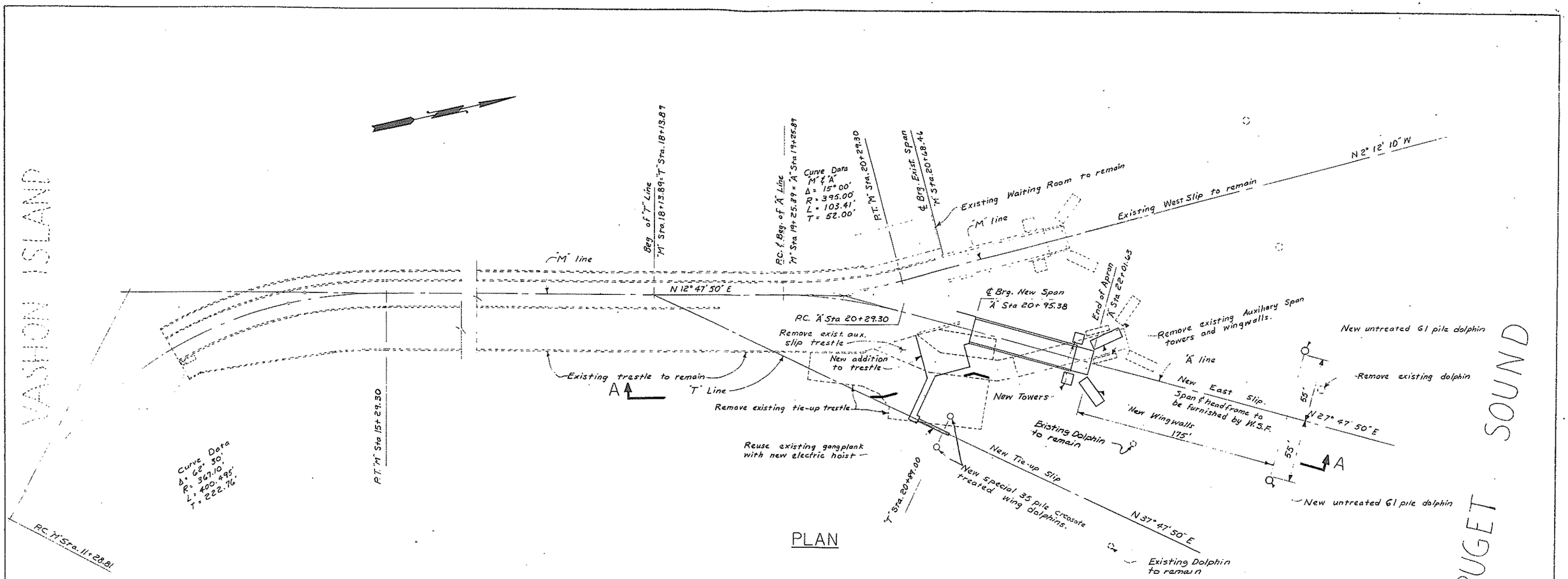

PLAN

GENERAL NOTES

1. All workmanship and materials shall be in accordance with the requirements of the State of Washington Department of Highways Standard Specifications for Road and Bridge Construction dated 1974.
2. All timber shall be rough unless noted otherwise.
3. All hardware shall be galvanized unless noted otherwise. Galvanize in accordance with ASTM-A-153.
4. All bolts through timber shall be fitted with malleable washers unless noted otherwise
5. See special provisions for timber and timber treatment specifications.

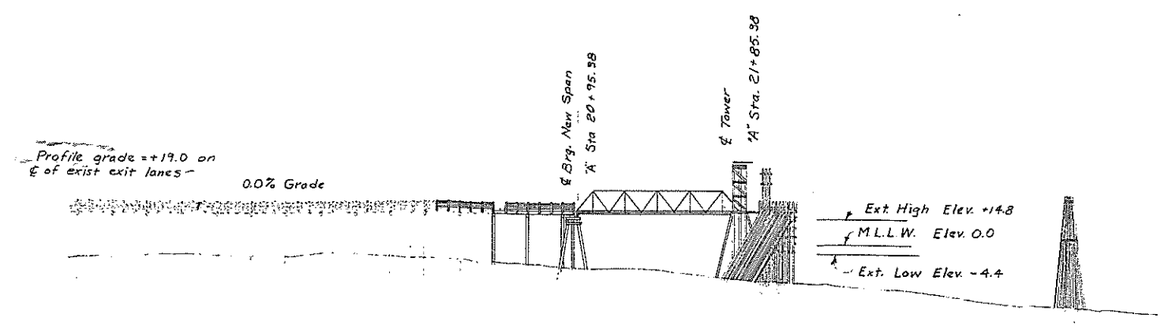

VIEW A-A

VASHON FERRY TERMINAL
AUXILIARY SLIP RECONSTRUCTION
KING COUNTY

LAYOUT

WASHINGTON STATE HIGHWAY COMMISSION
DEPARTMENT OF HIGHWAYS
OLYMPIA, WASHINGTON
G. H. ANDREWS DIRECTOR OF HIGHWAYS

C.C. Heihole

APPROVED Oct. 8, 1974

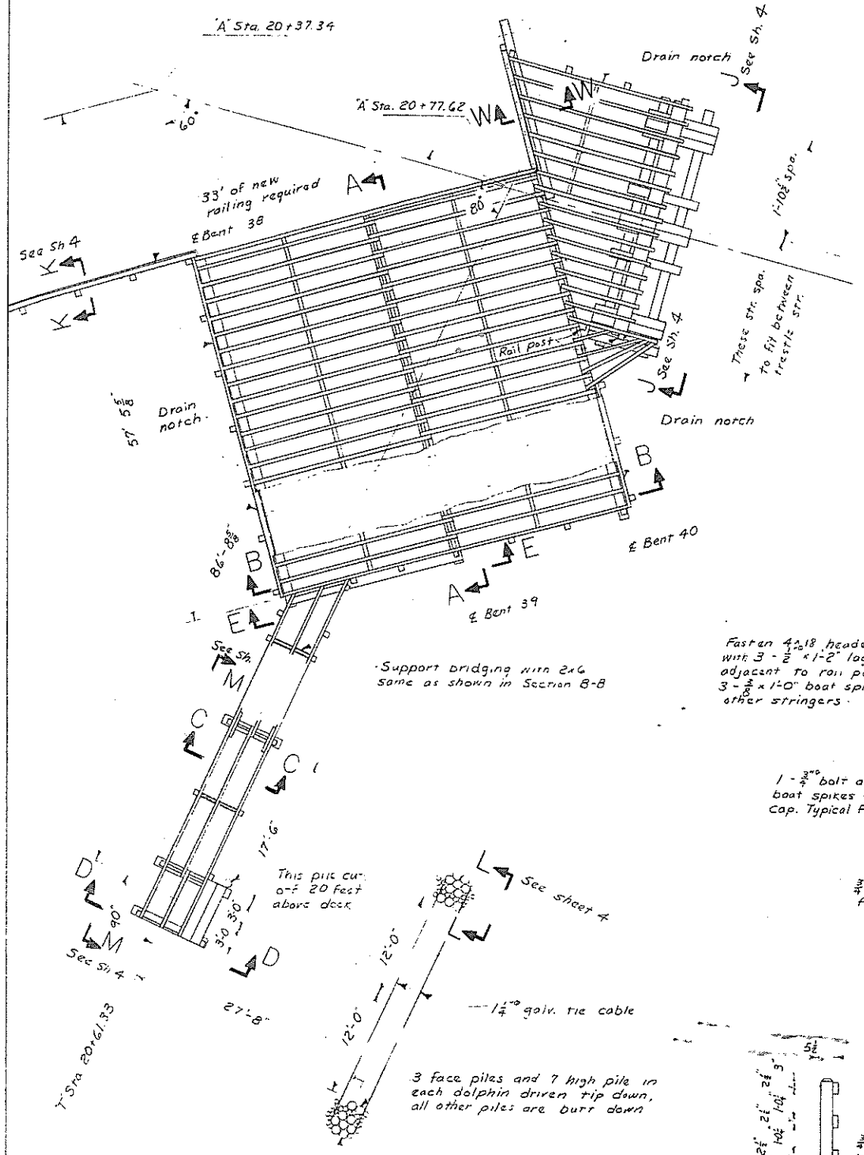

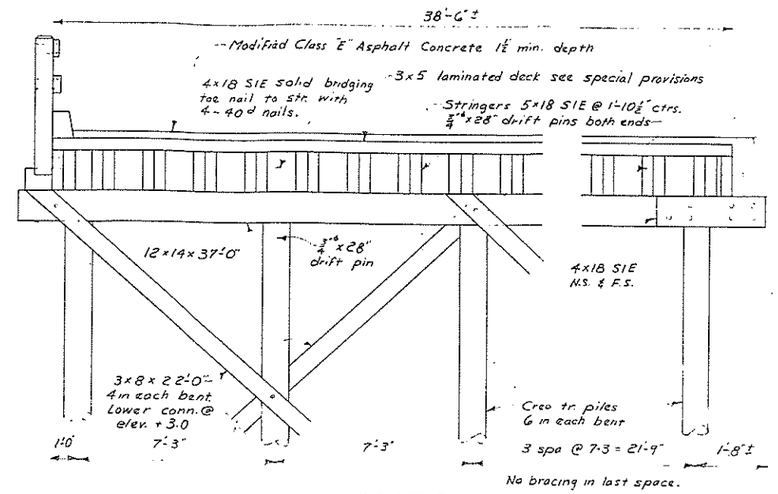

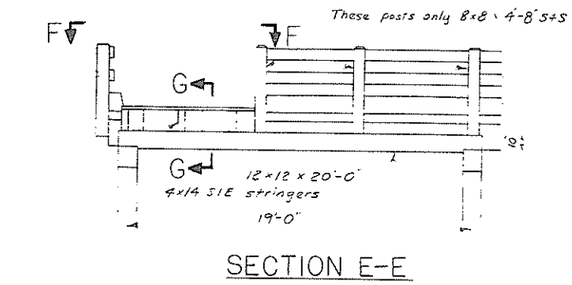

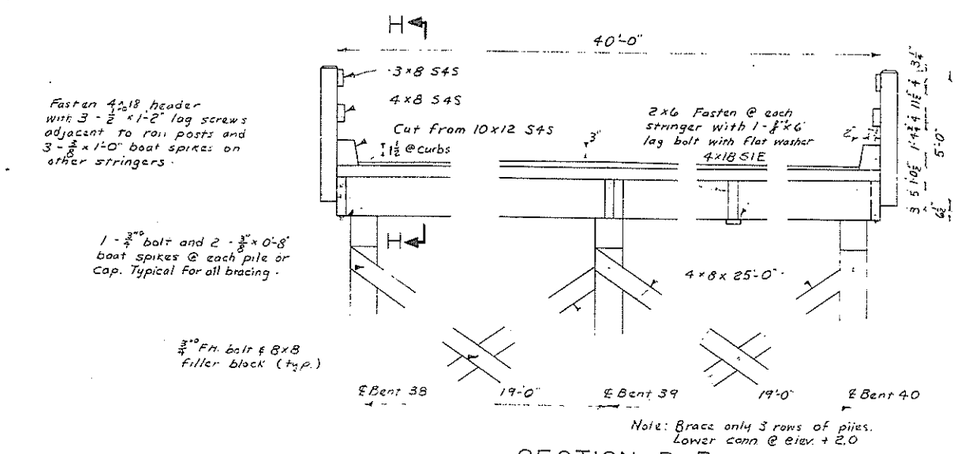

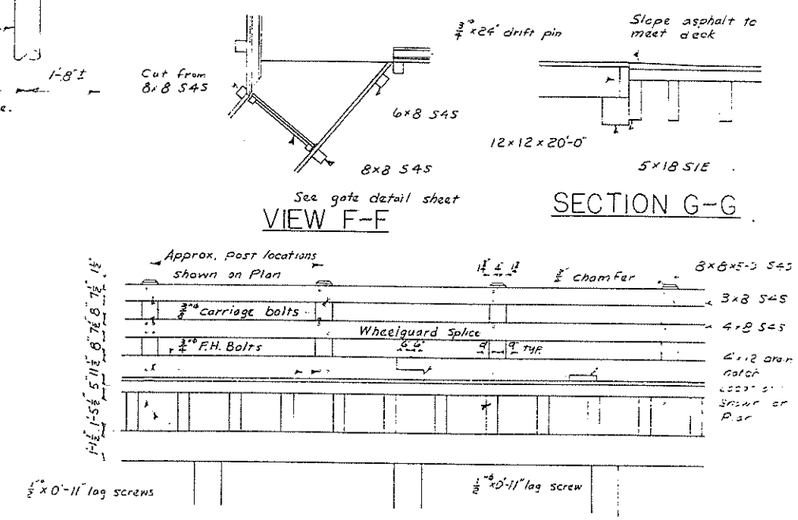

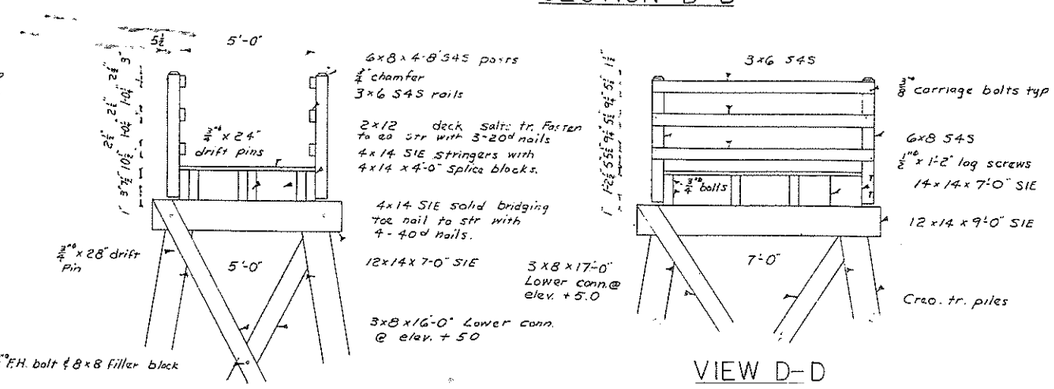

VASHON FERRY TERMINAL
AUXILIARY SLIP RECONSTRUCTION
KING COUNTY

TRESTLE AND TIE UP SLIP

WASHINGTON STATE HIGHWAY COMMISSION
DEPARTMENT OF HIGHWAYS
OLYMPIA, WASHINGTON
G. H. ANDREWS DIRECTOR OF HIGHWAYS