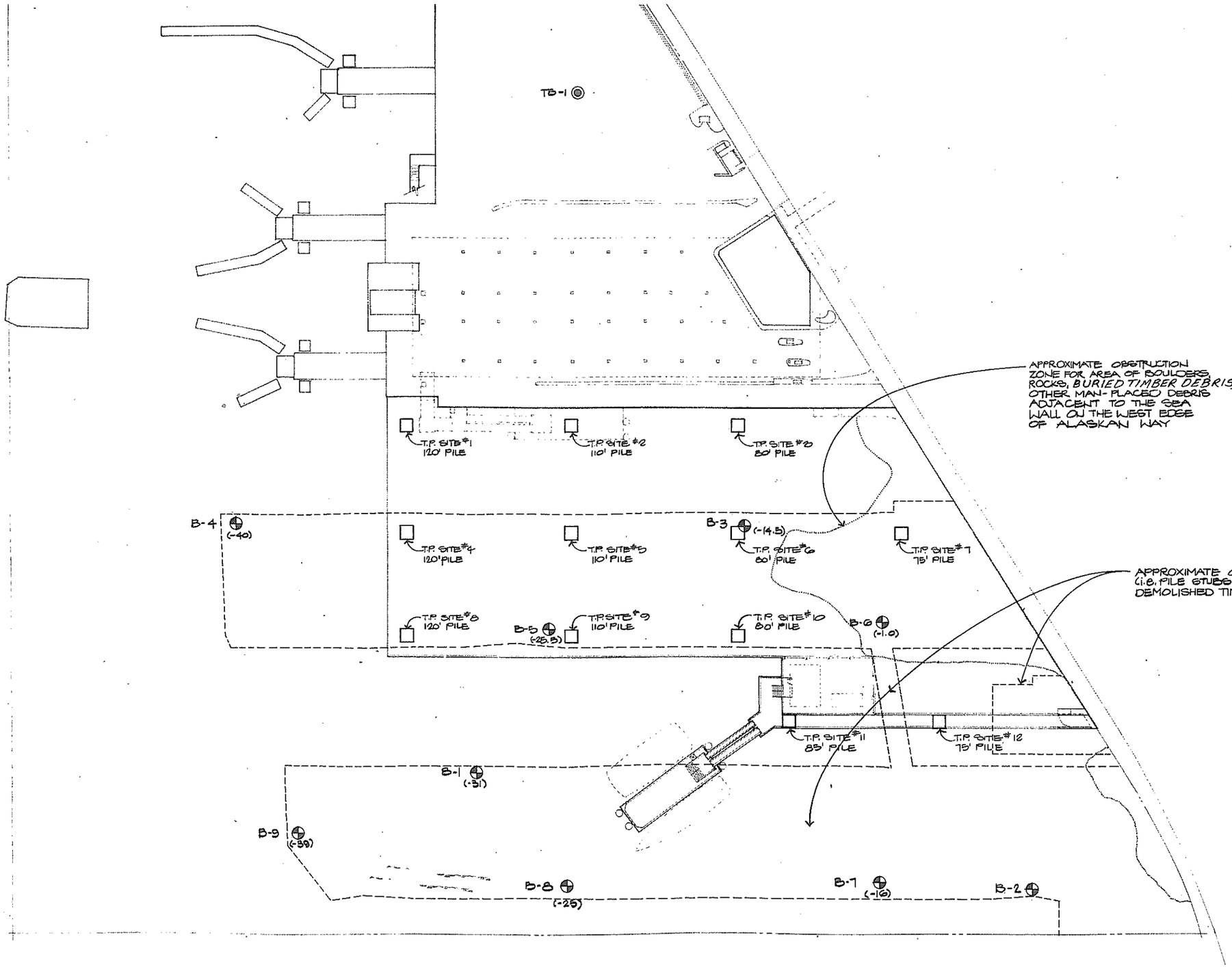

LEGEND

APPROXIMATE BORING LOCATION AND DESIGNATION:

TB-1 ◉ SHANNON & WILSON (1982)

B- ⊕ SHANNON & WILSON (1968)
( ) (MUD LINE ELEVATION DURING BORING)

NOTE: 1. SEE SPECIAL PROVISIONS FOR TEST HOLE DATA

2. PILE LENGTH (CONCRETE PLUS STEEL TIP) ARE APPROXIMATE, PLUS AN ADDITIONAL 10 FEET

0 20 50 100 150 FT.
1" = 50'

NORTH

	92440.00
	MARCH 1989
E	1" EQUALS 50'
GNED	GKG
WN	SMC
KED	DEB
. ENGR.	
. ADM.	

DATE	REVISION	BY	APP'D

REGION NO.	STATE	FED. AID PROJ. NO.	SHEET NO.	TOTAL SHEETS
10	WASH			

JOB NUMBER 89W060

CONTRACT NO.

APPROVED DATE

TL 1017 REGISTERED ARCHITECT ALLEN D. MOSER STATE OF WASHINGTON

Washington State Department of Transportation

Marine Transportation Division

TRA Architecture Engineering Planning Interiors
215 Columbia
Seattle, WA 98104
(206)682-1133
FAX 621-8782

Seattle Ferry Terminal

PIER STRUCTURE AND INTERIM PASSENGER ONLY FACILITIES

TEST PILE AND PRELOAD FILL PLAN

05:3

SHEET 10 OF 66 SHEETS

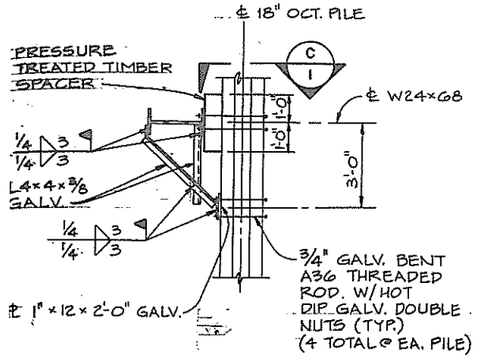

SECTION A/I
N.T.S.

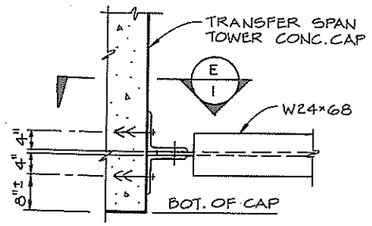

SECTION B/I
N.T.S.

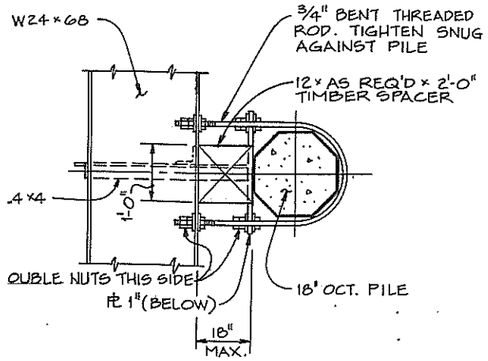

SECTION C/I
N.T.S.

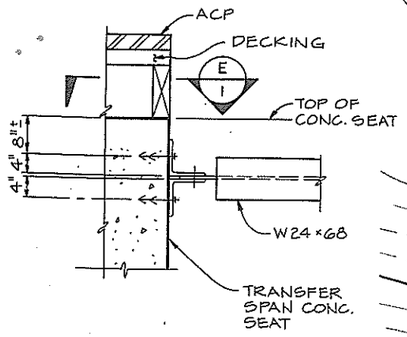

SECTION D/I
N.T.S.

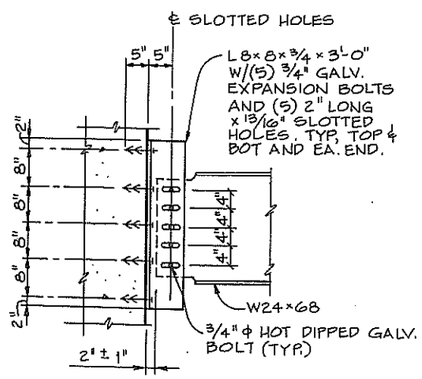

SECTION E/I
N.T.S.

DRAWING NOTES

1. Test piles A - C shall be 18" octagonal concrete piles with driving tips as detailed on Sheet 74.2.
2. Test piles A - C shall be driven vertically to a minimum penetration of 8 feet (6 foot driving tip + 2 foot concrete section) into the till bearing layer unless otherwise directed by the Engineer. Pile order lengths below cut off shall be:

Test Pile A	100 ft.
Test Pile B	100 ft.
Test Pile C	98 ft.

The above lengths include the length of the 6 foot driving tip.

3. Test piles A and B shall be cut off at elevation +20 ft. MLLW and braced as shown. Test pile C shall be cut off at elevation 18 ft. MLLW and securely braced to existing timber caps and stringers to prevent movement of the test pile.
4. Test pile C shall be driven through a hole cut by the Contractor in the existing dock. The hole shall be repaired to match adjacent existing construction immediately after completion of pile driving and testing.
5. Expansion bolts shall be Hilti Kwik-Bolts as supplied by Hilti, Inc., Tulsa, OK, Parabolt Concrete Anchors as manufactured by USM Corporation, Tempe, PA, Trubolt Stud Anchors by Ramset Fastening System, Division of Olin Corporation, New Haven, CT, or an approved equal. Expansion bolts shall be installed per manufacturer's recommendations and both lengths and embedments shall be as designated on the drawing.

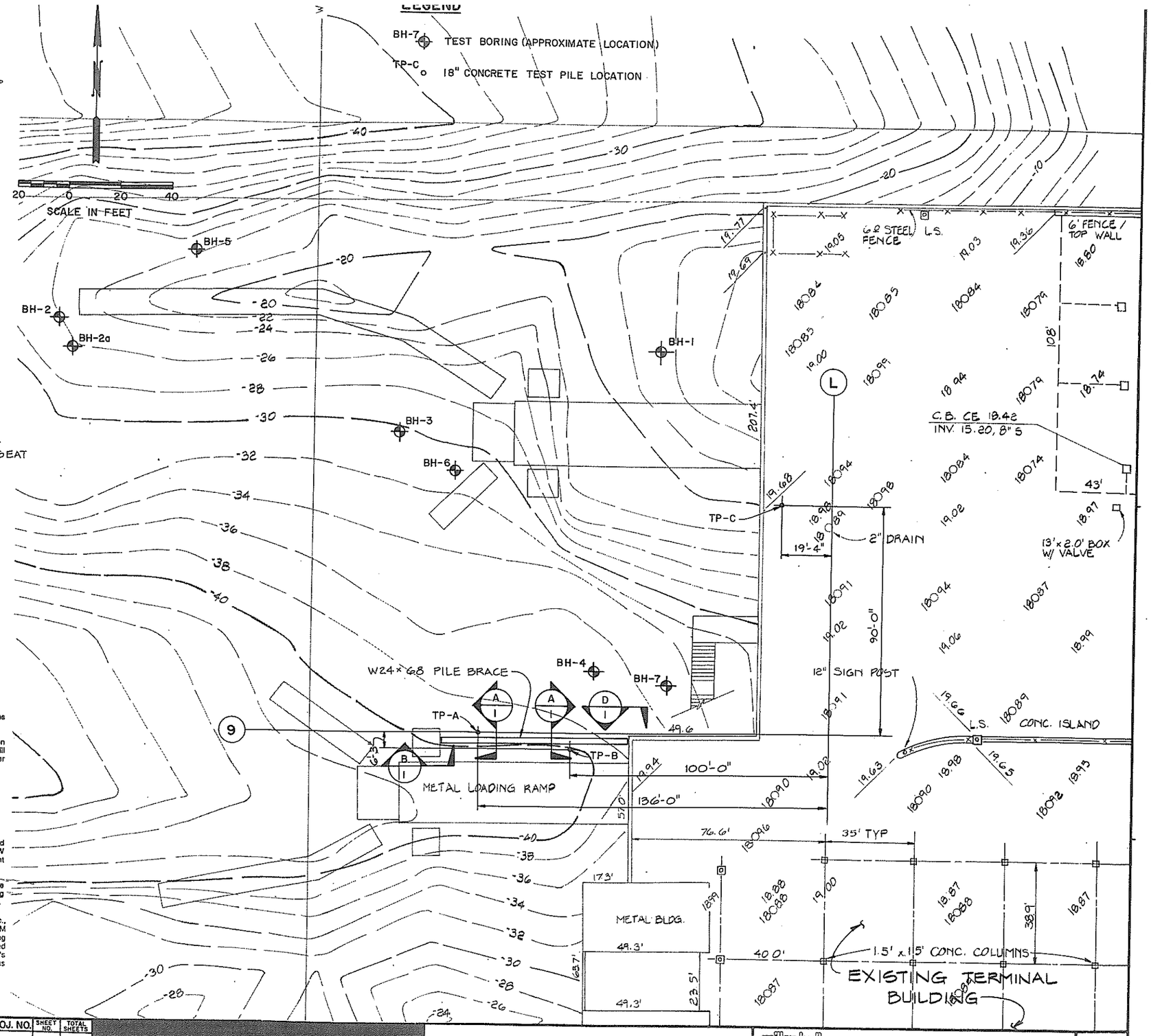

DATE	8-10-89				REGION NO.	STATE	FED. AID PROJ. NO.	SHEET NO.	TOTAL SHEETS
SCALE					10	WASH			
DESIGNED					JOB NUMBER				
DRAWN	R. TORGESON				89W060				
CHECKED					CONTRACT NO.				
PROJ. ENGR.		9-21-89	Add. New Sheet						
DIST. ADM.		DATE	REVISION	BY	APP'D				

APPROVED DATE

DAVID T. THOMAS — REGISTERED PROFESSIONAL ENGINEER

Washington State Department of Transportation
Marine Transportation Division

miller/hull
The Miller/Hull Partnership
Architecture and Planning
Room 220 Maritime Building
911 Western Avenue
Seattle, Washington 98104
Telephone 206.682.6837

Seattle Ferry Terminal
PIER STRUCTURE AND INTERIM PASSENGER ONLY FACILITIES

TEST PILES A, B & C PLAN

SHEET 10A OF 66

FORM 221-012