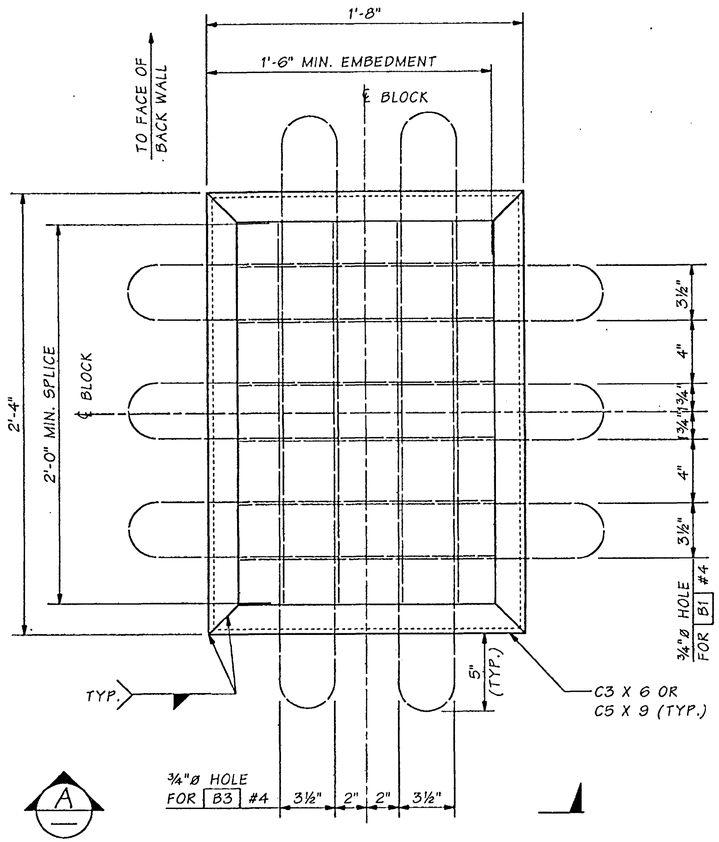

PLAN - REINFORCING FOR BEARING BLOCKS

REINFORCING STEEL TYPICAL FOR ALL BLOCKS
LOWER BEARING BLOCKS SHOWN

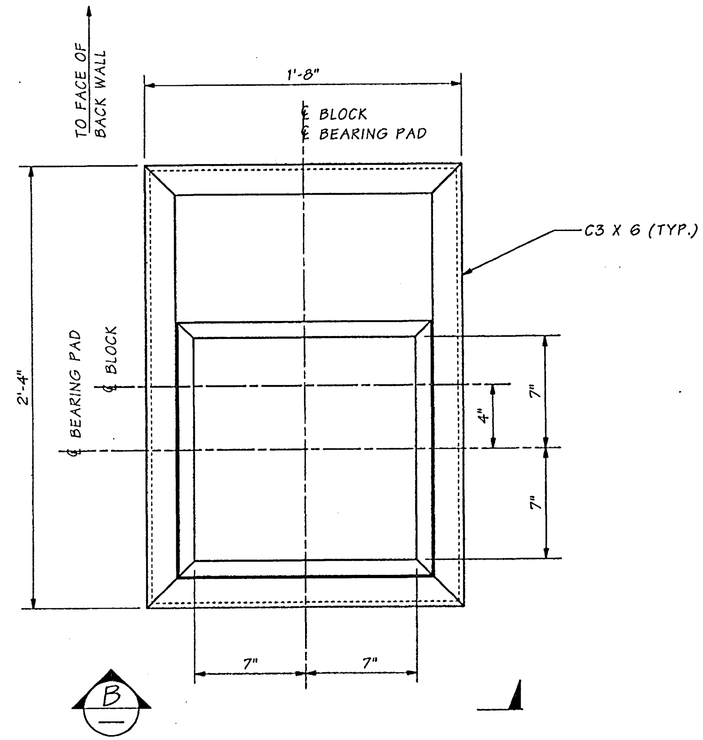

PLAN - UPPER BEARING BLOCK

REINFORCEMENT NOT SHOWN

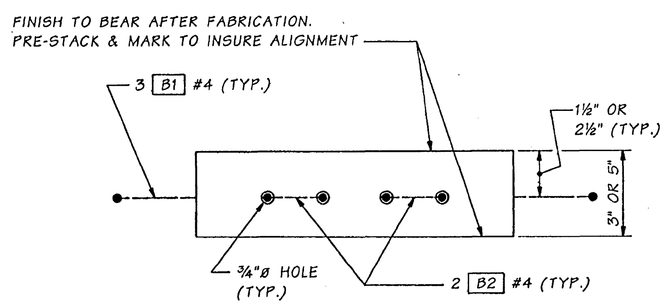

VIEW A

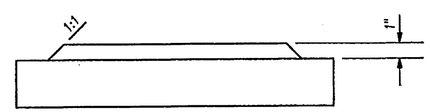

VIEW B

REQUIRED BEARING BLOCKS	
UPPER BLOCK	LOWER BLOCKS
3" HIGH	5" HIGH
6	12

NOTE: ALL BEARING BLOCKS & GROUT PADS SHALL BE LEVEL.

FOR "AS CONSTRUCTED PLANS" ONLY

SR 433 JOB NO. 1 SHEET 12

Bridge Design Engr.	Kapur, J		M:\Y-Team\Lewis_Clark Rehab\Oregon Appr\window files\BEARING BLOCK.WND								
Supervisor	Kirker, KN	08/02									
Designed By	Peralta, R	08/02									
Checked By	Talukdar, M	08/02									
Detailed By	Evans, P	08/02									
Bridge Projects Engr.											
Prelim. Plan By											
Architect/Specialist			DATE	REVISION	BY	APP'D					

REGION NO.	STATE	FED. AID PROJ. NO.	SHEET NO.	TOTAL SHEETS
10	WASH.	ACBH - 0433(007)		
JOB NUMBER 02x310				
6444				

STRUCTURAL REGISTERED PROFESSIONAL ENGINEER 71344 OREGON SEPT. 10, 2001 JUGESH KAPUR
EXPIRES 06-30-2003

BRIDGE AND STRUCTURES OFFICE

KARL N. KIRKER STATE OF WASHINGTON 16298 REGISTERED PROFESSIONAL ENGINEER
EXPIRES 11/3/03

Washington State Department of Transportation

SR 433
LEWIS AND CLARK BRIDGE
DECK REPLACEMENT

BEARING BLOCK DETAILS

BRIDGE SHEET NO. 0A12

SHEET 144 OF 258 SHEETS

Wed Sep 18 09:20:46 2002

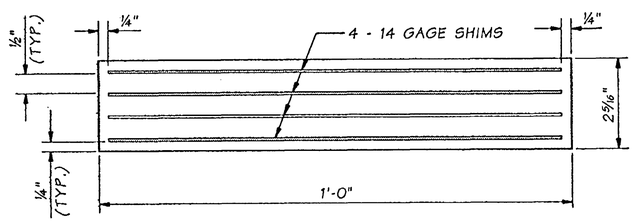

DETAIL B

ELASTOMERIC BEARING PAD
8 REQUIRED
DUROMETER HARDNESS = 60

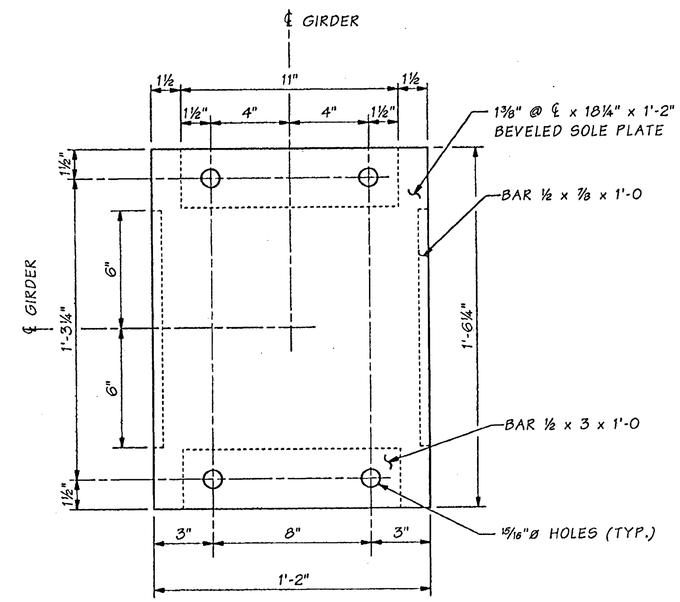

PLAN ~ BEVELED SOLE PLATE

FOR "AS CONSTRUCTED PLANS" ONLY

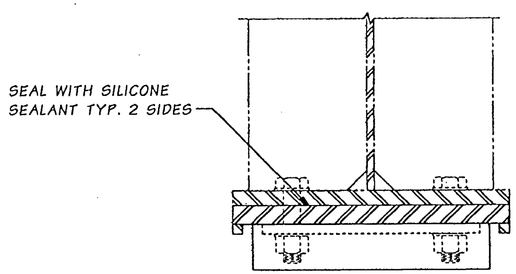

SECTION C
EXISTING GIRDER

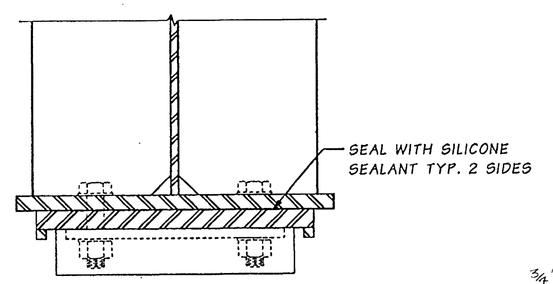

SECTION C
NEW GIRDER

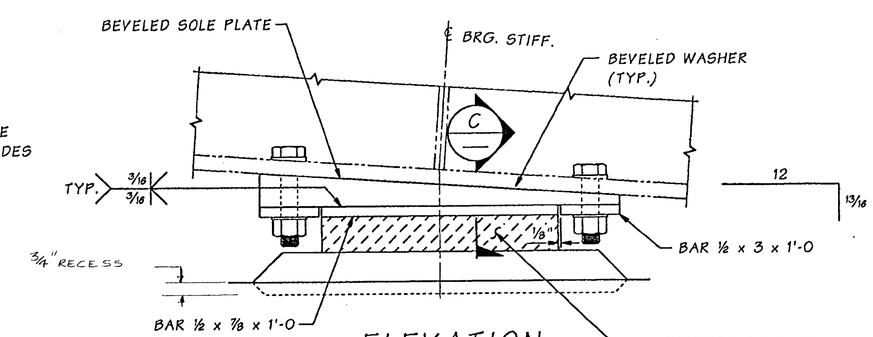

ELEVATION

NOTE: GROUT PADS FOR EXTERIOR GIRDERS ONLY

Bridge Design Engr.	Kapur, J		M:\Y-Team\Lewis_Clark Rehab\Oregon Appr\window files\PIER 9 BRG.WND								
Supervisor	Kirker, KN	08/02					REGION NO.	STATE	FED. AID PROJ. NO.	SHEET NO.	TOTAL SHEETS
Designed By	Peralta, R	08/02					10	WASH.			
Checked By	Talukdar, M	08/02					JOB NUMBER 02x310		ACBH - 0433(007)		
Detailed By	Evans, P	08/02									
Bridge Projects Engr.											
Prelim. Plan By											
Architect/Specialist			DATE	REVISION	BY	APP'D					

STRUCTURAL REGISTERED PROFESSIONAL ENGINEER 71344 OREGON SEPT. 10, 2002 JUGESH KAPUR
EXPIRES 06-30-2003

BRIDGE AND STRUCTURES OFFICE

KARL N. KIRKWOOD STATE OF WASHINGTON 16206 REGISTERED PROFESSIONAL ENGINEER
EXPIRES 11/3/03

Washington State Department of Transportation

SR 433
LEWIS AND CLARK BRIDGE
DECK REPLACEMENT

OREGON APPROACH BEARING DETAILS

BRIDGE SHEET NO. 0A13

SHEET 145 OF 258 SHEETS

SR 433 JOB NO. 1 SHEET 13

Wed Sep 18 08:44:33 2002

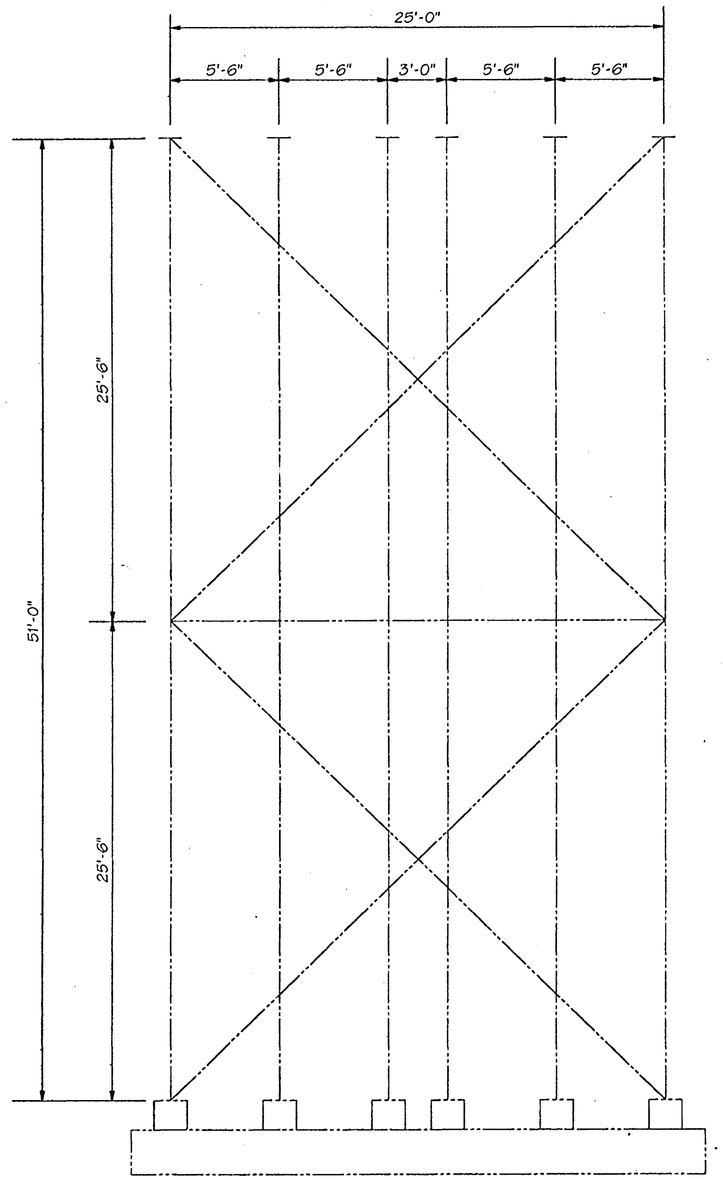

ELEVATION FOR EXISTING COLUMN & FOOTING LAYOUT

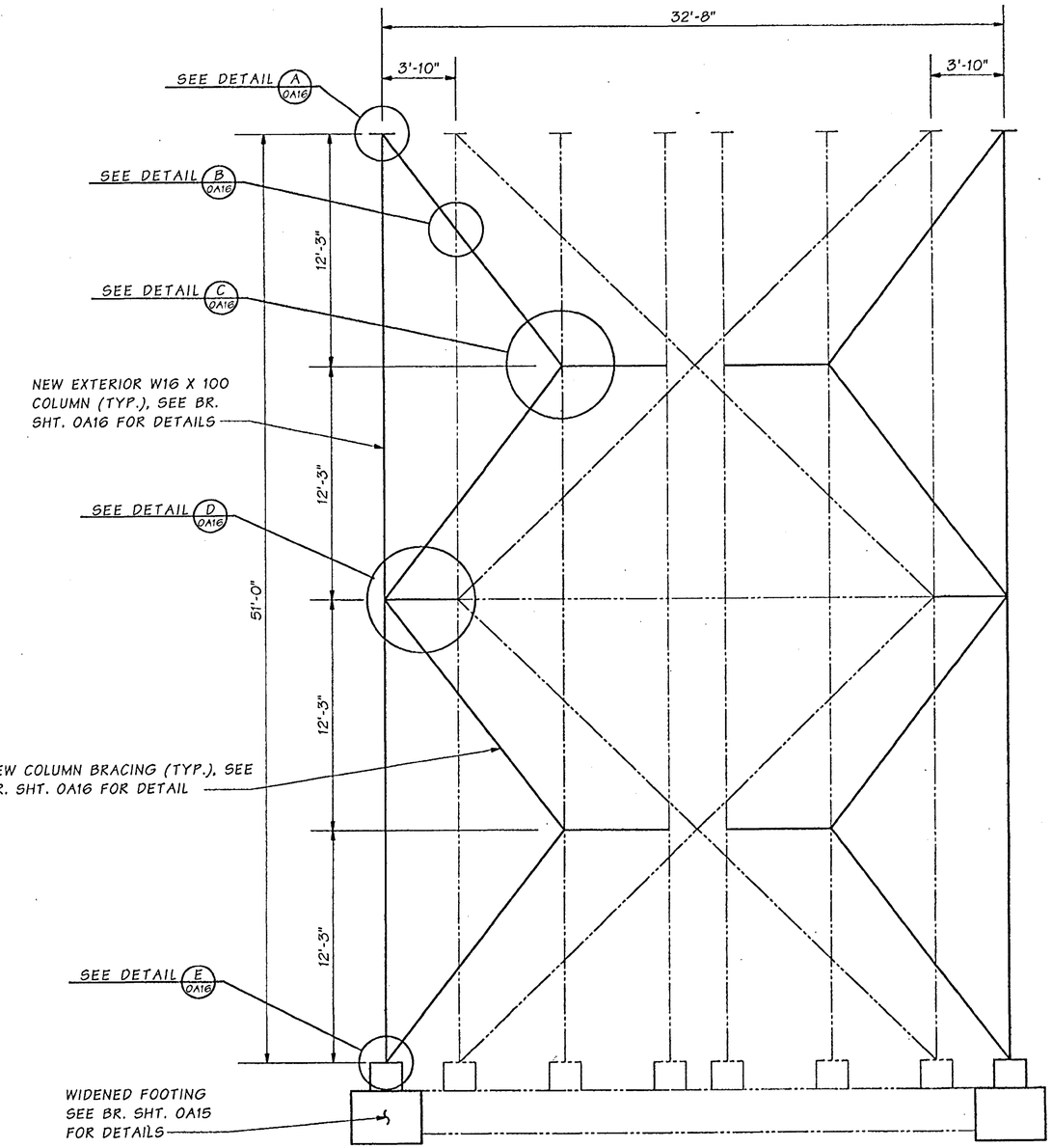

ELEVATION FOR MODIFIED COLUMN & FOOTING LAYOUT

FOR "AS CONSTRUCTED PLANS" ONLY

SR 433 JOB NO. 1 SHEET 14

Bridge Design Engr.	Kapur, J		M:\Y-Team\Lewis_Clark Rehab\Oregon Appr\Window files\PIER 8 ELEV.WND								
Supervisor	Kirker, KN	08/02					REGION NO.	STATE	FED. AID PROJ. NO.	SHEET NO.	TOTAL SHEETS
Designed By	Peralta, R	08/02					10	WASH.			
Checked By	Talukdar, M	08/02					JOB NUMBER 02x310		ACBH - 0433(007)		
Detailed By	Evans, P	08/02									
Bridge Projects Engr.											
Prelim. Plan By											
Architect/Specialist			DATE	REVISION	BY	APP'D	6/4/4				

STRUCTURAL REGISTERED PROFESSIONAL ENGINEER 71344 OREGON SEPT. 10, 2002 JUGESH KAPUR
EXPIRES 06-30-2003

BRIDGE AND STRUCTURES OFFICE

KARL N. KIRKER STATE OF WASHINGTON 16296 REGISTERED PROFESSIONAL ENGINEER
EXPIRES 11/3/03

Washington State Department of Transportation

SR 433
LEWIS AND CLARK BRIDGE
DECK REPLACEMENT

PIER 8 - ELEVATION

BRIDGE SHEET NO. 0A14

SHEET 146 OF 258 SHEETS

Tue Sep 17 11:50:16 2002

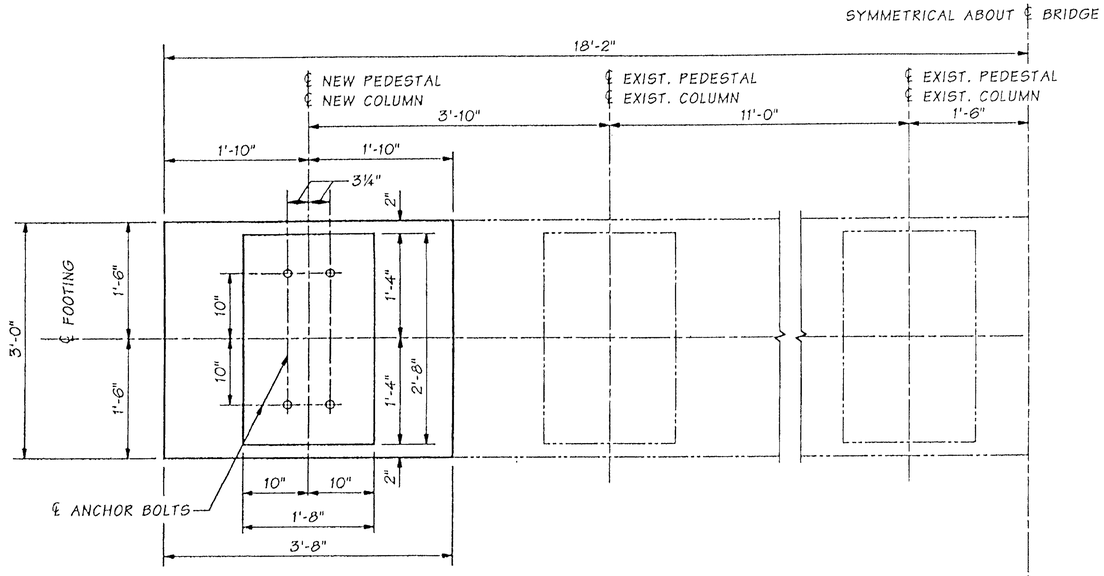

PLAN-FOOTING WIDENING

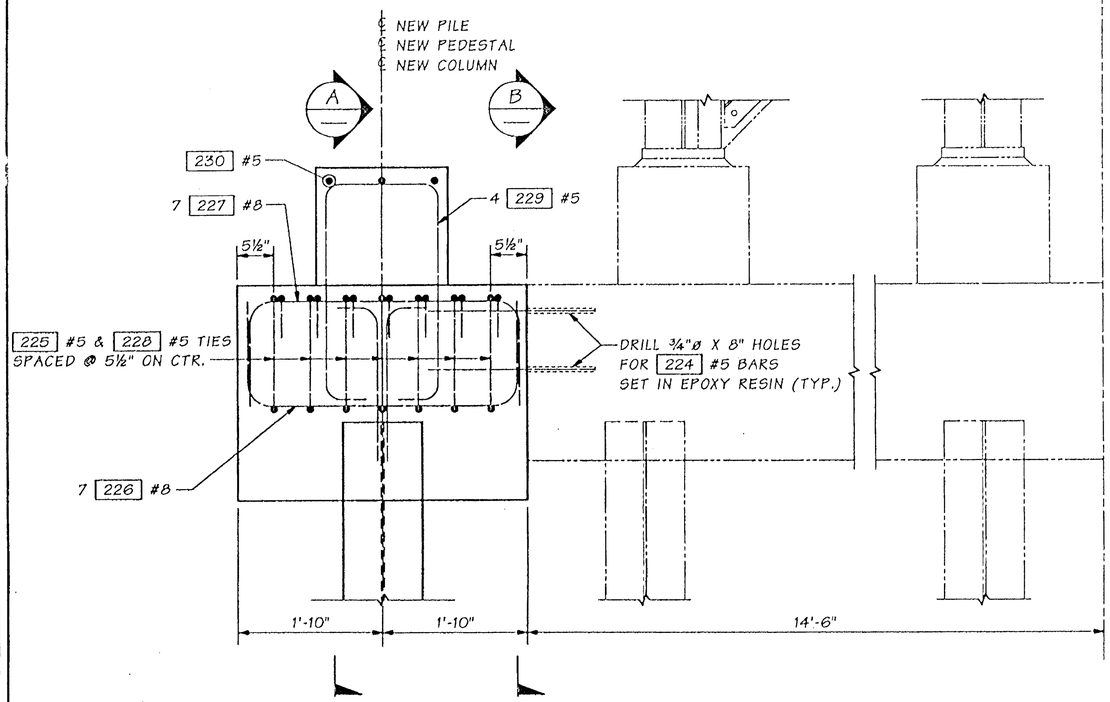

ELEVATION-FOOTING WIDENING

SYMMETRICAL ABOUT ℄ BRIDGE

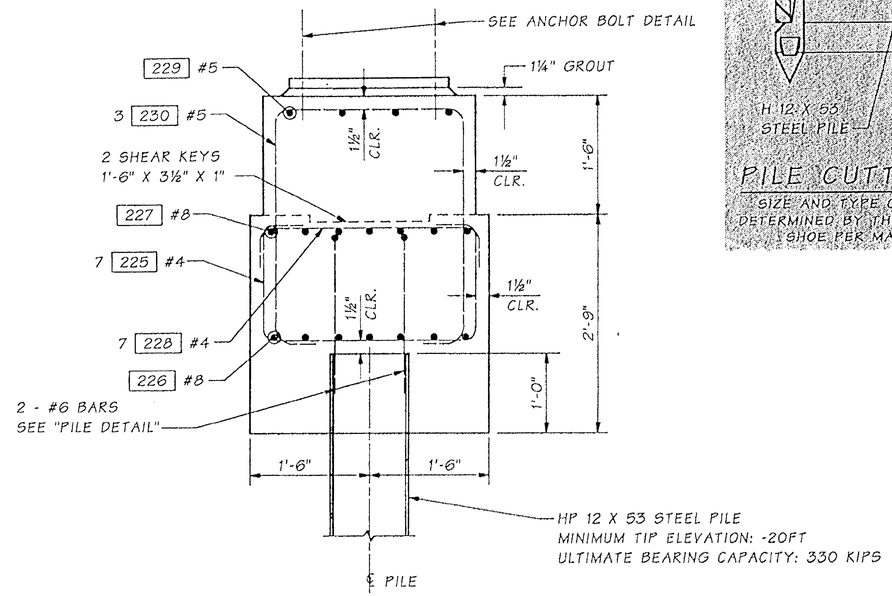

SECTION A

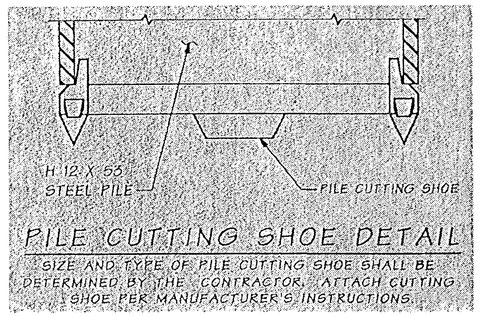

PILE CUTTING SHOE DETAIL

SIZE AND TYPE OF PILE CUTTING SHOE SHALL BE DETERMINED BY THE CONTRACTOR. ATTACH CUTTING SHOE PER MANUFACTURER'S INSTRUCTIONS.

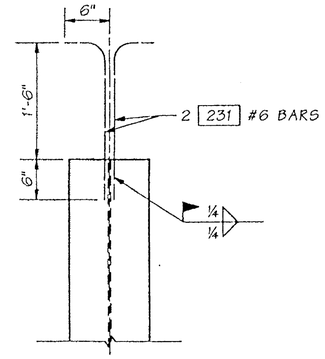

PILE DETAIL

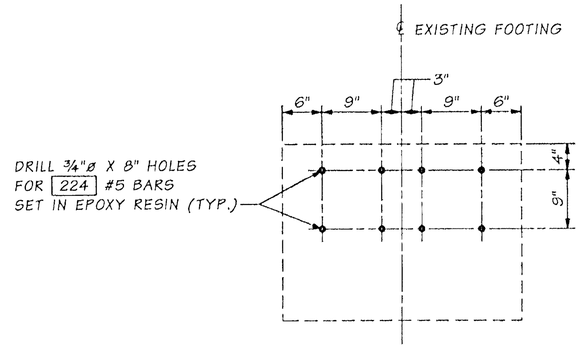

SECTION B

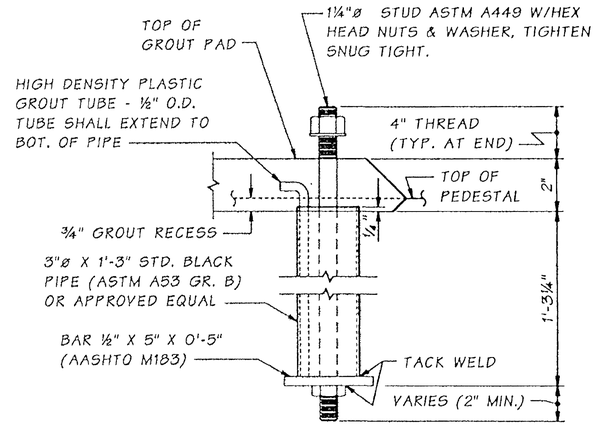

COLUMN ANCHOR BOLT DETAIL

PAINT ANCHOR BOLTS WITH ONE SHOP COAT IN ACCORDANCE WITH "APPLICATION OF PAINT" SPECIAL PROVISIONS TO 6" BELOW CONCRETE SURFACE & REQUIRED

FOR "AS CONSTRUCTED PLANS" ONLY

Bridge Design Engr.	Kapur, J		M:\Y-Team\Lewis_Clark Rehab\Oregon Appr\window files\COLUMN FTG.WND							
Supervisor	Kirker, KN	08/02								
Designed By	Peralta, R	08/02								
Checked By	Talukdar, M	08/02								
Detailed By	Evans, P	08/02								
Bridge Projects Engr.										
Prelim. Plan By			10/02	ADDED PILE CUTTING SHOE DETAIL	RP					
Architect/Specialist			DATE	REVISION	BY	APP'D				

REGION NO.	STATE	FED. AID PROJ. NO.	SHEET NO.	TOTAL SHEETS
10	WASH.			
JOB NUMBER 02x310		ACBH - 0433(007)		

STRUCTURAL REGISTERED PROFESSIONAL ENGINEER 7334 OREGON SEPT. 10, 2002 JUGESH KAPUR
EXPIRES 06-30-2003

BRIDGE AND STRUCTURES OFFICE

KARL N. KIRKER STATE OF WASHINGTON 12346 REGISTERED PROFESSIONAL ENGINEER
EXPIRES 11/3/03

Washington State Department of Transportation

SR 433
LEWIS AND CLARK BRIDGE
DECK REPLACEMENT

PIER 8 - FOOTING DETAILS

BRIDGE SHEET NO. OA15

SHEET 147 OF 258 SHEETS

SR 433 J O. 1 SHEET 15

Tue Oct 29 16:03:36 2002

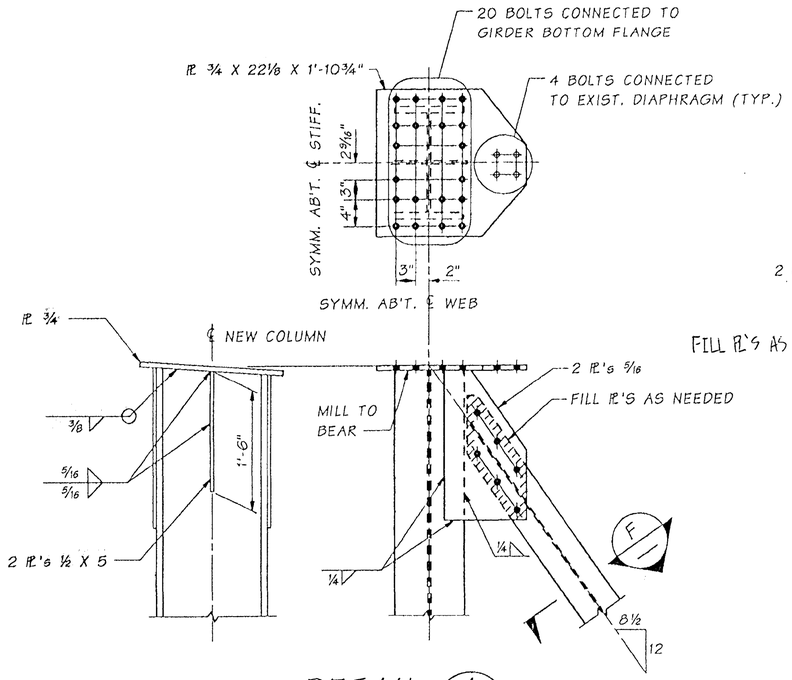

DETAIL A
TYP. AT 2 LOCATIONS
OA14

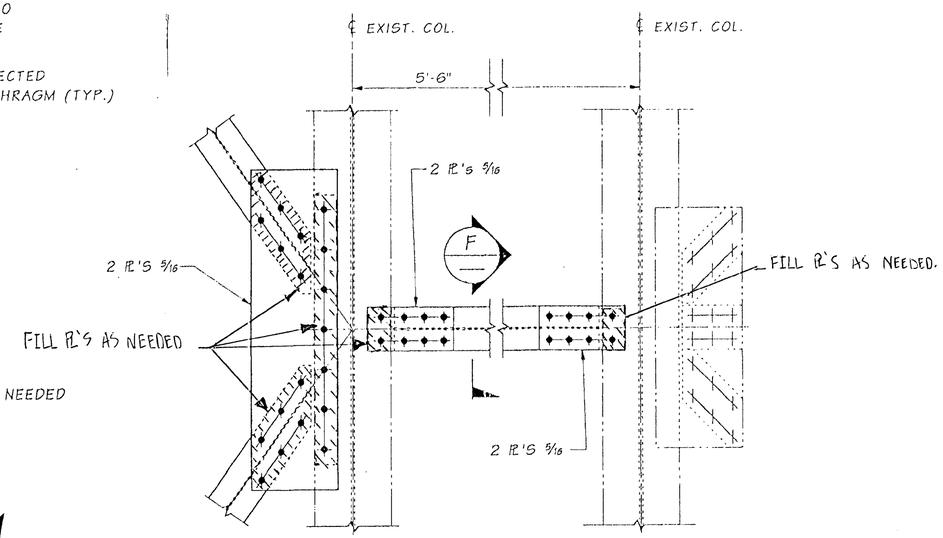

DETAIL C
TYP. AT 4 LOCATIONS
OA14

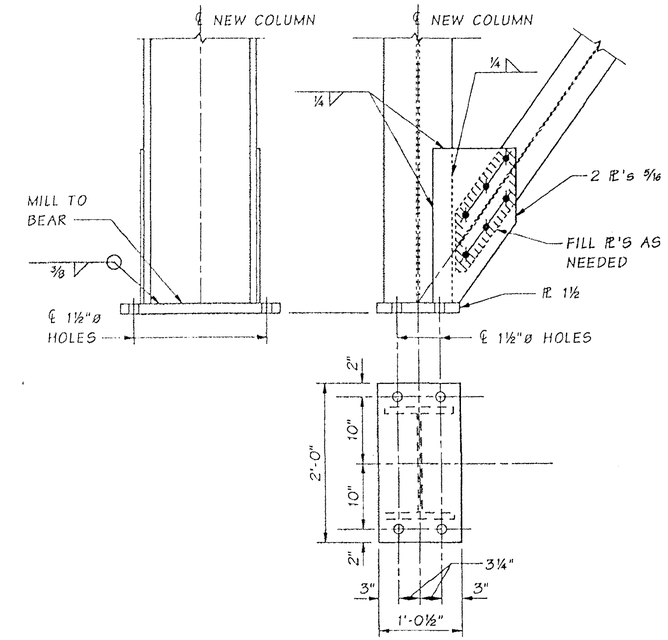

DETAIL E
TYP. AT 2 LOCATIONS
OA14

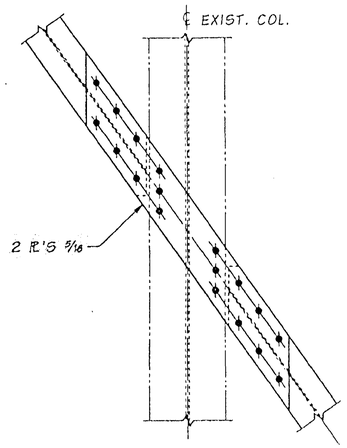

DETAIL B
TYP. AT 8 LOCATIONS
OA14

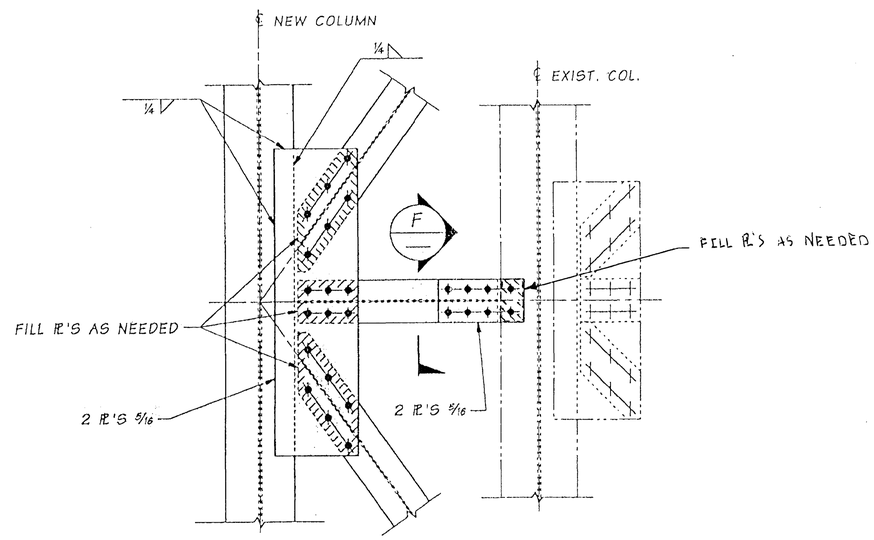

DETAIL D
TYP. AT 2 LOCATIONS
OA14

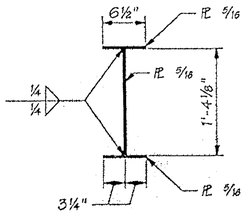

SECTION F
TYPICAL BRACING MEMBER

FOR "AS CONSTRUCTED PLANS" ONLY

Bridge Design Engr.	Kapur, J		M:\Y-Team\Lewis_Clark Rehab\Oregon Appr\window files\COLUMN DETAILS.WND								
Supervisor	Kirker, KN	08/02	11/02	ADDED BRACING SECTION VIEW	RP		REGION NO.	STATE	FED. AID PROJ. NO.	SHEET NO.	TOTAL SHEETS
Designed By	Peralta, R	08/02	11/02	ADDED PLATE THICKNESSES	RP		10	WASH.	ACBH - 0433(007)		
Checked By	Talukdar, M	08/02	11/02	ADDED FILL PLATES	RP						
Detailed By	Peralta, R	08/02	11/02	ADDED SHEET REFERENCES	RP		JOB NUMBER 02x310				
Bridge Projects Engr.			11/02	MODIFIED DIMENSIONS	RP						
Prelim. Plan By			11/02	MODIFIED WELD SYMBOLS	RP						
Architect/Specialist			DATE	REVISION	BY	APP'D	6444				

Wed Nov 20 12:49:17 2002

STRUCTURAL REGISTERED PROFESSIONAL ENGINEER 71344 OREGON SEPT. 10, 2002 JUGESH KAPUR
EXPIRES 06-30-2003

BRIDGE AND STRUCTURES OFFICE

KARL N. KIRKER STATE OF WASHINGTON 15246 REGISTERED PROFESSIONAL ENGINEER
EXPIRES 11/3/03

Washington State Department of Transportation

SR 433
LEWIS AND CLARK BRIDGE
DECK REPLACEMENT

PIER 8 - COLUMN DETAILS

BRIDGE SHEET NO. OA16

SHEET 148 OF 258 SHEETS

SR 433 JO. 1 SHEET 16

OREGON APPROACH WIDENING NOTES

1. DECK WIDENING SHALL BE PRECAST.
2. PRECAST GIRDER AND SLAB UNITS SHALL NOT BE INSTALLED UNTIL CONCRETE HAS ATTAINED 4000 PSI.
3. PRECAST GIRDER AND SLAB UNITS SHALL BE STORED IN THE UPRIGHT POSITION SUPPORTED AT THE BEARING LOCATIONS.

OREGON APPROACH SUGGESTED WIDENING PROCEDURE

1. AFTER ABUTMENT MODIFICATION AT PIER 9 IS COMPLETE, INSTALL NEW PILINGS, FOOTINGS, COLUMNS, AND BRACES AT PIER 8.
2. SET UP GIRDERS IN TEMPORARY CASTING AREA WITH SUPPORTS AT BEARING LOCATIONS. PROVIDE LATERAL SUPPORT FOR GIRDERS. CAST SLAB ON TOP OF NEW GIRDER TO PROPER PROFILE AND GRADE TAKEN FROM EXISTING BRIDGE DECK. ALLOW CONCRETE TO ATTAIN 4000 PSI.

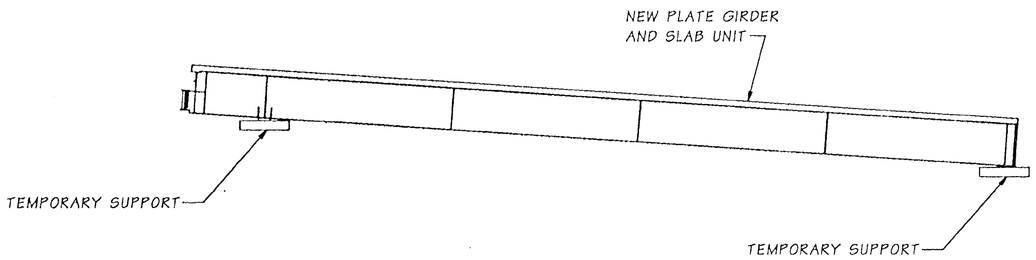

3. INSTALL TEMPORARY TRAFFIC BARRIER AND TRAFFIC CONTROL ON WEST SIDE OF APPROACH AS SHOWN IN TRAFFIC CONTROL PLAN ##, AND REMOVE PORTIONS OF EXISTING SUPERSTRUCTURE BEHIND TEMPORARY TRAFFIC BARRIER. CORE DRILL AND INSTALL DOWEL BARS.

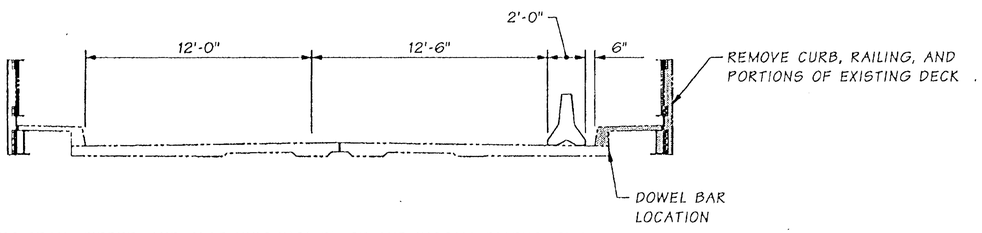

4. LIFT SPAN, GIRDER, AND SLAB UNIT INTO PLACE AND INSTALL DIAPHRAGMS.

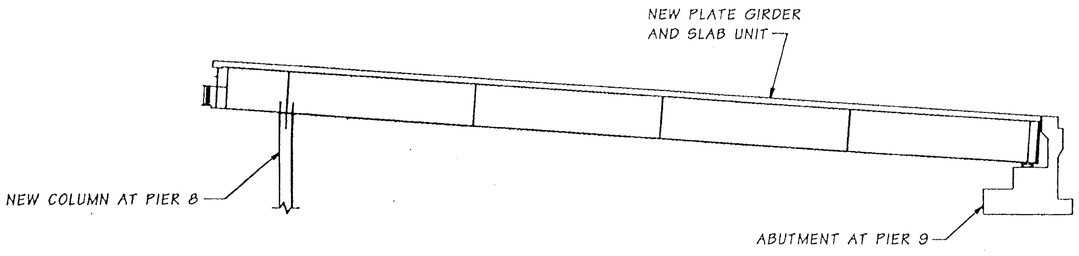

5. INSTALL LONGITUDINAL REINFORCING IN CLOSURE STRIP AND CAST CLOSURE POUR.

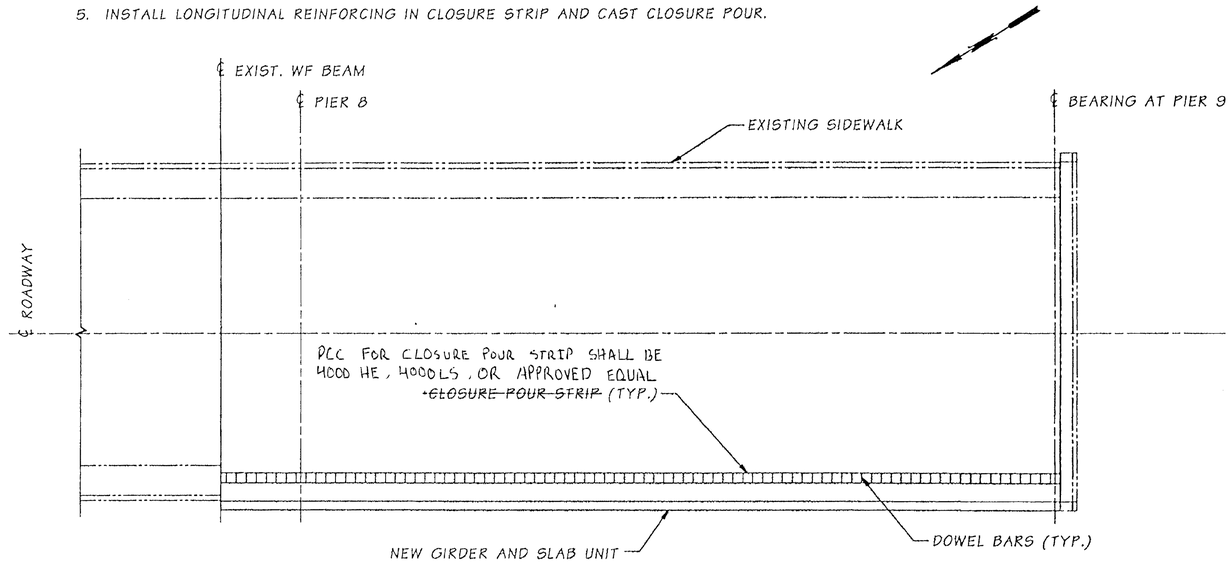

6. INSTALL GUARDRAIL POSTS, THRIE BEAM GUARDRAIL, AND PEDESTRIAN RAILING.
7. REMOVE TEMPORARY TRAFFIC BARRIER, RESTRIPE AND PLACE TEMPORARY TRAFFIC BARRIER ON EAST SIDE OF APPROACH.

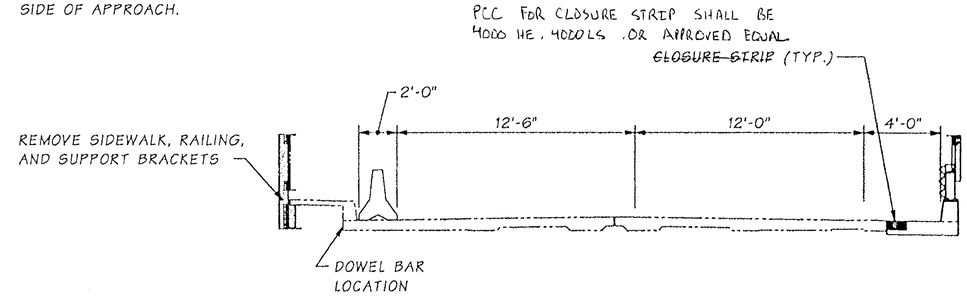

8. REPEAT STEPS 3 THROUGH 6 FOR EAST SIDE OF APPROACH.
9. REMOVE TEMPORARY TRAFFIC BARRIER, PLACE OVERLAY, RESTRIPE AND OPEN TO TRAFFIC.

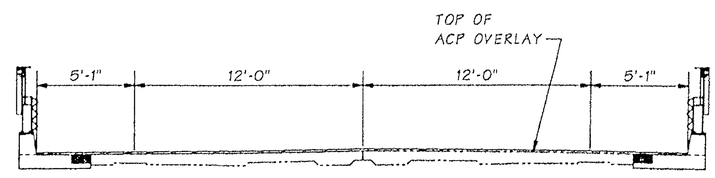

FOR "AS CONSTRUCTED PLANS" ONLY

Bridge Design Engr.	Kapur, J		M:\Y-Team\Lewis_Clark Rehab\Oregon Appr\window files\WIDENING SEQUENCE.WND				REGION NO.	STATE	FED. AID PROJ. NO.	SHEET NO.	TOTAL SHEETS
Supervisor	Kirker, KN	08/02					10	WASH.			
Designed By	Peralta, R	08/02									
Checked By	Talukdar, M	08/02					JOB NUMBER		ACBH - 0433(007)		
Detailed By	Evans, P	08/02					02x310				
Bridge Projects Engr.											
Prelim. Plan By			10/02	REMOVED SHADING	RP						
Architect/Specialist			DATE	REVISION	BY	APP'D					

Tue Oct 29 15:16:46 2002

STRUCTURAL REGISTERED PROFESSIONAL ENGINEER OREGON 71344 SEPT. 10, 2002 JUGESH KAPUR
EXPIRES 06-30-2003

BRIDGE AND STRUCTURES OFFICE

KARL N. KIRKER STATE OF WASHINGTON 18996 REGISTERED PROFESSIONAL ENGINEER
EXPIRES 11/3/03

Washington State Department of Transportation

SR 433
LEWIS AND CLARK BRIDGE
DECK REPLACEMENT

OREGON APPROACH
WIDENING SEQUENCE

BRIDGE SHEET NO. 0A17

SHEET 149 OF 258 SHEETS

SR 433 10. 1 SHEET 17

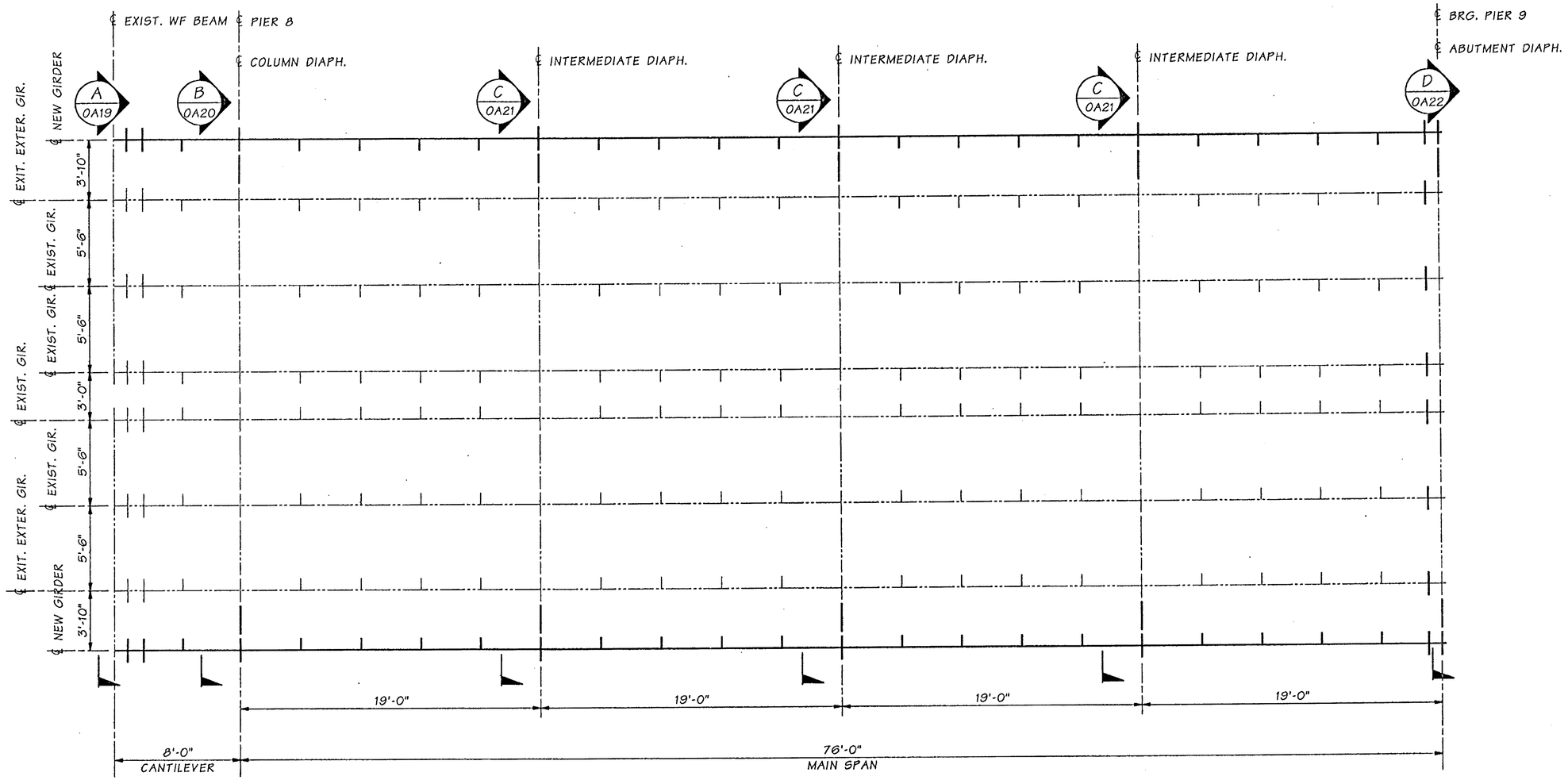

FRAMING PLAN

FOR "AS CONSTRUCTED PLANS" ONLY

SR 433 JOB NO. 1 SHEET 18

Bridge Design Engr.	Kapur, J		
Supervisor	Kirker, KN	08/02	
Designed By	Peralta, R	08/02	
Checked By	Talukdar, M	08/02	
Detailed By	Peralta, R	08/02	
Bridge Projects Engr.			
Prelim. Plan By			
Architect/Specialist			

M:\Y-Team\Lewis_Clark Rehab\Oregon Appr\Window files\FRAMING PLAN.WND

DATE	REVISION	BY	APP'D

REGION NO.	STATE	FED. AID PROJ. NO.	SHEET NO.	TOTAL SHEETS
10	WASH.	ACBH - 0433(007)		
JOB NUMBER 02x310				

STRUCTURAL REGISTERED PROFESSIONAL ENGINEER 71344 OREGON SEP. 10, 2002 JUGESH KAPUR
EXPIRES 06-30-2003

BRIDGE AND STRUCTURES OFFICE

KARL N. KIRKER STATE OF WASHINGTON 16206 REGISTERED PROFESSIONAL ENGINEER
EXPIRES 11/3/03

Washington State Department of Transportation

SR 433
LEWIS AND CLARK BRIDGE
DECK REPLACEMENT

OREGON APPROACH FRAMING PLAN

BRIDGE SHEET NO. 0A18

SHEET 150 OF 258 SHEETS

Tue Sep 17 11:49:27 2002

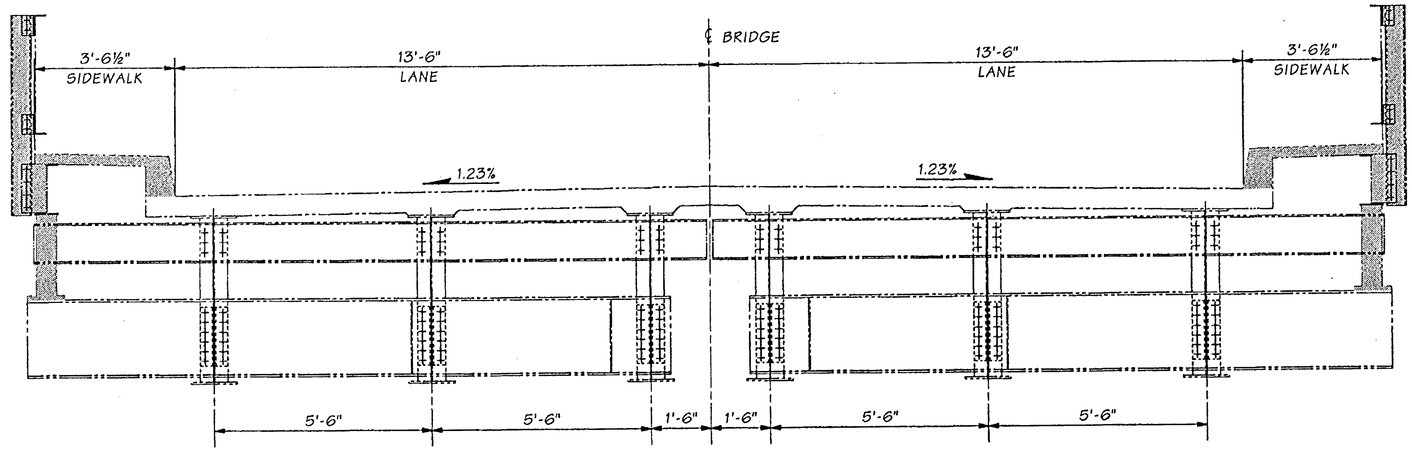

SECTION D / OA18

EXISTING END SPAN DIAPHRAGM
REMOVE SHADED PORTIONS

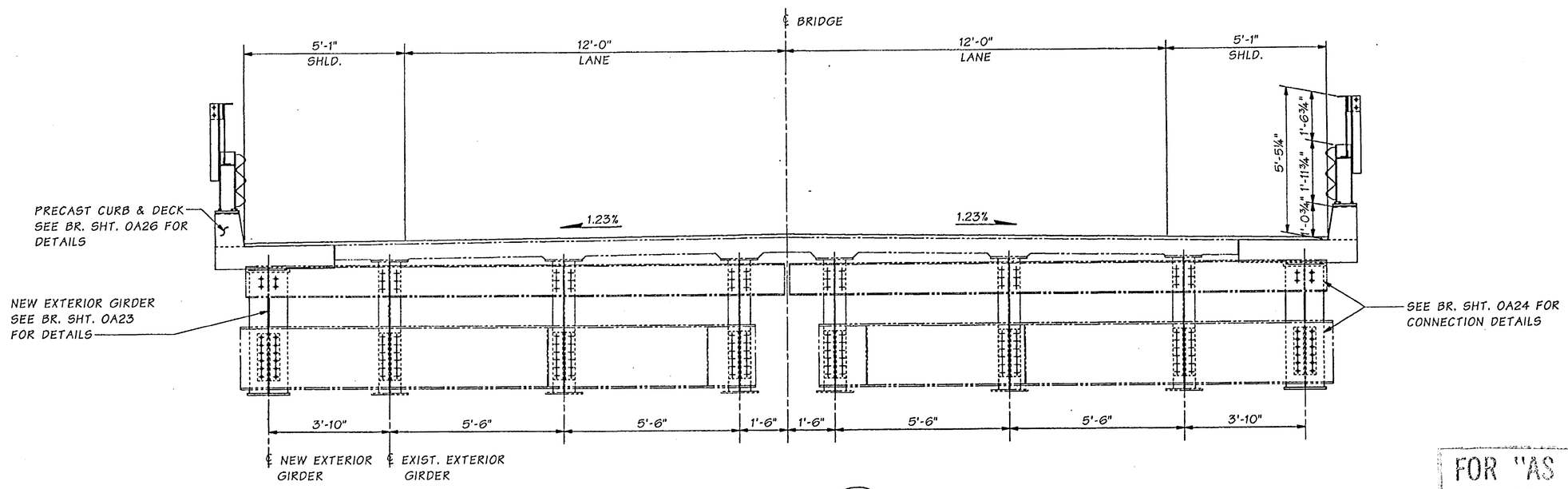

SECTION D / OA18

WIDENED END SPAN DIAPHRAGM

FOR "AS CONSTRUCTED PLANS" ONLY

SR 433 JOB NO. 1 SHEET 19

Bridge Design Engr.	Kapur, J		M:\Y-Team\Lewis_Clark Rehab\Oregon Appr\Window files\END DIAPH.WND
Supervisor	Kirker, KN	08/02	
Designed By	Peralta, R	08/02	
Checked By	Talukdar, M	08/02	
Detailed By	Evans, P	08/02	
Bridge Projects Engr.			
Prelim. Plan By			
Architect/Specialist			

DATE	REVISION	BY	APP'D

REGION NO.	STATE	FED. AID PROJ. NO.	SHEET NO.	TOTAL SHEETS
10	WASH.	ACBH - 0433(007)		
JOB NUMBER 02x310				

STRUCTURAL REGISTERED PROFESSIONAL ENGINEER 71334 OREGON SEPT. 10, 2002 JUGESH KAPUR
EXPIRES 06-30-2003

BRIDGE AND STRUCTURES OFFICE

KARL N. KIRKER STATE OF WASHINGTON 16256 REGISTERED PROFESSIONAL ENGINEER
EXPIRES 11/3/03

Washington State Department of Transportation

SR 433
LEWIS AND CLARK BRIDGE
DECK REPLACEMENT

OREGON APPROACH END DIAPHRAGM

BRIDGE SHEET NO. OA19

SHEET 151 OF 258 SHEETS

Tue Sep 17 11:48:22 2002

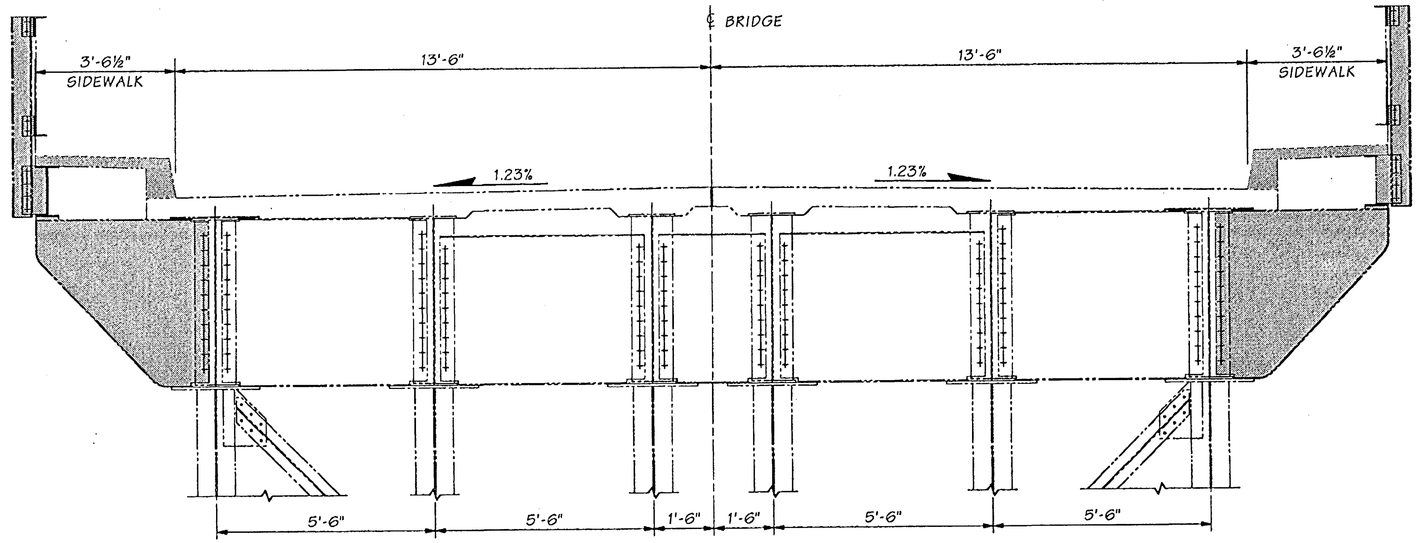

SECTION B / OA18

EXISTING COLUMN
DIAPHRAGM
REMOVE SHADED PORTIONS

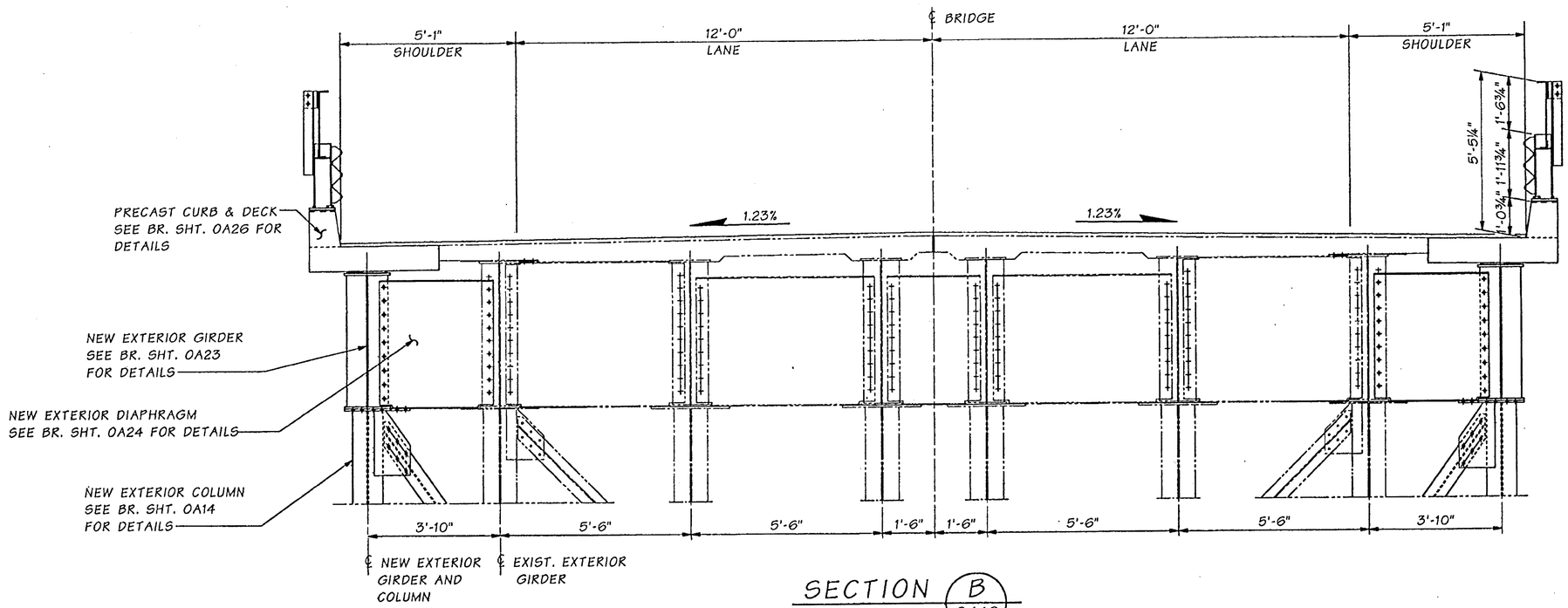

SECTION B / OA18

WIDENED COLUMN
DIAPHRAGM

FOR "AS CONSTRUCTED PLANS" ONLY

SR 433 JOB NO. 1 SHEET 20

Bridge Design Engr.	Kapur, J		M:\Y-Team\Lewis_Clark Rehab\Oregon Appr\Window files\COLUMN DIAPH.WND							
Supervisor	Kirker, KN	08/02								
Designed By	Peralta, R	08/02								
Checked By	Talukdar, M	08/02								
Detailed By	Evans, P	08/02								
Bridge Projects Engr.										
Prelim. Plan By										
Architect/Specialist			DATE	REVISION	BY	APP'D				

REGION NO.	STATE	FED. AID PROJ. NO.	SHEET NO.	TOTAL SHEETS
10	WASH.	ACBH - 0433(007)		
JOB NUMBER 02x310				

Tue Sep 17 11:47:46 2002

STRUCTURAL REGISTERED PROFESSIONAL ENGINEER 7134 OREGON 10-1-2002 JUGESH KAPUR
EXPIRES 06-30-2003

BRIDGE AND STRUCTURES OFFICE

KARL N. KIRKER STATE OF WASHINGTON 16246 REGISTERED PROFESSIONAL ENGINEER
EXPIRES 11/3/03

Washington State Department of Transportation

SR 433
LEWIS AND CLARK BRIDGE
DECK REPLACEMENT

OREGON APPROACH COLUMN DIAPHRAGM

BRIDGE SHEET NO. OA20

SHEET 152 OF 258 SHEETS

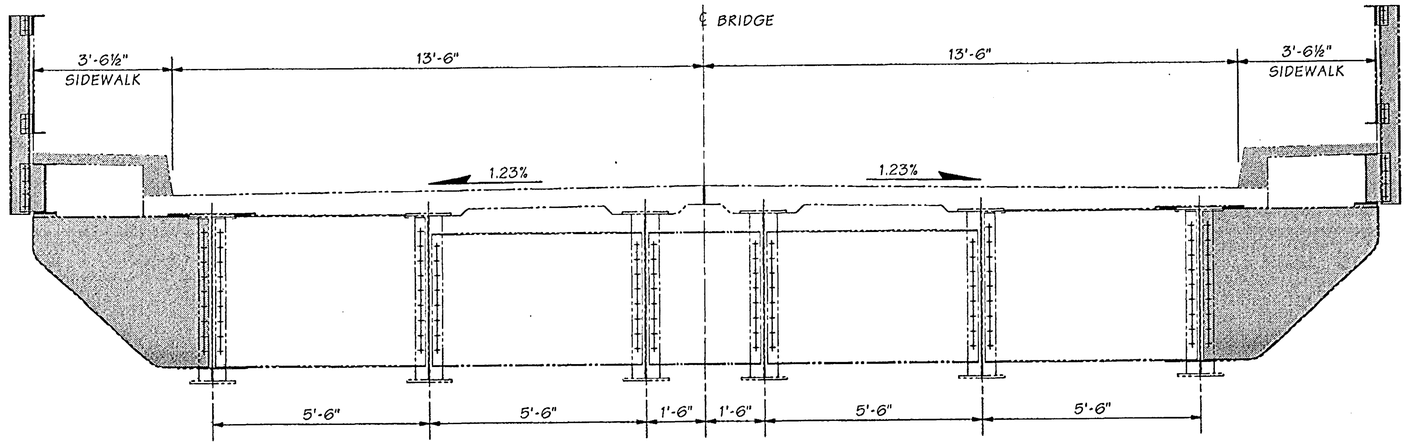

SECTION C/OA18

EXISTING INTERMEDIATE DIAPHRAGM
REMOVE SHADED PORTIONS

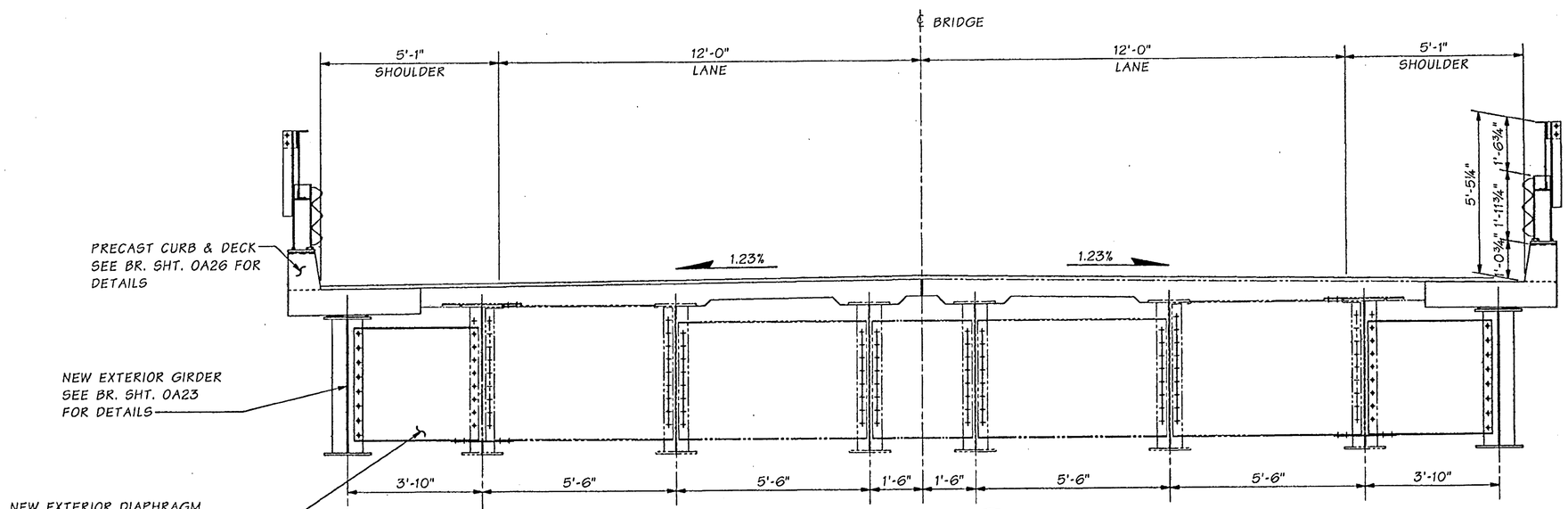

SECTION C/OA18

WIDENED INTERMEDIATE DIAPHRAGM

FOR "AS CONSTRUCTED PLANS" ONLY

SR 433 JOB NO. 1 SHEET 21

Bridge Design Engr.	Kapur, J		M:\Y-Team\Lewis_Clark Rehab\Oregon Appr\Window files\INTER DIAPH.WND				REGION NO.	STATE	FED. AID PROJ. NO.	SHEET NO.	TOTAL SHEETS
Supervisor	Kirker, KN	08/02					10	WASH.			
Designed By	Peralta, R	08/02									
Checked By	Talukdar, M	08/02					JOB NUMBER 02x310		ACBH - 0433(007)		
Detailed By	Evans, P	08/02									
Bridge Projects Engr.											
Prelim. Plan By											
Architect/Specialist			DATE	REVISION	BY	APP'D	6444				

STRUCTURAL REGISTERED PROFESSIONAL ENGINEER 71314 OREGON SEPT. 10, 2002 JUGESH KAPUR
EXPIRES 06-30-2003

BRIDGE AND STRUCTURES OFFICE

KARL N. KIRKER STATE OF WASHINGTON 10296 REGISTERED PROFESSIONAL ENGINEER
EXPIRES 11/3/03

Washington State Department of Transportation

SR 433
LEWIS AND CLARK BRIDGE
DECK REPLACEMENT

OREGON APPROACH
INTERMEDIATE DIAPHRAGM

BRIDGE SHEET NO. OA21

SHEET 153 OF 258 SHEETS

Tue Sep 17 11:49:31 2002

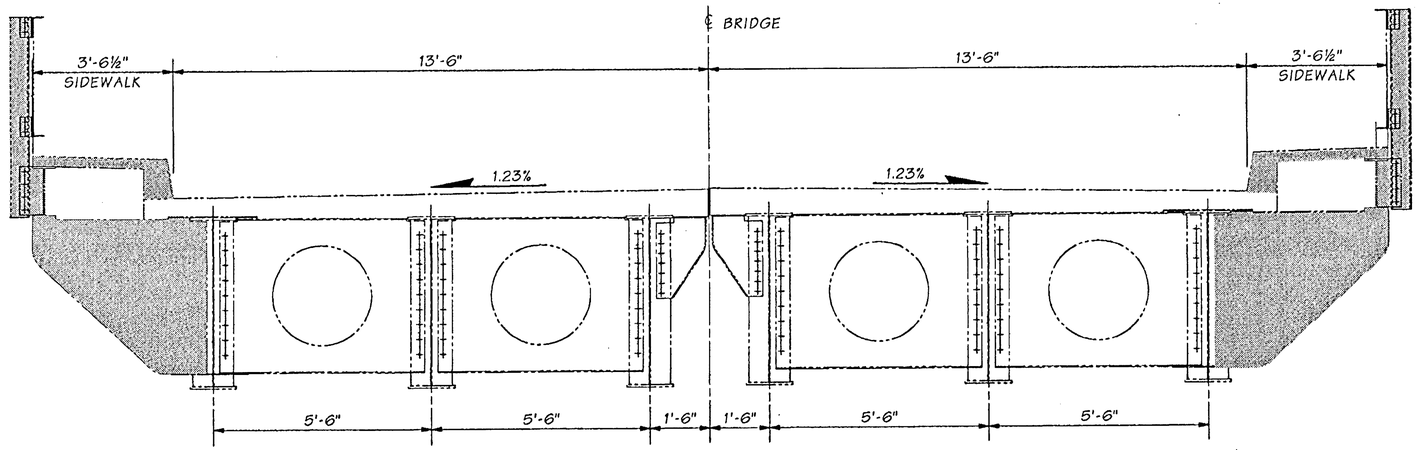

SECTION D/0A18
EXISTING ABUTMENT DIAPHRAGM
REMOVE SHADED PORTIONS

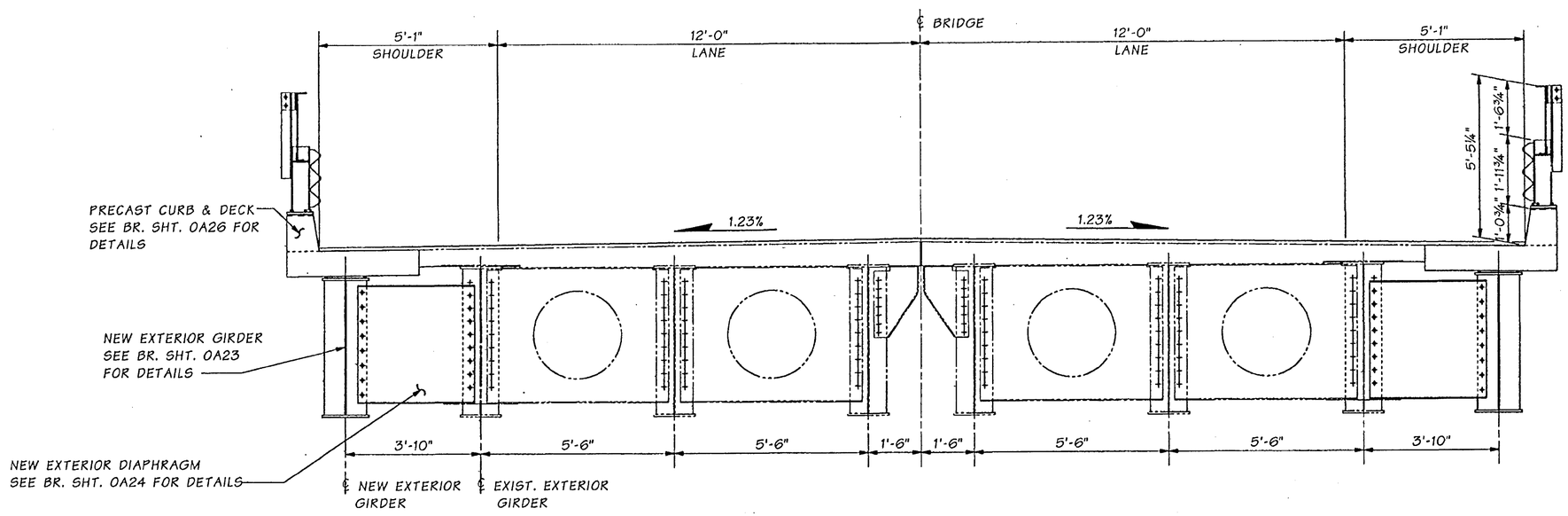

SECTION D/0A18
WIDENED ABUTMENT DIAPHRAGM

FOR "AS CONSTRUCTED PLANS" ONLY

SR 433 JOB NO. 1 SHEET 22

Bridge Design Engr.	Kapur, J	
Supervisor	Kirker, KN	08/02
Designed By	Peralta, R	08/02
Checked By	Talukdar, M	08/02
Detailed By	Evans,P/Peralta,R	08/02
Bridge Projects Engr.		
Prelim. Plan By		
Architect/Specialist		

M:\Y-Team\Lewis_Clark Rehab\Oregon Appr\window files\ABUT DIAPH.WND

DATE	REVISION	BY	APP'D

REGION NO.	STATE	FED. AID PROJ. NO.	SHEET NO.	TOTAL SHEETS
10	WASH.	ACBH - 0433(007)		

JOB NUMBER 02x310
6444

STRUCTURAL REGISTERED PROFESSIONAL ENGINEER 71344 OREGON OCT. 10, 2002 JUGESH KAPUR
EXPIRES 06-30-2003

BRIDGE AND STRUCTURES OFFICE

KARL N. KIRKER STATE OF WASHINGTON 16296 REGISTERED PROFESSIONAL ENGINEER
EXPIRES 11/3/03

Washington State Department of Transportation

SR 433
LEWIS AND CLARK BRIDGE
DECK REPLACEMENT

OREGON APPROACH ABUTMENT DIAPHRAGM

BRIDGE SHEET NO. 0A22
SHEET 154 OF 258 SHEETS

Tue Sep 17 15:20:52 2002

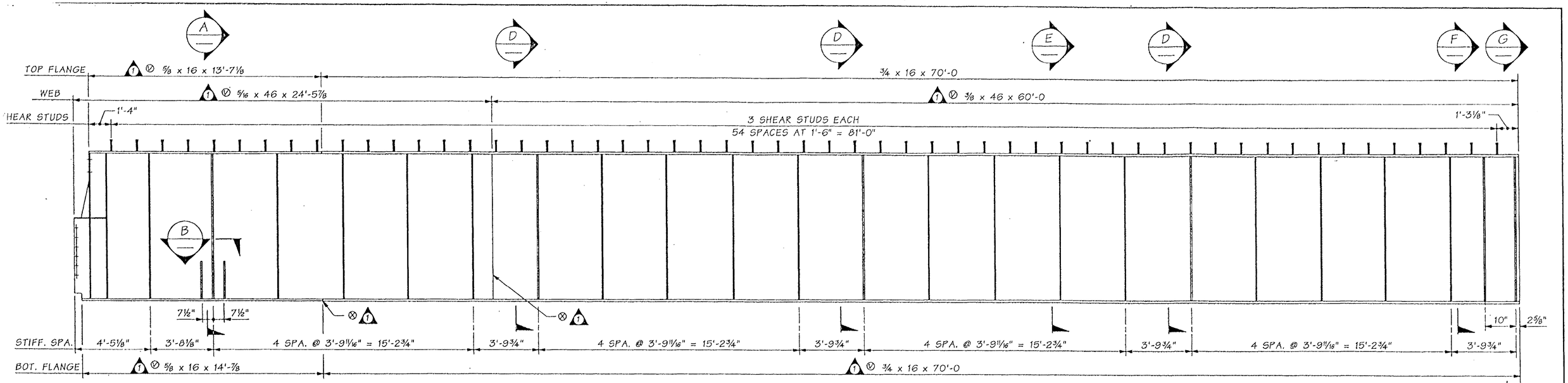

ELEVATION ~ GIRDER

2 REQUIRED

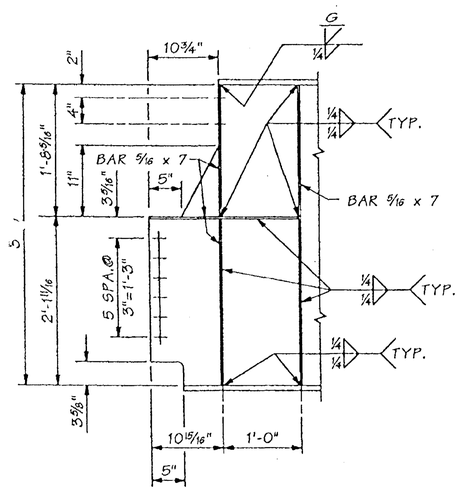

ELEVATION ~ GIRDER END DETAIL

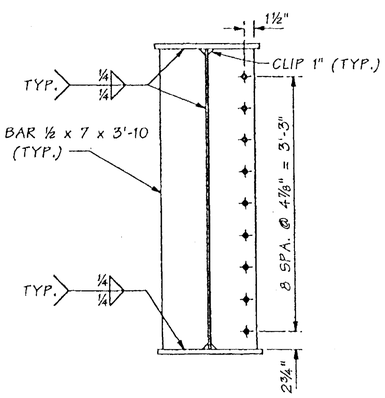

SECTION A
AT COLUMN DIAPH.

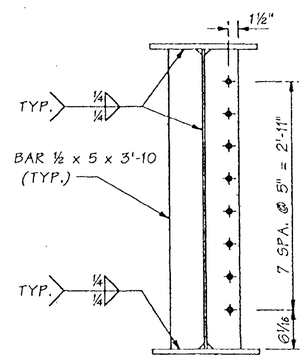

SECTION D
AT INTER. DIAPH.

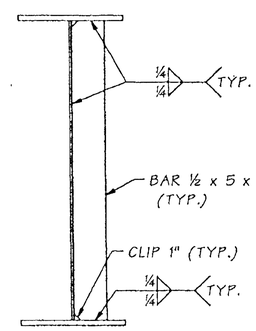

SECTION E
TYP. STIFF.

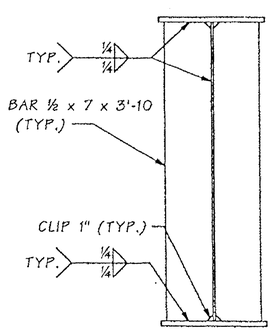

SECTION F
BRG. STIFF.

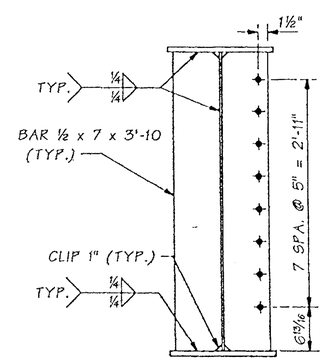

SECTION G
AT ABUT. DIAPH.

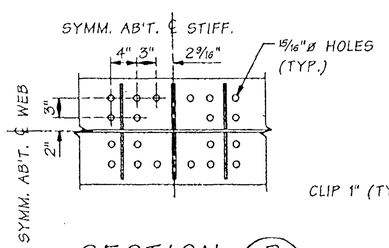

SECTION B

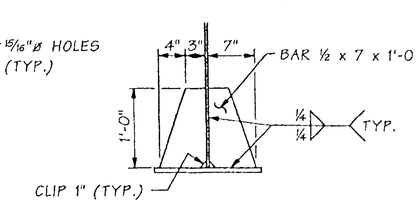

SECTION C

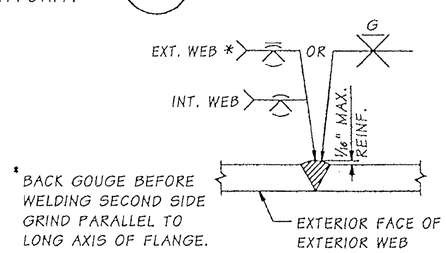

* BACK GOUGE BEFORE WELDING SECOND SIDE GRIND PARALLEL TO LONG AXIS OF FLANGE.

VERTICAL WEB SPLICE

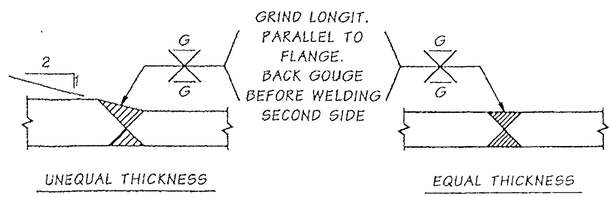

TENSION OR COMPRESSION FLANGE SPLICE

WELDED GIRDER SPLICE DETAILS

FOR "AS CONSTRUCTED PLANS" ONLY

STRUCTURAL STEEL NOTES:

1. MEMBERS MARKED ⊗ ARE MAIN LOAD CARRYING TENSILE MEMBERS OR TENSION COMPONENTS OF FLEXURAL MEMBERS AND SHALL MEET THE LONGITUDINAL CHARPY V-NOTCH TESTS AS DESCRIBED IN STD. SPEC. 6-03.2.
2. ⊗ DENOTES TENSION BUTT WELD FOR FLANGES OR WEBS.

Bridge Design Engr.	Kapur, J	
Supervisor	Kirker, KN	08/02
Designed By	Peralta, R	08/02
Checked By	Talukdar, M	08/02
Detailed By	House, L	08/02
Bridge Projects Engr.		
Prelim. Plan By		
Architect/Specialist		

M:\Y-Team\Lewis_Clark Rehab\Oregon Appr\window files\GIRDER DETAIL.WND

DATE	REVISION	BY	APP'D
02/03	1 ADDED STRUCTURAL STEEL SYMBOLS	MT	
02/03	2 ADDED STRUCTURAL STEEL NOTES	MT	

REGION NO.	STATE	FED. AID PROJ. NO.	SHEET NO.	TOTAL SHEETS
10	WASH.	ACBH - 0433(007)		
JOB NUMBER 02x310				

6444

BRIDGE AND STRUCTURES OFFICE

MONINDRA TALUKDAR STATE OF WASHINGTON REGISTERED PROFESSIONAL ENGINEER EXPIRES 6/1/04 03/20/03

Washington State Department of Transportation

SR 433
LEWIS AND CLARK BRIDGE
DECK REPLACEMENT

OREGON APPROACH GIRDER DETAILS

BRIDGE SHEET NO. 0A23

SHEET 155 OF 258 SHEETS

Tue Feb 18 13:13:22 2003

SR 433 B NO. 1 SHEET 23

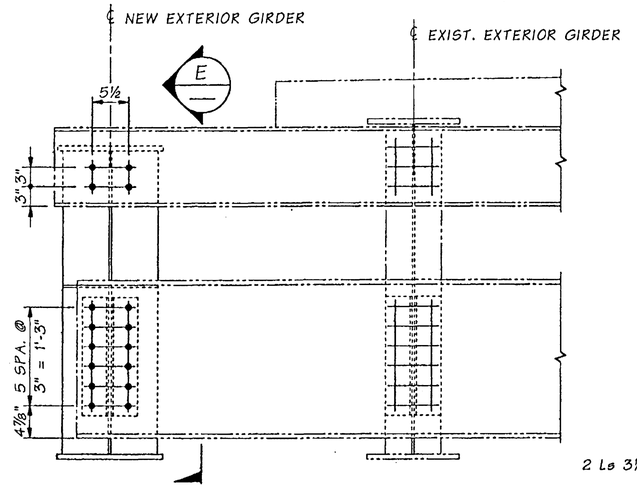

CONNECTION DETAIL AT END SPAN

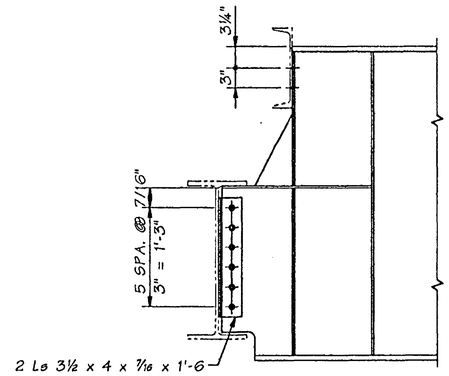

SECTION E

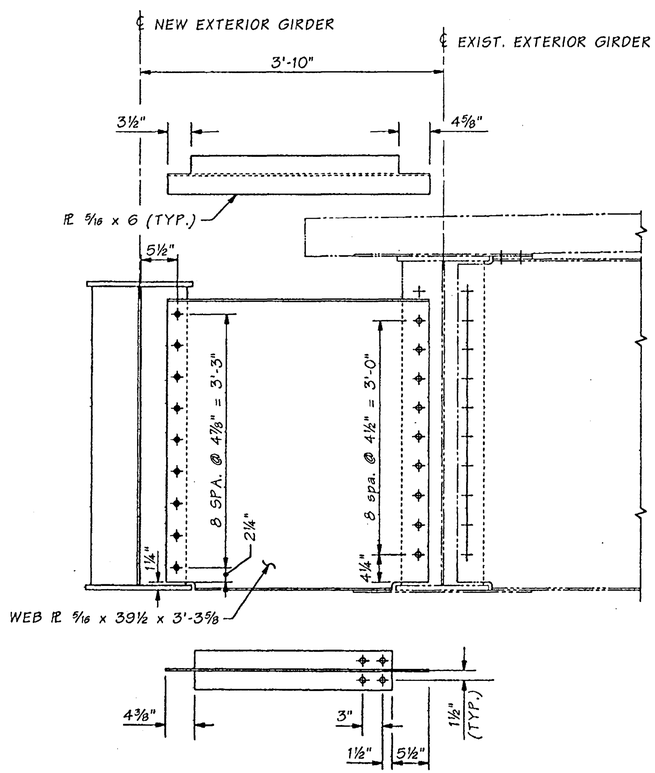

NEW EXTERIOR COLUMN DIAPHRAGM

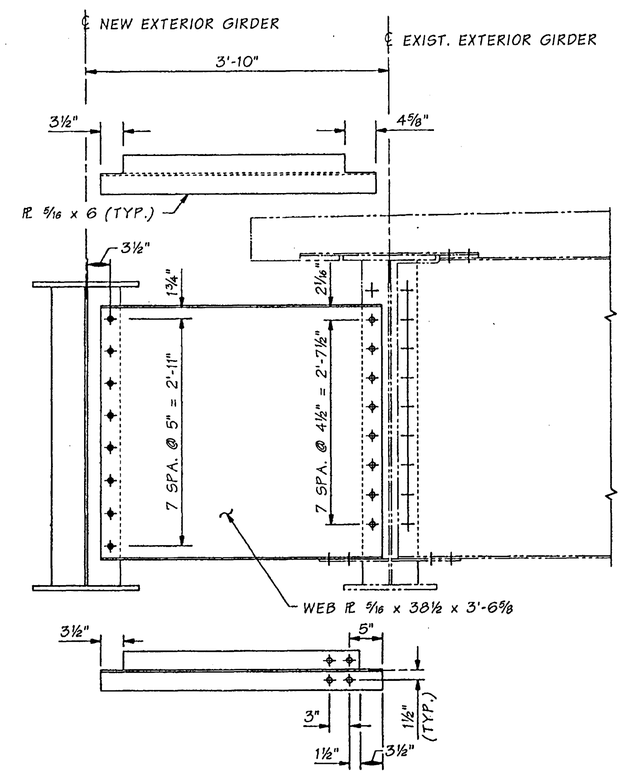

NEW EXTERIOR INTERMEDIATE DIAPHRAGM

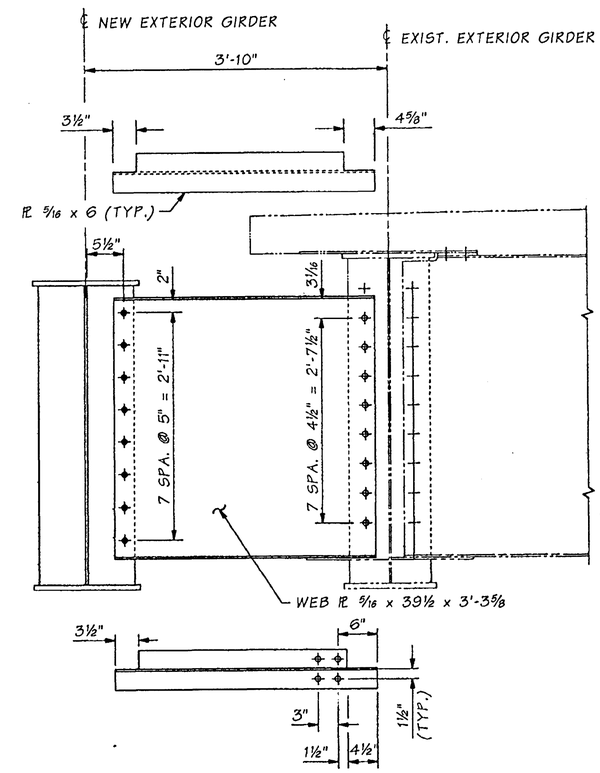

NEW EXTERIOR ABUTMENT DIAPHRAGM

FOR "AS CONSTRUCTED PLANS" ONLY

Bridge Design Engr.	Kapur, J		M:\Y-Team\Lewis_Clark Rehab\Oregon Appr\Window files\DIAPHRAGM DETAILS.WND								
Supervisor	Kirker, KN	08/02				REGION NO.	STATE	FED. AID PROJ. NO.	SHEET NO.	TOTAL SHEETS	
Designed By	Peralta, R	08/02				10	WASH.				
Checked By	Talukdar, M	08/02									
Detailed By	House, L	08/02				JOB NUMBER 02x310		ACBH - 0433(007)			
Bridge Projects Engr.											
Prelim. Plan By											
Architect/Specialist			DATE	REVISION	BY	APP'D					

Tue Sep 17 11:48:16 2002

STRUCTURAL REGISTERED PROFESSIONAL ENGINEER 71344 OREGON SEPT. 10, 2002 JUGESH KAPUR — EXPIRES 06-30-2003

BRIDGE AND STRUCTURES OFFICE

STATE OF WASHINGTON KARL N. KIRKER 10298 REGISTERED PROFESSIONAL ENGINEER — EXPIRES 11/3/03

Washington State Department of Transportation

SR 433
LEWIS AND CLARK BRIDGE
DECK REPLACEMENT

OREGON APPROACH DIAPHRAGM DETAILS

BRIDGE SHEET NO. 0A24

SHEET 156 OF 258 SHEETS

SR 433 JOB NO. 1 SHEET 24

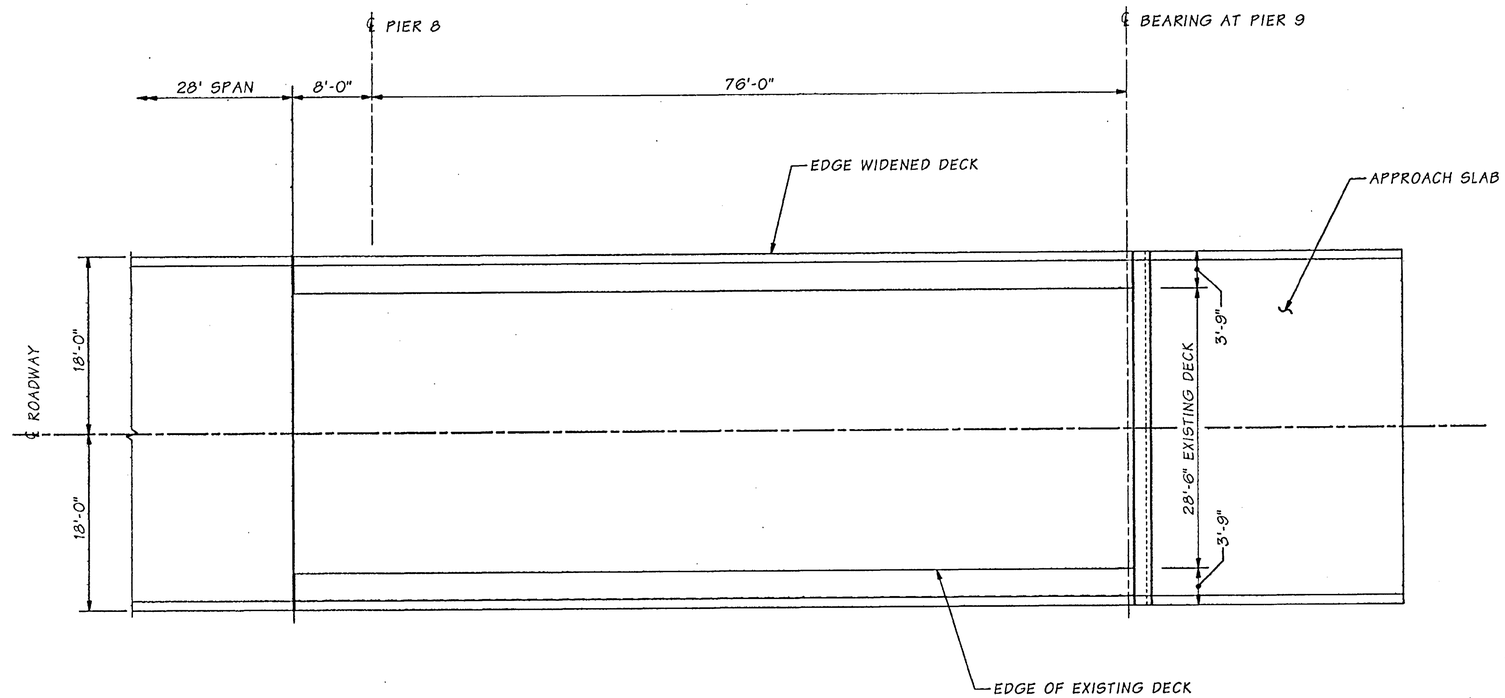

PLAN - OREGON APPROACH WIDENING

FOR "AS CONSTRUCTED PLANS" ONLY

SR 433 JOB NO. 1 SHEET 25

Bridge Design Engr.	Kapur, J		M:\Y-Team\Lewis_Clark Rehab\Oregon Appr\window files\PLAN SLAB.WND
Supervisor	Kirker, KN	08/02	
Designed By	Peralta, R	08/02	
Checked By	Talukdar, M	08/02	
Detailed By	Evans, P	08/02	
Bridge Projects Engr.			
Prelim. Plan By			
Architect/Specialist			

DATE	REVISION	BY	APP'D

REGION NO.	STATE	FED. AID PROJ. NO.	SHEET NO.	TOTAL SHEETS
10	WASH.	ACBH - 0433(007)		
JOB NUMBER 02x310				

STRUCTURAL REGISTERED PROFESSIONAL ENGINEER 71314 OREGON SEPT. 10, 2002 JUGESH KAPUR
EXPIRES 06-30-2003

BRIDGE AND STRUCTURES OFFICE

KARI N. KIRKER STATE OF WASHINGTON 18296 REGISTERED PROFESSIONAL ENGINEER
EXPIRES 11/3/03

Washington State Department of Transportation

SR 433
LEWIS AND CLARK BRIDGE
DECK REPLACEMENT

SLAB PLAN -- OREGON APPROACH

BRIDGE SHEET NO. 0A25

SHEET 157 OF 258 SHEETS

Wed Sep 18 10:35:37 2002

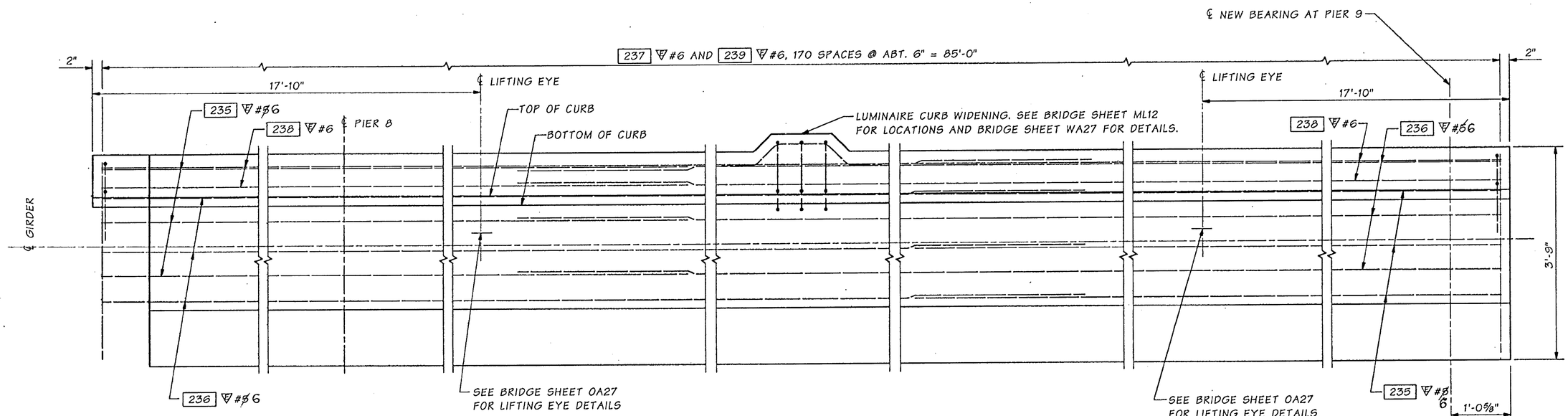

TOP MAT REINFORCMENT - OREGON APPROACH SPAN

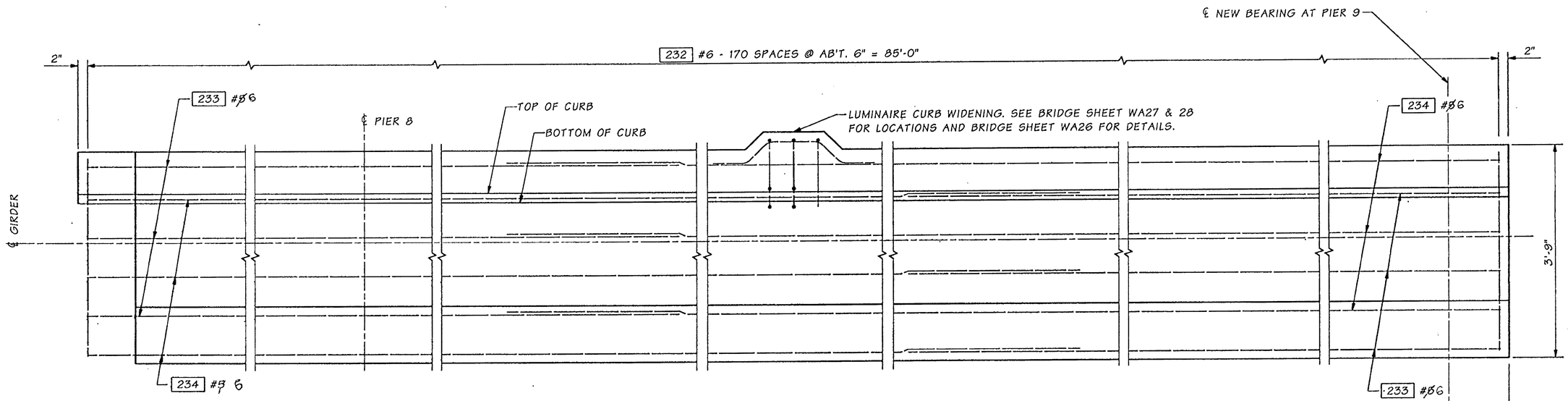

BOTTOM MAT REINFORCMENT - OREGON APPROACH SPAN

NOTE:
STANDARD PLAN A-2
UTILIZED FOR REINFORCEMENT

FOR "AS CONSTRUCTED PLANS" ONLY

SR 433 JOB NO. 1 SHEET 26

Bridge Design Engr.	Kapur, J	
Supervisor	Kirker, KN	08/02
Designed By	Peralta, R	08/02
Checked By	Talukdar, M	08/02
Detailed By	Evans, P	08/02
Bridge Projects Engr.		
Prelim. Plan By		
Architect/Specialist		

M:\Y-Team\Lewis_Clark Rehab\Oregon Appr\window files\SLAB REINF2.WND

DATE	REVISION	BY	APP'D

REGION NO.	STATE	FED. AID PROJ. NO.	SHEET NO.	TOTAL SHEETS
10	WASH.	ACBH - 0433(007)		
JOB NUMBER 02x310				
6444				

STRUCTURAL REGISTERED PROFESSIONAL ENGINEER 71314 STATE OF OREGON DEC. 10, 2002 JUGESH KAPUR
EXPIRES 06-30-2003

BRIDGE AND STRUCTURES OFFICE

KARL N. KIRKER STATE OF WASHINGTON 12206 REGISTERED PROFESSIONAL ENGINEER
EXPIRES 11/3/03

Washington State Department of Transportation

SR 433
LEWIS AND CLARK BRIDGE
DECK REPLACEMENT

SLAB REINFORCEMENT AT OREGON APPROACH

BRIDGE SHEET NO. 0A26

SHEET 158 OF 258 SHEETS

Wed Sep 18 08:29:21 2002

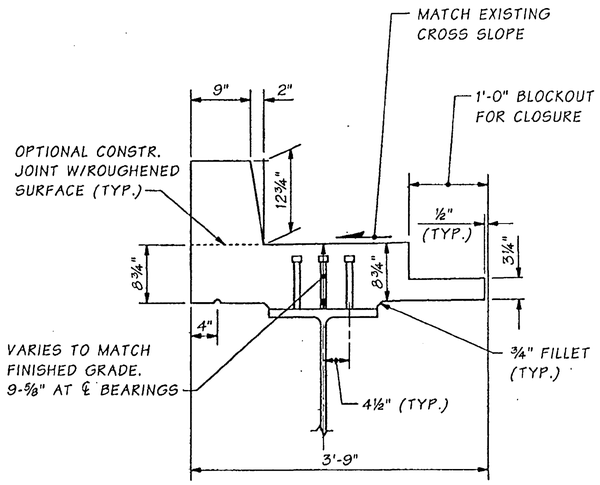

TYPICAL SECTION

FINISHED GRADE SHALL BE DETERMINED BY SURVEY OF EXISTING BRIDGE DECK AT FACE OF CURB AFTER REMOVAL OF EXISTING OVERLAY, AND CORRECTED FOR CROSS SLOPE AND DISTANCE TO ℄ OF GIRDER.

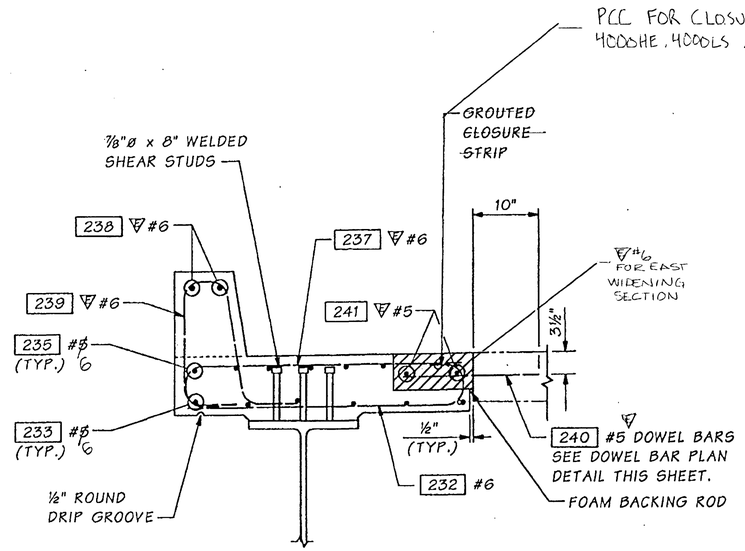

TYPICAL SECTION - REINFORCEMENT

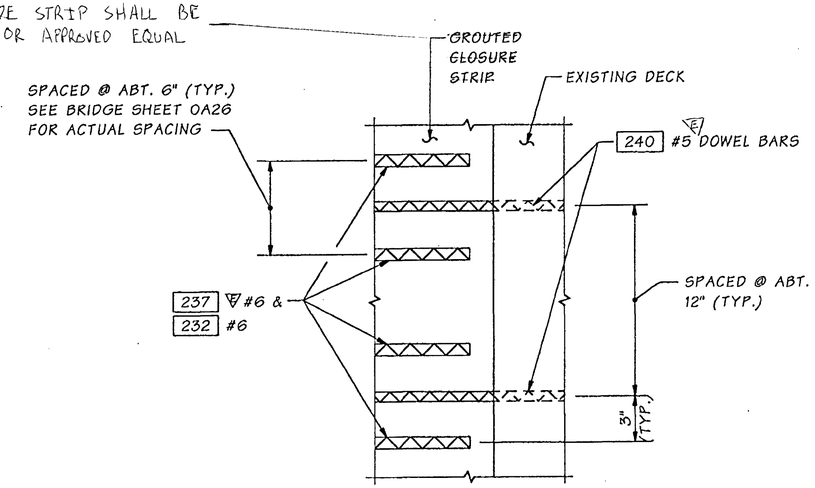

DOWEL BAR PLAN DETAIL

THE CONTRACTOR SHALL VERIFY THAT THE PLACEMENT OF THE DOWEL BARS AVOIDS INTERFERANCE WITH THE HOOKS OF THE TRANSVERSE REINFORCEMENT (BAR MARK 232) IN THE NEWLY CAST GIRDER AND SLAB UNITS.

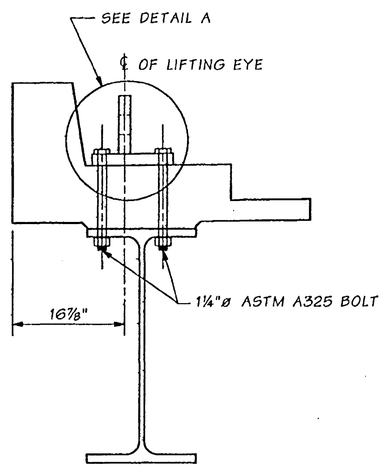

LIFTING EYE DETAILS

FOR LOCATIONS SEE BRIDGE SHEET 0A26

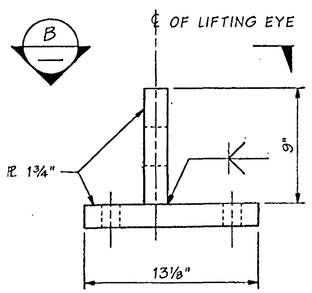

DETAIL A

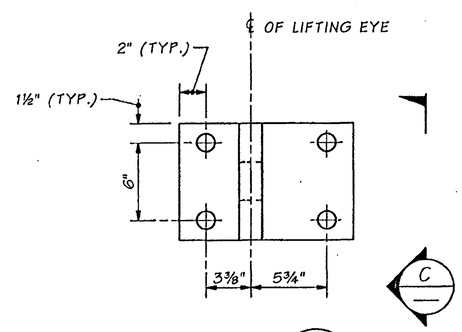

VIEW B

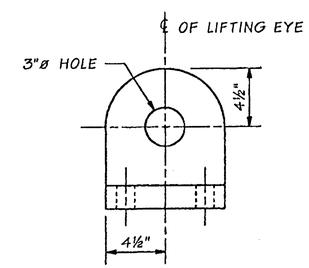

VIEW C

FOR "AS CONSTRUCTED PLANS" ONLY

Bridge Design Engr.	Kapur, J		M:\Y-Team\Lewis_Clark Rehab\Oregon Appr\window files\SLAB XSEC.WND
Supervisor	Kirker, KN	08/02	
Designed By	Peralta, R	08/02	
Checked By	Talukdar, M	08/02	
Detailed By	Evans, P	08/02	
Bridge Projects Engr.			
Prelim. Plan By			
Architect/Specialist			

DATE	REVISION	BY	APP'D

REGION NO.	STATE	FED. AID PROJ. NO.	SHEET NO.	TOTAL SHEETS
10	WASH.	ACBH - 0433(007)		
JOB NUMBER 02x310				

STRUCTURAL REGISTERED PROFESSIONAL ENGINEER 71344 OREGON SEPT. 10, 2002 JUGESH KAPUR — EXPIRES 06-30-2003

BRIDGE AND STRUCTURES OFFICE

STATE OF WASHINGTON KARL N. KIRKER 10296 REGISTERED PROFESSIONAL ENGINEER — EXPIRES 11/3/03

Washington State Department of Transportation

SR 433
LEWIS AND CLARK BRIDGE
DECK REPLACEMENT

OREGON APPROACH
SLAB TYPICAL SECTION

BRIDGE SHEET NO. 0A27

SHEET 159 OF 258 SHEETS

SR 433 JOB NO. 1 SHEET 27

Wed Sep 18 08:16:46 2002

NOTE: AT PIER 8 ONLY, RAPID SET LATEX MODIFIED CONCRETE (RSLMC) UTILIZED AS CAST-IN PLACE CONCRETE IN AREAS DESIGNATED AS "CLOSURE STRIP"

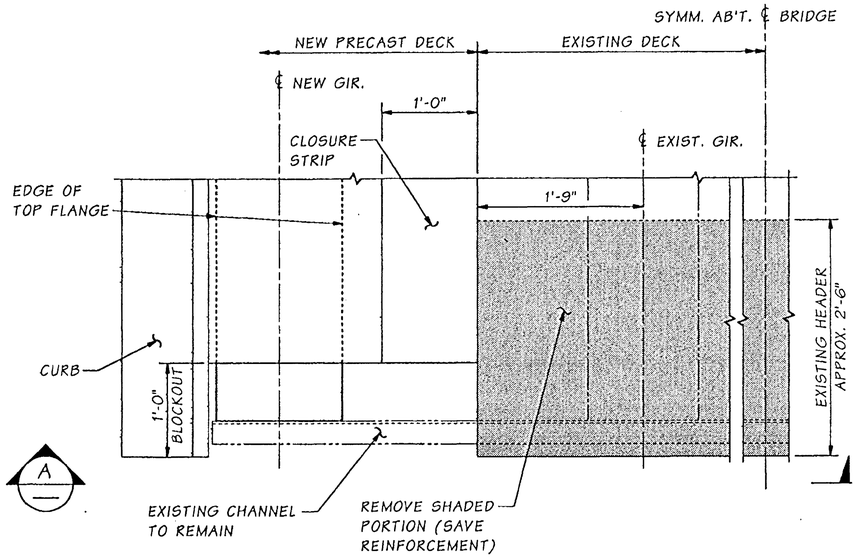

EXISTING PARTIAL PLAN AT ENDS OF PRECAST SEGMENTS

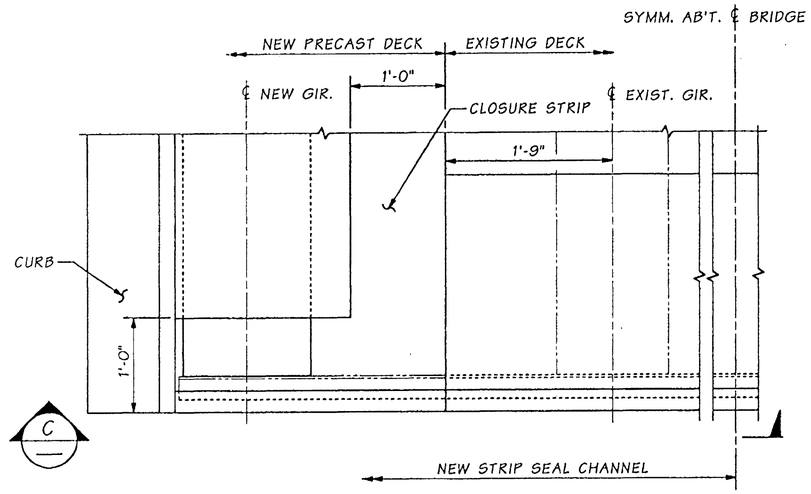

MODIFIED PARTIAL PLAN AT ENDS OF PRECAST SEGMENTS

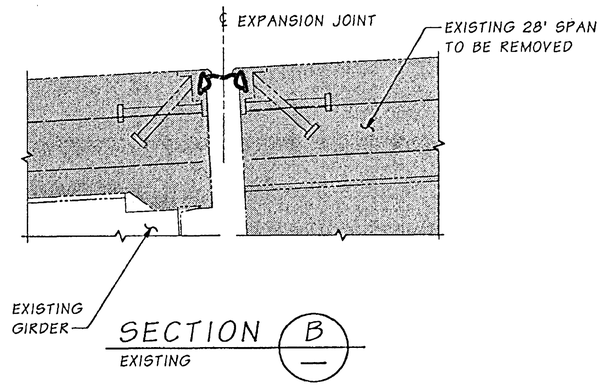

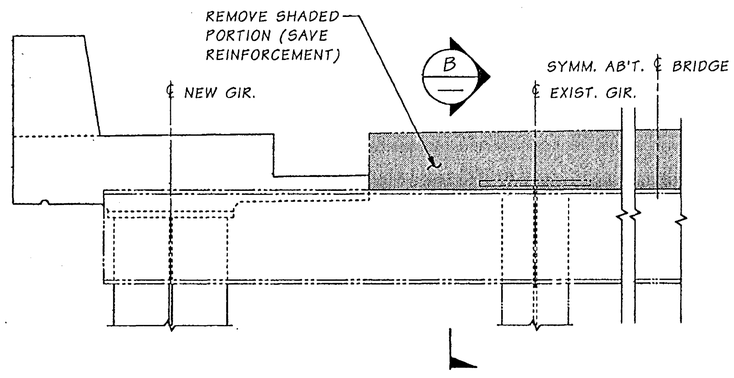

SECTION A

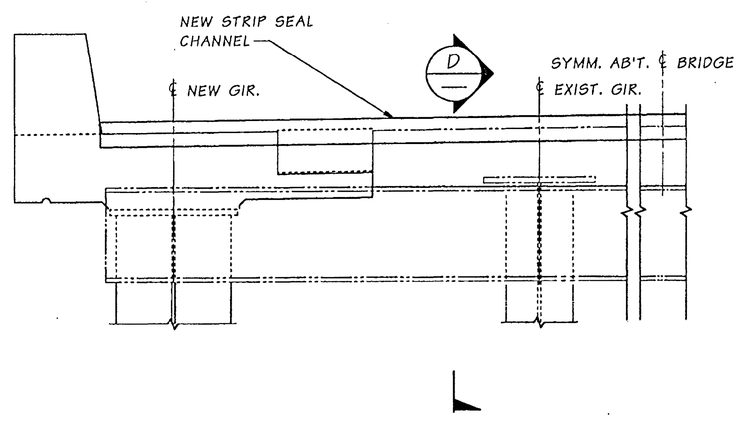

SECTION C

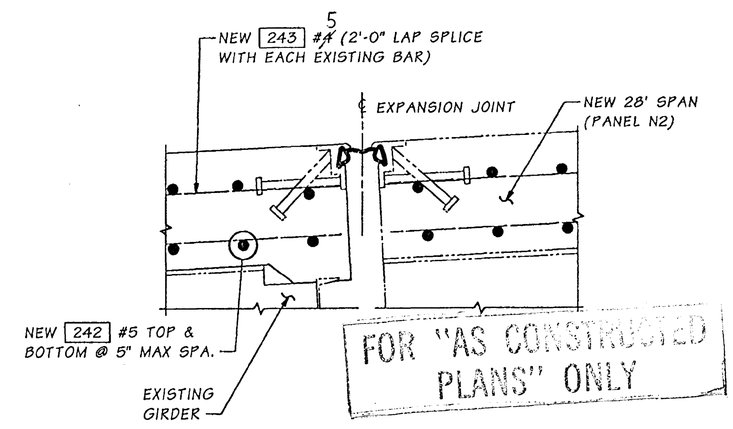

SECTION D
MODIFIED

SEE BRIDGE SHEET ML4 FOR STRIP SEAL DETAILS

Bridge Design Engr.	Kapur, J		M:\Y-Team\Lewis_Clark Rehab\Oregon Appr\window files\EXP JNT BLOCKOUT.WND
Supervisor	Kirker, KN	08/02	
Designed By	Peralta, R	08/02	
Checked By	Talukdar, M	08/02	
Detailed By	Evans, P	08/02	
Bridge Projects Engr.			
Prelim. Plan By			
Architect/Specialist			

DATE	REVISION	BY	APP'D

REGION NO.	STATE	FED. AID PROJ. NO.	SHEET NO.	TOTAL SHEETS
10	WASH.	ACBH - 0433(007)		
JOB NUMBER 02x310				

STRUCTURAL REGISTERED PROFESSIONAL ENGINEER 71384 OREGON SEPT. 10, 2002 JUGESH KAPUR
EXPIRES 06-30-2003

BRIDGE AND STRUCTURES OFFICE

KARL N. KIRKER STATE OF WASHINGTON 12208 ARCHITECT PROFESSIONAL ENGINEER
EXPIRES 11/3/03

Washington State Department of Transportation

SR 433
LEWIS AND CLARK BRIDGE DECK REPLACEMENT

EXPANSION JOINT BLOCKOUT

BRIDGE SHEET NO. 0A28

SHEET 160 OF 258 SHEETS

SR 433 JOB NO. 1 SHEET 28

Wed Sep 18 12:07:59 2002

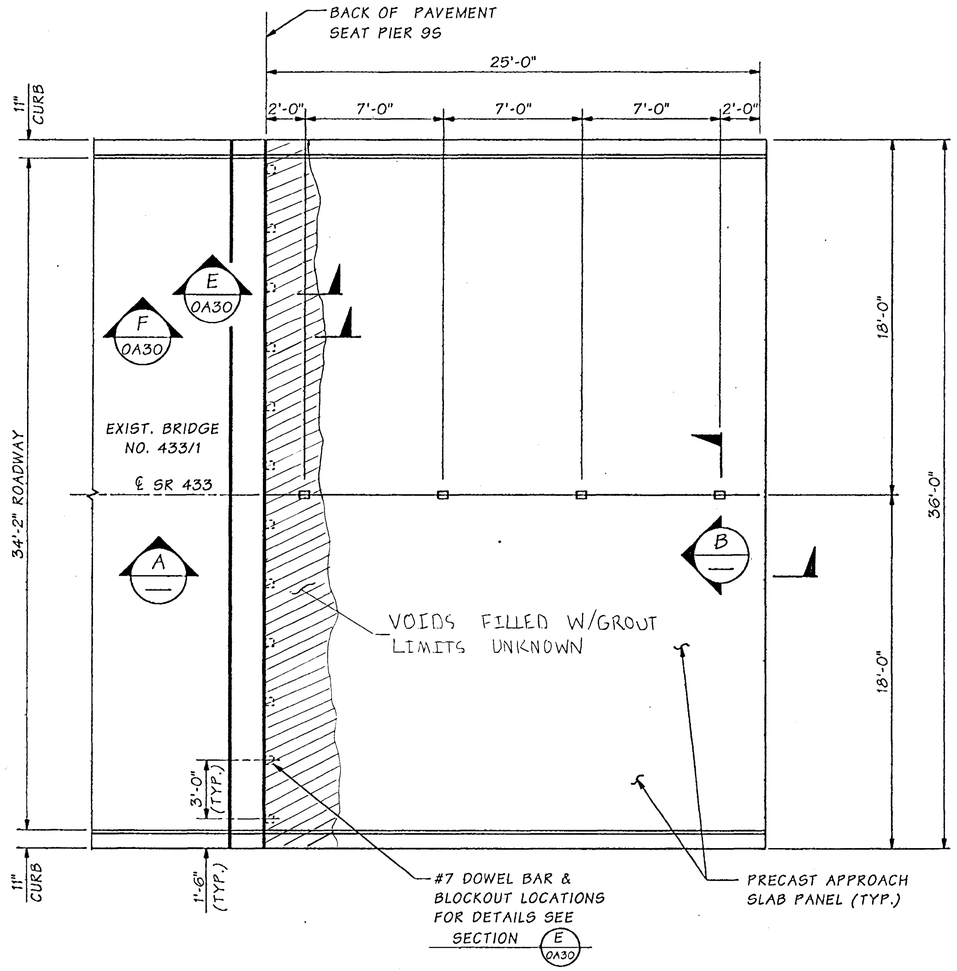

PLAN ~ APPROACH SLAB

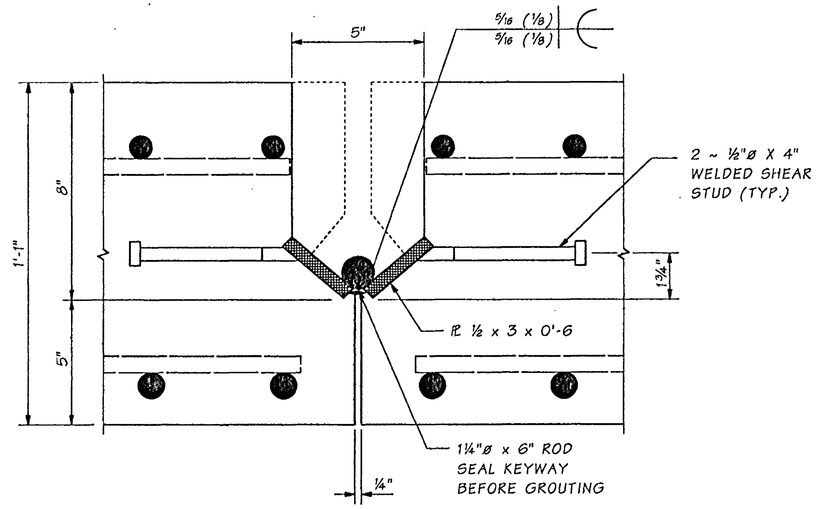

SECTION B
TYPICAL

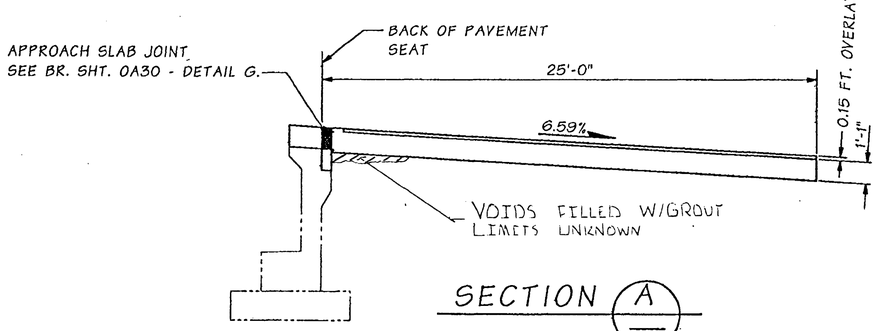

SECTION A

PROVIDE NOTCH IN APPROACH SLAB.
SEE DETAIL BRIDGE SHEET 0A11.

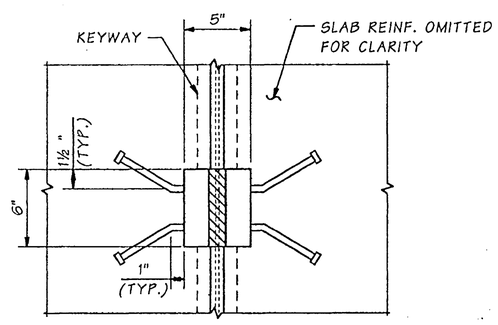

VIEW D

NOTE :

APPROACH SLAB SHALL CONSIST OF 2 PRECAST CONCRETE SLAB UNITS. EACH UNIT TO BE MANUFACTURED ACCORDING TO STANDARD PLAN A-2 MODIFIED AS SHOWN FOR AN 18'-0" WIDE PANEL INSTEAD OF THE STANDARD 12'-0" WIDTH. MAINTAIN 5" SPACING OF LONGITUDINAL BARS. SEE SECTION F 0A30

SEE SHEET 0A29A FOR OREGON APPROACH SLAB REINFORCEMENT DETAILS

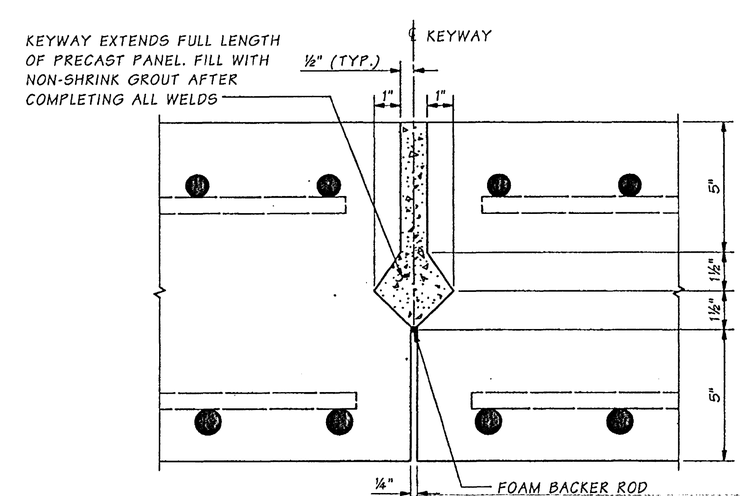

FOR "AS CONSTRUCTED PLANS" ONLY

SECTION C
TYPICAL

Bridge Design Engr.	Kapur, J		M:\Y-Team\Lewis_Clark Rehab\Oregon Appr\window files\APPROACH SLAB.WND
Supervisor	Kirker, KN	08/02	
Designed By	Peralta, R	08/02	
Checked By	Talukdar, M	08/02	
Detailed By	Evans, P	08/02	
Bridge Projects Engr.			
Prelim. Plan By			
Architect/Specialist			

DATE	REVISION	BY	APP'D

Tue Sep 17 11:46:58 2002

REGION NO.	STATE	FED. AID PROJ. NO.	SHEET NO.	TOTAL SHEETS
10	WASH.	ACBH - 0433(007)		
JOB NUMBER 02x310				

STRUCTURAL REGISTERED PROFESSIONAL ENGINEER 7174 OREGON SEPT. 10, 2002 JUGESH KAPUR
EXPIRES 06-30-2003

BRIDGE AND STRUCTURES OFFICE

KARL N. KIRKER STATE OF WASHINGTON 16298 REGISTERED PROFESSIONAL ENGINEER
EXPIRES 11/3/03

Washington State Department of Transportation

SR 433
LEWIS AND CLARK BRIDGE
DECK REPLACEMENT

OREGON APPROACH SLAB

BRIDGE SHEET NO. 0A29

SHEET 161 OF 258 SHEETS

SR 433 JOB NO. 1 SHEET 29

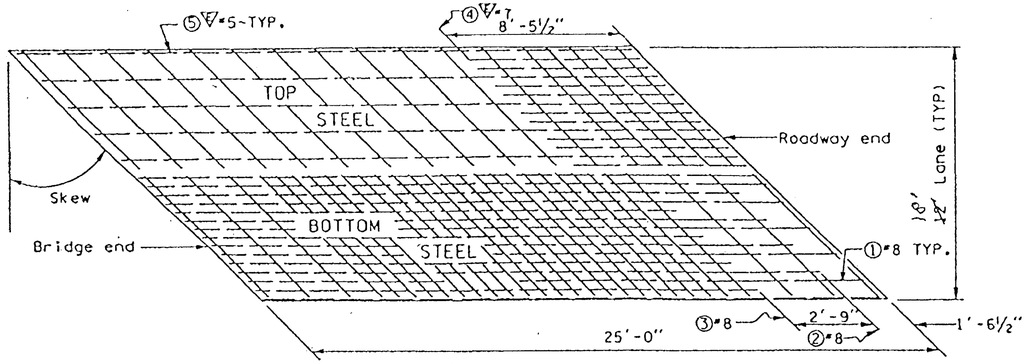

The plan above represents only the basic 12' x 25' slab module with skew. All approach slab construction shall be for full width of traffic lanes and shoulders at both ends of the bridge. For slab extension to include shoulders, continue reinforcing steel spacing and slab thickness in the same relationship as in the basic slab module.

PLAN

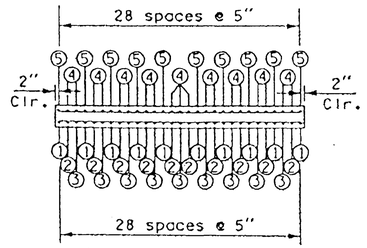

TRANSVERSE SECTION

NOTES

1. Design guidance shall be requested from Bridge and Structures Office:
   a. When skew exceeds 45°.
   b. When pavement seat exceeds 1'-1" (EXCEPT, if bridge deck is overlaid, slab thickness shall be increased to match top of overlay).
2. For multi-lane roadway, or for roadway with shoulders, all transverse steel bars may be full width, less 2" clear per side.
3. When bridge is "L" Type Abutment, a ½" premolded joint filler will be used (see "L" Type Abutment Joint Detail, Sheet 2).

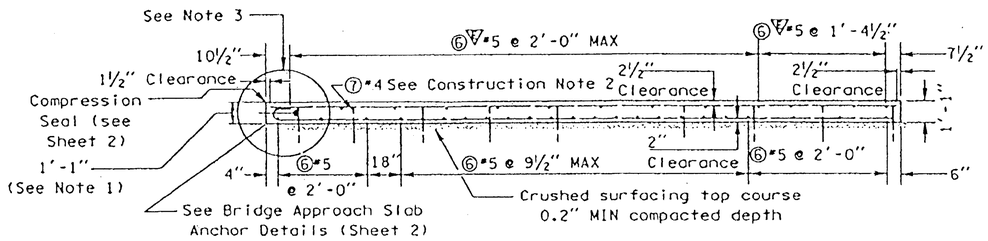

LONGITUDINAL SECTION

CONSTRUCTION NOTES

1. For PCC roadway, insert dowels parallel to center line at 1' O.C. along transverse construction joint. Additional details are shown on elevation below.

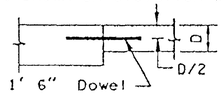

2. Approach slab edge treatment
   (a) Expansion joint between bridge deck and slab
   - edge both sides with ½" R.
   (b) Longitudinal exterior edge
   - edge with ½" R.
   (c) Transverse construction joint between slab and PCC roadway
   - edge both sides with ½" R.
   (d) Longitudinal construction joint between adjacent lanes, only when required
   - edge first pour only with ⅛" R.

   Additional details are shown on section below:

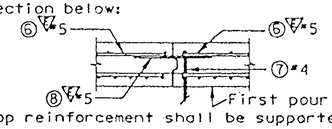

3. Top reinforcement shall be supported by Mark 7 bars driven into subgrade on approximately the following centers:
   3'-0" longitudinally
   2'-6" transversely

TABLE A

SKEW	LENGTH
0°	11'-8" Str.
5°	11'-9" Str.
10°	11'-10" Str.
15°	12'-1" Str.

BAR LIST FOR STANDARD 12' x 25' SLAB MODULE

LOCATION	MARK	SIZE	NO	LENGTH
Longitudinal bottom	①	8	10	25'-7"
Longitudinal bottom	②	8	10	24'-3"
Longitudinal bottom	③	8	9	21'-6"
Longitudinal top	④ ∇	7	19	8'-3" Str.
Longitudinal top	⑤ ∇	5	10	24'-8" Str.
Transverse bottom	6	5	19	See Table A
Transverse top	⑥ ∇	5	18	See Table A
Vertical tie bar	⑦	4	36	2'-0" Straight
Transverse tie bar	⑧ ∇	5	14	2'-0" Straight

∇ Epoxy Coated reinforcing steel

APPROXIMATE QUANTITIES (NO SKEW)

Epoxy coated steel reinforcing bars (lbs.)	862
Total steel reinforcing bars, excluding epoxy coated (lbs.)	2156
Additional steel per joint (lbs.)	30
Concrete (cu. yd.)	12
Bridge approach slab anchor	6

BENDING DIAGRAM

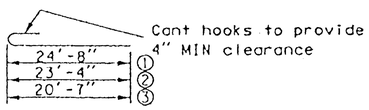

DATE	REVISION	BY
8/98	Added epoxy coated reinf. steel	RJD

M. MYINT LWIN
STATE OF WASHINGTON
10536
REGISTERED
PROFESSIONAL ENGINEER
12-16-98
EXPIRES JANUARY 17, 1999

BRIDGE APPROACH SLAB
STANDARD PLAN A-2

SHEET 1 OF 2 SHEETS

APPROVED FOR PUBLICATION
Clifford E. Mansfield 12/23/98
DEPUTY STATE DESIGN ENGINEER DATE
WASHINGTON STATE DEPARTMENT OF TRANSPORTATION
OLYMPIA, WASHINGTON

FOR "AS CONSTRUCTED PLANS" ONLY

FILE NAME	C:\AAWork\kelso\Svensen's Curve\L3425WASTESITE.dgn
TIME	02:37:18 PM
DATE	08/17/2005
PLOTTED BY	spahnk
DESIGNED BY	
ENTERED BY	
CHECKED BY	
PROJ. ENGR.	
REGIONAL ADM.	

REVISION | DATE | BY

REGION NO. 10 | STATE WASH | FED. AID PROJ. NO.
JOB NUMBER
CONTRACT NO. 0444 | LOCATION NO.

P.E. STAMP BOX DATE
P.E. STAMP BOX DATE

Washington State Department of Transportation

SR 433
LEWIS AND CLARK BRIDE
DECK REPLACEMENT

OREGON APPROACH SLAB REINFORCEMENT

PLOT11
0A29A
SHEET 161A OF 258 SHEETS

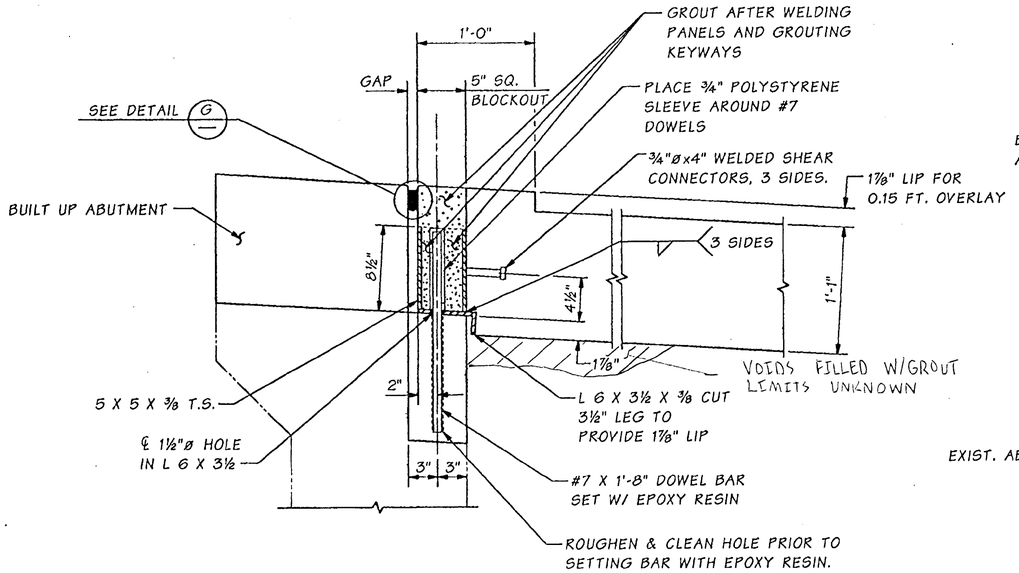

SECTION E 0A29

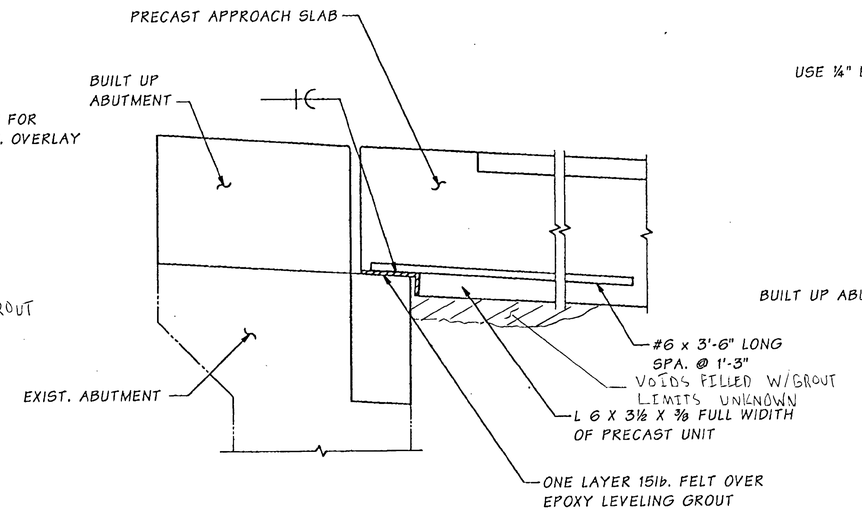

SECTION F 0A29

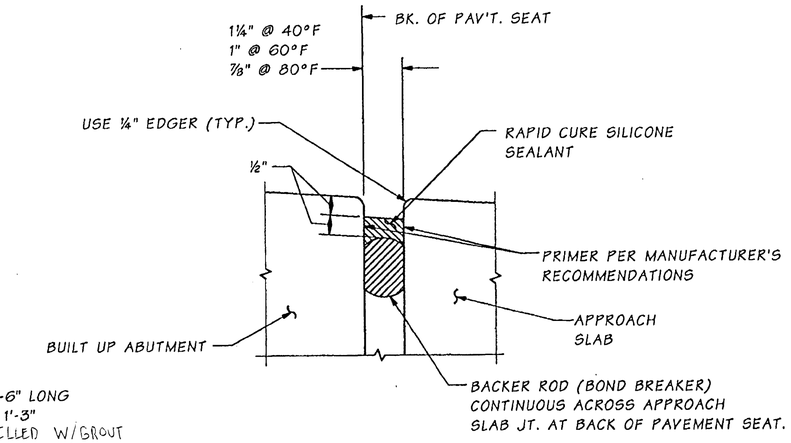

DETAIL G

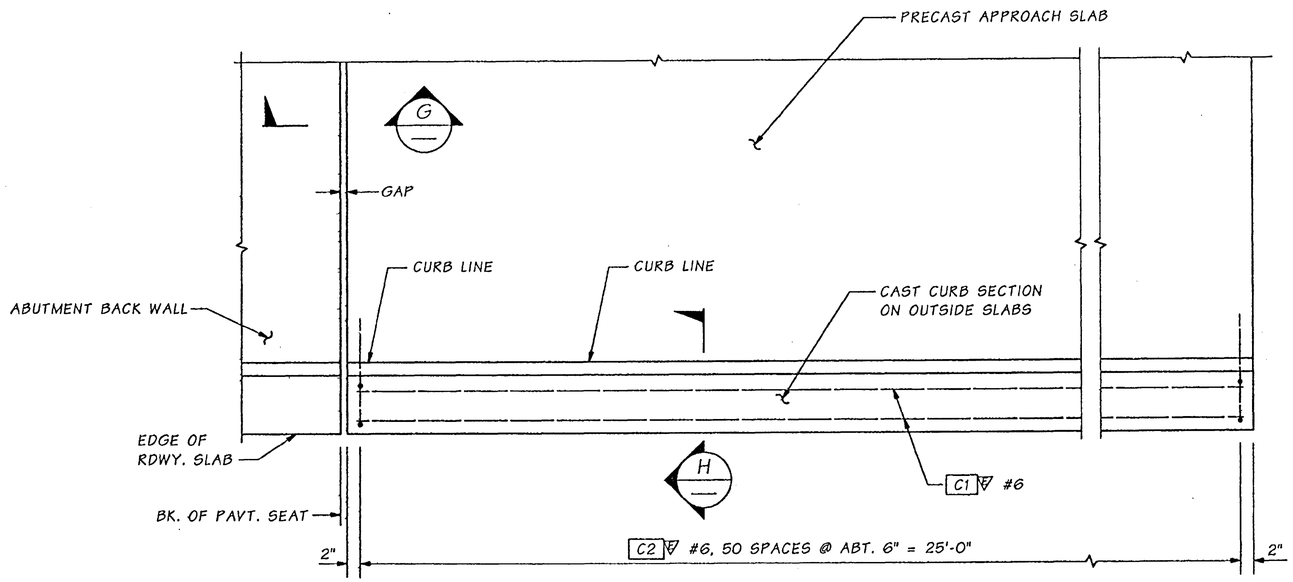

EXPANSION JOINT AND CURB DETAIL

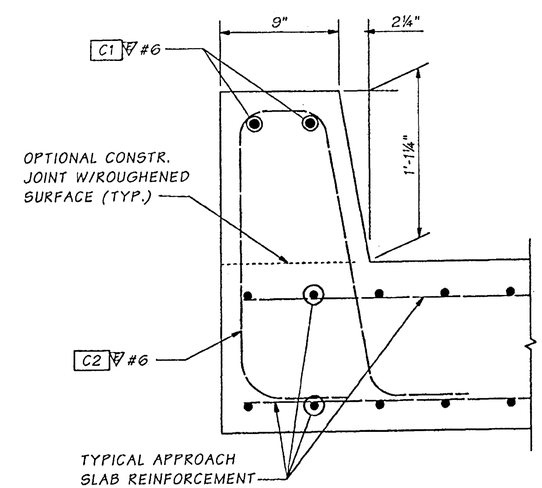

SECTION H

FOR "AS CONSTRUCTED PLANS" ONLY

CURB BAR LIST FOR APPROACH SLAB

MARK	SIZE	LENGTH	
C1	6	24'-8"	STR.
C2	6	5'-3"	

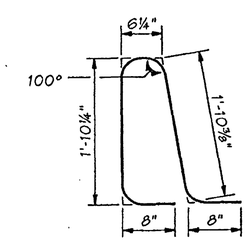

C2

ALL REINFORCING SHALL BE AASHTO M31, GR. 60.
BENDING DIAGRAM (ALL DIMENSIONS ARE OUT TO OUT)

SR 433 JOB NO. 1 SHEET 30

Bridge Design Engr.	Kapur, J		M:\Y-Team\Lewis_Clark Rehab\Oregon Appr\window files\ABUTMENT EXP JT.WND						
Supervisor	Kirker, KN	08/02				REGION NO.	STATE	FED. AID PROJ. NO.	SHEET NO.	TOTAL SHEETS
Designed By	Peralta, R	08/02				10	WASH.			
Checked By	Talukdar, M	08/02				JOB NUMBER 02x310		ACBH - 0433(007)		
Detailed By	Evans, P	08/02								
Bridge Projects Engr.										
Prelim. Plan By										
Architect/Specialist			DATE	REVISION	BY	APP'D	6444			

Tue Sep 17 14:45:53 2002

STRUCTURAL REGISTERED PROFESSIONAL ENGINEER 71344 OREGON SEPT. 10, 2002 JUGESH KAPUR
EXPIRES 06-30-2003

BRIDGE AND STRUCTURES OFFICE

KARL N. KIRKER STATE OF WASHINGTON 16002 REGISTERED PROFESSIONAL ENGINEER
EXPIRES 11/3/03

Washington State Department of Transportation

SR 433
LEWIS AND CLARK BRIDGE
DECK REPLACEMENT

OREGON APPROACH EXPANSION JOINT

BRIDGE SHEET NO. 0A30

SHEET 162 OF 258 SHEETS

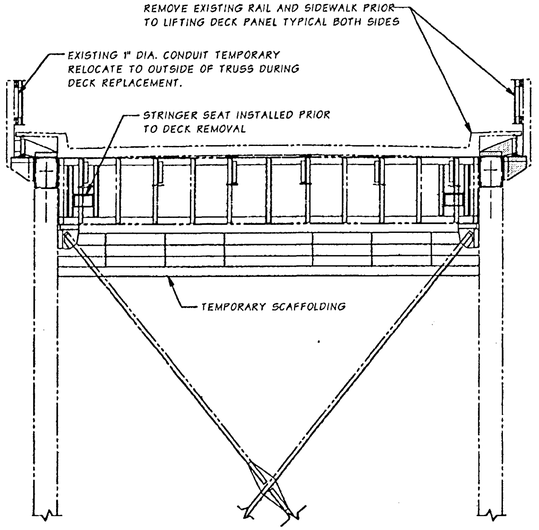

SECTION - EXISTING DECK

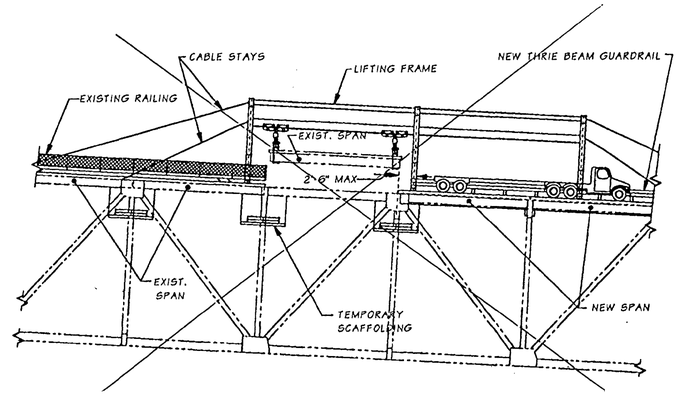

ELEVATION - DECK REPLACEMENT

CONTRACTOR'S ALTERNATE CRANE TRANSPORT USED

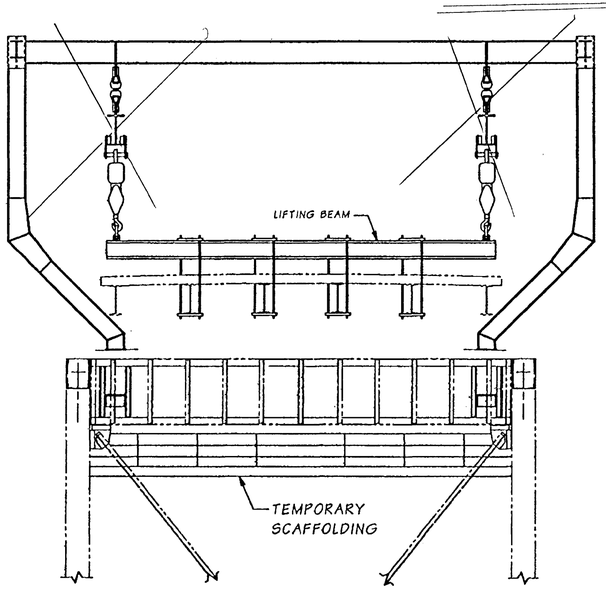

SECTION - REMOVING OLD DECK

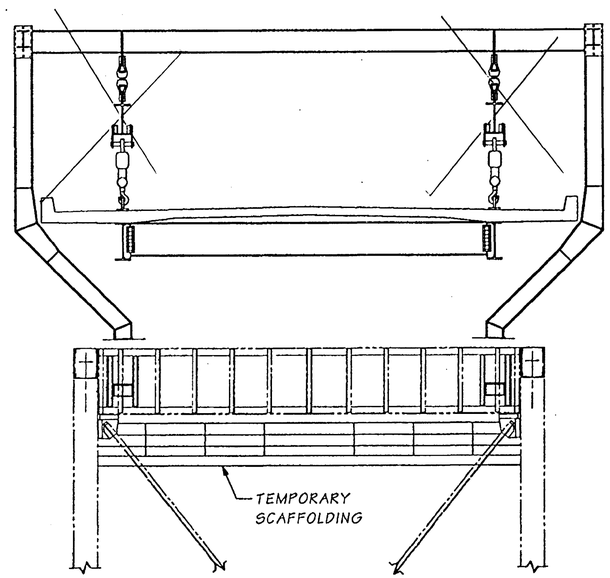

SECTION - PLACING NEW DECK

ENGINEERS SUGGESTED DECK REPLACEMENT SEQUENCE

1. TEMPORARILY RELOCATE CONDUIT AND J BOXES FOR NAVIGATIONAL LIGHTING TO THE OUTSIDE OF THE THROUGH TRUSS.

2. REMOVE CHAIN-LINK FENCE IN NORTH APPROACH DECK TRUSS.

3. INSTALL SCAFFOLDING UNDER BRIDGE.

4. INSTALL STRINGER SEATS ON FLOOR BEAMS FROM SCAFFOLDING UNDER BRIDGE. THIS WORK SHALL TAKE PLACE IN ADVANCE OF THE REMOVAL OF THE SUBJECT PANEL TO EXPEDITE THE PANEL REPLACEMENT.

5. CONSTRUCT NEW DECK REPLACMENT SECTIONS.

6. INSTALL LIFTING FRAME & CRANE RAIL SYSTEM.

7. CONSTRUCTION SEQUENCE DURING BRIDGE CLOSURES:
   - CLOSE THE BRIDGE TO TRAFFIC AT 9:30 P.M..
   - REMOVE SIDEWALKS, RAILING AND ABANDONED 4 INCH U.S. SPRINT CONDUIT ON PANEL TO BE REMOVED.
   - MOVE LIFTING FRAME & CRANE RAIL SYSTEM INTO POSITION OVER PANEL TO BE REMOVED AND INSTALL CABLE STAYS ON CRANE RAIL AND LIFTING FRAME.
   - ATTACH OVERHEAD CRANE RAIL TO DECK PANEL & SUPPORT DECK PANEL.
   - CUT THROUGH CONCRETE DECK AND ENDS OF EXISTING STRINGERS TO DETACH DECK PANEL FROM FLOOR BEAMS.
   - REMOVE DECK PANEL, BLAST CLEAN AND PRIME TOP FLANGE OF FLOOR BEAM.
   - PLACE NEW DECK PANEL.
   - INSTALL THRIE BEAM AND RAILING.
   - OPEN BRIDGE TO TRAFFIC BY 5:30 A.M. THE MORNING FOLLOWING THE 9:30 P.M. CLOSURE.
   - CONSTRUCT EXPANSION JOINT SEALS FOR PREVIOUS NIGHT PANEL PLACEMENTS.

8. REPEAT STEP 7 FOR EACH NIGHT OF CLOSURE.

9. ROAD PLATES OR OTHER SYSTEM MAY BE REQUIRED TO BRIDGE GAP AT FINGER JOINT LOCATIONS UNTIL THE FINGER JOINT HAS BEEN INSTALLED.

LIFTING FRAME AND CRANE RAIL NOTES

1. THE LIFTING FRAME & CRANE RAIL SYSTEM HAS BEEN DESIGNED IN ACCORDANCE WITH THE AISC, "MANUAL OF STEEL CONSTRUCTION, ALLOWABLE STRESS DESIGN", NINTH EDITION. THE CRANE RAIL HANGERS HAVE BEEN DESIGNED FOR THE TOTAL DEAD LOAD PLUS 30% FOR IMPACT USING A FACTOR OF SAFETY OF 2. THE TROLLEYS, HOISTS, SHACKLES, CLEVISES, PINS, RODS, HOOKS AND PAD EYES SHALL HAVE A MINIMUM FACTOR OF SAFETY OF 3 FOR THE WORKING LOADS SHOWN IN THE PLANS. IF THE CONTRACTORS EQUIPMENT OR METHODS OF OPERATION PRODUCE LOADS WHICH EXCEED THOSE SHOWN IN THE PLANS THE CONTRACTOR SHALL REDESIGN ALL COMPONENTS OF THE CRANE RAIL SYSTEM FOR THE HIGHER LOADS.

2. ALL HIGH STRENGTH BARS ARE ASSUMED TO BE AASHTO M275. ALL STRUCTURAL STEEL IN THE LIFTING FRAME IS ASSUMED TO BE ASTM 572 GRADE 50 ASSHTO M223. ALL OTHER STRUCTURAL STEEL SHALL MEET THE REQUIREMENTS LISTED IN THE STRUCTURAL STEEL NOTES.

3. THE LIFTING FRAME & CRANE RAIL SYSTEM SHOWN IS A SUGGESTED OPTION FOR THE PLACMENT OF THE DECK PANELS. THE CONTRACTOR MAY ALTER LIFTING FRAME AND/OR THE CRANE RAIL SYSTEM SHOWN OR COMPLETELY DEVISE HIS OWN METHOD FOR PLACEMENT OF DECK PANELS. ANY ALTERATIONS TO THE METHOD SHOWN AND/OR CONTRACTOR DESIGNED ELEMENTS SHALL BE SUPPORTED BY CALCULATIONS DEMONSTRATING STRESSES AND DEFLECTIONS IN NEW AND EXISTING STRUCTURAL ELEMENTS THAT ARE ACCEPTABLE TO THE ENGINEER, THE CALCULATIONS, SEQUENCES AND PROCEDURES SHALL BE SUBMITTED WITH THE SHOP PLANS TO THE ENGINEER FOR APPROVAL.

FOR "AS CONSTRUCTED PLANS" ONLY

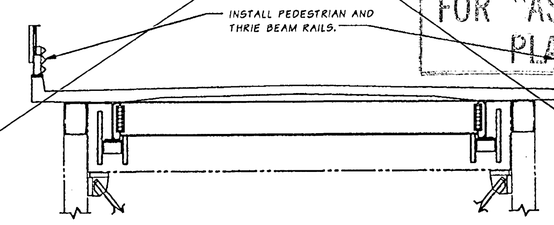

SECTION - NEW DECK INSTALLED

Bridge Design Engr.	Kapur, J		M:\Y-Team\Lewis_Clark Rehab\Oregon Appr\Window files\SEQUENCE.WND
Supervisor	Kirker, KN	08/02	
Designed By	Schultz, E	08/02	
Checked By	Talukdar, M	08/02	
Detailed By	Evans, P	08/02	
Bridge Projects Engr.			
Prelim. Plan By			
Architect/Specialist			

DATE	REVISION	BY	APP'D

REGION NO.	STATE	FED. AID PROJ. NO.	SHEET NO.	TOTAL SHEETS
10	WASH.	ACBH - 0433(007)		
JOB NUMBER 02x310				

STRUCTURAL REGISTERED PROFESSIONAL ENGINEER 71384 OREGON JULY 10, 2002 JUGESH KAPUR
EXPIRES 06-30-2003

BRIDGE AND STRUCTURES OFFICE

KARL N. KIRKER STATE OF WASHINGTON 10296 REGISTERED PROFESSIONAL ENGINEER
EXPIRES 11/3/03

Washington State Department of Transportation

SR 433
LEWIS AND CLARK BRIDGE
DECK REPLACEMENT

CONSTRUCTION SEQUENCE

BRIDGE SHEET NO. 0A31

SHEET 163 OF 258 SHEETS

SR 433 JOB NO. 1 SHEET 31

Tue Sep 17 11:50:21 2002

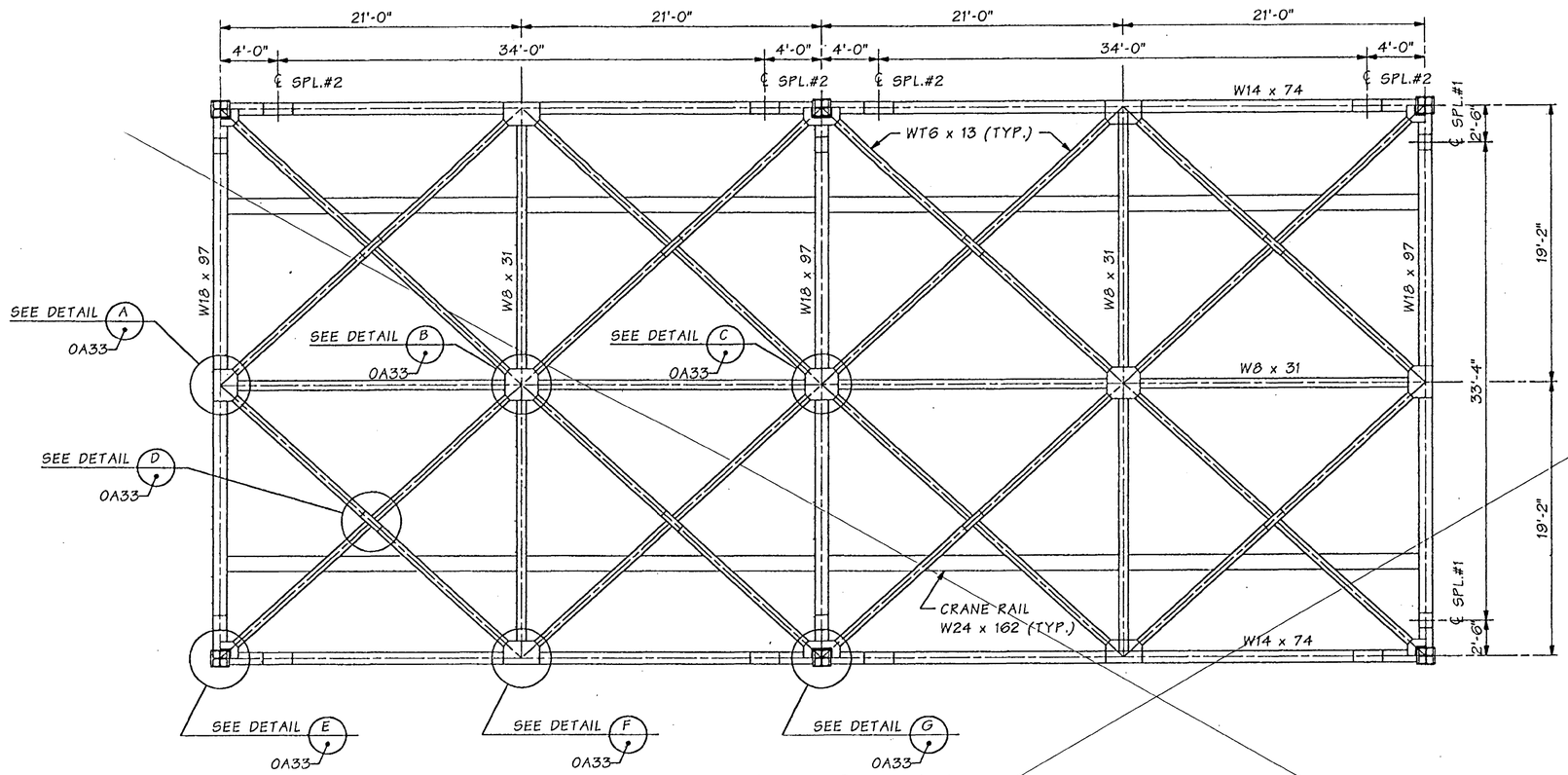

FRAMING PLAN

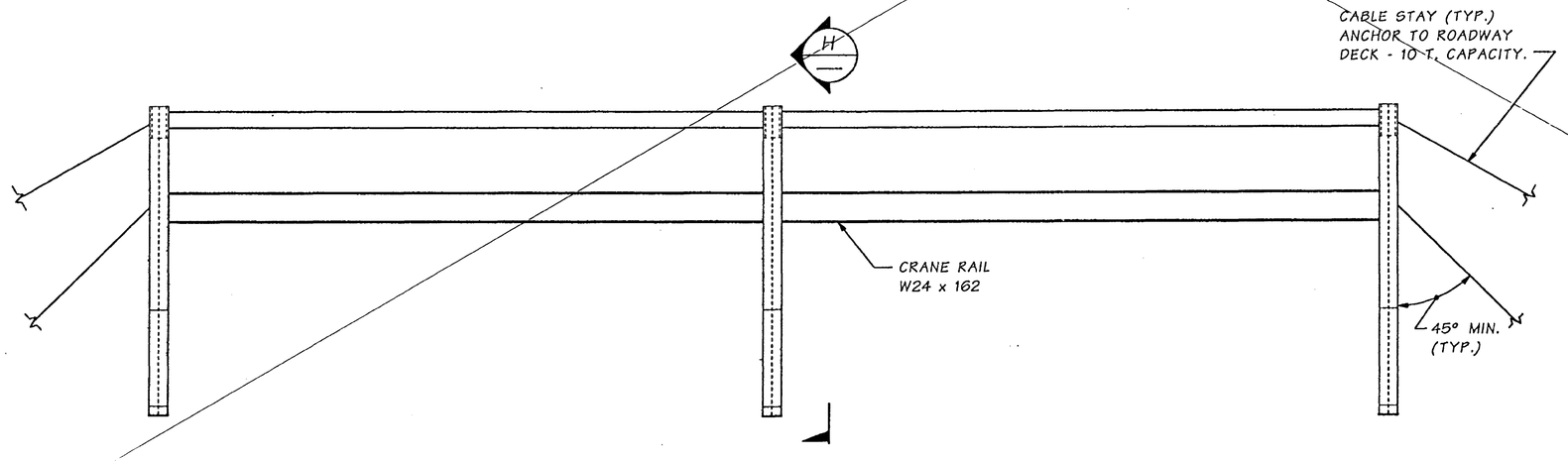

ELEVATION

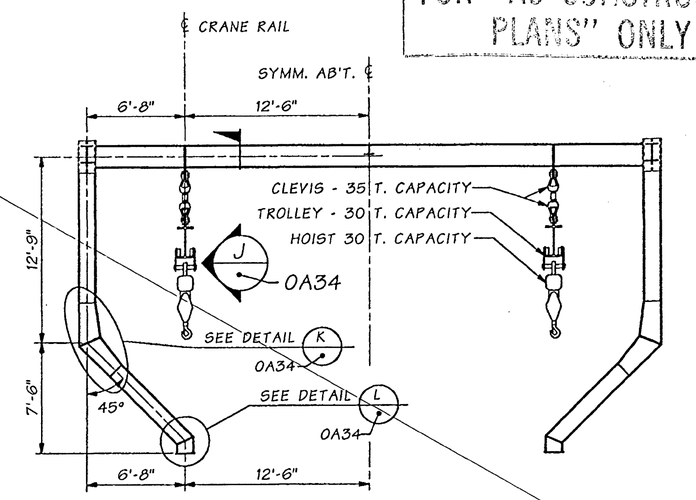

SECTION H

FOR "AS CONSTRUCTED PLANS" ONLY

Bridge Design Engr.	Kapur, J		M:\Y-Team\Lewis_Clark Rehab\Oregon Appr\Window files\LIFTING TOWER LAYOUT.WND
Supervisor	Kirker, KN	08/02	
Designed By	Schultz, E	08/02	
Checked By	Talukdar, M	08/02	
Detailed By	House, L	08/02	
Bridge Projects Engr.			
Prelim. Plan By			
Architect/Specialist			

DATE	REVISION	BY	APP'D

REGION NO.	STATE	FED. AID PROJ. NO.	SHEET NO.	TOTAL SHEETS
10	WASH.	ACBH - 0433(007)		
JOB NUMBER 02x310				

STRUCTURAL REGISTERED PROFESSIONAL ENGINEER 71344 OREGON SEPT. 10, 2002 JUGESH KAPUR
EXPIRES 06-30-2003

BRIDGE AND STRUCTURES OFFICE

KARL N. KIRKER STATE OF WASHINGTON 18298 REGISTERED PROFESSIONAL ENGINEER
EXPIRES 11/3/03

Washington State Department of Transportation

SR 433
LEWIS AND CLARK BRIDGE
DECK REPLACEMENT

DECK PANEL LIFTING FRAME

BRIDGE SHEET NO. OA32

SHEET 164 OF 258 SHEETS

SR 433 JOB NO. 1 SHEET 32

Tue Sep 17 11:49:41 2002

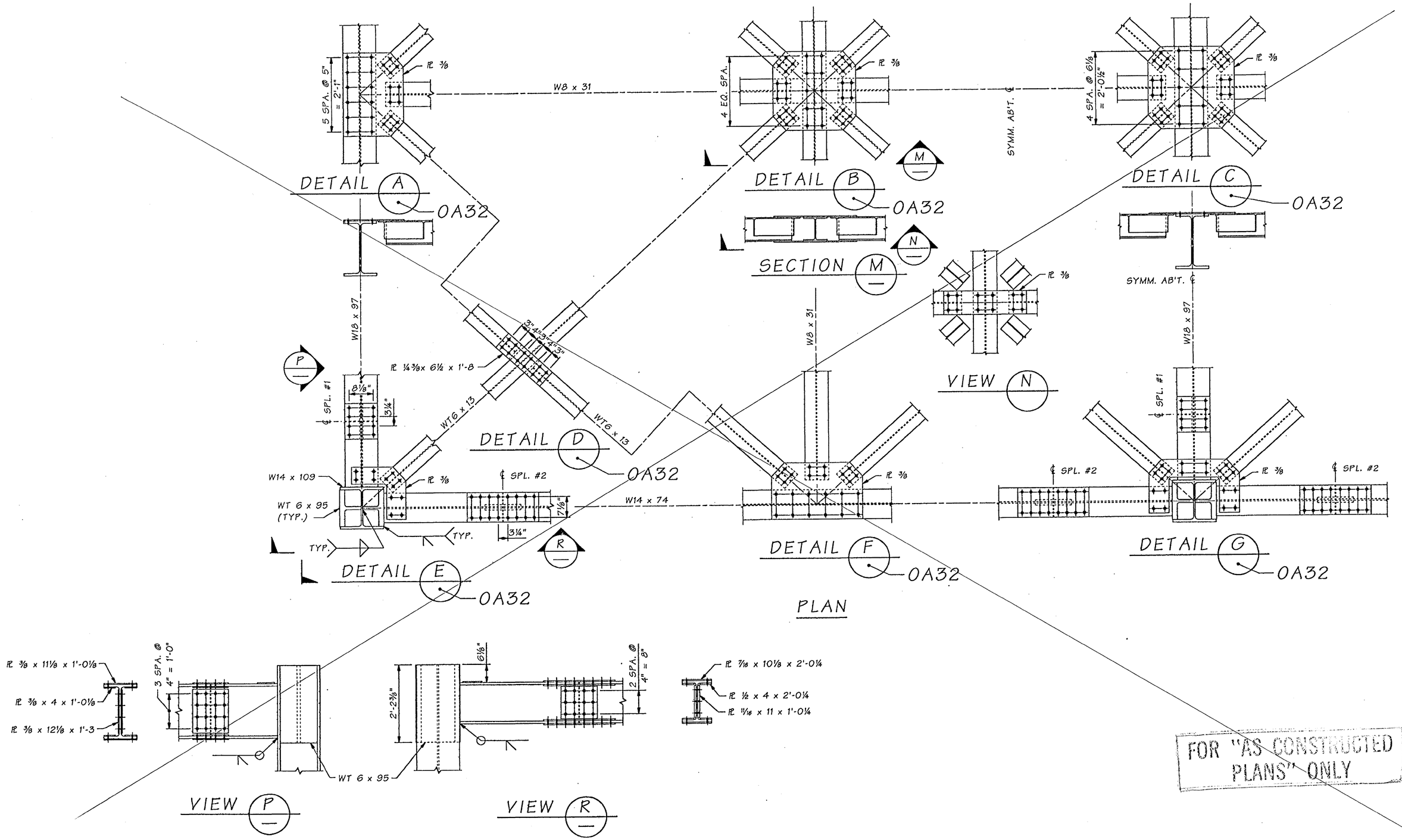

FOR "AS CONSTRUCTED PLANS" ONLY

SR 433 JOB NO. 1 SHEET 33

Bridge Design Engr.	Kapur, J		M:\Y-Team\Lewis_Clark Rehab\Oregon Appr\Window files\L TOWER DETAILS.WND								
Supervisor	Kirker, KN	08/02					REGION NO.	STATE	FED. AID PROJ. NO.	SHEET NO.	TOTAL SHEETS
Designed By	Schultz, E	08/02					10	WASH.			
Checked By	Talukdar, M	08/02					JOB NUMBER 02x310		ACBH - 0433(007)		
Detailed By	House, L	08/02									
Bridge Projects Engr.											
Prelim. Plan By											
Architect/Specialist			DATE	REVISION	BY	APP'D	6444				

STRUCTURAL REGISTERED PROFESSIONAL ENGINEER 71314 OREGON SEPT. 10, 2002 JUGESH KAPUR EXPIRES 06-30-2003

BRIDGE AND STRUCTURES OFFICE

KARL N. KIRKER STATE OF WASHINGTON 15296 REGISTERED PROFESSIONAL ENGINEER EXPIRES 11/3/03

Washington State Department of Transportation

SR 433
LEWIS AND CLARK BRIDGE
DECK REPLACEMENT

DECK PANEL LIFTING FRAME DETAILS

BRIDGE SHEET NO. 0A33

SHEET 165 OF 258 SHEETS

Tue Sep 17 11:49:35 2002

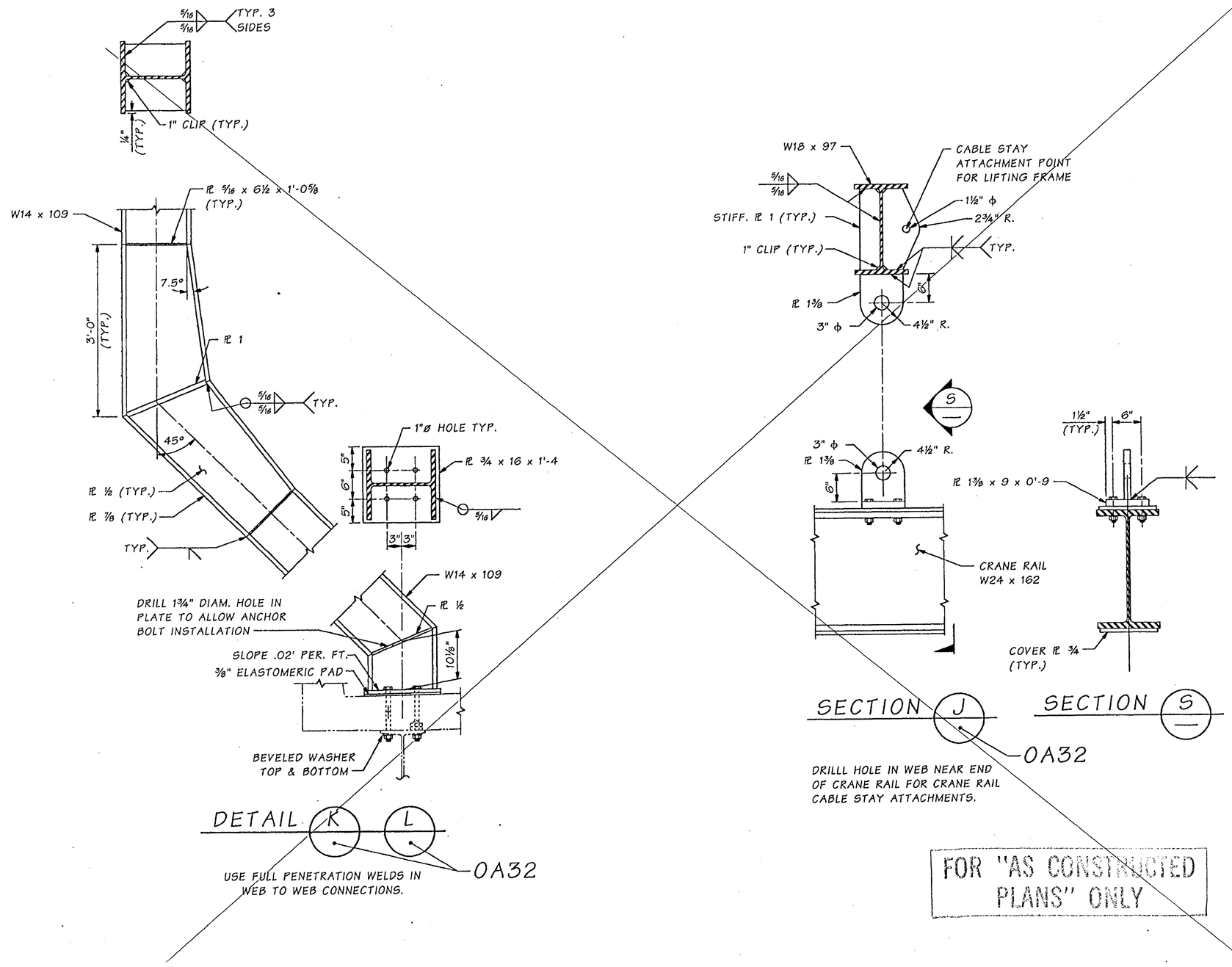

FOR "AS CONSTRUCTED PLANS" ONLY

SR 433 JOB NO. 1 SHEET 34

Bridge Design Engr.	Kapur, J		M:\Y-Team\Lewis_Clark Rehab\Oregon Appr\Window files\L TOWER DETAILS 2.WND								
Supervisor	Kirker, KN	08/02					REGION NO.	STATE	FED. AID PROJ. NO.	SHEET NO.	TOTAL SHEETS
Designed By	Schultz, E	08/02					10	WASH.	ACBH - 0433(007)		
Checked By	Talukdar, M	08/02					JOB NUMBER 02x310				
Detailed By	House, L	08/02									
Bridge Projects Engr.											
Prelim. Plan By											
Architect/Specialist			DATE	REVISION	BY	APP'D	6444				

STRUCTURAL REGISTERED PROFESSIONAL ENGINEER 71344 OREGON SEPT. 10, 2002 JUGESH KAPUR EXPIRES 06-30-2003

BRIDGE AND STRUCTURES OFFICE

KARL N. KIRKER STATE OF WASHINGTON 18298 REGISTERED PROFESSIONAL ENGINEER EXPIRES 11/3/03

Washington State Department of Transportation

SR 433
LEWIS AND CLARK BRIDGE
DECK REPLACEMENT

DECK PANEL LIFTING FRAME DETAILS

BRIDGE SHEET NO. 0A34

SHEET 166 OF 258 SHEETS

Tue Sep 17 11:49:37 2002

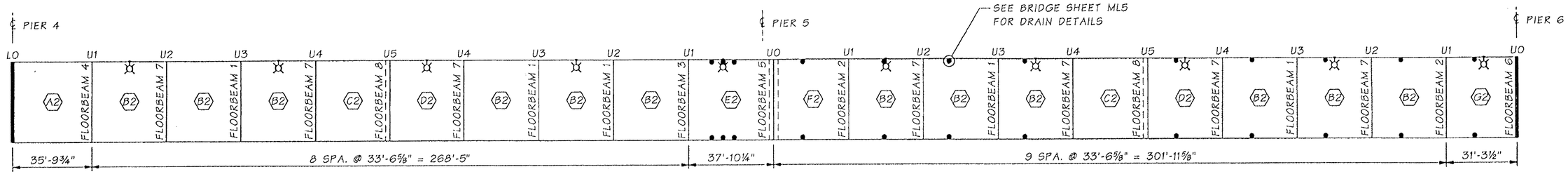

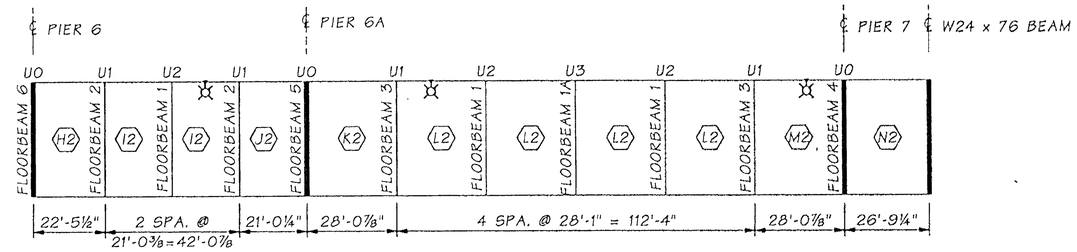

DECK PANEL LAYOUT

ALL PANEL DIMENSIONS BASED ON A STRUCTURAL TEMP. OF 64°F.

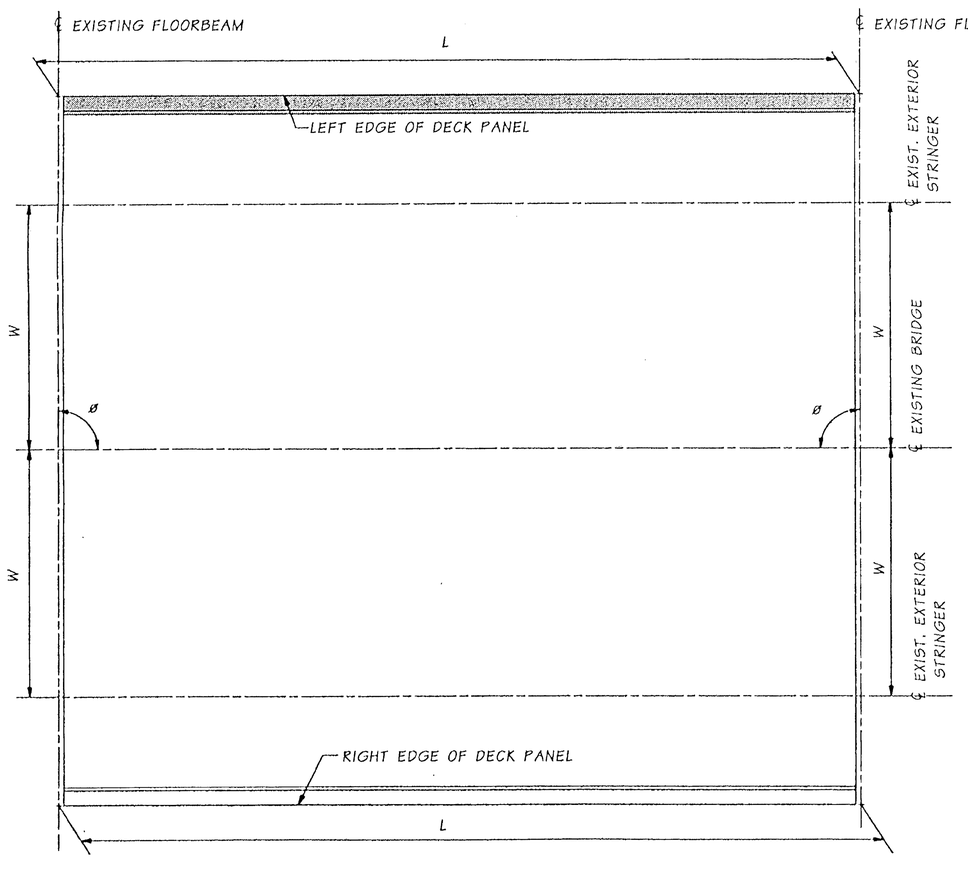

PLAN - PANEL GEOMETRY

NOTES:

1) FLOORBEAM DESIGNATION IS BASED ON ORIGINAL CONTRACT PLANS.

2) THE CONTRACTOR SHALL FIELD VERIFY THE MEASUREMENTS ϕ L & W SUCH THAT THE FINISHED DECK PANEL IS CONSTRUCTED TO THE FOLLOWING TOLERANCES.

   1) L ± ¼ INCH
   2) W ± ⅛ INCH
   3) DEPTH ± ⅛ INCH
   4) SWEEP (VARIATION FROM STRAIGHT LINE PARALLEL TO CENTERLINE OF MEMBER) ± ¼ INCH
   5) WARPING ± ⅛ INCH FROM NEAREST ADJACENT CORNER.

3) FOR SPACING OF SHEAR CONNECTIONS, PICK POINT CONNECTION AND LONGITUDINAL STRINGER TO TRANSVERSE STRINGER CONNECTION SEE BR. SHT. MS37.

4) THE CONTRACTOR SHALL FIELD MEASURE ALL EXISTING GEOMETRY THAT AFFECTS THE FINAL FIT OF THE NEW DECK PANELS. THE RESULTS OF THE FIELD MEASUREMENTS SHALL BE TABULATED AND INCLUDED IN THE SHOP DRAWINGS FOR BOTH THE STEEL AND CONCRETE PORTIONS OF THE DECK PANELS, INCLUDING CALCULATED ELEVATIONS FOR THE STRINGER SEAT SUPPORTS.

5) THE PROCEDURE USED FOR STORAGE OF THE PRECAST PANELS SHALL BE SUBMITTED TO THE ENGINEER FOR APPROVAL.

6) SHIM PLATES INSTALLED UNDER SS ROCKER PLATE AT BEAMSEATS
- PIER 5 – 1" SHIMPLATES INSTALLED AT 4 BEAMSEATS LOCATIONS
- FROM PIER 5 TO PIER 6 (9 LOCATIONS). 1" SHIMPLATES INSTALLED UNDER ALL SS ROCKER PLATES AT BEAMSEATS
- PIER 6 – 1" SHIMPLATES INSTALLED AT 14 BEAMSEAT LOCATIONS
- FROM PIER 6 TO PIER 6A (3 LOCATIONS) – SHIMPLATES FEATHERED FROM 3/4" TO 1/4" IN INCREMENTS OF 1/4" AT FLOORBEAMS
- PIER 6A – NO SHIMPLATES PLACED UNDER SS ROCKER AT BEAMSEAT LOCATIONS

LEGEND

U1 --- TRUSS PANEL POINT

(C) --- DECK PANEL TYPE.

--- FIXED PANEL JOINT. SEE "SILICONE SEALANT EXP. JT.", BRIDGE SHT. MS38

--- EXPANSION PANEL JOINT WITH EXPANSION SEAT BACK ON STATION. SEE "SILICONE SEALANT EXP. JT.", BRIDGE SHT. MS38

--- FINGER JOINT. SEE "FINGER JOINT AT PIER 5" BRIDGE SHTS. 0A74 - 0A78

--- STRIP SEAL EXPANSION JOINT. SEE "EXPANSION JOINT PIERS 4, 6, 6A, 7 & AT W24 x 76" BRIDGE SHT. ML4

--- LUMINAIRE POST LOCATION - FOR DETAILS SEE PANEL SHTS. ML11 - ML12

• --- DECK DRAIN - FOR DETAILS SEE BRIDGE SHT. ML5

FOR "AS CONSTRUCTED PLANS" ONLY

Bridge Design Engr.	Kapur, J		M:\Y-Team\Lewis_Clark Rehab\Oregon Appr\window files\DECK PANEL LAYOUT.WND				REGION NO.	STATE	FED. AID PROJ. NO.	SHEET NO.	TOTAL SHEETS
Supervisor	Kirker, KN	08/02					10	WASH.			
Designed By	Talukdar, M	08/02									
Checked By	Peralta, R	08/02									
Detailed By	House, L	08/02	10/02	MOVED CURB TO EDGE OF SLAB	RP		JOB NUMBER 02x310		ACBH - 0433(007)		
Bridge Projects Engr.											
Prelim. Plan By			10/02	ADDED NOTE	MT						
Architect/Specialist			DATE	REVISION	BY	APP'D					

Tue Oct 29 15:10:27 2002

STRUCTURAL REGISTERED PROFESSIONAL ENGINEER 71314 OREGON JULY 10, 2002 JUGESH KAPUR
EXPIRES 06-30-2003

BRIDGE AND STRUCTURES OFFICE

CARL N. KIRKER STATE OF WASHINGTON 10338 REGISTERED PROFESSIONAL ENGINEER
EXPIRES 11/13/03

Washington State Department of Transportation

SR 433
LEWIS AND CLARK BRIDGE
DECK REPLACEMENT

DECK PANEL AND FLOORBEAM LAYOUT

BRIDGE SHEET NO. 0A35

SHEET 167 OF 258 SHEETS

SR 433 NO. 1 SHEET 35

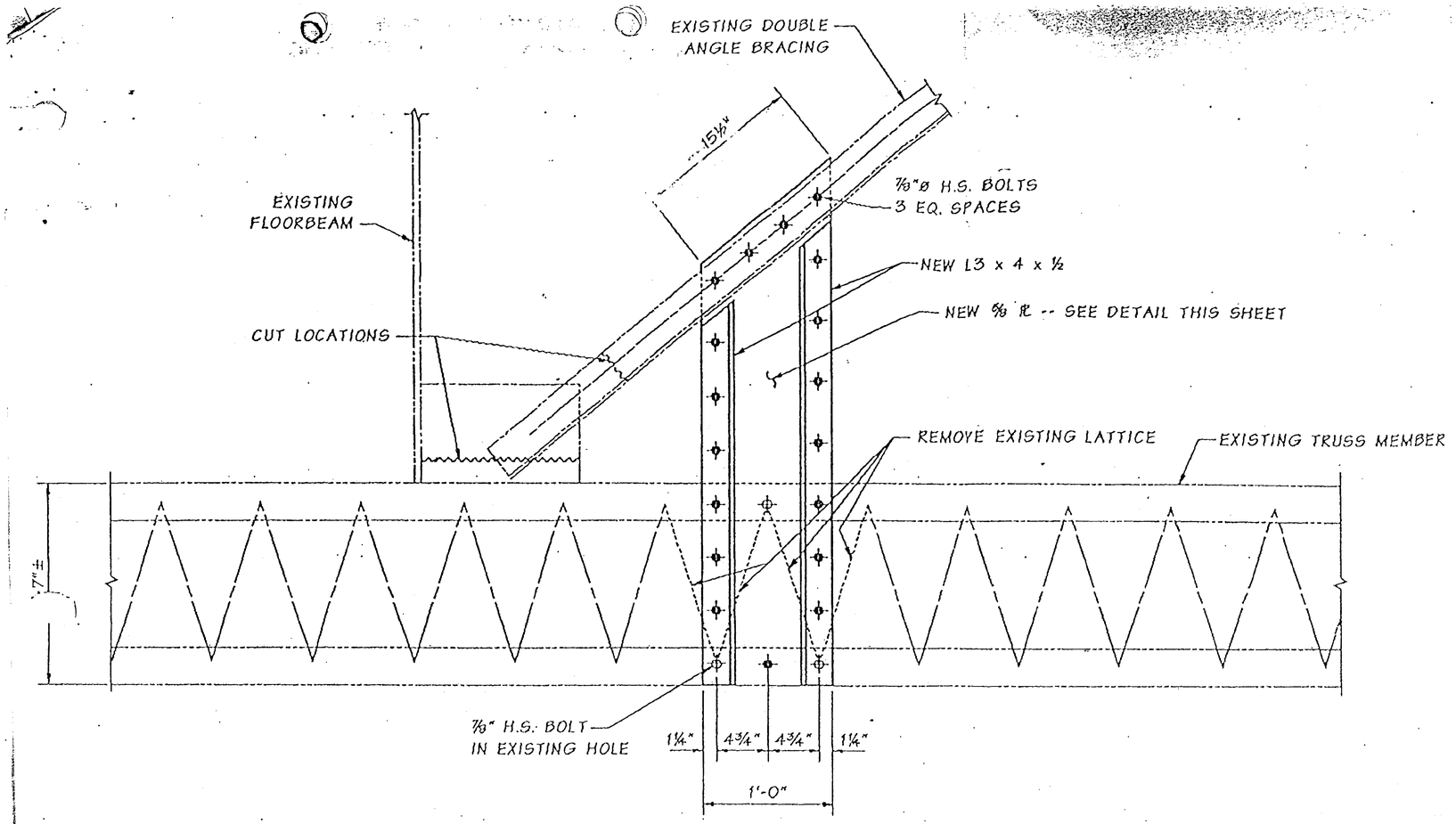

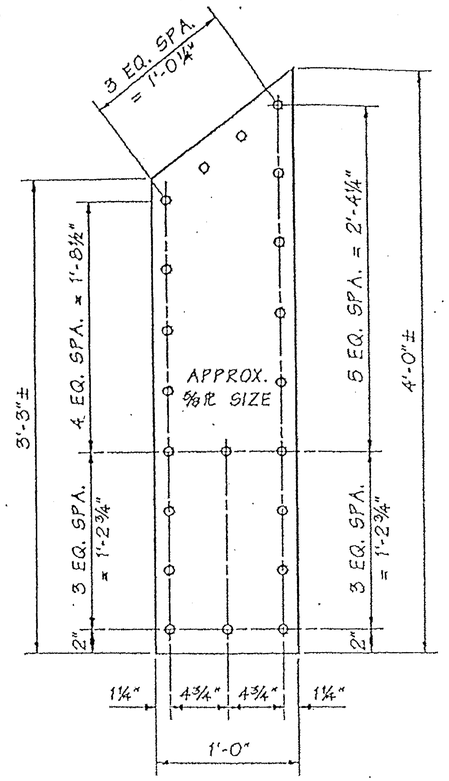

PLATE

Bracing Modification Detail

8 Locations - Make field modifications as directed by the Engineer.

1 each - South side near Pier 4 at floorbeam 4
2 each – Both sides near Pier 5 at floorbeam 3 and 2
2 each – Both sides near Pier 6 at floorbeam 2 and 2
2 each – Both side near Pier 6A at floorbeam 2 and 3
1 each – North side near Pier 7 at floorbeam 3

LEGEND

- NEW BOLT
- NEW BOLT REPLACING RIVET

ALL STRUCTURAL STEEL SHALL BE ASTM A-36.

ALL BOLTS SHALL BE ⅞" DIAMETER ASTM-A325.

FOR "AS CONSTRUCTED PLANS" ONLY

FILE NAME	C:\AAWork\Kelso\Svensen's Curve\L3425WASTESITE.dgn						
TIME	02:37:18 PM				REGION NO. 10	STATE WASH	FED. AID PROJ. NO.
DATE	08/17/2005						
PLOTTED BY	spahnk				JOB NUMBER		
DESIGNED BY							
ENTERED BY							
CHECKED BY					CONTRACT NO. 6144		LOCATION NO.
PROJ. ENGR.							
REGIONAL ADM.		REVISION	DATE	BY			

P.E. STAMP BOX DATE

P.E. STAMP BOX DATE

Washington State Department of Transportation

SR 433
LEWIS AND CLARK BRIDE
DECK REPLACEMENT

BRACING MODIFICATION DETAIL

PLOT11

0A35A

SHEET 167A OF 258 SHEETS

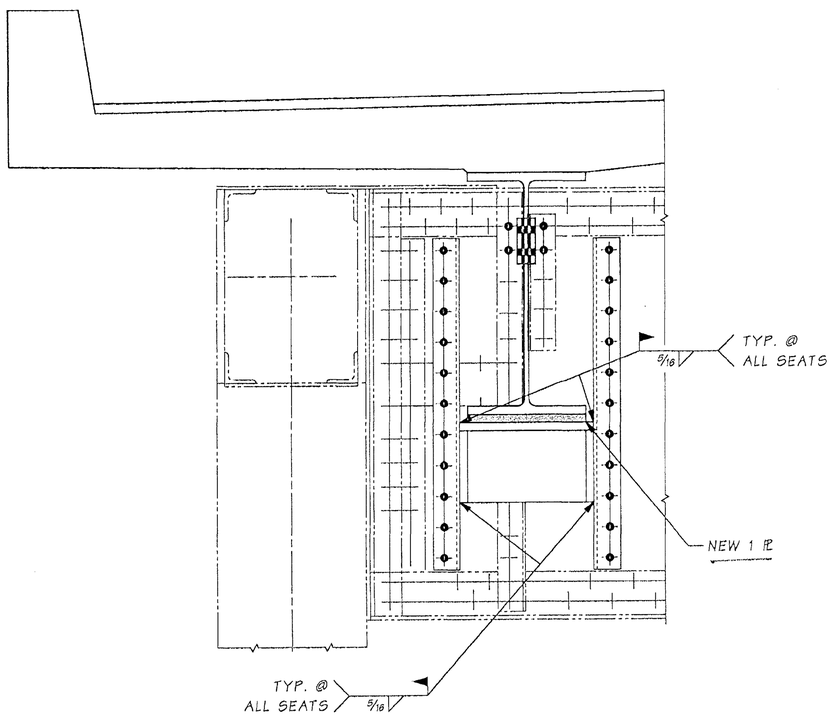

SECTION C

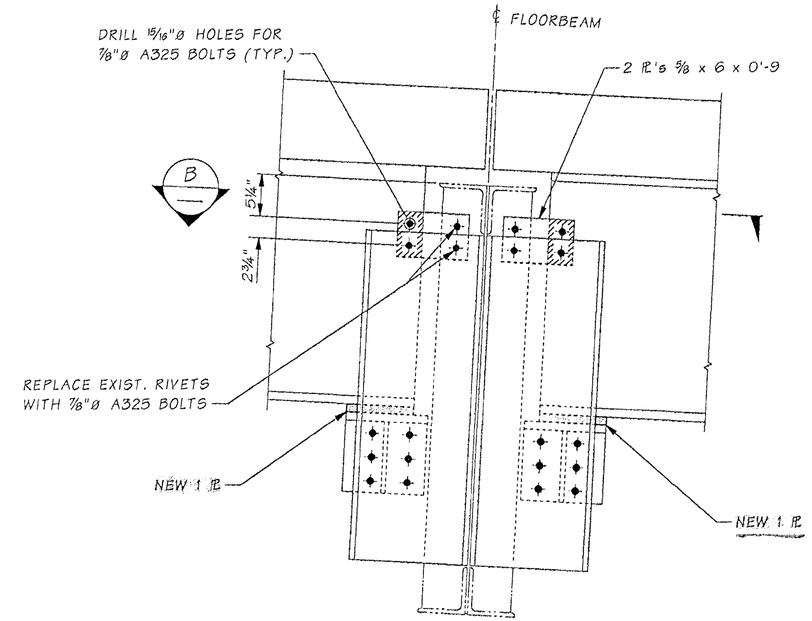

TYPICAL FLOORBEAM
335' SPAN

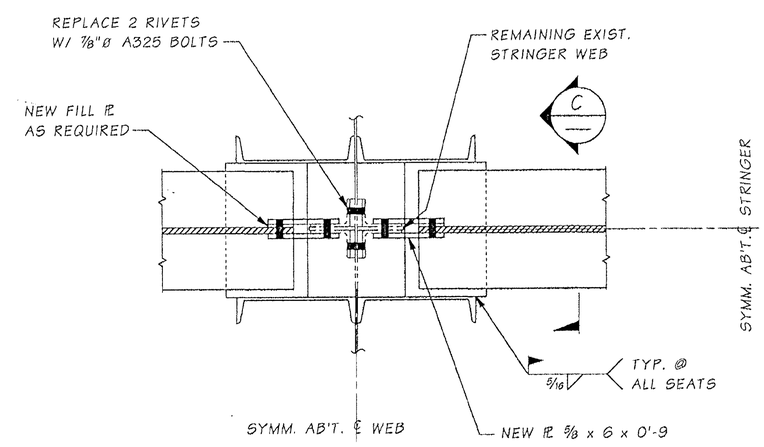

SECTION B

FOR "AS CONSTRUCTED PLANS" ONLY

SR 433 JOB NO. 0001 SHEET 0

Bridge Design Engr.	Kapur, J	M:\Y-Team\Lewis_Clark Rehab\Modifications\window files\FB RAISED 1IN.WND			REGION NO.	STATE	FED. AID PROJ. NO.	SHEET NO.	TOTAL SHEETS
Supervisor	Kirker, KN				10	WASH.			
Designed By	Talukdar, M								
Checked By					JOB NUMBER				
Detailed By	Evans, P.D.								
Bridge Projects Engr.									
Prelim. Plan By									
Architect/Specialist		DATE	REVISION	BY	APP'D				

Tue Dec 30 14:32:59 2003

BRIDGE AND STRUCTURES OFFICE

MONINDRA TALUKDAR — STATE OF WASHINGTON — 27628 — REGISTERED PROFESSIONAL ENGINEER — EXPIRES 6/1/04

Washington State Department of Transportation

SR 433
LEWIS & CLARK BRIDGE
DECK REPLACEMENT

TYPICAL FLOORBEAM

BRIDGE SHEET NO. 0A35B

SHEET 167B OF 258 SHEETS

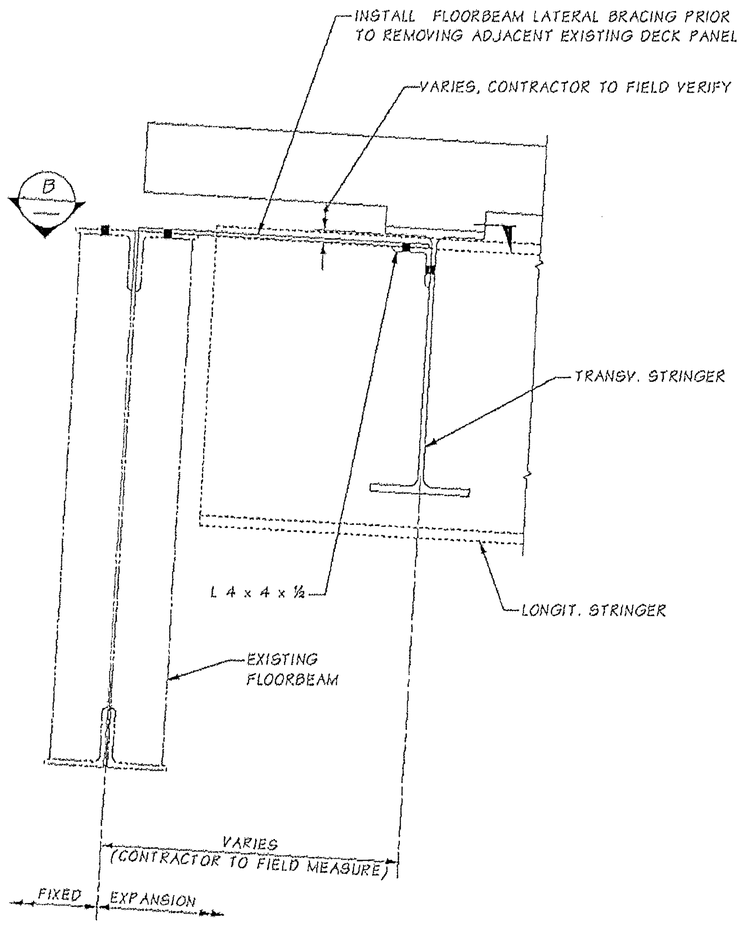

SECTION A

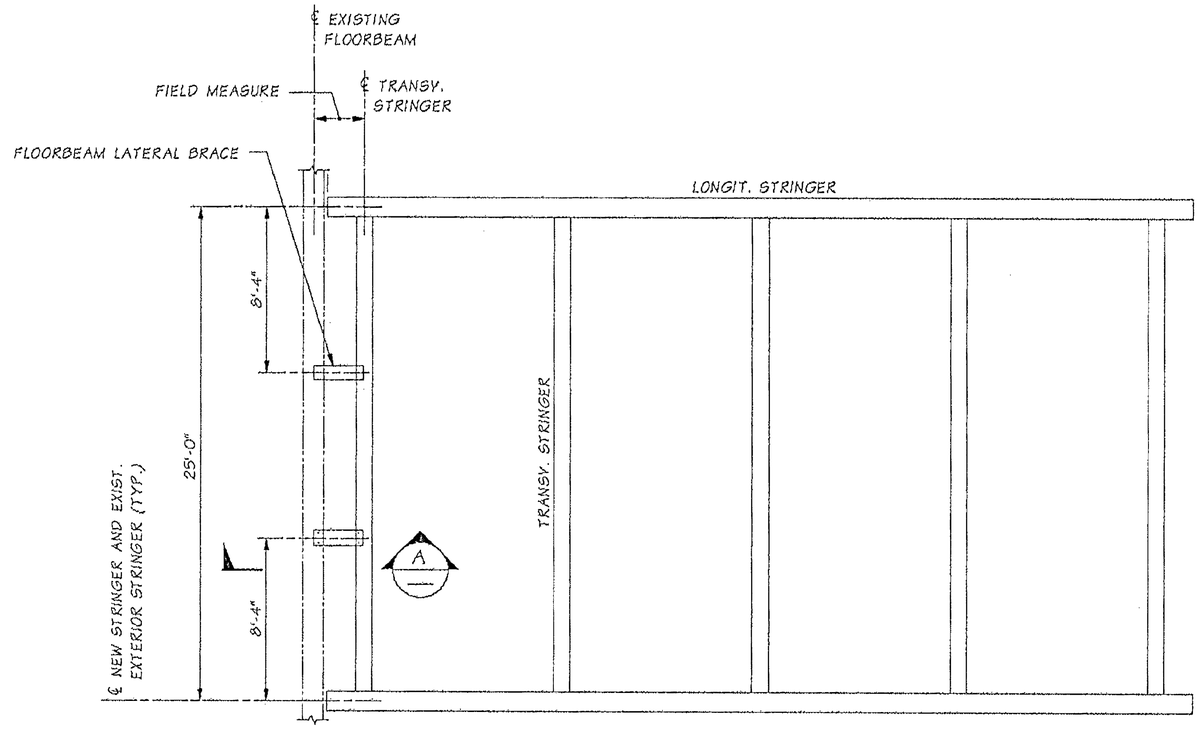

FRAMING PLAN

24 LOCATIONS
335' TRUSS FLOORBEAMS 1, 2, 3, 4 & 7
168' TRUSS FLOORBEAMS 1, 1A, & 3
84' TRUSS FLOORBEAMS 1 & 2

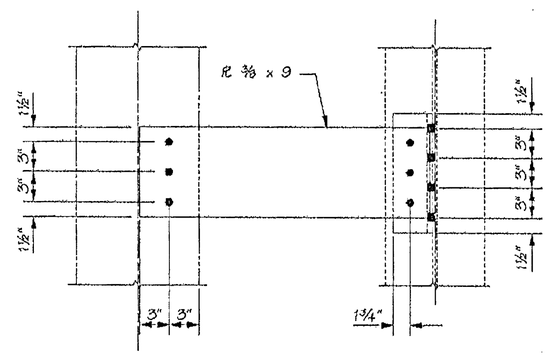

SECTION B

FOR "AS CONSTRUCTED PLANS" ONLY

SR 433 JOB NO. 0001 SHEET 1

Bridge Design Engr.	Kapur, J	M:\Y-Team\Lewis_Clark Rehab\Modifications\window files\OA F8 FIX BRACE.WND							
Supervisor	Kirker, KN				REGION NO.	STATE	FED. AID PROJ. NO.	SHEET NO.	TOTAL SHEETS
Designed By	Schultz, E				10	WASH.			
Checked By	Talukdar, M				JOB NUMBER				
Detailed By	Evans, P.D.								
Bridge Projects Engr.									
Prelim. Plan By									
Architect/Specialist		DATE	REVISION	BY	APPD	64444			

Wed Nov 26 09:20:36 2003

MONINDRA TALUKDAR — STATE OF WASHINGTON — 27544 — REGISTERED PROFESSIONAL ENGINEER — EXPIRES 6/1/04

BRIDGE AND STRUCTURES OFFICE

STRUCTURAL — REGISTERED PROFESSIONAL ENGINEER — 71344 — OREGON — SEPT. 10, 2003 — JUGESH KAPUR — EXPIRES 06-30-2005

Washington State Department of Transportation

SR 433
LEWIS & CLARK BRIDGE
DECK REPLACEMENT

FLOORBEAM LATERAL BRACE
OREGON APPROACH TRUSS

BRIDGE SHEET OA35C

SHEET 167C OF 258 SHEETS

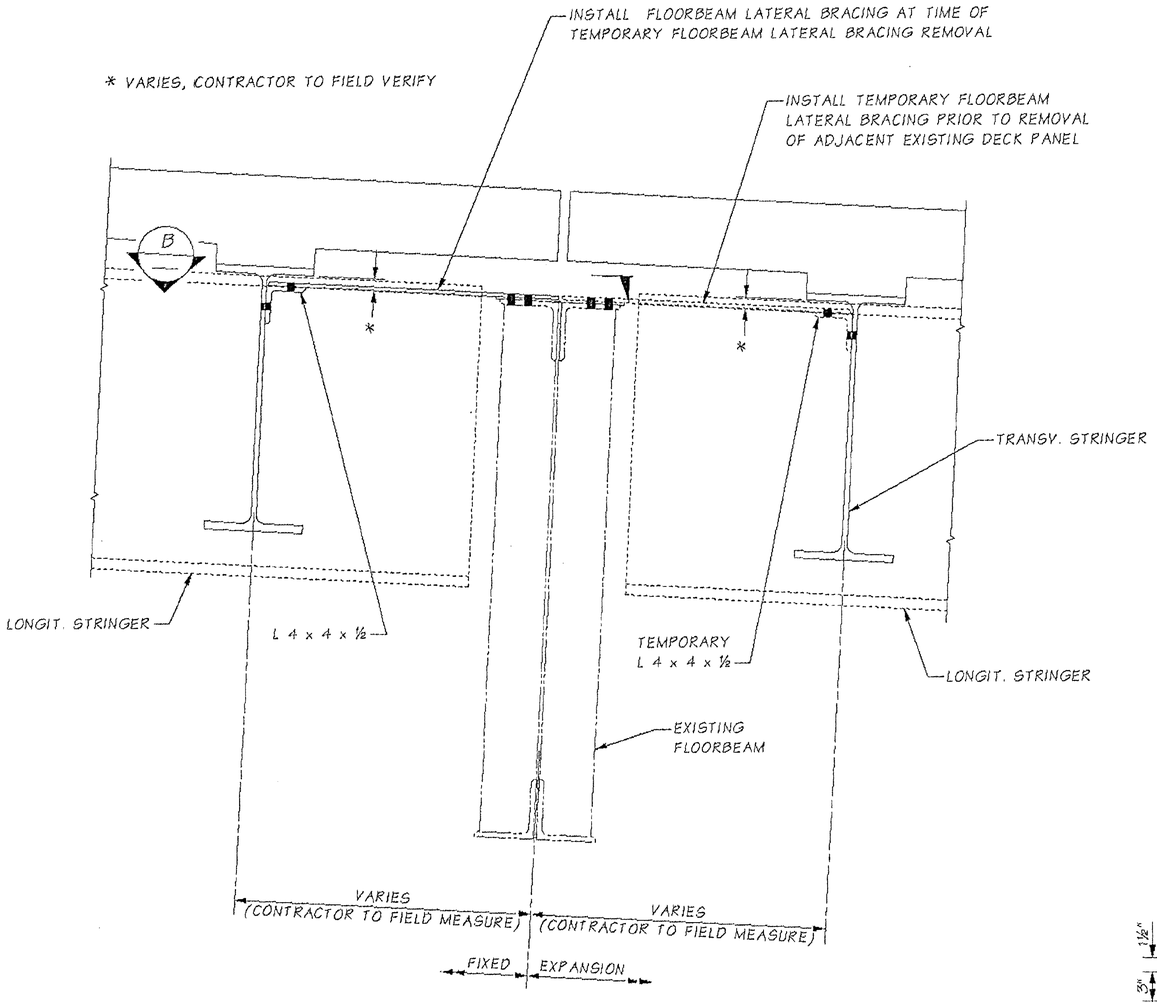

SECTION A

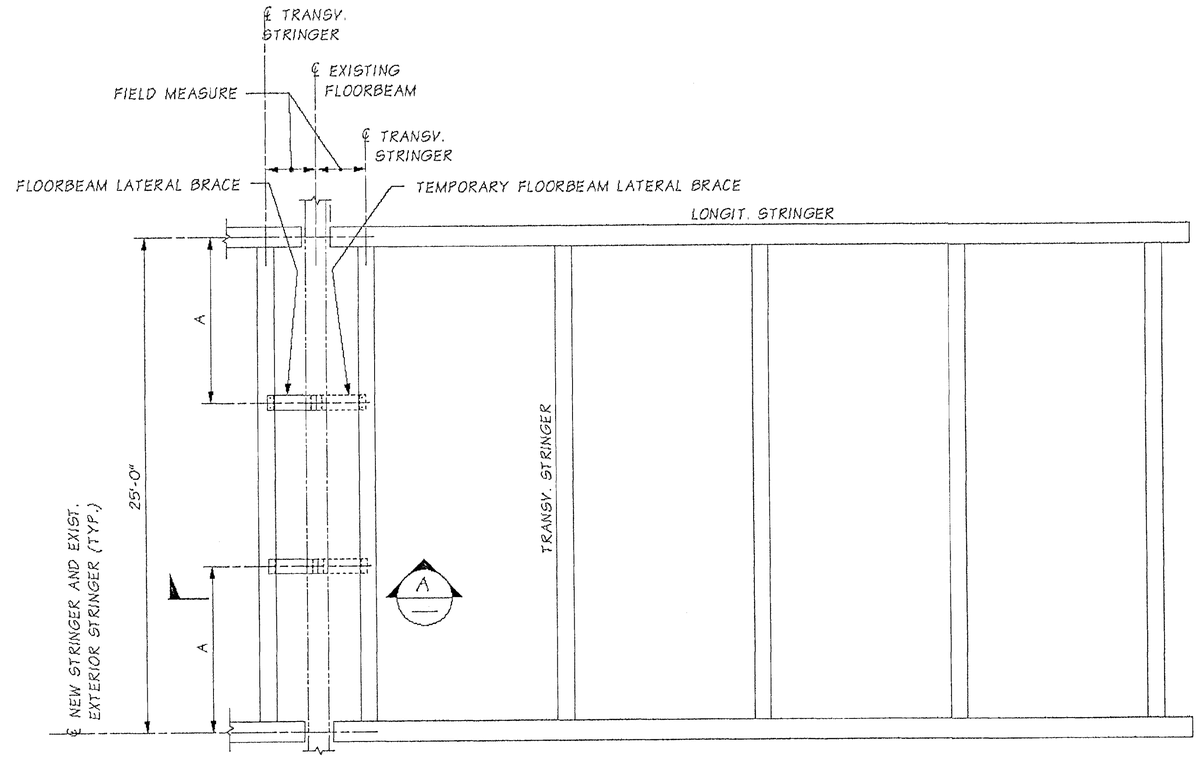

FRAMING PLAN

6 LOCATIONS

LOCATION	A
335' TRUSS FLOORBEAM 5, 6, & 8	8'-8½"
168' TRUSS FLOORBEAM 4 & 5	8'-2⅝"

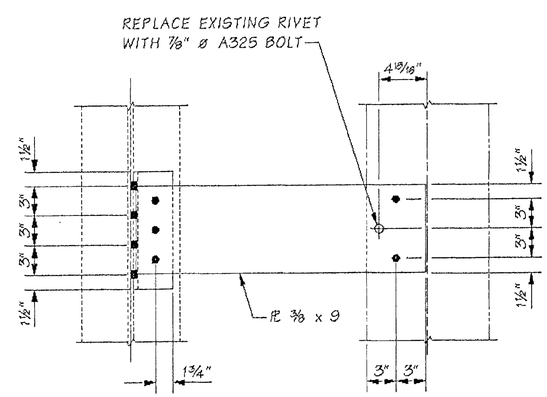

SECTION B
335' TRUSS FLOORBEAMS

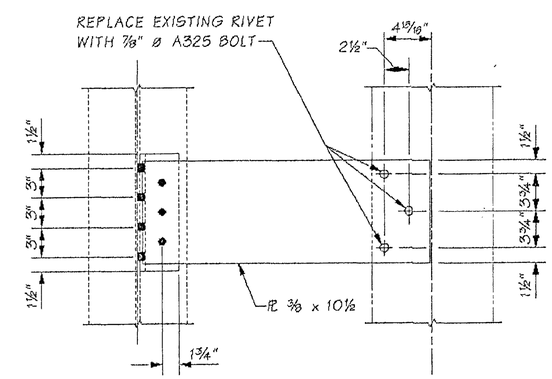

SECTION B
168' TRUSS FLOORBEAMS

● - NEW BOLT

⊕ - NEW BOLT REPLACING RIVET

"AS CONSTRUCTED PLANS" ONLY

Bridge Design Engr.	Kapur, J	M:\Y-Team\Lewis_Clark Rehab\Modifications\window files\OA FB BRACE.WND				REGION NO.	STATE	FED. AID PROJ. NO.	SHEET NO.	TOTAL SHEETS
Supervisor	Kirker, KN					10	WASH.			
Designed By	Schultz, E									
Checked By	Talukdar, M					JOB NUMBER				
Detailed By	Evans, P.D.									
Bridge Projects Engr.										
Prelim. Plan By										
Architect/Specialist		DATE	REVISION	BY	APP'D	6444				

MUNINDRA TALUKDAR, STATE OF WASHINGTON, 27628, REGISTERED PROFESSIONAL ENGINEER — EXPIRES 6/1/04

BRIDGE AND STRUCTURES OFFICE

STRUCTURAL REGISTERED PROFESSIONAL ENGINEER 71344 OREGON SEPT. 10, 2002 JUGESH KAPUR — EXPIRES 06-30-2005

Washington State Department of Transportation

SR 433
LEWIS & CLARK BRIDGE
DECK REPLACEMENT

FLOORBEAM LATERAL BRACE
OREGON APPROACH TRUSS

BRIDGE SHEET NO. 0A35D

SHEET 1670 OF 258 SHEETS

SR 433 JOB NO. 0001 SHEET 2

Wed Nov 26 09:19:12 2003

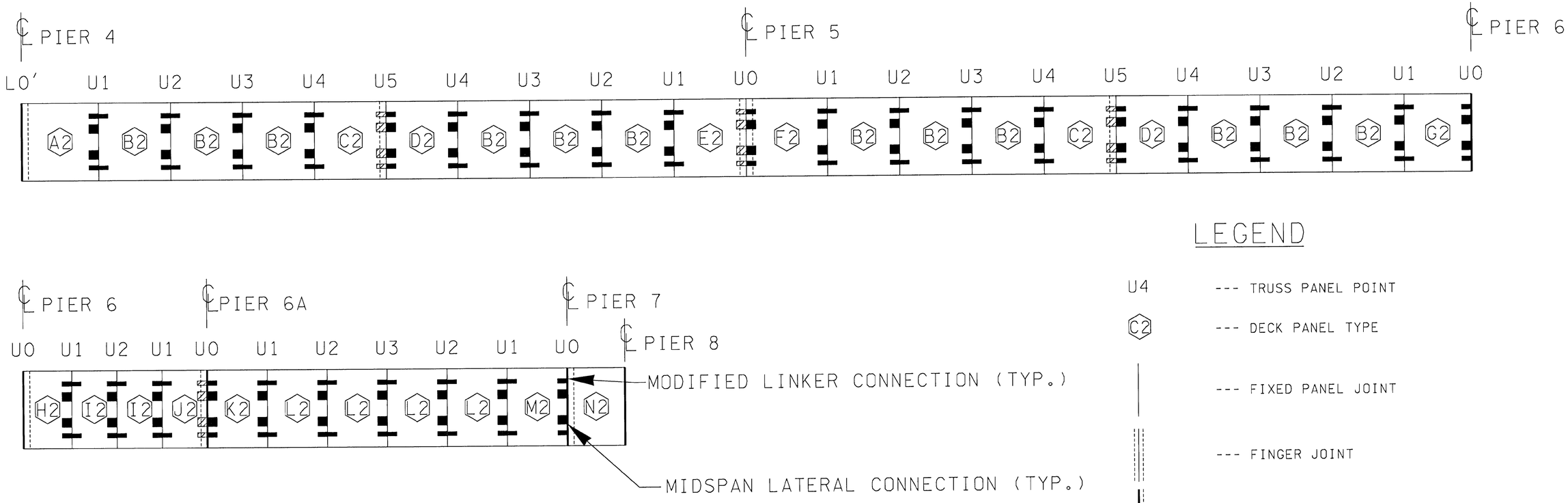

LEGEND

U4	--- TRUSS PANEL POINT
C2	--- DECK PANEL TYPE
	--- FIXED PANEL JOINT
	--- FINGER JOINT
	--- EXPANSION JOINT
	TEMPORARY MODIFIED LINKER/MIDSPAN LATERAL
	PERMANENT MODIFIED LINKER/MIDSPAN LATERAL

FOR "AS CONSTRUCTED PLANS" ONLY

FILE NAME	G:\444304\03 - Construction\C6444 - SR433, Lewis and Clark Bridge Deck Replacement\As-Builts\6444 Detail.dgn
TIME	12:54:17 PM
DATE	10/31/2005
PLOTTED BY	kingju
DESIGNED BY	
ENTERED BY	
CHECKED BY	
PROJ. ENGR.	
REGIONAL ADM.	

REVISION | DATE | BY

REGION NO. 10 | STATE WASH | FED.AID PROJ.NO.

JOB NUMBER

CONTRACT NO. 6444

LOCATION NO.

P.E. STAMP BOX DATE

P.E. STAMP BOX DATE

Washington State Department of Transportation

SR 433
LEWIS AND CLARK BRIDGE DECK REPLACEMENT

OREGON APPROACH
LINKER PLATE ASSEMBLY LOCATIONS

PLOT16

OA35E

SHEET 167E OF 258 SHEETS

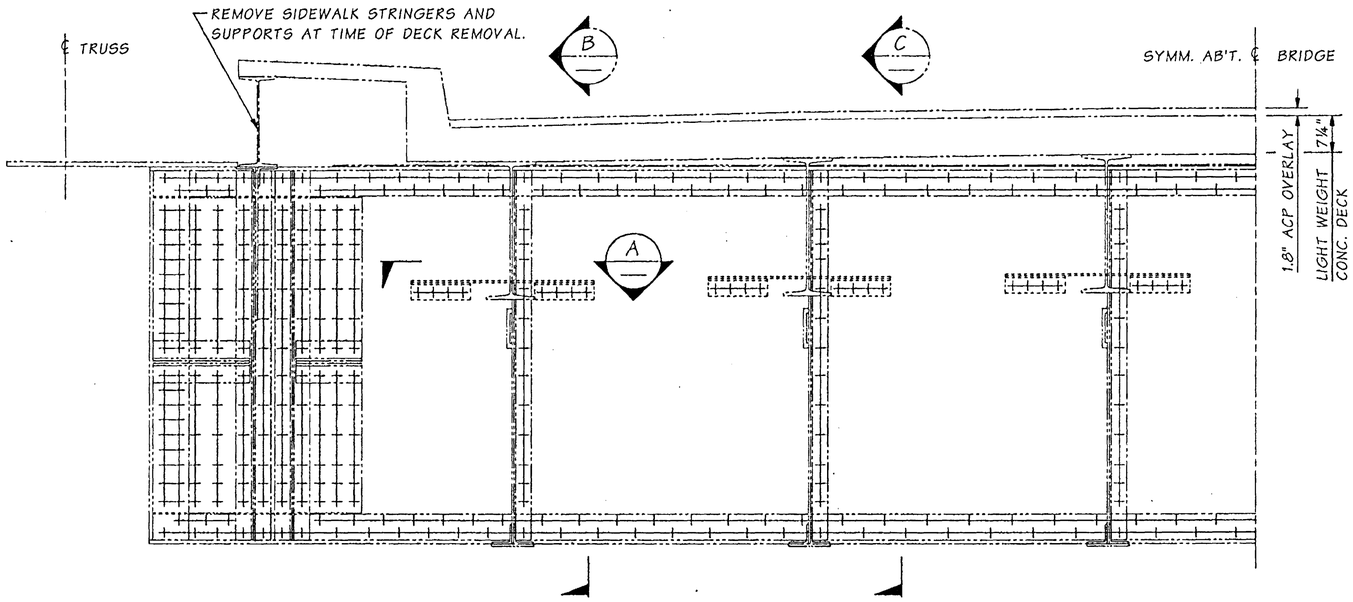

ELEVATION - EXISTING FLOORBEAM & DECK

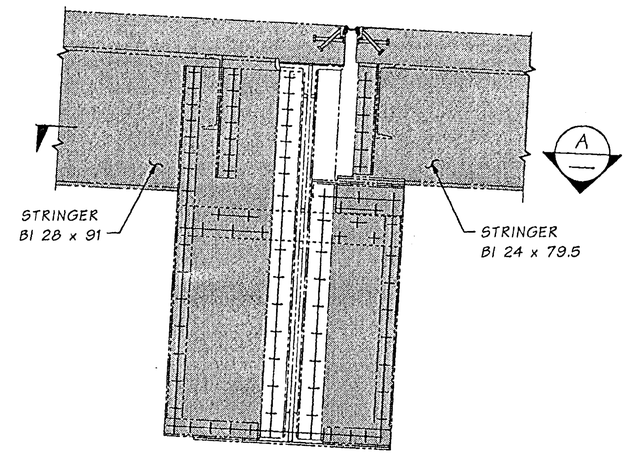

SECTION B

REMOVE SHADED PORTION AT EXTERIOR STRINGERS AT TIME OF DECK REMOVAL.

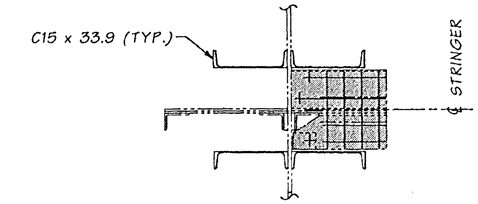

SECTION A

REMOVE SHADED PORTION AT EXTERIOR STRINGERS AT TIME OF DECK REMOVAL AND INSTALL STRINGER SEAT.

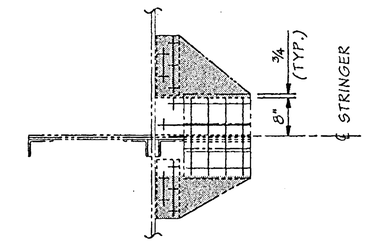

SECTION A

REMOVE SHADED PORTION AT EXTERIOR STRINGERS PRIOR TO DECK REMOVAL AND INSTALL C15 x 33.9

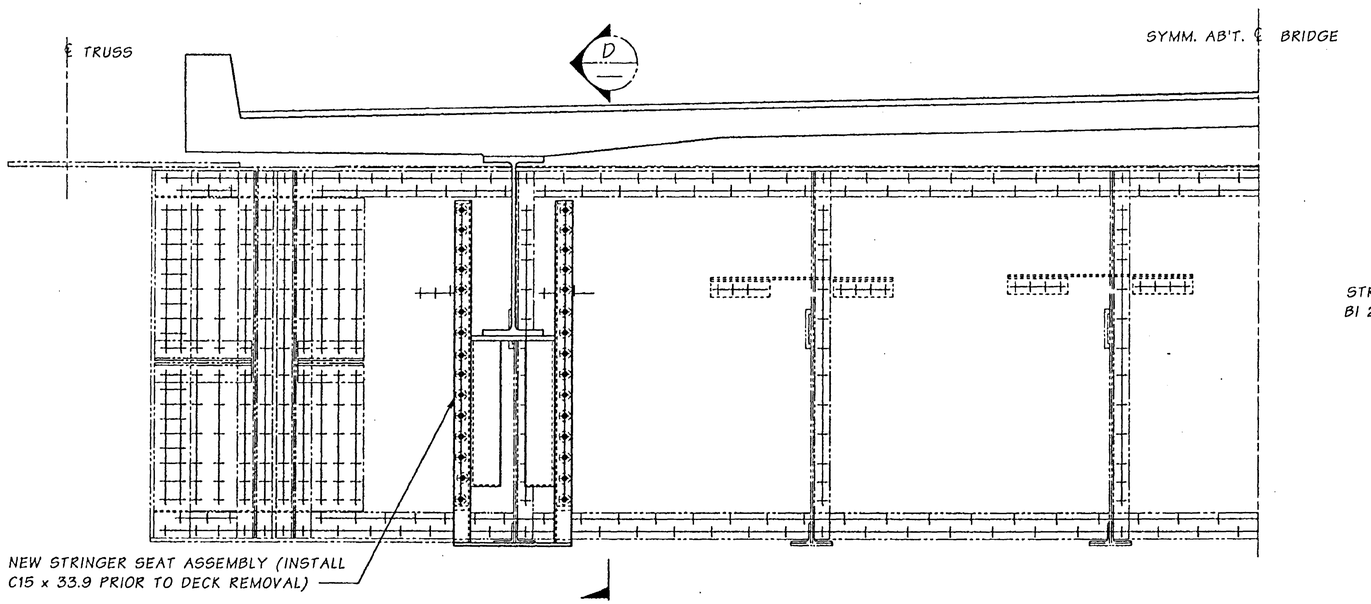

ELEVATION - MODIFIED FLOORBEAM & NEW DECK

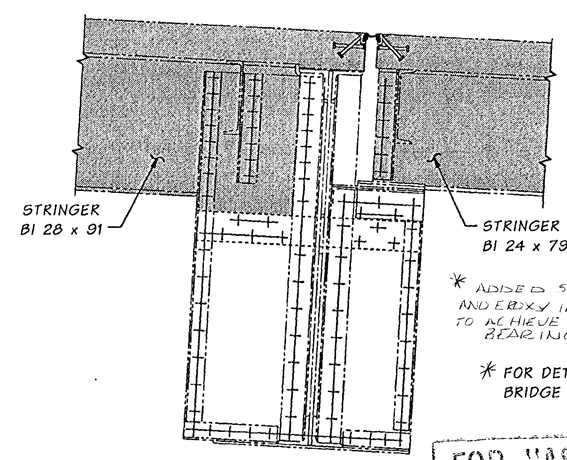

SECTION C

REMOVE SHADED PORTION AT INTERIOR STRINGERS AT TIME OF DECK REMOVAL.

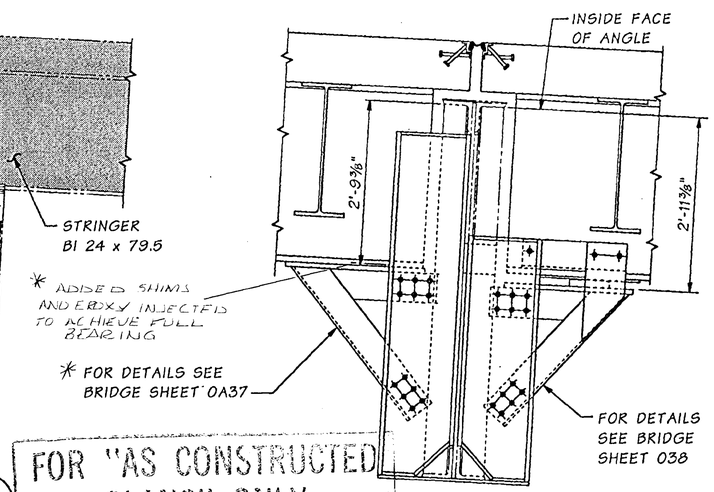

SECTION D

FOR "AS CONSTRUCTED PLANS" ONLY

NOTE: SEE SHEET WA37B FOR PIER 4 CONSTRUCTION SEQUENCE

Bridge Design Engr.	Kapur, J	
Supervisor	Kirker, KN	08/02
Designed By	Talukdar, M	08/02
Checked By	Peralta, R	08/02
Detailed By	House, L	08/02
Bridge Projects Engr.		
Prelim. Plan By		
Architect/Specialist		

M:\Y-Team\Lewis_Clark Rehab\Oregon Appr\window files\FB AT PIER 4.WND

DATE	REVISION	BY	APP'D

REGION NO.	STATE	FED. AID PROJ. NO.	SHEET NO.	TOTAL SHEETS
10	WASH.	ACBH - 0433(007)		

JOB NUMBER 02x310

STRUCTURAL REGISTERED PROFESSIONAL ENGINEER 71344 OREGON SEPT. 10, 2002 JUGESH KAPUR — EXPIRES 06-30-2003

BRIDGE AND STRUCTURES OFFICE

KARL N. KIRKER STATE OF WASHINGTON 18206 REGISTERED PROFESSIONAL ENGINEER — EXPIRES 11/3/03

Washington State Department of Transportation

SR 433
LEWIS AND CLARK BRIDGE
DECK REPLACEMENT

FLOORBEAM AT PIER 4

BRIDGE SHEET NO. 0A36

SHEET 168 OF 258 SHEETS

SR 433 JOB NO. 1 SHEET 36

Wed Sep 18 06:19:39 2002

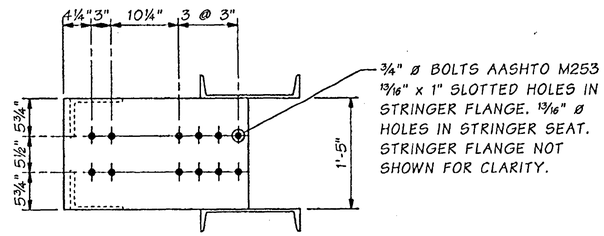

PLAN

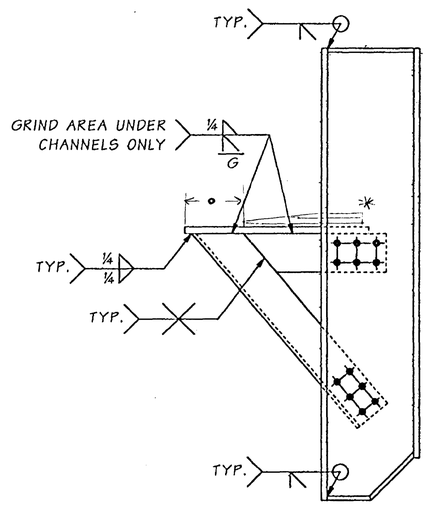

ELEVATION

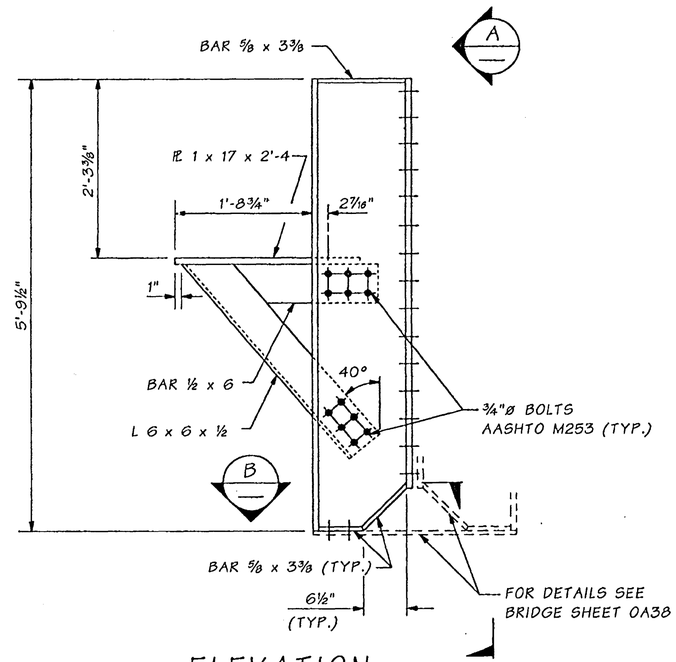

ELEVATION

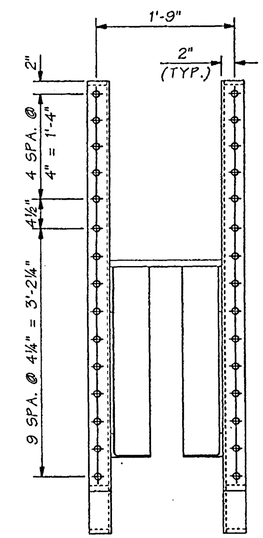

A VIEW

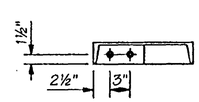

SECTION B

* SHIM STACK & EPOXY INJECTED

WEST SIDE:
¼"-0" SHIM STACK
5" of BEARING

EAST SIDE:
½"-0" SHIM STACK
7" of BEARING

FOR "AS CONSTRUCTED PLANS" ONLY

SR 433 JOB NO. 1 SHEET 37

Bridge Design Engr.	Kapur, J		M:\Y-Team\Lewis_Clark Rehab\Oregon Appr\Window files\P4 FB NORTH SEAT.WND				REGION NO.	STATE	FED. AID PROJ. NO.	SHEET NO.	TOTAL SHEETS
Supervisor	Kirker, KN	08/02					10	WASH.	ACBH - 0433(007)		
Designed By	Talukdar, M	08/02					JOB NUMBER 02x310				
Checked By	Peralta, R	08/02									
Detailed By	House, L	08/02									
Bridge Projects Engr.											
Prelim. Plan By											
Architect/Specialist			DATE	REVISION	BY	APP'D					

STRUCTURAL REGISTERED PROFESSIONAL ENGINEER 7134 OREGON SEPT. 10, 2002 JUGESH KAPUR
EXPIRES 06-30-2003

BRIDGE AND STRUCTURES OFFICE

KARL N. KIRKER STATE OF WASHINGTON 18298 REGISTERED PROFESSIONAL ENGINEER
EXPIRES 11/3/03

Washington State Department of Transportation

SR 433
LEWIS AND CLARK BRIDGE
DECK REPLACEMENT

PIER 4 - FIXED SIDE
STRINGER SEAT DETAILS

BRIDGE SHEET NO. 0A37
SHEET 169 OF 258 SHEETS

Tue Sep 17 11:49:51 2002

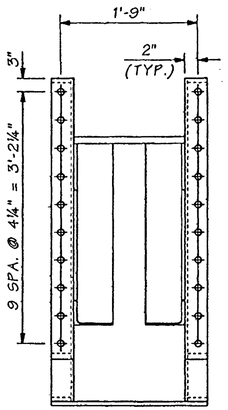

VIEW A

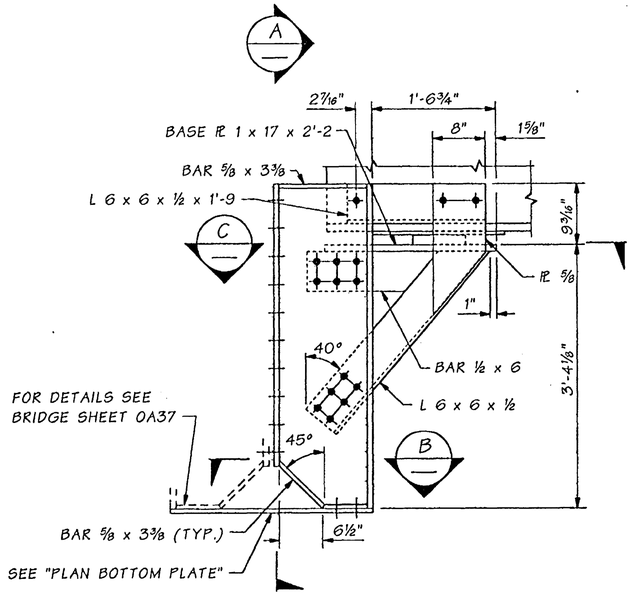

ELEVATION

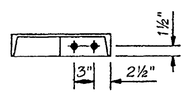

SECTION B

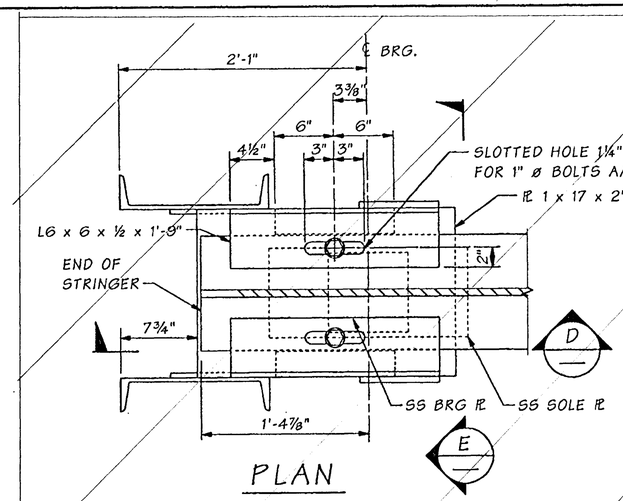

PLAN

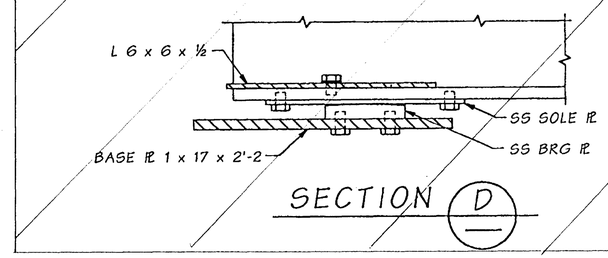

SECTION D

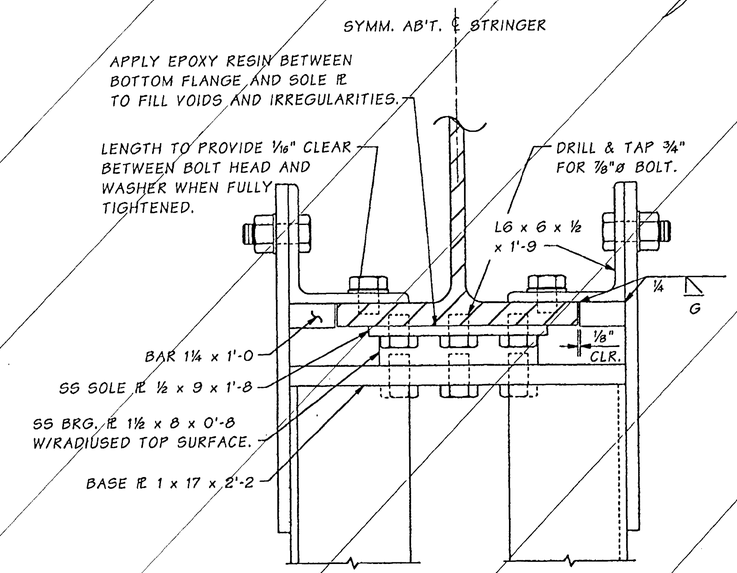

SECTION E

DELETED

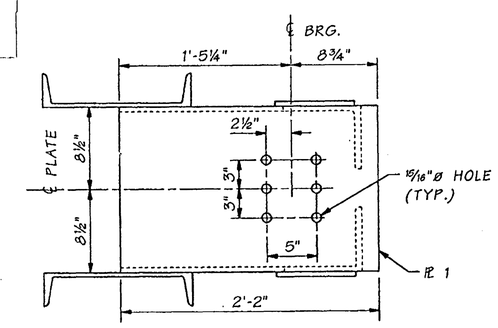

SECTION C

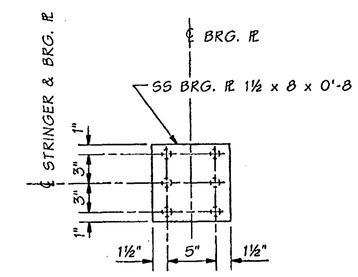

PLAN

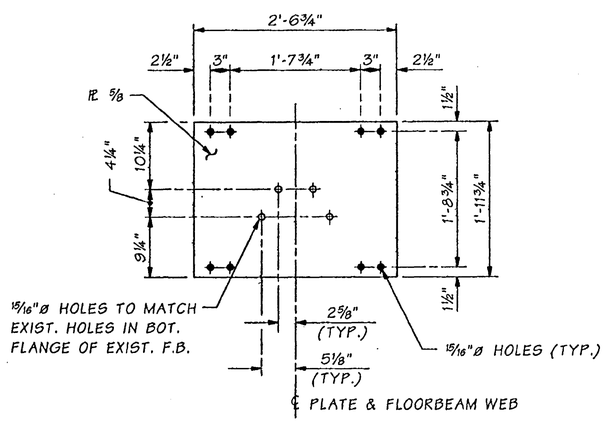

PLAN ~ BOTTOM PLATE

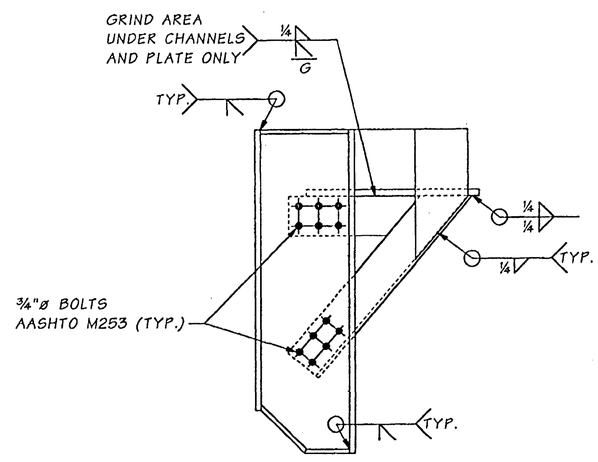

ELEVATION

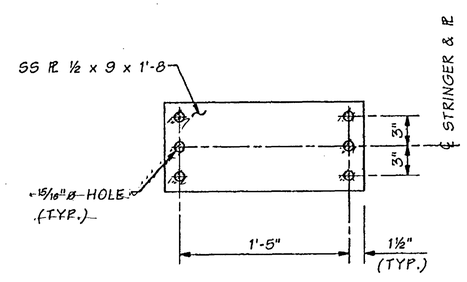

PLAN - SOLE PLATE

2 REQUIRED

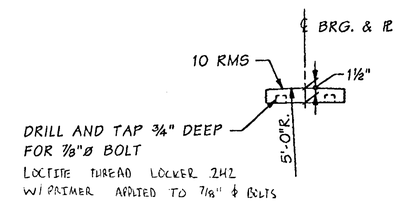

ELEVATION

BEARING PLATE

2 REQUIRED

FOR "AS CONSTRUCTED PLANS" ONLY

Bridge Design Engr.	Kapur, J		M:\Y-Team\Lewis_Clark Rehab\Oregon Appr\Window files\P4 FB SOUTH SEAT.WND
Supervisor	Kirker, KN	08/02	
Designed By	Talukdar, M	08/02	
Checked By	Peralta, R	08/02	
Detailed By	House, L	08/02	
Bridge Projects Engr.			
Prelim. Plan By			
Architect/Specialist			

DATE	REVISION	BY	APP'D

REGION NO.	STATE	FED. AID PROJ. NO.	SHEET NO.	TOTAL SHEETS
10	WASH.	ACBH - 0433(007)		
JOB NUMBER 02x310				

STRUCTURAL REGISTERED PROFESSIONAL ENGINEER 71341 OREGON SEPT. 10, 2003 JUGESH KAPUR — EXPIRES 06-30-2003

BRIDGE AND STRUCTURES OFFICE

KARL N. KIRKER STATE OF WASHINGTON 16206 REGISTERED PROFESSIONAL ENGINEER — EXPIRES 11/3/03

Washington State Department of Transportation

SR 433
LEWIS AND CLARK BRIDGE
DECK REPLACEMENT

PIER 4 - EXPANSION SIDE STRINGER SEAT DETAILS

BRIDGE SHEET NO. 0A38

SHEET 170 OF 258 SHEETS

SR 433 JOB NO. 1 SHEET 38

Tue Sep 17 11:49:53 2002

CHANGES

1. SLOTTED HOLE IN FLANGE IS ELIMINATED.
2. COPE L6 x 6 x ½ AS SHOWN
3. FIELD DRILL HOLES CONNECTING PL TO ANGLE IN FIELD AFTER FINAL ELEVATION ADJUSTMENT.
4. ALL OTHER DETAILS REMAIN THE SAME.

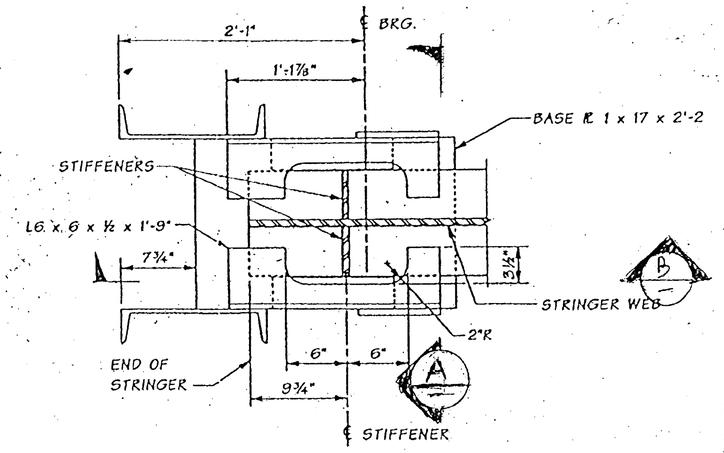

PLAN - GIRDER SEAT
EXP SIDE PIER 4

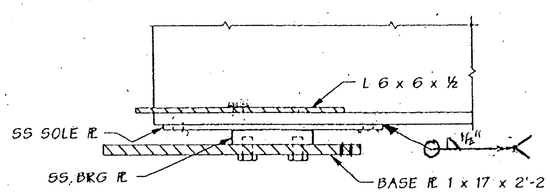

SECTION B

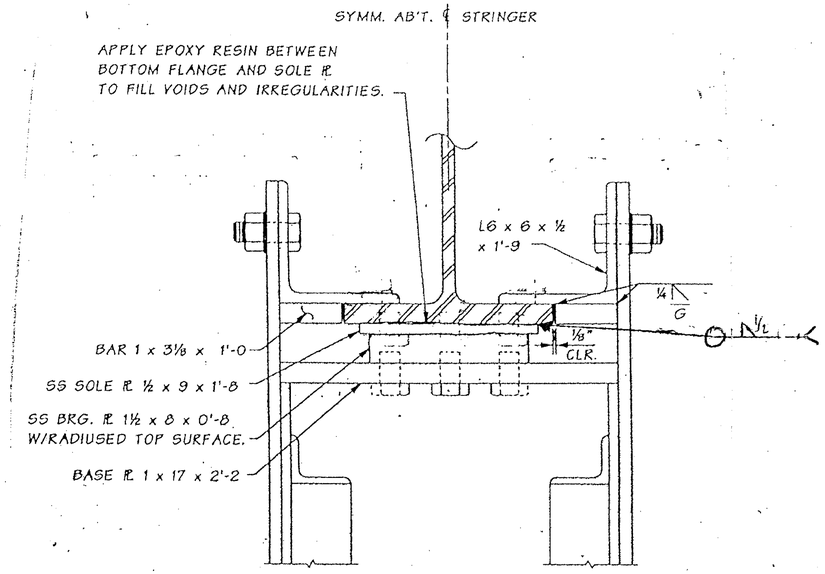

SECTION A

FOR "AS CONSTRUCTED PLANS" ONLY

FILE NAME	C:\AAWork\kelso\Svensen's Curve\L3425WASTESITE.dgn				REGION NO. 10	STATE WASH	FED.AID PROJ.NO.		
TIME	02:37:18 PM								
DATE	08/17/2005				JOB NUMBER				
PLOTTED BY	spohnk								
DESIGNED BY									
ENTERED BY					CONTRACT NO. 6444		LOCATION NO.		
CHECKED BY									
PROJ. ENGR.									
REGIONAL ADM.		REVISION	DATE	BY					

P.E. STAMP BOX DATE

P.E. STAMP BOX DATE

Washington State Department of Transportation

SR 433
LEWIS AND CLARK BRIDE
DECK REPLACEMENT

PIER 4 - BEARING DETAILS
EXPANSION SIDE

PLOT11

0A38A

SHEET 170A OF 258 SHEETS

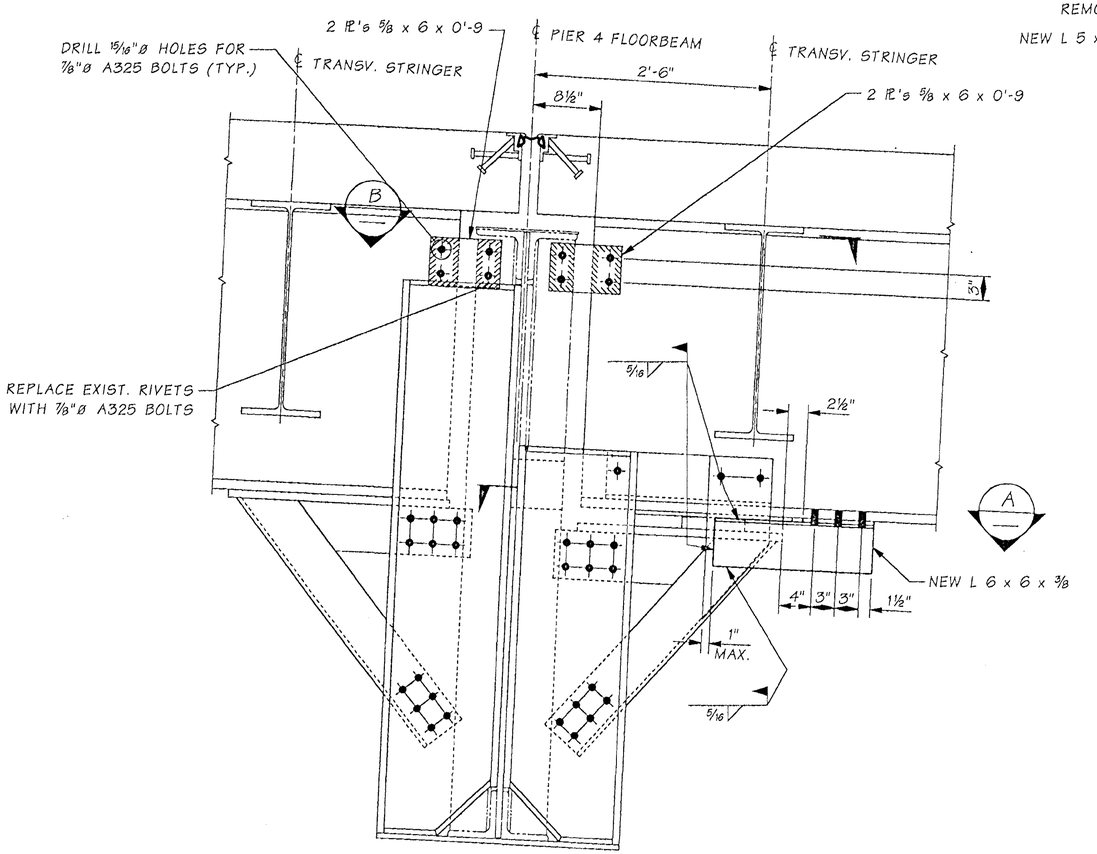

PIER 4 STRINGER SEAT

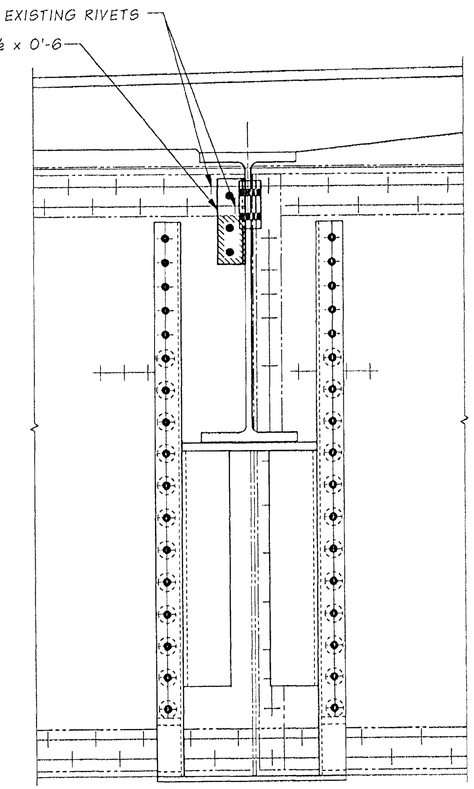

SECTION C

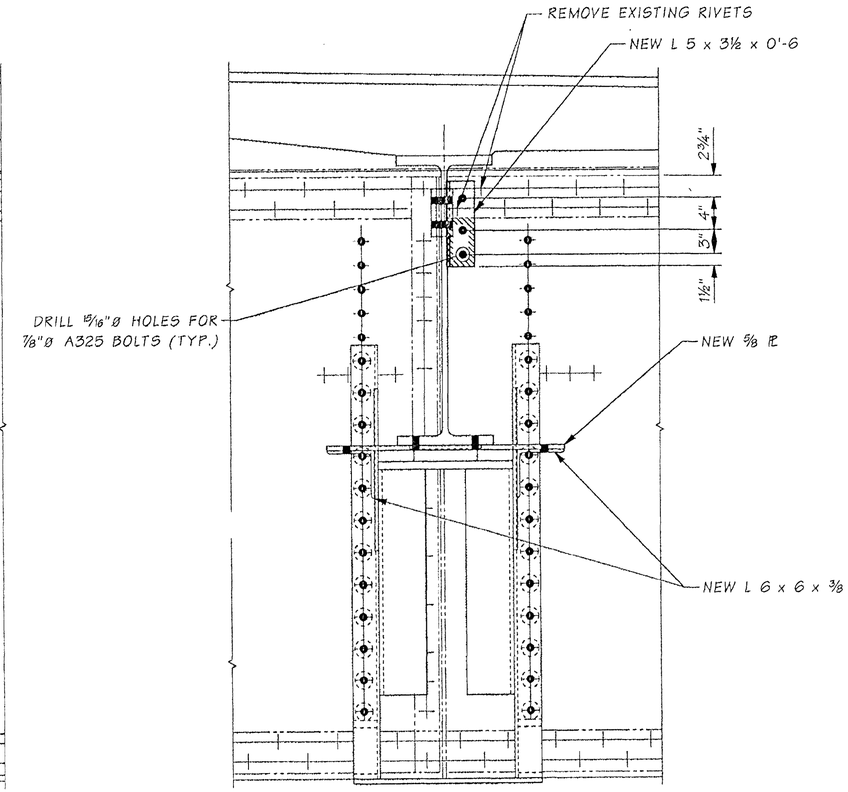

SECTION D

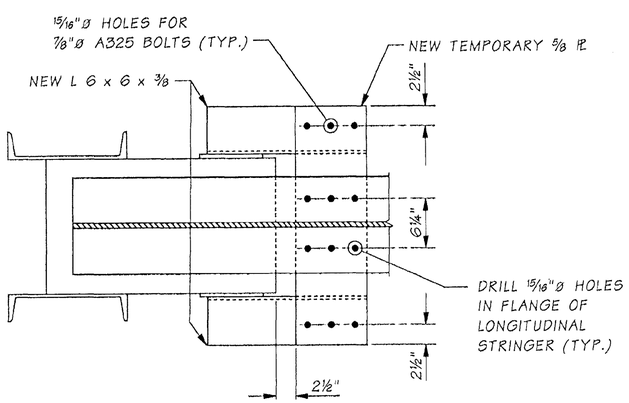

SECTION A

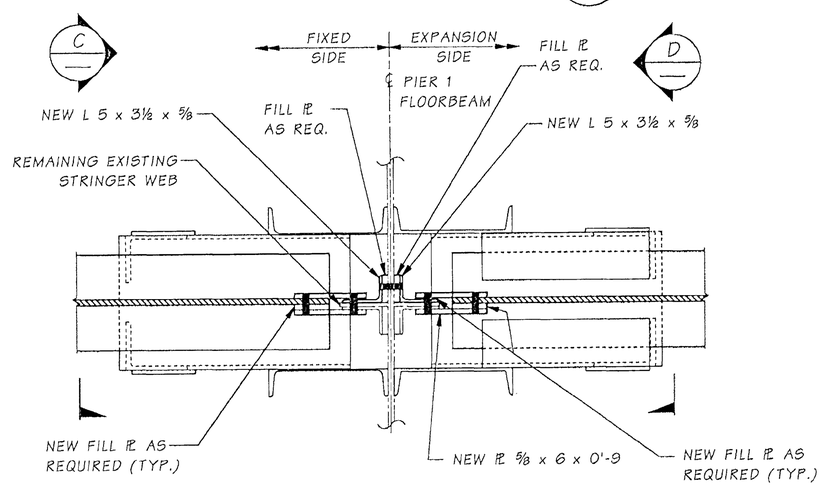

SECTION B

NOTES

1. ALL CONNECTIONS SHALL BE MADE ON EXPANSION SIDE STRINGER PANEL AS SHOWN BEFORE PANEL N IS PLACED.
2. PLACE PANEL A AND MAKE CONNECTIONS AS SHOWN BEFORE OPENING TO TRAFFIC
3. DISCONNECT BOLTS BETWEEN TEMPORARY PL, LONGITUDINAL STRINGER AND NEW CONNECTION ANGLE RIGHT AFTER PLACEMENT OF PANEL N.

FOR "AS CONSTRUCTED PLANS" ONLY

SR ___ JOB NO. 0001 SHEET 0

Bridge Design Engr.	M:\Y-Team\Lewis_Clark Rehab\Modifications\window files\P4 EXP SIDE.WND							
Supervisor					REGION NO.	STATE	FED. AID PROJ. NO.	SHEET NO. / TOTAL SHEETS
Designed By Talukdar, M					10	WASH.		
Checked By								
Detailed By Evans, P.D.					JOB NUMBER			
Bridge Projects Engr.								
Prelim. Plan By								
Architect/Specialist	DATE	REVISION	BY	APP'D				

Mon Sep 22 10:43:46 2003

BRIDGE AND STRUCTURES OFFICE

Washington State Department of Transportation

PIER 4 EXPANSION SIDE SEAT MODIFICATION

BRIDGE SHEET NO. 0A328

SHEET 170B OF 258 SHEETS

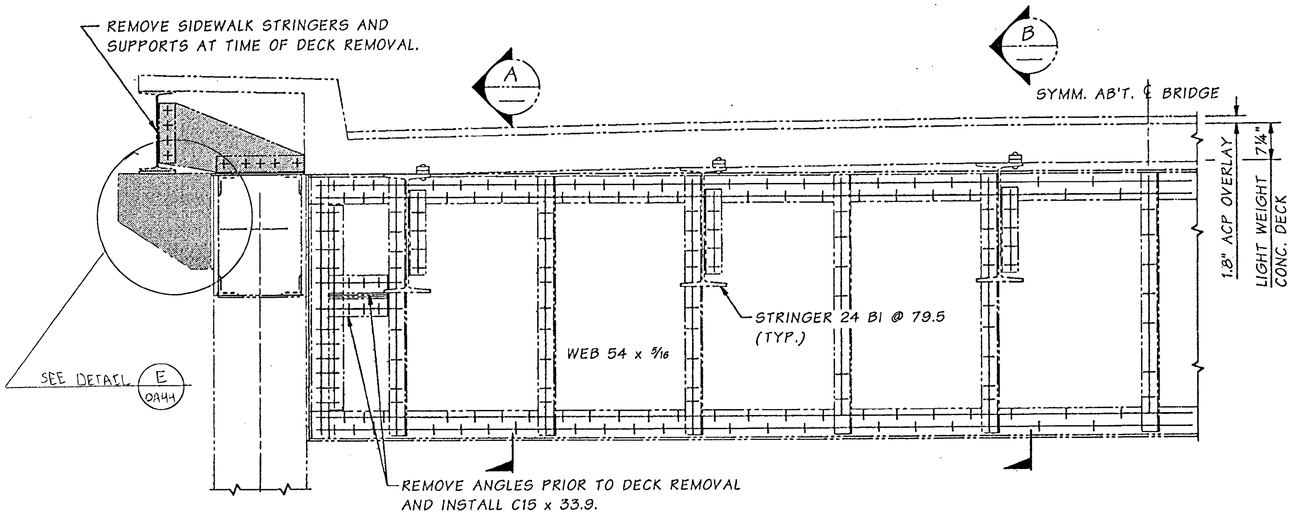

ELEVATION ~ EXISTING DECK & FLOORBEAM 4

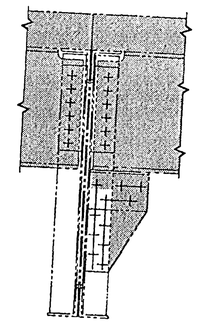

SECTION A

REMOVE SHADED PORTION AT EXTERIOR STRINGER AT TIME OF DECK REMOVAL.

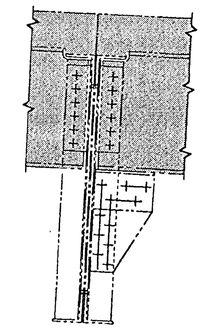

SECTION B

REMOVE SHADED PORTION AT INTERIOR STRINGER AT TIME OF DECK REMOVAL.

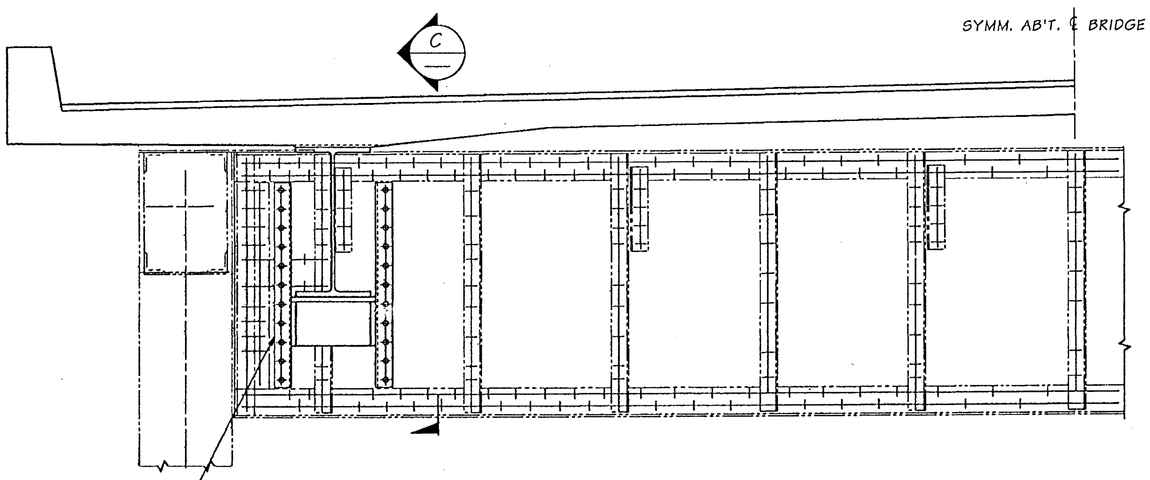

ELEVATION ~ MODIFIED FLOORBEAM & NEW DECK

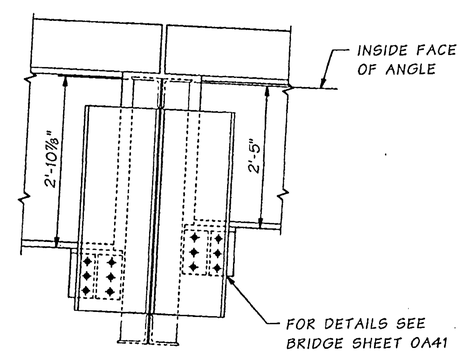

SECTION C

FOR "AS CONSTRUCTED PLANS" ONLY

Bridge Design Engr.	Kapur, J		M:\Y-Team\Lewis_Clark Rehab\Oregon Appr\window files\FB 4 335 SPAN.WND
Supervisor	Kirker, KN	08/02	
Designed By	Talukdar, M	08/02	
Checked By	Peralta, R	08/02	
Detailed By	House, L	08/02	
Bridge Projects Engr.			
Prelim. Plan By			
Architect/Specialist			

DATE	REVISION	BY	APP'D

REGION NO.	STATE	FED. AID PROJ. NO.	SHEET NO.	TOTAL SHEETS
10	WASH.	ACBH - 0433(007)		
JOB NUMBER 02x310				

STRUCTURAL REGISTERED PROFESSIONAL ENGINEER 71314 OREGON SEPT. 10, 2002 JUGESH KAPUR
EXPIRES 06-30-2003

BRIDGE AND STRUCTURES OFFICE

KARL N. KIRKER TYPE OF REGISTRATION PROFESSIONAL ENGINEER REGISTRANT 12206 STATE OF WASHINGTON
EXPIRES 11/3/03

Washington State Department of Transportation

SR 433
LEWIS AND CLARK BRIDGE
DECK REPLACEMENT

FLOORBEAM 4 - 335' SPAN

BRIDGE SHEET NO. 0A39

SHEET 171 OF 258 SHEETS

SR 433 JOB NO. 1 SHEET 39

Wed Sep 18 08:04:25 2002

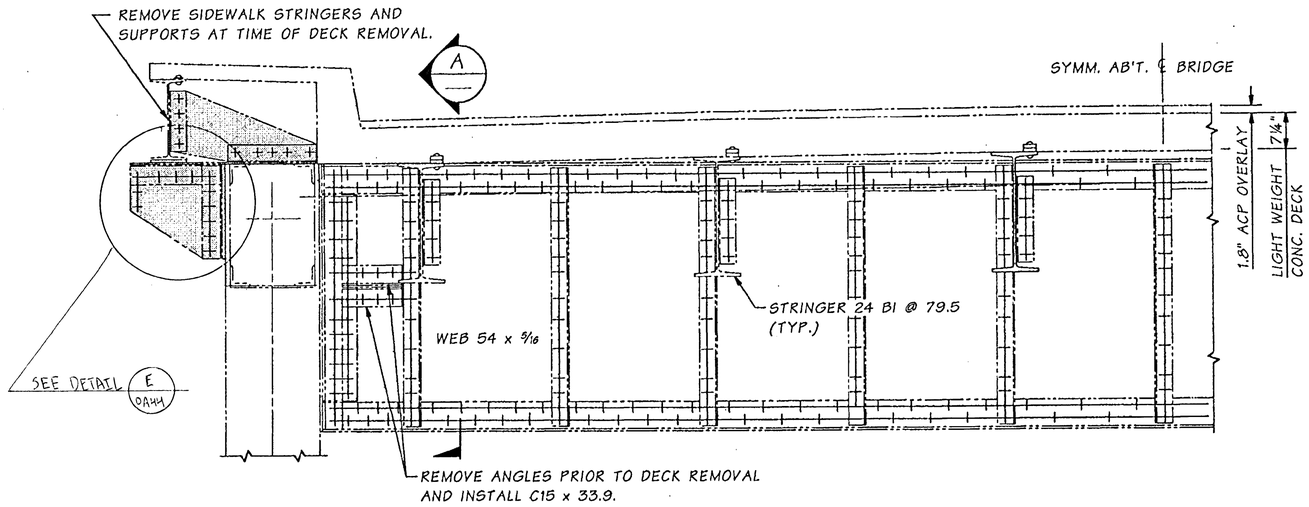

ELEVATION ~ EXISTING DECK & FLOORBEAM 1, 2, & 7

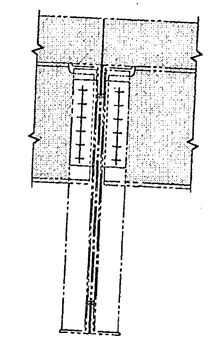

SECTION A

REMOVE SHADED PORTION AT TIME OF DECK REMOVAL

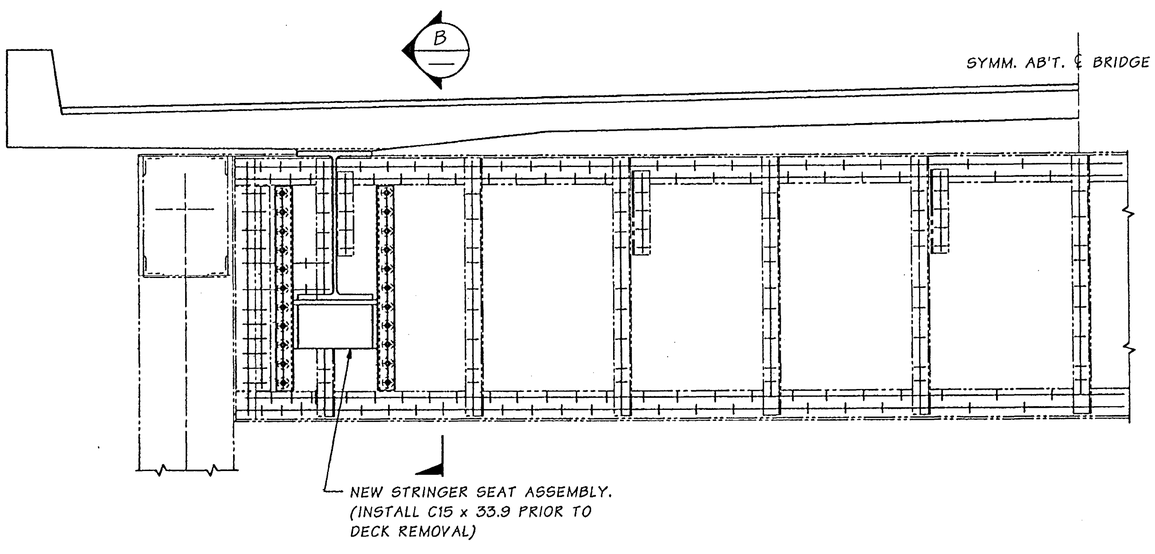

ELEVATION ~ MODIFIED FLOORBEAM & NEW DECK

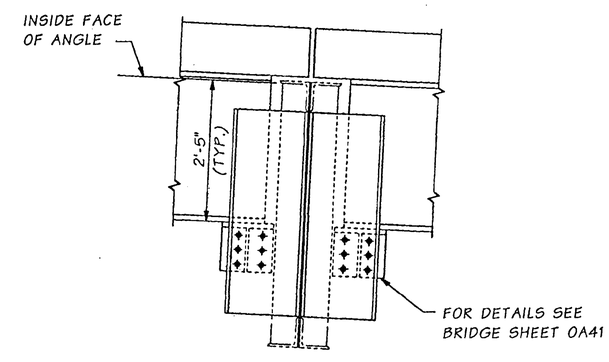

SECTION B

FOR "AS CONSTRUCTED PLANS" ONLY

SR 433 JOB NO. 1 SHEET 40

Bridge Design Engr.	Kapur, J	
Supervisor	Kirker, KN	08/02
Designed By	Talukdar, M	08/02
Checked By	Peralta, R	08/02
Detailed By	House, L	08/02
Bridge Projects Engr.		
Prelim. Plan By		
Architect/Specialist		

M:\Y-Team\Lewis_Clark Rehab\Oregon Appr\Window files\FB 1-2-7-335 SPAN.WND

DATE	REVISION	BY	APP'D

REGION NO.	STATE	FED. AID PROJ. NO.	SHEET NO.	TOTAL SHEETS
10	WASH.	ACBH - 0433(007)		

JOB NUMBER 02x310

6444

STRUCTURAL REGISTERED PROFESSIONAL ENGINEER 71304 OREGON SEPT. 10, 2002 JUGESH KAPUR EXPIRES 06-30-2003

BRIDGE AND STRUCTURES OFFICE

KARL N. KIRKER STATE OF WASHINGTON 18296 REGISTERED PROFESSIONAL ENGINEER 9/16/02 EXPIRES 11/3/03

Washington State Department of Transportation

SR 433
LEWIS AND CLARK BRIDGE
DECK REPLACEMENT

FLOORBEAM 1, 2, 7 - 335' SPAN

BRIDGE SHEET NO. 0A40

SHEET 172 OF 258 SHEETS

Tue Sep 17 11:48:57 2002

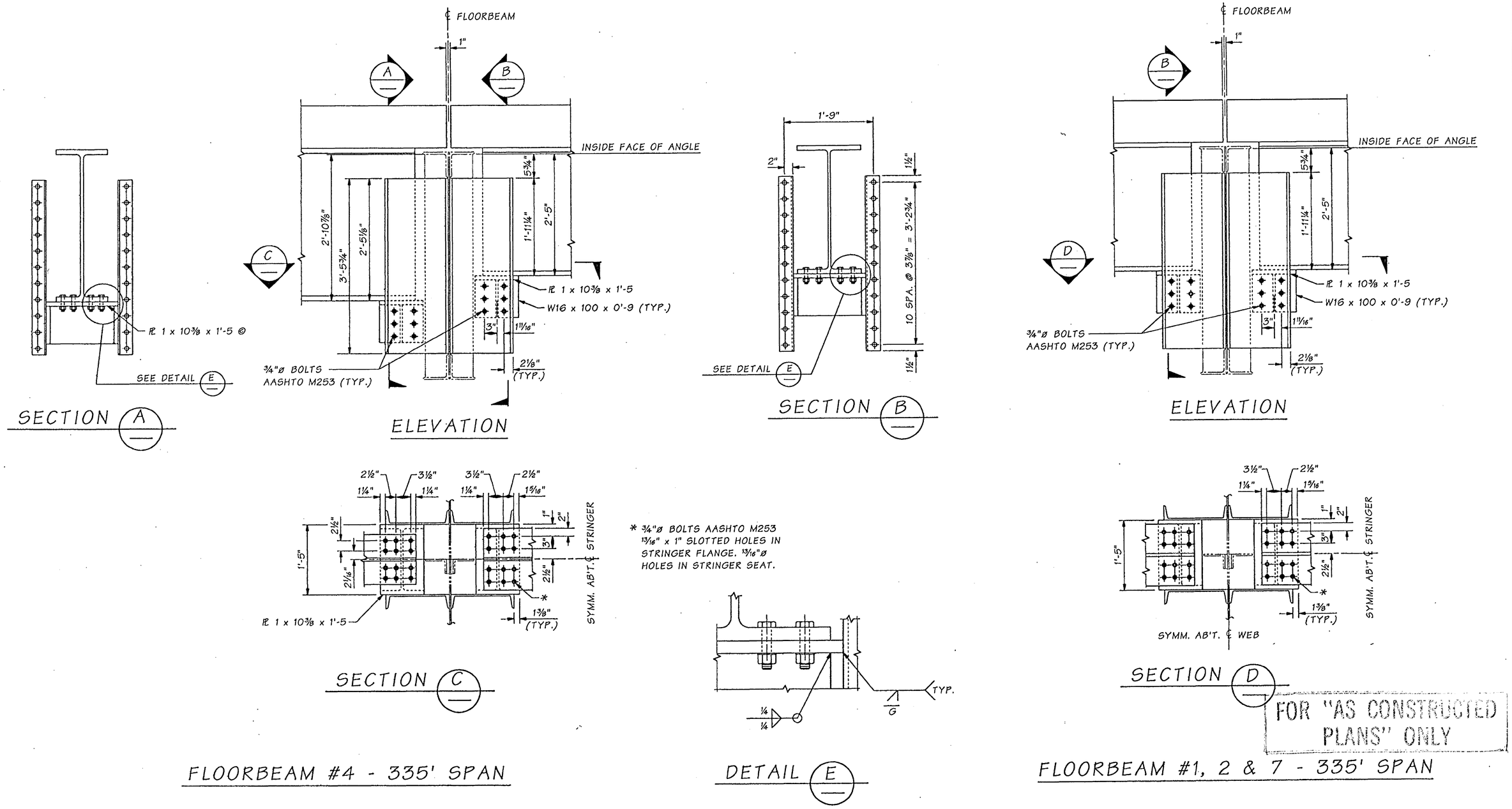

FOR "AS CONSTRUCTED PLANS" ONLY

FLOORBEAM #4 - 335' SPAN

FLOORBEAM #1, 2 & 7 - 335' SPAN

SR 433 JOB NO. 1 SHEET 41

Bridge Design Engr.	Kapur, J		M:\Y-Team\Lewis_Clark Rehab\Oregon Appr\Window files\FB 1 2 4 7 BRG SEAT.WND							
Supervisor	Kirker, KN	08/02					REGION NO.	STATE	FED. AID PROJ. NO.	SHEET NO.	TOTAL SHEETS
Designed By	Talukdar, M	08/02					10	WASH.			
Checked By	Peralta, R	08/02					JOB NUMBER 02x310		ACBH - 0433(007)		
Detailed By	House, L	08/02									
Bridge Projects Engr.											
Prelim. Plan By											
Architect/Specialist			DATE	REVISION	BY	APP'D					

STRUCTURAL REGISTERED PROFESSIONAL ENGINEER 71344 OREGON SEPT. 10, 2002 JUGESH KAPUR — EXPIRES 06-30-2003

BRIDGE AND STRUCTURES OFFICE

KARL N. KIRKER STATE OF WASHINGTON 19606 REGISTERED PROFESSIONAL ENGINEER — EXPIRES 11/3/03

Washington State Department of Transportation

SR 433
LEWIS AND CLARK BRIDGE
DECK REPLACEMENT

STRINGER SEAT DETAILS AT FLOORBEAMS 1, 2, 4, & 7 - 335' SPAN

BRIDGE SHEET NO. 0A41

SHEET 173 OF 258 SHEETS

Tue Sep 17 11:48:53 2002

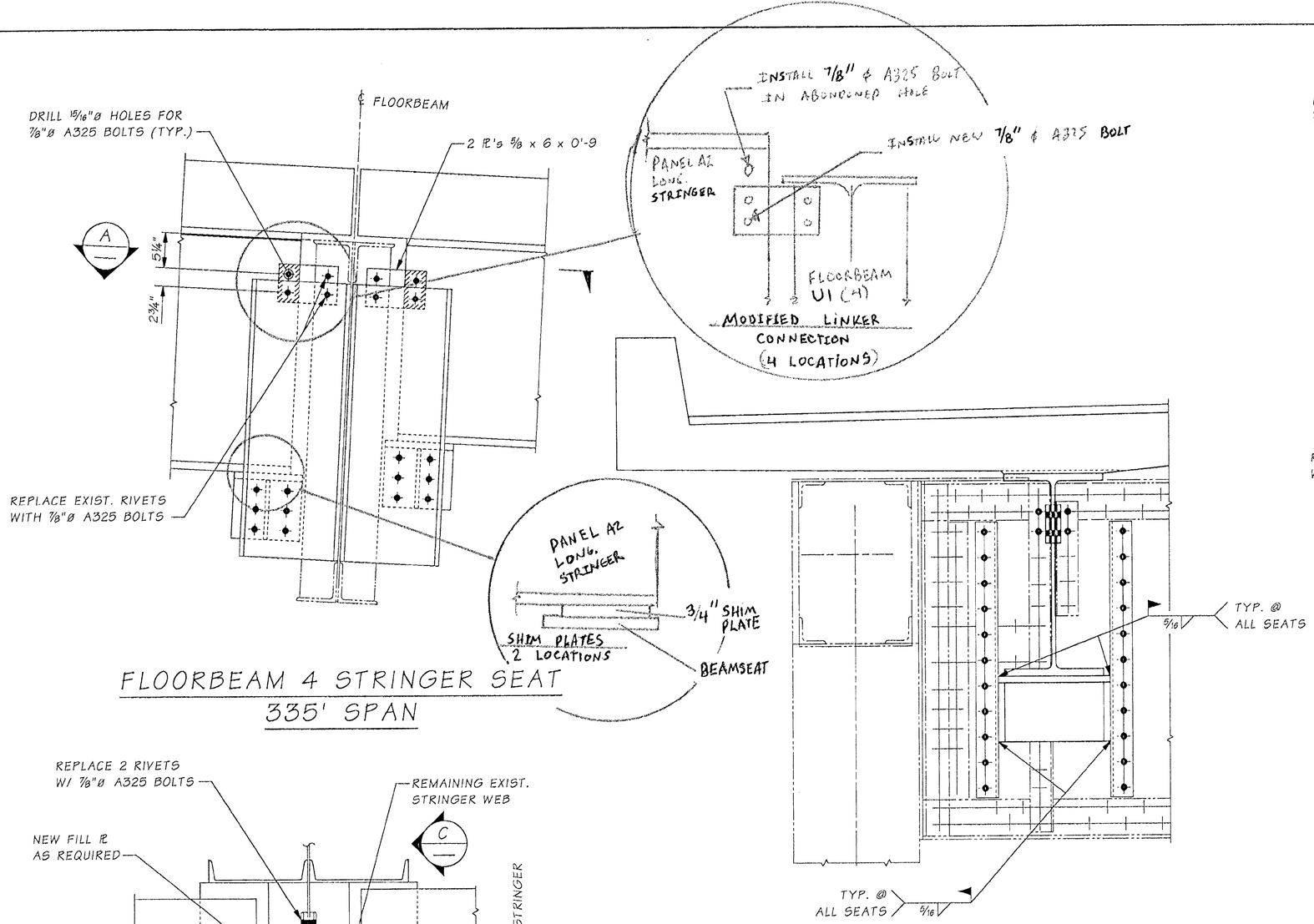

FLOORBEAM 4 STRINGER SEAT

335' SPAN

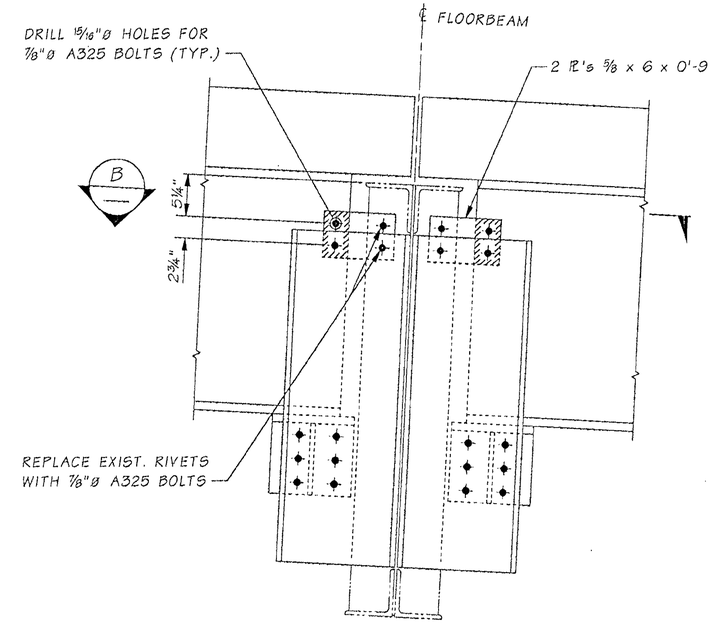

FLOORBEAM 1, 2 & 7 STRINGER SEAT

335' SPAN

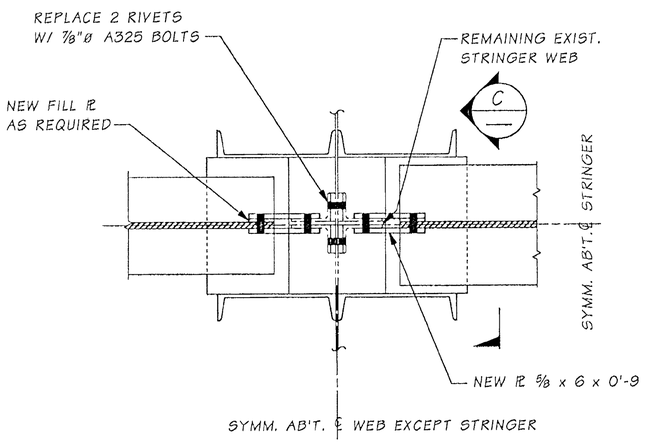

SECTION A

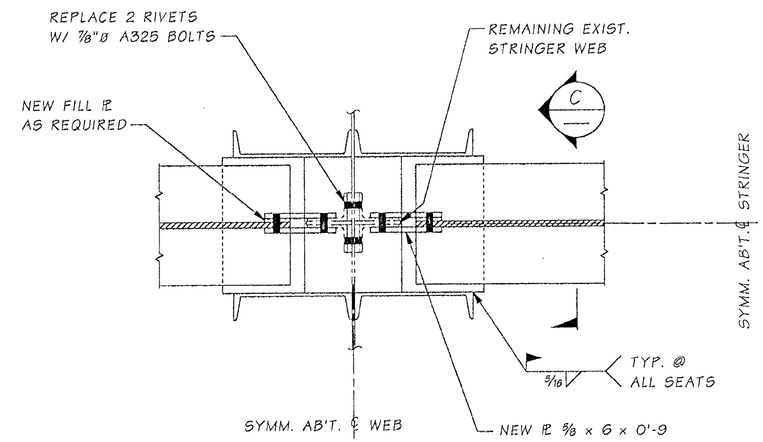

SECTION B

SECTION C

FOR "AS CONSTRUCTED PLANS" ONLY

Bridge Design Engr.	M:\Y-Team\Lewis_Clark Rehab\Modifications\window files\FB1-2-7 MOD.WND				REGION NO.	STATE	FED. AID PROJ. NO.	SHEET NO. / TOTAL SHEETS
Supervisor					10	WASH.		
Designed By								
Checked By					JOB NUMBER			
Detailed By								
Bridge Projects Engr.								
Prelim. Plan By								
Architect/Specialist	DATE	REVISION	BY	APP'D				

BRIDGE AND STRUCTURES OFFICE

Washington State Department of Transportation

FLOORBEAM 1,2,4 & 7 MODIFICATIONS

BRIDGE SHEET NO. 0A41B

SHEET 173A OF 258 SHEETS

SR ___ JOB NO. 0001 SHEET 0

Mon Sep 22 10:45:47 2003

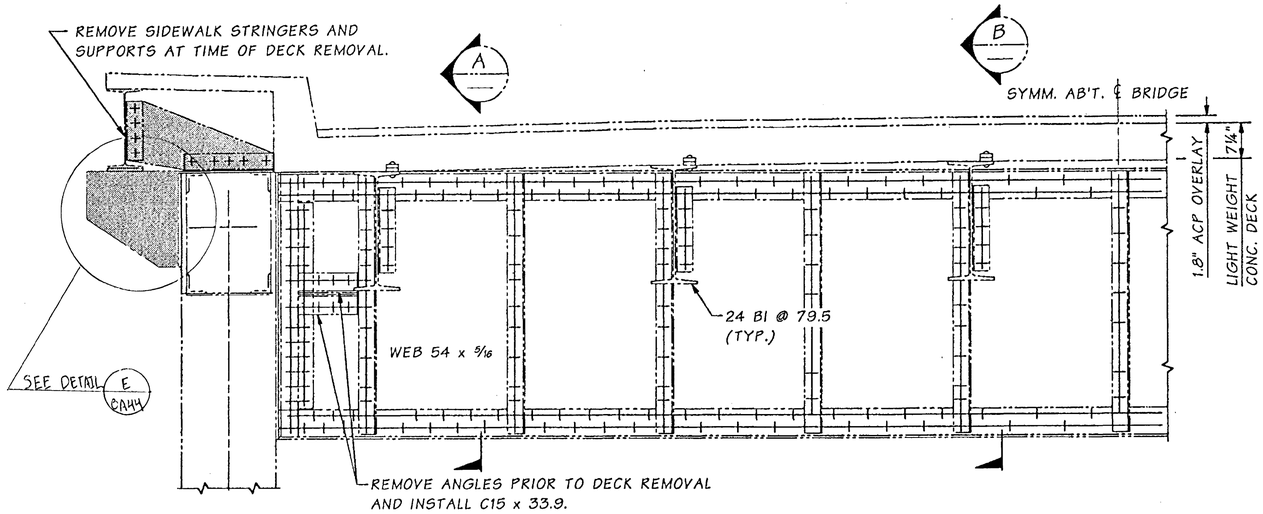

ELEVATION ~ EXISTING DECK & FLOORBEAM 3

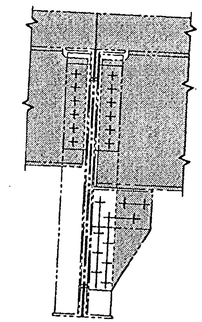

SECTION A

REOMVE SHADED PORTION AT EXTERIOR STRINGER AT TIME OF DECK REMOVAL.

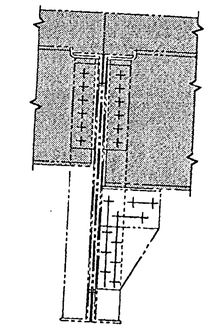

SECTION B

REOMVE SHADED PORTION AT INTERIOR STRINGER AT TIME OF DECK REMOVAL.

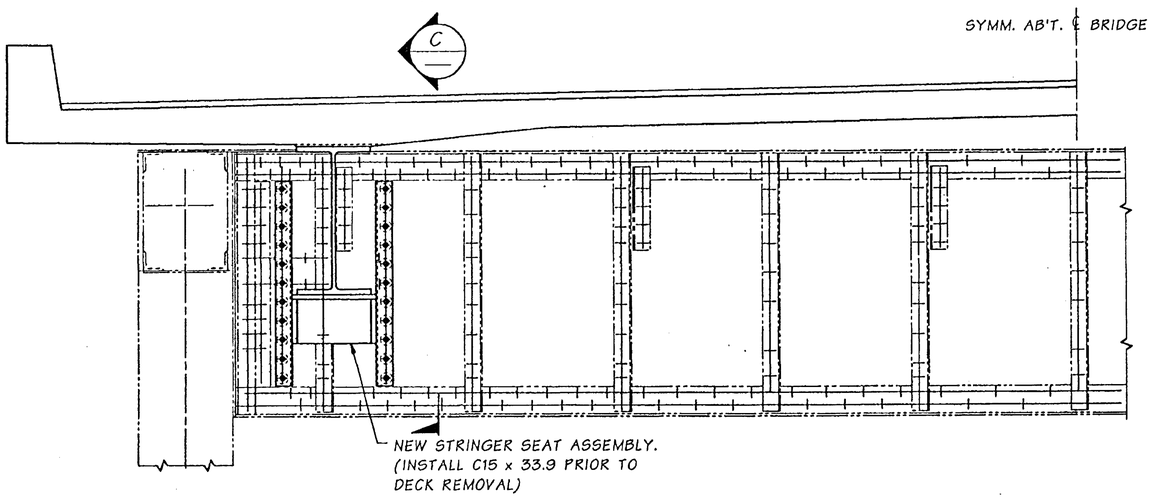

ELEVATION ~ MODIFIED FLOORBEAM & NEW DECK

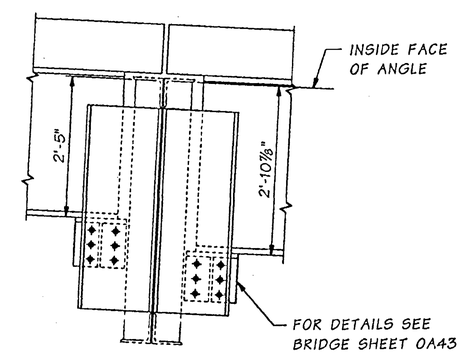

SECTION C

FOR "AS CONSTRUCTED PLANS" ONLY

SR 433 JOB NO. 1 SHEET 42

Bridge Design Engr.	Kapur, J		M:\Y-Team\Lewis_Clark Rehab\Oregon Appr\Window files\FB 3 335 SPAN.WND				REGION NO.	STATE	FED. AID PROJ. NO.	SHEET NO.	TOTAL SHEETS
Supervisor	Kirker, KN	08/02					10	WASH.	ACBH - 0433(007)		
Designed By	Talukdar, M	08/02									
Checked By	Peralta, R	08/02					JOB NUMBER 02x310				
Detailed By	House, L	08/02									
Bridge Projects Engr.							6444				
Prelim. Plan By											
Architect/Specialist			DATE	REVISION	BY	APP'D					

STRUCTURAL REGISTERED PROFESSIONAL ENGINEER 71344 OREGON SEPT. 10, 2002 JUGESH KAPUR EXPIRES 06-30-2003

BRIDGE AND STRUCTURES OFFICE

KARL N. KIRKER STATE OF WASHINGTON 10208 REGISTERED PROFESSIONAL ENGINEER 9/18/02 EXPIRES 11/3/03

Washington State Department of Transportation

SR 433
LEWIS AND CLARK BRIDGE
DECK REPLACEMENT

FLOORBEAM 3 - 335' SPAN

BRIDGE SHEET NO. 0A42

SHEET 174 OF 258 SHEETS

Tue Sep 17 11:48:59 2002

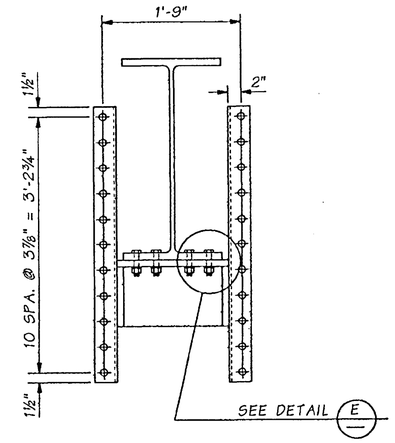

A SECTION

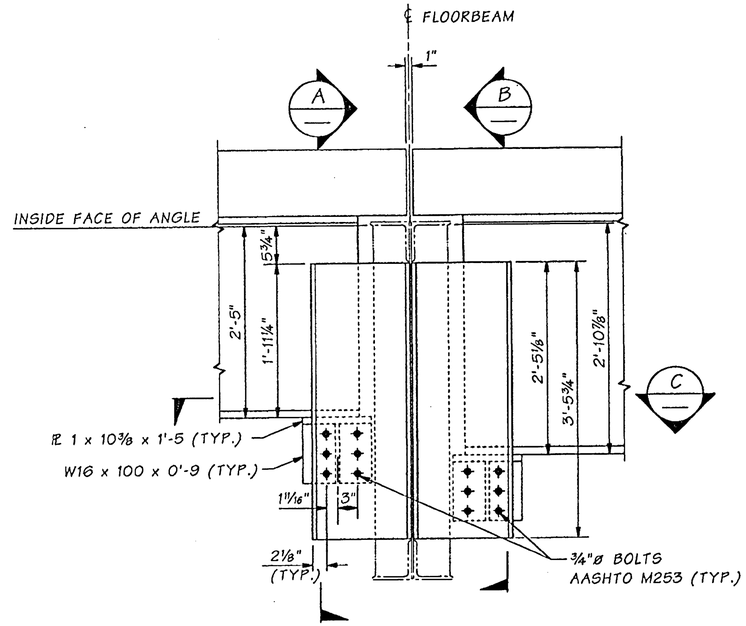

ELEVATION

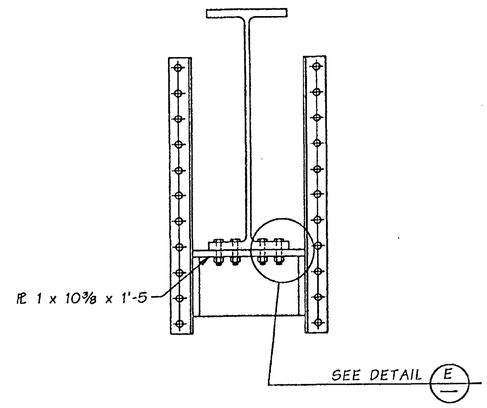

B SECTION

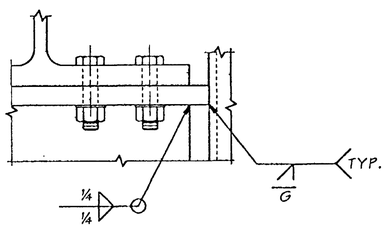

DETAIL E

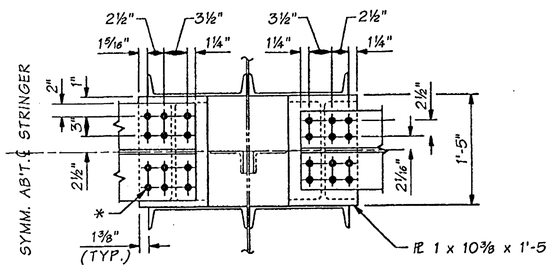

* ¾"ø BOLTS AASHTO M253 13/16" x 1" SLOTTED HOLES IN STRINGER FLANGE. 13/16"ø HOLES IN STRINGER SEAT.

C SECTION

FLOORBEAM #3 - 335' SPAN

FOR "AS CONSTRUCTED PLANS" ONLY

Bridge Design Engr.	Kapur, J		M:\Y-Team\Lewis_Clark Rehab\Oregon Appr\window files\FB 3 BS 335 SPAN.WND							
Supervisor	Kirker, KN	08/02				REGION NO.	STATE	FED. AID PROJ. NO.	SHEET NO.	TOTAL SHEETS
Designed By	Talukdar, M	08/02				10	WASH.	ACBH - 0433(007)		
Checked By	Peralta, R	08/02				JOB NUMBER 02x310				
Detailed By	House, L	08/02								
Bridge Projects Engr.										
Prelim. Plan By										
Architect/Specialist			DATE	REVISION	BY	APP'D	6444			

STRUCTURAL REGISTERED PROFESSIONAL ENGINEER 71344 OREGON SEPT. 10, 2001 JUGESH KAPUR — EXPIRES 06-30-2003

BRIDGE AND STRUCTURES OFFICE

KARL N. KIRKER STATE OF WASHINGTON 16296 REGISTERED PROFESSIONAL ENGINEER — EXPIRES 11/3/03

Washington State Department of Transportation

SR 433
LEWIS AND CLARK BRIDGE
DECK REPLACEMENT

STRINGER SEAT DETAILS AT FLOORBEAM 3 - 335' SPAN

BRIDGE SHEET NO. 0A43

SHEET 175 OF 258 SHEETS

SR 433 JOB NO. 1 SHEET 43

Wed Sep 18 08:06:12 2002

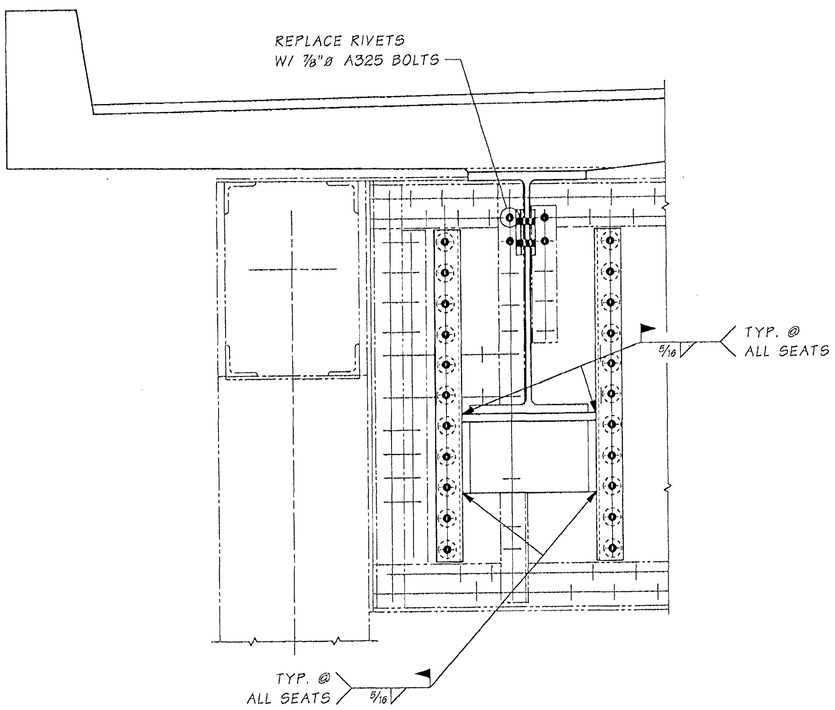

SECTION B

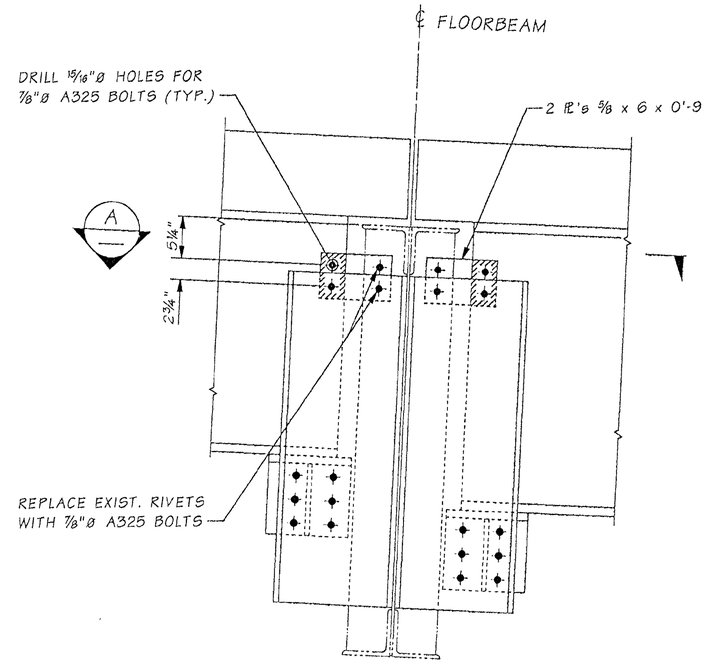

FLOORBEAM 3 STRINGER SEAT
335' SPAN

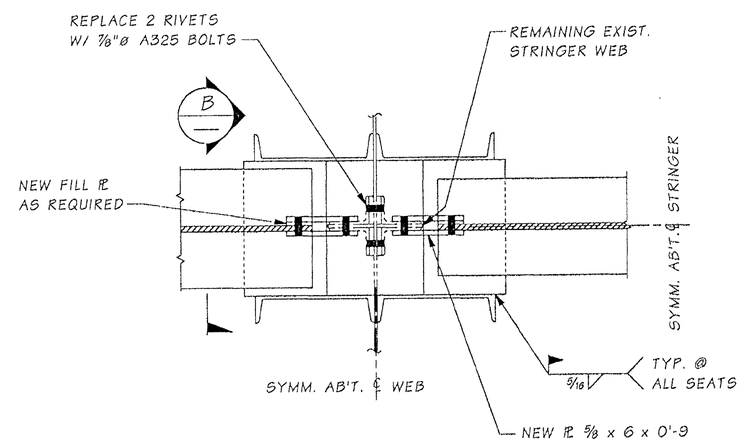

SECTION A

FOR "AS CONSTRUCTED PLANS" ONLY

SR _ JOB NO. 0001 SHEET 0

Bridge Design Engr.	M:\Y-Team\Lewis_Clark Rehab\Modifications\window files\FB3 MOD.WND				REGION NO.	STATE	FED. AID PROJ. NO.	SHEET NO. / TOTAL SHEETS
Supervisor					10	WASH.		
Designed By Talukdar, M					JOB NUMBER			
Checked By								
Detailed By Evans, P.D.								
Bridge Projects Engr.								
Prelim. Plan By								
Architect/Specialist	DATE	REVISION	BY	APP'D	6444			

Mon Sep 22 10:45:05 2003

BRIDGE AND STRUCTURES OFFICE

Washington State Department of Transportation

SR 433
LEWIS AND CLARK BRIDGE
DECK REPLACEMENT

FLOORBEAM 3 MODIFICATIONS

BRIDGE SHEET NO. 0A43B

SHEET 175A OF 258 SHEETS

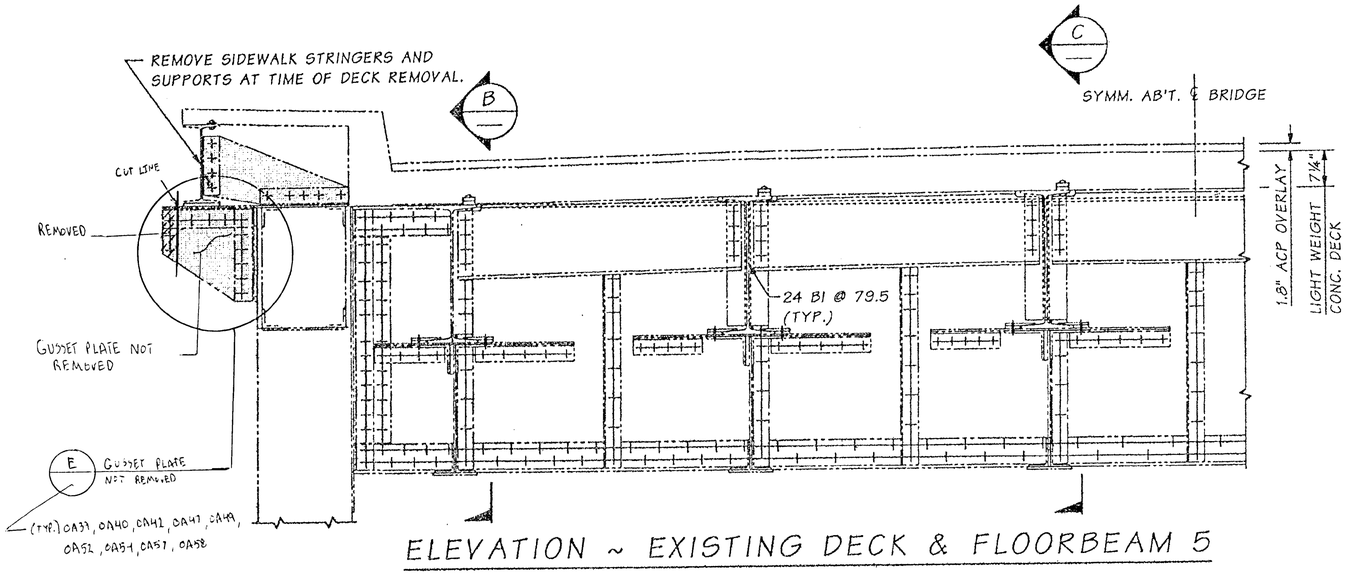

ELEVATION ~ EXISTING DECK & FLOORBEAM 5

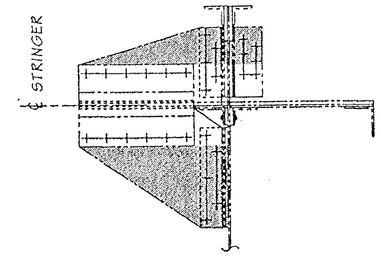

SECTION A

REMOVE SHADED PORTION AT EXTERIOR STRINGERS PRIOR TO DECK REMOVAL AND INSTALL C15 x 33.9

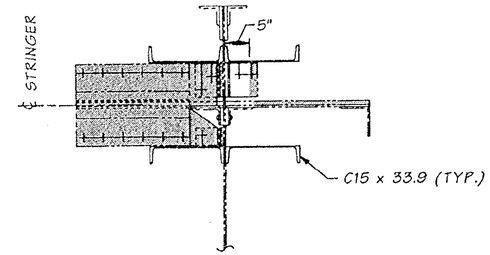

SECTION A

REMOVE SHADED PORTION AT EXTERIOR STRINGERS AT TIME OF DECK REMOVAL AND INSTALL STRINGER SEAT.

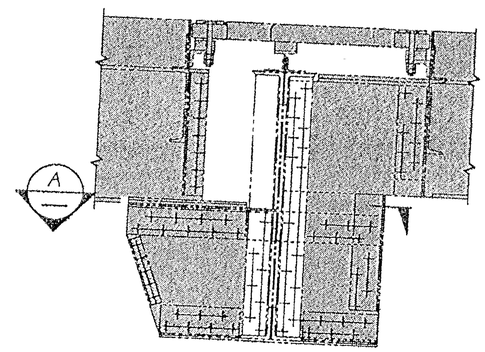

SECTION B

REMOVE SHADED PORTION AT EXTERIOR STRINGER AT TIME OF DECK REMOVAL.

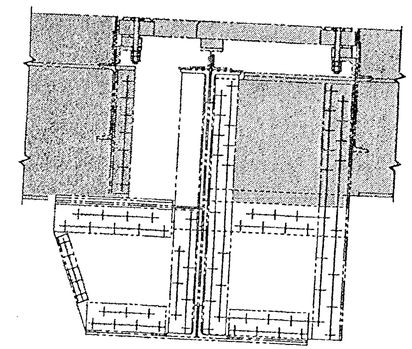

SECTION C

REMOVE SHADED PORTION AT INTERIOR STRINGER AT TIME OF DECK REMOVAL.

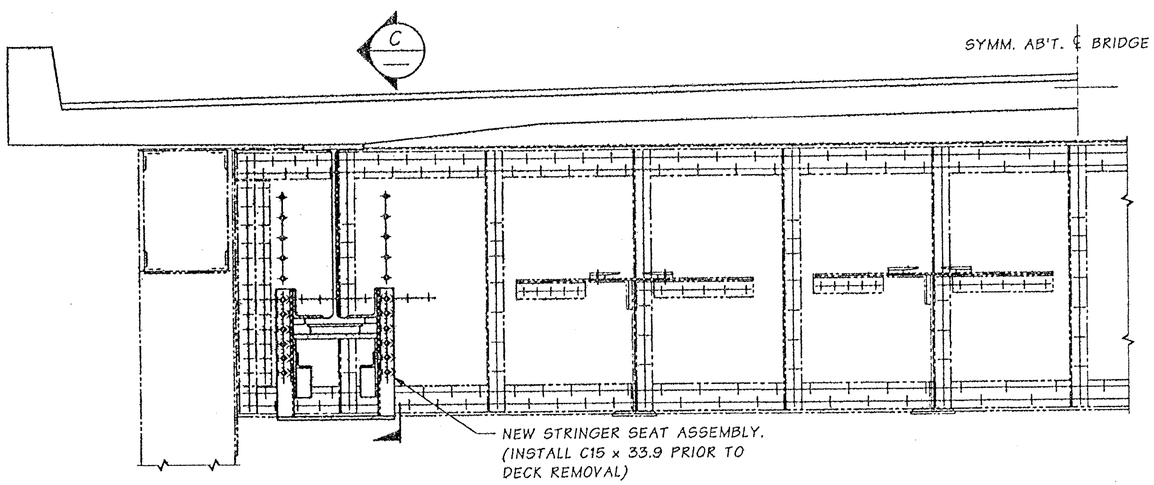

ELEVATION ~ MODIFIED FLOORBEAM & NEW DECK

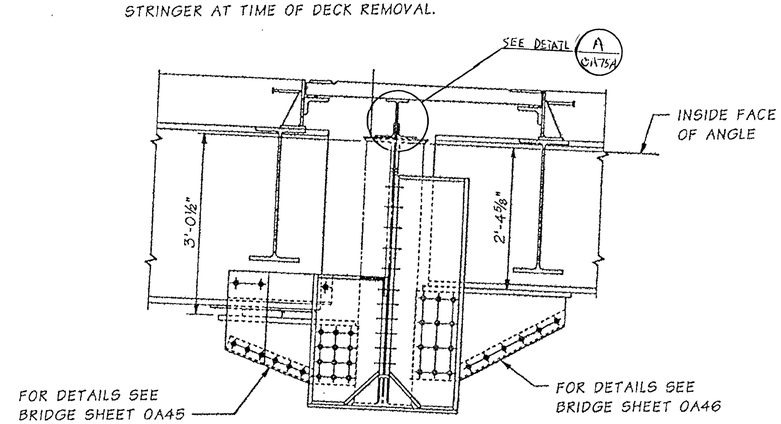

SECTION D

FOR "AS CONSTRUCTED PLANS" ONLY

SR 433 JOB NO. 1 SHEET 44

Bridge Design Engr.	Kapur, J		M:\Y-Team\Lewis_Clark Rehab\Oregon Appr\window files\FB 5 - 335 SPAN.WND							
Supervisor	Kirker, KN	08/02								
Designed By	Talukdar, M	08/02								
Checked By	Peralta, R	08/02								
Detailed By	House, L	08/02								
Bridge Projects Engr.										
Prelim. Plan By										
Architect/Specialist			DATE	REVISION	BY	APP'D				

Wed Sep 18 08:07:22 2002

REGION NO.	STATE	FED. AID PROJ. NO.	SHEET NO.	TOTAL SHEETS
10	WASH.	ACBH - 0433(007)		
JOB NUMBER 02x310				

STRUCTURAL REGISTERED PROFESSIONAL ENGINEER 71314 OREGON JULY 10, 2002 JUGESH KAPUR
EXPIRES 06-30-2003

BRIDGE AND STRUCTURES OFFICE

KARL N. KIRKER STATE OF WASHINGTON 12206 REGISTERED PROFESSIONAL ENGINEER
EXPIRES 11/3/03

Washington State Department of Transportation

SR 433
LEWIS AND CLARK BRIDGE
DECK REPLACEMENT

FLOORBEAM 5 AT PIER 5 - 335' SPAN

BRIDGE SHEET NO. OA44

SHEET 176 OF 258 SHEETS

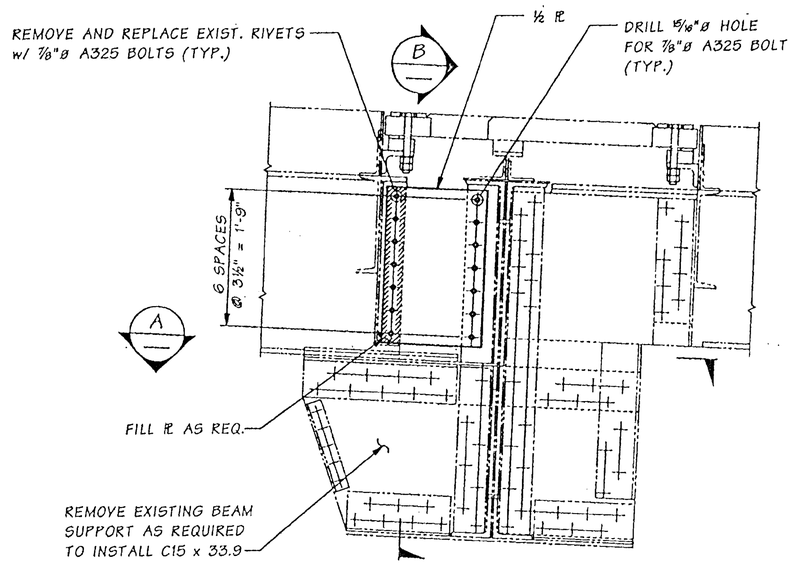

ELEVATION ~ EXISTING FLOORBEAM @ PIER 5

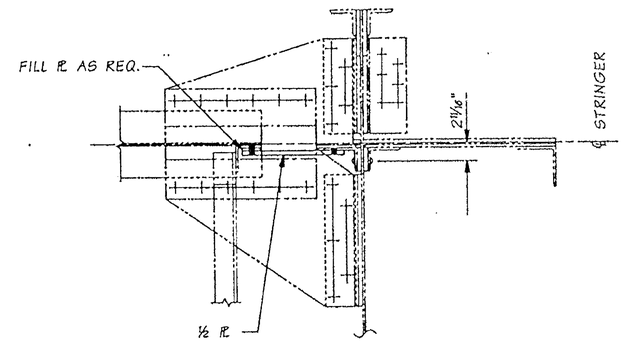

SECTION A

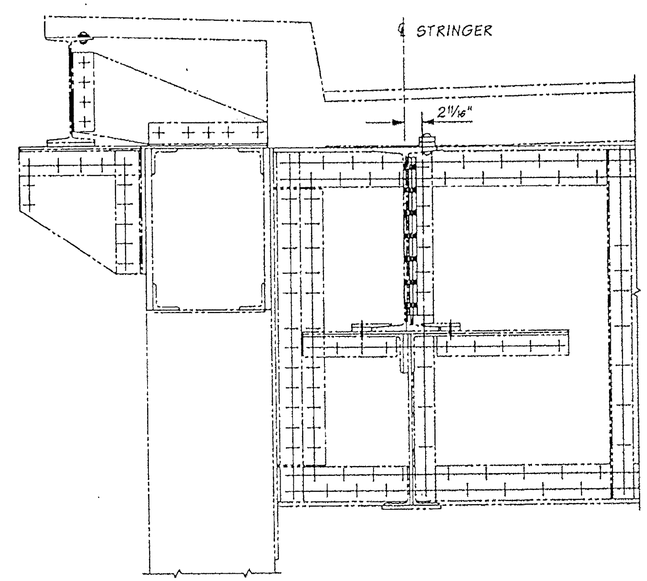

SECTION B

FOR "AS CONSTRUCTED PLANS" ONLY

05-06-04

Bridge Design Engr.	Kapur, J	M:\Y-Team\Lewis_Clark Rehab\Modifications\window files\P5 TEMP SUPPORT.WND							
Supervisor	Kirker, KN				REGION NO.	STATE	FED. AID PROJ. NO.	SHEET NO.	TOTAL SHEETS
Designed By	Talukdar, M				10	WASH.			
Checked By					JOB NUMBER				
Detailed By	Evans, P.D.								
Bridge Projects Engr.									
Prelim. Plan By									
Architect/Specialist		DATE	REVISION	BY	APP'D	644			

Tue Dec 30 14:31:05 2003

BRIDGE AND STRUCTURES OFFICE

MUNINDRA TALUKDAR — STATE OF WASHINGTON — 27408 — REGISTERED PROFESSIONAL ENGINEER — EXPIRES 6/1/04

Washington State Department of Transportation

SR 433
LEWIS & CLARK BRIDGE
DECK REPLACEMENT

PIER 5 TEMPORARY BEAM SUPPORT

BRIDGE SHEET NO. 0A44A

SHEET 176A OF 258 SHEETS

SR 433 B NO. 0001 SHEET 0

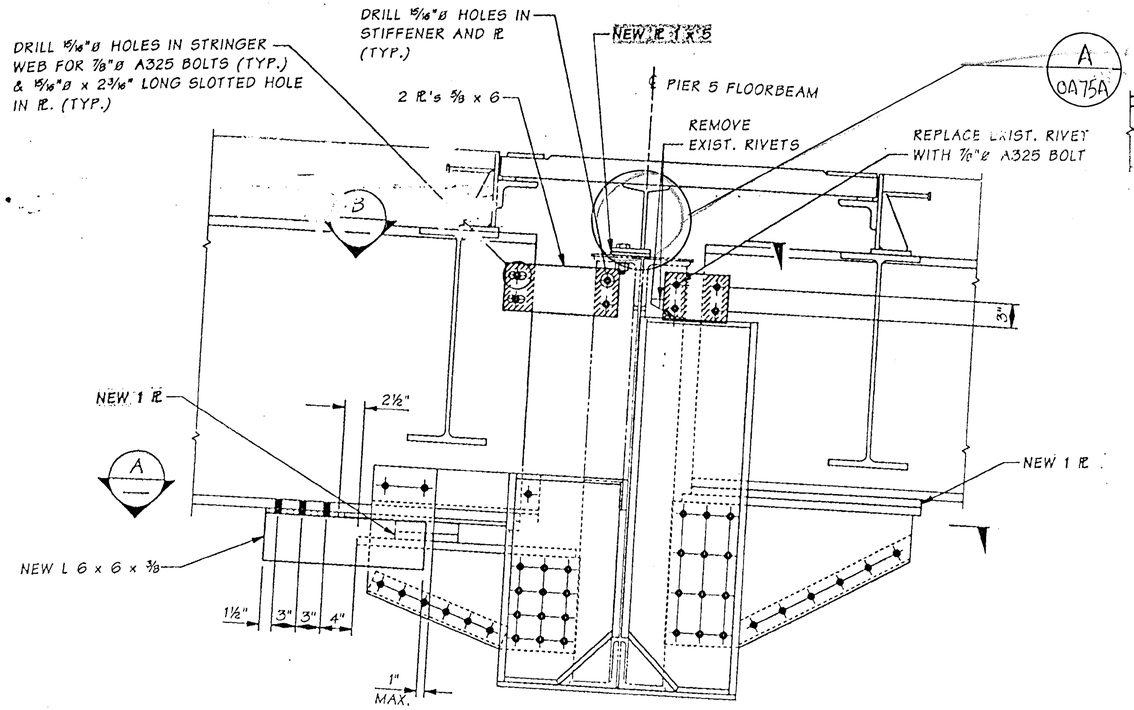

PIER 5 STRINGER SEAT

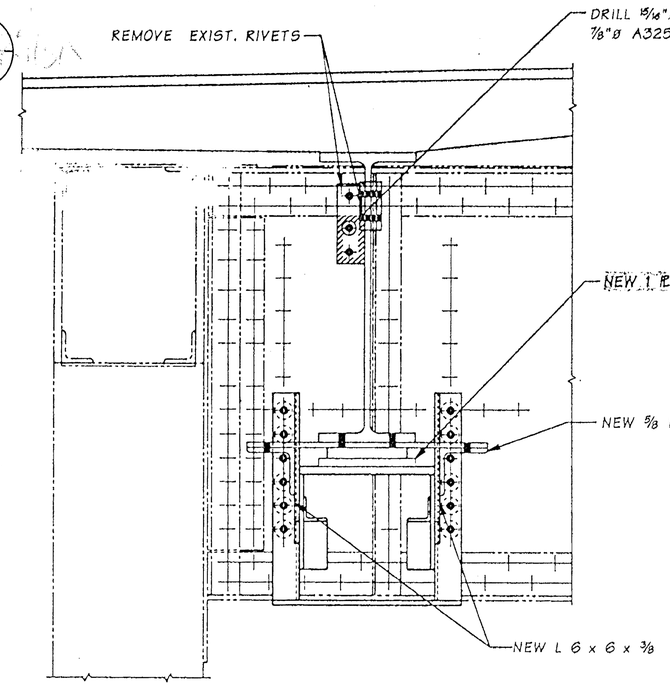

SECTION C

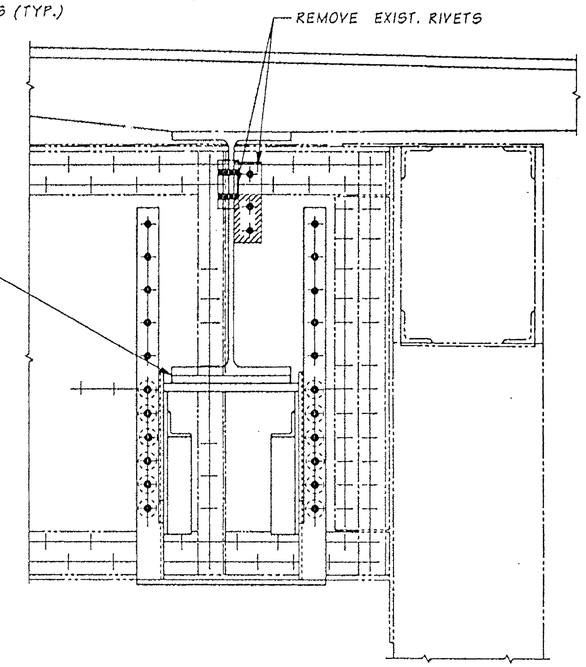

SECTION D

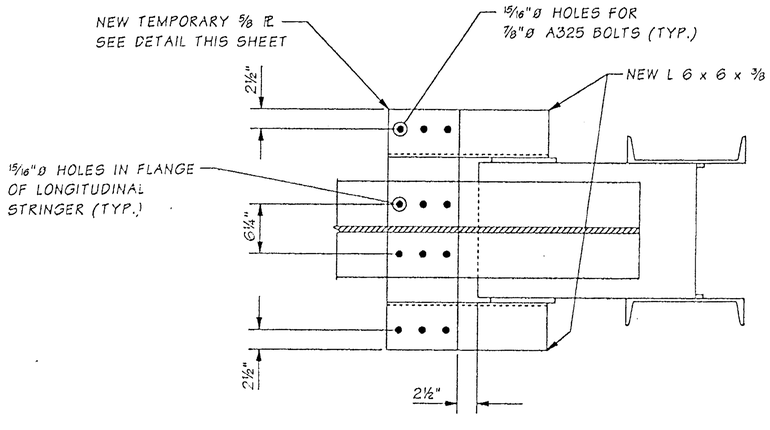

SECTION A

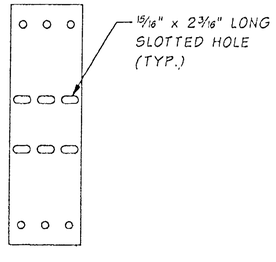

TEMPORARAY PL

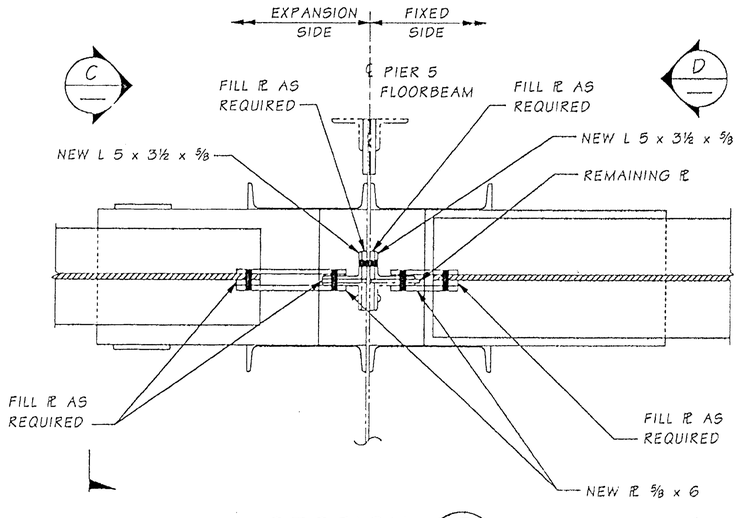

SECTION B

NOTES

1. ALL CONNECTIONS SHALL BE MADE ON EXPANSION SIDE STRINGER PANEL AS SHOWN BEFORE PANEL F2 IS PLACED.
2. DISCONNECT BOLTS BETWEEN TEMPORARY PL, LONGITUDINAL STRINGER AND NEW CONNECTION ANGLE RIGHT AFTER PLACEMENT OF PANEL F2.

FOR "AS CONSTRUCTED PLANS" ONLY

Bridge Design Engr.	Kapur, J	M:\Y-Team\Lewis_Clark Rehab\Modifications\window files\P5 RAISED 1IN.WND							
Supervisor	Kirker, KN				REGION NO.	STATE	FED. AID PROJ. NO.	SHEET NO.	TOTAL SHEETS
Designed By	Talukdar, M				10	WASH.			
Checked By					JOB NUMBER				
Detailed By	Evans, P.D.								
Bridge Projects Engr.									
Prelim. Plan By									
Architect/Specialist		DATE	REVISION	BY	APP'D	6444			

Tue Dec 30 14:32:15 2003

BRIDGE AND STRUCTURES OFFICE

MUNINDRA TALUKDAR — STATE OF WASHINGTON — 27628 — REGISTERED PROFESSIONAL ENGINEER — EXPIRES 6/1/04

Washington State Department of Transportation

SR 433
LEWIS & CLARK BRIDGE
DECK REPLACEMENT

PIER 5 MODIFICATION

BRIDGE SHEET NO. 0A44B
SHEET 176B OF 258 SHEETS

SR OB NO. 0001 SHEET 0

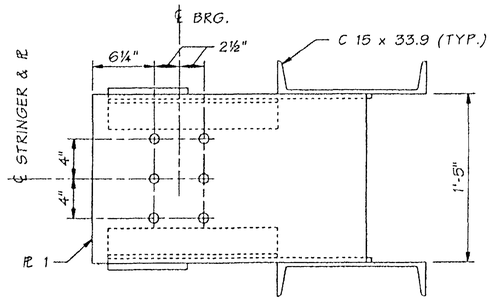

SECTION A

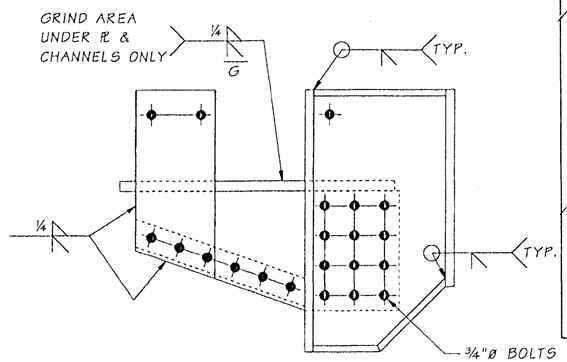

ELEVATION

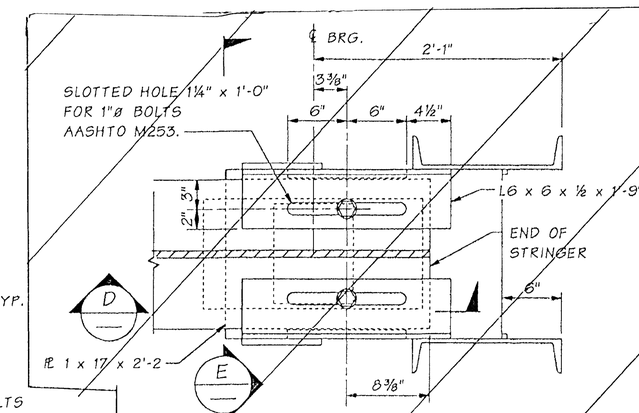

PLAN

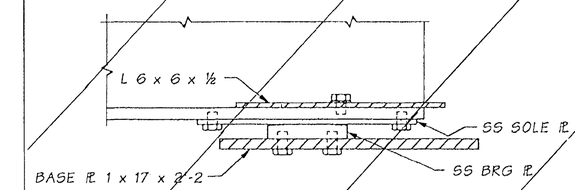

SECTION D

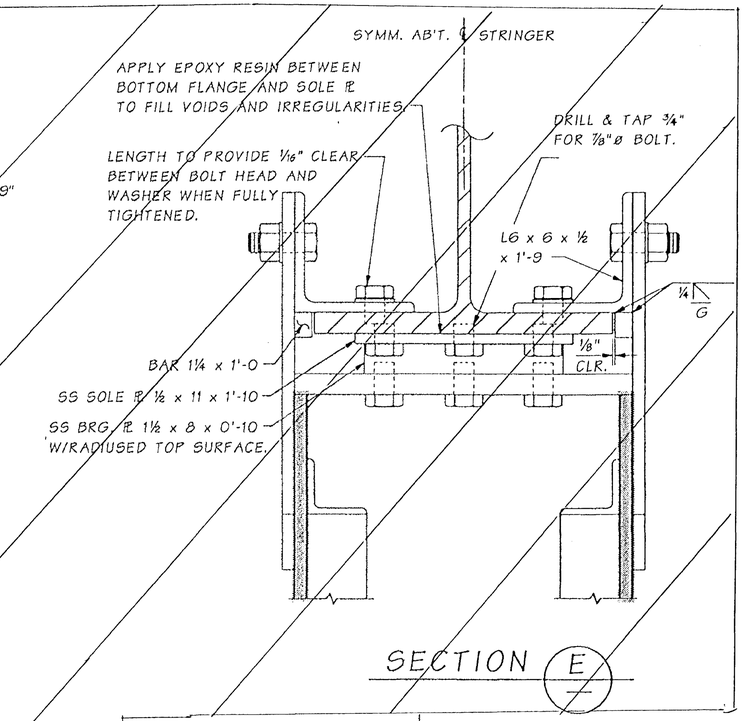

SECTION E

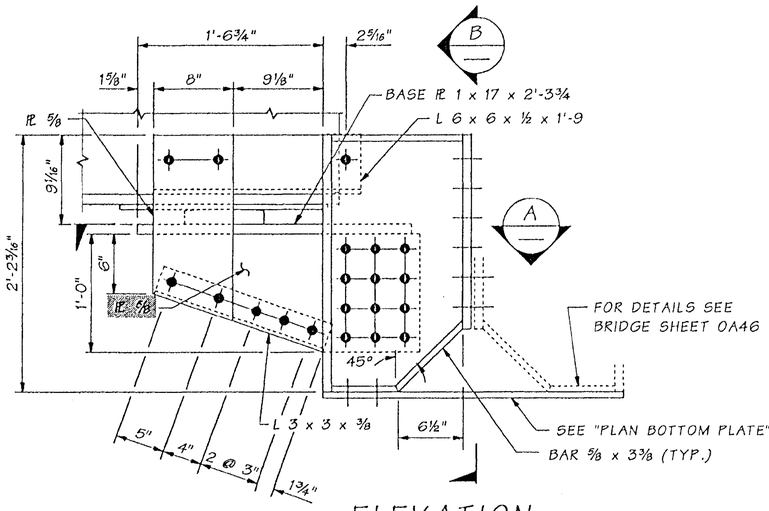

ELEVATION

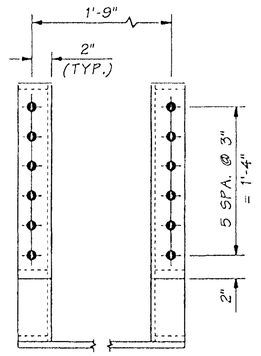

VIEW B

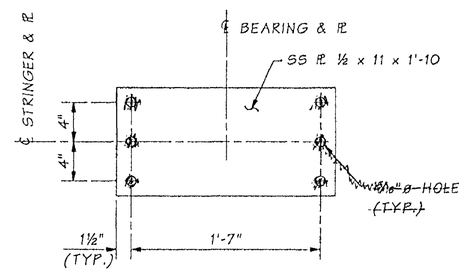

PLAN - SOLE PLATE

2 REQUIRED

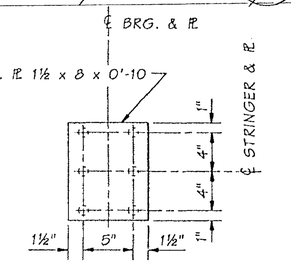

PLAN

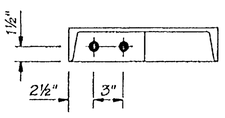

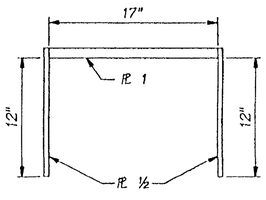

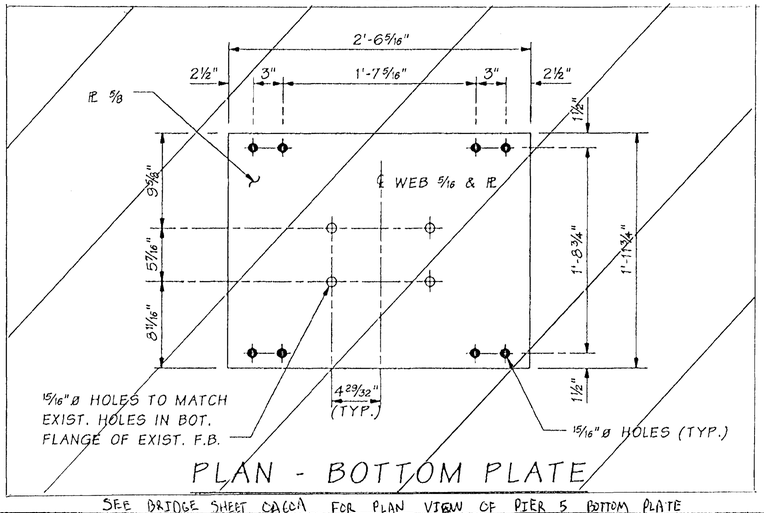

PLAN - BOTTOM PLATE

SEE BRIDGE SHEET 0A60A FOR PLAN VIEW OF PIER 5 BOTTOM PLATE

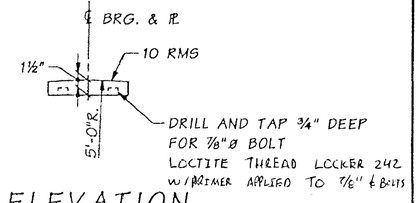

ELEVATION

BEARING PLATE

2 REQUIRED

FOR "AS CONSTRUCTED PLANS" ONLY

Bridge Design Engr.	Kapur, J		M:\Y-Team\Lewis_Clark Rehab\Oregon Appr\window files\P5 FB NORTH SEAT.WND								
Supervisor	Kirker, KN	08/02									
Designed By	Talukdar, M	08/02									
Checked By	Peralta, R	08/02									
Detailed By	House, L	08/02									
Bridge Projects Engr.											
Prelim. Plan By			10/02	MODIFIED PLATE	MT						
Architect/Specialist			DATE	REVISION	BY	APP'D					

Wed Oct 30 08:25:47 2002

REGION NO.	STATE	FED. AID PROJ. NO.	SHEET NO.	TOTAL SHEETS
10	WASH.			
JOB NUMBER 02x310		ACBH - 0433(007)		

STRUCTURAL REGISTERED PROFESSIONAL ENGINEER 17344 OREGON OCT. 10, 2002 JUGESH KAPUR
EXPIRES 06-30-2003

BRIDGE AND STRUCTURES OFFICE

KARL N. KIRKER STATE OF WASHINGTON 10-30-02 REGISTERED PROFESSIONAL ENGINEER
EXPIRES 11/3/03

Washington State Department of Transportation

SR 433
LEWIS AND CLARK BRIDGE
DECK REPLACEMENT

PIER 5 - EXPANSION SIDE
STRINGER SEAT DETAILS

BRIDGE SHEET NO. 0A45

SHEET 177 OF 258 SHEETS

SR 433 NO. 1 SHEET 45

CHANGES

1. SLOTTED HOLE IN FLANGE IS ELIMINATED.
2. COPE L6 x 6 x ½ AS SHOWN
3. FIELD DRILL HOLES CONNECTING ℞ TO ANGLE IN FIELD AFTER FINAL ELEVATION ADJUSTMENT.
4. ALL OTHER DETAILS REMAIN THE SAME.

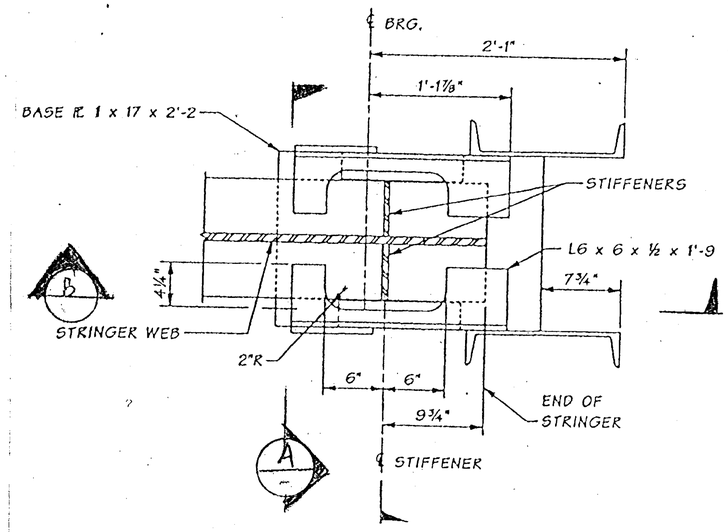

PLAN - GIRDER SEAT
EXP SIDE PIER 5

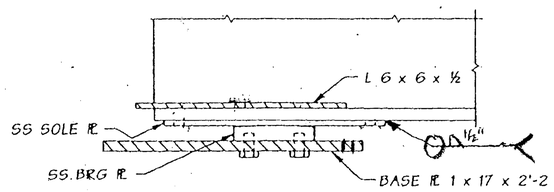

SECTION B

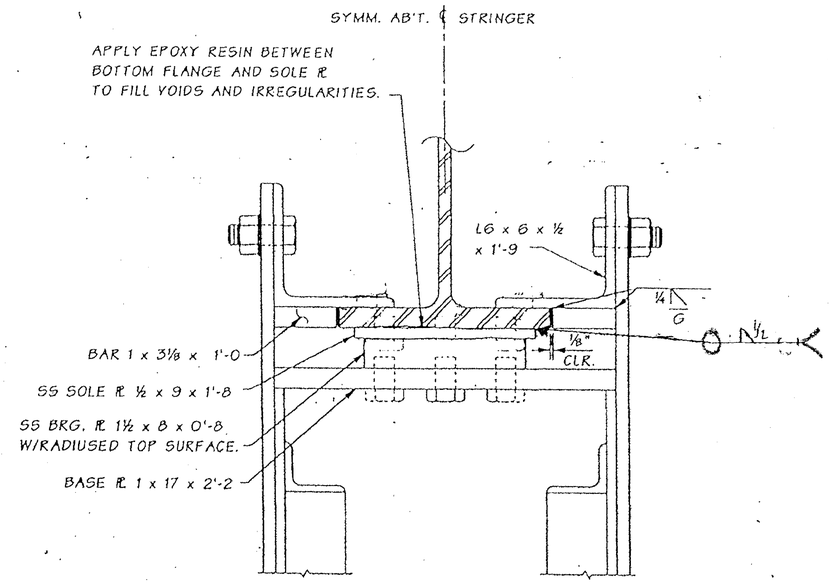

SECTION A

FOR "AS CONSTRUCTED PLANS" ONLY

FILE NAME	C:\AAWork\kelso\Svensen's Curve\L3425WASTESITE.dgn						
TIME	02:37:18 PM						
DATE	08/17/2005						
PLOTTED BY	spohnk						
DESIGNED BY							
ENTERED BY							
CHECKED BY							
PROJ. ENGR.							
REGIONAL ADM.		REVISION	DATE	BY			

REGION NO.	STATE	FED. AID PROJ. NO.
10	WASH	
JOB NUMBER		
CONTRACT NO. 6444		LOCATION NO.

P.E. STAMP BOX DATE

P.E. STAMP BOX DATE

Washington State Department of Transportation

SR 433
LEWIS AND CLARK BRIDE
DECK REPLACEMENT

PIER 5 - BEARING DETAILS
EXPANSION SIDE

PLOT11

OAHSA

SHEET 177A OF 258 SHEETS

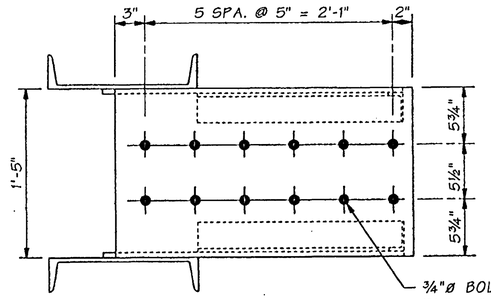

¾"ø BOLTS AASHTO M253 13/16" x 1" SLOTTED HOLES IN STRINGER FLANGE. 13/16"ø HOLES IN STRINGER SEAT. STRINGER FLANGE NOT SHOWN FOR CLARITY.

SECTION B

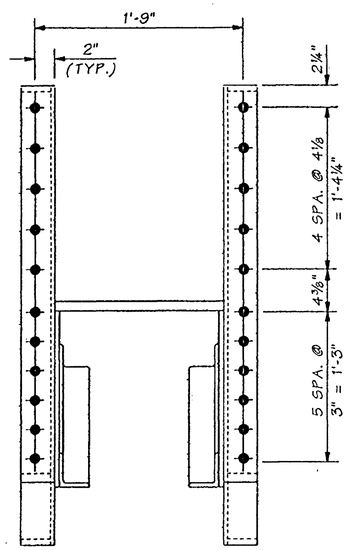

SECTION A

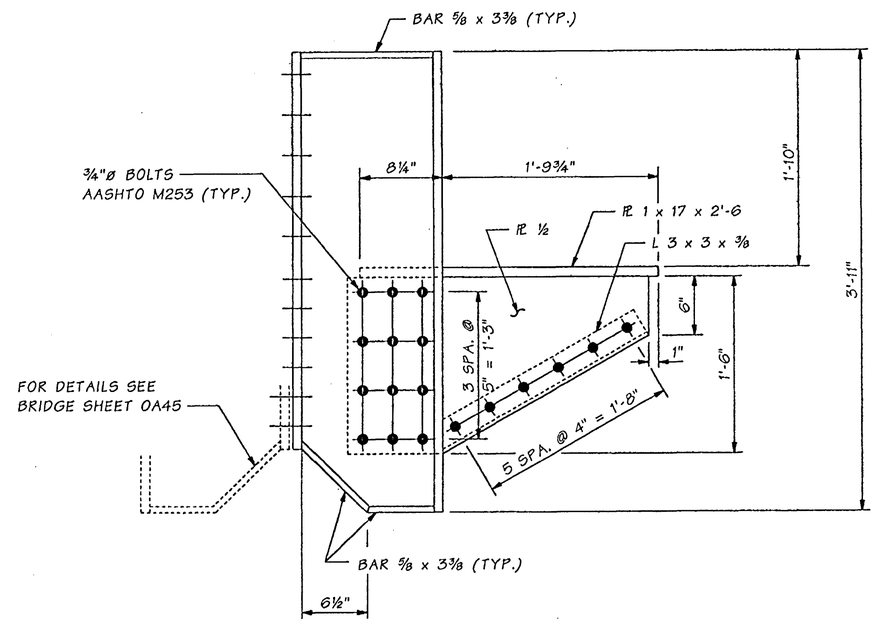

ELEVATION

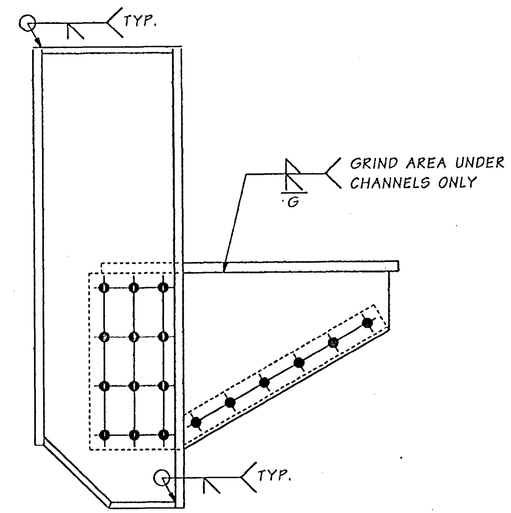

ELEVATION

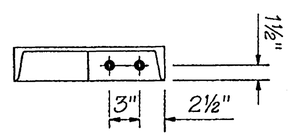

SECTION A

FOR "AS CONSTRUCTED PLANS" ONLY

Bridge Design Engr.	Kapur, J		M:\Y-Team\Lewis_Clark Rehab\Oregon Appr\Window files\P5 FB SOUTH SEAT.WND			REGION NO.	STATE	FED. AID PROJ. NO.	SHEET NO.	TOTAL SHEETS
Supervisor	Kirker, KN	08/02				10	WASH.	ACBH - 0433(007)		
Designed By	Talukdar, M	08/02								
Checked By	Peralta, R	08/02								
Detailed By	House, L	08/02				JOB NUMBER				
Bridge Projects Engr.						02x310				
Prelim. Plan By										
Architect/Specialist			DATE	REVISION	BY	APP'D				

Tue Sep 17 11:49:57 2002

REGISTERED PROFESSIONAL ENGINEER 71314 OREGON JUL. 10, 2001 JUGESH KAPUR — EXPIRES 06-30-2003

BRIDGE AND STRUCTURES OFFICE

STATE OF WASHINGTON KARL N. KIRKER 18608 REGISTERED PROFESSIONAL ENGINEER — EXPIRES 11/3/03

Washington State Department of Transportation

SR 433
LEWIS AND CLARK BRIDGE
DECK REPLACEMENT

PIER 5 - FIXED SIDE STRINGER SEAT DETAILS

BRIDGE SHEET NO. 0A46

SHEET 178 OF 258 SHEETS

SR 433 JOB NO. 1 SHEET 46

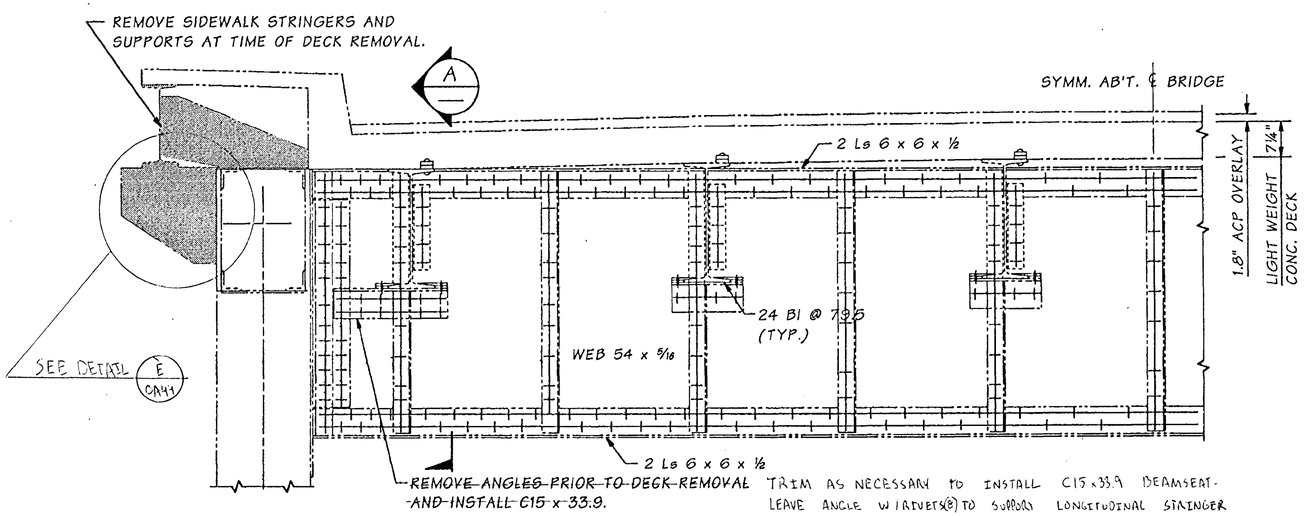

ELEVATION ~ EXISTING DECK & FLOORBEAM 8

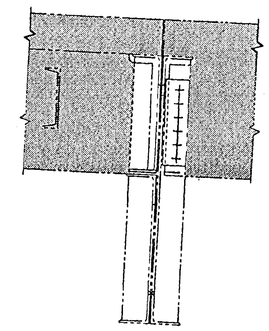

SECTION A

REMOVE SHADED PORTION AT TIME OF DECK REMOVAL

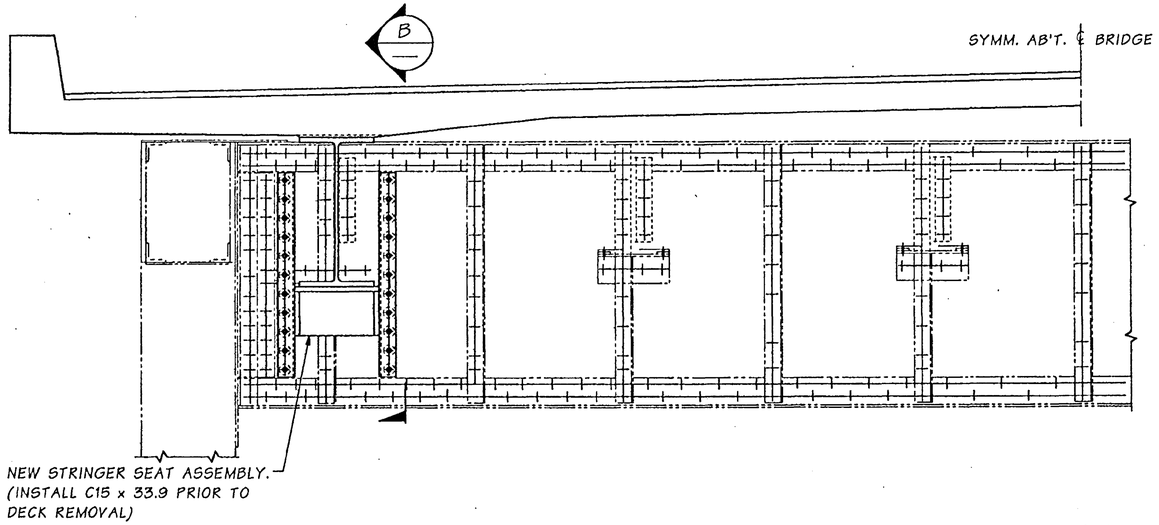

ELEVATION ~ MODIFIED FLOORBEAM & NEW DECK

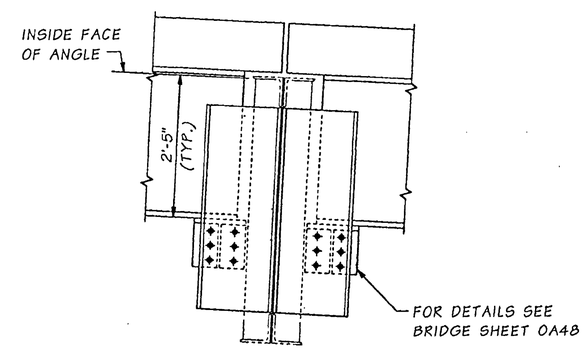

SECTION B

FOR "AS CONSTRUCTED PLANS" ONLY

SR 433 JOB NO. 1 SHEET 47

Bridge Design Engr.	Kapur, J		M:\Y-Team\Lewis_Clark Rehab\Oregon Appr\Window files\FB 8 - 335 SPAN.WND							
Supervisor	Kirker, KN	08/02				REGION NO.	STATE	FED. AID PROJ. NO.	SHEET NO.	TOTAL SHEETS
Designed By	Talukdar, M	08/02				10	WASH.	ACBH - 0433(007)		
Checked By	Peralta, R	08/02								
Detailed By	House, L	08/02				JOB NUMBER 02x310				
Bridge Projects Engr.										
Prelim. Plan By										
Architect/Specialist			DATE	REVISION	BY	APP'D				

Tue Sep 17 11:49:16 2002

STRUCTURAL REGISTERED PROFESSIONAL ENGINEER 71344 OREGON SEPT. 10, 2002 JUGESH KAPUR — EXPIRES 06-30-2003

BRIDGE AND STRUCTURES OFFICE

KARL N. KIRKER STATE OF WASHINGTON 16296 REGISTERED PROFESSIONAL ENGINEER — EXPIRES 11/3/03

Washington State Department of Transportation

SR 433
LEWIS AND CLARK BRIDGE
DECK REPLACEMENT

FLOORBEAM 8 - 335' SPAN

BRIDGE SHEET NO. OA47

SHEET 179 OF 258 SHEETS

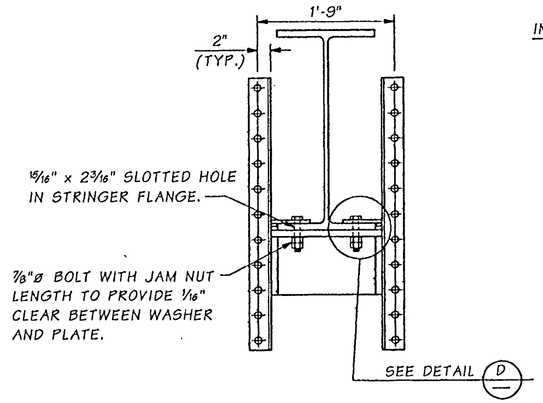

SECTION A

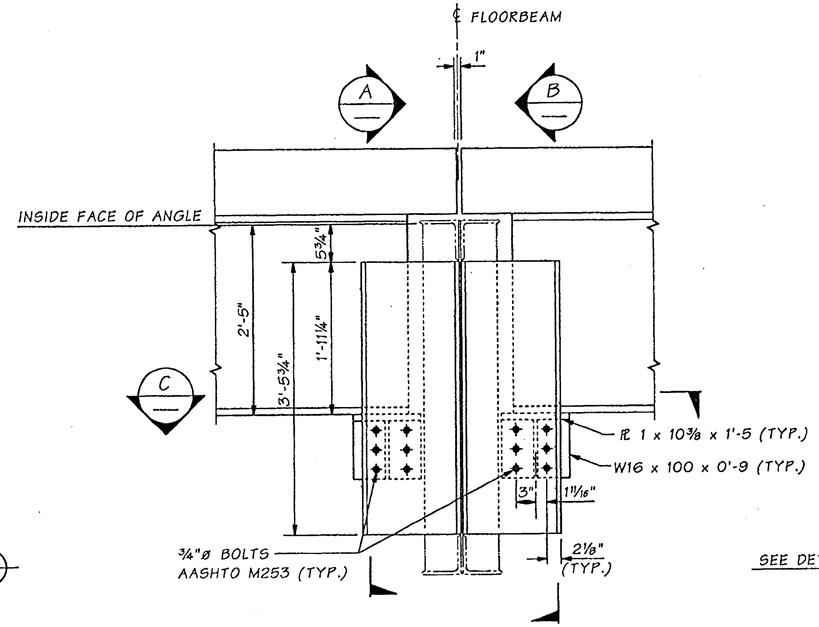

ELEVATION

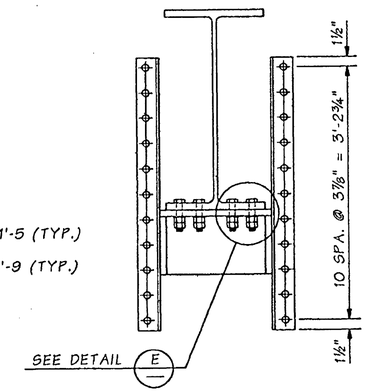

SECTION B

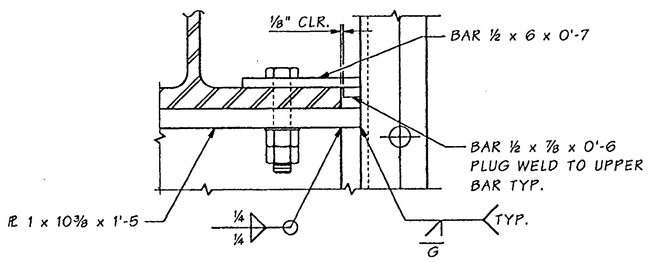

DETAIL D

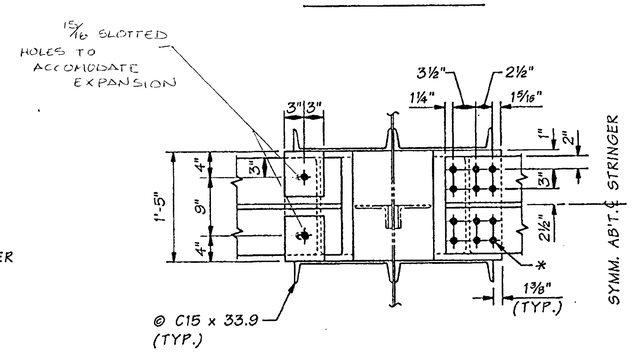

SECTION C

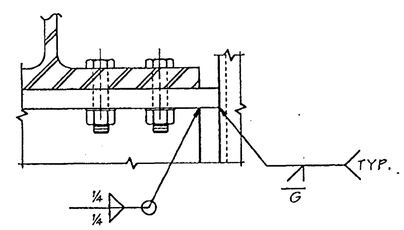

DETAIL E

* 3/4"ø BOLTS AASHTO M253 13/16" x 1" SLOTTED HOLES IN STRINGER FLANGE. 13/16"ø HOLES IN GIRDER SEAT.

FOR "AS CONSTRUCTED PLANS" ONLY

SR 433 JOB NO. 1 SHEET 48

Bridge Design Engr.	Kapur, J		M:\Y-Team\Lewis_Clark Rehab\Oregon Appr\Window files\FB 8 BRG SEAT.WND								
Supervisor	Kirker, KN	08/02									
Designed By	Talukdar, M	08/02									
Checked By	Peralta, R	08/02									
Detailed By	House, L	08/02									
Bridge Projects Engr.											
Prelim. Plan By											
Architect/Specialist			DATE	REVISION	BY	APP'D					

REGION NO.	STATE	FED. AID PROJ. NO.	SHEET NO.	TOTAL SHEETS
10	WASH.	ACBH - 0433(007)		
JOB NUMBER 02x310				

Tue Sep 17 11:49:18 2002

STRUCTURAL REGISTERED PROFESSIONAL ENGINEER 71344 OREGON OCT. 10, 2002 JUGESH KAPUR — EXPIRES 06-30-2003

BRIDGE AND STRUCTURES OFFICE

KARL N. KIRKER STATE OF WASHINGTON 14808 PROFESSIONAL ENGINEER — EXPIRES 11/3/03

Washington State Department of Transportation

SR 433
LEWIS AND CLARK BRIDGE
DECK REPLACEMENT

STRINGER SEAT DETAILS AT FLOORBEAM 8 - 335' SPAN

BRIDGE SHEET NO. 0A48

SHEET 180 OF 258 SHEETS

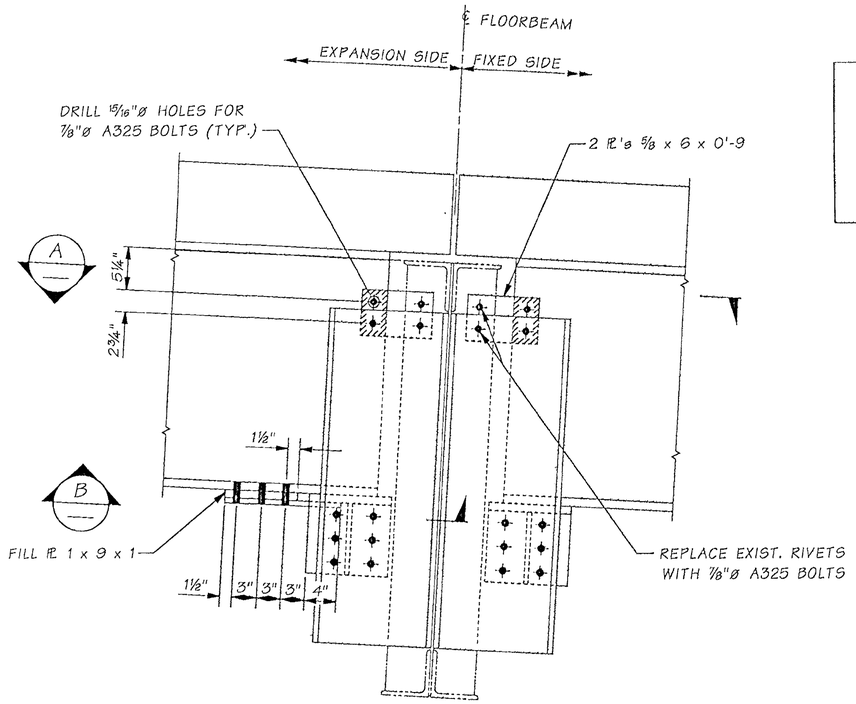

FLOORBEAM & STRINGER SEAT
335' SPAN

REMOVE TEMPORARY CONSTRUCTION PLATES
AFTER PLACEMENT OF ADJACENT DECK PANEL

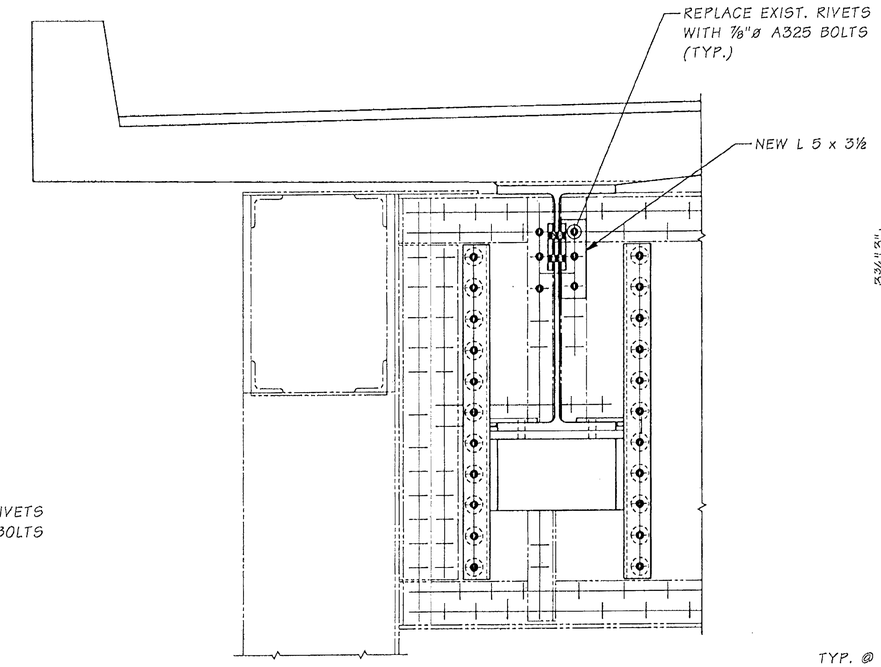

SECTION D

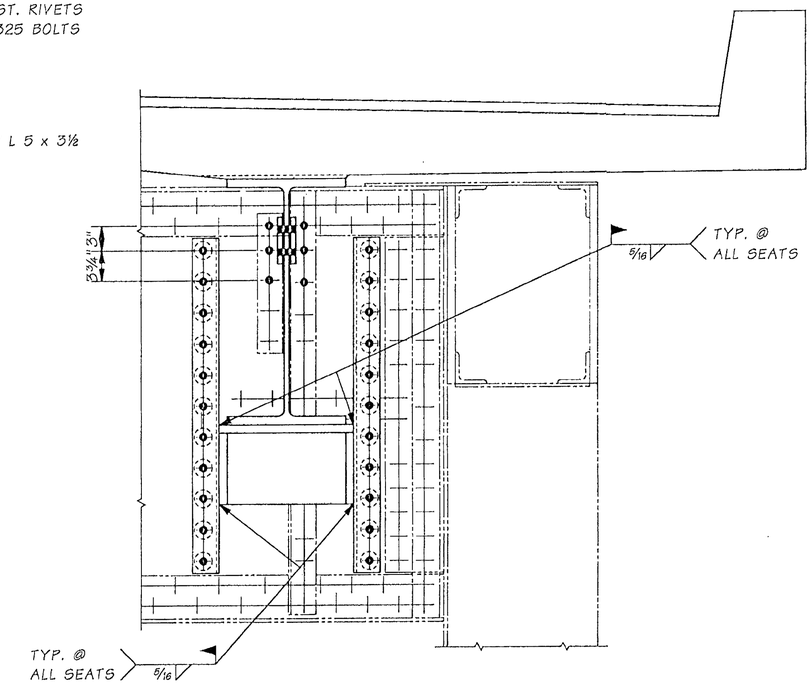

SECTION C

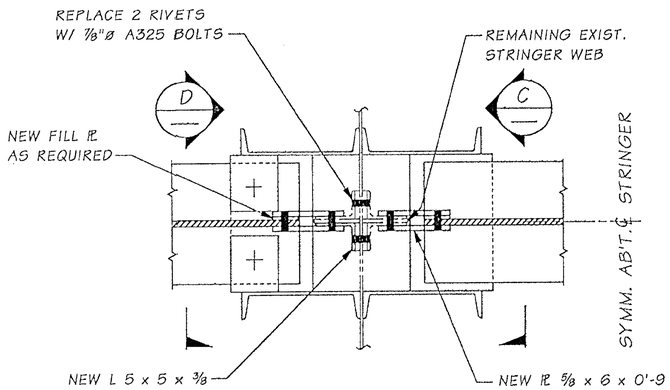

SECTION A

UNDER DEAD LOAD CONDITIONS ONLY, SUPPORT EXISTING STRINGER
WITH TEMPORARY SEAT TO INSTALL ANGLES PRIOR TO DECK REMOVAL

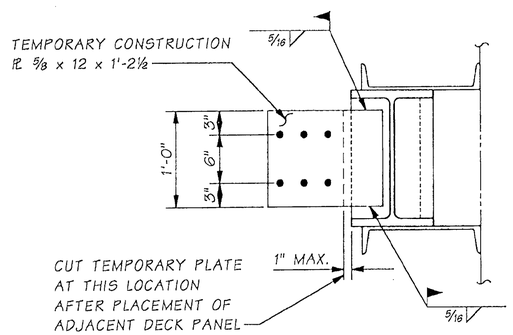

SECTION B

FOR "AS CONSTRUCTED PLANS" ONLY

Bridge Design Engr.	M:\Y-Team\Lewis_Clark Rehab\Modifications\window files\FB8 MOD.WND				REGION NO.	STATE	FED. AID PROJ. NO.	SHEET NO.	TOTAL SHEETS
Supervisor					10	WASH.			
Designed By Talukdar, M					JOB NUMBER				
Checked By									
Detailed By Evans, P.D.									
Bridge Projects Engr.									
Prelim. Plan By									
Architect/Specialist	DATE	REVISION	BY	APP'D	6444				

BRIDGE AND STRUCTURES OFFICE

Washington State Department of Transportation

FLOORBEAM & MODIFICATIONS

BRIDGE SHEET NO. 0A48B

SHEET 180A OF 258 SHEETS

SR 433 JOB NO. 0001 SHEET 0

Mon Sep 22 10:42:31 2003

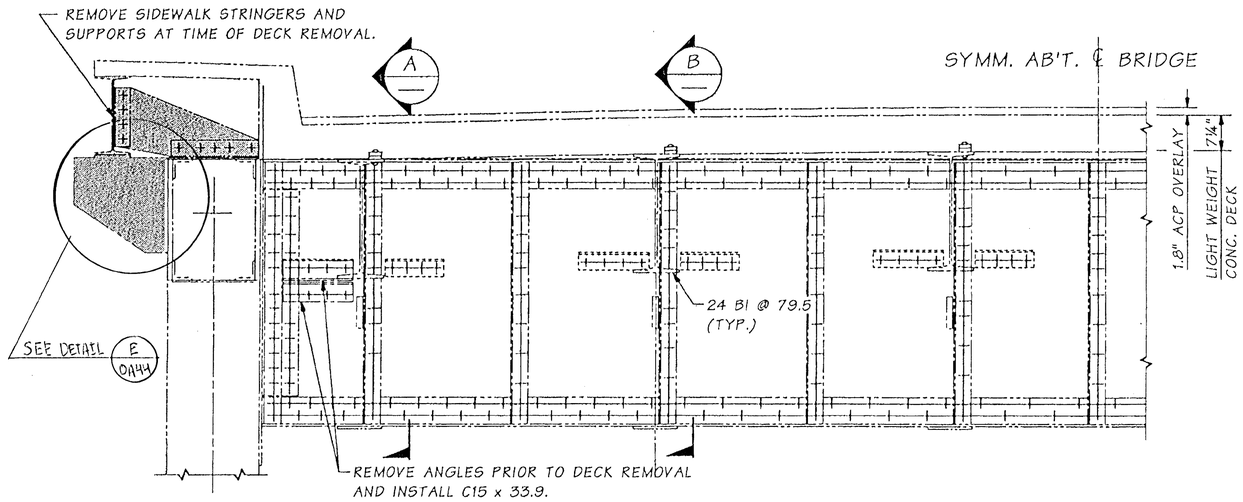

ELEVATION ~ EXISTING DECK & FLOORBEAM 3

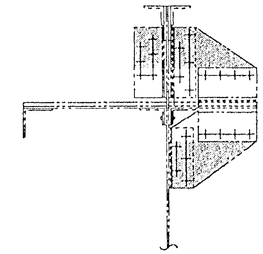

SECTION C

REMOVE SHADED PORTION AT EXTERIOR STRINGERS PRIOR TO DECK REMOVAL AND INSTALL C15 x 33.9

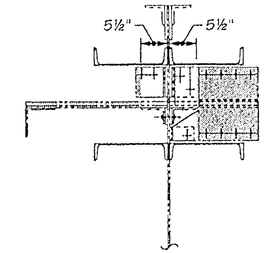

SECTION C

REMOVE SHADED PORTION AT EXTERIOR STRINGERS AT TIME OF DECK REMOVAL AND INSTALL STRINGER SEAT.

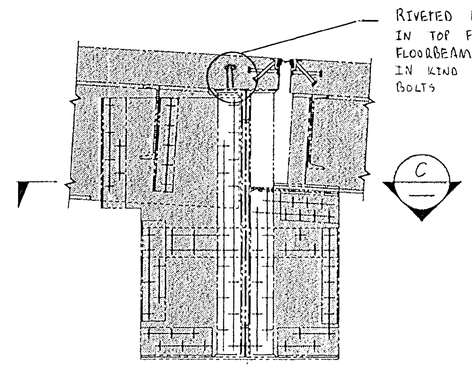

SECTION A

REMOVE SHADED PORTION AT EXTERIOR STRINGER AT TIME OF DECK REMOVAL.

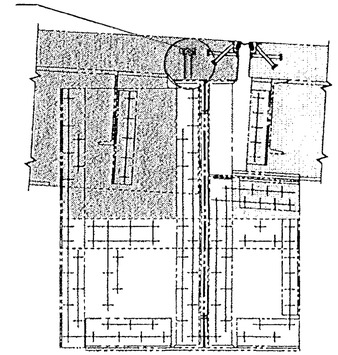

SECTION B

REMOVE SHADED PORTION AT INTERIOR STRINGER AT TIME OF DECK REMOVAL.

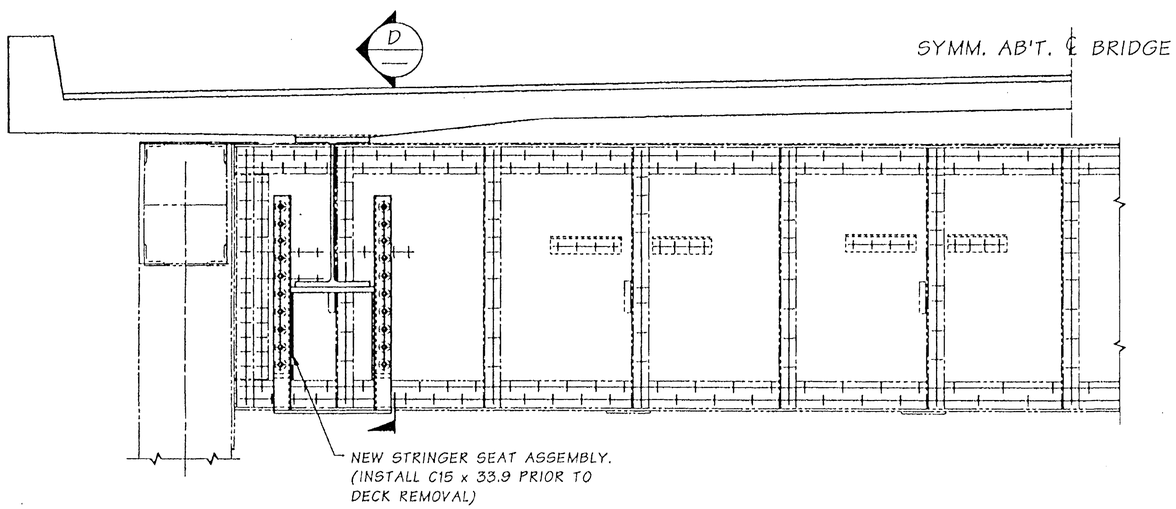

ELEVATION ~ MODIFIED FLOORBEAM & NEW DECK

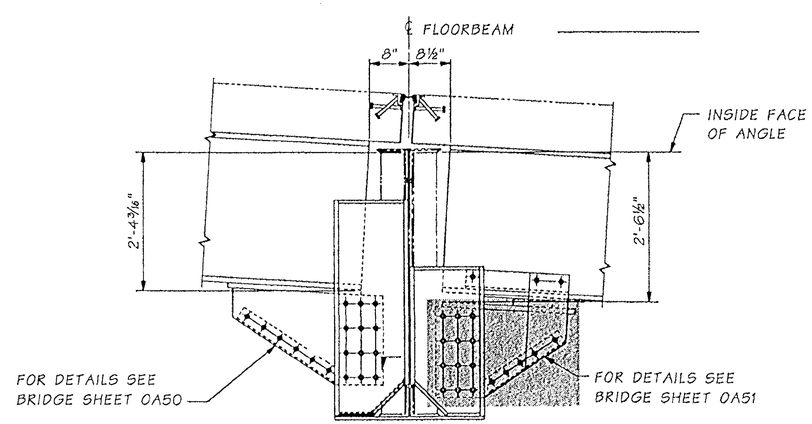

SECTION D

FOR "AS CONSTRUCTED PLANS" ONLY

Bridge Design Engr.	Kapur, J		M:\Y-Team\Lewis_Clark Rehab\Oregon Appr\window files\FB 6 - 335 SPAN.WND			REGION NO.	STATE	FED. AID PROJ. NO.	SHEET NO.	TOTAL SHEETS
Supervisor	Kirker, KN	08/02				10	WASH.	ACBH - 0433(007)		
Designed By	Talukdar, M	08/02								
Checked By	Peralta, R	08/02								
Detailed By	House, L	08/02				JOB NUMBER 02x310				
Bridge Projects Engr.			10/02	MODIFIED STRINGER SEAT ASSEMBLY	MT					
Prelim. Plan By										
Architect/Specialist			DATE	REVISION	BY	APP'D				

Tue Oct 29 15:19:49 2002

STRUCTURAL REGISTERED PROFESSIONAL ENGINEER 71444 OREGON OCT. 10, 2002 JUGESH KAPUR EXPIRES 06-30-2003

BRIDGE AND STRUCTURES OFFICE

STATE OF WASHINGTON KARL N. KIRKER 18094 REGISTERED PROFESSIONAL ENGINEER EXPIRES 11/3/03

Washington State Department of Transportation

SR 433
LEWIS AND CLARK BRIDGE
DECK REPLACEMENT

FLOORBEAM 6 AT PIER 6 - 335' SPAN

BRIDGE SHEET NO. 0A49

SHEET 181 OF 258 SHEETS

SR 433 J NO. 1 SHEET 49

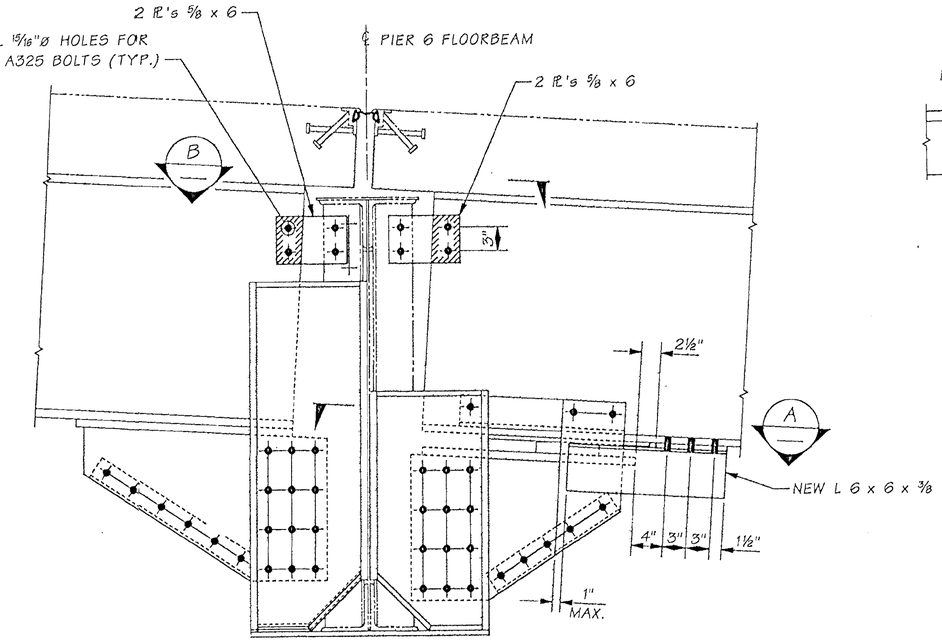

PIER 6 STRINGER SEAT

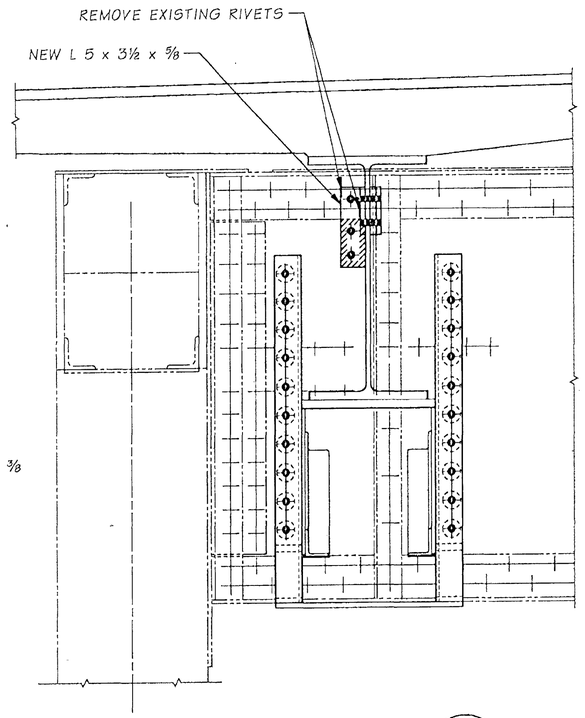

SECTION C

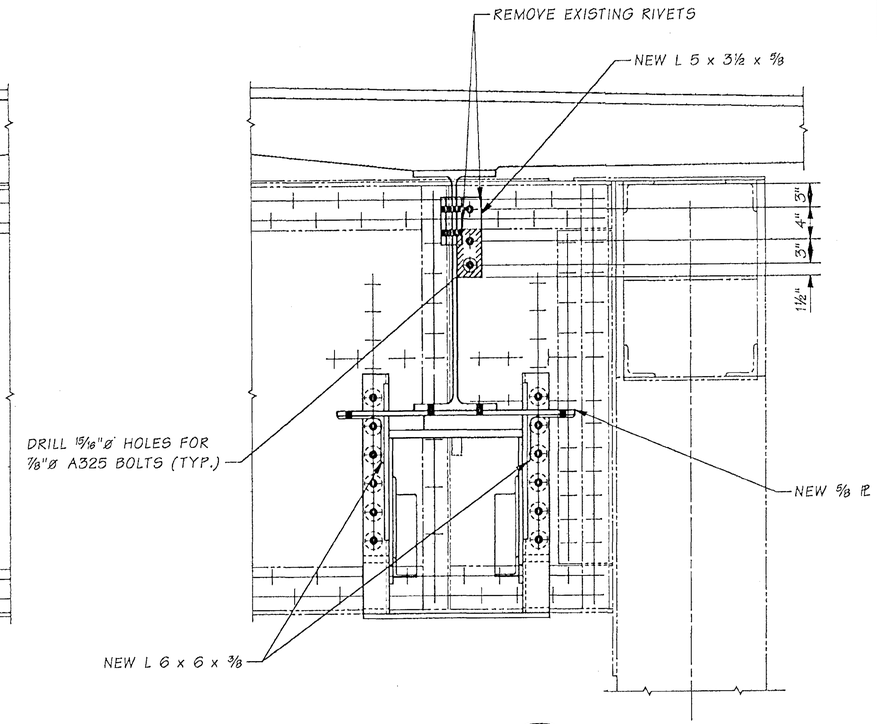

SECTION D

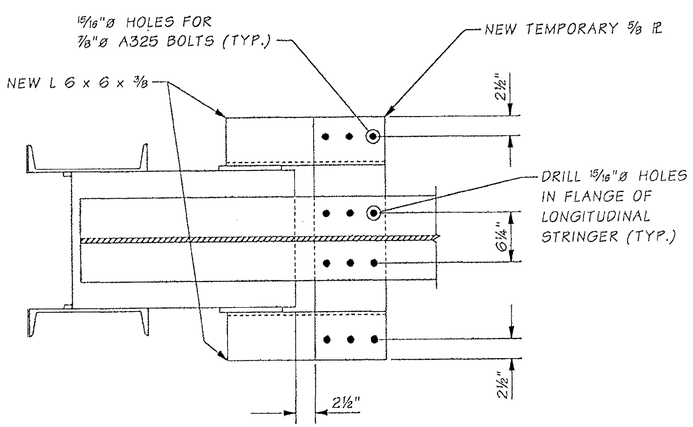

SECTION A

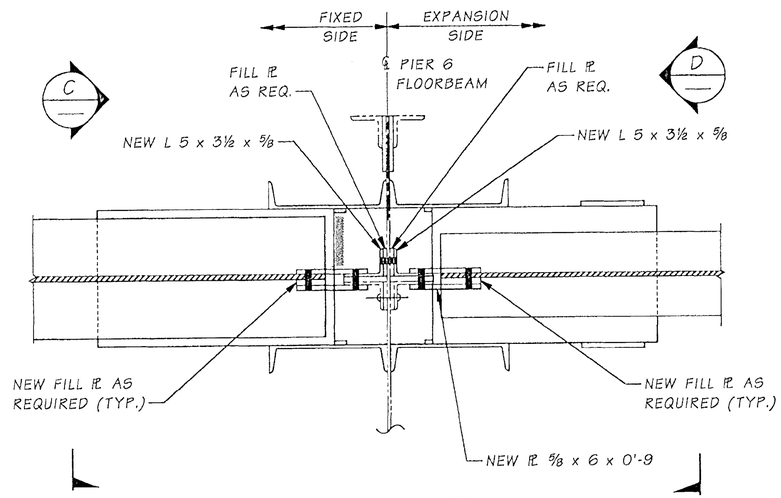

SECTION B

NOTES

1. ALL CONNECTIONS SHALL BE MADE ON EXPANSION SIDE STRINGER PANEL AS SHOWN BEFORE PANEL G2 IS PLACED.
2. DISCONNECT BOLTS BETWEEN TEMPORARY PL, LONGITUDINAL STRINGER AND NEW CONNECTION ANGLE RIGHT AFTER PLACEMENT OF PANEL G2.

FOR "AS CONSTRUCTED PLANS" ONLY

SR 433 JOB NO. 0001 SHEET 0

Bridge Design Engr.	Kapur, J	M:\Y-Team\Lewis_Clark Rehab\Modifications\window files\FB6 P6 MOD.WND							
Supervisor	Kirker, KN								
Designed By	Talukdar, M								
Checked By									
Detailed By	Evans, P.D.								
Bridge Projects Engr.									
Prelim. Plan By									
Architect/Specialist		DATE	REVISION	BY	APP'D				

REGION NO.	STATE	FED. AID PROJ. NO.	SHEET NO.	TOTAL SHEETS
10	WASH.			
JOB NUMBER				
1244				

Mon Oct 27 12:59:25 2003

BRIDGE AND STRUCTURES OFFICE

MUNINDRA TALUKDAR — STATE OF WASHINGTON — 27628 — REGISTERED PROFESSIONAL ENGINEER — EXPIRES 6/1/04

Washington State Department of Transportation

SR 433
LEWIS & CLARK BRIDGE
DECK REPLACEMENT

FLOORBEAM MODIFICATION AT PIER 6

BRIDGE SHEET NO. 0A49A

SHEET 181A OF 258 SHEETS

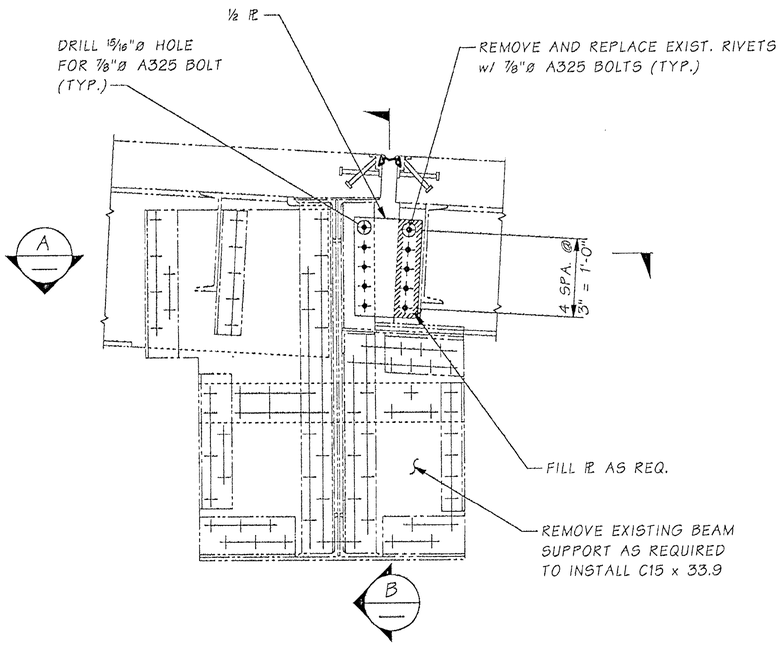

ELEVATION ~ EXISTING FLOORBEAM @ PIER 6

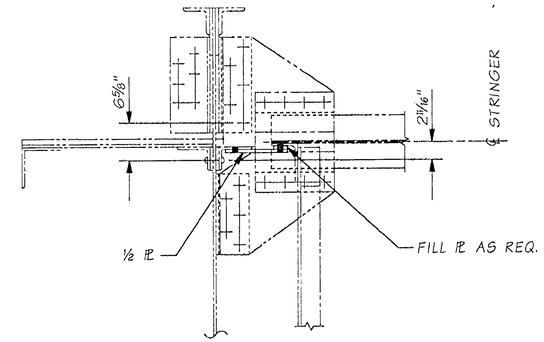

SECTION A

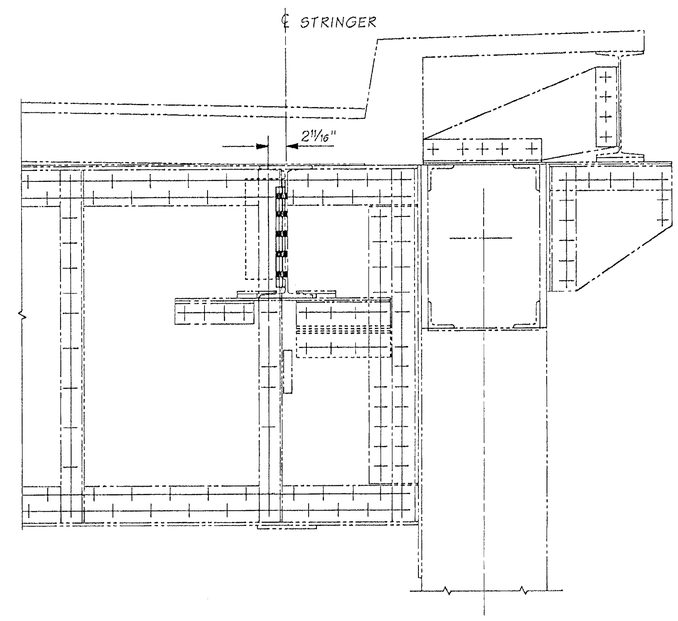

SECTION B

FOR "AS CONSTRUCTED" ONLY

SR 433 JOB NO. 0001 SHEET 0

Bridge Design Engr.	Kapur, J	M:\Y-Team\Lewis_Clark Rehab\Modifications\window files\P6 TEMP SUPPORT.WND				REGION NO.	STATE	FED. AID PROJ. NO.	SHEET NO.	TOTAL SHEETS
Supervisor	Kirker, KN					10	WASH.			
Designed By	Talukdar, M									
Checked By										
Detailed By	Evans, P.D.					JOB NUMBER				
Bridge Projects Engr.										
Prelim. Plan By										
Architect/Specialist		DATE	REVISION	BY	APP'D	6444				

Tue Dec 30 14:28:16 2003

BRIDGE AND STRUCTURES OFFICE

MUNINDRA TALUKDAR, STATE OF WASHINGTON, 27628, REGISTERED PROFESSIONAL ENGINEER, EXPIRES 6/1/04

Washington State Department of Transportation

SR 433
LEWIS & CLARK BRIDGE
DECK REPLACEMENT

PIER 6 TEMPORARY BEAM SUPPORT

BRIDGE SHEET NO. 0A49B

SHEET 181B OF 258 SHEETS

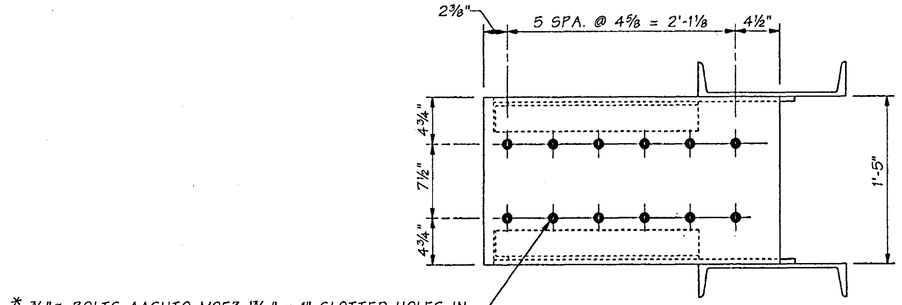

* ¾"ø BOLTS AASHTO M253 13/16" x 1" SLOTTED HOLES IN STRINGER FLANGE. 13/16"ø HOLES IN STRINGER SEAT. STRINGER FLANGE NOT SHOWN FOR CLARITY.

SECTION B

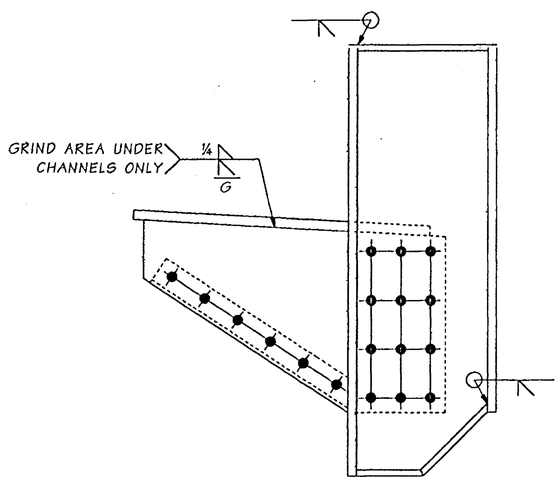

ELEVATION

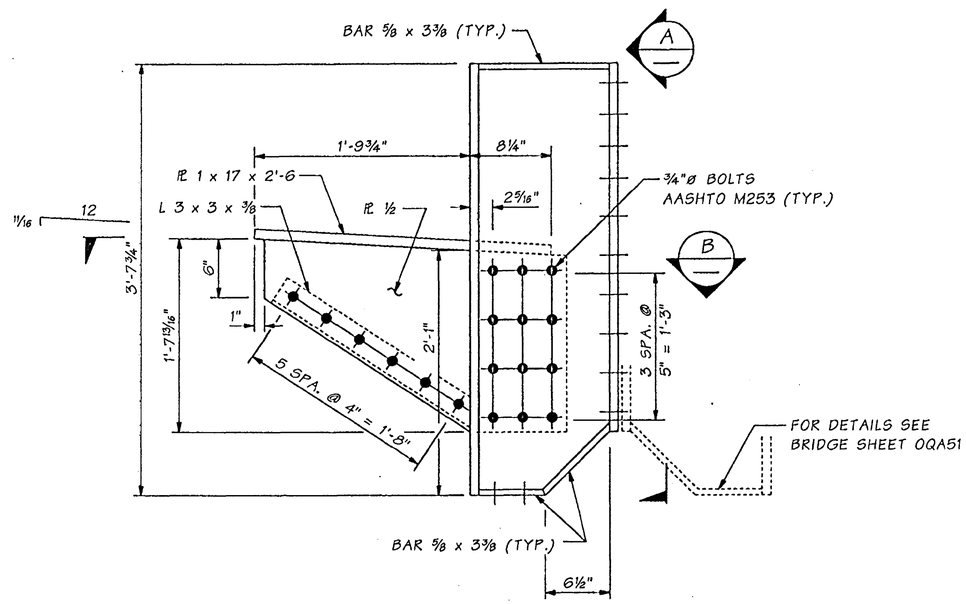

ELEVATION

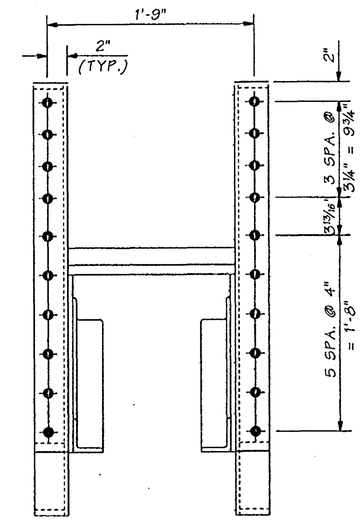

VIEW A

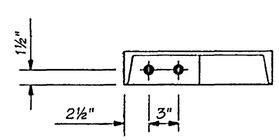

FOR "AS CONSTRUCTED PLANS" ONLY

SR 433 JOB NO. 1 SHEET 50

Bridge Design Engr.	Kapur, J		M:\Y-Team\Lewis_Clark Rehab\Oregon Appr\Window files\P6 FB NORTH SEAT.WND								
Supervisor	Kirker, KN	08/02									
Designed By	Talukdar, M	08/02									
Checked By	Peralta, R	08/02									
Detailed By	House, L	08/02									
Bridge Projects Engr.											
Prelim. Plan By											
Architect/Specialist			DATE	REVISION	BY	APP'D					

REGION NO.	STATE	FED. AID PROJ. NO.	SHEET NO.	TOTAL SHEETS
10	WASH.	ACBH - 0433(007)		
JOB NUMBER 02x310				

Tue Sep 17 11:49:59 2002

STRUCTURAL REGISTERED PROFESSIONAL ENGINEER 71334 STATE OF OREGON SEPT. 10, 2001 JUGESH KAPUR — EXPIRES 06-30-2003

BRIDGE AND STRUCTURES OFFICE

KARL N. KIRKER STATE OF WASHINGTON 16246 REGISTERED PROFESSIONAL ENGINEER — EXPIRES 11/3/03

Washington State Department of Transportation

SR 433
LEWIS AND CLARK BRIDGE
DECK REPLACEMENT

PIER 6 - FIXED SIDE STRINGER SEAT DETAILS

BRIDGE SHEET NO. 0A50

SHEET 182 OF 258 SHEETS

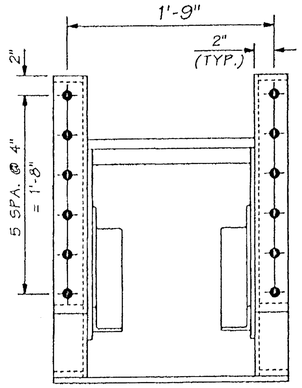

VIEW A

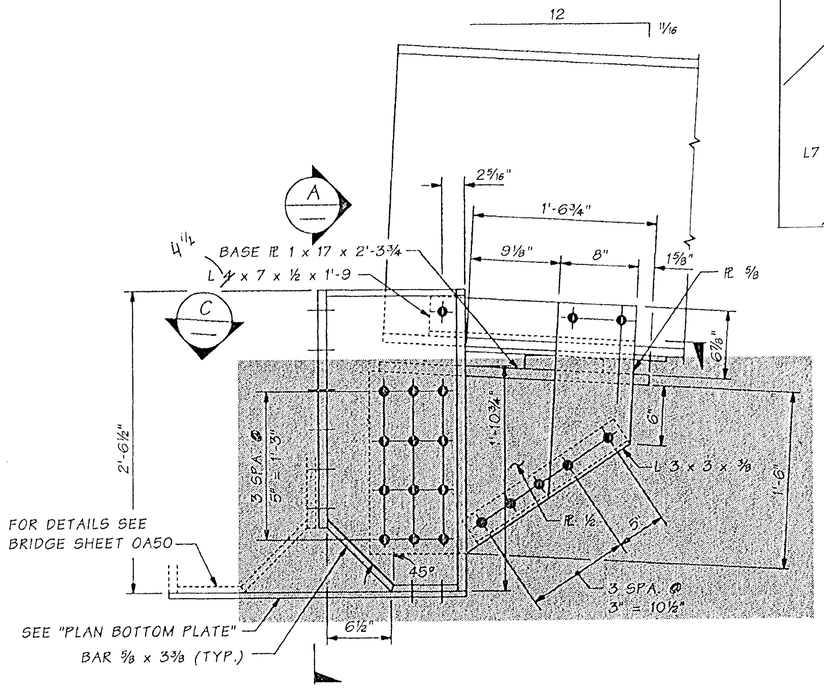

ELEVATION

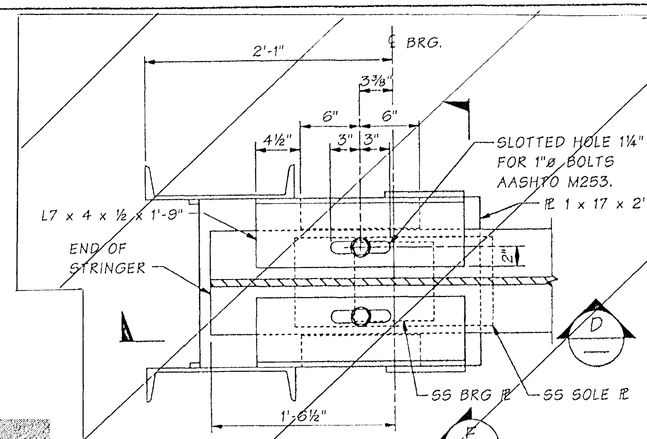

SECTION C

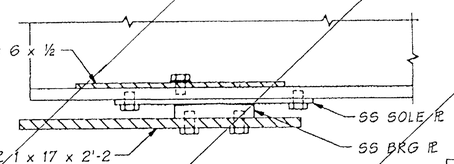

SECTION D

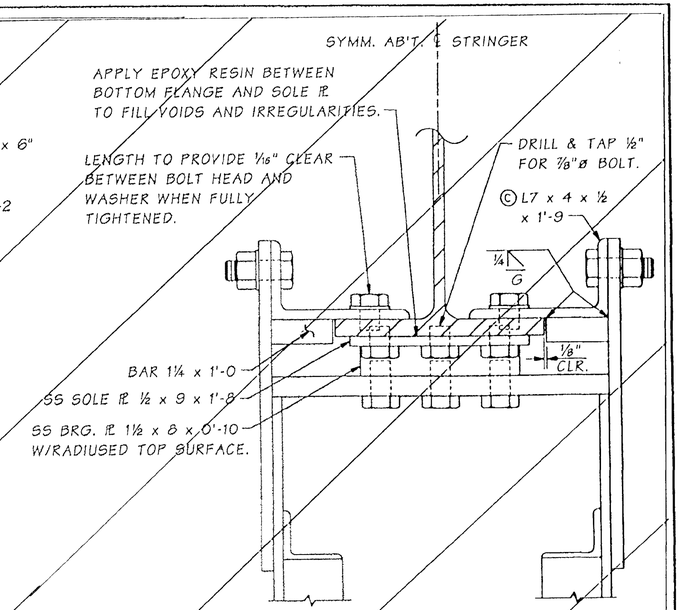

SECTION E

DELETED

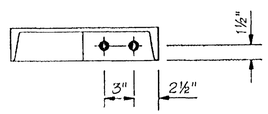

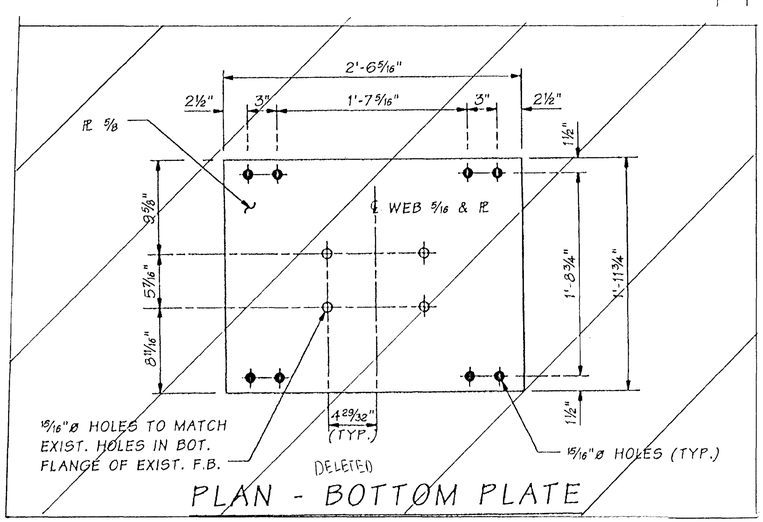

DELETED

PLAN - BOTTOM PLATE

– SEE BRIDGE SHEET OA60A FOR PLAN VIEW OF PIER 6 BOTTOM PLATE

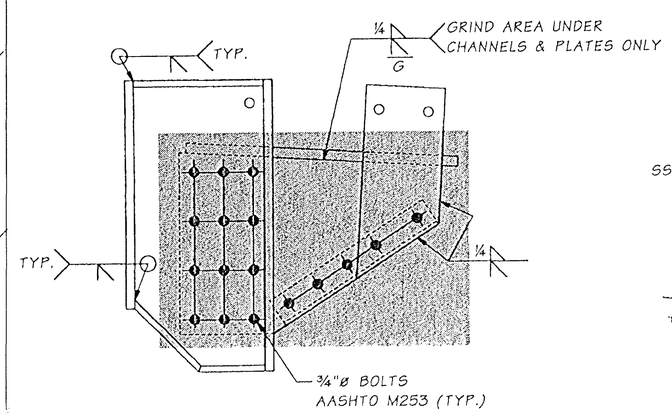

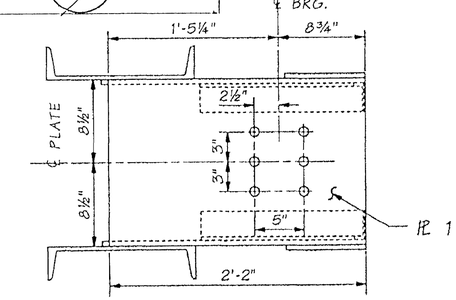

PLAN ~ BASE PLATE

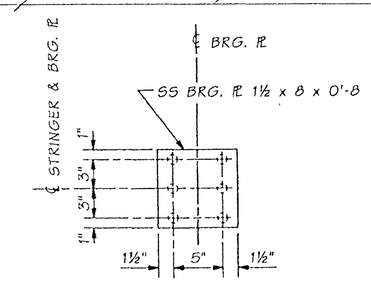

PLAN

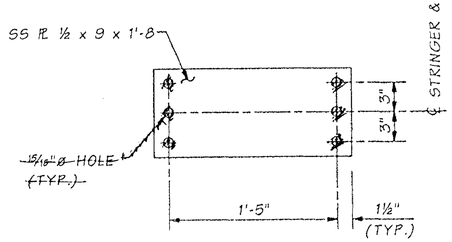

PLAN - SOLE PLATE

2 REQUIRED

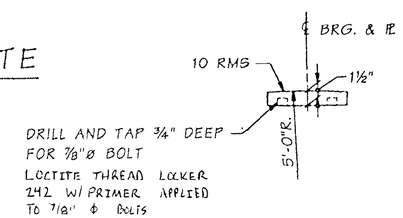

ELEVATION

BEARING PLATE

2 REQUIRED

FOR "AS CONSTRUCTED PLANS" ONLY

Bridge Design Engr.	Kapur, J		M:\Y-Team\Lewis_Clark Rehab\Oregon Appr\window files\PG FB SOUTH SEAT.WND			REGION NO.	STATE	FED. AID PROJ. NO.	SHEET NO.	TOTAL SHEETS
Supervisor	Kirker, KN	08/02				10	WASH.			
Designed By	Talukdar, M	08/02								
Checked By	Peralta, R	08/02				JOB NUMBER		ACBH - 0433(007)		
Detailed By	House, L	08/02				02x310				
Bridge Projects Engr.			10/02	MODIFIED STRINGER SEAT ASSEMBLY	MT					
Prelim. Plan By										
Architect/Specialist			DATE	REVISION	BY	APP'D				

Tue Oct 29 15:21:03 2002

STRUCTURAL REGISTERED PROFESSIONAL ENGINEER 77344 OREGON SEPT. 10, 2002 JUGESH KAPUR
EXPIRES 06-30-2003

BRIDGE AND STRUCTURES OFFICE

KARL N. KIRKER STATE OF WASHINGTON 22344 PROFESSIONAL ENGINEER
EXPIRES 11/3/03

Washington State Department of Transportation

SR 433
LEWIS AND CLARK BRIDGE
DECK REPLACEMENT

PIER 6 - EXPANSION SIDE
STRINGER SEAT DETAILS

BRIDGE SHEET NO. 0A51

SHEET 183 OF 258 SHEETS

SR 433 , NO. 1 SHEET 51

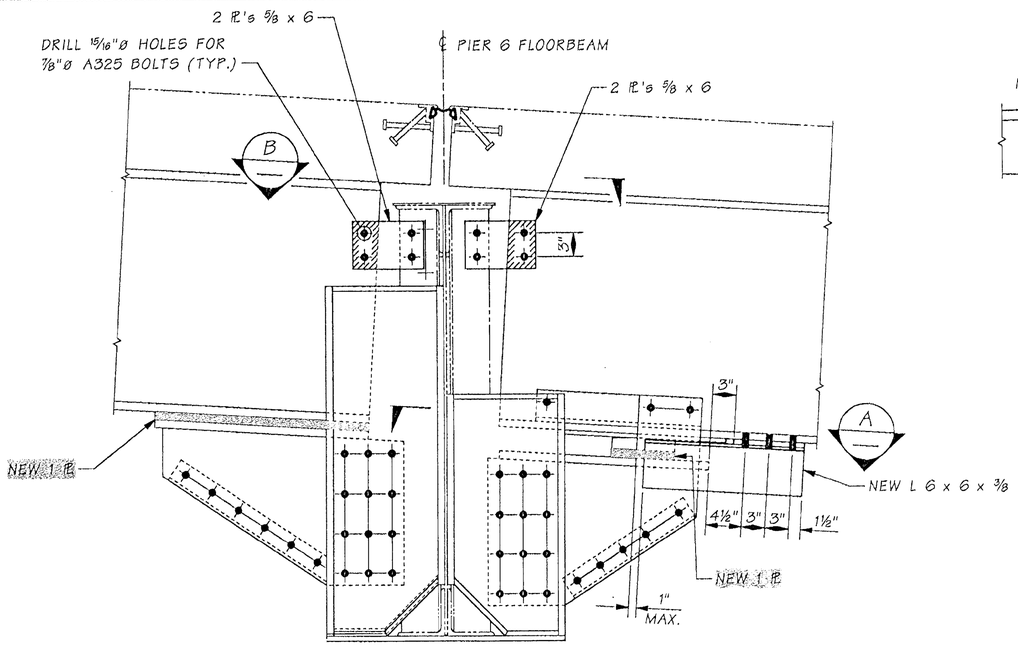

PIER 6 STRINGER SEAT

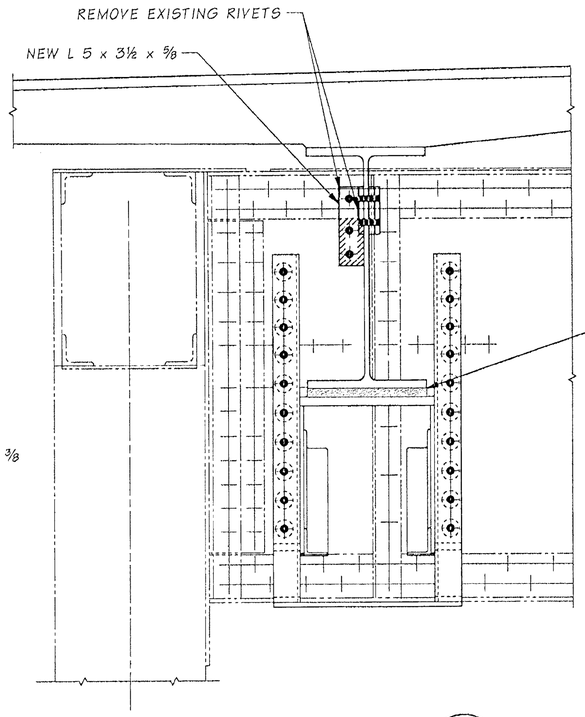

SECTION C

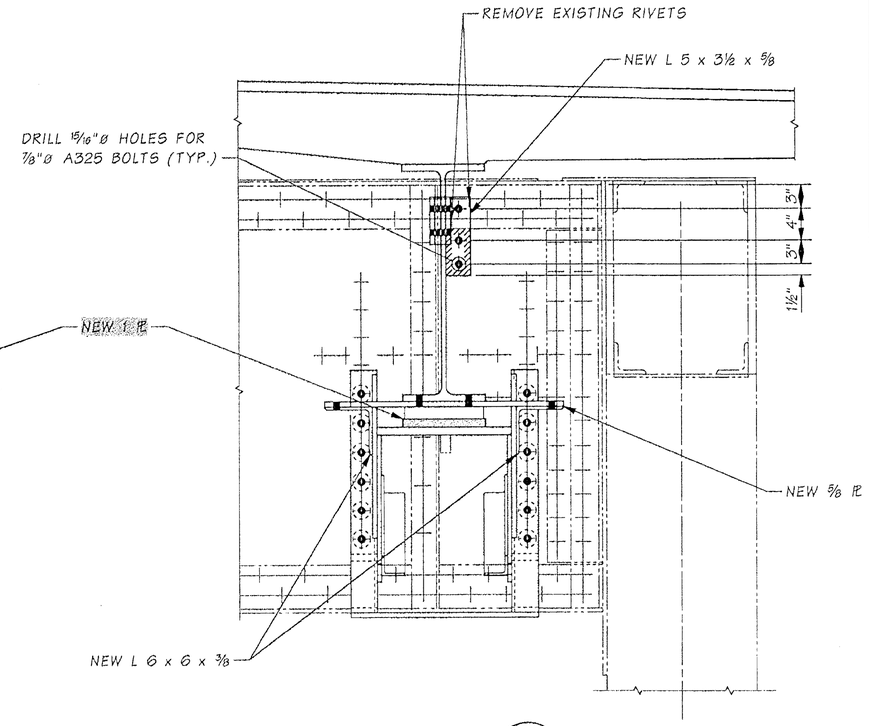

SECTION D

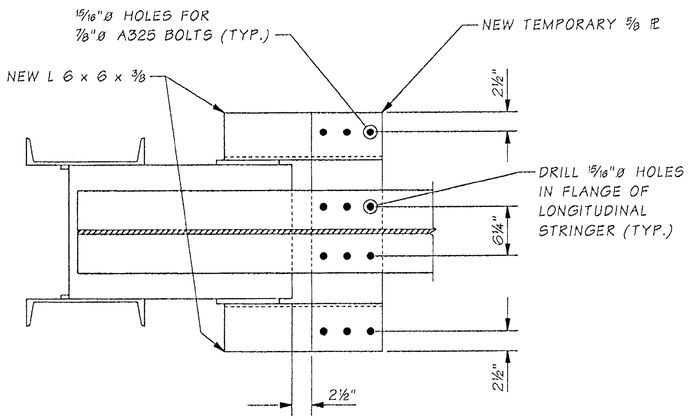

SECTION A

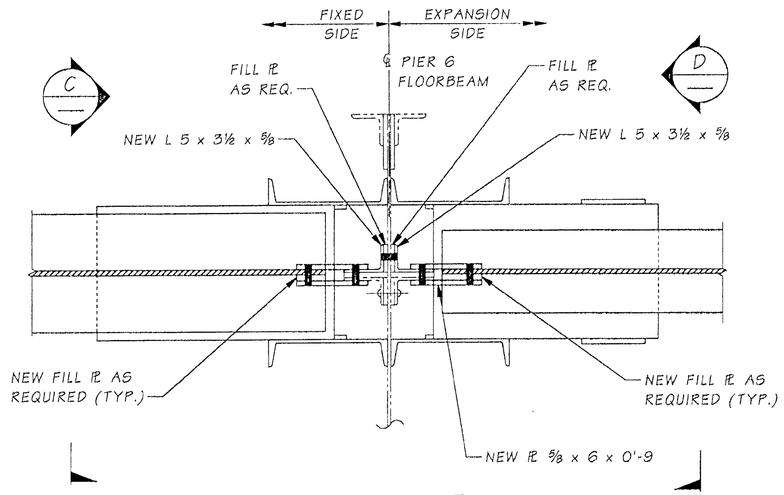

SECTION B

NOTES

1. ALL CONNECTIONS SHALL BE MADE ON EXPANSION SIDE STRINGER PANEL AS SHOWN BEFORE PANEL G2 IS PLACED.
2. DISCONNECT BOLTS BETWEEN TEMPORARY PL, LONGITUDINAL STRINGER AND NEW CONNECTION ANGLE RIGHT AFTER PLACEMENT OF PANEL G2.

FOR "AS CONSTRUCTED PLANS" ONLY

SR 433 JOB NO. 0001 SHEET 0

Bridge Design Engr.	Kapur, J	M:\Y-Team\Lewis_Clark Rehab\Modifications\window files\P6 RAISED 1IN.WND				REGION NO.	STATE	FED. AID PROJ. NO.	SHEET NO.	TOTAL SHEETS
Supervisor	Kirker, KN					10	WASH.			
Designed By	Talukdar, M					JOB NUMBER				
Checked By										
Detailed By	Evans, P.D.									
Bridge Projects Engr.										
Prelim. Plan By										
Architect/Specialist		DATE	REVISION	BY	APP'D	6/1/04				

BRIDGE AND STRUCTURES OFFICE

MUNINDRA TALUKDAR STATE OF WASHINGTON 27628 REGISTERED PROFESSIONAL ENGINEER EXPIRES 6/1/04

Washington State Department of Transportation

SR 433
LEWIS & CLARK BRIDGE
DECK REPLACEMENT

PIER 6 MODIFICATION

BRIDGE SHEET NO. 0A51A

SHEET 183A OF 256 SHEETS

Tue Dec 30 14:31:42 2003

CHANGES

1. SLOTTED HOLE IN FLANGE IS ELIMINATED.
2. COPE L6 x 6 x ½ AS SHOWN
3. FIELD DRILL HOLES CONNECTING ℞ TO ANGLE IN FIELD AFTER FINAL ELEVATION ADJUSTMENT.
4. ALL OTHER DETAILS REMAIN THE SAME.

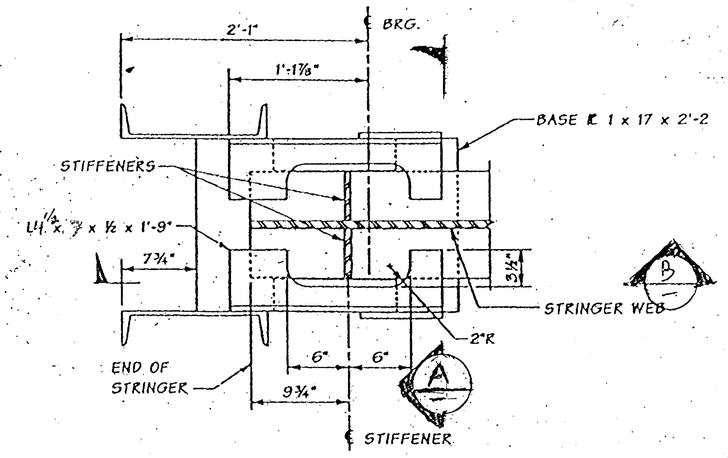

PLAN - GIRDER SEAT
EXP SIDE PIER 6

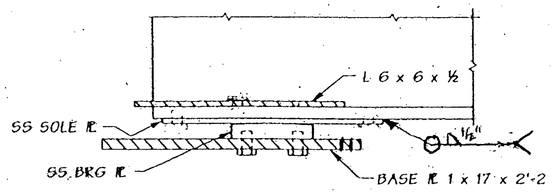

SECTION B

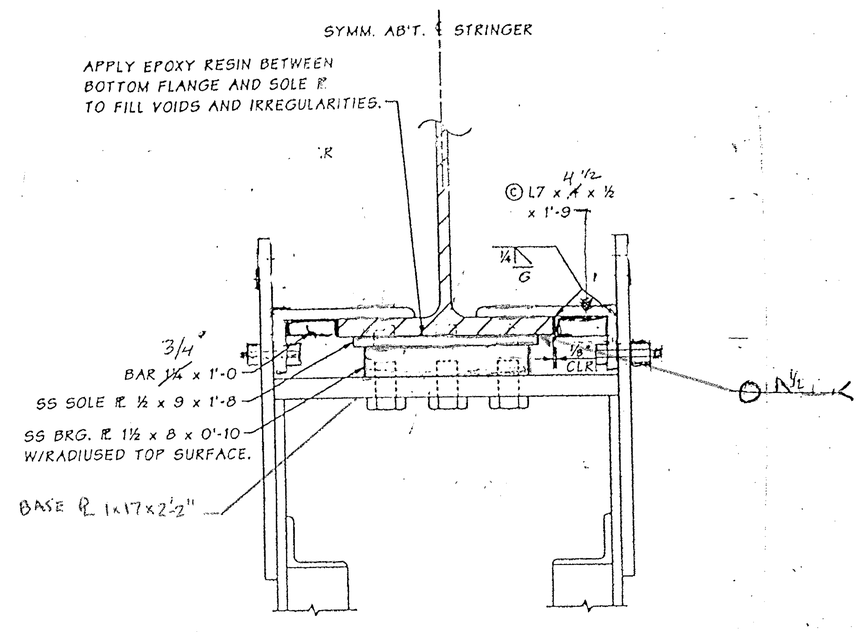

SECTION A

FOR "AS CONSTRUCTED PLANS" ONLY

FILE NAME	C:\AAWork\kelso\Svensen's Curve\L342SWASTESITE.dgn								PLOT11
TIME	02:37:18 PM				REGION NO. 10	STATE WASH	FED.AID PROJ.NO.	Washington State Department of Transportation	SR 433 LEWIS AND CLARK BRIDE DECK REPLACEMENT	OA518
DATE	08/17/2005				JOB NUMBER					SHEET 183B OF 258 SHEETS
PLOTTED BY	spohnk									
DESIGNED BY										
ENTERED BY										
CHECKED BY					CONTRACT NO. 6444		LOCATION NO.			
PROJ. ENGR.										
REGIONAL ADM.		REVISION	DATE	BY						

P.E. STAMP BOX DATE

P.E. STAMP BOX DATE

PIER 6 - BEARING DETAILS
EXPANSION SIDE

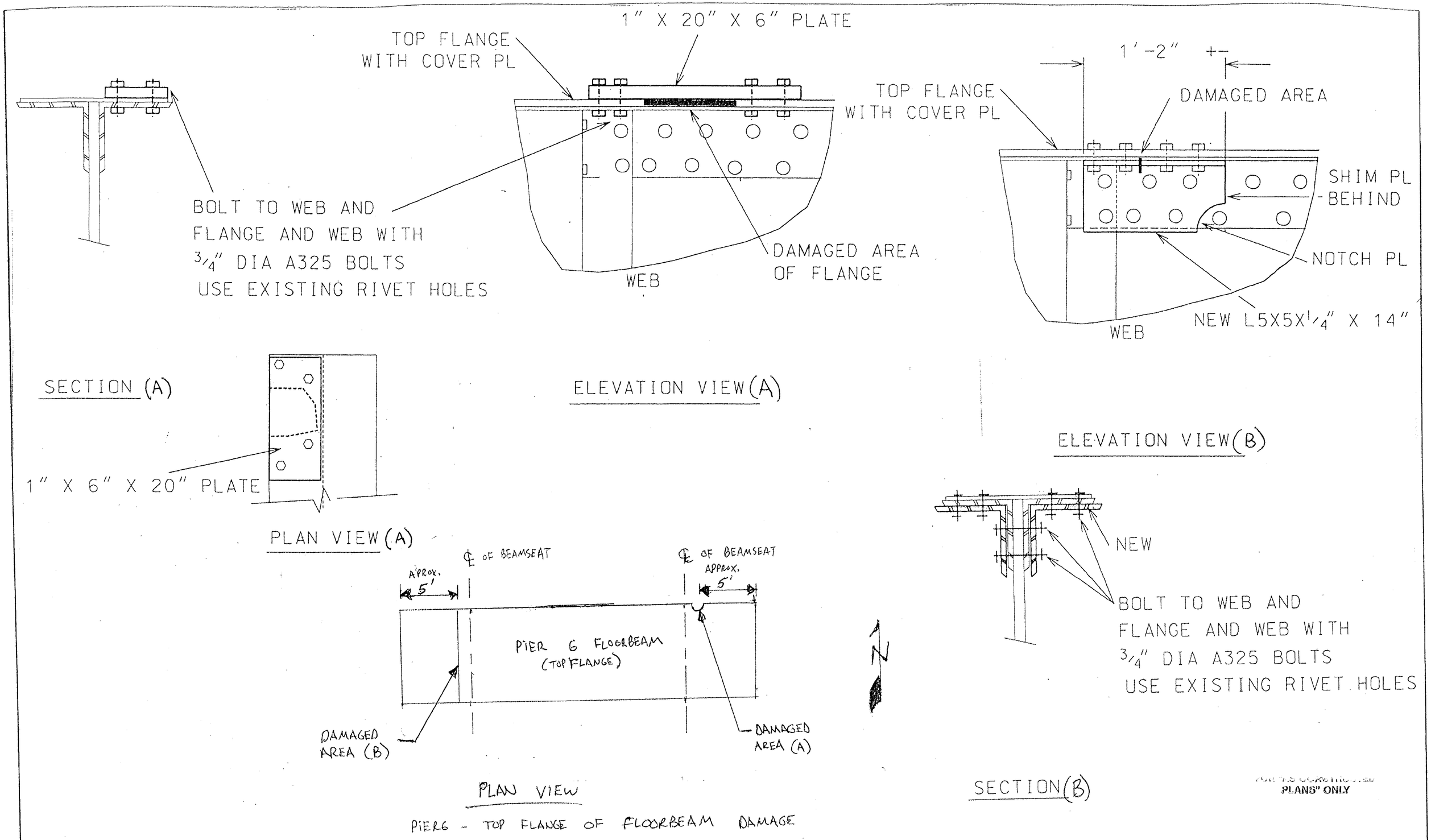

PLANS" ONLY

FILE NAME									PLOT11
TIME 02:37:18 PM				REGION NO. 10	STATE WASH	FED.AID PROJ.NO.			0A51C
DATE 08/17/2005				JOB NUMBER					
PLOTTED BY spohnk									
DESIGNED BY									SHEET 183C OF 258 SHEETS
ENTERED BY				CONTRACT NO. 6444		LOCATION NO.			
CHECKED BY									
PROJ. ENGR.									
REGIONAL ADM.	REVISION	DATE	BY				P.E. STAMP BOX DATE	P.E. STAMP BOX DATE	

Washington State Department of Transportation

SR 433
LEWIS AND CLARK BRIDE
DECK REPLACEMENT

PIER 6 - FLANGE REPAIR

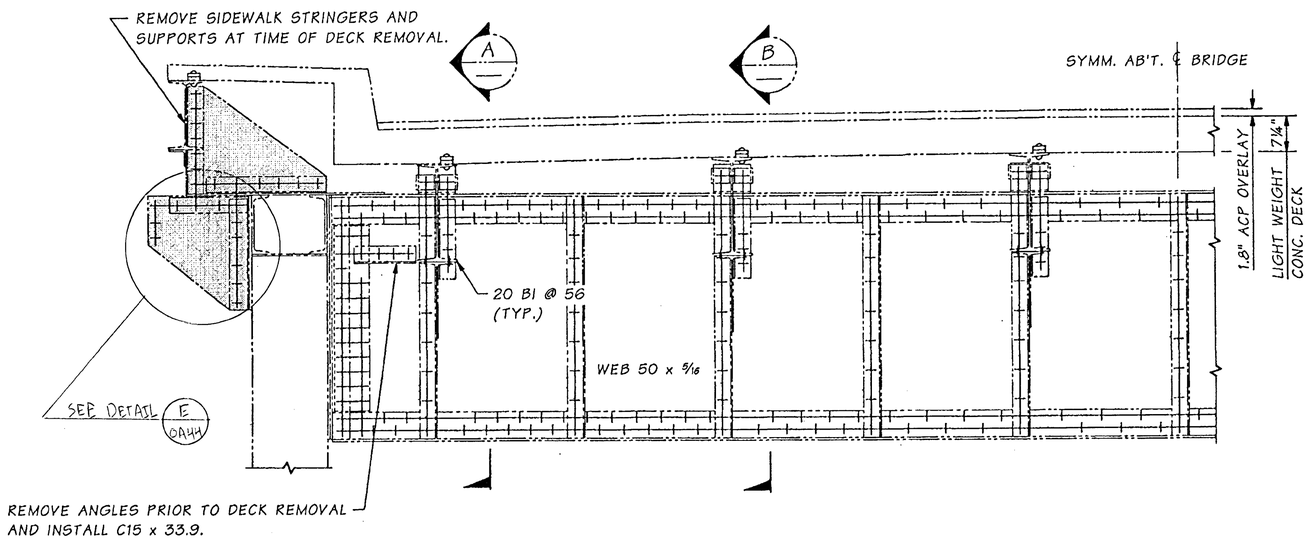

ELEVATION ~ EXISTING DECK & FLOORBEAM 1& 2

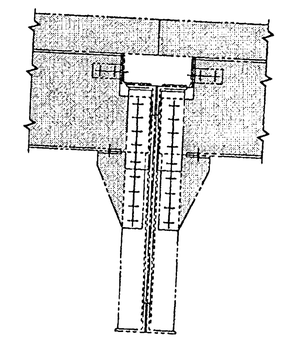

SECTION A

REMOVE SHADED PORTION AT TIME OF DECK REMOVAL

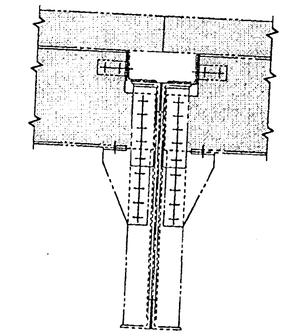

SECTION B

REMOVE SHADED PORTION AT TIME OF DECK REMOVAL

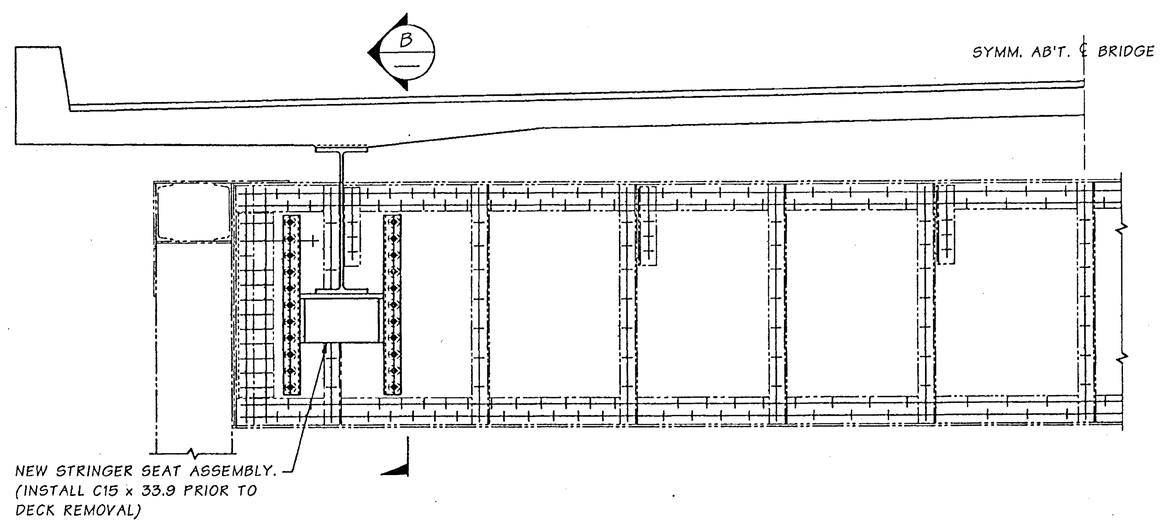

ELEVATION ~ MODIFIED FLOORBEAM & NEW DECK

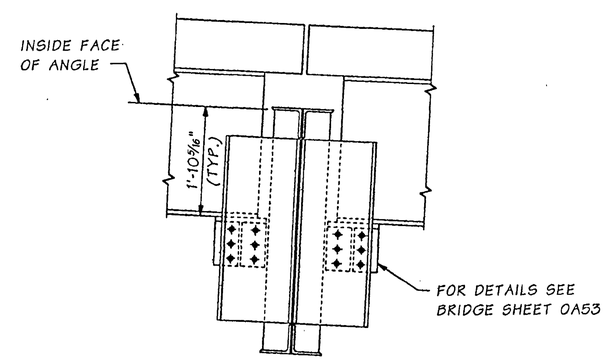

FOR "AS CONSTRUCTED PLANS" ONLY

Bridge Design Engr.	Kapur, J		M:\Y-Team\Lewis_Clark Rehab\Oregon Appr\Window files\FB 1 & 2 - 84 TRUSS.WND
Supervisor	Kirker, KN	08/02	
Designed By	Talukdar, M	08/02	
Checked By	Peralta, R	08/02	
Detailed By	House, L	08/02	
Bridge Projects Engr.			
Prelim. Plan By			
Architect/Specialist			

DATE	REVISION	BY	APP'D

REGION NO.	STATE	FED. AID PROJ. NO.	SHEET NO.	TOTAL SHEETS
10	WASH.	ACBH - 0433(007)		
JOB NUMBER 02x310				

STRUCTURAL REGISTERED PROFESSIONAL ENGINEER 71344 OREGON SEPT. 10, 2002 JUGESH KAPUR
EXPIRES 06-30-2003

BRIDGE AND STRUCTURES OFFICE

KARL N. KIRKER STATE OF WASHINGTON 16296 REGISTERED PROFESSIONAL ENGINEER
EXPIRES 11/3/03

Washington State Department of Transportation

SR 433
LEWIS AND CLARK BRIDGE
DECK REPLACEMENT

FLOORBEAM 1 & 2 - 84' SPAN

BRIDGE SHEET NO. 0A52

SHEET 184 OF 258 SHEETS

SR 433 JOB NO. 1 SHEET 52

Tue Sep 17 11:48:51 2002

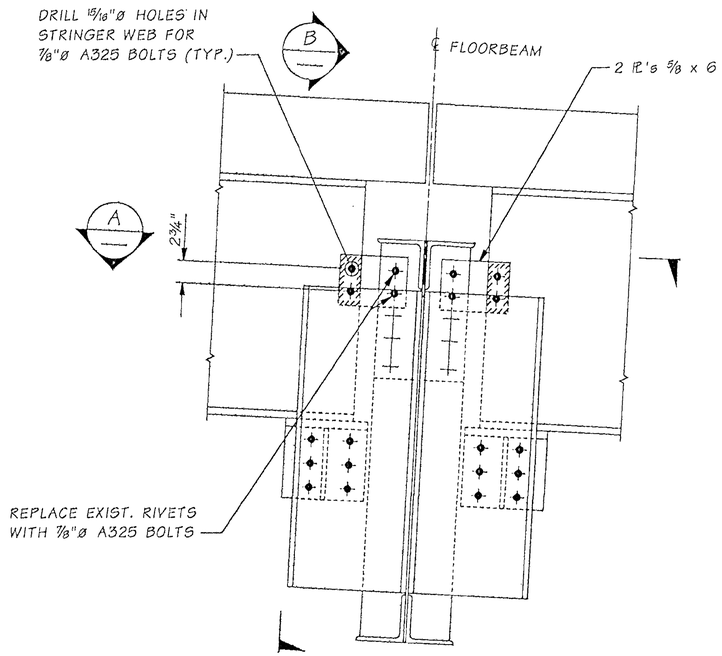

FLOORBEAM 1 & 2 - STRINGER SEATS
84' SPAN

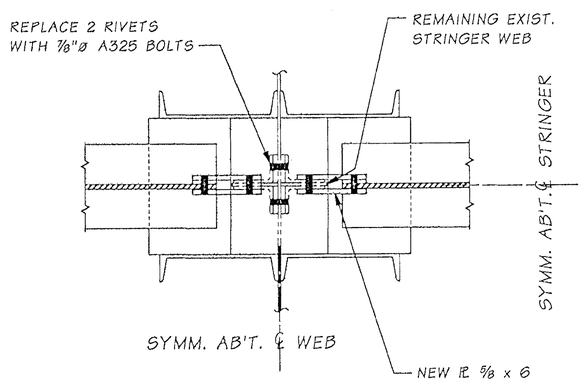

SECTION A

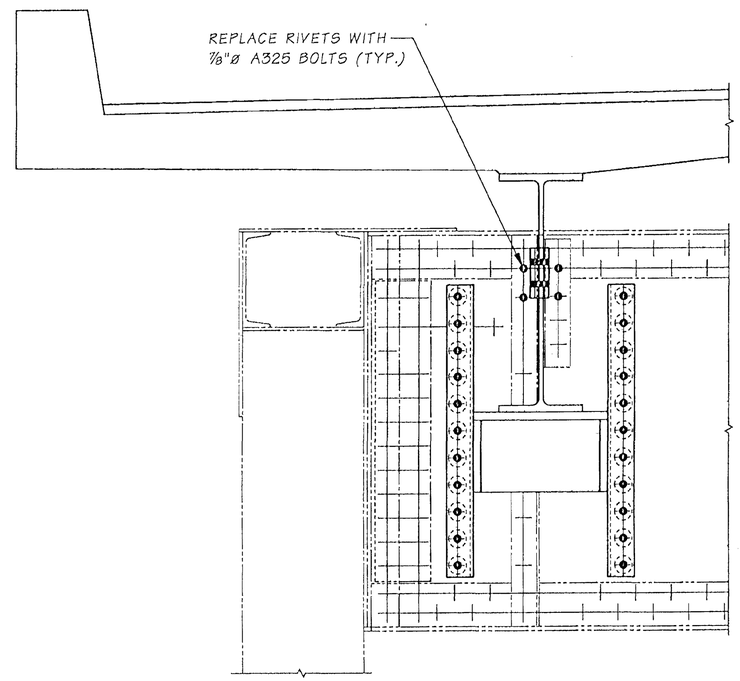

SECTION B

FOR "AS CONSTRUCTED PLANS" ONLY

SR 433 JOB NO. 0001 SHEET 0

Bridge Design Engr.	Kapur, J	M:\Y-Team\Lewis_Clark Rehab\Modifications\window files\FB 1 & 2 84FT MOD.WND							
Supervisor	Kirker, KN				REGION NO.	STATE	FED. AID PROJ. NO.	SHEET NO.	TOTAL SHEETS
Designed By	Talukdar, M				10	WASH.			
Checked By									
Detailed By	Evans, P.D.				JOB NUMBER				
Bridge Projects Engr.									
Prelim. Plan By									
Architect/Specialist		DATE	REVISION	BY	APP'D	6/4/4			

Mon Oct 27 12:55:06 2003

BRIDGE AND STRUCTURES OFFICE

MONINDRA TALUKDAR — STATE OF WASHINGTON — REGISTERED PROFESSIONAL ENGINEER — EXPIRES 6/1/04

Washington State Department of Transportation

SR 433
LEWIS & CLARK BRIDGE
DECK REPLACEMENT

FLOORBEAM 1 & 2 MODIFICATION AT 84' SPAN

BRIDGE SHEET NO. 0A52B

SHEET 184A OF 258 SHEETS

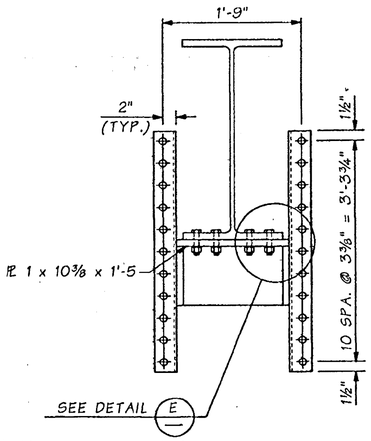

SECTION A

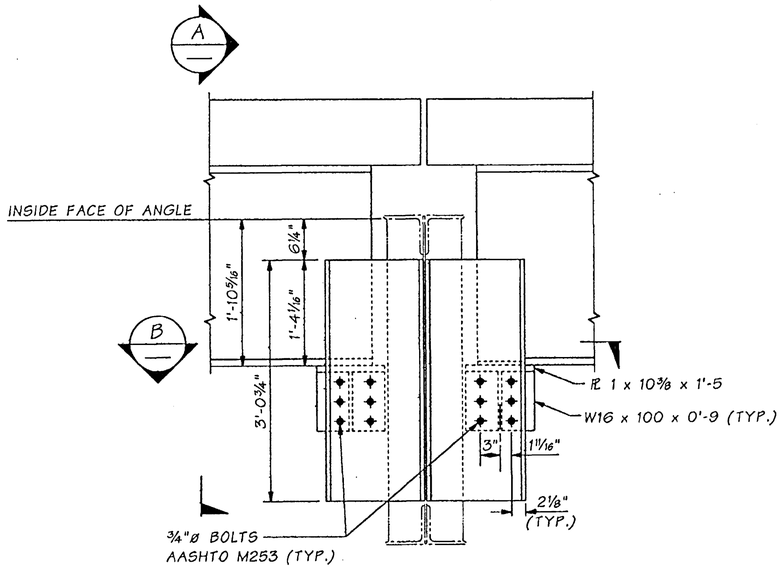

ELEVATION

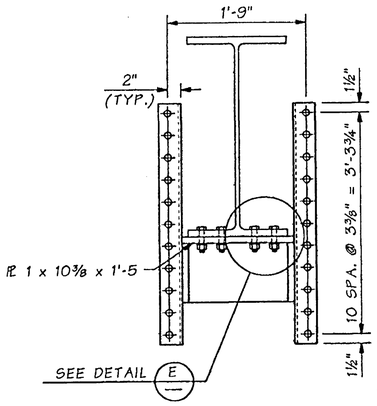

SECTION C

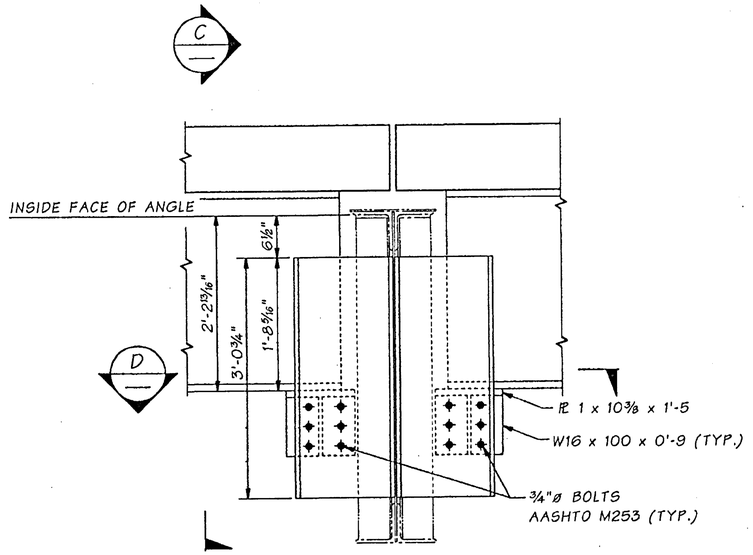

ELEVATION

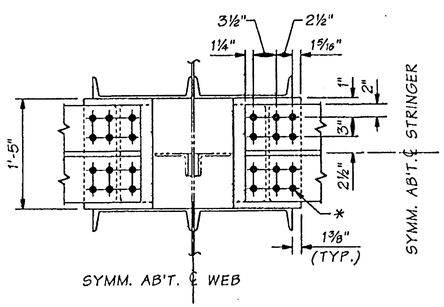

SECTION B

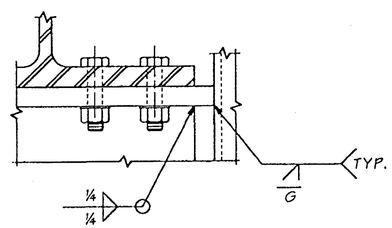

DETAIL E

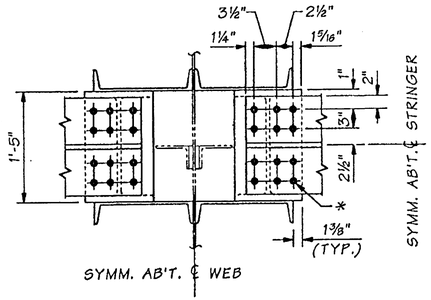

SECTION D

FLOORBEAM #1 & 2 - 84' SPAN

FLOORBEAM #1, 1A & 3 - 168'-3" SPAN

* ¾"ø BOLTS AASHTO M253
13/16" x 1" SLOTTED HOLES IN STRINGER FLANGE. 13/16"ø HOLES IN STRINGER SEAT.

FOR "AS CONSTRUCTED PLANS" ONLY

SR 433 JOB NO. 1 SHEET 53

Bridge Design Engr.	Kapur, J		M:\Y-Team\Lewis_Clark Rehab\Oregon Appr\Window files\FB 84 168 SEAT.WND								
Supervisor	Kirker, KN	08/02									
Designed By	Talukdar, M	08/02									
Checked By	Peralta, R	08/02									
Detailed By	House, L	08/02									
Bridge Projects Engr.											
Prelim. Plan By											
Architect/Specialist			DATE	REVISION	BY	APP'D	REGION NO.	STATE	FED. AID PROJ. NO.	SHEET NO.	TOTAL SHEETS
							10	WASH.	ACBH - 0433(007)		
							JOB NUMBER 02x310				

Tue Sep 17 11:49:20 2002

STRUCTURAL REGISTERED PROFESSIONAL ENGINEER 71844 OREGON SEPT. 10, 2002 JUGESH KAPUR
EXPIRES 06-30-2003

BRIDGE AND STRUCTURES OFFICE

KARL N. KIRKER STATE OF WASHINGTON 10206 REGISTERED PROFESSIONAL ENGINEER 9/18/02
EXPIRES 11/3/03

Washington State Department of Transportation

SR 433
LEWIS AND CLARK BRIDGE
DECK REPLACEMENT

STRINGER SEAT DETAILS
84' AND 168' SPANS

BRIDGE SHEET NO. 0A53

SHEET 185 OF 258 SHEETS

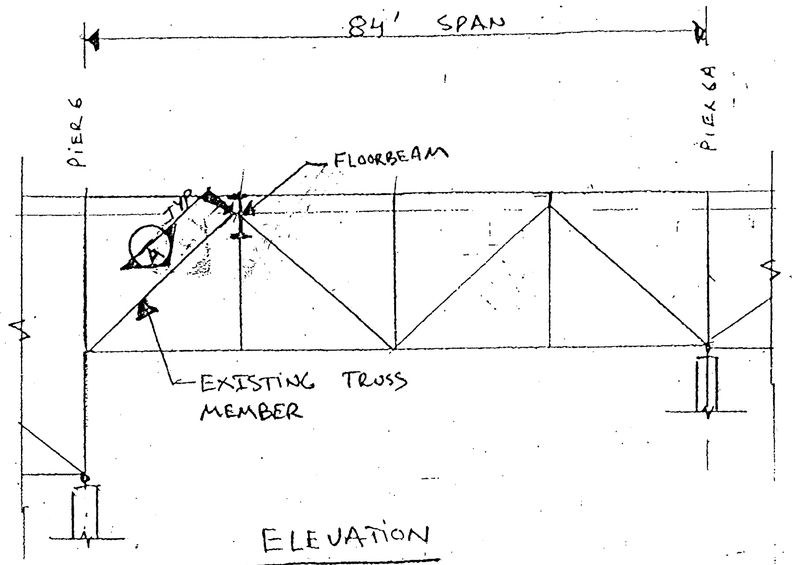

ELEVATION

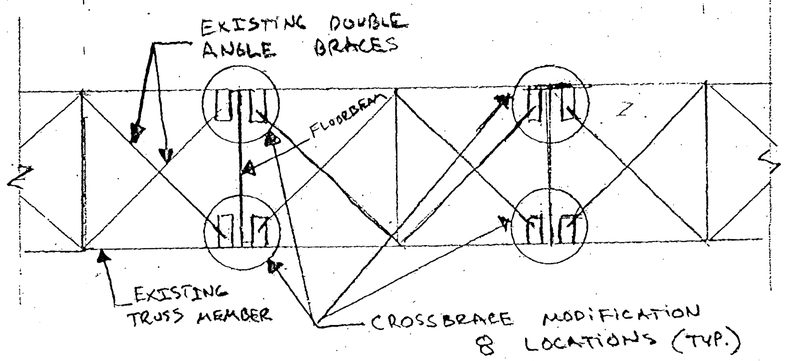

PLAN

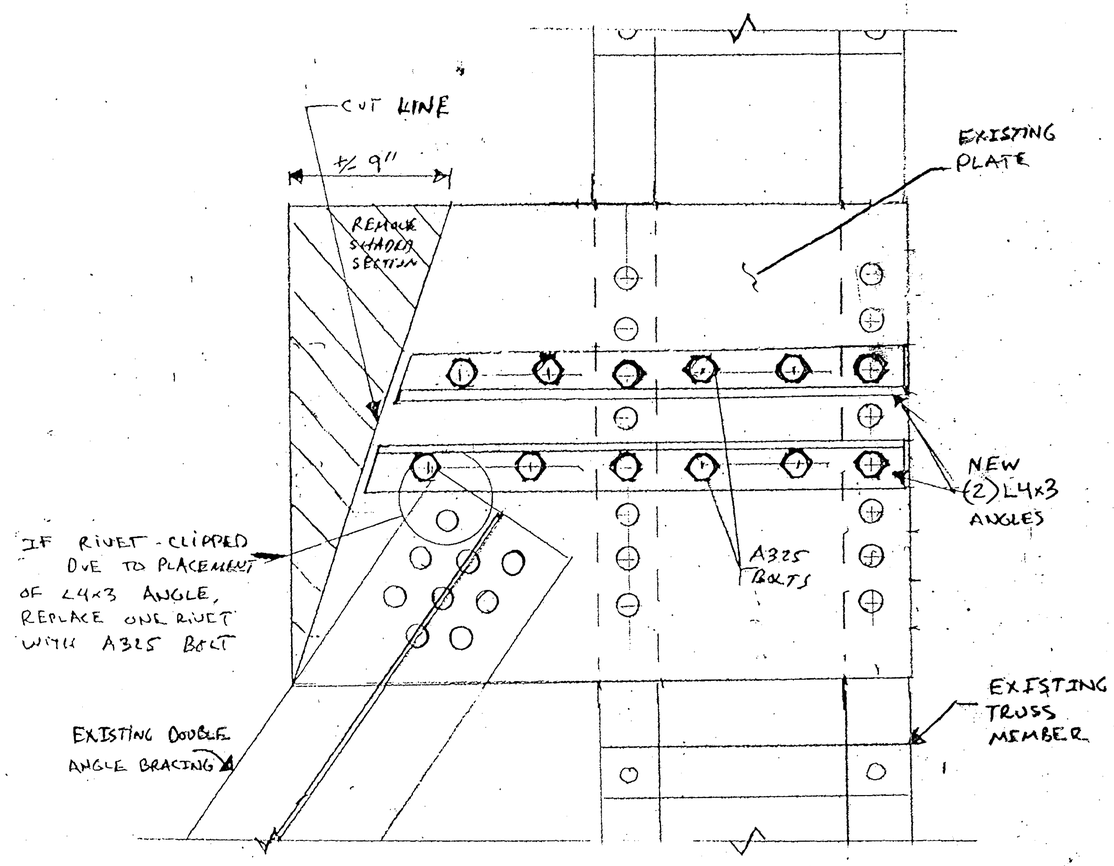

CROSSBRACE MODIFICATION (A) (TYP)

8 LOCATIONS - PIER 6 TO PIER 6A

NOTE: SHADED SECTION REMOVED TO ACCOMODATE NEW PANELS (LONGITUDINAL STRINGERS AND C-CHANNELS) INSTALLATION.

FOR "AS CONSTRUCTED PLANS" ONLY

FILE NAME	C:\AAWork\kelso\Svensen's Curve\L3425WASTESITE.dgn				REGION NO.	STATE	FED.AID PROJ.NO.			PLOT11
TIME	02:37:18 PM				10	WASH			Washington State Department of Transportation	SR 433 LEWIS AND CLARK BRIDE DECK REPLACEMENT
DATE	08/17/2005				JOB NUMBER					0A53A
PLOTTED BY	spahnk									SHEET 185A OF 258 SHEETS
DESIGNED BY										
ENTERED BY					CONTRACT NO.		LOCATION NO.			
CHECKED BY					6444					
PROJ. ENGR.										
REGIONAL ADM.		REVISION	DATE	BY				P.E. STAMP BOX DATE	P.E. STAMP BOX DATE	CROSSBRACE MODIFICATION PIER 6 TO PIER 6A

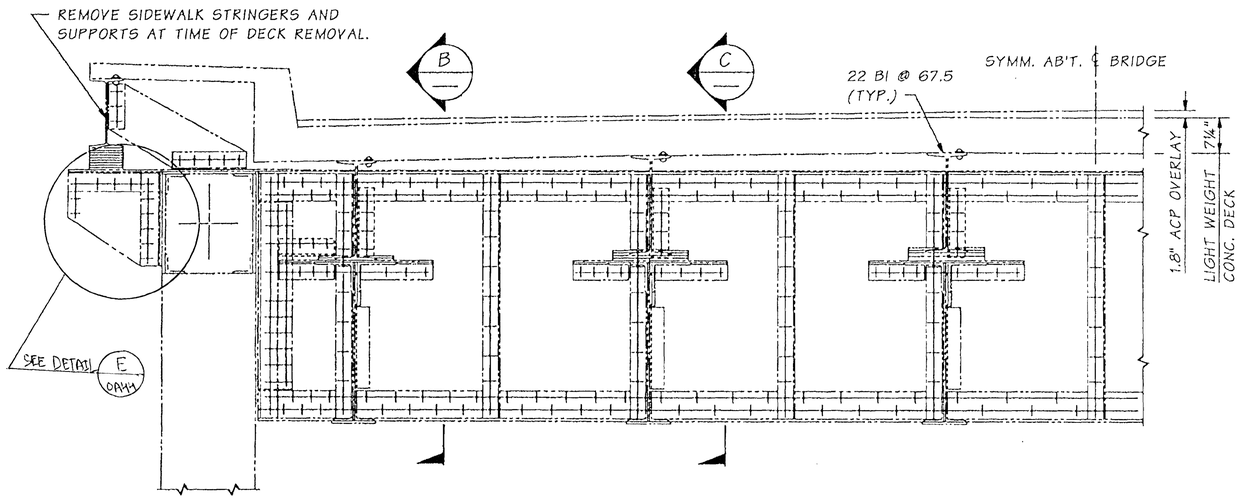

ELEVATION ~ EXISTING DECK & FLOORBEAM 5

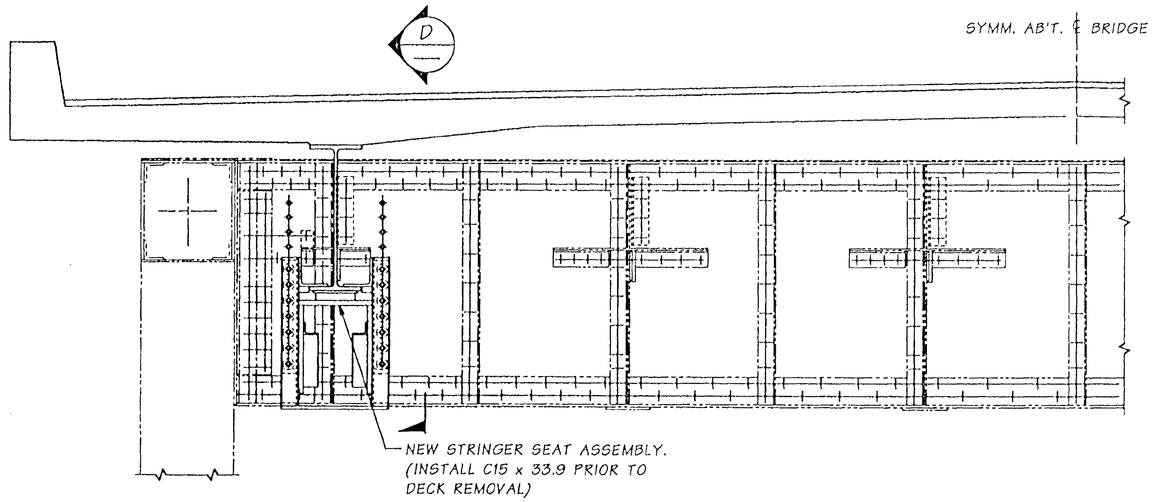

ELEVATION ~ MODIFIED FLOORBEAM & NEW DECK

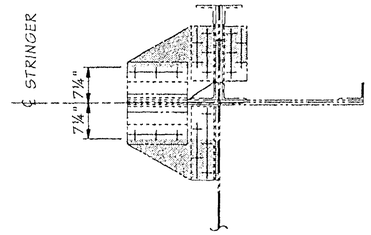

SECTION A

REMOVE SHADED PORTION AT EXTERIOR STRINGERS PRIOR TO DECK REMOVAL AND INSTALL C15 x 33.9

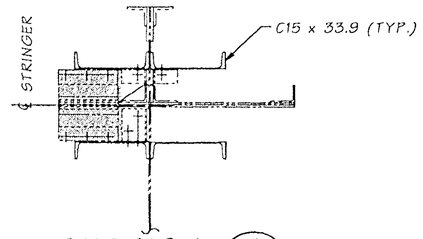

SECTION A

REMOVE SHADED PORTION AT EXTERIOR STRINGERS AT TIME OF DECK REMOVAL AND INSTALL STRINGER SEAT.

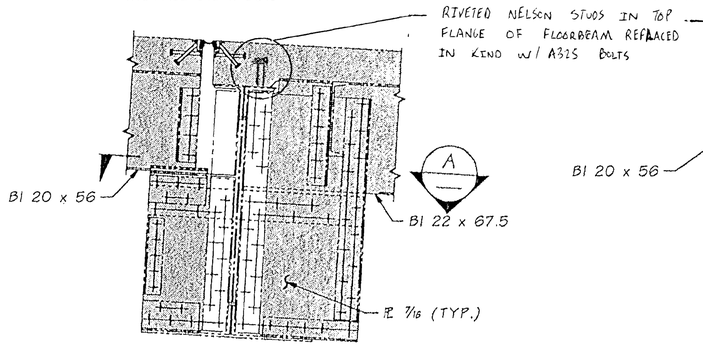

SECTION B

REOMVE SHADED PORTION AT EXTERIOR STRINGER AT TIME OF DECK REMOVAL.

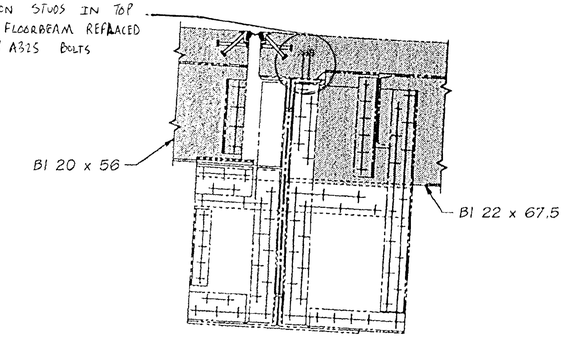

SECTION C

REOMVE SHADED PORTION AT INTERIOR STRINGER AT TIME OF DECK REMOVAL.

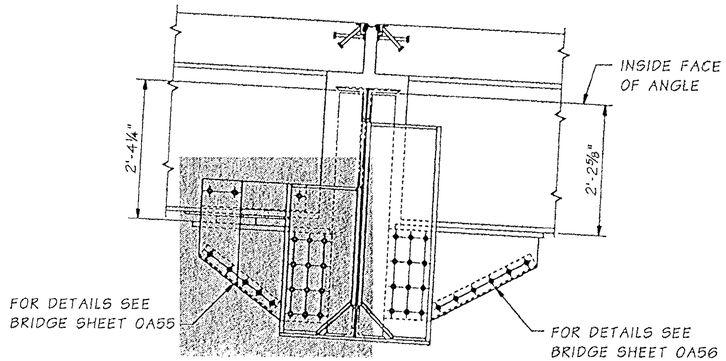

SECTION D

FOR "AS CONSTRUCTED PLANS" ONLY

Bridge Design Engr.	Kapur, J		M:\Y-Team\Lewis_Clark Rehab\Oregon Appr\window files\FB 5 - 168 SPAN.WND				REGION NO.	STATE	FED. AID PROJ. NO.	SHEET NO.	TOTAL SHEETS
Supervisor	Kirker, KN	08/02					10	WASH.			
Designed By	Talukdar, M	08/02									
Checked By	Peralta, R	08/02									
Detailed By	House, L	08/02					JOB NUMBER 02x310		ACBH - 0433(007)		
Bridge Projects Engr.			10/02	MODIFIED STRINGER SEAT ASSEMBLY	MT						
Prelim. Plan By											
Architect/Specialist			DATE	REVISION	BY	APP'D					

Tue Oct 29 15:21:48 2002

STRUCTURAL REGISTERED PROFESSIONAL ENGINEER 21344 OREGON SEPT. 10, 2002 JUGESH KAPUR
EXPIRES 06-30-2003

BRIDGE AND STRUCTURES OFFICE

KARL N. KIRKER REGISTERED PROFESSIONAL ENGINEER
EXPIRES 11/3/03

Washington State Department of Transportation

SR 433
LEWIS AND CLARK BRIDGE
DECK REPLACEMENT

FLOORBEAM 5 AT PIER 6A

BRIDGE SHEET NO. 0A54

SHEET 186 OF 258 SHEETS

SR 433 . NO. 1 SHEET 54

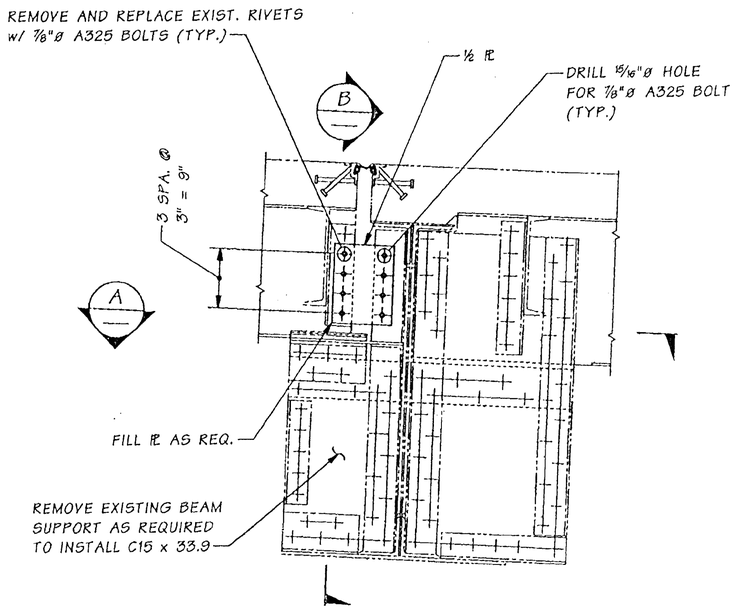

ELEVATION ~ EXISTING FLOORBEAM @ PIER 6A

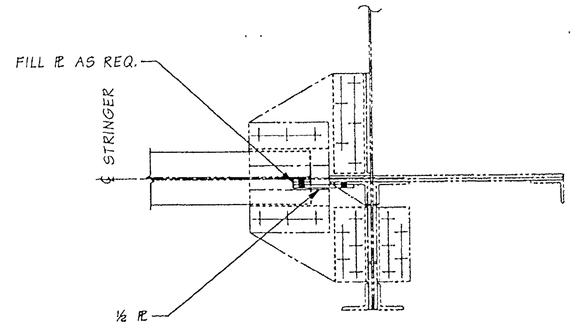

SECTION A

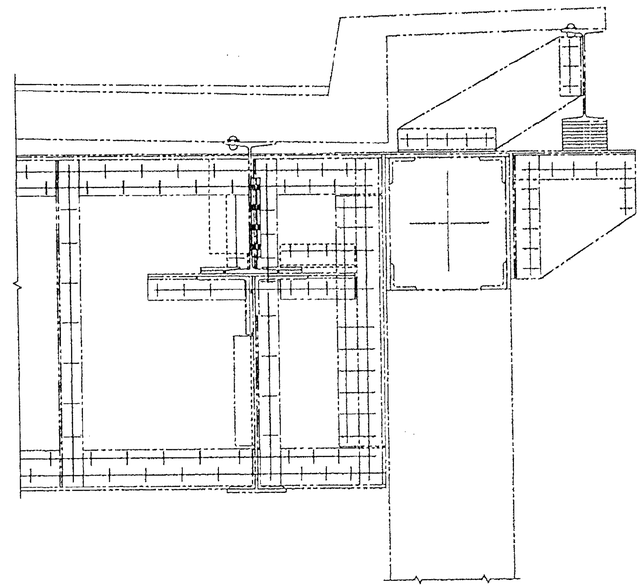

SECTION B

FOR "AS CONSTRUCTED" PLANS ONLY

Bridge Design Engr.	Kapur, J	M:\Y-Team\Lewis_Clark Rehab\Modifications\window files\P6A TEMP SUPPORT.WND							
Supervisor	Kirker, KN				REGION NO.	STATE	FED. AID PROJ. NO.	SHEET NO.	TOTAL SHEETS
Designed By	Talukdar, M				10	WASH.			
Checked By					JOB NUMBER				
Detailed By	Evans, P.D.								
Bridge Projects Engr.									
Prelim. Plan By									
Architect/Specialist		DATE	REVISION	BY	APP'D	6444			

BRIDGE AND STRUCTURES OFFICE

MUNINDRA TALUKDAR — STATE OF WASHINGTON — 27028 — REGISTERED PROFESSIONAL ENGINEER — EXPIRES 6/1/04

Washington State Department of Transportation

SR 433
LEWIS & CLARK BRIDGE
DECK REPLACEMENT

PIER 6A TEMPORARY BEAM SUPPORT

BRIDGE SHEET NO. 0A54B

SHEET 186A OF 256 SHEETS

SR 433 JOB NO. 0001 SHEET 0

Tue Dec 30 14:29:25 2003

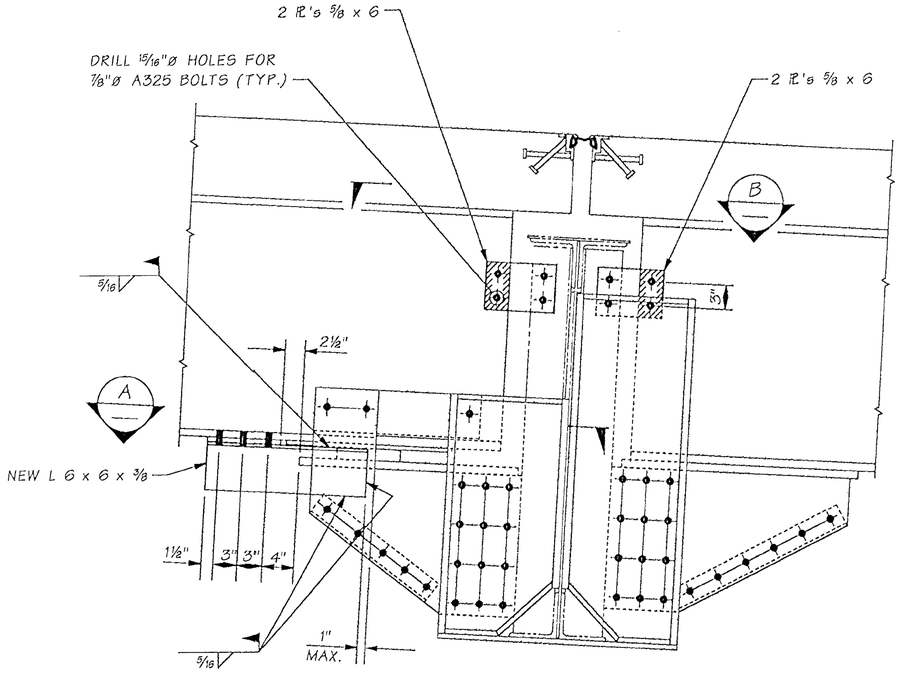

PIER 6A STRINGER SEAT

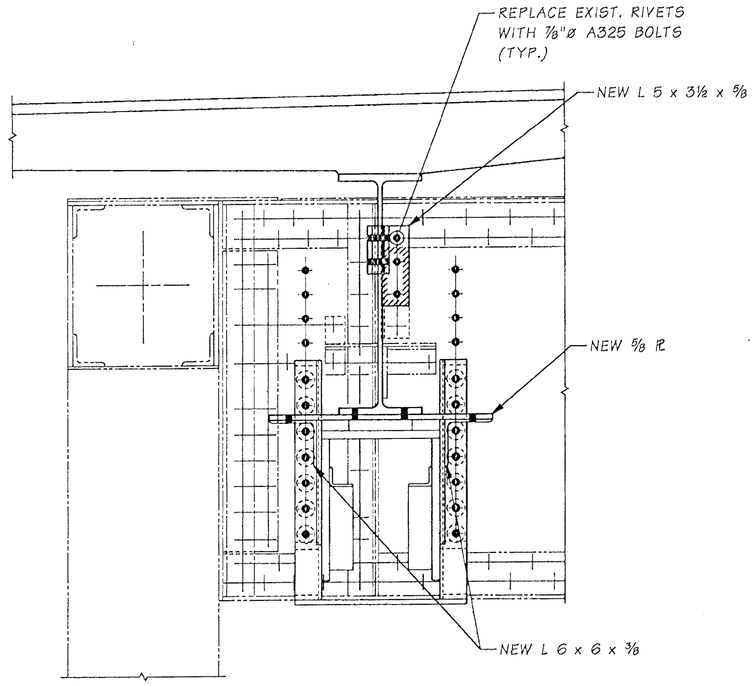

SECTION C

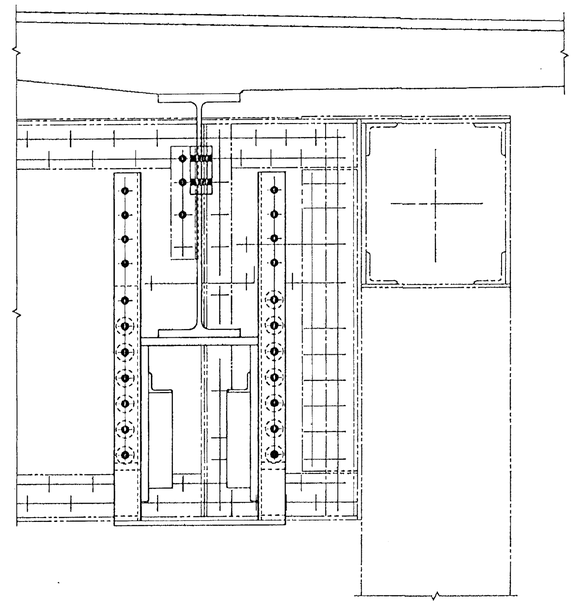

SECTION D

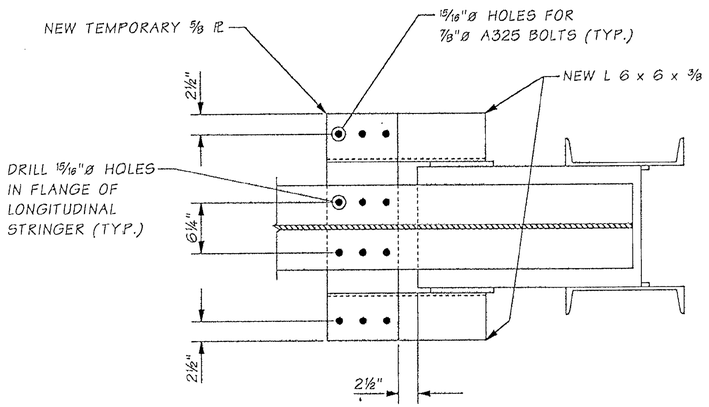

SECTION A

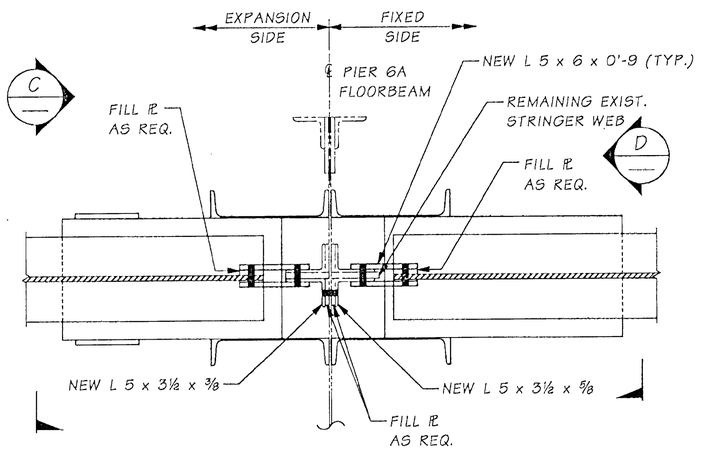

SECTION B

NOTES

1. ALL CONNECTIONS SHALL BE MADE ON EXPANSION SIDE STRINGER PANEL AS SHOWN BEFORE PANEL K2 IS PLACED.
2. DISCONNECT BOLTS BETWEEN TEMPORARY PL, LONGITUDINAL STRINGER AND NEW CONNECTION ANGLE RIGHT AFTER PLACEMENT OF PANEL K2.

FOR "AS CONSTRUCTED PLANS" ONLY

SR 433 JOB NO. 0001 SHEET 0

Bridge Design Engr.	Kapur, J	M:\Y-Team\Lewis_Clark Rehab\Modifications\window files\FB5 P6A MOD.WND							
Supervisor	Kirker, KN					REGION NO.	STATE	FED. AID PROJ. NO.	SHEET NO. / TOTAL SHEETS
Designed By	Talukdar, M					10	WASH.		
Checked By						JOB NUMBER			
Detailed By	Evans, P.D.								
Bridge Projects Engr.									
Prelim. Plan By									
Architect/Specialist		DATE	REVISION	BY	APP'D	6444			

Mon Oct 27 12:56:42 2003

BRIDGE AND STRUCTURES OFFICE

MUNINDRA TALUKDAR — STATE OF WASHINGTON — 27026 — REGISTERED PROFESSIONAL ENGINEER — EXPIRES 6/1/04

Washington State Department of Transportation

SR 433
LEWIS & CLARK BRIDGE
DECK REPLACEMENT

FLOORBEAM MODIFICATION AT PIER 6A

BRIDGE SHEET NO. 0A54C

SHEET 126B OF 256 SHEETS

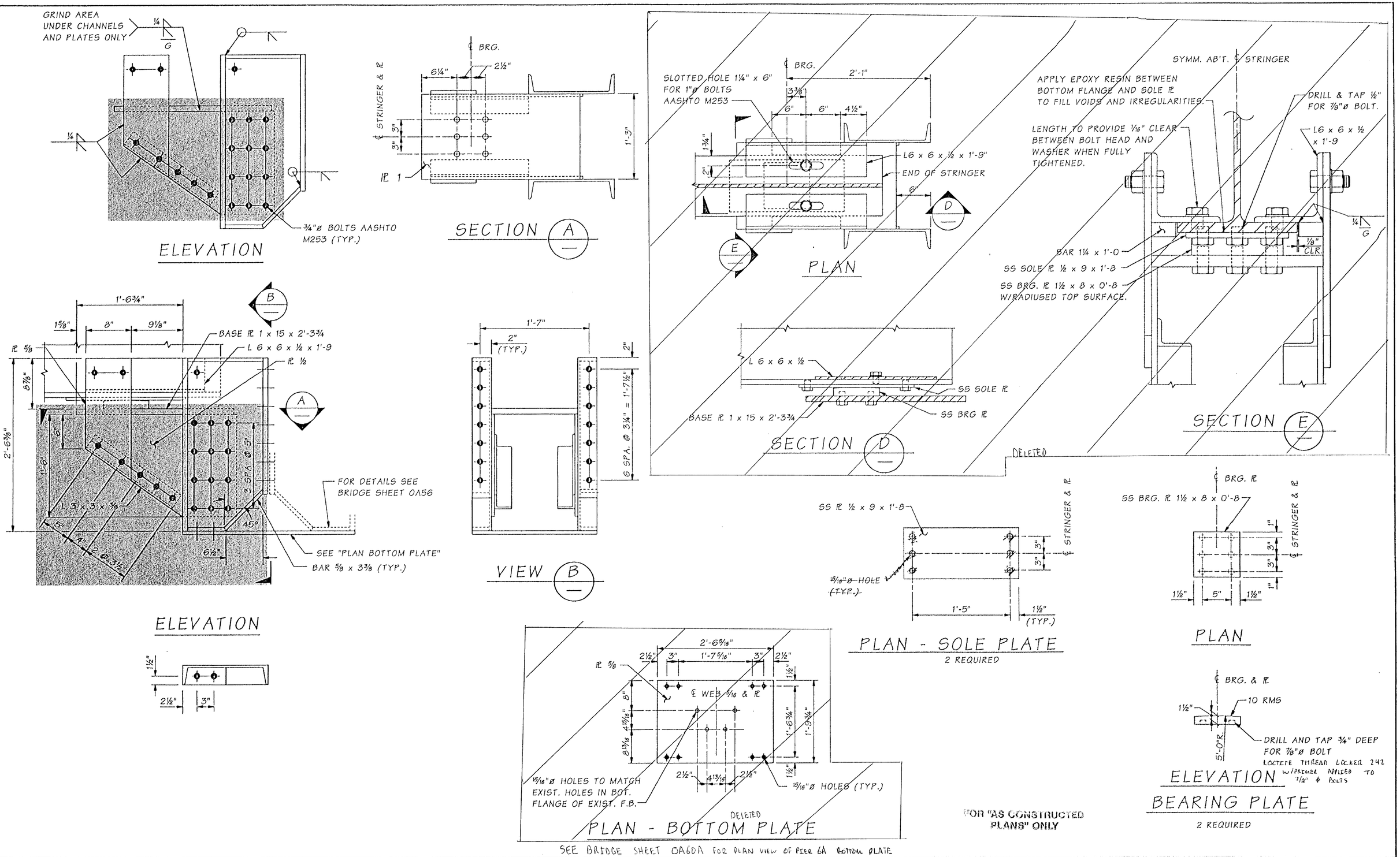

FOR "AS CONSTRUCTED PLANS" ONLY

Bridge Design Engr.	Kapur, J		M:\Y-Team\Lewis_Clark Rehab\Oregon Appr\window files\P6A FB NORTH SEAT.WND				REGION NO.	STATE	FED. AID PROJ. NO.	SHEET NO.	TOTAL SHEETS
Supervisor	Kirker, KN	08/02					10	WASH.			
Designed By	Talukdar, M	08/02									
Checked By	Peralta, R	08/02					JOB NUMBER 02x310		ACBH - 0433(007)		
Detailed By	House, L	08/02									
Bridge Projects Engr.			10/02	MODIFIED STRINGER SEAT ASSEMBLY	MT						
Prelim. Plan By											
Architect/Specialist			DATE	REVISION	BY	APP'D					

STRUCTURAL REGISTERED PROFESSIONAL ENGINEER 71414 OREGON OCT. 10, 2002 JUGESH KAPUR
EXPIRES 06-30-2003

BRIDGE AND STRUCTURES OFFICE

KARL N. KIRKER STATE OF WASHINGTON 10696 REGISTERED PROFESSIONAL ENGINEER
EXPIRES 11/3/03

Washington State Department of Transportation

SR 433
LEWIS AND CLARK BRIDGE
DECK REPLACEMENT

PIER 6A - EXPANSION SIDE
STRINGER SEAT DETAILS

BRIDGE SHEET NO. OA55
SHEET 187 OF 258 SHEETS

SR 433 J( ). 1 SHEET 55

Tue Oct 29 15:22:43 2002

CHANGES

1. SLOTTED HOLE IN FLANGE IS ELIMINATED.
2. COPE L6 x 6 x ½ AS SHOWN
3. FIELD DRILL HOLES CONNECTING ℞ TO ANGLE IN FIELD AFTER FINAL ELEVATION ADJUSTMENT.
4. ALL OTHER DETAILS REMAIN THE SAME.

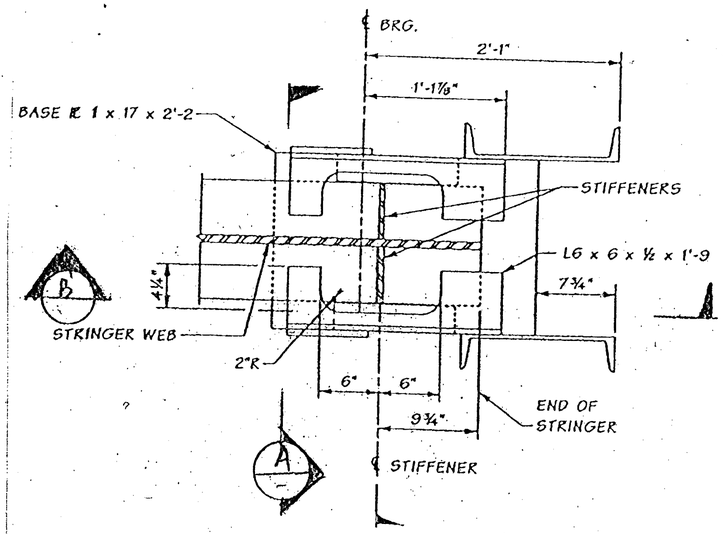

PLAN - GIRDER SEAT
EXP SIDE PIER 6A

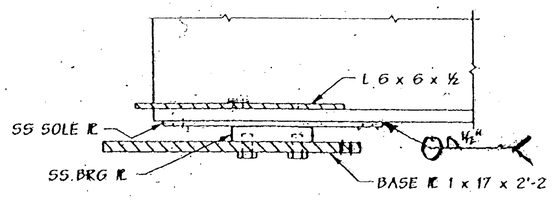

SECTION B

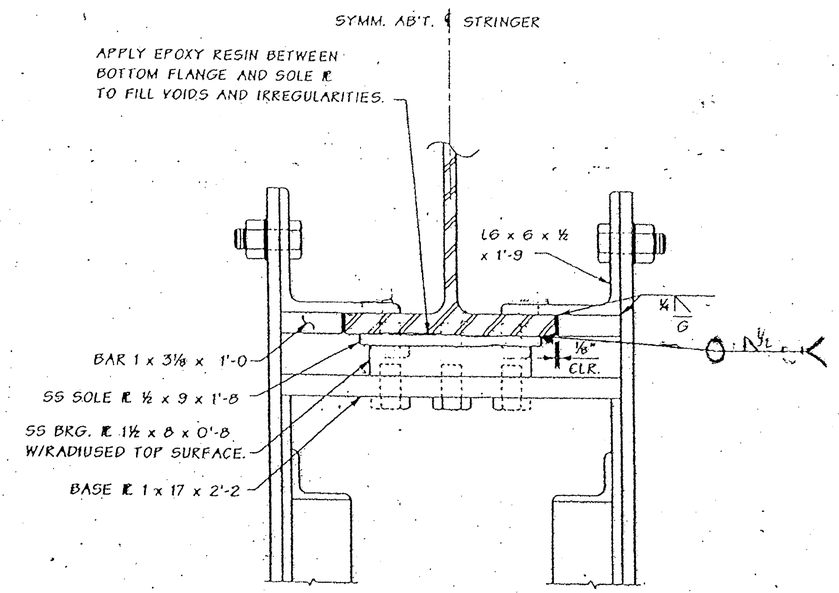

SECTION A

FOR "AS CONSTRUCTED PLANS" ONLY

FILE NAME	C:\AAWork\kelso\Svensen's Curve\L3425WASTESITE.dgn								PLOT11
TIME	02:37:18 PM			REGION NO. 10	STATE WASH	FED.AID PROJ.NO.		Washington State Department of Transportation	SR 433 LEWIS AND CLARK BRIDE DECK REPLACEMENT	9A55A
DATE	08/17/2005			JOB NUMBER						SHEET 187A OF 258 SHEETS
PLOTTED BY	spohnk									
DESIGNED BY										
ENTERED BY										
CHECKED BY				CONTRACT NO. 6444		LOCATION NO.			PIER 6A - BEARING DETAILS EXPANSION SIDE	
PROJ. ENGR.										
REGIONAL ADM.		REVISION	DATE	BY			P.E. STAMP BOX DATE	P.E. STAMP BOX DATE		

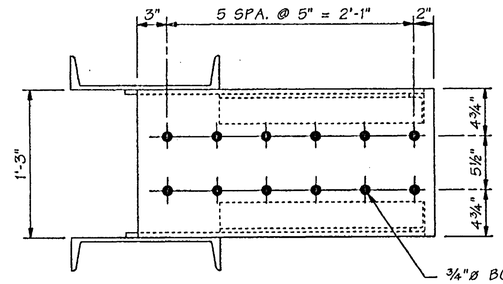

¾"ø BOLTS AASHTO M253. 13/16" X 1" SLOTTED HOLES IN STRINGER FLANGE. 13/16"ø HOLES IN STRINGER SEAT. STRINGER FLANGE NOT SHOWN FOR CLARITY (TYP.)

SECTION B

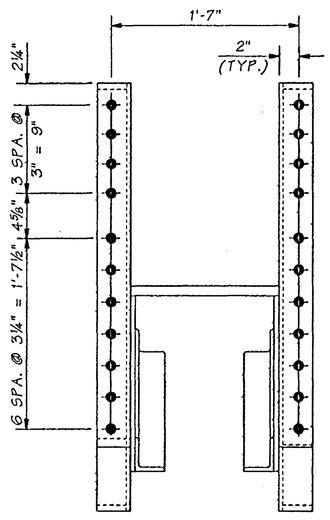

VIEW A

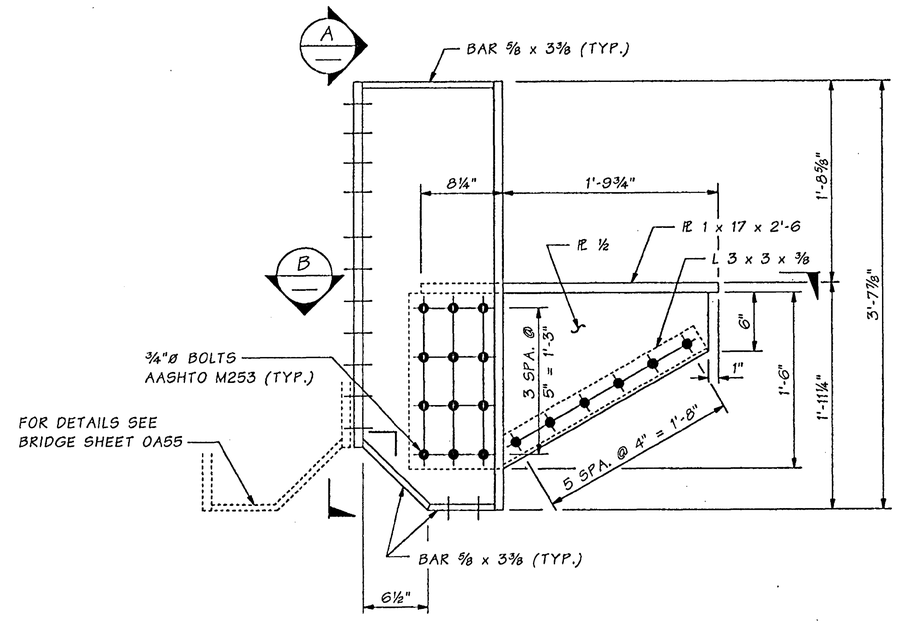

ELEVATION

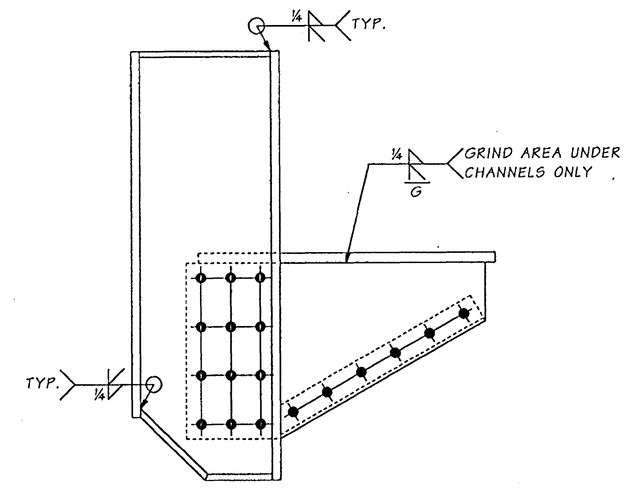

ELEVATION

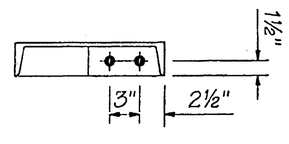

FOR "AS CONSTRUCTED PLANS" ONLY

Bridge Design Engr.	Kapur, J		M:\Y-Team\Lewis_Clark Rehab\Oregon Appr\Window files\P6A FB SOUTH SEAT.WND			REGION NO.	STATE	FED. AID PROJ. NO.	SHEET NO.	TOTAL SHEETS
Supervisor	Kirker, KN	08/02				10	WASH.	ACBH - 0433(007)		
Designed By	Talukdar, M	08/02								
Checked By	Peralta, R	08/02				JOB NUMBER 02x310				
Detailed By	House, L	08/02								
Bridge Projects Engr.										
Prelim. Plan By										
Architect/Specialist			DATE	REVISION	BY	APP'D				

STRUCTURAL REGISTERED PROFESSIONAL ENGINEER 71844 OREGON OCT 10, 2001 JUGESH KAPUR
EXPIRES 06-30-2003

BRIDGE AND STRUCTURES OFFICE

KARL N. KIRKER STATE OF WASHINGTON 16534 REGISTERED PROFESSIONAL ENGINEER
EXPIRES 11/3/03

Washington State Department of Transportation

SR 433
LEWIS AND CLARK BRIDGE
DECK REPLACEMENT

PIER 6A - FIXED SIDE
STRINGER SEAT DETAILS

BRIDGE SHEET NO. 0A56

SHEET 188 OF 258 SHEETS

SR 433 JOB NO. 1 SHEET 56

Tue Sep 17 11:50:05 2002

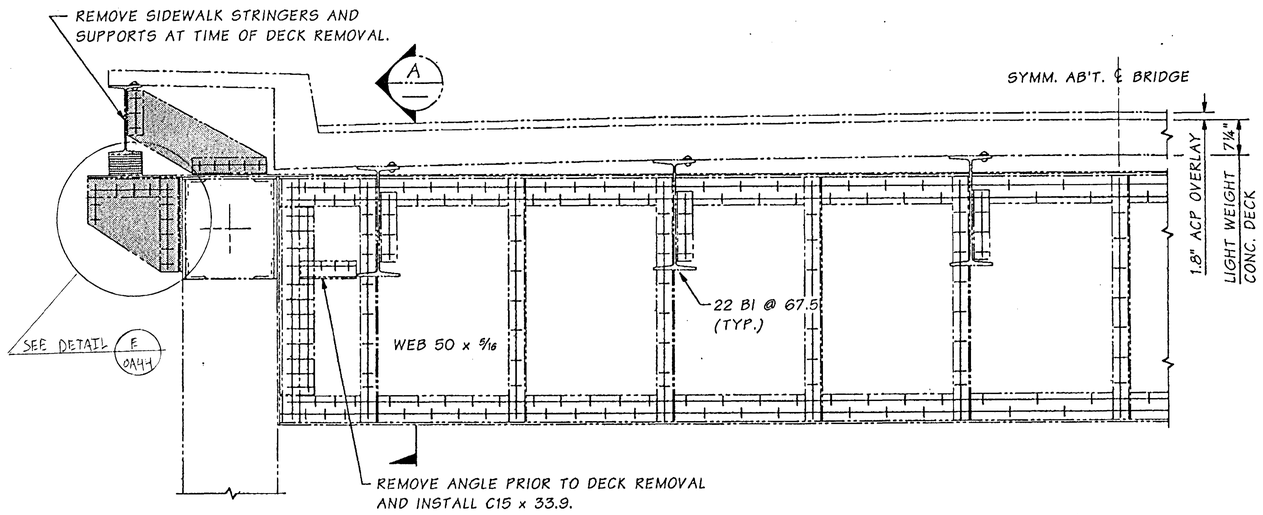

ELEVATION ~ EXISTING DECK & FLOORBEAM 1, 1A & 3

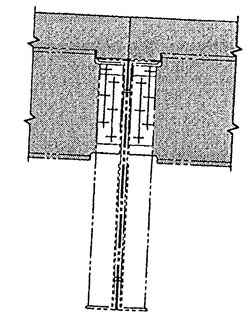

SECTION A

REMOVE SHADED PORTION AT TIME OF DECK REMOVAL

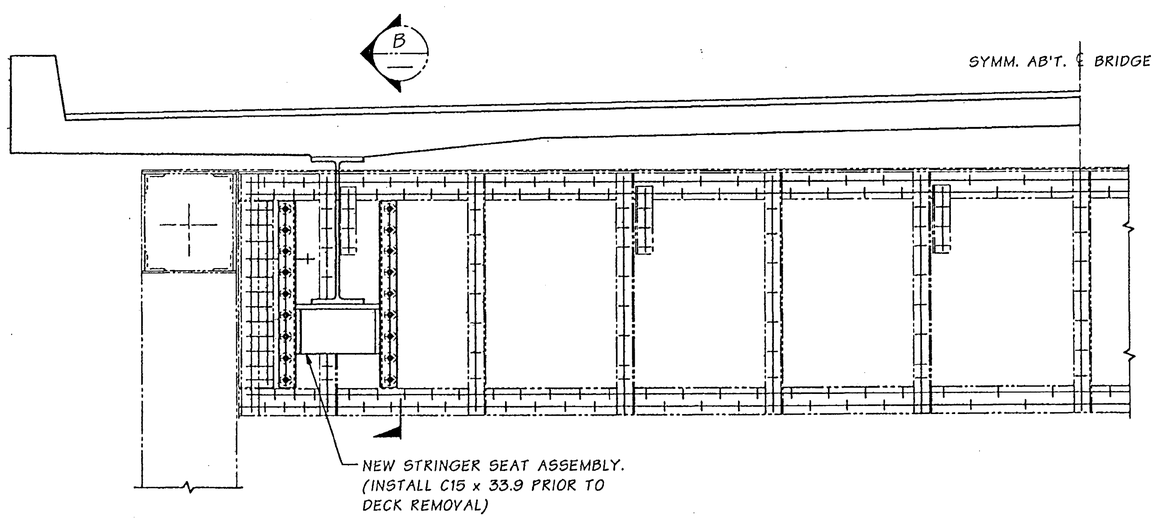

ELEVATION ~ MODIFIED FLOORBEAM & NEW DECK

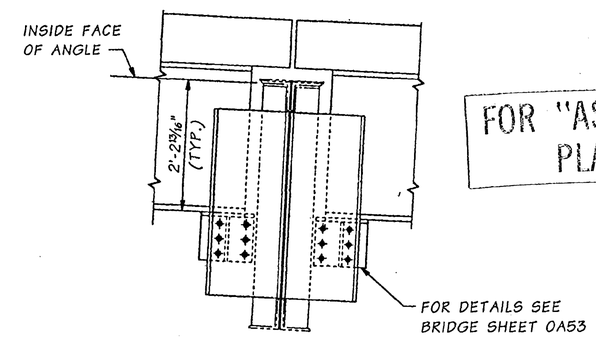

FOR "AS CONSTRUCTED PLANS" ONLY

SECTION B

Bridge Design Engr.	Kapur, J		M:\Y-Team\Lewis_Clark Rehab\Oregon Appr\Window files\FB 1-1A-3 168 SPAN.WND							
Supervisor	Kirker, KN	08/02				REGION NO.	STATE	FED. AID PROJ. NO.	SHEET NO.	TOTAL SHEETS
Designed By	Talukdar, M	08/02				10	WASH.			
Checked By	Peralta, R	08/02								
Detailed By	House, L	08/02				JOB NUMBER 02x310		ACBH - 0433(007)		
Bridge Projects Engr.										
Prelim. Plan By										
Architect/Specialist			DATE	REVISION	BY	APP'D				

STRUCTURAL REGISTERED PROFESSIONAL ENGINEER 71344 OREGON JULY 10, 2001 JUGESH KAPUR — EXPIRES 06-30-2003

BRIDGE AND STRUCTURES OFFICE

KARL N. KIRKER STATE OF WASHINGTON 18096 REGISTERED PROFESSIONAL ENGINEER — EXPIRES 11/3/03

Washington State Department of Transportation

SR 433
LEWIS AND CLARK BRIDGE
DECK REPLACEMENT

FLOORBEAM 1, 1A, & 3 - 168' SPAN

BRIDGE SHEET NO. 0A57

SHEET 189 OF 258 SHEETS

SR 433 JOB NO. 1 SHEET 57

Tue Sep 17 11:48:55 2002

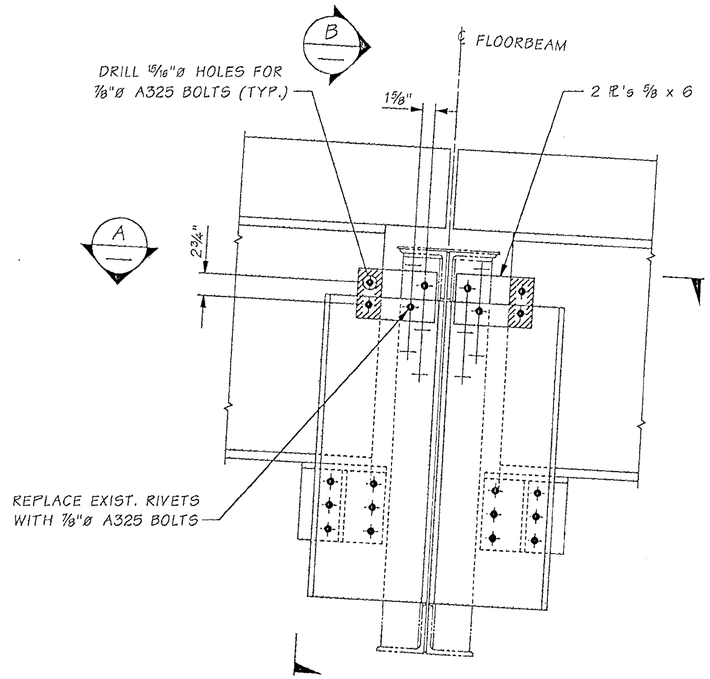

FLOORBEAM 1, 1A & 3 STRINGER SEATS
168' SPAN

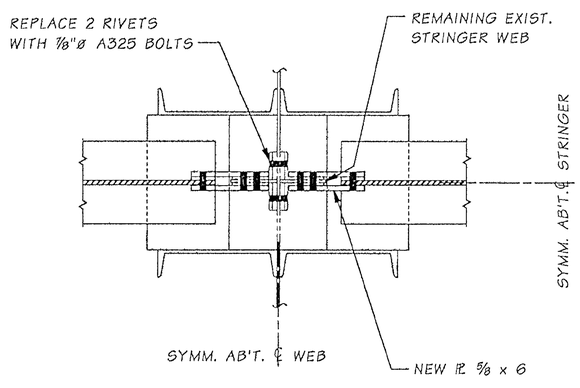

SECTION A

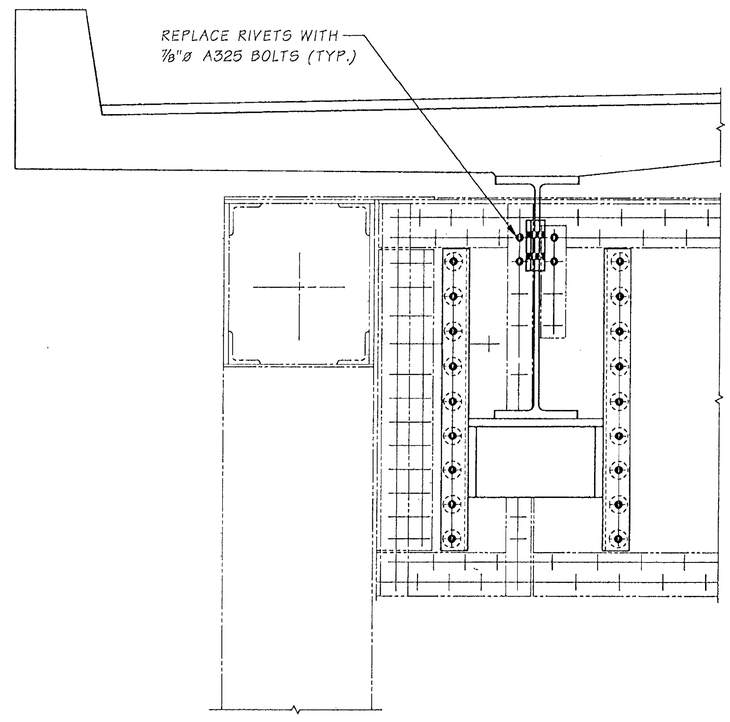

SECTION B

FOR "AS CONSTRUCTED PLANS" ONLY

SR 433 JOB NO. 0001 SHEET 0

Bridge Design Engr.	Kapur, J	M:\Y-Team\Lewis_Clark Rehab\Modifications\window files\FB 1-1A-3 168FT MOD.WND								
Supervisor	Kirker, KN					REGION NO.	STATE	FED. AID PROJ. NO.	SHEET NO.	TOTAL SHEETS
Designed By	Talukdar, M					10	WASH.			
Checked By						JOB NUMBER				
Detailed By	Evans, P.D.									
Bridge Projects Engr.										
Prelim. Plan By										
Architect/Specialist		DATE	REVISION	BY	APP'D	6444				

Mon Oct 27 12:54:22 2003

BRIDGE AND STRUCTURES OFFICE

MONINDRA TALUKDAR — STATE OF WASHINGTON — 27609 — REGISTERED PROFESSIONAL ENGINEER — EXPIRES 6/1/04

Washington State Department of Transportation

SR 433
LEWIS & CLARK BRIDGE
DECK REPLACEMENT

FLOORBEAM MODIFICATION AT FB 1,1A & 3
168' SPAN

BRIDGE SHEET NO. 0A57B

SHEET 189A OF 258 SHEETS

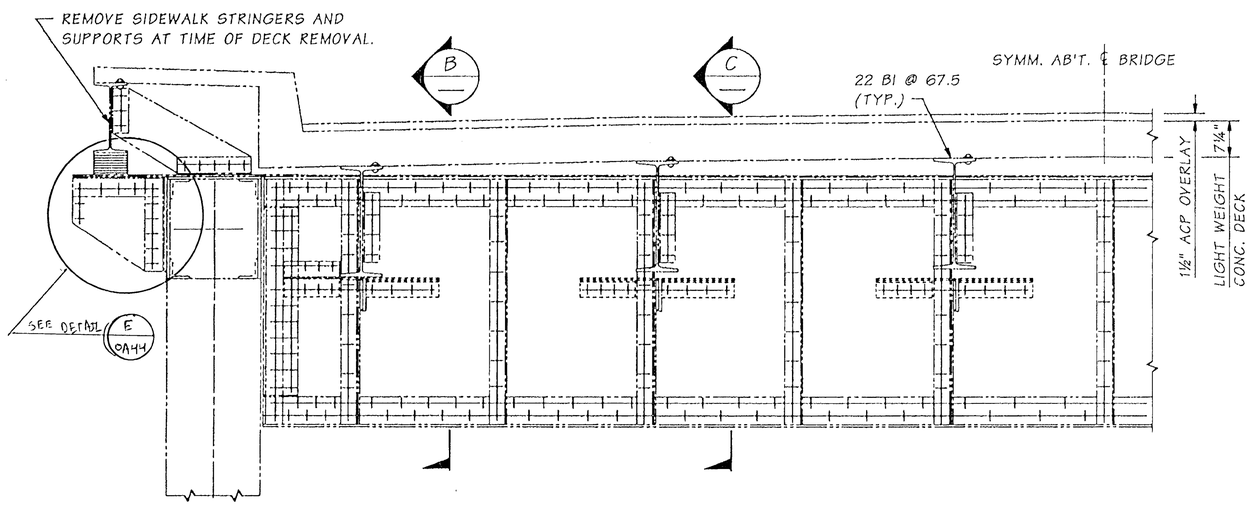

ELEVATION ~ EXISTING DECK & FLOORBEAM 4

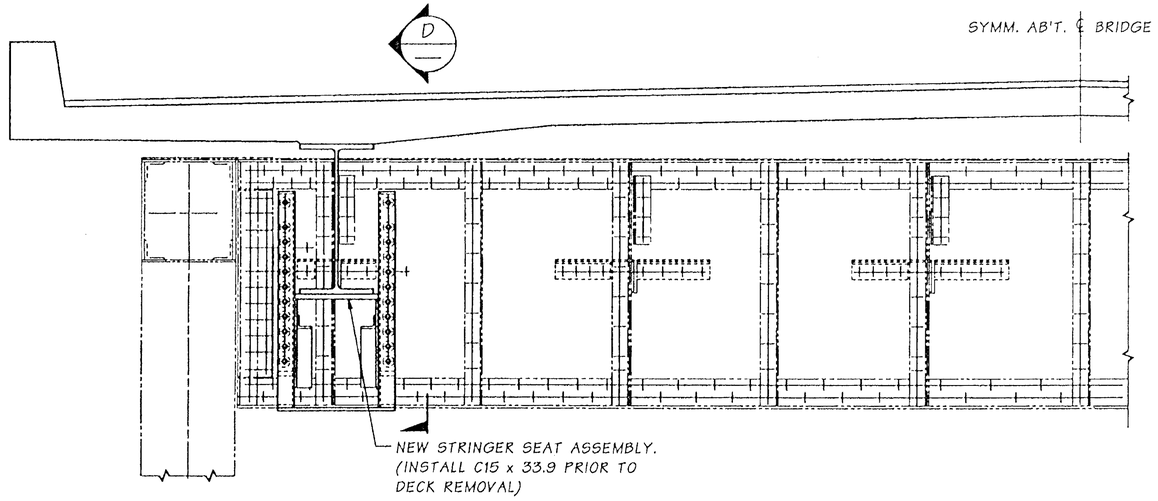

ELEVATION ~ MODIFIED FLOORBEAM & NEW DECK

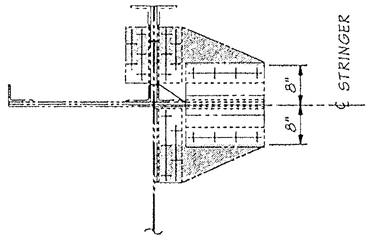

A SECTION

REMOVE SHADED PORTION AT EXTERIOR STRINGERS PRIOR TO DECK REMOVAL AND INSTALL C15 x 33.9

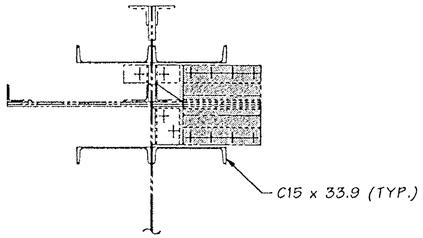

A SECTION

REMOVE SHADED PORTION AT EXTERIOR STRINGERS AT TIME OF DECK REMOVAL AND INSTALL STRINGER SEAT.

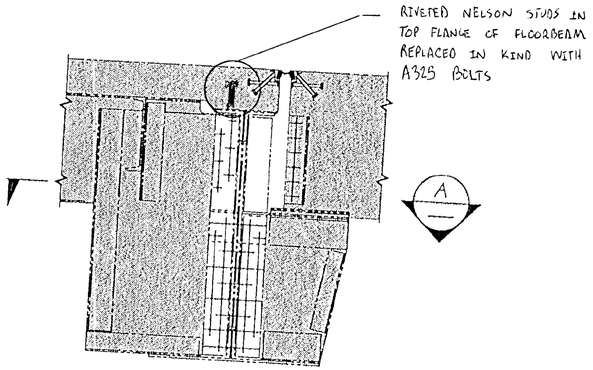

SECTION B

REMOVE SHADED PORTION AT EXTERIOR STRINGER AT TIME OF DECK REMOVAL.

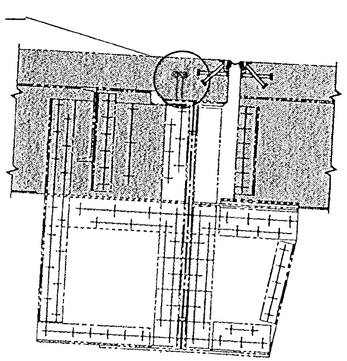

SECTION C

REMOVE SHADED PORTION AT INTERIOR STRINGER AT TIME OF DECK REMOVAL.

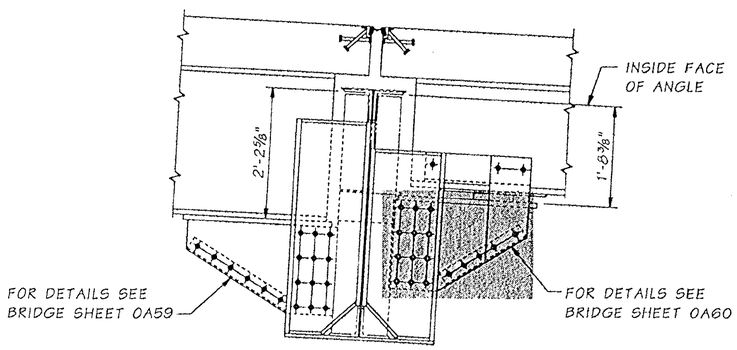

SECTION D

FOR "AS CONSTRUCTED PLANS" ONLY

Bridge Design Engr.	Kapur, J		M:\Y-Team\Lewis_Clark Rehab\Oregon Appr\window files\FB 4 - 168 SPAN.WND			REGION NO.	STATE	FED. AID PROJ. NO.	SHEET NO.	TOTAL SHEETS
Supervisor	Kirker, KN	08/02				10	WASH.			
Designed By	Talukdar, M	08/02								
Checked By	Peralta, R	08/02								
Detailed By	House, L	08/02				JOB NUMBER 02x310		ACBH - 0433(007)		
Bridge Projects Engr.		10/02	MODIFIED STRINGER SEAT ASSEMBLY	MT						
Prelim. Plan By										
Architect/Specialist		DATE	REVISION	BY	APP'D					

Tue Oct 29 15:23:39 2002

STRUCTURAL REGISTERED PROFESSIONAL ENGINEER 71314 OREGON JULY 10, 2002 JUGESH KAPUR — EXPIRES 06-30-2003

BRIDGE AND STRUCTURES OFFICE

KARL N. KIRKER REGISTERED PROFESSIONAL ENGINEER STATE OF WASHINGTON — EXPIRES 11/3/03

Washington State Department of Transportation

SR 433
LEWIS AND CLARK BRIDGE
DECK REPLACEMENT

FLOORBEAM 4 AT PIER 7 - 168' SPAN

BRIDGE SHEET NO. 0A58

SHEET 190 OF 258 SHEETS

SR 433 J 0. 1 SHEET 58

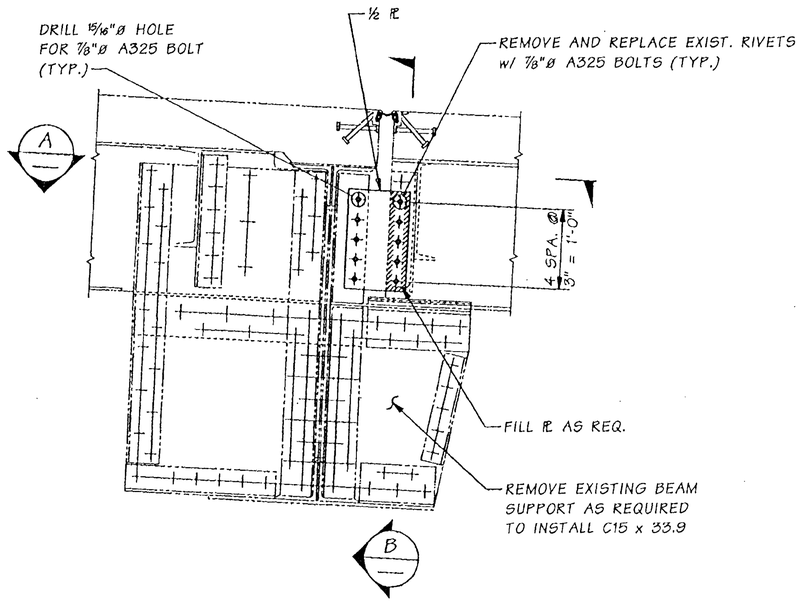

ELEVATION ~ EXISTING FLOORBEAM @ PIER 7

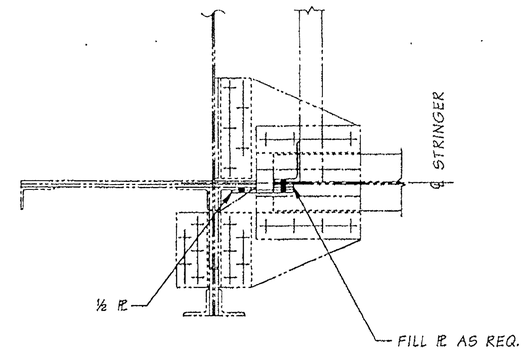

SECTION A

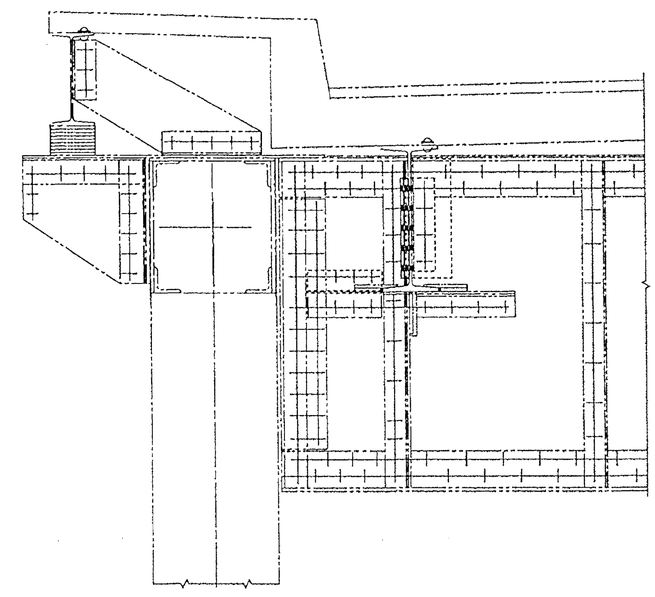

SECTION B

FOR "AS CONSTRUCTED PLANS" ONLY

SR 433 B NO. 0001 SHEET 0

Bridge Design Engr.	Kapur, J	M:\Y-Team\Lewis_Clark Rehab\Modifications\window files\P7 TEMP SUPPORT.WND							
Supervisor	Kirker, KN				REGION NO.	STATE	FED. AID PROJ. NO.	SHEET NO.	TOTAL SHEETS
Designed By	Talukdar, M				10	WASH.			
Checked By									
Detailed By	Evans, P.D.				JOB NUMBER				
Bridge Projects Engr.									
Prelim. Plan By									
Architect/Specialist		DATE	REVISION	BY	APP'D	6244			

Tue Dec 30 14:30:34 2003

BRIDGE AND STRUCTURES OFFICE

MONINDRA TALUKDAR — STATE OF WASHINGTON — REGISTERED PROFESSIONAL ENGINEER — EXPIRES 6/1/04

Washington State Department of Transportation

SR 433
LEWIS & CLARK BRIDGE
DECK REPLACEMENT

PIER 7 TEMPORARY BEAM SUPPORT

BRIDGE SHEET NO. 0A58B

SHEET 190A OF 258 SHEETS

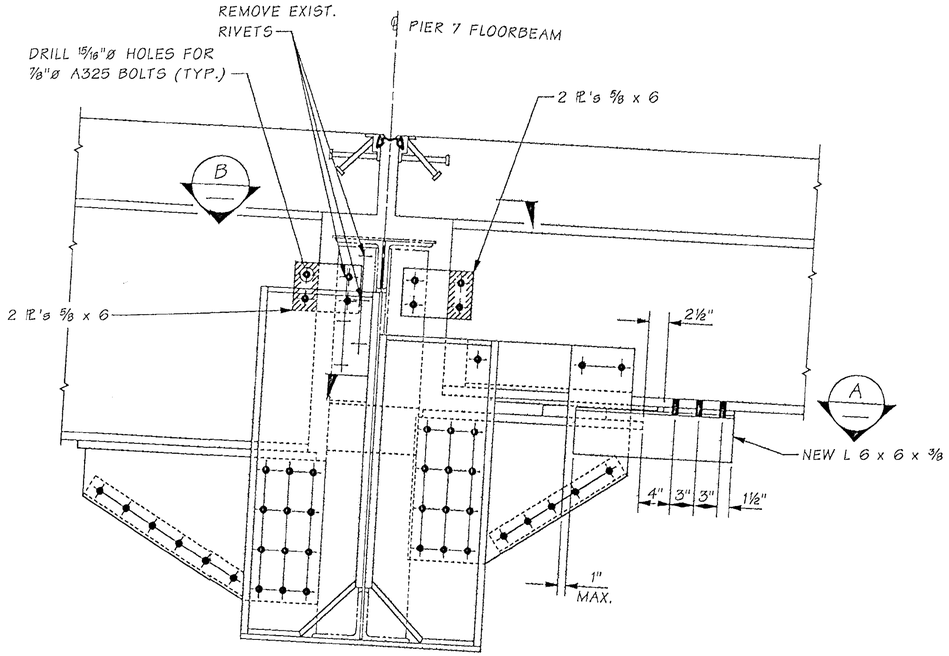

PIER 7 STRINGER SEAT

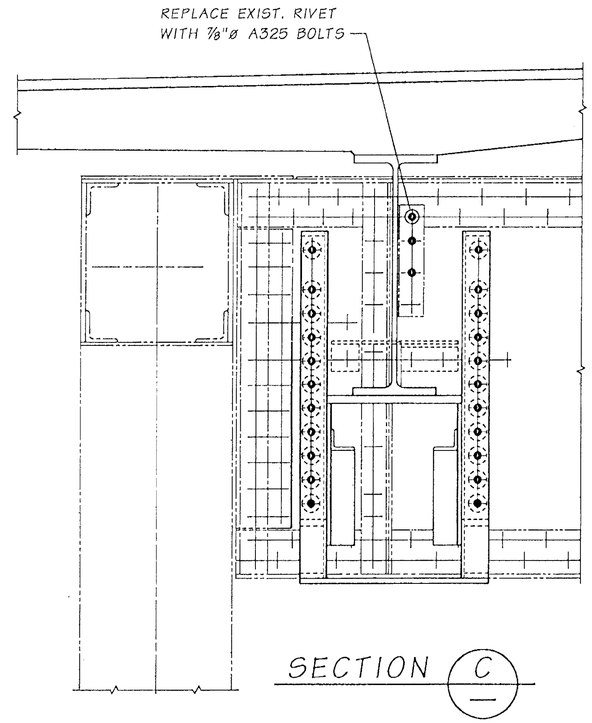

SECTION C

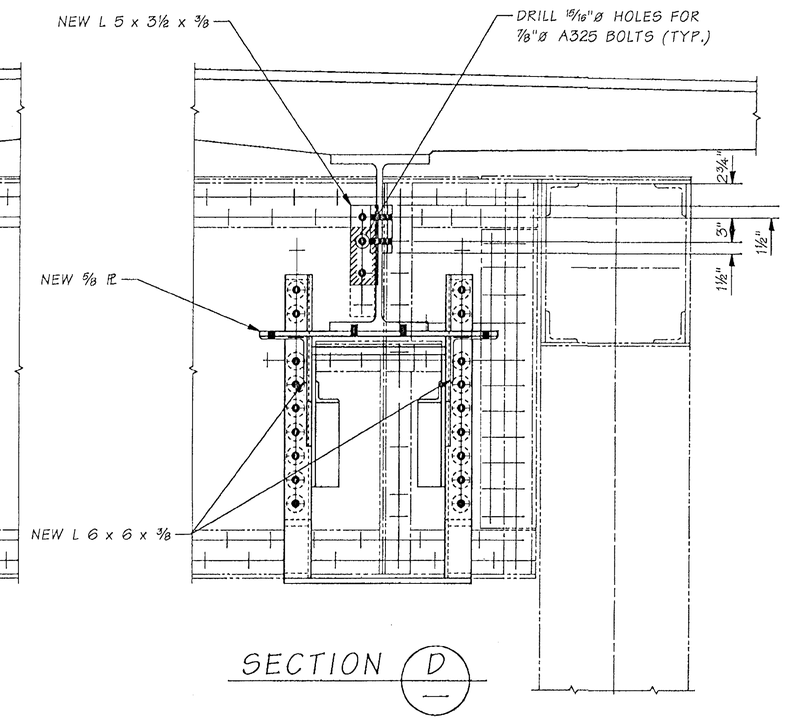

SECTION D

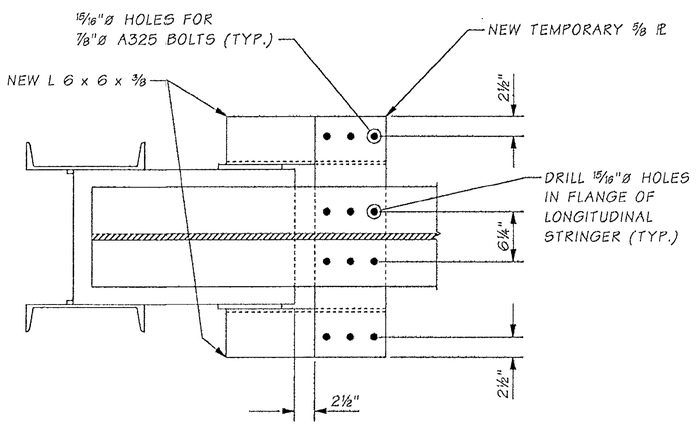

SECTION A

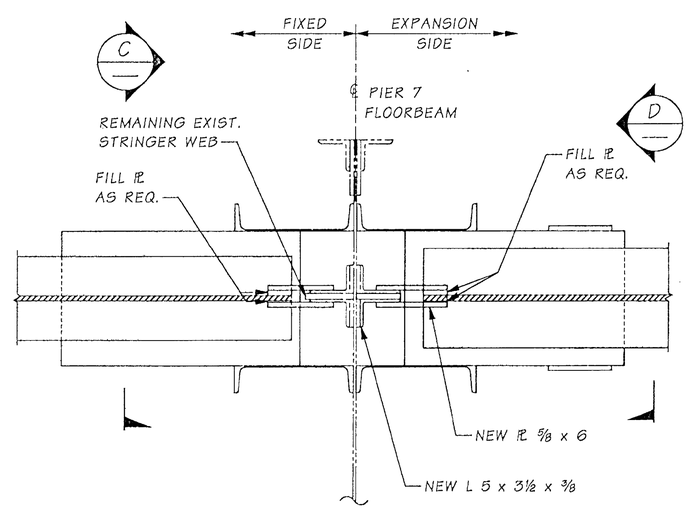

SECTION B

NOTES

1. ALL CONNECTIONS SHALL BE MADE ON EXPANSION SIDE STRINGER PANEL AS SHOWN BEFORE PANEL M2 IS PLACED.
2. DISCONNECT BOLTS BETWEEN TEMPORARY PL, LONGITUDINAL STRINGER AND NEW CONNECTION ANGLE RIGHT AFTER PLACEMENT OF PANEL M2.

FOR "AS CONSTRUCTED PLANS" ONLY

SR 433 JOB NO. 0001 SHEET 0

Bridge Design Engr.	Kapur, J	M:\Y-Team\Lewis_Clark Rehab\Modifications\window files\FB4 P7 MOD.WND							
Supervisor	Kirker, KN				REGION NO.	STATE	FED. AID PROJ. NO.	SHEET NO.	TOTAL SHEETS
Designed By	Talukdar, M				10	WASH.			
Checked By									
Detailed By	Evans, P.D.				JOB NUMBER				
Bridge Projects Engr.									
Prelim. Plan By									
Architect/Specialist		DATE	REVISION	BY	APP'D	6444			

Mon Oct 27 12:55:42 2003

BRIDGE AND STRUCTURES OFFICE

MUNINDRA TALUKDAR — STATE OF WASHINGTON — 27626 — REGISTERED PROFESSIONAL ENGINEER — EXPIRES 6/1/04

Washington State Department of Transportation

SR 433
LEWIS & CLARK BRIDGE
DECK REPLACEMENT

FLOORBEAM MODIFICATION AT PIER 7

BRIDGE SHEET NO. 0A58C

SHEET 190B OF 258 SHEETS

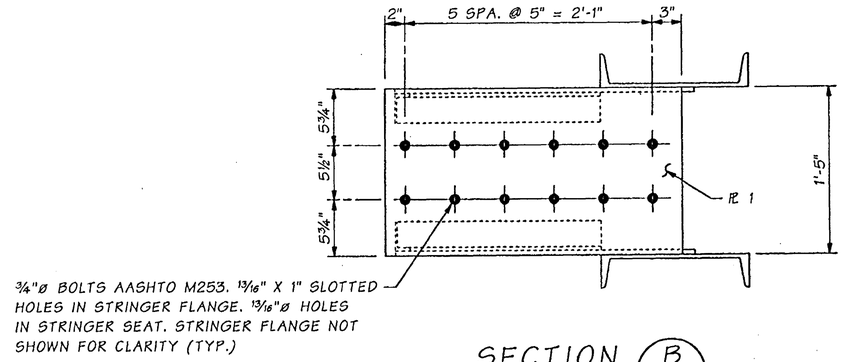

SECTION B

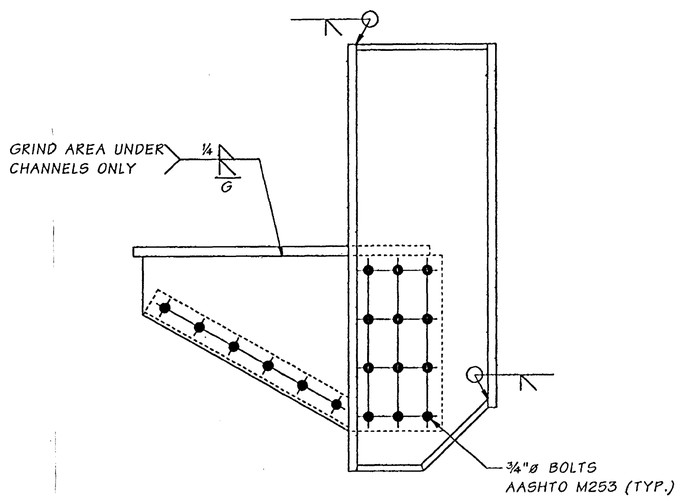

ELEVATION

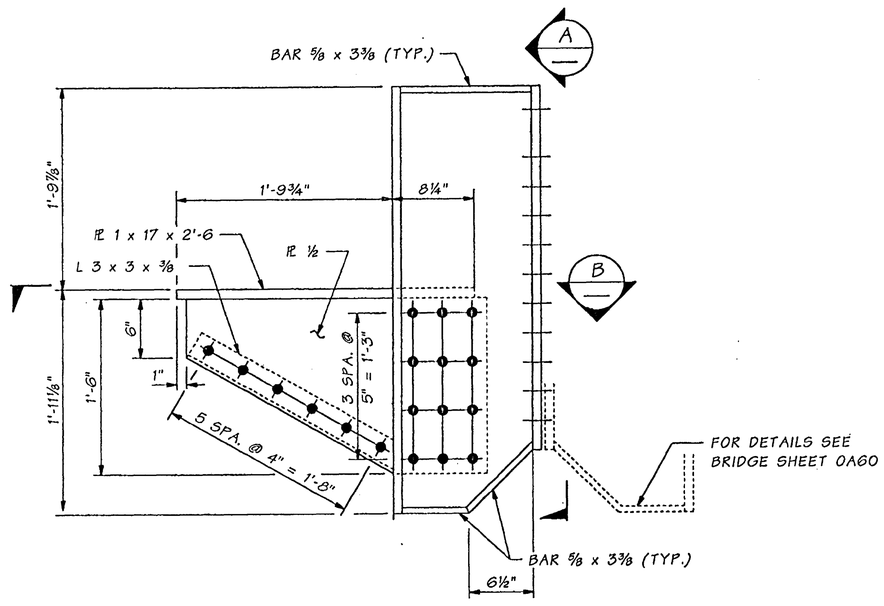

ELEVATION

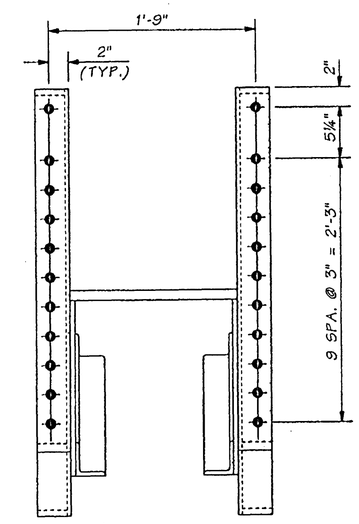

VIEW A

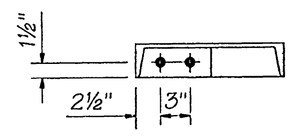

FOR "AS CONSTRUCTED PLANS" ONLY

SR 433 JOB NO. 1 SHEET 59

Bridge Design Engr.	Kapur, J		M:\Y-Team\Lewis_Clark Rehab\Oregon Appr\Window files\P7 FB NORTH SEAT.WND				REGION NO.	STATE	FED. AID PROJ. NO.	SHEET NO.	TOTAL SHEETS
Supervisor	Kirker, KN	08/02					10	WASH.			
Designed By	Talukdar, M	08/02									
Checked By	Peralta, R	08/02					JOB NUMBER 02x310		ACBH - 0433(007)		
Detailed By	House, L	08/02									
Bridge Projects Engr.											
Prelim. Plan By											
Architect/Specialist			DATE	REVISION	BY	APP'D	6444				

STRUCTURAL REGISTERED PROFESSIONAL ENGINEER 71744 OREGON OCT. 10, 2002 JUGESH KAPUR EXPIRES 06-30-2003

BRIDGE AND STRUCTURES OFFICE

KARL N. KIRKER STATE OF WASHINGTON 18296 REGISTERED PROFESSIONAL ENGINEER EXPIRES 11/3/03

Washington State Department of Transportation

SR 433
LEWIS AND CLARK BRIDGE
DECK REPLACEMENT

PIER 7 - FIXED SIDE STRINGER SEAT DETAILS

BRIDGE SHEET NO. 0A59

SHEET 191 OF 258 SHEETS

Tue Sep 17 11:50:07 2002

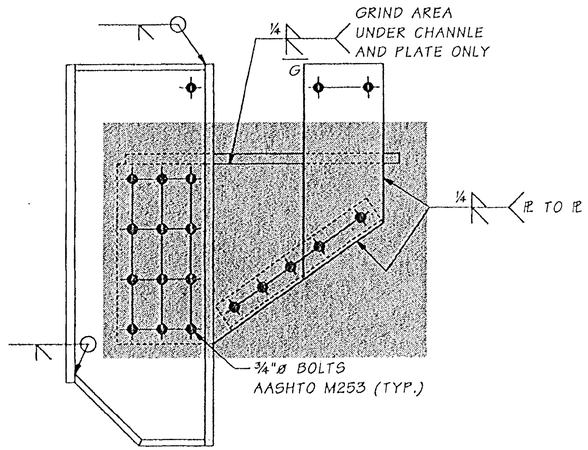

ELEVATION

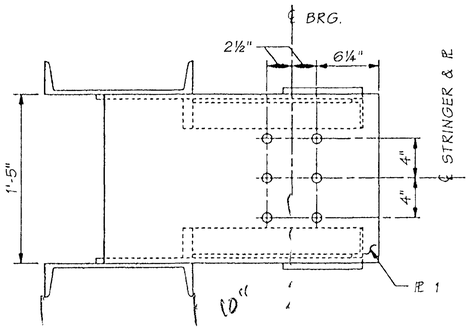

SECTION A

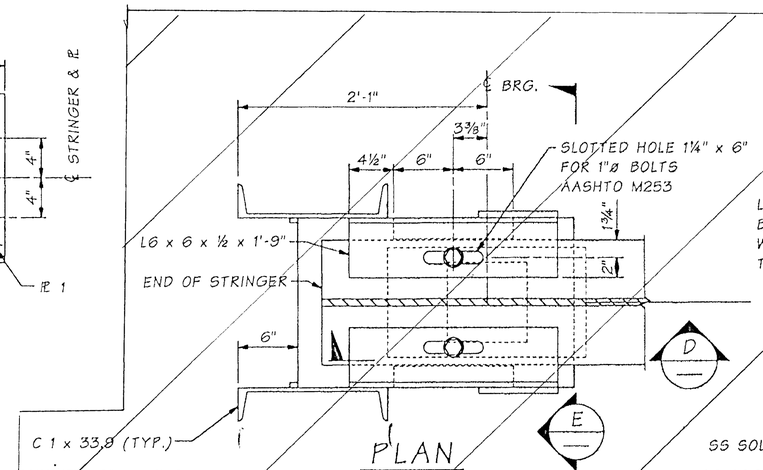

PLAN

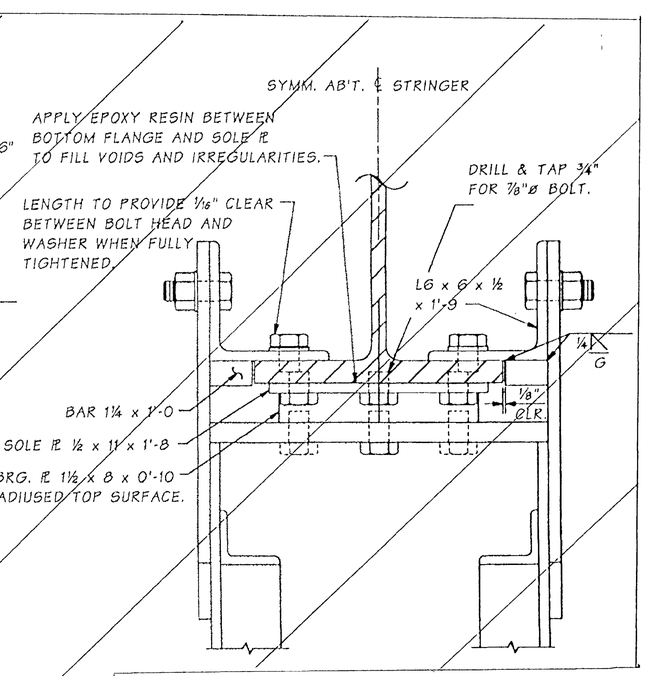

SECTION E

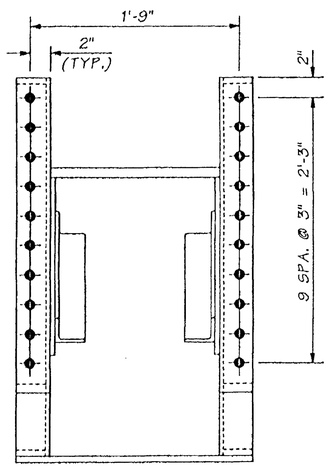

VIEW B

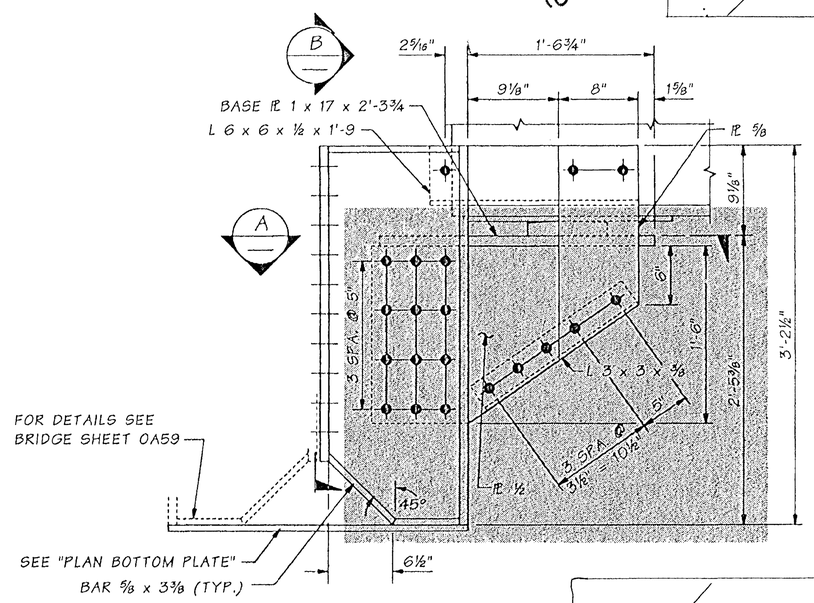

ELEVATION

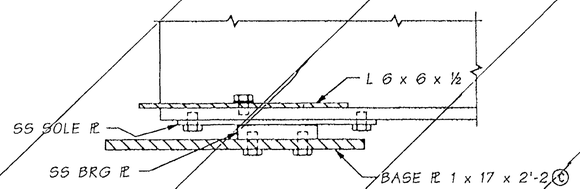

SECTION D

DELETED

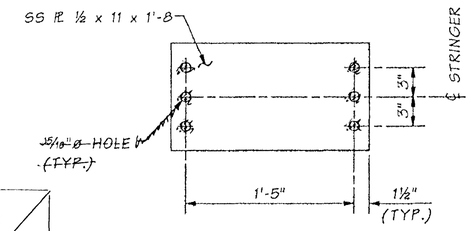

PLAN - SOLE PLATE

2 REQUIRED

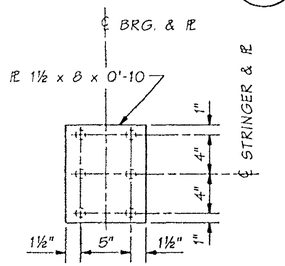

PLAN

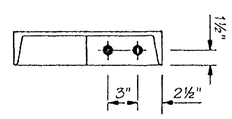

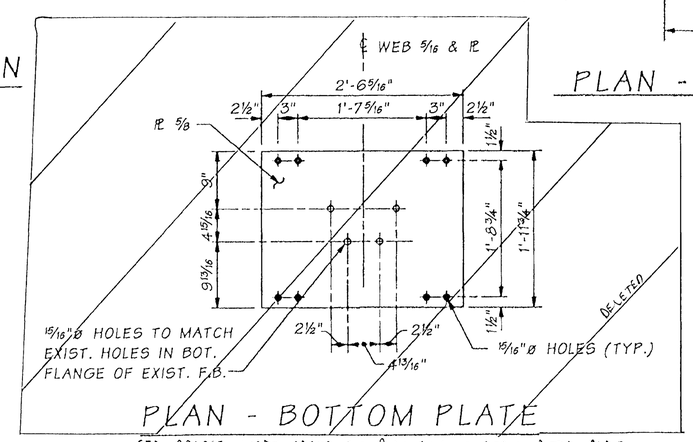

PLAN - BOTTOM PLATE

SEE BRIDGE SHEET 0A60A FOR PLAN VIEW OF PIER 7 BOTTOM PLATE

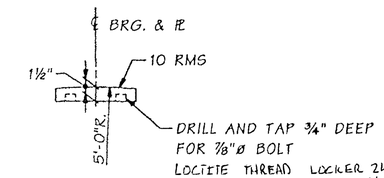

ELEVATION

BEARING PLATE

2 REQUIRED

FOR "AS CONSTRUCTED PLANS" ONLY

Bridge Design Engr.	Kapur, J		M:\Y-Team\Lewis_Clark Rehab\Oregon Appr\window files\P7 FB SOUTH SEAT.WND								
Supervisor	Kirker, KN	08/02									
Designed By	Talukdar, M	08/02									
Checked By	Peralta, R	08/02									
Detailed By	House, L	08/02									
Bridge Projects Engr.			10/02	MODIFIED STRINGER SEAT ASSEMBLY	MT						
Prelim. Plan By											
Architect/Specialist			DATE	REVISION	BY	APP'D					

Tue Oct 29 15:24:48 2002

REGION NO.	STATE	FED. AID PROJ. NO.	SHEET NO.	TOTAL SHEETS
10	WASH.			
JOB NUMBER 02x310		ACBH - 0433(007)		

STRUCTURAL REGISTERED PROFESSIONAL ENGINEER 71344 OREGON SEPT. 10, 2002 JUGESH KAPUR
EXPIRES 06-30-2003

BRIDGE AND STRUCTURES OFFICE

KARL N. KIRKER STATE OF WASHINGTON 12894 REGISTERED PROFESSIONAL ENGINEER 10-30-02
EXPIRES 11/3/03

Washington State Department of Transportation

SR 433
LEWIS AND CLARK BRIDGE
DECK REPLACEMENT

PIER 7 - EXPANSION SIDE
STRINGER SEAT DETAILS

BRIDGE SHEET NO. 0A60

SHEET 192 OF 258 SHEETS

SR 433 NO. 1 SHEET 60

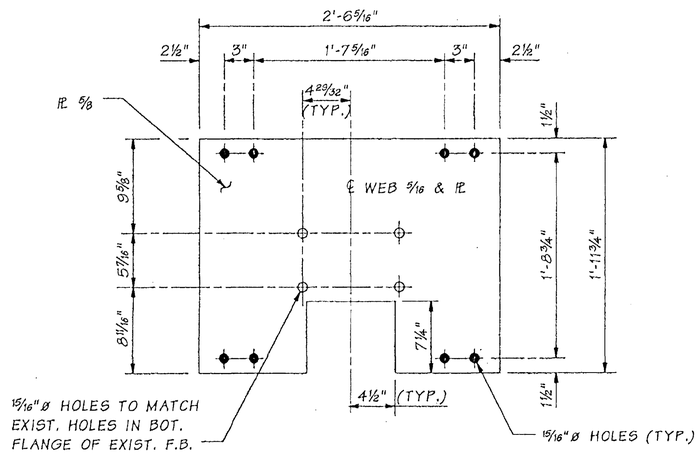

PLAN - BOTTOM PLATE
PIER 5 AND 6

REVISED
DETAILS FOR
PIER 5 OA45
PIER 6 OA51

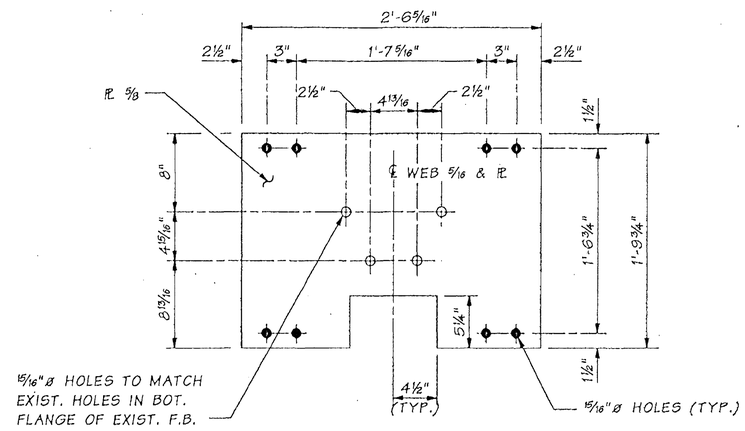

PLAN - BOTTOM PLATE
PIER 6A

REVISED
DETAILS FOR
OA55

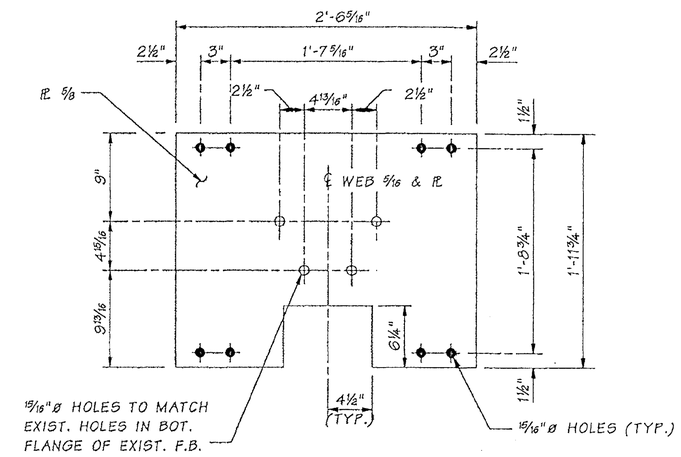

PLAN - BOTTOM PLATE
PIER 7

REVISED
DETAILS FOR
OA60

FOR "AS CONSTRUCTED PLANS" ONLY

Bridge Design Engr.	Kapur, J		M:\Y-Team\Lewis_Clark Rehab\Oregon Appr\Window files\REVISED BOT PLATES.WND							
Supervisor	Kirker, KN	08/02								
Designed By	Talukdar, M	03/03								
Checked By										
Detailed By	House, L.L.	03/03								
Bridge Projects Engr.										
Prelim. Plan By										
Architect/Specialist			DATE	REVISION	BY	APP'D				

REGION NO.	STATE	FED. AID PROJ. NO.	SHEET NO.	TOTAL SHEETS
10	WASH.	ACBH - 0433(007)		
JOB NUMBER 02x310				

BRIDGE AND STRUCTURES OFFICE

03/12/03

EXPIRES 6/1/04

Washington State Department of Transportation

SR 433
LEWIS AND CLARK BRIDGE
DECK REPLACEMENT

REVISED BOTTOM PLATE DETAILS

BRIDGE SHEET NO. OA60A

SHEET 192A OF 258 SHEETS

SR 433 ROUTE NO. 1 SHEET 0

Wed Mar 12 09:38:23 2003

CHANGES

1. SLOTTED HOLE IN FLANGE IS ELIMINATED.
2. COPE L6 x 6 x ½ AS SHOWN
3. FIELD DRILL HOLES CONNECTING ℞ TO ANGLE IN FIELD AFTER FINAL ELEVATION ADJUSTMENT.
4. ALL OTHER DETAILS REMAIN THE SAME.

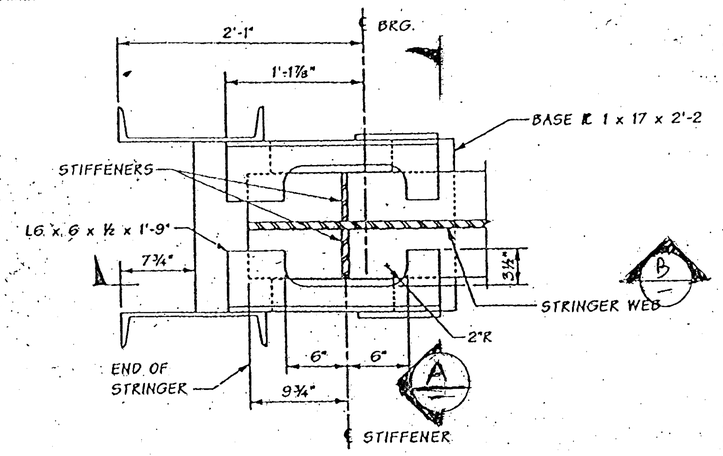

PLAN - GIRDER SEAT
EXP SIDE PIER 7

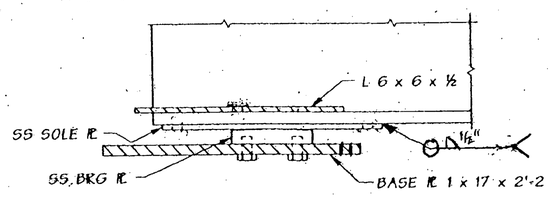

SECTION B

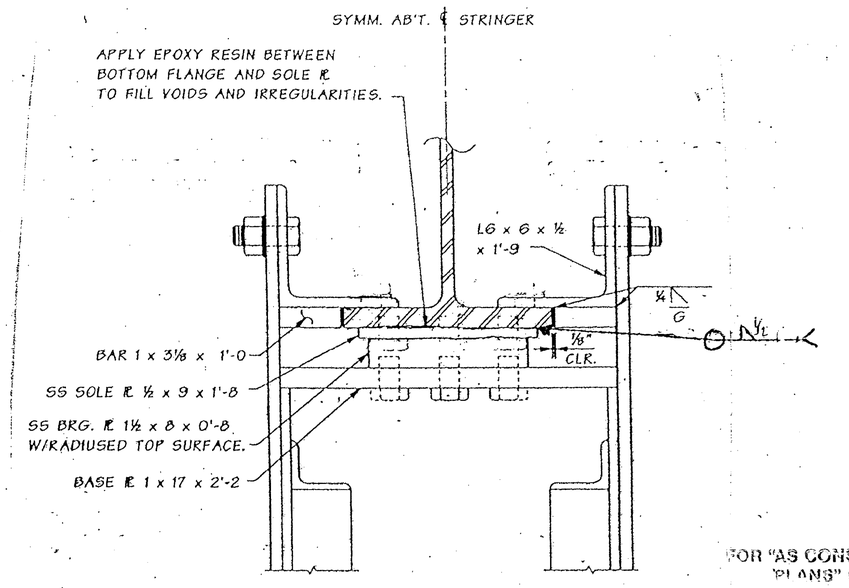

SECTION A

FOR "AS CONSTRUCTED PLANS" ONLY

FILE NAME	C:\AAWork\kelso\Svensen's Curve\L3425WASTESITE.dgn							
TIME	02:37:18 PM							
DATE	08/17/2005							
PLOTTED BY	spahnk							
DESIGNED BY								
ENTERED BY								
CHECKED BY								
PROJ. ENGR.								
REGIONAL ADM.		REVISION	DATE	BY				

REGION NO.	STATE	FED. AID PROJ. NO.
10	WASH	
JOB NUMBER		
CONTRACT NO. 6444		LOCATION NO.

P.E. STAMP BOX DATE

P.E. STAMP BOX DATE

Washington State Department of Transportation

SR 433
LEWIS AND CLARK BRIDE
DECK REPLACEMENT

PIER 7 - BEARING DETAILS
EXPANSION SIDE

PLOT11

0A60B

SHEET 192B OF 258 SHEETS

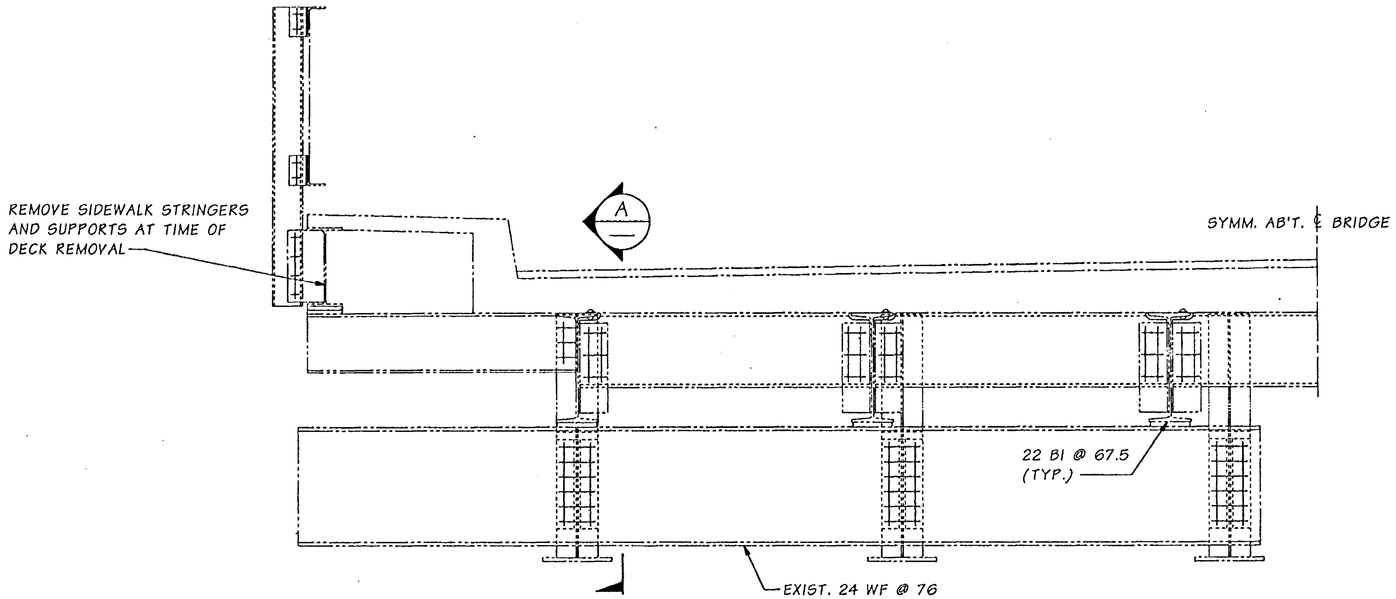

ELEVATION ~ EXISTING DECK AND STRINGER - GIRDER CONN.

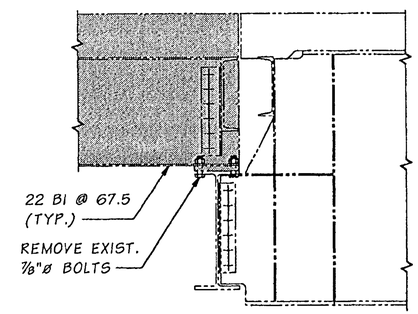

SECTION A

REMOVE SHADED PORTION AT TIME OF DECK REMOVAL.

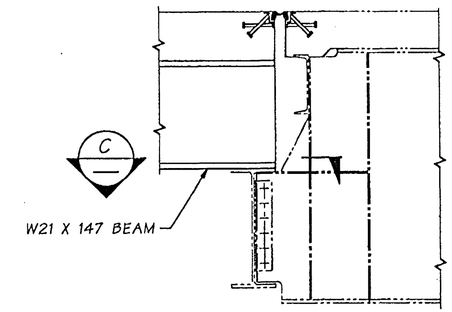

SECTION B

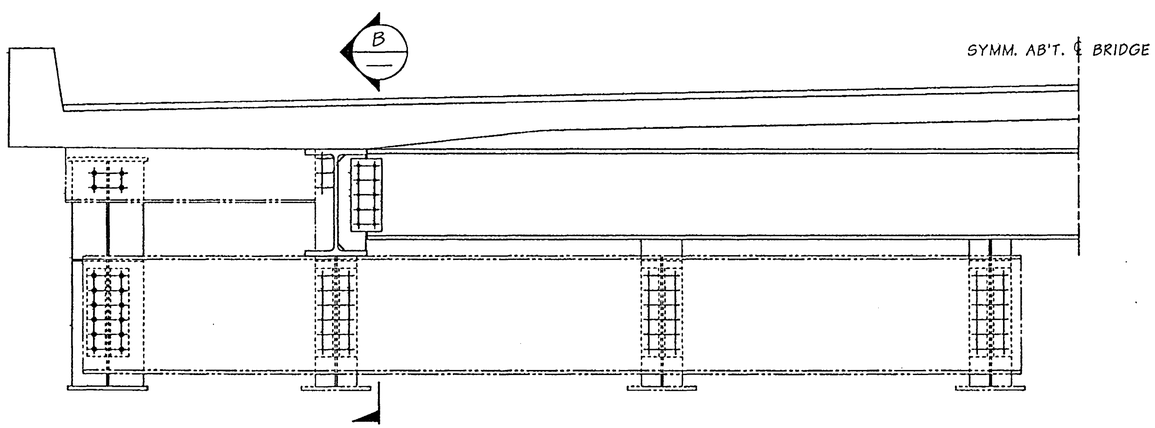

ELEVATION ~ MODIFIED STRINGER - GIRDER CONN. & NEW DECK

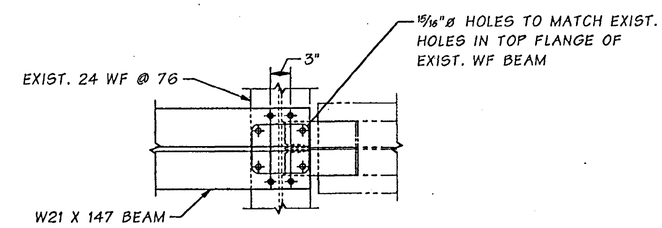

SECTION C

FIELD DRILL 15/16"ø HOLES IN BOT. FLANGE OF NEW W21 X 147 BEAM

FOR "AS CONSTRUCTED PLANS" ONLY

Bridge Design Engr.	Kapur, J		M:\Y-Team\Lewis_Clark Rehab\Oregon Appr\Window files\END SPAN 76.WND								
Supervisor	Kirker, KN	08/02				REGION NO.	STATE	FED. AID PROJ. NO.	SHEET NO.	TOTAL SHEETS	
Designed By	Talukdar, M	08/02				10	WASH.	ACBH - 0433(007)			
Checked By	Peralta, R	08/02									
Detailed By	House, L	08/02				JOB NUMBER 02x310					
Bridge Projects Engr.											
Prelim. Plan By											
Architect/Specialist			DATE	REVISION	BY	APP'D					

Tue Sep 17 11:40:24 2002

STRUCTURAL REGISTERED PROFESSIONAL ENGINEER 71314 OREGON SEPT. 10, 2002 JUGESH KAPUR — EXPIRES 06-30-2003

BRIDGE AND STRUCTURES OFFICE

KARL N. KIRKER STATE OF WASHINGTON 18006 REGISTERED PROFESSIONAL ENGINEER — EXPIRES 11/3/03

Washington State Department of Transportation

SR 433
LEWIS AND CLARK BRIDGE
DECK REPLACEMENT

TYPICAL SECTIONS NEAR PIER 8 - 28' SPAN

BRIDGE SHEET NO. 0A 61

SHEET 193 OF 258 SHEETS

SR 433 JOB NO. 1 SHEET 61

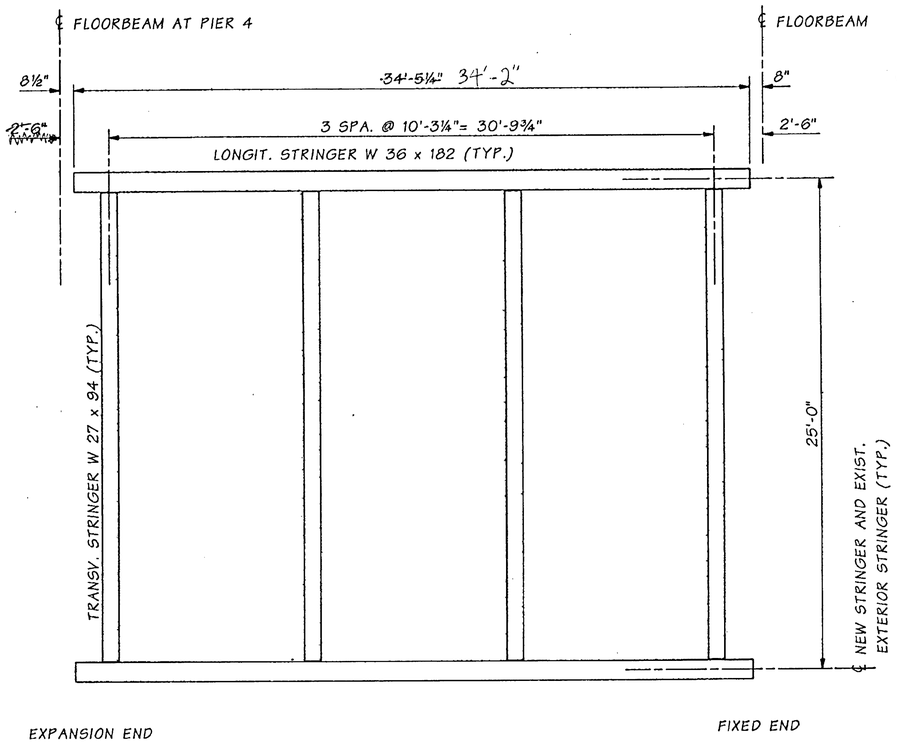

FRAMING PLAN

WHEN PANEL INSTALLED AT BRIDGE L0'-U1. U1 SIDE HIT CONFLICT AND LEFTED CONCRETE DECK OFF OF LONGITODINAL STRINGERS FOR APPROX. 5'. SHIM PLATES ADDED AT U1 UNDER SS ROCKER (SEE SHEET OA35) TO RAISE DECK AND PANEL REPAIRED WITH EPOXY INJECTION BETWEEN STRINGERS AND CONCRETE DECK.. TAMMS-DURAL FAST SET EPOXY LV USED FOR EPOXY REPAIR.

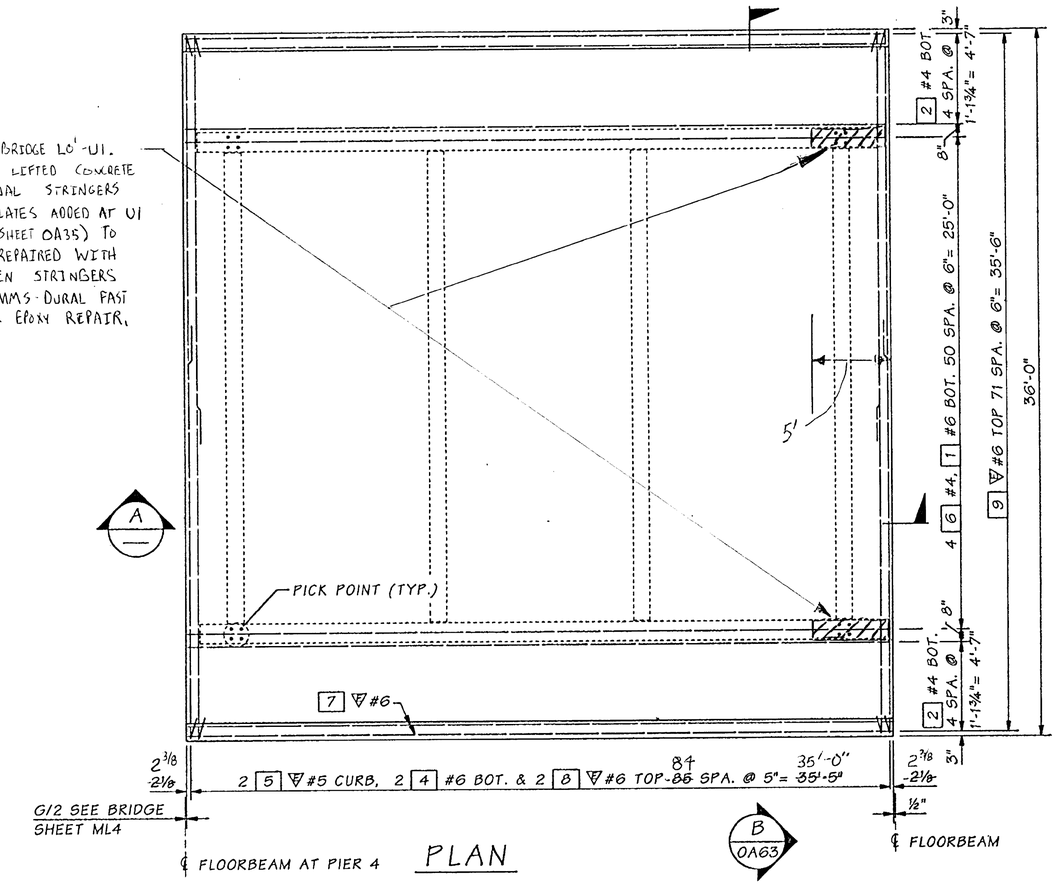

PLAN

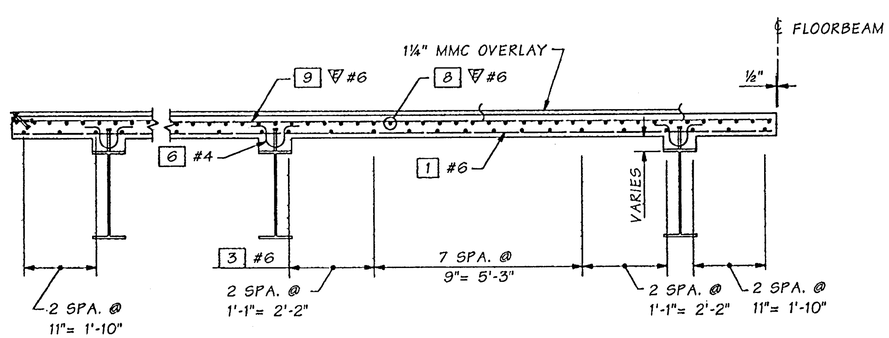

SECTION A

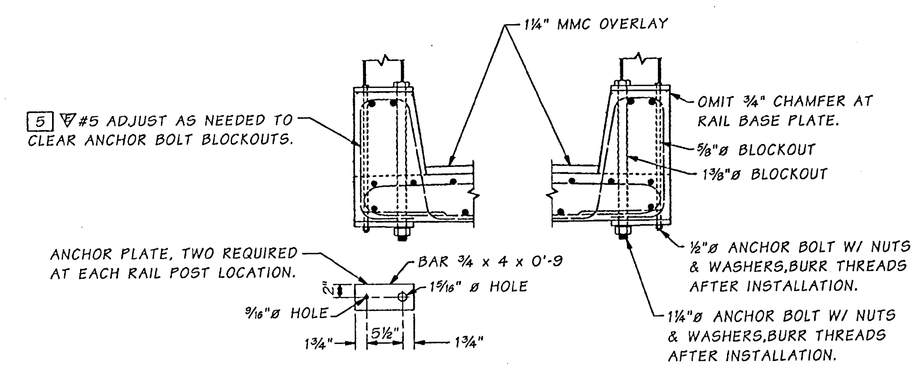

CURB DETAILS

SEE THRIE BEAM LAYOUT SHEETS FOR RAIL POST LOCATIONS.

FOR "AS CONSTRUCTED PLANS" ONLY

SR 433 JOB NO. 1 SHEET 62

Bridge Design Engr.	Kapur, J		
Supervisor	Kirker, KN		08/02
Designed By	Talukdar, M		08/02
Checked By	Peralta, R		08/02
Detailed By	House, L		08/02
Bridge Projects Engr.			
Prelim. Plan By			
Architect/Specialist			

M:\Y-Team\Lewis_Clark Rehab\Oregon Appr\window files\DECK A2 335.WND

DATE	REVISION	BY	APP'D

REGION NO.	STATE	FED. AID PROJ. NO.	SHEET NO.	TOTAL SHEETS
10	WASH.	ACBH - 0433(007)		
JOB NUMBER 02x310				

STRUCTURAL REGISTERED PROFESSIONAL ENGINEER 71374 OREGON SEPT. 10, 2002 JUGESH KAPUR
EXPIRES 06-30-2003

BRIDGE AND STRUCTURES OFFICE

KARL N. KIRKER STATE OF WASHINGTON 16259 REGISTERED PROFESSIONAL ENGINEER
EXPIRES 11/3/03

Washington State Department of Transportation

SR 433
LEWIS AND CLARK BRIDGE
DECK REPLACEMENT

335' TRUSS - DECK PANEL A2

BRIDGE SHEET NO. OA62

SHEET 194 OF 258 SHEETS

Wed Sep 18 08:10:39 2002

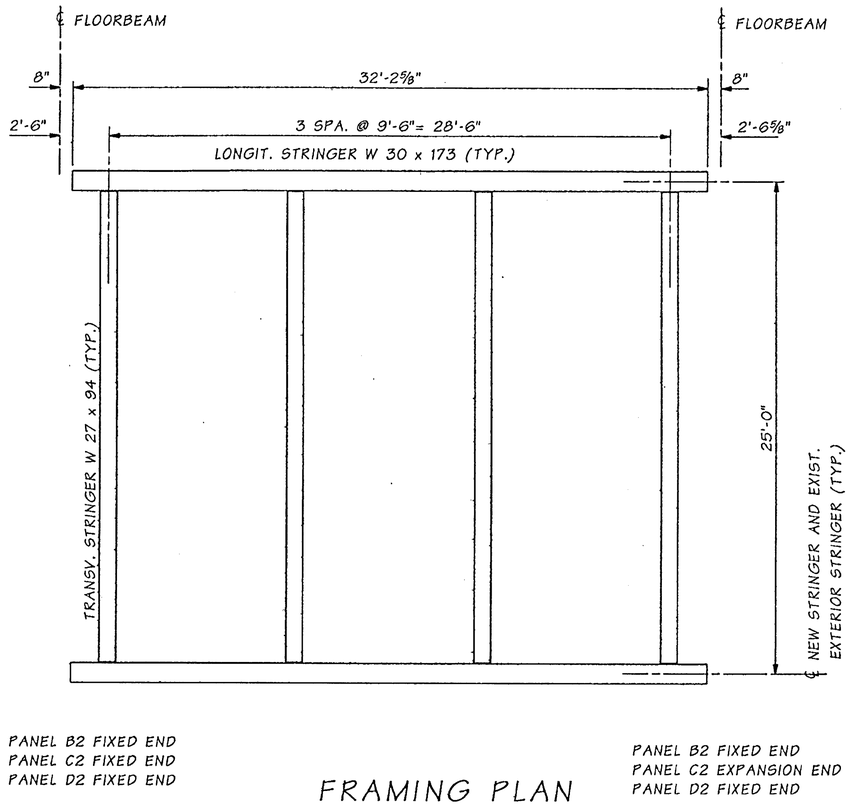

FRAMING PLAN

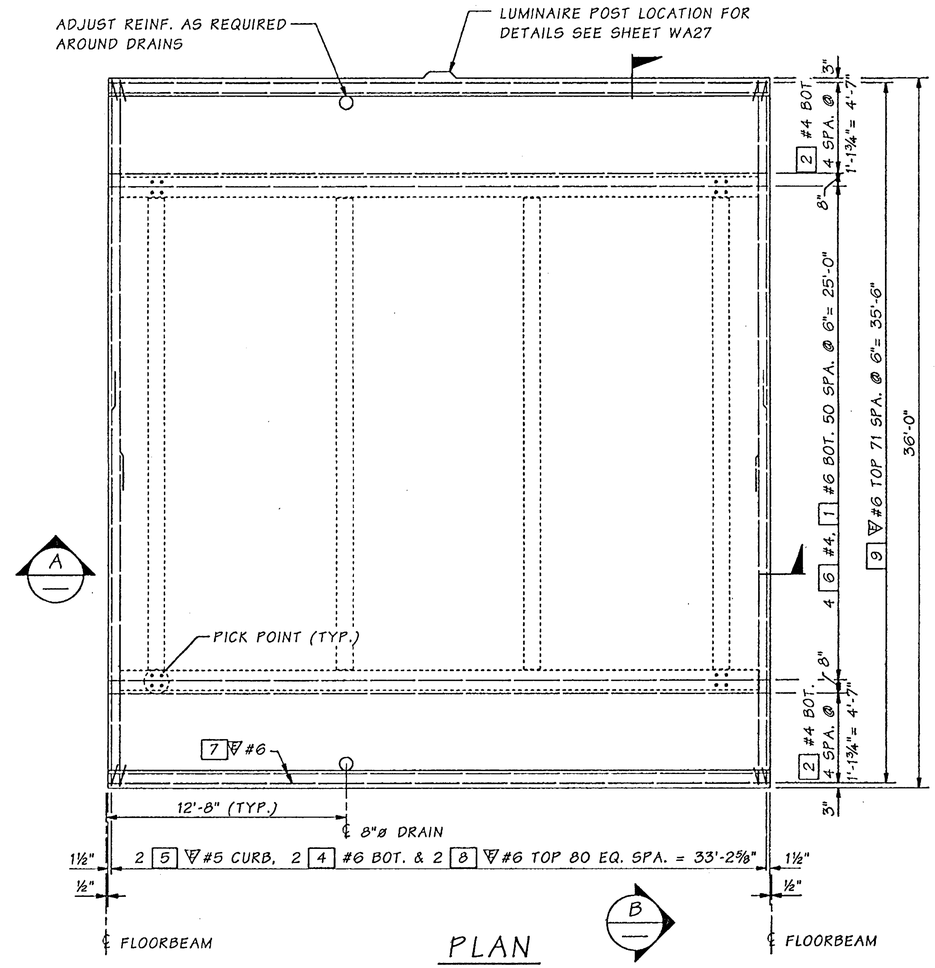

PLAN

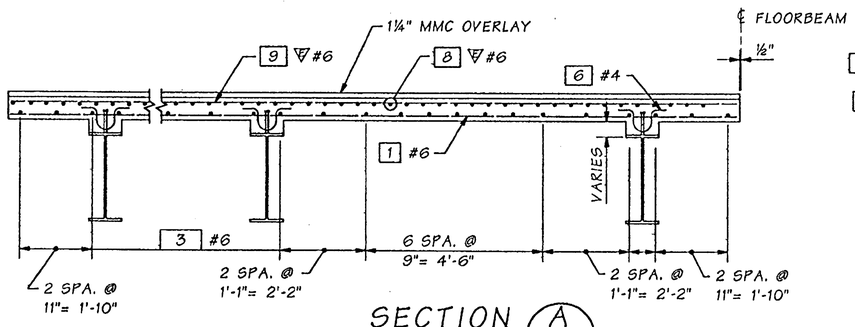

SECTION A

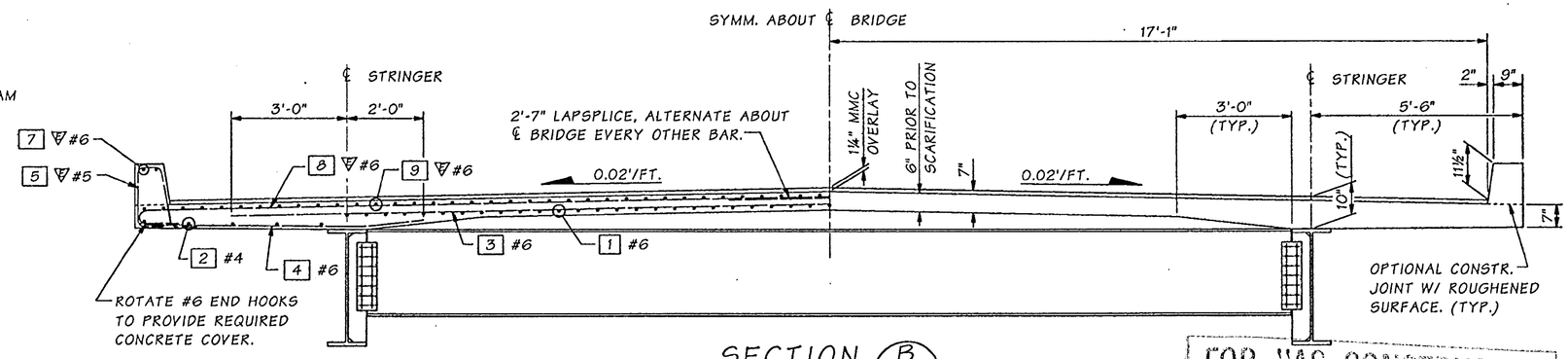

SECTION B

, 0A62 - 0A72

FOR "AS CONSTRUCTED PLANS" ONLY

Bridge Design Engr.	Kapur, J	
Supervisor	Kirker, KN	08/02
Designed By	Talukdar, M	08/02
Checked By	Peralta, R	08/02
Detailed By	House, L	08/02
Bridge Projects Engr.		
Prelim. Plan By		
Architect/Specialist		

M:\Y-Team\Lewis_Clark Rehab\Oregon Appr\Window files\DECK B2 C2 D2 335.WND

DATE	REVISION	BY	APP'D

REGION NO.	STATE	FED. AID PROJ. NO.	SHEET NO.	TOTAL SHEETS
10	WASH.	ACBH - 0433(007)		

JOB NUMBER 02x310

6444

STRUCTURAL REGISTERED PROFESSIONAL ENGINEER 71344 OREGON SEPT. 10, 2002 JUGESH KAPUR
EXPIRES 06-30-2003

BRIDGE AND STRUCTURES OFFICE

KARL N. KIRKER STATE OF WASHINGTON 16208 REGISTERED PROFESSIONAL ENGINEER
EXPIRES 11/3/03

Washington State Department of Transportation

SR 433
LEWIS AND CLARK BRIDGE
DECK REPLACEMENT

335' TRUSS - DECK PANEL B2, C2 & D2

BRIDGE SHEET NO. 0A63

SHEET 195 OF 258 SHEETS

SR 433 JOB NO. 1 SHEET 63

Tue Sep 17 11:47:54 2002

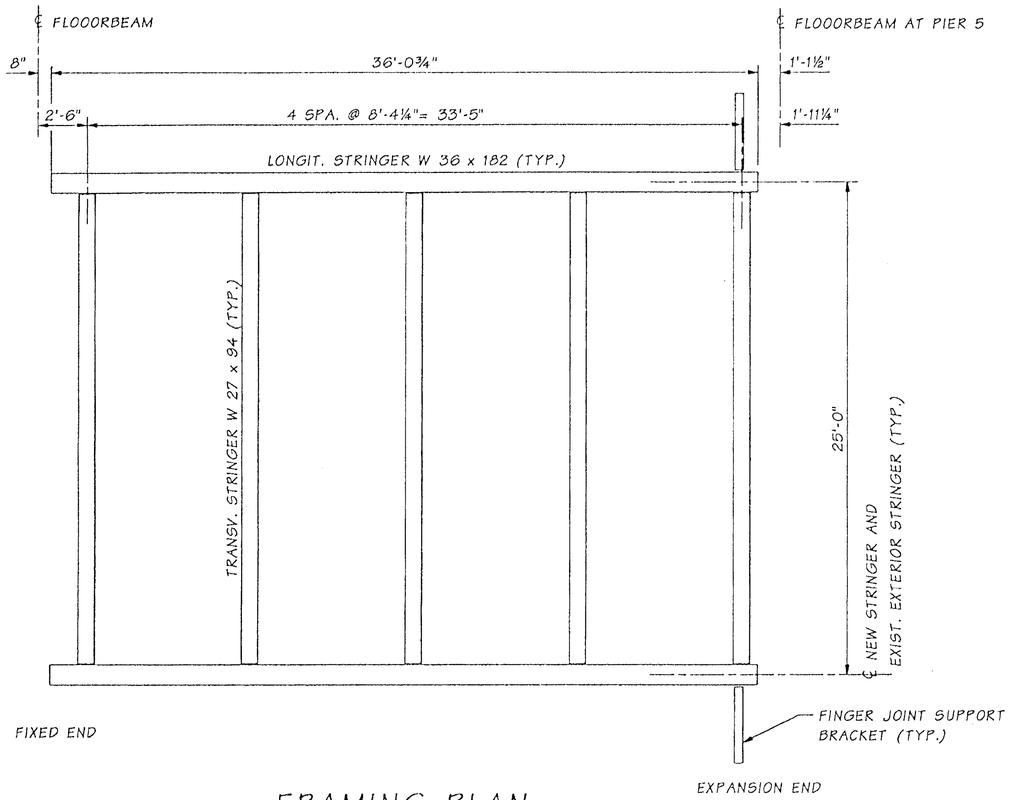

FRAMING PLAN

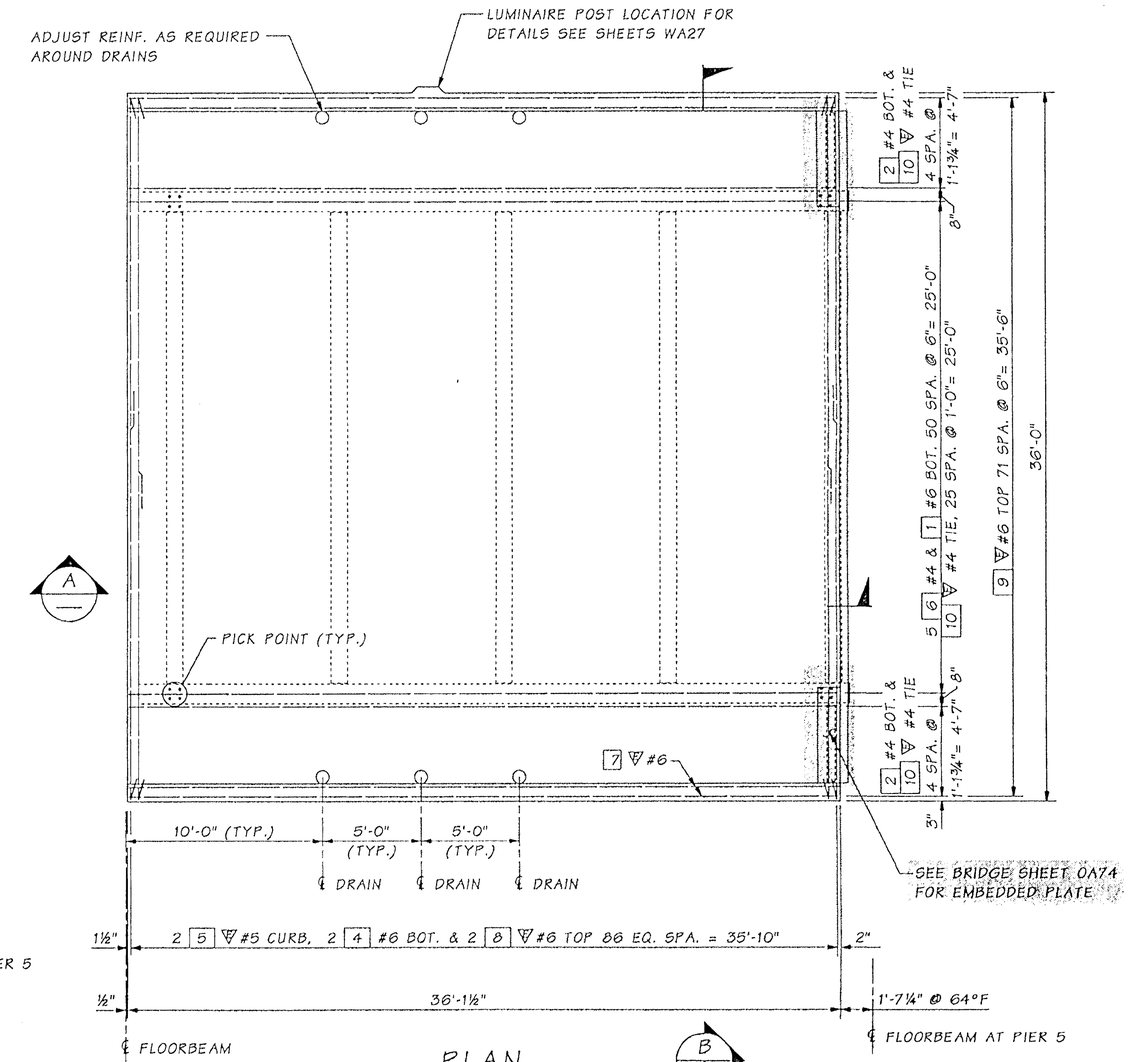

PLAN

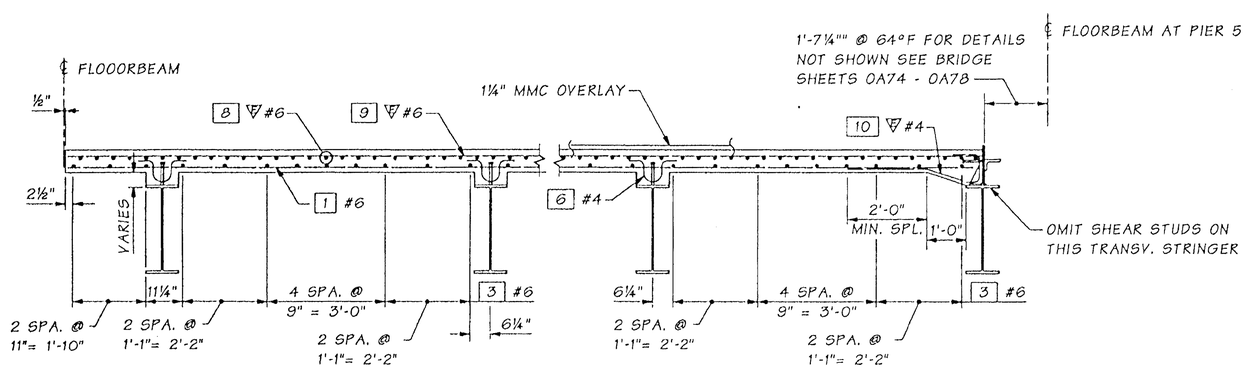

SECTION A

FOR "AS CONSTRUCTED PLANS" ONLY

Design Engr.	Kapur, J		M:\Y-Team\Lewis_Clark Rehab\Oregon Appr\window files\DECK E2 335.WND							
Supervisor	Kirker, KN	08/02				REGION NO.	STATE	FED. AID PROJ. NO.	SHEET NO.	TOTAL SHEETS
Designed By	Talukdar, M	08/02				10	WASH.			
Checked By	Peralta, R	08/02				JOB NUMBER 02x310		ACBH - 0433(007)		
Detailed By	House, L	08/02								
Bridge Projects Engr.										
Prelim. Plan By										
Architect/Specialist			DATE	REVISION	BY	APP'D				

Wed Oct 30 08:00:01 2002

STRUCTURAL REGISTERED PROFESSIONAL ENGINEER 71344 OREGON OCT. 10, 2002 JUGESH KAPUR — EXPIRES 06-30-2003

BRIDGE AND STRUCTURES OFFICE

KARL N. KIRKER STATE OF WASHINGTON 25256 REGISTERED PROFESSIONAL ENGINEER — EXPIRES 11/3/03

Washington State Department of Transportation

SR 433
LEWIS AND CLARK BRIDGE
DECK REPLACEMENT

335' TRUSS - DECK PANEL E2

BRIDGE SHEET NO. 0A64

SHEET 196 OF 258 SHEETS

SR 433 SHEET 64 2. 1

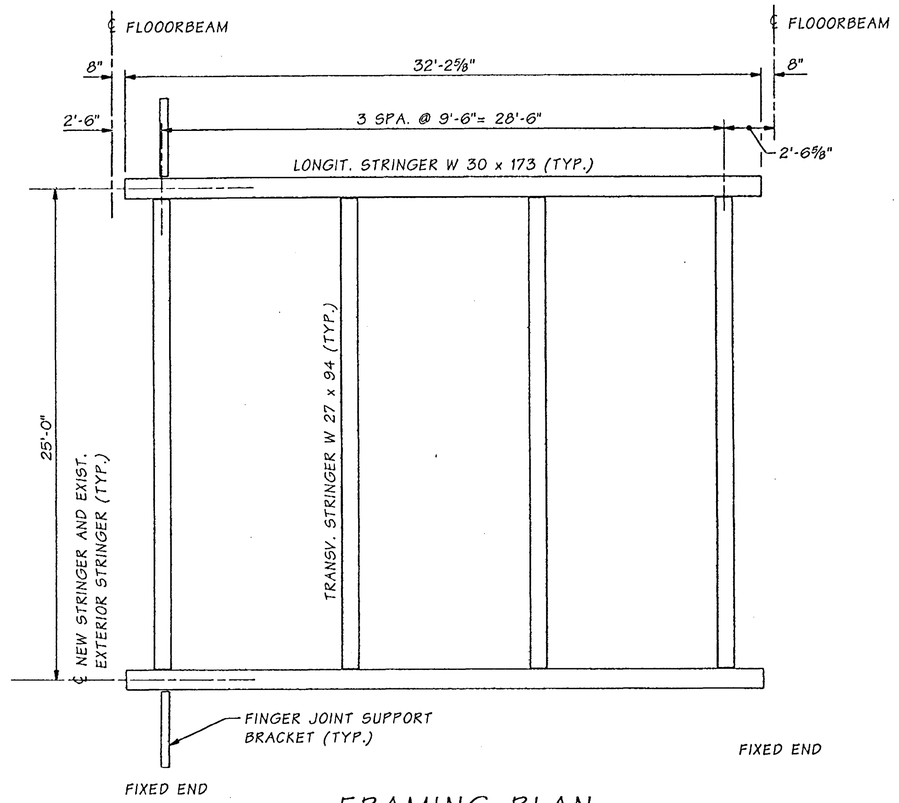

FRAMING PLAN

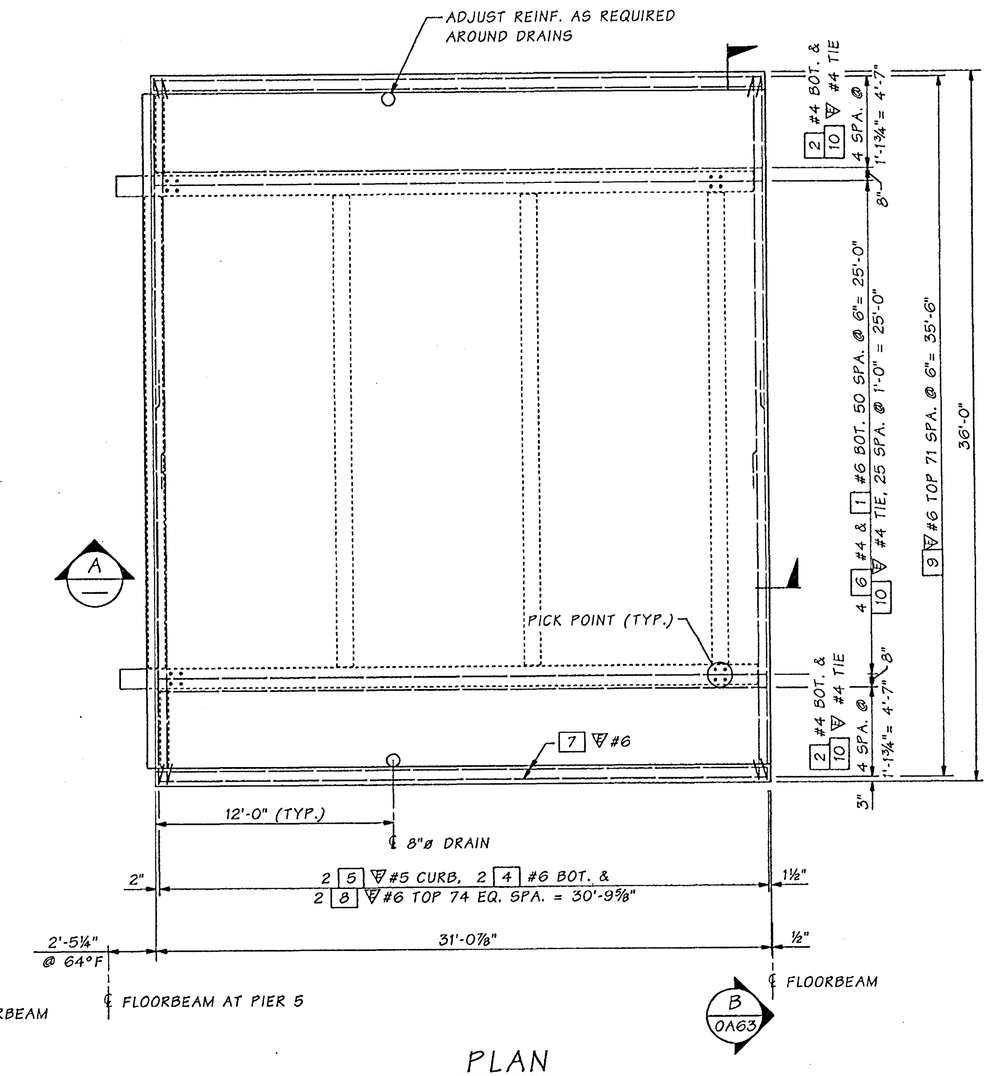

PLAN

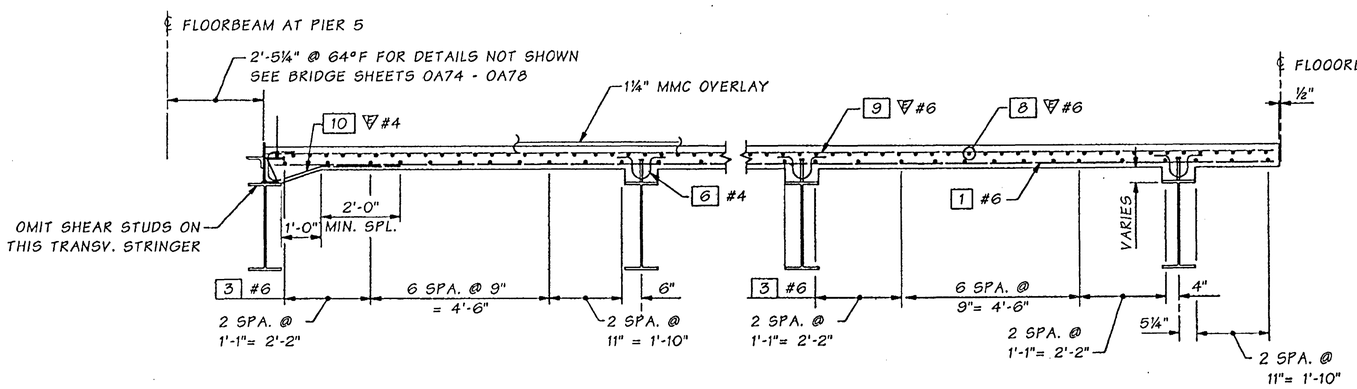

SECTION A

FOR "AS CONSTRUCTED PLANS" ONLY

Bridge Design Engr.	Kapur, J		M:\Y-Team\Lewis_Clark Rehab\Oregon Appr\Window files\DECK F2 335.WND
Supervisor	Kirker, KN	08/02	
Designed By	Talukdar, M	08/02	
Checked By	Peralta, R	08/02	
Detailed By	House, L	08/02	
Bridge Projects Engr.			
Prelim. Plan By			
Architect/Specialist			

DATE	REVISION	BY	APP'D

REGION NO.	STATE	FED. AID PROJ. NO.	SHEET NO.	TOTAL SHEETS
10	WASH.	ACBH - 0433(007)		
JOB NUMBER 02x310				

STRUCTURAL REGISTERED PROFESSIONAL ENGINEER 71344 OREGON SEPT. 10, 2002 JUGESH KAPUR
EXPIRES 06-30-2003

BRIDGE AND STRUCTURES OFFICE

KARL N. KIRKER STATE OF WASHINGTON 18296 REGISTERED PROFESSIONAL ENGINEER
EXPIRES 11/3/03

Washington State Department of Transportation

SR 433
LEWIS AND CLARK BRIDGE
DECK REPLACEMENT

335' TRUSS - DECK PANEL F2

BRIDGE SHEET NO. 0A65

SHEET 197 OF 258 SHEETS

SR 433 JOB NO. 1 SHEET 65

Tue Sep 17 11:47:59 2002

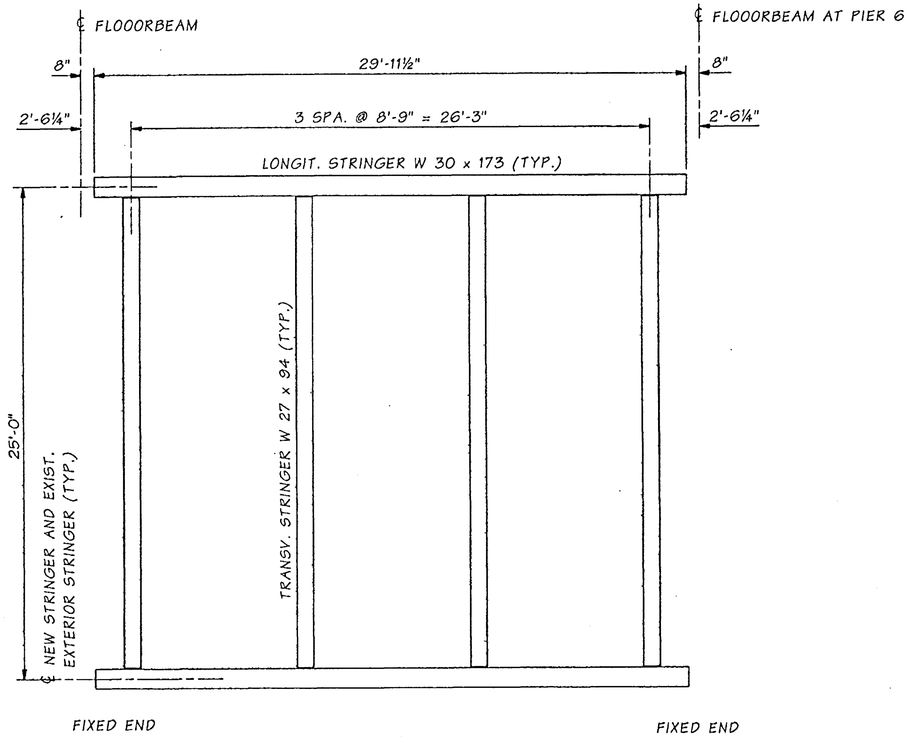

FRAMING PLAN

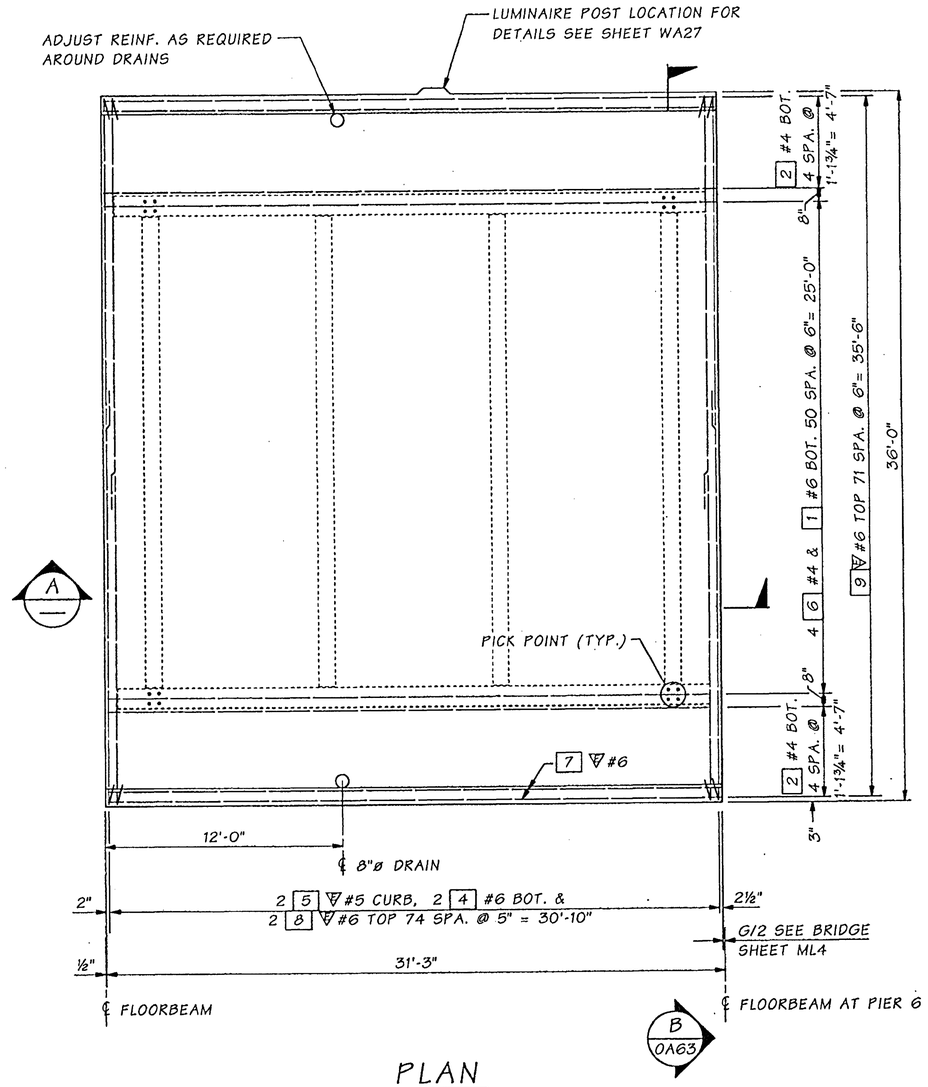

PLAN

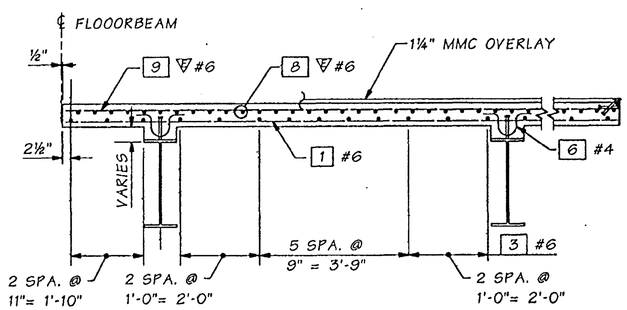

SECTION A

FOR "AS CONSTRUCTED PLANS" ONLY

Bridge Design Engr.	Kapur, J		M:\Y-Team\Lewis_Clark Rehab\Oregon Appr\Window files\DECK G2 335.WND							
Supervisor	Kirker, KN	08/02								
Designed By	Talukdar, M	08/02								
Checked By	Peralta, R	08/02								
Detailed By	House, L	08/02								
Bridge Projects Engr.										
Preliim. Plan By										
Architect/Specialist			DATE	REVISION	BY	APP'D				

REGION NO.	STATE	FED. AID PROJ. NO.	SHEET NO.	TOTAL SHEETS
10	WASH.			
JOB NUMBER 02x310		ACBH - 0433(007)		

Tue Sep 17 11:48:01 2002

STRUCTURAL REGISTERED PROFESSIONAL ENGINEER 71144 OREGON JULY 10, 2001 JUGESH KAPUR — EXPIRES 06-30-2003

BRIDGE AND STRUCTURES OFFICE

KARL N. KIRKER STATE OF WASHINGTON 18298 REGISTERED PROFESSIONAL ENGINEER — EXPIRES 11/3/03

Washington State Department of Transportation

SR 433
LEWIS AND CLARK BRIDGE
DECK REPLACEMENT

335' TRUSS - DECK PANEL G2

BRIDGE SHEET NO. 0A66

SHEET 198 OF 258 SHEETS

SR 433 JOB NO. 1 SHEET 66

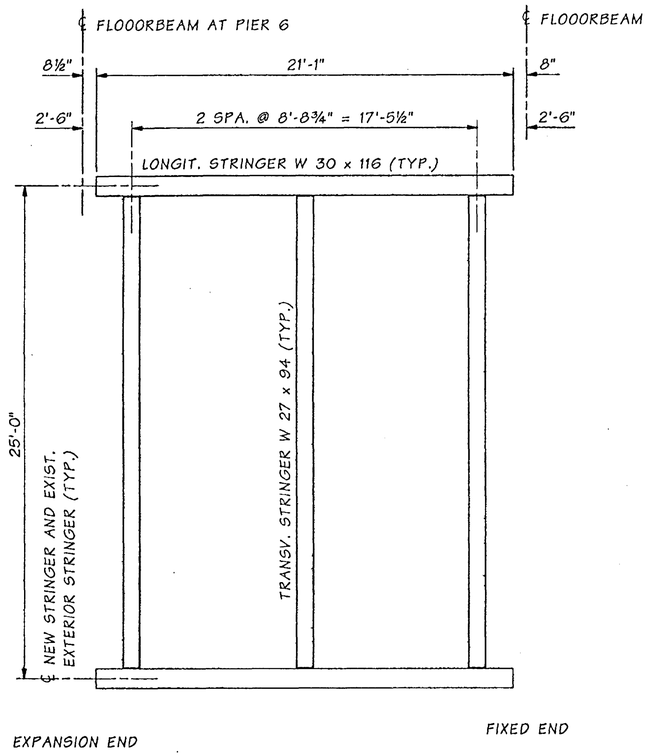

FRAMING PLAN

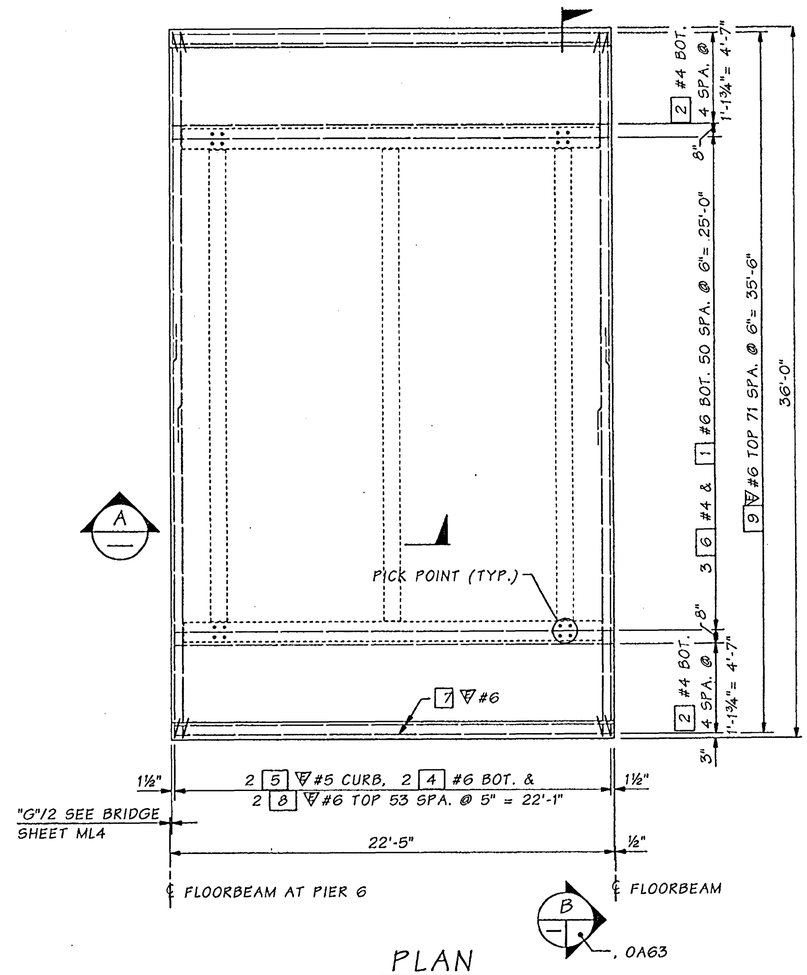

PLAN

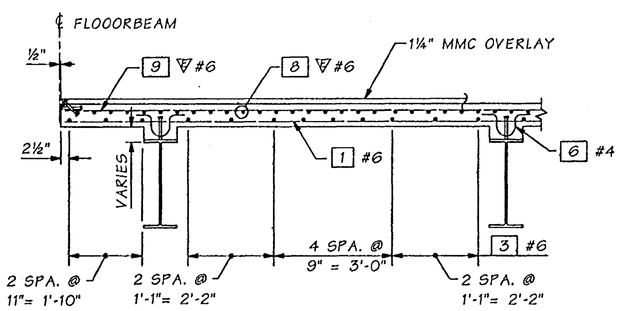

SECTION A

FOR "AS CONSTRUCTED PLANS" ONLY

SR 433 JOB NO. 1 SHEET 67

Bridge Design Engr.	Kapur, J		M:\Y-Team\Lewis_Clark Rehab\Oregon Appr\Window files\DECK H2 84.WND
Supervisor	Kirker, KN	08/02	
Designed By	Talukdar, M	08/02	
Checked By	Peralta, R	08/02	
Detailed By	House, L	08/02	
Bridge Projects Engr.			
Prelim. Plan By			
Architect/Specialist			

DATE	REVISION	BY	APP'D

REGION NO.	STATE	FED. AID PROJ. NO.	SHEET NO.	TOTAL SHEETS
10	WASH.	ACBH - 0433(007)		
JOB NUMBER 02x310				

STRUCTURAL REGISTERED PROFESSIONAL ENGINEER 71344 OREGON OCT. 10, 2002 JUGESH KAPUR
EXPIRES 06-30-2003

BRIDGE AND STRUCTURES OFFICE

STATE OF WASHINGTON KARL N. KIRKER 18246 REGISTERED PROFESSIONAL ENGINEER
EXPIRES 11/3/03

Washington State Department of Transportation

SR 433
LEWIS AND CLARK BRIDGE
DECK REPLACEMENT

84' TRUSS - DECK PANEL H2

BRIDGE SHEET NO. OA67

SHEET 199 OF 258 SHEETS

Tue Sep 17 11:40:03 2002

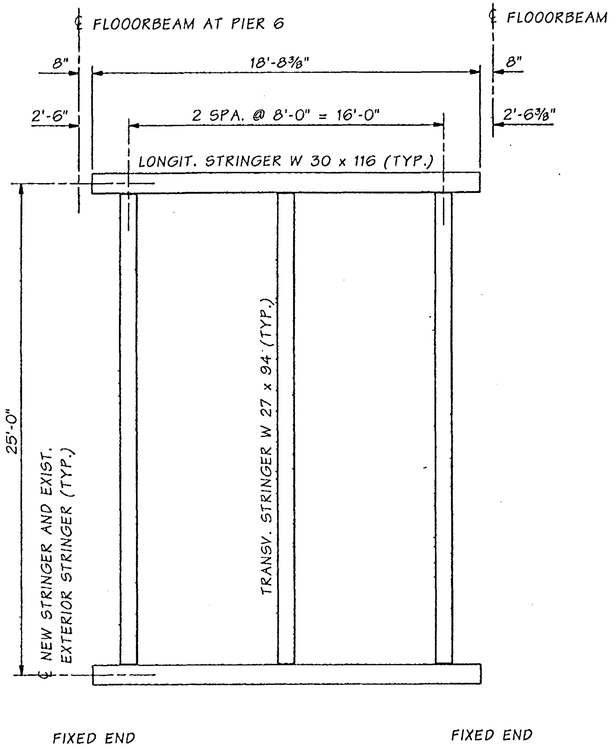

FRAMING PLAN

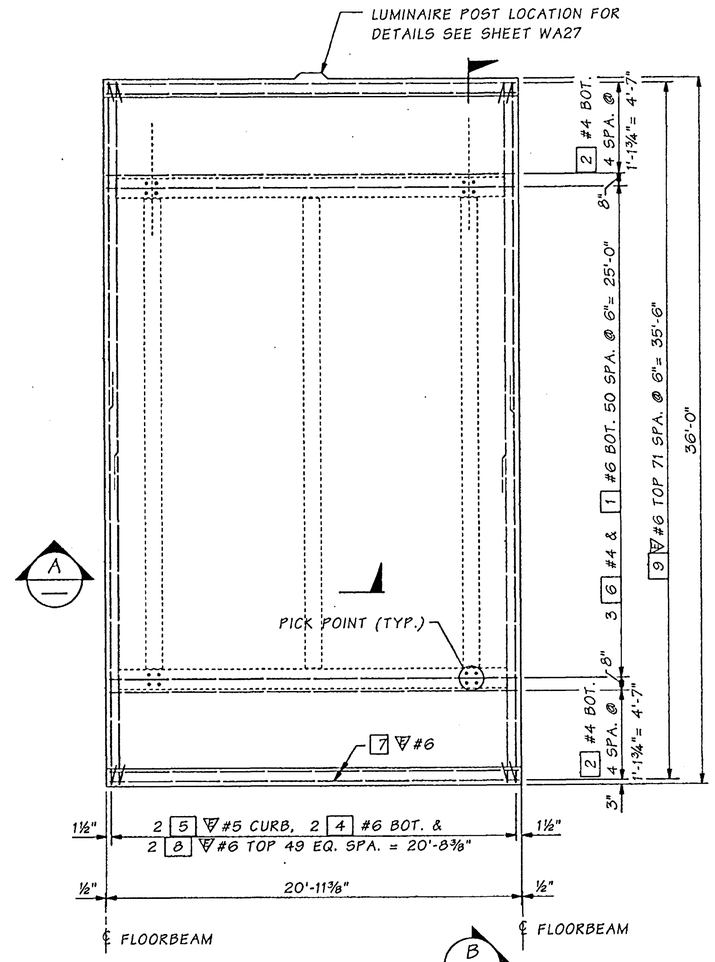

PLAN

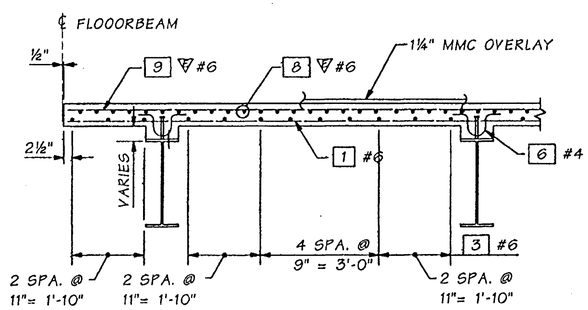

SECTION A

FOR "AS CONSTRUCTED PLANS" ONLY

SR 433 JOB NO. 1 SHEET 68

Bridge Design Engr.	Kapur, J		M:\Y-Team\Lewis_Clark Rehab\Oregon Appr\Window files\DECK I2 84.WND								
Supervisor	Kirker, KN	08/02									
Designed By	Talukdar, M	08/02									
Checked By	Peralta, R	08/02									
Detailed By	House, L	08/02									
Bridge Projects Engr.											
Prelim. Plan By											
Architect/Specialist			DATE	REVISION	BY	APP'D					

REGION NO.	STATE	FED. AID PROJ. NO.	SHEET NO.	TOTAL SHEETS
10	WASH.	ACBH - 0433(007)		
JOB NUMBER 02x310				
6444				

Tue Sep 17 11:48:04 2002

STRUCTURAL REGISTERED PROFESSIONAL ENGINEER 71334 OREGON SEPT. 10, 2002 JUGESH KAPUR
EXPIRES 06-30-2003

BRIDGE AND STRUCTURES OFFICE

KARL N. KIRKER STATE OF WASHINGTON 18896 REGISTERED PROFESSIONAL ENGINEER
EXPIRES 11/3/03

Washington State Department of Transportation

SR 433
LEWIS AND CLARK BRIDGE
DECK REPLACEMENT

84' TRUSS - DECK PANEL I2

BRIDGE SHEET NO. 0A68

SHEET 200 OF 258 SHEETS

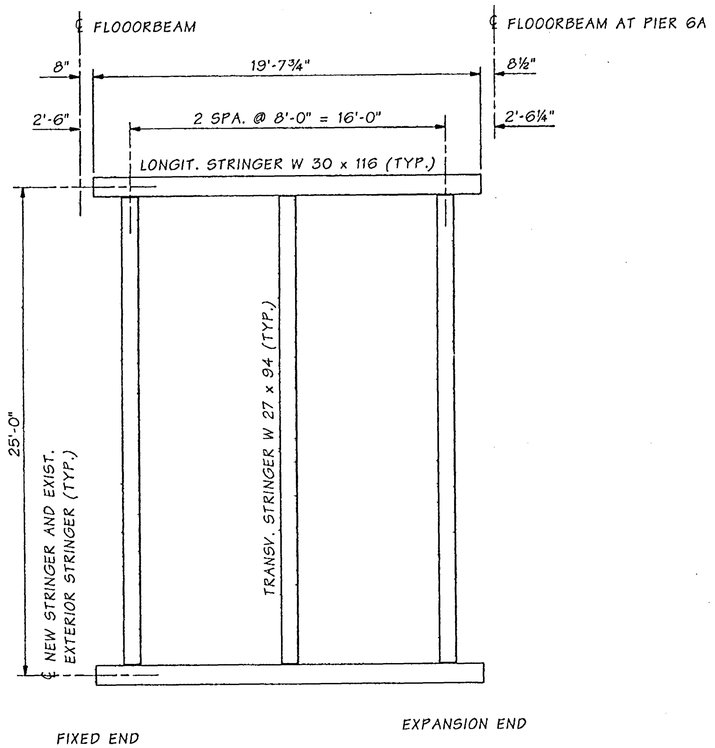

FRAMING PLAN

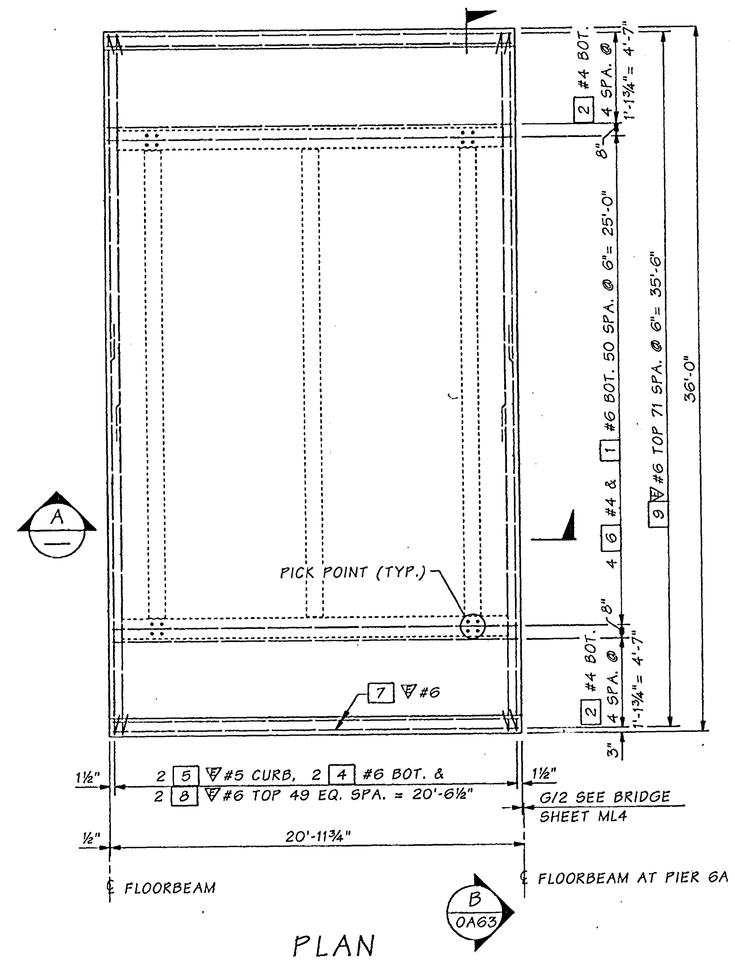

PLAN

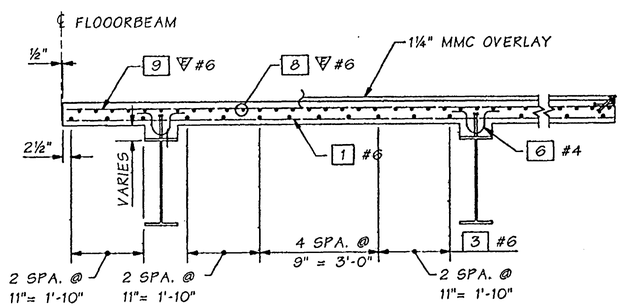

SECTION A

FOR "AS CONSTRUCTED PLANS" ONLY

Bridge Design Engr.	Kapur, J		M:\Y-Team\Lewis_Clark Rehab\Oregon Appr\Window files\DECK J2 84.WND				REGION NO.	STATE	FED. AID PROJ. NO.	SHEET NO.	TOTAL SHEETS
Supervisor	Kirker, KN	08/02					10	WASH.	ACBH - 0433(007)		
Designed By	Talukdar, M	08/02									
Checked By	Peralta, R	08/02									
Detailed By	House, L	08/02					JOB NUMBER 02x310				
Bridge Projects Engr.											
Prelim. Plan By											
Architect/Specialist			DATE	REVISION	BY	APP'D	6444				

STRUCTURAL REGISTERED PROFESSIONAL ENGINEER 71344 OREGON SEP. 10, 2002 JUGESH KAPUR
EXPIRES 06-30-2003

BRIDGE AND STRUCTURES OFFICE

KARL N. KIRKER STATE OF WASHINGTON 10296 REGISTERED PROFESSIONAL ENGINEER 9/18/02
EXPIRES 11/3/03

Washington State Department of Transportation

SR 433
LEWIS AND CLARK BRIDGE
DECK REPLACEMENT

84' TRUSS - DECK PANEL J2

BRIDGE SHEET NO. 0A69

SHEET 201 OF 258 SHEETS

SR 433 JOB NO. 1 SHEET 69

Tue Sep 17 11:48:06 2002

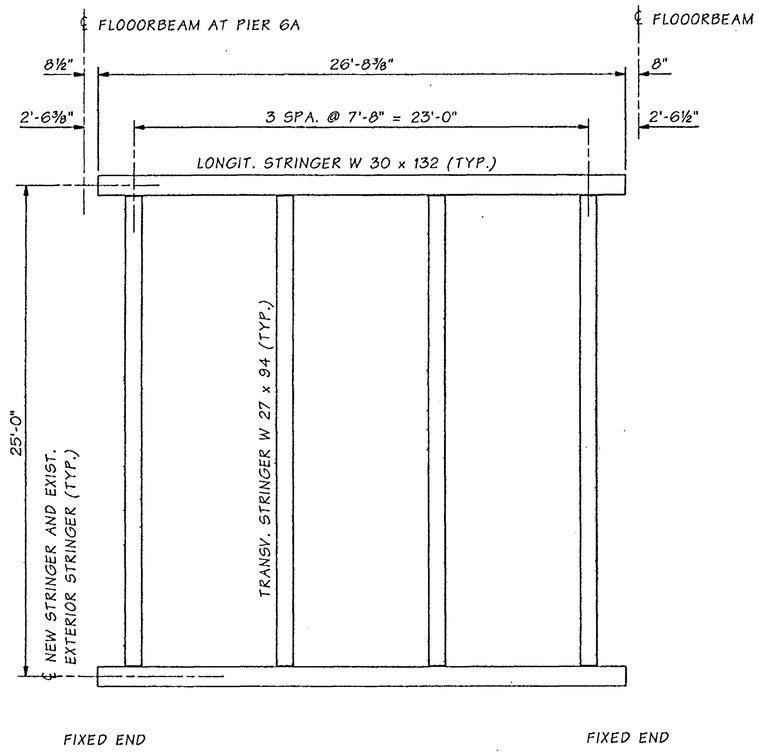

FRAMING PLAN

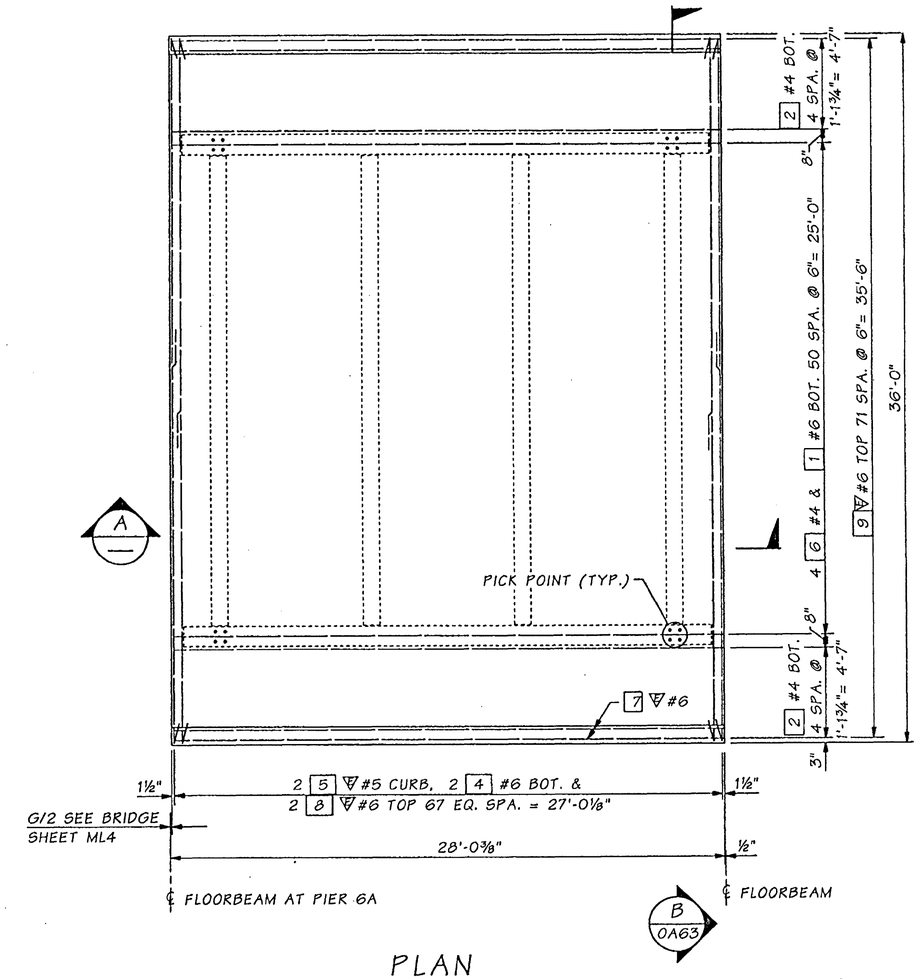

PLAN

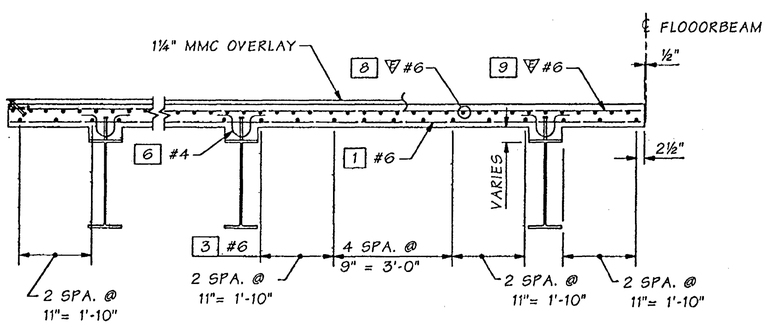

SECTION A

FOR "AS CONSTRUCTED PLANS" ONLY

Bridge Design Engr.	Kapur, J		M:\Y-Team\Lewis_Clark Rehab\Oregon Appr\Window files\DECK K2 168.WND
Supervisor	Kirker, KN	08/02	
Designed By	Talukdar, M	08/02	
Checked By	Peralta, R	08/02	
Detailed By	House, L	08/02	
Bridge Projects Engr.			
Prelim. Plan By			
Architect/Specialist			

DATE	REVISION	BY	APP'D

REGION NO.	STATE	FED. AID PROJ. NO.	SHEET NO.	TOTAL SHEETS
10	WASH.	ACBH - 0433(007)		
JOB NUMBER 02x310				
6444				

STRUCTURAL REGISTERED PROFESSIONAL ENGINEER 71344 OREGON SEPT. 10, 2002 JUGESH KAPUR
EXPIRES 06-30-2003

BRIDGE AND STRUCTURES OFFICE

KARL N. KIRKER STATE OF WASHINGTON 16296 REGISTERED PROFESSIONAL ENGINEER
EXPIRES 11/3/03

Washington State Department of Transportation

SR 433
LEWIS AND CLARK BRIDGE
DECK REPLACEMENT

168'-3" TRUSS - DECK PANEL K2

BRIDGE SHEET NO. 0A70

SHEET 202 OF 258 SHEETS

SR 433 JOB NO. 1 SHEET 70

Tue Sep 17 11:48:08 2002

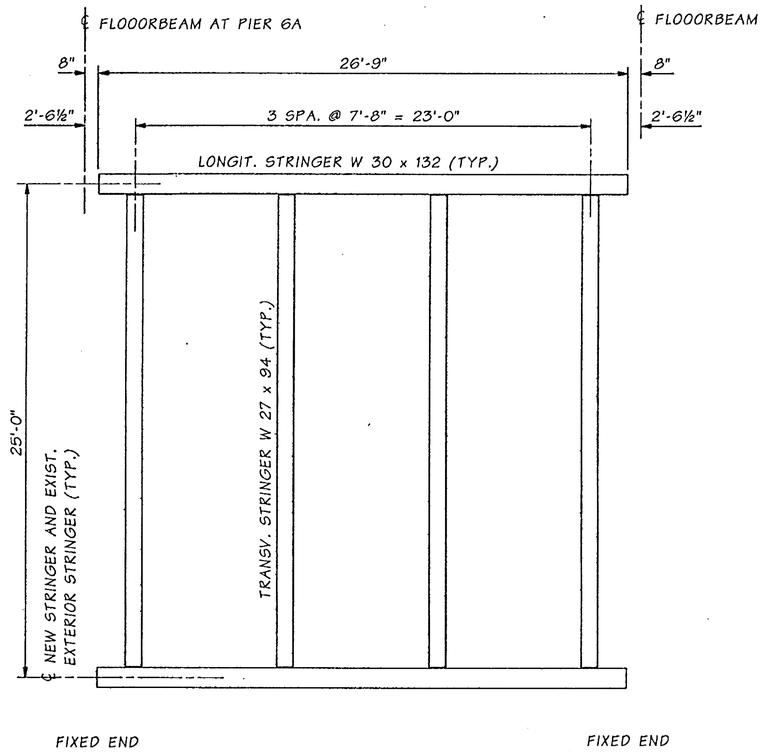

FRAMING PLAN

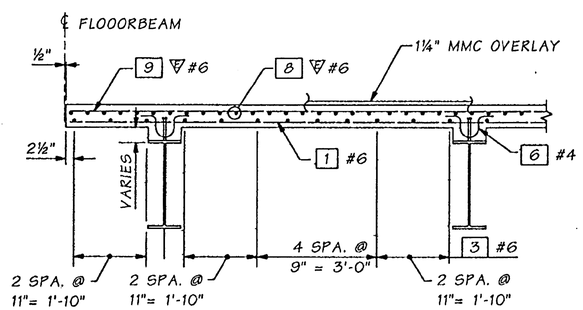

SECTION A

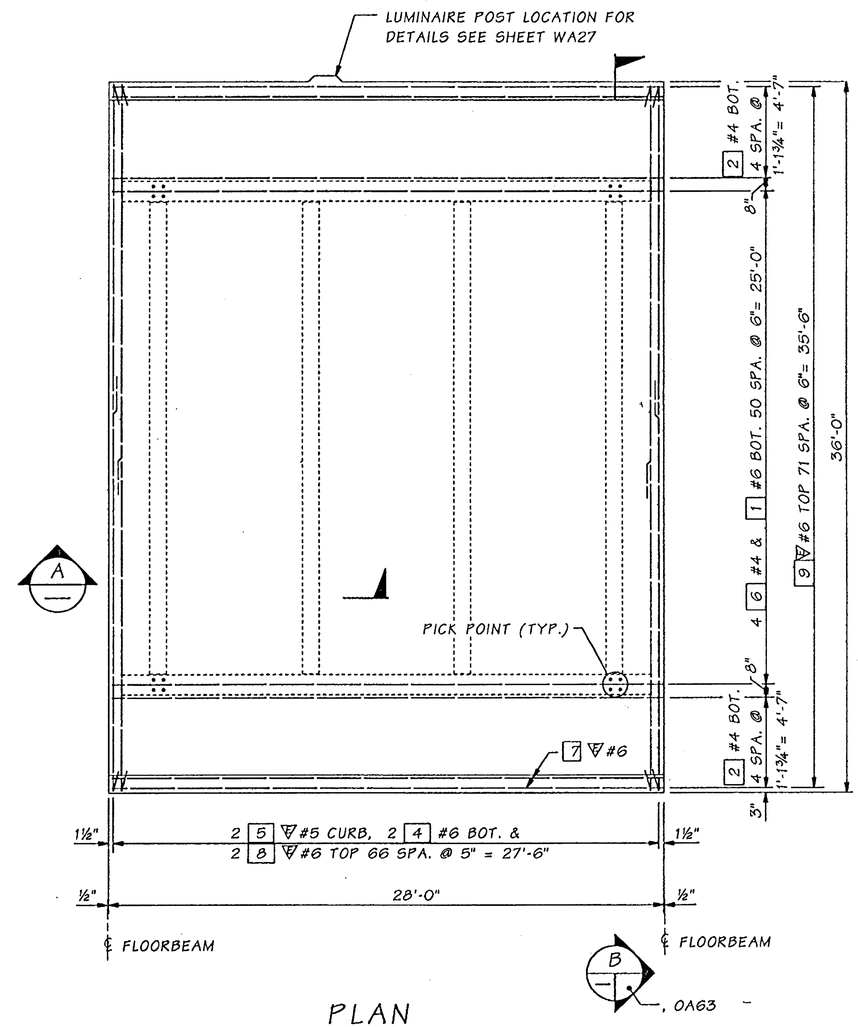

PLAN

FOR "AS CONSTRUCTED PLANS" ONLY

SR 433 JOB NO. 1 SHEET 71

Bridge Design Engr.	Kapur, J		
Supervisor	Kirker, KN	08/02	
Designed By	Talukdar, M	08/02	
Checked By	Peralta, R	08/02	
Detailed By	House, L	08/02	
Bridge Projects Engr.			
Prelim. Plan By			
Architect/Specialist			

M:\Y-Team\Lewis_Clark Rehab\Oregon Appr\Window files\DECK L2 168-3.WND

DATE	REVISION	BY	APP'D

REGION NO.	STATE	FED. AID PROJ. NO.	SHEET NO.	TOTAL SHEETS
10	WASH.	ACBH - 0433(007)		
JOB NUMBER 02x310				

STRUCTURAL REGISTERED PROFESSIONAL ENGINEER 71144 OREGON OCT. 10, 2002 JUGESH KAPUR
EXPIRES 06-30-2003

BRIDGE AND STRUCTURES OFFICE

KARL N. KIRKER STATE OF WASHINGTON 16896 REGISTERED PROFESSIONAL ENGINEER
EXPIRES 11/3/03

Washington State Department of Transportation

SR 433
LEWIS AND CLARK BRIDGE
DECK REPLACEMENT

168'-3" TRUSS - DECK PANEL L2

BRIDGE SHEET NO. 0A71

SHEET 203 OF 258 SHEETS

Tue Sep 17 11:48:10 2002

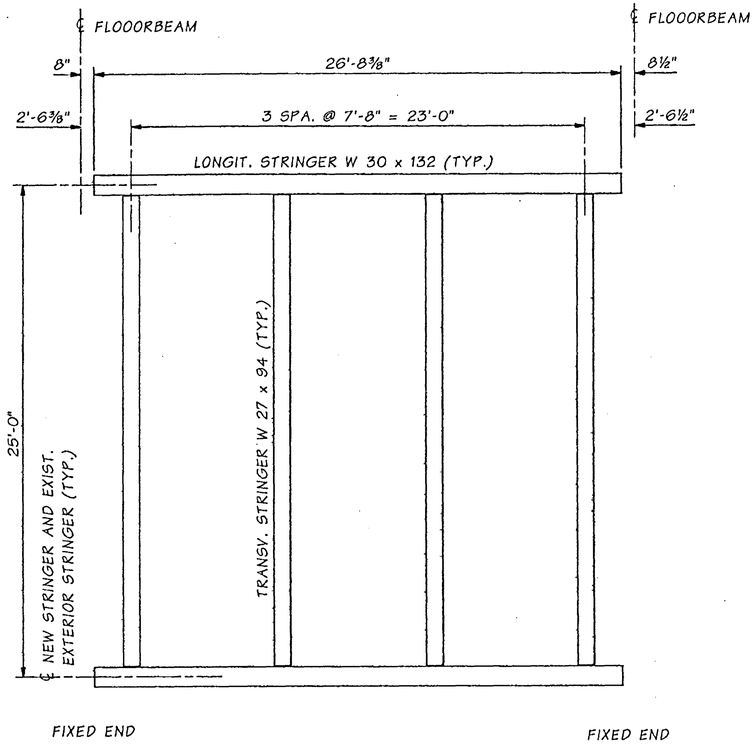

FRAMING PLAN

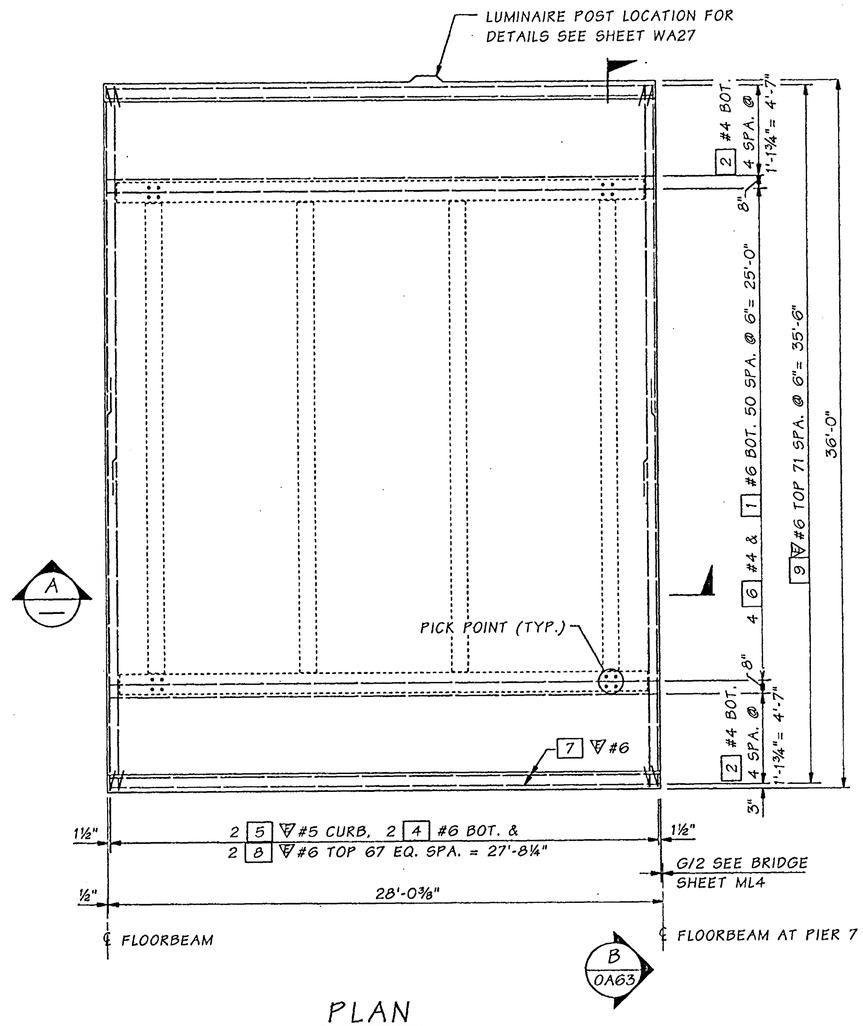

PLAN

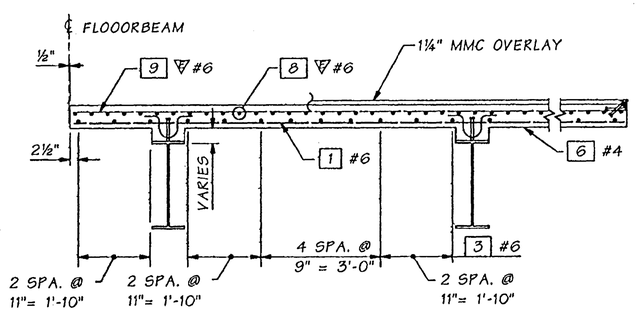

SECTION A

FOR "AS CONSTRUCTED PLANS" ONLY

Bridge Design Engr.	Kapur, J		M:\Y-Team\Lewis_Clark Rehab\Oregon Appr\Window files\DECK M2 168-3.WND								
Supervisor	Kirker, KN	08/02									
Designed By	Talukdar, M	08/02									
Checked By	Peralta, R	08/02									
Detailed By	House, L	08/02									
Bridge Projects Engr.											
Prelim. Plan By											
Architect/Specialist			DATE	REVISION	BY	APP'D					

REGION NO.	STATE	FED. AID PROJ. NO.	SHEET NO.	TOTAL SHEETS
10	WASH.	ACBH - 0433(007)		
JOB NUMBER 02x310				

Tue Sep 17 11:48:12 2002

STRUCTURAL REGISTERED PROFESSIONAL ENGINEER 71394 OREGON SEPT. 10, 2002 JUGESH KAPUR
EXPIRES 06-30-2003

BRIDGE AND STRUCTURES OFFICE

STATE OF WASHINGTON KARL N. KIRKER 36036 REGISTERED PROFESSIONAL ENGINEER
EXPIRES 11/3/03

Washington State Department of Transportation

SR 433
LEWIS AND CLARK BRIDGE
DECK REPLACEMENT

168'-3" TRUSS DECK PANEL M2

BRIDGE SHEET NO. 0A72

SHEET 204 OF 258 SHEETS

SR 433 JOB NO. 1 SHEET 72

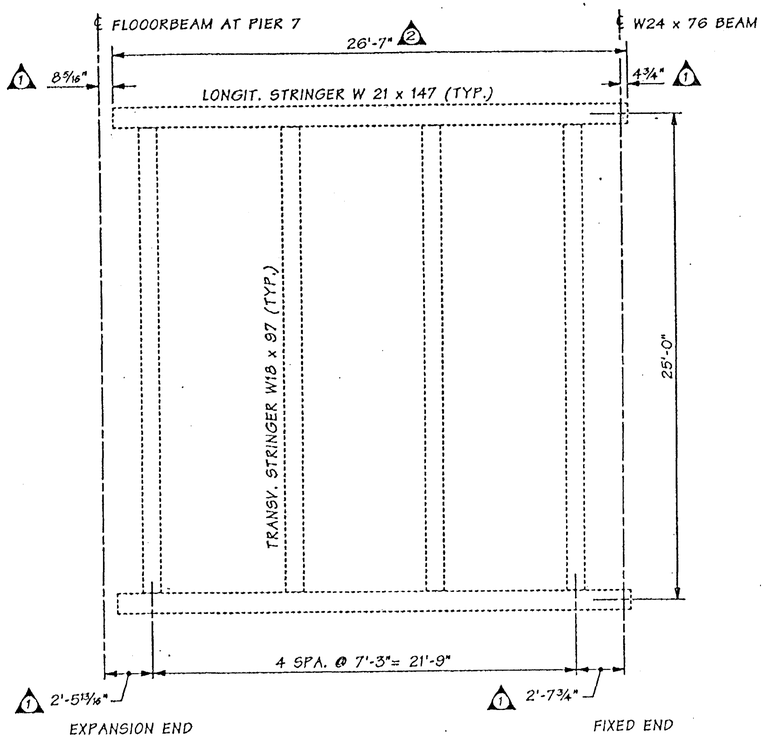

FRAMING PLAN

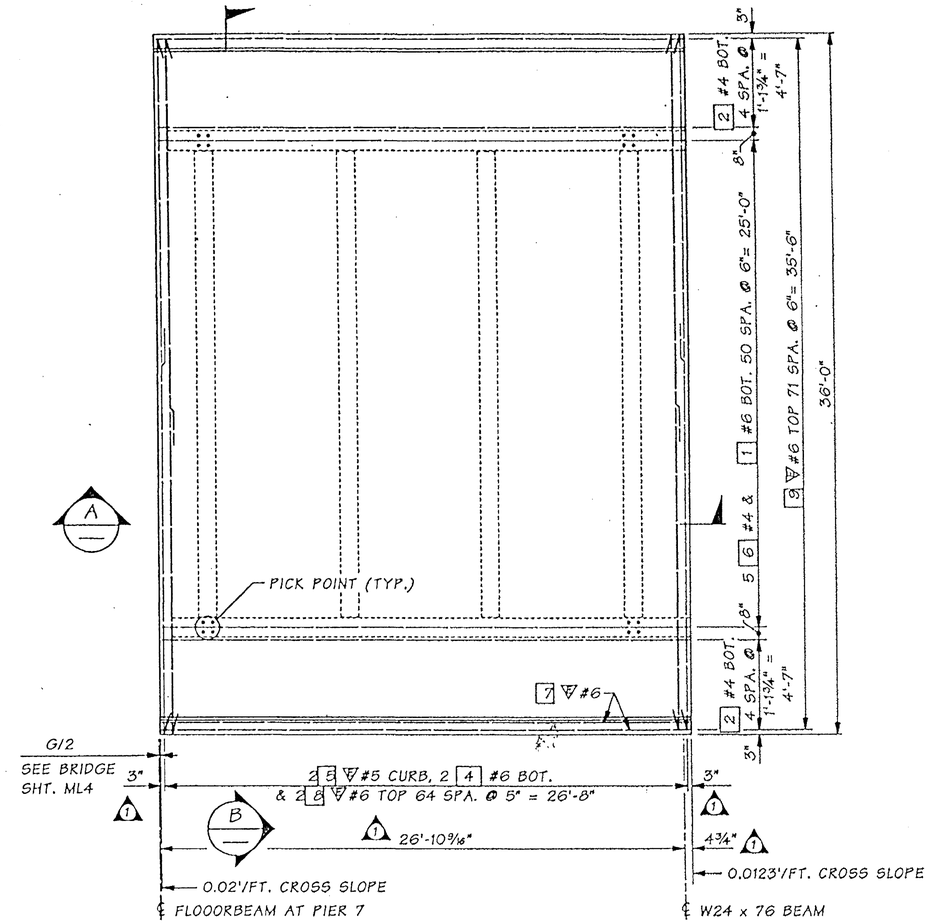

PLAN

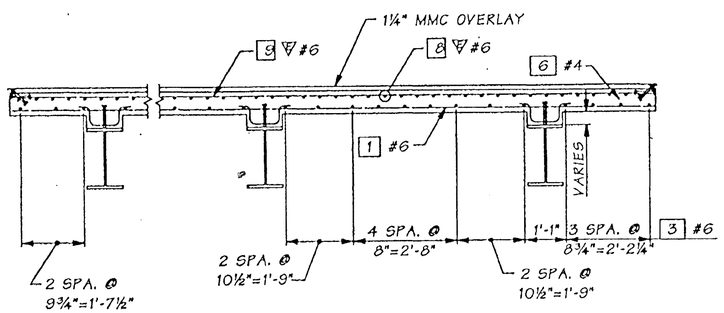

SECTION A

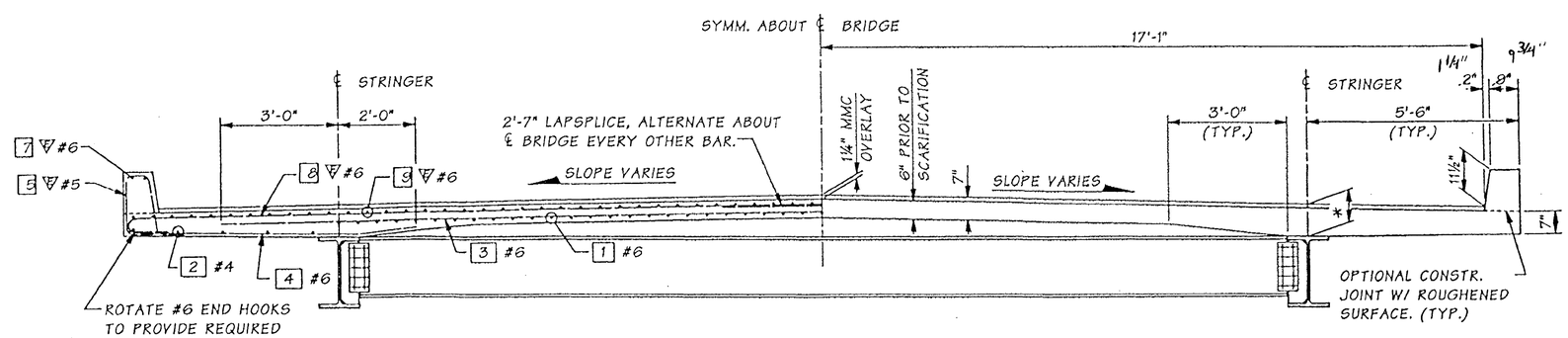

FOR "AS CONSTRUCTED PLANS" ONLY

SECTION B

* - 9 1/2" DEPTH AT 0.0123'/FT. CROSS SLOPE
10" DEPTH AT 0.02'/FT. CROSS SLOPE

Bridge Design Engr.	Kapur, J		M:\Y-Team\Lewis_Clark Rehab\Oregon Appr\Window files\28 FT SPAN.WND				REGION NO.	STATE	FED. AID PROJ. NO.	SHEET NO.	TOTAL SHEETS
Supervisor	Kirker, KN	04/03					10	WASH.			
Designed By	Peralta, R	08/02									
Checked By	Talukdar, M	08/02									
Detailed By	House, L	08/02	5/03	2 ADDED DIMENSION	RP		JOB NUMBER 02x310		ACBH - 0433(007)		
Bridge Projects Engr.											
Prelim. Plan By			5/03	1 REVISED DIMENSIONS	RP						
Architect/Specialist			DATE	REVISION	BY	APP'D	6/4/04				

STRUCTURAL REGISTERED PROFESSIONAL ENGINEER 71344 OREGON SEPT. 10, 2002 JUGESH KAPUR
EXPIRES 06-30-2003

BRIDGE AND STRUCTURES OFFICE

EXPIRES 6/1/04

Washington State Department of Transportation

SR 433
LEWIS AND CLARK BRIDGE
DECK REPLACEMENT

DECK PANEL N2

BRIDGE SHEET NO. 0A73

SHEET 205 OF 258 SHEETS

SR 433 J. NO. 1 SHEET 0A73

Wed May 14 14:18:30 2003

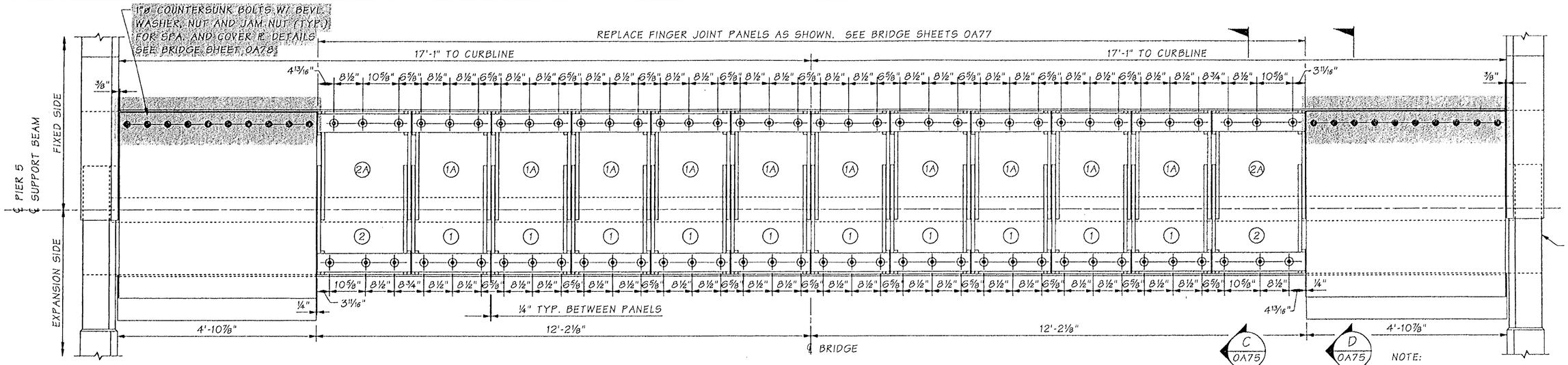

PLAN

NOTE:
ALL FINGER JOINT PANEL PLATES AND ALL OTHER PLATES SHALL BE ASTM A588 GR. 50 STEEL.

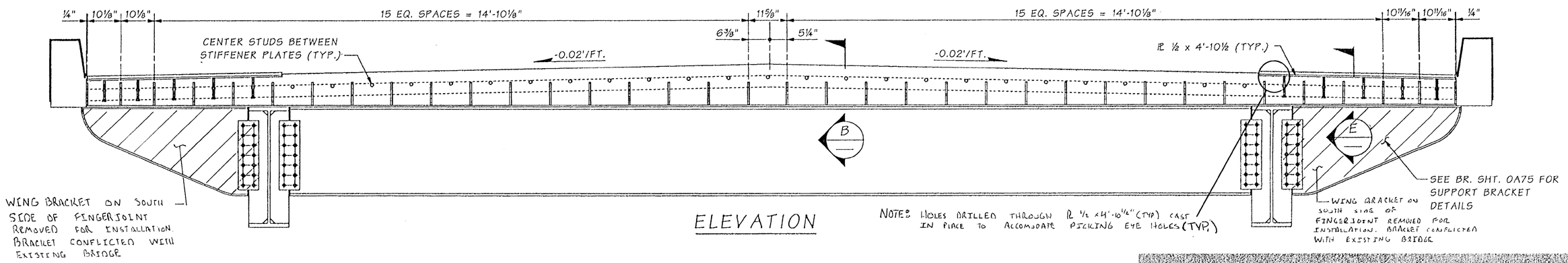

ELEVATION

NOTE: HOLES DRILLED THROUGH ℞ ½ x 4'-10½" (TYP) CAST IN PLACE TO ACCOMODATE PICKING EYE HOLES (TYP.)

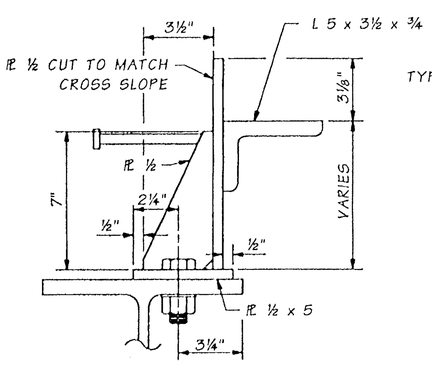

SECTION B
EXP. SIDE

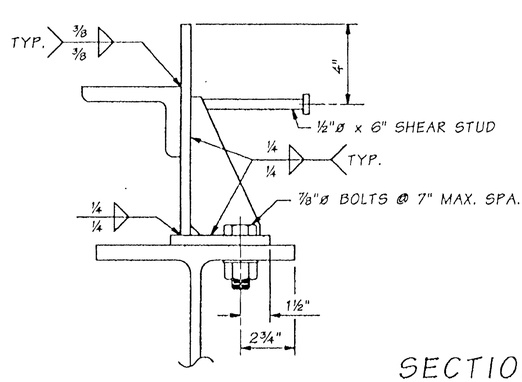

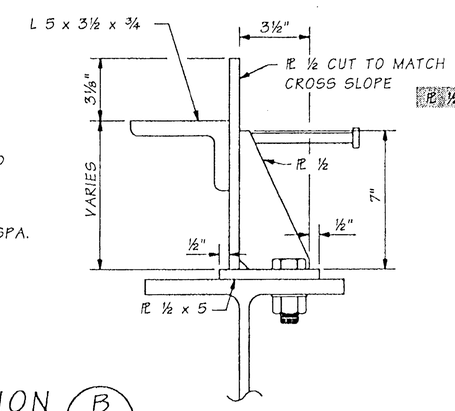

SECTION B
FIXED SIDE

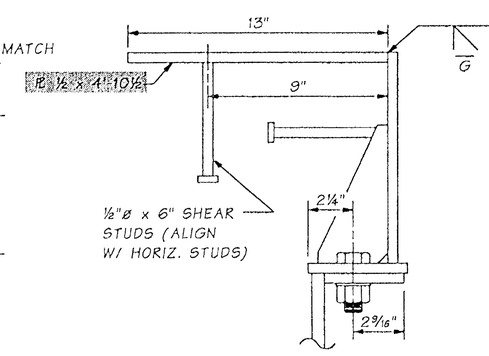

SECTION E
EXP. SIDE

FOR "AS CONSTRUCTED PLANS" ONLY

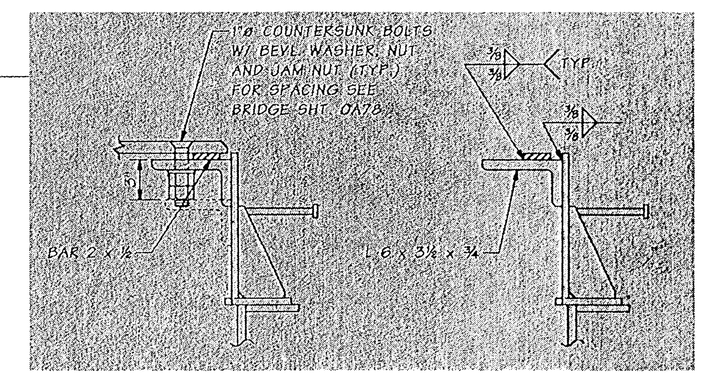

SECTION E
FIXED SIDE

Bridge Design Engr.	Kapur, J		M:\Y-Team\Lewis_Clark Rehab\Oregon Appr\window files\EXP-JT-P5-1.WND								
Supervisor	Kirker, KN	08/02									
Designed By	Nebergall, D	08/02									
Checked By	Talukdar, M	08/02									
Detailed By	Nebergall D, Evans P	08/02	10/02	MODIFIED PLATE CONNECTION	MT						
Bridge Projects Engr.											
Prelim. Plan By			10/02	MODIFIED NOTE	MT						
Architect/Specialist			DATE	REVISION	BY	APP'D					

Tue Oct 29 15:31:21 2002

REGION NO.	STATE	FED. AID PROJ. NO.	SHEET NO.	TOTAL SHEETS
10	WASH.	ACBH - 0433(007)		
JOB NUMBER 02x310				

6444

STRUCTURAL REGISTERED PROFESSIONAL ENGINEER 7244 OREGON OCT. 10, 2002 JUGESH KAPUR
EXPIRES 06-30-2003

BRIDGE AND STRUCTURES OFFICE

KARL N. KIRKER REGISTERED PROFESSIONAL ENGINEER 12296 STATE OF WASHINGTON
EXPIRES 11/3/03

Washington State Department of Transportation

SR 433
LEWIS AND CLARK BRIDGE
DECK REPLACEMENT

PIER 5 FINGER JOINT LAYOUT

BRIDGE SHEET NO. 0A74

SHEET 206 OF 258 SHEETS

SR 433 NO. 1 SHEET 74

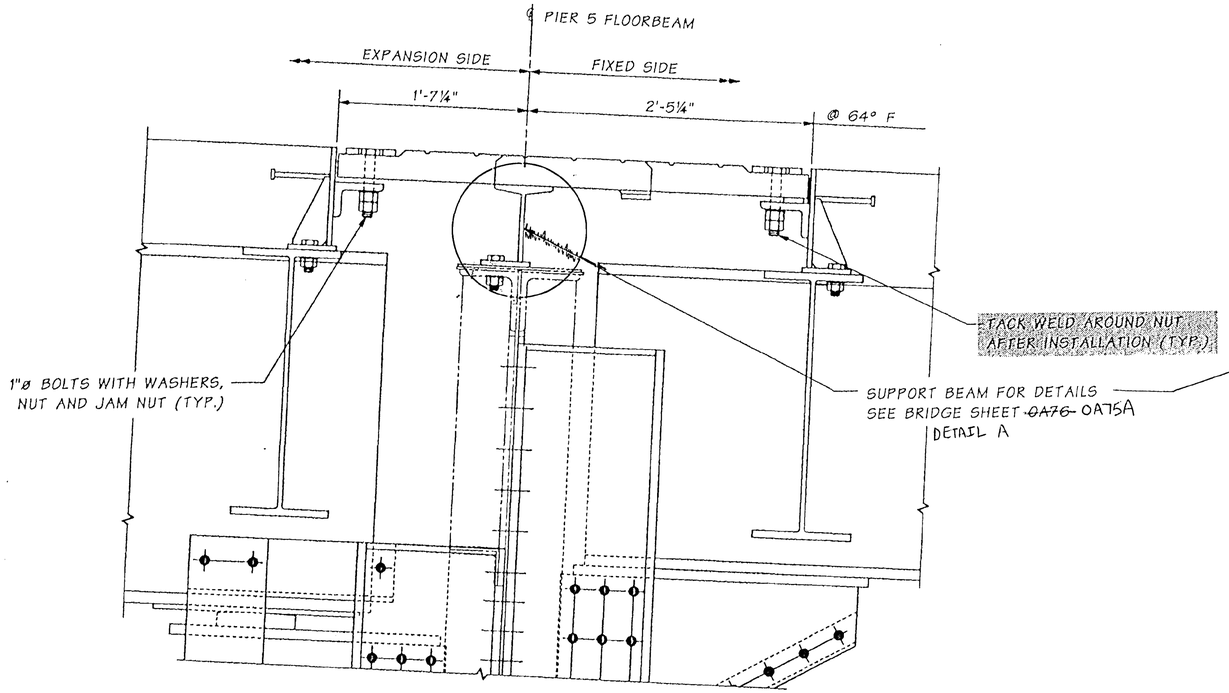

SECTION C OA74

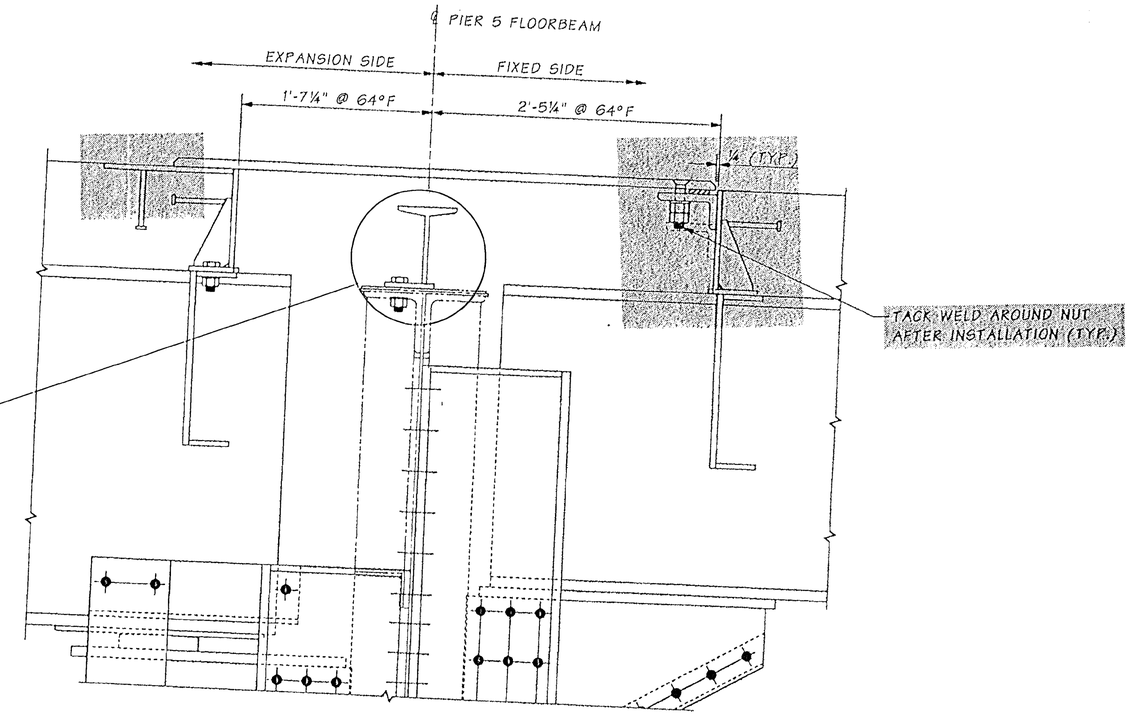

SECTION D OA74

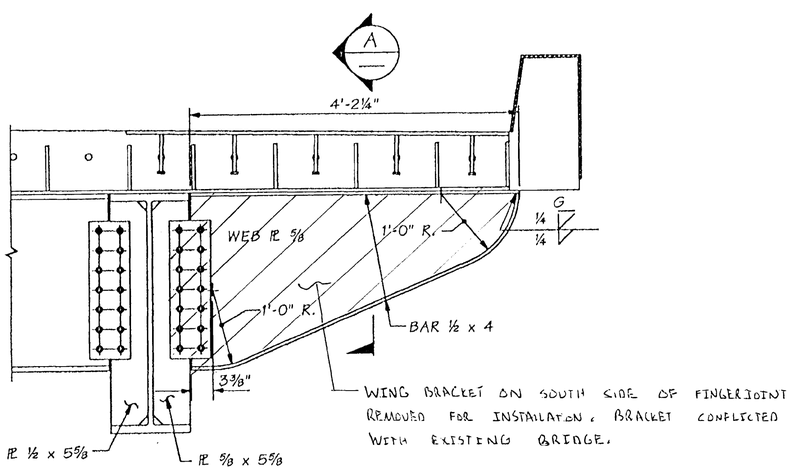

FINGER JOINT SUPPORT BRACKET AT PIER 5

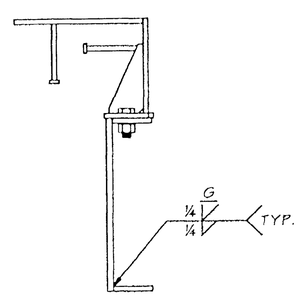

SECTION A

FOR "AS CONSTRUCTED PLANS" ONLY

Bridge Design Engr.	Kapur, J		M:\Y-Team\Lewis_Clark Rehab\Oregon Appr\window files\EXP-JT-P5-2.WND				REGION NO.	STATE	FED. AID PROJ. NO.	SHEET NO.	TOTAL SHEETS
Supervisor	Kirker, KN	08/02					10	WASH.	ACBH - 0433(007)		
Designed By	Nebergall, D	08/02									
Checked By	Talukdar, M	08/02									
Detailed By	House L, Evans P	08/02	10/02	MODIFIED PLATE CONNECTION	MT		JOB NUMBER 02x310				
Bridge Projects Engr.											
Prelim. Plan By			10/02	ADDED NOTE	MT		6444				
Architect/Specialist			DATE	REVISION	BY	APP'D					

STRUCTURAL REGISTERED PROFESSIONAL ENGINEER 71344 OREGON SEPT. 10, 2002 JUGESH KAPUR
EXPIRES 06-30-2003

BRIDGE AND STRUCTURES OFFICE

KARL N. KIRKER STATE OF WASHINGTON 18898 REGISTERED PROFESSIONAL ENGINEER
EXPIRES 11/3/03

Washington State Department of Transportation

SR 433
LEWIS AND CLARK BRIDGE
DECK REPLACEMENT

PIER 5 FINGER JOINT
SECTION DETAILS

BRIDGE SHEET NO. OA75
SHEET 207 OF 258 SHEETS

SR 433 JC 1 SHEET 75

Tue Oct 29 16:03:05 2002

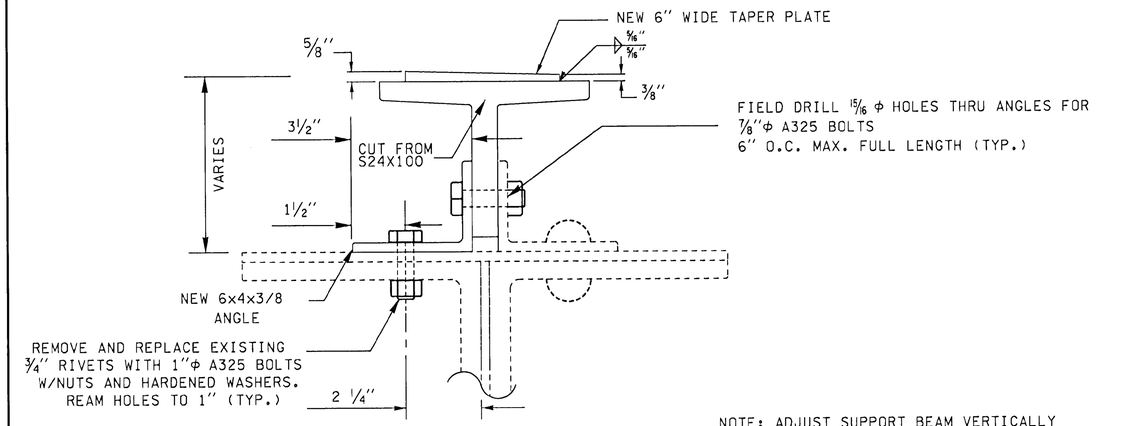

NOTE: ADJUST SUPPORT BEAM VERTICALLY AND HORIZONTALLY, TO ENSURE ALL FINGERJOINT ASSEMBLIES FIT PROPERLY. THE SUPPORT BEAM SHOULD BE ADJUSTED VERTICALLY TO ACCOMMODATE THE LOWEST FINGER ASSEMBLY.

DETAIL A

PIER 5 SUPPORT BEAM

NOT TO SCALE

OA44, OA44B, OA75

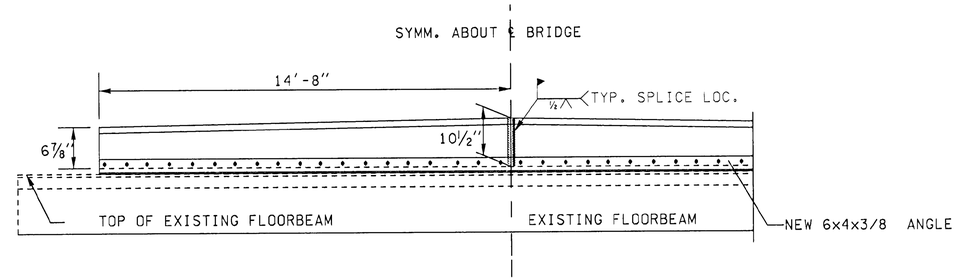

ELEVATION - EXISTING FLOORBEAM & SUPPORT BEAM

NOT TO SCALE

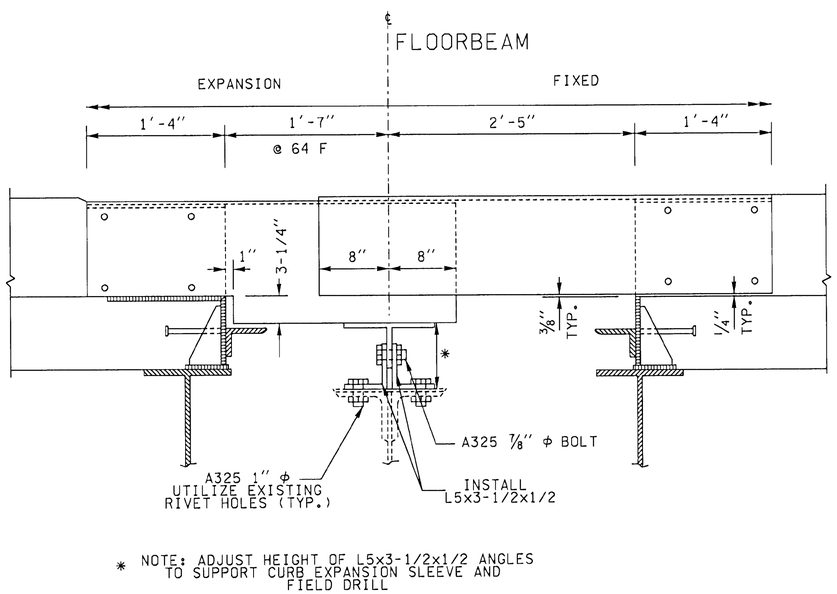

CURB EXPANSION SLEEVE SUPPORT B

NOT TO SCALE

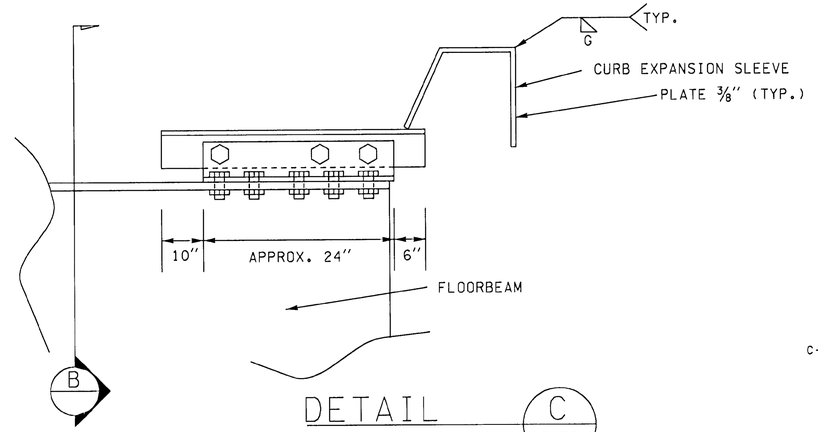

DETAIL C

OA76

NOT TO SCALE

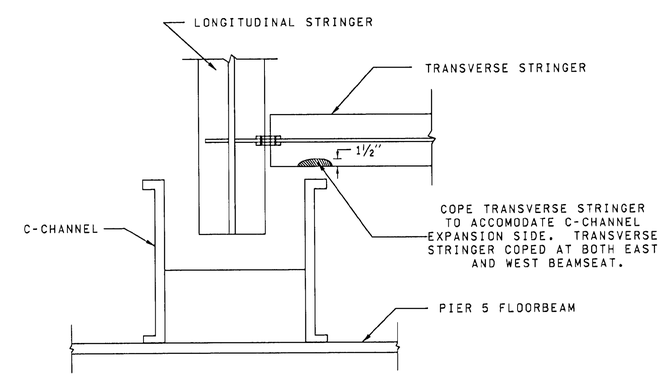

PLAN VIEW

BOTTOM FLANGE PIER 5 EXPANSION SIDE

NOT TO SCALE

FOR "AS CONSTRUCTED PLANS" ONLY

FILE NAME	G:\444304\03 - Construction\C6444 - SR433, Lewis and Clark Bridge Deck Replacement\As-Builts\6444 Detail.dgn						
TIME	02:07:40 PM				REGION NO. 10	STATE WASH	FED.AID PROJ.NO.
DATE	10/12/2005				JOB NUMBER		
PLOTTED BY	kingju						
DESIGNED BY					CONTRACT NO. 6444		LOCATION NO.
ENTERED BY							
CHECKED BY							
PROJ. ENGR.							
REGIONAL ADM.		REVISION	DATE	BY			

P.E. STAMP BOX DATE

P.E. STAMP BOX DATE

Washington State Department of Transportation

SR 433
LEWIS AND CLARK
BRIDGE DECK REPLACEMENT

PIER 5 DETAILS

PLOT10
OA75A

SHEET 207A OF 258 SHEETS

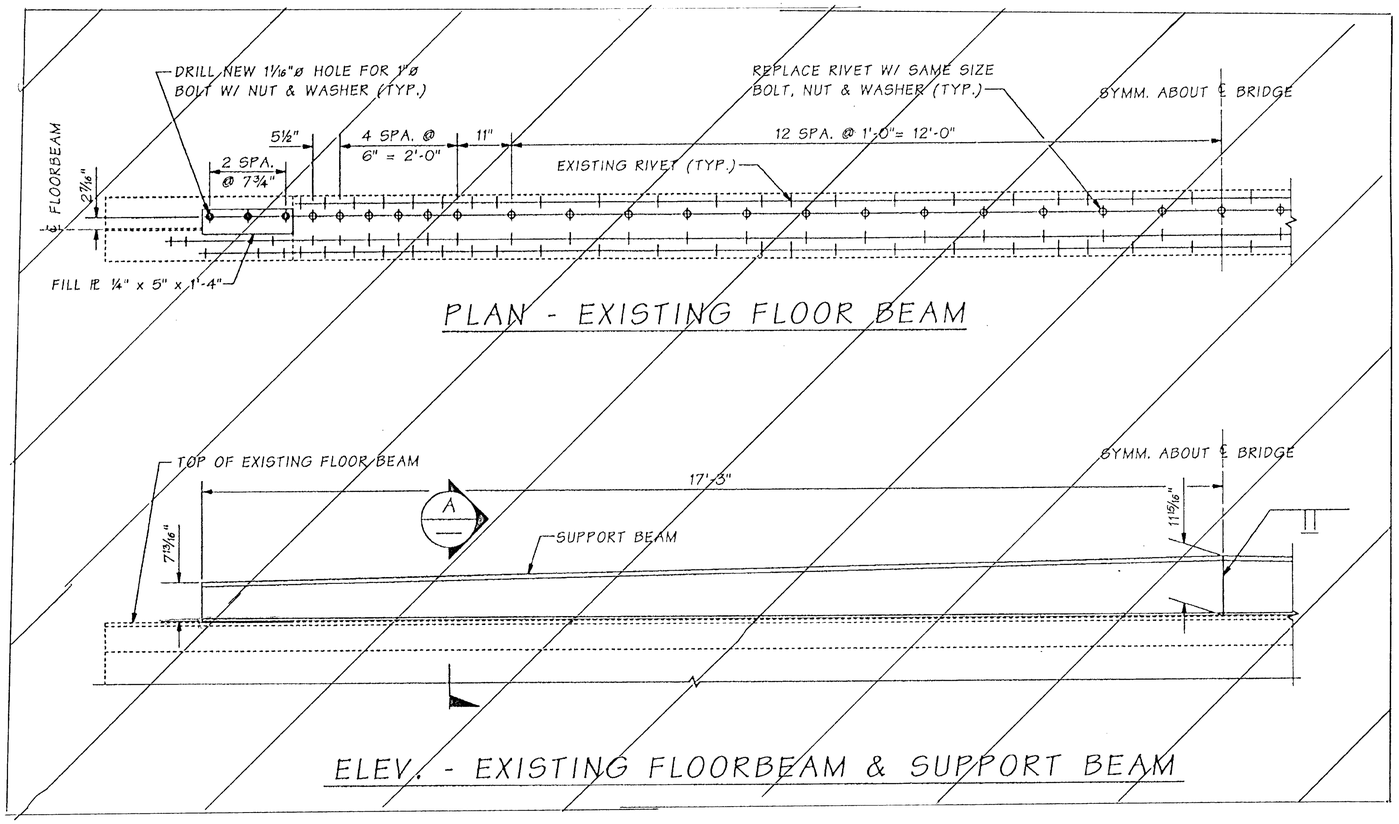

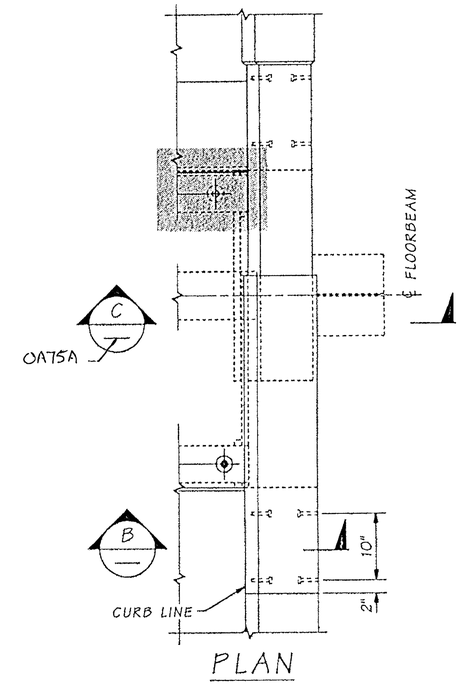

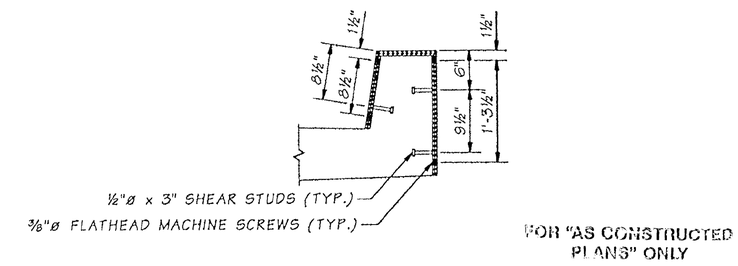

FOR "AS CONSTRUCTED PLANS" ONLY

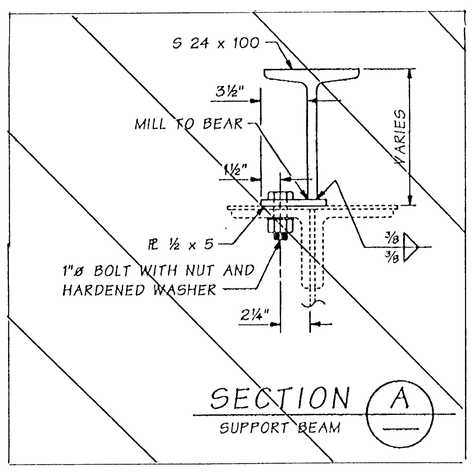

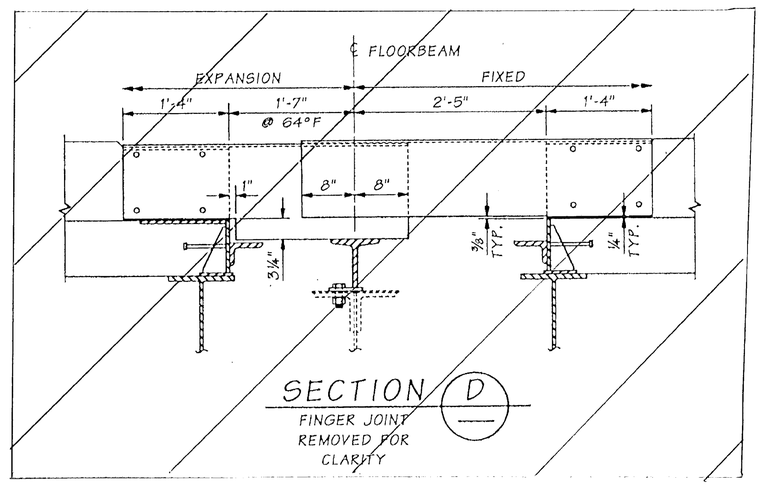

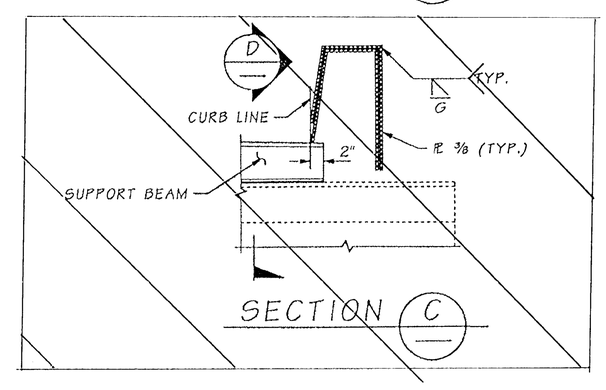

Bridge Design Engr.	Kapur, J		M:\Y-Team\Lewis_Clark Rehab\Oregon Appr\window files\EXP-JT-P5-3.WND								
Supervisor	Kirker, KN	08/02					REGION NO.	STATE	FED. AID PROJ. NO.	SHEET NO.	TOTAL SHEETS
Designed By	Nebergall, D	08/02					10	WASH.			
Checked By	Talukdar, M	08/02					JOB NUMBER 02x310		ACBH - 0433(007)		
Detailed By	Nebergall D, Evans	08/02									
Bridge Projects Engr.											
Prelim. Plan By			10/02	MODIFIED PLATE CONNECTION	MT						
Architect/Specialist			DATE	REVISION	BY	APP'D					

STRUCTURAL REGISTERED PROFESSIONAL ENGINEER 71844 OREGON SEPT. 10, 2001 JUGESH KAPUR
EXPIRES 06-30-2003

BRIDGE AND STRUCTURES OFFICE

KARL N. KIRKER STATE OF WASHINGTON 15298 REGISTERED PROFESSIONAL ENGINEER
EXPIRES 11/3/03

Washington State Department of Transportation

SR 433
LEWIS AND CLARK BRIDGE
DECK REPLACEMENT

PIER 5 FINGER JOINT CURB DETAILS

BRIDGE SHEET NO. 0A76
SHEET 208 OF 258 SHEETS

SR 433 J O. 1 SHEET 76

Tue Oct 29 15:27:11 2002

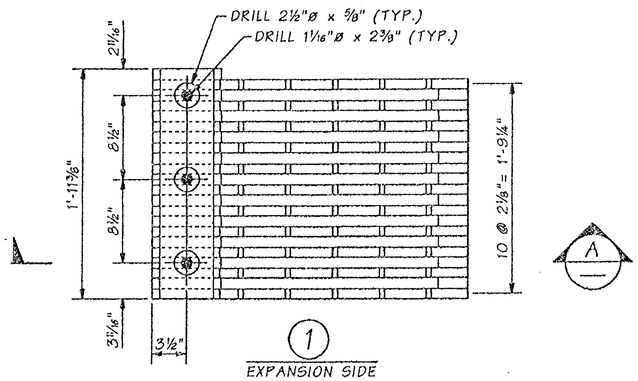

1
EXPANSION SIDE

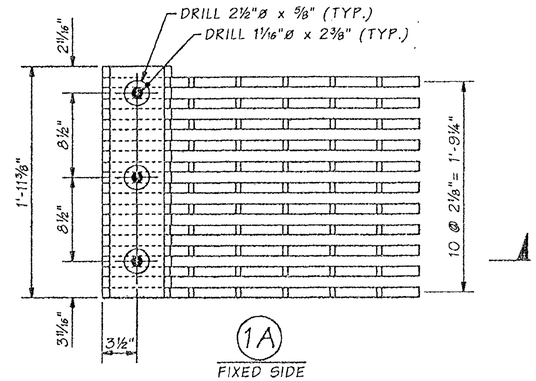

1A
FIXED SIDE

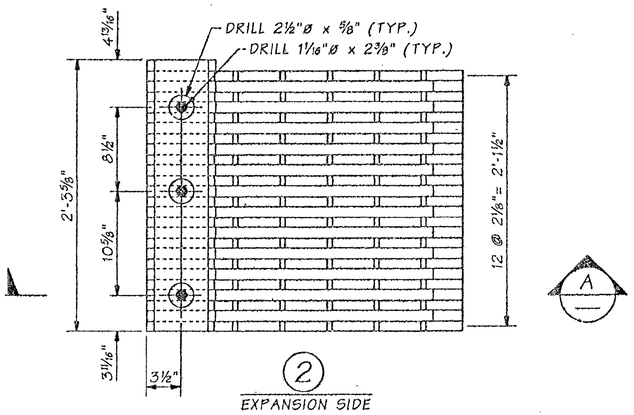

2
EXPANSION SIDE

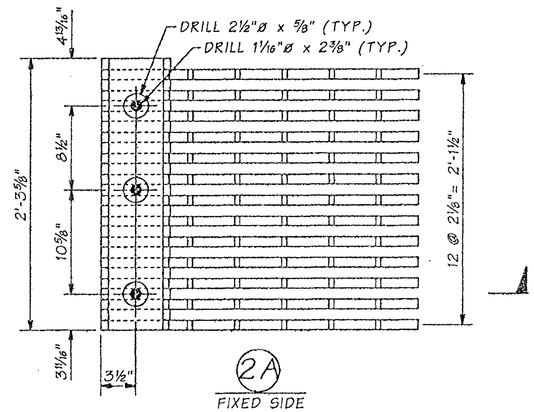

2A
FIXED SIDE

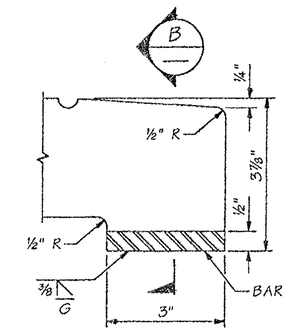

DETAIL

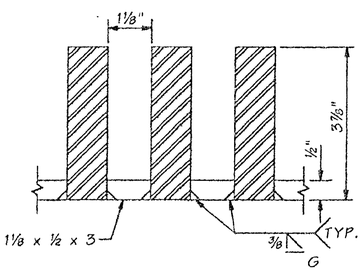

SECTION B

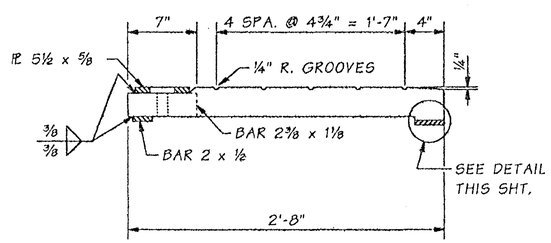

SECTION A
1 2

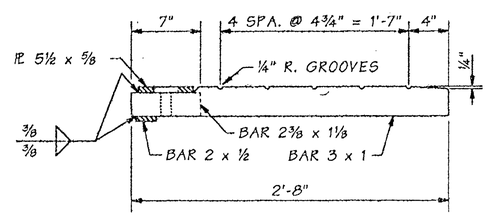

SECTION A
1A 2A

FOR "AS CONSTRUCTED PLANS" ONLY

Bridge Design Engr.	Kapur, J		M:\Y-Team\Lewis_Clark Rehab\Oregon Appr\Window files\EXP-JT-P5-4.WND							
Supervisor	Kirker, KN	08/02				REGION NO.	STATE	FED. AID PROJ. NO.	SHEET NO.	TOTAL SHEETS
Designed By	Nebergall, D	08/02				10	WASH.			
Checked By	Talukdar, M	08/02								
Detailed By	Nebergall D, Evans	08/02				JOB NUMBER 02x310		ACBH - 0433(007)		
Bridge Projects Engr.										
Prelim. Plan By										
Architect/Specialist			DATE	REVISION	BY	APP'D				

Wed Sep 18 06:20:30 2002

STRUCTURAL REGISTERED PROFESSIONAL ENGINEER 71144 OREGON SEPT. 10, 2002 JUGESH KAPUR
EXPIRES 06-30-2003

BRIDGE AND STRUCTURES OFFICE

KARL N. KIRKER STATE OF WASHINGTON 16898 PROFESSIONAL ENGINEER
EXPIRES 11/3/03

Washington State Department of Transportation

SR 433
LEWIS AND CLARK BRIDGE
DECK REPLACEMENT

PIER 5 FINGER JOINT DETAILS I
SHEET 1 OF 2

BRIDGE SHEET NO. 0A77

SHEET 209 OF 258 SHEETS

SR 433 JOB NO. 1 SHEET 77

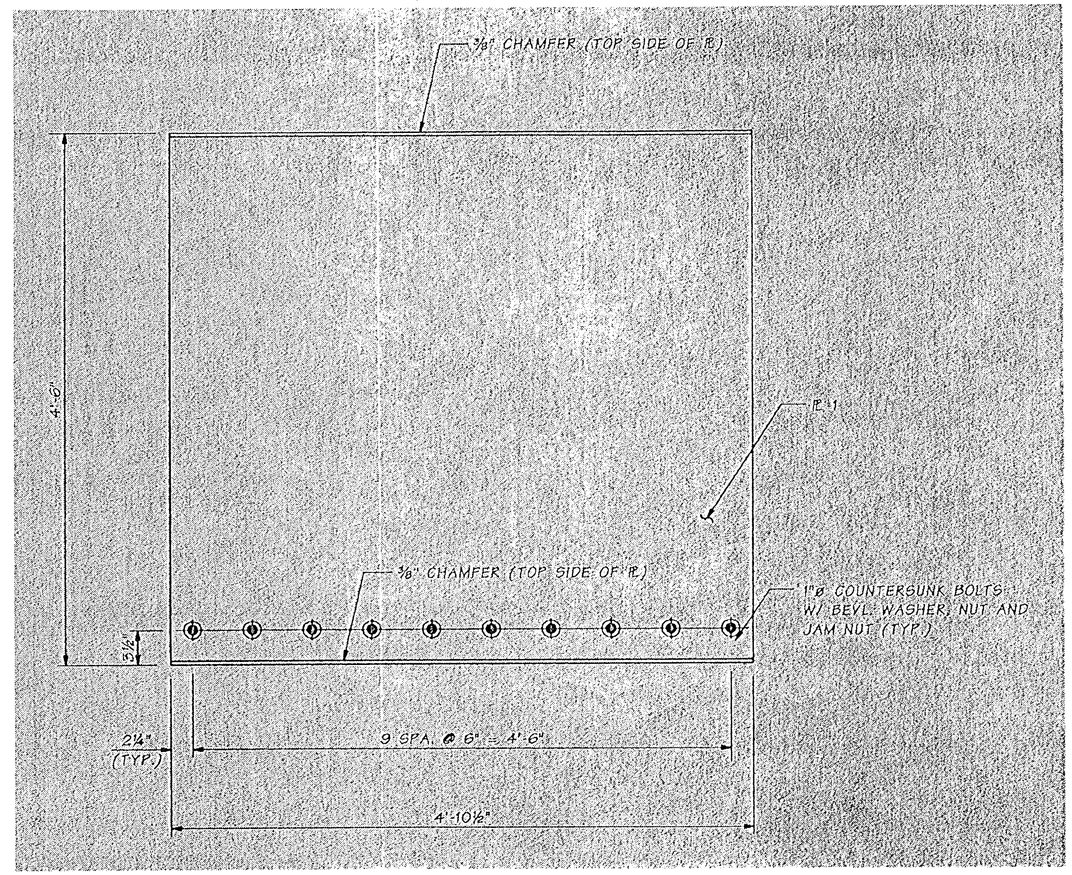

PLAN ~ COVER PLATE

FOR "AS CONSTRUCTED"

Bridge Design Engr.	Kapur, J	M:\Y-Team\Lewis_Clark Rehab\Oregon Appr\window files\EXP-JT-PS-5.WND									
Supervisor	Kirker, KN 08/02					REGION NO.	STATE	FED. AID PROJ. NO.	SHEET NO.	TOTAL SHEETS	
Designed By	Nebergall, D 08/02					10	WASH.				
Checked By	Talukdar, M 08/02										
Detailed By	Nebergall D, Evans 08/02					JOB NUMBER 02x310		ACBH - 0433(007)			
Bridge Projects Engr.											
Prelim. Plan By		10/02	MODIFIED PLATE	MT		6444					
Architect/Specialist		DATE	REVISION	BY	APP'D						

STRUCTURAL REGISTERED PROFESSIONAL ENGINEER 71344 OREGON SEPT. 10, 2002 JUGESH KAPUR
EXPIRES 06-30-2003

BRIDGE AND STRUCTURES OFFICE

KARL N. KIRKER STATE OF WASHINGTON 10890 REGISTERED PROFESSIONAL ENGINEER
EXPIRES 11/3/03

Washington State Department of Transportation

SR 433
LEWIS AND CLARK BRIDGE
DECK REPLACEMENT

PIER 5 FINGER JOINT DETAILS II
SHEET 2 OF 2

BRIDGE SHEET NO. 0A78
SHEET 210 OF 258 SHEETS

SR 433 J. .O. 1 SHEET 78

Tue Oct 29 14:20:32 2002

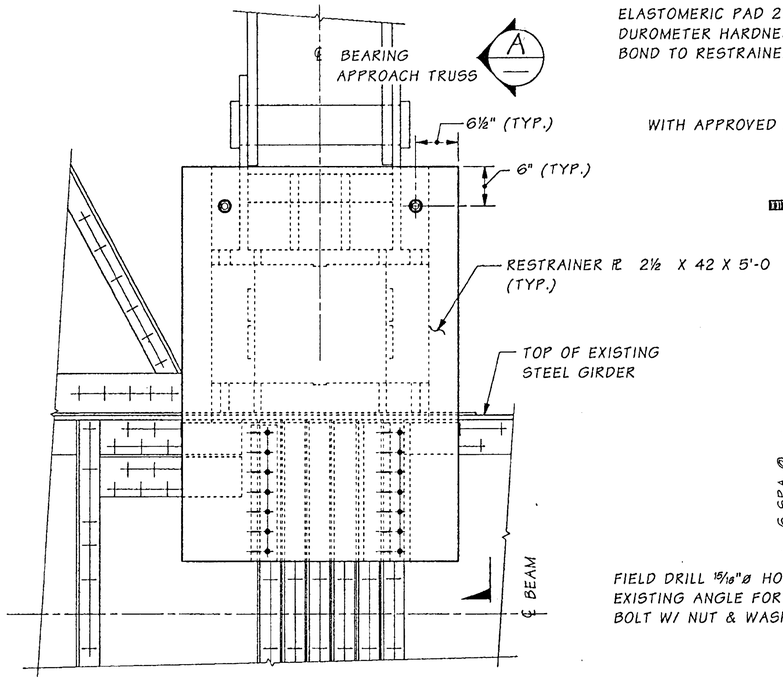

ELEVATION

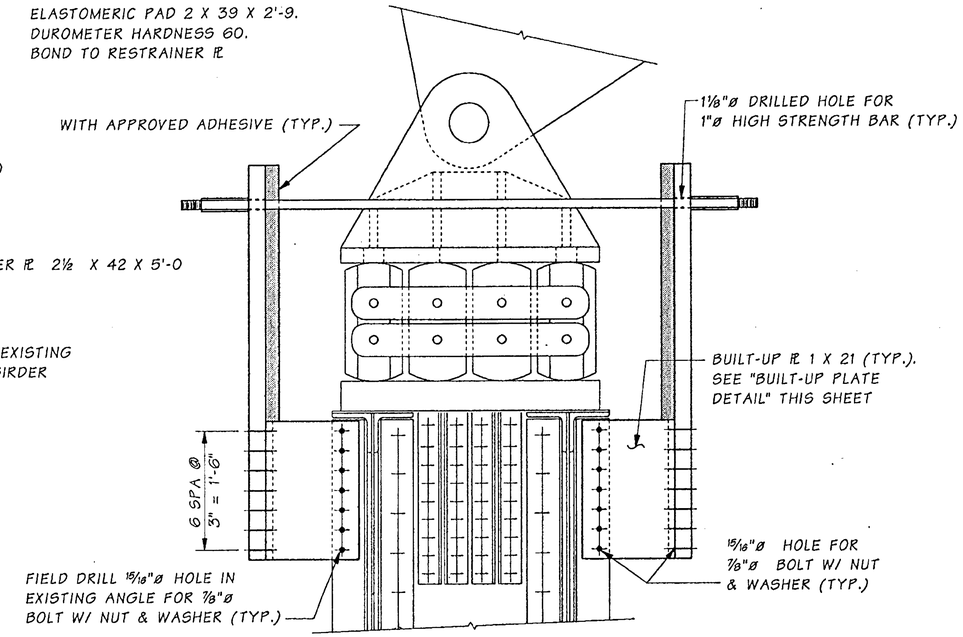

SECTION A

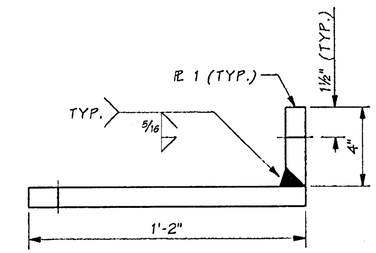

BUILT-UP PLATE DETAIL

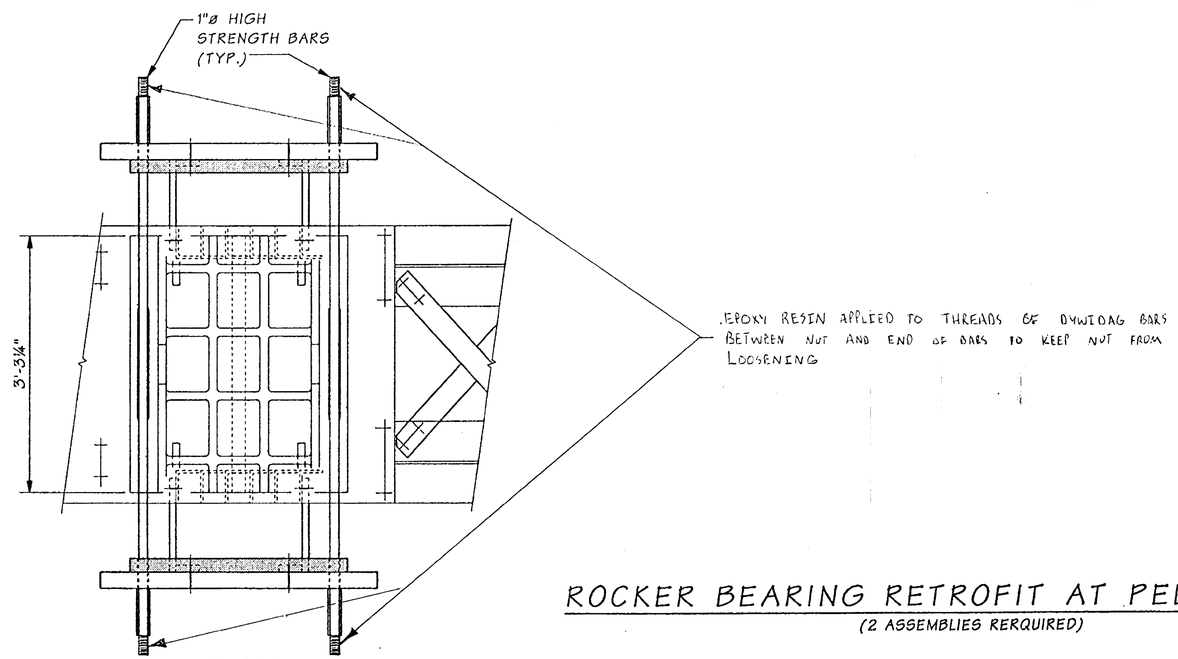

PLAN

ROCKER BEARING RETROFIT AT PEDESTAL C-D

(2 ASSEMBLIES REQUIRED)

BEARING RETROFIT NOTES:

1. ALL HIGH-STRENGTH BARS SHALL BE AASHTO M275 TYPE II BARS.
2. ALL STEEL PLATES SHALL BE ASTM A572 GRADE 50.
3. THE CONTRACTOR SHALL FIELD MEASURE ALL DIMENSIONS PRIOR TO FABRICATION OF ANY COMPONENT.

FOR "AS CONSTRUCTED PLANS" ONLY

Bridge Design Engr.	Kapur, J		M:\Y-Team\Lewis_Clark Rehab\Miscellaneous\Window files\ROCKER BRG C-D.WND
Supervisor	Kirker, KN	08/02	
Designed By	Talukdar, M	08/02	
Checked By	Clarke, PT	08/02	
Detailed By	House, L	08/02	
Bridge Projects Engr.			
Prelim. Plan By			
Architect/Specialist			

DATE	REVISION	BY	APP'D

REGION NO.	STATE	FED. AID PROJ. NO.	SHEET NO.	TOTAL SHEETS
10	WASH.	ACBH - 0433(007)		
JOB NUMBER 02x310				

KARL N. KIRKER, STATE OF WASHINGTON, 16296, REGISTERED PROFESSIONAL ENGINEER — EXPIRES 11/3/03

BRIDGE AND STRUCTURES OFFICE

MADHUSUDAN TALUKDAR, STATE OF WASHINGTON, 37828, REGISTERED PROFESSIONAL ENGINEER — EXPIRES 6/1/04

Washington State Department of Transportation

SR 433
LEWIS AND CLARK BRIDGE
DECK REPLACEMENT

ROCKER BEARING RETROFIT AT PEDESTAL C-D

BRIDGE SHEET NO. ML1

SHEET 211 OF 258 SHEETS

SR 433 JOB NO. 1566 SHEET 1

Tue Sep 17 12:01:42 2002

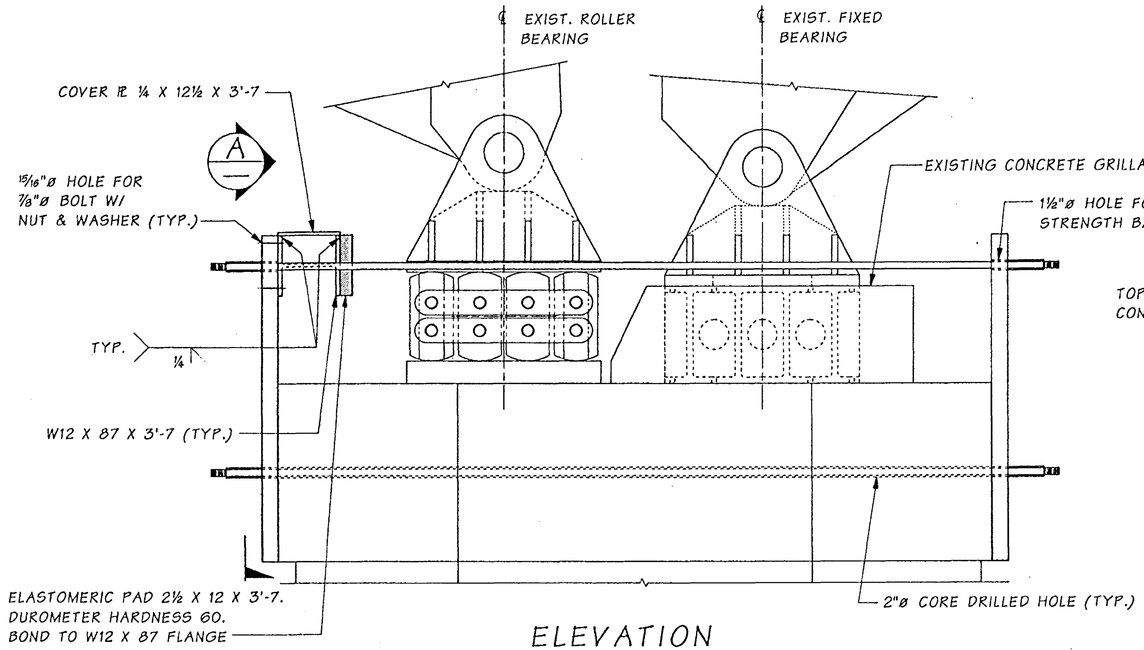

ELEVATION

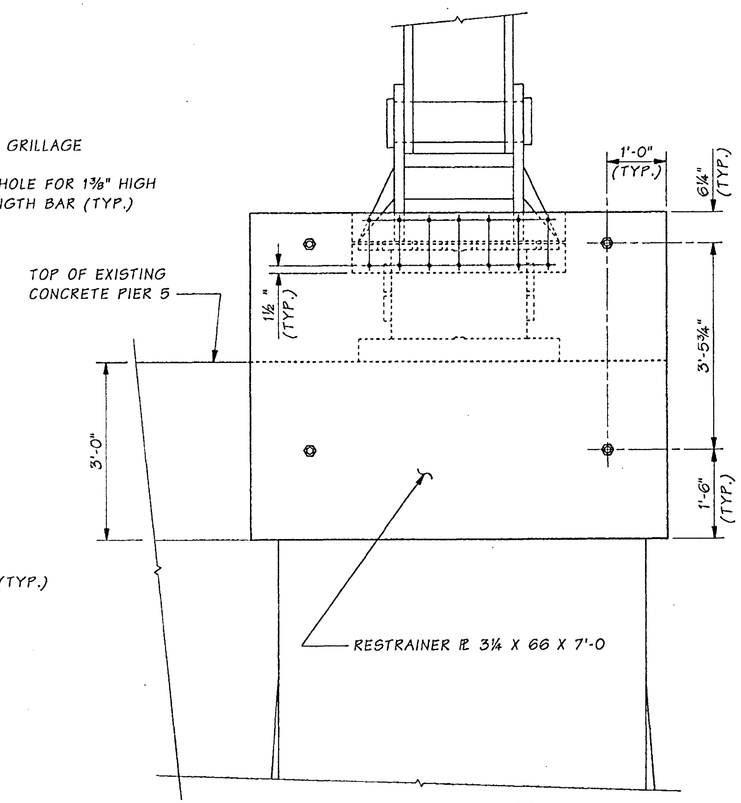

VIEW A

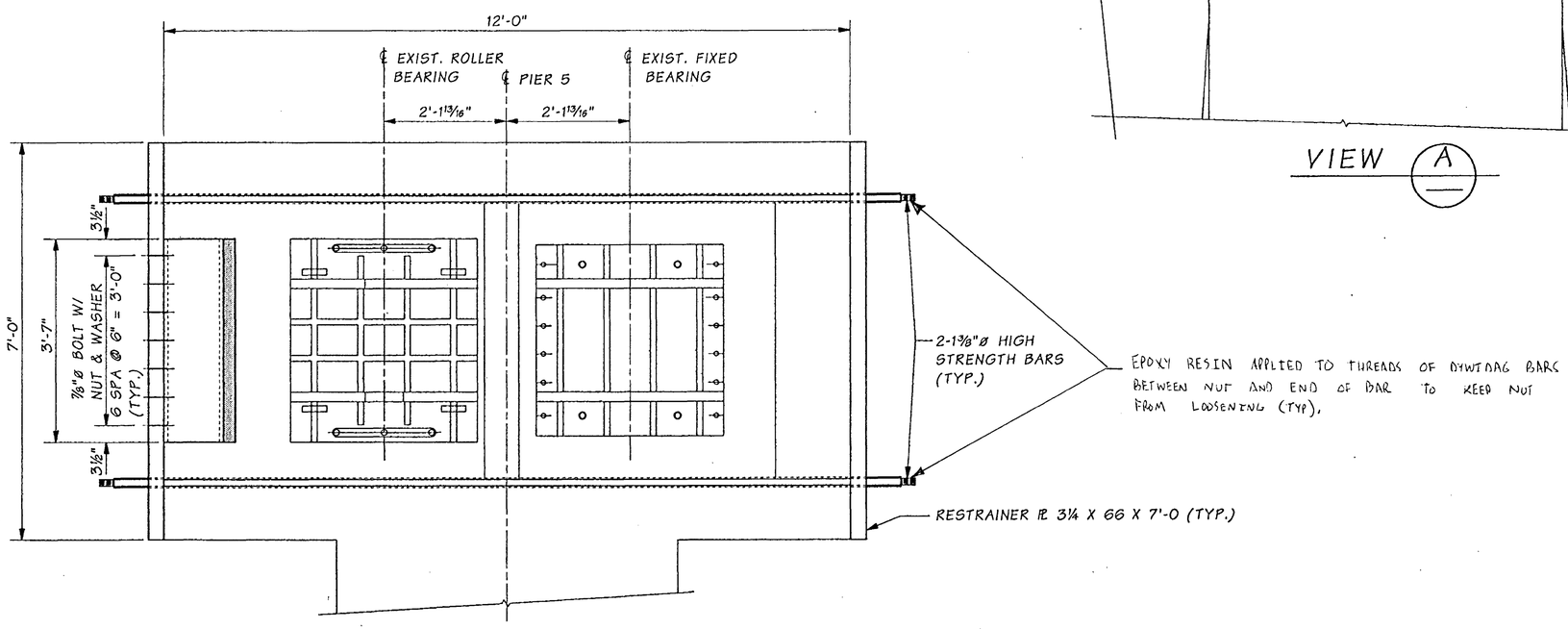

PLAN

BEARING RETROFIT NOTES:

1. ALL HIGH-STRENGTH BARS SHALL BE AASHTO M275 TYPE II BARS.
2. ALL STEEL PLATES SHALL BE ASTM A572 GRADE 50.
3. THE CONTRACTOR SHALL FIELD MEASURE ALL DIMENSIONS PRIOR TO FABRICATION OF ANY COMPONENT.

FOR "AS CONSTRUCTED PLANS" ONLY

ROCKER BEARING RETROFIT AT PIER 5

(2 ASSEMBLIES REQUIRED)

Bridge Design Engr.	Kapur, J	
Supervisor	Kirker, KN	08/02
Designed By	Talukdar, M	08/02
Checked By	Clarke, PT	08/02
Detailed By	House, L	08/02
Bridge Projects Engr.		
Prelim. Plan By		
Architect/Specialist		

M:\Y-Team\Lewis_Clark Rehab\Miscellaneous\Window files\ROCKER BRG P5.WND

DATE	REVISION	BY	APP'D

REGION NO.	STATE	FED. AID PROJ. NO.	SHEET NO.	TOTAL SHEETS
10	WASH.	ACBH - 0433(007)		
JOB NUMBER 02x310				
6444				

KARL N. KIRKER, STATE OF WASHINGTON, 16596, REGISTERED PROFESSIONAL ENGINEER — EXPIRES 11/3/03

BRIDGE AND STRUCTURES OFFICE

MUNINDRA TALUKDAR, STATE OF WASHINGTON, 37006, REGISTERED PROFESSIONAL ENGINEER — EXPIRES 6/1/04

Washington State Department of Transportation

SR 433
LEWIS AND CLARK BRIDGE
DECK REPLACEMENT

ROCKER BEARING RETROFIT AT PIER 5

BRIDGE SHEET NO. ML 2

SHEET 212 OF 258 SHEETS

SR 433 JOB NO. 1566 SHEET 2

Tue Sep 17 12:01:44 2002

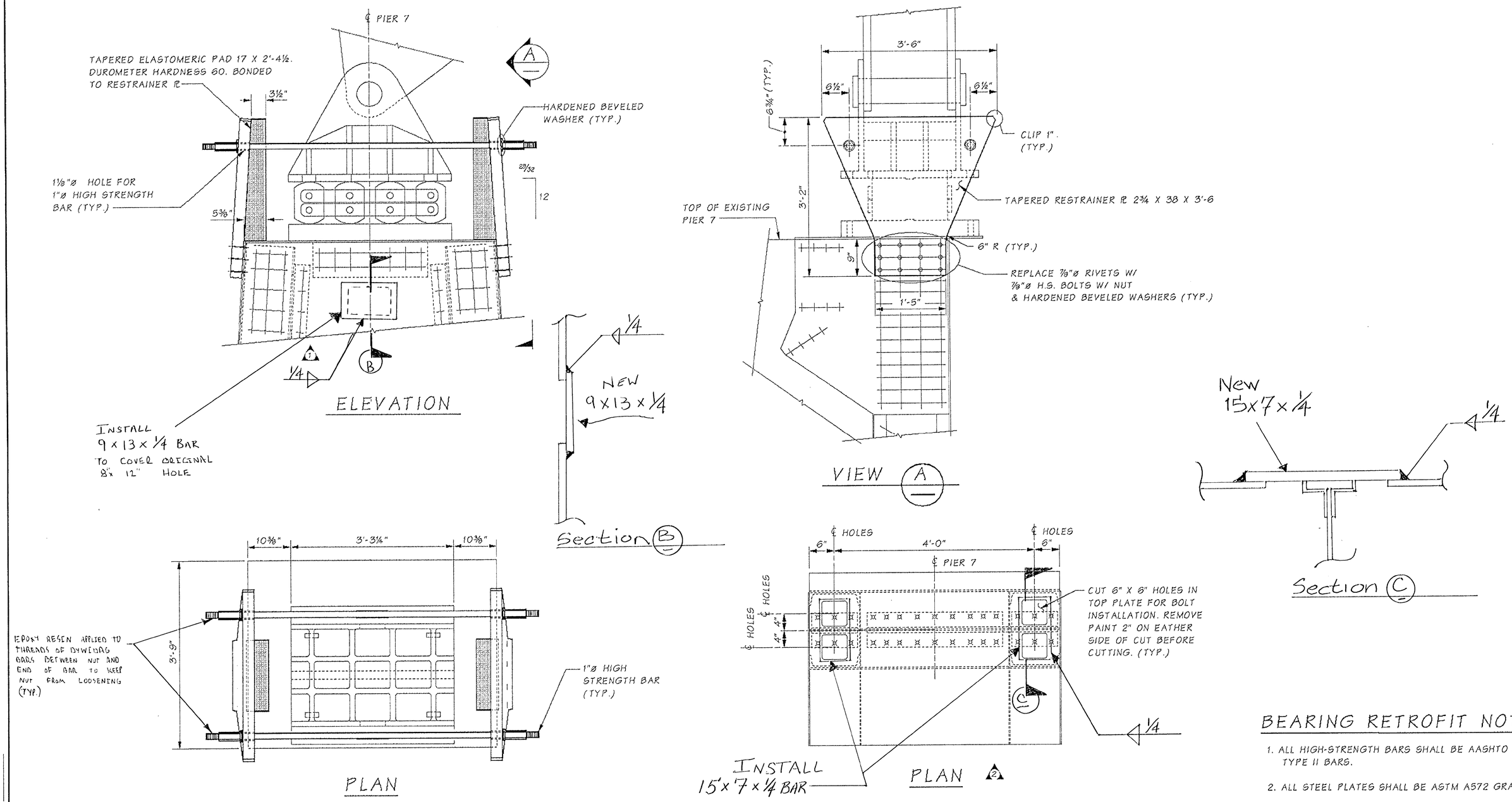

ROCKER BEARING RETROFIT AT PIER 7

(2 ASSEMBLIES REQUIRED)

FOR "AS CONSTRUCTED PLANS" ONLY

BEARING RETROFIT NOTES:

1. ALL HIGH-STRENGTH BARS SHALL BE AASHTO M275 TYPE II BARS.
2. ALL STEEL PLATES SHALL BE ASTM A572 GRADE 50.
3. THE CONTRACTOR SHALL FIELD MEASURE ALL DIMENSIONS PRIOR TO FABRICATION OF ANY COMPONENT.

SR 433 JOB NO. 1566 SHEET 3

Bridge Design Engr.	Kapur, J		M:\Y-Team\Lewis_Clark Rehab\Miscellaneous\window files\ROCKER BRG P7.WND								
Supervisor	Kirker, KN	08/02									
Designed By	Talukdar, M	08/02									
Checked By	Clarke, PT	08/02									
Detailed By	House, L	08/02	5/03	2 REVISED ACCESS HOLE LOCATIONS	MT						
Bridge Projects Engr.											
Prelim. Plan By			5/03	1 REMOVE ACCESS HOLE DETAILS	MT						
Architect/Specialist			DATE	REVISION	BY	APP'D					

REGION NO.	STATE	FED. AID PROJ. NO.	SHEET NO.	TOTAL SHEETS
10	WASH.	ACBH - 0433(007)		
JOB NUMBER 02x310				
6444				

KARL N. KIRKER, STATE OF WASHINGTON, 18206, REGISTERED PROFESSIONAL ENGINEER, EXPIRES 11/3/05

BRIDGE AND STRUCTURES OFFICE

MUNINDRA TALUKDAR, STATE OF WASHINGTON, 27608, REGISTERED PROFESSIONAL ENGINEER, EXPIRES 6/1/04

Washington State Department of Transportation

SR 433
LEWIS AND CLARK BRIDGE
DECK REPLACEMENT

ROCKER BEARING RETROFIT AT PIER 7

BRIDGE SHEET NO. ML3

SHEET 213 OF 258 SHEETS

Fri May 14 13:25:49 2004

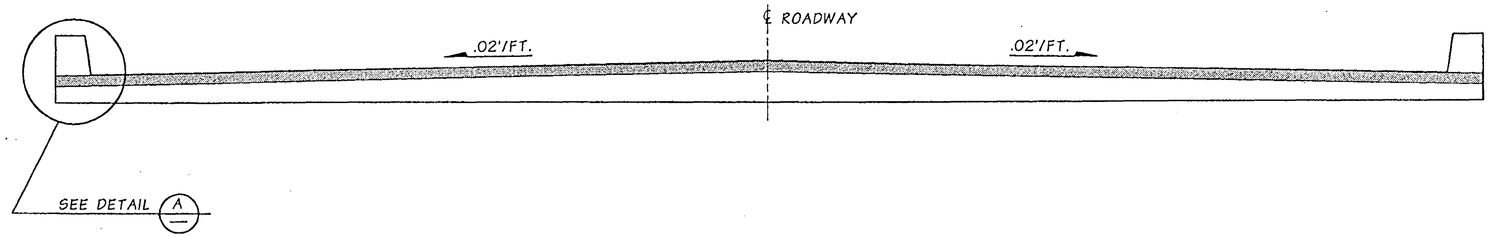

TYPICAL SECTION AT EXPANSION JOINT

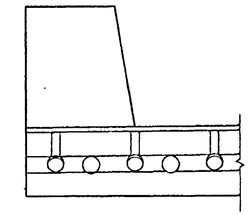

DETAIL A

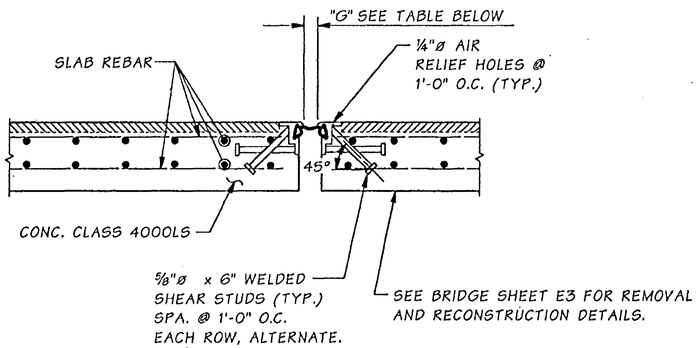

NEW EXPANSION JOINT @ PIERS 1, 4, 6, 6A & 7 @ W24 x 76 BEAM

4" MOTION RANGE

MANUFACTURER	ITEM NAME	OPENING "G" NORMAL TO JT. MIN.	OPENING "G" NORMAL TO JT. MAX.	MIN. INSTALLATION WIDTH NORMAL TO JOINT	OPENING "G" NORMAL TO JT. @40°F	OPENING "G" NORMAL TO JT. @64°F	OPENING "G" NORMAL TO JT. @80°F
* D. S. BROWN	** DSB STRIP SEAL A2R	½"	4½"	1½"	3¼"	2½"	2"
WATSON BOWMAN ACME	WABO STRIP SEAL SE400	0"	4"	1½"	2¾"	2"	1½"
R.J. WATSON, INC.	R.J. STRIP SEAL 400	0"	4"	1½"	2¾"	2"	1½"
HEXCEL FYFE CO.	STRIP J200-C ES500	¼"	5½"	1½"			

* D.S. BROWN . STRIP SEAL USED FOR BRIDGE JOINTS
** AT PIER 4 - DSB STRIP SEAL A2R-XTRA USED

STEEL SHAPE TYPES

MANUFACTURER	ITEM NAME	TYPE	S	T	TYPE	V	W	TYPE	X	Y
D. S. BROWN	DSB STRIP SEAL	SSCM2	1¼"	8"	SSA2, *	1¼"	2"	SSE2, *	1"	1½"
WATSON BOWMAN ACME	WABO STRIP SEAL	M, R	2¾"	3¼"	A	1¼"	2"	E	1½"	1½"
R.J. WATSON, INC.	RJ STRIP SEAL	RJM	2¾"	3¼"	RJA	1¼"	2"	RJE	1¼"	1½"
HEXCEL FYFE CO.	STRIP J200-C	C	2½"	3"	A	1¼"	2"	E	1⅜"	1½"

≠ USE TYPE "AM2" STEEL SHAPE WITH TYPE "SEQ" SEAL.
USE TYPE "SC" OR "SA" STEEL SHAPE WITH TYPE "SS" SEAL.
DESIGNATION TYPE AND DIMENSIONS MAY VARY AS MANUFACTURER'S INVENTORY CHANGES

* TRIM OUTSTANDING LEGS OF SSCM2 SHAPE FOR USE IN TRAFFIC BARRIER

FOR "AS CONSTRUCTED PLANS" ONLY

SR 433 JOB NO. 1566 SHEET 4

Bridge Design Engr.	Kapur, J	
Supervisor	Kirker, KN	08/02
Designed By	Talukdar, M	08/02
Checked By	Schultz, E	08/02
Detailed By	Evans, P	08/02
Bridge Projects Engr.		
Prelim. Plan By		
Architect/Specialist		

M:\Y-Team\Lewis_Clark Rehab\Miscellaneous\window files\EXP JT SS1.WND

DATE	REVISION	BY	APP'D

REGION NO.	STATE	FED. AID PROJ. NO.	SHEET NO.	TOTAL SHEETS
10	WASH.	ACBH - 0433(007)		

JOB NUMBER 02x310
6444

KARL N. KIRKER — STATE OF WASHINGTON — 10098 — REGISTERED PROFESSIONAL ENGINEER — EXPIRES 11/3/03

BRIDGE AND STRUCTURES OFFICE

MUNINDRA TALUKDAR — STATE OF WASHINGTON — 27628 — REGISTERED PROFESSIONAL ENGINEER — EXPIRES 6/1/04

Washington State Department of Transportation

SR 433
LEWIS AND CLARK BRIDGE
DECK REPLACEMENT

EXPANSION JOINTS - STRIP SEAL

BRIDGE SHEET NO. ML 4

SHEET 214 OF 258 SHEETS

Tue Sep 17 14:59:13 2002

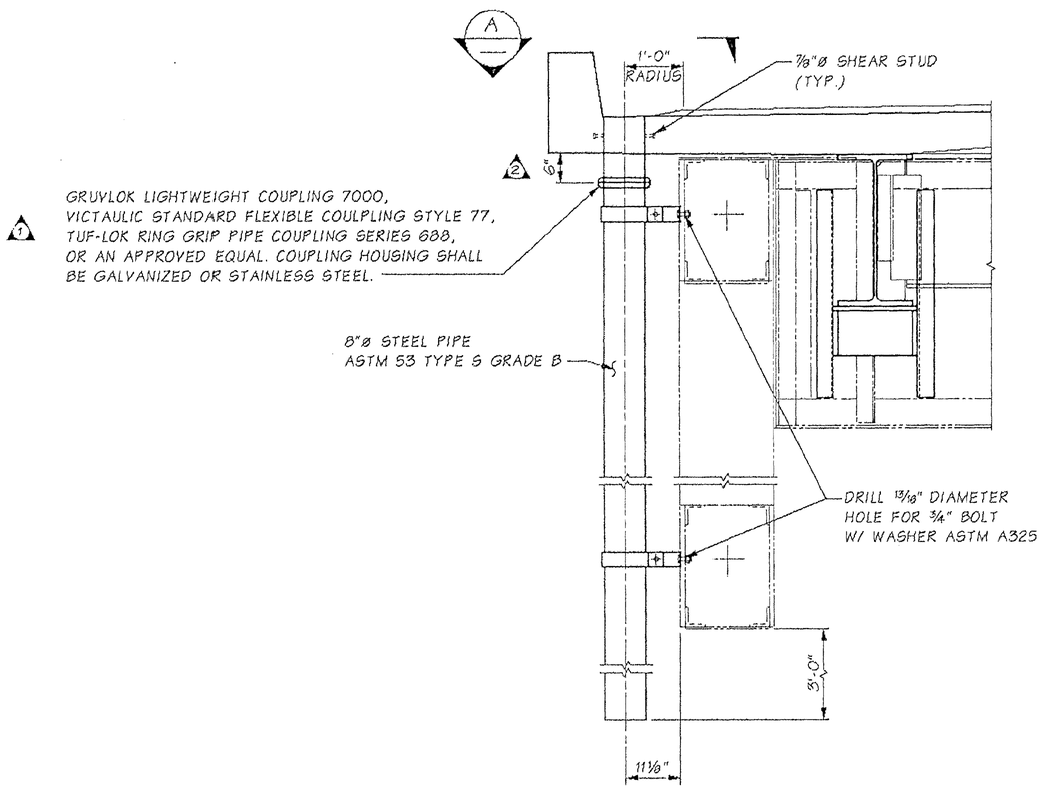

DRAIN DETAIL

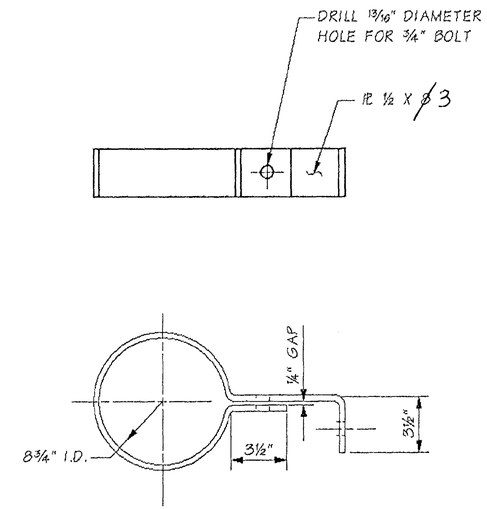

BRACKET DETAIL

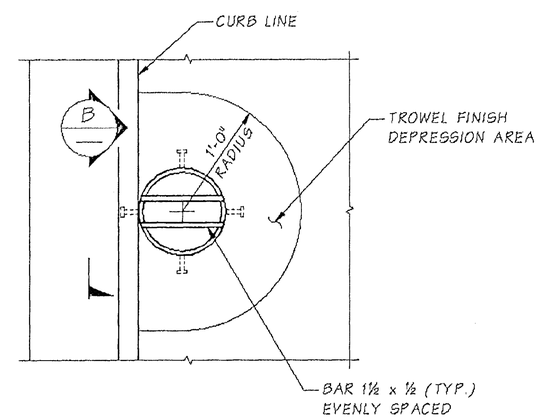

VIEW A

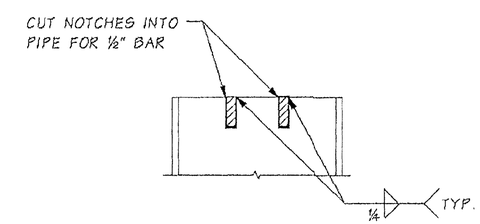

DETAIL B

NOTE: SEE DRAINAGE NOTES ON BRIDGE SHEET L2

FOR "AS CONSTRUCTED PLANS" ONLY

Bridge Design Engr.	Kapur, J		M:\Y-Team\Lewis_Clark Rehab\Miscellaneous\window files\DRAINS.WND			REGION NO.	STATE	FED. AID PROJ. NO.	SHEET NO.	TOTAL SHEETS
Supervisor	Kirker, KN	08/02				10	WASH.			
Designed By	Talukdar, M	08/02								
Checked By	Peralta, R	08/02								
Detailed By	Evans, P	08/02	03/03	1 ADD DIMENSION TO COUPLING	ES	JOB NUMBER 02x310		ACBH - 0433(007)		
Bridge Projects Engr.										
Prelim. Plan By			03/03	2 ADD PIPE COUPLING NOTE	ES					
Architect/Specialist			DATE	REVISION	BY	APPD				

Wed Nov 12 13:13:20 2003

KARL N. KIRKER — STATE OF WASHINGTON — 16328 — REGISTERED PROFESSIONAL ENGINEER — EXPIRES 11/3/05

BRIDGE AND STRUCTURES OFFICE

MONINDRA TALUKDAR — STATE OF WASHINGTON — 17639 — REGISTERED PROFESSIONAL ENGINEER — EXPIRES 4/1/04

Washington State Department of Transportation

SR 433
LEWIS AND CLARK BRIDGE
DECK REPLACEMENT

DRAINAGE DETAILS

BRIDGE SHEET NO. ML5

SHEET 215 OF 258 SHEETS

SR 433 JOB NO. 1566 SHEET 5

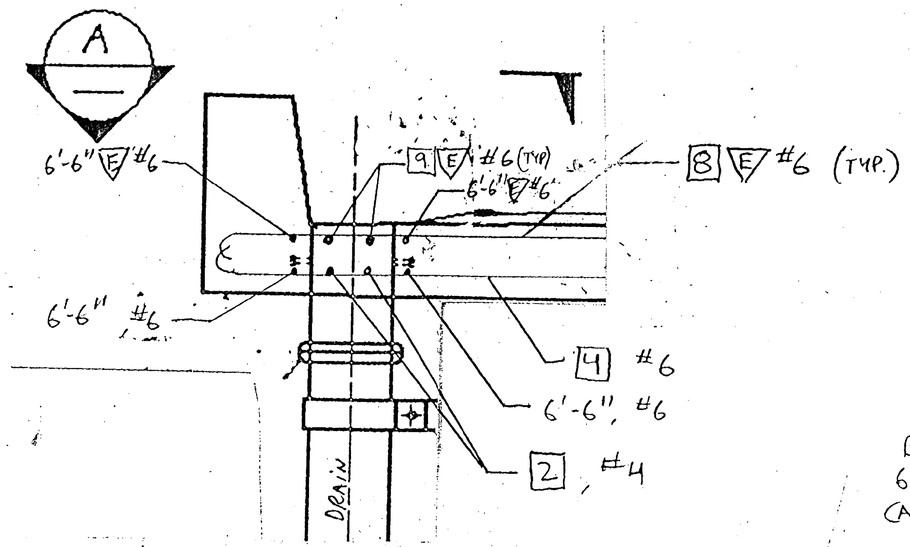

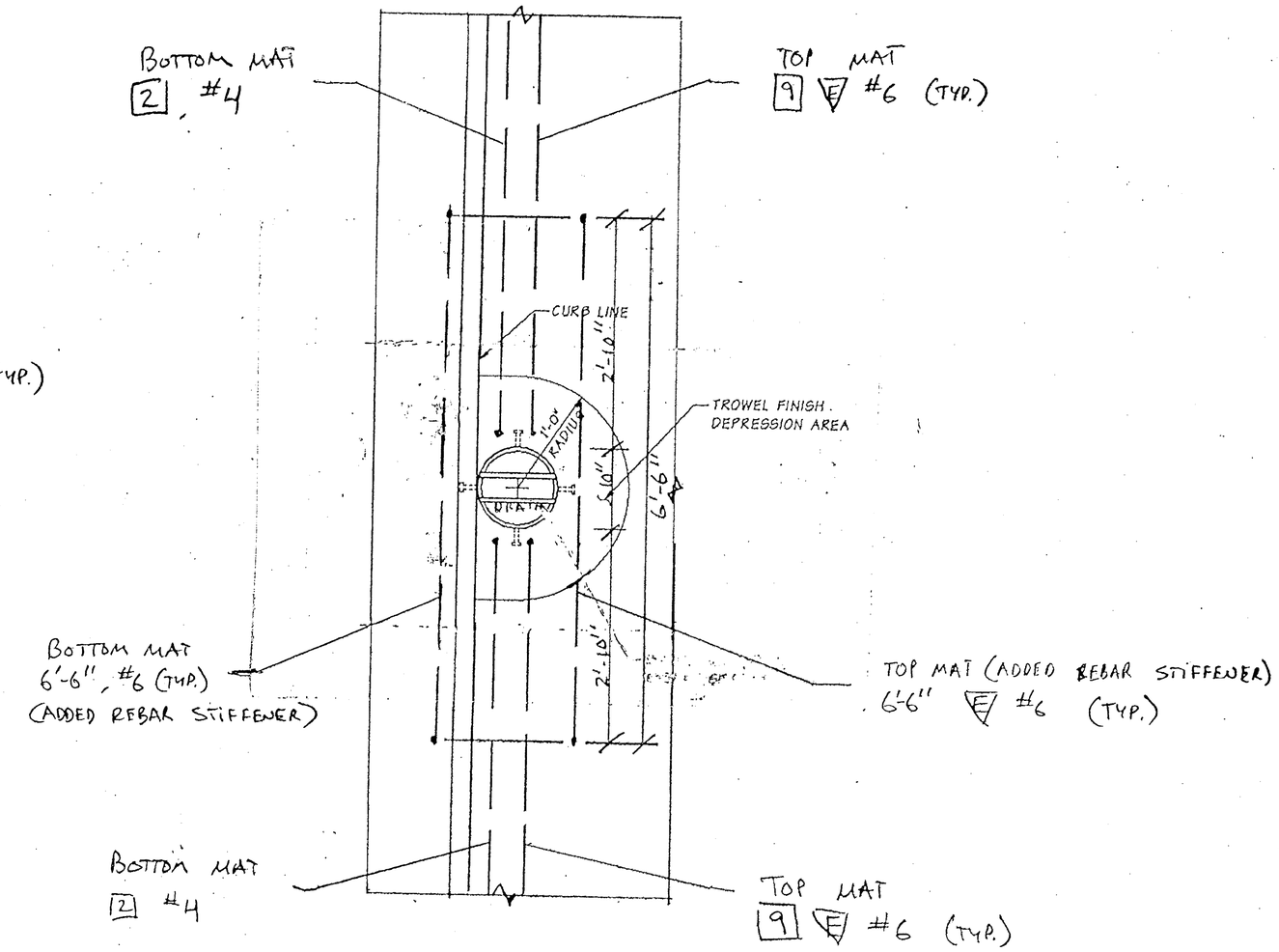

TYPICAL SECTION

REINFORCEMENT AROUND DRAINS
OREGON APPROACH
- ADDED REBAR STIFFENERS
LOCATIONS AT 24- 6" DRAINS

VIEW A

FOR "AS CONSTRUCTED PLANS" ONLY

FILE NAME	C:\AAWork\kelso\Svensen's Curve\L3425WASTESITE.dgn				
TIME	02:37:18 PM				
DATE	08/17/2005				
PLOTTED BY	spohnk				
DESIGNED BY					
ENTERED BY					
CHECKED BY					
PROJ. ENGR.					
REGIONAL ADM.		REVISION	DATE	BY	

REGION NO.	STATE	FED. AID PROJ. NO.
10	WASH	
JOB NUMBER		
CONTRACT NO.		LOCATION NO.

P.E. STAMP BOX DATE

P.E. STAMP BOX DATE

Washington State Department of Transportation

SR 433
LEWIS AND CLARK BRIDE
DECK REPLACEMENT

DRAIN REINFORCEMENT DETAILS
OREGON APPROACH

PLOT11

ML5A

SHEET 215A OF 258 SHEETS

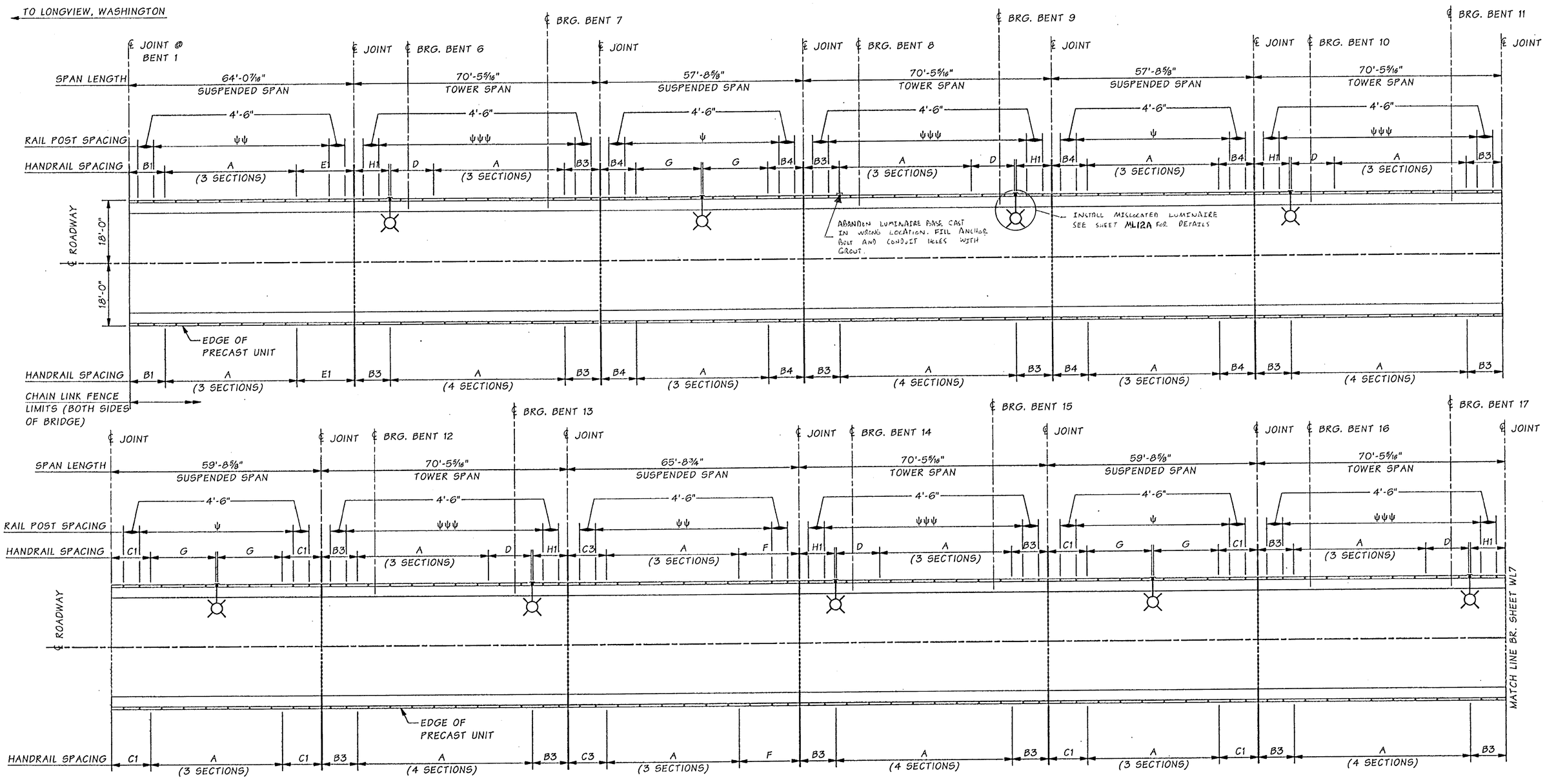

LEGEND

ψ	7 SPA. @ 6'-3" = 43'-9"
ψψ	8 SPA. @ 6'-3" = 50'-0"
ψψψ	9 SPA. @ 6'-3 = 56'-3"
	LUMINAIRE POST

RAIL & LUMINAIRE POST LAYOUT

NOTE: DIMENSIONS ARE ALONG SLAB GRADE

FOR "AS CONSTRUCTED PLANS" ONLY

NOTE: FOR HANDRAIL SECTION DETAILS SEE SHEETS ML13 THRU ML22.

Bridge Design Engr.	Kapur, J	
Supervisor	Kirker, KN	08/02
Designed By	Schultz, E	08/02
Checked By	Talukdar, M	08/02
Detailed By	Evans, P	08/02
Bridge Projects Engr.		
Prelim. Plan By		
Architect/Specialist		

M:\Y-Team\Lewis_Clark Rehab\Miscellaneous\window files\RAIL LAYOUT1.WND

DATE	REVISION	BY	APP'D

REGION NO.	STATE	FED. AID PROJ. NO.	SHEET NO.	TOTAL SHEETS
10	WASH.	ACBH - 0433(007)		

JOB NUMBER 02x310

BRIDGE AND STRUCTURES OFFICE

KARL N. KIRKER, STATE OF WASHINGTON, REGISTERED PROFESSIONAL ENGINEER — EXPIRES 11/3/03

MURTINDRA TALUKDAR, STATE OF WASHINGTON, REGISTERED PROFESSIONAL ENGINEER — EXPIRES 6/1/04

Washington State Department of Transportation

SR 433
LEWIS AND CLARK BRIDGE
DECK REPLACEMENT

RAIL AND LUMINAIRE POST LAYOUT
SHEET 1 OF 7

BRIDGE SHEET NO. ML6

SHEET 216 OF 258 SHEETS

SR 433 JOB NO. 1566 SHEET 6

Wed Sep 18 13:59:18 2002

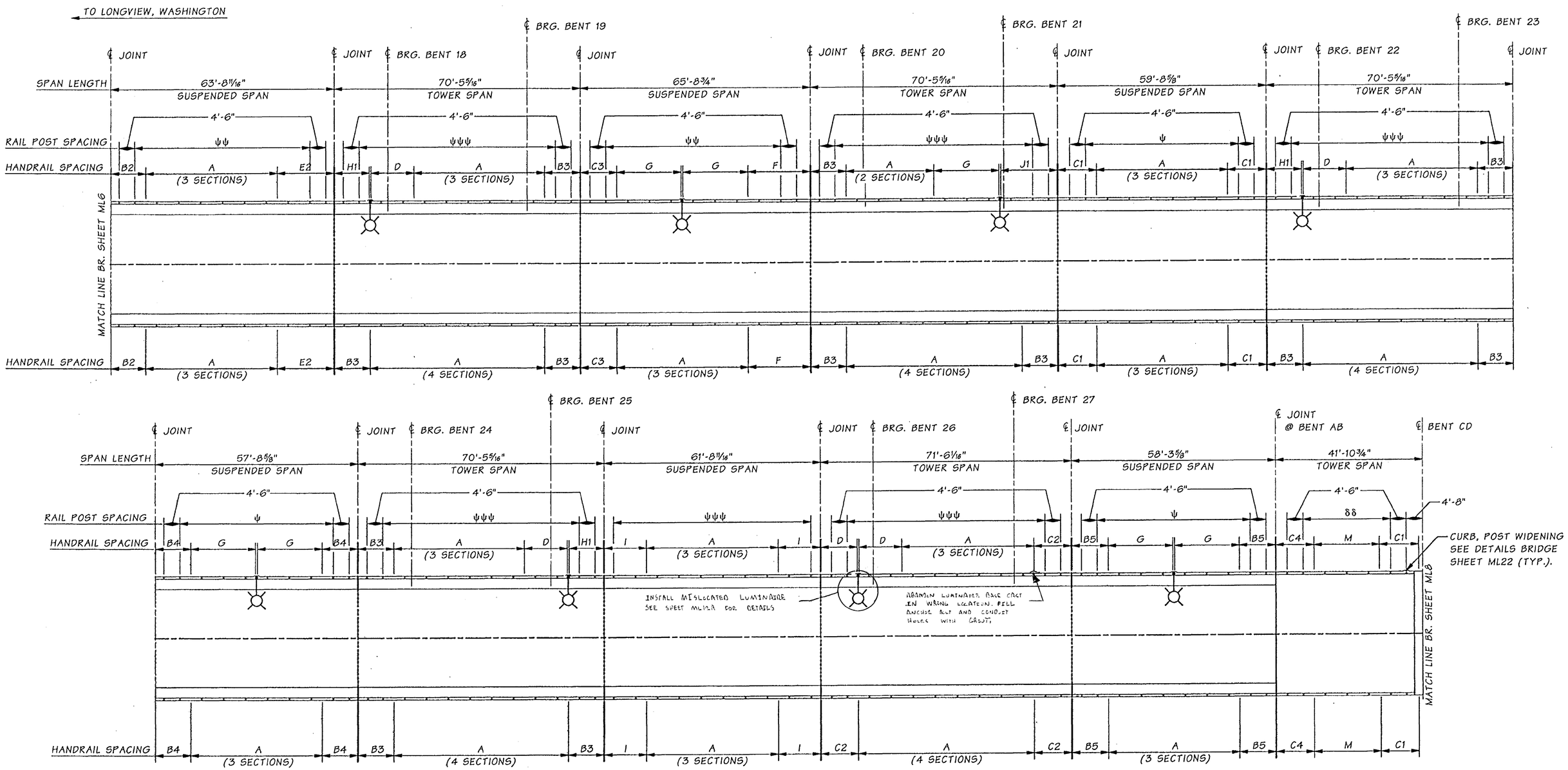

LEGEND

ψ	7 SPA. @ 6'-3" = 43'-9"
ψψ	8 SPA. @ 6'-3" = 50'-0"
ψψψ	9 SPA. @ 6'-3 = 56'-3"
—⊗	LUMINAIRE POST

RAIL & LUMINAIRE POST LAYOUT

NOTE: DIMENSIONS ARE ALONG SLAB GRADE

FOR "AS CONSTRUCTED PLANS" ONLY

TO RAINIER, OREGON

NOTE: FOR HANDRAIL SECTION DETAILS SEE SHEETS ML13 THRU ML22.

Bridge Design Engr.	Kapur, J	
Supervisor	Kirker, KN	08/02
Designed By	Schultz, E	08/02
Checked By	Talukdar, M	08/02
Detailed By	Evans, P	08/02
Bridge Projects Engr.		
Prelim. Plan By		
Architect/Specialist		

M:\Y-Team\Lewis_Clark Rehab\Miscellaneous\window files\RAIL LAYOUT2.WND

DATE	REVISION	BY	APP'D

REGION NO.	STATE	FED. AID PROJ. NO.	SHEET NO.	TOTAL SHEETS
10	WASH.	ACBH - 0433(007)		

JOB NUMBER 02x310

6444

KARL N. KIRKER — STATE OF WASHINGTON — REGISTERED PROFESSIONAL ENGINEER — 9/18/02 — EXPIRES 11/3/03

BRIDGE AND STRUCTURES OFFICE

MUNINDRA TALUKDAR — STATE OF WASHINGTON — REGISTERED PROFESSIONAL ENGINEER — 9/18/02 — EXPIRES 6/1/04

Washington State Department of Transportation

SR 433
LEWIS AND CLARK BRIDGE
DECK REPLACEMENT

RAIL AND LUMINAIRE POST LAYOUT
SHEET 2 OF 7

BRIDGE SHEET NO. ML 7

SHEET 217 OF 258 SHEETS

SR 433 JOB NO. 1566 SHEET 7

Wed Sep 18 10:30:54 2002

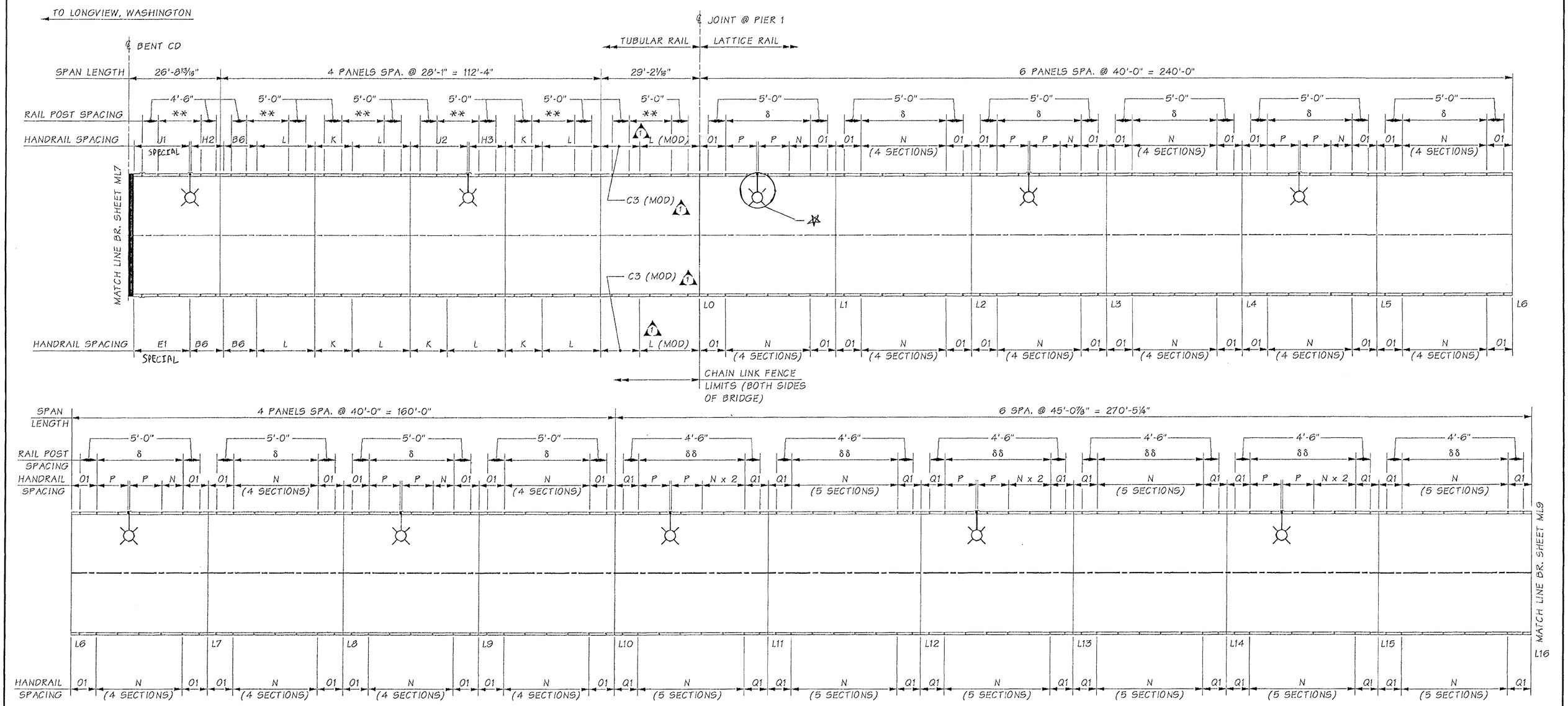

LEGEND

**	2 SPA. @ 6'-3" = 12'-6"
***	3 SPA. @ 6'-3 = 18'-9"
δ	4 SPA. @ 6'-3" = 25'-0"
δδ	5 SPA. @ 6'-3" = 31'-3"
	LUMINAIRE POST

✱ TRUSS MOUNTED LUMINAIRE
SEE SHEET TC-4A FOR DETAILS

RAIL & LUMINAIRE POST LAYOUT

FOR "AS CONSTRUCTED PLANS" ONLY

NOTE: FOR HANDRAIL SECTION DETAILS SEE SHEETS ML13 THRU ML22.

Bridge Design Engr.	Kapur, J	
Supervisor	Kirker, KN	08/02
Designed By	Schultz, E	08/02
Checked By	Talukdar, M	08/02
Detailed By	Evans, P	08/02
Bridge Projects Engr.		
Prelim. Plan By		04/15
Architect/Specialist		

M:\Y-Team\Lewis_Clark Rehab\Miscellaneous\window files\RAIL LAYOUT3.WND

DATE	REVISION	BY	APPD
04/15	1 CHANGE RAIL DESIGNATION	ES	

REGION NO.	STATE	FED. AID PROJ. NO.	SHEET NO.	TOTAL SHEETS
10	WASH.	ACBH - 0433(007)		

JOB NUMBER 02x310

6444

KARL N. KIRKER — STATE OF WASHINGTON — 18695 — REGISTERED PROFESSIONAL ENGINEER — EXPIRES 11/3/03

BRIDGE AND STRUCTURES OFFICE

MANINDRA TALUKDAR — STATE OF WASHINGTON — 27655 — REGISTERED PROFESSIONAL ENGINEER — EXPIRES 6/1/04

Washington State Department of Transportation

SR 433
LEWIS AND CLARK BRIDGE
DECK REPLACEMENT

RAIL AND LUMINAIRE POST LAYOUT
SHEET 3 OF 7

BRIDGE SHEET NO. ML8

SHEET 218 OF 258 SHEETS

Wed Apr 23 12:53:52 2003

SR 433 JOB NO. 1566 SHEET 8

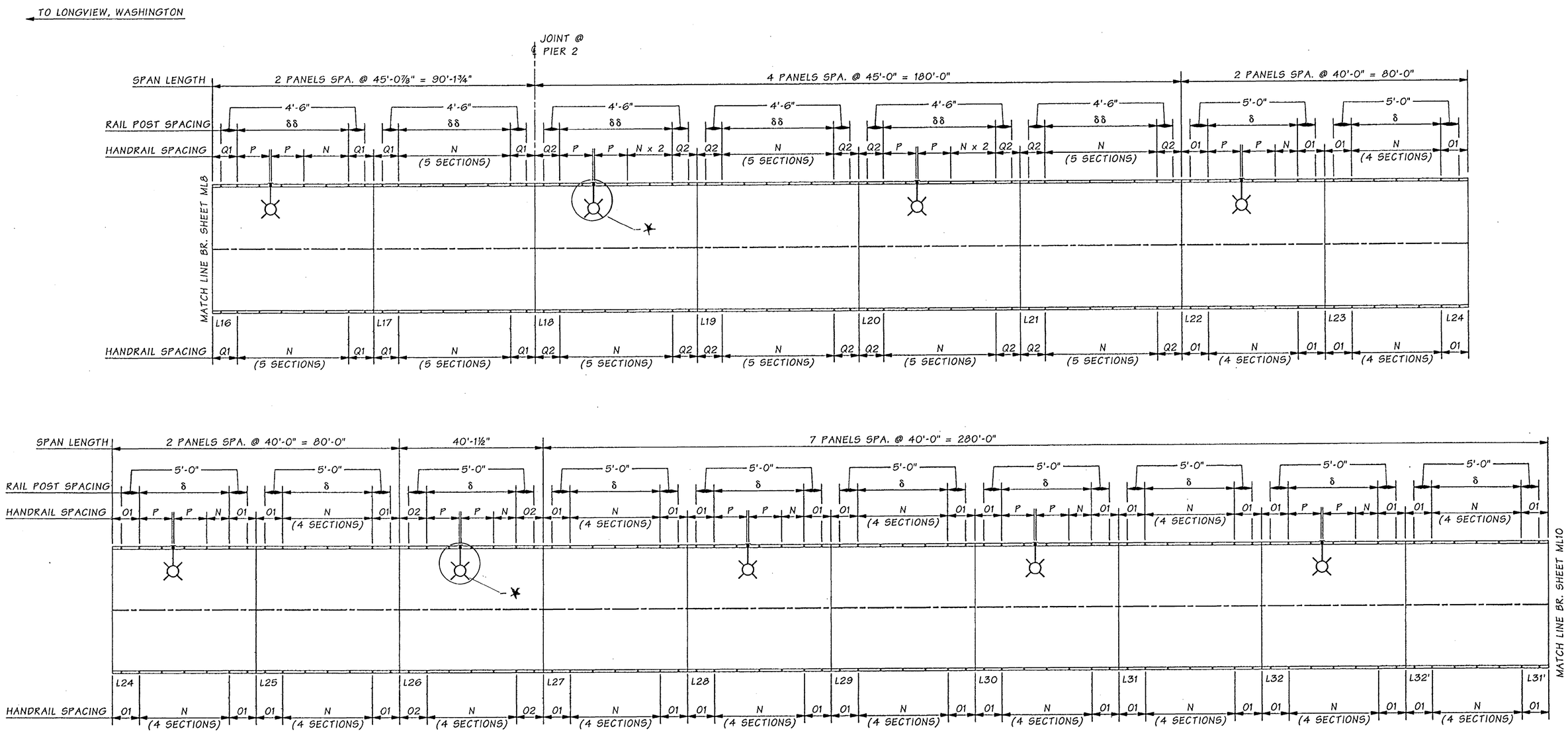

LEGEND

δ 4 SPA. @ 6'-3" = 25'-0"
δδ 5 SPA. @ 6'-3" = 31'-3"
LUMINAIRE POST

-✱ TRUSS MOUNTED LUMINAIRE. SEE SHT TC 4A FOR DETAILS

RAIL & LUMINAIRE POST LAYOUT

FOR "AS CONSTRUCTED PLANS" ONLY

NOTE: FOR HANDRAIL SECTION DETAILS SEE SHEETS ML13 THRU ML22.

Bridge Design Engr.	Kapur, J		M:\Y-Team\Lewis_Clark Rehab\Miscellaneous\window files\RAIL LAYOUT4.WND
Supervisor	Kirker, KN	08/02	
Designed By	Schultz, E	08/02	
Checked By	Talukdar, M	08/02	
Detailed By	Evans, P	08/02	
Bridge Projects Engr.			
Prelim. Plan By			
Architect/Specialist			

DATE	REVISION	BY	APP'D

REGION NO.	STATE	FED. AID PROJ. NO.	SHEET NO.	TOTAL SHEETS
10	WASH.	ACBH - 0433(007)		
JOB NUMBER 02x310				

KARL N. KIRKER — STATE OF WASHINGTON — 10696 — REGISTERED PROFESSIONAL ENGINEER — EXPIRES 11/3/03

BRIDGE AND STRUCTURES OFFICE

MONIRUZZAMAN TALUKDAR — STATE OF WASHINGTON — 37626 — REGISTERED PROFESSIONAL ENGINEER — EXPIRES 6/1/04

Washington State Department of Transportation

SR 433
LEWIS AND CLARK BRIDGE
DECK REPLACEMENT

RAIL AND LUMINAIRE POST LAYOUT
SHEET 4 OF 7

BRIDGE SHEET NO. ML9

SHEET 219 OF 258 SHEETS

SR 433 JOB NO. 1566 SHEET 9

Wed Sep 18 10:31:45 2002

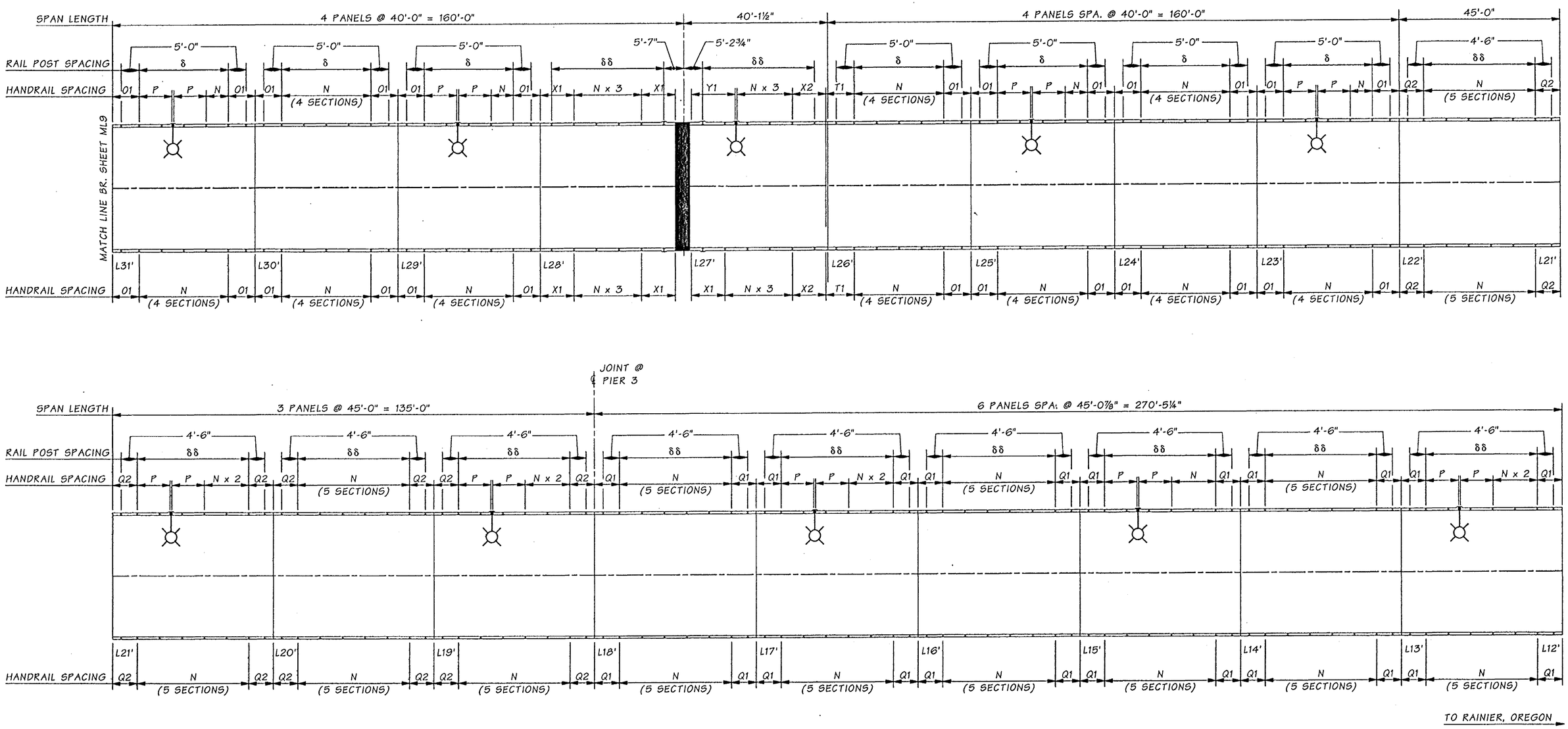

LEGEND

δ	4 SPA. @ 6'-3" = 25'-0"
δδ	5 SPA. @ 6'-3" = 31'-3"
	LUMINAIRE POST

RAIL & LUMINAIRE POST LAYOUT

FOR "AS CONSTRUCTED PLANS" ONLY

NOTE: FOR HANDRAIL SECTION DETAILS SEE SHEETS ML13 THRU ML22.

Bridge Design Engr.	Kapur, J	
Supervisor	Kirker, KN	08/02
Designed By	Schultz, E	08/02
Checked By	Talukdar, M	08/02
Detailed By	Evans, P	08/02
Bridge Projects Engr.		
Prelim. Plan By		
Architect/Specialist		

M:\Y-Team\Lewis_Clark Rehab\Miscellaneous\window files\RAIL LAYOUT5.WND

DATE	REVISION	BY	APP'D

REGION NO.	STATE	FED. AID PROJ. NO.	SHEET NO.	TOTAL SHEETS
10	WASH.	ACBH - 0433(007)		
JOB NUMBER 02x310				
6444				

KARL N. KIRKER — STATE OF WASHINGTON — 18296 — REGISTERED PROFESSIONAL ENGINEER — EXPIRES 11/3/03

BRIDGE AND STRUCTURES OFFICE

MUNINDRA TALUKDAR — STATE OF WASHINGTON — 27028 — REGISTERED PROFESSIONAL ENGINEER — EXPIRES 6/1/04

Washington State Department of Transportation

SR 433
LEWIS AND CLARK BRIDGE
DECK REPLACEMENT

RAIL AND LUMINAIRE POST LAYOUT
SHEET 5 OF 7

BRIDGE SHEET NO. ML10

SHEET 220 OF 258 SHEETS

SR 433 JOB NO. 1566 SHEET 10

Wed Sep 18 09:19:43 2002

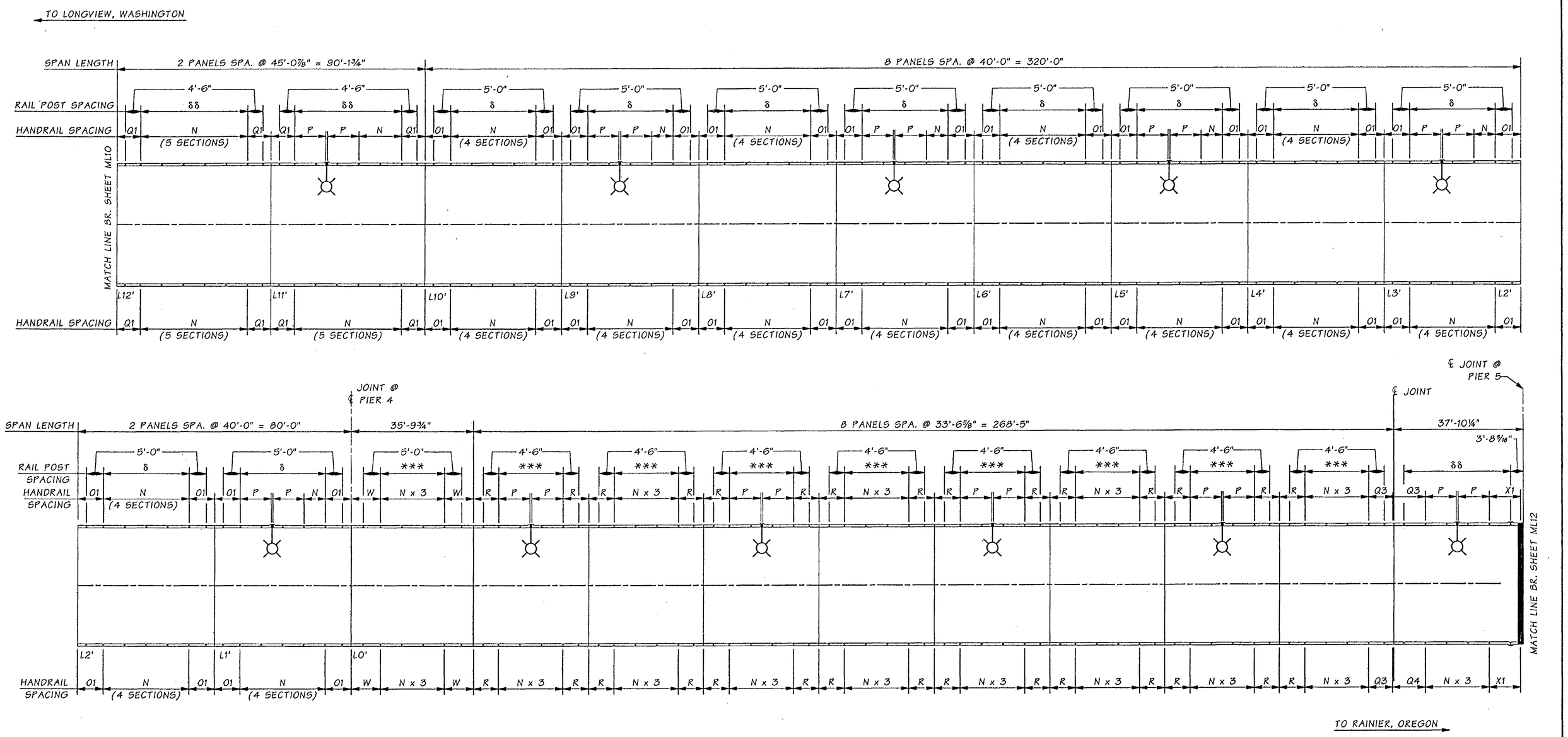

LEGEND

***	3 SPA. @ 6'-3 = 18'-9"
δ	4 SPA. @ 6'-3" = 25'-0"
δδ	5 SPA. @ 6'-3" = 31'-3"
	LUMINAIRE POST

RAIL & LUMINAIRE POST LAYOUT

FOR "AS CONSTRUCTED PLANS" ONLY

NOTE: FOR HANDRAIL SECTION DETAILS SEE SHEETS ML13 THRU ML22.

SR 433 JOB NO. 1566 SHEET 11

Bridge Design Engr.	Kapur, J	
Supervisor	Kirker, KN	08/02
Designed By	Schultz, E	08/02
Checked By	Talukdar, M	08/02
Detailed By	Evans, P	08/02
Bridge Projects Engr.		
Prelim. Plan By		
Architect/Specialist		

M:\Y-Team\Lewis_Clark Rehab\Miscellaneous\window files\RAIL LAYOUT6.WND

DATE	REVISION	BY	APP'D

REGION NO.	STATE	FED. AID PROJ. NO.	SHEET NO.	TOTAL SHEETS
10	WASH.	ACBH - 0433(007)		

JOB NUMBER 02x310

6444

KARL N. KIRKER — STATE OF WASHINGTON — 10298 — REGISTERED PROFESSIONAL ENGINEER — EXPIRES 11/3/03

BRIDGE AND STRUCTURES OFFICE

MUNINDRA TALUKDAR — STATE OF WASHINGTON — 27628 — REGISTERED PROFESSIONAL ENGINEER — EXPIRES 6/1/04

Washington State Department of Transportation

SR 433
LEWIS AND CLARK BRIDGE
DECK REPLACEMENT

RAIL AND LUMINAIRE POST LAYOUT
SHEET 6 OF 7

BRIDGE SHEET NO. ML11

SHEET 221 OF 258 SHEETS

Wed Sep 18 09:19:57 2002

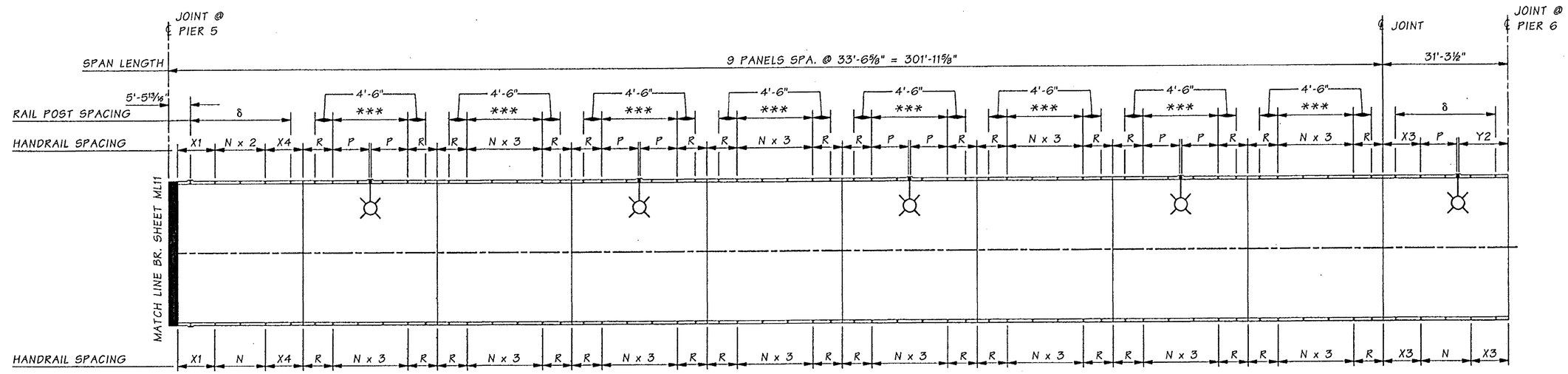

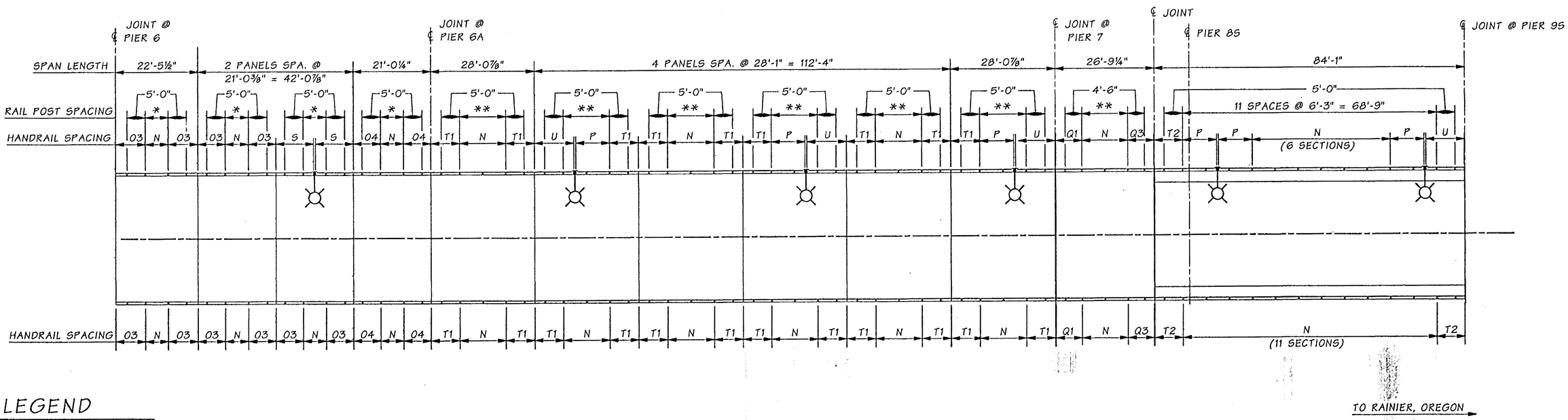

LEGEND

*	1 SPA. @ 6'-3"
**	2 SPA. @ 6'-3" = 12'-6"
***	3 SPA. @ 6'-3 = 18'-9"
δ	4 SPA. @ 6'-3" = 25'-0"
δδ	5 SPA. @ 6'-3" = 31'-3"
δδδ	6 SPA. @ 6'-3" = 37'-6"
	LUMINAIRE POST

RAIL & LUMINAIRE POST LAYOUT

FOR "AS CONSTRUCTED PLANS" ONLY

NOTE: FOR HANDRAIL SECTION DETAILS SEE SHEETS ML13 THRU ML22.

SR 433 JOB NO. 1566 SHEET 12

Bridge Design Engr.	Kapur, J		M:\Y-Team\Lewis_Clark Rehab\Miscellaneous\window files\RAIL LAYOUT7.WND			REGION NO.	STATE	FED. AID PROJ. NO.	SHEET NO.	TOTAL SHEETS	
Supervisor	Kirker, KN	08/02				10	WASH.				
Designed By	Schultz, E	08/02									
Checked By	Talukdar, M	08/02				JOB NUMBER		ACBH - 0433(007)			
Detailed By	Evans, P	08/02				02x310					
Bridge Projects Engr.											
Prelim. Plan By											
Architect/Specialist			DATE	REVISION	BY	APP'D					

Wed Sep 18 09:20:11 2002

KARL N. KIRKER — STATE OF KANSAS — 10296 — REGISTERED PROFESSIONAL ENGINEER — EXPIRES 11/3/03

BRIDGE AND STRUCTURES OFFICE

MONINDRA M. TALUKDAR — STATE OF WASHINGTON — 27605 — REGISTERED PROFESSIONAL ENGINEER — EXPIRES 6/1/04

Washington State Department of Transportation

SR 433
LEWIS AND CLARK BRIDGE
DECK REPLACEMENT

RAIL AND LUMINAIRE POST LAYOUT
SHEET 7 OF 7

BRIDGE SHEET NO. ML12

SHEET 222 OF 258 SHEETS

MISLOCATED LUMINAIRE BASES - NORTH APPROACH

GENERAL DESCRIPTION:
DURING SETTING PIPE RAILING ON THE WASHINGTON APPROACH WIDENING SECTIONS IT WAS DISCOVERED THAT TWO OF THE LUMINAIRE BASES WERE CAST IN THE WRONG LOCATION AND NOT PER PLAN. THIS WAS DUE TO A SURVEY ERROR. THE PANELS AFFECTED INCLUDED THE TOWER SPAN (4L), WHICH SITS ON THE LEFT SIDE OF THE BRIDGE BETWEEN BENTS 8 AND 9, AND THE TOWER SPAN (22L), WHICH SITS BETWEEN BENT 26 AND 27.

REFERRING TO CONTRACT PLAN SHEETS 216/217 AND 65, THE LOCATION OF THE LUMINAIRE ON 4L EXISTS BETWEEN THE "B3" AND THE FIRST "A" SECTION INSTEAD OF BETWEEN "D" AND "H1" SECTIONS. THE LOCATION OF THE LUMINAIRE ON THE 22L SECTION EXISTS BETWEEN THE "C2" AND THE FIRST "A" SECTION INSTEAD OF BETWEEN THE TWO "D" SECTIONS.

PROPOSED PRODEDURE AND DETAILS

EXISTING LUMINAIRE PEDESTALS

1. ABANDON EXISTING MISLOCATED PEDESTALS. INSTALL PLAQUE COMMEMORATION WSDOT AND CONTRACTOR COOPERATION (AT CONTRACTORS OPTION).
2. GROUT EXISTING ANCHOR BOLT HOLES AND CONDUIT.

AT PLAN LUMINAIRE LOCATIONS

1. BUSH TO ROUGHEN CONCRETE SURFACE AT LOCATION OF NEW LUMINAIRE.
2. DRILL AND EPOXY SIX BARS AT EACH LUMINAIRE LOCATION. 3 BARS TO REPLACE THE MARK 159 "MUSTACHE" BARS AND 3 TO REPLACE THE BAR MARK 158.
3. CORE DRILL TWO HOLES ON INCH IN DIAMETER AT LOCATION OF LUMINAIRE ANCHOR BOLTS. DO A TEST HOLE USING A 3/8" ROTOHAMMER BIT PRIOR TO CORE DRILLING TO ENSURE EXISTING REBAR WILL NOT BE HIT AND DAMAGED DURING CORE DRILLING.
4. FORM AND PLACE LUMINAIRE EXTENSION WITH STANDARD CLASS 4000 CONCRETE(NOT LIGHTWEIGHT)

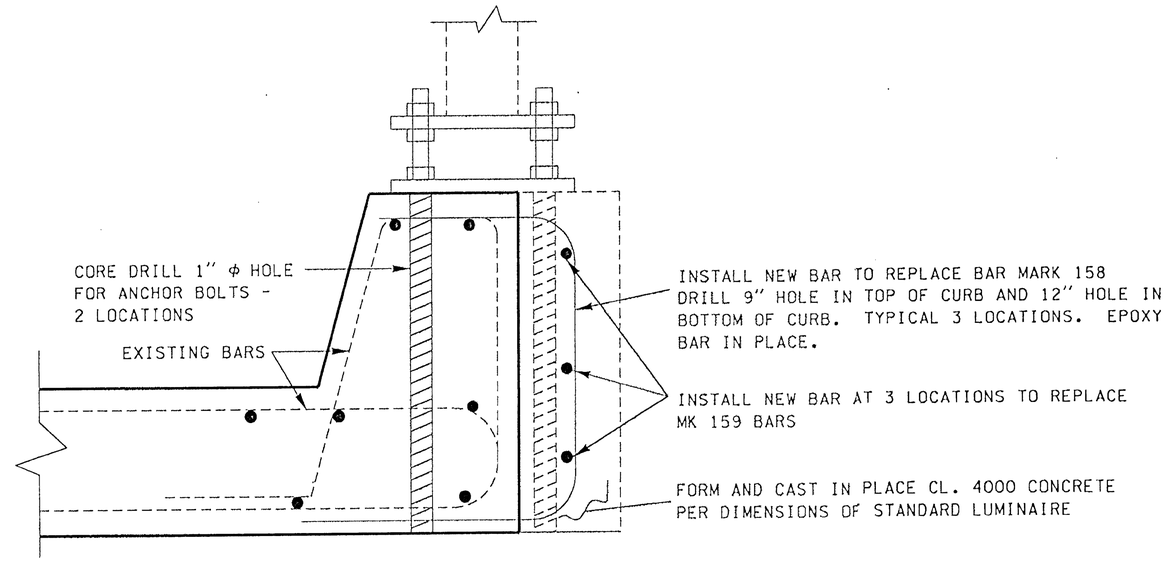

MISLOCATED LUMINAIRE SECTION

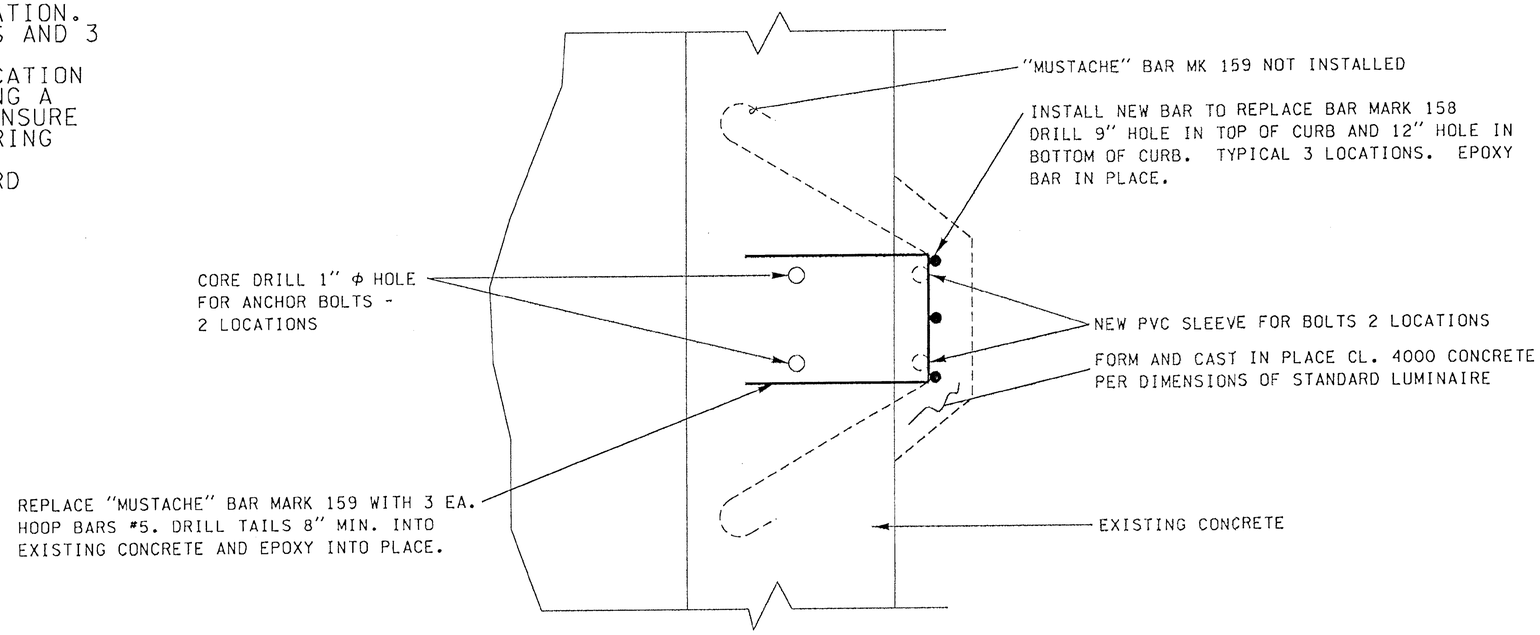

FOR "AS CONSTRUCTED PLANS" ONLY

PLAN VIEW

FILE NAME	G:\444304\03 - Construction\C6444 - SR433, Lewis and Clark Bridge Deck Replacement\As-Builts\6444 Detail.dgn				REGION NO. 10	STATE WASH	FED.AID PROJ.NO.		
TIME	6:41:20 AM								
DATE	11/15/2005				JOB NUMBER				
PLOTTED BY	kingju								
DESIGNED BY									
ENTERED BY					CONTRACT NO. 6444		LOCATION NO.		
CHECKED BY									
PROJ. ENGR.									
REGIONAL ADM.		REVISION	DATE	BY					

P.E. STAMP BOX DATE

P.E. STAMP BOX DATE

Washington State Department of Transportation

SR 433
LEWIS AND CLARK BRIDGE DECK REPLACEMENT

WASHINGTON APPROACH MISLOCATED LUMINAIRE BASES

PLOT18

ML12A

SHEET OF SHEETS

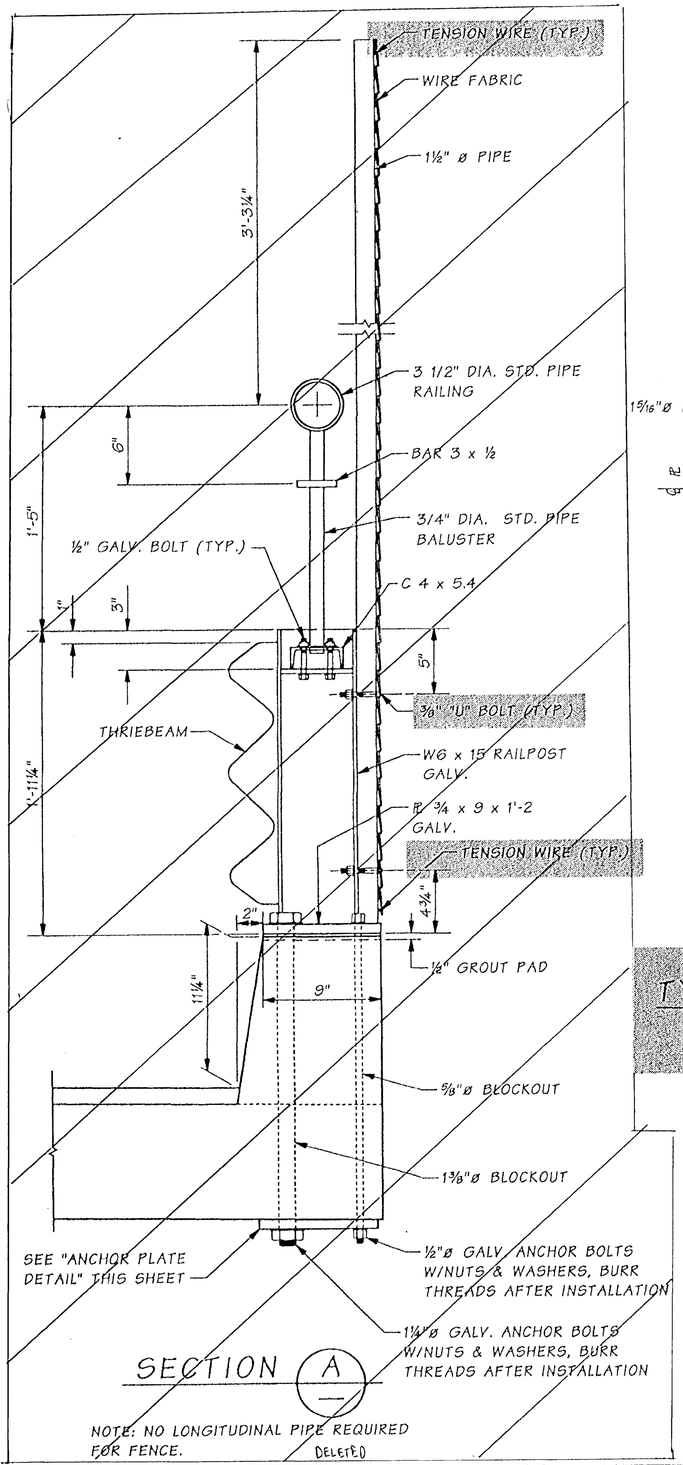

SECTION A

NOTE: NO LONGITUDINAL PIPE REQUIRED FOR FENCE. DELETED

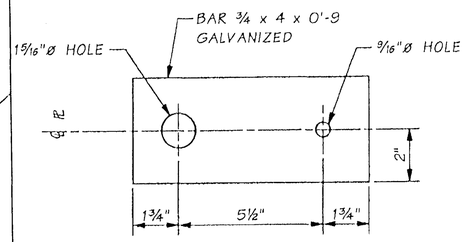

ANCHOR PLATE DETAIL

2 REQ. AT EA. POST LOCATION

* FROM BENT 1 TO BENT AB. · BAR ½ x 4 x 0'-9" GALVANIZED REPLACED BAR ¾ x 4 x 0'-9" GALVANIZED.

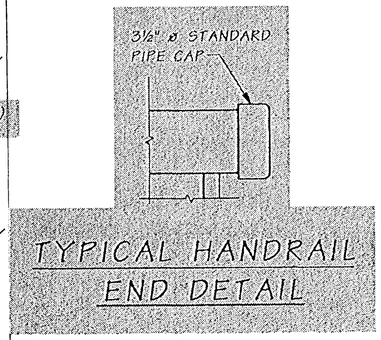

TYPICAL HANDRAIL END DETAIL

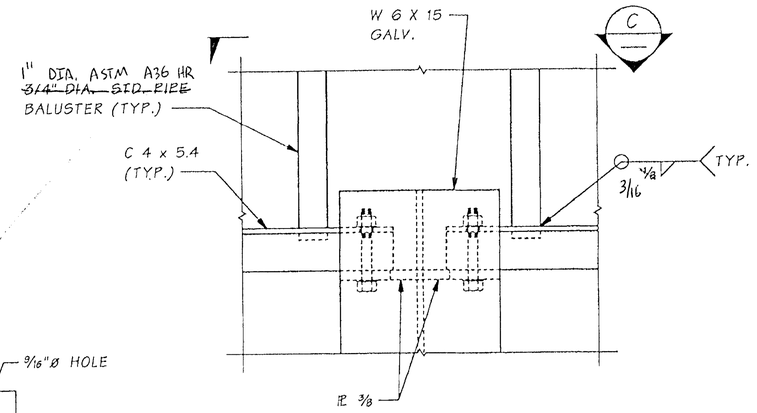

DETAIL B

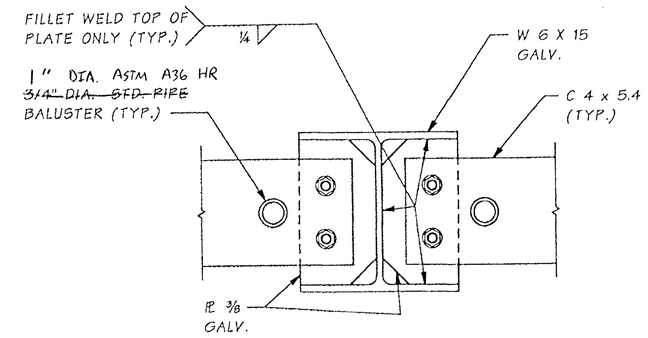

SECTION C

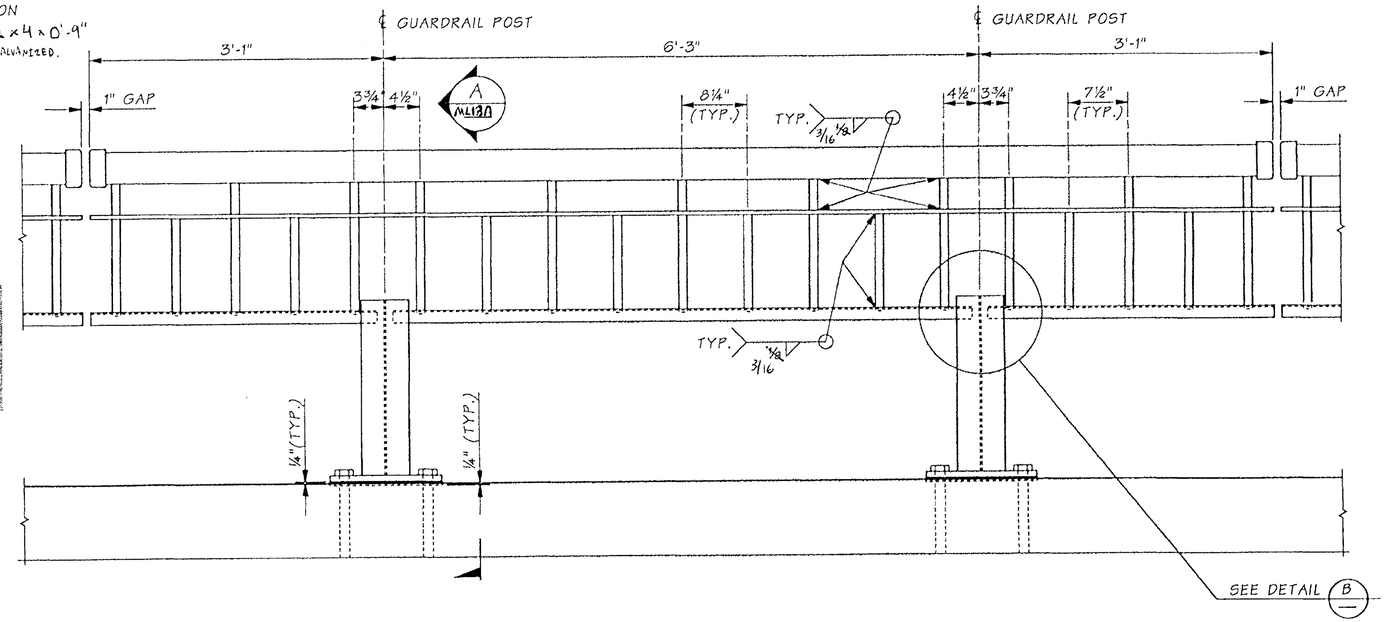

ELEVATION -- HANDRAIL SECTION A

THRIE BEAM NOT SHOWN FOR CLARITY

FOR "AS CONSTRUCTED PLANS" ONLY

Bridge Design Engr.	Kapur, J		M:\Y-Team\Lewis_Clark Rehab\Miscellaneous\window files\HANDRAIL-A.WND								
Supervisor	Kirker, KN										
Designed By	Schultz, E	08/02	10/02	MODIFIED NOTE	ES						
Checked By	Talukdar, M	08/02									
Detailed By	Evans, P	08/02	10/02	ADDED NOTE	ES						
Bridge Projects Engr.											
Prelim. Plan By			10/02	PIPE END DETAIL ADDED	ES						
Architect/Specialist			DATE	REVISION	BY	APP'D					

Wed Oct 30 07:07:03 2002

REGION NO.	STATE	FED. AID PROJ. NO.	SHEET NO.	TOTAL SHEETS
10	WASH.	ACBH - 0433(007)		
JOB NUMBER 02x310				

6444

KARL N. KIRKER — STATE OF WASHINGTON — REGISTERED PROFESSIONAL ENGINEER — EXPIRES 11/3/03

BRIDGE AND STRUCTURES OFFICE

MONIRUL TALUKDAR — STATE OF WASHINGTON — REGISTERED PROFESSIONAL ENGINEER — EXPIRES 6/1/04

Washington State Department of Transportation

SR 433
LEWIS AND CLARK BRIDGE
DECK REPLACEMENT

HANDRAIL DETAILS -- SECTION A

BRIDGE SHEET NO. ML13

SHEET 223 OF 258 SHEETS

SR 433 JOB . 1566 SHEET 13

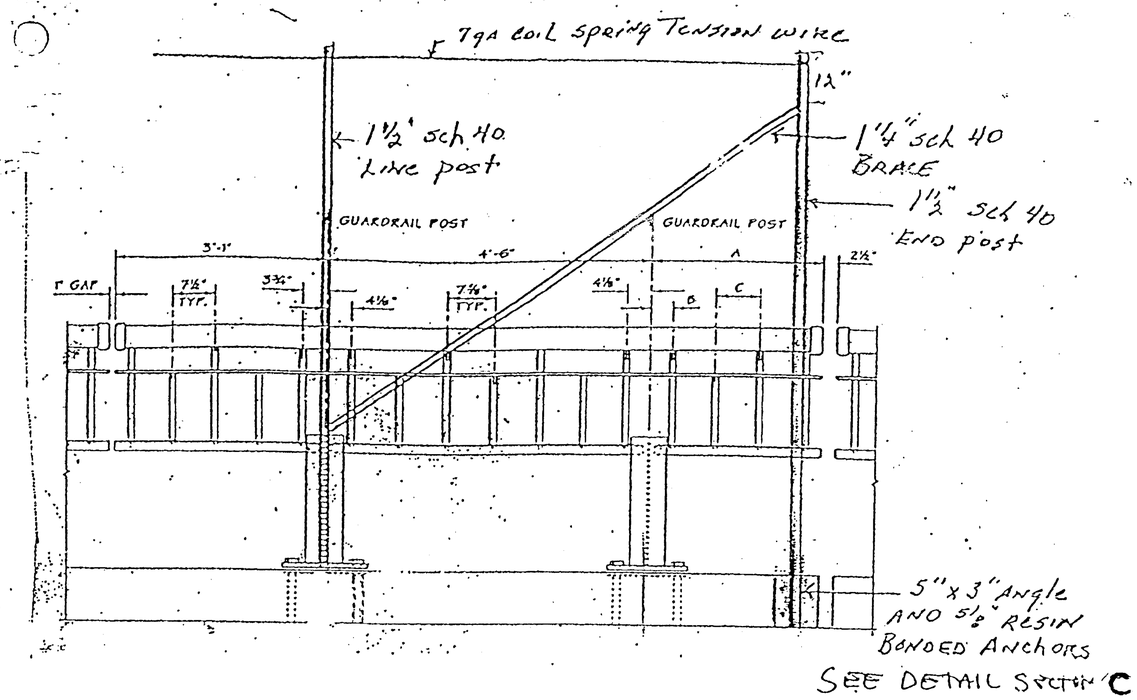

Bracing Detail

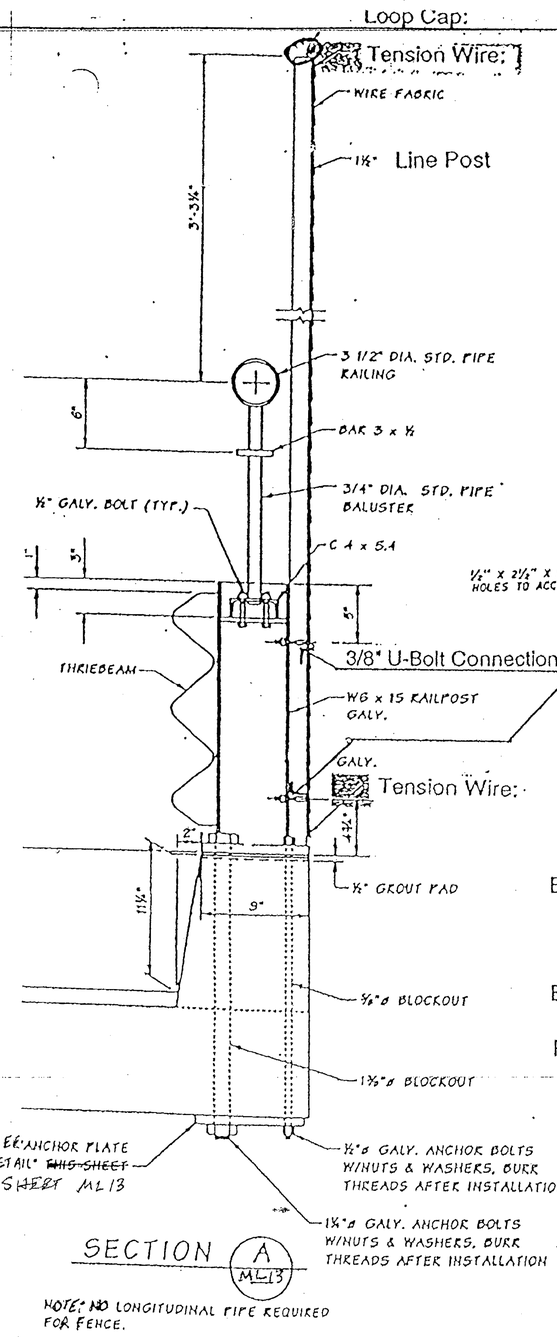

SECTION A ML13

NOTE: NO LONGITUDINAL PIPE REQUIRED FOR FENCE.

Tension Wire:

7 Gage Wire

Loop Cap:

Galvanized Malleable
Cast Iron or
Pressed Steel

Wire Fabric:

9 Gage, 84" (high),
2" Diamond Mesh,
Knuckled Selvage

Line Post:

Galv - 1 1/2" Diam
6'-9" total height measured from the Thrie Beam Base Plate

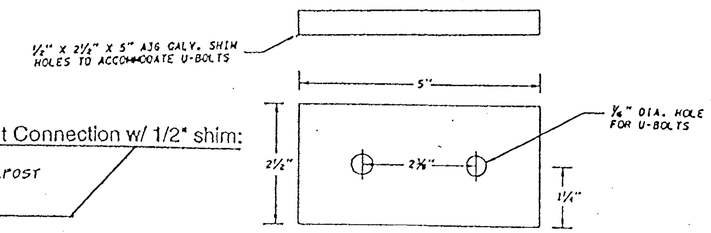

Galv. Shim to fit between Thrie Beam Post and 1½" Std. Fence Post to allow bottom of Fabric to be tied to Post

Brace Rail:

Galv - 1 1/4" Diam

Brace Rail Connection:

Rail Element & Rail End Hardware

Brace rail end connection shall be drilled and pinned with 1/4-inch by 2-1/2-inch Stainless Steel Cotter Pin

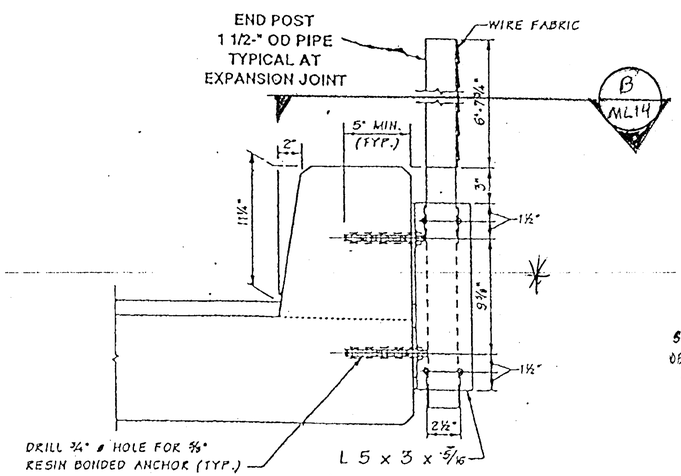

SECTION C ML14

BRACE RAIL REQUIRED AT ALL END POST LOCATIONS. INSTALL BRACE RAIL PER STANDARD PLAN P.2 CHAIN LINK FENCE TYPE 3

* SEE ML13B FOR INSTALLATION OF LINE POST AT ILLUMINAIRE BLOCKOUT LOCATIONS

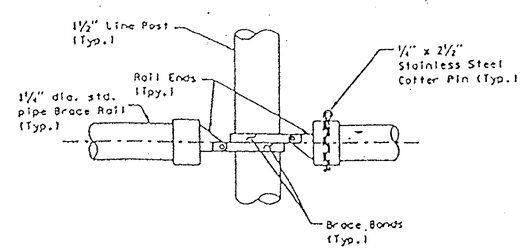

FOR "AS CONSTRUCTED PLANS" ONLY

FILE NAME	C:\AAWork\kelso\Svensen's Curve\L3425WASTESITE.dgn								PLOT11
TIME	02:37:18 PM				REGION NO. 10	STATE WASH	FED.AID PROJ.NO.	Washington State Department of Transportation	SR 433 LEWIS AND CLARK BRIDE DECK REPLACEMENT	ML13A
DATE	08/17/2005									
PLOTTED BY	spahnk				JOB NUMBER					
DESIGNED BY										
ENTERED BY										
CHECKED BY					CONTRACT NO. 6444		LOCATION NO.		HANDRAIL AND FENCE DETAILS	SHEET 223A OF 258 SHEETS
PROJ. ENGR.										
REGIONAL ADM.		REVISION	DATE	BY						

P.E. STAMP BOX DATE

P.E. STAMP BOX DATE

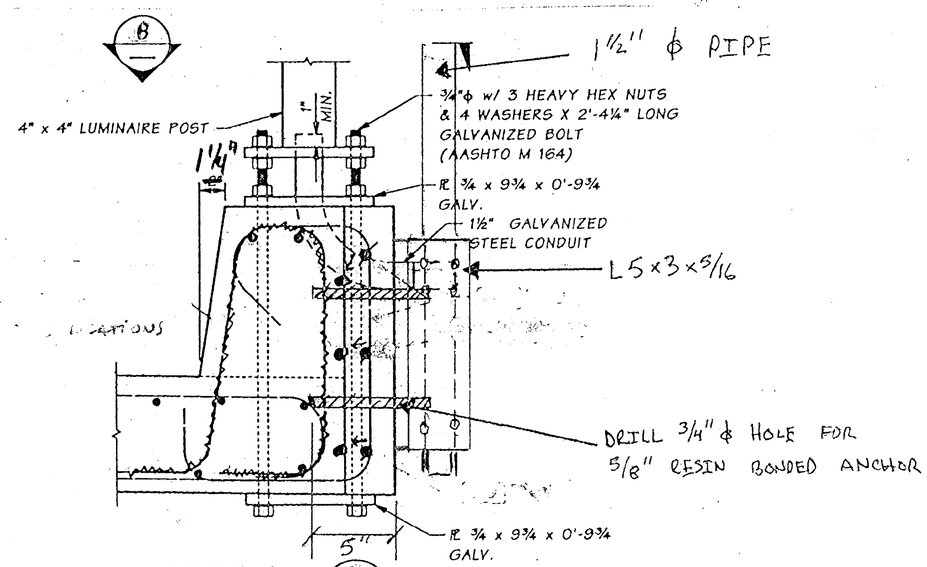

SECTION A

19 LOCATIONS ON WASHINGTON APPROACH

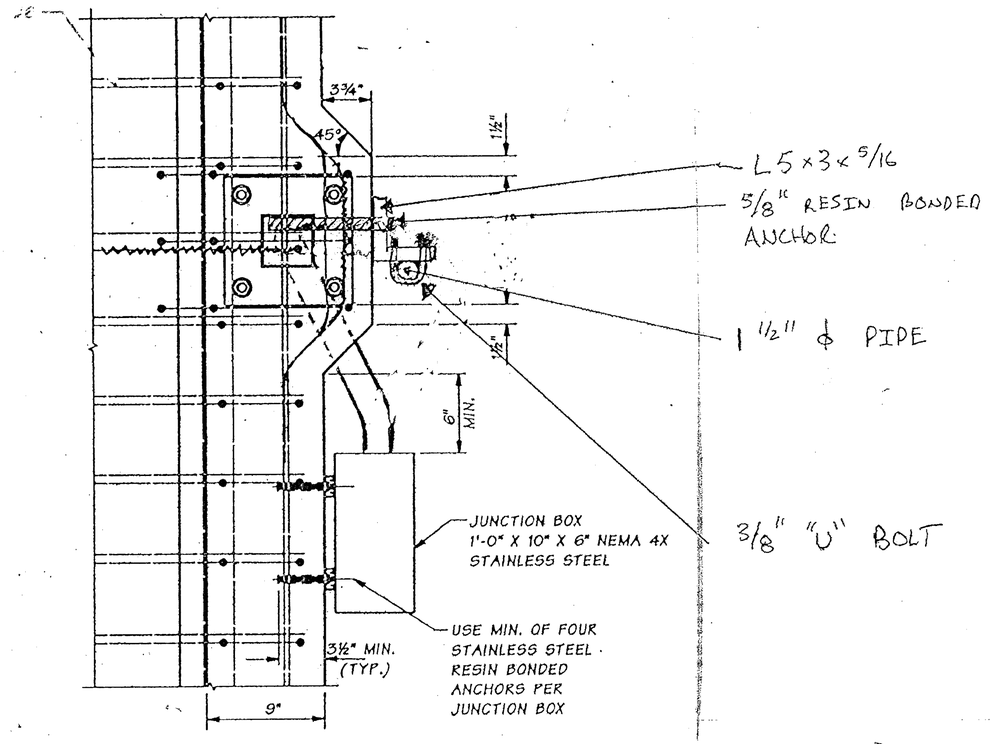

SECTION B

SEE BRIDGE SHEETS M6 THROUGH ML12 FOR LOCATIONS.

FOR "AS CONSTRUCTED PLANS" ONLY

FILE NAME	C:\AAWork\kelso\Svensen's Curve\L3425WASTESITE.dgn						
TIME	02:37:18 PM				REGION NO. 10	STATE WASH	FED. AID PROJ. NO.
DATE	08/17/2005						
PLOTTED BY	spahnk				JOB NUMBER		
DESIGNED BY							
ENTERED BY							
CHECKED BY					CONTRACT NO.	LOCATION NO.	
PROJ. ENGR.							
REGIONAL ADM.		REVISION	DATE	BY			

P.E. STAMP BOX DATE

P.E. STAMP BOX DATE

Washington State Department of Transportation

SR 433
LEWIS AND CLARK BRIDE
DECK REPLACEMENT

WASHINGTON APPROACH WIDENING
FENCE DETAIL @ LUMINAIRE

PLOT11

ML13B

SHEET 223B OF 250 SHEETS

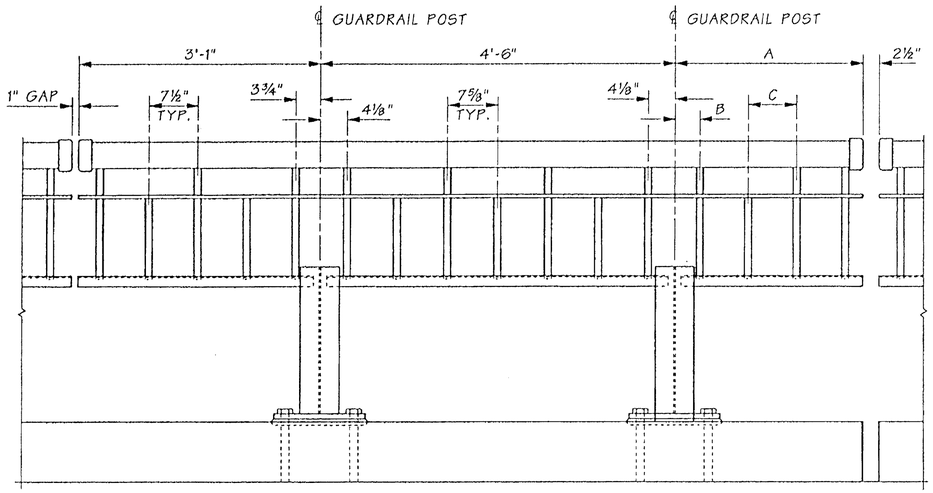

ELEVATION -- HANDRAIL SECTIONS B1 THROUGH B~~5~~6

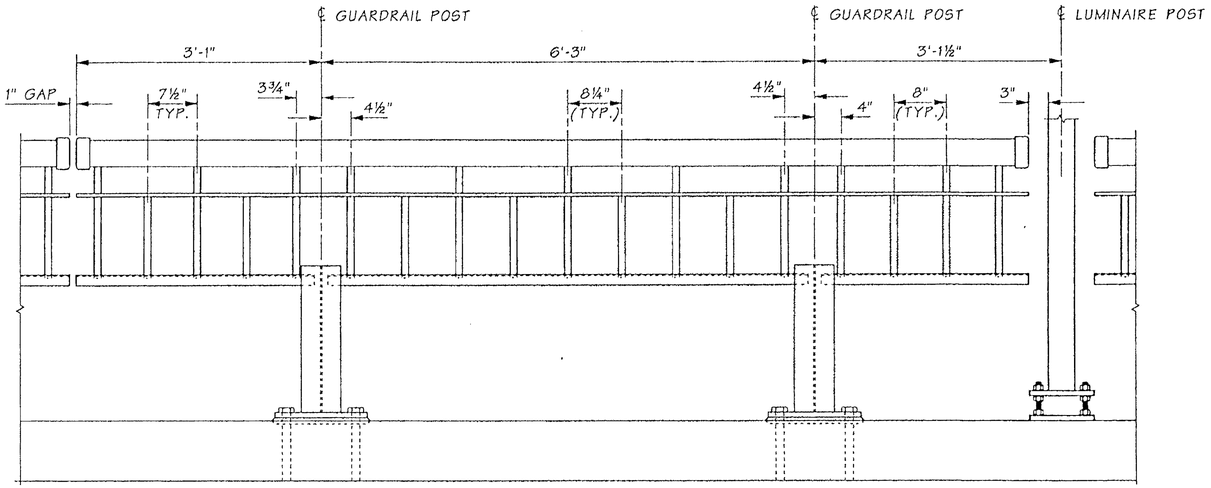

ELEVATION -- HANDRAIL SECTION D

AC
ML13A

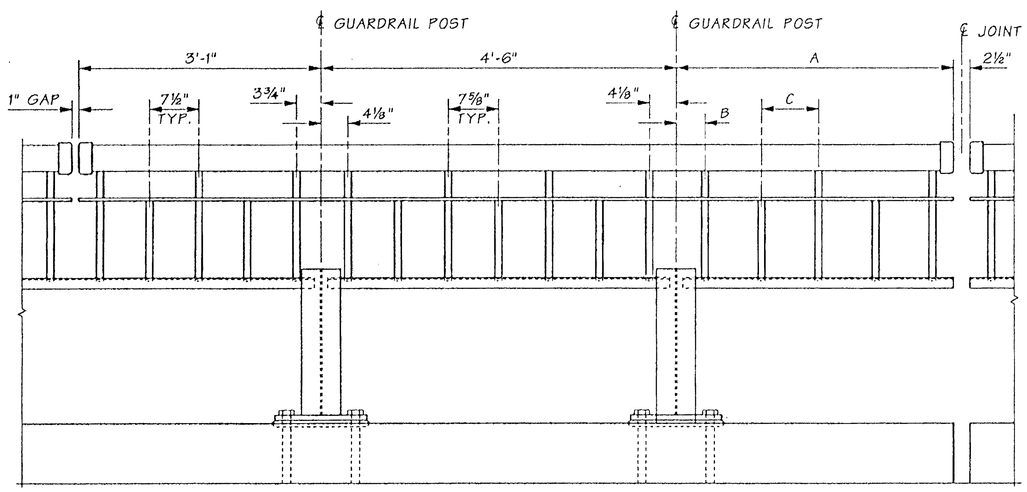

ELEVATION -- HANDRAIL SECTION C1 THROUGH C~~5~~4

HANDRAIL SECTION B SPACING

#	A	B	C
B1	2'-5"	3⅞"	7½"
B2	2'-3⅛"	3 11/16"	7"
B3	2'-6"	3 13/16"	7⅞"
B4	2'-4 9/16"	3⅞"	7⅜"
B5	2'-8 3/16"	4⅜"	8¼"
B6	1'-10 13/16"	3"	6"

HANDRAIL SECTION C SPACING

#	A ~~B~~		C
C1	3'-4 9/16"	4⅛"	8⅜"
C2	3'-0¼"	3¾"	7½"
C3	3'-3⅛"	4 3/16"	8"
C4	3'-1½"	3⅞"	7¾"

FOR "AS CONSTRUCTED PLANS" ONLY

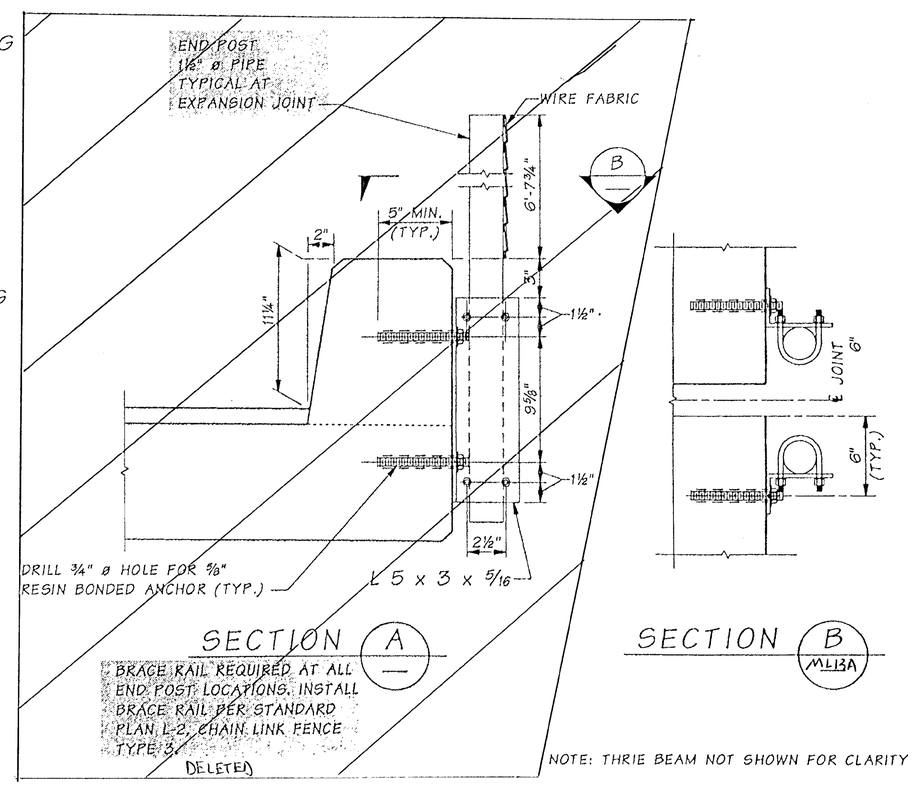

Bridge Design Engr.	Kapur, J		M:\Y-Team\Lewis_Clark Rehab\Miscellaneous\window files\HANDRAIL-B-C-D.WND								
Supervisor	Kirker, KN										
Designed By	Schultz, E	08/02									
Checked By	Talukdar, M	08/02									
Detailed By	Evans, P	08/02	10/02	MODIFIED NOTE	ES						
Bridge Projects Engr.											
Prelim. Plan By			10/02	ADDED NOTE	ES						
Architect/Specialist			DATE	REVISION	BY	APP'D					

REGION NO.	STATE	FED. AID PROJ. NO.	SHEET NO.	TOTAL SHEETS
10	WASH.	ACBH - 0433(007)		
JOB NUMBER 02x310				

KARL N. KIRKER, STATE OF WASHINGTON, REGISTERED PROFESSIONAL ENGINEER, 10/30/02, EXPIRES 11/3/03

BRIDGE AND STRUCTURES OFFICE

MONINDRA TALUKDAR, STATE OF WASHINGTON, REGISTERED PROFESSIONAL ENGINEER, 10/30/02, EXPIRES 6/1/04

Washington State Department of Transportation

SR 433
LEWIS AND CLARK BRIDGE
DECK REPLACEMENT

HANDRAIL DETAILS -- SECTION B,C & D

BRIDGE SHEET NO. ML14

SHEET 224 OF 258 SHEETS

SR 433 JO. 1566 SHEET 14

Tue Oct 29 15:32:45 2002

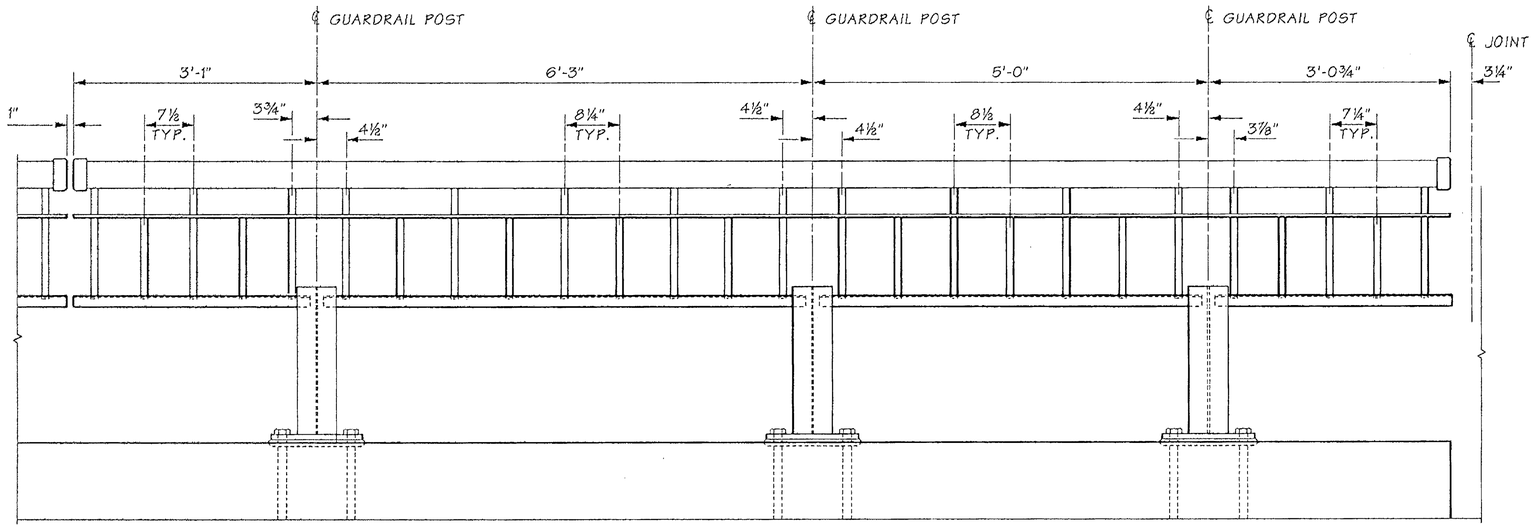

ELEVATION -- HANDRAIL SECTION L (MOD)

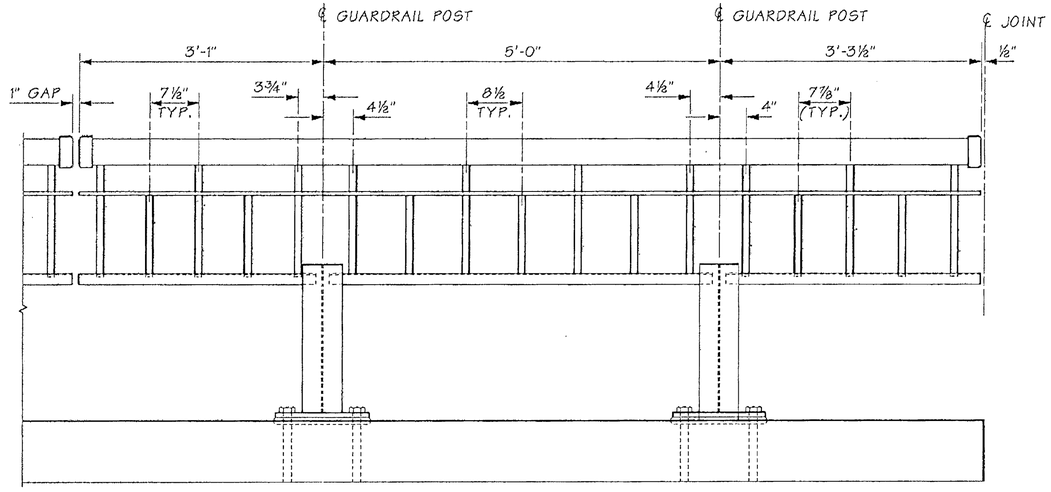

ELEVATION -- HANDRAIL SECTION C3 (MOD)

FOR "AS CONSTRUCTED PLANS" ONLY

NOTE: THRIE BEAM NOT SHOWN FOR CLARITY

SR 433 JOB NO. 1566 SHEET 14

Bridge Design Engr.	Kapur, J		M:\Y-Team\Lewis_Clark Rehab\Miscellaneous\window files\HANDRAIL- CLMOD.WND
Supervisor	Kirker, KN		
Designed By	Schultz, E	04/03	
Checked By	Talukdar, M	04/03	
Detailed By	Schultz, E	04/03	
Bridge Projects Engr.			
Prelim. Plan By			
Architect/Specialist			

DATE	REVISION	BY	APPD

REGION NO.	STATE	FED. AID PROJ. NO.	SHEET NO.	TOTAL SHEETS
10	WASH.	ACBH - 0433(007)		
JOB NUMBER 02x310				

KARL N. KIRKER — STATE OF WASHINGTON — 18095 — REGISTERED PROFESSIONAL ENGINEER — EXPIRES 11/3/03

BRIDGE AND STRUCTURES OFFICE

MUKUNDRA TALUKDAR — STATE OF WASHINGTON — 27608 — REGISTERED PROFESSIONAL ENGINEER — EXPIRES 6/1/04

Washington State Department of Transportation

SR 433
LEWIS AND CLARK BRIDGE
DECK REPLACEMENT

HANDRAIL DETAILS - MODIFIED SECTIONS

BRIDGE SHEET NO. ML14A

SHEET 224A OF 258 SHEETS

Wed Apr 23 12:53:27 2003

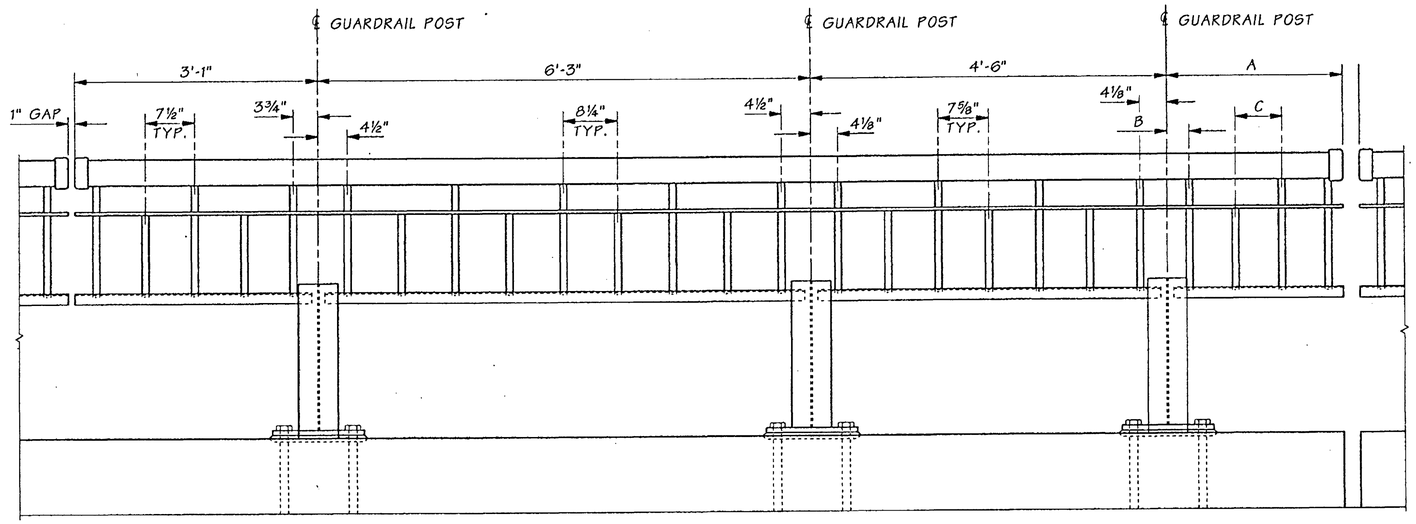

HANDRAIL SECTION E SPACING

#	A	B	C
E1	2'-5"	3⅞"	7½"
E2	2'-3⅛"	3 11/16"	7"

ELEVATION -- HANDRAIL SECTION E1 AND E2

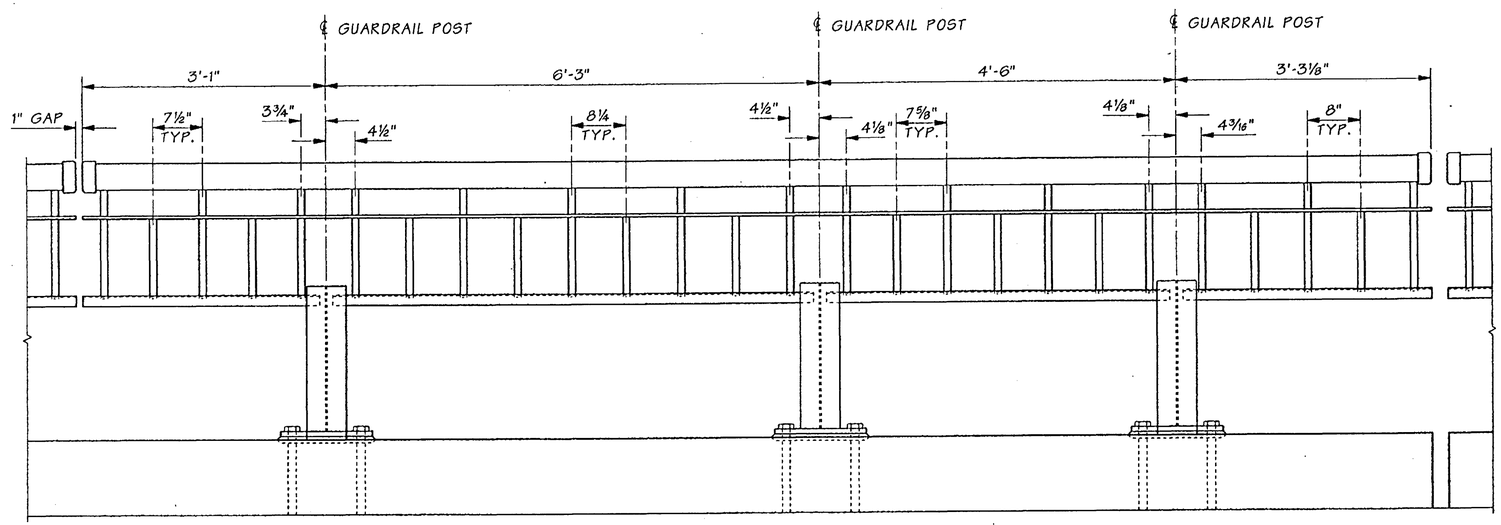

ELEVATION -- HANDRAIL SECTION F

FOR "AS CONSTRUCTED PLANS" ONLY

NOTE: THRIE BEAM NOT SHOWN FOR CLARITY

Bridge Design Engr.	Kapur, J	M:\Y-Team\Lewis_Clark Rehab\Miscellaneous\Window files\HANDRAIL-E-F.WND								
Supervisor	Kirker, KN									
Designed By	Schultz, E	08/02								
Checked By	Talukdar, M	08/02								
Detailed By	Evans, P	08/02								
Bridge Projects Engr.										
Prelim. Plan By										
Architect/Specialist			DATE	REVISION	BY	APP'D				

REGION NO.	STATE	FED. AID PROJ. NO.	SHEET NO.	TOTAL SHEETS
10	WASH.	ACBH - 0433(007)		
JOB NUMBER 02x310				
6444				

KARL N. KIRKER, STATE OF WASHINGTON, 10296, REGISTERED PROFESSIONAL ENGINEER, 9/18/02, EXPIRES 11/3/03

BRIDGE AND STRUCTURES OFFICE

MUHINDRA TALUKDAR, STATE OF WASHINGTON, 27628, REGISTERED PROFESSIONAL ENGINEER, 9/18/02, EXPIRES 6/1/04

Washington State Department of Transportation

SR 433
LEWIS AND CLARK BRIDGE
DECK REPLACEMENT

HANDRAIL DETAILS -- SECTIONS E & F

BRIDGE SHEET NO. ML 15

SHEET 225 OF 258 SHEETS

SR 433 JOB NO. 1566 SHEET 15

Tue Sep 17 12:01:01 2002

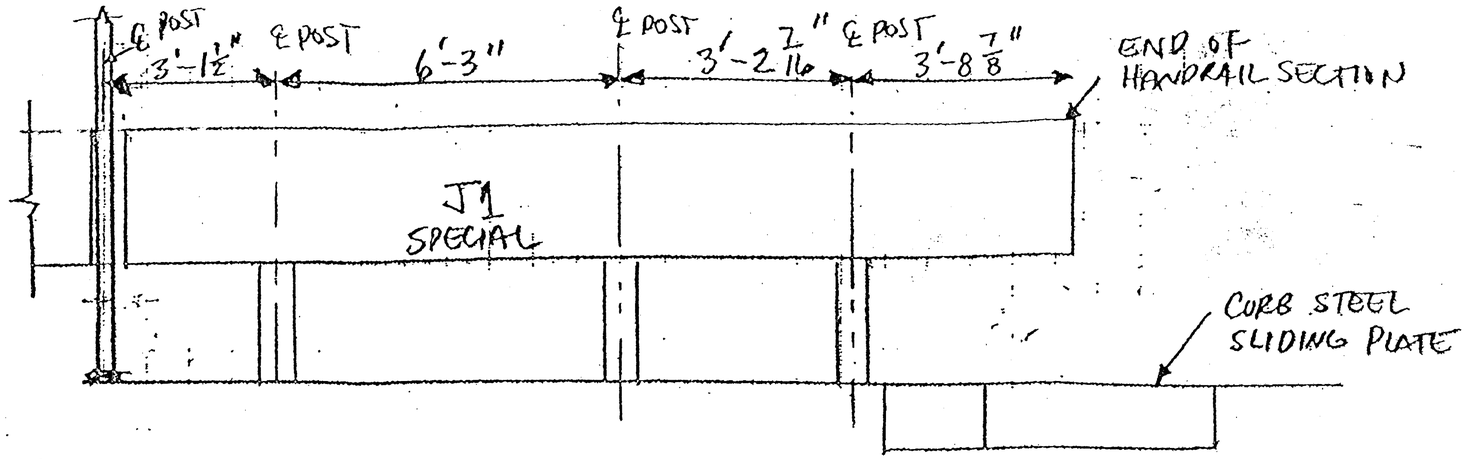

J1 SPECIAL @ PANEL B1

LOOKING WEST

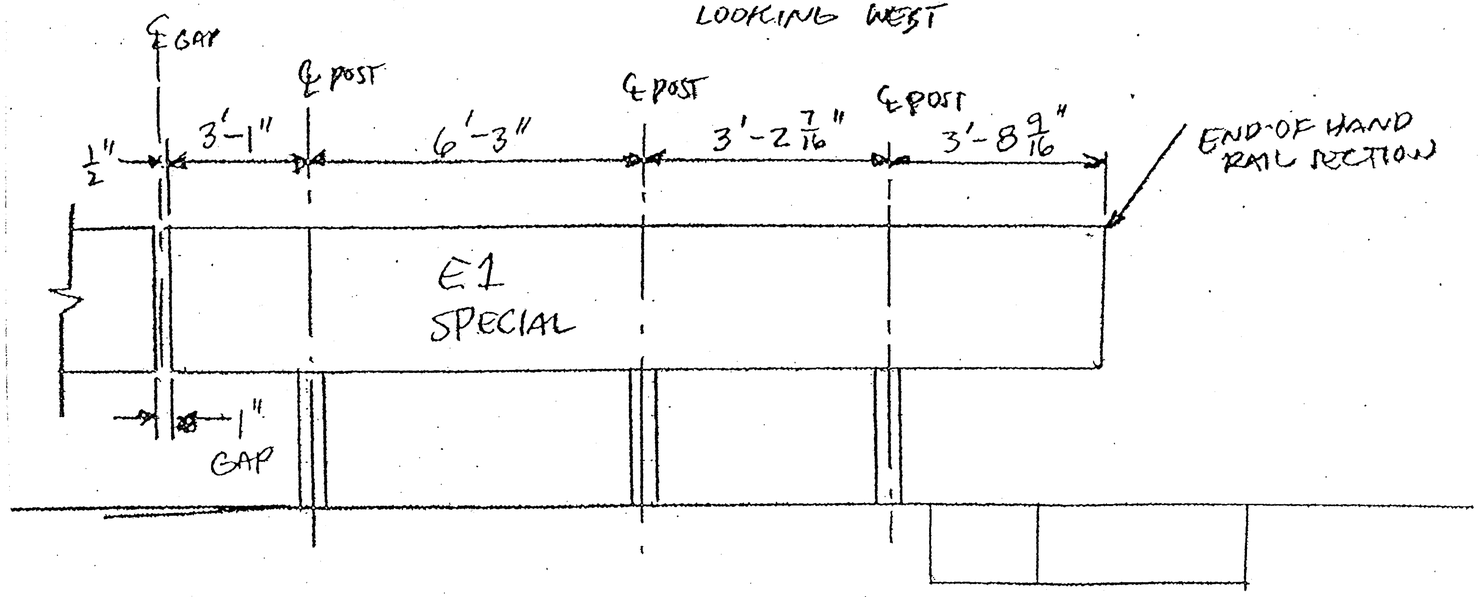

E1 SPECIAL @ PANEL B1

LOOKING WEST

FOR "AS CONSTRUCTED PLANS" ONLY

FILE NAME	C:\AAWork\kelso\Svensen's Curve\L3425WASTESITE.dgn									PLOT11
TIME	02:37:18 PM				REGION NO. 10	STATE WASH	FED.AID PROJ.NO.		Washington State Department of Transportation	SR 433 LEWIS AND CLARK BRIDE DECK REPLACEMENT	ML15A
DATE	08/17/2005										
PLOTTED BY	spahnk				JOB NUMBER						SHEET 225A OF 258 SHEETS
DESIGNED BY											
ENTERED BY											
CHECKED BY					CONTRACT NO. 6444		LOCATION NO.				
PROJ. ENGR.											
REGIONAL ADM.		REVISION	DATE	BY				P.E. STAMP BOX DATE	P.E. STAMP BOX DATE	HANDRAIL DETAILS	

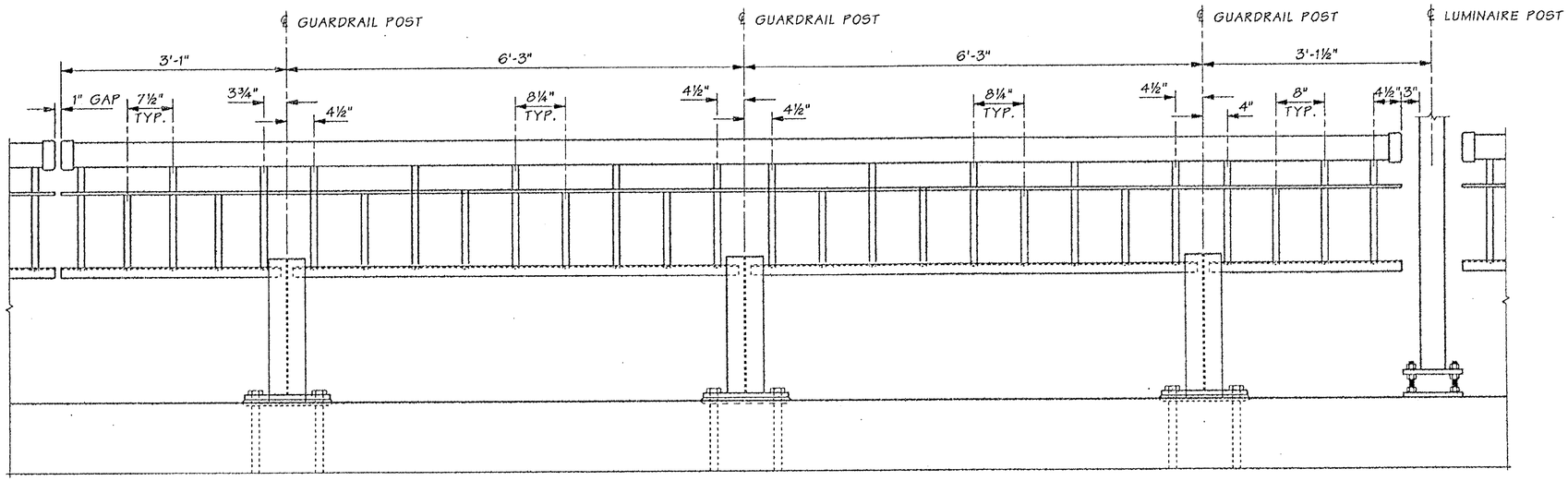

HANDRAIL SECTION H SPACING

#	A	B	C
H1	2'-5⅞"	4"	7¾"
H2	~~2'-1 13/16"~~	~~3⅜"~~	~~6¾"~~
	2'-5"	3 3/4	7 1/2

1

ELEVATION -- HANDRAIL SECTION G

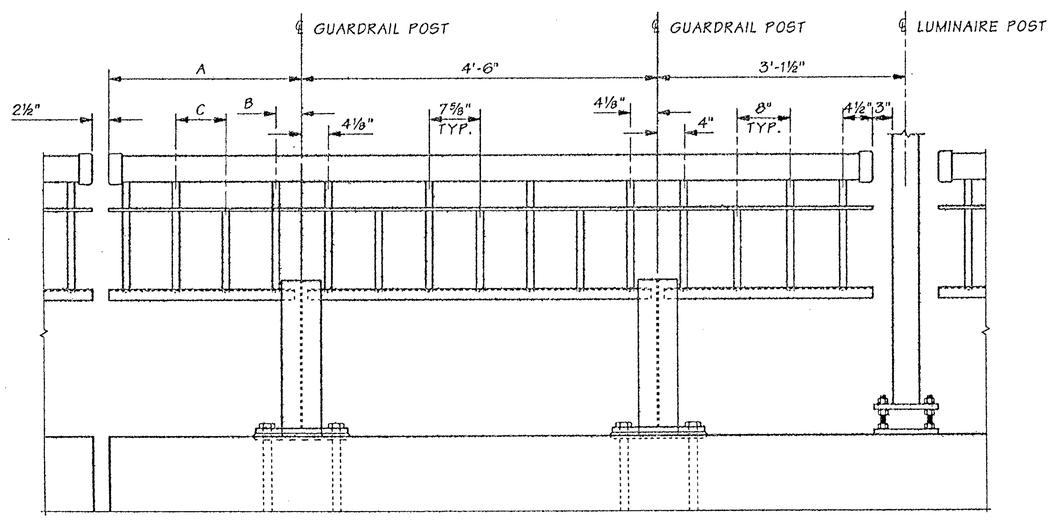

1

ELEVATION -- HANDRAIL SECTION H1 THROUGH H2

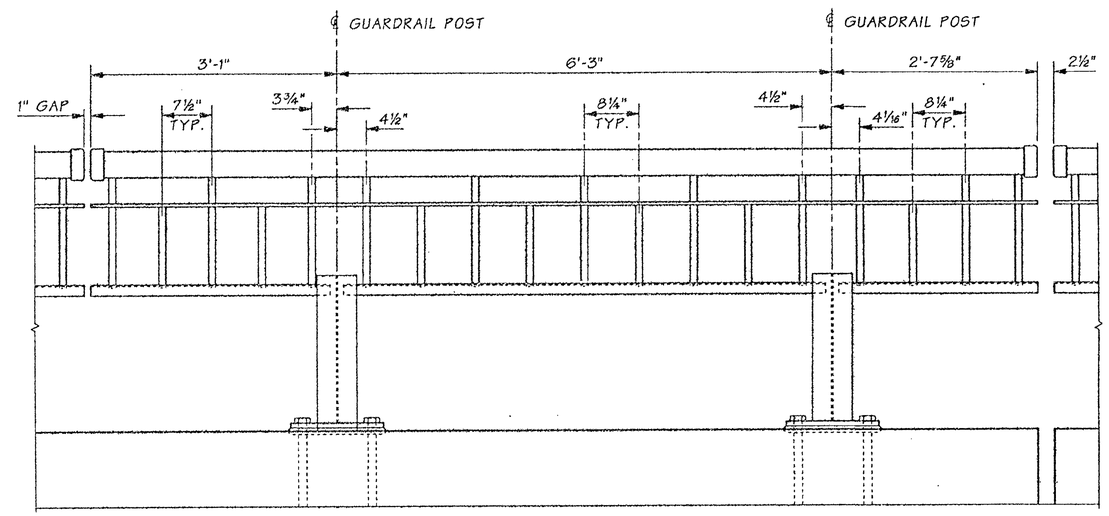

ELEVATION -- HANDRAIL SECTION I

FOR "AS CONSTRUCTED PLANS" ONLY

NOTE: THRIE BEAM NOT SHOWN FOR CLARITY

Bridge Design Engr.	Kapur, J		M:\Y-Team\Lewis_Clark Rehab\Miscellaneous\window files\HANDRAIL-G-H-I.WND								
Supervisor	Kirker, KN										
Designed By	Schultz, E	08/02									
Checked By	Talukdar, M	08/02									
Detailed By	Evans, P	08/02									
Bridge Projects Engr.											
Prelim. Plan By			04/03	1 REMOVED RAIL SEC. H3	ES						
Architect/Specialist			DATE	REVISION	BY	APP'D					

REGION NO.	STATE	FED. AID PROJ. NO.	SHEET NO.	TOTAL SHEETS
10	WASH.	ACBH - 0433(007)		
JOB NUMBER 02x310				

KARL N. KIRKER, STATE OF WASHINGTON, 16396, REGISTERED PROFESSIONAL ENGINEER, 9/13/02, EXPIRES 11/3/03

BRIDGE AND STRUCTURES OFFICE

MANDRA TALUKDAR, STATE OF WASHINGTON, 27826, REGISTERED PROFESSIONAL ENGINEER, 9/13/02, EXPIRES 6/1/04

Washington State Department of Transportation

SR 433
LEWIS AND CLARK BRIDGE
DECK REPLACEMENT

HANDRAIL DETAILS -- SECTIONS G,H & I

BRIDGE SHEET NO. ML 16

SHEET 226 OF 258 SHEETS

SR 433 JOB NO. 1566 SHEET 16

Tue Sep 17 12:01:03 2002

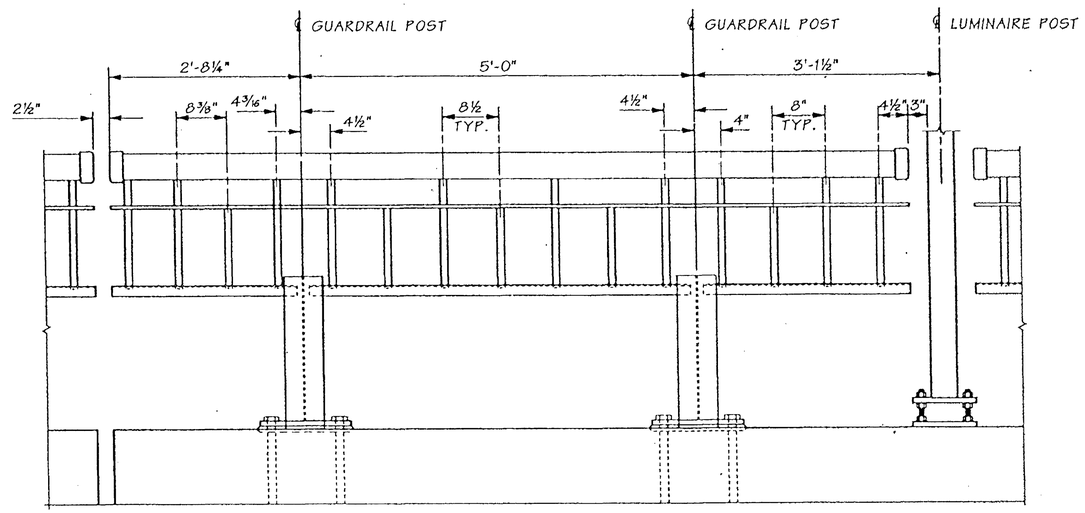

ELEVATION -- HANDRAIL SECTION H3 REVISED

NOTE: THRIE BEAM NOT SHOWN FOR CLARITY

"FOR "AS CONSTRUCTED PLANS" ONLY

NO. 1566 SHEET 16

SR 433

Bridge Design Engr.	Kapur, J		
Supervisor	Kirker, KN		
Designed By	Schultz, E	04/03	
Checked By	Talukdar, M	04/03	
Detailed By	Schultz, E	04/03	
Bridge Projects Engr.			
Prelim. Plan By			
Architect/Specialist			

M:\Y-Team\Lewis_Clark Rehab\Miscellaneous\Window files\HANDRAIL - H3.WND

DATE	REVISION	BY	APP'D

REGION NO.	STATE	FED. AID PROJ. NO.	SHEET NO.	TOTAL SHEETS
10	WASH.	ACBH - 0433(007)		
JOB NUMBER 02x310				

KARL N. KIRKER — STATE OF WASHINGTON — REGISTERED PROFESSIONAL ENGINEER — EXPIRES 11/3/03

BRIDGE AND STRUCTURES OFFICE

MADHUDRA TALUKDAR — STATE OF WASHINGTON — REGISTERED PROFESSIONAL ENGINEER — EXPIRES 6/1/04

Washington State Department of Transportation

SR 433
LEWIS AND CLARK BRIDGE
DECK REPLACEMENT

HANDRAIL DETAILS -- H3 REVISED

BRIDGE SHEET NO. ML16A

SHEET 226A OF 258 SHEETS

Mon Apr 28 15:16:34 2003

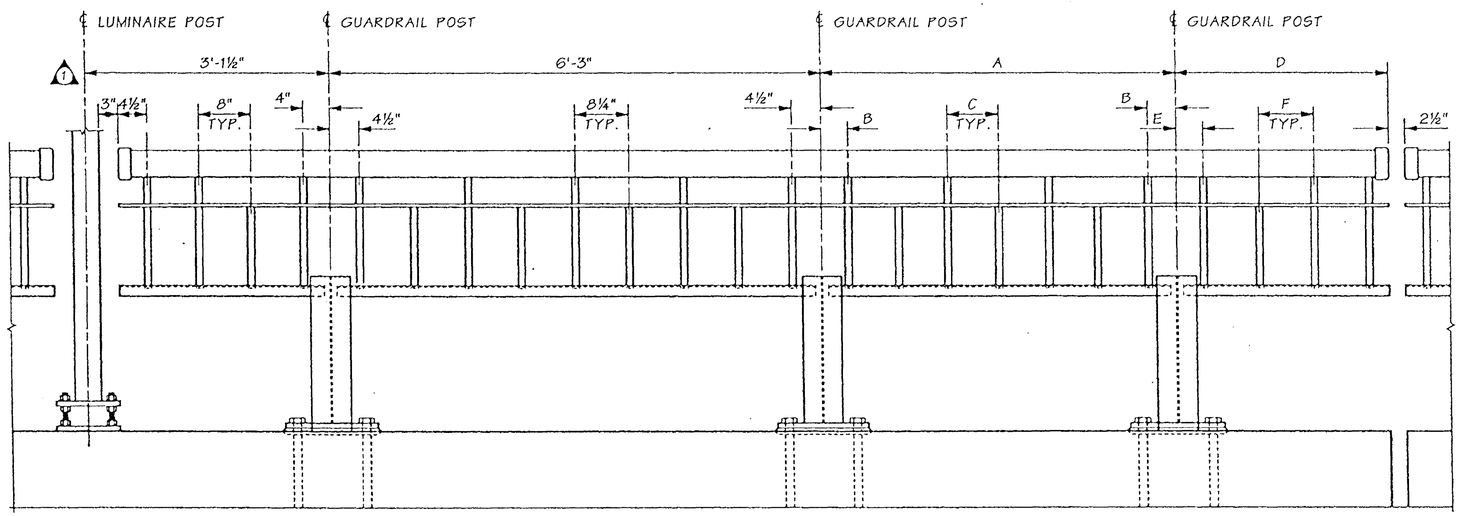

ELEVATION -- HANDRAIL SECTION J1 AND J2

HANDRAIL SECTION J SPACING

#	A	B	C	D	E	F
J1	4'-6"	4⅛"	7⅝"	2'-5 5/16"	4"	7¾"
J2	5'-0"	4½"	8½"	2'-8¼"	4 3/16"	8⅜"

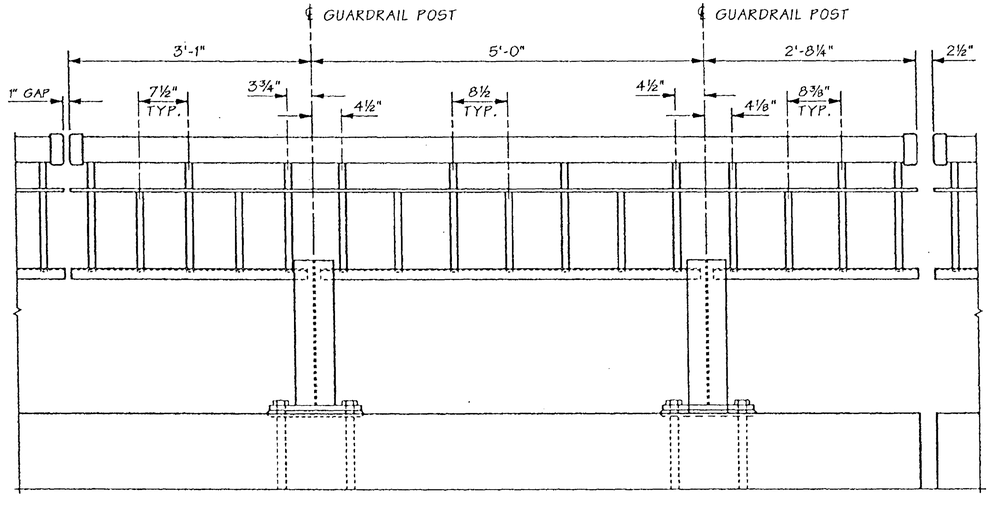

ELEVATION -- HANDRAIL SECTION K

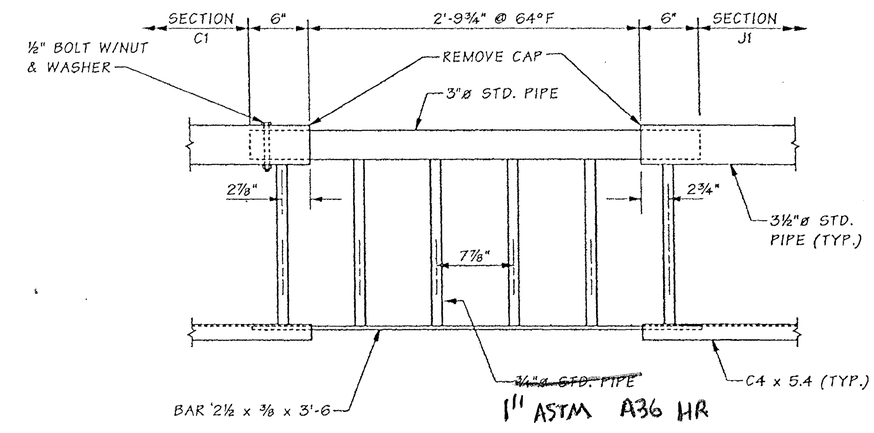

EXPANSION RAIL @ TOWER CD

2 LOCATIONS

FOR "AS CONSTRUCTED PLANS" ONLY

NOTE: THRIE BEAM NOT SHOWN FOR CLARITY

NO. 1566 SHEET 17

SR 43

Bridge Design Engr.	Kapur, J	
Supervisor	Kirker, KN	
Designed By	Schultz, E	08/02
Checked By	Talukdar, M	08/02
Detailed By	Evans, P	08/02
Bridge Projects Engr.		
Prelim. Plan By		
Architect/Specialist		

M:\Y-Team\Lewis_Clark Rehab\Miscellaneous\window files\HANDRAIL-J-K.WND

DATE	REVISION	BY	APP'D
04/03	1 REVISE PANEL J2 DIMENSIONS	ES	

REGION NO.	STATE	FED. AID PROJ. NO.	SHEET NO.	TOTAL SHEETS
10	WASH.	ACBH - 0433(007)		
JOB NUMBER 02x310				

6444

KARL N. KIRKER — STATE OF WASHINGTON — REGISTERED PROFESSIONAL ENGINEER — EXPIRES 11/3/03

BRIDGE AND STRUCTURES OFFICE

MINDAHRA TALUKDAR — STATE OF WASHINGTON — REGISTERED PROFESSIONAL ENGINEER — EXPIRES 6/1/04

Washington State Department of Transportation

SR 433
LEWIS AND CLARK BRIDGE
DECK REPLACEMENT

HANDRAIL DETAILS -- SECTIONS J & K

BRIDGE SHEET NO. ML17

SHEET 227 OF 258 SHEETS

Mon Apr 28 15:40:10 2003

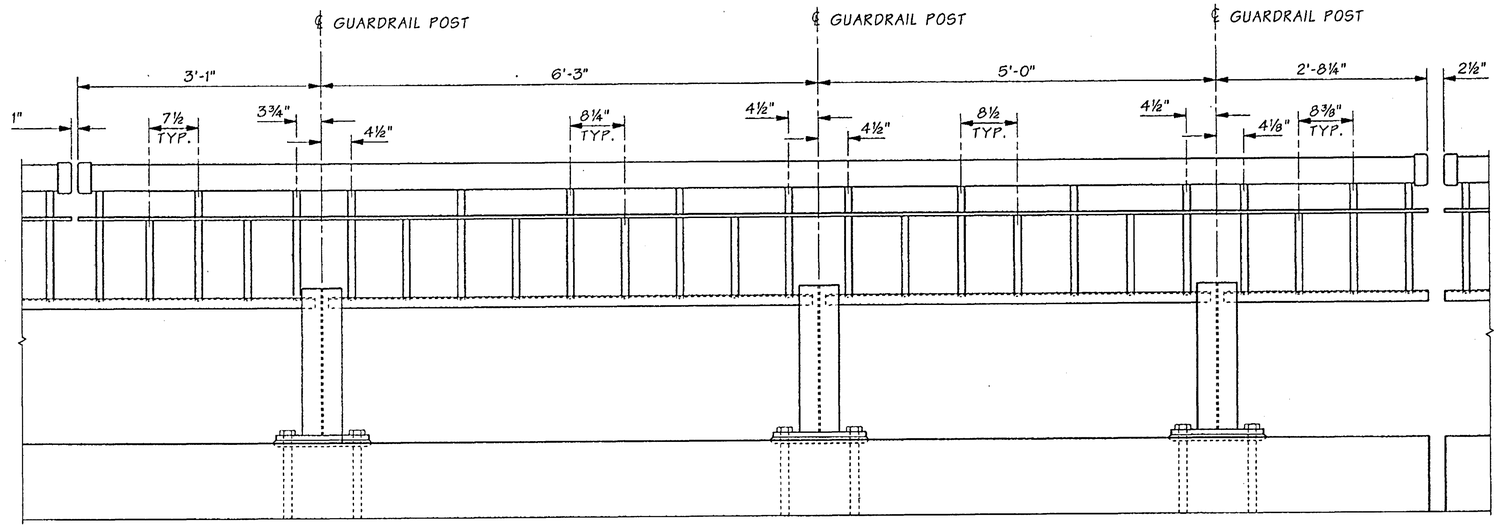

ELEVATION -- HANDRAIL SECTION L

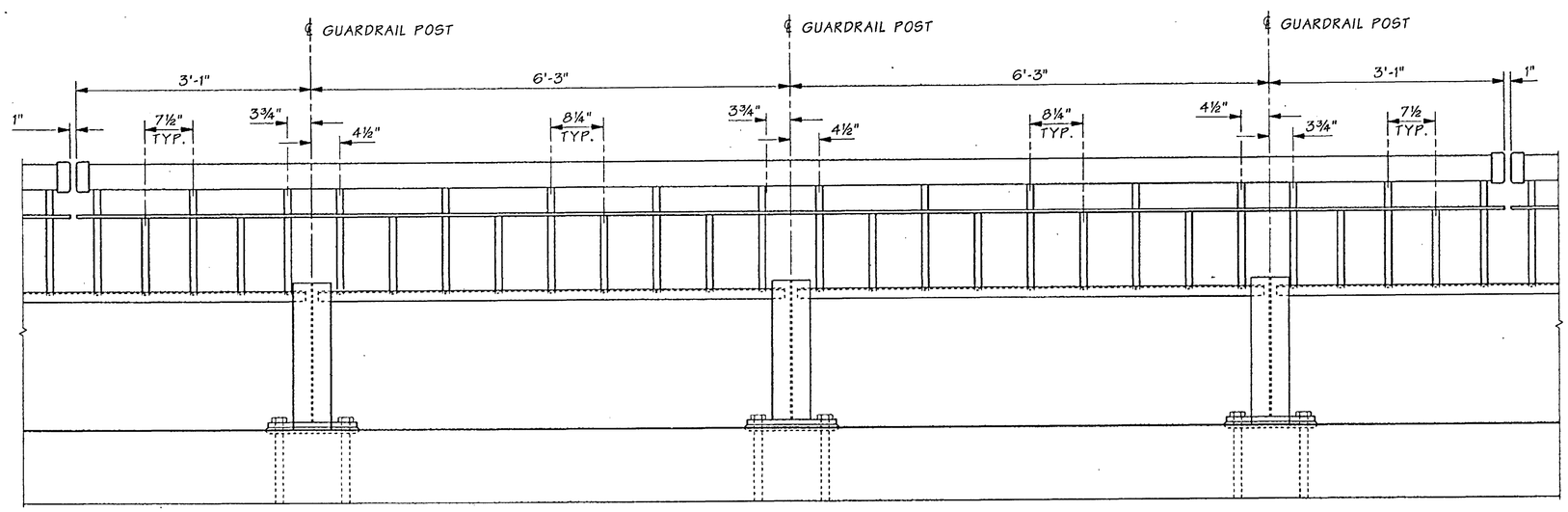

ELEVATION -- HANDRAIL SECTION M

FOR "AS CONSTRUCTED PLANS" ONLY

NOTE: THRIE BEAM NOT SHOWN FOR CLARITY

SR 433 JOB NO. 1566 SHEET 18

Bridge Design Engr.	Kapur, J		M:\Y-Team\Lewis_Clark Rehab\Miscellaneous\Window files\HANDRAIL-L-M.WND								
Supervisor	Kirker, KN										
Designed By	Schultz, E	08/02									
Checked By	Talukdar, M	08/02									
Detailed By	Evans, P	08/02									
Bridge Projects Engr.											
Prelim. Plan By											
Architect/Specialist			DATE	REVISION	BY	APP'D					

REGION NO.	STATE	FED. AID PROJ. NO.	SHEET NO.	TOTAL SHEETS
10	WASH.	ACBH - 0433(007)		
JOB NUMBER 02x310				
6444				

KARL N. KIRKER, STATE OF WASHINGTON, 18296, REGISTERED PROFESSIONAL ENGINEER, 9/18/02, EXPIRES 11/3/03

BRIDGE AND STRUCTURES OFFICE

MUNDIRA TALUKDAR, STATE OF WASHINGTON, 27626, REGISTERED PROFESSIONAL ENGINEER, 9/18/02, EXPIRES 6/1/04

Washington State Department of Transportation

SR 433
LEWIS AND CLARK BRIDGE
DECK REPLACEMENT

HANDRAIL DETAILS -- SECTIONS L & M

BRIDGE SHEET NO. ML 18

SHEET 228 OF 258 SHEETS

Tue Sep 17 12:01:06 2002

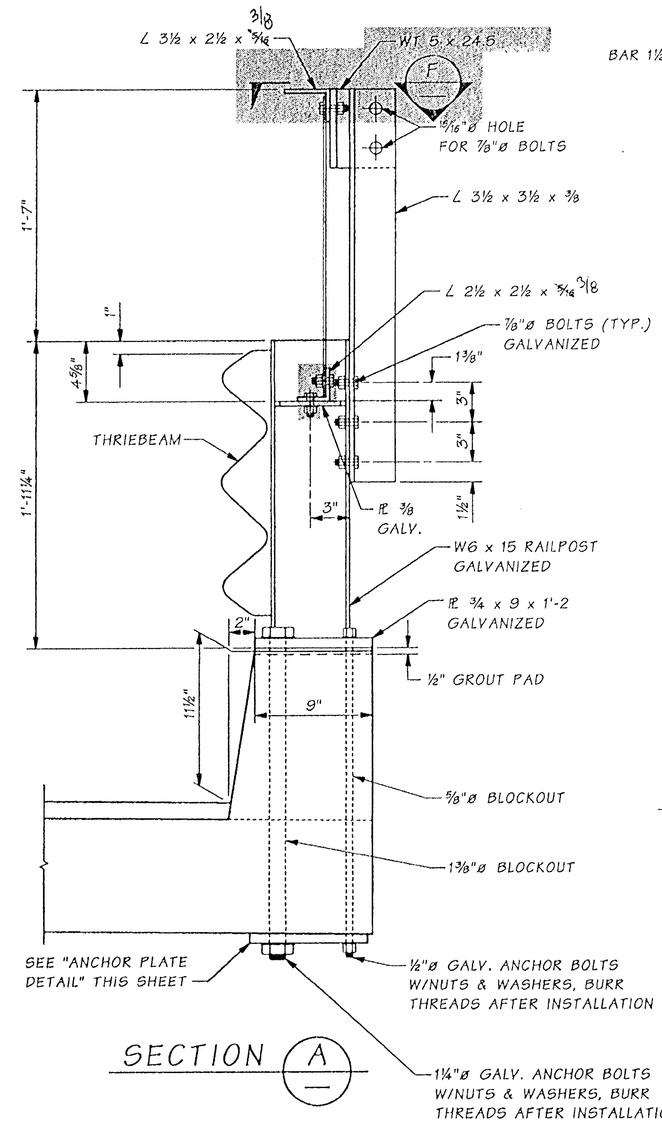

SECTION A

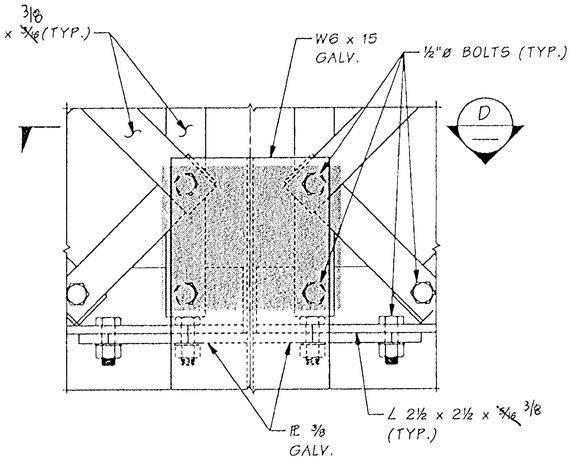

DETAIL C

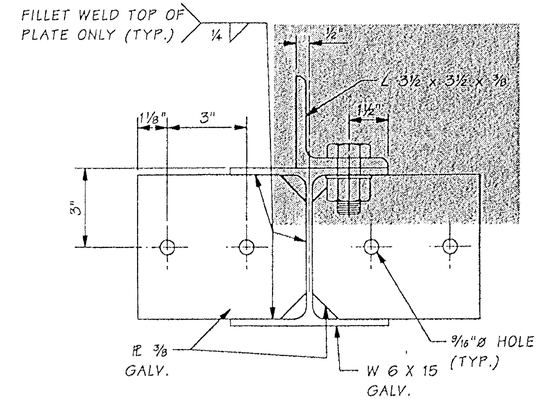

SECTION D

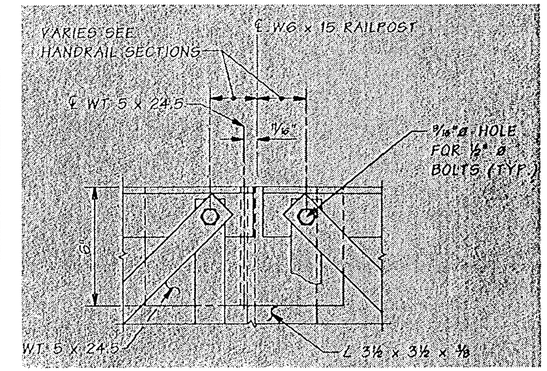

DETAIL E

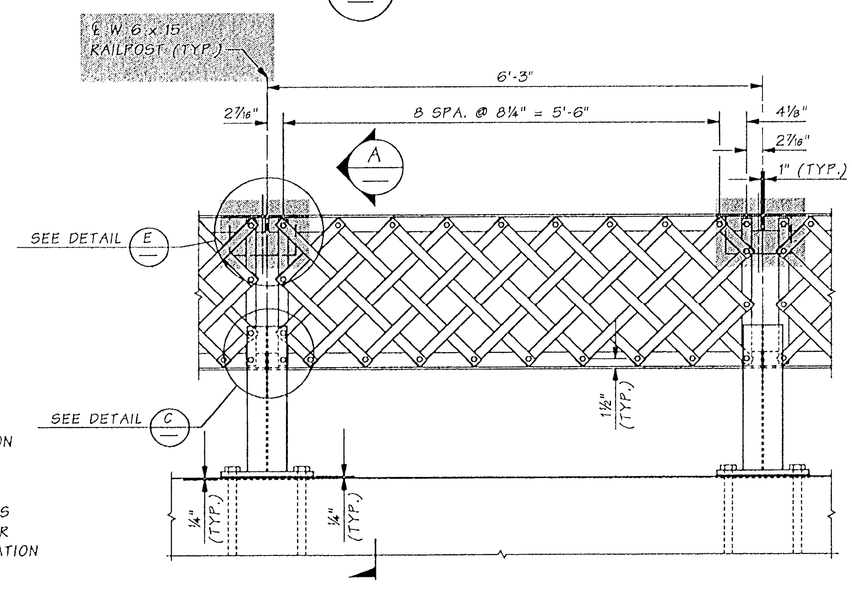

ELEVATION -- HANDRAIL SECTION N

THRIE BEAM NOT SHOWN FOR CLARITY

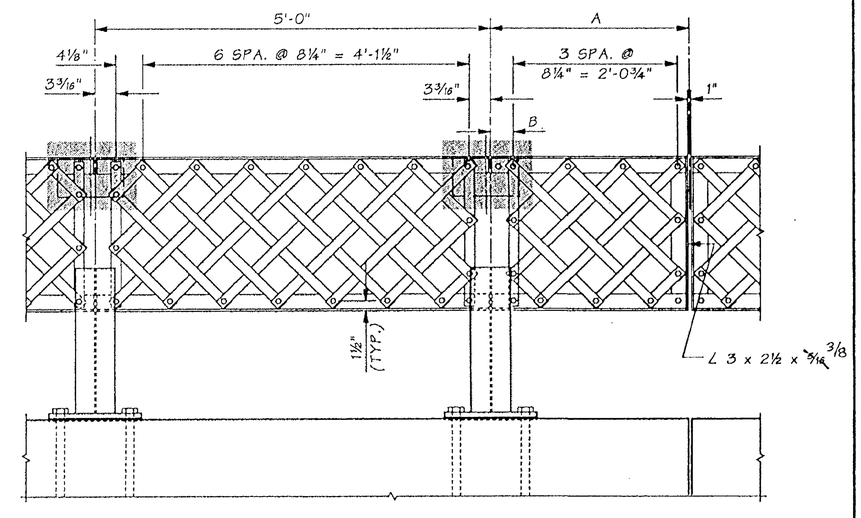

ELEVATION -- HANDRAIL SECTION O

THRIE BEAM NOT SHOWN FOR CLARITY

HANDRAIL SECTION O SPACING

#	A	B
01	2'-6"	3½"
02	2'-6¾"	3⅞"
03	2'-4 11/16"	1 15/16"
04	2'-4⅝"	1⅞"

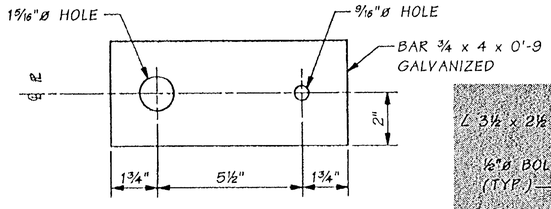

ANCHOR PLATE DETAIL

2 REQ. AT EA. POST LOCATION

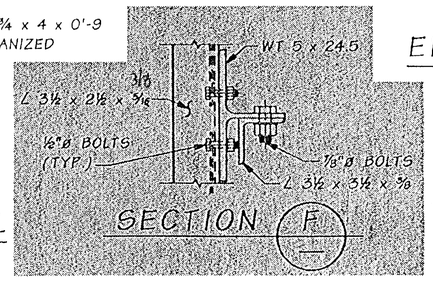

SECTION F

FOR "AS CONSTRUCTED" PLANS ONLY

Bridge Design Engr.	Kapur, J		M:\Y-Team\Lewis_Clark Rehab\Miscellaneous\window files\HANDRAIL-N-O.WND								
Supervisor	Kirker, KN										
Designed By	Schultz, E	08/02									
Checked By	Talukdar, M	08/02									
Detailed By	Evans, P	08/02	10/02	MODIFIED SECTION D & DETAIL E	ES						
Bridge Projects Engr.											
Prelim. Plan By			10/02	ADDED SECTION F	ES						
Architect/Specialist			DATE	REVISION	BY	APP'D					

Wed Oct 30 15:35:32 2002

REGION NO.	STATE	FED. AID PROJ. NO.	SHEET NO.	TOTAL SHEETS
10	WASH.	ACBH - 0433(007)		
JOB NUMBER 02x310				

KARL N. KIRKER — STATE OF WASHINGTON — PROFESSIONAL ENGINEER — EXPIRES 11/3/03

BRIDGE AND STRUCTURES OFFICE

MONIR H. TALUKDAR — STATE OF WASHINGTON — PROFESSIONAL ENGINEER — EXPIRES 6/1/04

Washington State Department of Transportation

SR 433
LEWIS AND CLARK BRIDGE
DECK REPLACEMENT

HANDRAIL DETAILS -- SECTIONS N & O

BRIDGE SHEET NO. ML19

SHEET 229 OF 258 SHEETS

SR 433 NO. 1566 SHEET 19

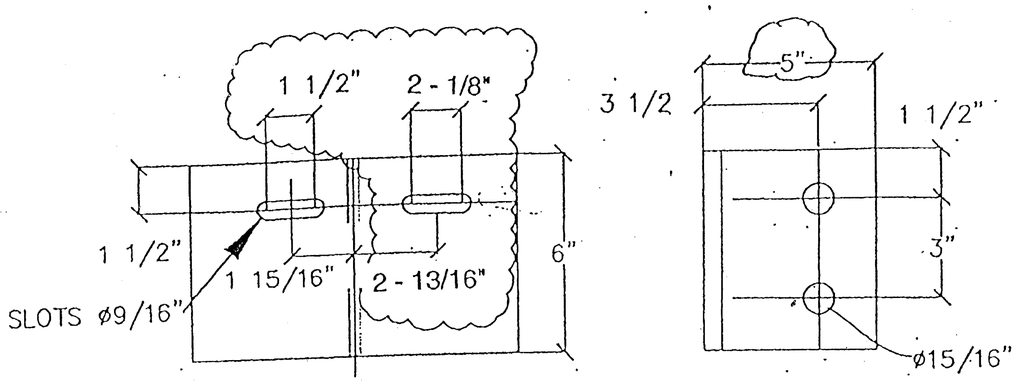

WT 5 X 24.5
102 as Shown
102 Opposite
For the left ends of panels
O, S, T, V, & W

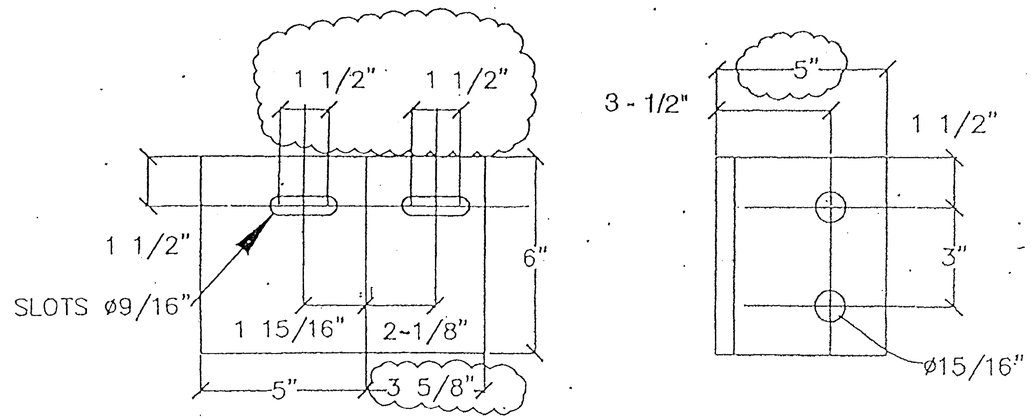

WT 5 X 24.5
109 AS SHOWN
110 OPP HAND
FOR RAILSECTIONS 01, 02, R, & T2

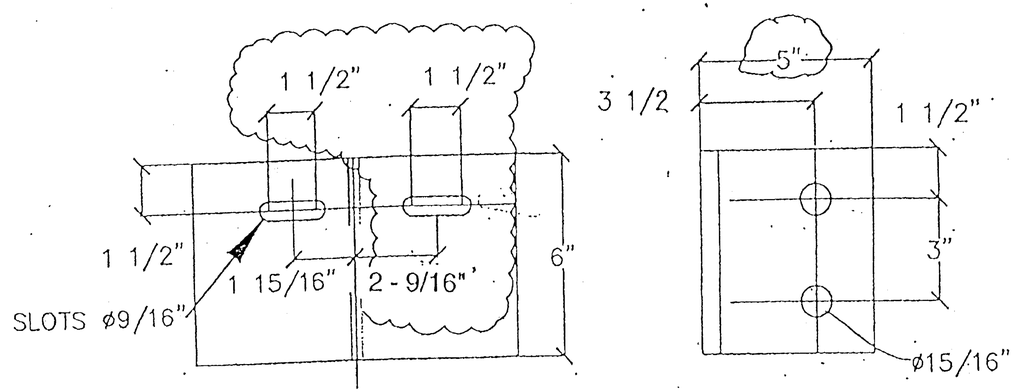

WT 5 X 24.5
448 as Shown
447 Opposite

Applies to all Handrail Sections where
WT 5 X 24.5 Structural Tees are shown

FOR "AS CONSTRUCTED PLANS" ONLY

FILE NAME	C:\AAWork\kelso\Svensen's Curve\L3425WASTESITE.dgn				REGION NO. 10	STATE WASH	FED.AID PROJ.NO.	Washington State Department of Transportation	SR 433 LEWIS AND CLARK BRIDE DECK REPLACEMENT	PLOT11
TIME	02:37:18 PM				JOB NUMBER					ML19A
DATE	08/17/2005									SHEET 229A OF 258 SHEETS
PLOTTED BY	spahnk									
DESIGNED BY										
ENTERED BY										
CHECKED BY					CONTRACT NO. 6444		LOCATION NO.			
PROJ. ENGR.										
REGIONAL ADM.		REVISION	DATE	BY					HANDRAIL DETAILS - STRUCTURAL TEES	

P.E. STAMP BOX DATE

P.E. STAMP BOX DATE

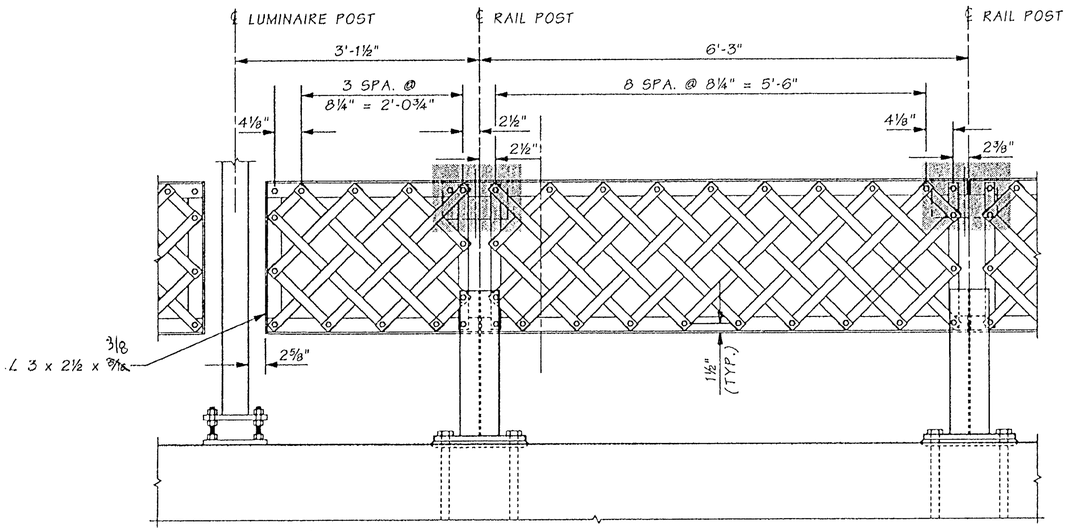

ELEVATION -- HANDRAIL SECTION P

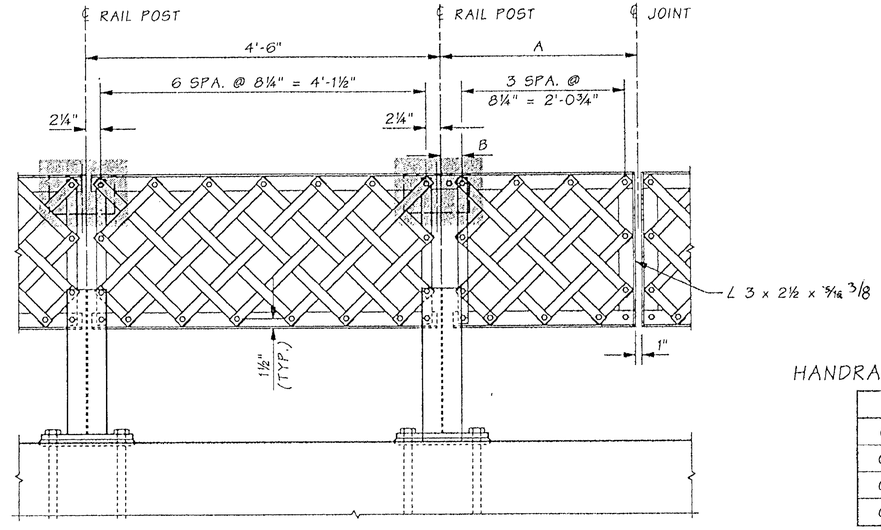

ELEVATION -- HANDRAIL SECTION Q

HANDRAIL SECTION Q SPACING

#	A	B
Q1	2'-4 15/16"	2 3/16"
Q2	2'-4½"	1¾"
Q3	2'-7⅝"	4⅞"
Q4	2'-6 1/16"	3 5/16"

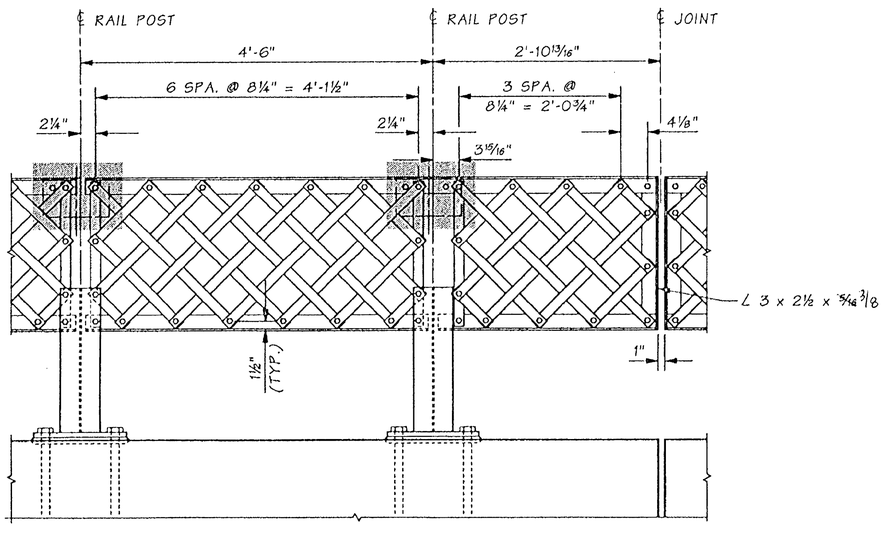

ELEVATION -- HANDRAIL SECTION R

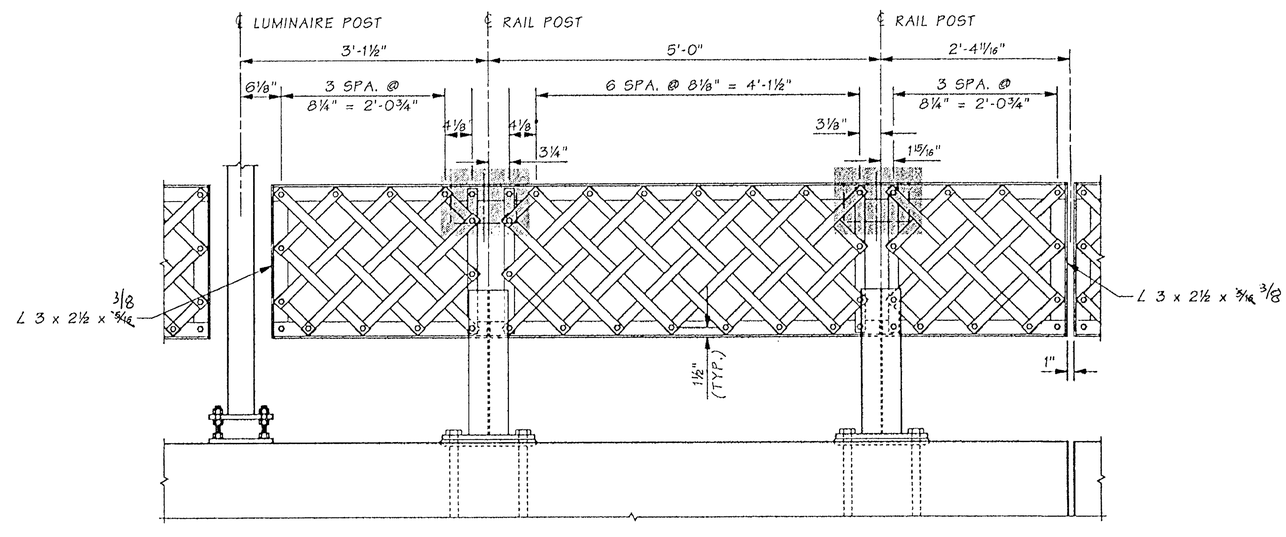

ELEVATION -- HANDRAIL SECTION S

FOR "AS CONSTRUCTED PLANS" ONLY

NOTE: THRIE BEAM NOT SHOWN FOR CLARITY

Bridge Design Engr.	Kapur, J		M:\Y-Team\Lewis_Clark Rehab\Miscellaneous\window files\HANDRAIL-P-Q-R-S.WND								
Supervisor	Kirker, KN										
Designed By	Schultz, E	08/02									
Checked By	Talukdar, M	08/02									
Detailed By	Evans, P	08/02									
Bridge Projects Engr.											
Prelim. Plan By			10/02	MODIFIED RAIL CONNECTION	ES						
Architect/Specialist			DATE	REVISION	BY	APP'D					

REGION NO.	STATE	FED. AID PROJ. NO.	SHEET NO.	TOTAL SHEETS
10	WASH.	ACBH - 0433(007)		
JOB NUMBER 02x310				

BRIDGE AND STRUCTURES OFFICE

KARL N. KIRKER — STATE OF WASHINGTON — 10/3/02 — PROFESSIONAL ENGINEER — EXPIRES 11/3/03

MENDRA TALUKDAR — STATE OF WASHINGTON — 10/3/02 — PROFESSIONAL ENGINEER — EXPIRES 6/1/04

Washington State Department of Transportation

SR 433
LEWIS AND CLARK BRIDGE
DECK REPLACEMENT

HANDRAIL DETAILS -- SEGMENTS P,Q,R & S

BRIDGE SHEET NO. ML20

SHEET 230 OF 258 SHEETS

SR 433 NO. 1566 SHEET 20

Wed Oct 30 15:49:37 2002

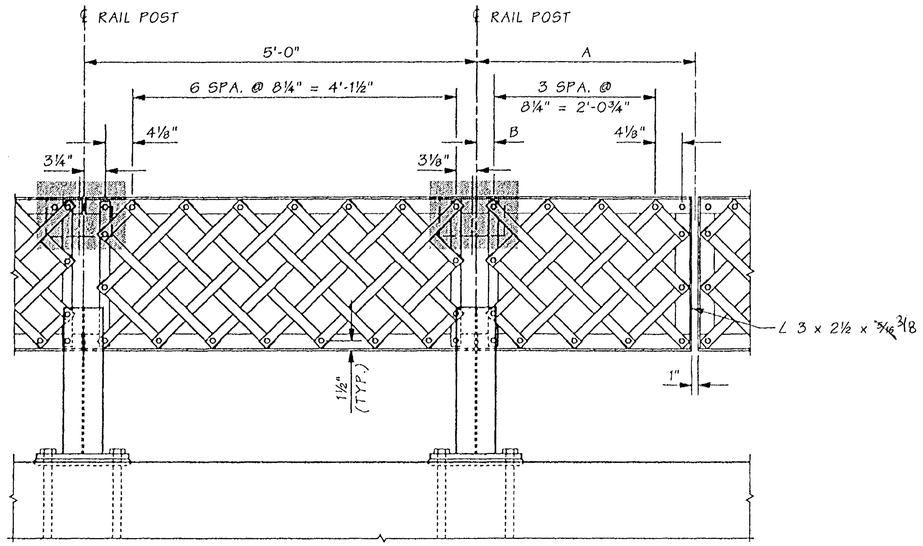

ELEVATION -- HANDRAIL SECTION T

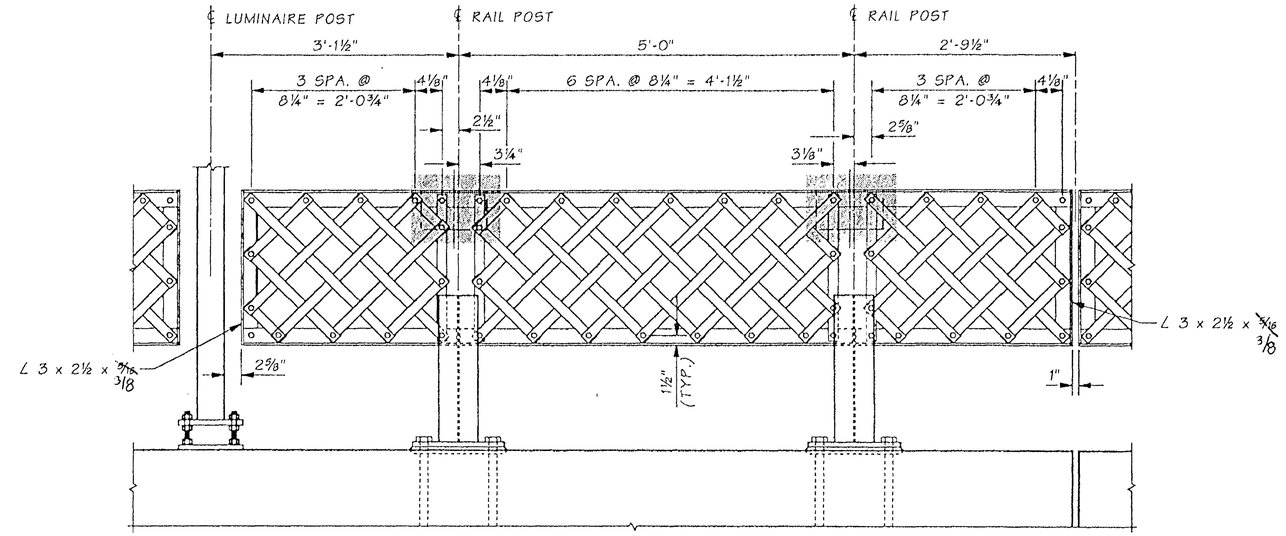

ELEVATION -- HANDRAIL SECTION U

HANDRAIL SECTION T SPACING

#	A	B
T1	2'-9½"	2⅝"
T2	2'-8"	1⅛"

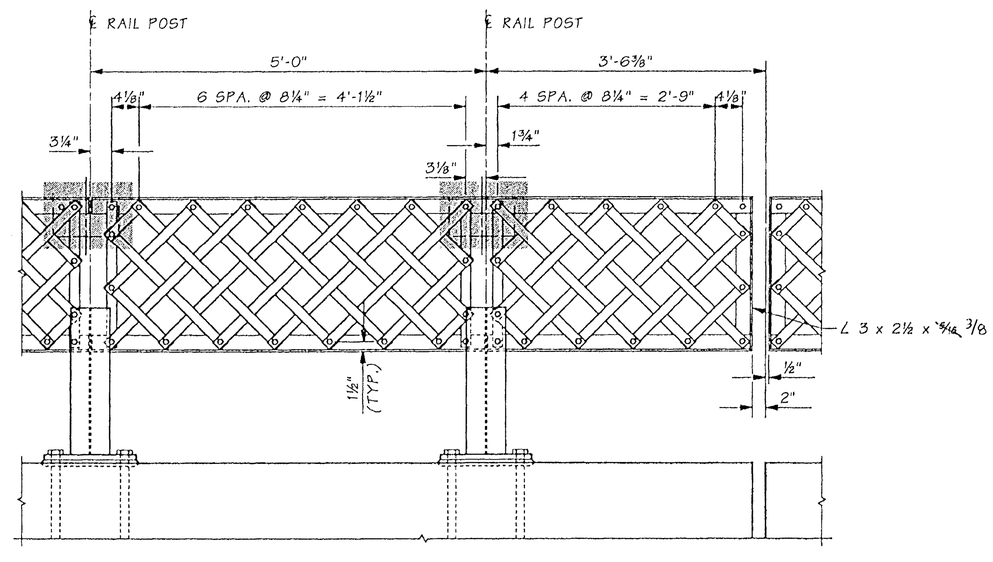

ELEVATION -- HANDRAIL SECTION W

FOR "AS CONSTRUCTED PLANS" ONLY

NOTE: THRIE BEAM NOT SHOWN FOR CLARITY

SR 433 JO. 1566 SHEET 21

Bridge Design Engr.	Kapur, J		M:\Y-Team\Lewis_Clark Rehab\Miscellaneous\window files\HANDRAIL-T-U-V-W.WND								
Supervisor	Kirker, KN										
Designed By	Schultz, E	08/02									
Checked By	Talukdar, M	08/02									
Detailed By	Evans, P	08/02									
Bridge Projects Engr.											
Prelim. Plan By			10/02	MODIFIED RAIL CONNECTION	ES						
Architect/Specialist			DATE	REVISION	BY	APP'D					

REGION NO.	STATE	FED. AID PROJ. NO.	SHEET NO.	TOTAL SHEETS
10	WASH.	ACBH - 0433(007)		
JOB NUMBER 02x310				
6444				

KARL N. KIRKER, STATE OF WASHINGTON, REGISTERED PROFESSIONAL ENGINEER — EXPIRES 11/3/03

BRIDGE AND STRUCTURES OFFICE

MUNIAMMA TALUKDAR, STATE OF WASHINGTON, REGISTERED PROFESSIONAL ENGINEER — EXPIRES 6/1/04

Washington State Department of Transportation

SR 433
LEWIS AND CLARK BRIDGE
DECK REPLACEMENT

HANDRAIL DETAILS -- SEGMENTS T,U,V & W

BRIDGE SHEET NO. ML21

SHEET 231 OF 258 SHEETS

Wed Oct 30 15:49:39 2002

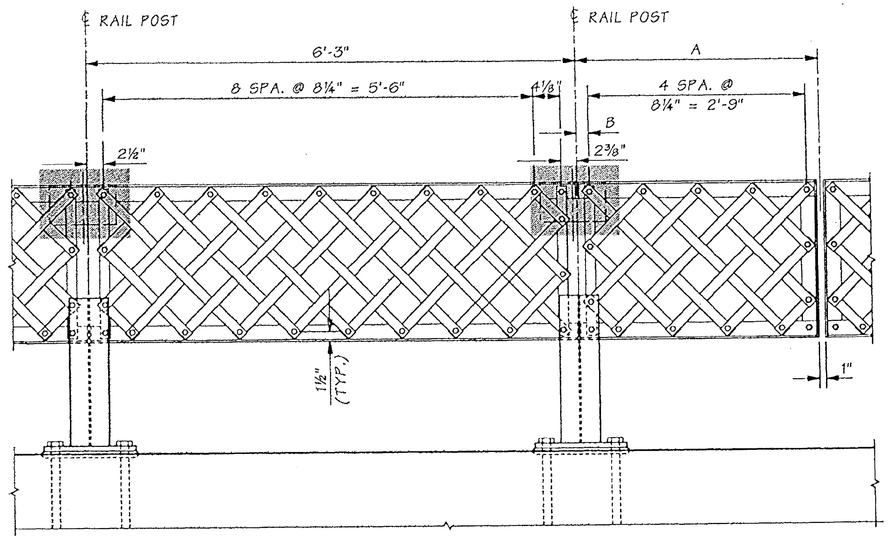

ELEVATION -- HANDRAIL SECTION X1 AND X2

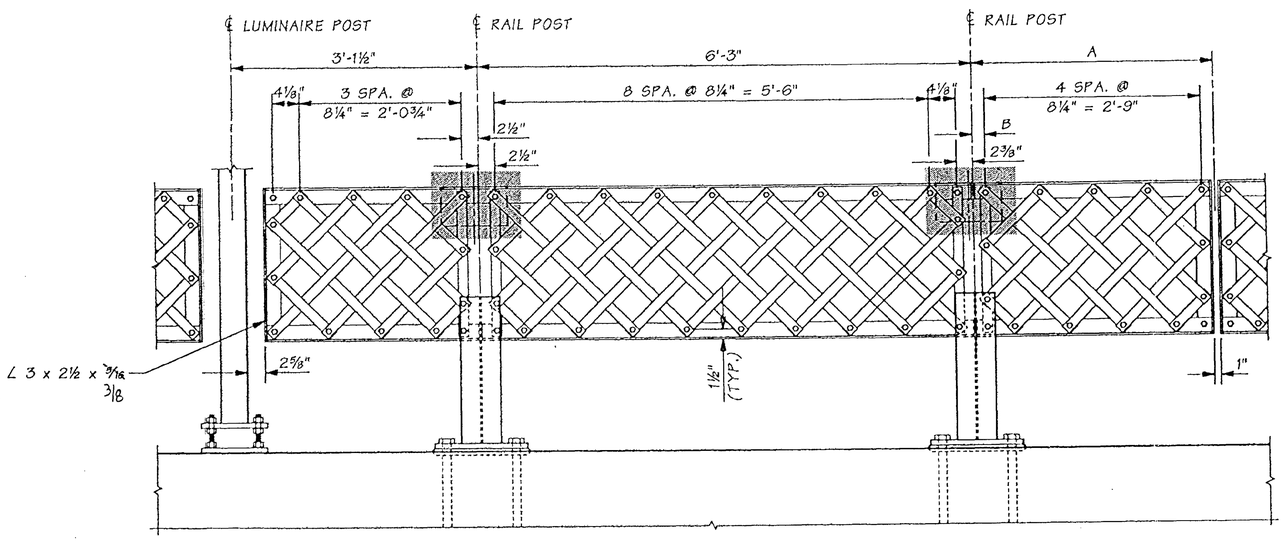

ELEVATION -- HANDRAIL SECTION Y1 AND Y2

HANDRAIL SECTION X SPACING

#	A	B
X1	3'-2"	3"
X2	3'-4½"	5½"
X3	3'-1¾"	2¾"
X4	3'-0 13/16"	1 13/16"

HANDRAIL SECTION Y SPACING

#	A	B
Y1	3'-2"	3"
Y2	3'-1¾"	2¾"

FOR "AS CONSTRUCTED PLANS" ONLY

1 EXPANSION RAIL DETAILS ON THIS SHEET ARE DELETED AND REPLACED WITH EXPANSION RAIL DETAILS ON BRIDGE SHEET ML22A.

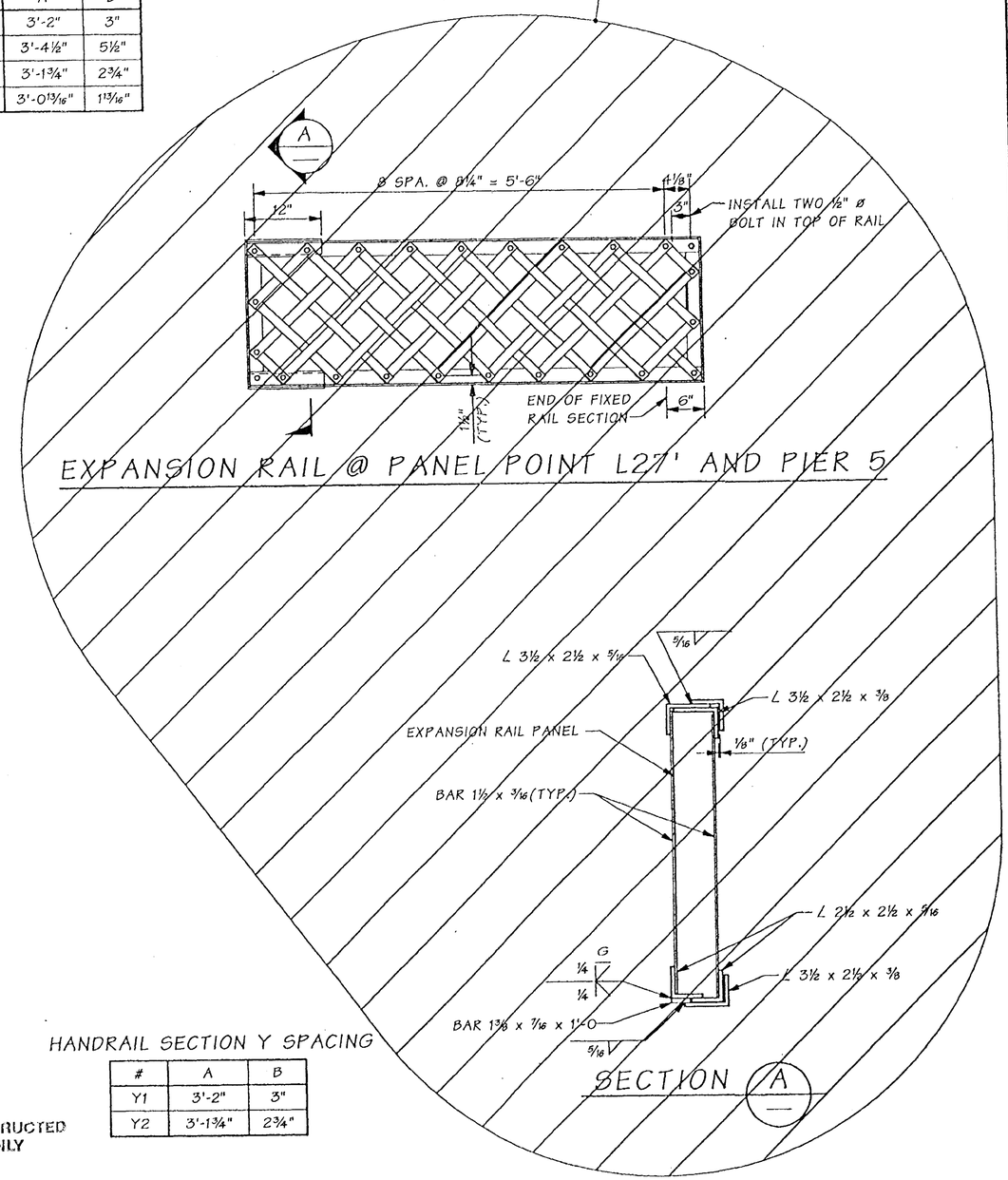

EXPANSION RAIL @ PANEL POINT L27' AND PIER 5

Bridge Design Engr.	Kapur, J		M:\Y-Team\Lewis_Clark Rehab\Miscellaneous\window files\HANDRAIL-X-Y.WND							
Supervisor	Kirker, KN									
Designed By	Schultz, E	08/02								
Checked By	Talukdar, M	08/02								
Detailed By	Evans, P	08/02	3/03	1 DELETED EXPANSION RAIL DETAILS	ES					
Bridge Projects Engr.										
Prelim. Plan By			10/02	MODIFIED RAIL CONNECTION	ES					
Architect/Specialist			DATE	REVISION	BY	APP'D				

Tue Mar 18 07:58:05 2003

REGION NO.	STATE	FED. AID PROJ. NO.	SHEET NO.	TOTAL SHEETS
10	WASH.	ACBH - 0433(007)		
JOB NUMBER 02x310				

KARL N. KIRKER — STATE OF WASHINGTON — REGISTERED PROFESSIONAL ENGINEER — EXPIRES 11/3/03

BRIDGE AND STRUCTURES OFFICE

MANZUR TALUKDAR — STATE OF WASHINGTON — REGISTERED PROFESSIONAL ENGINEER — EXPIRES 6/1/04

Washington State Department of Transportation

SR 433
LEWIS AND CLARK BRIDGE
DECK REPLACEMENT

HANDRAIL DETAILS -- SEGMENTS X & Y

BRIDGE SHEET NO. ML22

SHEET 232 OF 258 SHEETS

SR 433 JOB NO. 1566 SHEET 22

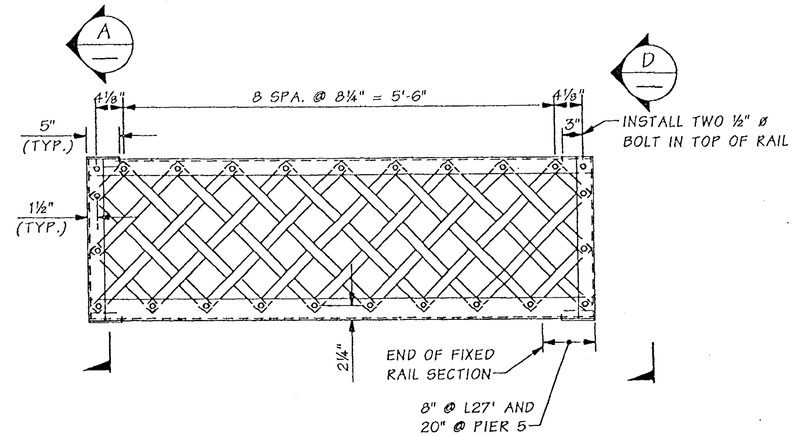

EXPANSION RAIL @ PANEL POINT L27' AND PIER 5

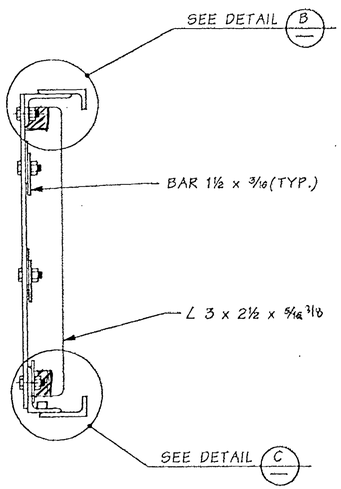

SECTION A

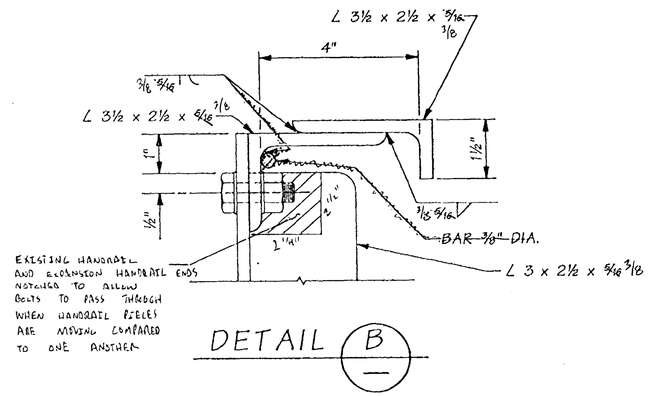

DETAIL B

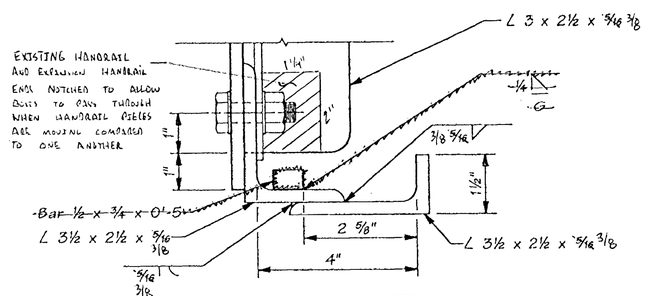

DETAIL C

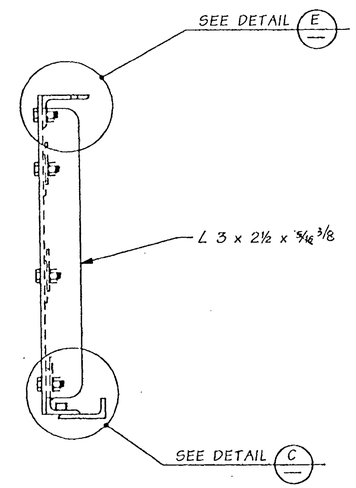

VIEW D

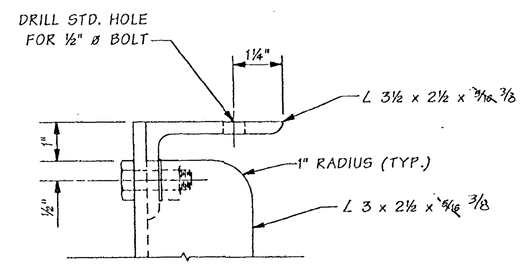

DETAIL E

FOR "AS CONSTRUCTED" PLANS ONLY

Bridge Design Engr.	Kapur, J	M:\Y-Team\Lewis_Clark Rehab\Miscellaneous\window files\HANDRAIL- EXP.WND							
Supervisor	Kirker, KN				REGION NO.	STATE	FED. AID PROJ. NO.	SHEET NO.	TOTAL SHEETS
Designed By	Schultz, E				10	WASH.			
Checked By	Talukdar, M								
Detailed By	Schultz, E				JOB NUMBER 02x310		ACBH - 0433(007)		
Bridge Projects Engr.									
Prelim. Plan By									
Architect/Specialist		DATE	REVISION	BY	APP'D				

KARL N. KIRKER — STATE OF WASHINGTON — REGISTERED PROFESSIONAL ENGINEER — EXPIRES 11/3/03

BRIDGE AND STRUCTURES OFFICE

MUNIRUDDIN TALUKDAR — STATE OF WASHINGTON — REGISTERED PROFESSIONAL ENGINEER — EXPIRES 6/1/04

Washington State Department of Transportation

SR 433
LEWIS AND CLARK BRIDGE
DECK REPLACEMENT

HANDRAIL DETAILS -- EXPANSION RAIL

BRIDGE SHEET NO. ML22A

SHEET 232A OF 258 SHEETS

SR 433 JOB NO. 1566 SHEET 0

Tue Mar 18 07:57:50 2003

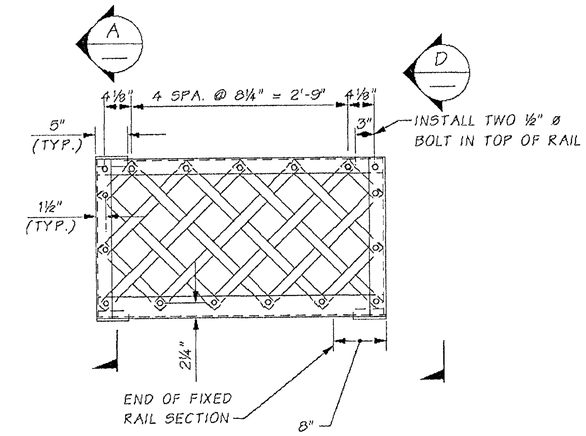

EXPANSION RAIL @ PIER 6

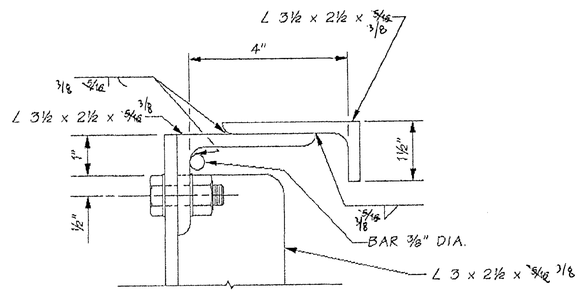

DETAIL B

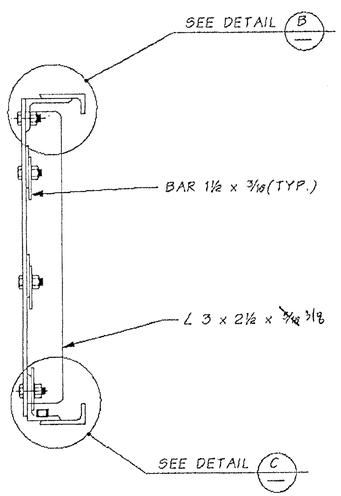

SECTION A

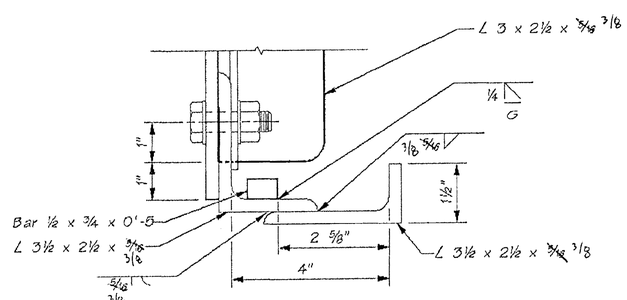

DETAIL C

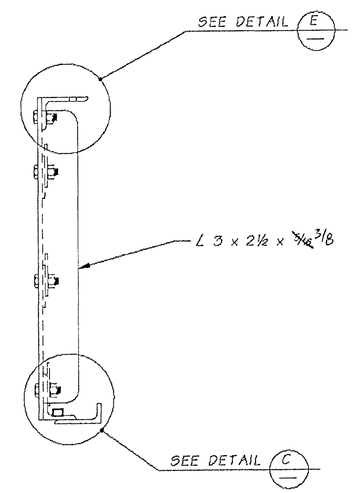

VIEW D

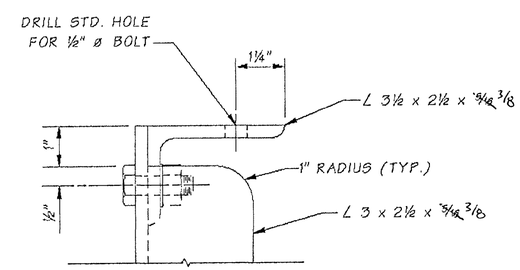

DETAIL E

FOR "AS CONSTRUCTED PLANS" ONLY

Bridge Design Engr.	Kapur, J		M:\Y-Team\Lewis_Clark Rehab\Modifications\Window files\EXP HANDRAIL.WND			REGION NO.	STATE	FED. AID PROJ. NO.	SHEET NO.	TOTAL SHEETS
Supervisor	Kirker, KN					10	WASH.			
Designed By	Schultz, E	04/04								
Checked By						JOB NUMBER				
Detailed By	Schultz, E	04/04								
Bridge Projects Engr.										
Prelim. Plan By										
Architect/Specialist			DATE	REVISION	BY	APP'D	6444			

Tue Apr 27 12:55:50 2004

ERIC HENRY SCHULTZ — STATE OF WASHINGTON — 38915 — REGISTERED PROFESSIONAL ENGINEER — EXPIRES 9/16/04

BRIDGE AND STRUCTURES OFFICE

KARL N. KIRKER — STATE OF WASHINGTON — 18304 — REGISTERED PROFESSIONAL ENGINEER — EXPIRES 11/9/03

Washington State Department of Transportation

SR 433
LEWIS & CLARK BRIDGE
DECK REPLACEMENT

HANDRAIL DETAILS -- EXPANSION RAIL
PIER 6

BRIDGE SHEET NO. ML22B

SHEET 233A OF 258 SHEETS

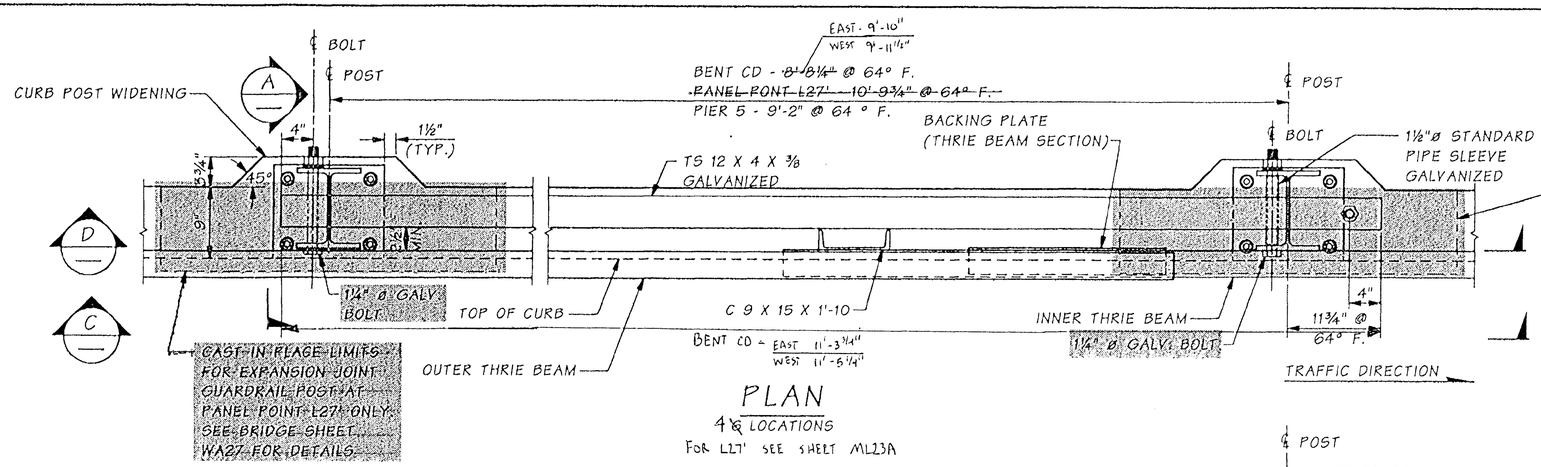

PLAN

4 LOCATIONS

FOR L27' SEE SHEET ML23A

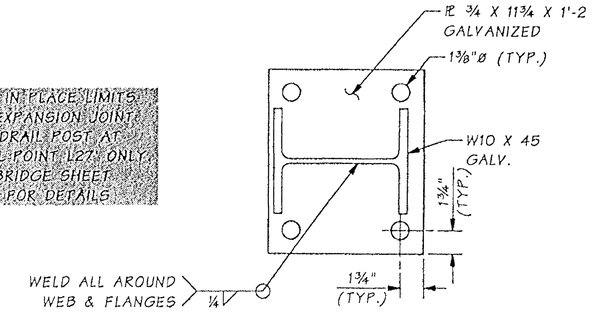

SECTION B

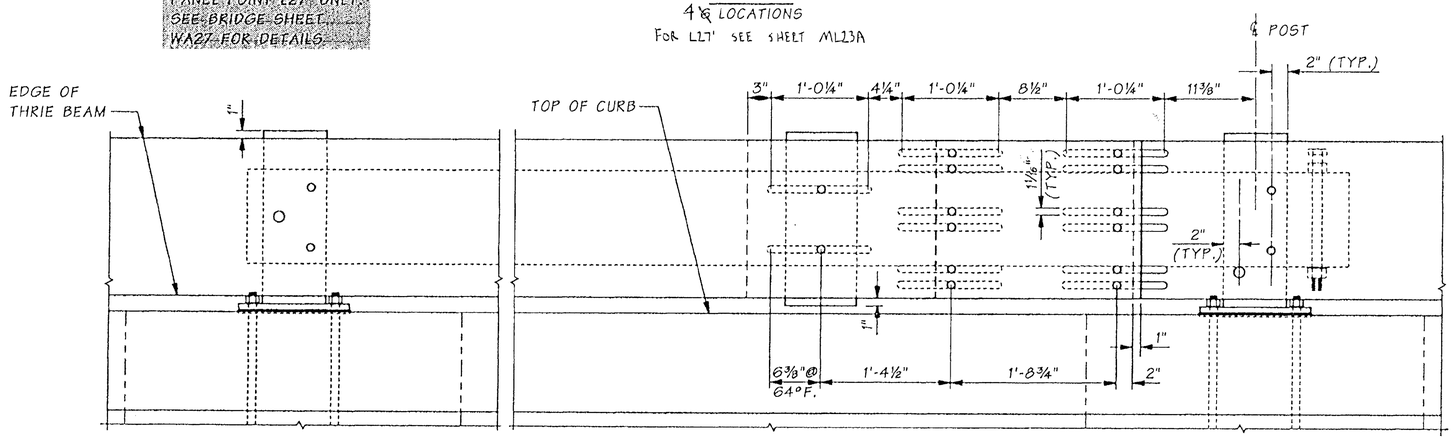

VIEW C

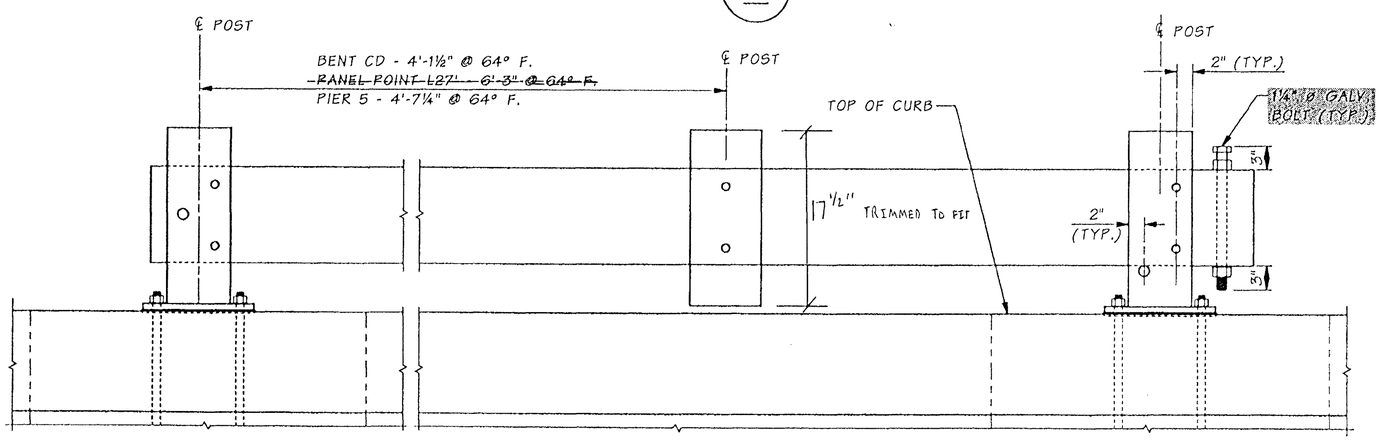

VIEW D

NOTE: REINF. STEEL IN CURB POST WIDENING SIMILAR TO LUMINAIRE BASE WIDENING. SEE BRIDGE SHEET WA27.

NOTE: AT PIER 1 AND PIER 4, THRIEBEAM RAIL SECTIONS THAT CROSS EXPANSION JOINTS - COUPLING AND CENTER ATTACHING BOLT HOLES WERE LENGTHENED BY 4" TO ALLOW EXPANSION IN THRIEBEAM

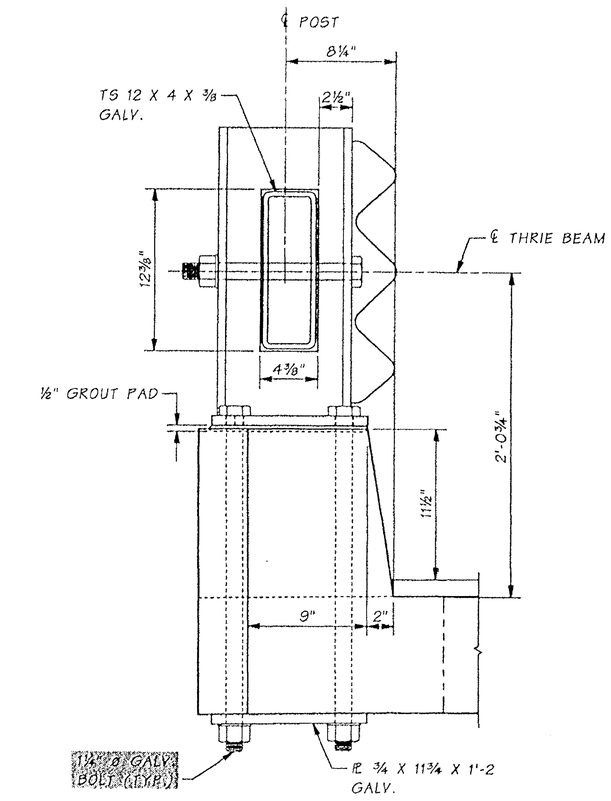

SECTION A

SEE HAND RAIL DETAILS FOR ATTACHMENTS TO POST.

FOR "AS CONSTRUCTED PLANS" ONLY

Bridge Design Engr.	Kapur, J		M:\Y-Team\Lewis_Clark Rehab\Miscellaneous\window files\RAIL EXP 3BEAM.WND								
Supervisor	Kirker, KN	08/02									
Designed By	Schultz, E	08/02									
Checked By	Talukdar, M	08/02									
Detailed By	Evans, P	08/02	11/02	ADDED CAST IN PLACE NOTE	ES						
Bridge Projects Engr.											
Prelim. Plan By			11/02	MODIFIED BOLT NOTES	ES						
Architect/Specialist			DATE	REVISION	BY	APP'D					

Tue Nov 05 09:56:55 2002

REGION NO.	STATE	FED. AID PROJ. NO.	SHEET NO.	TOTAL SHEETS
10	WASH.	ACBH - 0433(007)		
JOB NUMBER 02x310				

KARL N. KIRKER — STATE OF WASHINGTON — REGISTERED PROFESSIONAL ENGINEER — EXPIRES 11/3/03

BRIDGE AND STRUCTURES OFFICE

MANJUDRA TALUKDAR — STATE OF WASHINGTON — REGISTERED PROFESSIONAL ENGINEER — EXPIRES 6/1/04

11/05/02

Washington State Department of Transportation

SR 433
LEWIS AND CLARK BRIDGE
DECK REPLACEMENT

THRIE BEAM AT EXPANSION JOINTS

BRIDGE SHEET NO. ML23

SHEET 233 OF 258 SHEETS

SR 433 JK O. 1566 SHEET 23

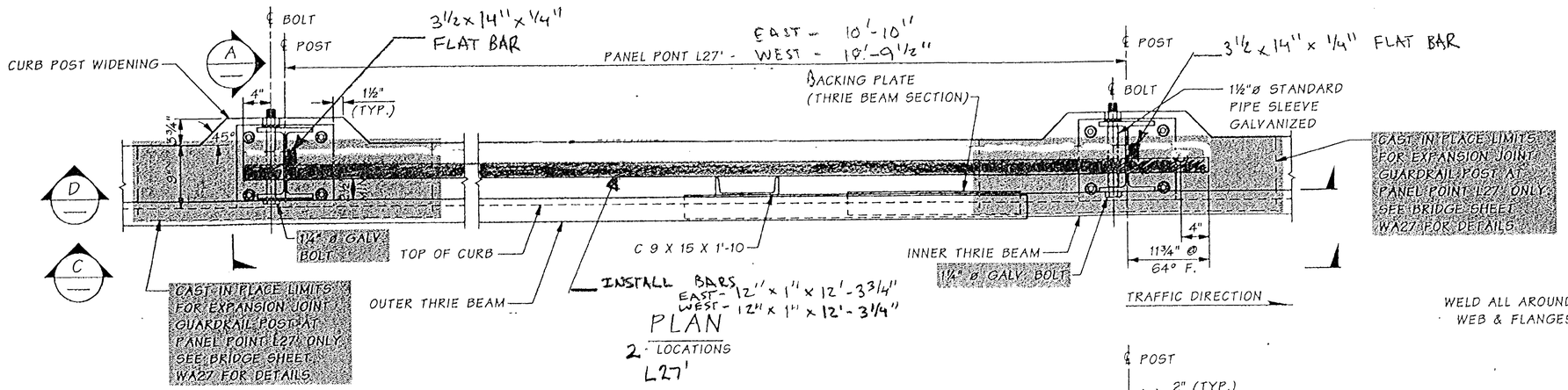

PLAN

2 LOCATIONS L27'

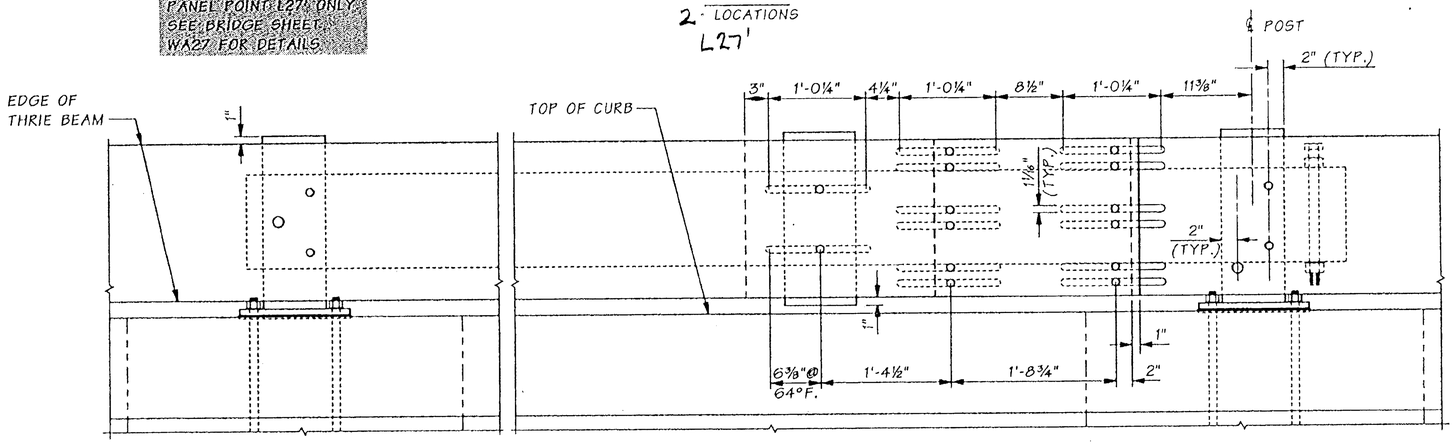

VIEW C

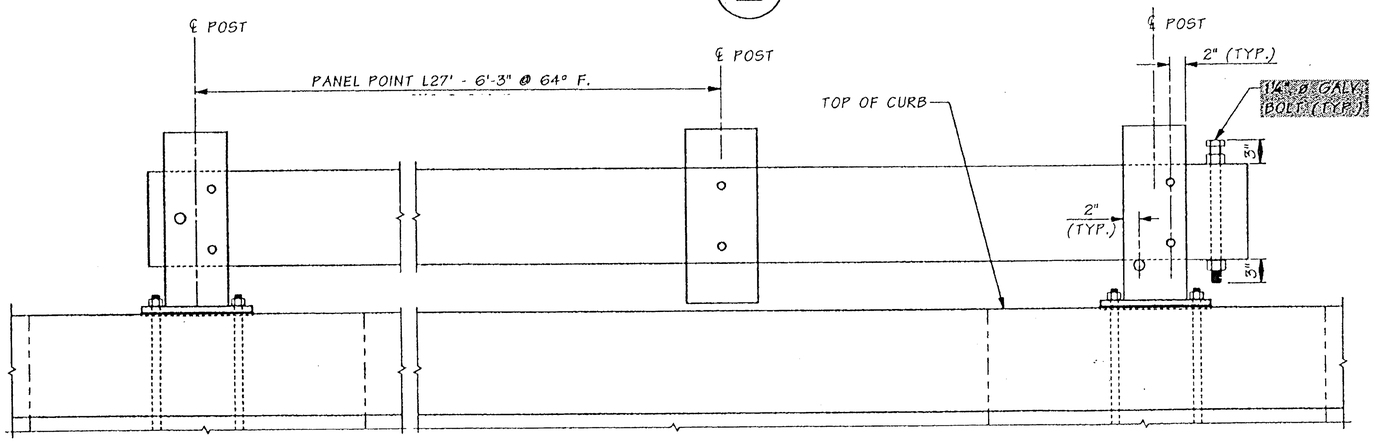

VIEW D

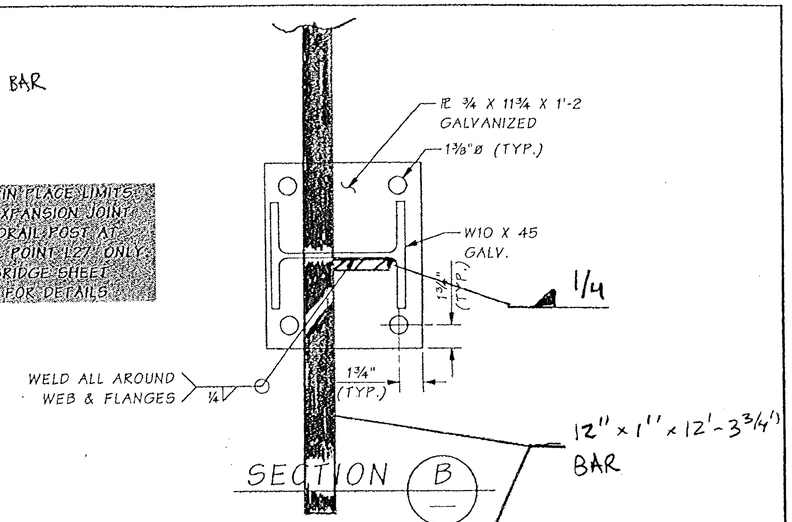

SECTION B

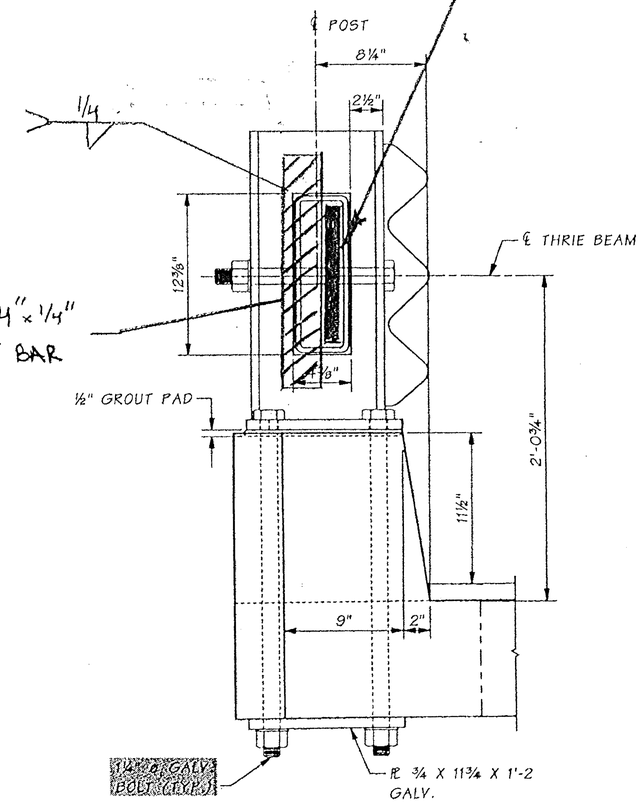

SECTION A

SEE HAND RAIL DETAILS FOR ATTACHMENTS TO POST.

NOTE: REINF. STEEL IN CURB POST WIDENING SIMILAR TO LUMINAIRE BASE WIDENING. SEE BRIDGE SHEET WA27.

FOR "AS CONSTRUCTED PLANS" ONLY

Bridge Design Engr.	Kapur, J		M:\Y-Team\Lewis_Clark Rehab\Miscellaneous\window files\RAIL EXP 3BEAM.WND			REGION NO.	STATE	FED. AID PROJ. NO.	SHEET NO.	TOTAL SHEETS
Supervisor	Kirker, KN	08/02				10	WASH.	ACBH - 0433(007)		
Designed By	Schultz, E	08/02				JOB NUMBER 02x310				
Checked By	Talukdar, M	08/02								
Detailed By	Evans, P	08/02	11/02	ADDED CAST IN PLACE NOTE	ES					
Bridge Projects Engr.										
Prelim. Plan By			11/02	MODIFIED BOLT NOTES	ES					
Architect/Specialist			DATE	REVISION	BY	APP'D				

Tue Nov 05 09:56:55 2002

KARL N. KIRKER — STATE OF WASHINGTON — PROFESSIONAL ENGINEER — EXPIRES 11/3/03

BRIDGE AND STRUCTURES OFFICE

MANINDRA TALUKDAR — STATE OF WASHINGTON — PROFESSIONAL ENGINEER — EXPIRES 6/1/04

11/05/02

Washington State Department of Transportation

SR 433
LEWIS AND CLARK BRIDGE
DECK REPLACEMENT

THRIE BEAM AT EXPANSION JOINT. L27'

BRIDGE SHEET NO. ML23A

SHEET 233A OF 258 SHEETS

SR 433 ; NO. 1566 SHEET 23

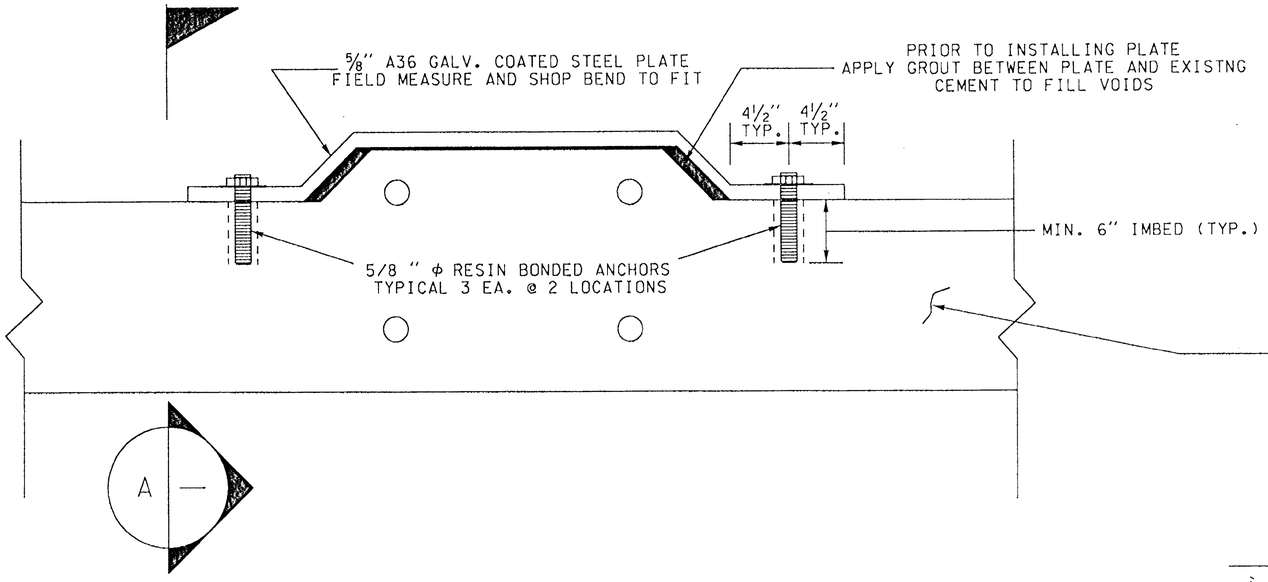

PLAN - BENT CD, PIER 5, L27'

NOTE: FURNISH AND INSTALL STEEL PLATES TO RESTRAIN
BLOCKOUTS AT FINGERJOINT LOCATIONS
BENT CD - 4 LOCATIONS
L27' - 2 LOCATIONS ON EXPANSION SIDE OF FINGERJOINT
PIER 5 - 4 LOCATIONS

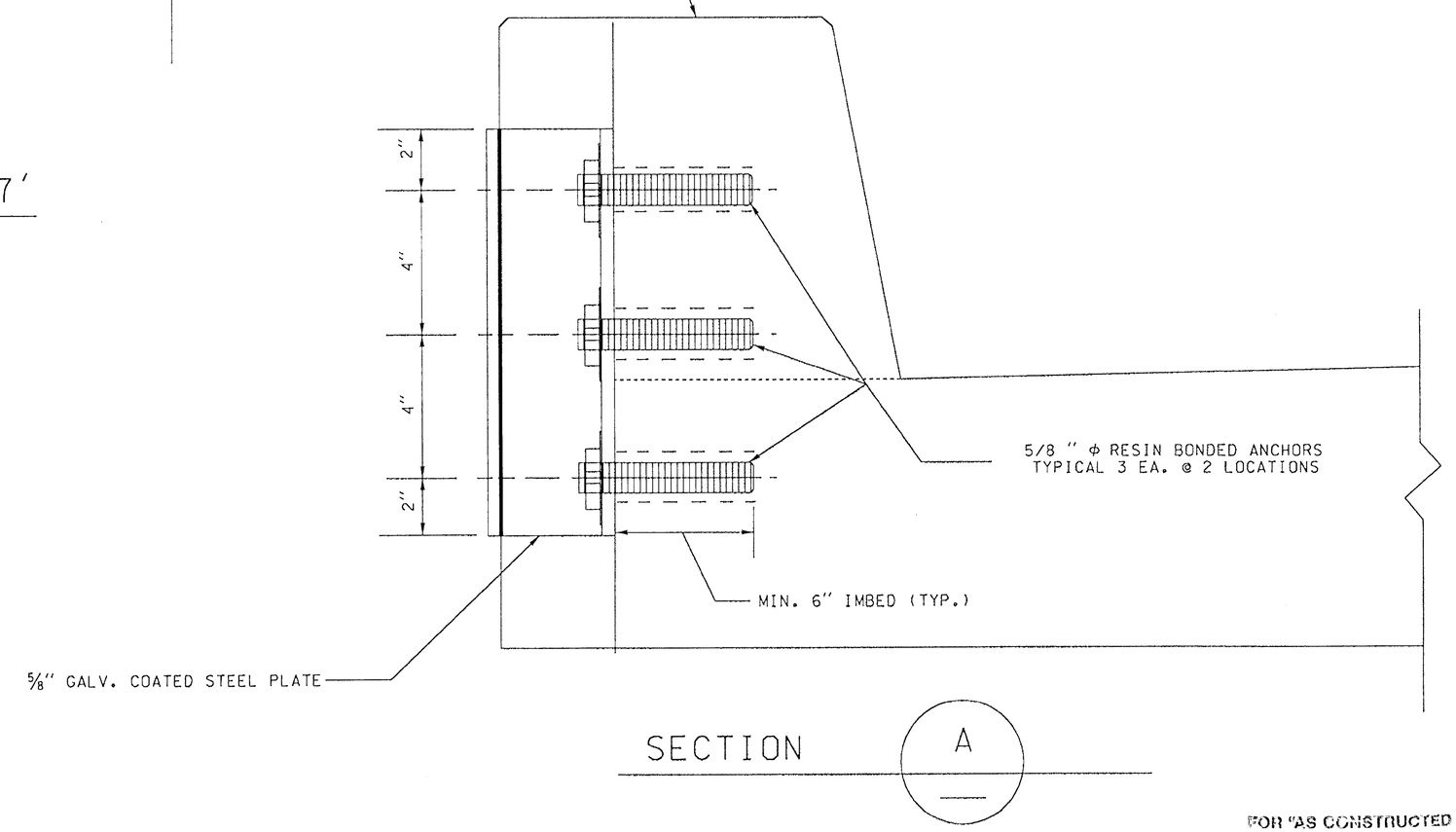

SECTION A

FOR "AS CONSTRUCTED PLANS" ONLY

NOT TO SCALE

FILE NAME				REGION NO.	STATE	FED.AID PROJ.NO.		Washington State Department of Transportation	SR 433 LEWIS AND CLARK BRIDGE DECK REPLACEMENT	PLOT4
TIME										ML23B
DATE	05/07/2005			10	WASH					
PLOTTED BY	MISTIC R.			JOB NUMBER						SHEET 283B OF 258 SHEETS
DESIGNED BY										
ENTERED BY	MISTIC R.									
CHECKED BY				CONTRACT NO.		LOCATION NO.			THRIE BEAM SUPPORT CURB MOD.	
PROJ. ENGR.	REVIS A.			6444		SR433				
REGIONAL ADM.		REVISION	DATE	BY			P.E. STAMP BOX DATE	P.E. STAMP BOX DATE		

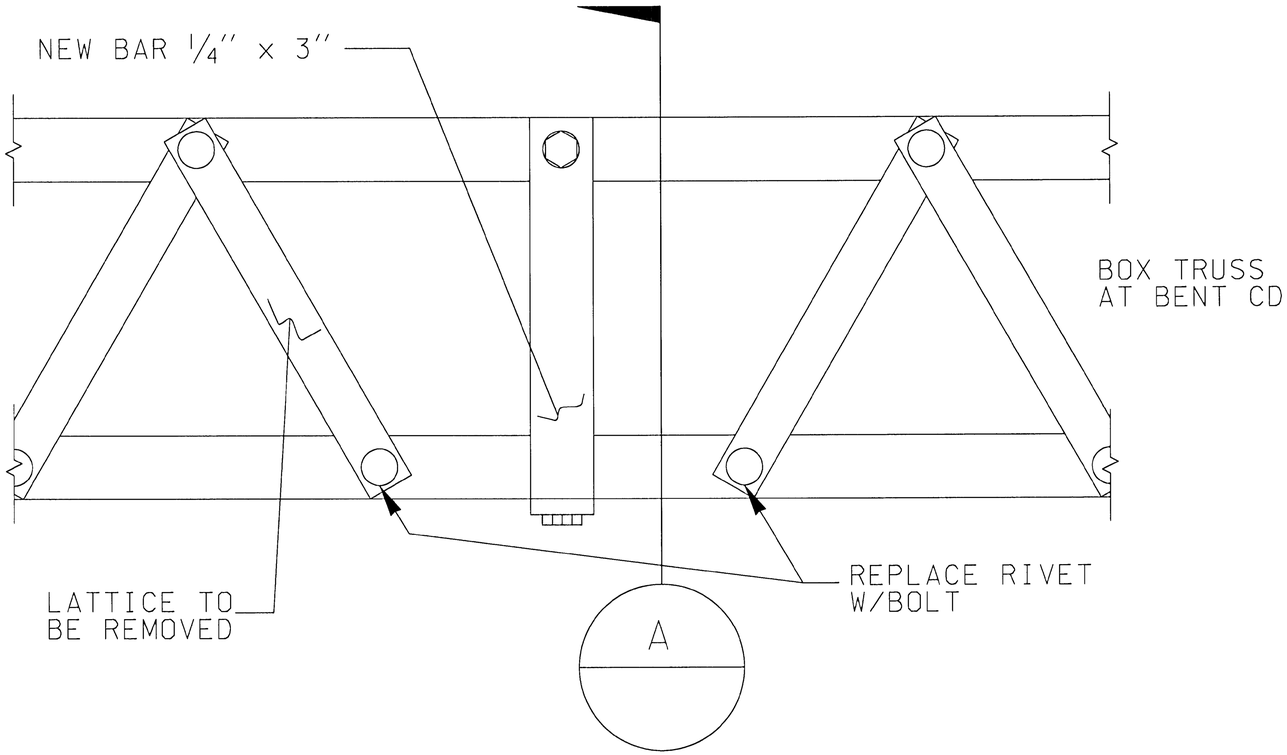

PLAN VIEW

LOCATION: BENT CD
PANEL B1 - WEST UNDER
EXPANSION JOINT CURB POST
WIDENING - REPLACE EXISTING
LATTICE WITH BAR 1/4" x 3"

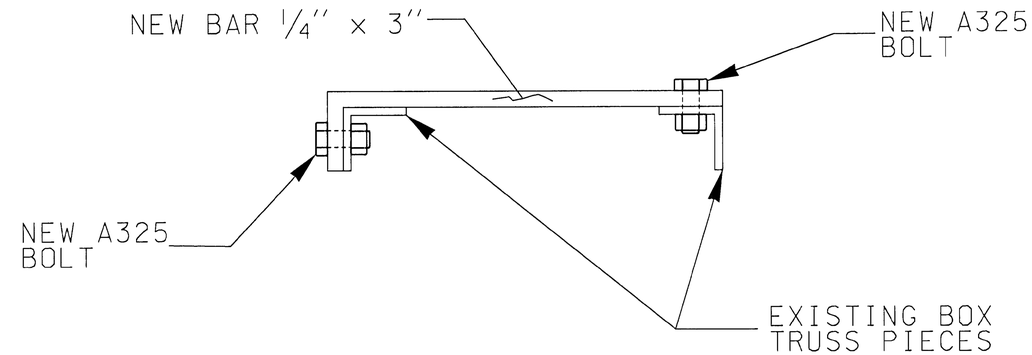

DETAIL A

NOT TO SCALE

FOR "AS CONSTRUCTED PLANS" ONLY

FILE NAME	G:\444304\03 - Construction\C6444 - SR433, Lewis and Clark Bridge Deck Replacement\As-Builts\6444 Detail.dgn						
TIME	12:44:54 PM						
DATE	10/14/2005						
PLOTTED BY	kingju						
DESIGNED BY							
ENTERED BY							
CHECKED BY							
PROJ. ENGR.							
REGIONAL ADM.		REVISION	DATE	BY			

REGION NO.	STATE	FED.AID PROJ.NO.
10	WASH	
JOB NUMBER		
CONTRACT NO. 6444		LOCATION NO.

P.E. STAMP BOX DATE

P.E. STAMP BOX DATE

Washington State Department of Transportation

SR 433
LEWIS AND CLARK BRIDGE
DECK REPLACEMENT

BENT CD - LATTICE REPLACEMENT

PLOT15
ML23C
SHEET 233C OF 258 SHEETS

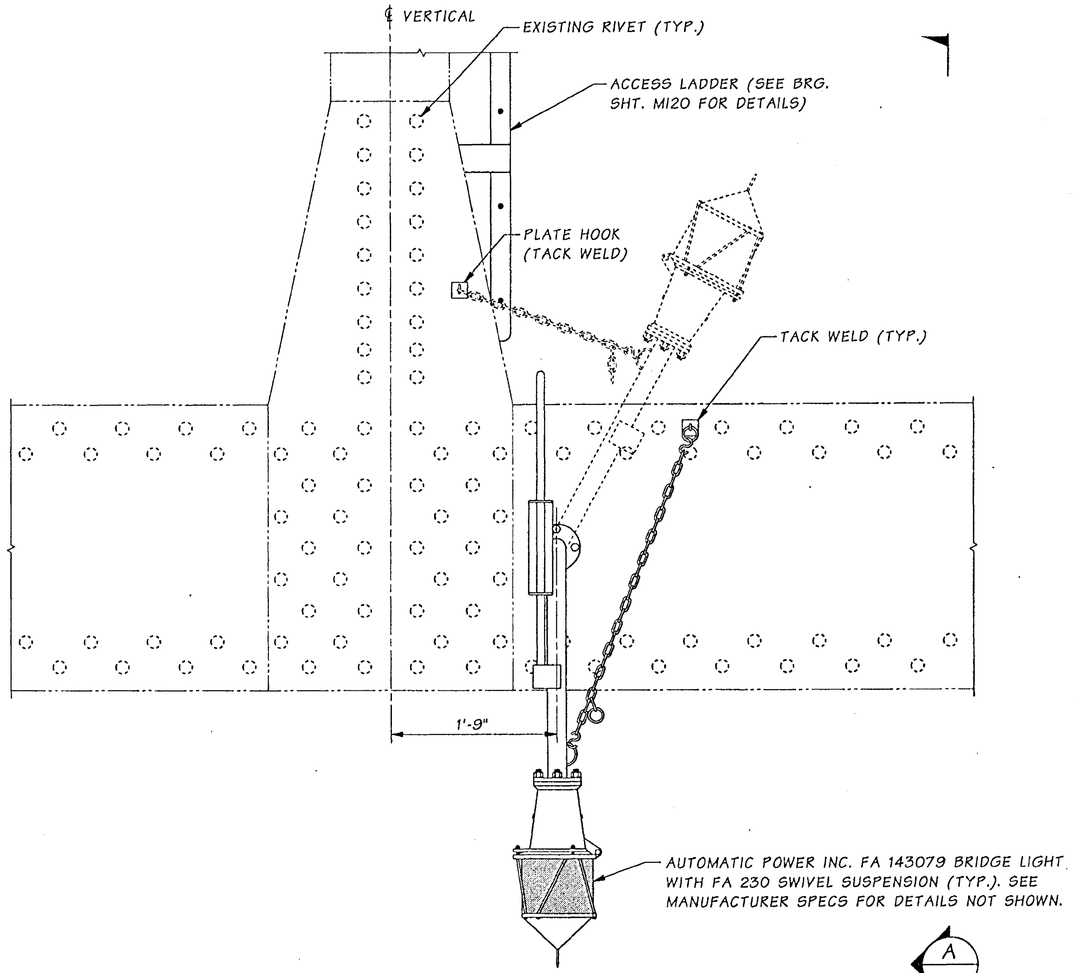

ELEVATION

L9 SHOWN. L9' SIMILAR. ARRANGEMENTS ARE TYPICAL FOR LIGHTS NL1 - NL2 AND NL19 - NL20 (TOTAL 4 REQ'D). SEE NAV. LIGHT LAYOUT FOR LOCATIONS.

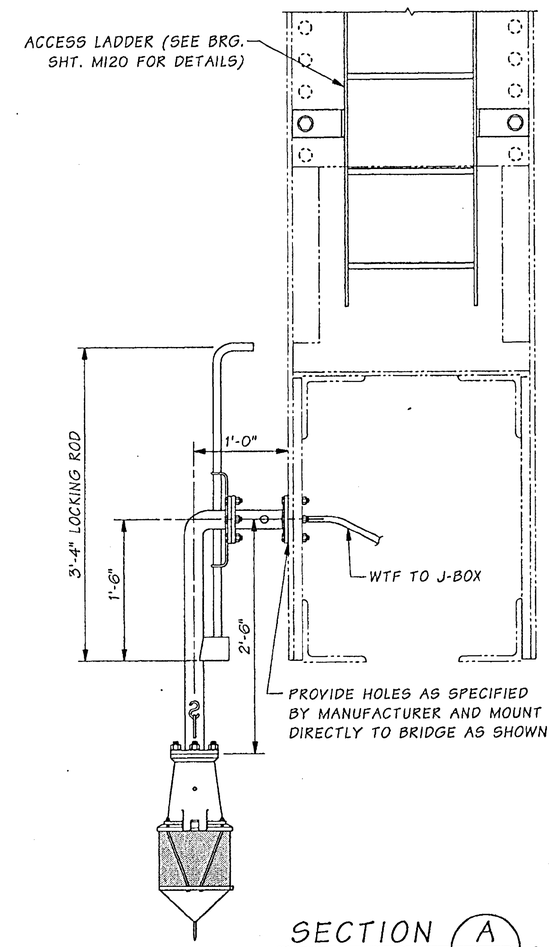

SECTION A

FOR "AS CONSTRUCTED PLANS" ONLY

NAVIGATION LIGHT NOTES:

1. GENERAL ARRANGEMENTS SHOWN. REFER TO MANUFACTURER SPECS FOR SPECIFIC DETAILS.
2. ARRANGEMENTS SHOWN ARE TYPICAL FOR BOTH EAST & WEST TRUSSES.
3. EXISTING LIGHTING SYSTEM MAY NEED TO BE MOVED IN ORDER TO ACCOMODATE THE NEW LIGHTS.
4. WTF - WATER TIGHT FLEXIBLE TUBING.

SR 433 JOB NO. 1566 SHEET 24

Bridge Design Engr.	Kapur, J		M:\Y-Team\Lewis_Clark Rehab\Miscellaneous\Window files\NAV LIGHTS1.WND				REGION NO.	STATE	FED. AID PROJ. NO.	SHEET NO.	TOTAL SHEETS
Supervisor	Kirker, KN	08/02					10	WASH.			
Designed By	Nebergall, D	08/02									
Checked By	Talukdar, M	08/02					JOB NUMBER 02x310		ACBH - 0433(007)		
Detailed By	Evans, P	08/02									
Bridge Projects Engr.											
Prelim. Plan By											
Architect/Specialist			DATE	REVISION	BY	APP'D	6444				

Tue Sep 17 12:01:15 2002

KARL N. KIRKER, STATE OF WASHINGTON, 10296, REGISTERED PROFESSIONAL ENGINEER — EXPIRES 11/3/03

BRIDGE AND STRUCTURES OFFICE

MUNDIRA TALUKDAR, STATE OF WASHINGTON, 27628, REGISTERED PROFESSIONAL ENGINEER — EXPIRES 6/1/04

Washington State Department of Transportation

SR 433
LEWIS AND CLARK BRIDGE
DECK REPLACEMENT

NAVIGATION LIGHT DETAILS

BRIDGE SHEET NO. ML24

SHEET 234 OF 258 SHEETS

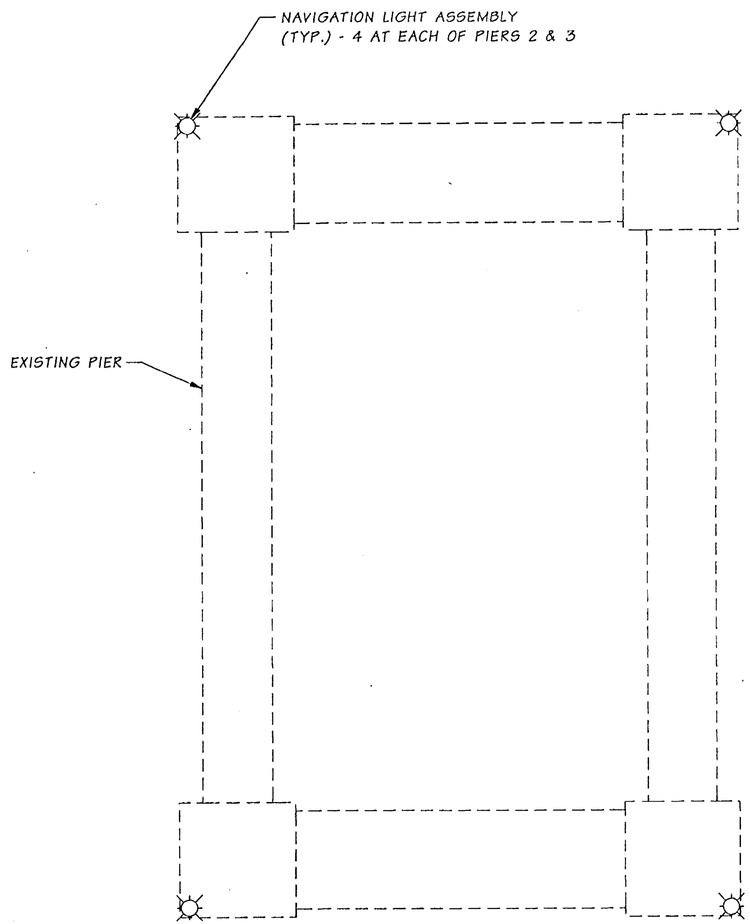

PIER PLAN

(TYP. PIERS 2 & 3) *

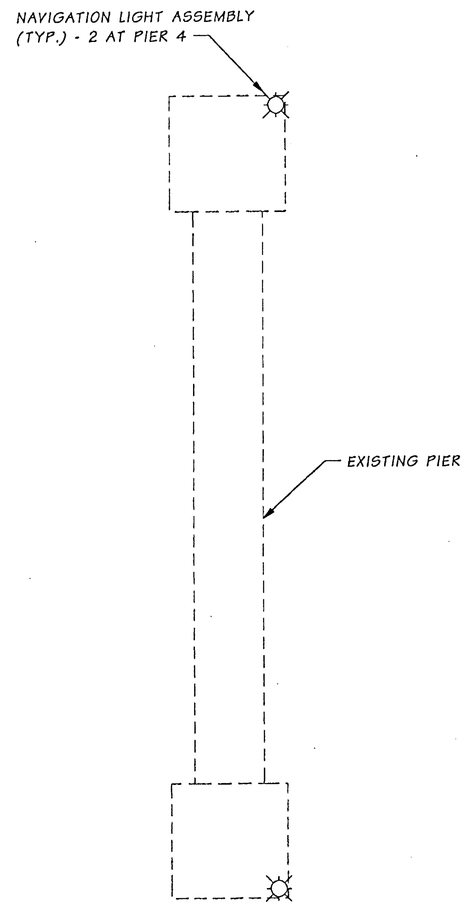

PIER PLAN

PIER 4 *

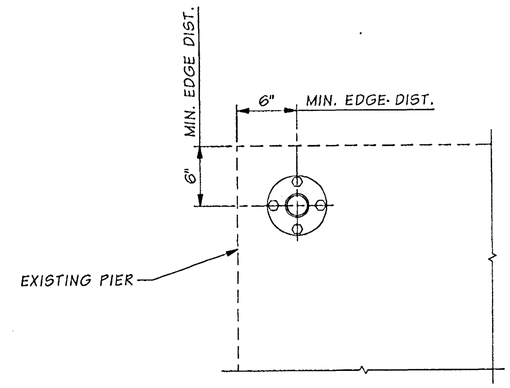

PLAN

SHOWN WITHOUT BRIDGE LIGHT
FOR CLARITY

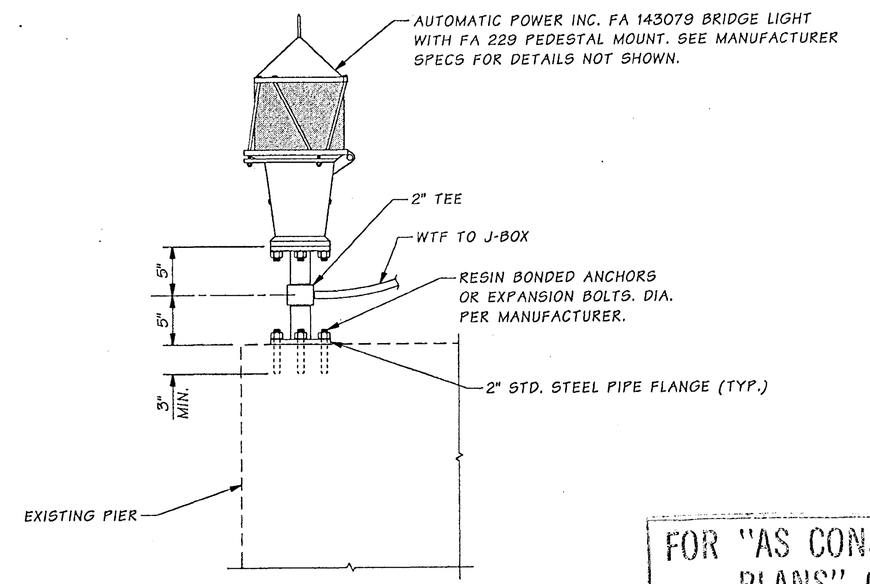

ELEVATION

NAVIGATION LIGHT ASSEMBLY

FOR "AS CONSTRUCTED PLANS" ONLY

* ARRANGEMENTS ARE TYPICAL FOR
LIGHTS NL3 - NL6, NL15 - NL18
AND NL21 - NL22 (TOTAL 10 REQ'D).
SEE NAV. LIGHT LAYOUT FOR LOCATIONS.

SR 433 JOB NO. 1566 SHEET 25

Bridge Design Engr.	Kapur, J		M:\Y-Team\Lewis_Clark Rehab\Miscellaneous\Window files\NAV LIGHTS4.WND								
Supervisor	Kirker, KN	08/02					REGION NO.	STATE	FED. AID PROJ. NO.	SHEET NO.	TOTAL SHEETS
Designed By	Nebergall, D	08/02					10	WASH.	ACBH - 0433(007)		
Checked By	Talukdar, M	08/02					JOB NUMBER 02x310				
Detailed By	Foote, N	08/02					6444				
Bridge Projects Engr.											
Prelim. Plan By											
Architect/Specialist			DATE	REVISION	BY	APP'D					

KARL N. KIRKER, STATE OF WASHINGTON, 15296, REGISTERED PROFESSIONAL ENGINEER — EXPIRES 11/3/03

BRIDGE AND STRUCTURES OFFICE

MUNIKPRA TALUKDAR, STATE OF WASHINGTON, 27628, REGISTERED PROFESSIONAL ENGINEER — EXPIRES 6/1/04

Washington State Department of Transportation

SR 433
LEWIS AND CLARK BRIDGE
DECK REPLACEMENT

NAVIGATION LIGHT DETAILS

BRIDGE SHEET NO. ML25

SHEET 235 OF 258 SHEETS

Tue Sep 17 12:01:20 2002

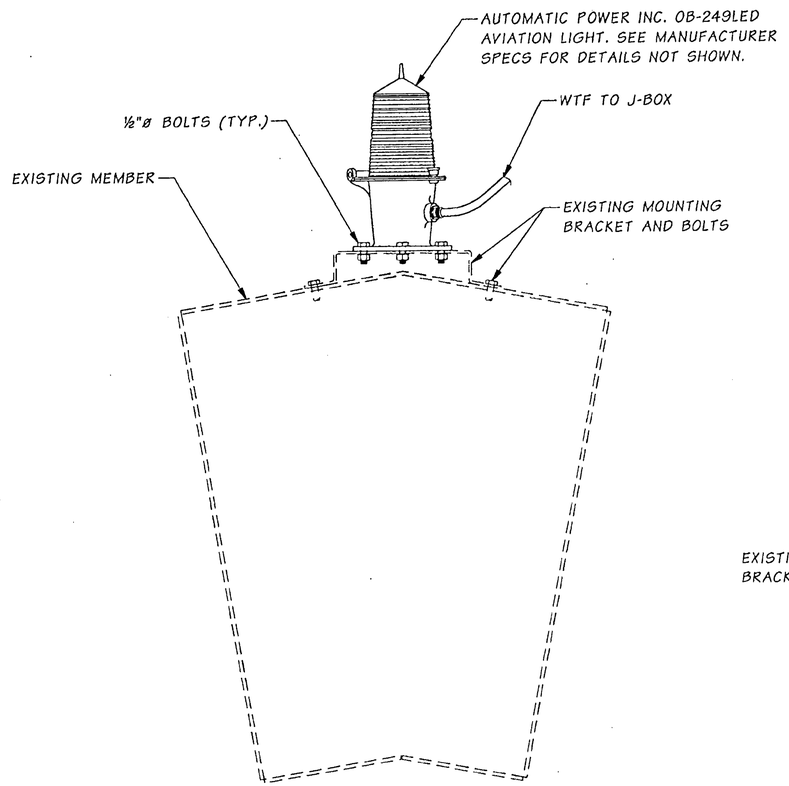

ELEVATION

U18 - U18 CROSSMEMBER. ARRANGEMENTS ARE TYPICAL FOR LIGHTS AL1 AND AL2 (TOTAL 2 REQ'D). SEE NAV. LIGHT LAYOUT FOR LOCATIONS.

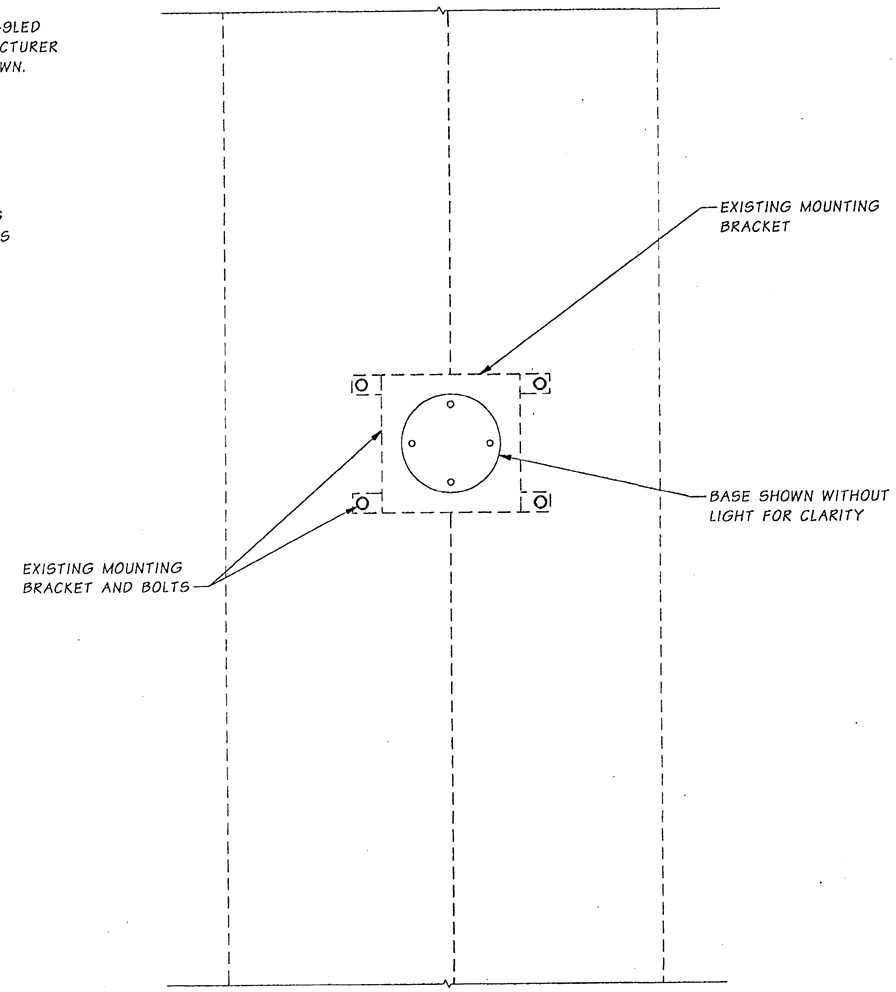

PLAN

U18 - U18 CROSSMEMBER

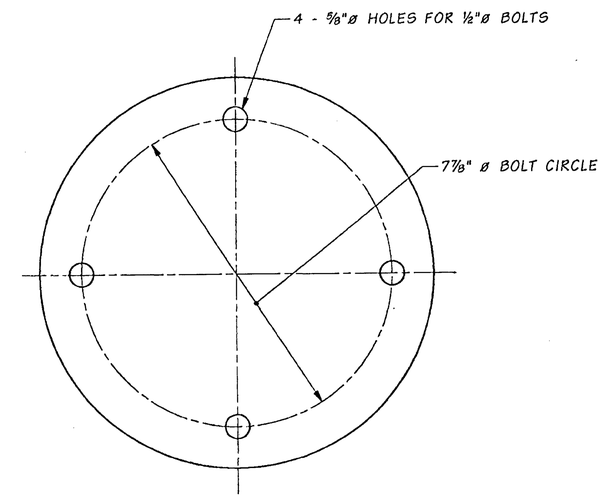

LIGHT BASE DETAIL

OB-249LED

FOR "AS CONSTRUCTED PLANS" ONLY

SR 433 JOB NO. 1566 SHEET 26

Bridge Design Engr.	Kapur, J		M:\Y-Team\Lewis_Clark Rehab\Miscellaneous\Window files\NAV LIGHTS3.WND							
Supervisor	Kirker, KN	08/02								
Designed By	Nebergall, D	08/02								
Checked By	Talukdar, M	08/02								
Detailed By	Evans, P	08/02								
Bridge Projects Engr.										
Prelim. Plan By										
Architect/Specialist			DATE	REVISION	BY	APP'D				

REGION NO.	STATE	FED. AID PROJ. NO.	SHEET NO.	TOTAL SHEETS
10	WASH.	ACBH - 0433(007)		
JOB NUMBER 02x310				
6444				

Tue Sep 17 12:01:18 2002

KARL N. KIRKER — STATE OF WASHINGTON — 16294 — REGISTERED PROFESSIONAL ENGINEER — EXPIRES 11/3/03

BRIDGE AND STRUCTURES OFFICE

MILANDRA T. TALUKDAR — STATE OF WASHINGTON — 27908 — REGISTERED PROFESSIONAL ENGINEER — EXPIRES 6/1/04

Washington State Department of Transportation

SR 433
LEWIS AND CLARK BRIDGE
DECK REPLACEMENT

NAVIGATION LIGHT DETAILS

BRIDGE SHEET NO. ML26

SHEET 236 OF 258 SHEETS

* BOLT SPACING BASED ON EXISTING RIVET LOCATION. CONTRACTOR SHALL VERIFY THIS DIMENSION IN THE FIELD PRIOR TO FABRICATION.

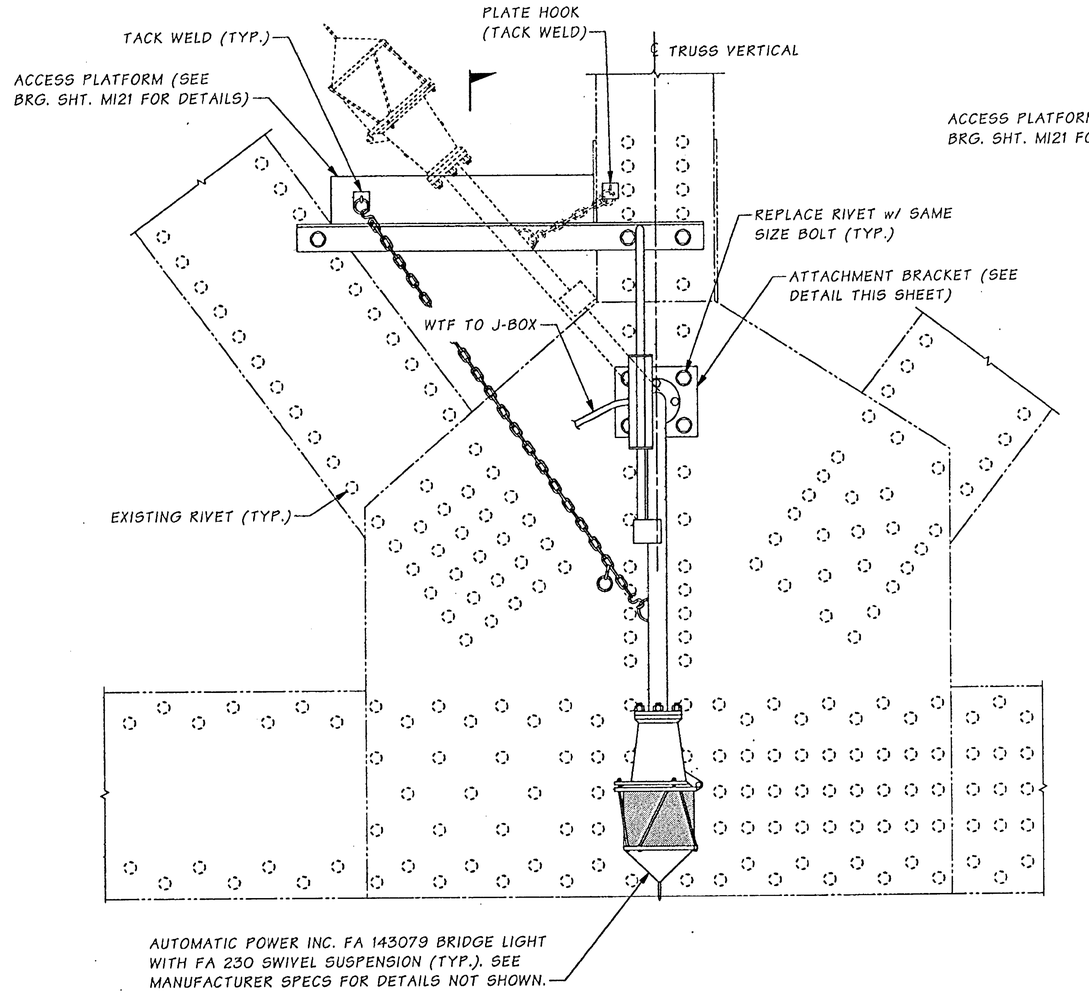

A

ELEVATION

L31 SHOWN. ARRANGEMENTS ARE TYPICAL FOR LIGHTS NL7 AND NL8 (TOTAL 2 REQ'D). SEE NAV. LIGHT LAYOUT FOR LOCATIONS.

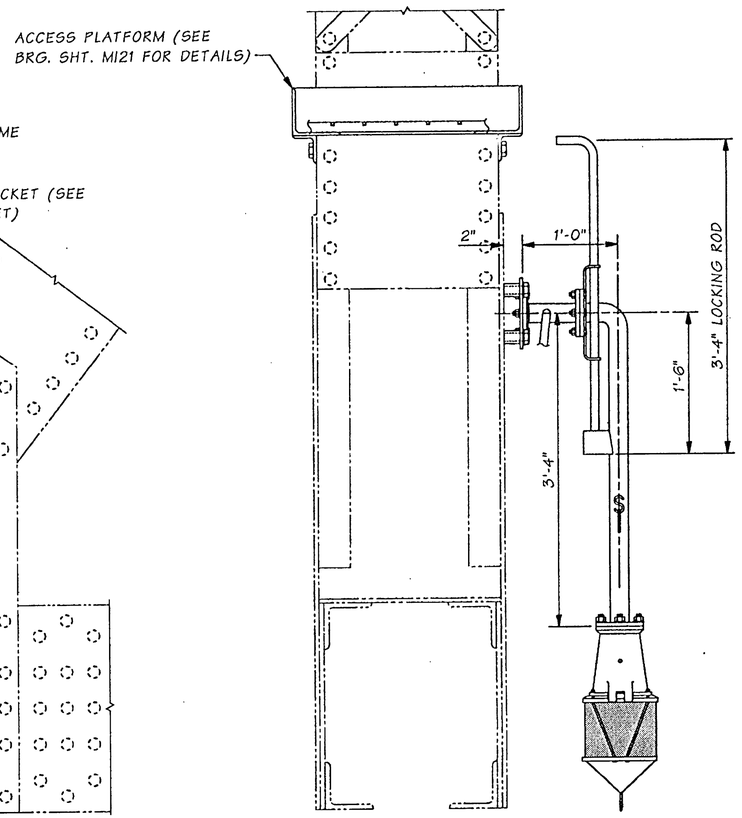

SECTION A

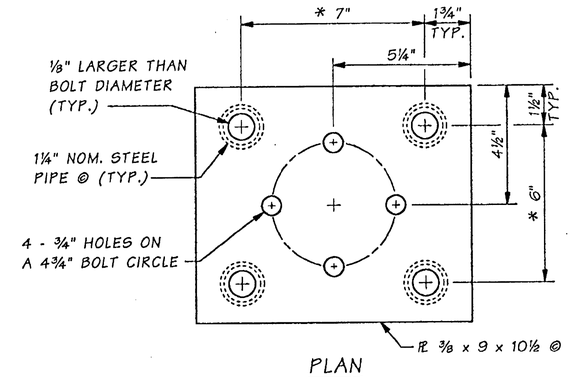

PLAN

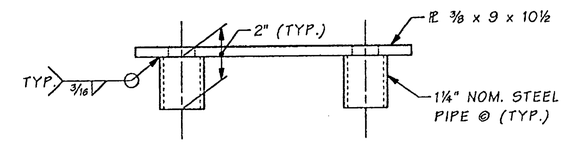

ELEVATION

ATTACHMENT BRACKET DETAIL

FABRICATE TWO (2)

FOR "AS CONSTRUCTED PLANS" ONLY

SR 433 JOB NO. 1566 SHEET 27

Bridge Design Engr.	Kapur, J		M:\Y-Team\Lewis_Clark Rehab\Miscellaneous\window files\NAV LIGHTS2.WND				REGION NO.	STATE	FED. AID PROJ. NO.	SHEET NO.	TOTAL SHEETS
Supervisor	Kirker, KN	08/02					10	WASH.			
Designed By	Nebergall, D	08/02									
Checked By	Talukdar, M	08/02					JOB NUMBER 02x310		ACBH - 0433(007)		
Detailed By	Foote, N	08/02									
Bridge Projects Engr.											
Prelim. Plan By											
Architect/Specialist			DATE	REVISION	BY	APP'D	6444				

Wed Sep 18 08:24:37 2002

KARL N. KIRKER — STATE OF WASHINGTON — 16298 — REGISTERED PROFESSIONAL ENGINEER — EXPIRES 11/3/03

BRIDGE AND STRUCTURES OFFICE

MUNDIAK TALUKDAR — STATE OF WASHINGTON — 27028 — REGISTERED PROFESSIONAL ENGINEER — EXPIRES 6/1/04

Washington State Department of Transportation

SR 433
LEWIS AND CLARK BRIDGE
DECK REPLACEMENT

NAVIGATION LIGHT DETAILS

BRIDGE SHEET NO. ML27

SHEET 237 OF 258 SHEETS

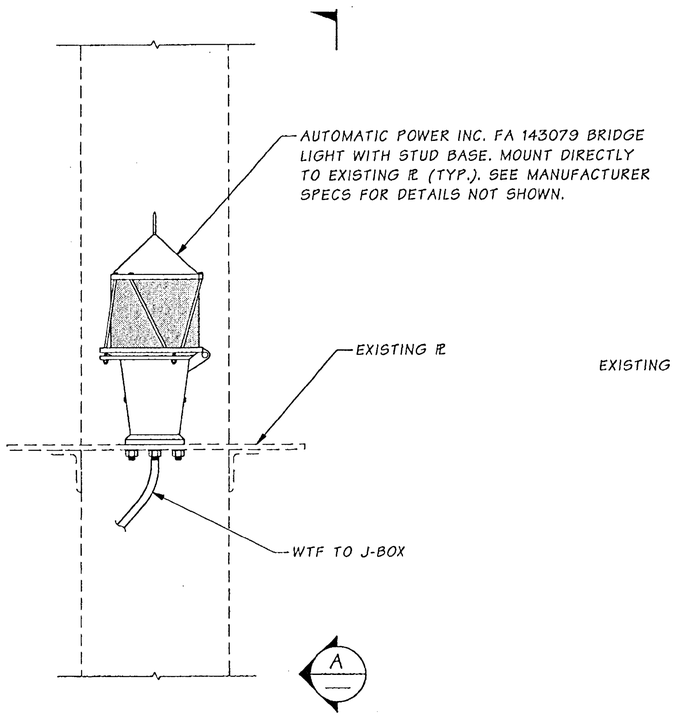

ELEVATION

L31 - U31 VERTICAL. ARRANGEMENTS ARE TYPICAL FOR LIGHTS NL9 - NL14 (TOTAL 6 REQ'D). SEE NAV. LIGHT LAYOUT FOR LOCATIONS.

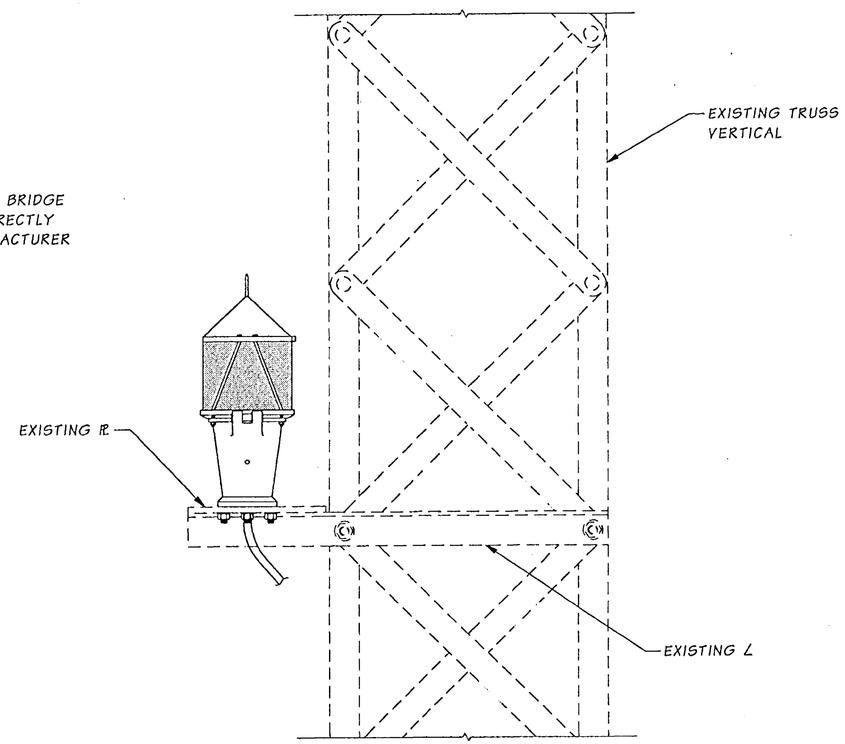

VIEW A

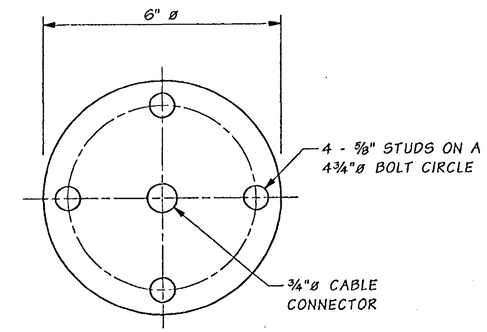

LIGHT BASE DETAIL

FA 143079

FOR "AS CONSTRUCTED PLANS" ONLY

Bridge Design Engr.	Kapur, J		M:\Y-Team\Lewis_Clark Rehab\Miscellaneous\Window files\NAV LIGHTS5.WND								
Supervisor	Kirker, KN	08/02									
Designed By	Nebergall, D	08/02									
Checked By	Talukdar, M	08/02									
Detailed By	Foote, N	08/02									
Bridge Projects Engr.											
Prelim. Plan By											
Architect/Specialist			DATE	REVISION	BY	APP'D					

REGION NO.	STATE	FED. AID PROJ. NO.	SHEET NO.	TOTAL SHEETS
10	WASH.	ACBH - 0433(007)		
JOB NUMBER 02x310				
6444				

KARL N. KIRKER — STATE OF WASHINGTON — REGISTERED PROFESSIONAL ENGINEER — EXPIRES 11/3/03

BRIDGE AND STRUCTURES OFFICE

MONJADRA TALUKDAR — STATE OF WASHINGTON — REGISTERED PROFESSIONAL ENGINEER — EXPIRES 6/1/04

Washington State Department of Transportation

SR 433
LEWIS AND CLARK BRIDGE
DECK REPLACEMENT

NAVIGATION LIGHT DETAILS

BRIDGE SHEET NO. ML28

SHEET 238 OF 258 SHEETS

SR 433 JOB NO. 1566 SHEET 28

Tue Sep 17 12:01:21 2002

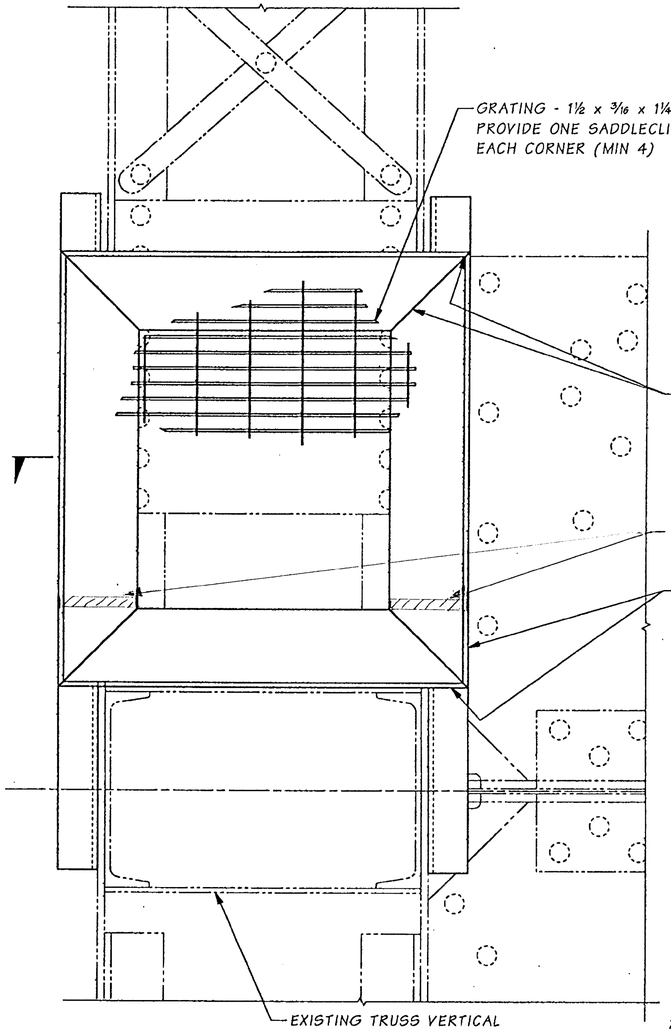

PLAN - PLATFORM AT L31

PLACE PLATFORM ON SAME SIDE
AS EXISTING LADDER. (TOTAL 2 REQ'D)

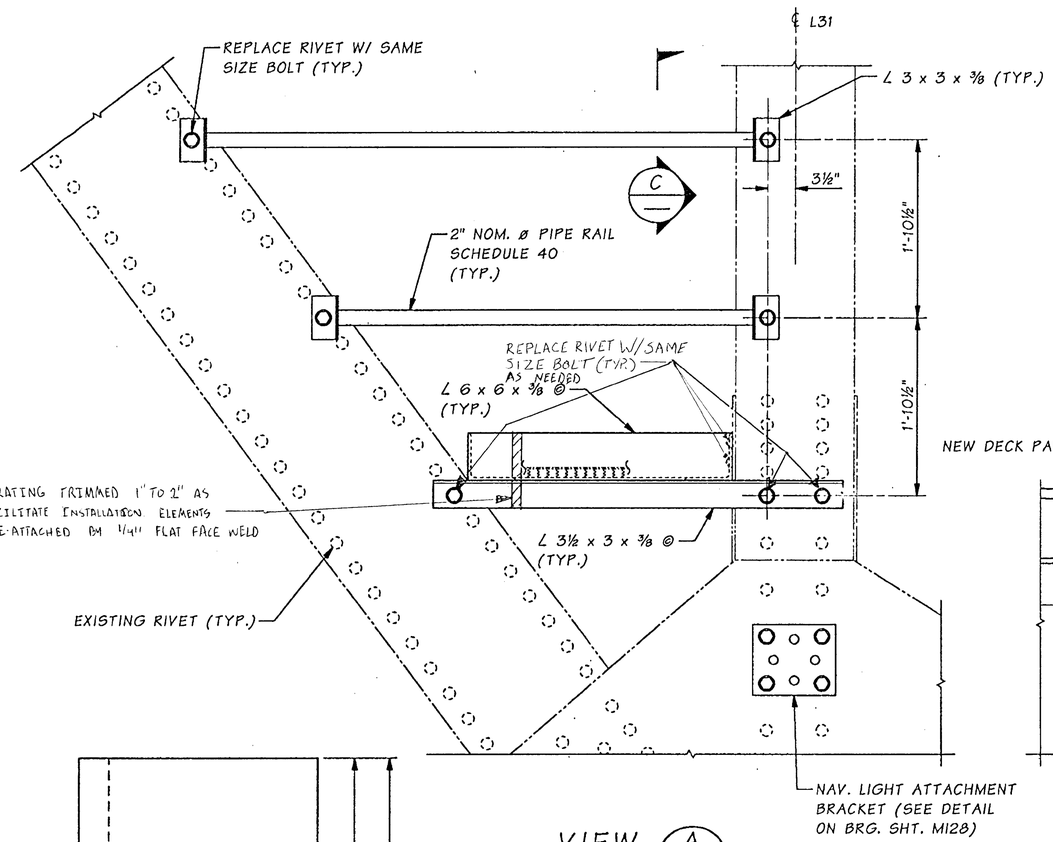

VIEW A

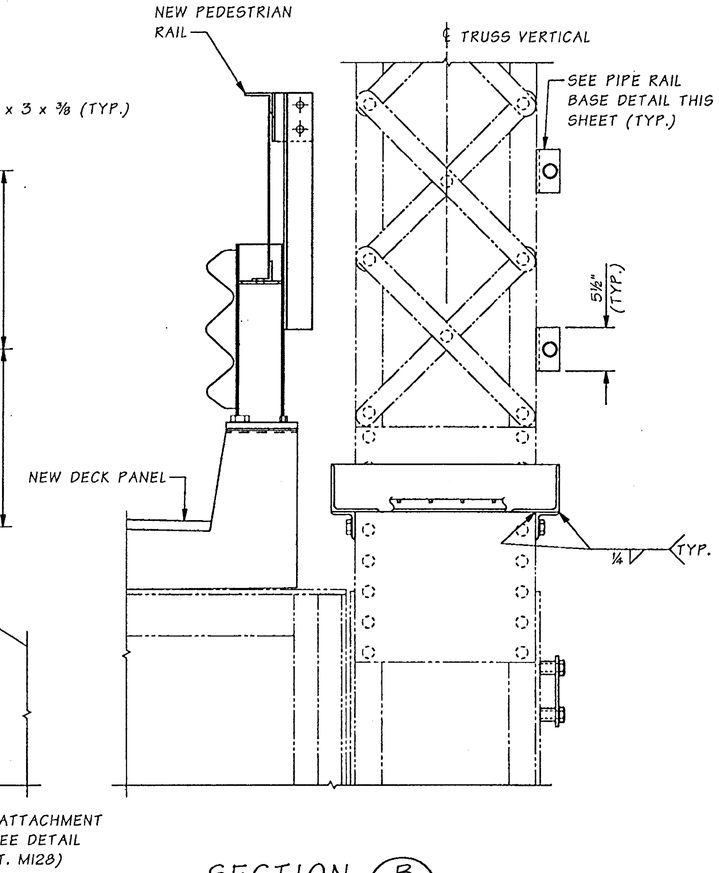

SECTION B

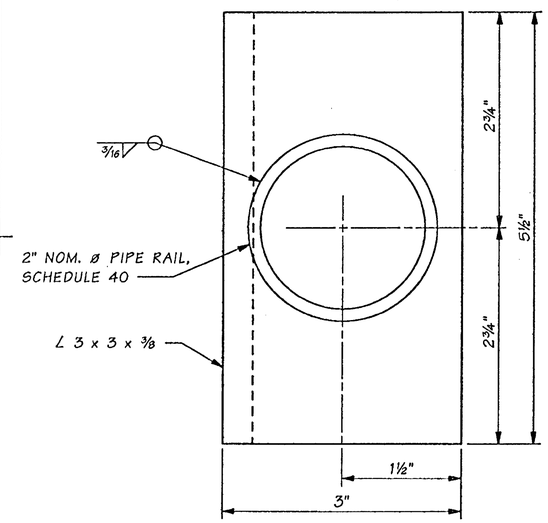

SECTION C

FOR "AS CONSTRUCTED PLANS" ONLY

NOTE:

1. ALL DETAILS SHOWN ARE TYPICAL BOTH EAST AND WEST TRUSSES.

SR 433 JOB NO. 1566 SHEET 29

Bridge Design Engr.	Kapur, J	
Supervisor	Kirker, KN	08/02
Designed By	Nebergall, D	08/02
Checked By	Talukdar, M	08/02
Detailed By	Foote, N	08/02
Bridge Projects Engr.		
Prelim. Plan By		
Architect/Specialist		

M:\Y-Team\Lewis_Clark Rehab\Miscellaneous\window files\ACCESS AT L31.WND

DATE	REVISION	BY	APP'D

REGION NO.	STATE	FED. AID PROJ. NO.	SHEET NO.	TOTAL SHEETS
10	WASH.	ACBH - 0433(007)		

JOB NUMBER 02x310

6444

KARL N. KIRKER — STATE OF WASHINGTON — 16296 — REGISTERED PROFESSIONAL ENGINEER — 9/3/02 — EXPIRES 11/3/03

BRIDGE AND STRUCTURES OFFICE

MUNINDRA TALUKDAR — STATE OF WASHINGTON — 27628 — REGISTERED PROFESSIONAL ENGINEER — 9/3/02 — EXPIRES 6/1/04

Washington State Department of Transportation

SR 433
LEWIS AND CLARK BRIDGE
DECK REPLACEMENT

PLATFORM AT L31

BRIDGE SHEET NO. ML29

SHEET 239 OF 258 SHEETS

Wed Sep 18 08:26:42 2002

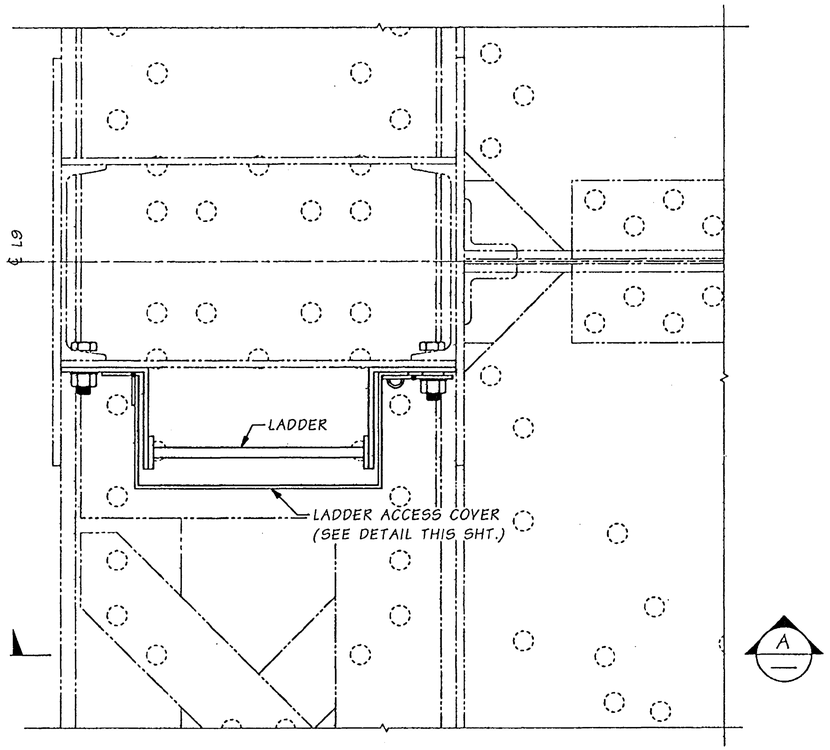

PLAN - LADDER AT L9

L9' SIMILAR. (TOTAL 4 REQ'D)

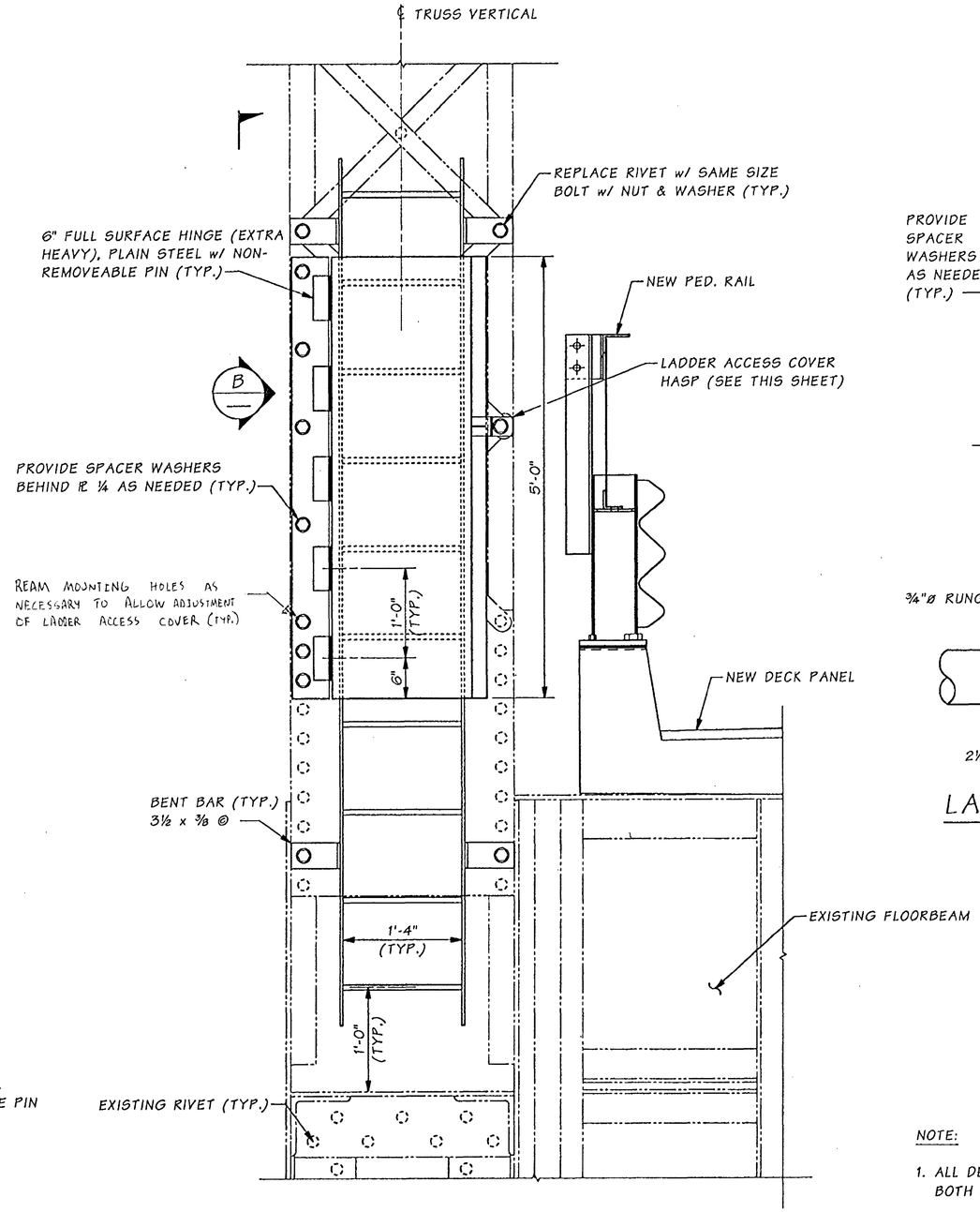

SECTION A

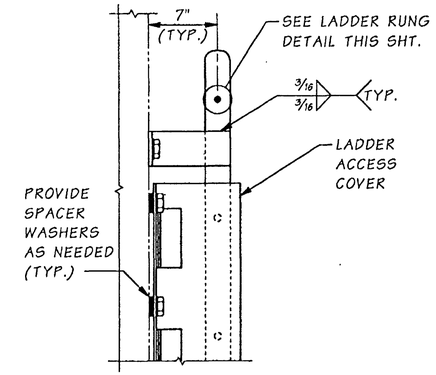

VIEW B

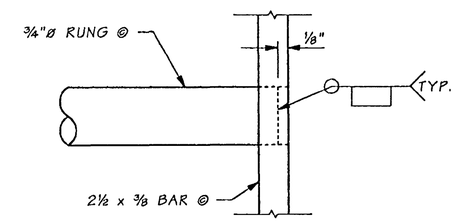

LADDER DETAIL

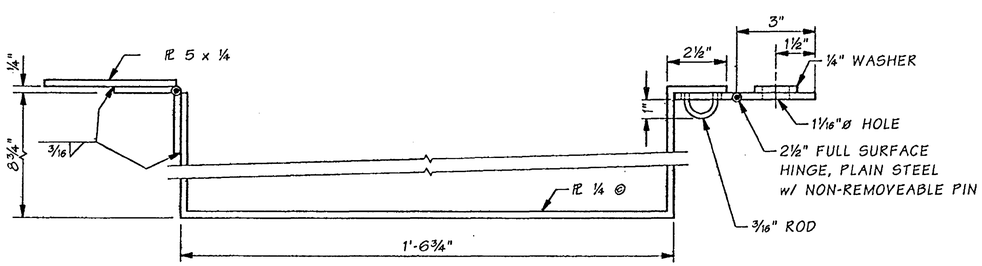

LADDER ACCESS COVER DETAIL

FOR "AS CONSTRUCTED PLANS" ONLY

NOTE:

1. ALL DETAILS SHOWN ARE TYPICAL BOTH EAST AND WEST TRUSSES.

Bridge Design Engr.	Kapur, J		M:\Y-Team\Lewis_Clark Rehab\Miscellaneous\window files\ACCESS AT L9.WND								
Supervisor	Kirker, KN	08/02					REGION NO.	STATE	FED. AID PROJ. NO.	SHEET NO.	TOTAL SHEETS
Designed By	Nebergall, D	08/02					10	WASH.	ACBH - 0433(007)		
Checked By	Talukdar, M	08/02					JOB NUMBER 02x310				
Detailed By	Foote, N	08/02									
Bridge Projects Engr.											
Prelim. Plan By											
Architect/Specialist			DATE	REVISION	BY	APP'D	6444				

Wed Sep 18 08:27:30 2002

KARL N. KIRKER — STATE OF WASHINGTON — 16298 — REGISTERED PROFESSIONAL ENGINEER — 9/18/02 — EXPIRES 11/3/03

BRIDGE AND STRUCTURES OFFICE

MUNINDRA TALUKDAR — STATE OF WASHINGTON — 27028 — REGISTERED PROFESSIONAL ENGINEER — 09/18/02 — EXPIRES 6/1/04

Washington State Department of Transportation

SR 433
LEWIS AND CLARK BRIDGE
DECK REPLACEMENT

LADDER AT L9

BRIDGE SHEET NO. ML30

SHEET 240 OF 258 SHEETS

SR 433 JOB NO. 1566 SHEET 30

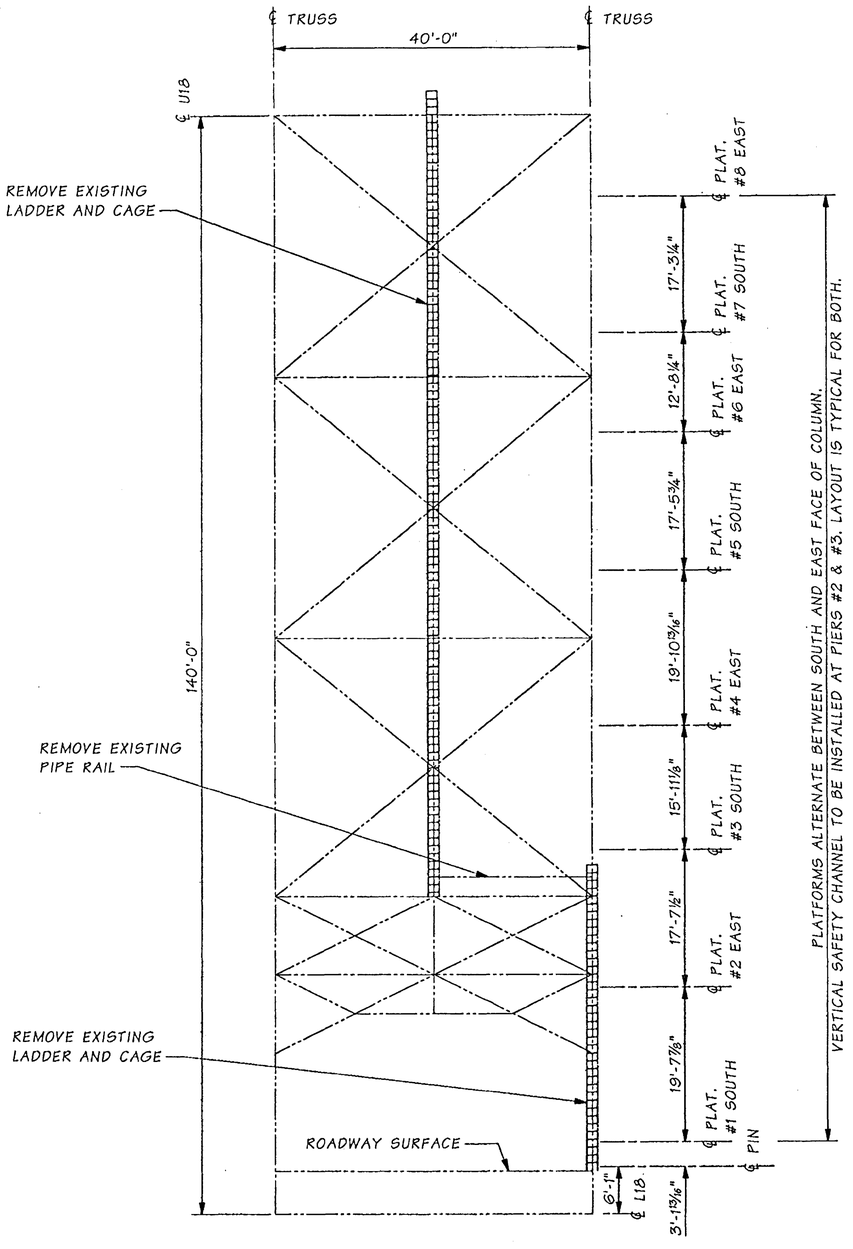

PLATFORM LOCATIONS

(LOOKING NORTH)

SOUTH FACING PLATFORM ℄'s ARE LOCATED AT ℄ OF PLATFORM BOLTS
EAST FACING PLATFORM ℄'s ARE LOCATED AT ℄ OF TOP PLATFORM BOLTS.
EXISTING LADDER REMOVAL TYPICAL FOR PIERS 2 AND 3
SEE BR. SHTS. ML31 THRU ML33 FOR DETAILS.

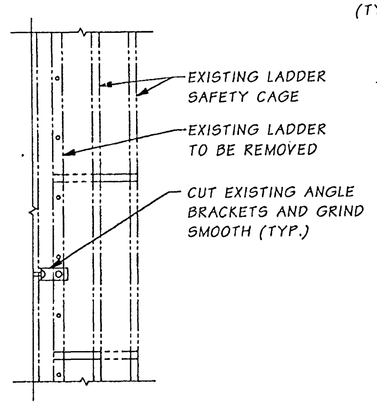

LADDER REMOVAL DETAIL

SEE SPECIAL PROVISION "REMOVAL OF STRUCTURE AND OBSTRUCTION".

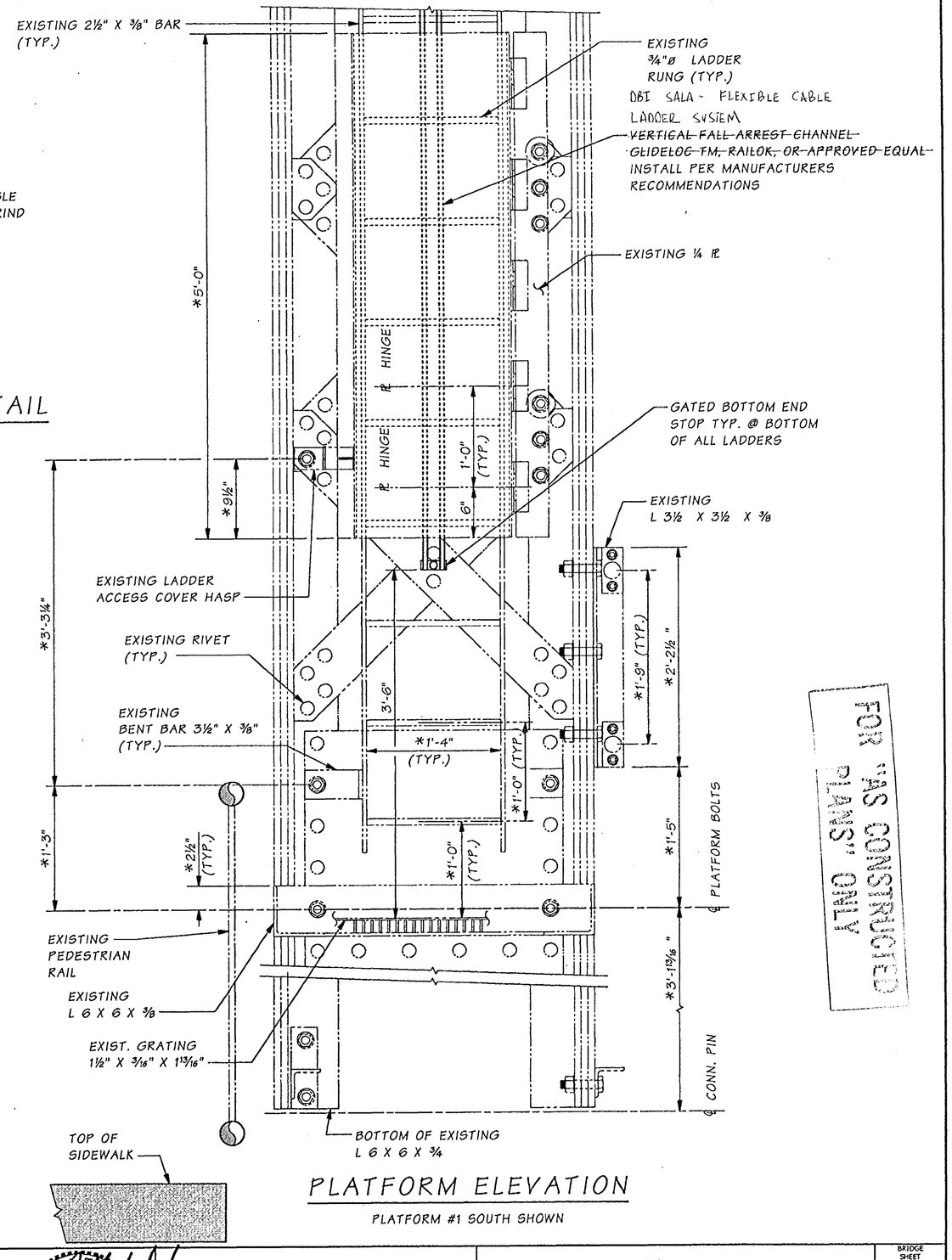

PLATFORM ELEVATION

PLATFORM #1 SOUTH SHOWN

FOR "AS CONSTRUCTED PLANS" ONLY

Bridge Design Engr.	Kapur, J		M:\Y-Team\Lewis_Clark Rehab\Miscellaneous\window files\PLATFORM1.WND
Supervisor	Kirker, KN	08/02	
Designed By	Schultz, E	08/02	
Checked By	Talukdar, M	08/02	
Detailed By	House, L/Evans P	08/02	
Bridge Projects Engr.			
Prelim. Plan By			
Architect/Specialist			

DATE	REVISION	BY	APP'D

REGION NO.	STATE	FED. AID PROJ. NO.	SHEET NO.	TOTAL SHEETS
10	WASH.	ACBH - 0433(007)		
JOB NUMBER 02x310				

KARL N. KIRKER — STATE OF WASHINGTON — 10206 — REGISTERED PROFESSIONAL ENGINEER — 9/13/02 — EXPIRES 11/3/03

BRIDGE AND STRUCTURES OFFICE

MIDHUNDAS TALUKDAR — STATE OF WASHINGTON — 27026 — REGISTERED PROFESSIONAL ENGINEER — 9/13/02 — EXPIRES 6/1/04

Washington State Department of Transportation

SR 433
LEWIS AND CLARK BRIDGE
DECK REPLACEMENT

LADDER SAFETY SYSTEM
SHEET 1 OF 3

BRIDGE SHEET NO. ML31

SHEET 241 OF 258 SHEETS

SR 433 JOB NO. 1566 SHEET 31

Wed Sep 18 16:07:05 2002

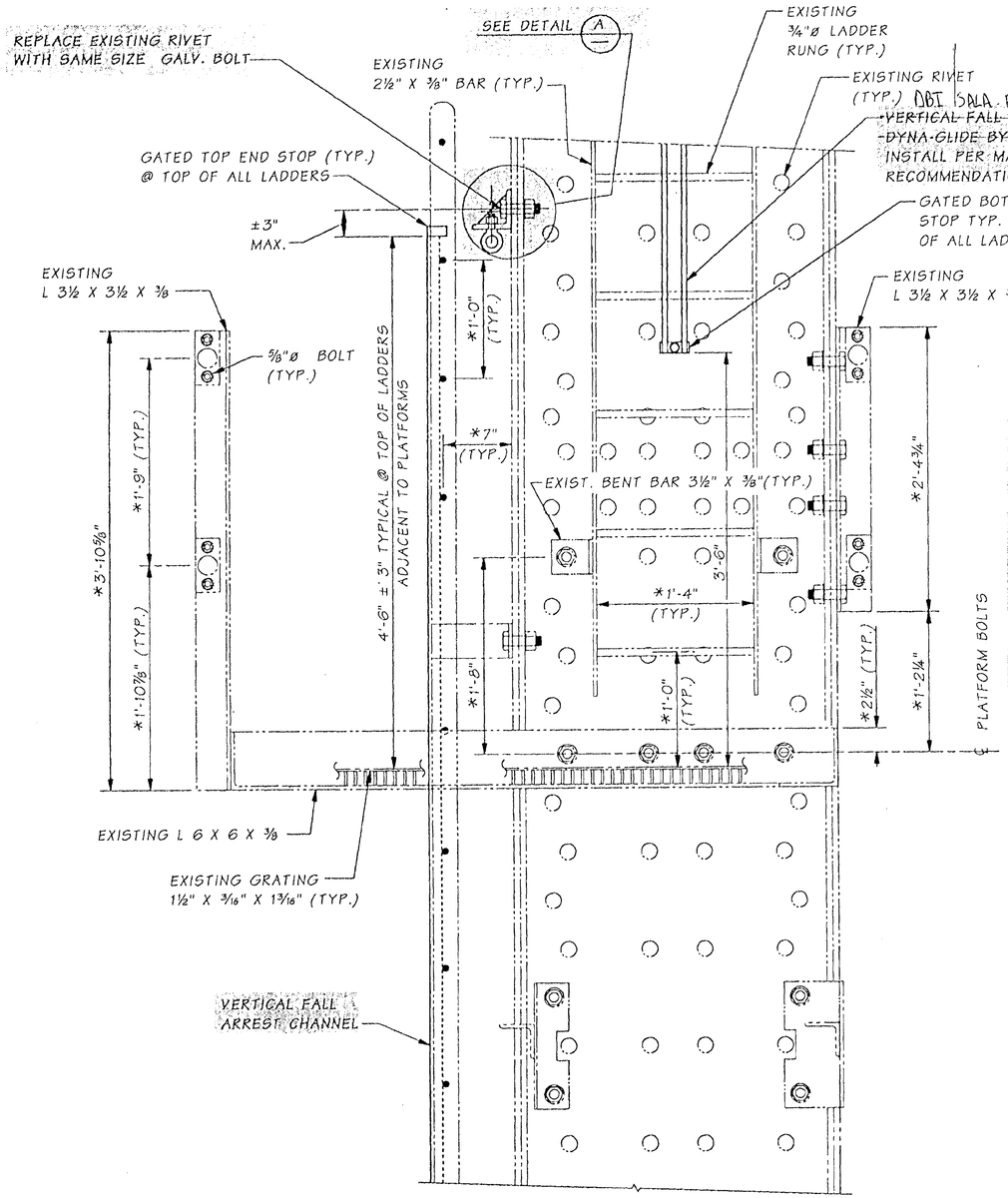

PLATFORM ELEVATION

PLATFORM #2 EAST SHOWN,
PLATFORMS #4, 6 & 8 EAST SIMILAR.
SEE BR. SHT. ML31 FOR LOCATIONS

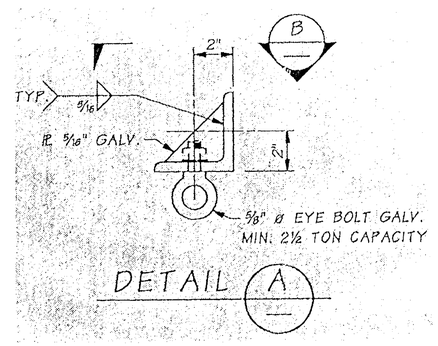

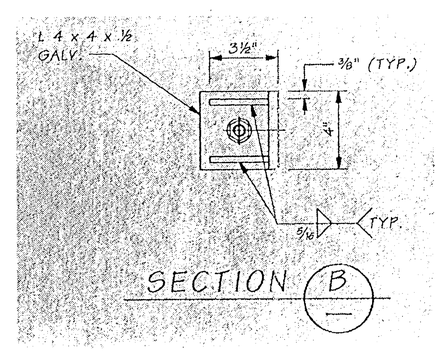

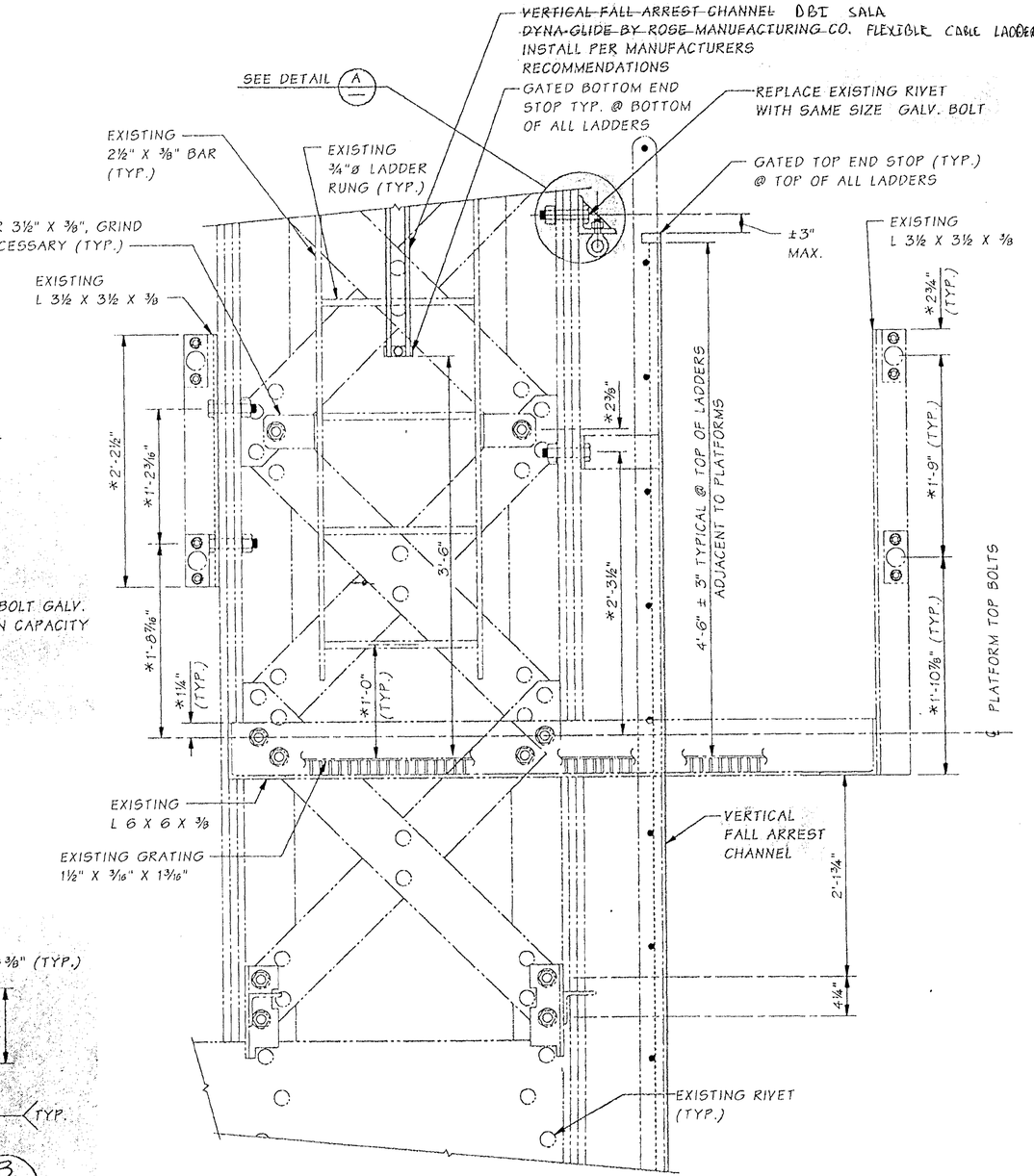

PLATFORM ELEVATION

PLATFORM #3 SOUTH SHOWN, PLATFORMS
#5 & 7 SOUTH SIMILAR. SEE BRIDGE SHEET ML31
FOR LOCATIONS

FOR "AS CONSTRUCTED PLANS" ONLY

SR 433 J NO. 1566 SHEET 32

Bridge Design Engr.	Kapur, J		M:\Y-Team\Lewis_Clark Rehab\Miscellaneous\window files\PLATFORM2.WND								
Supervisor	Kirker, KN	08/02									
Designed By	Schultz, E	08/02	11/02	REVISED FALL ARREST CHANNEL NOTE	ES		REGION NO.	STATE	FED. AID PROJ. NO.	SHEET NO.	TOTAL SHEETS
Checked By	Talukdar, M	08/02					10	WASH.			
Detailed By	House, L/Evans P	08/02	10/02	ADDED NOTE	ES		JOB NUMBER 02x310		ACBH - 0433(007)		
Bridge Projects Engr.											
Prelim. Plan By			10/02	MODIFIED ANCHOR	ES		6444				
Architect/Specialist			DATE	REVISION	BY	APP'D					

Mon Nov 25 08:29:28 2002

KARL N. KIRKER — STATE OF WASHINGTON — REGISTERED PROFESSIONAL ENGINEER — EXPIRES 11/3/03

BRIDGE AND STRUCTURES OFFICE

MONIRUL M. TALUKDAR — STATE OF WASHINGTON — REGISTERED PROFESSIONAL ENGINEER — EXPIRES 6/1/04

11/26/02

Washington State Department of Transportation

SR 433
LEWIS AND CLARK BRIDGE
DECK REPLACEMENT

LADDER SAFETY SYSTEM
SHEET 2 OF 3

BRIDGE SHEET NO. ML32

SHEET 242 OF 258 SHEETS

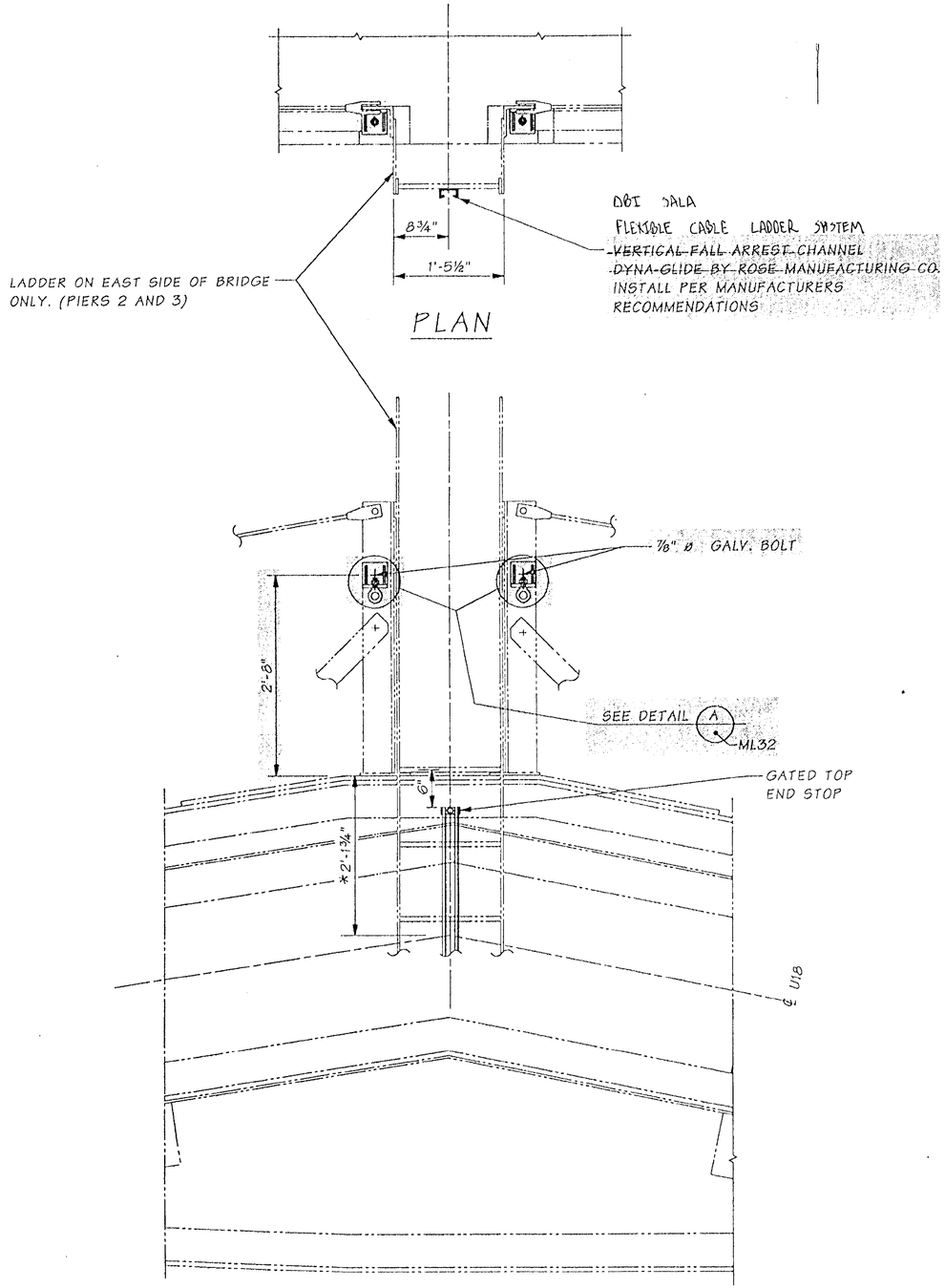

ELEVATION - EAST SIDE

PIER 2 SHOWN, PIER 3 SIMILAR.

FOR "AS CONSTRUCTED PLANS" ONLY

Bridge Design Engr.	Kapur, J		M:\Y-Team\Lewis_Clark Rehab\Miscellaneous\Window files\PLATFORM3.WND									
Supervisor	Kirker, KN	08/02										
Designed By	Schultz, E	08/02	11/02	REVISED FALL ARREST CHANNEL NOTE	ES		REGION NO.	STATE	FED. AID PROJ. NO.	SHEET NO.	TOTAL SHEETS	
Checked By	Talukdar, M	08/02					10	WASH.				
Detailed By	House, L/Evans P	08/02	10/02	ADDED NOTE	ES		JOB NUMBER		ACBH - 0433(007)			
Bridge Projects Engr.							02x310					
Prelim. Plan By			10/02	MODIFIED ANCHOR	ES		6444					
Architect/Specialist			DATE	REVISION	BY	APP'D						

Mon Nov 25 08:10:16 2002

KARL N. KIRKER — STATE OF WASHINGTON — REGISTERED PROFESSIONAL ENGINEER — EXPIRES 11/3/03

BRIDGE AND STRUCTURES OFFICE

KONSTANTIN K. TALUKDAR — STATE OF WASHINGTON — REGISTERED PROFESSIONAL ENGINEER — EXPIRES 6/1/04

Washington State Department of Transportation

SR 433
LEWIS AND CLARK BRIDGE
DECK REPLACEMENT

LADDER SAFETY SYSTEM
SHEET 3 OF 3

BRIDGE SHEET NO. ML33

SHEET 243 OF 258 SHEETS

SR 433 JOB NO. 1566 SHEET 33

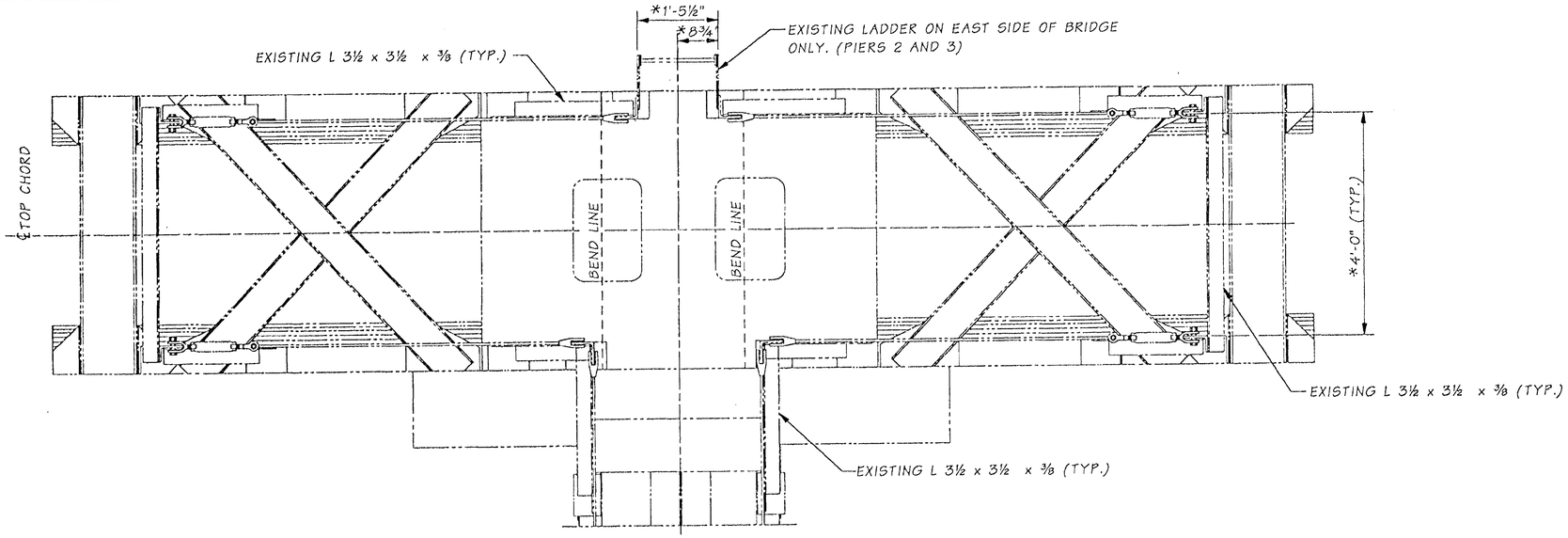

PLAN

EAST SIDE SHOWN WEST SIDE
SIMILAR EXCEPT FOR LADDER

TOP CHORD RAILING NOTES

1. THE CONTRACTOR SHALL SUBMIT WORKING SHOP DRAWINGS FOR THE TOP CHORD RAILING TO THE ENGINEER FOR APPROVAL.
2. PIPE AND STRUCTURAL TUBING SHALL BE ASTM A53 GRADE B.
3. POSTS, RAIL, AND HARDWARE SHALL BE GALVANIZED IN ACCORDANCE WITH AASHTO M111 OR M232 AS APPLICABLE.

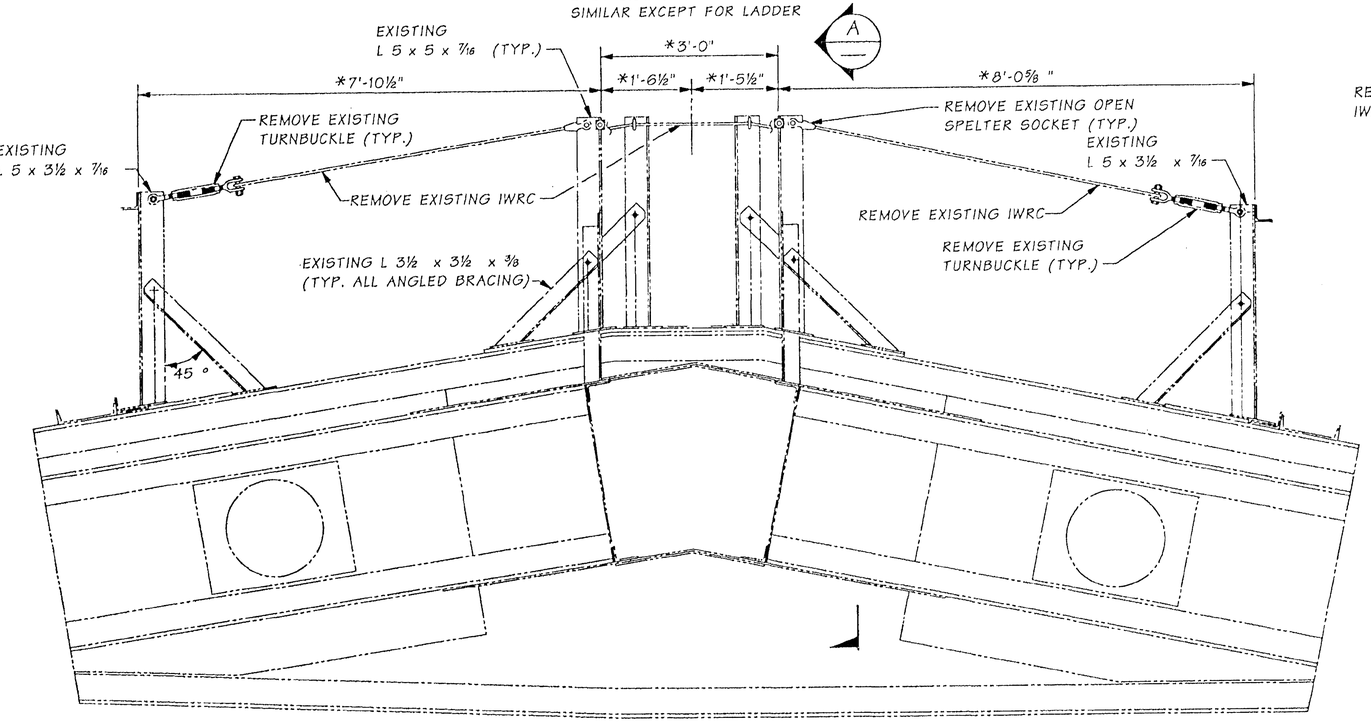

ELEVATION - WEST SIDE

PIER 2 SHOWN, PIER 3 SIMILAR.

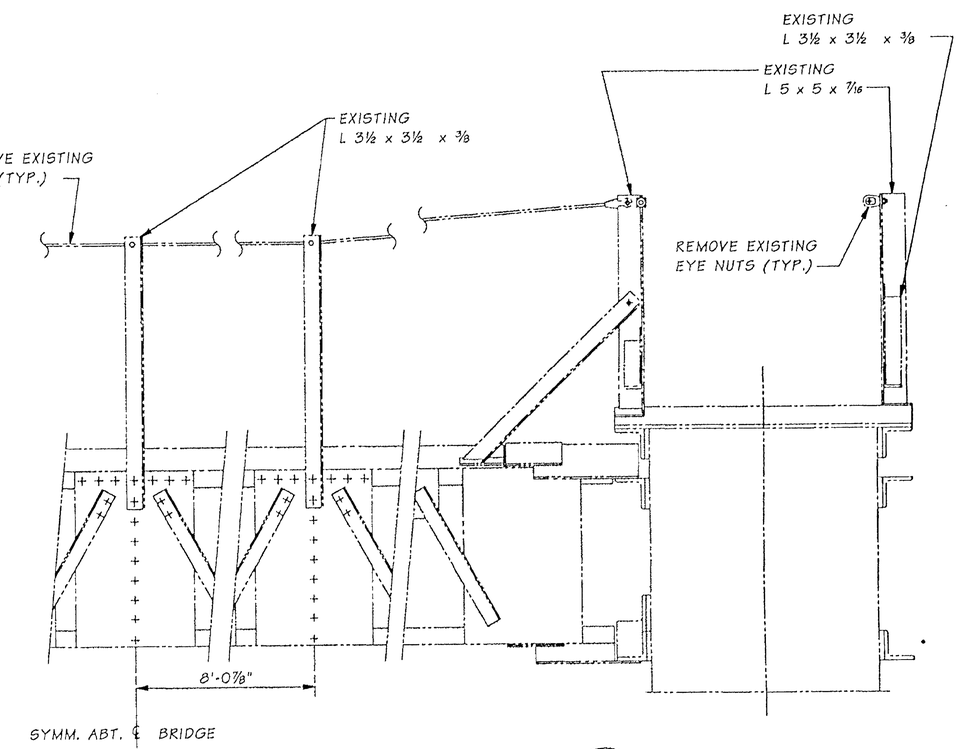

SECTION A

FOR "AS CONSTRUCTED PLANS" ONLY

...e Design Engr.	Kapur, J		M:\Y-Team\Lewis_Clark Rehab\Miscellaneous\Window files\TOP CHORD RAILING 1.WND				REGION NO.	STATE	FED. AID PROJ. NO.	SHEET NO.	TOTAL SHEETS
...pervisor	Kirker, KN						10	WASH.	ACBH - 0433(007)		
Designed By	Schultz, E	10/02					JOB NUMBER 02x310				
Checked By	Talukdar, M	10/02									
Detailed By	Schultz, E	10/02									
Bridge Projects Engr.											
Prelim. Plan By											
Architect/Specialist			DATE	REVISION	BY	APP'D	6444				

KARL N. KIRKER, STATE OF WASHINGTON, REGISTERED PROFESSIONAL ENGINEER, 10/30/02, EXPIRES 11/3/03

BRIDGE AND STRUCTURES OFFICE

MUNINDRA TALUKDAR, STATE OF WASHINGTON, REGISTERED PROFESSIONAL ENGINEER, 10/30/02, EXPIRES 6/1/04

Washington State Department of Transportation

SR 433
LEWIS AND CLARK BRIDGE
DECK REPLACEMENT

EXISTING TOP CHORD RAILING AT PIER 2 & 3

BRIDGE SHEET NO. ML33A

SHEET 243A OF 258 SHEETS

SR 433 J 1566 SHEET 33

Wed Oct 30 08:06:08 2002

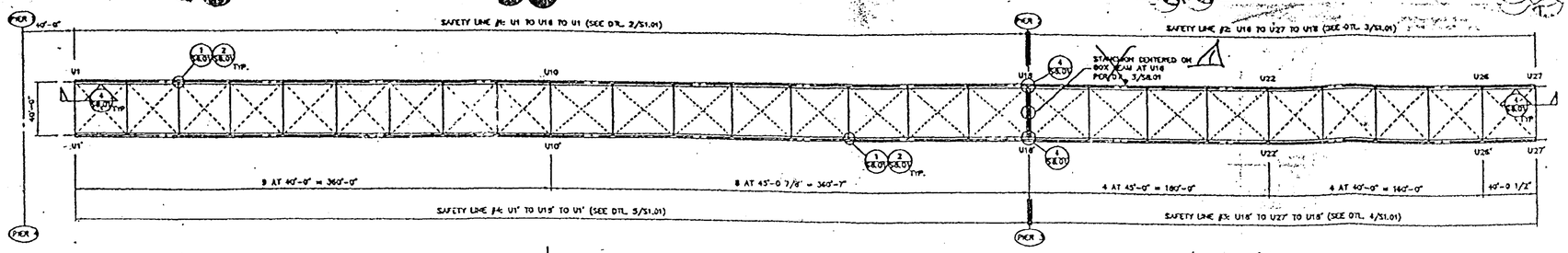

1 S1.01 SAFETY LINE LAYOUT PLAN
1" = 40'

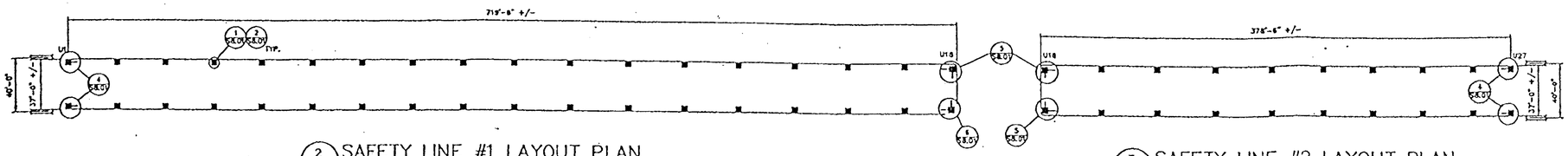

2 S1.01 SAFETY LINE #1 LAYOUT PLAN
NTS

3 S1.01 SAFETY LINE #2 LAYOUT PLAN
NTS

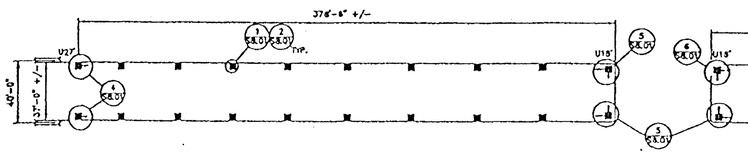

4 S1.01 SAFETY LINE #3 LAYOUT PLAN
NTS

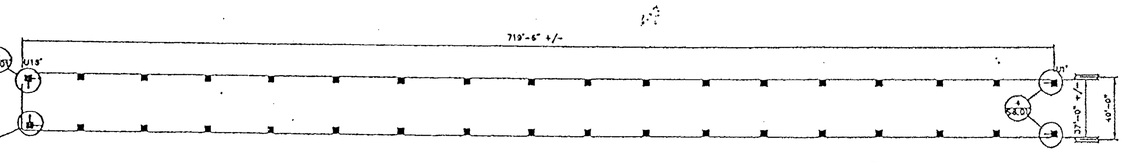

5 S1.01 SAFETY LINE #4 LAYOUT PLAN
NTS

STRUCTURAL NOTES

1. THE CONTRACTOR IS RESPONSIBLE FOR VERIFICATION AND CORRELATION OF ALL ITEMS AND WORK NECESSARY FOR COMPLETION OF THE PROJECT AS INDICATED BY THE CONTRACT DOCUMENTS. SHOULD ANY QUESTION ARISE REGARDING THE CONTRACT DOCUMENTS OR SITE CONDITIONS, THE CONTRACTOR SHALL REQUEST INTERPRETATION AND CLARIFICATION FROM THE ENGINEER BEFORE BEGINNING THE PROJECT. THE ABSENCE OF SUCH REQUEST SHALL SIGNIFY THAT THE CONTRACTOR HAS REVIEWED AND FAMILIARIZED HIMSELF WITH ALL ASPECTS OF THE PROJECT AND HAS COMPLETE COMPREHENSION THEREOF. ALL PHASES OF THE WORK SHALL CONFORM TO THE 1997 UNIFORM BUILDING CODE WITH ALL APPLICABLE WASHINGTON STATE AMENDMENTS. THE CONTRACTOR SHALL BE RESPONSIBLE FOR CONFORMANCE TO ALL SAFETY REGULATIONS DURING CONSTRUCTION.

2. THE CONTRACT DRAWINGS AND SPECIFICATIONS REPRESENT THE FINISHED STRUCTURE. UNLESS OTHERWISE SPECIFICALLY NOTED, THEY DO NOT INDICATE THE METHOD OF CONSTRUCTION OR CONSTRUCTION LOADS. THE CONTRACTOR SHALL PROVIDE ALL METHODS AND RELATED EQUIPMENT NECESSARY TO PROTECT THE STRUCTURE, WORKMEN AND OTHER PERSONS AND PROPERTY DURING CONSTRUCTION. THE CONTRACTOR SHALL, AT HIS OWN EXPENSE, ENGAGE PROPERLY QUALIFIED PERSONS TO DETERMINE WHERE AND HOW TEMPORARY PRECAUTIONARY MEASURES SHALL BE USED AND INSPECT SAME IN THE FIELD. ANY MATERIAL NOT AS SPECIFIED OR IMPROPER MATERIAL INSTALLATION OR WORKMANSHIP SHALL BE REMOVED AND REPLACED WITH SPECIFIED MATERIAL IN A WORKMANLIKE MANNER AT THE CONTRACTOR'S EXPENSE.

3. THESE PLANS, SPECIFICATIONS, ENGINEERING AND DESIGN WORK ARE INTENDED SOLELY FOR THE PROJECT SPECIFIED HEREIN. MILLER CONSULTING ENGINEERS DISCLAIMS ALL LIABILITY IF THESE PLANS AND SPECIFICATIONS OR THE DESIGN, ADVICE AND INSTRUCTIONS ATTENDANT THERETO ARE USED ON ANY PROJECT OR AT ANY LOCATION OTHER THAN THE PROJECT AND LOCATION SPECIFIED HEREIN. OBSERVATION VISITS TO THE JOB SITE AND SPECIAL INSPECTIONS ARE NOT PART OF THE STRUCTURAL ENGINEER'S RESPONSIBILITY UNLESS THE CONTRACT DOCUMENTS SPECIFY OTHERWISE.

4. ALL STRUCTURAL AND MISCELLANEOUS STEEL TO BE ASTM A36-97a. ALL BOLTS TO BE ASTM A325-97 WITH MATCHING NUTS. NUTS SHALL BE TIGHTENED AS FOLLOWS 1) FOR SLIP-CRITICAL CONNECTIONS, PER RESEARCH COUNCIL ON STRUCTURAL CONNECTIONS (RCSC) SPECIFICATION FOR STRUCTURAL JOINTS, SUBSECTION 8(a)(1) THROUGH 8(a)(4) AND TABLE 5. 2) FOR NON SLIP-CRITICAL CONNECTIONS, TO A SNUG TIGHT CONDITION AS SPECIFIED IN RCSC SPECIFICATION FOR STRUCTURAL JOINTS, SUBSECTION 8(c). ALL STRUCTURAL STEEL EXPOSED TO WEATHER SHALL BE ZINC (HOT-DIP GAL) COATED CONFORMING TO A123-97a(E). ALL WELDING TO CONFORM TO AMERICAN WELDING SOCIETY (AWS) D1.1-2000 USING E70XX ELECTRODES. WELD LENGTHS SHOWN ARE EFFECTIVE AS SPECIFIED PER THE SPECIFICATIONS OF THE AMERICAN INSTITUTE OF STEEL CONSTRUCTION (AISC). WHERE WELD LENGTHS ARE NOT SHOWN, THE WELD SHALL BE FULL LENGTH OF MEMBERS BEING JOINED. ALL BUTT WELDS SHALL BE FULL PENETRATION WELDS UNLESS NOTED OTHERWISE ON STRUCTURAL DRAWINGS. ALL STRUCTURAL STEEL TUBES SHALL BE ASTM A500-98, GRADE B, F_y= 46000 PSI.

5. SYSTEM IS DESIGNED TO MEET ALL APPLICABLE WASHINGTON STATE ADMINISTRATIVE CODES FOR FALL ARREST SYSTEMS.

6. ENGINEERING CALCULATIONS AND DESIGN LOADS TO THE EXISTING STRUCTURE ARE INCLUDED IN THE DESIGN PACKAGE.

7. INSTALL ALL PARTS PER MANUFACTURER'S RECOMMENDED INSTALLATION PROCEDURES.

1

THOMAS E. FOWLER
STATE OF WASHINGTON
22671
REGISTERED
PROFESSIONAL ENGINEER

EXPIRES: 6/19/04

Structurally Acceptable
WASHINGTON STATE
DEPARTMENT OF TRANSPORTATION
BRIDGE AND STRUCTURES OFFICE
BY: CONSTRUCTION SUPPORT ENGINEER
MAR -5 2004
DATE: _____

DRAWING INDEX

S1.01	STRUCTURAL NOTES, SAFETY LINE LAYOUT PLAN
S1.02	SAFETY CLIMB LADDER LAYOUT
S8.01	STRUCTURAL DETAILS

CONTRACT NO. 6444
CHANGE ORDER NO. 50
PAGE 5 OF 7

LINE IS 2 INCHES AT FULL SCALE
IF NOT 2" - SCALE ACCORDINGLY

COPYRIGHT 2003
Miller Consulting Engineers, Inc.

MILLER CONSULTING ENGINEERS
8570 SW Barber Blvd.
Suite One Hundred
Portland, OR 97219-5412
Phone (503) 246-1250
Fax (503) 246-1385

LEWIS AND CLARK BRIDGE
SAFETY LINE LAYOUT

SHEET CONTENT: LAYOUT PLAN
JOB NO. 040050
DRAWN ARL
CHECKED TEF
DATE 2-6-04
REVISIONS 1 3-1-04
ML33B
SHEET S 1.01

FOR "AS CONSTRUCTED PLANS" ONLY

FILE NAME	C:\AAWork\kelso\Svensen's Curve\L3425WASTESITE.dgn
TIME	02:37:18 PM
DATE	08/17/2005
PLOTTED BY	spahnk
DESIGNED BY	
ENTERED BY	
CHECKED BY	
PROJ. ENGR.	
REGIONAL ADM.	

REVISION | DATE | BY

REGION NO.	STATE	FED.AID PROJ.NO.
10	WASH	
JOB NUMBER		
CONTRACT NO. 6444		LOCATION NO.

P.E. STAMP BOX DATE
P.E. STAMP BOX DATE

Washington State Department of Transportation

SR 433
LEWIS AND CLARK BRIDE
DECK REPLACEMENT

TOP CHORD SAFETY LINE LAYOUT - LAYOUT PLAN

PLOT11
ML33B
SHEET 243B OF 258 SHEETS

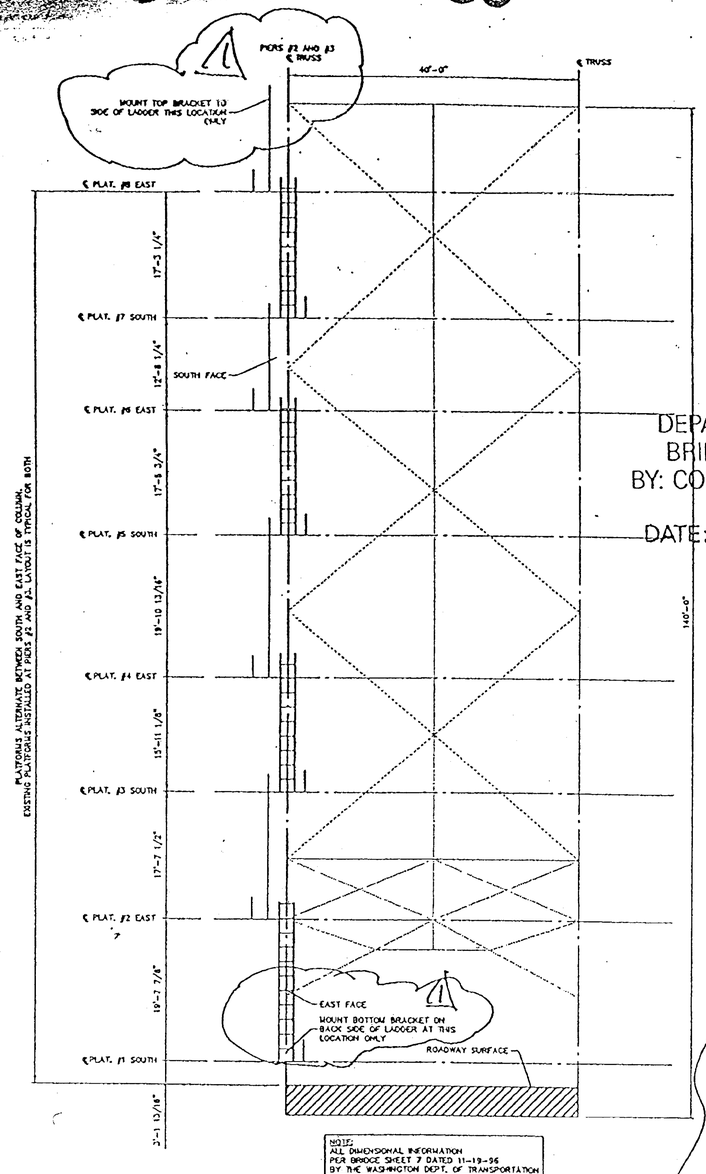

1 S1.02 PLATFORM LOCATIONS (LOOKING WEST) 1/8" = 1'-0"

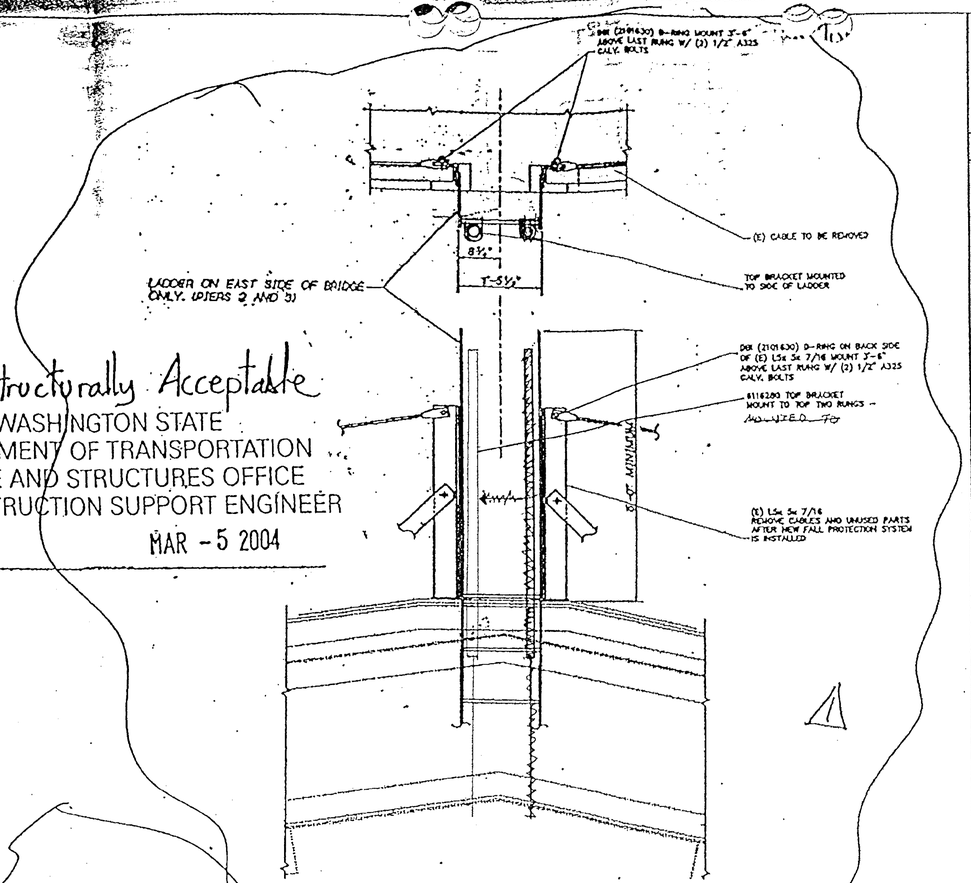

3 S1.02 LADDER DETAIL AT TOP OF BRIDGE

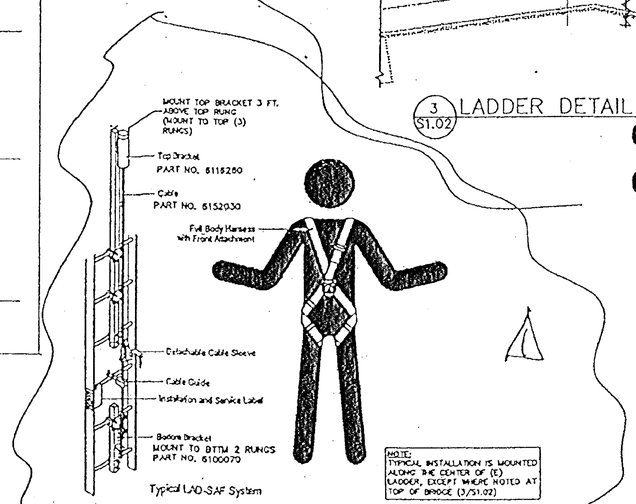

2 S1.02 TYPICAL LADDER DETAIL NTS

Structurally Acceptable
WASHINGTON STATE
DEPARTMENT OF TRANSPORTATION
BRIDGE AND STRUCTURES OFFICE
BY: CONSTRUCTION SUPPORT ENGINEER
DATE: MAR - 5 2004

CONTRACT NO. 6444
CHANGE ORDER NO. 50
PAGE 6 OF 7

THOMAS E. FOWLER
STATE OF WASHINGTON
23671
REGISTERED PROFESSIONAL ENGINEER
EXPIRES: 6/29/04

LINE IS 2 INCHES AT FULL SCALE
(IF NOT 2" - SCALE ACCORDINGLY)

COPYRIGHT 2003
Miller Consulting Engineers, Inc.

MILLER CONSULTING ENGINEERS
8570 SW Barber Blvd.
Suite One Hundred
Portland, OR 97219-5412
Phone (503) 246-1250
Fax (503) 246-1385

LEWIS AND CLARK BRIDGE
SAFETY LINE LAYOUT

SHEET CONTENT: LADDER LAYOUT PLAN

JOB NO. 040050
DRAWN ARL CHECKED
DATE 2-6-04
REVISIONS 3-1-04
ML33C
SHEET S1.02

FOR "AS CONSTRUCTED PLANS" ONLY

FILE NAME	C:\AAWork\kelso\Svensen's Curve\L3425WASTESITE.dgn						
TIME	02:37:18 PM						
DATE	08/17/2005						
PLOTTED BY	spahnk						
DESIGNED BY							
ENTERED BY							
CHECKED BY							
PROJ. ENGR.							
REGIONAL ADM.		REVISION	DATE	BY			

REGION NO.	STATE	FED. AID PROJ. NO.
10	WASH	
JOB NUMBER		
CONTRACT NO. 6444		LOCATION NO.

P.E. STAMP BOX DATE

P.E. STAMP BOX DATE

Washington State Department of Transportation

SR 433
LEWIS AND CLARK BRIDE
DECK REPLACEMENT

TOP CHORD SAFETY LINE LAYOUT - LADDER LAYOUT PLAN

PLOT11
ML33C
SHEET 243C OF 258 SHEETS

Structurally Acceptable
WASHINGTON STATE
DEPARTMENT OF TRANSPORTATION
BRIDGE AND STRUCTURES OFFICE
BY: CONSTRUCTION SUPPORT ENGINEER
DATE: MAR -5 2004

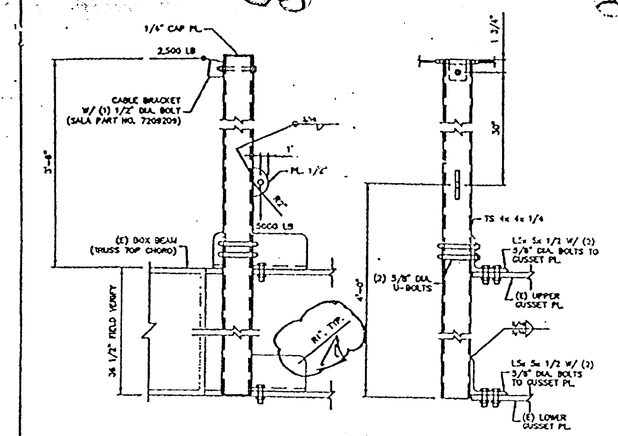

1 S8.01 TYPICAL STANCHION DETAIL
1 1/2" = 1'-0"

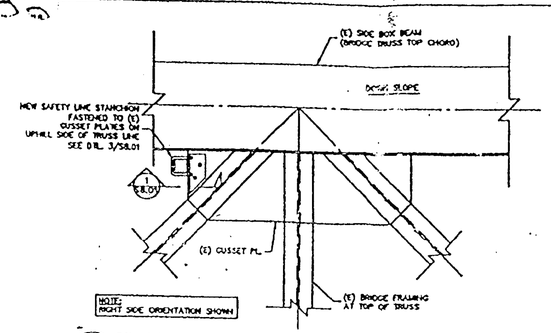

2 S8.01 TYPICAL STANCHION LOCATION DETAIL
3/4" = 1'-0"

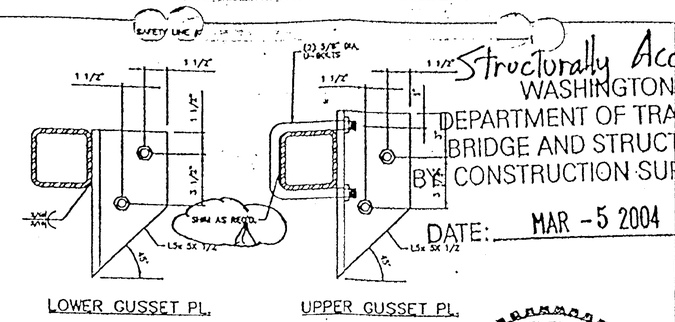

3 S8.01 PLAN VIEW ANGLE CONN. AT GUSSET PL.
3" = 1'-0"

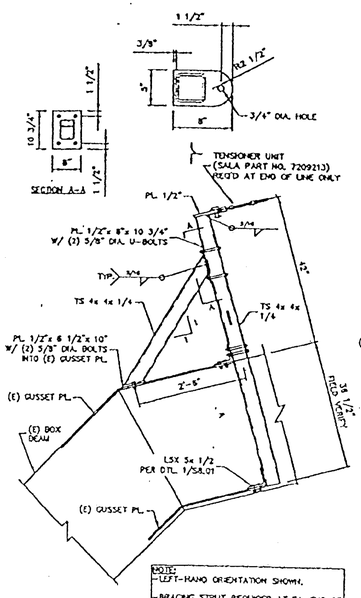

4 S8.01 STANCHION STRUT DETAIL
3/4" = 1'-0"

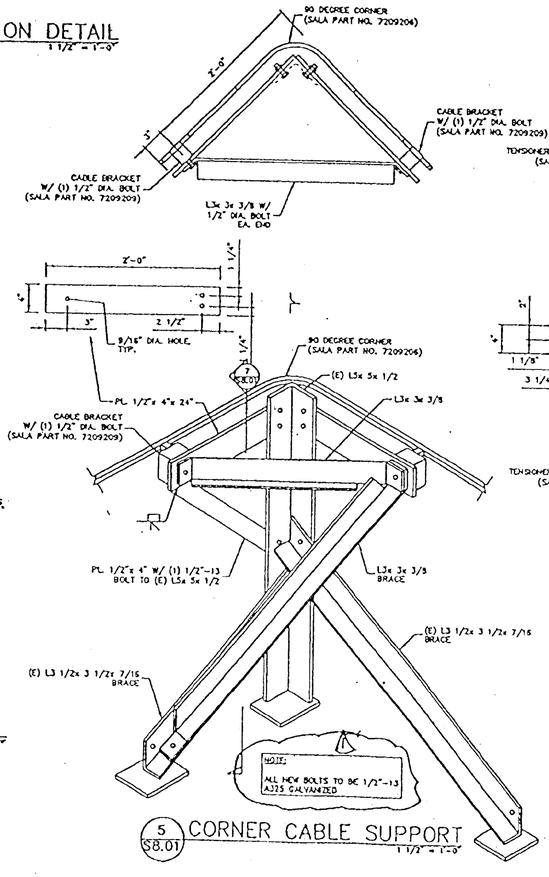

5 S8.01 CORNER CABLE SUPPORT
1 1/2" = 1'-0"

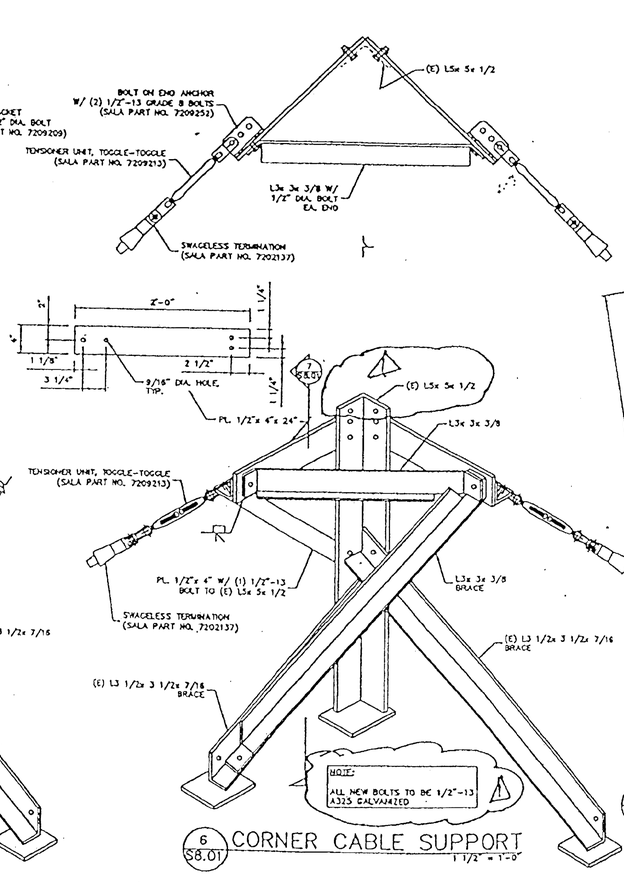

6 S8.01 CORNER CABLE SUPPORT
1 1/2" = 1'-0"

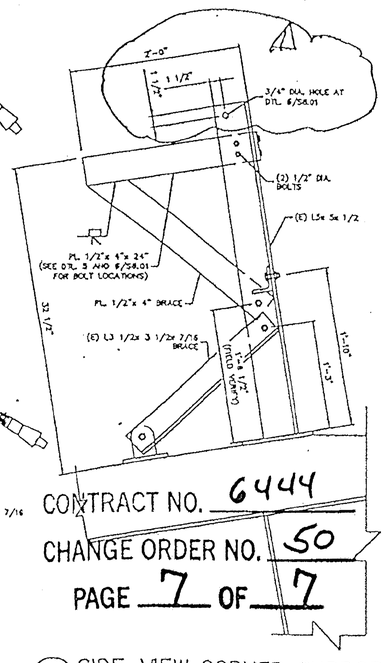

7 S8.01 SIDE VIEW CORNER SUPPORT
NTS

CONTRACT NO. 6444
CHANGE ORDER NO. 50
PAGE 7 OF 7

THOMAS E. FOWLER
STATE OF WASHINGTON
23671
REGISTERED PROFESSIONAL ENGINEER
EXPIRES: 6/29/04

LINE IS 2 INCHES AT FULL SCALE
(IF NOT 2" = SCALE ACCORDINGLY)

MILLER CONSULTING ENGINEERS
8570 SW Barbur Blvd.
Suite One Hundred
Portland, OR 97219-5412
Phone (503) 246-1250
Fax (503) 246-1385

LEWIS AND CLARK BRIDGE
SAFETY LINE LAYOUT

SHEET CONTENT: SAFETY LINE DETAILS

JOB No. 040050
DRAWN ARL
CHECKED
DATE 2-6-04
REVISIONS 1 3-1-04
ML33D
SHEET S 8.01

FOR "AS CONSTRUCTED PLANS" ONLY

FILE NAME	C:\AAWork\kelso\Svensen's Curve\L3425WASTESITE.dgn							PLOT11
TIME	02:37:18 PM							
DATE	08/17/2005							ML33D
PLOTTED BY	spohnk							
DESIGNED BY								SHEET 243D OF 258 SHEETS
ENTERED BY								
CHECKED BY								
PROJ. ENGR.								
REGIONAL ADM.		REVISION	DATE	BY				

REGION NO.	STATE	FED. AID PROJ. NO.
10	WASH	
JOB NUMBER		
CONTRACT NO. 6444		LOCATION NO.

P.E. STAMP BOX — DATE

P.E. STAMP BOX — DATE

Washington State Department of Transportation

SR 433
LEWIS AND CLARK BRIDE
DECK REPLACEMENT

TOP CHORD SAFETY LINE LAYOUT - SAFETY LINE DETAILS

S = Bar is included in substructure quantities.
L = Lump sum quantity.
T = Transverse or S = Seismic
E = Bar is to be epoxy coated.
V = Bar dimensions vary between dimensions shown on this line and the following line.

MARK NO.	LOCATION	SIZE	NO REQ'D	BEND TYPE	TIE OR STIR.	LUMP SUM	SUBSTR.	EPOXY COAT	VARIES	NO. EACH	U Ft.	U In.	W Ft.	W In.	X Ft.	X In.	Y Ft.	Y In.	Z Ft.	Z In.	θ_1 Deg.	θ_2 Deg.	LENGTH Ft.	LENGTH In.	WEIGHT Lbs.
	MAIN SPAN DECK REINF.																								
	DECK PANEL A																								
1	SLAB BOT. LONGIT.	6	51	50							39	7.5											39	8	3035
2	SLAB BOT. LONGIT.	4	10	50							39	7.5											39	8	265
3	SLAB BOT. TRANSV.	6	46	50							31	0.0											31	0	2142
4	SLAB BOT. TRANSV.	6	192	50							7	6.0											7	6	2163
5	CURB TRANSV.	5	192	93				E															4	8	934
6	SLAB BOT.TO TOP TIES	4	75	63							0	8.0	0	6.0	0	6.0	0	4.5	0	4.5			1	12	100
6	SLAB BOT.TO TOP TIES	4	90	63							0	8.0	0	5.3	0	5.3	0	4.5	0	4.5			1	11	113
6	SLAB BOT.TO TOP TIES	4	90	63							0	8.0	0	4.5	0	4.5	0	4.5	0	4.5			1	9	105
7	CURB LONGIT.	6	4	50				E			39	7.5											39	8	238
8	SLAB TOP TRANSV.	6	96	51				E			20	11.0											21	7	3115
8	SLAB TOP TRANSV.	6	96	51				E			17	6.0											18	2	2622
9	SLAB TOP LONGIV.	6	72	50				E			39	7.5											39	8	4285
	DECK PANELS B																								
1	SLAB BOT. LONGIT.	6	408	50							39	8.0											39	8	24306
2	SLAB BOT. LONGIT.	4	80	50							39	8.0											39	8	2120
3	SLAB BOT. TRANSV.	6	368	50							31	0.0											31	0	17133
4	SLAB BOT. TRANSV.	6	1536	50							7	5.0											7	5	17109
5	CURB TRANSV.	5	1536	93				E															4	8	7475
6	SLAB BOT.TO TOP TIES	4	600	63							0	8.0	0	6.0	0	6.0	0	4.5	0	4.5			1	12	801
6	SLAB BOT.TO TOP TIES	4	720	63							0	8.0	0	5.3	0	5.3	0	4.5	0	4.5			1	11	906
6	SLAB BOT.TO TOP TIES	4	720	63							0	8.0	0	4.5	0	4.5	0	4.5	0	4.5			1	9	841
7	CURB LONGIT.	6	32	50				E			39	8.0											39	8	1906
8	SLAB TOP TRANSV.	6	768	51				E			20	11.0											21	7	24920
8	SLAB TOP TRANSV.	6	768	51				E			17	6.0											18	2	20980
9	SLAB TOP LONGIV.	6	576	50				E			39	8.0											39	8	34314
	DECK PANELS C																								
1	SLAB BOT. LONGIT.	6	1020	50							39	8.0											39	8	60765
2	SLAB BOT. LONGIT.	4	200	50							39	8.0											39	8	5299
3	SLAB BOT. TRANSV.	6	920	50							31	0.0											31	0	42833
4	SLAB BOT. TRANSV.	6	3840	50							7	5.0											7	5	42773
5	CURB TRANSV.	5	3840	93				E															4	8	18689
6	SLAB BOT.TO TOP TIES	4	1500	63							0	8.0	0	6.0	0	6.0	0	4.5	0	4.5			1	12	2003
6	SLAB BOT.TO TOP TIES	4	1800	63							0	8.0	0	5.3	0	5.3	0	4.5	0	4.5			1	11	2264
6	SLAB BOT.TO TOP TIES	4	1800	63							0	8.0	0	4.5	0	4.5	0	4.5	0	4.5			1	9	2104
7	CURB LONGIT.	6	80	50				E			39	8.0											39	8	4766
8	SLAB TOP TRANSV.	6	1920	51				E			20	11.0											21	7	62301
8	SLAB TOP TRANSV.	6	1920	51				E			17	6.0											18	2	52449
9	SLAB TOP LONGIV.	6	1440	50				E			39	8.0											39	8	85786
	DECK PANELS D																								
1	SLAB BOT. LONGIT.	6	408	50							44	8.0											44	8	27370
2	SLAB BOT. LONGIT.	4	80	89							44	8.0	2	0.0									46	8	2494
3	SLAB BOT. TRANSV.	6	432	50							31	0.0											31	0	20113
4	SLAB BOT. TRANSV.	6	1712	50							7	5.0											7	5	19069
5	CURB TRANSV.	5	1712	93				E															4	8	8332
6	SLAB BOT.TO TOP TIES	4	600	63							0	8.0	0	6.0	0	6.0	0	4.5	0	4.5			1	12	801
6	SLAB BOT.TO TOP TIES	4	720	63							0	8.0	0	5.3	0	5.3	0	4.5	0	4.5			1	11	906
6	SLAB BOT.TO TOP TIES	4	720	63							0	8.0	0	4.5	0	4.5	0	4.5	0	4.5			1	9	841
7	CURB LONGIT.	6	32	50				E			44	8.0											44	8	2147
8	SLAB TOP TRANSV.	6	856	51				E			20	11.0											21	7	27776
8	SLAB TOP TRANSV.	6	856	51				E			17	6.0											18	2	23384
9	SLAB TOP LONGIV.	6	576	50				E			44	8.0											44	8	38640
	DECK PANELS E																								
1	SLAB BOT. LONGIT.	6	153	50							44	8.0											44	8	10264
2	SLAB BOT. LONGIT.	4	30	89							44	8.0	2	0.0									46	8	935
3	SLAB BOT. TRANSV.	6	162	50							31	0.0											31	0	7542
4	SLAB BOT. TRANSV.	6	642	50							7	5.0											7	5	7151
5	CURB TRANSV.	5	642	93				E															4	8	3125
6	SLAB BOT.TO TOP TIES	4	225	63							0	8.0	0	6.0	0	6.0	0	4.5	0	4.5			1	12	301
6	SLAB BOT.TO TOP TIES	4	270	63							0	8.0	0	5.3	0	5.3	0	4.5	0	4.5			1	11	340
6	SLAB BOT.TO TOP TIES	4	270	63							0	8.0	0	4.5	0	4.5	0	4.5	0	4.5			1	9	316
7	CURB LONGIT.	6	12	50				E			44	8.0											44	8	805
8	SLAB TOP TRANSV.	6	321	51				E			20	11.0											21	7	10416
8	SLAB TOP TRANSV.	6	321	51				E			17	6.0											18	2	8769
9	SLAB TOP LONGIV.	6	216	50				E			44	8.0											44	8	14490
	DECK PANELS F																								
1	SLAB BOT. LONGIT.	6	102	50							44	8.0											44	8	6842
2	SLAB BOT. LONGIT.	4	20	89							44	8.0	2	0.0									46	8	623
3	SLAB BOT. TRANSV.	6	108	50							31	0.0											31	0	5028
4	SLAB BOT. TRANSV.	6	428	50							7	5.0											7	5	4767
5	CURB TRANSV.	5	428	93				E															4	8	2083
6	SLAB BOT.TO TOP TIES	4	150	63							0	8.0	0	6.0	0	6.0	0	4.5	0	4.5			1	12	200
6	SLAB BOT.TO TOP TIES	4	180	63							0	8.0	0	5.3	0	5.3	0	4.5	0	4.5			1	11	226
6	SLAB BOT.TO TOP TIES	4	180	63							0	8.0	0	4.5	0	4.5	0	4.5	0	4.5			1	9	210
7	CURB LONGIT.	6	8	50				E			44	8.0											44	8	537

S = Bar is included in substructure quantities.
L = Lump sum quantity.
T = Transverse or S = Seismic
E = Bar is to be epoxy coated.
V = Bar dimensions vary between dimensions shown on this line and the following line.

MARK NO.	LOCATION	SIZE	NO REQ'D	BEND TYPE	TIE OR STIR.	LUMP SUM	SUBSTR.	EPOXY COAT	VARIES	NO. EACH	U Ft.	U In.	W Ft.	W In.	X Ft.	X In.	Y Ft.	Y In.	Z Ft.	Z In.	θ_1 Deg.	θ_2 Deg.	LENGTH Ft.	LENGTH In.	WEIGHT Lbs.
8	SLAB TOP TRANSV.	6	214	51				E			20	11.0											21	7	6944
8	SLAB TOP TRANSV.	6	214	51				E			17	6.0											18	2	5846
9	SLAB TOP LONGIV.	6	154	50				E			44	8.0											44	8	10331
	DECK PANELS G																								
1	SLAB BOT. LONGIT.	6	102	50							44	8.0											44	8	6842
2	SLAB BOT. LONGIT.	4	20	89							44	8.0	2	0.0									46	8	623
3	SLAB BOT. TRANSV.	6	108	50							31	0.0											31	0	5028
4	SLAB BOT. TRANSV.	6	428	50							7	5.0											7	5	4767
5	CURB TRANSV.	5	428	93				E															4	8	2083
6	SLAB BOT.TO TOP TIES	4	150	63							0	8.0	0	6.0	0	6.0	0	4.5	0	4.5			1	12	200
6	SLAB BOT.TO TOP TIES	4	180	63							0	8.0	0	5.3	0	5.3	0	4.5	0	4.5			1	11	226
6	SLAB BOT.TO TOP TIES	4	180	63							0	8.0	0	4.5	0	4.5	0	4.5	0	4.5			1	9	210
7	CURB LONGIT.	6	8	50				E			44	8.0											44	8	537
8	SLAB TOP TRANSV.	6	214	51				E			20	11.0											21	7	6944
8	SLAB TOP TRANSV.	6	214	51				E			17	6.0											18	2	5846
9	SLAB TOP LONGIV.	6	154	50				E			44	8.0											44	8	10331
	DECK PANEL H																								
1	SLAB BOT. LONGIT.	6	51	50							39	9.5											39	10	3048
2	SLAB BOT. LONGIT.	4	10	50							39	9.5											39	10	266
3	SLAB BOT. TRANSV.	6	46	50							31	0.0											31	0	2142
4	SLAB BOT. TRANSV.	6	192	50							7	5.0											7	5	2139
5	CURB TRANSV.	5	192	93				E															4	8	934
6	SLAB BOT.TO TOP TIES	4	75	63							0	8.0	0	6.0	0	6.0	0	4.5	0	4.5			1	12	100
6	SLAB BOT.TO TOP TIES	4	90	63							0	8.0	0	5.3	0	5.3	0	4.5	0	4.5			1	11	113
6	SLAB BOT.TO TOP TIES	4	90	63							0	8.0	0	4.5	0	4.5	0	4.5	0	4.5			1	9	105
7	CURB LONGIT.	6	4	50				E			39	9.5											39	10	239
8	SLAB TOP TRANSV.	6	96	51				E			20	11.0											21	7	3115
8	SLAB TOP TRANSV.	6	96	51				E			17	6.0											18	2	2622
9	SLAB TOP LONGIV.	6	72	50				E			39	9.5											39	10	4303
	DECK PANELS I																								
1	SLAB BOT. LONGIT.	6	408	50							39	8.0											39	8	24306
2	SLAB BOT. LONGIT.	4	80	50							39	8.0											39	8	2120
3	SLAB BOT. TRANSV.	6	368	50							31	0.0											31	0	17133
4	SLAB BOT. TRANSV.	6	1536	50							7	5.0											7	5	17109
5	CURB TRANSV.	5	1536	93																			4	8	7475
6	SLAB BOT.TO TOP TIES	4	600	63							0	8.0	0	6.0	0	6.0	0	4.5	0	4.5			1	12	801
6	SLAB BOT.TO TOP TIES	4	720	63							0	8.0	0	5.3	0	5.3	0	4.5	0	4.5			1	11	906
6	SLAB BOT.TO TOP TIES	4	720	63							0	8.0	0	4.5	0	4.5	0	4.5	0	4.5			1	9	841
7	CURB LONGIT.	6	32	50				E			39	8.0											39	8	1906
8	SLAB TOP TRANSV.	6	768	51				E			20	11.0											21	7	24920
8	SLAB TOP TRANSV.	6	768	51				E			17	6.0											18	2	20980
9	SLAB TOP LONGIV.	6	576	50				E			39	8.0											39	8	34314
	DECK PANEL J																								
1	SLAB BOT. LONGIT.	6	51	50							37	3.5											37	4	2856
2	SLAB BOT. LONGIT.	4	10	50							37	3.5											37	4	249
3	SLAB BOT. TRANSV.	6	43	50							31	0.0											31	0	2002
4	SLAB BOT. TRANSV.	6	182	50							7	5.0											7	5	2027
5	CURB TRANSV.	5	182	93				E															4	8	886
6	SLAB BOT.TO TOP TIES	4	75	63							0	8.0	0	6.0	0	6.0	0	4.5	0	4.5			1	12	100
6	SLAB BOT.TO TOP TIES	4	90	63							0	8.0	0	5.3	0	5.3	0	4.5	0	4.5			1	11	113
6	SLAB BOT.TO TOP TIES	4	90	63							0	8.0	0	4.5	0	4.5	0	4.5	0	4.5			1	9	105
7	CURB LONGIT.	6	4	50				E			37	3.5											37	4	224
8	SLAB TOP TRANSV.	6	91	51				E			20	11.0											21	7	2953
8	SLAB TOP TRANSV.	6	91	51				E			17	6.0											18	2	2486
9	SLAB TOP LONGIV.	6	72	50				E			37	3.5											37	4	4032
10	SLAB BOT.TO TOP TIES	4	18	94				E	V	2			0	9.6	0	5.9							4	10	
													0	7.7	0	4.0							4	8	57
10	SLAB BOT.TO TOP TIES	4	18	94				E	V	2			0	7.5	0	3.7							4	8	
													0	6.7	0	3.0							4	7	55
	DECK PANEL K																								
1	SLAB BOT. LONGIT.	6	51	50							38	3.0											38	3	2930
2	SLAB BOT. LONGIT.	4	10	50							38	3.0											38	3	255
3	SLAB BOT. TRANSV.	6	43	50							31	0.0											31	0	2002
4	SLAB BOT. TRANSV.	6	186	50							7	5.0											7	5	2072
5	CURB TRANSV.	5	186	93				E															4	8	905
6	SLAB BOT.TO TOP TIES	4	75	63							0	8.0	0	6.0	0	6.0	0	4.5	0	4.5			1	12	100
6	SLAB BOT.TO TOP TIES	4	90	63							0	8.0	0	5.3	0	5.3	0	4.5	0	4.5			1	11	113
6	SLAB BOT.TO TOP TIES	4	90	63							0	8.0	0	4.5	0	4.5	0	4.5	0	4.5			1	9	105
7	CURB LONGIT.	6	4	50				E			30	3.0											30	3	182
8	SLAB TOP TRANSV.	6	93	51				E			20	11.0											21	7	3018
8	SLAB TOP TRANSV.	6	93	51				E			17	6.0											18	2	2540
9	SLAB TOP LONGIV.	6	72	50				E			38	3.0											38	3	4136
10	SLAB BOT.TO TOP TIES	4	18	94				E	V	2			0	9.6	0	5.9							4	10	
													0	7.7	0	4.0							4	8	57
10	SLAB BOT.TO TOP TIES	4	18	94				E	V	2			0	7.5	0	4.0							4	8	
													0	6.7	0	3.0							4	7	55

STEEL REINFORCING BAR QUANTITIES NOT INCLUDED IN THIS BAR LIST

TRAFFIC BARRIER
BRIDGE GRATE INLETS
RETAINING WALL

BENDING DIAGRAMS

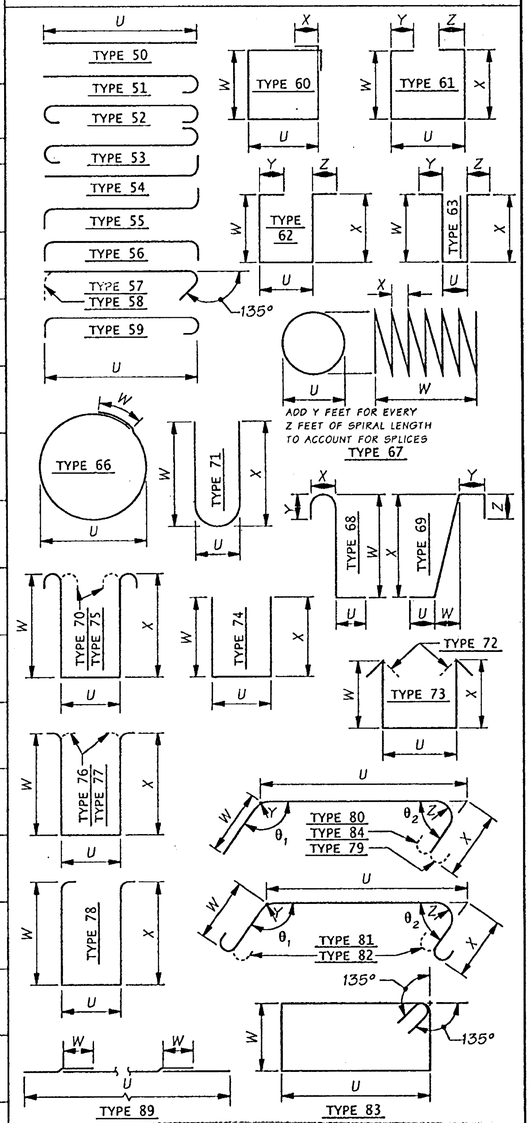

FOR "AS CONSTRUCTED PLANS" ONLY

NOTE:

1. ALL REINFORCING BARS ON THIS SHEET SHALL BE AASHTO M-31 UNLESS SHOWN OTHERWISE.
2. REINFORCING FOR TRAFFIC BARRIERS NOT SHOWN IN THE BAR LIST, SEE TRAFFIC BARRIER SHEET.
3. BEND FOR TRANSVERSE BARS DUE TO ROADWAY CROWN CONDITIONS HAS NOT BEEN SHOWN. THESE BARS SHALL BE BENT AS REQUIRED TO CONFORM TO THE CONFIGURATION OF THE STRUCTURE.

$ NUMBER AND LENGTH OF BARS TO BE DETERMINED BY THE CONTRACTOR FROM PLANS.

Bridge Design Engr.	Kapur, J		M:\Y-Team\Lewis_Clark Rehab\Entire\window files\Barlist1.WND
Supervisor	Kirker, KN	08/02	
Designed By	Talukdar, M	08/02	
Checked By	Peralta, R	08/02	
Detailed By	Evans, P	08/02	
Bridge Projects Engr.			
Prelim. Plan By			
Architect/Specialist			

DATE | REVISION | BY | APP'D

Wed Sep 18 10:21:25 2002

REGION NO.	STATE	FED. AID PROJ. NO.	SHEET NO.	TOTAL SHEETS
10	WASH.	ACBH - 0433(007)		
JOB NUMBER 02x310				

6444

BRIDGE AND STRUCTURES OFFICE

Washington State Department of Transportation

SR 433
LEWIS AND CLARK BRIDGE
DECK REPLACEMENT

BARLIST

BRIDGE SHEET NO. B1

SHEET 244 OF 258 SHEETS

SR 433 JOB NO. 1566 SHEET 1

S = Bar is included in substructure quantities.
L = Lump sum quantity.
T = Transverse or S = Seismic
E = Bar is to be epoxy coated.
V = Bar dimensions vary between dimensions shown on this line and the following line.

MARK NO.	LOCATION	SIZE	NO REQ'D	BEND TYPE	TIE OR STIR.	LUMP SUM	SUBSTR.	EPOXY COAT	VARIES	NO. EACH	U Ft.	U In.	W Ft.	W In.	X Ft.	X In.	Y Ft.	Y In.	Z Ft.	Z In.	θ_1 Deg.	θ_2 Deg.	LENGTH Ft.	LENGTH In.	WEIGHT Lbs.
	DECK PANELS L																								
1	SLAB BOT. LONGIT.	6	102	50							44	8.0											44	8	6842
2	SLAB BOT. LONGIT.	4	20	89							44	8.0	2	0.0									46	8	623
3	SLAB BOT. TRANSV.	6	108	50							31	0.0											31	0	5028
4	SLAB BOT. TRANSV.	6	428	50							7	5.0											7	5	4767
5	CURB TRANSV.	5	428	93																			4	8	2083
6	SLAB BOT.TO TOP TIES	4	150	63							0	8.0	0	6.0	0	6.0	0	4.5	0	4.5			1	12	200
6	SLAB BOT.TO TOP TIES	4	180	63							0	8.0	0	5.3	0	5.3	0	4.5	0	4.5			1	11	226
6	SLAB BOT.TO TOP TIES	4	180	63							0	8.0	0	4.5	0	4.5	0	4.5	0	4.5			1	9	210
7	CURB LONGIT.	6	8	50				E			44	8.0											44	8	537
8	SLAB TOP TRANSV.	6	214	51				E			20	11.0											21	7	6944
8	SLAB TOP TRANSV.	6	214	51				E			17	6.0											18	2	5846
9	SLAB TOP LONGIV.	6	154	50				E			44	8.0											44	8	10331
	DECK PANELS M																								
1	SLAB BOT. LONGIT.	6	153	50							44	8.0											44	8	10264
2	SLAB BOT. LONGIT.	4	30	89							44	8.0	2	0.0									46	8	935
3	SLAB BOT. TRANSV.	6	162	50							31	0.0											31	0	7542
4	SLAB BOT. TRANSV.	6	642	50							7	5.0											7	5	7151
5	CURB TRANSV.	5	642	93				E															4	8	3125
6	SLAB BOT.TO TOP TIES	4	225	63							0	8.0	0	6.0	0	6.0	0	4.5	0	4.5			1	12	301
6	SLAB BOT.TO TOP TIES	4	270	63							0	8.0	0	5.3	0	5.3	0	4.5	0	4.5			1	11	340
6	SLAB BOT.TO TOP TIES	4	270	63							0	8.0	0	4.5	0	4.5	0	4.5	0	4.5			1	9	316
7	CURB LONGIT.	6	12	50				E			44	8.0											44	8	805
8	SLAB TOP TRANSV.	6	321	51				E			20	11.0											21	7	10416
8	SLAB TOP TRANSV.	6	321	51				E			17	6.0											18	2	8769
9	SLAB TOP LONGIV.	6	216	50				E			44	8.0											44	8	14490
	DECK PANEL N																								
1	SLAB BOT. LONGIT.	6	51	50							39	7.5											39	8	3035
2	SLAB BOT. LONGIT.	4	10	50							39	7.5											39	8	265
3	SLAB BOT. TRANSV.	6	46	50							31	0.0											31	0	2142
4	SLAB BOT. TRANSV.	6	192	50							7	5.0											7	5	2139
5	CURB TRANSV.	5	192	93				E															4	8	934
6	SLAB BOT.TO TOP TIES	4	75	63							0	8.0	0	6.0	0	6.0	0	4.5	0	4.5			1	12	100
6	SLAB BOT.TO TOP TIES	4	90	63							0	8.0	0	5.3	0	5.3	0	4.5	0	4.5			1	11	113
6	SLAB BOT.TO TOP TIES	4	90	63							0	8.0	0	4.5	0	4.5	0	4.5	0	4.5			1	9	105
7	CURB LONGIT.	6	4	50				E			39	7.5											39	8	238
8	SLAB TOP TRANSV.	6	96	51				E			20	11.0											21	7	3115
8	SLAB TOP TRANSV.	6	96	51				E			17	6.0											18	2	2622
9	SLAB TOP LONGIV.	6	72	50				E			39	7.5											39	8	4285
	DECK PANEL O																								
1	SLAB BOT. LONGIT.	6	51	50							44	8.0											44	8	3421
2	SLAB BOT. LONGIT.	4	10	89							44	8.0	2	0.0									46	8	312
3	SLAB BOT. TRANSV.	6	54	50							31	0.0											31	0	2514
4	SLAB BOT. TRANSV.	6	214	50							7	5.0											7	5	2384
5	CURB TRANSV.	5	214	93				E															4	8	1042
6	SLAB BOT.TO TOP TIES	4	75	63							0	8.0	0	6.0	0	6.0	0	4.5	0	4.5			1	12	100
6	SLAB BOT.TO TOP TIES	4	90	63							0	8.0	0	5.3	0	5.3	0	4.5	0	4.5			1	11	113
6	SLAB BOT.TO TOP TIES	4	90	63							0	8.0	0	4.5	0	4.5	0	4.5	0	4.5			1	9	105
7	CURB LONGIT.	6	4	50				E			44	8.0											44	8	268
8	SLAB TOP TRANSV.	6	107	51				E			20	11.0											21	7	3472
8	SLAB TOP TRANSV.	6	107	51				E			17	6.0											18	2	2923
9	SLAB TOP LONGIV.	6	72	50				E			44	8.0											44	8	4830
	DECK PANELS P																								
1	SLAB BOT. LONGIT.	6	102	50							44	8.0											44	8	6842
2	SLAB BOT. LONGIT.	4	20	89							44	8.0											44	8	597
3	SLAB BOT. TRANSV.	6	108	50							31	0.0											31	0	5028
4	SLAB BOT. TRANSV.	6	428	50							7	5.0											7	5	4767
5	CURB TRANSV.	5	428	93				E															4	8	2083
6	SLAB BOT.TO TOP TIES	4	150	63							0	8.0	0	6.0	0	6.0	0	4.5	0	4.5			1	12	200
6	SLAB BOT.TO TOP TIES	4	180	63							0	8.0	0	5.3	0	5.3	0	4.5	0	4.5			1	11	226
6	SLAB BOT.TO TOP TIES	4	180	63							0	8.0	0	4.5	0	4.5	0	4.5	0	4.5			1	9	210
7	CURB LONGIT.	6	8	50				E			44	8.0											44	8	537
8	SLAB TOP TRANSV.	6	214	51				E			20	11.0											21	7	6944
8	SLAB TOP TRANSV.	6	214	51				E			17	6.0											18	2	5846
9	SLAB TOP LONGIV.	6	144	50				E			44	8.0											44	8	9660
	DECK PANEL Q																								
1	SLAB BOT. LONGIT.	6	51	50							44	8.0											44	8	3421
2	SLAB BOT. LONGIT.	4	10	89							44	8.0	2	0.0									46	8	312
3	SLAB BOT. TRANSV.	6	54	50							31	0.0											31	0	2514
4	SLAB BOT. TRANSV.	6	214	50							7	5.0											7	5	2384
5	CURB TRANSV.	5	214	93				E															4	8	1042
6	SLAB BOT.TO TOP TIES	4	75	63							0	8.0	0	6.0	0	6.0	0	4.5	0	4.5			1	12	100
6	SLAB BOT.TO TOP TIES	4	90	63							0	8.0	0	5.3	0	5.3	0	4.5	0	4.5			1	11	113
6	SLAB BOT.TO TOP TIES	4	90	63							0	8.0	0	4.5	0	4.5	0	4.5	0	4.5			1	9	105
7	CURB LONGIT.	6	4	50				E			44	8.0											44	8	268
8	SLAB TOP TRANSV.	6	107	51				E			20	11.0											21	7	3472
8	SLAB TOP TRANSV.	6	107	51				E			17	6.0											18	2	2923
9	SLAB TOP LONGIV.	6	72	50				E			44	8.0											44	8	4830

S = Bar is included in substructure quantities.
L = Lump sum quantity.
T = Transverse or S = Seismic
E = Bar is to be epoxy coated.
V = Bar dimensions vary between dimensions shown on this line and the following line.

MARK NO.	LOCATION	SIZE	NO REQ'D	BEND TYPE	TIE OR STIR.	LUMP SUM	SUBSTR.	EPOXY COAT	VARIES	NO. EACH	U Ft.	U In.	W Ft.	W In.	X Ft.	X In.	Y Ft.	Y In.	Z Ft.	Z In.	θ_1 Deg.	θ_2 Deg.	LENGTH Ft.	LENGTH In.	WEIGHT Lbs.
	WASHINGTON APPR. DECK REINF.																								
	DECK PANEL A1																								
1	SLAB BOT. LONGIT.	6	51	50							40	3.5											40	4	3086
2	SLAB BOT. LONGIT.	4	10	89							40	3.5	2	0.0									42	4	282
3	SLAB BOT. TRANSV.	6	42	50							31	0.0											31	0	1955
4	SLAB BOT. TRANSV.	6	180	50							7	5.0											7	5	2005
5	CURB TRANSV.	5	180	93				E															4	8	876
6	SLAB BOT.TO TOP TIES	4	75	63							0	8.0	0	6.0	0	6.0	0	4.5	0	4.5			1	12	100
6	SLAB BOT.TO TOP TIES	4	90	63							0	8.0	0	5.3	0	5.3	0	4.5	0	4.5			1	11	113
6	SLAB BOT.TO TOP TIES	4	90	63							0	8.0	0	4.5	0	4.5	0	4.5	0	4.5			1	9	105
7	CURB LONGIT.	6	4	50				E			40	3.5											40	4	242
8	SLAB TOP TRANSV.	6	90	51				E			20	11.0											21	7	2920
8	SLAB TOP TRANSV.	6	90	51				E			17	6.0											18	2	2459
9	SLAB TOP LONGIV.	6	72	50				E			40	3.5											40	4	4357
10	SLAB BOT. TO TOP TIES	4	18	94				E	V	2			0	9.6	0	5.9							4	10	
													0	7.7	0	4.0							4	8	57
10	SLAB BOT. TO TOP TIES	4	18	94				E	V	2			0	7.5	0	3.7							4	8	
													0	6.7	0	3.0							4	7	55
	DECK PANEL B1																								
1	SLAB BOT. LONGIT.	6	51	50							23	7.0											23	7	1806
2	SLAB BOT. LONGIT.	4	10	50							23	7.0											23	7	158
3	SLAB BOT. TRANSV.	6	30	50							31	0.0											31	0	1397
4	SLAB BOT. TRANSV.	6	112	50							7	5.0											7	5	1248
5	CURB TRANSV.	5	112	93				E															4	8	545
6	SLAB BOT.TO TOP TIES	4	45	63							0	8.0	0	6.0	0	6.0	0	4.5	0	4.5			1	12	60
6	SLAB BOT.TO TOP TIES	4	54	63							0	8.0	0	5.3	0	5.3	0	4.5	0	4.5			1	11	68
6	SLAB BOT.TO TOP TIES	4	54	63							0	8.0	0	4.5	0	4.5	0	4.5	0	4.5			1	9	63
7	CURB LONGIT.	6	4	50				E			23	7.0											23	7	142
8	SLAB TOP TRANSV.	6	56	51				E			20	11.0											21	7	1817
8	SLAB TOP TRANSV.	6	56	51				E			17	6.0											18	2	1530
9	SLAB TOP LONGIV.	6	72	50				E			23	7.0											23	7	2550
10	SLAB BOT. TO TOP TIES	4	18	94				E	V	2			0	9.6	0	5.9							4	10	
													0	7.7	0	4.0							4	8	57
10	SLAB BOT. TO TOP TIES	4	18	94				E	V	2			0	7.5	0	4.0							4	8	
													0	6.7	0	3.0							4	7	55
	DECK PANEL C1																								
1	SLAB BOT. LONGIT.	6	204	50							27	9.0											27	9	8502
2	SLAB BOT. LONGIT.	4	40	50							27	9.0											27	9	741
3	SLAB BOT. TRANSV.	6	132	50							31	0.0											31	0	6146
4	SLAB BOT. TRANSV.	6	536	50							7	5.0											7	5	5970
5	CURB TRANSV.	5	536	93				E															4	8	2609
6	SLAB BOT.TO TOP TIES	4	240	63							0	8.0	0	6.0	0	6.0	0	4.5	0	4.5			1	12	321
6	SLAB BOT.TO TOP TIES	4	288	63							0	8.0	0	5.3	0	5.3	0	4.5	0	4.5			1	11	362
6	SLAB BOT.TO TOP TIES	4	288	63							0	8.0	0	4.5	0	4.5	0	4.5	0	4.5			1	9	337
7	CURB LONGIT.	6	16	50				E			27	9.0											27	9	667
8	SLAB TOP TRANSV.	6	268	51				E			20	11.0											21	7	8696
8	SLAB TOP TRANSV.	6	268	51				E			17	6.0											18	2	7321
9	SLAB TOP LONGIV.	6	288	50				E			27	9.0											27	9	12003
	DECK PANEL D1																								
1	SLAB BOT. LONGIT.	6	51	50							28	9.5											28	10	2205
2	SLAB BOT. LONGIT.	4	10	50							28	9.5											28	10	192
3	SLAB BOT. TRANSV.	6	33	50							31	0.0											31	0	1536
4	SLAB BOT. TRANSV.	6	138	50							7	5.0											7	5	1537
5	CURB TRANSV.	5	138	93				E															4	8	672
6	SLAB BOT.TO TOP TIES	4	60	63							0	8.0	0	6.0	0	6.0	0	4.5	0	4.5			1	12	80
6	SLAB BOT.TO TOP TIES	4	72	63							0	8.0	0	5.3	0	5.3	0	4.5	0	4.5			1	11	91
6	SLAB BOT.TO TOP TIES	4	72	63							0	8.0	0	4.5	0	4.5	0	4.5	0	4.5			1	9	84
7	CURB LONGIT.	6	4	50				E			28	9.5											28	10	173
8	SLAB TOP TRANSV.	6	69	51				E			20	11.0											21	7	2239
8	SLAB TOP TRANSV.	6	69	51				E			17	6.0											18	2	1885
9	SLAB TOP LONGIV.	6	72	50				E			28	9.5											28	10	3113
	OREGON APPR. DECK REINF.																								
	DECK PANEL A2																								
1	SLAB BOT. LONGIT.	6	51	50							35	6.3											35	6	2721
2	SLAB BOT. LONGIT.	4	10	50							35	6.3											35	6	237
3	SLAB BOT. TRANSV.	6	42	50							31	0.0											31	0	1955
4	SLAB BOT. TRANSV.	6	172	50							7	5.0											7	5	1916
5	CURB TRANSV.	5	172	93				E															4	8	837
6	SLAB BOT.TO TOP TIES	4	60	63							0	8.0	0	6.0	0	6.0	0	4.5	0	4.5			1	12	80
6	SLAB BOT.TO TOP TIES	4	72	63							0	8.0	0	5.3	0	5.3	0	4.5	0	4.5			1	11	91
6	SLAB BOT.TO TOP TIES	4	72	63							0	8.0	0	4.5	0	4.5	0	4.5	0	4.5			1	9	84
7	CURB LONGIT.	6	4	50				E			35	6.3											35	6	213
8	SLAB TOP TRANSV.	6	86	51				E			20	11.0											21	7	2791
8	SLAB TOP TRANSV.	6	86	51				E			17	6.0											18	2	2349
9	SLAB TOP LONGIV.	6	72	50				E			35	6.3											35	6	3841

STEEL REINFORCING BAR QUANTITIES NOT INCLUDED IN THIS BAR LIST

TRAFFIC BARRIER
BRIDGE GRATE INLETS
RETAINING WALL

BENDING DIAGRAMS

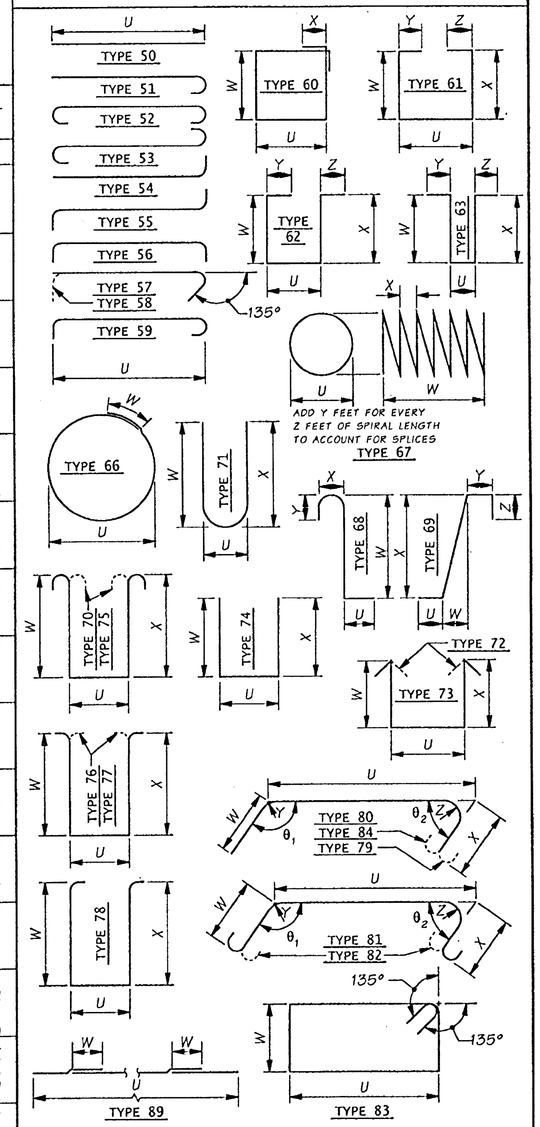

FOR "AS CONSTRUCTED PLANS" ONLY

NOTE:

1. ALL REINFORCING BARS ON THIS SHEET SHALL BE AASHTO M-31 UNLESS SHOWN OTHERWISE.
2. REINFORCING FOR TRAFFIC BARRIERS NOT SHOWN IN THE BAR LIST. SEE TRAFFIC BARRIER SHEET.
3. BEND FOR TRANSVERSE BARS DUE TO ROADWAY CROWN CONDITIONS HAS NOT BEEN SHOWN. THESE BARS SHALL BE BENT AS REQUIRED TO CONFORM TO THE CONFIGURATION OF THE STRUCTURE.

$ NUMBER AND LENGTH OF BARS TO BE DETERMINED BY THE CONTRACTOR FROM PLANS.

SR 433 JOB NO. 1566 SHEET 2

Bridge Design Engr.	Kapur, J	M:\Y-Team\Lewis_Clark Rehab\Entire\window files\Barlist2.WND
Supervisor	Kirker, KN 08/02	
Designed By	Talukdar, M 08/02	
Checked By	Peralta, R 08/02	
Detailed By	Evans, P 08/02	
Bridge Projects Engr.		
Prelim. Plan By		
Architect/Specialist		

DATE | REVISION | BY | APP'D

Wed Sep 18 10:20:54 2002

REGION NO.	STATE	FED. AID PROJ. NO.
10	WASH.	ACBH - 0433(007)

JOB NUMBER 02x310

6443

SHEET NO. | TOTAL SHEETS

BRIDGE AND STRUCTURES OFFICE

Washington State Department of Transportation

SR 433
LEWIS AND CLARK BRIDGE
DECK REPLACEMENT

BARLIST

BRIDGE SHEET NO. B2

SHEET 245 OF 258 SHEETS

S = Bar is included in substructure quantities.
L = Lump sum quantity.
T = Transverse or S = Seismic
E = Bar is to be epoxy coated.
V = Bar dimensions vary between dimensions shown on this line and the following line.

MARK NO.	LOCATION	SIZE	NO REQ'D	BEND TYPE	TIE OR STIR.	LUMP SUM	SUBSTR.	EPOXY COAT	VARIES	NO. EACH	U Ft.	U In.	W Ft.	W In.	X Ft.	X In.	Y Ft.	Y In.	Z Ft.	Z In.	θ_1 Deg.	θ_2 Deg.	LENGTH Ft.	LENGTH In.	WEIGHT Lbs.
	DECK PANEL B2																								
1	SLAB BOT. LONGIT.	6	612	50							35	6.5											35	6	32668
2	SLAB BOT. LONGIT.	4	120	50							35	6.5											35	6	2849
3	SLAB BOT. TRANSV.	6	504	50							31	0.0											31	0	23465
4	SLAB BOT. TRANSV.	6	2064	50							7	5.0											7	5	22990
5	CURB TRANSV.	5	2064	93				E															4	8	10045
6	SLAB BOT.TO TOP TIES	4	720	63							0	8.0	0	6.0	0	6.0	0	4.5	0	4.5			1	12	962
6	SLAB BOT.TO TOP TIES	4	864	63							0	8.0	0	5.3	0	5.3	0	4.5	0	4.5			1	11	1087
6	SLAB BOT.TO TOP TIES	4	864	63							0	8.0	0	4.5	0	4.5	0	4.5	0	4.5			1	9	1010
7	CURB LONGIT.	6	48	50				E			35	6.5											35	6	2562
8	SLAB TOP TRANSV.	6	1032	51				E			20	11.0											21	7	33487
8	SLAB TOP TRANSV.	6	1032	51				E			17	6.0											18	2	28191
9	SLAB TOP LONGIV.	6	864	50				E			35	6.5											35	6	46119
	DECK PANEL C2																								
1	SLAB BOT. LONGIT.	6	102	50							35	6.5											35	6	5445
2	SLAB BOT. LONGIT.	4	20	50							35	6.5											35	6	475
3	SLAB BOT. TRANSV.	6	84	50							31	0.0											31	0	3911
4	SLAB BOT. TRANSV.	6	344	50							7	5.0											7	5	3832
5	CURB TRANSV.	5	344	93				E															4	8	1674
6	SLAB BOT.TO TOP TIES	4	120	63							0	8.0	0	6.0	0	6.0	0	4.5	0	4.5			1	12	160
6	SLAB BOT.TO TOP TIES	4	144	63							0	8.0	0	5.3	0	5.3	0	4.5	0	4.5			1	11	181
6	SLAB BOT.TO TOP TIES	4	144	63							0	8.0	0	4.5	0	4.5	0	4.5	0	4.5			1	9	168
7	CURB LONGIT.	6	8	50				E			35	6.5											35	6	427
8	SLAB TOP TRANSV.	6	172	51				E			20	11.0											21	7	5581
8	SLAB TOP TRANSV.	6	172	51				E			17	6.0											18	2	4699
9	SLAB BOT. LONGIT.	6	144	50				E			35	6.5											35	6	7686
	DECK PANEL D2																								
1	SLAB BOT. LONGIT.	6	102	50							35	6.5											35	6	5445
2	SLAB BOT. LONGIT.	4	20	50							35	6.5											35	6	475
3	SLAB BOT. TRANSV.	6	84	50							31	0.0											31	0	3911
4	SLAB BOT. TRANSV.	6	344	50							7	5.0											7	5	3832
5	CURB TRANSV.	5	344	93				E															4	8	1674
6	SLAB BOT.TO TOP TIES	4	120	63							0	8.0	0	6.0	0	6.0	0	4.5	0	4.5			1	12	160
6	SLAB BOT.TO TOP TIES	4	144	63							0	8.0	0	5.3	0	5.3	0	4.5	0	4.5			1	11	181
6	SLAB BOT.TO TOP TIES	4	144	63							0	8.0	0	4.5	0	4.5	0	4.5	0	4.5			1	9	168
7	CURB LONGIT.	6	8	50				E			35	6.5											35	6	427
8	SLAB TOP TRANSV.	6	172	51				E			20	11.0											21	7	5581
8	SLAB TOP TRANSV.	6	172	51				E			17	6.0											18	2	4699
9	SLAB TOP LONGIV.	6	144	50				E			35	6.5											35	6	7686
	DECK PANEL E2																								
1	SLAB BOT. LONGIT.	6	51	50							35	10.5											35	10	2748
2	SLAB BOT. LONGIT.	4	10	89							35	10.5	2	0.0									35	10	240
3	SLAB BOT. TRANSV.	6	39	50							31	0.0											31	0	1816
4	SLAB BOT. TRANSV.	6	174	50							7	5.0											7	5	1938
5	CURB TRANSV.	5	174	93				E															4	8	847
6	SLAB BOT.TO TOP TIES	4	60	63							0	8.0	0	6.0	0	6.0	0	4.5	0	4.5			1	12	80
6	SLAB BOT.TO TOP TIES	4	72	63							0	8.0	0	5.3	0	5.3	0	4.5	0	4.5			1	11	91
6	SLAB BOT.TO TOP TIES	4	72	63							0	8.0	0	4.5	0	4.5	0	4.5	0	4.5			1	9	84
7	CURB LONGIT.	6	4	50				E			35	10.5											35	10	216
8	SLAB TOP TRANSV.	6	87	51				E			20	11.0											21	7	2823
8	SLAB TOP TRANSV.	6	87	51				E			17	6.0											18	2	2377
9	SLAB TOP LONGIV.	6	72	50				E			35	10.5											35	10	3879
10	SLAB BOT. TO TOP TIES	4	18	94				E	V	2			0	9.6	0	5.9							4	10	
													0	7.7	0	4.0							4	8	57
10	SLAB BOT. TO TOP TIES	4	18	94				E	V	2			0	7.5	0	3.7							4	8	
													0	6.7	0	3.0							4	7	55
	DECK PANEL F2																								
1	SLAB BOT. LONGIT.	6	51	50							30	10.0											30	10	2362
2	SLAB BOT. LONGIT.	4	10	89							30	10.0	2	0.0									30	10	206
3	SLAB BOT. TRANSV.	6	36	50							31	0.0											31	0	1676
4	SLAB BOT. TRANSV.	6	150	50							7	5.0											7	5	1671
5	CURB TRANSV.	5	150	93				E															4	8	730
6	SLAB BOT.TO TOP TIES	4	45	63							0	8.0	0	6.0	0	6.0	0	4.5	0	4.5			1	12	60
6	SLAB BOT.TO TOP TIES	4	54	63							0	8.0	0	5.3	0	5.3	0	4.5	0	4.5			1	11	68
6	SLAB BOT.TO TOP TIES	4	54	63							0	8.0	0	4.5	0	4.5	0	4.5	0	4.5			1	9	63
7	CURB LONGIT.	6	4	50				E			30	10.0											30	10	185
8	SLAB TOP TRANSV.	6	75	51				E			20	11.0											21	7	2434
8	SLAB TOP TRANSV.	6	75	51				E			17	6.0											18	2	2049
9	SLAB TOP LONGIV.	6	72	50				E			30	10.0											30	10	3334
10	SLAB BOT. TO TOP TIES	4	18	94				E	V	2			0	9.6	0	5.9							4	10	
													0	7.7	0	4.0							4	8	57
10	SLAB BOT. TO TOP TIES	4	18	94				E	V	2			0	7.5	0	3.7							4	8	
													0	6.7	0	3.0							4	7	55
	DECK PANEL G2																								
1	SLAB BOT. LONGIT.	6	51	50							30	11.0											30	11	2368
2	SLAB BOT. LONGIT.	4	10	50							30	11.0											30	11	207
3	SLAB BOT. TRANSV.	6	36	50							31	0.0											31	0	1676
4	SLAB BOT. TRANSV.	6	150	50							7	5.0											7	5	1671
5	CURB TRANSV.	5	150	93				E															4	8	730
6	SLAB BOT.TO TOP TIES	4	60	63							0	8.0	0	6.0	0	6.0	0	4.5	0	4.5			1	12	80
6	SLAB BOT.TO TOP TIES	4	72	63							0	8.0	0	5.3	0	5.3	0	4.5	0	4.5			1	11	91
6	SLAB BOT.TO TOP TIES	4	72	63							0	8.0	0	4.5	0	4.5	0	4.5	0	4.5			1	9	84
7	CURB LONGIT.	6	4	50				E			30	11.0											30	11	216
8	SLAB TOP TRANSV.	6	87	51				E			20	11.0											21	7	2823
8	SLAB TOP TRANSV.	6	87	51				E			17	6.0											18	2	2377
9	SLAB TOP LONGIV.	6	72	50				E			35	10.5											35	10	3879
10	SLAB BOT. TO TOP TIES	4	18	94				E	V	2			0	9.6	0	5.9							4	10	
													0	7.7	0	4.0							4	8	57
10	SLAB BOT. TO TOP TIES	4	18	94				E	V	2			0	7.5	0	3.7							4	8	
													0	6.7	0	3.0							4	7	55

S = Bar is included in substructure quantities.
L = Lump sum quantity.
T = Transverse or S = Seismic
E = Bar is to be epoxy coated.
V = Bar dimensions vary between dimensions shown on this line and the following line.

MARK NO.	LOCATION	SIZE	NO REQ'D	BEND TYPE	TIE OR STIR.	LUMP SUM	SUBSTR.	EPOXY COAT	VARIES	NO. EACH	U Ft.	U In.	W Ft.	W In.	X Ft.	X In.	Y Ft.	Y In.	Z Ft.	Z In.	θ_1 Deg.	θ_2 Deg.	LENGTH Ft.	LENGTH In.	WEIGHT Lbs.
5	CURB TRANSV.	5	150	93				E															4	8	730
6	SLAB BOT.TO TOP TIES	4	60	63							0	8.0	0	6.0	0	6.0	0	4.5	0	4.5			1	12	80
6	SLAB BOT.TO TOP TIES	4	72	63							0	8.0	0	5.3	0	5.3	0	4.5	0	4.5			1	11	91
6	SLAB BOT.TO TOP TIES	4	72	63							0	8.0	0	4.5	0	4.5	0	4.5	0	4.5			1	9	84
7	CURB LONGIT.	6	4	50				E			30	11.0											30	11	186
8	SLAB TOP TRANSV.	6	75	51				E			20	11.0											21	7	2434
8	SLAB TOP TRANSV.	6	75	51				E			17	6.0											18	2	2049
9	SLAB TOP LONGIV.	6	72	50				E			30	11.0											30	11	3343
	DECK PANEL H2																								
1	SLAB BOT. LONGIT.	6	51	50							22	2.0											22	2	1698
2	SLAB BOT. LONGIT.	4	10	50							22	2.0											22	2	148
3	SLAB BOT. TRANSV.	6	24	50							31	0.0											31	0	1117
4	SLAB BOT. TRANSV.	6	106	50							7	5.0											7	5	1181
5	CURB TRANSV.	5	106	93				E															4	8	516
6	SLAB BOT.TO TOP TIES	4	45	63							0	8.0	0	6.0	0	6.0	0	4.5	0	4.5			1	12	60
6	SLAB BOT.TO TOP TIES	4	54	63							0	8.0	0	5.3	0	5.3	0	4.5	0	4.5			1	11	68
6	SLAB BOT.TO TOP TIES	4	54	63							0	8.0	0	4.5	0	4.5	0	4.5	0	4.5			1	9	63
7	CURB LONGIT.	6	4	50				E			22	2.0											22	2	133
8	SLAB TOP TRANSV.	6	53	51				E			20	11.0											21	7	1720
8	SLAB TOP TRANSV.	6	53	51				E			17	6.0											18	2	1448
9	SLAB TOP LONGIV.	6	72	50				E			22	2.0											22	2	2397
	DECK PANEL I2																								
1	SLAB BOT. LONGIT.	6	102	50							20	8.0											20	8	3166
2	SLAB BOT. LONGIT.	4	20	50							20	8.0											20	8	276
3	SLAB BOT. TRANSV.	6	48	50							31	0.0											31	0	2235
4	SLAB BOT. TRANSV.	6	200	50							7	5.0											7	5	2228
5	CURB TRANSV.	5	200	93				E															4	8	973
6	SLAB BOT.TO TOP TIES	4	90	63							0	8.0	0	6.0	0	6.0	0	4.5	0	4.5			1	12	120
6	SLAB BOT.TO TOP TIES	4	108	63							0	8.0	0	5.3	0	5.3	0	4.5	0	4.5			1	11	136
6	SLAB BOT.TO TOP TIES	4	108	63							0	8.0	0	4.5	0	4.5	0	4.5	0	4.5			1	9	126
7	CURB LONGIT.	6	8	50				E			20	8.0											20	8	248
8	SLAB TOP TRANSV.	6	100	51				E			20	11.0											21	7	3245
8	SLAB TOP TRANSV.	6	100	51				E			17	6.0											18	2	2732
9	SLAB TOP LONGIV.	6	144	50				E			20	8.0											20	8	4470
	DECK PANEL J2																								
1	SLAB BOT. LONGIT.	6	51	50							20	7.5											20	8	1580
2	SLAB BOT. LONGIT.	4	10	50							20	7.5											20	8	138
3	SLAB BOT. TRANSV.	6	24	50							31	0.0											31	0	1117
4	SLAB BOT. TRANSV.	6	100	50							7	5.0											7	5	1114
5	CURB TRANSV.	5	100	93				E															4	8	487
6	SLAB BOT.TO TOP TIES	4	45	63							0	8.0	0	6.0	0	6.0	0	4.5	0	4.5			1	12	60
6	SLAB BOT.TO TOP TIES	4	54	63							0	8.0	0	5.3	0	5.3	0	4.5	0	4.5			1	11	68
6	SLAB BOT.TO TOP TIES	4	54	63							0	8.0	0	4.5	0	4.5	0	4.5	0	4.5			1	9	63
7	CURB LONGIT.	6	4	50				E			20	7.5											20	8	124
8	SLAB TOP TRANSV.	6	50	51				E			20	11.0											21	7	1622
8	SLAB TOP TRANSV.	6	50	51				E			17	6.0											18	2	1366
9	SLAB TOP LONGIV.	6	72	50				E			20	7.5											20	8	2230
	DECK PANEL K2																								
1	SLAB BOT. LONGIT.	6	51	50							27	9.0											27	9	2125
2	SLAB BOT. LONGIT.	4	10	50							27	9.0											27	9	185
3	SLAB BOT. TRANSV.	6	33	50							31	0.0											31	0	1536
4	SLAB BOT. TRANSV.	6	134	50							7	5.0											7	5	1493
5	CURB TRANSV.	5	134	93				E															4	8	652
6	SLAB BOT.TO TOP TIES	4	60	63							0	8.0	0	6.0	0	6.0	0	4.5	0	4.5			1	12	80
6	SLAB BOT.TO TOP TIES	4	72	63							0	8.0	0	5.3	0	5.3	0	4.5	0	4.5			1	11	91
6	SLAB BOT.TO TOP TIES	4	72	63							0	8.0	0	4.5	0	4.5	0	4.5	0	4.5			1	9	84
7	CURB LONGIT.	6	4	50				E			27	9.0											27	9	167
8	SLAB TOP TRANSV.	6	67	51				E			20	11.0											21	7	2174
8	SLAB TOP TRANSV.	6	67	51				E			17	6.0											18	2	1830
9	SLAB TOP LONGIV.	6	72	50				E			27	9.0											27	9	3001
	DECK PANEL L2																								
1	SLAB BOT. LONGIT.	6	204	50							27	9.0											27	9	8502
2	SLAB BOT. LONGIT.	4	40	50							27	9.0											27	9	741
3	SLAB BOT. TRANSV.	6	132	50							31	0.0											31	0	6146
4	SLAB BOT. TRANSV.	6	536	50							7	5.0											7	5	5970
5	CURB TRANSV.	5	536	93				E															4	8	2609
6	SLAB BOT.TO TOP TIES	4	240	63							0	8.0	0	6.0	0	6.0	0	4.5	0	4.5			1	12	321
6	SLAB BOT.TO TOP TIES	4	288	63							0	8.0	0	5.3	0	5.3	0	4.5	0	4.5			1	11	362
6	SLAB BOT.TO TOP TIES	4	288	63							0	8.0	0	4.5	0	4.5	0	4.5	0	4.5			1	9	337
7	CURB LONGIT.	6	16	50				E			27	9.0											27	9	667
8	SLAB TOP TRANSV.	6	268	51				E			20	11.0											21	7	8696
8	SLAB TOP TRANSV.	6	268	51				E			17	6.0											18	2	7321
9	SLAB TOP LONGIV.	6	288	50				E			27	9.0											27	9	12003
	DECK PANEL M2																								
1	SLAB BOT. LONGIT.	6	51	50							27	8.0											27	8	2119
2	SLAB BOT. LONGIT.	4	10	50							27	8.0											27	8	185
3	SLAB BOT. TRANSV.	6	33	50							31	0.0											31	0	1536
4	SLAB BOT. TRANSV.	6	134	50							7	5.0											7	5	1493

STEEL REINFORCING BAR QUANTITIES NOT INCLUDED IN THIS BAR LIST

TRAFFIC BARRIER
BRIDGE GRATE INLETS
RETAINING WALL

BENDING DIAGRAMS

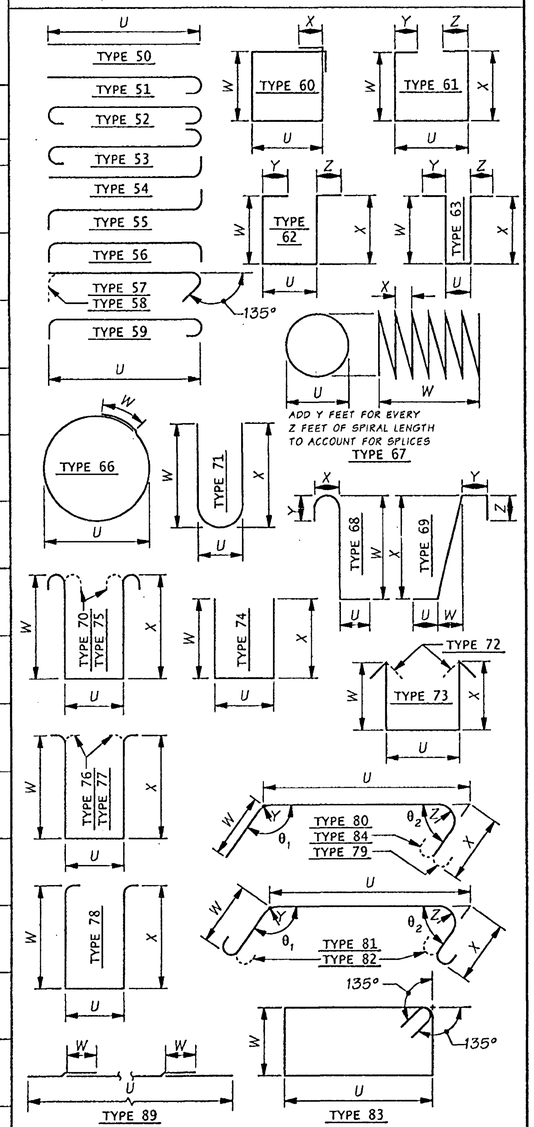

FOR "AS CONSTRUCTED PLANS" ONLY

NOTE:

1. ALL REINFORCING BARS ON THIS SHEET SHALL BE AASHTO M-31 UNLESS SHOWN OTHERWISE.
2. REINFORCING FOR TRAFFIC BARRIERS NOT SHOWN IN THE BAR LIST, SEE TRAFFIC BARRIER SHEET.
3. BEND FOR TRANSVERSE BARS DUE TO ROADWAY CROWN CONDITIONS HAS NOT BEEN SHOWN. THESE BARS SHALL BE BENT AS REQUIRED TO CONFORM TO THE CONFIGURATION OF THE STRUCTURE.
4. NUMBER AND LENGTH OF BARS TO BE DETERMINED BY THE CONTRACTOR FROM PLANS.

SR 433 JOB NO. 1566 SHEET 3

Bridge Design Engr.	Kapur, J		M:\Y-Team\Lewis_Clark Rehab\Entire\window files\Barlist3.WND
Supervisor	Kirker, KN	08/02	
Designed By	Talukdar, M	08/02	
Checked By	Peralta, R	08/02	
Detailed By	Evans, P	08/02	
Bridge Projects Engr.			
Prelim. Plan By			
Architect/Specialist			

DATE | REVISION | BY | APP'D

Wed Sep 18 10:22:14 2002

REGION NO.	STATE	FED. AID PROJ. NO.	SHEET NO.	TOTAL SHEETS
10	WASH.	ACBH - 0433(007)		

JOB NUMBER 02x310

BRIDGE AND STRUCTURES OFFICE

Washington State Department of Transportation

SR 433
LEWIS AND CLARK BRIDGE
DECK REPLACEMENT

BARLIST

BRIDGE SHEET NO. B3

SHEET 246 OF 258 SHEETS

S = Bar is included in substructure quantities.
L = Lump sum quantity.
T = Transverse or S = Seismic
E = Bar is to be epoxy coated.
V = Bar dimensions vary between dimensions shown on this line and the following line.

MARK NO.	LOCATION	SIZE	NO REQ'D	BEND TYPE	TIE OR STIR.	LUMP SUM	SUBSTR.	EPOXY COAT	VARIES	NO. EACH	DIMENSIONS (Out to Out) U Ft. In.	W Ft. In.	X Ft. In.	Y Ft. In.	Z Ft. In.	θ_1 Deg.	θ_2 Deg.	LENGTH Ft.	LENGTH In.	WEIGHT Lbs.
5	CURB TRANSV.	5	134	93				E										4	8	652
6	SLAB BOT.TO TOP TIES	4	60	63							0 8.0	0 6.0	0 6.0	0 4.5	0 4.5			1	12	80
6	SLAB BOT.TO TOP TIES	4	72	63							0 8.0	0 5.3	0 5.3	0 4.5	0 4.5			1	11	91
6	SLAB BOT.TO TOP TIES	4	72	63							0 8.0	0 4.5	0 4.5	0 4.5	0 4.5			1	9	84
7	CURB LONGIT.	6	4	50				E			27 8.0							27	8	166
8	SLAB TOP TRANSV.	6	67	51				E			20 11.0							21	7	2174
8	SLAB TOP TRANSV.	6	67	51				E			17 6.0							18	2	1830
9	SLAB TOP LONGIV.	6	72	50				E			27 8.0							27	8	2992
	DECK PANEL N2																			
1	SLAB BOT. LONGIT.	6	51	50							26 9.5							26	10	2052
2	SLAB BOT. LONGIT.	4	10	50							26 9.5							26	10	179
3	SLAB BOT. TRANSV.	6	33	50							31 0.0							31	0	1536
4	SLAB BOT. TRANSV.	6	130	50							7 5.0							7	5	1448
5	CURB TRANSV.	5	130	93				E										4	8	633
6	SLAB BOT.TO TOP TIES	4	60	63							0 9.0	0 6.0	0 6.0	0 4.5	0 4.5			2	1	83
6	SLAB BOT.TO TOP TIES	4	72	63							0 9.0	0 5.3	0 5.3	0 4.5	0 4.5			1	12	95
6	SLAB BOT.TO TOP TIES	4	72	63							0 9.0	0 4.5	0 4.5	0 4.5	0 4.5			1	10	88
7	CURB LONGIT.	6	4	50				E			26 9.5							26	10	161
8	SLAB TOP TRANSV.	6	65	51				E			20 11.0							21	7	2109
8	SLAB TOP TRANSV.	6	65	51				E			17 6.0							18	2	1776
9	SLAB TOP LONGIV.	6	72	50				E			26 9.5							26	10	2897
	BENT NO. 1																			
100	DOWEL - TOP ROW	8	24	51			S				3 6.0							4	5	283
101	DOWEL - BOTTOM ROW	5	27	51			S				3 0.0							3	7	101
102	TIES - JACKING SHELF	4	52	74	T		S				2 2.8	2 4.5	2 4.5					6	10	237
103	HORIZ. BARS - JACKING SHELF	4	8	50			S				35 1.0							35	1	187
104	HORIZ. BARS - BEARING SEAT	4	5	50			S				35 1.0							35	1	117
105	HORIZONTAL SLOPE 1	5	3	50			S				29 3.8							29	4	92
106	HORIZONTAL SLOPE 2	4	6	50			S				5 0.0							5	0	20
107	VERTICAL DOWELS	4	32	50			S	V	8		3 1.0							3	1	
											2 9.0							2	9	62
108	LOWER TIES	4	26	70			S	V	13		3 0.0	2 2.0	2 2.0					8	2	
											3 0.0	1 10.0	1 10.0					7	6	135
109	UPPER TIE	4	26	58	T		S				3 0.0							3	8	64
110	TRANSVERSE STOP HORIZONTAL	4	4	50			S				4 0.5							4	0	11
111	TRANSVERSE STOP TIE	5	10	74			S				0 9.0	1 10.5	1 10.5					4	3	44
112	CURB BASE DOWEL	4	10	74			S				0 11.0	1 9.5	1 9.5					4	4	29
113	BACKWALL DOWEL	4	10	74			S				0 11.0	1 9.5	1 9.5					4	4	29
114	BACKWALL TIE	4	10	74			S				1 1.0	1 11.0	1 11.0					4	8	31
115	CURB BASE TIE	4	10	74			S				1 1.0	1 4.0	1 4.0					3	6	24
116	BACKWALL LONGITUDINAL	4	14	50			S				4 3.0							4	3	40
117	CURB BASE LONGITUDINAL	4	14	50			S				4 11.3							4	11	46
118	CURB LONGITUDINAL	6	8	50			S	E			4 11.3							4	11	59
119	CURB	6	16	90			S	E										5	6	133
	WASHINGTON APPR. WIDENING																			
	DECK REINF.																			
150	TOP OF CURB LONGIT.	6	120	89				E			69 11.8	2 10.0						72	10	13123
150	TOP OF CURB LONGIT.	6	12	89				E			70 11.6	2 10.0						73	10	1330
150	TOP OF CURB LONGIT.	6	12	89				E			63 6.2	2 10.0						66	4	1196
150	TOP OF CURB LONGIT.	6	36	89				E			57 2.1	2 10.0						57	2	3091
150	TOP OF CURB LONGIT.	6	36	89				E			59 2.1	2 10.0						59	2	3199
150	TOP OF CURB LONGIT.	6	12	89				E			61 2.2	2 10.0						64	0	1154
150	TOP OF CURB LONGIT..	6	12	89				E			63 2.2	2 10.0						66	0	1190
150	TOP OF CURB LONGIT.	6	24	89				E			65 2.2	2 10.0						68	0	2452
150	TOP OF CURB LONGIT.	6	12	89				E			57 8.6	2 10.0						57	9	1040
151	CURB STIRRUP	6	6026	62				E			0 6.2	1 6.5	1 6.5	0 6.0	1 6.0			4	12	44979
152	DECK TOP TRANS.	6	6026	51				E			3 6.0							4	2	37917
153	DECK BOTTOM TRANS.	6	6026	51							3 6.0							4	2	37911
154	DOWEL BAR	5	3014	50				E			1 8.5							1	8	5373
155	TOP SLAB LONGIT.	5	120	89				E			69 11.8	2 10.0						72	10	9113
155	TOP SLAB LONGIT.	5	12	89				E			70 11.6	2 10.0						73	10	924
155	TOP SLAB LONGIT.	5	12	89				E			63 6.2	2 10.0						66	4	830
155	TOP SLAB LONGIT.	5	36	89				E			57 2.1	2 10.0						60	0	2253
155	TOP SLAB LONGIT.	5	36	89				E			59 2.1	2 10.0						62	0	2328
155	TOP SLAB LONGIT.	5	12	89				E			61 2.2	2 10.0						64	0	801
155	TOP SLAB LONGIT.	5	12	89				E			63 2.2	2 10.0						66	0	826
155	TOP SLAB LONGIT.	5	24	89				E			65 2.2	2 10.0						68	0	1702
155	TOP SLAB LONGIT.	5	12	89				E			57 8.6	2 10.0						60	7	758
156	BOTTM SLAB LONGIT.	5	120	89							69 11.8	2 10.0						72	10	9113
156	BOTTM SLAB LONGIT.	5	12	89							70 11.6	2 10.0						73	10	924
156	BOTTM SLAB LONGIT.	5	12	89							63 6.2	2 10.0						66	4	830
156	BOTTM SLAB LONGIT.	5	36	89							57 2.1	2 10.0						60	0	2253
156	BOTTM SLAB LONGIT.	5	36	89							59 2.1	2 10.0						62	0	2328
156	BOTTM SLAB LONGIT.	5	12	89							61 2.2	2 10.0						64	0	801
156	BOTTM SLAB LONGIT.	5	12	89							63 2.2	2 10.0						66	0	826
156	BOTTM SLAB LONGIT.	5	24	89							65 2.2	2 10.0						68	0	1702
156	BOTTM SLAB LONGIT.	5	12	89							57 8.6	2 10.0						60	7	758
157	TOP SLAB LONGIT.	5	40	89				E			69 11.8	2 10.0						72	10	3038
157	TOP SLAB LONGIT.	5	4	89				E			70 11.6	2 10.0						73	10	308
157	TOP SLAB LONGIT.	5	4	89				E			63 6.2	2 10.0						66	4	277
157	TOP SLAB LONGIT.	5	12	89				E			57 2.1	2 10.0						60	0	751
157	TOP SLAB LONGIT.	5	12	89				E			59 2.1	2 10.0						62	0	776

S = Bar is included in substructure quantities.
L = Lump sum quantity.
T = Transverse or S = Seismic
E = Bar is to be epoxy coated.
V = Bar dimensions vary between dimensions shown on this line and the following line.

MARK NO.	LOCATION	SIZE	NO REQ'D	BEND TYPE	TIE OR STIR.	LUMP SUM	SUBSTR.	EPOXY COAT	VARIES	NO. EACH	DIMENSIONS (Out to Out) U Ft. In.	W Ft. In.	X Ft. In.	Y Ft. In.	Z Ft. In.	θ_1 Deg.	θ_2 Deg.	LENGTH Ft.	LENGTH In.	WEIGHT Lbs.
157	TOP SLAB LONGIT.	5	4	89				E			61 2.2	2 10.0						64	0	267
157	TOP SLAB LONGIT.	5	4	89				E			63 2.2	2 10.0						66	0	275
157	TOP SLAB LONGIT.	5	8	89				E			65 2.2	2 10.0						68	0	567
157	TOP SLAB LONGIT.	5	4	89				E			57 8.6	2 10.0						60	7	253
158	LUMINAIRE BASE	5	51	76				E			1 6.5	1 4.0	0 9.8					4	10	257
159	LUMINAIRE BASE LONGIT.	5	51	81				E			1 0.8	1 0.8	1 0.8	0 2.5	0 2.5	45	45	3	2	170
160	CLOSURE POUR LONGIT.	5	40	89				E			69 11.8	2 10.0						72	10	3038
160	CLOSURE POUR LONGIT.	5	40	89				E			70 11.6	2 10.0						73	10	3079
160	CLOSURE POUR LONGIT.	5	40	89				E			63 6.2	2 10.0						66	4	2768
160	CLOSURE POUR LONGIT.	5	40	89				E			57 2.1	2 10.0						60	0	2503
160	CLOSURE POUR LONGIT.	5	40	89				E			59 2.1	2 10.0						62	0	2587
160	CLOSURE POUR LONGIT.	5	40	89				E			61 2.2	2 10.0						64	0	2671
160	CLOSURE POUR LONGIT.	5	40	89				E			63 2.2	2 10.0						66	0	2754
160	CLOSURE POUR LONGIT.	5	40	89				E			65 2.2	2 10.0						68	0	2837
160	CLOSURE POUR LONGIT.	5	40	89				E			57 8.6	2 10.0						60	7	2526
	PIER 9																			
200	STAGE 1 LOWER DOWEL	5	64	50			S				3 8.5							3	8	248
201	STAGE 1 UPPER DOWEL	5	32	50			S				5 2.5							4	2	174
202	STAGE 1 TRANSVERSE	5	32	74			S				2 2.5	2 2.5						4	3	143
203	STAGE 1 LONGITUDINAL	5	7	74			S				35 7.0							35	7	260
204	STAGE 2 VERTICAL DOWEL	5	32	54			S				2 8.0							3	4	112
205	STAGE 3 VERTICAL DOWEL	5	32	54			S				3 10.0							4	6	151
206	STAGE 2 HORIZONTAL DOWEL	5	32	54			S				2 0.0							2	8	90
207	STAGE 2 LONGITUDINAL	5	3	50			S				35 7.0							35	7	111
208	STAGE 2 TIES	5	32	58	T		S				1 0.0							1	10	61
209	STAGE 4 LONGITUDINAL 1	5	2	50			S				35 7.0							35	7	74
210	STAGE 4 LONGITUDINAL 2	5	12	50			S				3 6.0							3	6	44
211	STAGE 4 LONGITUDINAL 3	5	6	50			S				4 3.5							4	4	27
212	STAGE 4 HORIZONTAL DOWEL	5	32	54			S				4 0.0							4	8	157
213	TRANSVERSE STOP TIE	5	10	74			S				0 9.0	1 10.5	1 10.5					4	3	44
214	TRANSVERSE STOP HORIZONTAL	4	4	50			S				4 0.0							4	0	11
215	STAGE 4 TOP LONGITUDINALS	4	7	50			S				35 7.0							35	7	166
216	PAVEMENT SEAT DOWEL 1	4	28	71			S				0 9.0	0 11.5	0 11.5					2	3	43
217	PAVEMENT SEAT DOWEL 2	4	10	71			S				1 8.4	0 11.5	0 11.5					2	10	19
218	TOP OF BACKWALL DOWEL	4	38	80			S				1 1.6	1 6.0	1 6.0	0 2.0	0 2.0	94	86	3	11	100
219	CURB LONGITUDINAL	6	4	50			S	E			1 4.6							1	5	8
220	CURB TRANSVERSE	6	6	90			S	E										6	4	57
221	EXTERIOR TRANSVERSE	4	2	50			S				4 2.5							4	2	6
222	EXTERIOR DOWEL	4	4	80			S				0 7.3	0 8.0	1 2.4	0 2.0	0 2.0	140	127	2	5	6
B1	BEARING BLOCK LONG	4	108	71			S				0 3.5	2 6.8	2 6.8					5	3	377
B2	BEARING BLOCK TRANSVERSE	4	72	71			S				0 3.5	1 11.0	1 11.0					3	11	189
	PIER 8																			
224	FOOTING DOWEL	5	16	50			S				2 2.5							2	2	37
225	LONGITUDINAL TIE LOWER	5	14	76			S				2 8.0	1 5.5	1 5.5					6	9	98
226	TRANSVERSE TIE LOWER	5	14	74			S				3 5.4	1 4.0	1 4.0					5	10	85
227	TRANSVERSE TIE UPPER	5	14	74			S				3 5.0	1 4.0	1 4.0					5	10	85
228	LONGITUDINAL TIE UPPER	5	14	56			S				2 9.0							4	2	61
229	PEDESTAL TRANSVERSE	5	8	61			S				1 5.0	2 9.0	2 9.0	0 6.0	0 6.0			7	5	62
230	PEDESTAL LONGITUDINAL	5	6	61			S				2 4.3	2 11.5	2 11.5	0 6.0	0 6.0			8	9	55
231	PILE REBAR	6	8	54			S				2 0.0							2	10	34
	OREGON WIDENING DECK REINF.																			
232	BOTTOM TRANSVERSE	6	342	51							3 6.0							4	2	2152
233	LOWER LONGITUDINAL	5	6	89							85 0.0	2 4.0						89	8	561
234	LOWER LONGITUDINAL	5	6	89							85 0.0	2 4.0						89	8	561
235	UPPER LONGITUDINAL	5	6	89				E			85 0.0	2 4.0						89	8	561
236	UPPER LONGITUDINAL	5	6	89				E			85 0.0	2 4.0						89	8	561
237	UPPER TRANSVERSE	6	342	71	T			E			0 6.0	3 5.0	0 8.0					4	3	2193
238	CURB LONGITUDINAL	6	4	89	T			E			85 0.0	2 4.0						87	4	525
239	CURB TRANSVERSE	6	342	62	T			E			0 8.0	1 6.5	1 6.5	0 8.0	0 8.0			4	6	2289
240	DOWEL	5	342	50	T						1 8.5							1	8	609
241	CLOSURE STRIP LONGITUDINAL	5	4	89				E			85 0.0	2 4.0						89	8	374
242	HEADER TOP & BOT TRANSVERSE	5	12	50							30 0.0							30	0	375
243	HEADER LONGITUDINAL	4	53	50							2 6.0							6	0	89

STEEL REINFORCING BAR QUANTITIES NOT INCLUDED IN THIS BAR LIST

TRAFFIC BARRIER
BRIDGE GRATE INLETS
RETAINING WALL

BENDING DIAGRAMS

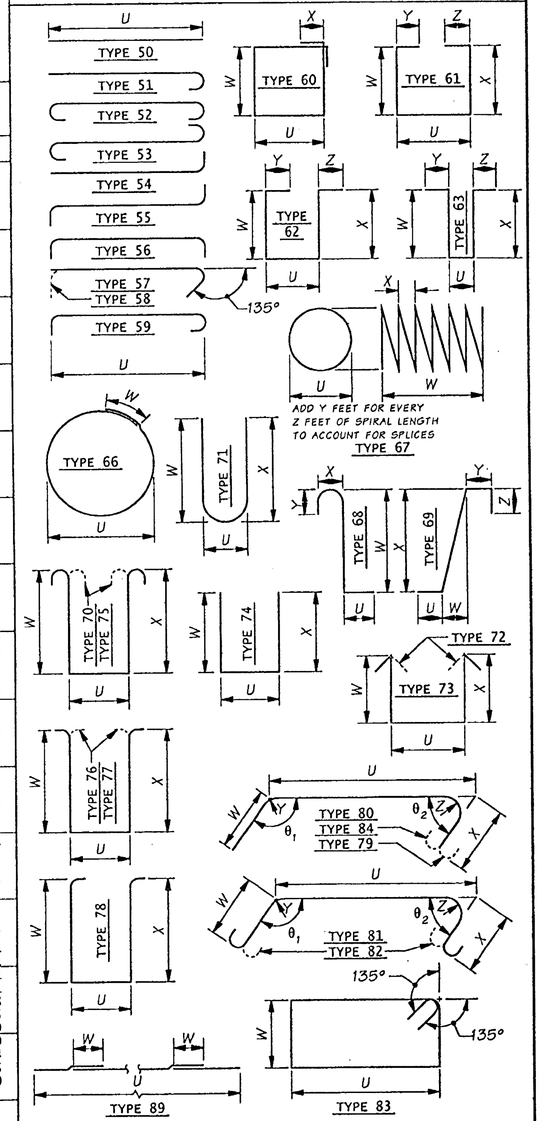

FOR "AS CONSTRUCTED PLANS" ONLY

NOTE:

1. ALL REINFORCING BARS ON THIS SHEET SHALL BE AASHTO M-31 UNLESS SHOWN OTHERWISE.
2. REINFORCING FOR TRAFFIC BARRIERS NOT SHOWN IN THE BAR LIST, SEE TRAFFIC BARRIER SHEET.
3. BEND FOR TRANSVERSE BARS DUE TO ROADWAY CROWN CONDITIONS HAS NOT BEEN SHOWN. THESE BARS SHALL BE BENT AS REQUIRED TO CONFORM TO THE CONFIGURATION OF THE STRUCTURE.
4. NUMBER AND LENGTH OF BARS TO BE DETERMINED BY THE CONTRACTOR FROM PLANS.

SR 433 JOB NO. 1566 SHEET 4

Bridge Design Engr.	Kapur, J		M:\Y-Team\Lewis_Clark Rehab\Entire\window files\Barlist4.WND
Supervisor	Kirker, KN	08/02	
Designed By	Talukdar, M	08/02	
Checked By	Peralta, R	08/02	
Detailed By	Evans, P	08/02	
Bridge Projects Engr.			
Prelim. Plan By			
Architect/Specialist			

DATE | REVISION | BY | APP'D

REGION NO.	STATE	FED. AID PROJ. NO.	SHEET NO.	TOTAL SHEETS
10	WASH.	ACBH - 0433(007)		
JOB NUMBER 02x310				

BRIDGE AND STRUCTURES OFFICE

Washington State Department of Transportation

SR 433
LEWIS AND CLARK BRIDGE DECK REPLACEMENT

BARLIST

BRIDGE SHEET NO. B4

SHEET 247 OF 258 SHEETS

Wed Sep 18 13:17:15 2002

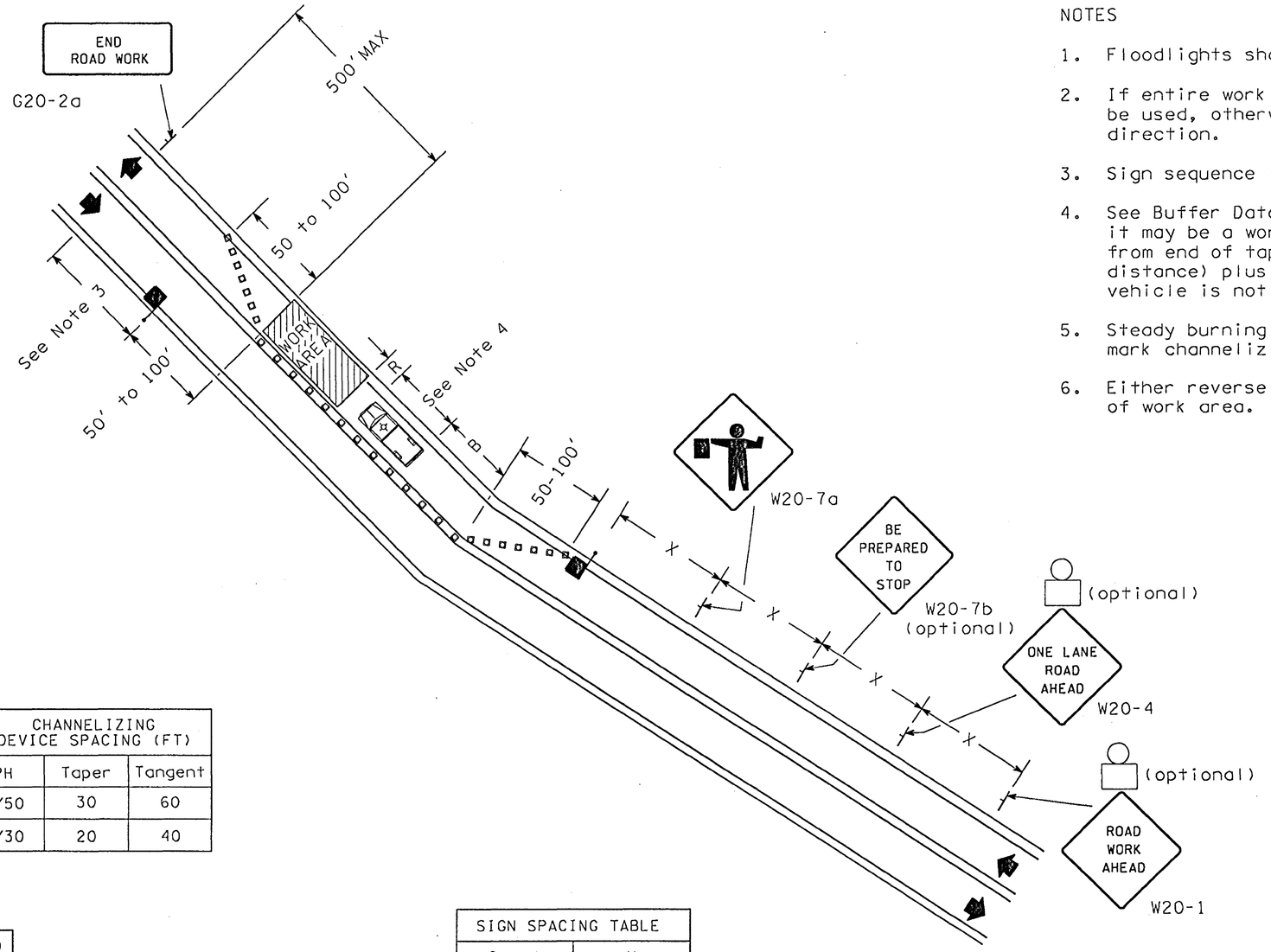

NOTES

1. Floodlights shall be provided to mark flagger stations at night.
2. If entire work area is visible from one station, one flagger may be used, otherwise two flaggers and signing will be required each direction.
3. Sign sequence is the same for both directions of travel.
4. See Buffer Data Table. Use of buffer vehicle is recommended, it may be a work vehicle. If buffer vehicle is used, minimum from end of taper to work area shall be total of "R" (roll ahead distance) plus length of vehicle, plus "B" (buffer space). If buffer vehicle is not used, minimum distance shall be "B".
5. Steady burning warning lights (Type C, MUTCD) should be used to mark channelizing devices at night as needed.
6. Either reverse cone taper or sign G20-2a may be used to show end of work area.

CHANNELIZING DEVICE SPACING (FT)		
MPH	Taper	Tangent
35/50	30	60
25/30	20	40

STANDARD SINGLE LANE CLOSURE

LEGEND

- Channelizing Devices
- Flagger
- Type A Flashing Warning Light

SIGN SPACING TABLE	
Speed	X
45/50 MPH	500'±
35/40 MPH	350'±
25/30 MPH	200'±

BUFFER DATA						
Buffer Space						
Speed (MPH)	25	30	35	40	45	50
B (FT) =	55	85	120	170	220	280
Buffer Vehicle Roll Ahead Distance						
4 Yard Dump Truck 24,000 LBS				Stationary Operation		
R (FT) =				100		

FOR "AS CONSTRUCTED PLANS" ONLY

Typical application of traffic control devices on a two-lane highway where one lane is closed and flagging is provided.

FILE NAME	g:\444304\CADD\LI566\LI566\XLI566trf.dgn				
TIME	12:17:48 PM				
DATE	09/25/2002				
DESIGNED BY	C. BRICHEUX				
ENTERED BY	D. WASSON				
CHECKED BY	R. TORRES				
PROJ. ENGR.	A. REVIS				
REGIONAL ADM.	D. WAGNER	REVISION	DATE	BY	

REGION NO.	STATE	FED.AID PROJ.NO.
10	WASH	
JOB NUMBER		
CONTRACT NO. 6444		LOCATION NO.

P.E. STAMP BOX — EXPIRES 09/03/03 — DATE 9/25/02

P.E. STAMP BOX — DATE

Washington State Department of Transportation

SR 433
LEWIS AND CLARK BRIDGE 433/1
DECK REPLACEMENT

CONSTRUCTION SIGNING CLASS B

PLOT1
TCP1
SHEET 248 OF 258 SHEETS

GENERAL NOTES

The maximum spacing between channelizing devices in a taper should be nearly equal in feet to the speed limit; the maximum spacing between channelizing devices used to separate traffic should be 2 times the speed limit, not to exceed 100'.

Channelizing devices shall be a minimum of 28" in height.

Steady burning warning lights (TYPE C, MUTCD) shall be used to mark channelizing devices at night as needed.

Flashing warning lights (TYPE A, MUTCD) shall be used to mark advance warning signs at night as needed.

Traffic Safety Drums shall be used for channelizing devices during nighttime operations. (See Special Provisions)

All signs are black on orange unless stated otherwise.

Sign locations are approximate. Actual locations to be determined by the Engineer.

All signs to be covered or removed when not applicable.

PCMS	
USE CAUTION	ROAD WORK AHEAD
1.5 SEC	1.5 SEC

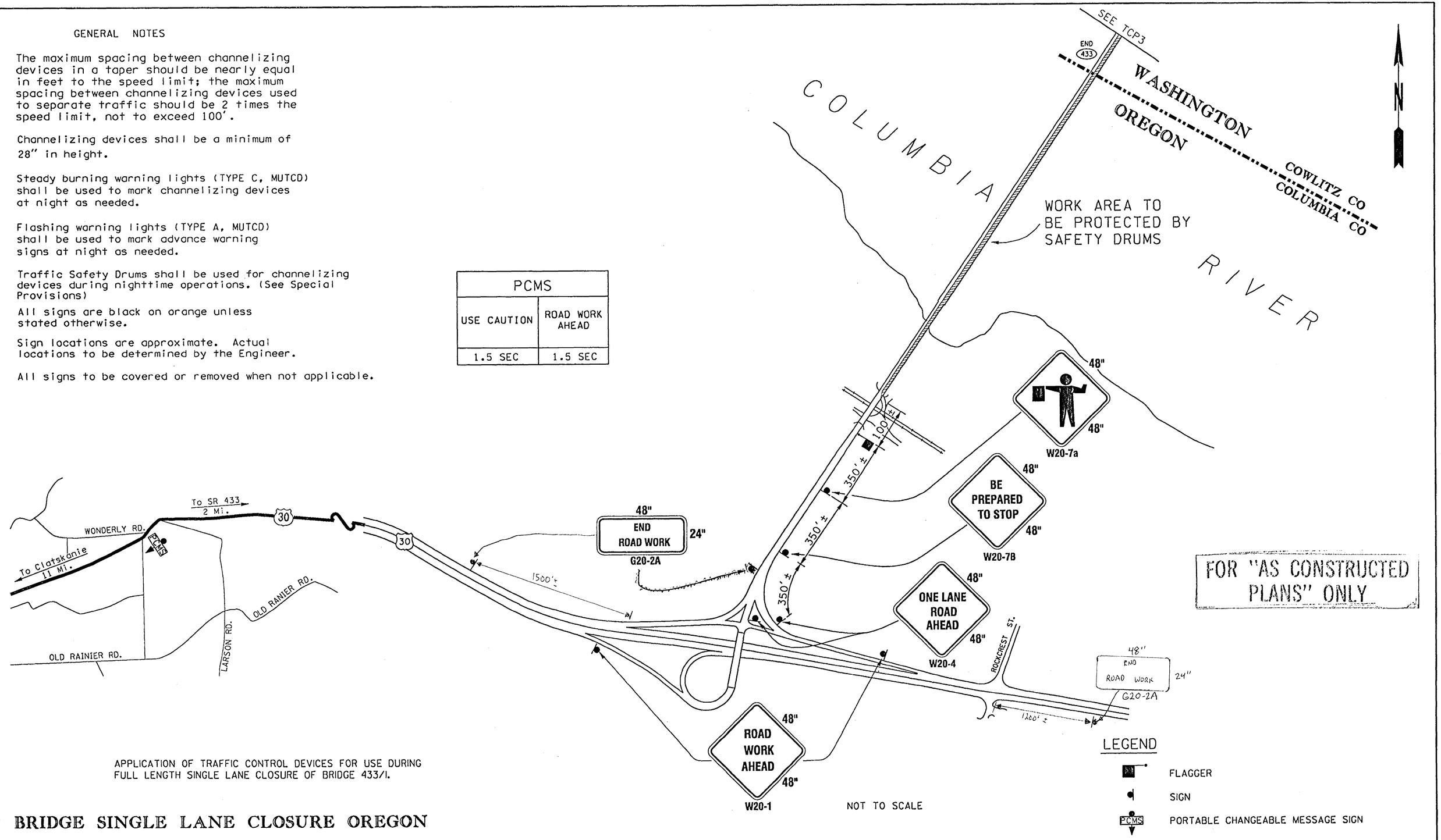

FOR "AS CONSTRUCTED PLANS" ONLY

LEGEND

FLAGGER

SIGN

PCMS PORTABLE CHANGEABLE MESSAGE SIGN

APPLICATION OF TRAFFIC CONTROL DEVICES FOR USE DURING FULL LENGTH SINGLE LANE CLOSURE OF BRIDGE 433/1.

NOT TO SCALE

BRIDGE SINGLE LANE CLOSURE OREGON

FILE NAME	g:\444304\CADD\L1566\L1566\XL1566trf.dgn				REGION NO.	STATE	FED.AID PROJ.NO.	
TIME	12:17:50 PM				10	WASH		
DATE	09/25/2002				JOB NUMBER			
DESIGNED BY	C. BRICHEUX							
ENTERED BY	D. WASSON				CONTRACT NO.		LOCATION NO.	
CHECKED BY	R. TORRES				6444			
PROJ. ENGR.	A. REVIS							
REGIONAL ADM.	D. WAGNER	REVISION	DATE	BY				

AMY B. REVIS, STATE OF WASHINGTON, 18150, REGISTERED PROFESSIONAL ENGINEER, EXPIRES 09/03/03 — 9/25/02 DATE — P.E. STAMP BOX

P.E. STAMP BOX — DATE

Washington State Department of Transportation

SR 433
LEWIS AND CLARK BRIDGE 433/1
DECK REPLACEMENT

CONSTRUCTION SIGNING CLASS B

PLOT2

TCP2

SHEET 249 OF 255 SHEETS

GENERAL NOTES

The maximum spacing between channelizing devices in a taper should be nearly equal in feet to the speed limit; the maximum spacing between channelizing devices used to separate traffic should be 2 times the speed limit, not to exceed 100'.

Channelizing devices shall be a minimum of 28" in height.

Steady burning warning lights (TYPE C, MUTCD) shall be used to mark channelizing devices at night as needed.

Flashing warning lights (TYPE A, MUTCD) shall be used to mark advance warning signs at night as needed.

Traffic Safety Drums shall be used for channelizing devices during nighttime operations. (See Special Provisions)

All signs are black on orange unless stated otherwise.

Sign locations are approximate. Actual locations to be determined by the Engineer.

All signs to be covered or removed when not applicable.

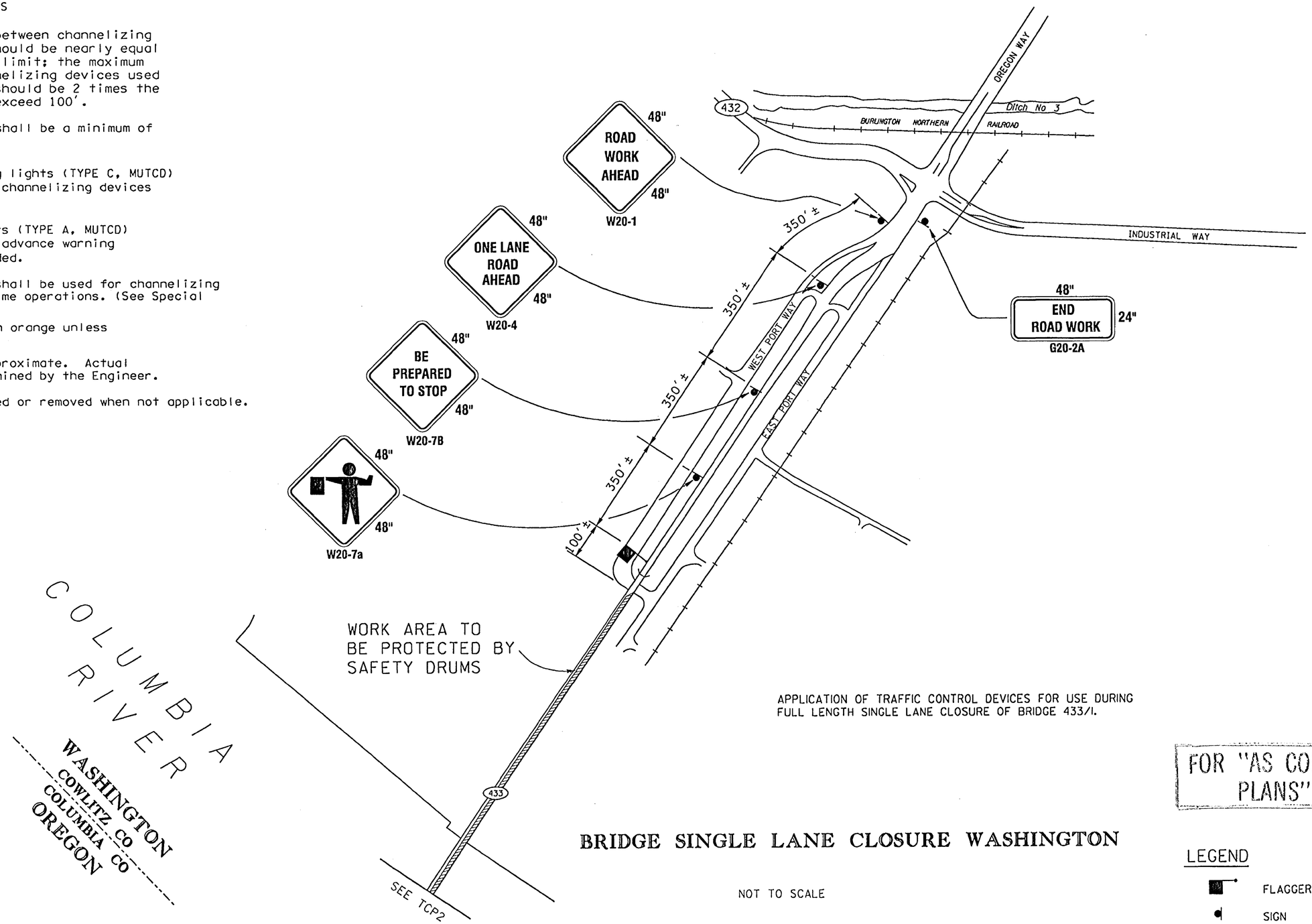

APPLICATION OF TRAFFIC CONTROL DEVICES FOR USE DURING FULL LENGTH SINGLE LANE CLOSURE OF BRIDGE 433/1.

FOR "AS CONSTRUCTED PLANS" ONLY

BRIDGE SINGLE LANE CLOSURE WASHINGTON

NOT TO SCALE

LEGEND

FLAGGER

SIGN

FILE NAME	g:\444304\CADD\L1566\L1566\XL1566trf.dgn						
TIME	12:17:52 PM						
DATE	09/25/2002						
DESIGNED BY	C. BRICHEUX						
ENTERED BY	D. WASSON						
CHECKED BY	R. TORRES						
PROJ. ENGR.	A. REVIS						
REGIONAL ADM.	D. WAGNER	REVISION	DATE	BY			

REGION NO. 10 STATE WASH

JOB NUMBER

CONTRACT NO. 6444

FED.AID PROJ.NO.

LOCATION NO.

AMY B. REVIS STATE OF WASHINGTON 38150 REGISTERED PROFESSIONAL ENGINEER

EXPIRES 09/03/02 DATE 9/25/02

P.E. STAMP BOX

P.E. STAMP BOX DATE

Washington State Department of Transportation

SR 433
LEWIS AND CLARK BRIDGE 433/1
DECK REPLACEMENT

CONSTRUCTION SIGNING CLASS B

PLOT3

TCP3

SHEET 250 OF 258 SHEETS

GENERAL NOTES

1. PROTECTIVE VEHICLE RECOMMENDED - MAY BE A WORK VEHICLE.
2. ALL SIGNS ARE 48"X48" BLACK ON ORANGE UNLESS OTHERWISE DESIGNATED.
3. TOTAL SIDEWALK CLOSURE REQUIRED FOR BOTH SIDES OF THE BRIDGE, CONTRACTOR TO SIGN ACCORDINGLY.
4. ALL SIGNS TO BE COVERED OR REMOVED WHEN NOT APPLICABLE.

CHANNELIZING DEVICE SPACING (FEET)		
MPH	TAPER	TANGENT
35	30	60

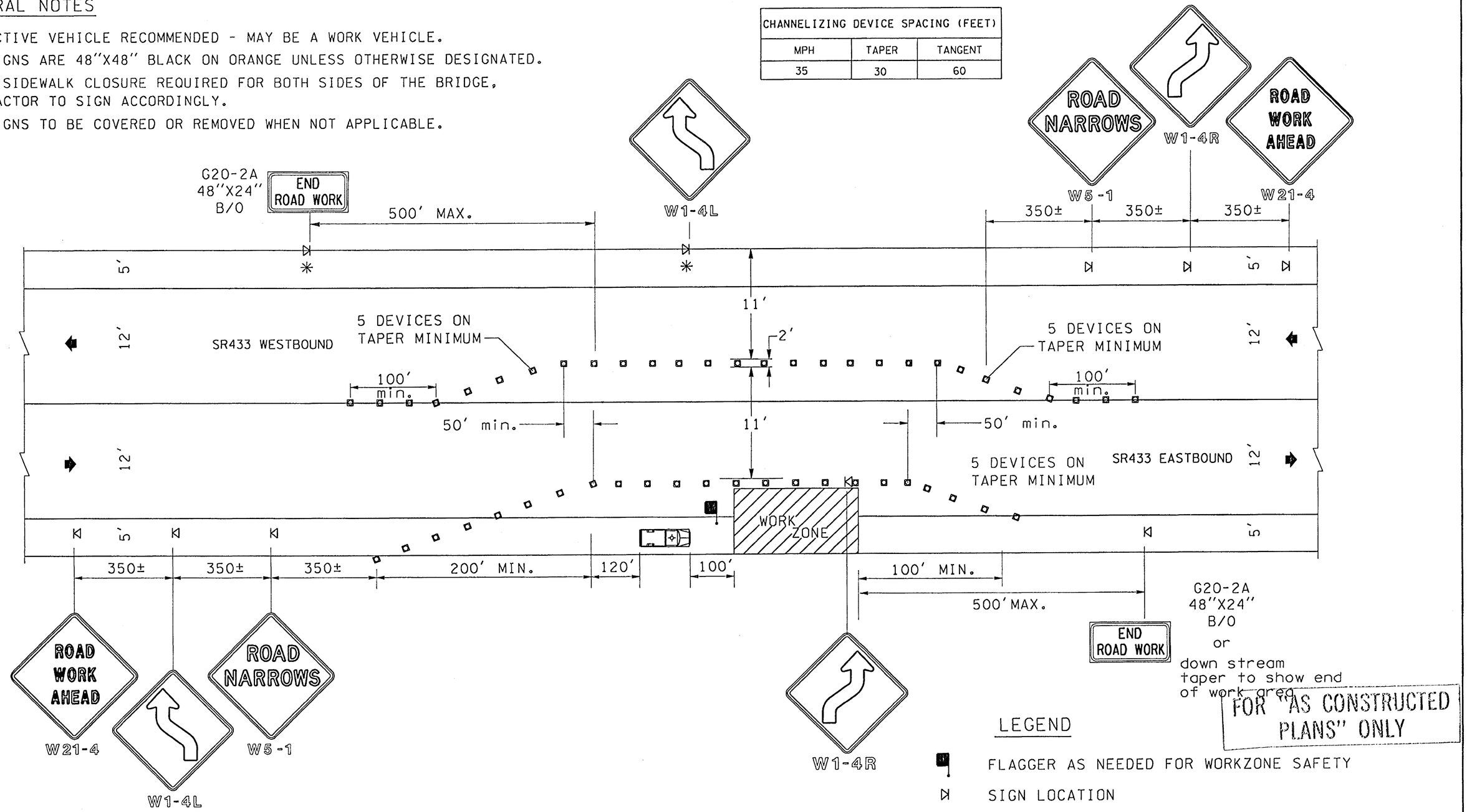

FOR "AS CONSTRUCTED PLANS" ONLY

LEGEND

- FLAGGER AS NEEDED FOR WORKZONE SAFETY
- SIGN LOCATION
- TEMPORARY TRAFFIC CONTROL DEVICES
- PROTECTIVE VEHICLE - RECOMMENDED (24,000 lbs. Min.) (ASSUMES DRY PAVEMENT)

LANE SHIFT - TWO WAY TRAFFIC

(35 MPH OR SLOWER)

✳ MOUNT ON OUTSIDE OF BRIDGE RAIL

FILE NAME	g:\444304\CADD\LI566\LI566\XLI566trf.dgn
TIME	12:17:53 PM
DATE	09/25/2002
DESIGNED BY	C. BRICHEUX
ENTERED BY	D. WASSON
CHECKED BY	R. TORRES
PROJ. ENGR.	A. REVIS
REGIONAL ADM.	D. WAGNER

REVISION | DATE | BY

REGION NO.	STATE	FED.AID PROJ.NO.
10	WASH	

JOB NUMBER

CONTRACT NO. 6444

LOCATION NO.

AMY B. REVIS, STATE OF WASHINGTON, 26150, REGISTERED PROFESSIONAL ENGINEER — EXPIRES 09/03/02 — 9/25/02 DATE — P.E. STAMP BOX

DATE — P.E. STAMP BOX

Washington State Department of Transportation

SR 433
LEWIS AND CLARK BRIDGE 433/1
DECK REPLACEMENT

CONSTRUCTION SIGNING CLASS B

PLOT4

TCP4

SHEET 251 OF 256 SHEETS

GENERAL NOTES

The maximum spacing between channelizing devices in a taper should be nearly equal in feet to the speed limit; the maximum spacing between channelizing devices used to separate traffic should be 2 times the speed limit, not to exceed 100'.

Channelizing devices shall be a minimum of 28" in height.

Steady burning warning lights (TYPE C, MUTCD) shall be used to mark channelizing devices at night as needed.

Flashing warning lights (TYPE A, MUTCD) shall be used to mark advance warning signs at night as needed.

Traffic Safety Drums shall be used for channelizing devices during nighttime operations. (See Special Provisions)

All signs are black on orange unless stated otherwise.

Sign locations are approximate. Actual locations to be determined by the Engineer.

All signs to be covered or removed when not applicable.

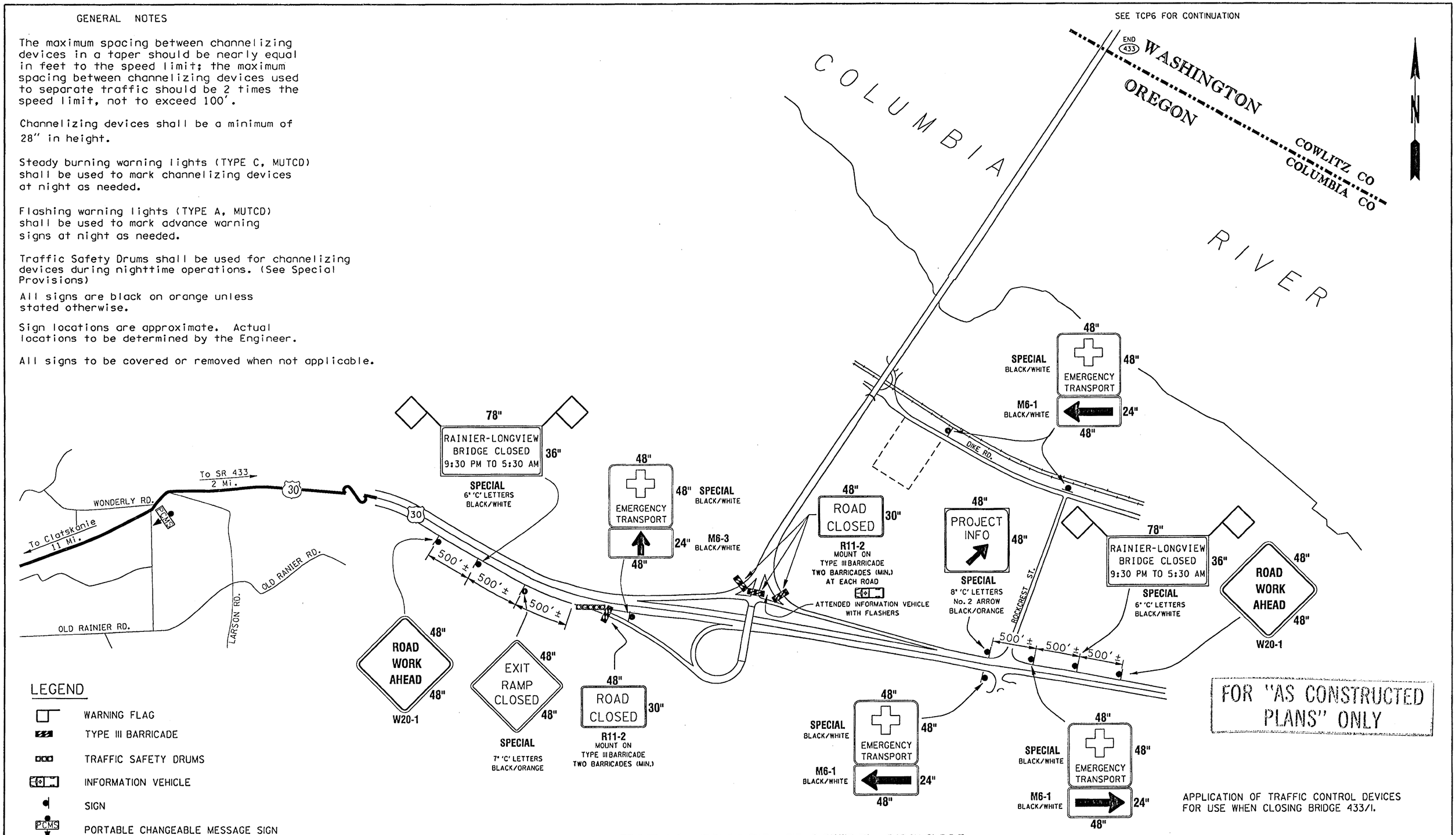

FOR "AS CONSTRUCTED PLANS" ONLY

APPLICATION OF TRAFFIC CONTROL DEVICES FOR USE WHEN CLOSING BRIDGE 433/1.

TOTAL BRIDGE CLOSURE OREGON

NOT TO SCALE

FILE NAME	g:\444304\CADD\L1566\L1566\XL1566trf.dgn				REGION NO. 10	STATE WASH	FED.AID PROJ.NO.		PLOT5
TIME	12:17:55 PM								TCP5
DATE	09/25/2002				JOB NUMBER				
DESIGNED BY	C. BRICHEUX								
ENTERED BY	D. WASSON								
CHECKED BY	R. TORRES				CONTRACT NO. 6444		LOCATION NO.		SHEET 252 OF 258 SHEETS
PROJ. ENGR.	A. REVIS								
REGIONAL ADM.	D. WAGNER	REVISION	DATE	BY					

AMY E. REVIS, STATE OF WASHINGTON, 26150, REGISTERED PROFESSIONAL ENGINEER, EXPIRES 09/03/03 — 9/25/02 DATE — P.E. STAMP BOX

P.E. STAMP BOX — DATE

Washington State Department of Transportation

SR 433
LEWIS AND CLARK BRIDGE 433/1
DECK REPLACEMENT

CONSTRUCTION SIGNING CLASS A

GENERAL NOTES

The maximum spacing between channelizing devices in a taper should be nearly equal in feet to the speed limit; the maximum spacing between channelizing devices used to separate traffic should be 2 times the speed limit, not to exceed 100'.

Channelizing devices shall be a minimum of 28" in height.

Steady burning warning lights (TYPE C, MUTCD) shall be used to mark channelizing devices at night as needed.

Flashing warning lights (TYPE A, MUTCD) shall be used to mark advance warning signs at night as needed.

Traffic Safety Drums shall be used for channelizing devices during nighttime operations. (See Special Provisions)

All signs are black on orange unless stated otherwise.

Sign locations are approximate. Actual locations to be determined by the Engineer.

All signs to be covered or removed when not applicable.

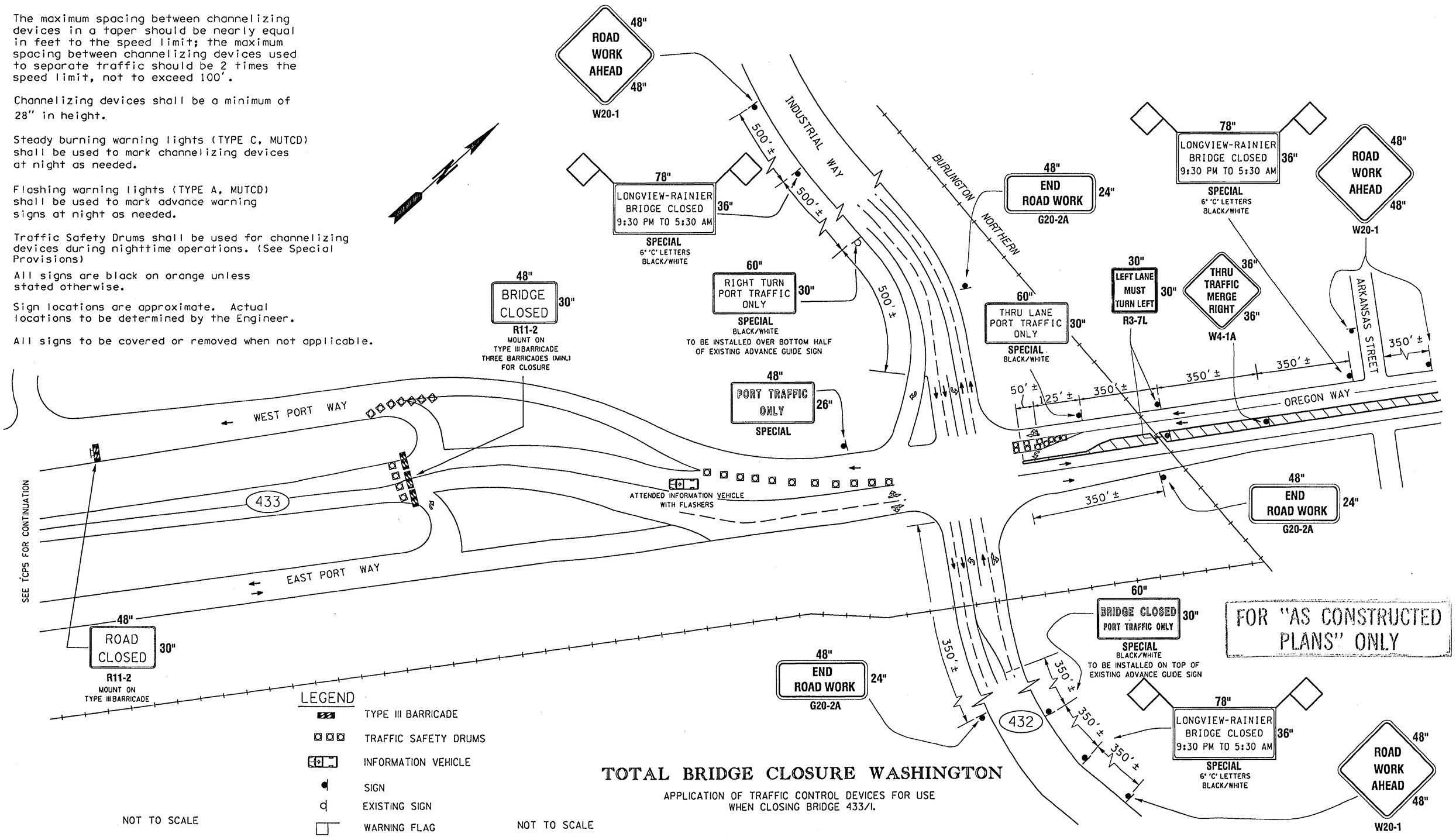

TOTAL BRIDGE CLOSURE WASHINGTON

APPLICATION OF TRAFFIC CONTROL DEVICES FOR USE WHEN CLOSING BRIDGE 433/1.

FILE NAME	g:\444304\CADD\LI566\LI566\XLI566trf.dgn				REGION NO. 10	STATE WASH	FED.AID PROJ.NO.
TIME	12:17:57 PM						
DATE	09/25/2002				JOB NUMBER		
DESIGNED BY	C. BRICHEUX						
ENTERED BY	D. WASSON						
CHECKED BY	R. TORRES				CONTRACT NO. 6444		LOCATION NO.
PROJ. ENGR.	A. REVIS						
REGIONAL ADM.	D. WAGNER	REVISION	DATE	BY			

ANY B. REVIS — STATE OF WASHINGTON — 38150 — REGISTERED PROFESSIONAL ENGINEER — EXPIRES 09/03/02 — 9/25/02 DATE — P.E. STAMP BOX

DATE — P.E. STAMP BOX

Washington State Department of Transportation

SR 433
LEWIS AND CLARK BRIDGE 433/1
DECK REPLACEMENT

CONSTRUCTION SIGNING CLASS A

PLOT11

TCP6

SHEET 253 OF 258 SHEETS

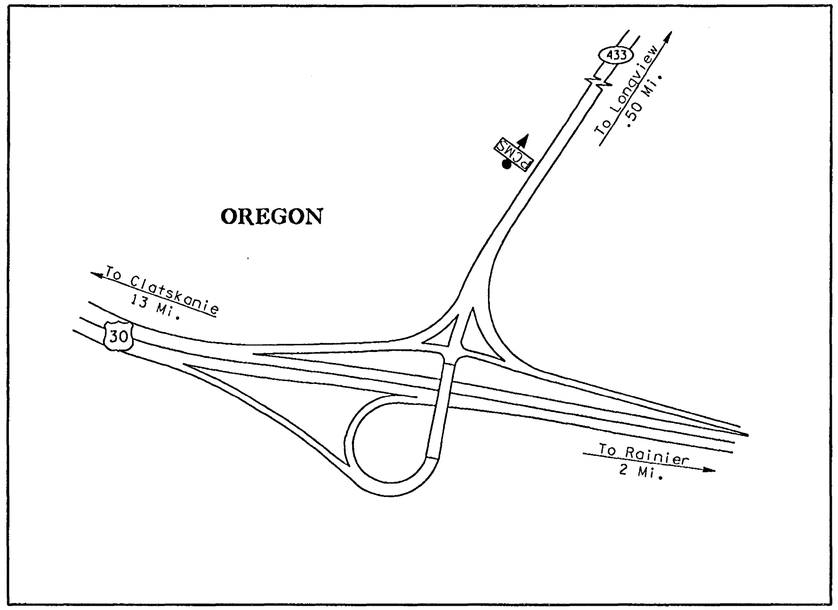

OR-11

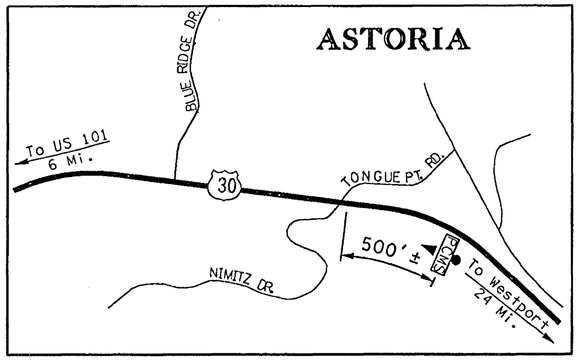

OR-2

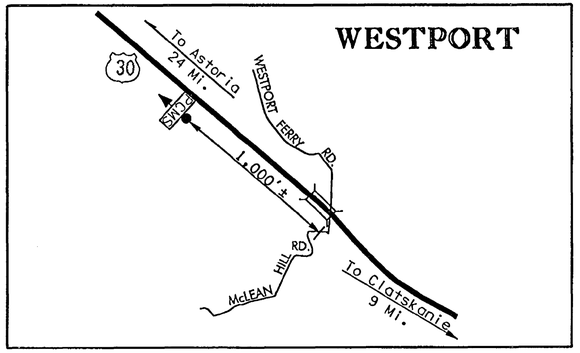

OR-3

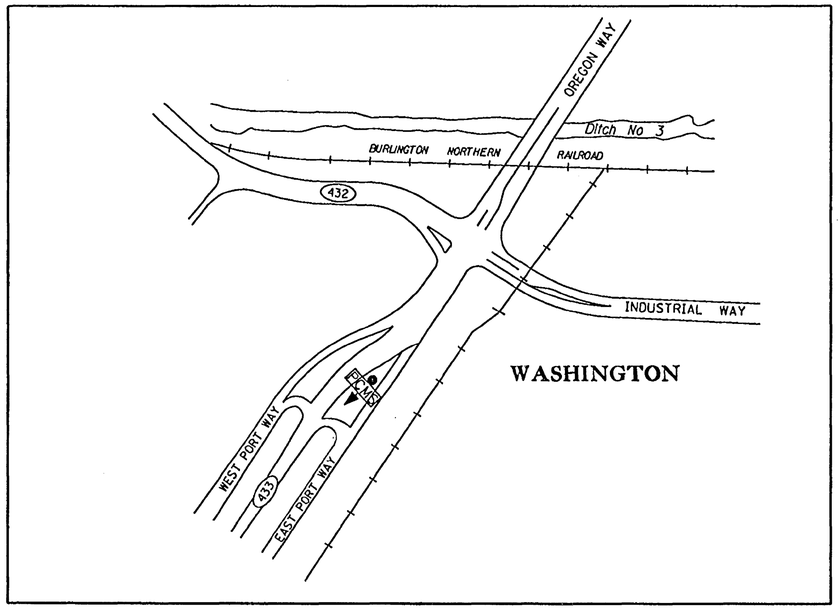

WA-7

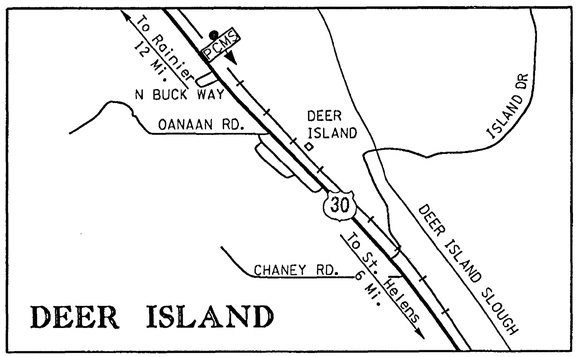

OR-10

NOT TO SCALE

PCMS PROJECT INFORMATION

GENERAL NOTES

The Engineer will provide the PCMS messages to the contractor for programming based on scheduled activities or as the need arises.

FOR "AS CONSTRUCTED PLANS" ONLY

LEGEND

PCMS — PORTABLE CHANGEABLE MESSAGE SIGN

FILE NAME	g:\444304\CADD\L1566\L1566\XL1566trf.dgn				REGION NO. 10	STATE WASH	FED.AID PROJ.NO.
TIME	12:17:58 PM						
DATE	09/25/2002				JOB NUMBER		
DESIGNED BY	C. BRICHEUX						
ENTERED BY	D. WASSON						
CHECKED BY	R. TORRES				CONTRACT NO. 6444		LOCATION NO.
PROJ. ENGR.	A. REVIS						
REGIONAL ADM.	D. WAGNER	REVISION	DATE	BY			

AMY B. REVIS, STATE OF WASHINGTON, 26150, REGISTERED PROFESSIONAL ENGINEER — EXPIRES 09/03/03 — 9/25/02 DATE — P.E. STAMP BOX

P.E. STAMP BOX — DATE

Washington State Department of Transportation

SR 433
LEWIS AND CLARK BRIDGE 433/1
DECK REPLACEMENT

INFORMATION PCMS

PLOT12

TCP7

SHEET 254 OF 256 SHEETS

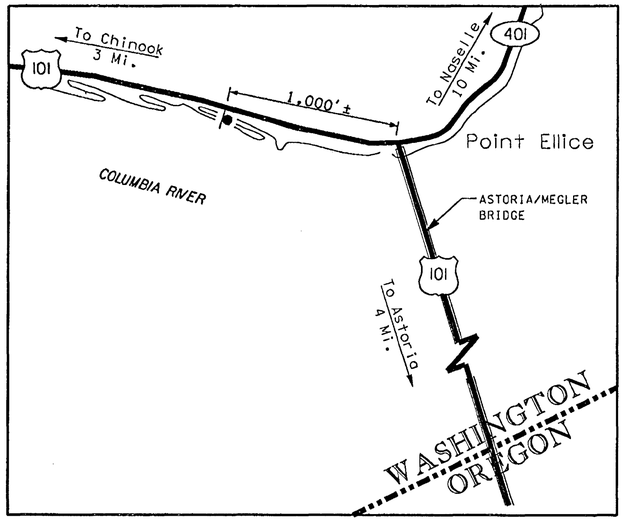

WA-1

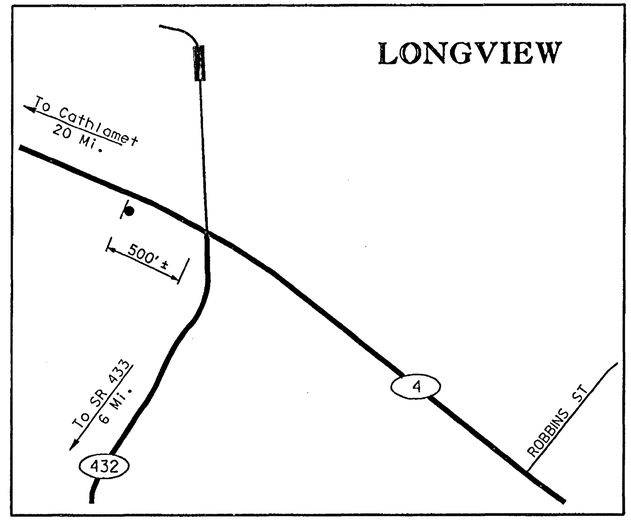

WA-3

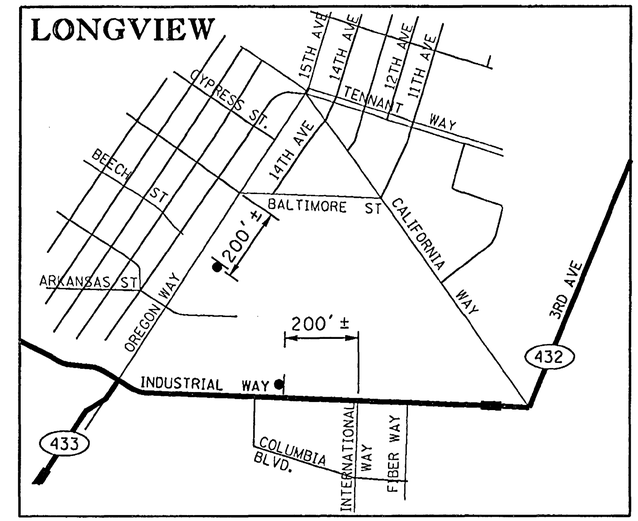

WA-6

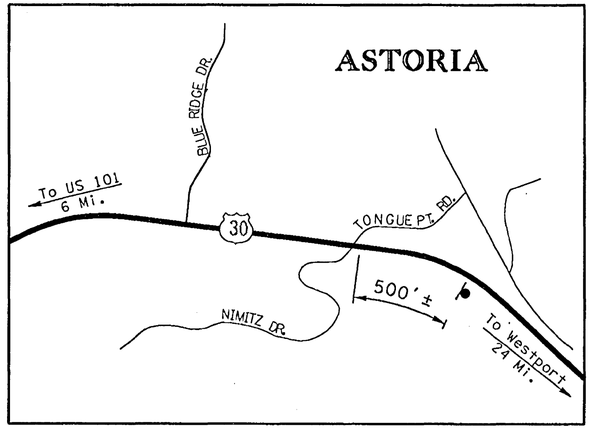

OR-2

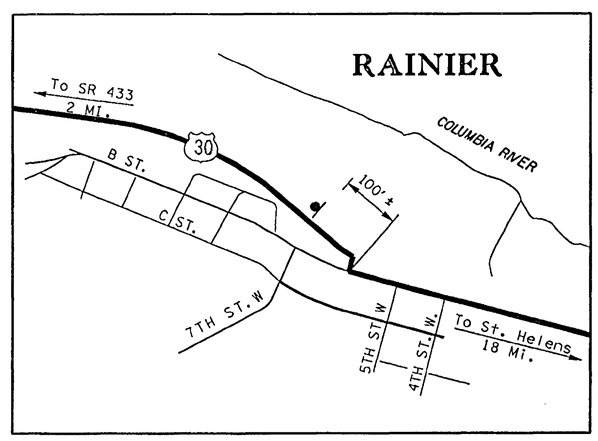

OR-6

GENERAL NOTES

APPLICATION OF INFORMATION SIGNS TO BE INSTALLED 14 DAYS IN ADVANCE OF ALL WEEKEND CLOSURES OF BRIDGE 433/1.

SIGN LOCATIONS ARE APPROXIMATE. ACTUAL LOCATIONS TO BE DETERMINED BY THE ENGINEER.

ALL SIGNS TO BE COVERED OR REMOVED WHEN NOT APPLICABLE.

FOR "AS CONSTRUCTED PLANS" ONLY

LEGEND

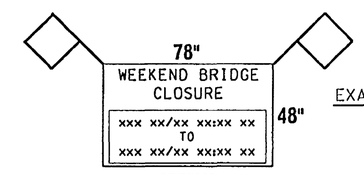

EXAMPLE:
FRI 7/25 11:30 PM
TO
MON 7/28 5:30 AM

WARNING FLAG

SIGNING FOR WEEKEND CLOSURE

NOT TO SCALE

FILE NAME	g:\444304\CADD\L1566\L1566\XL1566trf.dgn				REGION NO.	STATE	FED.AID PROJ.NO.			PLOT13
TIME	12:18:00 PM				10	WASH				TCP8
DATE	09/25/2002				JOB NUMBER					
DESIGNED BY	C. BRICHEUX									
ENTERED BY	D. WASSON									
CHECKED BY	R. TORRES				CONTRACT NO.		LOCATION NO.			SHEET 255 OF 258 SHEETS
PROJ. ENGR.	A. REVIS				6144					
REGIONAL ADM.	D. WAGNER	REVISION	DATE	BY						

AMY E. REVIS, STATE OF WASHINGTON, 26150, REGISTERED PROFESSIONAL ENGINEER
EXPIRES 09/03/03
9/25/02 DATE
P.E. STAMP BOX

DATE
P.E. STAMP BOX

Washington State Department of Transportation

SR 433
LEWIS AND CLARK BRIDGE 433/1
DECK REPLACEMENT

WEEKEND CLOSURE SIGNING

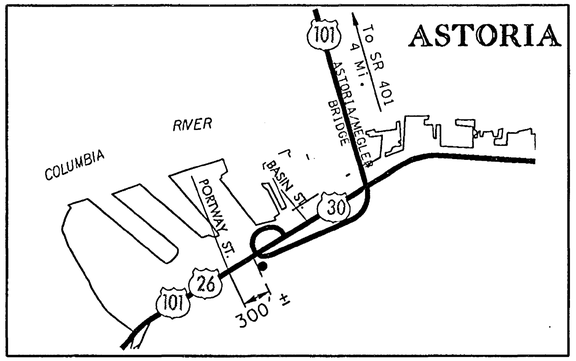

OR-1

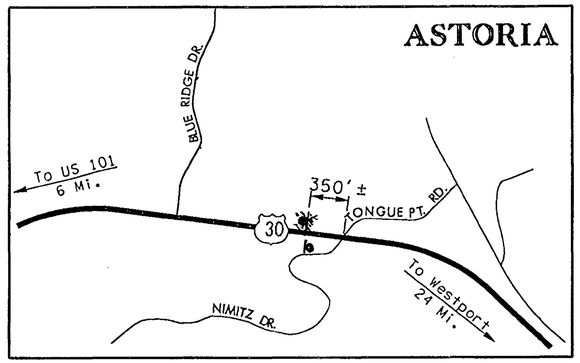

OR-2

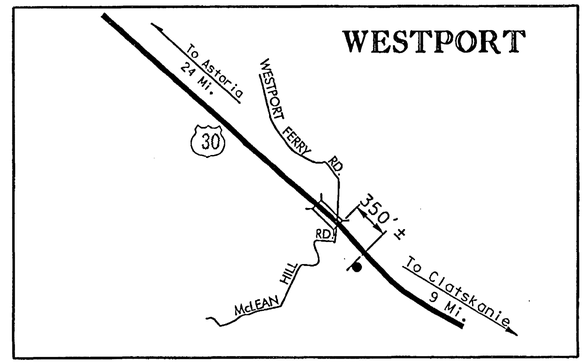

OR-3

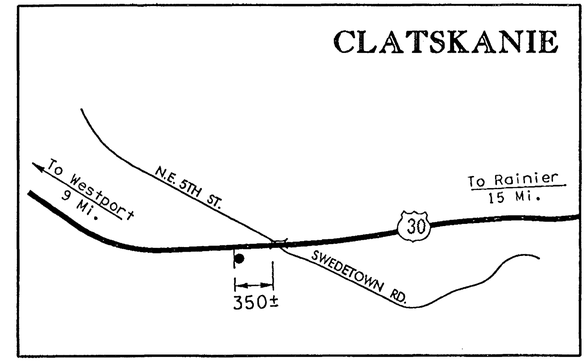

OR-4

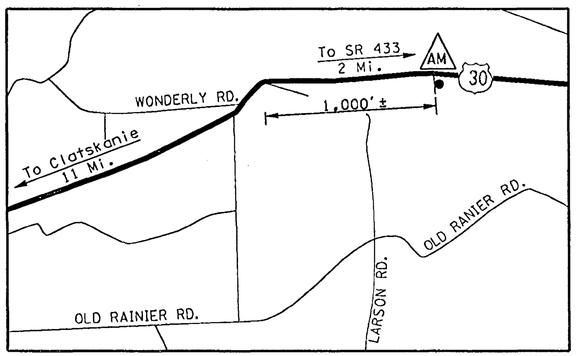

OR-5

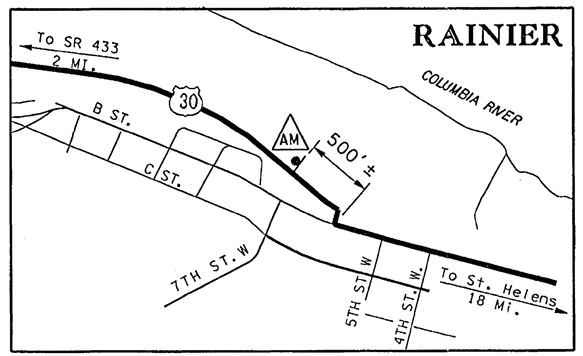

OR-6

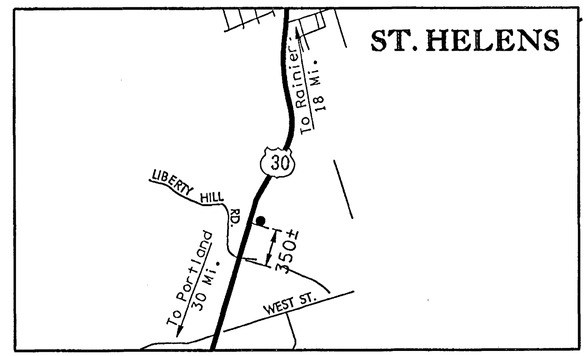

OR-7

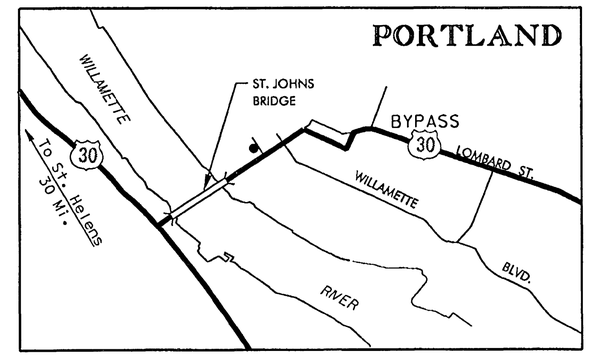

OR-8

LEGEND

AM
RADIO FREQUENCY

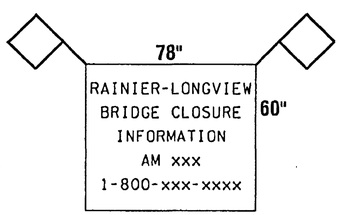

SPECIAL

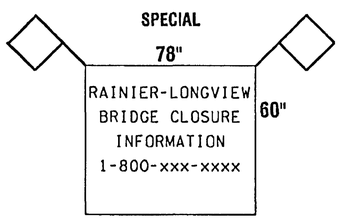

SPECIAL

WARNING FLAG

GENERAL NOTES

APPLICATION OF INFORMATION DEVICES TO BE INSTALLED 14 DAYS IN ADVANCE OF ALL WEEKEND CLOSURES OF BRIDGE 433/1.

SIGN LOCATIONS ARE APPROXIMATE. ACTUAL LOCATIONS TO BE DETERMINED BY THE ENGINEER.

ALL SIGNS TO BE COVERED OR REMOVED WHEN NOT APPLICABLE.

N

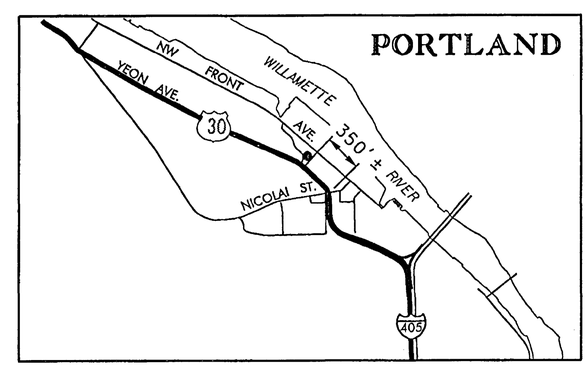

OR-9

APPLICATION OF INFORMATION SIGNS FOR DURATION OF PROJECT ON BRIDGE 433/1.

SIGNING FOR PROJECT INFORMATION - OREGON

FOR "AS CONSTRUCTED PLANS" ONLY

NOT TO SCALE

FILE NAME	g:\444304\CADD\LI566\LI566\XLI566trf.dgn						
TIME	12:18:02 PM						
DATE	09/25/2002						
DESIGNED BY	C. BRICHEUX						
ENTERED BY	D. WASSON						
CHECKED BY	R. TORRES						
PROJ. ENGR.	A. REVIS						
REGIONAL ADM.	D. WAGNER	REVISION	DATE	BY			

REGION NO.	STATE	FED.AID PROJ.NO.
10	WASH	
JOB NUMBER		
CONTRACT NO. 6444		LOCATION NO.

ARTY E. REVIS, STATE OF WASHINGTON, 26150, REGISTERED PROFESSIONAL ENGINEER, EXPIRES 09/03/03 — 9/25/02 DATE — P.E. STAMP BOX

DATE — P.E. STAMP BOX

Washington State Department of Transportation

SR 433
LEWIS AND CLARK BRIDGE 433/1
DECK REPLACEMENT

INFORMATION SIGN PLACEMENT

PLOT14

TCP9

SHEET 256 OF 256 SHEETS

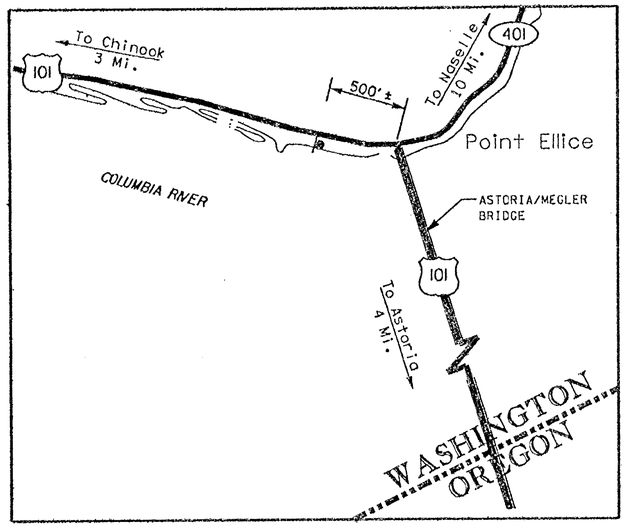

WA-1

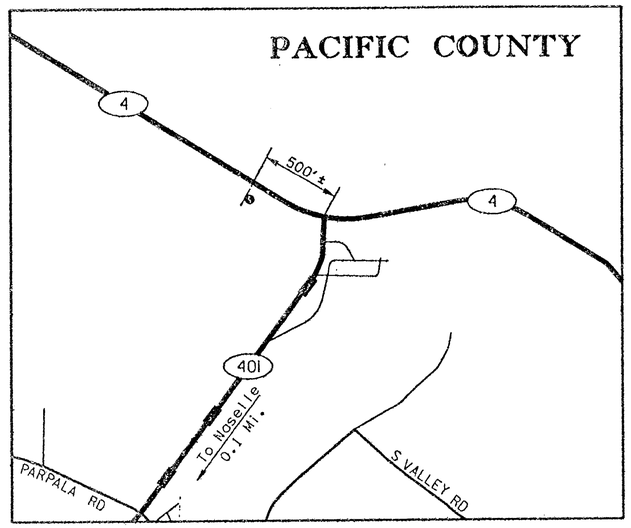

WA-2

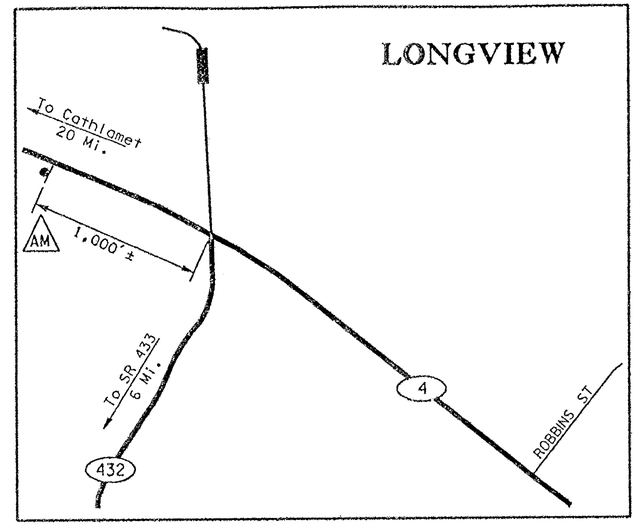

WA-3

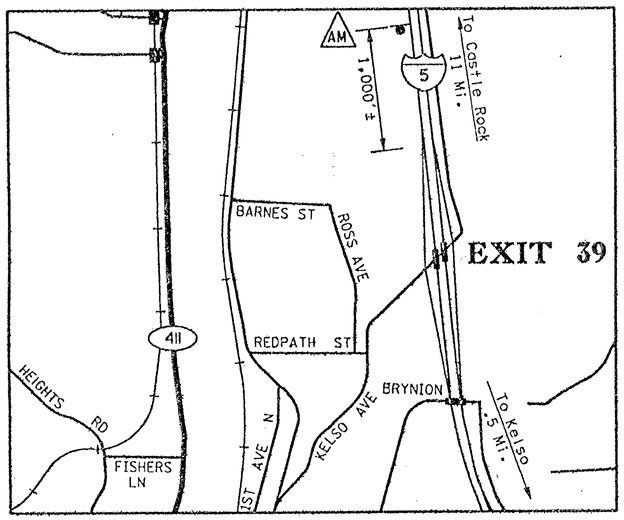

WA-4

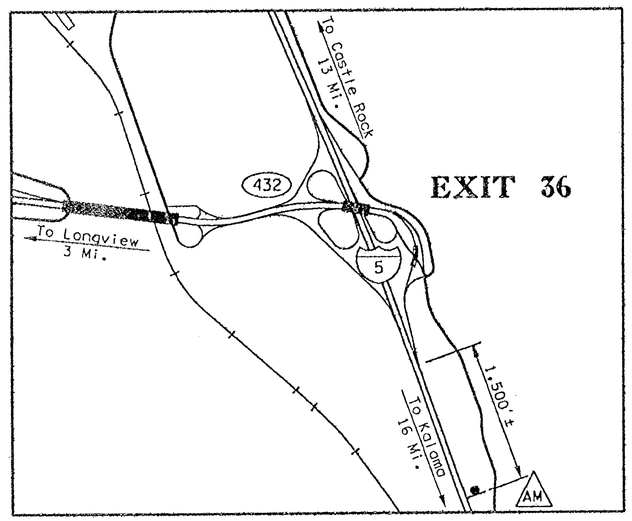

WA-5

LEGEND

AM RADIO FREQUENCY

78" LONGVIEW-RAINIER BRIDGE CLOSURE INFORMATION AM 530 1-866-427-4630 60"

SPECIAL

78" LONGVIEW-RAINIER BRIDGE CLOSURE INFORMATION 1-866-427-4630 60"

SPECIAL

WARNING FLAG

FOR "AS CONSTRUCTED PLANS" ONLY

GENERAL NOTES

APPLICATION OF INFORMATION SIGNS TO BE INSTALLED 14 DAYS IN ADVANCE OF ALL WEEKEND CLOSURES OF BRIDGE 433/1.

SIGN LOCATIONS ARE APPROXIMATE. ACTUAL LOCATIONS TO BE DETERMINED BY THE ENGINEER.

ALL SIGNS TO BE COVERED OR REMOVED WHEN NOT APPLICABLE.

APPLICATION OF INFORMATION SIGNS FOR WASHINGTON SIDE FOR DURATION OF PROJECT ON BRIDGE 433/1.

NOT TO SCALE

SIGNING FOR PROJECT INFORMATION - WASHINGTON

FILE NAME	g:\444304\CADD\L1566\L1566\XL1566trf.dgn				REGION NO.	STATE	FED.AID PROJ.NO.	AMY E. REVIS STATE OF WASHINGTON 26150 REGISTERED PROFESSIONAL ENGINEER EXPIRES 09/03/03 9/25/02 DATE P.E. STAMP BOX	DATE P.E. STAMP BOX	Washington State Department of Transportation	SR 433 LEWIS AND CLARK BRIDGE 433/1 DECK REPLACEMENT	PLOT15 TCP10
TIME	12:18:03 PM				10	WASH						
DATE	09/25/2002				JOB NUMBER							
DESIGNED BY	C. BRICHEUX				CONTRACT NO.		LOCATION NO.				INFORMATION SIGN PLACEMENT	SHEET 257 OF 258 SHEETS
ENTERED BY	D. WASSON											
CHECKED BY	R. TORRES											
PROJ. ENGR.	A. REVIS											
REGIONAL ADM.	D. WAGNER	REVISION	DATE	BY	6444							

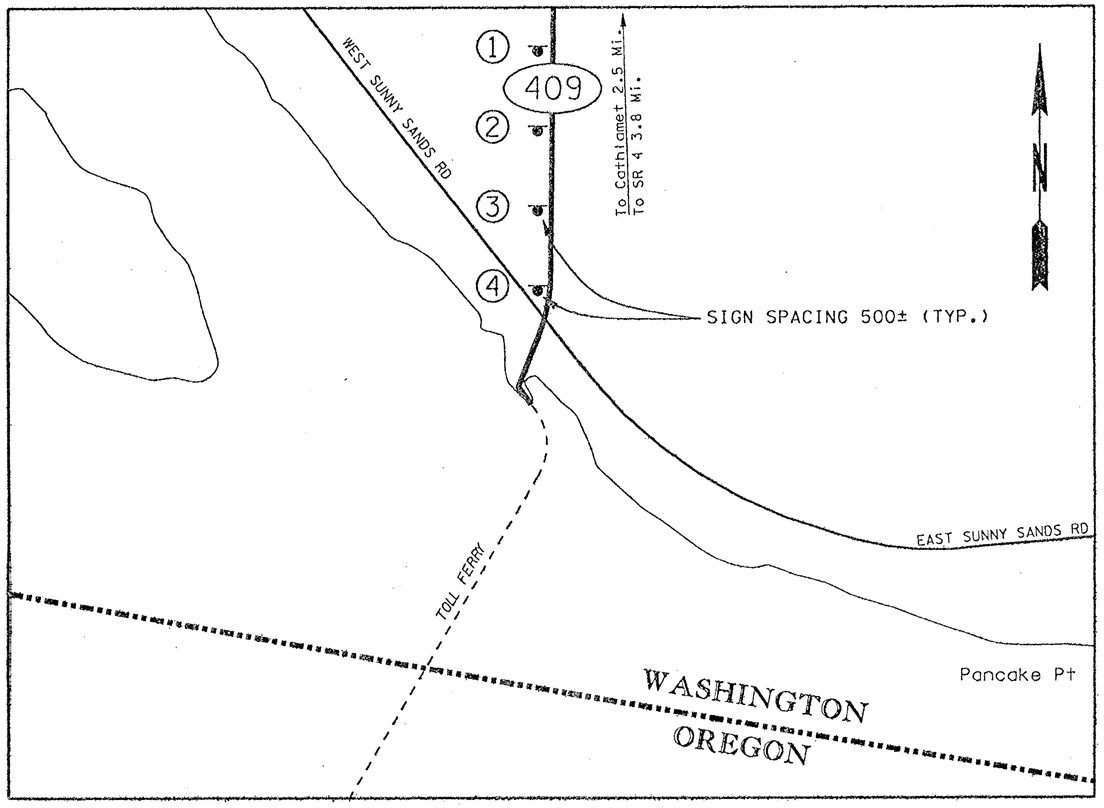

SIGN DESIGNATION	1	2	3	4
SIGN PLACEMENT	FERRY LOADING AHEAD (48" × 48") SPECIAL	EXPECT DELAYS (48" × 48") SPECIAL	BE PREPARED TO STOP (48" × 48") W20-7B	DO NOT BLOCK INTERSECTION (30" × 24") R10-7 BLACK/WHITE

SIGNING FOR WEEKEND CLOSURE: PUGET ISLAND FERRY

GENERAL NOTES

APPLICATION OF INFORMATION SIGNS TO BE INSTALLED 14 DAYS IN ADVANCE OF ALL WEEKEND CLOSURES OF BRIDGE 433/1D.

SIGN LOCATIONS ARE APPROXIMATE. ACTUAL LOCATIONS TO BE DETERMINED BY THE ENGINEER.

ALL SIGNS TO BE COVERED OR REMOVED WHEN NOT APPLICABLE.

APPLICATION OF TRAFFIC CONTROL DEVICES FOR USE DURING WEEKEND CLOSURES OF BRIDGE 433/1

FOR "AS CONSTRUCTED PLANS" ONLY

FILE NAME	g:\444304\CADD\LI566\LI566\XLI566trf.dgn				
TIME	12:18:05 PM				
DATE	09/25/2002				
DESIGNED BY	C. BRICHEUX				
ENTERED BY	D. WASSON				
CHECKED BY	R. TORRES				
PROJ. ENGR.	A. REVIS				
REGIONAL ADM.	D. WAGNER	REVISION	DATE	BY	

REGION NO.	STATE	FED.AID PROJ.NO.
10	WASH	
JOB NUMBER		
CONTRACT NO.		LOCATION NO.

AMY E. REVIS, STATE OF WASHINGTON, 26150, REGISTERED PROFESSIONAL ENGINEER — EXPIRES 09/03/03 — 9/25/02 DATE — P.E. STAMP BOX

P.E. STAMP BOX — DATE

Washington State Department of Transportation

SR 433
LEWIS AND CLARK BRIDGE 433/1
DECK REPLACEMENT

INFORMATION SIGN PLACEMENT

PLOT21

TCP11

SHEET 256 OF 258 SHEETS