Washington State
Department of Transportation

As Built Cover Sheet

Instructions: Enter all available data. Attach cover sheet to accompanying documentation and submit to:
Engineering Records
Transportation Building, Room SC-17
310 Maple Park Avenue SE
PO Box 47410
Olympia, WA 98504-47410
E-Mail: recimages@wsdot.wa.gov

General Data

Contract No. 6444	County: Cowlitz
Contract Title: Lewis And Clark Bridge 433/1 Deck Replacement	Federal Aid Number: ACBH-0433(007)
L No.	Structure ID / Job No.
Range: 5 & 6 E	Township: 7 & 8 N / Section
Horizontal Scale: 1 Inch =	Vertical Scale: 1 Inch =
Date Work Began (MM/DD/YY): 01/20/2003	Date Work Completed (MM/DD/YY): 11/17/2004 / Contractor Name: Max J. Kuney Company
Project Engineer: Amy Revis/Leon Winger	Region Transportation Engineer: Donald Wagner

WSF Data

Terminal Name	Vessel Name

Highway Data

Beginning Milepost: SR See Below ☒ A ☐ B	Ending Milepost: SR See Below ☒ A ☐ B	
Construction Length: 1.14 Mile(s)	SR No.: 433	Highway Also Known As

Bridge Data

Bridge No.: Shts 35-247

Facilities Data

FCR No.:

General Notes / Comments

Date Scanned (MM/DD/YY):

No. of Sheets Scanned:

Submitted to Engineering Records April 20, 2006, Volume 1 & Volume 2

SR 433 WA MP 0.63 to OR MP 0.51

AS-BUILT

SR 433

LEWIS AND CLARK BRIDGE 433/1 DECK REPLACEMENT

WASHINGTON STATE DEPARTMENT OF TRANSPORTATION
OLYMPIA, WASHINGTON

STATE ROUTE: 433 WA MP 0.63 TO OR MP 0.51 CONSTRUCTED LENGTH: 1.14 MILES

CONTRACT NO: 6444 F.A. NO: ACBH-0433(007) CONTRACTOR: Max J. Kuney Company

WORK BEGUN: 1/20/03 PHYSICAL WORK COMPLETE: 11/17/04

PROJECT ENGINEER: A. Revis REGION ADMINISTRATOR: Donald Wagner

INDEX

SHEET NO.	PLAN REFERENCE NO.	TITLE
1	IN1	INDEX
2	V1	VICINITY MAP
3-4	S01-S02	SUMMARY OF QUANTITIES
5-6	RS1-RS2	ROADWAY SECTIONS / TESC PLAN
7	UP1	WASHINGTON UTILITY PLAN
8	SP1	EMERGENCY HELIPAD SITE PREPARATION
9	SP2	SITE PREPARATION
10	SC1	WASHINGTON STAGE CONSTRUCTION PLAN
11	SC2	OREGON STAGE CONSTRUCTION PLAN
12	SC3	STAGE CONSTRUCTION PLANS
13 - 13A	SC4 - SC5	STAGE CONSTRUCTION DETAILS
14-15	VSP1-VSP2	VEGETATED STRIP PLAN / TESC PLAN
16-17	AP1-AP2	PAVING PLAN
18	AP3	WASHINGTON PLANING PROFILE
19	AP4	OREGON PAVING PROFILE
20 - 20A	T-1 - T-1A	ILLUMINATION SITE PREPARATION
21-26	TA-1-TA-6	ILLUMINATION PLAN
27	TB-1	ILLUMINATION SCHEDULES
28-31B	TC-1-TC-4B	ILLUMINATION DETAILS
32-33	TD1-TD2	NAVIGATION LIGHTS SYSTEM MODIFICATION
34	(SEE BRIDGE PLANS INDEX)	BRIDGE PLANS INDEX
35-247	(SEE BRIDGE PLANS INDEX)	BRIDGE PLANS
248-251	TCP1-TCP4	CONSTRUCTION SIGNING CLASS B

INDEX (CONTINUED)

SHEET NO.	PLAN REFERENCE NO.	TITLE
252-253	TCP5-TCP6	CONSTRUCTION SIGNING CLASS A
254	TCP7	INFORMATION PCMS
255	TCP8	WEEKEND CLOSURE SIGNING
256-258	TCP9-TCP11	INFORMATION SIGN PLACEMENT

FOR "AS CONSTRUCTED PLANS" ONLY

PLAN REFERENCE NO.
SHEET
OF
SHEETS

NOTE: ALL SHEET REFERENCES, FIRST NOS. OF STRUCTURE CODE DESIGNATIONS AND MATCH LINE SHEET REFERENCES, ETC., THROUGHOUT THE PLANS, REFER TO THE ENTRY IN THE PLAN REFERENCE NUMBER BOX.

FILE NAME	C:\AAWork\dgn\1566\XL1566Ind.dgn
TIME	12:17:40 PM
DATE	09/25/2002
DESIGNED BY	C. BRICHEUX
ENTERED BY	D. WASSON
CHECKED BY	R. TORRES
PROJ. ENGR.	A. REVIS
REGIONAL ADM.	D. WAGNER

REVISION | DATE | BY

REGION NO. 10 | STATE WASH | FED.AID PROJ.NO. ACBH-0433(007)
JOB NUMBER 02X310
CONTRACT NO. 6444
LOCATION NO.

AMY B. REVIS, STATE OF WASHINGTON, 26159, REGISTERED PROFESSIONAL ENGINEER
EXPIRES 09/03/03 — 9/25/02 DATE
P.E. STAMP BOX

DATE
P.E. STAMP BOX

Washington State Department of Transportation
PROJ. DEV. ENG.

SR 433
LEWIS AND CLARK BRIDGE 433/1
DECK REPLACEMENT

INDEX

PLOT1
IN1
SHEET 1 OF 258 SHEETS

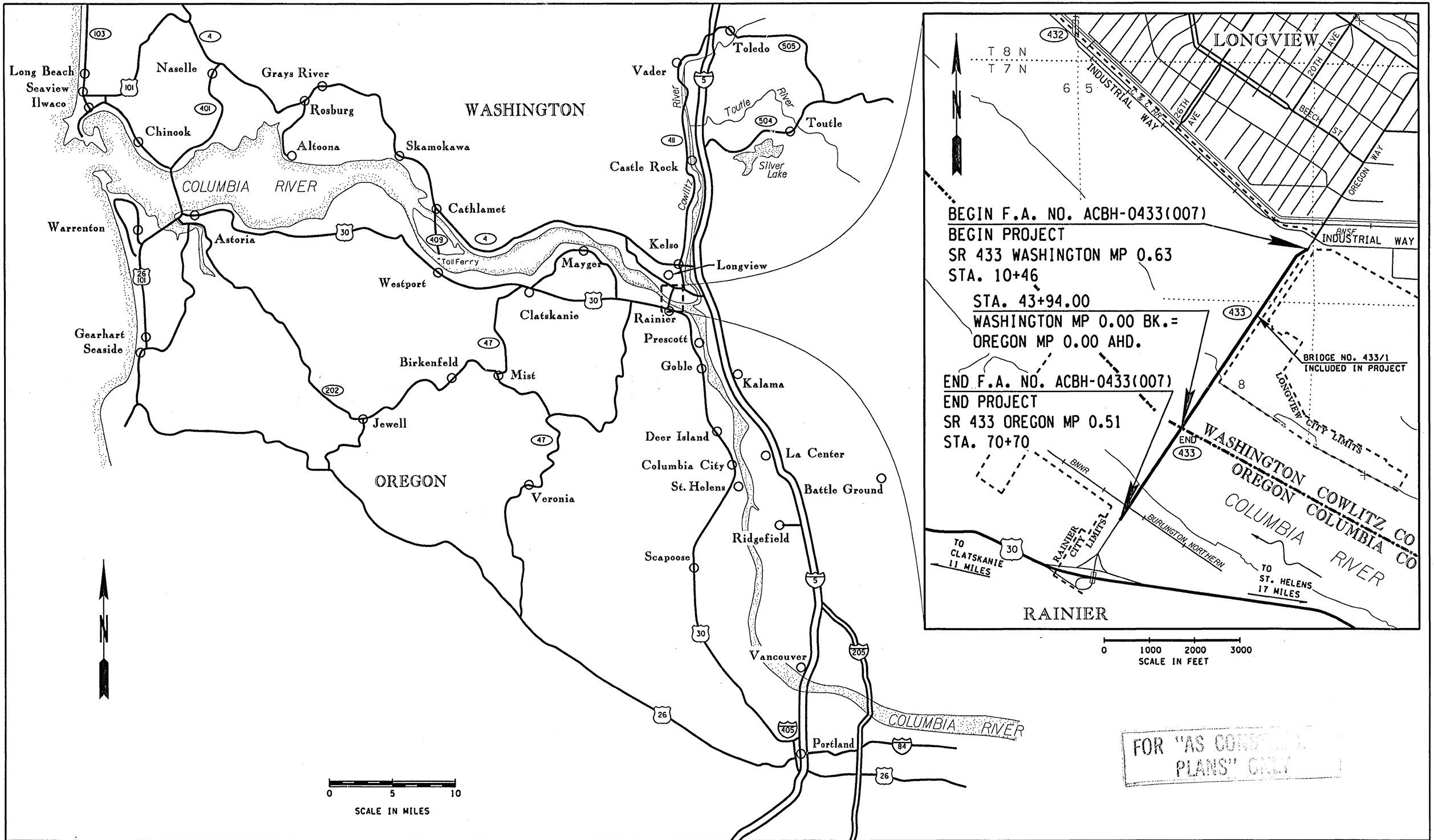

FOR "AS CONSTRUCTED PLANS" ONLY

FILE NAME	C:\AAWork\dgn\1566\XL1566Vlc.dgn						
TIME	02:46:41 PM						
DATE	09/25/2002						
DESIGNED BY	C. BRICHEUX						
ENTERED BY	D. WASSON						
CHECKED BY	R. TORRES						
PROJ. ENGR.	A. REVIS						
REGIONAL ADM.	D. WAGNER	REVISION	DATE	BY			

REGION NO.	STATE	FED. AID PROJ. NO.
10	WASH	
JOB NUMBER		
CONTRACT NO. 6444		LOCATION NO.

AMY E. REVIS — STATE OF WASHINGTON — 26150 — REGISTERED PROFESSIONAL ENGINEER — EXPIRES 09/03/03 — 9/25/02 DATE — P.E. STAMP BOX

DATE — P.E. STAMP BOX

Washington State Department of Transportation

SR 433
LEWIS AND CLARK BRIDGE 433/1
DECK REPLACEMENT

VICINITY MAP

PLOT1 VI

SHEET 2 OF 258 SHEETS

SUMMARY OF QUANTITIES

ITEM NO	TOTAL QUANTITY	SUB-TOTAL * SECTION I-07.2(1) OF STANDARD SPECS	SUB-TOTAL ** SECTION I-07.2(2) OF STANDARD SPECS	STD. ITEM NO.	UNIT	ITEM	GROUP 1 LEWIS AND CLARK BRIDGE WASHINGTON	GROUP 2 LEWIS AND CLARK BRIDGE OREGON	GROUP 3 SEISMIC RETROFIT WASHINGTON	GROUP 4 SEISMIC RETROFIT OREGON	GROUP 5 NAVIGATION LIGHTS WASHINGTON	GROUP 6 NAVIGATION LIGHTS OREGON	GROUP 7 BRIDGE PAINTER WASHINGTON	GROUP 8 BRIDGE PAINTER OREGON	GROUP 9 THIRD PARTY DAMAGE
						PREPARATION									
1	LUMP SUM	LUMP SUM	LUMP SUM	0001	L.S.	MOBILIZATION	L.S.	L.S.	L.S.	L.S.	L.S.	L.S.	L.S.	L.S.	
2	10000.00	10000.00		7715	DOL	FORCE ACCOUNT REMOVING OBSTRUCTIONS		10,000.00							
3	32.00		32.00	0145	L.F.	REMOVING CONC. BARRIER	32.00								
4	2670.00	1340.00	1330.00	0187	L.F.	REMOVING PAINT LINE	1,330.00	1,340.00							
5	LUMP SUM	LUMP SUM	LUMP SUM	0050	L.S.	REMOVAL OF STRUCTURE AND OBSTRUCTION	L.S.	L.S.							
						GRADING									
6	1110.00	730.00	380.00	0310	C.Y.	ROADWAY EXCAVATION INCL. HAUL	380.00	730.00							
						DRAINAGE									
7	LUMP SUM	LUMP SUM			L.S.	QUARRY SPALL		L.S.							
8	15.00	15.00		1072	C.Y.	HAND PLACED RIPRAP		15.00							
						STRUCTURE									
9	LUMP SUM	LUMP SUM	LUMP SUM	4311	L.S.	ROADWAY DECK MAIN SPANS	L.S.	L.S.							
10	LUMP SUM		LUMP SUM	4311	L.S.	ROADWAY DECK WASHINGTON APPROACH	L.S.		L.S.						
11	LUMP SUM	LUMP SUM		4311	L.S.	ROADWAY DECK OREGON APPROACH		L.S.		L.S.					
12	20750.00	9090.00	11660.00	4456	S.Y.	SCARIFYING CONC. SURFACE	11,660.00	9,090.00							
13	13820.00	8255.00	5565.00	4232	C.F.	MODIFIED CONC. OVERLAY	5,565.00	8,255.00							
14	14740.00	8800.00	5940.00	4233	S.Y.	FINISHING AND CURING MODIFIED CONC. OVERLAY	5,940.00	8,800.00							
15				7800	EACH	DELETED ITEM									
16				7800	EACH	DELETED ITEM									
17	LUMP SUM	LUMP SUM	LUMP SUM	4230	L.S.	STRUCTURAL CARBON STEEL	L.S.	L.S.							
18	1.00	1.00		8376	EACH	FURNISHING STEEL PILE TIP OR SHOE		1.00							
19	24.00	24.00			EACH	MICROPILES		24.00							
20	1.00	1.00			EACH	MICROPILE VERIFICATION LOAD TESTING		1.00							
21	1.00	1.00			EACH	MICROPILE PROOF LOAD TESTING		11.00							
22	1.00	1.00		4085	EACH	FURNISHING AND DRIVING STEEL TEST PILE		1.00							
23	105.00	105.00		4090	L.F.	FURNISHING ST. PILING		105.00							
24	1.00	1.00		4095	EACH	DRIVING ST. PILE		1.00							
25	-2.00	-1.00	-1.00	4219	DOL	DEFICIENT STRENGTH CONC. PRICE ADJUSTMENT	-1.00	-1.00							
26	LUMP SUM	LUMP SUM	LUMP SUM		L.S.	FIELD MEASUREMENT	L.S.	L.S.							
27	LUMP SUM		LUMP SUM		L.S.	ABUTMENT MODIFICATION/BEARING REPLACEMENT BENT 1	L.S.								
28	LUMP SUM	LUMP SUM			L.S.	SUBSTRUCTURE WIDENING - PIER 8		L.S.							
29	LUMP SUM	LUMP SUM			L.S.	ABUTMENT MODIFICATION/BEARING REPLACEMENT - PIER 9		L.S.							
30	LUMP SUM	LUMP SUM	LUMP SUM	4468	L.S.	CLEANING AND PAINTING							L.S.	L.S.	
31	LUMP SUM	LUMP SUM	LUMP SUM	4469	L.S.	CONTAINMENT OF ABRASIVES							L.S.	L.S.	
32	100000.00	60000.00	40000.00	4470	DOL	TESTING AND DISPOSAL OF CONTAINMENT WASTE							40,000.00	60,000.00	
33	LUMP SUM	LUMP SUM	LUMP SUM		L.S.	LADDERS SAFETY SYSTEMS					L.S.	L.S.			
34	LUMP SUM	LUMP SUM	LUMP SUM		L.S.	NAVIGATIONAL LIGHTS SYSTEM MODIFICATION					L.S.	L.S.			
35	LUMP SUM	LUMP SUM	LUMP SUM		L.S.	NAVIGATION LIGHTS LADDERS AND PLATFORM	L.S.	L.S.							
						SURFACING									
36	255.00	138.00	117.00	5100	TON	CRUSHED SURFACING BASE COURSE	117.00	138.00							
						CEMENT CONCRETE PAVEMENT									
37	100.00	100.00		5656	S.Y.	BRIDGE APPROACH SLAB		100.00							

GROUP LEGEND :

GROUP NUMBER	SR	CONTROL SECTION	TAX SCHEDULE	FUND PARTICIPANTS
1	433	080600	**	STATE OF OREGON,STATE FUNDS,FEDERAL AID
2	000	0800NT	*	STATE OF OREGON,STATE FUNDS,FEDERAL AID
3	433	080600	**	STATE OF OREGON,STATE FUNDS,FEDERAL AID
4	000	0800NT	*	STATE OF OREGON,STATE FUNDS,FEDERAL AID
5	433	080600	**	STATE OF OREGON,STATE FUNDS,FEDERAL AID
6	000	0800NT	*	STATE OF OREGON,STATE FUNDS,FEDERAL AID
7	433	080600	**	STATE OF OREGON,STATE FUNDS,FEDERAL AID
8	000	0800NT	*	STATE OF OREGON,STATE FUNDS,FEDERAL AID

GROUP NUMBER	SR	CONTROL SECTION	TAX SCHEDULE	FUND PARTICIPANTS
9	433	080600	**	STATE FUNDS

Preliminary Quantites Only. See Final CAPS Ledger for Final Quantities.

DATE	REVISION	BY
11/05/02	DELETED ITEMS 15, 16, 41. REVISED ITEMS 21 AND 72.	CM
11/06/02	ADDED ITEMS 77, 78, AND 79.	CM

REGION	STATE	FEDERAL AID PROJECT. NO.
10	WA	ACBH-0433(007)

JOB NUMBER 02X310/2

CONTRACT NO 006444

Washington State Department of Transportation

SR 433
LEWIS AND CLARK BRIDGE 433/1
DECK REPLACEMENT

SUMMARY OF QUANTITIES

SQ1

SHEET 3 OF 258 SHEETS

SUMMARY OF QUANTITIES

ITEM NO	TOTAL QUANTITY	SUB-TOTAL * SECTION 1-07.2(1) OF STANDARD SPECS	SUB-TOTAL ** SECTION 1-07.2(2) OF STANDARD SPECS	STD. ITEM NO.	UNIT	ITEM	GROUP 1 LEWIS AND CLARK BRIDGE WASHINGTON	GROUP 2 LEWIS AND CLARK BRIDGE OREGON	GROUP 3 SEISMIC RETROFIT WASHINGTON	GROUP 4 SEISMIC RETROFIT OREGON	GROUP 5 NAVIGATION LIGHTS WASHINGTON	GROUP 6 NAVIGATION LIGHTS OREGON	GROUP 7 BRIDGE PAINTER WASHINGTON	GROUP 8 BRIDGE PAINTER OREGON	GROUP 9 THIRD PARTY DAMAGE
						ASPHALT CONCRETE PAVEMENT									
38	300.00		300.00	5711	S.Y.	PLANING BITUMINOUS PAVEMENT	300.00								
39	4750.00	230.00	4520.00		S.Y.	PLANING BITUMINOUS PAVEMENT - BRIDGE	4,520.00	230.00							
41				7800	EACH	DELETED ITEM									
						EROSION CONTROL AND PLANTING									
40	40.00	24.00	16.00	6403	DAY	ESC LEAD	16.00	24.00							
42	10000.00	5000.00	5000.00	6489	DOL	TEMPORARY WATER POLLUTION/EROSION CONTROL	5,000.00	5,000.00							
43	0.58	0.42	0.16	6414	ACRE	SEEDING, FERTILIZING, AND MULCHING	0.16	0.42							
44	930.00	670.00	260.00	6400	C.Y.	TOPSOIL TYPE C	260.00	670.00							
45	1360.00	860.00	500.00	6373	L.F.	SILT FENCE	500.00	860.00							
						TRAFFIC									
46	38.00		38.00	6727	L.F.	EXTRUDED CURB	38.00								
47	65.00		65.00	6759	L.F.	BEAM GUARDRAIL TYPE 10	65.00								
48	2.00		2.00	6760	EACH	BEAM GUARDRAIL TRANSITION SECTION TYPE 1	2.00								
49	330.00	330.00		6780	L.F.	REMOVING AND RESETTING BEAM GUARDRAIL		330.00							
50	112.00		112.00	6784	L.F.	REMOVING AND RESETTING EXISTING PERMANENT BARRIER	112.00								
51	6690.00	1920.00	4770.00	6781	L.F.	TEMPORARY CONC. BARRIER	4,770.00	1,920.00							
52	19060.00	5260.00	13800.00	6888	L.F.	TEMPORARY PAVEMENT MARKING	13,800.00	5,260.00							
53	6220.00	3164.00	3056.00	6806	L.F.	PAINT LINE	3,056.00	3,164.00							
54	10960.00	5250.00	5710.00	6845	L.F.	PROFILED PLASTIC WIDE LINE	5,710.00	5,250.00							
55	LUMP SUM	LUMP SUM	LUMP SUM	6904	L.S.	ILLUMINATION SYSTEM	L.S.	L.S.							
56	LUMP SUM	LUMP SUM	LUMP SUM		L.S.	TEMPORARY TRAFFIC CONTROL	L.S.	L.S.							
57	10.00	10.00			S.F.	RELOCATE SIGN		10.00							
						OTHER ITEMS									
58	2120.00	1500.00	620.00		L.F.	TEMPORARY CONSTRUCTION FENCE	620.00	1,500.00							
59	360.00	360.00		7081	L.F.	CHAIN LINK FENCE TYPE 1		360.00							
60	1.00	1.00		7104	EACH	DOUBLE 20 FT. CHAIN LINK GATE		1.00							
61	10000.00	5000.00	5000.00	7480	DOL	ROADSIDE CLEANUP	5,000.00	5,000.00							
62	2000.00		2000.00	7400	HOUR	TRAINING	1,200.00		200.00		300.00		300.00		
63	LUMP SUM	LUMP SUM	LUMP SUM	7736	L.S.	SPCC PLAN	L.S.	L.S.							
64	10000.00	5000.00	5000.00		DOL	PEREGRINE FALCON MANAGEMENT	5,000.00	5,000.00							
65	LUMP SUM	LUMP SUM	LUMP SUM		L.S.	HELICOPTER EMERGENCY TRANSPORT FACILITY	L.S.	L.S.							
66	5.00		5.00	7725	DOL	REIMBURSEMENT FOR THIRD PARTY DAMAGE									5.00
67	-2.00	-1.00	-1.00	7728	DOL	MINOR CHANGE	-1.00	-1.00							
68	55000.00	27500.00	27500.00		DOL	WEEKEND BRIDGE CLOSURE REDUCTION INCENTIVE	27,500.00	27,500.00							
69	40000.00	20000.00	20000.00		DOL	TOTAL BRIDGE CLOSURE REDUCTION INCENTIVE	20,000.00	20,000.00							
70	20000.00	10000.00	10000.00		DOL	BRIDGE SINGLE LANE CLOSURE REDUCTION INCENTIVE	10,000.00	10,000.00							
71	100000.00	50000.00	50000.00		DOL	APRIL 30, 2004 COMPLETION INCENTIVE	50,000.00	50,000.00							
77	323.00	282.00	41.00	5751	TON	ASPHALT CONC. PAVEMENT CL. A PG 70-22	41.00	282.00							
78	2500.00		2500.00	7715	DOL	FORCE ACCOUNT GENERAL WEED CONTROL	2,500.00								
						ALTERNATE A1									
72	6760.00	325.00	6435.00		C.F.	RAPID SET LATEX MODIFIED CONCRETE OVERLAY	6,435.00	325.00							
73	LUMP SUM	LUMP SUM	LUMP SUM		L.S.	RAPID SET LATEX MODIFIED TRIAL OVERLAY	L.S.	L.S.							
79	10000.00	500.00	9500.00	4466	DOL	FURTHER DECK PREPARATION	9,500.00	500.00							

GROUP LEGEND :

GROUP NUMBER	SR	CONTROL SECTION	TAX SCHEDULE	FUND PARTICIPANTS
1	433	080600	**	STATE OF OREGON,STATE FUNDS,FEDERAL AID
2	000	0800NT	*	STATE OF OREGON,STATE FUNDS,FEDERAL AID
3	433	080600	**	STATE OF OREGON,STATE FUNDS,FEDERAL AID
4	000	0800NT	*	STATE OF OREGON,STATE FUNDS,FEDERAL AID
5	433	080600	**	STATE OF OREGON,STATE FUNDS,FEDERAL AID
6	000	0800NT	*	STATE OF OREGON,STATE FUNDS,FEDERAL AID
7	433	080600	**	STATE OF OREGON,STATE FUNDS,FEDERAL AID
8	000	0800NT	*	STATE OF OREGON,STATE FUNDS,FEDERAL AID

GROUP NUMBER	SR	CONTROL SECTION	TAX SCHEDULE	FUND PARTICIPANTS
9	433	080600	**	STATE FUNDS

Preliminary Quantites Only. See Final CAPS Ledger for Final Quantities.

DATE	REVISION	BY
11/05/02	DELETED ITEMS 15, 16, 41. REVISED ITEMS 21 AND 72.	CM
11/06/02	ADDED ITEMS 77, 78, AND 79.	CM
11/27/02	REVISED QUANTITIES-ITEMS 51 AND 52.	CM
11/27/02	REVISED ITEM NAME-ITEM 71	CM

REGION	STATE	FEDERAL AID PROJECT. NO.
10	WA	ACBH-0433(007)

JOB NUMBER 02X310/3

CONTRACT NO 006444

Washington State Department of Transportation

SR 433
LEWIS AND CLARK BRIDGE 433/1
DECK REPLACEMENT

SUMMARY OF QUANTITIES

SQ2

SHEET 4 OF 258 SHEETS

SUMMARY OF QUANTITIES

ITEM NO	TOTAL QUANTITY	SUB-TOTAL * SECTION 1-07.2(1) OF STANDARD SPECS	SUB-TOTAL ** SECTION 1-07.2(2) OF STANDARD SPECS	STD. ITEM NO.	UNIT	ITEM	GROUP 1 LEWIS AND CLARK BRIDGE WASHINGTON	GROUP 2 LEWIS AND CLARK BRIDGE OREGON	GROUP 3 SEISMIC RETROFIT WASHINGTON	GROUP 4 SEISMIC RETROFIT OREGON	GROUP 5 NAVIGATION LIGHTS WASHINGTON	GROUP 6 NAVIGATION LIGHTS OREGON	GROUP 7 BRIDGE PAINTER WASHINGTON	GROUP 8 BRIDGE PAINTER OREGON	GROUP 9 THIRD PARTY DAMAGE
						ALTERNATE A2									
74	10000.00	500.00	9500.00		DOL	BRIDGE DECK REPAIR PRIOR TO POLYESTER OVERLAY	9,500.00	500.00							
75	3380.00	160.00	3220.00		C.F.	POLYESTER CONCRETE OVERLAY	3,220.00	160.00							
76	10000.00	500.00	9500.00		DOL	GRINDING POLYESTER OVERLAY	9,500.00	500.00							

CHANGE ORDERS ADDED NEW BID ITEMS 77 to 165

GROUP LEGEND :

GROUP NUMBER	SR	CONTROL SECTION	TAX SCHEDULE	FUND PARTICIPANTS
1	433	080600	**	STATE OF OREGON,STATE FUNDS,FEDERAL AID
2	000	0800NT	*	STATE OF OREGON,STATE FUNDS,FEDERAL AID
3	433	080600	**	STATE OF OREGON,STATE FUNDS,FEDERAL AID
4	000	0800NT	*	STATE OF OREGON,STATE FUNDS,FEDERAL AID
5	433	080600	**	STATE OF OREGON,STATE FUNDS,FEDERAL AID
6	000	0800NT	*	STATE OF OREGON,STATE FUNDS,FEDERAL AID
7	433	080600	**	STATE OF OREGON,STATE FUNDS,FEDERAL AID
8	000	0800NT	*	STATE OF OREGON,STATE FUNDS,FEDERAL AID

GROUP NUMBER	SR	CONTROL SECTION	TAX SCHEDULE	FUND PARTICIPANTS
9	433	080600	**	STATE FUNDS

Preliminary Quantites Only. See Final CAPS Ledger for Final Quantities.

DATE	REVISION	BY
11/05/02	DELETED ITEMS 15, 16, 41 . REVISED ITEMS 21 AND 72.	CM
11/06/02	ADDED ITEMS 77, 78, AND 79	CM

REGION	STATE	FEDERAL AID PROJECT. NO.
10	WA	ACBH-0433(007)

JOB NUMBER 02X310/2

CONTRACT NO 006444

Washington State Department of Transportation

SR 433
LEWIS AND CLARK BRIDGE 433/1
DECK REPLACEMENT

SUMMARY OF QUANTITIES

SQ3

SHEET 4A OF 258 SHEETS

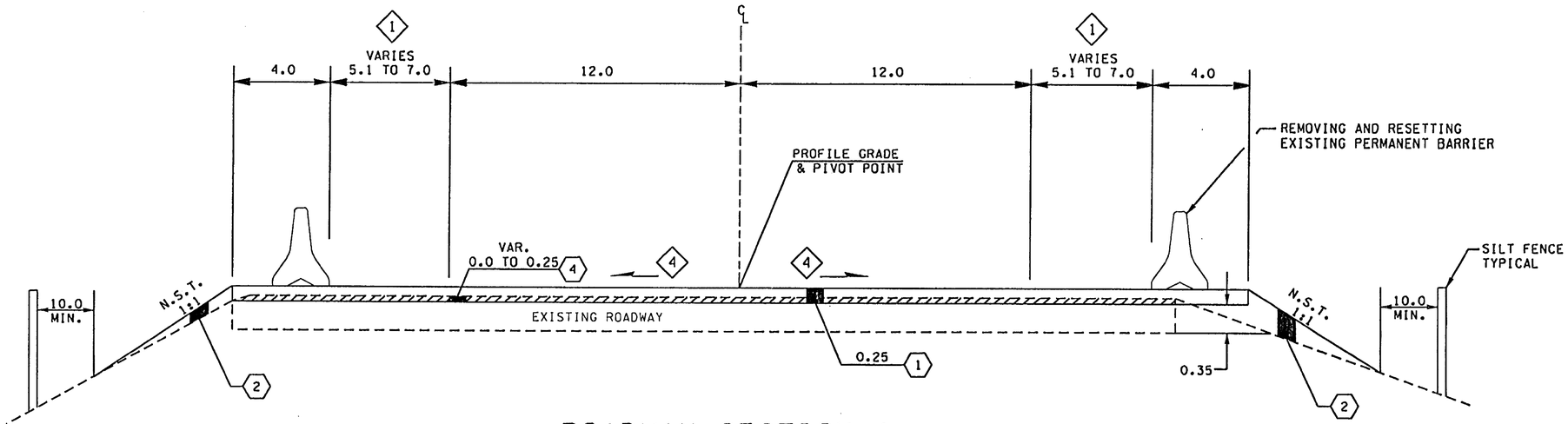

ROADWAY SECTION A

SR 433 STA. 12+50 TO 12+96 (LT)
SR 433 STA. 12+50 TO 12+99 (RT)

BRIDGE SECTION TABLE	
STATION	SEE BRIDGE PLAN SHEET
STA. 13+16.75 TO 28+25.75	WA15-WA16
STA. 28+25.75 TO 30+34.00	WA43
STA. 30+34.00 TO 57+53.42	MS5
STA. 57+53.42 TO 66+80.13	OA62
STA. 66+80.13 TO 67+16.29	OA8
STA. 67+16.29 TO 67+94.54	OA73

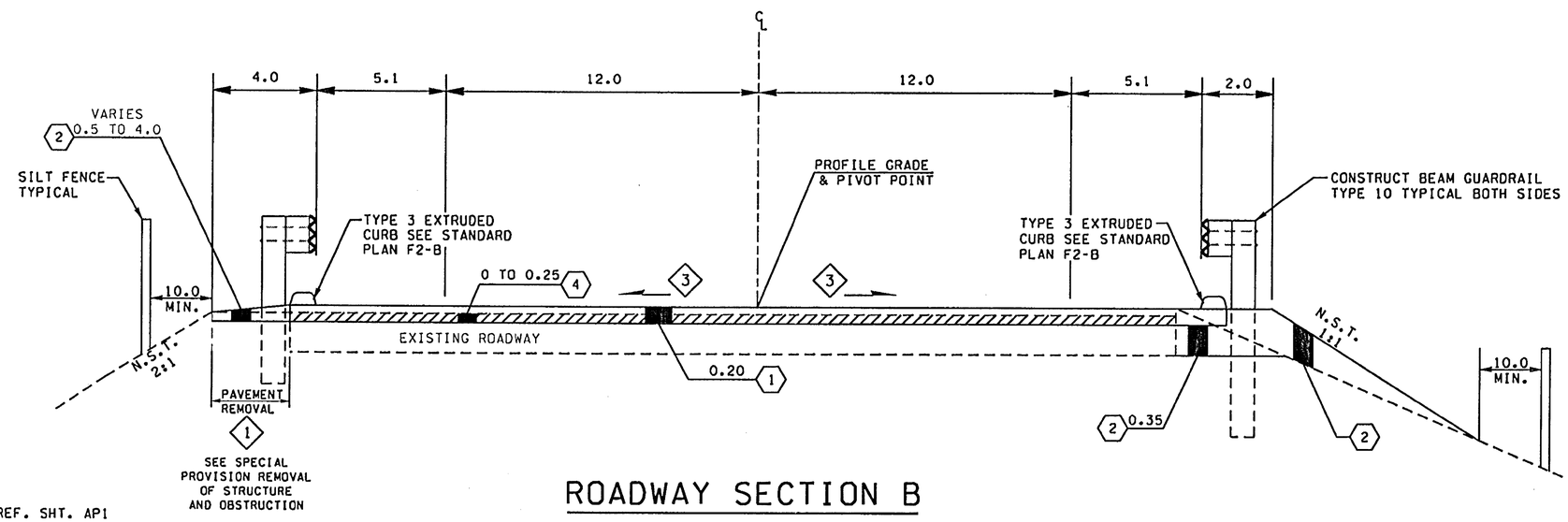

ROADWAY SECTION B

SR 433 STA. 12+96 TO 13+16.75 (LT)
SR 433 STA. 12+99 TO 13+16.75 (RT)
SR 433 STA. 13+16.75 TO 67+16.29 (SEE BRIDGE SECTION TABLE)

WASHINGTON APPROACH

FOR "AS CON... PLANS" ONLY

NOTES:

1. SEE PAVING PLAN REF. SHT. AP1
3. MATCH EXISTING BRIDGE CROSS SLOPE
4. MATCH EXISTING CROSS SLOPE

LEGEND

1. ASPHALT CONC. PAVEMENT CL. A PG 70-22
2. CRUSHED SURFACING BASE COURSE
4. PLANING BITUMINOUS PAVEMENT SEE PLANING PROFILE REF. SHT. AP3

N.S.T. NOT STEEPER THAN
ALL DEPTHS SHOWN ARE COMPACTED DEPTHS
ALL SLOPES ARE SHOWN AS H:V
ALL DIMENSIONS ARE IN FEET UNLESS OTHERWISE NOTED

FILE NAME	C:\AAWork\dgn\1566\XL1566rds.dgn
TIME	11:53:56 AM
DATE	09/25/2002
DESIGNED BY	C. BRICHEUX
ENTERED BY	D. WASSON
CHECKED BY	R. TORRES
PROJ. ENGR.	A. REVIS
REGIONAL ADM.	D. WAGNER

REVISION | DATE | BY

REGION NO. 10 | STATE WASH | FED.AID PROJ.NO.
JOB NUMBER
CONTRACT NO. 6444 | LOCATION NO.

AMY E. REVIS, STATE OF WASHINGTON, 20150, REGISTERED PROFESSIONAL ENGINEER, EXPIRES 09/03/03
9/25/02 DATE
P.E. STAMP BOX

DATE
P.E. STAMP BOX

Washington State Department of Transportation

SR 433
LEWIS AND CLARK BRIDGE 433/1
DECK REPLACEMENT

ROADWAY SECTIONS / TESC PLAN

PLOT1
RS1
SHEET 5 OF 258 SHEETS

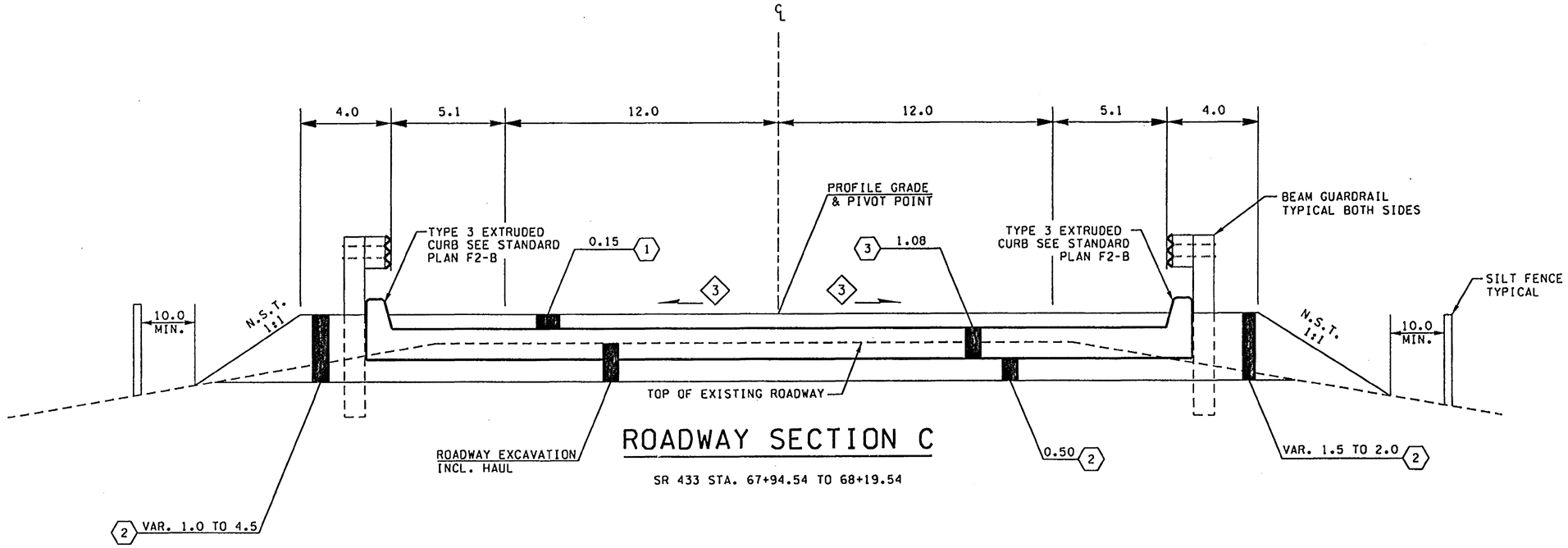

ROADWAY SECTION C

SR 433 STA. 67+94.54 TO 68+19.54

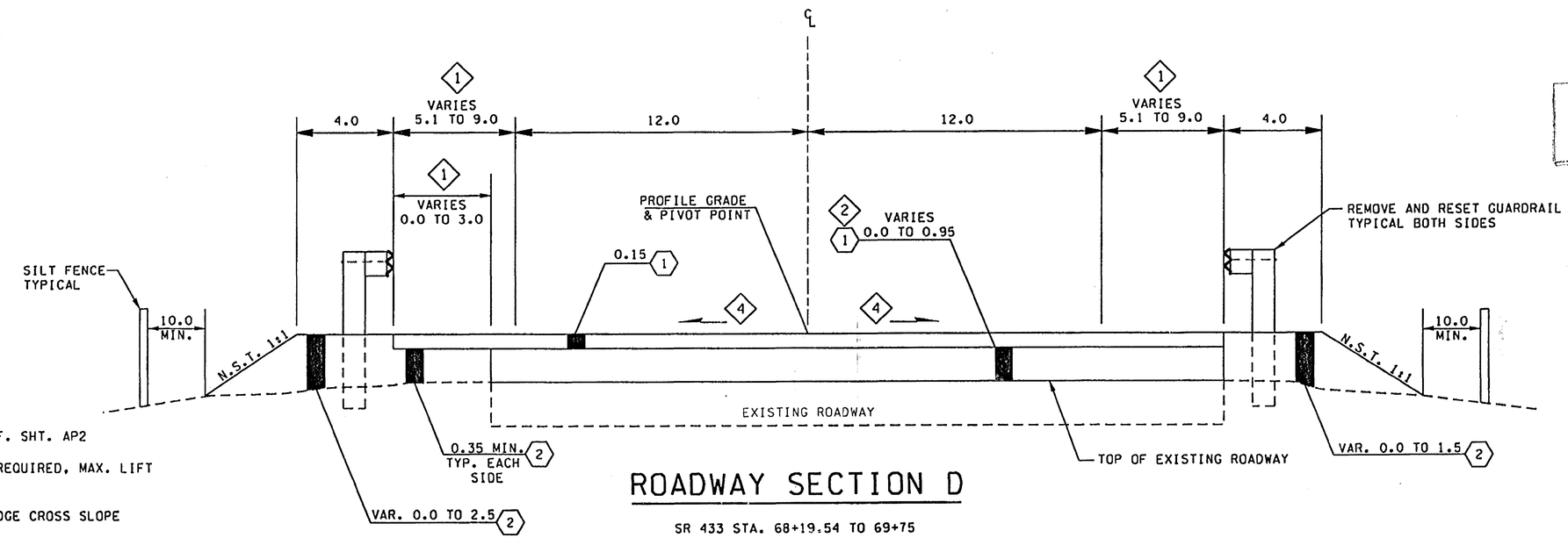

ROADWAY SECTION D

SR 433 STA. 68+19.54 TO 69+75

OREGON APPROACH

FOR "AS CO... PLANS" ...

LEGEND

1. ASPHALT CONC. PAVEMENT CL. A PG 70-22
2. CRUSHED SURFACING BASE COURSE
3. PRECAST CONCRETE APPROACH SLAB

NOTES:

1. SEE PAVING PLAN REF. SHT. AP2
2. MULTIPLE LIFTS AS REQUIRED, MAX. LIFT THICKNESS 0.35
3. MATCH EXISTING BRIDGE CROSS SLOPE
4. MATCH EXISTING CROSS SLOPE

N.S.T. NOT STEEPER THAN
ALL DEPTHS SHOWN ARE COMPACTED DEPTHS
ALL SLOPES ARE SHOWN AS H:V
ALL DIMENSIONS ARE IN FEET UNLESS OTHERWISE NOTED

FILE NAME	C:\AAWork\dgn\1566\XL1566rds.dgn				
TIME	10:38:15 AM				
DATE	09/23/2002				
DESIGNED BY	C. BRICHEUX				
ENTERED BY	D. WASSON				
CHECKED BY	R. TORRES				
PROJ. ENGR.	A. REVIS				
REGIONAL ADM.	D. WAGNER	REVISION	DATE	BY	

REGION NO.	STATE	FED.AID PROJ.NO.
10	WASH	
JOB NUMBER		
CONTRACT NO. 6444		LOCATION NO.

AMY B. REVIS, STATE OF WASHINGTON, 26150, REGISTERED PROFESSIONAL ENGINEER, EXPIRES 09/03/03 — 9/25/02 DATE — P.E. STAMP BOX

DATE — P.E. STAMP BOX

Washington State Department of Transportation

SR 433
LEWIS AND CLARK BRIDGE 433/1
DECK REPLACEMENT

ROADWAY SECTIONS / TESC PLAN

PLOT2
RS2
SHEET 6 OF 258 SHEETS

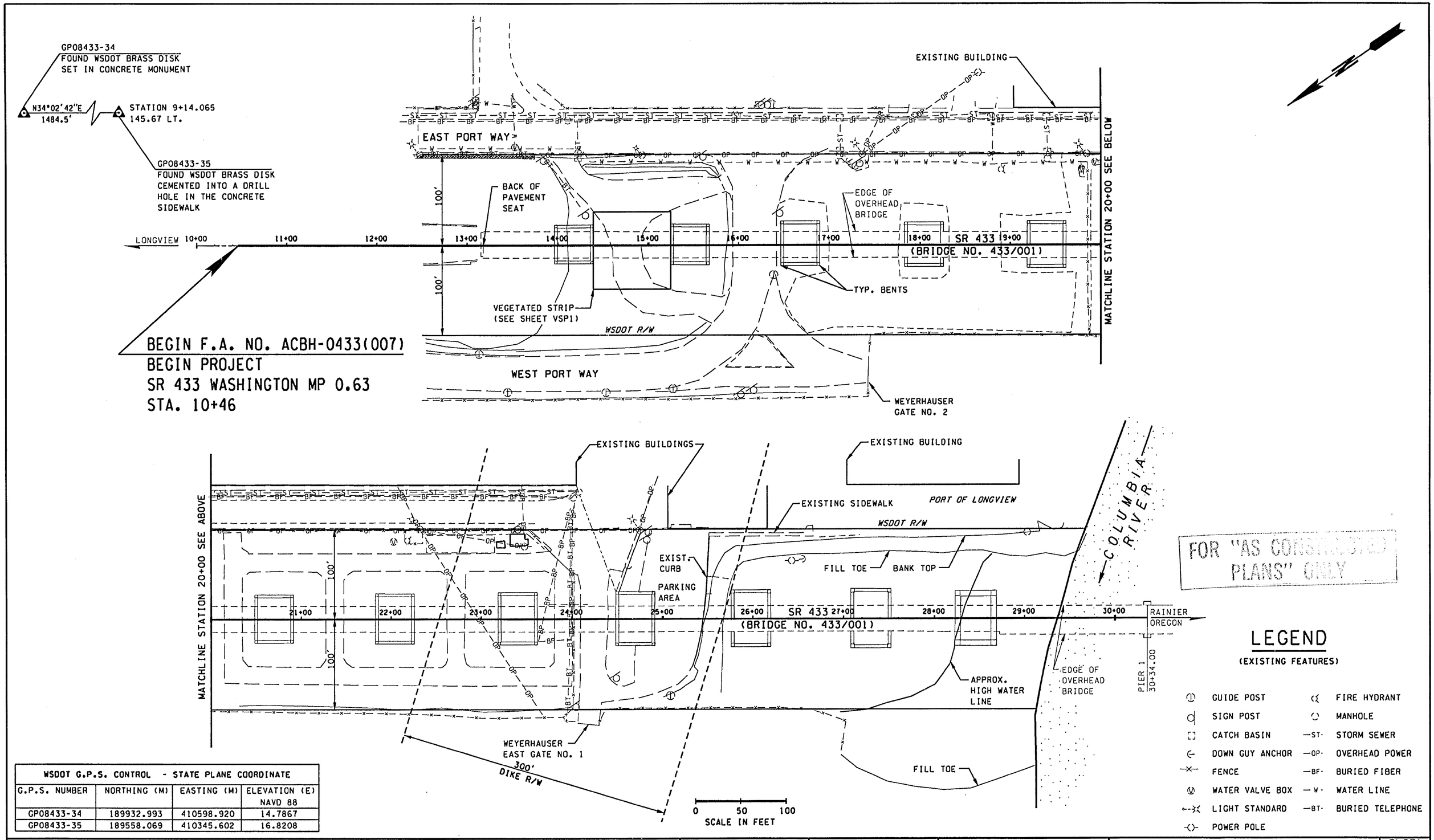

FOR "AS CONSTRUCTED PLANS" ONLY

LEGEND

(EXISTING FEATURES)

	GUIDE POST		FIRE HYDRANT
	SIGN POST		MANHOLE
	CATCH BASIN	—ST—	STORM SEWER
	DOWN GUY ANCHOR	—OP—	OVERHEAD POWER
	FENCE	—BF—	BURIED FIBER
	WATER VALVE BOX	—W—	WATER LINE
	LIGHT STANDARD	—BT—	BURIED TELEPHONE
	POWER POLE		

WSDOT G.P.S. CONTROL - STATE PLANE COORDINATE			
G.P.S. NUMBER	NORTHING (M)	EASTING (M)	ELEVATION (E) NAVD 88
GP08433-34	189932.993	410598.920	14.7867
GP08433-35	189558.069	410345.602	16.8208

FILE NAME	C:\AAWork\dgn\1566\XL1566sp.dgn
TIME	01:34:58 PM
DATE	09/25/2002
DESIGNED BY	C. BRICHEUX
ENTERED BY	D. WASSON
CHECKED BY	R. TORRES
PROJ. ENGR.	A. REVIS
REGIONAL ADM.	D. WAGNER

REVISION | DATE | BY

REGION NO.	STATE	FED.AID PROJ.NO.
10	WASH	

JOB NUMBER

CONTRACT NO. 64444

LOCATION NO.

AMY B. REVIS, STATE OF WASHINGTON, 26150, REGISTERED PROFESSIONAL ENGINEER
EXPIRES 09/03/02
9/25/02
DATE
P.E. STAMP BOX

DATE
P.E. STAMP BOX

Washington State
Department of Transportation

SR 433
LEWIS AND CLARK BRIDGE 433/1
DECK REPLACEMENT

WASHINGTON UTILITY PLAN

PLOT1
UP1

SHEET 7 OF 258 SHEETS

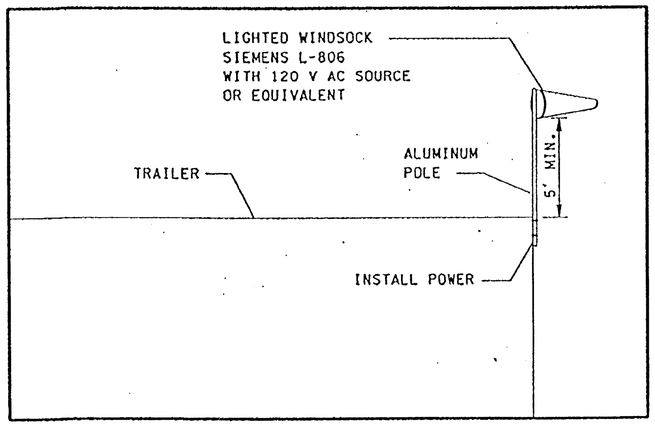

WINDSOCK DETAIL

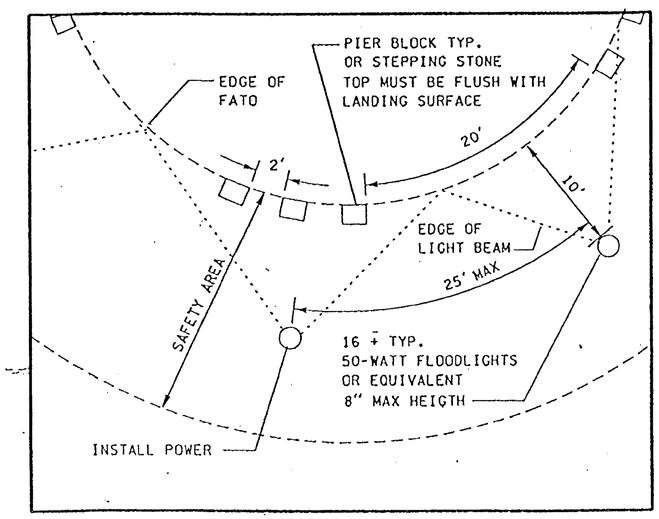

FATO AREA DELINEATION

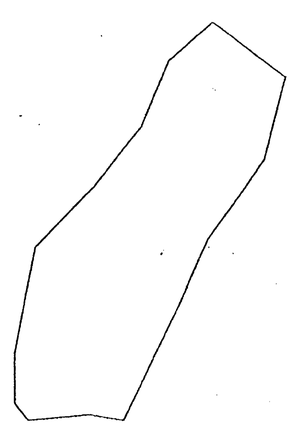

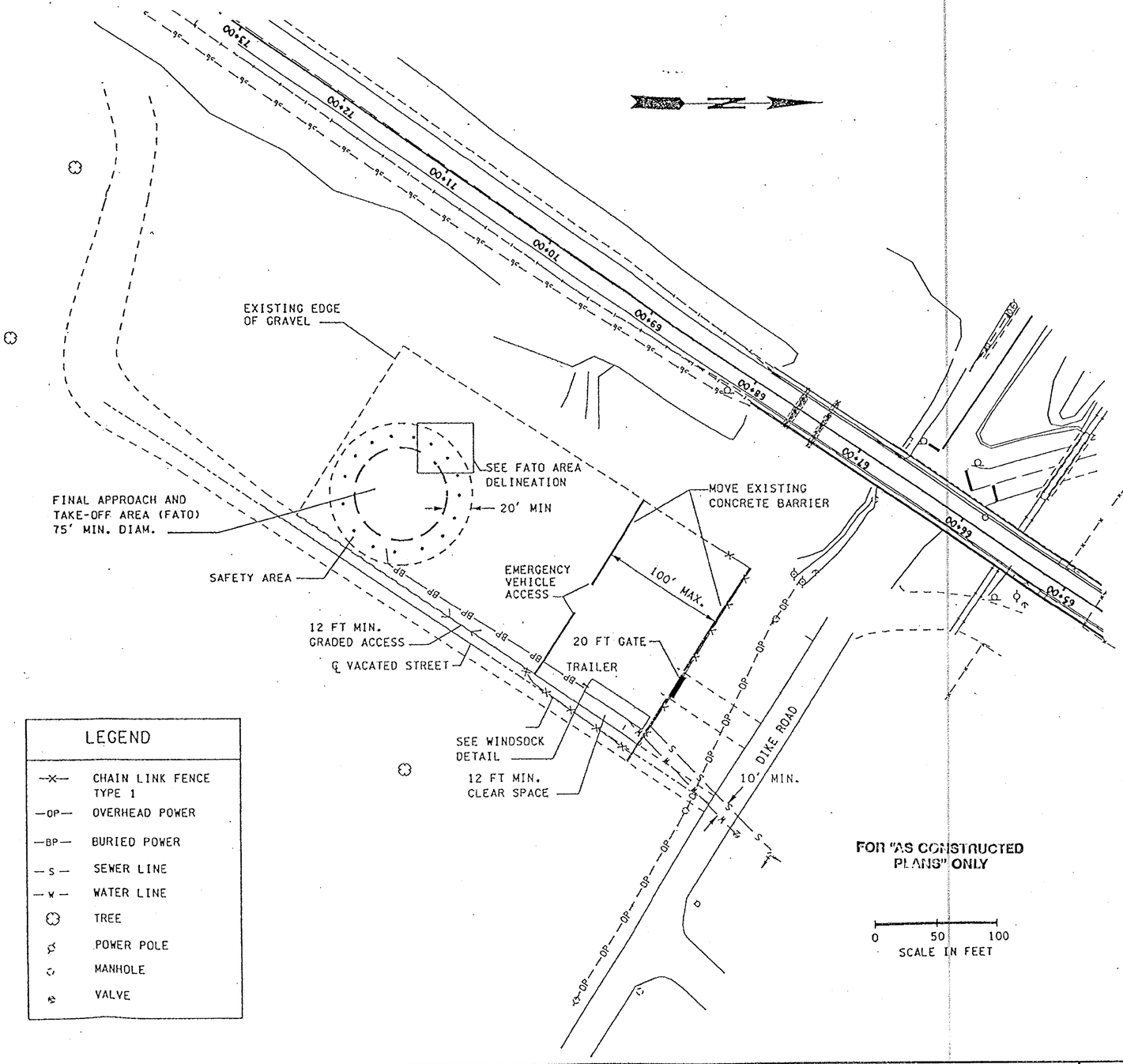

LEGEND

—x—	CHAIN LINK FENCE TYPE 1
—OP—	OVERHEAD POWER
—BP—	BURIED POWER
—S—	SEWER LINE
—W—	WATER LINE
	TREE
	POWER POLE
	MANHOLE
	VALVE

FILE NAME	h:\L & C Bridge\dgn\1566HELIPAD.dgn				REGION NO.	STATE	FED.AID PROJ.NO.		
TIME	02:38:18 PM				10	WASH			
DATE	05/13/2003				JOB NUMBER				
DESIGNED BY	CAROLINE BRICHEUX				CONTRACT NO.		LOCATION NO.		
ENTERED BY									
CHECKED BY									
PROJ. ENGR.									
REGIONAL ADM.		REVISION	DATE	BY	6/4/21				

AMY E. REVIS
STATE OF WASHINGTON
24150
REGISTERED PROFESSIONAL ENGINEER
EXPIRES 09/03/23
9/25/02
DATE
P.E. STAMP BOX

DATE
P.E. STAMP BOX

Washington State
Department of Transportation

SR 433
LEWIS AND CLARK BRIDGE 433/1
DECK REPLACEMENT

EMERGENCY HELIPAD SITE PREPARATION

PLOT2
SP1
SHEET 8 OF 258 SHEETS

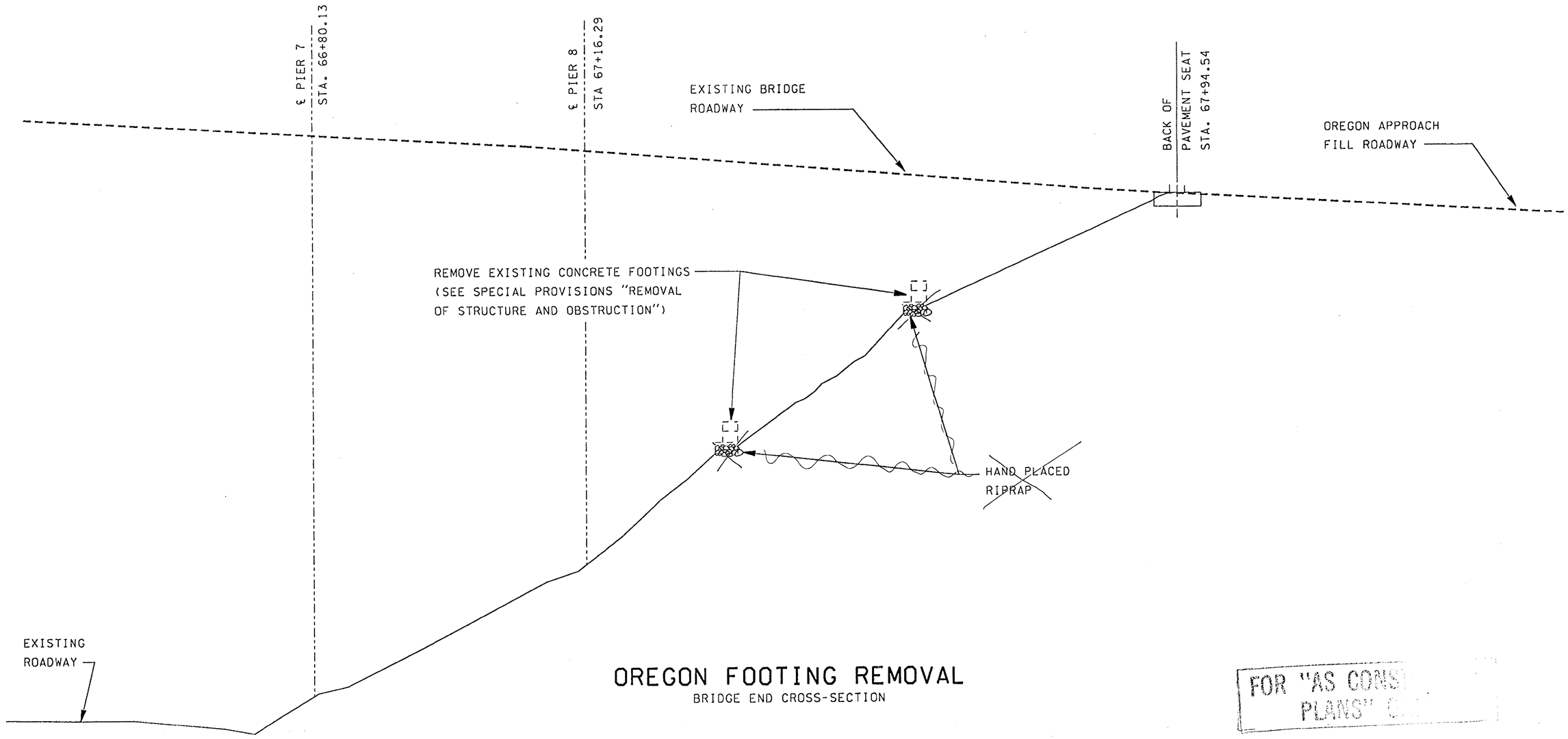

OREGON FOOTING REMOVAL

BRIDGE END CROSS-SECTION

FOR "AS CONS
PLANS" C

NOT TO SCALE

FILE NAME	C:\AAWork\dgn\1566\XL1566sp.dgn				REGION NO.	STATE	FED.AID PROJ.NO.	AMY E. REVIS STATE OF WASHINGTON 6150 REGISTERED PROFESSIONAL ENGINEER EXPIRES 09/03/03 9/25/02 DATE P.E. STAMP BOX	P.E. STAMP BOX DATE	Washington State Department of Transportation	SR 433 LEWIS AND CLARK BRIDGE 433/1 DECK REPLACEMENT	SP2
TIME	03:05:42 PM				10	WASH						
DATE	09/23/2002				JOB NUMBER							
DESIGNED BY	C. BRICHEUX				CONTRACT NO.		LOCATION NO.				SITE PREPARATION	SHEET 9 OF 258 SHEETS
ENTERED BY	D. WASSON				6444							
CHECKED BY	R. TORRES											
PROJ. ENGR.	A. REVIS											
REGIONAL ADM.	D. WAGNER	REVISION	DATE	BY								

BRIDGE WIDENING STAGING NOTES:

SUGGESTED BRIDGE WIDENING STAGING PLANS ARE SHOWN. THESE STAGING PLANS REQUIRE THAT FULL DECK PANELS BE PLACED PRIOR TO BRIDGE WIDENING TO PROVIDE A SPACE FOR THE BARRIER 10:1 TAPERS. THE CONTRACTOR MAY SUBMIT ALTERNATE BRIDGE WIDENING STAGING PLANS TO THE ENGINEER FOR APPROVAL A MINIMUM OF 14 DAYS BEFORE IMPLEMENTATION. AS A MINIMUM, A CONTRACTOR SUBMITTED STAGING PLAN SHALL MAINTAIN ONE SIDEWALK OPEN FOR PEDESTRIANS FOR THE FULL LENGTH OF THE BRIDGE AND TWO 11 FOOT LANES. THE CLOSED SIDEWALK SHALL BE SIGNED ACCORDINGLY.

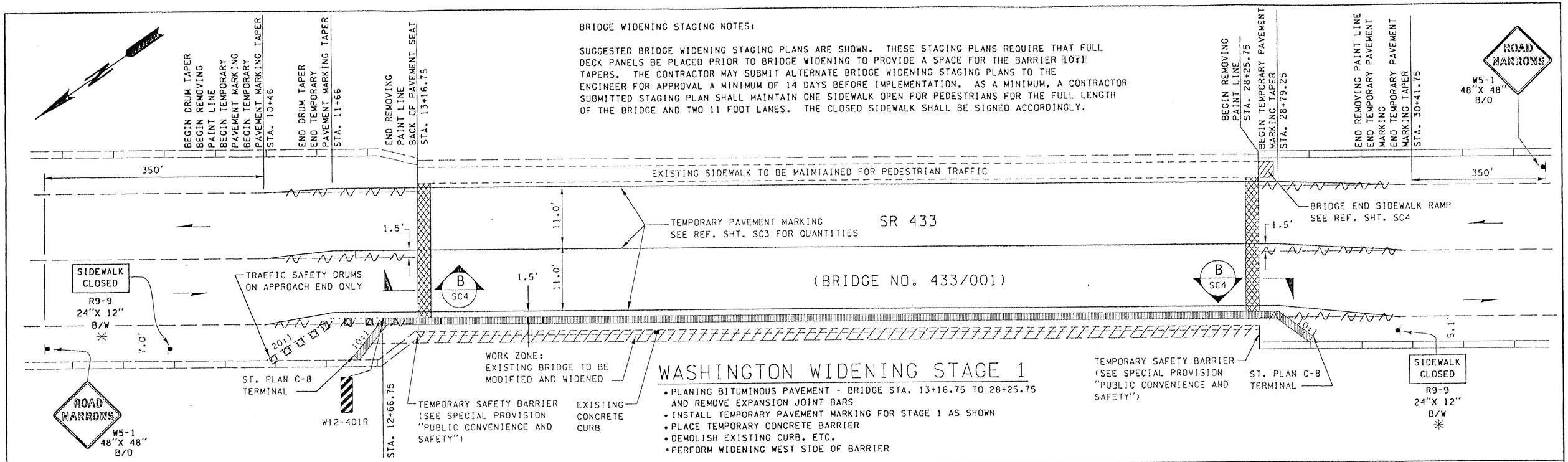

WASHINGTON WIDENING STAGE 1

- PLANING BITUMINOUS PAVEMENT - BRIDGE STA. 13+16.75 TO 28+25.75 AND REMOVE EXPANSION JOINT BARS
- INSTALL TEMPORARY PAVEMENT MARKING FOR STAGE 1 AS SHOWN
- PLACE TEMPORARY CONCRETE BARRIER
- DEMOLISH EXISTING CURB, ETC.
- PERFORM WIDENING WEST SIDE OF BARRIER

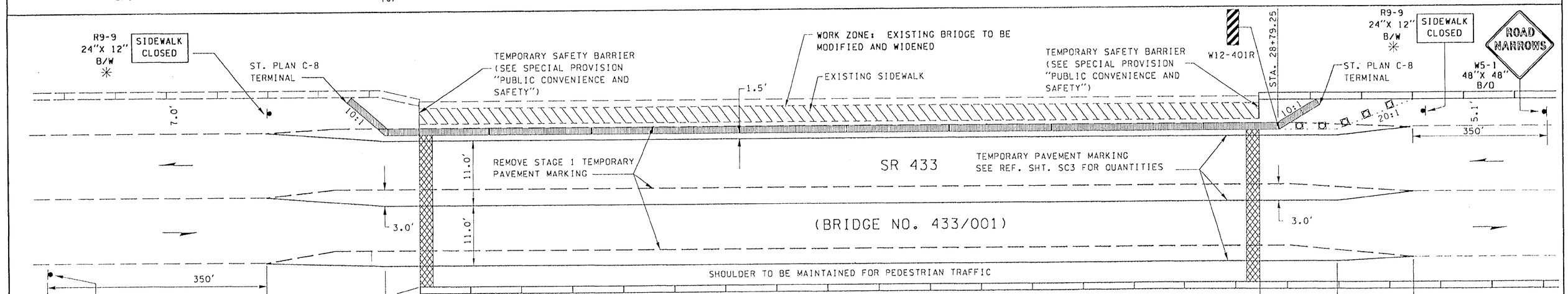

WASHINGTON WIDENING STAGE 2

- REMOVE STAGE 1 TEMPORARY PAVEMENT MARKING
- PLACE TEMPORARY CONCRETE BARRIER
- INSTALL TEMPORARY PAVEMENT MARKING FOR STAGE 2 AS SHOWN
- DEMOLISH EXISTING CURB & SIDEWALK, ETC.
- PERFORM WIDENING EAST SIDE OF BARRIER

FOR "AS CONSTRUCTED PLANS" ONLY

✳ "SIDEWALK CLOSED USE OTHER SIDE" SIGN R9-10 REQUIRED AT THE NEAREST INTERSECTION

** TEMPORARY CONCRETE BARRIER SHALL BE ANCHORED IN ACCORDANCE WITH STD. PLAN C8-e FOR TYPE 2 ANCHOR ASSEMBLY

LEGEND

- TRAFFIC SAFETY DRUM
- EXISTING GUARDRAIL
- REMOVING PAINT LINE
- TEMPORARY CONCRETE BARRIER **
- TEMPORARY RAMP SEE REF. SHT. SC4
- DIRECTION OF TRAFFIC

NOT TO SCALE

FILE NAME	C:\AAWork\dgn\1566\Bob\XL1566stg2.dgn				
TIME	07:17:01 AM	ADDED NOTE IN LEGEND	11/25/02	DW	
DATE	11/26/2002	CHANGED TAPER FROM 11:1 TO 10:1	11/25/02	DW	
DESIGNED BY	J. BROOKS				
ENTERED BY	D. WASSON				
CHECKED BY	R. TORRES				
PROJ. ENGR.	A. REVIS				
REGIONAL ADM.	D. WAGNER	REVISION	DATE	BY	

REGION NO. 10 | STATE WASH | JOB NUMBER | CONTRACT NO. 64444 | FED.AID PROJ.NO. | LOCATION NO.

ARTHUR D. REVIS, STATE OF WASHINGTON, 21550, REGISTERED PROFESSIONAL ENGINEER — EXPIRES 09/03/03 — 11/26/02 DATE — P.E. STAMP BOX

P.E. STAMP BOX — DATE

Washington State Department of Transportation

SR 433
LEWIS AND CLARK BRIDGE 433/1
DECK REPLACEMENT

WASHINGTON STAGE CONSTRUCTION PLAN

PLOT1 SC1

SHEET 10 OF 258 SHEETS

OREGON WIDENING STAGE 1

STAGING SEQUENCE MAY BE REVERSED

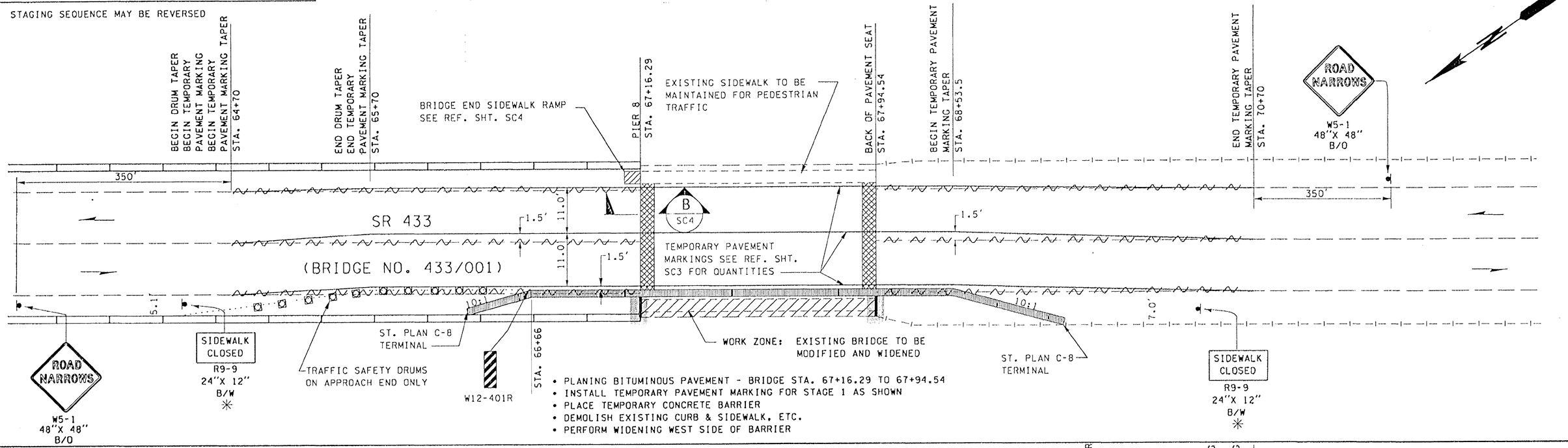

- PLANING BITUMINOUS PAVEMENT - BRIDGE STA. 67+16.29 TO 67+94.54
- INSTALL TEMPORARY PAVEMENT MARKING FOR STAGE 1 AS SHOWN
- PLACE TEMPORARY CONCRETE BARRIER
- DEMOLISH EXISTING CURB & SIDEWALK, ETC.
- PERFORM WIDENING WEST SIDE OF BARRIER

OREGON WIDENING STAGE 2

STAGING SEQUENCE MAY BE REVERSED

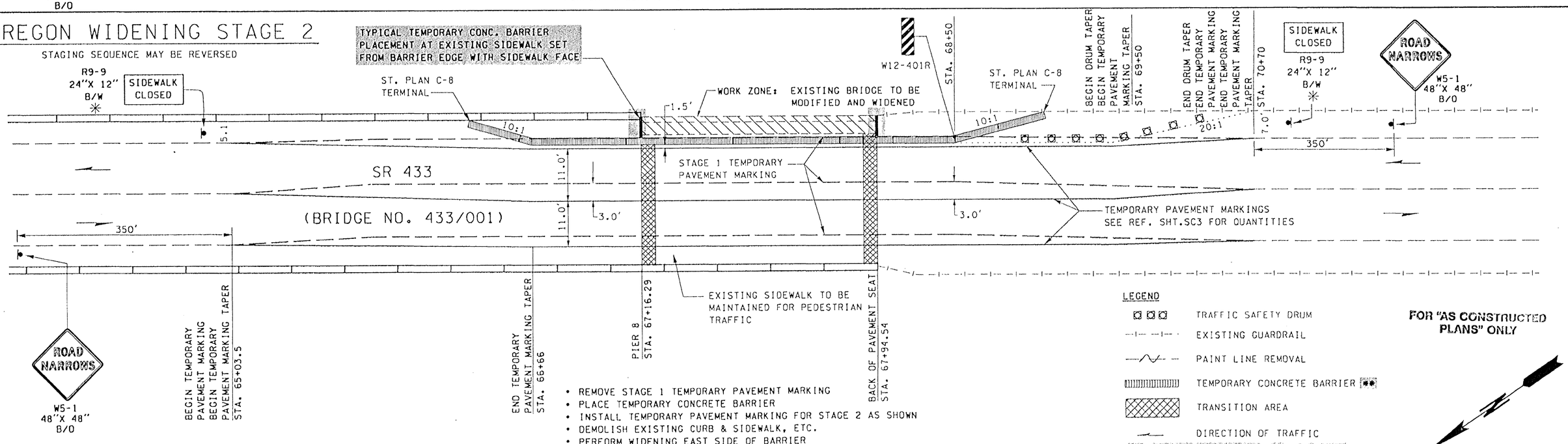

- REMOVE STAGE 1 TEMPORARY PAVEMENT MARKING
- PLACE TEMPORARY CONCRETE BARRIER
- INSTALL TEMPORARY PAVEMENT MARKING FOR STAGE 2 AS SHOWN
- DEMOLISH EXISTING CURB & SIDEWALK, ETC.
- PERFORM WIDENING EAST SIDE OF BARRIER

LEGEND

- TRAFFIC SAFETY DRUM
- EXISTING GUARDRAIL
- PAINT LINE REMOVAL
- TEMPORARY CONCRETE BARRIER **
- TRANSITION AREA
- DIRECTION OF TRAFFIC
- TEMPORARY SAFETY BARRIER

FOR "AS CONSTRUCTED PLANS" ONLY

✳ "SIDEWALK CLOSED USE OTHER SIDE" SIGN R9-10 REQUIRED AT THE NEAREST INTERSECTION

** TEMPORARY CONCRETE BARRIER SHALL BE ANCHORED IN ACCORDANCE WITH STD. PLAN C8-e FOR TYPE 2 ANCHOR ASSEMBLY

NOT TO SCALE

FILE NAME	C:\AAWork\dgn\1566\Bob\XL1566stg2.dgn					
TIME	07:17:03 AM	ADDED NOTE IN LEGEND	11/25/02	DW	REGION NO. 10	STATE WASH
DATE	11/26/2002	ADDED LEGEND	11/25/02	CB		
		ADDED NOTE	11/25/02	CB	JOB NUMBER	
DESIGNED BY	J. BROOKS					
ENTERED BY	D. WASSON					
CHECKED BY	R. TORRES				CONTRACT NO. 6444	
PROJ. ENGR.	A. REVIS					
REGIONAL ADM.	D. WAGNER	REVISION	DATE	BY		

FED.AID PROJ.NO.

LOCATION NO.

AMY E. REVIS — STATE OF WASHINGTON — REGISTERED PROFESSIONAL ENGINEER — EXPIRES 09/03/03 — 11/26/02 DATE — P.E. STAMP BOX

REGISTERED PROFESSIONAL ENGINEER — AMY ELIZABETH REVIS — OREGON — EXPIRES 12-31-2004 — 11/26/02 DATE — P.E. STAMP BOX

Washington State Department of Transportation

SR 433
LEWIS AND CLARK BRIDGE 433/1
DECK REPLACEMENT

OREGON STAGE CONSTRUCTION PLAN

PLOT2

SC2

SHEET 11 OF 258 SHEETS

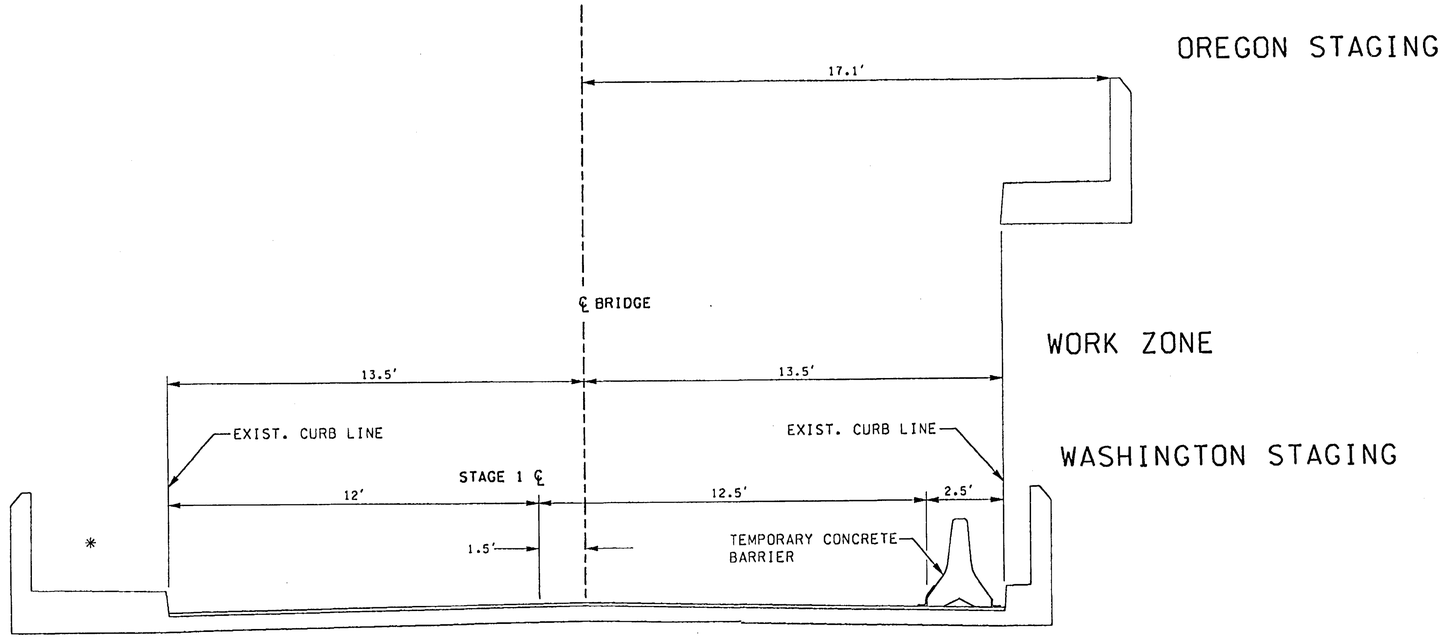

STAGE 1

STA. 12+50 TO STA. 28+60 WA
STA. 66+80 TO STA. 67+94 OR

ESTIMATED STAGE 1 QUANTITIES		
ITEM	WASHINGTON QUANTITY	OREGON QUANTITY
REMOVING PAINT LINE	1,330 LF	1,340 LF
TEMPORARY CONCRETE BARRIER	1,750 LF	325 LF
TEMPORARY PAVEMENT MARKING	5,850 LF	1,580 LF

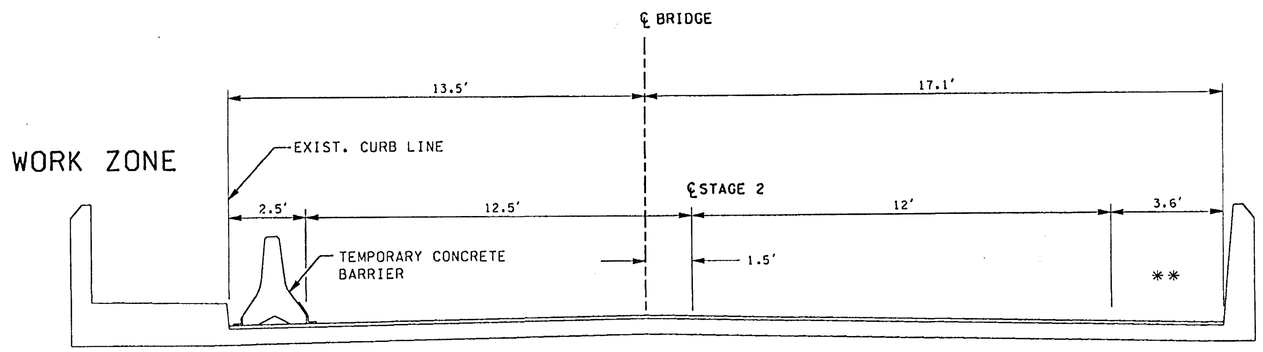

STAGE 2

STA. 12+50 TO STA. 28+60 WA
STA. 66+80 TO STA. 68+20 OR

ESTIMATED STAGE 2 QUANTITIES		
ITEM	WASHINGTON QUANTITY	OREGON QUANTITY
TEMPORARY CONCRETE BARRIER	1,750 LF	325 LF
TEMPORARY PAVEMENT MARKING	5,850 LF	1,580 LF

* EXISTING SIDEWALK TO BE MAINTAINED FOR PEDESTRIAN USE DURING STAGE 1.

** SHOULDER TO BE MAINTAINED FOR PEDESTRIAN USE DURING STAGE 2.

FOR "AS CONS... PLANS" ...

FILE NAME	C:\AAWork\dgn\1566\XL1566stg.dgn
TIME	03:06:00 PM
DATE	09/23/2002
DESIGNED BY	J. BROOKS
ENTERED BY	D. WASSON
CHECKED BY	R. TORRES
PROJ. ENGR.	A. REVIS
REGIONAL ADM.	D. WAGNER

REVISION | DATE | BY

REGION NO.	STATE	FED.AID PROJ.NO.
10	WASH	
JOB NUMBER		
CONTRACT NO. 6444		LOCATION NO.

AMY E. REVIS, STATE OF WASHINGTON, 26150, REGISTERED PROFESSIONAL ENGINEER
EXPIRES 09/03/03 — 9/25/02 DATE
P.E. STAMP BOX

P.E. STAMP BOX — DATE

Washington State Department of Transportation

SR 433
LEWIS AND CLARK BRIDGE 433/1
DECK REPLACEMENT

STAGE CONSTRUCTION PLANS

PLOT3
SC3
SHEET 12 OF 258 SHEETS

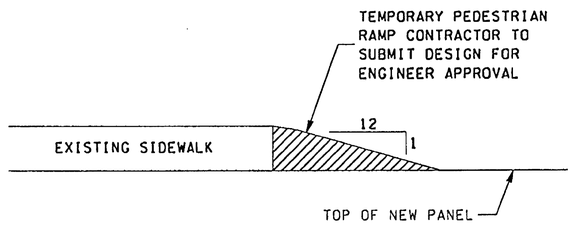

SIDEWALK RAMP

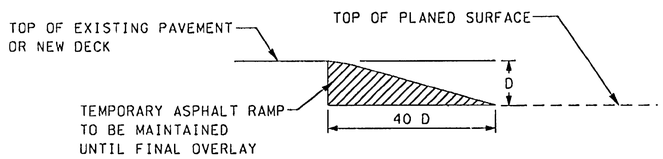

SECTION B SC4

TEMPORARY RAMP DETAILS

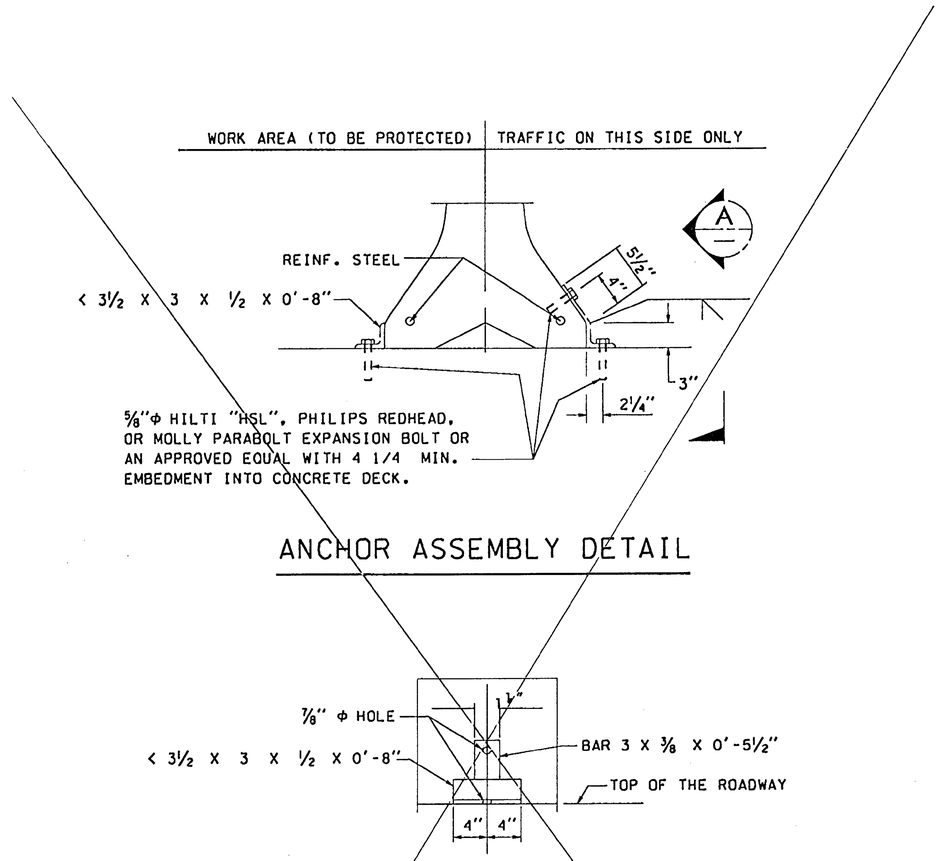

ANCHOR ASSEMBLY DETAIL

SECTION A

NOTES:

1. SHIMS MAY BE REQUIRED TO FIT THE BRACKET TO THE TEMPORARY CONCRETE BARRIER AND ROADWAY SURFACE.
2. LOCATION OF ANCHORS IS TO BE ADJUSTED TO MISS THE MAIN REINFORCING IN THE DECK WHEN DRILLING HOLES.
3. PROVIDE TWO (2) ANCHOR ASSEMBLIES FOR EACH SECTION OF THE TEMPORARY CONCRETE BARRIER ON THE ROADWAY SURFACE.
4. FOR DETAILS NOT SHOWN, SEE STANDARD PLAN C-8.
5. LOCATE ANCHORS APPROXIMATELY 2'-6" FROM BOTH ENDS OF EACH SECTION.
6. AFTER REMOVING THE TEMPORARY CONCRETE BARRIER, CLEAN AND FILL BOLT HOLES WITH A 2:1 SAND/CEMENT GROUT BY VOLUME.
7. FLARE RATE FOR TEMPORARY CONCRETE BARRIER MAY BE FLATTER THAN 11:1 TO FACILITATE FITTING THE ACTUAL LENGTHS OF TEMPORARY BARRIER.

FOR "AS CONSTRUCTED PLANS" ONLY

FILE NAME	C:\AAWork\dgn\1566\XL1566stg.dgn				REGION NO.	STATE	FED.AID PROJ.NO.
TIME	03:06:01 PM				10	WASH	
DATE	09/23/2002				JOB NUMBER		
DESIGNED BY	J. BROOKS						
ENTERED BY	D. WASSON						
CHECKED BY	R. TORRES				CONTRACT NO.		LOCATION NO.
PROJ. ENGR.	A. REVIS				6444		
REGIONAL ADM.	D. WAGNER	REVISION	DATE	BY			

AMY B. REVIS, STATE OF WASHINGTON, REGISTERED PROFESSIONAL ENGINEER, 36150, EXPIRES 09/03/02 — 9/25/02 DATE — P.E. STAMP BOX

DATE — P.E. STAMP BOX

Washington State Department of Transportation

SR 433
LEWIS AND CLARK BRIDGE 433/1
DECK REPLACEMENT

STAGE CONSTRUCTION DETAILS

PLOT4

SC4

SHEET 13 OF 256 SHEETS

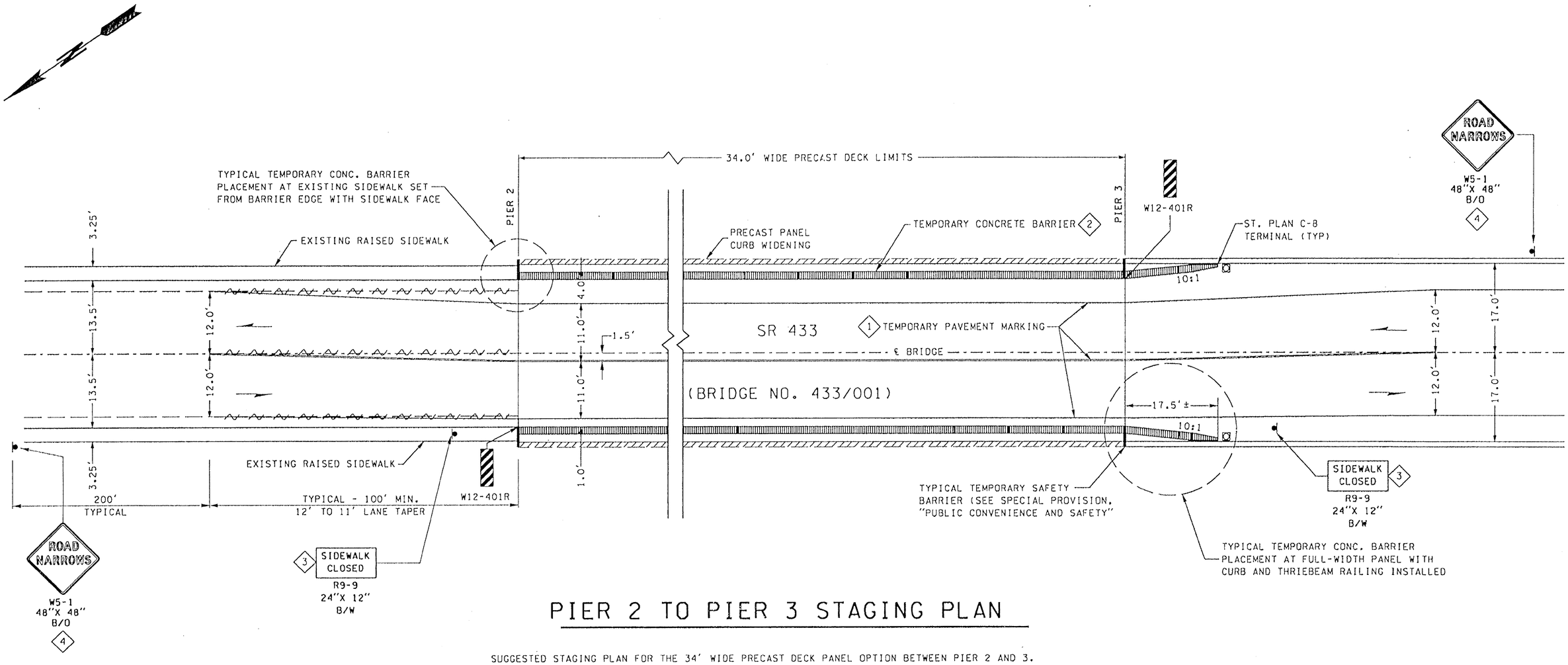

PIER 2 TO PIER 3 STAGING PLAN

SUGGESTED STAGING PLAN FOR THE 34' WIDE PRECAST DECK PANEL OPTION BETWEEN PIER 2 AND 3.

THE CONTRACTOR SHALL COORDINATE HIS WORK SO THAT, AS A MINIMUM, ONE OPEN SHOULDER OR SIDEWALK, CONTINUOUS ON ONE SIDE FOR THE FULL LENGTH OF THE BRIDGE, IS AVAILABLE FOR PEDESTRIAN USE WHEN BRIDGE IS OPEN TO TRAFFIC.

PLACEMENT OF 34' WIDE PRECAST DECK PANELS BEYOND THE LIMITS SHOWN ABOVE WILL REQUIRE ADVANCE ENGINEER APPROVAL.

NOTES

1. TEMPORARY PAVEMENT MARKING ON PRECAST DECK PANEL SHALL BE TAPE ONLY.
2. TEMPORARY CONCRETE BARRIER SHALL BE ANCHORED IN ACCORDANCE WITH STD. PLAN C-8E FOR TYPE 2 ANCHOR ASSEMBLY.
3. "SIDEWALK CLOSED USE OTHER SIDE" SIGN R9-10 SHALL BE REQUIRED AT THE NEAREST INTERSECTION ON EACH SIDE OF THE BRIDGE.
4. MOUNT ON BRIDGE RAIL.

LEGEND

- TRAFFIC SAFETY DRUM
- PAINT LINE REMOVAL
- TEMPORARY CONCRETE BARRIER
- DIRECTION OF TRAFFIC
- TEMPORARY SAFETY BARRIER

FOR "AS CONSTRUCTED PLANS" ONLY

NOT TO SCALE

FILE NAME	C:\AAWork\dgn\1566\Bob\XL1566stg2X.dgn						
TIME	08:28:44 AM						
DATE	11/26/2002						
DESIGNED BY	R. TORRES						
ENTERED BY	R. KNUDSEN						
CHECKED BY	R. TORRES						
PROJ. ENGR.	A. REVIS						
REGIONAL ADM.	D. WAGNER	REVISION	DATE	BY			

REGION NO.	STATE	FED. AID PROJ. NO.
10	WASH	
JOB NUMBER		
CONTRACT NO. 6444		LOCATION NO.

AMY E. REVIS, STATE OF WASHINGTON, 18, REGISTERED PROFESSIONAL ENGINEER — EXPIRES 09/03/03 — DATE 11/26/02 — P.E. STAMP BOX

REGISTERED PROFESSIONAL ENGINEER 72376, OREGON, AMY ELIZABETH REVIS — EXPIRES 12-31-2004 — DATE 11/26/02 — P.E. STAMP BOX

Washington State Department of Transportation

SR 433
LEWIS AND CLARK BRIDGE 433/1
DECK REPLACEMENT

PIER 2-3 STAGE CONSTRUCTION PLANS

PLOTS: SC5

SHEET 13 A OF 258 SHEETS

EAST/PORT WAY

SILT FENCE

EDGE OF EXISTING BRIDGE

SR 433

11+00 12+00 13+00 14+00 15+00 16+00 17+00

85'

BENT NO. 8
℄ STA. 15+26.00

BENT NO. 7
℄ STA. 14+38.00

WEST PORT WAY

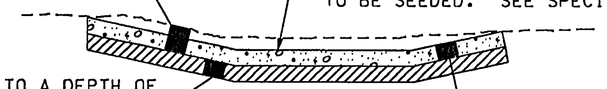

A-A
NOT TO SCALE

VEGETATED STRIP WASHINGTON SIDE

0 20 40
SCALE IN FEET

FOR "AS CONSTRUCTED PLANS" ONLY

LEGEND

VEGETATED STRIP LIMIT

SILT FENCE

ALL DIMENSIONS IN FEET UNLESS OTHERWISE NOTED

FILE NAME	C:\AAWork\dgn\1566\XL1566vgt.dgn
TIME	03:06:49 PM
DATE	09/23/2002
DESIGNED BY	C. BRICHEUX/D. CORLETT
ENTERED BY	D. WASSON
CHECKED BY	R. TORRES
PROJ. ENGR.	A. REVIS
REGIONAL ADM.	D. WAGNER

REVISION | DATE | BY

REGION NO.	STATE	FED.AID PROJ.NO.
10	WASH	

JOB NUMBER

CONTRACT NO. 6444

LOCATION NO.

AMY B. REVIS STATE OF WASHINGTON 36150 REGISTERED PROFESSIONAL ENGINEER
EXPIRES 09/03/03
9/25/02
P.E. STAMP BOX DATE

P.E. STAMP BOX DATE

Washington State Department of Transportation

SR 433
LEWIS AND CLARK BRIDGE 433/1
DECK REPLACEMENT

VEGETATED STRIP PLAN /TESC PLAN

PLOT2
VSP1
SHEET 14 OF 258 SHEETS

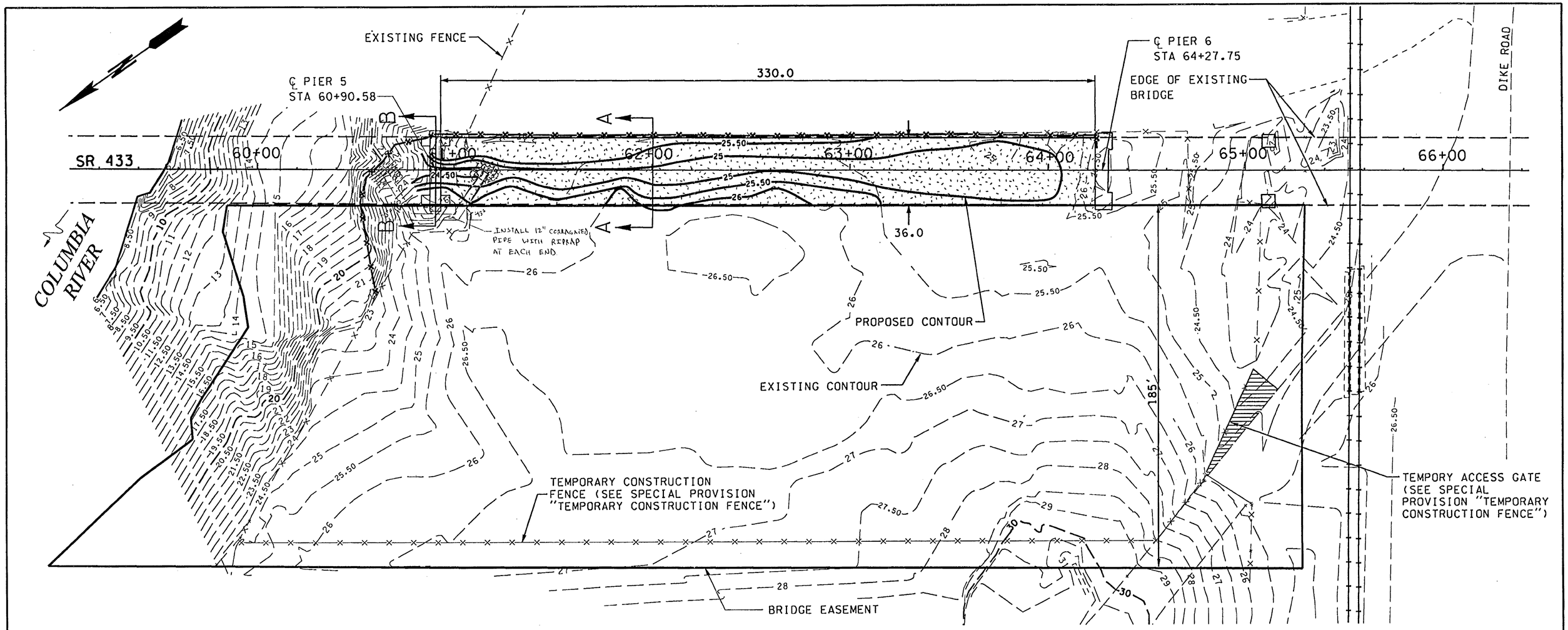

VEGETATED STRIP OREGON SIDE

0 20 40
SCALE IN FEET

FOR "AS CONSTRUCTED PLANS" ONLY

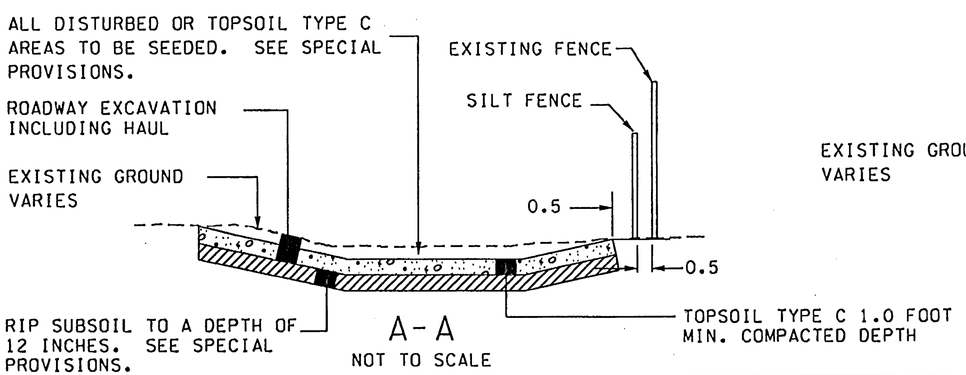

A-A
NOT TO SCALE

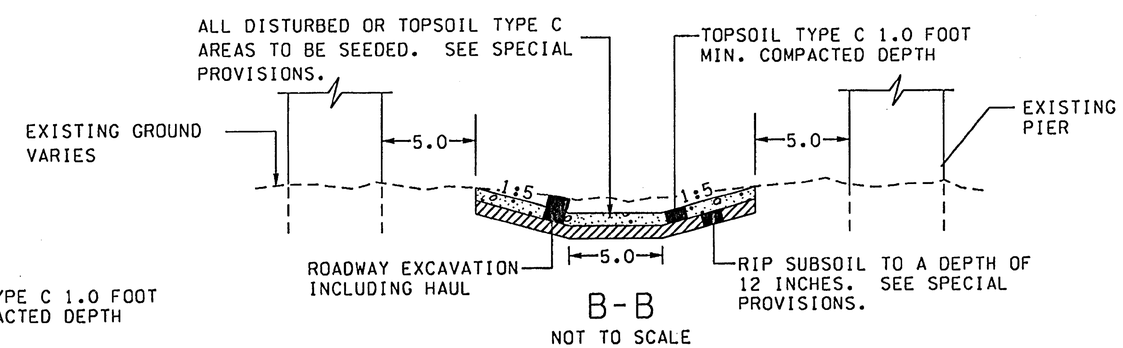

B-B
NOT TO SCALE

LEGEND

- CRUSHED SURFACING BASE COURSE FOR TEMPORARY ACCESS AS REQUIRED
- VEGETATED STRIP LIMIT
- SILT FENCE

ALL DIMENSIONS IN FEET UNLESS OTHERWISE NOTED

FILE NAME	C:\AAWork\dgn\1566\XL1566vgt.dgn
TIME	10:40:38 AM
DATE	09/23/2002
DESIGNED BY	C. BRICHEUX/D. CORLETT
ENTERED BY	D. WASSON
CHECKED BY	R. TORRES
PROJ. ENGR.	A. REVIS
REGIONAL ADM.	D. WAGNER

REVISION | DATE | BY

REGION NO.	STATE	FED.AID PROJ.NO.
10	WASH	
JOB NUMBER		
CONTRACT NO. 6444		LOCATION NO.

AMY B. REVIS, STATE OF WASHINGTON, 26150, REGISTERED PROFESSIONAL ENGINEER
EXPIRES 09/03/02
9/25/02 DATE
P.E. STAMP BOX

DATE
P.E. STAMP BOX

Washington State Department of Transportation

SR 433
LEWIS AND CLARK BRIDGE 433/1
DECK REPLACEMENT

VEGETATED STRIP PLAN /TESC PLAN

PLOT1
VSP2
SHEET 15 OF 258 SHEETS

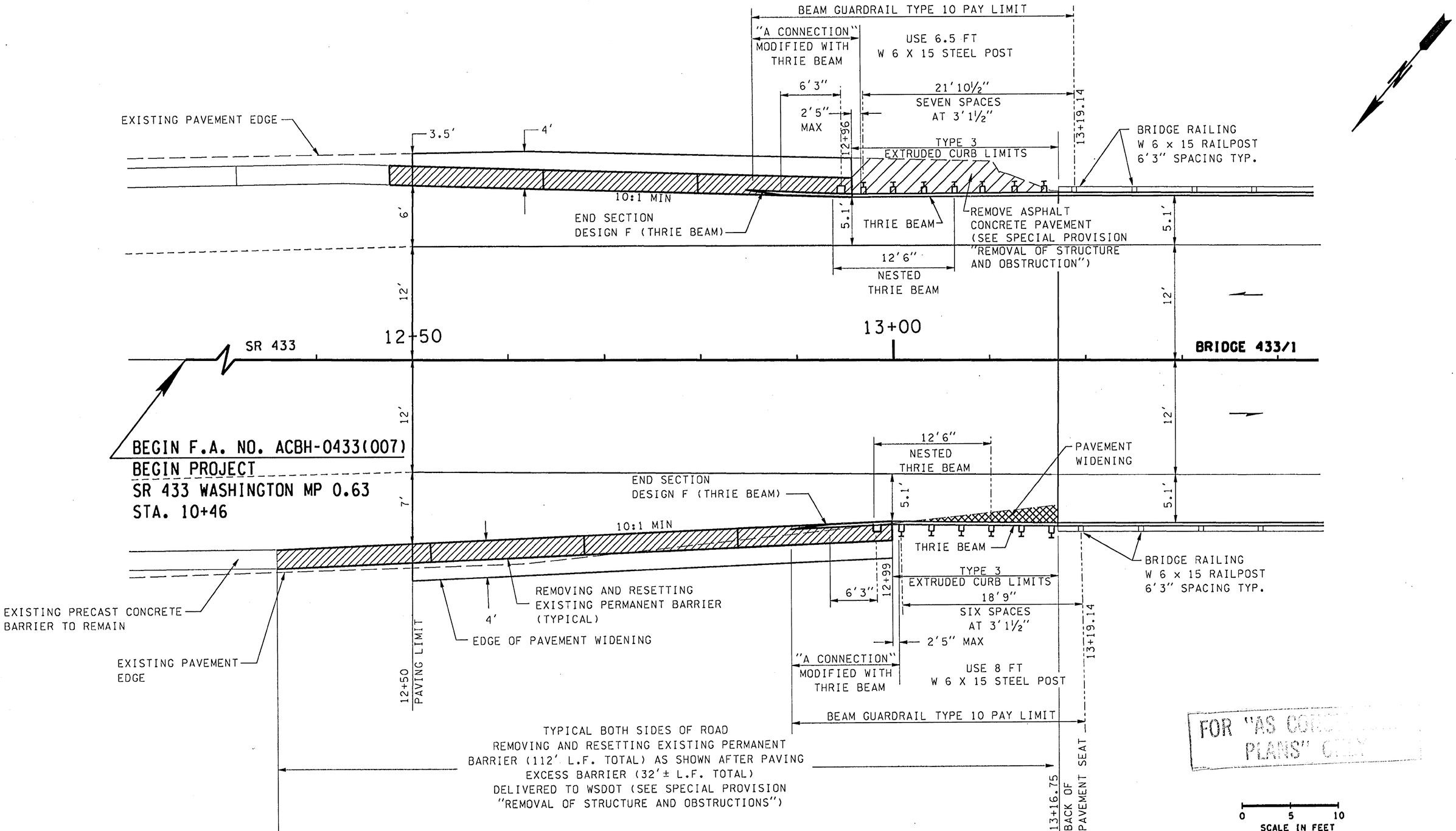

WASHINGTON APPROACH PLAN

FILE NAME	C:\AAWork\dgn\1566\XL1566app.dgn				REGION NO.	STATE	FED.AID PROJ.NO.
TIME	01:34:31 PM				10	WASH	
DATE	09/25/2002				JOB NUMBER		
DESIGNED BY	C. BRICHEUX						
ENTERED BY	D. WASSON						
CHECKED BY	R. TORRES				CONTRACT NO.		LOCATION NO.
PROJ. ENGR.	A. REVIS				6444		
REGIONAL ADM.	D. WAGNER	REVISION	DATE	BY			

AMY B. REVIS — STATE OF WASHINGTON — 36150 — REGISTERED PROFESSIONAL ENGINEER — EXPIRES 09/03/03 — 9/25/02 DATE — P.E. STAMP BOX

DATE — P.E. STAMP BOX

Washington State Department of Transportation

SR 433
LEWIS AND CLARK BRIDGE 433/1
DECK REPLACEMENT

PAVING PLAN

PLOT1
AP1
SHEET 16 OF 258 SHEETS

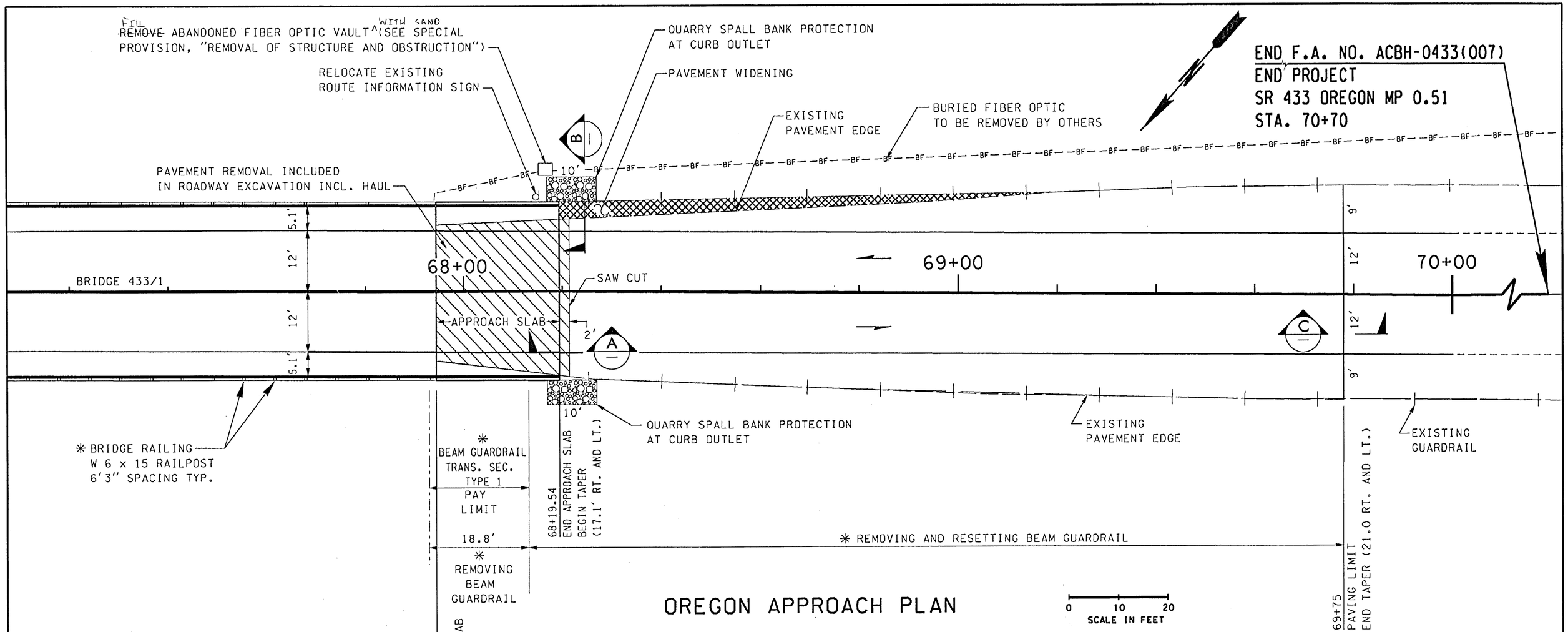

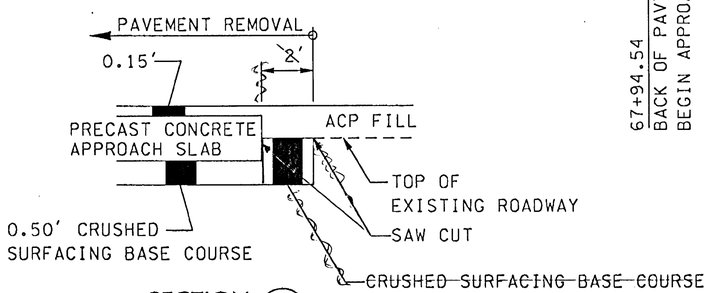

SECTION A

NOT TO SCALE

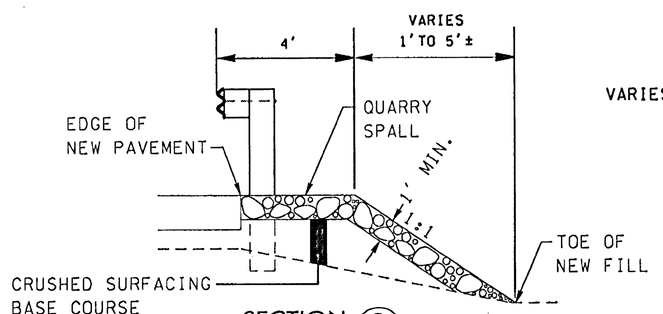

SECTION B

NOT TO SCALE

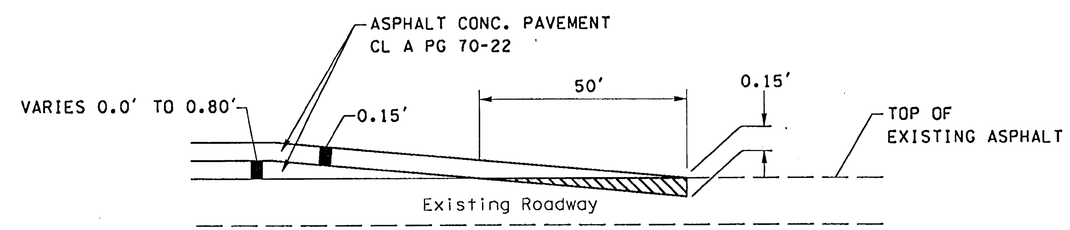

LEGEND

Existing Asphalt Concrete Pavement to be Planed

SECTION C

NOT TO SCALE

FOR "AS CONSTRUCTED PLANS" ONLY

* TYPICAL FOR BOTH SIDES OF ROADWAY

FILE NAME	C:\AAWork\dgn\1566\XL1566app.dgn				REGION NO. 10	STATE WASH	FED.AID PROJ.NO.	PLOT2
TIME	01:34:37 PM							AP2
DATE	09/25/2002				JOB NUMBER			
DESIGNED BY	C. BRICHEUX							
ENTERED BY	D. WASSON							
CHECKED BY	R. TORRES				CONTRACT NO. 6144		LOCATION NO.	
PROJ. ENGR.	A. REVIS							
REGIONAL ADM.	D. WAGNER	REVISION	DATE	BY				

AMY B. REVIS, STATE OF WASHINGTON, 36150, REGISTERED PROFESSIONAL ENGINEER — EXPIRES 09/03/03 — 9/25/02 DATE — P.E. STAMP BOX

P.E. STAMP BOX — DATE

Washington State Department of Transportation

SR 433
LEWIS AND CLARK BRIDGE 433/1
DECK REPLACEMENT

PAVING PLAN

SHEET 17 OF 258 SHEETS

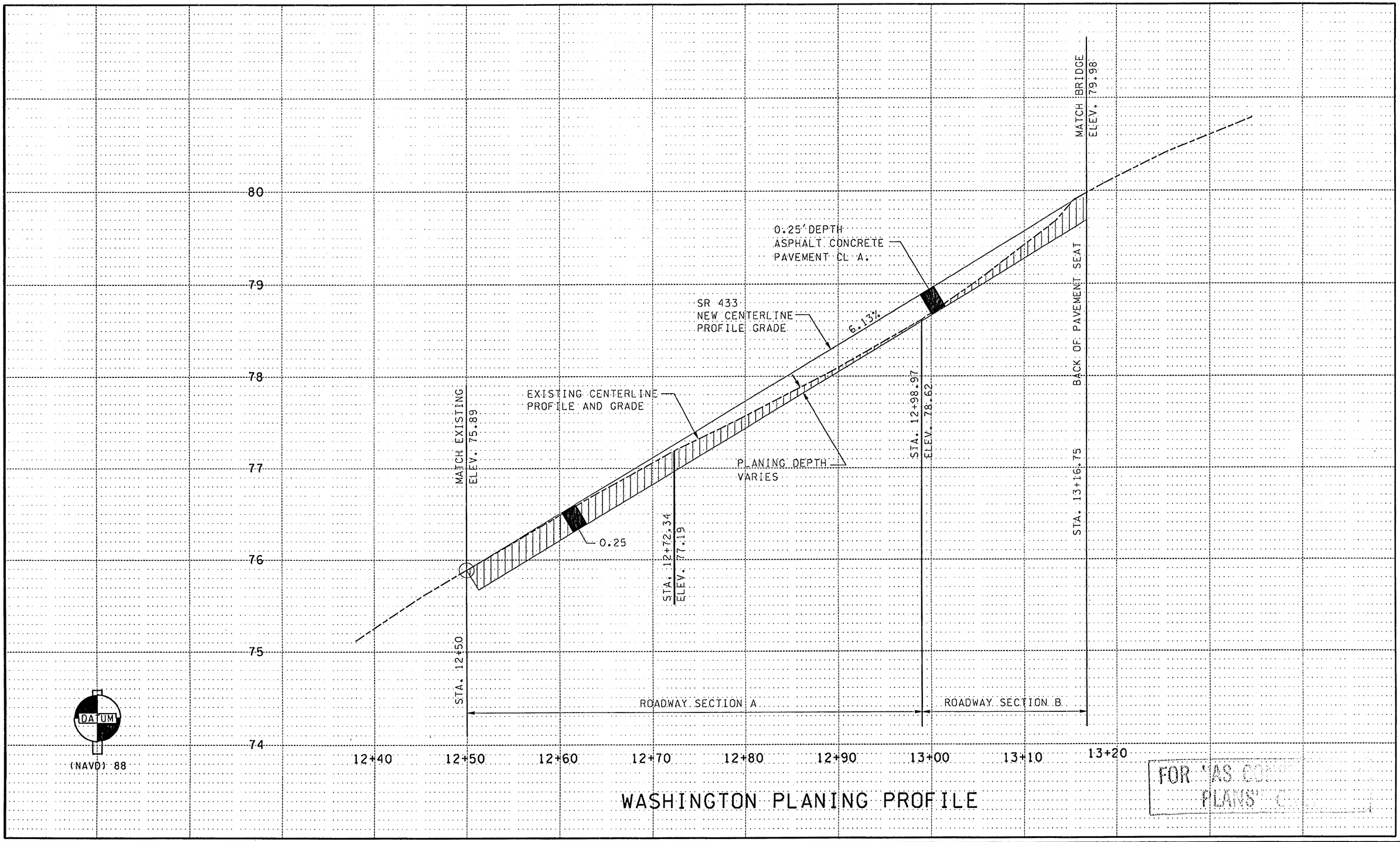

FILE NAME	C:\AAWork\dgn\1566\XL1566app.dgn						
TIME	03:04:44 PM						
DATE	09/23/2002						
DESIGNED BY	C. BRICHEUX						
ENTERED BY	D. WASSON						
CHECKED BY	R. TORRES						
PROJ. ENGR.	A. REVIS						
REGIONAL ADM.	D. WAGNER	REVISION	DATE	BY			

REGION NO.	STATE	FED.AID PROJ.NO.
10	WASH	
JOB NUMBER		
CONTRACT NO. 6444		LOCATION NO.

AMY E. REVIS, STATE OF WASHINGTON, 26150, REGISTERED PROFESSIONAL ENGINEER, EXPIRES 09/03/03
9/25/02 DATE
P.E. STAMP BOX

DATE
P.E. STAMP BOX

Washington State Department of Transportation

SR 433
LEWIS AND CLARK BRIDGE 433/1
DECK REPLACEMENT

WASHINGTON PLANING PROFILE

PLOT3
AP3
SHEET 18 OF 258 SHEETS

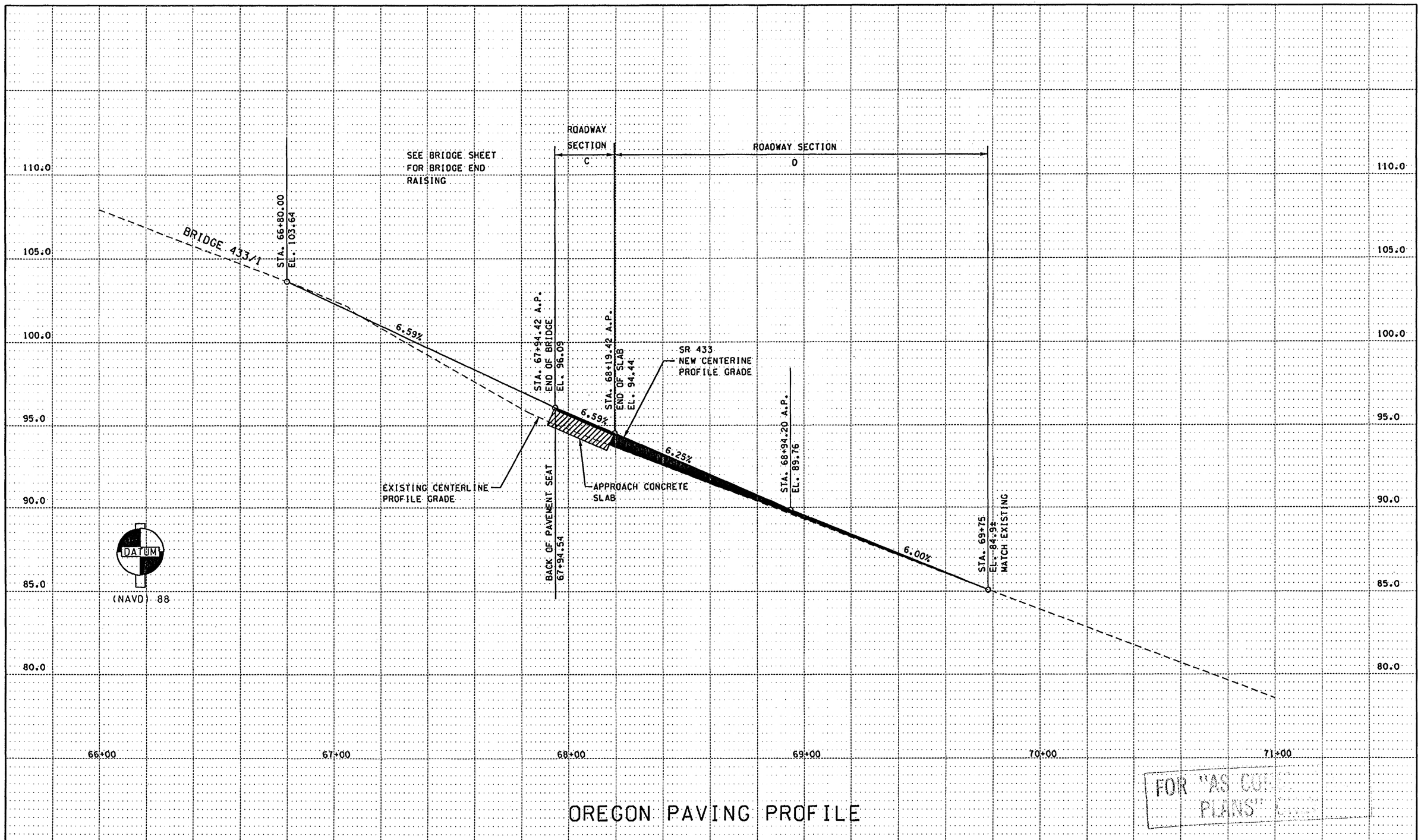

OREGON PAVING PROFILE

FILE NAME	C:\AAWork\dgn\1566\XL1566app.dgn				REGION NO. 10	STATE WASH	FED.AID PROJ.NO.
TIME	03:04:46 PM				JOB NUMBER		
DATE	09/23/2002				CONTRACT NO. 6444		LOCATION NO.
DESIGNED BY	C. BRICHEUX						
ENTERED BY	D. WASSON						
CHECKED BY	R. TORRES						
PROJ. ENGR.	A. REVIS						
REGIONAL ADM.	D. WAGNER	REVISION	DATE	BY			

AMY B. REVIS, STATE OF WASHINGTON, 36150, REGISTERED PROFESSIONAL ENGINEER, EXPIRES 09/03/03
Revis 9/25/02 DATE

DATE

Washington State Department of Transportation

SR 433
LEWIS AND CLARK BRIDGE 433/1
DECK REPLACEMENT

OREGON PAVING PROFILE

PLOT4
AP4
SHEET 19 OF 258 SHEETS

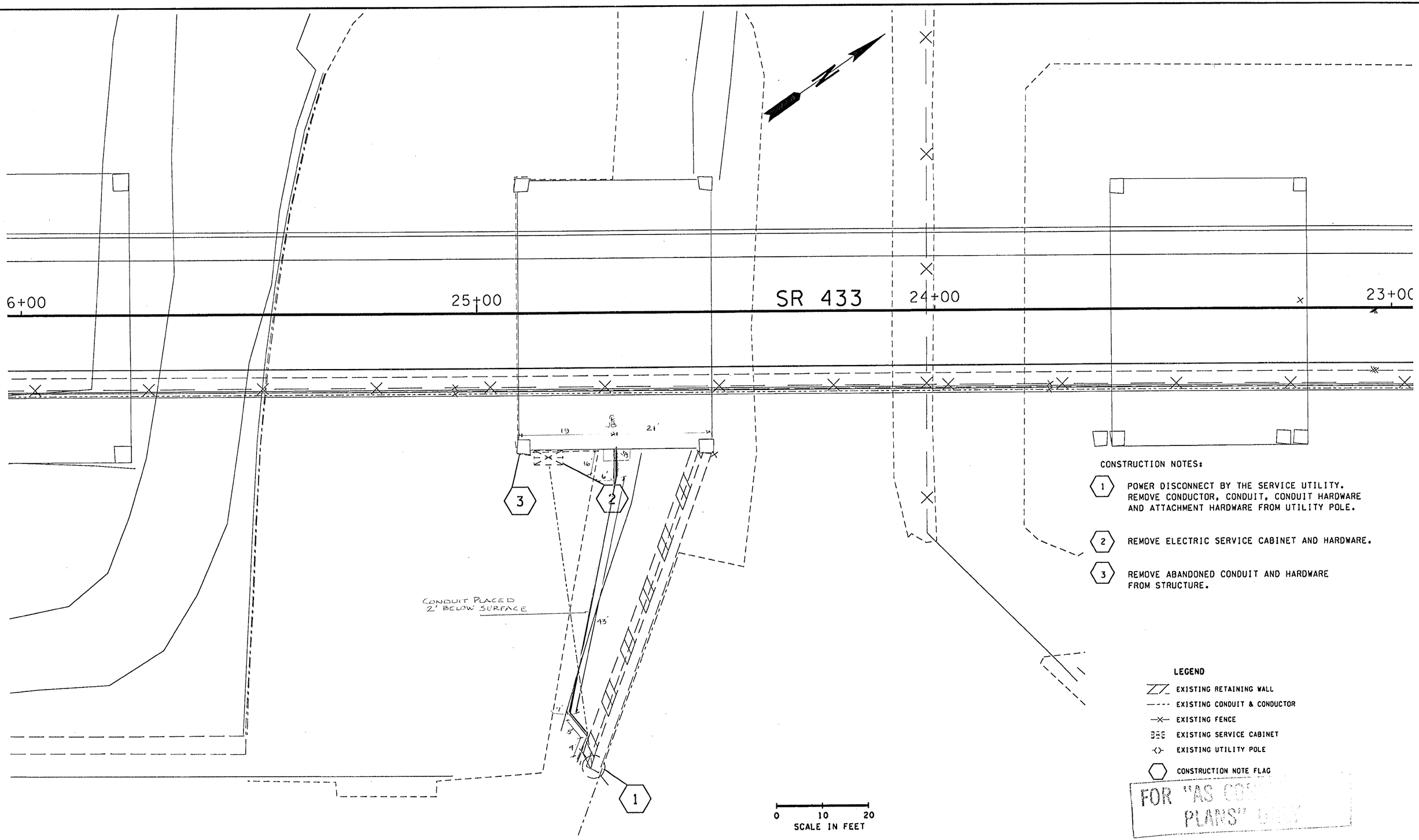

CONSTRUCTION NOTES:

1. POWER DISCONNECT BY THE SERVICE UTILITY. REMOVE CONDUCTOR, CONDUIT, CONDUIT HARDWARE AND ATTACHMENT HARDWARE FROM UTILITY POLE.
2. REMOVE ELECTRIC SERVICE CABINET AND HARDWARE.
3. REMOVE ABANDONED CONDUIT AND HARDWARE FROM STRUCTURE.

LEGEND

- EXISTING RETAINING WALL
- EXISTING CONDUIT & CONDUCTOR
- EXISTING FENCE
- EXISTING SERVICE CABINET
- EXISTING UTILITY POLE
- CONSTRUCTION NOTE FLAG

FOR "AS CONSTRUCTED" PLANS

FILE NAME	c:\dgn\x11566\x11566trf.dgn				REGION NO.	STATE	FED.AID PROJ.NO.
TIME	03:24:33 PM				10	WASH	
DATE	09/19/2002				JOB NUMBER		
DESIGNED BY	TRAFFIC DESIGN						
ENTERED BY	BC				CONTRACT NO.		LOCATION NO.
CHECKED BY	D. HOKANSON				6444		
PROJ. ENGR.	R. KENISTON						
REGIONAL ADM.	D. WAGNER	REVISION	DATE	BY			

RICHARD K. KENISTON — STATE OF WASHINGTON — 25522 — REGISTERED PROFESSIONAL ENGINEER — EXPIRES 04/13/04 — 9/19/02 DATE — P.E. STAMP BOX

REGISTERED PROFESSIONAL ENGINEER — 71291 — STATE OF WASHINGTON — RICHARD KELLY KENISTON — EXPIRES 06-30-2003 — 9/19/02 DATE — P.E. STAMP BOX

Washington State Department of Transportation

SR 433
LEWIS AND CLARK BRIDGE 433/1
DECK REPLACEMENT

ELECTRICAL – SITE PREPARATION

PLOT1

T-1

SHEET 20 OF 22 SHEETS

DOT 233-007AX
Revised 7/92

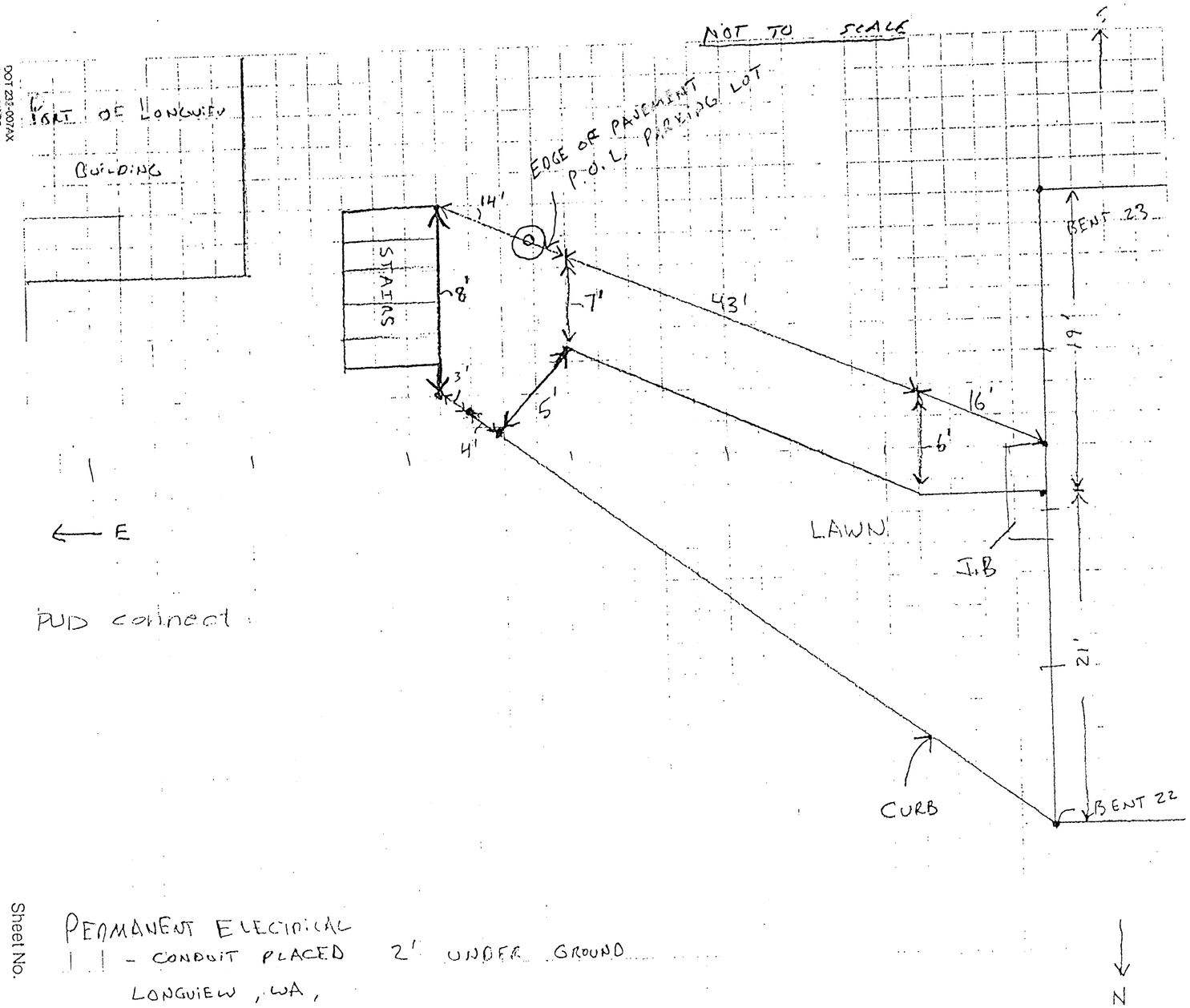

Sheet No.

PERMANENT ELECTRICAL
| | - CONDUIT PLACED 2' UNDER GROUND
LONGVIEW, WA,

* CONDUIT GOES TO JUNCTION BOX FOR BRIDGE ELECTRICAL SYSTEM

FOR "AS CONSTRUCTED PLANS" ONLY

FILE NAME	C:\AAWork\kelso\Svensen's Curve\L3425WASTESITE.dgn				
TIME	02:37:18 PM				
DATE	08/17/2005				
PLOTTED BY	spahnk				
DESIGNED BY					
ENTERED BY					
CHECKED BY					
PROJ. ENGR.					
REGIONAL ADM.		REVISION	DATE	BY	

REGION NO.	STATE	FED. AID PROJ. NO.
10	WASH	
JOB NUMBER		
CONTRACT NO. 64444		LOCATION NO.

P.E. STAMP BOX DATE

P.E. STAMP BOX DATE

Washington State Department of Transportation

SR 433
LEWIS AND CLARK BRIDE
DECK REPLACEMENT

ELLECTRICAL - JB/CONDUIT LOCATION

PLOT11

T-1A

SHEET 20A OF 258 SHEETS

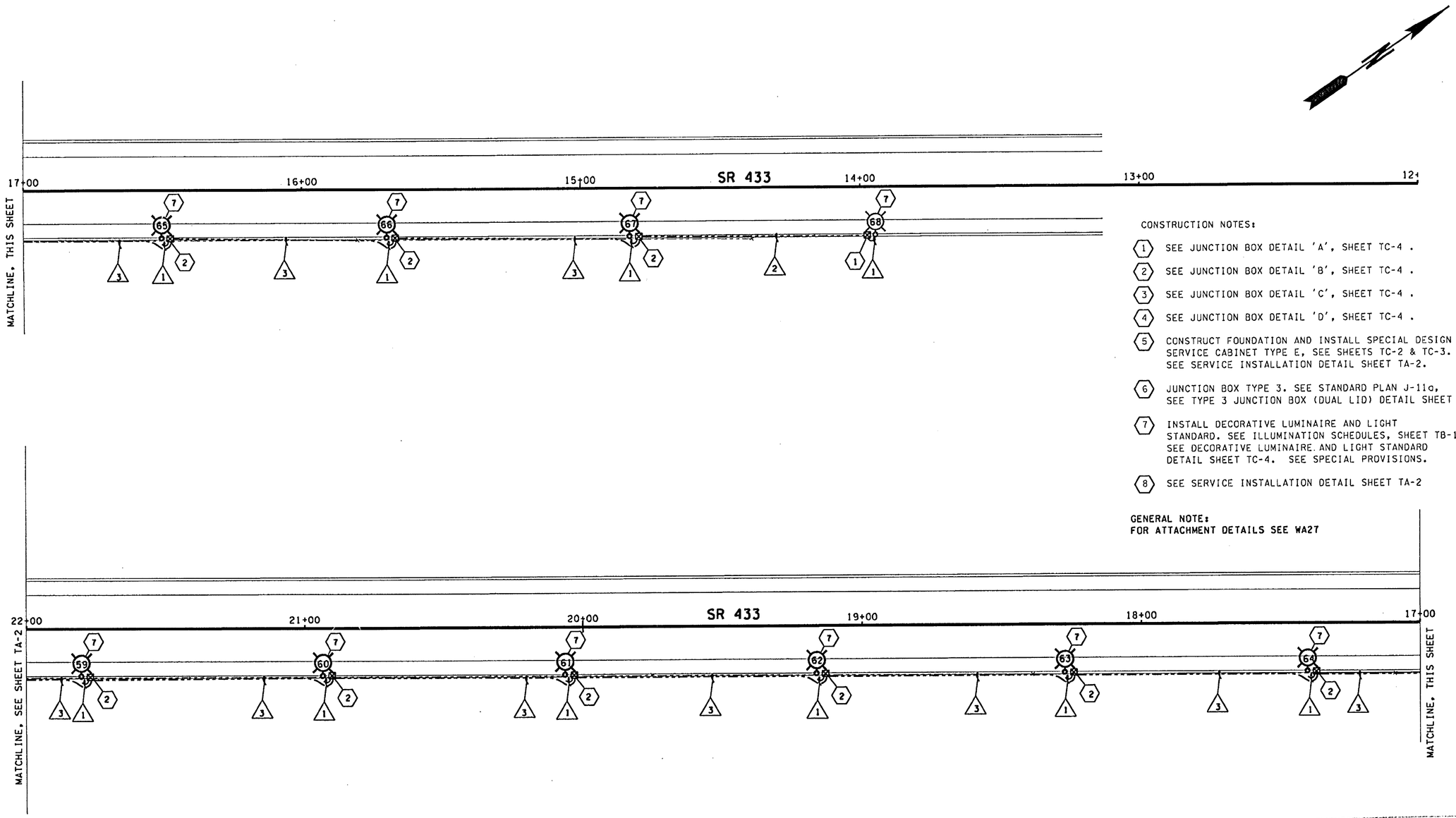

CONSTRUCTION NOTES:

1. SEE JUNCTION BOX DETAIL 'A', SHEET TC-4 .
2. SEE JUNCTION BOX DETAIL 'B', SHEET TC-4 .
3. SEE JUNCTION BOX DETAIL 'C', SHEET TC-4 .
4. SEE JUNCTION BOX DETAIL 'D', SHEET TC-4 .
5. CONSTRUCT FOUNDATION AND INSTALL SPECIAL DESIGN SERVICE CABINET TYPE E, SEE SHEETS TC-2 & TC-3. SEE SERVICE INSTALLATION DETAIL SHEET TA-2.
6. JUNCTION BOX TYPE 3. SEE STANDARD PLAN J-11a, SEE TYPE 3 JUNCTION BOX (DUAL LID) DETAIL SHEET TC-1.
7. INSTALL DECORATIVE LUMINAIRE AND LIGHT STANDARD. SEE ILLUMINATION SCHEDULES, SHEET TB-1. SEE DECORATIVE LUMINAIRE AND LIGHT STANDARD DETAIL SHEET TC-4. SEE SPECIAL PROVISIONS.
8. SEE SERVICE INSTALLATION DETAIL SHEET TA-2

GENERAL NOTE:
FOR ATTACHMENT DETAILS SEE WA27

FOR "AS CONS... PLANS" ONLY

0 20 40
SCALE IN FEET

FILE NAME	c:\dgn\xll566\xll566+lll.dgn				REGION NO.	STATE	FED.AID PROJ.NO.		
TIME	02:38:42 PM				10	WASH			
DATE	09/19/2002				JOB NUMBER				
DESIGNED BY	TRAFFIC DESIGN				CONTRACT NO.		LOCATION NO.		
ENTERED BY	BC				6444				
CHECKED BY	D. HOKANSON								
PROJ. ENGR.	R. KENISTON								
REGIONAL ADM.	D. WAGNER	REVISION	DATE	BY					

RICHARD K. KENISTON, STATE OF WASHINGTON, REGISTERED PROFESSIONAL ENGINEER, 6529, EXPIRES 04/13/04, 9/20/02 DATE, P.E. STAMP BOX

REGISTERED PROFESSIONAL ENGINEER, 71291, RICHARD KELLY KENISTON, EXPIRES 06-30-2003, 9/20/02 DATE, P.E. STAMP BOX

Washington State Department of Transportation

SR 433
LEWIS AND CLARK BRIDGE 433/1
DECK REPLACEMENT

ILLUMINATION PLAN

PLOT2
TA-1
SHEET 21 OF 258 SHEETS

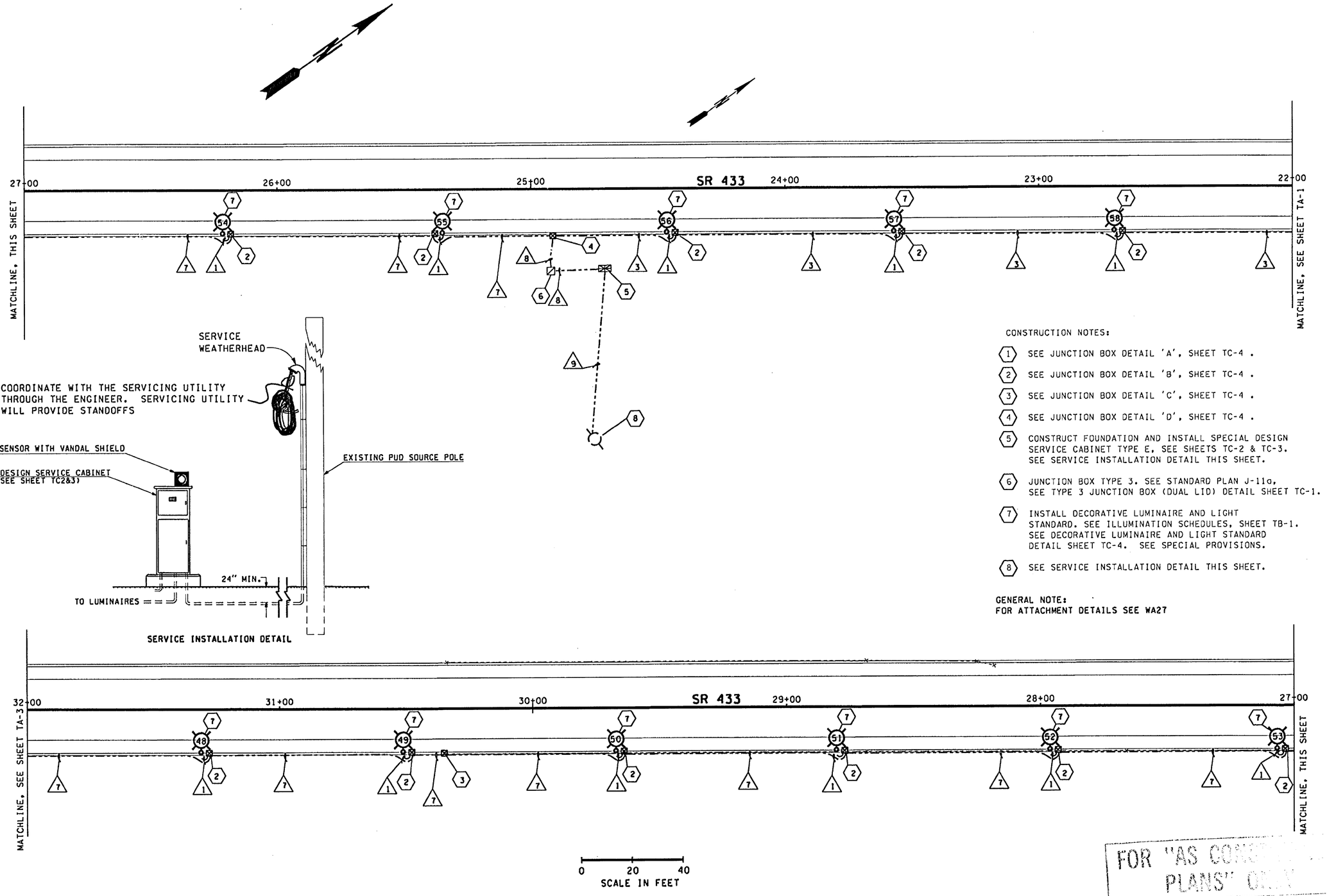

CONSTRUCTION NOTES:

1. SEE JUNCTION BOX DETAIL 'A', SHEET TC-4 .
2. SEE JUNCTION BOX DETAIL 'B', SHEET TC-4 .
3. SEE JUNCTION BOX DETAIL 'C', SHEET TC-4 .
4. SEE JUNCTION BOX DETAIL 'D', SHEET TC-4 .
5. CONSTRUCT FOUNDATION AND INSTALL SPECIAL DESIGN SERVICE CABINET TYPE E, SEE SHEETS TC-2 & TC-3. SEE SERVICE INSTALLATION DETAIL THIS SHEET.
6. JUNCTION BOX TYPE 3. SEE STANDARD PLAN J-11a, SEE TYPE 3 JUNCTION BOX (DUAL LID) DETAIL SHEET TC-1.
7. INSTALL DECORATIVE LUMINAIRE AND LIGHT STANDARD. SEE ILLUMINATION SCHEDULES, SHEET TB-1. SEE DECORATIVE LUMINAIRE AND LIGHT STANDARD DETAIL SHEET TC-4. SEE SPECIAL PROVISIONS.
8. SEE SERVICE INSTALLATION DETAIL THIS SHEET.

GENERAL NOTE:
FOR ATTACHMENT DETAILS SEE WA27

FOR "AS CONS... PLANS" ONLY

FILE NAME	c:\dgn\xll566\xll566t1ll.dgn				REGION NO.	STATE	FED.AID PROJ.NO.			PLOT3
TIME	02:38:43 PM				10	WASH				TA-2
DATE	09/19/2002				JOB NUMBER					
DESIGNED BY	TRAFFIC DESIGN				CONTRACT NO.		LOCATION NO.			SHEET 22 OF 258 SHEETS
ENTERED BY	BC				6444					
CHECKED BY	D. HOKANSON									
PROJ. ENGR.	R. KENISTON									
REGIONAL ADM.	D. WAGNER	REVISION	DATE	BY						

RICHARD K. KENISTON, STATE OF WASHINGTON, REGISTERED PROFESSIONAL ENGINEER, EXPIRES 04/13/04 — 9/20/02 DATE — P.E. STAMP BOX

REGISTERED PROFESSIONAL ENGINEER, RICHARD KELLY KENISTON, EXPIRES 06-30-2003 — 9/20/02 DATE — P.E. STAMP BOX

Washington State Department of Transportation

SR 433
LEWIS AND CLARK BRIDGE 433/1
DECK REPLACEMENT

ILLUMINATION PLAN

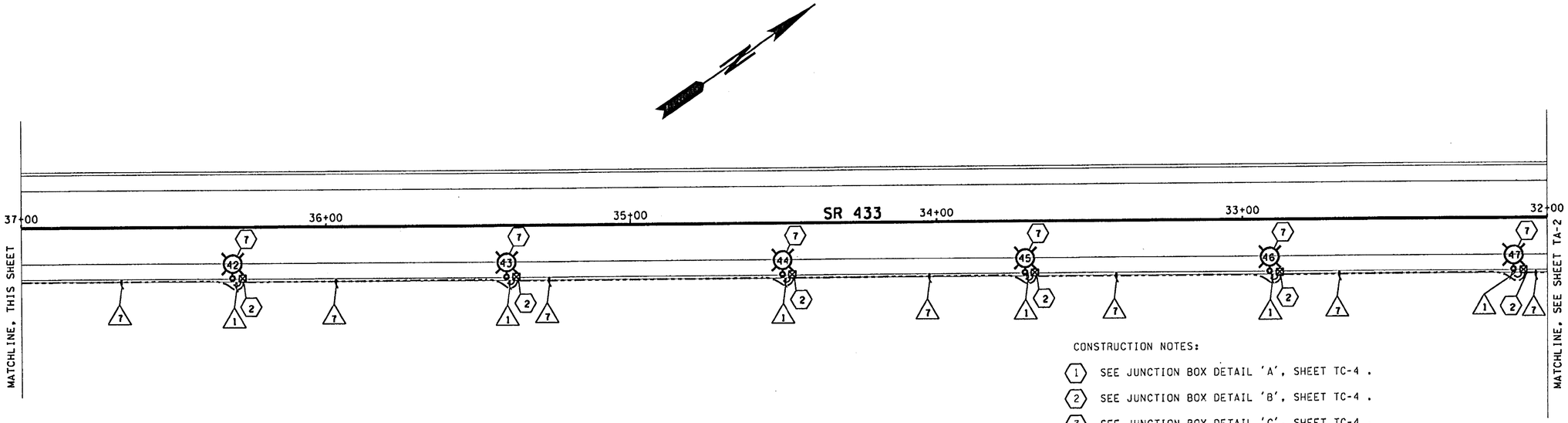

CONSTRUCTION NOTES:

1. SEE JUNCTION BOX DETAIL 'A', SHEET TC-4 .
2. SEE JUNCTION BOX DETAIL 'B', SHEET TC-4 .
3. SEE JUNCTION BOX DETAIL 'C', SHEET TC-4 .
4. SEE JUNCTION BOX DETAIL 'D', SHEET TC-4 .
5. CONSTRUCT FOUNDATION AND INSTALL SPECIAL DESIGN SERVICE CABINET TYPE E, SEE SHEETS TC-2 & TC-3. SEE SERVICE INSTALLATION DETAIL SHEET TA-2.
6. JUNCTION BOX TYPE 3. SEE STANDARD PLAN J-11a, SEE TYPE 3 JUNCTION BOX (DUAL LID) DETAIL SHEET TC-1.
7. INSTALL DECORATIVE LUMINAIRE AND LIGHT STANDARD. SEE ILLUMINATION SCHEDULES, SHEET TB-1. SEE DECORATIVE LUMINAIRE AND LIGHT STANDARD DETAIL SHEET TC-4. SEE SPECIAL PROVISIONS.
8. SEE SERVICE INSTALLATION DETAIL SHEET TA-2

GENERAL NOTE:
FOR ATTACHMENT DETAILS SEE WA27

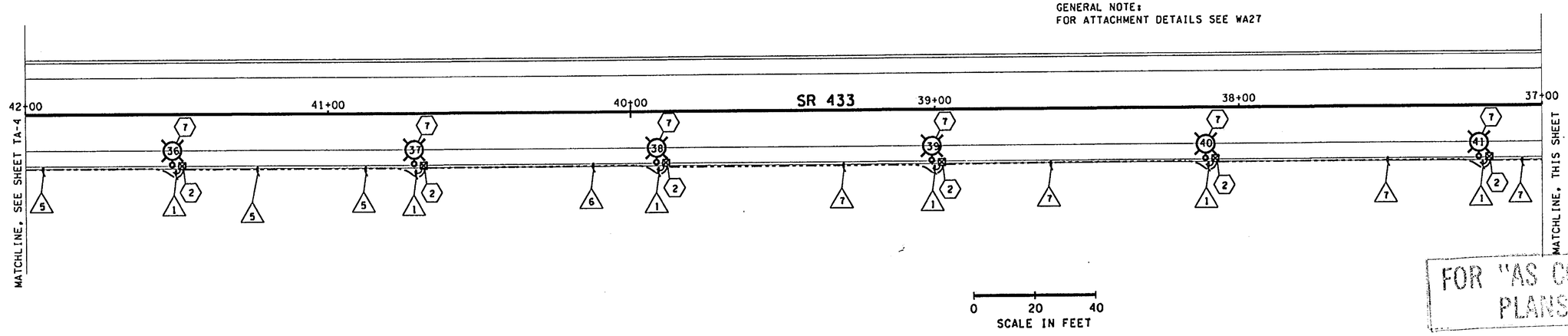

FOR "AS CONSTRUCTED PLANS" ONLY

FILE NAME	c:\dgn\xl1566\xl1566t111.dgn						
TIME	02:38:45 PM						
DATE	09/19/2002						
DESIGNED BY	TRAFFIC DESIGN						
ENTERED BY	BC						
CHECKED BY	D. HOKANSON						
PROJ. ENGR.	R. KENISTON						
REGIONAL ADM.	D. WAGNER	REVISION	DATE	BY			

REGION NO.	STATE	FED.AID PROJ.NO.
10	WASH	
JOB NUMBER		
CONTRACT NO. 6444		LOCATION NO.

RICHARD K. KENISTON, STATE OF WASHINGTON, REGISTERED PROFESSIONAL ENGINEER
EXPIRES 04/13/04
9/20/02 DATE
P.E. STAMP BOX

REGISTERED PROFESSIONAL ENGINEER, KELLY KENISTON
EXPIRES 06-30-2003
9/20/02 DATE
P.E. STAMP BOX

Washington State Department of Transportation

SR 433
LEWIS AND CLARK BRIDGE 433/1
DECK REPLACEMENT

ILLUMINATION PLAN

PLOT4

TA-3

SHEET 23 OF 258 SHEETS

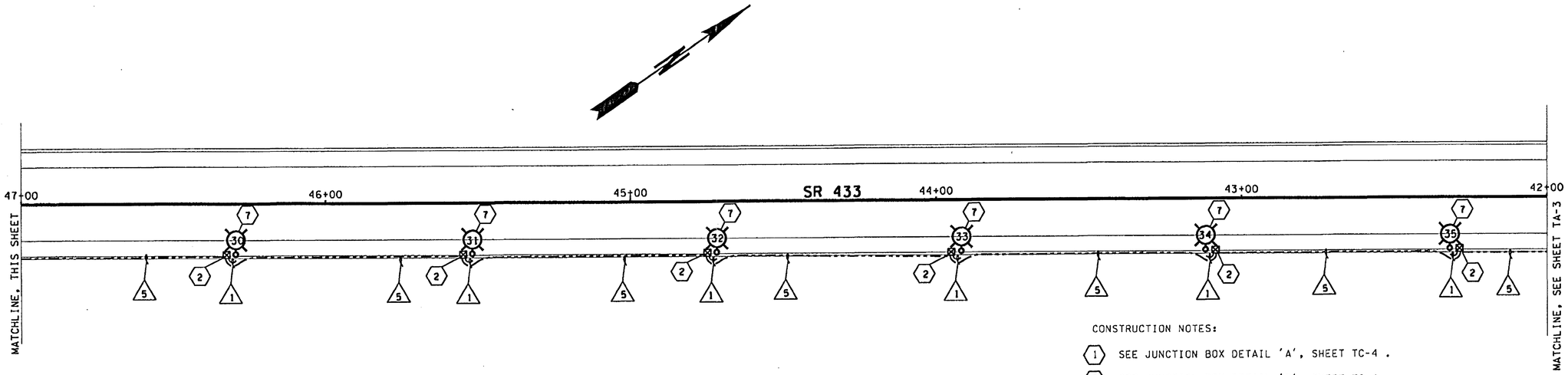

CONSTRUCTION NOTES:

1. SEE JUNCTION BOX DETAIL 'A', SHEET TC-4 .
2. SEE JUNCTION BOX DETAIL 'B', SHEET TC-4 .
3. SEE JUNCTION BOX DETAIL 'C', SHEET TC-4 .
4. SEE JUNCTION BOX DETAIL 'D', SHEET TC-4 .
5. CONSTRUCT FOUNDATION AND INSTALL SPECIAL DESIGN SERVICE CABINET TYPE E, SEE SHEETS TC-2 & TC-3. SEE SERVICE INSTALLATION DETAIL SHEET TA-2.
6. JUNCTION BOX TYPE 3. SEE STANDARD PLAN J-11a, SEE TYPE 3 JUNCTION BOX (DUAL LID) DETAIL SHEET TC-1.
7. INSTALL DECORATIVE LUMINAIRE AND LIGHT STANDARD. SEE ILLUMINATION SCHEDULES, SHEET TB-1. SEE DECORATIVE LUMINAIRE AND LIGHT STANDARD DETAIL SHEET TC-4. SEE SPECIAL PROVISIONS.
8. SEE SERVICE INSTALLATION DETAIL SHEET TA-2

GENERAL NOTE:
FOR ATTACHMENT DETAILS SEE WA27

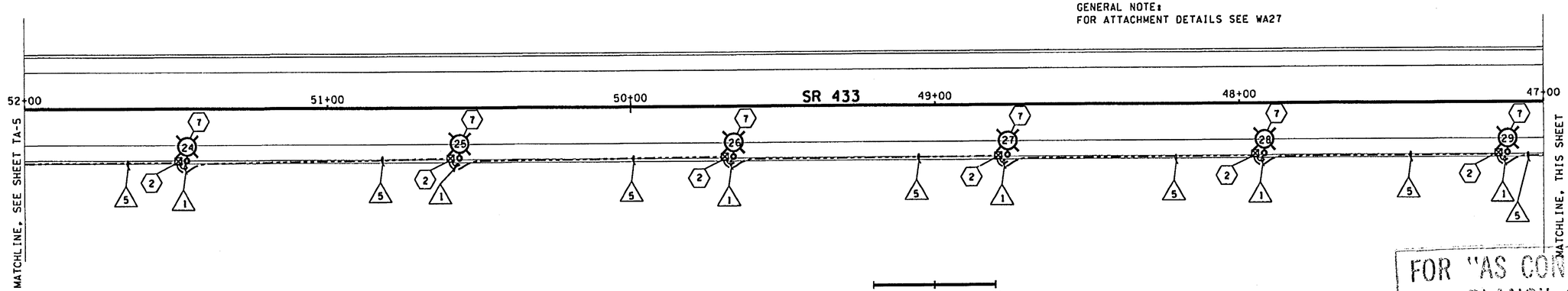

0 20 40
SCALE IN FEET

FOR "AS CONSTRUCTED PLANS" ONLY

FILE NAME	c:\dgn\xl1566\xl1566tlll.dgn				REGION NO. 10	STATE WASH	FED.AID PROJ.NO.
TIME	02:38:46 PM				JOB NUMBER		
DATE	09/19/2002				CONTRACT NO. 6444		LOCATION NO.
DESIGNED BY	TRAFFIC DESIGN						
ENTERED BY	BC						
CHECKED BY	D. HOKANSON						
PROJ. ENGR.	R. KENISTON						
REGIONAL ADM.	D. WAGNER	REVISION	DATE	BY			

RICHARD K. KENISTON — STATE OF WASHINGTON — 26529 — REGISTERED PROFESSIONAL ENGINEER
EXPIRES 04/13/04 — 9/20/02 DATE — P.E. STAMP BOX

REGISTERED PROFESSIONAL ENGINEER — KELLY KENISTON — EXPIRES 06-30-2003 — 9/20/02 DATE — P.E. STAMP BOX

Washington State Department of Transportation

SR 433
LEWIS AND CLARK BRIDGE 433/1
DECK REPLACEMENT

ILLUMINATION PLAN

PLOT5
TA-4
SHEET 24 OF 358 SHEETS

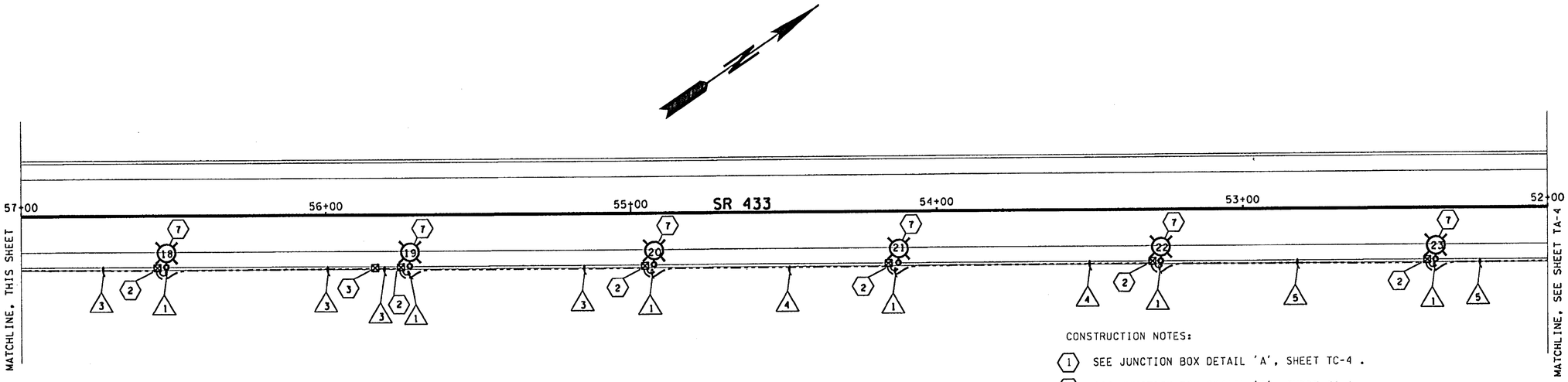

CONSTRUCTION NOTES:

1. SEE JUNCTION BOX DETAIL 'A', SHEET TC-4 .
2. SEE JUNCTION BOX DETAIL 'B', SHEET TC-4 .
3. SEE JUNCTION BOX DETAIL 'C', SHEET TC-4 .
4. SEE JUNCTION BOX DETAIL 'D', SHEET TC-4 .
5. CONSTRUCT FOUNDATION AND INSTALL SPECIAL DESIGN SERVICE CABINET TYPE E, SEE SHEETS TC-2 & TC-3. SEE SERVICE INSTALLATION DETAIL SHEET TA-2.
6. JUNCTION BOX TYPE 3. SEE STANDARD PLAN J-11a, SEE TYPE 3 JUNCTION BOX (DUAL LID) DETAIL SHEET TC-1.
7. INSTALL DECORATIVE LUMINAIRE AND LIGHT STANDARD. SEE ILLUMINATION SCHEDULES, SHEET TB-1. SEE DECORATIVE LUMINAIRE AND LIGHT STANDARD DETAIL SHEET TC-4. SEE SPECIAL PROVISIONS.
8. SEE SERVICE INSTALLATION DETAIL SHEET TA-2

GENERAL NOTE:
FOR ATTACHMENT DETAILS SEE WA27

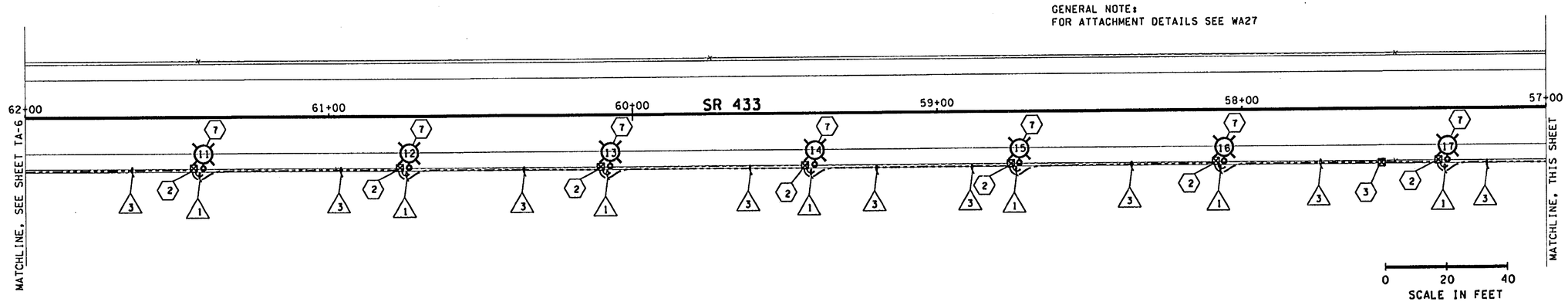

FOR "AS CONSTRUCTED PLANS" ONLY

FILE NAME	c:\dgn\x11566\x11566t111.dgn				REGION NO.	STATE	FED.AID PROJ.NO.
TIME	02:38:47 PM				10	WASH	
DATE	09/19/2002				JOB NUMBER		
DESIGNED BY	TRAFFIC DESIGN				CONTRACT NO.		LOCATION NO.
ENTERED BY	BC				6444		
CHECKED BY	D. HOKANSON						
PROJ. ENGR.	R. KENISTON						
REGIONAL ADM.	D. WAGNER	REVISION	DATE	BY			

RICHARD K KENISTON, STATE OF WASHINGTON, REGISTERED PROFESSIONAL ENGINEER, EXPIRES 04/13/04 — 9/20/02 DATE — P.E. STAMP BOX

REGISTERED PROFESSIONAL ENGINEER, RICHARD KELLY KENISTON, EXPIRES 06-30-2003 — 9/20/02 DATE — P.E. STAMP BOX

Washington State Department of Transportation

SR 433
LEWIS AND CLARK BRIDGE 433/1
DECK REPLACEMENT

ILLUMINATION PLAN

PLOT6
TA-5
SHEET 25 OF 258 SHEETS

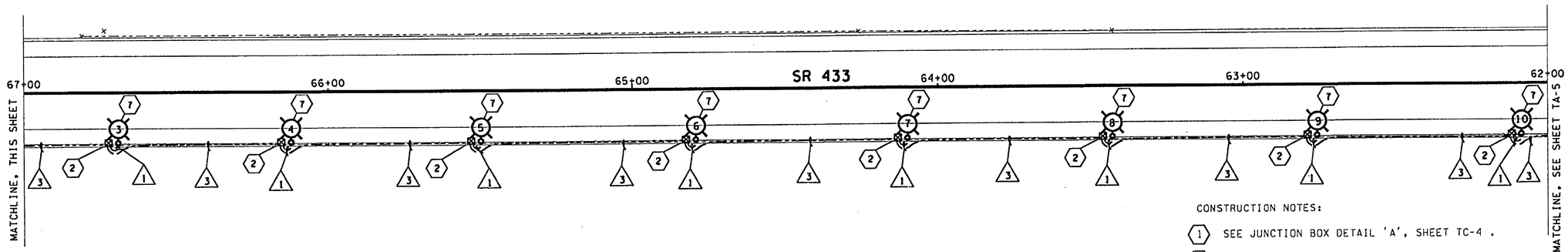

CONSTRUCTION NOTES:

1. SEE JUNCTION BOX DETAIL 'A', SHEET TC-4 .
2. SEE JUNCTION BOX DETAIL 'B', SHEET TC-4 .
3. SEE JUNCTION BOX DETAIL 'C', SHEET TC-4 .
4. SEE JUNCTION BOX DETAIL 'D', SHEET TC-4 .
5. CONSTRUCT FOUNDATION AND INSTALL SPECIAL DESIGN SERVICE CABINET TYPE E, SEE SHEETS TC-2 & TC-3. SEE SERVICE INSTALLATION DETAIL SHEET TA-2.
6. JUNCTION BOX TYPE 3. SEE STANDARD PLAN J-11a, SEE TYPE 3 JUNCTION BOX (DUAL LID) DETAIL SHEET TC-1.
7. INSTALL DECORATIVE LUMINAIRE AND LIGHT STANDARD. SEE ILLUMINATION SCHEDULES, SHEET TB-1. SEE DECORATIVE LUMINAIRE AND LIGHT STANDARD DETAIL SHEET TC-4. SEE SPECIAL PROVISIONS.
8. SEE SERVICE INSTALLATION DETAIL SHEET TA-2

GENERAL NOTE:
FOR ATTACHMENT DETAILS SEE WA27

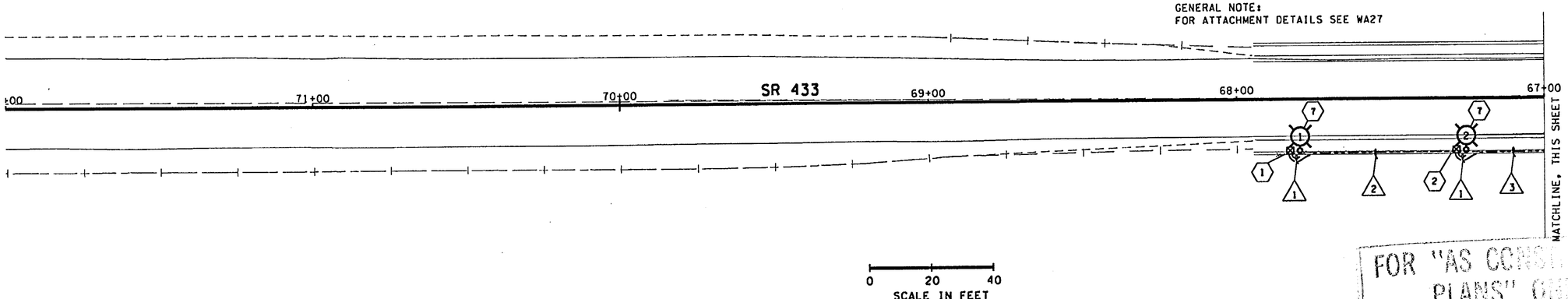

FOR "AS CONSTRUCTED PLANS" ONLY

FILE NAME	c:\dgn\xl1566\xl1566t1ll.dgn						
TIME	02:38:49 PM						
DATE	09/19/2002						
DESIGNED BY	TRAFFIC DESIGN						
ENTERED BY	BC						
CHECKED BY	D. HOKANSON						
PROJ. ENGR.	R. KENISTON						
REGIONAL ADM.	D. WAGNER	REVISION	DATE	BY			

REGION NO.	STATE	FED.AID PROJ.NO.
10	WASH	
JOB NUMBER		
CONTRACT NO. 64444		LOCATION NO.

RICHARD K. KENISTON, STATE OF WASHINGTON, REGISTERED PROFESSIONAL ENGINEER — EXPIRES 04/13/04 — 9/20/02 DATE — P.E. STAMP BOX

REGISTERED PROFESSIONAL ENGINEER, RICHARD KELLY KENISTON — EXPIRES 06-30-2003 — 9/20/02 DATE — P.E. STAMP BOX

Washington State Department of Transportation

SR 433
LEWIS AND CLARK BRIDGE 433/1
DECK REPLACEMENT

ILLUMINATION PLAN

PLOT7

TA-6

SHEET 26 OF 258 SHEETS

LUMINAIRE SCHEDULE

LUMINAIRE NUMBER	CIRCUIT	LOCATION STATION	LOCATION OFFSET	TYPE-DISTRIBUTION-WATTAGE	MAST ARM	H1	BASE TYPE	COMMENTS
1	A	SR433 67+82.11	17.78' L	II - SHORT CUTOFF - 150 HPS	2.67'	18'	FIXED	
2	B	SR433 67+26.04	17.78' L	II - SHORT CUTOFF - 150 HPS	2.67'	18'	FIXED	
3	A	SR433 66+71.48	17.78' L	II - SHORT CUTOFF - 150 HPS	2.67'	18'	FIXED	
4	B	SR433 66+15.40	17.78' L	II - SHORT CUTOFF - 150 HPS	2.67'	18'	FIXED	
5	A	SR433 65+53.08	17.78' L	II - SHORT CUTOFF - 150 HPS	2.67'	18'	FIXED	
6	B	SR433 64+82.65	17.78' L	II - SHORT CUTOFF - 150 HPS	2.67'	18'	FIXED	
7	A	SR433 64+16.22	17.78' L	II - SHORT CUTOFF - 150 HPS	2.67'	18'	FIXED	
8	B	SR433 63+47.27	17.78' L	II - SHORT CUTOFF - 150 HPS	2.67'	18'	FIXED	
9	A	SR433 62+80.27	17.78' L	II - SHORT CUTOFF - 150 HPS	2.67'	18'	FIXED	
10	B	SR433 62+13.26	17.78' L	II - SHORT CUTOFF - 150 HPS	2.67'	18'	FIXED	
11	A	SR433 61+46.26	17.78' L	II - SHORT CUTOFF - 150 HPS	2.67'	18'	FIXED	
12	B	SR433 60+76.68	17.78' L	II - SHORT CUTOFF - 150 HPS	2.67'	18'	FIXED	
13	A	SR433 60+07.96	17.78' L	II - SHORT CUTOFF - 150 HPS	2.67'	18'	FIXED	
14	B	SR433 59+40.96	17.78' L	II - SHORT CUTOFF - 150 HPS	2.67'	18'	FIXED	
15	A	SR433 58+73.95	17.78' L	II - SHORT CUTOFF - 150 HPS	2.67'	18'	FIXED	
16	B	SR433 58+06.91	17.78' L	II - SHORT CUTOFF - 150 HPS	2.67'	18'	FIXED	
17	A	SR433 57+31.29	17.78' L	II - SHORT CUTOFF - 150 HPS	2.67'	18'	FIXED	
18	B	SR433 56+51.43	17.78' L	II - SHORT CUTOFF - 150 HPS	2.67'	18'	FIXED	
19	A	SR433 55+71.55	17.78' L	II - SHORT CUTOFF - 150 HPS	2.67'	18'	FIXED	
20	B	SR433 54+91.67	17.78' L	II - SHORT CUTOFF - 150 HPS	2.67'	18'	FIXED	
21	A	SR433 54+11.79	17.78' L	II - SHORT CUTOFF - 150 HPS	2.67'	18'	FIXED	
22	B	SR433 53+26.26	17.78' L	II - SHORT CUTOFF - 150 HPS	2.67'	18'	FIXED	
23	A	SR433 52+36.25	17.78' L	II - SHORT CUTOFF - 150 HPS	2.67'	18'	FIXED	
24	B	SR433 51+46.24	17.78' L	II - SHORT CUTOFF - 150 HPS	2.67'	18'	FIXED	
25	A	SR433 50+56.23	17.78' L	II - SHORT CUTOFF - 150 HPS	2.67'	18'	FIXED	
26	B	SR433 49+66.22	17.78' L	II - SHORT CUTOFF - 150 HPS	2.67'	18'	FIXED	
27	A	SR433 48+76.22	17.78' L	II - SHORT CUTOFF - 150 HPS	2.67'	18'	FIXED	
28	B	SR433 47+91.79	17.78' L	II - SHORT CUTOFF - 150 HPS	2.67'	18'	FIXED	
29	A	SR433 47+11.82	17.78' L	II - SHORT CUTOFF - 150 HPS	2.67'	18'	FIXED	
30	B	SR433 46+29.53	17.78' L	II - SHORT CUTOFF - 150 HPS	2.67'	18'	FIXED	
31	A	SR433 45+52.16	17.78' L	II - SHORT CUTOFF - 150 HPS	2.67'	18'	FIXED	
32	B	SR433 44+72.16	17.78' L	II - SHORT CUTOFF - 150 HPS	2.67'	18'	FIXED	
33	A	SR433 43+92.16	17.78' L	II - SHORT CUTOFF - 150 HPS	2.67'	18'	FIXED	
34	B	SR433 43+12.15	17.78' L	II - SHORT CUTOFF - 150 HPS	2.67'	18'	FIXED	
35	A	SR433 42+32.16	17.78' L	II - SHORT CUTOFF - 150 HPS	2.67'	18'	FIXED	
36	B	SR433 41+52.21	17.78' L	II - SHORT CUTOFF - 150 HPS	2.67'	18'	FIXED	
37	A	SR433 40+71.61	17.78' L	II - SHORT CUTOFF - 150 HPS	2.67'	18'	FIXED	
38	B	SR433 39+91.64	17.78' L	II - SHORT CUTOFF - 150 HPS	2.67'	18'	FIXED	
39	A	SR433 39+01.04	17.78' L	II - SHORT CUTOFF - 150 HPS	2.67'	18'	FIXED	
40	B	SR433 38+11.07	17.78' L	II - SHORT CUTOFF - 150 HPS	2.67'	18'	FIXED	
41	A	SR433 37+20.02	17.78' L	II - SHORT CUTOFF - 150 HPS	2.67'	18'	FIXED	
42	B	SR433 36+29.94	17.78' L	II - SHORT CUTOFF - 150 HPS	2.67'	18'	FIXED	
43	A	SR433 35+39.87	17.78' L	II - SHORT CUTOFF - 150 HPS	2.67'	18'	FIXED	
44	B	SR433 34+49.79	17.78' L	II - SHORT CUTOFF - 150 HPS	2.67'	18'	FIXED	
45	A	SR433 33+70.44	17.78' L	II - SHORT CUTOFF - 150 HPS	2.67'	18'	FIXED	
46	B	SR433 32+90.50	17.78' L	II - SHORT CUTOFF - 150 HPS	2.67'	18'	FIXED	
47	A	SR433 32+10.56	17.78' L	II - SHORT CUTOFF - 150 HPS	2.67'	18'	FIXED	
48	B	SR433 31+30.62	17.78' L	II - SHORT CUTOFF - 150 HPS	2.67'	18'	FIXED	
49	A	SR433 30+50.70	17.78' L	II - SHORT CUTOFF - 150 HPS	2.67'	18'	FIXED	
50	B	SR433 29+65.73	17.78' L	II - SHORT CUTOFF - 150 HPS	2.67'	18'	FIXED	
51	A	SR433 28+83.66	17.78' L	II - SHORT CUTOFF - 150 HPS	2.67'	18'	FIXED	
52	B	SR433 27+94.84	17.78' L	II - SHORT CUTOFF - 150 HPS	2.67'	18'	FIXED	
53	A	SR433 27+05.04	17.78' L	II - SHORT CUTOFF - 150 HPS	2.67'	18'	FIXED	
54	B	SR433 26+22.43	17.78' L	II - SHORT CUTOFF - 150 HPS	2.67'	18'	FIXED	
55	A	SR433 25+33.46	17.78' L	II - SHORT CUTOFF - 150 HPS	2.67'	18'	FIXED	
56	B	SR433 24+44.50	17.78' L	II - SHORT CUTOFF - 150 HPS	2.67'	18'	FIXED	
57	A	SR433 23+58.19	17.78' L	II - SHORT CUTOFF - 150 HPS	2.67'	18'	FIXED	
58	B	SR433 22+67.79	17.78' L	II - SHORT CUTOFF - 150 HPS	2.67'	18'	FIXED	
59	A	SR433 21+78.50	17.78' L	II - SHORT CUTOFF - 150 HPS	2.67'	18'	FIXED	
60	B	SR433 20+94.44	17.78' L	II - SHORT CUTOFF - 150 HPS	2.67'	18'	FIXED	
61	A	SR433 20+04.47	17.78' L	II - SHORT CUTOFF - 150 HPS	2.67'	18'	FIXED	
62	B	SR433 19+14.50	17.78' L	II - SHORT CUTOFF - 150 HPS	2.67'	18'	FIXED	
63	A	SR433 18+28.44	17.78' L	II - SHORT CUTOFF - 150 HPS	2.67'	18'	FIXED	
64	B	SR433 17+38.46	17.78' L	II - SHORT CUTOFF - 150 HPS	2.67'	18'	FIXED	
65	A	SR433 16+48.50	17.78' L	II - SHORT CUTOFF - 150 HPS	2.67'	18'	FIXED	
66	B	SR433 15+70.44	17.78' L	II - SHORT CUTOFF - 150 HPS	2.67'	18'	FIXED	
67	A	SR433 14+81.47	17.78' L	II - SHORT CUTOFF - 150 HPS	2.67'	18'	FIXED	
68	B	SR433 13+92.50	17.78' L	II - SHORT CUTOFF - 150 HPS	2.67'	18'	FIXED	

LTF = LIQUID TIGHT FLEXIBLE METAL CONDUIT

RGS = RIGID GALVANIZED STEEL CONDUIT

BREAKER SCHEDULE

TYPE E SERVICE 240/480V

CIRCUIT	DESCRIPTION	BREAKER RATING	CONTACTOR RATING	VOLTAGE	NOTES
---	MAIN	175AMP/DPST	N/A	480	
A	ILLUMINATION A	30AMP/DPST	30 AMP	480	
B	ILLUMINATION B	30AMP/DPST	30 AMP	480	
C	ILLUMINATION C	30AMP/DPST	30 AMP	480	FUTURE
D	ILLUMINATION D	30AMP/DPST	30 AMP	480	FUTURE
E	NAVIGATION	15AMP/SPST	30 AMP	120	
F	AVIATION	15AMP/SPST	30 AMP	120	
G	RADAR	15AMP/SPST	N/A	120	

BUSSWORK SHALL BE RATED AT 200 AMP MINIMUM

FOR "AS CONSTRUCTED PLANS" ONLY

WIRING SCHEDULE

△ NO.	CONDUIT SIZE	CONDUCTORS	COMMENTS
1	1½" LTF	2-#10 USE	CKT A & CKT B
2	1½" RGS	2-#8 USE	CKT A & CKT B
3	1½" RGS	4-#8 USE	CKT A & CKT B
4	1½" RGS	2-#8 USE	CKT A
		2-#6 USE	CKT B
5	1½" RGS	4-#6 USE	CKT A & CKT B
6	1½" RGS	2-#6 USE	CKT B
		2-#4 USE	CKT A
7	1½" RGS	4-#4 USE	CKT A & CKT B
8	2" RGS	4-#4 USE	CKT A & CKT B
9	2" RGS	3-#2/0 USE	SERVICE POWER

FILE NAME	c:\dgn\xll566\xll566+lll.dgn
TIME	02:38:56 PM
DATE	09/19/2002
DESIGNED BY	TRAFFIC DESIGN
ENTERED BY	BC
CHECKED BY	D. HOKANSON
PROJ. ENGR.	R. KENISTON
REGIONAL ADM.	D. WAGNER

REVISION | DATE | BY

REGION NO. 10 | STATE WASH | FED.AID PROJ.NO.

JOB NUMBER

CONTRACT NO. 64444 | LOCATION NO.

RICHARD K. KENISTON STATE OF WASHINGTON 16329 REGISTERED PROFESSIONAL ENGINEER EXPIRES 04/13/04 9/20/02 DATE P.E. STAMP BOX

REGISTERED PROFESSIONAL ENGINEER 7129 RICHARD KELLY KENISTON EXPIRES 06-30-2003 9/20/02 DATE P.E. STAMP BOX

Washington State Department of Transportation

SR 433
LEWIS AND CLARK BRIDGE 433/1
DECK REPLACEMENT

ILLUMINATION SCHEDULES

PLOT14

TB-1

SHEET 27 OF 28 SHEETS

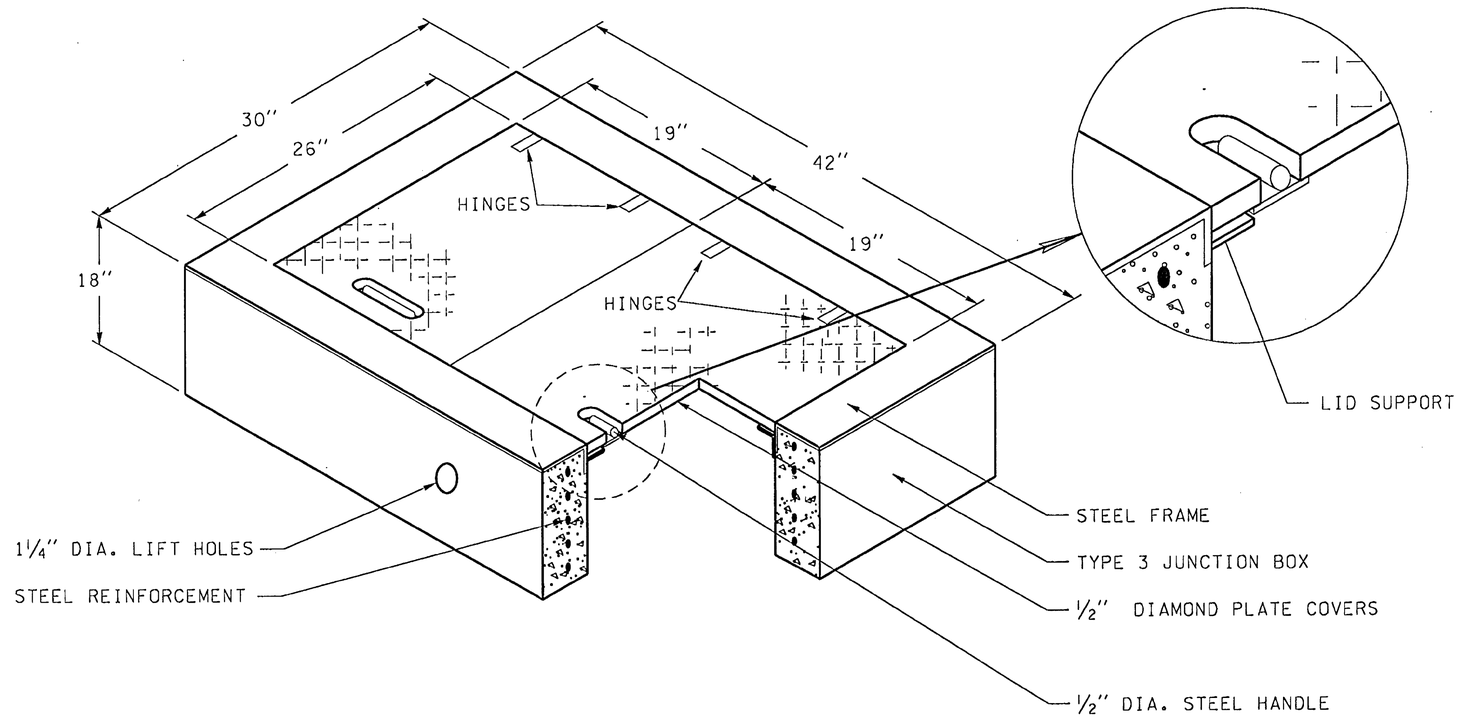

TYPE 3 JUNCTION BOX (DUAL LID)

TYPE 3 JUNCTION BOXES SHALL MEET ALL SPECIFICATIONS ON STANDARD PLAN J-11a WITH THE EXCEPTION OF THE BOX DEPTH AND LID WHICH SHALL BE AS SHOWN ON THIS DETAIL. THE HINGES SHALL ALLOW THE LID TO OPEN 180°.

(NOT TO SCALE)

FOR "AS CONSTRUCTED PLANS" ONLY

FILE NAME	c:\dgn\xll566\xll566tlll.dgn					
TIME	02:38:58 PM					
DATE	09/19/2002					
DESIGNED BY	TRAFFIC DESIGN					
ENTERED BY	BC					
CHECKED BY	D. HOKANSON					
PROJ. ENGR.	R. KENISTON					
REGIONAL ADM.	D. WAGNER	REVISION	DATE	BY		

REGION NO.	STATE	FED.AID PROJ.NO.
10	WASH	
JOB NUMBER		
CONTRACT NO. 6444		LOCATION NO.

RICHARD K. KENISTON, STATE OF WASHINGTON, REGISTERED PROFESSIONAL ENGINEER, EXPIRES 04/13/04 — 9/20/02 DATE — P.E. STAMP BOX

REGISTERED PROFESSIONAL ENGINEER, KELLY KENISTON, EXPIRES 06-30-2003 — 9/20/02 DATE — P.E. STAMP BOX

Washington State Department of Transportation

SR 433
LEWIS AND CLARK BRIDGE 433/1
DECK REPLACEMENT

TYPE 3 JUNCTION BOX (DUAL LID) DETAIL

PLOT15

TC-1

SHEET 28 OF 258 SHEETS

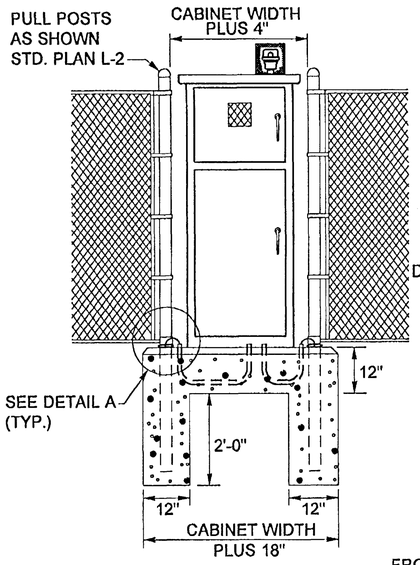

FRONT VIEW

NOTE: INSTALL FOUNDATION AS SLAB SECTION UNLESS IDENTIFIED FOR CONSTRUCTION IN FENCE LINE IN CONTRACT PLANS.

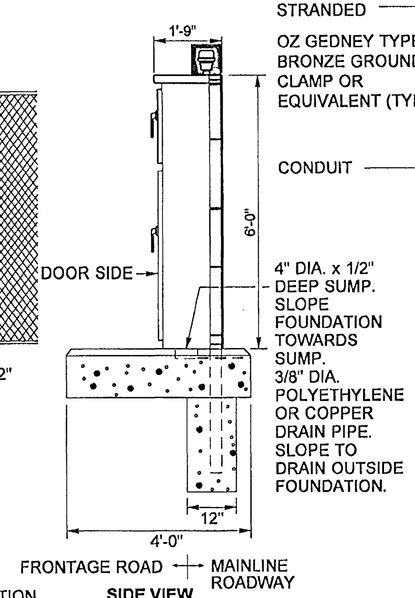

SIDE VIEW

INSTALLATION DETAIL

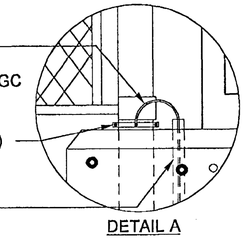

DETAIL A

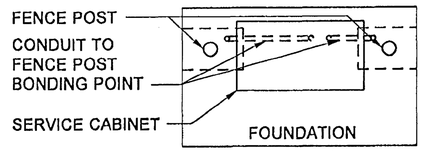

PLAN VIEW

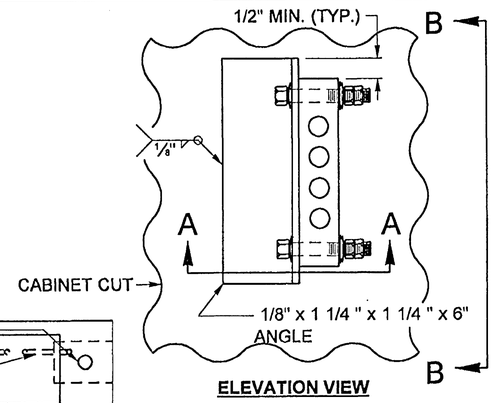

ELEVATION VIEW

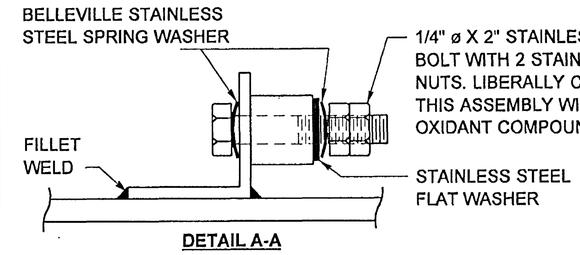

DETAIL A-A

CABINET MAIN BONDING JUMPER DETAIL.

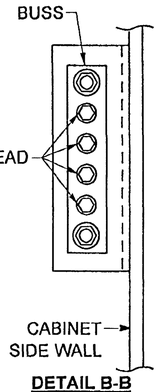

DETAIL B-B

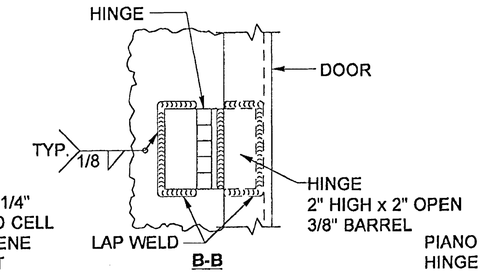

B-B

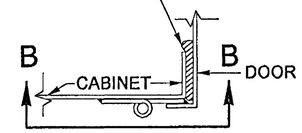

REMOVE HINGE PIN PRIOR TO WELDING HINGE TO CABINET AND PRIOR TO HOT DIP GALVANIZING CABINET. AFTER GALVANIZING REPLACE PIN WITH BRASS PIN & SOLDER IN PLACE.

DOOR HINGE DETAIL
ALTERNATE FOR TYPE B MODIFIED CABINET

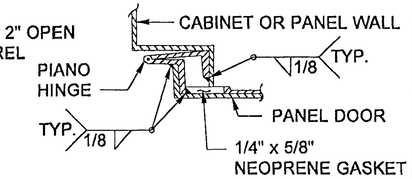

DOOR HINGE DETAIL

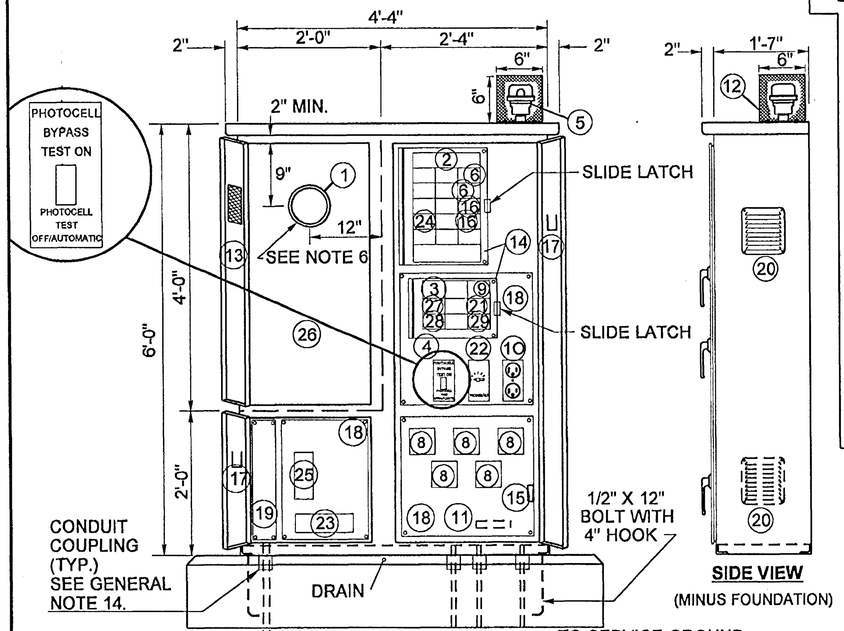

FRONT VIEW

SERVICE CABINET DETAIL

SIDE VIEW

(MINUS FOUNDATION)

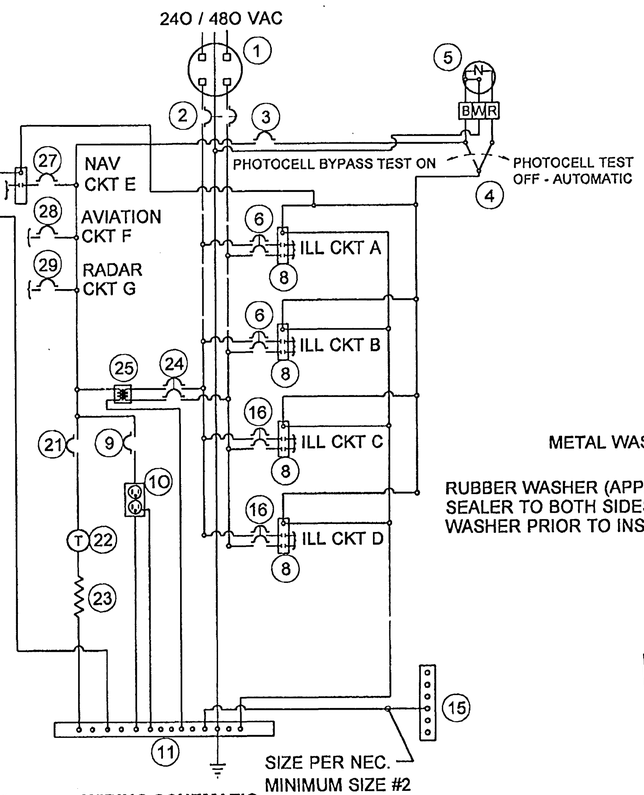

WIRING SCHEMATIC

SPECIAL DESIGN SERVICE CABINET TYPE E

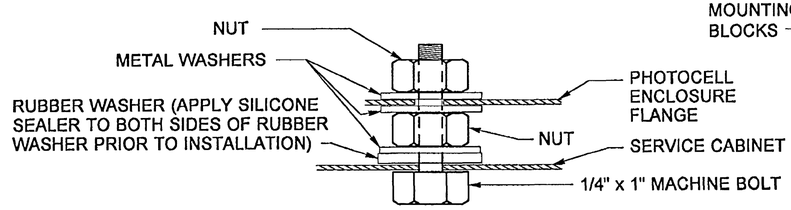

PHOTOCELL ENCLOSURE MOUNTING DETAIL

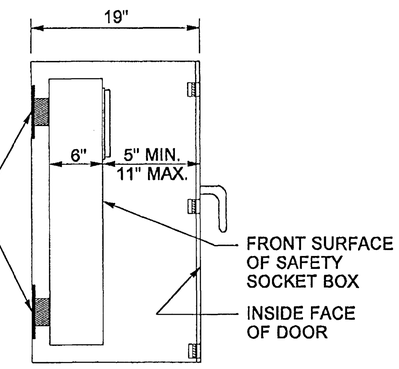

SAFETY SOCKET BOX MOUNTING DETAIL

FABRICATE MOUNTING BLOCKS AFTER VERIFYING THE SERVICE UTILITY STAND OFF DIMENSION.

FOR "AS CONSTRUCTED PLANS" ONLY

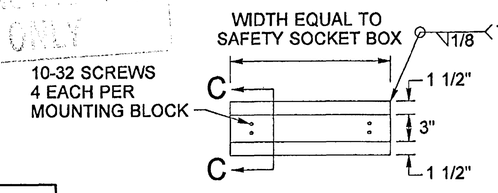

MOUNTING BLOCK DETAIL

12 GA - MATERIAL TO BE SAME AS CABINET MATERIAL

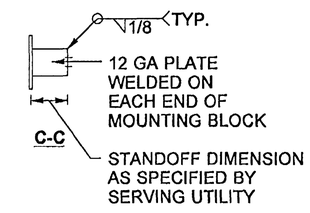

SEE STANDARD PLAN "CABINET FOUNDATION DETAILS", FOR DETAILS NOT SHOWN.

FILE NAME	c:\dgn\xl1566\xl1566+lll.dgn				
TIME	02:38:52 PM				
DATE	09/19/2002				
DESIGNED BY					
ENTERED BY					
CHECKED BY					
PROJ. ENGR.					
REGIONAL ADM.		REVISION	DATE	BY	

REGION NO.	STATE	FED.AID PROJ.NO.
10	WASH	
JOB NUMBER		
CONTRACT NO. 6444		LOCATION NO.

RICHARD K. KRAUSTOR — STATE OF WASHINGTON — 25329 — REGISTERED PROFESSIONAL ENGINEER — EXPIRES 04/13/04 — 9/20/02 DATE — P.E. STAMP BOX

REGISTERED PROFESSIONAL ENGINEER — 21791 — RICHARD KELLY KRAUSTOR — EXPIRES 06-30-2003 — 9/20/02 DATE — P.E. STAMP BOX

Washington State Department of Transportation

SR 433
LEWIS AND CLARK BRIDGE 433/1
DECK REPLACEMENT

SPECIAL DESIGN SERVICE CABINET, TYPE 'E'

PLOT12

TC-2

SHEET 29 OF 258 SHEETS

GENERAL NOTES
200 AMP TYPE 240/480 1ø SERVICE CABINET

1. SEE DIVISION 9, SERVICE CABINETS, IN THE STANDARD SPECIFICATIONS.
2. HINGES SHALL HAVE STAINLESS STEEL OR BRASS PINS.
3. CABINETS SHALL BE RATED NEMA 3R AND SHALL INCLUDE TWO RAIN TIGHT VENTS.
4. METERING EQUIPMENT DOOR SHALL BE PAD LOCKABLE. EACH DOOR SHALL BE GASKETED. INSTALL BEST CX CONSTRUCTION CORE ON BOTTOM LEFT AND RIGHT DOORS. SEE DOOR HINGE DETAIL. CONCEALED HEAVY DUTY STAINLESS STEEL LIFT OFF HINGES ARE ALLOWED AS AN ALTERNATIVE TO DOOR HINGE DETAIL. UPPER LEFT DOOR SHALL HAVE 3 HINGES, LOWER LEFT DOOR SHALL HAVE 2 HINGES AND RIGHT DOOR SHALL HAVE 3 HINGES. THE LOWER DOOR SHALL HAVE A TWO POSITION DOOR STOP ASSEMBLY.
5. THE FOLLOWING EQUIPMENT WITHIN THE SERVICE ENCLOSURE SHALL HAVE AN APPROPRIATELY ENGRAVED PHENOLIC NAME PLATE ATTACHED WITH SCREWS OR RIVETS: KEY NUMBERS 2, 3, 4, 6, 7, 8, 9, 16, 21 AND 25. KEY NUMBER 4 NAME PLATE SHALL READ; PHOTOCELL BYPASS TEST ON AND PHOTOCELL TEST OFF- AUTOMATIC. SEE SERVICE CABINET DETAIL.
6. METERING ARRANGEMENTS VARY WITH DIFFERENT SERVING UTILITIES. THE UTILITY MAY REQUIRE METER BASE MOUNTING IN THE ENCLOSURE, ON THE SIDE OR ON THE BACK OF THE ENCLOSURE. THE UTILITY MAY REQUIRE THE DIMENSION BETWEEN THE DOOR AND THE FRONT OF THE SAFETY SOCKET BOX TO BE LESS THAN THE 11 INCHES SHOWN IN THE LEFT SIDE- SAFETY SOCKET BOX MOUNTING DETAIL. THE CONTRACTOR SHALL VERIFY THE SERVING UTILITY'S REQUIREMENTS PRIOR TO FABRICATION OF AND INSTALLING THE SERVICE EQUIPMENT.
7. DIMENSIONS SHOWN ARE MINIMUM AND SHALL BE ADJUSTED TO ACCOMMODATE THE VARIOUS SIZES OF EQUIPMENT INSTALLED.
8. ALL BUSSWORK SHALL BE HIGH GRADE COPPER AND SHALL EQUAL OR EXCEED THE MAIN BREAKER RATING. ALL BREAKERS SHALL BOLT ONTO THE BUSSWORK. JUMPERING OF BREAKERS SHALL NOT BE ALLOWED. BUSSWORK SHALL ACCOMMODATE ALL FUTURE EQUIPMENT AS SHOWN IN THE BREAKER SCHEDULE.
9. THE PHOTOCELL UNIT SHALL BE CENTERED IN THE PHOTOCELL ENCLOSURE TO PERMIT 360 DEGREE ROTATION OF THE PHOTOCELL WITHOUT REMOVAL OF THE PHOTOCELL UNIT OR THE PHOTOCELL ENCLOSURE.
10. ALL INTERNAL WIRE RUNS SHALL BE IDENTIFIED WITH "TO - FROM" CODED TAGS LABELED WITH THE CODE LETTERS AND/OR NUMBERS SHOWN ON THE SCHEDULES. APPROVED PVC OR POLYOLEFIN WIRE MARKING SLEEVES SHALL BE USED.
11. ALL NUTS, BOLTS AND WASHERS USED FOR MOUNTING THE PHOTOCELL ENCLOSURE SHALL BE STAINLESS STEEL.
12. A 1% TOLERANCE IS ALLOWED FOR ALL DIMENSIONS.
13. SEE PLANS FOR BREAKER SCHEDULE.
14. INSTALL CONDUIT COUPLINGS ON ALL CONDUITS. PLACE COUPLINGS FLUSH WITH TOP OF CONCRETE FOUNDATION.
15. SEAL CABINET TO FOUNDATION WITH A 1/2 " BEAD OF SILICONE. APPLY SILICONE TO DRY SURFACE ONLY.
16. THE METER BASE PORTION OF THIS SERVICE WAS DESIGNED TO MEET METERING PORTION OF EUSERC DRAWING 309 REQUIREMENTS.

KEY

1. METER BASE PER SERVING UTILITY REQUIREMENTS. AS A MINIMUM, THE METER BASE SHALL BE SAFETY SOCKET BOX WITH FACTORY INSTALLED TEST BYPASS FACILITY THAT MEETS THE REQUIREMENTS OF EUSERC DRAWING 305.
2. MAIN BREAKER (SEE BREAKER SCHEDULE)
3. PHOTOCELL BREAKER (SPST 15 AMP - 120/240 VOLT)
4. TEST SWITCH (SPDT SNAP ACTION, POSITIVE CLOSE 15 AMP - 120/277 VOLT "T" RATED)
5. PHOTO ELECTRIC CONTROL, STD. SPEC. 9 - 29.11(2)
6. BRANCH BREAKER (SEE BREAKER SCHEDULE)
7. SIGNAL TRANSFORMER BREAKER (SEE BREAKER SCHEDULE)
8. CONTACTOR (SEE BREAKER SCHEDULE)
9. RECEPTACLE BREAKER (SPST 20 AMP - 120/240 VOLT)
10. RECEPTACLE, GROUNDED (GFCI 20 AMP - 125 VOLT)
11. NEUTRAL BUSS, 14 LUG COPPER
12. PHOTOCELL ENCLOSURE - ENCLOSURE TO BE FABRICATED FROM⅝" EXPANDED STEEL MESH WITH WELDED SEAMS AND MOUNTING FLANGES. HOT DIP GALVANIZED AFTER FABRICATION. TYPE 5052 - H32 ALUMINUM WITH ⅝" x⅝" OPENINGS EQUIVALENT TO⅝" EXPANDED STEEL MESH MAY BE USED AS ALTERNATIVE MATERIAL. SEE PHOTOCELL ENCLOSURE MOUNTING DETAILS.
13. HINGED FRONT FACING DOOR WITH 4" x 4" MIN POLISHED WIRE GLASS WINDOW.
14. HINGED DEAD FRONT WITH 1/4 TURN FASTENERS OR SLIDE LATCH
15. CABINET MAIN BONDING JUMPER. BUSS SHALL BE 4 LUG TINNED COPPER. SEE CABINET MAIN BONDING JUMPER DETAIL.
16. SPARE BRANCH BREAKER (DPST 30AMP- 240/480 VOLT)
17. METAL WIRING DIAGRAM HOLDER
18. REMOVABLE EQUIPMENT MOUNTING PAN
19. 6" x 6" MIN UNDERGROUND FEED - SERVICE WIREWAY (LEFT REAR CORNER)
20. SCREENED VENTS, 2 REQUIRED, 1 EACH SIDE, LOUVERED PLATES
21. HEATER BREAKER (SPST 15 AMP - 120/240 VOLT)
22. THERMOSTAT, 40°F CLOSURE - 3 DIFFERENTIAL
23. STRIP HEATER (100 WATT NOMINAL) , WITH TERMINAL STRIP COVER
24. TRANSFORMER BREAKER (DPST 15 AMP - 480 VOLT)
25. DRY TRANSFORMER (480/120 VOLT) 7.5 KVA COPPER BUSSED AND COPPER WOUND
26. RESERVED FOR METER, CURRENT TRANSFORMER AND/OR DISCONNECT SWITCH AS REQUIRED BY THE UTILITY
27. NAVIGATION LIGHT BREAKER (SEE BREAKER SCHEDULE)
28. AIRCRAFT LIGHT BREAKER (SEE BREAKER SCHEDULE)
29. RADAR BREAKER (SEE BREAKER SCHEDULE)

FOR "AS CONSTRUCTED PLANS" ONLY

FILE NAME	c:\dgn\xll566\xll566tlll.dgn				REGION NO.	STATE	FED.AID PROJ.NO.
TIME	02:38:54 PM				10	WASH	
DATE	09/19/2002				JOB NUMBER		
DESIGNED BY							
ENTERED BY							
CHECKED BY					CONTRACT NO.		LOCATION NO.
PROJ. ENGR.							
REGIONAL ADM.		REVISION	DATE	BY	6244		

RICHARD K KRANICK, STATE OF WASHINGTON, 15529, REGISTERED PROFESSIONAL ENGINEER — EXPIRES 04/13/04 — P.E. STAMP BOX — 9/20/02 DATE

REGISTERED PROFESSIONAL ENGINEER, KELLY KENISTON — EXPIRES 06-30-2003 — P.E. STAMP BOX — 9/20/02 DATE

Washington State Department of Transportation

SR 433
LEWIS AND CLARK BRIDGE 433/1
DECK REPLACEMENT

SPECIAL DESIGN SERVICE CABINET, TYPE 'E'

PLOT13

TC-3

SHEET 30 OF 258 SHEETS

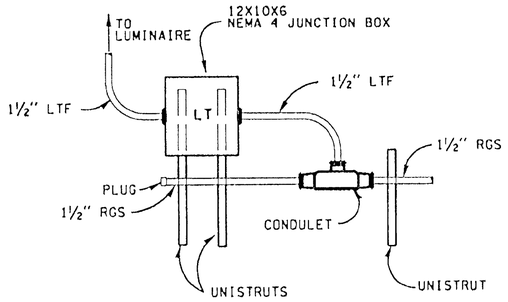

JUNCTION BOX DETAIL A

VICINITY LUMINAIRES NO.1 & NO.68(mirror)

GENERAL NOTES:
FOR ATTACHMENT DETAILS SEE WA27

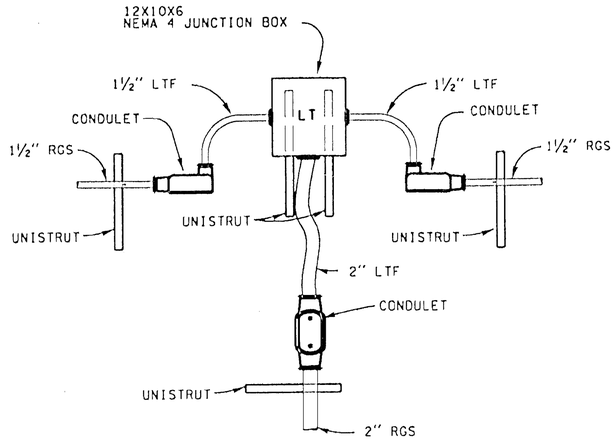

JUNCTION BOX DETAIL D

VICINITY STA. 24+93

GENERAL NOTES:
FOR ATTACHMENT DETAILS SEE WA27

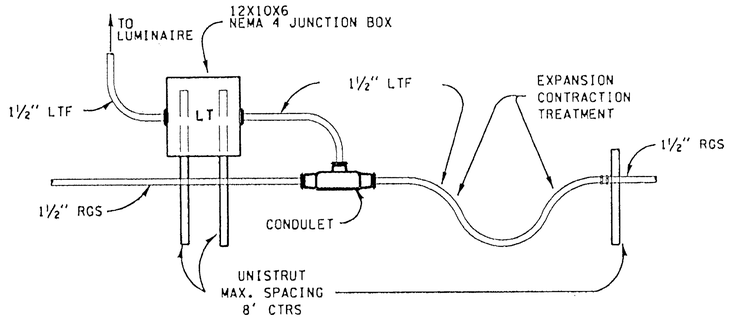

JUNCTION BOX DETAIL B

VICINITY LUMINAIRES NO.s 2 THRU 67

GENERAL NOTES:
FOR ATTACHMENT DETAILS SEE WA27

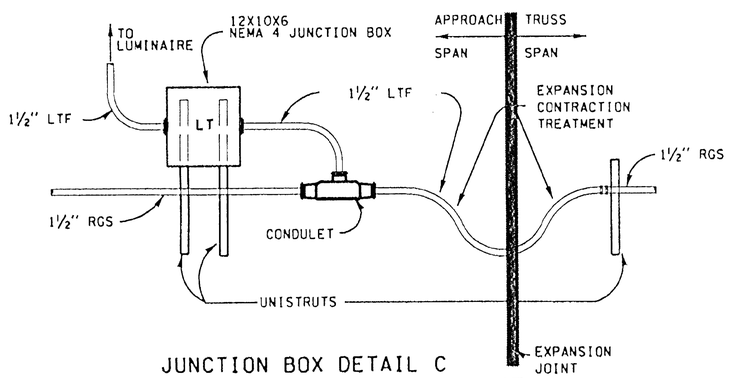

JUNCTION BOX DETAIL C

VICINITY STA. 30+34 & STA. 57+54

GENERAL NOTES:
FOR ATTACHMENT DETAILS SEE WA27

LTF = LIQUID TIGHT FLEXIBLE METAL CONDUIT

RGS = RIGID GALVANIZED STEEL CONDUIT

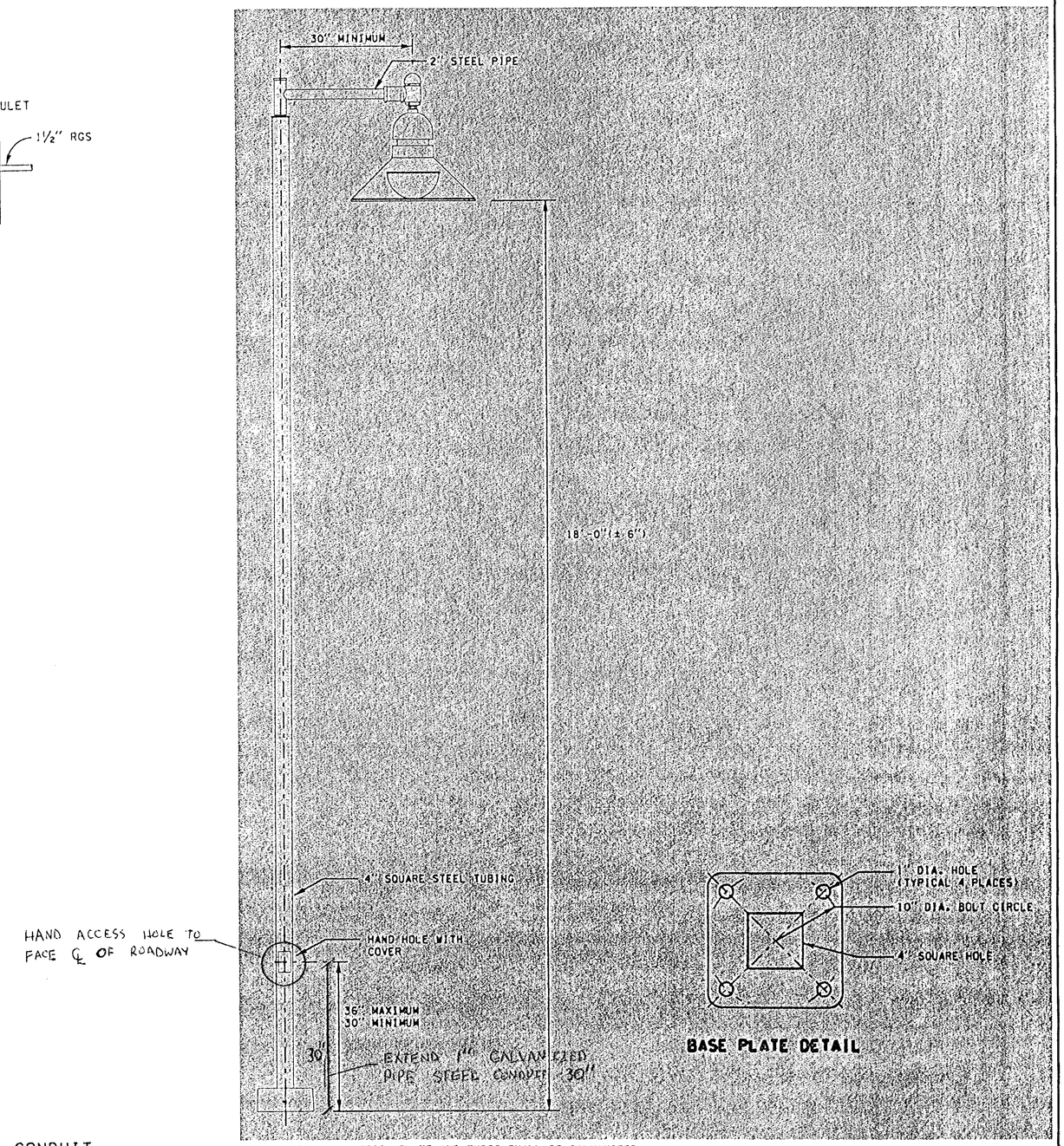

NOTE: ALL STEEL PLATE AND TUBES SHALL BE GALVANIZED AFTER FABRICATION

DECORATIVE LUMINAIRE AND LIGHT STANDARD DETAIL

NOT TO SCALE

FOR "AS CONSTRUCTED PLANS" ONLY

FILE NAME	c:\dgn\x11566\x11566t111.dgn				REGION NO.	STATE	FED.AID PROJ.NO.
TIME	04:34:35 PM				10	WASH	
DATE	09/30/2002				JOB NUMBER		
DESIGNED BY	TRAFFIC DESIGN						
ENTERED BY	BC						
CHECKED BY	D. HOKANSON	BASE PLATE DETAIL	9/30/02		CONTRACT NO.		LOCATION NO.
PROJ. ENGR.	R. KENISTON	DECORATIVE LUMINAIRE AND LIGHT STANDARD DETAIL	9/30/02		6444		
REGIONAL ADM.	D. WAGNER	REVISION	DATE	BY			

RICHARD K. KENISTON, STATE OF WASHINGTON, REGISTERED PROFESSIONAL ENGINEER — EXPIRES 04/13/04 — 10/15/02 DATE — P.E. STAMP BOX

REGISTERED PROFESSIONAL ENGINEER, KELLY KENISTON — EXPIRES 06-30-2003 — 10/15/02 DATE — P.E. STAMP BOX

Washington State Department of Transportation

SR 433
LEWIS AND CLARK BRIDGE 433/1
DECK REPLACEMENT

MISC. ILLUMINATION DETAILS

PLOT11

TC-4

SHEET 31 OF 258 SHEETS

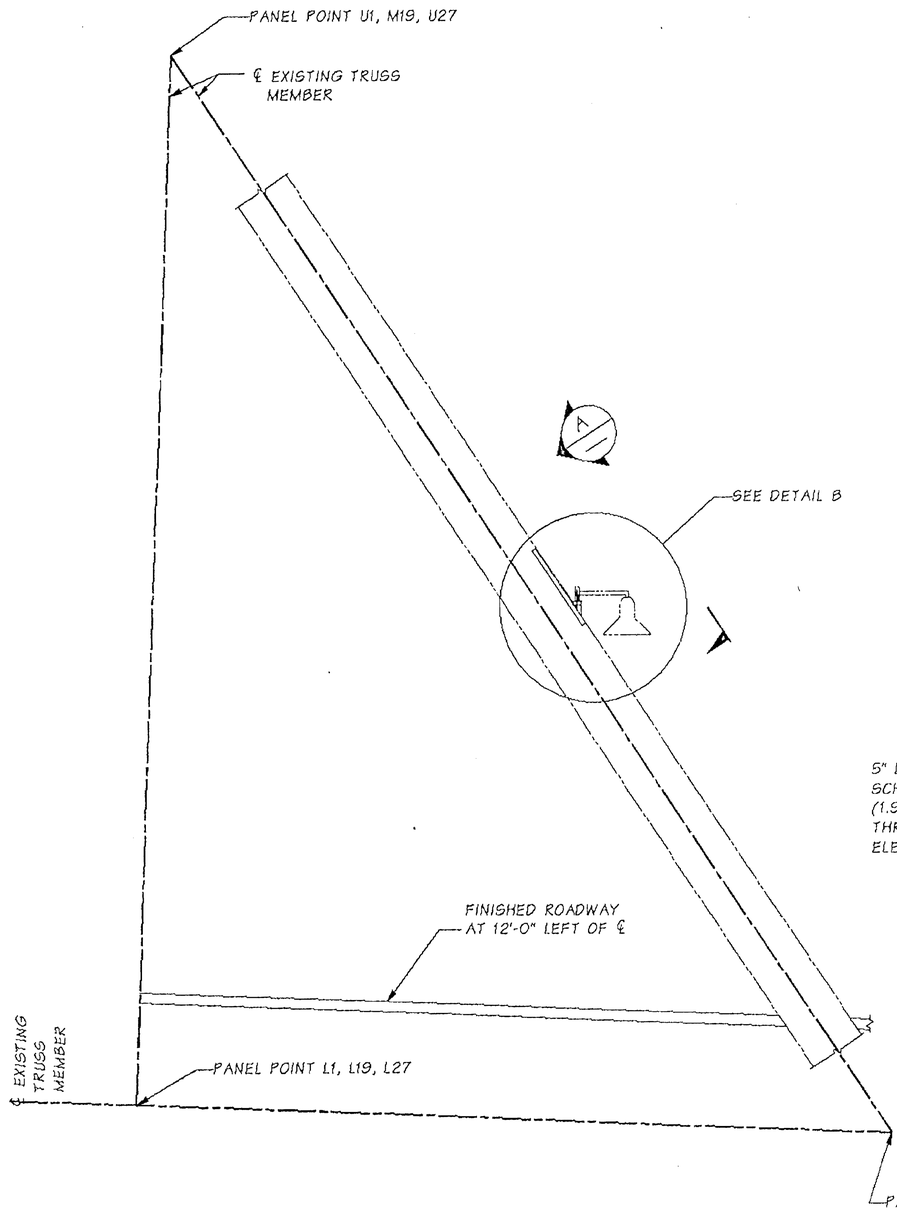

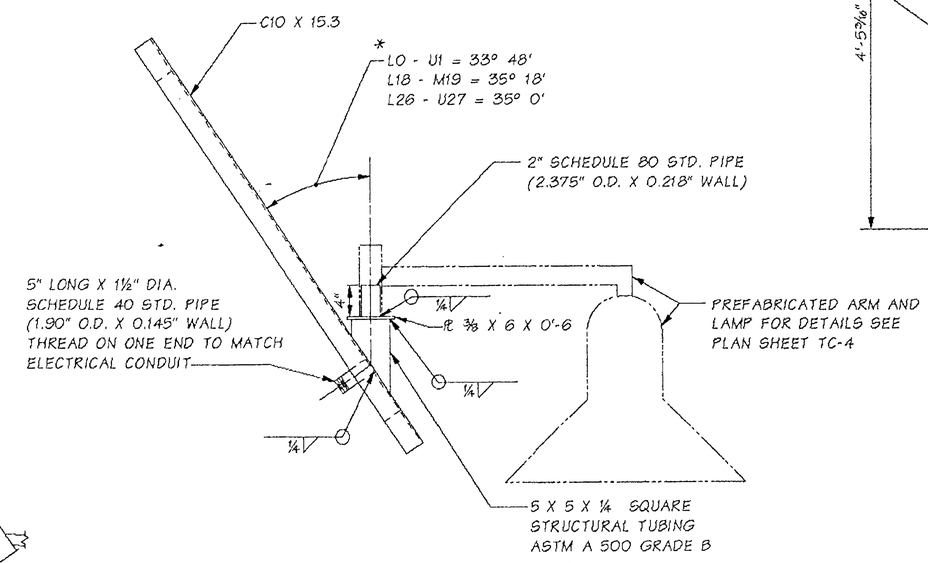

DETAIL B

* FIELD VERIFY ANGLES PRIOR TO FABRICATION

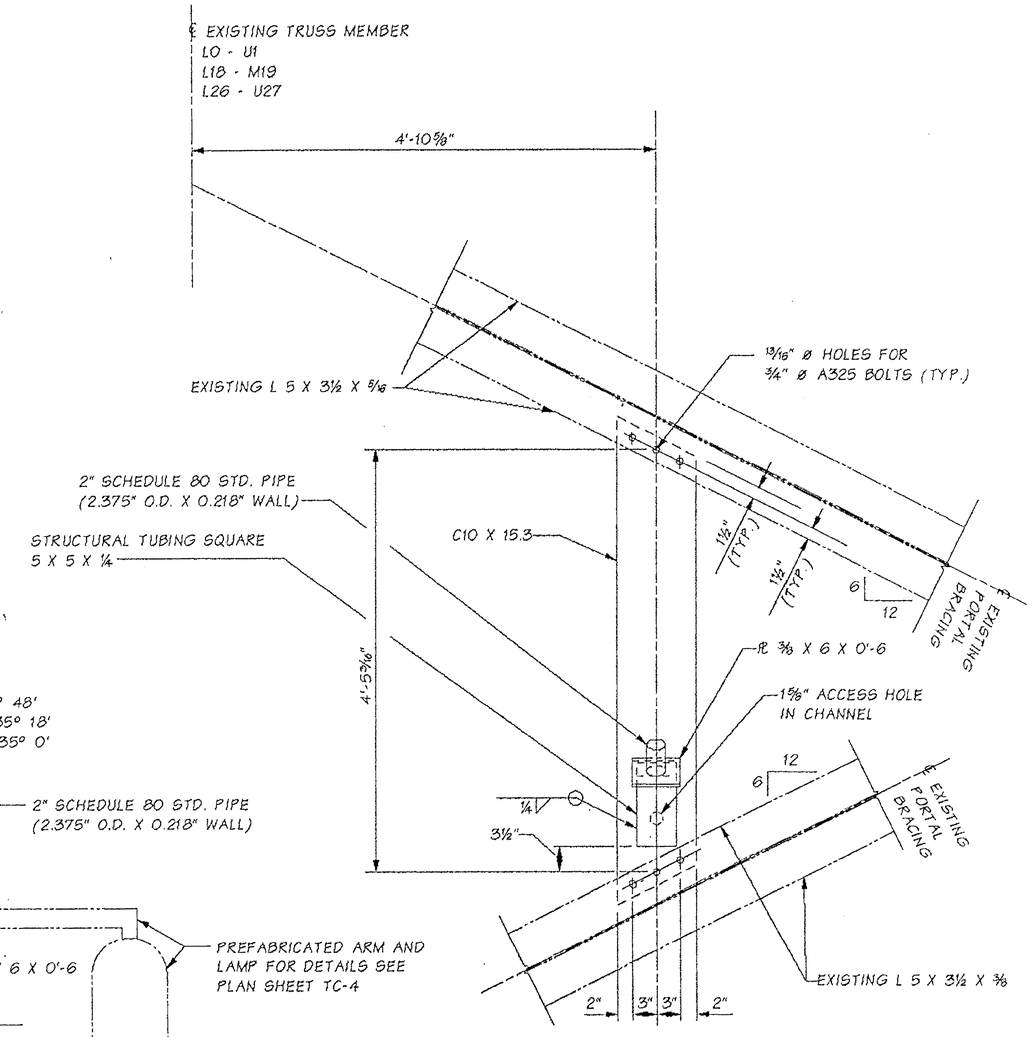

SECTION A

NOTE: ILLUMINAIRE BLOCKOUTS FOR ASSOCIATED SPECIAL LUMINAIRES ABANDONED. HOLES (CONDUIT AND ANCHOR BOLT) FILLED WITH GROUT.

NOTE: PAINT NEW STEEL IN ACCORDANCE WITH SECTION 6-07.3(1)

FOR "AS CONSTRUCTED PLANS" ONLY

Bridge Design Engr.	Kapur, J		M:\Personal\Schule\window files\LUMINAIRE.WND
Supervisor	Kirker, KN		
Designed By	Schultz, E	03/04	
Checked By	Talukdar, M	03/04	
Detailed By	Schultz, E	03/04	
Bridge Projects Engr.			
Prelim. Plan By			
Architect/Specialist			

DATE	REVISION	BY	APPD

REGION NO.	STATE	FED. AID PROJ. NO.	SHEET NO.	TOTAL SHEETS
10	WASH.			

JOB NUMBER 02X390

ERIC HENRY SCHULTZ — STATE OF WASHINGTON — 36910 — REGISTERED PROFESSIONAL ENGINEER — EXPIRES 5/16/04

BRIDGE AND STRUCTURES OFFICE

MONINDRA TALUKDAR — STATE OF WASHINGTON — 27628 — REGISTERED PROFESSIONAL ENGINEER — EXPIRES 5/31/04

Washington State Department of Transportation

SR 433
LEWIS AND CLARK BRIDGE
DECK REPLACEMENT

SPECIAL LUMINAIRE AT L0, L18, & L26

BRIDGE SHEET NO. TC4A

SHEET 31A OF 258 SHEETS

SR 433 JOB NO. 1556 SHEET 1

Fri Mar 05 09:23:23 2004

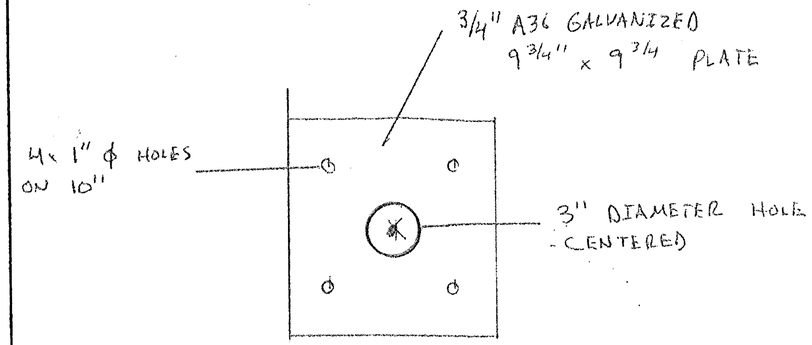

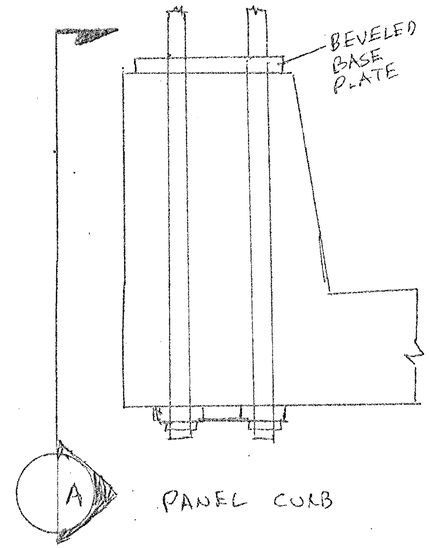

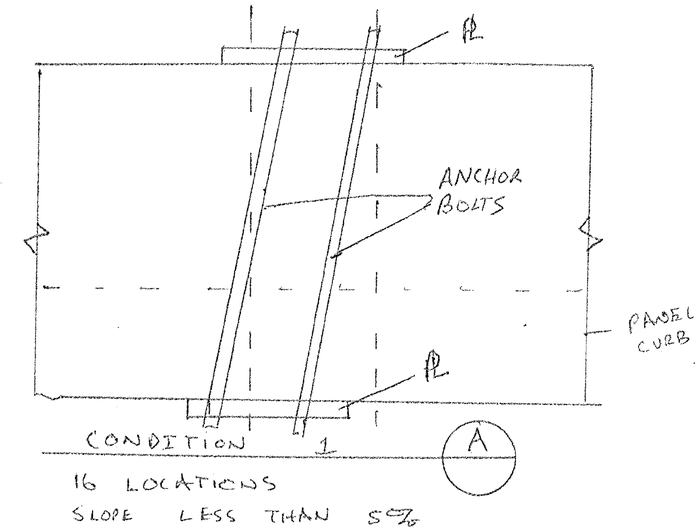

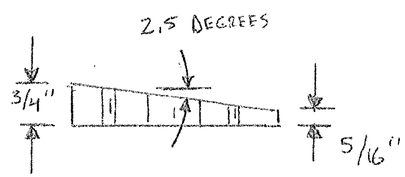

BASE PLATE DETAILS

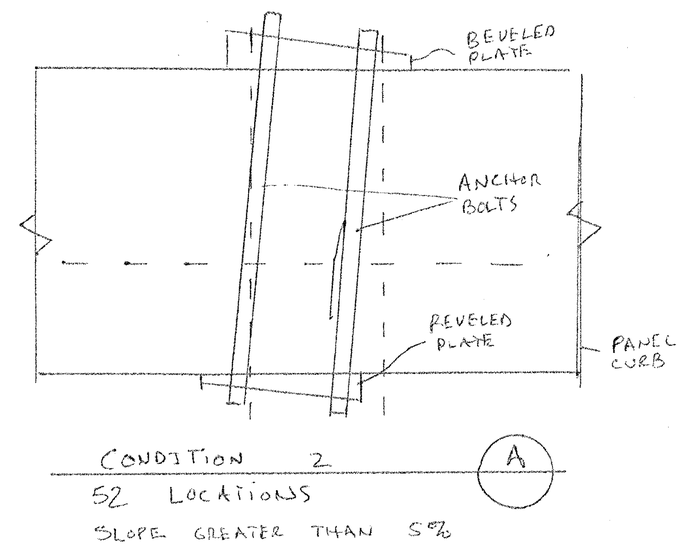

BEVELED BASE PLATES FOR LUMINAIRES

FOR "AS CONSTRUCTED PLANS" ONLY

FILE NAME	C:\AAWork\kelso\Svensen's Curve\L3425WASTESITE.dgn									PLOT11
TIME	02:37:18 PM				REGION NO.	STATE	FED.AID PROJ.NO.	Washington State Department of Transportation	SR 433 LEWIS AND CLARK BRIDE DECK REPLACEMENT	
DATE	08/17/2005				10	WASH				TC4B
PLOTTED BY	spohnk				JOB NUMBER					SHEET 31B OF 258 SHEETS
DESIGNED BY										
ENTERED BY										
CHECKED BY					CONTRACT NO.		LOCATION NO.			
PROJ. ENGR.					6424					
REGIONAL ADM.		REVISION	DATE	BY				P.E. STAMP BOX DATE	P.E. STAMP BOX DATE	LUMINAIRE BASE PLATES

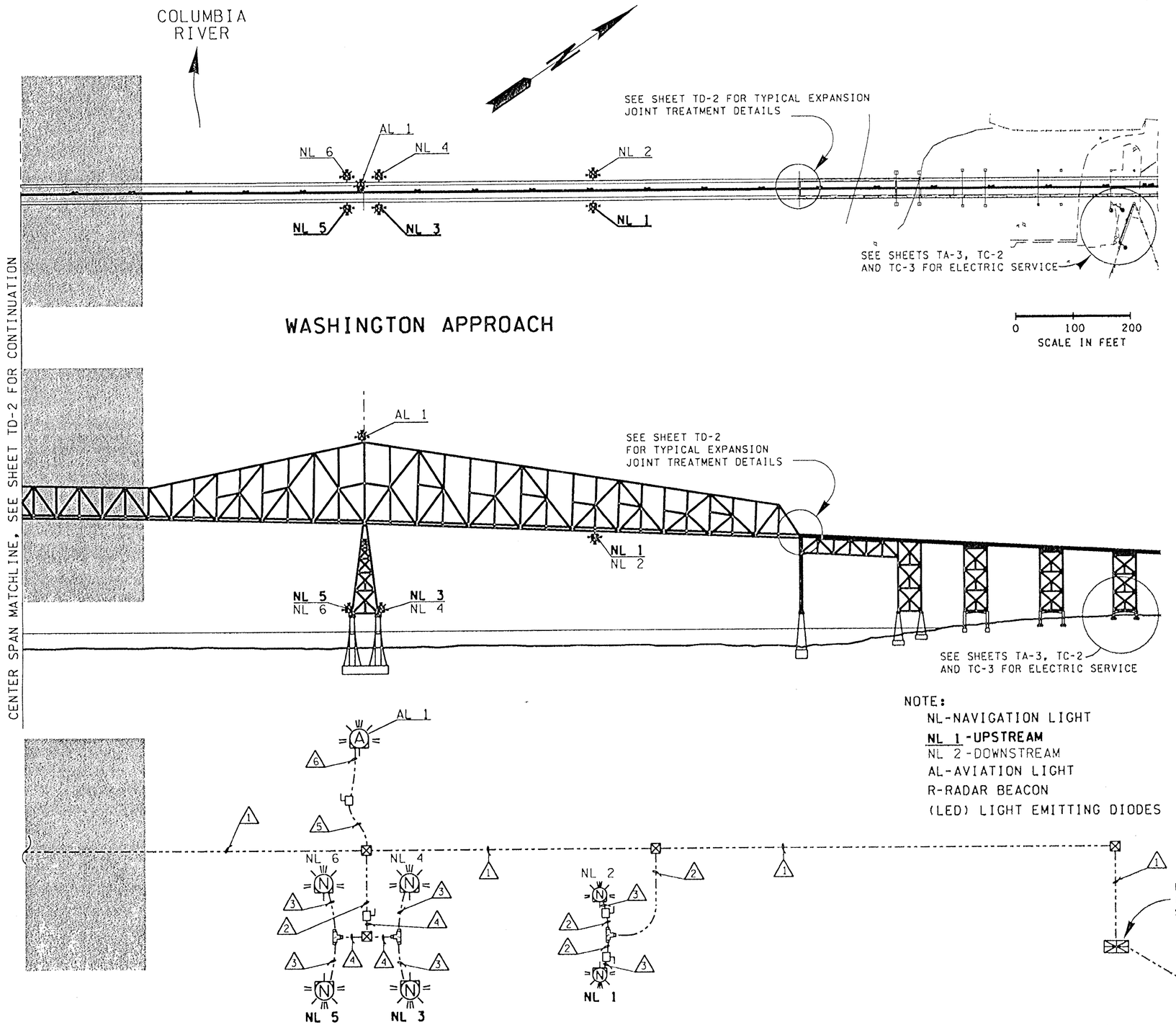

LEGEND

- ELECTRICAL SWITCH
- 'T' CONDULET
- 'Thru' CONDULET
- CONDUIT & CONDUCTOR
- WIRE NOTE FLAG
- BRIDGE NAVIGATION WARNING LIGHT
- AVIATION OBSTRUCTION WARNING LIGHT
- CHARGER
- BATTERY
- RADAR BEACON
- 12X10X6 NEMA 4 JUNCTION BOX

NOTE:
NL-NAVIGATION LIGHT
NL 1 -UPSTREAM
NL 2 -DOWNSTREAM
AL-AVIATION LIGHT
R-RADAR BEACON
(LED) LIGHT EMITTING DIODES

WIRING SCHEDULE				
RUN NO.	CONDUIT SIZE	WIRE SIZE	CIRCUIT NO.	REMARKS
1	1½"	2-#8	E	
		2-#8	F	
		2-#8	G	
2	1"	2-#8	E	
3	¾"	2-#12	E	LTF
4	1"	4-#12	E	
5	1"	2-#8	F	
6	¾"	2-#12	F	LTF
7	1"	2-#8	G	
8	1½"	2-#8	E	
		2-#8	F	

LTF-LIQUID TIGHT FLEXIBLE CONDUIT
ALL CONDUIT IS RIGID GALVANIZED STEEL (RGS) UNLESS OTHERWISE NOTED.

GENERAL NOTES:

NAVIGATION LIGHTS: NL1, NL2, NL7, NL8, NL19 AND NL20 SHALL BE GREEN LEDS. SEE SPECIAL PROVISIONS.

NAVIGATION LIGHTS: NL3, NL4, NL5, NL6, NL15, NL16, NL17, NL18, NL21 AND NL22 SHALL BE RED LEDS. SEE SPECIAL PROVISIONS.

NAVIGATION LIGHTS: NL9, NL10, NL11, NL12, NL13 AND NL14 SHALL BE CLEAR (WHITE) LEDS. SEE SPECIAL PROVISIONS.

AVIATION LIGHTS: AL-1 AND AL-2 SHALL BE RED LEDS. SEE SPECIAL PROVISIONS.

MAXIMUM SPACING FOR JUNCTION BOXES SHALL BE 250'.

FOR BREAKER SCHEDULE SEE SHEET TB-1.

FOR MOUNTING DETAILS SEE SHEETS ML-23 THRU ML-27.

FOR "AS CONSTRUCTED PLANS" ONLY

FILE NAME	C:\dgn\xll566\xll566nlit.dgn				
TIME	08:50:30 AM				
DATE	11/04/2002				
DESIGNED BY	TRAFFIC DESIGN				
ENTERED BY	BC				
CHECKED BY	W. WIRKKALA				
PROJ. ENGR.	R. KENISTON				
REGIONAL ADM.	D. WAGNER	REVISION	DATE	BY	

REGION NO.	STATE	FED.AID PROJ.NO.
10	WASH	
JOB NUMBER		
CONTRACT NO. 6444		LOCATION NO.

RICHARD K KENISTON, STATE OF WASHINGTON, REGISTERED PROFESSIONAL ENGINEER — EXPIRES 04/13/04 — 11/4/02 DATE — P.E. STAMP BOX

REGISTERED PROFESSIONAL ENGINEER 71291, RICHARD KELLY KENISTON — EXPIRES 06-30-2003 — 11/4/02 DATE — P.E. STAMP BOX

Washington State Department of Transportation

SR 433
LEWIS AND CLARK BRIDGE 433/1
DECK REPLACEMENT

NAVIGATION LIGHTS PLAN

PLOT1
TD-1
SHEET 32 OF 258 SHEETS

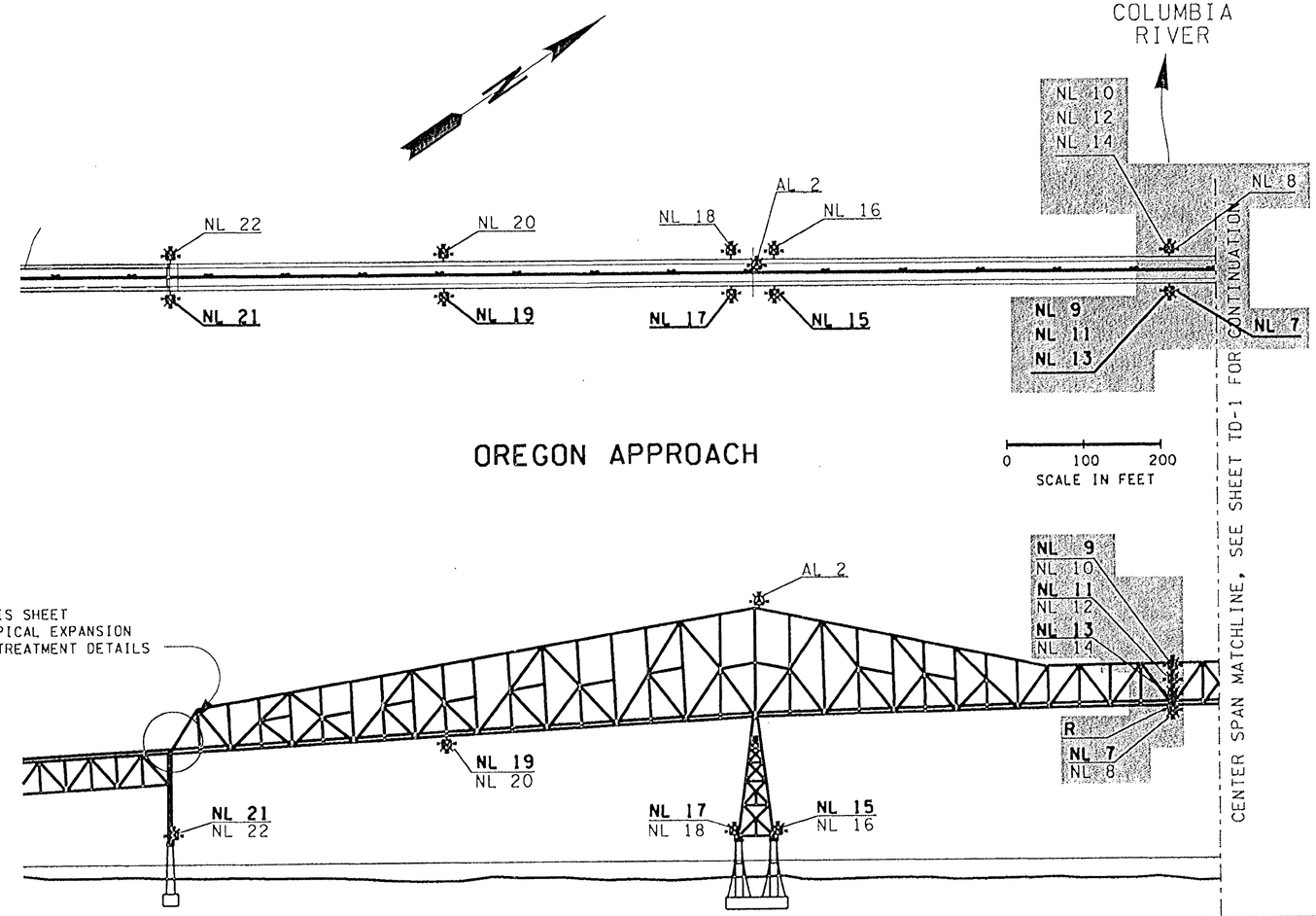

LEGEND

- ELECTRICAL SWITCH
- 'T' CONDULET
- 'Thru' CONDULET
- CONDUIT & CONDUCTOR
- WIRE NOTE FLAG
- BRIDGE NAVIGATION WARNING LIGHT
- AVIATION OBSTRUCTION WARNING LIGHT
- CHARGER
- BATTERY
- RADAR BEACON
- 12X10X6 NEMA 4 JUNCTION BOX

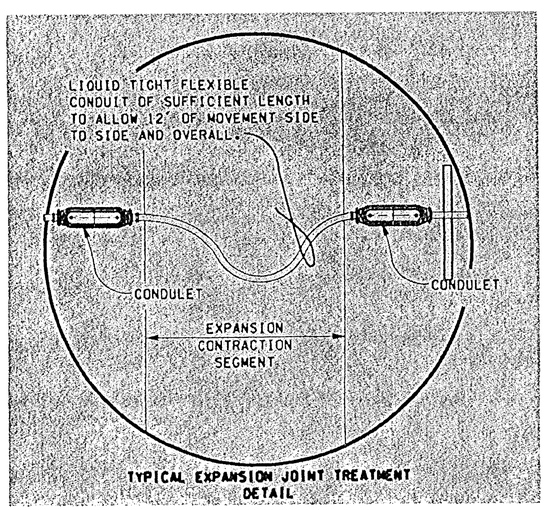

TYPICAL EXPANSION JOINT TREATMENT DETAIL

NOTE:
NL-NAVIGATION LIGHT
NL 1 -UPSTREAM
NL 2 -DOWNSTREAM
R-RADAR BEACON
(LED) LIGHT EMITTING DIODES

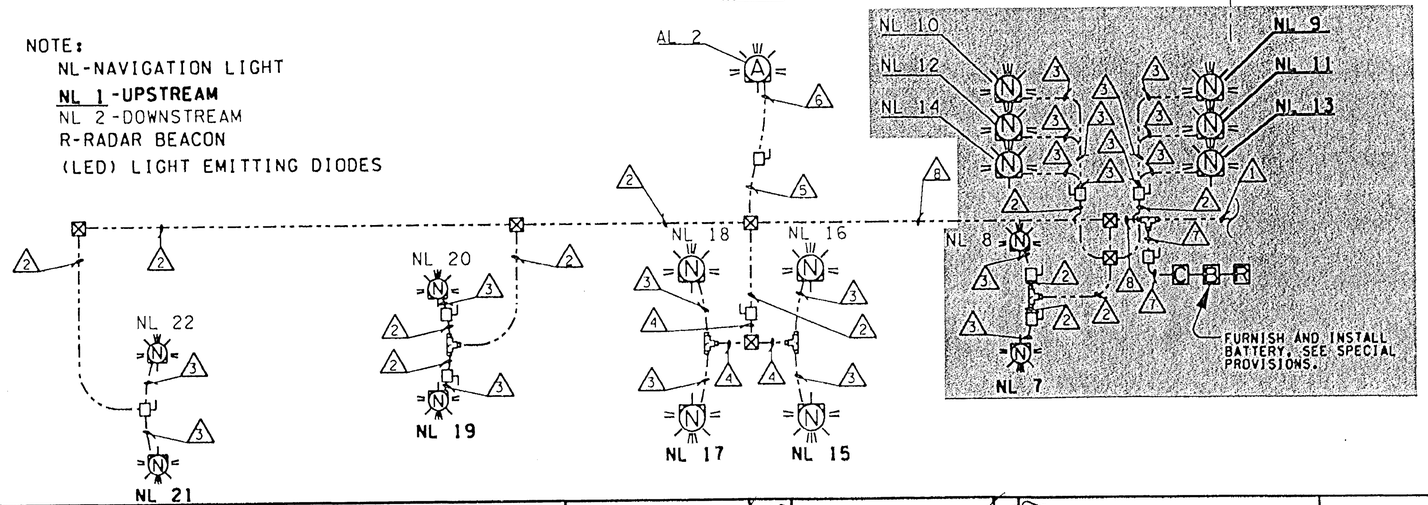

WIRING SCHEDULE				
RUN NO.	CONDUIT SIZE	WIRE SIZE	CIRCUIT NO.	REMARKS
1	1½"	2-#8	E	
		2-#8	F	
		2-#8	G	
2	1"	2-#8	E	
3	¾"	2-#12	E	LTF
4	1"	4-#12	E	
5	1"	2-#8	F	
6	¾"	2-#12	F	LTF
7	1"	2-#8	G	
8	1½"	2-#8	E	
		2-#8	F	

LTF-LIQUID TIGHT FLEXIBLE CONDUIT
ALL CONDUIT IS RIGID GALVANIZED STEEL (RGS) UNLESS OTHERWISE NOTED.

GENERAL NOTES:

NAVIGATION LIGHTS: NL1, NL2, NL7, NL8, NL19 AND NL20 SHALL BE GREEN LEDS. SEE SPECIAL PROVISIONS.

NAVIGATION LIGHTS: NL3, NL4, NL5, NL6, NL15, NL16, NL17, NL18, NL21 AND NL22 SHALL BE RED LEDS. SEE SPECIAL PROVISIONS.

NAVIGATION LIGHTS: NL9, NL10, NL11, NL12, NL13 AND NL14 SHALL BE CLEAR (WHITE) LEDS. SEE SPECIAL PROVISIONS.

AVIATION LIGHTS: AL-1 AND AL-2 SHALL BE RED LEDS. SEE SPECIAL PROVISIONS.

MAXIMUM SPACING FOR JUNCTION BOXES SHALL BE 250'.

FOR BREAKER SCHEDULE SEE SHEET TB-1.

FOR MOUNTING DETAILS SEE SHEETS ML-23 THRU ML-27.

FOR "AS CONSTRUCTED PLANS" ...

FILE NAME	C:\dgn\xl1566\xl1566nlit.dgn				REGION NO. 10	STATE WASH	FED.AID PROJ.NO.
TIME	08:57:21 AM				JOB NUMBER		
DATE	11/04/2002				CONTRACT NO. 6444		LOCATION NO.
DESIGNED BY	TRAFFIC DESIGN						
ENTERED BY	BC						
CHECKED BY	W. WIRKKALA						
PROJ. ENGR.	R. KENISTON						
REGIONAL ADM.	D. WAGNER	REVISION	DATE	BY			

RICHARD L. KENISTON, STATE OF WASHINGTON, REGISTERED PROFESSIONAL ENGINEER — EXPIRES 04/13/04 — 11/4/02 DATE — P.E. STAMP BOX

REGISTERED PROFESSIONAL ENGINEER, RICHARD KELLY KENISTON — EXPIRES 06-30-2003 — 11/4/02 DATE — P.E. STAMP BOX

Washington State Department of Transportation

SR 433
LEWIS AND CLARK BRIDGE 433/1
DECK REPLACEMENT

NAVIGATION LIGHTS PLAN

PLOT2
TD-2
SHEET 33 OF 258 SHEETS

BRIDGE SHEET NUMBER	SHEET TITLE
L1	INDEX SHEET 1 OF 3
L2	INDEX SHEET 2 OF 3
L3	INDEX SHEET 3 OF 3
L4	ENTIRE LAYOUT
L5	GENERAL NOTES
WA1	LAYOUT - WASHINGTON APPROACH
WA2	NOTES FOR BENT NO. 1
WA3	BENT NO. 1 - JACKING & BLOCKING DETAILS
WA4	BENT NO. 1 - JACKING & BLOCKING DETAILS
WA5	BENT NO. 1 - BEARING SEAT & MISC DETAILS
WA6	BENT NO. 1 - JACKING & BLOCKING SHELF & BEARING SEAT DETAILS
WA7	BENT NO. 1 - ELASTOMERIC BEARING PAD DETAILS
WA8	CONSTRUCTION SEQUENCE
WA9	FIXED BENT FLOORBEAM
WA10	ROCKER BENT FLOORBEAM
WA11	TYPICAL SECTION - BENT A-B
WA12	TOWER SPAN BEARING DETAILS
WA13	WASHINGTON APPROACH FRAMING PLAN SHEET 1 OF 2
WA14	WASHINGTON APPROACH FRAMING PLAN SHEET 2 OF 2
WA15	TYPICAL SECTION TOWER DIAPHRAGM
WA16	INTERMEDIATE DISPHRAGM
WA16A	CENTERLINE JOINT MITIGATION
WA17	REMOVAL DETAILS
WA18	CROSS FRAME DETAILS
WA19	GIRDER DETAILS - TOWER SPANS
WA20	GIRDER DETAILS - SUSPENDED SPANS
WA21	GIRDER DETAILS - BENT A-B
WA22	PIN AND HAGER DETAILS

BRIDGE SHEET NUMBER	SHEET TITLE
WA22A	BENT 1 DETAIL
WA23	GIRDER/SLAB - TYPICAL SECTION WASHINGTON APPROACH
WA24	SLAB REINFORCEMENT - TOWER SPANS
WA25	SLAB REINFORCEMENT - SUSPENDED SPANS
WA26	EXPANSION JOINT BLOCKOUT
WA26A	EXPANSION JOINT BLOCKOUT DETAILS
WA26B	EXPANSION JOINT MODIFICATION NEAR BENT 8 & 10
WA26C	WASHINGTON APPROACH - UREFAST AT BENT 12, 17, & 22
WA26C	WASHINGTON APPROACH - UREFAST AT BENT 1 ABUTMENT
WA27	MISCELLANEOUS DETAILS
WA28	SLAB PLAN - WASHINGTON APPROACH SHEET 1 OF 2
WA29	SLAB PLAN - WASHINGTON APPROACH SHEET 2 OF 2
WA30	DRAIN DETAILS - WASHINGTON APPROACH
WA30A	DRAIN REINFORCEMENT DETAILS - WASHINGTON APPROACH
WA31	DECK PANEL LAYOUT
WA31A	WASHINGTON APPROACH LINKER PLATE ASSEMBLY LOCATIONS
WA32	BENT A-B
WA33	STRINGER SEAT DETAILS AT BENT A-B
WA33A	REVISED STRINGER SEAT DETAILS AT BENT A-B
WA34	BENT C-D
WA35	GIRDER SEAT FIXED SIDE 40' BENT C-D
WA36	GIRDER SEAT EXPANSION SIDE 40' BENT C-D
WA36A	BENT CD - BEARING DETAILS EXPANSION SIDE
WA37	PIER 1 FLOORBEAM
WA37A	PIER 1 - EXPANSION SIDE STRINGER SEAT DETAILS
WA37B	PIER 1 & PIER 4 - CONSTRUCTION SEQUENCE
WA38	PIER 1 - EXPANSION SIDE STRINGER SEAT DETAILS
WA38A	PIER 1 - EXPANSION SIDE STRINGER SEAT MODIFICATIONS
WA38B	PIER 1 - BEARING DETAILS EXPANSION SIDE

BRIDGE SHEET NUMBER	SHEET TITLE
WA39	PIER 1 - FIXED SIDE STRINGER SEAT DETAILS
WA40	FLOORBEAM 1, 1A - AT 168' SPAN
WA41	FLOORBEAM 2 - AT 168' SPAN
WA42	STRINGER SEAT DETAILS - 168' SPAN
WA42A	MODIFIED STRINGER CONNECTION WASHINGTON APPROACH DECK TRUSS
WA42B	FLOORBEAM LATERAL BRACE WASHINGTON APPROACH DECK TRUSS
WA42C	BRACING MODIFICATION DETAIL
WA43	DECK PANEL A1
WA44	DECK PANEL B1
WA45	DECK PANEL C1
WA46	DECK PANEL D1
WA47	BENT C-D - FINGER JOINT LAYOUT
WA48	BENT C-D - FINGER JOINT DETAILS 1
WA48A	BENT CD DETAILS
WA48B	FINGERJOINT MODIFICATION
WA48C	BENT C-D - CRACK MITIGATION
WA49	BENT C-D - FINGER JOINT DETAILS 2
WA50	BENT C-D - FINGER JOINT DETAILS 3
WA51	BENT C-D - FINGER JOINT CURB DETAILS
MS1	LAYOUT - MAIN SPANS
MS1A	LINKER PLATE ASSEMBLY LOCATIONS
MS1B	LINKER PLATE ASSEMBLY LOCATIONS
MS1C	LINKER PLATE ASSEMBLY LOCATIONS
MS1D	LINKER PLATE ASSEMBLY LOCATIONS
MS2	CONSTRUCTION SEQUENCE
MS3	TRUSS NUMBERING
MS4	TRUSS NUMBERING
MS5	BRIDGE SECTIONS

BRIDGE SHEET NUMBER	SHEET TITLE
MS6	MISCELLANEOUS REMOVAL DETAILS
MS7	MAIN SPAN - BOTTOM LATERAL SYSTEM RETROFIT
MS8	MAIN SPAN - BOTTOM LATERAL SYSTEM RETROFIT
MS9	STRINGER SEATS AT TYPICAL FLOORBEAM
MS10	FLOORBEAM AT L18
MS11	FLOORBEAM AT L18'
MS11A	REPLACEMENT OF FLOORBEAM ANGLE STIFFENER L26'
MS12	FLOORBEAM AT L27
MS12B	L27 TEMPORARY BEAM SUPPORT
MS13	FLOORBEAM AT L27'
MS13B	L27' TEMPORARY BEAM SUPPORT
MS13C	FLOORBEAM MODIFICATION AT L27'
MS14	STRINGER SEAT DETAILS
MS14B	MODIFIED STRINGER CONNECTION
MS14C	FLOORBEAM LATERAL BRACE MAIN SPAN
MS14D	MODIFIED STRINGER CONNECTION
MS14E	FLOORBEAM LATERAL BRACE MAIN SPAN
MS14F	L29' MODIFIED STRINGER CONNECTION
MS15	STRINGER SEAT DETAILS L27'
MS16	DECK REPLACEMENT DETAILS
MS17	DECK REPLACEMENT DETAILS
MS18	DECK REPLACEMENT DETAILS AT L0 AND L0'
MS19	LIFTING FRAME AT L0 AND L0'
MS20	LIFTING FRAME DETAILS
MS21	CRANE RAIL HANGERS AT PORTALS
MS22	CRANE RAIL HANGERS AT L18 - M19
MS23	CRANE RAIL HANGERS AT M17 - L18
MS24	CRANE RAIL HANGERS AT M17 - L17
MS25	DECK PANEL LAYOUT

FOR "AS CONSTRUCTED PLANS" ONLY

FILE NAME	G:\444304\03 - Construction\C6444 - SR433, Lewis and Clark Bridge Deck Replacement\As-Builts\6444 Detail.dgn				
TIME	01:15:26 PM				
DATE	10/31/2005				
PLOTTED BY	kingju				
DESIGNED BY					
ENTERED BY					
CHECKED BY					
PROJ. ENGR.		AS-BUILT UPDATED INDEX	10/13/05	JK	
REGIONAL ADM.		REVISION	DATE	BY	

REGION NO.	STATE	FED.AID PROJ.NO.
10	WASH	
JOB NUMBER		
CONTRACT NO. 6444		LOCATION NO.

P.E. STAMP BOX DATE

P.E. STAMP BOX DATE

Washington State Department of Transportation

SR 433
LEWIS AND CLARK
BRIDGE DECK REPLACEMENT

DRAWING INDEX SHEET 1 OF 3

PLOT13

L1

SHEET 34 OF 258 SHEETS

BRIDGE SHEET NUMBER	SHEET TITLE
MS26	DECK PANEL A
MS27	DECK PANELS B, C, AND I
MS28	DECK PANELS D, E, AND M
MS29	DECK PANELS F, G, AND L
MS30	DECK PANEL H
MS31	DECK PANEL J
MS32	DECK PANEL K
MS33	DECK PANEL N
MS34	DECK PANEL O
MS35	DECK PANEL P
MS36	DECK PANEL Q
MS37	MISC. DECK PANEL DETAILS
MS38	SILICONE SEALANT EXPANSION JOINT
MS39	L27′ FINGER JOINT LAYOUT
MS39A	L27′ - BEARING DETAILS - EXPANSION SIDE
MS40	L27′ FINGER JOINT SECTION DETAILS
MS41	FINGER JOINT CURB DETAILS
MS41A	L27′ DETAILS
MS42	FINGER JOINT DETAILS SHEET 1 OF 2
MS43	FINGER JOINT DETAILS SHEET 2 OF 2
OA1	LAYOUT - OREGON APPROACH
OA2	OREGON APPROACH ABUTMENT NOTES
OA3	OREGON APPROACH JACKING DETAILS
OA4	PIER 9 - MICROPILE DETAILS
OA4A	PIER 9 - MICROPILE DETAILS
OA5	OREGON APPROACH ABUTMENT SHEET 1 OF 7
OA5A	OREGON APPROACH PIER 9 CURTAIN WALLS
OA6	OREGON APPROACH ABUTMENT SHEET 2 OF 7

BRIDGE SHEET NUMBER	SHEET TITLE
OA7	OREGON APPROACH ABUTMENT SHEET 3 OF 7
OA8	OREGON APPROACH ABUTMENT SHEET 4 OF 7
OA9	OREGON APPROACH ABUTMENT SHEET 5 OF 7
OA10	OREGON APPROACH ABUTMENT SHEET 6 OF 7
OA11	OREGON APPROACH ABUTMENT SHEET 7 OF 7
OA12	BEARING BLOCK DETAILS
OA13	OREGON APPROACH BEARING DETAILS
OA14	PIER 8 - ELEVATION
OA15	BENT 8S - FOOTING DETAILS
OA16	PIER 8 - COLUMN DETAILS
OA17	OREGON APPROACH WIDENING SEQUENCE
OA18	OREGON APPROACH FRAMING PLAN
OA19	OREGON APPROACH END DIAPHRAGM
OA20	OREGON APPROACH COLUMN DIAPHRAGM
OA21	OREGON APPROACH INTERMEDIATE DISPHRAGM
OA22	OREGON APPROACH ABUTMENT DIAPHRAGM
OA23	OREGON APPROACH GIRDER DETAILS
OA24	OREGON APPROACH DIAPHRAGM DETAILS
OA25	SLAB PLAN - OREGON APPROACH
OA26	SLAB REINFORCEMENT AT OREGON APPROACH SPAN
OA27	OREGON APPROACH SLAB TYP. SECTION
OA28	EXPANSION JOINT BLOCKOUT
OA29	OREGON APPROACH SLAB
OA29A	OREGON APPROACH SLAB REINFORCEMENT
OA30	OREGON APPROACH EXPANSION JOINT
OA31	CONSTRUCTION SEQUENCE
OA32	DECK PANEL LIFTING FRAME
OA33	DECK PANEL LIFTING FRAME DETAILS
OA34	DECK PANEL LIFTING FRAME DETAILS

BRIDGE SHEET NUMBER	SHEET TITLE
OA35	DECK PANEL AND FLOORBEAM LAYOUT
OA35A	BRACING MODIFICATION DETAIL
OA35B	TYPICAL FLOORBEAM
OA35C	FLOORBEAM LATERAL BRACE OREGON APPROACH TRUSS
OA35D	FLOORBEAM LATERAL BRACE OREGON APPROACH TRUSS
OA35E	OREGON APPROACH LINKER PLATE ASSEMBLY LOCATIONS
OA36	FLOORBEAM AT PIER 4
OA37	PIER 4 - FIXED SIDE STRINGER SEAT DETAILS
OA38	PIER 4 - EXPANSION SIDE STRINGER SEAT DETAILS
OA38A	PIER 4 - BEARING DETAILS EXPANSION SIDE
OA38B	PIER 4 - EXPANSION SIDE SEAT MODIFICATION
OA39	FLOORBEAM 4 - 335′ SPAN
OA40	FLOORBEAM 1, 2, 7 - 335′ SPAN
OA41	STRINGER SEAT DETAILS AT FLOORBEAM 1, 2, 4, & 7 - 335′ SPAN
OA41B	FLOORBEAM 1, 2, 4, & 7 MODIFICATIONS
OA42	FLOORBEAM 3 - 335′ SPAN
OA43	STRINGER SEAT DETAILS AT FLOORBEAM 3 - 335′ SPAN
OA43B	FLOORBEAM 3 MODIFICATIONS
OA44	FLOORBEAM 5 AT PIER 5 - 335′ SPAN
OA44A	PIER 5 TEMPORARY BEAM SUPPORT
OA44B	PIER 5 MODIFICATIONS
OA45	PIER 5 - EXPANSION SIDE STRINGER SEAT DETAILS
OA45A	PIER 5 - BEARING DETAILS EXPANSION SIDE
OA46	PIER 5 - FIXED SIDE STRINGER SEAT DETAILS
OA47	FLOORBEAM 8 - 335′ SPAN
OA48	STRINGER SEAT DETAILS AT FLOORBEAM 8 - 335′ SPAN
OA48B	FLOORBEAM 8 MODIFICATIONS
OA49	FLOORBEAM 6 AT PIER 6 - 335′ SPAN
OA49A	FLOORBEAM MODIFICATION @ PIER 6

BRIDGE SHEET NUMBER	SHEET TITLE
OA49B	PIER 6 TEMPORARY BEAM SUPPORT
OA50	PIER 6 - FIXED SIDE STRINGER SEAT DETAILS
OA51	PIER 6 - EXPANSION SIDE STRINGER SEAT DETAILS
OA51A	PIER 6 MODIFICATIONS
OA51B	PIER 6 - BEARING DETAILS EXPANSION SIDE
OA51C	PIER 6 - FLANGE REPAIR
OA52	FLOORBEAM 1 & 2 - 84′ SPAN
OA52B	FLOORBEAM 1 & 2 MODIFICATIONS AT 84′ SPAN
OA53	STRINGER SEAT DETAILS AT 84′ AND 168′ SPANS
OA53A	CROSSBRACE MODIFICATION - PIER 6 TO PIER 6A
OA54	FLOORBEAM 5 AT PIER 6A
OA54B	PIER 6A TEMPORARY BEAM SUPPORT
OA54C	FLOORBEAM MODIFICATION AT PIER 6A
OA55	PIER 6A - EXPANSION SIDE STRINGER SEAT DETAILS
OA55A	PIER 6A - BEARING DETAILS EXPANSION SIDE
OA56	PIER 6A - FIXED SIDE STRINGER SEAT DETAILS
OA57	FLOORBEAM 1, 1A & 3 - 168′ SPAN
OA57B	FLOORBEAM MODIFICATION AT FB 1, 1A & 3 - 168′ SPAN
OA58	FLOORBEAM 4 AT PIER 7 - 168′ SPAN
OA58B	PIER 7 TEMPORARY BEAM SUPPORT
OA58C	FLOORBEAM MODIFICATION AT PIER 7
OA59	PIER 7 - FIXED SIDE STRINGER SEAT DETAILS
OA60	PIER 7 - EXPANSION SIDE STRINGER SEAT DETAILS
OA60A	REVISED BOTTOM PLATE DETAILS
OA60B	PIER 7 - BEARING DETAILS EXPANSION SIDE
OA61	TYP. SECTION NEAR PIER 8 - 28′ SPAN
OA62	335′ TRUSS - DECK PANEL A2
OA63	335′ TRUSS - DECK PANEL B2, C2 & D2
OA64	335′ TRUSS - DECK PANEL E2

FOR "AS CONSTRUCTED PLANS" ONLY

FILE NAME	G:\444304\03 - Construction\C6444 - SR433, Lewis and Clark Bridge Deck Replacement\As-Builts\6444 Detail.dgn
TIME	01:15:20 PM
DATE	10/31/2005
PLOTTED BY	kingju
DESIGNED BY	
ENTERED BY	
CHECKED BY	
PROJ. ENGR.	
REGIONAL ADM.	

REVISION | DATE | BY

REGION NO.	STATE	FED.AID PROJ.NO.
10	WASH	
JOB NUMBER		
CONTRACT NO. 6444		LOCATION NO.

P.E. STAMP BOX DATE

P.E. STAMP BOX DATE

Washington State Department of Transportation

SR 433
LEWIS AND CLARK
BRIDGE DECK REPLACEMENT

DRAWING INDEX SHEET 2 OF 3

PLOT12

L2

SHEET 35 OF 258 SHEETS

BRIDGE SHEET NUMBER	SHEET TITLE
OA65	335' TRUSS - DECK PANEL F2
OA66	335' TRUSS - DECK PANEL G2
OA67	84' TRUSS - DECK PANEL H2
OA68	84' TRUSS - DECK PANEL I2
OA69	84' TRUSS - DECK PANEL J2
OA70	168'-3" TRUSS - DECK PANEL K2
OA71	168'-3" TRUSS - DECK PANEL L2
OA72	168'-3" TRUSS - DECK PANEL M2
OA73	DECK PANEL N2
OA74	PIER 5 FINGER JOINT LAYOUT
OA75	PIER 5 FINGER JOINT SECTION DETAILS
OA75A	PIER 5 DETAILS
OA76	PIER 5 FINGER JOINT CURB DETAILS
OA77	PIER 5 FINGER JOINT DETAILS SHEET 1 OF 2
OA78	PIER 5 FINGER JOINT DETAILS SHEET 2 OF 2
ML1	ROCKER BEARING RETROFIT AT PEDESTAL CD
ML2	ROCKER BEARING RETROFIT AT PIER 5
ML3	ROCKER BEARING RETROFIT AT PIER 7
ML4	EXPANSION JOINTS - STRIP SEAL
ML5	DRAINAGE DETAILS
ML5A	DRAIN REINFORCEMENT DETAILS - OREGON APPROACH
ML6	RAIL AND LUMINAIRE POST LAYOUT SHEET 1 OF 7
ML7	RAIL AND LUMINAIRE POST LAYOUT SHEET 2 OF 7
ML8	RAIL AND LUMINAIRE POST LAYOUT SHEET 3 OF 7
ML9	RAIL AND LUMINAIRE POST LAYOUT SHEET 4 OF 7
ML10	RAIL AND LUMINAIRE POST LAYOUT SHEET 5 OF 7
ML11	RAIL AND LUMINAIRE POST LAYOUT SHEET 6 OF 7
ML12	RAIL AND LUMINAIRE POST LAYOUT SHEET 7 OF 7

BRIDGE SHEET NUMBER	SHEET TITLE
ML12A	WASHINGTON APPROACH - MISLOCATED LUMINAIRE BASES
ML13	HANDRAIL DETAILS -- SECTION A
ML13A	HANDRAIL & FENCE DETAILS
ML13B	WASHINGTON APPROACH WIDENING FENCE DETAIL @ LUMINAIRES
ML14	HANDRAIL DETAILS -- SECTION B, C, & D
ML14A	HANDRAIL DETAILS -- MODIFIED SECTION L & C3
ML15	HANDRAIL DETAILS -- SECTION E & F
ML15A	HANDRAIL DETAILS -- MODIFIED SECTION E1 SPECIAL & J1 SPECIAL
ML16	HANDRAIL DETAILS -- SECTION G, H & I
ML16A	HANDRAIL DETAILS -- MODIFIED SECTION H3 REVISED
ML17	HANDRAIL DETAILS -- SECTION J & K
ML18	HANDRAIL DETAILS -- SECTION L & M
ML19	HANDRAIL DETAILS -- SECTION N & O
ML19A	HANDRAIL DETAILS - STRUCTURAL TEES
ML20	HANDRAIL DETAILS -- SECTION P, Q, R, & S
ML21	HANDRAIL DETAILS -- SECTION T, U, V & W
ML22	HANDRAIL DETAILS -- SECTION X & Y
ML22A	HANDRAIL DETAILS - EXPANSION RAIL
ML22B	HANDRAIL DETAILS - EXPANSION RAIL PIER 6
ML23	THRIE BEAM AT EXPANSION JOINTS
ML23A	THRIE BEAT AT L27' EXPANSION JOINT
ML23B	THRIE BEAT SUPPORT CURB MOD.
ML23C	BENT CD - LATTICE REPLACEMENT
ML24	NAVIGATION LIGHT DETAILS
ML25	NAVIGATION LIGHT DETAILS
ML26	NAVIGATION LIGHT DETAILS
ML27	NAVIGATION LIGHT DETAILS
ML28	NAVIGATION LIGHT DETAILS
ML29	PLATFORM AT L31

BRIDGE SHEET NUMBER	SHEET TITLE
ML30	LADDER AT L9
ML31	LADDER SAFETY SYSTEM SHEET 1 OF 3
ML32	LADDER SAFETY SYSTEM SHEET 2 OF 3
ML33	LADDER SAFETY SYSTEM SHEET 3 OF 3
ML33A	EXISTING TOP CHORD RAILING AT PIER 2 & 3
ML33B	TOP CHORD SAFETY LINE LAYOUT - LAYOUT PLAN
ML33C	TOP CHORD SAFETY LINE LAYOUT - LADDER LAYOUT PLAN
ML33D	TOP CHORD SAFETY LINE LAYOUT - SAFETY LINE DETAILS
B1	BARLIST 1
B2	BARLIST 2
B3	BARLIST 3
B4	BARLIST 4

BRIDGE SHEET NUMBER	SHEET TITLE

FOR "AS CONSTRUCTED PLANS" ONLY

FILE NAME	G:\444304\03 - Construction\C6444 - SR433, Lewis and Clark Bridge Deck Replacement\As-Builts\6444 Detail.dgn				
TIME	01:15:15 PM				
DATE	10/31/2005				
PLOTTED BY	kingju				
DESIGNED BY					
ENTERED BY					
CHECKED BY					
PROJ. ENGR.					
REGIONAL ADM.		REVISION	DATE	BY	

REGION NO.	STATE	FED.AID PROJ.NO.
10	WASH	
JOB NUMBER		
CONTRACT NO. 6444		LOCATION NO.

P.E. STAMP BOX DATE

P.E. STAMP BOX DATE

Washington State Department of Transportation

SR 433
LEWIS AND CLARK
BRIDGE DECK REPLACEMENT

DRAWING INDEX SHEET 3 OF 3

PLOT11

L3

SHEET 36 OF 258 SHEETS

TWP. 7N. R. 2W. W.M.
COWLITZ COUNTY, WA./ COLUMBIA COUNTY, OR,

SR 433

* TRANSITION BETWEEN NEW AND EXISTING DECK CROSS SECTIONS.

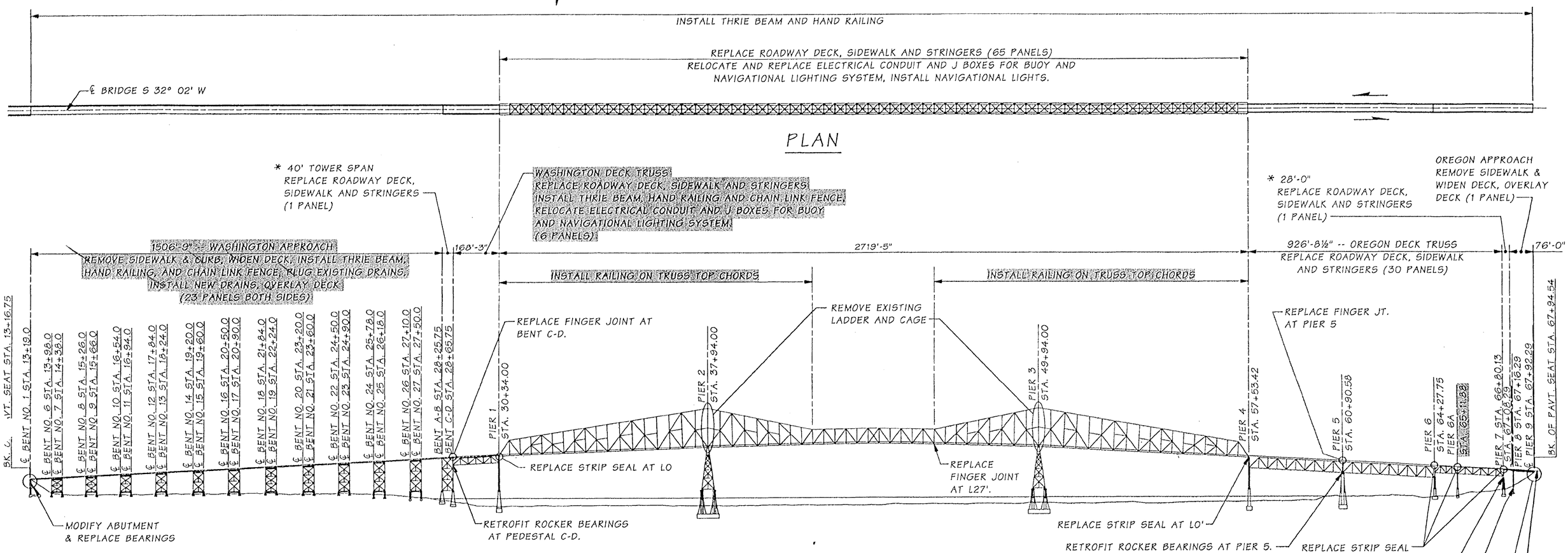

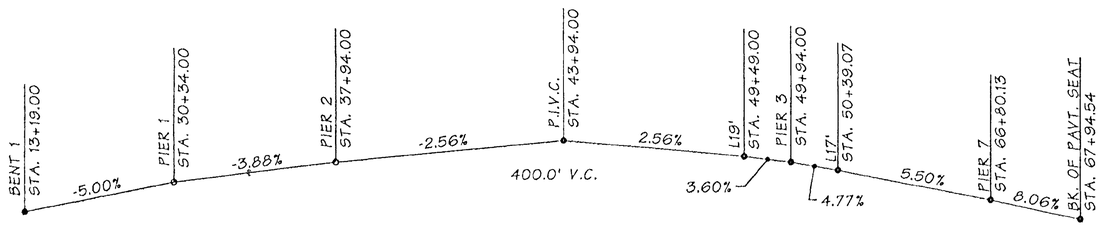

PROFILE PER 1929/1963 PLANS

FOR "AS CONSTRUCTED PLANS" ONLY

DECK REPLACEMENT
LOADING HS 20-44

NO. 1566 SHEET 4

SR 433

Line Design Engr.	Kapur, J		M:\Y-Team\Lewis_Clark Rehab\Entire\window files\ENTIRE LAYOUT.WND								
	Kirker, KN										
	Talukdar, M	08/02	10/02	MODIFIED NOTE	MT		REGION NO.	STATE	FED. AID PROJ. NO.	SHEET NO.	TOTAL SHEETS
Checked By	Schultz, E	08/02					10	WASH.			
Detailed By	Evans, P	08/02	10/02	CORRECTED STATION	MT		JOB NUMBER 02x310		ACBH - 0433(007)		
Bridge Projects Engr.											
Prelim. Plan By			10/02	ADDED NOTE	ES						
Architect/Specialist			DATE	REVISION	BY	APP'D					

Tue Oct 29 14:26:29 2002

BRIDGE AND STRUCTURES OFFICE

JUGESH KAPUR STATE OF WASHINGTON 10480 REGISTERED PROFESSIONAL ENGINEER
10-30-02 EXPIRES 5/19/04

Washington State Department of Transportation

SR 433
LEWIS AND CLARK BRIDGE
DECK REPLACEMENT

LAYOUT

BRIDGE SHEET NO. L4

SHEET 37 OF 258 SHEETS

GENERAL NOTES

1. ALL MATERIAL AND WORKMANSHIP SHALL BE IN ACCORDANCE WITH THE REQUIREMENTS OF THE WASHINGTON STATE DEPARTMENT OF TRANSPORTATION STANDARD SPECIFICATIONS FOR ROAD, BRIDGE AND MUNICIPAL CONSTRUCTION DATED 2002, AND AMENDMENTS.
2. THE NEW PORTIONS OF THE STRUCTURE HAVE BEEN DESIGNED IN ACCORDANCE WITH THE REQUIREMENTS OF THE AASHTO STANDARD SPECIFICATIONS FOR HIGHWAY BRIDGES SIXTEENTH EDITION - 1996 AND INTERIMS THROUGH 2001. ALL OTHER STRUCTURAL ELEMENTS ARE DESIGNED IN ACCORDANCE WITH THE REQUIREMENTS FOR LOAD FACTOR DESIGN. SEISMIC DESIGN OF THIS STRUCTURE HAS BEEN DONE USING AN ACCELERATION COEFFICIENT OF 0.15.
3. THE CONCRETE IN THE ROADWAY DECK SHALL BE LIGHT WEIGHT CONCRETE. ALL OTHER CAST-IN-PLACE CONCRETE SHALL BE CLASS 4000 UNLESS OTHERWISE NOTED ON THE PLANS.
4. FALSEWORK SHALL BE CAREFULLY RELEASED TO PREVENT IMPACT OR UNDUE STRESS IN THE STRUCTURE.
5. THE DETAILS AND DIMENSIONS SHOWN IN THE PLANS ARE BASED ON ORIGINAL CONSTRUCTION RECORDS TOGETHER WITH FIELD SURVEY DATA. THESE DIMENSIONS SHALL BE MEASURED BY THE CONTRACTOR IN THE FIELD, PRIOR TO THE FABRICATION OF ANY PARTS.
6. UNLESS OTHERWISE SHOWN ON THE PLANS, THE CONCRETE COVER MEASURED FROM THE FACE OF CONCRETE TO THE FACE OF ANY REINFORCING STEEL SHALL BE 1 INCH AT THE TOP AND BOTTOM OF THE ROADWAY SLAB AND 1½ INCHES AT ALL OTHER LOCATIONS.
7. THE CONTRACTOR SHALL SUBMIT PROCEDURES FOR ROADWAY DECK REMOVAL AND REPLACEMENT TO THE ENGINEER FOR APPROVAL IN ACCORDANCE WITH SECTION 6-01.9.
8. THE NEW DECK SLAB IS AT A HIGHER ELEVATION BY 3⅛" FROM TOP OF EXISTING ASPHALT ON OLD DECK AT THE CROWN POINT. THE CONTRACTOR MAY ADJUST THE 3⅛" DIMENSION UP OR DOWN IN ORDER TO PROVIDE A SMOOTH ROADWAY PROFILE AND ELIMINATE INTERFERENCE OF BOTTOM OF DECK WITH TOP OF FLOOR BEAM. THE CONTRACTOR SHALL SUBMIT DETAILS FOR METHOD OF SMOOTH TRANSITIONING OF TRAFFIC BETWEEN OLD AND NEW DECKS.

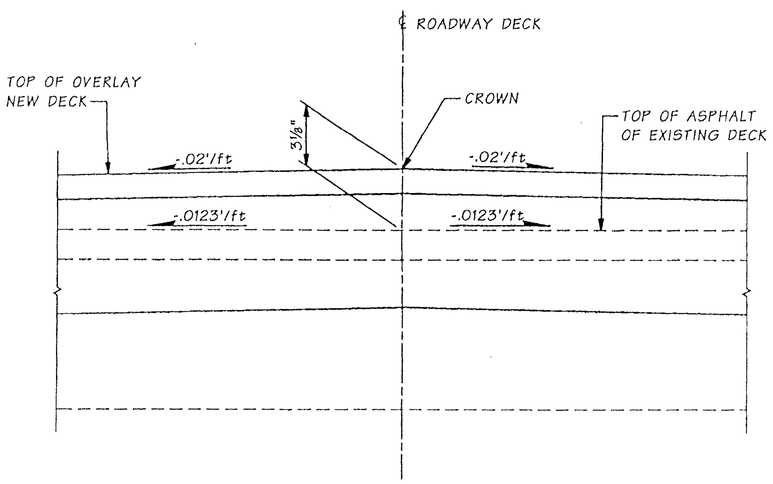

CROWN DETAIL

SEE GENERAL NOTE #8

STRUCTURAL STEEL NOTES

1. ALL STRUCTURAL STEEL SHALL BE ASTM A-36 OR AASHTO M270 GRADE 36 UNLESS OTHERWISE SHOWN IN THE PLANS.
2. ASTM A1011 MAY BE USED FOR FILLER PLATES LESS THAN ¼ INCH THICKNESS.
3. ALL FIELD AND SHOP CONNECTIONS SHALL BE MADE WITH HIGH STRENGTH BOLTS, WITH BOLT HEADS TOWARD THE OUTSIDE AND UNDERSIDE OF THE BRIDGE. ALL HIGH STRENGTH BARS SHALL BE AASHTO M275, HIGH STRENGTH BOLTS SHALL BE AASHTO M164 AND SHALL BE ⅞" DIAMETER UNLESS SHOWN OTHERWISE ON THE PLANS. NUTS AND WASHERS SHALL CONFORM TO STANDARD SPECIFICATIONS SECTION 9-06.5(3). THE MINIMUM CENTER-TO-CENTER DIMENSION SHALL BE 3" UNLESS SHOWN OTHERWISE. ALL BOLT HOLES SHALL BE THE BOLT DIAMETER PLUS 1/16" UNLESS CALLED OUT OTHERWISE.
4. WHERE A RIVET IS BEING REPLACED WITH A HIGH STRENGTH BOLT, REAM THE EXISTING RIVET HOLE TO THE BOLT DIAMETER PLUS 1/16".
5. ALL WELDING SHALL BE DONE TO MINIMIZE DISTORTION. THE WELDING SEQUENCES AND PROCEDURES TO BE USED SHALL BE SUBMITED TO THE ENGINEER FOR APPROVAL PRIOR TO THE START OF WELDING.
6. TRANSVERSE STIFFENERS SHALL BE NORMAL TO THE FLANGES UNLESS OTHERWISE SHOWN.
7. ALL DIMENSIONS ARE HORIZONTAL AND VERTICAL UNLESS OTHERWISE SHOWN.
8. ALL WELDED SHEAR CONNECTORS SHALL BE ⅞ INCH DIAMETER.
9. ALL LONGITUDINAL STRINGERS FOR THE DECK PANELS ARE FRACTURE CRITICAL MEMBERS AND SHALL MEET THE FRACTURE CONTROL REQUIREMENT TEST AS DESCRIBED IN THE STANDARD SPECIFICATIONS 6-03.
10. GALVANIZING SHALL BE IN ACCORDANCE WITH AASHTO M 111 OR M 232 AS APPLICABLE.
11. BOLT HOLES REMAINING IN GIRDER AND OTHER STEEL MEMBERS UPON REMOVAL OF DECK FORMWORK, TEMPORARY BRACING AND EXISTING BRIDGE RAILS SHALL MEET THE REQUIREMENTS OF STANDARD SPECIFICATIONS, SECTION 6.02.3(17)K .
12. ALL STRUCTURAL STEEL SHALL BE EITHER PAINTED IN ACCORDANCE WITH THE SPECIAL PROVISIONS, OR GALVANIZED. THE SIDEWALK TRANSITION RAMP,CURB AND SIDEWALK SLIDER PLATES AND THEIR ASSOCIATED HARDWARE SHALL BE GALVANIZED.
13. SLOTTED HOLES SHALL BE MADE WITH THE SLOTS RUNNING LONGITUDINAL (ie. PARALLEL TO ℄ OF NEW STRINGERS.)
14. THE EXISTING FLOORBEAMS AND REMAINING ATTACHED PLATES & BEAMS AT LOCATIONS WHERE THE DECK IS BEING REPLACED SHALL BE PAINTED TO THE LIMITS SHOWN BELOW.
15. THE CONTRACTOR SHALL MAKE AVAILABLE SHIMS PLATES WITH A MINIMUM THICKNESS OF 1/16" WITH PRE-DRILLED HOLES AS REQUIRED FOR REPLACEMENT OF DECK SLAB AND BEARINGS.

DRAINAGE ASSEMBLY NOTES

1. ALL PARTS IN DRAINAGE ASSEMBLY SHALL BE GALVANIZED PER AASHTO M111 EXCEPT RODS, BOLTS, NUTS & WASHERS GALVANIZED PER AASHTO M232.
2. DRAIN PIPE SHALL BE STANDARD STEEL PIPE CONFORMING TO ASTM A 53, BOLTS SHALL CONFORM TO ASTM A 307.
3. ALL EXPOSED DRAINAGE TO BE PAINTED.
4. THE CONTRACTOR SHALL SUBMIT FABRICATION DRAWINGS FOR THE APPROVAL BY THE ENGINEER.

LEGEND:

- B/15 — IDENTIFIES SECTION, VIEW OR DETAIL
- B/15 — TAKEN OR SHOWN ON BRIDGE SHEET 15
- B/— — TAKEN OR SHOWN ON THE SAME SHEET
- = EPOXY COATED REINFORCING BAR
- - EXISTING RIVET
- - NEW BOLT
- - NEW BOLT (HIDDEN)
- - NEW BOLT REPLACING RIVET
- - NEW BOLT REPLACING RIVET (HIDDEN)

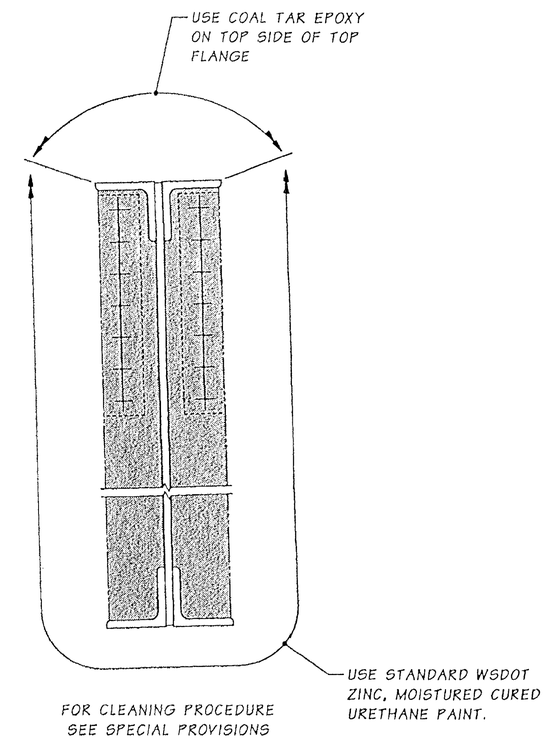

FLOORBEAM AT DECK REPLACEMENT AREA

FOR "AS CONSTRUCTED PLANS" ONLY

Design Engr.	Kapur, J		M:\Y-Team\Lewis_Clark Rehab\Entire\window files\GENERAL NOTES.WND			REGION NO.	STATE	FED. AID PROJ. NO.	SHEET NO.	TOTAL SHEETS	
	Kirker, KN					10	WASH.	ACBH - 0433(007)			
	Talukdar, M	08/02									
Checked By	Peralta, R	08/02				JOB NUMBER 02x310					
Detailed By	Evans, P	08/02	10/02	MODIFIED NOTES	MT						
Bridge Projects Engr.											
Prelim. Plan By			10/02	ADDED LIMITS OF CUTTING BEAM	MT	6444					
Architect/Specialist			DATE	REVISION	BY	APP'D					

Tue Oct 29 14:21:52 2002

KARL N. KIRKER — STATE OF WASHINGTON — REGISTERED PROFESSIONAL ENGINEER — EXPIRES 11/3/03

BRIDGE AND STRUCTURES OFFICE

MIDHUSHRAN TALUKDAR — STATE OF WASHINGTON — REGISTERED PROFESSIONAL ENGINEER — EXPIRES 6/1/04

Washington State Department of Transportation

SR 433
LEWIS AND CLARK BRIDGE
DECK REPLACEMENT

GENERAL NOTES

BRIDGE SHEET NO. L5

SHEET 38 OF 258 SHEETS

SR 433 ACB NO. 1566 SHEET 5

TWP. 7N. R. 2W. W.M.
COWLITZ COUNTY

SR 433

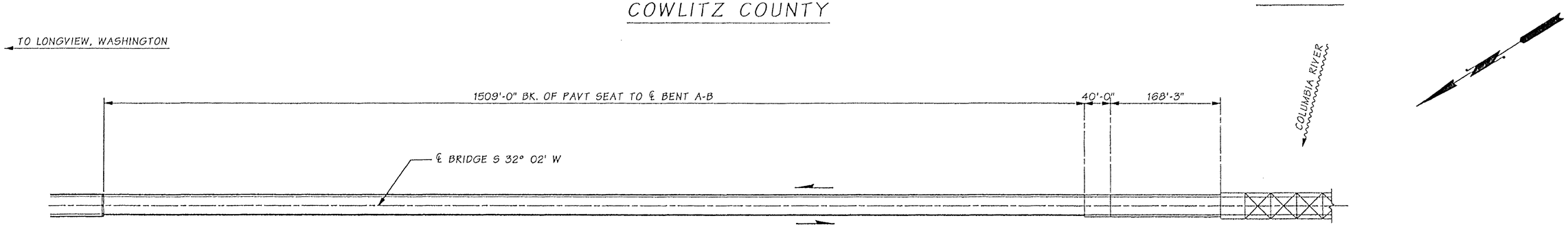

PLAN

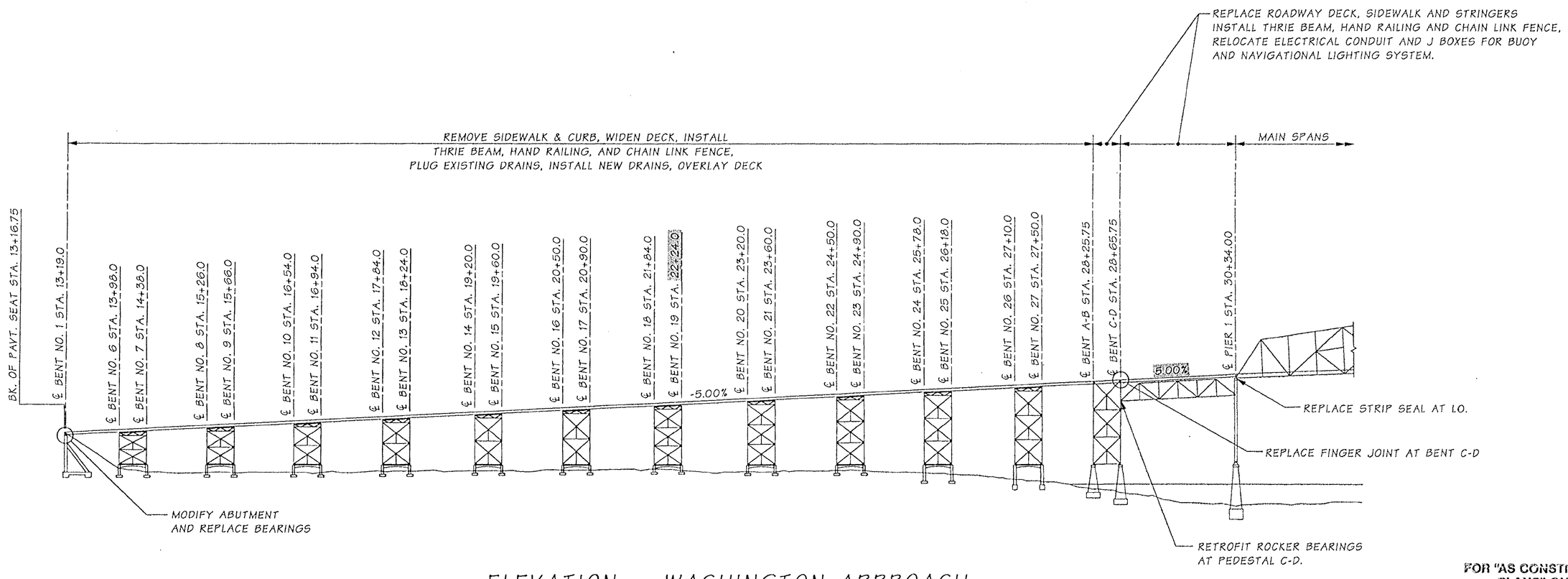

ELEVATION -- WASHINGTON APPROACH

FOR "AS CONSTRUCTED PLANS" ONLY

DECK WIDENING & REPLACEMENT
LOADING HS 20-44

Design Engr.	Kapur, J.		M:\Y-Team\Lewis_Clark Rehab\Washington Appr\window files\LAYOUT.WND								
	Kirker, KN						REGION NO.	STATE	FED. AID PROJ. NO.	SHEET NO.	TOTAL SHEETS
Checked By	Talukdar, M	08/02					10	WASH.			
Checked By	Peralta, R	08/02									
Detailed By	House, L	08/02	10/02	CORRECTED SLOPE	MT		JOB NUMBER 02x310		ACBH - 0433(007)		
Bridge Projects Engr.											
Prelim. Plan By			10/02	CORRECTED STATION	MT		6444				
Architect/Specialist			DATE	REVISION	BY	APP'D					

KARL N. KIRKER — PROFESSIONAL ENGINEER — EXPIRES 11/3/03

BRIDGE AND STRUCTURES OFFICE

MUNINDRA TALUKDAR — PROFESSIONAL ENGINEER — EXPIRES 6/1/04

Washington State Department of Transportation

SR 433
LEWIS AND CLARK BRIDGE
DECK REPLACEMENT

LAYOUT -- WASHINGTON APPROACH

BRIDGE SHEET NO. WA1

SHEET 39 OF 258 SHEETS

SR 433 NO. 1566 SHEET 1

Tue Oct 29 14:27:48 2002

SUGGESTED BEARING REPLACEMENT AND ABUTMENT-MODIFICATION PROCEDURE

1. EXCAVATE SOIL AT ABUTMENT TO LIMITS SHOWN FOR CONSTRUCTION OF JACKING AND BLOCKING SHELF IN BRIDGE SHEET WA3.
2. CONSTRUCT JACK AND BLOCKING SHELF AND INSTALL JACK AND BLOCKING STIFFENER ASSEMBLIES AS SHOWN IN BRIDGE SHEETS WA3 AND WA4.
3. AFTER THE CONCRETE IN THE SHELF REACHES A MINIMUM COMPRESSIVE STRENGTH OF 4000 PSI; INSTALL THE JACKING SYSTEM, JACKS, AND BLOCKING ASSEMBLIES AS SHOWN IN THE PLANS.
4. CLOSE THE BRIDGE TO ALL TRAFFIC AND RAISE THE BRIDGE A SUFFICIENT HEIGHT (1/2" MAXIMUM) TO FACILITATE THE REMOVAL OF THE EXISTING TIMBER BLOCKS AND TO COMPLETE THE PLACEMENT OF THE BLOCKING ASSEMBLIES. SHIM BLOCKING ASSEMBLIES TO A TIGHT FIT AGAINST THE BOTTOM FLANGE OF THE GIRDER. ONCE THE BLOCKING ASSEMBLIES ARE IN PLACE, LOWER THE BRIDGE AND REOPEN TO TRAFFIC.
5. CONSTRUCT NEW CONCRETE PEDESTAL.
6. ATTACH NEW SOLE PLATES TO EXISTING GIRDERS. AFTER THE CONCRETE IN THE NEW PEDESTAL REACHES A MINIMUM COMPRESSIVE STRENGTH OF 4000 PSI; PLACE NEW GROUT PADS.
7. AFTER THE GROUT PADS REACH A MINIMUM COMPRESSIVE STRENGTH OF 4000 PSI, CLOSE THE BRIDGE TO ALL TRAFFIC AND RAISE THE BRIDGE A SUFFICIENT HEIGHT (1/2" MAXIMUM) TO INSTALL THE NEW ELASTOMERIC PADS AND TO REMOVE BLOCKING ASSEMBLIES.
8. ONCE THE NEW ELASTOMERIC BEARING PADS ARE IN PLACE, LOWER THE BRIDGE AND REOPEN TO TRAFFIC.

BEARING REPLACMENT NOTES

1. ALL ELASTOMERIC BEARINGS HAVE BEEN DESIGNED FOR SERVICE LOAD STRESSES.
2. ELASTOMER LAYERS SHALL BE DUROMETER HARDNESS 60. STEEL SHIMS SHALL CONFORM TO ASTM A1011 GRADE 36.
3. THE CONTRACTOR SHALL LOCATE ANY EXISTING STEEL REINFORCING USING NON-DESTRUCTIVE METHODS TO AVOID DAMAGE DURING DRILLING OPERATIONS, THE CONTRACTOR SHALL NOTIFY THE ENGINEER IMMEDIATELY IF ANY EXISTING REBAR OR ANCHOR BOLTS ARE ENCOUNTERED THAT CONFLICT WITH THE WORK DETAILED, AND SHALL OBTAIN APPROVAL FROM THE ENGINEER BEFORE CONTINUING WORK.
4. THE CONTRACTOR SHALL SUBMIT DESIGN CALCULATIONS AND WORKING SHOP DRAWINGS FOR THE JACKING SYSTEM, JACKS, AND BLOCKING ASSEMBLIES TO THE ENGINEER FOR APPROVAL.
5. CALCULATED JACKING LOAD PER JACK POINT:
   JACKING LOAD : 34 KIPS/JACKING POINT
6. CALCULATED BLOCKING LOADS PER BLOCKING POINT:
   DEAD LOAD : 34 KIPS/BLOCKING POINT
   LIVE LOAD + IMPACT : 118 KIPS/BLOCKING POINT
7. ALL SIX GIRDERS SHALL BE RAISED AND LOWERED SIMULTANEOUSLY AND THE MAXIMUM RELATIVE DISPLACEMENT BETWEEN ADJACENT GIRDERS SHALL NOT EXCEED ¼". EACH JACK SHALL BE SIZED FOR AT LEAST 200% OF THE ANTICIPATED JACKING LOAD.
8. NO TRAFFIC WILL BE ALLOWED ONTO THE BRIDGE DURING JACKING (RAISING AND LOWERING) OPERATIONS.
9. BLOCKING ASSEMBLIES SHALL BE DESIGNED AND INSTALLED TO ASSURE THAT THE ROADWAY ELEVATION AFTER JACKING OPERATIONS MATCHES THE EXISTING ROADWAY ELEVATION.
10. TOP OF NEW GROUT PAD ELEVATIONS SHALL BE SET TO ASSURE THAT THE ROADWAY ELEVATION FOLLOWING CONSTRUCTION SHALL MATCH THE EXISTING ROADWAY ELEVATION.

FOR "AS CONS... PLANS" O...

SR 433 JOB NO. 1566 SHEET 2

Bridge Design Engr.	Kapur, J.	
Supervisor	Kirker, KN	08/02
Designed By	Talukdar, M	08/02
Checked By	Peralta, R	08/02
Detailed By	House, L	08/02
Bridge Projects Engr.		
Prelim. Plan By		
Architect/Specialist		

M:\Y-Team\Lewis_Clark Rehab\Washington Appr\window files\NOTES 1.WND

DATE	REVISION	BY	APP'D

REGION NO.	STATE	FED. AID PROJ. NO.	SHEET NO.	TOTAL SHEETS
10	WASH.	ACBH - 0433(007)		
JOB NUMBER 02x310				

KARL N. KIRKER — STATE OF WASHINGTON — 12594 — REGISTERED PROFESSIONAL ENGINEER — EXPIRES 11/3/03

BRIDGE AND STRUCTURES OFFICE

MEKTADRA TALUKDAR — STATE OF WASHINGTON — 27628 — REGISTERED PROFESSIONAL ENGINEER — EXPIRES 6/1/04

Washington State Department of Transportation

SR 433
LEWIS AND CLARK BRIDGE
DECK REPLACEMENT

NOTES FOR BENT NO. 1

BRIDGE SHEET NO. WA2

SHEET 40 OF 258 SHEETS

Tue Sep 17 10:58:05 2002

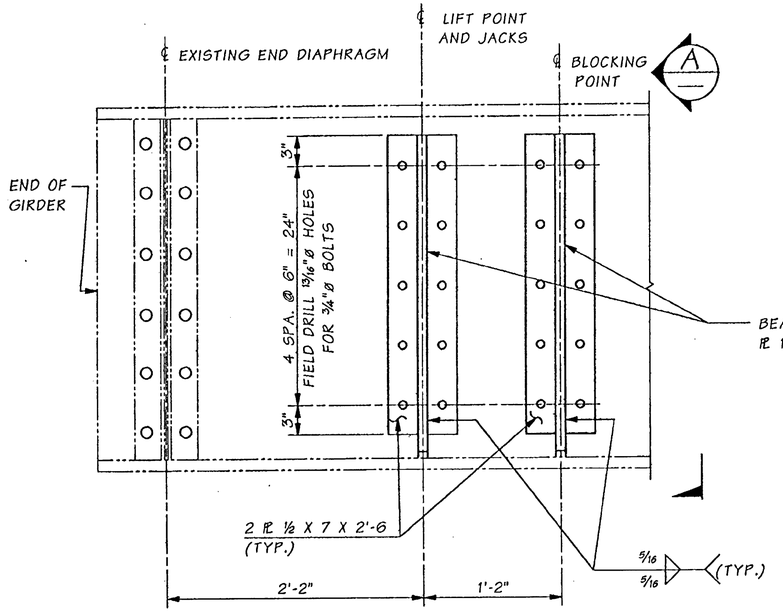

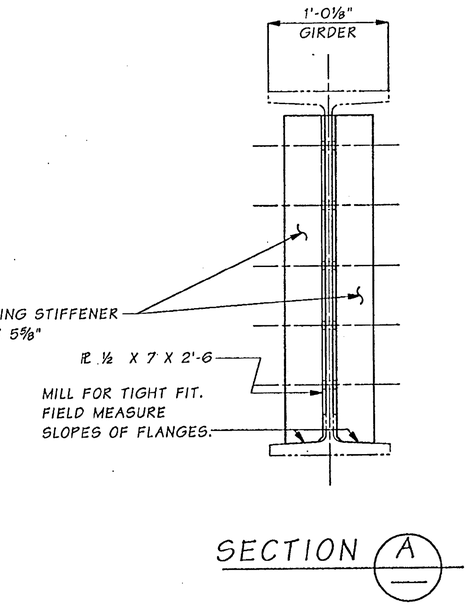

ELEVATION ~ JACKING AND BLOCKING STIFFENER ASSEMBLIES FOR INTERIOR GIRDERS

* - CONTRACTOR SHALL VERIFY BLOCKING & JACK STIFFENER LOCATIONS AND STIFFENER DIMENSIONS FOR FIT, BEFORE FABRICATING STIFFENERS.

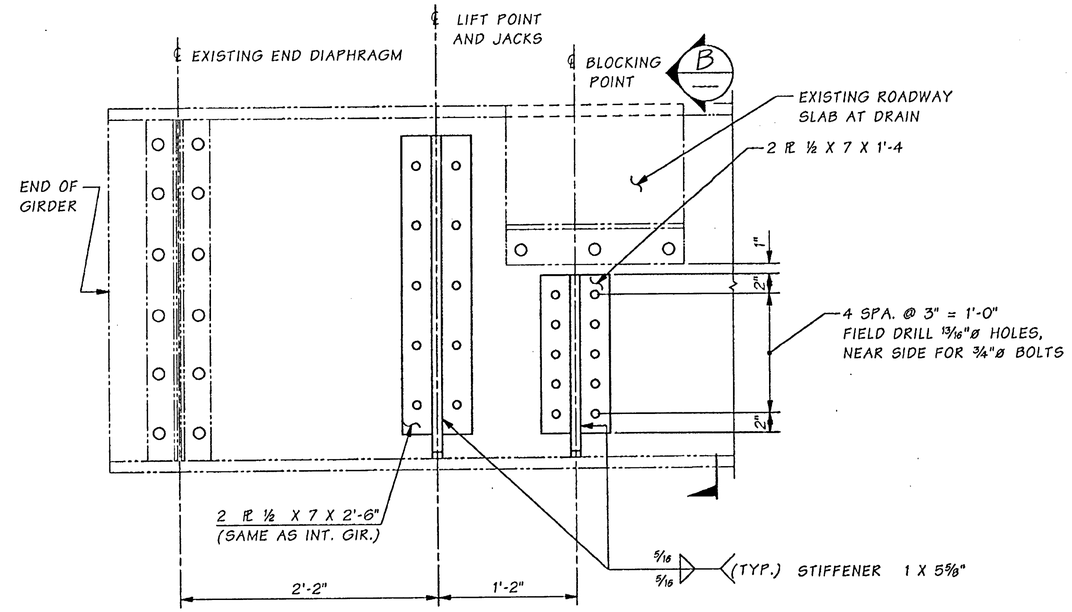

ELEVATION ~ JACKING AND BLOCKING STIFFENER ASSEMBLIES FOR EXTERIOR GIRDERS

* - CONTRACTOR SHALL VERIFY BLOCKING & JACK STIFFENER LOCATIONS AND STIFFENER DIMENSIONS FOR FIT, BEFORE FABRICATING STIFFENERS.

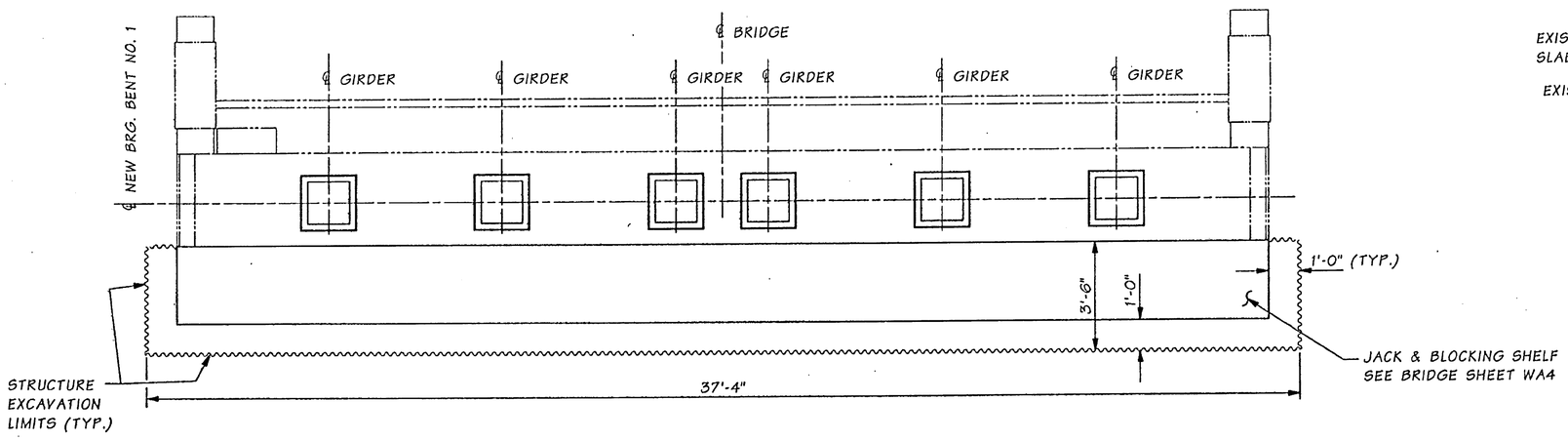

PLAN - NORTH ABUTMENT

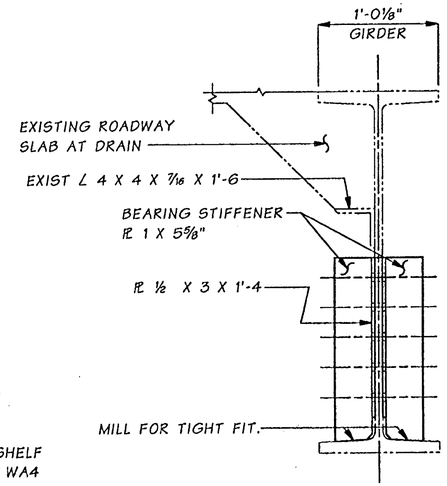

SECTION B

FOR "AS CONSTRUCTED PLANS" ONLY

Bridge Design Engr.	Kapur, J.		
Supervisor	Kirker, KN	08/02	
Designed By	Peralta, R	08/02	
Checked By	Talukdar, M	08/02	
Detailed By	Evans, P	08/02	
Bridge Projects Engr.			
Prelim. Plan By			
Architect/Specialist			

M:\Y-Team\Lewis_Clark Rehab\Washington Appr\window files\JACKING DETS.WND

DATE	REVISION	BY	APP'D

REGION NO.	STATE	FED. AID PROJ. NO.	SHEET NO.	TOTAL SHEETS
10	WASH.	ACBH - 0433(007)		
JOB NUMBER 02x310				

KARL N. KIRKER — PROFESSIONAL ENGINEER — EXPIRES 11/3/03

BRIDGE AND STRUCTURES OFFICE

MIDHANDRA TALUKDAR — PROFESSIONAL ENGINEER — EXPIRES 6/1/04

Washington State Department of Transportation

SR 433
LEWIS AND CLARK BRIDGE
DECK REPLACEMENT

BENT NO. 1 - JACKING & BLOCKING DETAILS

BRIDGE SHEET NO. WA3

SHEET 41 OF 258 SHEETS

SR 433 JOB NO. 1566 SHEET 3

Wed Sep 18 09:13:35 2002

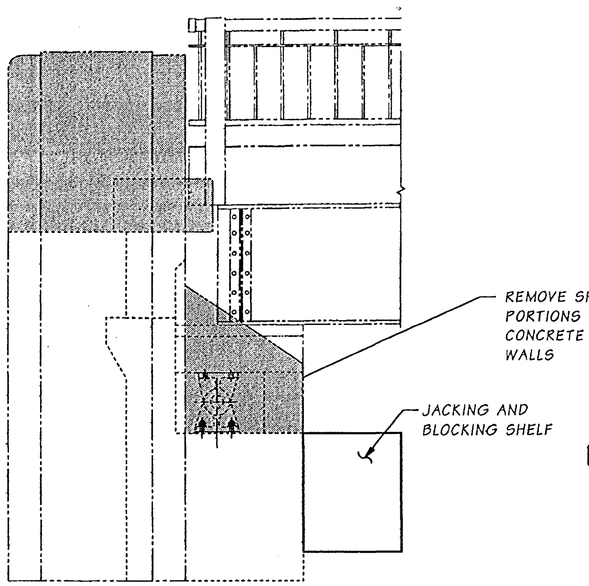

VIEW B

REMOVE SHADED PORTIONS

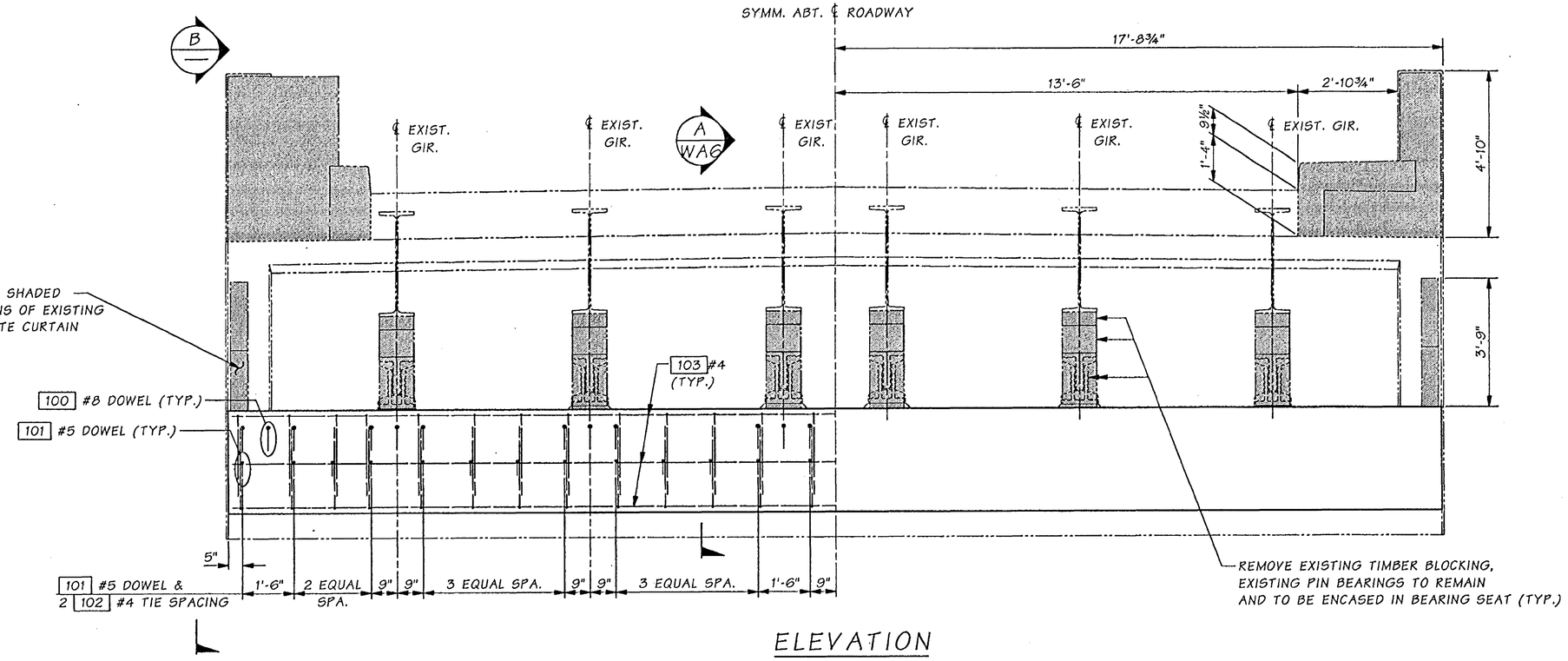

ELEVATION

REMOVE SHADED PORTIONS

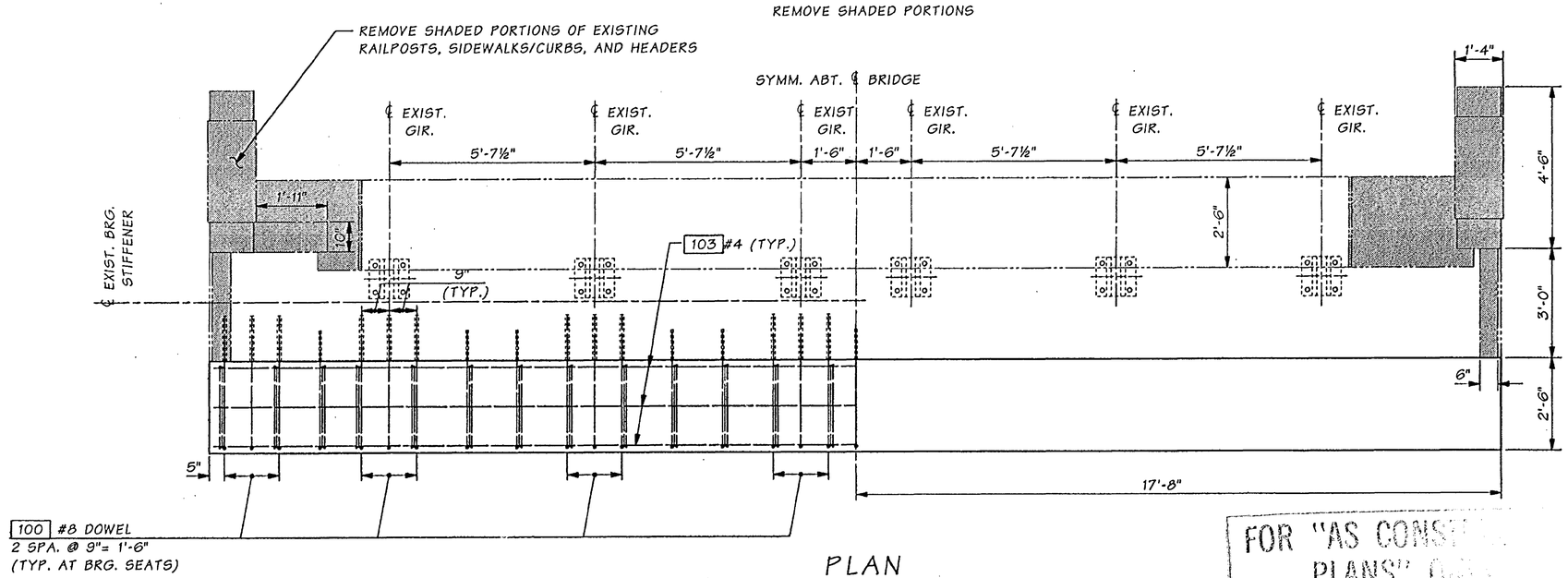

PLAN

REMOVE SHADED PORTIONS

FOR "AS CONST... PLANS" ON...

Bridge Design Engr.	Kapur, J.		M:\Y-Team\Lewis_Clark Rehab\Washington Appr\Window files\ABUTMENT1.WND								
Supervisor	Kirker, KN	08/02					REGION NO.	STATE	FED. AID PROJ. NO.	SHEET NO.	TOTAL SHEETS
Designed By	Peralta, R	08/02					10	WASH.			
Checked By	Talukdar, M	08/02					JOB NUMBER 02x310		ACBH - 0433(007)		
Detailed By	Evans, P	08/02									
Bridge Projects Engr.											
Prelim. Plan By											
Architect/Specialist			DATE	REVISION	BY	APP'D	6444				

KARL N. KIRKER — STATE OF WASHINGTON — 12298 — REGISTERED PROFESSIONAL ENGINEER — EXPIRES 11/3/03

BRIDGE AND STRUCTURES OFFICE

MUNINDRA TALUKDAR — STATE OF WASHINGTON — 27628 — REGISTERED PROFESSIONAL ENGINEER — EXPIRES 6/1/04

Washington State Department of Transportation

SR 433
LEWIS AND CLARK BRIDGE
DECK REPLACEMENT

BENT NO. 1 - JACKING AND BLOCKING SHELF

BRIDGE SHEET NO. WA4

SHEET 42 OF 258 SHEETS

SR 433 JOB NO. 1566 SHEET 4

Wed Sep 18 13:55:47 2002

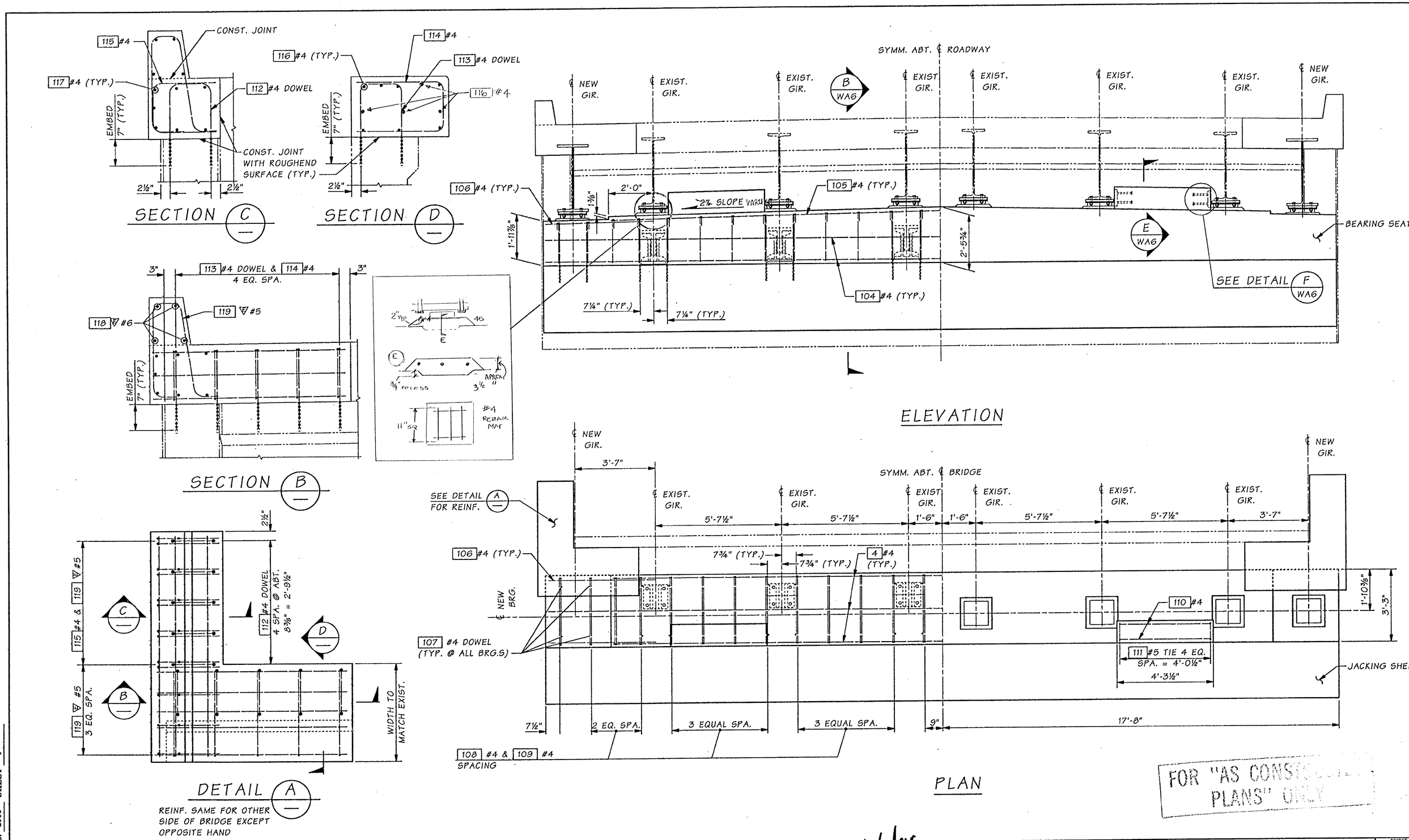

FOR "AS CONSTRUCTED PLANS" ONLY

Bridge Design Engr.	Kapur, J		M:\Y-Team\Lewis_Clark Rehab\Washington Appr\window files\ABUTMENT2.WND								
Supervisor	Kirker, KN	08/02					REGION NO.	STATE	FED. AID PROJ. NO.	SHEET NO.	TOTAL SHEETS
Designed By	Peralta, R	08/02					10	WASH.			
Checked By	Talukdar, M	08/02					JOB NUMBER 02x310		ACBH - 0433(007)		
Detailed By	Evans, P	08/02									
Bridge Projects Engr.											
Prelim. Plan By											
Architect/Specialist			DATE	REVISION	BY	APP'D	6444				

KARL N. KIRKER, STATE OF WASHINGTON, 18296, REGISTERED PROFESSIONAL ENGINEER, 9/18/02, EXPIRES 11/3/03

BRIDGE AND STRUCTURES OFFICE

MUNDERA TALUKDAR, STATE OF WASHINGTON, 27628, REGISTERED PROFESSIONAL ENGINEER, 9/18/02, EXPIRES 6/1/04

Washington State Department of Transportation

SR 433
LEWIS AND CLARK BRIDGE
DECK REPLACEMENT

BENT NO. 1 - BEARING SEAT & MISCELLANEOUS DETAILS

BRIDGE SHEET NO. WA 5

SHEET 43 OF 258 SHEETS

SR 433 JOB NO. 1566 SHEET 5

Wed Sep 18 07:47:44 2002

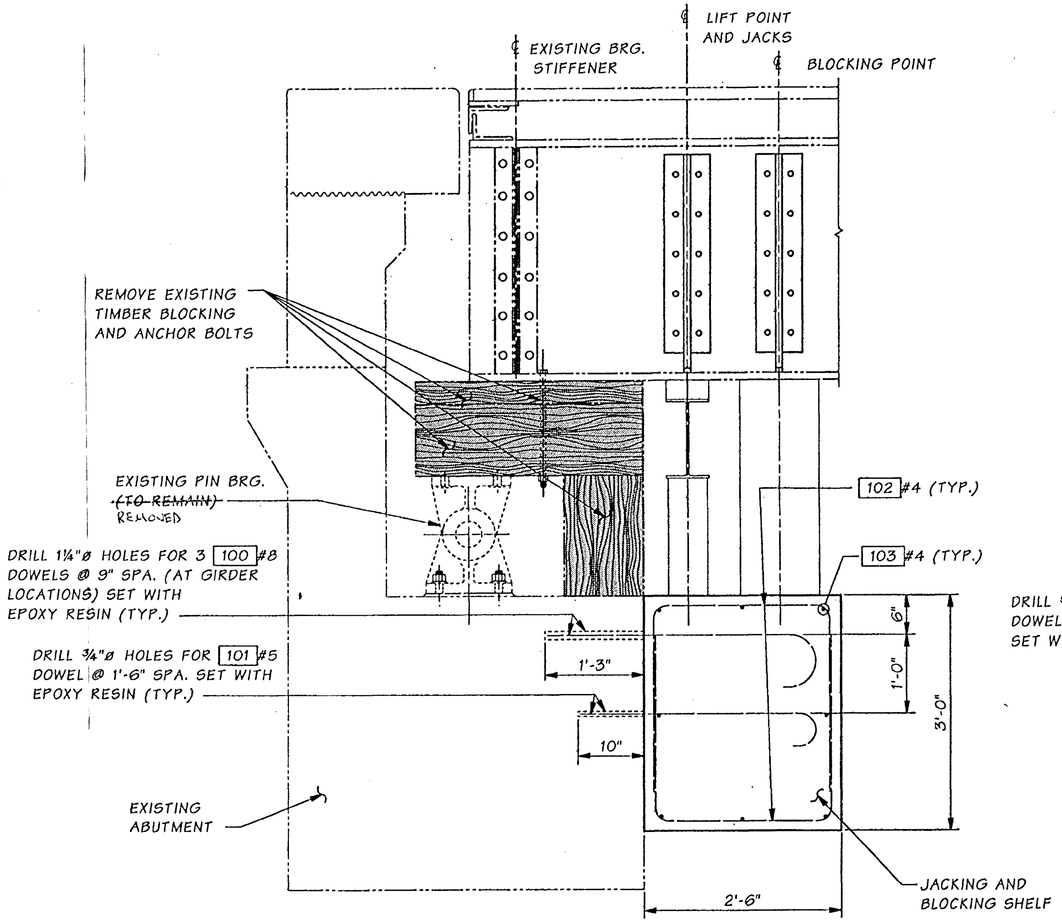

SECTION A WA4

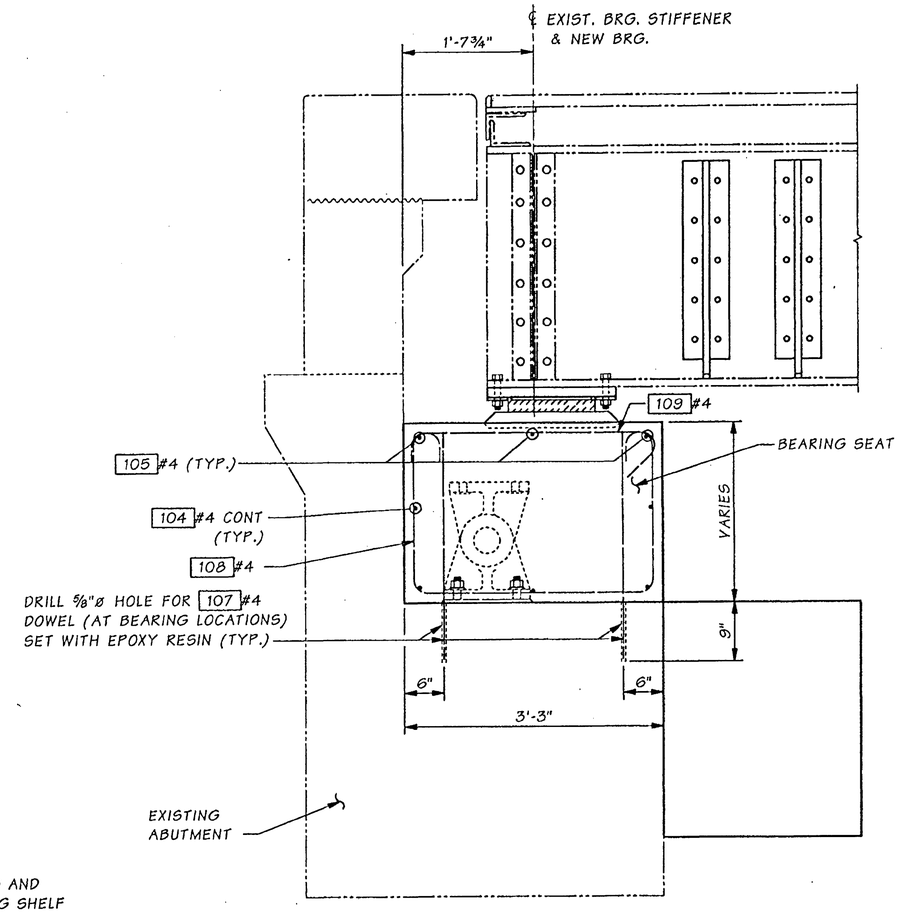

SECTION B WA5

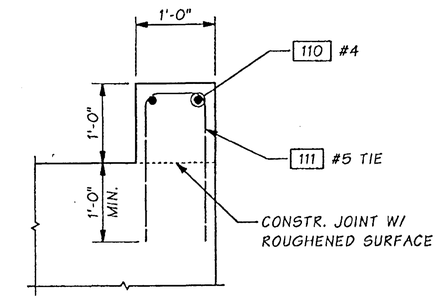

SECTION E WA5

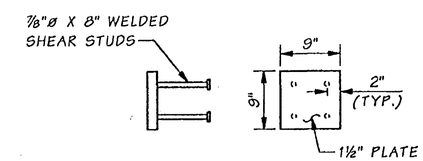

DETAIL F WA5

FOR "AS CONSTRUCTED PLANS" ONLY

SR 433 JOB NO. 1566 SHEET 6

Bridge Design Engr.	Kapur, J		M:\Y-Team\Lewis_Clark Rehab\Washington Appr\window files\ABUTMENT3.WND								
Supervisor	Kirker, KN	08/02					REGION NO.	STATE	FED. AID PROJ. NO.	SHEET NO.	TOTAL SHEETS
Designed By	Peralta, R	08/02					10	WASH.			
Checked By	Talukdar, M	08/02					JOB NUMBER 02x310		ACBH - 0433(007)		
Detailed By	Evans, P	08/02									
Bridge Projects Engr.											
Prelim. Plan By											
Architect/Specialist			DATE	REVISION	BY	APP'D	6444				

Wed Sep 18 11:06:42 2002

KARL N. KIRKER 9/18/02 PROFESSIONAL ENGINEER EXPIRES 11/3/03

BRIDGE AND STRUCTURES OFFICE

MUNINDRA TALUKDAR 9/18/02 PROFESSIONAL ENGINEER EXPIRES 6/1/04

Washington State Department of Transportation

SR 433
LEWIS AND CLARK BRIDGE
DECK REPLACEMENT

BENT NO. 1 - JACKING & BLOCKING SHELF AND BEARING SEAT DETAILS

BRIDGE SHEET NO. WA 6

SHEET 44 OF 258 SHEETS

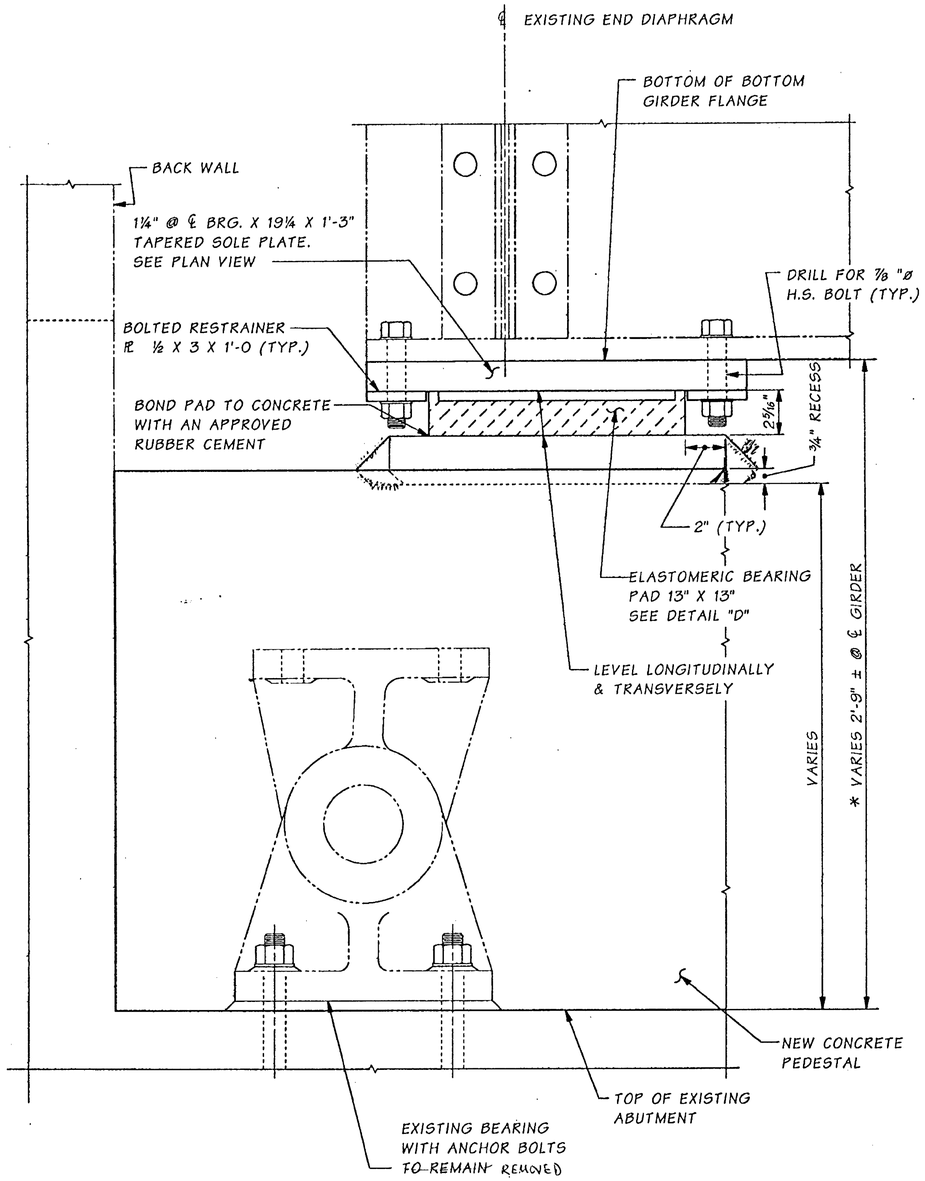

ELEVATION OF NEW LAMINATED ELASTOMERIC BEARING PADS

* - CONTRACTOR TO VERIFY DIMENSIONS IN FIELD

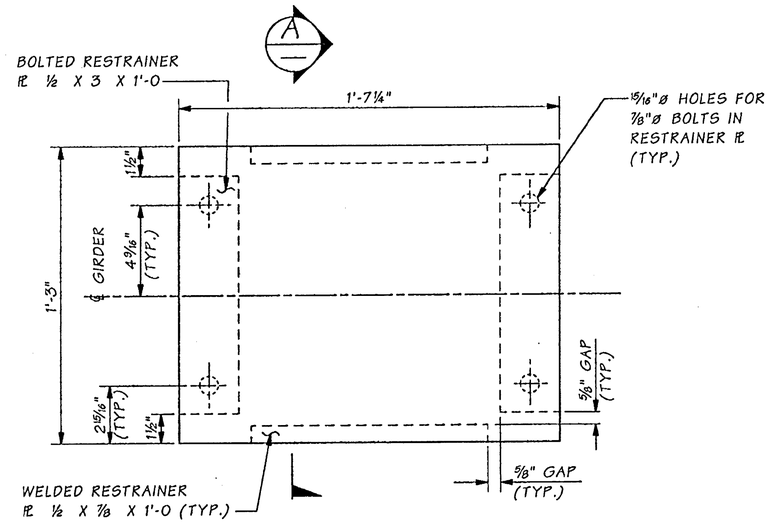

PLAN ~ SOLE PLATE

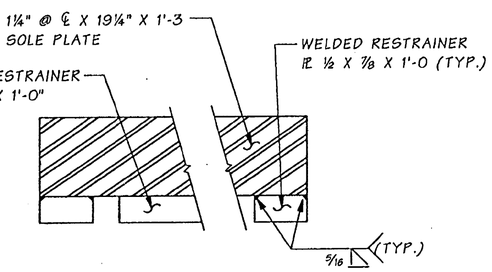

SECTION A

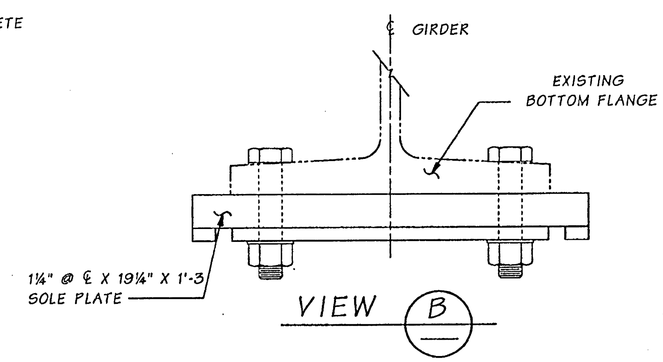

VIEW B

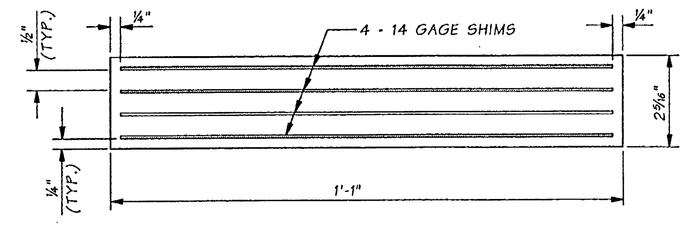

DETAIL D

ELASTOMERIC BEARING PAD
8 REQUIRED
DUROMETER HARDNESS = 60

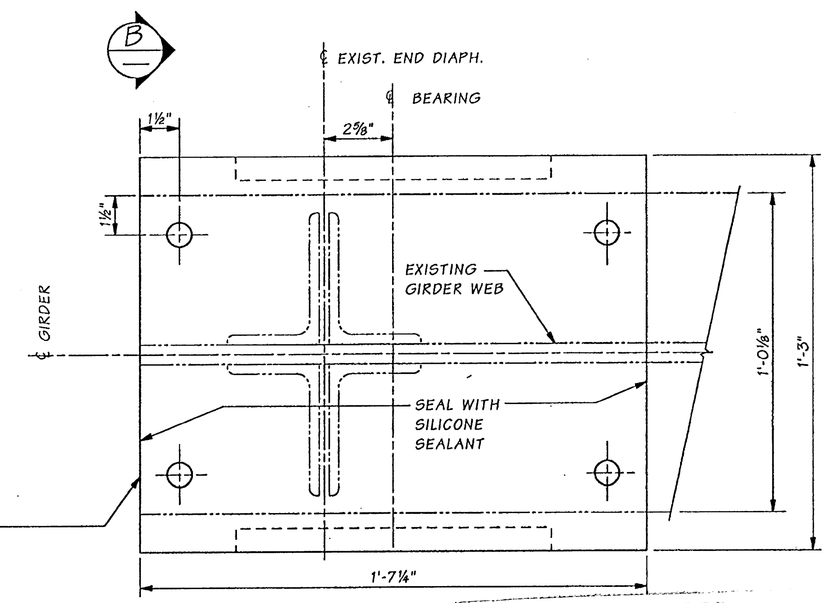

FOR "AS CONSTRUCTED PLANS" ONLY

SOLE PLATE CONNECTION TO GIRDER FLANGE

Bridge Design Engr.	Kapur, J		M:\Y-Team\Lewis_Clark Rehab\Washington Appr\window files\PIER 1 BRG.WND
Supervisor	Kirker, KN	08/02	
Designed By	Peralta, R	08/02	
Checked By	Talukdar, M	08/02	
Detailed By	Evans, P	08/02	
Bridge Projects Engr.			
Prelim. Plan By			
Architect/Specialist			

DATE	REVISION	BY	APP'D

REGION NO.	STATE	FED. AID PROJ. NO.	SHEET NO.	TOTAL SHEETS
10	WASH.	ACBH - 0433(007)		
JOB NUMBER 02x310				

KARL N. KIRKER — STATE OF WASHINGTON — 10506 — REGISTERED PROFESSIONAL ENGINEER — EXPIRES 11/3/03

BRIDGE AND STRUCTURES OFFICE

MONINDRA TALUKDAR — STATE OF WASHINGTON — 27025 — REGISTERED PROFESSIONAL ENGINEER — EXPIRES 6/1/04

Washington State Department of Transportation

SR 433
LEWIS AND CLARK BRIDGE
DECK REPLACEMENT

BENT NO. 1 - ELASTOMERIC BEARING PAD DETAILS

BRIDGE SHEET NO. WA7

SHEET 45 OF 258 SHEETS

SR 433 JOB NO. 1566 SHEET 7

Wed Sep 18 07:42:09 2002

WASHINGTON APPROACH WIDENING NOTES

1. DECK WIDENING SHALL BE PRECAST.

2. PRECAST GIRDER AND SLAB UNITS SHALL NOT BE INSTALLED UNTIL CONCRETE HAS ATTAINED 4000 PSI.

3. PRECAST GIRDER AND SLAB UNITS SHALL BE STORED IN THE UPRIGHT POSITION SUPPORTED AT THE BEARING LOCATIONS.

WASHINGTON APPROACH SUGGESTED CONSTRUCTION PROCEDURE

1. RETROFIT ABUTMENT AND REPLACE BEARINGS AT BENT 1 PER "SUGGESTED ABUTMENT - MODIFICATION PROCEDURE SHEET WA2.
2. REPLACE ROADWAY DECK, SIDEWALK, STRINGERS AND INSTALL THRIE BEAM GUARDRAIL BETWEEN BENT A-B AND PIER 1 PER BRIDGE SHEET OA31.
3. INSTALL CROSS BEAM EXTENSIONS AND BEARING SUPPORTS ON TOWERS.
4. SET UP TOWER SPAN AND SUSPENDED SPAN GIRDERS IN TEMPORARY CASTING AREA WITH SUPPORTS AT BEARING AND PIN LOCATIONS. PROVIDE LATERAL SUPPORT FOR GIRDERS. CAST SLAB ON TOP OF GIRDERS TO PROPER PROFILE AND GRADE TAKEN FROM EXISTING BRIDGE DECK. ALLOW CONCRETE TO ATTAIN 4000 PSI.

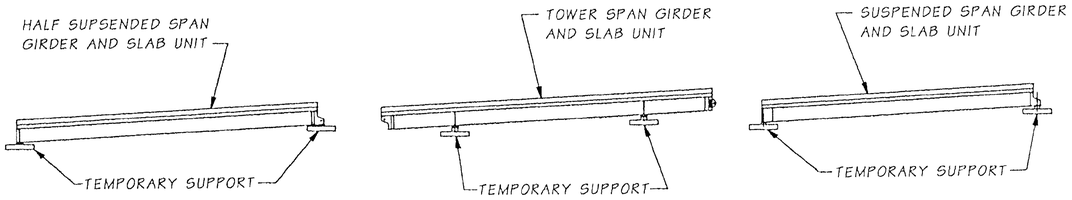

5. INSTALL TEMPORARY TRAFFIC BARRIER AND TRAFFIC CONTROL ON WEST SIDE OF APPROACH AS SHOWN IN TRAFFIC CONTROL PLAN, AND REMOVE PORTIONS OF EXISTING SUPERSTRUCTURE BEHIND TEMPORARY TRAFFIC BARRIER. CORE DRILL AND INSTALL DOWEL BARS.

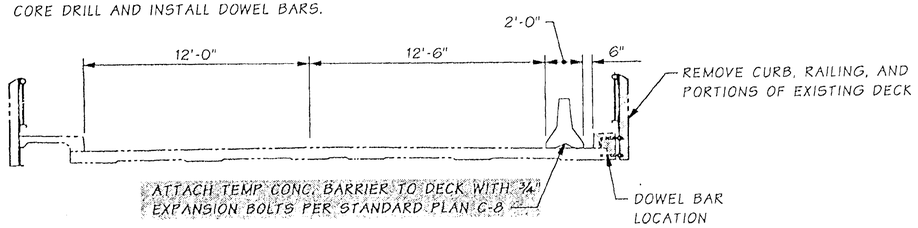

6. LIFT TOWER SPANS, GIRDER AND SLAB UNITS INTO PLACE AND INSTALL CROSS FRAMES.

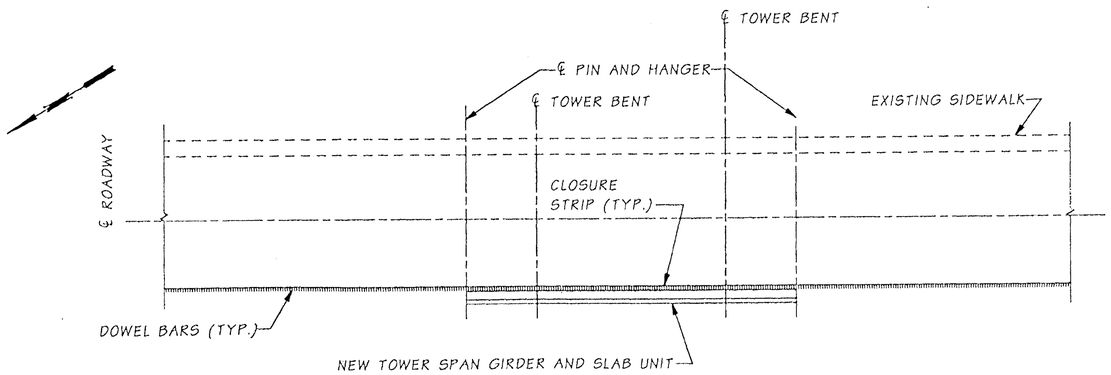

7. LIFT SUSPENDED SPAN GIRDER AND SLAB UNIT INTO PLACE AND INSTALL PINS, HANGERS AND CROSS FRAMES.

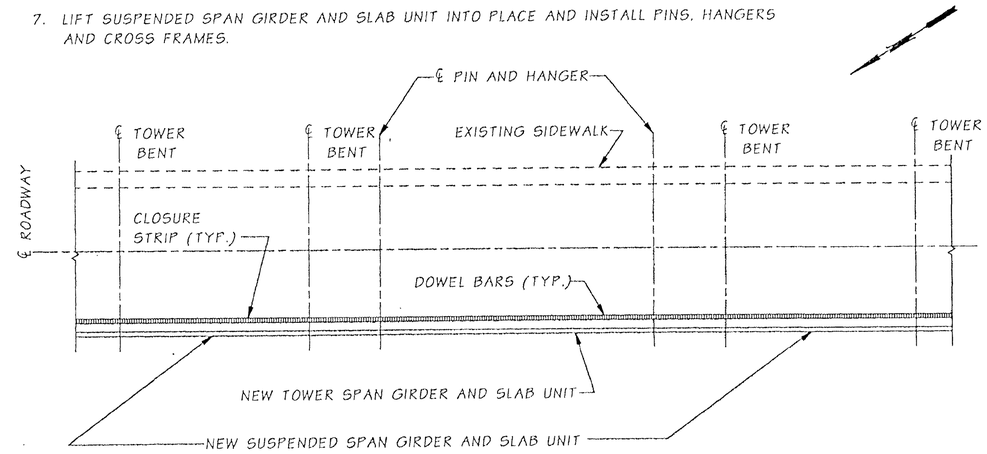

8. INSTALL LONGITUDINAL REINFORCING IN CLOSURE STRIP AND CAST CLOSURE.
9. INSTALL GUARDRAIL POSTS, THRIE BEAM GUARDRAIL, AND PEDESTRIAN RAILING.
10. REMOVE TEMPORARY TRAFFIC BARRIER, RESTRIPE AND PLACE TEMPORARY TRAFFIC BARRIER ON EAST SIDE OF APPROACH.

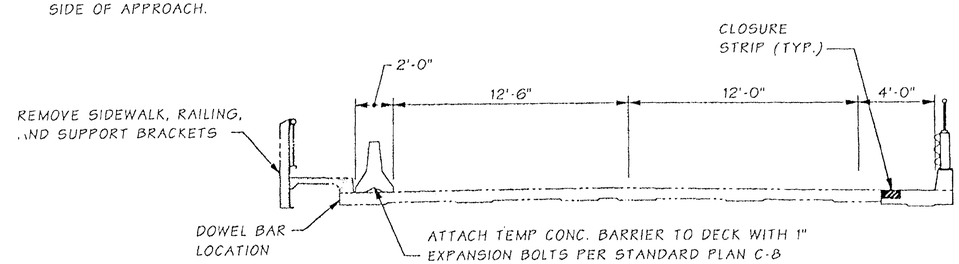

11. REPEAT STEPS 4 THROUGH 11 FOR EAST SIDE OF APPROACH.
12. REMOVE TEMPORARY TRAFFIC BARRIER, PLACE OVERLAY, RESTRIPE AND OPEN TO TRAFFIC.

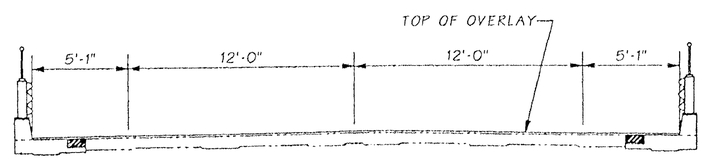

FOR "AS CONSTRUCTED PLANS" ONLY

1566 SHEET 8

SR 433

Design Engr.	Kapur, J		M:\Y-Team\Lewis_Clark Rehab\Washington Appr\window files\SEQUENCE.WND				REGION NO.	STATE	FED. AID PROJ. NO.	SHEET NO.	TOTAL SHEETS
Supervisor	Kirker, KN	08/02					10	WASH.	ACBH - 0433(007)		
Designed By	Talukdar, M	08/02	11/02	MODIFIED NOTE	MT		JOB NUMBER 02x310				
Checked By	Peralta, R	08/02									
Detailed By	House, L	08/02	10/02	MODIFIED TITLE	MT		6444				
Bridge Projects Engr.											
Prelim. Plan By			10/02	SHADING REMOVED	MT						
Architect/Specialist			DATE	REVISION	BY	APP'D					

Thu Nov 21 11:05:51 2002

KARL N. KIRKER — STATE OF WASHINGTON — REGISTERED PROFESSIONAL ENGINEER — EXPIRES 11/3/03

BRIDGE AND STRUCTURES OFFICE

MINDAHAR TALUKDAR — STATE OF WASHINGTON — REGISTERED PROFESSIONAL ENGINEER — EXPIRES 6/1/04

Washington State Department of Transportation

SR 433
LEWIS AND CLARK BRIDGE
DECK REPLACEMENT

CONSTRUCTION SEQUENCE

BRIDGE SHEET NO. WA8

SHEET 46 OF 258 SHEETS

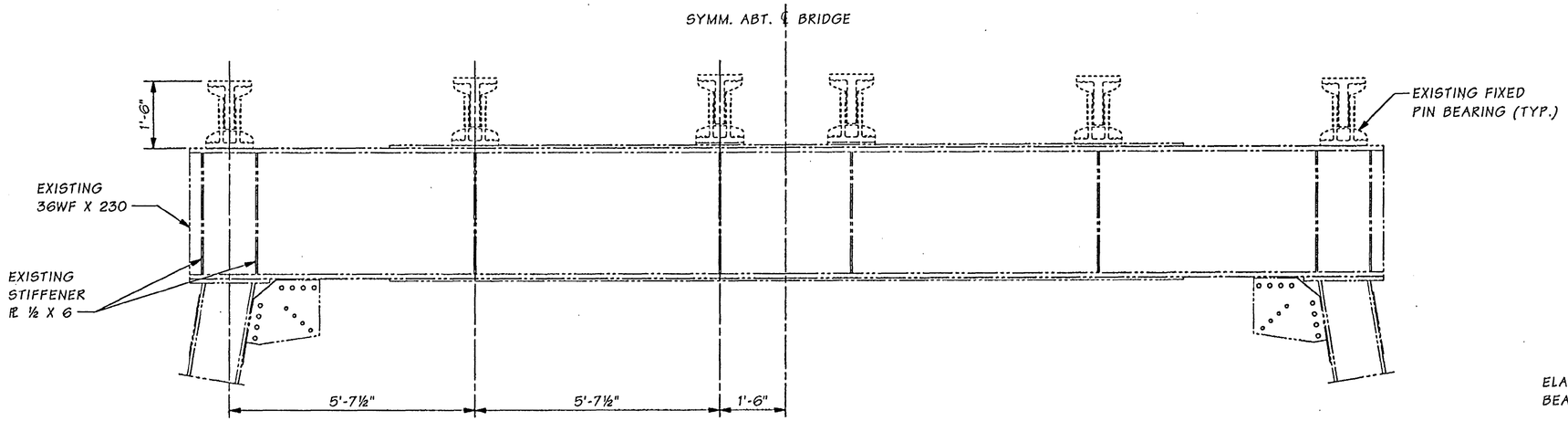

ELEVATION -- EXISTING CROSSBEAM @ FIXED BENTS

BENTS 6, 8, 10, 12, 14, 16, 18, 20, 22, 24 & 26 SHOWN

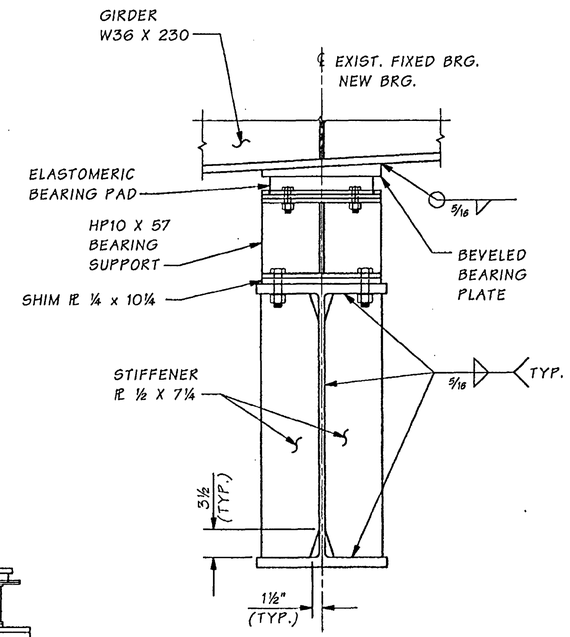

SECTION A

SEE BRIDGE SHEET WA12 FOR BEARING PLATE, BEARING PAD & SUPPORT DETAILS

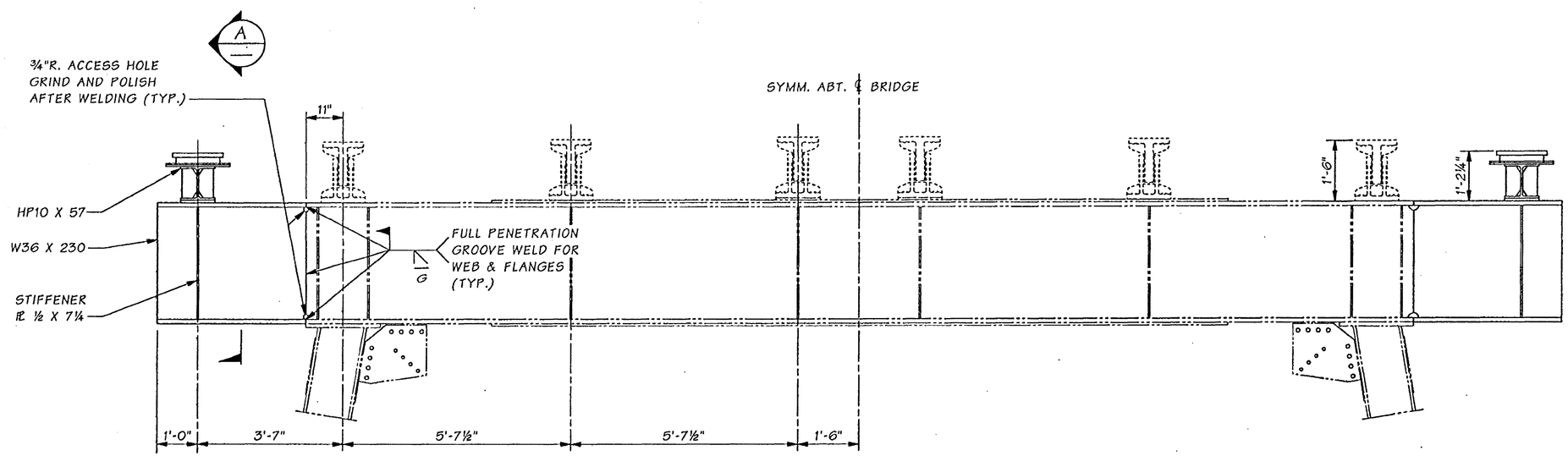

ELEVATION -- MODIFIED CROSSBEAM @ FIXED BENTS

BENTS 6, 8, 10, 12, 14, 16, 18, 20, 22, 24 & 26 SHOWN

FOR "AS CONSTRUCTED PLANS" ONLY

SR 433 JOB NO. 1566 SHEET 9

Bridge Design Engr.	Kapur, J		
Supervisor	Kirker, KN	08/02	
Designed By	Schultz, E	08/02	
Checked By	Talukdar, M	08/02	
Detailed By	Evans, P	08/02	
Bridge Projects Engr.			
Prelim. Plan By			
Architect/Specialist			

M:\Y-Team\Lewis_Clark Rehab\Washington Appr\window files\B6 FLOORBEAM.WND

DATE	REVISION	BY	APP'D

REGION NO.	STATE	FED. AID PROJ. NO.	SHEET NO.	TOTAL SHEETS
10	WASH.	ACBH - 0433(007)		
JOB NUMBER 02x310				
6444				

KARL N. KIRKER — STATE OF WASHINGTON — 12206 — REGISTERED PROFESSIONAL ENGINEER — 9/18/02 — EXPIRES 11/3/03

BRIDGE AND STRUCTURES OFFICE

MANJUNATH K. TALUKDAR — STATE OF WASHINGTON — 27669 — REGISTERED PROFESSIONAL ENGINEER — 9/18/02 — EXPIRES 6/1/04

Washington State Department of Transportation

SR 433
LEWIS AND CLARK BRIDGE
DECK REPLACEMENT

FIXED BENT FLOORBEAM

BRIDGE SHEET NO. WA9

SHEET 47 OF 258 SHEETS

Wed Sep 18 11:12:07 2002

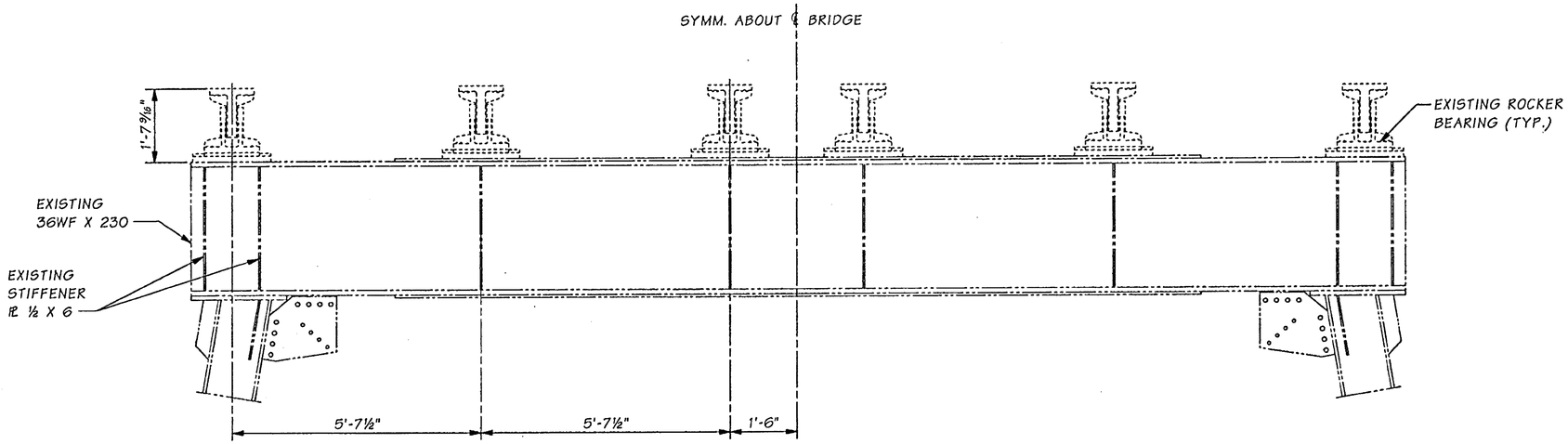

ELEVATION -- EXISTING CROSSBEAM @ ROCKER BENTS

BENTS 7, 9, 11, 13, 17, 19, 21, 23 & 27 SHOWN

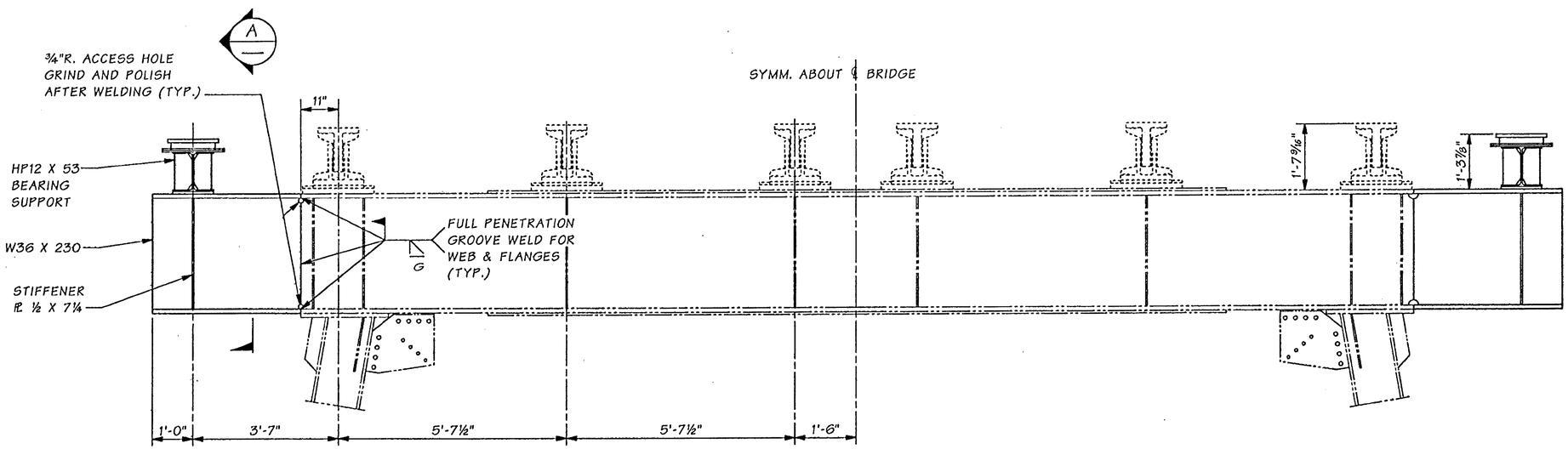

ELEVATION -- MODIFIED CROSSBEAM @ ROCKER BENTS

BENTS 7, 9, 11, 13, 15, 17, 19, 21, 23, 25 & 27 SHOWN

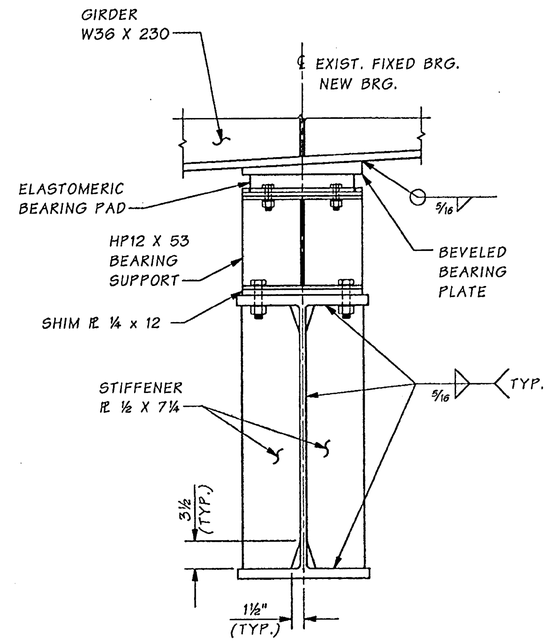

SECTION A

SEE BRIDGE SHEET WA12 FOR BEARING PLATE, BEARING PAD & SUPPORT DETAILS

FOR "AS CONSTRUCTED PLANS" ONLY

SR 433 JOB NO. 1566 SHEET 10

Bridge Design Engr.	Kapur, J	
Supervisor	Kirker, KN	08/02
Designed By	Schultz, E	08/02
Checked By	Talukdar, M	08/02
Detailed By	Evans, P	08/02
Bridge Projects Engr.		
Prelim. Plan By		
Architect/Specialist		

M:\Y-Team\Lewis_Clark Rehab\Washington Appr\window files\B7 FLOORBEAM.WND

DATE	REVISION	BY	APP'D

REGION NO.	STATE	FED. AID PROJ. NO.	SHEET NO.	TOTAL SHEETS
10	WASH.	ACBH - 0433(007)		
JOB NUMBER 02x310				
6444				

KARL N. KIRKER — STATE OF WASHINGTON — 27828 — REGISTERED PROFESSIONAL ENGINEER — EXPIRES 11/3/03

BRIDGE AND STRUCTURES OFFICE

MUNINDRA TALUKDAR — STATE OF WASHINGTON — 27828 — REGISTERED PROFESSIONAL ENGINEER — EXPIRES 6/1/04

Washington State Department of Transportation

SR 433
LEWIS AND CLARK BRIDGE
DECK REPLACEMENT

ROCKER BENT FLOORBEAM

BRIDGE SHEET NO. WA10

SHEET 48 OF 258 SHEETS

Wed Sep 18 11:12:36 2002

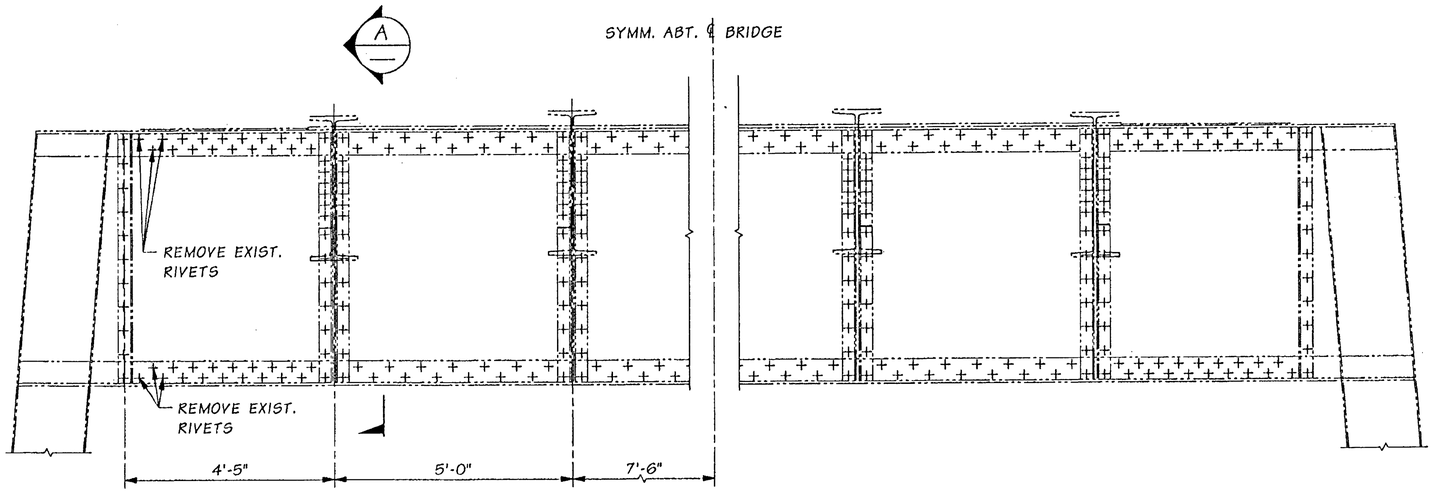

ELEVATION -- EXISTING FLOORBEAM @ BENT A-B

(LOOKING SOUTH)

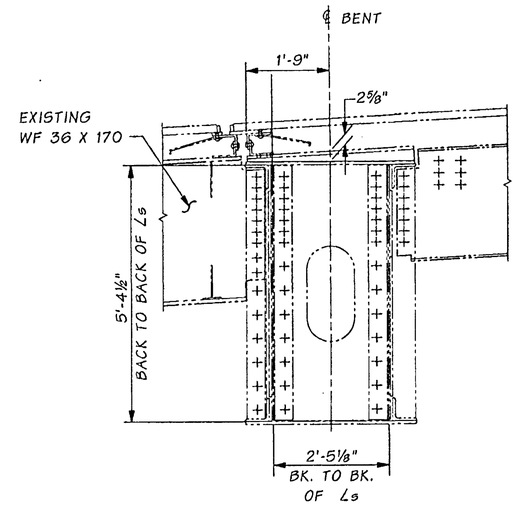

SECTION A

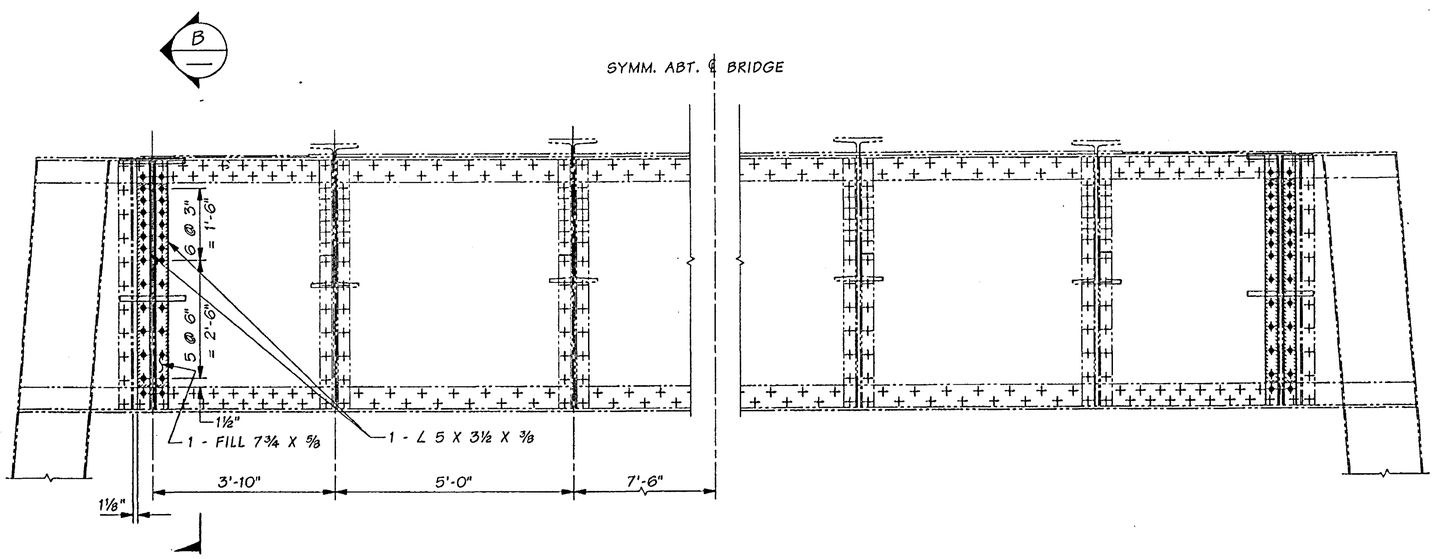

ELEVATION -- MODIFIED FLOORBEAM @ BENT A-B

(LOOKING SOUTH)

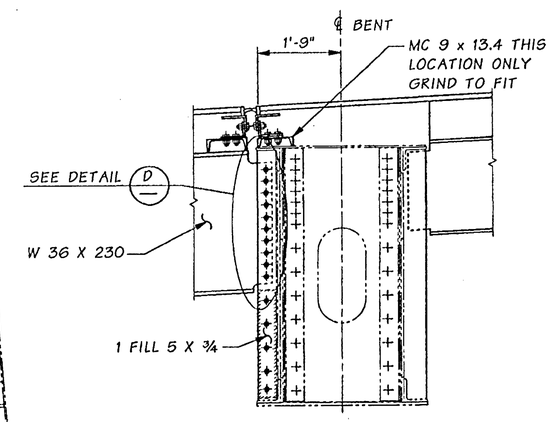

SECTION B

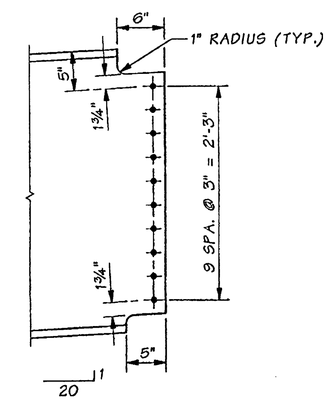

DETAIL D

-WA21

FOR "AS CONS... PLANS" ONLY

Bridge Design Engr.	Kapur, J		M:\Y-Team\Lewis_Clark Rehab\Washington Appr\Window files\BENT AB.WND				REGION NO.	STATE	FED. AID PROJ. NO.	SHEET NO.	TOTAL SHEETS
Supervisor	Kirker, KN	08/02					10	WASH.	ACBH - 0433(007)		
Designed By	Schultz, E	08/02					JOB NUMBER 02x310				
Checked By	Talukdar, M	08/02									
Detailed By	Evans, P	08/02									
Bridge Projects Engr.											
Prelim. Plan By											
Architect/Specialist			DATE	REVISION	BY	APP'D	6444				

KARL N. KIRKER, STATE OF WASHINGTON, 18298, REGISTERED PROFESSIONAL ENGINEER, 9/18/02, EXPIRES 11/3/03

BRIDGE AND STRUCTURES OFFICE

MUNINDRA K. TALUKDAR, STATE OF WASHINGTON, 27628, REGISTERED PROFESSIONAL ENGINEER, 9/18/02, EXPIRES 6/1/04

Washington State Department of Transportation

SR 433
LEWIS AND CLARK BRIDGE
DECK REPLACEMENT

TYPICAL SECTION - BENT AB

BRIDGE SHEET NO. WA11

SHEET 49 OF 258 SHEETS

SR 433 JOB NO. 1566 SHEET 11

Tue Sep 17 16:28:06 2002

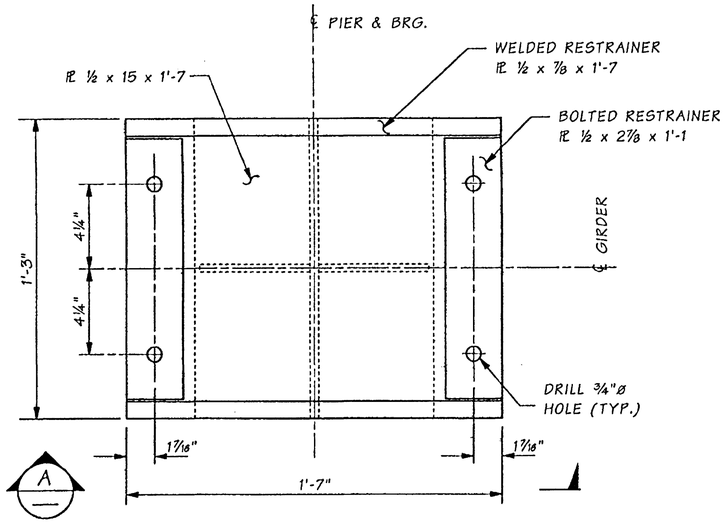

TOWER SPAN BEARING PLATE

HP 12 x 53 SHOWN
HP 10 x 57 SIMILAR

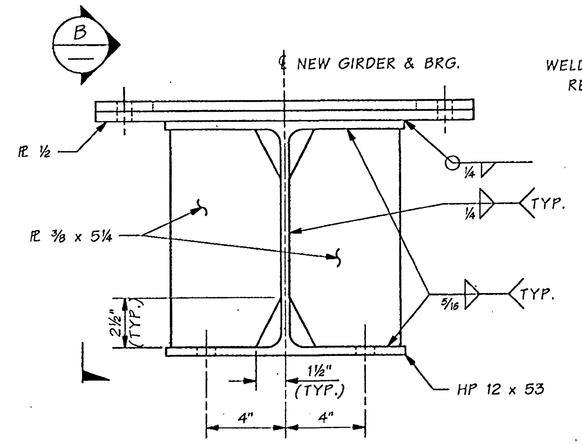

VIEW A

ROCKER BENT
22 REQUIRED

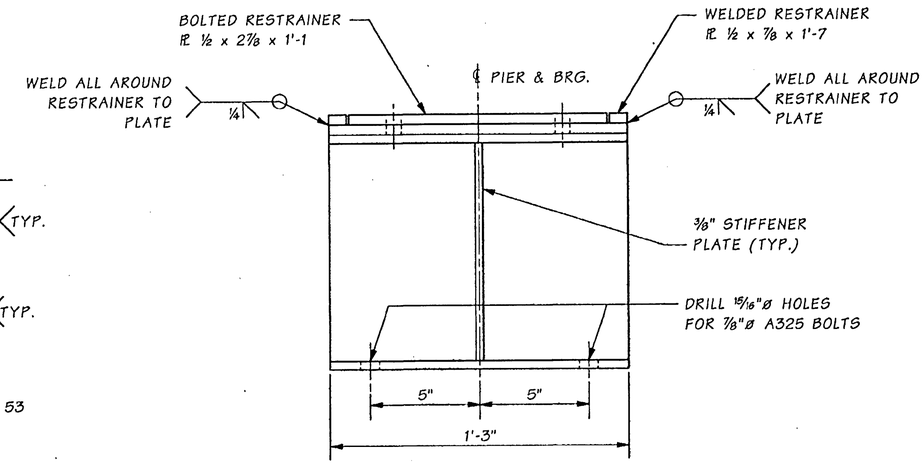

VIEW B

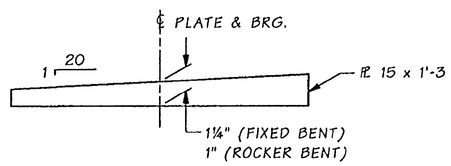

BEVELED BEARING PLATE

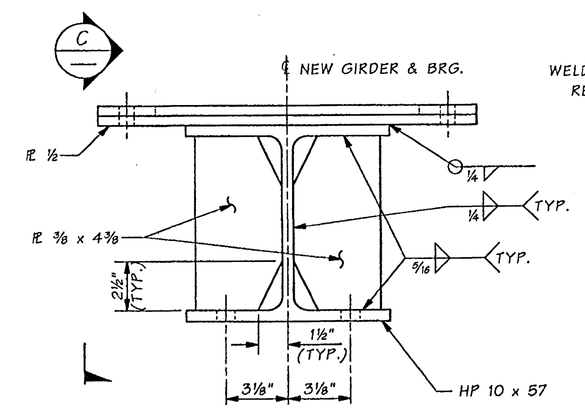

VIEW A

FIXED BENT
22 REQUIRED

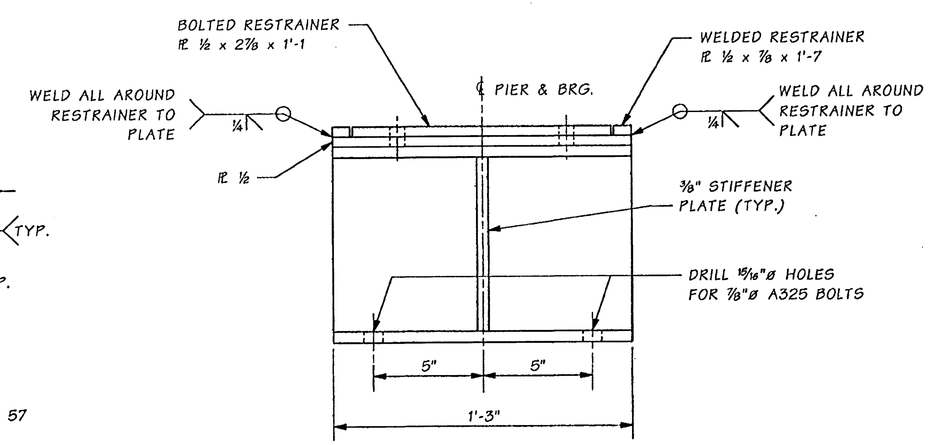

VIEW C

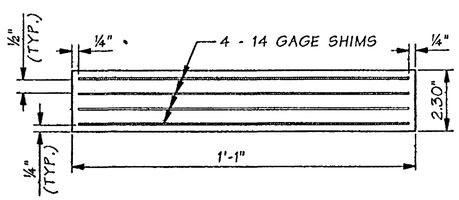

ELASTOMERIC BEARING PAD

DUROMETER HARDNESS = 60
SHEAR MODULUS AT 73° 130 PSI

FOR "AS CONSTRUCTED PLANS" ONLY

Bridge Design Engr.	Kapur, J		M:\Y-Team\Lewis_Clark Rehab\Washington Appr\Window files\TOWER BEARINGS.WND
Supervisor	Kirker, KN	08/02	
Designed By	Schultz, E	08/02	
Checked By	Talukdar, M	08/02	
Detailed By	Evans, P	08/02	
Bridge Projects Engr.			
Prelim. Plan By			
Architect/Specialist			

DATE	REVISION	BY	APP'D

REGION NO.	STATE	FED. AID PROJ. NO.	SHEET NO.	TOTAL SHEETS
10	WASH.	ACBH - 0433(007)		
JOB NUMBER 02x310				
6444				

KARL N. KIRKER — STATE OF WASHINGTON — REGISTERED PROFESSIONAL ENGINEER — EXPIRES 11/3/03

BRIDGE AND STRUCTURES OFFICE

MUHAMMAD A. TALUKDAR — STATE OF WASHINGTON — REGISTERED PROFESSIONAL ENGINEER — EXPIRES 6/1/04

Washington State Department of Transportation

SR 433
LEWIS AND CLARK BRIDGE
DECK REPLACEMENT

TOWER SPAN BEARING DETAILS

BRIDGE SHEET NO. WA12

SHEET 50 OF 258 SHEETS

SR 433 JOB NO. 1566 SHEET 12

Tue Sep 17 15:54:05 2002

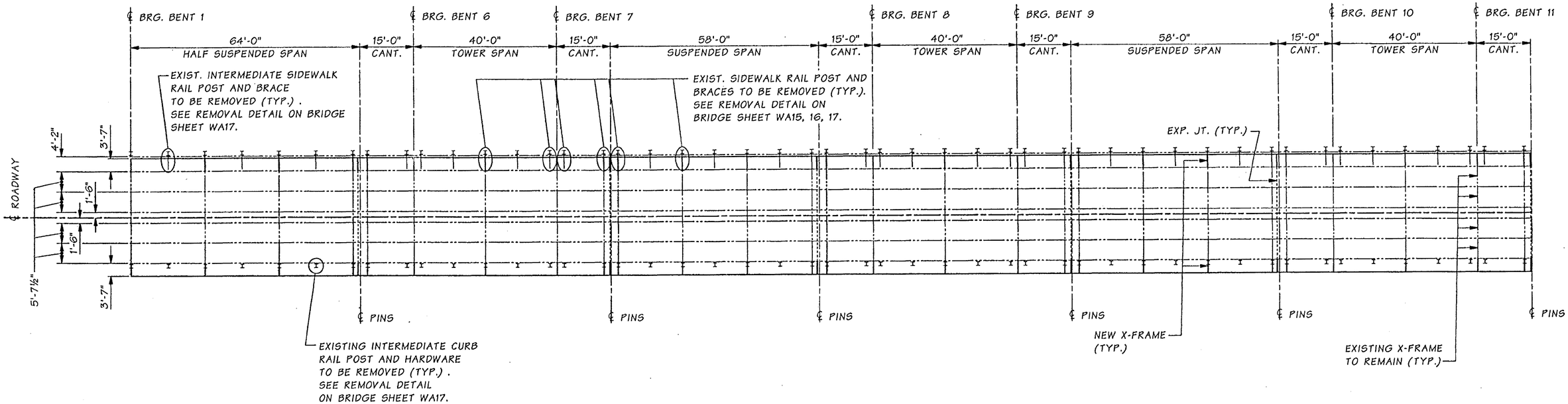

GIRDER FRAMING PLAN

FOR "AS CONSTRUCTED PLANS" ONLY

SR 433 JOB NO. 1566 SHEET 13

Bridge Design Engr.	Kapur, J	
Supervisor	Kirker, KN	08/02
Designed By	Schultz, E	08/02
Checked By	Talukdar, M	08/02
Detailed By	Evans, P	08/02
Bridge Projects Engr.		
Prelim. Plan By		
Architect/Specialist		

M:\Y-Team\Lewis_Clark Rehab\Washington Appr\Window files\FRAME L01.WND

DATE	REVISION	BY	APP'D

REGION NO.	STATE	FED. AID PROJ. NO.	SHEET NO.	TOTAL SHEETS
10	WASH.	ACBH - 0433(007)		
JOB NUMBER 02x310 6444				

KARL N. KIRKER, STATE OF WASHINGTON, 16296, REGISTERED PROFESSIONAL ENGINEER — EXPIRES 11/3/03

BRIDGE AND STRUCTURES OFFICE

MUNINDRA TALUKDAR, STATE OF WASHINGTON, 27068, REGISTERED PROFESSIONAL ENGINEER — EXPIRES 6/1/04

Washington State Department of Transportation

SR 433
LEWIS AND CLARK BRIDGE
DECK REPLACEMENT

WASHINGTON APPROACH FRAMING PLAN
SHEET 1 OF 2

BRIDGE SHEET NO. WA13

SHEET 51 OF 258 SHEETS

Tue Sep 17 15:53:39 2002

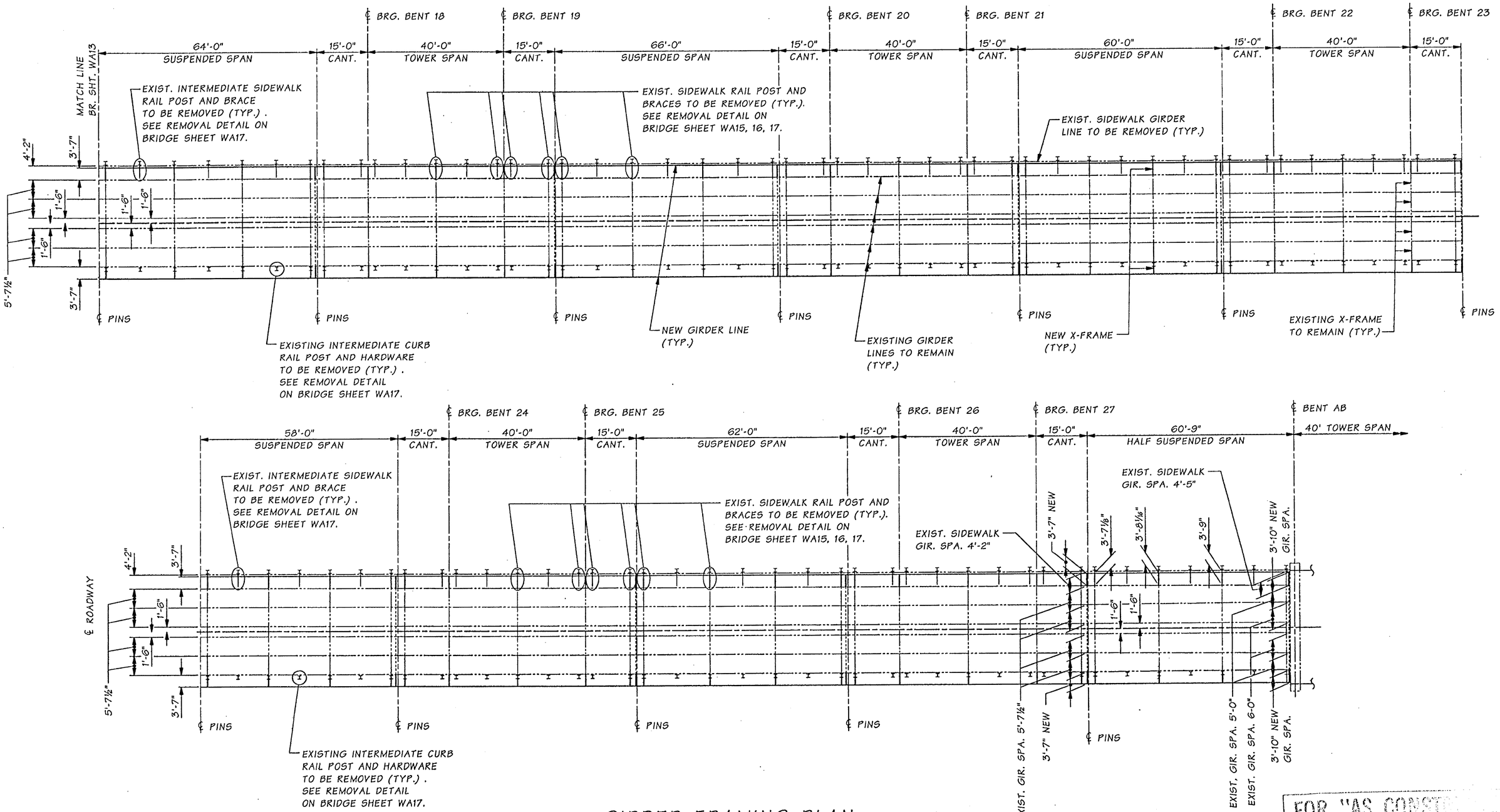

GIRDER FRAMING PLAN

FOR "AS CONSTR... PLANS" ONL...

SR 433 JOB NO. 1566 SHEET 14

Bridge Design Engr.	Kapur, J	
Supervisor	Kirker, KN	08/02
Designed By	Schultz, E	08/02
Checked By	Talukdar, M	08/02
Detailed By	Evans, P	08/02
Bridge Projects Engr.		
Prelim. Plan By		
Architect/Specialist		

M:\Y-Team\Lewis_Clark Rehab\Washington Appr\Window files\FRAME L02.WND

DATE	REVISION	BY	APP'D

REGION NO.	STATE	FED. AID PROJ. NO.	SHEET NO.	TOTAL SHEETS
10	WASH.	ACBH - 0433(007)		

JOB NUMBER 02x310

6444

KARL N. KIRKER, STATE OF WASHINGTON, 10206, REGISTERED PROFESSIONAL ENGINEER — EXPIRES 11/3/03

BRIDGE AND STRUCTURES OFFICE

MENDODAN TALUKDAR, STATE OF WASHINGTON, 27026, REGISTERED PROFESSIONAL ENGINEER — EXPIRES 6/1/04

Washington State Department of Transportation

SR 433
LEWIS AND CLARK BRIDGE
DECK REPLACEMENT

WASHINGTON APPROACH FRAMING PLAN
SHEET 2 OF 2

BRIDGE SHEET NO. WA14

SHEET 52 OF 258 SHEETS

Tue Sep 17 15:53:41 2002

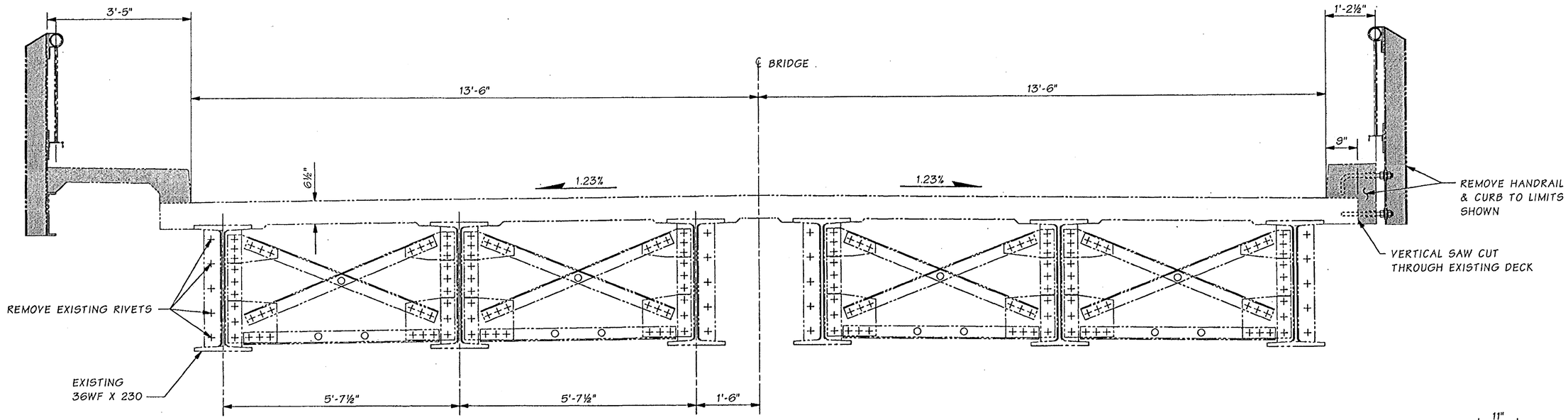

TYPICAL SECTION -- EXISTING CROSS FRAMES AT TOWERS

REMOVE SHADED PORTIONS AT TIME OF ADJACENT GIRDER PLACEMENT

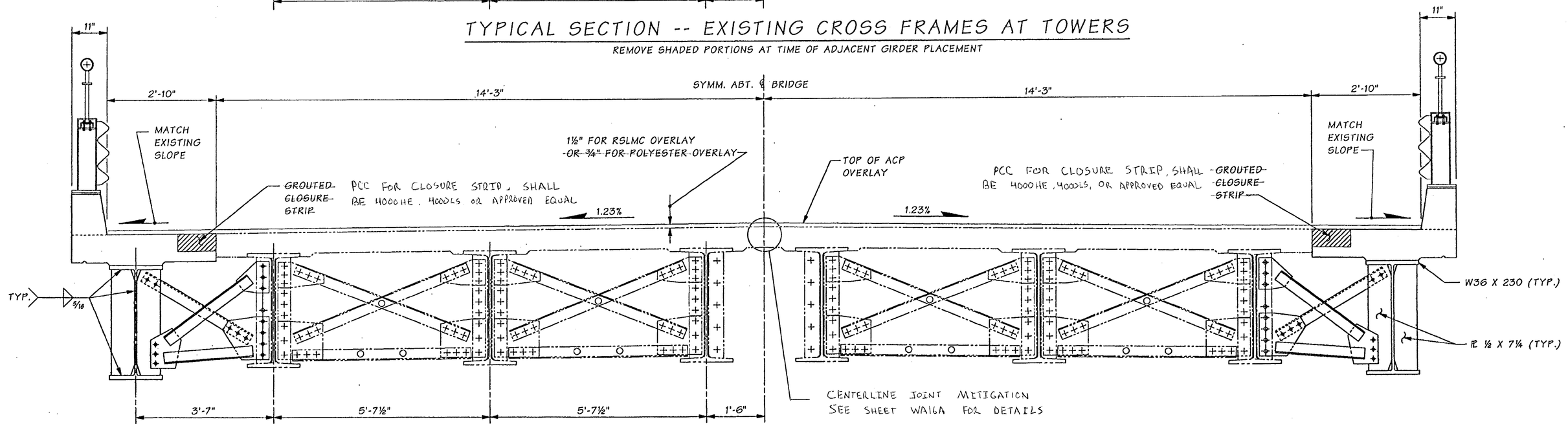

TYPICAL SECTION -- MODIFIED CROSS FRAMES AT TOWERS

END CROSS FRAME AT BENT NO. 1 SIMILIAR
SEE BRIDGE SHEET WA18 FOR X-FRAME DETAILS

FOR "AS CONSTRUCTED PLANS" ONLY

SR 433 JOB NO. 1566 SHEET 15

Bridge Design Engr.	Kapur, J	
Supervisor	Kirker, KN	08/02
Designed By	Schultz, E	08/02
Checked By	Talukdar, M	08/02
Detailed By	Evans, P	08/02
Bridge Projects Engr.		
Prelim. Plan By		
Architect/Specialist		

M:\Y-Team\Lewis_Clark Rehab\Washington Appr\Window files\TOWER DIAPH.WND

DATE	REVISION	BY	APP'D

REGION NO.	STATE	FED. AID PROJ. NO.	SHEET NO.	TOTAL SHEETS
10	WASH.	ACBH - 0433(007)		

JOB NUMBER 02x310

6444

KARL N. KIRKER, STATE OF WASHINGTON, REGISTERED PROFESSIONAL ENGINEER, 9/18/02, EXPIRES 11/3/03

BRIDGE AND STRUCTURES OFFICE

SHIVINDRA VALLAPARAM, STATE OF WASHINGTON, REGISTERED PROFESSIONAL ENGINEER, 9/18/02, EXPIRES 6/1/04

Washington State Department of Transportation

SR 433
LEWIS AND CLARK BRIDGE
DECK REPLACEMENT

TOWER DIAPHRAGM

BRIDGE SHEET NO. WA 15

SHEET 53 OF 258 SHEETS

Tue Sep 17 15:54:06 2002

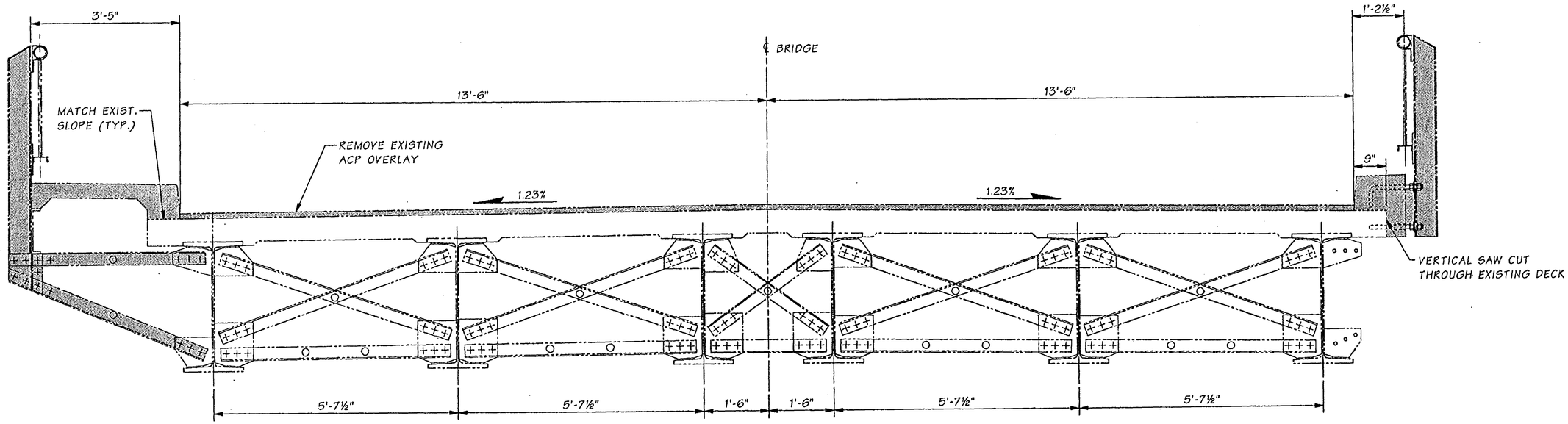

TYPICAL SECTION -- EXISTING INTERMEDIATE CROSS FRAMES

EXISTING WF 36 x 230 GIRDER SHOWN
EXISTING WF 36 X 170, WF 36 X 182 & WF 36 X 194 SIMILAR
REMOVE SHADED PORTIONS AT TIME OF ADJACENT GIRDER PLACEMENT

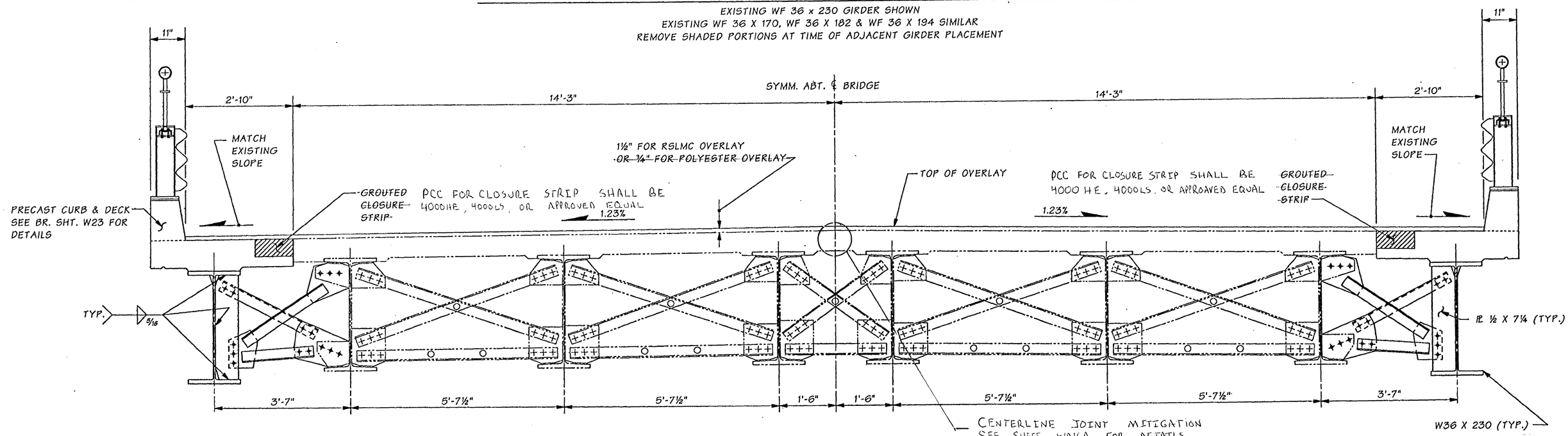

TYPICAL SECTION -- MODIFIED INTERMEDIATE CROSS FRAMES

EXISTING WF 36 x 230 GIRDER SHOWN
EXISTING WF 36 X 170, WF 36 X 182 & WF 36 X 194 SIMILAR
SEE BRIDGE SHEET WA18 FOR CROSS FRAME DETAILS.

FOR "AS CONSTRUCTED PLANS" ONLY

Bridge Design Engr.	Kapur, J		M:\Y-Team\Lewis_Clark Rehab\Washington Appr\Window files\INTERMEDIATE DIAPH.WND								
Supervisor	Kirker, KN	08/02					REGION NO.	STATE	FED. AID PROJ. NO.	SHEET NO.	TOTAL SHEETS
Designed By	Schultz, E	08/02					10	WASH.	ACBH - 0433(007)		
Checked By	Talukdar, M	08/02					JOB NUMBER 02x310				
Detailed By	Evans, P	08/02					6444				
Bridge Projects Engr.											
Prelim. Plan By											
Architect/Specialist			DATE	REVISION	BY	APP'D					

KARL N. KIRKER, STATE OF WASHINGTON, 13296, REGISTERED PROFESSIONAL ENGINEER, 9/5/02, EXPIRES 11/3/03

BRIDGE AND STRUCTURES OFFICE

MINIHERA TALUKDAR, STATE OF WASHINGTON, 27628, REGISTERED PROFESSIONAL ENGINEER, 9/5/02, EXPIRES 6/1/04

Washington State Department of Transportation

SR 433
LEWIS AND CLARK BRIDGE
DECK REPLACEMENT

INTERMEDIATE DIAPHRAGM

BRIDGE SHEET NO. WA16

SHEET 54 OF 258 SHEETS

SR 433 JOB NO. 1566 SHEET 16

Tue Sep 17 15:53:42 2002

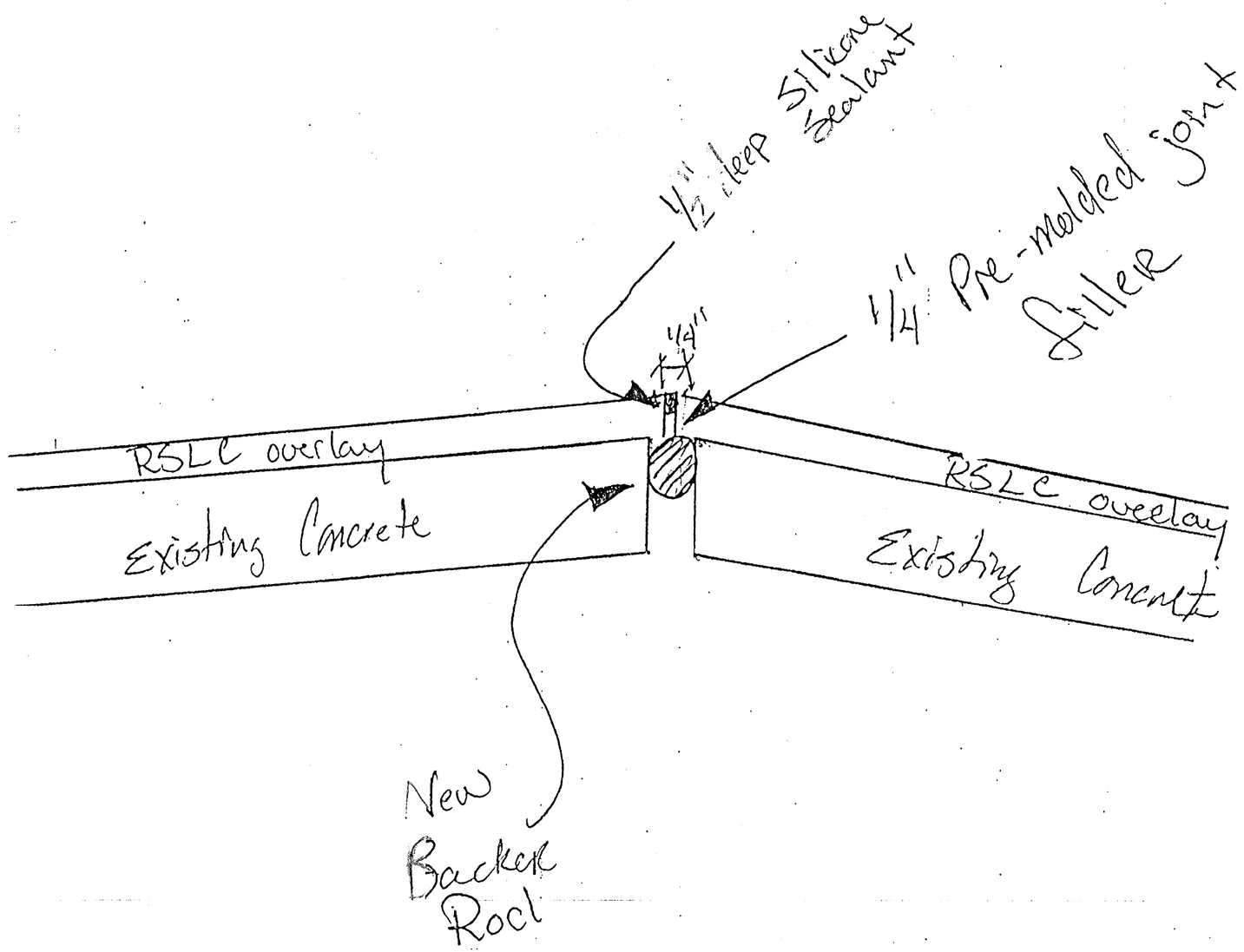

CENTERLINE JOINT MITIGATION

WASHINGTON APPROACH - STA 13+19.00 TO 28+25.75

OREGON APPROACH - STA 67+16.29 TO 67+92.29

FOR "AS CONSTRUCTED PLANS" ONLY

FILE NAME	C:\AAWork\kelso\Svensen's Curve\L3425WASTESITE.dgn									PLOT11
TIME	02:37:18 PM				REGION NO. 10	STATE WASH	FED.AID PROJ.NO.	Washington State Department of Transportation	SR 433 LEWIS AND CLARK BRIDE DECK REPLACEMENT	WAIGA
DATE	08/17/2005				JOB NUMBER					SHEET 54A OF 258 SHEETS
PLOTTED BY	spahnk									
DESIGNED BY										
ENTERED BY										
CHECKED BY					CONTRACT NO. 6444		LOCATION NO.			
PROJ. ENGR.										
REGIONAL ADM.		REVISION	DATE	BY				P.E. STAMP BOX DATE	P.E. STAMP BOX DATE	CENTERLINE JOINT MITIGATION

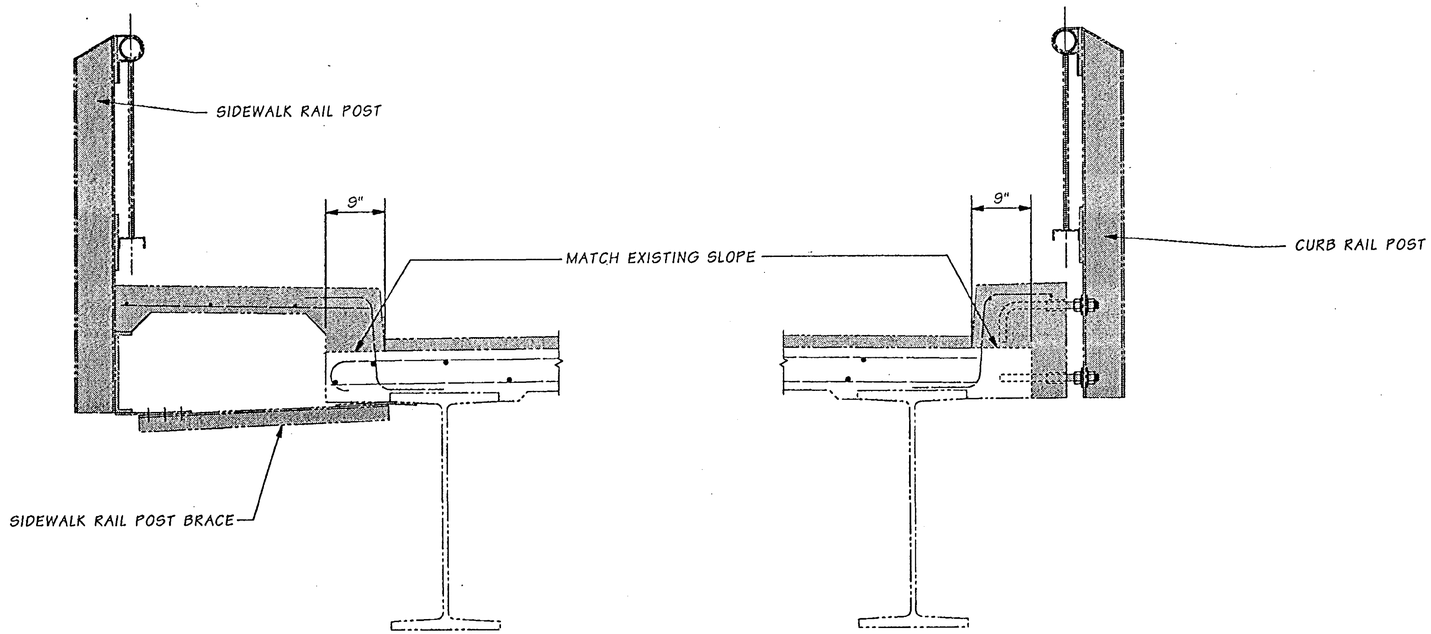

WEST SIDE

EAST SIDE

TYPICAL SECTION @ EXISTING INTERMEDIATE RAIL POST

REMOVE SHADED PORTION AT TIME OF ADJACENT GIRDER PLACEMENT
(58 LOCATIONS)

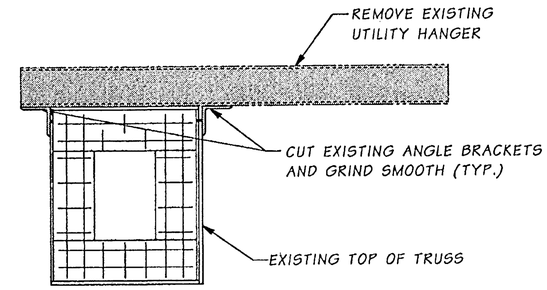

(240 LOCATIONS)

TYPICAL SECTION OF EXISTING UTILITY HANGER IN THROUGH TRUSS SPANS

HANGERS LOCATED THROUGHOUT THROUGH TRUSS SPANS ON BOTH SIDES OF BRIDGE.

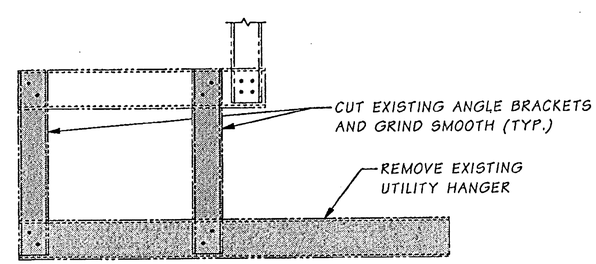

(20 LOCATIONS)

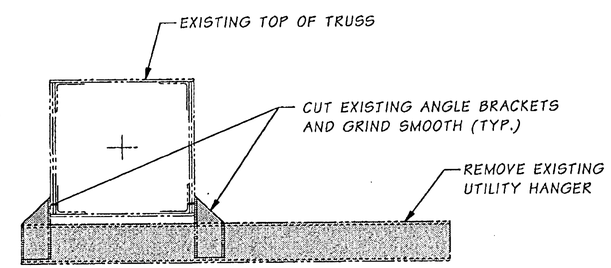

(90 LOCATIONS)

TYPICAL SECTION OF EXISTING UTILITY HANGER IN DECK TRUSS SPANS

HANGERS LOCATED THROUGHOUT DECK TRUSS SPANS ON BOTH SIDES OF BRIDGE.

FOR "AS CO[illegible] PLANS" ONLY

SR 433 JOB NO. 1566 SHEET 17

Bridge Design Engr.	Kapur, J		M:\Y-Team\Lewis_Clark Rehab\Washington Appr\window files\REMOVAL DETS.WND
Supervisor	Kirker, KN	08/02	
Designed By	Schultz, E	08/02	
Checked By	Talukdar, M	08/02	
Detailed By	Evans, P	08/02	
Bridge Projects Engr.			
Prelim. Plan By			
Architect/Specialist			

DATE	REVISION	BY	APP'D

REGION NO.	STATE	FED. AID PROJ. NO.	SHEET NO.	TOTAL SHEETS
10	WASH.	ACBH - 0433(007)		
JOB NUMBER 02x310				
6444				

KARL N. KIRKER — STATE OF WASHINGTON — 15696 — REGISTERED PROFESSIONAL ENGINEER — EXPIRES 11/3/03

BRIDGE AND STRUCTURES OFFICE

MONINDRA TALUKDAR — STATE OF WASHINGTON — 27626 — REGISTERED PROFESSIONAL ENGINEER — EXPIRES 6/1/04

Washington State Department of Transportation

SR 433
LEWIS AND CLARK BRIDGE
DECK REPLACEMENT

REMOVAL DETAILS

BRIDGE SHEET NO. WA17

SHEET 55 OF 258 SHEETS

Thu Sep 19 14:19:20 2002

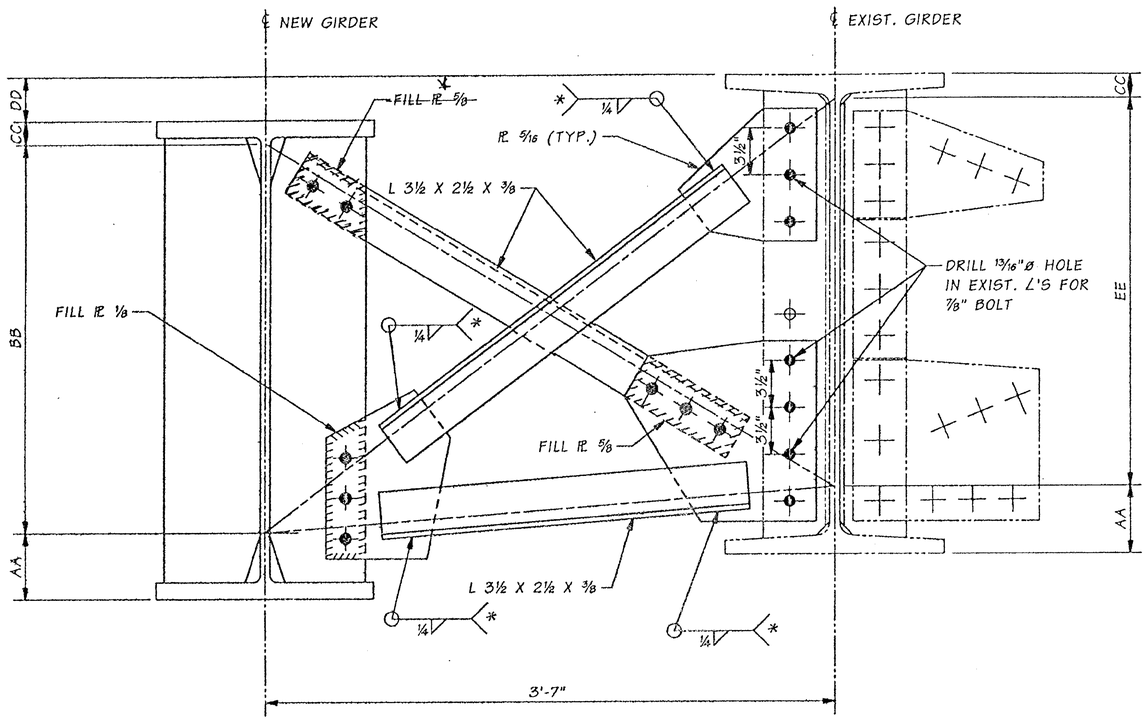

TYPICAL CROSS FRAME AT TOWERS

CROSS FRAME DESIGNATION	AA	BB	CC	DD	EE	# OF LOCATIONS
ECF 194	5 5/16"	2'-4 9/16"	2"	3 3/16"	2'-5¼"	2
TCF 230	5"	2'-5 3/16"	1¾"	3¼"	2'-5 3/16"	44

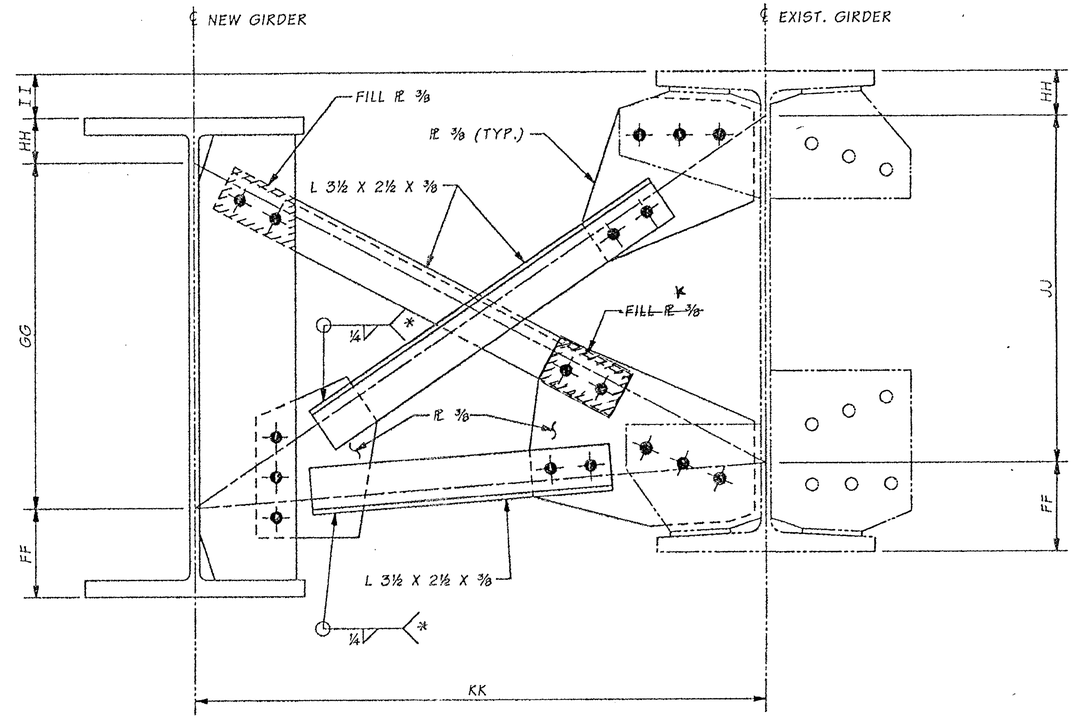

TYPICAL INTERMEDIATE CROSS FRAME

CROSS FRAME DESIGNATION	FF	GG	HH	II	JJ	KK	# OF LOCATIONS
ICF 170A	6 15/16"	2'-1 11/16"	3 5/16"	3 5/16"	2'-1 15/16"	3'-7"	48
ICF 170B	6 15/16"	2'-1 11/16"	3 5/16"	3 5/16"	2'-1 15/16"	3'-7⅛"	2
ICF 170C	6 15/16"	2'-1¾"	3¼"	3 5/16"	2'-2"	3'-8 1/16"	2
ICF 170D	6⅞"	2'-1⅞"	3 3/16"	3 5/16"	2'-2⅛"	3'-9"	2
ICF 182	7 1/16"	2'-1 7/16"	3 7/16"	3 5/16"	2'-1 15/16"	3'-7"	8
ICF 194	7¼"	2'-1 3/16"	3½"	3 5/16"	2'-1 13/16"	3'-7"	30
ICF 230	6⅝"	2'-1 15/16"	3⅜"	3¼"	2'-1 15/16"	3'-7"	66

✱ FILL PL DELETED

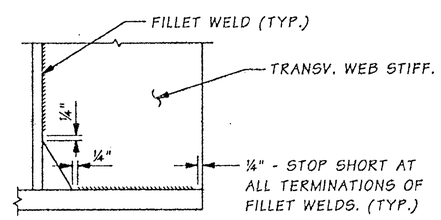

TYPICAL FILLET WELD TERMINATION DETAIL

NOTE: TOP AND BOTTOM (RIGHT SIDE) GUSSET PLATES FIELD DRILLED

* DO NOT WRAP WELDS AT INTERSECTIONS - HOLD BACK ¼"

FOR "AS CONSTRUCTED PLANS" ONLY

SR 433 JOB NO. 1566 SHEET 18

Bridge Design Engr.	Kapur, J	
Supervisor	Kirker, KN	08/02
Designed By	Schultz, E	08/02
Checked By	Talukdar, M	08/02
Detailed By	Evans, P	08/02
Bridge Projects Engr.		
Prelim. Plan By		
Architect/Specialist		

M:\Y-Team\Lewis_Clark Rehab\Washington Appr\Window files\X-FRAME EXT.WND

DATE	REVISION	BY	APP'D

REGION NO.	STATE	FED. AID PROJ. NO.	SHEET NO.	TOTAL SHEETS
10	WASH.	ACBH - 0433(007)		

JOB NUMBER 02x310

6444

KARL N. KIRKER — STATE OF WASHINGTON — 10590 — REGISTERED PROFESSIONAL ENGINEER — 9/13/02 — EXPIRES 11/3/03

BRIDGE AND STRUCTURES OFFICE

MUNINDRA TALUKDAR — STATE OF WASHINGTON — 27065 — REGISTERED PROFESSIONAL ENGINEER — 9/13/02 — EXPIRES 6/1/04

Washington State Department of Transportation

SR 433
LEWIS AND CLARK BRIDGE
DECK REPLACEMENT

CROSS FRAME DETAILS

BRIDGE SHEET NO. WA18

SHEET 56 OF 258 SHEETS

Tue Sep 17 15:54:08 2002

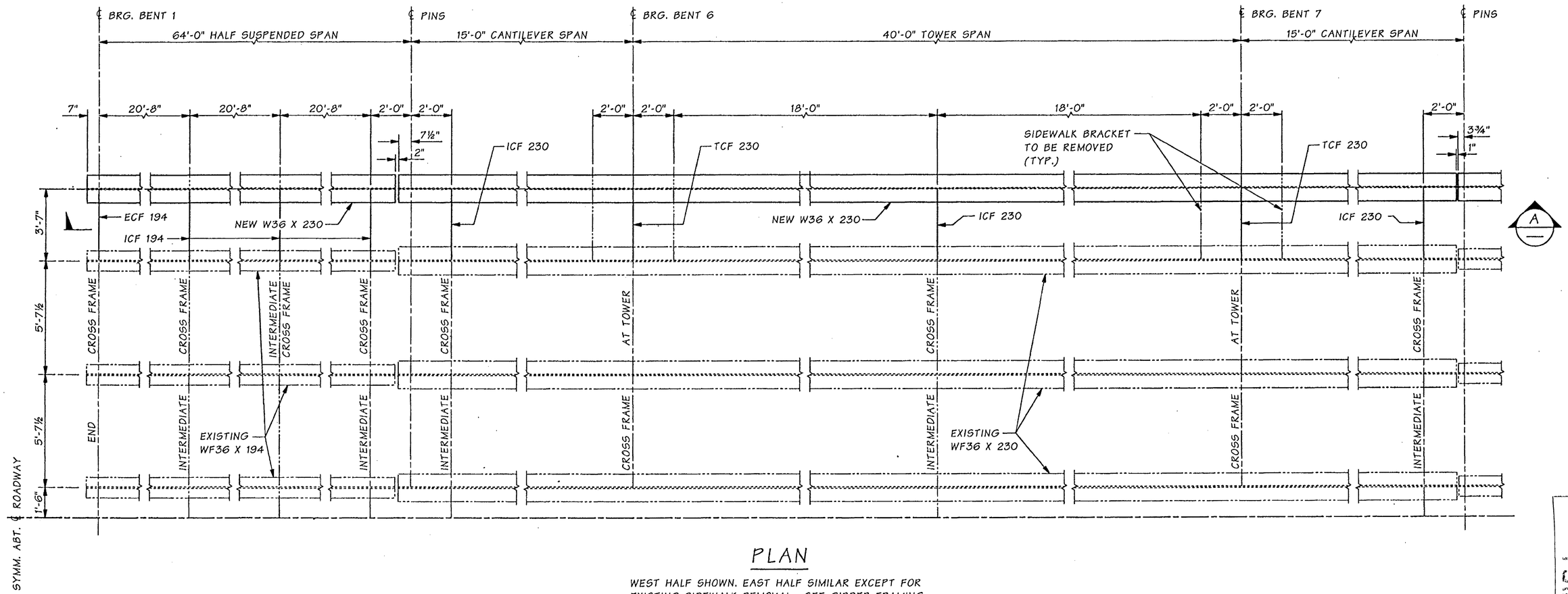

PLAN

WEST HALF SHOWN. EAST HALF SIMILAR EXCEPT FOR EXISTING SIDEWALK REMOVAL. SEE GIRDER FRAMING PLAN FOR SIDEWALK BRACKET REMOVAL LOCATIONS

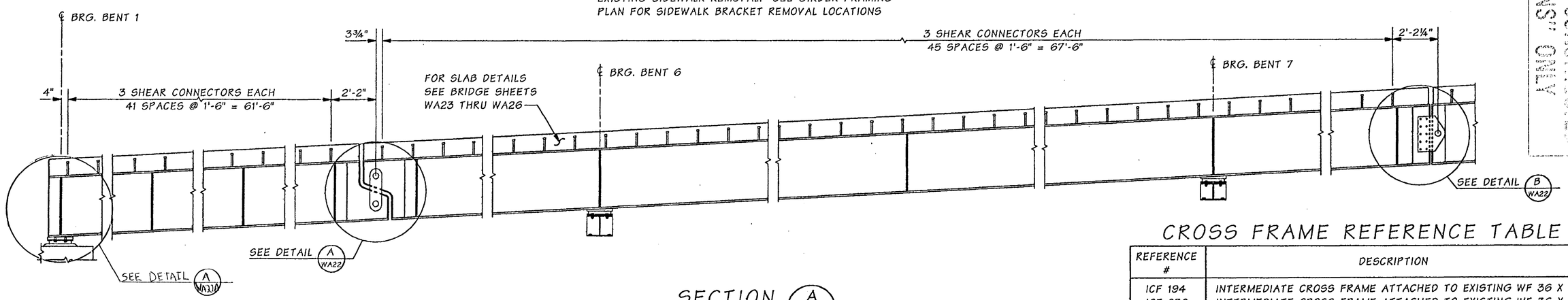

SECTION A

ALL TOWER & CANTILEVER SPANS SIMILAR EXCEPT CANTILEVER SPAN AT BENT 27

CROSS FRAME REFERENCE TABLE

REFERENCE #	DESCRIPTION
ICF 194 ICF 230	INTERMEDIATE CROSS FRAME ATTACHED TO EXISTING WF 36 X 194 INTERMEDIATE CROSS FRAME ATTACHED TO EXISTING WF 36 X 230
ECF 194	END CROSS FRAME ATTACHED TO EXISTING WF 36 X 194
TCF 230	TOWER CROSS FRAME ATTACHED TO EXISTING WF 36 X 230

SEE BRIDGE SHEET WA15, 16, 18 FOR CROSS FRAME DETAILS.

FOR "AS CONSTRUCTED PLANS" ONLY

SR 433 JOB NO. 1566 SHEET 19

Bridge Design Engr.	Kapur, J	
Supervisor	Kirker, KN	08/02
Designed By	Schultz, E	08/02
Checked By	Talukdar, M	08/02
Detailed By	Evans, P	08/02
Bridge Projects Engr.		
Prelim. Plan By		
Architect/Specialist		

M:\Y-Team\Lewis_Clark Rehab\Washington Appr\Window files\SPANS1.WND

DATE	REVISION	BY	APP'D

REGION NO.	STATE	FED. AID PROJ. NO.	SHEET NO.	TOTAL SHEETS
10	WASH.	ACBH - 0433(007)		

JOB NUMBER 02x310

6444

KARL N. KIRKER — PROFESSIONAL ENGINEER — EXPIRES 11/3/03

BRIDGE AND STRUCTURES OFFICE

MUNINDRA TALUKDAR — PROFESSIONAL ENGINEER — EXPIRES 6/1/04

Washington State Department of Transportation

SR 433
LEWIS AND CLARK BRIDGE
DECK REPLACEMENT

GIRDER DETAILS -- TOWER SPANS

BRIDGE SHEET NO. WA19

SHEET 57 OF 258 SHEETS

Tue Sep 17 15:54:00 2002

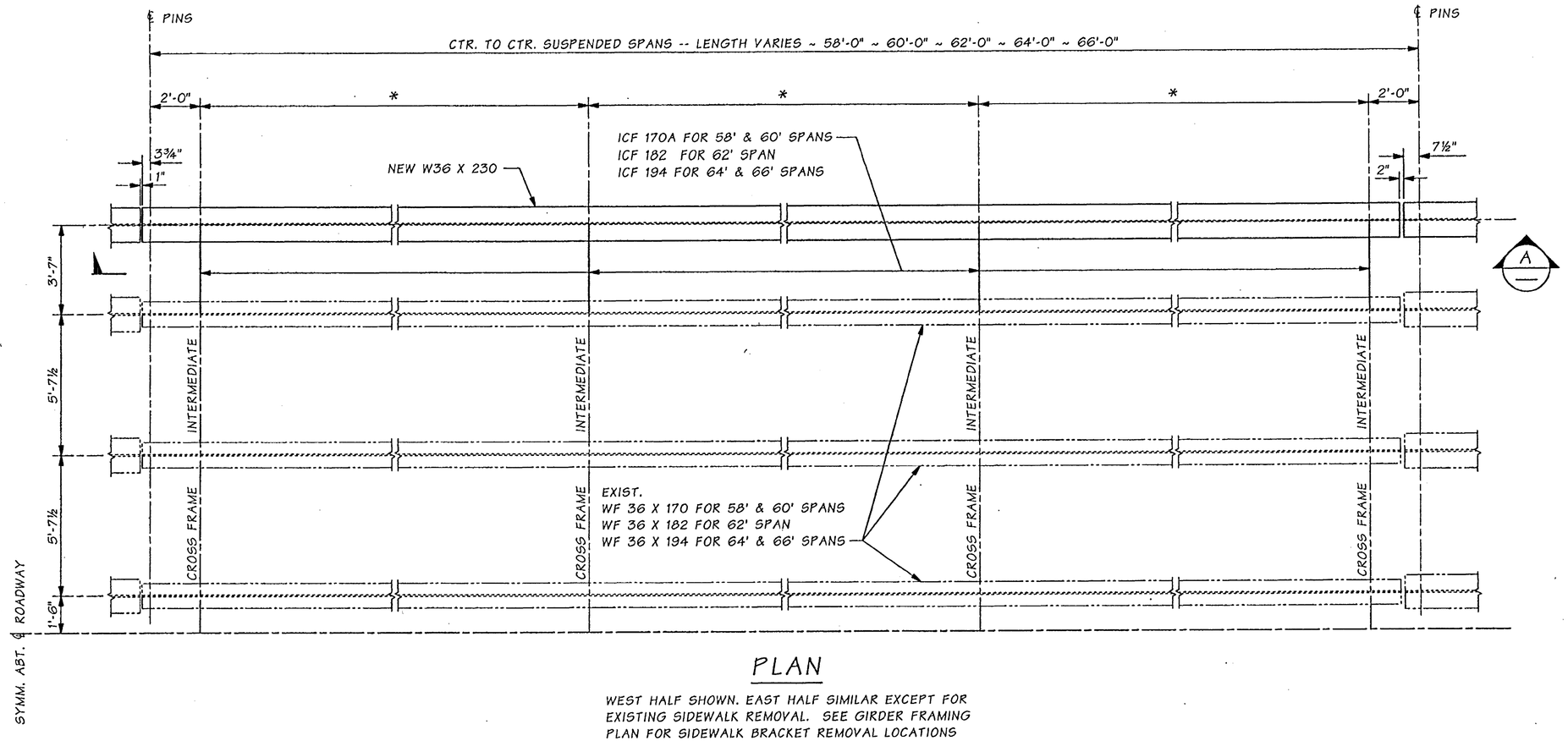

PLAN

WEST HALF SHOWN. EAST HALF SIMILAR EXCEPT FOR EXISTING SIDEWALK REMOVAL. SEE GIRDER FRAMING PLAN FOR SIDEWALK BRACKET REMOVAL LOCATIONS

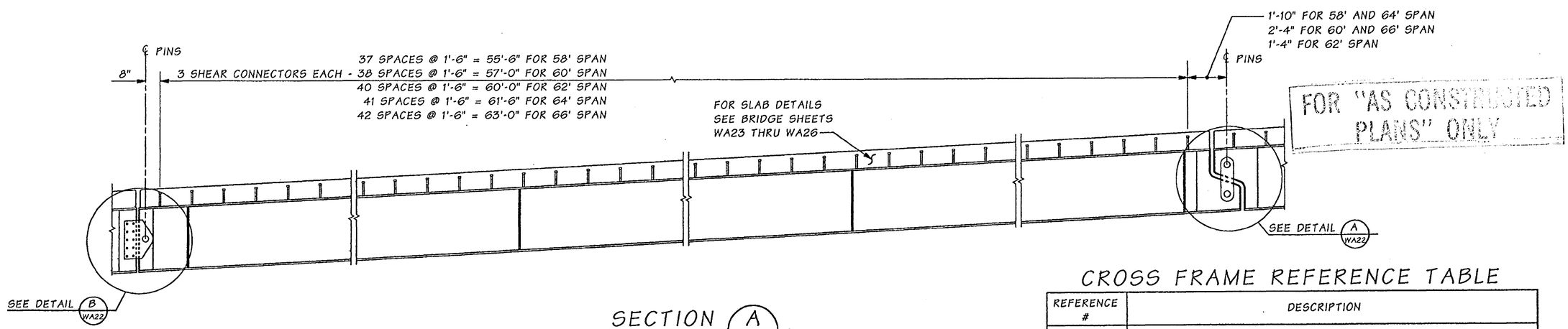

FOR "AS CONSTRUCTED PLANS" ONLY

SECTION A

ALL SUSPENDED SPANS SIMILIAR EXCEPT BENT 1 TO BENT 6 AND BENT 27 TO BENT A-B

CROSS FRAME REFERENCE TABLE

REFERENCE #	DESCRIPTION
ICF 170A	INTERMEDIATE CROSS FRAME ATTACHED TO EXISTING WF 36 X 170A
ICF 182	INTERMEDIATE CROSS FRAME ATTACHED TO EXISTING WF 36 X 182
ICF 194	INTERMEDIATE CROSS FRAME ATTACHED TO EXISTING WF 36 X 194

SEE BRIDGE SHEET WA15, 16, 18 FOR CROSS FRAME DETAILS.

* SEE GIRDER FRAMING PLAN FOR DIMENSIONS IN SUSPENDED SPANS.

SR 433 JOB NO. 1566 SHEET 20

Bridge Design Engr.	Kapur, J		M:\Y-Team\Lewis_Clark Rehab\Washington Appr\Window files\SPANS2.WND
Supervisor	Kirker, KN	08/02	
Designed By	Schultz, E	08/02	
Checked By	Talukdar, M	08/02	
Detailed By	Evans, P	08/02	
Bridge Projects Engr.			
Prelim. Plan By			
Architect/Specialist			

DATE	REVISION	BY	APP'D

REGION NO.	STATE	FED. AID PROJ. NO.	SHEET NO.	TOTAL SHEETS
10	WASH.	ACBH - 0433(007)		
JOB NUMBER 02x310				
6444				

KARL N. KIRKER, STATE OF WASHINGTON, 10206, REGISTERED PROFESSIONAL ENGINEER — EXPIRES 11/3/03

BRIDGE AND STRUCTURES OFFICE

MUNINDRA TALUKDAR, STATE OF WASHINGTON, 27026, REGISTERED PROFESSIONAL ENGINEER — EXPIRES 6/1/04

Washington State Department of Transportation

SR 433
LEWIS AND CLARK BRIDGE
DECK REPLACEMENT

GIRDER DETAILS -- SUSPENDED SPANS

BRIDGE SHEET NO. WA20

SHEET 58 OF 258 SHEETS

Tue Sep 17 15:54:01 2002

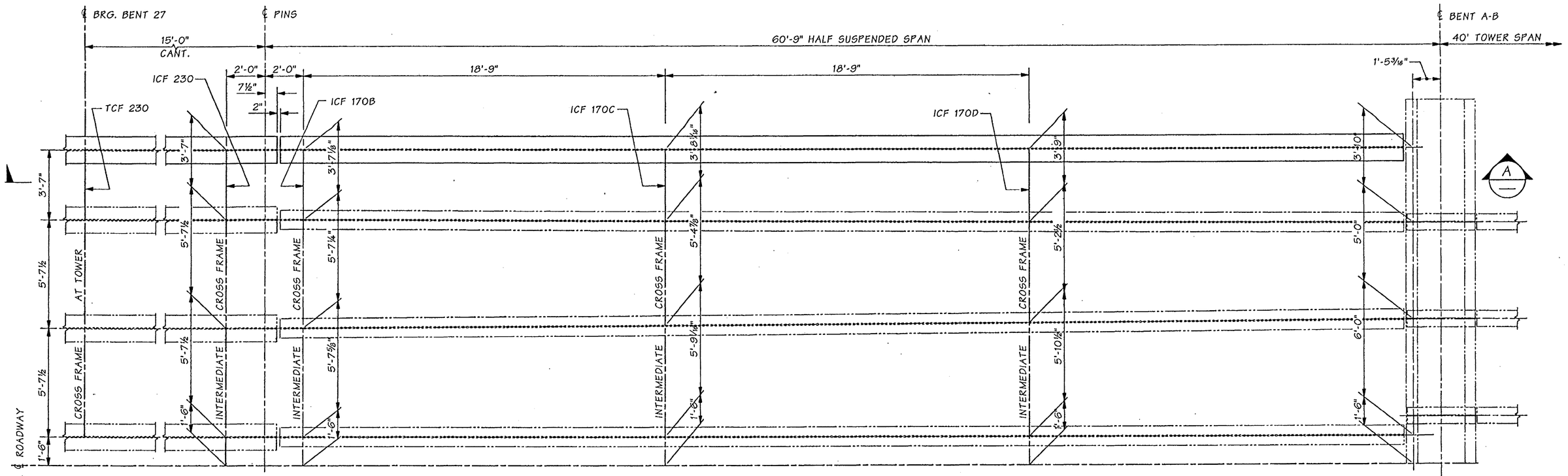

PLAN

WEST HALF SHOWN. EAST HALF SIMILAR EXCEPT FOR EXISTING SIDEWALK REMOVAL. SEE FRAMING PLAN FOR SIDEWALK BRACKET REMOVAL LOCATIONS

FOR "AS CONSTRUCTED PLANS" ONLY

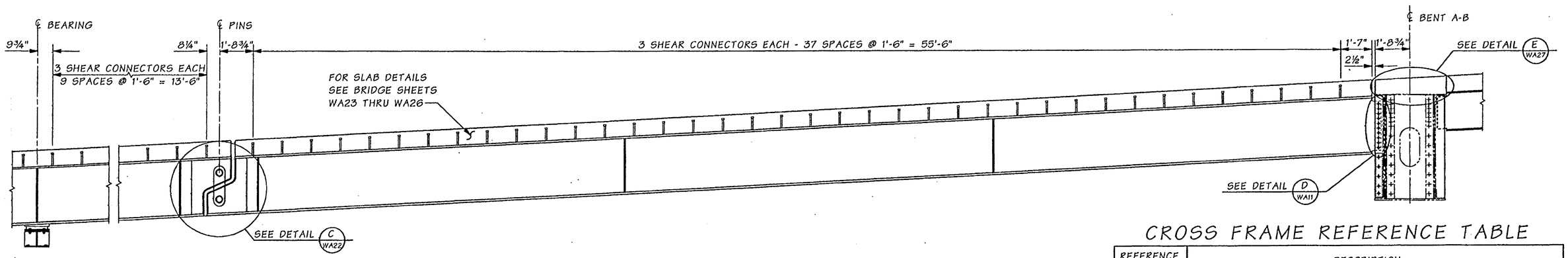

SECTION A

BENT ~~26~~ 27 TO BENT A-B SHOWN

CROSS FRAME REFERENCE TABLE

REFERENCE #	DESCRIPTION
ICF 170B	INTERMEDIATE CROSS FRAME ATTACHED TO EXISTING WF 36 X 170
ICF 170C	INTERMEDIATE CROSS FRAME ATTACHED TO EXISTING WF 36 X 170
ICF 170D	INTERMEDIATE CROSS FRAME ATTACHED TO EXISTING WF 36 X 170
ICF 230	INTERMEDIATE CROSS FRAME ATTACHED TO EXISTING WF 36 X 230
TCF 230	TOWER CROSS FRAME ATTACHED TO EXISTING WF 36 X 230

SEE BRIDGE SHEET WA15, 16, 18 FOR CROSS FRAME DETAILS.

Bridge Design Engr.	Kapur, J	
Supervisor	Kirker, KN	08/02
Designed By	Schultz, E	08/02
Checked By	Talukdar, M	08/02
Detailed By	Evans, P	08/02
Bridge Projects Engr.		
Prelim. Plan By		
Architect/Specialist		

M:\Y-Team\Lewis_Clark Rehab\Washington Appr\Window files\SPANS3.WND

DATE	REVISION	BY	APP'D

REGION NO.	STATE	FED. AID PROJ. NO.	SHEET NO.	TOTAL SHEETS
10	WASH.	ACBH - 0433(007)		
JOB NUMBER 02x310				

KARL N. KIRKER — STATE OF WASHINGTON — REGISTERED PROFESSIONAL ENGINEER — EXPIRES 11/3/03

BRIDGE AND STRUCTURES OFFICE

MINHARAJ TALUKDAR — STATE OF WASHINGTON — REGISTERED PROFESSIONAL ENGINEER — EXPIRES 6/1/04

Washington State Department of Transportation

SR 433
LEWIS AND CLARK BRIDGE
DECK REPLACEMENT

GIRDER DETAILS -- BENT A-B

BRIDGE SHEET NO. WA21

SHEET 59 OF 258 SHEETS

SR 433 JOB NO. 1566 SHEET 21

Tue Sep 17 15:54:03 2002

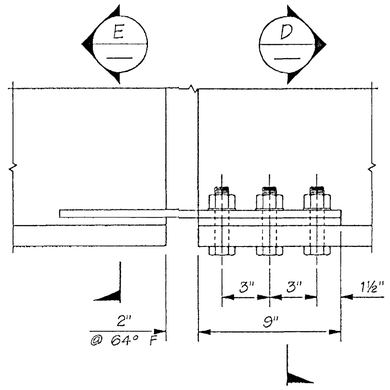

WIND SHOE DETAIL

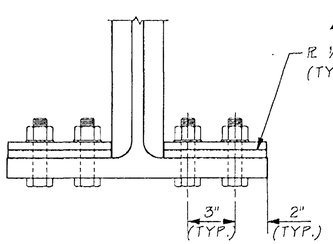

SECTION D

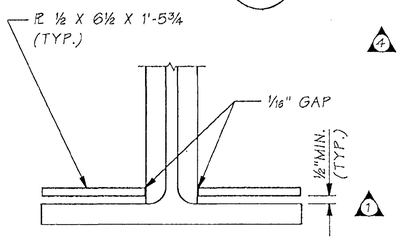

SECTION E

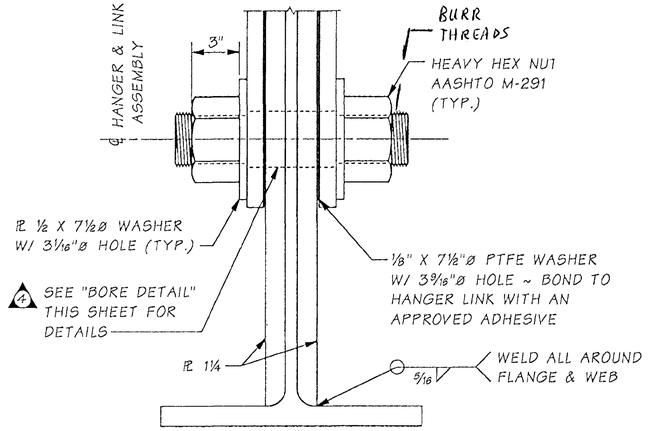

TYPICAL SECTION
PIN & HANGER CONNECTION

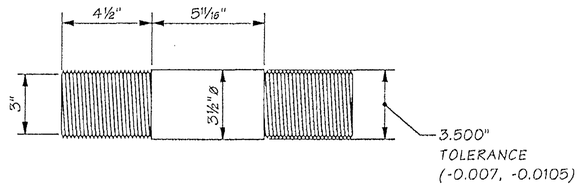

HANGER PIN

ASTM A276 UNS 21800 PIN
INSTALL WITH EXTREME
HIGH PRESSURE GREASE

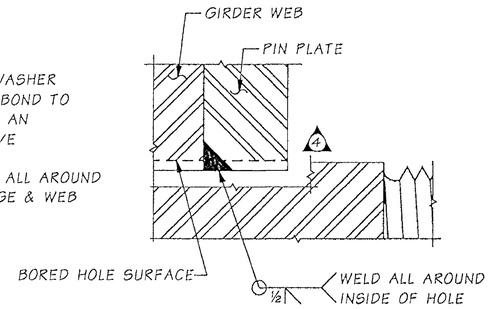

WELDING DETAIL

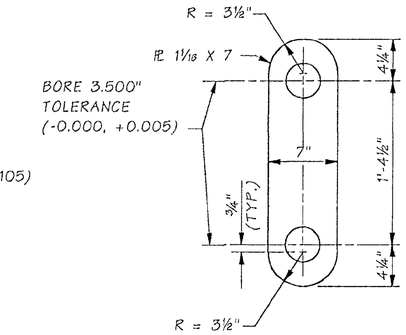

HANGER LINK DETAIL

48 REQUIRED
HANGER LINKS SHALL HAVE A MIN.
CVN TOUGHNESS OF 25ft-lb @ 40°F,
TESTING FREQUENCY "P".

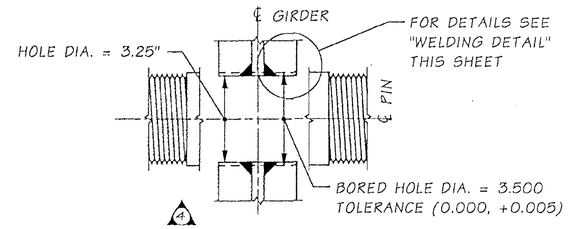

BORE DETAIL

BORE HOLE AFTER WELDING

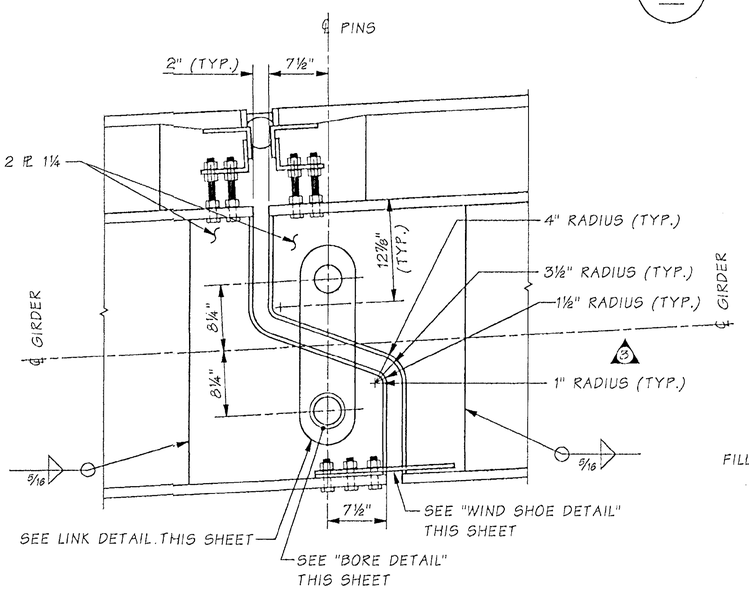

DETAIL A
22 LOCATIONS
WA19, 20

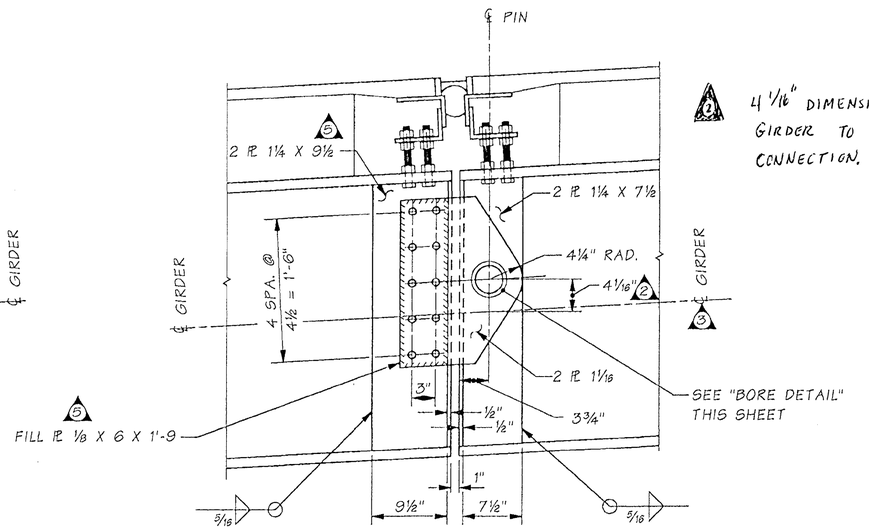

4 1/16" DIMENSION FROM ℄ OF GIRDER TO ℄ OF PINNED CONNECTION.

DETAIL B
20 LOCATIONS
WA19, 20

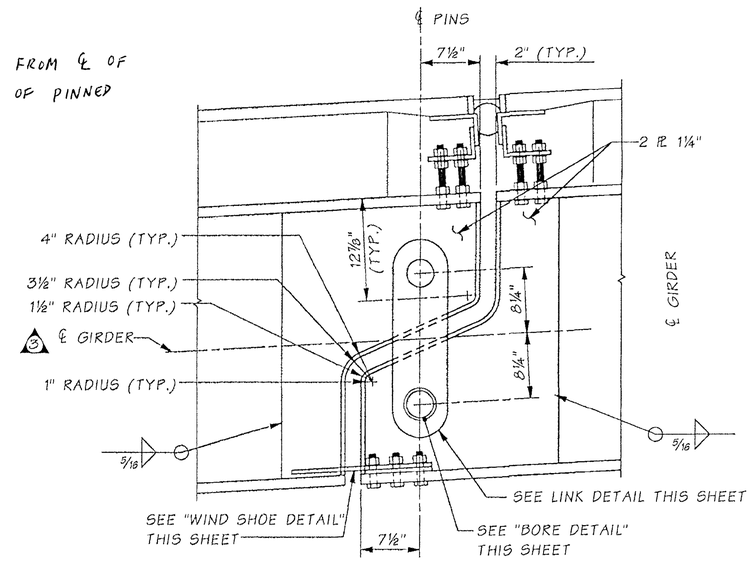

DETAIL C
2 LOCATIONS
WA21

FOR "AS CONSTRUCTED PLANS" ONLY

Bridge Design Engr.	Kapur, J		M:\Y-Team\Lewis_Clark Rehab\Washington Appr\window files\PINS-HANGERS.WND								
Supervisor	Kirker, KN	08/02	04/15	5	MODIFY THICKNESS, ADD FILL	ES		REGION NO.	STATE	FED. AID PROJ. NO.	SHEET NO.	TOTAL SHEETS
Designed By	Schultz, E	08/02	04/15	4	DELETE TUBING	ES		10	WASH.	ACBH - 0433(007)		
Checked By	Talukdar, M	08/02	04/15	3	MODIFY VERT. GIRDER ALIGNMENT	ES						
Detailed By	Evans, P	08/02	04/15	2	RELOCATE PIN CENTERLINE	ES		JOB NUMBER 02x310				
Bridge Projects Engr.												
Prelim. Plan By			04/15	1	MODIFY PLATE THICKNESS	ES		64444				
Architect/Specialist			DATE		REVISION	BY	APP'D					

Fri Nov 18 15:40:22 2005

KARL N. KIRKER — STATE OF WASHINGTON — 15298 — REGISTERED PROFESSIONAL ENGINEER — EXPIRES 11/3/05

BRIDGE AND STRUCTURES OFFICE

MONINDRA TALUKDAR — STATE OF WASHINGTON — 27028 — REGISTERED PROFESSIONAL ENGINEER — EXPIRES 6/1/06

Washington State Department of Transportation

SR 433
LEWIS AND CLARK BRIDGE
DECK REPLACEMENT

PIN AND HANGER DETAILS

BRIDGE SHEET NO. WA 22

SHEET 60 OF 258 SHEETS

SR 433 JOB NO. 1566 SHEET 22

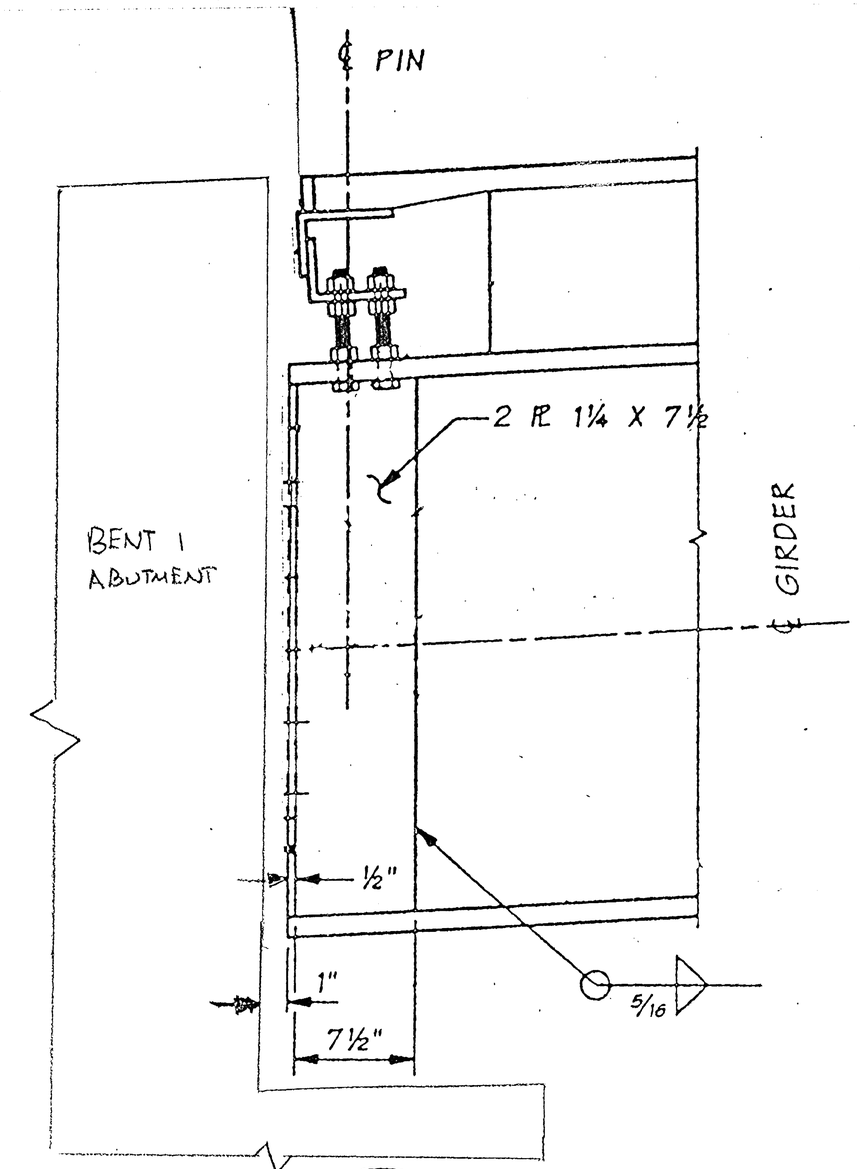

DETAIL A

2 LOCATIONS

NOTE: FOR BENT 1 DETAILS SEE SHEETS WA2 THROUGH WA7

WA19.

FOR "AS CONSTRUCTED PLANS" ONLY

FILE NAME	C:\AAWork\kelso\Svensen's Curve\L3425WASTESITE.dgn									PLOT11
TIME	02:37:18 PM				REGION NO. 10	STATE WASH	FED.AID PROJ.NO.		Washington State Department of Transportation	WA22A
DATE	08/17/2005								SR 433 LEWIS AND CLARK BRIDE DECK REPLACEMENT	SHEET 60A OF 258 SHEETS
PLOTTED BY	spohnk				JOB NUMBER					
DESIGNED BY										
ENTERED BY										
CHECKED BY					CONTRACT NO. 6444		LOCATION NO.			
PROJ. ENGR.										
REGIONAL ADM.		REVISION	DATE	BY				P.E. STAMP BOX DATE	P.E. STAMP BOX DATE	BENT 1 · DETAIL

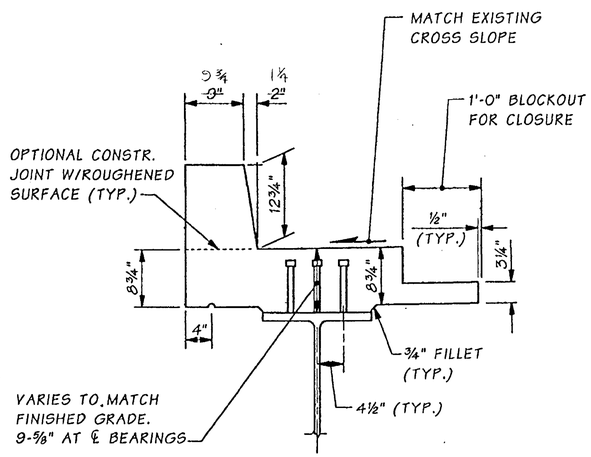

TYPICAL SECTION

FINISHED GRADE SHALL BE DETERMINED BY SURVEY OF EXISTING BRIDGE DECK AT FACE OF CURB AFTER REMOVAL OF EXISTING OVERLAY, AND CORRECTED FOR CROSS SLOPE AND DISTANCE TO ℄ OF GIRDER.

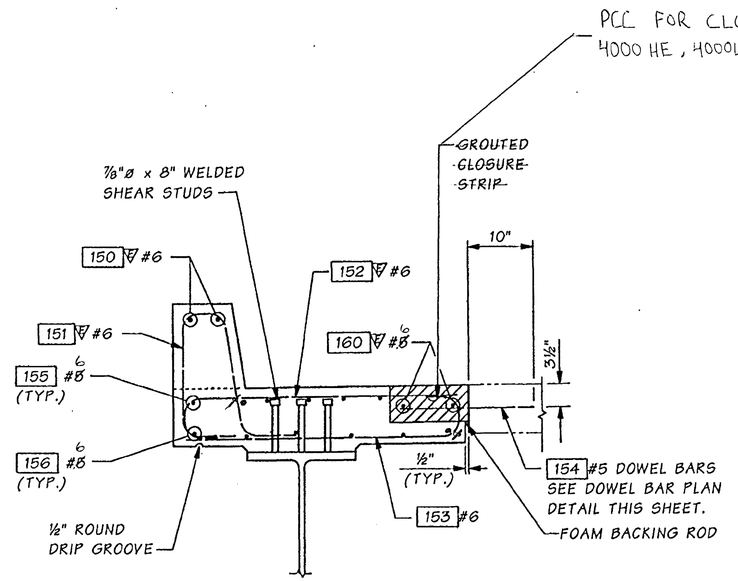

TYPICAL SECTION - REINFORCEMENT

NOTE: 155 156 #5 CHANGED TO #6 (TYP.) BARS
160 E #5 CHANGE TO #6

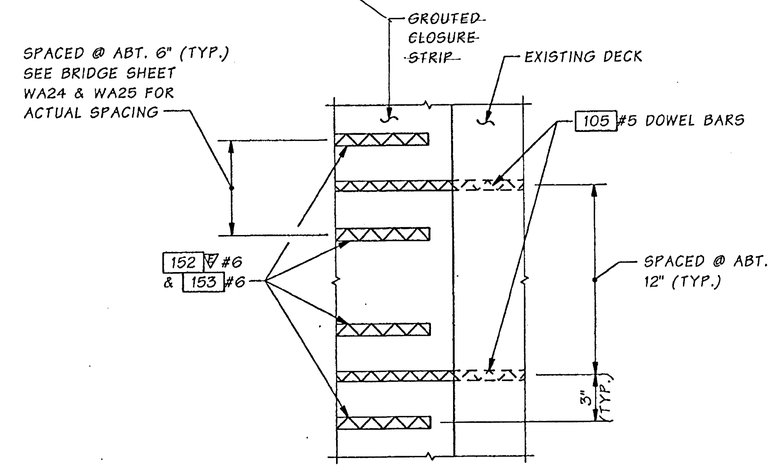

DOWEL BAR PLAN DETAIL

THE CONTRACTOR SHALL VERIFY THAT THE PLACEMENT OF THE DOWEL BARS AVOIDS INTERFERANCE WITH THE HOOKS OF THE TRANSVERSE REINFORCEMENT (BAR MARK 153) IN THE NEWLY CAST GIRDER AND SLAB UNITS.

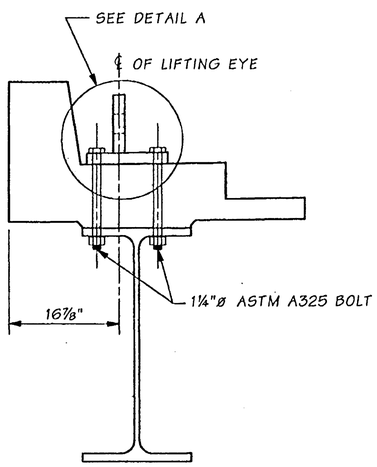

LIFTING EYE DETAILS

FOR LOCATIONS SEE BRIDGE SHEETS WA24 & WA25.

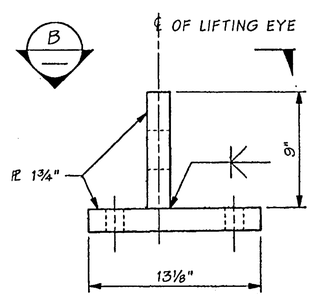

DETAIL A

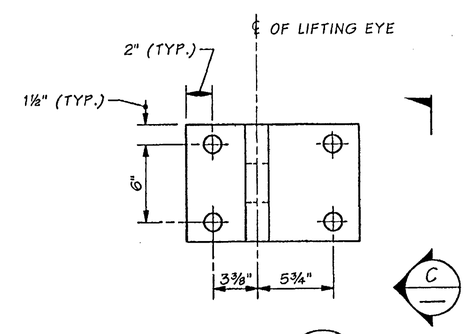

VIEW B

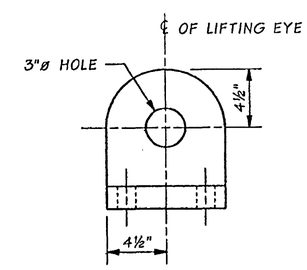

VIEW C

FOR "AS CONSTRUCTED PLANS" ONLY

Bridge Design Engr.	Kapur, J	
Supervisor	Kirker, KN	08/02
Designed By	Schultz, E	08/02
Checked By	Talukdar, M	08/02
Detailed By	Evans, P	08/02
Bridge Projects Engr.		
Prelim. Plan By		
Architect/Specialist		

M:\Y-Team\Lewis_Clark Rehab\Washington Appr\Window files\SLAB-CAMBER.WND

DATE	REVISION	BY	APP'D

REGION NO.	STATE	FED. AID PROJ. NO.	SHEET NO.	TOTAL SHEETS
10	WASH.	ACBH - 0433(007)		

JOB NUMBER 02x310

6444

KARL N. KIRKER — STATE OF WASHINGTON — 40296 — REGISTERED PROFESSIONAL ENGINEER — 9/13/02 — EXPIRES 11/3/03

BRIDGE AND STRUCTURES OFFICE

MUNINDRA TALUKDAR — STATE OF WASHINGTON — 27626 — REGISTERED PROFESSIONAL ENGINEER — 9/13/02 — EXPIRES 6/1/04

Washington State Department of Transportation

SR 433
LEWIS AND CLARK BRIDGE
DECK REPLACEMENT

GIRDER & SLAB TYPICAL SECTION
WASHINGTON APPROACH

BRIDGE SHEET NO. WA23

SHEET 61 OF 258 SHEETS

SR 433 JOB NO. 1566 SHEET 23

Tue Sep 17 15:53:58 2002

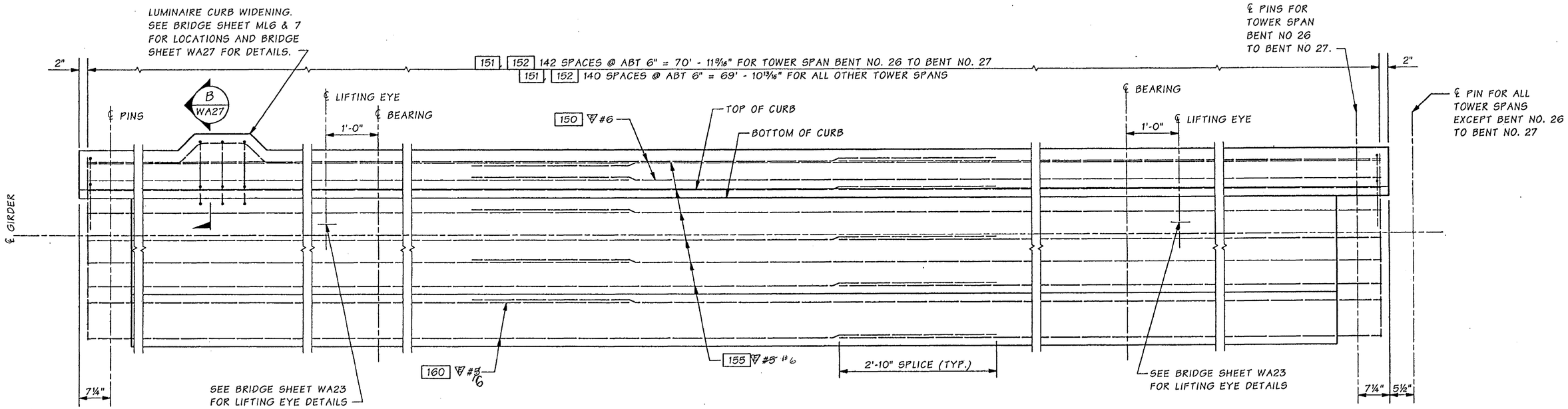

TOP MAT REINFORCMENT - TOWER SPANS

SEE RAIL & LUMINAIRE POST LAYOUT SHEETS FOR THRIE BEAM POST LOCATIONS

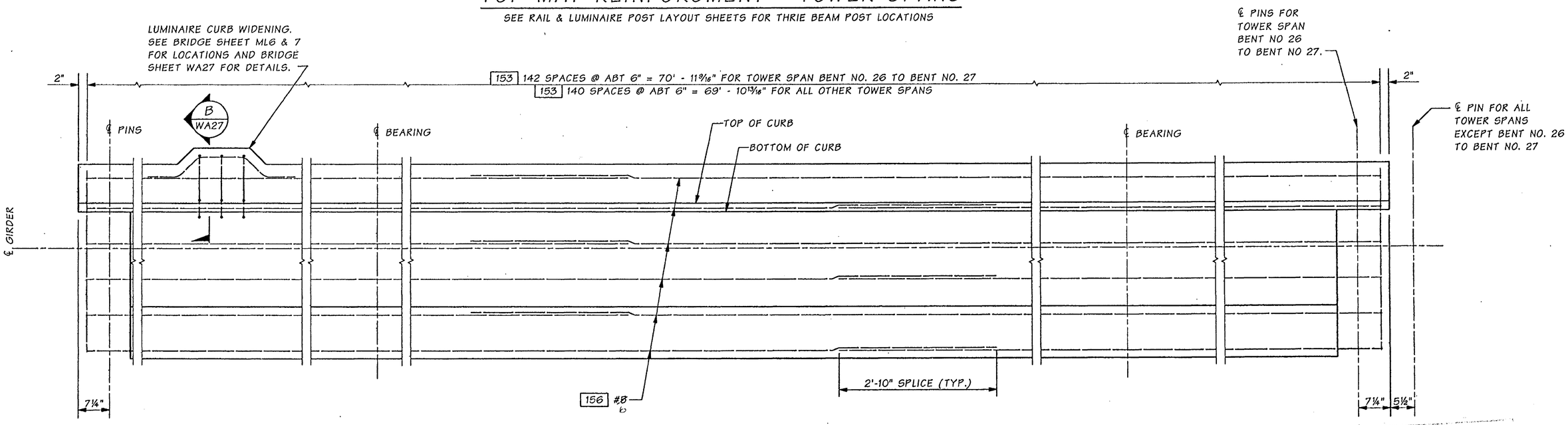

BOTTOM MAT REINFORCMENT - TOWER SPANS

FOR "AS CONSTRUCTED PLANS" ONLY

NOTE:
LOCATION OF REBAR SPLICES AT CONTRACTORS OPTION. ALL SPLICES SHALL BE ALTERNATED SO THAT NO MORE THAN 50% OF THE REBAR IS SPLICED AT THE SAME LOCATION NORMAL TO CENTERLINE OF ROADWAY.

SR 433 JOB NO. 1566 SHEET 24

Bridge Design Engr.	Kapur, J	
Supervisor	Kirker, KN	08/02
Designed By	Schultz, E	08/02
Checked By	Talukdar, M	08/02
Detailed By	Evans, P	08/02
Bridge Projects Engr.		
Prelim. Plan By		
Architect/Specialist		

M:\Y-Team\Lewis_Clark Rehab\Washington Appr\Window files\SLAB REINF1.WND

DATE	REVISION	BY	APP'D

REGION NO.	STATE	FED. AID PROJ. NO.	SHEET NO.	TOTAL SHEETS
10	WASH.	ACBH - 0433(007)		

JOB NUMBER 02x310

6444

KARL N. KIRKER, STATE OF WASHINGTON, 16296, REGISTERED PROFESSIONAL ENGINEER — EXPIRES 11/3/03

BRIDGE AND STRUCTURES OFFICE

MUNINDRA TALUKDAR, STATE OF WASHINGTON, 27626, REGISTERED PROFESSIONAL ENGINEER — EXPIRES 6/1/04

Washington State Department of Transportation

SR 433
LEWIS AND CLARK BRIDGE
DECK REPLACEMENT

SLAB REINFORCEMENT -- TOWER SPANS

BRIDGE SHEET NO. WA24

SHEET 62 OF 258 SHEETS

Tue Sep 17 15:53:55 2002

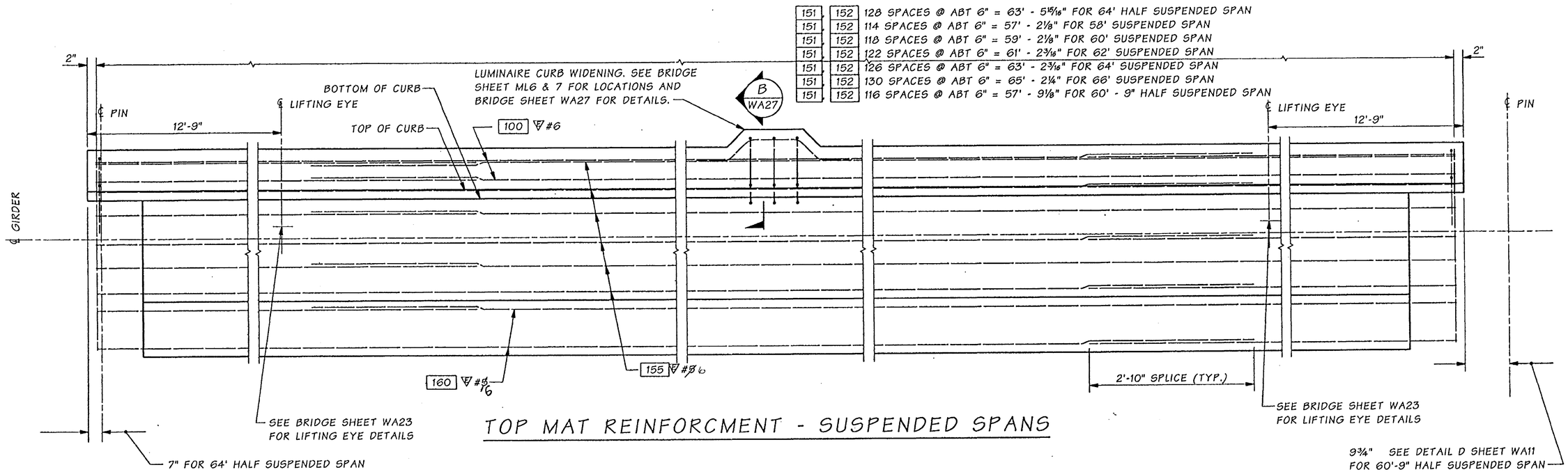

TOP MAT REINFORCMENT - SUSPENDED SPANS

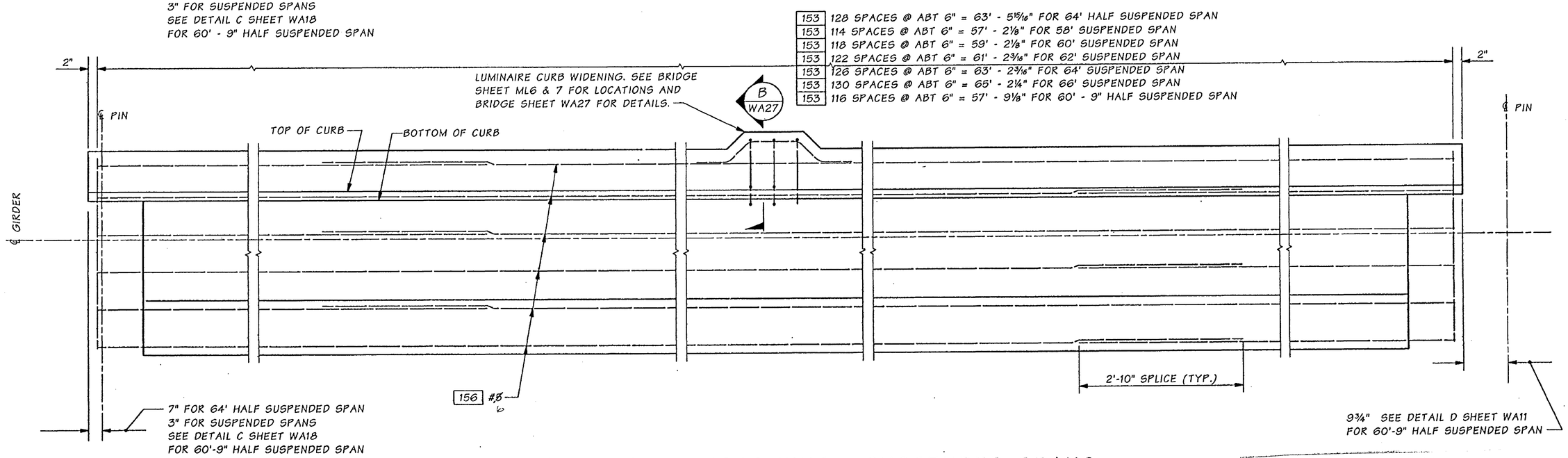

BOTTOM MAT REINFORCMENT - SUSPENDED SPANS

NOTE:
LOCATION OF REBAR SPLICES AT CONTRACTORS OPTION. ALL SPLICES SHALL BE ALTERNATED SO THAT NO MORE THAN 50% OF THE REBAR IS SPLICED AT THE SAME LOCATION NORMAL TO CENTERLINE OF ROADWAY.

FOR "AS CONSTRUCTED PLANS" ONLY

SR 433 JOB NO. 1566 SHEET 25

Bridge Design Engr.	Kapur, J	
Supervisor	Kirker, KN	08/02
Designed By	Schultz, E	08/02
Checked By	Talukdar, M	08/02
Detailed By	Evans, P	08/02
Bridge Projects Engr.		
Prelim. Plan By		
Architect/Specialist		

M:\Y-Team\Lewis_Clark Rehab\Washington Appr\Window files\SLAB REINF2.WND

DATE	REVISION	BY	APP'D

REGION NO.	STATE	FED. AID PROJ. NO.	SHEET NO.	TOTAL SHEETS
10	WASH.	ACBH - 0433(007)		
JOB NUMBER 02x310				

6444

KARL N. KIRKER — STATE OF WASHINGTON — 27608 — REGISTERED PROFESSIONAL ENGINEER — 9/18/02 — EXPIRES 11/3/03

BRIDGE AND STRUCTURES OFFICE

MUNITHERA TALUKDAR — STATE OF WASHINGTON — 27608 — REGISTERED PROFESSIONAL ENGINEER — 9/18/02 — EXPIRES 6/1/04

Washington State Department of Transportation

SR 433
LEWIS AND CLARK BRIDGE
DECK REPLACEMENT

SLAB REINFORCEMENT
SUSPENDED SPANS

BRIDGE SHEET NO. WA25

SHEET 63 OF 258 SHEETS

Tue Sep 17 15:53:57 2002

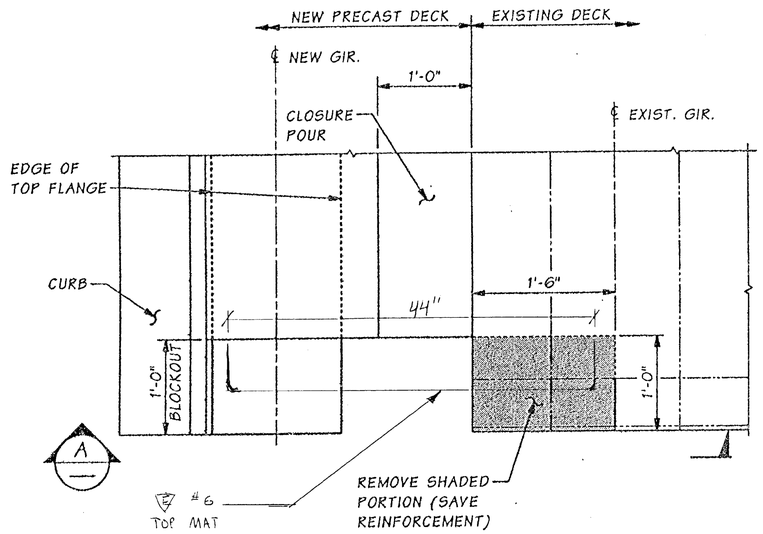

PARTIAL PLAN AT ENDS OF PRECAST SEGMENTS

(PRIOR TO JOINT INSTALLATION & CLOSURE POUR)

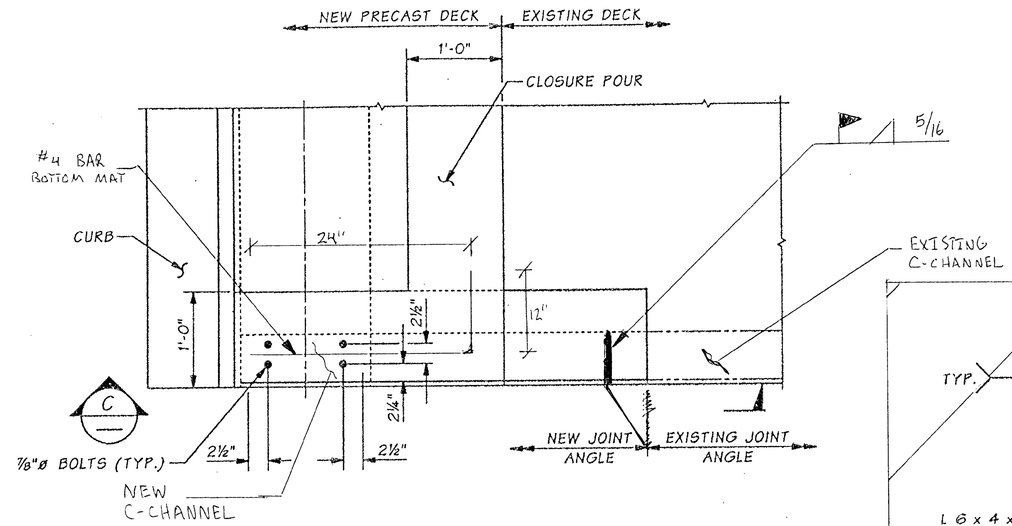

PARTIAL PLAN AT ENDS OF PRECAST SEGMENTS

(AFTER JOINT INSTALLATION & CLOSURE POUR)

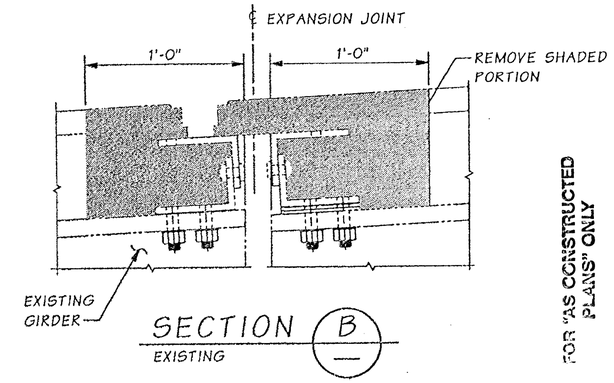

SECTION B EXISTING

FOR "AS CONSTRUCTED PLANS" ONLY

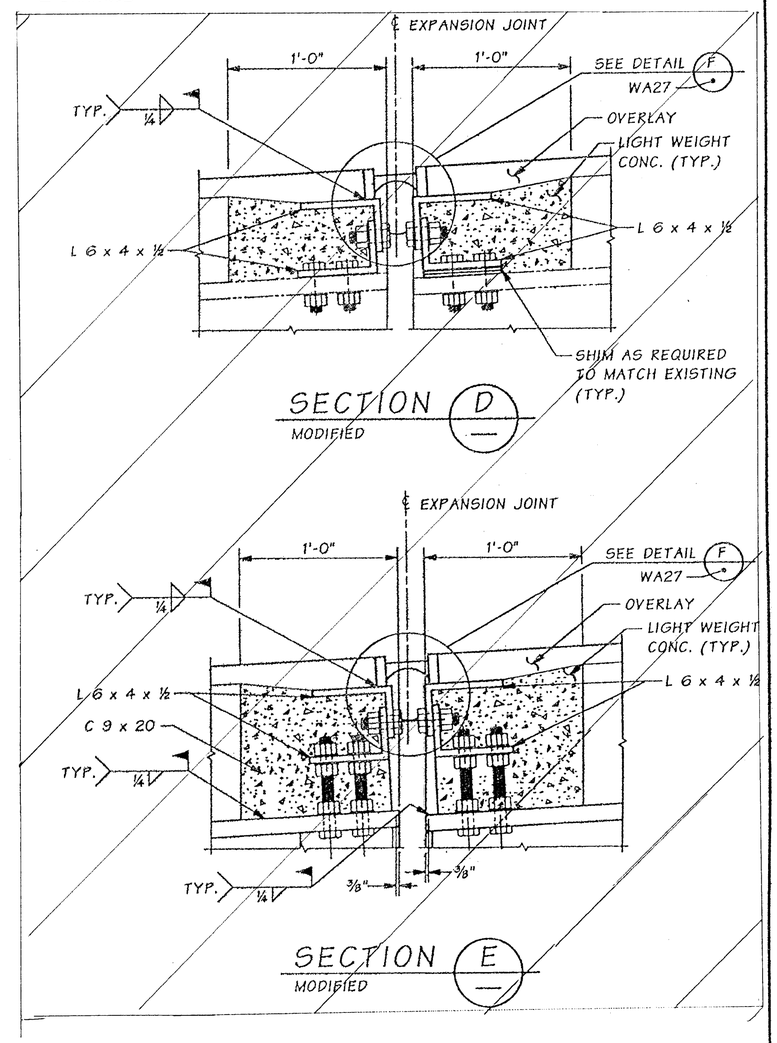

SECTION D MODIFIED

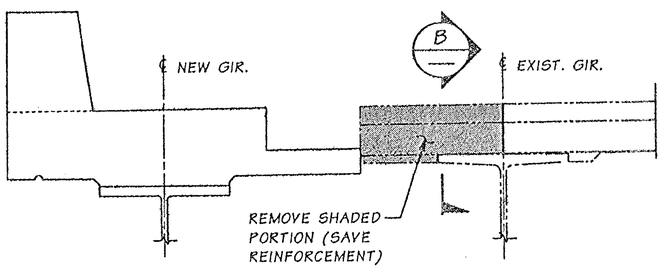

SECTION A

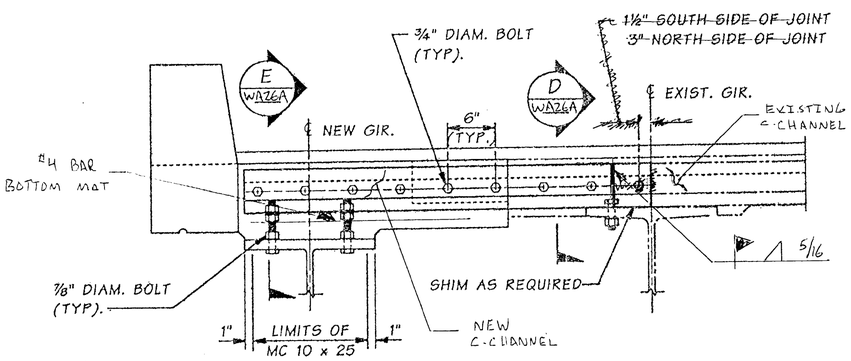

SECTION C

SECTION E MODIFIED

NOTE: NEW C-CHANNELS TRIMMED AS NECESSARY TO FIT END TO END WITH EXISTING C-CHANNELS. UTILIZE SINGLE PASS, 5/16 FILLET WELD ALONG TOP JOINT OF NEW AND EXISTING C-CHANNELS

-WA APPROACH - ALTERNATIVE END TREATMENT.

STAGE 1 - TRIM TOP AND BOTTOM MAT REBAR, AS NECESSARY, TO INSTALL BUILT C-CHANNEL.

STAGE 2 - IF TOP MAT REINFORCING BAR IS SEVERED - REPLACE SEVERED TOP MAT TRANSVERSE REINFORCING BAR WITH EPOXY #6, BEND TYPE 54 WITH 3'-4" SPLICE. - IF BOTTOM MAT REINFORCING BAR IS SEVERED - REPLACE SEVERED BOTTOM MAT TRANSVERSE REINFORCING BAR WITH #4 BEND TYPE 54, UNDER C-CHANNEL SHAPE.

NOTE: THE ENDS OF THE MARK 153 #6 MAY HAVE TO BE TRIMMED TO FACILITATE THE INSTALLATION OF THE BUILT C-CHANNELS. IF THE ENDS OF THE MARK 153 #6 ARE TRIMMED, ADDITIONAL #6 REINFORCING BARS ARE NOT REQUIRED.

Bridge Design Engr.	Kapur, J		M:\Y-Team\Lewis_Clark Rehab\Washington Appr\Window files\EXP JT BLOCKOUT.WND								
Supervisor	Kirker, KN	08/02									
Designed By	Schultz, E	08/02									
Checked By	Talukdar, M	08/02									
Detailed By	Evans, P	08/02									
Bridge Projects Engr.											
Prelim. Plan By											
Architect/Specialist			DATE	REVISION	BY	APP'D					

REGION NO.	STATE	FED. AID PROJ. NO.	SHEET NO.	TOTAL SHEETS
10	WASH.	ACBH - 0433(007)		
JOB NUMBER 02x310				

KARL N. KIRKER — STATE OF WASHINGTON — 36206 — REGISTERED PROFESSIONAL ENGINEER — EXPIRES 11/3/03

BRIDGE AND STRUCTURES OFFICE

MUSLEH TALUKDAR — STATE OF WASHINGTON — 17202 — REGISTERED PROFESSIONAL ENGINEER — EXPIRES 6/1/04

Washington State Department of Transportation

SR 433
LEWIS AND CLARK BRIDGE
DECK REPLACEMENT

EXPANSION JOINT BLOCKOUT

BRIDGE SHEET NO. WA26

SHEET 64 OF 258 SHEETS

SR 433 JOB NO. 1566 SHEET 26

Tue Sep 17 15:53:37 2002

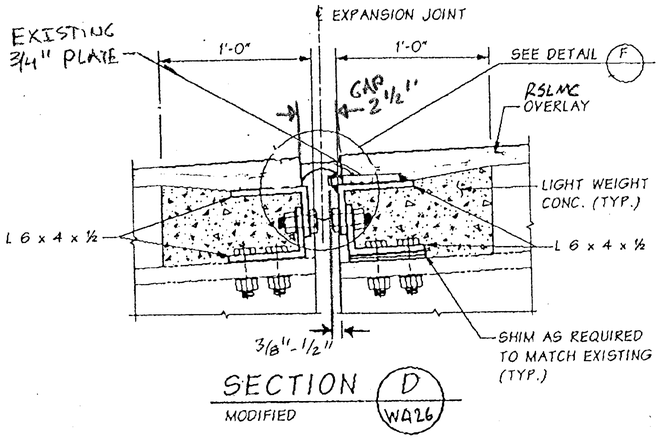

SECTION D
MODIFIED WA26

WASHINGTON APPROACH
TYPICAL WIDENING GAP ≤ 2 1/2"

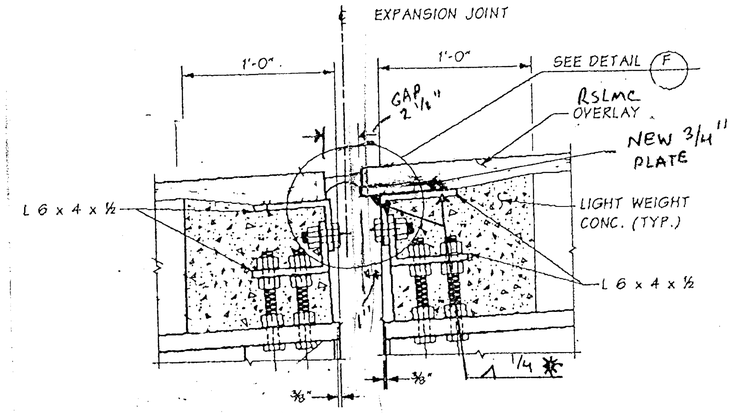

SECTION E
MODIFIED WA26

WASHINGTON APPROACH
TYPICAL WIDENING GAP ≥ 2 1/2"

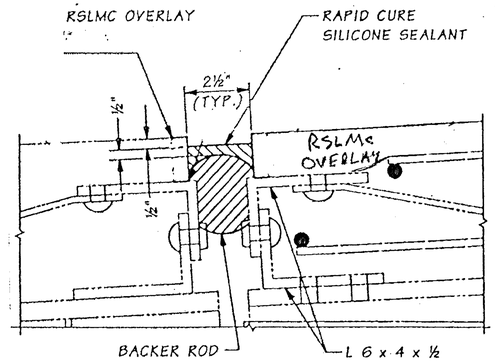

DETAIL F

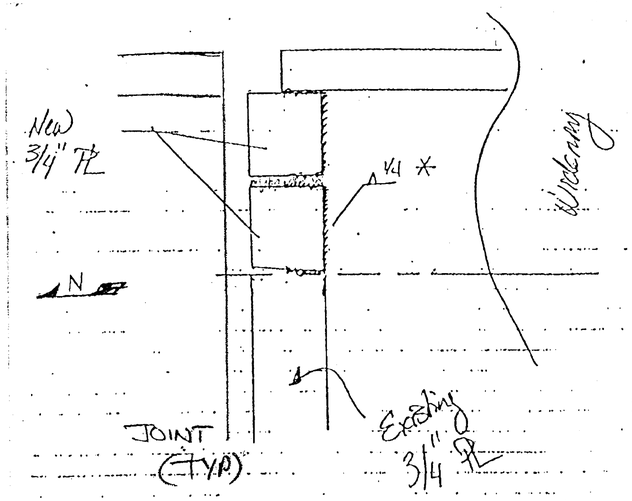

PLAN VIEW
NEW 3/4" CANTILEVER PLATE

FOR "AS CONSTRUCTED PLANS" ONLY

FILE NAME	C:\AAWork\kelso\Svensen's Curve\L3425WASTESITE.dgn										PLOT11
TIME	02:37:18 PM				REGION NO.	STATE	FED.AID PROJ.NO.				
DATE	08/17/2005				10	WASH					WA26A
PLOTTED BY	spahnk				JOB NUMBER						
DESIGNED BY											SHEET 64A OF 258 SHEETS
ENTERED BY											
CHECKED BY					CONTRACT NO.		LOCATION NO.				
PROJ. ENGR.											
REGIONAL ADM.		REVISION	DATE	BY	6444			P.E. STAMP BOX DATE	P.E. STAMP BOX DATE	Washington State Department of Transportation	SR 433 LEWIS AND CLARK BRIDE DECK REPLACEMENT
											EXPANSION JOINT BLACKOUT DETAILS

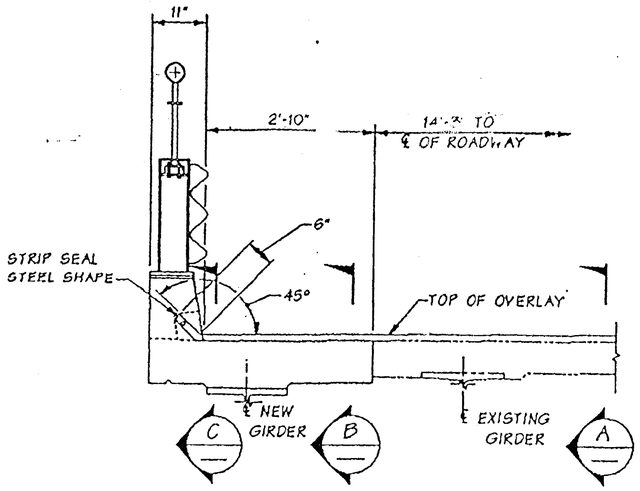

PARTIAL ROADWAY SECTION @ JOINT NEAR BENT 8 & 10

(RSLMC OVERLAY)

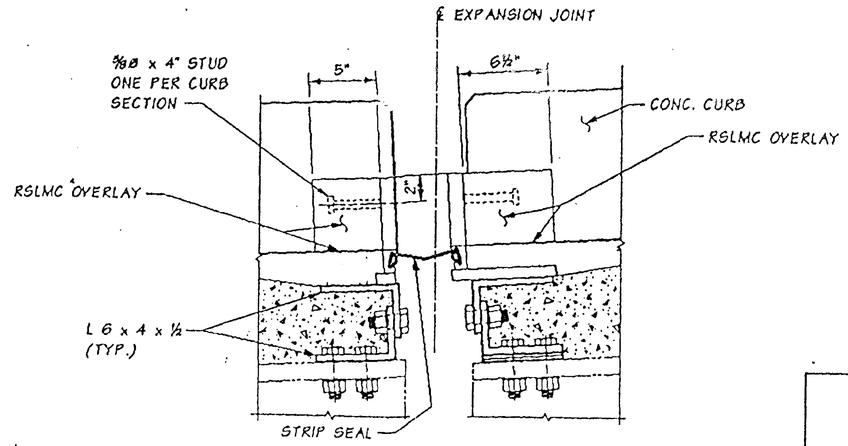

SECTION C

(RSLMC OVERLAY)

STEEL SHAPE TYPES

MANUFACTURER	ITEM NAME	TYPE	X	Y
D. S. BROWN	DSB STRIP SEAL A2R-0	SSE2	1"	1½"

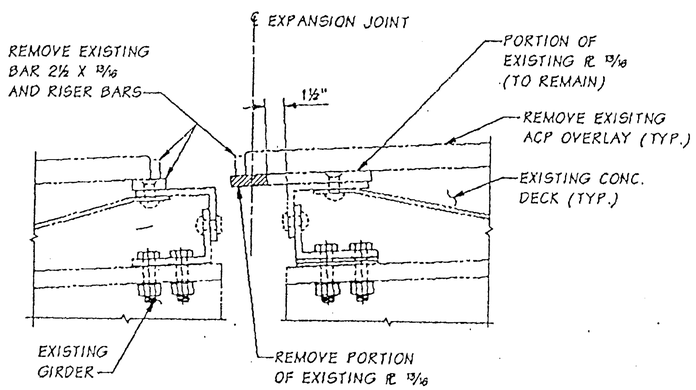

SECTION A

EXISTING

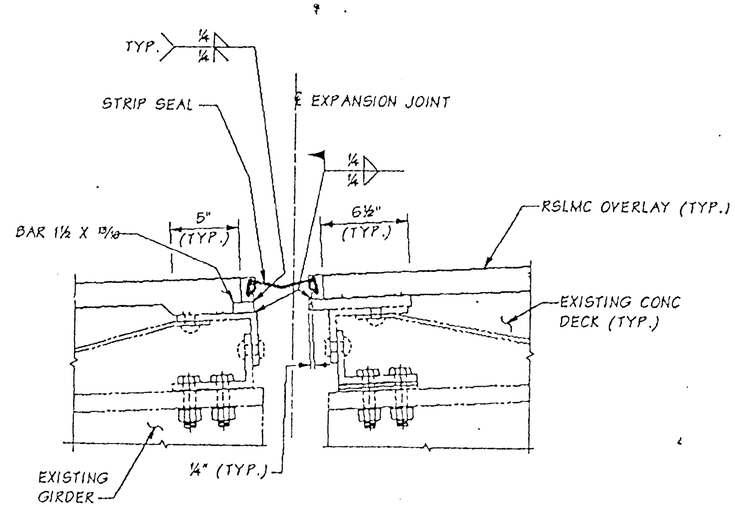

SECTION A

MODIFIED
(RSLMC OVERLAY)

FOR "AS CONSTRUCTED PLANS" ONLY

SR 433 JOB NO. 1566 SHEET 26

Bridge Design Engr.	Kapur, J	
Supervisor	Kirker, KN	
Designed By	Schultz, E	10/03
Checked By	Talukdar, M	10/03
Detailed By	Schultz, E	10/03
Bridge Projects Engr.		
Prelim. Plan By		
Architect/Specialist		

M:\Y-Team\Lewis_Clark Rehab\Washington Appr\window files\EXP JT BLOCKOUT 2.WND

DATE	REVISION	BY	APPD

REGION NO.	STATE	FED. AID PROJ. NO.	SHEET NO.	TOTAL SHEETS
10	WASH.	ACBH - 0433(007)		
JOB NUMBER 02x310				

The Oct 30 07:16:50 2003

MONINDRA TALUKDAR — STATE OF WASHINGTON — PROFESSIONAL ENGINEER — EXPIRES 11/1/04

BRIDGE AND STRUCTURES OFFICE

KARL N. KIRKER — STATE OF WASHINGTON — PROFESSIONAL ENGINEER — EXPIRES 11/9/03

Washington State Department of Transportation

SR 433
LEWIS AND CLARK BRIDGE
DECK REPLACEMENT

EXPANSION JOINT MODIFICATION
NEAR BENT 8 AND 10

BRIDGE SHEET NO. WA26B

SHEET 64B OF 258 SHEETS

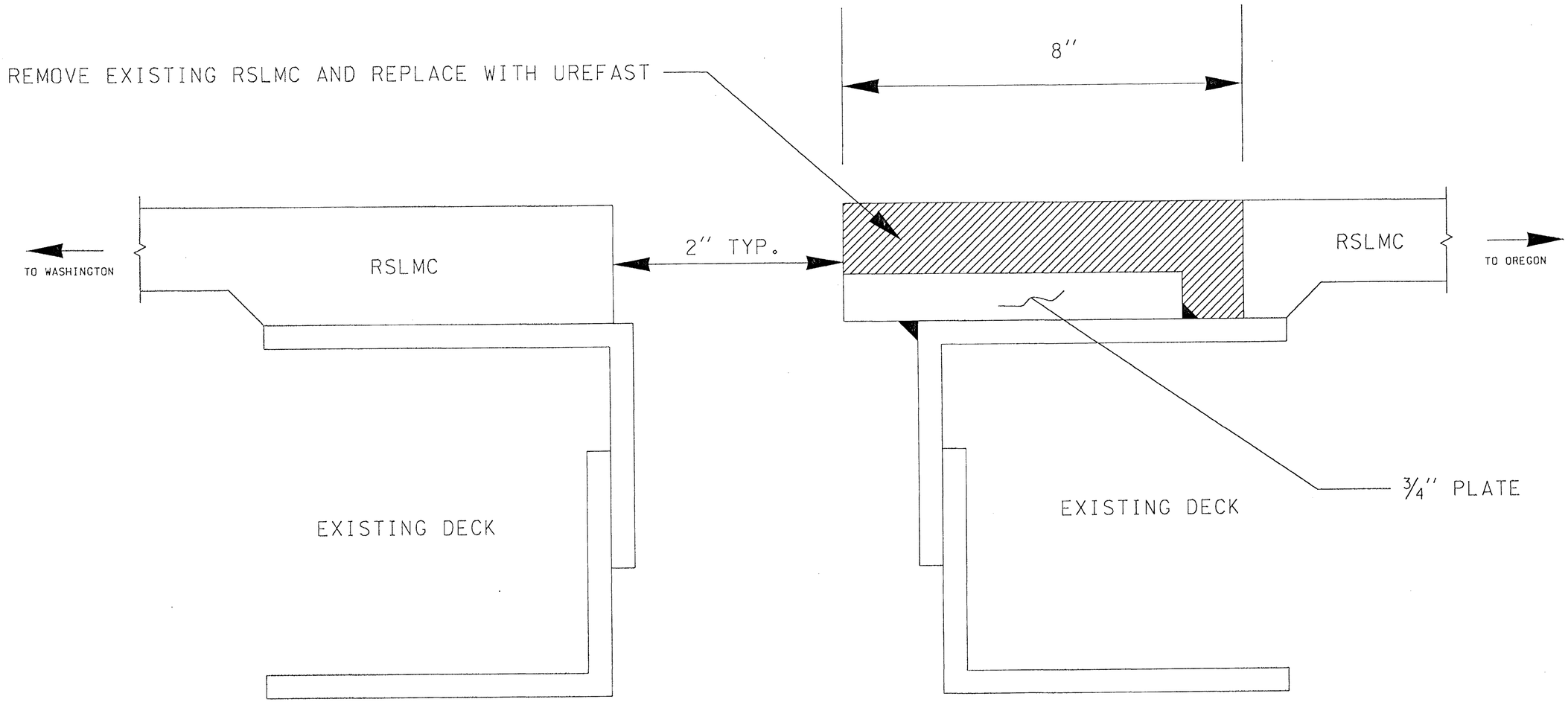

WASHINGTON APPROACH -
UREFAST JOINT TREATMENT
BENT 12 - 34' WIDE (EAST AND WEST LANES)
BENT 17 - 17' WIDE (EAST LANE)
BENT 22 - 17' WIDE (WEST LANE)

FOR "AS CONSTRUCTED PLANS" ONLY

FILE NAME	G:\444304\03 - Construction\C6444 - SR433,Lewis and Clark Bridge Deck Replacement\As-Builts\6444 Detail.dgn						
TIME	12:44:25 PM						
DATE	10/13/2005						
PLOTTED BY	kingju						
DESIGNED BY							
ENTERED BY							
CHECKED BY							
PROJ. ENGR.							
REGIONAL ADM.		REVISION	DATE	BY			

REGION NO.	STATE	FED.AID PROJ.NO.
10	WASH	
JOB NUMBER		
CONTRACT NO. 6444		LOCATION NO.

P.E. STAMP BOX DATE

P.E. STAMP BOX DATE

Washington State Department of Transportation

SR 433
LEWIS AND CLARK BRIDGE
DECK REPLACEMENT

WASHINGTON APPROACH -
UREFAST AT BENT 12, 17 & 22

PLOT14
WA26C
SHEET 64C OF 258 SHEETS

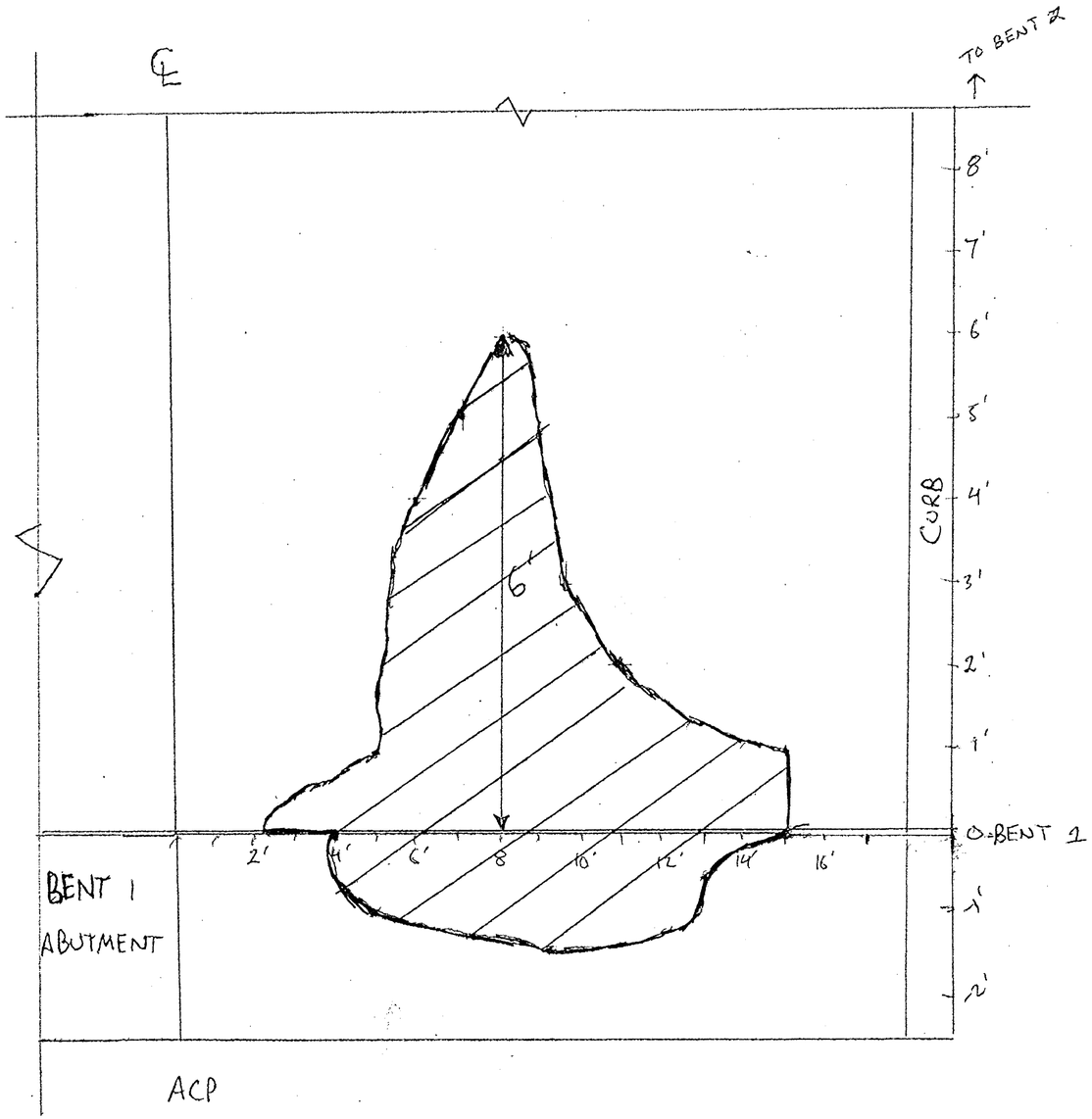

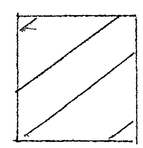

— RSLMC. DELAMINATION

NOTES DELAMINATED AREA REMOVED (AND REPLACED WITH UREFAST.

FOR "AS CONSTRUCTED PLANS" ONLY

FILE NAME	C:\AAWork\kelso\Svensen's Curve\L3425WASTESITE.dgn								PLOT11
TIME	02:37:18 PM				REGION NO. 10	STATE WASH	FED.AID PROJ.NO.	Washington State Department of Transportation	SR 433 LEWIS AND CLARK BRIDE DECK REPLACEMENT	WA260
DATE	08/17/2005				JOB NUMBER				
PLOTTED BY	spohnk								
DESIGNED BY									
ENTERED BY									
CHECKED BY					CONTRACT NO. 64444		LOCATION NO.		WASHINGTON APPROACH - UREFAST AT BENT 1 ABUTMENT	SHEET 640 OF 258 SHEETS
PROJ. ENGR.									
REGIONAL ADM.		REVISION	DATE	BY					

P.E. STAMP BOX DATE

P.E. STAMP BOX DATE

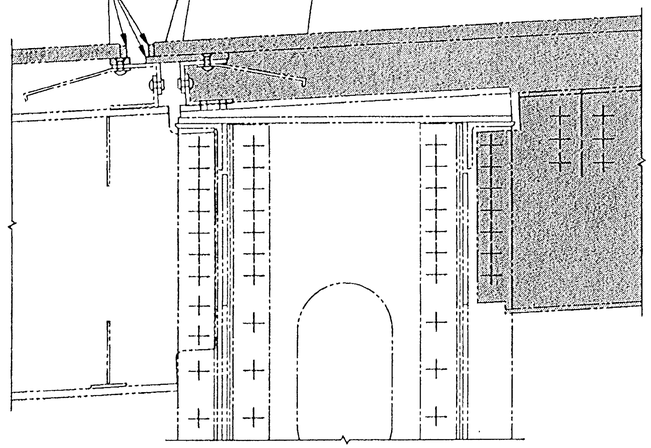

DETAIL E
EXISTING
WA21

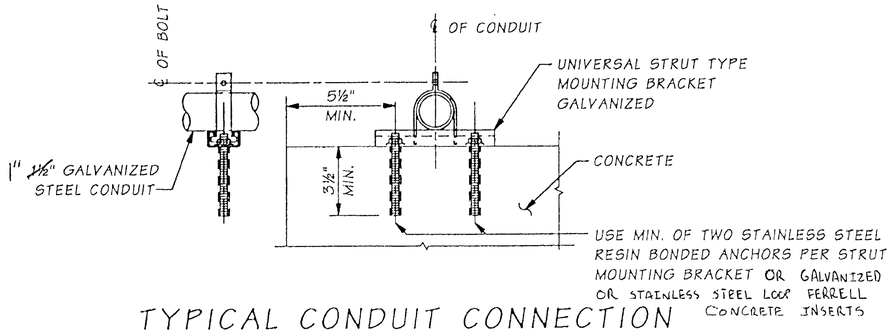

TYPICAL CONDUIT CONNECTION TO CONCRETE

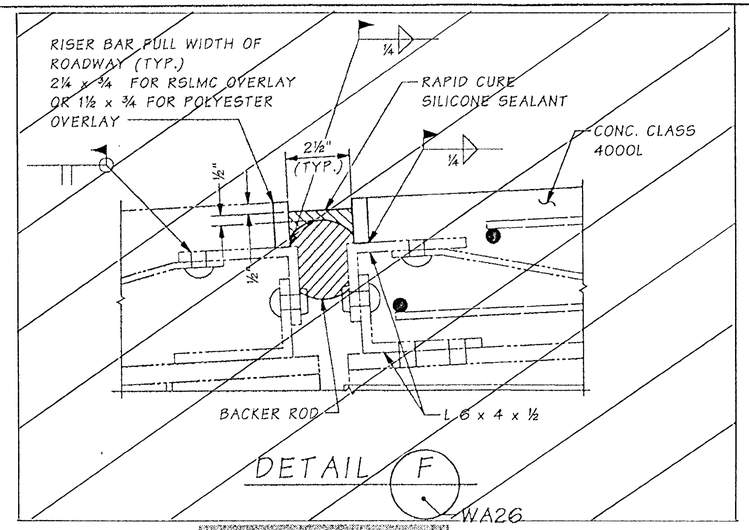

DETAIL F
WA26

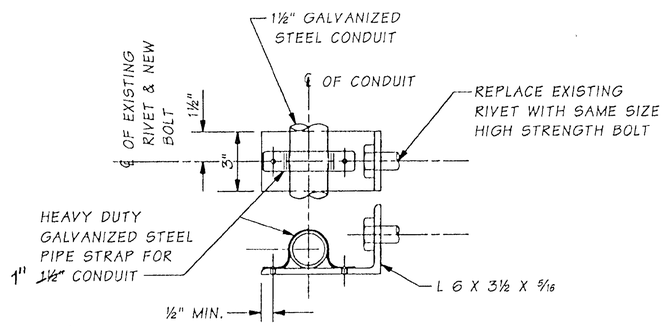

TYPICAL CONDUIT CONNECTION TO STEEL MEMBERS

ATTACH STRAP WITH GALVANIZED BOLTS

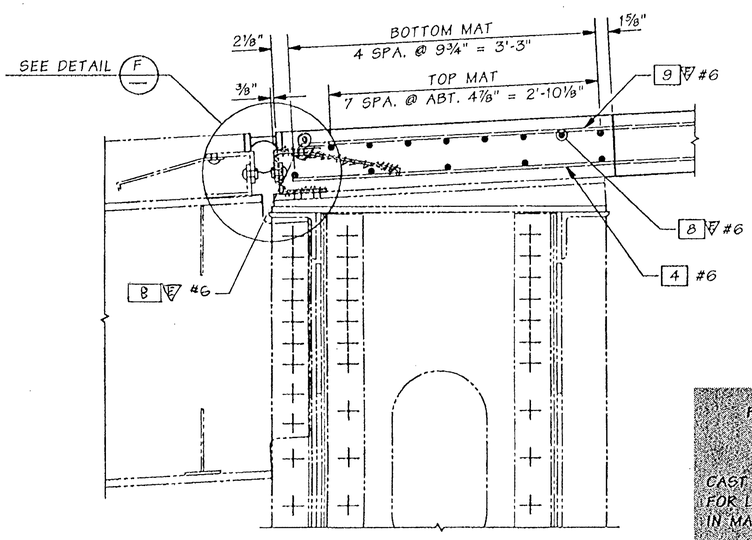

DETAIL E
MODIFIED
WA21

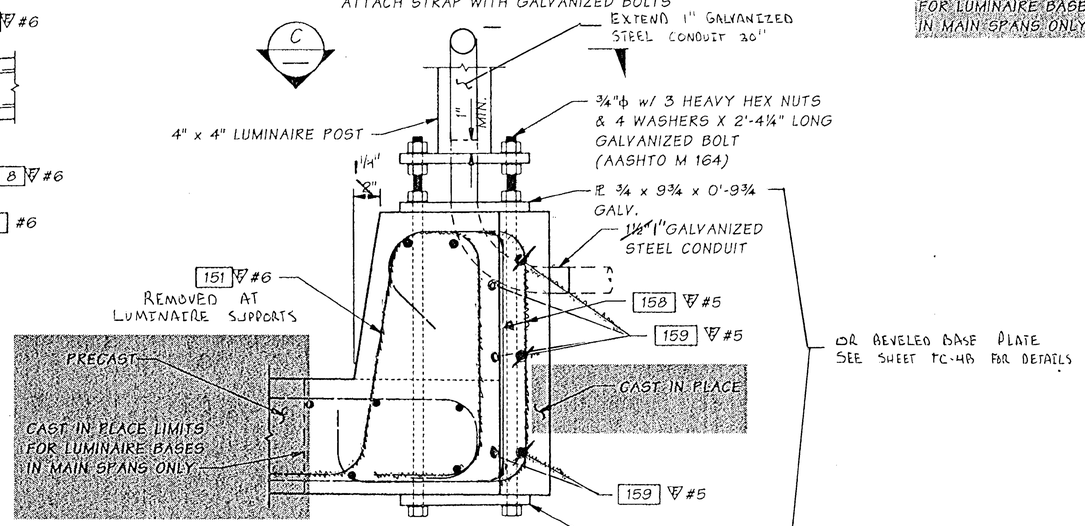

SECTION B
WA24, WA25

19 LOCATIONS - WASHINGTON APPROACH
33 LOCATIONS - MAIN SPANS
16 LOCATIONS - OREGON APPROACH

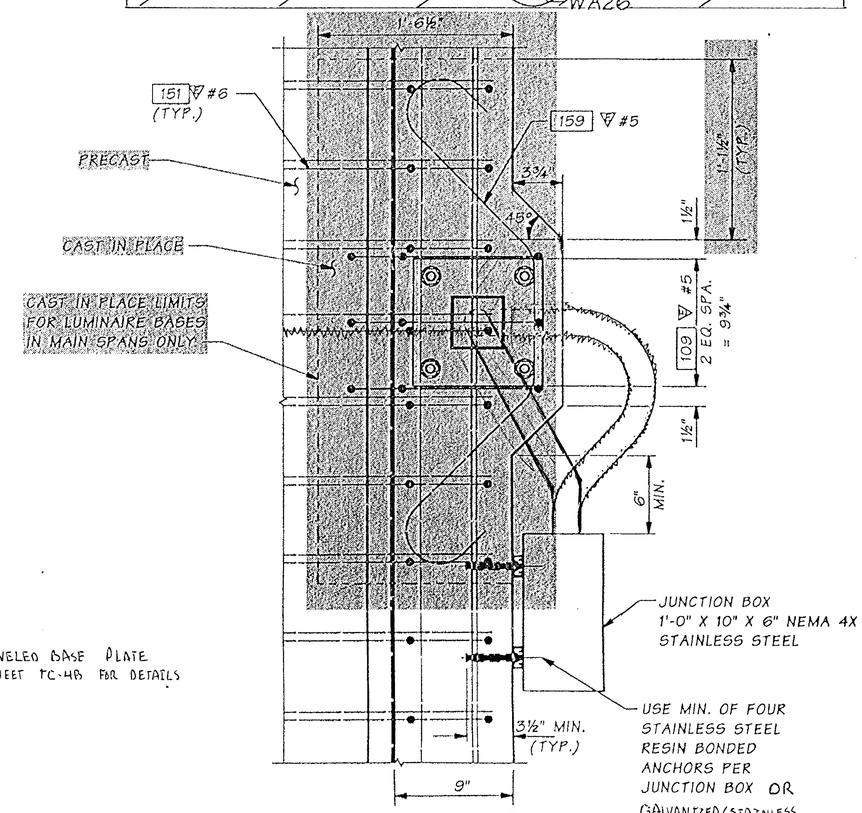

SECTION C

SEE BRIDGE SHEETS WA24 & WA25 FOR REINFORCEMENT NOT CALLED OUT. SEE BRIDGE SHEETS ML6 THROUGH ML12 FOR LOCATIONS.

FOR "AS CONSTRUCTED PLANS" ONLY

Bridge Design Engr.	Kapur, J		M:\Y-Team\Lewis_Clark Rehab\Washington Appr\window files\LUM REINF.WND			REGION NO.	STATE	FED. AID PROJ. NO.	SHEET NO.	TOTAL SHEETS	
Supervisor	Kirker, KN	08/02				10	WASH.				
Designed By	Schultz, E	08/02									
Checked By	Talukdar, M	08/02				JOB NUMBER		ACBH - 0433(007)			
Detailed By	Evans, P	08/02				02x310					
Bridge Projects Engr.											
Prelim. Plan By		11/02	MODIFIED SECTION B & C	ES		6444					
Architect/Specialist		DATE	REVISION	BY	APP'D						

Tue Nov 05 09:51:24 2002

KARL N. KIRKER — STATE OF WASHINGTON — 13609 — REGISTERED PROFESSIONAL ENGINEER — EXPIRES 11/3/03

BRIDGE AND STRUCTURES OFFICE

MONINDRA TALUKDAR — STATE OF WASHINGTON — 17106 — REGISTERED PROFESSIONAL ENGINEER — EXPIRES 6/1/03

Washington State Department of Transportation

SR 433
LEWIS AND CLARK BRIDGE
DECK REPLACEMENT

MISCELLANEOUS DETAILS

BRIDGE SHEET NO. WA27

SHEET 65 OF 258 SHEETS

SR 433 VO. 1566 SHEET 27

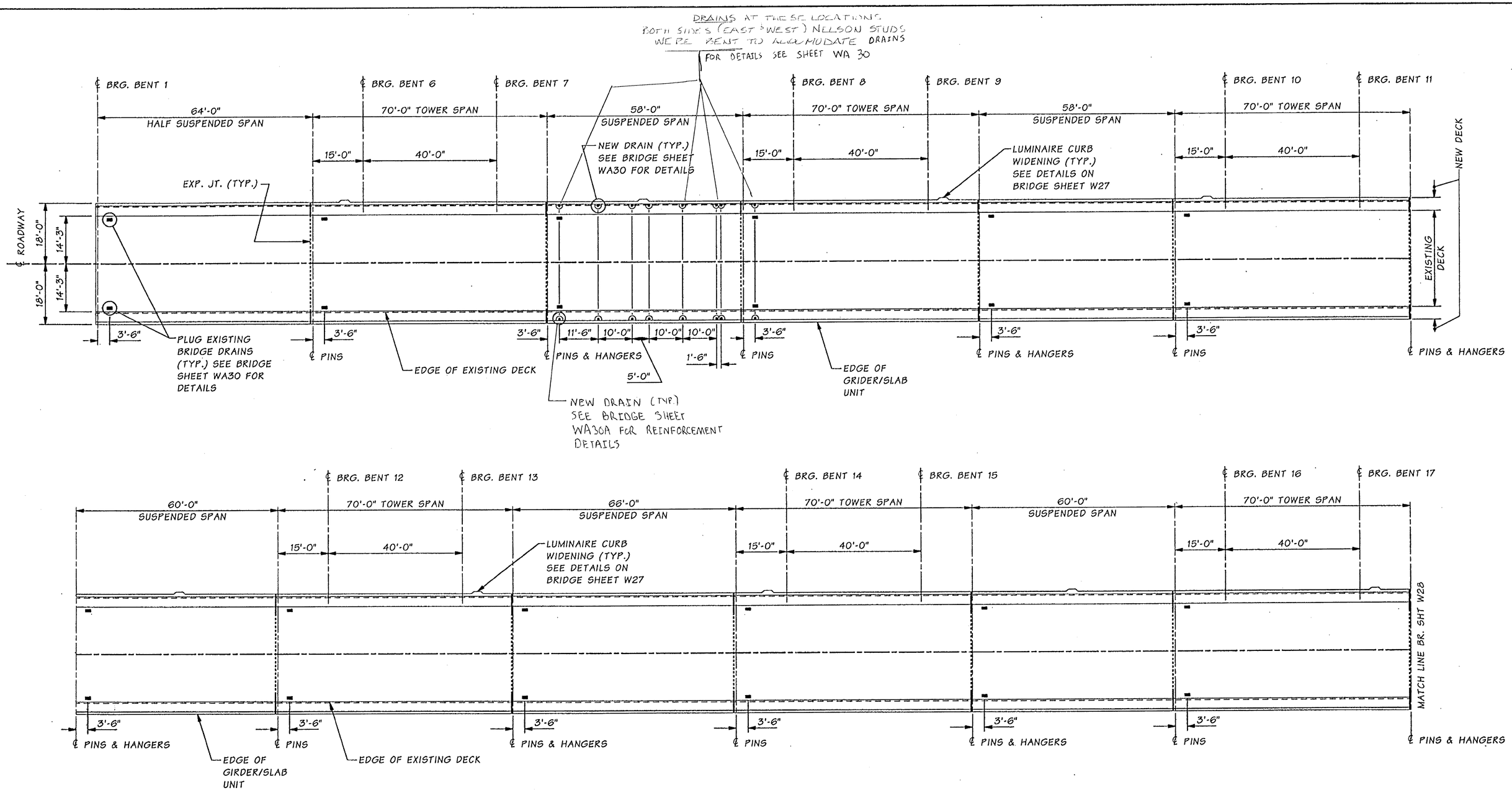

DECK PANEL LAYOUT - WASHINGTON APPROACH WIDENING

NOTE: WASHINGTON APPROACH BENT 1 TO BENT AB, ROADWAY SCARIFIED BY HYDROSCARIFICATION METHODS BEFORE PLACEMENT OF 1½" RSLMC OVERLAY

FOR "AS CONS... PLANS" ...

SR 433 JOB NO. 1566 SHEET 28

Bridge Design Engr.	Kapur, J	
Supervisor	Kirker, KN	08/02
Designed By	Schultz, E	08/02
Checked By	Talukdar, M	08/02
Detailed By	Evans, P	08/02
Bridge Projects Engr.		
Prelim. Plan By		
Architect/Specialist		

M:\Y-Team\Lewis_Clark Rehab\Washington Appr\Window files\SLAB L01.WND

DATE	REVISION	BY	APP'D

REGION NO.	STATE	FED. AID PROJ. NO.	SHEET NO.	TOTAL SHEETS
10	WASH.	ACBH - 0433(007)		
JOB NUMBER 02x310				
6444				

KARL N. KIRKER, STATE OF WASHINGTON, REGISTERED PROFESSIONAL ENGINEER, 9/1/02, EXPIRES 11/3/03

BRIDGE AND STRUCTURES OFFICE

MUNDIRA TALUKDAR, STATE OF WASHINGTON, REGISTERED PROFESSIONAL ENGINEER, 9/1/02, EXPIRES 6/1/04

Washington State Department of Transportation

SR 433
LEWIS AND CLARK BRIDGE
DECK REPLACEMENT

SLAB PLAN -- WASHINGTON APPROACH
SHEET 1 OF 2

BRIDGE SHEET NO. WA28

SHEET 66 OF 258 SHEETS

Tue Sep 17 15:53:51 2002

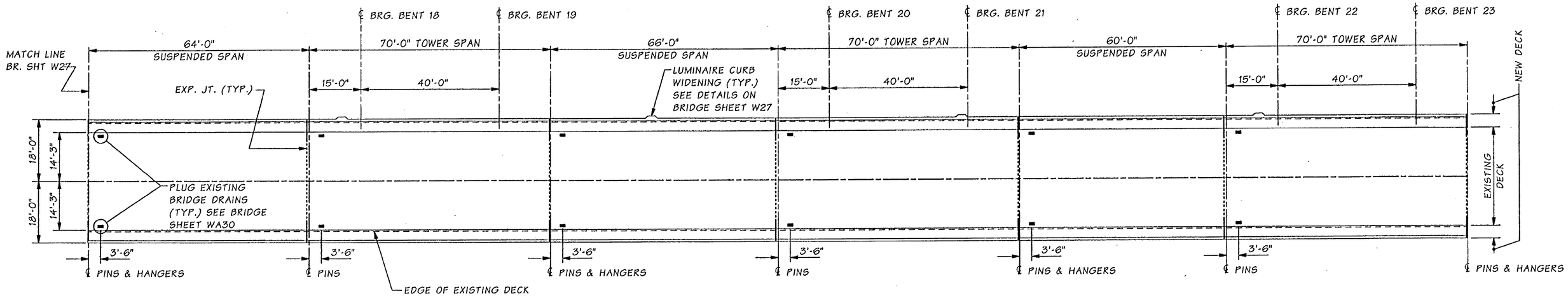

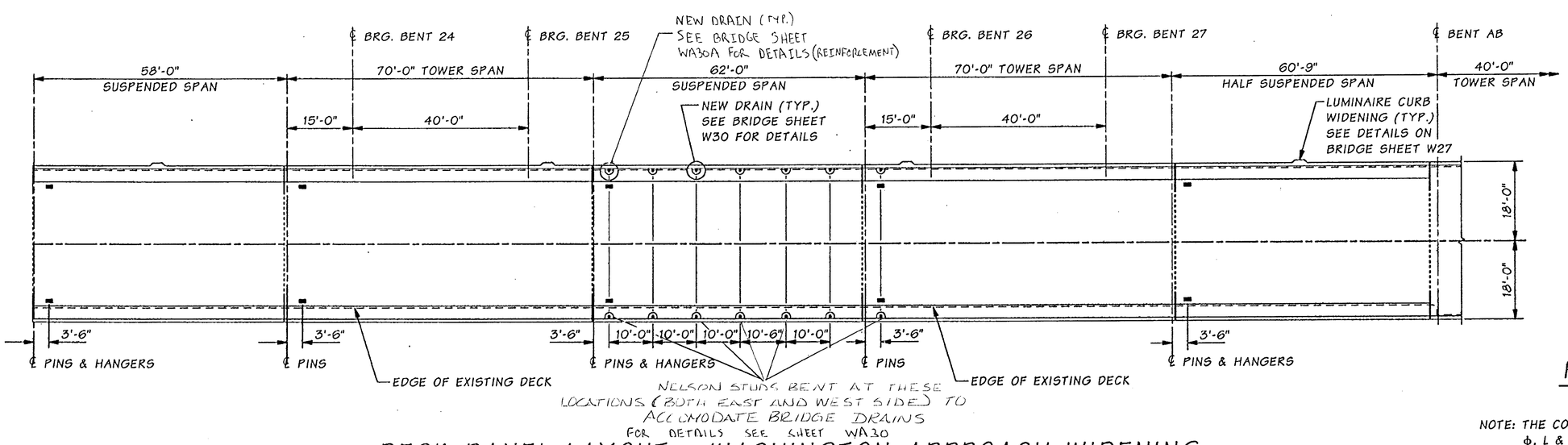

DECK PANEL LAYOUT - WASHINGTON APPROACH WIDENING

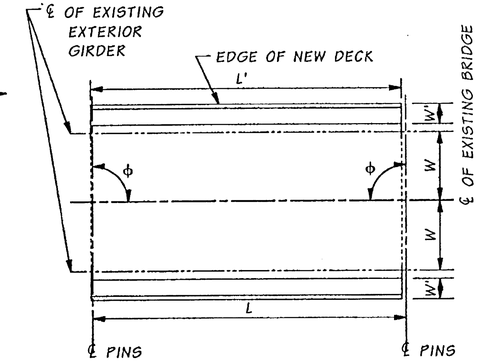

PLAN - PANEL GEOMETRY

NOTE: THE CONTRACTOR SHALL FIELD VERIFY THE MEASUREMENTS ϕ, L & W SUCH THAT THE FINISHED DECK PANEL IS CONSTRUCTED TO THE FOLLOWING TOLERANCES.

1) L' ± ¼ INCH
2) W' ± ⅛ INCH
3) DEPTH ± ⅛ INCH
4) SWEEP (VARIATION FROM STRAIGHT LINE PARALLEL TO CENTERLINE OF MEMBER) ± ¼ INCH

FOR "AS CONST... PLANS" ONLY

SR 433 JOB NO. 1566 SHEET 29

Bridge Design Engr.	Kapur, J	
Supervisor	Kirker, KN	08/02
Designed By	Schultz, E	08/02
Checked By	Talukdar, M	08/02
Detailed By	Evans, P	08/02
Bridge Projects Engr.		
Prelim. Plan By		
Architect/Specialist		

M:\Y-Team\Lewis_Clark Rehab\Washington Appr\Window files\SLAB LO2.WND

DATE	REVISION	BY	APP'D

REGION NO.	STATE	FED. AID PROJ. NO.	SHEET NO.	TOTAL SHEETS
10	WASH.	ACBH - 0433(007)		
JOB NUMBER 02x310				

6444

KARL N. KIRKER, STATE OF WASHINGTON, 10298, REGISTERED PROFESSIONAL ENGINEER, EXPIRES 11/3/03

BRIDGE AND STRUCTURES OFFICE

MONTANDRA TALUKDAR, STATE OF WASHINGTON, 27628, REGISTERED PROFESSIONAL ENGINEER, EXPIRES 6/1/04

Washington State Department of Transportation

SR 433
LEWIS AND CLARK BRIDGE DECK REPLACEMENT

SLAB PLAN -- WASHINGTON APPROACH SHEET 2 OF 2

BRIDGE SHEET NO. WA29

SHEET 67 OF 258 SHEETS

Tue Sep 17 15:53:53 2002

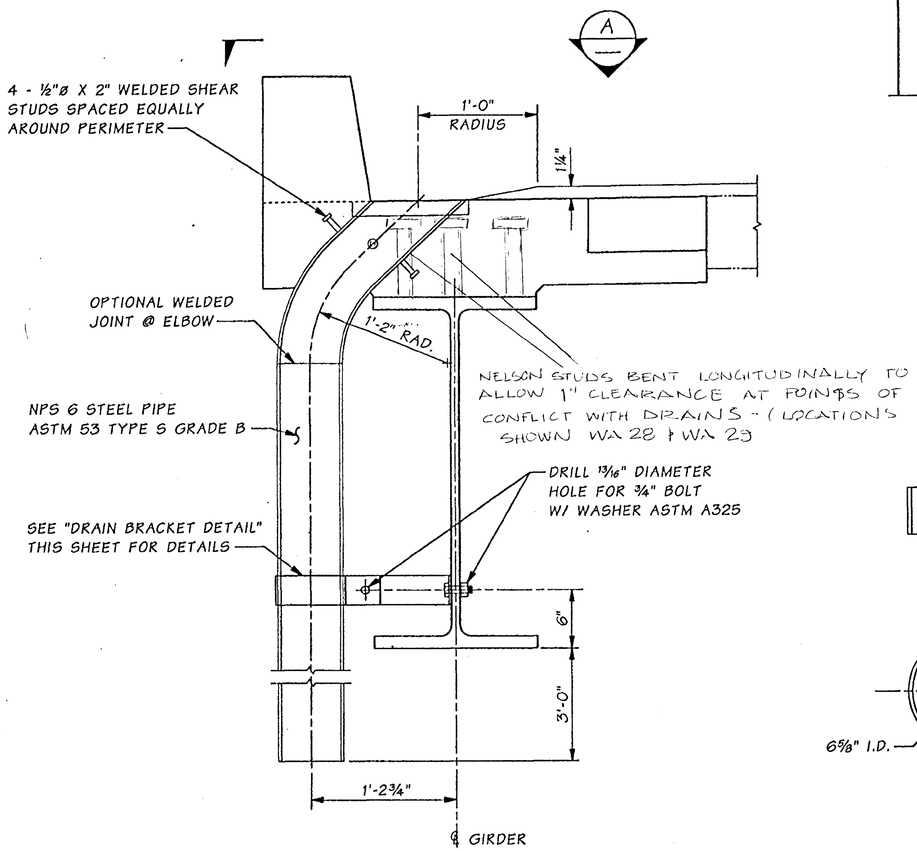

DRAIN DETAIL

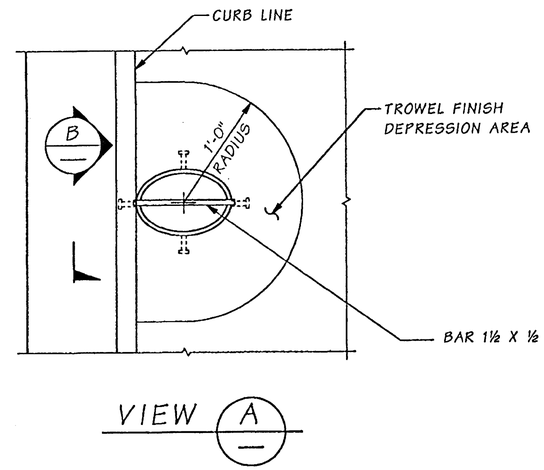

VIEW A

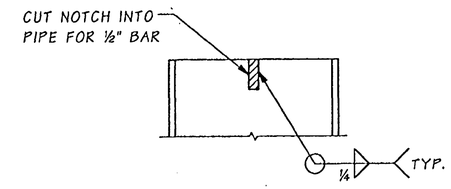

VIEW B

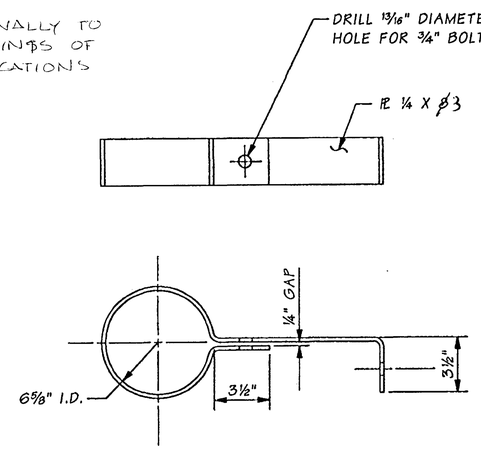

DRAIN BRACKET DETAIL

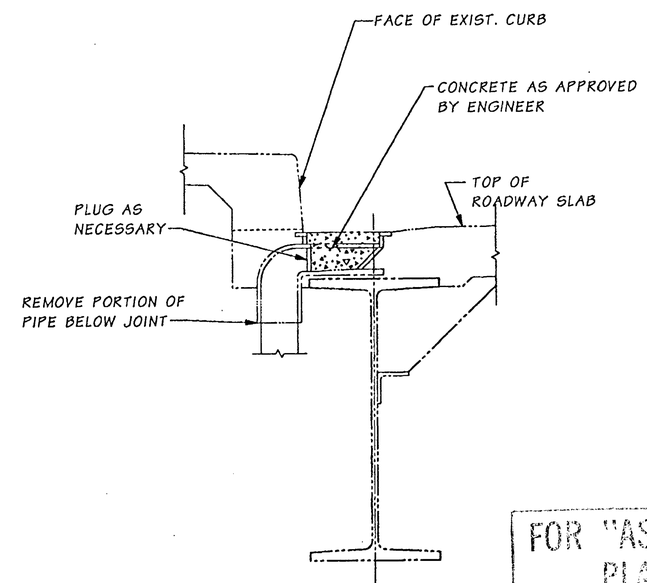

FOR "AS CONSTRUCTED PLANS" ONLY

BRIDGE DRAIN PLUG DETAIL

(46 LOCATIONS)

REMOVE DRAIN GRATING & GALV. STEEL CHAIN. FILL DRAIN WITH CONCRETE GROUT AFTER PLUGGING.

SR 433 JOB NO. 1566 SHEET 30

Bridge Design Engr.	Kapur, J	
Supervisor	Kirker, KN	08/02
Designed By	Talukdar, M	08/02
Checked By	Peralta, R	08/02
Detailed By	House, L	08/02
Bridge Projects Engr.		
Prelim. Plan By		
Architect/Specialist		

M:\Y-Team\Lewis_Clark Rehab\Washington Appr\Window files\DRAINS.WND

DATE	REVISION	BY	APP'D

REGION NO.	STATE	FED. AID PROJ. NO.	SHEET NO.	TOTAL SHEETS
10	WASH.	ACBH - 0433(007)		

JOB NUMBER 02x310

6244

KARL N. KIRKER, STATE OF WASHINGTON, 18298, REGISTERED PROFESSIONAL ENGINEER — EXPIRES 11/3/03 — 9/3/02

BRIDGE AND STRUCTURES OFFICE

MUNDIA A. TALUKDAR, STATE OF WASHINGTON, 27628, REGISTERED PROFESSIONAL ENGINEER — EXPIRES 6/1/04 — 9/3/02

Washington State Department of Transportation

SR 433
LEWIS AND CLARK BRIDGE
DECK REPLACEMENT

DRAIN DETAILS -- WASHINGTON APPROACH

BRIDGE SHEET NO. WA30

SHEET 68 OF 258 SHEETS

Tue Sep 17 11:27:23 2002

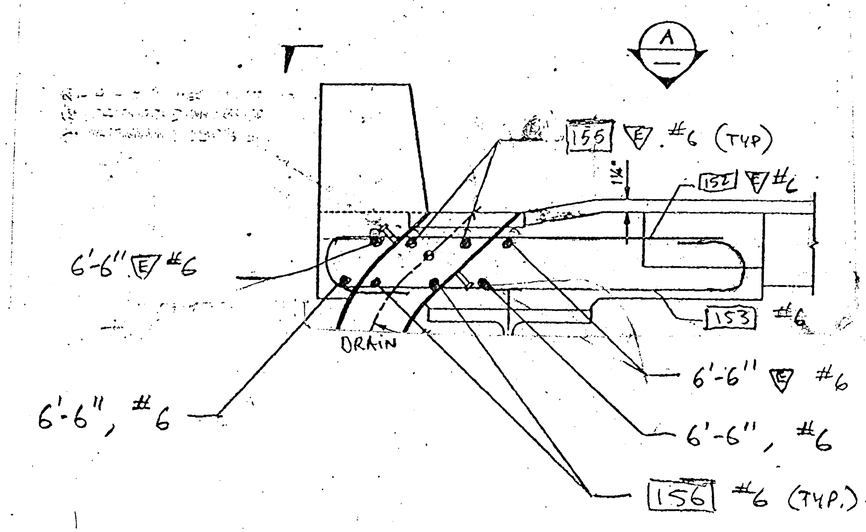

TYPICAL SECTION -
REINFORCEMENT AROUND DRAIN
WASHINGTON APPROACH WIDENING
- ADDED REBAR STIFFENERS
LOCATIONS AT 30 - 8" DRAINS

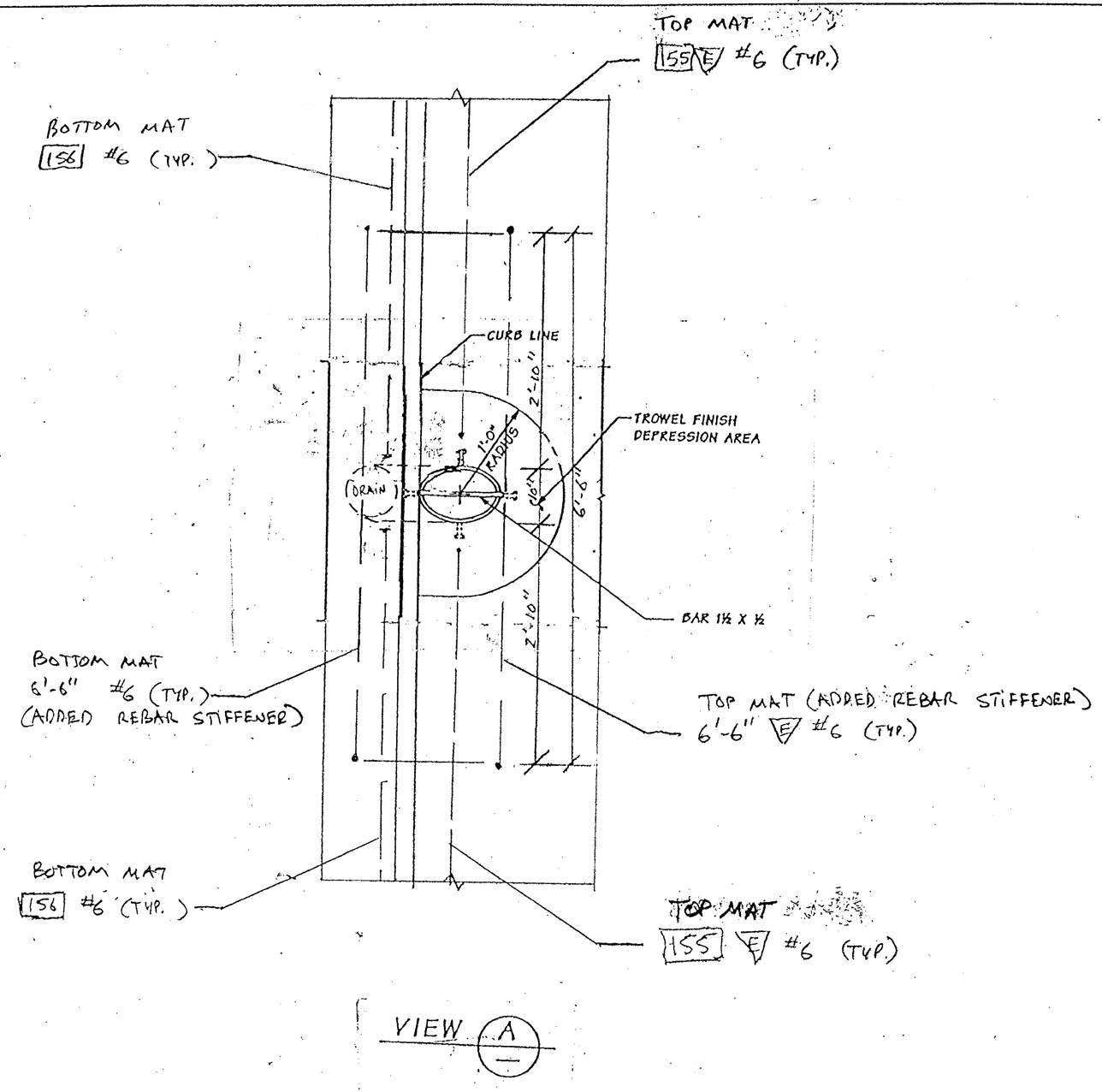

FOR "AS CONSTRUCTED PLANS" ONLY

FILE NAME	C:\AAWork\kelso\Svensen's Curve\L3425WASTESITE.dgn					
TIME	02:37:18 PM			REGION NO. 10	STATE WASH	FED.AID PROJ.NO.
DATE	08/17/2005			JOB NUMBER		
PLOTTED BY	spahnk					
DESIGNED BY						
ENTERED BY				CONTRACT NO. 6444	LOCATION NO.	
CHECKED BY						
PROJ. ENGR.						
REGIONAL ADM.		REVISION	DATE	BY		

P.E. STAMP BOX DATE

P.E. STAMP BOX DATE

Washington State Department of Transportation

SR 433
LEWIS AND CLARK BRIDE
DECK REPLACEMENT

DRAIN REINFORCEMENT DETAILS
WASHINGTON APPROACH

PLOT11
WA30A
SHEET 68A OF 258 SHEETS

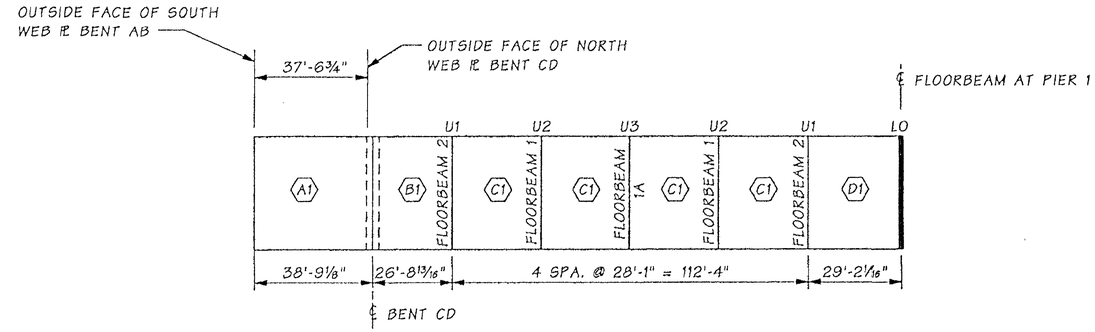

DECK PANEL LAYOUT

ALL PANEL DIMENSIONS BASED ON A STRUCTURAL TEMP. OF 64°F.

NOTE:
FLOORBEAM DESIGNATION IS BASED ON ORIGINAL CONTRACT PLANS.

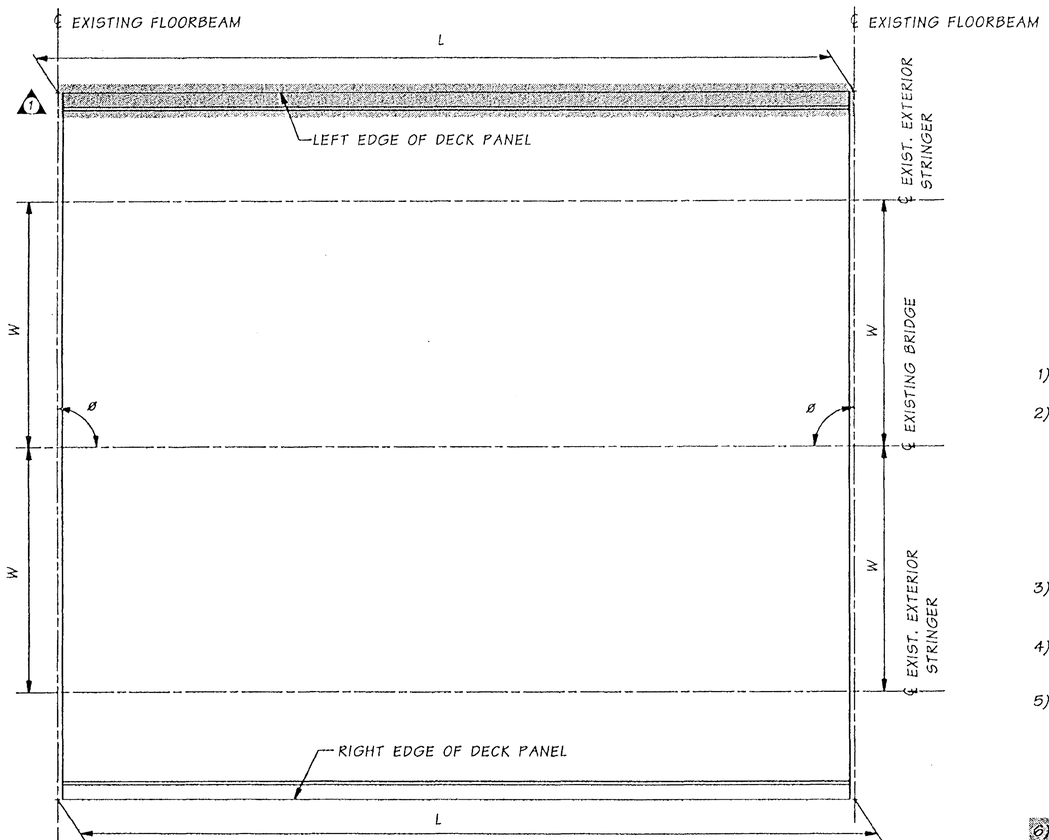

PLAN - PANEL GEOMETRY

NOTES:

1) FLOORBEAM DESIGNATION IS BASED ON ORIGINAL CONTRACT PLANS.

2) THE CONTRACTOR SHALL FIELD VERIFY THE MEASUREMENTS ϕ L & W SUCH THAT THE FINISHED DECK PANEL IS CONSTRUCTED TO THE FOLLOWING TOLERANCES.

   1) L ± ¼ INCH
   2) W ± ⅛ INCH
   3) DEPTH ± ⅛ INCH
   4) SWEEP (VARIATION FROM STRAIGHT LINE PARALLEL TO CENTERLINE OF MEMBER) ± ¼ INCH
   5) WARPING ± ⅛ INCH FROM NEAREST ADJACENT CORNER.

3) FOR SPACING OF SHEAR CONNECTIONS, PICK POINT CONNECTION AND LONGITUDINAL STRINGER TO TRANSVERSE STRINGER CONNECTION SEE BR. SHT. MS37.

4) FOR ENGINEER'S SUGGESTED DECK REPLACEMENT SEQUENCE AND LIFTING FRAME DETAILS SEE BRIDGE SHEET OA31 TO OA34.

5) THE CONTRACTOR SHALL FIELD MEASURE ALL EXISTING GEOMETRY THAT AFFECTS THE FINAL FIT OF THE NEW DECK PANELS. THE RESULTS OF THE FIELD MEASUREMENTS SHALL BE TABULATED AND INCLUDED IN THE SHOP DRAWINGS FOR BOTH THE STEEL AND CONCRETE PORTIONS OF THE DECK PLANELS, INCLUDING CALCULATED ELEVATIONS FOR THE STRINGER SEAT SUPPORTS.

6) THE PROCEDURE USED FOR STORAGE OF THE PRECAST PANELS SHALL BE SUBMITTED TO THE ENGINEER FOR APPROVAL.

LEGEND

U1 --- TRUSS PANEL POINT.

(C) --- DECK PANEL TYPE.

--- FIXED PANEL JOINT. SEE "SILICONE SEALANT EXP. JT.", BRIDGE SHT. MS38

--- FINGER JOINT. SEE "FINGER JOINT AT BENT CD" BRIDGE SHT. WA46 TO WA51.

--- STRIP SEAL EXPANSION JOINT. SEE "EXPANSION JOINT PIER 1", BRIDGE SHT. ML4

FOR "AS CONSTRUCTED PLANS" ONLY

SR 433 NO. 1566 SHEET 31

Bridge Design Engr.	Kapur, J		M:\Y-Team\Lewis_Clark Rehab\Washington Appr\window files\DECK LAYOUT 40 - 168.WND				REGION NO.	STATE	FED. AID PROJ. NO.	SHEET NO.	TOTAL SHEETS
Supervisor	Kirker, KN						10	WASH.			
Designed By	Talukdar, M	08/02									
Checked By	Peralta, R	08/02									
Detailed By	House, L	08/02	10/02	MOVED CURB LOCATION	MT		JOB NUMBER 02x310		ACBH - 0433(007)		
Bridge Projects Engr.											
Prelim. Plan By			10/02	ADDED NOTE	MT						
Architect/Specialist			DATE	REVISION	BY	APP'D	6444				

Tue Oct 29 15:56:03 2002

KARL N. KIRKER — STATE OF WASHINGTON — REGISTERED PROFESSIONAL ENGINEER — EXPIRES 11/3/03

BRIDGE AND STRUCTURES OFFICE

MUNINDRA TALUKDAR — STATE OF WASHINGTON — REGISTERED PROFESSIONAL ENGINEER — EXPIRES 6/1/04

Washington State Department of Transportation

SR 433
LEWIS AND CLARK BRIDGE
DECK REPLACEMENT

DECK PANEL LAYOUT

BRIDGE SHEET NO. WA31

SHEET 69 OF 258 SHEETS

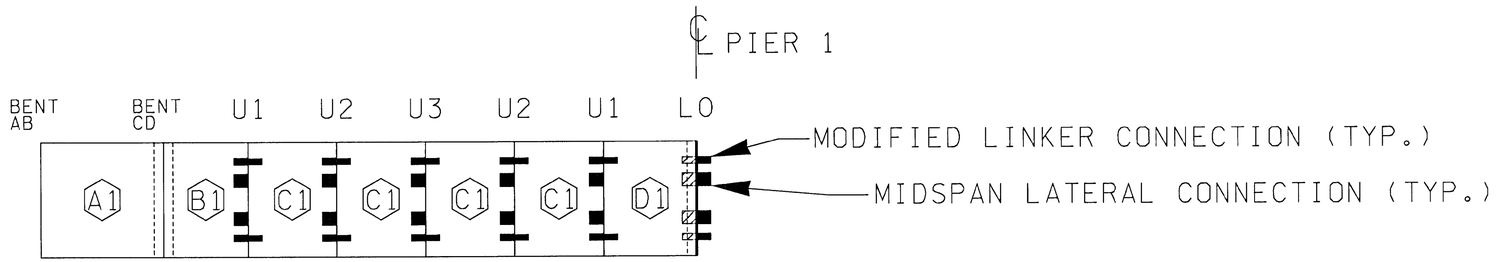

LEGEND

U4	--- TRUSS PANEL POINT
C2	--- DECK PANEL TYPE
	--- FIXED PANEL JOINT
	--- FINGER JOINT
	--- EXPANSION JOINT
	TEMPORARY MODIFIED LINKER/MIDSPAN LATERAL
	PERMANENT MODIFIED LINKER/MIDSPAN LATERAL

FOR "AS CONSTRUCTED PLANS" ONLY

FILE NAME	G:\444304\03 - Construction\C6444 - SR433, Lewis and Clark Bridge Deck Replacement\As-Builts\6444 Detail.dgn
TIME	12:54:22 PM
DATE	10/31/2005
PLOTTED BY	kingju
DESIGNED BY	
ENTERED BY	
CHECKED BY	
PROJ. ENGR.	
REGIONAL ADM.	

REVISION | DATE | BY

REGION NO.	STATE	FED.AID PROJ.NO.
10	WASH	

JOB NUMBER

CONTRACT NO. 6444

LOCATION NO.

P.E. STAMP BOX DATE

P.E. STAMP BOX DATE

Washington State Department of Transportation

SR 433
LEWIS AND CLARK BRIDGE
DECK REPLACEMENT

WASHINGTON APPROACH
LINKER PLATE ASSEMBLY LOCATIONS

PLOT17

WA31A

SHEET 69 A OF 258 SHEETS

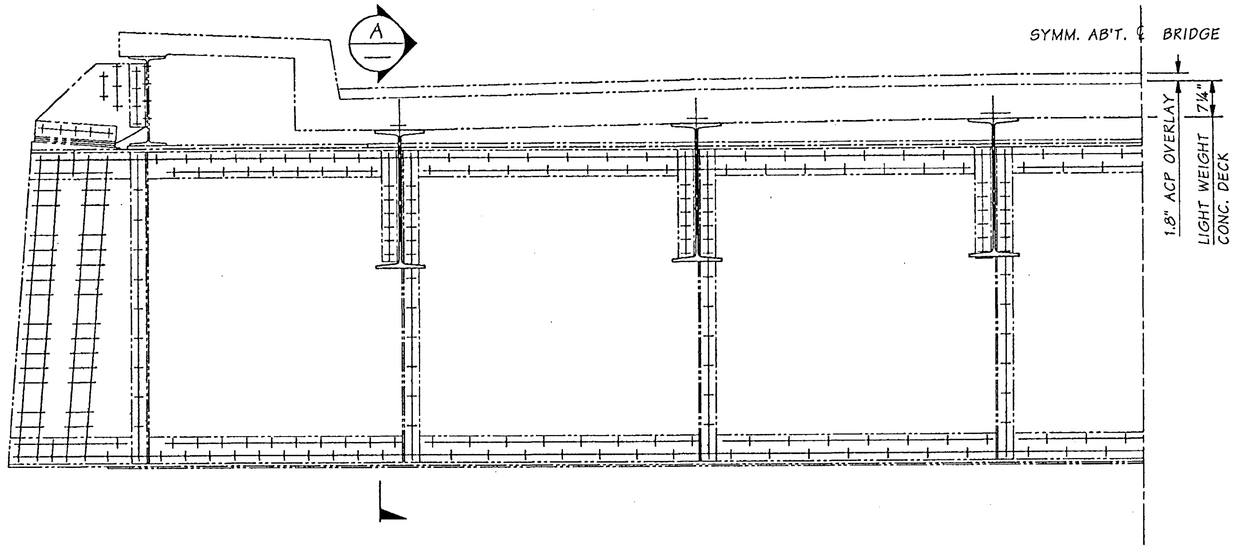

ELEVATION ~ EXISTING DECK & BENT AB

LOOKING BACK ON STATION

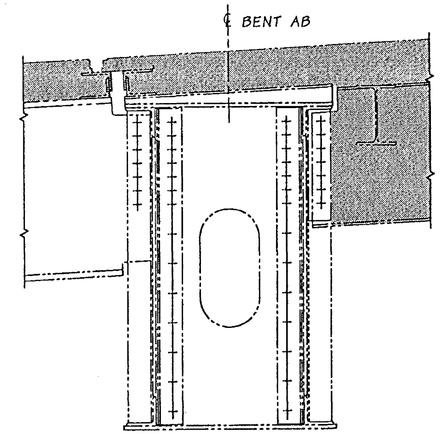

SECTION A

REMOVE SHADED PORTION AT TIME OF DECK REMOVAL

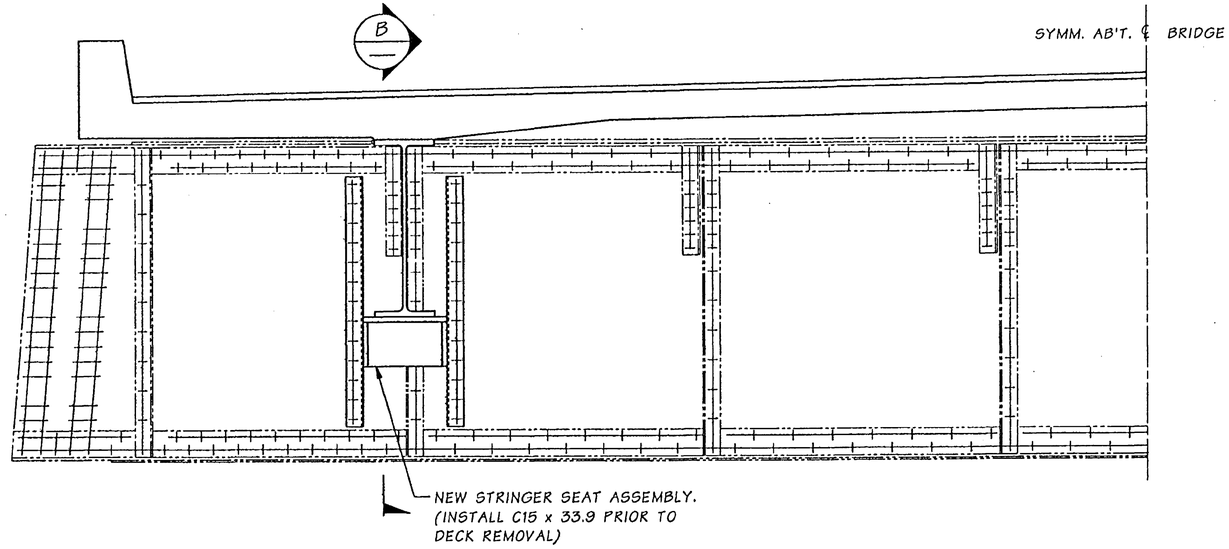

ELEVATION ~ NEW DECK AT BENT AB

LOOKING BACK ON STATION

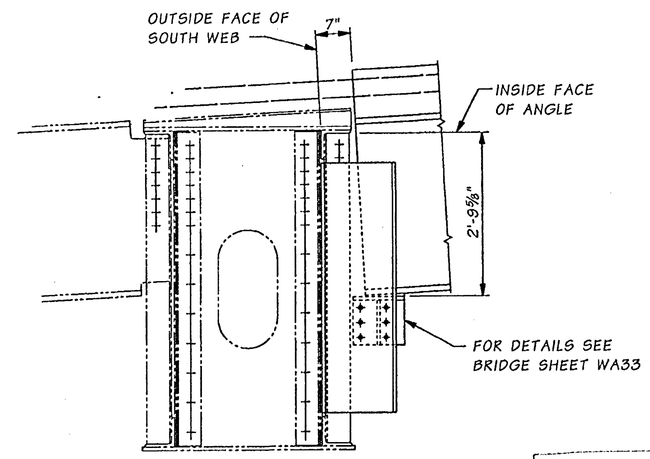

SECTION B

FOR "AS CONSTRUCTED PLANS" ONLY

SR 433 JOB NO. 1566 SHEET 32

Bridge Design Engr.	Kapur, J		M:\Y-Team\Lewis_Clark Rehab\Washington Appr\Window files\40 FT TOWER GAB1.WND							
Supervisor	Kirker, KN	08/02				REGION NO.	STATE	FED. AID PROJ. NO.	SHEET NO.	TOTAL SHEETS
Designed By	Talukdar, M	08/02				10	WASH.			
Checked By	Peralta, R	08/02				JOB NUMBER				
Detailed By	House, L	08/02				02x310		ACBH - 0433(007)		
Bridge Projects Engr.										
Prelim. Plan By										
Architect/Specialist			DATE	REVISION	BY	APP'D				

Wed Sep 18 07:24:31 2002

KARL N. KIRKER — STATE OF WASHINGTON — REGISTERED PROFESSIONAL ENGINEER — EXPIRES 11/3/03

BRIDGE AND STRUCTURES OFFICE

MONINDRA TALUKDAR — STATE OF WASHINGTON — REGISTERED PROFESSIONAL ENGINEER — EXPIRES 6/1/04

Washington State Department of Transportation

SR 433
LEWIS AND CLARK BRIDGE
DECK REPLACEMENT

BENT A-B

BRIDGE SHEET NO. WA32

SHEET 70 OF 258 SHEETS

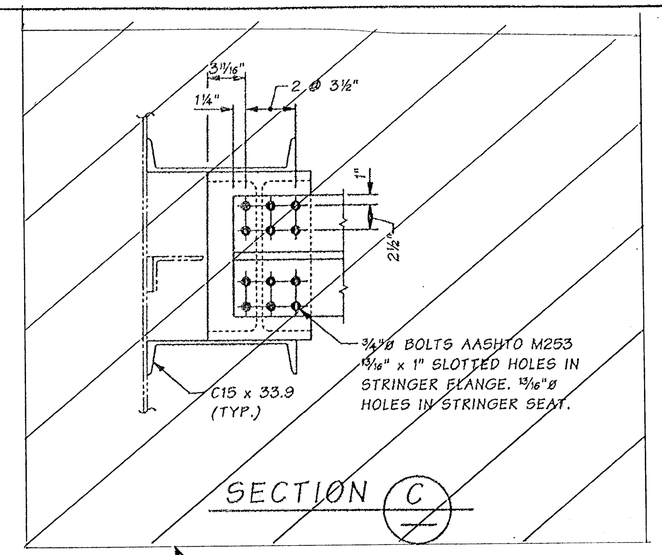

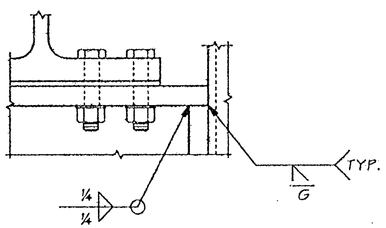

DETAIL E

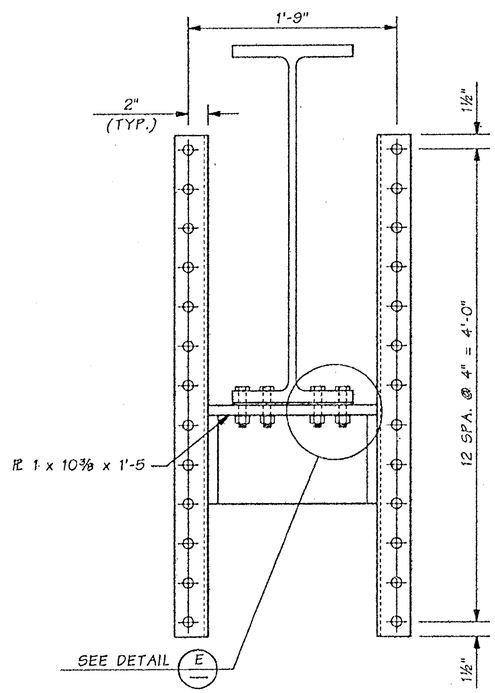

SECTION B

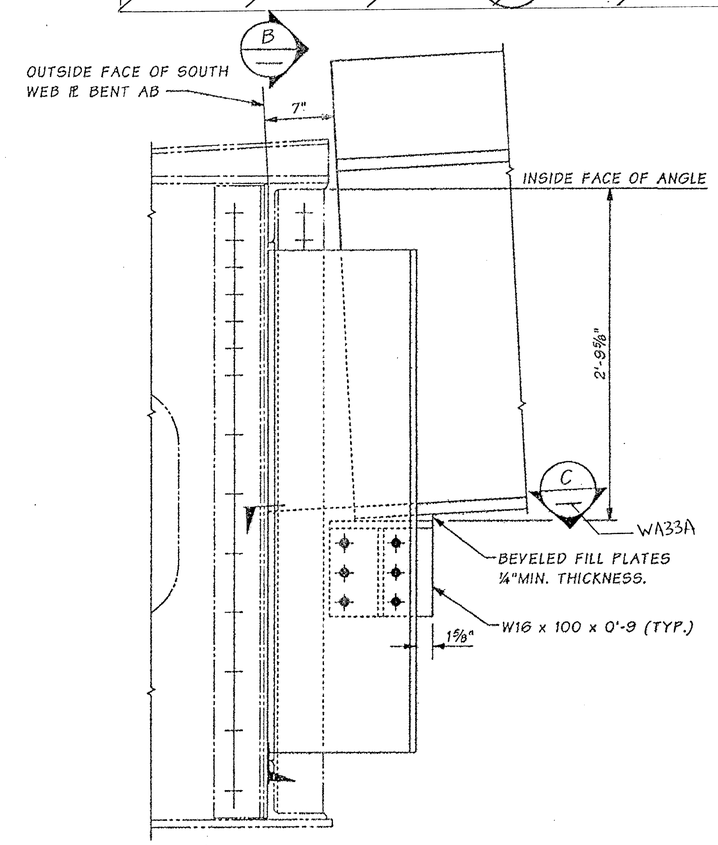

ELEVATION ~ SOUTH SIDE BENT AB

FOR "AS CONSTRUCTED PLANS" ONLY

SR 433 JOB NO. 1566 SHEET 33

Bridge Design Engr.	Kapur, J		M:\Y-Team\Lewis_Clark Rehab\Washington Appr\window files\A-B STRINGER SEAT.WND								
Supervisor	Kirker, KN										
Designed By	Talukdar, M	08/02									
Checked By	Peralta, R	08/02									
Detailed By	House, L	08/02									
Bridge Projects Engr.											
Prelim. Plan By											
Architect/Specialist			DATE	REVISION	BY	APP'D					

REGION NO.	STATE	FED. AID PROJ. NO.	SHEET NO.	TOTAL SHEETS
10	WASH.	ACBH - 0433(007)		
JOB NUMBER 02x310				
6444				

KARL N. KIRKER — STATE OF WASHINGTON — REGISTERED PROFESSIONAL ENGINEER — EXPIRES 11/3/03

BRIDGE AND STRUCTURES OFFICE

MANDIRA TALUKDAR — STATE OF WASHINGTON — REGISTERED PROFESSIONAL ENGINEER — EXPIRES 6/1/04

Washington State Department of Transportation

SR 433
LEWIS AND CLARK BRIDGE
DECK REPLACEMENT

STRINGER SEAT DETAILS
AT BENT A-B

BRIDGE SHEET NO. WA33

SHEET 71 OF 258 SHEETS

Wed Sep 18 11:26:33 2002

MODIFY AS FOLLOWS:

1. PLACE 5/8" FILL PL BETWEEN EXISTING WEB AND CHANNELS
2. CONNECT CHANNEL TO W16 X 100 WITH 3/4"ø BOLTS AASHTO M 253.
3. EVERTHING ELSE REMAINS THE SAME

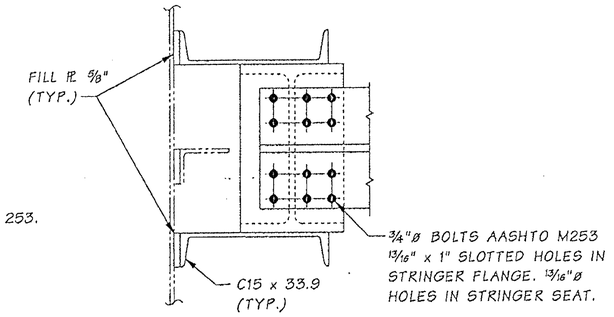

SECTION C

REVISED DETAILS FOR WA 33

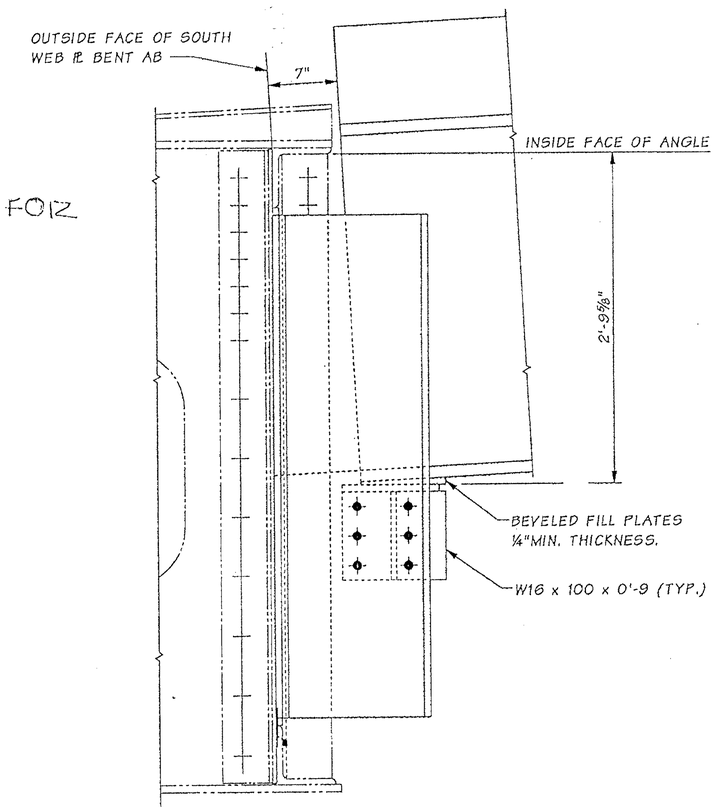

ELEVATION ~ SOUTH SIDE BENT AB

FOR "AS CONSTRUCTED PLANS" ONLY

SR 433 JOB NO. 1566 SHEET WA0

Bridge Design Engr.	Kapur, J	M:\Y-Team\Lewis_Clark Rehab\Washington Appr\Window files\REVISION.WND							
Supervisor	Kirker, KN				REGION NO.	STATE	FED. AID PROJ. NO.	SHEET NO.	TOTAL SHEETS
Designed By	Talukdar, M				10	WASH.			
Checked By	Peralta, R								
Detailed By					JOB NUMBER 02x310		ACBH - 0433(007)		
Bridge Projects Engr.									
Prelim. Plan By									
Architect/Specialist		DATE	REVISION	BY	APP'D	6444			

BRIDGE AND STRUCTURES OFFICE

MEENDRA TALUKDAR 24 STATE OF WASHINGTON REGISTERED PROFESSIONAL ENGINEER EXPIRES 6/1/04

03/12

Washington State Department of Transportation

SR 433
LEWIS AND CLARK BRIDGE
DECK REPLACEMENT

REVISED STRINGER SEAT DETAILS AT BENT A-B

BRIDGE SHEET NO. WA33A

SHEET 71 A OF 258 SHEETS

Wed Mar 12 13:07:38 2003

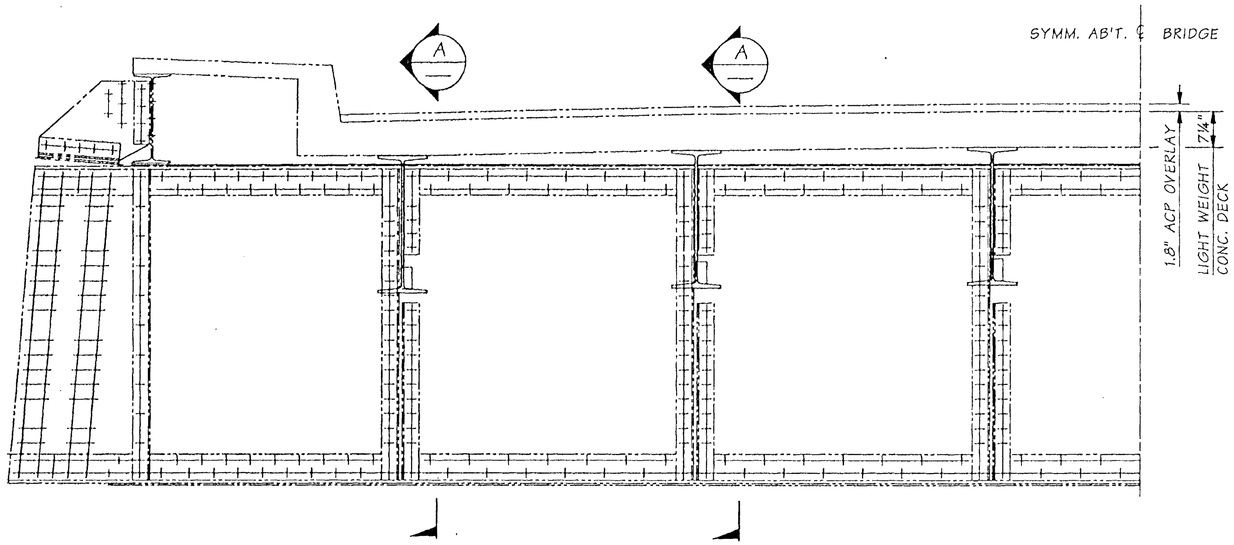

ELEVATION ~ EXISTING DECK BENT C-D

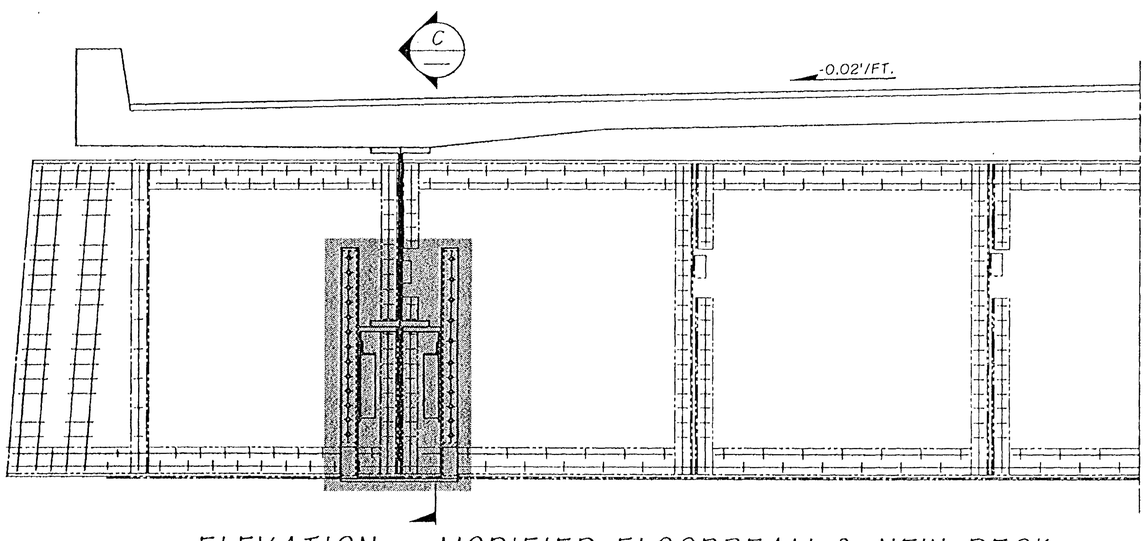

ELEVATION ~ MODIFIED FLOORBEAM & NEW DECK

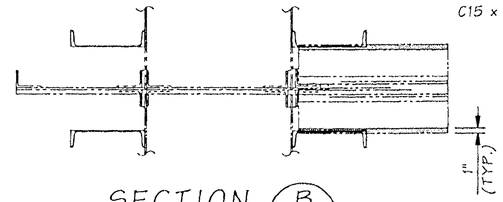

SECTION B

REMOVE SHADED PORTION AT EXTERIOR STRINGERS PRIOR TO DECK REMOVAL AND INSTALL C15 x 33.9

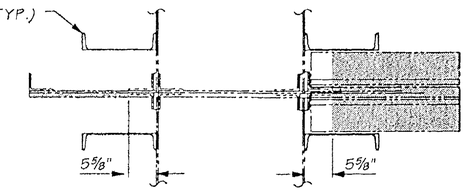

SECTION B

REMOVE SHADED PORTION AT EXTERIOR STRINGERS AT TIME OF DECK REMOVAL AND INSTALL STRINGER SEAT.

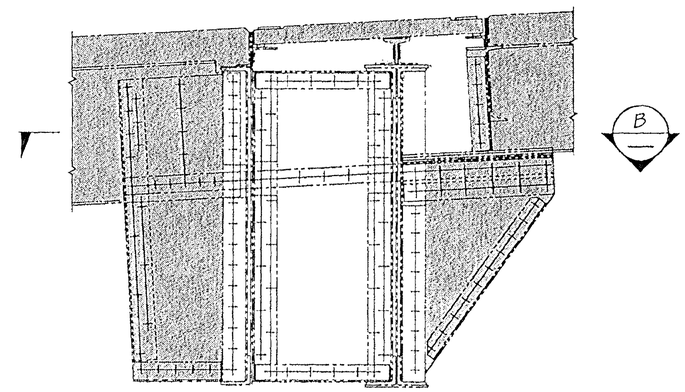

SECTION C

REMOVE SHADED PORTION AT EXTERIOR STRINGERS AT TIME OF DECK REMOVAL AND INSTALL STRINGER SEAT.

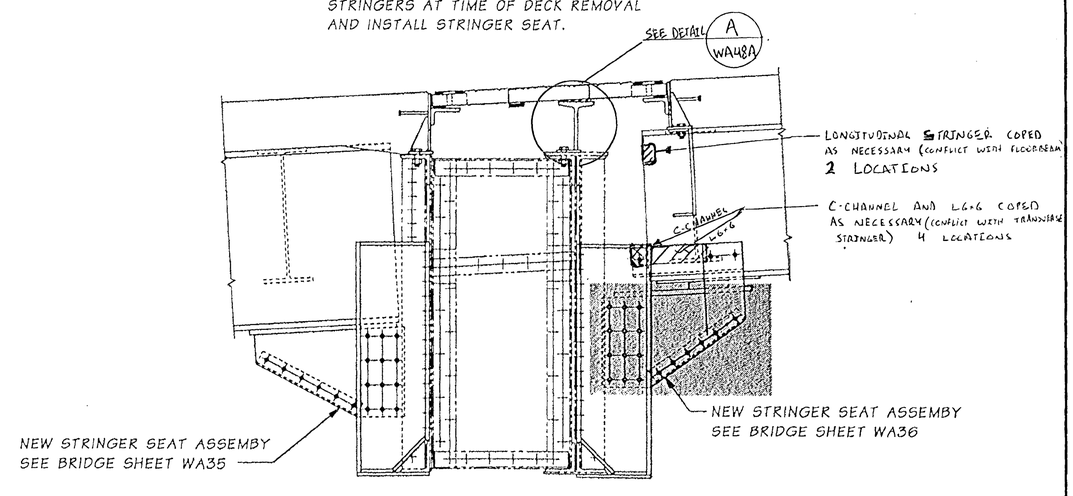

SECTION C

FOR "AS CONSTRUCTED PLANS" ONLY

Bridge Design Engr.	Kapur, J		M:\Y-Team\Lewis_Clark Rehab\Washington Appr\window files\EXP-JT-CD1.WND								
Supervisor	Kirker, KN						REGION NO.	STATE	FED. AID PROJ. NO.	SHEET NO.	TOTAL SHEETS
Designed By	Talukdar, M	08/02					10	WASH.			
Checked By	Peralta, R	08/02	10/02	ADDED STRINGER SEAT ASSEMBLY	MT						
Detailed By	House, L	08/02					JOB NUMBER 02x310		ACBH - 0433(007)		
Bridge Projects Engr.			10/02	MODIFIED STRINGER SEAT ASSEMBLY	MT						
Prelim. Plan By											
Architect/Specialist			DATE	REVISION	BY	APP'D					

Tue Oct 29 14:31:30 2002

KARL N. KIRKER — PROFESSIONAL ENGINEER — EXPIRES 11/3/03

BRIDGE AND STRUCTURES OFFICE

MUNINDRA TALUKDAR — PROFESSIONAL ENGINEER — EXPIRES 6/1/04

Washington State Department of Transportation

SR 433
LEWIS AND CLARK BRIDGE
DECK REPLACEMENT

BENT C-D

BRIDGE SHEET NO. WA34

SHEET 72 OF 258 SHEETS

SR 433 NO. 1566 SHEET 34

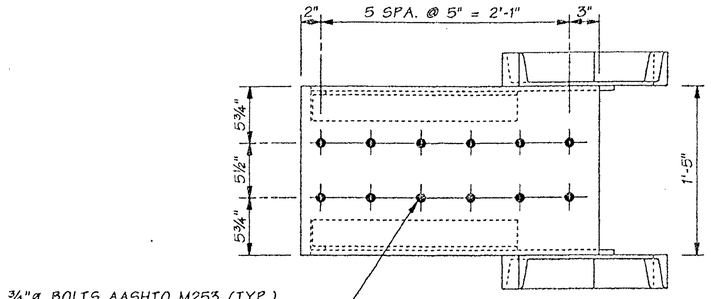

¾"ø BOLTS AASHTO M253 (TYP.)
13/16" x 1" SLOTTED HOLES IN STRINGER FLANGE. 13/16"ø HOLES IN STRINGER SEAT. STRINGER FLANGE NOT SHOWN FOR CLARITY.

SECTION A

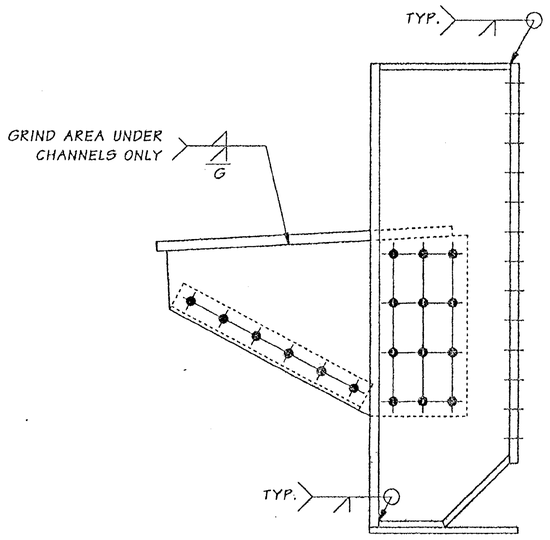

ELEVATION

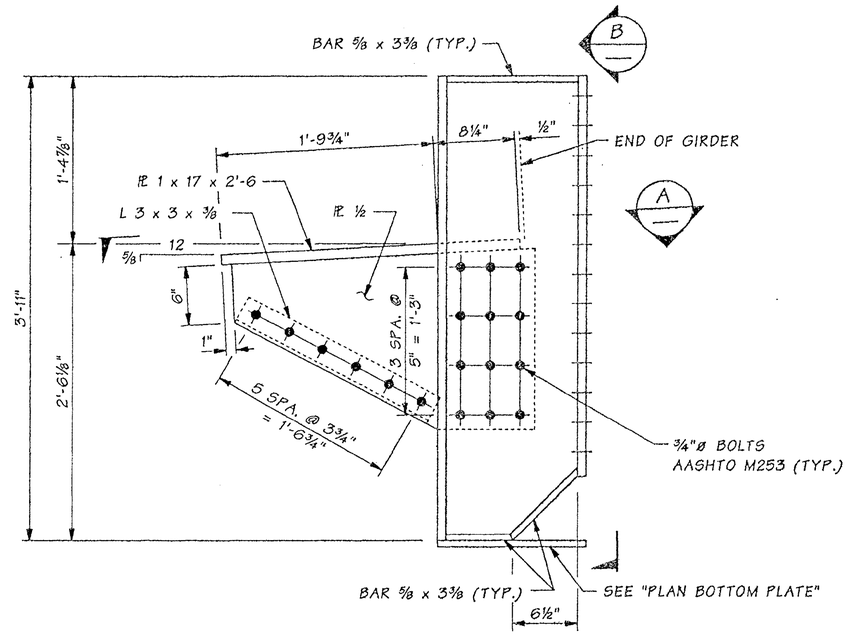

ELEVATION

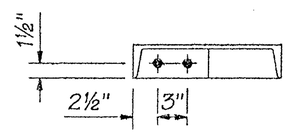

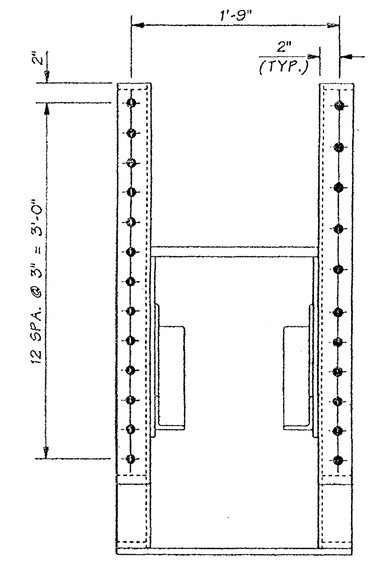

VIEW B

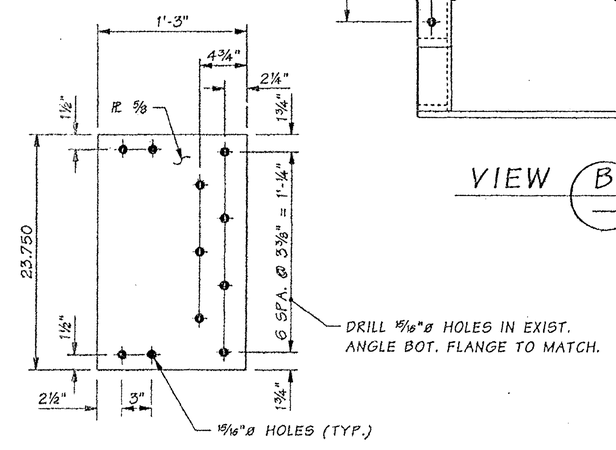

PLAN - BOTTOM PLATE

FOR "AS CONSTRUCTED PLANS" ONLY

Bridge Design Engr.	Kapur, J		M:\Y-Team\Lewis_Clark Rehab\Washington Appr\Window files\EXP-JT-CD2.WND
Supervisor	Kirker, KN	08/02	
Designed By	Talukdar, M	08/02	
Checked By	Peralta, R	08/02	
Detailed By	House, L	08/02	
Bridge Projects Engr.			
Prelim. Plan By			
Architect/Specialist			

Tue Sep 17 16:28:19 2002

DATE	REVISION	BY	APP'D

REGION NO.	STATE	FED. AID PROJ. NO.	SHEET NO.	TOTAL SHEETS
10	WASH.	ACBH - 0433(007)		
JOB NUMBER 02x310				

KARI N. KIRKER — STATE OF WASHINGTON — 16294 — REGISTERED PROFESSIONAL ENGINEER — EXPIRES 11/3/03

BRIDGE AND STRUCTURES OFFICE

MUHAMMAD TALUKDAR — STATE OF WASHINGTON — 27828 — REGISTERED PROFESSIONAL ENGINEER — EXPIRES 6/1/04

Washington State Department of Transportation

SR 433
LEWIS AND CLARK BRIDGE
DECK REPLACEMENT

GIRDER SEAT FIXED SIDE
40' BENT C-D

BRIDGE SHEET NO. WA35

SHEET 73 OF 258 SHEETS

SR 433 JOB NO. 1566 SHEET 35

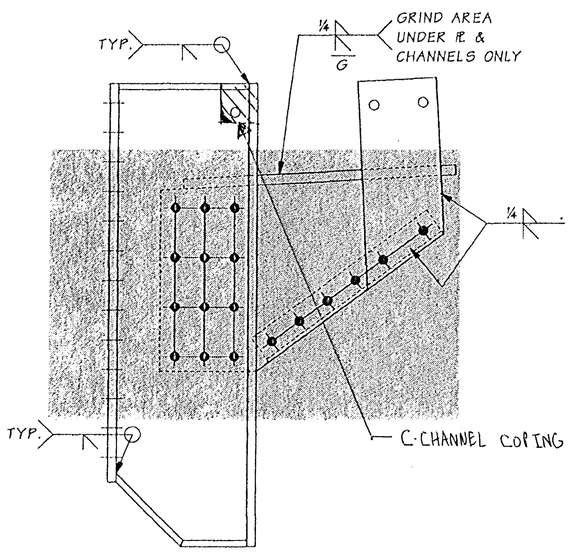

ELEVATION

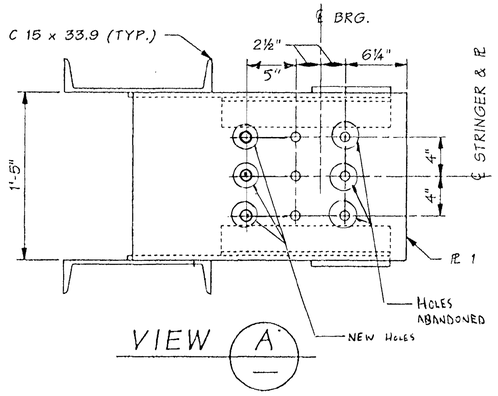

VIEW A

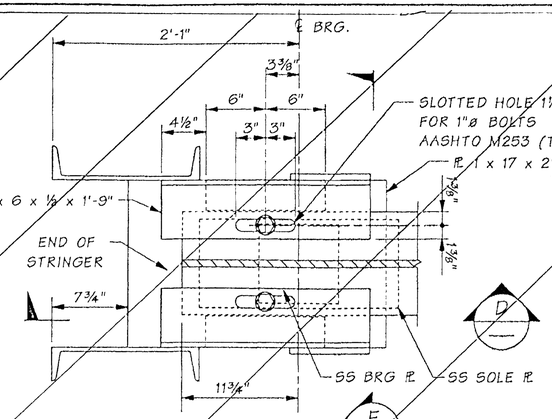

PLAN

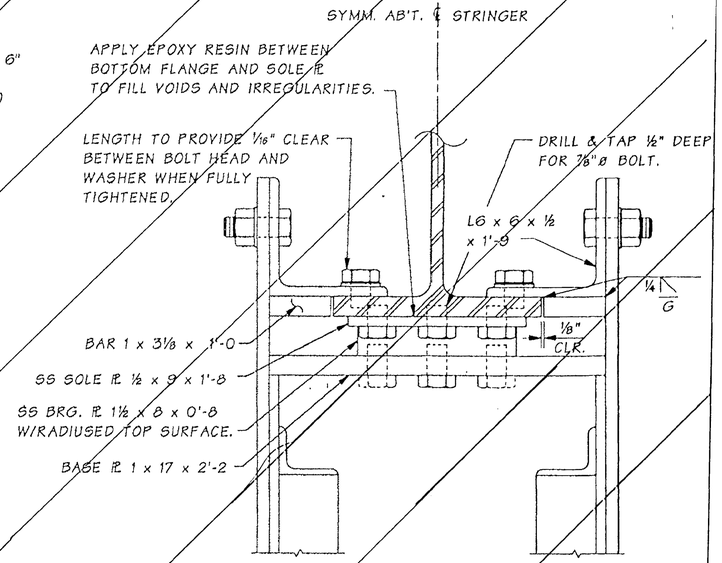

SECTION E

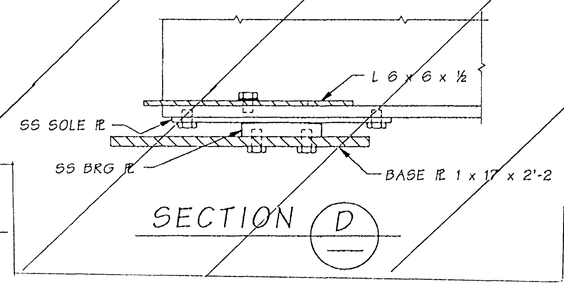

SECTION D

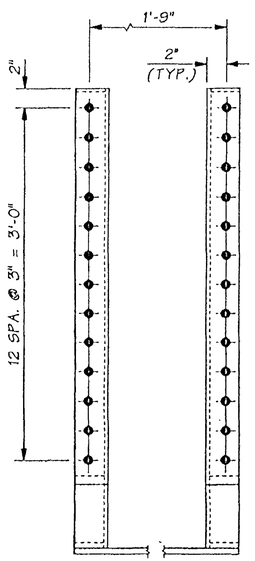

VIEW B

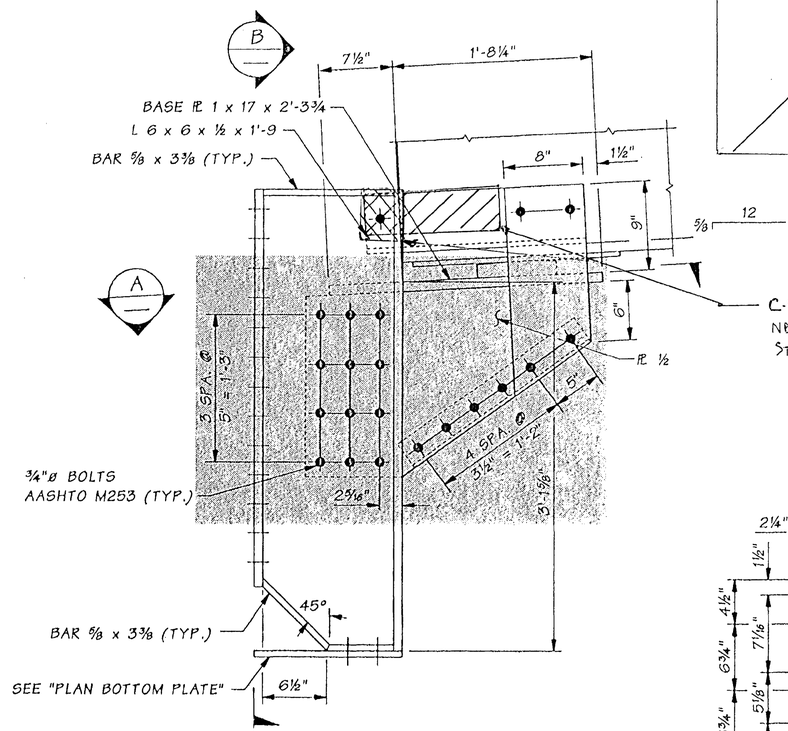

ELEVATION

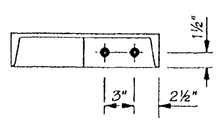

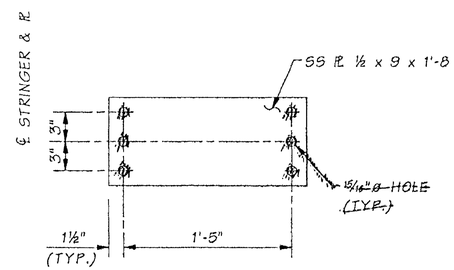

PLAN - SOLE PLATE

2 REQUIRED

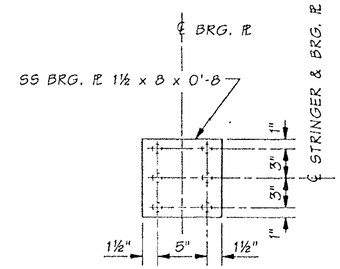

PLAN

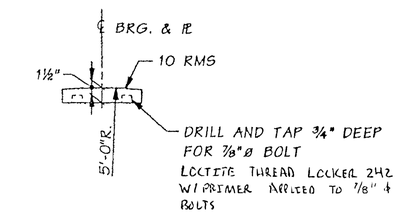

ELEVATION
BEARING PLATE

2 REQUIRED

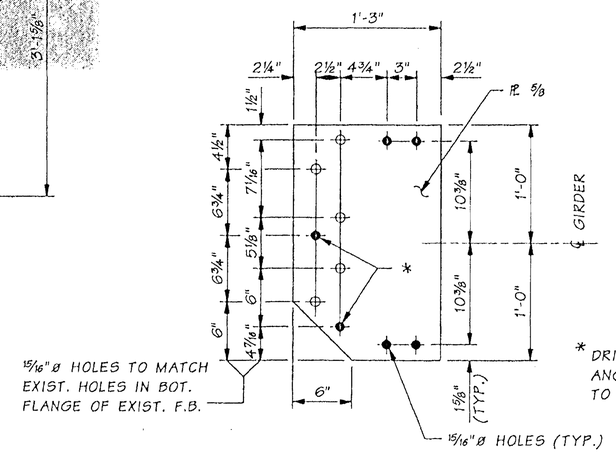

PLAN - BOTTOM PLATE

* DRILL 15/16"ø HOLES IN ANGLE BOT. FLANGE TO MATCH.

FOR "AS CONSTRUCTED PLANS" ONLY

Bridge Design Engr.	Kapur, J		M:\Y-Team\Lewis_Clark Rehab\Washington Appr\window files\EXP-JT-CD3.WND								
Supervisor	Kirker, KN										
Designed By	Talukdar, M	08/02									
Checked By	Peralta, R	08/02									
Detailed By	House, L	08/02									
Bridge Projects Engr.			10/02	MODIFIED STRINGER SEAT ASSEMBLY	MT						
Prelim. Plan By											
Architect/Specialist			DATE	REVISION	BY	APP'D					

Tue Oct 29 16:33:49 2002

REGION NO.	STATE	FED. AID PROJ. NO.	SHEET NO.	TOTAL SHEETS
10	WASH.	ACBH - 0433(007)		

JOB NUMBER 02x310

64444

KARL N. KIRKER — STATE OF WASHINGTON — REGISTERED PROFESSIONAL ENGINEER — 10/30/02 — EXPIRES 11/3/03

BRIDGE AND STRUCTURES OFFICE

MONINDRA TALUKDAR — STATE OF WASHINGTON — REGISTERED PROFESSIONAL ENGINEER — 10/30/02 — EXPIRES 6/3/04

Washington State Department of Transportation

SR 433
LEWIS AND CLARK BRIDGE
DECK REPLACEMENT

GIRDER SEAT EXPANSION SIDE
40' BENT C-D

BRIDGE SHEET NO. WA36

SHEET 74 OF 258 SHEETS

SR 433 NO. 1566 SHEET 36

CHANGES

1. SLOTTED HOLE IN FLANGE IS ELIMINATED.
2. COPE L6 x 6 x ½ AS SHOWN
3. FIELD DRILL HOLES CONNECTING ℞ TO ANGLE IN FIELD AFTER FINAL ELEVATION ADJUSTMENT.
4. ALL OTHER DETAILS REMAIN THE SAME.

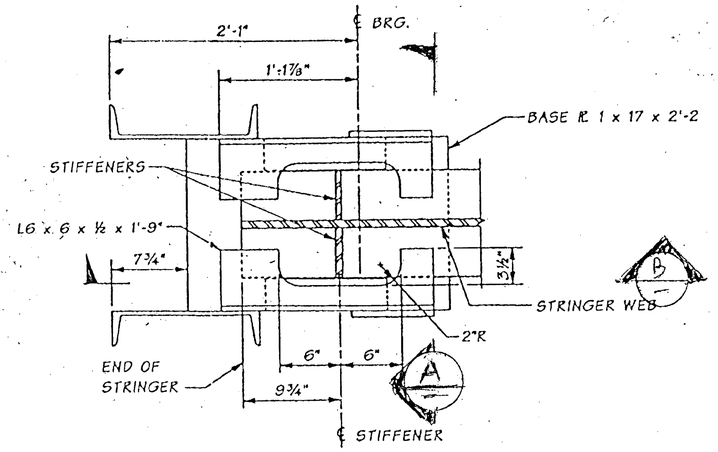

PLAN - GIRDER SEAT
EXP SIDE BENT C-D

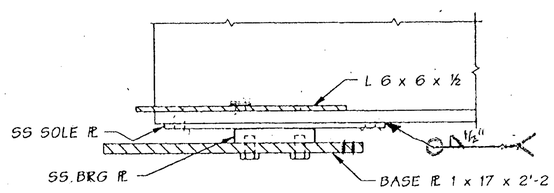

SECTION B

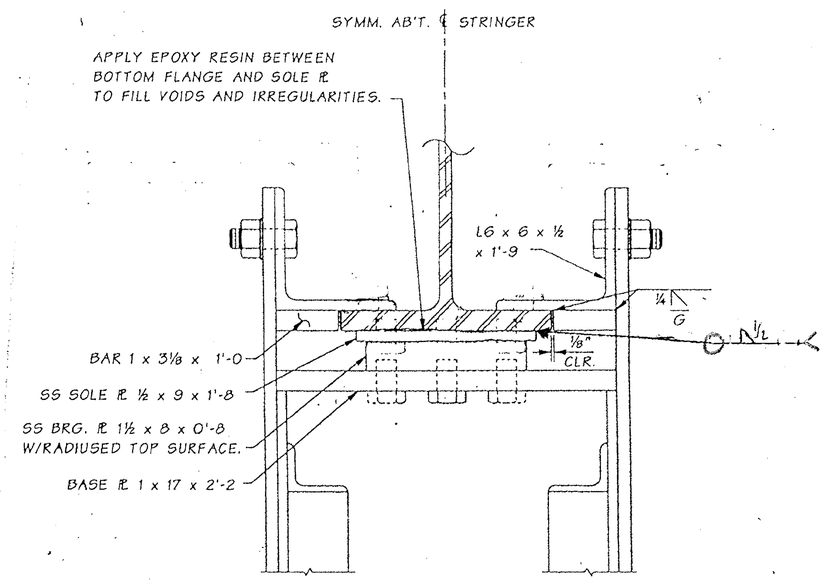

SECTION A

FOR "AS CONSTRUCTED PLANS" ONLY

FILE NAME	C:\AAWork\kelso\Svensen's Curve\L3425WASTESITE.dgn						
TIME	02:37:18 PM						
DATE	08/17/2005						
PLOTTED BY	spahnk						
DESIGNED BY							
ENTERED BY							
CHECKED BY							
PROJ. ENGR.							
REGIONAL ADM.		REVISION	DATE	BY			

REGION NO. 10 | STATE WASH | FED. AID PROJ. NO.

JOB NUMBER

CONTRACT NO. 6444 | LOCATION NO.

P.E. STAMP BOX DATE

P.E. STAMP BOX DATE

Washington State Department of Transportation

SR 433
LEWIS AND CLARK BRIDE
DECK REPLACEMENT

BENT C-D - BEARING DETAILS
EXPANSION SIDE

PLOT11

WA36A

SHEET 74A OF 258 SHEETS

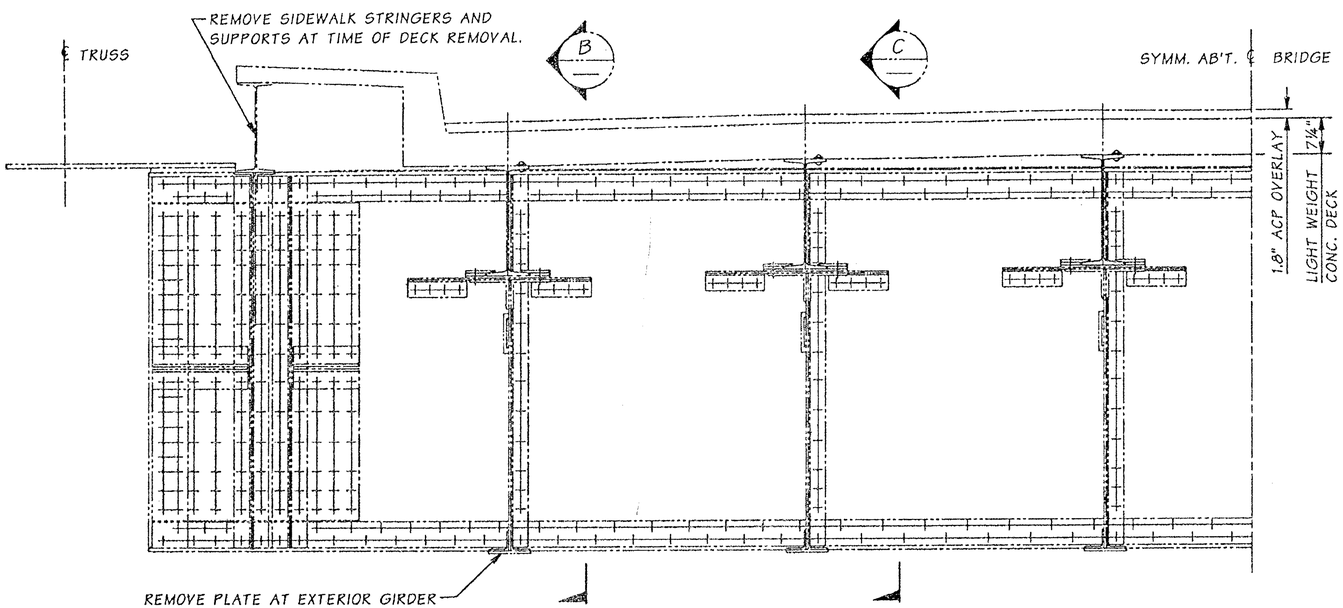

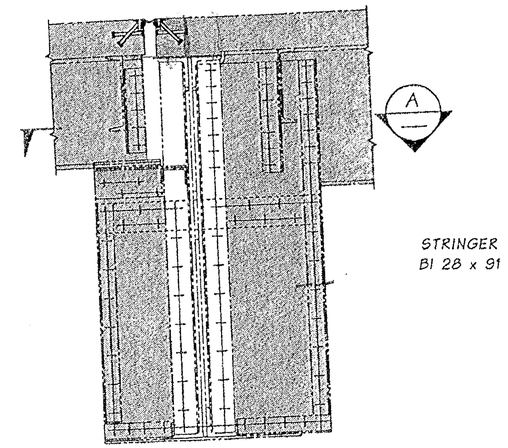

SECTION B

REMOVE SHSDED PORTION AT EXTERIOR STRINGERS AT TIME OF DECK REMOVAL.

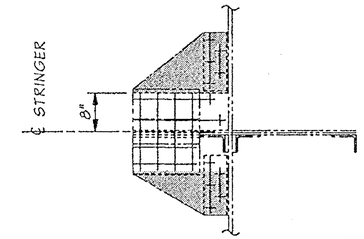

SECTION A

REMOVE SHADED PORTION AT EXTERIOR STRINGERS PRIOR TO DECK REMOVAL AND INSTALL C15 x 33.9

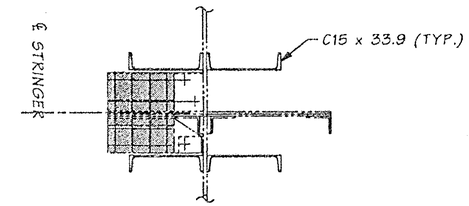

SECTION A

REMOVE SHADED PORTION AT EXTERIOR STRINGERS AT TIME OF DECK REMOVAL AND INSTALL STRINGER SEAT.

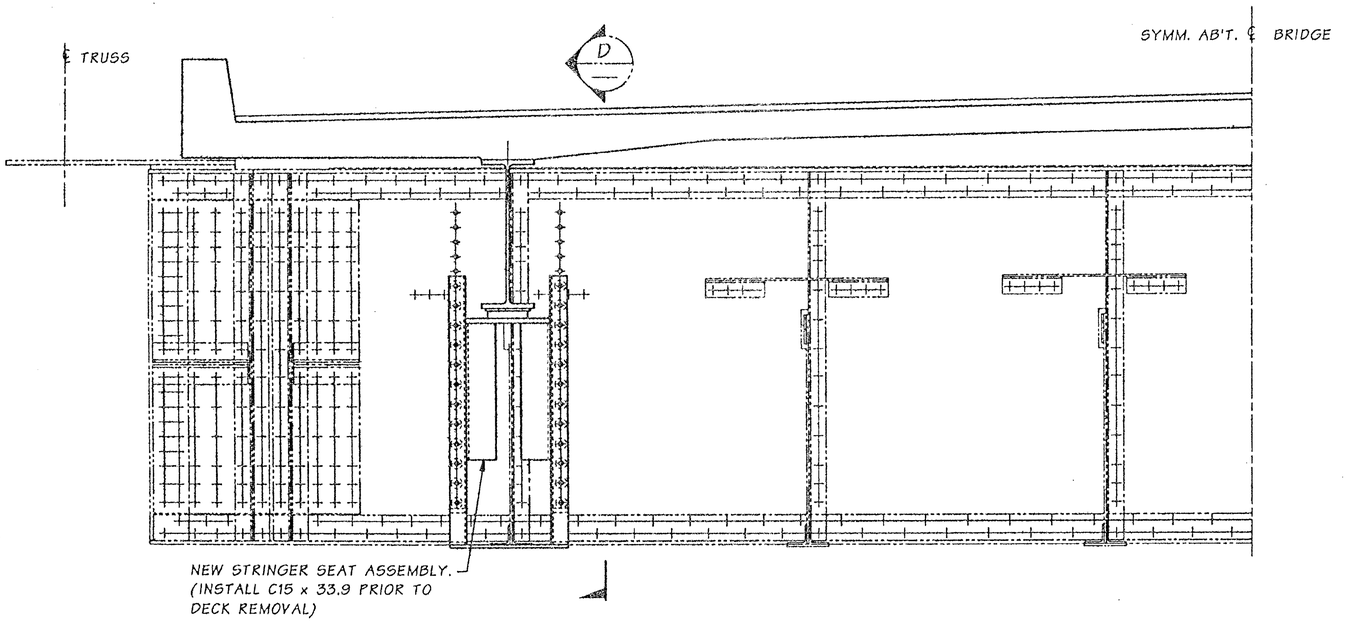

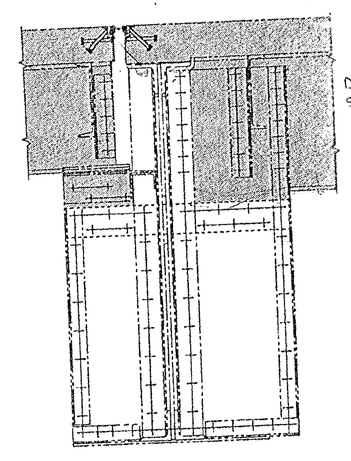

SECTION C

REMOVE SHSDED PORTION AT INTERIOR STRINGERS AT TIME OF DECK REMOVAL.

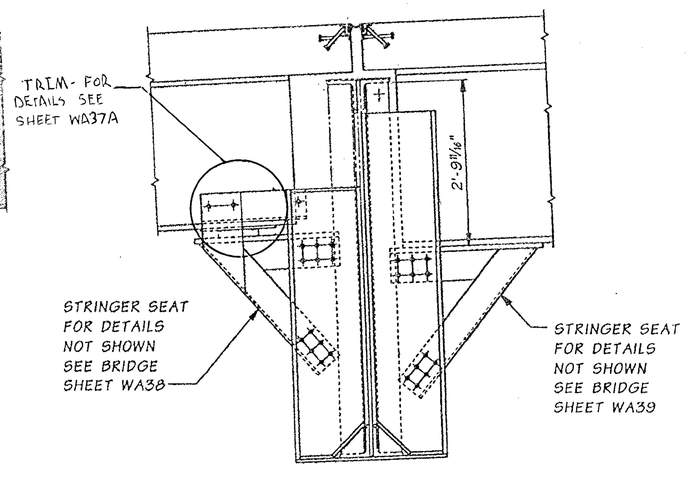

SECTION D

FOR "AS CONSTRUCTED PLANS" ONLY

SR 433 JOB NO. 1566 SHEET 37

Bridge Design Engr.	Kapur, J		M:\Y-Team\Lewis_Clark Rehab\Washington Appr\window files\P1 FB.WND				REGION NO.	STATE	FED. AID PROJ. NO.	SHEET NO.	TOTAL SHEETS
Supervisor	Kirker, KN	08/02					10	WASH.			
Designed By	Talukdar, M	08/02									
Checked By	Peralta, R	08/02					JOB NUMBER 02x310		ACBH - 0433(007)		
Detailed By	House, L	08/02									
Bridge Projects Engr.											
Prelim. Plan By											
Architect/Specialist			DATE	REVISION	BY	APP'D	6444				

Wed Sep 18 10:39:54 2002

KARL N. KIRKER — STATE OF WASHINGTON — PROFESSIONAL ENGINEER — EXPIRES 11/3/03 — 9/18/02

BRIDGE AND STRUCTURES OFFICE

MUNINDRA TALUKDAR — STATE OF WASHINGTON — PROFESSIONAL ENGINEER — EXPIRES 6/1/04 — 9/18/02

Washington State Department of Transportation

SR 433
LEWIS AND CLARK BRIDGE
DECK REPLACEMENT

PIER 1 FLOORBEAM

BRIDGE SHEET NO. WA37

SHEET 75 OF 258 SHEETS

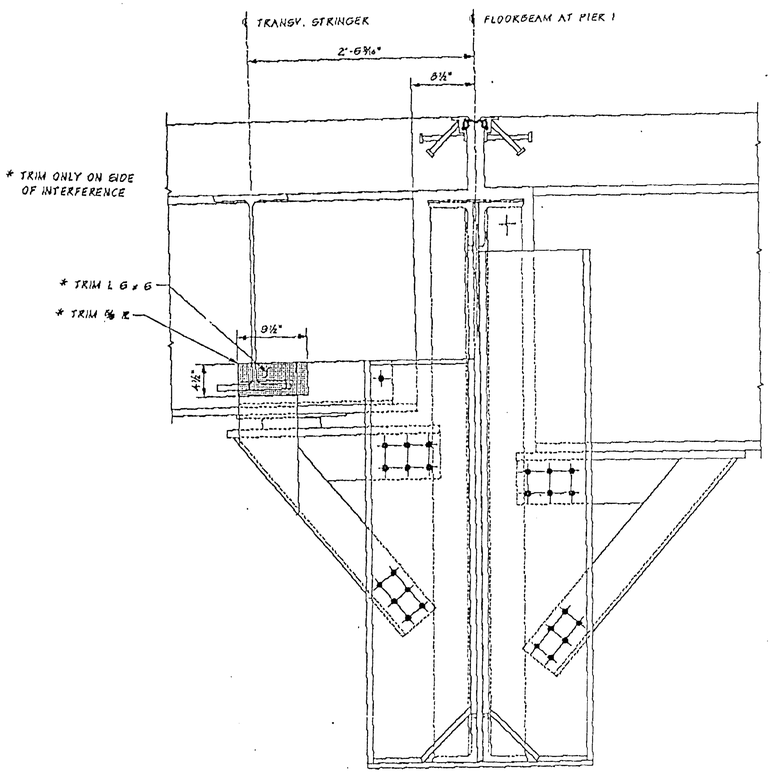

PIER 1 -- EXPANSION SIDE
STRINGER SEAT

FOR "AS CONSTRUCTED PLANS" ONLY

FILE NAME	C:\AAWork\kelso\Svensen's Curve\L3425WASTESITE.dgn				REGION NO.	STATE	FED.AID PROJ.NO.			PLOT11
TIME	02:37:18 PM				10	WASH			Washington State Department of Transportation	SR 433 LEWIS AND CLARK BRIDE DECK REPLACEMENT
DATE	08/17/2005				JOB NUMBER					WA37A
PLOTTED BY	spahnk									SHEET 75A OF 258 SHEETS
DESIGNED BY										
ENTERED BY					CONTRACT NO.		LOCATION NO.			
CHECKED BY					6444					
PROJ. ENGR.										
REGIONAL ADM.		REVISION	DATE	BY				P.E. STAMP BOX DATE	P.E. STAMP BOX DATE	PIER 1 - EXPANSION SIDE STRINGER SEAT DETAILS

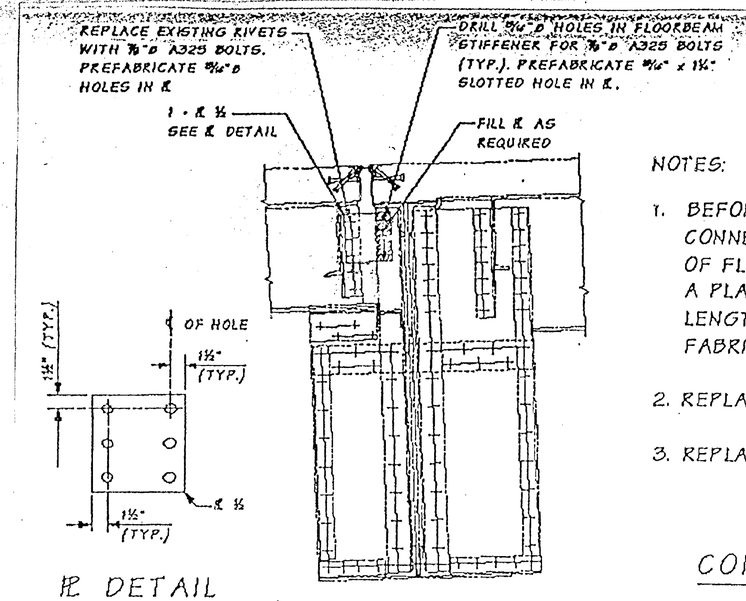

℞ DETAIL

PIER 1 FLOORBEAM

NOTES:

1. BEFORE REPLACING PANELS AT LO & LO', CONNECT ALL EXISTING STRINGERS TO STIFFENER OF FLOOR BEAM ON THE EXPANSION SIDE WITH A PLATE AS SHOWN. CONTRACTOR TO MEASURE LENGTH AND WIDTH OF PLATE REQUIRED BEFORE FABRICATION.

2. REPLACE PANEL A BEFORE PANEL D1 AT PIER 1.

3. REPLACE PANEL N BEFORE A2 AT PIER 4.

CONSTRUCTION SEQUENCE

1. REMOVE EXISTING RIVETS IN STIFFENER OF EXISTING STRINGERS AS SHOWN.

2. DRILL HOLE IN EXISTING FLOOR BEAM STIFFENER AS SHOWN.

3. 1. AND 2. ABOVE CAN BE DONE UP TO A WEEK IN ADVANCE OF PLACEMENT OF FIXED PANEL.

4. FABRICATE ℞ WITH A SLOTTED HOLE ON ONE EDGE AND STANDARD HOLE ON OPPOSITE EDGE AS SHOWN

5. CONNECT EXISTING STRINGERS TO FLOOR BEAM STIFFENERS WITH PLATES @ 2 HOURS BEFORE BRIDGE CLOSURE ON DAY OF PANEL PLACEMENT, TO MINIMIZE TEMPERATURE DISTORTIONS.

6. REMOVE CONNECTION PLATE IMMEDIATELY AFTER PLACEMENT OF FIXED PANEL COMPLETE WITH CONNECTION PLATES ACCORDING TO PROCEDURE SUBMITTED BEFORE.

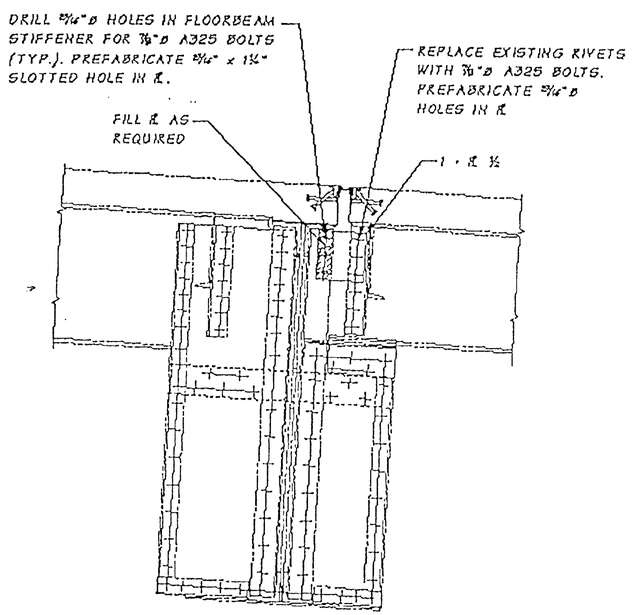

PIER 4 FLOORBEAM

FOR "AS CONSTRUCTED PLANS" ONLY

FILE NAME	C:\AAWork\kelso\Svensen's Curve\L3425WASTESITE.dgn									PLOT11
TIME	02:37:18 PM				REGION NO. 10	STATE WASH	FED.AID PROJ.NO.	Washington State Department of Transportation	SR 433 LEWIS AND CLARK BRIDE DECK REPLACEMENT	WA37B
DATE	08/17/2005				JOB NUMBER					SHEET 75B OF 258 SHEETS
PLOTTED BY	spahnk									
DESIGNED BY										
ENTERED BY										
CHECKED BY					CONTRACT NO. 6444		LOCATION NO.			
PROJ. ENGR.										
REGIONAL ADM.		REVISION	DATE	BY					PIER 1 & PIER 4 - CONSTRUCTION SEQUENCE	

P.E. STAMP BOX DATE

P.E. STAMP BOX DATE

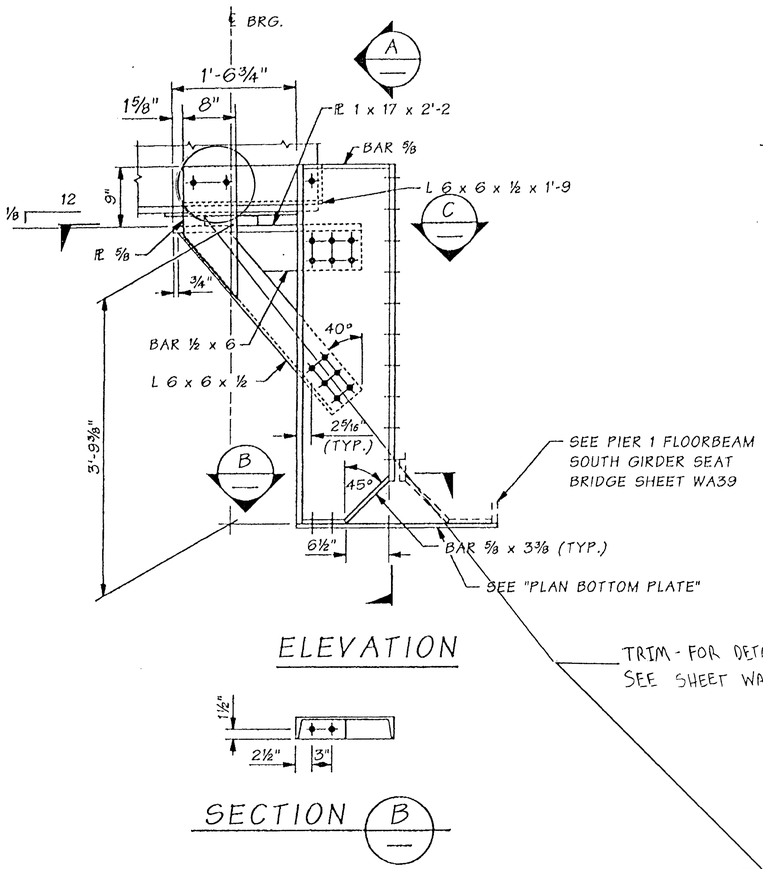

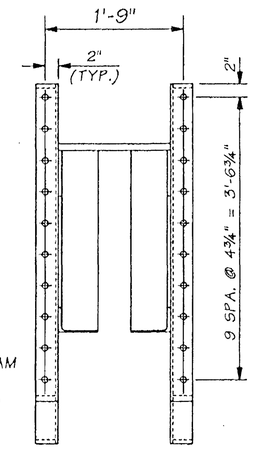

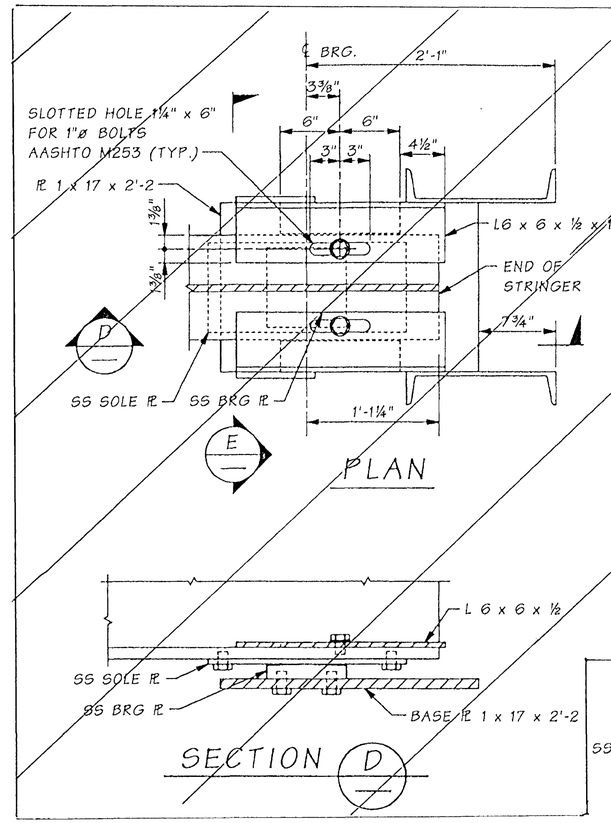

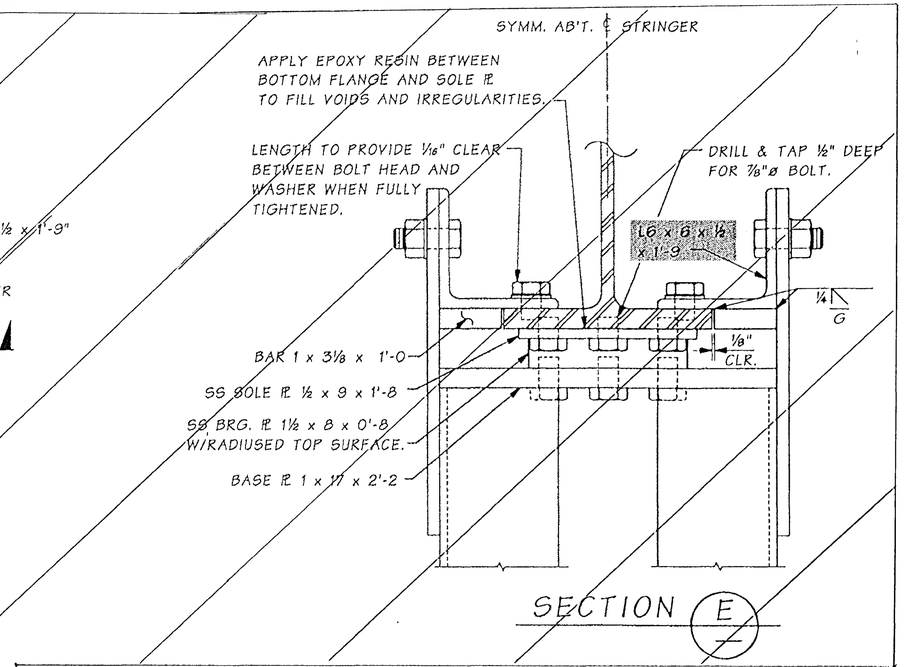

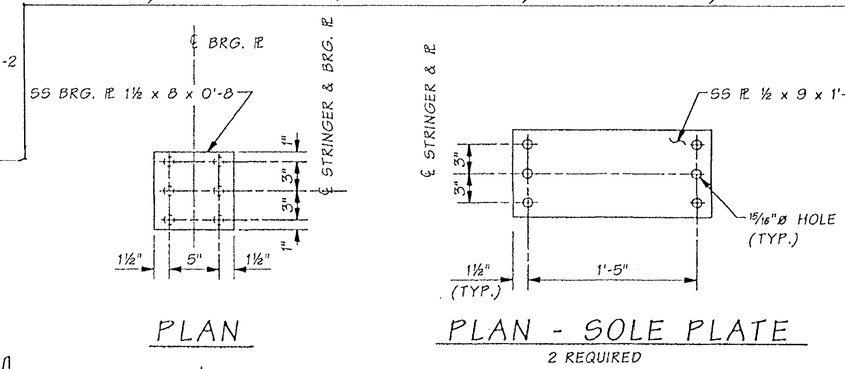

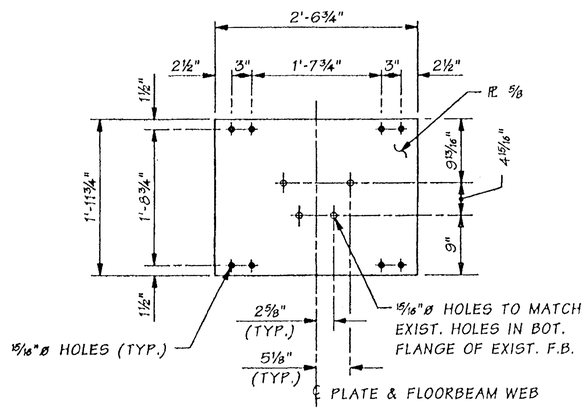

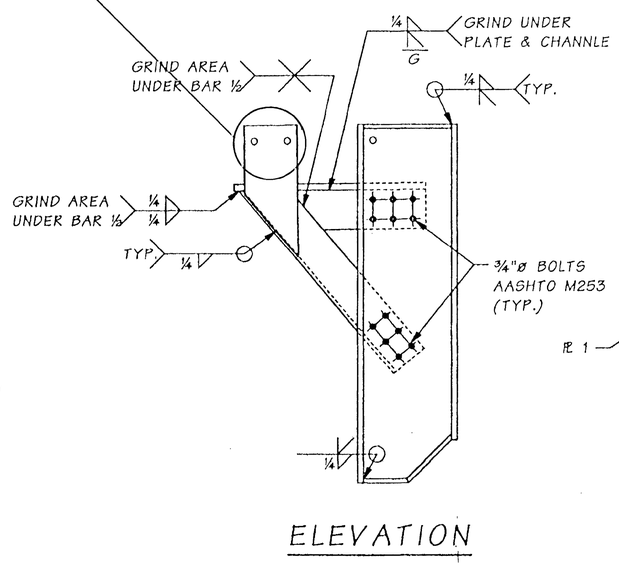

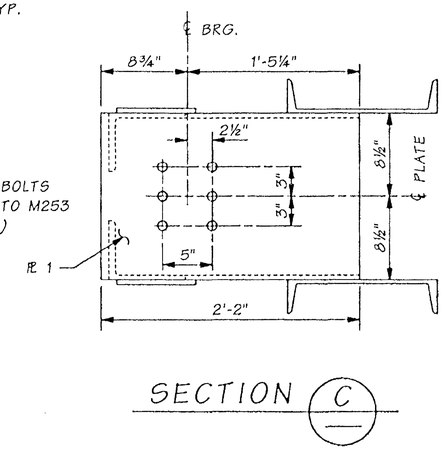

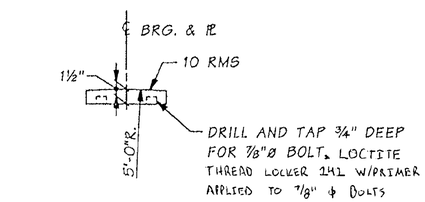

FOR "AS CONSTRUCTED PLANS" ONLY

Bridge Design Engr.	Kapur, J		M:\Y-Team\Lewis_Clark Rehab\Washington Appr\window files\P1 FB NORTH SEAT.WND			REGION NO.	STATE	FED. AID PROJ. NO.	SHEET NO.	TOTAL SHEETS
Supervisor	Kirker, KN					10	WASH.			
Designed By	Talukdar, M	08/02				JOB NUMBER 02x310		ACBH - 0433(007)		
Checked By	Peralta, R	08/02								
Detailed By	House, L	08/02								
Bridge Projects Engr.										
Prelim. Plan By		10/02	REMOVED © SYMBOL	MT						
Architect/Specialist		DATE	REVISION	BY	APP'D					

Tue Oct 29 14:34:38 2002

KARL N. KIRKER — PROFESSIONAL ENGINEER — EXPIRES 11/3/03

BRIDGE AND STRUCTURES OFFICE

MADHUSUDAN TALUKDAR — PROFESSIONAL ENGINEER — EXPIRES 6/1/04

Washington State Department of Transportation

SR 433
LEWIS AND CLARK BRIDGE
DECK REPLACEMENT

PIER 1 - EXPANSION SIDE
STRINGER SEAT DETAILS

BRIDGE SHEET NO. WA38

SHEET 76 OF 258 SHEETS

SR 433 TO. 1566 SHEET 38

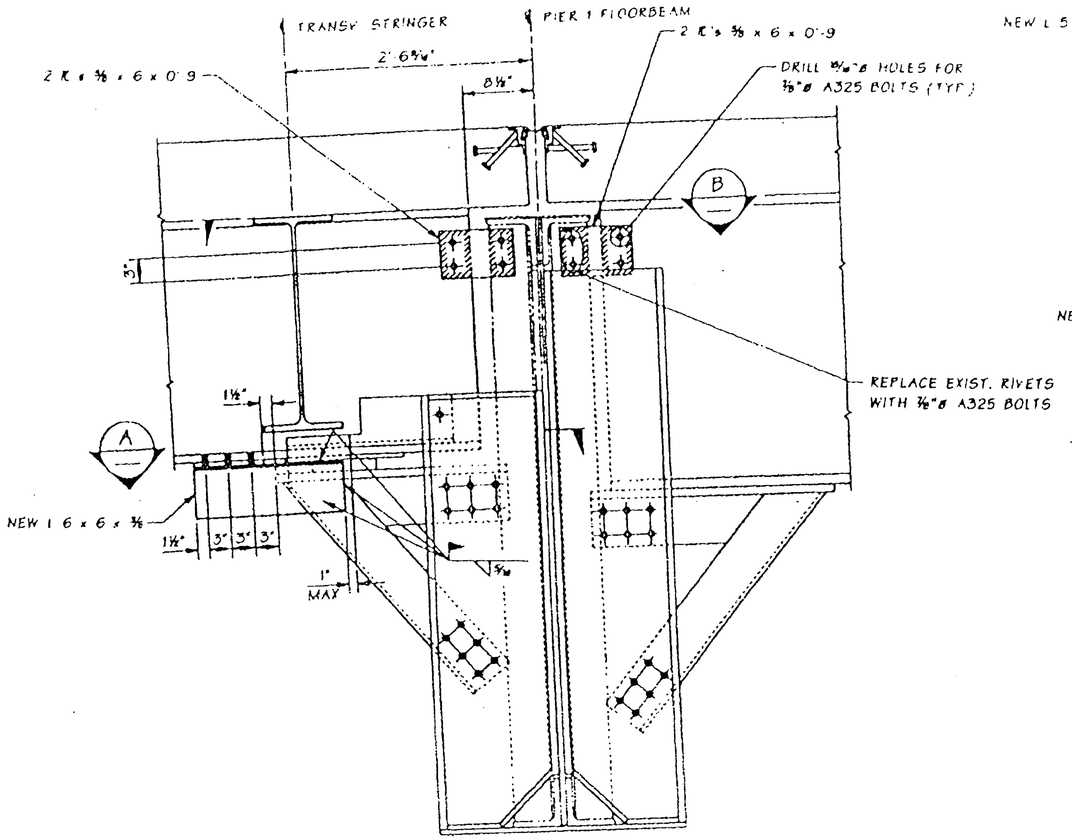

PIER 1
STRINGER SEAT

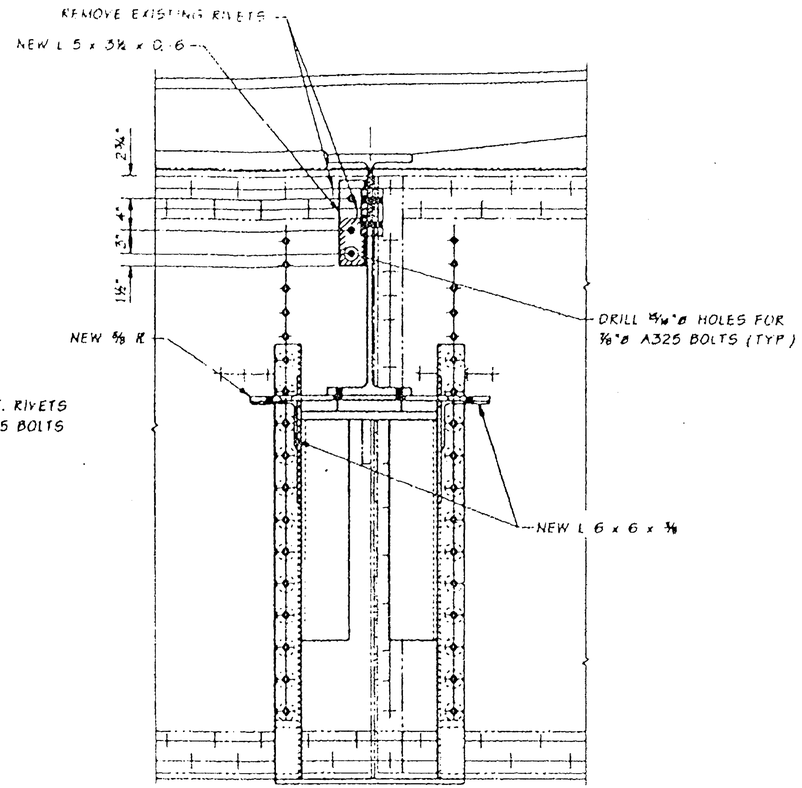

SECTION C

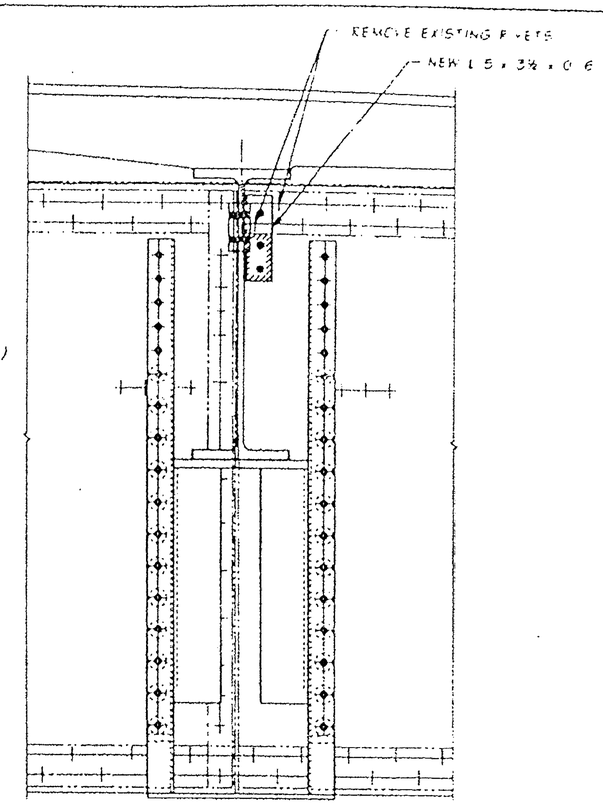

SECTION D

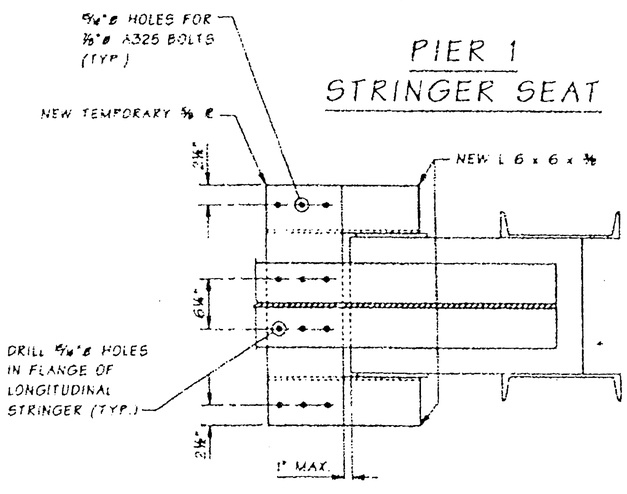

SECTION A

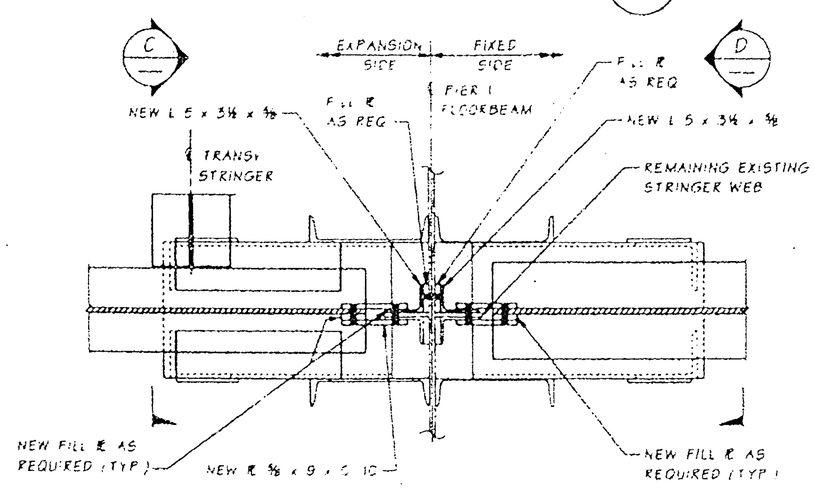

SECTION B

NOTES

1. ALL CONNECTIONS SHALL BE MADE ON EXPANSION SIDE STRINGER PANEL AS SHOWN BEFORE PANEL A IS PLACED
2. PLACE PANEL A AND MAKE CONNECTIONS AS SHOWN BEFORE OPENING TO TRAFFIC
3. DISCONNECT BOLTS BETWEEN TEMPORARY PL LONGITUDINAL STRINGER AND NEW CONNECTION ANGLE RIGHT AFTER PLACEMENT OF PANEL A

FOR "AS CONSTRUCTED PLANS" ONLY

Bridge Design Engr	Kapur, J	
Supervisor	Kirker, KN	
Designed By	Talukdar, M	10/03
Checked By	Schultz, E	10/03
Detailed By	Evans, P.D.	10/03
Bridge Projects Engr.		
Prelim. Plan By		
Architect/Specialist		

M:\Y-Team\Lewis_Clark Rehab\Modifications\Window files\P1 EXP SIDE.WND

DATE	REVISION	BY	APP'D

REGION NO.	STATE	FED. AID PROJ. NO.	SHEET NO.	TOTAL SHEETS
10	WASH			

JOB NUMBER 6444

BRIDGE AND STRUCTURES OFFICE

Washington State Department of Transportation

SR 433
LEWIS & CLARK BRIDGE
DECK REPLACEMENT

PIER 1 EXPANSION SIDE
SEAT MODIFICATION

BRIDGE SHEET NO. WA38A
SHEET 76A OF 258 SHEETS

SR 433 JOB NO. 0001 SHEET 1

Fri Oct 09 16:41:26 2003

CHANGES

1. SLOTTED HOLE IN FLANGE IS ELIMINATED.
2. COPE L6 x 6 x ½ AS SHOWN
3. FIELD DRILL HOLES CONNECTING ℞ TO ANGLE IN FIELD AFTER FINAL ELEVATION ADJUSTMENT.
4. ALL OTHER DETAILS REMAIN THE SAME.

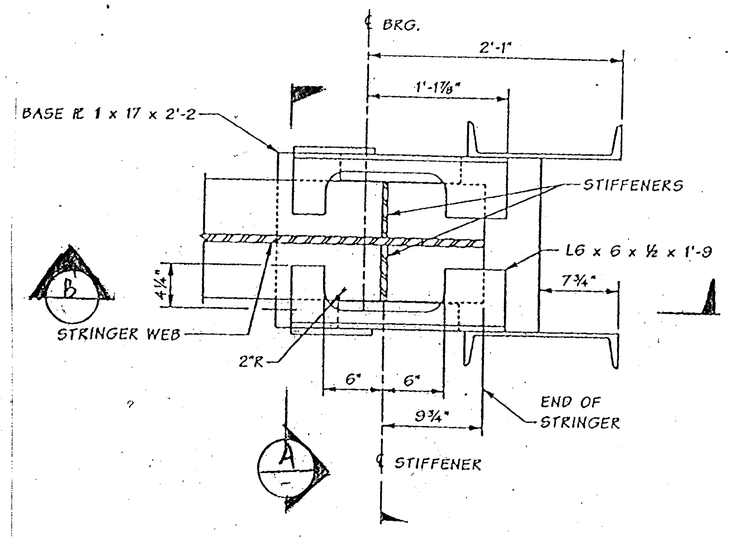

PLAN - GIRDER SEAT
EXP SIDE PIER 1

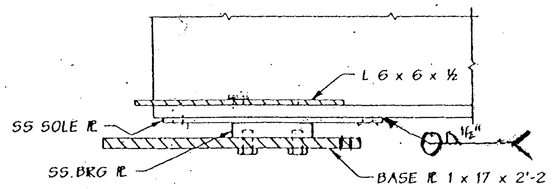

SECTION B

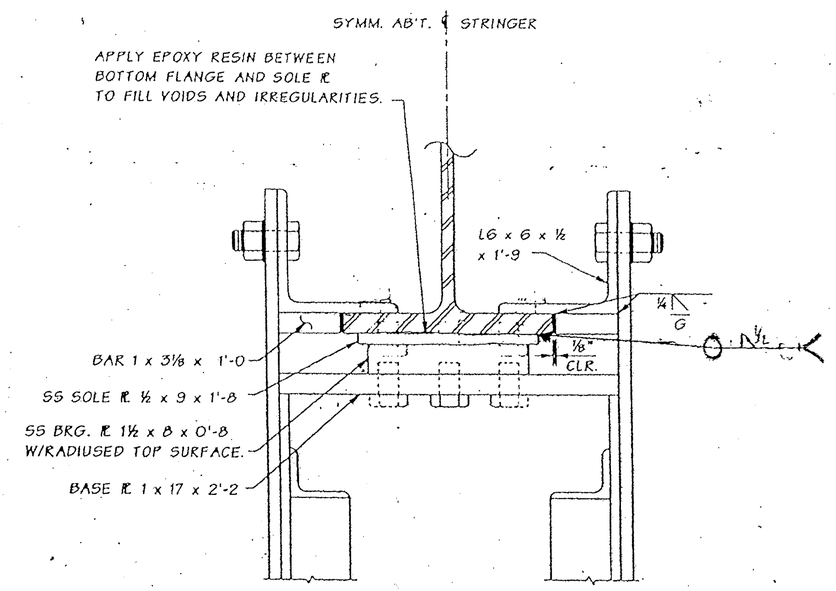

SECTION A

FOR "AS CONSTRUCTED PLANS" ONLY

FILE NAME	C:\AAWork\kelso\Svensen's Curve\L3425WASTESITE.dgn						
TIME	02:37:18 PM						
DATE	08/17/2005						
PLOTTED BY	spohnk						
DESIGNED BY							
ENTERED BY							
CHECKED BY							
PROJ. ENGR.							
REGIONAL ADM.		REVISION	DATE	BY			

REGION NO.	STATE	FED. AID PROJ. NO.
10	WASH	
JOB NUMBER		
CONTRACT NO. 6444		LOCATION NO.

P.E. STAMP BOX DATE

P.E. STAMP BOX DATE

Washington State Department of Transportation

SR 433
LEWIS AND CLARK BRIDE
DECK REPLACEMENT

PIER 1 - BEARING DETAILS
EXPANSION SIDE

PLOT11

WA38B

SHEET 76B OF 258 SHEETS

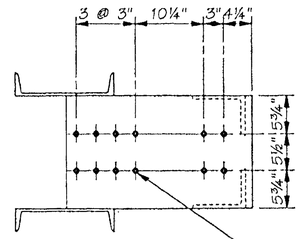

¾"ø BOLTS AASHTO M253 (TYP.)
13/16" x 1" SLOTTED HOLES IN STRINGER FLANGE. 13/16"ø HOLES IN STRINGER SEAT. STRINGER FLANGE NOT SHOWN FOR CLARITY.

PLAN

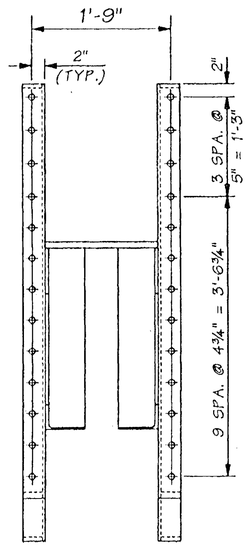

VIEW A

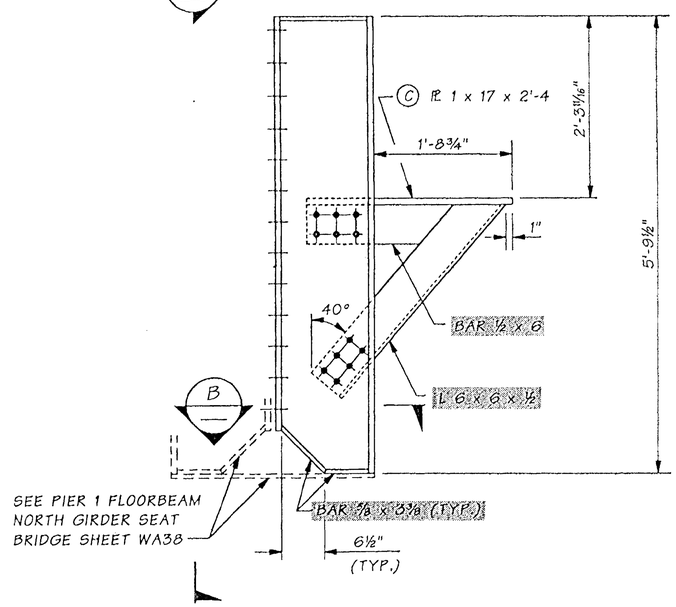

ELEVATION

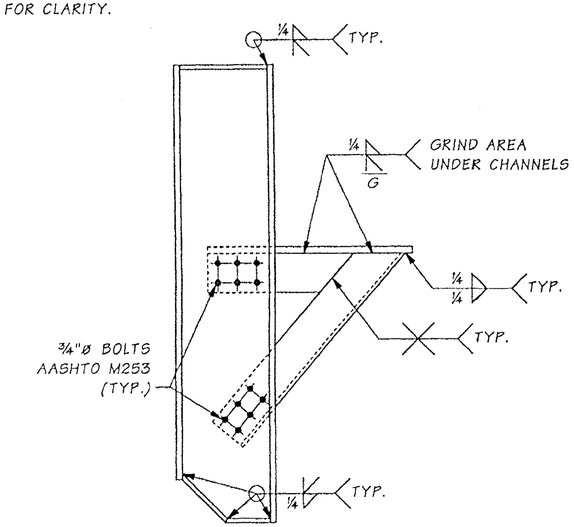

ELEVATION

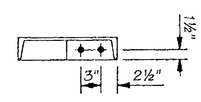

SECTION B

FOR "AS CONSTRUCTED PLANS" ONLY

Lead Design Engr.	Kapur, J		M:\Y-Team\Lewis_Clark Rehab\Washington Appr\window files\P1 FB SOUTH SEAT.WND							
Engr	Kirker, KN					REGION NO.	STATE	FED. AID PROJ. NO.	SHEET NO.	TOTAL SHEETS
Designed By	Talukdar, M	08/02				10	WASH.			
Checked By	Peralta, R	08/02								
Detailed By	House, L	08/02				JOB NUMBER 02x310		ACBH - 0433(007)		
Bridge Projects Engr.										
Prelim. Plan By		10/02	REMOVED © SYMBOL	MT						
Architect/Specialist		DATE	REVISION	BY	APP'D					

Tue Oct 29 14:36:40 2002

KARL N. KIRKER — STATE OF WASHINGTON — REGISTERED PROFESSIONAL ENGINEER — EXPIRES 11/3/03

BRIDGE AND STRUCTURES OFFICE

MUNANDRA TALUKDAR — STATE OF WASHINGTON — REGISTERED PROFESSIONAL ENGINEER — EXPIRES 4/1/04

Washington State Department of Transportation

SR 433
LEWIS AND CLARK BRIDGE
DECK REPLACEMENT

PIER 1 - FIXED SIDE
STRINGER SEAT DETAILS

BRIDGE SHEET NO. WA39

SHEET 77 OF 258 SHEETS

SR 433 NO. 1566 SHEET 39

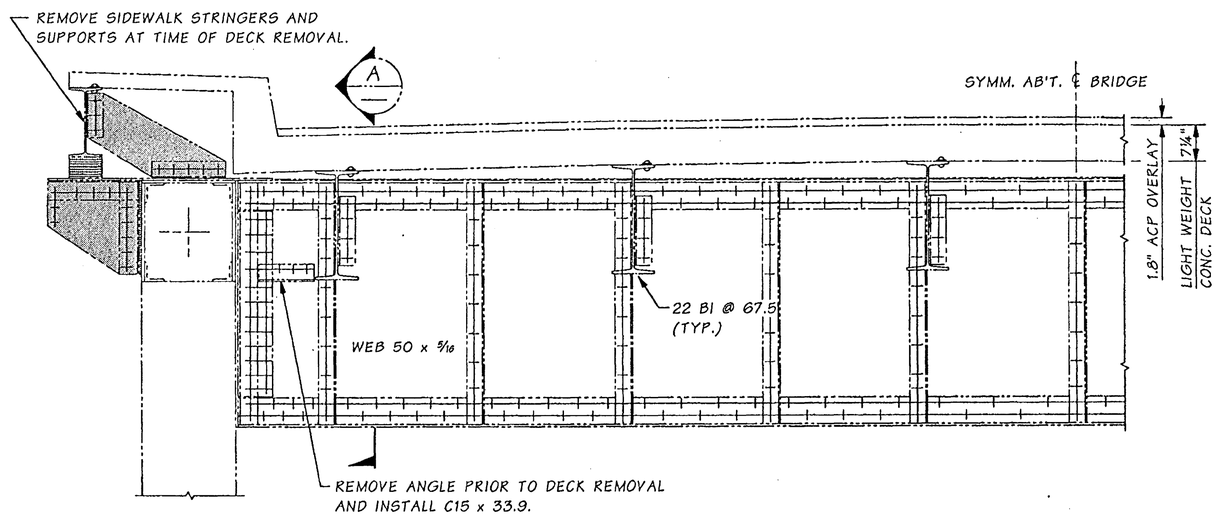

ELEVATION ~ EXISTING DECK & FLOORBEAM 1 & 1A

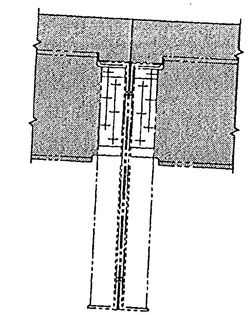

SECTION A

REMOVE SHADED PORTION AT TIME OF DECK REMOVAL

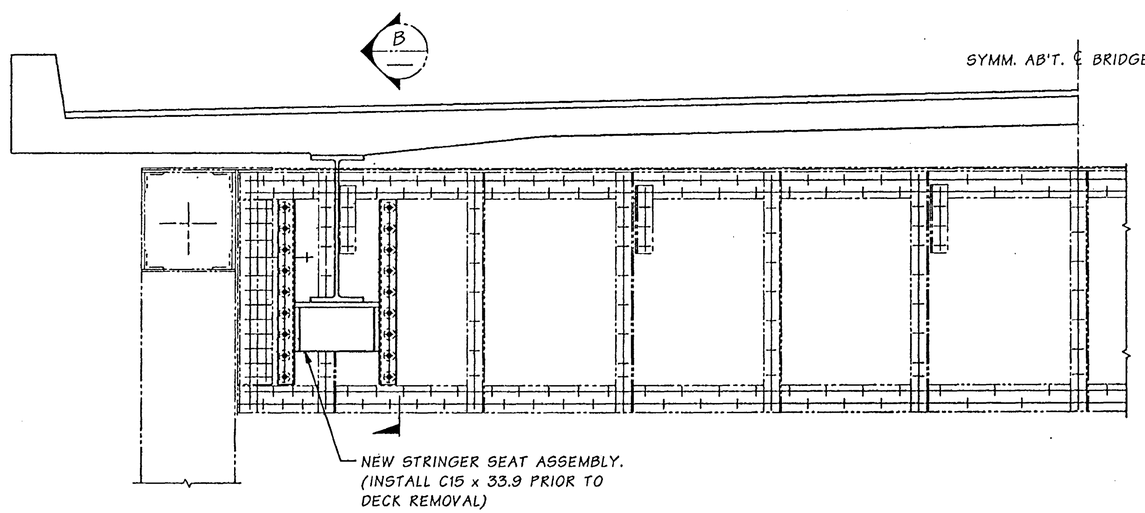

ELEVATION ~ MODIFIED FLOORBEAM & NEW DECK

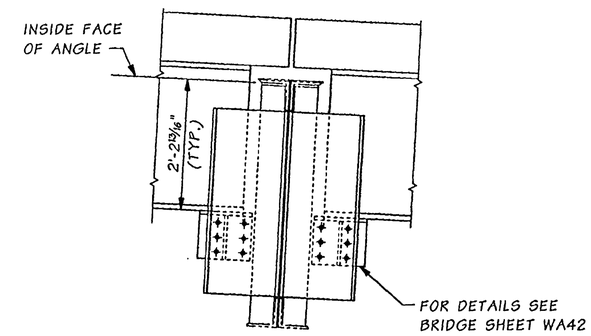

SECTION B

FOR "AS CONSTRUCTED PLANS" ONLY

SR 433 JOB NO. 1566 SHEET 40

Bridge Design Engr.	Kapur, J		M:\Y-Team\Lewis_Clark Rehab\Washington Appr\Window files\WA FB 1 -3.WND								
Supervisor	Kirker, KN	08/02									
Designed By	Talukdar, M	08/02									
Checked By	Peralta, R	08/02									
Detailed By	House, L	08/02									
Bridge Projects Engr.											
Prelim. Plan By											
Architect/Specialist			DATE	REVISION	BY	APP'D					

REGION NO.	STATE	FED. AID PROJ. NO.	SHEET NO.	TOTAL SHEETS
10	WASH.	ACBH - 0433(007)		
JOB NUMBER 02x310				
6444				

KARL N. KIRKER — STATE OF WASHINGTON — 12596 — REGISTERED PROFESSIONAL ENGINEER — EXPIRES 11/3/03

BRIDGE AND STRUCTURES OFFICE

MONINDRA TALUKDAR — STATE OF WASHINGTON — 27628 — REGISTERED PROFESSIONAL ENGINEER — EXPIRES 6/1/04 — 9/18/02

Washington State Department of Transportation

SR 433
LEWIS AND CLARK BRIDGE
DECK REPLACEMENT

FLOORBEAM 1, 1A - 168' SPAN

BRIDGE SHEET NO. WA40

SHEET 78 OF 258 SHEETS

Tue Sep 17 11:28:42 2002

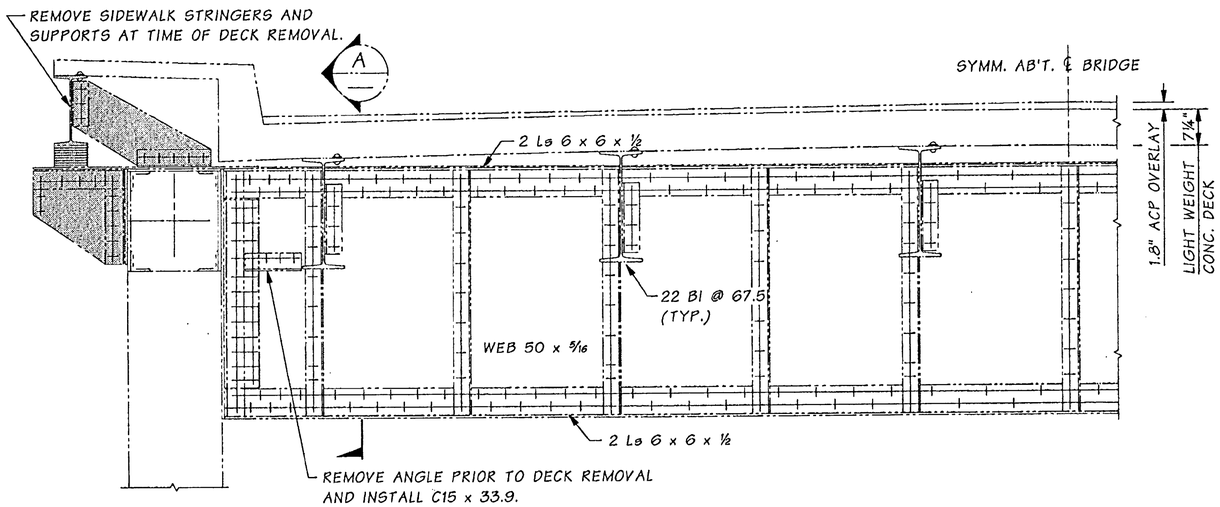

ELEVATION ~ EXISTING DECK & FLOORBEAM 2

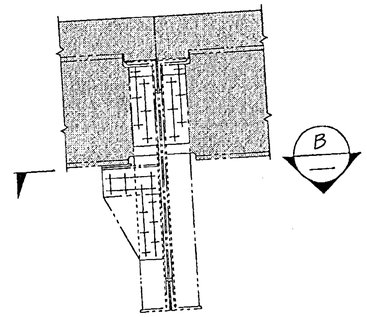

SECTION A

REMOVE SHADED PORTION AT TIME OF DECK REMOVAL

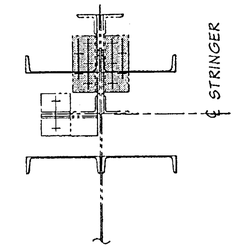

SECTION B

REMOVE SHADED PORTION AT EXTERIOR STRINGERS PRIOR TO DECK REMOVAL AND INSTALL C15 x 33.9

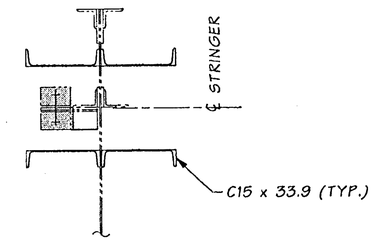

SECTION B

REMOVE SHADED PORTION AT EXTERIOR STRINGERS AT TIME OF DECK REMOVAL AND INSTALL STRINGER SEAT.

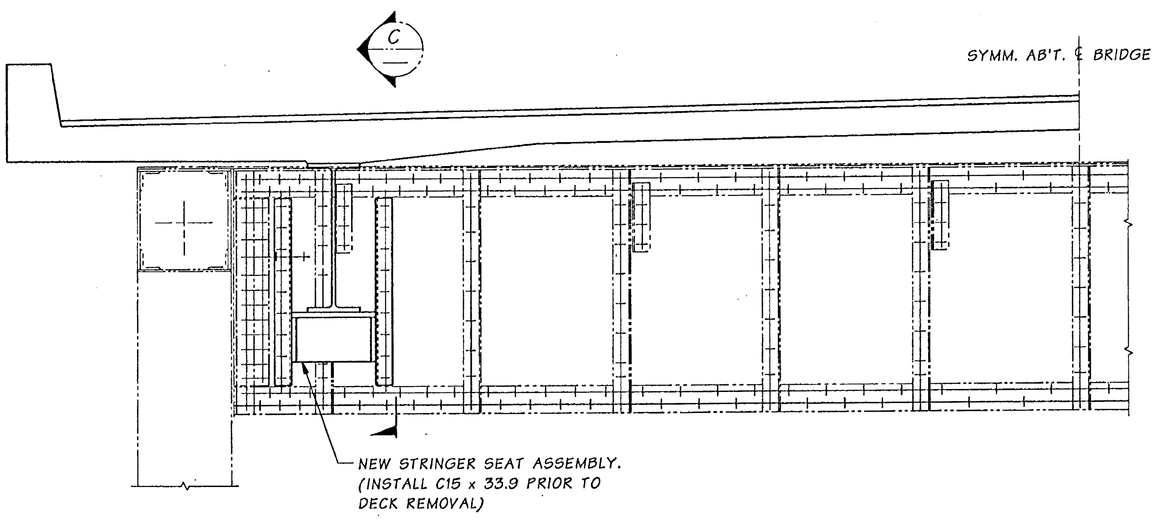

ELEVATION ~ MODIFIED FLOORBEAM & NEW DECK

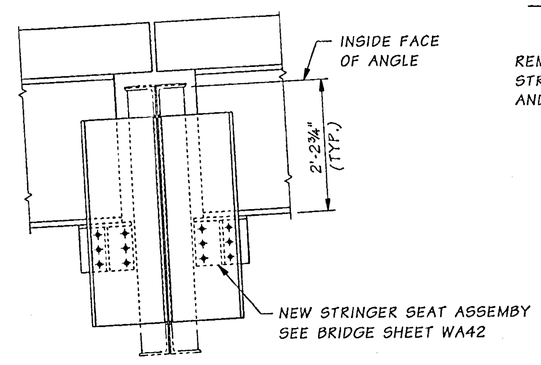

SECTION C

FOR "AS CONSTRUCTED PLANS" ONLY

Bridge Design Engr.	Kapur, J		
Supervisor	Kirker, KN	08/02	
Designed By	Talukdar, M	08/02	
Checked By	Peralta, R	08/02	
Detailed By	House, L	08/02	
Bridge Projects Engr.			
Prelim. Plan By			
Architect/Specialist			

M:\Y-Team\Lewis_Clark Rehab\Washington Appr\window files\WA FB 2.WND

DATE	REVISION	BY	APP'D

REGION NO.	STATE	FED. AID PROJ. NO.	SHEET NO.	TOTAL SHEETS
10	WASH.	ACBH - 0433(007)		
JOB NUMBER 02x310				

KARL N. KIRKER, STATE OF WASHINGTON, REGISTERED PROFESSIONAL ENGINEER, EXPIRES 11/3/03

BRIDGE AND STRUCTURES OFFICE

MESHANDRA TALUKDAR, STATE OF WASHINGTON, REGISTERED PROFESSIONAL ENGINEER, EXPIRES 6/1/04

Washington State Department of Transportation

SR 433
LEWIS AND CLARK BRIDGE
DECK REPLACEMENT

FLOORBEAM 2 - 168' SPAN

BRIDGE SHEET NO. WA 41

SHEET 19 OF 258 SHEETS

SR 433 JOB NO. 1566 SHEET 41

Tue Sep 17 16:20:42 2002

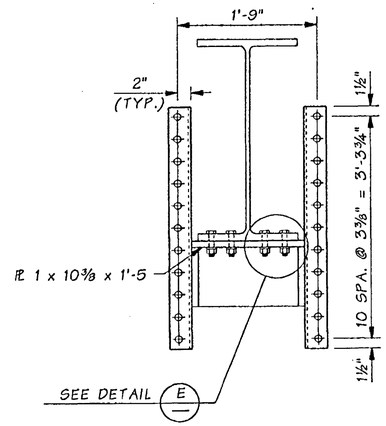

SECTION C

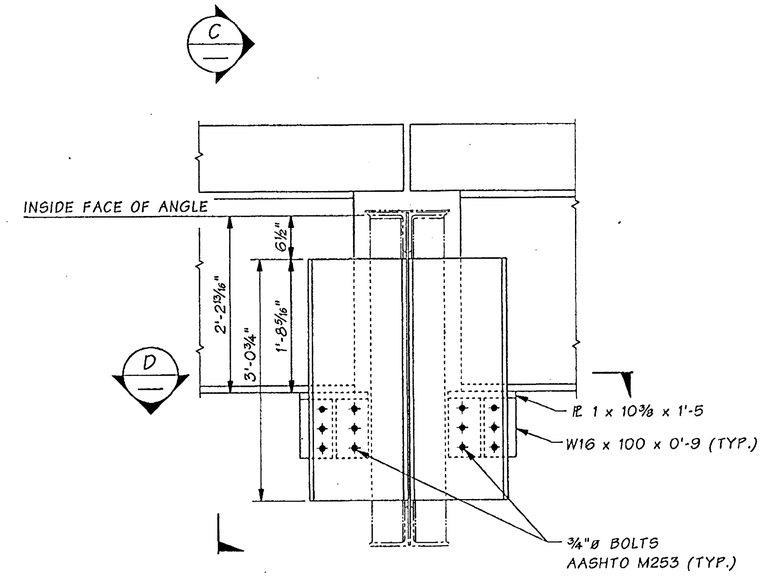

ELEVATION

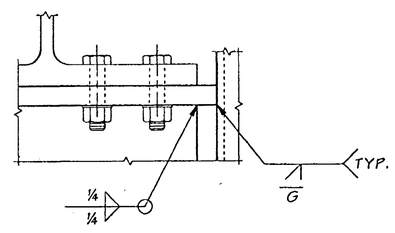

DETAIL E

* ¾"ø BOLTS AASHTO M253
13/16" x 1" SLOTTED HOLES IN STRINGER FLANGE. 13/16"ø HOLES IN STRINGER SEAT.

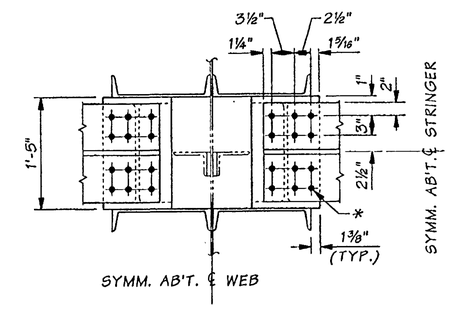

SECTION D

FLOORBEAM #1, 1A & 2 - 168' SPAN

FOR "AS CONSTRUCTED PLANS" ONLY

Bridge Design Engr.	Kapur, J		M:\Y-Team\Lewis_Clark Rehab\Washington Appr\Window files\stringer seat detail.WND								
Supervisor	Kirker, KN	08/02									
Designed By	Talukdar, M	08/02									
Checked By	Peralta, R	08/02									
Detailed By	House, L	08/02									
Bridge Projects Engr.											
Prelim. Plan By											
Architect/Specialist			DATE	REVISION	BY	APP'D					

REGION NO.	STATE	FED. AID PROJ. NO.	SHEET NO.	TOTAL SHEETS
10	WASH.	ACBH - 0433(007)		
JOB NUMBER 02x310				

KARL N. KIRKER, STATE OF WASHINGTON, 18098, REGISTERED PROFESSIONAL ENGINEER, 9/18/02, EXPIRES 11/3/03

BRIDGE AND STRUCTURES OFFICE

MENDORA TALUKDAR, STATE OF WASHINGTON, 27028, REGISTERED PROFESSIONAL ENGINEER, 9/18/02, EXPIRES 6/1/04

Washington State Department of Transportation

SR 433
LEWIS AND CLARK BRIDGE
DECK REPLACEMENT

STRINGER SEAT DETAILS - 168' SPAN

BRIDGE SHEET NO. WA42

SHEET 80 OF 258 SHEETS

SR 433 JOB NO. 1566 SHEET 42

Tue Sep 17 16:28:39 2002

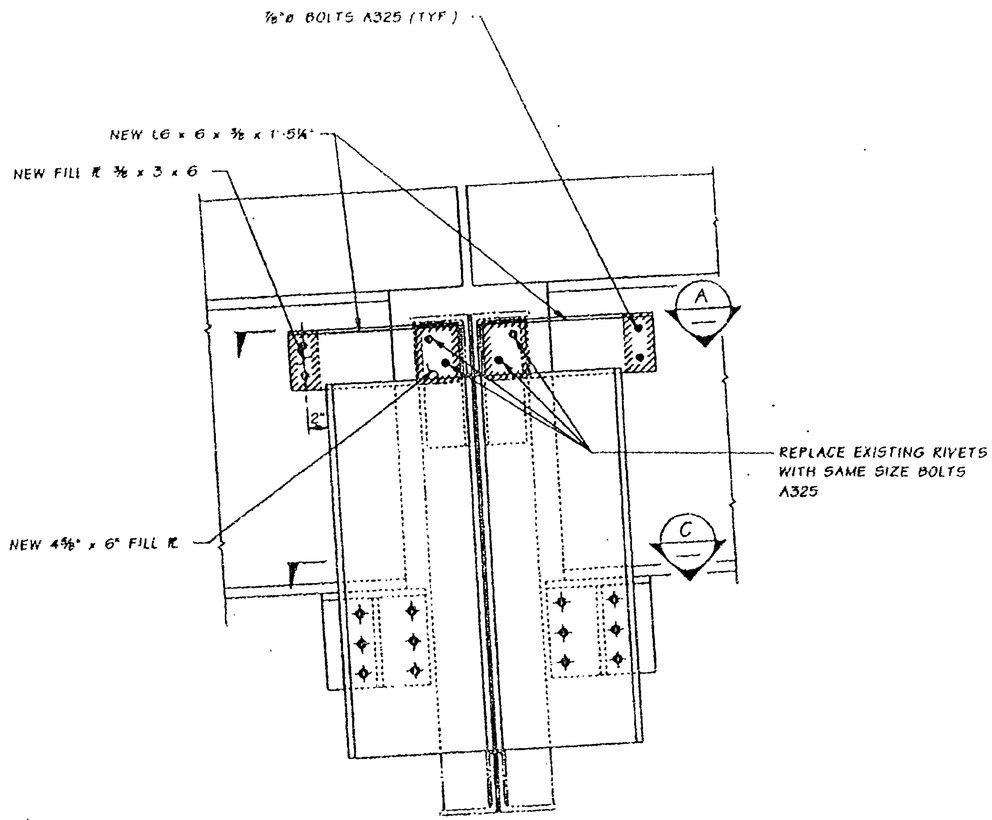

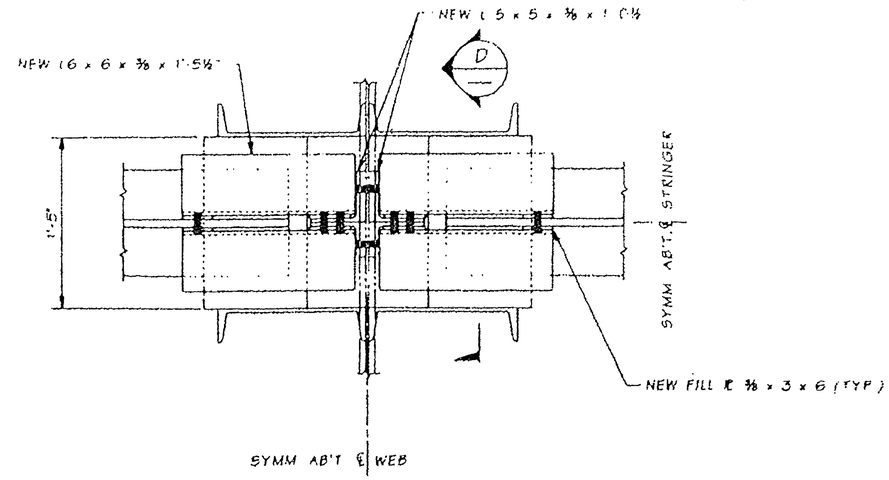

SECTION A

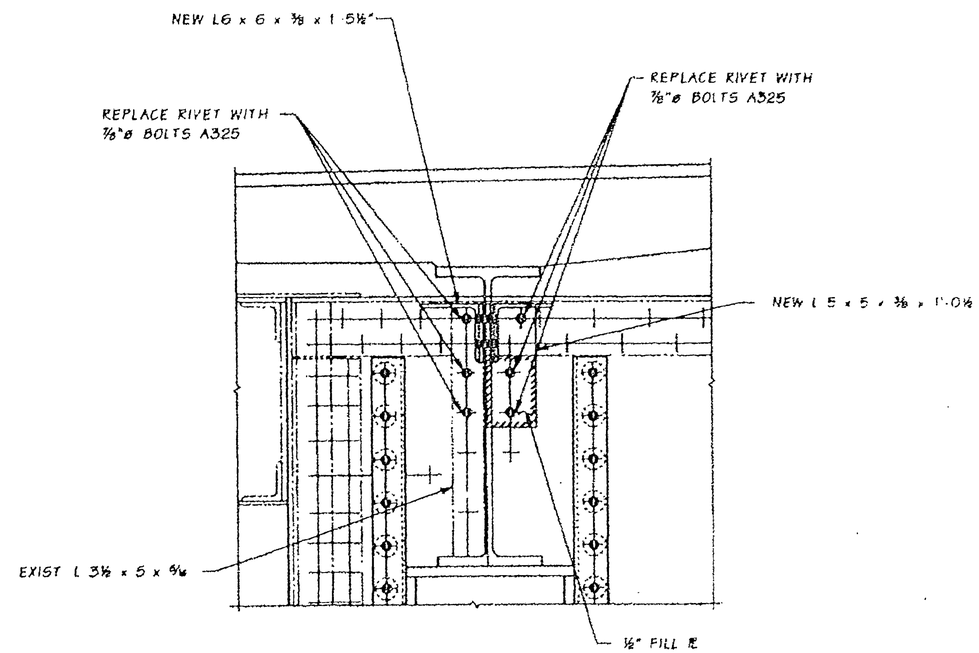

SECTION D

MODIFIED CONNECTION
TYPICAL WASHINGTON APPROACH TRUSS SPAN FLOORBEAM

NOTE: INSTALL L6 x 6 x 5/8 AT TIME OF PANEL PLACEMENT

BENT AB TO LO

FOR "AS CONSTRUCTED PLANS" ONLY

Bridge Design Engr.	Kapur, J		M:\Y-Team\Lewis_Clark Rehab\Modifications\window files\WA F8 1-1A-2.WND				REGION NO.	STATE	FED AID PROJ. NO.	SHEET NO.	TOTAL SHEETS
Supervisor	Kirker, KN						10	WASH			
Designed By	Talukdar, M	07/03					JOB NUMBER				
Checked By	Schultz, E	07/03									
Approved By	Evans, P.D.	07/03									
Bridge Projects Engr											
Prelim. Plan By											
Architect/Specialist			DATE	REVISION	BY	APP'D	6444				

Thu Oct 09 16:51:43 2003

MONINDRA TALUKDAR — EXPIRES 6/1/04 — 10/9/03

BRIDGE AND STRUCTURES OFFICE

JUGESH KAPUR — EXPIRES 5/15/04 — 10.9.03

Washington State Department of Transportation

SR 433
LEWIS & CLARK BRIDGE
DECK REPLACEMENT

MODIFIED STRINGER CONNECTION
WASHINGTON APPROACH DECK TRUSS

BRIDGE SHEET NO. WA42A
SHEET 80A OF 258 SHEETS

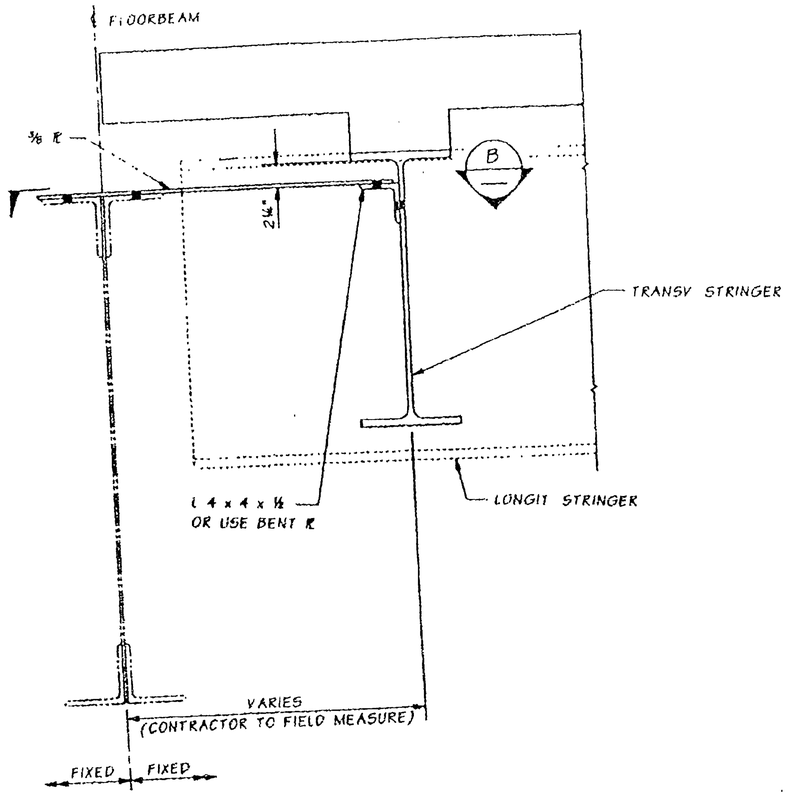

SECTION A

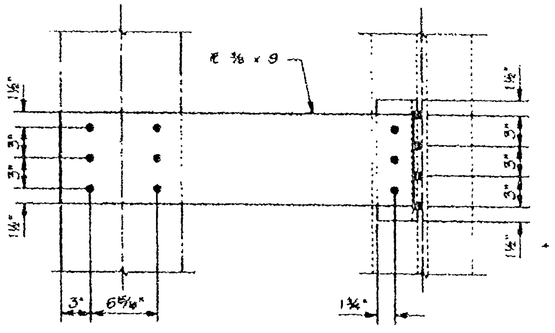

SECTION B

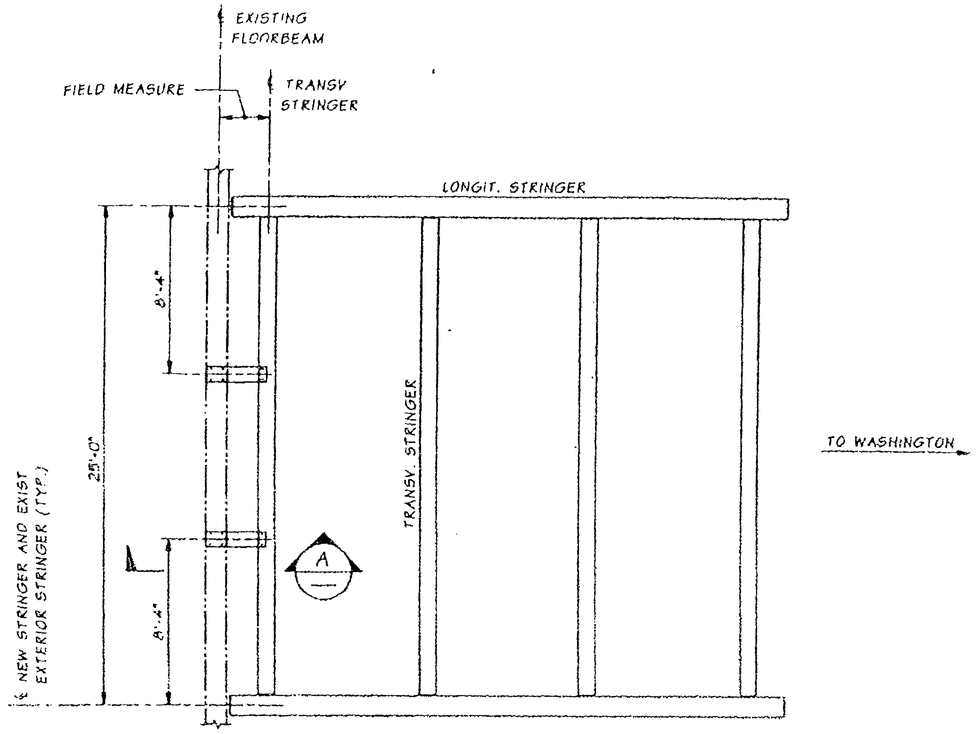

FRAMING PLAN

FOR "AS CONSTRUCTED PLANS" ONLY

Bridge Design Engr.	Kapur, J	
Supervisor	Kirker, KN	
Designed By	Talukdar, M	07/03
Checked By	Schultz, E	07/03
Detailed By	Evans, P.D.	07/03
Bridge Projects Engr.		
Prelim. Plan By		
Architect/Specialist		

M:\Y-Team\Lewis_Clark Rehab\Modifications\Window files\WA FB BRACE.WND

DATE	REVISION	BY	APP'D

REGION NO.	STATE	FED. AID PROJ. NO.	SHEET NO.	TOTAL SHEETS
10	WASH.			
JOB NUMBER				
6444				

Thu Oct 09 16:20:15 2003

BRIDGE AND STRUCTURES OFFICE

10/10/03

8.9.03

Washington State Department of Transportation

SR 433
LEWIS & CLARK BRIDGE
DECK REPLACEMENT

FLOORBEAM LATERAL BRACE
WASHINGTON APPROACH DECK TRUSS

BRIDGE SHEET NO. WA42B

SHEET 80B OF 258 SHEETS

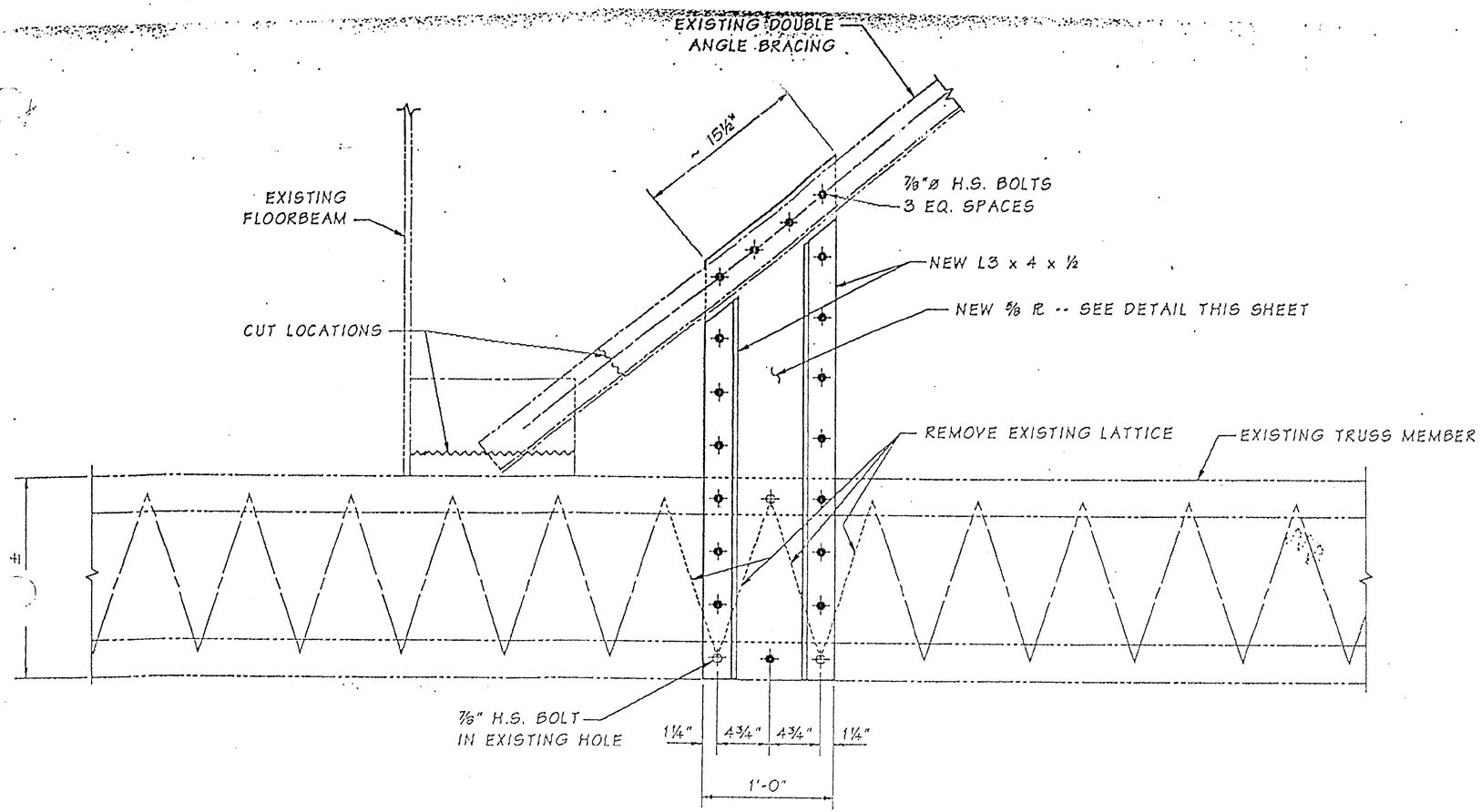

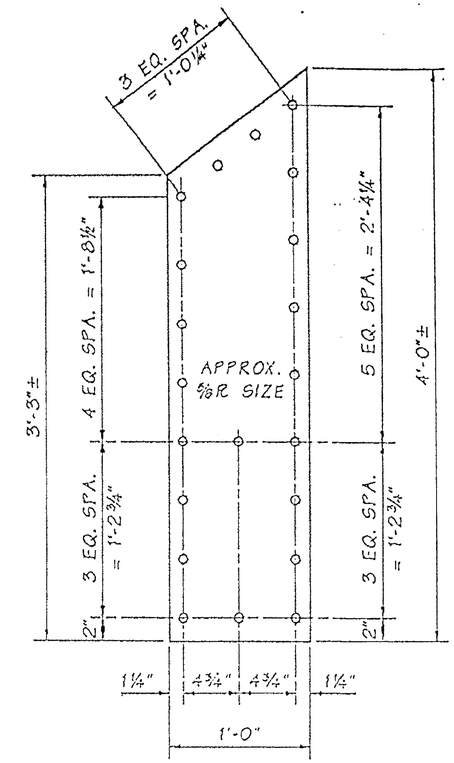

PLATE

BRACING MODIFICATION DETAIL

TYPICAL 4 LOCATIONS
2 AT PANEL JOINT U1 NEAR BENT C0
2 AT PANEL JOINT U1 NEAR PIER 1

LEGEND

- NEW BOLT
- NEW BOLT REPLACING RIVET

ALL STRUCTURAL STEEL SHALL BE ASTM A-36.

ALL BOLTS SHALL BE ⅞" DIAMETER ASTM-A325.

FOR "AS CONSTRUCTED PLANS" ONLY

FILE NAME	C:\AAWork\kelso\Svensen's Curve\L3425WASTESITE.dgn									PLOT11
TIME	02:37:18 PM				REGION NO. 10	STATE WASH	FED.AID PROJ.NO.	Washington State Department of Transportation	SR 433 LEWIS AND CLARK BRIDE DECK REPLACEMENT	WA42C
DATE	08/17/2005									SHEET 80C OF 258 SHEETS
PLOTTED BY	spahnk				JOB NUMBER					
DESIGNED BY										
ENTERED BY										
CHECKED BY					CONTRACT NO. 6444		LOCATION NO.			
PROJ. ENGR.										
REGIONAL ADM.		REVISION	DATE	BY					BRACING MODIFICATION DETAIL	

P.E. STAMP BOX DATE

P.E. STAMP BOX DATE

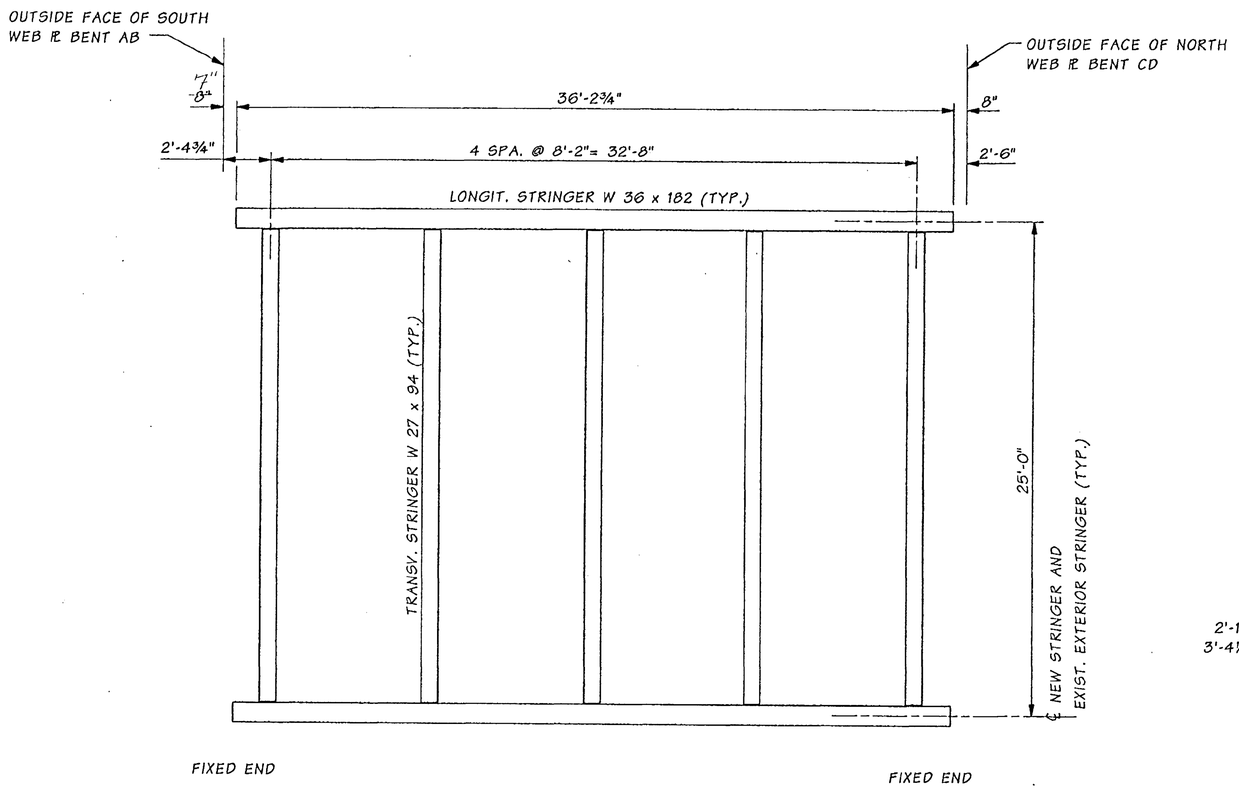

FRAMING PLAN

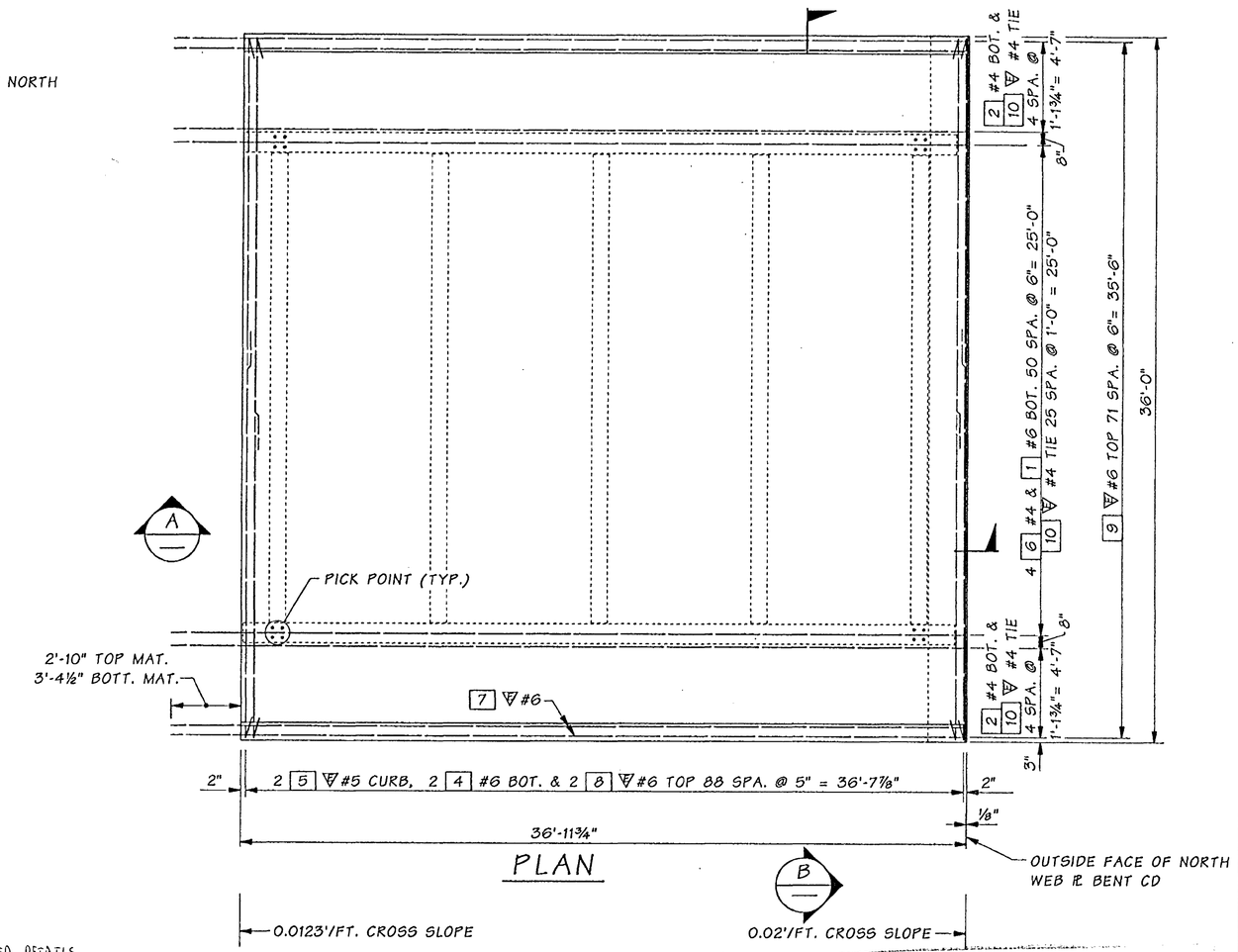

PLAN

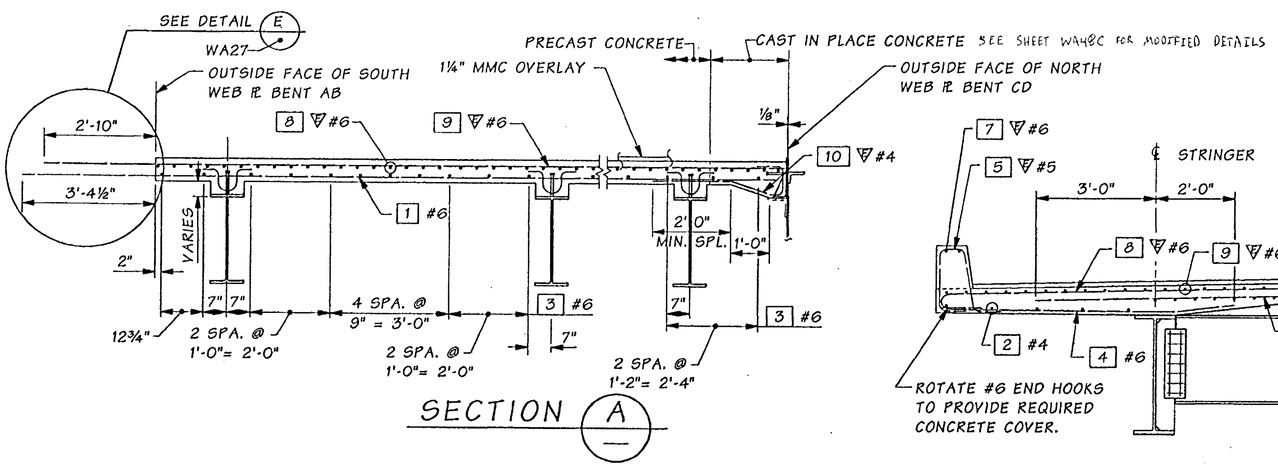

SECTION A

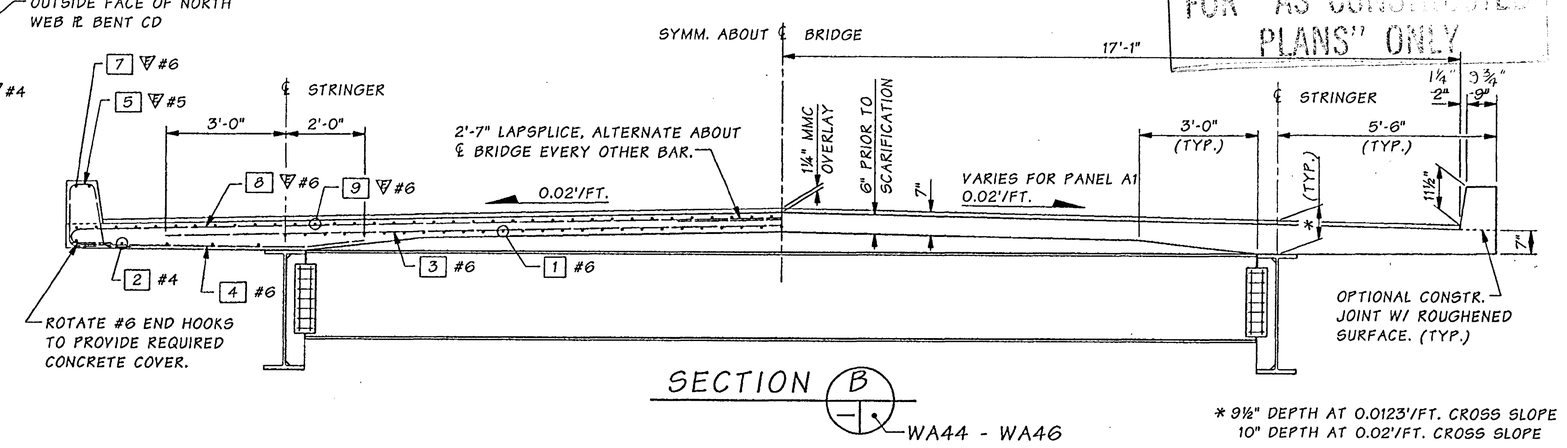

SECTION B

WA44 - WA46

* 9½" DEPTH AT 0.0123'/FT. CROSS SLOPE
10" DEPTH AT 0.02'/FT. CROSS SLOPE

FOR "AS CONSTRUCTED PLANS" ONLY

Bridge Design Engr.	Kapur, J	
Supervisor	Kirker, KN	08/02
Designed By	Talukdar, M	08/02
Checked By	Peralta, R	08/02
Detailed By	House, L	08/02
Bridge Projects Engr.		
Prelim. Plan By		
Architect/Specialist		

M:\Y-Team\Lewis_Clark Rehab\Washington Appr\Window files\DECK PANEL A1.WND

DATE	REVISION	BY	APP'D

REGION NO.	STATE	FED. AID PROJ. NO.	SHEET NO.	TOTAL SHEETS
10	WASH.	ACBH - 0433(007)		

JOB NUMBER 02x310

6444

KARL N. KIRKER, STATE OF WASHINGTON, 18296, REGISTERED PROFESSIONAL ENGINEER — EXPIRES 11/3/03

BRIDGE AND STRUCTURES OFFICE

MUNTINDRA TALUKDAR, STATE OF WASHINGTON, 27626, REGISTERED PROFESSIONAL ENGINEER — EXPIRES 6/1/04

Washington State Department of Transportation

SR 433
LEWIS AND CLARK BRIDGE
DECK REPLACEMENT

DECK PANEL A1

BRIDGE SHEET NO. WA43

SHEET 81 OF 258 SHEETS

SR 433 JOB NO. 1566 SHEET 43

Tue Sep 17 16:28:09 2002

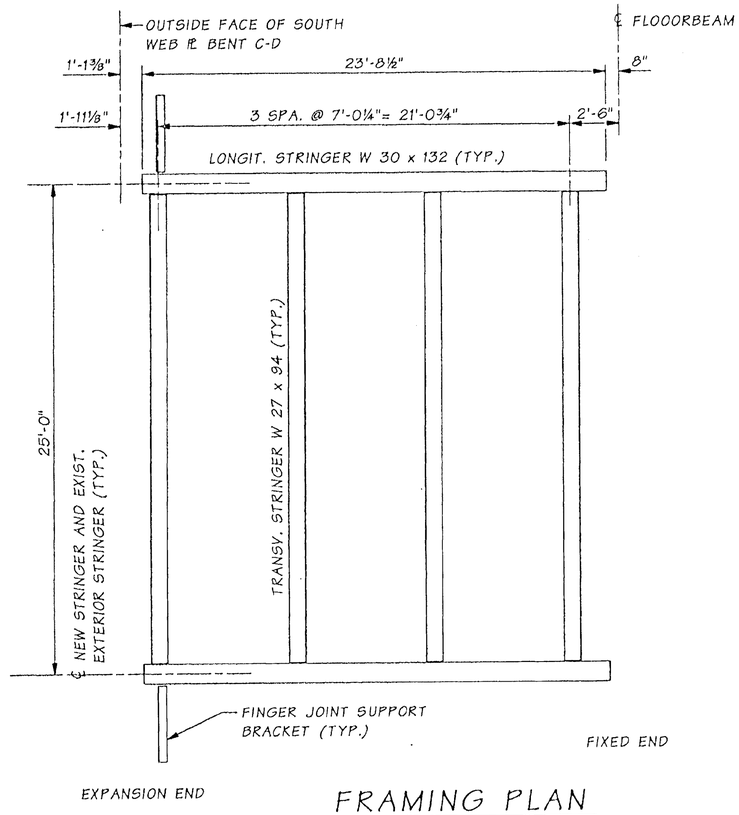

FRAMING PLAN

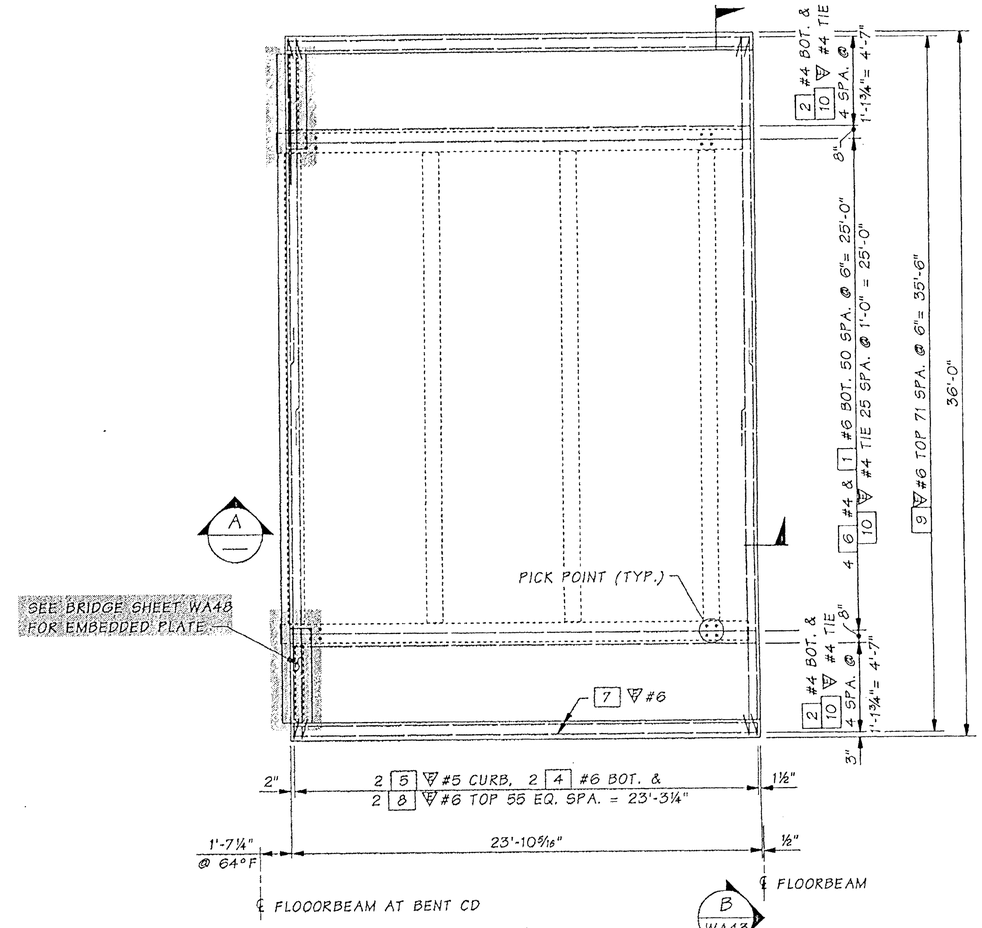

PLAN

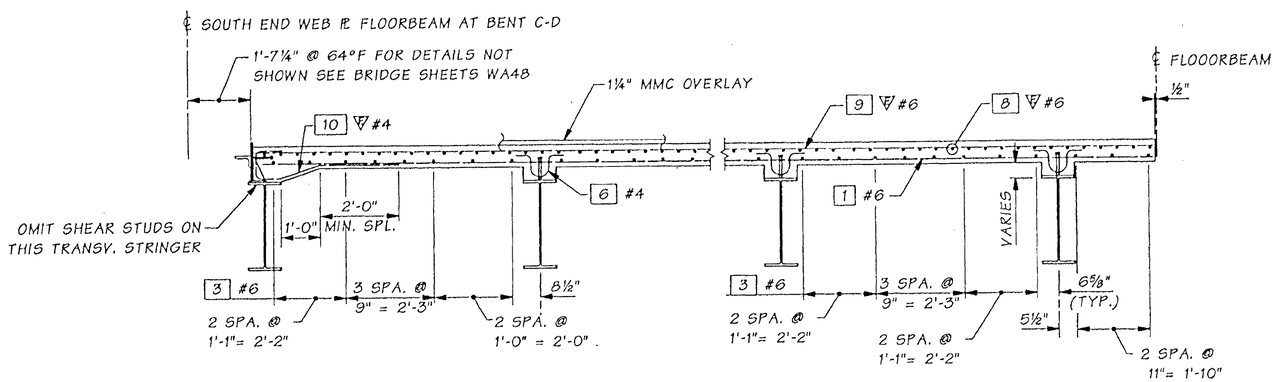

SECTION A

FOR "AS CONSTRUCTED PLANS" ONLY

Bridge Design Engr.	Kapur, J		M:\Y-Team\Lewis_Clark Rehab\Washington Appr\window files\DECK PANEL B1.WND				REGION NO.	STATE	FED. AID PROJ. NO.	SHEET NO.	TOTAL SHEETS
Engineer	Kirker, KN						10	WASH.			
Checked By	Talukdar, M	08/02									
Checked By	Peralta, R	08/02					JOB NUMBER 02x310		ACBH - 0433(007)		
Detailed By	House, L	08/02									
Bridge Projects Engr.											
Prelim. Plan By			10/02	ADDED PLATE & NOTE	MT		6444				
Architect/Specialist			DATE	REVISION	BY	APP'D					

Wed Oct 30 07:22:41 2002

KARL N. KIRKER, STATE OF WASHINGTON, 15296, REGISTERED PROFESSIONAL ENGINEER — EXPIRES 11/3/03

BRIDGE AND STRUCTURES OFFICE

MUNINDRA TALUKDAR, STATE OF WASHINGTON, 27628, REGISTERED PROFESSIONAL ENGINEER — EXPIRES 6/1/04

Washington State Department of Transportation

SR 433
LEWIS AND CLARK BRIDGE
DECK REPLACEMENT

DECK PANEL B1

BRIDGE SHEET NO. WA44

SHEET 82 OF 258 SHEETS

SR 433 JOB NO. 1566 SHEET 44

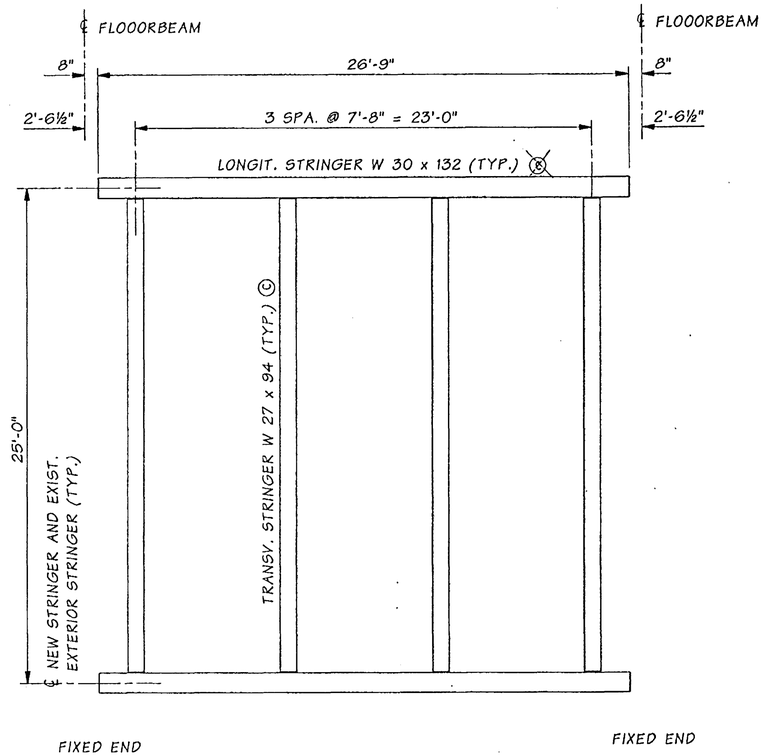

FRAMING PLAN

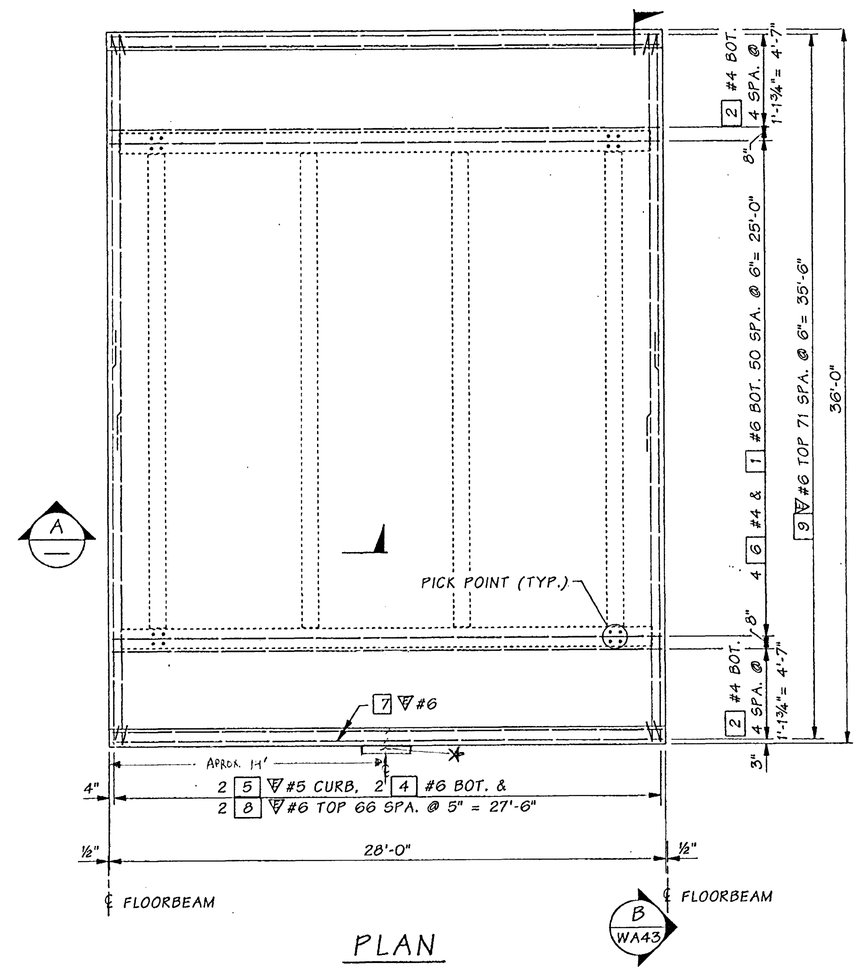

PLAN

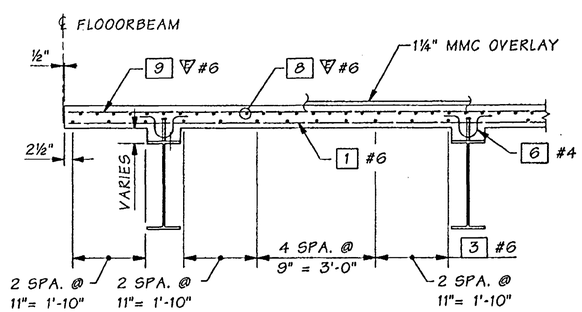

SECTION A

* EXISTING LONGITUDINAL REBAR IN CURB DAMAGED BY CORE DRILLING AT PANEL U3-U2 WEST SIDE. INSTALL 5/8" x 12" x 3' GALVANIZED PLATE WITH 5/8" ϕ RESIN BONDED ANCHORS W/ 6" IMBED

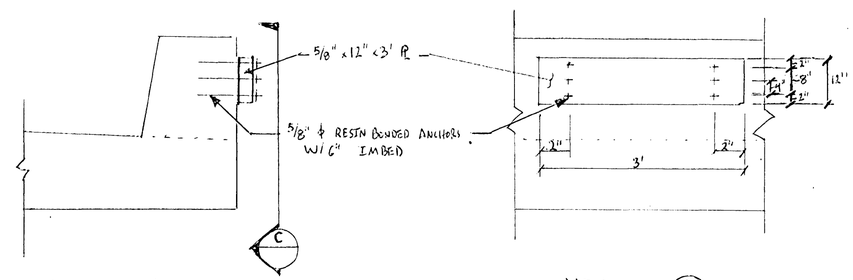

SECTION VIEW

VIEW C

FOR "AS CONSTRUCTED PLANS" ONLY

Bridge Design Engr.	Kapur, J		M:\Y-Team\Lewis_Clark Rehab\Washington Appr\Window files\DECK PANEL C1.WND								
Supervisor	Kirker, KN	08/02					REGION NO.	STATE	FED. AID PROJ. NO.	SHEET NO.	TOTAL SHEETS
Designed By	Talukdar, M	08/02					10	WASH.			
Checked By	Peralta, R	08/02					JOB NUMBER 02x310		ACBH - 0433(007)		
Detailed By	House, L	08/02									
Bridge Projects Engr.											
Prelim. Plan By											
Architect/Specialist			DATE	REVISION	BY	APP'D	6444				

KARL N. KIRKER, STATE OF WASHINGTON, REGISTERED PROFESSIONAL ENGINEER, 9/18/02, EXPIRES 11/3/03

BRIDGE AND STRUCTURES OFFICE

MENTINDRA TAIMUKAR, STATE OF WASHINGTON, REGISTERED PROFESSIONAL ENGINEER, 9/18/02, EXPIRES 6/1/04

Washington State Department of Transportation

SR 433
LEWIS AND CLARK BRIDGE
DECK REPLACEMENT

DECK PANEL C1

BRIDGE SHEET NO. WA45

SHEET 83 OF 258 SHEETS

SR 433 JOB NO. 1566 SHEET 45

Tue Sep 17 16:28:13 2002

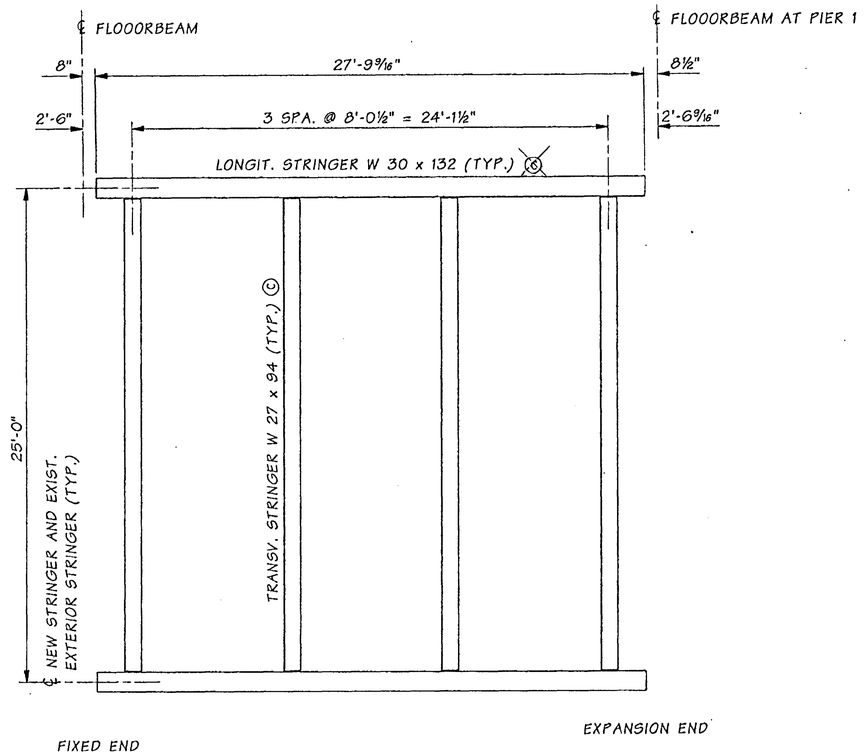

FRAMING PLAN

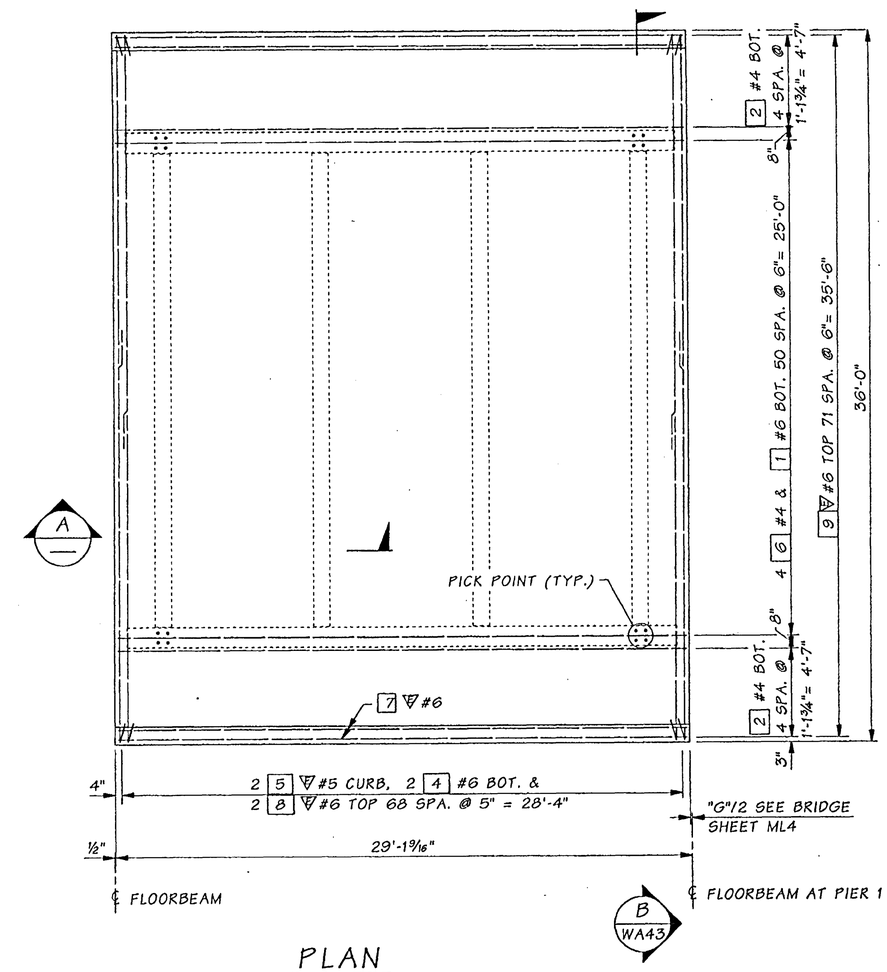

PLAN

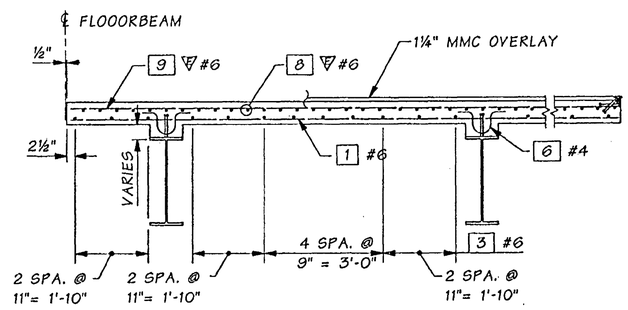

SECTION A

FOR "AS CONSTRUCTED PLANS" ONLY

Bridge Design Engr.	Kapur, J		M:\Y-Team\Lewis_Clark Rehab\Washington Appr\Window files\DECK PANEL D1.WND								
Supervisor	Kirker, KN	08/02				REGION NO.	STATE	FED. AID PROJ. NO.	SHEET NO.	TOTAL SHEETS	
Designed By	Talukdar, M	08/02				10	WASH.	ACBH - 0433(007)			
Checked By	Peralta, R	08/02				JOB NUMBER 02x310					
Detailed By	House, L	08/02									
Bridge Projects Engr.											
Prelim. Plan By											
Architect/Specialist			DATE	REVISION	BY	APP'D					

KARL N. KIRKER — STATE OF WASHINGTON — REGISTERED PROFESSIONAL ENGINEER — EXPIRES 11/3/03

BRIDGE AND STRUCTURES OFFICE

MINDAHRA TALUKDAR — STATE OF WASHINGTON — REGISTERED PROFESSIONAL ENGINEER — EXPIRES 6/1/04

Washington State Department of Transportation

SR 433
LEWIS AND CLARK BRIDGE
DECK REPLACEMENT

DECK PANEL D1

BRIDGE SHEET NO. WA46

SHEET 84 OF 258 SHEETS

SR 433 JOB NO. 1566 SHEET 46

Tue Sep 17 16:28:14 2002

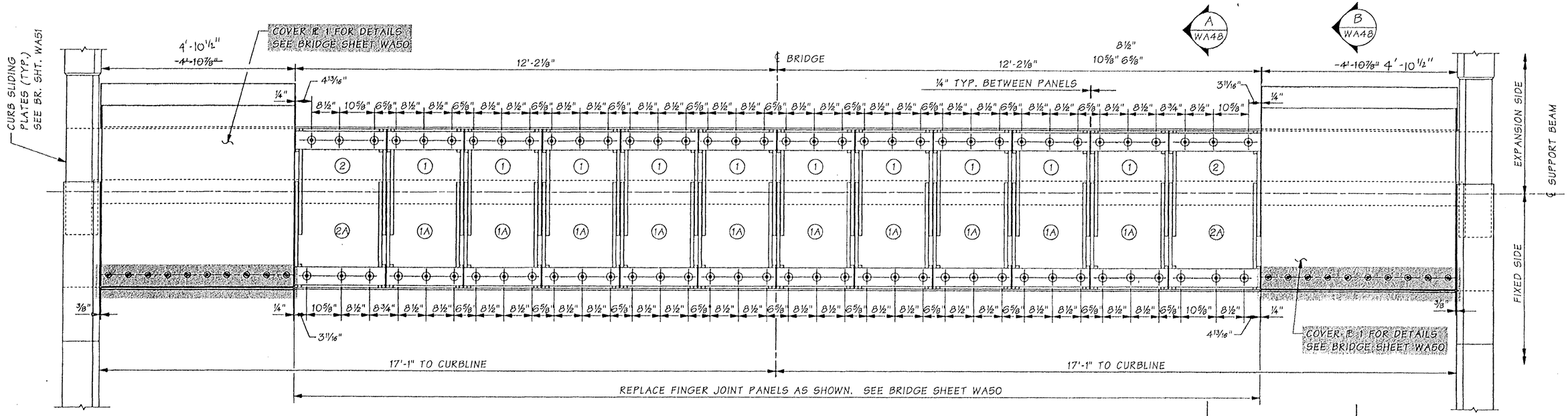

PLAN

NOTE:
ALL FINGER JOINT PANEL PLATES AND ALL OTHER PLATES SHALL BE ASTM A588 GR. 50 STEEL.

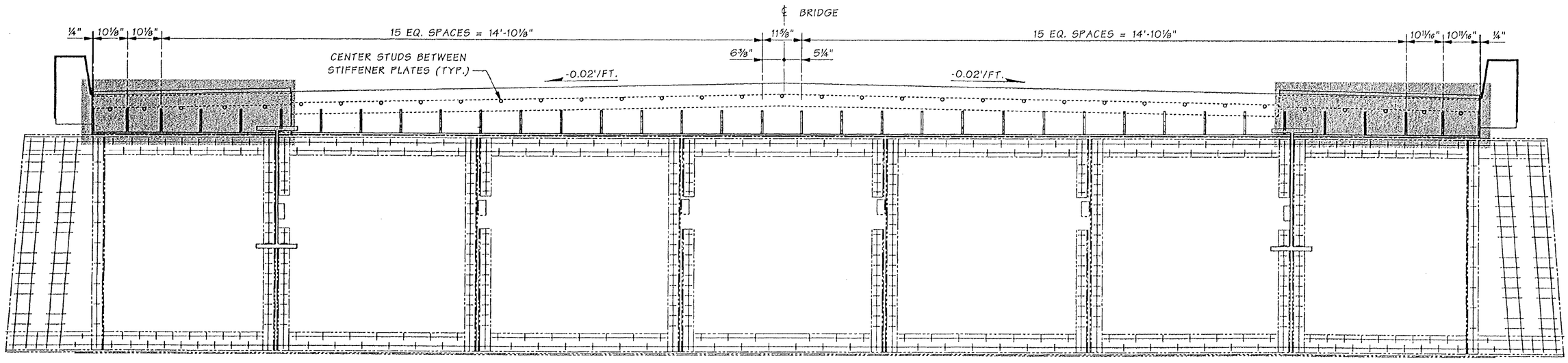

ELEVATION

NOTE: HOLES DRILLED IN CAST IN PLACE COVER PL'S ½ x 4'-10½" TO ACCOMODATE PICKING EYE HOLES

FOR "AS CONSTRUCTED PLANS" ONLY

Bridge Design Engr.	Kapur, J		M:\Y-Team\Lewis_Clark Rehab\Washington Appr\window files\EXP-JT-CD4.WND								
Supervisor	Kirker, KN										
Designed By	Talukdar, M	08/02									
Checked By	Peralta, R	08/02	10/02	MODIFIED PLATE CONNECTION	MT						
Detailed By	House, L	08/02									
Bridge Projects Engr.			10/02	MODIFIED NOTE	MT						
Prelim. Plan By											
Architect/Specialist			DATE	REVISION	BY	APP'D					

REGION NO.	STATE	FED. AID PROJ. NO.	SHEET NO.	TOTAL SHEETS
10	WASH.	ACBH - 0433(007)		

JOB NUMBER 02x310

6444

KARL N. KIRKER, STATE OF WASHINGTON, REGISTERED PROFESSIONAL ENGINEER, 10/30/02, EXPIRES 11/3/03

BRIDGE AND STRUCTURES OFFICE

MUNINDRA TALUKDAR, STATE OF WASHINGTON, REGISTERED PROFESSIONAL ENGINEER, 10/30/02, EXPIRES 6/1/04

Washington State Department of Transportation

SR 433
LEWIS AND CLARK BRIDGE
DECK REPLACEMENT

BENT CD - FINGER JOINT LAYOUT

BRIDGE SHEET NO. WA47

SHEET 85 OF 258 SHEETS

Tue Oct 29 16:15:17 2002

SR 433 NO. 1566 SHEET 47

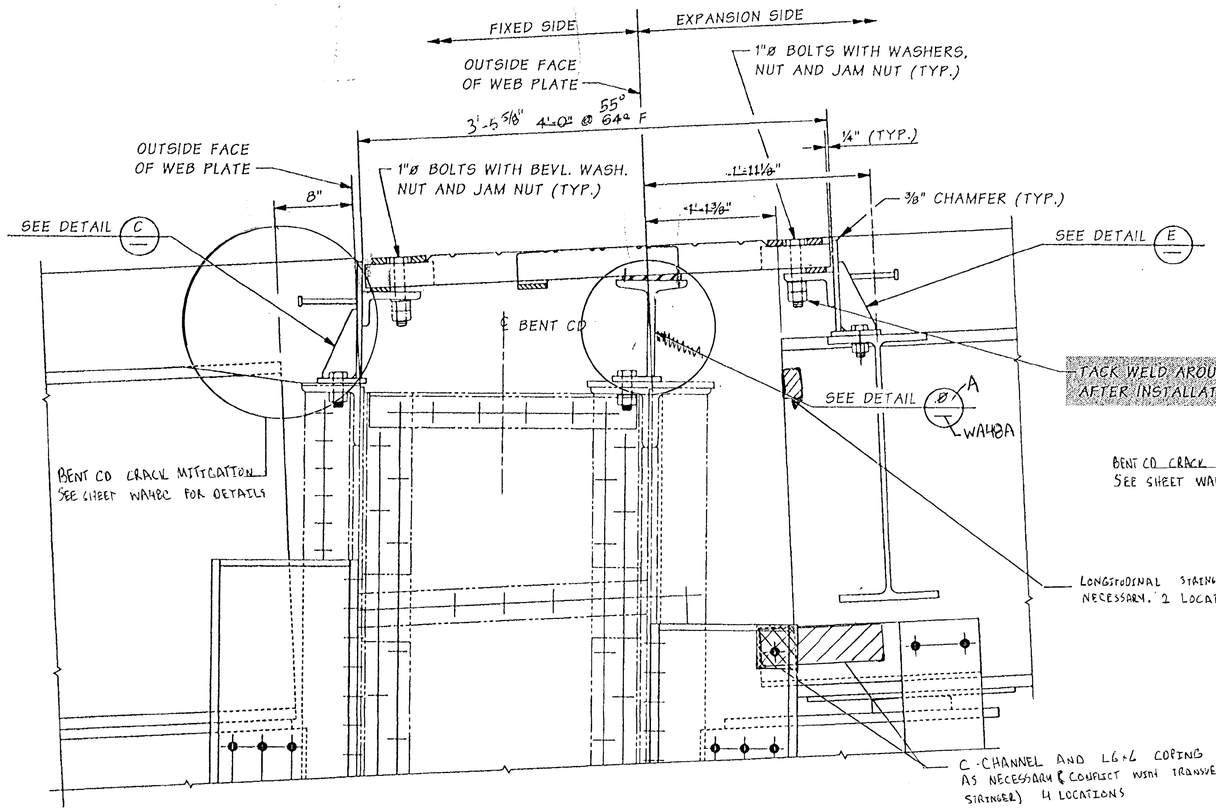

SECTION A WA47

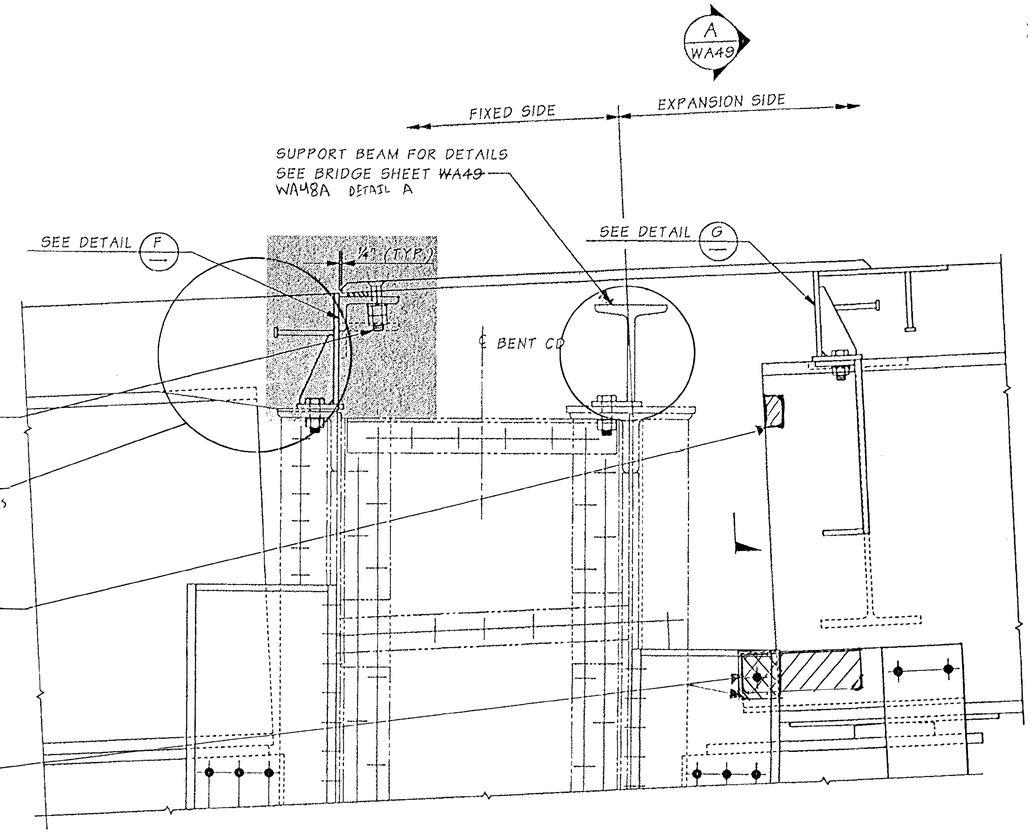

SECTION B WA47

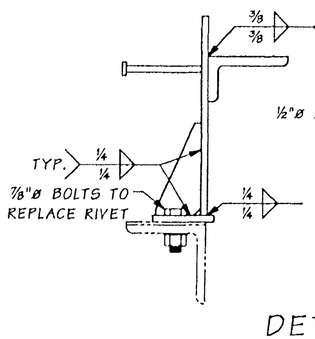

DETAIL C

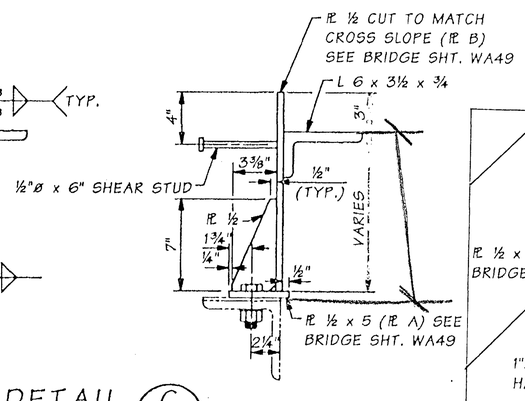

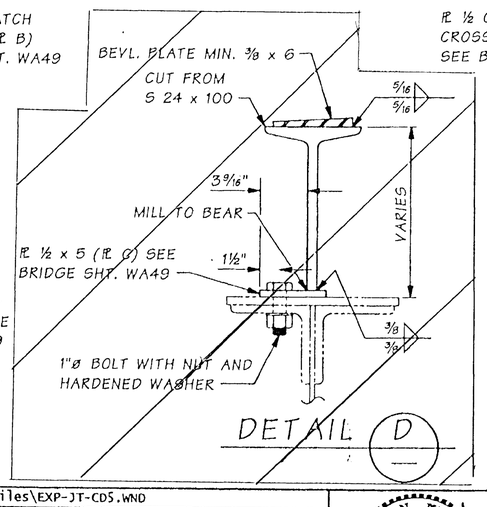

DETAIL D

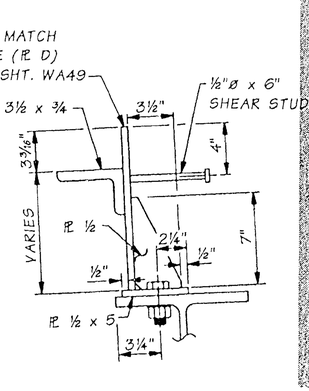

DETAIL E

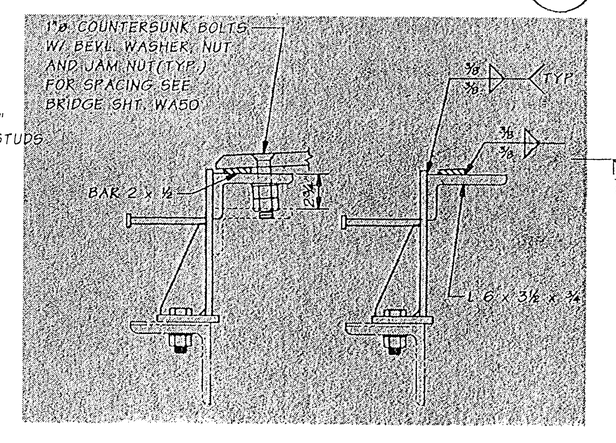

DETAIL F

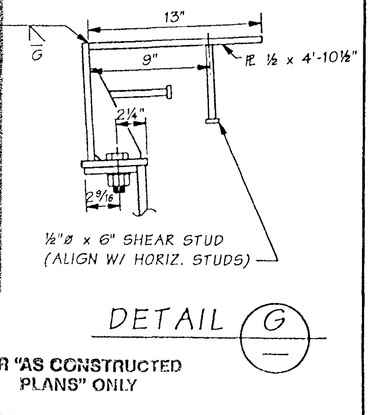

DETAIL G

FOR "AS CONSTRUCTED PLANS" ONLY

Bridge Design Engr.	Kapur, J		M:\Y-Team\Lewis_Clark Rehab\Washington Appr\window files\EXP-JT-CD5.WND								
Supervisor	Kirker, KN										
Designed By	Talukdar, M	08/02									
Checked By	Peralta, R	08/02									
Detailed By	House, L	08/02	10/02	MODIFIED PLATE CONNECTION	MT						
Bridge Projects Engr.											
Prelim. Plan By			10/02	ADDED NOTE	MT						
Architect/Specialist			DATE	REVISION	BY	APP'D					

Tue Oct 29 14:41:58 2002

REGION NO.	STATE	FED. AID PROJ. NO.	SHEET NO.	TOTAL SHEETS
10	WASH.	ACBH - 0433(007)		
JOB NUMBER 02x310				

6/4/4

KARL N. KIRKER — STATE OF WASHINGTON — 20294 — REGISTERED PROFESSIONAL ENGINEER — EXPIRES 11/3/03

BRIDGE AND STRUCTURES OFFICE

MOHINDRA TALUKDAR — STATE OF WASHINGTON — 27262 — REGISTERED PROFESSIONAL ENGINEER — EXPIRES 6/1/04

Washington State Department of Transportation

SR 433
LEWIS AND CLARK BRIDGE
DECK REPLACEMENT

BENT CD - FINGER JOINT DETAILS

BRIDGE SHEET NO. WA48

SHEET 86 OF 258 SHEETS

SR 433 NO. 1566 SHEET 48

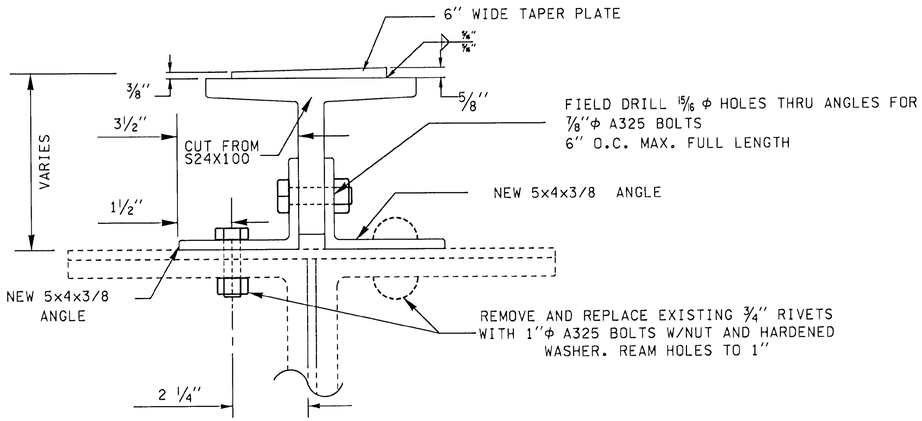

DETAIL A

BENT CD SUPPORT BEAM

NOT TO SCALE

WA34, WA48, WA48A1

NOTE: ADJUST SUPPORT BEAM VERTICALLY AND HORIZONTALLY, TO ENSURE ALL FINGERJOINT ASSEMBLIES FIT PROPERLY. THE SUPPORT BEAM SHOULD BE ADJUSTED VERTICALLY TO ACCOMMODATE THE LOWEST FINGER ASSEMBLY.

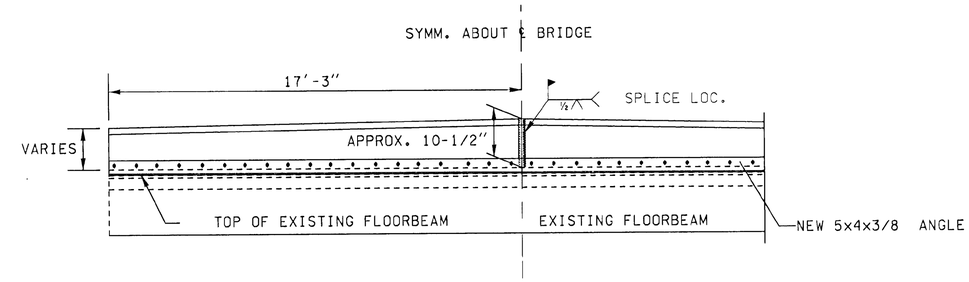

ELEVATION - EXISTING FLOORBEAM & SUPPORT BEAM

NOT TO SCALE

FOR "AS CONSTRUCTED PLANS" ONLY

FILE NAME	G:\444304\03 - Construction\C6444 - SR433, Lewis and Clark Bridge Deck Replacement\As-Builts\6444 Detail.dgn			REGION NO.	STATE	FED.AID PROJ.NO.	
TIME	01:59:08 PM			10	WASH		
DATE	10/12/2005			JOB NUMBER			
PLOTTED BY	kingju						
DESIGNED BY							
ENTERED BY							
CHECKED BY				CONTRACT NO.		LOCATION NO.	
PROJ. ENGR.				6444			
REGIONAL ADM.		REVISION	DATE	BY			

P.E. STAMP BOX DATE

P.E. STAMP BOX DATE

Washington State Department of Transportation

SR 433
LEWIS AND CLARK
BRIDGE DECK REPLACEMENT

BENT CD DETAILS

PLOT8

WA48A

SHEET 86A OF 258 SHEETS

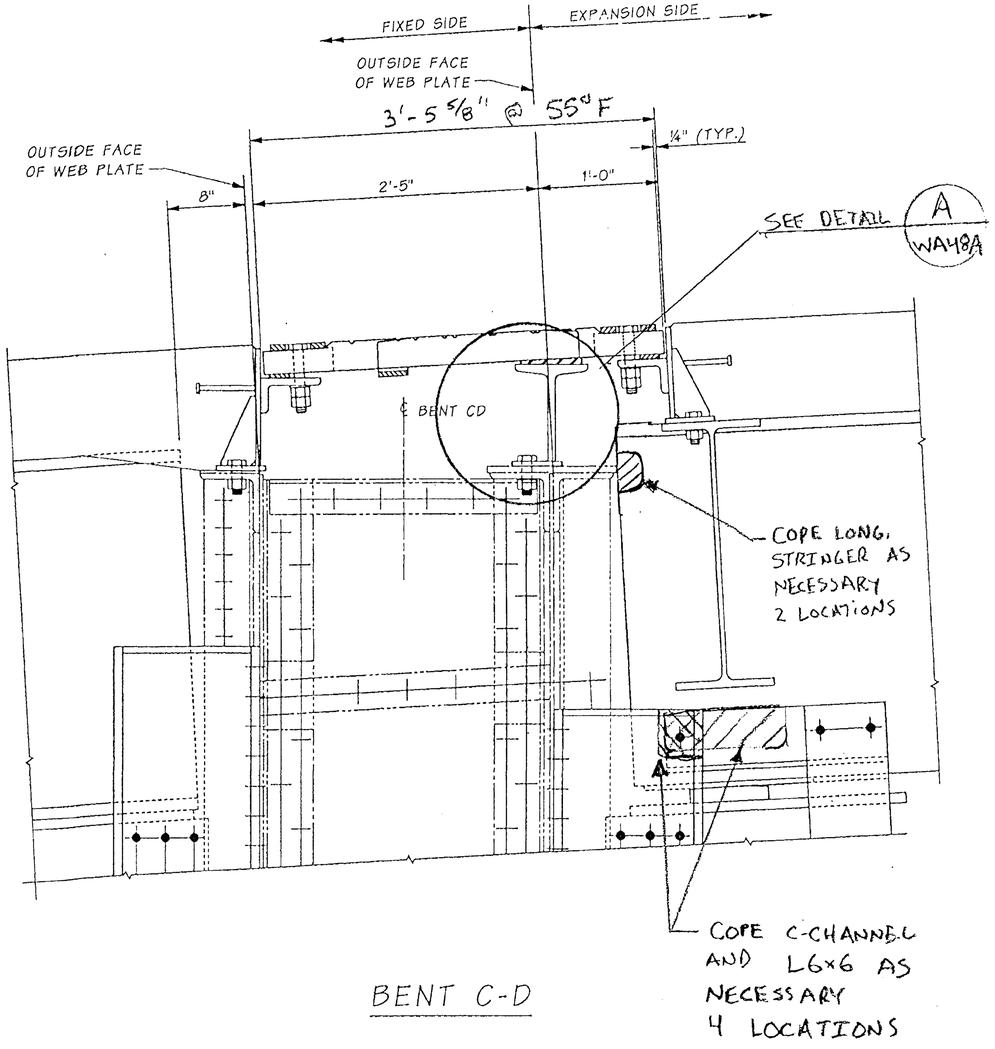

BENT C-D

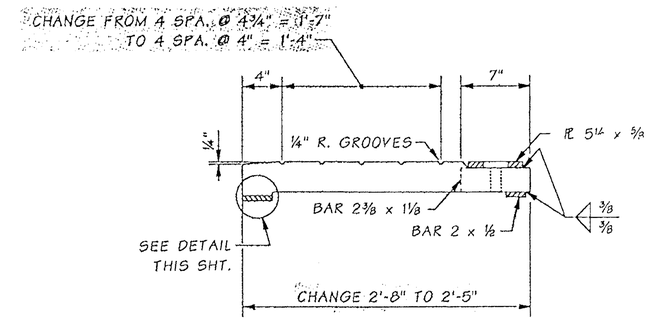

SECTION A (1)(2)

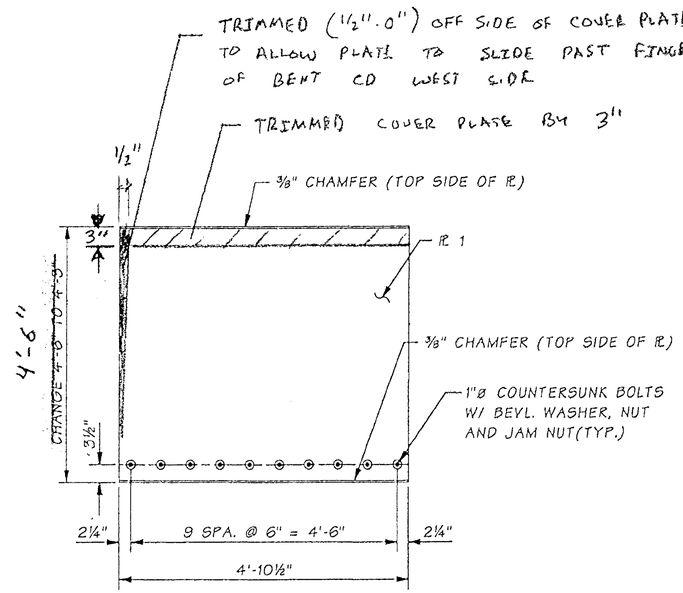

PLAN ~ COVER PLATE

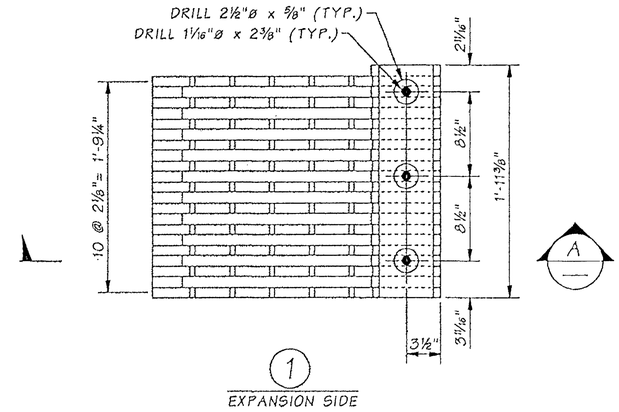

(1) EXPANSION SIDE

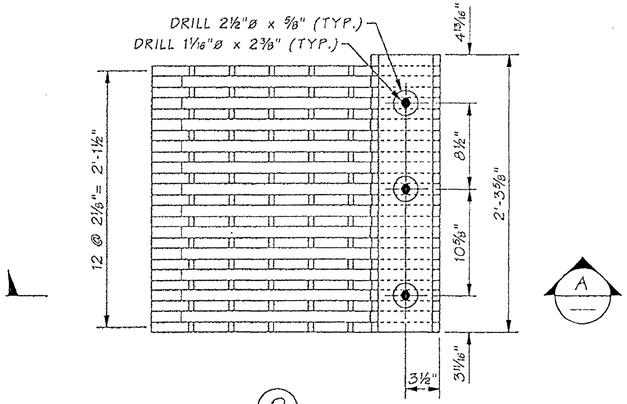

(2) EXPANSION SIDE

FOR "AS CONSTRUCTED PLANS" ONLY

NOTES:

1. CHANGE LENGTH OF EXPANSION FINGER AS SHOWN.
2. CHANGE LENGTH OF COVER PLATE AS SHOWN.
3. ALL OTHER DETAILS REMAIN THE SAME.

B NO. 0001 SHEET 1

SR 4

Bridge Design Engr.	M:\Y-Team\Lewis_Clark Rehab\Modifications\window files\EXP BENT CD.WND							
Supervisor								
Designed By Talukdar, M								
Checked By								
Detailed By Evans, P.D.								
Bridge Projects Engr.								
Prelim. Plan By								
Architect/Specialist	DATE	REVISION	BY	APP'D				

REGION NO.	STATE	FED. AID PROJ. NO.	SHEET NO.	TOTAL SHEETS
10	WASH.			
JOB NUMBER				
6444				

Wed Oct 08 14:04:48 2003

BRIDGE AND STRUCTURES OFFICE

MONJUDRA TALUKDAR — STATE OF WASHINGTON — 27868 — REGISTERED PROFESSIONAL ENGINEER — EXPIRES 6/1/04

Washington State Department of Transportation

SR 433
LEWIS AND CLARK BRIDGE
DECK REPLACEMENT
FINGER JOINT MODIFICATIONS

BRIDGE SHEET NO. WA48B
SHEET 86B OF 258 SHEETS

STAGE 1

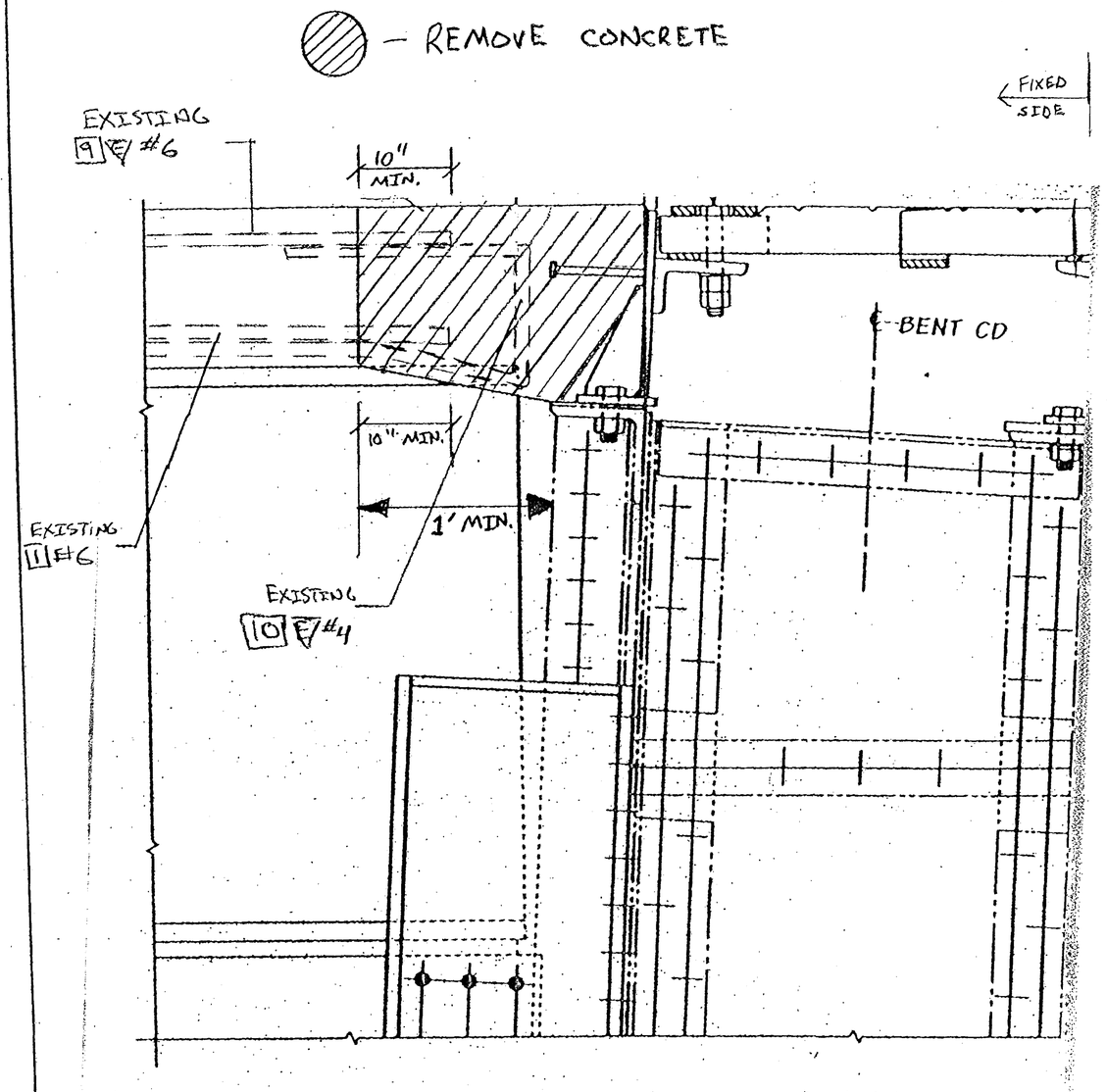

STAGE 2

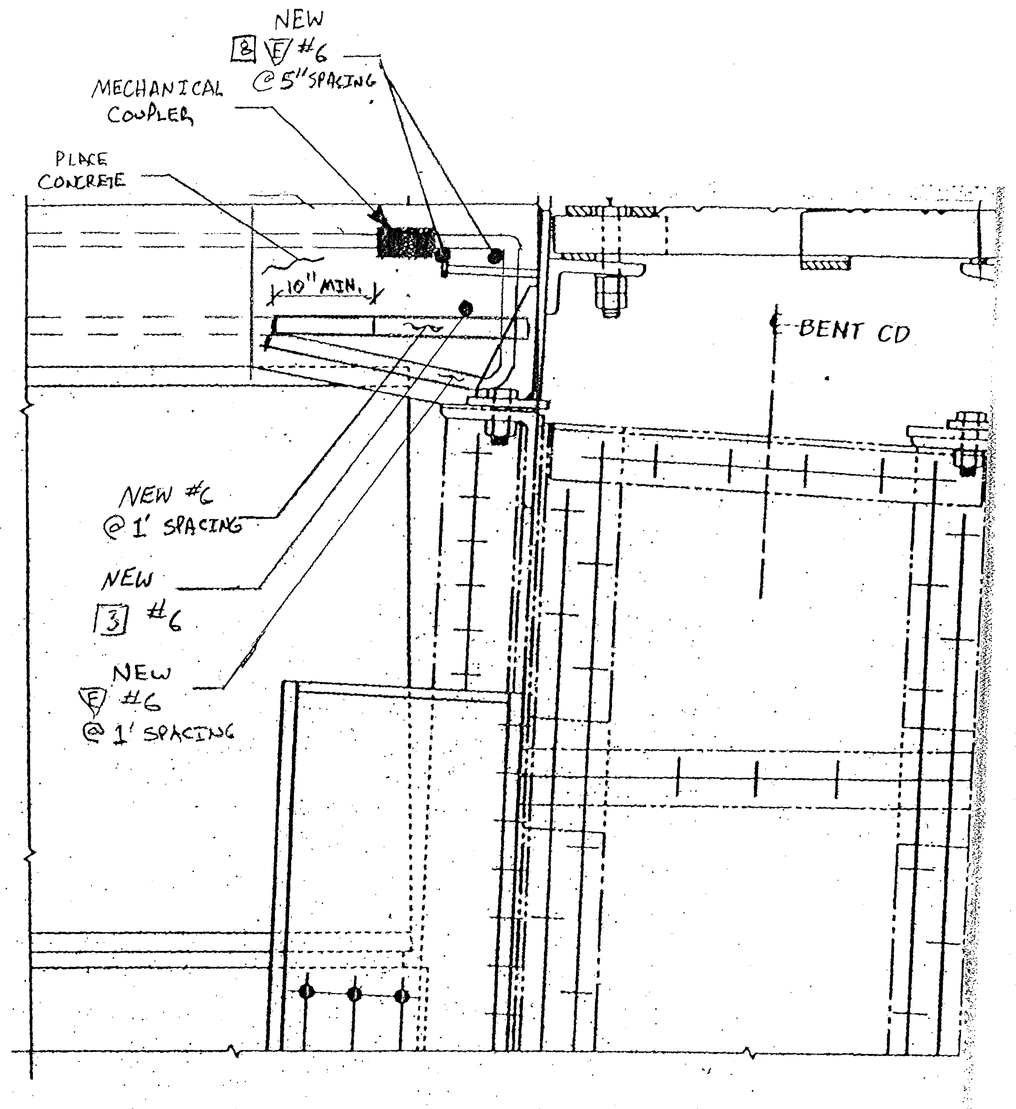

FOR "AS CONSTRUCTED PLANS" ONLY

FILE NAME	C:\AAWork\kelso\Svensen's Curve\L3425WASTESITE.dgn				
TIME	02:37:18 PM				
DATE	08/17/2005				
PLOTTED BY	spahnk				
DESIGNED BY					
ENTERED BY					
CHECKED BY					
PROJ. ENGR.					
REGIONAL ADM.		REVISION	DATE	BY	

REGION NO.	STATE	FED. AID PROJ. NO.
10	WASH	
JOB NUMBER		
CONTRACT NO. 6444		LOCATION NO.

P.E. STAMP BOX DATE

P.E. STAMP BOX DATE

Washington State Department of Transportation

SR 433
LEWIS AND CLARK BRIDE
DECK REPLACEMENT

BENT CD CRACK MITIGATION

PLOT11

WA48C

SHEET 86C OF 258 SHEETS

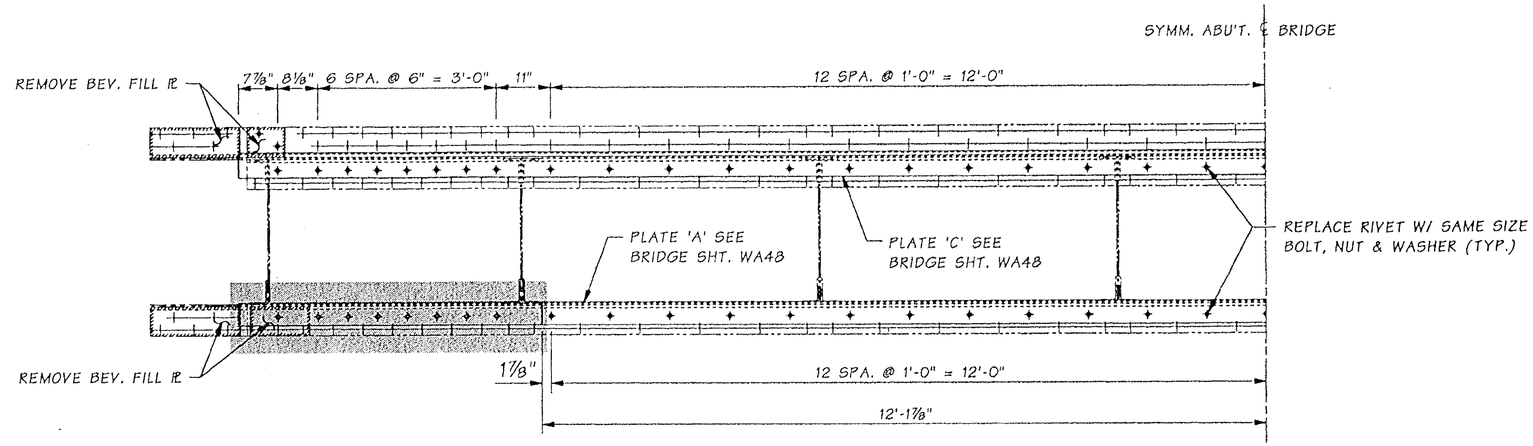

PLAN ~ BENT CD

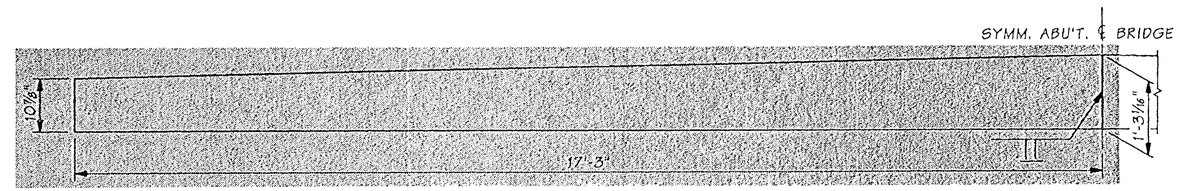

ELEVATION ~ PLATE 'B'

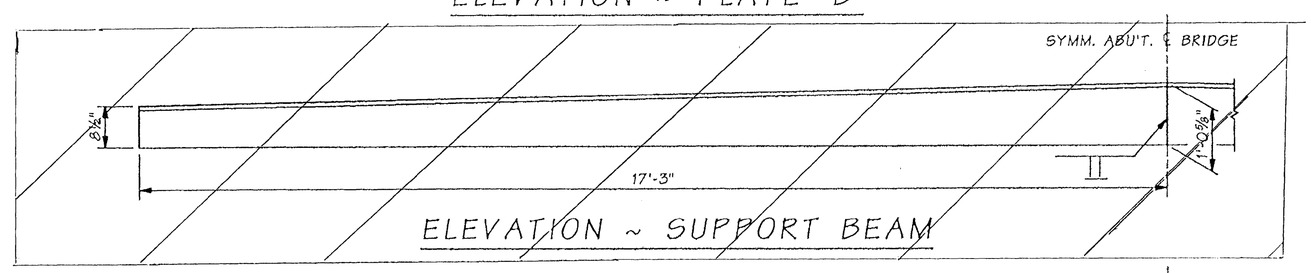

ELEVATION ~ SUPPORT BEAM

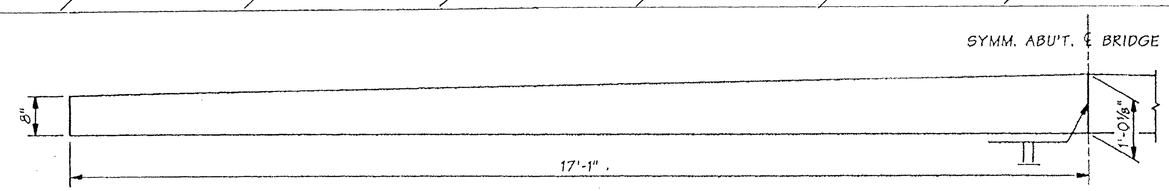

ELEVATION ~ PLATE 'D'

FOR "AS CONSTRUCTED PLANS" ONLY

NOTE: BOTTOM OF SUPPORT BEAM TRIMMED - SEE SHEET WA48A FOR FINAL CONFIGURATION.

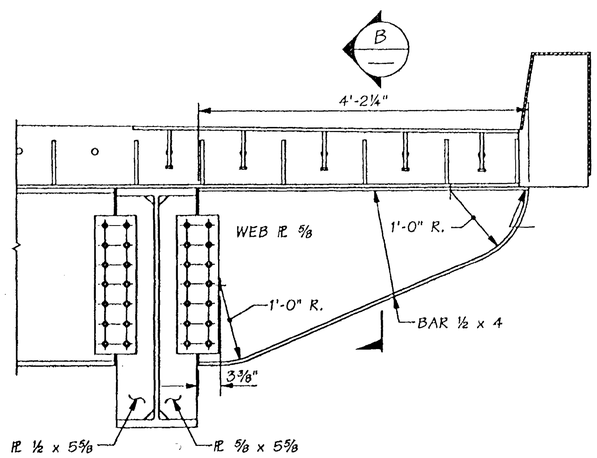

SECTION A WA48

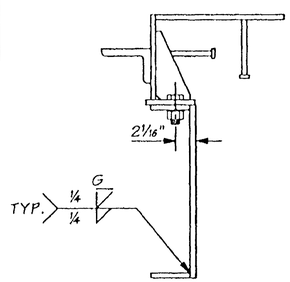

SECTION B

Bridge Design Engr.	Kapur, J		M:\Y-Team\Lewis_Clark Rehab\Washington Appr\window files\EXP-JT-CD6.WND								
Supervisor	Kirker, KN										
Designed By	Talukdar, M	08/02									
Checked By	Peralta, R	08/02									
Detailed By	House, L	08/02	10/02	EXTENDED PLATE "A"	MT						
Bridge Projects Engr.											
Prelim. Plan By			10/02	EXTENDED PLATE "B"	MT						
Architect/Specialist			DATE	REVISION	BY	APP'D					

REGION NO.	STATE	FED. AID PROJ. NO.	SHEET NO.	TOTAL SHEETS
10	WASH.	ACBH - 0433(007)		
JOB NUMBER 02x310				
6444				

KARL N. KIRKER — STATE OF WASHINGTON — REGISTERED PROFESSIONAL ENGINEER — 10/30/02 — EXPIRES 11/3/03

BRIDGE AND STRUCTURES OFFICE

MUNINDRA TALUKDAR — STATE OF WASHINGTON — REGISTERED PROFESSIONAL ENGINEER — 10/30/02 — EXPIRES 6/1/04

Washington State Department of Transportation

SR 433
LEWIS AND CLARK BRIDGE
DECK REPLACEMENT

BENT CD - FINGER JOINT DETAILS 2

BRIDGE SHEET NO. WA49

SHEET 87 OF 258 SHEETS

SR 433 NO. 1566 SHEET 49

Tue Oct 29 14:42:55 2002

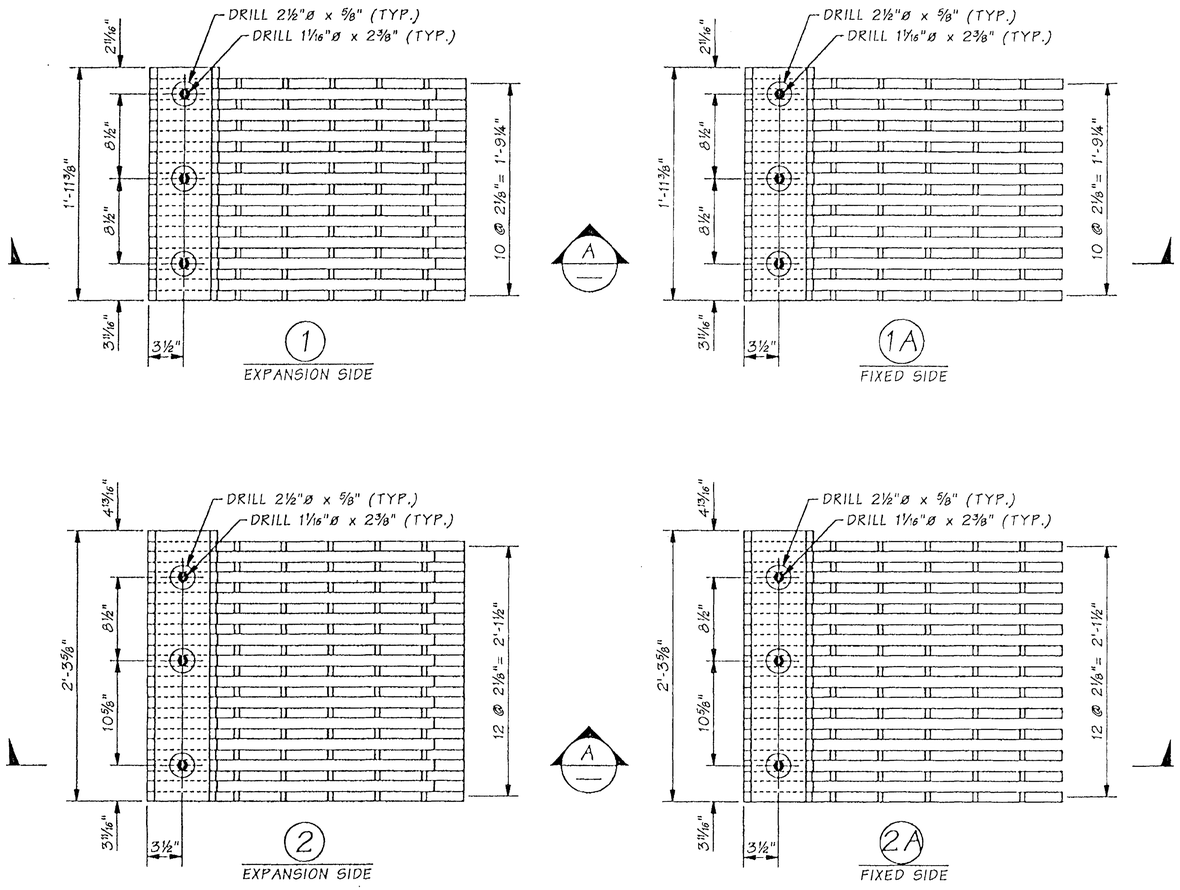

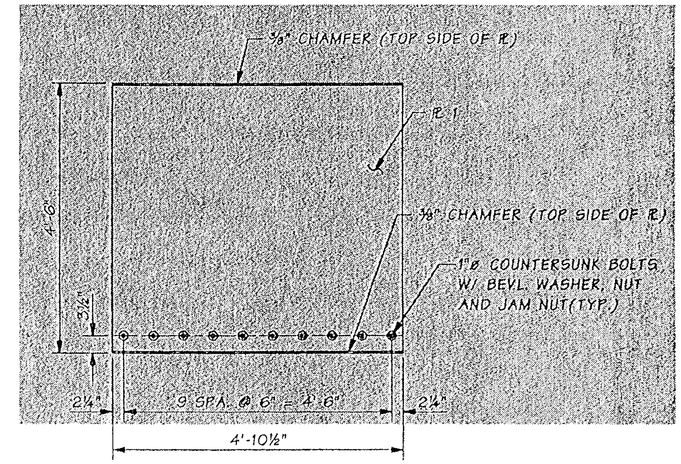

PLAN ~ COVER PLATE

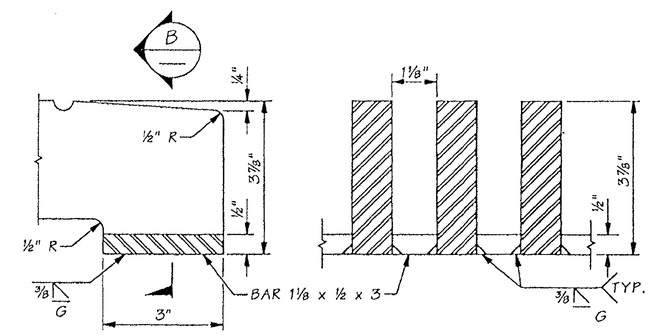

DETAIL

SECTION B

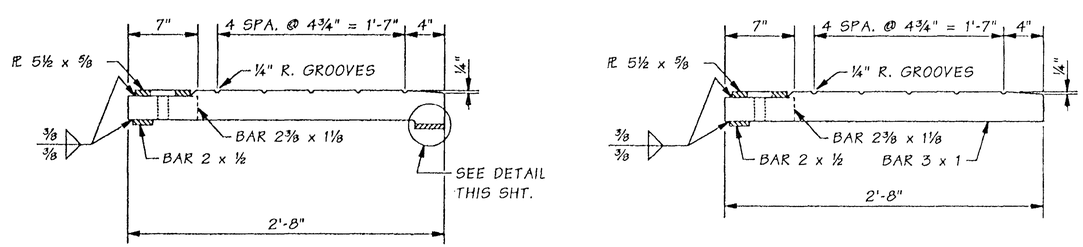

SECTION A (1)(2)

SECTION A (1A)(2A)

FOR "AS CONSTRUCTED PLANS" ONLY

Bridge Design Engr.	Kapur, J		M:\Y-Team\Lewis_Clark Rehab\Washington Appr\window files\EXP-JT-CD8.WND								
Supervisor	Kirker, KN										
Designed By	Talukdar, M	08/02									
Checked By	Peralta, R	08/02									
Detailed By	House, L	08/02									
Bridge Projects Engr.											
Prelim. Plan By			10/02	MODIFIED PLATE	MT						
Architect/Specialist			DATE	REVISION	BY	APP'D					

REGION NO.	STATE	FED. AID PROJ. NO.	SHEET NO.	TOTAL SHEETS
10	WASH.	ACBH - 0433(007)		
JOB NUMBER 02x310				

KARL N. KIRKER — PROFESSIONAL ENGINEER — EXPIRES 11/3/03

BRIDGE AND STRUCTURES OFFICE

MUNINDRA TALUKDAR — PROFESSIONAL ENGINEER — EXPIRES 6/1/04

Washington State Department of Transportation

SR 433
LEWIS AND CLARK BRIDGE
DECK REPLACEMENT

BENT CD - FINGER JOINT DETAILS 3

BRIDGE SHEET NO. WA50

SHEET 88 OF 258 SHEETS

Tue Oct 29 14:24:55 2002

SR 433 NO. 1566 SHEET 50

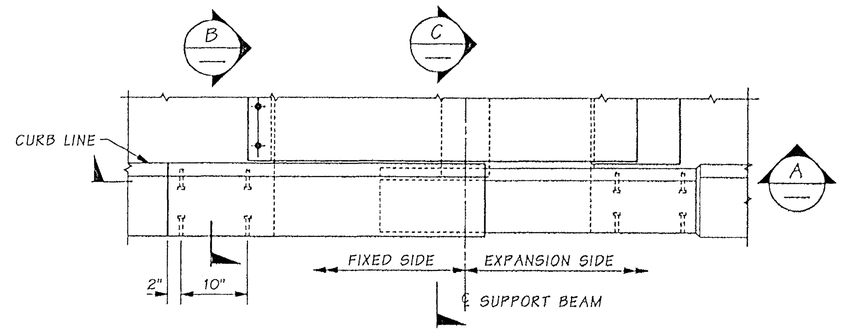

PLAN ~ EXP. CURB

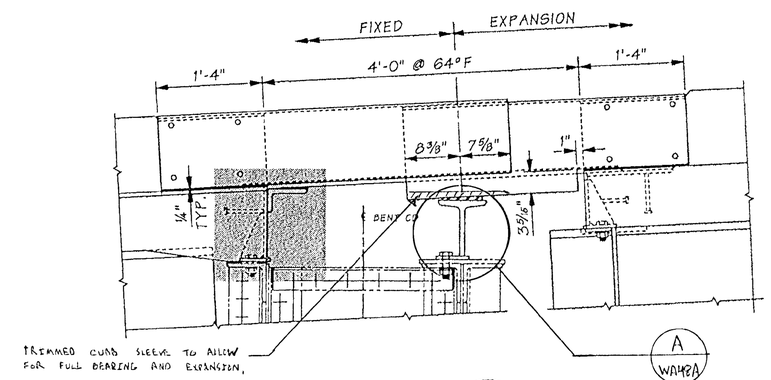

SECTION A

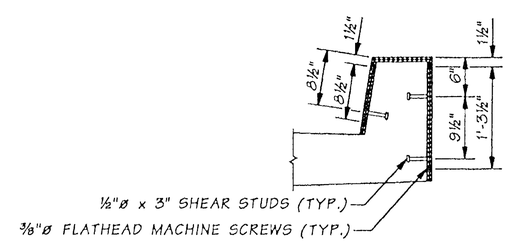

SECTION B

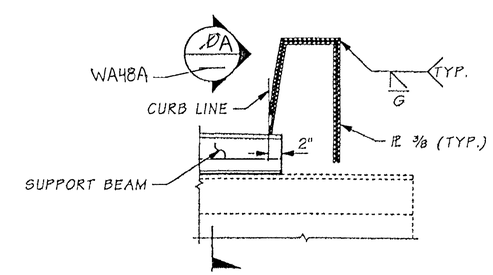

SECTION C

FOR "AS CONSTRUCTED PLANS" ONLY

Bridge Design Engr.	Kapur, J		M:\Y-Team\Lewis_Clark Rehab\Washington Appr\window files\EXP-JT-CD7.WND								
Supervisor	Kirker, KN										
Designed By	Talukdar, M	08/02									
Checked By	Peralta, R	08/02									
Detailed By	House, L	08/02									
Bridge Projects Engr.			10/02	MODIFIED SIDEWALK JOINT	MT						
Prelim. Plan By											
Architect/Specialist			DATE	REVISION	BY	APP'D					

REGION NO.	STATE	FED. AID PROJ. NO.	SHEET NO.	TOTAL SHEETS
10	WASH.	ACBH - 0433(007)		
JOB NUMBER 02x310				

KARL N. KIRKER — STATE OF WASHINGTON — REGISTERED PROFESSIONAL ENGINEER — EXPIRES 11/3/03

BRIDGE AND STRUCTURES OFFICE

MANJURA TALUKDAR — STATE OF WASHINGTON — REGISTERED PROFESSIONAL ENGINEER — EXPIRES 6/1/04

Washington State Department of Transportation

SR 433
LEWIS AND CLARK BRIDGE
DECK REPLACEMENT

BENT CD - FINGER JOINT
CURB DETAILS

BRIDGE SHEET NO. WA51

SHEET 89 OF 258 SHEETS

Tue Oct 29 15:04:22 2002

SR 433 NO. 1566 SHEET 51

TWP. 7N. R. 2W. W.M.
COWLITZ COUNTY, WA / COLUMBIA COUNTY, OR

SR 433

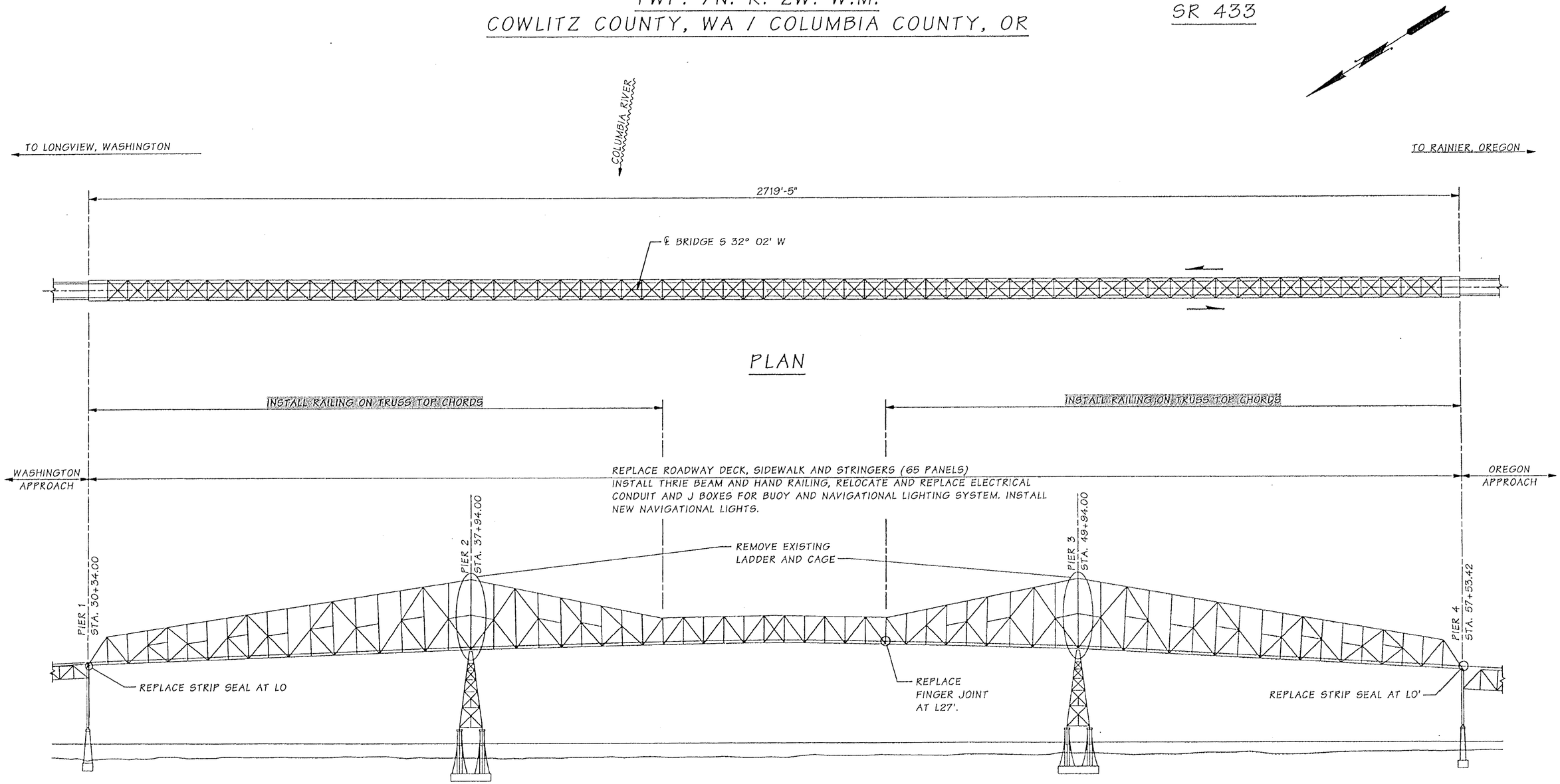

FOR "AS CONSTRUCTED PLANS" ONLY

ELEVATION -- MAIN SPANS

DECK REPLACEMENT
LOADING HS 20-44

Design Engr.	Kapur, J		M:\Y-Team\Lewis_Clark Rehab\Main Truss\window files\LAYOUT.WND				REGION NO.	STATE	FED. AID PROJ. NO.	SHEET NO.	TOTAL SHEETS
	Clarke, PT	08/02					10	WASH.	ACBH - 0433(007)		
By	Clarke, PT	08/02									
Checked By	Talukdar, M	08/02					JOB NUMBER 02x310				
Detailed By	House, L	08/02					6444				
Bridge Projects Engr.											
Prelim. Plan By			10/02	ADDED NOTE	ES						
Architect/Specialist			DATE	REVISION	BY	APP'D					

STRUCTURAL REGISTERED PROFESSIONAL ENGINEER 71314 OREGON OCT. 10, 2002 JUGESH KAPUR
EXPIRES 06-30-2003

BRIDGE AND STRUCTURES OFFICE

PATRICK T. CLARKE STATE OF WASHINGTON 27776 REGISTERED PROFESSIONAL ENGINEER
EXPIRES 1/17/04

Washington State Department of Transportation

SR 433
LEWIS AND CLARK BRIDGE
DECK REPLACEMENT

LAYOUT --- MAIN SPANS

BRIDGE SHEET NO. MS 1

SHEET 90 OF 258 SHEETS

SR 433 BR NO. 0001 SHEET 1

Tue Oct 29 15:05:33 2002

= TEMPORARY LINKER
= PERMANENT LINKER

PIER 1

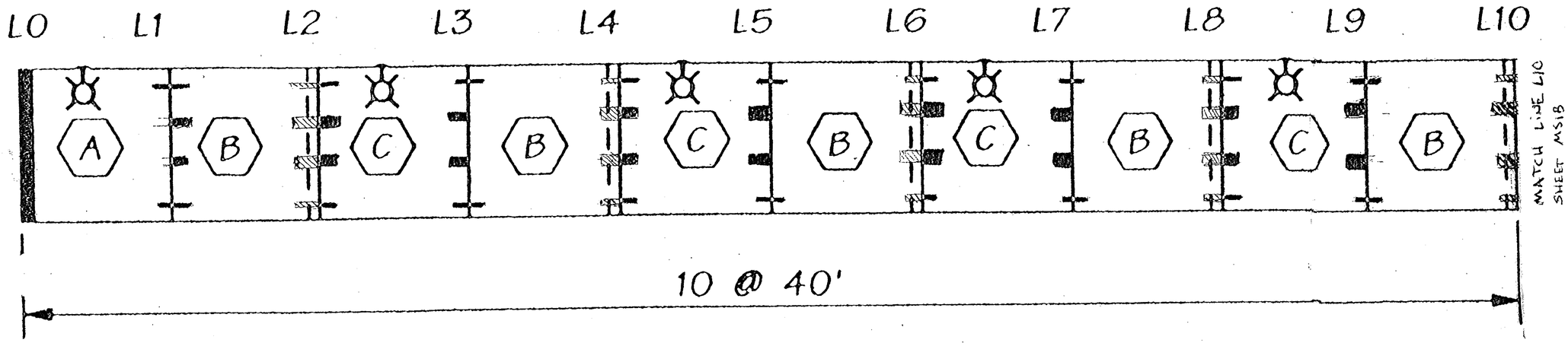

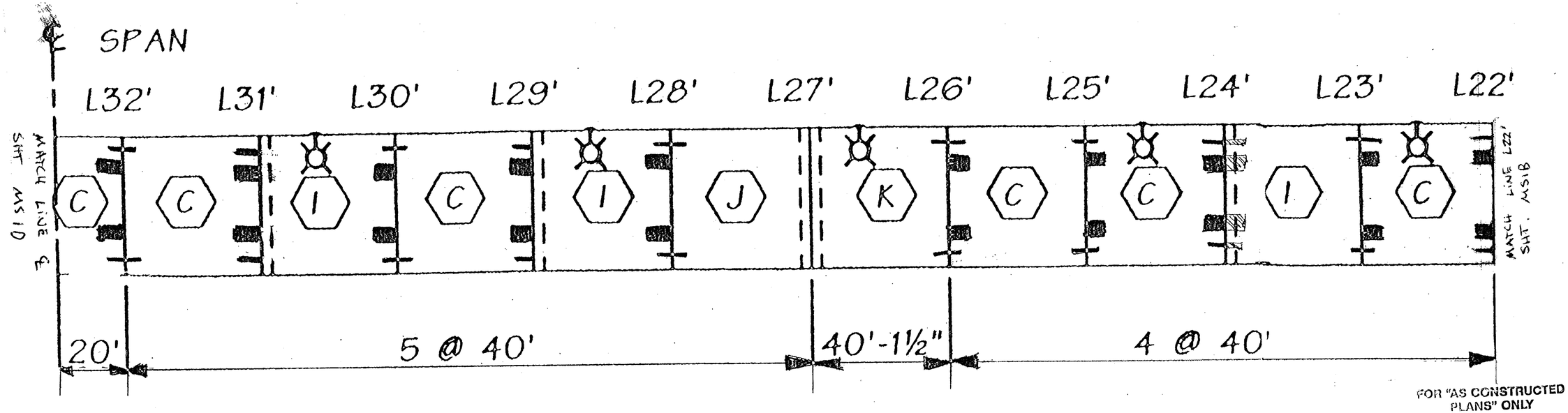

FOR "AS CONSTRUCTED PLANS" ONLY

FILE NAME										PLOT11
TIME	02:37:18 PM				REGION NO.	STATE	FED.AID PROJ.NO.		Washington State Department of Transportation	SR 433 LEWIS AND CLARK BRIDE DECK REPLACEMENT	MS1A
DATE	08/17/2005				10	WASH					
PLOTTED BY	spahnk				JOB NUMBER						
DESIGNED BY											
ENTERED BY					CONTRACT NO.		LOCATION NO.				SHEET 90A OF 258 SHEETS
CHECKED BY					6444						
PROJ. ENGR.								P.E. STAMP BOX DATE	P.E. STAMP BOX DATE		
REGIONAL ADM.		REVISION	DATE	BY						LINKER PLATE ASSEMBLY LOCATIONS	

= TEMPORARY LINKER

= PERMANENT LINKER

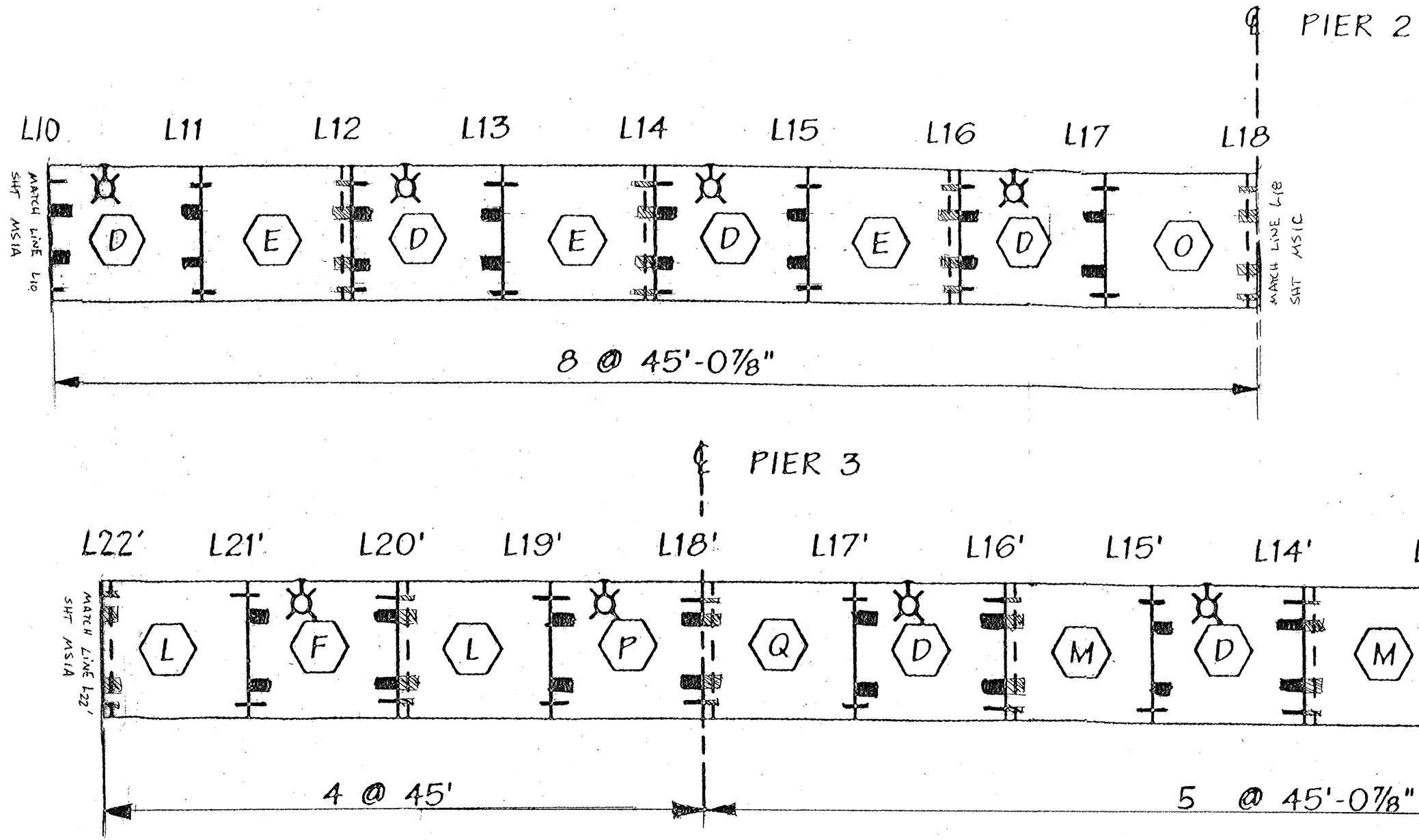

FOR "AS CONSTRUCTED PLANS" ONLY

FILE NAME										PLOT11
TIME	02:37:18 PM				REGION NO. 10	STATE WASH	FED.AID PROJ.NO.		Washington State Department of Transportation	SR 433 LEWIS AND CLARK BRIDE DECK REPLACEMENT	MS1B
DATE	08/17/2005				JOB NUMBER						SHEET 90B OF 258 SHEETS
PLOTTED BY	spahnk										
DESIGNED BY											
ENTERED BY											
CHECKED BY					CONTRACT NO. 6444		LOCATION NO.				
PROJ. ENGR.											
REGIONAL ADM.		REVISION	DATE	BY				P.E. STAMP BOX DATE	P.E. STAMP BOX DATE	LINKER PLATE ASSEMBLY LOCATIONS	

= TEMPORARY LINKER

= PERMANENT LINKER

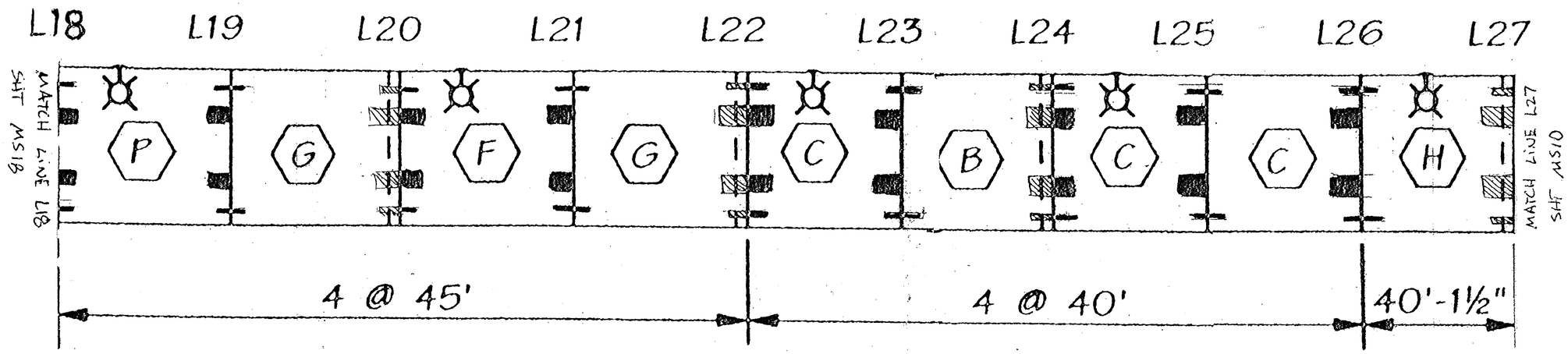

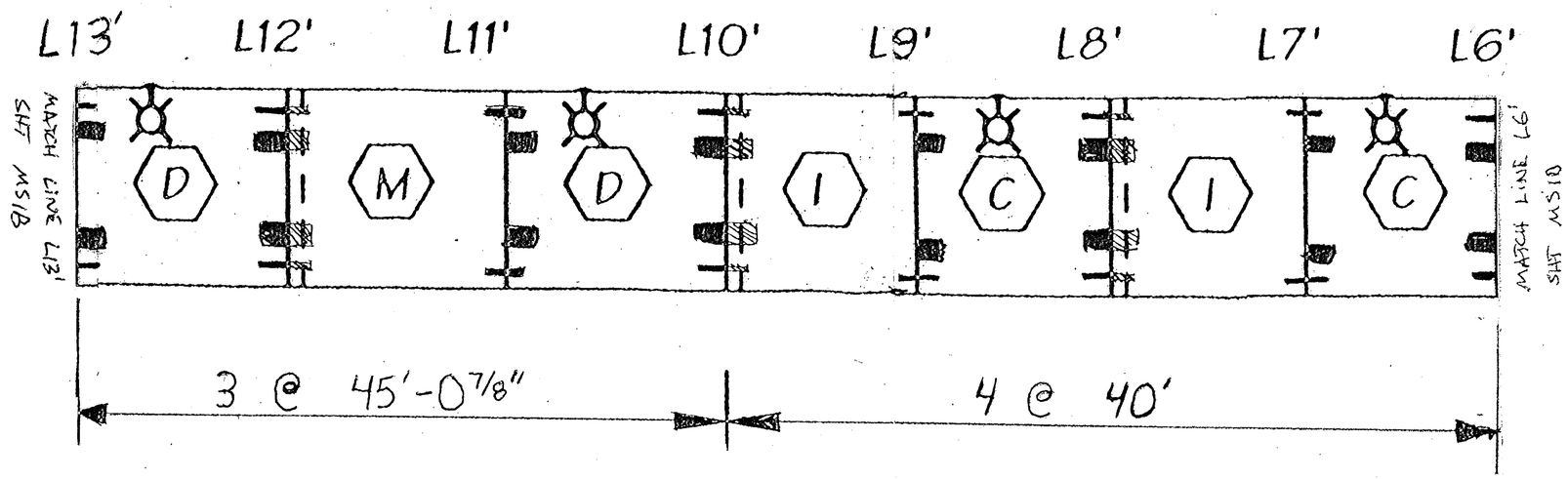

FOR "AS CONSTRUCTED PLANS" ONLY

FILE NAME									PLOT11
TIME 02:37:18 PM				REGION NO. 10	STATE WASH	FED.AID PROJ.NO.		Washington State Department of Transportation	MS1C
DATE 08/17/2005				JOB NUMBER				SR 433 LEWIS AND CLARK BRIDE DECK REPLACEMENT	SHEET 90C OF 258 SHEETS
PLOTTED BY spahnk									
DESIGNED BY									
ENTERED BY									
CHECKED BY				CONTRACT NO. 6444		LOCATION NO.			
PROJ. ENGR.									
REGIONAL ADM.	REVISION	DATE	BY				P.E. STAMP BOX DATE	P.E. STAMP BOX DATE	LINKER PLATE ASSEMBLY LOCATIONS

= TEMPORARY LINKER
= PERMANENT LINKER

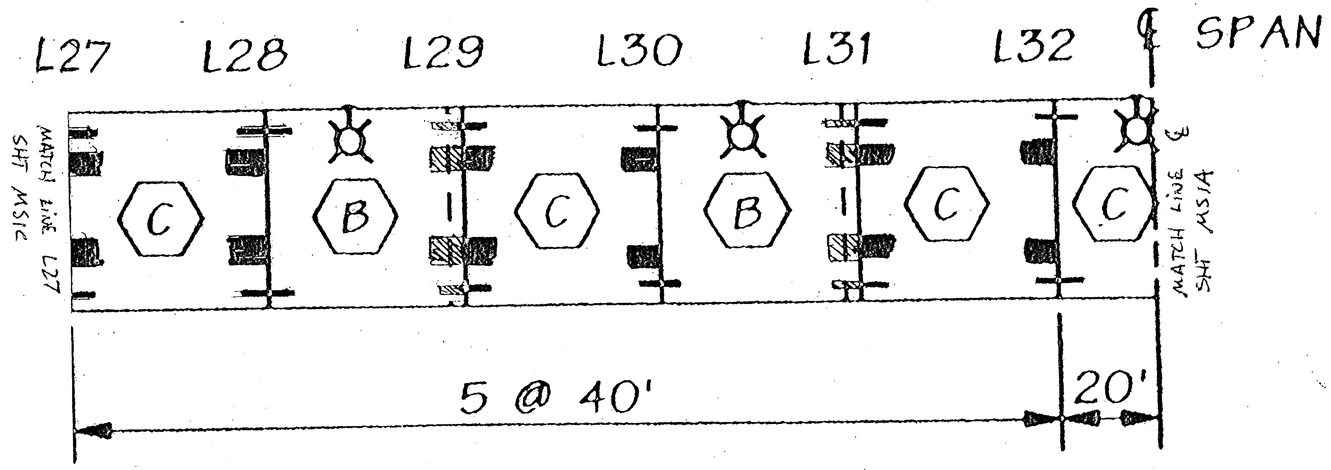

PIER 4

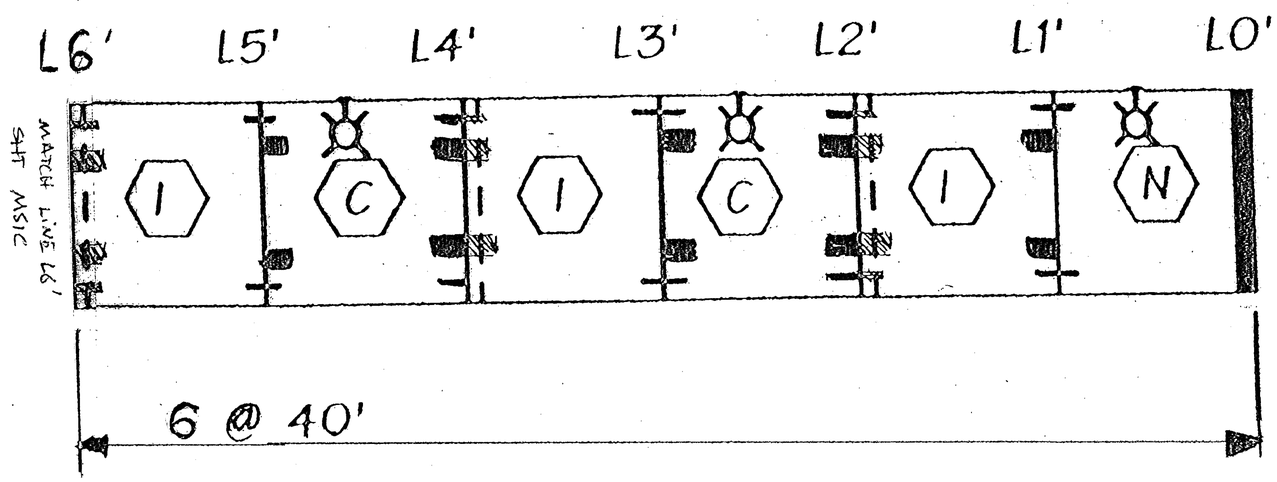

FOR "AS CONSTRUCTED PLANS" ONLY

FILE NAME									PLOT11
TIME 02:37:18 PM				REGION NO. 10	STATE WASH	FED.AID PROJ.NO.		Washington State Department of Transportation	MS1D
DATE 08/17/2005				JOB NUMBER				SR 433 LEWIS AND CLARK BRIDE DECK REPLACEMENT	SHEET 90D OF 258 SHEETS
PLOTTED BY spohnk									
DESIGNED BY									
ENTERED BY									
CHECKED BY				CONTRACT NO.		LOCATION NO.	P.E. STAMP BOX DATE	P.E. STAMP BOX DATE	
PROJ. ENGR.									
REGIONAL ADM.		REVISION	DATE	BY				LINKER PLATE ASSEMBLY LOCATIONS	

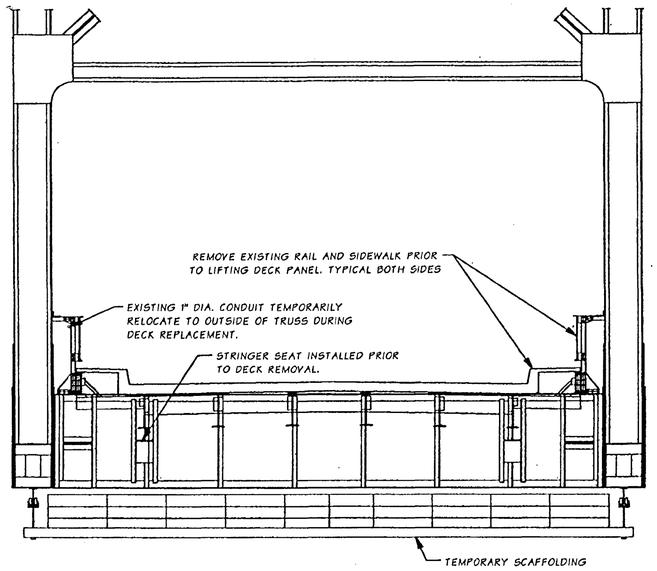

SECTION - EXISTING DECK

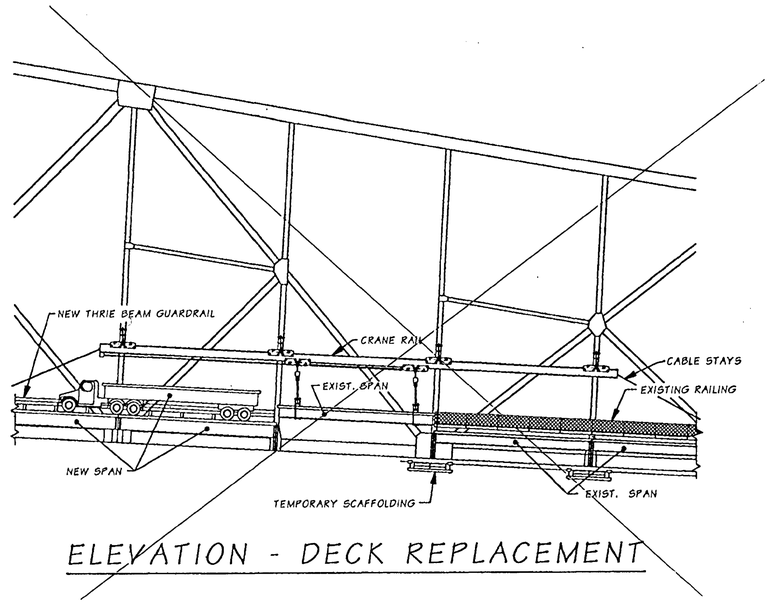

ELEVATION - DECK REPLACEMENT

ENGINEER'S SUGGESTED DECK REPLACEMENT SEQUENCE

1. TEMPORARILY RELOCATE CONDUIT AND J BOXES FOR NAVIGATIONAL LIGHTING TO THE OUTSIDE OF THE THROUGH TRUSS.

2. REMOVE CHAIN-LINK FENCE IN VICINITY OF THROUGH TRUSS.

3. INSTALL SCAFFOLDING UNDER BRIDGE.

4. INSTALL STRINGER SEATS ON FLOOR BEAMS FROM SCAFFOLDING UNDER BRIDGE. THIS WORK SHALL TAKE PLACE IN ADVANCE OF THE REMOVAL OF THE SUBJECT PANEL TO EXPEDITE THE PANEL REPLACEMENT.

5. CONSTRUCT NEW DECK REPLACMENT SECTIONS. DUE TO WIDTH RESTRICTION AT PANEL POINT L27', ALL PANELS FROM PANEL POINT L0 TO L27' MAY BE SHIPPED FROM WA SIDE WHILE PANELS BETWEEN L27' AND L0' MAY BE SHIPPED FROM OR. SIDE.
6. INSTALL CRANE RAIL RAIL SYSTEM.

7. CONSTRUCTION SEQUENCE DURING BRIDGE CLOSURES:
   - CLOSE THE BRIDGE TO TRAFFIC AT 9:30 p.m..
   - REMOVE SIDEWALKS, RAILING AND ABANDONED 4 INCH U.S. SPRINT CONDUIT ON PANEL TO BE REMOVED.
   - ADVANCE CRANE RAIL ON SUSPENDING TROLLEYS,POSITION OVER PANEL TO BE REMOVED AND LOCK FLANGE BRAKES.
   - ATTACH OVERHEAD CRANE RAIL TO DECK PANEL & SUPPORT DECK PANEL.
   - CUT THROUGH CONCRETE DECK AND ENDS OF EXISTING STRINGERS TO DETACH DECK PANEL FROM FLOOR BEAMS.
   - REMOVE DECK PANEL, BLAST CLEAN AND PRIME FLOOR BEAM AS NOTED ON BRIDGE SHEET L4.
   - PLACE NEW DECK PANEL.
   - INSTALL THRIE BEAM AND TUBE RAILING.
   - OPEN BRIDGE TO TRAFFIC BY 5:30 A.M. THE MORNING FOLLOWING THE 9:30 P.M. CLOSURE.
   - CONSTRUCT EXPANSION JOINT SEALS FOR PREVIOUS NIGHT PANEL PLACEMENTS.

8. REPEAT STEP 7 FOR EACH NIGHT OF CLOSURE.

9. ROAD PLATES OR OTHER SYSTEM MAY BE REQUIRED TO BRIDGE GAP AT FINGER JOINT LOCATIONS UNTIL THE FINGER JOINT HAS BEEN INSTALLED.

CRANE RAIL NOTES

1. THE CRANE RAIL HAS BEEN DESIGNED IN ACCORDANCE WITH THE AISC, "MANUAL OF STEEL CONSTRUCTION, ALLOWABLE STRESS DESIGN", NINTH EDITION. THE CRANE RAIL HANGERS AND LIFTING BEAMS HAVE BEEN DESIGNED FOR THE TOTAL DEAD LOAD PLUS 30% FOR IMPACT USING A FACTOR OF SAFETY OF 2. THE TROLLEYS, HOISTS, SHACKLES, CLEVISES, PINS, RODS, HOOKS AND PAD EYES SHALL HAVE A MINIMUM FACTOR OF SAFETY OF 3 FOR THE WORKING LOADS SHOWN IN THE PLANS. IF THE CONTRACTORS EQUIPMENT OR METHODS OF OPERATION PRODUCE LOADS WHICH EXCEED THOSE SHOWN IN THE PLANS THE CONTRACTOR SHALL REDESIGN ALL COMPONENTS OF THE CRANE RAIL SYSTEM FOR THE HIGHER LOADS.

2. ALL HIGH STRENGTH BARS SHALL BE AASHTO M275. ALL OTHER STRUCTURAL STEEL SHALL MEET THE REQUIREMENTS LISTED IN THE STRUCTURAL STEEL NOTES.

3. THE CRANE RAIL SYSTEM SHOWN IS A SUGGESTED OPTION FOR THE PLACMENT OF THE DECK PANELS. THE CONTRACTOR MAY ALTER THE CRANE RAIL SYSTEM SHOWN OR COMPLETELY DEVISE HIS OWN METHOD FOR PLACEMENT OF DECK PANELS. ANY ALTERATIONS TO THE METHOD SHOWN AND/OR CONTRACTOR DESIGNED ELEMENTS SHALL BE SUPPORTED BY CALCULATIONS DEMONSTRATING STRESSES AND DEFLECTIONS IN NEW AND EXISTING STRUCTURAL ELEMENTS THAT ARE ACCEPTABLE TO THE ENGINEER. THE CALCULATIONS, SEQUENCES AND PROCEDURES SHALL BE SUBMITTED WITH THE SHOP PLANS TO THE ENGINEER FOR APPROVAL.

CRANE RAIL - NOT UTILIZED
ALTERNATE CRANE SYSTEM USED

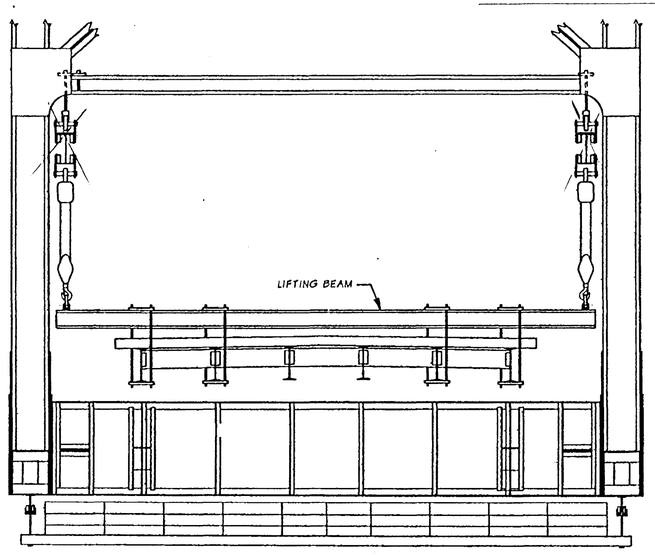

SECTION - REMOVING OLD DECK

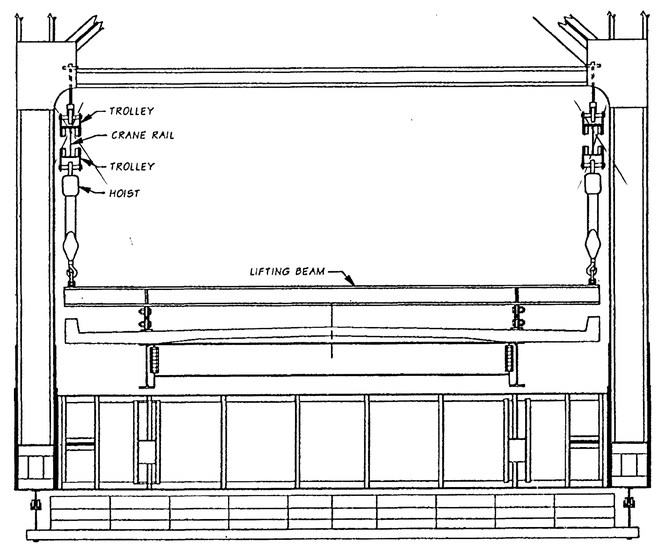

SECTION - PLACING NEW DECK

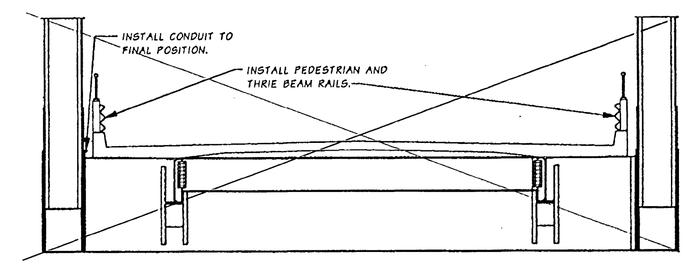

SECTION - NEW DECK INSTALLED

FOR "AS CONSTRUCTED" PLANS ONLY

Bridge Design Engr.	Kapur, J		M:\Y-Team\Lewis_Clark Rehab\Main Truss\Window files\CONSTR SEQ.WND							
Supervisor	Clarke, PT	08/02				REGION NO.	STATE	FED. AID PROJ. NO.	SHEET NO.	TOTAL SHEETS
Designed By	Clarke, PT	08/02				10	WASH.	ACBH - 0433(007)		
Checked By	Talukdar, M	08/02				JOB NUMBER 02x310				
Detailed By	House, L	08/02								
Bridge Projects Engr.										
Prelim. Plan By										
Architect/Specialist			DATE	REVISION	BY	APP'D				

Tue Sep 17 10:32:49 2002

STRUCTURAL REGISTERED PROFESSIONAL ENGINEER 71844 OREGON OCT. 10, 2002 JUGESH KAPUR
EXPIRES 06-30-2003

BRIDGE AND STRUCTURES OFFICE

PATRICK T. CLARKE STATE OF WASHINGTON 27776 REGISTERED PROFESSIONAL ENGINEER
EXPIRES 1/17/04

Washington State Department of Transportation

SR 433
LEWIS AND CLARK BRIDGE
DECK REPLACEMENT

CONSTRUCTION SEQUENCE

BRIDGE SHEET NO. MS 2

SHEET 91 OF 258 SHEETS

SR 433 JOB NO. 0001 SHEET 2

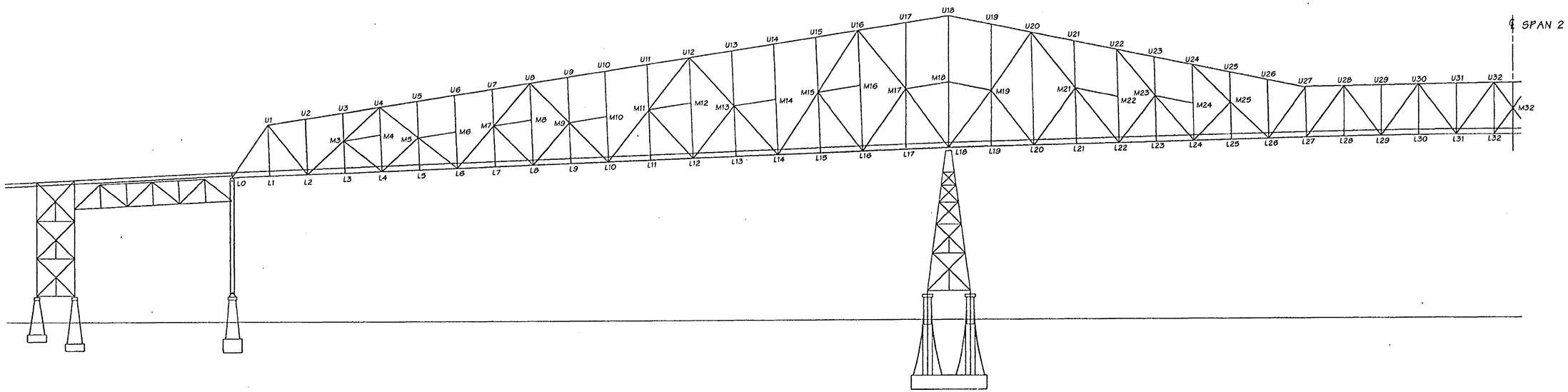

FOR "AS CONSTRUCTED PLANS" ONLY

SR 433 JOB NO. 0001 SHEET 3

Bridge Design Engr.	Kapur, J		M:\Y-Team\Lewis_Clark Rehab\Main Truss\Window files\PP1.WND								
Supervisor	Clarke, PT	08/02									
Designed By	Clarke, PT	08/02									
Checked By	Talukdar, M	08/02									
Detailed By	House, L	08/02									
Bridge Projects Engr.											
Prelim. Plan By											
Architect/Specialist			DATE	REVISION	BY	APP'D					

REGION NO.	STATE	FED. AID PROJ. NO.	SHEET NO.	TOTAL SHEETS
10	WASH.	ACBH - 0433(007)		
JOB NUMBER 02x310				

STRUCTURAL REGISTERED PROFESSIONAL ENGINEER 71844 OREGON OCT. 10, 2001 JUGESH KAPUR
EXPIRES 06-30-2003

BRIDGE AND STRUCTURES OFFICE

PATRICK T. CLARKE STATE OF WASHINGTON 27770 REGISTERED PROFESSIONAL ENGINEER
EXPIRES 1/17/04

Washington State Department of Transportation

SR 433
LEWIS AND CLARK BRIDGE
DECK REPLACEMENT

TRUSS NUMBERING

BRIDGE SHEET NO. MS3

SHEET 92 OF 258 SHEETS

Tue Sep 17 10:34:38 2002

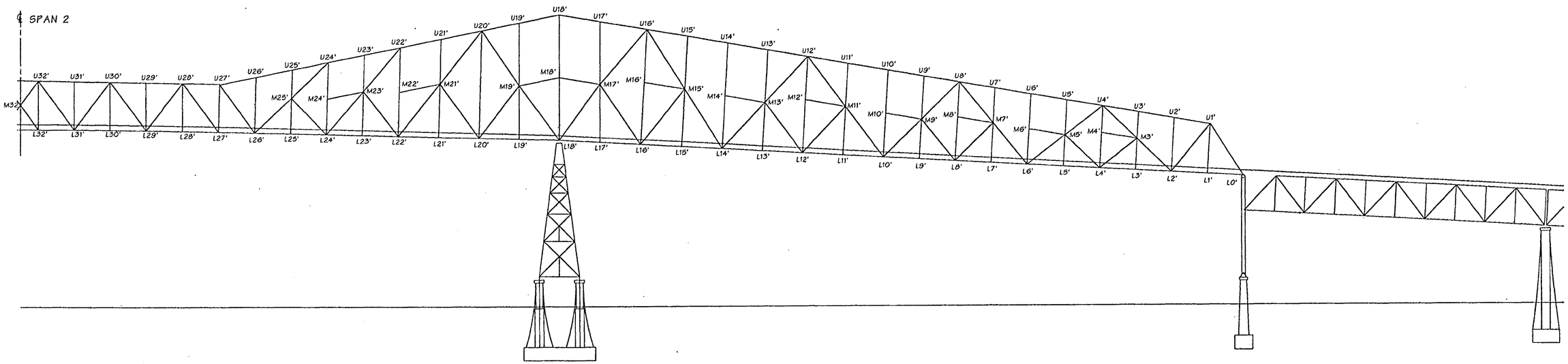

FOR "AS CONSTRUCTED PLANS" ONLY

SR 433 JOB NO. 0001 SHEET 4

Bridge Design Engr.	Kapur, J		M:\Y-Team\Lewis_Clark Rehab\Main Truss\Window files\PP2.WND								
Supervisor	Clarke, PT	08/02					REGION NO.	STATE	FED. AID PROJ. NO.	SHEET NO.	TOTAL SHEETS
Designed By	Clarke, PT	08/02					10	WASH.	ACBH - 0433(007)		
Checked By	Talukdar, M	08/02									
Detailed By	House, L	08/02					JOB NUMBER 02x310				
Bridge Projects Engr.											
Prelim. Plan By											
Architect/Specialist			DATE	REVISION	BY	APP'D	6444				

STRUCTURAL REGISTERED PROFESSIONAL ENGINEER 71314 OREGON SEPT. 10, 2002 JUGESH KAPUR
EXPIRES 06-30-2003

BRIDGE AND STRUCTURES OFFICE

PATRICK T. CLARKE STATE OF WASHINGTON 27775 REGISTERED PROFESSIONAL ENGINEER
EXPIRES 1/17/04

Washington State Department of Transportation

SR 433
LEWIS AND CLARK BRIDGE
DECK REPLACEMENT

TRUSS NUMBERING

BRIDGE SHEET NO. MS4

SHEET 93 OF 258 SHEETS

Tue Sep 17 10:34:41 2002

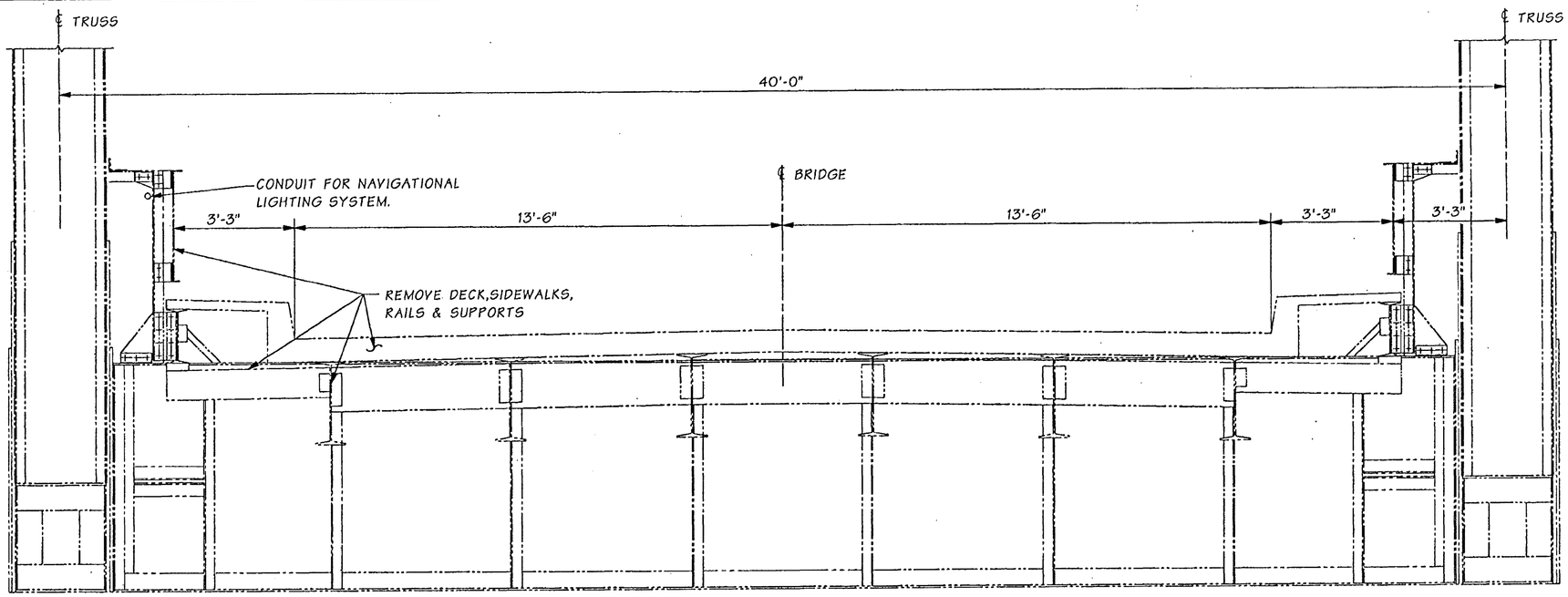

SECTION - EXISTING DECK

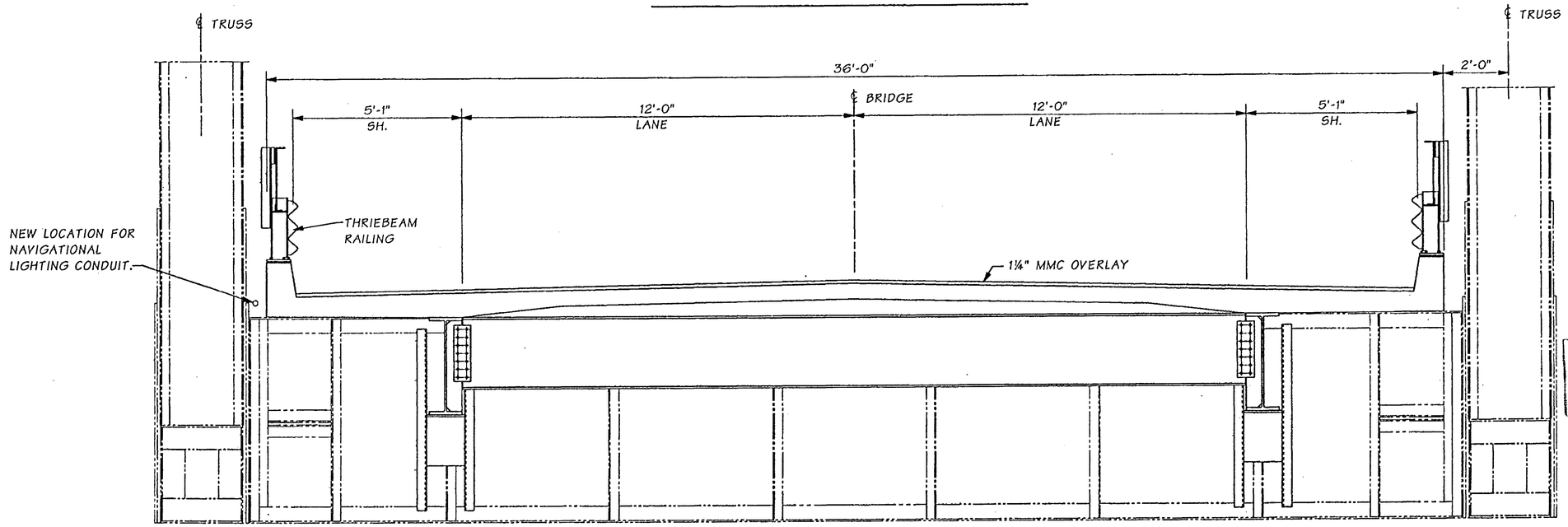

SECTION - NEW DECK INSTALLED

FOR "AS CONSTRUCTED PLANS" ONLY

Bridge Design Engr.	Kapur, J		M:\Y-Team\Lewis_Clark Rehab\Main Truss\window files\OLD-NEW.WND								
Supervisor	Clarke, PT	08/02									
Designed By	Clarke, PT	08/02									
Checked By	Talukdar, M	08/02									
Detailed By	House, L	08/02									
Bridge Projects Engr.											
Prelim. Plan By											
Architect/Specialist			DATE	REVISION	BY	APP'D					

REGION NO.	STATE	FED. AID PROJ. NO.	SHEET NO.	TOTAL SHEETS
10	WASH.	ACBH - 0433(007)		
JOB NUMBER 02x310				

STRUCTURAL REGISTERED PROFESSIONAL ENGINEER 71374 OREGON SEPT. 10, 2002 JUGESH KAPUR
EXPIRES 06-30-2003

BRIDGE AND STRUCTURES OFFICE

PATRICK T. CLARKE STATE OF WASHINGTON 27770 REGISTERED PROFESSIONAL ENGINEER
EXPIRES 1/17/04

Washington State Department of Transportation

SR 433
LEWIS AND CLARK BRIDGE
DECK REPLACEMENT

BRIDGE SECTIONS

BRIDGE SHEET NO. MS5

SHEET 94 OF 258 SHEETS

SR 433 JOB NO. 0001 SHEET 5

Wed Sep 18 09:19:42 2002

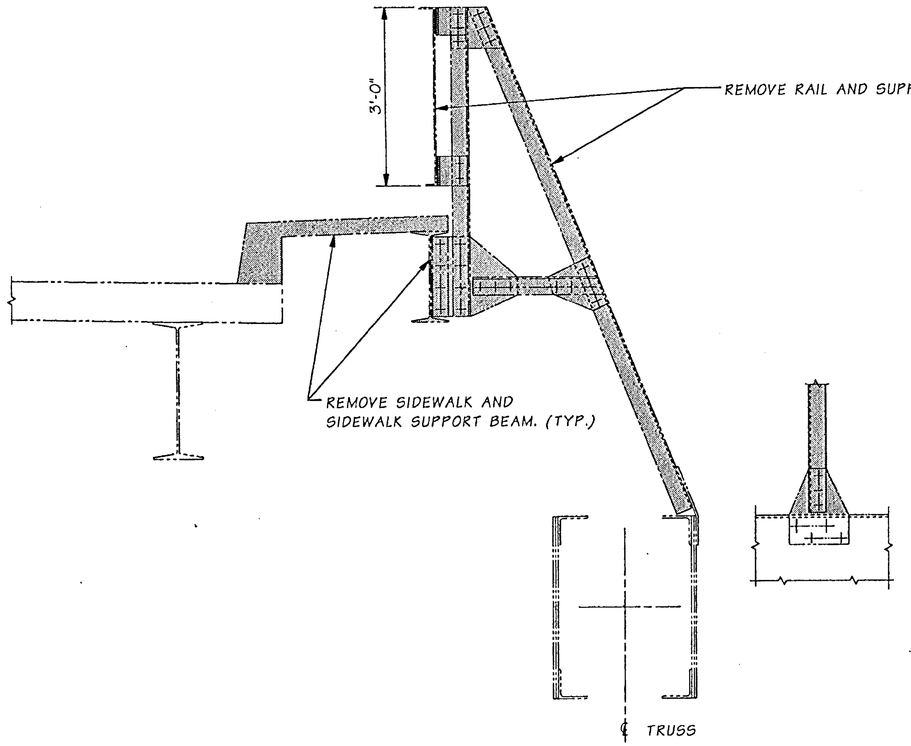

RAIL SUPPORT
BETWEEN PANEL POINTS
520 LOCATIONS (4 EACH PANEL)

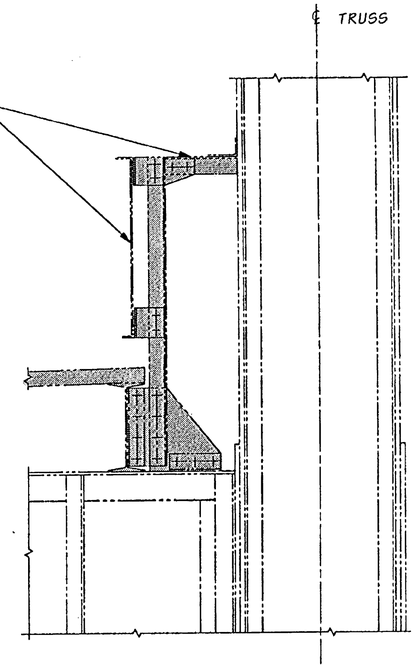

RAIL SUPPORT
AT PANEL POINTS
128 LOCATIONS

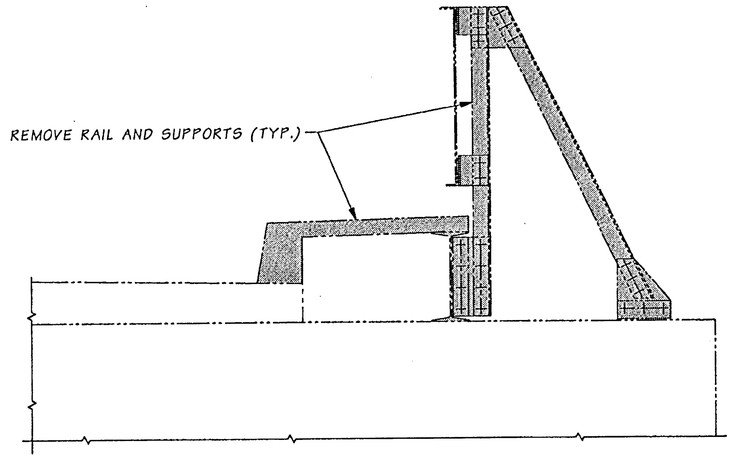

RAIL SUPPORT AT Lo
4 LOCATIONS

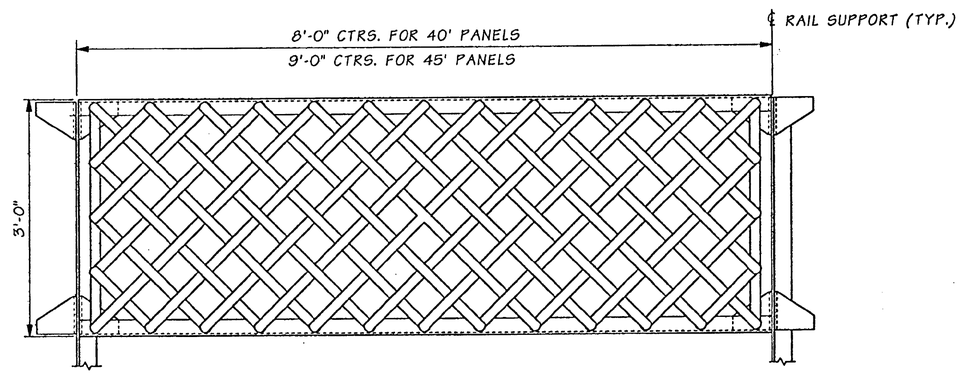

ELEVATION - TYPICAL HAND RAILS

FOR "AS CONSTRUCTED PLANS" ONLY

SR 433 JOB NO. 0001 SHEET 6

Bridge Design Engr.	Kapur, J		M:\Y-Team\Lewis_Clark Rehab\Main Truss\Window files\EXIST-HAND-RAIL.WND				REGION NO.	STATE	FED. AID PROJ. NO.	SHEET NO.	TOTAL SHEETS
Supervisor	Clarke, PT	08/02					10	WASH.	ACBH - 0433(007)		
Designed By	Clarke, PT	08/02					JOB NUMBER 02x310				
Checked By	Talukdar, M	08/02									
Detailed By	House, L	08/02									
Bridge Projects Engr.											
Prelim. Plan By											
Architect/Specialist			DATE	REVISION	BY	APP'D	6444				

STRUCTURAL REGISTERED PROFESSIONAL ENGINEER 71344 OREGON SEPT. 10, 2002 JUGESH KAPUR EXPIRES 06-30-2003

BRIDGE AND STRUCTURES OFFICE

PATRICK T. CLARKE STATE OF WASHINGTON REGISTERED PROFESSIONAL ENGINEER EXPIRES 1/17/04

Washington State Department of Transportation

SR 433
LEWIS AND CLARK BRIDGE
DECK REPLACEMENT

MISCELLANEOUS REMOVAL DETAILS

BRIDGE SHEET NO. MS6

SHEET 95 OF 258 SHEETS

Tue Sep 17 10:33:32 2002

NOTE:
1. FOR TRUSS PANEL POINT NUMBERING SEE BRIDGE SHEET MS3 - 4.
2. THE CONTRACTOR SHALL SUBMIT DETAILS FOR SUPPORTING THE BOTTOM LATERAL SYSTEM DURING REMOVAL OF THE EXIST. DECK PANAL AND RECONNECTION TO THE NEW DECK PANEL.

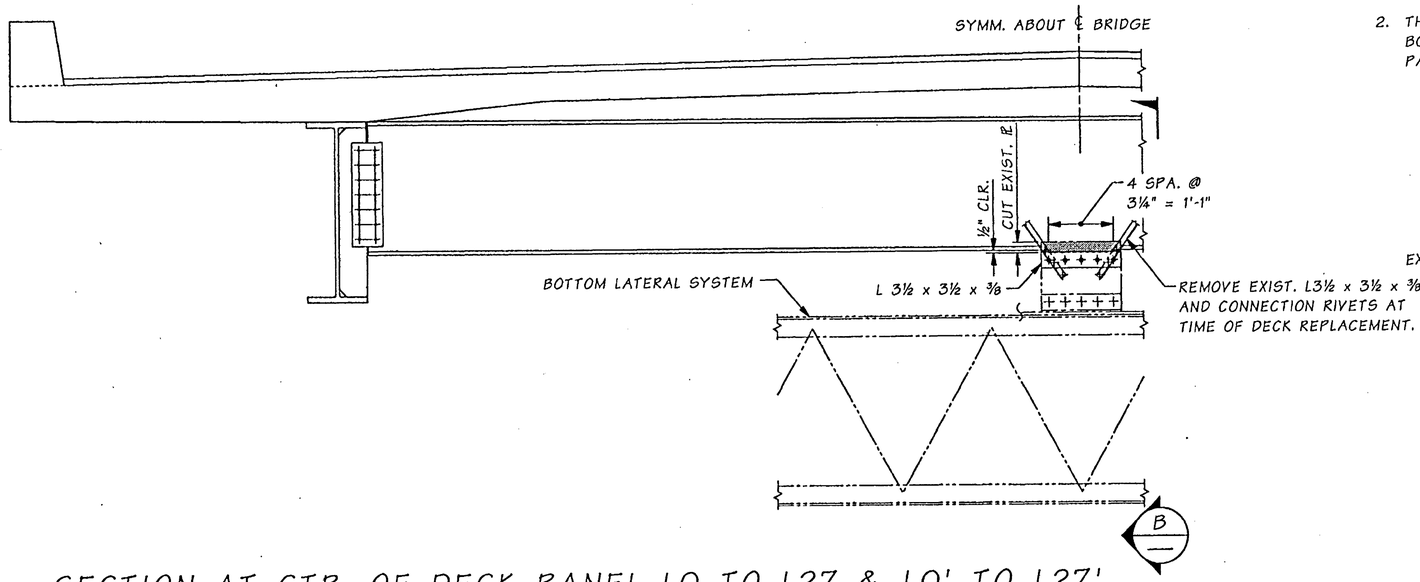

SECTION AT CTR. OF DECK PANEL L0 TO L27 & L0' TO L27'

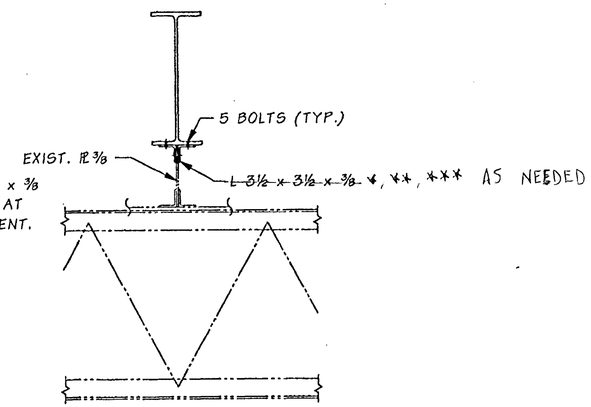

SECTION B

*-L 3½ x 3½ x ⅜ W/PREDRILLED HOLES
**-L5 x 3½ x ⅜ W/PREDRILLED HOLES (50 EACH)
***-L5 x 5 x ⅜ W/PREDRILLED HOLES (16 EACH)

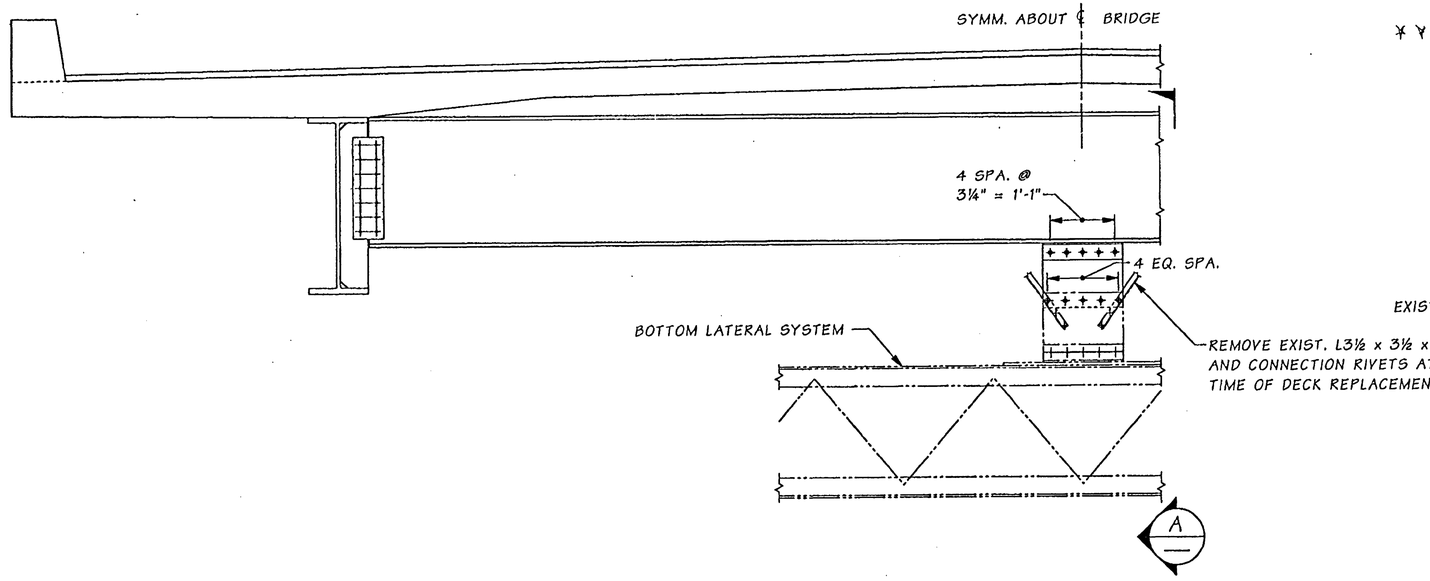

SECTION AT CTR. OF DECK PANEL L27 TO L32 & L27' TO L32'

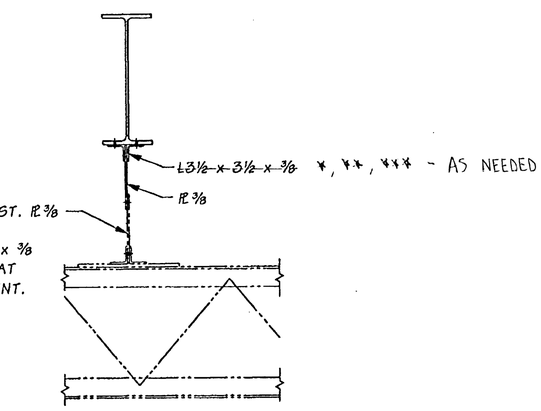

SECTION A

FOR "AS CONSTR... PLANS" ONLY

Bridge Design Engr.	Kapur, J		M:\Y-Team\Lewis_Clark Rehab\Main Truss\Window files\BOT LAT SUP SPAN.WND				REGION NO.	STATE	FED. AID PROJ. NO.	SHEET NO.	TOTAL SHEETS
Supervisor	Clarke, PT	08/02					10	WASH.			
Designed By	Talukdar, M	08/02									
Checked By	Peralta, R	08/02					JOB NUMBER 02x310		ACBH - 0433(007)		
Detailed By	House, L	08/02									
Bridge Projects Engr.											
Prelim. Plan By											
Architect/Specialist			DATE	REVISION	BY	APP'D	6444				

STRUCTURAL REGISTERED PROFESSIONAL ENGINEER 71344 OREGON SEPT. 10, 2002 JUGESH KAPUR EXPIRES 06-30-2003

BRIDGE AND STRUCTURES OFFICE

PATRICK T. GLASSER STATE OF WASHINGTON REGISTERED PROFESSIONAL ENGINEER EXPIRES 1/17/04

Washington State Department of Transportation

SR 433
LEWIS AND CLARK BRIDGE
DECK REPLACEMENT

MAIN SPAN BOTTOM LATERAL SYSTEM RETROFIT

BRIDGE SHEET NO. MS 7

SHEET 96 OF 258 SHEETS

SR 433 JOB NO. 0001 SHEET 7

Tue Sep 17 10:32:43 2002

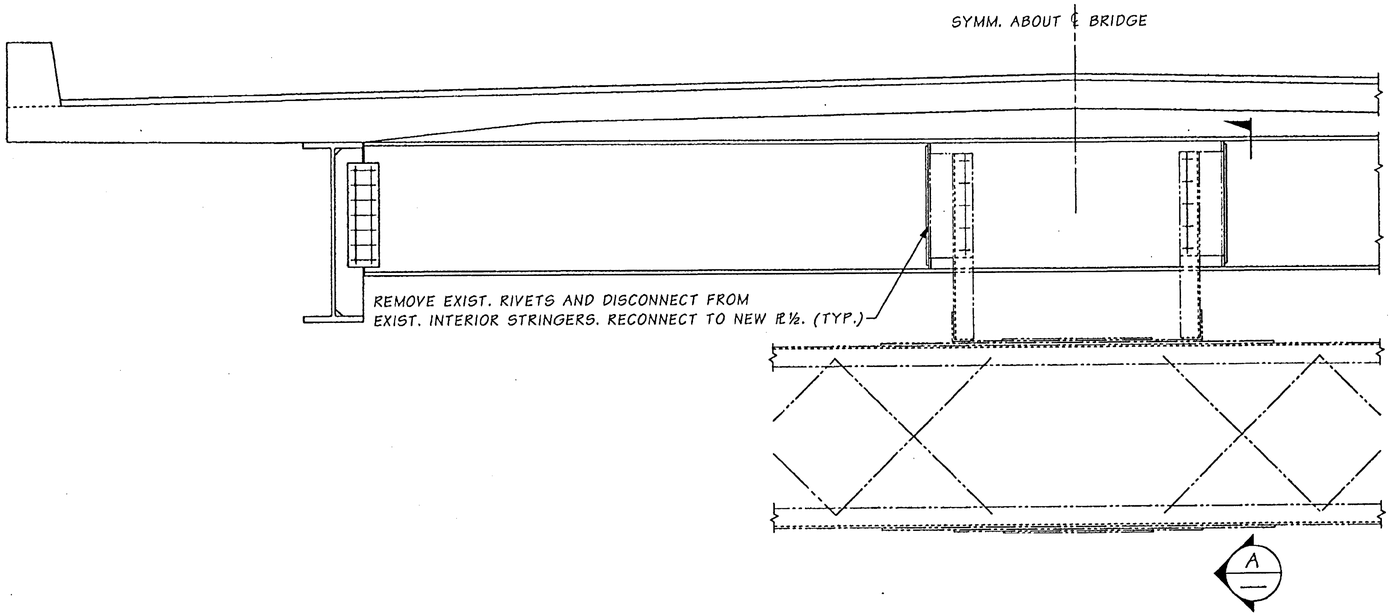

SECTION AT CTR. OF PANEL L26 - L27 & L26' - L27'

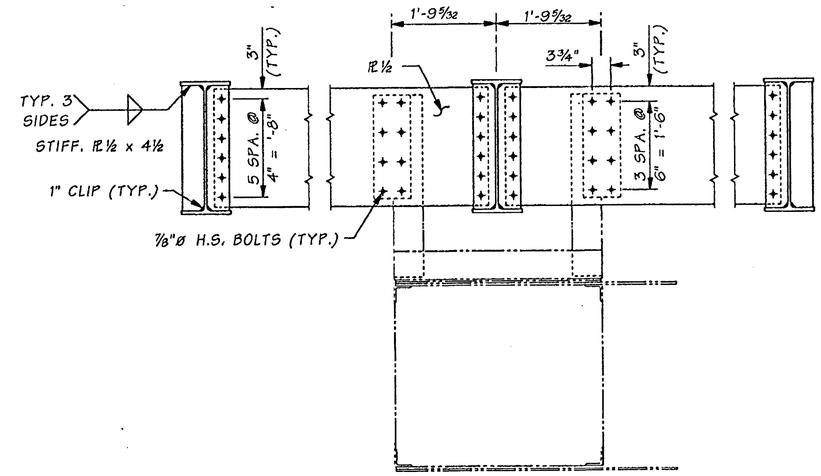

SECTION A

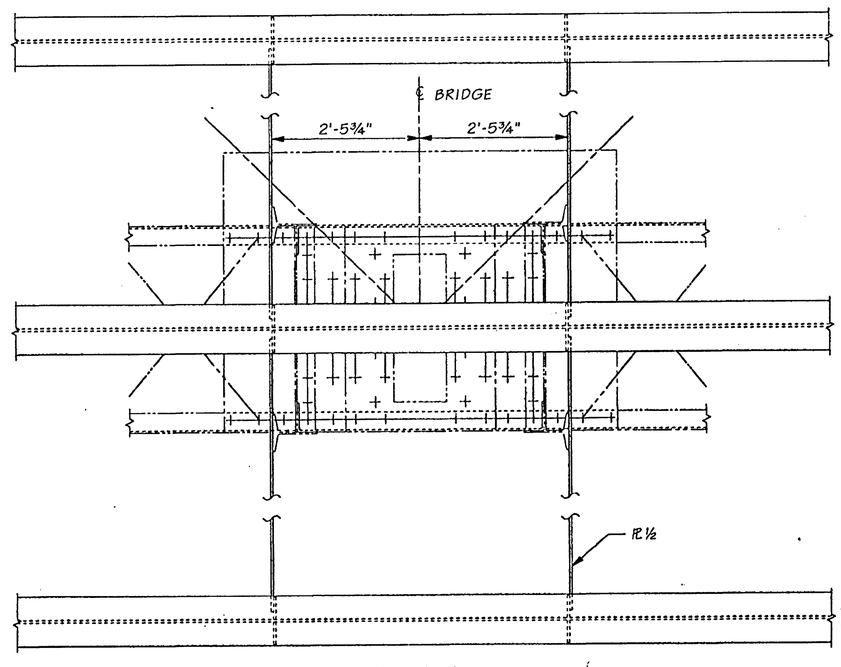

PLAN

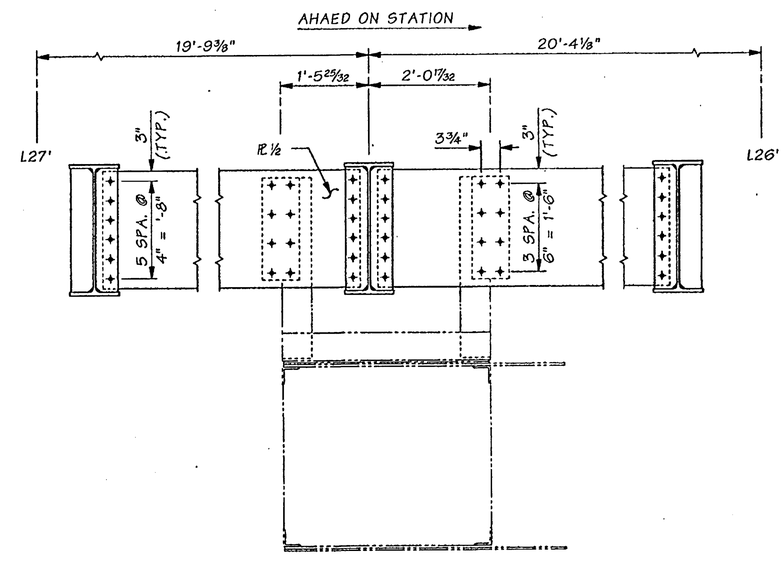

SECTION A

FOR "AS CONSTRUCTED PLANS" ONLY

Bridge Design Engr.	Kapur, J		M:\Y-Team\Lewis_Clark Rehab\Main Truss\Window files\BOT LATERALS.WND								
Supervisor	Clarke, PT	08/02									
Designed By	Talukdar, M	08/02									
Checked By	Peralta, R	08/02									
Detailed By	House, L	08/02									
Bridge Projects Engr.											
Prelim. Plan By											
Architect/Specialist			DATE	REVISION	BY	APP'D					

REGION NO.	STATE	FED. AID PROJ. NO.	SHEET NO.	TOTAL SHEETS
10	WASH.	ACBH - 0433(007)		
JOB NUMBER 02x310				

STRUCTURAL REGISTERED PROFESSIONAL ENGINEER 71344 OREGON SEPT. 10, 2002 JUGESH KAPUR
EXPIRES 06-30-2003

BRIDGE AND STRUCTURES OFFICE

PATRICK T. CLARKE STATE OF WASHINGTON 17770 REGISTERED PROFESSIONAL ENGINEER
EXPIRES 1/17/04

Washington State Department of Transportation

SR 433
LEWIS AND CLARK BRIDGE
DECK REPLACEMENT

MAIN SPAN BOTTOM LATERAL SYSTEM RETROFIT

BRIDGE SHEET NO. MS8

SHEET 97 OF 258 SHEETS

SR 433 JOB NO. 0001 SHEET 8

Tue Sep 17 10:32:46 2002

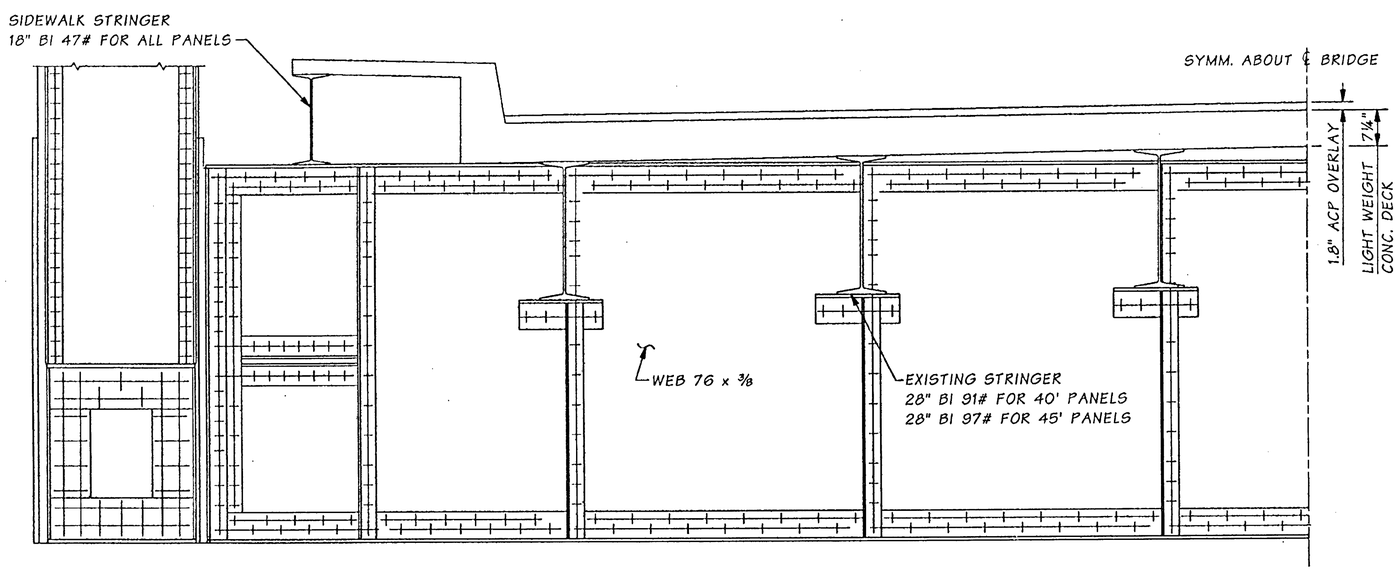

ELEVATION - EXISTING FLOORBEAM & DECK

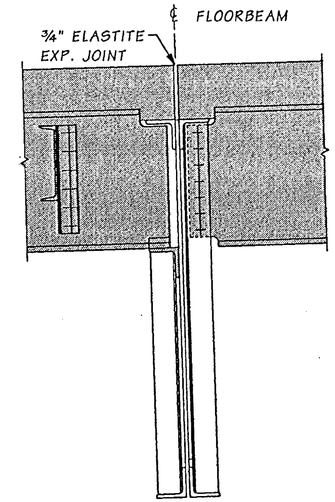

EXPANSION - FIXED

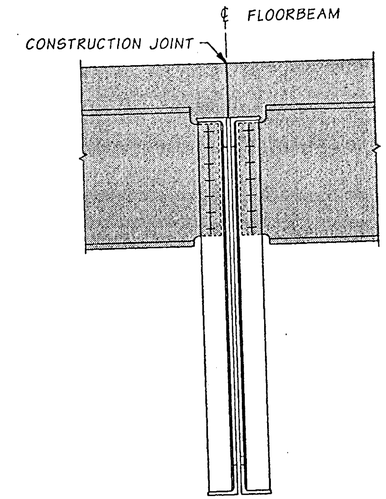

FIXED - FIXED

SECTIONS - EXISTING STRINGER TO FLOORBEAM CONNECTIONS

REMOVE SHADED PORTION AT TIME OF DECK REMOVAL

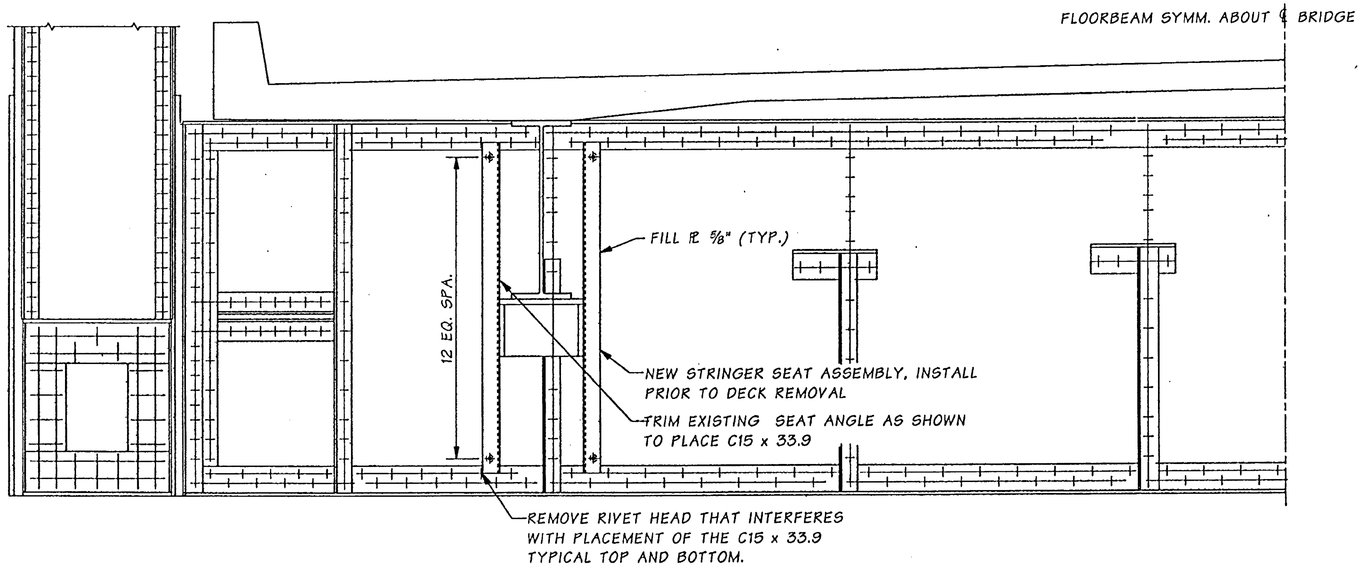

ELEVATION - MODIFIED FLOORBEAM & NEW DECK

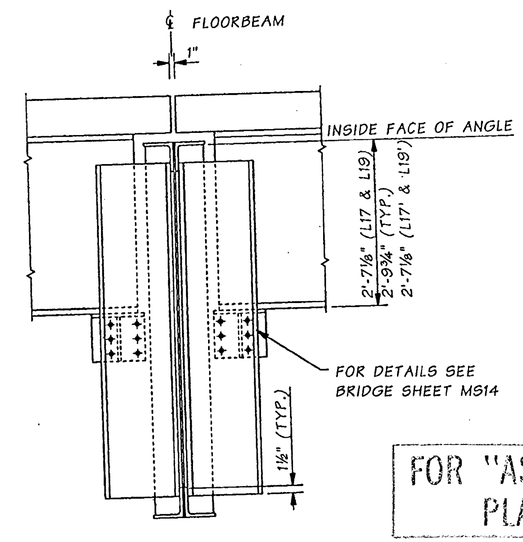

FOR "AS CONS... PLANS" ONLY

SECTIONS - NEW STRINGER TO FLOORBEAM CONNECTIONS

Bridge Design Engr.	Kapur, J	
Supervisor	Clarke, PT	08/02
Designed By	Clarke, PT	08/02
Checked By	Talukdar, M	08/02
Detailed By	House, L	08/02
Bridge Projects Engr.		
Prelim. Plan By		
Architect/Specialist		

M:\Y-Team\Lewis_Clark Rehab\Main Truss\Window files\TYPICAL-FB.WND

DATE	REVISION	BY	APP'D

REGION NO.	STATE	FED. AID PROJ. NO.	SHEET NO.	TOTAL SHEETS
10	WASH.	ACBH - 0433(007)		

JOB NUMBER 02x310

6444

STRUCTURAL REGISTERED PROFESSIONAL ENGINEER 71344 OREGON SEPT. 10, 2002 JUGESH KAPUR
EXPIRES 06-30-2003

BRIDGE AND STRUCTURES OFFICE

PATRICK T. CLARKE STATE OF WASHINGTON REGISTERED PROFESSIONAL ENGINEER
EXPIRES 1/17/04

Washington State Department of Transportation

SR 433
LEWIS AND CLARK BRIDGE
DECK REPLACEMENT

STRINGER SEATS AT TYPICAL FLOORBEAM

BRIDGE SHEET NO. MS9

SHEET 98 OF 258 SHEETS

SR 433 JOB NO. 0001 SHEET 9

Tue Sep 17 10:34:43 2002

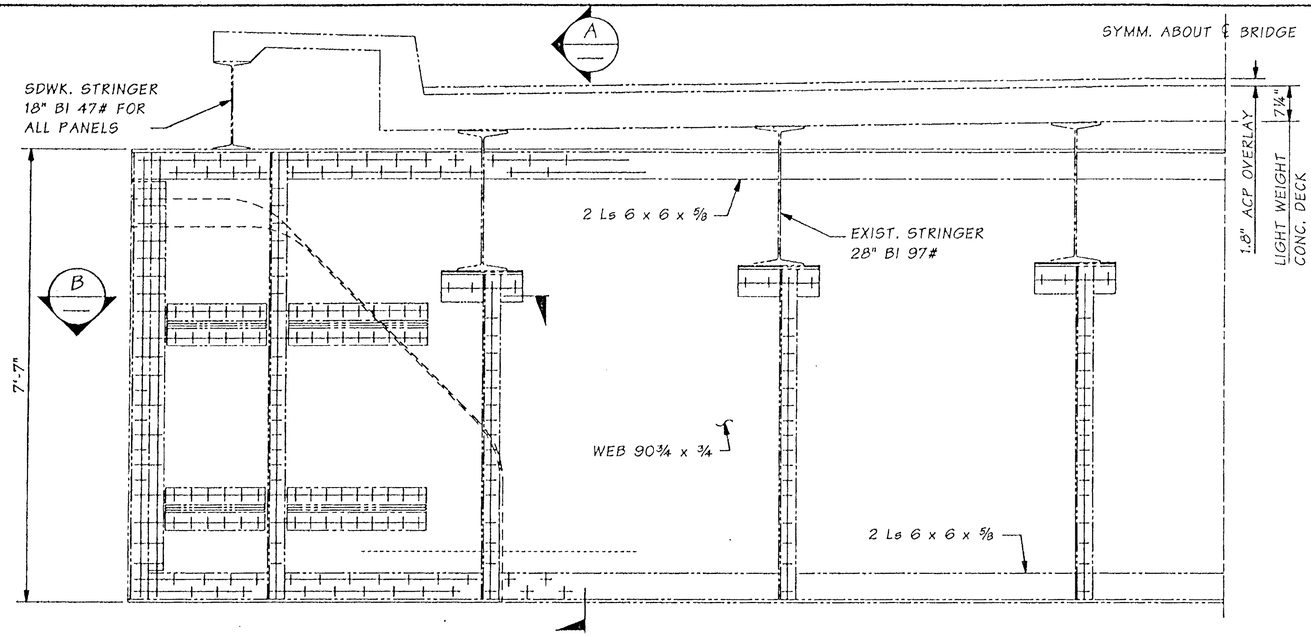

ELEVATION - EXISTING FLOORBEAM & DECK

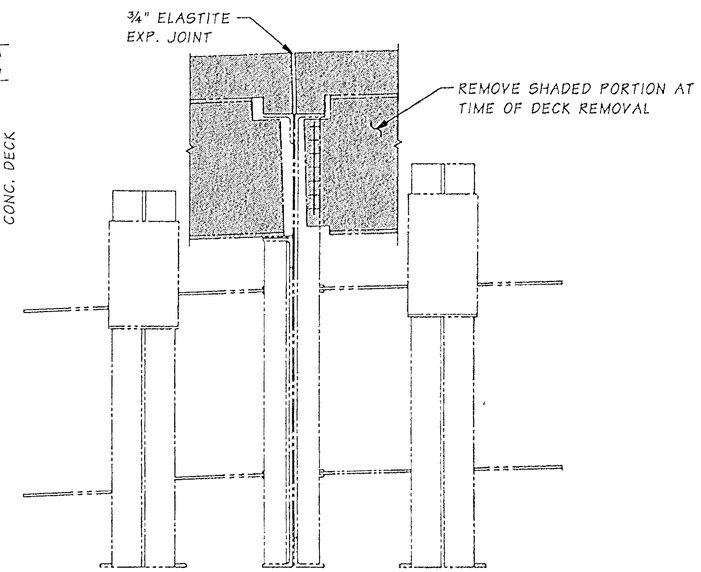

SECTION A

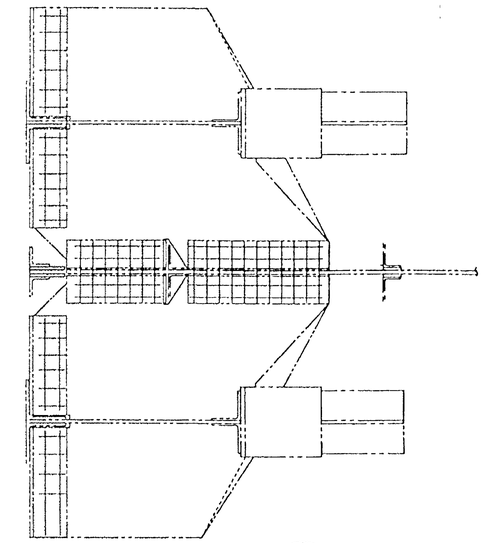

SECTION B

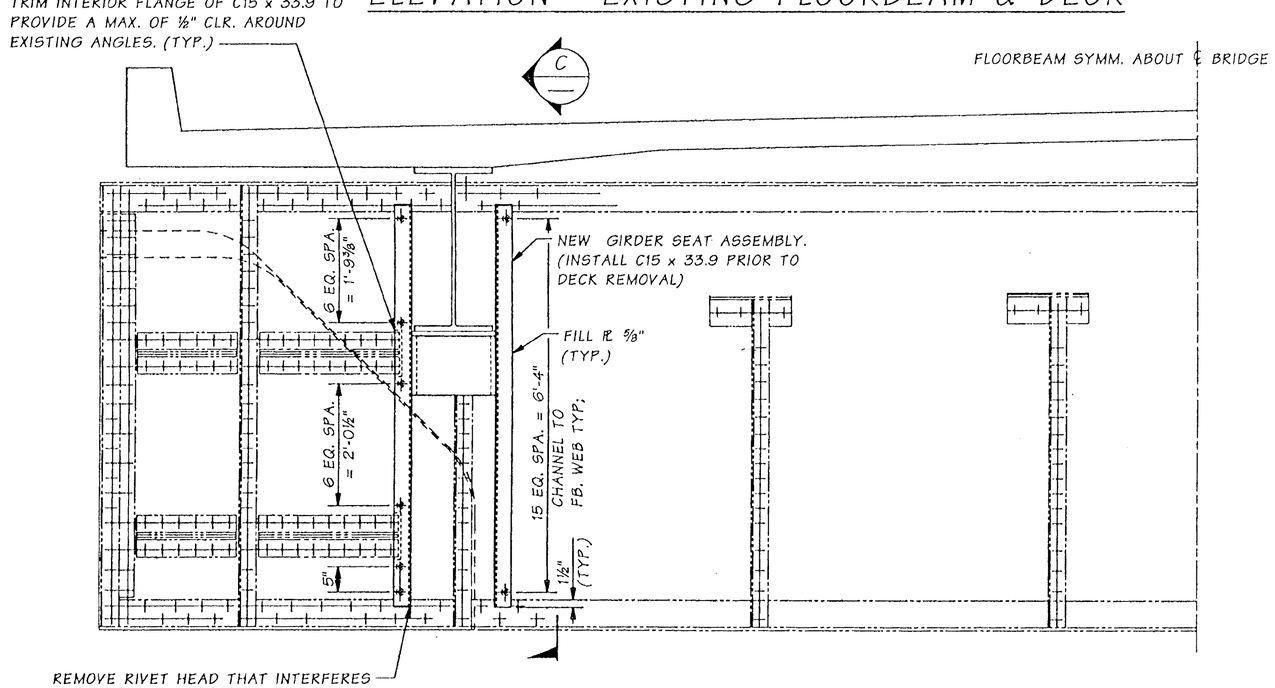

ELEVATION - MODIFIED FLOORBEAM & NEW DECK

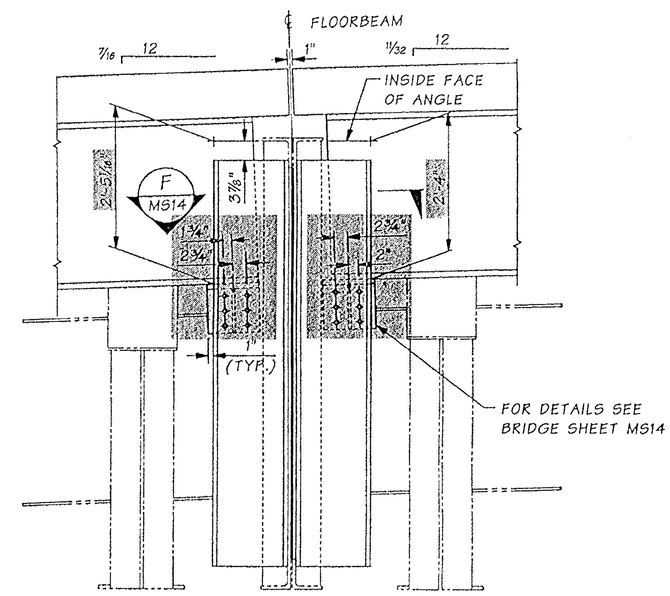

SECTION C

FOR "AS CONSTRUCTED PLANS" ONLY

Bridge Design Engr.	Kapur, J		M:\Y-Team\Lewis_Clark Rehab\Main Truss\window files\PIER-2-3-FB.WND								
Supervisor	Clarke, PT	08/02									
Designed By	Clarke, PT	08/02									
Checked By	Talukdar, M	08/02									
Detailed By	House, L	08/02									
Bridge Projects Engr.											
Prelim. Plan By			10/02	MODIFIED FLOORBEAM SECTION	MT						
Architect/Specialist			DATE	REVISION	BY	APP'D					

Tue Oct 29 15:08:40 2002

REGION NO.	STATE	FED. AID PROJ. NO.	SHEET NO.	TOTAL SHEETS
10	WASH.	ACBH - 0433(007)		
JOB NUMBER 02x310				

6444

STRUCTURAL REGISTERED PROFESSIONAL ENGINEER 72144 OREGON OCT. 10, 2002 JUGESH KAPUR
EXPIRES 06-30-2003

BRIDGE AND STRUCTURES OFFICE

PATRICK T. McGRATH STATE OF WASHINGTON 18668 REGISTERED PROFESSIONAL ENGINEER
EXPIRES 1/17/04

Washington State Department of Transportation

SR 433
LEWIS AND CLARK BRIDGE
DECK REPLACEMENT

FLOORBEAM AT L18

BRIDGE SHEET NO. MS10

SHEET 99 OF 258 SHEETS

SR 433 J NO. 0001 SHEET 10

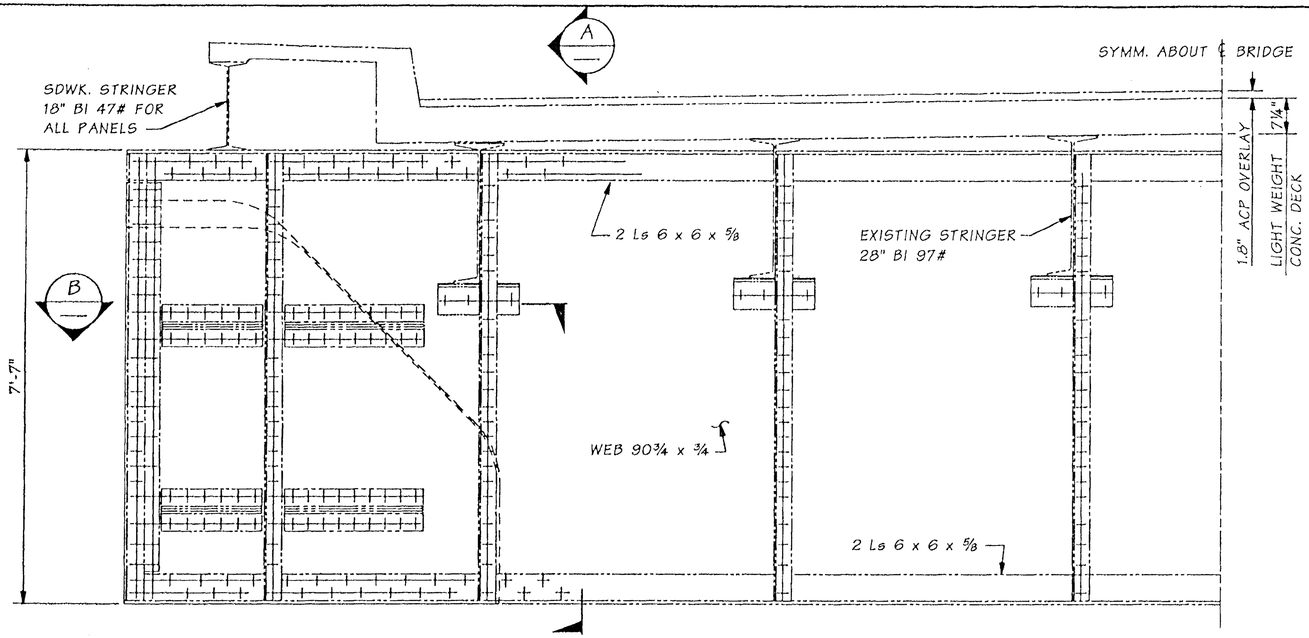

ELEVATION - EXISTING FLOORBEAM & DECK

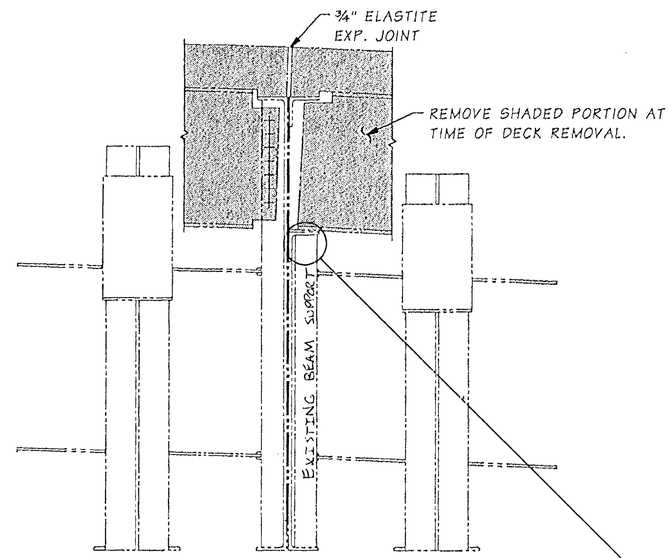

SECTION A

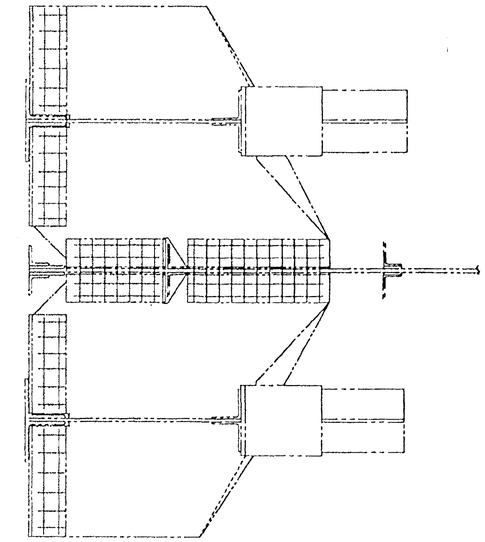

SECTION B

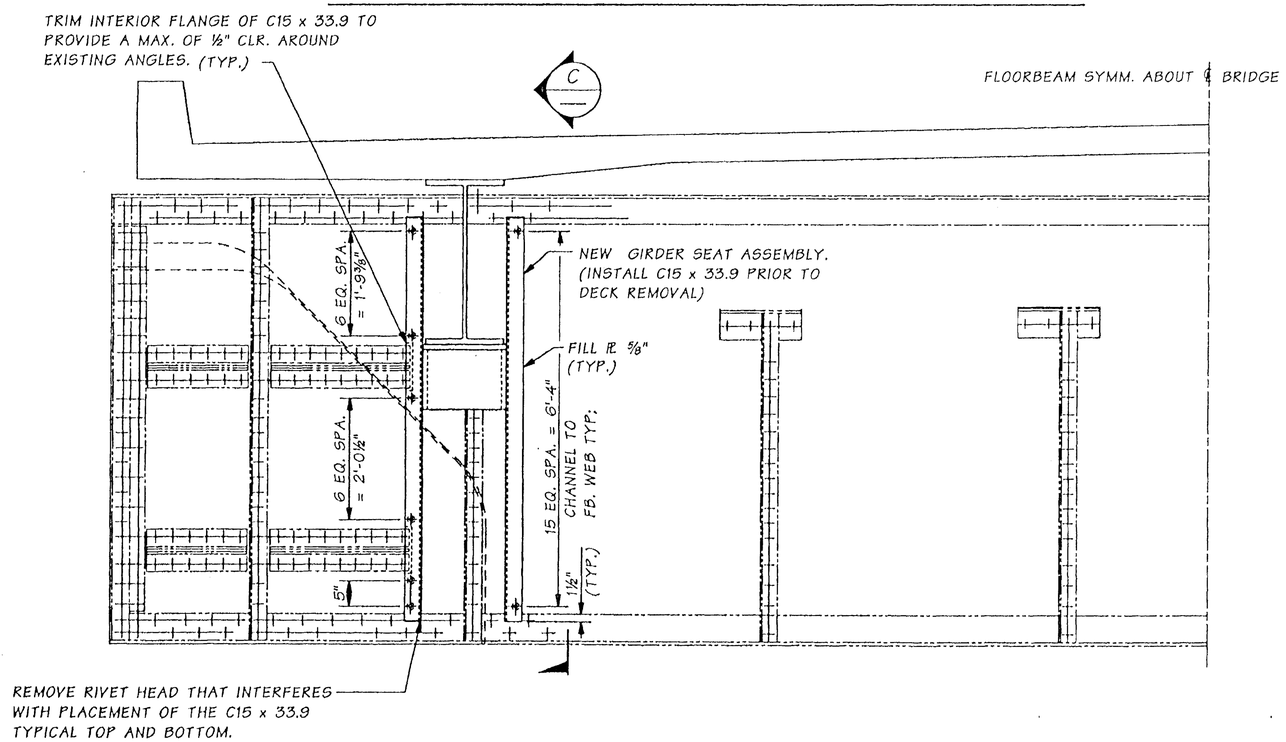

ELEVATION - MODIFIED FLOORBEAM & NEW DECK

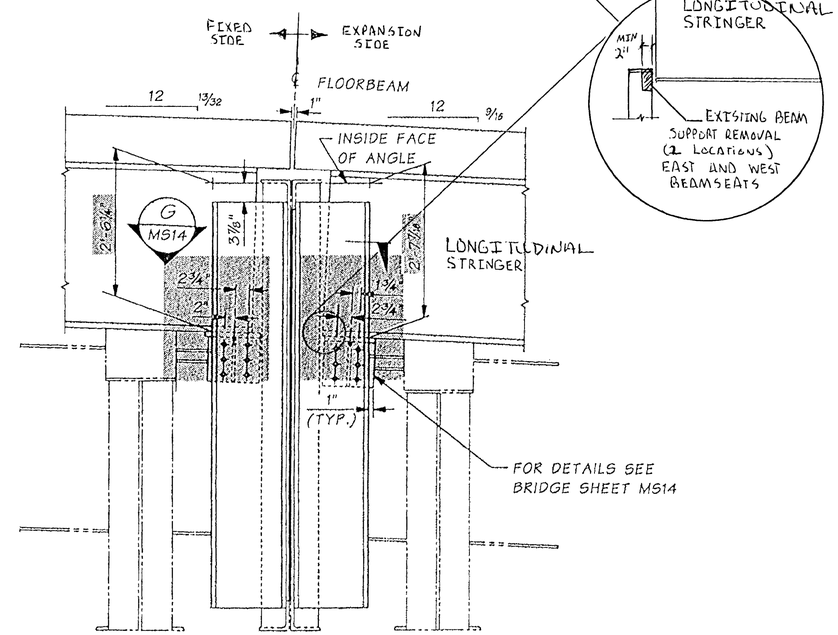

SECTION C

FOR "AS CONSTRUCTED PLANS" ONLY

Bridge Design Engr.	Kapur, J		M:\Y-Team\Lewis_Clark Rehab\Main Truss\window files\L18PRIM-FB.WND								
Supervisor	Clarke, PT	08/02					REGION NO.	STATE	FED. AID PROJ. NO.	SHEET NO.	TOTAL SHEETS
Designed By	Clarke, PT	08/02					10	WASH.			
Checked By	Talukdar, M	08/02					JOB NUMBER 02x310		ACBH - 0433(007)		
Detailed By	House, L	08/02									
Bridge Projects Engr.											
Prelim. Plan By			10/02	MODIFIED FLOORBEAM SECTION	MT						
Architect/Specialist			DATE	REVISION	BY	APP'D	6444				

STRUCTURAL REGISTERED PROFESSIONAL ENGINEER 71344 OREGON SEPT. 10, 2002 JUGESH KAPUR — EXPIRES 06-30-2003

BRIDGE AND STRUCTURES OFFICE

PATRICK T. CLARKE STATE OF WASHINGTON 27776 REGISTERED PROFESSIONAL ENGINEER — EXPIRES 1/17/04

Washington State Department of Transportation

SR 433
LEWIS AND CLARK BRIDGE
DECK REPLACEMENT

FLOORBEAM AT L18'

BRIDGE SHEET NO. MS11

SHEET 100 OF 258 SHEETS

SR 433 J NO. 0001 SHEET 11

Tue Oct 29 15:08:42 2002

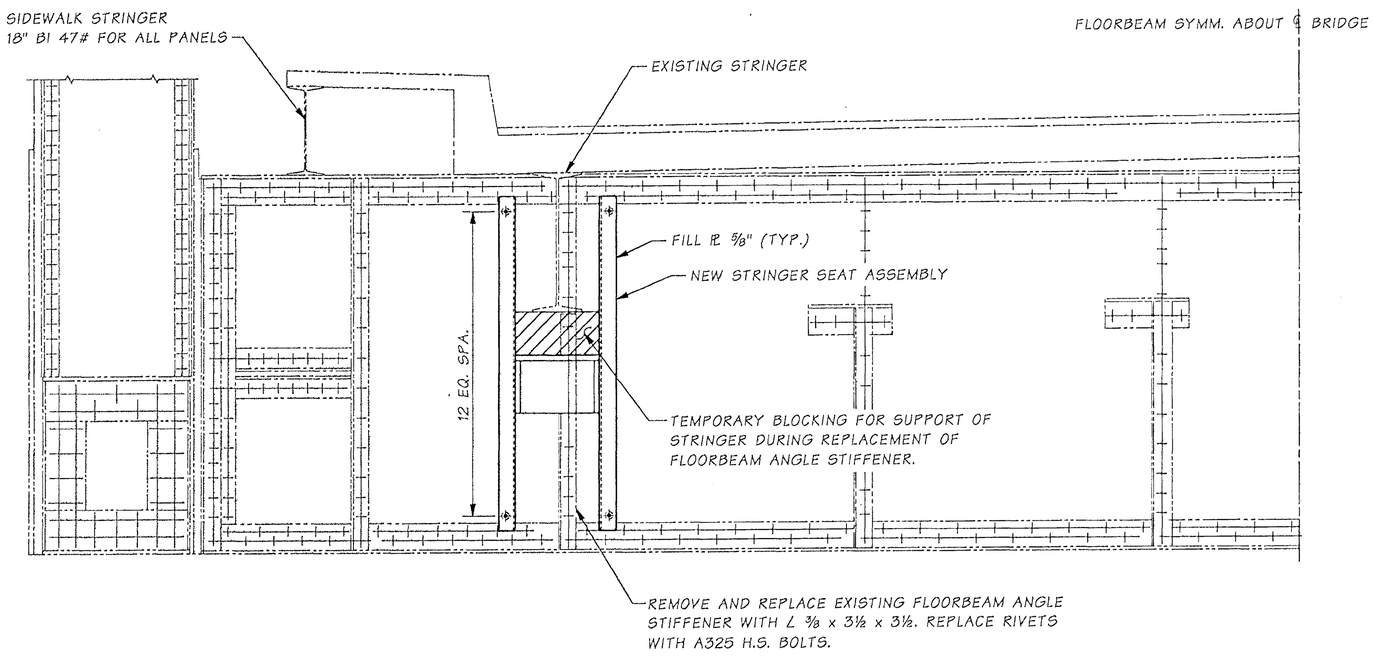

ELEVATION - REPLACEMENT OF FLOORBEAM ANGLE STIFFENER AT PANEL POINT L26'

NOTE:

THE REPLACEMENT OF THE ANGLE STIFFENER SHALL BE PERFORMED UNDER DEAD LOAD CONDITIONS ONLY. NO LIVE LOAD TRAFFIC SHALL BE ALLOWED ON THE BRIDGE.

FOR "AS CONSTRUCTED PLANS" ONLY

SR 433 JOB NO. 0001 SHEET 1

Bridge Design Engr.	Kapur, J	M:\Y-Team\Lewis_Clark Rehab\Main Truss\window files\CO FB TO STRINGER.WND				REGION NO.	STATE	FED. AID PROJ. NO.	SHEET NO.	TOTAL SHEETS
Supervisor	Kirker, KN 08/02					10	WASH.	ACBH - 0433(007)		
Designed By	Talukdar, M									
Checked By										
Detailed By	Schicchi, V.B.					JOB NUMBER 02x310				
Bridge Projects Engr.										
Prelim. Plan By										
Architect/Specialist		DATE	REVISION	BY	APP'D	6444				

Thu Oct 23 09:10:00 2003

BRIDGE AND STRUCTURES OFFICE

MUNINDRA TALUKDAR STATE OF WASHINGTON 27628 REGISTERED PROFESSIONAL ENGINEER EXPIRES 6/1/04

Washington State Department of Transportation

SR 433
LEWIS AND CLARK BRIDGE
DECK REPLACEMENT

REPLACEMENT OF FLOORBEAM ANGLE STIFFENER

BRIDGE SHEET NO. MS11A

SHEET 100A OF 258 SHEETS

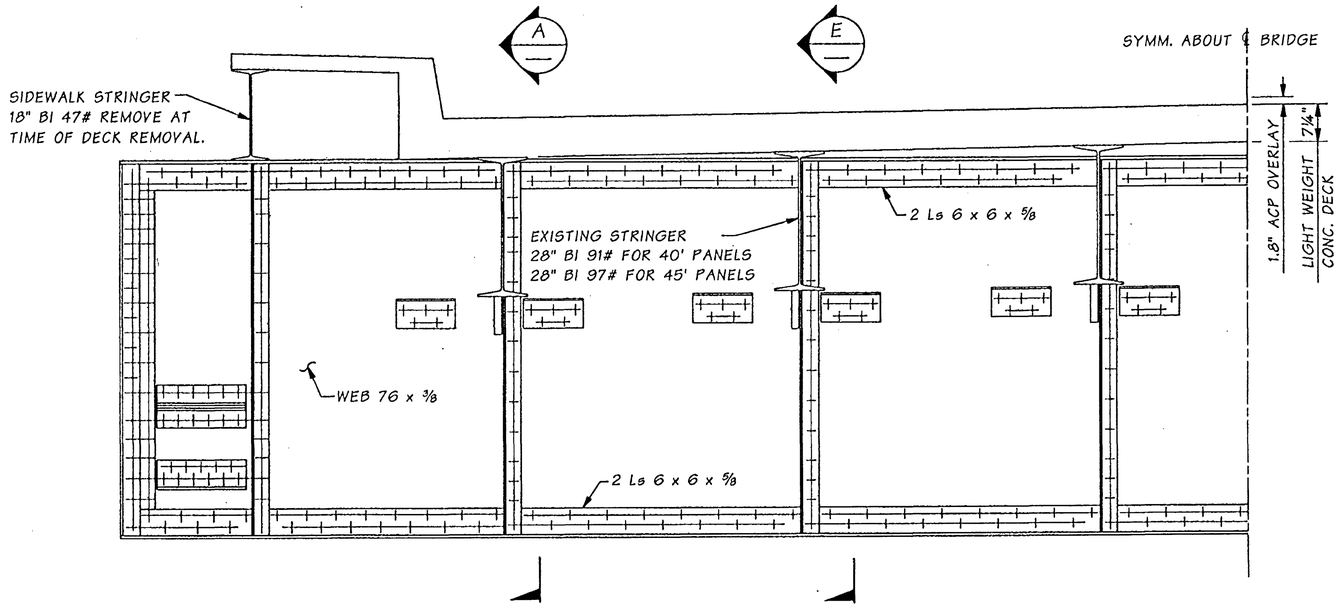

ELEVATION - EXISTING FLOORBEAM & DECK

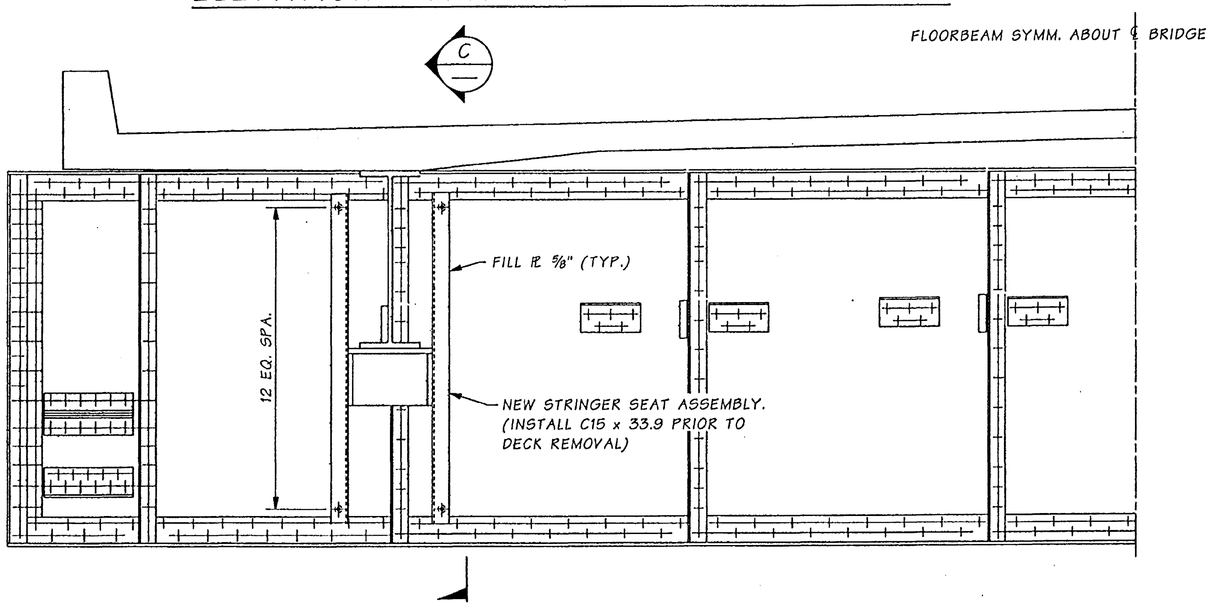

ELEVATION - MODIFIED FLOORBEAM & NEW DECK

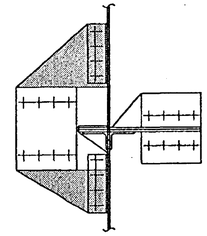

SECTION B

REMOVE SHADED PORTION OF EXTERIOR STRINGER PRIOR TO DECK REMOVAL AND INSTALL C15 x 33.9

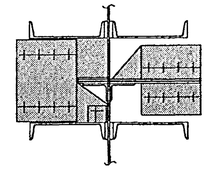

SECTION B

REMOVE SHADED PORTION AT EXTERIOR STRINGER AT TIME OF DECK REMOVAL AND INSTALL STRINGER SEAT.

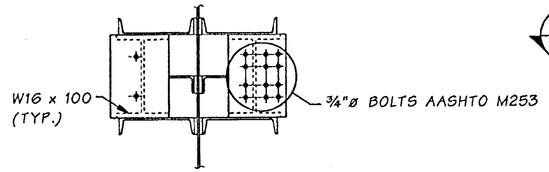

SECTION D

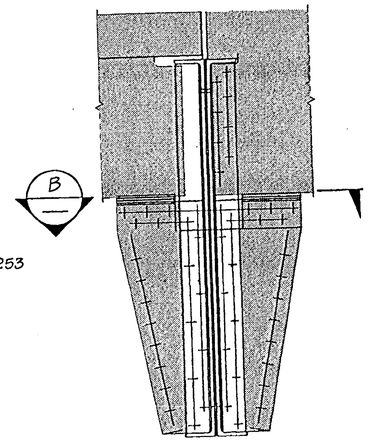

SECTION A

REMOVE SHADED PORTION AT EXTERIOR STRINGER AT TIME OF DECK REMOVAL.

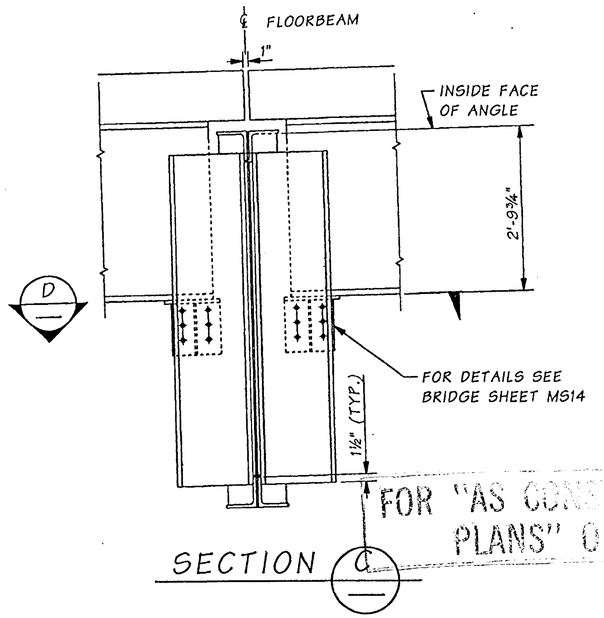

SECTION C

FOR "AS CONS
PLANS" ON

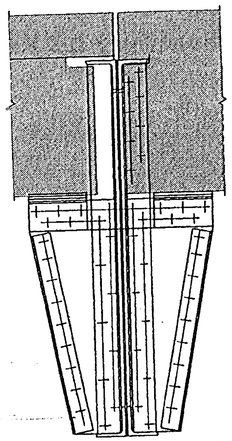

SECTION E

REMOVE SHADED PORTION AT INTERIOR STRINGERS AT TIME OF DECK REMOVAL.

Bridge Design Engr.	Kapur, J		M:\Y-Team\Lewis_Clark Rehab\Main Truss\Window files\L27-FLOORBEAM.WND								
Supervisor	Clarke, PT.	08/02				REGION NO.	STATE	FED. AID PROJ. NO.	SHEET NO.	TOTAL SHEETS	
Designed By	Clarke, PT	08/02				10	WASH.	ACBH - 0433(007)			
Checked By	Talukdar, M	08/02				JOB NUMBER 02x310					
Detailed By	House, L	08/02									
Bridge Projects Engr.											
Prelim. Plan By											
Architect/Specialist			DATE	REVISION	BY	APP'D					

STRUCTURAL REGISTERED PROFESSIONAL ENGINEER 71344 OREGON SEPT. 10, 2002 JUGESH KAPUR
EXPIRES 06-30-2003

BRIDGE AND STRUCTURES OFFICE

PATRICK T. GRIMM STATE OF WASHINGTON 19770 REGISTERED PROFESSIONAL ENGINEER
EXPIRES 1/17/04

Washington State Department of Transportation

SR 433
LEWIS AND CLARK BRIDGE
DECK REPLACEMENT

FLOORBEAM AT L27

BRIDGE SHEET NO. MS12

SHEET 101 OF 258 SHEETS

SR 433 JOB NO. 0001 SHEET 12

Tue Sep 17 10:34:15 2002

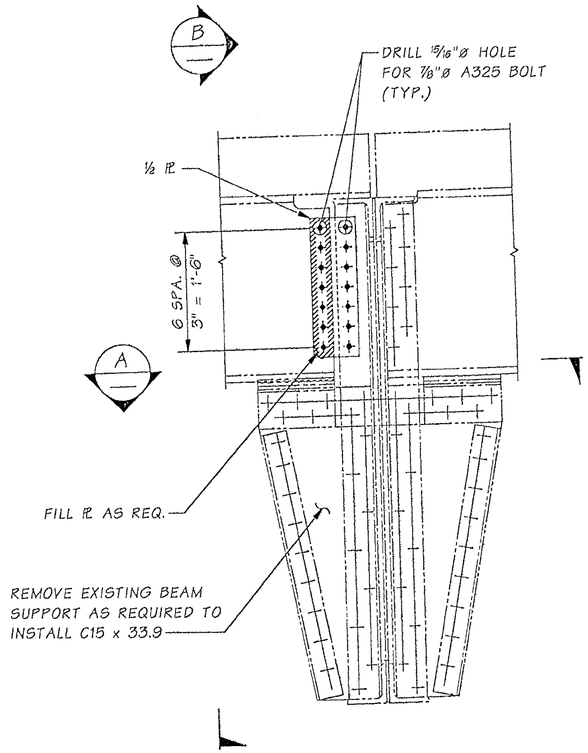

ELEVATION - EXISTING FLOORBEAM @ L27

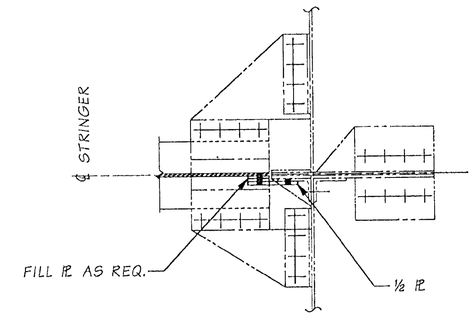

SECTION A

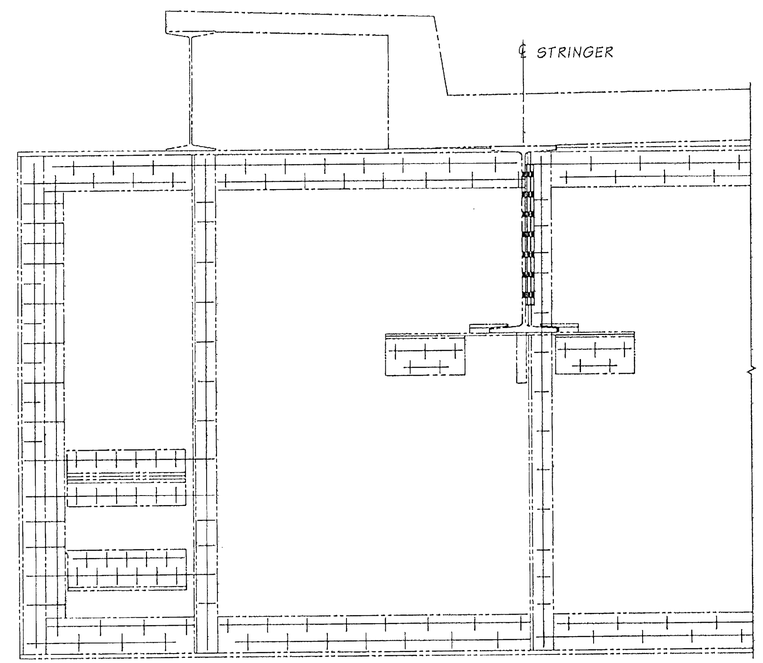

SECTION B

FOR "AS CONSTRUCTED PLANS" ONLY

Bridge Design Engr.	Kapur, J	M:\Y-Team\Lewis_Clark Rehab\Modifications\Window files\L27 TEMP SUPPORT.WND						
Supervisor	Kirker, KN				REGION NO.	STATE	FED. AID PROJ. NO.	SHEET NO.	TOTAL SHEETS
Designed By	Talukdar, M				10	WASH.			
Checked By					JOB NUMBER				
Detailed By	Evans, P.D.								
Bridge Projects Engr.									
Prelim. Plan By									
Architect/Specialist		DATE	REVISION	BY	APP'D	6444			

MUNINDRA TALUKDAR — STATE OF WASHINGTON — 27608 — REGISTERED PROFESSIONAL ENGINEER — EXPIRES 6/1/04

BRIDGE AND STRUCTURES OFFICE

Washington State Department of Transportation

SR 433
LEWIS & CLARK BRIDGE
DECK REPLACEMENT

L27 TEMPORARY BEAM SUPPORT

BRIDGE SHEET NO. MS12B

SHEET 101A OF 258 SHEETS

SR 433 JOB NO. 0001 SHEET 0

Thu Nov 13 10:17:58 2003

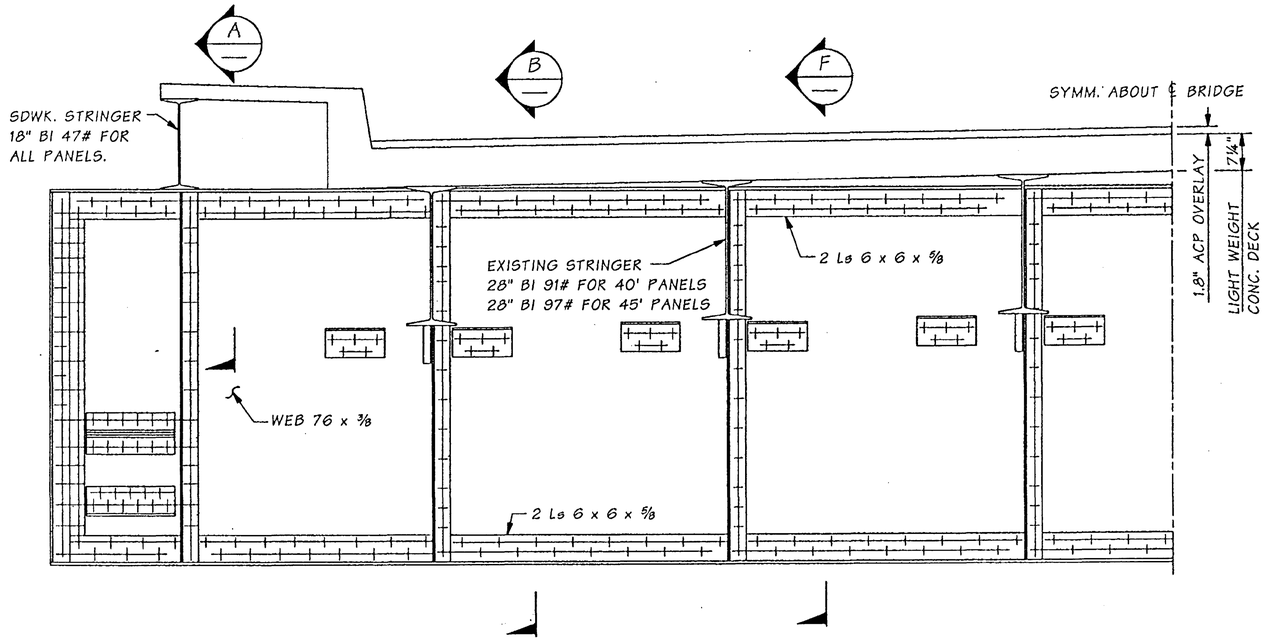

ELEVATION - EXISTING FLOORBEAM & DECK

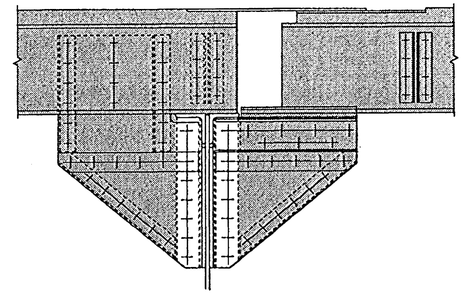

SECTION A

REMOVE SHADED PORTION AT TIME OF DECK REMOVAL.

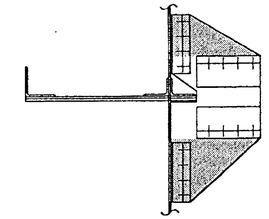

SECTION C

REMOVE SHADED PORTION AT EXTERIOR STRINGERS PRIOR TO DECK REMOVAL AND INSTALL C15 x 33.9

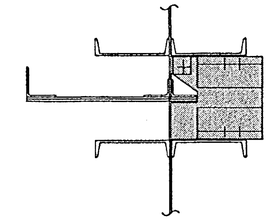

SECTION C

REMOVE SHADED PORTION AT EXTERIOR STRINGER AT TIME AT DECK REMOVAL AND INSTALL STRINGER SEAT

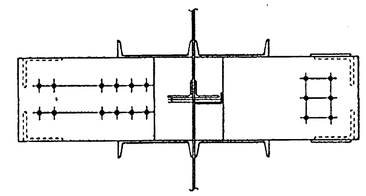

SECTION E

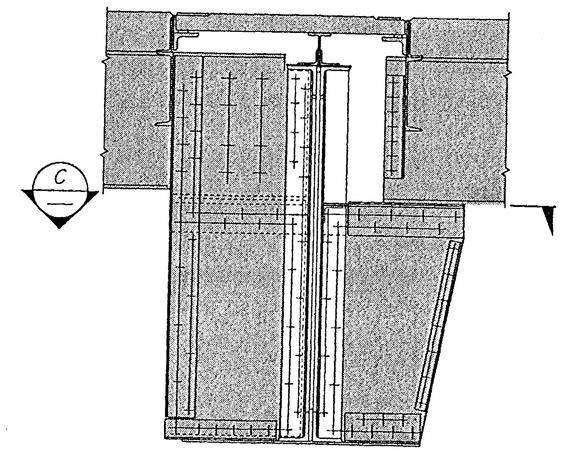

SECTION B

REMOVE SHADED PORTION AT EXTERIOR STRINGERS AT TIME OF DECK REMOVAL.

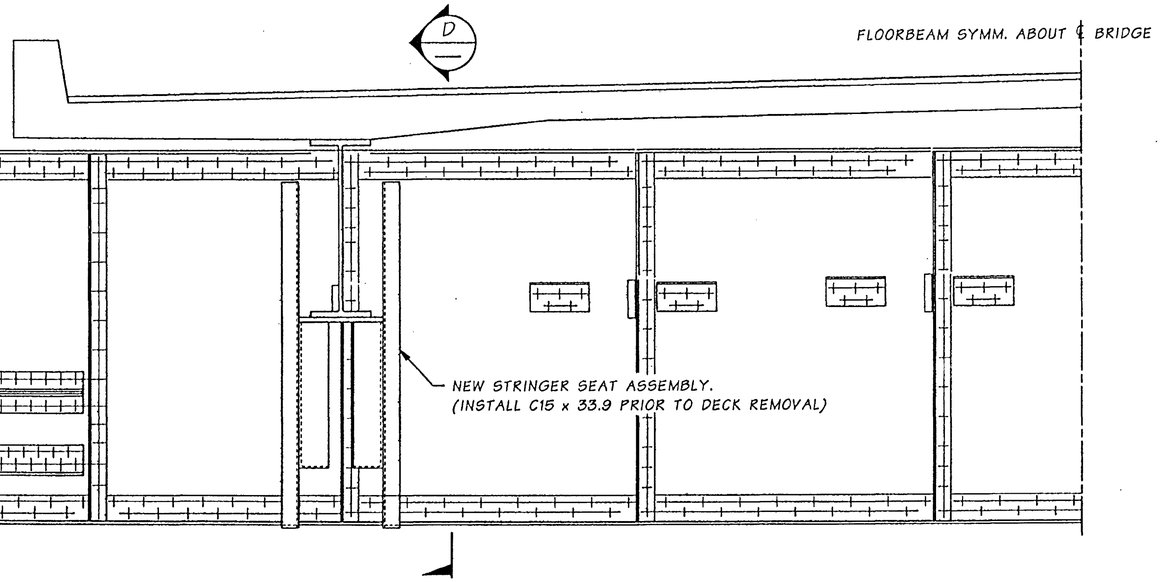

ELEVATION - MODIFIED FLOORBEAM & NEW DECK

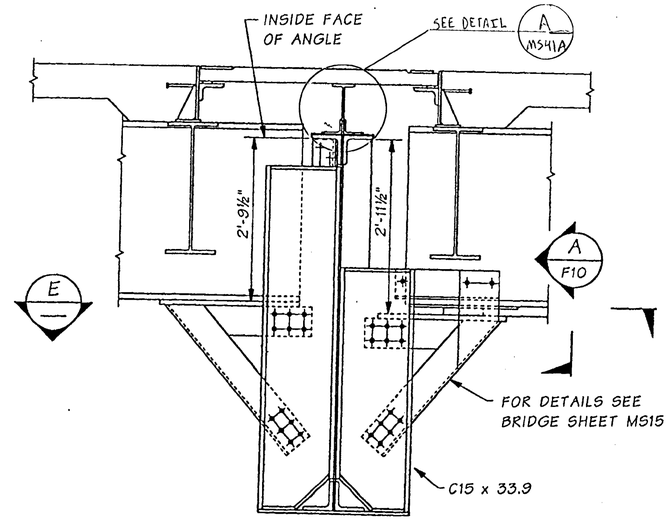

SECTION D

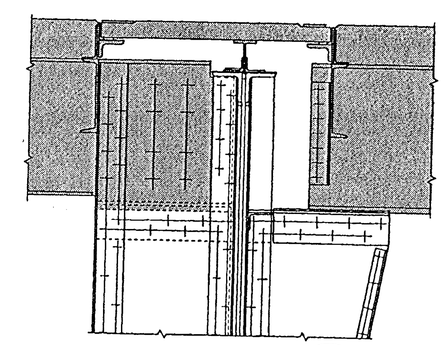

SECTION F

REMOVE SHADED PORTION AT INTERIOR STRINGERS AT TIME OF DECK REMOVAL.

FOR "AS CONSTRUCTED PLANS" ONLY

Bridge Design Engr.	Kapur, J	
Supervisor	Clarke, PT	08/02
Designed By	Clarke, PT	08/02
Checked By	Talukdar, M	08/02
Detailed By	House, L	08/02
Bridge Projects Engr.		
Prelim. Plan By		
Architect/Specialist		

M:\Y-Team\Lewis_Clark Rehab\Main Truss\Window files\L27PRIM-FB.WND

DATE	REVISION	BY	APP'D

REGION NO.	STATE	FED. AID PROJ. NO.	SHEET NO.	TOTAL SHEETS
10	WASH.	ACBH - 0433(007)		
JOB NUMBER 02x310				
6444				

STRUCTURAL REGISTERED PROFESSIONAL ENGINEER 71344 OREGON SEPT. 10, 2002 JUGESH KAPUR
EXPIRES 06-30-2003

BRIDGE AND STRUCTURES OFFICE

PATRICK T. CLARKE STATE OF WASHINGTON REGISTERED PROFESSIONAL ENGINEER
EXPIRES 1/17/04

Washington State Department of Transportation

SR 433
LEWIS AND CLARK BRIDGE
DECK REPLACEMENT

FLOORBEAM AT L27'

BRIDGE SHEET NO. MS13

SHEET 102 OF 258 SHEETS

SR 433 JOB NO. 0001 SHEET 13

Tue Sep 17 10:34:17 2002

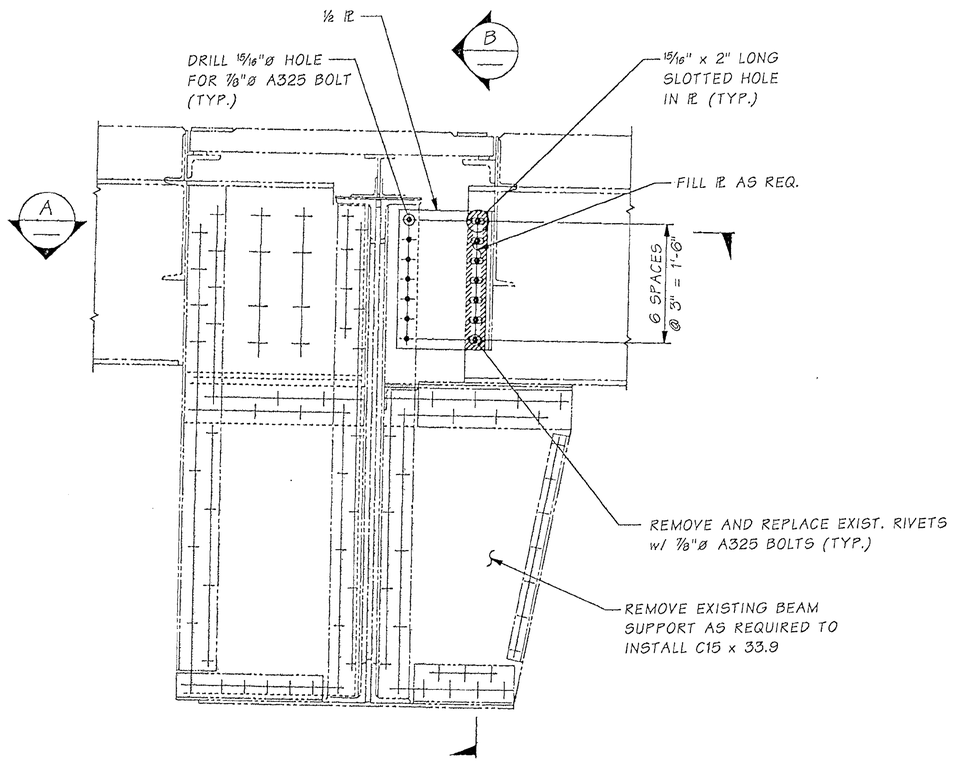

ELEVATION - EXISTING FLOORBEAM @ L27'

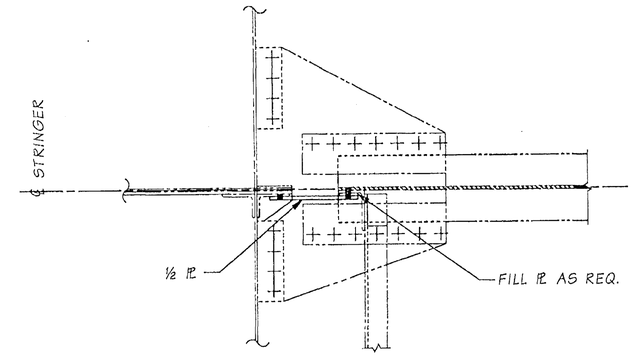

SECTION A

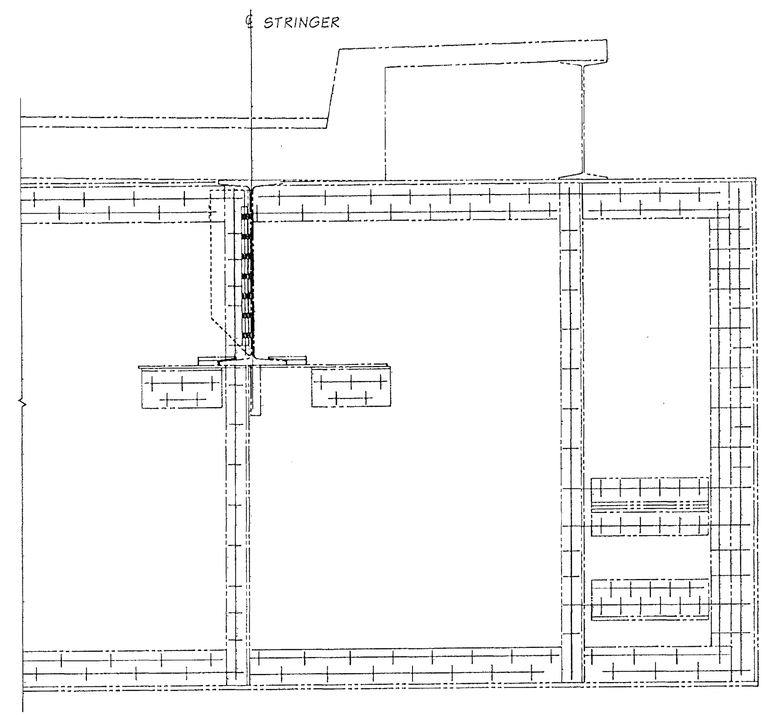

SECTION B

FOR "AS CONSTRUCTED PLANS" ONLY

SR 433 JOB NO. 0001 SHEET 1

Bridge Design Engr.	Kapur, J	M:\Y-Team\Lewis_Clark Rehab\Modifications\Window files\L27P TEMP SUPPORT.WND							
Supervisor	Kirker, KN				REGION NO.	STATE	FED. AID PROJ. NO.	SHEET NO.	TOTAL SHEETS
Designed By	Talukdar, M				10	WASH.			
Checked By					JOB NUMBER				
Detailed By	Evans, P.D.								
Bridge Projects Engr.									
Prelim. Plan By									
Architect/Specialist		DATE	REVISION	BY	APP'D	6444			

Thu Nov 13 10:19:56 2003

MONINDRA TALUKDAR — STATE OF WASHINGTON — 27626 — REGISTERED PROFESSIONAL ENGINEER — EXPIRES 6/1/04

BRIDGE AND STRUCTURES OFFICE

Washington State Department of Transportation

SR 433
LEWIS & CLARK BRIDGE
DECK REPLACEMENT

L27' TEMPORARY BEAM SUPPORT

BRIDGE SHEET NO. MS13B

SHEET 102A OF 258 SHEETS

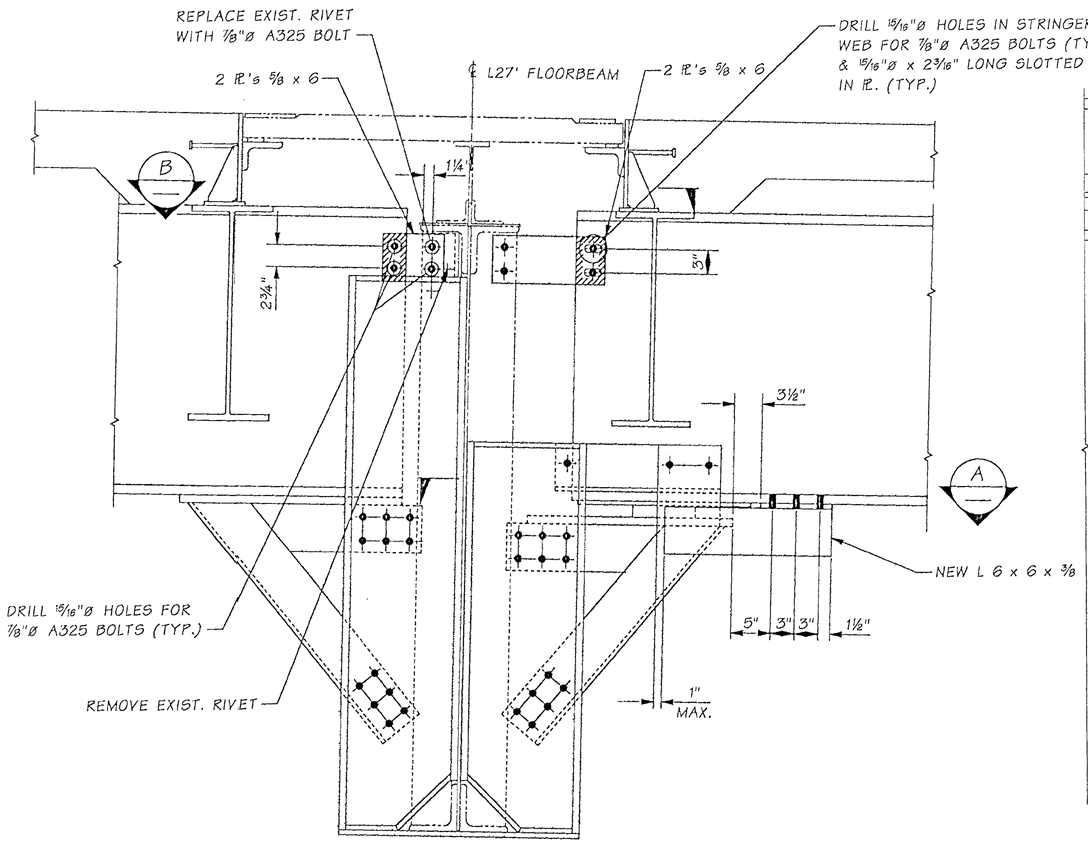

L27' STRINGER SEAT

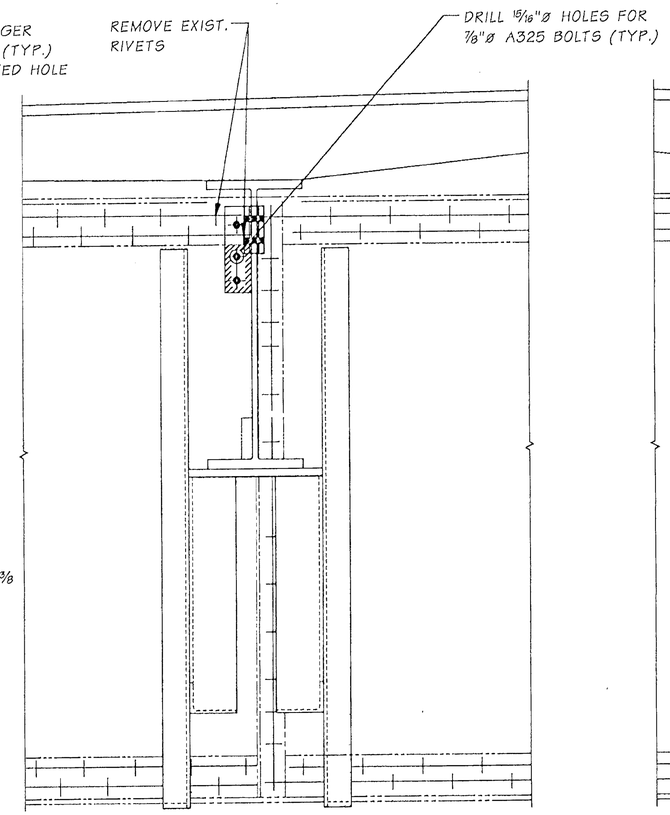

SECTION C

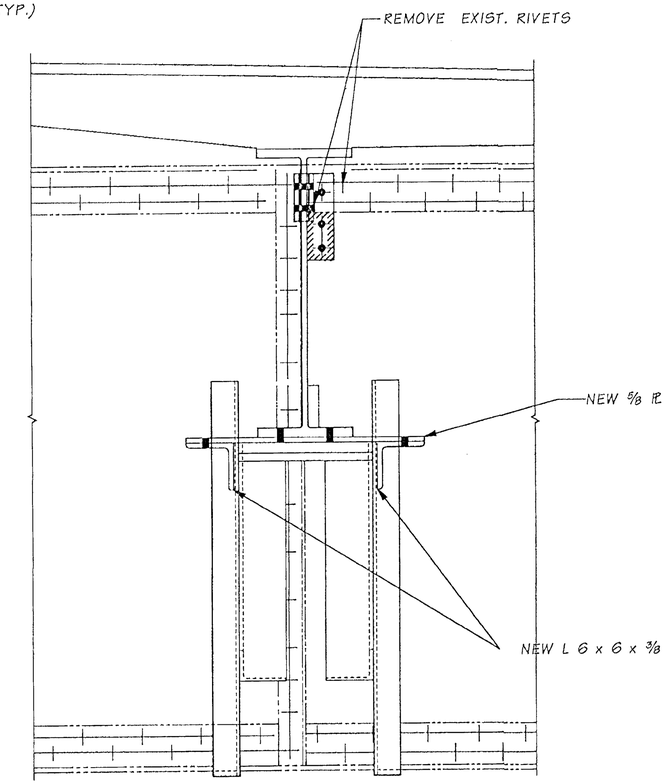

SECTION D

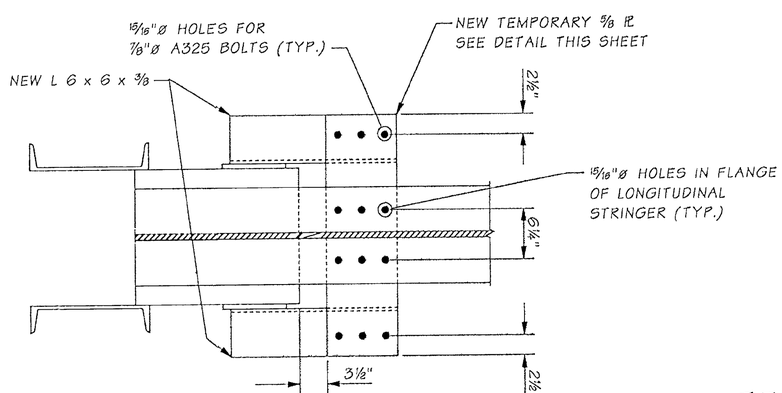

SECTION A

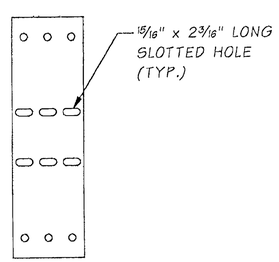

TEMPORARY PL

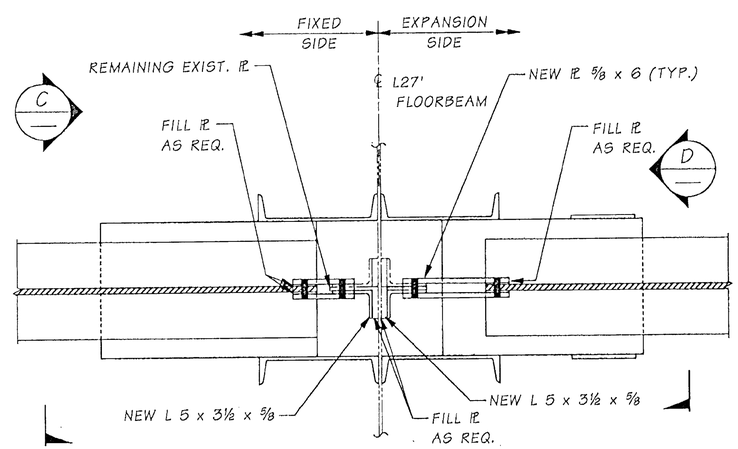

SECTION B

NOTES

1. ALL CONNECTIONS SHALL BE MADE ON EXPANSION SIDE STRINGER PANEL AS SHOWN BEFORE PANEL J IS PLACED.
2. DISCONNECT BOLTS BETWEEN TEMPORARY PL, LONGITUDINAL STRINGER AND NEW CONNECTION ANGLE RIGHT AFTER PLACEMENT OF PANEL J.

FOR "AS CONSTRUCTED PLANS" ONLY

Bridge Design Engr.	Kapur, J	M:\Y-Team\Lewis_Clark Rehab\Modifications\window files\L27PRIM FB MOD.WND			REGION NO.	STATE	FED. AID PROJ. NO.	SHEET NO.	TOTAL SHEETS
Supervisor	Kirker, KN				10	WASH.			
Designed By	Talukdar, M				JOB NUMBER				
Checked By									
Detailed By	Evans, P.D.								
Bridge Projects Engr.									
Prelim. Plan By									
Architect/Specialist		DATE	REVISION	BY	APP'D	6444			

BRIDGE AND STRUCTURES OFFICE

MUNINDRA TALUKDAR — STATE OF WASHINGTON — 27623 — REGISTERED PROFESSIONAL ENGINEER — EXPIRES 6/1/04

Washington State Department of Transportation

SR 433
LEWIS & CLARK BRIDGE
DECK REPLACEMENT

FLOORBEAM MODIFICATION AT L27'

BRIDGE SHEET NO. MS13C

SHEET 102B OF 258 SHEETS

SR 433 JOB NO. 0001 SHEET 0

Mon Oct 27 12:57:44 2003

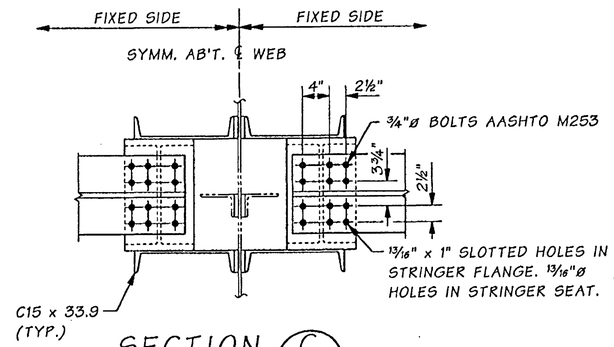

SECTION C

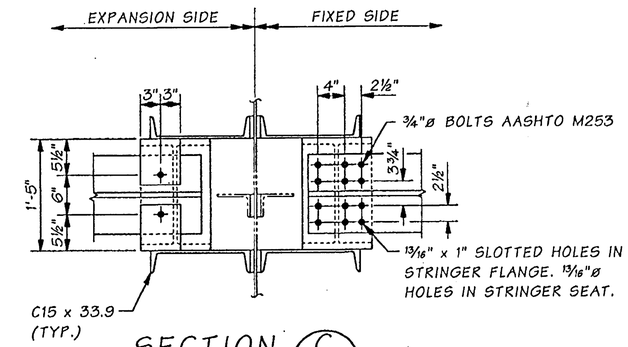

SECTION C

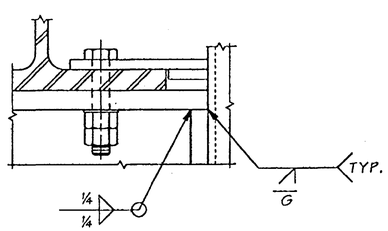

DETAIL E

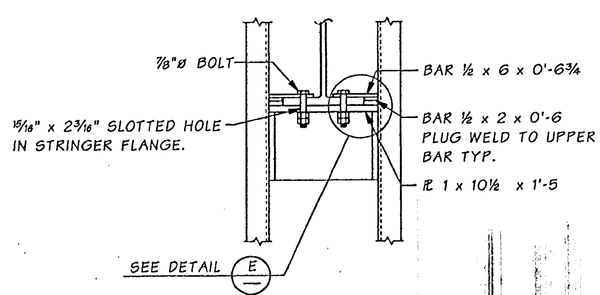

SECTION D

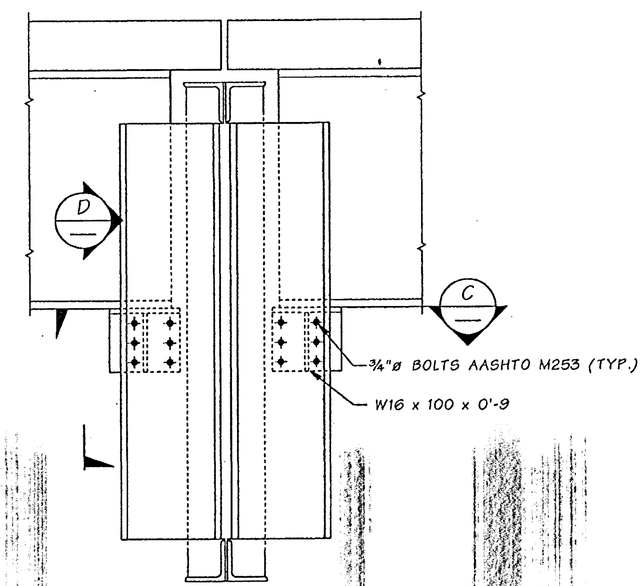

TYPICAL FLOORBEAM

FOR "AS CONSTRUCTED PLANS" ONLY

SR 433 JOB NO. 0001 SHEET 14

Bridge Design Engr.	Kapur, J		M:\Y-Team\Lewis_Clark Rehab\Main Truss\Window files\GIRDER-SEAT.WND				REGION NO.	STATE	FED. AID PROJ. NO.	SHEET NO.	TOTAL SHEETS
Supervisor	Clarke, PT	08/02					10	WASH.	ACBH - 0433(007)		
Designed By	Clarke, PT	08/02					JOB NUMBER 02x310				
Checked By	Talukdar, M	08/02									
Detailed By	House, L	08/02									
Bridge Projects Engr.											
Prelim. Plan By											
Architect/Specialist			DATE	REVISION	BY	APP'D	6444				

Tue Sep 17 10:33:59 2002

STRUCTURAL REGISTERED PROFESSIONAL ENGINEER 71344 OREGON SEPT. 10, 2002 JUGESH KAPUR EXPIRES 06-30-2003

BRIDGE AND STRUCTURES OFFICE

PATRICK T. CLARKE STATE OF WASHINGTON 27776 REGISTERED PROFESSIONAL ENGINEER EXPIRES 1/17/04

Washington State Department of Transportation

SR 433
LEWIS AND CLARK BRIDGE
DECK REPLACEMENT

STRINGER SEAT DETAILS

BRIDGE SHEET NO. MS14

SHEET 103 OF 258 SHEETS

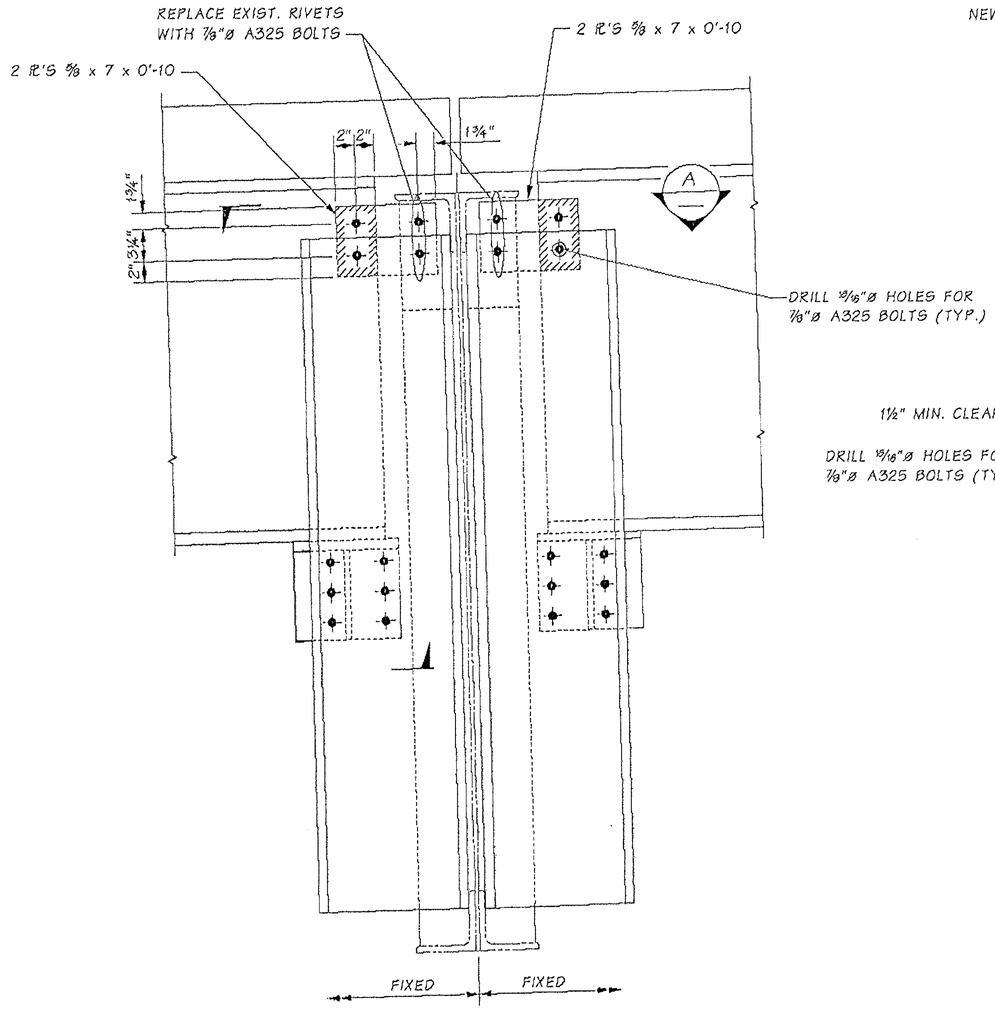

MODIFIED CONNECTION
TYPICAL MAIN SPAN FLOORBEAM

(FIXED LOCATIONS)

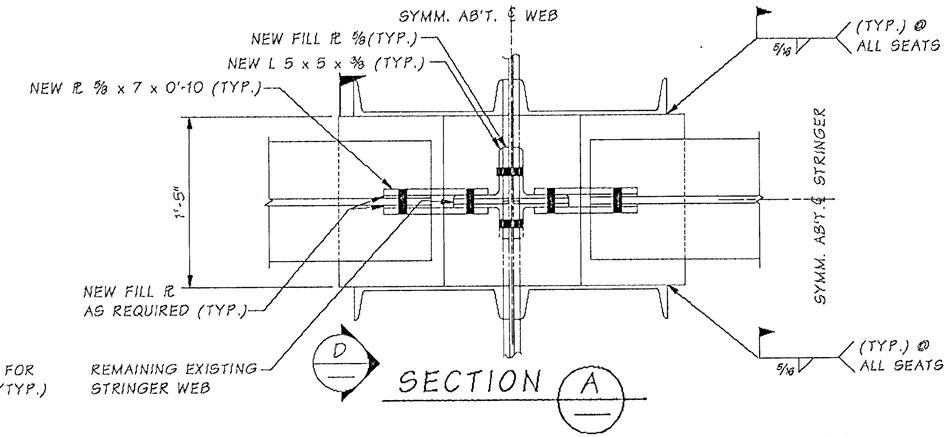

SECTION A

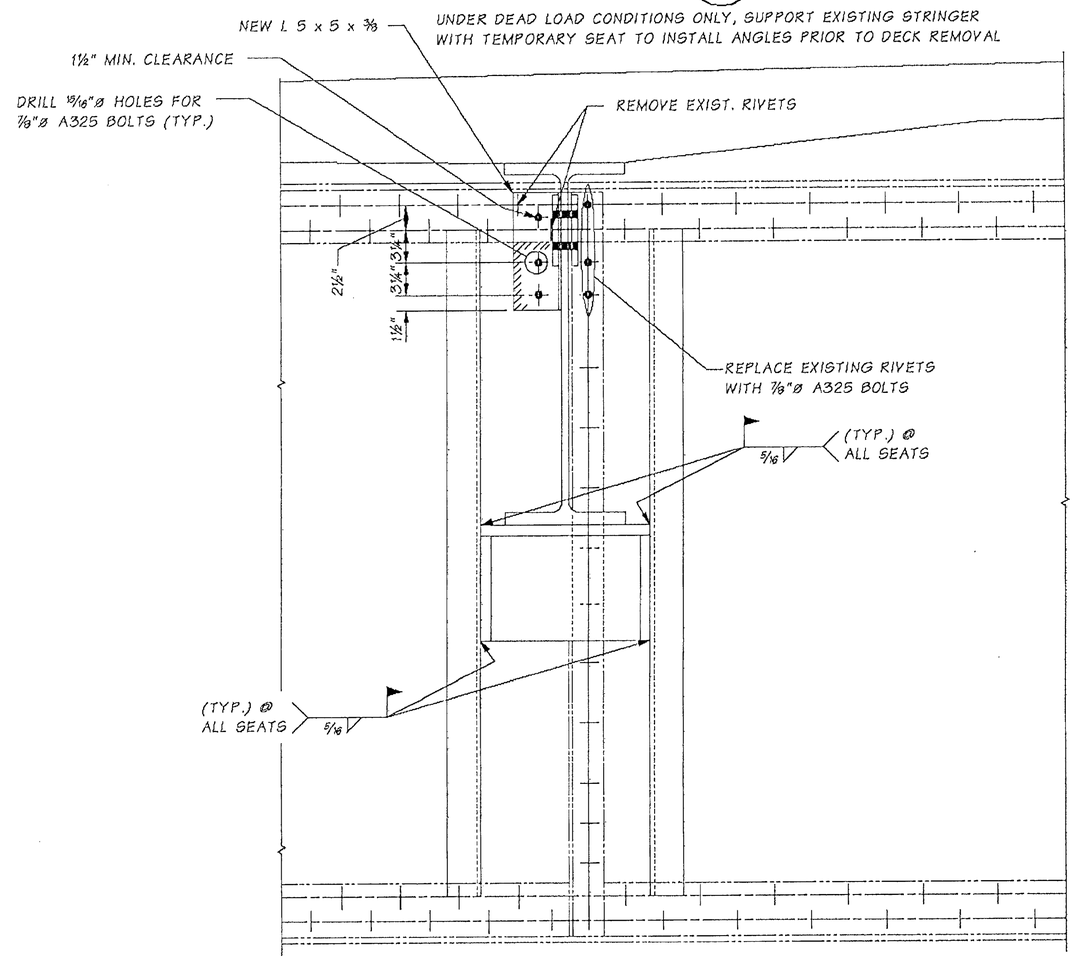

SECTION D

FOR "AS CONSTRUCTED PLANS" ONLY

NOTE:
1. PLATES AND ANGLES SHALL BE GRADE 36 OR 50 AASHTO M270 AND SHALL MEET THE CHARPY V-NOTCH REQUIREMENTS OF AASHTO M270 TEMPERATURE ZONE 2.
2. ALL WELDS SHALL BE TERMINATED 1/4" FROM EDGES.

SR 241 JOB NO. SHEET

Bridge Design Engr.	Kapur, J		M:\Personal\NguyenV\window files\MT1.WND							
Supervisor	Kirker, KN									
Designed By	Talukdar, M	07/03								
Checked By	Schultz, E	07/03								
Detailed By	Evans, PD	07/03								
Bridge Projects Engr.										
Prelim. Plan By										
Architect/Specialist			DATE	REVISION	BY	APP'D				

REGION NO.	STATE	FED. AID PROJ. NO.	SHEET NO.	TOTAL SHEETS
10	WASH.			
JOB NUMBER				
6444				

MUNINDRA TALUKDAR — STATE OF WASHINGTON — 27628 — REGISTERED PROFESSIONAL ENGINEER — EXPIRES 6/1/04

BRIDGE AND STRUCTURES OFFICE

STRUCTURAL REGISTERED PROFESSIONAL ENGINEER — 71344 — OREGON — SEPT. 10, 2002 — JUGESH KAPUR — EXPIRES 06-30-2005

Washington State Department of Transportation

SR 433
LEWIS & CLARK BRIDGE
DECK REPLACEMENT

MODIFIED STRINGER CONNECTION

BRIDGE SHEET NO. MS14B

SHEET 103A OF 258 SHEETS

Tue Jul 29 15:10:16 2003

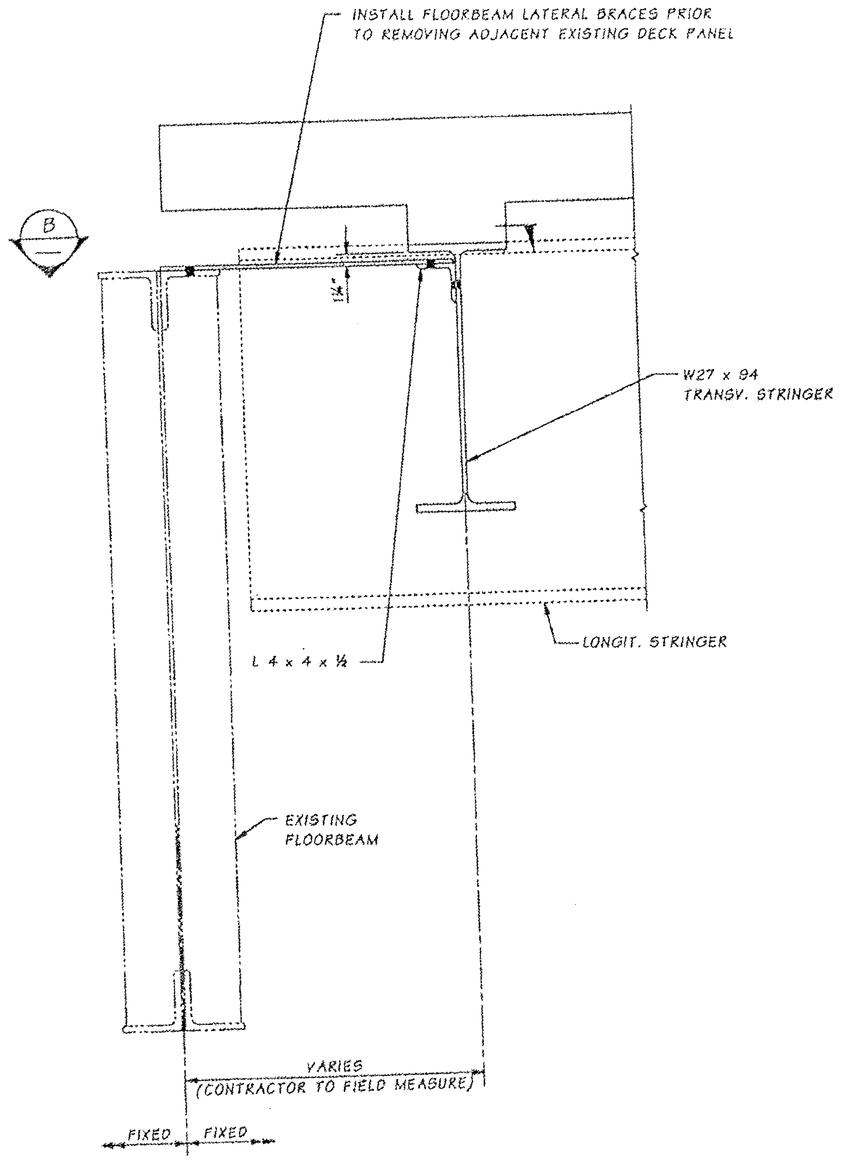

SECTION A

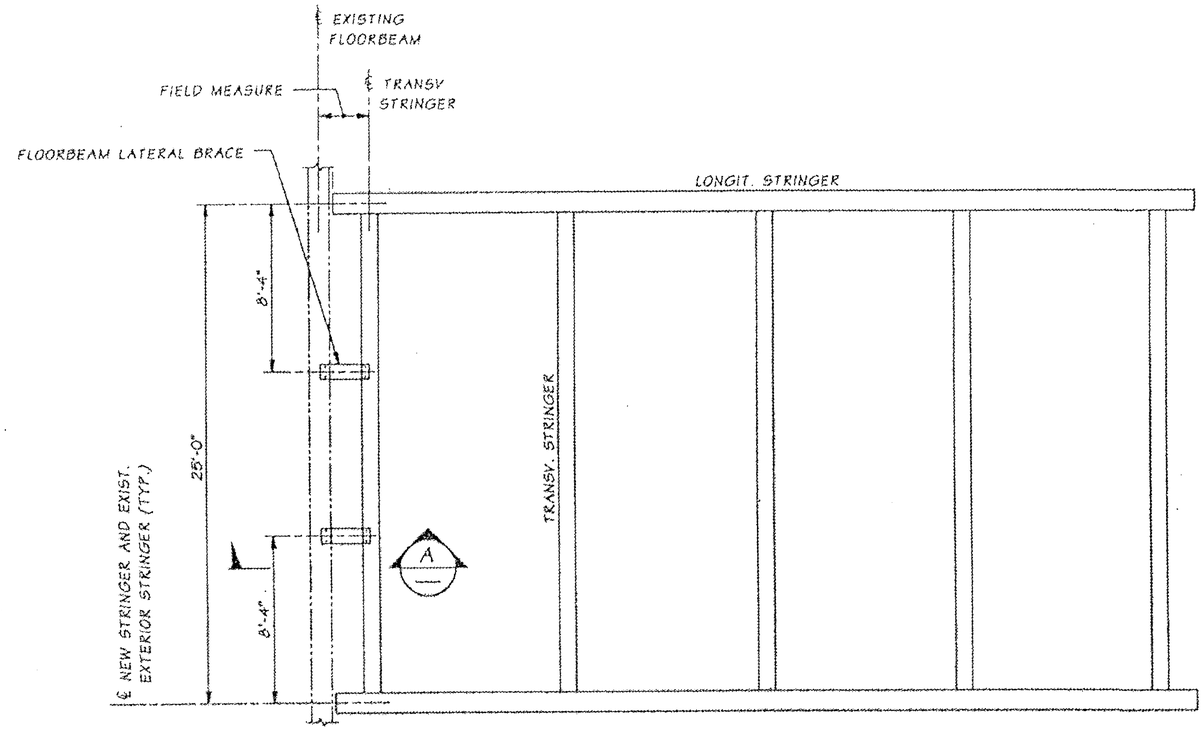

FRAMING PLAN

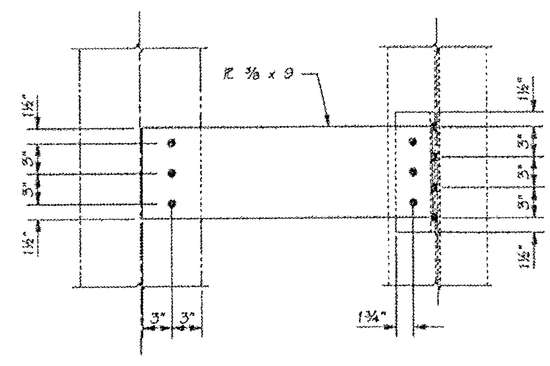

SECTION B

FOR "AS CONSTRUCTED PLANS" ONLY

Bridge Design Engr.	Kapur, J		
Supervisor	Kirker, KN		
Designed By	Talukdar, M	07/03	
Checked By	Schultz, E	07/03	
Detailed By	Evans, P.D.	07/03	
Bridge Projects Engr.			
Prelim. Plan By			
Architect/Specialist			

M:\Y-Team\Lewis_Clark Rehab\Modifications\Window files\MAIN FB FIX BRACE.WND

DATE	REVISION	BY	APP'D

REGION NO.	STATE	FED. AID PROJ. NO.	SHEET NO.	TOTAL SHEETS
10	WASH.			

JOB NUMBER 6444

BRIDGE AND STRUCTURES OFFICE

Washington State Department of Transportation

SR 433
LEWIS & CLARK BRIDGE
DECK REPLACEMENT

FLOORBEAM LATERAL BRACE
MAIN SPAN

BRIDGE SHEET NO. MS14C

SHEET 103B OF 258 SHEETS

SR 433 JOB NO. 0001 SHEET 1

Thu Oct 09 18:20:14 2003

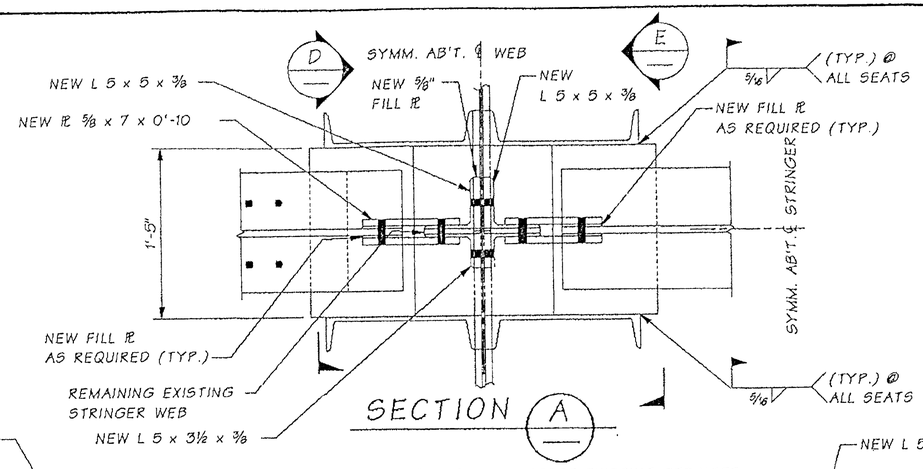

SECTION A

UNDER DEAD LOAD CONDITIONS ONLY, SUPPORT EXISTING STRINGER WITH TEMPORARY SEAT TO INSTALL ANGLES PRIOR TO DECK REMOVAL

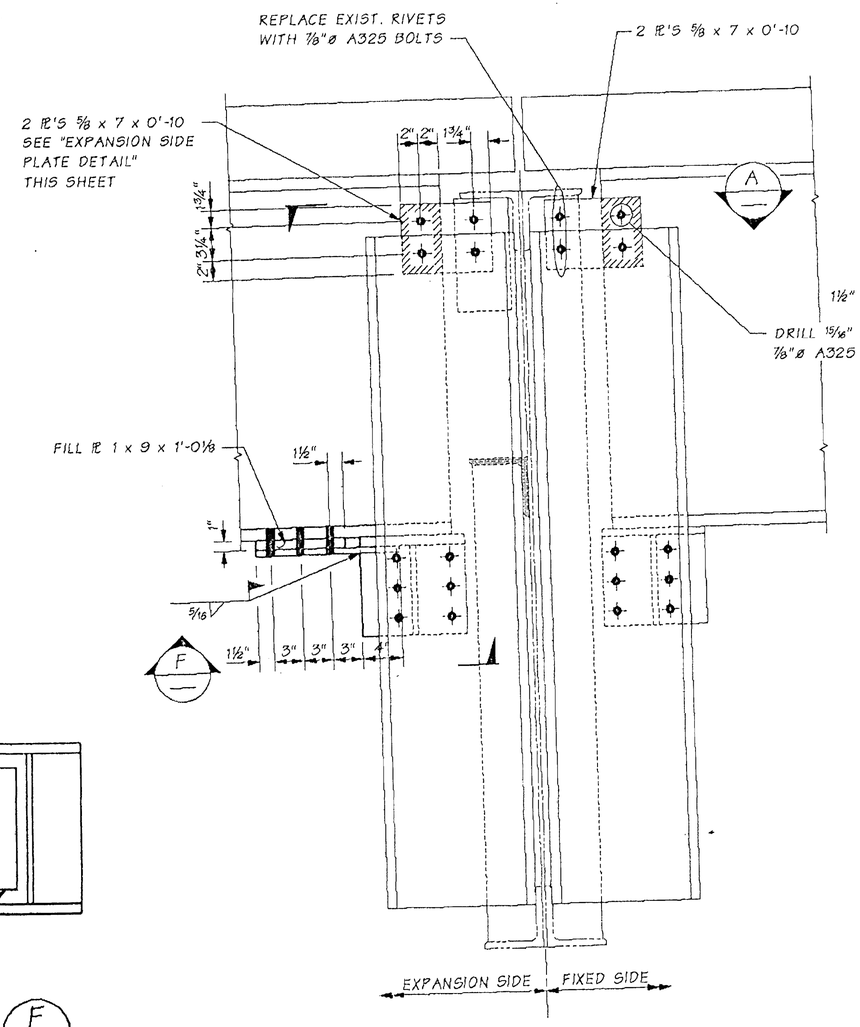

MODIFIED CONNECTION
TYPICAL MAIN SPAN FLOORBEAM
EXPANSION JOINT

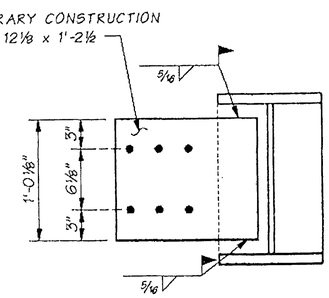

SECTION F

REMOVE TEMPORARY CONSTRUCTION PLATE AFTER PLACEMENT OF ADJACENT DECK PANEL

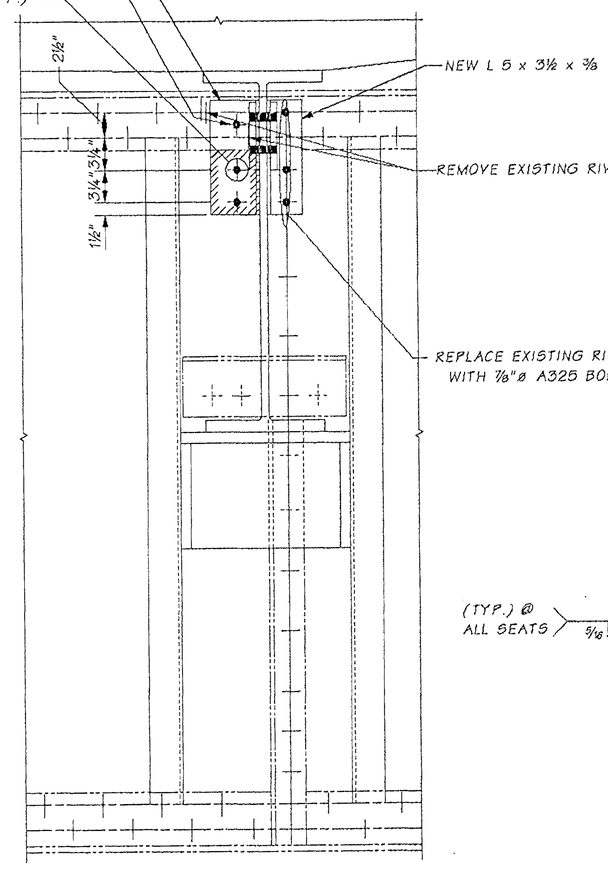

SECTION D

FOR "AS CONSTRUCTED PLANS" ONLY

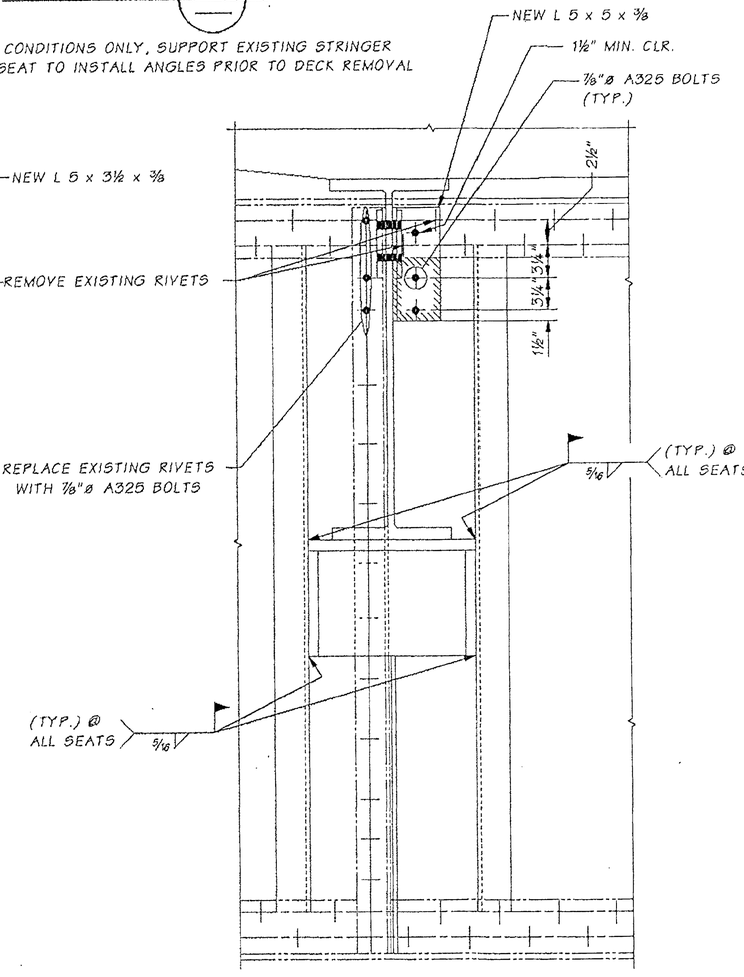

SECTION E

NOTE:

1. PLATES AND ANGLES SHALL BE GRADE 36 OR 50 AASHTO M270 AND SHALL MEET THE CHARPY V-NOTCH REQUIREMENTS OF AASHTO M270 TEMPERATURE ZONE 2.
2. ALL WELDS SHALL BE TERMINATED ¼" FROM EDGES.

Bridge Design Engr.	Kapur, J		M:\Personal\NguyenV\window files\MT2.WND								
Supervisor	Kirker, KN										
Designed By	Talukdar, M	07/03									
Checked By	Schultz, E	07/03									
Detailed By	Evans, PD	07/03									
Bridge Projects Engr.											
Prelim. Plan By											
Architect/Specialist			DATE	REVISION	BY	APP'D					

Tue Jul 29 15:10:10 2003

REGION NO.	STATE	FED. AID PROJ. NO.	SHEET NO.	TOTAL SHEETS
10	WASH.			
JOB NUMBER				
6444				

MUNDIRA TALUKDAR — STATE OF WASHINGTON — 21540 — REGISTERED PROFESSIONAL ENGINEER — EXPIRES 6/3/04

BRIDGE AND STRUCTURES OFFICE

STRUCTURAL REGISTERED PROFESSIONAL ENGINEER — 71344 — OREGON — SEPT. 10, 2002 — JUGESH KAPUR — EXPIRES 06-30-2003

Washington State Department of Transportation

SR 433
LEWIS & CLARK BRIDGE
DECK REPLACEMENT

MODIFIED STRINGER CONNECTION

BRIDGE SHEET NO. MS14D

SHEET 103C OF 258 SHEETS

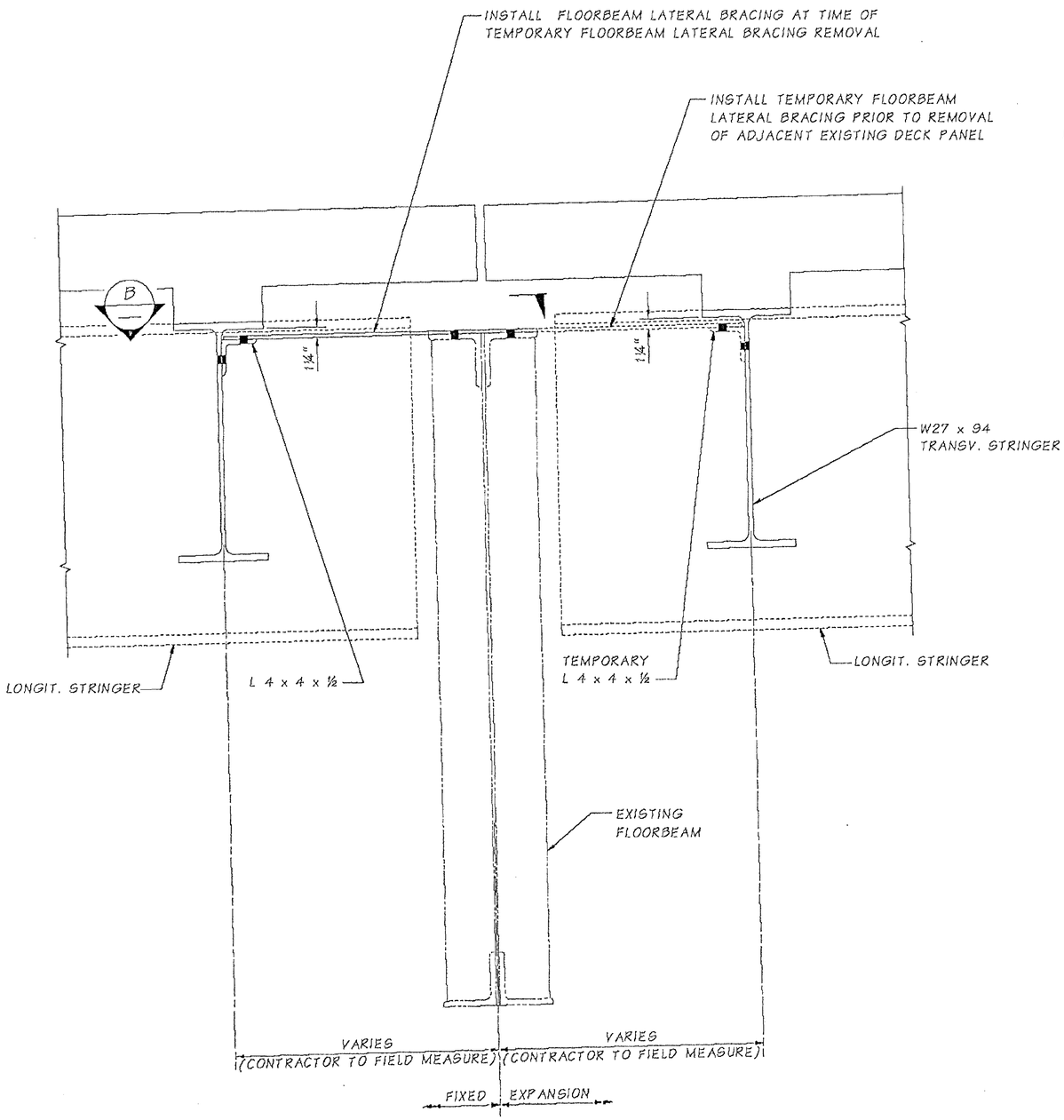

SECTION A

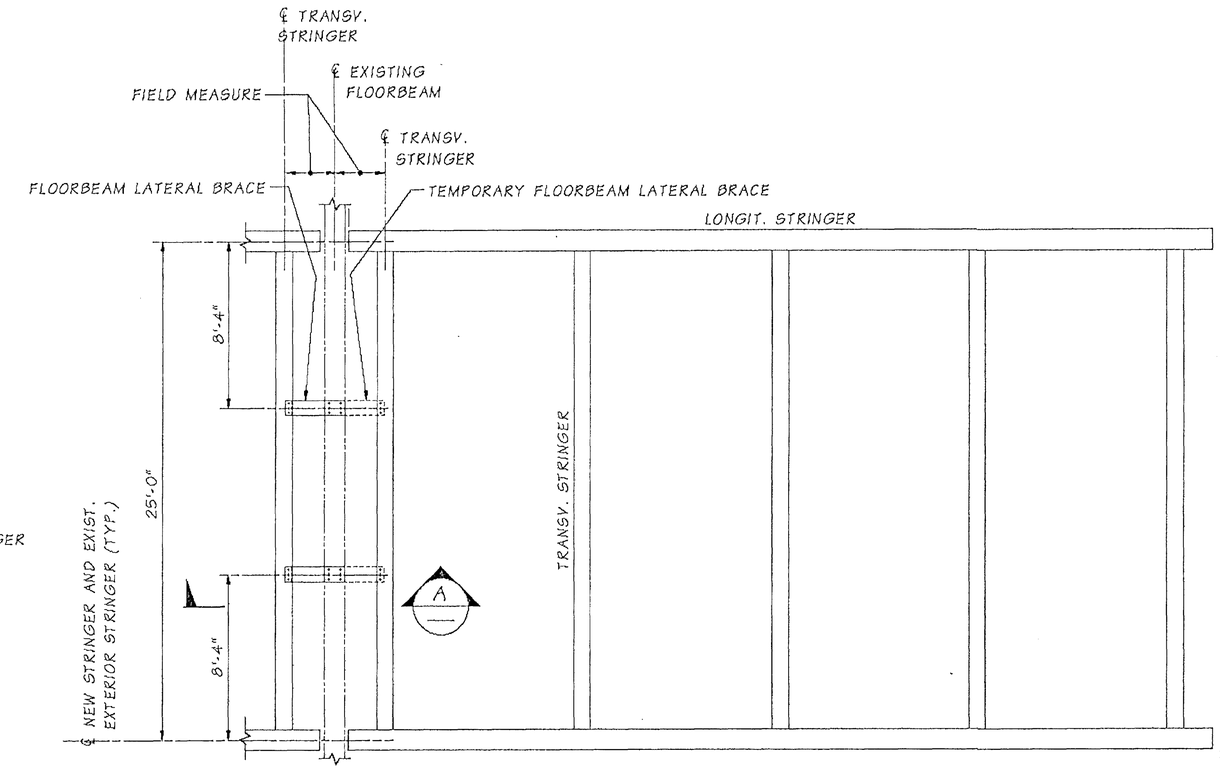

FRAMING PLAN

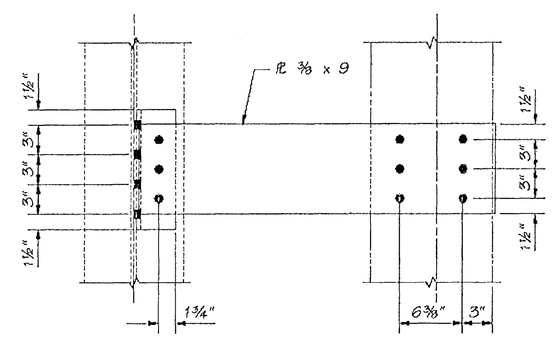

SECTION B

FOR "AS CONSTRUCTED PLANS" ONLY

SR 433 JOB NO. ____ SHEET 1

Bridge Design Engr.	Kapur, J		N: Lewis & Clark Bridge Rehab MAIN SPAN CONN EXP.MAN								
Supervisor	Kirker, KN										
Designed By	Schultz, E	07/03									
Checked By	Talukdar, M	07/03									
Detailed By	Evans, PD	07/03									
Bridge Projects Engr.											
Prelim. Plan By											
Architect/Specialist			DATE	REVISION	BY	APP'D					

REGION NO.	STATE	FED. AID PROJ. NO.	SHEET NO.	TOTAL SHEETS
10	WASH.			
JOB NUMBER				
6444				

MONIMDRA TALUKDAR — STATE OF WASHINGTON — 24826 — PROFESSIONAL ENGINEER — EXPIRES 6/1/04

BRIDGE AND STRUCTURES OFFICE

STRUCTURAL REGISTERED PROFESSIONAL ENGINEER 71344 OREGON SEPT. 10, 2003 JUGESH KAPUR — EXPIRES 06-30-2005

Washington State Department of Transportation

SR 433
LEWIS & CLARK BRIDGE
DECK REPLACEMENT

FLOORBEAM LATERAL BRACE
MAIN SPAN

BRIDGE SHEET NO. MS14E

SHEET 103D OF 258 SHEETS

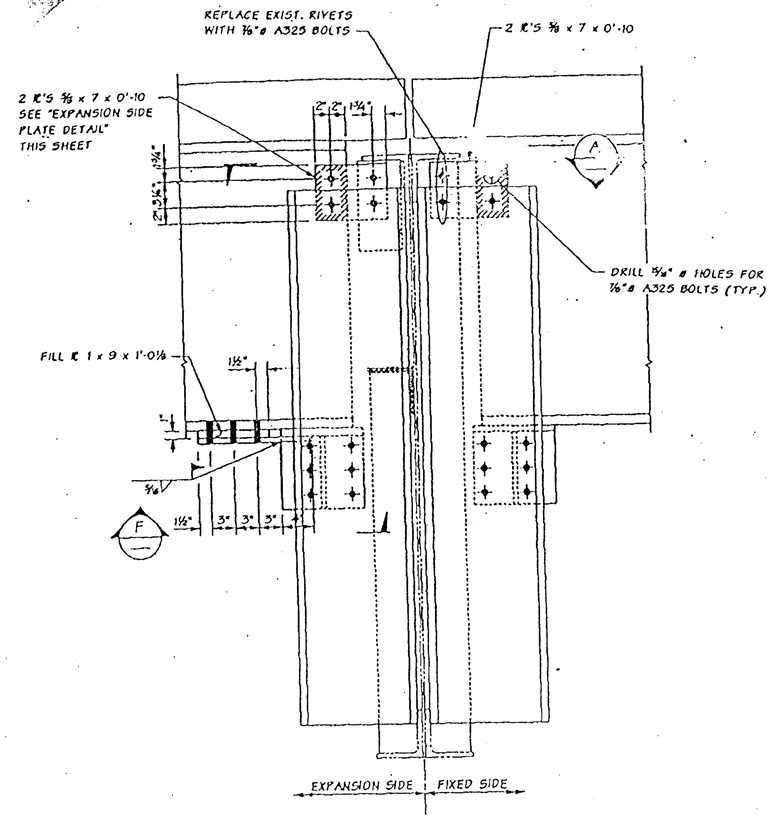

MODIFIED CONNECTION
TYPICAL MAIN SPAN FLOORBEAM
EXPANSION JOINT

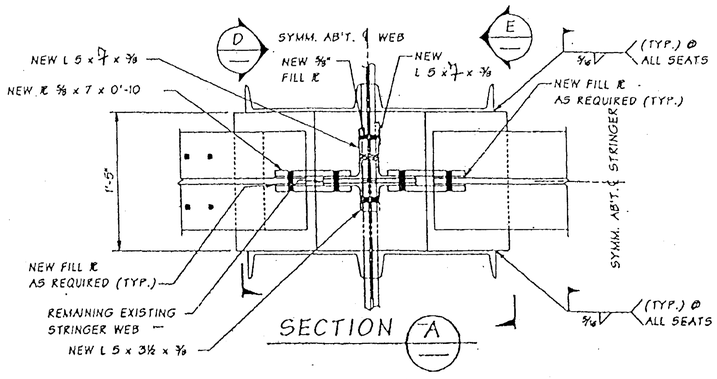

SECTION A

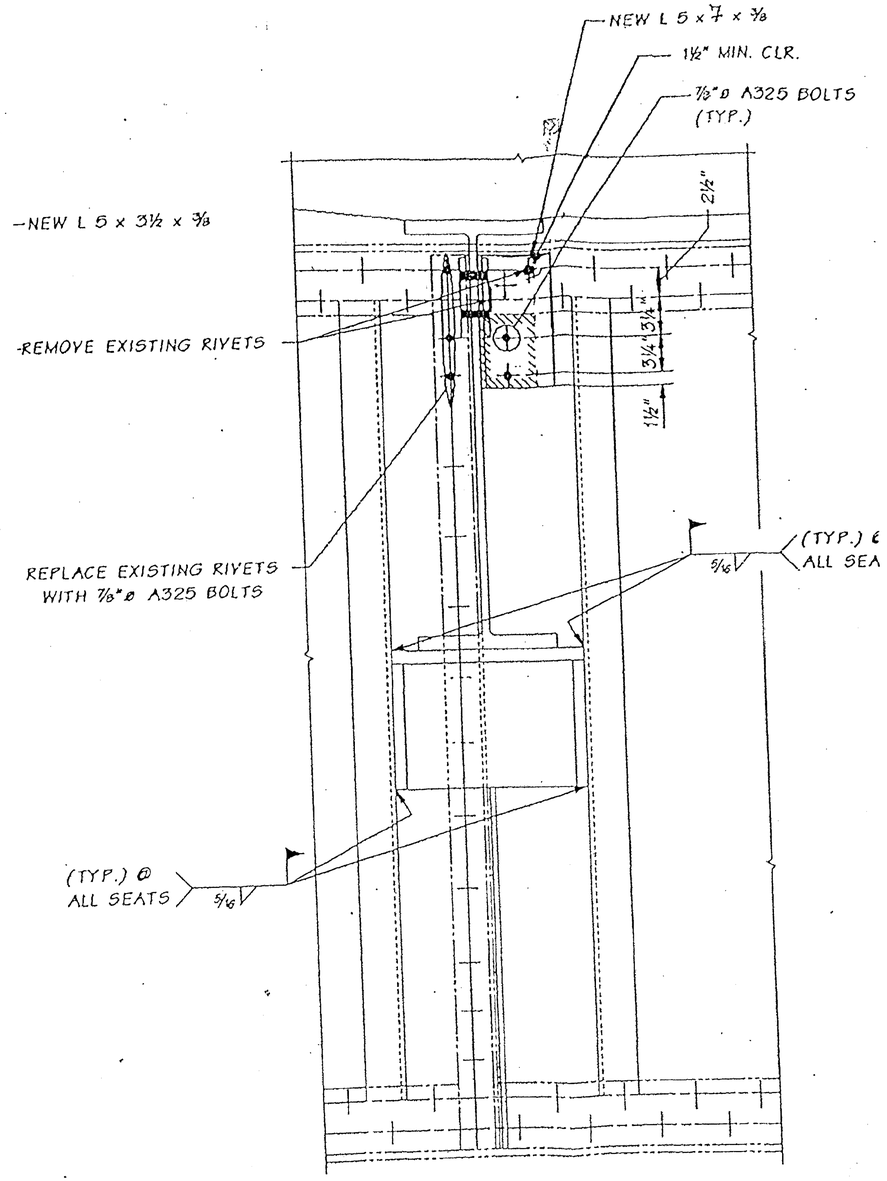

SECTION E

FOR "AS CONSTRUCTED PLANS" ONLY

FILE NAME	C:\AAWork\kelso\Svensen's Curve\L3425WASTESITE.dgn				
TIME	02:37:18 PM				
DATE	08/17/2005				
PLOTTED BY	spahnk				
DESIGNED BY					
ENTERED BY					
CHECKED BY					
PROJ. ENGR.					
REGIONAL ADM.		REVISION	DATE	BY	

REGION NO.	STATE	FED. AID PROJ. NO.
10	WASH	
JOB NUMBER		
CONTRACT NO. 6444		LOCATION NO.

P.E. STAMP BOX DATE

P.E. STAMP BOX DATE

Washington State Department of Transportation

SR 433
LEWIS AND CLARK BRIDE
DECK REPLACEMENT

L-29' MODIFIED STRINGER CONNECTION

PLOT11

M514F

SHEET 103F

258 SHEETS

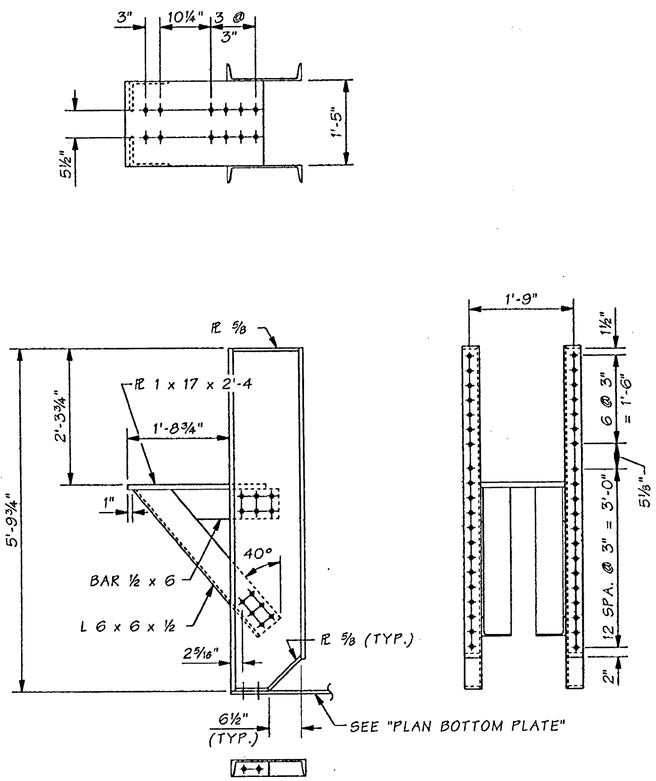

FIXED SIDE OF L27'

FOR DETAILS NOT SHOWN
SEE EXP. SIDE OF L27'

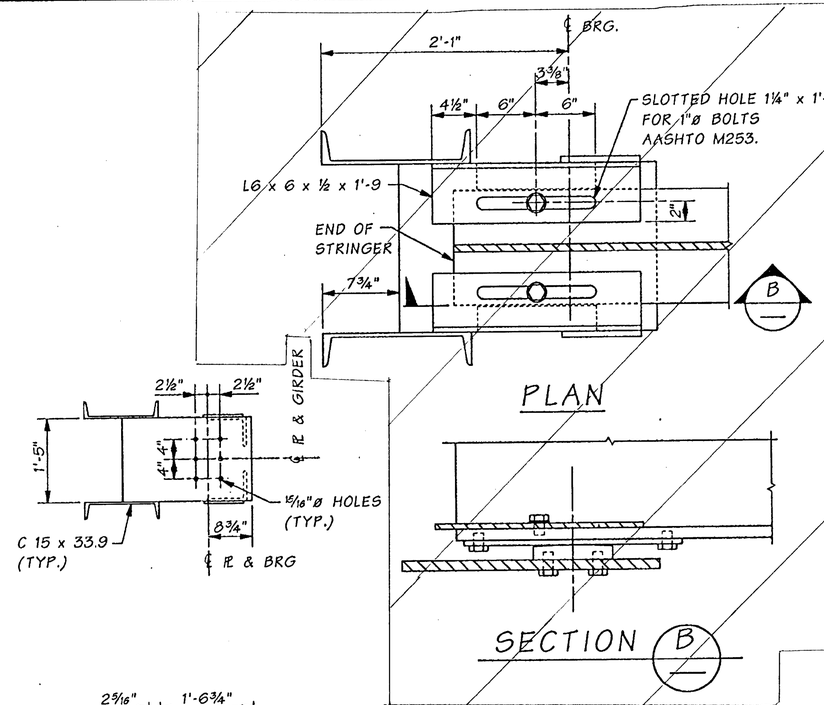

PLAN

SECTION B

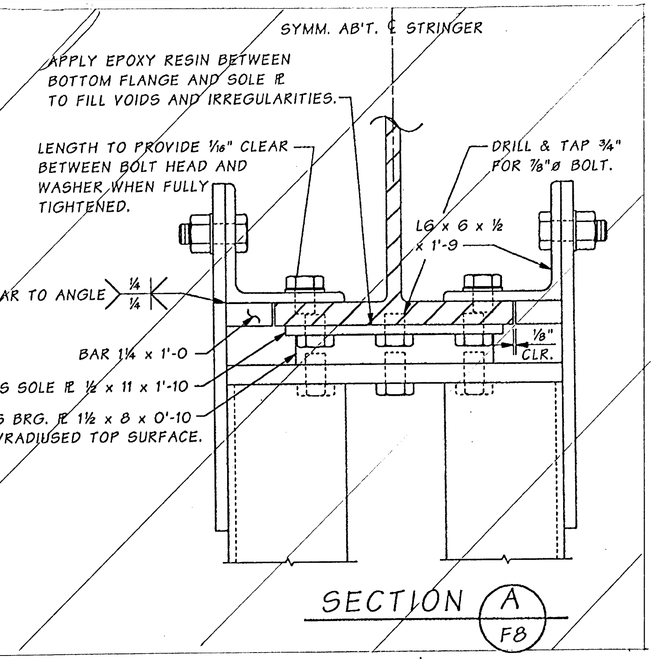

SECTION A

F8

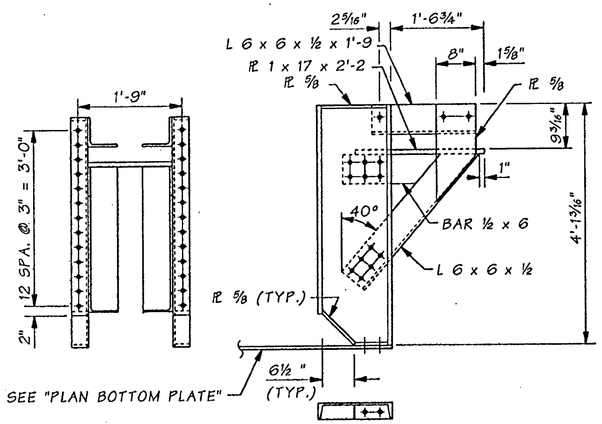

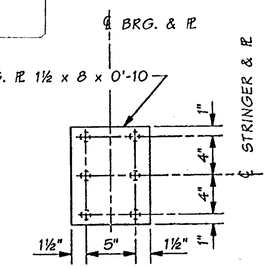

PLAN

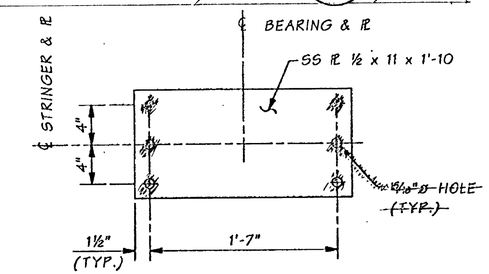

PLAN - SOLE PLATE

2 REQUIRED

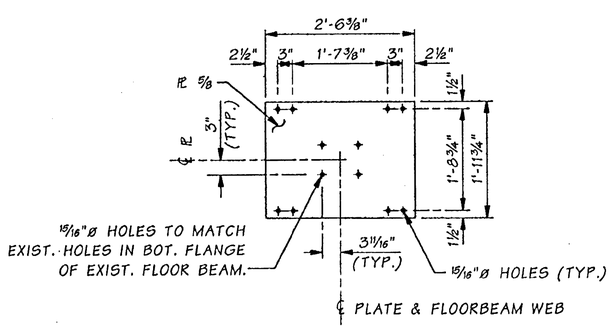

PLAN ~ BOTTOM PLATE

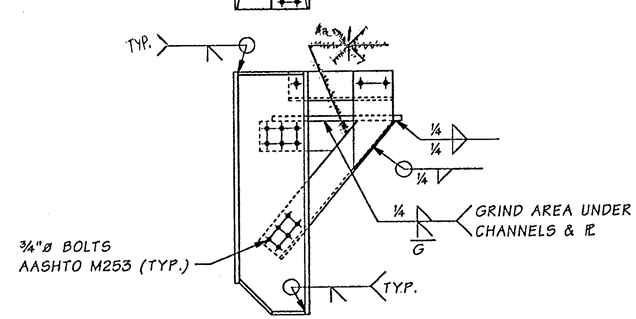

EXP. SIDE OF L27'

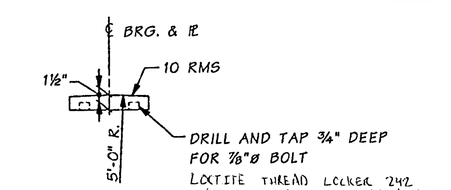

ELEVATION

BEARING PLATE

2 REQUIRED

FOR "AS CONSTRUCTED PLANS" ONLY

Bridge Design Engr.	Kapur, J		M:\Y-Team\Lewis_Clark Rehab\Main Truss\Window files\EXP-F-JOINT.WND			REGION NO.	STATE	FED. AID PROJ. NO.	SHEET NO.	TOTAL SHEETS
Supervisor	Clarke, PT	08/02				10	WASH.			
Designed By	Clarke, PT	08/02				JOB NUMBER 02x310		ACBH - 0433(007)		
Checked By	Talukdar, M	08/02								
Detailed By	House, L	08/02								
Bridge Projects Engr.										
Prelim. Plan By										
Architect/Specialist			DATE	REVISION	BY	APP'D				

STRUCTURAL REGISTERED PROFESSIONAL ENGINEER 71344 STATE OF OREGON JUGESH KAPUR 10-2-02 EXPIRES 06-30-2003

BRIDGE AND STRUCTURES OFFICE

PATRICK T. CLARKE STATE OF WASHINGTON 19331 REGISTERED PROFESSIONAL ENGINEER EXPIRES 1/17/04

Washington State Department of Transportation

SR 433
LEWIS AND CLARK BRIDGE
DECK REPLACEMENT

STRINGER SEAT DETAILS L27'

BRIDGE SHEET NO. MS15

SHEET 104 OF 258 SHEETS

SR 433 JOB NO. 0001 SHEET 15

Tue Sep 17 10:33:40 2002

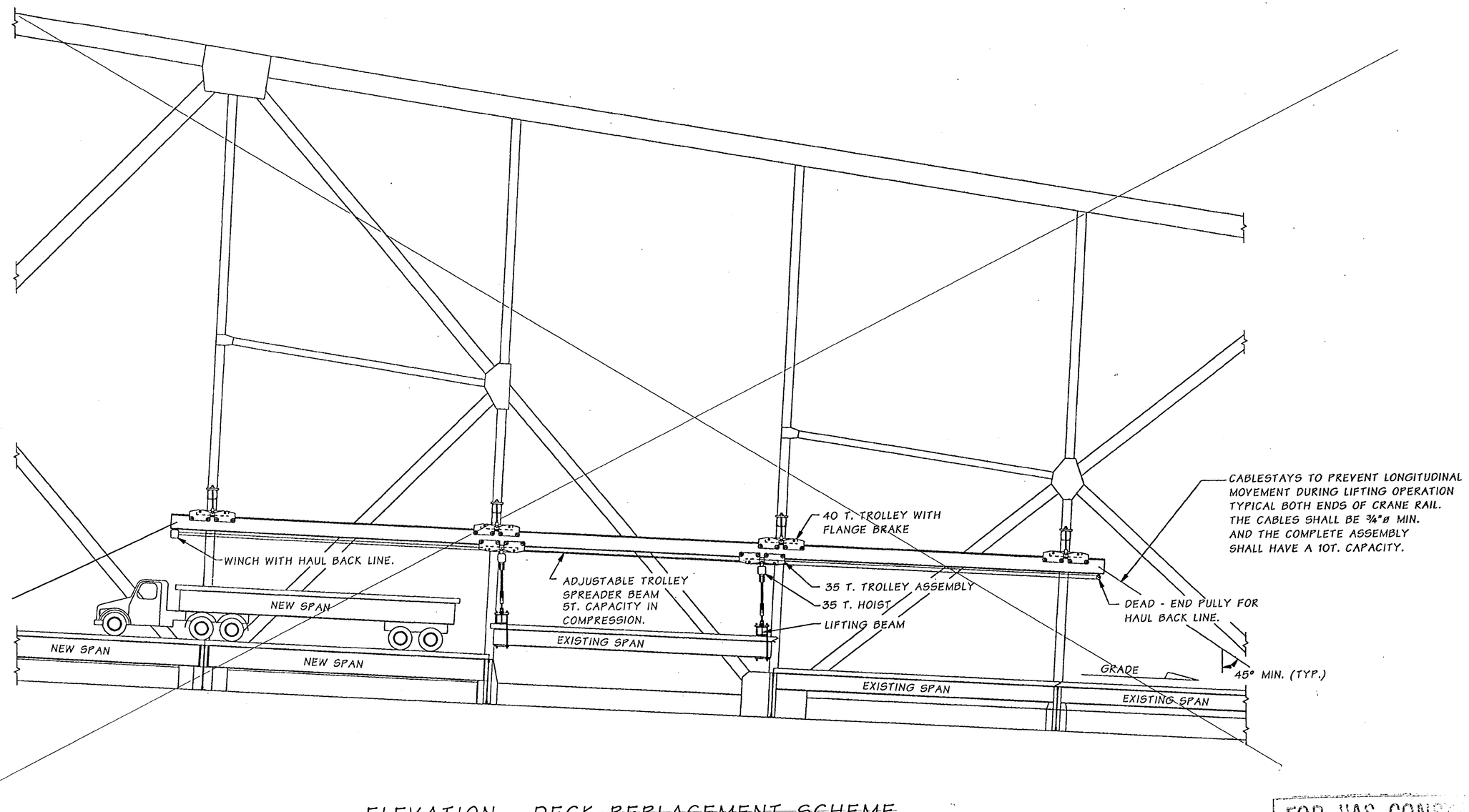

~~ELEVATION - DECK REPLACEMENT SCHEME~~

ALTERNATE CRANE SYSTEM USED
BRIDGE SHEETS MS16 - MS24 NOT APPLICABLE

FOR "AS CONSTRUCTED PLANS" ONLY

Bridge Design Engr.	Kapur, J		M:\Y-Team\Lewis_Clark Rehab\Main Truss\Window files\LONGIT-SEC.WND								
Supervisor	Clarke, PT	08/02					REGION NO.	STATE	FED. AID PROJ. NO.	SHEET NO.	TOTAL SHEETS
Designed By	Clarke, PT	08/02					10	WASH.	ACBH - 0433(007)		
Checked By	Talukdar, M	08/02					JOB NUMBER 02x310				
Detailed By	House, L	08/02									
Bridge Projects Engr.											
Prelim. Plan By											
Architect/Specialist			DATE	REVISION	BY	APP'D	6444				

STRUCTURAL REGISTERED PROFESSIONAL ENGINEER 71444 OREGON SEPT. 10, 2001 JUGESH KAPUR
EXPIRES 06-30-2003

BRIDGE AND STRUCTURES OFFICE

PATRICK T. CLARKE STATE OF WASHINGTON REGISTERED PROFESSIONAL ENGINEER
EXPIRES 1/17/04

Washington State Department of Transportation

SR 433
LEWIS AND CLARK BRIDGE
DECK REPLACEMENT

DECK REPLACEMENT DETAILS

BRIDGE SHEET NO. MS16

SHEET 105 OF 258 SHEETS

SR 433 JOB NO. 0001 SHEET 16

Tue Sep 17 10:34:22 2002

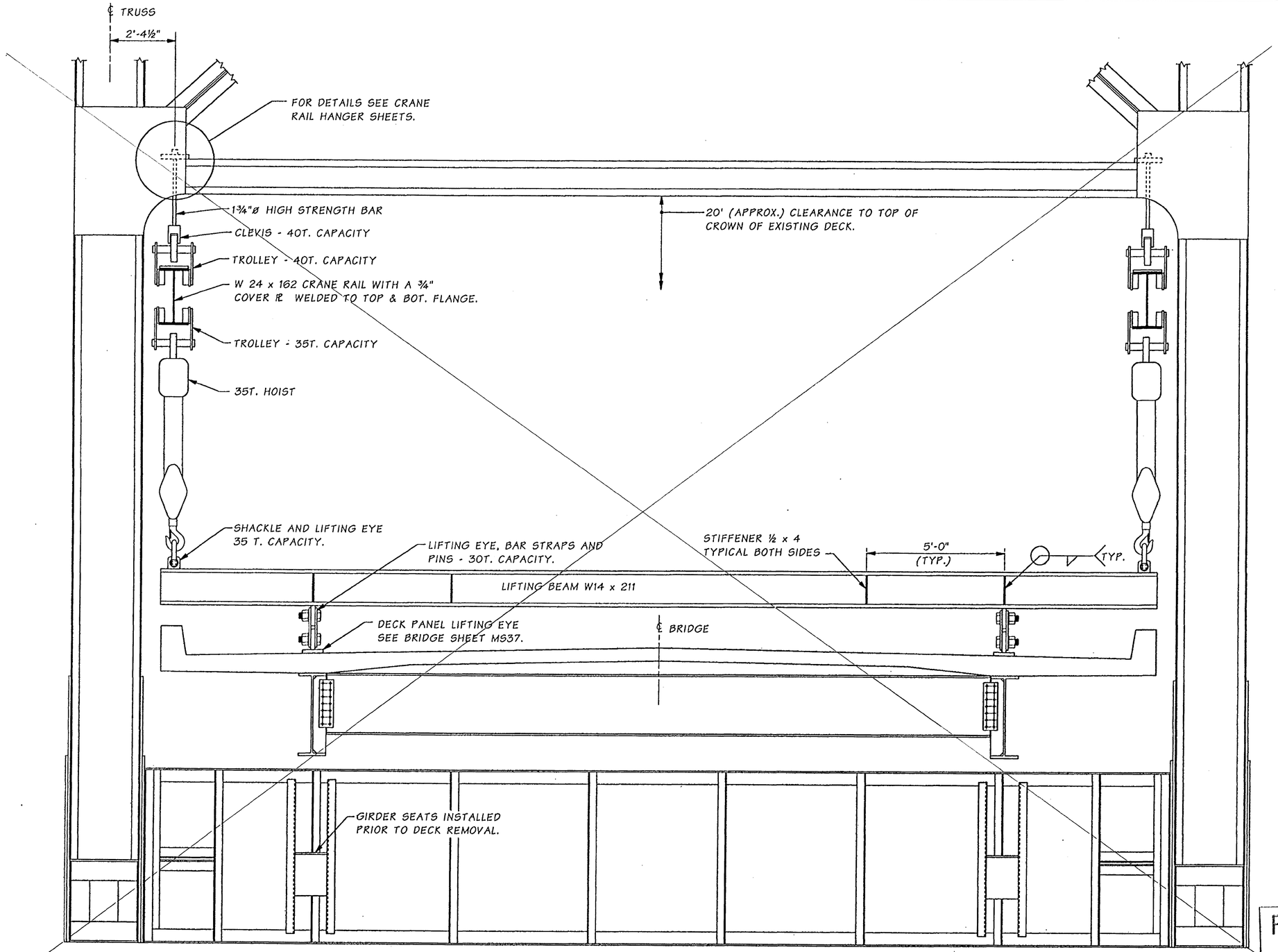

FOR "AS CONSTRUCTED PLANS" ONLY

SECTION - PLACING NEW DECK

SR 433 JOB NO. 0001 SHEET 17

Bridge Design Engr.	Kapur, J	
Supervisor	Clarke, PT	08/02
Designed By	Clarke, PT	08/02
Checked By	Talukdar, M	08/02
Detailed By	House, L	08/02
Bridge Projects Engr.		
Prelim. Plan By		
Architect/Specialist		

M:\Y-Team\Lewis_Clark Rehab\Main Truss\Window files\TYP-SEC-NEW.WND

DATE	REVISION	BY	APP'D

REGION NO.	STATE	FED. AID PROJ. NO.	SHEET NO.	TOTAL SHEETS
10	WASH.	ACBH - 0433(007)		

JOB NUMBER 02x310

6444

STRUCTURAL REGISTERED PROFESSIONAL ENGINEER 71344 OREGON SEPT. 10, 2002 JUGESH KAPUR EXPIRES 06-30-2003

BRIDGE AND STRUCTURES OFFICE

PATRICK T. CLARKE STATE OF WASHINGTON 37776 REGISTERED PROFESSIONAL ENGINEER EXPIRES 1/17/04

Washington State Department of Transportation

SR 433
LEWIS AND CLARK BRIDGE
DECK REPLACEMENT

DECK REPLACEMENT DETAILS

BRIDGE SHEET NO. MS17

SHEET 106 OF 258 SHEETS

Tue Sep 17 10:34:46 2002

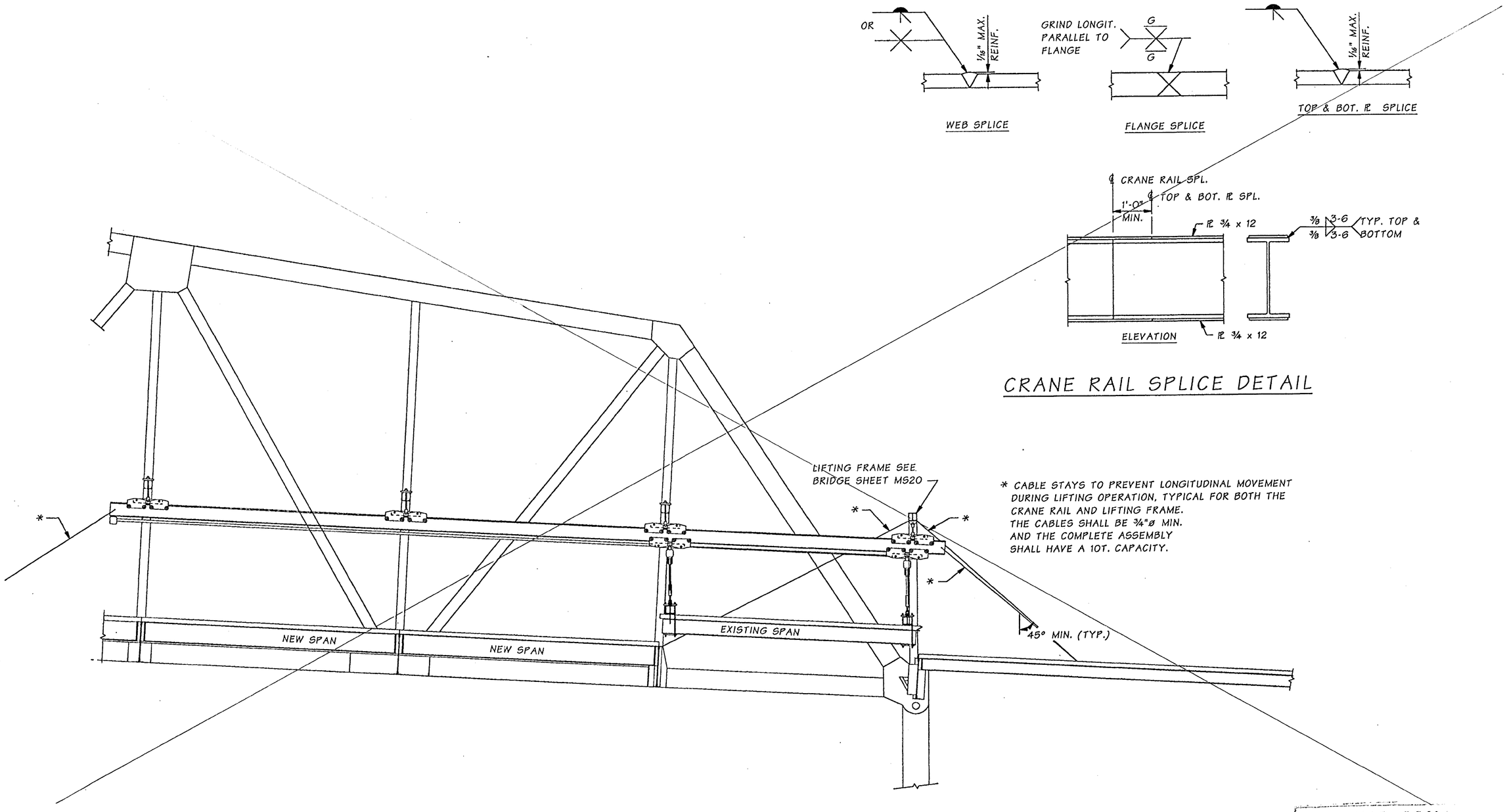

CRANE RAIL SPLICE DETAIL

* CABLE STAYS TO PREVENT LONGITUDINAL MOVEMENT DURING LIFTING OPERATION, TYPICAL FOR BOTH THE CRANE RAIL AND LIFTING FRAME. THE CABLES SHALL BE 3/4"ø MIN. AND THE COMPLETE ASSEMBLY SHALL HAVE A 10T. CAPACITY.

FOR "AS CONS... PLANS" ONLY

SR 433 JOB NO. 0001 SHEET 18

Bridge Design Engr.	Kapur, J		M:\Y-Team\Lewis_Clark Rehab\Main Truss\Window files\LONGIT-SEC-2.WND				REGION NO.	STATE	FED. AID PROJ. NO.	SHEET NO.	TOTAL SHEETS
Supervisor	Clarke, PT	08/02					10	WASH.	ACBH - 0433(007)		
Designed By	Clarke, PT	08/02					JOB NUMBER 02x310				
Checked By	Talukdar, M	08/02									
Detailed By	House, L	08/02									
Bridge Projects Engr.											
Prelim. Plan By											
Architect/Specialist			DATE	REVISION	BY	APP'D	6444				

STRUCTURAL REGISTERED PROFESSIONAL ENGINEER 71314 OREGON SEPT. 10, 2002 JUGESH KAPUR
EXPIRES 06-30-2003

BRIDGE AND STRUCTURES OFFICE

PATRICK T. CLARKE STATE OF WASHINGTON REGISTERED PROFESSIONAL ENGINEER
EXPIRES 1/17/04

Washington State Department of Transportation

SR 433
LEWIS AND CLARK BRIDGE
DECK REPLACEMENT

DECK REPLACEMENT DETAILS AT LO AND LO'

BRIDGE SHEET NO. MS18

SHEET 107 OF 258 SHEETS

Tue Sep 17 10:34:25 2002

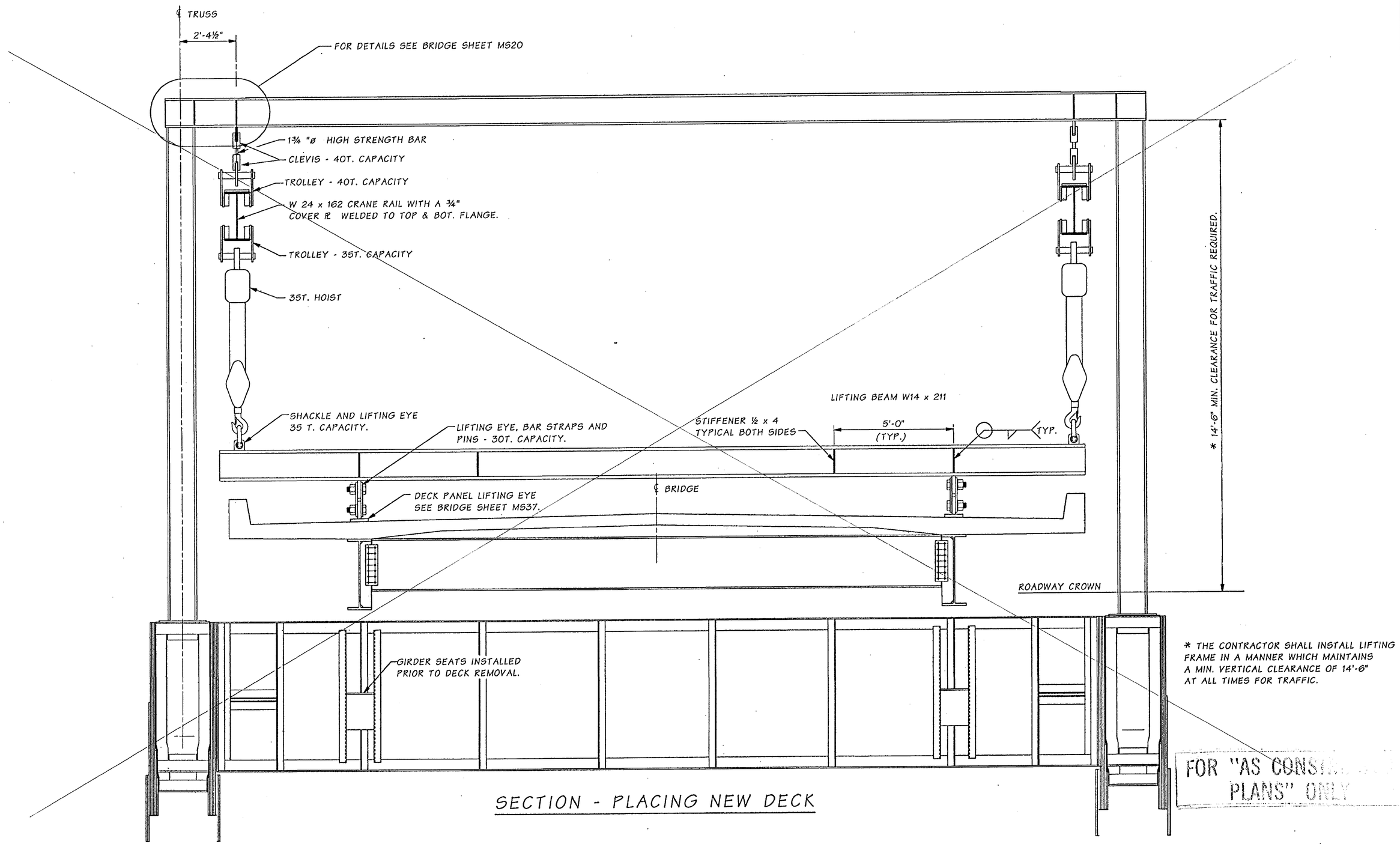

FOR "AS CONSTRUCTED PLANS" ONLY

SECTION - PLACING NEW DECK

SR 433 JOB NO. 0001 SHEET 19

Bridge Design Engr.	Kapur, J		
Supervisor	Clarke, PT	08/02	
Designed By	Clarke, PT	08/02	
Checked By	Talukdar, M	08/02	
Detailed By	House, L	08/02	
Bridge Projects Engr.			
Prelim. Plan By			
Architect/Specialist			

M:\Y-Team\Lewis_Clark Rehab\Main Truss\Window files\FRAME-AT-LO.WND

DATE	REVISION	BY	APP'D

REGION NO.	STATE	FED. AID PROJ. NO.	SHEET NO.	TOTAL SHEETS
10	WASH.	ACBH - 0433(007)		
JOB NUMBER 02x310				

STRUCTURAL REGISTERED PROFESSIONAL ENGINEER 73144 OREGON JULY 10, 2002 JUGESH KAPUR
EXPIRES 06-30-2003

BRIDGE AND STRUCTURES OFFICE

PATRICK T. CLARKE STATE OF WASHINGTON 27776 REGISTERED PROFESSIONAL ENGINEER
EXPIRES 1/17/04

Washington State Department of Transportation

SR 433
LEWIS AND CLARK BRIDGE
DECK REPLACEMENT

LIFTING FRAME AT LO AND LO'

BRIDGE SHEET NO. MS19

SHEET 108 OF 258 SHEETS

Tue Sep 17 10:33:56 2002

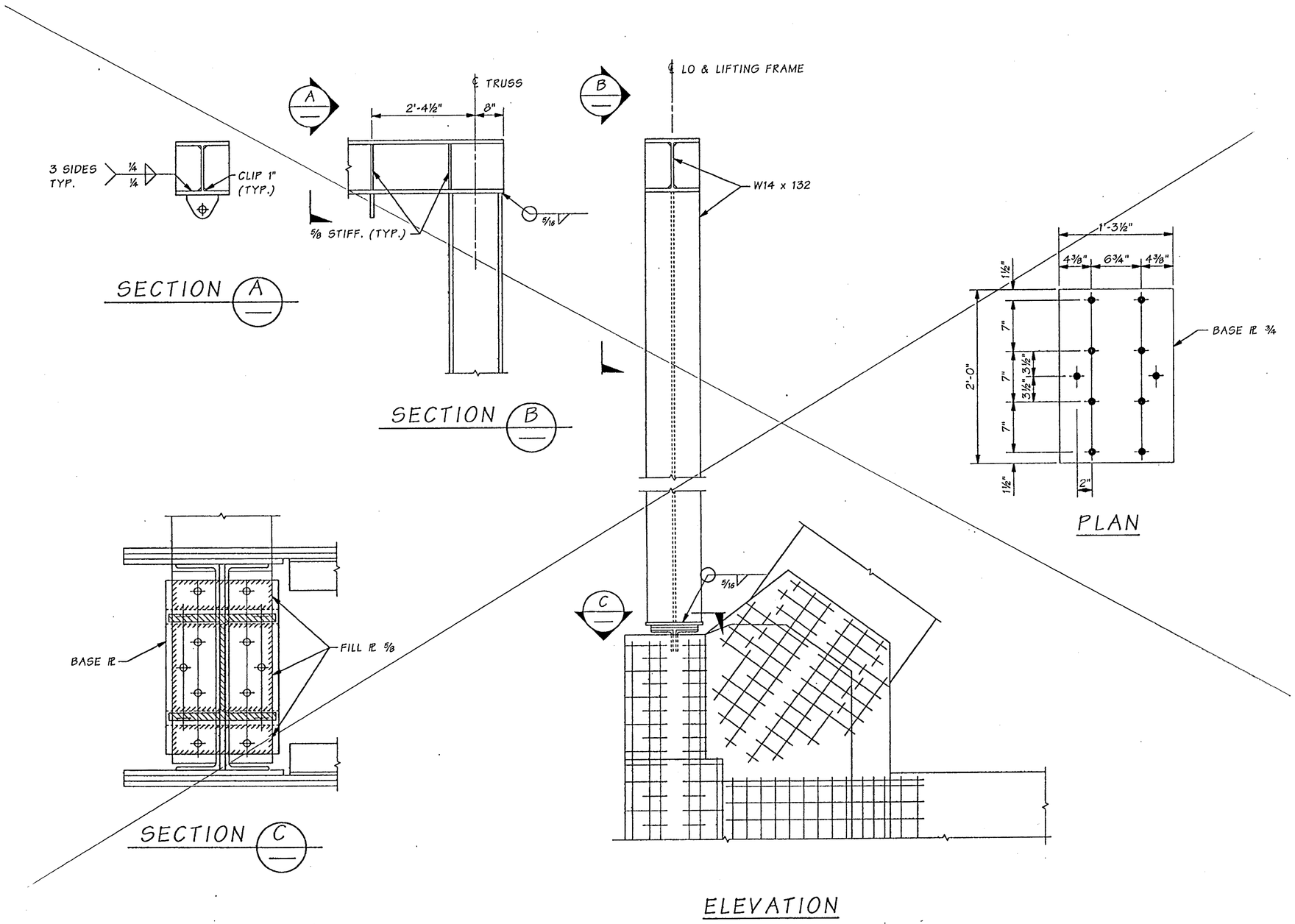

FOR "AS CONSTRUCTED PLANS" ONLY

SR 433 JOB NO. 0001 SHEET 20

Bridge Design Engr.	Kapur, J		M:\Y-Team\Lewis_Clark Rehab\Main Truss\Window files\LO-LONG-SEC.WND			REGION NO.	STATE	FED. AID PROJ. NO.	SHEET NO.	TOTAL SHEETS
Supervisor	Clarke, PT	08/02				10	WASH.	ACBH - 0433(007)		
Designed By	Clarke, PT	08/02								
Checked By	Talukdar, M	08/02				JOB NUMBER 02x310				
Detailed By	House, L	08/02								
Bridge Projects Engr.										
Prelim. Plan By										
Architect/Specialist			DATE	REVISION	BY	APP'D				

Tue Sep 17 10:34:01 2002

STRUCTURAL REGISTERED PROFESSIONAL ENGINEER 71314 OREGON SEPT. 10, 2001 JUGESH KAPUR
EXPIRES 06-30-2003

BRIDGE AND STRUCTURES OFFICE

PATRICK T. CLARKE STATE OF WASHINGTON REGISTERED PROFESSIONAL ENGINEER
EXPIRES 1/17/04

Washington State Department of Transportation

SR 433
LEWIS AND CLARK BRIDGE
DECK REPLACEMENT

LIFTING FRAME DETAILS

BRIDGE SHEET NO. MS20

SHEET 109 OF 258 SHEETS

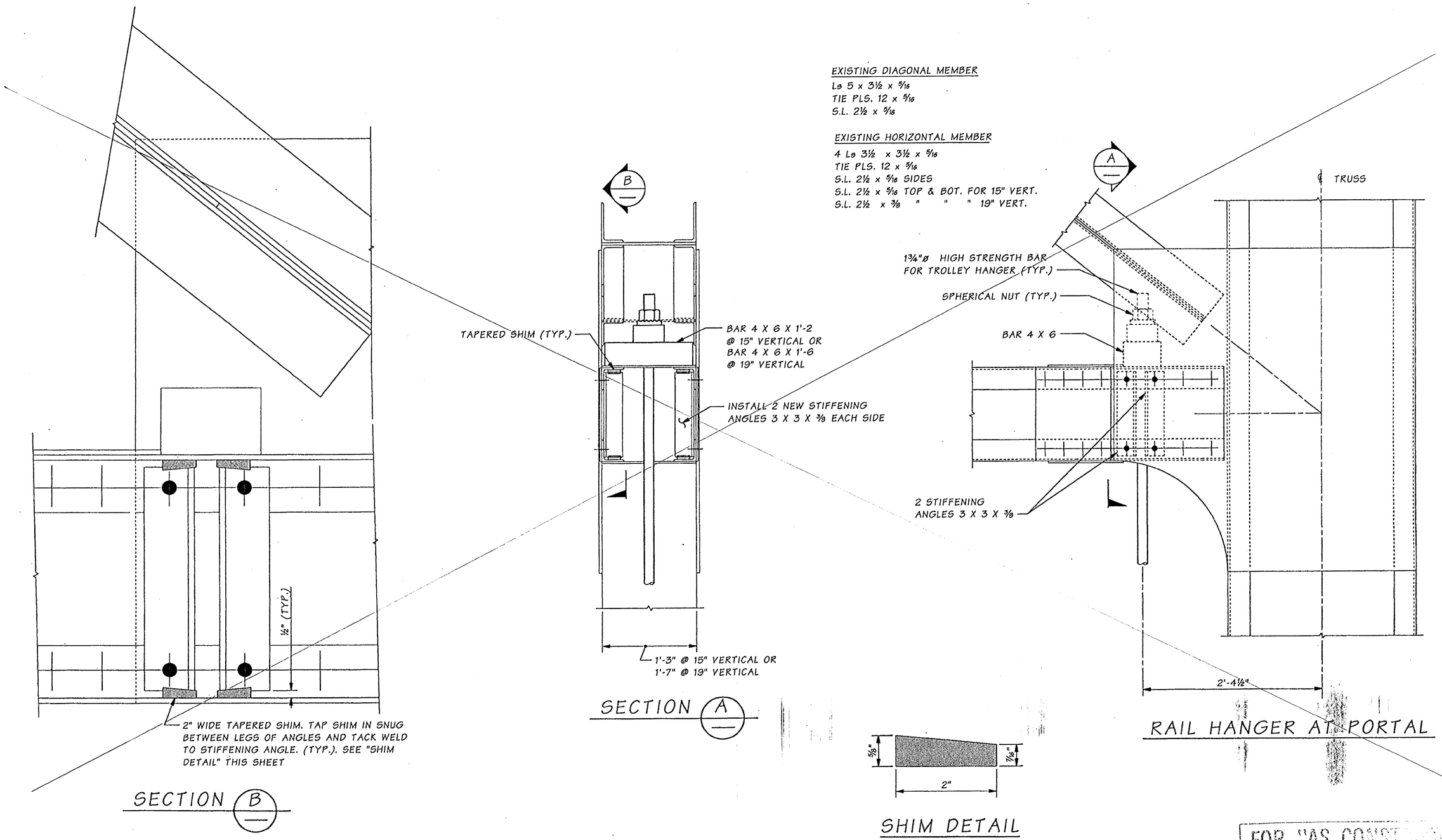

FOR "AS CONSTRUCTED PLANS" ONLY

Bridge Design Engr.	Kapur, J		M:\Y-Team\Lewis_Clark Rehab\Main Truss\Window files\OVERHEAD-RAIL.WND				REGION NO.	STATE	FED. AID PROJ. NO.	SHEET NO.	TOTAL SHEETS
Supervisor	Clarke, PT	08/02					10	WASH.	ACBH - 0433(007)		
Designed By	Clarke, PT	08/02									
Checked By	Talukdar, M	08/02					JOB NUMBER 02x310				
Detailed By	House, L	08/02									
Bridge Projects Engr.											
Prelim. Plan By											
Architect/Specialist			DATE	REVISION	BY	APP'D	6/4/4				

STRUCTURAL REGISTERED PROFESSIONAL ENGINEER 7134 OREGON SEPT. 10, 2002 JUGESH KAPUR
EXPIRES 06-30-2003

BRIDGE AND STRUCTURES OFFICE

PATRICK T. CLARKE REGISTERED PROFESSIONAL ENGINEER
EXPIRES 1/17/04

Washington State Department of Transportation

SR 433
LEWIS AND CLARK BRIDGE
DECK REPLACEMENT

CRANE RAIL HANGERS AT PORTALS

BRIDGE SHEET NO. MS21

SHEET 110 OF 258 SHEETS

SR 433 JOB NO. 0001 SHEET 21

Tue Sep 17 10:34:33 2002

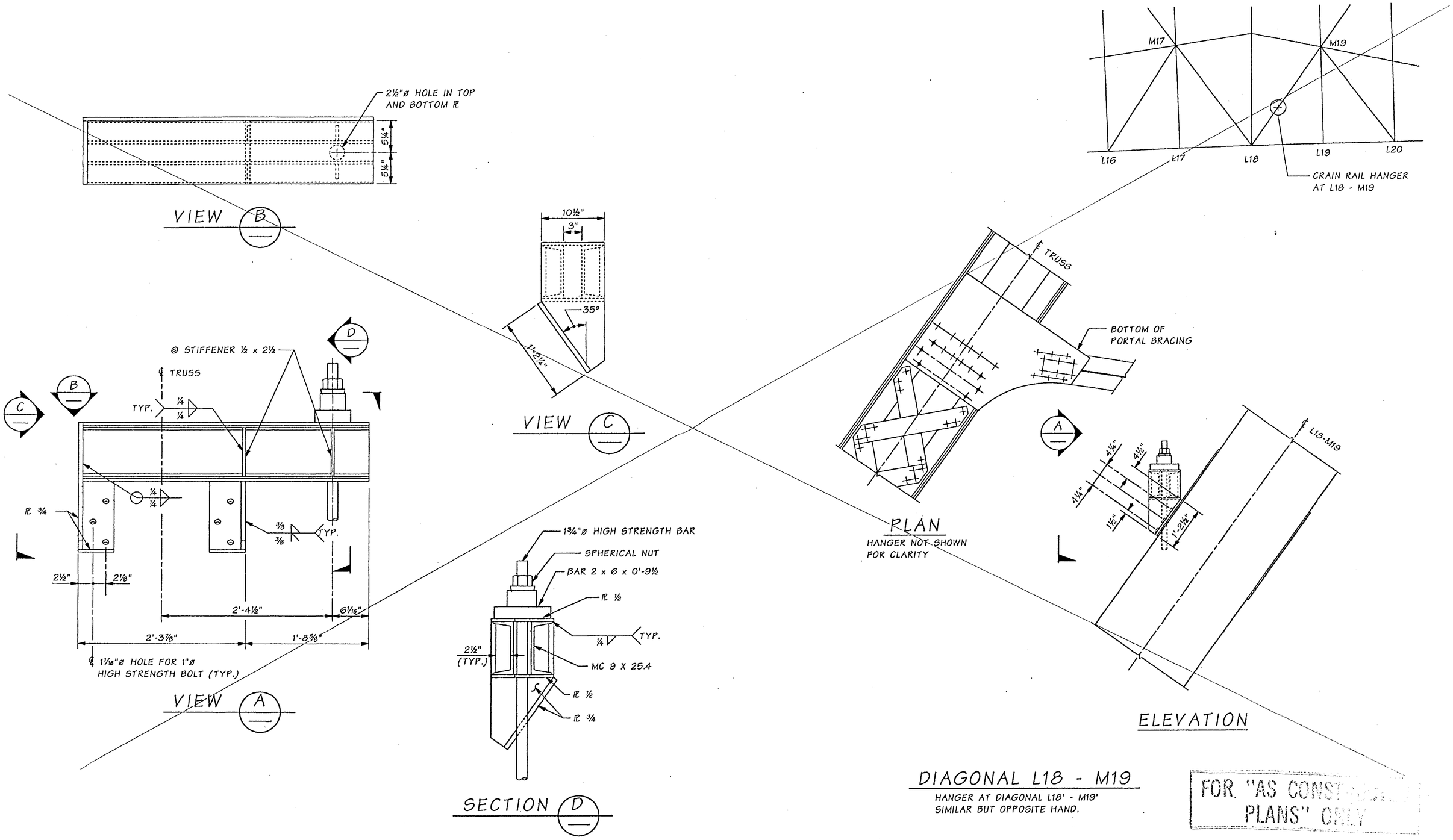

FOR "AS CONST[illegible] PLANS" ONLY

Bridge Design Engr.	Kapur, J	
Supervisor	Clarke, PT	08/02
Designed By	Clarke, PT	08/02
Checked By	Talukdar, M	08/02
Detailed By	House, L	08/02
Bridge Projects Engr.		
Prelim. Plan By		
Architect/Specialist		

M:\Y-Team\Lewis_Clark Rehab\Main Truss\Window files\L18-M19-OVERHEAD-RL.WND

DATE	REVISION	BY	APP'D

REGION NO.	STATE	FED. AID PROJ. NO.	SHEET NO.	TOTAL SHEETS
10	WASH.	ACBH - 0433(007)		
JOB NUMBER 02x310				
6444				

STRUCTURAL REGISTERED PROFESSIONAL ENGINEER 71384 OREGON SEPT. 10, 2002 JUGESH KAPUR EXPIRES 06-30-2003

BRIDGE AND STRUCTURES OFFICE

PATRICK T. [illegible] STATE OF WASHINGTON REGISTERED PROFESSIONAL ENGINEER EXPIRES 1/17/04

Washington State Department of Transportation

SR 433
LEWIS AND CLARK BRIDGE
DECK REPLACEMENT

CRANE RAIL HANGER AT L18 - M19

BRIDGE SHEET NO. M522

SHEET 111 OF 258 SHEETS

SR 433 JOB NO. 0001 SHEET 22

Tue Sep 17 10:34:09 2002

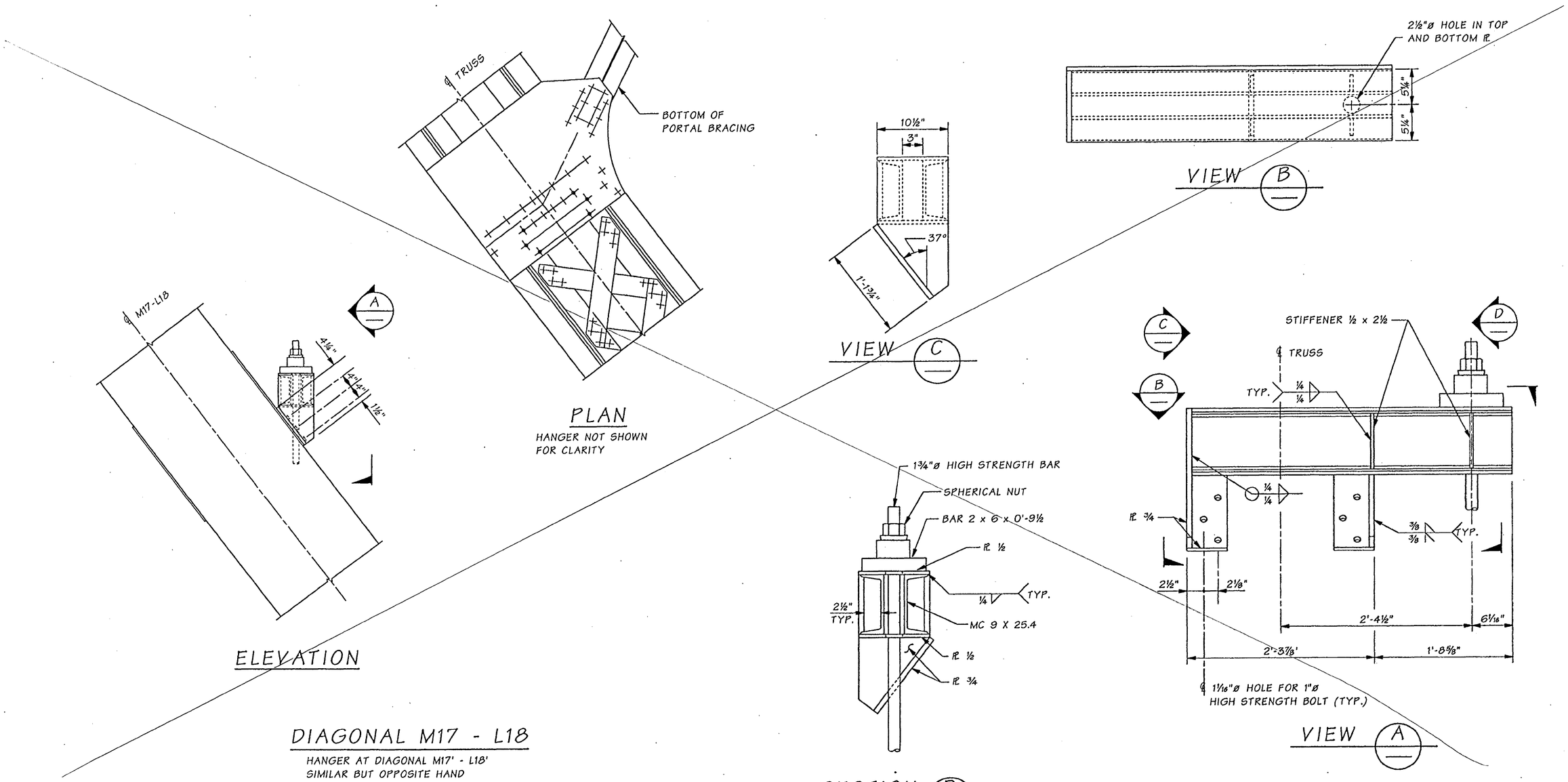

FOR "AS CONSTRUCTED PLANS" ONLY

Bridge Design Engr.	Kapur, J		
Supervisor	Clarke, PT	08/02	
Designed By	Clarke, PT	08/02	
Checked By	Talukdar, M	08/02	
Detailed By	House, L	08/02	
Bridge Projects Engr.			
Prelim. Plan By			
Architect/Specialist			

M:\Y-Team\Lewis_Clark Rehab\Main Truss\Window files\L18-M17-OVERHEAD-RL.WND

DATE	REVISION	BY	APP'D

REGION NO.	STATE	FED. AID PROJ. NO.	SHEET NO.	TOTAL SHEETS
10	WASH.	ACBH - 0433(007)		
JOB NUMBER 02x310				

STRUCTURAL REGISTERED PROFESSIONAL ENGINEER 71314 OREGON JULY 10, 2001 JUGESH KAPUR
EXPIRES 06-30-2003

BRIDGE AND STRUCTURES OFFICE

PATRICK T. CLARKE STATE OF WASHINGTON 37776 REGISTERED PROFESSIONAL ENGINEER
EXPIRES 1/17/04

Washington State Department of Transportation

SR 433
LEWIS AND CLARK BRIDGE
DECK REPLACEMENT

CRANE RAIL HANGER AT M17-L18

BRIDGE SHEET NO. MS23

SHEET 112 OF 258 SHEETS

SR 433 JOB NO. 0001 SHEET 23

Tue Sep 17 10:34:06 2002

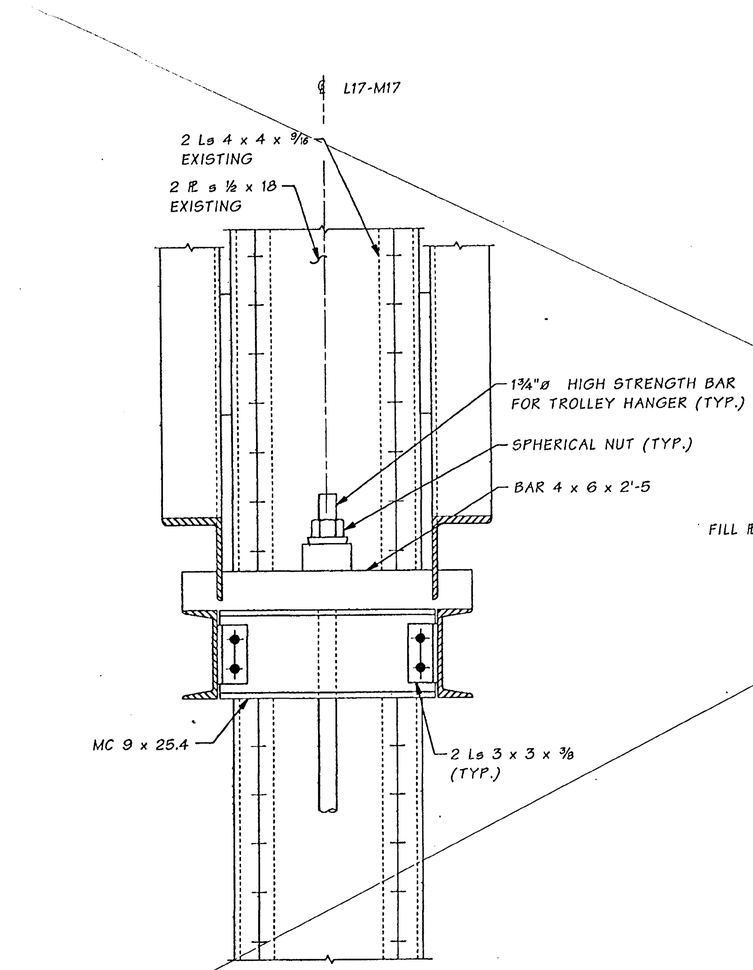

SECTION A

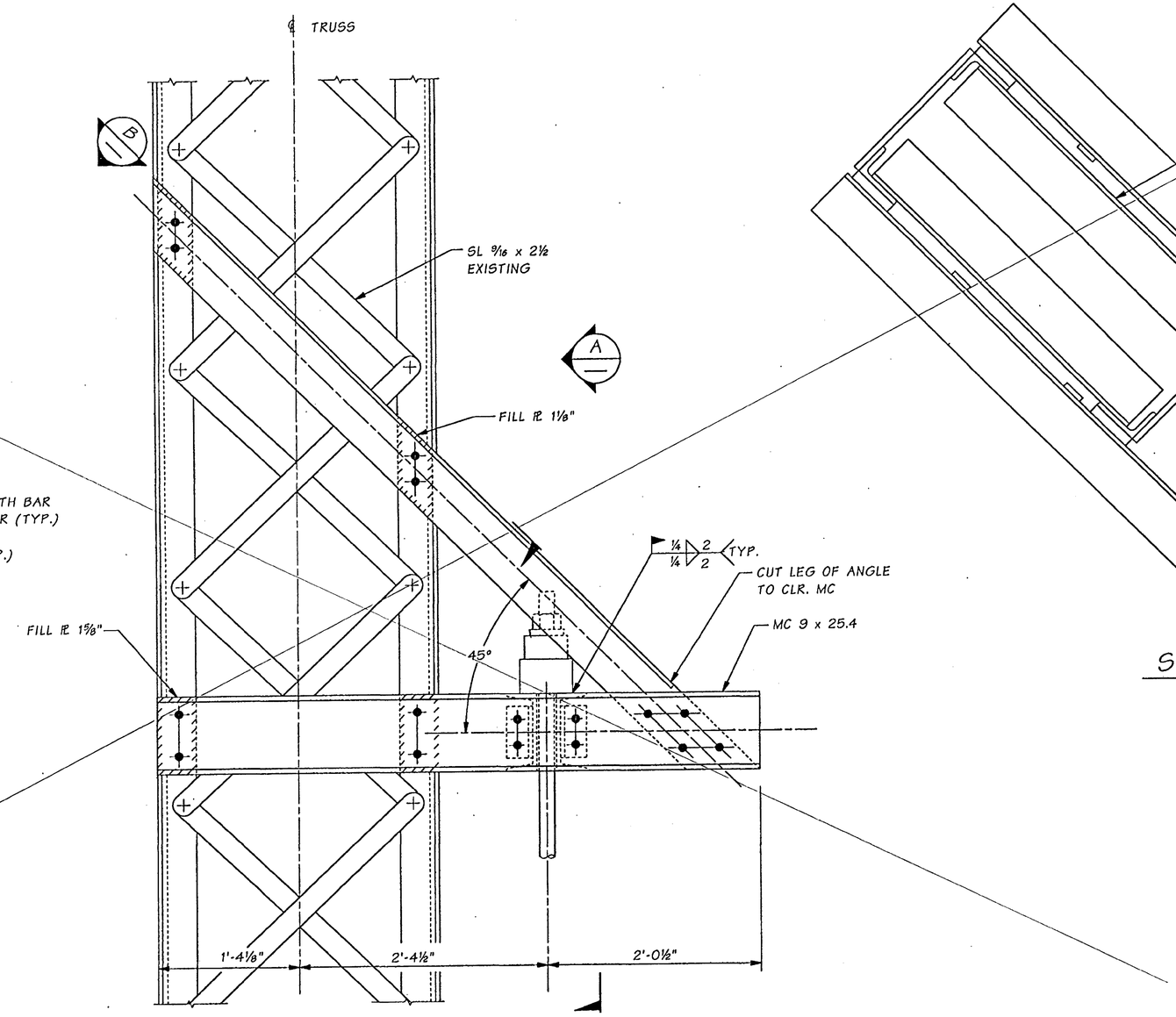

ELEVATION

HANGER L17 SHOWN, L17', L19 AND L19' SIMILAR.

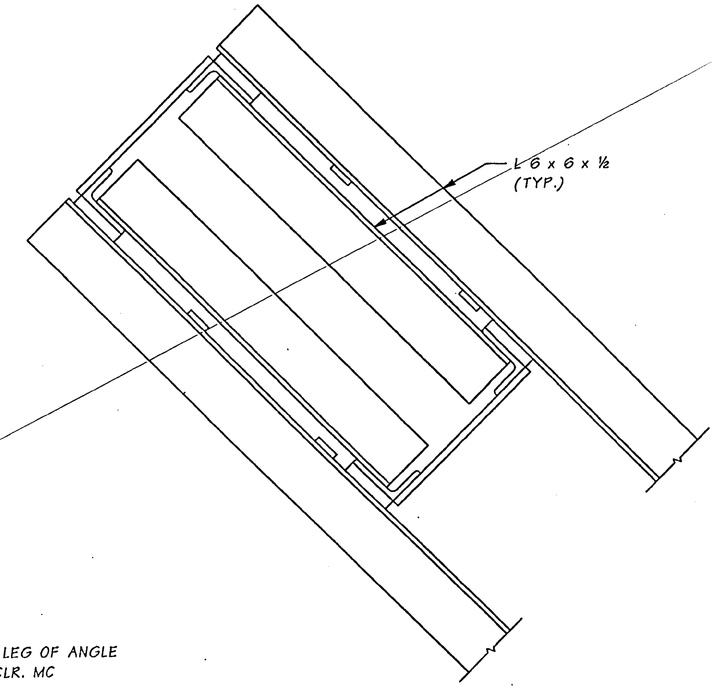

SECTION B

FOR "AS CONSTRUCTED PLANS" ONLY

Bridge Design Engr.	Kapur, J		
Supervisor	Clarke, PT	08/02	
Designed By	Clarke, PT	08/02	
Checked By	Talukdar, M	08/02	
Detailed By	House, L	08/02	
Bridge Projects Engr.			
Prelim. Plan By			
Architect/Specialist			

M:\Y-Team\Lewis_Clark Rehab\Main Truss\Window files\L17-M17-OVRHEAD-RAIL.WND

DATE	REVISION	BY	APP'D

REGION NO.	STATE	FED. AID PROJ. NO.	SHEET NO.	TOTAL SHEETS
10	WASH.	ACBH - 0433(007)		
JOB NUMBER 02x310				
6444				

STRUCTURAL REGISTERED PROFESSIONAL ENGINEER 71344 OREGON SEPT. 10, 2002 JUGESH KAPUR
EXPIRES 06-30-2003

BRIDGE AND STRUCTURES OFFICE

PATRICK T. CLARKE STATE OF WASHINGTON 27776 REGISTERED PROFESSIONAL ENGINEER
EXPIRES 1/17/04

Washington State Department of Transportation

SR 433
LEWIS AND CLARK BRIDGE
DECK REPLACEMENT

CRANE RAIL HANGER AT M17 - L17

BRIDGE SHEET NO. MS24

SHEET 113 OF 258 SHEETS

SR 433 JOB NO. 0001 SHEET 24

Tue Sep 17 10:34:04 2002

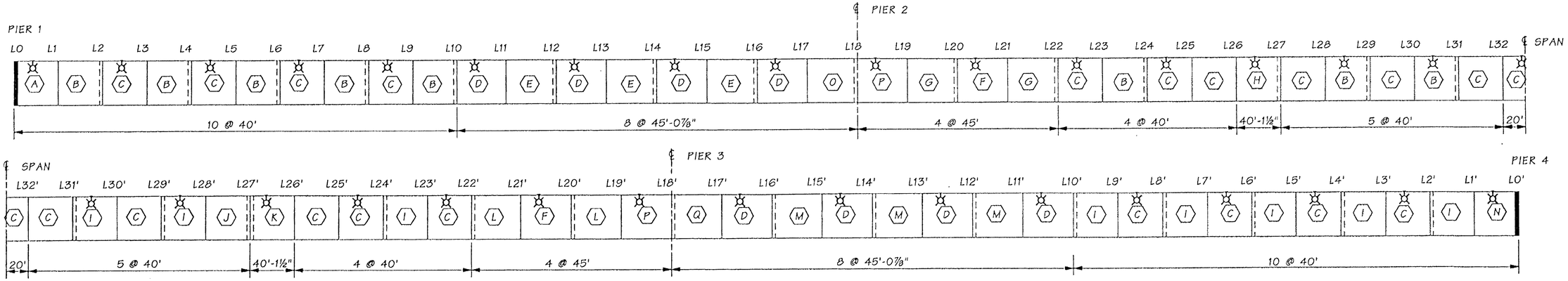

ALL PANEL DIMENSIONS BASED ON A STRUCTURAL TEMP. OF 64° F.

DECK PANEL LAYOUT

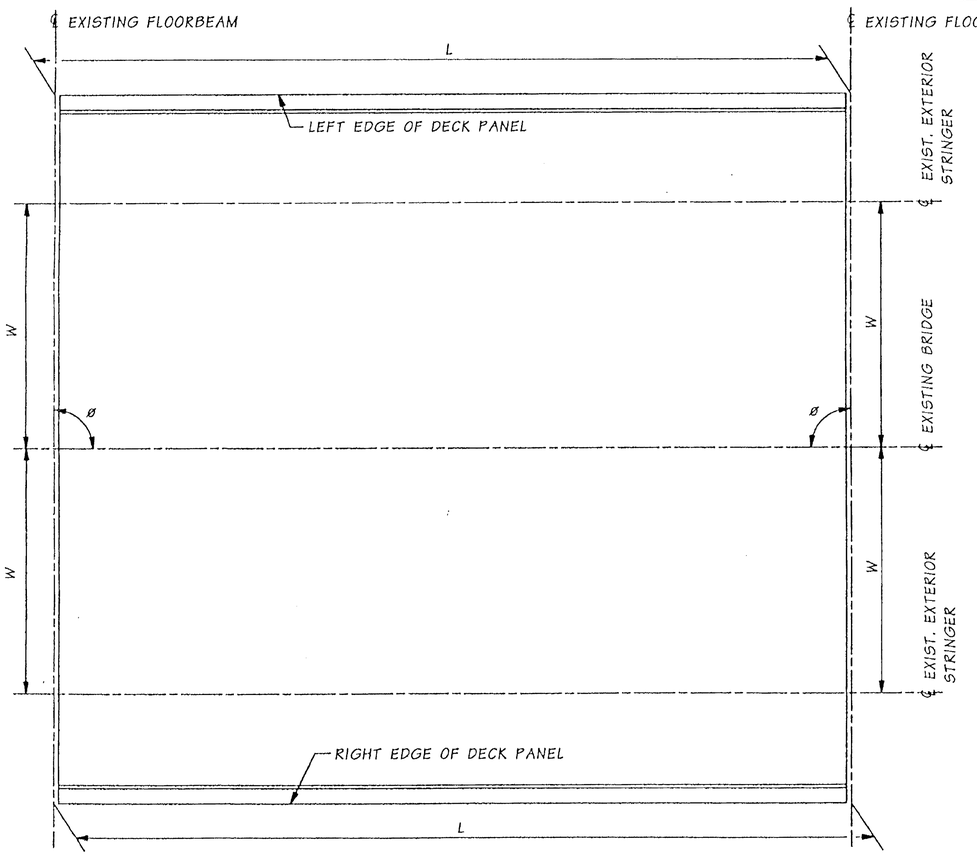

PLAN - PANEL GEOMETRY

NOTES:

1) THE CONTRACTOR SHALL FIELD VERIFY THE MEASUREMENTS ϕ L & W SUCH THAT THE FINISHED DECK PANEL IS CONSTRUCTED TO THE FOLLOWING TOLERANCES.

   1) L ± ¼ INCH
   2) W ± ⅛ INCH
   3) DEPTH ± ⅛ INCH
   4) SWEEP (VARIATION FROM STRAIGHT LINE PARALLEL TO CENTERLINE OF MEMBER) ± ¼ INCH
   5) WARPING ± ⅛ INCH FROM NEAREST ADJACENT CORNER.

2) FOR SPACING OF SHEAR CONNECTORS, PICK POINT CONNECTION AND LONGITUDINAL STRINGER TO TRANSVERSE STRINGER CONNECTION. SEE BR. SHT. MS37.

3) THE CONTRACTOR SHALL FIELD MEASURE ALL EXISTING GEOMETRY THAT AFFECTS THE FINAL FIT OF THE NEW DECK PANELS. THE RESULTS OF THE FIELD MEASUREMENTS SHALL BE TABULATED AND INCLUDED IN THE SHOP DRAWINGS FOR BOTH THE STEEL AND CONCRETE PORTIONS OF THE DECK PLANELS, INCLUDING CALCULATED ELEVATIONS FOR THE STRINGER SEAT SUPPORTS.

4) THE PROCEDURE USED FOR STORAGE OF THE PRECAST PANELS SHALL BE SUBMITTED TO THE ENGINEER FOR APPROVAL.

LEGEND

L11 --- TRUSS PANEL POINT.

(C) --- DECK PANEL TYPE.

--- FIXED PANEL JOINT. SEE "SILICONE SEALANT EXP. JT.", BRIDGE SHT. MS38

--- EXPANSION PANEL JOINT WITH EXPANSION SEAT BACK ON STATION. SEE "SILICONE SEALANT EXP. JT.", BRIDGE SHT. MS38

--- EXPANSION PANEL JOINT WITH EXPANSION SEAT AHEAD ON STATION. SEE "SILICONE SEALANT EXP. JT.", BRIDGE SHT. MS38

--- FINGER JOINT. SEE "FINGER JOINT AT L27' " BRIDGE SHTS. MS39 - MS43

--- STRIP SEAL EXPANSION JOINT. SEE "EXPANSION JOINT PIERS 1 AND 4", BRIDGE SHTS. ML4

--- LUMINAIRE POST LOCATION FOR DETAILS SEE PANEL SHEETS ML8 - ML11

FOR "AS CONSTRUCTED PLANS" ONLY

Engr.	Kapur, J		M:\Y-Team\Lewis_Clark Rehab\Main Truss\window files\EXP-JOINT.WND								
	Clarke, PT	08/02									
	Clarke, PT	08/02									
Checked By	Talukdar, M	08/02									
Detailed By	House, L	08/02									
Bridge Projects Engr.											
Prelim. Plan By			10/02	ADDED NOTE	MT						
Architect/Specialist			DATE	REVISION	BY	APP'D					

REGION NO.	STATE	FED. AID PROJ. NO.	SHEET NO.	TOTAL SHEETS
10	WASH.			
JOB NUMBER 02x310		ACBH - 0433(007)		

STRUCTURAL REGISTERED PROFESSIONAL ENGINEER 71144 OREGON OCT. 10, 2002 JUGESH KAPUR — EXPIRES 06-30-2003

BRIDGE AND STRUCTURES OFFICE

PATRICK T. CLARKE STATE OF WASHINGTON REGISTERED PROFESSIONAL ENGINEER — EXPIRES 1/17/04

Washington State Department of Transportation

SR 433
LEWIS AND CLARK BRIDGE
DECK REPLACEMENT

DECK PANEL LAYOUT

BRIDGE SHEET NO. MS25

SHEET 114 OF 258 SHEETS

SR 433 NG. 0001 SHEET 25

Tue Oct 29 15:07:43 2002

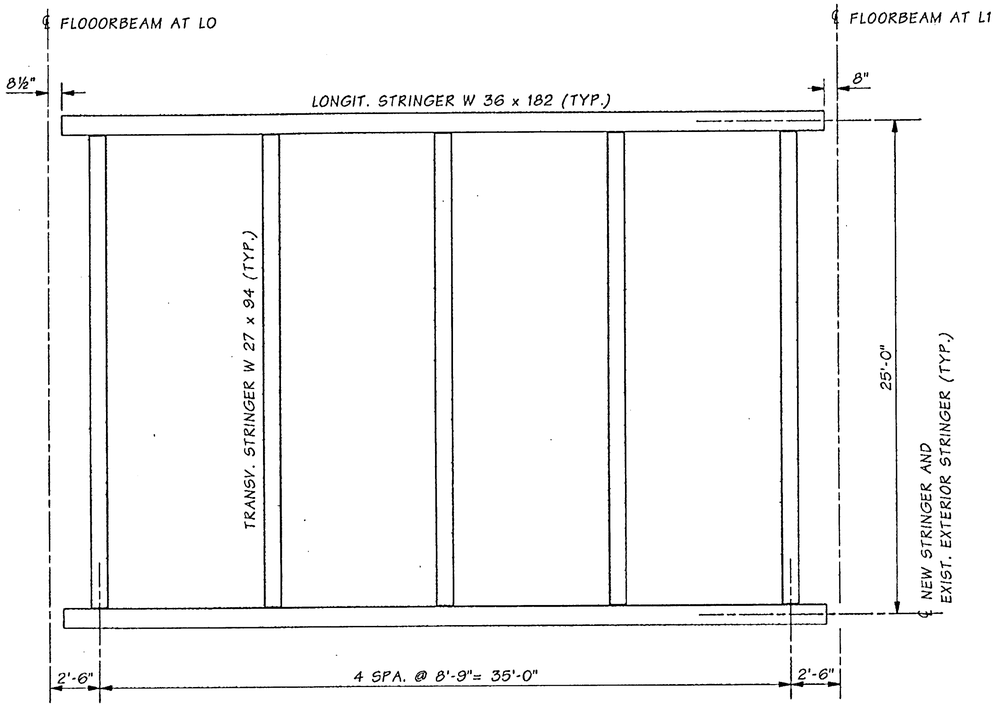

FRAMING PLAN

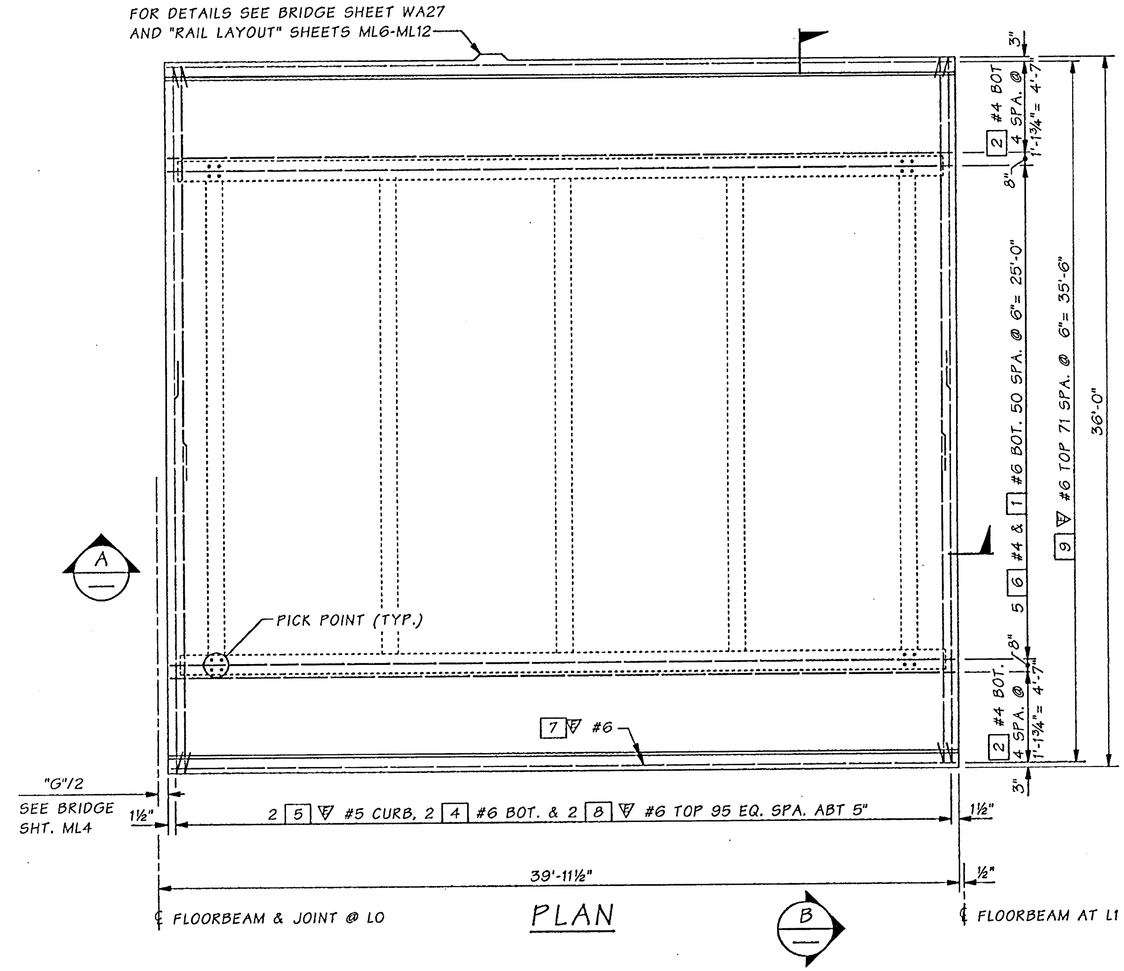

PLAN

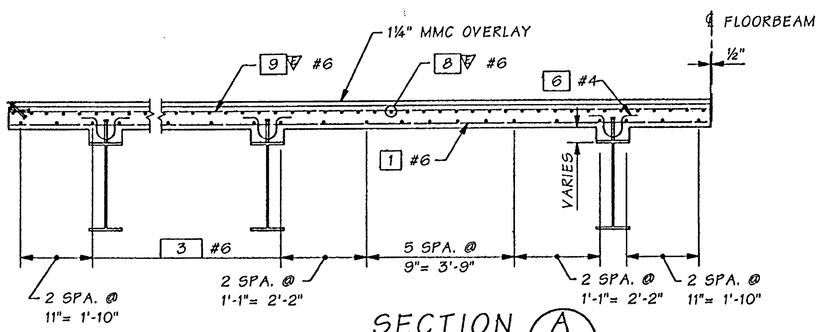

SECTION A

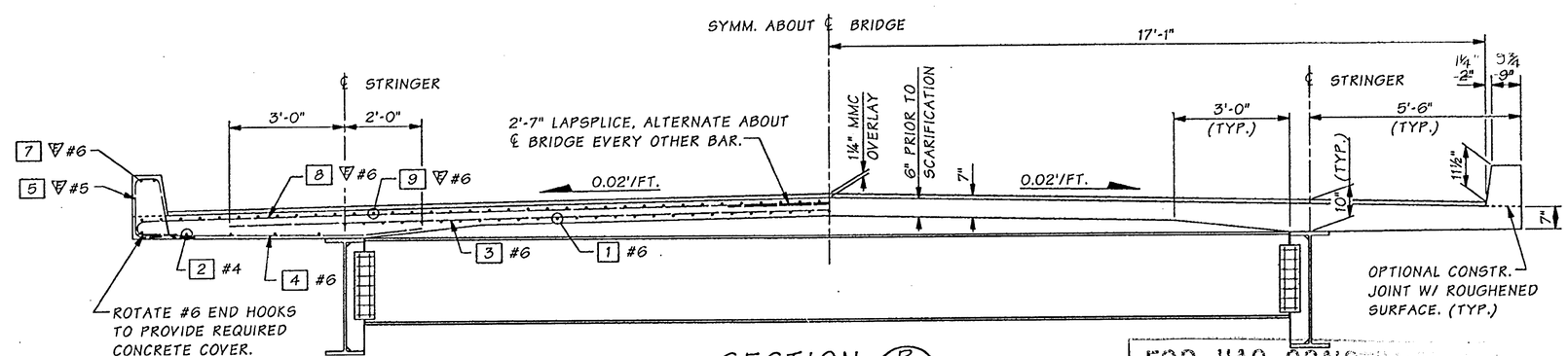

SECTION B

, MS27

FOR "AS CONSTRUCTED PLANS" ONLY

Bridge Design Engr.	Kapur, J		M:\Y-Team\Lewis_Clark Rehab\Main Truss\Window files\DECK-A-PANEL.WND							
Supervisor	Clarke, PT	08/02								
Designed By	Clarke, PT	08/02								
Checked By	Talukdar, M	08/02								
Detailed By	House, L	08/02								
Bridge Projects Engr.										
Prelim. Plan By										
Architect/Specialist			DATE	REVISION	BY	APP'D				

REGION NO.	STATE	FED. AID PROJ. NO.	SHEET NO.	TOTAL SHEETS
10	WASH.	ACBH - 0433(007)		
JOB NUMBER 02x310				
6444				

STRUCTURAL REGISTERED PROFESSIONAL ENGINEER 71340 OREGON SEPT. 10, 2002 JUGESH KAPUR
EXPIRES 06-30-2003

BRIDGE AND STRUCTURES OFFICE

PATRICK T. CLARKE STATE OF WASHINGTON REGISTERED PROFESSIONAL ENGINEER
EXPIRES 1/17/04

Washington State Department of Transportation

SR 433
LEWIS AND CLARK BRIDGE
DECK REPLACEMENT

DECK PANEL A

BRIDGE SHEET NO. MS26

SHEET 115 OF 258 SHEETS

SR 433 JOB NO. 0001 SHEET 26

Tue Sep 17 10:32:58 2002

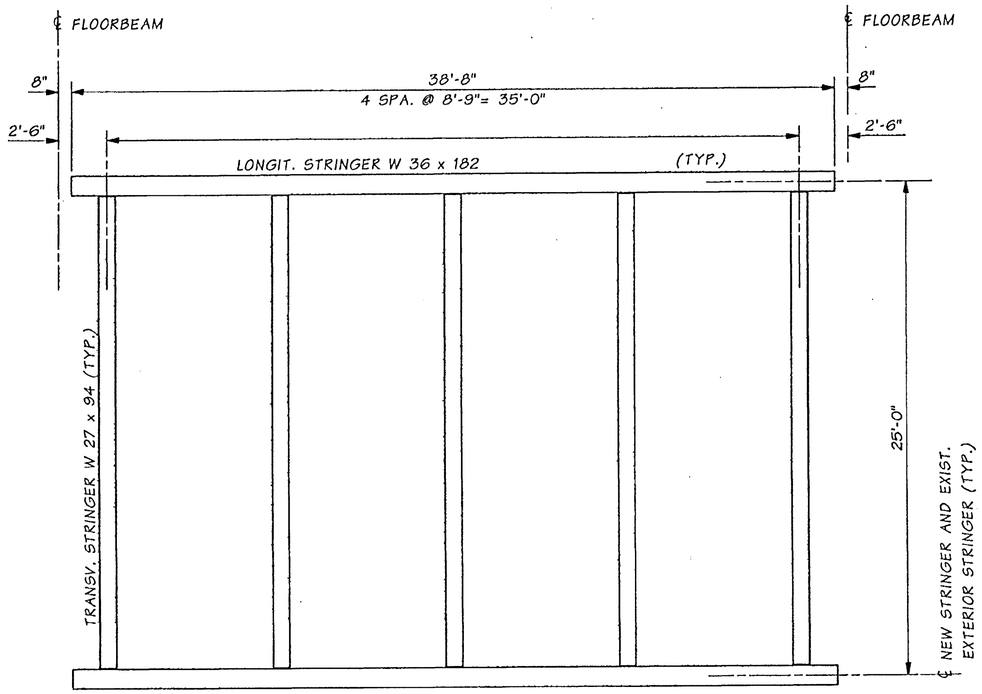

PANEL B FIXED END
PANEL C FIXED END
PANEL I EXPANSION END

PANEL B EXPANSION END
PANEL C FIXED END
PANEL I FIXED END

FRAMING PLAN

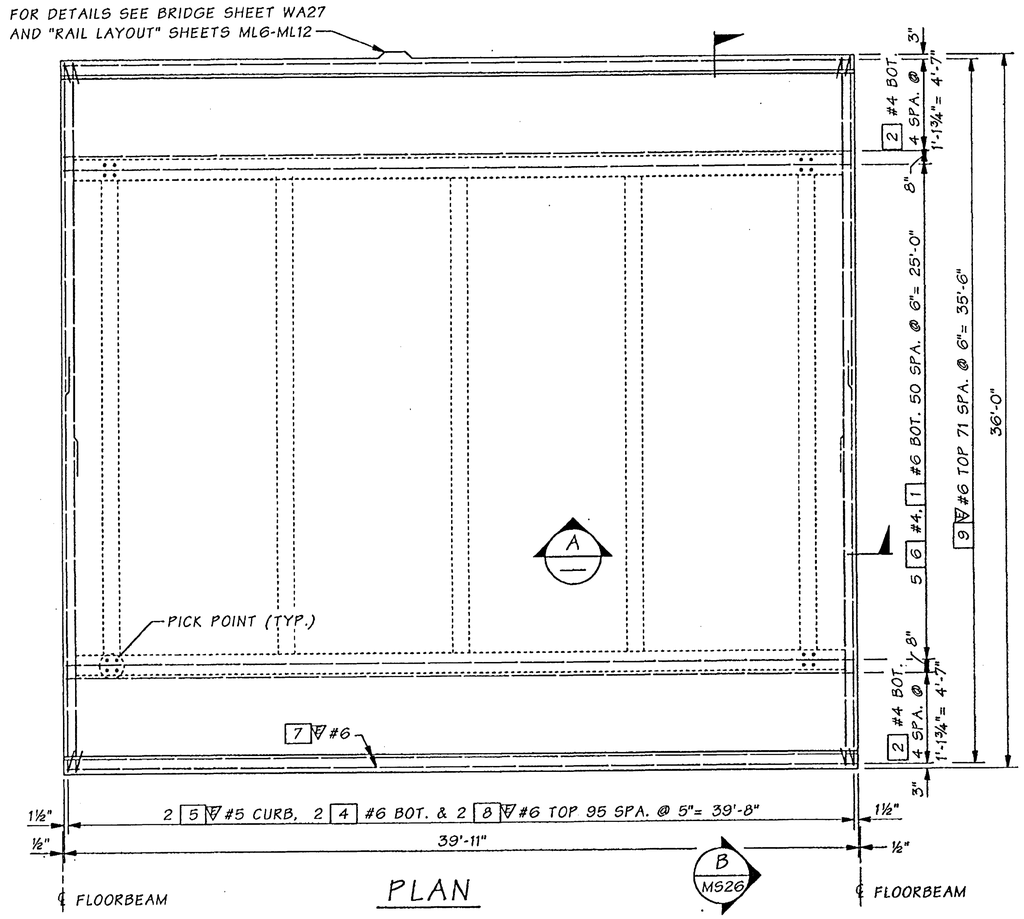

PLAN

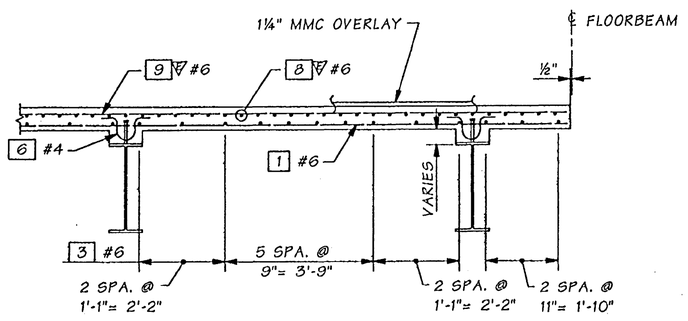

SECTION A

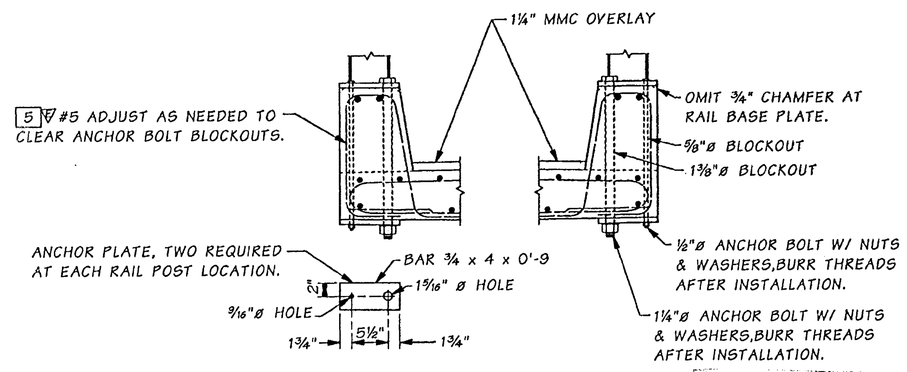

CURB DETAILS

SEE THRIE BEAM LAYOUT SHEETS FOR RAIL POST LOCATIONS.

FOR "AS CONSTRUCTED PLANS" ONLY

Bridge Design Engr.	Kapur, J		M:\Y-Team\Lewis_Clark Rehab\Main Truss\window files\DECK-B-C-I-PANEL.WND							
Supervisor	Clarke, PT	08/02				REGION NO.	STATE	FED. AID PROJ. NO.	SHEET NO.	TOTAL SHEETS
Designed By	Clarke, PT	08/02				10	WASH.	ACBH - 0433(007)		
Checked By	Talukdar, M	08/02				JOB NUMBER 02x310				
Detailed By	House, L	08/02								
Bridge Projects Engr.										
Prelim. Plan By										
Architect/Specialist			DATE	REVISION	BY	APP'D				

STRUCTURAL REGISTERED PROFESSIONAL ENGINEER 71344 OREGON SEPT. 10, 2002 JUGESH KAPUR
EXPIRES 06-30-2003

BRIDGE AND STRUCTURES OFFICE

PATRICK T. [illegible] STATE OF WASHINGTON 27770 REGISTERED PROFESSIONAL ENGINEER
EXPIRES 1/17/04

Washington State Department of Transportation

SR 433
LEWIS AND CLARK BRIDGE
DECK REPLACEMENT

DECK PANELS B, C AND I

BRIDGE SHEET NO. MS27

SHEET 116 OF 258 SHEETS

SR 433 JOB NO. 0001 SHEET 27

Wed Sep 18 08:35:53 2002

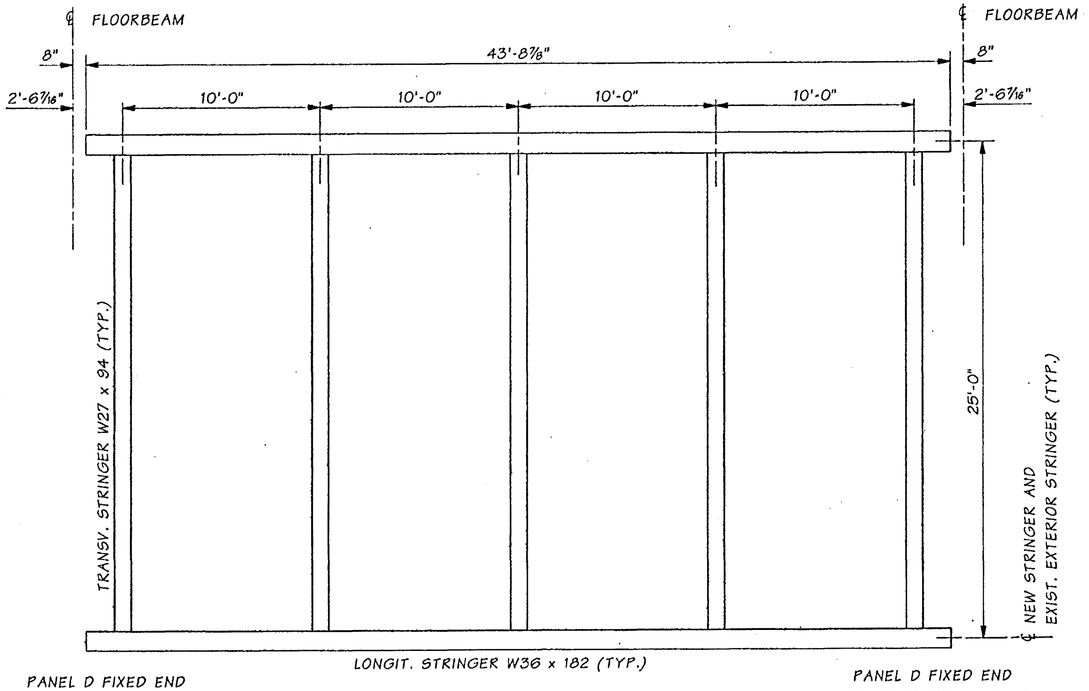

FRAMING PLAN

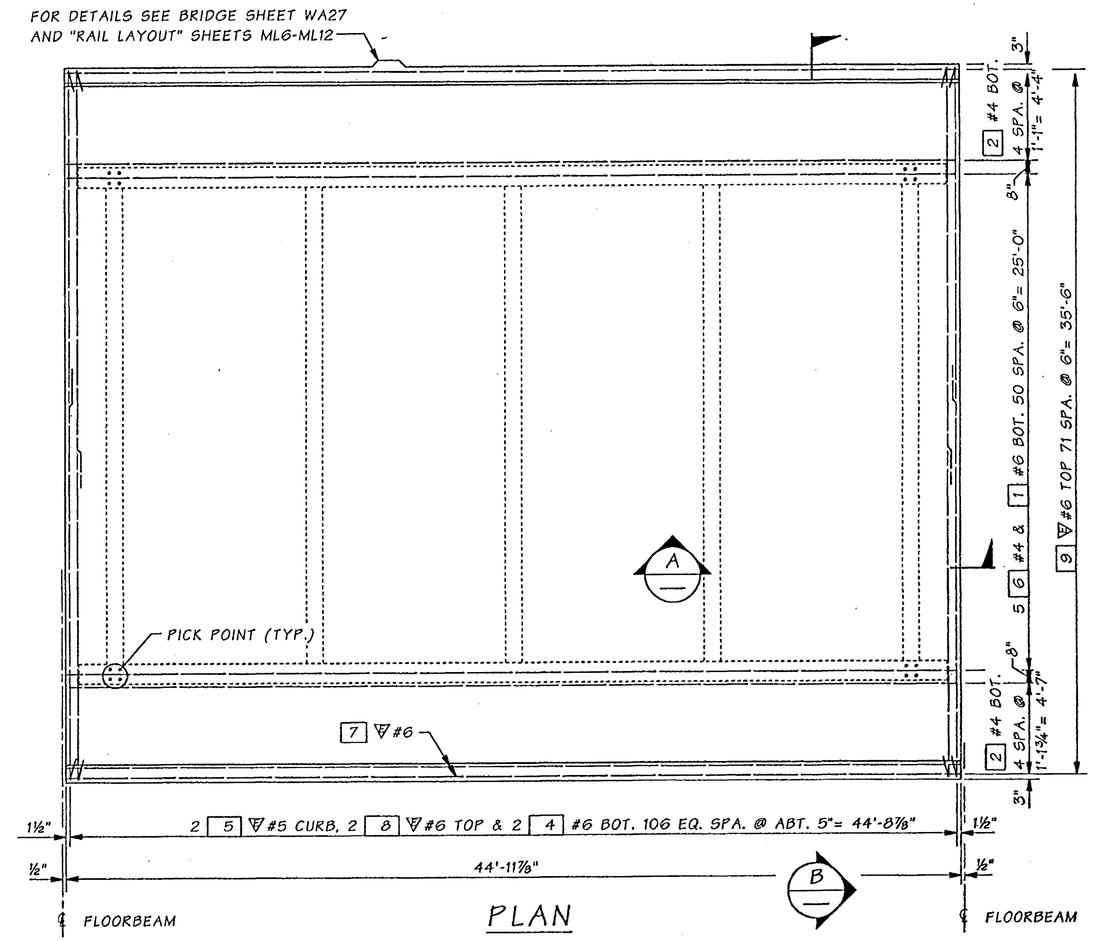

PLAN

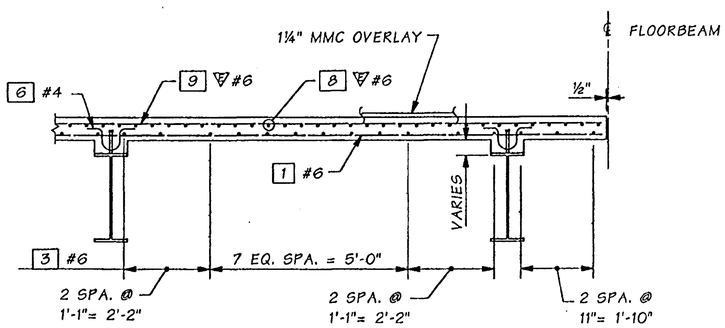

SECTION A, MS29

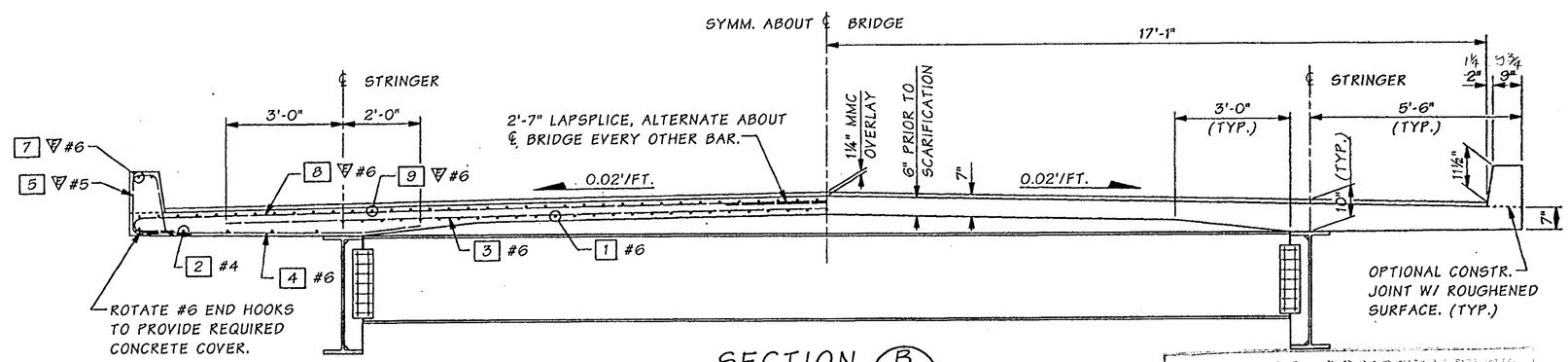

SECTION B, MS29 - MS33

FOR "AS CONSTRUCTED PLANS" ONLY

Bridge Design Engr.	Kapur, J		M:\Y-Team\Lewis_Clark Rehab\Main Truss\Window files\DECK-D-PANEL.WND			REGION NO.	STATE	FED. AID PROJ. NO.	SHEET NO.	TOTAL SHEETS
Supervisor	Clarke, PT	08/02				10	WASH.	ACBH - 0433(007)		
Designed By	Clarke, PT	08/02				JOB NUMBER 02x310				
Checked By	Talukdar, M	08/02								
Detailed By	House, L	08/02								
Bridge Projects Engr.										
Prelim. Plan By										
Architect/Specialist			DATE	REVISION	BY	APP'D				

STRUCTURAL REGISTERED PROFESSIONAL ENGINEER 71394 OREGON SEPT. 10, 2001 JUGESH KAPUR
EXPIRES 06-30-2003

BRIDGE AND STRUCTURES OFFICE

PATRICK T. CLARKE STATE OF WASHINGTON 27175 REGISTERED PROFESSIONAL ENGINEER
EXPIRES 1/17/04

Washington State Department of Transportation

SR 433
LEWIS AND CLARK BRIDGE
DECK REPLACEMENT

DECK PANELS D, E & M

BRIDGE SHEET NO. MS28

SHEET 117 OF 258 SHEETS

SR 433 JOB NO. 0001 SHEET 28

Tue Sep 17 10:33:03 2002

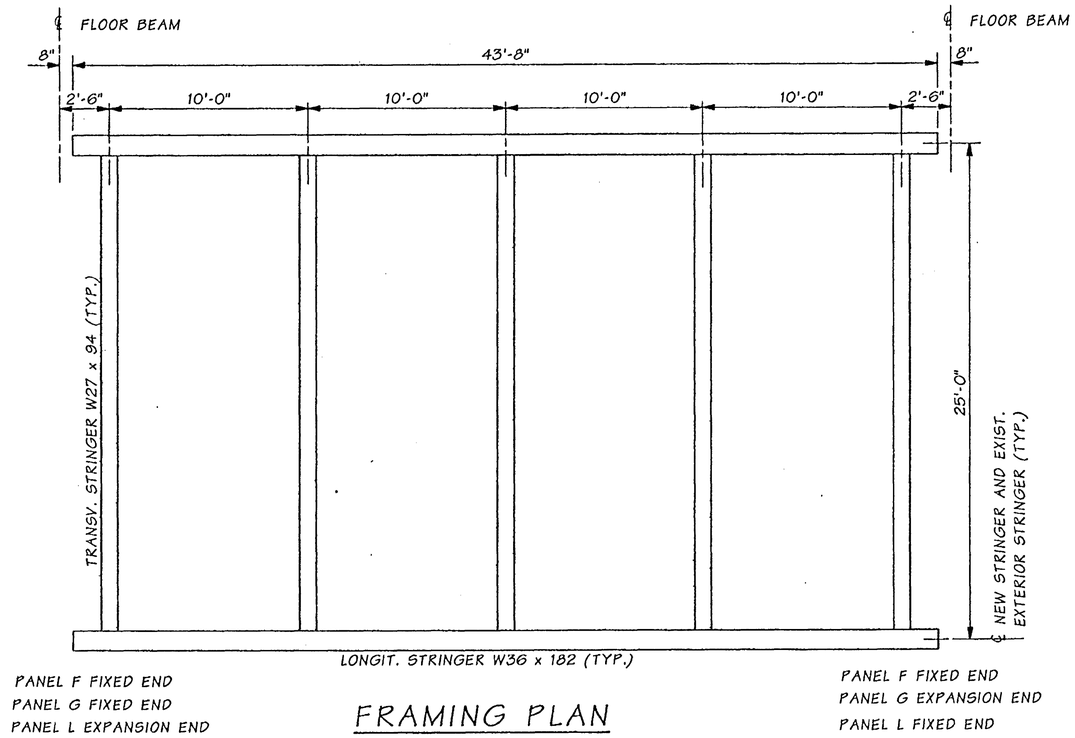

FRAMING PLAN

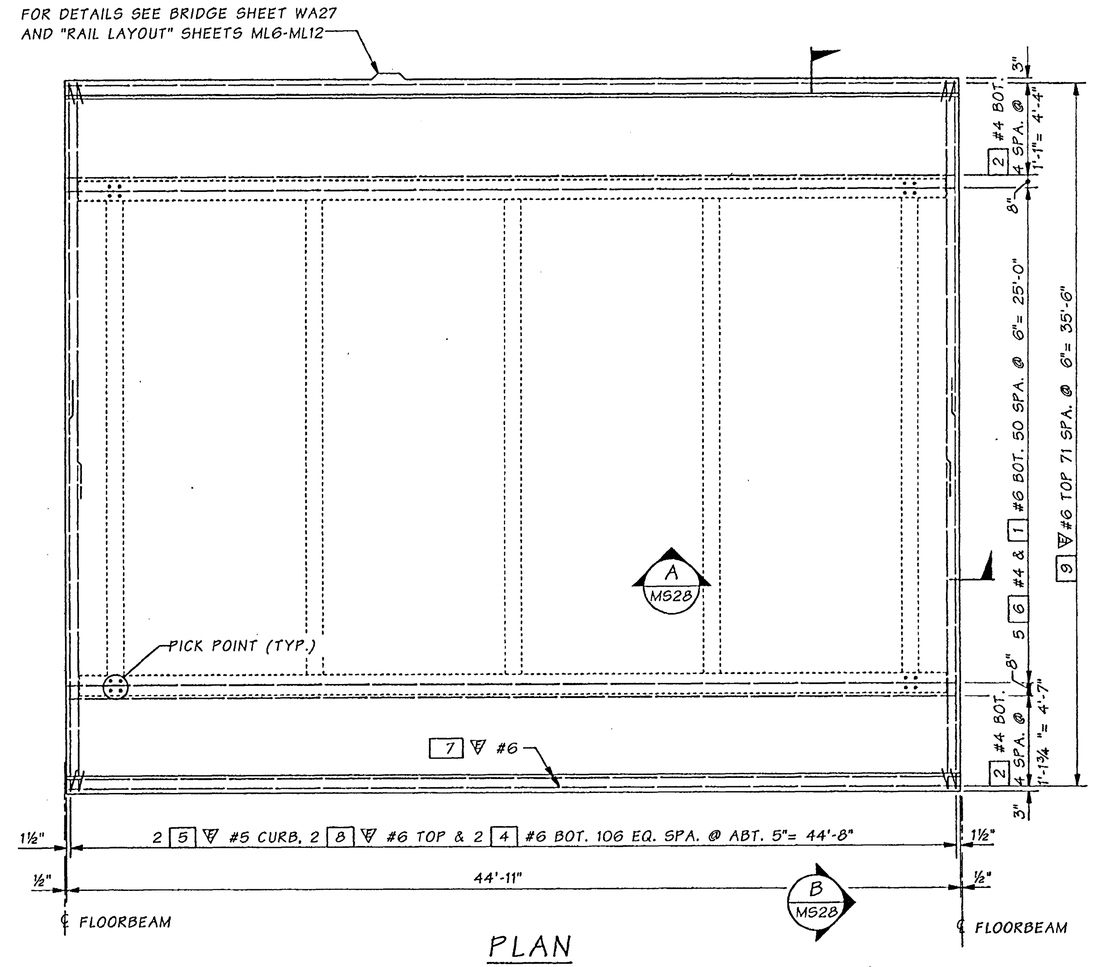

PLAN

FOR "AS CONSTRUCTED PLANS" ONLY

SR 433 JOB NO. 0001 SHEET 29

Bridge Design Engr.	Kapur, J		M:\Y-Team\Lewis_Clark Rehab\Main Truss\Window files\DECK-F-G-L-PANEL.WND				REGION NO.	STATE	FED. AID PROJ. NO.	SHEET NO.	TOTAL SHEETS
Supervisor	Clarke, PT	08/02					10	WASH.	ACBH - 0433(007)		
Designed By	Clarke, PT	08/02					JOB NUMBER 02x310				
Checked By	Talukdar, M	08/02									
Detailed By	House, L	08/02									
Bridge Projects Engr.											
Prelim. Plan By											
Architect/Specialist			DATE	REVISION	BY	APP'D	6/4/4				

Tue Sep 17 10:33:06 2002

STRUCTURAL REGISTERED PROFESSIONAL ENGINEER 71344 OREGON SEPT. 10, 2002 JUGESH KAPUR
EXPIRES 06-30-2003

BRIDGE AND STRUCTURES OFFICE

PATRICK T. CLARKE STATE OF WASHINGTON 37776 REGISTERED PROFESSIONAL ENGINEER
EXPIRES 1/17/04

Washington State Department of Transportation

SR 433
LEWIS AND CLARK BRIDGE
DECK REPLACEMENT

DECK PANELS F, G & L

BRIDGE SHEET NO. MS29

SHEET 118 OF 258 SHEETS

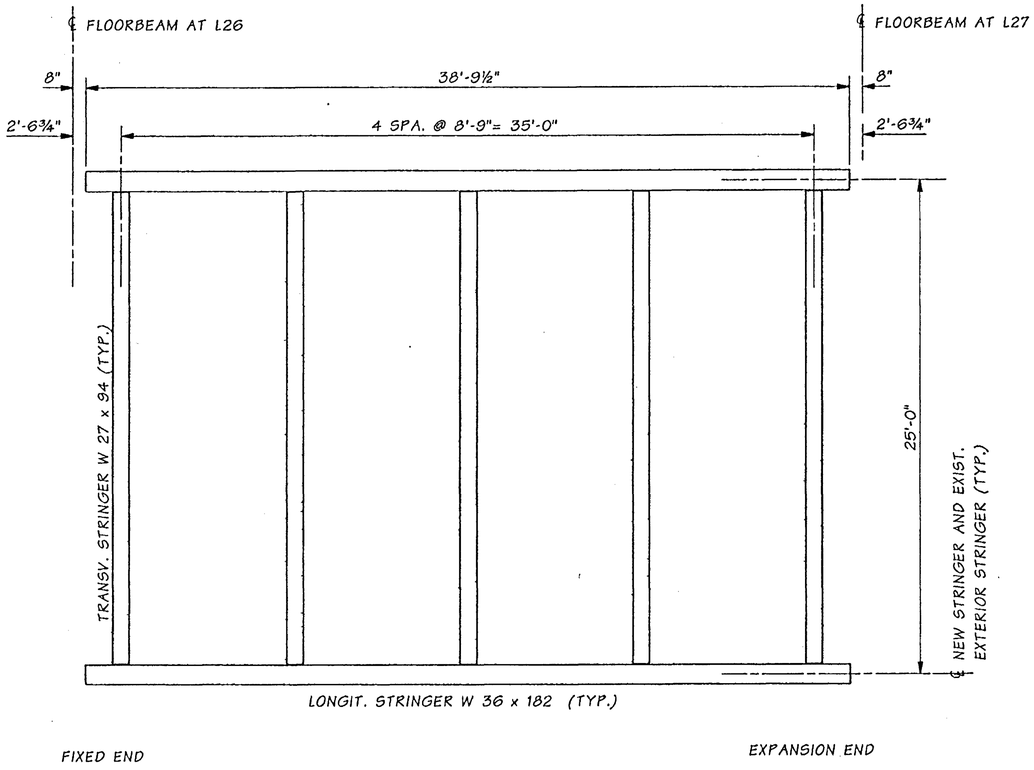

FRAMING PLAN

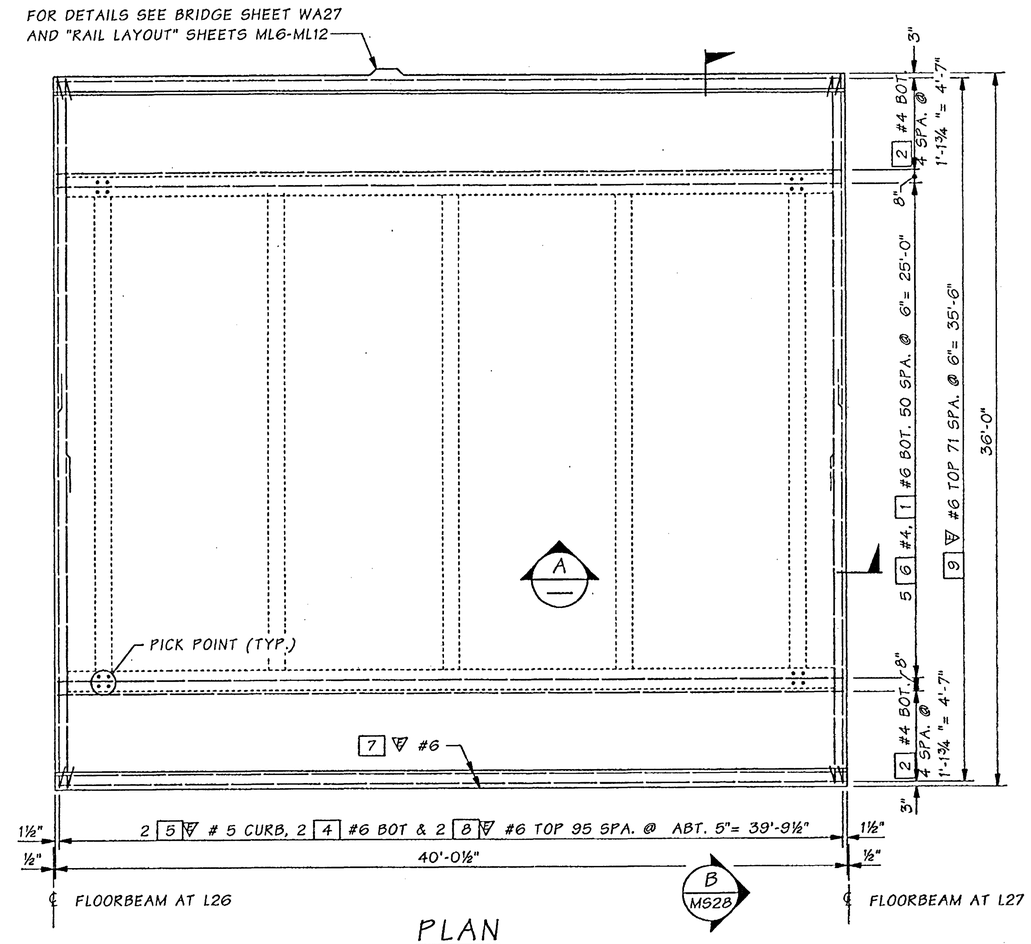

PLAN

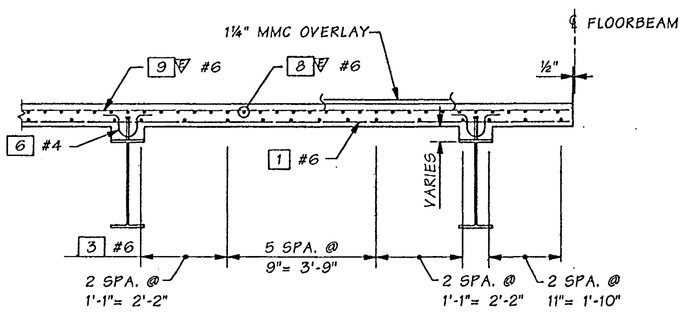

SECTION A

FOR "AS CONSTRUCTED PLANS" ONLY

Bridge Design Engr.	Kapur, J		M:\Y-Team\Lewis_Clark Rehab\Main Truss\window files\DECK-H-PANEL.WND							
Supervisor	Clarke, PT	08/02								
Designed By	Clarke, PT	08/02								
Checked By	Talukdar, M	08/02								
Detailed By	House, L	08/02								
Bridge Projects Engr.										
Prelim. Plan By										
Architect/Specialist			DATE	REVISION	BY	APP'D				

REGION NO.	STATE	FED. AID PROJ. NO.	SHEET NO.	TOTAL SHEETS
10	WASH.	ACBH - 0433(007)		
JOB NUMBER 02x310				

STRUCTURAL REGISTERED PROFESSIONAL ENGINEER 71344 OREGON SEPT. 10, 2002 JUGESH KAPUR
EXPIRES 06-30-2003

BRIDGE AND STRUCTURES OFFICE

PATRICK T. CLARKE STATE OF WASHINGTON 37770 REGISTERED PROFESSIONAL ENGINEER
EXPIRES 1/17/04

Washington State Department of Transportation

SR 433
LEWIS AND CLARK BRIDGE
DECK REPLACEMENT

DECK PANEL H

BRIDGE SHEET NO. MS30

SHEET 119 OF 258 SHEETS

SR 433 JOB NO. 0001 SHEET 30

Wed Sep 18 15:05:44 2002

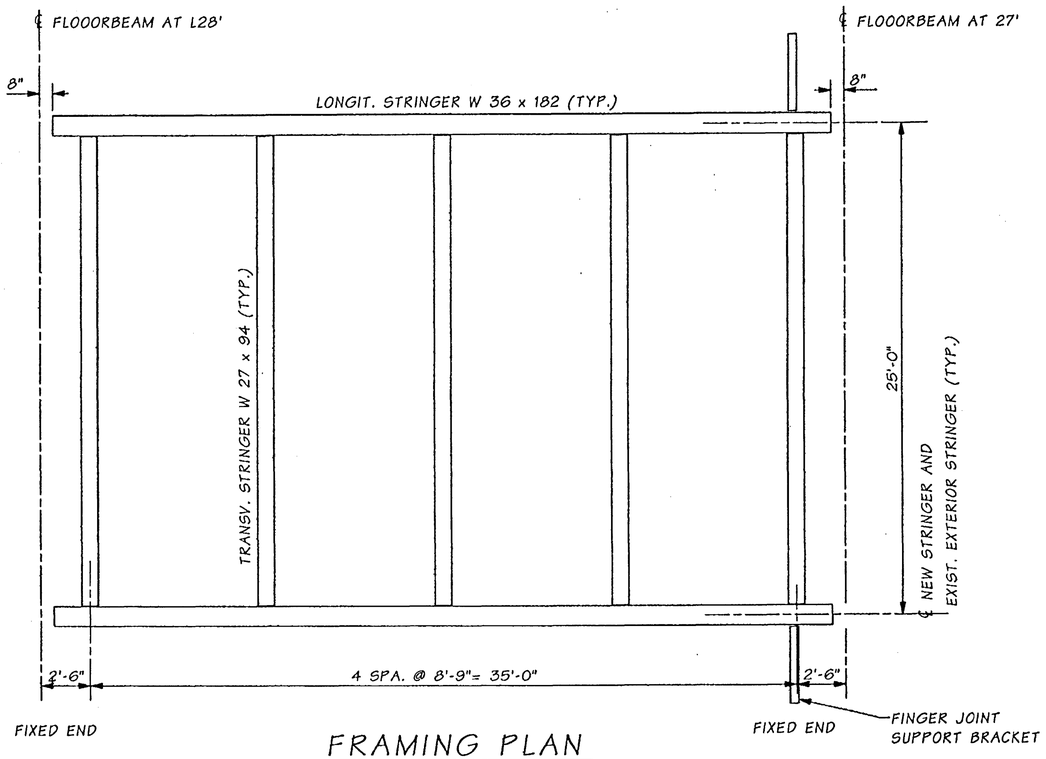

FRAMING PLAN

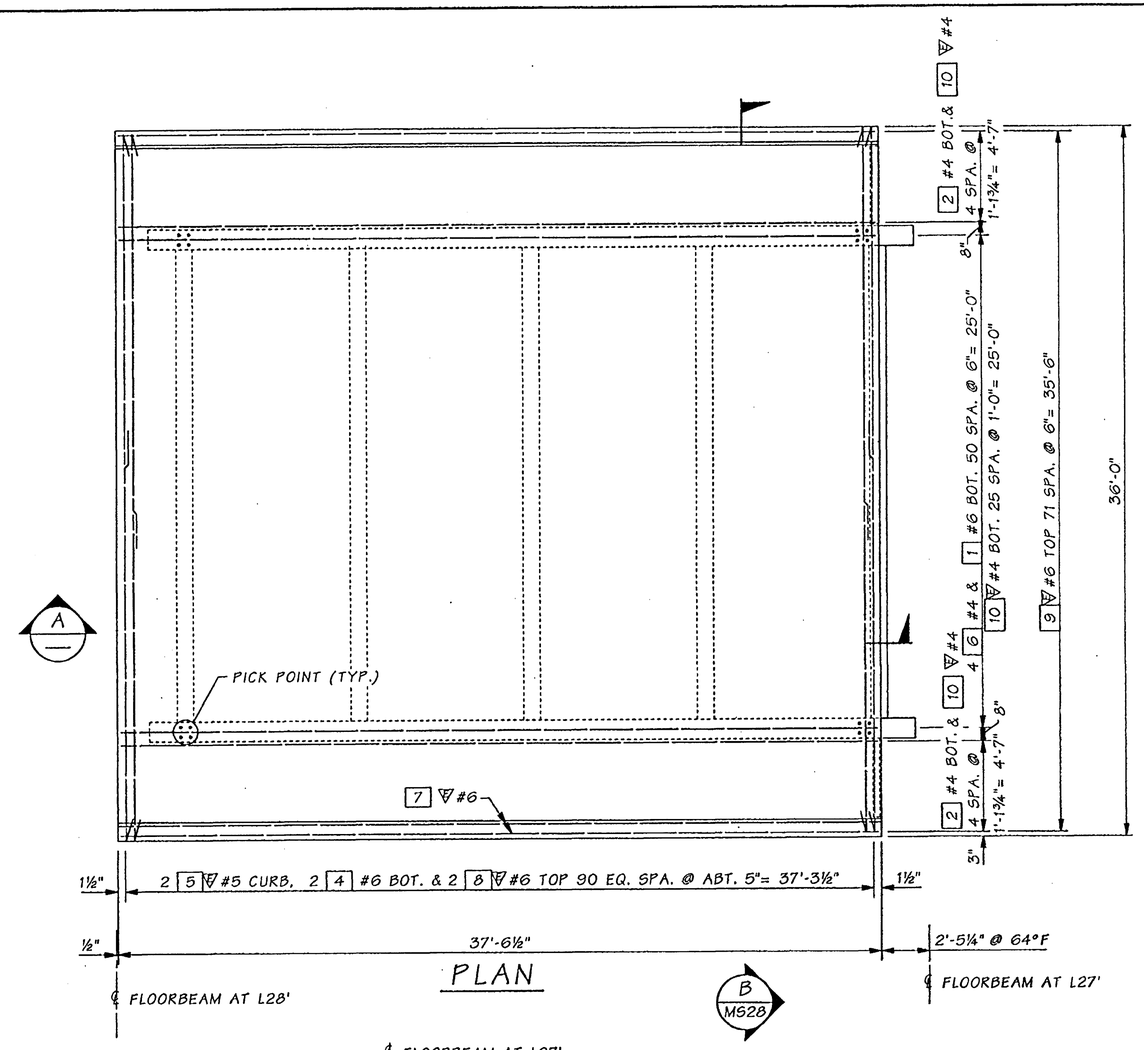

PLAN

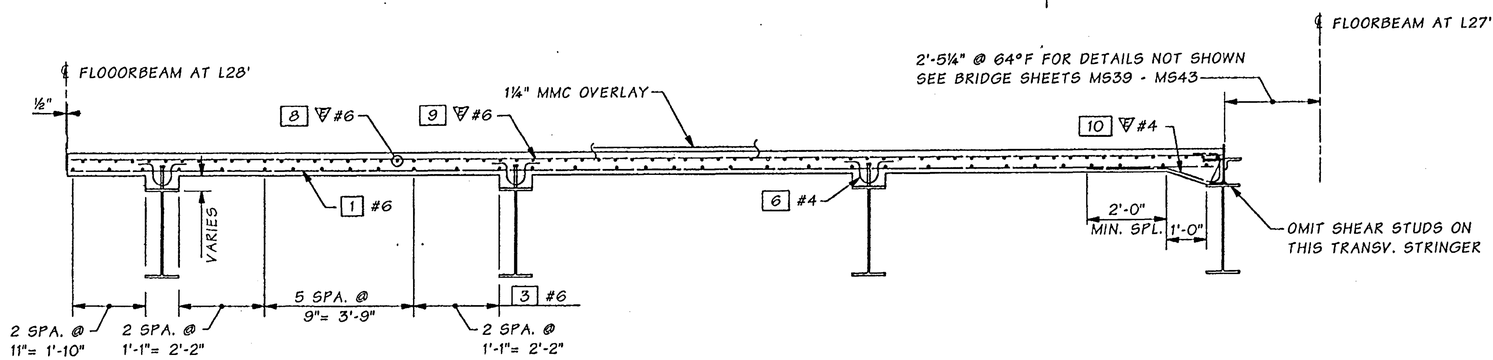

A SECTION

FOR "AS CONSTRUCTED PLANS" ONLY

Bridge Design Engr.	Kapur, J		M:\Y-Team\Lewis_Clark Rehab\Main Truss\Window files\DECK-J-PANEL.WND								
Supervisor	Clarke, PT	08/02					REGION NO.	STATE	FED. AID PROJ. NO.	SHEET NO.	TOTAL SHEETS
Designed By	Clarke, PT	08/02					10	WASH.	ACBH - 0433(007)		
Checked By	Talukdar, M	08/02					JOB NUMBER 02x310				
Detailed By	House, L	08/02									
Bridge Projects Engr.											
Prelim. Plan By											
Architect/Specialist			DATE	REVISION	BY	APP'D	6444				

STRUCTURAL REGISTERED PROFESSIONAL ENGINEER 71344 OREGON SEPT. 10, 2002 JUGESH KAPUR EXPIRES 06-30-2003

BRIDGE AND STRUCTURES OFFICE

PATRICK T. OLIVER STATE OF WASHINGTON 36775 REGISTERED PROFESSIONAL ENGINEER EXPIRES 1/17/04

Washington State Department of Transportation

SR 433
LEWIS AND CLARK BRIDGE
DECK REPLACEMENT

DECK PANEL J

BRIDGE SHEET NO. MS31

SHEET 120 OF 258 SHEETS

SR 433 JOB NO. 0001 SHEET 31

Tue Sep 17 10:33:11 2002

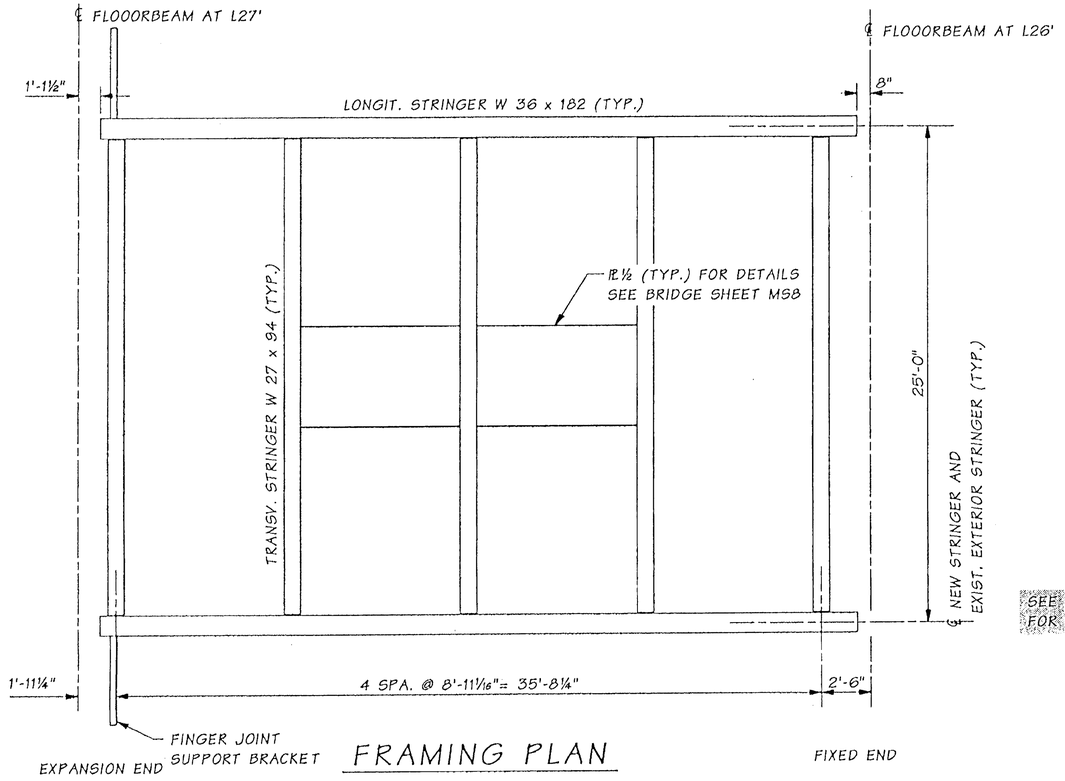

FRAMING PLAN

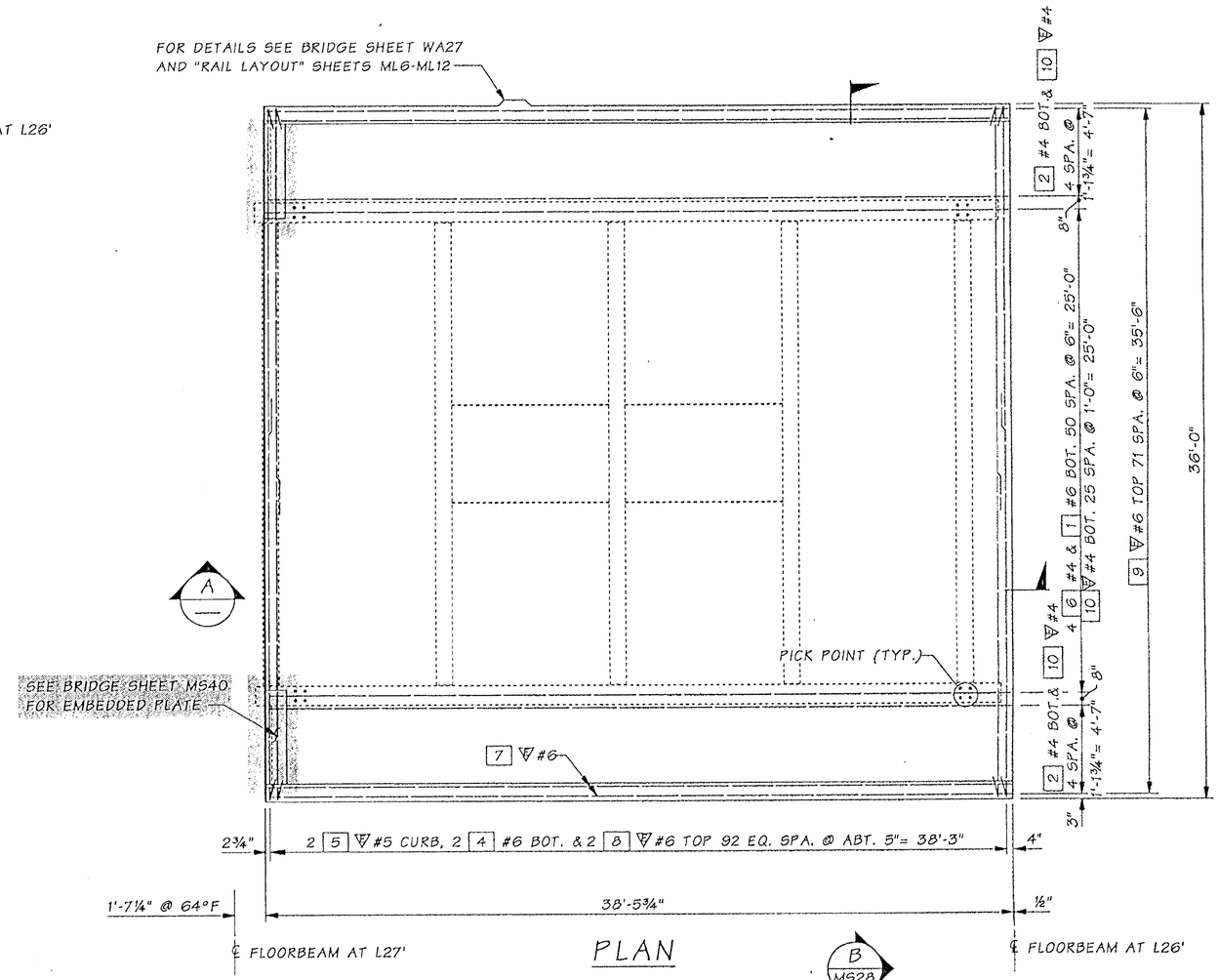

PLAN

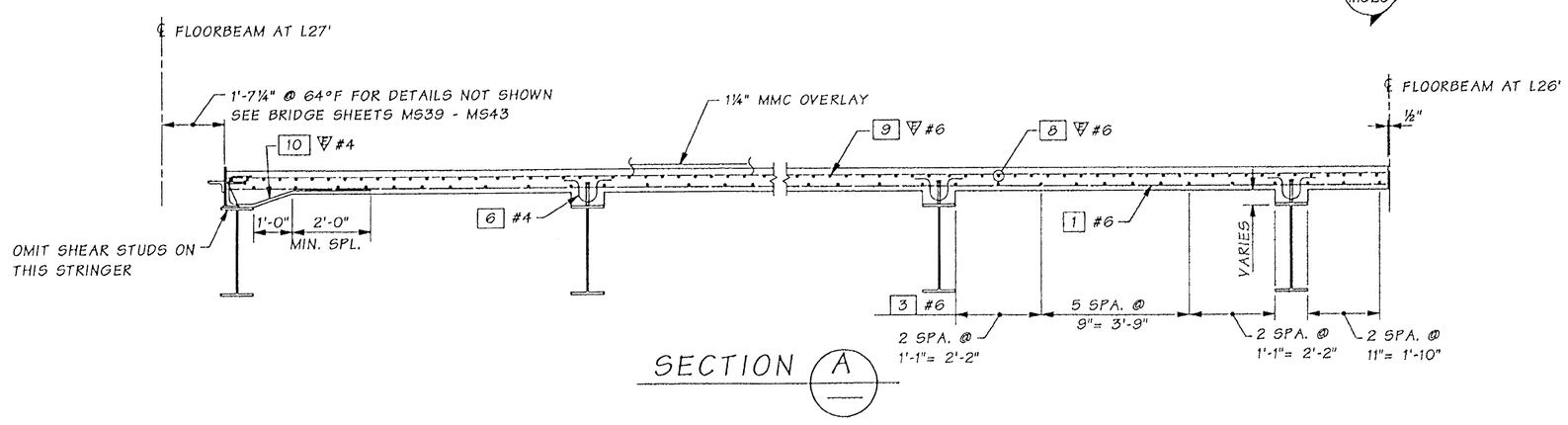

SECTION A

FOR "AS CONSTRUCTED PLANS" ONLY

NO. 0001 SHEET 32

SR 433

Design Engr.	Kapur, J		
Sor	Clarke, PT	08/02	
ned By	Clarke, PT	08/02	
Checked By	Talukdar, M	08/02	
Detailed By	House, L	08/02	
Bridge Projects Engr.			
Prelim. Plan By		10/02	
Architect/Specialist			

M:\Y-Team\Lewis_Clark Rehab\Main Truss\window files\DECK-K-PANEL.WND

DATE	REVISION	BY	APP'D
10/02	ADDED PLATE & NOTE	MT	

REGION NO.	STATE	FED. AID PROJ. NO.	SHEET NO.	TOTAL SHEETS
10	WASH.	ACBH - 0433(007)		
JOB NUMBER 02x310				

STRUCTURAL REGISTERED PROFESSIONAL ENGINEER 71314 OREGON OCT. 10, 2002 JUGESH KAPUR
EXPIRES 06-30-2003

BRIDGE AND STRUCTURES OFFICE

PATRICK T. OLIVA STATE OF WASHINGTON REGISTERED PROFESSIONAL ENGINEER
EXPIRES 1/17/04

Washington State Department of Transportation

SR 433
LEWIS AND CLARK BRIDGE
DECK REPLACEMENT

DECK PANEL K

BRIDGE SHEET NO. MS32

SHEET 121 OF 258 SHEETS

Wed Oct 30 07:26:35 2002

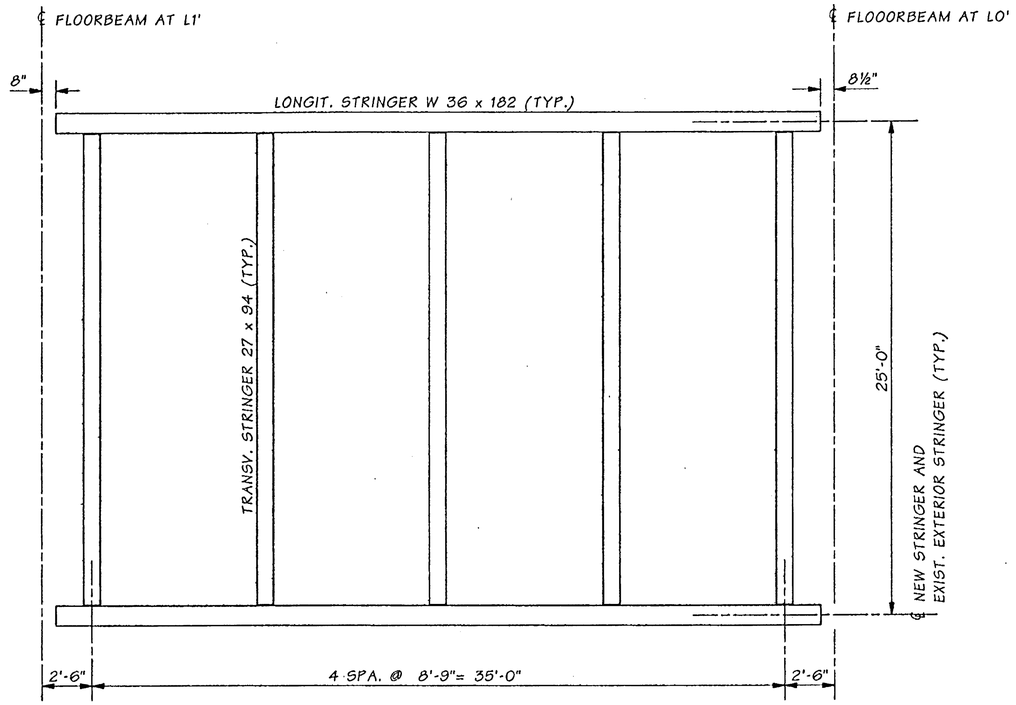

FRAMING PLAN

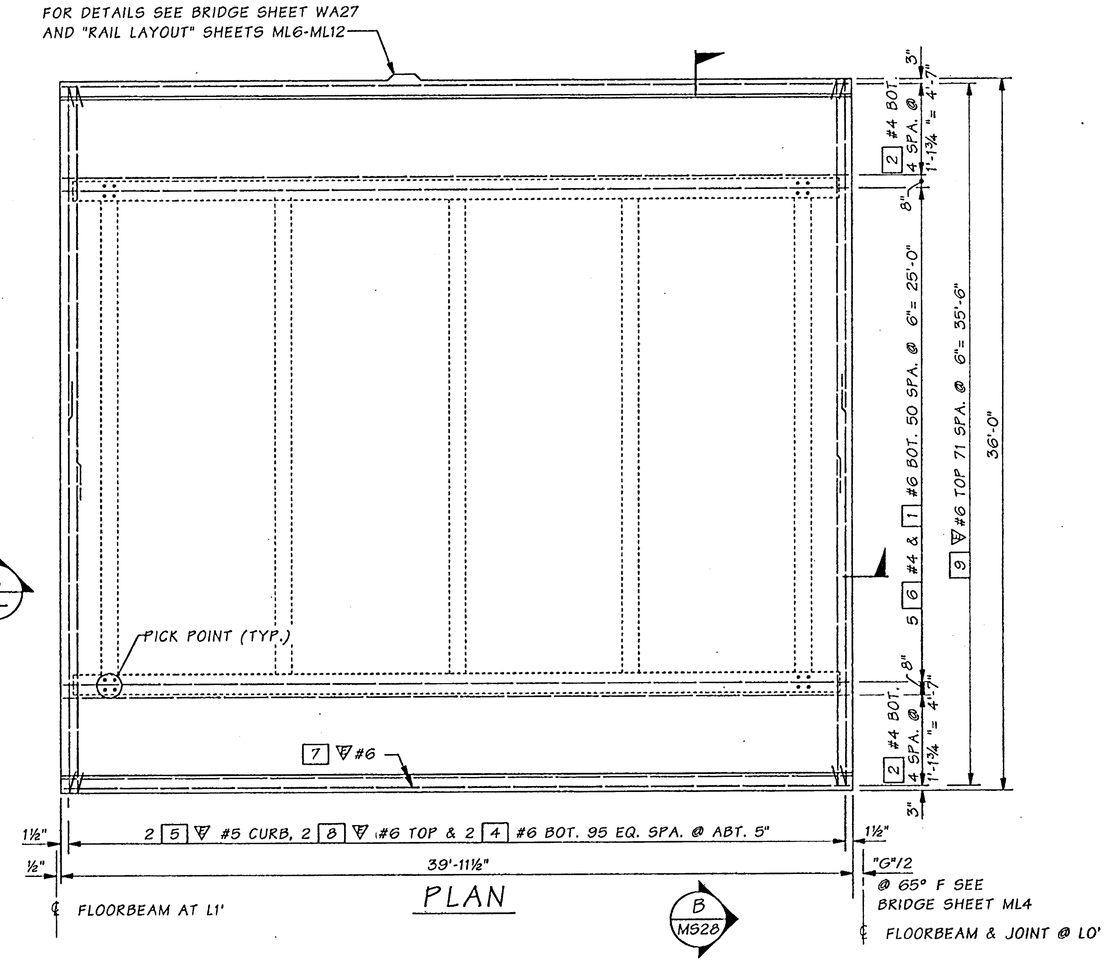

PLAN

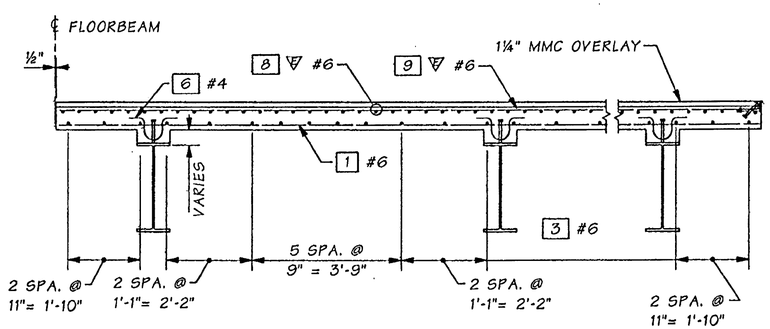

A SECTION

FOR "AS CONSTRUCTED PLANS" ONLY

Bridge Design Engr.	Kapur, J		M:\Y-Team\Lewis_Clark Rehab\Main Truss\Window files\DECK-N-PANEL.WND
Supervisor	Clarke, PT	08/02	
Designed By	Clarke, PT	08/02	
Checked By	Talukdar, M	08/02	
Detailed By	House, L	08/02	
Bridge Projects Engr.			
Prelim. Plan By			
Architect/Specialist			

DATE	REVISION	BY	APP'D

REGION NO.	STATE	FED. AID PROJ. NO.	SHEET NO.	TOTAL SHEETS
10	WASH.	ACBH - 0433(007)		
JOB NUMBER 02x310				

STRUCTURAL REGISTERED PROFESSIONAL ENGINEER 71344 OREGON SEPT. 10, 2002 JUGESH KAPUR
EXPIRES 06-30-2003

BRIDGE AND STRUCTURES OFFICE

PATRICK T. PAY STATE OF WASHINGTON 37776 REGISTERED PROFESSIONAL ENGINEER
EXPIRES 1/17/04

Washington State Department of Transportation

SR 433
LEWIS AND CLARK BRIDGE
DECK REPLACEMENT

DECK PANEL N

BRIDGE SHEET NO. MS33

SHEET 122 OF 258 SHEETS

Tue Sep 17 10:33:16 2002

SR 433 JOB NO. 0001 SHEET 33

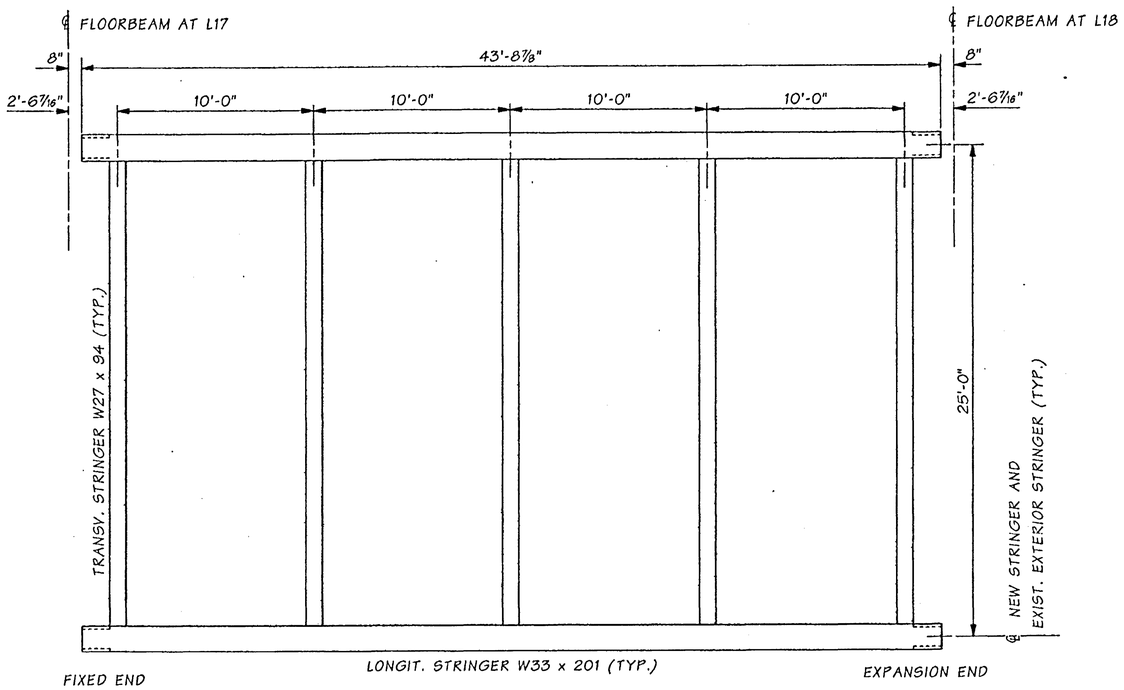

FRAMING PLAN

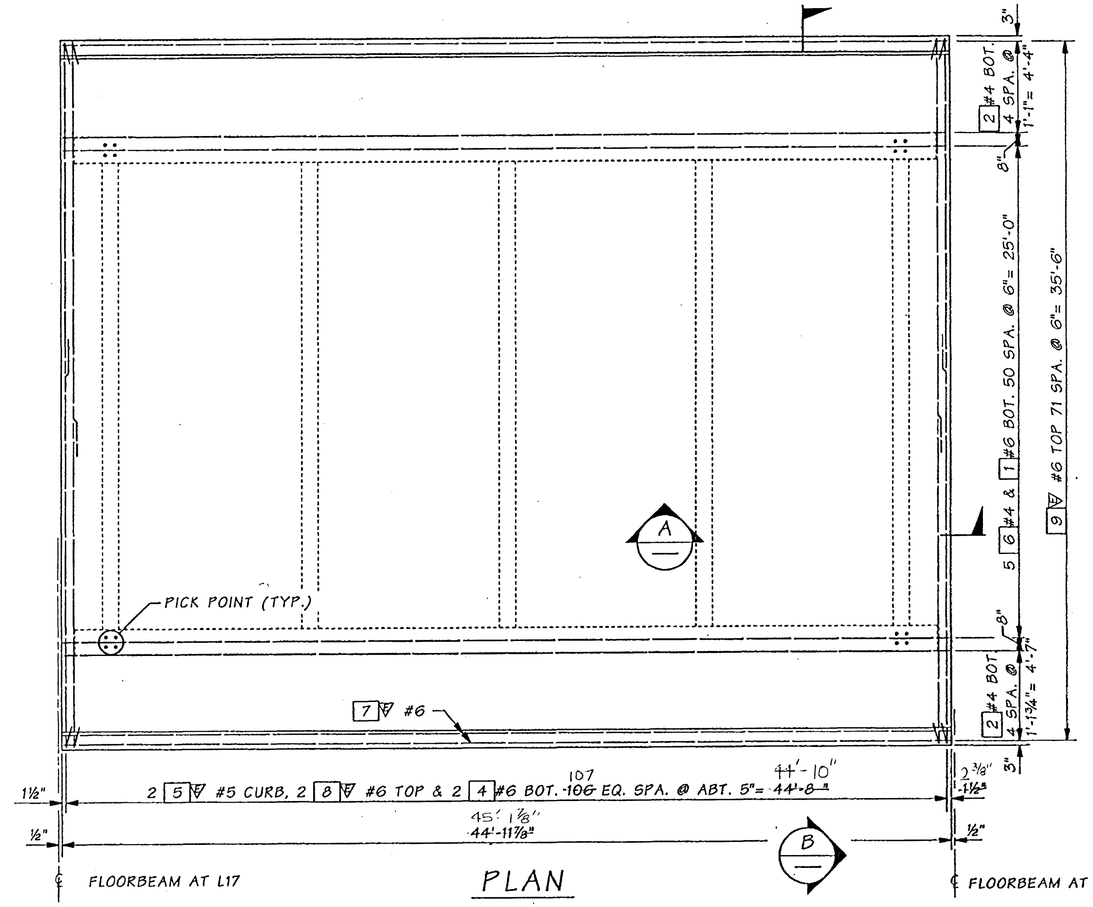

PLAN

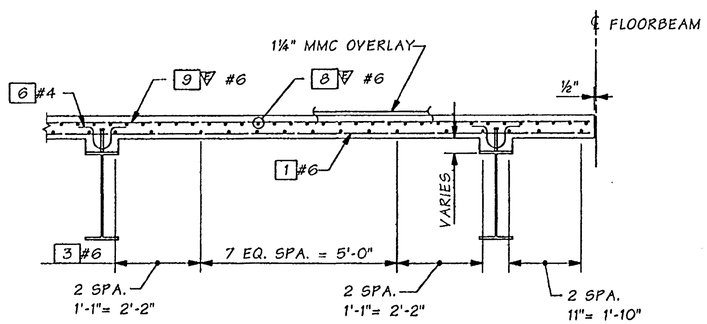

SECTION A, MS34

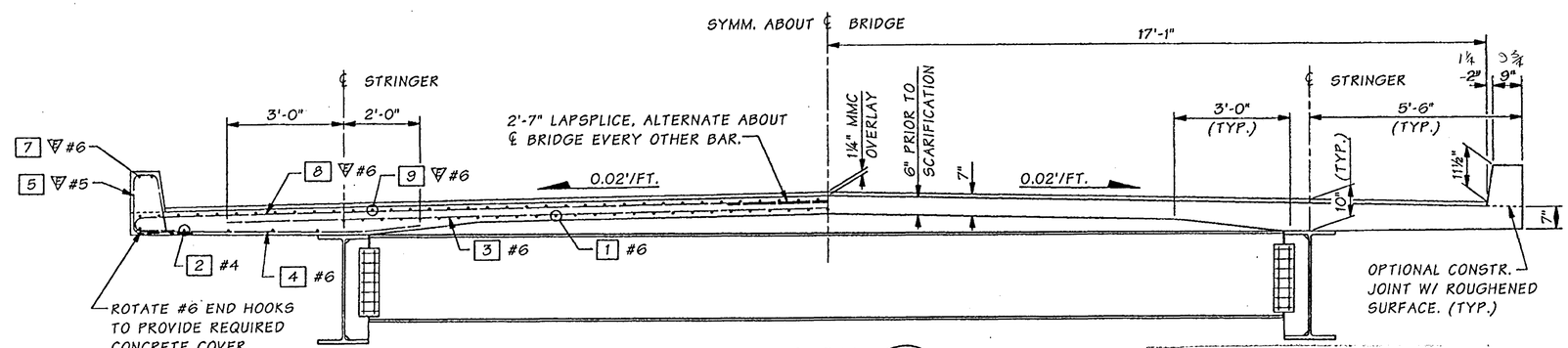

SECTION B, MS35 - MS36

FOR "AS CONSTRUCTED PLANS" ONLY

Bridge Design Engr.	Kapur, J		M:\Y-Team\Lewis_Clark Rehab\Main Truss\Window files\DECK-O-PANEL.WND							
Supervisor	Clarke, PT	08/02				REGION NO.	STATE	FED. AID PROJ. NO.	SHEET NO.	TOTAL SHEETS
Designed By	Clarke, PT	08/02				10	WASH.			
Checked By	Talukdar, M	08/02				JOB NUMBER 02x310		ACBH - 0433(007)		
Detailed By	House, L	08/02								
Bridge Projects Engr.										
Prelim. Plan By										
Architect/Specialist			DATE	REVISION	BY	APP'D				

STRUCTURAL REGISTERED PROFESSIONAL ENGINEER 71314 OREGON SEPT. 10, 2002 JUGESH KAPUR
EXPIRES 06-30-2003

BRIDGE AND STRUCTURES OFFICE

PATRICK T. TALUKDAR STATE OF WASHINGTON 17775 REGISTERED PROFESSIONAL ENGINEER
EXPIRES 1/17/04

Washington State Department of Transportation

SR 433
LEWIS AND CLARK BRIDGE
DECK REPLACEMENT

DECK PANEL O

BRIDGE SHEET NO. MS34

SHEET 123 OF 258 SHEETS

SR 433 JOB NO. 0001 SHEET 34

Tue Sep 17 10:33:19 2002

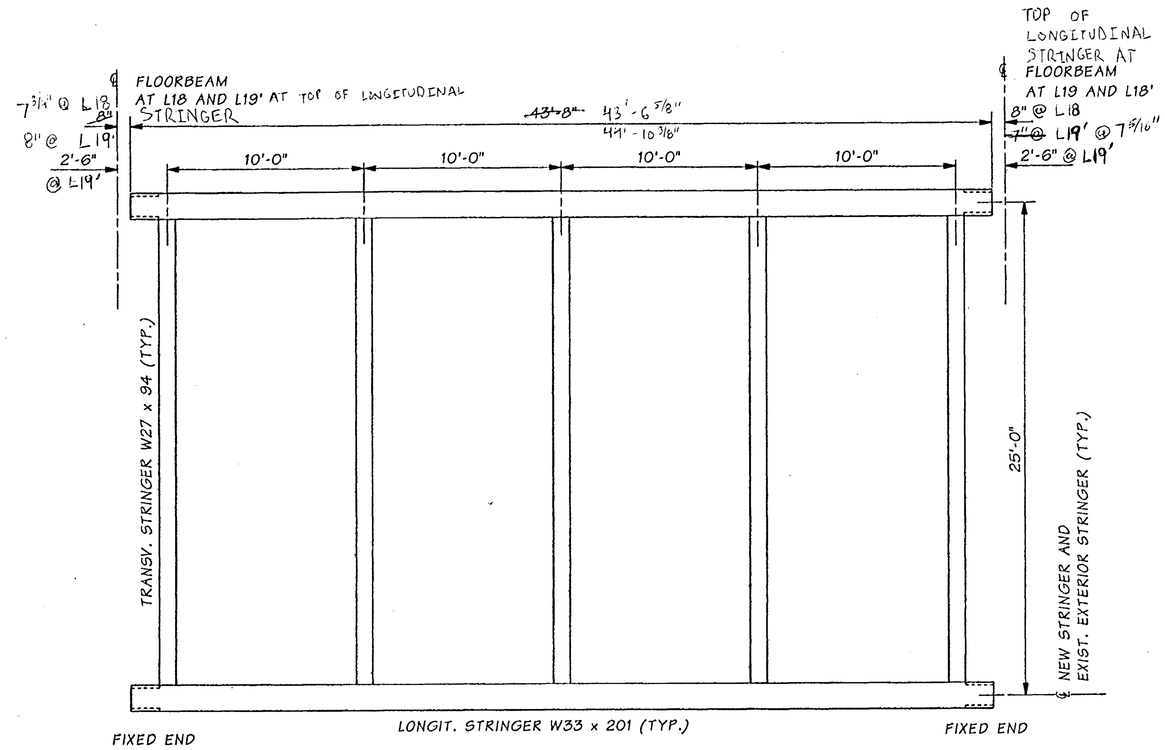

FRAMING PLAN

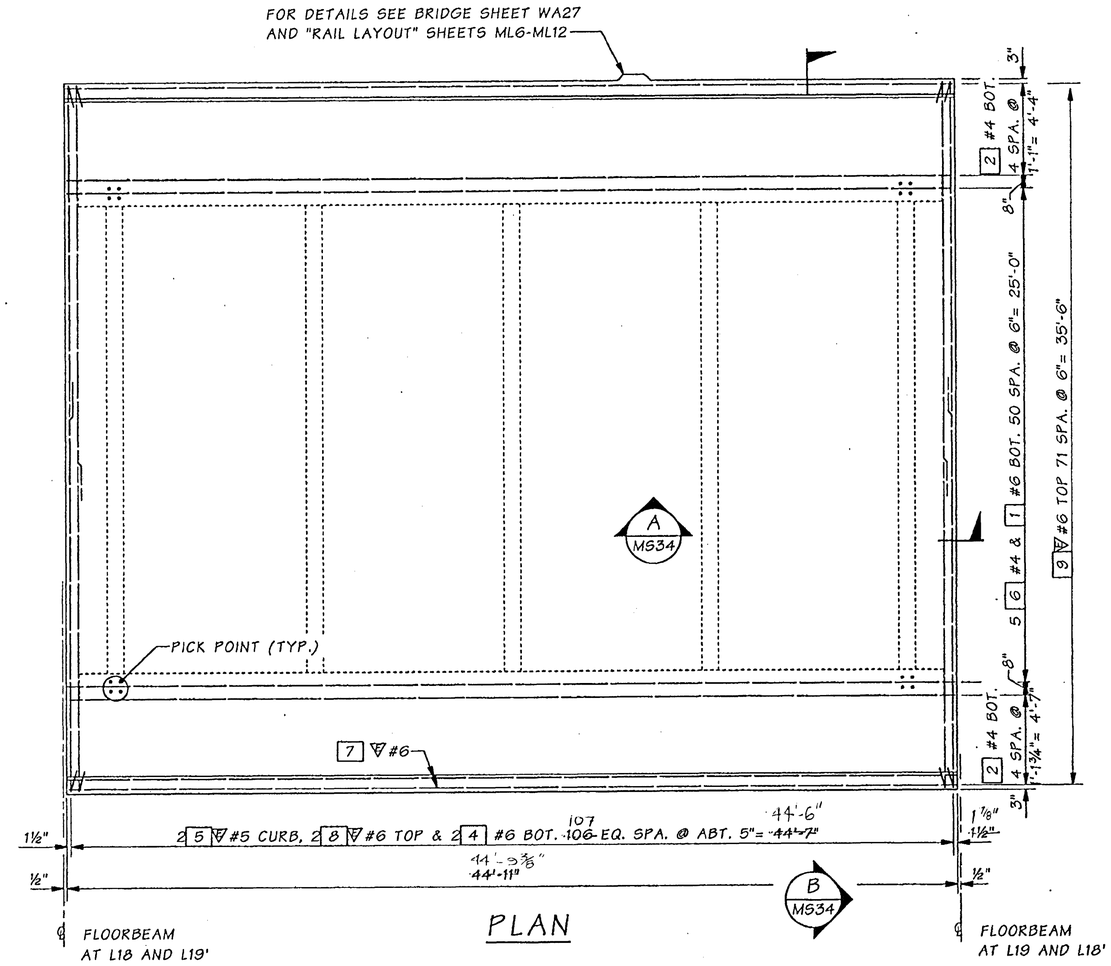

PLAN

FOR "AS CONSTRUCTED PLANS" ONLY

Bridge Design Engr.	Kapur, J		M:\Y-Team\Lewis_Clark Rehab\Main Truss\Window files\DECK-P-PANEL.WND				REGION NO.	STATE	FED. AID PROJ. NO.	SHEET NO.	TOTAL SHEETS
Supervisor	Clarke, PT	08/02					10	WASH.			
Designed By	Clarke, PT	08/02									
Checked By	Talukdar, M	08/02					JOB NUMBER 02x310		ACBH - 0433(007)		
Detailed By	House, L	08/02									
Bridge Projects Engr.											
Prelim. Plan By											
Architect/Specialist			DATE	REVISION	BY	APP'D	6444				

STRUCTURAL REGISTERED PROFESSIONAL ENGINEER 71344 OREGON JUGESH KAPUR EXPIRES 06-30-2003

BRIDGE AND STRUCTURES OFFICE

PATRICK T. CLARKE STATE OF WASHINGTON 27776 REGISTERED PROFESSIONAL ENGINEER EXPIRES 1/17/04

Washington State Department of Transportation

SR 433
LEWIS AND CLARK BRIDGE
DECK REPLACEMENT

DECK PANEL P

BRIDGE SHEET NO. MS35

SHEET 124 OF 258 SHEETS

SR 433 JOB NO. 0001 SHEET 35

Tue Sep 17 10:33:22 2002

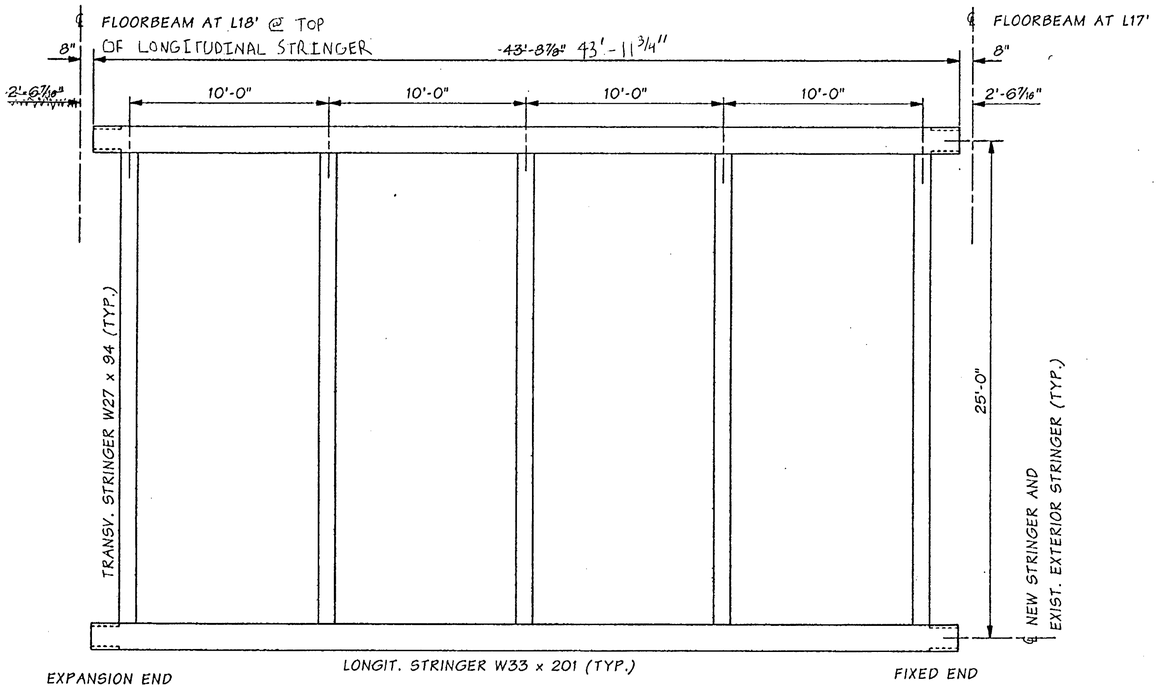

FRAMING PLAN

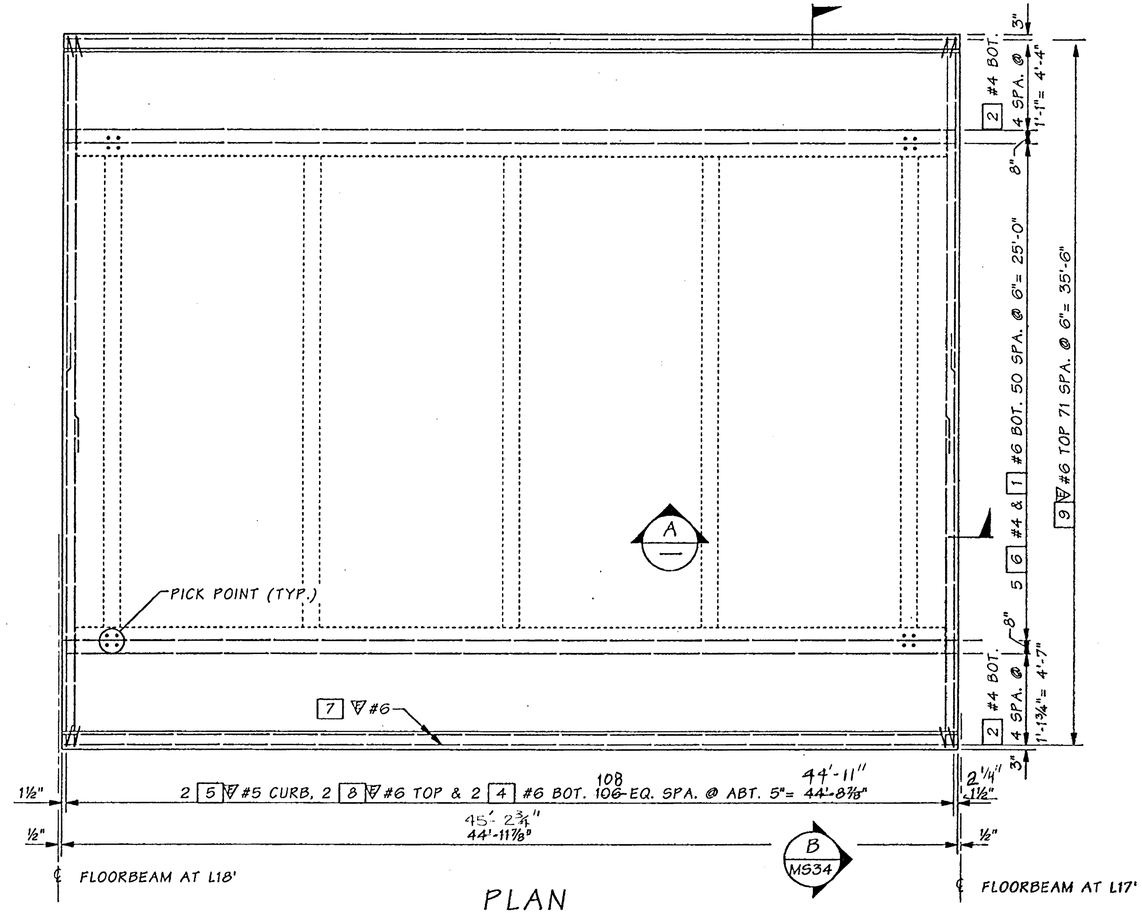

PLAN

FOR "AS CONSTRUCTED PLANS" ONLY

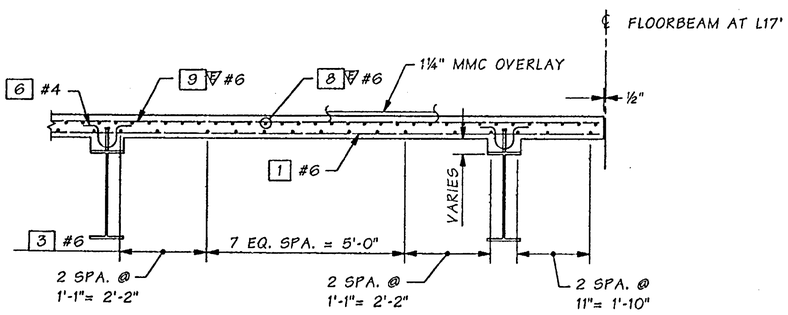

SECTION A

Bridge Design Engr.	Kapur, J		M:\Y-Team\Lewis_Clark Rehab\Main Truss\Window files\DECK-Q-PANEL.WND							
Supervisor	Clarke, PT	08/02								
Designed By	Clarke, PT	08/02								
Checked By	Talukdar, M	08/02								
Detailed By	House, L	08/02								
Bridge Projects Engr.										
Prelim. Plan By										
Architect/Specialist			DATE	REVISION	BY	APP'D				

Tue Sep 17 10:33:24 2002

REGION NO.	STATE	FED. AID PROJ. NO.	SHEET NO.	TOTAL SHEETS
10	WASH.	ACBH - 0433(007)		
JOB NUMBER 02x310				

STRUCTURAL REGISTERED PROFESSIONAL ENGINEER 71144 OREGON SEPT. 10, 2002 JUGESH KAPUR
EXPIRES 06-30-2003

BRIDGE AND STRUCTURES OFFICE

PATRICK T. CLARKE STATE OF WASHINGTON 37770 REGISTERED PROFESSIONAL ENGINEER
EXPIRES 1/17/04

Washington State Department of Transportation

SR 433
LEWIS AND CLARK BRIDGE
DECK REPLACEMENT

DECK PANEL Q

BRIDGE SHEET NO. MS36

SHEET 125 OF 258 SHEETS

SR 433 JOB NO. 0001 SHEET 36

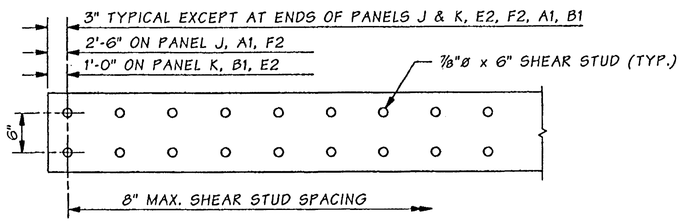

PLAN - LONGIT. STRINGER

ADJUST SHEAR STUDS TO CLEAR HOLES AND BLOCKOUTS FOR LIFTING EYES AT PICK POINTS.

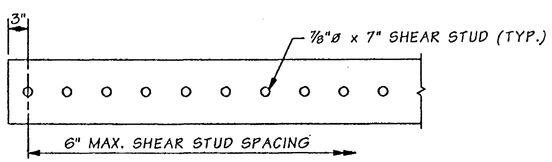

PLAN - TRANSV. STRINGER

OMIT SHEAR STUDS ON THE TWO TRANSV. STRINGERS THAT SUPPORT THE FINGER JOINT AT L27', PIER 5 & BENT CD

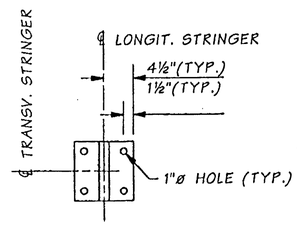

PLAN

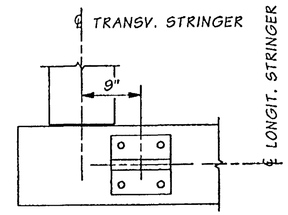

LIFTING EYE LOCATION FOR PANELS J & K, E2, F2, A1, B1

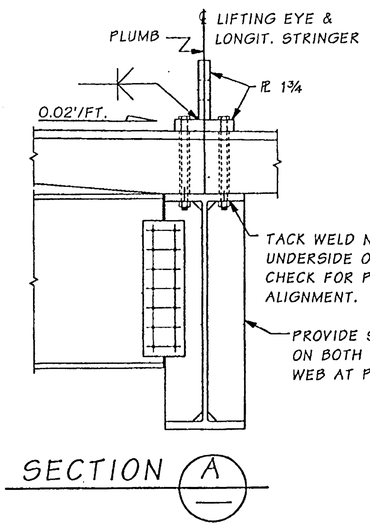

SECTION A

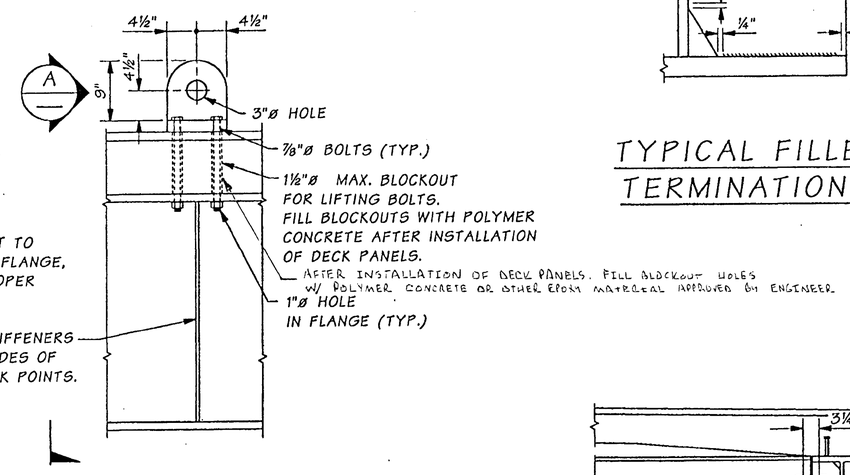

ELEVATION

LIFTING EYE DETAILS

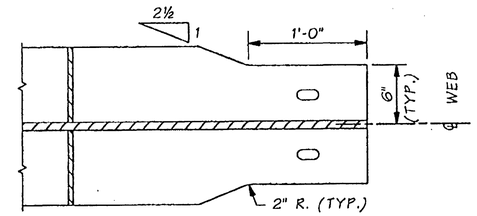

PLAN - BOTTOM FLANGE OF W33 x 201

TRIM BOTTOM FLANGE ONLY.

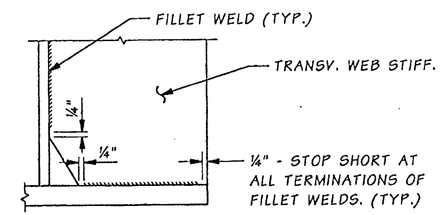

TYPICAL FILLET WELD TERMINATION DETAIL

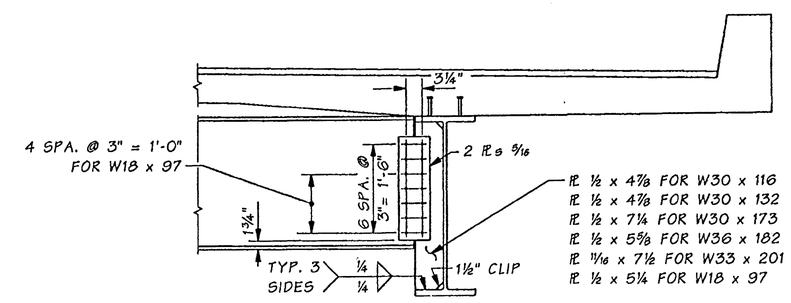

TYPICAL LONGIT. STRINGER TO TRANSV. STRINGER CONNECTION

PROVIDE STIFF. ON BOTH SIDES OF WEB AT PICK POINTS

FOR AS CONSTRUCTED PLANS ONLY

Bridge Design Engr.	Kapur, J		M:\Y-Team\Lewis_Clark Rehab\Main Truss\Window files\MISC STEEL DETS.WND			REGION NO.	STATE	FED. AID PROJ. NO.	SHEET NO.	TOTAL SHEETS
Supervisor	Clarke, PT	08/02				10	WASH.			
Designed By	Clarke, PT	08/02								
Checked By	Talukdar, M	08/02				JOB NUMBER 02x310		ACBH - 0433(007)		
Detailed By	House, L	08/02								
Bridge Projects Engr.										
Prelim. Plan By										
Architect/Specialist			DATE	REVISION	BY	APP'D	6/4/4			

Tue Sep 17 10:34:27 2002

STRUCTURAL REGISTERED PROFESSIONAL ENGINEER 71704 OREGON SEPT. 10, 2002 JUGESH KAPUR — EXPIRES 06-30-2003

BRIDGE AND STRUCTURES OFFICE

STATE OF WASHINGTON PATRICK T. GALLAGHER 37770 REGISTERED PROFESSIONAL ENGINEER — EXPIRES 1/17/04

Washington State Department of Transportation

SR 433
LEWIS AND CLARK BRIDGE
DECK REPLACEMENT

MISC. DECK PANEL DETAILS

BRIDGE SHEET NO. MS37

SHEET 126 OF 258 SHEETS

SR 433 JOB NO. 0001 SHEET 37

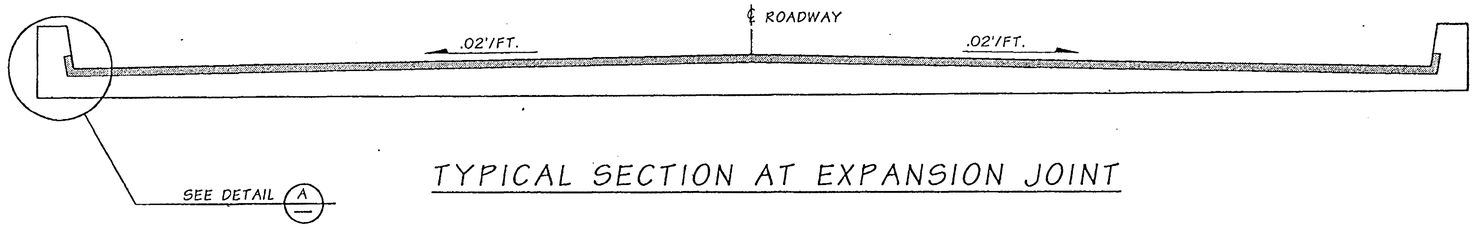

TYPICAL SECTION AT EXPANSION JOINT

CONSTRUCTION SEQUENCE

1. PRIMER FACES OF THE JOINT IN ACCORDANCE WITH THE MANUFACTURER'S RECOMMENDATIONS.
2. PLACE AN APPROPRIATELY SIZED BACKER ROD TO THE CORRECT DEPTH IN NEW JOINT OPENING PER MANUFACTURER'S DIRECTIONS.
3. MIX AND PLACE SILICONE JOINT SEALANT PER MANUFACTURER'S DIRECTIONS IN JOINT OPENING.

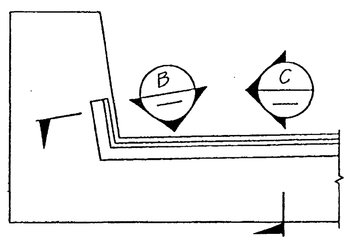

DETAIL A

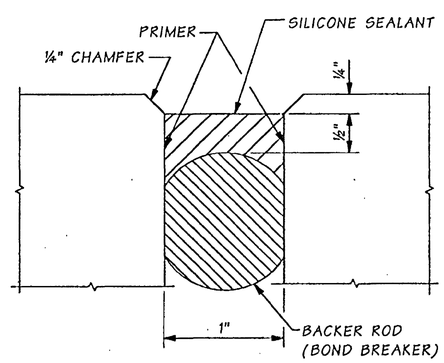

SECTION B

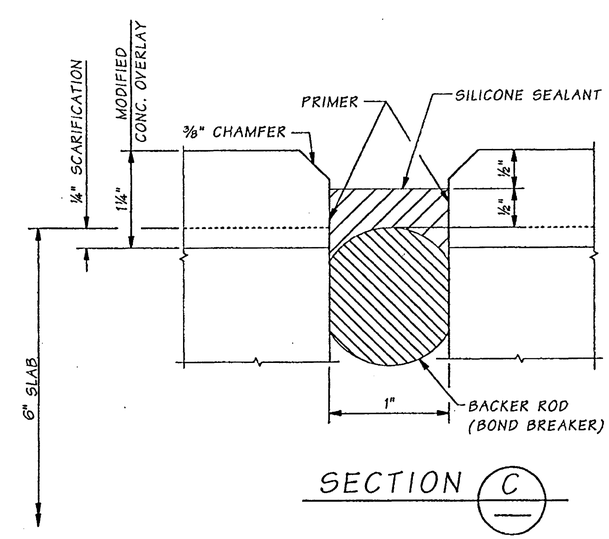

SECTION C

FOR "AS CONSTRUCTED PLANS" ONLY

SR 433 JOB NO. 0001 SHEET 38

Bridge Design Engr.	Kapur, J		M:\Y-Team\Lewis_Clark Rehab\Main Truss\Window files\EXP-1-JOINT.WND								
Supervisor	Clarke, PT	08/02					REGION NO.	STATE	FED. AID PROJ. NO.	SHEET NO.	TOTAL SHEETS
Designed By	Clarke, PT	08/02					10	WASH.			
Checked By	Talukdar, M	08/02					JOB NUMBER 02x310		ACBH - 0433(007)		
Detailed By	Evans, P	08/02									
Bridge Projects Engr.											
Prelim. Plan By											
Architect/Specialist			DATE	REVISION	BY	APP'D					

STRUCTURAL REGISTERED PROFESSIONAL ENGINEER 71344 OREGON SEPT. 10, 2002 JUGESH KAPUR
EXPIRES 06-30-2003

BRIDGE AND STRUCTURES OFFICE

PATRICK T. CLARKE STATE OF WASHINGTON 37776 REGISTERED PROFESSIONAL ENGINEER
EXPIRES 1/17/04

Washington State Department of Transportation

SR 433
LEWIS AND CLARK BRIDGE
DECK REPLACEMENT

SILICONE SEALANT
EXPANSION JOINT

BRIDGE SHEET NO. MS38

SHEET 127 OF 258 SHEETS

Tue Sep 17 10:33:34 2002

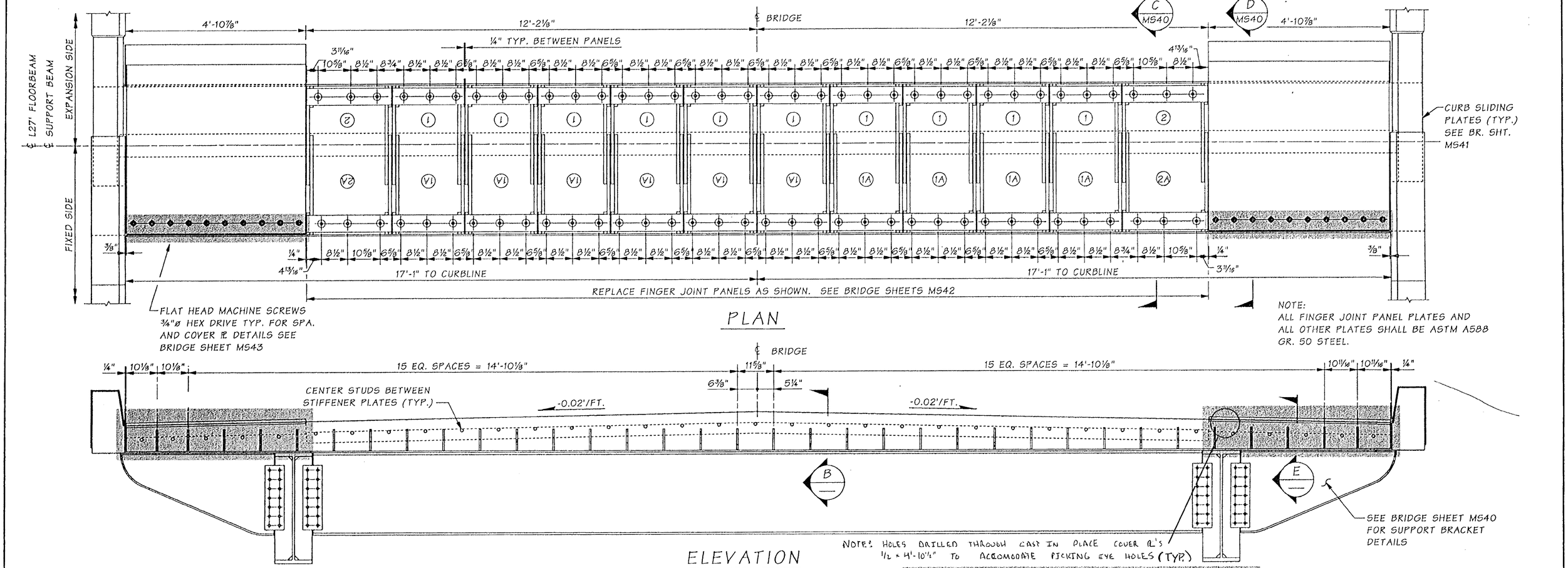

Bridge Design Engr.	Kapur, J		M:\Y-Team\Lewis_Clark Rehab\Main Truss\window files\EXP-F3.WND								
Supervisor	Clarke, PT	08/02									
Designed By	Clarke, PT	08/02									
Checked By	Talukdar, M	08/02									
Detailed By	House, L	08/02	10/02	MODIFIED PLATE CONNECTION	MT						
Bridge Projects Engr.											
Prelim. Plan By			10/02	MODIFIED NOTE	MT						
Architect/Specialist			DATE	REVISION	BY	APP'D					

Tue Oct 29 15:30:01 2002

REGION NO.	STATE	FED. AID PROJ. NO.	SHEET NO.	TOTAL SHEETS
10	WASH.			
JOB NUMBER 02x310		ACBH - 0433(007)		

STRUCTURAL REGISTERED PROFESSIONAL ENGINEER 71114 OREGON OCT. 10, 2001 JUGESH KAPUR
EXPIRES 06-30-2003

BRIDGE AND STRUCTURES OFFICE

PATRICK T. CLARKE STATE OF WASHINGTON 17776 REGISTERED PROFESSIONAL ENGINEER
EXPIRES 1/17/04

Washington State Department of Transportation

SR 433
LEWIS AND CLARK BRIDGE
DECK REPLACEMENT

L27' FINGER JOINT LAYOUT

BRIDGE SHEET NO. MS39

SHEET 128 OF 258 SHEETS

SR 433 J JO. 0001 SHEET 39

CHANGES

1. SLOTTED HOLE IN FLANGE IS ELIMINATED.
2. COPE L6 x 6 x ½ AS SHOWN
3. FIELD DRILL HOLES CONNECTING ℞ TO ANGLE IN FIELD AFTER FINAL ELEVATION ADJUSTMENT.
4. ALL OTHER DETAILS REMAIN THE SAME.

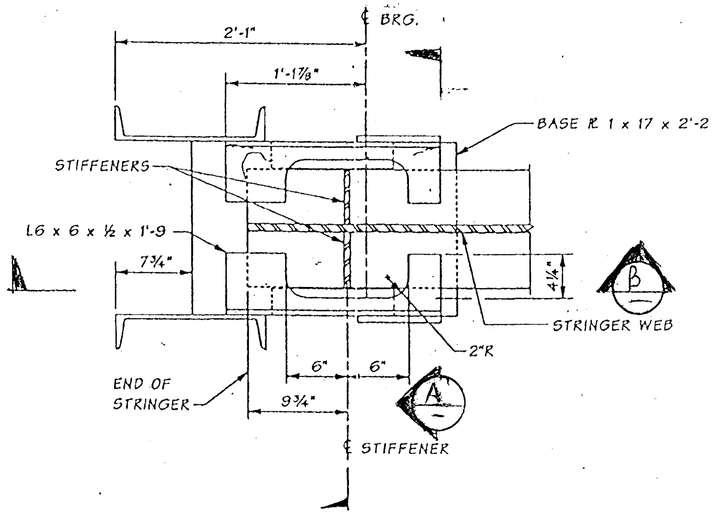

PLAN - GIRDER SEAT
EXP SIDE L27'

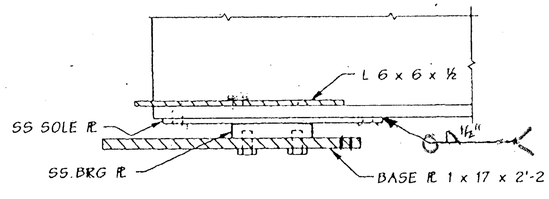

SECTION B

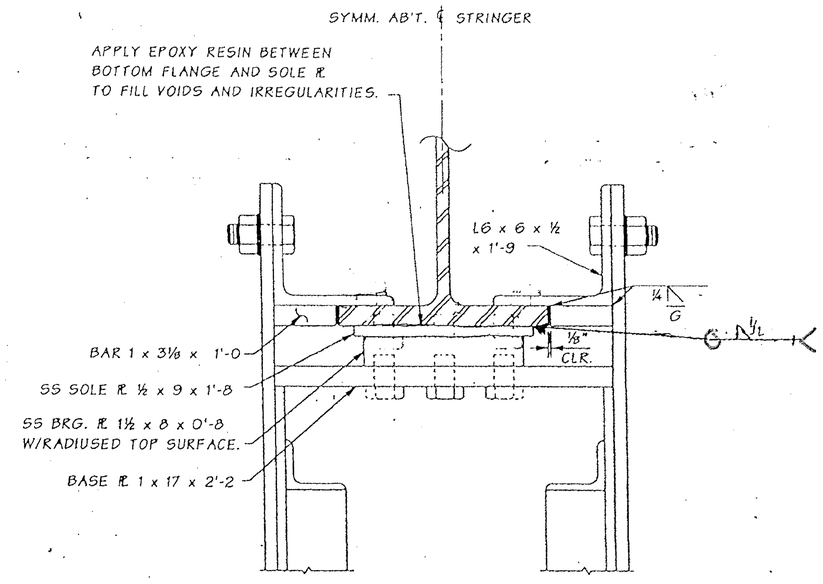

SECTION A

FOR "AS CONSTRUCTED PLANS" ONLY

FILE NAME	C:\AAWork\kelso\Svensen's Curve\L3425WASTESITE.dgn				REGION NO. 10	STATE WASH	FED.AID PROJ.NO.		Washington State Department of Transportation	SR 433 LEWIS AND CLARK BRIDE DECK REPLACEMENT	PLOT11 MS39A
TIME	02:37:18 PM										
DATE	08/17/2005				JOB NUMBER						
PLOTTED BY	spohnk										
DESIGNED BY											
ENTERED BY											
CHECKED BY					CONTRACT NO. 6444		LOCATION NO.			L27' - BEARING DETAILS EXPANSION SIDE	SHEET 128A OF 258 SHEETS
PROJ. ENGR.											
REGIONAL ADM.		REVISION	DATE	BY				P.E. STAMP BOX DATE	P.E. STAMP BOX DATE		

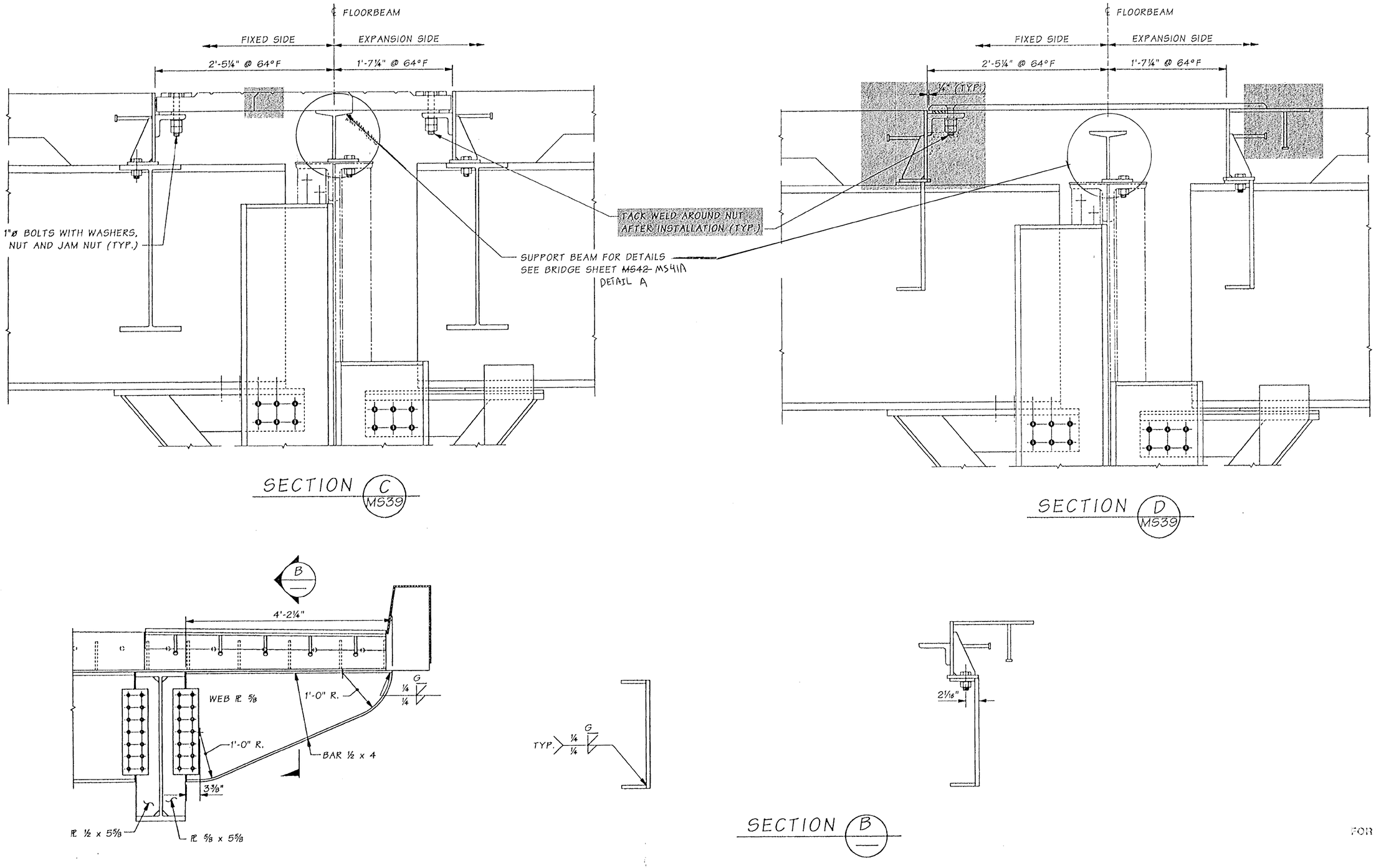

FINGER JOINT SUPPORT BRACKET AT L27'

FOR "AS CONSTRUCTED PLANS" ONLY

Bridge Design Engr.	Kapur, J		M:\Y-Team\Lewis_Clark Rehab\Main Truss\window files\EXP-F5.WND								
Supervisor	Clarke, PT	08/02					REGION NO.	STATE	FED. AID PROJ. NO.	SHEET NO.	TOTAL SHEETS
Designed By	Nebergall, D	08/02	10/02	MODIFIED PLATE CONNECTION	MT		10	WASH.	ACBH - 0433(007)		
Checked By	Talukdar, M	08/02									
Detailed By	Nebergall, D	08/02	10/02	ADDED NOTE	MT		JOB NUMBER 02x310				
Bridge Projects Engr.											
Prelim. Plan By			10/02	MODIFIED FINGER JOINT	MT		6444				
Architect/Specialist			DATE	REVISION	BY	APP'D					

STRUCTURAL REGISTERED PROFESSIONAL ENGINEER 71144 OREGON SEPT. 10, 2002 JUGESH KAPUR EXPIRES 06-30-2003

BRIDGE AND STRUCTURES OFFICE

PATRICK T. CLARKE STATE OF WASHINGTON 37775 REGISTERED PROFESSIONAL ENGINEER EXPIRES 1/17/04

Washington State Department of Transportation

SR 433
LEWIS AND CLARK BRIDGE
DECK REPLACEMENT

L27' FINGER JOINT
SECTION DETAILS

BRIDGE SHEET NO. MS40

SHEET 129 OF 258 SHEETS

SR 433 J 0.0001 SHEET 40

Tue Oct 29 14:15:47 2002

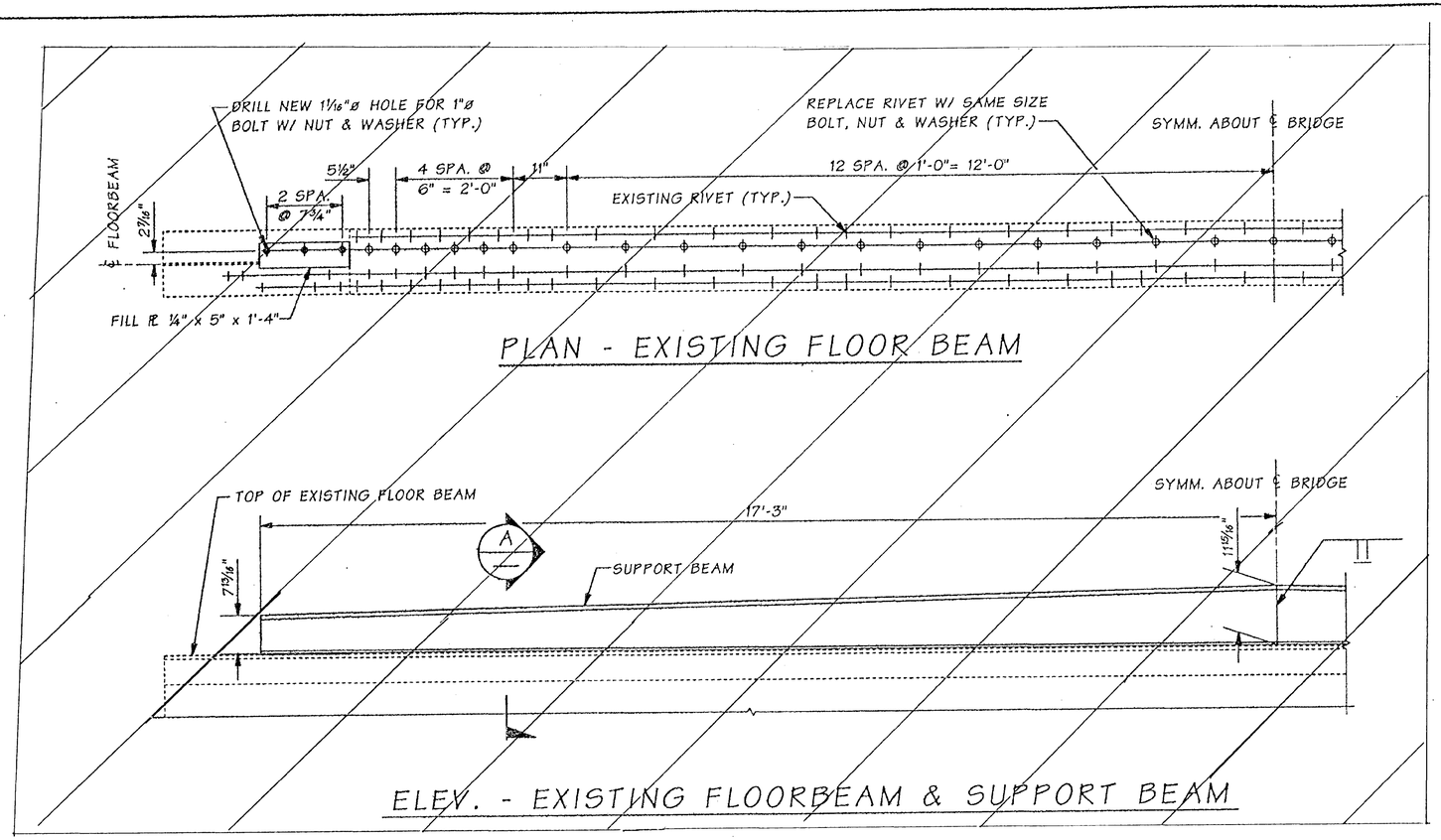

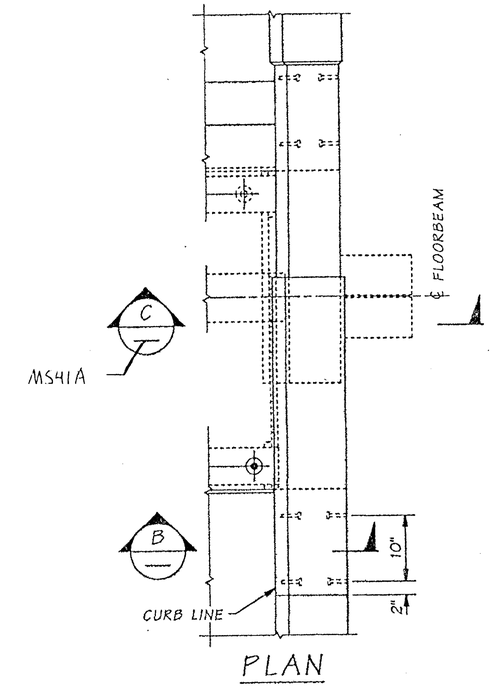

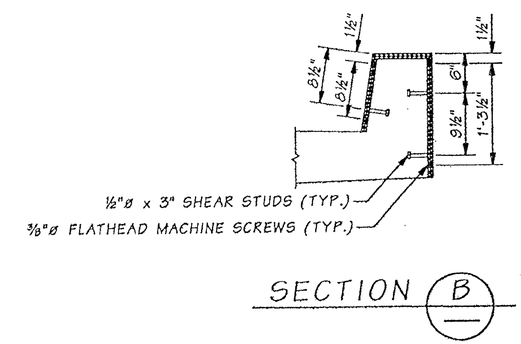

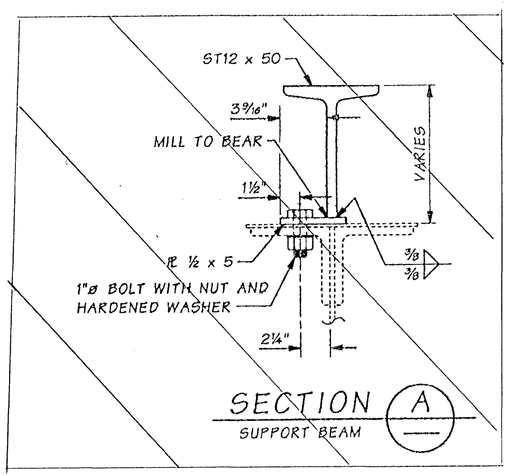

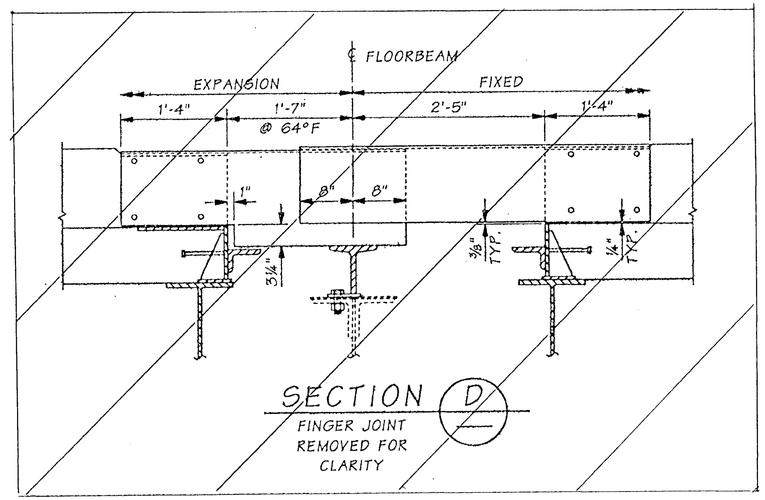

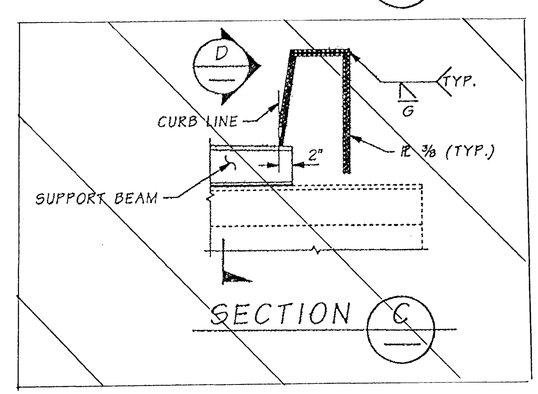

FOR "AS CONSTRUCTED PLANS" ONLY

Bridge Design Engr.	Kapur, J		
Supervisor	Clarke, PT	08/02	
Designed By	Nebergall, D	08/02	
Checked By	Talukdar, M	08/02	
Detailed By	Nebergall, D	08/02	
Bridge Projects Engr.			
Prelim. Plan By			
Architect/Specialist			

M:\Y-Team\Lewis_Clark Rehab\Main Truss\window files\CURB-SDWK-EXP.WND

DATE	REVISION	BY	APP'D

REGION NO.	STATE	FED. AID PROJ. NO.	SHEET NO.	TOTAL SHEETS
10	WASH.	ACBH - 0433(007)		
JOB NUMBER 02x310				

STRUCTURAL REGISTERED PROFESSIONAL ENGINEER 71844 STATE OF OREGON OCT. 10, 2002 JUGESH KAPUR
EXPIRES 06-30-2003

BRIDGE AND STRUCTURES OFFICE

PATRICK T. CLARKE STATE OF WASHINGTON REGISTERED PROFESSIONAL ENGINEER
EXPIRES 1/17/04

Washington State Department of Transportation

SR 433
LEWIS AND CLARK BRIDGE
DECK REPLACEMENT

FINGER JOINT CURB DETAIL

BRIDGE SHEET NO. MS 41

SHEET 130 OF 258 SHEETS

SR 433 JOB NO. 0001 SHEET 41

Tue Sep 17 15:31:31 2002

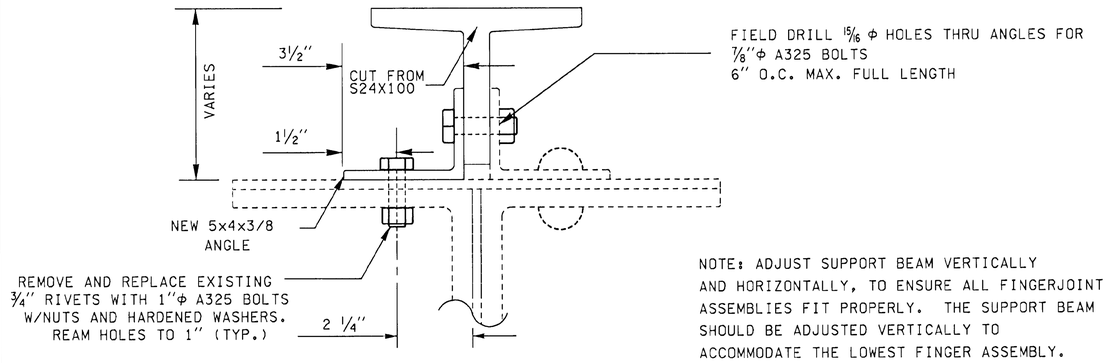

DETAIL A

L27' SUPPORT BEAM

NOT TO SCALE

MS13, MS40

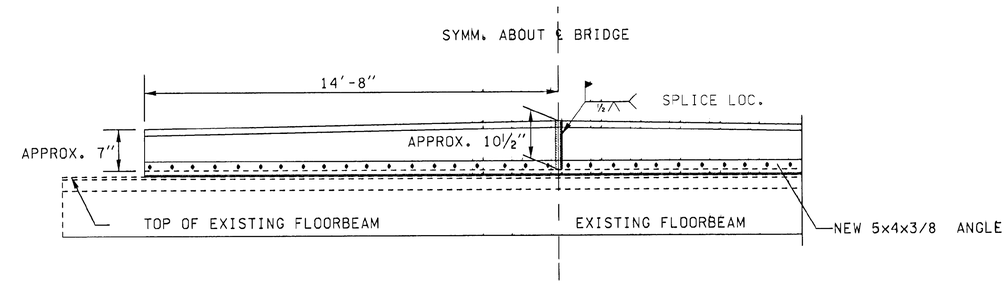

ELEVATION - EXISTING FLOORBEAM & SUPPORT BEAM

NOT TO SCALE

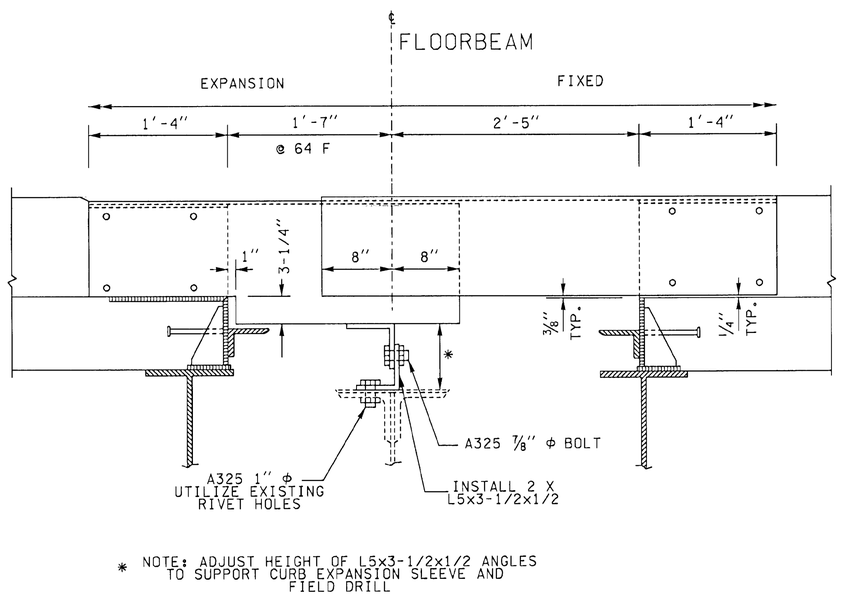

CURB EXPANSION SLEEVE SUPPORT B

NOT TO SCALE

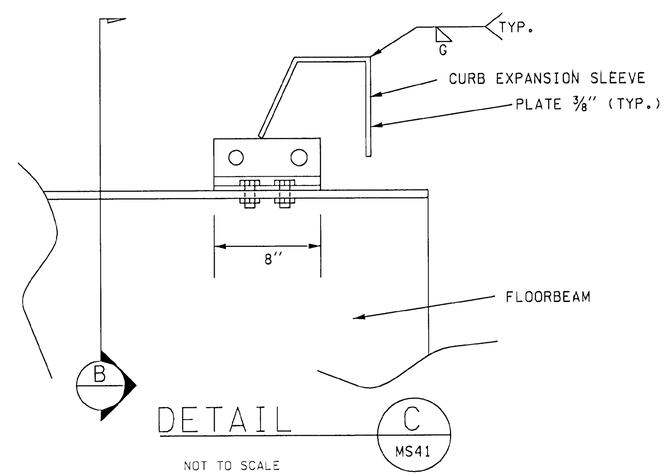

DETAIL C

MS41

NOT TO SCALE

FOR "AS CONSTRUCTED PLANS" ONLY

FILE NAME	G:\444304\03 - Construction\C6444 - SR433, Lewis and Clark Bridge Deck Replacement\As-Builts\6444 Detail.dgn						
TIME	01:29:38 PM						
DATE	10/12/2005						
PLOTTED BY	kingju						
DESIGNED BY							
ENTERED BY							
CHECKED BY							
PROJ. ENGR.							
REGIONAL ADM.		REVISION	DATE	BY			

REGION NO.	STATE	FED.AID PROJ.NO.
10	WASH	
JOB NUMBER		
CONTRACT NO. 6444		LOCATION NO.

P.E. STAMP BOX DATE

P.E. STAMP BOX DATE

Washington State Department of Transportation

SR 433
LEWIS AND CLARK
BRIDGE DECK REPLACEMENT

L27' DETAILS

PLOT9

MS41A

SHEET 130A OF 258 SHEETS

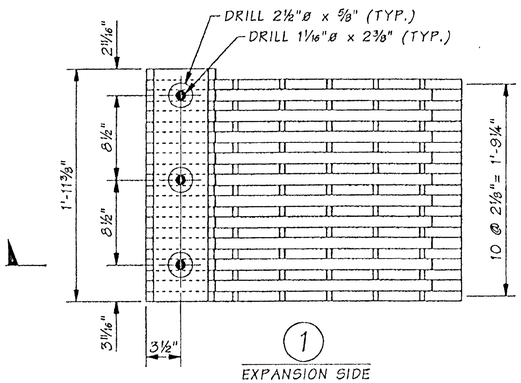

1
EXPANSION SIDE

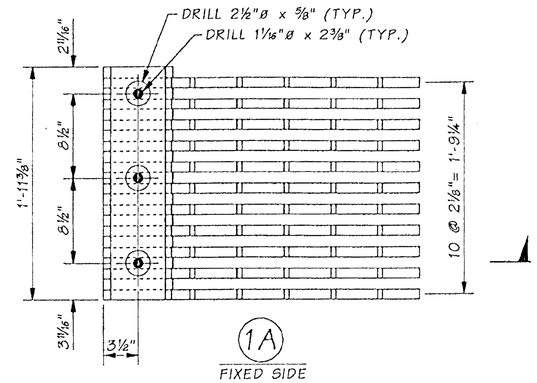

1A
FIXED SIDE

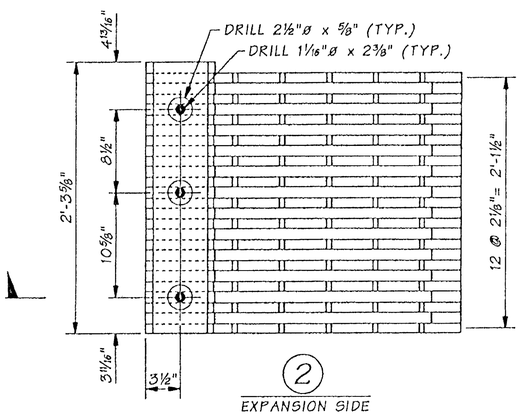

2
EXPANSION SIDE

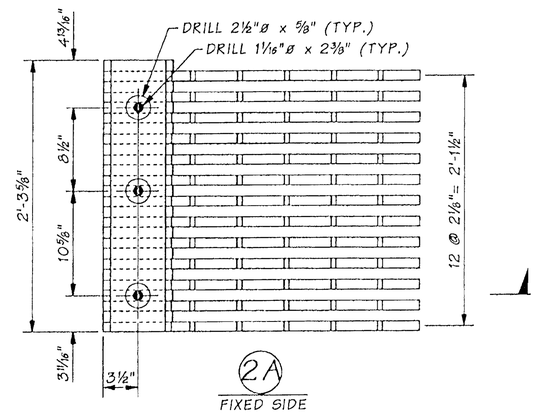

2A
FIXED SIDE

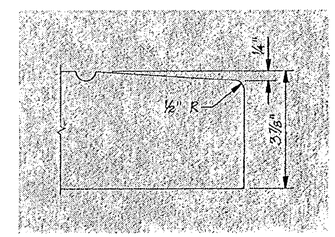

DETAIL

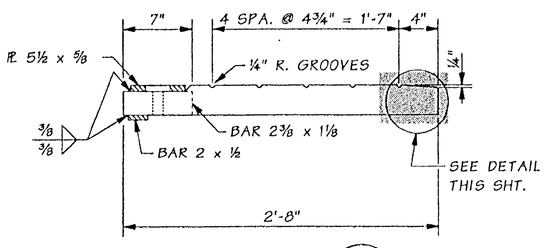

SECTION A
1 2

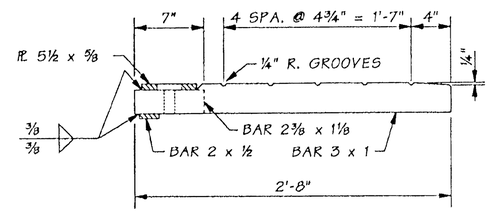

SECTION A
1A 2A

FOR "AS CONSTRUCTED PLANS" ONLY

Bridge Design Engr.	Kapur, J		M:\Y-Team\Lewis_Clark Rehab\Main Truss\window files\EXP-F2.WND								
Supervisor	Clarke, PT	08/02									
Designed By	Nebergall, D	08/02									
Checked By	Talukdar, M	08/02									
Detailed By	Nebergall, D	08/02									
Bridge Projects Engr.											
Prelim. Plan By			10/02	MODIFIED FINGER JOINT	MT						
Architect/Specialist			DATE	REVISION	BY	APP'D					

REGION NO.	STATE	FED. AID PROJ. NO.	SHEET NO.	TOTAL SHEETS
10	WASH.	ACBH - 0433(007)		
JOB NUMBER 02x310				

STRUCTURAL REGISTERED PROFESSIONAL ENGINEER 71144 OREGON OCT. 10, 2002 JUGESH KAPUR
EXPIRES 06-30-2003

BRIDGE AND STRUCTURES OFFICE

PATRICK T. O'CONNELL STATE OF WASHINGTON 27775 REGISTERED PROFESSIONAL ENGINEER
EXPIRES 1/11/04

Washington State Department of Transportation

SR 433
LEWIS AND CLARK BRIDGE
DECK REPLACEMENT

FINGER JOINT DETAILS
SHEET 1 OF 2

BRIDGE SHEET NO. MS42

SHEET 131 OF 258 SHEETS

SR 433 J NO. 0001 SHEET 42

Tue Oct 29 16:49:59 2002

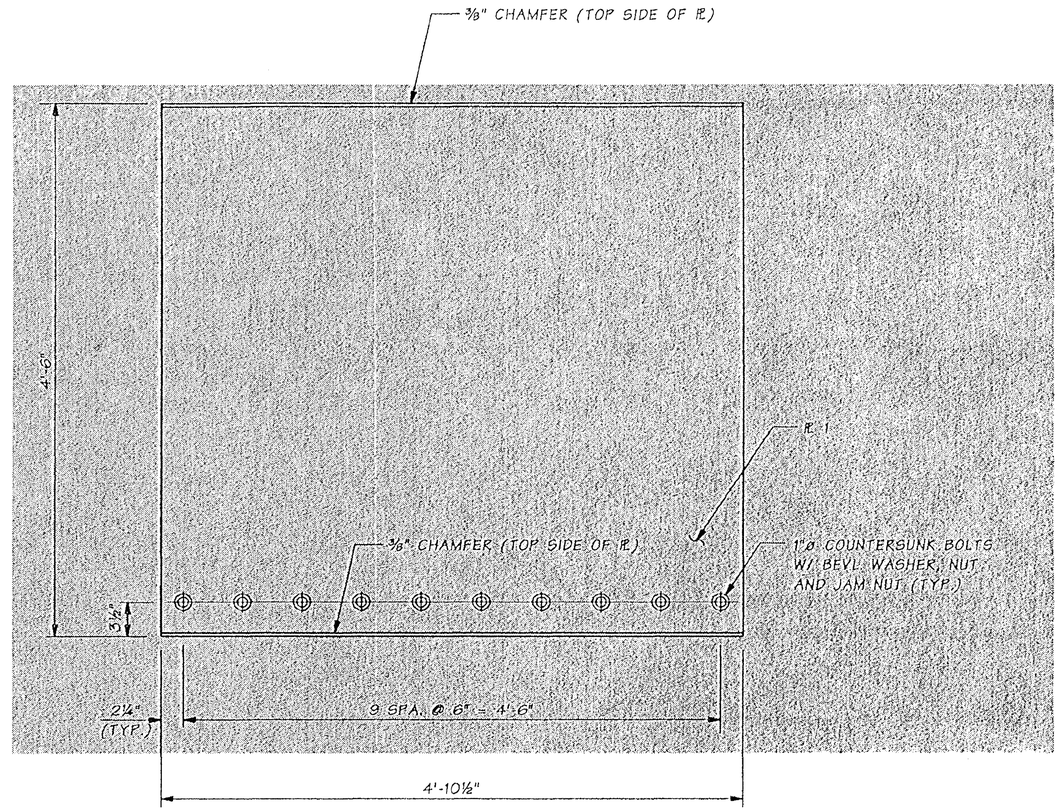

PLAN ~ COVER PLATE

FOR "AS CONSTRUCTED PLANS" ONLY

SR 433 J 0. 0001 SHEET 43

Bridge Design Engr.	Kapur, J		M:\Y-Team\Lewis_Clark Rehab\Main Truss\window files\EXP-F4.WND				REGION NO.	STATE	FED. AID PROJ. NO.	SHEET NO.	TOTAL SHEETS
Supervisor	Clarke, PT	08/02					10	WASH.			
Designed By	Nebergall, D	08/02									
Checked By	Talukdar, M	08/02									
Detailed By	Nebergall, D	08/02					JOB NUMBER 02x310		ACBH - 0433(007)		
Bridge Projects Engr.											
Prelim. Plan By			10/02	MODIFIED PLATE	MT						
Architect/Specialist			DATE	REVISION	BY	APP'D					

Wed Oct 30 09:34:07 2002

STRUCTURAL REGISTERED PROFESSIONAL ENGINEER 71844 OREGON JUGESH KAPUR
EXPIRES 06-30-2003

BRIDGE AND STRUCTURES OFFICE

PATRICK T. CLARKE STATE OF WASHINGTON 37776 REGISTERED PROFESSIONAL ENGINEER
EXPIRES 1/17/04

Washington State Department of Transportation

SR 433
LEWIS AND CLARK BRIDGE
DECK REPLACEMENT

FINGER JOINT DETAILS
SHEET 2 OF 2

BRIDGE SHEET NO. MS43

SHEET 132 OF 258 SHEETS

INDEX

SHEET NO.	PLAN REFERENCE NO.	TITLE
1	IN1	INDEX
2	V1	VICINITY MAP
3-4	SQ1-SQ2	SUMMARY OF QUANTITIES
5-6	RS1-RS2	ROADWAY SECTIONS / TESC PLAN
7	UP1	WASHINGTON UTILITY PLAN
8	SP1	EMERGENCY HELIPAD SITE PREPARATION
9	SP2	SITE PREPARATION
10	SC1	WASHINGTON STAGE CONSTRUCTION PLAN
11	SC2	OREGON STAGE CONSTRUCTION PLAN
12	SC3	STAGE CONSTRUCTION PLANS
13 - 13A	SC4 - SC5	STAGE CONSTRUCTION DETAILS
14-15	VSP1-VSP2	VEGETATED STRIP PLAN / TESC PLAN
16-17	AP1-AP2	PAVING PLAN
18	AP3	WASHINGTON PLANING PROFILE
19	AP4	OREGON PAVING PROFILE
20 - 20A	T-1 - T-1A	ILLUMINATION SITE PREPARATION
21-26	TA-1-TA-6	ILLUMINATION PLAN
27	TB-1	ILLUMINATION SCHEDULES
28-31B	TC-1-TC-4B	ILLUMINATION DETAILS
32-33	TD1-TD2	NAVIGATION LIGHTS SYSTEM MODIFICATION
34	(SEE BRIDGE PLANS INDEX)	BRIDGE PLANS INDEX
35-247	(SEE BRIDGE PLANS INDEX)	BRIDGE PLANS
248-251	TCP1-TCP4	CONSTRUCTION SIGNING CLASS B

INDEX (CONTINUED)

SHEET NO.	PLAN REFERENCE NO.	TITLE
252-253	TCP5-TCP6	CONSTRUCTION SIGNING CLASS A
254	TCP7	INFORMATION PCMS
255	TCP8	WEEKEND CLOSURE SIGNING
256-258	TCP9-TCP11	INFORMATION SIGN PLACEMENT

FOR "AS CONSTRUCTED PLANS" ONLY

PLAN REFERENCE NO.
SHEET OF SHEETS

NOTE: ALL SHEET REFERENCES, FIRST NOS. OF STRUCTURE CODE DESIGNATIONS AND MATCH LINE SHEET REFERENCES, ETC., THROUGHOUT THE PLANS, REFER TO THE ENTRY IN THE PLAN REFERENCE NUMBER BOX.

FILE NAME C:\AAWork\dgn\1566\XL1566Ind.dgn
TIME 12:17:40 PM
DATE 09/25/2002

DESIGNED BY C. BRICHEUX
ENTERED BY D. WASSON
CHECKED BY R. TORRES
PROJ. ENGR. A. REVIS
REGIONAL ADM. D. WAGNER

REVISION | DATE | BY

REGION NO. 10 | STATE WASH | FED.AID PROJ.NO. ACBH-0433(007)
JOB NUMBER 02X310
CONTRACT NO. 6444
LOCATION NO.

AMY B. REVIS, STATE OF WASHINGTON, 26150, REGISTERED PROFESSIONAL ENGINEER, EXPIRES 09/09/03
9/25/02 DATE
P.E. STAMP BOX

DATE
P.E. STAMP BOX

Washington State Department of Transportation
PROJ. DEV. ENG.

SR 433
LEWIS AND CLARK BRIDGE 433/1
DECK REPLACEMENT

INDEX

PLOT1
IN1
SHEET 132A OF 258 SHEETS

TWP. 7N. R. 2W. W.M.
COLUMBIA COUNTY

SR 433

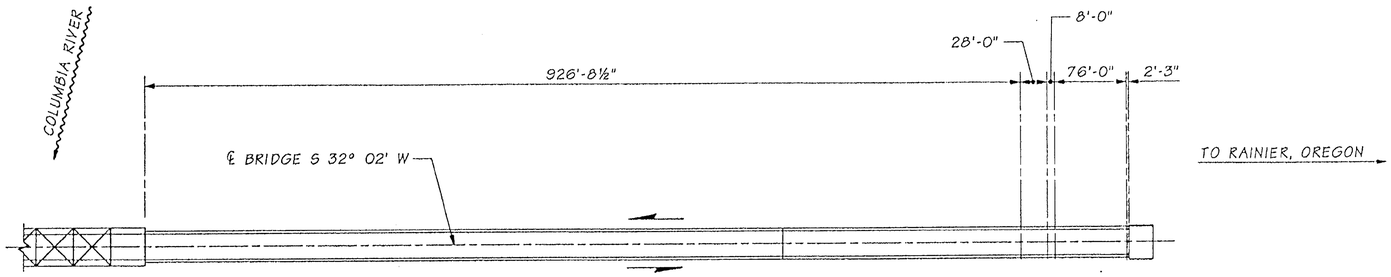

PLAN

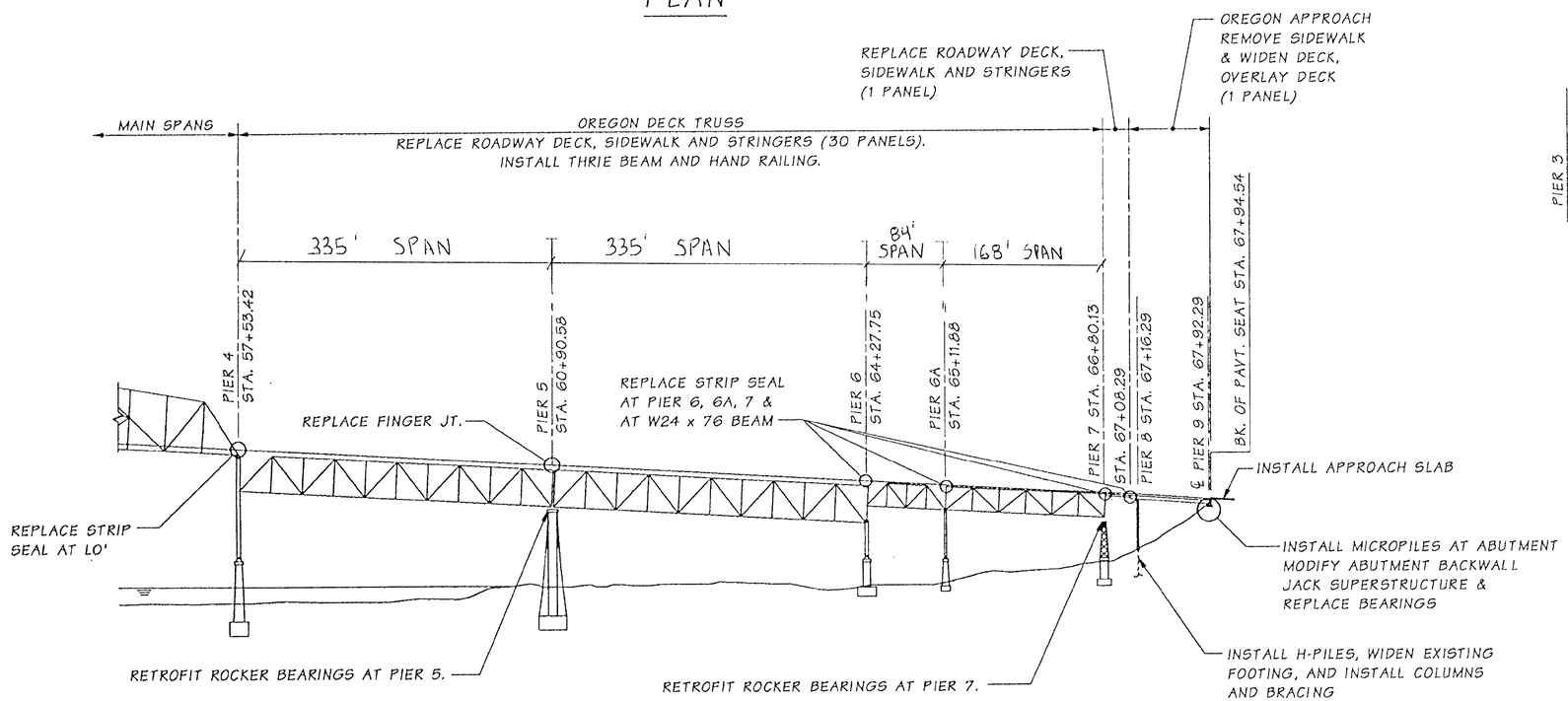

ELEVATION -- OREGON APPROACH

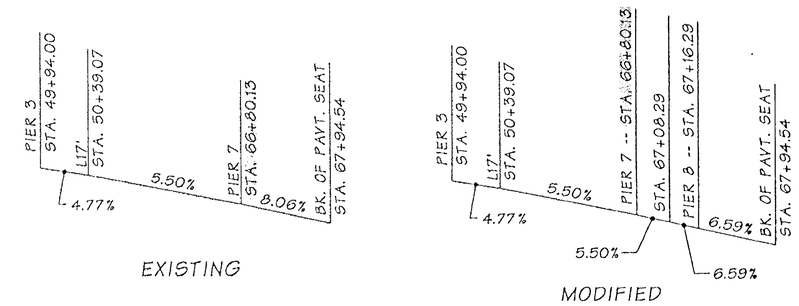

PROFILE

FOR "AS CONSTRUCTED PLANS" ONLY

DECK WIDENING & REPLACEMENT
LOADING HS 20-44

Bridge Design Engr.	Kapur, J		M:\Y-Team\Lewis_Clark Rehab\Oregon Appr\window files\LAYOUT.WND				REGION NO.	STATE	FED. AID PROJ. NO.	SHEET NO.	TOTAL SHEETS
Supervisor	Kirker, KN	08/02					10	WASH.			
Designed By	Peralta, R	08/02									
Checked By	Talukdar, M	08/02					JOB NUMBER 02x310		ACBH - 0433(007)		
Detailed By	Evans, P	08/02									
Bridge Projects Engr.			10/02	CORRECTED COUNTY NAME	RP						
Prelim. Plan By			10/02	CORRECTED STATIONING	RP						
Architect/Specialist			DATE	REVISION	BY	APP'D	6444				

Wed Oct 30 08:20:57 2002

STRUCTURAL REGISTERED PROFESSIONAL ENGINEER 71341 OREGON SEPT. 10, 2002 JUGESH KAPUR
EXPIRES 06-30-2003

BRIDGE AND STRUCTURES OFFICE

KARL N. KIRKER STATE OF WASHINGTON REGISTERED PROFESSIONAL ENGINEER 10/30/02
EXPIRES 11/3/03

Washington State Department of Transportation

SR 433
LEWIS AND CLARK BRIDGE
DECK REPLACEMENT

LAYOUT -- OREGON APPROACH

BRIDGE SHEET NO. 0A 1
SHEET 133 OF 258 SHEETS

SR 433 J 0. 1 SHEET 1

SUGGESTED ABUTMENT-MODIFICATION PROCEDURE

1. EXCAVATE SOIL AT ABUTMENT TO LIMITS SHOWN FOR MICROPILE DRILLING AT AND STAGE 1 CONSTRUCTION.
2. CORE DRILL HOLES IN EXISTING CONCRETE DECK AND ABUTMENT FOOTING TO FACILITATE INSTALLATION OF MICROPILES.
3. INSTALL MICROPILES AS SHOWN AND PATCH HOLES IN DECK AFTER INSTALLATION IS COMPLETED.
4. PERFORM STAGE 1 CONSTRUCTION AND INSTALL JACK AND BEARING STIFFENER ASSEMBLIES AS SHOWN.
5. AFTER THE CONCRETE IN STAGE 1 CONSTRUCTION REACHES A MINIMUM COMPRESSIVE STRENGTH OF 4000 PSI, PERFORM STAGE 2 CONSTRUCTION AND INSTALL NEW STEEL SOLES PLATE AS SHOWN.
6. AFTER THE CONCRETE IN STAGE 2 CONSTRUCTION REACHES A MINIMUM COMPRESSIVE STRENGTH OF 4000 PSI, INSTALL JACKING SYSTEM AND JACKS AT LOCATIONS SHOWN TO PERFORM STAGE 3 CONSTRUCTION.
7. CLOSE THE BRIDGE TO ALL TRAFFIC AND RAISE THE BRIDGE A SUFFICIENT HEIGHT TO FACILITATE THE REMOVAL OF EXISTING BEARING ELEMENTS AND THE PLACEMENT OF THE LOWER BEARING BLOCK. REMOVE EXISTING BEARING ELEMENTS AS SHOWN IN THE PLANS.
8. INSTALL LOWER BEARING BLOCKS AND TEMPORARY SHORING. PLACE STEEL SHIMS AND GROUT AS REQUIRED UNDER LOWER BLOCKS (ONLY) TO ENSURE TOP OF BLOCKS ARE LEVEL.
9. LOWER BRIDGE ONTO TEMPORARY SHORING AND RESET JACKS AS REQUIRED.
10. REPEAT STEPS 7 THROUGH 9 UNTIL ALL BEARING BLOCKS ARE INSTALLED AS SHOWN IN THE PLANS. (TWO LOWER BEARING BLOCKS AND ONE UPPER BEARING BLOCK PER GIRDER)
11. RAISE THE BRIDGE A SUFFICIENT HEIGHT TO FACILITATE THE INSTALLATION THE NEW ELASTOMERIC BEARINGS.
12. REMOVE TEMPORARY SHORING, INSTALL NEW ELASTOMERIC BEARINGS AND LOWER BRIDGE ONTO BEARINGS.
13. WELD THE PRECAST BLOCKS TOGETHER AND PERFORM STAGE 4 CONSTRUCTION.
14. EXCAVATE FILL BEHIND ABUTMENT TO FACILITATE PLACEMENT OF PRECAST CONCRETE APPROACH SLABS.
15. CONSTRUCT NEW PAVEMENT SEAT AS SHOWN IN THE PLANS.

ABUTMENT-MODIFICATION NOTES

1. MICROPILE LOCATIONS ARE SHOWN ON THESE PLANS AND THE CONTRACTOR SHALL SUBMIT TO THE ENGINEER FOR APPROVAL DETAILED MICROPILE DESIGN CALCULATIONS AND WORKING DRAWINGS. THE DESIGN LOAD FOR EACH MICROPILE SHALL BE AS FOLLOWS:
   A. VERTICAL MICROPILES - 171 KIPS COMPRESSION
   B. BATTERED MICROPILES - 140 KIPS TENSION
2. THE CONTRACTOR SHALL LOCATE ANY EXISTING STEEL REINFORCING USING NON-DESTRUCTIVE METHODS TO AVOID DAMAGE DURING DRILLING OPERATIONS, THE CONTRACTOR SHALL NOTIFY THE ENGINEER IMMEDIATELY IF ANY EXISTING REBAR OR ANCHOR BOLTS ARE ENCOUNTERED THAT CONFLICT WITH THE WORK DETAILED, AND SHALL OBTAIN APPROVAL FROM THE ENGINEER BEFORE CONTINUING WORK.
3. THE CONTRACTOR SHALL SUBMIT DESIGN DOCUMENTATION AND WORKING DRAWINGS FOR THE JACKING SYSTEM AND JACKS TO THE ENGINEER FOR APPROVAL. THE CALCULATED JACKING LOAD PER JACK POINT IS 42 KIPS.
4. ALL SIX GIRDERS SHALL BE RAISED AND LOWERED SIMULTANEOUSLY AND THE MAXIMUM RELATIVE DISPLACEMENT BETWEEN ADJACENT GIRDERS SHALL NOT EXCEED ¼". EACH JACK SHALL BE SIZED FOR AT LEAST 200% OF THE ANTICIPATED JACKING LOAD. NO TRAFFIC WILL BE ALLOWED ONTO THE BRIDGE DURING JACKING (RAISING AND LOWERING) OPERATIONS.
5. THE CONTRACTOR MAY USE THE EXISTING BEARING ELEMENTS AS TEMPORARY SHORING
6. ALL ELASTOMERIC BEARINGS HAVE BEEN DESIGNED FOR SERVICE LOAD STRESSES. ELASTOMER LAYERS SHALL BE DUROMETER HARDNESS 60. STEEL SHIMS SHALL CONFORM TO ASTM A1011 GRADE 36.
7. THE CONCRETE IN THE PRECAST APPROACH SLAB SHALL BE CLASS 4000.

FOR "AS CONSTRUCTED PLANS" ONLY

Design Engr.	Kapur, J		M:\Y-Team\Lewis_Clark Rehab\Oregon Appr\window files\NOTES.WND				REGION NO	STATE	FED. AID PROJ. NO.	SHEET NO.	TOTAL SHEETS
Supervisor	Kirker, KN	08/02					10	WASH.	ACBH - 0433(007)		
Designed By	Peralta, R	08/02					JOB NUMBER 02x310				
Checked By	Talukdar, M	08/02									
Detailed By	Evans, P	08/02									
Bridge Projects Engr.											
Prelim. Plan By			11/02	MODIFIED NOTE	RP						
Architect/Specialist			DATE	REVISION	BY	APP'D					

Wed Nov 20 13:59:08 2002

STRUCTURAL REGISTERED PROFESSIONAL ENGINEER 71884 OREGON JUGESH KAPUR MAY 10, 2003 — EXPIRES 06-30-2003

BRIDGE AND STRUCTURES OFFICE

KARL N. KIRKER STATE OF WASHINGTON 18290 REGISTERED PROFESSIONAL ENGINEER — EXPIRES 11/3/03

Washington State Department of Transportation

SR 433
LEWIS AND CLARK BRIDGE
DECK REPLACEMENT

OREGON APPROACH ABUTMENT NOTES

BRIDGE SHEET NO. OA2

SHEET 134 OF 258 SHEETS

SR 433 D. 1 SHEET 2

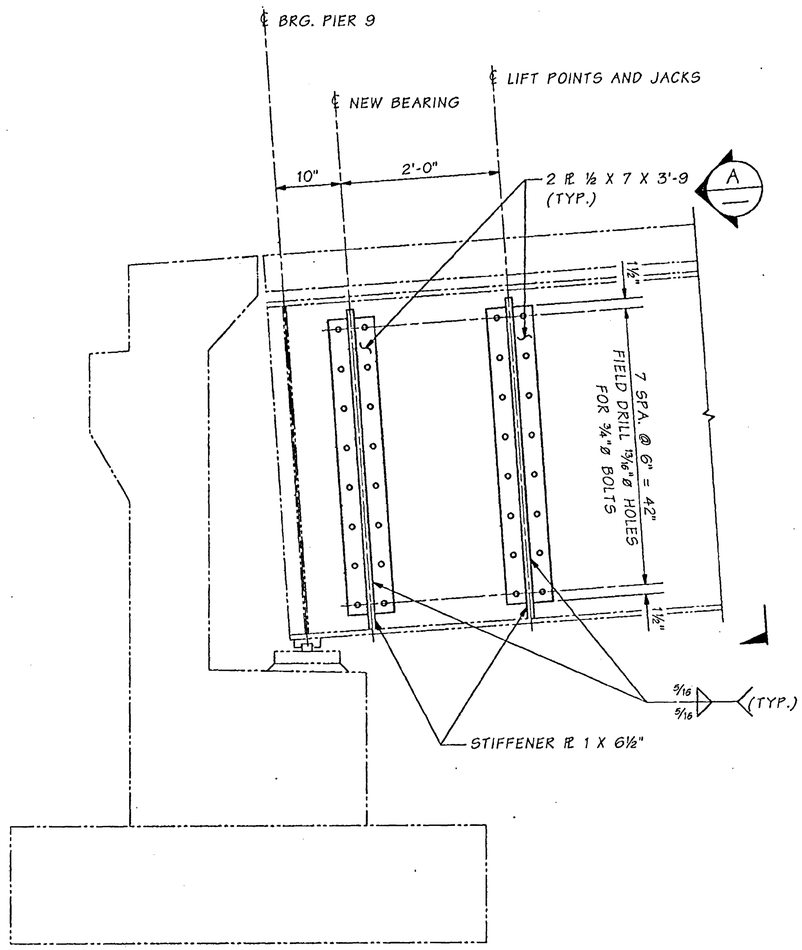

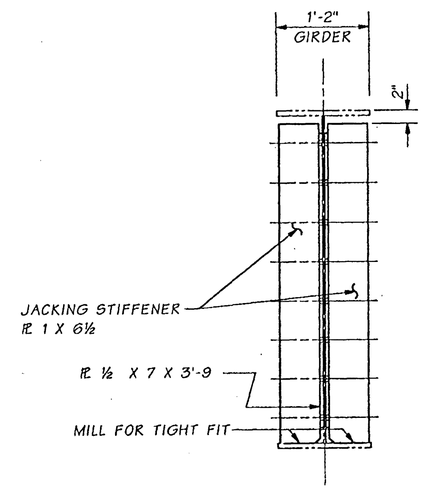

SECTION A

ELEVATION ~ JACK AND BEARING STIFFENER ASSEMBLIES FOR EXISTING GIRDERS

* - CONTRACTOR SHALL VERIFY BEARING & JACK STIFFENER LOCATIONS AND STIFFENER DIMENSIONS FOR FIT, BEFORE FABRICATING STIFFENERS.

FOR "AS CONSTRUCTED PLANS" ONLY

SR 433 JOB NO. 1 SHEET 3

Bridge Design Engr.	Kapur, J		M:\Y-Team\Lewis_Clark Rehab\Oregon Appr\window files\JACKING DETS.WND							
Supervisor	Kirker, KN	08/02								
Designed By	Peralta, R	08/02								
Checked By	Talukdar, M	08/02								
Detailed By	Evans, P	08/02								
Bridge Projects Engr.										
Prelim. Plan By										
Architect/Specialist			DATE	REVISION	BY	APP'D				

REGION NO.	STATE	FED. AID PROJ. NO.	SHEET NO.	TOTAL SHEETS
10	WASH.	ACBH - 0433(007)		
JOB NUMBER 02x310				

6444

STRUCTURAL REGISTERED PROFESSIONAL ENGINEER 71344 OREGON SEP. 10, 2002 JUGESH KAPUR
EXPIRES 06-30-2003

BRIDGE AND STRUCTURES OFFICE

KARL N. KIRKER STATE OF WASHINGTON 12598 REGISTERED PROFESSIONAL ENGINEER
EXPIRES 11/3/03

Washington State Department of Transportation

SR 433
LEWIS AND CLARK BRIDGE
DECK REPLACEMENT

SOUTH APPROACH JACKING DETAILS

BRIDGE SHEET NO. OA 3

SHEET 135 OF 258 SHEETS

Wed Sep 18 10:29:55 2002

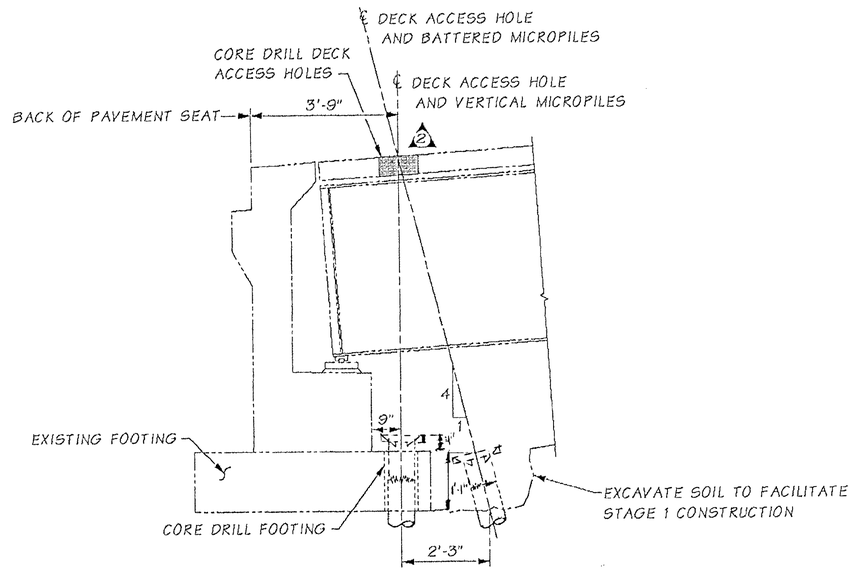

SECTION A
MICROPILE INSTALLATION AT PIER 9

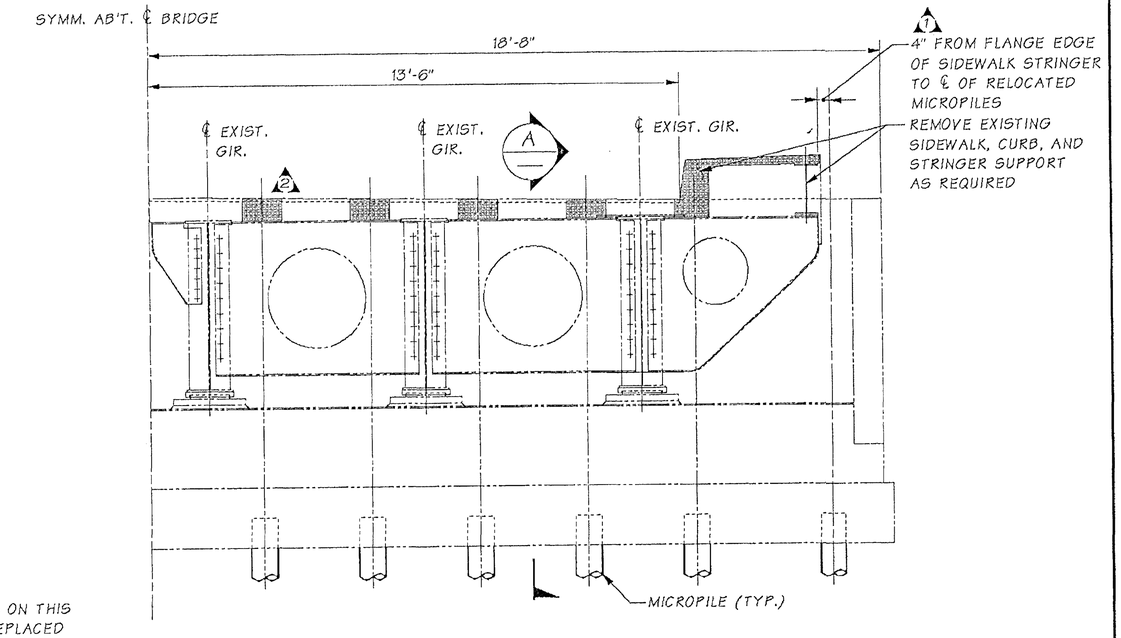

ELEVATION

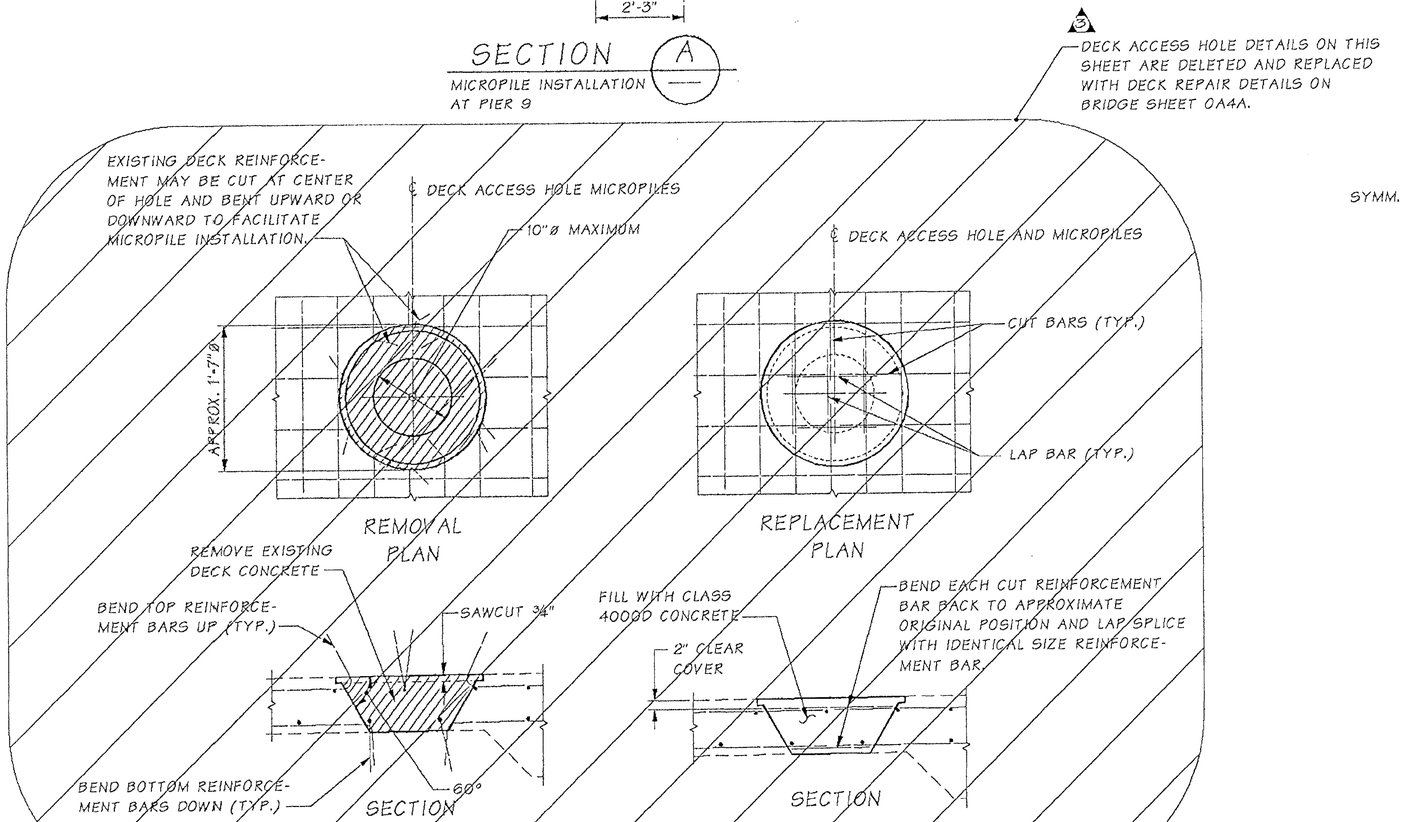

DECK ACCESS HOLE DETAIL

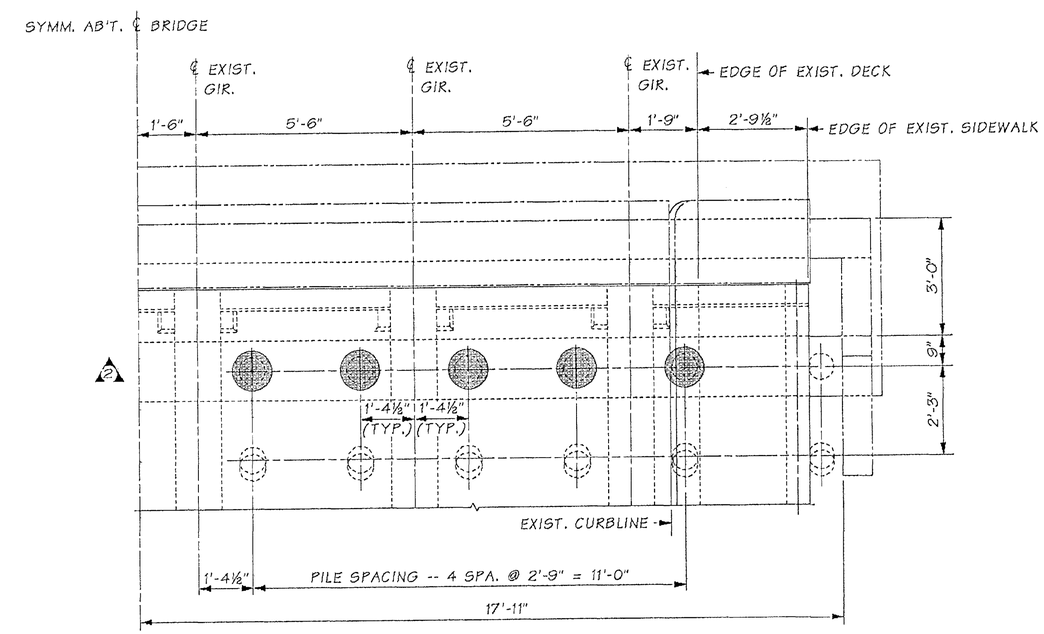

PLAN

FOR "AS CONSTRUCTED PLANS" ONLY

Bridge Design Engr.	Kapur, J		M:\Y-Team\Lewis_Clark Rehab\Oregon Appr\window files\MICROPILES.WND								
Supervisor	Kirker, KN	04/03					REGION NO.	STATE	FED. AID PROJ. NO.	SHEET NO.	TOTAL SHEETS
Designed By	Peralta, R	08/02	4/03	3	DELETED DECK ACCESS HOLE	RP	10	WASH.			
Checked By	Talukdar, M	08/02			DETAILS						
Detailed By	Evans, P	08/02	4/03	2	REVISED DECK ACCESS HOLES	RP	JOB NUMBER 02x310		ACBH - 0433(007)		
Bridge Projects Engr.											
Prelim. Plan By			4/03	1	REVISED MICROPILE LOCATION	RP					
Architect/Specialist			DATE		REVISION	BY	APP'D	6444			

STRUCTURAL REGISTERED PROFESSIONAL ENGINEER 71344 OREGON SEPT. 10, 2002 JUGESH KAPUR
EXPIRES 06-30-2003

BRIDGE AND STRUCTURES OFFICE

KARL N. KIRKER STATE OF WASHINGTON 18295 REGISTERED PROFESSIONAL ENGINEER
EXPIRES 11/3/03

Washington State Department of Transportation

SR 433
LEWIS AND CLARK BRIDGE
DECK REPLACEMENT

PIER 9 - MICROPILE DETAILS

BRIDGE SHEET NO. 0A4
SHEET 136 OF 258 SHEETS

SR 433 JOB NO. 1 SHEET 0A4

Tue Apr 29 07:30:15 2003

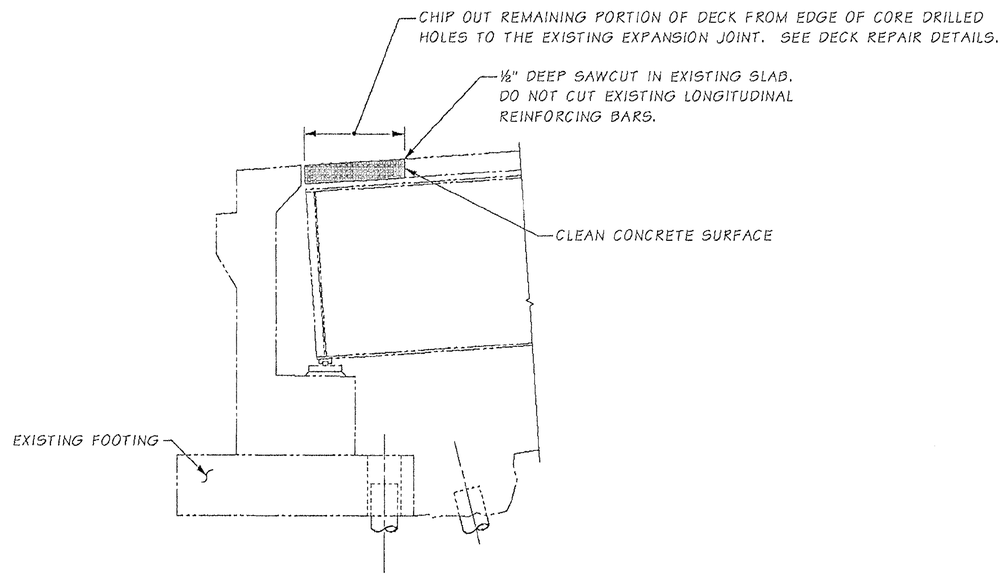

SECTION A
DECK REPAIR AT PIER 9

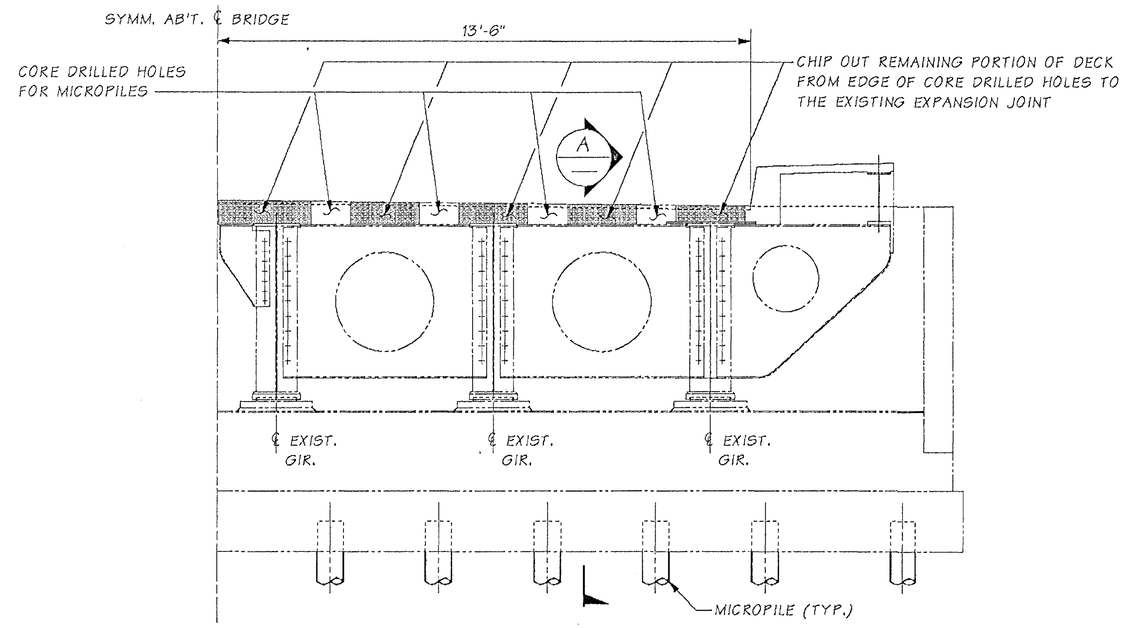

ELEVATION

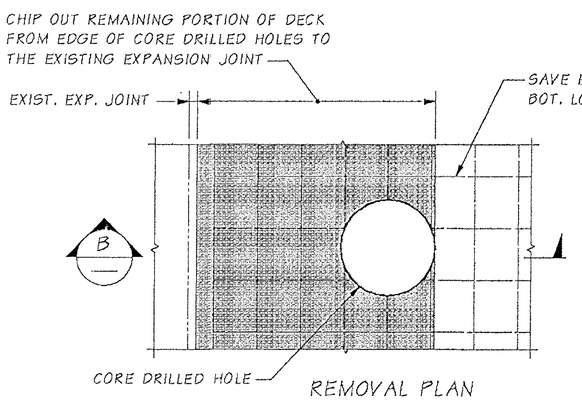

REMOVAL PLAN

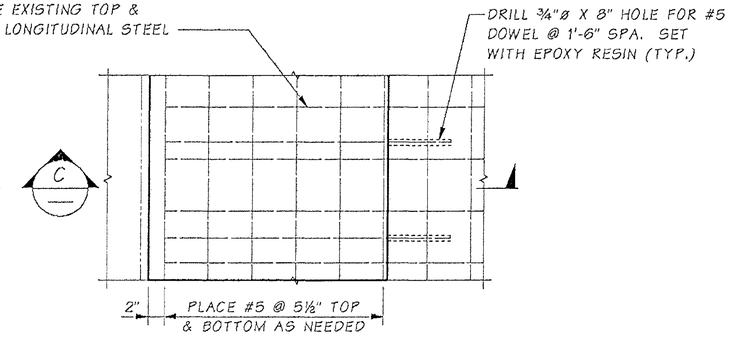

REPLACEMENT PLAN

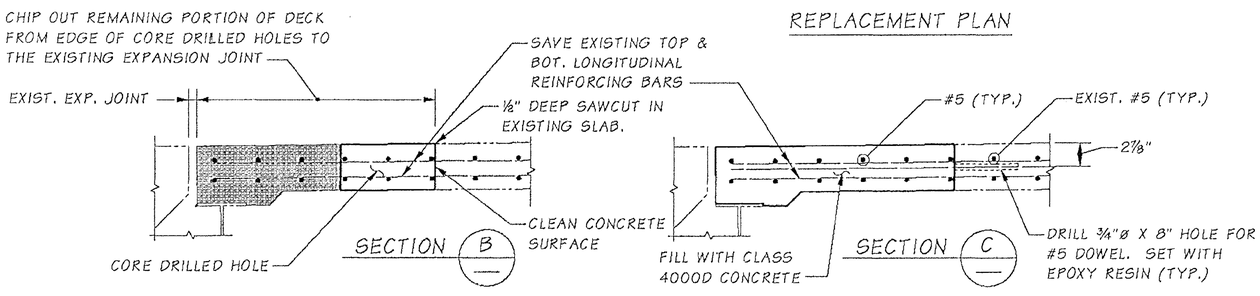

DECK REPAIR DETAILS

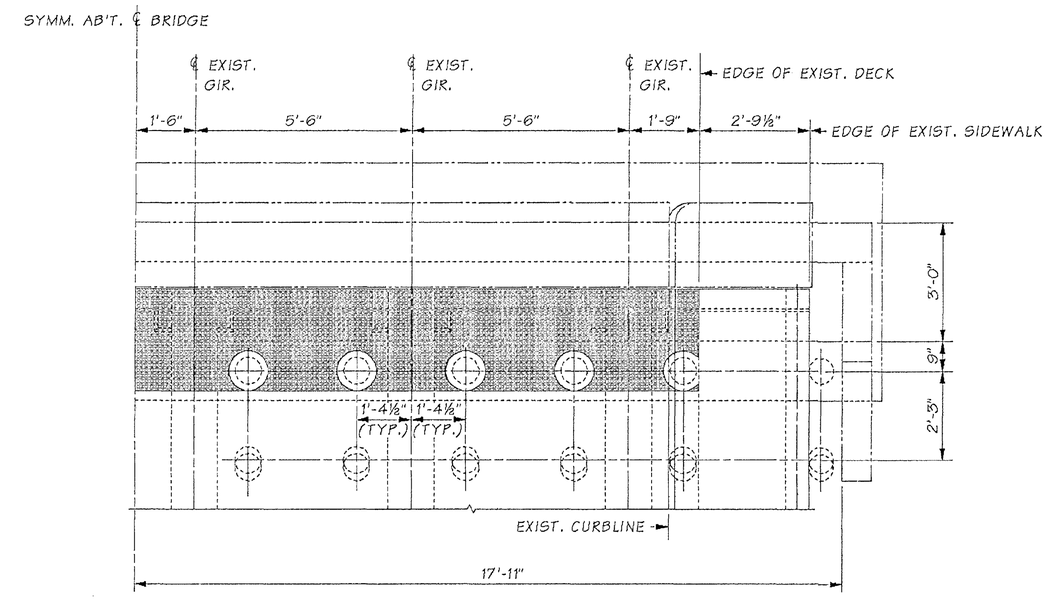

PLAN

FOR "AS CONSTRUCTED PLANS" ONLY

Bridge Design Engr.	Kapur, J		M:\Y-Team\Lewis_Clark Rehab\Oregon Appr\window files\MICROPILE DECK.WND
Supervisor	Kirker, KN	04/03	
Designed By	Peralta, R	04/03	
Checked By	Schultz, E	04/03	
Detailed By	Peralta, R	04/03	
Bridge Projects Engr.			
Prelim. Plan By			
Architect/Specialist			

DATE	REVISION	BY	APP'D

REGION NO.	STATE	FED. AID PROJ. NO.	SHEET NO.	TOTAL SHEETS
10	WASH.	ACBH - 0433(007)		
JOB NUMBER 02x310				

STRUCTURAL REGISTERED PROFESSIONAL ENGINEER 71344 OREGON SEPT. 10, 2001 JUGESH KAPUR EXPIRES 06-30-2003

BRIDGE AND STRUCTURES OFFICE

KARL N. KIRKER STATE OF WASHINGTON 16205 REGISTERED PROFESSIONAL ENGINEER EXPIRES 11/3/03

Washington State Department of Transportation

SR 433
LEWIS AND CLARK BRIDGE
DECK REPLACEMENT

PIER 9 - DECK REPAIR DETAILS

BRIDGE SHEET NO. 0A4A

SHEET 136A OF 258 SHEETS

SR 433 JOB NO. 1 SHEET 0A4

Tue Apr 29 07:30:13 2003

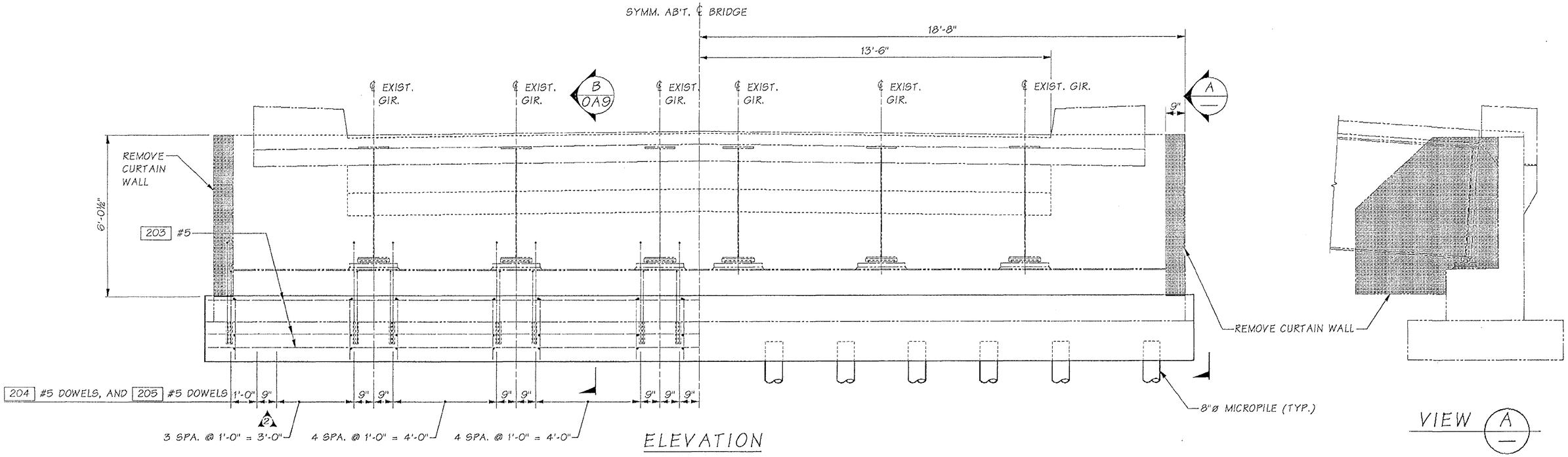

ELEVATION

STAGE 1 CONSTRUCTION

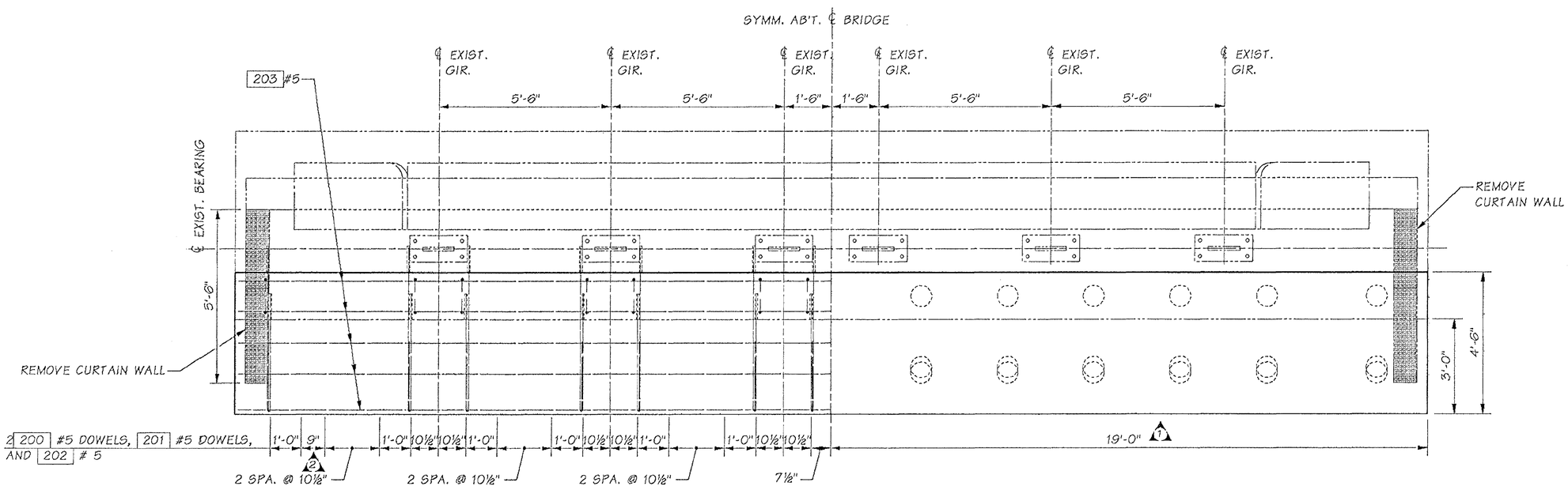

PLAN

STAGE 1 CONSTRUCTION

FOR "AS CONSTRUCTED PLANS" ONLY

Bridge Design Engr.	Kapur, J		M:\Y-Team\Lewis_Clark Rehab\Oregon Appr\window files\ABUTMENT1.WND			
Supervisor	Kirker, KN	04/03				
Designed By	Peralta, R	08/02				
Checked By	Talukdar, M	08/02				
Detailed By	Evans, P	08/02	04/03	2 REVISED REBAR SPACING	RP	
Bridge Projects Engr.						
Prelim. Plan By			04/03	1 WIDENED FOOTING	RP	
Architect/Specialist			DATE	REVISION	BY	APP'D

REGION NO.	STATE	FED. AID PROJ. NO.	SHEET NO.	TOTAL SHEETS
10	WASH.	ACBH - 0433(007)		
JOB NUMBER 02x310				
6444				

STRUCTURAL REGISTERED PROFESSIONAL ENGINEER 71344 OREGON SEPT. 10, 2002 JUGESH KAPUR EXPIRES 06-30-2003

BRIDGE AND STRUCTURES OFFICE

KARL N. KIRKER STATE OF WASHINGTON 10396 REGISTERED PROFESSIONAL ENGINEER EXPIRES 11/3/03

Washington State Department of Transportation

SR 433
LEWIS AND CLARK BRIDGE
DECK REPLACEMENT

OREGON APPROACH ABUTMENT
SHEET 1 OF 7

BRIDGE SHEET NO. 0A5

SHEET 137 OF 258 SHEETS

SR 433 JOB NO. 1 SHEET 0A5

OA - PIER 9

CURTAIN WALL DETAILS

EAST + WEST (2 LOCATIONS)

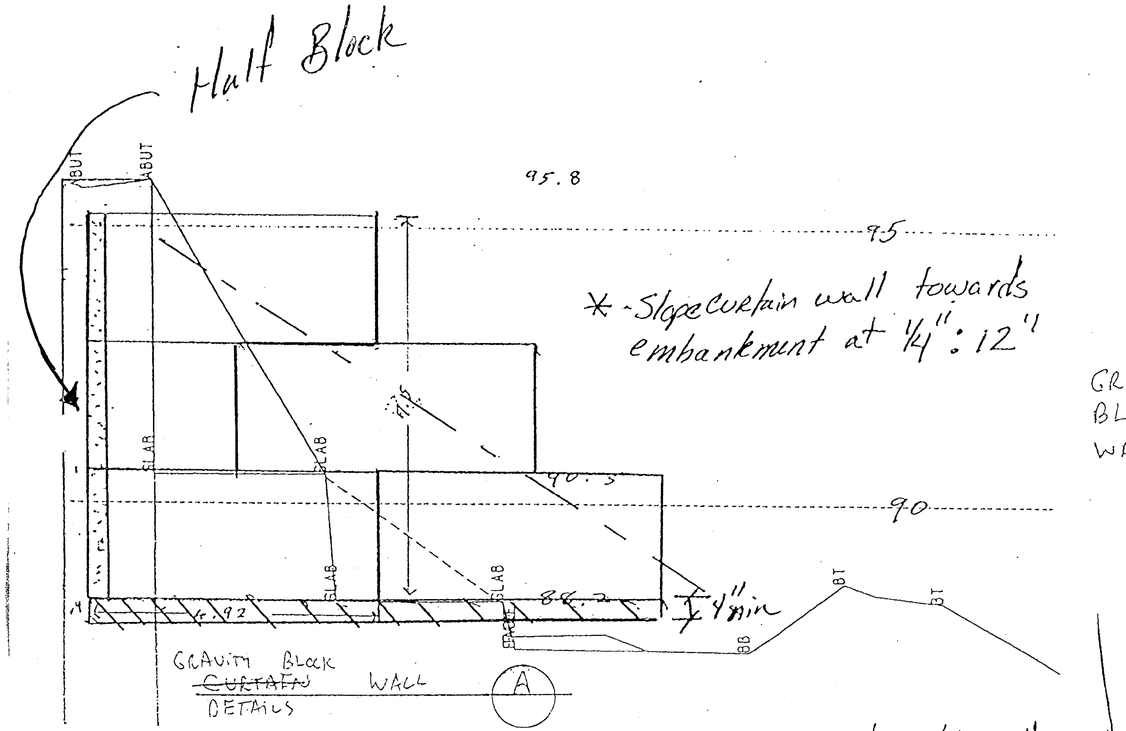

* - Slope curtain wall towards embankment at 1/4" : 12"

- Install Geosynthetic between abutment & curtain wall
- Compacted CSBC
- Proposed fill line

Note: Bottom of block set level with jacking pad elevation.

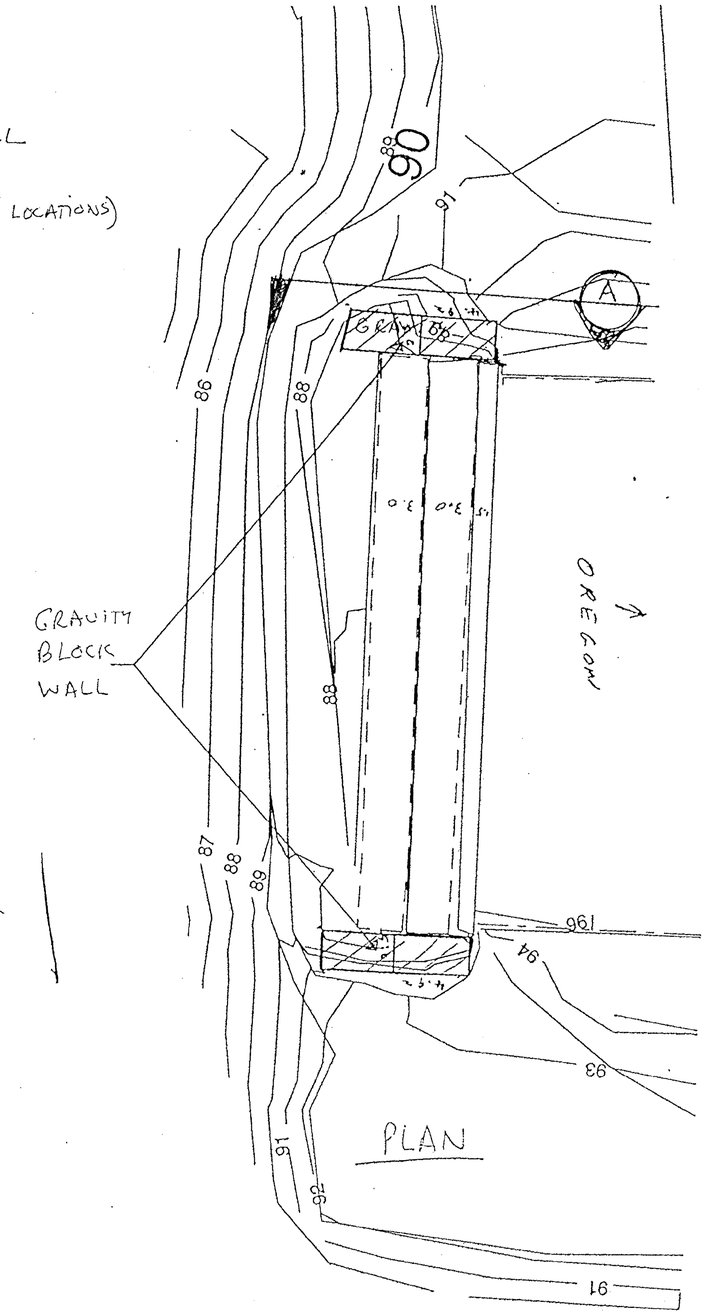

C5-26-C4

CA

FOR "AS CONSTRUCTED PLANS" ONLY

FILE NAME	C:\AAWork\kelso\Svensen's Curve\L3425WASTESITE.dgn								PLOT11
TIME	02:37:18 PM								
DATE	08/17/2005				REGION NO. 10	STATE WASH	FED. AID PROJ. NO.	Washington State Department of Transportation	SR 433 LEWIS AND CLARK BRIDE DECK REPLACEMENT	OASA
PLOTTED BY	spahnk				JOB NUMBER				
DESIGNED BY									
ENTERED BY									
CHECKED BY					CONTRACT NO. 6444		LOCATION NO.		
PROJ. ENGR.									
REGIONAL ADM.		REVISION	DATE	BY					

P.E. STAMP BOX DATE

P.E. STAMP BOX DATE

PIER 9 - CURTAIN WALL DETAILS

SHEET 137A OF 258 SHEETS

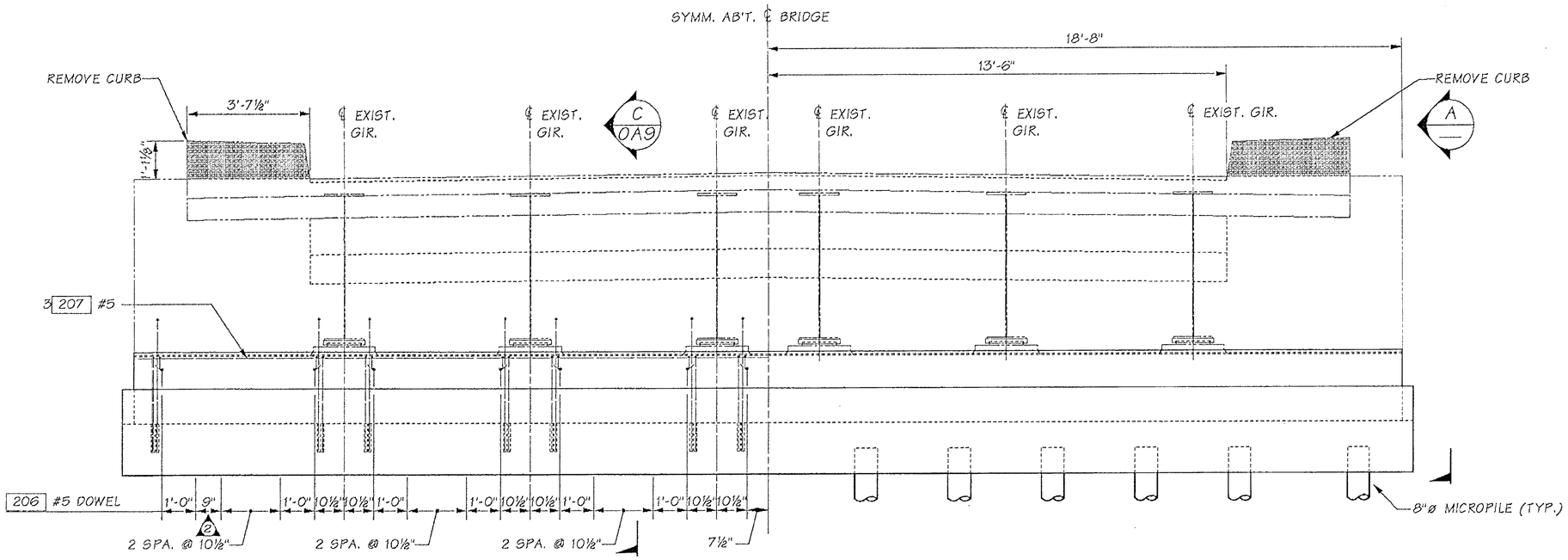

ELEVATION

STAGE 2 CONSTRUCTION

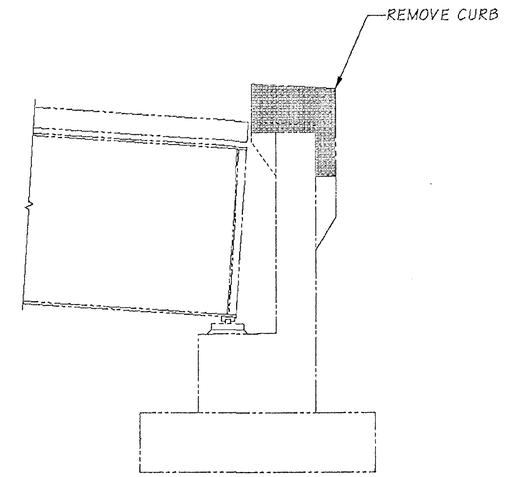

VIEW A

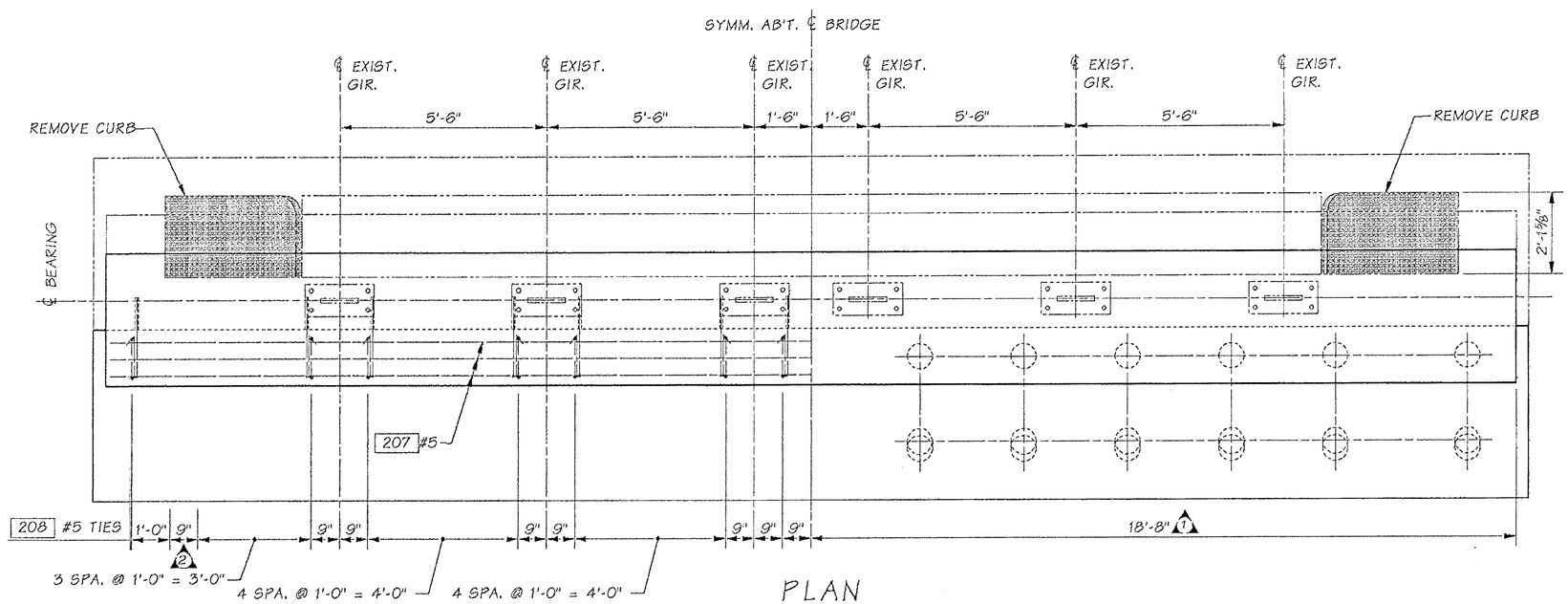

PLAN

STAGE 2 CONSTRUCTION

FOR "AS CONSTRUCTED PLANS" ONLY

SR 433 JOB NO. 1 SHEET 0A6

Bridge Design Engr.	Kapur, J		M:\Y-Team\Lewis_Clark Rehab\Oregon Appr\window files\ABUTMENT2.WND			
Supervisor	Kirker, KN	04/03				
Designed By	Peralta, R	08/02				
Checked By	Talukdar, M	08/02				
Detailed By	Evans, P	08/02	04/03	2 REVISED REBAR SPACING	RP	
Bridge Projects Engr.						
Prelim. Plan By			04/03	1 WIDENED ABUTMENT	RP	
Architect/Specialist			DATE	REVISION	BY	APP'D

REGION NO.	STATE	FED. AID PROJ. NO.	SHEET NO.	TOTAL SHEETS
10	WASH.	ACBH - 0433(007)		

JOB NUMBER 02x310

6444

STRUCTURAL REGISTERED PROFESSIONAL ENGINEER 71344 OREGON SEPT. 10, 2002 JUGESH KAPUR EXPIRES 06-30-2003

BRIDGE AND STRUCTURES OFFICE

KARL N. KIRKER STATE OF WASHINGTON 18296 REGISTERED PROFESSIONAL ENGINEER EXPIRES 11/3/03

Washington State Department of Transportation

SR 433
LEWIS AND CLARK BRIDGE
DECK REPLACEMENT

OREGON APPROACH ABUTMENT
SHEET 2 OF 7

BRIDGE SHEET NO. 0A6

SHEET 138 OF 258 SHEETS

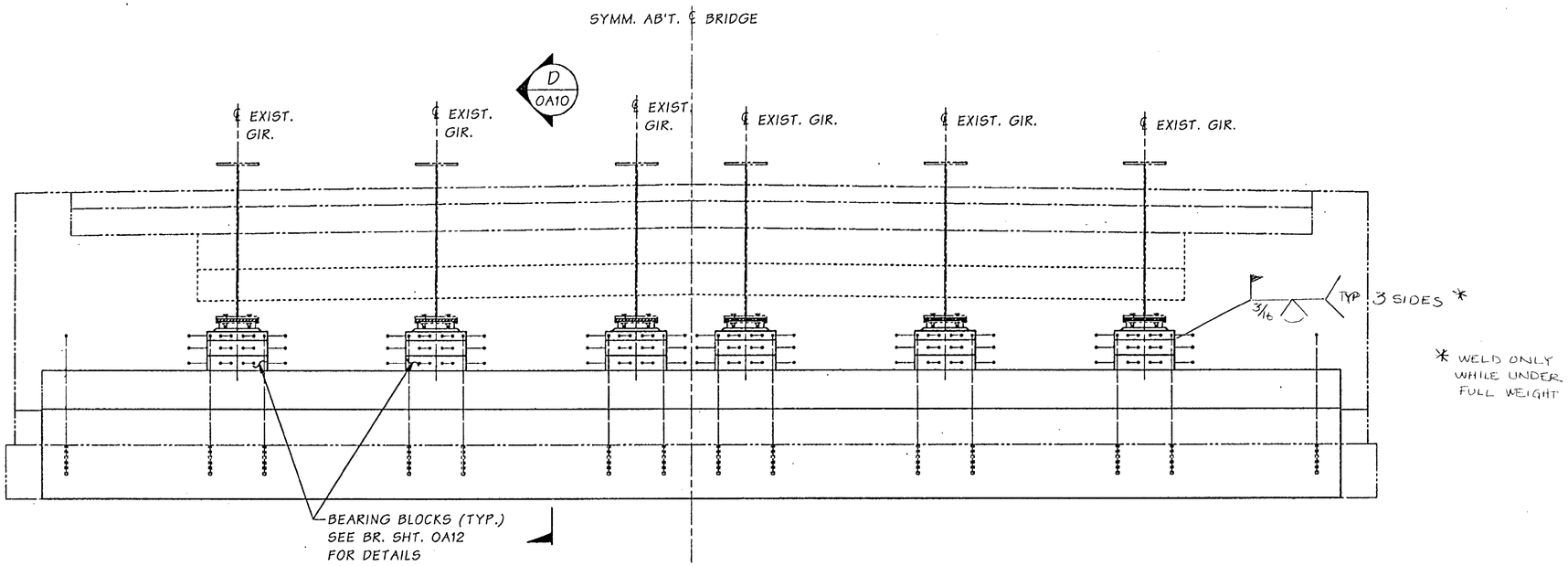

ELEVATION

STAGE 3 CONSTRUCTION

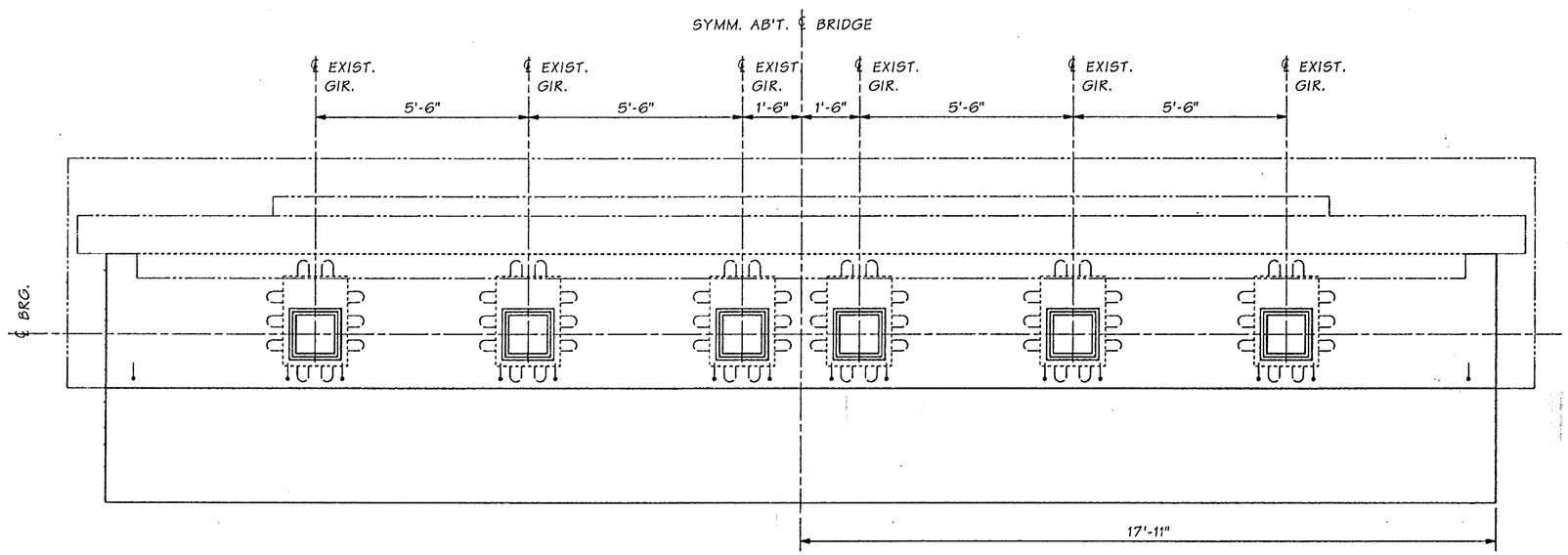

PLAN

STAGE 3 CONSTRUCTION

FOR "AS CONSTRUCTED PLANS" ONLY

SR 433 JOB NO. 1 SHEET 7

Bridge Design Engr.	Kapur, J	
Supervisor	Kirker, KN	08/02
Designed By	Peralta, R	08/02
Checked By	Talukdar, M	08/02
Detailed By	Evans, P	08/02
Bridge Projects Engr.		
Prelim. Plan By		
Architect/Specialist		

M:\Y-Team\Lewis_Clark Rehab\Oregon Appr\window files\ABUTMENT3.WND

DATE	REVISION	BY	APP'D

REGION NO.	STATE	FED. AID PROJ. NO.	SHEET NO.	TOTAL SHEETS
10	WASH.	ACBH - 0433(007)		

JOB NUMBER 02x310

6444

STRUCTURAL REGISTERED PROFESSIONAL ENGINEER 73344 OREGON SEPT. 10, 2002 JUGESH KAPUR
EXPIRES 06-30-2003

BRIDGE AND STRUCTURES OFFICE

KARL N. KIRKER STATE OF WASHINGTON 18296 REGISTERED PROFESSIONAL ENGINEER
EXPIRES 11/3/03

Washington State Department of Transportation

SR 433
LEWIS AND CLARK BRIDGE
DECK REPLACEMENT

OREGON APPROACH ABUTMENT
SHEET 3 OF 7

BRIDGE SHEET NO. OA 7

SHEET 139 OF 258 SHEETS

Wed Sep 18 09:13:38 2002

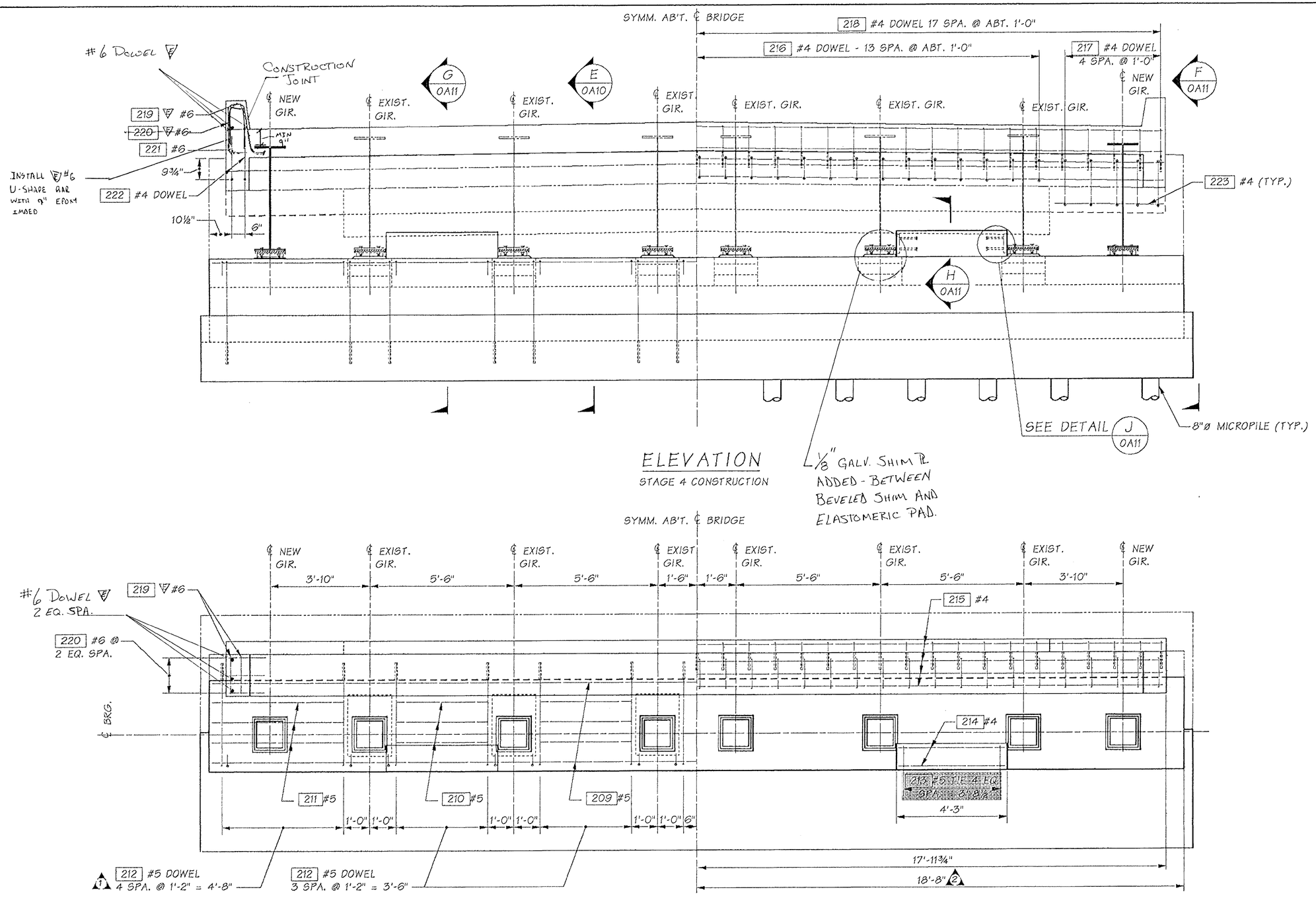

ELEVATION

STAGE 4 CONSTRUCTION

PLAN

STAGE 4 CONSTRUCTION

FOR "AS CONSTRUCTED PLANS" ONLY

Bridge Design Engr.	Kapur, J		M:\Y-Team\Lewis_Clark Rehab\oregon Appr\window files\ABUTMENT4.WND								
Supervisor	Kirker, KN	04/03									
Designed By	Peralta, R	08/02	04/03	2 WIDENED BEARING SEAT	RP		REGION NO.	STATE	FED. AID PROJ. NO.	SHEET NO.	TOTAL SHEETS
Checked By	Talukdar, M	08/02					10	WASH.			
Detailed By	Evans, P	08/02	04/03	1 REVISED REBAR SPACING	RP		JOB NUMBER 02x310		ACBH - 0433(007)		
Bridge Projects Engr.											
Prelim. Plan By			10/02	MODIFIED DIMENSION	RP						
Architect/Specialist			DATE	REVISION	BY	APP'D	6444				

STRUCTURAL REGISTERED PROFESSIONAL ENGINEER 71344 OREGON SEPT. 10, 2002 JUGESH KAPUR EXPIRES 06-30-2003

BRIDGE AND STRUCTURES OFFICE

KARL N. KIRKER STATE OF WASHINGTON 18395 REGISTERED PROFESSIONAL ENGINEER EXPIRES 11/3/03

Washington State Department of Transportation

SR 433
LEWIS AND CLARK BRIDGE
DECK REPLACEMENT

OREGON APPROACH ABUTMENT
SHEET 4 OF 7

BRIDGE SHEET NO. 0A8

SHEET 140 OF 258 SHEETS

SR 433 JOB NO. 1 SHEET 0A8

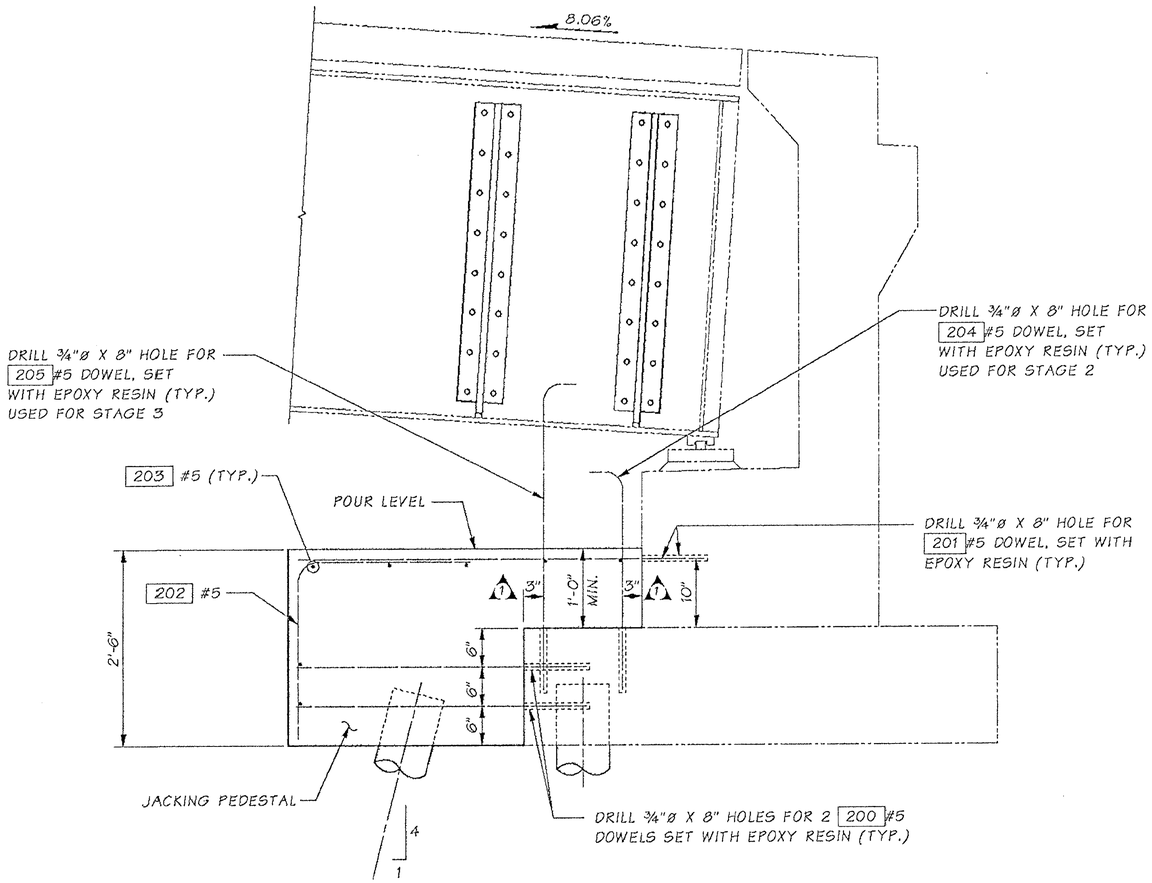

SECTION B
STAGE 1 CONSTRUCTION OA5

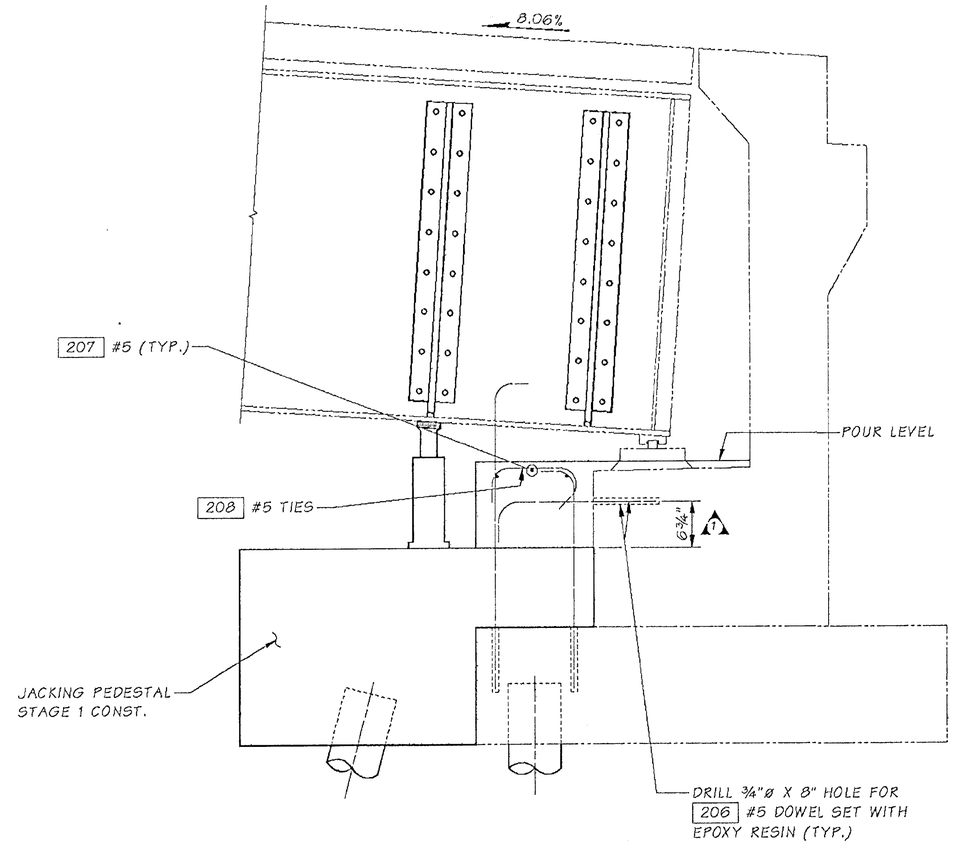

SECTION C
STAGE 2 CONSTRUCTION OA6

FOR "AS CONSTRUCTED PLANS" ONLY

Bridge Design Engr.	Kapur, J		M:\Y-Team\Lewis_Clark Rehab\Oregon Appr\window files\ABUTMENT5.WND			REGION NO.	STATE	FED. AID PROJ. NO.	SHEET NO.	TOTAL SHEETS
Supervisor	Kirker, KN	04/03				10	WASH.	ACBH - 0433(007)		
Designed By	Peralta, R	08/02								
Checked By	Talukdar, M	08/02				JOB NUMBER 02x310				
Detailed By	Evans, P	08/02								
Bridge Projects Engr.										
Prelim. Plan By		04/03	1 ADDED DIMENSIONS	RP						
Architect/Specialist		DATE	REVISION	BY	APP'D					

STRUCTURAL REGISTERED PROFESSIONAL ENGINEER 71344 OREGON SEPT. 20, 2002 JUGESH KAPUR
EXPIRES 06-30-2003

BRIDGE AND STRUCTURES OFFICE

KARL N. KIRKER STATE OF WASHINGTON 16295 REGISTERED PROFESSIONAL ENGINEER
EXPIRES 11/3/03

Washington State Department of Transportation

SR 433
LEWIS AND CLARK BRIDGE
DECK REPLACEMENT

OREGON APPROACH ABUTMENT
SHEET 5 OF 7

BRIDGE SHEET NO. OA9

SHEET 141 OF 258 SHEETS

SR 433 JOB NO. 1 SHEET OA9

Tue Apr 29 07:36:10 2003

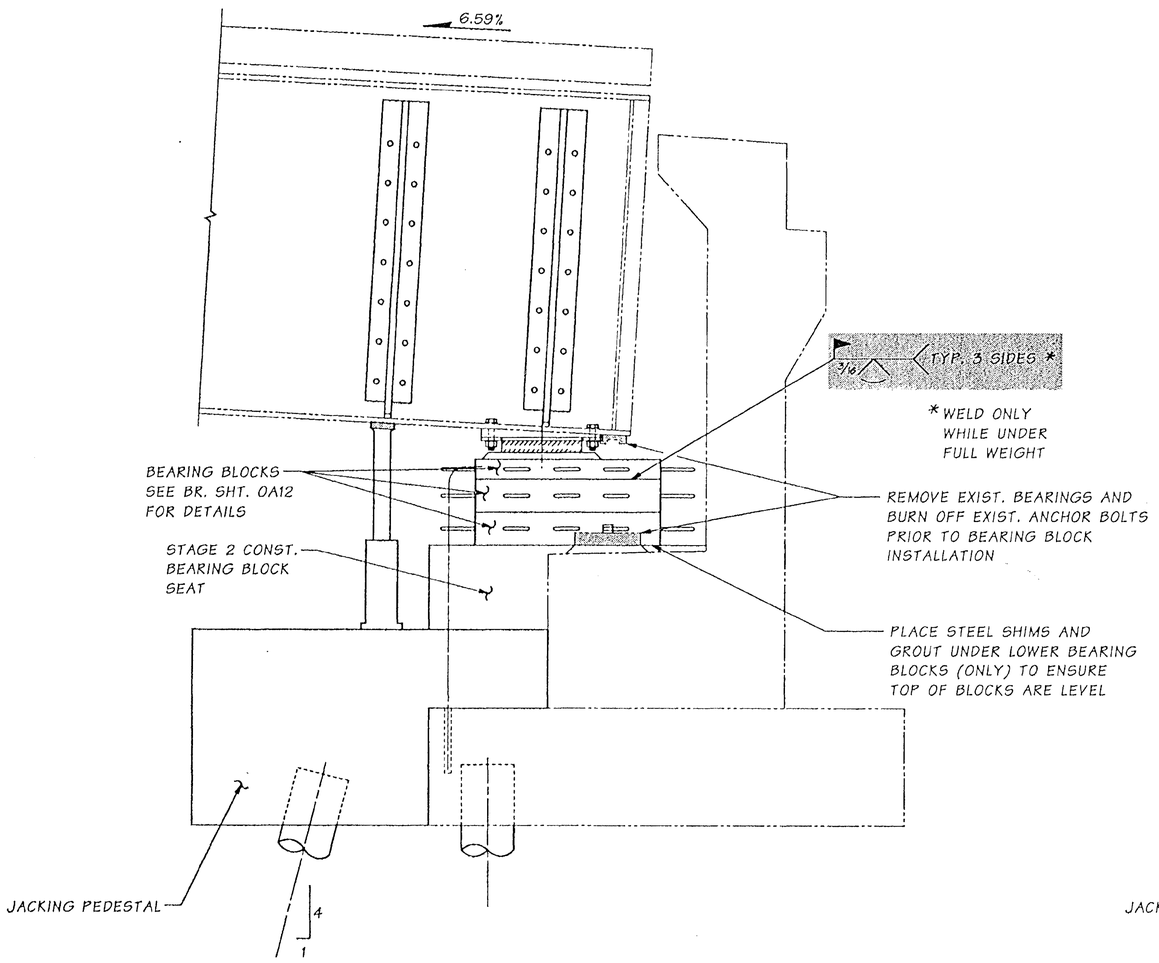

SECTION D
STAGE 3 CONSTRUCTION OA7

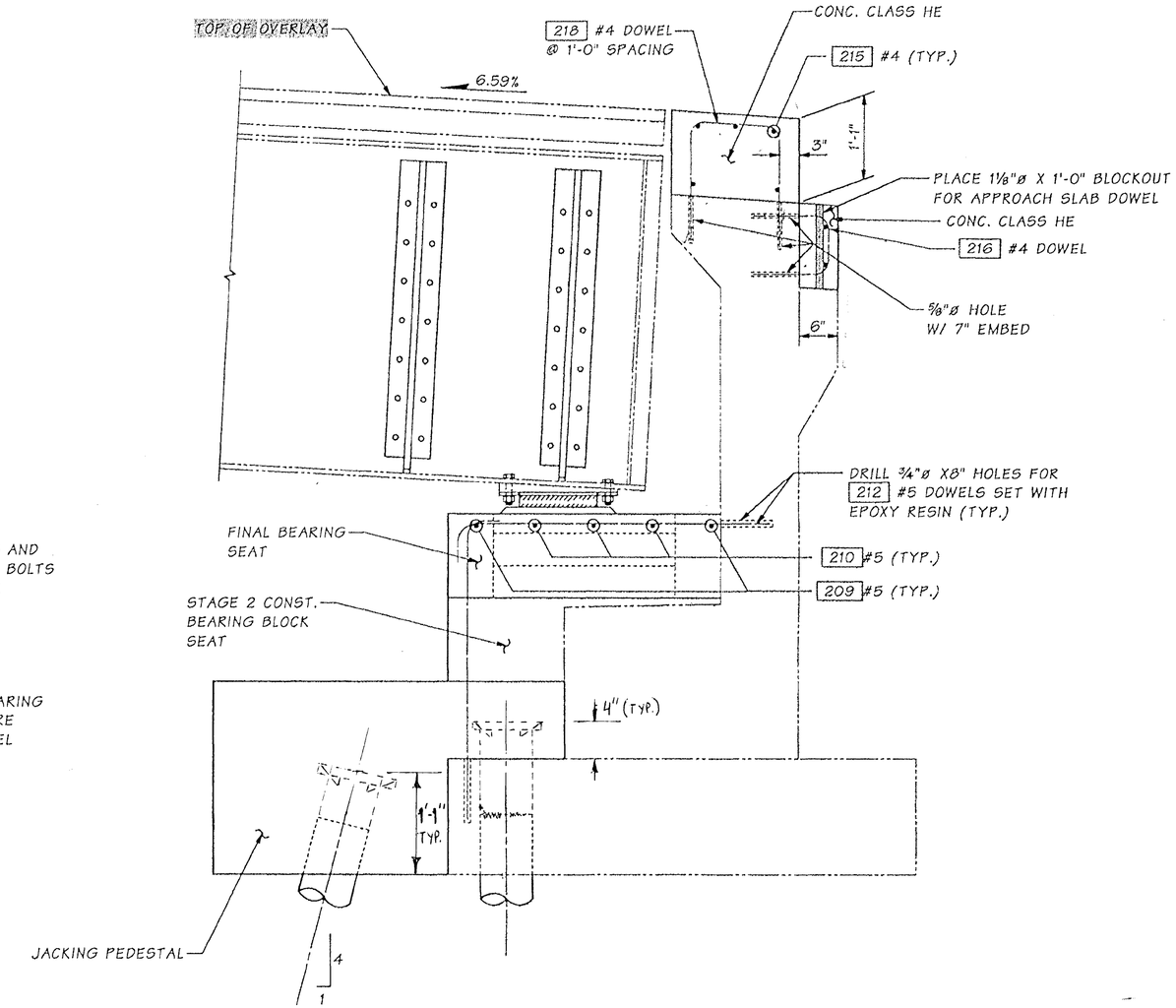

SECTION E
STAGE 4 CONSTRUCTION OA8

FOR "AS CONSTRUCTED PLANS" ONLY

SR 433 NO. 1 SHEET 10

Bridge Design Engr.	Kapur, J		M:\Y-Team\Lewis_Clark Rehab\Oregon Appr\window files\ABUTMENT6.WND								
Supervisor	Kirker, KN	08/02					REGION NO.	STATE	FED. AID PROJ. NO.	SHEET NO.	TOTAL SHEETS
Designed By	Peralta, R	08/02					10	WASH.			
Checked By	Talukdar, M	08/02									
Detailed By	Evans, P	08/02					JOB NUMBER 02x310		ACBH - 0433(007)		
Bridge Projects Engr.			10/02	ADDED OVERLAY NOTE	RP						
Prelim. Plan By			10/02	ADDED WELD NOTE	RP		6444				
Architect/Specialist			DATE	REVISION	BY	APP'D					

Tue Oct 29 15:14:37 2002

STRUCTURAL REGISTERED PROFESSIONAL ENGINEER 71144 OREGON SEPT. 10, 2002 JUGESH KAPUR
EXPIRES 06-30-2003

BRIDGE AND STRUCTURES OFFICE

KARL N. KIRKER PROFESSIONAL ENGINEER
EXPIRES 11/3/03

Washington State Department of Transportation

SR 433
LEWIS AND CLARK BRIDGE
DECK REPLACEMENT

OREGON APPROACH ABUTMENT
SHEET 6 OF 7

BRIDGE SHEET NO. OA10
SHEET 142 OF 258 SHEETS

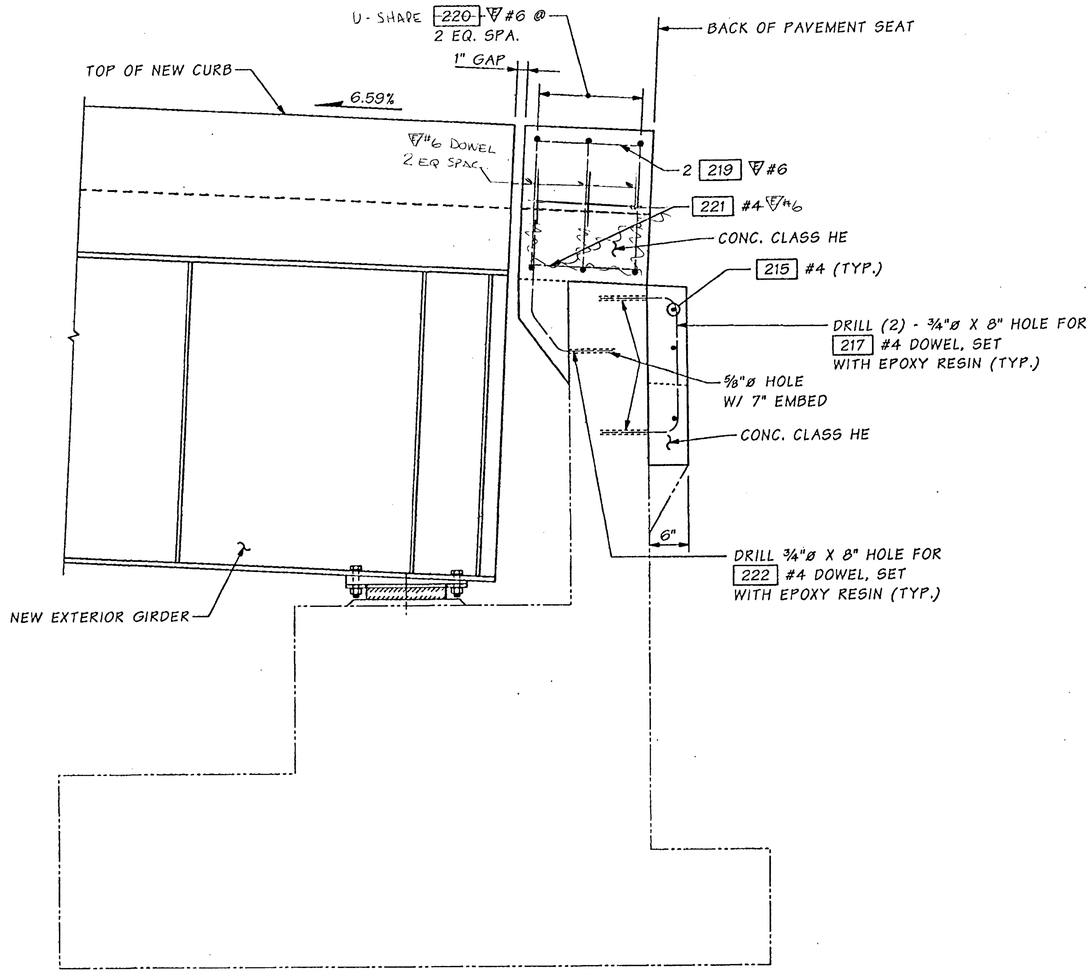

SECTION F
STAGE 4 CONSTRUCTION OA8

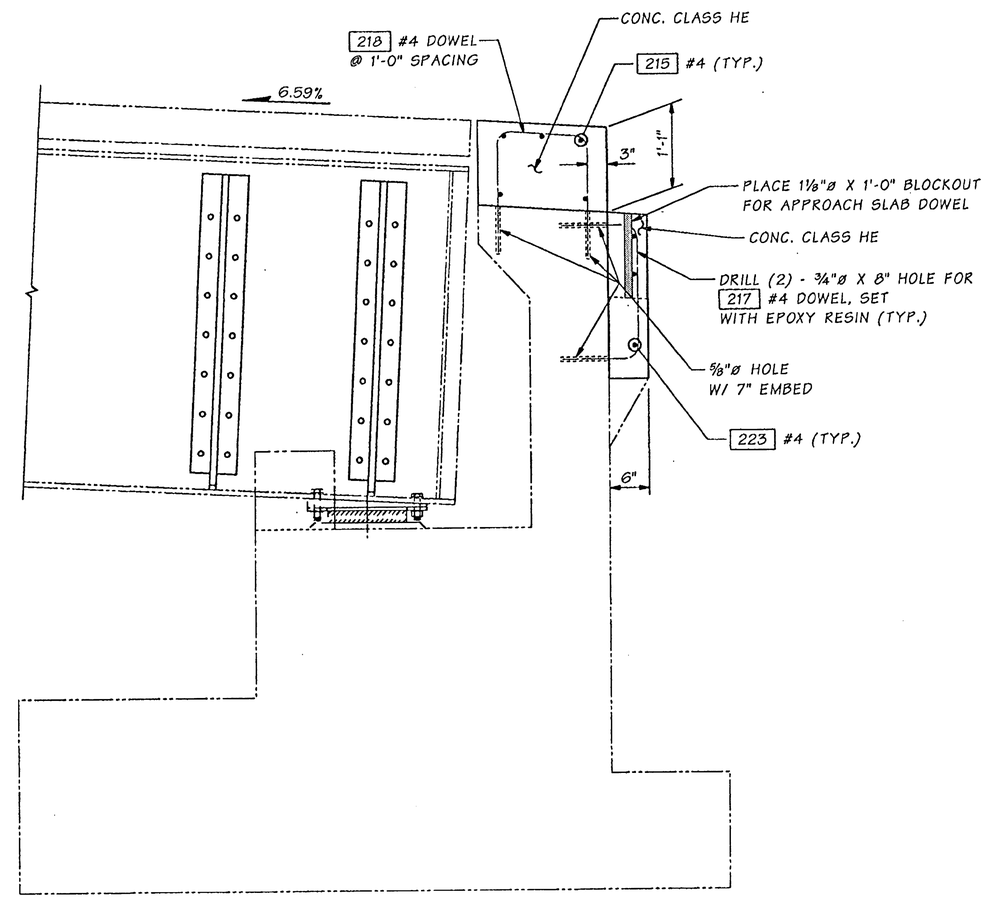

SECTION G
STAGE 4 CONSTRUCTION OA8

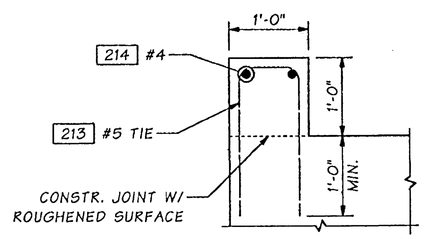

SECTION H
OA8

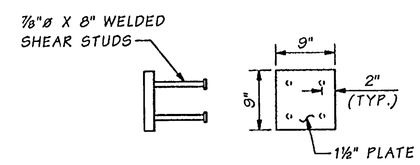

DETAIL J
OA8

FOR "AS CONSTRUCTED PLANS" ONLY

Bridge Design Engr.	Kapur, J		M:\Y-Team\Lewis_Clark Rehab\Oregon Appr\window files\ABUTMENT7.WND							
Supervisor	Kirker, KN	08/02								
Designed By	Peralta, R	08/02								
Checked By	Talukdar, M	08/02								
Detailed By	Evans, P	08/02								
Bridge Projects Engr.										
Prelim. Plan By										
Architect/Specialist			DATE	REVISION	BY	APP'D				

Wed Sep 18 10:37:21 2002

REGION NO.	STATE	FED. AID PROJ. NO.	SHEET NO.	TOTAL SHEETS
10	WASH.	ACBH - 0433(007)		
JOB NUMBER 02x310				

STRUCTURAL REGISTERED PROFESSIONAL ENGINEER 71314 OREGON SEPT. 10, 2002 JUGESH KAPUR
EXPIRES 06-30-2003

BRIDGE AND STRUCTURES OFFICE

KARL N. KIRKER STATE OF WASHINGTON 10296 REGISTERED PROFESSIONAL ENGINEER
EXPIRES 11/3/03

Washington State Department of Transportation

SR 433
LEWIS AND CLARK BRIDGE
DECK REPLACEMENT

OREGON APPROACH ABUTMENT
SHEET 7 OF 7

BRIDGE SHEET NO. OA 11

SHEET 143 OF 258 SHEETS

SR 433 JOB NO. 1 SHEET 11