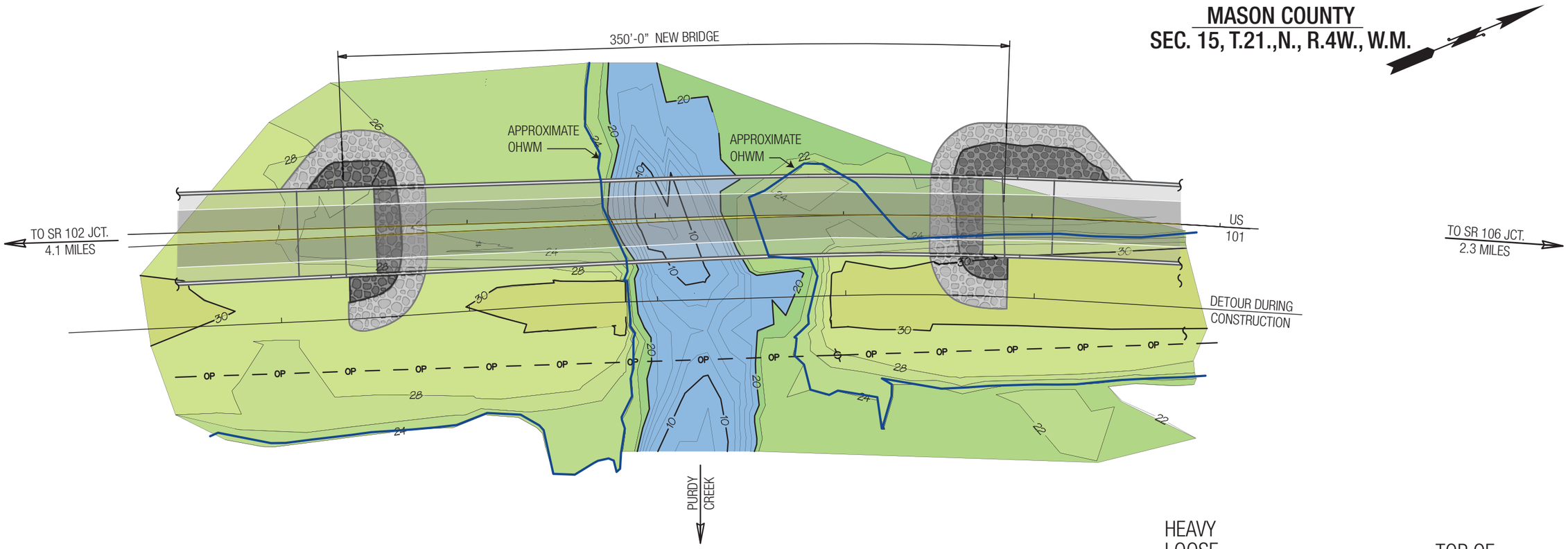

PLAN

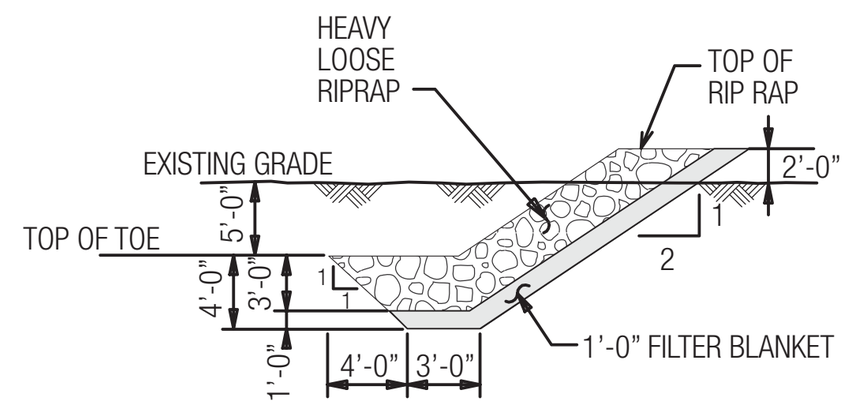

TYP. DETAIL @ TOE

Washington State Department of Transportation

Proposed Riprap Placement
Purdy Creek Bridge Replacement
Figure 10

BERGER/ABAM ENGINEERS INC.