RED/GREEN 5/22

## CURVE DATA

| P.I. STATION | Δ | RADIUS | TANGENT | LENGTH | BK. TANGENT BRG. |
|---|---|---|---|---|---|
| SB 29+88.49 | 45°06'33.0" RT. | 2380.00' | 988.49' | 1873.78' | N 20°57'41" W |
| NB 32+55.96 | 45°06'33.0" RT. | 3024.00' | 1255.96' | 2380.81' | N 20°57'41" W |

SEC. 12, T.15N., R.3W., W.M.
THURSTON COUNTY

I-5

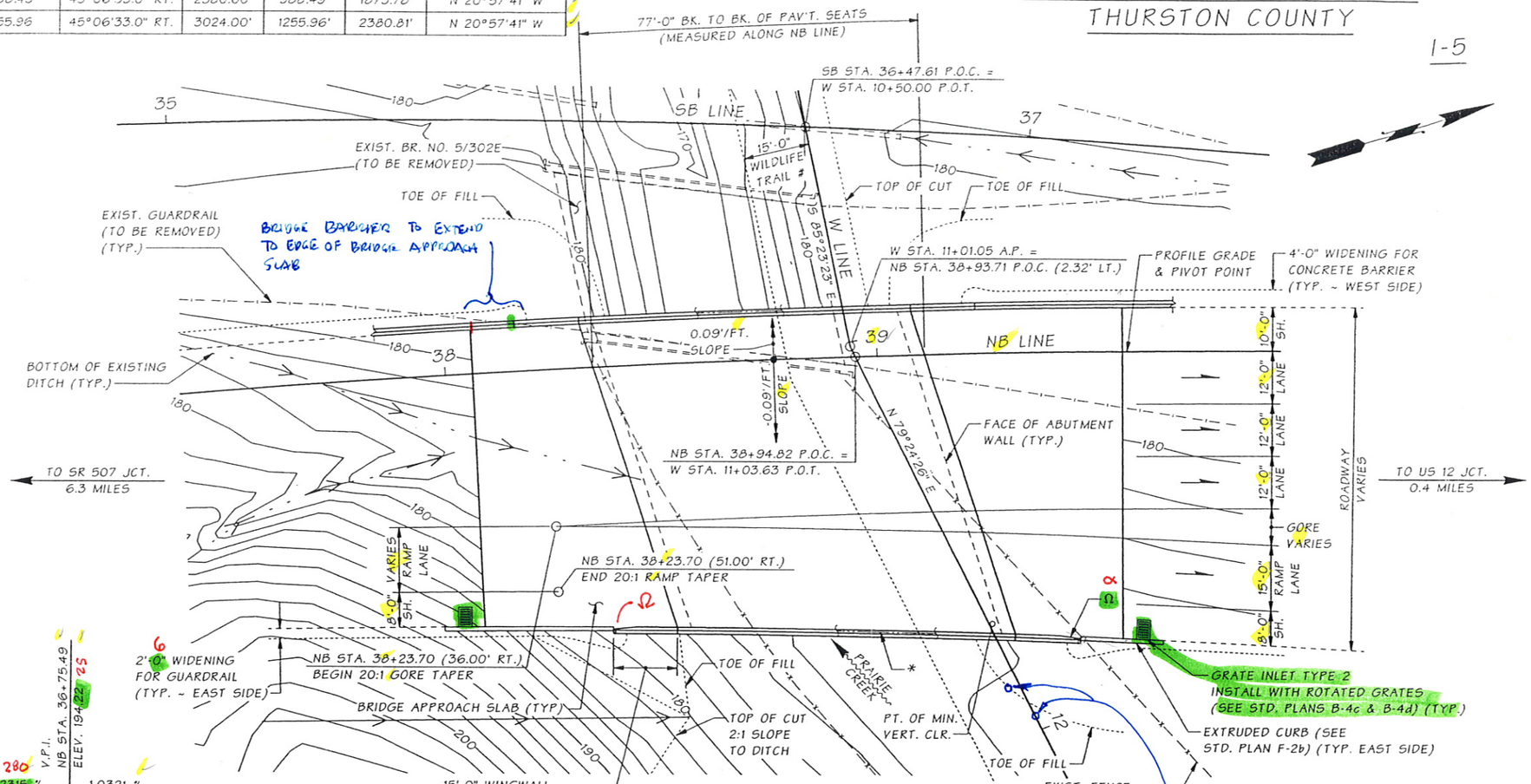


PLAN

BEARING OF ALL PIERS IS S 88°00'00" W

* 2 ~ 2"Ø CONDUIT PIPES IN TRAFFIC BARRIER FOR FULL LENGTH OF BRIDGE, WING WALLS & RETAINING WALLS (TYP.)

# SEE WILDLIFE TRAIL DETAIL.

Ω THRIE BEAM CONNECTION TYPE "D" (TYP. 2 LOC.) (SEE STD. PLAN C-5)
BEAM GUARDRAIL (TYPE 31) TRANSITION SECTION TYPE 21 (SEE STD. PLAN C-25.20-00)

α F CONNECTION (SEE STD. PLAN C-5)

(THRIE BM NOT NECESSARY ON DOWNSTREAM ENDS, SO CONNECT W-BEAM GR TO BRIDGE BARRIER DIRECTLY WITH AN "F" CONNECTION.)

V.P.I. NB STA. 36+75.49 ELEV. 194.22 25

1.280

+1.2315 % -1.0321 %

2000.00' V.C.

NB LINE PROFILE

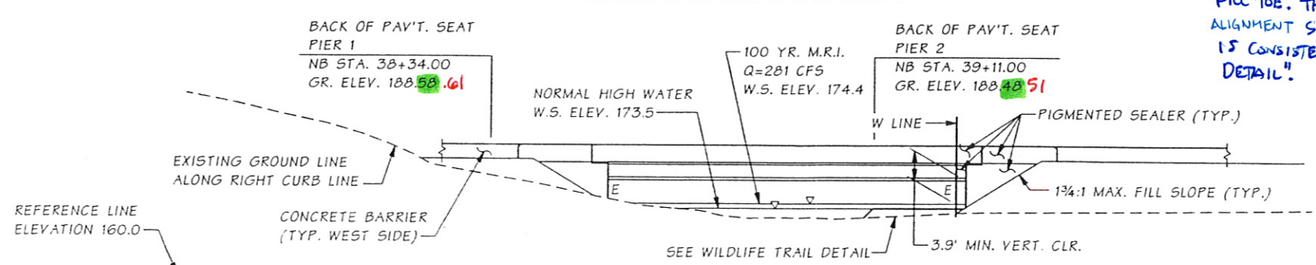


ELEVATION

GRADE ELEVATIONS SHOWN ARE FINISH GRADES AT TOP OF ROADWAY SLAB ON NB LINE AND ARE EQUAL TO PROFILE GRADE. SEE STD. PLAN H-9 FOR EMBANKMENT DETAILS AT BRIDGE ENDS.

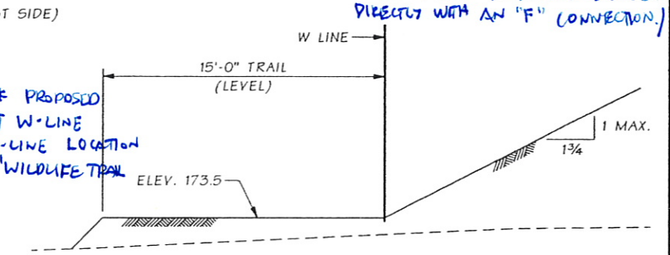


WILDLIFE TRAIL DETAIL

DATUM

NAVD 1988

NOTE: 500 YR MRI
Q = 478 CFS
W.S. ELEV. 175.6

P.C. GIRDERS (WF42G)
LOADING: HL-93

PLAN APPROVED BY:

J. Kapur 11/05
BRIDGE & STRUCTURES ENGINEER

PROJECT DEVELOPMENT ENGINEER

| | | |
|---|---|---|
| Bridge Design Engr. | Stoddard, RB | |
| Supervisor | Anderson, MW | |
| Designed By | | |
| Checked By | Diedrich, A | 07/05 |
| Detailed By | Andersen, JM | 04/05 |
| Bridge Projects Engr. | Kirker, KN | 08/05 |
| Prelim. Plan By | Chu, A | 04/05 |
| Architect/Specialist | PDK/BK | 08/05 |

M:\PRELIMINARY PLANS\GRAND MOUND TO MAYTOWN\PRAIRIE CREEK\5-302E NEW PRELIM 05-03-07.MAN

| DATE | REVISION | BY | APPD |
|---|---|---|---|

| REGION NO. | STATE | FED. AID PROJ. NO. | SHEET NO. | TOTAL SHEETS |
|---|---|---|---|---|
| 10 | WASH. | | | |
| JOB NUMBER | | | | |

Tue May 15 16:27:09 2007

(C-25.20-00)

BRIDGE AND STRUCTURES OFFICE

JUGESH KAPUR STATE OF WASHINGTON 15400 REGISTERED PROFESSIONAL ENGINEER EXPIRES 5/19/06

Washington State Department of Transportation

PRELIMINARY PLAN

BRIDGE SHEET NO. 1 SHEET OF SHEETS

BRIDGE WITH APPROACH FILLS
W42G P.C. GIRDERS
"A" DIMENSION = 10" (PRELIMINARY, NOT FOR DESIGN)
DECK PROTECTIVE SYSTEM 1 (EPOXY COATED REBARS)
CAST-IN-PLACE CONCRETE STRENGTH SHALL BE 4000 PSI

PT. OF MIN. VERT. CLR.: NB STA. 39+27.0 (65.8' LT.)

| | |
|---|---|
| COAST GUARD LIAISON | GAW |
| COAST GUARD PERMIT NOT REQ'D. | N/A |
| PERMIT TARGET DATE | |

SR 5 JOB NO. 7412 SHEET 1 OF 3

BRIDGE EMBANKMENTS WILL FOLLOW THE FORMAT GIVEN IN STANDARD PLAN C-25.20-00, WHETHER GR IS USED OR NOT. EMBANKMENT WIDENING IS MEASURED 3' OUTSIDE OF BRIDGE BARRIER, ASSUMING 2' FOR BRIDGE BARRIER FOR A TOTAL OF 5' EMBANKMENT WIDENING. STD. PLAN H-9 SHOWS THE EMBANKMENT WIDENING AS BEING MEASURED FROM THE OUTSIDE OF THE BRIDGE BARRIER

C.S. 3401 ~ PROJ. NO. OL3451D ~ OLYMPIC REGION ~ I-5 ~ GRAND MOUND I/C TO MAYTOWN I/C ~ PRAIRIE CREEK BRIDGE NO. 5/302E REPL.

RED/GREEN
5/22

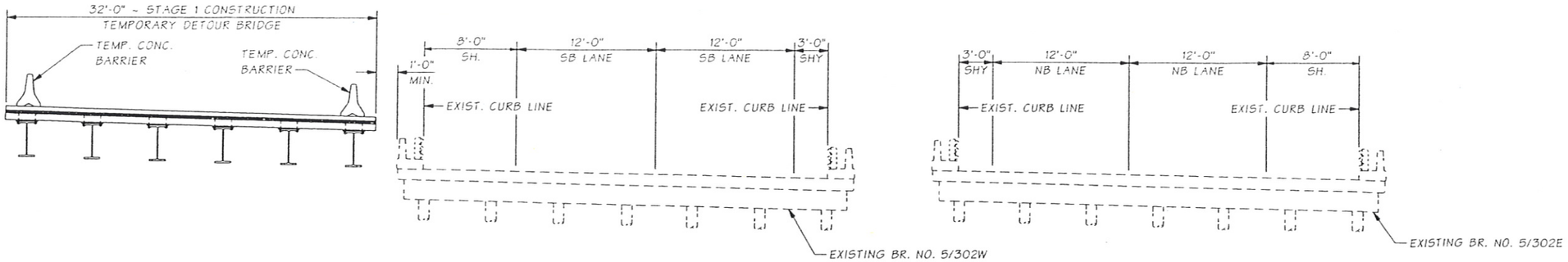


## TYPICAL SECTION ~ EXISTING & STAGE 1

SHOWN NEAR MID-SPAN

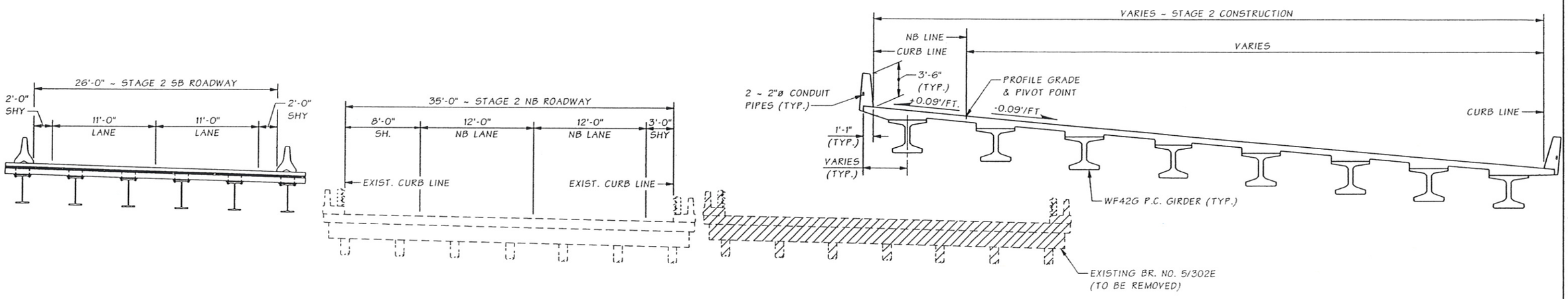


## TYPICAL SECTION ~ STAGE 2

SHOWN NEAR MID-SPAN

C.S. 3401 ~ PROJ. NO. OL3451D ~ OLYMPIC REGION ~ I-5 ~ GRAND MOUND I/C TO MAYTOWN I/C ~ BRIDGE NO. 5/302E REPLACEMENT

SR 5 JOB NO. 7412 SHEET 2 OF 3

| | | | | | | | | | | | |
|---|---|---|---|---|---|---|---|---|---|---|---|
| Bridge Design Engr. | Stoddard, RW | | M:\PRELIMINARY PLANS\GRAND MOUND TO MAYTOWN\PRAIRIE CREEK\5-302E STG CONST.MAN | | | | REGION NO. | STATE | FED. AID PROJ. NO. | SHEET NO. | TOTAL SHEETS |
| Supervisor | Anderson, MW | | | | | | 10 | WASH. | | | |
| Designed By | | | | | | | JOB NUMBER | | | | |
| Checked By | Diedrich, A | 07/05 | | | | | | | | | |
| Detailed By | Andersen, JM | 06/05 | | | | | | | | | |
| Bridge Projects Engr. | Kirker, KN | 08/05 | | | | | | | | | |
| Prelim. Plan By | Chu, A | 06/05 | | | | | | | | | |
| Architect/Specialist | PDK/BK | 08/05 | DATE | REVISION | BY | APP'D | | | | | |

Tue May 15 16:27:26 2007

BRIDGE AND STRUCTURES OFFICE

JUGESH KAPUR — STATE OF WASHINGTON — 25400 — REGISTERED PROFESSIONAL ENGINEER — EXPIRES 5/19/06

Washington State Department of Transportation

PRELIMINARY PLAN

BRIDGE SHEET NO. 2

SHEET OF SHEETS

RED/GREEN
5/22

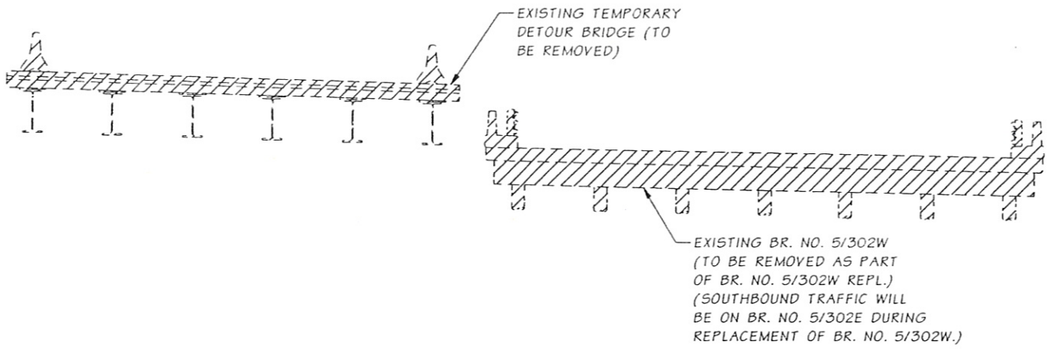


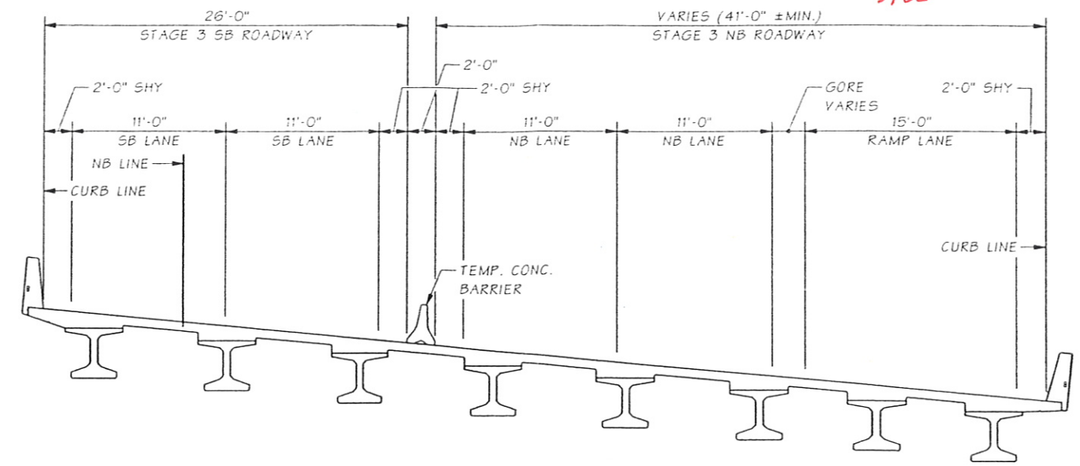


## TYPICAL SECTION ~ STAGE 3

SHOWN NEAR MID-SPAN
SEE "TYPICAL SECTION ~ STAGE 2" ON BRIDGE SHEET 2
FOR CALLOUTS NOT SHOWN.

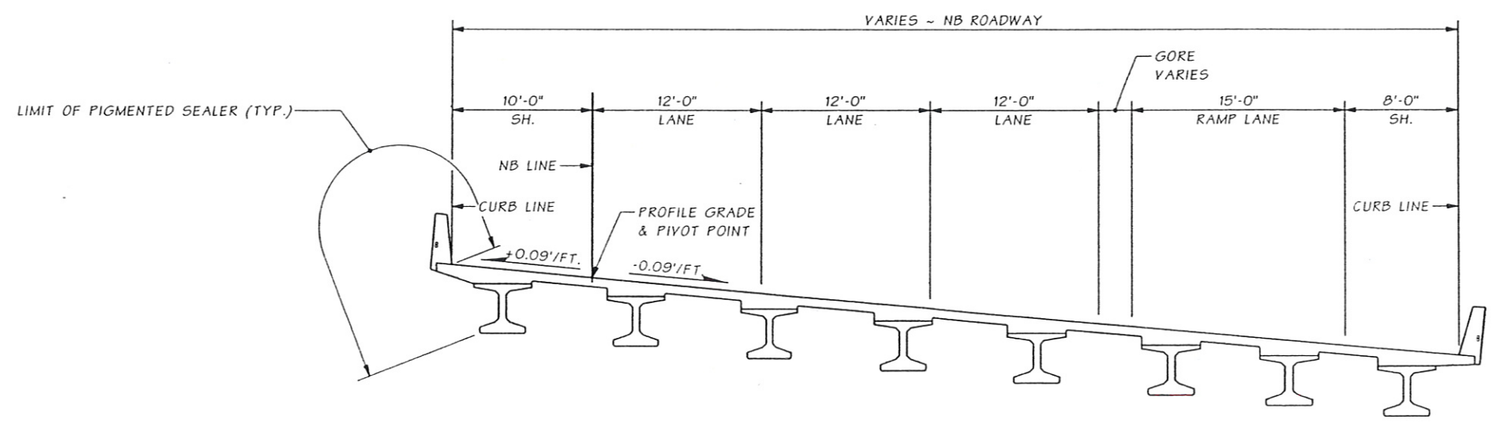


## TYPICAL SECTION

SHOWN NEAR MID-SPAN
SEE "TYPICAL SECTION ~ STAGE 2" ON BRIDGE SHEET 2
FOR CALLOUTS NOT SHOWN.

SR 5 JOB NO. 7412 SHEET 3 OF 3

| | | |
|---|---|---|
| Bridge Design Engr. | Kapur, J | 08/05 |
| Supervisor | | |
| Designed By | | |
| Checked By | Diedrich, A | 07/05 |
| Detailed By | Andersen, JM | 06/05 |
| Bridge Projects Engr. | Kirker, KN | 08/05 |
| Prelim. Plan By | Chu, A | 06/05 |
| Architect/Specialist | PDK/BK | 08/05 |

Tue May 15 16:27:54 2007

M:\PRELIMINARY PLANS\GRAND MOUND TO MAYTOWN\PRAIRIE CREEK\5-302E TYP SEC.MAN

| DATE | REVISION | BY | APP'D |
|---|---|---|---|

| REGION NO. | STATE | FED. AID PROJ. NO. | SHEET NO. | TOTAL SHEETS |
|---|---|---|---|---|
| 10 | WASH. | | | |
| JOB NUMBER | | | | |

BRIDGE AND STRUCTURES OFFICE

JEROME A. WEIGEL, STATE OF WASHINGTON, 14748, REGISTERED PROFESSIONAL ENGINEER
EXPIRES 6/29/06

Washington State Department of Transportation

PRELIMINARY PLAN

BRIDGE SHEET NO. 3
SHEET OF SHEETS

C.S. 3401 ~ PROJ. NO. OL3451D ~ OLYMPIC REGION ~ I-5 ~ GRAND MOUND I/C TO MAYTOWN I/C ~ BRIDGE NO. 5/302E REPLACEMENT

SEC. 31, T.16N., R.2W., W.M.

THURSTON COUNTY

RED/GREEN 5/22

1-5

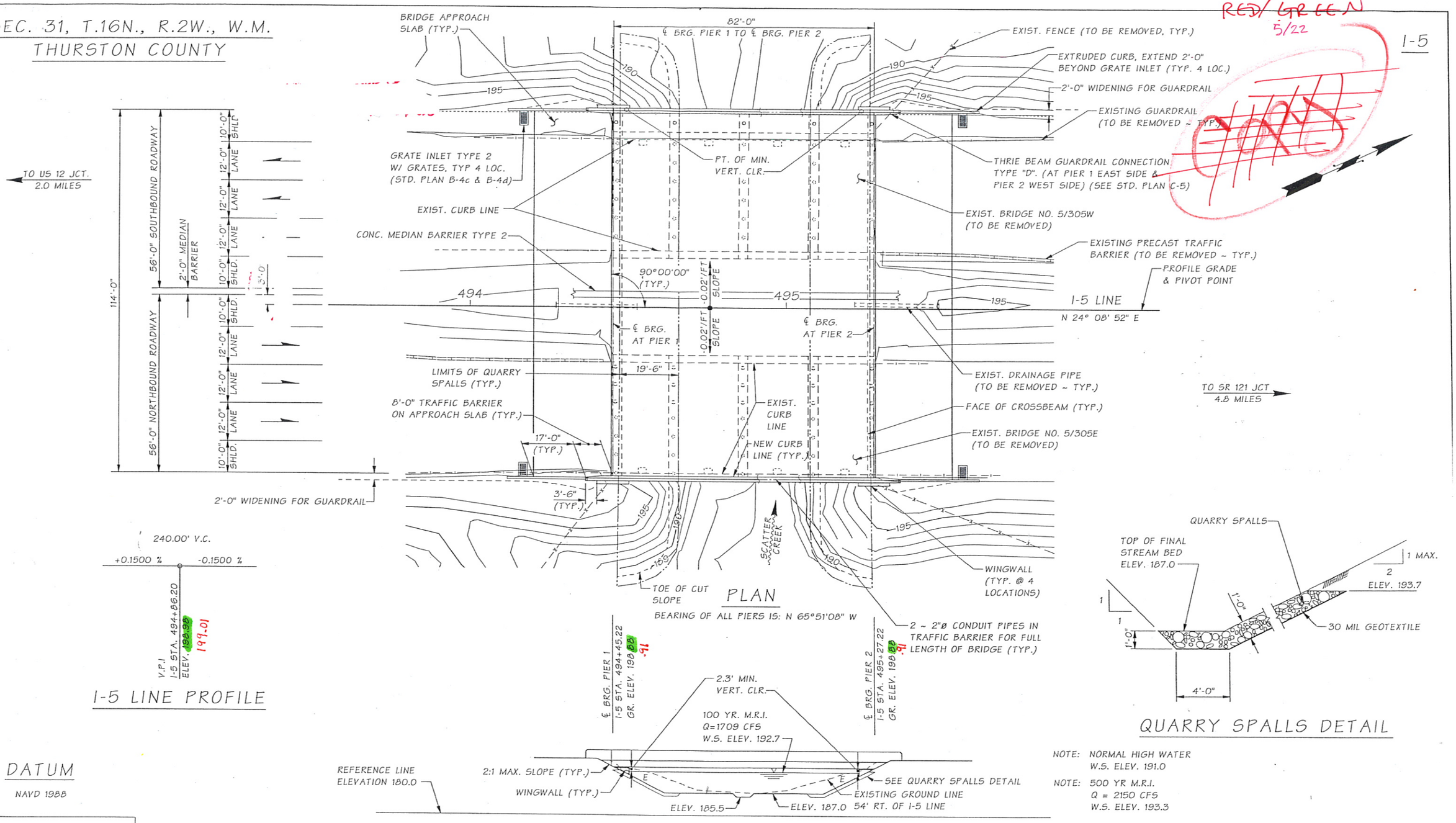


PLAN

BEARING OF ALL PIERS IS: N 65°51'08" W

QUARRY SPALLS DETAIL

NOTE: NORMAL HIGH WATER W.S. ELEV. 191.0

NOTE: 500 YR M.R.I. Q = 2150 CFS W.S. ELEV. 193.3

DATUM

NAVD 1988

ELEVATION

GRADE ELEVATIONS SHOWN ARE FINISH GRADES AT TOP OF ROADWAY SLAB ON I-5 LINE AND ARE EQUAL TO PROFILE GRADE. SEE STD. PLAN H-9 FOR EMBANKMENT DETAILS AT BRIDGE ENDS.

PRECAST PRESTRESSED 2'-2" VOIDED SLAB WITH 5" C.I.P. CONCRETE TOPPING

LOADING: HL-93

PLAN APPROVED BY:

J. Kapur 11/05

BRIDGE & STRUCTURES ENGINEER

Michele L. Britton 2/06

| | | | |
|---|---|---|---|
| Bridge Design Engr. | Stoddard, RB | | |
| Supervisor | Anderson, MW | | |
| Designed By | | | |
| Checked By | Dietrich, A. | 07/05 | |
| Detailed By | Avery, D | 05/05 | |
| Bridge Projects Engr. | Kirker, KN | 08/05 | |
| Prelim. Plan By | Chu, A/Lewis R. | 05/05 | |
| Architect/Specialist | Kindeman/Khaleghi | 08/05 | |

M:\PRELIMINARY PLANS\GRAND MOUND TO MAYTOWN\SCATTER CREEK\NEW- S-305 E&W LAYOUT.MAN

| DATE | REVISION | BY | APP'D |
|---|---|---|---|

| REGION NO | STATE | FED. AID PROJ. NO. | SHEET NO | TOTAL SHEETS |
|---|---|---|---|---|
| 10 | WASH. | | | |

JOB NUMBER

BRIDGE AND STRUCTURES OFFICE

JUGESH KAPUR STATE OF WASHINGTON 25400 REGISTERED PROFESSIONAL ENGINEER

EXPIRES 3/15/06

Washington State Department of Transportation

PRELIMINARY PLAN

BRIDGE SHEET NO. 1 OF SHEETS

SR 5 JOB NO. 7407 SHEET 1 OF 3

Wed Feb 01 10:05:24 2006

RED/ GREEN
5/22

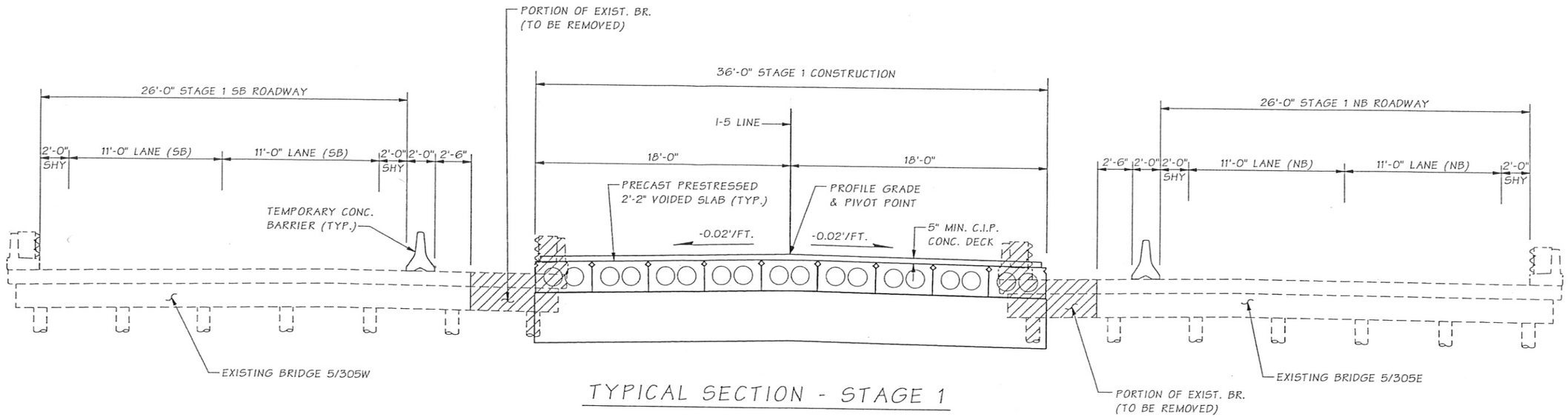


## TYPICAL SECTION - STAGE 1

SECTION SHOWN NEAR PIER 2

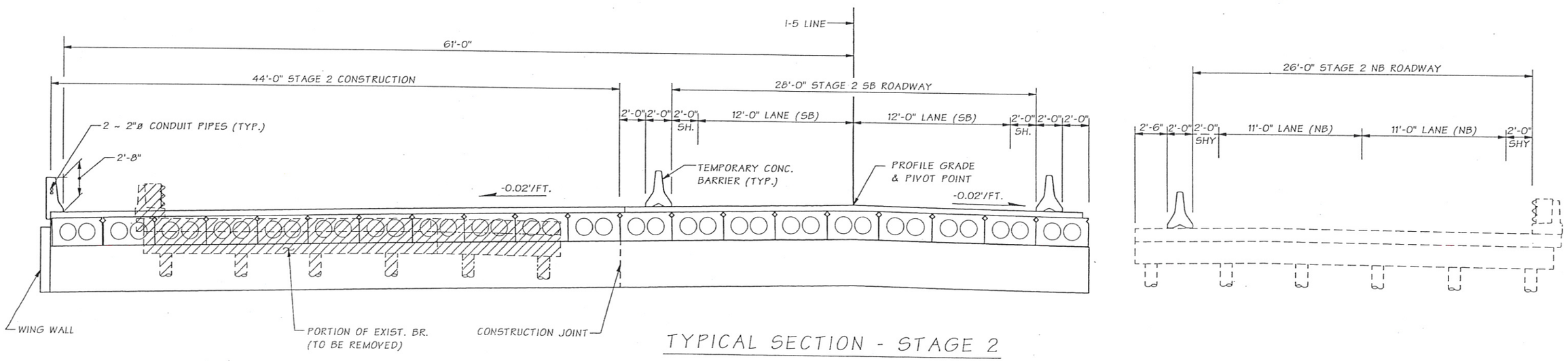


## TYPICAL SECTION - STAGE 2

SECTION SHOWN NEAR PIER 2

| | | | | | | | | | | | |
|---|---|---|---|---|---|---|---|---|---|---|---|
| Bridge Design Engr. | Stoddard, RB | | M:\PRELIMINARY PLANS\GRAND MOUND TO MAYTOWN\SCATTER CREEK\5-305E&W TYP SECT 1.MAN | | | | | | | | |
| Supervisor | Anderson, MW | | | | | | | | | | |
| Designed By | | | | | | | | | | | |
| Checked By | Dietrich, A | 07/05 | | | | | | | | | |
| Detailed By | Avery, D | 05/05 | | | | | | | | | |
| Bridge Projects Engr. | Kirker, KN | 08/05 | | | | | | | | | |
| Prelim. Plan By | Chu, A | 05/05 | | | | | | | | | |
| Architect/Specialist | Kinderman/Kaleghi | 08/05 | DATE | REVISION | BY | APP'D | | | | | |

| REGION NO. | STATE | FED. AID PROJ. NO. | SHEET NO. | TOTAL SHEETS |
|---|---|---|---|---|
| 10 | WASH. | | | |
| JOB NUMBER | | | | |

Wed Feb 01 10:18:11 2006

BRIDGE AND STRUCTURES OFFICE

JUGESH KAPUR, STATE OF WASHINGTON, 25400, REGISTERED PROFESSIONAL ENGINEER
EXPIRES 5/15/06

Washington State Department of Transportation

PRELIMINARY PLAN

BRIDGE SHEET NO. 2

SHEET OF SHEETS

SR 5 JOB NO. 7407 SHEET 2 OF 3

RED/GREEN
5/22

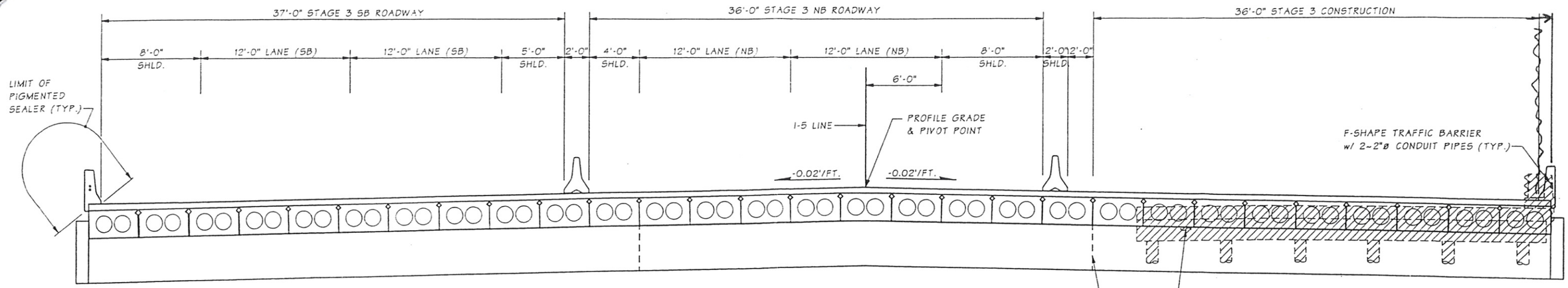


NOTE: FOR STAGE 3, LATERAL LOCATION OF (2) SB & NB LANES MAY BE DIFFERENT THAN SHOWN

## TYPICAL SECTION - STAGE 3

SECTION SHOWN NEAR PIER 2

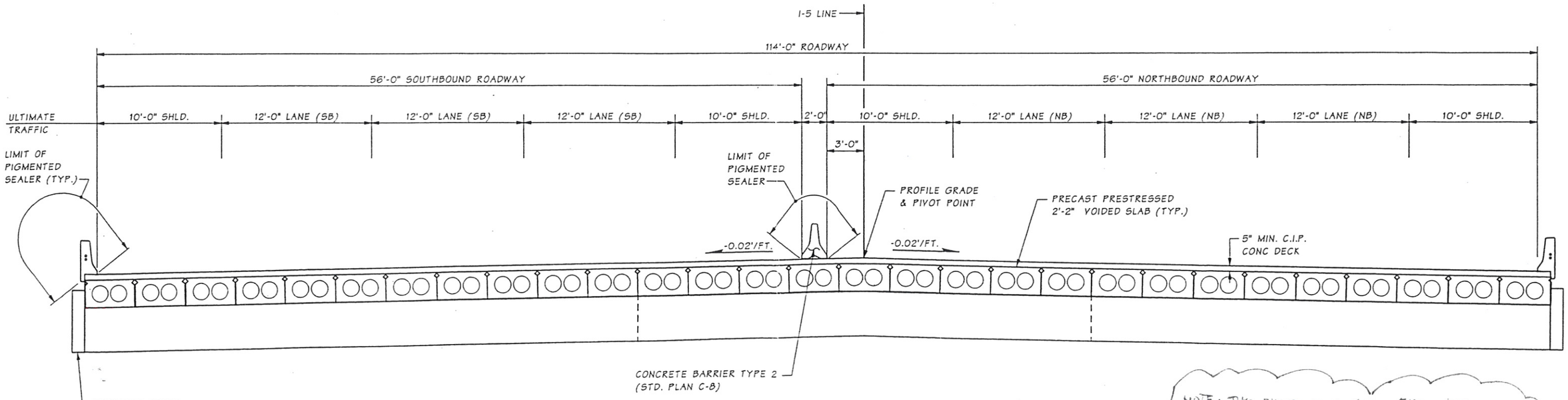


## TYPICAL SECTION - STAGE 4 & ULTIMATE

SECTION SHOWN NEAR PIER 2

NOTE: THIS SHEET IS A COPY FROM ONE OF THE PRELIMINARY BRIDGE SETS SENT OVER FOR REVIEW.

| | | | | | | | | | | |
|---|---|---|---|---|---|---|---|---|---|---|
| Bridge Design Engr. | Kapur, J | 08/05 | M:\PRELIMINARY PLANS\GRAND MOUND TO MAYTOWN\SCATTER CREEK\5-305E&W TYP SECT 2.MAN | | | | | | | |
| Supervisor | | | | | | | | | | |
| Designed By | | | | | | | | | | |
| Checked By | Dietrich, A | 07/05 | | | | | | | | |
| Detailed By | Avery, D | 05/05 | | | | | | | | |
| Bridge Projects Engr. | Kirker, KN | 08/05 | | | | | | | | |
| Prelim. Plan By | Chu, A | 05/05 | | | | | | | | |
| Architect/Specialist | Kinderman/Kaleghi | 08/05 | DATE | REVISION | BY | APP'D | | | | |

Thu Aug 04 09:42:16 2005

| REGION NO. | STATE | FED. AID PROJ. NO. | SHEET NO. | TOTAL SHEETS |
|---|---|---|---|---|
| 10 | WASH. | | | |
| JOB NUMBER | | | | |

BRIDGE AND STRUCTURES OFFICE

JEROME A. WEIGEL — STATE OF WASHINGTON — 14748 — REGISTERED PROFESSIONAL ENGINEER — EXPIRES 6/29/06

Washington State Department of Transportation

PRELIMINARY PLAN

BRIDGE SHEET NO. 3 OF SHEETS

SR 5 JC . 7407 SHEET 3 OF 3

C.S. 3401 ~ PROJ. NO. OL3451 ~ OLYMPIC REGION ~ I-5 ~ GRAND MOUND I/C TO MAYTOWN I/C ~ SCATTER CR. BR. NO. 5/305 E&W REPLACEMENT

| CURVE DATA | | | | | |
|---|---|---|---|---|---|
| P.I. STATION | Δ | RADIUS | TANGENT | LENGTH | BK. TANGENT BRG. |
| P 15+36.13 | 26°00'00" RT. | 800.00' | 184.69' | 363.03' | N 68°17'44" E |
| DR 16+39.48 | 2°17'00" RT. | 4730.00' | 94.20' | 188.50' | N 12°00'44" E |
| DL 16+70.50 | 5°42'60" LT. | 5325.29' | 265.88' | 531.33' | N 20°00'44" E |

# SEC. 5, T.16N., R.2W., W.M.
# THURSTON COUNTY

1-5

RED/GREEN 5/22

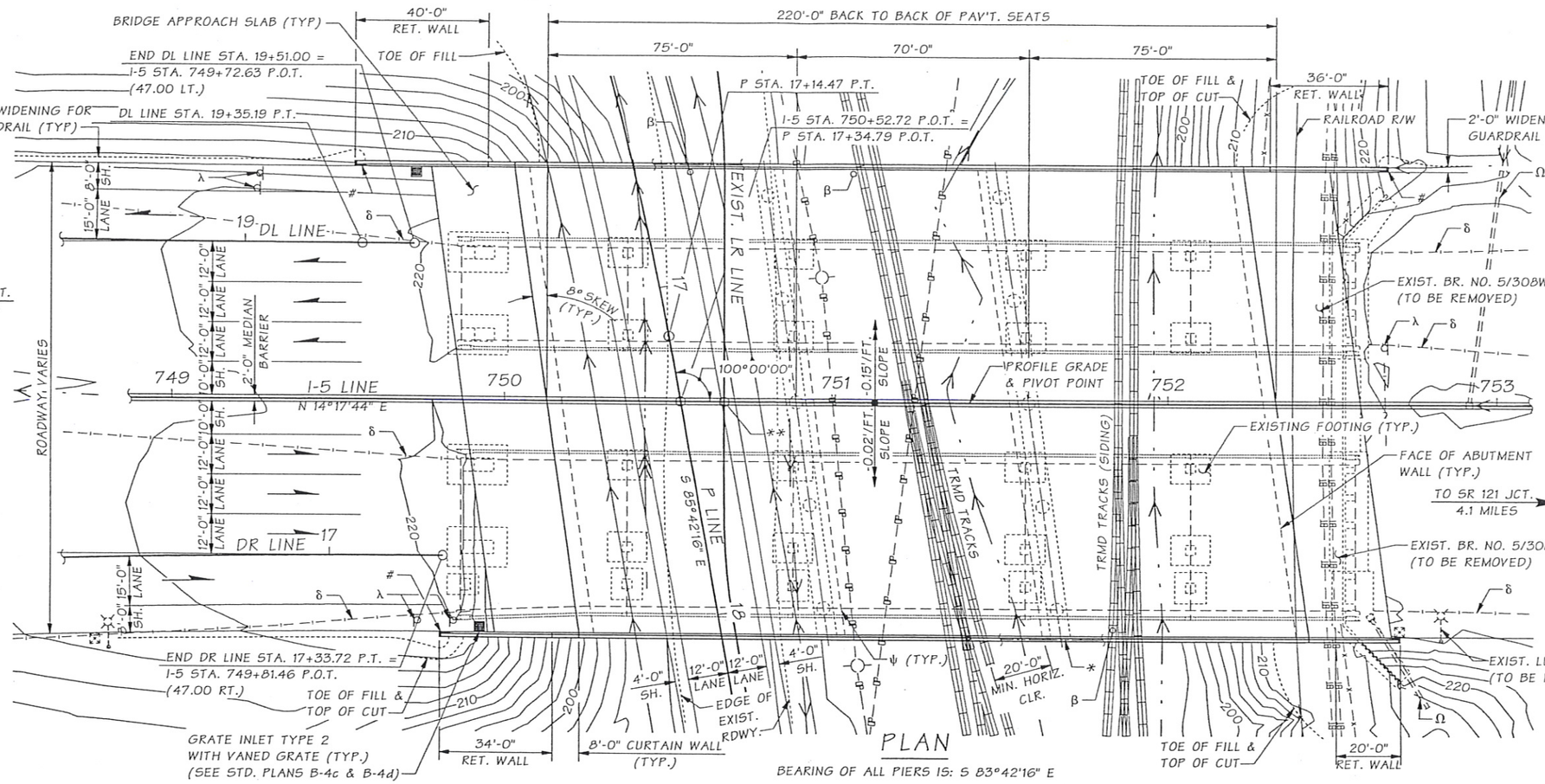


## P LINE PROFILE

## PLAN

BEARING OF ALL PIERS IS: S 83°42'16" E

* 2 ~ 2"ø CONDUIT PIPES IN TRAFFIC BARRIER FOR FULL LENGTH OF TRAFFIC BARRIER (TYP.)

\# THRIE BEAM GUARDRAIL CONNECTION TYPE "D" (STD. PLAN C-5)

δ EXISTING GUARDRAIL OR BARRIER (TO BE REMOVED)

Ω EXISTING DRAINAGE (TO BE ABANDONED)

β POINT OF MINIMUM VERTICAL CLEARANCE

ψ RAILROAD CRASH WALL

** I-5 STA. 750+65.70 P.O.T. = EXIST. LR STA. 7+47.36 P.O.T.

λ EXISTING SIGN (TO BE REMOVED)

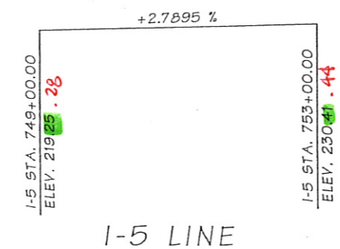


## I-5 LINE PROFILE

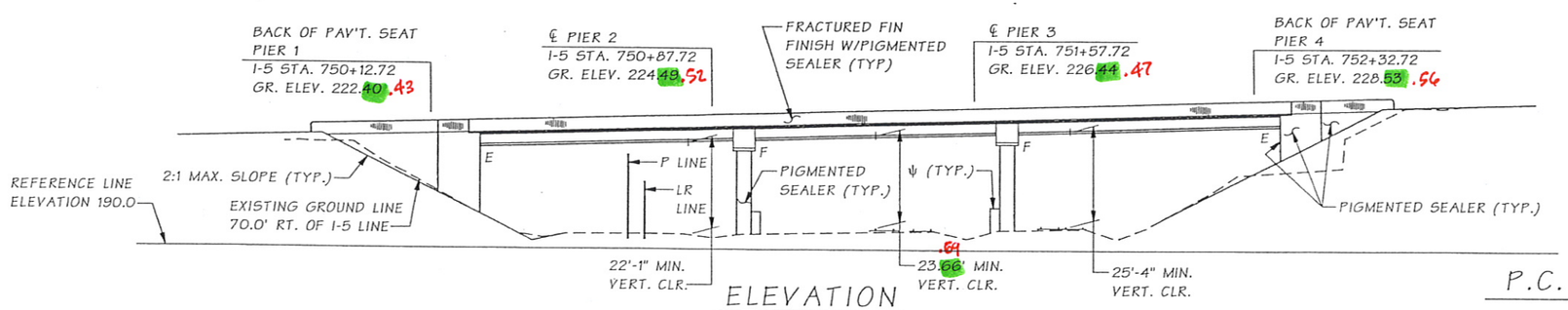


## ELEVATION

GRADE ELEVATIONS SHOWN ARE FINISH GRADES AT TOP OF ROADWAY SLAB ON I-5 LINE AND ARE EQUAL TO PROFILE GRADE. SEE STD. PLAN H-9 FOR EMBANKMENT DETAILS AT BRIDGE ENDS.

## DATUM

NAVD 1988

## P.C. GIRDERS (W42G)
## CONT. FOR LL
## LOADING: HL-93

PLAN APPROVED BY:

J. Kapur 11/05
BRIDGE & STRUCTURES ENGINEER
Michele L. Scottos 2/06

| | | | | | | | | | |
|---|---|---|---|---|---|---|---|---|---|
| Bridge Design Engr. | Stoddard, RB | | M:\PRELIMINARY PLANS\GRAND MOUND TO MAYTOWN\BR 5-308\5-308EW BSD.MAN | | | | | | |
| Supervisor | Anderson, MW | | | | REGION NO. | STATE | FED. AID PROJ. NO. | SHEET NO. | TOTAL SHEETS |
| Designed By | | | | | 10 | WASH. | | | |
| Checked By | Diedrich, A | 06/05 | | | JOB NUMBER | | | | |
| Detailed By | Andersen, J.M. | 01/05 | | | | | | | |
| Bridge Projects Engr. | Kirker, KN | 06/05 | | | | | | | |
| Prelim. Plan By | Tran, L.H. | 01/05 | | | | | | | |
| Architect/Specialist | PDK/BK | 04/05 | DATE | REVISION | BY | APP'D | | | |

Mon Jan 30 09:35:41 2006

BRIDGE AND STRUCTURES OFFICE

JUGESH KAPUR — STATE OF WASHINGTON — 15400 — REGISTERED PROFESSIONAL ENGINEER — EXPIRES 5/19/06

Washington State Department of Transportation

PRELIMINARY PLAN

BRIDGE SHEET NO. 1 SHEET OF SHEETS

SR 5 JOB NO. 7410 SHEET 1 OF 5

RED/GREEN
5/22

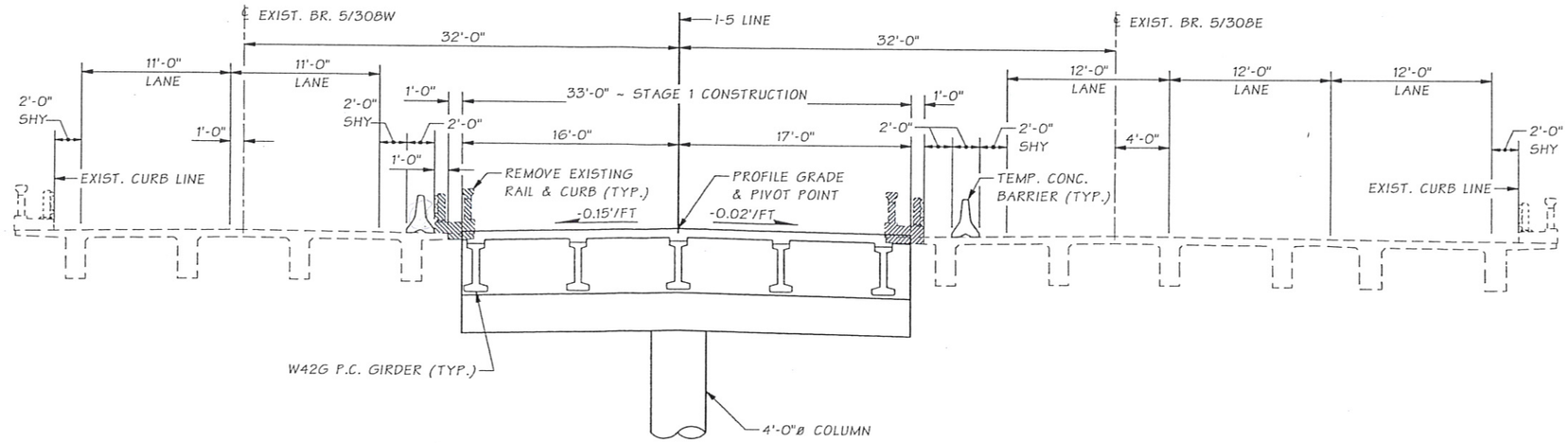


## TYPICAL SECTION ~ STAGE 1

SHOWN NEAR PIER 2.

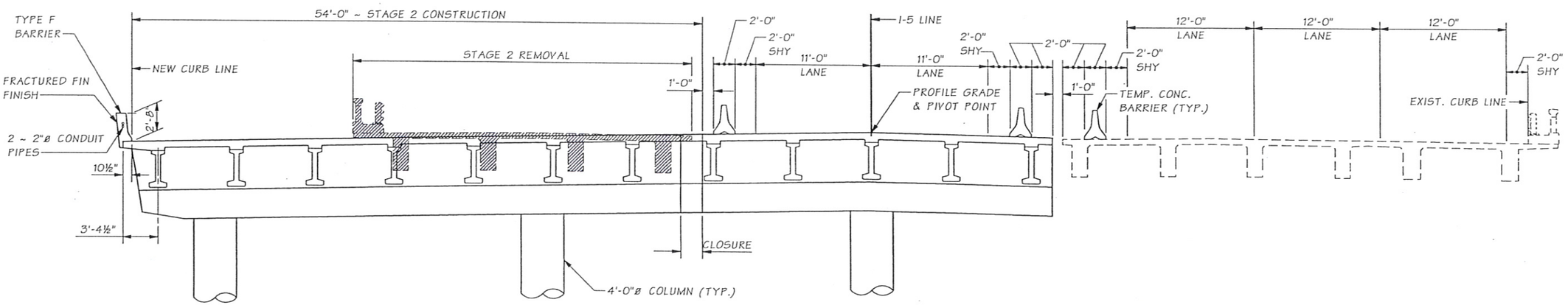


## TYPICAL SECTION ~ STAGE 2

SEE "TYPICAL SECTION ~ STAGE 1" FOR CALLOUTS NOT SHOWN.

SR 5 JOB NO. 7410 SHEET 2

| | | | |
|---|---|---|---|
| Bridge Design Engr. | Stoddard, RB | | M:\PRELIMINARY PLANS\GRAND MOUND TO MAYTOWN\BR 5-308\STAGE CONSTR.MAN |
| Supervisor | Anderson, M.W. | | |
| Designed By | | | |
| Checked By | DIEDRICH, AC | 05/05 | |
| Detailed By | Andersen, J.M. | 02/05 | |
| Bridge Projects Engr. | Kirker, KN | 06/05 | |
| Prelim. Plan By | Tran, L.H. | 02/05 | |
| Architect/Specialist | PDK/BK | 04/05 | |

| DATE | REVISION | BY | APP'D |
|---|---|---|---|
| | | | |

| REGION NO. | STATE | FED. AID PROJ. NO. | SHEET NO. | TOTAL SHEETS |
|---|---|---|---|---|
| 10 | WASH. | | | |
| JOB NUMBER | | | | |

Wed Feb 01 13:16:31 2006

BRIDGE AND STRUCTURES OFFICE

JUGESH KAPUR — STATE OF WASHINGTON — IDAHO — REGISTERED PROFESSIONAL ENGINEER
EXPIRES 5/19/06

Washington State Department of Transportation

PRELIMINARY PLAN

BRIDGE SHEET NO. 2 OF SHEETS

RED/GREEN
5/22

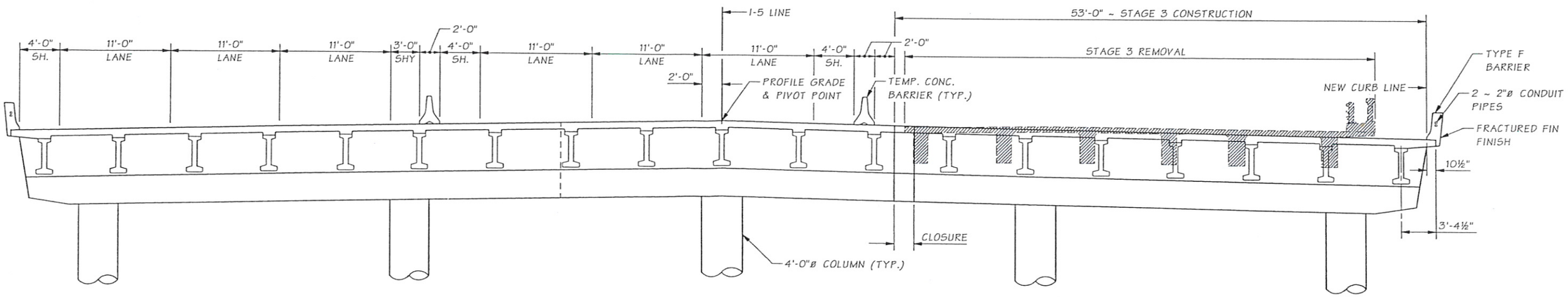


## TYPICAL SECTION ~ STAGE 3

SEE "TYPICAL SECTION ~ STAGE 1" ON BRIDGE SHEET 2
FOR CALLOUTS NOT SHOWN.

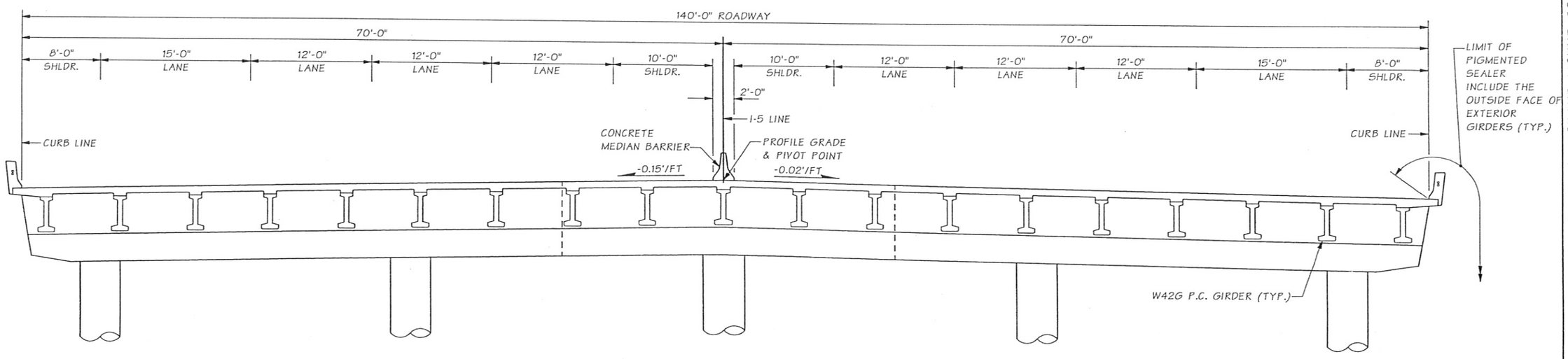


## TYPICAL SECTION - FINAL

SEE "TYPICAL SECTION ~ STAGE 3" FOR CALLOUTS NOT SHOWN.

SR 5 JOB NO. 7410 SHEET 3

| | | | | | | | | | | |
|---|---|---|---|---|---|---|---|---|---|---|
| Bridge Design Engr. | Stoddard, RB | | M:\PRELIMINARY PLANS\GRAND MOUND TO MAYTOWN\BR 5-308\TYP SEC.MAN | | | | | | | |
| Supervisor | Anderson, M. W. | | | | | REGION NO | STATE | FED. AID PROJ. NO. | SHEET NO | TOTAL SHEETS |
| Designed By | | | | | | 10 | WASH. | | | |
| Checked By | Diedrich, A.C. | 05/05 | | | | | | | | |
| Detailed By | Andersen, J.M. | 01/05 | | | | JOB NUMBER | | | | |
| Bridge Projects Engr. | Kirker, KN | 03/05 | | | | | | | | |
| Prelim. Plan By | Tran, L.H. | 01/05 | | | | | | | | |
| Architect/Specialist | PDK/BK | 04/05 | DATE | REVISION | BY | APP'D | | | | |

Wed Feb 01 13:17:21 2006

BRIDGE AND STRUCTURES OFFICE

JUGESH KAPUR — STATE OF WASHINGTON — 25406 — REGISTERED PROFESSIONAL ENGINEER
EXPIRES 5/19/06

Washington State Department of Transportation

PRELIMINARY PLAN

BRIDGE SHEET NO. 3 OF SHEETS

PLANS ADMINISTRATOR / CONTROL OFFICE

RED/GREEN
5/22

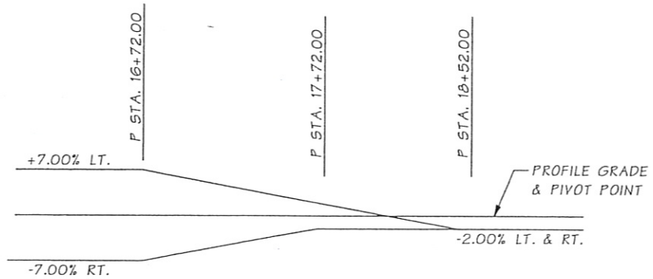


## P LINE
## SUPERELEVATION DIAGRAM

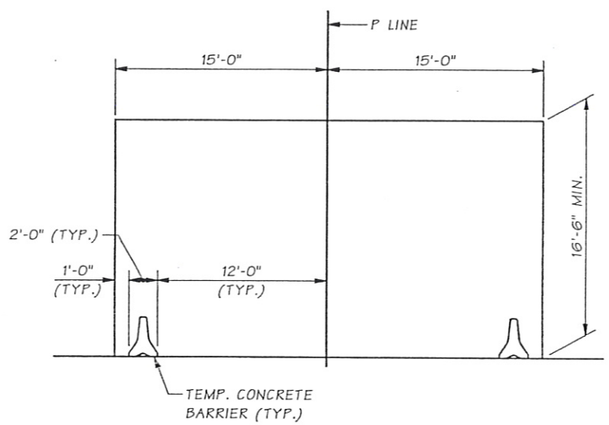


## FALSEWORK OPENING DIAGRAM

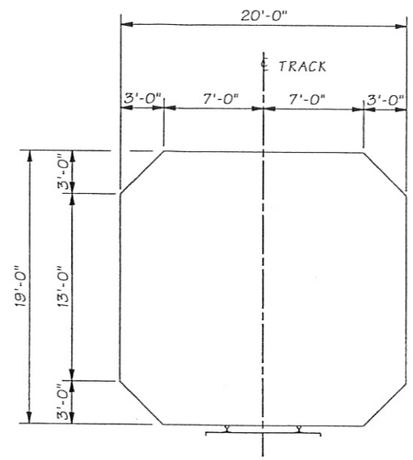


## RAILROAD
## CONSTRUCTION CLEARANCES

| T.R.M.D. RAILROAD ELEVATIONS | | |
|---|---|---|
| I-5 STATION | OFFSET | ELEVATION |
| 750+90.48 | 140.00 LT. | 196.01 |
| 750+98.29 | 109.41 LT. | 195.88 |
| 751+05.50 | 78.96 LT. | 195.74 |
| 751+12.01 | 49.42 LT. | 195.64 |
| 751+19.02 | 15.12 LT. | 195.46 |
| 751+24.45 | 14.24 RT. | 195.48 |
| 751+28.33 | 35.91 RT. | 195.53 |
| 751+33.28 | 64.32 RT. | 195.55 |
| 751+38.14 | 92.88 RT. | 195.66 |
| 751+43.22 | 122.60 RT. | 195.77 |
| 751+48.15 | 151.44 RT. | 195.84 |
| 751+21.00 | 6.95 LT. | 195.44 |
| 751+23.82 | 8.15 RT. | 195.47 |
| 751+25.14 | 14.13 RT. | 195.50 |
| 751+30.12 | 35.60 RT. | 195.57 |
| 751+37.55 | 64.04 RT. | 195.57 |
| 751+42.80 | 92.09 RT. | 195.65 |
| 751+47.85 | 121.84 RT. | 195.74 |
| 751+52.79 | 150.71 RT. | 195.83 |
| 751+25.25 | 7.73 LT. | 195.50 |
| 751+28.01 | 7.41 RT. | 195.50 |
| 751+29.17 | 13.92 RT. | 195.54 |
| 751+32.96 | 35.03 RT. | 195.56 |
| 751+37.99 | 64.03 RT. | 195.56 |
| 751+45.28 | 91.64 RT. | 195.66 |
| 751+53.44 | 121.03 RT. | 195.44 |
| 751+60.37 | 149.63 RT. | 195.40 |
| 750+95.08 | 141.17 LT. | 196.12 |
| 751+02.84 | 110.71 LT. | 195.98 |
| 751+10.12 | 80.01 LT. | 195.84 |
| 751+16.78 | 49.91 LT. | 195.73 |
| 751+23.75 | 15.57 LT. | 195.52 |
| 751+29.90 | 13.88 RT. | 195.53 |
| 751+34.72 | 34.60 RT. | 195.61 |
| 751+42.27 | 63.58 RT. | 195.67 |
| 751+49.95 | 90.93 RT. | 195.65 |
| 751+58.09 | 120.24 RT. | 195.45 |
| 751+65.15 | 148.43 RT. | 195.37 |
| 751+90.52 | 141.01 LT. | 195.63 |
| 751+88.63 | 121.62 LT. | 195.24 |
| 751+86.75 | 96.32 LT. | 195.27 |
| 751+85.71 | 62.78 LT. | 195.44 |
| 751+85.15 | 33.05 LT. | 195.58 |
| 751+85.16 | 16.04 LT. | 195.71 |
| 751+85.18 | 9.98 RT. | 195.88 |
| 751+84.82 | 28.95 RT. | 195.93 |
| 751+83.88 | 60.91 RT. | 196.01 |
| 751+82.29 | 88.15 RT. | 195.88 |
| 751+82.00 | 92.23 RT. | 195.86 |
| 751+79.98 | 121.18 RT. | 195.75 |
| 751+78.32 | 146.00 RT. | 195.66 |
| 751+85.37 | 28.93 RT. | 195.91 |
| 751+86.12 | 61.85 RT. | 195.93 |
| 751+86.64 | 93.49 RT. | 195.68 |
| 751+84.63 | 123.18 RT. | 195.62 |
| 751+83.15 | 145.27 RT. | 195.52 |
| 751+87.16 | 93.87 RT. | 195.66 |
| 751+89.98 | 148.11 RT. | - |
| 751+92.59 | 124.01 LT. | 195.25 |
| 751+91.59 | 98.64 LT. | 195.11 |
| 751+90.45 | 63.99 LT. | 195.28 |
| 751+89.93 | 34.01 LT. | 195.36 |
| 751+89.95 | 17.17 LT. | 195.52 |
| 751+89.94 | 9.11 RT. | 195.72 |
| 751+90.15 | 30.31 RT. | 195.77 |
| 751+90.91 | 60.30 RT. | 195.83 |
| 751+94.94 | 147.04 RT. | - |

SR 5 JOB NO. 7410 SHEET 4

| | | | | | | | | | | |
|---|---|---|---|---|---|---|---|---|---|---|
| Bridge Design Engr. | Stoddard, RB | | M:\PRELIMINARY PLANS\GRAND MOUND TO MAYTOWN\BR 5-308\ELEVATION 1.MAN | | | REGION NO. | STATE | FED. AID PROJ. NO. | SHEET NO. | TOTAL SHEETS |
| Supervisor | Anderson, M.W. | | | | | 10 | WASH. | | | |
| Designed By | | | | | | JOB NUMBER | | | | |
| Checked By | Diedrich, A. C. | 05/05 | | | | | | | | |
| Detailed By | Andersen, J.M. | 03/05 | | | | | | | | |
| Bridge Projects Engr. | Kirker, KN | 06/05 | | | | | | | | |
| Prelim. Plan By | Tran, L.H. | 03/05 | | | | | | | | |
| Architect/Specialist | PDK/BK | 04/05 | DATE | REVISION | BY | APP'D | | | | |

Mon Jan 30 11:00:07 2006

BRIDGE AND STRUCTURES OFFICE

JUGESH KAPUR
STATE OF WASHINGTON
25400
REGISTERED
PROFESSIONAL ENGINEER
EXPIRES 5/19/06

Washington State Department of Transportation

PRELIMINARY PLAN

BRIDGE SHEET NO. 4

SHEET OF SHEETS

RED/GREEN
5/22

## EXISTING COLUMN LOCATIONS BRIDGE 5/308W

| PIER 2 - WEST COLUMN | | PIER 3 - WEST COLUMN | | PIER 4 - WEST COLUMN | | PIER 5 - WEST COLUMN | |
|---|---|---|---|---|---|---|---|
| Station | Offset (LT) | Station | Offset (LT) | Station | Offset (LT) | Station | Offset (LT) |
| 750+35.54 | 43.16 | 750+85.57 | 46.26 | 751+55.45 | 43.18 | 752+05.38 | 43.27 |
| 750+35.56 | 46.25 | ‡750+85.53 | 43.16 | ‡751+55.47 | 46.24 | ‡752+05.38 | 46.34 |
| | | ‡750+88.53 | 43.16 | 751+58.45 | 43.16 | 752+08.45 | 43.29 |
| | | 750+88.52 | 46.24 | 751+58.47 | 46.25 | 752+08.38 | 46.34 |
| **PIER 2 - EAST COLUMN** | | **PIER 3 - EAST COLUMN** | | **PIER 4 - EAST COLUMN** | | **PIER 5 - EAST COLUMN** | |
| Station | Offset (LT) | Station | Offset (LT) | Station | Offset (LT) | Station | Offset (LT) |
| 750+35.59 | 18.37 | 750+85.51 | 18.37 | 751+55.47 | 18.42 | 752+05.40 | 18.50 |
| ‡750+35.54 | 21.48 | ‡750+85.49 | 21.48 | ‡751+55.47 | 21.47 | ‡752+05.36 | 21.50 |
| 750+38.55 | 18.45 | ‡750+88.51 | 18.40 | 751+58.49 | 18.45 | 752+08.41 | 18.45 |
| 750+38.55 | 21.48 | 750+88.50 | 21.51 | 751+58.54 | 21.44 | 752+08.38 | 21.55 |

## EXISTING COLUMN LOCATIONS BRIDGE 5/308E

| PIER 2 - WEST COLUMN | | PIER 3 - WEST COLUMN | | PIER 4 - WEST COLUMN | | PIER 5 - WEST COLUMN | |
|---|---|---|---|---|---|---|---|
| Station | Offset (RT) | Station | Offset (RT) | Station | Offset (RT) | Station | Offset (RT) |
| ‡750+35.49 | 17.68 | ‡750+85.48 | 17.66 | ‡751+55.43 | 17.61 | 752+05.47 | 17.63 |
| 750+35.50 | 20.77 | 750+85.47 | 20.78 | 751+55.36 | 20.72 | ‡752+05.44 | 20.75 |
| 750+38.50 | 17.69 | 750+88.49 | 17.64 | 751+58.43 | 17.69 | 752+08.43 | 17.65 |
| 750+38.50 | 20.74 | ‡750+88.48 | 20.76 | 751+58.28 | 20.80 | 752+08.43 | 20.73 |
| **PIER 2 - MIDDLE COLUMN** | | **PIER 3 - MIDDLE COLUMN** | | **PIER 4 - MIDDLE COLUMN** | | **PIER 5 - MIDDLE COLUMN** | |
| Station | Offset (RT) | Station | Offset (RT) | Station | Offset (RT) | Station | Offset (RT) |
| ‡750+35.49 | 42.41 | ‡750+85.47 | 42.38 | ‡751+55.45 | 42.37 | 752+05.43 | 42.40 |
| 750+35.51 | 45.49 | 750+85.45 | 45.50 | 751+55.37 | 45.48 | ‡752+05.42 | 45.48 |
| 750+38.57 | 42.41 | 750+88.47 | 42.40 | 751+58.42 | 42.38 | 752+08.43 | 42.41 |
| 750+38.51 | 45.49 | ‡750+88.44 | 45.54 | 751+58.27 | 45.54 | 752+08.39 | 45.49 |
| **PIER 2 - EAST COLUMN** | | **PIER 3 - EAST COLUMN** | | **PIER 4 - EAST COLUMN** | | **PIER 5 - EAST COLUMN** | |
| Station | Offset (RT) | Station | Offset (RT) | Station | Offset (RT) | Station | Offset (RT) |
| ‡750+35.46 | 53.67 | 750+85.49 | 53.71 | 751+55.52 | 53.69 | 752+05.22 | 53.74 |
| 750+35.31 | 56.73 | 750+85.41 | 56.85 | 751+55.35 | 56.83 | ‡752+05.26 | 56.81 |
| 750+38.53 | 53.61 | 750+88.47 | 53.76 | 751+58.29 | 56.90 | 752+08.34 | 53.75 |
| ‡750+38.55 | 56.67 | ‡750+88.42 | 56.84 | | | 752+08.34 | 56.81 |

## EXISTING TOP OF CURB FACE ELEVATIONS BRIDGE 5/305W

| | Station | Offset (LT) | Elevation | Offset (LT) | Elevation |
|---|---|---|---|---|---|
| ‡‡ | 749+86.05 | | | 18.30 | 220.92 |
| ‡‡ | 749+86.50 | 46.43 | 220.93 | | |
| | 749+90 | 46.45 | 221.02 | 18.29 | 221.03 |
| | 749+95 | 46.47 | 221.14 | 18.28 | 221.17 |
| | 750+00 | 46.49 | 221.27 | 18.27 | 221.31 |
| | 750+05 | 46.51 | 221.40 | 18.26 | 221.44 |
| | 750+10 | 46.50 | 221.54 | 18.26 | 221.59 |
| | 750+15 | 46.48 | 221.69 | 18.26 | 221.73 |
| | 750+20 | 46.45 | 221.84 | 18.26 | 221.87 |
| | 750+25 | 46.45 | 221.98 | 18.25 | 222.01 |
| | 750+30 | 46.46 | 222.13 | 18.24 | 222.15 |
| | 750+35 | 46.47 | 222.28 | 18.22 | 222.28 |
| | 750+40 | 46.54 | 222.39 | 18.26 | 222.42 |
| | 750+45 | 46.48 | 222.51 | 18.25 | 222.57 |
| | 750+50 | 46.44 | 222.64 | 18.25 | 222.71 |
| | 750+55 | 46.46 | 222.79 | 18.25 | 222.84 |
| | 750+60 | 46.47 | 222.94 | 18.24 | 222.98 |
| | 750+65 | 46.46 | 223.09 | 18.24 | 223.12 |
| | 750+70 | 46.46 | 223.25 | 18.24 | 223.26 |
| | 750+75 | 46.45 | 223.40 | 18.24 | 223.41 |
| | 750+80 | 46.45 | 223.55 | 18.23 | 223.55 |
| | 750+85 | 46.44 | 223.70 | 18.22 | 223.70 |
| | 750+90 | 46.44 | 223.84 | 18.23 | 223.83 |
| | 750+95 | 46.45 | 223.97 | 18.24 | 223.95 |
| | 751+00 | 46.46 | 224.09 | 18.25 | 224.08 |
| | 751+05 | 46.47 | 224.22 | 18.25 | 224.21 |
| | 751+10 | 46.49 | 224.36 | 18.24 | 224.36 |
| | 751+15 | 46.50 | 224.49 | 18.24 | 224.50 |
| | 751+20 | 46.51 | 224.64 | 18.24 | 224.65 |
| | 751+25 | 46.52 | 224.79 | 18.25 | 224.80 |
| | 751+30 | 46.52 | 224.93 | 18.25 | 224.94 |
| | 751+35 | 46.49 | 225.07 | 18.24 | 225.08 |
| | 751+40 | 46.45 | 225.20 | 18.23 | 225.22 |
| | 751+45 | 46.45 | 225.34 | 18.23 | 225.36 |
| | 751+50 | 46.46 | 225.50 | 18.24 | 225.50 |
| | 751+55 | 46.47 | 225.66 | 18.25 | 225.65 |
| | 751+60 | 46.48 | 225.79 | 18.26 | 225.80 |
| | 751+65 | 46.48 | 225.91 | 18.28 | 225.94 |
| | 751+70 | 46.49 | 226.04 | 18.30 | 226.08 |
| | 751+75 | 46.48 | 226.18 | 18.28 | 226.23 |
| | 751+80 | 46.47 | 226.32 | 18.27 | 226.37 |
| | 751+85 | 46.47 | 226.45 | 18.27 | 226.51 |
| | 751+90 | 46.48 | 226.58 | 18.29 | 226.62 |
| | 751+95 | 46.48 | 226.71 | 18.32 | 226.74 |
| | 752+00 | 46.49 | 226.88 | 18.31 | 226.87 |
| | 752+05 | 46.50 | 227.06 | 18.29 | 226.99 |
| | 752+10 | 46.45 | 227.20 | 18.30 | 227.20 |
| | 752+15 | 46.44 | 227.34 | 18.31 | 227.33 |
| | 752+20 | 46.44 | 227.47 | 18.32 | 227.46 |
| | 752+25 | 46.44 | 227.61 | 18.33 | 227.60 |
| | 752+30 | 46.43 | 227.76 | 18.33 | 227.75 |
| | 752+35 | 46.42 | 227.91 | 18.33 | 227.90 |
| | 752+40 | 46.45 | 228.05 | | |
| | 752+45 | 46.48 | 228.19 | | |
| | 752+50 | 46.52 | 228.34 | | |
| | 752+55 | 46.56 | 228.48 | | |
| ‡‡ | 752+57.57 | 46.58 | 228.55 | | |

## EXISTING TOP OF CURB FACE ELEVATIONS BRIDGE 5/305E

| | Station | Offset (RT) | Elevation | Offset (RT) | Elevation |
|---|---|---|---|---|---|
| ‡‡ | 749+86.23 | 17.54 | 220.83 | | |
| ‡‡ | 749+86.73 | | | 63.53 | 220.95 |
| | 749+90 | 17.55 | 220.94 | 63.38 | 221.03 |
| | 749+95 | 17.57 | 221.09 | 63.16 | 221.16 |
| | 750+00 | 17.59 | 221.23 | 62.93 | 221.29 |
| | 750+05 | 17.61 | 221.38 | 62.71 | 221.41 |
| | 750+10 | 17.62 | 221.53 | 62.46 | 221.55 |
| | 750+15 | 17.63 | 221.68 | 62.20 | 221.71 |
| | 750+20 | 17.64 | 221.83 | 61.94 | 221.86 |
| | 750+25 | 17.62 | 221.98 | 61.84 | 222.01 |
| | 750+30 | 17.59 | 222.12 | 61.83 | 222.15 |
| | 750+35 | 17.55 | 222.26 | 61.83 | 222.30 |
| | 750+40 | 17.50 | 222.42 | 61.81 | 222.43 |
| | 750+45 | 17.54 | 222.55 | 61.79 | 222.56 |
| | 750+50 | 17.57 | 222.68 | 61.77 | 222.70 |
| | 750+55 | 17.57 | 222.83 | 61.76 | 222.84 |
| | 750+60 | 17.56 | 222.97 | 61.75 | 222.98 |
| | 750+65 | 17.55 | 223.12 | 61.76 | 223.12 |
| | 750+70 | 17.52 | 223.28 | 61.79 | 223.27 |
| | 750+75 | 17.50 | 223.43 | 61.81 | 223.42 |
| | 750+80 | 17.51 | 223.58 | 61.78 | 223.56 |
| | 750+85 | 17.52 | 223.72 | 61.75 | 223.69 |
| | 750+90 | 17.52 | 223.86 | 61.75 | 223.82 |
| | 750+95 | 17.50 | 223.99 | 61.77 | 223.95 |
| | 751+00 | 17.48 | 224.13 | 61.79 | 224.08 |
| | 751+05 | 17.47 | 224.26 | 61.80 | 224.21 |
| | 751+10 | 17.47 | 224.38 | 61.79 | 224.34 |
| | 751+15 | 17.47 | 224.51 | 61.79 | 224.47 |
| | 751+20 | 17.48 | 224.64 | 61.79 | 224.61 |
| | 751+25 | 17.50 | 224.77 | 61.78 | 224.74 |
| | 751+30 | 17.51 | 224.91 | 61.78 | 224.88 |
| | 751+35 | 17.49 | 225.07 | 61.77 | 225.03 |
| | 751+40 | 17.48 | 225.23 | 61.76 | 225.17 |
| | 751+45 | 17.47 | 225.39 | 61.76 | 225.32 |
| | 751+50 | 17.48 | 225.54 | 61.75 | 225.47 |
| | 751+55 | 17.48 | 225.69 | 61.75 | 225.62 |
| | 751+60 | 17.47 | 225.83 | 61.76 | 225.77 |
| | 751+65 | 17.45 | 225.96 | 61.77 | 225.93 |
| | 751+70 | 17.44 | 226.08 | 61.77 | 226.08 |
| | 751+75 | 17.46 | 226.22 | 61.75 | 226.21 |
| | 751+80 | 17.48 | 226.35 | 61.73 | 226.34 |
| | 751+85 | 17.49 | 226.49 | 61.71 | 226.49 |
| | 751+90 | 17.48 | 226.64 | 61.70 | 226.64 |
| | 751+95 | 17.48 | 226.79 | 61.69 | 226.78 |
| | 752+00 | 17.45 | 226.91 | 61.70 | 226.92 |
| | 752+05 | 17.42 | 227.03 | 61.72 | 227.06 |
| | 752+10 | 17.42 | 227.20 | 61.66 | 227.21 |
| | 752+15 | 17.45 | 227.34 | 61.67 | 227.35 |
| | 752+20 | 17.49 | 227.48 | 61.69 | 227.48 |
| | 752+25 | 17.49 | 227.62 | 61.69 | 227.62 |
| | 752+30 | 17.48 | 227.76 | 61.69 | 227.76 |
| | 752+35 | 17.47 | 227.89 | 61.69 | 227.90 |
| | 752+40 | | | 61.69 | 228.06 |
| | 752+45 | | | 61.69 | 228.22 |
| | 752+50 | | | 61.70 | 228.38 |
| | 752+55 | | | 61.70 | 228.54 |
| ‡‡ | 752+57.65 | | | 61.70 | 228.62 |

NOTES:

‡ AVERAGE OF 2 SURVEY SHOTS AT CORNER OF COLUMN

‡‡ POINT OFF BRIDGE

SR 5 JOB NO. 7410 SHEET 5

| | | | |
|---|---|---|---|
| Bridge Design Engr. | Stoddard, RB | | |
| Supervisor | Anderson, M.W. | | |
| Designed By | | | |
| Checked By | Diedrich, A.C. | 05/05 | |
| Detailed By | Andersen, J.M. | 03/05 | |
| Bridge Projects Engr. | Kirker, KN | 06/05 | |
| Prelim. Plan By | Tran, L.H. | 03/05 | |
| Architect/Specialist | PDK/BK/GAW | 03/05 | |

Wed Feb 01 13:17:44 2006

M:\PRELIMINARY PLANS\GRAND MOUND TO MAYTOWN\BR 5-308\ELEVATION 2.MAN

| DATE | REVISION | BY | APP'D |
|---|---|---|---|

| REGION NO. | STATE | FED. AID PROJ. NO. | SHEET NO. | TOTAL SHEETS |
|---|---|---|---|---|
| 10 | WASH. | | | |
| JOB NUMBER | | | | |

BRIDGE AND STRUCTURES OFFICE

JUGESH KAPUR — STATE OF WASHINGTON — 25400 — REGISTERED PROFESSIONAL ENGINEER — EXPIRES 5/19/06

Washington State Department of Transportation

PRELIMINARY PLAN

BRIDGE SHEET NO. 5 OF SHEETS

RED/GREEN 3/22

## CURVE DATA

| P.I. STATION | Δ | RADIUS | TANGENT | LENGTH | BK. TANGENT BRG. |
|---|---|---|---|---|---|
| SB 19+88.49 | 45°06'33.0" RT. | 2380.00' | 988.49' | 1873.78' | N 20°57'41" W |
| NB 22+55.96 | 45°06'33.0" RT. | 3024.00' | 1255.96' | 2380.81' | N 20°57'41" W |

## SEC. 12, T.15N., R.3W., W.M.
## THURSTON COUNTY

I-5

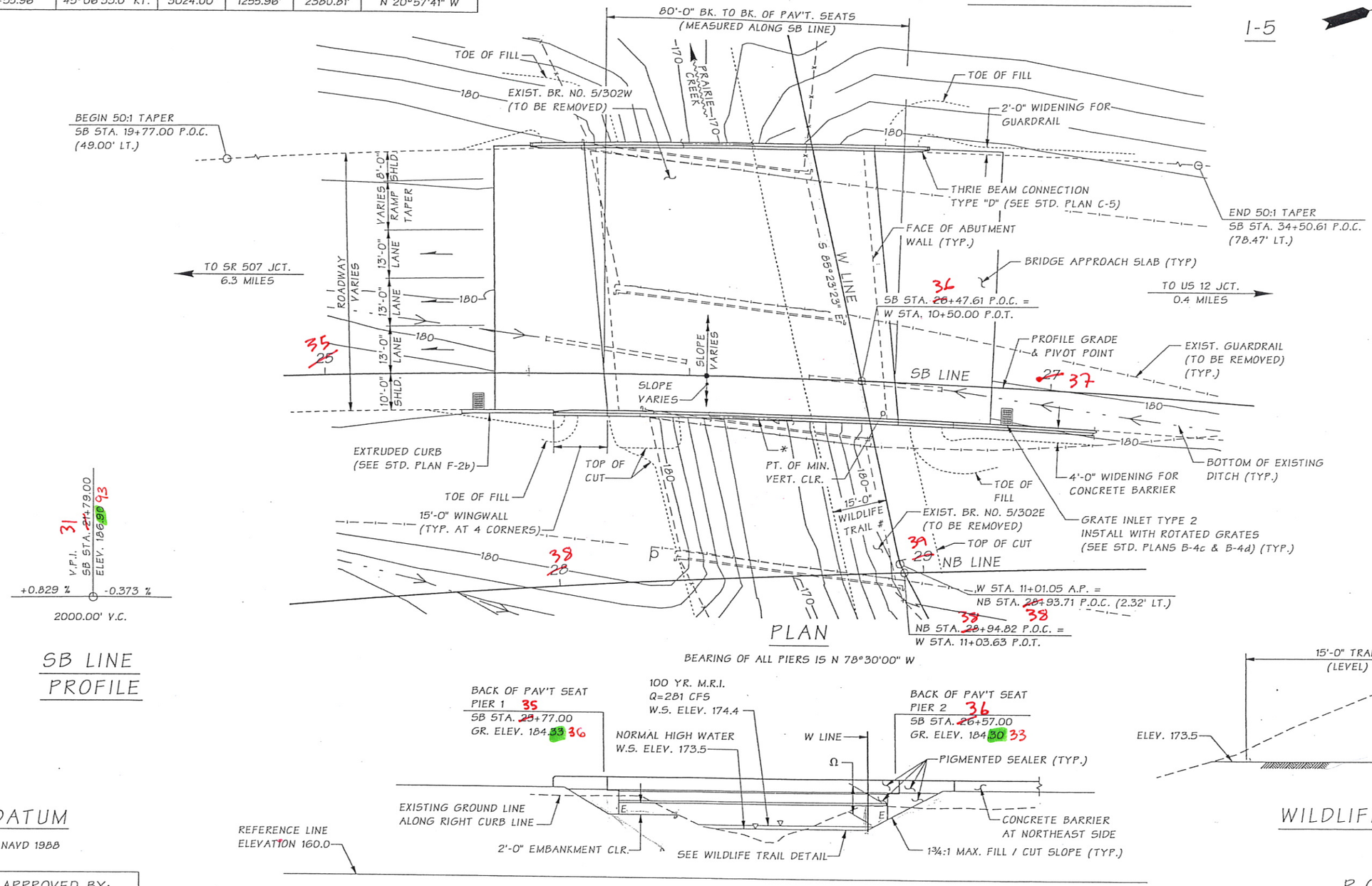


## PLAN

BEARING OF ALL PIERS IS N 78°30'00" W




## SB LINE PROFILE

## DATUM

NAVD 1988




## ELEVATION

GRADE ELEVATIONS SHOWN ARE FINISH GRADES AT TOP OF ROADWAY SLAB ON SB LINE AND ARE EQUAL TO PROFILE GRADE. SEE STD. PLAN H-9 FOR EMBANKMENT DETAILS AT BRIDGE ENDS.

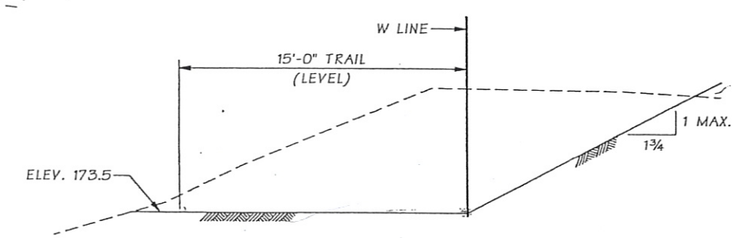


## WILDLIFE TRAIL DETAIL

PRELIMINARY
Subject to Revision

* 2 ~ 2"ø CONDUIT PIPES IN TRAFFIC BARRIER FOR FULL LENGTH OF BRIDGE, CURTAIN WALLS & RETAINING WALLS (TYP.)

Ω 4.5' MIN. VERT. CLR.

\# SEE WILDLIFE TRAIL DETAIL.

NOTE: 500 YR MRI
Q = 478 CFS
W.S. ELEV. 175.6

## P.C. GIRDERS (W42G)
## LOADING: HL-93

PLAN APPROVED BY:

J. Kapur 11/05
BRIDGE & STRUCTURES ENGINEER
Michele L. Britton 2/06
PROJECT DEVELOPMENT ENGINEER

| | | | |
|---|---|---|---|
| Bridge Design Engr. | Stoddard, RB | | |
| Supervisor | Anderson, MW | | |
| Designed By | | | |
| Checked By | Diedrich, A | 07/05 | |
| Detailed By | Andersen, JM | 04/05 | |
| Bridge Projects Engr. | Kirker, KN | 08/05 | |
| Prelim. Plan By | Chu, A | 04/05 | |
| Architect/Specialist | PDK/BK | 08/05 | |

M:\PRELIMINARY PLANS\GRAND MOUND TO MAYTOWN\PRAIRIE CREEK\5-302W.MAN

| DATE | REVISION | BY | APPD |
|---|---|---|---|
| | | | |

| REGION NO. | STATE | FED. AID PROJ. NO. | SHEET NO. | TOTAL SHEETS |
|---|---|---|---|---|
| 10 | WASH. | | | |
| JOB NUMBER | | | | |

BRIDGE AND STRUCTURES OFFICE

JUGESH KAPUR — STATE OF WASHINGTON — 21392 — REGISTERED PROFESSIONAL ENGINEER — EXPIRES 5/15/06

Washington State Department of Transportation

PRELIMINARY PLAN

BRIDGE SHEET NO. 1

SHEET OF

Wed Feb 01 10:19:33 2006

SR 5 JOB NO. 7412 SHEET 1 OF 2

BRIDGE WITH APPROACH FILLS
W42G P.C. GIRDERS
"A" DIMENSION = 10" (PRELIMINARY, NOT FOR DESIGN)
DECK PROTECTIVE SYSTEM I (EPOXY COATED REBARS)
CAST-IN-PLACE CONCRETE STRENGTH SHALL BE 4000 PSI

| | | |
|---|---|---|
| COAST GUARD LIAISON | GAW | |
| COAST GUARD PERMIT NOT REQ'D. | N/A | |
| PERMIT TARGET DATE | | |

RED/GREEN
5/22

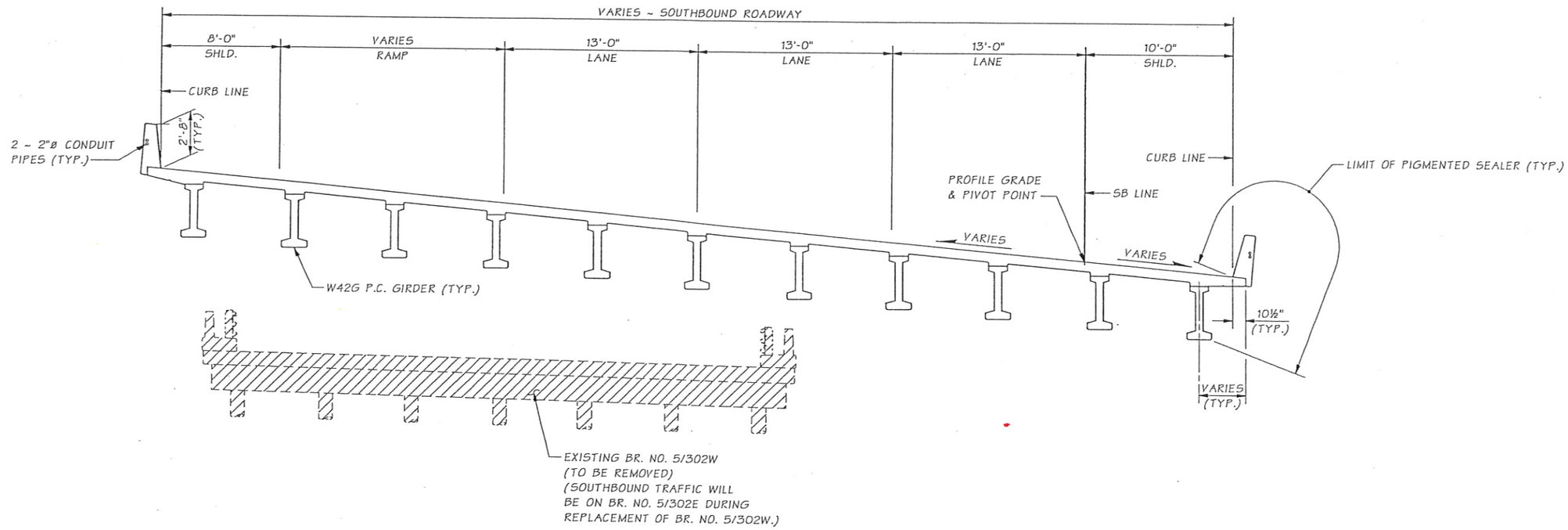


## TYPICAL SECTION

SHOWN NEAR MID-SPAN

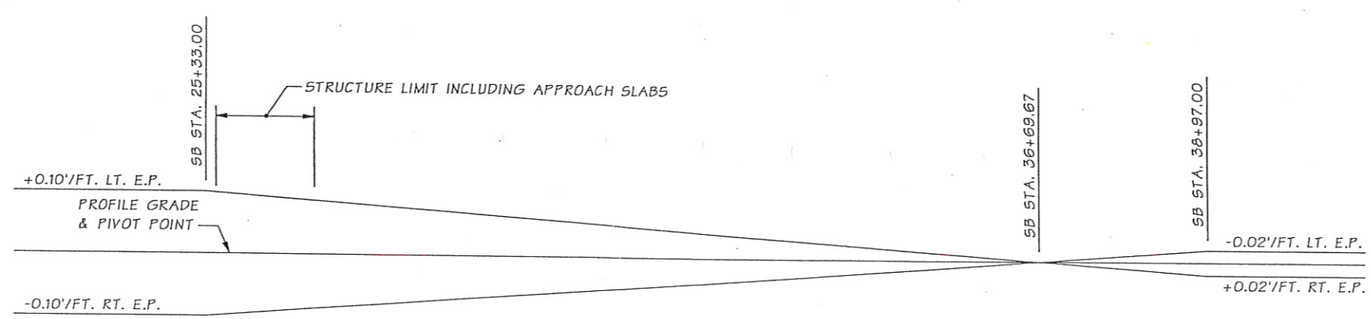


## SB LINE
## SUPERELEVATION TRANSITION DIAGRAM

SR 5 JOB NO. 7412 SHEET 2 OF 2

| | | |
|---|---|---|
| Bridge Design Engr. | Stoddard, RB | |
| Supervisor | Anderson, MW | |
| Designed By | | |
| Checked By | Diedrich, A | 07/05 |
| Detailed By | Andersen, JM | 04/05 |
| Bridge Projects Engr. | Kirker, KN | 08/05 |
| Prelim. Plan By | Chu, A | 04/05 |
| Architect/Specialist | PDK/BK | 08/05 |

Wed Feb 01 10:15:22 2006

M:\PRELIMINARY PLANS\GRAND MOUND TO MAYTOWN\PRAIRIE CREEK\5-302W TYP SEC.MAN

| DATE | REVISION | BY | APP'D |
|---|---|---|---|

| REGION NO | STATE | FED. AID PROJ. NO. | SHEET NO. | TOTAL SHEETS |
|---|---|---|---|---|
| 10 | WASH. | | | |
| JOB NUMBER | | | | |

BRIDGE AND STRUCTURES OFFICE

YOGESH KAPUR — STATE OF WASHINGTON — 25406 — REGISTERED PROFESSIONAL ENGINEER — EXPIRES 5/15/06

Washington State Department of Transportation

PRELIMINARY PLAN

BRIDGE SHEET NO. 2

SHEET OF