NOTE:
TO BE SUPPLIED BY MACCAFERRI PER WSL GUIDELINES.

DOUBLE SPIRAL CABLE ANCHOR SPECIFICATIONS

DOUBLE SPIRAL CABLE ANCHOR DETAILS (TYP.)

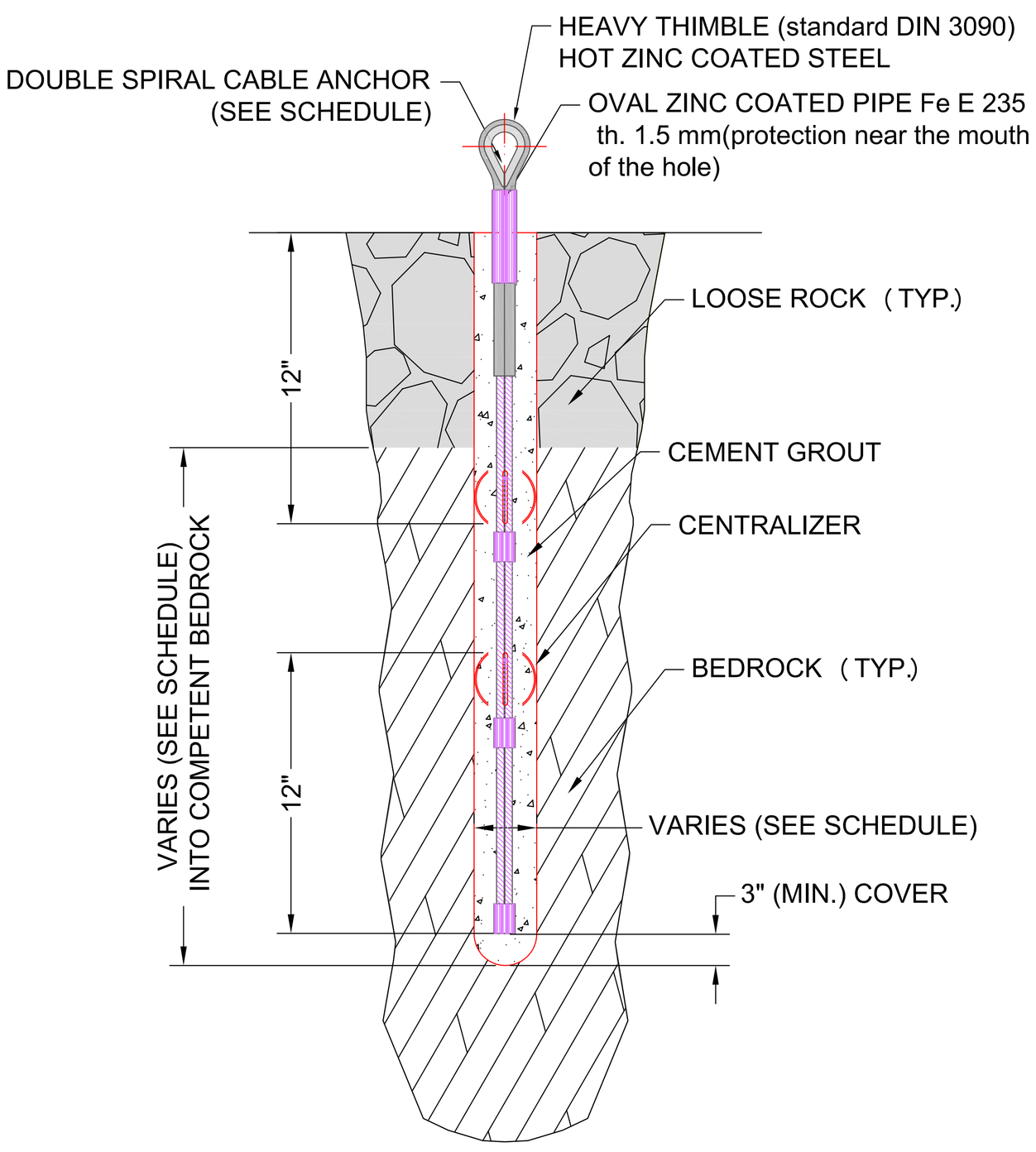

HEAVY THIMBLE DETAIL (STANDARD DIN 3090)

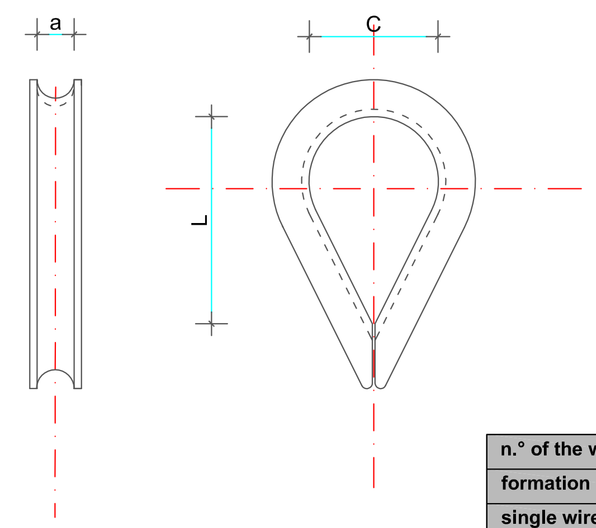

ROPE DIAMETER	stainless steel tube coating						glass fibres epoxidic coating					
	ϕ_{TUBE}	L_{TUBE}	*thimble size*	a	L	C	coats	thickn	*thimble size*	a	L	C
(mm)	(mm)	(mm)		(mm)	(mm)	(mm)	(n.)	(mm)		(mm)	(mm)	(mm)
10	16.0	1000	*18*	20	127	45	5	1.5	*14*	16	102	35
12	16.0	1200	*18*	20	127	45	5	1.5	*16*	18	113	40
14	20.0	1500	*20*	22	141	50	5	1.5	*18*	20	127	45
16	21.3	1500	*22*	24	153	55	5	1.5	*20*	22	141	50
18	25.0	1500	*26*	29	181	65	5	1.5	*22*	24	153	55
20	26.9	1500	*28*	31	193	70	5	1.5	*24*	26	165	60
22	28.0	1500	*28*	31	223	80	5	1.5	*26*	29	181	65
24	30.0	1500	*32*	35	223	80	5	1.5	*28*	31	193	70

stainless steel tube coating: the tube diameter related on the table is outer; the thickness of the stainless steel tube is 1.5 mm.

	ANCHOR CABLE DIAMETER (mm)							
	ϕ=10.0 mm	**ϕ=12.0 mm**	**ϕ=14.0 mm**	**ϕ=16.0 mm**	**ϕ=18.0 mm**	**ϕ=20.0 mm**	**ϕ=22.0 mm**	**ϕ=24.0 mm**
n.° of the wires in the cable	19		37					
formation	12 + 6 + 1		18 + 12 + 6 + 1					
single wire diameter (mm)	2.00	2.40	2.00	2.30	2.55	2.85	3.15	3.43
standard UNI	7690		7690 reference					
rope weight (kp/m)	0.495	0.713	0.964	1.260	1.590	1.970	2.380	2.830
galvanizing class	class "A" (according to standard EN 10244-2)							
minimal Zn mass (g/mq)	205				230			250
rope breaking strength (kN)	94.83	136.30	181.40	237.30	300.01	370.70	448.20	533.50
anchor breaking strength (kN)	**170.69**	**245.34**	**326.52**	**427.14**	**540.02**	**667.26**	**806.76**	**960.30**

	TOTAL WEIGHT OF THE ANCHOR (kp)							
L D	**ϕ=10.0 mm**	**ϕ=12.0 mm**	**ϕ=14.0 mm**	**ϕ=16.0 mm**	**ϕ=18.0 mm**	**ϕ=20.0 mm**	**ϕ=22.0 mm**	**ϕ=24.0 mm**
2.00 m	3.96	5.40	6.96	8.46	10.59	12.87	14.85	19.24
2.50 m	4.59	6.26	8.08	9.88	12.34	15.02	17.48	22.32
3.00 m	5.09	6.98	9.04	11.14	13.93	16.99	19.86	25.15
3.50 m	5.72	7.84	10.15	12.57	15.69	19.15	22.49	28.23
4.00 m	6.21	8.55	11.12	13.83	17.28	21.12	24.87	31.06
4.50 m	6.84	9.41	12.23	15.25	19.03	23.27	27.50	34.14
5.00 m	7.34	10.13	13.20	16.51	20.62	25.24	29.88	36.97
5.50 m	7.97	10.99	14.31	17.94	22.38	27.39	32.51	40.05
6.00 m	8.46	11.70	15.27	19.20	23.97	29.36	34.89	42.88
6.50 m	9.09	12.57	16.39	20.62	25.72	31.51	37.52	45.96
7.00 m	9.59	13.28	17.35	21.88	27.31	33.48	39.90	48.79
7.50 m	10.22	14.14	18.47	23.31	29.07	35.63	42.53	51.87
8.00 m	10.71	14.86	19.43	24.57	30.66	37.60	44.91	54.70

	Position	Anchor Type	Hole Diameter (in)	Wire Rope Diameter (mm)	Anchor Breaking Strength (kN)	Anchor Breaking Strength (kips)	Calculated Anchor Design Load per Manufacturer (kN)	Calculated Anchor Design Load per Manufacturer (kips)	S.F. Against Anchor Cable Failure per Manufacturer's Design Load	Embedment Depth into competent Rock for Design Load with S.F. = 2 (ft)	S.F. Against Anchor Pullout Failure per Manufacturer's Design Load
Dk=3.0 N=3.2	End Section (WF)	Upslope - End Anchor	3.0	22	807	181	285	64.1	2.8	6	2.0
		Upslope - End Anchor	2.5	22	807	181	285	64.1	2.8	7	2.0
		Upslope - Interior Anchor	3.0	22	807	181	341	76.7	2.4	7	2.0
		Upslope - Interior Anchor	2.5	22	807	181	341	76.7	2.4	8	2.0
		Downslope	3.0	12	245	55	93	20.9	2.6	4	2.0
		Downslope	2.5	12	245	55	93	20.9	2.6	4	2.0
	Interval Section (RF)	Upslope -End Anchor	3.0	20	667	150	156	35.1	4.3	5	2.0
		Upslope- End Anchor	2.5	20	667	150	156	35.1	4.3	5	2.0
		Upslope - Interior Anchor	3.0	20	667	150	284	63.8	2.3	6	2.0
		Upslope - Interior Anchor	2.5	20	667	150	284	63.8	2.3	7	2.0
		Downslope	3.0	10	171	38	61	13.7	2.8	3	2.0
		Downslope	2.5	10	171	38	61	13.7	2.8	3	2.0
	Intermediate Section (MF)	Upslope	3.0	20	667	150	268	60.2	2.5	6	2.0
		Upslope	2.5	20	667	150	268	60.2	2.5	7	2.0
		Downslope	3.0	10	171	38	56	12.6	3.0	3	2.0
		Downslope	2.5	10	171	38	56	12.6	3.0	3	2.0

ALL UNITS ARE IN mm UNLESS OTHERWISE NOTED

Dk 3.0 N 3.2 WIRE ROPE ANCHOR SPECIFICATIONS

REVISED

WSDOT Avalanche Barrier
Maccaferri Snow Net Barrier
Kittitas, Washington

PREPARED AT THE REQUEST OF
HI-TECH Rockfall Construction
PO Box 674
Forest Grove, Oregon 97116

KANE GeoTech, Inc.
Geoengineering Consultants
7400 Shoreline Drive, Suite 6
Stockton, California 95219
www.kanegeotech.com
Tel: 209-472-1822
Fax: 209-472-0802

SHEET 10 OF 13

DRAWN: JAM/BJF
CHECKED: WFK
JOB NO: GT11-26
SCALE: AS SHOWN
DATE: 2013 05-30
DESIGN: WFK

© 2013 KANE GeoTech. Inc.