NOTE:
TO BE SUPPLIED BY MACCAFERRI PER WSL GUIDELINES.

VERTICAL BAR

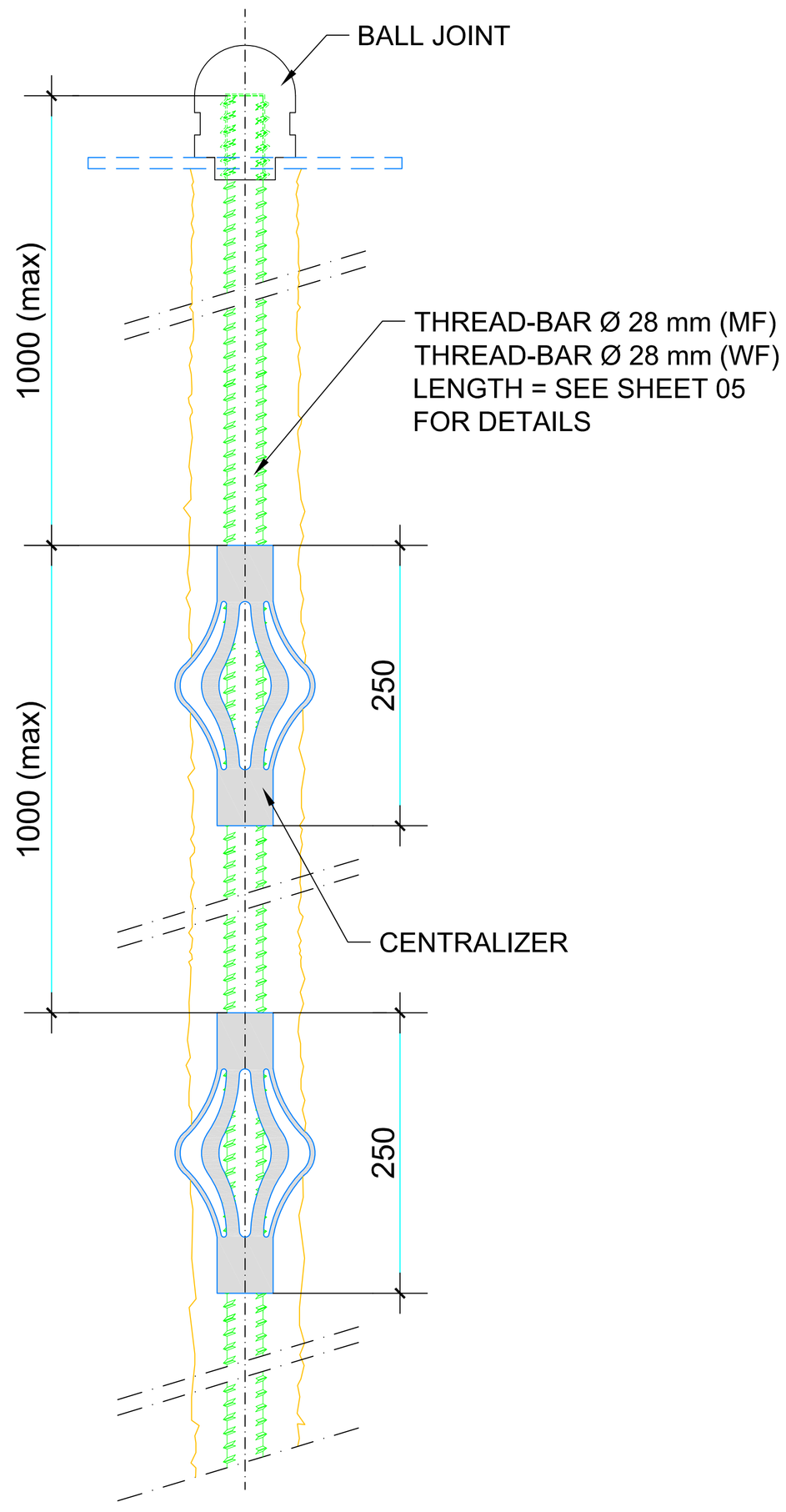

CENTRALIZER DETAIL

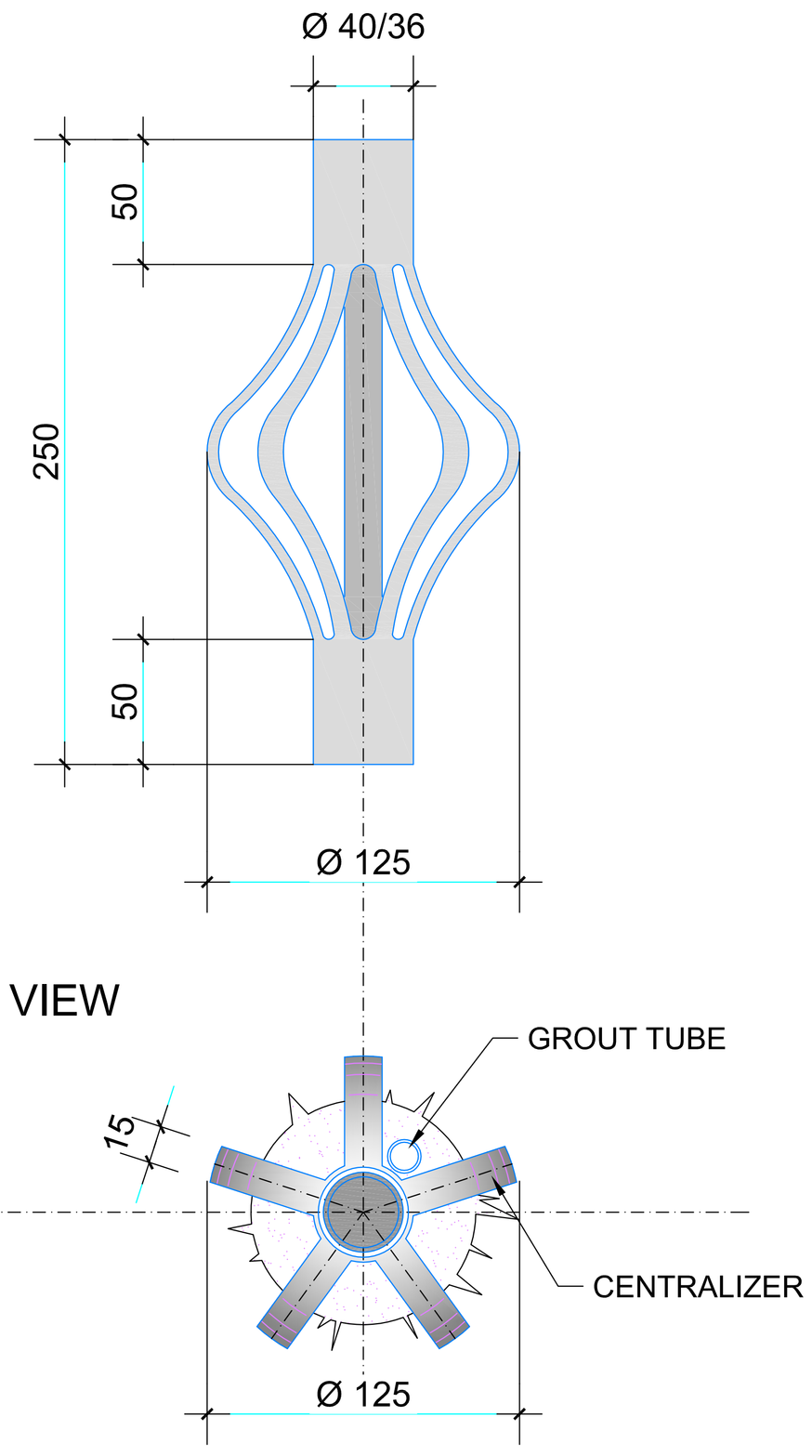

ALL UNITS ARE IN mm UNLESS OTHERWISE NOTED

Dk 3.0 N 3.2 THREAD-BAR CENTRALIZER DETAILS

REVISED

WSDOT Avalanche Barrier
Maccaferri Snow Net Barrier
Kittitas, Washington

PREPARED AT THE REQUEST OF
HI-TECH Rockfall Construction
PO Box 674
Forest Grove, Oregon 97116

KANE GeoTech, Inc.
Geoengineering Consultants
7400 Shoreline Drive, Suite 6
Stockton, California 95219
www.kanegeotech.com
Tel: 209-472-1822
Fax: 209-472-0802

SHEET 8 OF 13

DRAWN: JAM/BJF
CHECKED: WFK
JOB NO: GT11-26
SCALE: AS SHOWN
DATE: 2013 05-30
DESIGN: WFK

© 2013 KANE GeoTech, Inc.