9/28/19 = 420 S.F.
9/30/19 = 120 SF
10/2/19 = 36 SF

Total 576 S.F.

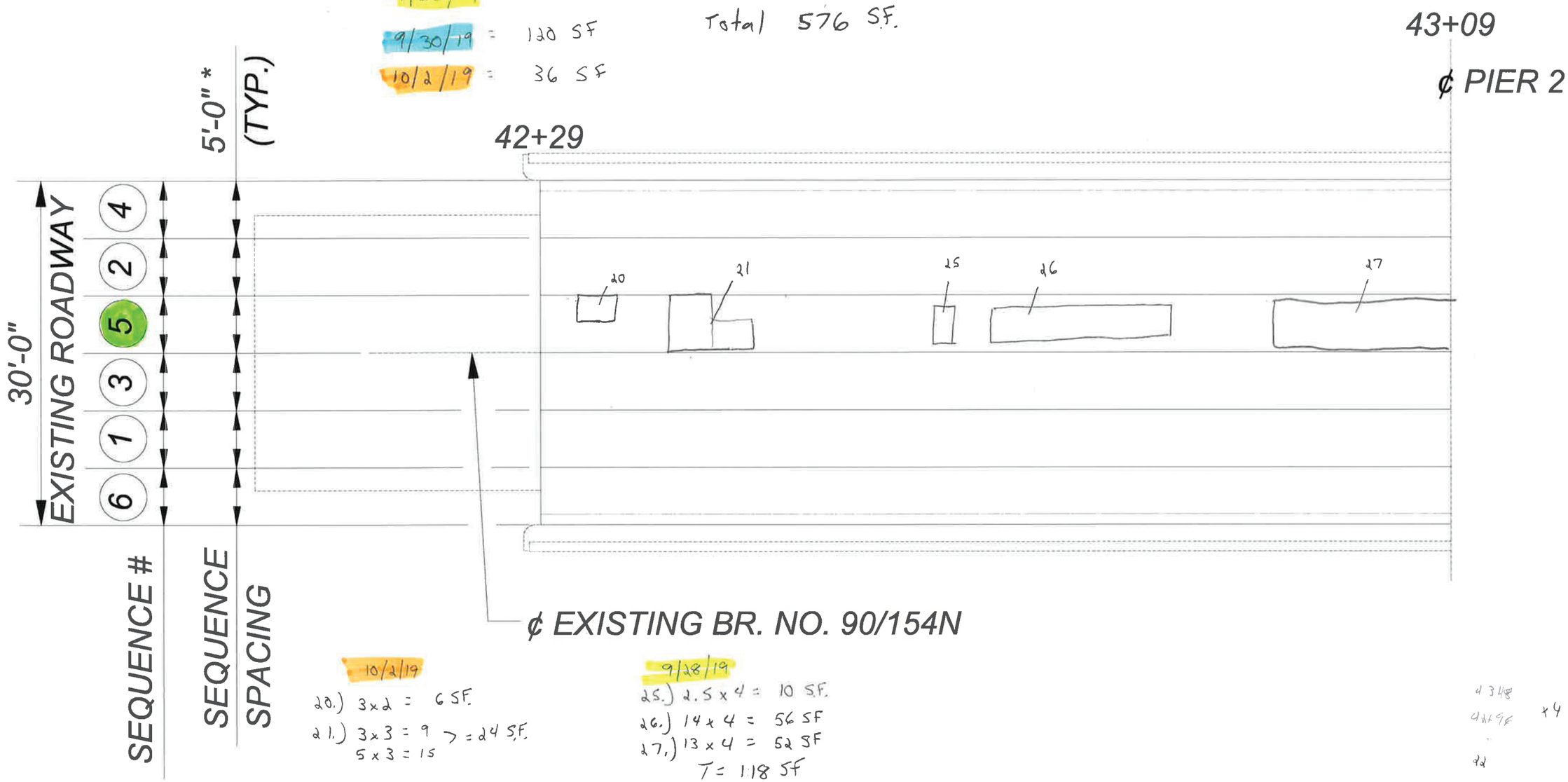

10/2/19
20.) 3x2 = 6 SF.
21.) 3x3 = 9 > = 24 S.F.
5x3 = 15

T = 30 SF

9/28/19
25.) 2.5 x 4 = 10 S.F.
26.) 14 x 4 = 56 SF
27.) 13 x 4 = 52 SF
T = 118 SF

148 SF

FILE NAME	P:\454302\CONTRACT\C9214 I-90 Yakima River Bridges EB & WB Deck Rehab_CAD_Sheets\Scarifying Sequence Sheets\006-SCARIFICATION SEQ 2_BR90-150N.dgn						Plot 1
TIME	1:53:26 PM				REGION NO. 10 / STATE WASH	FED.AID PROJ.NO.	PLAN REF NO
DATE	6/25/2019				JOB NUMBER		
PLOTTED BY	dellint						
DESIGNED BY							SHEET
ENTERED BY							OF
CHECKED BY					CONTRACT NO.	LOCATION NO.	SHEETS
PROJ. ENGR.							
REGIONAL ADM.		REVISION	DATE	BY			

P.E. STAMP BOX DATE P.E. STAMP BOX DATE

Washington State Department of Transportation

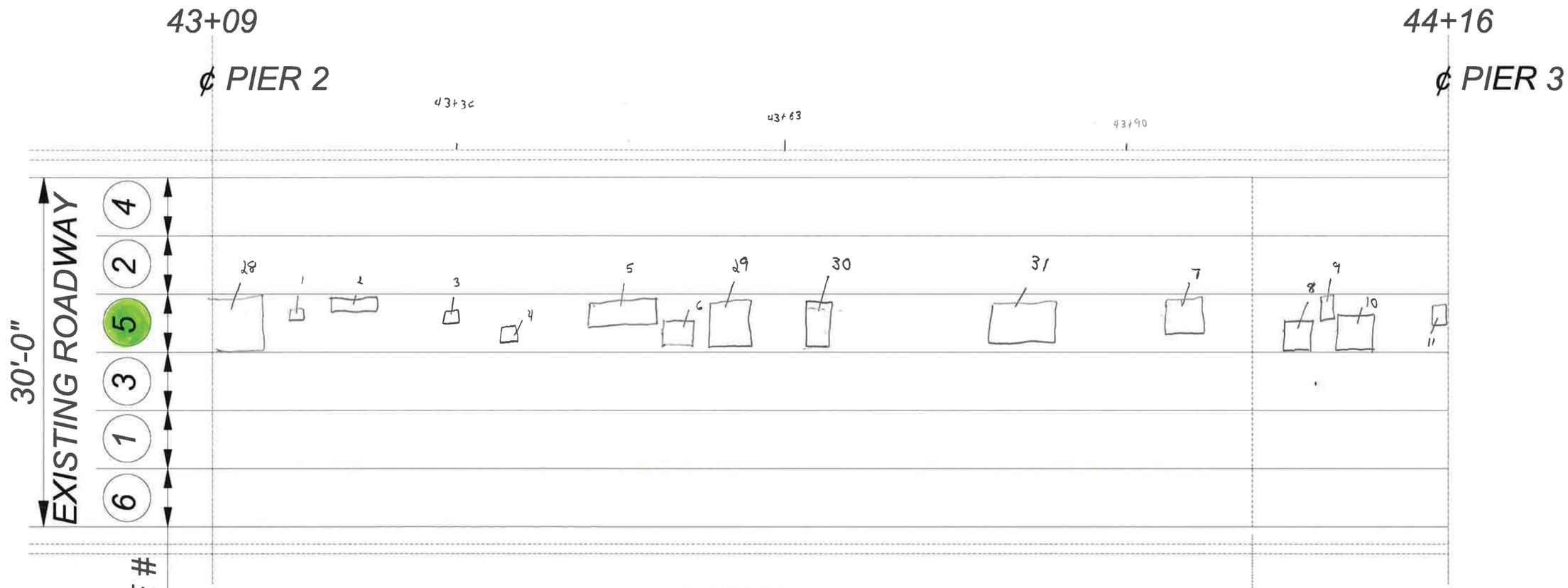

9-30-19

1.) 2x2 = 4 S.F.
2.) 4x2 = 8 S.F.
3.) 2x2 = 4 S.F.
4.) 2x2 = 4 S.F.
5.) 5x3 = 15 S.F.
6.) 3x2 = 6 S.F.
7.) 4x4 = 16 S.F.
8.) 3x2 = 6 S.F.
9.) 2.5x1.5 = 4 S.F.
10.) 4x4 = 16 S.F.

11.) 2x2 = 4 S.F.

T = 87 SF

9/28/19

28.) 9 x 4 = 36 SF
29.) 6.5 x 4 = 26 SF
30.) 3.5 x 4 = 14 SF
31.) 7.5 x 4 = 30 SF

T = 106 SF

193 S.F.

FILE NAME	P:\454302\CONTRACT\C9214 I-90 Yakima River Bridges EB & WB Deck Rehab_CAD_Sheets\Scarifying Sequence Sheets\006-SCARIFICATION SEQ 2_BR90-150N.dgn						Plot 2
TIME	1:59:25 PM			REGION NO. 10	STATE WASH	FED.AID PROJ.NO.	PLAN REF NO
DATE	6/25/2019			JOB NUMBER			
PLOTTED BY	dellint						SHEET
DESIGNED BY							OF
ENTERED BY							
CHECKED BY				CONTRACT NO.		LOCATION NO.	SHEETS
PROJ. ENGR.							
REGIONAL ADM.		REVISION	DATE	BY			

P.E. STAMP BOX DATE P.E. STAMP BOX DATE

Washington State Department of Transportation

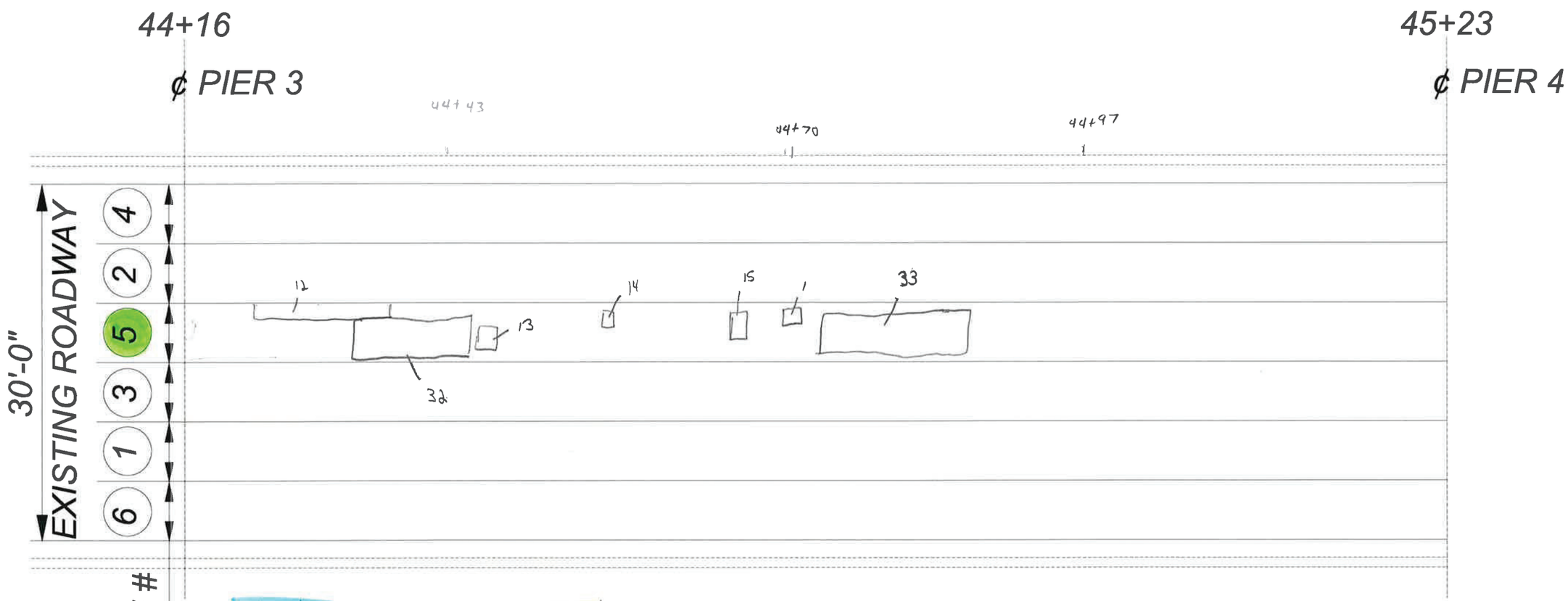

SEQUENCE #

9/30/19

12.) 6 x 1 = 6 S.F.
13.) 2 x 2 = 4 S.F.
14.) 1 x 1 = 1 S.F.
15.) 2 x 1 = 2 S.F.
16.) 1 x 1 = 1 S.F.

T = 14 SF

9/28/19

32.) 12 x 4 = 48 SF
33.) 13 x 4 = 52 S.F.

T = 100 SF

114 SF

FILE NAME	P:\454302\CONTRACT\C9214 I-90 Yakima River Bridges EB & WB Deck Rehab_CAD_Sheets\Scarifying Sequence Sheets\006-SCARIFICATION SEQ			REGION NO.	STATE	FED.AID PROJ.NO.	2_BR90-150N.dgn
TIME	1:55:24 PM			10	WASH		
DATE	6/25/2019			JOB NUMBER			
PLOTTED BY	dellint						
DESIGNED BY							
ENTERED BY							
CHECKED BY				CONTRACT NO.		LOCATION NO.	
PROJ. ENGR.							
REGIONAL ADM.		REVISION	DATE	BY			

DATE P.E. STAMP BOX

DATE P.E. STAMP BOX

Washington State Department of Transportation

Plot 3

PLAN REF NO

SHEET

OF

SHEETS

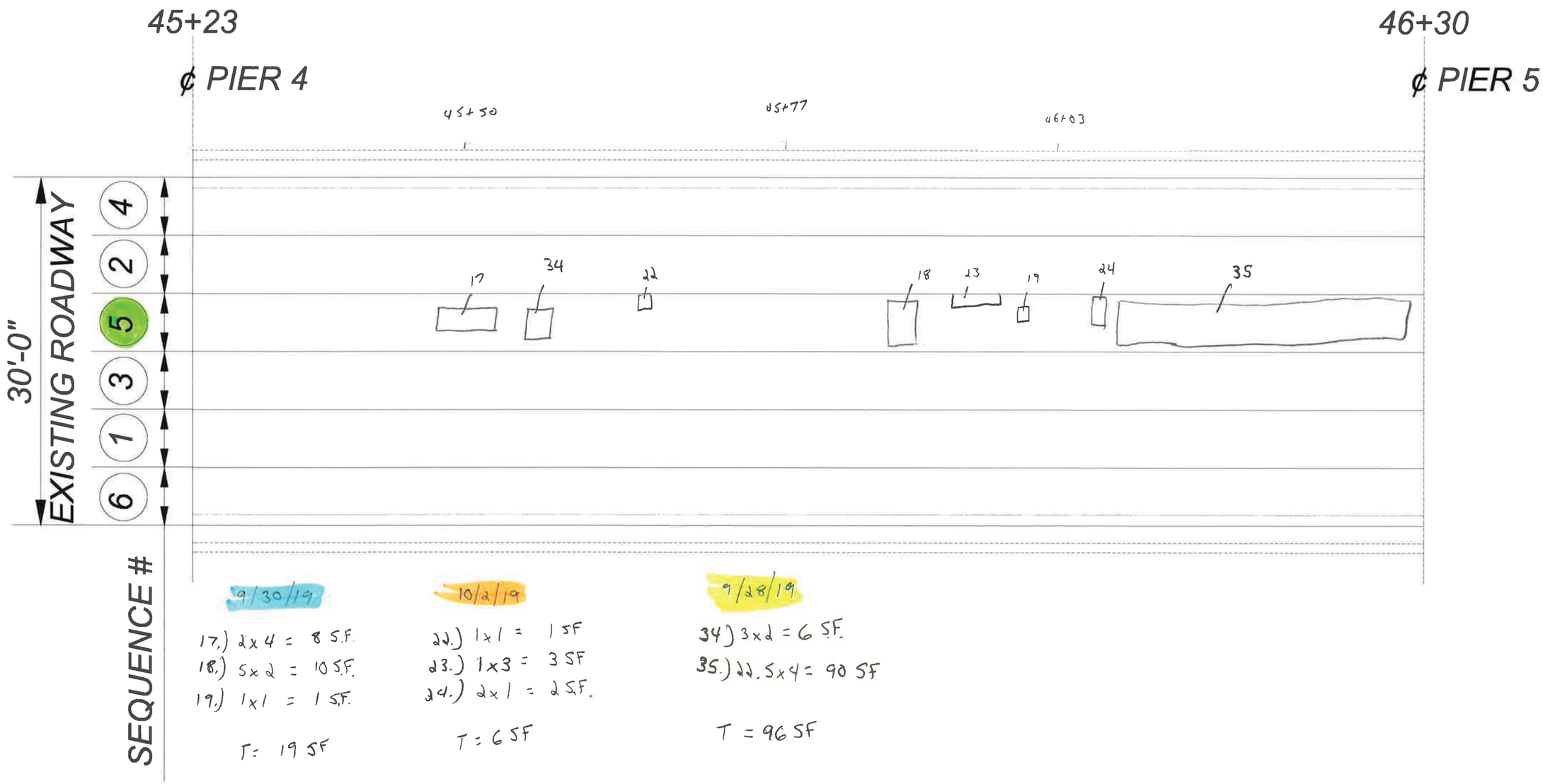

FILE NAME	P:\454302\CONTRACT\C9214 I-90 Yakima River Bridges EB & WB Deck Rehab_CAD_Sheets\Scarifying Sequence Sheets\006-SCARIFICATION SEQ 2_BR90-150N.dgn						
TIME	1:55:44 PM				REGION NO.	STATE	FED.AID PROJ.NO.
DATE	6/25/2019				10	WASH	
PLOTTED BY	dellint				JOB NUMBER		
DESIGNED BY							
ENTERED BY							
CHECKED BY					CONTRACT NO.		LOCATION NO.
PROJ. ENGR.							
REGIONAL ADM.		REVISION	DATE	BY			

P.E. STAMP BOX DATE

P.E. STAMP BOX DATE

Washington State Department of Transportation

Plot 4

PLAN REF NO

SHEET

OF

SHEETS

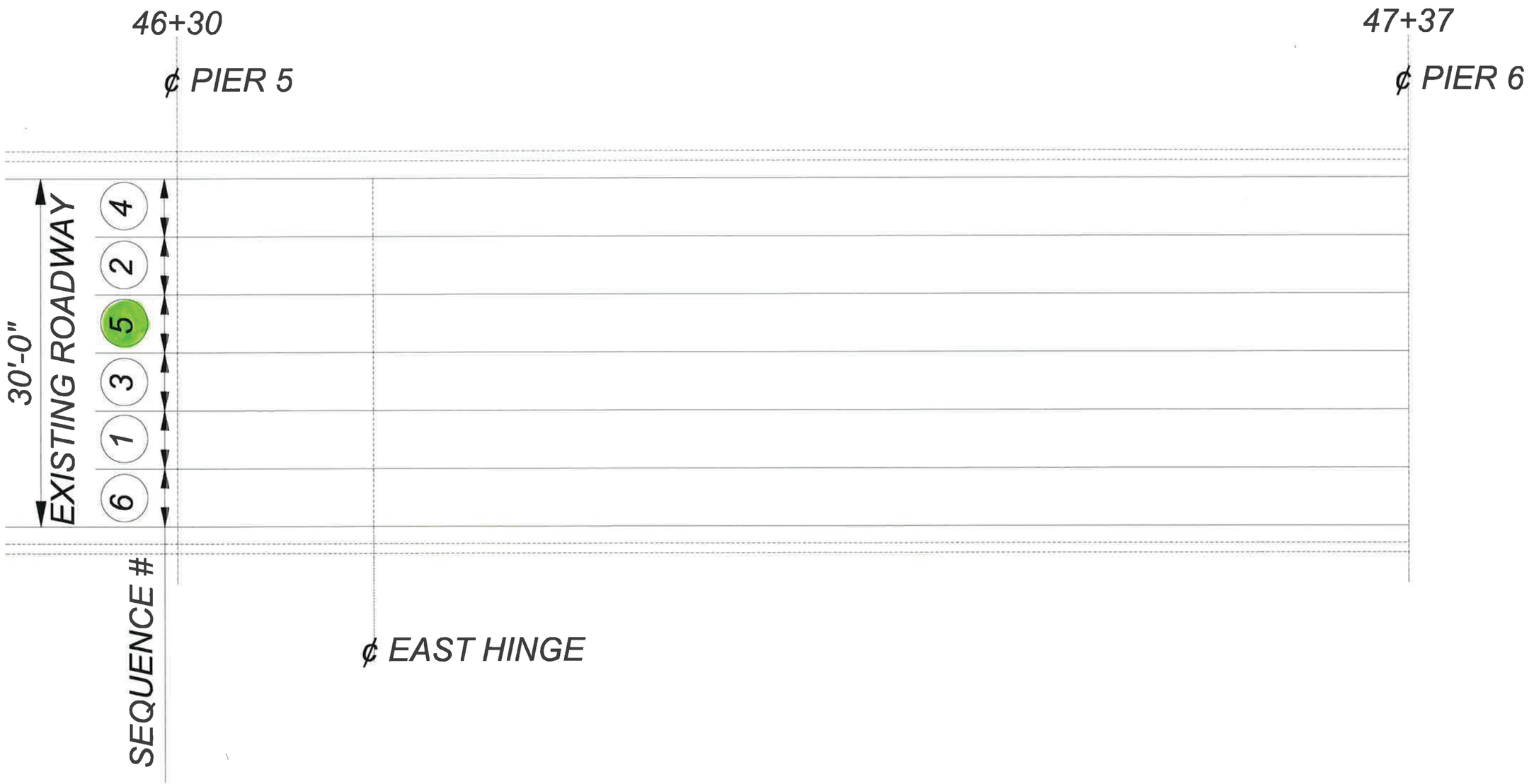

FILE NAME	P:\454302\CONTRACT\C9214 I-90 Yakima River Bridges EB & WB Deck Rehab_CAD_Sheets\Scarifying Sequence Sheets\006-SCARIFICATION SEQ 2_BR90-150N.dgn			
TIME	1:56:04 PM			
DATE	6/25/2019			
PLOTTED BY	dellint			
DESIGNED BY				
ENTERED BY				
CHECKED BY				
PROJ. ENGR.				
REGIONAL ADM.		REVISION	DATE	BY

REGION NO.	STATE	FED.AID PROJ.NO.
10	WASH	
JOB NUMBER		
CONTRACT NO.		LOCATION NO.

DATE
P.E. STAMP BOX

DATE
P.E. STAMP BOX

Washington State
Department of Transportation

Plot 5
PLAN REF NO

SHEET
OF
SHEETS

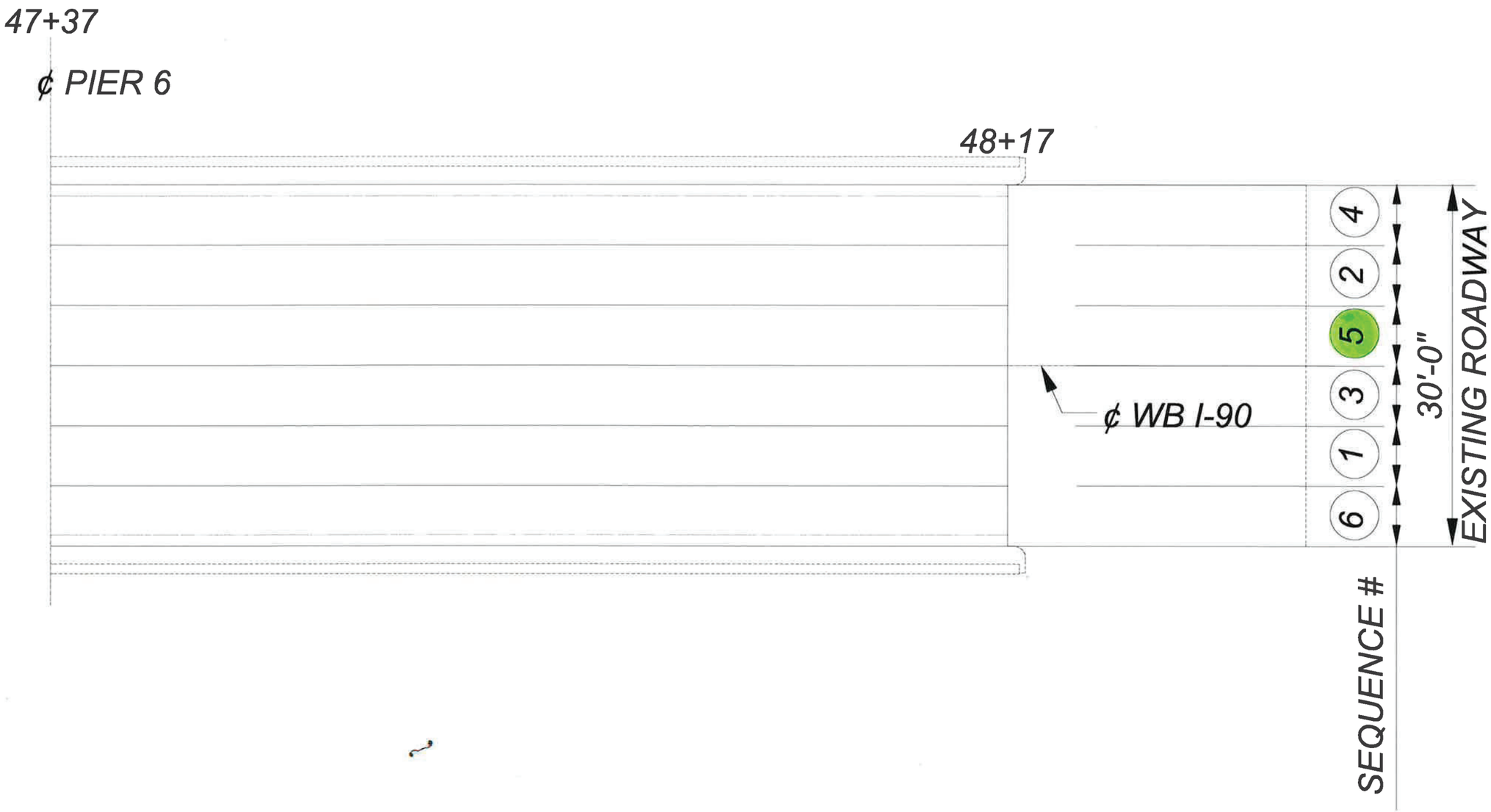

FILE NAME	P:\454302\CONTRACT\C9214 I-90 Yakima River Bridges EB & WB Deck Rehab_CAD_Sheets\Scarifying Sequence Sheets\006-SCARIFICATION SEQ						2_BR90-150N.dgn
TIME	1:56:24 PM				REGION NO. 10	STATE WASH	FED.AID PROJ.NO.
DATE	6/25/2019						
PLOTTED BY	dellint				JOB NUMBER		
DESIGNED BY							
ENTERED BY							
CHECKED BY					CONTRACT NO.		LOCATION NO.
PROJ. ENGR.							
REGIONAL ADM.		REVISION	DATE	BY			

DATE
P.E. STAMP BOX

DATE
P.E. STAMP BOX

Washington State
Department of Transportation

Plot 6
PLAN REF NO

SHEET
OF
SHEETS