8/29
Total : 871.5 sq Ft

9/3
Total : 7.25 sq Ft

Total
878.75

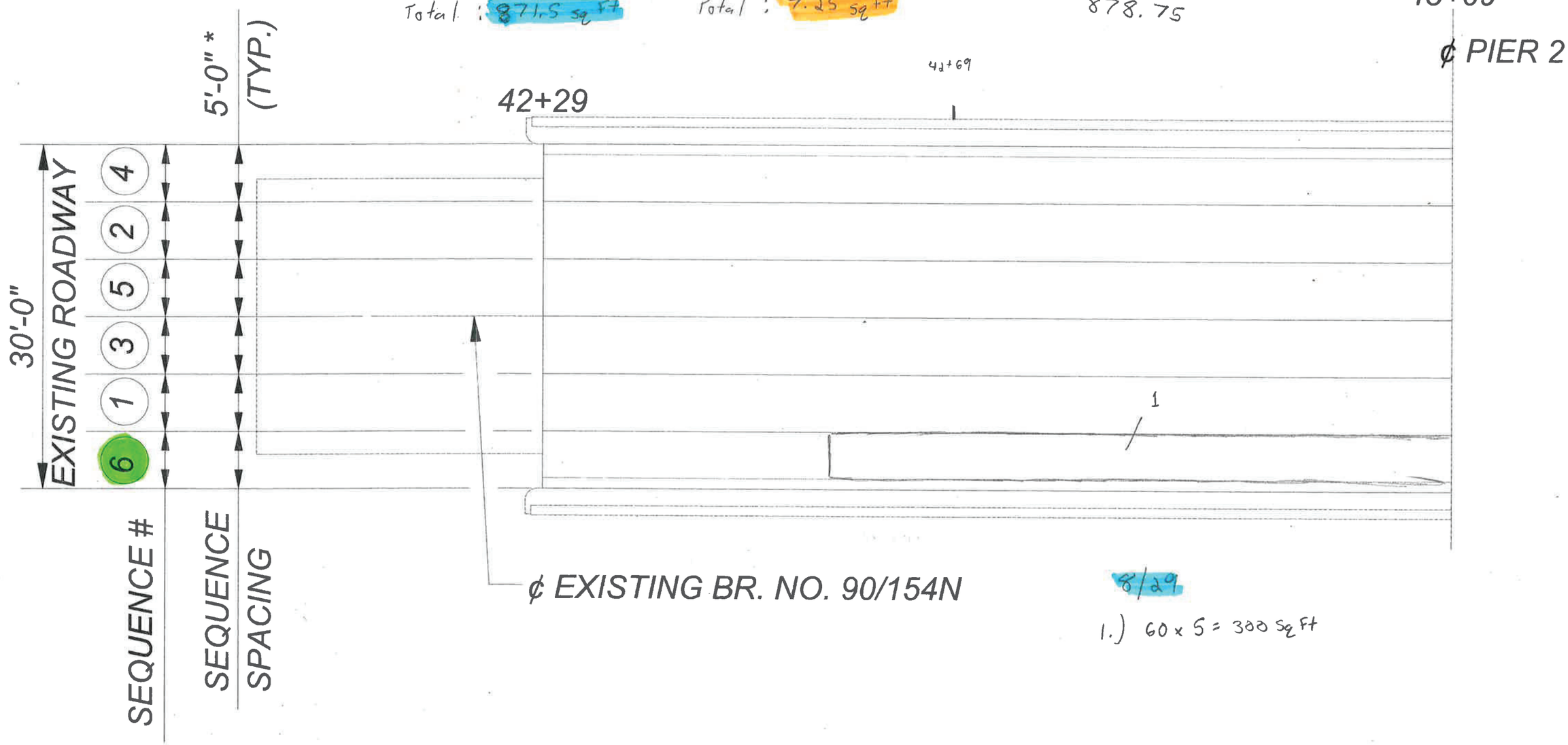

8/29
1.) 60 x 5 = 300 Sq Ft

Page Total : 300 sq Ft

FILE NAME	P:\454302\CONTRACT\C9214 I-90 Yakima River Bridges EB & WB Deck Rehab_CAD_Sheets\Scarifying Sequence Sheets\006-SCARIFICATION SEQ 2_BR90-150N.dgn								Plot 1
TIME	1:43:20 PM				REGION NO.	STATE	FED.AID PROJ.NO.		PLAN REF NO
DATE	6/25/2019				10	WASH		Washington State Department of Transportation	
PLOTTED BY	dellint				JOB NUMBER				SHEET
DESIGNED BY									OF
ENTERED BY									
CHECKED BY					CONTRACT NO.		LOCATION NO.		SHEETS
PROJ. ENGR.									
REGIONAL ADM.		REVISION	DATE	BY			P.E. STAMP BOX DATE	P.E. STAMP BOX DATE	

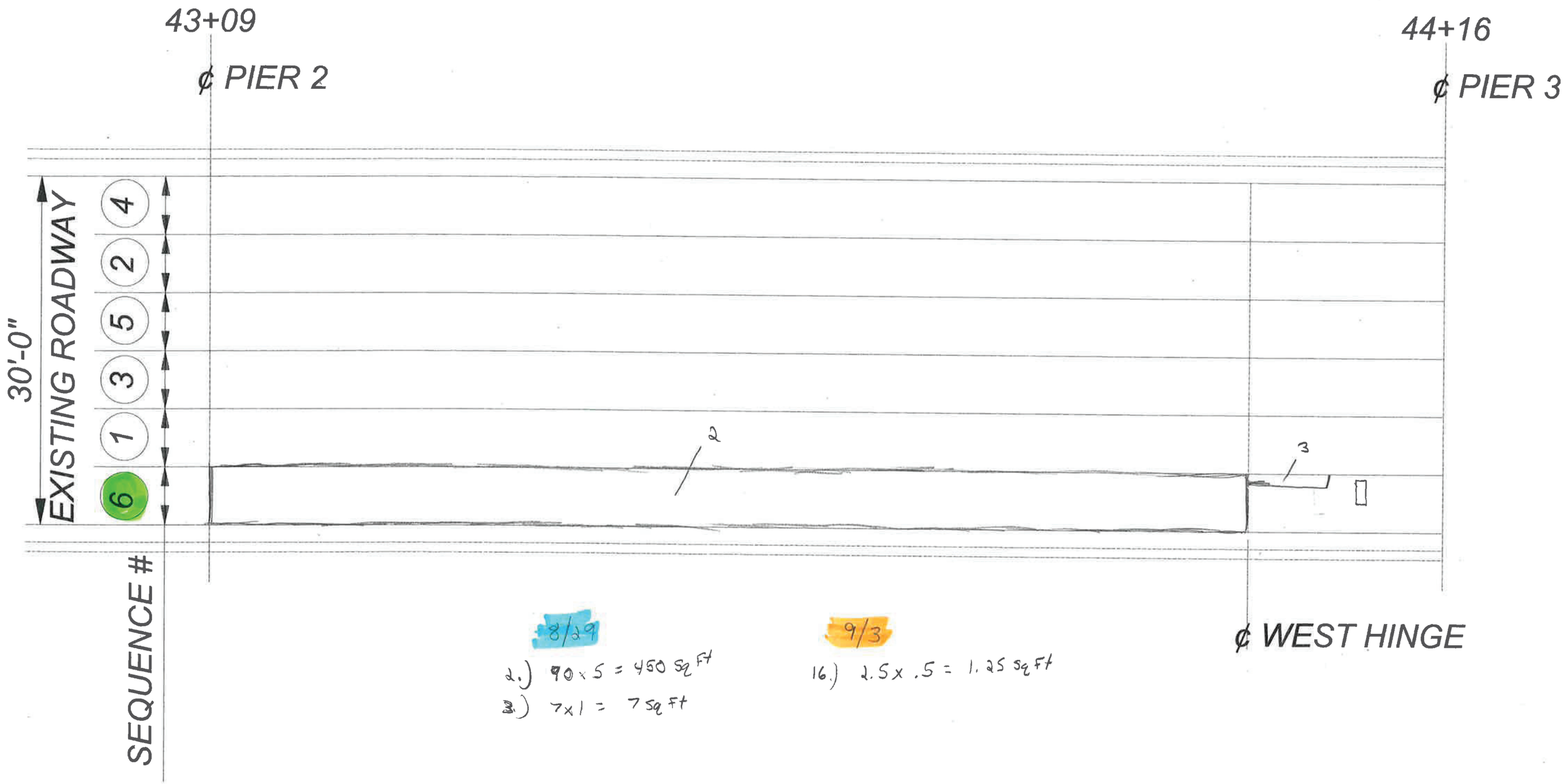

8/29

2.) 90 x 5 = 450 sq Ft

3.) 7 x 1 = 7 sq Ft

9/3

16.) 2.5 x .5 = 1.25 sq Ft

Page Total : 458.25 sq Ft

FILE NAME	P:\454302\CONTRACT\C9214 I-90 Yakima River Bridges EB & WB Deck Rehab_CAD_Sheets\Scarifying Sequence Sheets\006-SCARIFICATION SEQ				REGION NO.	STATE	FED.AID PROJ.NO.	2_BR90-150N.dgn	Plot 2
TIME	1:43:21 PM				10	WASH			PLAN REF NO
DATE	6/25/2019								
PLOTTED BY	dellint				JOB NUMBER				
DESIGNED BY									SHEET
ENTERED BY									
CHECKED BY					CONTRACT NO.		LOCATION NO.		OF
PROJ. ENGR.									
REGIONAL ADM.		REVISION	DATE	BY				DATE P.E. STAMP BOX	DATE P.E. STAMP BOX	Washington State Department of Transportation		SHEETS

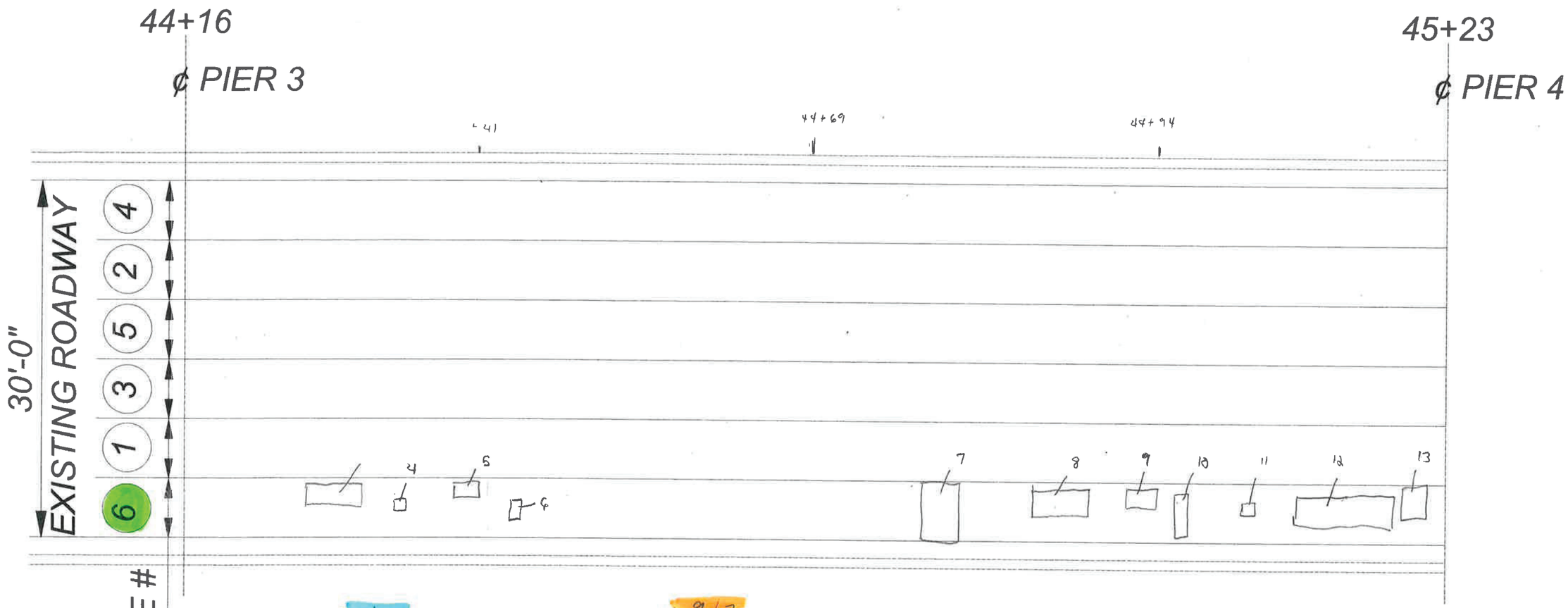

8/29

4.) 1x1 = 1 sq Ft
5.) 1.5x2 = 3 sq Ft
6.) 2x1 = 2 sq Ft
7.) 3.5x5 = 17.5 sq Ft
8.) 3x4.5 = 13.5 sq Ft
9.) 2x3 = 6 sq Ft
10.) 1.5x4.5 = 6.75 sq Ft
11.) 1x1 = 1 sq Ft
12.) 12x2.5 = 30 sq Ft
13.) 3.5x2.5 = 8.75 sq Ft

9/3

17.) 2x3 = 6 sq Ft

Page Total: 95.5 sq Ft

FILE NAME	P:\454302\CONTRACT\C9214 I-90 Yakima River Bridges EB & WB Deck Rehab_CAD_Sheets\Scarifying Sequence Sheets\006-SCARIFICATION SEQ 2_BR90-150N.dgn									Plot 3
TIME	1:43:22 PM				REGION NO.	STATE	FED.AID PROJ.NO.			PLAN REF NO
DATE	6/25/2019				10	WASH			Washington State Department of Transportation	
PLOTTED BY	dellint				JOB NUMBER					SHEET
DESIGNED BY										OF
ENTERED BY										
CHECKED BY					CONTRACT NO.		LOCATION NO.			SHEETS
PROJ. ENGR.										
REGIONAL ADM.		REVISION	DATE	BY				P.E. STAMP BOX DATE	P.E. STAMP BOX DATE	

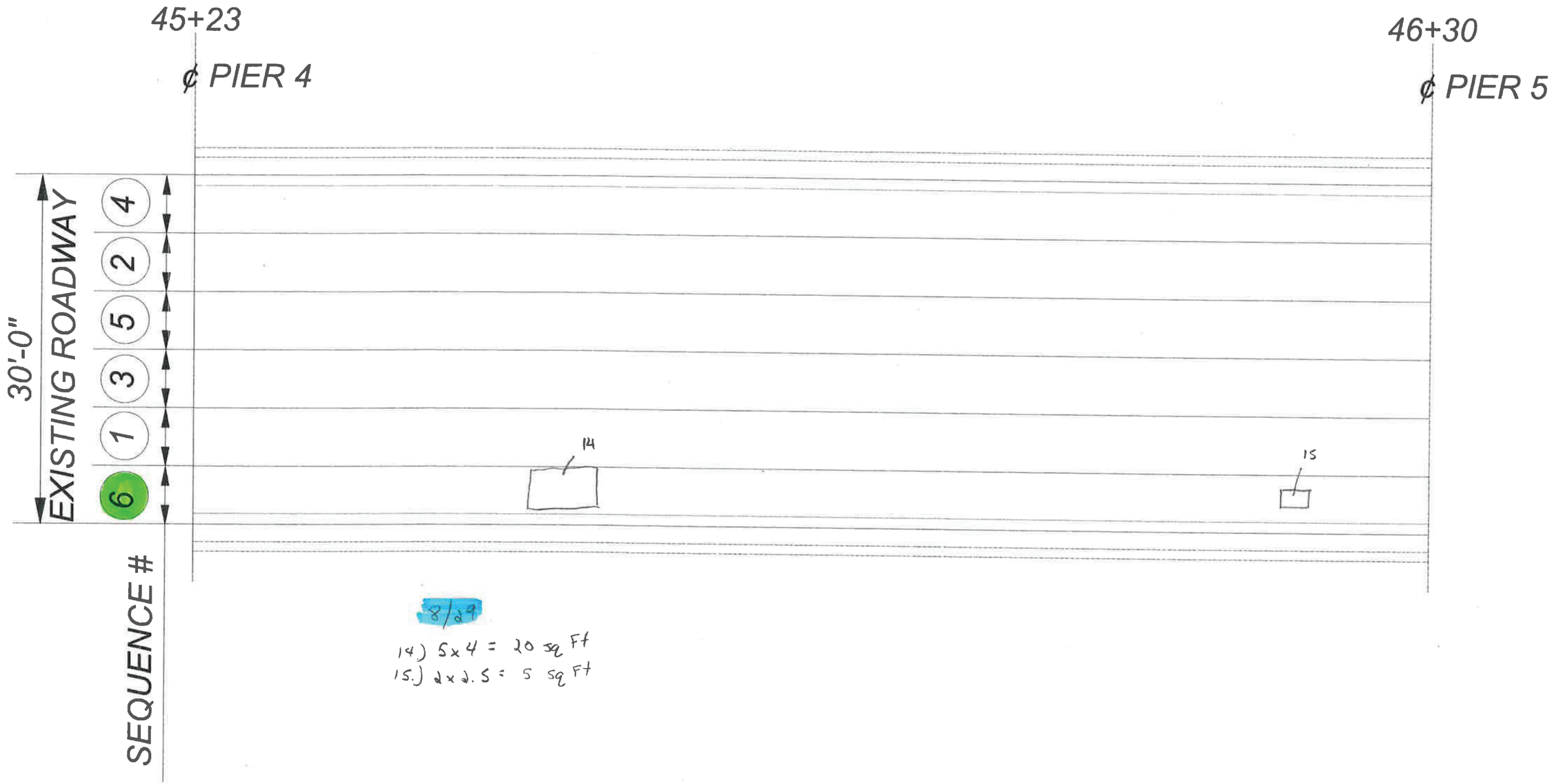

8/29

14.) 5x4 = 20 sq Ft
15.) 2x2.5 = 5 sq Ft

Page Total: 25 sq ft

FILE NAME	P:\454302\CONTRACT\C9214 I-90 Yakima River Bridges EB & WB Deck Rehab_CAD_Sheets\Scarifying Sequence Sheets\006-SCARIFICATION SEQ						2_BR90-150N.dgn			Plot 4
TIME	1:43:23 PM				REGION NO.	STATE	FED.AID PROJ.NO.			PLAN REF NO
DATE	6/25/2019				10	WASH			Washington State Department of Transportation	
PLOTTED BY	dellint				JOB NUMBER					SHEET
DESIGNED BY										OF
ENTERED BY										SHEETS
CHECKED BY					CONTRACT NO.		LOCATION NO.			
PROJ. ENGR.										
REGIONAL ADM.		REVISION	DATE	BY			P.E. STAMP BOX DATE	P.E. STAMP BOX DATE		

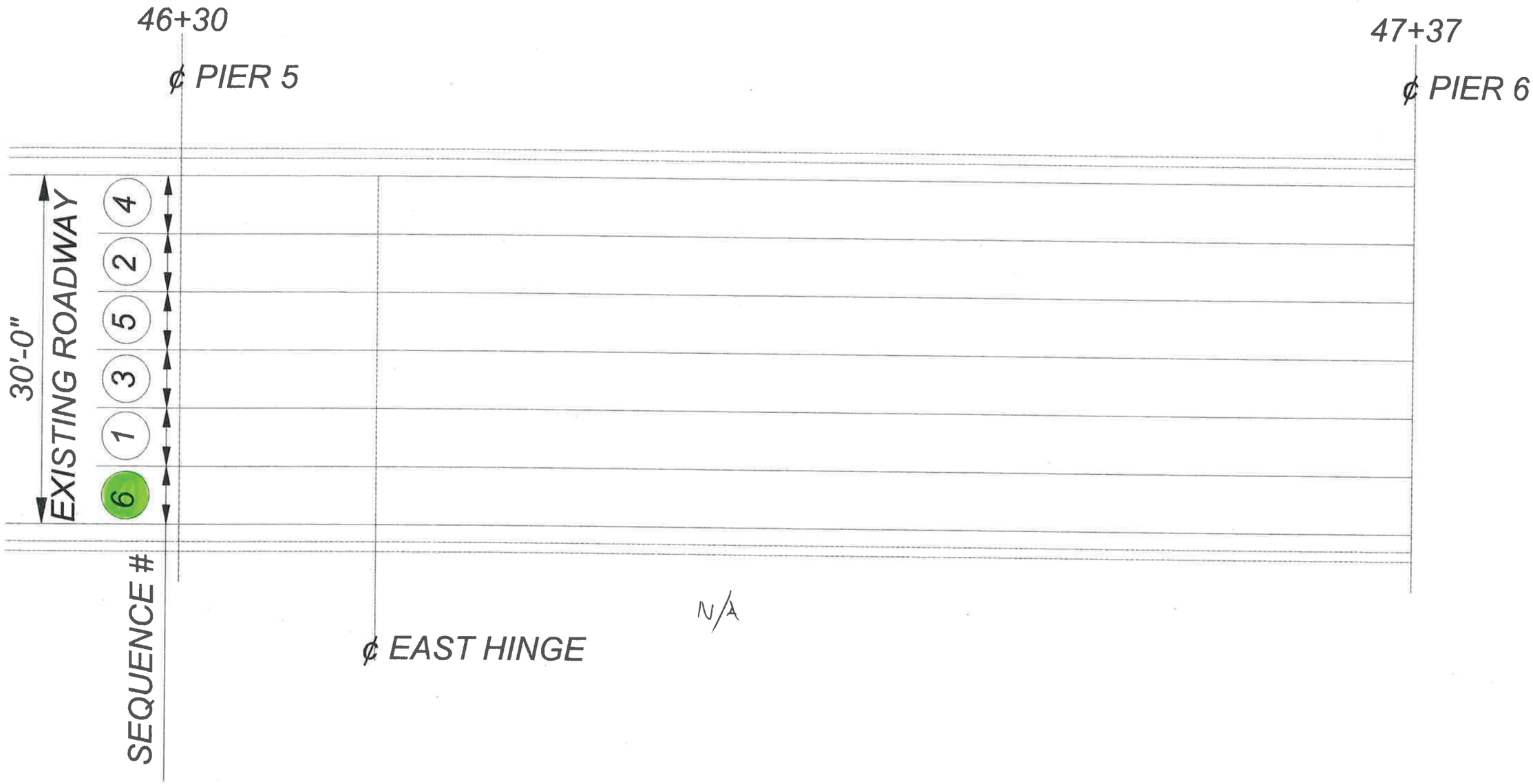

FILE NAME	P:\454302\CONTRACT\C9214 I-90 Yakima River Bridges EB & WB Deck Rehab_CAD_Sheets\Scarifying Sequence Sheets\006-SCARIFICATION SEQ						2_BR90-150N.dgn		Plot 5
TIME	1:43:24 PM				REGION NO.	STATE	FED.AID PROJ.NO.		PLAN REF NO
DATE	6/25/2019				10	WASH			
PLOTTED BY	dellint				JOB NUMBER				SHEET
DESIGNED BY									OF
ENTERED BY									
CHECKED BY					CONTRACT NO.		LOCATION NO.		SHEETS
PROJ. ENGR.									
REGIONAL ADM.		REVISION	DATE	BY					

P.E. STAMP BOX DATE

P.E. STAMP BOX DATE

Washington State
Department of Transportation

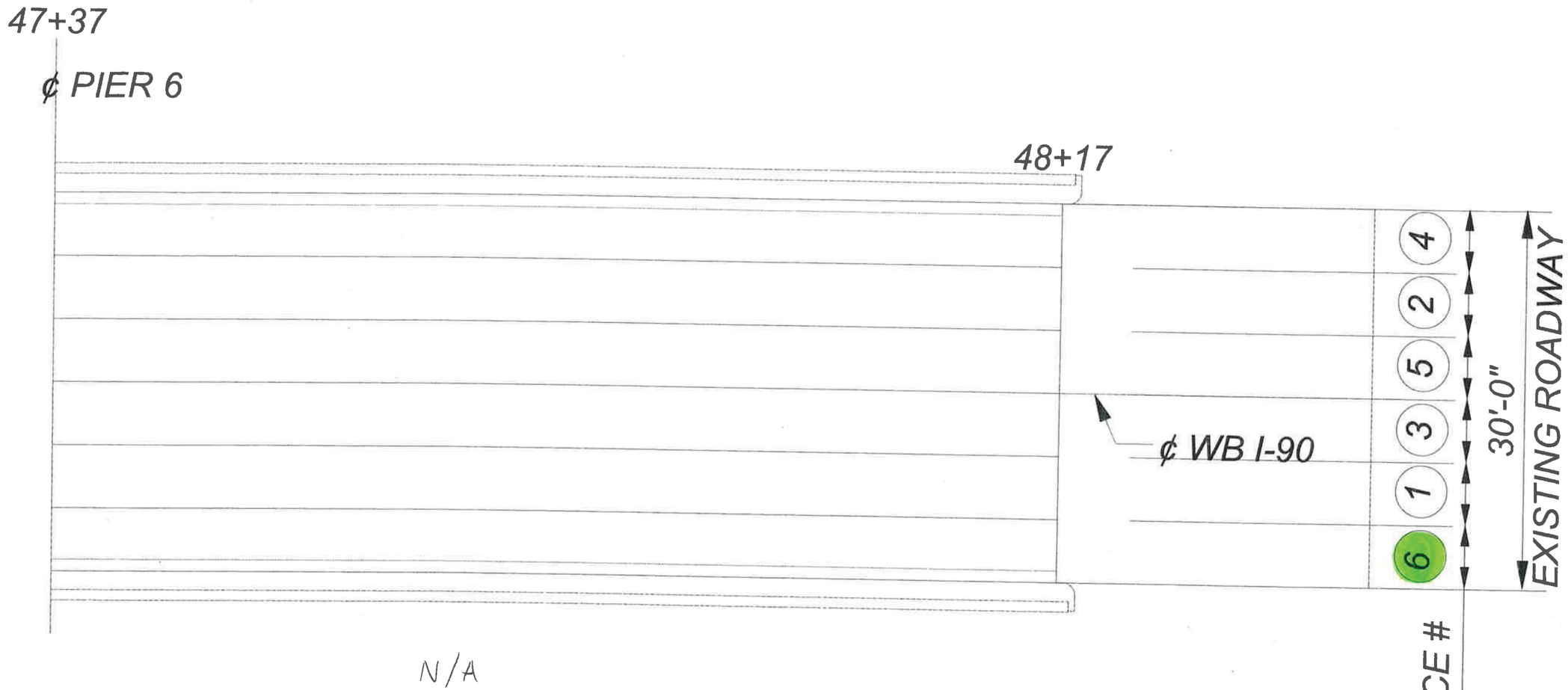

N/A

FILE NAME	P:\454302\CONTRACT\C9214 I-90 Yakima River Bridges EB & WB Deck Rehab_CAD_Sheets\Scarifying Sequence Sheets\006-SCARIFICATION SEQ						2_BR90-150N.dgn		Plot 6
TIME	1:43:25 PM				REGION NO.	STATE	FED.AID PROJ.NO.		PLAN REF NO
DATE	6/25/2019				10	WASH			
PLOTTED BY	dellint				JOB NUMBER				
DESIGNED BY									
ENTERED BY									
CHECKED BY					CONTRACT NO.		LOCATION NO.		SHEET OF SHEETS
PROJ. ENGR.									
REGIONAL ADM.		REVISION	DATE	BY			P.E. STAMP BOX DATE	P.E. STAMP BOX DATE	

Washington State Department of Transportation