Bridge 154N, Pass 3

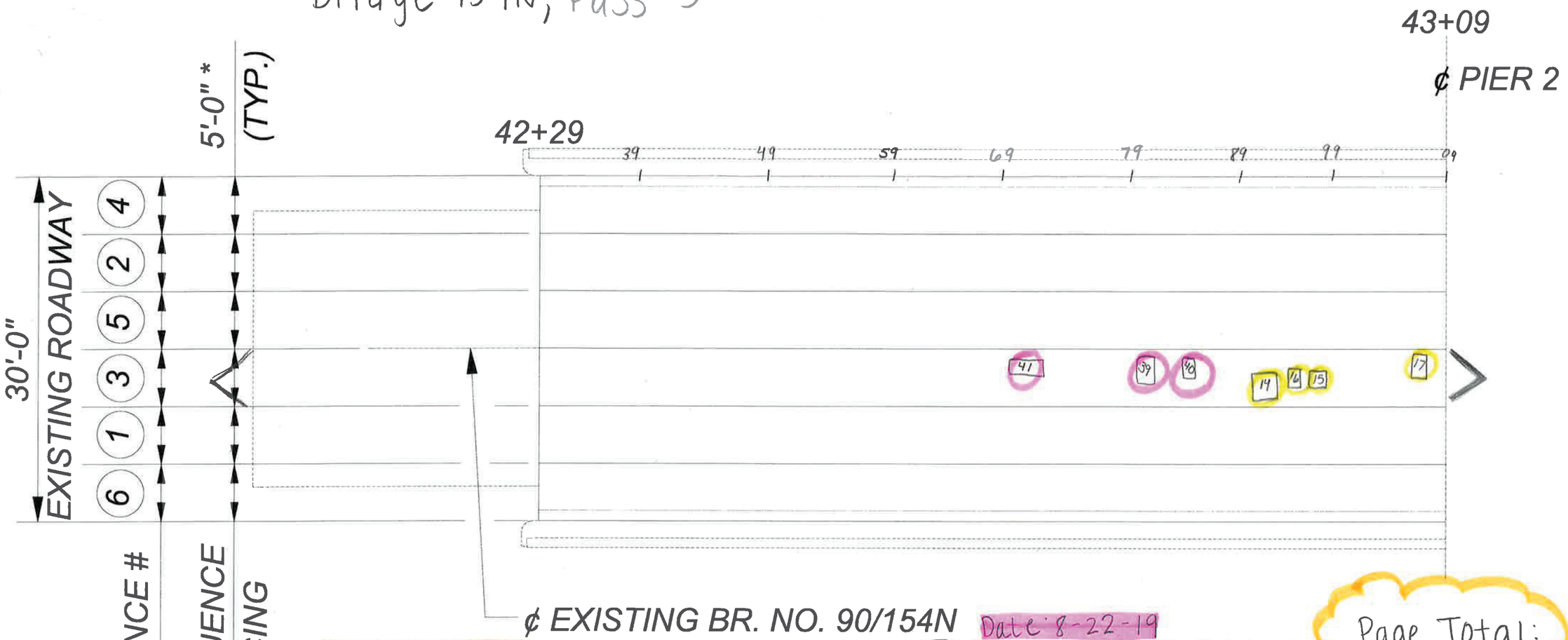

Date 8-20-19

14	42+90	3x2 - 6 SF
15	42+98	2x2 - 4 SF
16	42+95	1x2 - 2 SF
17	43+05	4x1 - 8 SF
	Total	20 SF

page 1

Date 8-22-19

39	42+80	2x4 - 8 SF
40	42+86	1x2 - 2 SF
41	42+70	3x1 - 3 SF
	Total	13 SF

Page Total: 33 SF

FILE NAME	P:\454302\CONTRACT\C9214 I-90 Yakima River Bridges EB & WB Deck Rehab_CAD_Sheets\Scarifying Sequence Sheets\005-SCARIFICATION SEQ 2_BR90-150N.dgn					
TIME	1:53:26 PM			REGION NO. 10	STATE WASH	FED.AID PROJ.NO.
DATE	6/25/2019			JOB NUMBER		
PLOTTED BY	dellint					
DESIGNED BY						
ENTERED BY						
CHECKED BY				CONTRACT NO.	LOCATION NO.	
PROJ. ENGR.						
REGIONAL ADM.		REVISION	DATE	BY		

P.E. STAMP BOX DATE

P.E. STAMP BOX DATE

Washington State Department of Transportation

Plot 1

PLAN REF NO

SHEET OF SHEETS

Bridge 154N Pass 3

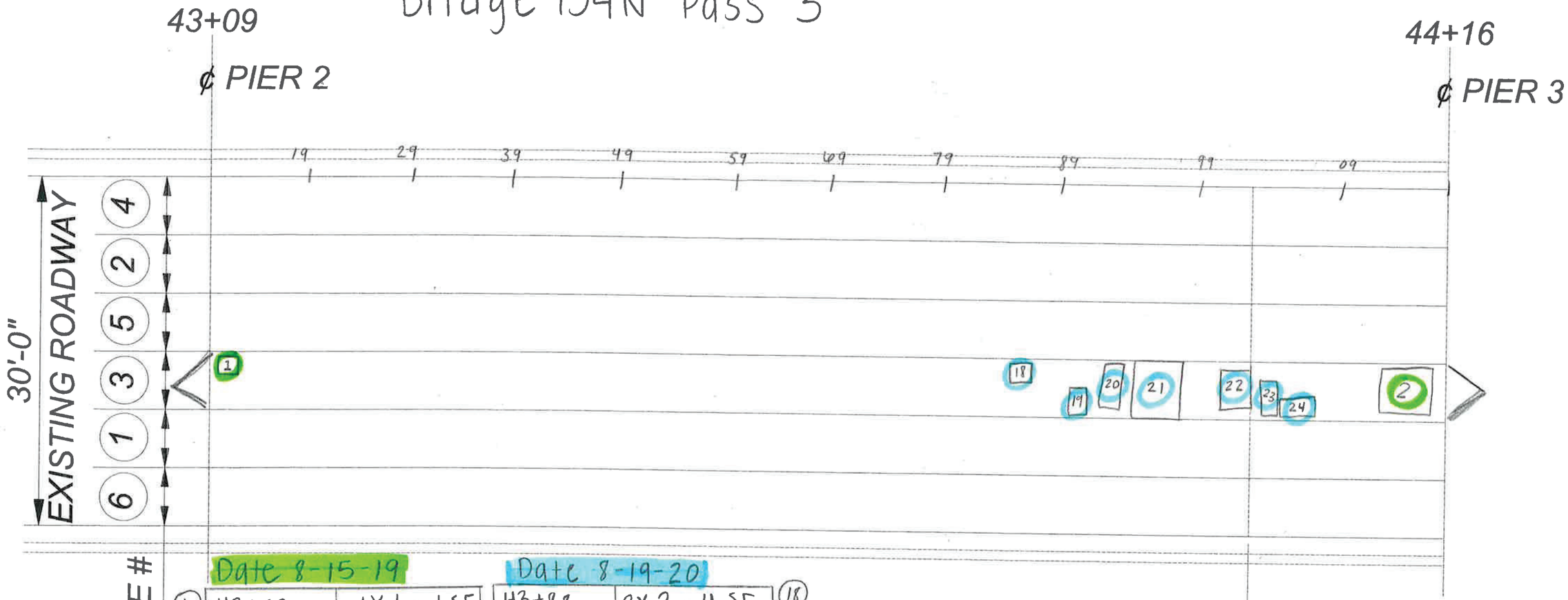

SEQUENCE #

Date 8-15-19

1	43+10	1X1 - 1SF
2	44+15	6X5 - 30SF
	Total	31 SF

Date 8-19-20

18	43+88	2X2 - 4 SF
19	43+90	1X2 - 2 SF
20	43+93	5X2 - 10 SF
21	43+95	7X4 - 28 SF
22	44+01	3X5 - 15 SF
23	44+05	3X4 - 12 SF
24	44+07	2X4 - 8 SF
	Total	79 SF

Page Total:
110 SF

page 2

FILE NAME	P:\454302\CONTRACT\C9214 I-90 Yakima River Bridges EB & WB Deck Rehab_CAD_Sheets\Scarifying Sequence Sheets\006-SCARIFICATION SEQ 2_BR90-150N.dgn									Plot 2
TIME	1:43:21 PM				REGION NO.	STATE	FED.AID PROJ.NO.		Washington State Department of Transportation	PLAN REF NO
DATE	6/25/2019				10	WASH				
PLOTTED BY	dellint				JOB NUMBER					
DESIGNED BY										SHEET
ENTERED BY										OF
CHECKED BY					CONTRACT NO.		LOCATION NO.			
PROJ. ENGR.										SHEETS
REGIONAL ADM.		REVISION	DATE	BY				DATE P.E. STAMP BOX	DATE P.E. STAMP BOX	

Bridge 154N, Pass 3

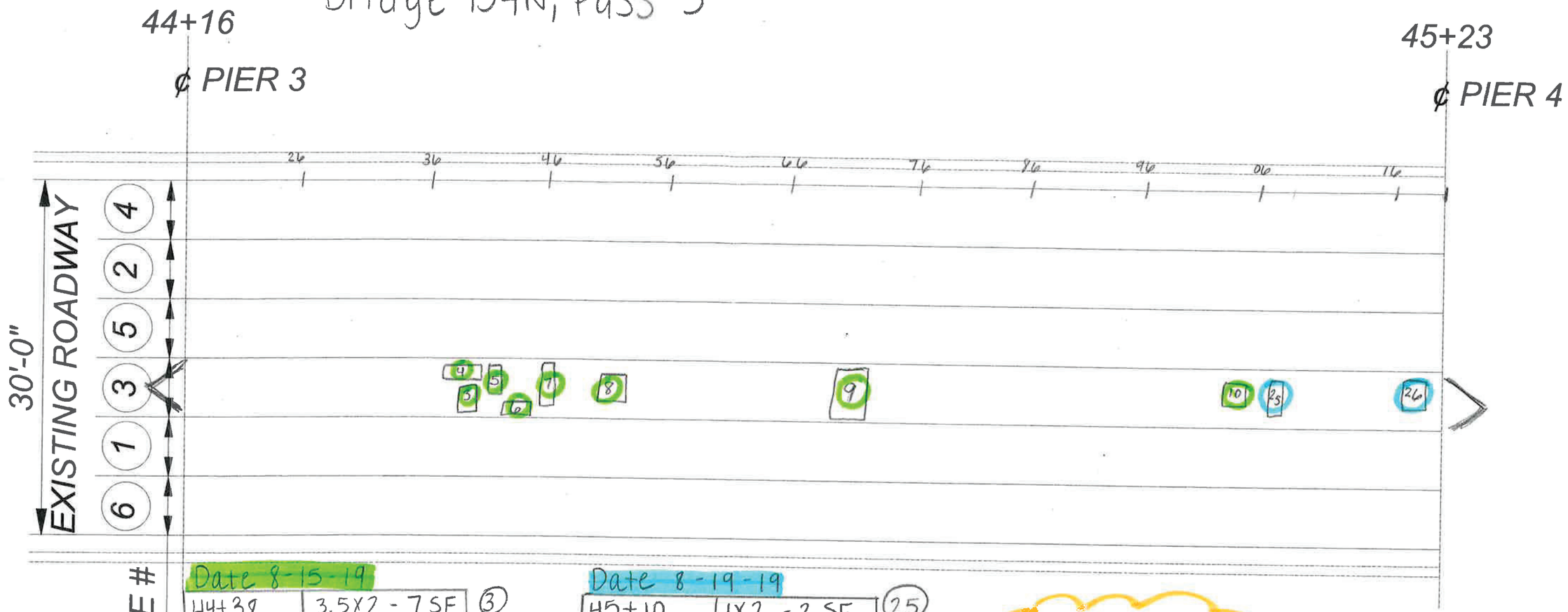

SEQUENCE #

Date 8-15-19

44+38	3.5x2 - 7 SF	3
44+40	3x1 - 3 SF	4
44+42	2x1 - 2 SF	5
44+44	3x2 - 6 SF	6
44+46	4x2 - 8 SF	7
44+53	3x3 - 9 SF	8
44+70	2x8 - 16 SF	9
45+05	2x2 - 4 SF	10
Total	55 SF	

Date 8-19-19

45+10	1x2 - 2 SF	25
45+20	3x3 - 9 SF	26
Total	11 SF	

Page Total:
66 SF

page 3

FILE NAME	P:\454302\CONTRACT\C9214 I-90 Yakima River Bridges EB & WB Deck Rehab_CAD_Sheets\Scarifying Sequence Sheets\006-SCARIFICATION SEQ					2_BR90-150N.dgn	
TIME	1:43:22 PM				REGION NO. 10	STATE WASH	FED.AID PROJ.NO.
DATE	6/25/2019				JOB NUMBER		
PLOTTED BY	dellint						
DESIGNED BY							
ENTERED BY					CONTRACT NO.	LOCATION NO.	
CHECKED BY							
PROJ. ENGR.							
REGIONAL ADM.		REVISION	DATE	BY			

P.E. STAMP BOX DATE

P.E. STAMP BOX DATE

Washington State
Department of Transportation

Plot 3
PLAN REF NO

SHEET
OF
SHEETS

Bridge 154N, Pass 3

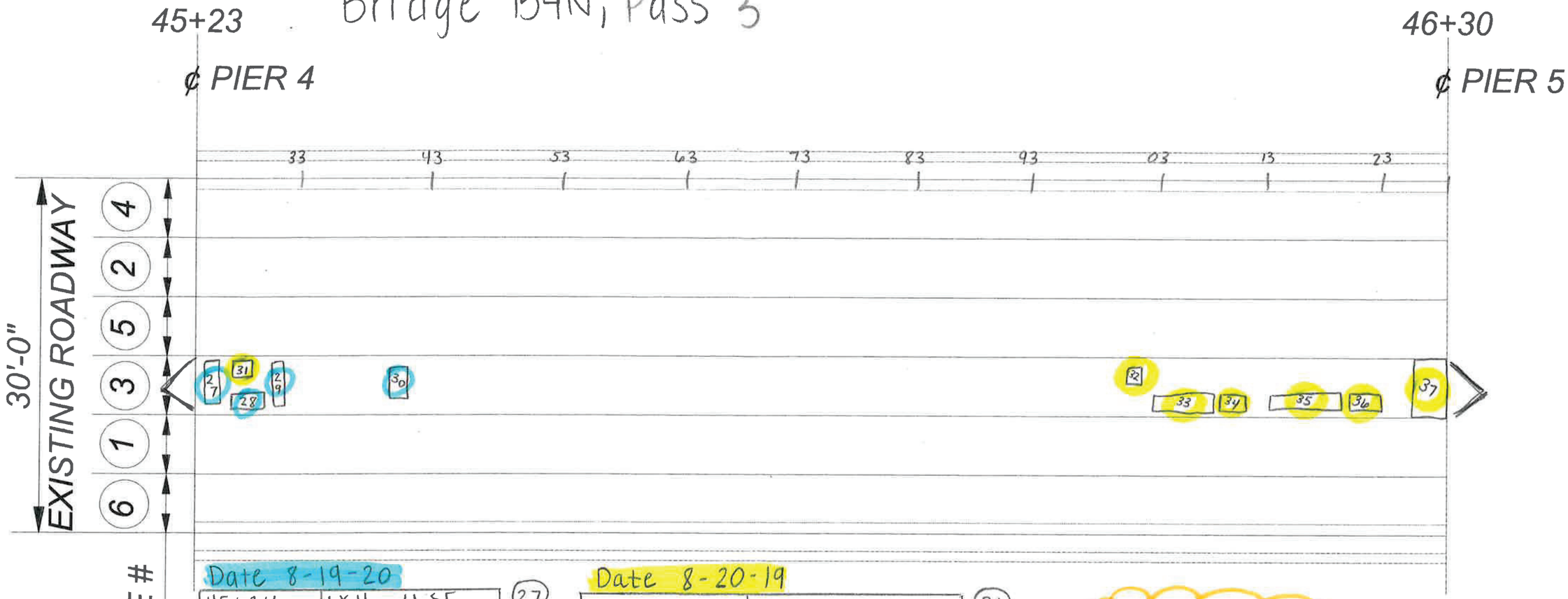

Date 8-19-20

45+24	1x4 - 4 SF	27
45+25	1x2.5 - 2.5 SF	28
45+30	4x.6 - 2.4 SF	29
45+40	1x2 - 2 SF	30
Total	10.9 SF	

Date 8-20-19

45+27	2x2 - 4 SF	31
46+00	1x1 - 1 SF	32
46+05	6x2 - 12 SF	33
46+08	2x2 - 4 SF	34
46+20	8x2 - 16 SF	35
46+25	4x2 - 8 SF	36
46+30	6x3.5 - 21 SF	37
Total	66 SF	

Page Total: 76.9

page 4

FILE NAME	P:\454302\CONTRACT\C9214 I-90 Yakima River Bridges EB & WB Deck Rehab_CAD_Sheets\Scarifying Sequence Sheets\006-SCARIFICATION SEQ 2_BR90-150N.dgn				REGION NO. 10	STATE WASH	FED.AID PROJ.NO.		Washington State Department of Transportation	Plot 4
TIME	1:43:23 PM									PLAN REF NO
DATE	6/25/2019									
PLOTTED BY	dellint				JOB NUMBER					SHEET
DESIGNED BY										OF
ENTERED BY					CONTRACT NO.		LOCATION NO.			SHEETS
CHECKED BY										
PROJ. ENGR.										
REGIONAL ADM.		REVISION	DATE	BY				P.E. STAMP BOX DATE	P.E. STAMP BOX DATE	

Bridge 154N, Pass 3

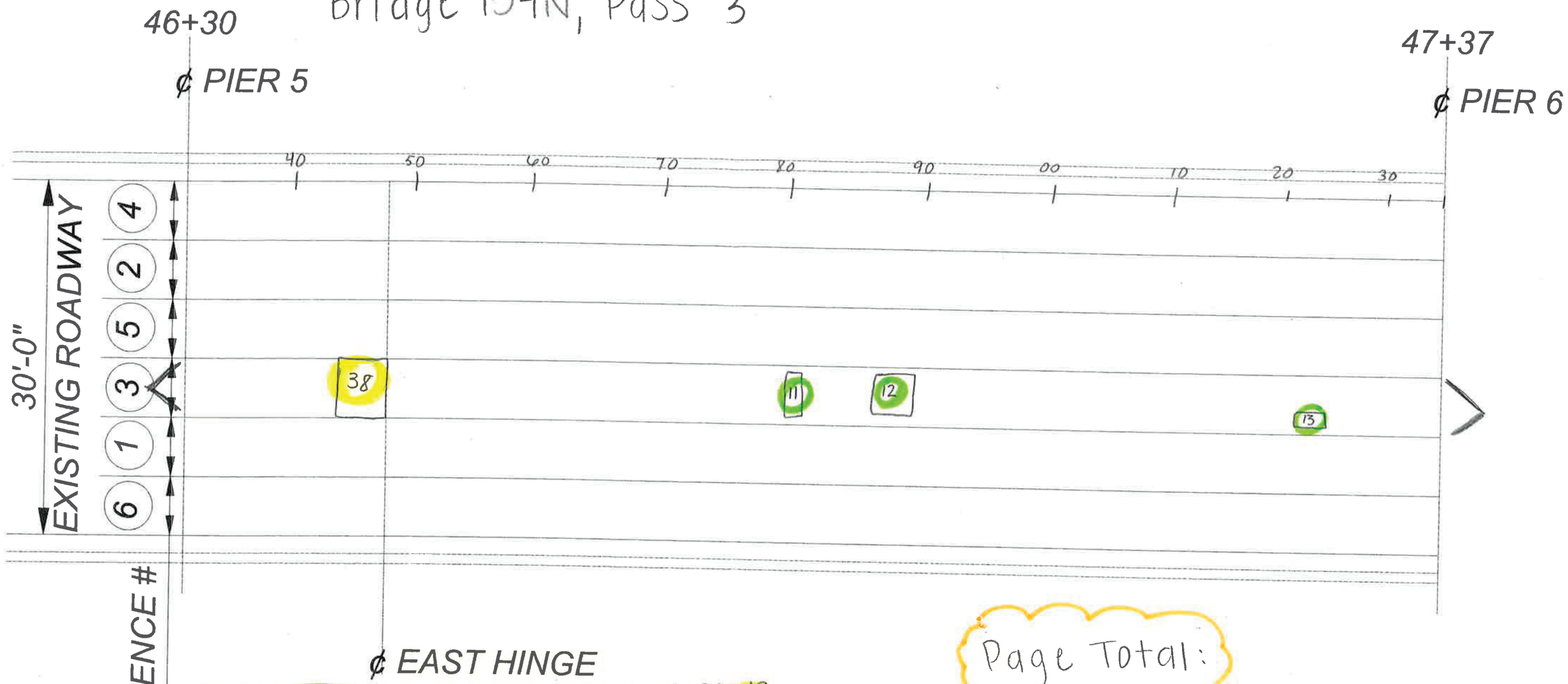

Date 8-15-19

46+80	4x1 - 4 SF	11
46+86	5x5 - 25 SF	12
47+23	2x2 - 4 SF	13
Total	33 SF	

Date 8-20-19

46+40	3x5 - 15 SF	38
Total	15 SF	

Page Total: 48 SF

page 5

FILE NAME	P:\454302\CONTRACT\C9214 I-90 Yakima River Bridges EB & WB Deck Rehab_CAD_Sheets\Scarifying Sequence Sheets\006-SCARIFICATION SEQ					2_BR90-150N.dgn		Plot 5
TIME	1:43:24 PM			REGION NO. 10	STATE WASH	FED.AID PROJ.NO.		PLAN REF NO
DATE	6/25/2019			JOB NUMBER				
PLOTTED BY	dellint							
DESIGNED BY								
ENTERED BY								
CHECKED BY				CONTRACT NO.		LOCATION NO.		SHEET OF SHEETS
PROJ. ENGR.								
REGIONAL ADM.		REVISION	DATE	BY			P.E. STAMP BOX DATE	P.E. STAMP BOX DATE

Washington State Department of Transportation

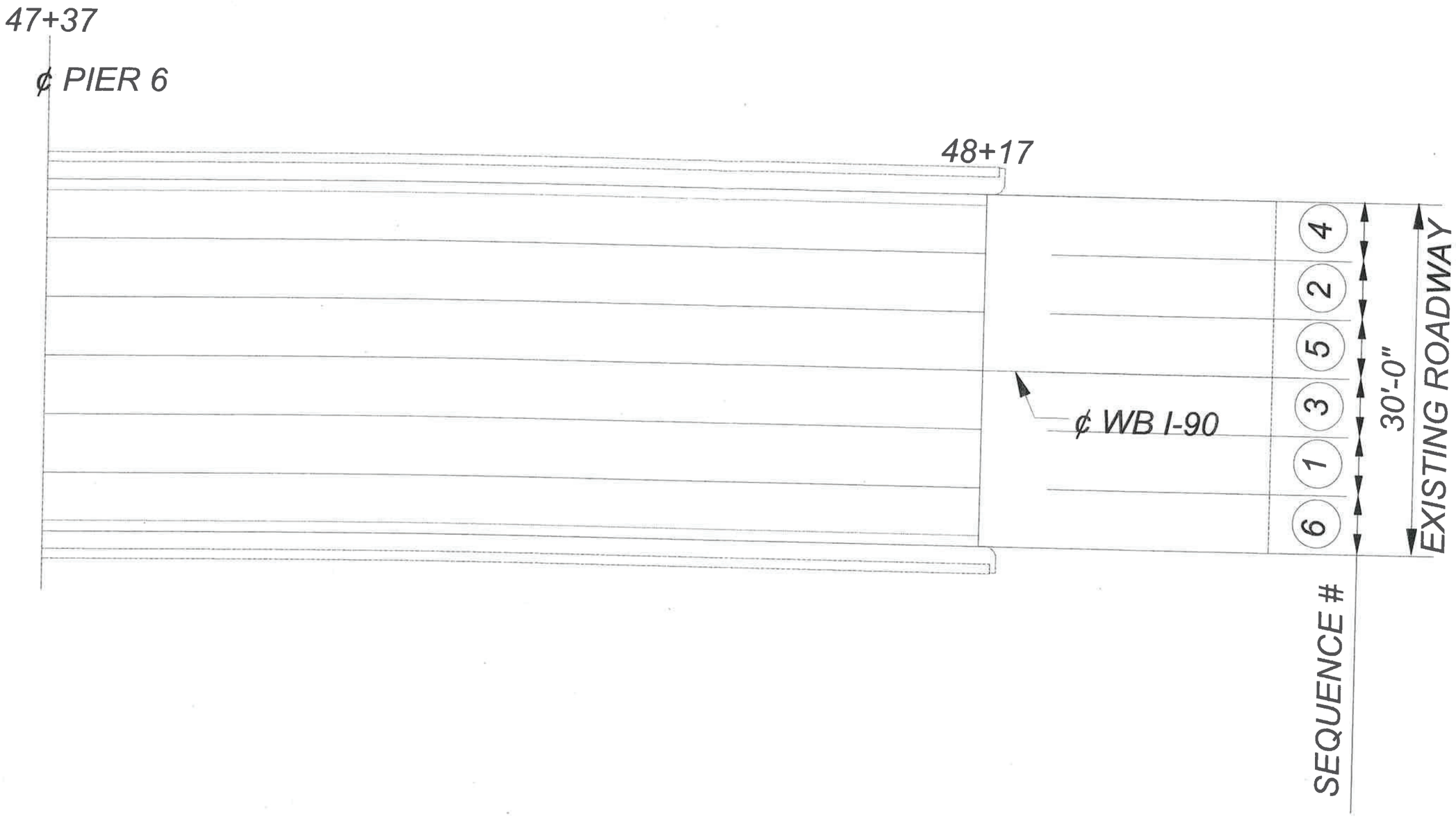

FILE NAME	P:\454302\CONTRACT\C9214 I-90 Yakima River Bridges EB & WB Deck Rehab_CAD_Sheets\Scarifying Sequence Sheets\006-SCARIFICATION SEQ					2_BR90-150N.dgn			Plot 6
TIME	1:43:25 PM			REGION NO.	STATE	FED.AID PROJ.NO.		Washington State Department of Transportation	PLAN REF NO
DATE	6/25/2019			10	WASH				
PLOTTED BY	dellint			JOB NUMBER					SHEET
DESIGNED BY									OF
ENTERED BY									
CHECKED BY				CONTRACT NO.		LOCATION NO.			SHEETS
PROJ. ENGR.									
REGIONAL ADM.		REVISION	DATE	BY			P.E. STAMP BOX DATE	P.E. STAMP BOX DATE	