6/17 : 120 SF
6/18 : 276 SF
6/19 : 235 SF
6/21 : 270 SF
6/24 : 149 SF

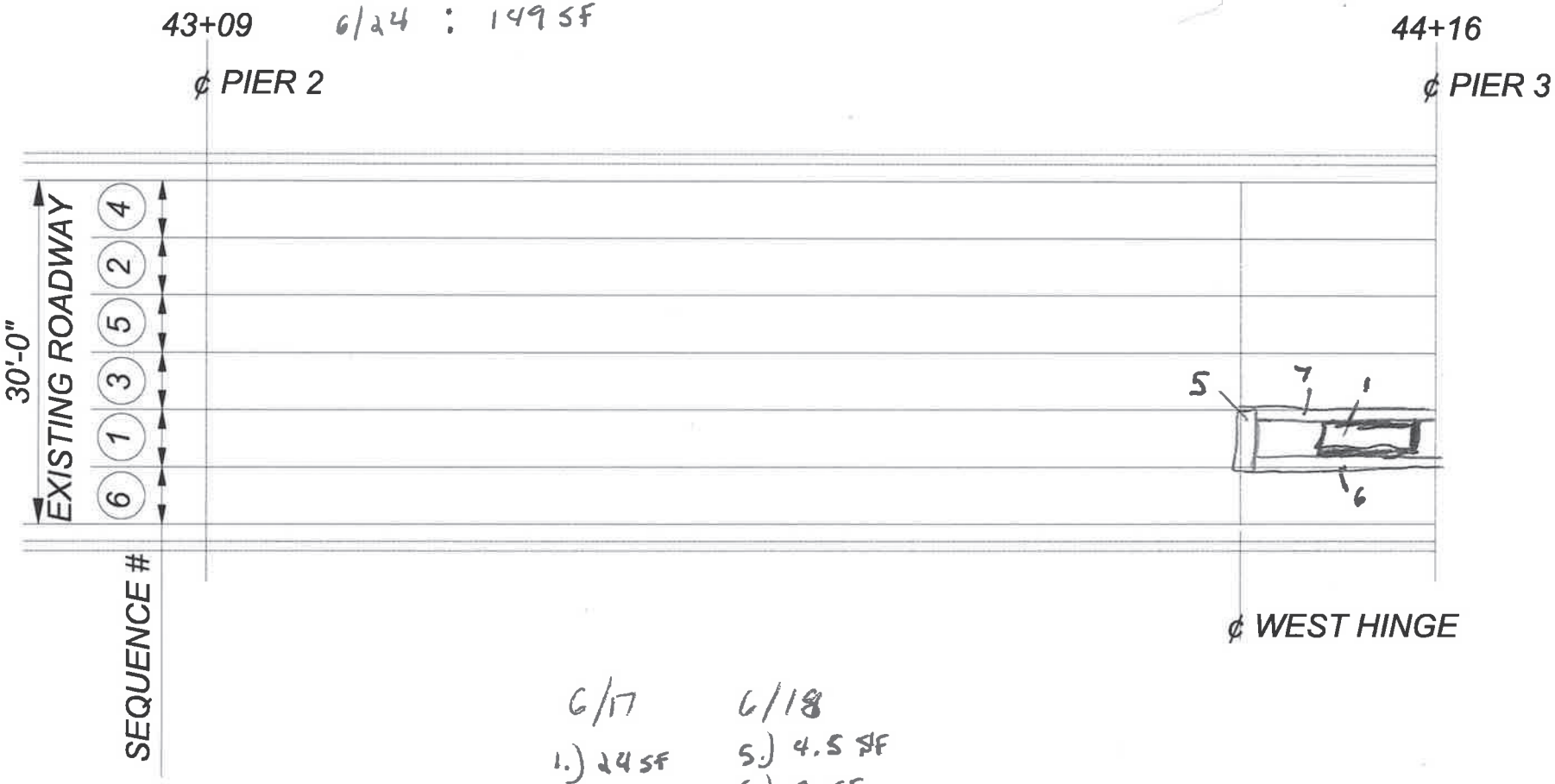

6/17
1.) 24 SF

6/18
5.) 4.5 SF
6.) 8 SF
7.) 8 SF

FILE NAME	P:\434302\CONTRACT\C9214 I-90 Yakima River Bridges EB & WB Deck Rehab_CAD_Sheets\Scarifying Sequence Sheets\006-SCARIFICATION SEQ 2_BR90-150N.dgn			
TIME	1:59:25 PM			
DATE	6/25/2019			
PLOTTED BY	dellint			
DESIGNED BY				
ENTERED BY				
CHECKED BY				
PROJ. ENGR.				
REGIONAL ADM.	REVISION	DATE	BY	

REGION NO. 10 STATE WASH
FED.AID PROJ.NO.
JOB NUMBER
CONTRACT NO.
LOCATION NO
P.E. STAMP BOX DATE
P.E. STAMP BOX DATE

Washington State Department of Transportation

Plot 2
PLAN REF NO
SHEET OF SHEETS

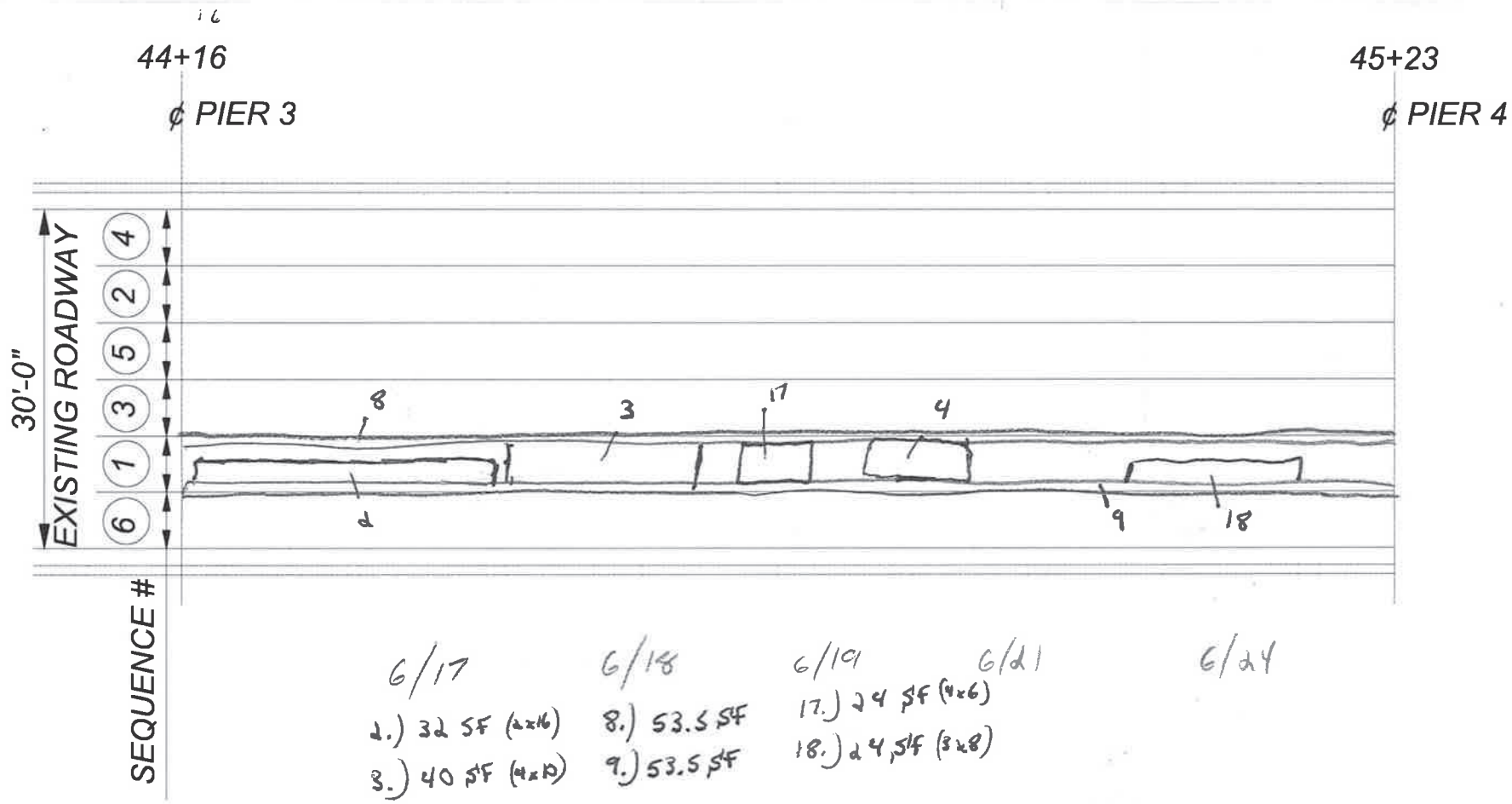

6/17

2.) 32 SF (2x16)

3.) 40 SF (4x10)

4.) 24 SF (4x6)

6/18

8.) 53.5 SF

9.) 53.5 SF

6/19

17.) 24 SF (4x6)

18.) 24 SF (3x8)

6/21

6/24

FILE NAME	P:\454302\CONTRACT\C9214 I-90 Yakima River Bridges EB & WB Deck Rehab_CAD_Sheets\Scarifying Sequence Sheets\006-SCARIFICATION SEQ 2_BR50-150N.dgn
TIME	1:55:24 PM
DATE	6/25/2019
PLOTTED BY	dellint
DESIGNED BY	
ENTERED BY	
CHECKED BY	
PROJ. ENGR.	
REGIONAL ADM.	

REVISION | DATE | BY

REGION NO. 10 | STATE WASH | FED.AID PROJ.NO.

JOB NUMBER

CONTRACT NO. | LOCATION NO.

P.E. STAMP HERE | DATE

P.E. STAMP HERE | DATE

Washington State Department of Transportation

Plot 3

PLAN REF NO

SHEET OF SHEETS

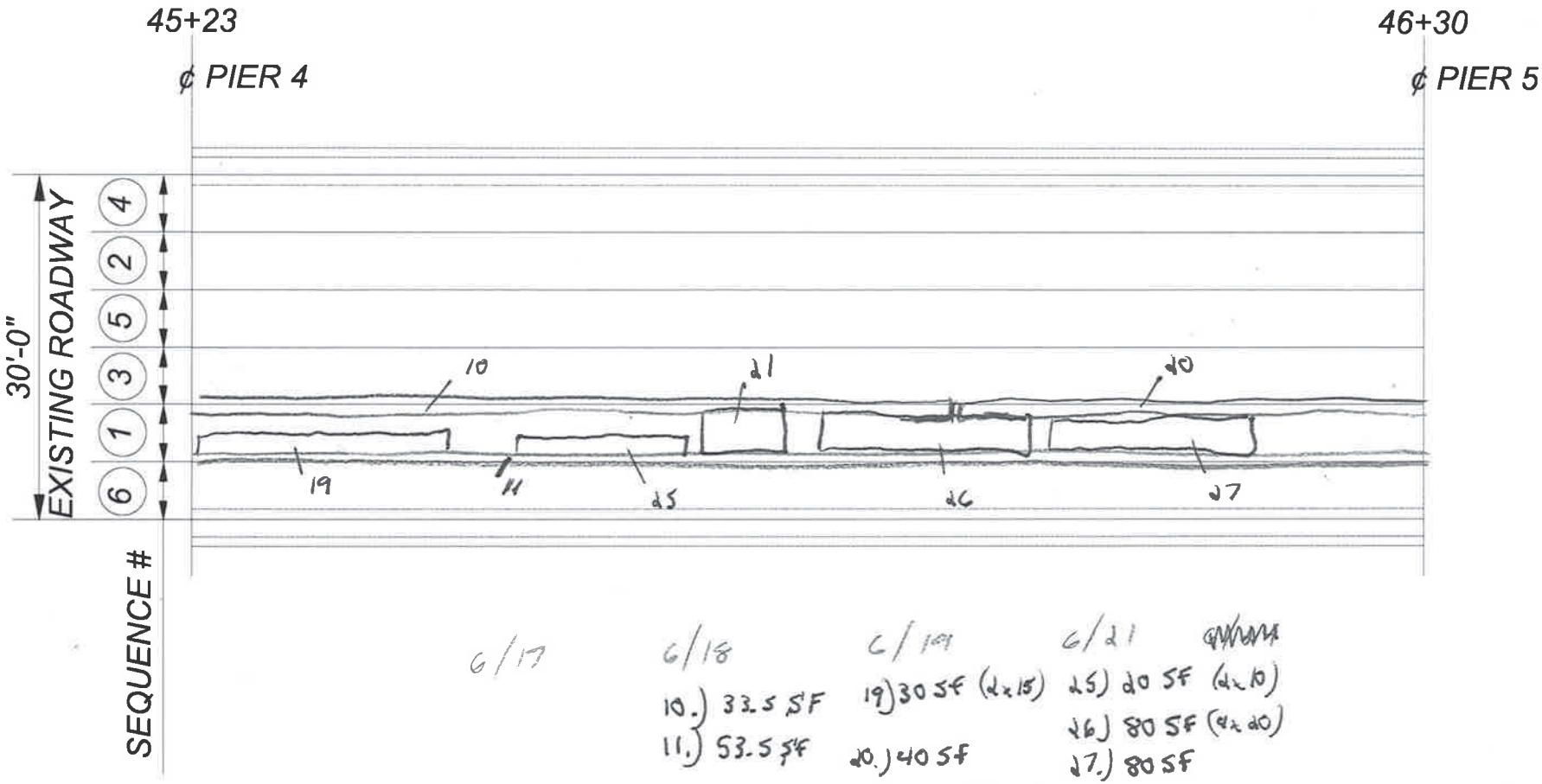

6/17

6/18
10.) 33.5 SF
11.) 53.5 SF

6/19
19) 30 SF (2x15)
20.) 40 SF
21) 20 SF (4x5)

6/21
25) 20 SF (2x10)
26) 80 SF (4x20)
27.) 80 SF

FILE NAME	P:\454302\CONTRACT\C9214 I-90 Yakima River Bridges EB & WB Deck Rehabi_CAD_Sheets\Scarifying Sequence Sheets\006-SCARIFICATION SEQ 2_BR50-150N.dgn
TIME	1:55:44 PM
DATE	6/25/2019
PLOTTED BY	dellint
DESIGNED BY	
ENTERED BY	
CHECKED BY	
PROJ. ENGR.	
REGIONAL ADM.	

REVISION | DATE | BY

REGION NO. | STATE: 10 WASH

FED.AID PROJ.NO.

JOB NUMBER

CONTRACT NO.

LOCATION NO.

DATE

P.E. STAMP SIZE

Washington State Department of Transportation

Plot 4

PLAN REF NO

SHEET OF SHEETS

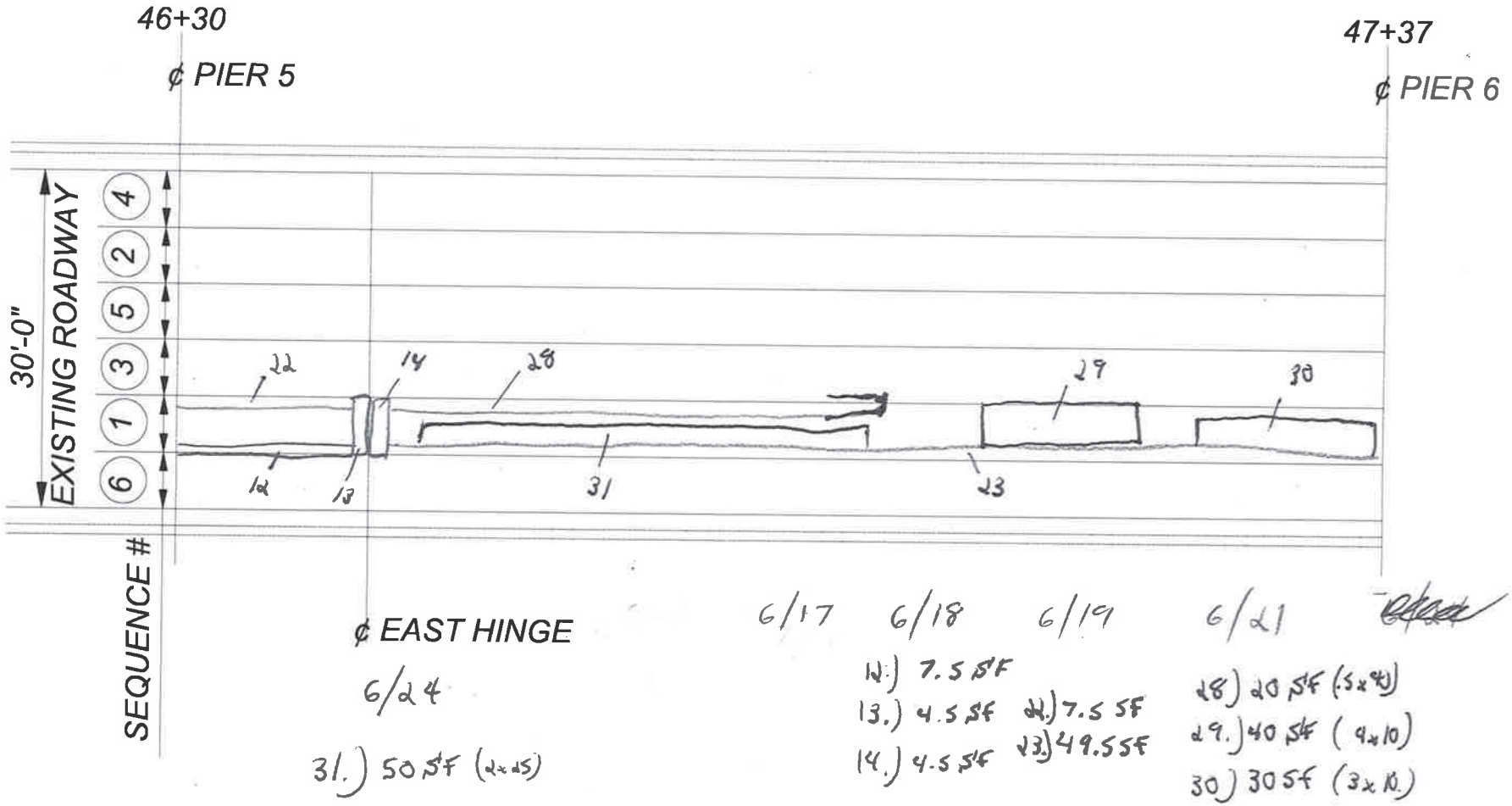

FILE NAME	P:\454302\CONTRACTIC9214 I-90 Yakima River Bridges EB & WB Deck Rehab_CAD_Sheets\Scarifying Sequence Sheets\006-SCARIFICATION SEQ 2_BR90-150N.dgn
TIME	1:56:04 PM
DATE	6/25/2019
PLOTTED BY	dellint
DESIGNED BY	
ENTERED BY	
CHECKED BY	
PROJ. ENGR.	
REGIONAL ADM.	

REVISION | DATE | BY

REGION NO. 10 | STATE WASH | FED.AID PROJ.NO.

JOB NUMBER

CONTRACT NO. | LOCATION NO.

P.E. STAMP BOX | DATE | P.E. STAMP BOX | DATE

Washington State Department of Transportation

Plot 5

PLAN REF NO.

SHEET OF SHEETS

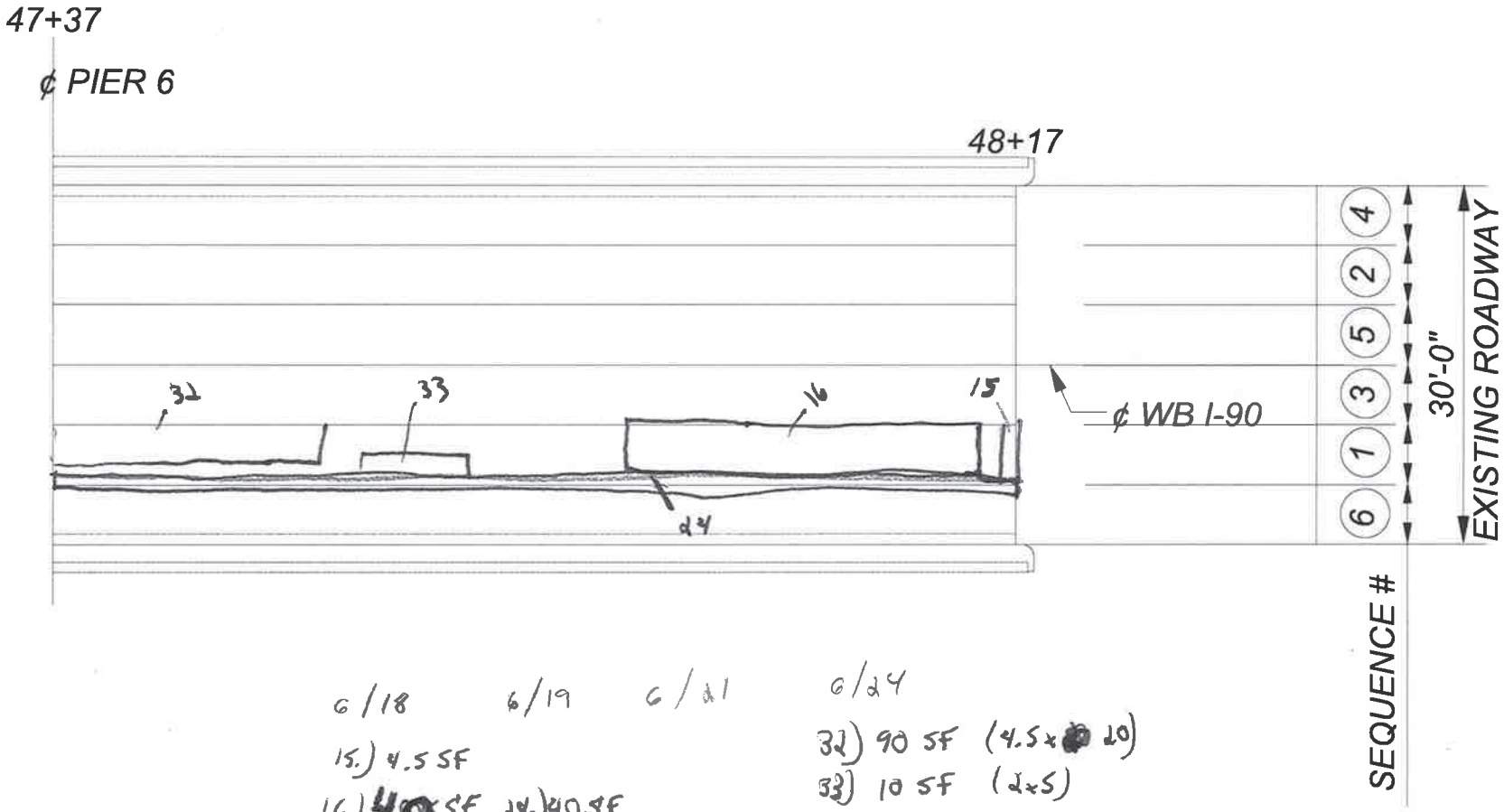

6/18 6/19 6/21 6/24

15.) 4.5 SF

16) 40 SF (4x10) 24.) 40 SF

32) 90 SF (4.5x20)

33) 10 SF (2x5)

FILE NAME	P:\454302\CONTRACT\C9214 I-90 Yakima River Bridges EB & WB Deck Rehab_CAD_Sheets\Scarifying Sequence Sheets\006-SCARIFICATION SEQ 2_BR50-150N.dgn
TIME	1:56:24 PM
DATE	6/25/2019
PLOTTED BY	dellint
DESIGNED BY	
ENTERED BY	
CHECKED BY	
PROJ. ENGR.	
REGIONAL ADM.	

REVISION | DATE | BY

REGION NO. 10 STATE WASH

FED.AID PROJ.NO.

JOB NUMBER

CONTRACT NO.

LOCATION NO.

P.E. STAMP BOX DATE

P.E. STAMP BOX DATE

Washington State Department of Transportation

Plot 6

PLAN REF NO

SHEET OF SHEETS