1.2. Drainage Facilities (RFP 2.17.6.8)

This Manual is intended to provide operation and maintenance guidance for the facility while it is used as a pontoon manufacturing site as well as operation and maintenance guidance while the site is not used for manufacturing pontoons.

The site is comprised of ditches, catch basins, manholes, inlets, pipes, biofiltration swales, four treatment ponds, and two pump systems. One pump system (process water pump system) pumps water collected from the precast laydown beds and casting basin up to the north pond (Pond 1) for treatment while the other pump system (groundwater pump system) is exclusively used for a permanent groundwater collection and pump system.

During pontoon manufacturing, all runoff from the precast laydown beds and casting basin is considered process water and shall be treated according to criteria established in the DOE Sand and Gravel Permit. During periods when the facility is not used for manufacturing process water, the runoff shall not be considered process water and may be treated and disposed of according to surface water treatment methods established in the HRM 2008, provided that the Washington Department of Ecology has been notified, and collected water quality data demonstrates no undue influence to the parameters as originally monitored for process water.

The southwest pond (Pond 2) and southeast pond (Pond 3) function as water quality treatment wet ponds during pontoon manufacturing and after the site is no longer used to manufacture pontoons. Pond 4 functions exclusively as a groundwater pre-settlement pond prior to conveyance to an infiltration trench.

During periods when the site is operating as a pontoon manufacturing facility, the north pond (Pond 1) with 4 cells will operate as both a process water treatment pond and a water quality wet pond. The first 2 cells (northwest cells 1A and 1B) will operate as sediment trapping and water quality wet pond treatment from the general north work area and the batch plant work area. The next three cells (northeastern cells 2, 3, and 4) will operate as process water treatment with the eastern most cell 4 functioning as pre-settlement. During periods when the site is not functioning as a pontoon casting facility, the north pond will operate as a water quality wet pond, but all discharges must still comply with the facility's NPDES permit effluent limits.

The site stormwater facilities have been designed according to the standards and best management practices established in the HRM (2008). As a supplement to this Manual, a general maintenance inspection checklist for Stormwater Best Management Practices, Chapter 5 (2008 HRM) shall be used as a checklist, record document, and decision guidance for maintenance and inspection activities associated with the drainage system.

No maintenance agreements with local jurisdictions have been made for the drainage facilities within project limits.

See as-built plans in Appendix B for additional information.

1.2.1. Conveyance Systems

The site is comprised of surface and subsurface conveyance systems designed to convey runoff to water quality treatment facilities. Surface drainage features include grass lined ditches, culverts, and emergency overflow spillways.

Subsurface conveyance systems include storm drain inlets, catch basins, manholes, water quality treatment wet ponds, control structures, and a groundwater cutoff trench and collection system. The surface and subsurface conveyance systems shall be inspected and maintained according to the following maintenance requirements.

A. Surface Conveyance Systems (Ditches)

The ditches shall be maintained to keep the flow line clear of debris, trash, and/or other flow obstructing objects. The ditches shall be grass lined and trimmed to keep grass short. The ditches should be inspected bi-annually for erosion, clogging, sedimentation, and scouring. Additional inspections shall be performed immediately after heavy storm events (precipitation totaling 0.5” or more in 24 hours) and/or times of high runoff. The grass lining shall be stabilized with rock or other permanent erosion control measures if repeated scouring is observed.

B. Surface Conveyance Systems (Culverts)

Culverts collect ditch runoff and drain into the water quality treatment facilities located on-site. The culvert inlets shall be inspected bi-annually and after Design Storm events (precipitation totaling 5.0” or more in 24 hours). Culverts with 50 percent or more constriction shall be flushed or otherwise cleaned to maintain them free of sedimentation, debris, trash, or other obstructions. Trash barriers shall be free of trash and not obstruct flows. The culvert inlets and outlets shall have rock slope stabilization to prevent erosion of the slope cover over the pipe.

C. Surface Conveyance Systems (Emergency Outfall Spillway)

The emergency outfall channels, spillways, and berms shall be kept free of tree or shrub growth. If root system is small (base less than 4 inches), the root system may be left in place; otherwise, the roots should be removed and the protection restored. The emergency weirs shall be free and clear of trash, debris, or other obstructions. The rock lining shall be inspected and repaired if signs of erosion or piping are observed or native soil or geotextile is exposed.

D. Subsurface Conveyance Systems (Inlets, Catch Basins, and Manholes)

The inlets, catch basins, and manholes have been designed to trap sediment. The structures shall be inspected bi-annually and after Design Storm events (precipitation totaling 5.0” or more in 24 hours) for sediment deposition and cleaned if trash, debris, or sediment (in the basin) exceeds 60% of the sump depth as measured from the bottom of the basin to invert of the lowest pipe into or out of the basin, but in no case is clearance less than 6 inches from the sediment surface to the invert of the lowest pipe.

Some structures have been provided with control tees and/or fitted with shear gates to allow the pond outfalls to be shut off. The structures and gates provide point of compliance sampling points as well as mechanisms to stop flows in the event that discharge flows do not achieve permit compliance values. These shall be inspected bi-annually for damage and repaired or replaced if tees are not securely attached to structure wall, are not in upright position, are not watertight and if gates are not water resistant, are more than 50% rusted, do not move freely as designed , or lift handle is not in place.

1.2.2. Process Water System

The process water system is comprised of a series of catch basins, pipes, sumps, pumps, and process water treatment pond. While the site is used for pontoon manufacturing, all catch basins, manholes, and inlets serving the precast laydown beds and casting basin are part of the process water collection system. All structures included as part of the process water system shall be cleaned and material shall be disposed of according to Process Water criteria and regulations. Section 1.2.1 above shall be used for maintenance guidance.

A. Casting Basin Flooding Preparation

Prior to flooding the casting basin, the casting basin shall be washed down and the process water system shall be completely pumped dry. The sumps and pump chambers shall be pumped dry, the pumps shall be shut off, and the system shall be charged with clean or treated water. Each inlet shall be fitted with filter fabric or netting to prevent fish entrapment but allow water to drain through. After charging the system, the casting basin may be flooded.

After float-out, the casting basin may be drained with ballast pumps and fish handling procedures contained in Section 1.1.1.B. The casting basin may need to be washed down and the inlets will need to be checked for debris, seaweed, and other items prior to turning on the pump system. After checking the catch basins and sumps for miscellaneous debris, the process water pump systems may be turned on and the system may operate as process water containment and conveyance.

B. Process Water Pond (While Not Manufacturing Pontoons)

The process water pumps under the north end of the casting basin must stay in operation while the site is not in use. The pumps convey all stormwater runoff collected by the casting basin and precast laydown areas to the north pond which functions as a water quality wet pond.

During periods when the site is not used to manufacture pontoons, the north pond operates as a large wet pond. Cells 1A and 4 provide sediment treatment. Cells 1B, 2, and 3 provide water quality treatment. Valves located between cells 1B and 2, 2 and 3, and 3 and 4 are in an open position and allow for continuous co-mingling between ponds. The pond cells 2 and3 have an HDPE exposed liner visible for regular inspection. The emergency outfalls, side slopes, presettling cells, and debris barriers shall be inspected and maintained according to the maintenance standards established in the table in section 1.2.4.

C. Process Water Pond (While Manufacturing Pontoons)

During pontoon manufacturing, the north pond functions as both a water quality treatment pond and as a process water treatment pond. The two cells divided by a block wall weir function as a water quality wet pond with a sediment cell (Cell 1A) and water quality cell (Cell 1B). The valve connecting the water quality cell 1B and Cell 2 may be in a closed position to prevent process water from mixing with the surface water runoff treatment. The valves between cells 2 and 3 and cells 3 and 4 may be opened and closed to control process water “batches” prior to discharge. Cell 4 functions as a

presettlement cell from the pump discharge conveyance system. Cell 3 functions as a containment and holding cell for treated process water, and cell 2 is available for additional capacity and PH dilution. Process water may be allowed to gravity drain between cells to manage "batches". The recommended operating mechanism for the pond is to set up a temporary water treatment system that can pump water out of cell 4 at approximately 2,000 gpm and externally treat the water for pH prior to discharge. When the water meets the criteria established in the Sand and Gravel Permit, the water may be discharged directly to the west ditch outfall conveyance system. If the water is not suitable for discharge it may be discharged into cell 3 or 4 for additional treatment and/or re-circulation.

D. Process Water Pond (Sewer Discharge)

Cell 3 in the north pond has a contingency discharge to the existing City of Aberdeen Wastewater Treatment Plant. The discharge pipe has two control structures. One provides oil trapping, and the other is a shear gate mechanism to direct flows to the sewer. The pipe is sized to drain the pond in approximately 6 hours and the process water pumps are sized to fill the pond in approximately 6 hours. Therefore, the maximum discharge to the sewer is once per day (assuming a 12 hour work day and overnight treatment). After discharge to the sewer, the shear gate shall be closed and water can be stored in cell 3 until treated and acceptable for discharge to the sewer system.

Due to the invert elevation of the discharge pipe in relation to the depressed bottom of the pond cell, approximately one foot of water cannot be drained out of cell 3 with gravity. The depressed bottom traps sediment and prevents highly turbid water from discharging to the sewer system. The remaining one foot may be pumped out or remain within the pond.

E. Process Water Pond (10-yr Storm Water Quality Volume)

The north pond system provides treatment for the water quality volume but not the storage for the water quality volume while manufacturing pontoons. The 10-year storm volume is 209,000 CF (1,563,320 gal). The north process water pond cells are capable of containing approximately 120,000 CF (897,600 gal). The basin conveyance system can contain another 5,000 CF (37,400 gal) and the remaining 84,000 CF (628,320 gal) may be detained in the casting basin floor (approximately 5 inches deep). If the 10-yr storm hits while the casting basin is approximately 80% full (with pontoons), the 84,000 CF water quality volume would stage detain approximately 2.5-feet deep in the casting basin. Since this is not practical for pontoon manufacturing, the temporary water treatment system is to be turned on and operated for a flow based treatment to maintain acceptable water levels within the casting basin.

1.2.3. Groundwater Dewatering System

Only two structures at the south end of the casting basin are associated with the groundwater collection system (a sump structure and a pump structure). All cleanouts within the casting basin and slope cutoff trenches are associated with the groundwater dewatering system and do not need to be treated as process water. The permanent groundwater dewatering system is comprised of a series of pipes, sumps, pumps, a presettlement pond, and an infiltration trench. Section 1.2.1 and 1.2.2 above shall be used for maintenance guidance.

A. Casting Basin Flooding Preparation

The groundwater system shall be turned off prior to flooding the casting basin and the sumps shall be checked to make sure they are charged with water. During flooding, float-out, and draining down to the top of the casting basin side wall, the groundwater system shall be turned off. As soon as the water is below the rim of the groundwater manhole the groundwater pumps shall be turned on. The groundwater manhole is located near the southeast corner of the basin (see Appendix B for As-Built location). At no time shall the casting basin be allowed to drain below the top of the side wall without the groundwater pumps being turned on. The pumps and collection system are designed to prevent hydrostatic forces from building up under the casting basin and heaving the slab.

1.2.4. Stormwater Best Management Practices (BMP's)

The project utilizes the following BMP's to treat runoff, stormwater, groundwater, and process water:

A. Water Quality Wet Pond

a) Ponds and Liners

Three ponds located in the north, southwest, and southeast sections of the site have been designed to function as water quality wet ponds to treat stormwater runoff. Each of the ponds has been designed with sedimentation cells and wet pond cells for presettlement and permanent wet pool storage.

b) Primary and Secondary Outfalls

Each pond has been designed according to the 2008 HRM to include a primary outfall and secondary emergency outfall. Primary outfall pipes slope upward out of the ponds into control structures which are connected to an outfall pipe conveyance system discharging to the launch channel or perimeter ditches. The purpose of the pipes sloping upward out of the ponds is to prevent water from discharging below the desired water quality treatment surface elevation as well as trap oils within the pond without constructing a flow restrictor orifice preventer device. Emergency outfalls are either rock stabilized emergency spillways or large diameter emergency overflow structures.

c) North Pond Valves

The north pond is designed to operate as a wet pond while the site is not used to manufacture pontoons. Each of the valves between the cells shall be in an open position allowing water to drain from cell to cell for co-mingling and treatment. Shear gates in the 30-inch diameter outfall conveyance system control structures shall be in open positions to allow discharge to the western perimeter ditch. The sewer discharge pipe shear gate shall be in a closed position.

B. Maintenance

The two cells in the north pond and secondary cell in Pond 2 are lined with exposed HDPE membrane and will require low impact inspection and maintenance only, no machine or vehicle access or operations are permitted. The emergency outfalls, side slopes, presettling cells, and debris barriers shall be inspected and maintained according to the maintenance standards established in the following table.

Maintenance Component	Defect or Problem	Condition When Maintenance is Needed	Results Expected When Maintenance is Performed
General	Trash and debris	Accumulations exceed 5 cubic feet (about equal to the amount of trash needed to fill one standard-size garbage can) per 1,000 square feet. In general, there should be no visual evidence of dumping. If less than threshold, all trash and debris will be	Trash and debris are cleared from site.

Maintenance Component	Defect or Problem	Condition When Maintenance is Needed	Results Expected When Maintenance is Performed
		removed as part of the next scheduled maintenance.	
	Poisonous vegetation and noxious weeds	Poisonous or nuisance vegetation may constitute a hazard to maintenance personnel or the public. Noxious weeds as defined by state or local regulations are evident. (Apply requirements of adopted integrated pest management [IPM] policies for the use of herbicides).	No danger is posed by poisonous vegetation where maintenance personnel or the public might normally be. (Coordinate with local health department.) Complete eradication of noxious weeds may not be possible. Compliance with state or local eradication policies is required.
	Contaminants and pollution	Oil, gasoline, contaminants, or other pollutants are evident. (Coordinate removal/cleanup with local water quality response agency.)	No contaminants or pollutants are present.
	Rodent holes	For facilities acting as a dam or berm: rodent holes are evident or there is evidence of water piping through dam or berm via rodent holes.	Rodents are destroyed and dam or berm repaired. (Coordinate with local health department; coordinate with Ecology Dam Safety Office if pond exceeds 10 acre-feet.)
	Beaver dams	Dam results in change or function of the facility.	Facility is returned to design function. (Coordinate trapping of beavers and removal of dams with appropriate permitting agencies.)
	Insects	Insects such as wasps and hornets interfere with maintenance activities.	Insects are destroyed or removed from site. Insecticides are applied in compliance with adopted IPM policies.
	Tree growth and hazard trees	Tree growth does not allow maintenance access or interferes with maintenance activity (slope mowing, silt removal, vactoring, or equipment movements). If trees are not interfering with access or maintenance, do not remove. Dead, diseased, or dying trees are observed. (Use a certified arborist to determine health of tree or removal requirements.)	Trees do not hinder maintenance activities. Harvested trees should be recycled into mulch or other beneficial uses (such as alders for firewood). Hazard trees are removed.
Side slopes of pond	Erosion	Eroded damage is over 2 inches deep and cause of damage is still present, or there is potential for continued erosion. Erosion is observed on a compacted berm embankment.	Slopes are stabilized using appropriate erosion control measures (such as rock reinforcement, planting of grass, and compaction). If erosion is occurring on compacted berms, a licensed civil engineer should be consulted to

Maintenance Component	Defect or Problem	Condition When Maintenance is Needed	Results Expected When Maintenance is Performed
			resolve source of erosion.
Storage Areas	Sediment	Accumulated sediment exceeds 10% of the designed pond depth, unless otherwise specified, or affects inletting or outletting condition of the facility.	Sediment is cleaned out to designed pond shape and depth. Pond is reseeded if necessary to control erosion.
Pond berms (dikes)	Settlements	Any part of berm has settled 4 inches lower than the design elevation. If settlement is apparent, measure berm to determine amount of settlement. A licensed civil engineer should be consulted to determine the source of the settlement.	Dike is built back to the design elevation.
	Piping	Water flow is discernible through pond berm. Ongoing erosion is observed, with potential for erosion to continue. (Recommend a geotechnical engineer be called in to inspect and evaluate condition and recommend repair of condition.)	Piping is eliminated. Erosion potential is resolved.

C. Process Water Treatment Pond

The north pond can function as a process water treatment pond and/or a water quality wet pond. The pond may discharge to either the western perimeter ditch or the City of Aberdeen Wastewater Treatment Plant. During pontoon manufacturing, the valve between cells 1B and cell 2 can be closed and the emergency overflow structure can be used to discharge flows to the 30-inch diameter outfall conveyance system. The emergency outfall can discharge the full 100-year storm for the entire north pond and has ample capacity for the smaller cell 1A and 1B tributary flows. The valves between cells 2 and 3 and 3 and 4 may be operated to isolate treated process water or “batches” and route water from one cell to another during pontoon manufacturing. The recommended approach is to close all valves to create separate storage cells and use cell 4 as a presettlement area. Water may be pumped from cell 4 treated for pH and total suspended solids and either discharged into the sewer conveyance system or the 30-inch diameter outfall conveyance system. If the treated water does not meet permit thresholds, it may be discharged into cells 2 or 3 for additional treatment prior to discharge. Cell 2 can only discharge to the 30-inch diameter western perimeter ditch, and cell 3 may discharge to either the western perimeter ditch or the City sewer system.

D. Groundwater Presettlement Pond

The groundwater presettlement pond has been designed as a double cell system. The first cell operates as a presettlement cell and dissipates concentrated flows from the pump system. The second cell provides additional settlement. An outfall pipe drains upward from the second cell into a control structure for conveyance to an infiltration trench or outfall pipe. The pipe out of the second cell slopes upward into the control structure to trap water at the required elevation providing the necessary water surface

area insuring adequate presettlement treatment. The control structure directs flows to two 8-inch diameter pipes for discharge into the underground infiltration trench or to a 12-inch diameter overflow pipe into the eastern perimeter ditch. The control structure is also able to trap oils within the presettlement pond.

The presettlement pond contains a till liner approximately 18-inches deep. The pond may be subject to fluctuating water levels depending on the elevation of the groundwater and volume of water pumped from the groundwater collection system surrounding and beneath the casting basin. In the event of an unusually high groundwater elevation, maximum pumping rates (400 gpm), and a 100-year storm, the emergency overflow structure between the presettlement ponds and the southeastern water quality wet pond has been provided to provide relief for the 12-inch diameter outfall and allow water to drain toward the launch channel and prevent site flooding. During the 100-year storm event, the eastern perimeter ditch may run full due to offsite City flows draining into the eastern perimeter ditch and the 12-inch diameter outfall may not discharge at full capacity.

E. Groundwater Infiltration Trench

The purpose of the groundwater infiltration trench is to infiltrate groundwater pumped out from under the casting basin and cutoff trenches into the ground adjacent to the City of Aberdeen Wastewater Treatment Plant to prevent settlement near the plant structures. The groundwater infiltration trench is constructed with a continuous PVC pipe fitted with tees for discharge dispersion throughout the trench. The trench is comprised of large aggregate and free-draining material. The pipes may be flushed from the control structure and inspected with small diameter pipe if necessary. A water depth monitoring column is located within the parking lot and may be used to monitor the depth of water within the infiltration trench. See drawing DD10 in Appendix B for the exact location of the water depth monitoring column. The water table depth should be monitored and logged monthly to track seasonal infiltration rates and depth of water table. The data shall be used to monitor infiltration rates and capacity of the trench to verify the trench operates according to design.

F. Biofiltration Swales

The biofiltration swales throughout the parking lot, around the stockpile area, and on the northeast corner of the site are intended to capture continuous surface runoff. The biofiltration swales shall be mowed and maintained free of trash and debris. The outlet structure grates shall be free of leaves and other blocking material.

The conveyance and biofiltration systems shall be inspected and maintained according to the criteria established in the table below.

Sediment accumulation on grass	Sediment depth exceeds 2 inches.	Remove sediment deposits on grass treatment area of the swale. When finished, swale should be level from side to side and drain freely toward outlet.
Standing water	Water stands in the swale between storms and does not drain freely.	Any of the following may apply: remove sediment or trash blockages; improve grade from head to foot of swale; remove clogged check dams; add underdrains39;

		or convert to a wet biofiltration swale.
Flow spreader	Flow spreader is uneven or clogged so that flows are not uniformly distributed through entire swale width.	Level the spreader and clean so that flows are spread evenly over entire swale width.
Constant baseflow	Small quantities of water continually flow through the swale, even when it has been dry for weeks, and an eroded, muddy channel has formed in the swale bottom.	Add a low-flow pea gravel drain the length of the swale, or bypass the baseflow around the swale.
Poor vegetation coverage	Grass is sparse or bare, or eroded patches occur in more than 10% of the swale bottom.	Determine why grass growth is poor and correct that condition. Replant with plugs of grass from the upper slope: plant in the swale bottom at 8-inch intervals; or reseed into loosened, fertile soil.
Vegetation	Grass becomes excessively tall (greater than 10 inches); nuisance weeds and other vegetation start to take over.	Mow vegetation or remove nuisance vegetation so that flow is not impeded. Grass should be mowed to a height of 6 inches. Mowing is not required for wet biofiltration swales. However, fall harvesting of very dense vegetation after plant die-back is recommended.
Excessive shading	Grass growth is poor because sunlight does not reach swale.	If possible, trim back overhanging limbs and remove brushy vegetation on adjacent slopes.
Inlet/outlet	Inlet/outlet areas are clogged with sediment/debris.	Remove material so there is no clogging or blockage in the inlet and outlet area.
Trash and debris	Trash and debris have accumulated in the swale.	Remove trash and debris from bioswale.
Erosion/scouring	Swale bottom has eroded or scoured due to flow channelization or high flows.	For ruts or bare areas less than 12 inches wide, repair the damaged area by filling with crushed gravel. If bare areas are large (generally greater than 12 inches wide), the swale should be regraded and reseeded. For smaller bare areas, overseed when bare spots are evident, or take plugs of grass from the upper slope and plant in the swale bottom at 8-inch intervals.

A control structure fitted with a stand pipe setup with a flap gate is located on the southeastern edge of the launch channel adjacent to Pond 3. The control structure is the point of compliance and the enclosed shear gate may be shut off if discharge flows do not meet required permit discharge criteria. The biofiltration swales are constructed to achieve permit discharge criteria. The existing ditch east of the parking lot is a jurisdictional wetland/ditch, and any water discharged to this ditch must comply with the site's NPDES permit conditions.

G. Oil Trapping and Containment

During the operations phase of this facility, it is recommended that the wet ponds have oil containment booms located near the primary and emergency outfall structures. The booms should be installed per the manufacturer's recommendations and allow the boom to float up and down with the surface water elevation. The boom should be installed to prevent water from entering the emergency outfall without passing through the containment boom. The booms would provide primary containment and the outfall control structures provide secondary containment. Containment booms should be checked and maintained and the covering replaced according to the manufacturer's product specifications.

1.2.5. Tabulation of Approximate Quantities for New Stormwater Facilities

Manholes, Catch Basins, and Control Structures	(61 EA)
Storm Drain Pipe	(1,970 FT)
Storm Drain Pipe (Sanitary Sewer Connection)	(420 FT)
Process Water Collection Pipes System	(2,210 LF)
Groundwater Collection System	(14,500 LF)
Groundwater Pump System	(1 EA)
Process Water Pump System	(1 EA)
Biofiltration Swales	(8 EA)
Pond Sites	(2.5 AC)

1.2.6. Owner's Manuals & Manufacturer's Operation Manuals for Drainage Facilities

1.2.6. Owner's Manuals & Manufacturers Operation Manuals for Drainage Facilities

This section contains the technical specifications of the pumps that remain on site, how they have been installed, and how they are controlled. Also included, is a Map showing the location of the pumps and how water flows through the site. A section index is shown below.

A. Drainage Flow-path Layout
B. Type 1 Pump: Godwin GSP10
C. Type 1 Pump: Installation Detail
D. Type 2/3 Pumps: Vaughn SE4S3-460V-080 / Vaughn SE3P1-460V-080
E. Vaughn SE Series Pump Owner's Manual
F. Type 2/3 Pump Control Panel Operation
G. Micro-spike HDPE Liner
H. PROCO 700 Series Tide-Flex Valve
I. Water Systems Miscellanea

Mothball Drainage Plan

Rev 6/16/15

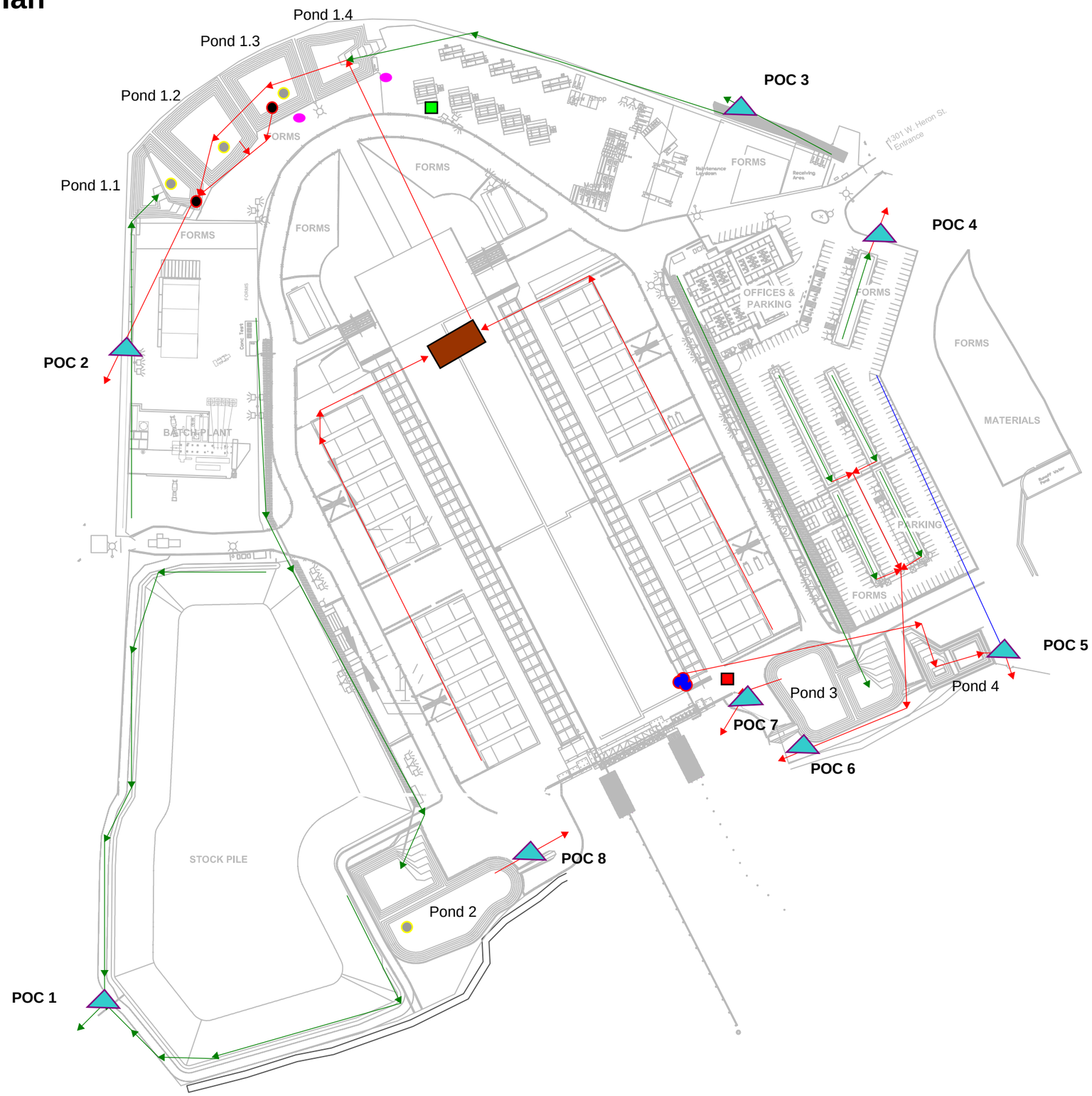

LEGEND

- Type 1 Pump: Godwin GSP10 x 3 EA
- Type 2 Pumps: Vaughn SE4S3-460V-098 x 3 EA
- Type 3 Pumps: Vaughn SE3P1-4607-080 x 2 EA
- Outfall
- Swing Gate (To remain closed)
- On-Site Surface Conveyance
- Buried Pipe
- Groundwater Trench
- Point Of Compliance
- Type 2 Control Panel
- Type 3 Control Panel

B. Type 1 Pump: Godwin GSP10

There are three of these pumps on site, located in cells 2 and 3 of Pond 1, and the west end on Pond 2. The technical specifications are shown below.

Godwin Sub-Prime® Technical Specifications

GST05

	Rated HP	Speed RPM	Operating Voltage	Rated Current Amps	Discharge Connection	Weight	Maximum Height	Maximum Width	Maximum Solids
GSP Small Dewatering Pumps - Single Phase									
GSP05	0.5 HP	3600	115, 230	5.8, 3.2	2"	20 lbs	12.8"	7.2"	0.33"
GSP10	1.0 HP	3600	115, 230	10.3, 5.11	2"	29 lbs.	14.1"	7.2"	0.33"
GSP20	2.0 HP	3600	115/230	25.9/13.0	3"	61 lbs.	24.5"	9.25"	0.33"

OPERATING AND MAINTENANCE MANUAL

ISSUE: 1

DATE: NOVEMBER 2013

Think Orange. Think Godwin®

GSP SUB-PRIME

GSP05 / GSP10

ELECTRIC SUBMERSIBLE PUMP

godwin
a xylem brand

C US

SUB-PRIME® WARRANTY

Xylem Dewatering Solutions, Inc. warrants its equipment to be free from defects in workmanship and materials for a period of six (6) months.

The Company's sole obligation under this Sub-Prime warranty shall be to replace parts when necessary on products that have been returned to the Company or an authorized service center and found to be defective by the Company. This warranty covers the above described portable pumping equipment when used for pumping non-corrosive liquids containing limited quantities of abrasive particles in compliance with documentation furnished with the equipment and Company representations.

Xylem Dewatering Solutions shall not be liable for any special, indirect, or consequential damages of any kind. Major components not manufactured by the Company are covered by the original manufacturer's warranty in lieu of this warranty. The Company will not be held responsible for travel expenses, rented equipment, outside contractor's fees, or unauthorized repair shop expenses. The Company neither assumes or authorizes any person or other company to assume for it, any other obligation in connection with the sale of its equipment. Any enlargement or modification of this by a representative or other sales agent is their exclusive responsibility. Transportation charges shall be born by the buyer. Returns must have prior written authorization from the Company.

This warranty shall extend only to the original owner and shall not apply to any products that have been repaired or altered without the Company's consent or have been subject to misuse, accident, or neglect, or have been used for uses other than the Company's intended purpose.

No other warranties expressed or implied including implied warranties of merchantability and fitness for a particular purpose, will apply.

godwin

a xylem brand

Xylem Dewatering Solutions, Inc.

22 Floodgate Road
Bridgeport, NJ 08014

Phone: 856-467-3636 • Fax: 856-467-4841

godwinpumps.com

Issue: 1 • Revised: 11/13

© 2013 Xylem, Inc. All rights reserved. Godwin is a trademark of Xylem Dewatering Solutions, Inc., a wholly-owned subsidiary of Xylem Inc. Sub-Prime® and the color orange for pumps are registered trademarks of Xylem Dewatering Solutions, Inc.

C SP® US

Godwin Sub-Prime® pump models GSP05 and GSP10 are listed by CSA International as certified.

No liability is assumed with respect to the use of any information contained in this publication. While every precaution has been taken in the preparation of this publication, Xylem Dewatering Solutions, Inc. assumes no responsibility for errors or omissions nor is any liability assumed for damages resulting from the use of information contained in this publication. This publication, as well as operational details described herein, are subject to change without notice.

IMPORTANT SAFETY INFORMATION

READ THIS BEFORE INSTALLING OR OPERATING THIS EQUIPMENT

Because of the variety of conditions and environments in which this equipment can be used, the user and those responsible for this equipment must satisfy themselves as to the safety and acceptability of each application and operating conditions of this equipment.

IN NO EVENT will Xylem Dewatering Solutions be responsible or liable for indirect or consequential damages resulting from the use or application of this equipment.

Areas of this manual identifying important areas of concern appear as:

!!! IMPORTANT !!!

Alerts the reader where equipment can be damaged or economic loss can occur if procedures are not followed properly.

!!! WARNING !!!

Alerts the reader where people may cause risk of injury if procedures are not followed properly.

Caution statements: refer to the following guidelines when using this pump.

!!! CAUTION !!!

RISK OF SHOCK. DO NOT REMOVE CORD OR STRAIN RELIEF. DO NOT CONNECT CONDUIT TO PUMP.

!!! CAUTION !!!

THIS PUMP HAS BEEN EVALUATED FOR USE WITH WATER ONLY.

!!! CAUTION !!!

USE WITH APPROVED MOTOR CONTROL THAT MATCHES MOTOR INPUT IN FULL LOAD AMPERES.

!!! CAUTION !!!

USE WITH APPROVED MOTOR CONTROL THAT MATCHES MOTOR INPUT IN FULL LOAD AMPERES WITH OVERLOAD ELEMENT(S) SELECTED OR ADJUSTED IN ACCORDANCE WITH CONTROL INSTRUCTIONS.

22 Floodgate Road
Bridgeport, NJ 08014
Phone: 856-467-3636 • Fax: 856-467-4841
godwinpumps.com

godwin
a xylem brand

GSP05 AND GSP10 SUB-PRIME® TECHNICAL SPECIFICATIONS

	Rated HP/Kw	Speed RPM	Operating Voltage	Rated Current Amps	Discharge Connection in/mm	Weight lbs./kg.	Maximum Height in/mm	Maximum Width in/mm	GPM/ L/Sec	Maximum Head ft/m	Maximum Solids in/mm	NEMA Code
GSP Dewatering Pumps – Single Phase												
GSP05	0.5 HP 0.37 Kw	3600	115, 230	5.8, 2.9	2″ 50mm	20 lbs. 9 kg	12.8″ 325mm	7.2″ 183mm	70 gpm 8.8 l/sec	39′ 11.9 M	0.33″ 8.5mm	B
GSP10	1.0 HP 0.75 Kw	3600	115, 230	10.3, 5.11	2″ 50mm	29 lbs. 13 kg	14.1″ 358mm	7.2″ 183mm	90 gpm 5.7 l/sec.	60′ 18.3 M	0.33″ 8.5mm	B

GSP SUB-PRIME® PERFORMANCE CURVES

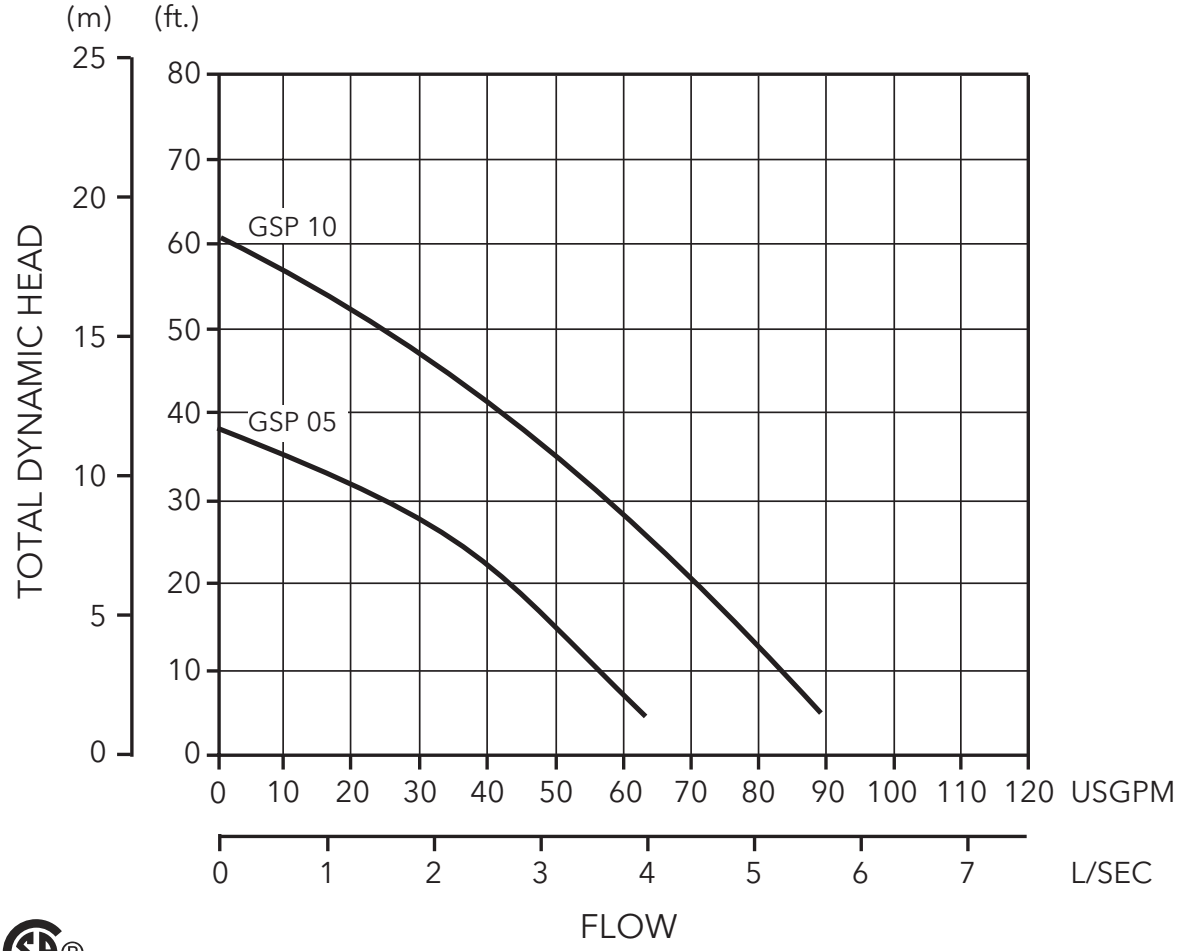

The GSP05 and GSP10 Godwin Sub-Prime® pumps are listed by CSA International as certified.

INTRODUCTION

Thank you for purchasing a Godwin Sub-Prime electric submersible pump.

With proper care, your Sub-Prime pump will provide long lasting, reliable service.

Please read the following information before using any equipment and follow all instructions carefully.

Before installing the pump, check the data plate to be sure that the unit received corresponds to your order.

Figure 1 shows an illustration of the data plate and its associated pump details.

Figure 1 - Data Plate

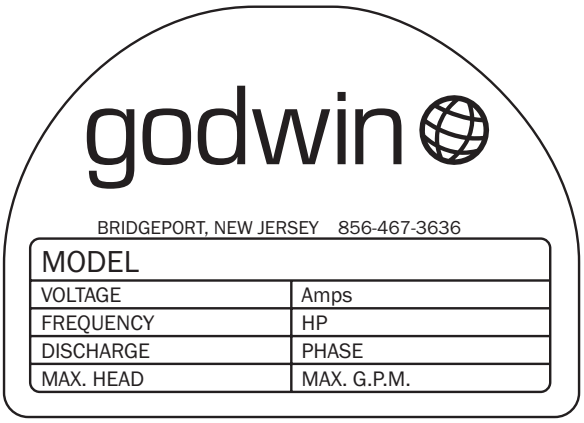

Use the information included on the data plate to ensure that your pump matches the requirements of your application as well as the voltage, phase and amperage of your electrical supply.

SAFETY INFORMATION

Before starting the pump, be sure to familiarize yourself with the application, pump limitations and potential hazards. Serious injury could result if pump limitations are exceeded or safety guidelines are not followed carefully.

Preliminary safety guidelines include, but are not limited to, the following:

1. Make sure that pumps are prevented from rolling during transport.
2. Never attempt to rewire the pump unit on your own. Should the pump require electrical servicing, including installation or alteration of any electrical components, contact the factory for your nearest authorized service center. Installation or alteration of electrical components by other than an authorized service center will void the pump warranty.
3. When handling the pump, use non-metallic safety shoes.
4. Always disconnect the power source when handling the pump unit. Handling the pump while the power source is connected could result in electrical shock causing injury or death.
5. When installing or moving the pump, make sure that eye bolts, carrying handles, and their means of attachment are undamaged. Before installing the pump, attach a rope to the handle for use in lowering and lifting the pump.
6. Always check cable prior to lowering the pump into the water. If the cable sheath is damaged and the cable is lowered into the water, water may enter into the junction chamber of the pump. If the cable is damaged, it must be replaced.
7. Do not pump flammable or explosive fluids such as gasoline, fuel oil or kerosene.
8. Do not operate pump in explosive atmospheres.

9. Before starting the unit, be sure product to be pumped is compatible with component materials (see the "Specifications" section of this manual for a list of materials of construction.)
10. Ensure that the power source conforms to pump requirements. Verify proper voltage and current capacity before operating the equipment. Verify that the pump is connected correctly, has the correct fuses and is connected to ground.
11. Take all necessary precautions to provide adequate protection and guarding around moving parts.
12. Disconnect all power before entering the water with the pump unit. Allowing anyone in the water while the pump is energized could result in serious injury or death.
13. If persons are likely to come into physical contact with the pump or pumped media, for example on construction sites or farms, the grounded socket must have an additional ground-fault protection device (GFI) connected. When pumping near a lake (beaches, ponds, fountains, etc.), keep a safety distance of at least 20 meters (65 ft.) between the person and the pump.
14. Wear safety glasses at all times while working with the pump unit.
15. Do not place the pump unit directly into a swimming pool. If pump must be used in a swimming pool, special safety regulations may apply. Consult local requirements prior to using the unit in a swimming pool.
16. On certain installations, the sound level may exceed 70 dBA.

Additional safety considerations are included throughout this manual as applicable to each section.

SPECIFICATIONS

Minimum Liquid Temperature	41°F / 5°C
Maximum Liquid Temperature	90°F / 32°C
Viscosity	<5cp
Maximum Submergence	16.4 Feet / 5 Meters
pH Level	Between 6.5 and 8
Maximum Percentage of Sand and/or Soil	2% by volume
Power Supply Fluctuation	
- Voltage	+/- 10%
- Frequency	+/- 1%

(Note: When both voltage and frequency fluctuate, amount of fluctuation must be within half of each fluctuation range).

Maximum Starts per Hour	10
Oil Capacity	
Turbine oil #32 recommended (32 cSt/40°C)	
GSP05 – GSP10	4.4 oz. (0.14 Liters)

Materials of Construction:

Discharge Connection	Cast Aluminum
Stator Casing	Cast Aluminum
Impeller	
GSP05 – GSP10	Urethane
Strainer	Steel
Suction Cover	Steel

INSPECTION & STORAGE

All Godwin Sub-Prime pumps are inspected and tested prior to shipment. However, you should inspect each unit upon receipt to ensure that there has been no damage sustained during transport. Use the following to inspect your pump upon receipt.

1. Pump casing should have no dents or excessive wear.
2. Discharge of pump should be clean with no nicks or burrs.
3. Electrical wires should show no cuts, tears, abrasions or wear.

If it is necessary to store the unit for a length of time when it will not be used, return the pump to its original shipping container and store in a clean, dry area. The pump should not be stored in a location with wide temperature fluctuations or in an area with excessive moisture, dust or dirt. Do not store the pump in an incomplete wet pit.

ROTATIONAL CONSIDERATIONS

The impeller of your Godwin Sub-Prime pump rotates in a clockwise direction when viewed from the top of the pump with the unit standing in an upright position. To check that rotation is correct, before submerging pump in product, suspend pump from the handle and momentarily engage power to the unit. As the pump starts, you should observe a counterclockwise start reaction ("kick") when viewed from the top of the pump. This is the pump reaction and indicates that the pump is turning in the correct clockwise rotation. A clockwise "kick" indicates incorrect rotation. Figure 2 illustrates start reaction.

Figure 2 - Start Reaction

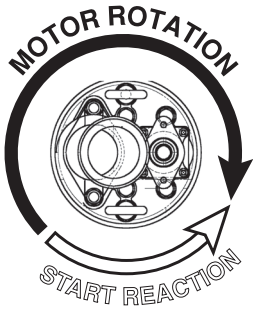

Operating a pump with an incorrect rotation may reduce pump performance, cause damage to the unit and will void the warranty. If incorrect rotation is indicated, contact the factory or engage the services of a qualified, licensed electrician to correct the problem.

INSTALLATION

!!! WARNING !!!

> Always disconnect the power source when handling the pump unit. Handling the pump while the power source is connected could result in electrical shock causing serious injury or death to the user.

Xylem Dewatering Solutions does not recommend self-installation of this unit. To ensure proper and safe installation, engage the services of qualified personnel or a licensed electrician.

!!! WARNING !!!

> Before beginning any installation, ensure that all controls are properly sized and include overload, short circuit and instantaneous protection. Attempting installation without these considerations could increase the chance of electrical shock causing serious injury or death to the user.

!!! WARNING !!!

Risk of electric shock – This pump is supplied with a grounding conductor and grounding-type attachment plug. To reduce the risk of electric shock, be certain that it is connected only to a properly grounded, grounding-type receptacle.

Before using the Godwin Sub-Prime pump, observe the following safety precautions.

1. When handling the pump, always use non-metallic safety shoes..
2. The Godwin Sub-Prime pump should not be used in explosive or fire-risk conditions or for pumping flammable liquids.
3. If persons are likely to come into physical contact with the pump or pumped media, for example on construction sites or farms, the grounded socket must have an additional ground-fault protection device (GFI) connected. When pumping near a lake (beaches, ponds, fountains, etc.), a safety distance of at least 20 meters (65 feet) between the person and the pump should be observed. The pump must never be placed directly into a swimming pool. If used in connection with swimming pools, special safety regulations apply.

Discharge Hose/Piping

Before installing the pump unit, install all discharge hose / piping. It may be helpful to lay out discharge runs prior to connecting the pump unit. Use the following when connecting discharge hose or pipe.

1. Choose hose with the correct diameter and pressure rating for your application.
2. Discharge piping should be as direct as possible. Elbows or kinks in the hose will reduce pump capacity.
3. Using very long discharge runs or unnecessarily small bore hoses or pipes can result in pressure losses. If long discharge runs are necessary, consider using larger diameter pipe or hose.
4. Xylem Dewatering Solutions recommends the use of a check valve to prevent backflow between pump on/off cycles. Backflow between on/off cycles can cause the pump to run incorrectly and result in severe damage to the unit. Damage caused by backflow to the unit is not covered by warranty.

Power Cable

Inspect all cable prior to operating the pump. A damaged cable sheath that is lowered into the water could result in the junction chamber filling with water. Your Godwin Sub- Prime pump is equipped with a special cable specific to these units. In the case of damage, the cable must be replaced by an authorized repair center that will be able to provide the appropriate replacement part.

If possible, keep cable out of strong sunlight as this could cause damage to the outer cable jacket. Whenever possible keep cable in a relatively straight path. Coiling cable can result in voltage drops.

If an extension cable is required, ensure that it is correctly sized (AWG) prior to connecting. The power cable(s) should not be spliced extended.

!!! IMPORTANT !!!

Operating the pump unit with damaged cable may result in further damage to the equipment and the risk of electric shock, resulting in serious injury or death to the user.

Pump Installation

After checking rotation, ensuring that discharge runs are connected correctly, and verifying that cable is appropriately sized, the pump can be lowered into the sump. Be sure that the power source is disconnected prior to handling the pump.

!!! WARNING !!!

> Always disconnect the power source when handling the pump unit. Handling the pump while the power source is connected could result in electrical shock causing serious injury or death to the user.

Inspect the unit to be sure that all eye bolts and carrying handles are undamaged. Attach a rope, steel cable or chain to the pump handle and use it to lower the pump into the sump. Ensure that lifting material is adequate to safely carry the weight of the unit. The rope/steel cable/chain should remain at the edge of the sump for use in raising the unit once pumping is completed. Do not attempt to lift the unit using the power cable or discharge hose.

!!! IMPORTANT !!!

> Never use the power cable to raise or lower the pump. Straining the cable can cause severe damage to the unit and serious injury or death to the user.

Take notice of the material in the sump. To avoid excessive wear and ensure maximum capacity, the unit should not be allowed to burrow itself into sand or clay.

If sump material is soft, use one of the following methods to prevent burrowing.

1. Place a plank at the floor of the sump and position the pump on the plank.
2. Install a bed of coarse gravel at the base of the sump to prevent the unit from sinking into the sand.
3. Place the pump into a cut-down and perforated oil drum to keep the pump in position.

During Operation

If the pump has been operating in dirty water, allow it to run for short period in clean water or flush clean water through the discharge port. If clay, cement or other types of dirt are left in the pump, they may clog the impeller and seal area.

Your Godwin Sub-Prime pump is supplied with automatically resetting, overload protection. Therefore, no external protection is required. The built-in motor protector automatically stops the motor in case of overload and /or locked impeller.

After Operation

After operation, clean the inside and outside of the pump with clean water. Store pump in a dried condition.

MANUAL & AUTOMATIC OPERATION

Your Godwin Sub-Prime pump can be operated manually or automatically. A two-float automatic control panel will provide precise operation and is the recommended means of automatic operation for all Sub-Prime units.

Electrical requirements vary from state to state. If you are planning to use a control panel for operation of the unit, Godwin Pumps strongly recommends employing qualified personnel or a licensed electrician for installation of the control system.

!!! IMPORTANT !!!

Take care that the control box matches the voltage and amperage of the pump. Damage to both the pump motor and the float could result from using an improperly sized control panel.

When using a control panel, check that the circuit breaker and overload are properly sized before connecting the unit. For automatic control panels, connect floats to the panel and set desired levels as specified by the manufacturer's instructions. Floats should be set to levels that will minimize the number of starts per hour. Maximum number of starts per hour is 10. In addition, the lower float should be set so that the pump will shut off before product is lowered to the point where the pump is uncovered. Once set, the pump can be lowered into the product and the control panel engaged.

Manual and automatic control panels are available from Xylem Dewatering Solutions.

Float Switches

Xylem Dewatering Solutions can also provide an optional float switch package consisting of 30'/50' power cord with piggy-back power plug, variable length float tether, and sealed float. Pumping range is determined by tether length according to the following guide.

Tether Length	3.5″ 89mm	5″ 127mm	7″ 178mm	9″ 229mm	11″ 279mm	13″ 330mm	15″ 381mm
Pumping Range	6.5″ 165mm	7.5″ 191mm	8.5″ 216mm	10″ 254mm	11″ 279mm	12.5″ 318mm	13.5″ 343mm

Figure 3 - Float Switch Installation

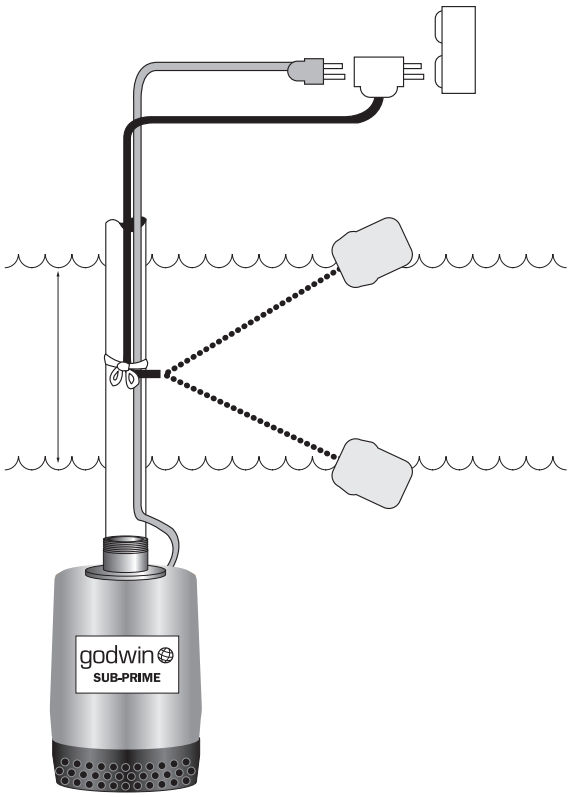

Pumping range is based on operation in non-turbulent conditions. Actual range may vary due to temperature conditions and cord shape. Tether length increases variance of pumping range. Float switch may not be available for all models.

PERMANENT INSTALLATION

If the pump is to be positioned for permanent installation, use the diagram in Figure 4 to provide correct installation.

Figure 4 – Permanent Installation

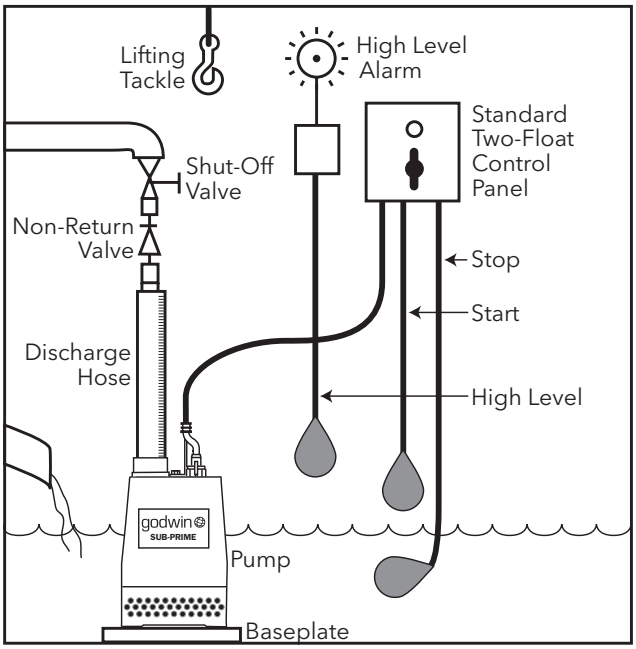

A. Pump should be positioned on a secure, level base to prevent unnecessary movement, creep or sinking.

B. Include lifting tackle for ease of removal when service is required.

C. A shut-off valve enables the user to manually isolate the pump discharge system, allowing access to the check valve or pump during service.

D. Install a non-return check valve to prevent flow of pumped product back into the pump which could result in damage to the unit.

E. Consider the use of a high-level overflow alarm as a safety mechanism in the event that product level increases beyond the capabilities of the unit.

Custom controls for permanent installation are available from Xylem Dewatering Solutions. Please consult the factory for additional information.

PREVENTATIVE MAINTENANCE

Daily Preventative Maintenance

Your Godwin Sub-Prime pump requires very little daily maintenance. Maintenance is normally limited to checking the following items each time the pump is to be used.

!!! WARNING !!!

> Always disconnect the power source when handling the pump unit. Handling the pump while the power source is connected could result in electrical shock causing injury or death.

1. Inspect cable for signs of wear or abrasions. Torn or otherwise damaged cable must be replaced.
2. Review application to ensure that the unit chosen is adequate for the project and that it is in proper operating condition.

Three Month Preventative Maintenance

Every three months (1000 hours), power source should be disconnected, pump should be removed from service and pump oil should be inspected. Oil must be changed every six months (2000 hours of operation). If, upon inspection, the oil contains too much water, i.e. heavily emulsified (milky looking), or the oil housing contains separated water, the oil should be changed regardless of amount of time since inspection. A procedure for removing and inspecting pump oil is included in "Six Month Preventative Maintenance."

Six Month Preventative Maintenance

After every six months of operation, your Godwin Sub-Prime pump should be removed from service for preventative maintenance inspections.

At this time, you should do the following:

!!! WARNING !!!

Always disconnect the power source when handling the pump unit. Handling the pump while the power source is connected could result in electrical shock causing injury or death.

1. Disconnect pump from electrical service with proper Lock Out/Tag Out procedures.
2. Clean pump thoroughly and inspect for visible damage.
3. Inspect cable for wear abrasions and cuts. Should cable need to be replaced, consult dealer for approved repair facility.
4. Have the motor meggered by an electrical technician. Proper reading for a good stator are readings greater than 20 MegOhms. Lower readings, while not necessarily indicating a bad motor, may signify moisture intrusion into the motor. If readings are less than 20 MegOhms, consult dealer for an authorized service facility. Readings below 1 MegOhm are unsatisfactory, and the pump must be serviced.
5. Lay pump on its side and remove bottom plate to inspect condition of impeller and wearplate. Spin impeller by hand to feel for damage. Listen for bearing and other noises. If wearplate needs adjustment, loosen the nuts holding the wearplate in position and then tighten the same nuts evenly all around until the wearplate just touches the impeller. Back off the nuts slowly and evenly until the impeller just spins free. Check that all nuts are tight and replace bottom plate.
6. Replace pump oil. Use the following procedure to remove, inspect and replace oil:

a. Unscrew the oil plug and remove associated gasket.

Figure 5 – Oil Plug Removal

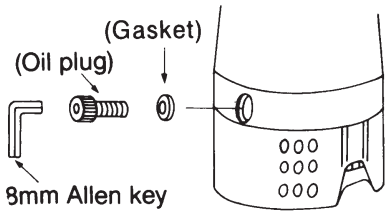

b. Lay the pump on its side and drain all oil into a suitable vessel.

Figure 6 – Draining Pump Oil

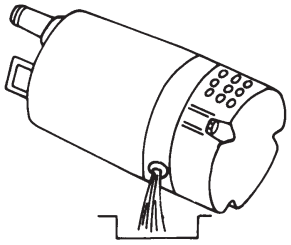

c. If the oil appears heavily emulsified (milky looking) or if the oil housing contains separated water, the oil and shaft seal must be replaced.

d. Using an oil can, fill with appropriate pump oil (see "Specifications"). Tighten the oil plug and seal washer securely.

Figure 7 – Filling Pump Oil

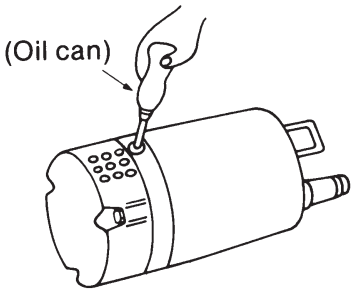

If during preventative maintenance, additional service is indicated, consult the factory for your nearest authorized service location.

Yearly Preventative Maintenance

To ensure your Sub-Prime pump remains in top operating condition, it should be serviced annually by an authorized service center. If the pump is due for yearly preventative maintenance, remove the pump from service and contact the factory for your nearest authorized service location.

CORRECTIVE MAINTENANCE

If the unit will not pump, use the following Troubleshooting Guide to determine the possible cause and correction.

TROUBLESHOOTING GUIDE

Pump will not start

Possible Cause	Correction
Power Supply Failure	Check fuse and replace if necessary, reset circuit breaker or ask power company to check voltage.
Loose wiring	Check condition of wiring. Tighten if necessary.
Foreign matter in pump	Flush pump clean.
Obstruction in pump or piping	Remove.
Improper Rotation (3-phase units)	Qualified personnel or a licensed electrician observing all proper safety procedures should reverse direction by switching any two of the primary leads from the pump.
Improper Rotation (Single Phase)	Consult Factory.
Damaged Cable	Damaged cable must be replaced with cable of compatible type. Contact the factory for your closest authorized service center.
Jammed Impeller	Disconnect pump from power by performing Lock Out/Tag Out procedure. With power isolated, remove pump from water and lay it on its side. Remove bottom of screen from pump and observe if impeller rotates by hand. If it does not rotate freely, look for obstruction. If impeller can not be freed, then place bottom back on pump and consult factory for a list of authorized service centers.
Water In Motor	Contact factory for a list of authorized service locations.
Motor Breakdown	Contact factory for a list of authorized service locations

Motor Protector Trips
(Reset by disconnecting and re-connecting the current to the unit.)

Possible Cause	Correction
Under Voltage	Verify that power supply matches motor requirements. Contact a qualified electrician to review the application.
Water Temperature Too High	Reduce temperature to maximum 103°F / 40°C
Motor Overload	Allow pump to cool down. Restart pump while taking amp draw reading. If pump trips again or amp draw is higher than rated value, shut pump off and consult factory for a list of authorized service centers.
Jammed Impeller	Disconnect pump from power by performing Lock Out/Tag Out procedure. With power isolated, remove pump from water and lay it on its side. Remove bottom of screen from pump and observe if impeller rotates by hand. If it does not rotate freely, look for obstruction. If impeller can not be freed, then place bottom back on pump and consult factory for a list of authorized service centers.
Viscosity too high	Consult factory for suggested correction.

TROUBLESHOOTING GUIDE (Continued)

Too Little or No Product

Possible Cause	Correction
Strainer blocked	Remove debris from screen. Flush the pump to clean.
Hose pinched or kinked	Rearrange hose to run in a straight line with no bends or kinks
Hose too long or undersized	Shorten hose, increase hose diameter or use larger pump model
Total dynamic head too high	Switch to a unit capable of pumping to a higher head or consider connecting several pumps in series.
Liquid level in sump too low	Check liquid level and location of switches if applicable.
Obstruction in pump or piping	Remove.
Worn or damaged impeller	Repair/Replace.

WIRING DIAGRAMS

Following are wiring diagrams for the GSP Pump Models. These drawings are for reference only. Should the pump require electrical servicing, including installation or alteration of any electrical components, contact the factory for your nearest authorized service center. Installation or alteration of electrical components by other than an authorized service center will void the pump warranty.

GSP05, GSP10, Single Phase, 115 and 230 Volt Wiring Diagram

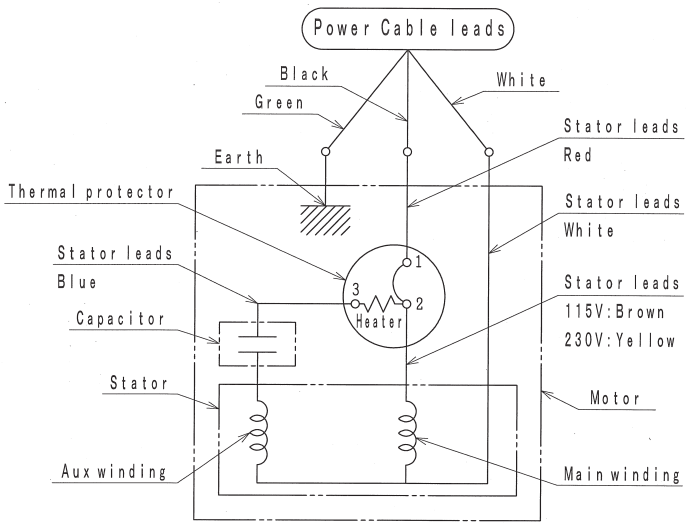

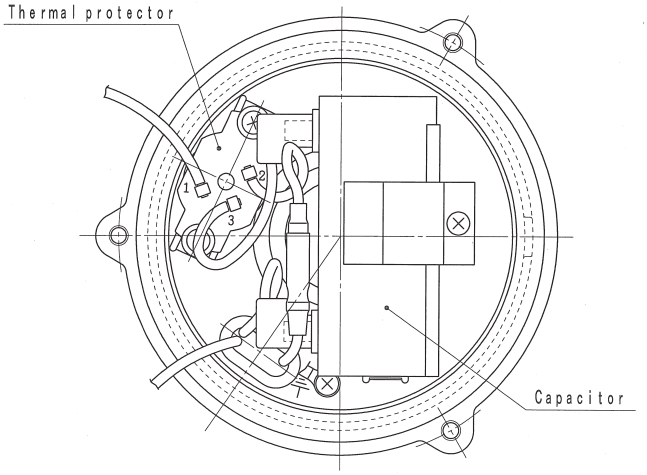

PARTS

The following pages show parts breakdowns for the Godwin Sub-Prime GSP05/GSP10 pump. When contacting factory for parts replacements, please have the serial number of your pump available.

Exploded View – GSP05 Parts Breakdown

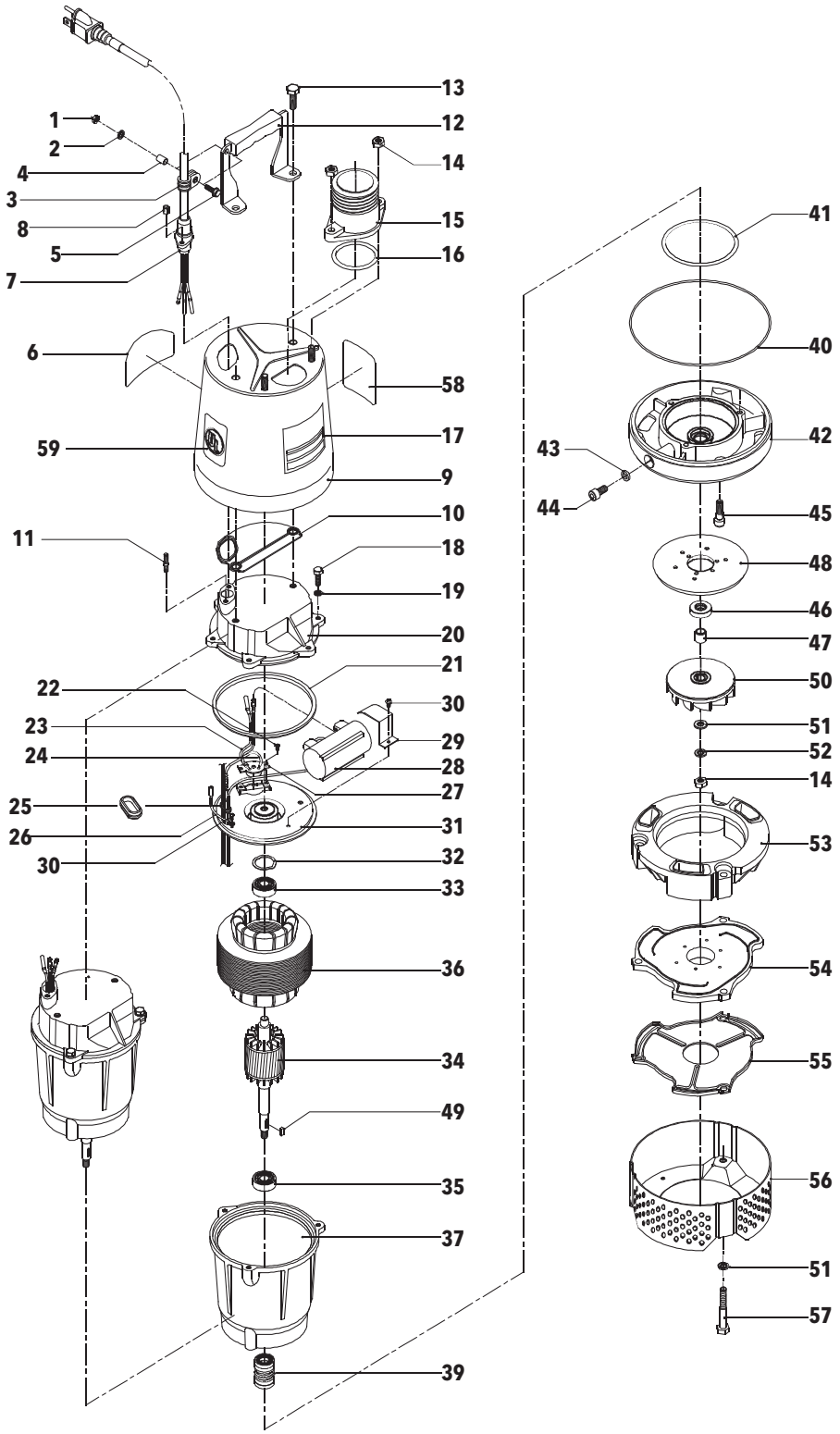

Parts List – GSP05 - Single Phase

No.	Description	Part Number	Qty.
1	NUT	GSP051001	1
2	WASHER	GSP051002	1
3	CABLE CLAMP	GSP051003	1
4	CLAMP SPACER	GSP051004	1
5	CLAMP BOLT	GSP051005	1
6	SUBPRIME LABEL	GSP010006	1
7	30 FT POWER CABLE	GSP050007 (115V)	1
		GSP050007230 (230V)	1
8	CABLE NUT	GSP051008	2
9	PUMP CASING	GSP050009	1
10	PACKING	GSP051010	1
11	STUD	GSP051011	2
12	HANDLE	GSPT051301	1
13	BOLT	GSP051013	2
14	NUT	1140063A	3
15	2" DISCHARGE FITTING	GSP051015	1
16	O-RING	GSP051016	1
17	NAME PLATE	GSP050017	1
18	BOLT	GSP051018	3
19	WASHER	GSP051019	3
20	MOTOR COVER	GSP051020	1
21	PACKING	GSP051021	1
22	SCREW	GSP051022	2
23	LEAD WIRE	GSP010023	1
24	LEAD WIRE	GSP010024	1
25	GROMMET	GSP051025	1
26	GROUND WIRE	GSP051026	1
27	MOTOR PROTECTOR	GSP050027	1
28	CAPACITOR	GSP051028	1
29	BAND	GSP051029	1
30	SCREW	GSP051030	2

No.	Description	Part Number	Qty.
31	BEARING HOUSING	GSP051031	1
32	WAVE WASHER	GSP051032	1
33	UPPER BEARING	GSP051033	1
34	ROTOR	GSP050034	1
35	LOWER BEARING	GSP051035	1
36	STATOR	GSP050036 (115V)	1
		GSP050036230 (230V)	1
37	STATOR CASING	GSP050037	1
39	MECHANICAL SEAL	GSP051039	1
40	ORING	GSP051040	1
41	ORING	38.1283.4112A	1
42	SEAL HOUSING	GSP051042	1
43	SEALING WASHER	GSP051043	1
44	OIL PLUG	GSP051044	1
45	BOLT	GSP051045	3
46	OIL SEAL	GSP051046	1
47	SLEEVE	GSP051047	1
48	REAR COVER	GSP051048	1
49	IMPELLER KEY	GSP051049	1
50	IMPELLER	GSP050050	1
51	WASHER	1147016A	4
52	SPRING WASHER	35.0201.6162A	1
53	PUMP CASING	GSP051063	1
54	SUCTION PLATE	GSP051064	1
55	SUCTION COVER	GSP051055	1
56	STRAINER	GSP051056	1
57	BOLT	GSP051057	3
58	WARNING LABEL	GSP051058	1
59	UL LABEL	GSP051059	1

Exploded View – GSP10 Parts Breakdown

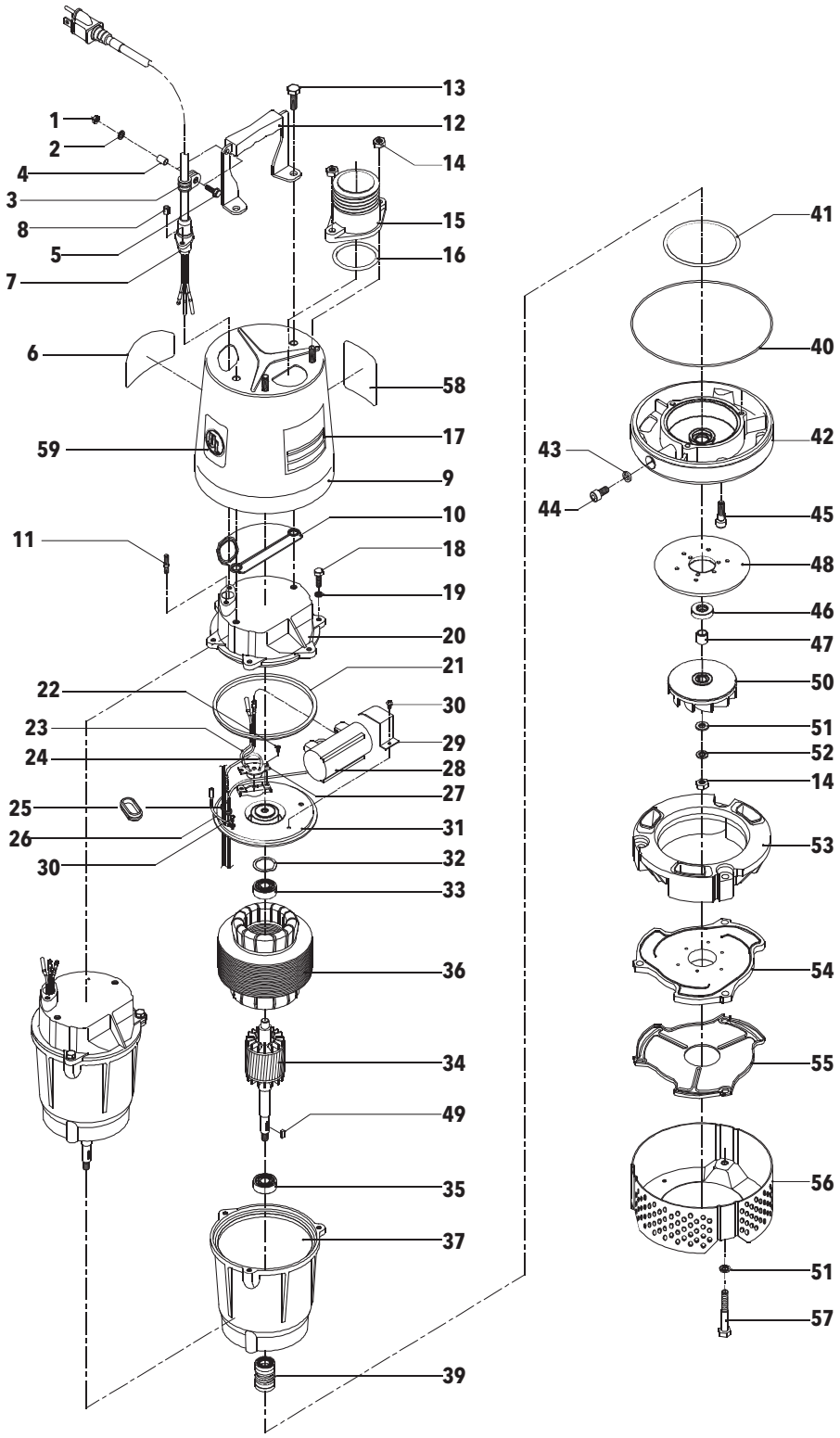

Parts List – GSP10 - Single Phase

No.	Description	Part Number	
1	NUT	GSP051001	1
2	WASHER	GSP051002	1
3	CABLE CLAMP	GSP051003	1
4	CLAMP SPACER	GSP051004	1
5	CLAMP BOLT	GSP051005	1
6	SUBPRIME LABEL	GSP010006	1
7	50 FT POWER CABLE	GSP010007115 (115V)	1
		GSP010007230 (230V)	1
8	CABLE NUT	GSP051008	2
9	PUMP CASING	GSP050009	1
10	PACKING	GSP051010	1
11	STUD	GSP051011	2
12	HANDLE	GSPT051301	1
13	BOLT	GSP051013	2
14	NUT	1140063A	3
15	2" DISCHARGE FITTING	GSP051015	1
16	O-RING	GSP051016	1
17	NAME PLATE	GSP010017	1
18	BOLT	GSP051018	3
19	WASHER	GSP051019	3
20	MOTOR COVER	GSP051020	1
21	PACKING	GSP051021	1
22	SCREW	GSP051022	2
23	LEAD WIRE	GSP010023	1
24	LEAD WIRE	GSP010024	1
25	GROMMET	GSP051025	1
26	GROUND WIRE	GSP051026	1
27	MOTOR PROTECTOR	GSP010027	1
28	CAPACITOR	GSP051028	1
29	BAND	GSP051029	1
30	SCREW	GSP051030	2

No.	Description	Part Number	
31	BEARING HOUSING	GSP051031	1
32	WAVE WASHER	GSP051032	1
33	UPPER BEARING	GSP051033	1
34	ROTOR	GSP010034	1
35	LOWER BEARING	GSP051035	1
36	STATOR	GSP010036 (115V)	1
		GSP010036230 (230V)	1
37	STATOR CASING	GSP010037	1
39	MECHANICAL SEAL	GSP051039	1
40	ORING	GSP051040	1
41	ORING	38.1283.4112A	1
42	SEAL HOUSING	GSP051042	1
43	SEALING WASHER	GSP051043	1
44	OIL PLUG	GSP051044	1
45	BOLT	GSP051045	3
46	OIL SEAL	GSP051046	1
47	SLEEVE	GSP051047	1
48	REAR COVER	GSP051048	1
49	IMPELLER KEY	GSP051049	1
50	IMPELLER	GSP010050	1
51	WASHER	1147016A	4
52	SPRING WASHER	35.0201.6162A	1
53	PUMP CASING	GSP051063	1
54	SUCTION PLATE	GSP051064	1
55	SUCTION COVER	GSP051055	1
56	STRAINER	GSP051056	1
57	BOLT	GSP051057	3
58	WARNING LABEL	GSP051058	1
59	UL LABEL	GSP051059	1

Xylem |ˈzīləm|

Xylem (NYSE: XYL) is a leading global water technology provider, enabling customers to transport, treat, test and efficiently use water in public utility, residential and commercial building services, industrial and agricultural settings. The company does business in more than 150 countries through a number of market-leading product brands, and its people bring broad applications expertise with a strong focus on finding local solutions to the world's most challenging water and wastewater problems. Xylem is headquartered in White Plains, N.Y., with 2012 annual revenues of $3.8 billion and approximately 12,900 employees worldwide. Xylem has been named to the Dow Jones Sustainability World Index for the last two years for advancing sustainable business practices and solutions worldwide.

The name Xylem is derived from classical Greek and is the tissue that transports water in plants, highlighting the engineering efficiency of our water-centric business by linking it with the best water transportation of all—that which occurs in nature. For more information, please visit us at www.xyleminc.com.

xylem
Let's Solve Water

Xylem Dewatering Solutions
22 Floodgate Road
Bridgeport, New Jersey 08014
USA

Tel: 856-467-3636

Fax: 856-467-4841

sales@godwinpumps.com

www.godwinpumps.com

© 2013 Xylem, Inc. GSP0510_Subprime November 2013

C. Type 1 Pump: Installation Detail

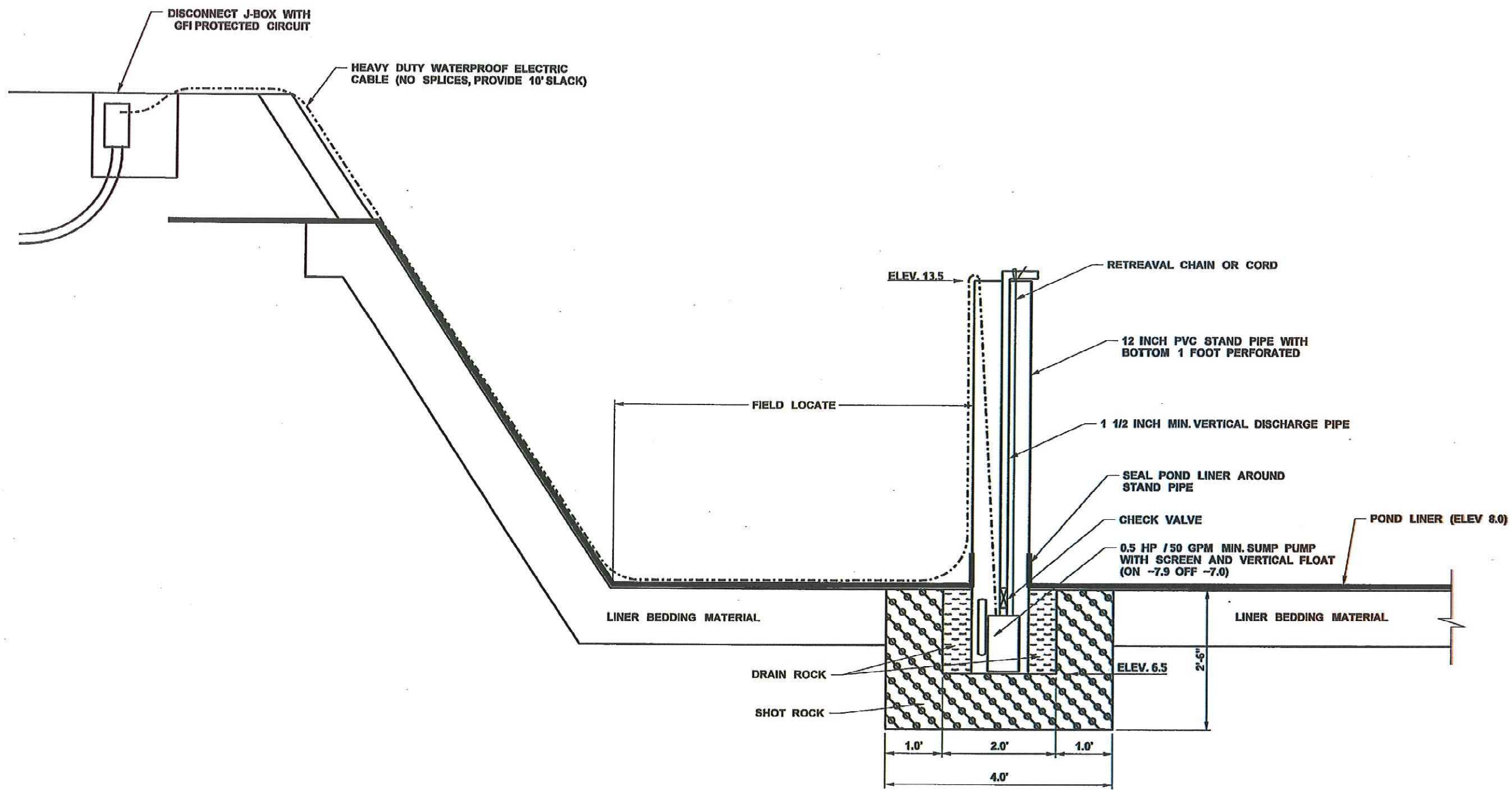

UNDER LINER SUMP PUMP DETAIL (1)
(N.T.S.)

Released For Construction
DAA, DGAM - 11.22.11

FILE NAME	IP_PWP:dms52808\49854_dd_a_024.dgn						
TIME	22-NOV-2011 10:28				REGION NO. 10	STATE WASH	FED.AID PROJ.NO.
DATE	22-NOV-2011						
PLOTTED BY	tmakousky						
DESIGNED BY	R. KITTLER				JOB NUMBER 007826		
ENTERED BY	T. MAKOUSKY						
CHECKED BY	T. SCHNETZER				CONTRACT NO. 007826		LOCATION NO.
PROJ. ENGR.	T. SCHNETZER	REV 0 - RELEASE FOR CONSTRUCTION (NDC035)	11-16-11	RIK			
REGIONAL ADM.	K. DAYTON	REVISION	DATE	BY			

Kiewit General HNTB kpff

RICHARD A. KITTLE, STATE OF WASHINGTON, 45071, REGISTERED PROFESSIONAL ENGINEER, 11-22-11

Washington State Department of Transportation
AS-BUILT

SR 520
PONTOON CONSTRUCTION
DESIGN-BUILD PROJECT
PACKAGE B - SITE FACILITY IMPROVEMENTS

DRAINAGE DETAILS

DD24

SHEET 93A OF 270 SHEET

D. Type 2/3 Pumps: Vaughn SE4S3-460V-080 / Vaughn SE3P1-460V-080

There are three Type 2 pumps in a sump at the north end of the basin. There are two Type 3 pumps in a sump at the south end of the basin. The technical specifications for both types of pumps were provided in a joint document from the manufacturer. The document follows in the subsequent pages.

DETAIL NOTES:

1. CONTRACTOR SHALL VERIFY THAT INLET OUTLET FITS ANY FITTINGS AND/OR PIPES USED FOR CONNECTION.

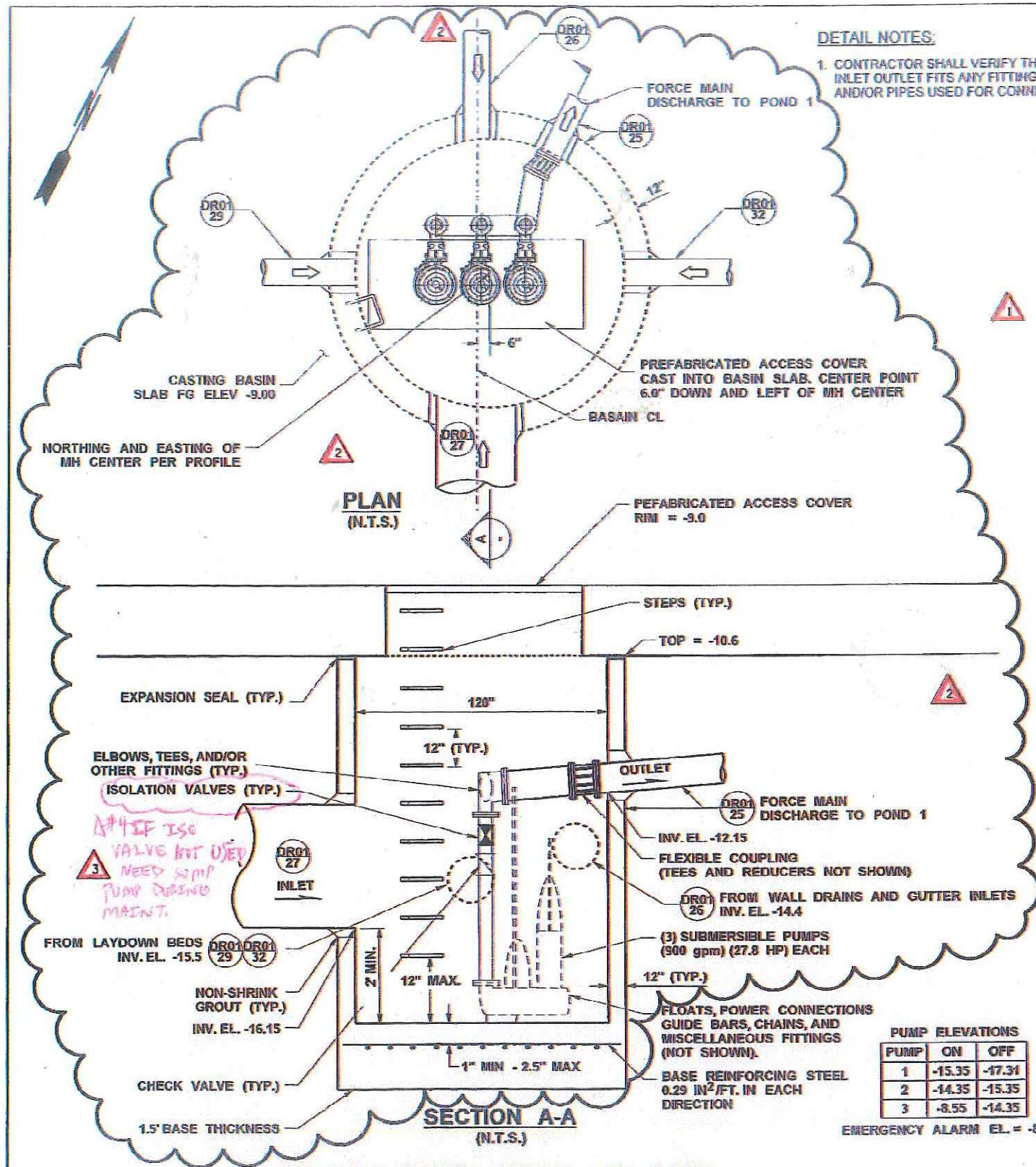

Δ#4 IF ISO VALVE NOT USED NEED SUMP PUMP DURING MAINT.

PUMP ELEVATIONS

PUMP	ON	OFF
1	-15.35	-17.31
2	-14.35	-15.35
3	-8.55	-14.35

EMERGENCY ALARM EL. = -8.05

PROCESS WATER PUMPS AND SUMP
CATCH BASIN TYPE SPECIAL 120 IN. DIAM. CONTROL STRUCTURE (1)
(N.T.S.)

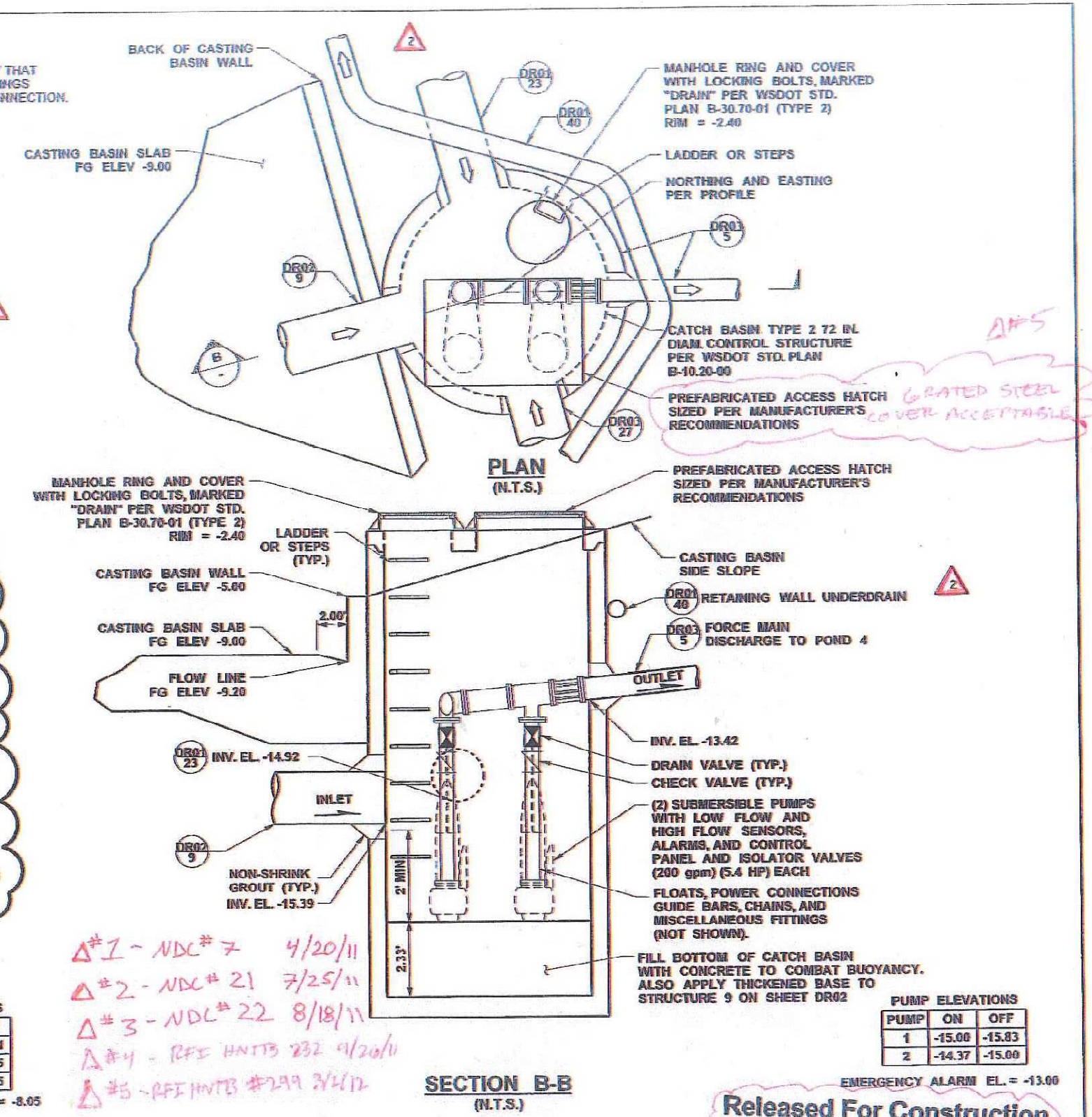

Δ#5 GRATED STEEL COVER ACCEPTABLE

Δ#1 - NDC# 7 4/20/11
Δ#2 - NDC# 21 7/25/11
Δ#3 - NDC# 22 8/18/11
Δ#4 - RFI HNTB 232 9/20/11
Δ#5 - RFI HNTB #299 3/4/12

PUMP ELEVATIONS

PUMP	ON	OFF
1	-15.00	-15.83
2	-14.37	-15.00

EMERGENCY ALARM EL. = -13.00

Released For Construction
DAH 7-20-11

GROUNDWATER PUMPS AND SUMP
CATCH BASIN TYPE 2 72 IN. DIAM. CONTROL STRUCTURE (2)
(N.T.S.)

FILE NAME	IP_PWP:dms52808\49854_dd_s_012.dgn				REGION NO. 10	STATE WASH	FED.AID PROJ.NO.
TIME	19-JUL-2011 08:16						
DATE	19-JUL-2011						
PLOTTED BY	tmakousky				JOB NUMBER 007826		
DESIGNED BY	J. RADUENZ	REV 3 - NDC 022 PUMP STATION RELOCATION	07-20-11	RIK			
ENTERED BY	R. JOHNSON	REV 2 - NDC 021 WALL EXTENSION	06-24-11	RIK			
CHECKED BY	R. KITTLER	REV 1 - NDC 007	04-08-11	RIK	CONTRACT NO. 007826		LOCATION NO.
PROJ. ENGR.	T. SCHNETZER	REV 0 - RELEASE FOR CONSTRUCTION	02-25-11	RIK			
REGIONAL ADM.	K. DAYTON	REVISION	DATE	BY			

Kiewit General HNTB kpff

RICHARD A. KITTLER STATE OF WASHINGTON 38071 REGISTERED PROFESSIONAL ENGINEER 5/19/11

Washington State Department of Transportation
AS-BUILT

SR 520
PONTOON CONSTRUCTION
DESIGN-BUILD PROJECT
PACKAGE B - SITE FACILITY IMPROVEMENTS

DRAINAGE DETAILS

DD12

SHEET 82 OF 270 SHEET

VAUGHAN COMPANY, INC.

ENGINEERING SUBMITTAL

PORT OF GRAYS HARBOR
520 PONTOON PROJECT

SUBMERSIBLE RUN OFF PUMPS

3 EACH MODEL SE4S3-460V-098
25 HP, 1750 RPM RELIANCE MOTORS

2 EACH MODEL SE3P1-460V-080
7.5 HP, 1750 RPM RELIANCE MOTORS

June 22, 2011
Prepared by: Ferdy Kloetzer

VAUGHAN COMPANY, INC.
364 MONTE-ELMA ROAD
MONTESANO, WA 98563
(360) 249-4042
(360) 249-6155 FAX

TABLE OF CONTENTS
ENGINEERING SUBMITTAL
PORT OF GRAYS HARBOR
SUBMERSIBLE PUMPS
SECTION 11317

1. List of equipment to be supplied.
2. Outline dimension drawing no. 114799 describing the proposed SE4S3-460V-098 Vaughan pump.
3. Outline dimension drawing no. 114800 describing the proposed SE3P1-460V-080 Vaughan pump.
4. Vaughan spec sheet describing the Vaughan E-Series Submersible Chopper pump.
5. Certified Performance curves marked for proposed performance.
6. Exploded assembly drawing showing materials of construction.
7. Data for the Reliance Electric submersible 25 HP and 7.5 HP, 1750 RPM motors with wiring diagram.
8. Data sheets describing the paint.
9. Control panel information.

LIST OF EQUIPMENT TO BE SUPPLIED
PORT OF GRAYS HARBOR
SUBMERSIBLE RUN OFF PUMPS

3 EA VAUGHAN MODEL SE4S3-460V-098 SUBMERSIBLE CHOPPER PUMP, PUMP PERFORMANCE: 900 GPM @ 45' TDH,

CONSISTING OF:
CASING AND BACK PULL-OUT PLATE, cast ductile iron.
IMPELLER, CUTTER NUT AND UPPER CUTTER, cast steel, heat treated to minimum 60 Rockwell C Hardness. Impeller dynamically balanced.
CUTTER BAR, plate steel, heat treated to minimum 60 Rockwell C Hardness.
SHAFT, heat treated steel.
ELASTOMERS, BUNA N.
DRIVE, 25 HP, 1750 RPM, 460 volt, 3 phase, 60 Hz, 1.15 SF, Explosion Proof (Class 1, Group D) submersible motor with tandem mechanical seals, moisture sensors, internal thermostats, and 25 ft of power cable, manufactured by Reliance.
STANDARD FINISH: treated with solvent wash and coated with Tnemec 27WB Epoxy.

3 EA STANDARD GUIDE RAIL SYSTEM, as follows:

4" BASE ELBOW, cast ductile iron.
4" GUIDE BRACKET, cast ductile iron.
TOP MOUNTING AND CHAIN HOLDER BRACKET, 316 stainless steel.
(1) INTERMEDIATE STIFFENER BRACKETS, 316 stainless steel.

1 EA TRI-PLEX CONTROL PANEL, per schematic and bill of materials.

LIST OF EQUIPMENT TO BE SUPPLIED
PORT OF GRAYS HARBOR
SUBMERSIBLE RUN OFF PUMPS

2 EA VAUGHAN MODEL SE3P1-460V-080 SUBMERSIBLE CHOPPER PUMP, CAPABLE OF 200 GPM @ 45' TDH,

CONSISTING OF:
CASING AND BACK PULL-OUT PLATE, cast ductile iron.
IMPELLER, CUTTER NUT AND UPPER CUTTER, cast steel, heat treated to minimum 60 Rockwell C Hardness. Impeller dynamically balanced.
CUTTER BAR, plate steel, heat treated to minimum 60 Rockwell C Hardness.
SHAFT, heat treated steel.
ELASTOMERS, BUNA N.
DRIVE, 7.5 HP, 1750 RPM, 460 volt, 3 phase, 60 Hz, 1.15 SF, Explosion Proof (Class 1, Group D) submersible motor with tandem mechanical seals, moisture sensors, internal thermostats, and 25 ft of power cable, manufactured by Reliance.
STANDARD FINISH: treated with solvent wash and coated with Tnemec 27WB Epoxy.

2 EA STANDARD GUIDE RAIL SYSTEM CONSISTING OF:

3" BASE ELBOW, cast ductile iron.
3" GUIDE BRACKET, cast ductile iron.
TOP MOUNTING AND CHAIN HOLDER BRACKET, 316 stainless steel.
(1) INTERMEDIATE STIFFENER BRACKETS, 316 stainless steel.

1 EA DUPLEX CONTROL PANEL, per schematic and Bill of Materials:

NOTE:
THE ITEMS CONTAINED IN THIS LIST OF EQUIPMENT ARE THE ONLY ITEMS BEING SUPPLIED BY VAUGHAN COMPANY, THE PUMP MANUFACTURER. OTHER SPECIFIC ITEMS WHICH MAY BE REQUIRED BY THE SPECIFICATION, INCLUDING, BUT NOT LIMITED TO THE ITEMS LISTED BELOW, MUST BE FURNISHED BY OTHERS:

GAUGES, SWITCHES, VALVES AND OTHER SPECIALTIES NOT SPECIFICALLY CALLED OUT HEREIN.
SPECIAL COATINGS OTHER THAN THOSE QUOTED.
FACTORY PERFORMANCE, HYDRO, VIBRATION AND NOISE TESTS.
EQUIPMENT, LABOR, MATERIAL AND PERSONNEL REQUIRED TO PERFORM FIELD TESTING OF PUMPS.
SPECIAL MOTOR SPECIFICATIONS INCLUDING HIGH EFFICIENCY, MILL AND CHEM DUTY, EXPLOSION PROOF, INTERNAL SPACE HEATERS, ETC.
FACTORY MOTOR TESTS.
INTRINSICALLY SAFE FEATURES.
STARTUP SERVICES.
SPARE PARTS.
ADDITIONAL LUBRICANTS OTHER THAN THOSE CONTAINED WITHIN THE PUMP.
ANCHOR BOLTS.
ACCESS HATCH COVERS OR HOISTS.
2 INCH PIPE RAILS FOR GUIDERAILS.
LIFTING CABLES AND SAFETY HOOKS.
FREIGHT

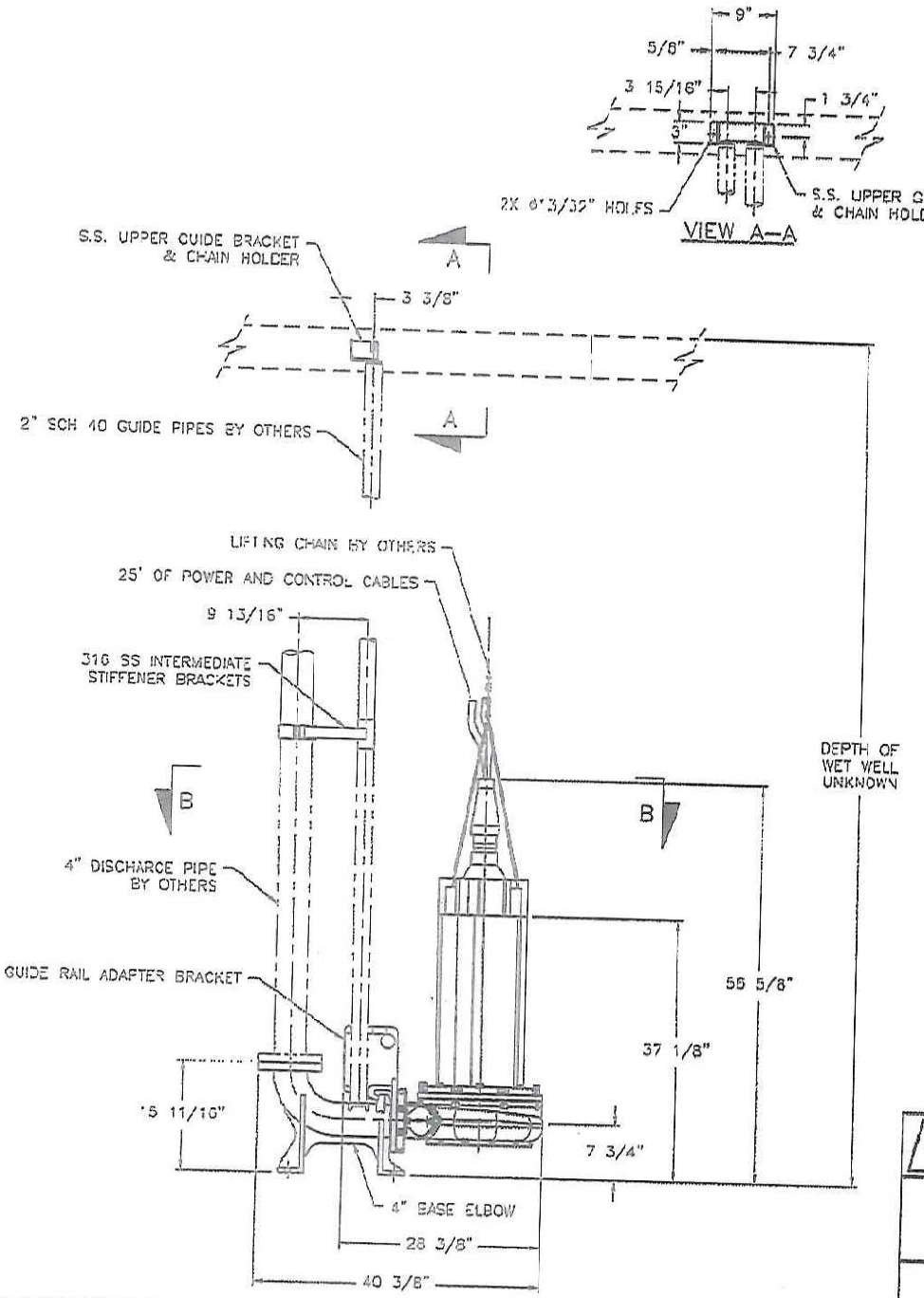

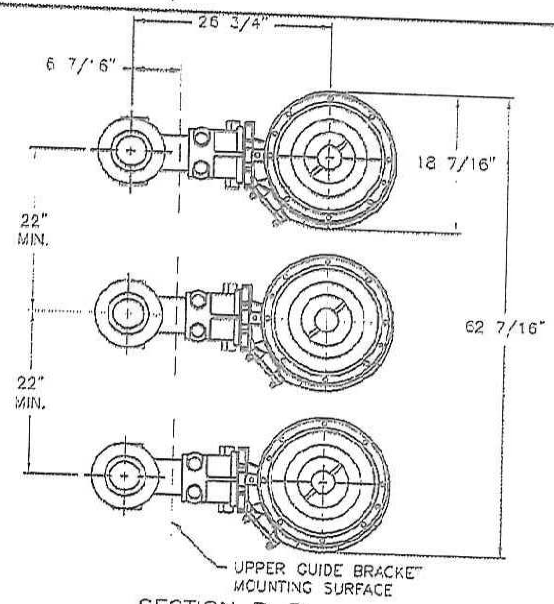

SECTION B–B

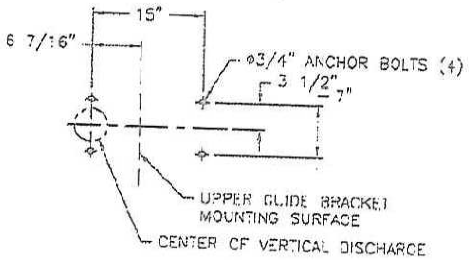

ANCHOR BOLT DETAIL

NOTES:

1. PUMP WEIGHT: 216 LBS
2. MOTOR WEIGHT: 750 LBS
3. TOTAL WEIGHT: 966 LBS
4. PERFORMANCE REQUIRED: 900 GPM @ 45' TDH
5. MOTOR: 25 HP, 1750 RPM, 460V, 3 PH, 60 HZ, 1.15 SF, EXPLOSION PROOF (CLASS 1, GRP D) SUBMERSIBLE MOTOR W/ TANDEM MECHANICAL SEALS MOISTURE SENSORS, INTERNAL THERMOSTATS
6. BUNA–N ELASTOMERS REQUIRED.
7. (3) 4" STANDARD GUIDERAIL SYSTEMS REQUIRED.
8. FINISH: SOLVENT WASHED & COATED W/ INEMEC TYPOXY 27WB EPOXY.
9. (1) TRI–PLEX CONTROL PANEL REQUIRED.

Vaughan

OUTLINE DIMENSIONS
MODEL: SE4S3–460V–098
(3) RUN OFF PUMPS
PORT OF GRAYS HARBOR

YCC	YCC	KCW	1"=1'	
		6/22/11	114799	0

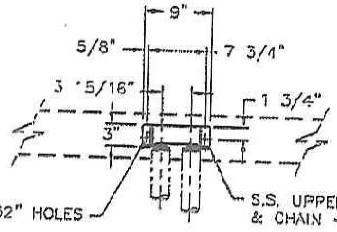

VIEW A–A

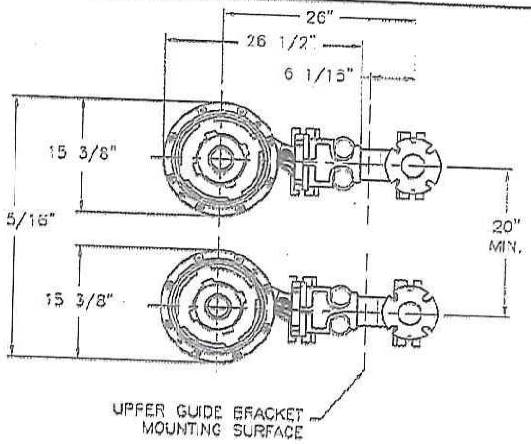

SECTION B–B

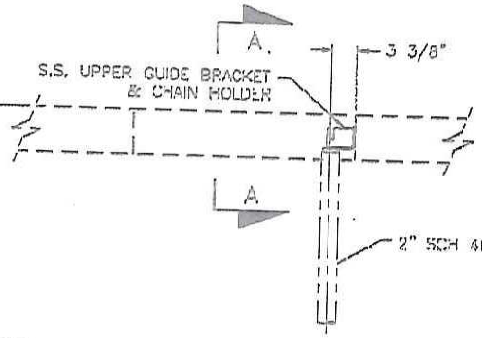

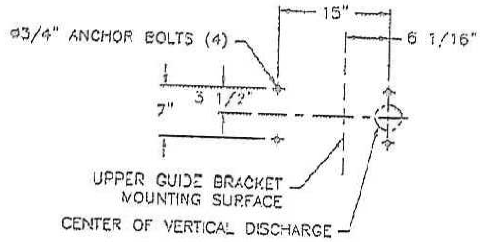

ANCHOR BOLT DETAIL

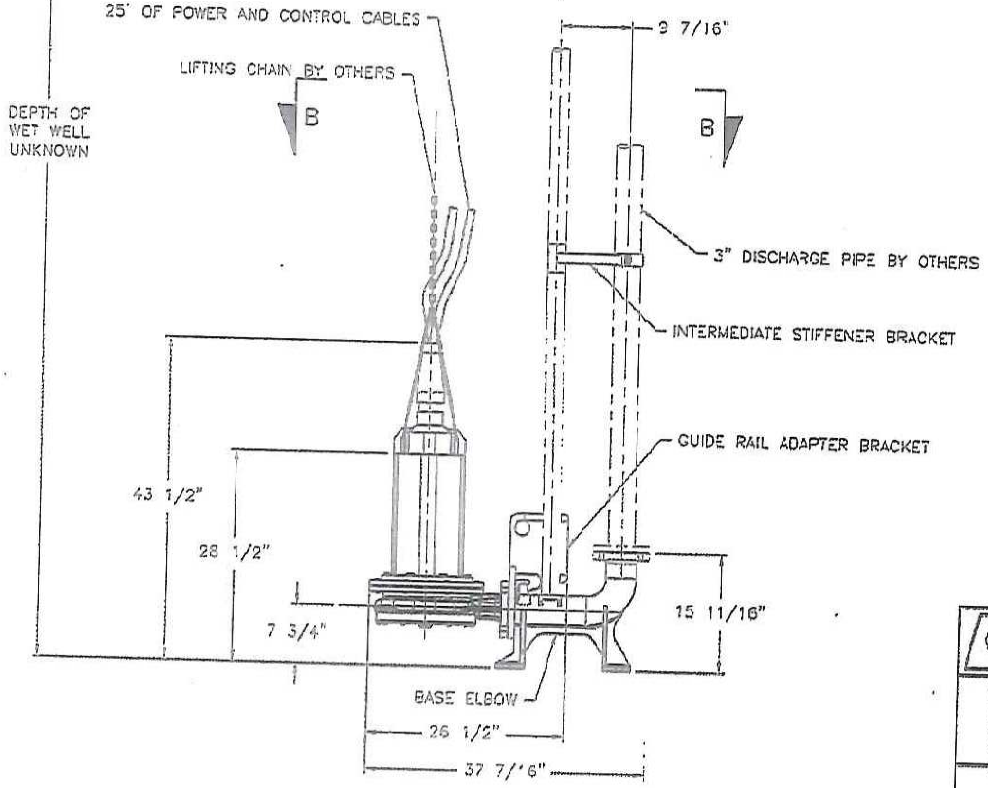

NOTES:

1. PUMP WEIGHT: 218 LBS
2. MOTOR WEIGHT: 200 LBS
3. TOTAL WEIGHT: 418 LBS
4. PERFORMANCE REQUIRED: 200 GPM @ 45' TDH
5. MOTOR: 7.5 HP, 1750 RPM, 460V, 3 PH, 60 HZ, 1.15 SF, EXPLOSION PROOF (CLASS 1, GRP D) SUBMERSIBLE MOTOR W/ TANDEM MECHANICAL SEALS MOISTURE SENSORS, INTERNAL THERMOSTATS
6. BUNA–N ELASTOMERS REQUIRED.
7. (2) 3" STANDARD GUIDERAIL SYSTEMS REQUIRED.
8. FINISH: SOLVENT WASHED & COATED W/ TNEMEC TYPOXY 27WB EPOXY.
9. (1) DUPLEX CONTROL PANEL REQUIRED.

Vaughan

VAUGHAN CO., INC.
364 MONTE-CARLO ROAD
MONROEVILLE, PA 15146
PHONE (412) 349-4000
FAX (412) 349-6155

THIS DRAWING IS THE PROPERTY OF VAUGHAN COMPANY INC. IT IS FURNISHED FOR YOUR CONFIDENTIAL INFORMATION. PURPOSES ONLY, AND IS NOT TO BE DISCLOSED TO ANYONE NOR BE REPRODUCED OR USED FOR ANY OTHER PURPOSES WITHOUT THE EXPRESS WRITTEN CONSENT OF VAUGHAN COMPANY INC.

OUTLINE DIMENSIONS
MODEL: SE3P1-48V-080
(2) RUN OFF PUMPS
PORT OF GRAYS HARBOR

DRAWN BY: YCC	CHECKED BY: YCC	DRAWN BY: KCW	SCALE: 1"=1'	DWG NUMBER
		DATE: 6/22/11	DRAWING NUMBER: 114800	REVISION NUMBER: 0

SPECIFICATIONS

3"-6" SUBMERSIBLE E-SERIES CHOPPER PUMPS

The submersible chopper pump shall be specifically designed to pump waste solids at heavy consistencies without plugging or dewatering of the solids. Materials shall be chopped/macerated and conditioned by the pump as an integral part of the pumping action. The pump must have demonstrated the ability to chop through and pump high concentrations of solids such as plastics, heavy rags, grease and hair balls, wood, paper products and stringy materials without plugging, both in tests and field applications. Pump shall be manufactured by Vaughan Co., Inc.

DETAILS OF CONSTRUCTION

A. Casing and Back Pull-Out Plate: The pump casing shall be of volute design, spiraling outward to the 125 lb. flanged centerline discharge. Back pull-out design shall incorporate jacking bolts for accurate adjustment of impeller-to-cutter bar clearance. Casing & backplate shall be ductile cast iron with all water passages to be smooth, and free of blowholes and imperfections for good flow characteristics. A pressure tap shall be included on or near the discharge flange. Backplate shall include a replaceable Rockwell C 60 steel cutter adjustable for 0.005-0.015" clearance to cut against the rotating impeller pumpout vanes for removing fiber and debris.

B. Impeller: Shall be semi-open type with pump out vanes to reduce seal area pressure. Chopping/maceration of materials shall be accomplished by the action of the cupped and sharpened leading edges of the impeller blades moving across the cutter bar at the intake openings, with a maximum set clearance between the impeller and cutter bar of 0.015-0.025" cold. Impeller shall be cast alloy steel heat treated to minimum Rockwell C 60 and dynamically balanced. The impeller shall be keyed to the shaft and shall have no axial adjustments and no set screws.

C. Cutter Bar Plate: Shall be recessed into the pump bowl and shall contain at least 2 shear bars extending diametrically across the intake opening to within 0.010-0.020" of the rotating cutter nut tooth, for the purpose of preventing intake opening blockage and wrapping of debris at the shaft area. Chopper pumps utilizing individually mounted shear bars shall not be acceptable. Cutter bar shall be alloy steel heat-treated to minimum Rockwell C 60.

D. Cutter Nut: The impeller shall be secured to the shaft using a cutter nut, designed to cut stringy materials and prevent binding using a raised, rotating cutter tooth. The cutter nut shall be cast steel heat treated to minimum Rockwell C 60.

E. Upper Cutter: Shall be threaded into the back pull-out adapter plate behind the impeller, designed to cut against the pump-out vanes and the impeller hub, reducing and removing stringy materials from the mechanical seal area. Upper cutter shall be cast steel heat treated to minimum Rockwell C 60. The upper cutter teeth are positioned as closely as possible to the center of shaft rotation to minimize cutting torque and nuisance motor tripping. The ratio of upper cutter cutting diameter to shaft diameter in the upper cutter area of the pump shall be 3.0 or less.

F. Shafting: Pump shafting shall be heat-treated alloy steel. The pump shaft shall directly couple to the motor shaft, with a bolt and keyway.

G. Submersible Electric Motor: Shall be U/L LISTED EXPLOSION PROOF for Class 1, Group D, Division 1 hazardous locations, rated at 25 & 7.5 HP, 1750 RPM, 460 Volts, 60 Hertz and 3 phase, with a 1.15 service factor and Class F insulation. Motor shall be equipped with tandem independently mounted mechanical seals in oil bath and with dual moisture sensing probes. The inner and outer seals shall be separated by an oil-filled chamber. The oil chamber shall act as a barrier to trap moisture and provide sufficient time for a planned shutdown. The oil shall also provide lubrication to the internal seal. The inner seal shall be a standard UL listed John Crane Type 21 or equal, with carbon rotating faces and ceramic stationary faces. The outer seal construction shall be designed for easy replacement. Outer mechanical seal shall be 316 stainless steel metal bellows type with silicon carbide or tungsten carbide faces. Seal shall be positively driven by set screws. Elastomers shall be of Viton®. Motor shall include two normally closed automatic resetting thermostats connected in series and imbedded in adjoining phases. Motor frame shall be cast iron, and all hardware and shaft shall be stainless steel.

H. Stainless Steel Nameplates: Shall be attached to the pump and drive motor giving the manufacturer's model and serial number, rated capacity, head, speed and all pertinent data.

I. Guide Rail System: Provide a guide rail system consisting of cast ductile iron pump guide bracket and discharge elbow with mounting feet and 125 lb. flanges, an upper guide rail mounting bracket and intermediate guide brackets every 10 feet. Two (galvanized or stainless steel) guide rails to be provided by others.

J. Surface Preparation: Solvent wash. Coat with minimum 3 MDFT epoxy.

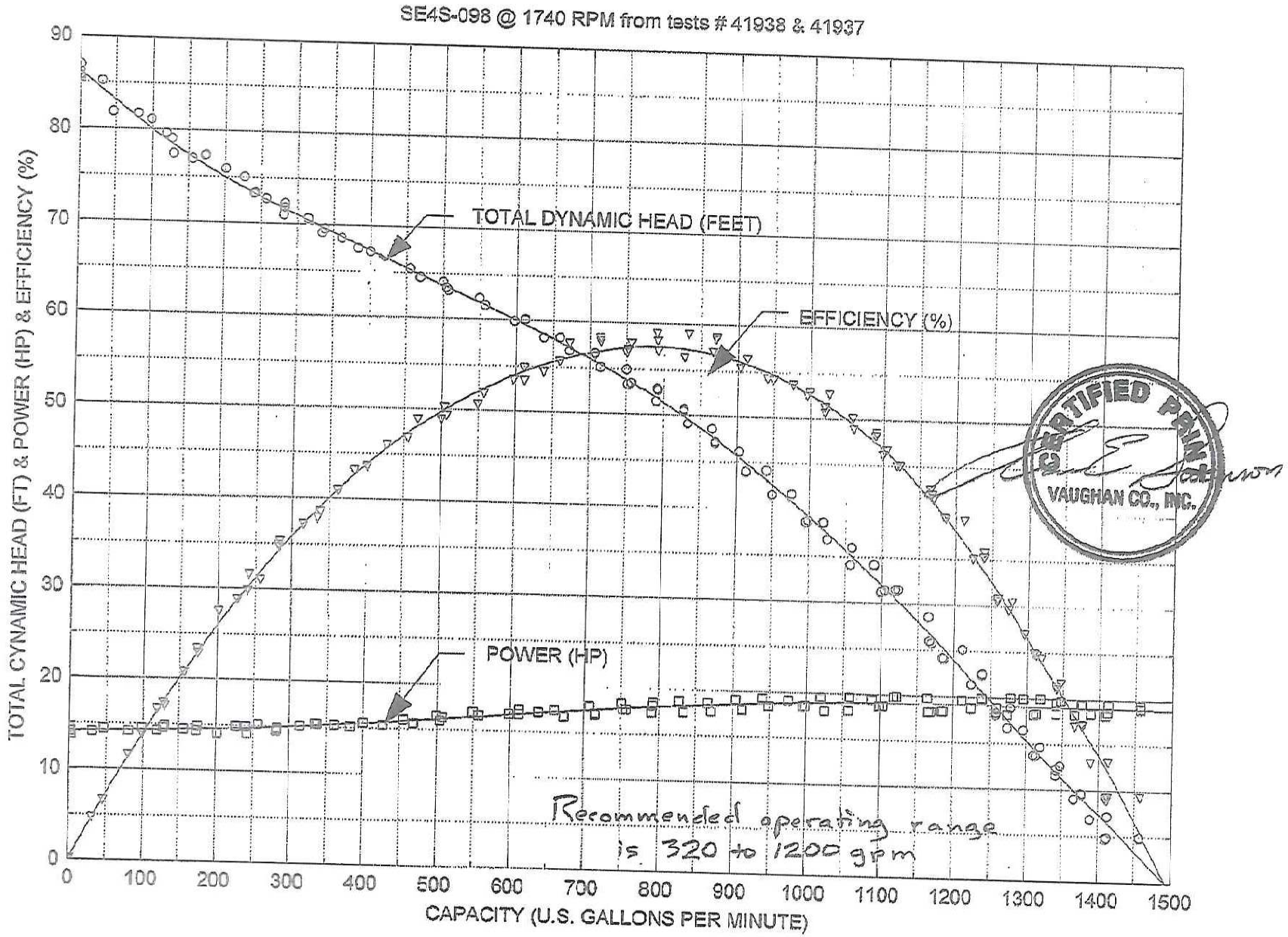
SE4S-098 @ 1740 RPM from tests # 41938 & 41937
TOTAL CYNAMIC HEAD (FT) & POWER (HP) & EFFICIENCY (%)
CAPACITY (U.S. GALLONS PER MINUTE)
TOTAL DYNAMIC HEAD (FEET)
EFFICIENCY (%)
POWER (HP)
Recommended operating range is 320 to 1200 gpm
CERTIFIED PRINT
VAUGHAN CO., INC.

SE3P-080 @ 1730 RPM w/ 7.5 HP MOTOR; SN: 102428-A; TEST # 31305

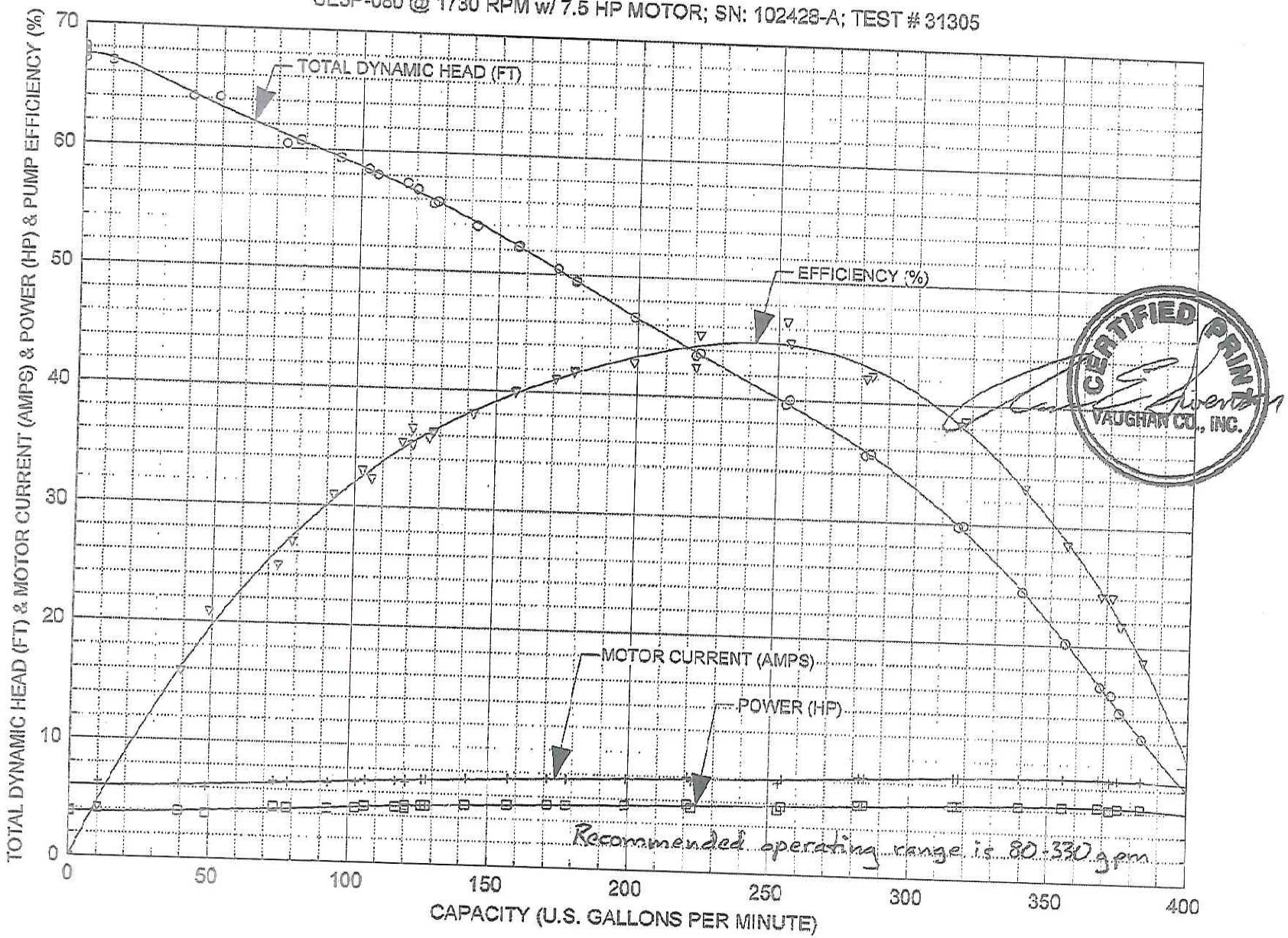

CERTIFIED PRINT
VAUGHAN CO., INC.

SE4S

REV	DATE	CHANGE
3	5/16/03	REVISED MATERIALS OF CONSTRUCTION. IMPELLER WAS A148. UPPER CUTTER AND CUTTERNUT WERE B620. ADDED MATERIAL COLUMN
2	1/21/03	ADDED ITEM #22 SHAFT LENGTH SHIMS. REVISED SEAL. RENUMBERED #8 (RETAINING RING WAS #13)
1		ADDED O-RING AT MOTOR FLANGE. REMOVED MACHINING CUTS ON MOTOR FLANGE REVISED ADJUSTING SLEEVES

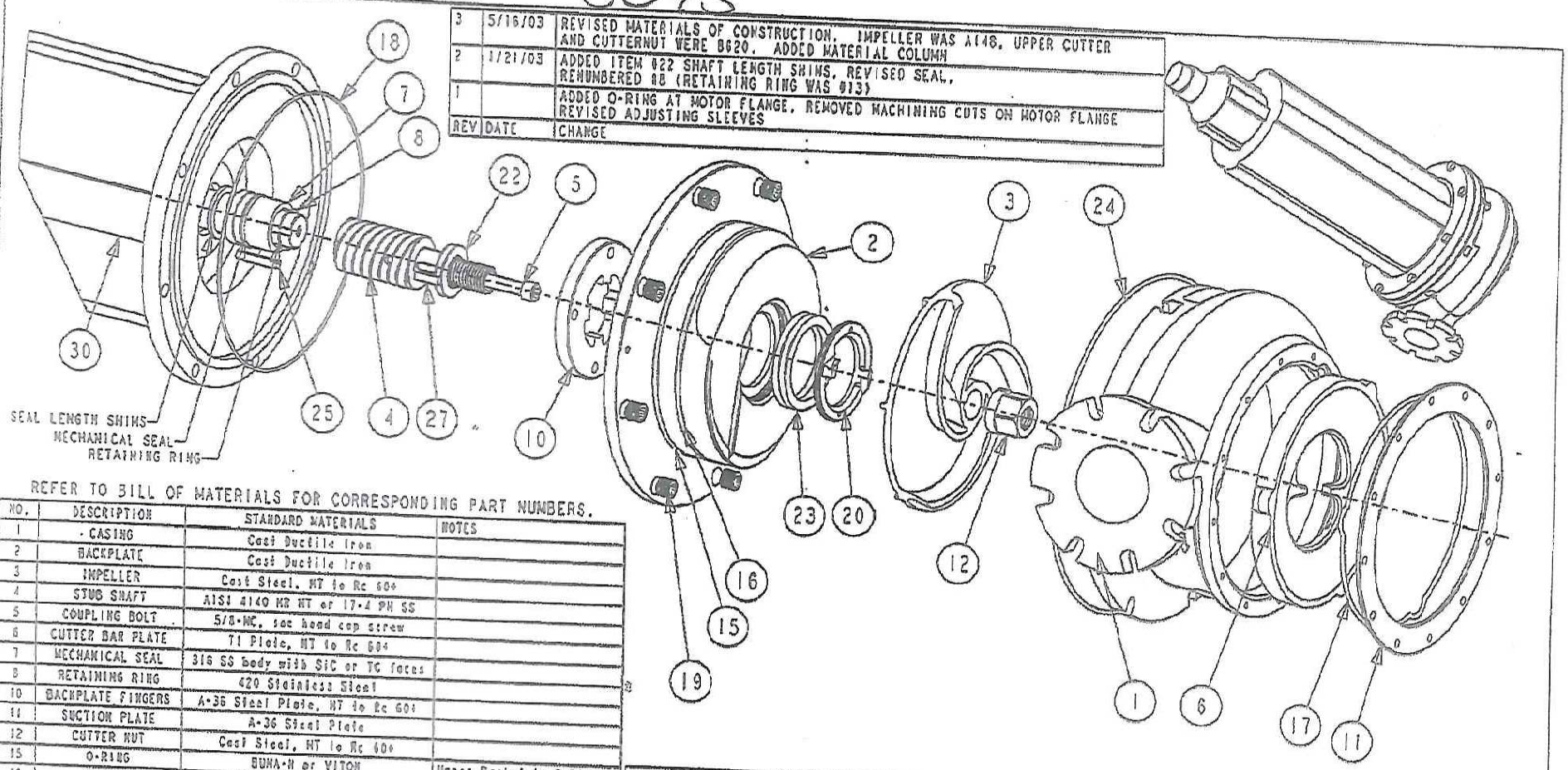

REFER TO BILL OF MATERIALS FOR CORRESPONDING PART NUMBERS.

NO.	DESCRIPTION	STANDARD MATERIALS	NOTES
1	CASING	Cast Ductile Iron	
2	BACKPLATE	Cast Ductile Iron	
3	IMPELLER	Cast Steel, HT to Rc 60+	
4	STUB SHAFT	AISI 4140 HR HT or 17-4 PH SS	
5	COUPLING BOLT	5/8-NC, soc head cap screw	
6	CUTTER BAR PLATE	T1 Plate, HT to Rc 60+	
7	MECHANICAL SEAL	316 SS body with SiC or TC faces	
8	RETAINING RING	420 Stainless Steel	
10	BACKPLATE FINGERS	A-36 Steel Plate, HT to Rc 60+	
11	SUCTION PLATE	A-36 Steel Plate	
12	CUTTER NUT	Cast Steel, HT to Rc 60+	
15	O-RING	BUNA-N or VITON	Upper Backplate O-Ring
16	O-RING	BUNA-N or VITON	Lower Backplate O-Ring
17	O-RING	BUNA-N or VITON	Suction Plate O-Ring
18	O-RING	BUNA-N or VITON	Motor Fl/Backplate O-Ring
19	ADJUSTING SLEEVE	Cooled Steel	Impeller/Cutterbar Adj
20	UPPER CUTTER	Cast Steel, HT to Rc 60+	
22	SHAFT LENGTH SHIM	301 Stainless Steel, min Rc 30	
23	UPPER CUTTER SHIMS	Fiber Gasket Material	3 Required
24	O-RING	BUNA-N or VITON	Casing/Backplate O-Ring
25	KEY	316 Stainless Steel	Stub Shaft Key
27	KEY	316 Stainless Steel	Impeller Key
30	SUBMERSIBLE MOTOR	Reliance Electric Submersible	

Vaughan

VAUGHAN CO., INC.
364 MONTE-ELMA ROAD
MONTESANO, WA 98563
(360) 249-4042
FAX (360) 249-6156

THIS DRAWING IS THE PROPERTY OF VAUGHAN CO., INC. IT IS FURNISHED TO YOU FOR CONFIDENTIAL INFORMATION PURPOSES ONLY, AND IS NOT TO BE DISCLOSED TO ANYONE ELSE, OR REPRODUCED OR USED FOR MANUFACTURING PURPOSES WITHOUT THE EXPRESS WRITTEN CONSENT OF VAUGHAN CO., INC.

UNLESS OTHERWISE NOTED, TOLERANCES ARE TO BE:
SIGNIFICANT DIMENSIONS: .125 ALLOWED
DIMENSIONS: MACHINING: 1-DEC: .125
DIMENSIONS: MACHINING: 2-DEC: .030
DIMENSIONS: MACHINING: 3-DEC: .010
CASTING TOLERANCE: AMOUNT ON SIDE: .010
CASTING TOLERANCE: PARTING LINE: .155
BREAK ALL MACHINED EDGES .045 R UNLESS NOTED OTHERWISE

CHK'D BY | ENGR | JO NUMBER

TITLE: MODEL SE WITH 210TY & 250TY EXPLODED ASSEMBLY

DRAWN BY	SCALE	PART NUMBER
M. PINE	N/A	
DATE: 7/13/00	DRAWING NUMBER: 107008B	REV: 3

SE3P

REV	DATE	CHANGE
5	7/29/10	REMOVED BOM ITEMS THAT WERE PART OF SEAL ASSM - AJC
4	5/13/03	REVISED MATERIALS OF CONSTRUCTION, ADDED NEW COLUMN FOR MATERIALS
3	11/21/03	ADDED ITEM #22 SHAFT LENGTH SHIMS. REVISED SEAL, REMUMBERED #8 (SEAL SLEEVE WAS #13), #9 (O-RING WAS #14)
2		ADDED O-RING AT MOTOR FLANGE, REMOVED MACHINING CUTS ON MOTOR FLANGE, REV ADJ SLEEVES

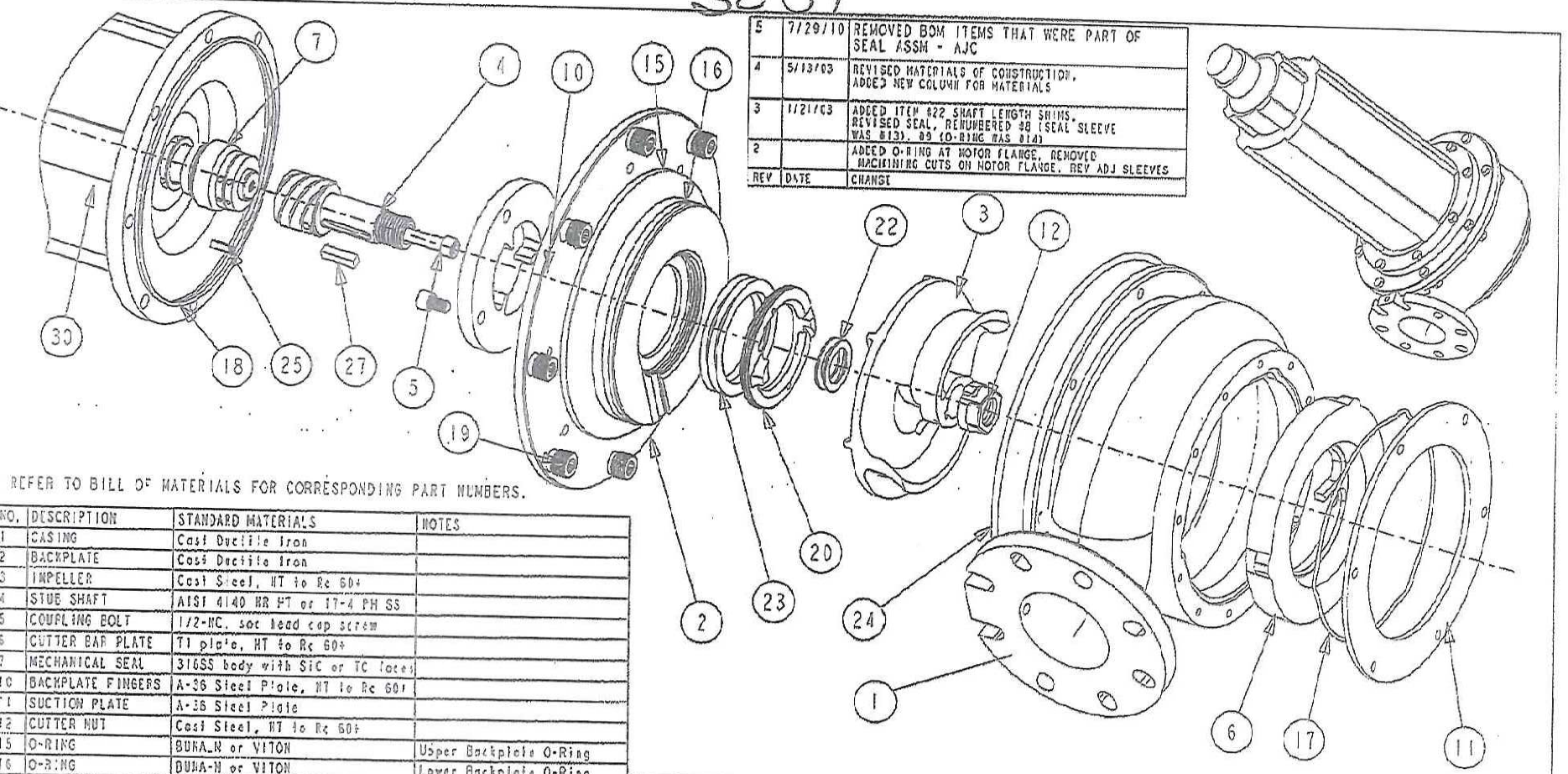

REFER TO BILL OF MATERIALS FOR CORRESPONDING PART NUMBERS.

NO.	DESCRIPTION	STANDARD MATERIALS	NOTES
1	CASING	Cast Ductile Iron	
2	BACKPLATE	Cast Ductile Iron	
3	IMPELLER	Cast Steel, HT to Rc 60+	
4	STUB SHAFT	AISI 4140 HR HT or 17-4 PH SS	
5	COUPLING BOLT	1/2-NC, soc head cap screw	
6	CUTTER BAR PLATE	T1 plate, HT to Rc 60+	
7	MECHANICAL SEAL	316SS body with SiC or TC faces	
10	BACKPLATE FINGERS	A-36 Steel Plate, HT to Rc 60+	
11	SUCTION PLATE	A-36 Steel Plate	
12	CUTTER NUT	Cast Steel, HT to Rc 60+	
15	O-RING	BUNA-N or VITON	Upper Backplate O-Ring
16	O-RING	BUNA-N or VITON	Lower Backplate O-Ring
17	O-RING	BUNA-N or VITON	Suction Plate O-Ring
18	O-RING	BUNA-N OR VITON	Motor Flg/Backplate O-Ring
19	ADJUSTING SLEEVE	Coated Steel	Impeller/CutterBar Adj
20	UPPER CUTTER	Cast Steel, HT to Rc 60+	
22	SHAFT LENGTH SHIM	301 Stainless Steel, min Rc 30	
23	UPPER CUTTER SHIMS	Fiber Gasket Material	3 Required
24	O-RING	BUNA-N or VITON	Casing/Backplate O-Ring
25	KEY	316 Stainless Steel	Stub Shaft Key
27	KEY	316 Stainless Steel	Impeller Key
30	180TY MOTOR	Reliance Electric Submersible	

Vaughan

VAUGHAN CO., INC.
364 MONTE-ELMA ROAD
MONTESANO, WA 98563
(360) 249-4042
FAX (360) 249-6155

THIS DRAWING IS THE PROPERTY OF VAUGHAN CO., INC. IT IS FURNISHED TO YOU FOR CONFIDENTIAL INFORMATION PURPOSES ONLY, AND IS NOT TO BE DISCLOSED TO ANYONE ELSE, OR REPRODUCED OR USED FOR MANUFACTURING PURPOSES WITHOUT THE EXPRESS WRITTEN CONSENT OF VAUGHAN CO., INC.

TITLE

MODEL SE WITH 180TY EXPLODED ASSEMBLY SHEET 1

UNLESS OTHERWISE NOTED, TOLERANCES ARE TO DE:
SURFACE FINISH: 125 MICROINCHES
DIMENSIONS: MACHINING: X.XX ±.016
DIMENSIONS: MACHINING: X.XXX ±.020
DIMENSIONS: MACHINING: X.XXXX ±.010
GEOMETRIC TOLERANCE: RUNOUT ON CYLINDERS: .010
GEOMETRIC TOLERANCE: PARALLELISM: .005
BREAK ALL MACHINED EDGES .005 R UNLESS NOTED OTHERWISE

CHK'D BY	ENGR	DRAWN BY	SCALE	PART NUMBER
		M. PINE	0.250	
JO HUNGER		DATE 6/28/00	DRAWING NUMBER 107008A	REV 5

EXPLODED ASSEMBLY
VAUGHAN SUBMERSIBLE PUMP GUIDE RAIL SYSTEM

Vaughan Co., Inc.
364 Monte-Elma Road
Montesano, WA 98563
Phone (360) 249-4042
Fax (360) 249-6155

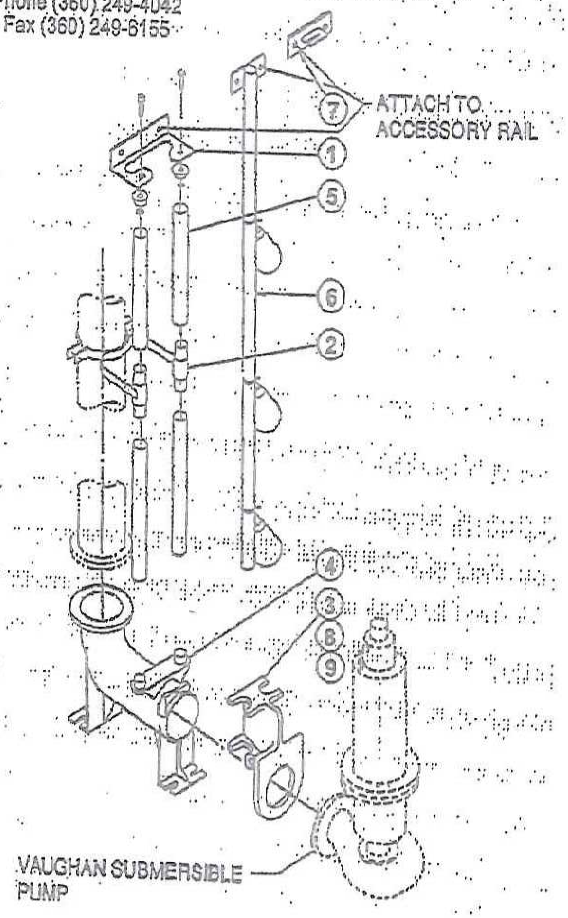

ITEM	DESCRIPTION	STANDARD	SPARK PROOF
1	Upper Guide Bracket: (2) 3/8 x 1 bolts, (2) unistrut nuts	316 Stainless Steel	316 Stainless Steel
2	Intermediate Stiffener Bracket	316 Stainless Steel	316 Stainless Steel
3	Guide Bracket	Ductile Iron 80-55-06	Aluminum Bronze ASTM B148
4	Base Elbow (4) ¾ x 4 anchor bolts	Ductile Iron 80-55-06	Ductile Iron 80-55-06
5	Guide Pipes: 2" SCH 40	Galvanized Steel: 316 SS (Optional)	Galvanized Steel: 316 SS (Optional)
6	Retractable Float Switch Assembly: (2) 3/8 x 1 bolts, (2) unistrut nuts	1 ¼" Pipe ASTM A120 Polypropylene Floats	1 ¼" Pipe ASTM A120 Polypropylene Floats
7	Chain Attach Bracket (2) 3/8 x 1 bolts, (2) unistrut nuts	316 Stainless Steel	316 Stainless Steel
8	4x6 Guide Bracket	See item #3	See item #3
9	3x4 Guide Bracket	See item #3	See item #3

SE4S

REL. S.O.	FRAME	HP	TYPE	PHASE/ HERTZ	RPM	VOLTS
	250TY	25	P	3/60	1760	230/460

AMPS	DUTY	AMB °C/ INSUL.	S.F.	NEMA DESIGN	CODE LETTER	ENCL.
64.2/32.1	*	40/F	1.15	B	F	SUB

E/S	ROTOR	TEST S.O.	TEST DATE	STATOR RES.@25 °C OHMS (BETWEEN LINES)
424437	418138036SE	---	---	.123/.492

PERFORMANCE

LOAD	HP	AMPERES	RPM	INPUT KW	% POWER FACTOR	% EFFE-CIENCY
NO LOAD	0	11.9	1800	1.06	11.2	0
1/4	6.26	14.2	1790	5.61	51.2	80.4
2/4	12.5	18.9	1781	10.7	71.3	87.2
3/4	18.7	25.0	1771	15.8	79.3	88.7
4/4	25.0	32.1	1759	21.1	82.5	88.5
5/4	31.2	39.9	1746	26.6	83.7	87.6

SPEED TORQUE

	RPM	TORQUE % FULL LOAD	TORQUE LB.-FT.	AMPERES
LOCKED ROTOR	0	168	126	175
PULL UP	360	144	108	169
BREAKDOWN	1621	236	176	99.4
FULL LOAD	1759	100	74.6	32.1

AMPERES SHOWN FOR 460. VOLT CONNECTION. IF OTHER VOLTAGE CONNECTIONS ARE AVAILABLE, THE AMPERES WILL VARY INVERSELY WITH THE RATED VOLTAGE

REMARKS: CALCULATED DATA
*15MIN IN AIR, CONT IN LIQUID

Rockwell Automation

DR. BY D. H. BYRD
CK. BY T.S. WILLIAMS
APP. BY D. H. BYRD
DATE 04/13/05

A-C MOTOR PERFORMANCE DATA

W00698-B-E007
ISSUE DATE 04/13/05

Printed on 4/13/05 8:34 @ xgg

SE3P

REL. S.O.	FRAME	HP	TYPE	PHASE/ HERTZ	RPM	VOLTS
	180TY	7.5	P	3/60	1730	230/460

AMPS	DUTY	AMB °C/ INSUL.	S.F.	NEMA DESIGN	CODE LETTER	ENCL.
20.2/10.1	*	40/F	1.15	B	H	SUB

E/S	ROTOR	TEST S.O.	TEST DATE	STATOR RES.@25 °C OHMS (BETWEEN LINES)
535600	418424037YE	---	---	.533/2.13

PERFORMANCE

LOAD	HP	AMPERES	RPM	INPUT KW	% POWER FACTOR	% EFFI-CIENCY
NO LOAD	0	3.9	1800	.523	16.8	0
1/4	1.88	4.6	1783	1.96	53.1	71.5
2/4	3.75	6.0	1768	3.47	72.1	80.7
3/4	5.63	7.9	1751	5.07	80.1	82.9
4/4	7.50	10.1	1732	6.76	83.9	82.7
5/4	9.37	12.6	1709	8.59	85.9	81.4

SPEED TORQUE

	RPM	TORQUE % FULL LOAD	TORQUE LB.-FT.	AMPERES
LOCKED ROTOR	0	198	45.0	62.5
PULL UP	400	180	41.0	60.0
BREAKDOWN	1400	281	64.0	37.9
FULL LOAD	1732	100	22.7	10.1

AMPERES SHOWN FOR 460. VOLT CONNECTION. IF OTHER VOLTAGE CONNECTIONS ARE AVAILABLE, THE AMPERES WILL VARY INVERSELY WITH THE RATED VOLTAGE

REMARKS: CALCULATED DATA
SUBMERISBLE MOTOR
*15MIN IN AIR, CONT IN LIQUID

BALDOR
BALDOR • DODGE • RELIANCE

DR. BY D. M. BYRD
CK. BY T. S. WILLIAMS
APP. BY D. M. BYRD
DATE 10/12/04

A-C MOTOR
PERFORMANCE E02757-A-A001
DATA ISSUE DATE 10/12/04

Printed on 11/13/07 10:20 © uangbeugda

Bill.Macy

From: Bryan Dierick [BryanD@chopperpumps.com]
Sent: Tuesday, July 19, 2011 2:52 PM
To: Bill.Macy
Cc: Chris.Otey
Subject: Vaughan chopper pumps

Bill,

Here is the power cable information you had requested.

Duplex pumps (7.5 Hp). Power cable is .735 dia. +/- .035, size 10.

Tri-plex pumps (25 Hp). Power cable is 1.35 dia. +/- .100, Size 4.

The Control cable for each pump is .485 dia. +/- .025, size 18.

Bryan Dierick
Vaughan Company

1-2"

1/8"

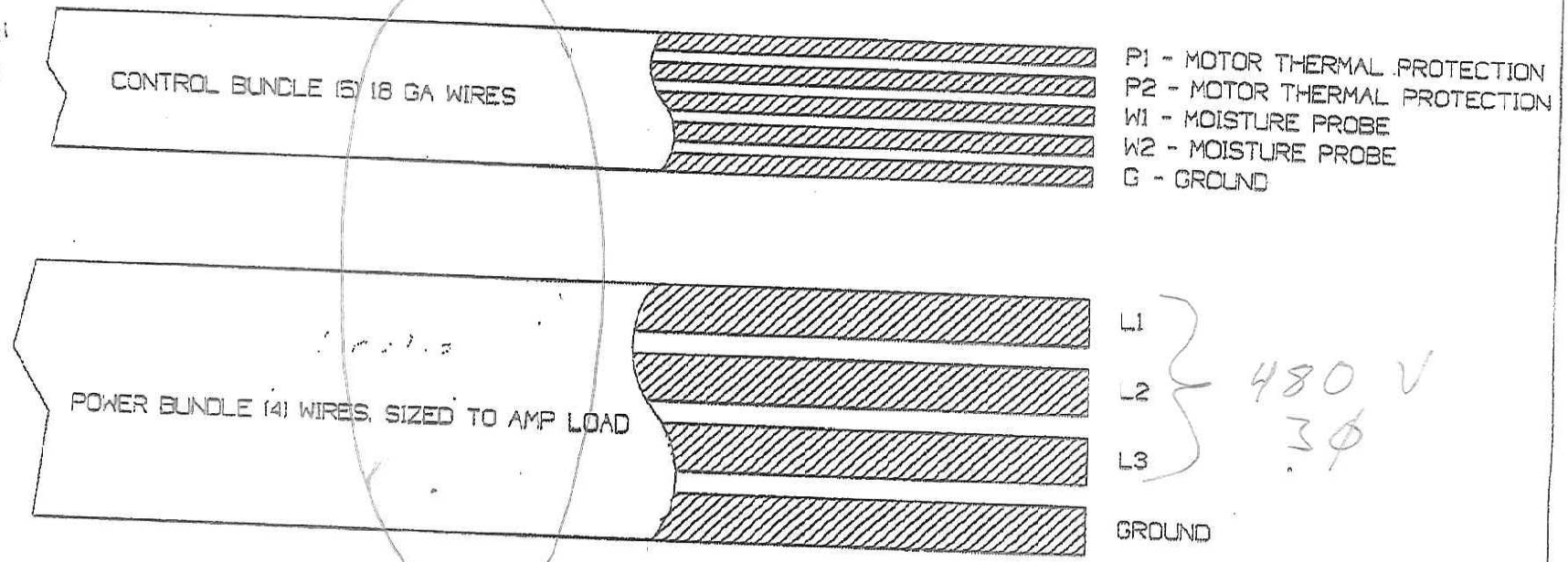

CABLE IS LABELED 90 C DRY AND 60 C WATER RESISTANT 600V (UL) E7332 ---LL0025 CSA 500W 90C FT1

Vaughan

VAUGHAN CO., INC
364 MONTE-ELMA ROAD
MONTESANO, WA 98563
(360) 249-4042
FAX (360) 249-6155

THIS DRAWING IS THE PROPERTY OF VAUGHAN CO., INC. IT IS FURNISHED TO YOU FOR CONFIDENTIAL INFORMATION PURPOSES ONLY, AND IS NOT TO BE DISCLOSED TO ANYONE ELSE, OR REPRODUCED OR USED FOR MANUFACTURING PURPOSES WITHOUT THE EXPRESS WRITTEN CONSENT OF VAUGHAN CO., INC.

TITLE

CONNECTION DIAGRAM SUBMERSIBLE MOTORS

Brian

UNLESS OTHERWISE NOTED, TOLERANCES ARE TO BE:
SURFACE FINISH: 125 MICROINCHES
DIMENSIONS: WELDING: XXX- 1/16
DIMENSIONS: MACHINING: XXX- .020
DIMENSIONS: MACHINING: XXXX- .010
GEOMETRIC TOLERANCE: RUNOUT ON CYLINDERS: .010
GEOMETRIC TOLERANCE: PARALLELISM: .005

BREAK ALL MACHINED EDGES .005 R UNLESS NOTED OTHERWISE

CHK'D BY	ENGR	DRAWN BY	SCALE	PART NUMBER
DGM	DGM	DGM	NONE	
JO NUMBER		DATE 8/12/99	DRAWING NUMBER 106778	REV 0

Submersible Motors

AC Motors

Specifications

1/2-200 HP Submersible Wet Pit Applications in Water and Sewage

U/L Listed 1-135 HP Class 1, Groups C & D Under 1 HP Class I, Group D

| 1.0 Scope | 2.0 General | 3.0 Mechanical | 4.0 Electrical | Typical Dimensions |

1.0 Scope

This specification details the mechanical and electrical requirements for squirrel-cage induction motors, both single and three phase, designed for wet well submersible applications in water and sewage.

It is the intent of this specification to define submersible premium quality motors which will provide efficient operation with high mechanical integrity under adverse operating conditions for maximum life and minimum life cycle costs. This specification covers sewage wet well applications defined by the National Electric Code as Class 1; Division 1, hazardous locations section 501-8 (a) requiring explosion proof construction.

2.0 General

2.1 All motors covered by this specification shall conform to the latest applicable requirements of NEMA, IEEE, ANSI and NEC standards.

2.2 Motors shall be designed for continuous submerged duty in water and sewage, and minimum 15 minute duty continuous in air under full load operating conditions.

2.3 3-Phase motors shall be rated 200/400, 230/460, or 575 volts. 1-Phase motors shall be rated 115/230 volts. Multivoltage motors shall be final connected for one voltage and designed for easy field reconnection.

2.4 Ratings will be based upon 40□C ambient conditions.

2.5 Motor construction shall be designed to withstand 200 p.s.i. water pressure at all seal locations.

2.6 All motors shall be furnished with Class F rated insulation materials or better. Insulation materials rated lower than Class F (Class B or A) are specifically prohibited.

2.7 Motors 1 horsepower up to and including 135 horsepower, shall be rated as Class F, 1.15 service factor, Class 1, Groups C & D. Motors under 1 HP shall be rated as Class B, 1.0 service factor, Class 1, Group D.

2.8 All motors will be CSA (Canadian Standards Association) and U.L. (Underwriters Laboratories) approved and namcplated accordingly.

2.9 All motors shall be manufactured in the United States of America. The ability to provide any/all replacement parts, engineering design support, complete dynamometer testing, and U/L rerate capability shall be provided domestically.

3.0 Mechanical

3.1.0 Bearings and Lubrication

3.1.1 Bearings shall be ball, single row, deep groove, Conrad type, and shall have a Class 3 internal fit conforming to AFBMA Std. 20.

3.1.2 Bearings shall be selected to proved minimum L10 rating life of 17,500 hours.

3.1.3 The motor shall be designed to limit the bearing temperature rise to a maximum of 60□C under full load conditions.

3.1.4 Motors shall be greased by the manufacturer with a premium moisture resistant polyurea thickened grease containing rust inhibitors and suitable for operation over a temperature range of -25□C to +120□C.

3.2.0 Shaft Seal

3.2.1 Two independently-mounted mechanical face type seals shall be provided. The inner and outer seals shall be separated by an oil filled chamber. Double seal (back to back) configurations are not acceptable due to the potential for failure of both seals as a result of

lodged solids. Similarly bellows-type and jacketed seal construction is also prohibited.

The oil chamber shall act as a barrier to trap moisture and provide sufficient time for a planned shutdown. The oil shall also provide lubrication to the internal seal.

3.2.2 Standard John Crane Type 21, Sealot type 43 or Sealot type 42, U/L approved seals shall be provided. Carbon rotating faces and ceramic stationary faces shall be considered standard. Optional seal construction including Tungsten/Carbide faces and use of Viton□ elastomers are acceptable alternatives. Viton elastomers are recommended for ambients of 61□C and higher.

3.2.3 The outer seal construction shall be designed for easy replacement.

3.2.4 The outer seal assembly will be designed to allow solids and particles to be thrown away from the seal face.

3.2.5 In compliance with U/L Standards for explosion proof motors, a flame path shall be provided by a labyrinth slinger in the bottom flange in order to prevent the ignition of ambient gases. Under such conditions the seal design shall allow for pressure relief across either seal face.

3.3.0 Moisture Protection System

3.3.1 Dual (2) moisture sensing probes are to be provided that extend into the oil chamber located between the outer and inner seal and used to detect the presence of moisture should the outer seal fail.

3.3.2 The moisture protection system shall also be designed to detect water in the motor chamber and provide a warning signal prior to water levels reaching the bearing or wound stator assemblies.

3.4.0 Cap/Cable Assembly

3.4.1 The power cable and cap assembly shall be designed to prevent moisture from wicking through the cable assembly even when the cable jacket has been punctured.

3.4.2 Power and control cable entry into the lead connection chamber shall be epoxy encapsulated for positive moisture sealing. Compression type fittings or connectors shall not be considered equal.

3.4.3 A Buna-N power and control cable grommet shall be provided in addition to the epoxy sealed leads.

3.5.0 Enclosure and Shaft

3.5.1 The motor enclosure including; frame, end brackets, flange and cap assembly shall be cast iron, ASTM type A-48, Class 25 or better.

3.5.2 Motor frame construction will not have fins and will be a smooth surface to prevent the clogging of solids and provide for easy cleaning.

3.5.3 The top end bracket will include integrally cast provisions for vertical lifting capability.

3.5.4 All mating frame fits to have rabbet joints with large overlap as well as O-ring shall be Buna-N (nitrile), Viton O-rings may be supplied
as an option and are required for ambient conditions of 61□C and higher.

3.5.6 Motor shaft be 416 stainless steel. 303, 304, 410 stainless steel 17-4 PH, Carpenter 20, all types of Monel or Nitronic 50 stainless steel may be specified as options.

3.5.7 All external hardware including the motor nameplate shall be made of stainless steel.

3.5.8 Motor rotor construction shall be die cast aluminum or fabricated copper or their respective alloys. Rotors on frames 213T and above shall be keyed to shaft and rotating assembly dynamically balanced to NEMA limits per MG1-12.05. Balance weights if required, shall be secured to the rotor resistance ring or fan blades by rivets. Machine screws and nuts are prohibited.

3.5.9 All exposed motor parts including frame, brackets, flange, and cap assembly shall receive an alkyd primer and epoxy ester finish coat of high grade paint to resist rust and corrosion.

4.0 Electrical

4.1 All motors shall successfully operate under power supply variations per NEMA MG1-14.30.

4.2 Motors shall be designed to limit the maximum surface temperature to NEC specifications for Division 1; Class 1, Group D, or Class 1, Group C & D for hazardous locations.

4.3 All motors shall be NEMA Design B or A with torque and starting current in accordance with NEMA MG-12.

4.4 Motors shall have copper windings.

4.5 Motor insulation system shall be Class F minimum, utilizing materials and insulation systems evaluated in accordance with IEEE 117 classification tests.

4.6 Motors leads shall be nonwicking type, Class F temperature rating or better and permanently numbered for identification.

4.7 Entire would stator assembly shall receive a minimum of 2 coats of varnish applied using a dip and bake process.

4.8 All motors to include 2 normally closed automatic reset thermostats connected in series and embedded in adjoining phases as required by Underwriters Laboratories for motors of 1 HP or higher.

Typoxy® SERIES 27WB

PRODUCT PROFILE

GENERIC DESCRIPTION Inorganic Hybrid Water-Based Epoxy

COMMON USAGE An advanced generation, low odor, high solids, water-based epoxy coating for protection and finishing of steel and concrete. For use on the interior and exterior of tanks, pipes and equipment. Superior wetting for marginally prepared steel and tightly adhering old coatings. This coating is ideally suited for steel fabrication and OEM applications. Also widely used as a field tie-coat. Provides fast curing and rapid handling capabilities. Patent pending.

COLOR Vaughan Green

FINISH Eggshell

PERFORMANCE CRITERIA Contact your Tnemec representative for specific test results.

COATING SYSTEM

PRIMERS
Steel: Self-priming or Series 1, L69, L69F, N69, N69F, V69, V69F, 90-1K97, 90-97, H90-97, 91-H_2O, 94-H_2O, 394
Galvanized Steel: Self-priming
Concrete: Self-priming, 215, 218
CMU: Self-priming, 130, 215
Drywall: Self-priming, 151

TOPCOATS Series 6, 30, 35, 73, 113, 114, 115, 156, 157, 158, 180, 181, 280, 281, 287, 290, 291, 297, 400, 406, 435, 446, 740, 750, 1028, 1029, 1070, 1071, 1072, 1074, 1075, 1077, 1078, 1080, 1081

SURFACE PREPARATION

STEEL
Immersion Service: SSPC-SP10/NACE 2 Near-White Blast Cleaning. **Note: For immersion service, must be primed with either Series 1, 66, L69, L69F, N69, N69F, V69, V69F, 90-1K97, 90-97, H90-97, 91-H_2O, 94-H_2O or 161.**
Non-Immersion Service: SSPC-SP6/NACE 3 Commercial Blast Cleaning
Note: Abrasive blast cleaning generally produces the best coating performance. If conditions will not permit this, Series 27WB may be applied to SSPC-SP2 or SP3 Hand or Power Tool Cleaned surfaces.

GALVANIZED STEEL Surface preparation recommendations will vary depending on substrate and exposure conditions. Consult the latest version of Tnemec Technical Bulletin 98-09 or contact your Tnemec representative or Tnemec Technical Services.

CAST/DUCTILE IRON Contact your Tnemec representative or Tnemec Technical Services.

CONCRETE Allow new concrete to cure 28 days. For optimum results and/or immersion service, abrasive blast referencing SSPC-SP13/NACE 6, ICRI CSP2-4 Surface Preparation of Concrete and Tnemec's Surface Preparation and Application Guide.

CMU Allow mortar to cure for 28 days. Prepare in accordance with SSPC-SP13/NACE 6 to level protrusions and mortar spatter and remove other contaminants.

PAINTED SURFACES **Non-Immersion Service:** Ask your Tnemec representative for specific recommendations.

ALL SURFACES Must be clean, dry and free of oil, grease and other contaminants.

TECHNICAL DATA

VOLUME SOLIDS* 100% (mixed)

RECOMMENDED DFT 4.0 to 14.0 mils (100 to 350 microns) per coat. **Note: Number of coats and thickness requirements will vary with substrate, application method and exposure. Contact your Tnemec representative.**

CURING TIME

Temperature	To Touch	To Handle	To Recoat
95°F (35°C)	30 minutes	1 hour	2 hours
75°F (24°C)	1 hour	2 hours	3 hours
55°F (13°C)	2 hours	4½ hours	6 hours
40°F (5°C)	3 hours	7 hours	15 hours

Curing time varies with surface temperature, air movement, humidity and film thickness. For immersion service cure a minimum of 6 hours at 75°F (24°C).

VOLATILE ORGANIC COMPOUNDS* Unthinned
0.10 lbs/gallon
(11 grams/litre)

HAPS 0 lbs/gal solids

THEORETICAL COVERAGE* 1,604 mil sq ft/gal (39.4 m^2/L at 25 microns). See APPLICATION for coverage rates.

NUMBER OF COMPONENTS Two: Part A and Part B (One Part A to One Part B by volume.)

PACKAGING KITS CONSIST OF:

	PART A	PART B	Yield (mixed)
Medium Kit	3 gal pail (partial fill)	6 gal pail (partial fill)	4 gallons (15.1L)
Small Kit	1 gallon can	1 gallon can	2 gallons (7.56L)

Published technical data and instructions are subject to change without notice. The online catalog at www.tnemec.com should be referenced for the most current technical data and instructions or you may contact your Tnemec representative for current technical data and instructions.
© September 29, 2008, by Tnemec Company, Inc.

SERIES 27WB Typoxy®

TECHNICAL DATA continued

NET WEIGHT PER GALLON*	14.56 ± 0.25 lbs (6.60 ± .11 kg) (mixed)	
STORAGE TEMPERATURE	Minimum 40°F (4°C)	Maximum 90°F (32°C)
TEMPERATURE RESISTANCE	(Dry) Continuous 250°F (121°C)	Intermittent 275°F (135°C)
SHELF LIFE	6 months	
FLASH POINT - SETA	Part A: 147°F (64°C)	Part B: >200°F (93°C)

HEALTH & SAFETY: Paint products contain chemical ingredients which are considered hazardous. Read container label warning and Material Safety Data Sheet for important health and safety information prior to the use of this product. Keep out of the reach of children.

APPLICATION

COVERAGE RATES*

	Unthinned			Thinned 25%		
	Dry Mils (Microns)	Wet Mils (Microns)	Sq Ft/Gal (m^2/Gal)	Dry Mils (Microns)	Wet Mils (Microns)	Sq Ft/Gal (m^2/Gal)
Minimum	4.0 (100)	4.0 (100)	401 (37.3)	4.0 (100)	5.5 (140)	301 (27.9)
Maximum	14.0 (355)	14.0 (355)	115 (10.6)	14.0 (355)	18.5 (470)	86 (8.0)

Note: Roller or brush application may require two or more coats to obtain recommended film thickness. Allow for overspray and surface irregularities. Wet film thickness is rounded to the nearest 0.5 mil or 5 microns. Application of coating below minimum or above maximum recommended dry film thicknesses may adversely affect coating performance.

MIXING: Power mix contents of the container marked Part B, making sure no pigment remains on the bottom. Add the contents of the can marked Part A to Part B while under mechanical agitation. During mixing, scrape the container wall to aid in complete blending of the two components. Continue agitation until the two components are thoroughly mixed. Thin by volume and thoroughly mix after mixing the Part A and Part B components. Do not use mixed material beyond pot life limits. Note: A clean mixing blade devoid of paint buildup is needed after each kit to ensure proper mixing of components. Both components should be above 50°F (10°C) prior to mixing.

POT LIFE: 1 hour at 77°F (25°C) thinned 25% with water

SPRAY LIFE: 45 minutes at 77°F (25°C) when thinned 25% with water.

THINNING: For spray application, thinning is required at 25% or 1 quart (946 mL) per gallon with clean tap water. For brush or roller thin 15% to 25% per gallon with clean tap water.

TEMPERATURE REQUIREMENT: **Surface Temperature:** Minimum 40°F (4°C), optimum 65°F to 80°F (18°C to 27°C), maximum of 120°F (49°C). The substrate temperature should be at least 5°F (3°C) above the dew point. Coating will not cure below minimum surface temperature.

Material Temperature: For optimum application and handling, the material temperature during application should be between 70°F and 85°F (21°C and 29°C). Temperature will affect the workability. Cool temperatures increase viscosity and decrease workability. Warm temperatures will decrease viscosity and shorten pot life.

APPLICATION EQUIPMENT

Air Spray

Gun	Fluid Tip	Air Cap	Air Hose ID	Mat'l Hose ID	Atomizing Pressure	Pot Pressure
DeVilbiss JGA	E	765 or 704	5/16" or 3/8" (7.9 or 9.5 mm)	3/8" or 1/2" (9.5 or 12.7 mm)	50-70 psi (3.4-4.8 bar)	15-25 psi (1.0-1.7 bar)

Low temperatures or longer hoses require higher pot pressure. Do not allow material to remain in hose.

Airless Spray

Tip Orifice	Atomizing Pressure	Mat'l Hose ID	Manifold Filter
0.017"-0.021" (430-535 microns)	3700-5000 psi (255-345 bar)	1/4" or 3/8" (6.4 or 9.5 mm)	60 mesh (250 microns)

Use appropriate tip/atomizing pressure for equipment, applicator technique and weather conditions.

Roller: Use 3/8" or 1/2" (9.5 mm to 12.7 mm) synthetic woven nap covers.

Brush: Recommended for small areas only. Use high quality natural or synthetic bristle brushes.

CLEANUP: Flush and clean all equipment immediately after use with water, followed by a final flush with MEK or Methyl Acetate.

*Values may vary with color.

WARRANTY & LIMITATION OF SELLER'S LIABILITY: Tnemec Company, Inc. warrants only that its coatings represented herein meet the formulation standards of Tnemec Company, Inc. THE WARRANTY DESCRIBED IN THE ABOVE PARAGRAPH SHALL BE IN LIEU OF ANY OTHER WARRANTY, EXPRESSED OR IMPLIED, INCLUDING BUT NOT LIMITED TO, ANY IMPLIED WARRANTY OF MERCHANTABILITY OR FITNESS FOR A PARTICULAR PURPOSE. THERE ARE NO WARRANTIES THAT EXTEND BEYOND THE DESCRIPTION ON THE FACE HEREOF. The buyer's sole and exclusive remedy against Tnemec Company, Inc. shall be for replacement of the product in the event a defective condition of the product should be found to exist and the exclusive remedy shall not have failed its essential purpose as long as Tnemec is willing to provide comparable replacement product to the buyer. NO OTHER REMEDY (INCLUDING, BUT NOT LIMITED TO, INCIDENTAL OR CONSEQUENTIAL DAMAGES FOR LOST PROFITS, LOST SALES, INJURY TO PERSON OR PROPERTY, ENVIRONMENTAL INJURIES OR ANY OTHER INCIDENTAL OR CONSEQUENTIAL LOSS) SHALL BE AVAILABLE TO THE BUYER. Technical and application information herein is provided for the purpose of establishing a general profile of the coating and proper coating application procedures. Test performance results were obtained in a controlled environment and Tnemec Company makes no claim that these tests or any other tests, accurately represent all environments. As application, environmental and design factors can vary significantly, due care should be exercised in the selection and use of the coating. FOR INDUSTRIAL USE ONLY.

THE TNEMEC COMPANY INCORPORATED
6800 CORPORATE DRIVE, KANSAS CITY, MISSOURI 64120-1372 TEL: 1 800 TNEMEC 1 www.tnemec.com

Panel Wiring Diagram
Model DAX480 3Ø SF HS DS

Quote# 122210JS1.1

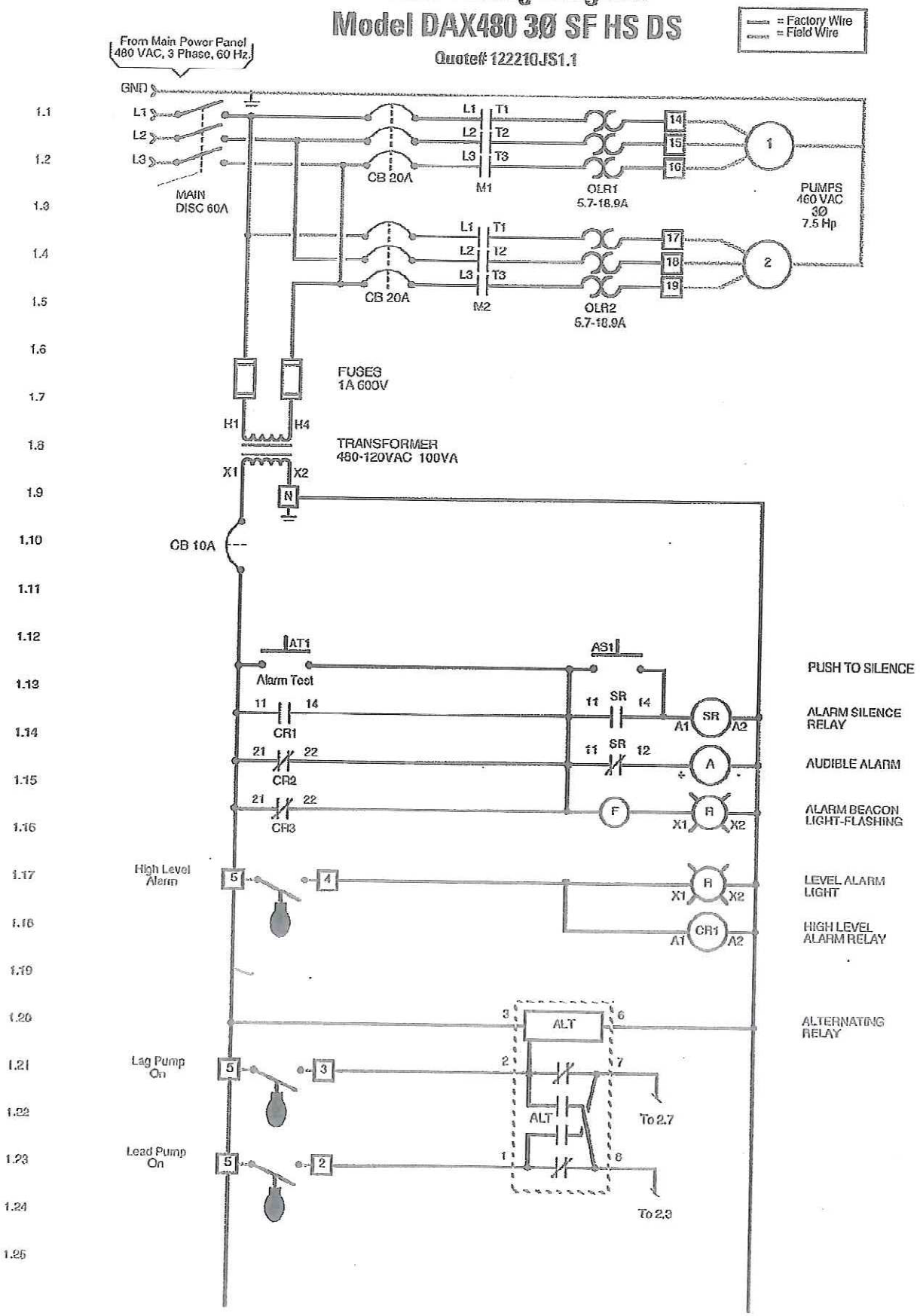

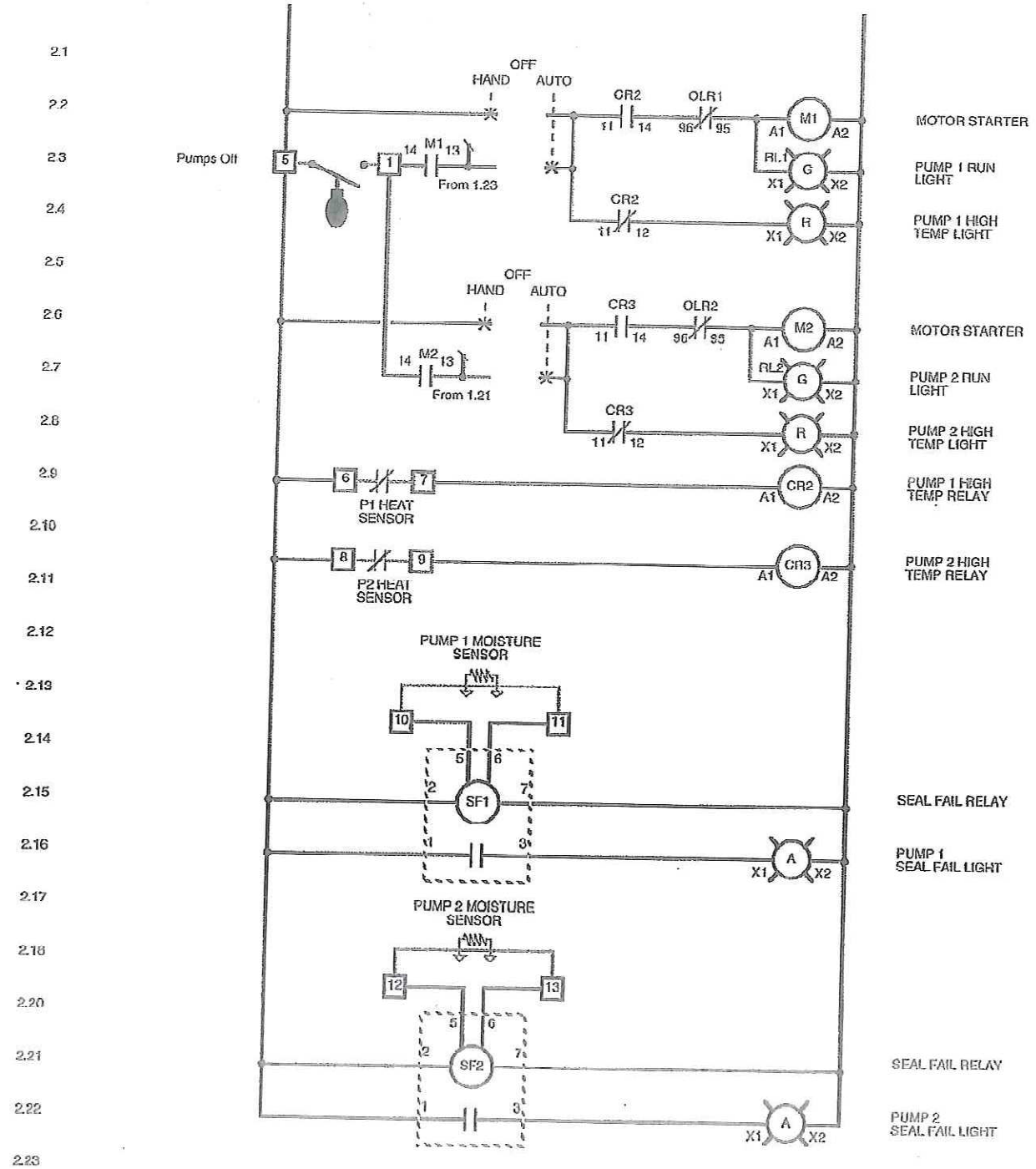
2.1
2.2
2.3
2.4
2.5
2.6
2.7
2.8
2.9
2.10
2.11
2.12
2.13
2.14
2.15
2.16
2.17
2.18
2.20
2.21
2.22
2.23
2.24
2.25
2.26
2.27
2.28
2.29
OFF
HAND
AUTO
CR2
OLR1
11
14
96
95
A1
A2
M1
MOTOR STARTER
Pumps Off
5
1
14
M1
13
From 1.23
RL1
G
X1
X2
PUMP 1 RUN LIGHT
CR2
11
12
R
PUMP 1 HIGH TEMP LIGHT
OFF
HAND
AUTO
CR3
OLR2
M2
MOTOR STARTER
14
M2
13
From 1.21
RL2
PUMP 2 RUN LIGHT
CR3
PUMP 2 HIGH TEMP LIGHT
6
7
P1 HEAT SENSOR
CR2
PUMP 1 HIGH TEMP RELAY
8
9
P2 HEAT SENSOR
CR3
PUMP 2 HIGH TEMP RELAY
PUMP 1 MOISTURE SENSOR
10
11
5
6
2
7
SF1
SEAL FAIL RELAY
1
3
A
PUMP 1 SEAL FAIL LIGHT
PUMP 2 MOISTURE SENSOR
12
13
SF2
SEAL FAIL RELAY
PUMP 2 SEAL FAIL LIGHT

BOM
DAX480 3Ø DS SF HS

10 Digit #	Item #	Manufacturn	Description	Qty
Audio Alarms & Horns				
13-16-56-1020	MW-09-201-Q	Floyd Bell	Audible Alarm; 120V	1
Circuit Breakers				
13-16-11-1014	QCR1010	Cutler Ham	Circuit Breaker; 1P, 10A	1
13-16-66-1510	T1N020TL	ABB	Circuit Breaker; 3P, 20A, 480V, 22kA/C	2
Enclosures				
13-21-31-1060	VJ1816HWPL1X	Vynckler	Enclosure; 18x16, Fiberglass	1
XX-XX-XX-4039	ORENCO	OSI	Backplate; 15x17, Aluminum	1
XX-XX-XX-5009	ORENCO	OSI	Duplex Hardware Package,HD	1
13-16-99-1010	C103PM	Cust. Com.	Din Rail; 1 Meter	0.6
Fuses & Fuse Blocks				
13-16-26-1250	USCC2I	F.Shaw	Fuse Block; 2P, 30A, Class CC, Indicators	1
13-16-26-1060	FNQ-R1	Bussman	Fuse; 1A, 600V, 13/32"x1 1/2"	2
Labels				
XX-XX-XX-5005	ORENCO	OSI	Duplex Label Package	1
13-56-41-1547	LB 94913	Brady	Arc Flash Hazard	1
Custom Engraved Lables			Layout to be determined by Label Operator (2 lines maximum)	
XX-XX-XX-5148	Engraved 2" x .5"	OSI	VAUGHAN	1
Lights & Pushbuttons		Idec		
13-16-36-1490	HW1P-1FQD-G-120	Idec	Pilot Light; Green, Illuminated, 120V, Complete	2
13-16-36-1473	HW1P-1FQD-R-120	Idec	Pilot Light; Red, 120V, Complete	2
13-16-36-1476	HW1P-1FQD-A-120	Idec	Pilot Light; Amber, 120V, Complete	2
13-16-36-1178	MX15	Ingram	Dome Light; Mini, Red, 15W, 120V	1
13-16-36-1194	SSF150W	Ingram	Solid State Flasher SSF150W	1
Motor Contactors/NEMA Rated				
13-16-16-1305	A16-30-10-84	ABB	Contactor; 3P, 17A, 1NO, 110/50, 110-120/60	2
Overloads				
13-16-46-1305	E16DU18.9-10	ABB	Overload Relay; 5.7-18.9A	2
Relays				
13-16-46-1071	RJ2S-C-A120	Idec	RJ Relay; DPDT, 8A, AC 120V Coil	4
13-16-46-1283	SJ2S-07L	Idec	SJ Socket; 8 Pin, DIN/Pnl Mt	4
13-16-46-1160	ARP 43S	SSAC	Relay, Alternating, w/ Selector Switch	1
13-16-46-1290	SR2P-06	Idec	Base; 8-Pin, Touch Safe	3
Sensors				
13-16-51-1007	LLC44A1A	ABB	Sensor; liquid level control, adjustable, 120V	2
Switches				
13-16-66-1022	02-0003	Mcgill	Switches; Toggle, On-On, Mcgill	2
13-16-66-1030	93-0003	Mcgill	Switches; Toggle, (On)-Off-(On), Mcgill	1
13-16-66-1190	C1131/27 (C1131/28)	APMHEXSEAL	Switch Toggle Seal	1
13-16-66-1376	OT60E3	ABB	Switch, Disconnect, 60 Amp, 600V, UL 98	1
13-16-66-1350	OHY2AJ1	ABB	Handle,Disconnect, Red/Yellow, Padlockable, 3R	1
13-16-66-1356	OXS5X250	ABB	Shaft, Disconnect, 9.6", 100A	1
13-46-21-1051	UMCN20NO	ALDIND	Float Switch "V" Mechanical NO Unimax 20' cord	4
Terminal Blocks & Accessories				
13-16-71-1450	3004524	Phoenix	Terminal Block; UK 6N, 50A, 600V	21
13-16-71-1480	800886	Phoenix	End Block; ENS 35N	2
13-16-71-1490	303020	Phoenix	End Cover; D-UK 4/10 (UK 5 & 6)	1
13-16-71-1502	200059	Phoenix	Jumper; 3P,, UK6	1
XX-XX-XX-5563	misc	Phoenix	PHO Number	21
13-16-71-1536	FS PDB 2A	F. Shaw	Distribution block; 175A, 600V, 1in/4out	3
Transformers & Power Supplies				
13-16-81-1462	AE07-0100	Acme	Transformer; 100VA, PRI:208/230/460V, SEC.115V	1
13-16-81-1475	PL-79925	Acme	Transformer Cover; for 50 to 350VA	1
XX-XX-XX-5012	ORENCO	OSI	Duplex Wire Package	1

E. Vaughn SE Series Pump Owner's Manual

Both the Type 1 and Type 2 pumps were manufactured by Vaughn Company, Inc. The provided owner's manual describes operation and maintenance instructions, it follows in the subsequent pages.

ELECTRIC SUBMERSIBLE PUMPS
SE SERIES

INSTALLATION, OPERATION AND MAINTENANCE INSTRUCTIONS

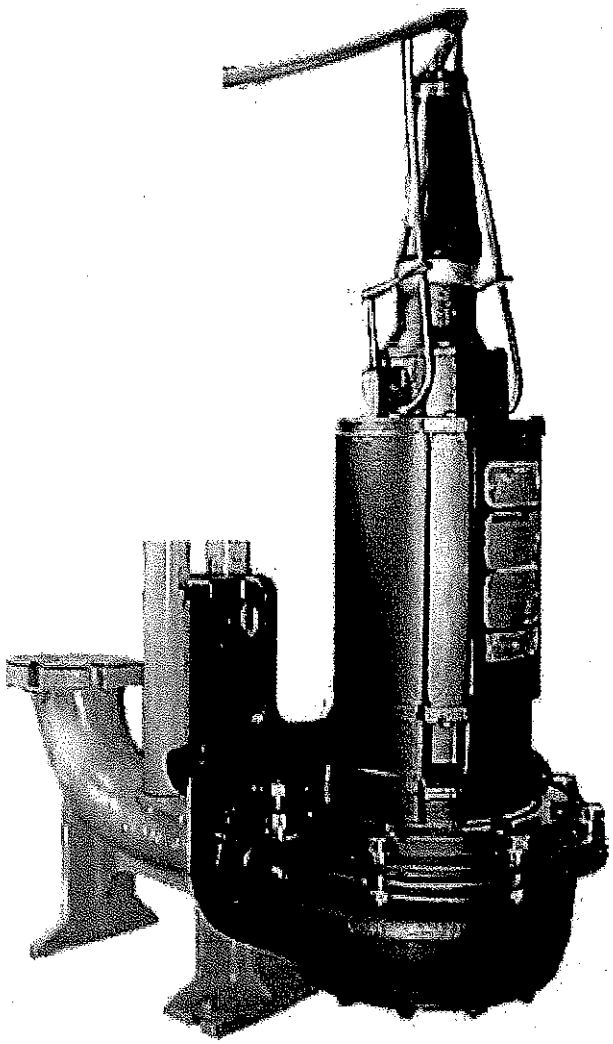

VAUGHAN COMPANY, INC.

364 MONTE-ELMA ROAD, MONTESANO, WASHINGTON 98563

PHONE: (360) 249-4042 FAX (360) 249-6155

Form V375 REV 3 MAY09

INSTALLATION, OPERATION, and MAINTENANCE INSTRUCTIONS

TABLE OF CONTENTS

1. **CAUTIONS AND WARNINGS** ..... Page 3

2. **DESCRIPTION OF SUBMERSIBLE CHOPPER PUMP** ..... Page 4
   A. Description of Major Pump Components
   B. Proper Applications for Vaughan Chopper Pumps
   C. Uses of Vaughan Pumps that May Cause Trouble

3. **INSTALLATION INSTRUCTIONS** ..... Page 7
   A. Receipt Inspection
   B. Storage Considerations
   C. Mounting the Pump and Guiderail System in your Pit
   D. Piping
   E. Controls
   F. Submersible Motor

4. **PUMP STARTUP INSTRUCTIONS** ..... Page 10

5. **STARTUP AND CERTIFICATION CHECKLIST** ..... Page 11

6. **NORMAL OPERATION OF PUMP** ..... Page 13

7. **SHUTDOWN INSTRUCTIONS** ..... Page 14
   A. Manual Shutdown
   B. Automatic Shutdown
   C. Emergency Shutdown

8. **MAINTENANCE** ..... Page 14
   A. Routine Maintenance
   B. Corrective Maintenance

9. **TROUBLESHOOTING** ..... Page 16

10. **WARRANTY** ..... Page 17

SECTION 1: CAUTIONS AND WARNINGS

DANGER!

- Wear eye protection, rubber gloves, and aprons when working on or inspecting this pump.
- Enter tanks or pits with extreme caution and only when using a self-contained breathing apparatus and only when a harness and tether is tied around your waist. Two people should be stationed outside the pit or tank holding onto the harness and tether so they can pull you out of the pit in an emergency. Consult the confined space entry procedures that have been recommended for your location. Pits or tanks may contain dangerous gases that can cause death.
- Do not allow people under pump assembly while it is being lifted.
- Disconnect electrical power and lock out and tag out circuit breakers to pump motor and associated equipment when inspecting or making adjustments. Note that duplex pumps with alternating relays must both be locked out; otherwise, you cannot be sure which pump you have isolated and it could start up unexpectedly.
- Reliance submersible motors used on these pumps meet explosion proof requirements for hazardous environments. However, the guiderail system or oil monitor system may not meet explosion-proof requirements unless specifically ordered for this purpose. Introducing non-explosion proof equipment into a hazardous environment as defined by the National Electrical Code can cause a dangerous explosion. Consult Vaughan Co. for help or advice.
- This pump may start automatically if wired to float switches or other equipment. Before inspecting or working on this equipment, always isolate electrical power. If duplex pumps are in use with an alternating relay installed in your control panel, open circuit breaker to both pumps. Otherwise, the pump may not be isolated and could start unexpectedly.
- Keep hands, feet and clothing away from moving machinery.
- Pump motors are connected to high voltage. Allow only qualified electricians to service this electrical equipment only in accordance with the latest revision of the National Electrical Code and other applicable requirements.

If there are any questions regarding the safe and proper methods for operating or servicing this pump, please contact Vaughan Co., Inc. for assistance.

DANGER!

- As it is possible to run Vaughan Chopper pumps and Screw pumps dry, for quality assurance or troubleshooting reasons, it is extremely important to ensure suction and discharge connections are always properly guarded to prevent anything (i.e. foreign objects or pump parts) from being thrown from the pump as a projectile. All pumps must be run with either a) suction and discharge piping in place, or b) blind flanges installed on suction and discharge connections. Blind flanges should be vented to avoid pressure build-up. Note that cast rotating parts could break if metal to metal contact occurs while the pump is running dry.

CAUTION!

- Disconnect power to the pump before lifting the pump up out of the pit. Be extremely careful to avoid damage to the power cable when lifting or handling this pump.
- This pump is a "Chopper Pump". There are sharp corners, edges and pinch areas which can cause serious cuts. Be careful; wear protective gloves whenever possible. If you cut yourself, seek medical help immediately to avoid serious infection.
- Lift pump and motor by pump lifting cable only. Lifting by any other parts of this equipment may be dangerous or may damage equipment. Inspect the lifting bail regularly to be sure it is not damaged or frayed. Replace immediately if the cable is weakened in any way.
- Lift pump and motor with an adequately sized hoist or crane. Consult Vaughan Co., Inc. shipping department for weight of your equipment if you are in doubt.
- Keep all pit openings covered when not in use.
- This pump uses oil which if spilled can cause a slipping hazard and danger to personnel.
- Do not operate this equipment unless safety guards or devices are in place and properly adjusted.
- Shut pump off when adjusting fittings to avoid being sprayed with pumpage. Pumped materials may be hot, corrosive, poisonous, or otherwise dangerous to personnel.
- Never clean, oil or repair machinery while in motion.
- Keep electrical control panel area clear to avoid personnel hazard.
- Make certain all personnel are clear of equipment before operating.

SECTION 2: DESCRIPTION OF VAUGHAN SUBMERSIBLE CHOPPER PUMP

The Vaughan submersible chopper pump is specifically designed for pumping trash laden material from wet pits in industrial and municipal plants. The pump can be used in the recirculating mode of operation to mix the pit before pumpout, but a recirculation system of external piping, or an add-on recirculation valve system onto the guiderail elbow must be obtained from Vaughan Co. Material is chopped up by the pump so that particle size is reduced and downstream plugging problems are reduced.

The E-Series chopper pumps offer additional improvements over the previous standard submersible chopper pumps:

1. The backpullout casing design allows for easy removal of the rotating assembly.
2. The impeller-to-cutterbar clearance can be adjusted externally without the use of shims or the need for pump disassembly.
3. New techniques for improving the hydraulic efficiency have been implemented.

A. DESCRIPTION OF MAJOR PUMP COMPONENTS

Note: Please refer to the illustrations in this manual which show the pump cross-section and the submersible chopper pump mounted on Vaughan's guiderail system. These pictures will help you understand this section more fully.

CHOPPER IMPELLER: The impeller on the Vaughan pump serves two purposes. First, it induces flow by drawing liquid into the pump and then accelerating it into the pump casing. Second, the impeller provides chopping capability for the pump. The leading edge of each impeller blade slopes forward to creating a knife edge so that as material enters the pump, it is caught and cut between impeller blade and the cast stationary shear bars at the inlet openings of the cutter bar plate. The impeller is held onto the pump shaft by a special "cutter nut".

CUTTER BAR PLATE: The cutter bar plate also serves two functions. First, it acts as a "wear plate" to seal pressure generated by the rotating impeller inside the pump. Second, the cutter bar provides two shear bars at the entrance to the pump so that material may be chopped by the pump impeller acting against these stationary shear bars.

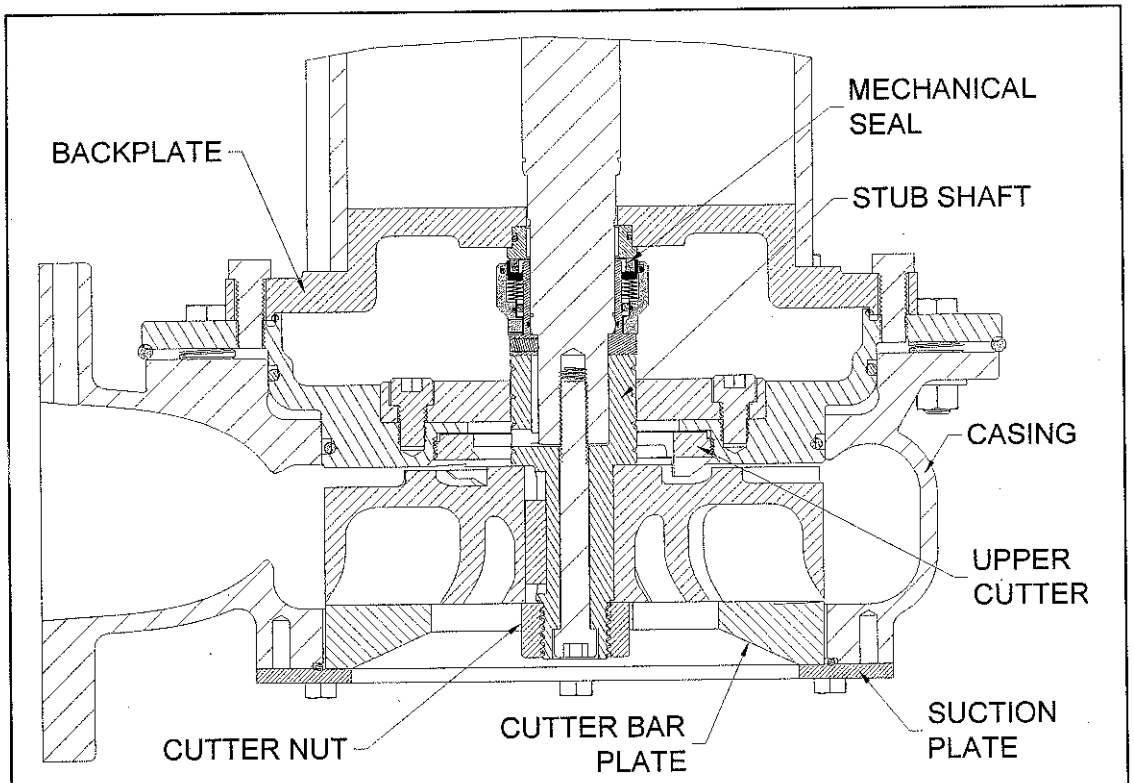

CROSS-SECTION OF SE SERIES SUBMERSIBLE PUMP

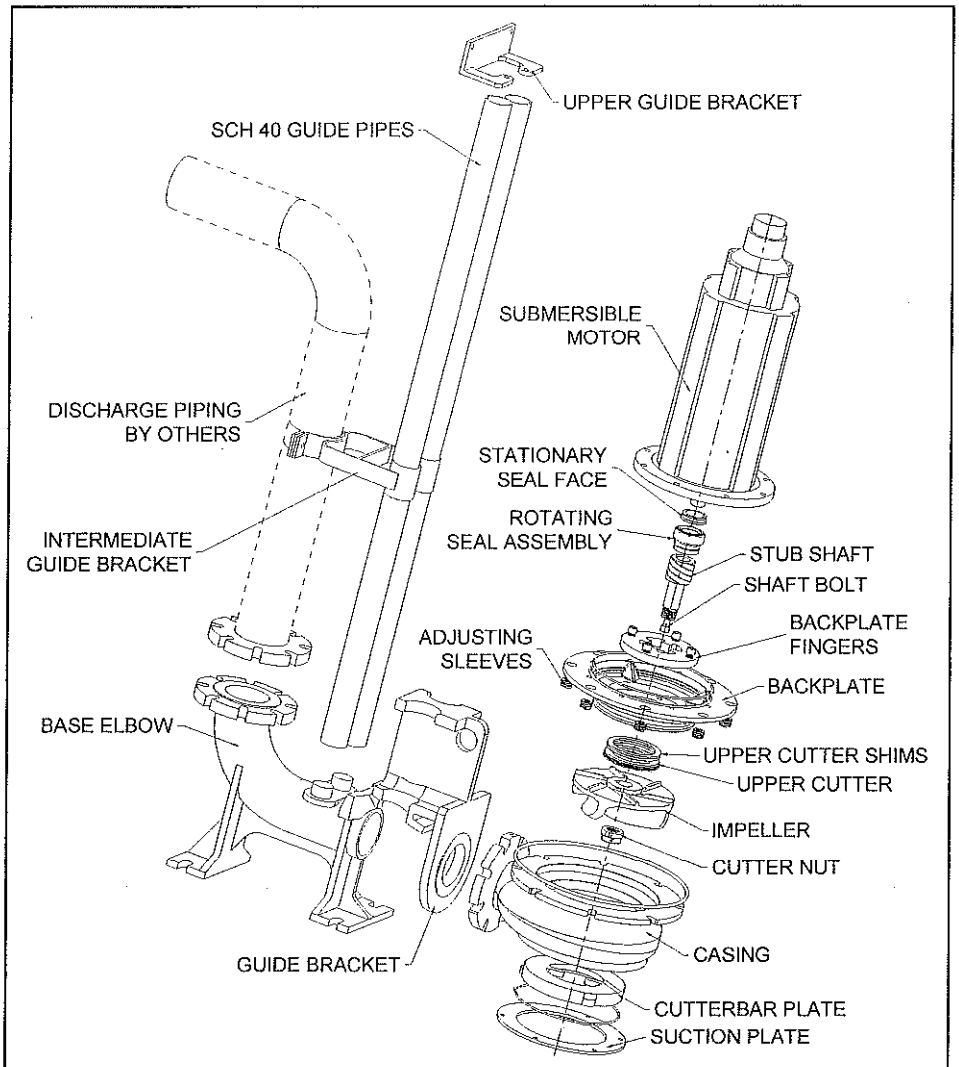

EXPLODED ASSEMBLY OF PUMP AND GUIDERAIL SYSTEM

DISINTEGRATOR TOOL: The disintegrator tool, an option on submersible pumps, is an auxiliary cutter located below the pump inlet to help prevent blockage. Matted material which tends to block the opening to the pump can be cut up or knocked away by this tool until flow can resume into the pump. The disintegrator tool has the disadvantage, however, that material which tends to wrap – material like rags, hair, and nylon fiber – can ball up on the tool and eventually block flow into the intake openings of the pump. (Vaughan Co. does not recommend the use of a disintegrator tool whenever you are pumping sewage or sewage sludge.) If the pump is installed with a disintegrator tool and if suction blockage becomes a problem due to wrapping (problems usually show up as a reduced flow or severe vibration), then the tool should be replaced with a suitable stainless steel set screw.

SEVERE DUTY LOWER SEAL IN SUBMERSIBLE MOTOR: The submersible motors utilized by Vaughan Co. (either Reliance or Yeomans) are designed with two mechanical seals. One above (the upper seal) and one below (the lower seal) an oil chamber located below the rotor and stator. Normally these seals are John Crane Type 21 with carbon / ceramic faces. Vaughan Co. has replaced the lower seal with a Sealol 680 or AES SAI/I100 with silicon carbide faces to better handle the trash-laden slurries that Vaughan pumps encounter. The 680 seal is further protected by a patented stainless steel cylindrical shroud made by Vaughan Co.

GUIDERAIL SYSTEM:
Vaughan submersible chopper pumps can be supplied with a simple stand or with a guiderail system. The guiderail system allows the pump to be withdrawn from the pit without the need for anyone to enter the pit. When mounted on the guiderail elbow the pump is supported completely by the pump casing discharge flange and adapter bracket. If the pump is to be mounted in a hazardous environment, you need to inform us so that we can supply a non-sparking aluminum bronze adapter bracket for the pump.

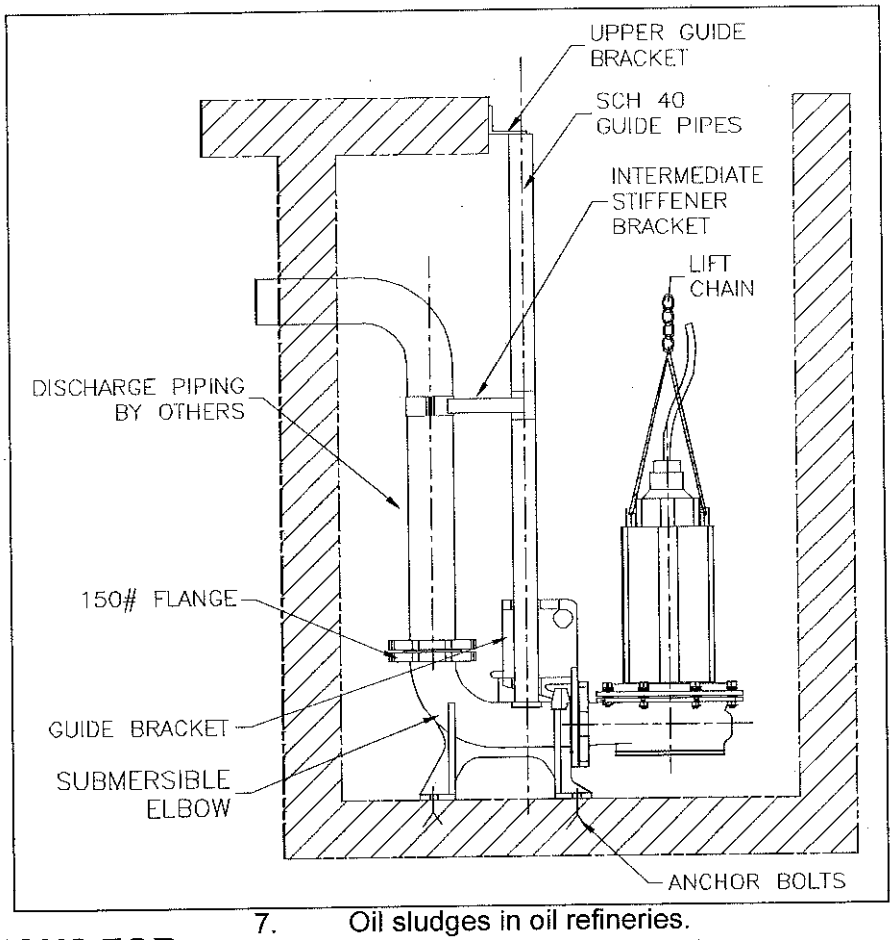

B. PROPER APPLICATIONS FOR VAUGHAN CHOPPER PUMPS

Vaughan Chopper Pumps are used for pumping liquid slurries contaminated with debris which can be chopped and mixed into the slurry. The benefit of this approach is that a more homogenous slurry is pumped, making some slurries pumpable (which might otherwise not be pumpable) and eliminating downstream plugging in other equipment. Also, screens located upstream of the pump may often be eliminated, cutting labor costs. Vaughan pumps are routinely used to pump the following slurries:

1. Sewage and sewage sludge
2. Fish waste.
3. Vegetable waste.
4. Mill scale.
5. Aluminum chips from machining operations.
6. Lead oxide and plastics in battery plants.
7. Oil sludges in oil refineries.
8. Wood chips and paper waste.
9. Animal manures (dairy cow, pigs, and chicken).
10. Feathers mixed with blood and water in poultry plants.
11. Animal fat in rendering and hide processing plants.
12. Plastic debris.
13. Coal slurry.

System design is very important in making any pump work successfully in pumping debris-laden slurries. There must be enough liquid so that material can be pumped. Also, liquid and material must be able to flow freely to the pump.

C. USES OF VAUGHAN PUMPS THAT MAY CAUSE TROUBLE

If the system is not designed correctly for proper handling of your material, or if the pump is incorrectly chosen for your system, the pump

may not work to your satisfaction or the pump may experience early failures of seals or bearings. The following problems can be experienced:

1. When pumps vibrate, they are damaged.
2. A pump must be operated in the solid line areas of its pump performance curve. Operation in the dashed lines indicates vibration areas.
3. Operating a pump against very low backpressure damages pumps.
4. Operating a pump against too much backpressure damages pumps.
5. Chopper pump impellers with the largest number of blades are the most efficient, but they also provide the poorest solids handling. Added impeller blades block the inlet and cause increased binding on fiber during chopping. When pumping sewage and similar slurries, choose impellers with the *least* number of blades.
6. When pumping materials that float or settle in a pit, agitation and chopping with the pump are required before pit pumpout.
7. You cannot pump slurry that is too hot from an open pit. 65 deg C (149 deg F) is a reasonable upper limit for non-hazardous pits.
8. You must have a reliable electrical power supply for a pump to work properly. If you have too much voltage drop because of an undersized cable or transformer, the motor will not be able to provide full power to the pump and it will stall during chopping of debris.

SECTION 3: INSTALLATION INSTRUCTIONS

A. RECEIPT INSPECTION

Prior to shipment Vaughan pumps are carefully crated and inspected to ensure arrival at your plant in good condition. On receiving your pump, examine it carefully to assure that no damaged or broken parts have resulted from mishandling during shipping. Look for signs that the pump has been dropped, such as missing paint, dented flanges, cracked housings, or leaking oil. Turn the pump shaft by hand and verify that it turns over smoothly. If the shaft binds, look for debris between impeller and cutter bar. Otherwise, shaft binding could indicate damage. If damage has occurred, report to your carrier immediately, and consult your local Vaughan representative or call Vaughan Co. for advice.

B. STORAGE CONSIDERATIONS

If equipment is to be stored for longer than two weeks, take the following action:

1. Coat exposed steel with a light layer of grease or protective spray-on lubricant to protect the equipment from corrosion.
2. Rotate the pump shaft 1/4 turn once each week to keep the bearings from sitting in one position for extended periods of time.
3. Avoid storing rotating equipment near other vibrating equipment. The vibrations can damage the ball bearings and result in premature failure once the equipment is started up.
4. Store rotating equipment in a clean, dry, heated area away from areas where it could be damaged from impact, smoke, dirt, vibration, corrosive fumes or liquids, or from condensation inside the motor or pump. It is helpful to cover equipment with plastic.

C. MOUNTING THE PUMP AND GUIDERAIL SYSTEM IN YOUR PIT

The Vaughan submersible pump is heavy and will require a crane to lift it into position over your pit. Lifting the pump by the stainless steel bale over the motor is the only recommended method for lifting.

CAUTION

Lift pump and motor with an adequately sized hoist, crane, or forklift. Consult Vaughan Co., Inc. shipping department for weight of your equipment if you are in doubt.

DANGER

Do not allow people under pump assembly while it is being lifted.

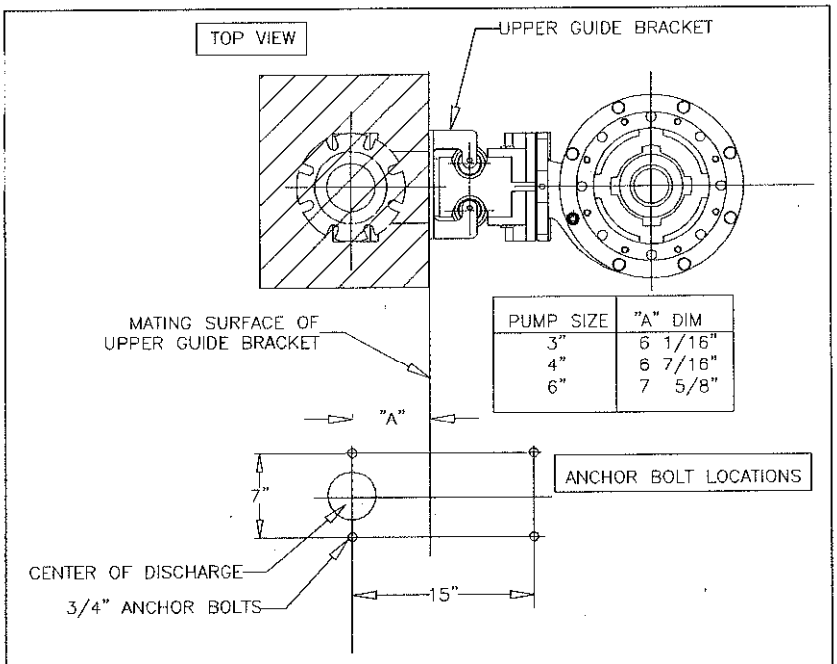

PUMP SIZE	"A" DIM
3"	6 1/16"
4"	6 7/16"
6"	7 5/8"

ANCHORBOLT POSITIONS RELATIVE TO UPPER MOUNTING BRACKET

If the pump is to be mounted on a guiderail system, the elbow will have to be bolted to the floor, and the guiderail upper bracket will have to be bolted either to your access cover frame or to some other structural member. The pump and elbow should be mounted at least 12" away from the nearest vertical wall in the pit.

Vaughan Co. recommends the use of Molly Parabolt anchor bolts, or equal, 1/2" x 5 1/4" long. *Please note that before startup, the pump should be located out of the pit where correct pump rotation may be verified.*

The drawing above shows a typical installation of a submersible pump mounted in a pit, with dimensions on where to mount the anchor bolts for the different size elbows.

Normally the customer or the contractor will supply 2" standard galvanized or stainless steel pipe for the actual guiderails. All other components in the guiderail system are available from Vaughan. When lifting a submersible pump on the guiderail system, use caution to avoid binding of the discharge bracket on the guiderails. Adjusting the angle on which the lifting cable pulls up on the motor lifting bail can relieve a great deal of the binding that might otherwise occur.

After startup, when lowering the pump into a pit on a guiderail system, it may be helpful to turn the pump on while the pump is mating to the elbow so that any debris may be flushed away from the mating surfaces, thus minimizing chances for leakage later. (Never do this with 3510 RPM pumps.) Vaughan submersible pumps use a metal-to-metal connection between pump and elbow for minimum mating problems over the life of the equipment.

Always take care to avoid damaging the motor cables and the epoxy joint where the cables enter the motor. If the cables are stretched, pulled, or crushed, they will be damaged.

The exact details of your pump and guiderail system, (i.e., parts breakdown, outline dimensions, and weight) are available from Vaughan Co.

DANGER

Reliance submersible motors used on these pumps meet explosion proof requirements for hazardous environments. However, the guiderail system or oil monitor system may not meet explosion-proof requirements unless specifically ordered for this purpose. Introducing non-explosion proof equipment into a hazardous environment as defined by the National Electrical Code can cause a dangerous explosion. Consult Vaughan Co. for help or advice.

D. PIPING

As a general rule in piping layout, avoid frictional losses by minimizing fittings and abrupt changes in direction and by choosing

piping size carefully. Remember that when pumping sludges that this material has significantly higher friction losses than water, so larger diameter piping is often required, usually at least 6".

If you are going uphill or going into a force main, or if there is more than one pump pumping into a common header, a check valve and isolation valve will be required on the discharge of the pump. *It is strongly recommended that you provide a 1/4" NPT pressure tap in the valve box or in the piping just above or out of the pit so that you can measure the actual operating conditions of the pump during startup. Also, if you are ever required to do any troubleshooting, this fitting will be required.* For pumping suspended solids, maintain at least 3-5 fps. velocity in horizontal runs, and 8-10 fps in vertical runs. Otherwise, material can settle and plug the discharge line, particularly at elbows.

CAUTION

Be sure that all piping connections are tightened and properly supported before operation of this pump.

E. CONTROLS

If your installation is considered a hazardous location, be sure that an electrician experienced in hazardous environment wiring and controls is involved with your installation.

Vaughan Chopper Pumps, because they cut and condition the material they pump, require positive motor protection with correctly sized breakers, starters, and overload protection. A Chopper Pump can jam and stall on material too tough to chop, and; therefore, carefully thought out overload protection for your expensive submersible motor is critical to avoid motor burnout.

Also, the Reliance and Yeomans submersible motors have two protective devices, the seal failure moisture probe and the thermostatic switches. Both of these devices must be incorporated into the controls. The sample controls schematics presented below shows these items wired into the system. The recommended Warrick type 2800 moisture sensing circuits should be installed within 150 feet of motor moisture probes. Also, please see the Reliance (or Yeomans) Installation and Operating Manual for more details on these devices.

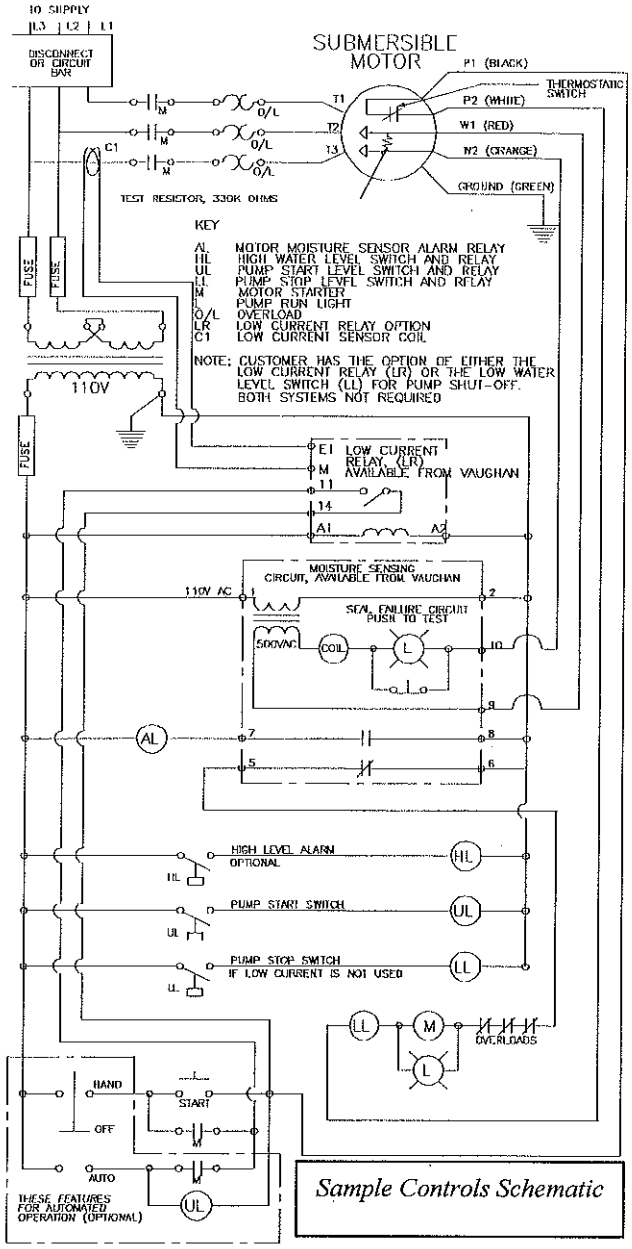

Sample Controls Schematic

F. SUBMERSIBLE MOTOR

Please read the Reliance, or Yeomans, submersible motor Application, Installation and Operation Manual before operating this equipment.

Please note that the Reliance submersible motor is designed to be cooled by the liquid in

the pit. It can operate only 15 minutes in air before overheating and automatic opening of the internal thermostatic switches. For proper cooling and operation of this motor, it must be covered by liquid, or if it's uncovered, it must not operate for more than 15 minutes in air. Also, this motor is designed for explosion proof use in liquids at temperatures up to 104°F (40°C). In non-hazardous environments it can operate up to 149°F (65°C). This motor is not rated for use in liquid temperatures which exceed these limits.

The Yeomans CLC motors are designed for continuous operation in air. They do not carry a UL or FM approval for use in an environment requiring explosion proof equipment.

Also, the biggest cause of problems with submersible motors is electrical cable damage or damage to the cable cap assembly. *Do not stretch the cable! And never lift the pump by the electrical cable!* Otherwise, it will be damaged. Damage shows up as moisture probe or thermostatic switch failures (damage to the smaller of the two wires) or can result in a short of the main power cables.

SECTION 4: PUMP STARTUP INSTRUCTIONS

1. *Please review all warnings on page 3!*

2. The submersible chopper pump cannot be properly started unless the pump is out of the pit. With the pump out of the pit, laying horizontally, take the following action:

   Perform the rotation check. When checking pump rotation, at the control panel, hit the "ON" button, then the "OFF" button as fast as possible to merely "jog" the motor. If the impeller turns counterclockwise (as seen from the intake side), then you are ready to start the pump.

   If the impeller turns clockwise, (wrong direction), then open the circuit breakers to the motor panel using your plant's normal safety precautions for locking and tagging out breakers, and then reverse any two leads to the motor starter in the control panel. Then close the breakers to the panel, and recheck the motor direction to be sure it's correct. If the pump is allowed to run backwards for any significant length of time, the pump can be damaged.

CAUTION

If the pump is allowed to run backwards for any significant length of time, the impeller can loosen, and eventually damage the pump.

3. Solid mounting of the pump onto the guiderail elbow helps keep vibrations minimized during operation of the pump. Anything you can do safely to make sure the pump is firmly seated onto the elbow will be helpful. If after startup the pump is vibrating, it may be helpful to lift the pump up and reseat it onto the elbow several times. And sometimes reseating the pump onto the elbow with the pump running is helpful. (Only do this with 1750 or 1170 RPM pumps, never with a 3510 RPM pump.)

4. When the STARTUP AND CERTIFICATION CHECKLIST is completed, you may start up the pump. Please make a photocopy of the completed checklist and mail it or FAX it to your local Vaughan representative or to Vaughan Co. Engineering. We will verify that the pump and system are properly matched to protect your investment.

CAUTION

Pump speeds and operating conditions must fall within the acceptable limits of the performance curve of the pump.

VAUGHAN SUBMERSIBLE SE SERIES CHOPPER PUMP
STARTUP AND CERTIFICATION CHECKLIST

Pump Serial No. _____ Date: _____

Contact name of person performing startup: _____

Contact phone number: _____

Pump shaft turns freely by hand?	YES ☐	NO ☐
All piping attached to pump is being independently supported? (not by the pump)	YES ☐	NO ☐
All piping joints are leaktight?	YES ☐	NO ☐
Pump is turning CW as viewed from the motor end?	YES ☐	NO ☐
Moisture Sensor Relay connected and tested to ensure proper function?	YES ☐	NO ☐

ELECTRICAL DATA

Motor Mfr: _____ HP: _____ RPM: _____

Nameplate Voltage: _____ Nameplate F.L. Amperage: _____

Operating Voltage: L1-L2 _____ L2-L3 _____ L1-L3 _____

Operating Amperage: I1 _____ I2 _____ I3 _____

SYSTEM DATA

What type of material are you pumping? _____

_____

Temperature (degF) _____ Specific Gravity _____ %Solids _____

Describe your piping system: Total equivalent length of pipe _____FT

Pipe size: _____ in. Elevation change from water level to disch point (ft.) _____

Estimated Total Head (ft): _____ Required Flow (GPM): _____

PUMP OPERATING DATA

Pump Model _____ Impeller Diameter _____

Discharge Pressure (psig) _____ Dim "Z1" _____feet
(distance from liquid level to pressure gauge)

Suction Pressure _____

Pump Flow (GPM) _____

Is pump running quietly? _____ Noisily?_____ Very noisily? _____

NOTE: If pump is not running quietly, please contact us immediately for help. Severe vibration can damage the pump very quickly.

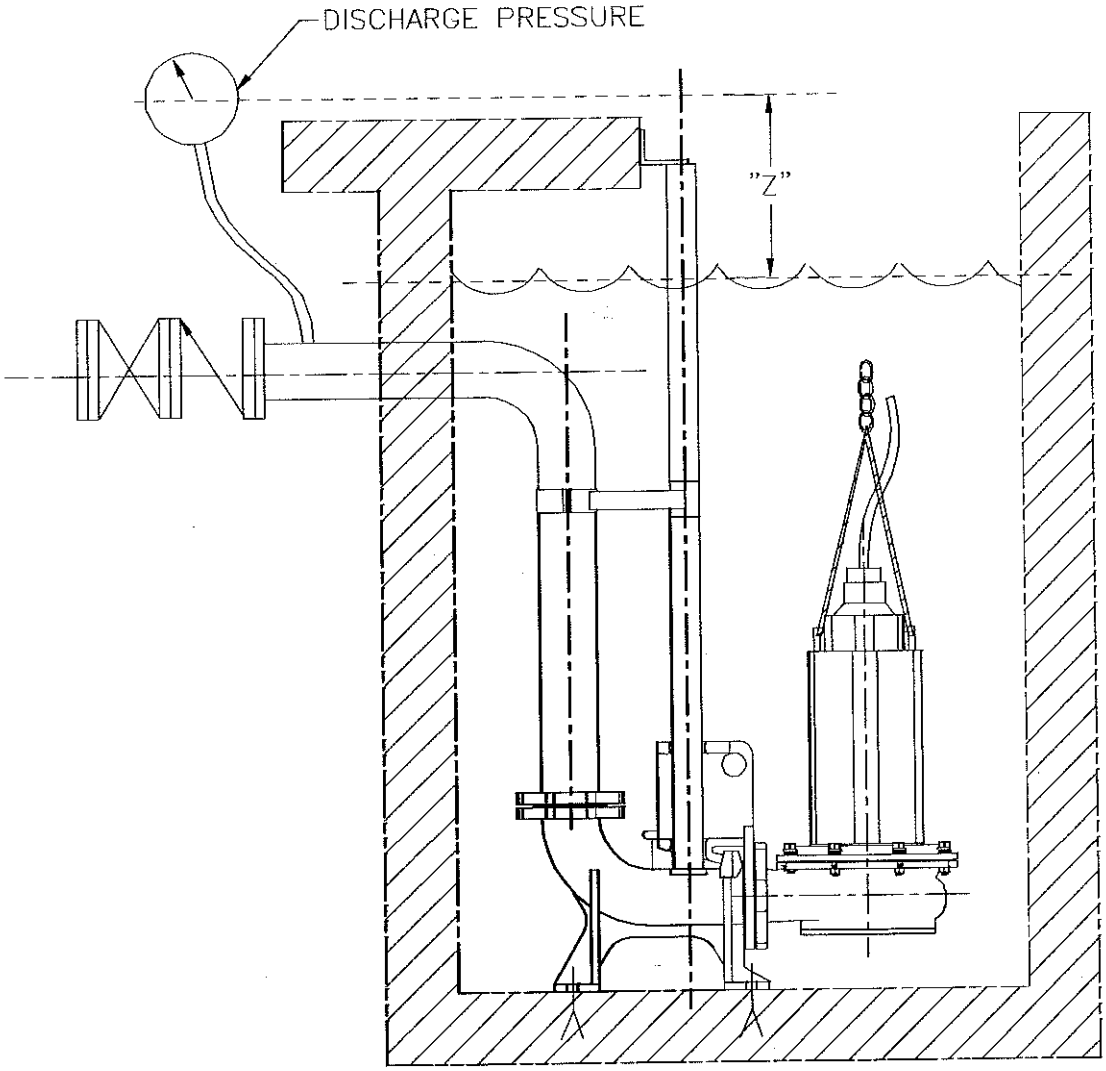

SECTION 6: NORMAL PUMP OPERATION

A. NOISE

The Vaughan pumps which operate at either 1750 RPM or 1170 RPM are normally quiet running, and the major source of noise is the electric motor. Higher head pumps operating at 3510 RPM, however, will be noisier due to the nature of the pump design. Typically, noise level will be around 90-93 dbA in this pump. (However, mechanical vibrations should be minimal.) Also, there are times, particularly at startup, when the pit may be in bad condition, and an otherwise quiet running pump will be fairly noisy, due to the large amount of chopping and conditioning work that the pump must do. In time, the pump noise should dissipate as the majority of the difficult material is broken up and homogenized.

B. VIBRATION

Vibration, like noise, should be minimal in the pump unless the pump is doing heavy chopping. If a particularly tough rag, or nylon pantyhose gets caught in the pump, temporary dynamic imbalance and some flow blockage will occur until the rag is chopped up and cleared. These conditions will create vibration that is undesirable. But this condition is generally only temporary, and the chopping action of the pump normally clears the obstruction with time.

Please note that every effort has been made at the factory to ensure that this pump operates smoothly and without vibration. For example, all impellers are dynamically balanced after impeller machining to less than 0.1 ounce of imbalance. The pump shaft is very tightly held by ball bearings so that there is virtually no shaft movement.

The most important action that you can take to eliminate vibration during operation is to make sure that you have a firm, solid, massive foundation to bolt the pump to during installation. Also, during repair, following the Vaughan Overhaul procedures and using Vaughan parts will give you the best chance of keeping your pump operating as smoothly as possible over time. And finally, pumping liquid below 40 deg C or 65 deg C (see page 10) and operating the pump within the allowable head/ flow (solid line) portions of the performance curve will make sure that the pump does not cavitate and vibrate.

C. MOTOR OVERLOADS

A motor overload is not part of normal operation, but can happen more often in a chopper pump than in other types of "non-clog" pumps because of unpredictable chopping demands. If you find that the motor has tripped out on overload, when you restart the motor, have an electrician check operating amps. Make sure that the motor is not pulling more than max. allowable full load amps. Note especially that repeatedly resetting the motor overload devices and restarting the motor when it repeatedly trips out again is a guaranteed way to burn out the motor! Please pull the pump up out of the pit and see if something unchoppable is stuck in the pump before you ruin this expensive motor.

D. EXPECTED BENEFITS OF VAUGHAN PUMPS

Most customers who install a Vaughan pump see several advantages:

1. Minimal pump attention required.
2. Minimal chances of pump plugging.
3. Minimal chances of loss of prime due to air binding.
4. Minimal problems downstream because material is preconditioned.
5. Minimal ancillary equipment required for grinding or comminuting or for mixing.

SECTION 7: SHUTDOWN INSTRUCTIONS

A. MANUAL SHUTDOWN

In the manual mode of operation, a Vaughan pump is shut down by hitting the "OFF" button or turning the auto/man/off switch to the "OFF" position on the front panel of your control panel. If any repair or maintenance work is to be done on the pump, be sure to follow all the warnings at the beginning of this manual.

DANGER
Be sure to turn off electrical power by opening the breaker at the control panel and by following all plant safety procedures!

B. AUTOMATIC SHUTDOWN

Automatic operation normally shuts the pump down for you, usually on low pit level. If the pump does not shutdown when the pit is pumped out, the pump may be shutdown manually, but you will want to troubleshoot your level control system to find out why the auto operation is working improperly.

If you are going to do any maintenance, adjustment or inspection on this pump or motor, be sure to follow all warnings at the beginning of this manual. Be sure to turn off electrical power by opening the main panel breaker and by following all plant safety procedures, since in the automatic mode, the pump could start automatically if not isolated!

C. EMERGENCY SHUTDOWN

In any kind of emergency when the pump needs to be shutdown, hit the manual "OFF" switch or pushbutton on the front of the pump control panel. If any work has to be done on the pump or motor, open the main breaker on the pump control panel so that the pump cannot automatically restart when personnel are near the pump or motor.

SECTION 8: MAINTENANCE

A. ROUTINE MAINTENANCE

MONTHLY:

1. Check amperage draw to the pump motor and compare to that measured at startup. Make sure that power draw does not exceed allowable amperage to the motor at full load.

ANNUALLY:

Remove pump from the pit and inspect for wear or damaged parts.

Isolate the pump electrically (open breakers) and remove pump from the pit. Inspect for suction blockage and check impeller clearance from cutter bar. The desired gap at the cutting edges is 0.010–0.020".

If adjustment is necessary, the clearance can be adjusted externally by modifying the position of the rotating assembly. The entire rotating assembly, including the impeller, moves in and out of the casing to adjust the impeller-to-cutterbar gap. The cutterbar assembly bolts directly into the casing without shims.

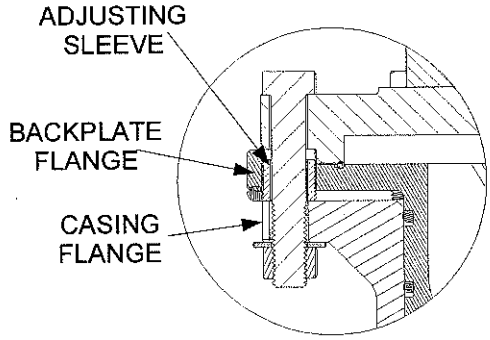

To adjust (see diagram above and on Page 15):

a. Loosen the nuts and thru bolts at all (8) adjusting sleeve locations.

   The adjusters can be moved in/out by completely removing the nut / thru bolt and using an Allen wrench.

   Back off all adjusters (turn counter-clockwise).

b. Choose (3) of the adjusting sleeves (approximately equally spaced) to adjust the gap between the backplate and the casing flange.

   By turning the sleeve in a clockwise direction, you are increasing the gap between the backplate flange and the casing flange, which results in a greater clearance between the cutterbar and impeller.

   Use a feeler gauge to ensure that the gap is equal at each adjusting sleeve (approximately 3/16").

c. Once the gap is equal, be sure to turn each of the (3) adjusting screws an equal amount to keep the casing flange parallel to the backplate, which will also keep the impeller parallel to the cutterbar.

d. Use the adjusting screws to move the casing/cutterbar either in or out from the backplate to achieve 0.010" – 0.020" impeller- to-cutterbar clearance.
   Note: Depending on the pump model, one full turn of the adjuster is equal to 0.063" - 0.072". Turning the adjuster one "flat" or one "point" is equal to about 0.010" - 0.012".

e. Once the impeller-to-cutterbar clearance is correct, tighten the (5) unused adjusting sleeves against the casing flange and lock down with thru bolts and nuts.

   After all nuts and thru bolts are tightened, check for smooth shaft rotation by rotating the pump's shaft by hand.

Be especially alert to rough spots on the bearings. Make sure there is no axial play in the pump shaft and that no oil is leaking across the seal faces into the pump bowl. Inspect pump casing and adapter bracket for wear and replace as necessary. Check for loose, corroded or worn hardware and tighten or replace as necessary. Refer to the Overhaul manual for submersible pumps for more details. If needed, replace impeller and cutter bar as required.

B. CORRECTIVE MAINTENANCE

Because overhaul of a Vaughan submersible pump is a major undertaking, the Overhaul Instruction is a separate procedure. Please do not try to overhaul or repair the pump without this important procedure and without the exploded assembly parts breakdown. The overhaul manual was sent to you by mail when your order for the pump was placed at the factory. If you do not have a copy of this manual, please call Vaughan Co. Engineering; we will make sure you get proper instructions overnight.

For more information, visit our chopperpumps website at http://www.chopperpumps.com

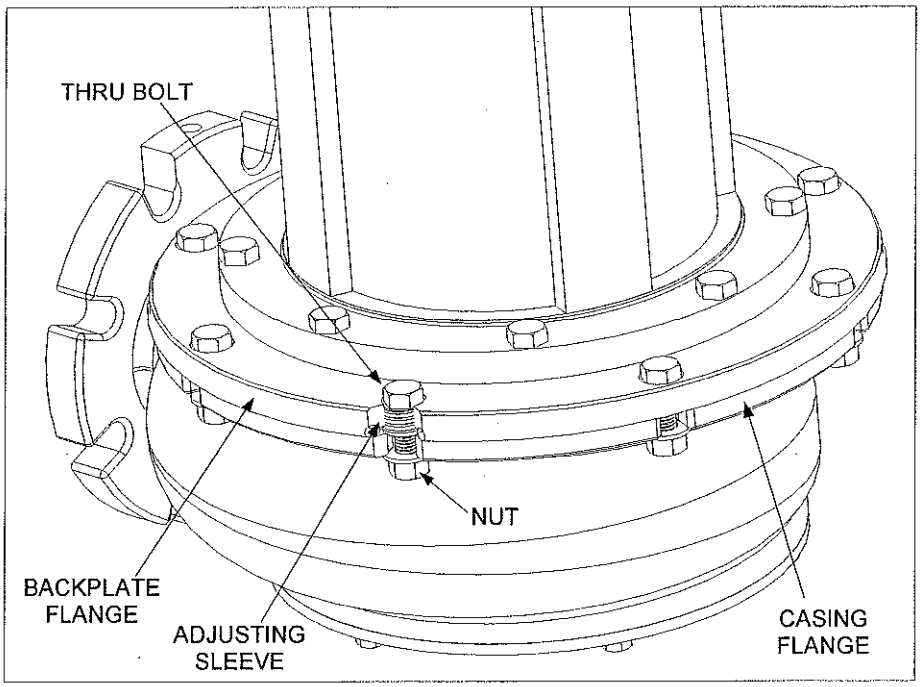

SECTION 9: TROUBLESHOOTING

The following table deals with pump and system problems but not with motor problems. The warranty for Reliance motors is covered by Reliance Electric. The warranty for Yeomans motors is covered by Yeomans Chicago Corporation. Before contacting Reliance or Yeomans, please contact Vaughan Co. for advice.

Attached to this section is a troubleshooting chart that will help you get some idea of what symptoms could cause what problems. If you would like help, please call Vaughan Co. Engineering for troubleshooting help. We'll be glad to offer assistance.

	POSSIBLE PROBLEMS	SYMPTOMS: Short Life of Pumping Parts	Low Discharge Pressure	Contamination of Oil	Excssive Power Required	Abnormally High Vibration	Short Bearing or Seal Life	Pump Binding or Plugging	High Brng Temp	Low Flow
SUCTION PROBLEMS	Insufficient NPSH		■			■	■			■
	Gas Binding of Pump (air trapped in eye of impeller)		■			■	■			■
	Vortexing in Pit at Inlet					■				■
	Intake Openings Blocked		■			■				■
SYSTEM PROBLEMS	Pump Speed High or Impeller Dia. Too Large	■			■	■	■			
	Pump Speed Low or Impeller Dia. Too Small		■			■	■			■
	Fluid Excessively Hot	■	■			■	■			■
	Pump Too Near Wall or Floor					■	■	■		
	Pump Rotation Incorrect	■	■		■	■	■	■		■
	System Head Too High					■	■			■
	System Head Too Low	■	■		■	■	■			
	Excessive Strain or Weight on Pump Flange					■	■			
	Pumped Fluid Abrasive or Corrosive	■	■					■		■
	Specific Gravity Higher than Expected				■					■
	Viscosity Higher than Expected				■					■
	Operation at Low Capacity					■	■			
	Improper Parallel Operation of Pumps	■				■	■			■
	Improper Series Operation of Pumps	■			■	■	■			
ELECTRICAL PROBLEMS	Loss of Phase				■			■		
	Low Voltage				■			■		
	Phase-to-Ground Leakage				■					
MECHANICAL PROBLEMS	Pump Discharge Blocked					■				■
	Misalignment of Pump/Driver					■	■		■	
	Foundation not Rigid					■	■			
	External Tool Wrapped with Rags		■			■	■			■
	Worn Bearings				■	■			■	
	Mechanical Seal Failure			■						
	Bent Shaft					■	■			
	Cutter Bar Insert or Impeller Worn				■			■		
	Impeller Damaged or Loose on Shaft	■	■		■	■		■		■
	Shaft Running Off Center					■	■			
	Lack of Lubrication				■	■	■		■	
	Improper Repair/Installation of Bearings			■		■	■			
	Dirt in Bearings					■	■			
	Impeller hitting internal cutter					■				

VAUGHAN CO., INC. PRODUCT WARRANTY

Vaughan Co., Inc. warrants to the original purchaser/end user all pumps and pump parts manufactured by Vaughan Co. to be free from defects in workmanship or material for a period of one (1) year from date of startup or eighteen (18) months from the date of shipment from Vaughan Co., whichever occurs sooner. If during said warranty period, any pump or pump parts manufactured by Vaughan Co. prove to be defective in workmanship or material under normal use and service, and if such pump or pump parts are returned to Vaughan Co.'s factory at Montesano, WA, or to a Vaughan authorized Service Facility, transportation charges prepaid, and if the pump or pump parts are found to be defective in workmanship or material, they will be replaced or repaired by Vaughan Co. free of charge. Products repaired or replaced from the Vaughan Co. factory or a Vaughan authorized Service Facility under this warranty will be returned freight prepaid. Vaughan Co. shall not be responsible for the cost of labor for pump or part removal and/or re-installation.

All warranty claims must be submitted in writing to Vaughan Co. not later than thirty (30) days after warranty breach occurrence. The original warranty length shall not be extended with respect to pumps or parts repaired or replaced by Vaughan Co. under this Warranty. This Warranty is voided as to pumps or parts repaired/replaced by other than Vaughan Co. or its duly authorized representatives.

Vaughan Co. shall not be liable for consequential damages of any kind and the purchaser by acceptance of delivery assumes all liability for the consequences of the use or misuse of Vaughan Co. products by the purchaser, its employees or others. Vaughan Co. will not be held responsible for travel expenses, rented equipment, outside contractor's fees, or unauthorized repair service or parts.

This warranty shall not apply to any product or part of product which has been subjected to misuse, accident, negligence, operated in the dashed portion of the published pump curves, used in a manner contrary to Vaughan's printed instructions or damaged due to a defective power supply, improper electrical protection or faulty installation, maintenance, or repair. Wear caused by pumping abrasive or corrosive fluids or by cavitation is not covered under this warranty.

Equipment and accessories purchased by Vaughan Co. from outside sources which are incorporated into any Vaughan pump or any pump part are warranted only to the extent of and by the original manufacturer's warranty or guarantee, if any, which warranty, if appropriate, will be assigned by Vaughan Co. to the purchaser/end user.

THIS IS VAUGHAN CO.'S SOLE WARRANTY AND IS IN LIEU OF ALL OTHER WARRANTIES, EXPRESSED OR IMPLIED, WHICH ARE HEREBY EXCLUDED INCLUDING IN PARTICULAR ALL WARRANTIES OF MERCHANTABILITY OR FITNESS FOR A PARTICULAR PURPOSE.

Vaughan Co. neither assumes, nor authorizes any person or company to assume for it, any other obligation in connection with the sale of its equipment with the exception of a valid Vaughan "Performance Guarantee" or "Extended Warranty," if applicable. Any other enlargement or modification of this warranty by a representative or other selling agent shall not be legally binding on Vaughan Co.

BALDOR • RELIANCE

AC Submersible Pump Motors

Installation & Operating Manual

4/09

MN414

Any trademarks used in this manual are the property of their respective owners.

Table of Contents

Section 1
General Information 1–1
Overview 1–1
Limited Warranty 1–1
Safety Notice 1–1
Receiving 1–2
Handling 1–2
Section 2
Installation & Operation 2–1
Overview 2–1
Installation 2–2
Grounding 2–3
Operation 2–6

Section 1
General Information

Overview This manual contains general procedures that apply to Baldor•Reliance Motor products. Be sure to read and understand the Safety Notice statements in this manual. For your protection, do not install, operate or attempt to perform maintenance procedures until you understand the **Warning and Caution** statements.

A **Warning** statement indicates a possible unsafe condition that can cause harm to personnel.

A **Caution** statement indicates a condition that can cause damage to equipment.

Important: **This instruction manual is not intended to include a comprehensive listing of all details for all procedures required for installation, operation and maintenance. This manual describes general guidelines that apply to most of the motor products. If you have a question about a procedure or are uncertain about any detail, Do Not Proceed. Please contact your Baldor District Office for more information or clarification.**

Before you install, operate or perform maintenance, become familiar with the following:

- NEMA Publication MG-2, Safety Standard for Construction and guide for Selection, Installation and Use of Electric Motors and Generators.
- The National Electrical Code
- Local codes and Practices

Limited Warranty

www.baldor.com/support/warranty_standard.asp

Safety Notice: This equipment contains high voltage! Electrical shock can cause serious or fatal injury. Only qualified personnel should attempt installation, operation and maintenance of electrical equipment.

Be sure that you are completely familiar with NEMA publication MG-2, safety standards for construction and guide for selection, installation and use of electric motors and generators, the National Electrical Code and local codes and practices. Unsafe installation or use can cause conditions that lead to serious or fatal injury. Only qualified personnel should attempt the installation, operation and maintenance of this equipment.

WARNING: **The Adjustable Speed Controller may apply hazardous voltages to the motor leads after power to the controller has been turned off. Verify that the controller is incapable of delivering hazardous voltages and that the voltage at the motor leads is zero before proceeding. Failure to observe this precaution may result in severe bodily injury or death.**

WARNING: **Do not touch electrical connections before you first ensure that power has been disconnected. Electrical shock can cause serious or fatal injury. Only qualified personnel should attempt the installation, operation and maintenance of this equipment.**

WARNING: **Be sure the system is properly grounded before applying power. Do not apply AC power before you ensure that all grounding instructions have been followed. Electrical shock can cause serious or fatal injury. National Electrical Code and Local codes must be carefully followed.**

WARNING: **Avoid extended exposure to machinery with high noise levels. Be sure to wear ear protective devices to reduce harmful effects to your hearing.**

WARNING: **Surface temperatures of motor enclosures may reach temperatures which can cause discomfort or injury to personnel accidentally coming into contact with hot surfaces. Protection should be provided by the user to protect against accidental contact with hot surfaces. Failure to observe this precaution could result in bodily injury.**

WARNING: **This equipment may be connected to other machinery that has rotating parts or parts that are driven by this equipment. Improper use can cause serious or fatal injury. Only qualified personnel should attempt to install operate or maintain this equipment.**

WARNING: **Do not by-pass or disable protective devices or safety guards. Safety features are designed to prevent damage to personnel or equipment. These devices can only provide protection if they remain operative.**

WARNING: **Avoid the use of automatic reset devices if the automatic restarting of equipment can be hazardous to personnel or equipment.**

WARNING: **Be sure the load is properly coupled to the motor shaft before applying power. The shaft key must be fully captive by the load device. Improper coupling can cause harm to personnel or equipment if the load decouples from the shaft during operation.**

WARNING: **Use proper care and procedures that are safe during handling, lifting, installing, operating and maintaining operations. Improper methods may cause muscle strain or other harm.**

Safety Notice Continued

WARNING: **Pacemaker danger – Magnetic and electromagnetic fields in the vicinity of current carrying carrying conductors and permanent magnet motors can result result in a serious health hazard to persons with cardiac pacemakers, metal implants, and hearing aids. To avoid risk, stay way from the area surrounding a permanent magnet motor.**

WARNING: **Incorrect motor rotation direction can cause serious or fatal injury or equipment damage. Be sure to verify motor rotation direction before coupling the load to the motor shaft.**

WARNING: **Do not use non UL/CSA listed explosion proof motors in the presence of flammable or combustible vapors or dust. These motors are not designed for atmospheric conditions that require explosion proof operation.**

WARNING: **Motors that are to be used in flammable and/or explosive atmospheres must display the UL label on the nameplate along with CSA listed logo. Specific service conditions for these motors are defined in NFPA 70 (NEC) Article 500.**

WARNING: **UL Listed motors must only be serviced by UL Approved Authorized Baldor Service Centers if these motors are to be returned to a hazardous and/or explosive atmosphere.**

WARNING: **Thermostat contacts automatically reset when the motor has slightly cooled down. To prevent injury or damage, the control circuit should be designed so that automatic starting of the motor is not possible when the thermostat resets.**

Caution: **To prevent equipment damage, be sure that the electrical service is not capable of delivering more than the maximum motor rated amps listed on the rating plate.**

Caution: **If a HI POT test (High Potential Insulation test) must be performed, follow the precautions and procedure in NEMA MG1 and MG2 standards to avoid equipment damage.**

Caution: **Never raise or lower the motor/pump by the power cords. Use lifting eyes provided in the motor casting (opposite drive end) and attache a cord/cable to lift the weight of the motor and pump. Failure to lift this motor properly may seriously damage the lead connections and water seals and seriously damage the motor.**

If you have any questions or are uncertain about any statement or procedure, or if you require additional information please contact your Baldor District Office or an Authorized Baldor Service Center.

Receiving

Each Baldor•Reliance Motor is thoroughly tested at the factory and carefully packaged for shipment. When you receive your motor, there are several things you should do immediately.

1. Observe the condition of the shipping container and report any damage immediately to the commercial carrier that delivered your motor.
2. Verify that the part number of the motor you received is the same as the part number listed on your purchase order.

Handling

The motor must be stored shaft down in its' original packaging until it is to be into service. The motor should only be lifted using the lifting eyes provided, see Figure 2-1.

Caution: **Never raise or lower the motor/pump by the power cords. Use lifting eyes provided in the motor casting (opposite drive end) and attach a cord/cable to lift the weight of the motor and pump. Failure to lift this motor properly may seriously damage the lead connections and water seals and seriously damage the motor.**

1. Only use the lifting eyes provided to lift the motor. Never attempt to lift the motor by the power cords.
2. Be sure the motor is stored shaft down until ready to install.

Section 2
Installation & Operation

Overview

Installation should conform to the National Electrical Code as well as local codes and practices.

All Baldor•Reliance Submersible Pump Motors Include thermal devices as standard.
Normally, there are four conditions during which a submersible sewage pump may be operated in gases or vapors.

1. When the wet well is being dewatered.
2. When the pump motor assembly is being lowered down the guide rails.
   The flow from the pump is needed during the installation process to ensure that solids are cleared from the discharge flange area to ensure proper seating.
3. When low–level cutoff controls fail.
4. When low–level sensors are positioned at the bottom of the pump assembly.

Continuous Operation Gasses Or Vapors

Be sure you have selected the correct motor for your application. The horsepower rating of the motor is determined by the pump design, impeller size & head and flow conditions.

Operating time is a function of pit size, pump capacity, and flow conditions. Only the pump manufacturer can ensure that the pump motor is properly applied for continuous in–gas or vapor operation. As with any motor product, it is essential that proper consideration be given to the load characteristics to ensure the motor will not be overloaded. Should such an overload occur, thermostats embedded in the windings will provide a signal to deenergize the motor. However, proper consideration of the application will prevent such an overload.

Caution: **Lift using Lift Eyes only. Lifting by power cords will cause motor damage. Use spreader bar to evenly distribute lift force. Angle of lift rope (no spreader bar) should not exceed 45° from vertical, excessive lift angle can damage motor.**

Figure 2-1

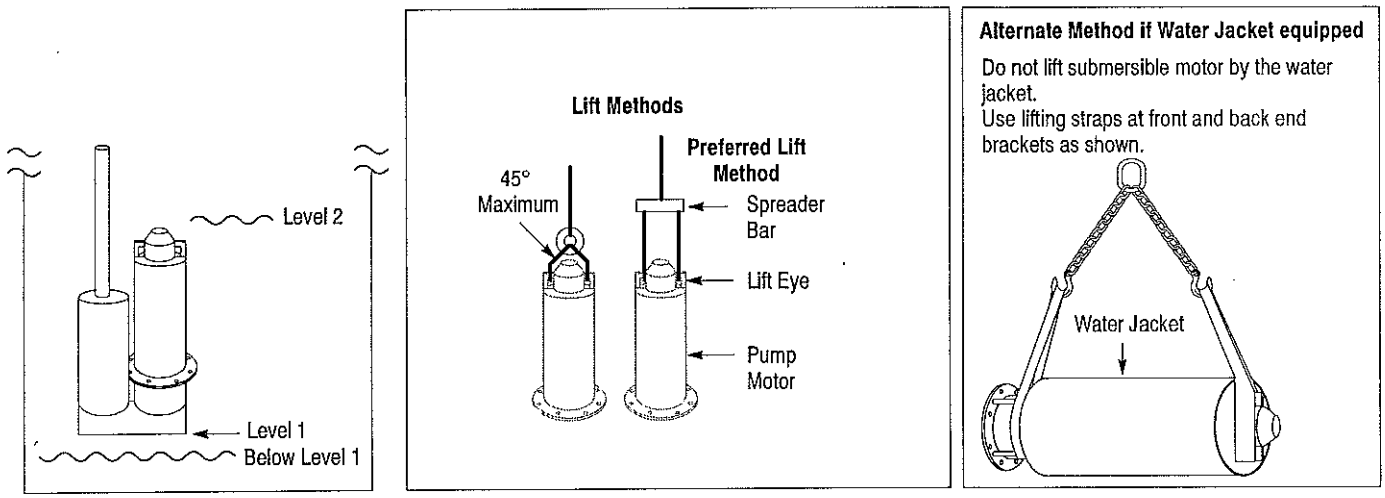

The following load conditions should be noted, refer to Figure 2-1:

1. Below Level 1 (below the pump) fluid is not pumped and no load is reflected to the motor.
2. One pump should always be sized sufficiently large to draw the well down (even under maximum flow conditions). The maximum amount of time the motor will operate fully loaded and uncovered is the amount of time required to draw the well down from Level 2 (top of the motor) to the bottom of the pump.
3. Time described in 2 should not be greater than 15 minutes.
4. These notes do not make allowance for the following:
   a. The heat exchanger effect of the attached pump. It is pumping a relatively cool fluid and will remove some heat.
   b. The motor does not operate fully loaded completely in gas. It is fully loaded as the motor is being uncovered.
   c. If the well is being drawn down from the top of the motor and the maximum flow conditions exist, the influent flow will usually provide excellent cooling of the pump motor.

WARNING: **Do not touch electrical connections before you first ensure that power has been disconnected. Electrical shock can cause serious or fatal injury. Only qualified personnel should attempt the installation, operation and maintenance of this equipment.**

WARNING: **The Adjustable Speed Controller may apply hazardous voltages to the motor leads after power to the controller has been turned off. Verify that the controller is incapable of delivering hazardous voltages and that the voltage at the motor leads is zero before proceeding. Failure to observe this precaution may result in severe bodily injury or death.**

Installation

When the submersible pump motor leaves the factory it is ready for installation. No adjustment, venting or oil filling is required.

Considerations

1. The user must select a motor starter and over–current protection suitable for this motor and its application. Consult motor starter application data as well as the National Electric Code and/or other local codes.
2. Maximum submergence of motor is not to exceed 160 ft (49m) in depth and or 100 PSI (690 kpas) at the external motor seal for Tandem Seal designs. For slurry seal designs the maximum external motor seal pressure is 15 PSI (103 kpas).
3. Thermal Protectors must be connected. Leads marked P1 and P2 (See Figure 2-2).
4. Moisture Sensing Probes must be connected. Leads marked W1 and W2. (See Figure 2-3).
5. Check your power supply against final nameplate connection voltage.
6. Motor will operate properly with frequency not more than ±5% and voltage not more than ±10% above or below nameplate rating.
7. Performance within this range will not necessarily be the same as the established performance at exact rated voltage and frequency.
8. For three phase motors only: To reverse direction of a three phase motor, interchange any two motor lead connections at the starter.

Installation Procedure

To prevent damage to the motor, do not use force to drive pump on (drive impeller onto motor shaft) or to remove pump from motor shaft.

1. Turn off and lockout all power and verify the voltage at the motor starter connectors are zero.
2. Connect the motor power leads to the connectors in the motor starter. (See "Grounding").

Note: The motor lead cable assembly for all Submersible Pump Motors has 3 marked power leads plus two ground leads, two thermal leads and two moisture sensing probe leads.

3. **Three Phase Motors ONLY.**
   a. Turn off and lockout all power and verify the voltage at the motor starter connectors are zero.
   b. Be sure the motor shaft is disconnected from the load and will not cause mechanical rotation of the motor shaft.
   c. Remove all unused shaft keys and loose rotating parts to prevent them from flying off.
   d. Momentarily apply power and check the direction of rotation of the motor shaft.
   Motors are designed for bi–directional shaft rotation. When voltages in an A–B–C phase sequence are applied to leads U/T1, V/T2, W/T3 clockwise shaft rotation facing the opposite drive end will result. If shaft rotation is incorrect, change the direction of rotation as follows:
      i. Turn off and lockout all power and verify that the voltage at the motor leads is zero.
      ii. Reverse any two of three motor power leads at the motor starter.
      iii. Restore power and verify correct rotation.
      iv. Turn off and lockout all power and verify that the voltage at the motor leads is zero.
4. Connect the two Thermal Protectors at the motor starter as shown in Figure 2-2.
5. Connect the two Moisture Sensing Probes at the motor starter as shown in Figure 2-3.
6. Follow pump manufacturer's instructions and mount the pump on the motor shaft.
7. Secure the pump case to the motor flange.
8. Attach drain piping to pump.
9. Use spreader bar and lifting eyes (see Figure 2-1) to lower the motor/pump assembly to the proper depth. Be sure that motor wires are not damaged (contact with metal objects etc.)
10. Set control parameter values (if applicable) according to motor nameplate values.

Grounding In the USA consult the National Electrical Code, Article 430 for information on grounding of motors and generators, and Article 250 for general information on grounding. In making the ground connection, the installer should make certain that there is a solid and permanent metallic connection between the ground point, the motor or generator terminal housing, and the motor or generator frame. In non–USA locations consult the appropriate national or local code applicable.

Motors with resilient cushion rings usually must be provided with a bonding conductor across the resilient member. Some motors are supplied with the bonding conductor on the concealed side of the cushion ring to protect the bond from damage. Motors with bonded cushion rings should usually be grounded at the time of installation in accordance with the above recommendations for making ground connections. When motors with bonded cushion rings are used in multimotor installations employing group fusing or group protection, the bonding of the cushion ring should be checked to determine that it is adequate for the rating of the branch circuit over current protective device being used.

There are applications where grounding the exterior parts of a motor or generator may result in greater hazard by increasing the possibility of a person in the area simultaneously contacting ground and some other nearby live electrical parts of other ungrounded electrical equipment. In portable equipment it is difficult to be sure that a positive ground connection is maintained as the equipment is moved, and providing a grounding conductor may lead to a false sense of security.

Select a motor starter and over current protection suitable for this motor and its application. Consult motor starter application data as well as the National Electric Code and/or other applicable local codes.

Adjustable Frequency Power Inverters used to supply adjustable frequency power to induction motors produce wave forms with lower order harmonics with voltage spikes superimposed. Turn–to–turn, phase–to–phase, and ground insulation of stator windings are subject to the resulting dielectric stresses. Suitable precautions should be taken in the design of these drive systems to minimize the magnitude of these voltage spikes. Consult the drive instructions for maximum acceptable motor lead lengths, and proper grounding.

Thermal Protection

Thermostat leads marked P1 & P2 must be connected in series with the stop button of the 3–wire pilot circuit of the magnetic motor controller, so that the thermostat will open the circuit before dangerous temperatures are reached. Thermostats are automatic reset for use in a normally closed circuit where the thermostat is connected In series with the holding coil of the magnetic starter. Thermostats provide "Over Temperature" Protection in accordance with NEMA MG 1–12.53. Thermostats do not provide winding over temperature protection (locked rotor). It is suggested that over current protection be used in the motor starter to ensure locked rotor protection.

Figure 2-2 Thermal Protection Circuit

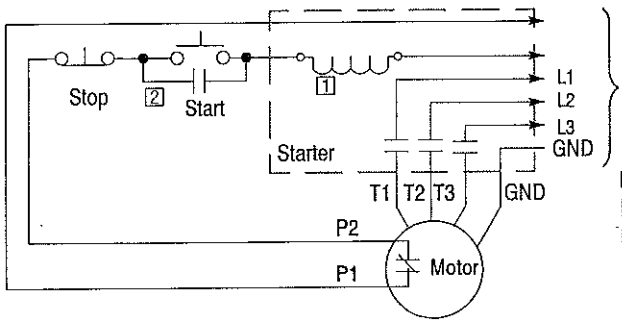

Volts AC	Continuous Amps	Inrush Amps
110–120	3.0	30
220–240	1.5	15
440–480	0.75	7.5
550–600	0.6	6.0

P1 & P2 N.C. Thermostat Leads (N.O. Contacts unacceptable to UL)
1 Starter Holding Coil
2 Holding Coil Contacts (N.O.)

Motor Power Cable Lead Color

	Black	White	Red	Orange	Green
Polyphase	T1	T2	T3	-	Ground
Single Phase	T1	T4	TA	-	Ground

Moisture Protection

The submersible moisture protection system consists of the non–wicking cable cap assembly and the dual moisture sensing probes. The cable cap assembly prevents moisture from wicking through the cable assembly even when the cable jacket has been punctured.

Dual moisture sensing probes (Warrick type) extend into the oil chamber located between the tandem mechanical seals. Should the outer seal fail, water will enter the oil chamber through the labyrinth slinger paths and create a water/oil emulsion in the oil chamber. The moisture detector control applies 500 volts to the moisture probes.

The presence of water in the oil chamber increases the conductivity sufficiently to increase current flow through the probe circuit which illuminates a warning light and activates a relay to de–energize the motor. The leakage detector control must be purchased separately from
Charles F. Warrick Co. Normandy Ct. Royal Oak, MI 48073 (810) 549–4900.

The leakage detector control system must be connected for the warranty and the U/L listing to be valid. For information on the relay, see www.gemssensors.com (look for Model 2800/2810 relay).
It's circuit diagram is shown in Figure 2-3.

Figure 2-3 Moisture Sensing Circuit

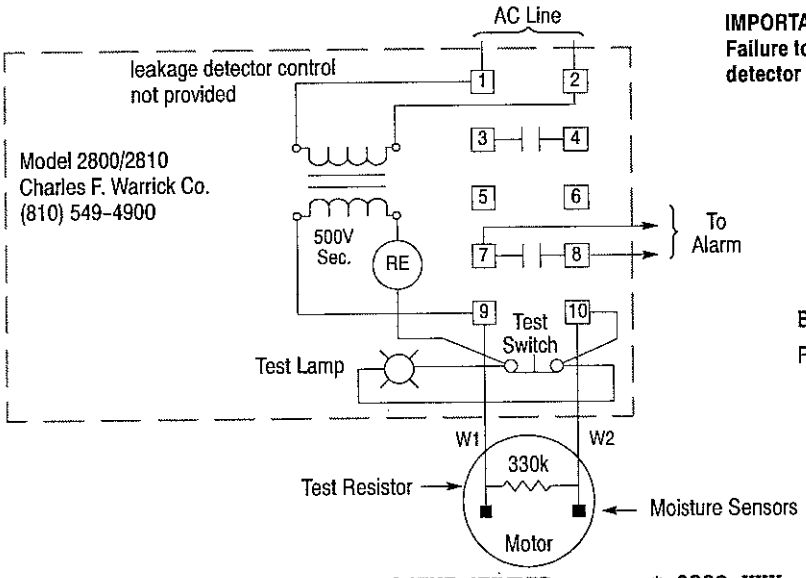

IMPORTANT:
Failure to properly connect and use this leakage detector system voids motor warranty.

Control Cable Lead Color

Black	White	Red	Orange	Green
P1	P2	W1	W2	Ground

ORDER BY COMPONENT NUMBER ----- *–2800–XXX

AC SUPPLY LINE VOLTAGE & FREQUENCY	
1	115V 50/60 Hz
2	230V 50/60Hz
4	480V 50/60Hz

Line voltage are nominal values and may range from nominal minus 15% to nominal plus 10%.

CONTACT CONFIGURATION	TERMINAL PAIR		
	3–4	5–6	7 8
A	•	N.O.	•
B	•	N.C.	•
C	N.O.	•	N.O.
D	N.C.	•	N.O.
E	N.C.	•	N.C.
F	N.O.	N.O.	N.O.
G	N.C.	NO.	N.O.
H	N.C.	N.C.	N.O.
J	N.C.	N.C.	N.C.
N.O.	NORMALLY OPEN		
N.C.	NORMALLY CLOSED		
•	NONE PROVIDED		

NEMA TYPE ENCLOSURE	
1	1
4	2, 4, 6

Installation (for reference only)

Note: Since changes occur, always refer to installation and connection documentation from the manufacturer and follow their procedures.

All type 2800–XXX controls are identified by a specific component number which follows the format 2800–XXX where the X's are replaced by numbers and letters indicative of the A–C supply line voltage and frequency, contact configuration and enclosure. Each control has a data label on the right hand side of the terminal block. In addition, each enclosed control has another data label on the outside of the enclosure cover.

Mount the control on a vertical surface with the transformer on the left hand side and accomplish all indicated wiring. Terminals on the control are numbered and are in the same relative position as the terminals shown on the wiring diagram.

Terminal pair 1 –2 must be continuously energized from an A–C supply line of electrical characteristics shown on the data label. Contacts must be wired into the electrical load circuit(s) of the warning devices as required. Each contact used for load duty must be wired in series with the load and that series branch circuit connected across a power source compatible with the load.

Wiring must be provided from the moisture detector sensor probe leads W1 and W2 to terminals 9 and 10 of the 2800–XXX control. Control leads should not be installed in the same conduit as power leads. Induced voltage can cause false moisture signals.

Contact Operation

Normally open load contacts close and normally closed load contacts open when the sensor probes detect the influx of moisture within the motor.

Test Procedure

A normally closed pushbutton and neon indicating lamp are provided as means of checking the moisture sensing components. When the pushbutton is depressed, the indicating lamp will be illuminated to indicate (A) power is supplied to the control, (B) the control is operative, and (C) wiring to the moisture sensing probes in the motor is intact. This procedure should be performed periodically to confirm integrity of circuit. Signal devices The signal device may be audible (bell, buzzer, horn or siren) or visible (incandescent or neon lamp) or both – a signal device of your choice may be obtained from your local electrical supply house.

Signal Devices

The signal device may be audible (bell, buzzer, horn or siren) or visible (incandescent or neon lamp) or both – a signal device of your choice may be obtained from your local electrical supply house.

System Operation

It is recommended that upon indication (by warning light, etc.,) of outer seal failure that the motor be removed from the installation and the oil and outer seal be replaced as soon as possible. If reconditioning is not performed within a 30 day period it is recommended that the inner seal be thoroughly inspected and replaced if required.

WARNING: **Surface temperatures of motor enclosures may reach temperatures which can cause discomfort or injury to personnel accidentally coming into contact with hot surfaces. Protection should be provided by the user to protect against accidental contact with hot surfaces. Failure to observe this precaution could result in bodily injury.**

WARNING: **Do not touch electrical connections before you first ensure that power has been disconnected. Electrical shock can cause serious or fatal injury. Only qualified personnel should attempt the installation, operation and maintenance of this equipment.**

WARNING: **Disconnect all electrical power from the motor windings and accessory devices before disassembly of the motor. Electrical shock can cause serious or fatal injury.**

WARNING: **Be sure the system is properly grounded before applying power. Do not apply AC power before you ensure that all grounding instructions have been followed. Electrical shock can cause serious or fatal injury. National Electrical Code and Local codes must be carefully followed.**

Operation

During operation, observe the motors performance. It should run smoothly with little noise.
Motor operation may stop for one of the following trip conditions:

1. If moisture infiltrates the motor, the moisture detector circuit will activate.
2. If the motor overheats, the Thermal Protection circuit will activate.
3. Other condition detected by motor starter (over current, overvoltage, etc. if equipped)

Unbalanced voltage or single–phase operation of poly phase motor may cause excessive heating and ultimate failure. Only a slight unbalance of voltage applied to a poly phase motor will cause large unbalanced currents and resultant overheating. Periodic checks of phase voltage, frequency and power consumption of a motor (measured at the motor starter) while in operation are recommended; such checks assure the correctness of frequency and voltage applied to the motor and yield an indication of the load offered by the apparatus which the motor drives.
Comparisons of this data with previous no load and full–load power demands will give an indication of the performance of the complete machine. Any serious deviations should be investigated and corrected.

If a problem with the motor occurs, contact your Baldor District Office for repair.

Should the lead connector assembly be damaged or the integrity of the encapsulation be in question, it is required that a replacement lead connector assembly be ordered from Baldor, contact your Baldor District Office. Renewal instructions will be provided with the replacement parts.

Baldor District Offices

UNITED STATES

ARIZONA
PHOENIX
4211 S 43RD PLACE
PHOENIX, AZ 85040
PHONE: 602-470-0407
FAX: 602-470-0464

ARKANSAS
CLARKSVILLE
1001 COLLEGE AVE.
CLARKSVILLE, AR 72830
PHONE: 479-754-9108
FAX: 479-754-9205

CALIFORNIA
LOS ANGELES
6480 FLOTILLA
COMMERCE, CA 90040
PHONE: 323-724-6771
FAX: 323-721-5859
HAYWARD
21055 FORBES STREET
HAYWARD, CA 94545
PHONE: 510-785-9900
FAX: 510-785-9910

COLORADO
DENVER
3855 ForestStreet
Denver, CO 80207
PHONE: 303-623-0127
FAX: 303-595-3772

CONNECTICUT
WALLINGFORD
65 SOUTH TURNPIKE ROAD
WALLINGFORD, CT 06492
PHONE: 203-269-1354
FAX: 203-269-5485

FLORIDA
TAMPA/PUERTO RICO/
VIRGIN ISLANDS
3906 EAST 11TH AVENUE
TAMPA, FL 33605
PHONE: 813-248-5078
FAX: 813-247-2984

GEORGIA
ATLANTA
62 TECHNOLOGY DR.
ALPHARETTA, GA 30005
PHONE: 770-772-7000
FAX: 770-772-7200

ILLINOIS
CHICAGO
4 SAMMONS COURT
BOLINGBROOK, IL 60440
PHONE: 630-296-1400
FAX: 630-226-9420

INDIANA
INDIANAPOLIS
5525 W. MINNESOTA STREET
INDIANAPOLIS, IN 46241
PHONE: 317-246-5100
FAX: 317-246-5110

IOWA
DES MOINES
1800 DIXON STREET, SUITE C
DES MOINES, IA 50316
PHONE: 515-263-6929
FAX: 515-263-6515

MARYLAND
BALTIMORE
6660 SANTA BARBARA RD.
SUITE 22-24
ELKRIDGE, MD 21075
PHONE: 410-579-2135
FAX: 410-579-2677

MASSACHUSETTS
BOSTON
6 PULLMAN STREET
WORCESTER, MA 01606
PHONE: 508-854-0708
FAX: 508-854-0291

MICHIGAN
DETROIT
5993 ProgressDrive
STERLING HEIGHTS, MI 48312
PHONE: 586-978-9800
FAX: 586-978-9969

MINNESOTA
MINNEAPOLIS
21080 134TH AVE. NORTH
ROGERS, MN 55374
PHONE: 763-428-3633
FAX: 763-428-4551

MISSOURI
ST LOUIS
422 INDUSTRIAL DRIVE
MARYLAND HEIGHTS, MO 63043
PHONE: 314-298-1800
FAX: 314-298-7660
KANSAS CITY
1501 BEDFORD AVENUE
NORTH KANSAS CITY, MO 64116
PHONE: 816-587-0272
FAX: 816-587-3735

NEW YORK
AUBURN
ONE ELLIS DRIVE
AUBURN, NY 13021
PHONE: 315-255-3403
FAX: 315-253-9923

NORTH CAROLINA
GREENSBORO
1220 ROTHERWOOD ROAD
GREENSBORO, NC 27406
PHONE: 336-272-6104
FAX: 336-273-6628

OHIO
CINCINNATI
2929 CRESCENTVILLE ROAD
WEST CHESTER, OH 45069
PHONE: 513-771-2600
FAX: 513-772-2219
CLEVELAND
8929 FREEWAY DRIVE
MACEDONIA, OH 44056
PHONE: 330-468-4777
FAX: 330-468-4778

OKLAHOMA
TULSA
7170 S. Braden, Suite140
Tulsa, OK 74136
PHONE: 918-366-9320
FAX: 918-366-9338

OREGON
PORTLAND
20393 SW AVERY COURT
TUALATIN, OR 97062
PHONE: 503-691-9010
FAX: 503-691-9012

PENNSYLVANIA
PHILADELPHIA
1035 THOMAS BUSCH
MEMORIAL HIGHWAY
PENNSAUKEN, NJ 08110
PHONE: 856-661-1442
FAX: 856-663-6363
PITTSBURGH
159 PROMINENCE DRIVE
NEW KENSINGTON, PA 15068
PHONE: 724-889-0092
FAX: 724-889-0094

TENNESSEE
MEMPHIS
4000 WINCHESTER ROAD
MEMPHIS, TN 38118
PHONE: 901-365-2020
FAX: 901-365-3914

TEXAS
DALLAS
3040 QUEBEC
DALLAS, TX 75247
PHONE: 214-634-7271
FAX: 214-634-8674
HOUSTON
10355 W. LittleYorkRd.
Suite300
Houston, TX 77041
PHONE: (281) 977-6500
FAX: (281) 977-6510

UTAH
SALT LAKE CITY
2230 SOUTH MAIN STREET
SALT LAKE CITY, UT 84115
PHONE: 801-832-0127
FAX: 801-832-8911

WISCONSIN
MILWAUKEE
2725 SOUTH 163RD STREET
NEW BERLIN, WI 53151
PHONE: 262-784-5940
FAX: 262-784-1215

INTERNATIONAL SALES
FORT SMITH, AR
P.O. BOX 2400
FORT SMITH, AR 72902
PHONE: 479-646-4711
FAX: 479-648-5895

CANADA
EDMONTON, ALBERTA
4053-92 STREET
EDMONTON, ALBERTA T6E 6R8
PHONE: 780-434-4900
FAX: 780-438-2800
TORONTO
OAKVILLE, ONTARIO
2750 COVENTRY ROAD
OAKVILLE, ONTARIO L6H 6R1
PHONE: 905-829-3301
FAX: 905-829-3302
MONTREAL, QUEBEC
5155, J.A. Bombardier
St-Hubert(Québec) Canada
J3Z 1G4
PHONE: 514-933-2711
FAX: 514-933-8639
VANCOUVER,
BRITISH COLUMBIA
1538 KEBET WAY
PORT COQUITLAM,
BRITISH COLUMBIA V3C 5M5
PHONE 604-421-2822
FAX: 604-421-3113
WINNIPEG, MANITOBA
54 PRINCESS STREET
WINNIPEG, MANITOBA R3B 1K2
PHONE: 204-942-5205
FAX: 204-956-4251

AUSTRALIA
UNIT 3, 6 STANTON ROAD
SEVEN HILLS, NSW 2147,
AUSTRALIA
PHONE: (61) (2) 9674 5455
FAX: (61) (2) 9674 2495
UNIT 8, 5 KELLETTS ROAD
ROWVILLE, VICTORIA, 3178
AUSTRALIA
PHONE: (61) (3) 9753 4355
FAX: (61) (3) 9753 4366

ELSALVADOR
RESIDENCIAL PINARES DE SUIZA
POL. 15 #44,
NVA. SAN SALVADOR,
EL SALVADOR
PHONE: +503 2288-1519
FAX: +503 2288-1518

CHILE
LuisThayerOjeda166,
of402 - Providencia
Santiago, Chile
Phone: +56 2 816 9900

CHINA
160 SongSHENG road
SongjiangINDUSTRY ZONE
Shanghai201613, China
PHONE: +86 21 5760 5335
Fax: +86 21 5760 5336

GERMANY
DIESELSTRASSE 22
D-85551 KIRCHHEIM
MUNICH, GERMANY
PHONE: +49 89 90 5080
FAX: +49 89 90 50 8492

INDIA
14, COMMERCE AVENUE
MAHAGANESH COLONY
PAUD ROAD
PUNE - 411038
MAHARASHTRA, INDIA
PHONE: +91 20 25 45 27 17 / 18
FAX: +91 20 25 45 27 19

ITALY
BaldorASR AG
SUCCURSALE DI Mendrisio
ViaBorromini, 20A
CH-6850 Mendrisio
Switzerland
PHONE: 0041 91 640 99 50
FAX: 0041 91 630 26 33

JAPAN
DIA BLDG 802,
2-21-1 TSURUYA-CHO,
KANAGAWA-KU
YOKOHAMA, 221-0835, JAPAN
PHONE: 81-45-412-4506
FAX: 81-45-412-4507

MEXICO
LEON, guanajuato
KM. 2.0 BLVD. AEROPUERTO
LEÓN 37545, GUANAJUATO,
MEXICO
PHONE: +52 477 761 2030
FAX: +52 477 761 2010

MIDDLE EAST & NORTH AFRICA
VSE INTERNATIONAL CORP.
P. O. BOX 5618
BUFFALO GROVE, IL 60089-5618
PHONE: 847 590 5547
FAX: 847 590 5587

PANAMA
AVE. RICARDO J. ALFARO
EDIFICIO SUN TOWERS MALL
PISO 2, LOCAL 55
CiudaddePanamá, Panamá
PHONE: +507 236-5155
Fax: +507 236-0591

SINGAPORE
18 KAKI BUKIT ROAD 3, #03-09
ENTREPRENEUR BUSINESS
CENTRE SINGAPORE 415978
PHONE: (65) 6744 2572
FAX: (65) 6747 1708

SWITZERLAND
POSTFACH 73
SCHUTZENSTRASSE 59
CH-8245 FEUERTHALEN
SWITZERLAND
PHONE: +41 52 647 4700
FAX: +41 52 659 2394

TAIWAN
1F, No126 Wenshan3rdStreet,
NantunDistrict,
TaichungCity408
TaiwanR.O.C
PHONE: (886) 4 238 04235
FAX: (886) 4 238 04463

UNITED KINGDOM
6 BRISTOL DISTRIBUTION PARK
HAWKLEY DRIVE
BRISTOL BS32 0BF U.K.
PHONE: +44 1454 850000
FAX: +44 1454 859001

VENEZUELA
Av. Roma. QtaelMilagro. Urb.
CaliforniaNorte
Caracas, 1070
Venezuela
Phone/fax: +58 212 272 7343
mobile: +58 414 114 8623

414-0409

BALDOR®

BALDOR ELECTRIC COMPANY
World Headquarters
P.O. Box 2400 Fort Smith, AR 72901-2400
(479) 646-4711 Fax (479) 648-5792
www.baldor.com

© 2009 Baldor Electric Company
MN414

All rights reserved. Printed in USA
4/09

F. Type 2/3 Pump Control Panel Operation

The basin sumps containing the Type 2 and Type 3 pumps -North and South, respectively – are operated by remote control panels, as shown on the Final Drainage layout presented in 1.2.6.A. These control panels should generally be left on the "Auto" setting to avoid overheating. An instructional guide to control panel operation has been included.

For proper operation of the basin pumping system, the following items should be verified.

Step 1: turn switch to "off" position

Step 2: unlatch side of box, and open face

Step 3: ensure both toggle switches on right side are set to "auto"

Step 4: ensure alternating relay switch is set to "alternate"

Step 5: close face, and re-secure latches on side of box

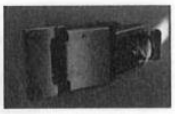

Step 6: turn switch back to "on" position

This should ensure that the basin pumping system operates as designed, and automatically pumps out the basin when the water trips the floats. However, if the red strobe light is flashing on top of the box, the pumps are not working correctly, and the following steps should be followed to turn the pumps on manually.

Step 1: turn switch to "off" position

Step 2: unlatch side of box, and open face

Step 3: flip toggle switch 1 on right side to "auto" and toggle switch 2 to "man"

Step 4: close face, and re-secure latches on side of box

Step 5: turn switch back to "on" position

Step 6: press red button to silence alarm

Micro Spike HDPE Liner

High Density Polyethylene Micro Spike® Liner

Product Data

Property	Test Method	Values				
Thickness, nominal (mm)		30 (.75)	40 (1.0)	60 (1.5)	80 (2.0)	100 (2.5)
Thickness (min. ave.), mil (mm)	ASTM D5994*	29 (.71)	38 (.95)	57 (1.43)	76 (1.90)	95 (2.38)
Thickness (lowest indiv. for 8 of 10 spec.), mil (mm)	ASTM D5994*	27 (.68)	36 (.90)	54 (1.35)	72 (1.80)	90 (2.25)
Thickness (lowest indiv. for 1 of 10 spec.), mil (mm)	ASTM D5994*	26 (.64)	34 (.85)	51 (1.28)	68 (1.70)	85 (2.13)
*The thickness values may be changed due to project specifications (i.e., absolute minimum thickness)						
Asperity Height (min. ave.), mil (mm)	GRI GM12/ASTM D7466	16 (.41)	16 (.41)	16 (.41)	16 (.41)	16 (.41)
Density, g/cc, minimum	ASTM D792, Method B	0.94	0.94	0.94	0.94	0.94
Tensile Properties (ave. both directions)	ASTM D6693, Type IV					
Strength @ Yield (min. ave.), lb/in width (N/mm)	2 in/minute	66 (11.6)	88 (15.4)	132 (23.1)	176 (30.8)	220 (38.5)
Elongation @ Yield (min. ave.), % (GL=1.3in)	5 specimens in each direction	13	13	13	13	13
Strength @ Break (min. ave.), lb/in width (N/mm)		66 (11.6)	88 (15.4)	132 (23.1)	176 (30.8)	220 (38.5)
Elongation @ Break (min. ave.), % (GL=2.0in)		350	350	350	350	350
Tear Resistance (min. ave.), lbs. (N)	ASTM D1004	23 (102)	30 (133)	45 (200)	60 (267)	72 (320)
Puncture Resistance (min. ave.), lbs. (N)	ASTM D4833	60 (267)	90 (400)	120 (534)	150 (667)	180 (801)
Carbon Black Content (range in %)	ASTM D4218	2 - 3	2 - 3	2 - 3	2 - 3	2 - 3
Carbon Black Dispersion (Category)	ASTM D5596	Only near spherical agglomerates for 10 views: 9 views in Cat. 1 or 2, and 1 view in Cat. 3				
Stress Crack Resistance (Single Point NCTL), hours	ASTM D5397, Appendix	300	300	300	300	300
Oxidative Induction Time, minutes	ASTM D3895, 200°C, 1 atm O_2	≥100	≥100	≥100	≥100	≥100
Melt Flow Index, g/10 minutes	ASTM D1238, 190°C, 2.16kg	≤1.0	≤1.0	≤1.0	≤1.0	≤1.0
Oven Aging with HP OIT, (% retained after 90 days)	ASTM D5721 / ASTM D5885, 150°C, 500psi O_2	80	80	80	80	80
UV Resistance with HP OIT, (% retained after 1600 hours)	GRI GM11 / ASTM D5885, 150°C, 500psi O_2	20hr. Cycle @ 75°C/4 hr. dark condensation @ 60°C				
		50	50	50	50	50

These product specifications meet or exceed GRI's GM13

Supply Information (Standard Roll Dimensions)

Thickness mil	Thickness mm	Width ft	Width m	Length ft	Length m	Area (approx.) ft²	Area (approx.) m²	Weight (average)* lbs	Weight (average)* kg
30	.75	23	7	930	283.117	21,390	1,984	3,900	1,770
40	1.0	23	7	710	216.41	16,330	1,514.87	3,900	1,770
60	1.5	23	7	505	153.53	11,615	1,078	3,900	1,770
80	2.0	23	7	385	117.35	8,855	821	3,900	1,770
100	2.5	23	7	310	94.49	7,130	661	3,900	1,770

Notes:
All rolls are supplied with two slings. All rolls are wound on a 6 inch core. Special lengths are available on request. All roll lengths and widths have a tolerance of ±1%
**The weight values may change due to project specifications (i.e. absolute minimum thickness or special roll lengths) or shipping requirements (i.e. international containerized shipments).*

All information, recommendations and suggestions appearing in this literature concerning the use of our products are based upon tests and data believed to be reliable; however, it is the users responsibility to determine the suitability for their own use of the products described herein. Since the actual use by others is beyond our control, no guarantee or warranty of any kind, expressed or implied, is made by Agru/America as to the effects of such use or the results to be obtained, nor does Agru/America assume any liability in connection herewith. Any statement made herein may not be absolutely complete since additional information may be necessary or desirable when particular or exceptional conditions or circumstances exist or because of applicable laws or government regulations. Nothing herein is to be construed as permission or as a recommendation to infringe any patent.

500 Garrison Road, Georgetown, South Carolina 29440 843-546-0600 800-373-2478 Fax: 843-527-2738
email: salesmkg@agruamerica.com www.agruamerica.com

© Agru America, Inc. 2010

NORTHWEST LININGS &
GEOTEXTILE PRODUCTS, Inc.
"Helping to Protect the Environment"
21000 77th Avenue South
Kent, WA 98032
(253) 872-0244 • (800) 729-6954
FAX: (253) 872-0245
www.northwestlinings.com

NORTHWEST LININGS & GEOTEXTILES PRODUCTS, INC.
CONSTRUCTION QUALITY CONTROL MANUAL
FOR HDPE AND LLDPE CONTAINMENT MEMBRANE
FIELD INSTALLATIONS

NORTHWEST LININGS AND GEOTEXTILES
HDPE/LLDPE-FIELD QUALITY CONTROL MANUAL

I. INTRODUCTION

A. This manual describes the Quality Control Procedures utilized by Northwest Linings (NWL) Installation Personnel to assure quality workmanship and installation integrity of HDPE/LLDPE Geomembranes.

B. Geosynthetic components of lining systems which are addressed in this manual are HDPE/LLDPE Geomembranes. NWL recognizes that specific documentation of the specific installation is required to substantiate this Quality Control Program.

II. HDPE/LLDPE GEOMEMBRANE INSTALLATION

A. Earth Work

1. The general and/or earthwork contractor shall be responsible for preparing and maintaining the subgrade in a condition suitable for liner installation unless agreed otherwise.

2. Surfaces to be lined shall be smooth and free of debris, roots, and angular or sharp rocks to a depth of four (4) inches. All fill shall consist of well-graded material free of organics, trash, clayballs or other harmful matter. No sharp edged stones, stones larger than one (1) inch diameter or hard objects shall be allowed within the top four (4) inches of the subgrade. The surface shall be compacted in accordance with project specifications but in no event below the minimum required to provide a firm unyielding foundation sufficient to permit the movement of vehicles and welding equipment over the surface without causing rutting or other harmful effects. The subgrade shall have no sudden sharp or abrupt changes in grade.

3. The earthwork contractor shall protect the subgrade from becoming too dry, flooding and freezing. Protection, if required, may consist of a thin plastic protective cover (or other material as approved by the engineer) installed over the subgrade until the placement of the liner begins. Subgrade found to have cracks greater than 1/2 inch in width or depth or which exhibit swelling, heaving or other similar conditions shall be reworked by the general contractor to remove these defects.

4. Surface acceptance: Upon request, NWL will provide the Owner's Representative with a written acceptance of the surface to be lined. This acceptance will be limited to an amount of area that NWL is capable of lining in a particular work shift. Subsequent repairs to the subgrade and the surface shall remain the responsibility of the earthwork contractor.

B. Crest Anchorage System

1. The anchor trench shall be excavated by the earthwork contractor to lines and widths shown on the design drawings prior to geomembrane placement.

2. Anchor trenches excavated in clay soils susceptible to desiccation cracks should be excavated only the distance required for that days liner placement to minimize the potential for cracking of the clay soils.

3. Corners in the anchor trench shall be slightly rounded where the geomembrane enters the trench to minimize sharp bends in the liner.

C. Preparation for Geomembrane Deployment

1. Panel Layout: Prior to liner deployment, layout drawings shall be produced to indicate the panel configuration and location of seams.

2. Identification: Each panel used shall be given a numeric or alpha-numeric identifier consistent with the layout drawing. This identification number shall be related to a manufacturing roll number.

D. Field Panel Placement

1. Location: NWL will attempt to install field panels at the location indicated on the layout drawing. If panels are positioned in a location other than that indicated on the layout drawings, the revised location shall be noted in the field on a layout drawing which will be modified at the completion of the project to reflect actual panel locations.

2. Weather Conditions: Geomembrane deployment shall not be done during any precipitation, in the presence of excessive moisture (i.e. fog, dew), in an area of standing or ponded water, or during high winds.

3. Method of Deployment:

    1. The method and equipment used to deploy the panels must not damage the geomembrane or the supporting subgrade surface. The supporting sub-grade must be prepared and maintained in a condition to support the equipment needed for the installation.

    2. The rolls of liner will be deployed from a spreader bar apparatus supported by a fork lift, loader or other piece of heavy equipment that can safely lift and move the rolls. Heavy equipment will not be allowed to operate directly on geomembrane.

    3. No personnel working on the liner will smoke, wear shoes that can damage the geomembrane, or engage in actions which could result in damage to the geomembrane.

    4. Adequate temporary ballast and/or anchoring, (i.e. sandbags,) which will not damage the geomembrane, will be placed to prevent uplift of the liner by wind.

    5. The geomembrane will be deployed in a manner to minimize wrinkles.

    6. Rubber tired and tracked ATV's and similar equipment are acceptable to operate on the geomembrane with ground pressure less than 8 psi. Tires and tracks will be checked for sharp edges, rocks or debris that may damage the liner before operating on the geomembrane. Driving paths will be as straight as possible avoiding sharp turns, sudden stops and starts.

    7. Any damage to a panel of geomembrane will be repaired in accordance with Section IV. Any area of a panel seriously damaged (torn, twisted, or crimped) will be marked, cut out, and removed from the work area with resulting seaming and/or repairs performed in accordance with Section IV of this document.

E. Field Seaming

1. General Requirements:

    1. Layout: In general, seams shall be oriented parallel to the slope, (down hill) not across the slope. Whenever possible, horizontal seams should be located not less than five (5) feet from the toe of the slope. Each seam shall be numbered in a manner compatible with the panel layout drawing for documentation of seam testing results.

    2. Personnel: All personnel performing seaming operations shall be trained in the operation of the equipment being used and will qualify by successfully welding a test seam as described herein. The project foreman will provide direct supervision of all personnel seaming to verify proper welding procedures are followed.

F. Equipment:

1. Fusion Welding: Fusion Welding consists of placing a heated wedge, mounted on a self propelled vehicular unit, between two (2) overlapped sheets such that both sheets are heated to temperatures ranging from 600 degrees F. to 950 degrees F. After being heated by the wedge, the overlapped edges pass through a set of preset pressure rollers which compress the panels together forming a continuous homogenous fusion weld. The fusion welder is equipped with a temperature readout device which continuously monitors the temperature of the wedge.

2. Extrusion Fillet Welding: Extrusion welding consists of introducing a ribbon of molten resin along the edge of the seam overlap to the two sheets to be welded. The molten polymer causes some of the material of each sheet to be liquefied resulting in a homogeneous bond between the molten weld bead and the surfaces of the sheets. The extrusion welder is equipped with gauges giving the temperature in the apparatus and the preheat temperature at the nozzle.

G. Seam Preparation:

1. Fusion Welding:

    1. Overlap the panels approximately four (4) inches.

    2. Clean the seam area prior to seaming to assure the area is clean and free of moisture, dust, dirt and debris.

    3. No grinding is required for fusion welding.

    4. Adjust the panels so that seams are aligned with the fewest possible number of wrinkles and "fishmouths".

2. Extrusion Welding:

    1. Overlap the panels a minimum of three (3) inches.

    2. Temporarily bond the panels to be welded taking care not to damage the geomembrane.

    3. Grind seam overlap prior to welding within 15 minutes of welding operation in manner that does not damage the geomembrane.

    4. Clean the seam area prior to seaming to assure the area is clean and free of moisture, dust dirt and debris of any kind.

    5. Purge the extruder prior to beginning the seam to remove all heat-degraded Extrudate from the barrel.

    6. Keep welding rod clean and off the ground.

H. Test Seams:

Test seams shall be performed at the beginning of each seaming period and at least once each five hours for each seaming apparatus used that day. Test seams shall be made on fragment pieces of the liner and under the same conditions as actual seams.

1. Test Seam Length:

    The test seam shall be at least three feet long, made by joining 2 pieces at least 9" in width.

2. Sample Procedures:

    1. Visually inspect the seam for squeeze out, footprint, pressure and general appearance.

    2. Two samples one inch wide shall be cut from the test seam. The samples shall then be tested in peel and shall not fail in the seam. Failure shall be a film tear bond (FTB). If a sample fails, the entire procedure shall be repeated.

    3. If any of the second set of samples fail, the machine shall not be accepted and used for seaming until the problem is corrected and 2 passing tests are achieved.

4. After completion of the test the remaining portion of the test seam shall be discarded. Documentation of the test seams will be maintained by listing machine I.D. number, operators name, temperature control setting and test results.

5. Passing test results records shall be maintained on NWL's test weld report form.

6. If test samples are to act as destructive samples then the sample shall be marked, logged and saved. If samples are to be cut from the actual finished seam for Lab Testing, the test seams shall be discarded per above.

I. General Seaming Procedures:

1. Seaming shall extend to the outside edge of panels to be placed in the anchor trench.

2. While welding a seam, monitor and maintain the proper overlap.

3. Inspect seam area to assure area is clean and free of moisture, dust, dirt and debris of any kind.

4. While welding a seam, monitor temperature gauges to assure proper settings are maintained and that the machine is operating properly.

5. Align wrinkles at the seam overlap to allow welding through a wrinkle.

6. Fishmouths or wrinkles at seam overlaps that cannot be welded through shall be cut along the ridge in order to achieve a flat overlap. The cut area shall be seamed. Any portion where the overlap is inadequate shall be patched with an oval or round patch extending six inches beyond the cut in all directions.

7. All cross/butt seams between two rows of seamed panels shall be welded during the coolest time of the day to allow for contraction of the geomembrane.

8. All "T" joints shall have the overlap from the wedge welder seam trimmed back to allow an extrusion fillet weld. Then grind two inches on either side of the seam and extrusion weld all of the area prepared by grinding.

J. Weather Conditions:

NWL relies on the experience of the Project Superintendent and the results of test seams to determine seaming restriction by weather. Many factors, such as ambient temperature, humidity, wind, sunshine, etc., can effect the integrity of field seams and must be taken into account when deciding whether or not seaming should proceed. Test seams are required prior to daily production seaming to determine if the weather conditions will effect NWL's ability to produce quality seams. Additional non-destructive and destructive testing of production seams substantiate the decision made by the Project Superintendent to seam on any given day.

SECTION III Seam Testing-Quality & Control-Geomembranes

A. Concept:

NWL installation crews will non-destructively test all field seams over their full length using air pressure testing, vacuum testing or other approved method, to verify the continuity and integrity of the seams.

B. Air Pressure Testing:

The weld seam created by the fusion welding process is composed of two welded seams separated by an unwelded channel approximately 3/8 of an inch wide. This channel permits seams to be tested by inflating the sealed channel with air to a predetermined pressure and observing the stability of the pressurized channel over time.

C. Equipment for air testing:

1. An air pump (manual or motor driven) capable of generating and sustaining a pressure of 30 PSI.
2. A rubber hose with fittings and connections.
3. A sharp hollow needle with a pressure gauge capable of reading and sustaining a pressure of 30 PSI.
4. Procedure for air testing:
5. Seal both ends of the seam to be tested.
6. Insert needle in the sealed channel.
7. Inflate the test channel to a pressure between 25 to 30 PSI, in accordance with the following schedule, close valve, and allow 2 minutes for the injected air to come into equilibrium in the channel. Observe initial pressure after approximately 2 minutes.

INITIAL PRESSURE SCHEDULE*

MATERIAL	(MIL)	MIN. PSI	MAX. PSI	MAX. PRESSURE DIFF. AFTER 5 MINUTES
	40	25	30	4
	50	26	30	4
	60	27	30	4
	80	30	30	4
	100	30	30	4

* Initial pressure settings are read after a two minute relaxing period. The purpose of this period is to permit the air temperature and pressure to stabilize.

8. Observe and record the air pressure five minutes after the relaxing period ends. If loss of pressure exceeds the value above or if the pressure does not stabilize, locate the faulty area and repair.
9. Upon completion of the pressure test the end of the seam opposite the pressure gauge is cut. A decrease in gauge pressure must be observed or the air channel will be considered blocked and the test will be repeated after the blockage is corrected.
10. Remove needle and seal resulting hole by extrusion welding.
11. Record test results on non-destructive test form
12. In the event of a Non-Complying Air pressure test, the following procedure shall be followed.
13. Check seam-end seals and retest seams.
14. If non-compliance reoccurs, cut one inch samples from each end of the seam and additional samples at the distance specified.
15. Perform destructive field peel test on the samples.
16. If all samples pass destructive testing remove the overlap left by the wedge welder and perform an Air Pressure/Soap Test or vacuum test.
17. If a leak is detected by the air pressure/soap or the vacuum test, repair by extrusion welding. Test repair by vacuum testing.
18. If no leak is discovered air pressure/soap testing, the seam will pass non-destructive testing.

19. If no leak is discovered by vacuum testing, the seam will pass non-destructive testing.

20. If one or more samples fail the peel test, additional samples will be taken.

21. When two passing samples are located, the seam between these two locations will be considered complying. The area outside of this length will be considered non-complying and the entire length extrusion welded.

22. Test the entire length of the repaired seam by vacuum testing.

D. Air Pressure Testing/Soap Testing:

This test is used when the seam fails the air pressure test due to slow pressure loss. The procedure is to constantly supply pressure to the seam air channel while spraying the length with a soap and water solution and visually examining the seam for bubbles. Note: This option is not recommended during high wind conditions.

1. Equipment for Air Pressure/Soap Testing:

    1. The same equipment as the air pressure test.

    2. A soap solution and means to apply the solution.

2. Procedure for Air Pressure/Soap Testing:

    1. Trim excess overlap material off at edge of seam

    2. Insert needle gauge assembly in opposite ends of the seam to be tested to show that pressure is continuous throughout the channel.

    3. Maintain 30 psi

    4. Apply soap solution to the weld edge and visually examine for bubbles.

    5. If no bubbles appear the problem is with the inside track "secondary weld". This seam is acceptable providing it has passed peel tests.

    6. If any bubbles appear on the outside track "Primary weld", repair defect by extrusion welding and vacuum test the repair.

E. Vacuum Testing:

This test is used when the geometry of the weld makes air pressure testing impossible or impractical or when attempting to locate the precise location of a defect believed to exist after air pressure testing.

1. Equipment for vacuum testing:

    1. Vacuum box consisting of a rigid housing, a transparent viewing window, a soft neoprene gasket attached to the bottom, port hole or valve assembly and a vacuum gauge.

    2. Vacuum pump assembly or compressor with a venturi equipped with a pressure controller and pipe connections.

    3. A rubber pressure/vacuum hose with fittings and connections.

    4. A soap solution with a means to apply the solution.

2. Procedure for Vacuum Testing:

1. Trim excess overlap from seam.
2. Apply soap solution to the area to be tested.
3. Place the vacuum box over the area and apply sufficient downward pressure to seal the box against the liner.
4. Open the vacuum valve and apply a minimum of 5 in. Hg vacuum to the area as indicated by the gauge on the box.
5. Ensure that a leak-tight seal is created.
6. For a period of not less than five seconds, examine the geomembrane through the viewing window for the presence of soap bubbles.
7. If no bubbles appear after five to ten seconds, close the valve and move overlap and repeat the process.

3. Procedure for non-complying test:

   1. Mark all areas where soap bubbles appear and repair the marked areas.
   2. Retest repaired areas.

F. Destructive Testing:

The purpose of destructive testing is to determine and evaluate seam strength. These tests require direct sampling and thus subsequent patching. Therefore destructive testing should be held to a minimum to reduce the amount of repairs required.

1. Procedure for Destructive Testing:

1.1. Destructive test samples shall be marked and cut out randomly at a minimum average frequency of one test location every 700 feet of seam length.

1.2. Additional test may be taken in areas of contamination, offset welds, visible crystallinity or other potential cause of faulty welds.

1) Sample Size:

a) The sample should be twelve inches wide with a seam fourteen inches long centered lengthwise in the sample. The sample may be increased in size to accommodate independent lab testing by the owner or by specific project specifications.

b) A one inch sample shall be cut from each end of the test seam for field testing on a calibrated field tensiometer.

2) The one inch wide samples shall be tested in the field for peel. If any field sample fails to pass FTB, it will be assumed the sample fails destructive testing. The procedures outlined in Section 2 shall be followed to locate passing samples to send to the laboratory.

i) If the sample passes the field test, the remaining portion of the sample test strip shall be sent to Northwest Linings for laboratory testing to evaluate seam strength and confirm field testing.

1. Procedure in the event of Destructive Test Failure:

1. Cut additional field samples for testing. In the case of a field production seam, the samples must lay a minimum of ten feet in each direction from the location of the failed sample. Perform a field test with the tensiometer for peel strength. and confirm field testing.

2. If the laboratory samples pass, then reconstruct the seam up to the two passing sample locations.

1. Heat tack the overlap along the length of the seam to be reconstructed and extrusion weld.

2. Vacuum test the extrusion weld.

3. If either of the samples fails then additional samples are taken in accordance with the above procedure until two passing samples are found to establish the zone in which the seam should be reconstructed.

4. All passing seams must be bounded by two locations from which samples passing destructive test have been taken.

5. In the case of reconstructed seams exceeding 150 feet, a sample must be taken and pass destructive testing.

6. All destructive seam samples sent to Northwest Linings shall be numbered and recorded on a destructive seam test form.

3. Northwest Linings Quality Assurance Laboratory Testing:

The remaining destructive sample will be sent to a qualified laboratory and will be tested in "Seam Strength" and "Peel Adhesion" (ASTM D 3083 and ASTM D413) as modified in NSF Standard No. 54. Five specimens shall be tested for each test method with data recorded. Four out of the five specimens must pass for each test in order for the seam to pass the destructive test.

SECTION IV Defects and Repairs

A. Inspection

1. Northwest Linings Project Superintendent shall conduct a detailed walk through and visually check all seams and non-seam areas of the geomembrane for defects, holes, blisters and signs of damage during installation.

2. All other NWL installation personnel shall at all times, be on the lookout for any damaged areas. Damaged areas shall be marked and repaired.

B. Procedure

1. Repair procedures: Any portion of the geomembrane showing a flaw, or failing destructive or non-destructive test shall be repaired. Several methods exist for repairs, and the decision as to the appropriate method shall be made by NWL's Project Superintendent. Methods available for repair:

1. Patching - used to repair large holes, tears and destructive sample locations. All patches shall extend at least six inches beyond the defect and all corners of patches shall be rounded.

2. Grinding and welding - used to repair sections of extruded seams.

3. Spot welding or seaming - used to repair small tears, pinholes or other minor localized flaws.

4. Capping - used to repair lengths of failed extruded areas.

5. Removal of a bad seam and replacement with a strip of new material seamed into place.

C. Verification of Repairs:

1. Every repair shall be non-destructively tested using the methods set out in this manual Repairs which pass the non-destructive test shall be deemed adequate. Large repairs may require a destructive test. Repair test results shall be logged on a repair report form. The repair location shall be recorded on a record drawing.

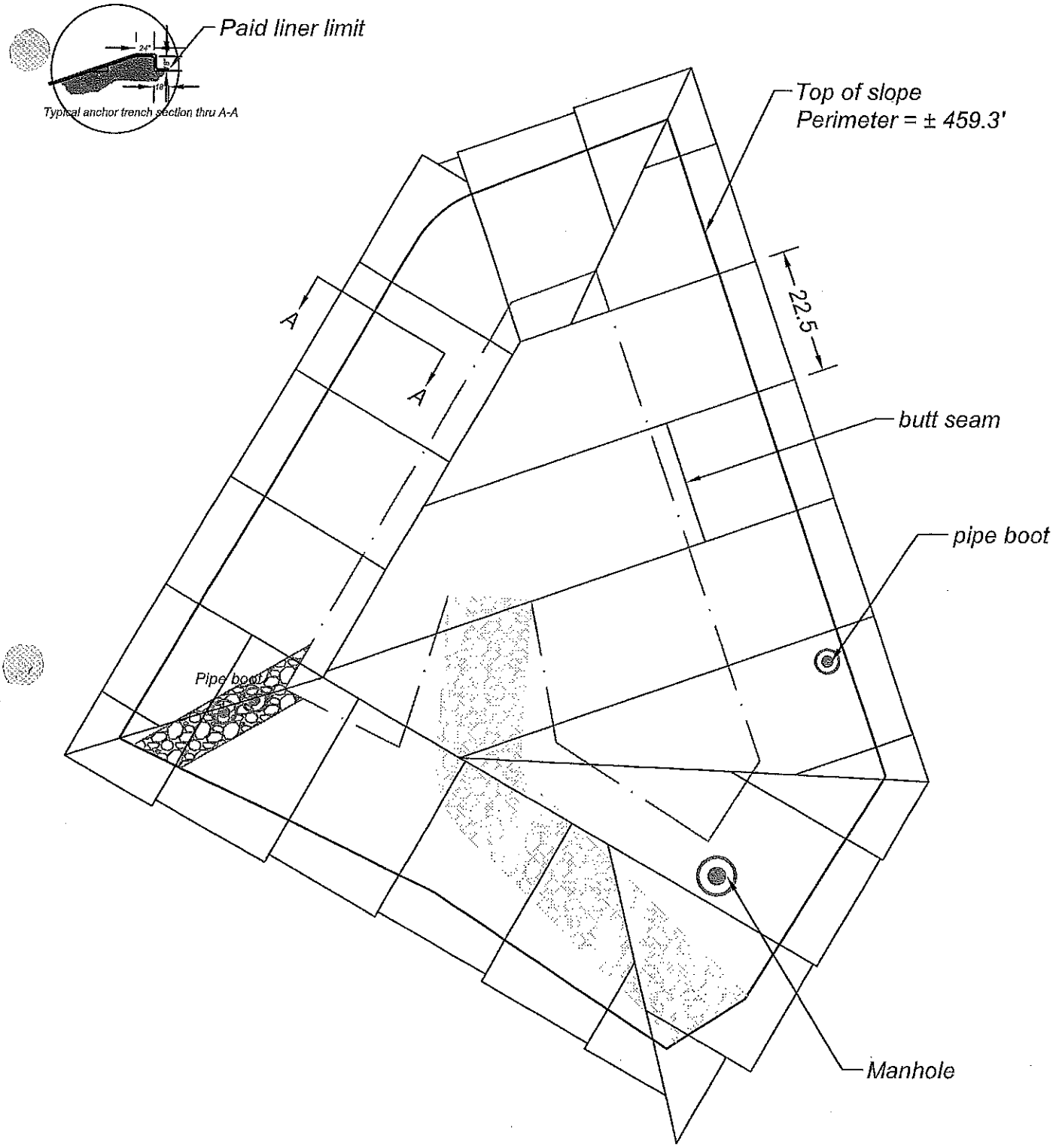

note: exact number, position and sequence of panel installation will be determined in the field by the nwl site supervisor.

Proposed 40-mil Textured HDPE liner panel layout

Cell 1-Pond 1

0 10 20 40

GRAPHIC SCALE

ET NO.	DETAIL	NORTHWEST LININGS & GEOTEXTILE PRODUCTS, Inc.	JOB NAME: Kiewit 520 Pontoons
		www.northwestlinings.com	JOB NO. N 1 1 0 0 1
		21000 77TH AVE. SOUTH KENT, WA. 98032	DATE: 1 28 11 / CHECKED: KH
		(253) 872-0244 (253) 872-0245 FAX	BY: SG / SCALE: AS SHOWN

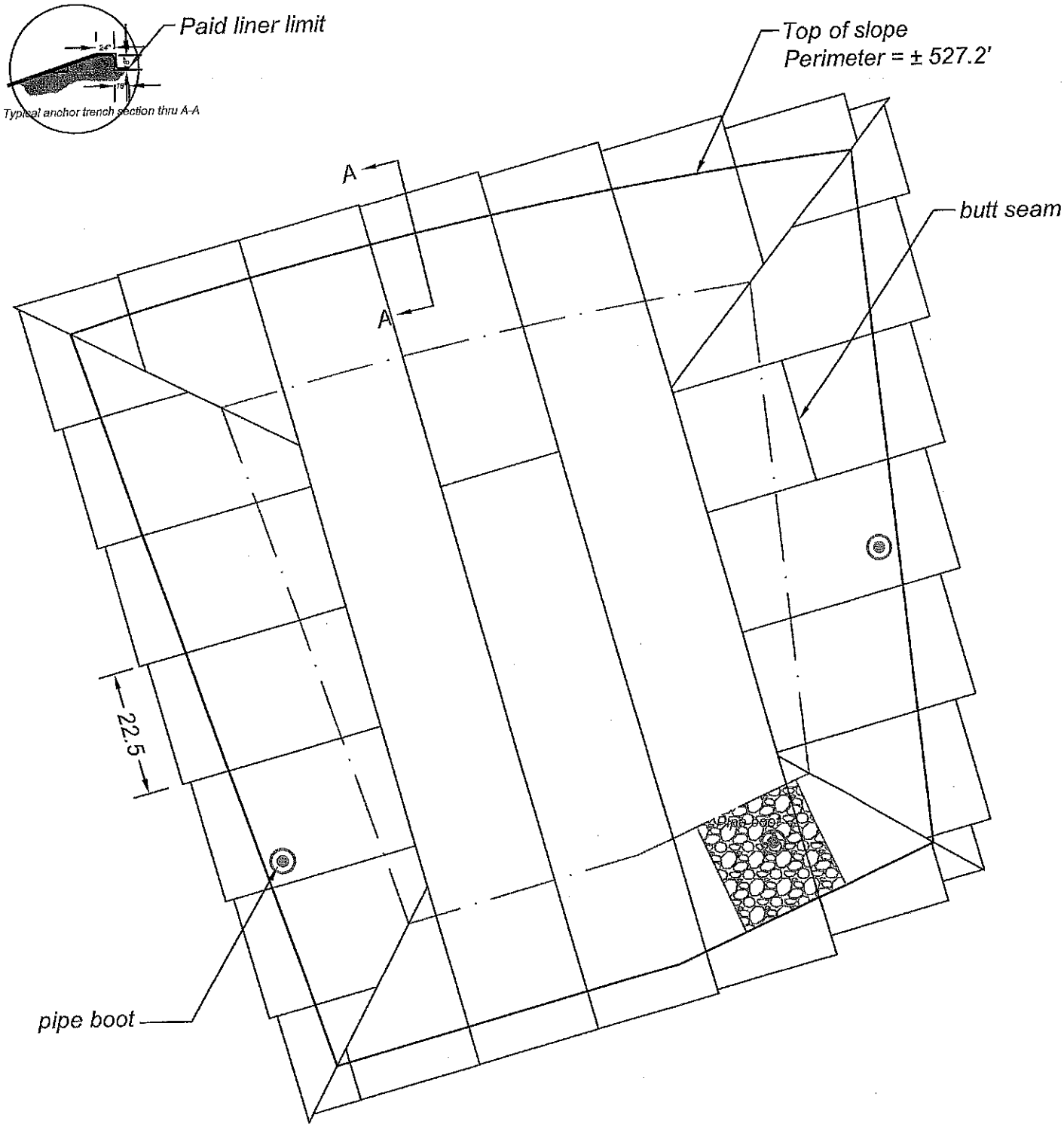

note: exact number, position and sequence of panel installation will be determined in the field by the nwl site supervisor .

Proposed 40-mil Textured HDPE liner panel layout

Cell 2-Pond 1

0 10 20 40

GRAPHIC SCALE

SHEET NO.	DETAIL	NORTHWEST LININGS & GEOTEXTILE PRODUCTS, Inc.	JOB NAME:	Kiewit 520 Pontoons		
			JOB NO.	N 1 1 0 0 1		
		www.northwestlinings.com	DATE:	1 28 11	CHECKED:	KH
		21000 77TH AVE. SOUTH KENT, WA. 98032 (253) 872-0244 (253) 872-0245 FAX	BY:	SG	SCALE:	AS SHOWN

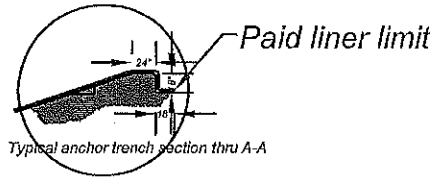

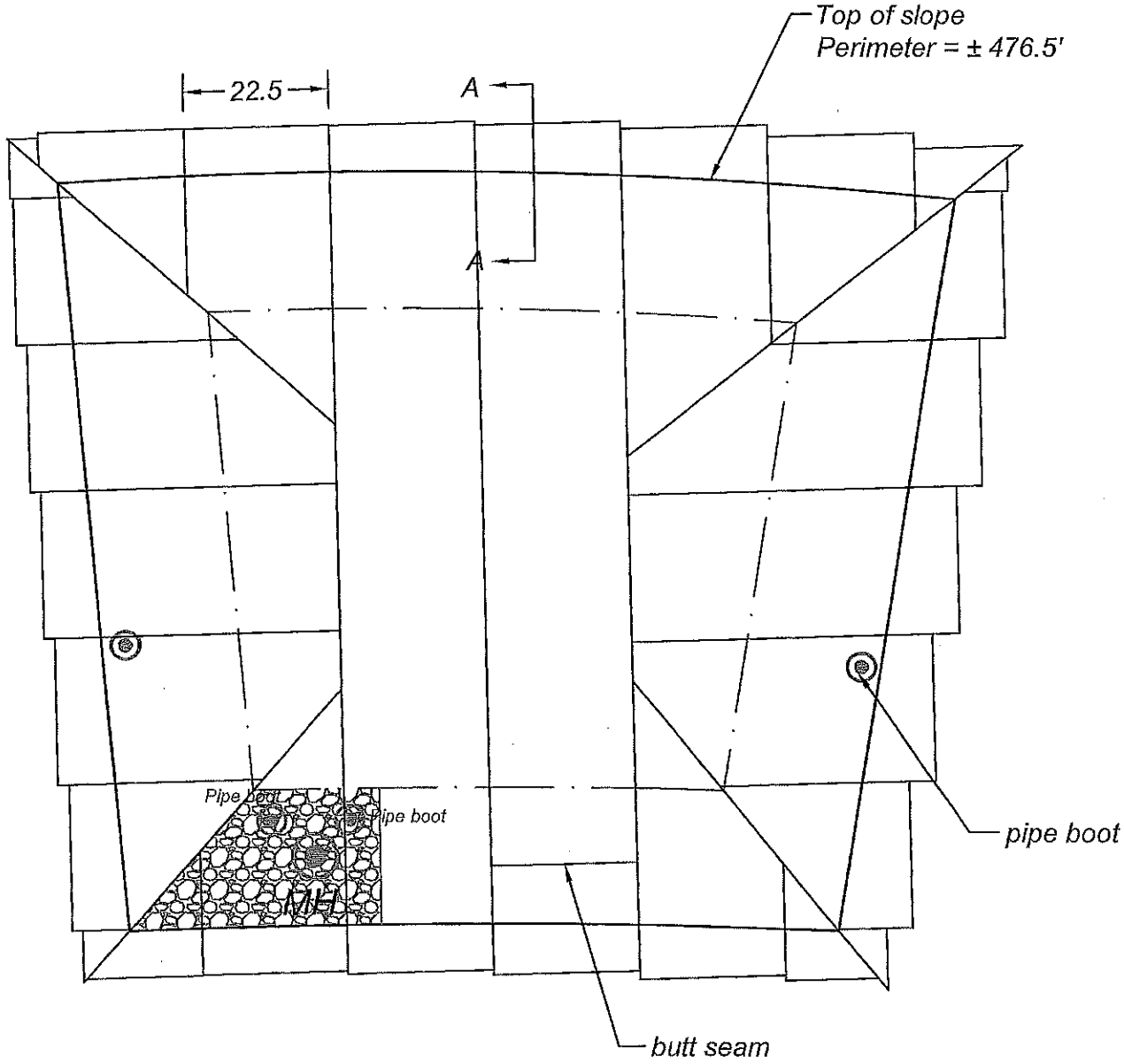

note: exact number, position and sequence of panel installation will be determined in the field by the nwl site supervisor.

Proposed 40-mil Textured HDPE liner panel layout

Cell 3-Pond 1

0 10 20 40

GRAPHIC SCALE

SHEET NO.	DETAIL	NORTHWEST LININGS & GEOTEXTILE PRODUCTS, Inc.	JOB NAME:	Kiewit 520 Pontoons		
			JOB NO.	N 1 1 0 0 1		
		www.northwestlinings.com	DATE:	1 28 11	CHECKED:	KH
		21000 77TH AVE. SOUTH KENT, WA. 98032 (253) 872-0244 (253) 872-0245 FAX	BY:	SG	SCALE:	AS SHOWN

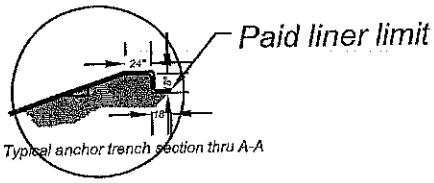

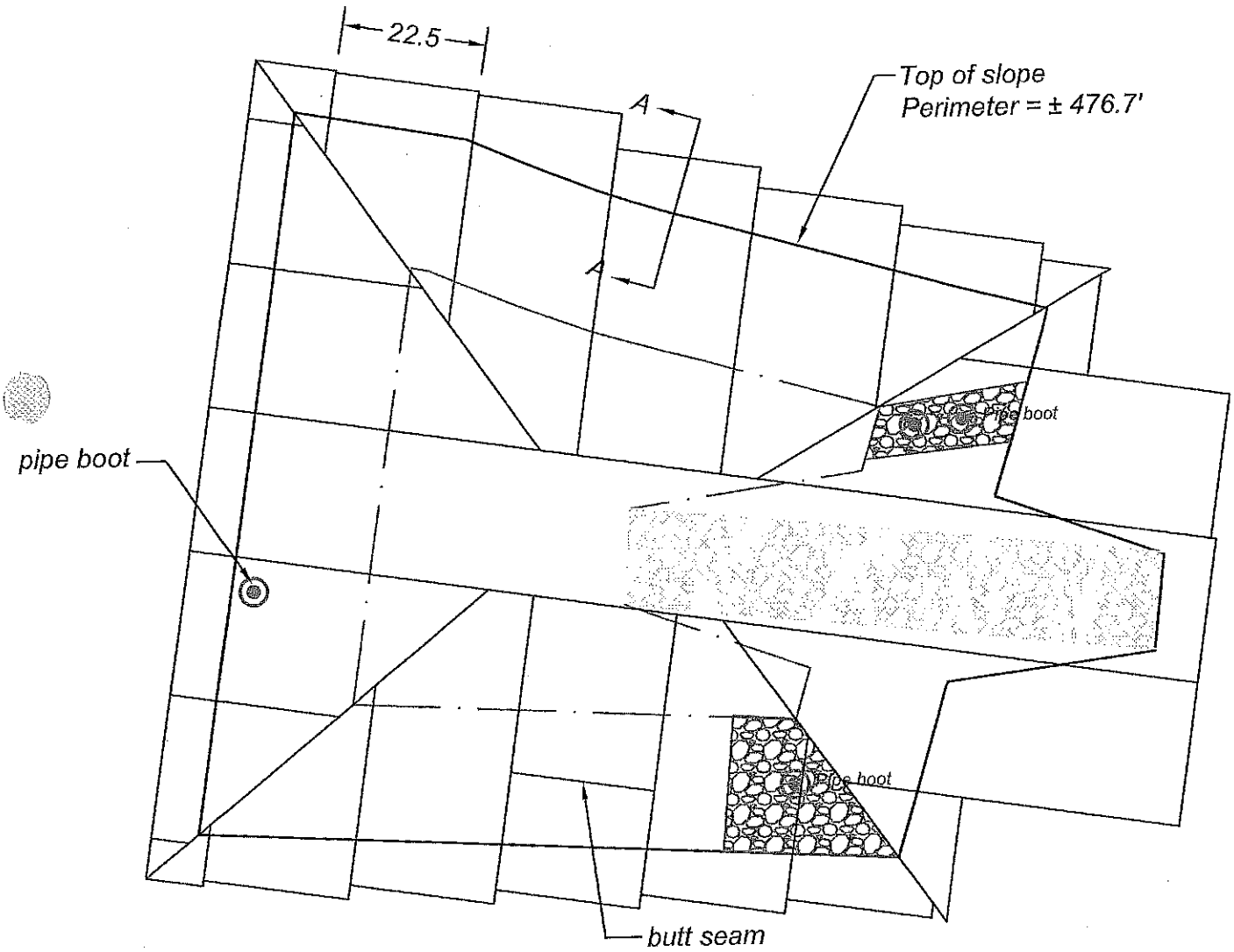

note: exact number, position and sequence of panel installation will be determined in the field by the nwl site supervisor.

Proposed 40-mil Textured HDPE liner panel layout

Cell 4-Pond 1

0 10 20 40

GRAPHIC SCALE

SHEET NO.	DETAIL	NORTHWEST LININGS & GEOTEXTILE PRODUCTS, Inc.	JOB NAME:	Kiewit 520 Pontoons		
			JOB NO.	N 1 1 0 0 1		
		www.northwestlinings.com	DATE:	1 28 11	CHECKED:	KH
		21000 77TH AVE. SOUTH KENT, WA. 98032 (253) 872-0244 (253) 872-0245 FAX	BY:	SG	SCALE:	AS SHOWN

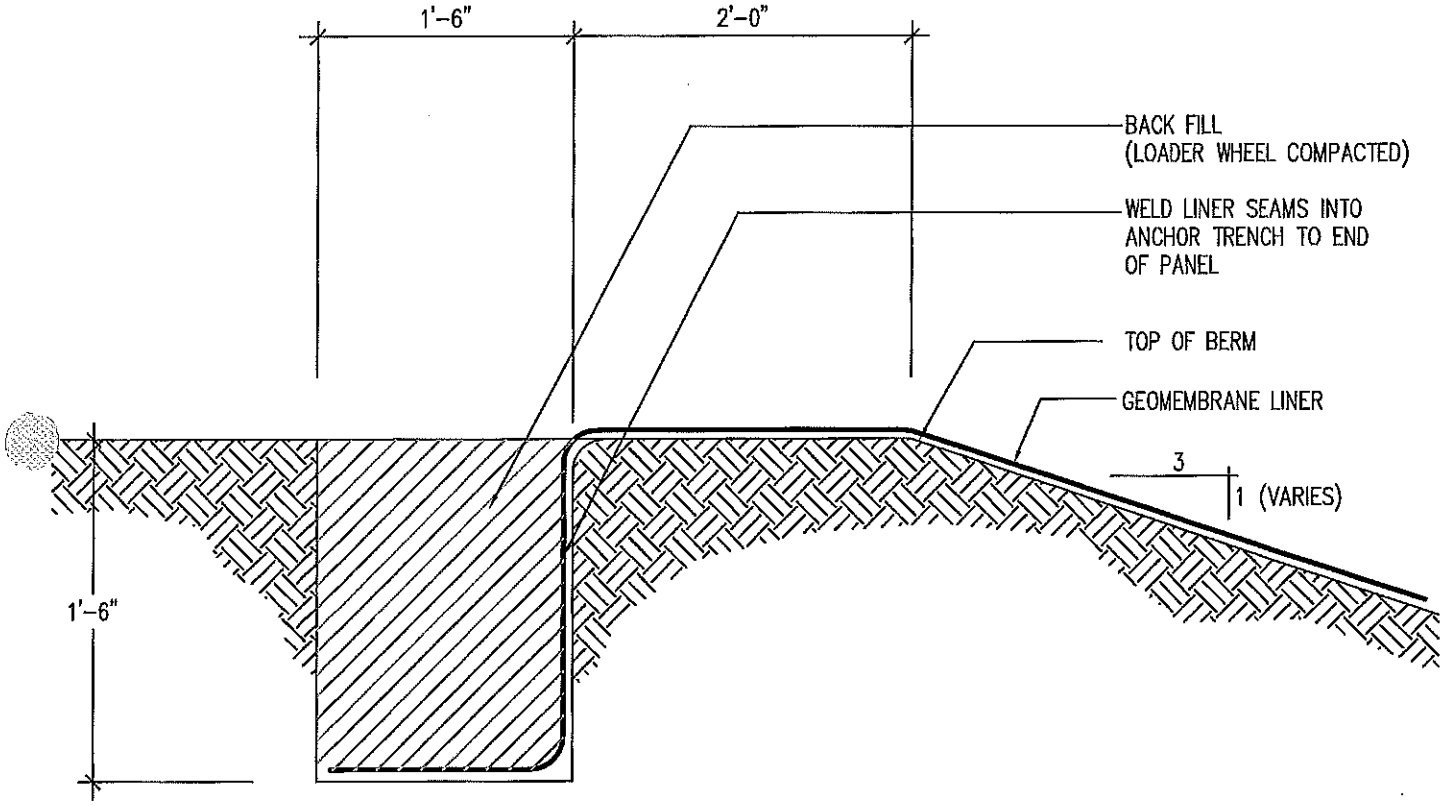

TYPICAL ANCHOR TRENCH

EXPOSED LINING SYSTEM

N T S

H.D.P.E – POLYPROPELENE – URETHANE – COOLGUARD – XR 5

Northwest Linings & Geotextile Products, Inc.(NWL) is not a licensed engineering firm and does not practice engineering or provide engineering services. **NWL does not make any representation or warranties, express or implied, as to any drawings, or the suitability of any of the drawings for a particular use or purpose. Without limiting the foregoing, NWL makes no representation or warranty that the drawings are appropriate for any particular installation.** Only a registered professional engineer who has specialized knowledge of a particular project and the needs and requirements of such project can determine what specific design, engineering or installation detail is best suited for each project.

SHEET NO.	DETAIL	NORTHWEST LININGS & GEOTEXTILE PRODUCTS, Inc.	JOB NAME:			
			JOB NO.			
		www.northwestlinings.com	DATE:		CHECKED:	
		21000 77TH AVE. SOUTH KENT, WA. 98032 (253) 872-0244 (253) 872-0245 FAX	BY:		SCALE:	N T S

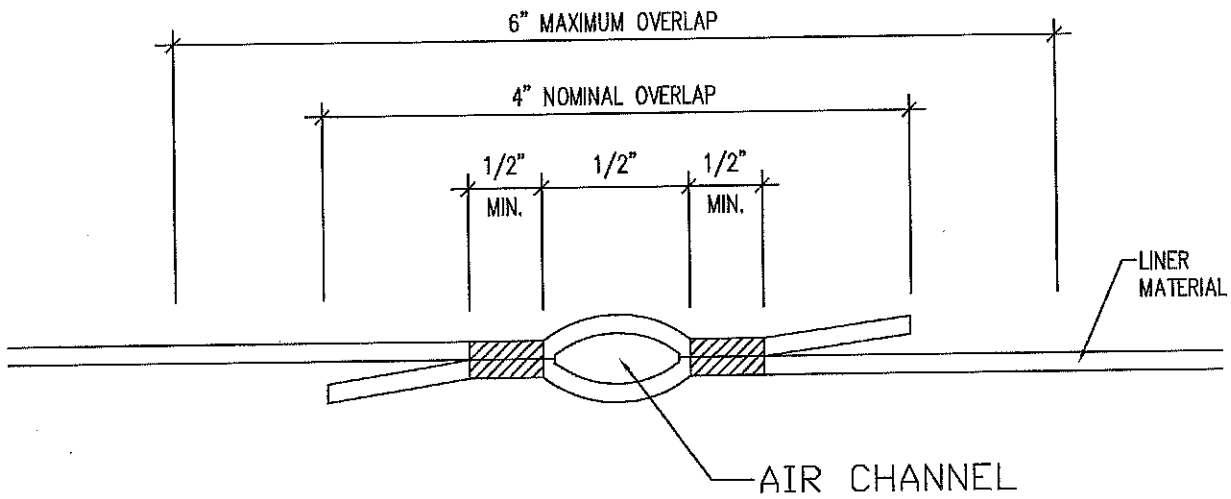

NOTES:

AIR PRESSURE TESTING IS THE PRIMARY METHOD FOR NON DESTRUCTIVE TESTING DOUBLE FUSION WELDING

DOUBLE FUSION WELD

NTS

Northwest Linings & Geotextile Products, Inc.(NWL) is not a licensed engineering firm and does not practice engineering or provide engineering services. **NWL does not make any representation or warranties, express or implied, as to any drawings, or the suitability of any of the drawings for a particular use or purpose. Without limiting the foregoing, NWL makes no representation or warranty that the drawings are appropriate for any particular installation.** Only a registered professional engineer who has specialized knowledge of a particular project and the needs and requirements of such project can determine what specific design, engineering or installation detail is best suited for each project.

SHEET NO.	DETAIL	NORTHWEST LININGS & GEOTEXTILE PRODUCTS, Inc.	JOB NAME:			
			JOB NO.			
			DATE:	12 03 03	CHECKED:	
			BY:		SCALE:	

www.northwestlinings.com
21000 77TH AVE. SOUTH
KENT, WA. 98032
(253) 872-0244 (253) 872-0245 FAX

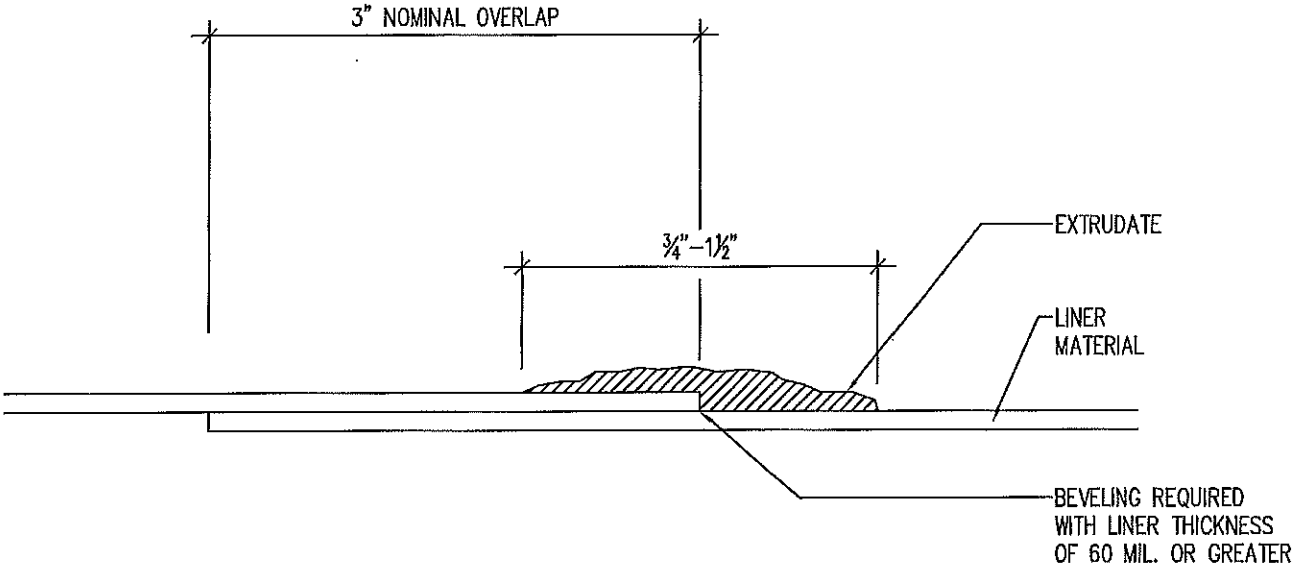

NOTES:

LINER SHEETS TACK WELDED TOGETHER AT OVERLAP TO FORM TEMPORARY BOND PRIOR TO WELDING

GRINDING NOT TO EXCEED 1/4" PAST 'SQUEEZE-OUT' ON EITHER SIDE. PROPER CARE SHOULD BE TAKEN IN NOT REMOVING TOO MUCH MATERIAL WHEN GRINDING

VACUUM TESTING IS THE NONDESTRUCTIVE SEAM TEST METHOD FOR EXTRUSION WELDS

EXTRUSION WELD

NTS

Northwest Linings & Geotextile Products, Inc.(NWL) is not a licensed engineering firm and does not practice engineering or provide engineering services. **NWL does not make any representation or warranties, express or implied, as to any drawings, or the suitability of any of the drawings for a particular use or purpose. Without limiting the foregoing, NWL makes no representation or warranty that the drawings are appropriate for any particular installation.** Only a registered professional engineer who has specialized knowledge of a particular project and the needs and requirements of such project can determine what specific design, engineering or installation detail is best suited for each project.

DETAIL NO.	DETAIL	NORTHWEST LININGS & GEOTEXTILE PRODUCTS, Inc.	JOB NAME:		
			JOB NO.		
			DATE:	CHECKED:	
			BY:	SCALE:	

www.northwestlinings.com
21000 77TH AVE. SOUTH
KENT, WA. 98032
(253) 872-0244 (253) 872-0245 FAX

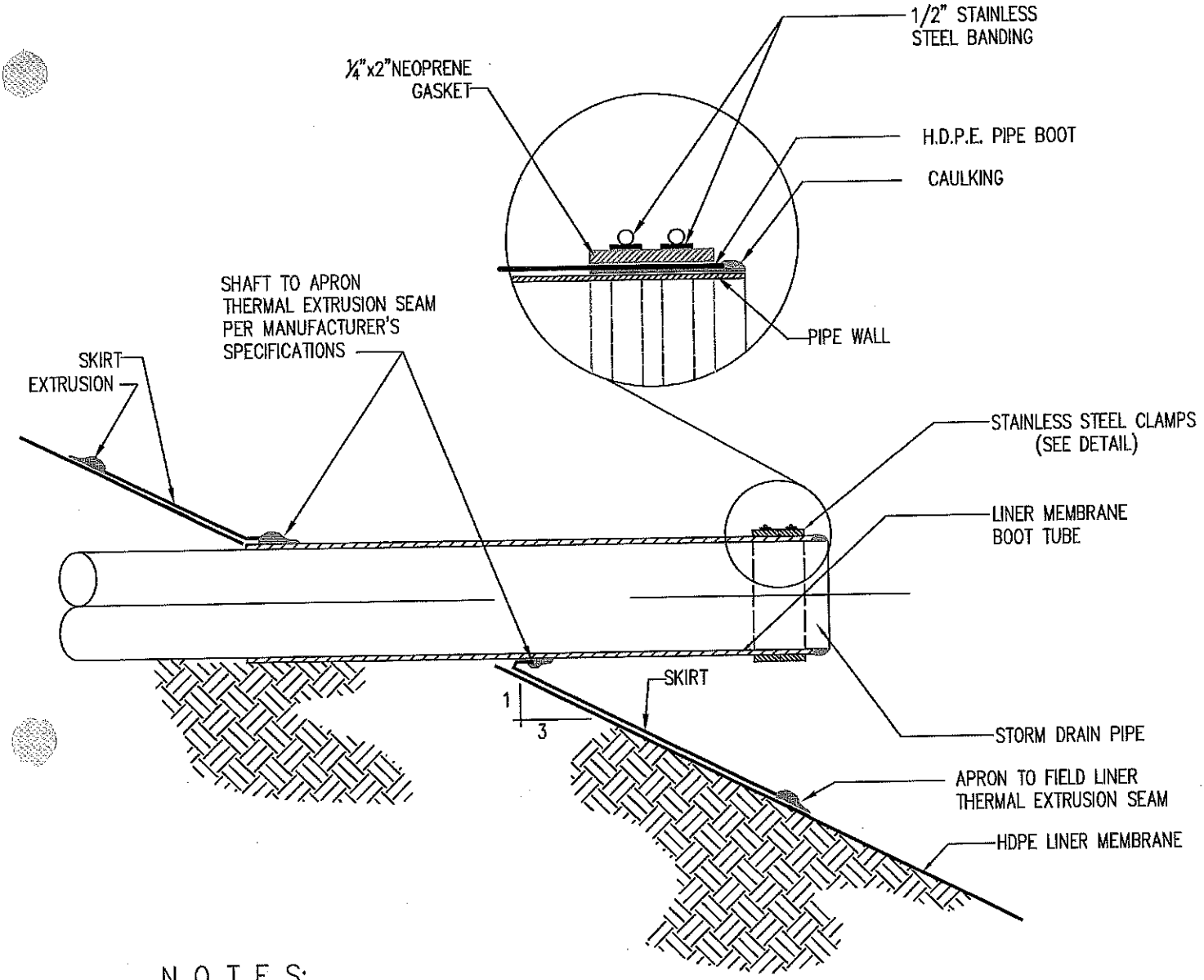

NOTES:

HOLE FOR PENETRATION OF MEMBRANE SHALL BE CUT UNDERSIZED SO THAT STRETCHED LINER FORMS A 1" FLANGE OVER THE PIPE

LINER SLOPE PENETRATION DETAIL (PIPE)

N T S

HDPE, LLDPE

Northwest Linings & Geotextile Products, Inc.(NWL) is not a licensed engineering firm and does not practice engineering or provide engineering services. **NWL does not make any representation or warranties, express or implied, as to any drawings, or the suitability of any of the drawings for a particular use or purpose. Without limiting the foregoing, NWL makes no representation or warranty that the drawings are appropriate for any particular installation.** Only a registered professional engineer who has specialized knowledge of a particular project and the needs and requirements of such project can determine what specific design, engineering or installation detail is best suited for each project.

SHEET NO.	DETAIL	NORTHWEST LININGS & GEOTEXTILE PRODUCTS, Inc.	JOB NAME:			
			JOB NO.			
			DATE:	12 11 07	CHECKED:	KL/SK
			BY:	SG	SCALE:	NTS

www.northwestlinings.com
21000 77TH AVE. SOUTH
KENT, WA. 98032
(253) 872-0244 (253) 872-0245 FAX

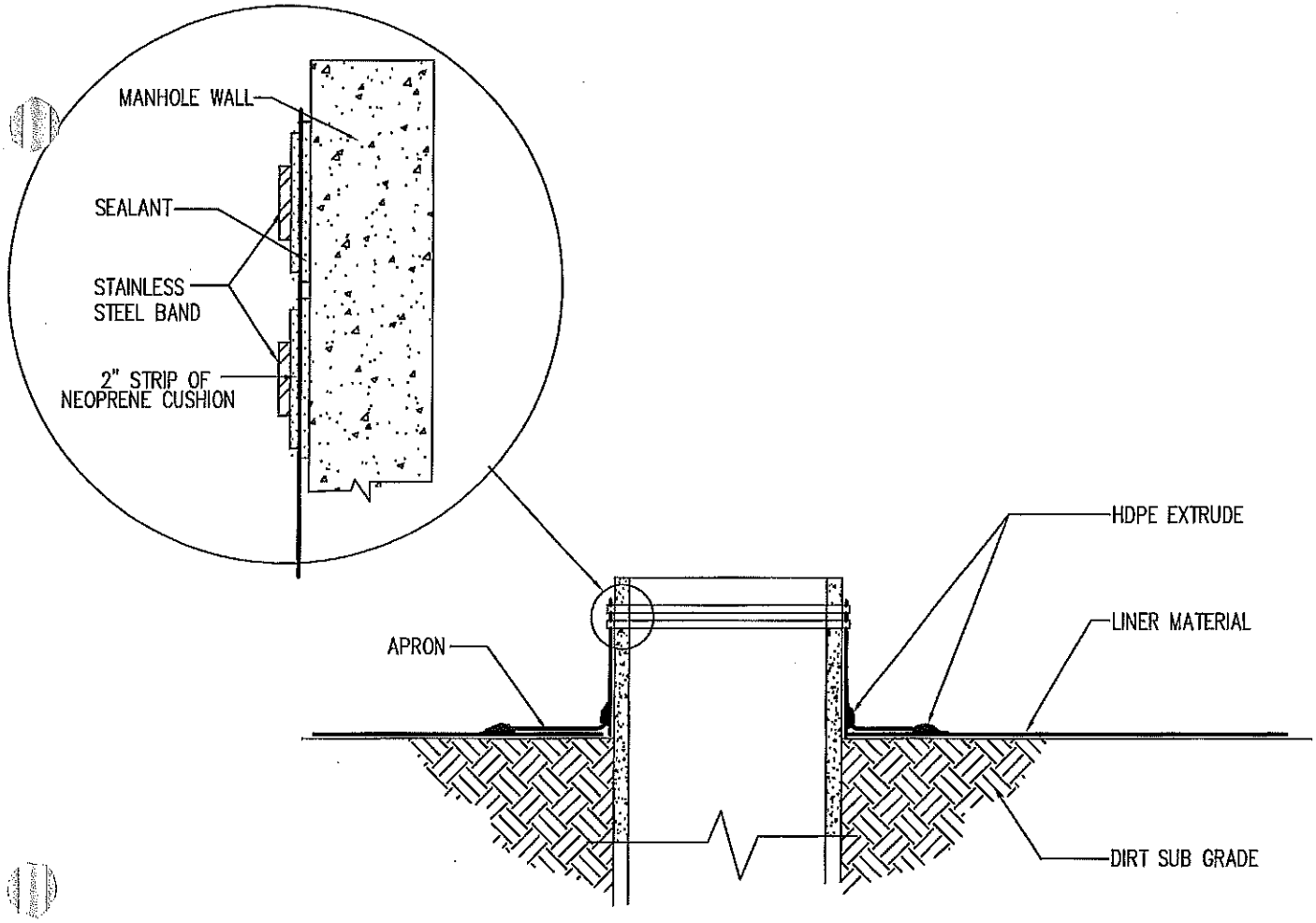

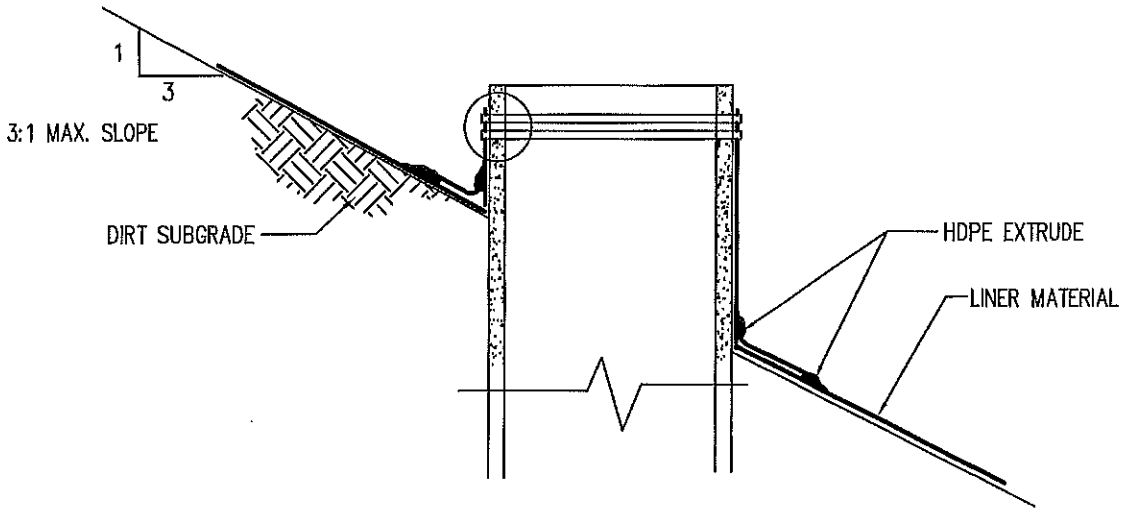

MANHOLE BOOT DETAIL

NTS

Northwest Linings & Geotextile Products, Inc.(NWL) is not a licensed engineering firm and does not practice engineering or provide engineering services. **NWL does not make any representation or warranties, express or implied, as to any drawings, or the suitability of any of the drawings for a particular use or purpose. Without limiting the foregoing, NWL makes no representation or warranty that the drawings are appropriate for any particular installation.** Only a registered professional engineer who has specialized knowledge of a particular project and the needs and requirements of such project can determine what specific design, engineering or installation detail is best suited for each project.

SHEET NO.	DETAIL	NORTHWEST LININGS & GEOTEXTILE PRODUCTS, Inc.	JOB NAME:			
			JOB NO.			
		www.northwestlinings.com	DATE:	2 17 04	CHECKED:	
		21000 77TH AVE. SOUTH KENT, WA. 98032 (253) 872-0244 (253) 872-0245 FAX	BY:		SCALE:	

Installation, Operation & Maintenance Manual

Series 700

(Style 710, 720, 730, 740)

Customer:

Project:

PROCO PRODUCTS, INC.

The Expansion Joint and Check Valve People

2431 North Wigwam Dr.
Stockton, CA 95205
Toll-Free Phone: 800-344-3246
Phone: 209-943-6088 (*International*)
Fax: 209-943-0242
Email: sales@procoproducts.com

Table of Contents

1.0 Introduction 3
1.1 Style 710: ProFlex Flanged Rubber Check Valve 3
1.2 Style 720: ProFlex Flanged In-Line Rubber Check Valve 3
1.3 Style 730: ProFlex Sleeved Rubber Check Valve 3
1.4 Style 740: ProFlex In-Line Slip-In Rubber Check Valve 3
2.0 Storage and Handling 4
2.1 Storage 4
2.2 Handling 4
3.0 Prior to Installation 4
3.1 Inspect the Received Check Valve 4
3.2 Verify the System Parameters 4
3.3 Check Valve Mating Surface 4
3.4 Safety Area 4
4.0 Installation 5
4.1 ProFlex Check Valve Installation 5
4.1.1 Style 710: ProFlex Flanged Rubber Check Valve Installation 5
4.1.2 Style 720: ProFlex Slip-In Flanged Rubber Check Valve Installation 6
4.1.3 Style 730: ProFlex Sleeved Rubber Check Valve Installation 7
4.1.4 Style 740: ProFlex In-Line Slip-In Rubber Check Valve Installation 8
4.1.5 Flange Bolt Torqueing (Style 710/720) 9
4.1.6 Anchor Bolts/Pins (Style 730/740) 9
5.0 Operation 10
6.0 Maintenance 10
7.0 Appendix A 11
7.1 Torque Data 11
7.2 Sample Torqueing Patterns 11

1.0 Introduction

The Proco Series 700 ProFlex rubber check valves are designed to provide outstanding back-flow prevention; eliminating costly and unwanted back-flow from rivers, oceans, storm water, and is an excellent choice for sewage diffuser systems. The Proco Series 700 ProFlex rubber check valves are fully passive flow devices requiring neither maintenance nor any outside sources of power or manual assistance to operate. They are offered as direct replacements for ineffective and maintenance ridden flap-type check valves as well as for new/existing construction and custom applications. Each check valve is manufactured to exacting specifications ensuring a perfect fit and usability and is available in a wide variety of elastomers to meet the design requirements of the application. This installation, operation and maintenance manual will cover the general practices for the proper installation, operation and maintenance of the Proco Series 700 ProFlex rubber check valves.

1.1 Style 710: ProFlex Flanged Rubber Check Valve

This type of rubber check valve is designed to bolt directly to existing flanges or new installations, flanges are drilled to ANSI 125/150# standard but other drill patterns are available upon request. This style of rubber check valve can be installed in either vertical or horizontal applications.

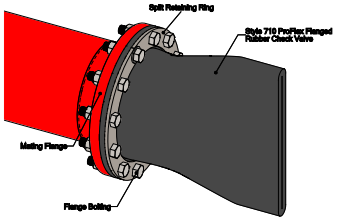

Figure 1: Style 710

1.2 Style 720: ProFlex Flanged In-Line Rubber Check Valve

This type of rubber check valve is designed to fit directly inside of existing piping systems. The design is supplied with a flat face rubber flange which allows installation between existing pipe flanges eliminating the requirement for a valve body. Flanges are drilled to ANSI 125/150# standard but other drill patterns are available upon request. This style of rubber check valve can be installed in either vertical or horizontal applications.

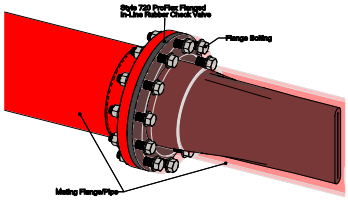

Figure 2: Style 720

1.3 Style 730: ProFlex Sleeved Rubber Check Valve

This type of rubber check valve is designed to easily slip over an existing pipe and is affixed to the pipe with heavy duty stainless steel clamps. This style of rubber check valve can be installed in either a vertical or horizontal orientation for most applications. *Note: External Clamp shown is of a general style and will change depending on the size of the supplied check valve.*

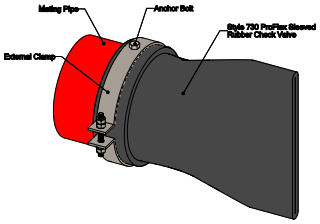

Figure 3: Style 730

1.4 Style 740: ProFlex In-Line Slip-In Rubber Check Valve

This type of rubber check valve is designed to slip directly inside of an existing pipe and is supplied with a stainless steel expandable clamp to secure in place. This style of rubber check valve can be installed in either a vertical or horizontal orientation for most applications.

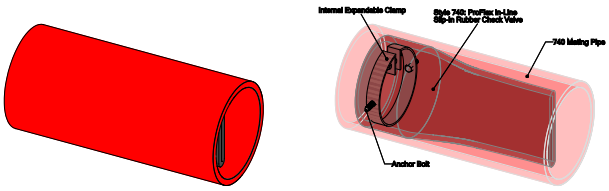

Figure 4: Style 740

2.0 Storage and Handling

2.1 Storage

2.1.1 Inside

The ideal storage location for a Proco Series 700 ProFlex rubber check valve is in a warehouse setting with a relatively dry and cool location. Store the check valve in a vertical position on a pallet or wooden platform similar to as shown in Figure 5 below.

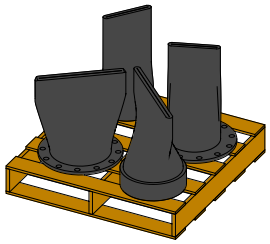

Figure 5: Typical Check Valve Storage Position

2.1.2 Outside

If the rubber check valve is to be stored outside, keep the check valve protected in a waterproof crate until ready for installation. Keep the check valve protected from any external elements such as direct UV exposure. Do not lay other boxes on top of the check valve or check valve box.

2.2 Handling

Care should be taken when handling the Proco Series 700 ProFlex rubber check valves whether big or small to reduce the possibility of damaging the check valve during installation. For large size check valves, special care should be taken in loading, hoisting, and lowering; being careful not to hit adjacent equipment, forklift tines, crane cables, etc. All check valves 36” and larger are manufactured with a lifting support hole to assist in the safe and proper lifting/installation of these check valves. The lifting support holes are not intended to support the entire weight of the check valve and care must be taken to adequately support the cuffed or flanged end as well. *Note: Proco Products, Inc. will not be responsible or liable for damage to the rubber check valve, adjacent equipment, or injury to personnel if these steps are not taken.*

3.0 Prior to Installation

3.1 Inspect the Received Check Valve

ProFlex check valves are fully inspected at the factory and are carefully packaged to arrive at the job site ready for installation. Upon receipt of the check valve(s), inspect for damage that may have occurred during transportation and immediately contact your transportation company to report any damage. Check the item(s) received against the packing slip to ensure that all items have been received. For any questions or concerns about the received product contact your Agent or Proco Products, Inc. at sales@procoproducts.com or for immediate assistance call (800) 344-3246 (US/Canada) or (209) 943-6088 (International).

3.2 Verify the System Parameters

Check the system design parameters for the application to ensure the specified/supplied Proco Series 700 rubber check valve(s) will meet the system requirements.

3.3 Check Valve Mating Surface

Inspect the mating flange/surface to ensure that it is undamaged and clean and free of all foreign matter before installation of the check valve. For slip-on style of rubber check valves, the mating pipe must be free of sharp edges which may damage the inside sealing diameter of the check valve.

3.4 Safety Area

Always check your work area before installation for safety hazards which may cause injury or damage to personnel or product. Develop and discuss a safety and exit plan for you and your fellow employees in the event of an emergency.

4.0 Installation

Note: Each Proco Series 700 ProFlex rubber check valve installation can be considered a major pipe installation and the same safety requirements as used in pipe contracting installations should be implemented. Each Proco Series 700 ProFlex rubber check valve regardless of size should be installed in the same manner. Proco Products, Inc. will accept no responsibility for an improperly installed ProFlex rubber check valve(s) or the improper use of this product. Incorrect installation may result in injury to personnel, reduced check valve service life and/or damage to other adjacent equipment.

4.1 ProFlex Check Valve Installation

4.1.1 Style 710: ProFlex Flanged Rubber Check Valve Installation

4.1.1.1 Step 1: Align

Position/Align the Flanged Rubber check valve into the system. For horizontal applications the bill of the check valve should be in vertical orientation relative to the ground unless there are clearance issues. In the case of clearance issues the check valve may be rotated to a maximum of 35 degrees to allow clearance to the ground.

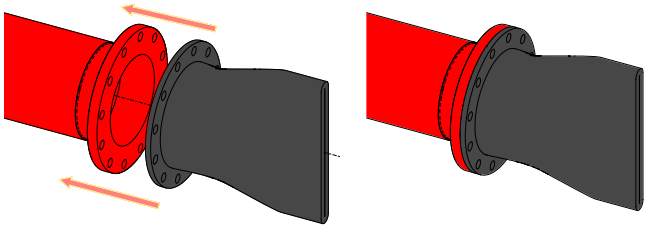

Figure 6: Style 710 Step 1

4.1.1.2 Step 2: Retaining Rings

Position the split retaining rings onto the flange check valve. Use a flat washer to properly cover the split in the retaining ring.

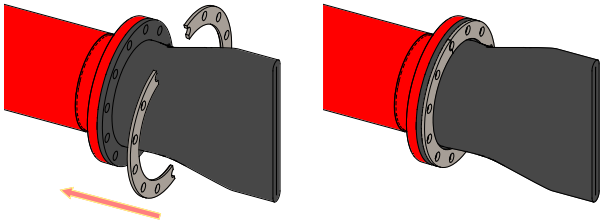

Figure 7: Style 710 Step 2

4.1.1.3 Step 3: Flange Bolting

Insert the flange bolting and tighten the flange bolting hardware to a “snug” tight fit before torqueing. Proceed to section 4.1.5 for proper torqueing values and a sample torqueing pattern.

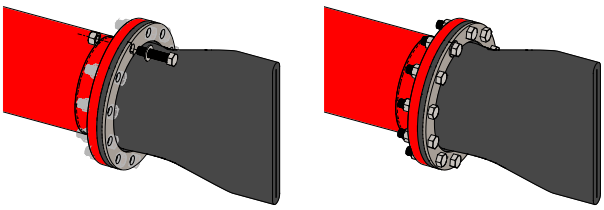

Figure 8: Style 710 Step 3

4.1.2 Style 720: ProFlex Slip-In Flanged Rubber Check Valve Installation

4.1.2.1 Step 1: Insert

Insert the Slip-In flanged rubber check valve into the existing pipe. For horizontal applications the bill of the check valve should be installed in a vertical orientation in the mating pipe as shown in below in Figure 9.

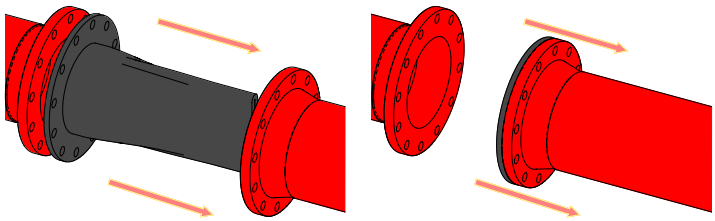

Figure 9: Style 720 Step 1

4.1.2.2 Step 2: Attach

Re-attach the 2 mating pipe flanges.

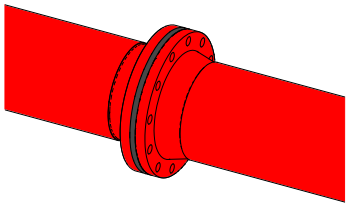

Figure 10: Style 720 Step 2

4.1.2.3 Step 3: Flange Bolting

Add the flange bolting to the installation and tighten to a “snug” tight fit before torqueing. Proceed to step 4.1.5 for proper torqueing values and a sample torqueing pattern.

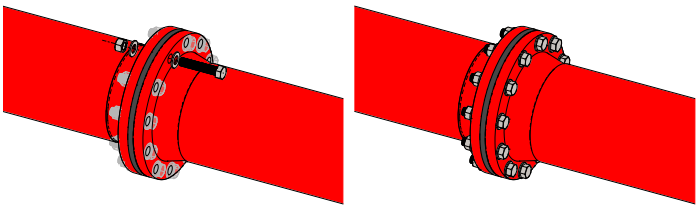

Figure 11: Style 720 Step 3

4.1.3 Style 730: ProFlex Sleeved Rubber Check Valve Installation

4.1.3.1 Step 1: Slip-On

For Slip-On rubber check valves, slip the rubber check valve over the existing pipe. For horizontal applications the bill of the check valve must be installed in a vertical orientation relative to the ground unless there are clearance issues. In the case of clearance issues the check valve may be rotated to a maximum of 35 degrees to allow clearance to the ground. To ease installation it is acceptable but not necessary to add soapy water to the exterior of the pipe to facilitate the installation of the check valve.

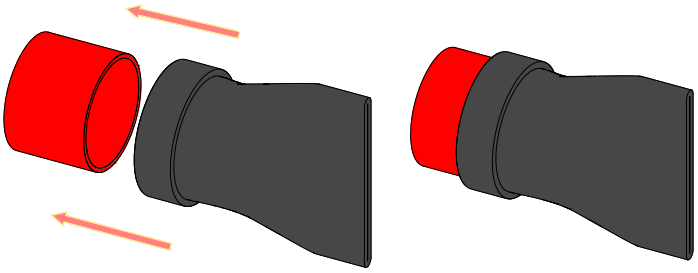

Figure 12: Style 730 Step 1

4.1.3.2 Step 2: External Clamps

Add the external clamps to the slip-on rubber check valve. For nominal diameters less than or equal to 10” the check valve will be supplied with either T-Bolt or Worm Gear Clamps. For nominal diameters greater than 10”, the check valve(s) will be supplied with fabricated stainless steel clamp(s). *Note: The supplied number of clamps will vary depending on size and application.*

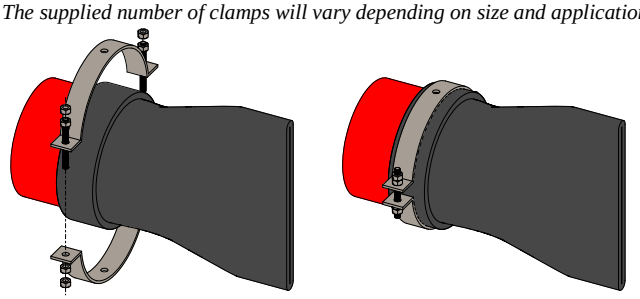

Figure 13: Style 730 Step 2

4.1.3.3 Step 3: Tighten Clamps

Tighten the external clamp until the rubber is compressed by the external clamp and a tight fit is achieved then proceed to section 4.1.6 for anchor bolting/pinning to anchor the slip-on check valve to the mating piping.

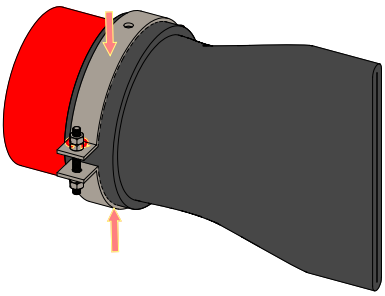

Figure 14: Style 730 Step 3

4.1.4 Style 740: ProFlex In-Line Slip-In Rubber Check Valve Installation

4.1.4.1 Step 1: Slip-In

Insert the slip-in check valve inside the existing pipe. For horizontal applications the bill of the check valve must be installed in vertical orientation as shown below in Figure 15.

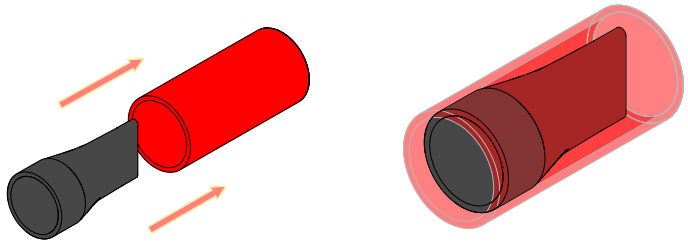

Figure 15: Style 740 Step 1

4.1.4.2 Step 2: Insert Clamp

Insert and the expandable internal clamp into the rubber check valve.

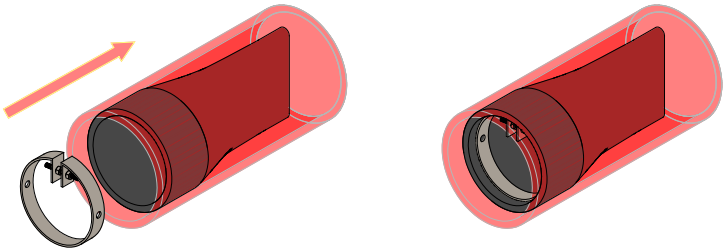

Figure 16: Style 740 Step 2

4.1.4.3 Step 3: Expand Clamp

Tighten the expandable internal clamp until the stainless steel portion of the clamp has imbedded itself into the rubber of the valve. Tighten the lock nut once the internal expandable clamp is in the proper position and proceed to section 4.1.6 for anchor bolting/pinning to anchor the slip-in check valve to the mating pipe. *Note: This style of check valve installation relies on external pressure of the internal expandable clamp to ensure that the valve does not move, care should be taken to ensure proper sealing.*

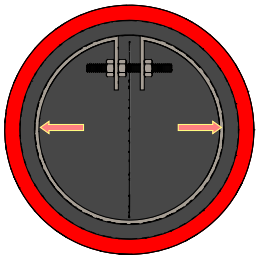

Figure 17: Style 740 Step 3

4.1.5 Flange Bolt Torqueing (Style 710/720)

Torqueing should then be accomplished in steps gradually and as evenly as possible around the circumference of the flange. The bolts should be tightened in an alternating sequence similar to a star pattern shown below in Figure 18 to within the proper torque range specified for the size of check valve to be installed. The flange bolting is not considered tight and "locked-on" until the edges of the check valve flange bulges out or extrudes slightly. Refer to appendix A for the proper ranges of torque values as well as further examples of the proper patterns used for torqueing the flange bolting. *Note: Never tighten bolts on a flanged rubber check valve to the point where there is contact between the retaining ring and mating flange. This type of tightening will crush the integrated rubber flange of the check valve and cause a premature failure.*

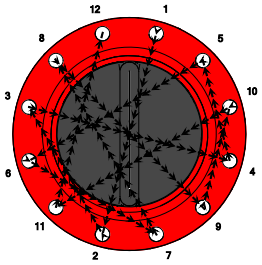

Figure 18: Sample Torque Pattern

4.1.6 Anchor Bolts/Pins (Style 730/740)

After the Check Valve is installed, drill a hole or holes, depending on the valve size, through the cuff of the check valve and into the mating pipe using the center hole on the clamp as a guide. Insert a bolt, which will be sufficient in length to completely travel through the clamp, valve and mating pipe. Completely weld or use some other means of ensuring that this bolt/pin will not fall out or be removed.

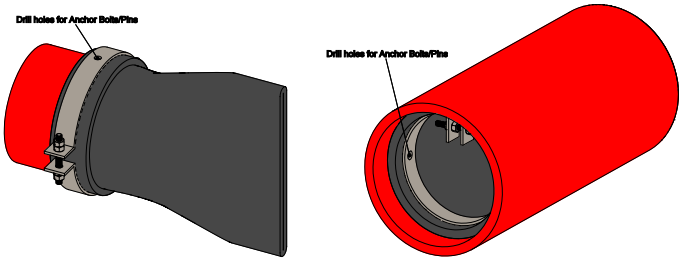

Figure 19: Style 730 & 740 Drilled Hole Positions

4.1.6.1 Style 730: Insert the Bolt/Pin through the drilled hole(s) and weld the Bolt/Pin to the expandable clamp.

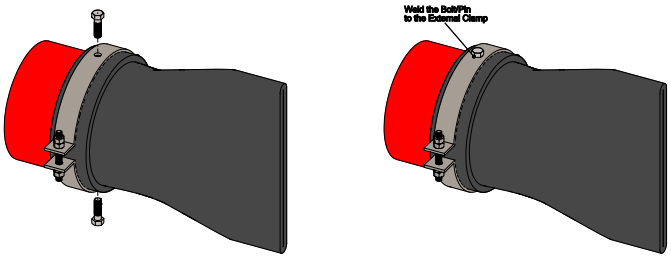

Figure 20: Style 730 Anchor Bolt/Pin Install

4.1.6.2 Style 740: Insert the Bolt/Pin through the drilled hole(s) and weld the Bolt/Pin to the internal expandable clamp.

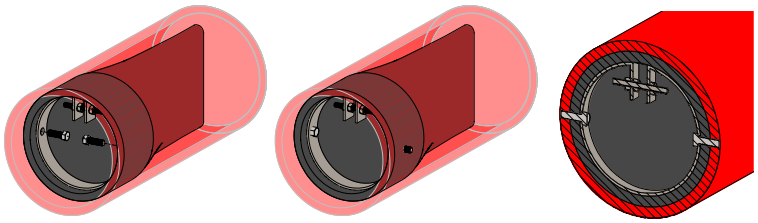

Figure 21: Style 740 Anchor Bolt/Pin Install

5.0 Operation

The ProFlex Series 700 Check Valves require little operational requirements. Each unit is an elastomeric back flow device which relies solely on inlet flow pressure and back flow pressure to provide operation.

6.0 Maintenance

ProFlex Series 700 Check Valves require little maintenance. Periodic inspections can ensure that the check valve will provide years of maintenance-free service. Check for cuts or gouges which can easily be repaired with a self-curing rubber compound (Contact Proco). Ensure that the bill section is free from any debris that may have been lodged in the bill. This will be the only areas of concern that require periodic inspection.

7.0 Appendix A

7.1 Torque Data

Table 1: Style 710/730 Flange Torque Values	
Size	Approx. Torque Values
1" thru 2"	20 - 40 ft./lbs.
2.5" thru 5"	25 - 60 ft./lbs.
6" thru 12"	35 - 140 ft./lbs.
14" thru 18"	50 - 180 ft./lbs.
20" thru 24"	60 - 200 ft./lbs.
26" thru 40"	70 - 300 ft./lbs.
42" thru 50"	80 - 300 ft./lbs.
52" thru 60"	100 - 400 ft./lbs.
66" thru 72"	200 - 500 ft./lbs.
78" thru 90"	300 - 600 ft./lbs.
96" thru 108"	400 - 700 ft./lbs.
120"	500 - 800 ft./lbs.

7.2 Sample Torqueing Patterns

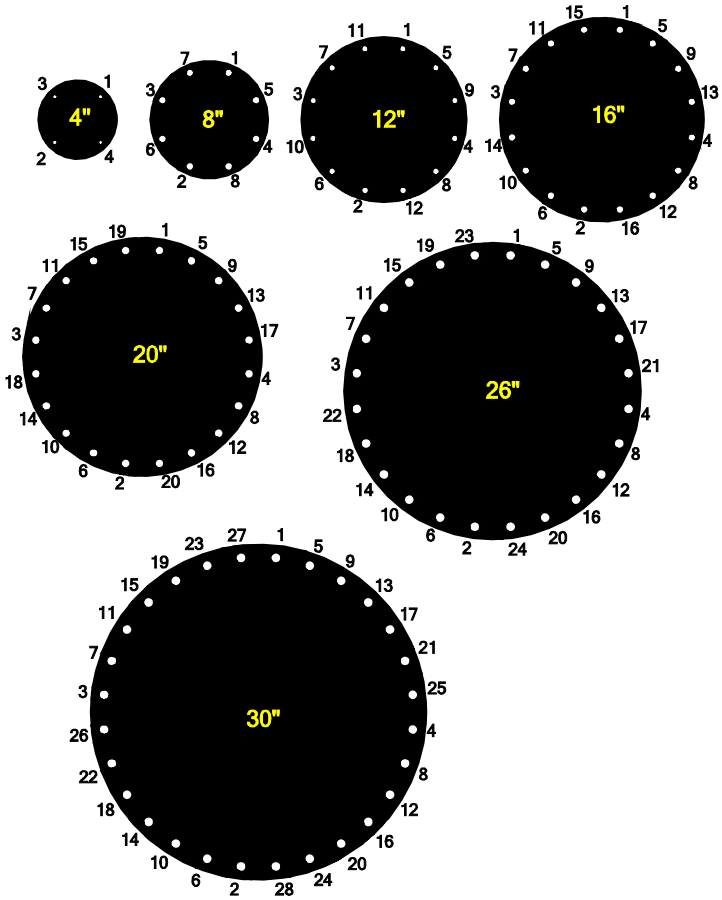

Figure 22: Sample Torque Patterns

AquaSHIELD

PROTECTIVE ENCLOSURES

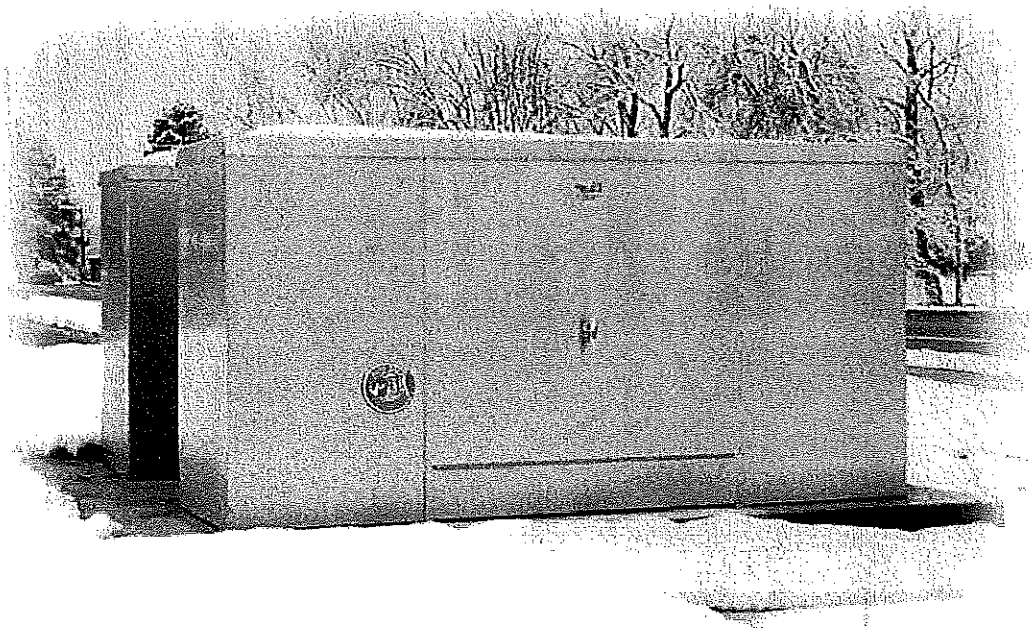

FREEZE AND VANDAL PROTECTION FOR OUTDOOR WATER SYSTEMS

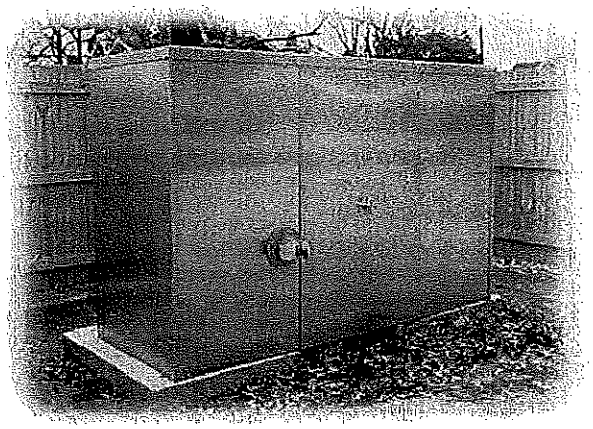

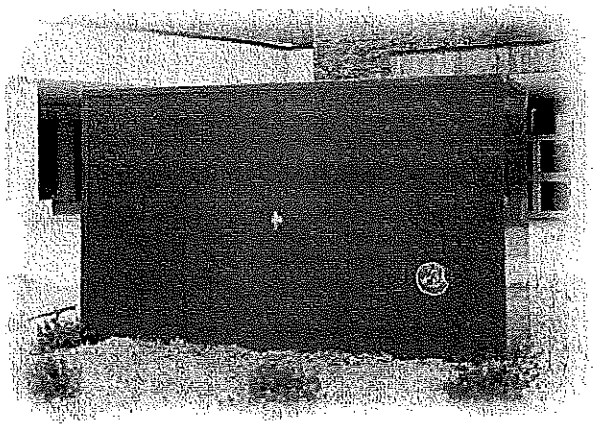

NORTH LITTLE ROCK, ARKANSAS

501-791-1800 • 888-345-6675 • www.aquashieldenclosures.com

SUBMITTAL DATA SHEET
(888)345-6675
Fax (501)791-1801
Web: aquashieldenclosures.com
Email:

AquaSHIELD
Backflow Enclosures

BFP8 SERIES

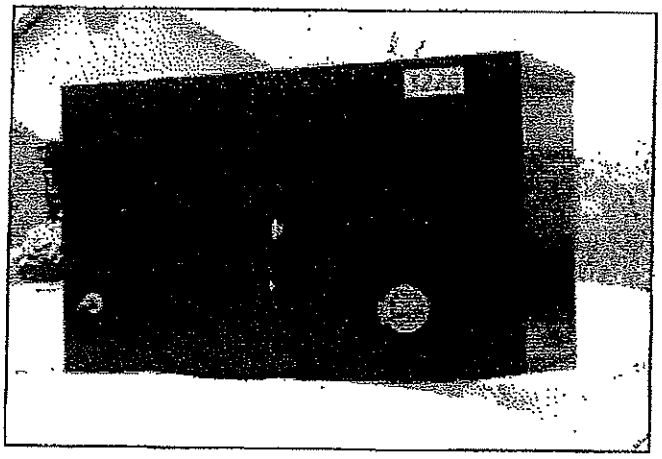

Product Materials
.050 mill finished marine grade aluminum
Polyisocyanurate insulation 1.5" thick (10.0R-value)

ENCLOSURE FEATURES

- Easy Access
- Lockable for Vandal Protection
- Freeze Protection (-30F)
- No subassembly required
- Oversized Drains at Enclosure Grade
- Structurally Rigid Insulation
- Simple Installation
- Mounting Hardware Included

STANDARDS & CODES

- ASSE 1060
- ASTM B209
- OSHA 1910

The backflow enclosure shall be ASSB 1060 certified and shall provide freeze and vandal protection for backflow preventers installed outside and above ground. Materials shall be (.050/18 ga.) mill finished aluminum bonded to a unicellular, non-wicking polisocyanurate foam core insulation. Insulation shall be 1.5" thick (R10) and have a heavy black reinforced fiber each side. Drain shall be insulated and sized to accommodate maximum discharge of the backflow preventer valve and remain closed except during discharge of the backflow valve. The enclosure shall have full access for testing and servicing of the backflow preventer with strategically placed lockable access panels. Enclosure shall be anchored to a concrete pad within the enclosure with masonry anchors.

Heat when required (ASSE 1060 Class 1) shall be a thermostatically controlled 120V/1PH fan forced heater . Heater shall be UL or ETL listed and sized to maintain a +40°F inside the enclosure with an outside temperature of –30°F.Heater shall have a six-foot cord and plug for easy receptacle connection. Power source shall be a ground fault interupter receptacle supplied and installed by others. Electrical power source shall be installed in accordance with all state and local codes.

MODEL NUMBER	ENCLOSURE DESCRIPTION	INSIDE DIMENSIONS			OUTSIDE DIMENSIONS			CONCRETE PAD DIMENSIONS			SHIPPING WEIGHT
BFP8-N	2 DOOR PANEL	120"L	38"W	56"H	123" L	41" W	58"H	135"L	53"W	6"T	430#
BFP8-NS	4 DOOR PANEL	142"L	38"W	56"H	145"L	41"W	58"H	157"L	53"W	6"T	495#
BFP8-O	2 DOOR PANEL	120"L	38"W	78"H	123"L	41"W	80"H	135"L	53"W	6"T	500#
BFP8-OS	4 DOOR PANEL	142"	38"W	78"H	145"L	41"W	80"H	157"L	53"W	6"T	545#
BFP8-NA	2 DOOR PANEL	74"L	47"W	54"H	77"L	50"W	56"H	89"L	62"W	6"T	340#
BFP8-NAT	2 DOOR PANEL	74"L	47"W	60"H	77"L	50"W	62"H	89"L	62"W	6"T	370#
BFP8-OA	2 DOOR PANEL	74"L	67"W	54"H	77"L	70"W	56"H	89"L	82"W	6"T	405#
BFP8-OAT	2 DOOR PANEL	74"L	67"W	60"H	77"L	70"W	62"H	89"L	82"W	6"T	445#

SUBMITTAL DATA SHEET
(888)345-6675
Fax (501)791-1801
Web: aquashieldenclosures.com
Email:

AquaSHIELD
Backflow Enclosures

BFP10 SERIES

ENCLOSURE FEATURES

- Easy Access
- Lockable for Vandal Protection
- Freeze Protection (-30F)
- No subassembly required
- Oversized Drains at Enclosure Grade
- Structurally Rigid Insulation
- Simple Installation
- Mounting Hardware Included

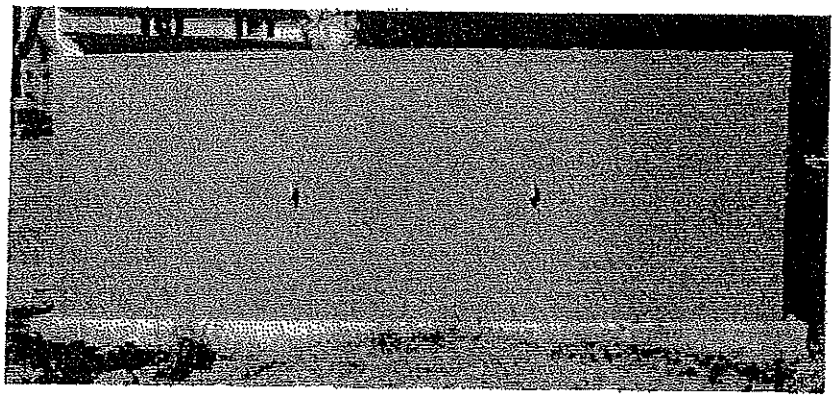

STANDARDS & CODES

- ASSE 1060
- ASTM B209
- OSHA 1910

Product Materials
.050 mill finished marine grade aluminum
Polyisocyanurate insulation 1.5" thick (10.0R-value)

The backflow enclosure shall be ASSE 1060 certified and shall provide freeze and vandal protection for backflow preventers installed outside and above ground. Materials shall be (.050/18 ga.) mill finished aluminum bonded to a unicellular, non-wicking polisocyanurate foam core insulation. Insulation shall be 1.5" thick (R10) and have a heavy black reinforced fiber each side. Drain shall be insulated and sized to accommodate maximum discharge of the backflow valve and remain closed except during discharge of the backflow valve. The enclosure shall have full access for testing and servicing of the backflow preventer with strategically placed lockable access panels. Enclosure shall be anchored to a concrete pad within the enclosure with masonry anchors.

Heat when required (ASSE 1060 Class 1) shall be a thermostatically controlled 120V/1PH fan forced heater . Heater shall be UL or ETL listed and sized to maintain a +40°F inside the enclosure with an outside temperature of –30°F.Heater shall have a six-foot cord and plug for easy receptacle connection. Power source shall be a ground fault interupter receptacle supplied and installed by others. Electrical power source shall be installed in accordance with all state and local codes.

MODEL NUMBER	ENCLOSURE DESCRIPTION	INSIDE DIMENSIONS			OUTSIDE DIMENSIONS			CONCRETE PAD DIMENSIONS			SHIPPING WEIGHT
BFP10-N	4 DOOR PANEL	142"L	40"W	80"H	145" L	43" W	82"H	157"L	55"W	6"T	525#
BFP10-NS	4 DOOR PANEL	172"L	40"W	80"H	175"L	43"W	82"H	187"L	55"W	6"T	620#
BFP10-O	4 DOOR PANEL	142"L	40W	90"H	145"L	43"W	92"H	157"L	55"W	6"T	575#
BFP10-OS	4 DOOR PANEL	172" L	40"W	90"H	175"L	43"W	92"H	187"L	55"W	6"T	695#

AquaSHIELD

PROTECTIVE ENCLOSURES

OPERATIONS & MAINTENANCE SCHEDULE

The AquaSHIELD enclosure is designed for minimum maintenance. Areas that need to be checked at the beginning of each cold session are:

- **Heater**
  - Insure that power is supplied to heater.
  - Check correct operation of the heater: that it turns on and gets hot. (Note: An ice cube on the thermostat sensor bulb works great)
  - Adjustable thermostats should be set to 40°F.

- **Enclosure**
  - Visually inspect the unit for physical damage
  - Insure all locks and latches are lubricated and secure.

- **Accessories**
  - Check operation of any accessories.

AquaSHIELD 2020 West 38th Street · No. Little Rock, Ar · Voice (501) 791-1800 · Fax (501) -791-1800
www.aquashieldenclosures.com

North American Pipe Corporation

www.northamericanpipe.com

Product Description:

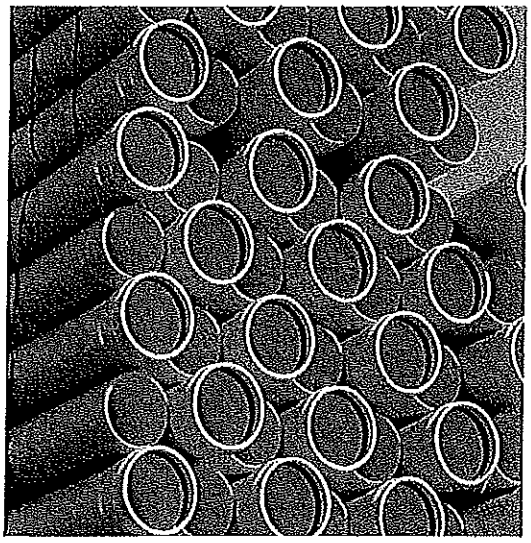

ASTM D3034
Gasketed Gravity Sewer Pipe

North American Pipe's ASTM D3034 Gravity Sewer PVC product line is manufactured to meet the needs of modern municipal waste water systems, residential waste water control and other non-pressure applications. With top quality raw materials and modern processing technology North American Pipe's ASTM D3034 Gravity Sewer pipe meets all industry standards in addition to our own rigorous quality control standards. North American Pipe's ASTM D3034 Gravity Sewer pipe utilizes Reiber style gaskets throughout the entire product offering. North American Pipe produces a full range of ASTM D3034Gravity Sewer pipe in SDR-35 and SDR-26 classifications. Whether specifying or installing our pipe you can be assured that North American Pipe will provide the pipe "Right, On Time, All the Time".

This product is made in accordance with the following specifications:

ASTM D3034
ASTM D3212
ASTM D1784
ASTM F477

Short Form Specification
for North American Pipe Corporation
ASTM D3034 Gasketed Gravity Sewer Pipe

PVC gravity sewer pipe shall be made from a compound conforming to a cell classification of 12454 or 12364 as defined by ASTM D1784 and in accordance with ASTM D3034 for sizes four inch through fifteen inch. The wall thickness, when tested according to ASTM D3412, shall correspond to a dimension ratio of SDR 35 with a pipe stiffness value of 46 or SDR26 with a pipe stiffness of 115 for heavy wall pipe. Integral bells shall incorporate locked in gaskets meeting the requirements of ASTM D3212 and F477. The pipe shall be provided in lengths of 14 feet or 20 feet as required.

Rev: 06/2009

2801 Post Oak Blvd. | Suite 600 | Houston | TX | 77056
Phone: 713-840-7473 Toll Free 800-999-7473 Fax: 713-552-0087

North American Pipe Corporation

www.northamericanpipe.com

ASTM D3034 Gasketed Gravity Sewer Pipe

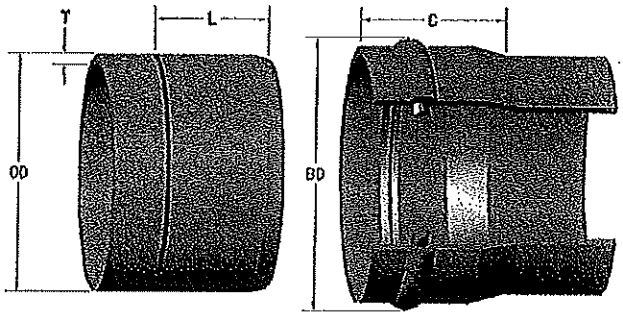

NOMINAL PIPE SIZE	OUTSIDE DIA. – NOM. (OD)	*APPROX. BELL DIA. (BD)	**APPROX. BELL DEPTH (C)	INSERT MARK (L)
4"	4.215	5.25	4.27	3.13
6"	6.275	7.50	5.40	4.00
8"	8.400	10.00	6.27	4.13
10"	10.500	12.25	7.16	5.13
12"	12.500	14.25	8.04	5.38
15"	15.300	17.25	9.61	7.38

NOMINAL PIPE SIZE	SDR 35 (T)	SDR 26 (T)	SDR 23.5 (T)
4"	.120	.162	.178
6"	.180	.241	.265
8"	.240	.323	
10"	.300	.404	
12"	.360	.481	
15"	.437	.588	

Note: These dimensions are for estimating purposes only * Dimension given for Approx. Bell Diameter (BD) is for highest pressure class ** Nominal depth, depth will vary by pressure class

Rev: 06/2009

2801 Post Oak Blvd. | Suite 600 | Houston | TX | 77056
Phone: 713-840-7473 Toll Free 800-999-7473 Fax: 713-552-0087

PVC & CPVC UTILITY BALL VALVES

UT-2-0306

Economy, Utility and Quality

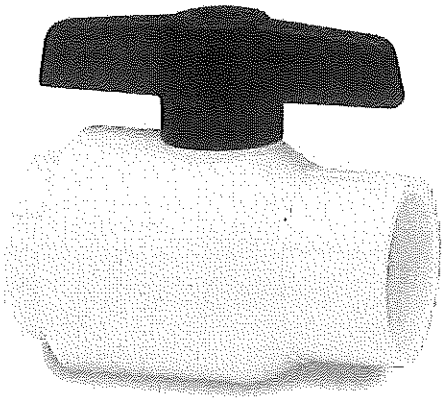

A high quality, economical quarter-turn shutoff valve designed for irrigation, pool and spa, and general purpose applications. IPS sizes 1/2" - 2" available in PVC White, PVC Gray or CPVC with socket or threaded end connectors. Sizes 3" - 4" available in PVC White with socket or threaded end connectors. 6" size available in PVC White with socket end connectors and high-efficiency lever style handle for easier operation.

PVC White, PVC Gray or CPVC Construction
Excellent companion for PVC systems such as lawn sprinklers, pools, spas, water gardens and other light-duty applications.

One-Piece Sealed Unit
Never requires adjustment.

Teflon® HDPE Ball Seats
Smooth operating Teflon® HDPE floating seat design reduces wear.

EPDM O-ring Seals
High grade, abrasion resistant EPDM elastomer O-rings.

Full Schedule 80 Bore
In full open position, full bore virtually eliminates pressure drop, providing optimum flow.

Sample Engineering Specifications
All thermoplastic ball valves shall be Utility sealed unit type constructed from PVC Type I Cell Classification 12454 or CPVC Type IV Cell Classification 23447. All O-rings shall be EPDM. All valves shall have Safe-T-Shear® stem and double stop Polypropylene handle. All valves shall be listed by NSF for use in potable water service. All valves shall be pressure rated at 150 psi for water at 73° F, as manufactured by Spears® Manufacturing Company.

High Impact Polypropylene Handle
Features double stop engagement.

Safe-T-Shear® Stem
Developed to help prevent line fluids from leaking out in the event of ball valve stem damage. Engineered for high strength, the stem incorporates a special shear point to control accidental breakage. Over torquing breaks occur above the stem O-ring leaving the seal intact until replacement can be made.

150 psi Pressure Rating
Maximum Internal Pressure at 73° F for a variety of applications.

Certified by NSF for Potable Water
All Utility Ball Valves are Certified by NSF International for potable water use.

For additional information, please refer to Spears® THERMOPLASTIC VALVES AND ACCESSORIES PRODUCT GUIDE & ENGINEERING SPECIFICATIONS V-4 and THERMOPLASTIC VALVES & ACCESSORIES Price Schedule V-1.

MADE IN THE U.S.A. WITH PRIDE

LPCB LOSS PREVENTION CERTIFICATION BOARD — UKAS QUALITY MANAGEMENT 007

Quality Systems Certificate No. 303
Corporate Facilities, Sylmar, CA
Assessed to ISO 9001: 2008

PROGRESSIVE PRODUCTS FROM SPEARS® INNOVATION & TECHNOLOGY

Visit our web site: www.spearsmfg.com

Teflon® is a registered trademark of Dupont Company.

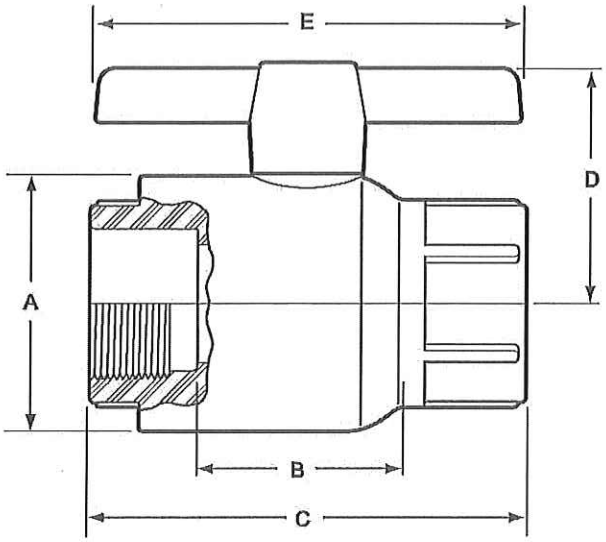

Dimensions, Weights & C_V Values

Nominal Size	Dimension Reference (Inches, ± 1/16)					Approx. Wt. (Lbs.)		C_v[2] Values
	A	B[1]	C	D	E[3]	PVC	CPVC	
1/2	1-7/16	1-1/4	2-11/16	1-11/16	2-3/4	.16	.17	46
3/4	1-25/32	1-7/16	2-31/32	1-29/32	3-7/32	.25	.27	91
1	2-1/32	1-5/8	3-3/8	2-7/16	3-1/2	.34	.36	160
1-1/4	2-9/16	1-31/32	3-7/8	2-13/16	3-3/4	.57	.60	306
1-1/2	2-15/16	2-1/2	4-11/16	2-15/16	4-1/4	.88	.90	429
2	3-9/16	2-27/32	5-5/32	3-13/16	4-31/32	1.34	1.34	755
2-1/2	4-5/16	3-17/32	7-1/32	4-5/32	5-9/16	2.31	N/A	1126
3	5-5/16	4-19/32	8-11/32	5-9/16	7-21/32	4.78	N/A	1660
4	6-11/16	5-21/32	9-11/16	6-6/32	10-27/32	8.00	N/A	3129
6[3]	10-3/16	8-3/32	14-3/16	8-5/32	14-3/32	23.24	N/A	7942

1: Valve Lay Length
2: Gallons per minute at 1 psi pressure drop. Values calculated from valve laying length, based on derivative of Hazen-Williams equation with surface roughness factor of C=150.
3: 6" valve has lever handle, dimension is from valve stem centerline (not illustrated)

Temperature Pressure Rating

System Operating Temperature °F		73 (23)	100 (38)	110 (43)	120 (49)	130 (54)	140 (60)	150 (66)	160 (71)	170 (77)	180 (82)	190 (88)
Valve Pressure Rating psi (MPa)	PVC	150 (1.03)	93 (.64)	75 (.52)	60 (.41)	45 (.31)	33 (.23)	-0- (-0-)	-0- (-0-)	-0- (-0-)	-0- (-0-)	-0- (-0-)
	CPVC	150 (1.03)	123 (.85)	110 (.76)	98 (.68)	86 (.58)	75 (.52)	68 (.47)	60 (.41)	48 (.33)	38 (.26)	-0- (-0-)

NOT FOR USE WITH COMPRESSED AIR OR GASES

SPEARS® MANUFACTURING COMPANY • CORPORATE OFFICE
15853 Olden St., Sylmar, CA 91342 • PO Box 9203, Sylmar, CA 91392
(818) 364-1611 • www.spearsmfg.com

© Copyright 2010 Spears® Manufacturing Company. All Rights Reserved. Printed in the United States of America 05/10.

SPEARS® MANUFACTURING COMPANY
CORPORATE OFFICE
15853 OLDEN STREET • SYLMAR, CALIFORNIA 91342
MAILING ADDRESS: P.O. BOX 9203 • SYLMAR, CALIFORNIA 91392
TELEPHONE (818) 364-1611 • FAX (818) 364-6945
www.spearsmfg.com

CERTIFICATE OF COMPLIANCE

PVC AND CPVC UTILITY BALL VALVE

Spears® Manufacturing Company certifies that its Utility Ball Valves are manufactured in the U.S.A. from a Polyvinyl Chloride (PVC) compound having a cell classification of 12454 and a Chlorinated Polyvinyl Chloride (CPVC) compound having a cell classification of 23447 conforming to ASTM Standard D1784. O-ring seals are provided in EPR (EPDM).

These valves have a maximum internal pressure rating of 150 psi non-shock at 73°F and incorporate a Safe-T-Shear® stem as an added safety feature. Utility Valves are listed for potable water service by NSF International®.

Alan Lunt
Director, Technical Services
alunt@spearsmfg.net

March 2011

P.O. Box 3300, Term."A"
London, Ont. Canada
N6A 4K3
(519) 681-2140
1-800-265-1815
Fax (519) 681-2156

MULTI FITTINGS
Engineered Tough

4507 LeSaint Court
Fairfield, Ohio USA
45014
(513) 942-9910
1-800-523-3539
Fax (513) 942-9914

Trench Tough

SDR 35 GASKETED SEWER FITTINGS

LETTER OF COMPLIANCE

Scope:
This letter of compliance covers Multi Fittings requirements for 4" through 42" (100 mm – 1050 mm) **PVC Trench Tough SDR35 Gasketed Sewer Fittings.** These products meet or exceed performance standards set by the American Society of Testing and Materials (ASTM), CSA International (CSA) and the International Association of Plumbing and Mechanical Officials (IAPMO).

Trench Tough SDR35 Gasketed Sewer Fittings are compatible with pipe manufactured to ASTM D 3034, CSA B182.1 and CSA B182.2 and is suitable for the non-pressure drainage of sewage and surface water. They can also be used in applications involving subsurface drainage.

Material:
Rigid PVC Poly(Vinyl Chloride) used in the manufacturing of **Trench Tough SDR35 Gasketed Sewer Fittings** complies with ASTM D 1784, *Standard Specification for Rigid Poly(Vinyl Chloride) (PVC) Compounds and Chlorinated Poly(Vinyl Chloride) (CPVC) Compounds,* having a cell classification 12454 or 13343.
Gasket materials used in the manufacturing of **Trench Tough SDR35 Gasketed Sewer Fittings** complies with either of the following requirements:
ASTM F 477 *"Standard Specification for Elastomeric Seals (Gaskets) for Joining Plastic Pipe"* for low-head applications
ASTM F 913 *"Standard Specification for Thermoplastic Elastomeric Seals (Gaskets) for Joining Plastic Pipe"*

Molded Fittings:
Molded **Trench Tough SDR35 Gasketed Sewer Fittings** conform to the following standards:
ASTM D 3034 *"Standard Specification for Type PSM Poly(Vinyl Chloride) (PVC) Sewer Pipe and Fittings"*
ASTM D 3212 *"Standard Specification for Joints for Drain and Sewer Plastic Pipes Using Flexible Elastomeric Seals"*
ASTM F 1336 *"Standard Specification for Poly(Vinyl Chloride) (PVC) Gasketed Sewer Fittings"*
CSA B182.1 *"Plastic Drain and Sewer Pipe and Pipe Fittings"*
CSA B182.2 *"PVC Sewer Pipe and Fittings (PSM Type)"*
IAPMO *"Uniform Plumbing Code"*

Fabricated Fittings:

Fabricated **Trench Tough SDR35 Gasketed Sewer Fittings** are made from segments of pipe conforming to the following standards:
ASTM D3 034 *"Standard Specification for Type PSM Poly(Vinyl Chloride) (PVC) Sewer Pipe and Fittings"*
ASTM D 3212 *"Standard Specification for Joints for Drain and Sewer Plastic Pipes Using Flexible Elastomeric Seals"*
ASTM F 679 *"Standard Specification for Poly(Vinyl Chloride) (PVC) Large-Diameter Plastic Gravity Sewer Pipe and Fittings"*
ASTM F 1336 *"Standard Specification for Poly(Vinyl Chloride) (PVC) Gasketed Sewer Fittings"*
CSA B182.2 *"PVC Sewer Pipe and Fittings (PSM Type)"*
Note: Molded components meeting the requirements listed above may also be used as part of the fabricated fitting.

Markings:
Trench Tough SDR35 Gasketed Sewer Fittings are marked as prescribed in the above applicable standards to indicate size of the fittings, material designation, compliance to standard, and manufacturer's name or trademark.

Color Coding:
Gaskets for **Trench Tough SDR35 Gasketed Sewer Fittings** are black.

Yours truly,

Frank Yorio
Senior Vice President, Operations

Issue Date: 2004-03-29
Print Date: 2005-05-03

VINYLTECH VT PVC • PIPE

GRAVITY SEWER MAIN

TECHNICAL DATA SUBMITTAL

SEWER PIPE

ASTM D 3034 SDR 35 PVC SEWER PIPE					
NOMINAL SIZE (IN)	(mm)	OUTER DIAMETER (IN)	MINIMUM WALL	14' LENGTH WEIGHT (LB/100')	20' LENGTH WEIGHT (LB/100')
4	(100)	4.215	0.120	105.7	104.2
6	(150)	6.275	0.180	232.6	229.0
8	(200)	8.400	0.240	417.8	410.3
10	(250)	10.500	0.300	657.4	643.9
12	(300)	12.500	0.360	944.1	922.7
15	(375)	15.300	0.437	1390.0	1361.0

ASTM D 3034 SDR 26 PVC SEWER PIPE				
NOMINAL SIZE (IN)	(mm)	OUTER DIAMETER (IN)	MINIMUM WALL	14' LENGTH WEIGHT (LB/100')
4	(100)	4.215	0.162	150.0
6	(150)	6.275	0.241	320.0
8	(200)	8.400	0.323	580.0
10	(250)	10.500	0.404	900.0
12	(300)	12.500	0.481	1300.0
15	(375)	15.300	0.588	2000.0

ASTM F 679 (T-1 WALL) PVC SEWER PIPE					
NOMINAL SIZE (IN)	(mm)	OUTER DIAMETER (IN)	MINIMUM WALL	14' LENGTH WEIGHT (LB/100')	20' LENGTH WEIGHT (LB/100')
18	(450)	18.701	0.536	2115.0	2095.0

PIPE DIAGRAM

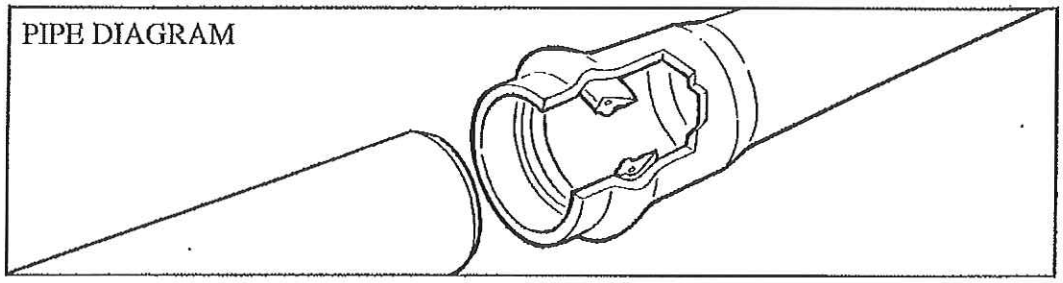

THE RIEBER SEALING SYSTEM

The Rieber system provides a proven pipe joint with an excellent track record in the field. It is the fastest growing system in the world because of its many advantages.

- Factory installed, locked-in gasket
- The pipe bell forms over the gasket, making a perfect fit
- Avoids the possibility of installing the wrong gasket
- Reduces installation problems
- The locked-in gasket eliminates gasket roll-out during joining
- The gasket is molded vs. extruded and spliced
- Works equally well under pressure or vacuum
- Three sealing points achieved vs. two
- LEAK-PROOF JOINTS
- "THE WORLDS BEST JOINT"

VINYLTECH VT PVC • PIPE
201 S. 61st Avenue • Phoenix, AZ 85043
602 233-0071 • 602 272-4847 Fax • www.vtpipe.com
AN OTTERTAIL COMPANY

VINYLTECH SEWER PIPE
TECHNICAL DATA SUBMITTAL

VINYLTECH VT PVC • PIPE

SEWER PIPE

CONFORMANCE
These specifications designate the requirements for manufacturing and installing Vinyltech PVC sewer pipe.

ASTM D 3034 - Standard Specification for Type PSM Poly (Vinyl Chloride) (PVC) Sewer Pipe and Fittings

ASTM F 679 - Standard Specification for Poly (Vinyl Chloride) (PVC) Large Diameter Plastic Gravity Sewer Pipe and fittings

ASTM D 3212 - Standard Specification for Joints for Drain and Sewer Plastic Pipes Using Flexible Elastomeric Seals

ASTM F 477 - Standard Specification for Elastomeric Seals (Gaskets) for Joining Plastic Pipe

ASTM D 1784 - Standard Specification for Rigid Poly (Vinyl Chloride) (PVC) Compounds and Chlorinated Poly (Vinyl Chloride) (CPVC) Compounds

ASTM D 2152 - Standard Test Method for Extruded Poly (Vinyl Chloride) (PVC) Pipe and Molded Fittings by Acetone Immersion

ASTM D 2444 - Standard Test Method for Determination of the Impact Resistance of Thermoplastic Pipe and Fittings by Means of Tup (Falling Weight)

ASTM D 2321 - Standard Practice for Underground Installation of Thermoplastic Pipe for Sewers and other Gravity-Flow Applications

ASTM D 2412 - Standard Test Method for Determination of External Loading Characteristics of Plastic Pipe by Parallel-Plate Loading

IAPMO (File No. 2128) - Uniform Plumbing Code (UPC) - Vinyltech sewer pipe is IAPMO listed for ASTM 3034 SDR 35 4-15 inch and SDR 26 4-12 inch.

PIPE COMPOUND
The pipe shall be extruded from compounds meeting the requirements of Cell Classification 12454-B, as defined in ASTM D 1784, *Standard Specification for Rigid Poly (Vinyl Chloride) (PVC) Compounds and Chlorinated Poly (Vinyl Chloride) (CPVC) Compounds.*

PIPE
Vinyltech pipe shall be manufactured in accordance with ASTM D 3034 (4"-15") and ASTM F 679 (18") (Wall Thickness T-1).

GASKET JOINT
The gasket shall be reinforced with a steel ring and meet the requirements of ASTM F477. Vinyltech pipe shall have an integral bell end with a locked-in factory installed gasket and shall meet the requirements of ASTM D 3212.

MARKING
The pipe shall be marked in accordance with ASTM D 3034 and F 679.

QUALITY CONTROL
Requirements for manufacturing and testing are conducted in strict accordance with ASTM specifications and are outlined in ASTM D 3034 and F 679.

INSTALLATION
Recommended installation procedure of Vinyltech Corporation and the Uni-Bell PVC Pipe Association are outlined in ASTM D 2321, *Underground Installation of Flexible Thermoplastic Sewer Pipe.* Vinyltech recommends the *Uni-Bell Handbook of PVC Pipe* as an invaluable resource guide.

ASSEMBLING THE PIPE
Assembling of Vinyltech PVC Sewer Pipe is easily accomplished by hand or by using a bar and block. A depth of entry mark is on each spigot end to serve as a visual check for rapid, accurate joint inspection. **Do not over insert.**

1) Remove any mud, sand, or other foreign matter from the belled and spigot ends of the pipe. Carefully clean the gasket area.
2) With a clean applicator (a brush or hand) lubricate the entire surface of the pipe from the spigot end to the depth of entry mark and the contact surface of the gasket with **Vinyltech Brand Lubricant.**
3) Brace the bell to avoid disturbing the already installed joints. Align the pipe, insert the spigot into the bell and push until the entry mark is reached. **Do not insert past the entry mark line.**

VINYLTECH VT PVC • PIPE
201 S. 61st Avenue • Phoenix, AZ 85043
602 233-0071 • 602 272-4847 Fax • www.vtpipe.com
AN OTTERTAIL COMPANY

Effective 01/07

No.	QTY.	DESCRIPTION	MATERIAL
1	1	STEM	CAST BRASS ASTM B62 ALLOY C83600
2	2	O-RING	EPDM D2000
3	1	BALL	CAST BRASS ASTM B62 ALLOY C83600
4	1	GASKET - SEAL	NITRILE D2000
5	1	BODY	CAST BRASS ASTM B62 ALLOY C83600
6	1	O-RING	EPDM D2000
7	1	END PIECE	CAST BRASS ASTM B62 ALLOY C83600

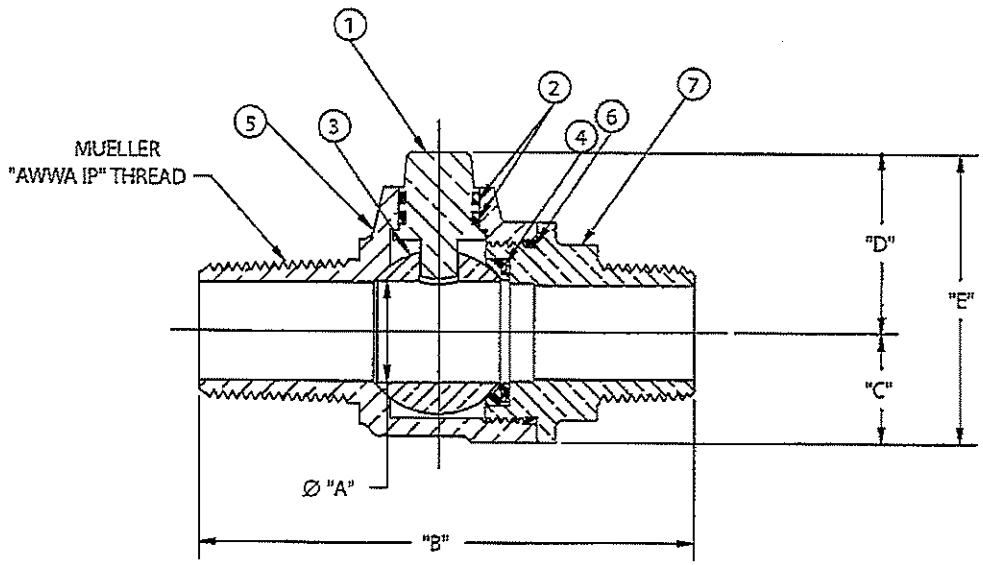

SIZE	ØA	B	C	D	E
1 1/2	1.500	5.829	1.500	2.235	3.735
2	2.000	6.404	1.820	2.557	4.377

FILEPATH: PROD-ENG/MUELLER/APPROVED/B2969

REV	ECR	DESCRIPTION	DATE	BY	CHKR

PER EST NO: DXXXX EST FIN WT = 0.0000 lbs

DRFTR	RWB	6/25/03
CHKR		
ENGR		
MGR		
	BY	DATE
STK No:		
MAT'L:		

Mueller Co.

UNLESS OTHERWISE NOTED
SURFACE PREPARATION:
BREAK CORNER(S) — .000
SURFACE FINISH — 000 RMS
TOLERANCE(S):
LINEAR ——— ± .000
ANGULAR ——— ± 0° 00'

THIRD ANGLE PROJECTION

REF. No.

SCALE NONE

DESCR. B2969 MUELLER CORP. STOP BALL VALVE ("AWWA IP" x MIP)

PART NUMBER B2969

PART NUMBER B2969

44-MRKTG

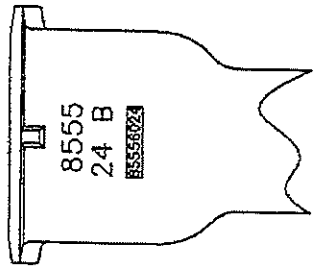

VIEW OF BACK SIDE LETTERING

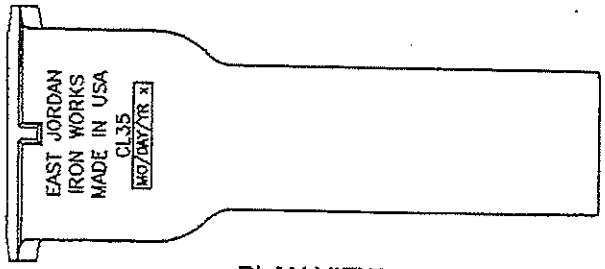

PLAN VIEW

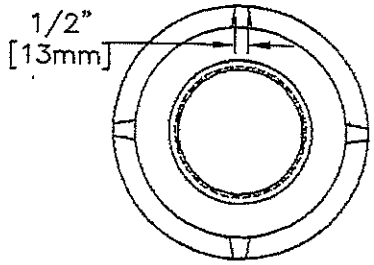

END VIEW

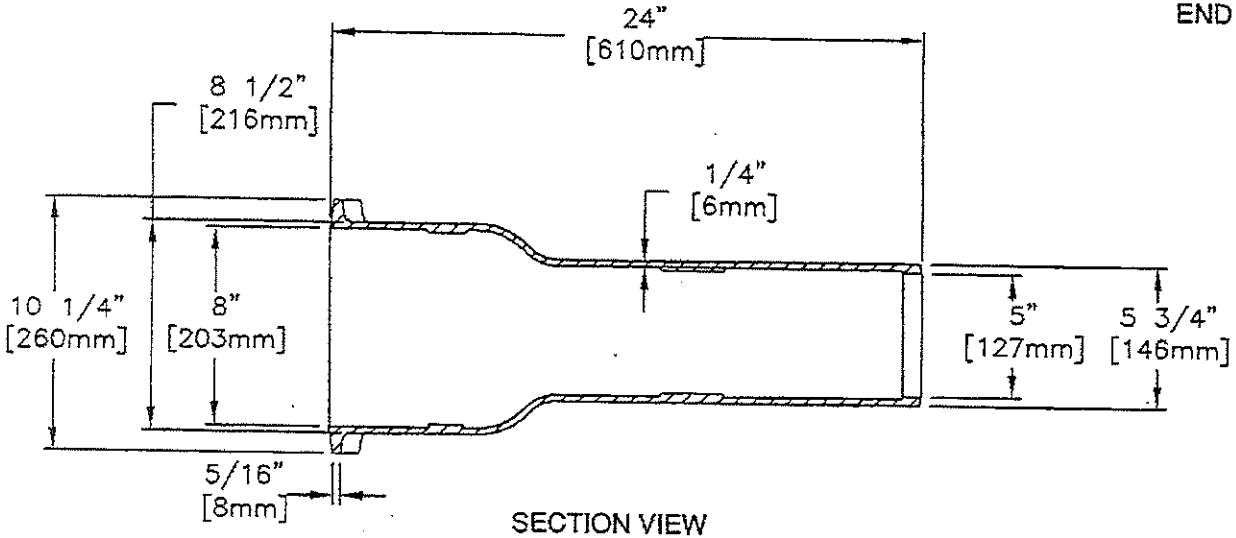

SECTION VIEW

EJIW EAST JORDAN IRON WORKS EST.1883
800-626-4653
www.ejiw.com
MADE IN USA

PRODUCT NUMBER
85556024

CATALOG NUMBER
8555 - 24"

8555 24 B
SLIDE VALVE BOX
BOTTOM SECTION

LOAD RATING
HEAVY DUTY

COATING
DIPPED

MATERIAL SPECIFICATION
V BOX – GRAY IRON
ASTM A48 CL35B

OPEN AREA
N/A

√ DESIGNATES MACHINED SURFACE

DRAWN	DATE
TCL	02/15/02
LAST REVISED	DATE
SBB	08/20/08

REFERENCE INFORMATION
85556024

CONFIDENTIAL: This drawing is the property of East Jordan Iron Works, Inc. and embodies confidential information, trade secret information, and/or know how that is the property of East Jordan Iron Works, Inc. © Copyright 2006 East Jordan Iron Works, Inc.

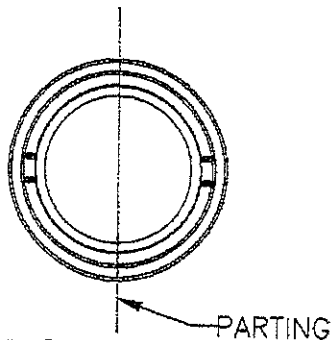

TOP VIEW

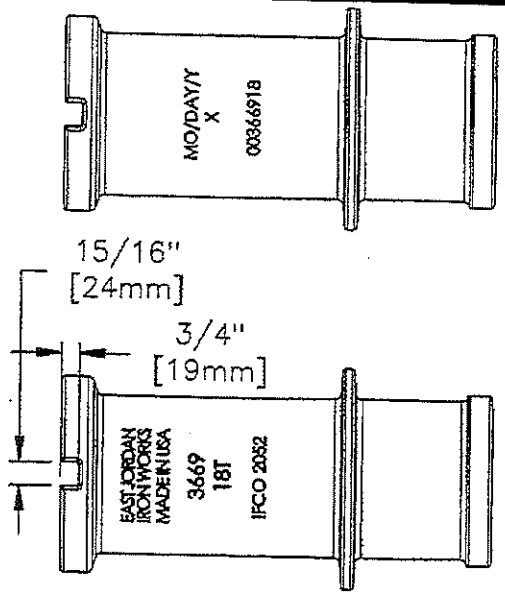

SIDE VIEW

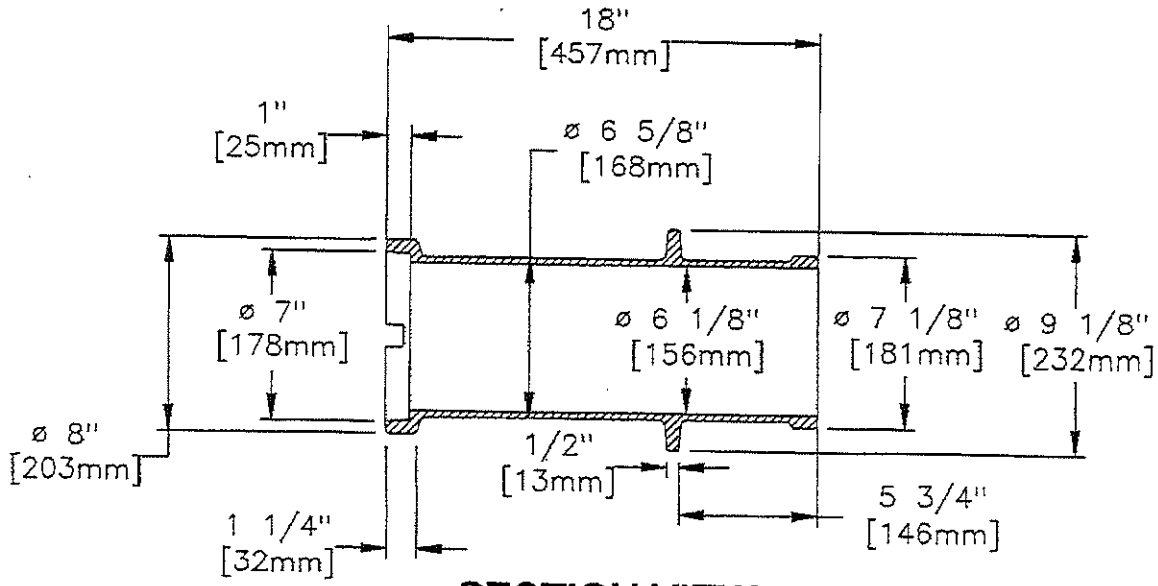

SECTION VIEW

EAST JORDAN
IRON WORKS, INC.
P.O. BOX 439
EAST JORDAN, MI. 49727
1-800-874-4100
FAX 231-536-4458

DRAWN	DATE
TCL	12/11/04
APPROVED	DATE

18" VALVE BOX
TOP SECTION

PRODUCT NO.
00366918

CATALOG NO.
3669 18T

REF. PRODUCT DRAWING
00366918

EST. WT.
VLV B TOP: 34 LBS 15kg

OPEN AREA
N/A

MAT'L SPEC.
VLV B TOP - GRAY IRON
ASTM A48 CL35B

LOAD RATING
HEAVY DUTY

SERVICE FITTINGS WITH MUELLER® PACK JOINT CONNECTION

Mueller Co.

Shaded area indicates changes Rev. 9-09

E-15404

Straight coupling MUELLER Pack Joint Connection for IPS PE pipe - **both ends**
**Note: 3/4" size only may also be used on PVC

3/4"**	1"	1"x3/4"	1-1/2"	1-1/4"	2"

V-15401

Straight coupling MUELLER Pack Joint Connection for IPS PVC pipe - **both ends**
**Note: 3/4" size only may also be used on IPS PE

1"x3/4"**

E-15443

Straight coupling MUELLER Pack Joint Connection for IPS PE pipe x Pack Joint Connection for CTS O.D. tubing
**Note: 3/4" size only may also be used on PVC

3/4"**	3/4"**x1"	1"

V-15441

Straight coupling MUELLER Pack Joint Connection for IPS PVC pipe x Pack Joint Connection for CTS O.D. tubing

1"	1"x3/4"	1-1/2"	1-1/2"x3/4"	2"

E-15454

Straight coupling MUELLER Pack Joint Connection for IPS PE* x F.I.P. thread
**Note: 3/4" size only may also be used on PVC

3/4"**	1"	1"x3/4"**	1-1/4"	1-1/2"	2"

V-15442

Straight coupling MUELLER Pack Joint Connection for IPS PVC* pipe x F.I.P. thread

1"	1"x3/4"	1-1/2"	1-1/2"x3/4"	1-1/2"x1"	2"

E-15429

Straight coupling MUELLER Pack Joint Connection for IPS PE* x M.I.P. thread
**Note: 3/4" size only may also be used on PVC

3/4"**	3/4"**x1"	1"	1"x3/4"	1-1/4"	1-1/2"	2"

V-15440

Straight coupling MUELLER Pack Joint Connection for IPS PVC* pipe x M.I.P. thread

1"	1"x3/4"	1-1/2"	1-1/2"x1"	2"

V-15445

Straight coupling MUELLER Pack Joint Connection for IPS PVC pipe x MUELLER 110® Conductive Compression Connection for CTS O.D.* tubing. 2 pc. const. Assembled wrench tite.

2"

*See chart on page 6.15 for tubing and pipe that may be used with these connections.
**Note: 3/4" size only may also be used on PVC
NOTE: Sizes shown above represent nominal size of fitting. When two sizes are given, first is size of MUELLER Pack Joint Connection and second is size of threaded end.

MUELLER Service Fittings are manufactured and tested in accordance with ANSI/AWWA C800

Mueller Co.

Rev. 4-01

3/4" - 2" MUELLER® 300™ BALL CORPORATION VALVES

B-2996

MUELLER 300 Ball Corporation Valve
Inlet: AWWA taper (MUELLER "CC") thread
Outlet: M.I.P. thread

3/4"	1"	1-1/2"	2"

B-20013

MUELLER 300 Ball Corporation Valve
Inlet: AWWA I.P. thread
Outlet: M.I.P. thread (Full size diameter inlet to outlet)

3/4"	1"

OPTIONAL T-HEAD:

All ball corporation valves are available with a 360° turn T-head cap by adding "-10" to catalog number: Example: B-25008-10
For a 3/4" or 1" detachable T-head caps for corporation valves add "-00" to catalog number.Example: B-25008-00

RECLAIMED WATER STYLE:

All ball corporation valves area available marked for "reclaimed water" by adding "-20" to the catalog number. Example: B-25008-20.

B-2969

MUELLER 300 Ball Corporation Valve
Inlet: AWWA I.P. thread
Outlet: M.I.P. thread (Full size diameter inlet to outlet).

1-1/2" →	2"

NOTE: Sizes shown above represent nominal size of inlet and outlet connections. When two sizes are given, the first is size of inlet and the second is size of outlet.

Mueller Co.

Rev. 4-01

3/4" - 2" MUELLER® 300™ BALL CORPORATION VALVES

B-2996

MUELLER 300 Ball Corporation Valve
Inlet: AWWA taper (MUELLER "CC") thread
Outlet: M.I.P. thread

3/4"	1"	1-1/2"	2"

B-20013

MUELLER 300 Ball Corporation Valve
Inlet: AWWA I.P. thread
Outlet: M.I.P. thread (Full size diameter inlet to outlet)

3/4"	1"

OPTIONAL T-HEAD:

All ball corporation valves are available with a 360° turn T-head cap by adding "-10" to catalog number: Example: B-25008-10
For a 3/4" or 1" detachable T-head caps for corporation valves add "-00" to catalog number.Example: B-25008-00

RECLAIMED WATER STYLE:

All ball corporation valves area available marked for "reclaimed water" by adding "-20" to the catalog number. Example: B-25008-20.

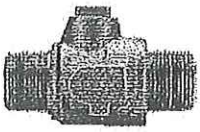

B-2969

MUELLER 300 Ball Corporation Valve
Inlet: AWWA I.P. thread
Outlet: M.I.P. thread (Full size diameter inlet to outlet).

1-1/2" →	2"

NOTE: Sizes shown above represent nominal size of inlet and outlet connections. When two sizes are given, the first is size of inlet and the second is size of outlet.

4"-12" MUELLER® A-2360 RESILIENT WEDGE GATE VALVES - M.J. x FL.

8-04 Shaded area indicates change.

- Catalog number–
  A-2360-16 mechanical joint x flanged ends (with mechanical joint unassembled accessories)
  A-2360-19 mechanical joint x flanged ends (less mechanical joint accessories)
- Sizes— 4", 6", 8", 10", 12"
- Meets or exceeds all applicable requirements of ANSI/AWWA C509 Standard and is certified to ANSI/NSF 61
- Flanged end dimensions and drilling comply with ANSI B16.1, class 125
- Mechanical joint end complies with ANSI/AWWA C111 Standard
- Iron body with nominal 10 mils MUELLER® Pro-Gard™ Fusion Epoxy Coated interior and exterior surfaces
- Epoxy coating meets or exceeds all applicable requirements of ANSI/AWWA C550 Standard and is certified to ANSI/NSF 61
- Iron wedge, symmetrical & fully encapsulated with molded rubber; no exposed iron
- Non-rising stem (NRS)
- Triple O-ring seal stuffing box (2 upper &1 lower O-rings)
- 2" square wrench nut (optional handwheel available)—open left or open right
- 4"-12" sizes—250 psig (1723 kPa) maximum working pressure, 500 psig (3447 kPa) static test pressure
- UL Listed, FM Approved —200 psig (1379 kPa)

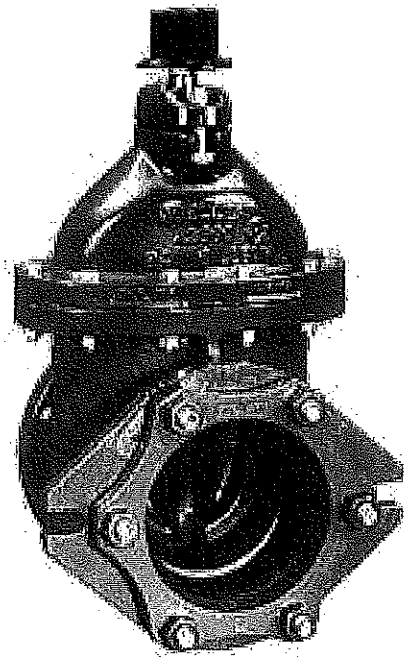

A-2360-16
M.J. accessories shipped unassembled

Options

See pages 10.34 and 10.35 for more information on Resilient Wedge Gate Valve options

- Position indicators
- Stainless steel fasteners: Type 304, Type 316
- ASTM B98-C66100/H02 stem
- Handwheel

Resilient wedge gate valve parts

Catalog Part No.	Description	Material	Material standard
G-16	Bonnet Bolts & Nuts	Carbon Steel	ASTM A307 Grade B, Zinc Plated
G-41	Stuffing Box Bolts & Nuts	Carbon Steel	ASTM A307 Grade B, Zinc Plated
G-49	Stem O -rings (3)	Rubber	ASTM D2000
G-200	Wrench Nut Cap Screw	Carbon Steel	ASTM A307 Grade B, Zinc Plated
G-201	Stuffing Box Seal	Rubber	ASTM D2000
G-202	Wrench Nut	Cast Iron	ASTM A126 CL.B
G-203	Stem	Bronze	ASTM B138
G-204	Hand Wheel (not shown)	Cast Iron	ASTM A126 CL.B
G-205	Stem Nut	Bronze	ASTM B62
G-206	Guide Cap Bearings	Celcon	
G-207	Stuffing Box	Cast iron	ASTM A126 CL.B
G-208	Anti-friction Washers (2)	Celcon	
G-209	Wedge, Rubber Encapsulated	Cast Iron*	ASTM A126 CL.B
G-210**	Bonnet	Cast Iron	ASTM A126 CL.B
G-211**	Bonnet O-ring	Nitrite	ASTM D2000
G-212**	Body	Cast Iron	ASTM A126 CL.B

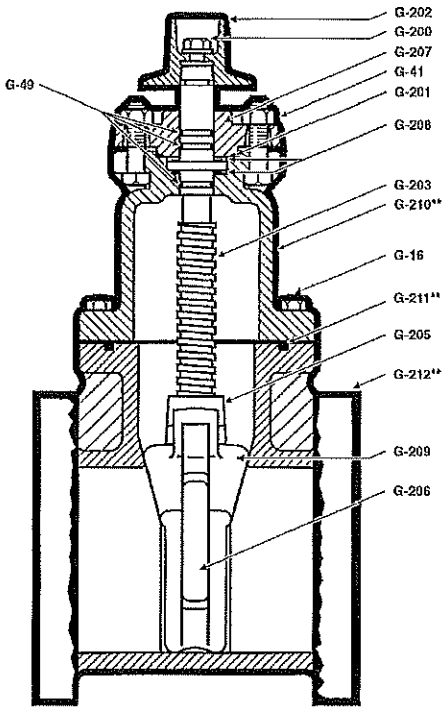

* Fully encapsulated in molded rubber with no iron exposed

** Previous to 1999 these parts on 4"-12" valves were designed with a gasket instead of an O-ring and with additional bolts. Confirm the type of seal when ordering a replacement gasket or O-ring.

SEE PAGE 10.39 FOR ORDERING INSTRUCTIONS

10.24 Mueller Co. 2", 2-1/2" & 3" MUELLER® A-2360 RESILIENT WEDGE GATE VALVE -THD. x THD.

Rev. 8-04 Shaded area indicates change.

- Catalog number– **A-2360-8** threaded ends
- Sizes—2", 2-1/2", 3"
- Meets or exceeds all applicable requirements of ANSI/AWWA C509 Standard and is certified to ANSI/NSF 61
- Threaded end dimensions comply with ANSI B2.1
- Iron body with nominal 10 mils MUELLER® Pro-Gard™ Epoxy Fusion Coated interior and exterior surfaces
- Epoxy coating meets or exceeds all applicable requirements of ANSI/AWWA C550 Standard and is certified to ANSI/NSF 61
- Iron wedge, symmetrical & fully encapsulated with molded rubber; no exposed iron
- Non-rising stem (NRS)
- Triple O-ring seal stuffing box (2 upper & 1 lower O-rings)
- 2" square wrench nut (optional handwheel available)-- open left or open right
- 2"-3" sizes—250 psig (1723 kPa) maximum working pressure, 500 psig (3447 kPa) static test pressure
- UL Listed, FM Approved: 200 psig (1379 kPa)-- 3" size

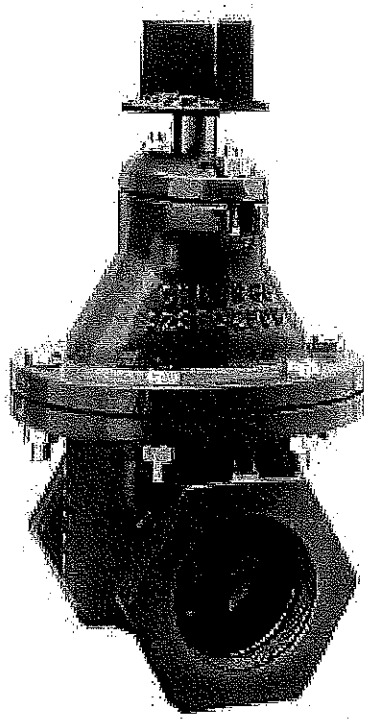

A-2360-8

Options

See pages 10.34 and 10.35 for more information on Resilient Wedge Gate Valve options

- Position indicators
- ASTM B98-C66100/H02 stem
- Stainless steel fasteners: Type 304, Type 316
- Handwheel

Resilient wedge gate valve parts

Catalog Part No.	Description	Material	Material standard
G-16	Bonnet Bolts & Nuts	Carbon Steel	ASTM A307 Grade B, Zinc Plated
G-41	Stuffing Box Bolts & Nuts	Carbon Steel	ASTM A307 Grade B, Zinc Plated
G-49	Stem O -rings (3)	Rubber	ASTM D2000
G-200	Wrench Nut Cap Screw	Carbon Steel	ASTM A307 Grade B, Zinc Plated
G-201	Stuffing Box Seal	Rubber	ASTM D2000
G-202	Wrench Nut	Cast Iron	ASTM A126 CL.B
G-203	Stem	Bronze	ASTM B138
G-204	Hand Wheel (not shown)	Cast Iron	ASTM A126 CL.B
G-205	Stem Nut	Bronze	ASTM B62
G-206	Guide Cap Bearings	Celcon	
G-207	Stuffing Box	Cast iron	ASTM A126 CL.B
G-208	Anti-friction Washers (2)	Celcon	
G-209	Wedge, Rubber Encapsulated	Cast Iron*	ASTM A126 CL.B
G-210	Bonnet	Cast Iron	ASTM A126 CL.B
G-211	Bonnet Gasket	Neoprene	ASTM D2000
G-212	Body	Cast Iron	ASTM A126 CL.B

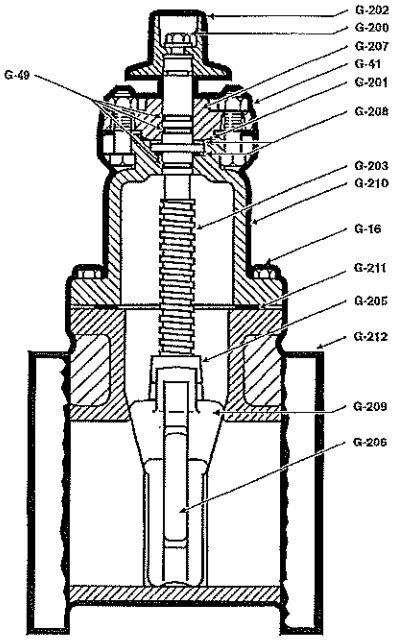

* Fully encapsulated in molded rubber with no iron exposed

SEE PAGE 10.39 FOR ORDERING INSTRUCTIONS

LIMITED WARRANTY

Mueller Co. warrants its products to be free of defects in workmanship and material under normal use and service and when used for the purposes and under the conditions for which they are intended.

Obligation under this Warranty is limited, at Company's option, to adjustment, repair or replacement of the defective product. Purchaser must immediately notify Mueller Co. in writing of the claimed defect. Company shall have the right to inspect said product and Purchaser shall, if requested, return the defective product to Mueller Co., with transportation prepaid. Purchaser shall assume all responsibility and expense for removal, reinstallation, and freight charges in connection with the foregoing remedy.

Mueller Co. shall not be liable for indirect, special, incidental or consequential damage or penalties and does not assume any liability of Purchaser to others, or to others, for injury to persons or property.

THIS WARRANTY IS IN LIEU OF ALL OTHER WARRANTIES, EXPRESSED OR IMPLIED.

GATE VALVES USER INSTALLATION MANUAL

This booklet is designed to assist you, the installer of gate valves, by assuring that you have received a working valve, that the valve is stored and handled properly, and that after installation it will work satisfactorily. The AWWA C500 Water Works Gate Valve Standard requires working pressure and test pressure ratings be established for valves up to 12" at 200 psig water working pressure – 400 psig test pressure; for 14" valves and larger at 150 psig water working pressure – 300 psig test pressure. (Mueller® Resilient Wedge Valves are rated at 250 psig working pressure, 500 psig test pressure.) Every valve must be hydrostatically tested at the manufacturer's plant before shipment.

Following these simple instructions will make your job easier:

(A) INSPECTION ON DELIVERY

- When you first get the valve, check it for possible damage in shipment, conformance to specifications, opening direction, shortages, etc.
- Carefully unload all valves - do not drop valve - or lift valve using gearing, bypass or other appendage as a hook.
- Valve should be opened and then closed to make sure it works properly. Also check opening direction against the order instruction.
- Any problems should be reported immediately to the Trucker and noted on bill of lading, and signed by the driver on your copy.

(B) STORAGE

- Valves should be stored in a partially open position.
- When possible, keep valves out of the weather.
- In cold climates the inside of the valve must be kept drained of any water to prevent freezing.
- When stored outside, valve stem should be in a vertical position.
- Whenever possible, valves should be covered with a water-proof covering.
- Protect all parts of the valve at all times.
- Protect rubber seat of resilient wedge valves from ozone and hydrocarbons (solvents, paints and oils, etc.).

(C) INSPECTION BEFORE INSTALLATION

- Check to see the valve end-joints are clean.
- The valve is not damaged.
- Open and close valve - make sure it works properly.
- Keep valve closed when placing in trench.
- Inspect casting for damage.
  (Repair Finish Kit 280087 is available for use on both resilient wedge and double-disc gate valves.)

(D) INSTALLATION

- Handle valve carefully.
- Prepare pipe ends in accordance with pipe manufacturers' instructions.
- Install valve as/per appropriate instructions for the specified joint (flanged, mechanical joint, slip-on, etc.)
- Water main should be properly supported to avoid line stress on valve.
- In buried applications, make sure that the valve box does not transmit traffic loads or other stress to the valve.
- Do not use valves to force a pipeline into position.
- Do not deflect any valve/pipe joint.

(E) TESTING

- Do not backfill valves before hydrostatic system test. Leave the valves exposed while the pipeline is being pressurized. Check to see that all valve joints and pressure containing bolting, including bonnet bolts, are tight.
- AWWA C-500 states that double-disc gate valves have an allowable leakage rate. This allowable leakage must be taken into consideration when hydrostatically testing the system. (This does not apply to resilient wedge valves.)
- Valves can be tested **(but not operated)** at two times the rated pressure of the valve.
- After testing, steps should be taken to relieve any trapped pressure in body of valves.

GENERAL NOTES

These reference materials are available and should be helpful in the installation and testing of Gate Valve products.

- AWWA C-500 (Gate Valves – 3" thru 48")
- AWWA C-509 (Resilient Seated Gate Valves 3" thru 12" Nominal Pipe Size)
- AWWA C-600 Installation of Ductile Iron Water Mains and Main Appurtenances.
- All installation, operation and maintenance instructions issued by the manufacturer of the pipe and the valves.
- Valve user guide as published by MSS.
- AWWA Recommendation for Installation, Operation and Maintenance of Gate Valves.
- NFPA-24 – Outside Pipeline Protection Equipment U/L.
- AWWA C-515 Reduced Wall Gate Valves.

These industry practices have been listed to help you make a safe and acceptable installation of a gate valve.

MUELLER® SUPER CENTURION® FIRE HYDRANT

Rev. 8-04 Shaded area indicates changes

- **Super Centurion 250™ 3-way catalog numbers (approved to UL 246, FM 1510, ANSI/AWWA C502 Standards) -**
  A-421 4-1/2" main valve opening three way (two hose nozzles and one pumper nozzle)
  A-423 5-1/4" main valve opening three way (two hose nozzles and one pumper nozzle)
  Super Centurion 200™ 2-way catalog numbers (approved to ANSI/AWWA C502 Standards) -
  A-420 4-1/2" main valve opening two way (two hose nozzles)
  A-422 5-1/4" main valve opening two way (two hose nozzles)
  A-425 5-1/4" main valve opening two way (two pumper nozzles)
  Super Centurion 200™ 1-way catalog number (approved to ANSI/AWWA C502 Standards)-
  A-424 4-1/2" main valve opening one way (one pumper nozzle)
- 10 year limited warranty on material and workmanship
- Meets all applicable parts of ANSI/AWWA C502 Standard
- Post type dry barrel design
- Dry top design with O-ring sealed oil reservoir
- Traffic feature with stainless steel safety stem coupling
- Compression-type main valve closes with pressure for positive seal; it is made of rubber and is conveniently reversible providing a spare for long service life
- Operating nut available in wide variety of shapes and sizes-open left or right
- Field replaceable hose and pumper nozzles
- Hose and pumper nozzles have large radius, full flow openings for low friction loss
- Contoured shoe is designed for full flow
- Dual bronze drain valves provide effective barrel drainage
- 250 psig (1723 kPa) maximum working pressure, 500 psig (3447 kPa) static test pressure for 3-way hydrants; 200 psig (1379 kPa) maximum working pressure, 400 psig (2758 kPa) static test pressure for 2-way and 1-way hydrants

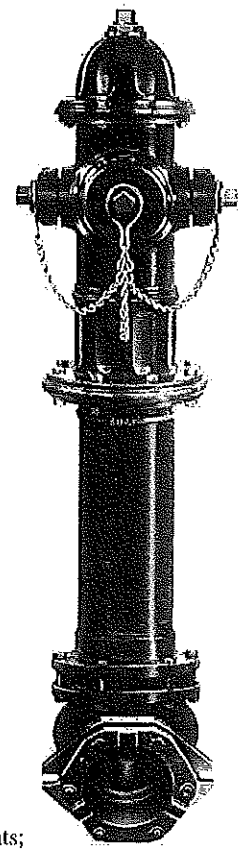

Dimensions

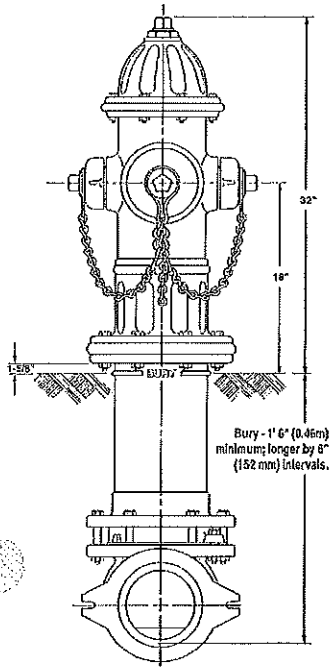

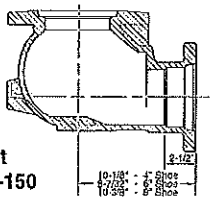

Mechanical joint standard and D-150

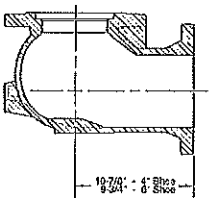

Flange
ANSI 125/150 or PN 10/16 Drilling

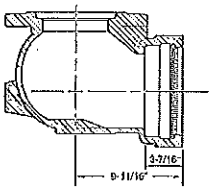

Slip-on

Non-rotating bolt design: cast-in pads eliminate need for anti-rotation bolts.

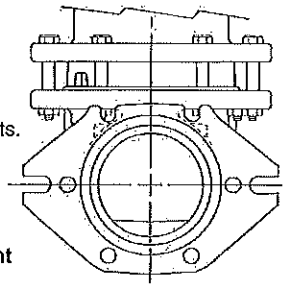

Front view detail of Mechanical joint (Standard only)

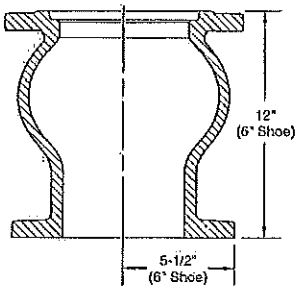

Vertical Flange*

* 4" Vertical shoe available for A-420 and A-421 hydrants.

SEE PAGE 9.28 FOR ORDERING INSTRUCTIONS

WILKINS
a ZURN company

Model 350DA
Double Check Detector Assembly

SPECIFICATION SUBMITTAL SHEET

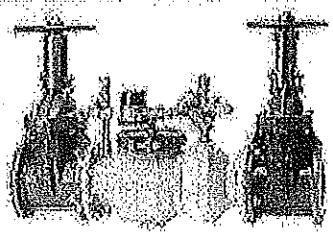

APPLICATION
Designed for installation on potable water connections in fire sprinkler systems to protect against both backsiphonage and backpressure of polluted water into the potable water supply. Model 350DA shall provide protection where a potential health hazard does not exist. Incorporates metered by-pass to detect leaks and unauthorized water use.

FEATURES
Sizes: ☐ 2 1/2" ☐ 3" ☐ 4" ☐ 6" ☐ 8" ☒ 10" ☐ 12"

Maximum working water pressure	175 PSI
Maximum working water temperature	140°F
Hydrostatic test pressure	350 PSI
End connections (Grooved for steel)	AWWA C606
→ (Flanged)	ANSI B16.1 Class 125

OPTIONS (suffixes can be combined)
- ☒ - with OS & Y gate valves (standard)
- ☐ L - less shut-off valves (flanged body connections)
- ☐ LM - less water meter
- ☐ - with remote reading meter
- ☐ - with gpm meter (standard)
- ☐ - with cu ft/min meter
- ☐ G - with groove end gate valves
- ☐ FG - with flanged inlet gate connection and grooved outlet gate connection
- ☐ PI - with Post Indicator Gate Valve (4"-10")

ACCESSORIES
- ☐ Repair kit (rubber only)
- ☐ Thermal expansion tank (Model WXTP)
- ☐ OS & Y Gate valve tamper switch (OSY-40)
- ☐ Test Cock Lock (Model TCL24)

STANDARDS COMPLIANCE (Sizes 2 1/2"-10" Horiz. & Vert.) (12" Horizontal Only)
- ASSE® Listed 1048 (Sizes 2 1/2" thru 10")
- CSA® Certified B64.5 (Sizes 2 1/2" thru 8")
- AWWA Compliant C510 (Sizes 2 1/2" thru 10")
- UL® Classified (Sizes 2 1/2" thru 12")
- C-UL® Classified (Sizes 2 1/2" thru 12")
- FM® Approved (Sizes 2 1/2" thru 10")
- Approved by the Foundation for Cross Connection Control and Hydraulic Research at the University of Southern California (Sizes 2 1/2" thru 10")

MATERIALS

Main valve body	Ductile Iron ASTM A 536 Grade 4
Access covers	Ductile Iron ASTM A 536 Grade 4
Coatings	FDA Approved fusion epoxy finish
Internals	Stainless steel, 300 Series NORYL™, NSF Listed
Fasteners	Stainless Steel, 300 Series
Elastomers	EPDM (FDA approved) Buna Nitrile (FDA approved)
Polymers	NORYL™, NSF Listed
Springs	Stainless Steel, 300 Series

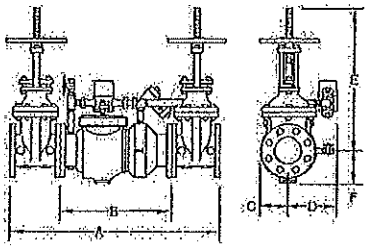

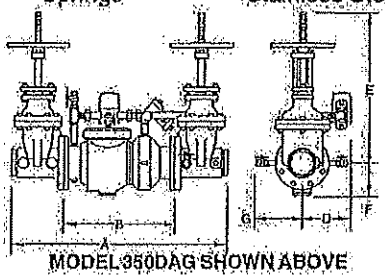

MODEL 350DAG SHOWN ABOVE

Attention: Model 350DA (flange body) and Model 350ADA (grooved body) have different lay lengths.

DIMENSIONS & WEIGHTS (do not include pkg.)

MODEL 350DA SIZE		DIMENSION (approximate)																WEIGHT			
		A		B LESS GATE VALVES		C		D		E OS&Y OPEN		E OS&Y CLOSED		F		G		WITHOUT GATE VALVES		WITH OS&Y GATE VALVES	
In.	mm	In.	mm	In.	mm	In.	mm	In.	mm	In.	mm	In.	mm	In.	mm	In.	mm	lbs.	kg	lbs.	kg
2 1/2	65	31	787	15 7/8	403	3 3/4	95	9	229	16 3/8	416	13 7/8	352	3 1/2	89	7 1/4	184	68	30.9	178	80.8
3	80	32	813	15 7/8	403	3 3/4	95	9	229	18 7/8	479	15 5/8	397	3 1/2	89	7 1/4	184	68	30.9	198	90
4	100	37 5/8	956	19 1/2	495	4 1/2	114	9	229	22 3/4	578	18 1/4	464	6	152	8	203	106	48	296	134.4
6	150	44 3/4	1137	23 1/2	597	5 1/2	140	10 1/2	267	30 1/8	765	23 3/4	603	7	178	10	254	180	81.7	480	217.9
8	200	60 3/4	1543	37 3/4	959	10	254	12	305	37 3/4	959	29 1/4	743	8 1/2	216	11	279	374	170	850	385.9
10	250	63 3/4	1619	37 3/4	959	10	254	12	305	45 3/4	1162	35 3/8	899	8 1/2	216	11	279	404	183	1222	554.8
12	300	66 1/4	1683	38	965	10	254	12	305	53 1/8	1349	40 5/8	1032	8 7/8	226	11	279	463	210	1623	736.2

(Patent No. 5,913,331)

DOCUMENT #: BF-350DA REVISION: 5/07

WILKINS
a ZURN company

Model 375ADA
Reduced Pressure Detector Assembly

SPECIFICATION SUBMITTAL SHEET

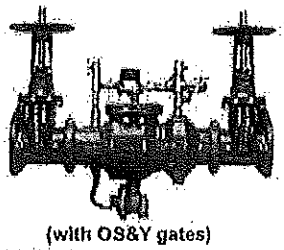

(with OS&Y gates)

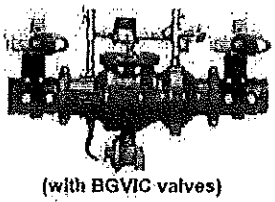

(with BGVIC valves)

FEATURES

Sizes: ☐ 2 1/2" ☒ 3" ☒ 4" ☐ 6" ☐ 8" ☐ 10"

Maximum working water pressure	175 PSI
Maximum working water temperature	140°F
Hydrostatic test pressure	350 PSI
End connections (Grooved for steel pipe)	AWWA C606
(Flanged)	ANSI B16.1 Class 125

OPTIONS (Suffixes can be combined)

- ☐ - with flanged end OS & Y gate valves (standard)
- ☐ L - less shut-off valves (grooved body connections)
- ☐ LM - less water meter
- ☐ - with remote reading meter
- ☐ - with gpm meter (standard)
- ☐ - with cu ft/min meter
- ☐ G - with grooved end OS&Y gate valves
- ☐ FG - with flanged inlet gate connection and grooved outlet gate connection
- ☐ MS - with Integral Relief Valve Monitor Switch
- ☐ BGVIC - with grooved end butterfly valves
- ☐ PI - with Post Indicator Gate Valves

ACCESSORIES

- ☐ Air gap (Model AG)
- ☐ Repair kit (rubber only)
- ☐ Thermal expansion tank (Model XT)
- ☐ OS & Y Gate valve tamper switch (OSY-40)
- ☐ QT-SET Quick Test Fitting Set
- ☐ Test Cock Lock (Model TCL24)

DIMENSIONS & WEIGHTS (do not include pkg.)

MODEL 375ADA SIZE		WEIGHT							
		WITHOUT GATES		WITH OS&Y GATES (GXF)		WITH OS&Y GATES (GXG)		WITH BUTTERFLY VALVES (GXG)	
in.	mm	lbs.	kg	lbs.	kg	lbs.	kg	lbs.	kg
2 1/2	65	112	50.8	214	97	206	93.5	131	59.4
3	80	111	50	231	104.8	221	100.3	132	60
4	100	98	45	252	114	226	103	130	59
6	150	151	69	387	176	357	162	203	92
8	200	321	146	797	362	773	351	429	195
10	250	374	170	1059	480	937	425	546	248

APPLICATION

Designed for installation on potable water lines in fire protection systems to protect against both backsiphonage and backpressure of contaminated water into the potable water supply. The Model 375ADA shall provide protection where a potential health hazard exists. Incorporates metered by-pass to detect leaks and unauthorized water use.

STANDARDS COMPLIANCE (4" - 8")

- ASSE® Listed 1047
- CSA® Certified
- UL® Classified (2 1/2" - 10")
- C-UL® Classified (2 1/2" - 10")
- FM® Approved
- Approved by the Foundation for Cross Connection Control and Hydraulic Research at the University of Southern California (2 1/2" - 8")
- NYC MEA 104-05-M

MATERIALS

Main valve body	Ductile Iron ASTM A 536 Grade 4
Access covers	Ductile Iron ASTM A 536 Grade 4
Coatings	FDA Approved fusion epoxy finish
Internals	Stainless steel, 300 Series NORYL™, NSF Listed
Fasteners & Springs	Stainless Steel, 300 Series
Elastomers	EPDM (FDA approved) Buna Nitrile (FDA approved)
Polymers	NORYL™, NSF Listed
Sensing line	Stainless steel, braided hose

MODEL 375ADA with standard OS&Y

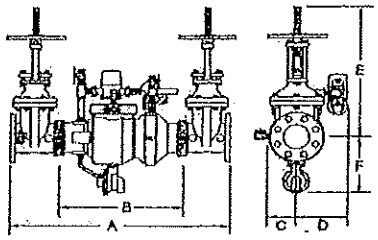

MODEL 375ADA with BGVIC option

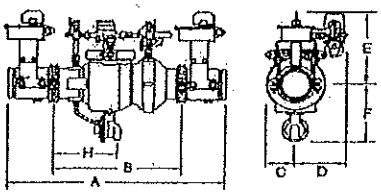

Attention: Model 375ADA (grooved body) and Model 375DA (flange body) have different lay lengths.

MODEL 375ADA SIZE		DIMENSION (approximate)																			
		A		A WITH BUTTERFLY VALVES		B LESS GATE VALVES		C		D		E OS&Y OPEN		E OS&Y CLOSED		E WITH BUTTERFLY VALVES		F		H	
in.	mm	in.	mm	in.	mm	in.	mm	in.	mm	in.	mm	in.	mm	in.	mm	in.	mm	in.	mm	in.	mm
21/2	65	35 1/8	892	32 1/8	816	20 1/8	511	4 1/2	114	9	229	16 3/8	416	13 7/8	352	8	203	11	279	7 1/4	184
3	80	36 1/8	918	32 5/8	829	20 1/8	511	4 1/2	114	9	229	18 7/8	479	15 5/8	397	8	203	11	279	7 1/4	184
4	100	38 1/4	972	33 1/4	845	19 7/8	505	4 1/2	114	9	229	22 3/4	578	18 1/4	464	9 1/8	232	11	279	7 1/4	184
6	150	47 1/4	1200	40 1/4	1022	25 7/8	657	5 1/2	140	10 1/2	267	30 1/8	765	23 3/4	603	10 1/8	257	12 3/8	314	9 1/4	235
8	200	61 5/8	1565	54 1/2	1384	38 1/2	978	10	254	12	305	37 3/4	959	29 1/4	743	11 15/16	303	15 3/8	391	13 7/8	333
10	250	64 5/8	1642	59 1/2	1485	38 1/2	978	10	254	12	305	45 3/4	1162	35 3/8	899	13 5/16	338	15 3/8	391	16 7/16	418

Relief Valve discharge port:
2 1/2"- 6" - 2.75 sq. in.
8" -10" - 3.69 sq. in.

(Patent No. 5,913,331)

DOCUMENT #: BF-375ADA REVISION: 11/08

WILKINS a Zurn company, 1747 Commerce Way, Paso Robles, CA 93446 Phone:805/238-7100 Fax:805/238-5766
In Canada: ZURN INDUSTRIES LIMITED, 3544 Nashua Dr., Mississauga, Ontario L4V 1L2 Phone:905/405-8272 Fax:905/405-1292
Product Support Help Line: 1-877-BACKFLOW (1-877-222-5366) • Website: http://www.zurn.com

Wilkins® Terms and Conditions

Price and Terms of Payment

Terms are net, payable 30 days from date of invoice. All pricing in U.S. currency. The Buyer shall pay all sales, consumers, or other applicable taxes. A 1-1/2% per month service charge will be added to all past due invoices. Annual rate 18% of the outstanding balance due.

Minimum invoice $50.00. Zurn reserves the right to apply a minimum order charge to equal $50.00. All orders are subject to credit approval by the Zurn Credit Department prior to the acceptance of an order. Orders may be refused, delivery may be withheld, or shipment stopped in transit without any liability on Zurn's part if in its sole opinion, the Buyer's ability to pay for the merchandise or the terms and conditions herein are in doubt. The Credit Department of Zurn must be notified of potential pricing errors within 30 days of invoice date.

Freight

All sales are F.O.B. Zurn's plant. Zurn will allow full freight allowance only on Zurn Wilkins® orders of $5,000 or more. This full freight allowance is when the shipment is within the continental United States and has a destiny of a Buyer's standard address of job location. Routing of shipment shall be determined at the sole discretion of Zurn. Multi product line orders totaling $7,500 can be combined to meet FFA guidelines. Shipping dates are estimates and time of delivery is not the essence of this sale of the contract therefore. Under no circumstances will Zurn have any responsibility on account of any delays in manufacture, transportation, or otherwise.

Limited Warranty

All goods sold hereunder are warranted to be free from defects in material and factory workmanship for a period of one year from the date of purchase. Zurn will replace goods at no cost that prove defective provided Zurn is notified in writing of such defect and the goods are returned to Zurn prepaid at Paso Robles, California, with evidence that they have been properly maintained and used in accordance with instructions. ZURN SHALL NOT BE RESPONSIBLE FOR ANY LABOR CHARGES OR ANY LOSS, INJURY, OR DAMAGES WHATSOEVER, INCLUDING, BUT NOT LIMITED TO, INCIDENTAL OR CONSEQUENTIAL DAMAGES. The sole and exclusive remedy shall be limited to the replacement of the defective goods. Before installation and use, the purchaser shall determine the suitability of the product for his intended use and the purchaser assumes all risk and liability whatever in the connection therewith. Where permitted by law, THE IMPLIED WARRANTY OF MERCHANTABILITY IS LIMITED TO A PERIOD OF ONE YEAR AND SHALL BE LIMITED SOLELY TO THE REPLACEMENT OF THE DEFECTIVE GOODS. A damaged/broken test cock or ball valve is not considered defective. Please reference the Wilkins Rep Guide for assistance. All weights stated in Zurn catalogs and lists are approximate and are not guaranteed.

Illustrations of Typical Installations

The typical installations for various products found in each product section are intended to illustrate the products and potential options for the use of these products. Under no circumstances are they to be construed as recommended installation procedures. Consult local codes and project specifications for proper installation instructions.

Returned Goods

Standard cataloged material may be returned only with written permission of Zurn. Returned goods are subject to a 25% restocking charge of total saleable material returned, plus cost of reconditioning, if necessary, to make material sellable. Transportation charges are the responsibility of the Buyer. Credit allowance will be in the form of merchandise credit only – not cash credit. The value of a return must total at least $50.00 to qualify for credit allowance. A damaged/broken test cock or ball valve is not considered defective. Please reference the Wilkins Rep Guide for assistance. No credit will be allowed for parts unless originally ordered and invoiced as parts. No credit will be allowed for discontinued or made-to-order items. Items that have been specially made are not subject to return or cancellation except by special negotiation. Material must be returned within two years of invoice date for credit to be issued.

Shortage/Damage Claims

Notification of material shortages or incorrect filling of orders must be made to Zurn within 10 days of receipt. No claims over three months old will be honored. Buyer agrees to make all complaints for damage in transit or "short count" directly to the carrier; before the contents are unloaded have the carrier agent's acknowledgement of such damage noted on the bill of lading and to present to the carrier its agent's acknowledgement of such damaged material with formal claim covering said damage.

General

Zurn reserves the right to make changes in design or equipment of any item or product without incurring any obligation on previously sold items, and to discontinue items at any time, without notice. Possession of this Catalog or other sales literature is not to be construed as an offer to sell. All orders are subject to acceptance by the general office of Zurn in Paso Robles, California.

Catalog printed in U.S.A.

AMERICAN
FLOW CONTROL

14"- 66" SERIES 2500 RESILIENT WEDGE GATE VALVE

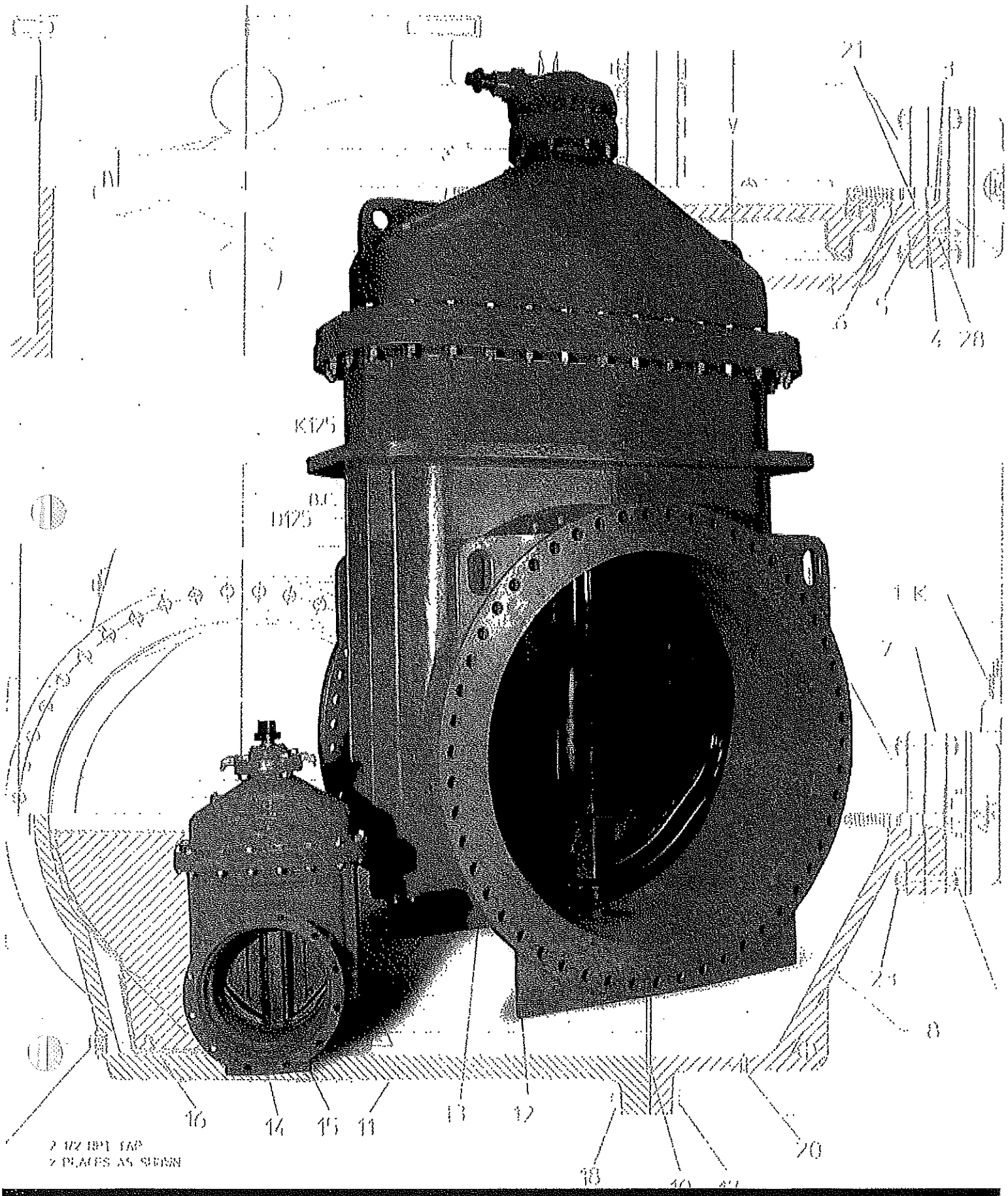

FEATURES/BENEFITS/SPECIFICATIONS

FEATURES

AMERICAN Flow Control's **14"- 66" Series 2500 Ductile Iron Resilient Wedge Gate Valves** are suitable for use in potable water, sewage and fire protection systems. These valves have a rated working pressure of 250 p.s.i.g with zero leakage. The waterway is clear and unobstructed.

ADVANTAGES OVER BUTTERFLY VALVES

- No disc in waterway to restrict flow or to increase pumping costs.
- Allows passage of pigging devices.
- Internal parts can be serviced without cutting valve out of pipeline.
- 250 p.s.i.g. rating provides for future pressure increases over the 150 p.s.i.g. pressure rating found on most butterfly valves.

ADVANTAGES OVER DOUBLE DISC GATE VALVES

- Zero allowable leakage.
- Lower torque requirements to operate valve.
- 250 p.s.i.g. pressure rating compared to the 150 p.s.i.g. rating found on double disc gate valves.
- Epoxy coated inside and out.
- Lighter total valve weight.
- Single gate construction. Double disk gate valves have multiple parts that can seize together.

The 14"- 66" Series 2500 Resilient Wedge Gate Valves have these standard features:

- 250 p.s.i.g. rating
- Ductile Iron construction
- Triple O-Ring stem seals
- NSF certified coating
- Thrust washers
- Epoxy coating inside and out
- Zero leakage
- Optional gearing (Standard on 30" and larger)
- Ductile Iron wedge fully encapsulated with EPDM rubber
- 20"- 48" Flex Ring boltless restrained joint
- Cast flats on valve body so valve stands upright for storage or during installation
- Bypass available at additional cost

BENEFITS

DUCTILE IRON CONSTRUCTION
The ductile iron body and bonnet provide superior strength and allow a pressure rating of 250 p.s.i.g. The strength of ductile iron doubles that provided by gray iron. This added strength and higher pressure rating are provided in a compact, lighter design.

TRIPLE O-RING STEM SEALS
Sealing the lubrication chamber is a series of three O-Ring stem seals. The O-Rings help to isolate the lubrication chamber.

EPOXY COATING
The 14"- 66" Series 2500 valves are epoxy coated both on the interior as well as the exterior of the valve. The coating is applied after the valve body is shot-blasted clean. The coating is applied to all ferrous surfaces so that even the bolt holes and body-to-bonnet flange surfaces are fully epoxy coated.

LIFTING DEVICES 14"- 66"
Stuffing box is constructed of high-strength ductile iron with integral lifting device. This allows the valve to be handled without having to lift the valve by the operating nut. 42"- 66" valves have integrally cast lifting lugs.

THRUST WASHERS
Thrust washers are located above and below the stem collar to reduce operating input torque and assist in trouble-free operation of the valve.

NO FLAT GASKETS
The stuffing box gasket and throat flange gasket are pressure-energized rubber O-Rings. This provides a seal without the need for excessive bolt loading as is required of flat gaskets.

SPECIFICATIONS

Valves 14" - 66" shall be resilient wedge type rated for 250 p.s.i.g. cold water working pressure. All cast ferrous components shall be ductile iron, ASTM A536. Valves 14" - 66" shall meet or exceed all applicable requirements of AWWA C515. The words "Ductile Iron" or "D.I." shall be cast on the valve. The wedge shall be ductile iron fully encapsulated with EPDM rubber.

The wedge shall be symmetrical and seal equally well with flow in either direction. The wedge nut shall be independent of the wedge and held in place on three sides by the wedge to prevent possible misalignment. Valves shall be NSF Standard 61 Certified.

Bolting materials shall have 304 stainless steel unless otherwise specified. Bolts may have either regular square or hexagonal shaped heads with dimensions conforming to ANSI B18.2.1. Metric size socket head cap screws are not allowed. The operating nut shall be constructed of ductile iron. All gaskets shall be pressure energized O-Ring type seals. Stem shall be sealed by three O-Rings. The top two O-Rings shall be replaceable with the valve fully open and while subject to full rated working pressure. O-Rings set in a cartridge shall not be allowed. The valve shall have thrust washers located with (1) above and (1) below the thrust collar to assist operation of the valve. All internal and external surfaces of the valve body and bonnet shall have an epoxy coating, complying with ANSI/AWWA C550. Valves shall be AMERICAN Flow Control's **Series 2500 Resilient Wedge Gate Valve.**

Warranty

American Production Valve warrants all valves sold by it to be free from all defects in materials and workmanship for one full year from the date of the shipment.

At the discretion of American Production Valve the exclusive remedy of the purchase in the event of a defect is expressly limited to repair or replacement of the valve, subject to availability. F.O.B. Houston. The company will not assume any liability, or expense for transportation or repairs made outside its plant, without consent.

Equipment or accessories manufactured by other companies are not warranted. In no event shall the company be liable to the purchaser or anyone else for indirect or consequential damages of any kind.

The company's liability shall in no case exceed the unit value of the valve. Any unauthorized disassembly, repair, or modification of the valve or its components will cause the above warranty to be void.

This warranty is made in lieu of all other warranties expressed or implied. In particular there is no implied warranty of merchantability or fitness for a particular purpose.

Contact American Production Valve today for a quote
or call us today at (800) 344-4199

American Production Valve 1108 Pennsylvania Houston TX 77587 • Tel (800) 344-4199, (713) 910-4844 • Fax (713) 910-1130
© 2012 American Production Valve - Industrial Valve Distributor

Waterman INDUSTRIES

RED TOP® WATER CONTROL, GATES, VALVES and EQUIPMENT

PO Box 458, Exeter, CA 93221
Ph. (559)562-4000 Fax (559)562-2277
www.watermanusa.com

June 28, 2011

Western States Valves & Controls, LLC.
P.O. Box 5610
Salem, OR 97304

REF: Pontoon Catch Basin – Salem, OR
PO NO: 0357
Waterman Quote No.: WQ10-A-17394A
Waterman Job No.: A17394A

Dear Customer:

The intent of this letter is to notify you that submittal drawing RA-11-0171, RA-11-0173, RA-11-0174 and RA-11-0175 have been revised (Revision 1, dated June 28, 2011) per your review comments.

Please forward copies of submittal drawings to all parties involved. Return the submittal drawings either signed and dated to Waterman Industries for manufacture or indicate on the drawings what modifications are required. Waterman will make revisions to any drawing requiring modification prior to production.

If you have any questions or need any assistance please don't hesitate to call the project manager. The project manager for your project will be **Danny White.**

Sincerely,
Danny White
Project Manager (559-562-8693)
danny.white@watermanusa.com

C-16 SHEAR GATE

- Double Wedge Type
- Bronze Trim

Waterman C-16 Shear Gates are designed for filling or emptying tanks in both water and sewage plants, for low pressure drainage lines and other similar operations. All sizes are bronze wedged and bronze seated. The wedges are removable for easy replacement. Three feet of lifting handle is furnished as standard. These gates are designed for low seating pressure applications (not suitable for unseating heads).

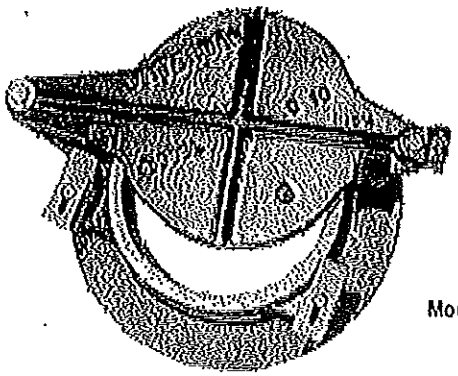

Model C-16

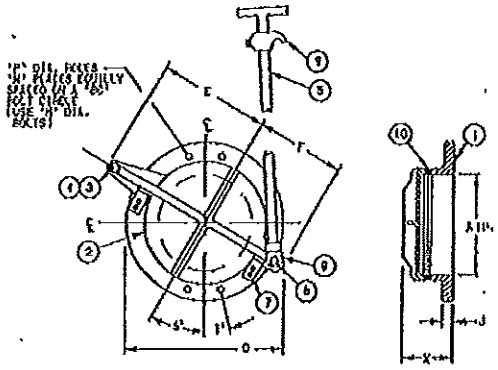

DIMENSIONS IN INCHES											
A	BC	D	E	F	J	K	M	N	P	S*	T*
4	7½	9⅛	6¾	6⅜	⅝	5	⅝	8	¾	45	22½
6	9½	11	7⅞	7⅜	⅝	5	¾	8	⅞	45	22½
8	11¾	13½	9⅛	7⅜	⅝	5	¾	8	⅞	45	22½
10	14¼	16	11½	9⅜	11/16	5	⅞	12	1	30	15
12	17	19	13¾	10 5/16	11/16	5	⅞	12	1	30	15
14	18¾	21	14¾	11½	¾	5	1	12	1⅛	30	15
16	21¼	23½	15⅞	12¼	¾	5	1	16	1⅛	22½	11¼
18	22¾	25	16⅝	13¾	⅞	5	1⅛	16	1¼	22½	11¼
20	25	27	17¾	14¾	⅞	5⅛	1⅛	20	1¼	18	9
24	29½	32	19¾	16⅝	1	5⅜	1¼	20	1⅜	18	9
30	36	38¾	24	20¾	1⅛	7	1¼	28	1⅝	12.85	6.43
36	42¼	46	28¼	24	1¼	8	1½	32	1⅝	11¼	5⅝

NOTE: These dimensions are for preliminary design purposes only. Do not use for installation unless part of a certified and approved submittal.

Ⓐ 125 lb. drilling standard. "P" Dia. holes, "N" places equally spaced, as shown on "BC" Dia. bolt circles uses "M" Dia. bolts.

PARTS	
No.	Name
1	Frame - Cast Iron ASTM A-126 Class B.
2	Cover - Cast Iron ASTM A-126 Class B*.
3	Hinge Bolt - Bronze ASTM B-98.
4	Bronze Bushing - (not shown) Commercial bronze.
5	Lift Rod - ⅝d. pipe 1.319 Ø schedule 40.
6	Lug Bolt - Bronze ASTM B-98.
7	Bronze Wedges and Bolts - (2) Req'd. ASTM B-98.
8	Lift Lug - Cast Iron ASTM A-126 Class B.
9	Adj. Lug - ASTM A-126 Class B.
10	Bronze Seats - ASTM B-21 alloy 462.
* 4" and 6" cover is cast in bronze	

TYPICAL SPECIFICATIONS
WATERMAN MODEL C-16 SHEAR GATES

Shear gates shall be designed to effectively control flows under seating head conditions. Frame shall be of cast iron with pads to receive the bolt on wedges and shall be of the flanged type drilled for mounting to an ANSI 125# flange or mounting to a wall. The seating surface shall be bronze machined to a smooth surface. The wedges shall be cast bronze and be securely attached to the frame utilizing two stainless steel bolts per wedge and shall be adjustable to ensure proper closure.

The cover shall be cast iron with machined bronze seat attached (sizes 4" and 6" shall be cast bronze with machined seating surface) and incorporate cast wedge pads for mating with the wedges. The cover shall be mounted to the frame utilizing a stainless steel hinge bolt. A cast iron lifting lug shall be bolted to the cover in such a manner as to allow a swiveling action. The lug shall be made so that it accepts a pipe type lifting rod which is to be field cut to the desired length.

Shear gates shall be Waterman Industries, Inc. Model C-16 or approved equal.

DRAWN BY: MARK SUDA

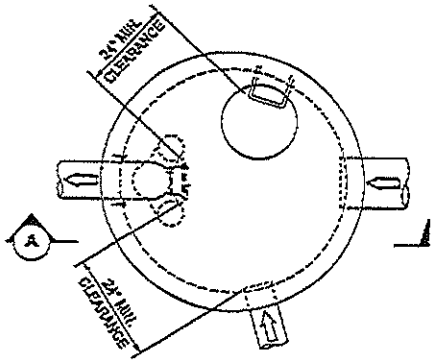

PLAN VIEW

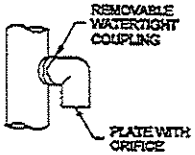

ELBOW DETAIL

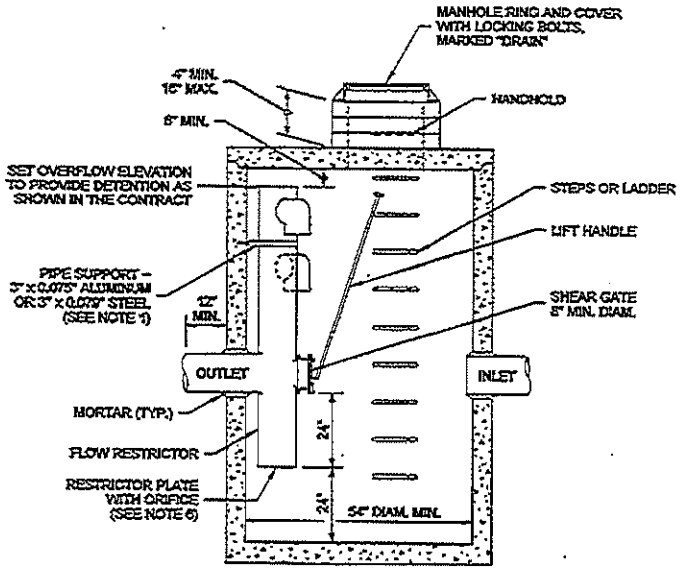

VIEW (A)

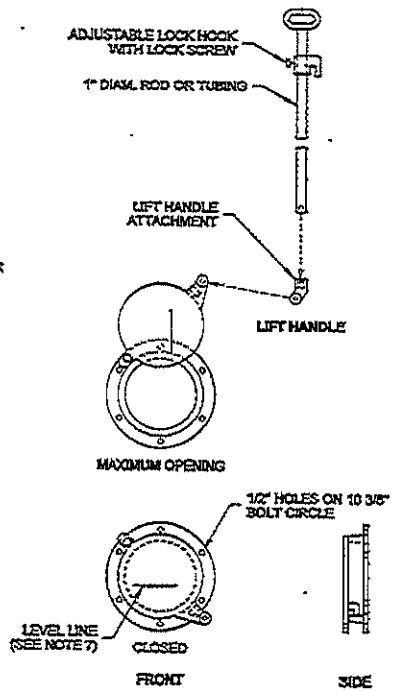

SHEAR GATE DETAILS

NOTES

1. The pipe supports and the flow restrictor shall be constructed of the same material and be anchored at a maximum spacing of 38". Attach the pipe supports to the manhole with 5/8" stainless steel expansion bolts or embed the supports into the manhole wall 2".
2. The vertical riser stem of the flow restrictor shall be the same diameter as the horizontal outlet pipe with a minimum diameter of 8".
3. The flow restrictor shall be fabricated from one of the following materials:

   0.060" Corrugated Aluminum Alloy Drain Pipe
   0.064" Corrugated Galvanized Steel Drain Pipe with Treatment 1
   0.064" Corrugated Aluminized Steel Drain Pipe
   0.060" Aluminum alloy flat sheet, in accordance with ASTM B 209, 5052 H32 or EPS
   High Density Polyethylene Storm Sewer Pipe
4. The frame and ladder or steps are to be offset so that: the shear gate is visible from the top; the climb-down space is clear of the riser and gate; the frame is clear of the curb.
5. The multi-orifice elbows may be located as shown, or all placed on one side of the riser to assure ladder clearance. The size of the elbows and their placement shall be specified in the Contract.
6. Restrictor plate with orifice as specified in the Contract. The opening is to be cut round and smooth.
7. The shear gate shall be made of aluminum alloy in accordance with ASTM B 26 and ASTM B 275, designation ZG32A; or cast iron in accordance with ASTM A 48, Class 30B.

   The lift handle shall be made of a similar metal to the gate (to prevent galvanic corrosion), it may be of solid rod or hollow tubing, with adjustable hook as required.

   A neoprene rubber gasket is required between the riser mounting flange and the gate flange.

   Install the gate so that the level-line mark is level when the gate is closed.

   The mating surfaces of the lid and the body shall be machined for proper fit.

   All shear gate bolts shall be stainless steel.
8. The shear gate maximum opening shall be controlled by limited hinge movement, a stop tab, or some other device.
9. Alternative shear gate designs are acceptable if material specifications are met and flange bolt pattern matches.

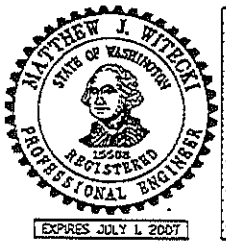

CATCH BASIN TYPE 2 WITH FLOW RESTRICTOR

STANDARD PLAN B-10.40-00

SHEET 1 OF 1 SHEET

APPROVED FOR PUBLICATION

Harold J. Peterfeso 06-01-06

STATE DESIGN ENGINEER DATE

Washington State Department of Transportation

	GATE	A	B	C
[1] △1	1	10.65 FT.	18.08 FT.	74-1/2
[1] △1	2	10.75 FT.	17.87 FT.	71
[1] △1	3	9.60 FT.	17.20 FT.	76-1/2

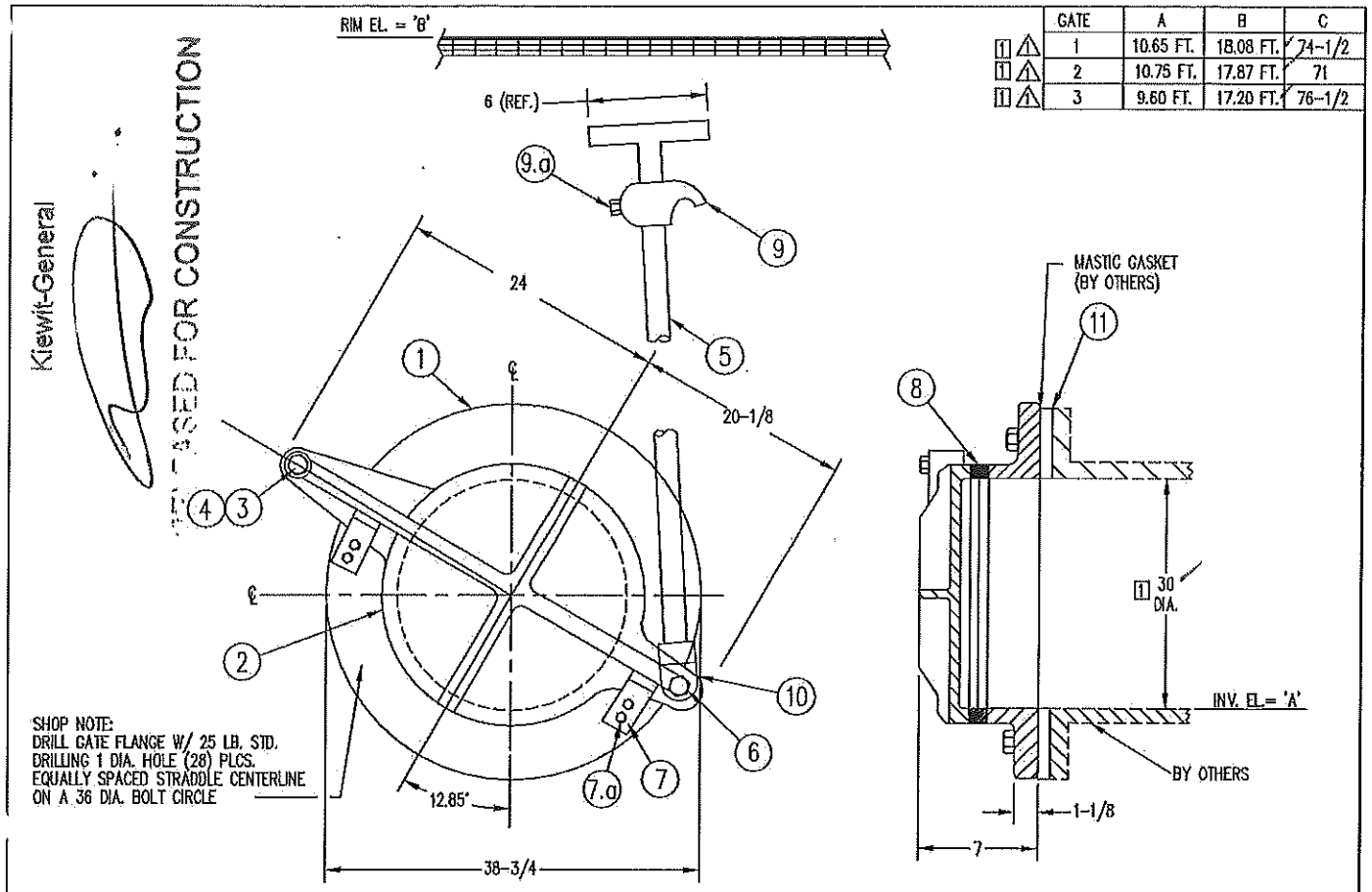

SHOP NOTE:
DRILL GATE FLANGE W/ 25 LB. STD.
DRILLING 1 DIA. HOLE (28) PLCS.
EQUALLY SPACED STRADDLE CENTERLINE
ON A 36 DIA. BOLT CIRCLE

DESCRIPTION	PART #/ SIZE	MATERIAL	FIN	QTY	TOT
1. FRAME	W-1925	CAST IRON ASTM A-126 CL B	6E	1	△1 3
2. COVER	W-1924	CAST IRON ASTM A-126 CL B	6E	1	3
3. HINGE BOLT	3/4 NC. X 3-1/2 LG. W/ NUT	STN. STL. HDW: ASTM F-593G/H, & 594 GRP 2 (TY. 316)	2	1/1	3/3
4. BUSHING	25/32 I.D.	COMMERCIAL BRONZE	3	1	3
5. LIFT ROD	3/8 DIA. PIPE 'C' LG.	COMMERCIAL BRONZE	2	1	3
6. LIFT BOLT	3/8 NC. X 2 LG. W/ NUT	COMMERCIAL BRONZE	2	1/2	3/6
7. WEDGE BLOCK	W-1926 (REF. 103722)	COMP. BRONZE ASTM B-584 AL 844	2,3	2	6
a) WEDGE BOLTS	3/4 NC X 3-1/2 LG. W/ NUT	STN. STL. HDW: ASTM F-593G/H, & 594 GRP 2 (TY. 316)	2	2/2	6/6
8. SEATS	---	COMP. BRONZE ASTM B-584 AL 844	3	2	6
9. ADJUSTING LUG	W-1246 (REF. 100593)	CAST IRON ASTM A-126 CL B	6E	1	3
a) LUG BOLT	3/8-16 NC	STN. STL. HDW: ASTM F-593G/H, & 594 GRP 2 (TY. 316)	2	1	3
10. LIFT LUG	W-1209 (REF. 100592)	CAST IRON ASTM A-126 CL B	6E	1	3
11. HDPE ADAPTER		STRUCTURAL STEEL A-36	6C	1	3

FINISH KEY

1. AS CAST
2. MILL
3. MACHINED
4. GALVANIZE ASTM A-123

6E-BLAST CLEAN PER SSPC-SP10
TDFT-11 MILS
POLYAMIDE EPOXY COLOR: GRAY [1]

6C BLAST CLEAN PER SSPC-SP10
TDFT 16 MILS COAL TAR EPOXY
COLOR: BLACK [1]

NOTES:
[1] CONTRACTOR TO VERIFY OR SUPPLY

GATE DESIGNED FOR 20 FT. SEATING HEAD; 0 FT. UNSEATING HEAD

(3) GATES REQUIRED △1

REF. PLAN SHEET 75

REV.NO.	DATE	BY
△1	JUN. 28,'11 JLG	DW

REUSE OF DOCUMENTS: THIS DOCUMENT AND THE IDEAS AND DESIGNS INCORPORATED HEREIN, AS AN INSTRUMENT OF PROFESSIONAL SERVICE, IS THE PROPERTY OF WATERMAN INDUSTRIES INC. AND IS NOT TO BE USED, IN WHOLE OR IN PART, FOR ANY OTHER PROJECT WITHOUT THE WRITTEN AUTHORIZATION OF WATERMAN INDUSTRIES INC. © WATERMAN INDUSTRIES INC.

30 DIA. WATERMAN MODEL
C-16F SHEAR GATE

FOR: WESTERN STATES VALVES & CONTROLS, LLC.
P.O. BOX 5610
SALEM, OR. 97304
PO: 0357

REF: PONTOON CATCH BASIN
SALEM, OR

ENG:

JOB NO.	PROJECT MANAGER
A17394A	DANNY WHITE
QUOTE NO.	DRAWN BY / CHK'D BY / ENGINEER
WQ10-A-17394A	DK / JAL/FPC / REM
QUOTE ITEM NO.	SHEET
1	1 OF 1
SCALE	DATE
NTS	JUNE 20, '11
DRAWING NO.	
RA-11-0171	

Waterman INDUSTRIES

P.O. BOX 458 • 25500 Road 204 • Exeter, California 93221 • Phone (559)562-4000 • FAX (559)562-2277 • www.watermanusa.com

RELEASED FOR CONSTRUCTION

Klewit-General

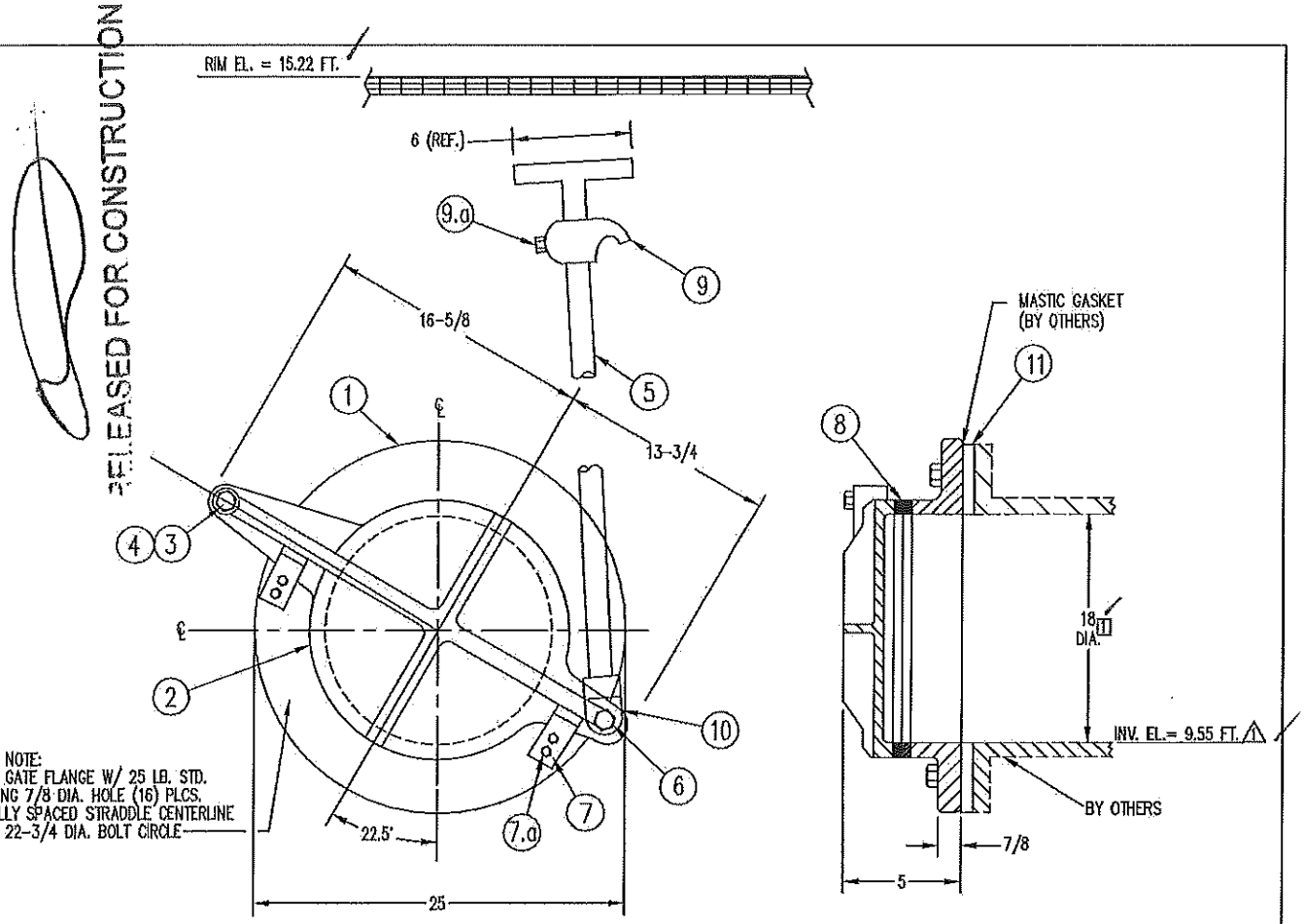

DESCRIPTION	PART #/ SIZE	MATERIAL	FIN	QTY	TOT	FINISH KEY
1. FRAME	W-1242	CAST IRON ASTM A-126 CL. B	6E	1	1	1. AS CAST
2. COVER	W-1241	CAST IRON ASTM A-126 CL. B	6E	1	1	2. MILL
3. HINGE BOLT	1/2 NC. X 3-1/2 LG. W/ NUT	STN. STL. HDW: ASTM F-593G/H, & 594 GRP 2 (TY. 316)	2	1/1	1/1	3. MACHINED 4. GALVANIZE ASTM A-123
4. BUSHING	17/32 I.D.	COMMERCIAL BRONZE	3	1	1	6E-BLAST CLEAN PER SSPC-SP10
1 5. LIFT ROD	3/8 DIA. PIPE 60 LG.	COMMERCIAL BRONZE	2	1	1	TDFT-11 MILS
6. LIFT BOLT	3/8 NC. X 2 LG. W/ NUT	COMMERCIAL BRONZE	2	1/2	1/2	POLYAMIDE EPOXY COLOR: GRAY [1]
7. WEDGE BLOCK	W-536 (REF. 100594)	COMP. BRONZE ASTM B-584 AL 844	2,3	2	2	
a) WEDGE BOLTS	1/2 NC X 3-1/2 LG. W/ NUT	STN. STL. HDW: ASTM F-593G/H, & 594 GRP 2 (TY. 316)	2	2/2	2/2	6G BLAST CLEAN PER SSPC-SP10 TDFT 16 MILS COAL TAR EPOXY COLOR: BLACK [1]
8. SEATS	---	COMP. BRONZE ASTM B-584 AL 844	3	2	2	
9. ADJUSTING LUG	W-1246 (REF. 100593)	CAST IRON ASTM A-126 CL. B	6E	1	1	
9a. LUG BOLT	3/8-16 NC	STN. STL. HDW: ASTM F-593G/H, & 594 GRP 2 (TY. 316)	2	1	1	
10. LIFT LUG	W-1209 (REF. 100592)	CAST IRON ASTM A-126 CL. B	6E	1	1	
11. HDPE ADAPTER		STRUCTURAL STEEL A-36	6C	1	1	NOTES: [1] CONTRACTOR TO VERIFY OR SUPPLY

GATE DESIGNED FOR 20 FT. SEATING HEAD; 0 FT. UNSEATING HEAD

(1) GATE REQUIRED [1]

REF. PLAN SHEET 76

REV.NO.	DATE	BY
1	JUN. 28,'11 JLG	DW

REUSE OF DOCUMENTS: THIS DOCUMENT AND THE IDEAS AND DESIGNS INCORPORATED HEREIN, AS AN INSTRUMENT OF PROFESSIONAL SERVICE, IS THE PROPERTY OF WATERMAN INDUSTRIES INC. AND IS NOT TO BE USED, IN WHOLE OR IN PART, FOR ANY OTHER PROJECT WITHOUT THE WRITTEN AUTHORIZATION OF WATERMAN INDUSTRIES INC. © WATERMAN INDUSTRIES INC.

18 DIA. WATERMAN MODEL
C-16F SHEAR GATE

FOR: WESTERN STATES VALVES & CONTROLS, LLC.
P.O. BOX 5610
SALEM, OR. 97304

PO: 0357

REF: PONTOON CATCH BASIN
SALEM, OR

ENG:

JOB NO.	PROJECT MANAGER
A17394A	DANNY WHITE
QUOTE NO.	DRAWN BY / CHK'D BY / ENGINEER
WQ10-A-17394A	DK / JAL/FPC / REM
QUOTE ITEM NO.	SHEET
5	1 OF 1
SCALE	DATE
NTS	JUNE 20, '11
DRAWING NO.	
RA-11-0173	

Waterman INDUSTRIES
P.O. BOX 458 • 25500 Road 204 • Exeter, California 93221 • Phone (559)562-4000 • FAX (559)562-2277 • www.watermanusa.com

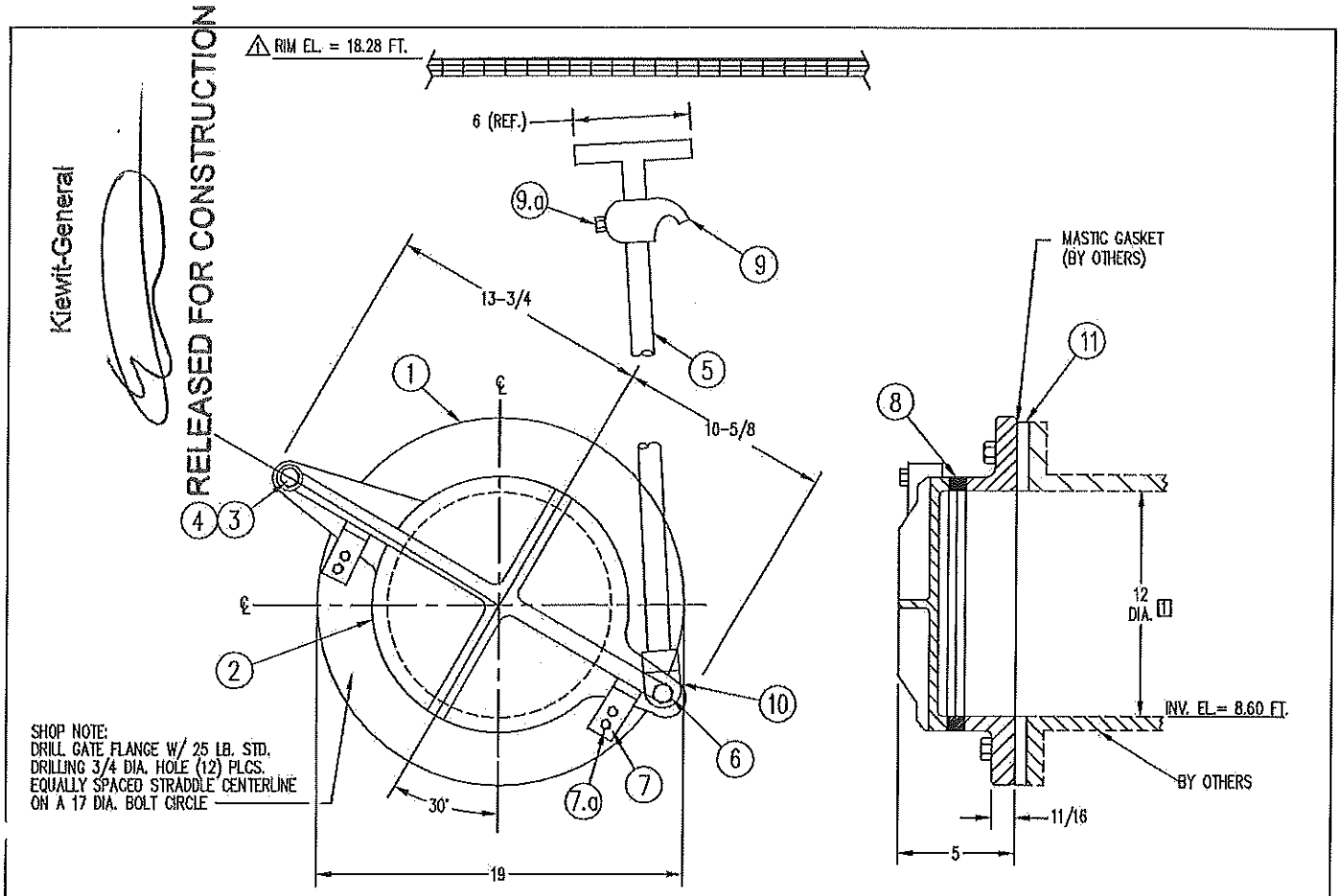

DESCRIPTION	PART #/ SIZE	MATERIAL	FIN	QTY	TOT
1. FRAME	W-945	CAST IRON ASTM A-126 CL B	6E	1	1
2. COVER	W-944	CAST IRON ASTM A-126 CL B	6E	1	1
3. HINGE BOLT	1/2 NC. X 3 LG. W/ NUT	STN. STL. HDW:ASTM F-593G/H, & 594 GRP 2 (TY. 316)	2	1/1	1/1
4. BUSHING	17/32 I.D.	COMMERCIAL BRONZE	3	1	1
1 5. LIFT ROD	3/8 DIA. PIPE X 111 LG.	COMMERCIAL BRONZE	2	1	1
6. LIFT BOLT	3/8 NC. X 2 LG. W/ NUT	COMMERCIAL BRONZE	2	1/2	1/2
7. WEDGE BLOCK	W-536 (REF. 100594)	COMP. BRONZE ASTM B-584 AL 844	2,3	2	2
a) WEDGE BOLTS	1/2 NC X 3-1/2 LG. W/ NUT	STN. STL. HDW:ASTM F-593G/H, & 594 GRP 2 (TY. 316)	2	2/2	2/2
8. SEATS	---	COMP. BRONZE ASTM B-584 AL 844	3	2	2
9. ADJUSTING LUG	W-1246 (REF. 100593)	CAST IRON ASTM A-126 CL B	6E	1	1
9a. LUG BOLT	3/8-16 NC	STN. STL. HDW:ASTM F-593G/H, & 594 GRP 2 (TY. 316)	2	1	1
10. LIFT LUG	W-1209 (REF. 100592)	CAST IRON ASTM A-126 CL B	6E	1	1
11. HDPE ADAPTER		STRUCTURAL STEEL A-36	6C	1	1

FINISH KEY

1. AS CAST
2. MILL
3. MACHINED
4. GALVANIZE ASTM A-123

6E-BLAST CLEAN PER SSPC-SP10
TDFT-11 MILS
POLYAMIDE EPOXY COLOR:GRAY 1

6C BLAST CLEAN PER SSPC-SP10
TDFT 16 MILS COAL TAR EPOXY
COLOR: BLACK 1

NOTES:
1 CONTRACTOR TO VERIFY OR SUPPLY

GATE DESIGNED FOR 20 FT. SEATING HEAD; 0 FT. UNSEATING HEAD

(1) GATE REQUIRED 1

REF. PLAN SHEET 77

REUSE OF DOCUMENTS: THIS DOCUMENT AND THE IDEAS AND DESIGNS INCORPORATED HEREIN, AS AN INSTRUMENT OF PROFESSIONAL SERVICE, IS THE PROPERTY OF WATERMAN INDUSTRIES INC. AND IS NOT TO BE USED, IN WHOLE OR IN PART, FOR ANY OTHER PROJECT WITHOUT THE WRITTEN AUTHORIZATION OF WATERMAN INDUSTRIES INC. © WATERMAN INDUSTRIES INC.

REV.NO.	DATE	BY
1	JUN. 28,'11 JLG	DW

12 DIA. WATERMAN MODEL
C-16F SHEAR GATE

FOR: WESTERN STATES VALVES & CONTROLS, LLC.
P.O. BOX 5610
SALEM OR, 97304
PO: 0357

REF: PONTOON CATCH BASIN
SALEM OR.

ENG:

JOB NO. A17394A	PROJECT MANAGER DANNY WHITE
QUOTE NO. WQ10-A-17394A	DRAWN BY DK / CHK'D BY JAL/FPC / ENGINEER REM
QUOTE ITEM NO. 7	SHEET 1 OF 1
SCALE NTS	DATE JUNE 20, '11
DRAWING NO. RA-11-0174	

Waterman INDUSTRIES

P.O. BOX 458 • 25500 Road 204 • Exeter, California 93221 • Phone (559)562-4000 • FAX (559)562-2277 • www.watermanusa.com

RELEASED FOR CONSTRUCTION

Kiewit-General

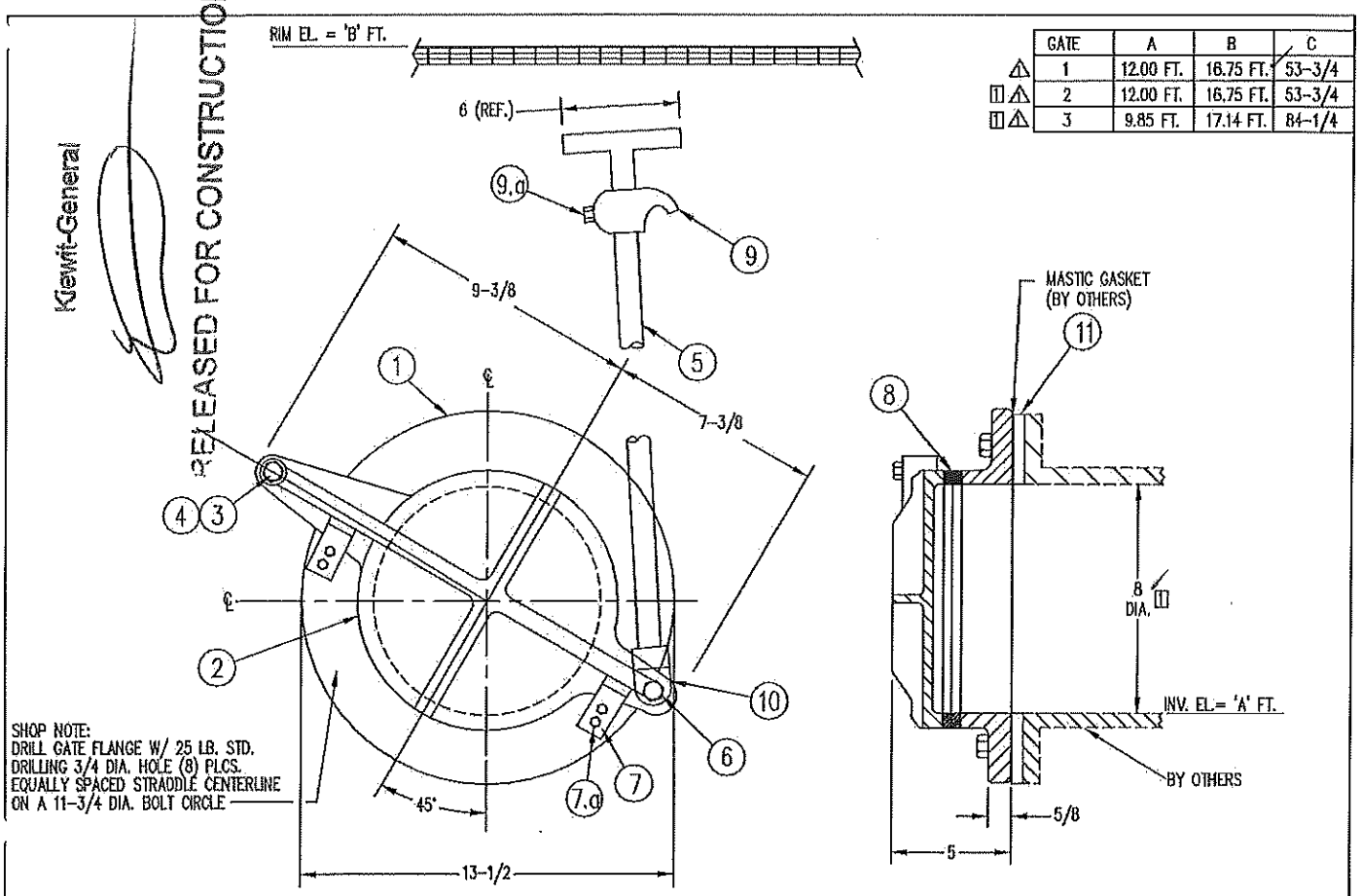

	GATE	A	B	C
△	1	12.00 FT.	16.75 FT.	53-3/4
1 △	2	12.00 FT.	16.75 FT.	53-3/4
1 △	3	9.85 FT.	17.14 FT.	84-1/4

SHOP NOTE:
DRILL GATE FLANGE W/ 25 LB. STD.
DRILLING 3/4 DIA. HOLE (8) PLCS.
EQUALLY SPACED STRADDLE CENTERLINE
ON A 11-3/4 DIA. BOLT CIRCLE

DESCRIPTION	PART #/ SIZE	MATERIAL	FIN	QTY	TOT
1. FRAME	W-1239	CAST IRON ASTM A-126 CL B	6E	1	3
2. COVER	W-1238	CAST IRON ASTM A-126 CL B	6E	1	3
3. HINGE BOLT	1/2 NC. X 3 LG. W/ NUT	STN. STL. HDW. ASTM F-593G/H, & 594 GRP 2 (TY. 316)	2	1/1	3/3
4. BUSHING	17/32 I.D.	COMMERCIAL BRONZE	3	1	3
5. LIFT ROD	3/8 DIA. PIPE X 'C' LG.	COMMERCIAL BRONZE	2	1	3
6. LIFT BOLT	3/8 NC. X 2 LG. W/ NUT	COMMERCIAL BRONZE	2	1/2	3/6
7. WEDGE BLOCK	W-536 (REF. 100594)	COMP. BRONZE ASTM B-584 AL 844	2,3	2	6
a) WEDGE BOLTS	1/2 NC X 3-1/2 LG. W/ NUT	STN. STL. HDW. ASTM F-593G/H, & 594 GRP 2 (TY. 316)	2	2/2	6/6
8. SEATS	---	COMP. BRONZE ASTM B-584 AL 844	3	2	6
9. ADJUSTING LUG	W-1246 (REF. 100593)	CAST IRON ASTM A-126 CL B	6E	1	3
9a. LUG BOLT	3/8-16 NC	STN. STL. HDW. ASTM F-593G/H, & 594 GRP 2 (TY. 316)	2	1	3
10. LIFT LUG	W-1209 (REF. 100592)	CAST IRON ASTM A-126 CL B	6E	1	3
11. HDPE ADAPTER		STRUCTURAL STEEL A-36	6C	1	3

FINISH KEY

1. AS CAST
2. MILL
3. MACHINED
4. GALVANIZE ASTM A-123

6E-BLAST CLEAN PER SSPC-SP10
TDFT-11 MILS
POLYAMIDE EPOXY COLOR: GRAY 1

6C BLAST CLEAN PER SSPC-SP10
TDFT 16 MILS COAL TAR EPOXY
COLOR: BLACK 1

NOTES:
1 CONTRACTOR TO VERIFY OR SUPPLY

GATE DESIGNED FOR 20 FT. SEATING HEAD; 0 FT. UNSEATING HEAD

(3) GATES REQUIRED 1

REF. PLAN SHEET 75

REV.NO.	DATE	BY
1	JUN. 28,'11 JLG	DW

REUSE OF DOCUMENTS: THIS DOCUMENT AND THE IDEAS AND DESIGNS INCORPORATED HEREIN, AS AN INSTRUMENT OF PROFESSIONAL SERVICE, IS THE PROPERTY OF WATERMAN INDUSTRIES INC. AND IS NOT TO BE USED, IN WHOLE OR IN PART, FOR ANY OTHER PROJECT WITHOUT THE WRITTEN AUTHORIZATION OF WATERMAN INDUSTRIES INC. © WATERMAN INDUSTRIES INC.

8 DIA. WATERMAN MODEL
C-16F SHEAR GATE

FOR: WESTERN STATES VALVES & CONTROLS, LLC.
P.O. BOX 5610
SALEM OR, 97304
PO: 0357

REF: PONTOON CATCH BASIN
SALEM OR.

ENG:

JOB NO. A17394A	PROJECT MANAGER DANNY WHITE
QUOTE NO. WQ10-A-17394A	DRAWN BY DK / CHK'D BY JAL/FPC / ENGINEER REM
QUOTE ITEM NO. 9	SHEET 1 OF 1
SCALE NTS	DATE JUNE 20, '11
DRAWING NO. RA-11-0175	

Waterman INDUSTRIES

P.O. BOX 458 • 25500 Road 204 • Exeter, California 93221 • Phone (559)562-4000 • FAX (559)562-2277 • www.watermanusa.com

Site Response 360.338.2091

SAFETY COMPLIANCE
TRAINING, SUPPORT AND SUPPLIES

Washington State LABOR & INDUSTRIES TRAINING & CONSULTING

OIL-ONLY SORBENT BOOMS (Polypropylene)

#B810 – Oil Only Sorbent Booms (Polypropylene), 8" x 10', 4/bale

- Provides containment & maximum adsorption while repelling water
- Absorbs oil on land or water even when raining
- Will not sink even if the boom is saturated
- Comprised of anti-shed or non-lint netting
- Overlapping clips for deployment in any length
- Embedded rope for easy deployment and retrieval in water
- Ideal uses include wastewater troughs, loading docks, ponds, rivers, and oceans to absorb oily spills

360-338-2091 or www.site-response.com