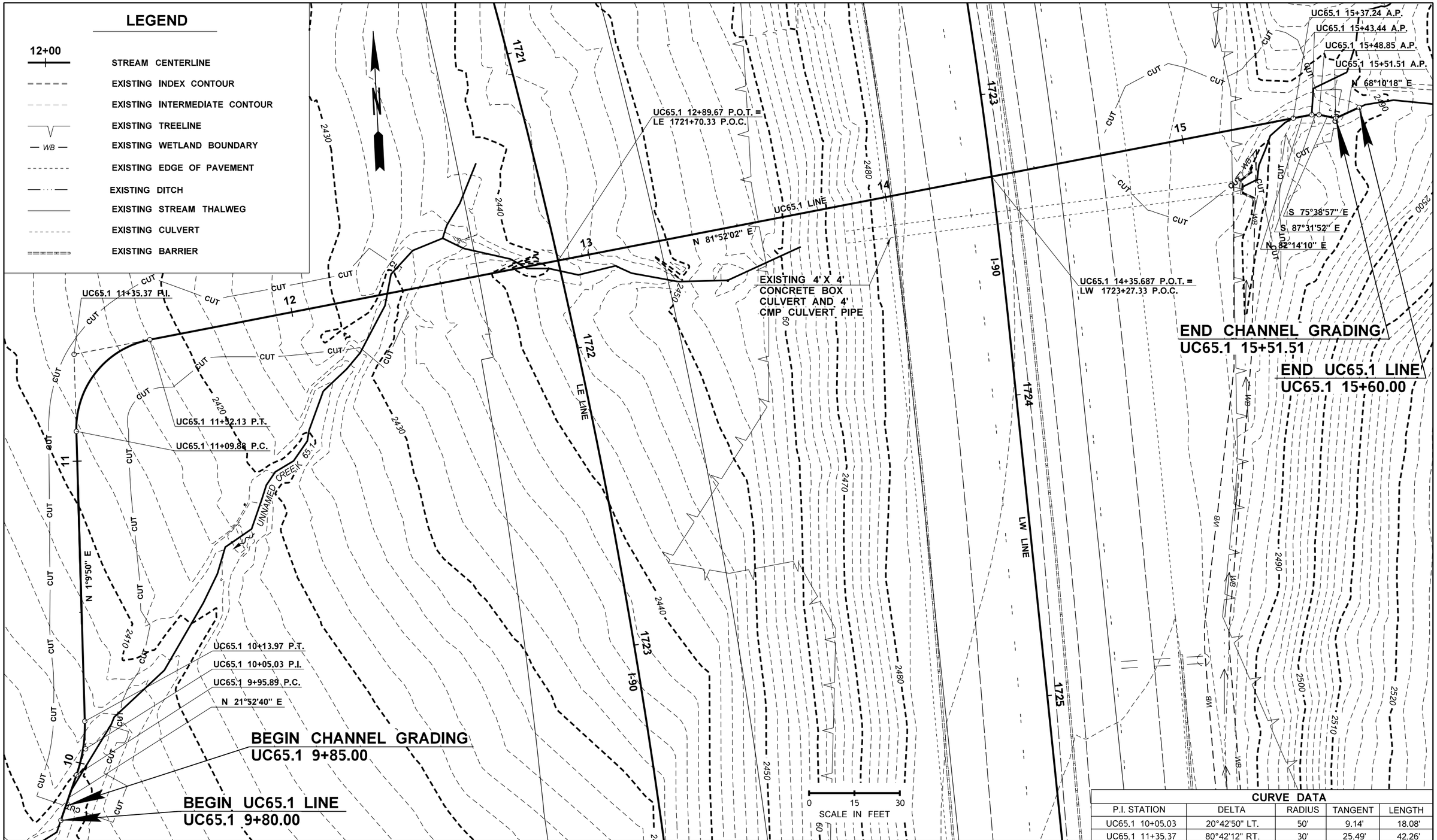

CURVE DATA				
P.I. STATION	DELTA	RADIUS	TANGENT	LENGTH
UC65.1 10+05.03	20°42'50" LT.	50'	9.14'	18.08'
UC65.1 11+35.37	80°42'12" RT.	30'	25.49'	42.26'

FILE NAME	K:\452201\090\06736_Phase 3\Design_CAD_Sheets\105-SitePlans\XL5479_PS_SP_03-UC 65.1.dgn
TIME	9:30:53 PM
DATE	11/21/2021
PLOTTED BY	kingk
DESIGNED BY	HQ HYDRAULICS
ENTERED BY	SCR PD
CHECKED BY	HQ HYDRAULICS
PROJ. ENGR.	A. BYRD
REGIONAL ADM.	T. TREPANIER

REVISION | DATE | BY

REGION NO. 10 | STATE WASH | FED.AID PROJ.NO.

JOB NUMBER

CONTRACT NO. | LOCATION NO.

P.E. STAMP BOX DATE

P.E. STAMP BOX DATE

Washington State Department of Transportation

I-90
CABIN CREEK I/C TO W EASTON I/C
PHASE 3 - ADD LANES/WILDLIFE BRIDGES

UNNAMED CREEK (MP 65.1) SITE PLANS

Plot 1

PLAN REF NO CR3-1

SHEET OF SHEETS

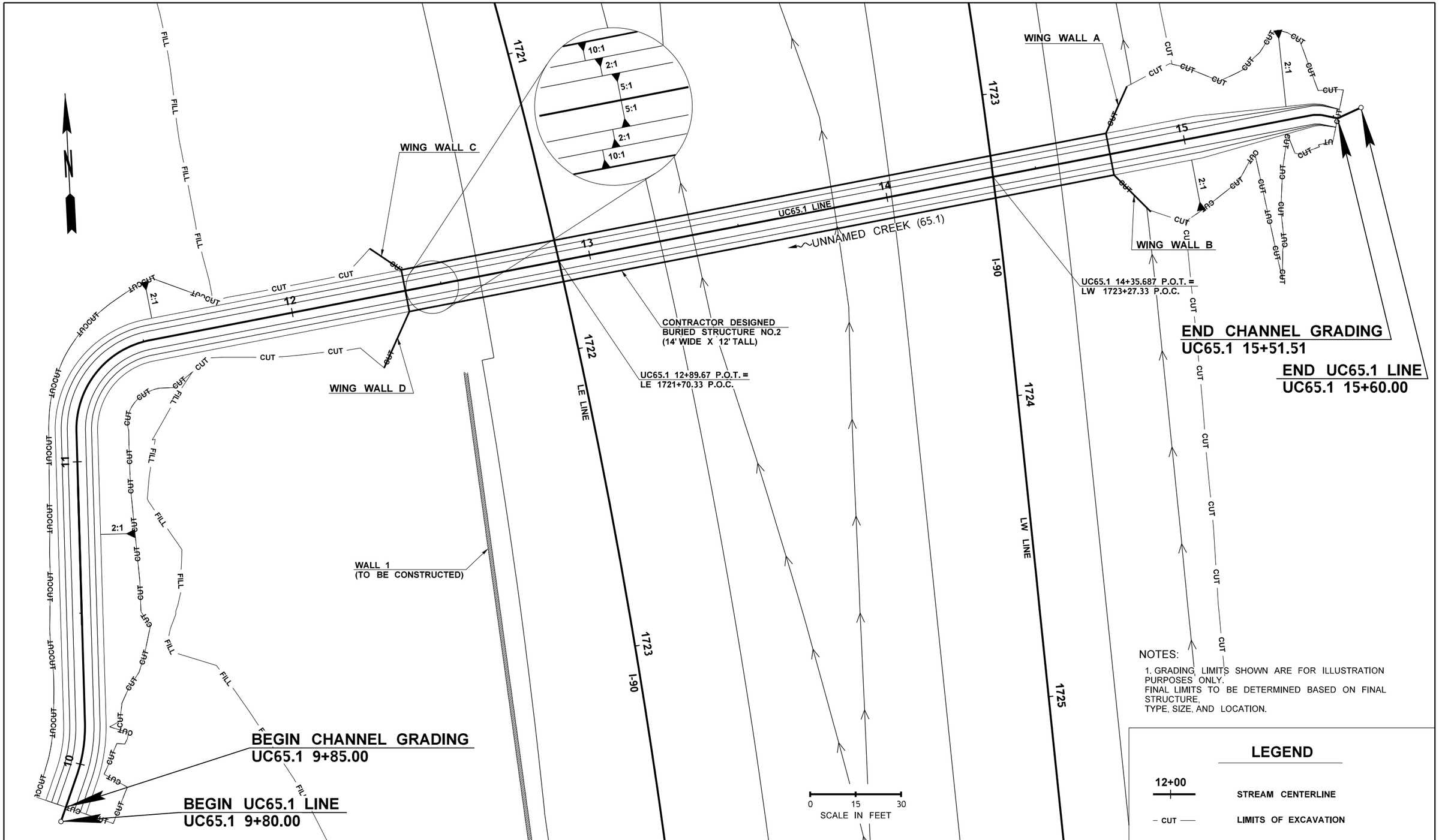

NOTES:

1. GRADING LIMITS SHOWN ARE FOR ILLUSTRATION PURPOSES ONLY.
FINAL LIMITS TO BE DETERMINED BASED ON FINAL STRUCTURE,
TYPE, SIZE, AND LOCATION.

LEGEND

12+00	STREAM CENTERLINE
– CUT —	LIMITS OF EXCAVATION

FILE NAME	K:\452201\090\06736_Phase 3\Design_CAD_Sheets\105-SitePlans\XL5479_PS_SP_03-UC 65.1.dgn				REGION NO. 10	STATE WASH	FED.AID PROJ.NO.
TIME	9:30:56 PM				JOB NUMBER		
DATE	11/21/2021						
PLOTTED BY	kingk				CONTRACT NO.		LOCATION NO.
DESIGNED BY	HQ HYDRAULICS						
ENTERED BY	SCR PD						
CHECKED BY	HQ HYDRAULICS						
PROJ. ENGR.	A. BYRD						
REGIONAL ADM.	T. TREPANIER	REVISION	DATE	BY			

P.E. STAMP BOX DATE

P.E. STAMP BOX DATE

Washington State
Department of Transportation

I-90
CABIN CREEK I/C TO W EASTON I/C
PHASE 3 - ADD LANES/WILDLIFE BRIDGES

UNNAMED CREEK (MP 65.1) SITE PLANS

Plot 2

PLAN REF NO
CR3-2

SHEET
OF
SHEETS

LEGEND

LWM - TYPE A - 30" DBH X 30' LONG		10 ~~(16~~ EACH)
LWM - TYPE ~~B~~ C - 24" DBH X ~~30'~~ 20' LONG		9 ~~(6~~ EACH)
LWM - TYPE ~~D~~ E - 20" DBH X ~~15'~~ 10' LONG		9 ~~(19~~ EACH)
STREAMBED BOULDER THREE MAN		27 (9 EACH)

This is the count for only the in-stream LWM. We had discussed separating out the habitat logs which include the Type B on the cascade slope and logs in the existing channel. Add the habitat logs below the in-stream logs

ADDITIONAL LWM

LWM - TYPE A - 30" DBH X 30' LONG (7 EACH)

LWM - TYPE B - 24" DBH X 20' LONG (4 EACH)

Add more LWM as needed

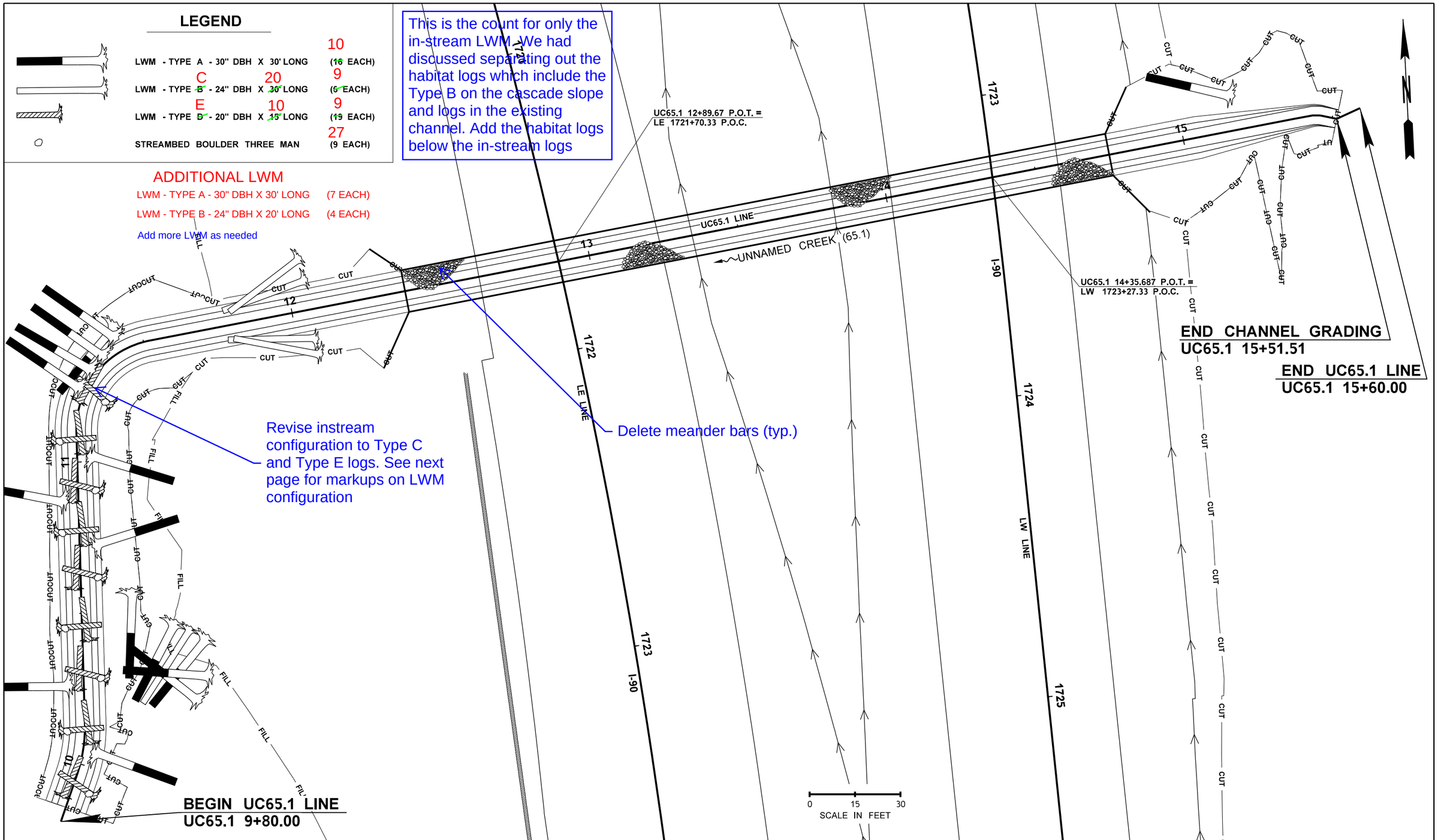

FILE NAME	K:\452201\090\06736_Phase 3\Design_CAD_Sheets\105-SitePlans\XL5479_PS_SP_03-UC 65.1.dgn					
TIME	9:30:58 PM					
DATE	11/21/2021					
PLOTTED BY	kingk					
DESIGNED BY	HQ HYDRAULICS					
ENTERED BY	SCR PD					
CHECKED BY	HQ HYDRAULICS					
PROJ. ENGR.	A. BYRD					
REGIONAL ADM.	T. TREPANIER	REVISION	DATE	BY		

REGION NO.	STATE	FED.AID PROJ.NO.
10	WASH	
JOB NUMBER		
CONTRACT NO.		LOCATION NO.

P.E. STAMP BOX DATE

P.E. STAMP BOX DATE

Washington State Department of Transportation

I-90
CABIN CREEK I/C TO W EASTON I/C
PHASE 3 - ADD LANES/WILDLIFE BRIDGES

UNNAMED CREEK (MP 65.1) SITE PLANS

Plot 3

PLAN REF NO CR3-3

SHEET OF SHEETS

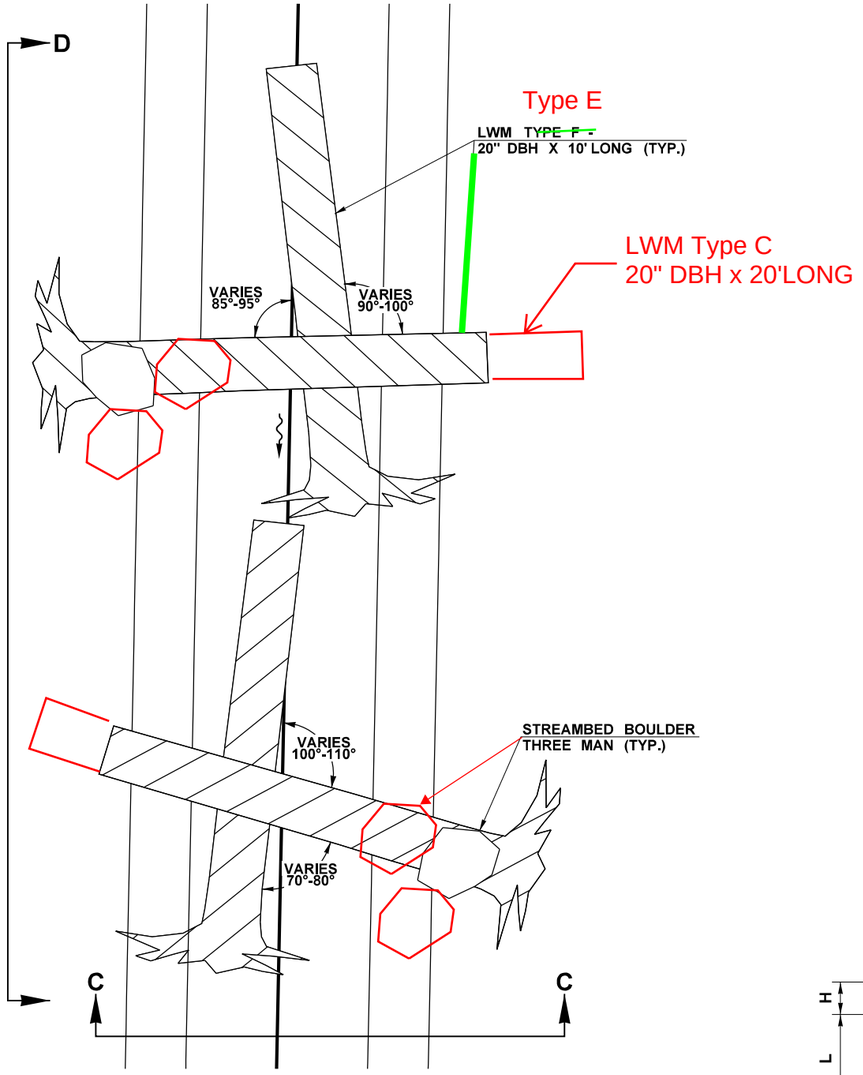

LWM STRUCTURE TYPE B

NOT TO SCALE

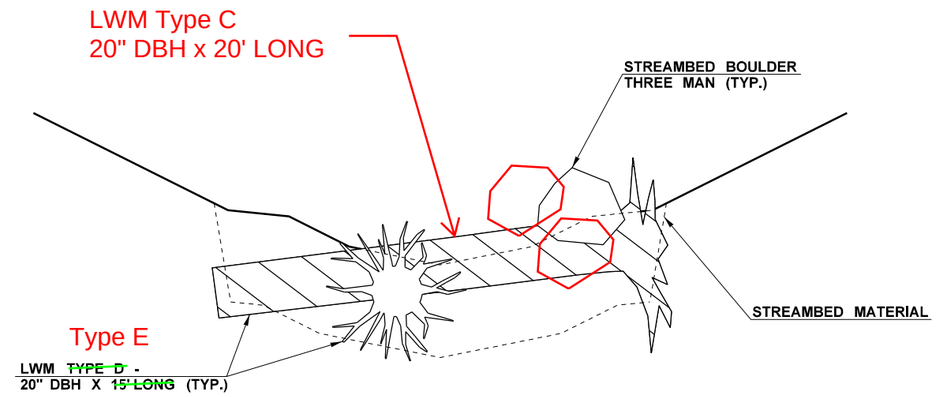

SECTION C-C

NOT TO SCALE

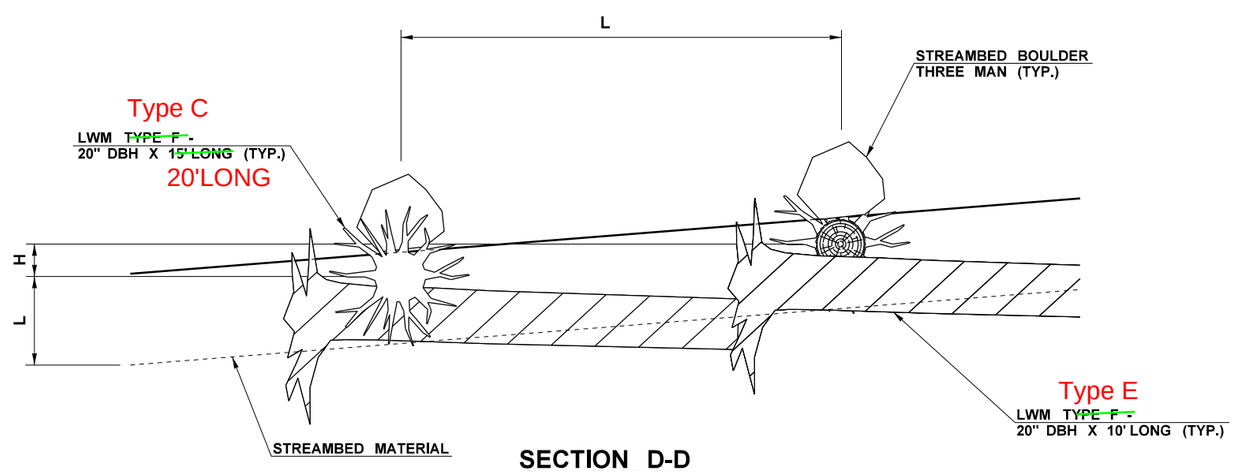

SECTION D-D

NOT TO SCALE

FILE NAME	K:\452201\090\06736_Phase 3\Design_CAD_Sheets\105-SitePlans\XL5479_PS_LWM_Details.dgn						
TIME	3:06:02 PM				REGION NO. 10	STATE WASH	FED.AID PROJ.NO.
DATE	10/7/2021						
PLOTTED BY	rodrigjo						
DESIGNED BY	HQ HYDRAULICS				JOB NUMBER		
ENTERED BY	SCR PD						
CHECKED BY	K. KING				CONTRACT NO.		LOCATION NO.
PROJ. ENGR.	A. BYRD						
REGIONAL ADM.	T. TREPANIER	REVISION	DATE	BY			

P.E. STAMP BOX DATE

P.E. STAMP BOX DATE

Washington State
Department of Transportation

I-90
CABIN CREEK I/C TO W EASTON I/C
PHASE 3 - ADD LANES/WILDLIFE BRIDGES

LWM DETAILS

Plot 2

PLAN REF NO

SHEET

OF

SHEETS

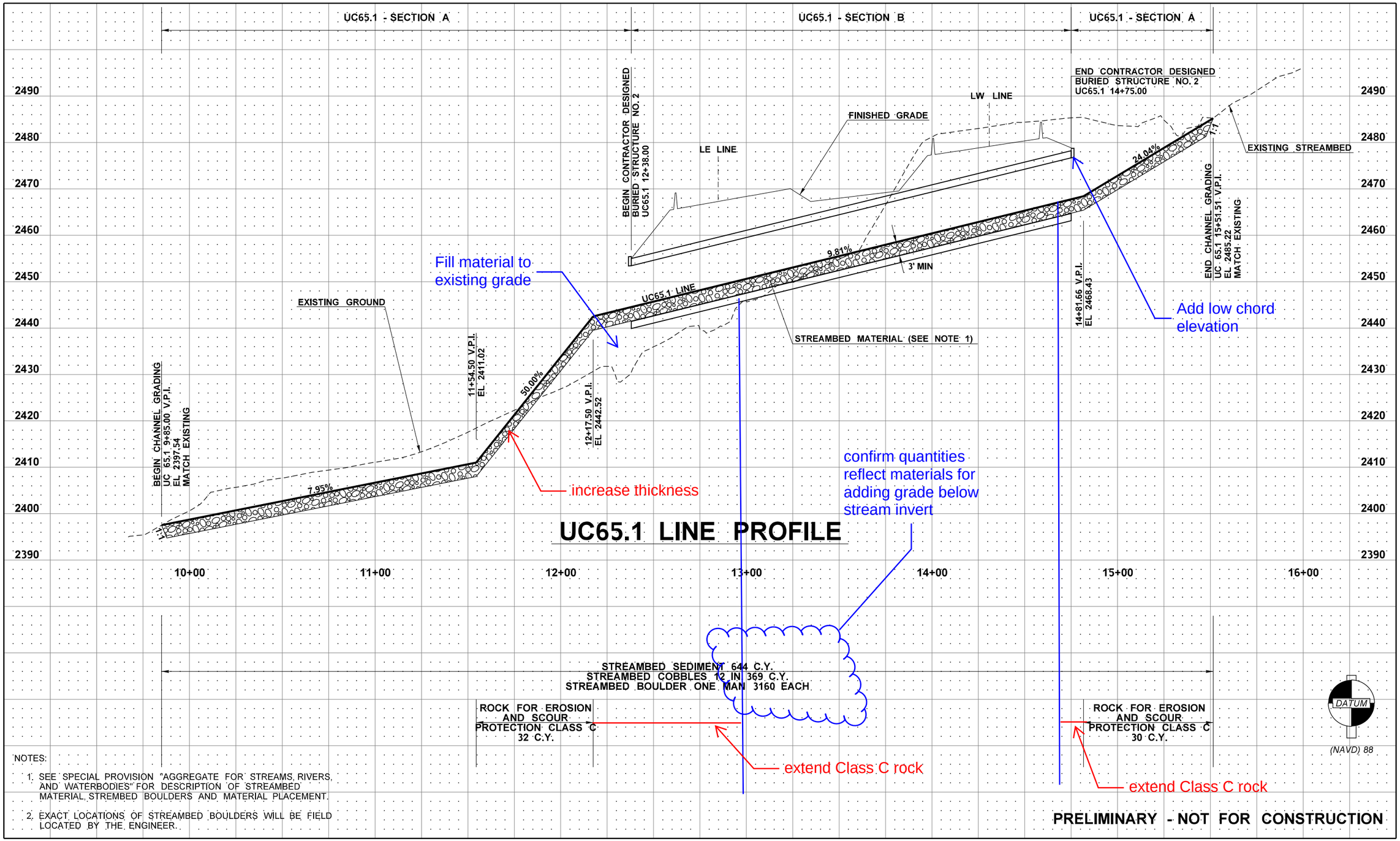

NOTES:

1. SEE SPECIAL PROVISION "AGGREGATE FOR STREAMS, RIVERS, AND WATERBODIES" FOR DESCRIPTION OF STREAMBED MATERIAL, STREMBED BOULDERS AND MATERIAL PLACEMENT.
2. EXACT LOCATIONS OF STREAMBED BOULDERS WILL BE FIELD LOCATED BY THE ENGINEER.

FILE NAME	K:\452201\090\06736_Phase 3\Design_CAD_Sheets\105-SitePlans\XL5479_PS_SP_03-UC 65.1.dgn
TIME	9:31:01 PM
DATE	11/21/2021
PLOTTED BY	kingk
DESIGNED BY	HQ HYDRAULICS
ENTERED BY	SCR PD
CHECKED BY	HQ HYDRAULICS
PROJ. ENGR.	A. BYRD
REGIONAL ADM.	T. TREPANIER

REVISION	DATE	BY

REGION NO.	STATE	FED.AID PROJ.NO.
10	WASH	
JOB NUMBER		
CONTRACT NO.		LOCATION NO.

P.E. STAMP BOX DATE

P.E. STAMP BOX DATE

Washington State Department of Transportation

I-90
CABIN CREEK I/C TO W EASTON I/C
PHASE 3 - ADD LANES/WILDLIFE BRIDGES

UNNAMED CREEK (MP 65.1) SITE PLANS

Plot 4
PLAN REF. NO. CR3-4
SHEET OF SHEETS

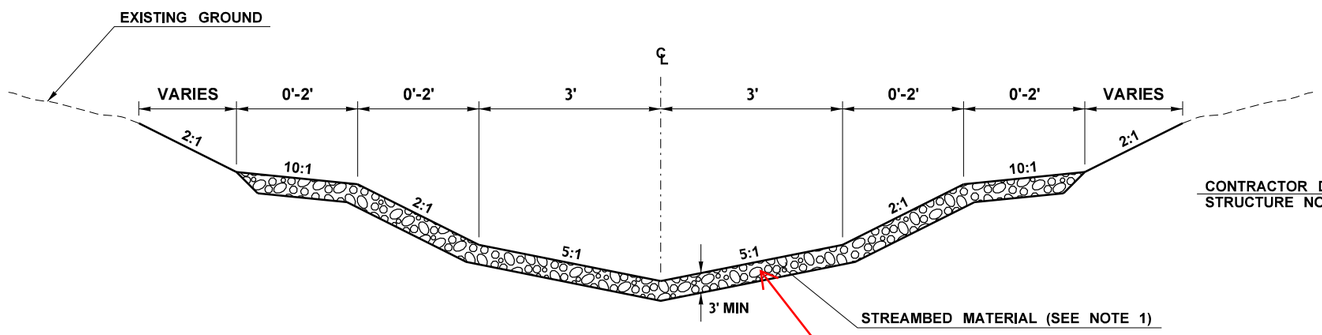

Need to distinguish different types of streambed material vs Class C Rock

These are typically not shown on the stream sheets.

UC65.1 - SECTION A

(NOT TO SCALE)
UC65.1 9+85.00 TO UC65.1 12+38.00
UC65.1 14+75.00 TO UC65.1 15+51.51

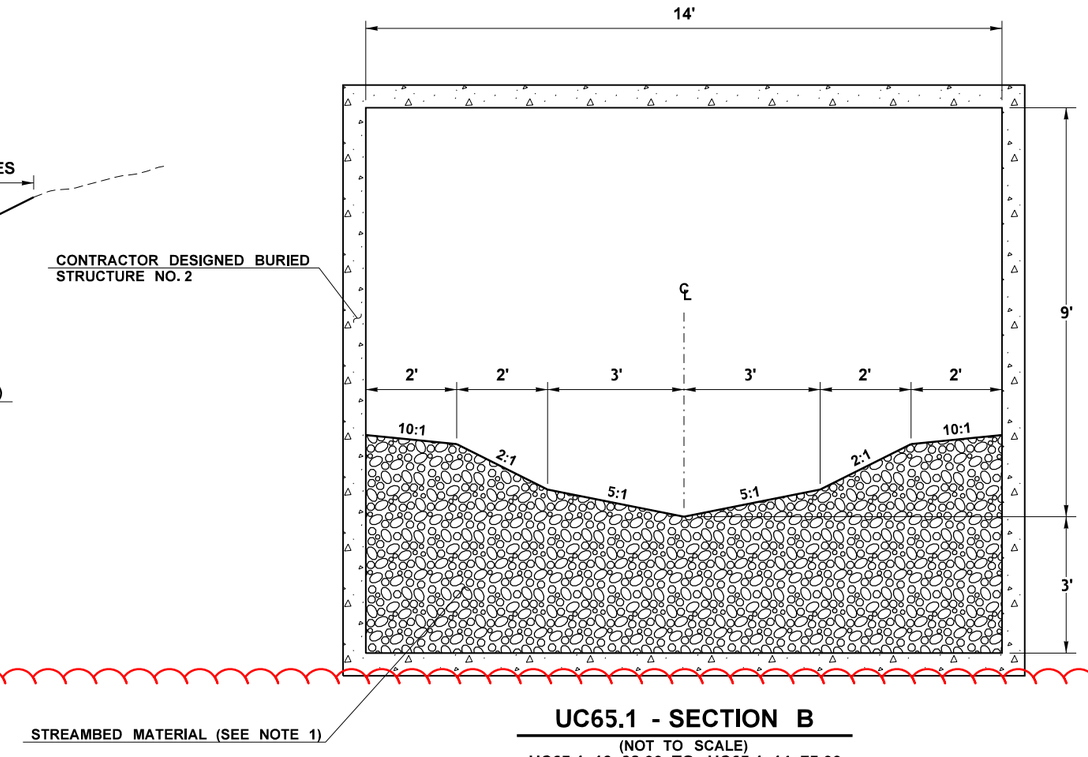

UC65.1 - SECTION B

(NOT TO SCALE)
UC65.1 12+38.00 TO UC65.1 14+75.00

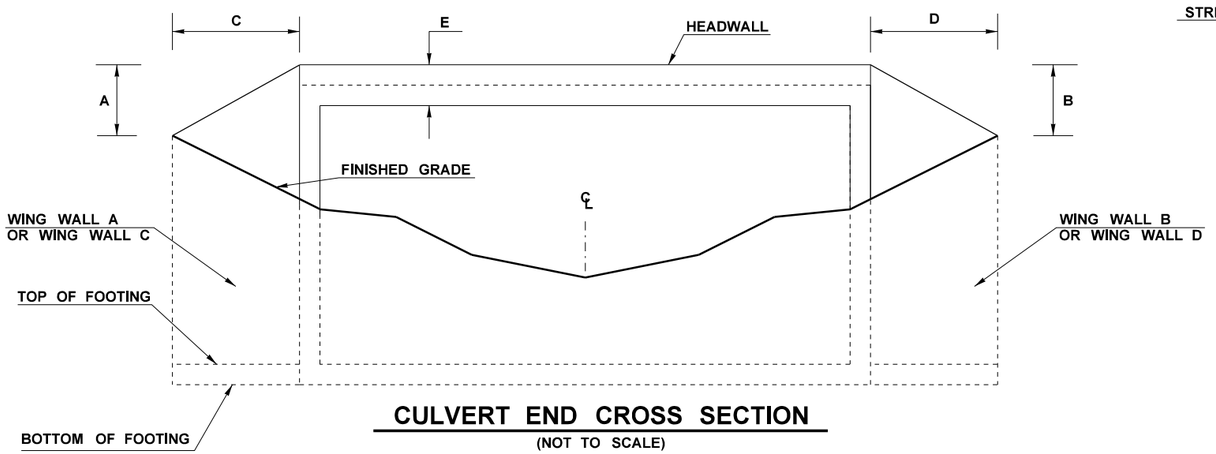

CULVERT END CROSS SECTION

(NOT TO SCALE)

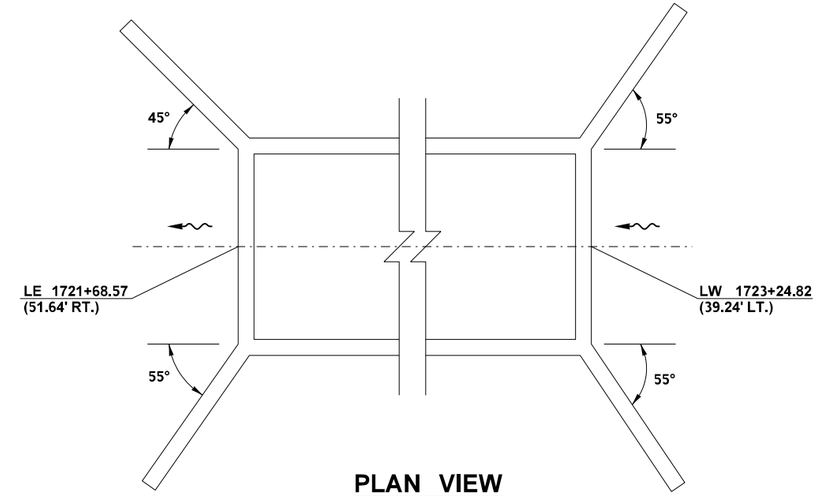

PLAN VIEW

(NOT TO SCALE)

NOTES:

1. SEE SPECIAL PROVISION "AGGREGATE FOR STREAMS, RIVERS, AND WATERBODIES" FOR DESCRIPTION OF STREAMBED MATERIAL, STREMBED BOULDERS AND MATERIAL PLACEMENT.
2. EXACT LOCATIONS OF STREAMBED BOULDERS WILL BE FIELD LOCATED BY THE ENGINEER.
3. FIRST AND LAST 10 FEET OF CREEK SECTION SHALL TRANSITION TO MATCH EXISTING STREAM CROSS SECTION.

TYPICAL END SECTION DIMENSIONS

DESCRIPTION	DIMENSION (FT.)				
	A	B	C	D	E
UPSTREAM	9.3	9.2	17.0	17.2	2.0
DOWNSTREAM	8.4	9.9	12.6	20.3	2.0

PRELIMINARY - NOT FOR CONSTRUCTION

FILE NAME	K:\452201\090\06736_Phase 3\Design_CAD_Sheets\105-SitePlans\XL5479_PS_SP_03-UC 65.1.dgn						
TIME	9:31:04 PM						
DATE	11/21/2021						
PLOTTED BY	kingk						
DESIGNED BY	HQ HYDRAULICS						
ENTERED BY	SCR PD						
CHECKED BY	HQ HYDRAULICS						
PROJ. ENGR.	A. BYRD						
REGIONAL ADM.	T. TREPANIER	REVISION	DATE	BY			

REGION NO. 10 | STATE WASH | FED.AID PROJ.NO.
JOB NUMBER
CONTRACT NO. | LOCATION NO.

P.E. STAMP BOX DATE
P.E. STAMP BOX DATE

Washington State Department of Transportation

I-90
CABIN CREEK I/C TO W EASTON I/C
PHASE 3 - ADD LANES/WILDLIFE BRIDGES
UNNAMED CREEK (MP 65.1) SITE PLANS

Plot 5
PLAN REF NO CR3-5
SHEET OF SHEETS

NOTES:

1. LOCATION AND ORIENTATION OF STREAMBED FEATURES SHOWN ON THIS SHEET ARE APPROXIMATE. FINAL LOCATIONS AND ORIENTATIONS TO BE APPROVED BY THE ENGINEER
2. BODY OF POINT BAR COMPOSED OF 70% ONE-MAN BOULDERS, 30% STREAMBED SEDIMENT.
3. HEAD OF POINT BAR COMPOSED OF 70% TWO-MAN BOULDERS, 30% STREAMBED SEDIMENT

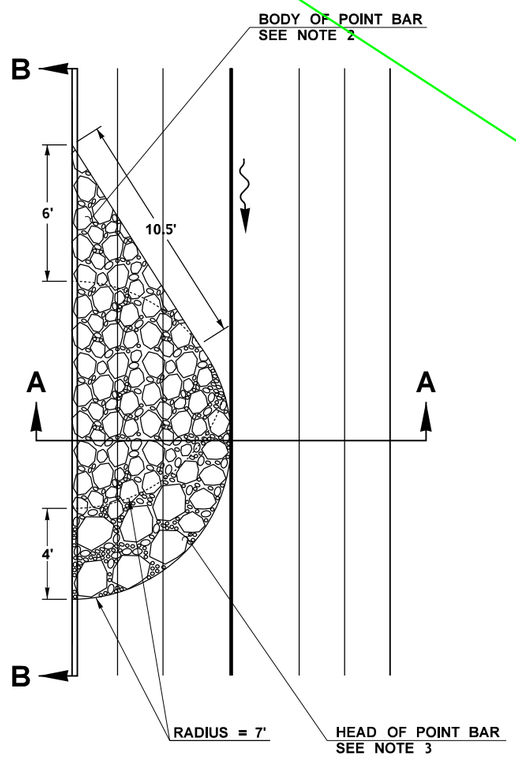

POINT BAR DETAIL

(NOT TO SCALE)

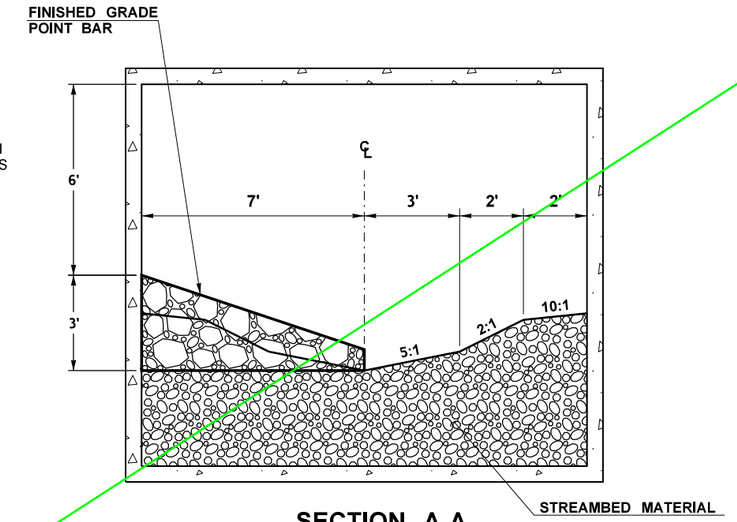

SECTION A-A

(NOT TO SCALE)

Delete page

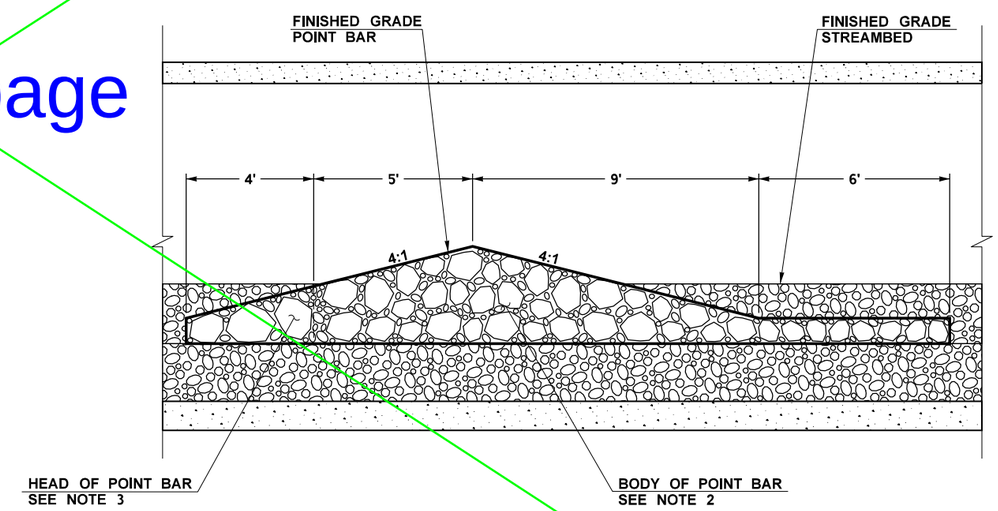

SECTION B-B

(NOT TO SCALE)

FILE NAME	K:\452201\090\06736_Phase 3\Design_CAD_Sheets\105-SitePlans\XL5479_PS_SP_03-UC 65.1.dgn						
TIME	9:31:06 PM				REGION NO. 10	STATE WASH	FED.AID PROJ.NO.
DATE	11/21/2021						
PLOTTED BY	kingk				JOB NUMBER		
DESIGNED BY	HQ HYDRAULICS						
ENTERED BY	SCR PD						
CHECKED BY	HQ HYDRAULICS				CONTRACT NO.		LOCATION NO.
PROJ. ENGR.	A. BYRD						
REGIONAL ADM.	T. TREPANIER	REVISION	DATE	BY			

P.E. STAMP BOX DATE

P.E. STAMP BOX DATE

Washington State Department of Transportation

I-90
CABIN CREEK I/C TO W EASTON I/C
PHASE 3 - ADD LANES/WILDLIFE BRIDGES

UNNAMED CREEK (MP 65.1) SITE PLANS

Plot 6

PLAN REF NO CR3-6

SHEET OF SHEETS