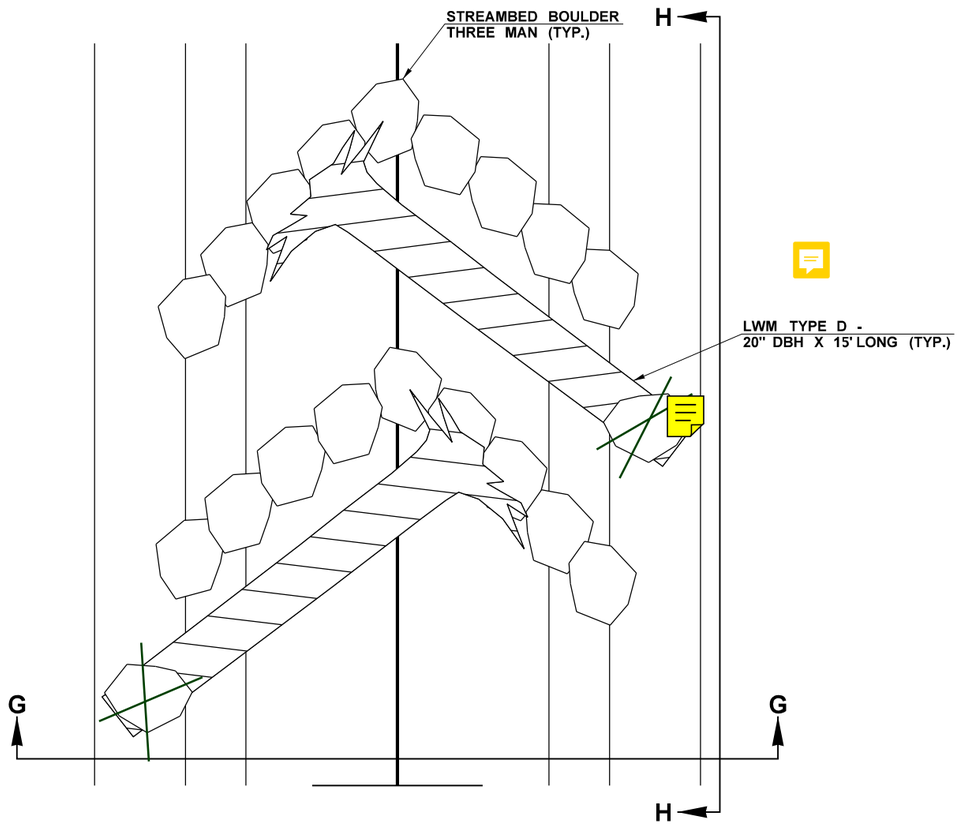

LWM STRUCTURE TYPE D

NOT TO SCALE

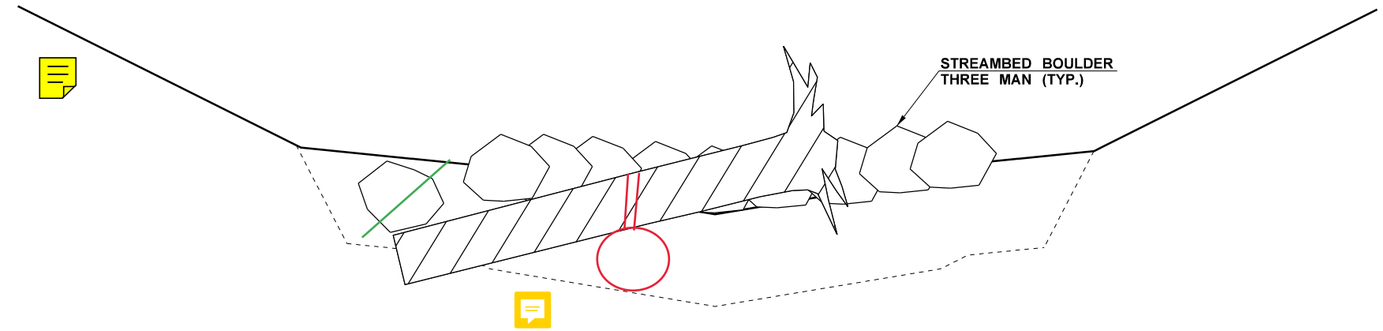

SECTION G-G

NOT TO SCALE

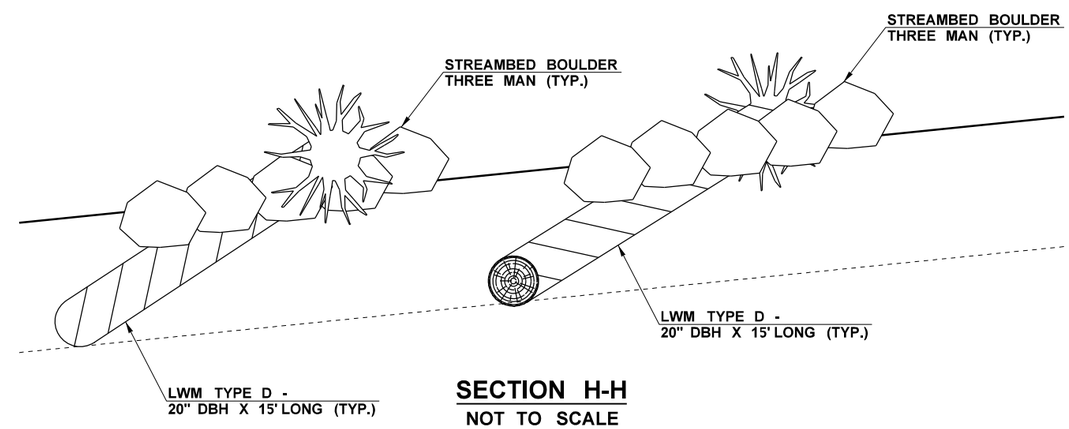

SECTION H-H

NOT TO SCALE

FILE NAME	K:\452201\090\06736_Phase 3\Design_CAD_Sheets\105-SitePlans\XL5479_PS_LWM_Details.dgn						
TIME	10:07:08 PM				REGION NO. 10	STATE WASH	FED.AID PROJ.NO.
DATE	11/21/2021						
PLOTTED BY	kingk				JOB NUMBER		
DESIGNED BY							
ENTERED BY							
CHECKED BY					CONTRACT NO.		LOCATION NO.
PROJ. ENGR.							
REGIONAL ADM.		REVISION	DATE	BY			

P.E. STAMP BOX DATE

P.E. STAMP BOX DATE

Washington State
Department of Transportation

Plot 4

PLAN REF NO

SHEET

OF

SHEETS

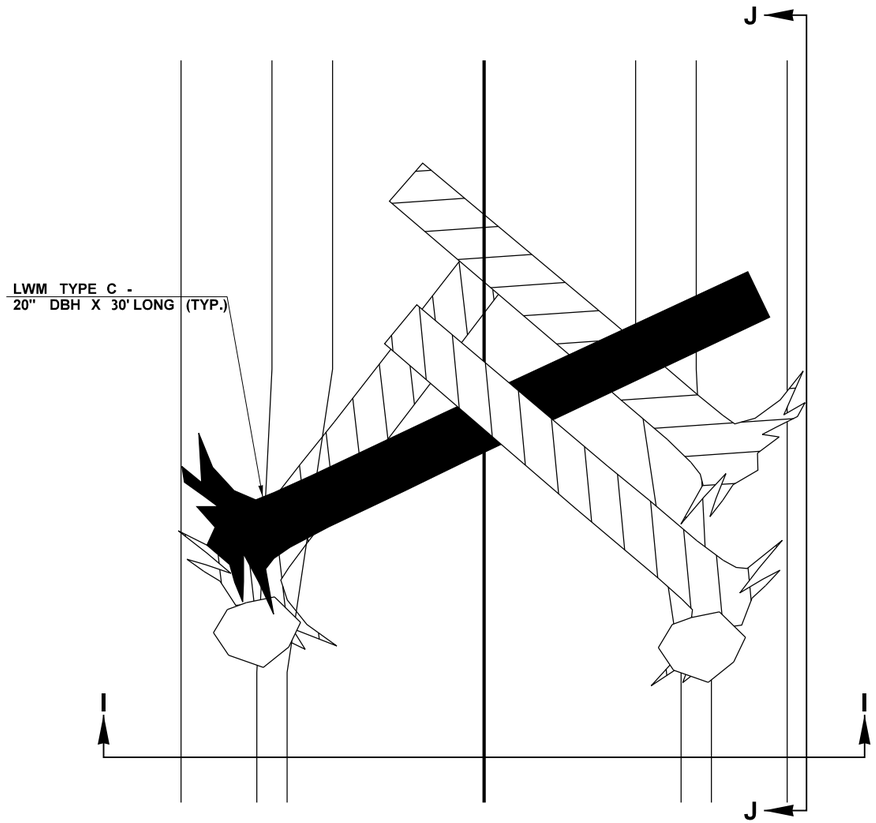

LWM STRUCTURE TYPE E

NOT TO SCALE

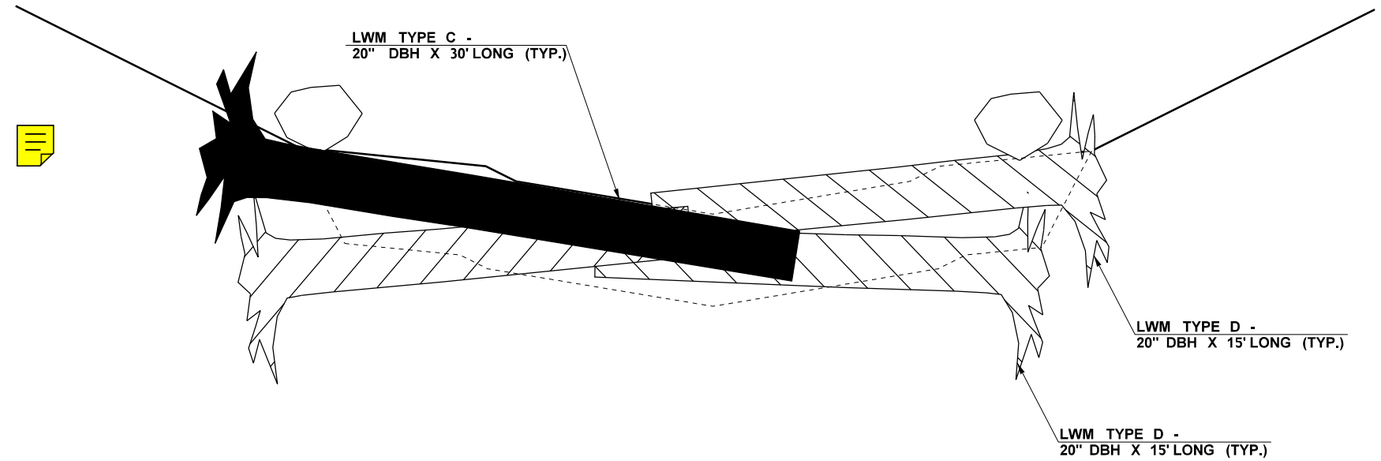

SECTION I-I

NOT TO SCALE

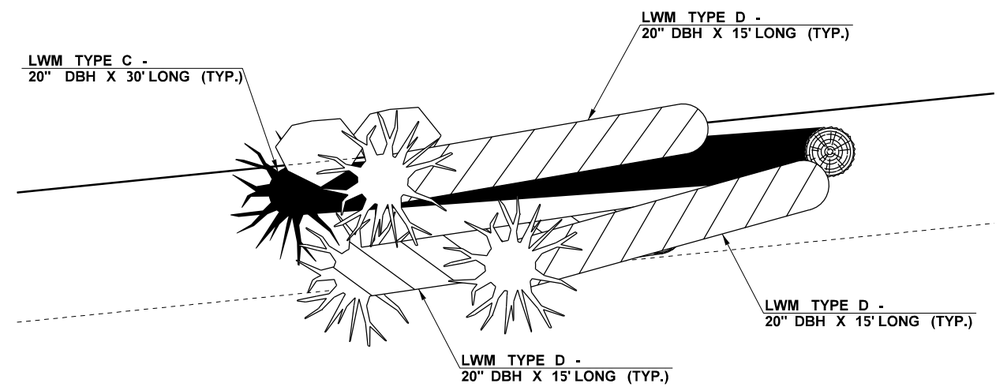

SECTION J-J

NOT TO SCALE

FILE NAME	K:\452201\090\06736_Phase 3\Design_CAD_Sheets\105-SitePlans\XL5479_PS_LWM_Details.dgn							Plot 5
TIME	10:07:09 PM				REGION NO. 10	STATE WASH	FED.AID PROJ.NO.	PLAN REF NO
DATE	11/21/2021							
PLOTTED BY	kingk				JOB NUMBER			SHEET
DESIGNED BY								OF
ENTERED BY								
CHECKED BY					CONTRACT NO.		LOCATION NO.	SHEETS
PROJ. ENGR.								
REGIONAL ADM.		REVISION	DATE	BY				

P.E. STAMP BOX DATE

P.E. STAMP BOX DATE

Washington State
Department of Transportation

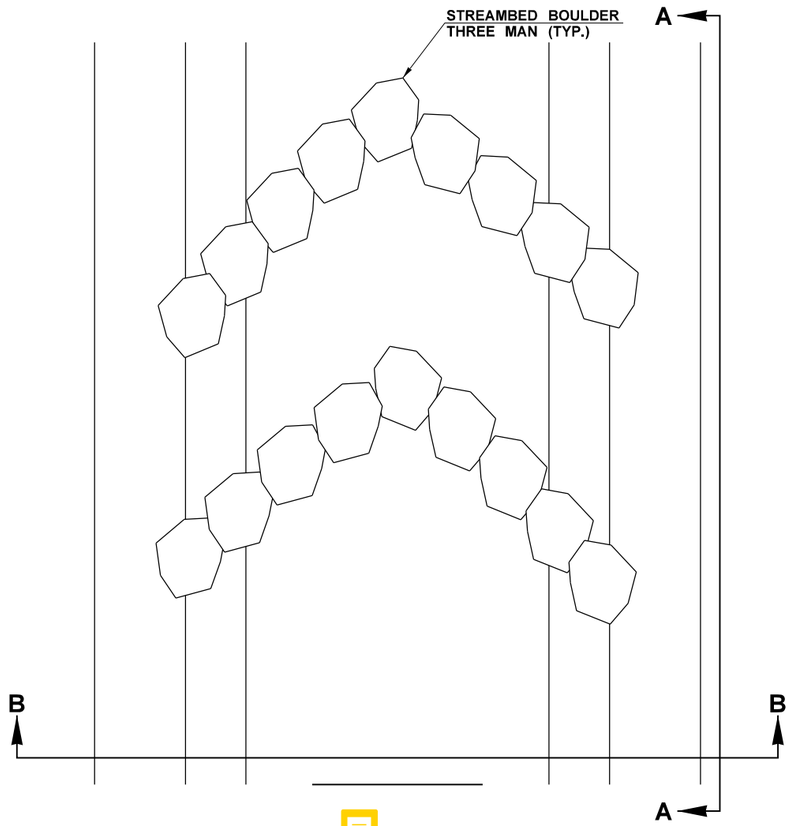

ROCK WIER STRUCTURE

NOT TO SCALE

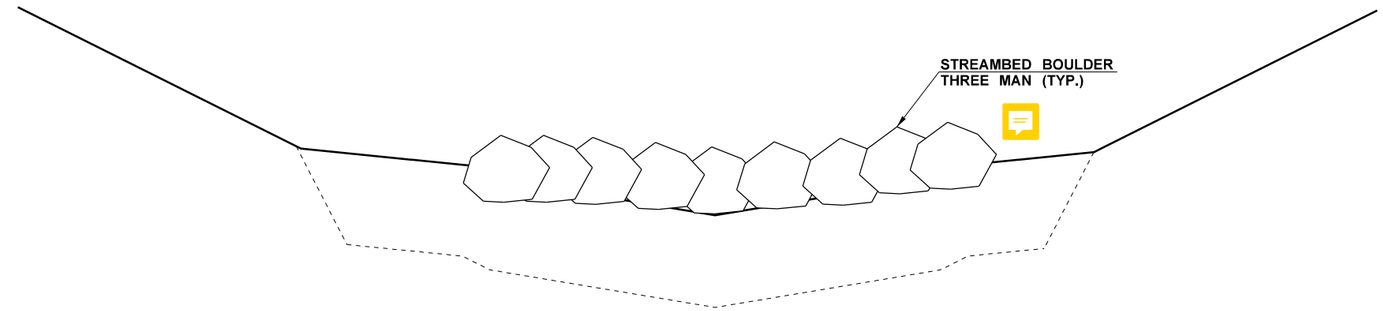

SECTION B-B

NOT TO SCALE

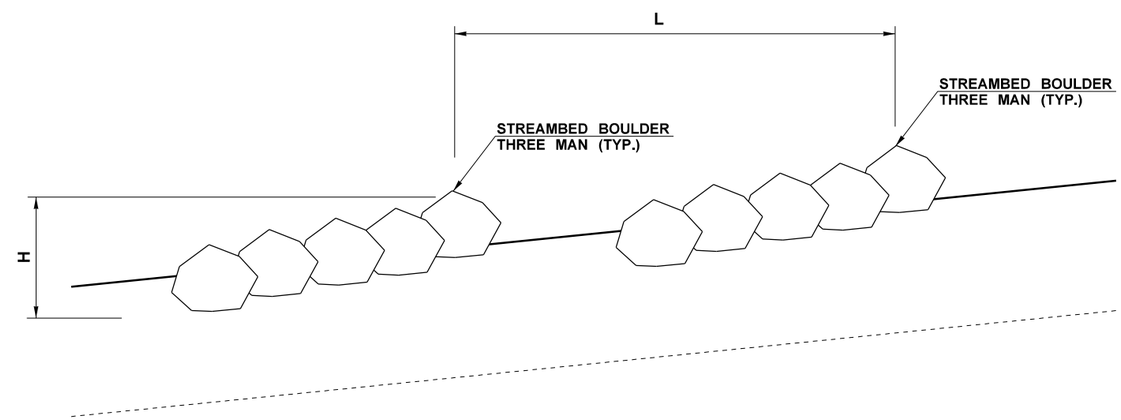

SECTION A-A

NOT TO SCALE

FILE NAME	K:\452201\090\06736_Phase 3\Design_CAD_Sheets\105-SitePlans\XL5479_PS_LWM_Details.dgn			REGION NO.	STATE	FED.AID PROJ.NO.
TIME	10:07:14 PM			10	WASH	
DATE	11/21/2021			JOB NUMBER		
PLOTTED BY	kingk					
DESIGNED BY						
ENTERED BY				CONTRACT NO.		LOCATION NO.
CHECKED BY						
PROJ. ENGR.						
REGIONAL ADM.		REVISION	DATE	BY		

P.E. STAMP BOX DATE

P.E. STAMP BOX DATE

Washington State
Department of Transportation

Plot 4

PLAN REF NO

SHEET

OF

SHEETS

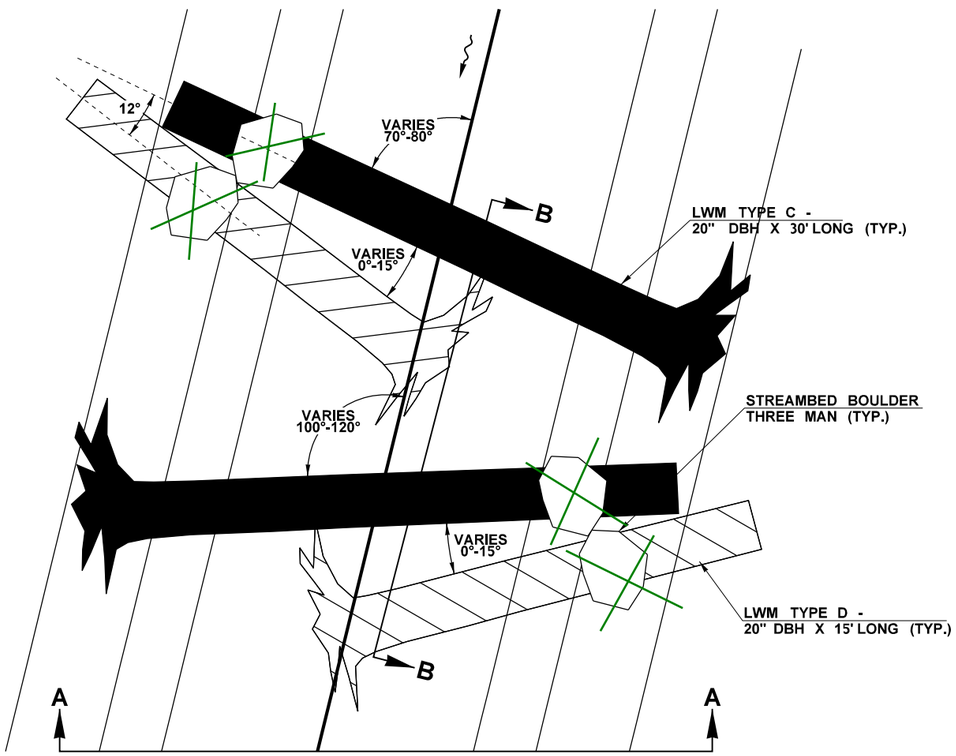

LWM STRUCTURE TYPE A

NOT TO SCALE

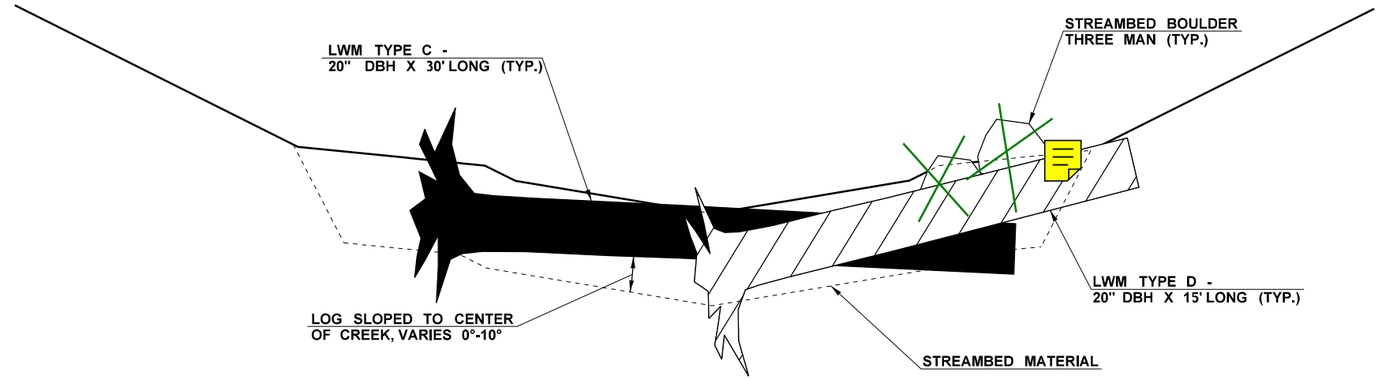

SECTION A-A

NOT TO SCALE

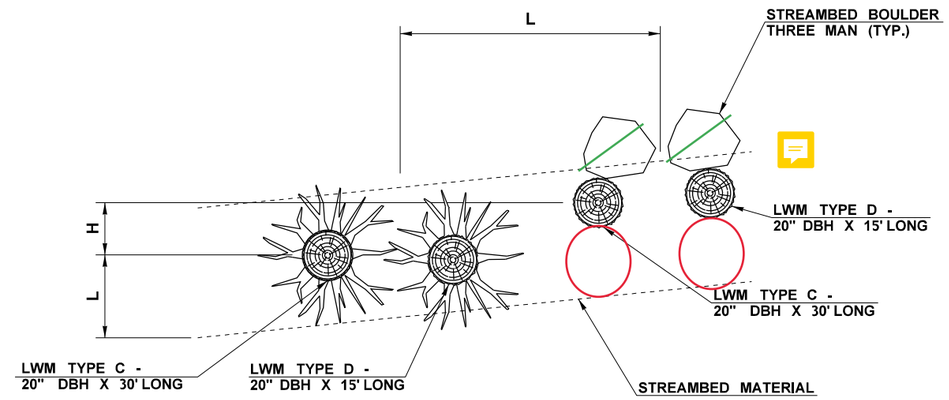

SECTION B-B

NOT TO SCALE

FILE NAME	K:\452201\090\06736_Phase 3\Design_CAD_Sheets\105-SitePlans\XL5479_PS_LWM_Details.dgn						
TIME	10:07:15 PM				REGION NO. 10	STATE WASH	FED.AID PROJ.NO.
DATE	11/21/2021						
PLOTTED BY	kingk				JOB NUMBER		
DESIGNED BY	HQ HYDRAULICS						
ENTERED BY	SCR PD						
CHECKED BY	K. KING				CONTRACT NO.		LOCATION NO.
PROJ. ENGR.	A. BYRD						
REGIONAL ADM.	T. TREPANIER	REVISION	DATE	BY			

DATE
P.E. STAMP BOX

DATE
P.E. STAMP BOX

Washington State
Department of Transportation

I-90
CABIN CREEK I/C TO W EASTON I/C
PHASE 3 - ADD LANES/WILDLIFE BRIDGES

LWM DETAILS

Plot 1
PLAN REF NO

SHEET
OF
SHEETS