WASHINGTON STATE DEPARTMENT OF TRANSPORTATION
BRIDGE & STRUCTURES BRANCH

Project 3rd Lake Wash. Floating Br. Stage II Sheet No. 2 of sheets
S. R. 90 Made by YMT Check by Date 3/83 Supv YFC/KTS

Transv. Rdwy slab design – portion of pontoon D near wall 13

Materials:

strand : 4 ~ 0.6"φ strand $f_s' = 270^{ksi}$ $A_s = .868^{in^2}$

size of duct: 1" x 3" oval shape.

Bar Tendon – under investigation for the way of placing bar tendon thru all transv. C & I precast units with a rdwy. slope of .02'/ft. from the median barrier (KTS 3/7/83) ($1\frac{3}{8}$"φ w/ 2"φ duct)

Concrete $f_c' = 5^{ksi}$

Transv. Tendon profile: (c.g. of strand to top of rdwy slab)

$1L_1$ $\frac{1}{2}(9") = 4\frac{1}{2}"$

$2L_1$ $1\frac{1}{2}" + .75 + \frac{1}{2}" + Z \doteq 2\frac{3}{4}"$ (c.g. = 2.7 + Z ≐ 3" for design)

$\frac{3}{8}$" = 1'-0"

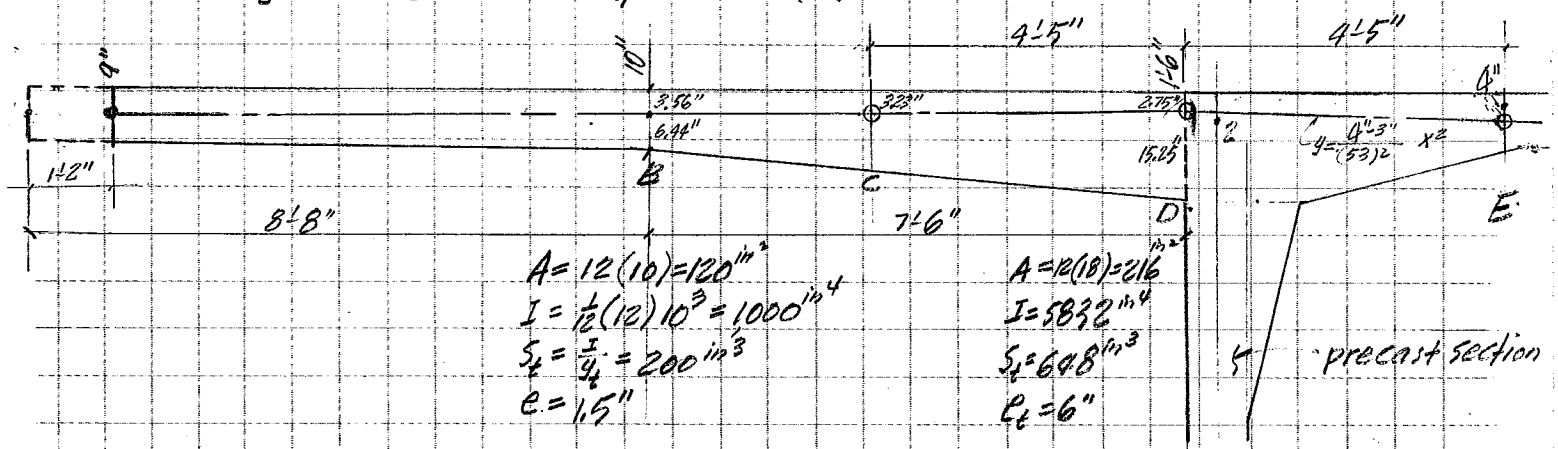

$A = 12(10) = 120^{in^2}$
$I = \frac{1}{12}(12)10^3 = 1000^{in^4}$
$S_t = \frac{I}{y_t} = 200^{in^3}$
$e = 1.5"$

$A = 12(18) = 216^{in^2}$
$I = 5832^{in^4}$
$S_t = 648^{in^3}$
$e_t = 6"$

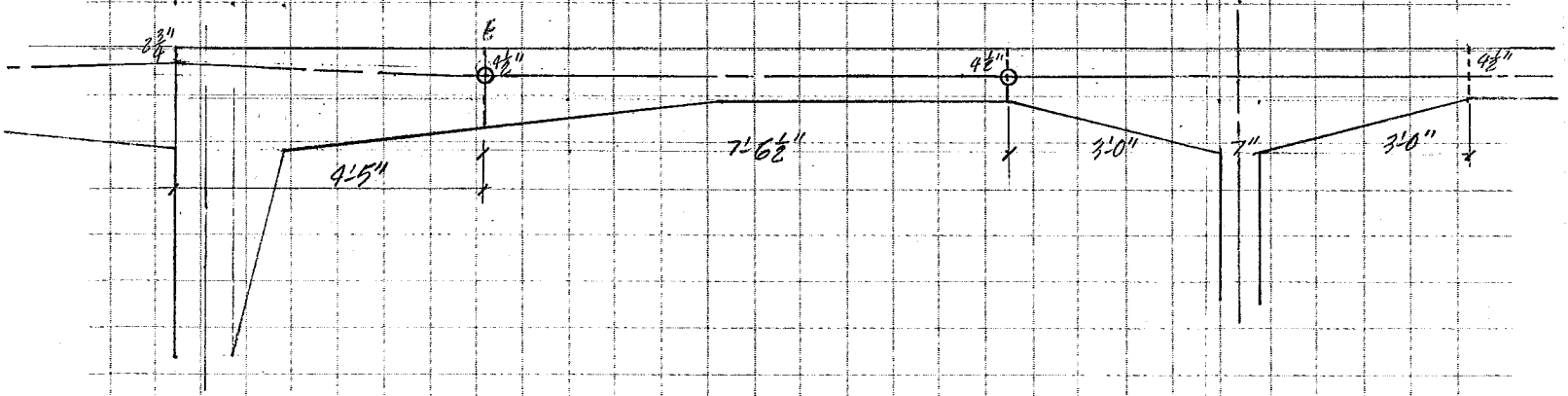

3300315

Angle Changes

A to D $\alpha \doteq \frac{2(4.5'' - 2.75'')\frac{1}{12}}{15'} = .0194$ rad.

D to E $\alpha \doteq \frac{2(4.5 - 2.75)\frac{1}{12}}{4.4167} = .0660$

E to L $\alpha = \frac{0}{43.67'} = 0$

L to Q $\alpha \doteq \frac{2(22.5' \times .02'/')}{22.5'} = .0400$

Q to R $\alpha \doteq .0660$

R to U $\alpha \doteq .0194$

Total angle changes = .2110 radians

$f_s' = 270^{ksi}$
$P_j = .75 f_s' = 202.5^{ksi} = T_0$
Anchor set 3/8"
$\mu = .25$
$K = .0002$

Friction losses and control point Jacking stress

JACKING @ A END

point A to D

$\mu\alpha + KL = .25(.0194) + .0002(15') = .0079$

$T_D = T_0 e^{-(\mu\alpha + KL)} = 200.91^{ksi} = .9922\ P_j$

point A to E

$\mu\alpha + KL = .25(.0194 + .066) + .0002(19.4167) = .0253$ (.0039)

$T_E = T_0 e^{-(\mu\alpha + KL)} = 197.45^{ksi} = .9751\ P_j$

point A to L

$\mu\alpha + KL = .25(.0194 + .066) + .0002(63.1) = .034$

$T_L = T_0 e^{-(\mu\alpha + KL)} = 195.74^{ksi} = .9666\ P_j$

point A to Q

$\mu\alpha + KL = .25(.0194 + .066 + .04) + .0002(85.583) = .0485$ (.1255)

$T_Q = T_0 e^{-(\mu\alpha + KL)} = 192.92^{ksi} = .9527\ P_j$

point A to R

$\mu\alpha + KL = .25(.1255 + .066) + .0002(90) = .0659$ (.1915)

$T_R = T_0 e^{-(\mu\alpha + KL)} = 189.59^{ksi} = .9362\ P_j$

point A to U

$\mu\alpha + KL = .25(.1915 + .0194) + .0002(105) = .0737$ (.2110)

$T_U = T_0 e^{-(\mu\alpha + KL)} = 188.10^{ksi} = .9289\ P_j$

33003158

Jacking stress @ R

$d = 202.5 - 189.59 = 12.91^{ksi}$ $\Delta L = \frac{3}{8}''$

$X = \sqrt{\frac{28000(3/8)\ 90}{12(12.91)}} = 78.1' < 90'$ o.k.

$\Delta f = \frac{2dX}{L} = \frac{2(12.91)\ 78.1}{90} = 22.41^{ksi} = .1106\ P_j$

JACKING @ U END

point U to R

$\mu\alpha + KL = .25(.0194) + .0002(15') = .0079$

$T_R = T_0 e^{-(\mu\alpha + KL)} = 200.91^{ksi} = .9922\ P_j$

point U to Q

$\mu\alpha + KL = .0253$

$T_Q = T_0 e^{-(\mu\alpha + KL)} = 197.45^{ksi} = .9751\ P_j$

point U to L

$\mu\alpha + KL = .25(.0194 + .066) + .0002(41.92) = .0298$

$T_L = T_0 e^{-(\mu\alpha + KL)} = 196.56^{ksi} = .9707\ P_j$

point U to E $\alpha_{CE} = \frac{2(43.67 \times .02\frac{1}{2})}{43.67} = .04$

$\mu\alpha + KL = .25(.0194 + .066 + .04) + .0002(85.5833) = .0485$

$T_E = T_0 e^{-(\mu\alpha + KL)} = 192.92^{ksi} = .9527\ P_j$

point U to D

$T_E = 189.59^{ksi} = .9362\ P_j$

point U to A

$T_A = 188.10^{ksi} = .9289\ P_j$

Jacking stress @ D

$d = 202.5 - 189.59 = 12.91^{ksi}$

$X = 78.1' < 90'$

$\Delta f = \frac{2dX}{L} = 22.41^{ksi}$

33003159

WASHINGTON STATE DEPARTMENT OF TRANSPORTATION
BRIDGE & STRUCTURES BRANCH
Project 3rd Lake Wash. Floating Br. Stage II Sheet No. 5 of sheets
S. R. 90 Made by YMT Check by Date 3/83 Supv. YFC/RTS

Transv. Rdwy slab design
Cantilever Slab (North) (* Loading Condition adivsed by AWB RTS 3/23/83)

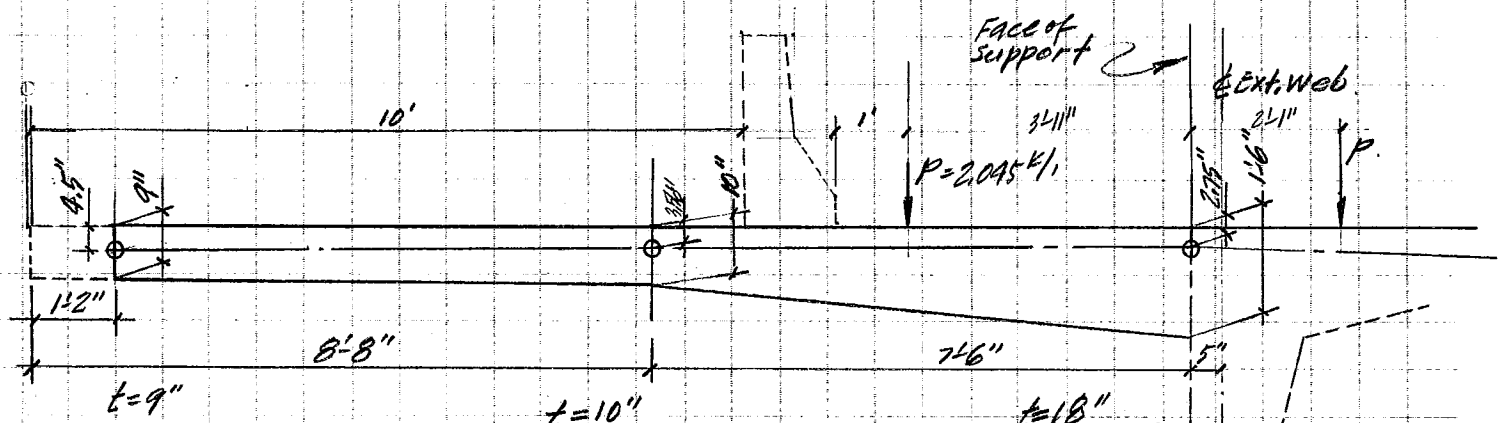

$t=10"$
$A=12(10)=120^{in^2}$
$S=\frac{1}{6}(12)(10)^2=200^{in^3}$
$e=1.44"$

$t=18"$
$A=216^{in^2}$
$S=648^{in^3}$
$e=6.25$ (6" for design)

M. @ Face of support ~ t=18"

Loadings:

D.L.: pedestrian Railing .015 k/' @ 16.17' = .24 k'
Traffic Barrier .009 k/' @ 5.7' = 2.33
Slab .75'(.160 kcf) $\frac{1}{2}(16.17)^2$ = 15.69
$\frac{1}{2}[\frac{1}{12}(8.67')\cdot.16^{kcf}(7.5+\frac{8.67}{3})]$ = .68
$\frac{1}{2}(\frac{1}{12})\cdot.160(7.5)^2$ = .38
$\frac{1}{6}(.67)\cdot.160(7.5)^2$ = 1.01
20.33 k'

$1\frac{1}{2}$" overlay $\frac{1}{2}[\frac{1.5}{12}(.150)(16.16)^2$ = 2.45
22.78 k'

LL. pedestrian @ 85 psf
.085 ksf (10') 11.17' = 9.49 k' (w/I = 12.34 k')

HS-20 $16^k(1.3)[.36+1.25(.02)]$ = 8.01 $P_{equiv.}=2.045^k$

$M=M_{DL}+M_{L+I}=22.78^{k'}+20.35^{k'}=43.2^{k'}$

Temporary condition: (Cantilever slab only)
$M=15.69^{k'}+.68+.38+1.01=17.76$ @ Face of support.

33003160

WASHINGTON STATE DEPARTMENT OF TRANSPORTATION
BRIDGE & STRUCTURES BRANCH

Project 3rd Lake Washington Floating Br. Stage II Sheet No. 6 of ____ sheets
S. R. 90 Made by YMT Check by ____ Date 3/83 Supv. YFC/RTS

Cantilever slab (south) (* Loading condition advised by AWK RTS 3/23/83)

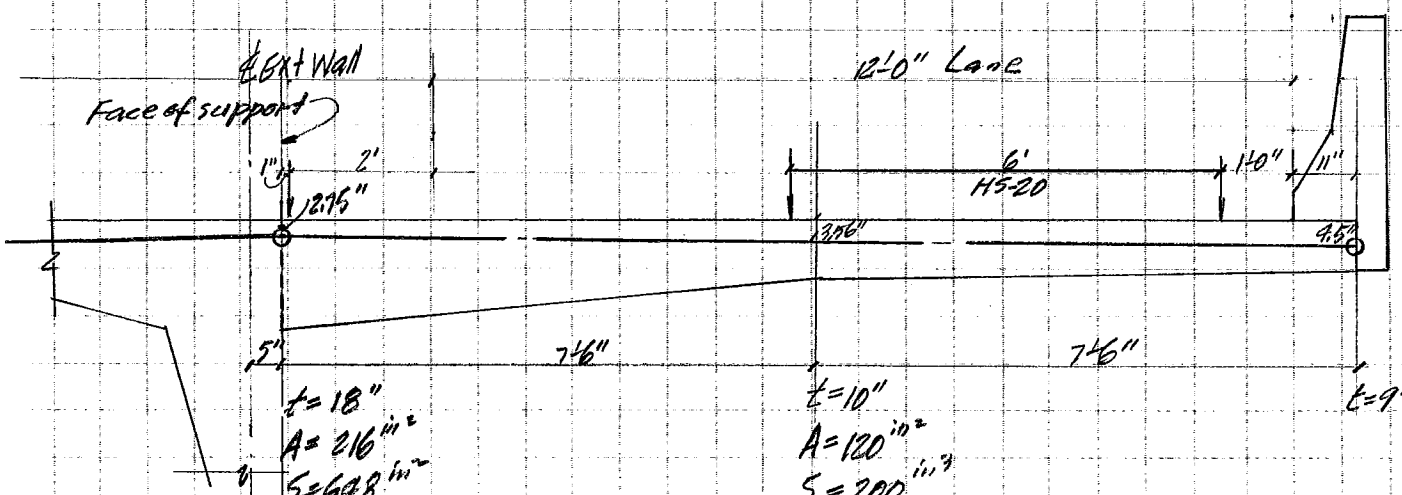

Moments @ Face of Support ~ t=18"

Loadings

D.L. Traffic Barrier .409 k/' x 15' = 6.135 k'

9" Slab .75'(.160) ½(15)² = 13.5

½(1/12)(7.5).160(7.5+7.5/2) = .563

½(1/12).160(7.5)² = .38

1/6(.67).160(7.5)² = 1.01

21.59 k'

1½" overlay ½(1.5/12).150(15)² = 2.11

23.7 k'

HS 20 $M_{HS20} = 16(1.3)[.54+.43+1.25(.18+.065)] = 26.55$ k'/ft.

Rail Rapid Transit:

$M_{RR} = 12.533^k(1.3)[.48+.39+.30+.125+.125+.035+.046+.011] = 24.64$ k'/' $< M_{HS20}$

$M = M_{DL} + M_{L+I} = 23.7^{k'} + 26.55 \doteq 50.3^{k'}$

Moments @ near Mid span ~ t=10"

Traffic Barrier .409 k/'(7.5') = 3.07 k'

9" slab .75(.160) ½(7.5)² = 3.375 k'

1/6(1/12).160(7.5)² = .125 k'

6.57 k'

HS-20 $16^k(1.3)[.245+1.25(.085+.024)] = 7.93$ k'/ft

$M = M_{DL} + M_{L+I} = 6.57 + 7.93 = 14.50^{k'}$

Temporary condition: (Cantilever slab only)

$M = 3.375^{k'} + .125 + 7.93 = 11.43^{k'}$

33003161

WASHINGTON STATE DEPARTMENT OF TRANSPORTATION
BRIDGE & STRUCTURES BRANCH

Project 3rd Wash Floating Br. stage II Sheet No. 7 of ____ sheets
S. R. 90 Made by YMY Check by ____ Date 3/83 Supv. YFC/RTS

No. of strands required (Cantilever slab-south)

M_1 @ Face of support (South) $= M_D + M_{LL+I} = 23.7^{k'} + 26.6^{k'} = 50.3^{k'}$

$f_t = 0 = \frac{.760\,P_j}{216} + \frac{.760(6'')P_j}{648} - \frac{50.3^{k'}(12)}{648}$ $P_j = 88.32^k$

No. of .6"φ strand req'd. per Ft. $= \frac{88.32^k}{\frac{.868}{4}(.75 f_s')} = 2.01$ strands/Ft.

4~.6"φ strands @ Max. Spa. $= \frac{4(12)}{2.01} = 23.9''$ $\overset{*}{>}$ 1'-9" stage I using
21"

Try 4~.6"φ strands @ 1'-9"

$P_j' = .868(.75 P_j)\frac{1}{1.75} = 100.44^k/Ft.$ $.760 P_j = 76.27^k/Ft$

1 Stress @ Face of support: Final condition (comp.)

$f_t = -\frac{.760 P_j}{216} - \frac{.760(6'')P_j}{648} + \frac{50.3^{k'}(12)}{648} = -.128^{ksi} < 4\sqrt{f_c'} = 2^{ksi}$ O.K

$f_b = -.353^{ksi} + .706 - .932 = -.578^{ksi} < 4\sqrt{f_c'}$ O.K

2 Stress @ Face of support: Temporary condition w/o Traffic Barrier & overlay.

$f_t = -\frac{.760 P_j}{216} - \frac{.760(6)P_j}{648} + \frac{15.45^{k'}(12)}{648} = -.773^{ksi} < 4\sqrt{f_c'}$

$f_b = -.353 + .706 - .286 = .067^{ksi}$ Tension, @ Time of P/S But.

3 Stress @ Face of support: (w/o LL)

$f_t = -.353 - .706 + \frac{23.7^{k'}(12)}{648} = -.621^{ksi} < 4\sqrt{f_c'}$ O.K.

$f_b = -.353 + .706 - .440 = -.086^{k'}$

33003162

Ultimate Moment capacity @ Final condition (cantilever slab - south)

$M_{UA} = 1.3(23.7^{k'}) + 2.16(26.55^{k'}) = 88.34^{k'}$

$A_s^* = .868^{in^2}$ @ 1'-9" spa. $= \frac{.868^{in^2}}{1.75'} = .496^{in^2}/ft.$

$f_c' = 5^{ksi}$ $b = 12''$ $d = 18'' - 3'' = 15''$

$p^* = \frac{.496}{12(15)} = .0028$

$f_{su}^* = f_s'\left(1 - .5\frac{p^* f_{su}}{f_c'}\right) = 270\left[1 - (.5)\frac{.0028(270)}{5}\right] = 249.91^{ksi}$

$p^* \times \frac{f_{su}^*}{f_c'} = .0028 \cdot \frac{249.91}{5} = .138 < .30$ o.k.

The moment capacity:

$M_u = A_s^* f_{su}^* d\left(1 - .6\frac{p^* f_{su}^*}{f_c'}\right)$

$= .496(249.9)\,15\left[1 - (.6)\frac{.0028(249.9)}{5}\right]\frac{1}{12} = 142.^{k'} > M_{UA}$ o.k.

Stresses @ Mid-span of cantilever slab - south $t = 10''$

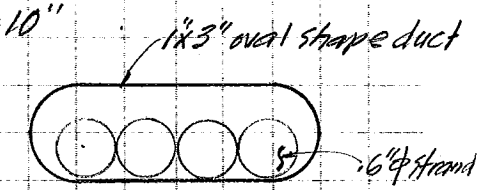

Final condition

$-M_W = M_{DL} + M_{L+I} = 6.57^{k'} + 7.93^{k'} = 14.50^{k'}$

$f_t = -\frac{.760 P_i}{120} - \frac{.760(1.2'')P_i}{200} + \frac{14.50(12)}{200} = -.223 < 4\sqrt{f_c'}$ o.k.

$f_b = -.636 + .458 - .870 = -1.048 < 4\sqrt{f_c'}$

Temporary condition

$-M_W = M_{DL} + M_{L+I} = 11.43^{k'}$

$f_t = -.636 - .458 + \frac{11.43(12)}{200} = -.408^{ksi} < 4\sqrt{f_c'}$ o.k.

$f_b = -.636 + .456 - .686 = -.864^{ksi} < 4\sqrt{f_c'}$ o.k.

33003163

WASHINGTON STATE DEPARTMENT OF TRANSPORTATION
BRIDGE & STRUCTURES BRANCH

Project ..... Sheet No. 9 of ..... sheets

S. R. ..... Made by ..... Check by ..... Date 3/83 Supv. .....

(A) Cantilever slab Loading @ D (North) — Face of Ext. wall

Most conservative Loading — W/T.B. @ Edge of slab, wheel load 1 ft from curb line.

Traffic Barrier $M_{T.B.} = .409^{k}(16.16') = 6.61^{k'}$

D.L. of cantilever slab

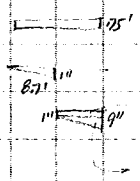

$\frac{1}{2}(.75')\cdot 160^{kcf}(16.16')^2 = 15.68^{k'}$

$\frac{1}{2}(\frac{1}{12})8.67'(.160)(7.5+\frac{8.67}{3}) = .60$

$\frac{1}{2}(\frac{1}{12}'')\cdot 160(7.5)^2 = .375$

$\frac{1}{6}(.75)\cdot 160(7.5)^2 = 1.125$

$\Big\}\ 17.782^{k'}$

$1\frac{1}{2}''$ overlay $\frac{1}{2}(\frac{1.5''}{12})\cdot 150(16.16')^2 = 2.45$

$26.84^{k'}$

LL+I $= 35.34^{k'}$ (27.9$^{k'}$ one lane load)*

* one lane load rather than 2 lane load.

Final condition (S1) $D + L + I + H^{\to 0} + K^{\to 0}$

$-M = 26.84^{k'} + 35.34^{k'} = 62.18^{k'}$
(27.9$^{k'}$)* (54.7$^{k'}$)*

Temp. condition: (w/o T.B. LL, overlay, but D.L of cantilever slab)

$-M = 17.78^{k'}$

(B) Cantilever slab load @ B

Most conservative Loading

Traffic Barrier $M_{T.B.} = .409^{k}(8.67') = 3.545^{k'}$

Slab ▭ $\frac{1}{2}(.75)\cdot 160(8.67)^2 = 4.507$

◁ $\frac{1}{6}(\frac{1}{12})\cdot 160(8.67)^2 = .167$

$8.22^{k'}$

LL+I = $8.93^{k'}$

Final condition (S1) $D + L + I + H^{\to 0} + K^{\to 0}$

$-M = 8.22 + 8.93 = 17.15^{k'}$

Temp. condition $-M = 8.22^{k'}$

33003164

No. of strand req'd @ cantilever slab "D"

Final condition

* one Lane Load @ cantilever slab

$-M_W = M_{DL} + M_{L+I} = 62.2^{k'}$ *(54.7k')

$f_t = 0 = \frac{.7742\,P_j}{216^{in^2}} + \frac{.774(6'')P_j}{648^{in^3}} - \frac{62.2^{k'}(12)}{648^{in^3}}$ *(54.7k') $P_j = 107.12^k$ *(94.2k)

No. of .6"φ strand req'd. per Ft $= \frac{107.12^k}{\frac{.868}{4}(.75f_s')} = 2.44$ strands/Ft (94.2k) (2.144)

4~.6"φ strand @ spa. $= \frac{4(12)}{2.4378} = 19.7'' \doteq 1'\text{-}9''$ to match stage I (*(2.144)) *(22.4")

6.65% over stress @ most fictitious loading condition

use 4~.6"φ strand @ 1'-9" spa.

$P_j = .868(.75f_s')\frac{1}{1.75} = 100.44^k$

$f_t = \frac{.774\,P_j}{216} + \frac{.774(6)P_j}{648} - \frac{62.2(12)}{648} = .36 + .72 - 1.152 = -.0715^{ksi} < 3\sqrt{f_c'} = 212^{ksi}$ (.760Pj) *(54.7k) *(1.013) .0925 small tension *(.067 ksi comp.)

$f_b = .36^{ksi} - .72 + 1.152 = .792^{ksi} < .4f_c' = 2^{ksi}$ (1.013) (.653) O.K.

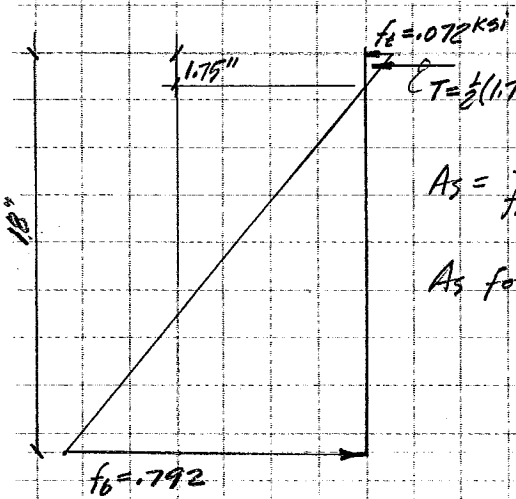

$T = \frac{1}{2}(1.75'')\,.072^{ksi} = .063^{k/'}$

$A_s = \frac{T}{f_s} = \frac{.063^{k/'}}{24^{ksi}} = .0026^{in^2/'}$

A_s for T+SH $= \frac{1}{8}^{in^2/'}$

$A_s = .128^{in^2/'} < \#4 @ 18''\ A_s = .13^{in^2/'}$

Temporary construction condition (w/o LL, traffic Barriers, 1½" overlay)

$-M_W = 17.8^{k'}$

$f_t = \frac{.774\,P_j}{216} + \frac{.774(6)P_j}{648} - \frac{17.8^{k'}(12)}{648} = .36 + .72 - .33 = .750^{ksi} < .4f_c'$ O.K.

$f_b = .36^{ksi} - .72 + .33 = -.030^{ksi}$ small

33003165

Ultimate Moment capacity @ Final condition "D"

$M_{uA} = 1.3(26.84) + 2.16(35.34) = 111.5^{k'}$

$A_s^* = .868^{in^2}$ 4 ~ .6" ϕ strands

$f_c' = 5^{ksi}$

$b = 12''$ $d = 18 - 3 = 15''$

$p^* = \frac{A_s^*}{bd} = \frac{.868}{12(15)} = .0048$

$f_{su}^* = f_s'\left(1 - .5\frac{p^* f_{su}}{f_c'}\right) = 270\left[1 - (.5)\frac{.0048(270)}{5}\right] = 234.85^{ksi}$

$p^* \frac{f_{su}^*}{f_c'} = .0048\left(\frac{234.85}{5}\right) = .227 < .30$ o.k.

The Moment capacity

$M_u = A_s^* f_{su}^* d\left(1 - .6\frac{p^* f_{su}}{f_c'}\right)$

$= .868(234.85)15\left[1 - (.6)\frac{.0048(234.85)}{5}\right]\frac{1}{12} = 220^{k'} > M_{uA}$ o.k.

Stress @ cantilever slab $t = 10''$

Final condition

$-M_W = M_D + M_{L+I} = 8.22 + 8.93^{k'} = 17.2^{k'}$

$f_t = \frac{.774 P_i}{120} + \frac{.774(1.5) P_i}{200} - \frac{17.2(12)}{200} = .648^{ksi} + .583 - 1.032 = .199^{ksi} < .4f_c'$ o.k.

$f_b = .648 - .583 + 1.032 = 1.10^{ksi} < .4f_c'$ o.k.

Temporary construction condition (w/o LL. Traffic Barrier & 1½" overlay)

$-M_W = 8.22^{k'}$

$f_t = .648 + .583 - \frac{8.22(12)}{200} = .738^{ksi} < .4f_c'$

$f_b = .648 - .583 + .493 = .558 < .4f_c'$ o.k.

3800316 6

X

WASHINGTON STATE DEPARTMENT OF TRANSPORTATION
BRIDGE & STRUCTURES BRANCH

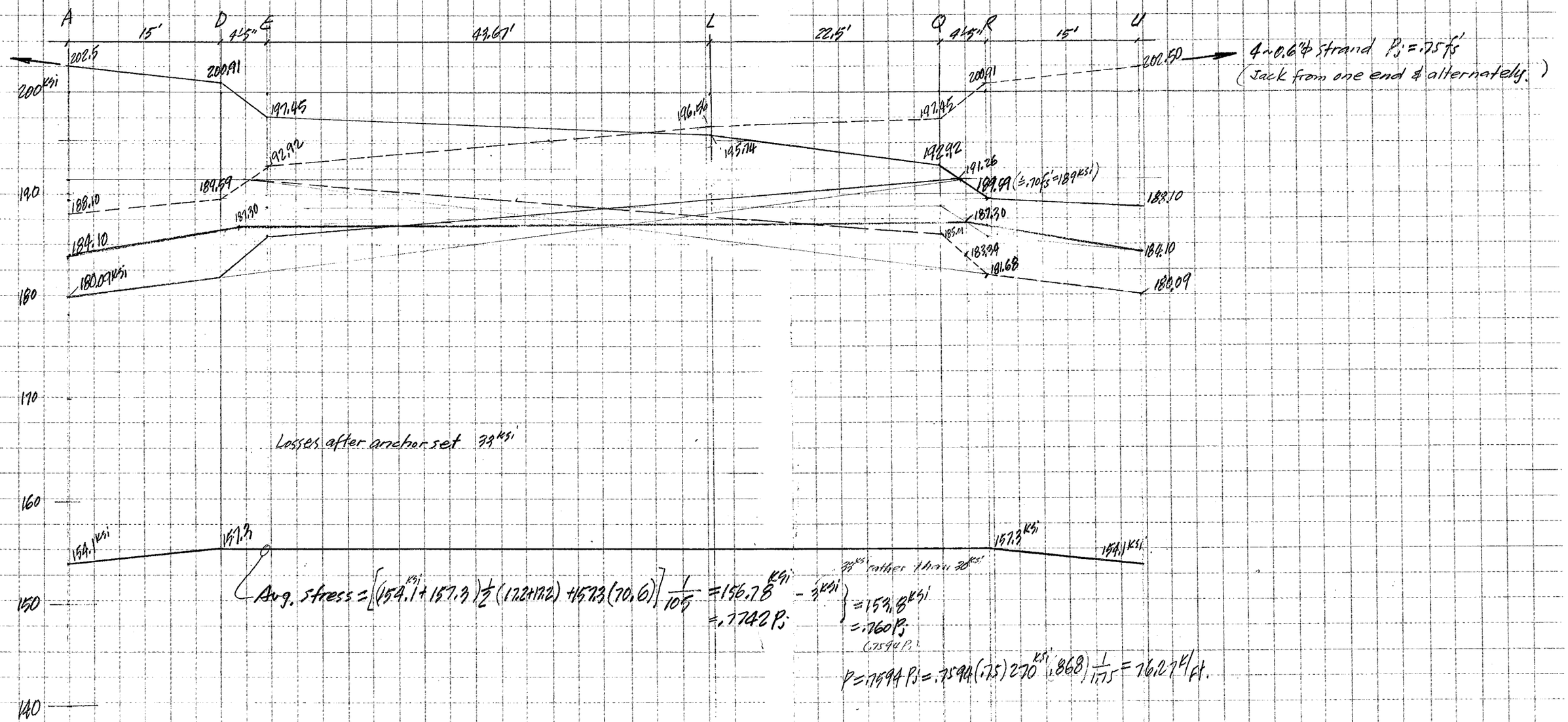

33003167

DOT Form 232-007 Revised 10/82

WASHINGTON STATE DEPARTMENT OF TRANSPORTATION
BRIDGE & STRUCTURES BRANCH

Project..... Sheet No. 13 of..... sheets
S. R. ..... Made by ..... Check by ..... Date 3/3/ Supv. .....

Cantilever slab (North)
Shear @ connection

D.L.

			Moment Arm		
Pedestrian Railing	.015 k/'	x	16.17'	=	.24 k'
Traffic Barrier	.409	x	5.7	=	2.33
9" slab .75'(.16)16.17' =	1.940	x	$\frac{1}{2}$(16.17)	=	15.69
1" Taper $\frac{1}{2}[\frac{1}{12}(8.67)\cdot.160]$ =	.058	x	$(7.5)+\frac{8.67}{3}$ 10.39	=	.68
1" thickening $\frac{1}{12}(.160)7.5$ =	.10	x	$\frac{1}{2}$(7.5)	=	.38
1" Taper $\frac{1}{2}(.67)\cdot.16(7.5)$ =	.40		$\frac{1}{3}$(7.5)	=	1.01
	3.822 k/'				20.33 k

$1\frac{1}{2}$" overlay $\frac{1.5"}{12}(.150)16.17$ = .303 k/' x $\frac{1}{2}$(16.17) = 2.45
4.125 k/' 22.78 k'

L.L. pedestrian @ $\frac{85^{psf}}{1000}(10)$ = .85 k/' x 11.17 9.49 k'

HS 20. (L+I) 2.04 k 8.01 k'

$V = DL + (LL+I) = 4.125^{k/'} + (.85)1.3 + 2.04 = 7.27^{k}$
$V_n = 1.3(DL) + 2.16(LL+I) = 5.36^{k} + 28.58 = 33.94^{k}$
$M = M_{DL} + M_{L+I} = 22.78 + 9.49^{k'}(1.3) + 8.01 = 43.127^{k'}$

AASHTO p.136. The shear stress carried by the shear key shall not exceed $2\sqrt{f_c'}$
$2\sqrt{f_c'} = 2\sqrt{5000} = 141.42^{psi}$
thick of shear key $t = \frac{V}{2\sqrt{f_c'}(b)} = \frac{7.27^{k}(1000)}{141.42(12)} = 4.3"$

Shear-Friction

SLD $A_{vf} = \frac{V}{f_s\mu} = \frac{7.27^{k}}{24^{ksi}(1.0)} = .303^{in^2} < .53^{in/'} + 4 \sim .6"\phi$ strands

$v = \frac{V}{bd} = \frac{7.27^{k}(1000)}{12"(18-2.55)} = 39.2^{psi} < .09f_c' = .09(5000) = 450$
$< 360^{psi}$ max.

LFD. $A_{vf} = \frac{V_n}{f_y\mu} = \frac{33.94^{k}}{60^{ksi}(1)} = .566^{in^2}$

$v = \frac{33.94^{k}(1000)}{12(18-2.55)} = 183^{psi} < .2f_c' = .2(5000) = 1000^{psi}$
< 800 psi O.K.

33003168

DOT FORM 232-007 REVISED 9/81 Sheet No.