Use of 1-90 Floating Bridge for Rail Transit Technical Memorandum

DRAFT

November 11, 1991

Planning and Engineering Services for Phase II
of the Metro Regional Transit Project

Prepared by
Parsons Brinckerhoff /Kaiser Engineers Team

USE OF I-90 FLOATING BRIDGE FOR RAIL TRANSIT

TECHNICAL MEMORANDUM

Submitted to:

METRO
821 Second Avenue
Seattle, Washington 98104

Submitted by:

Parsons Brinckerhoff/Kaiser Engineers Team
999 Third Avenue
Seattle, Washington 98104

November 11, 1991

EXECUTIVE SUMMARY

Provision of high capacity transit service to the East Corridor requires crossing Lake Washington. The I-90 bridge was not designed by the Washington State Department of Transportation (WSDOT) to accommodate joint rail and High Occupancy Vehicle (HOV) use for that crossing. As the concepts for enhanced transit service to the East Corridor have gained detail during the system planning process, the need to assess the I-90 bridge's ability to accommodate the current transit scenario of joint operations has led to this updated analysis. Building on previous studies and analysis, this study had two major objectives related to the I-90 bridge and its use to support projected transit needs;

- Assess the ability of the floating bridge to support joint rail transit and bus operations/HOV's simultaneously; this relates to the unique qualities of the floating bridge, including its buoyancy and structural limitations.

- Evaluate the operational limitations of the bridge for joint operations. What restrictions, if any, would the bridge impose on its design and operation.

Previous studies have attempted to verify the live and dead load assumptions made by WSDOT in their design calculations. The general conclusions of this study conducted at a conceptual level of engineering with only limited data on the bridge structure,and previous studies, was that while WSDOT's calculations were based on a different rail vehicle than currently envisioned, live load differences probably presented no significant problems. WSDOT used a dead load calculation of 133 pounds per linear foot for the rail transit dead load contribution. Previous studies, particularly that performed by Raymond Kaiser Engineers and used in the later work performed by ABAM Engineers, indicated that a typical light transit system dead load allowance was approximately 293 pounds per linear foot when the weight of all components and not just the trackwork were included in the calculation. These studies were based on an open track section that did not contain the concrete overlay necessary joint rail and bus use.

Based on the considerably heavier dead load requirements of 1,340 pounds per linear foot for a double track, low profile rail with direct fixation fasteners and a lightweight concrete overlay to accommodate joint use, the task of the review panel assembled for the analysis was to create a lighter joint use cross section. The review panel identified several alternative schemes for use of the 40' wide transitway. The alternatives recognized the joint use of the transitway. Based on an iterative definition / evaluation / refinement process the design for a joint use transitway was identified as a rail guideway using direct track fixation to the bridge deck, using low profile rail to minimize the depth of overlay needed to run buses and HOV's on the same surface, and using a light weight concrete for that running surface.

The key conclusion of this analysis is that the transitway can physically accommodate the rail system, buses and HOV's simultaneously. There are however, some operational and potential safety issues that result. The dead load impact of joint usage of the bridge includes a potential loss of almost 5" of freeboard on the floating portion of the bridge. This is after the concrete barriers are replaced with equivalent steel ones, for a significant weight savings. Additional weight savings, which reduce the loss of freeboard to less than one inch, may be possible by including approximately 1" of unbalance in the top of rails and grinding up to 1.5" off of the running surface of the bridge deck on the transitway. Since the running surface for vehicles will be restored when the overlay is placed on the deck after rail installation, this would be a temporary measure. In addition, it may be possible to increase the buoyancy of the floating portion of the bridge by adding additional floatation. WSDOT will need to determine what loss of freeboard, if any, would be acceptable.

Operating a rail transit system jointly with buses and HOV's on the bridge entails coordination of HOV, bus and rail system operations to a high degree. It would allow buses and HOV's to pass through the Mercer Island/Island Crest Station and the Rainier Avenue Station.

The combined operation of trains, buses and HOV's on the transitway requires a lower operating speed for the transitway than would be the case for buses/HOV's only or an exclusive rail operation. Specifically, an exclusive rail operation permits top speeds of 50 to 65 mph, and sometimes higher. Busways and HOV lanes can operate at 55 mph. Mixing buses and HOV's with trains would require slower speeds to allow a train operator to see any vehicle stopped ahead of the train and be able to stop the train in time. Since trains require considerable distance to fully stop from high speeds, lower speeds (25 to 35 miles per hour) are typical of such mixed traffic operations.

The inclusion of HOV's in the operation of the transitway with trains and buses introduces another constraint on operations. Specifically, while buses are not an integral part of rail operations and do force a reduced level of service, they are operated by professional drivers who may be instructed in unique safety and operations procedures. This includes safe exiting instructions and signal system conventions unfamiliar to the general public. Private cars in HOV lanes are operated by anyone who chooses to use them and has enough passengers to qualify as an HOV. Addition of HOV's to a busway increases the need for enforcement areas, breakdown areas and some communications capabilities. In short, the transitway becomes analogous to mixed traffic operations.

As regards the design of the HOV/bus lanes, the location of the rails is offset to the north side of the transitway due to the design of the bridge. Operating cars and buses in that alignment results in an awkward location for the breakdown lane, on the south side of the bridge across the eastbound travel lane. In addition, due to the dead load issue and the current design of the access ramps, no barrier separating opposing lanes has been included in the analysis. This does not comply with current WSDOT/FHWA criteria and may not be acceptable for safety reasons. If it is determined that HOV's will not jointly use the transitway, bus and rail operations using the configuration shown in Figure 3-1 should be possible.

Further analysis of the interaction between the rail, the bridge and the design of the transit system is required. The conclusion of this study is that the conditions encountered in using the bridge are technically feasible and the alternative remains feasible pending better definition of the transit requirements by the RTP team. In addition, the following recommendations are made:

1. Continue to use the I-90 bridge in planning for transit service to the East Corridor. Initiate further discussions with WSDOT and FHWA regarding the use of the I-90 bridge for enhanced transit service, including rail service.

2. Initiate further study of field conditions on the I-90 bridge as soon as possible. Further information is essential to advance the design of the bridge to accomodate transit requirements and for input to the RTP design process. Appendix C provides an outline of an expanded design and analysis program of the I-90 bridge.

3. While the I-90 bridge should not dictate system design, it should consider:

    a. An LRT vehicle would accommodate the movements that will be encountered crossing the transition span.

    b. Maximum axle loadings specified for the rail vehicle should reflect consideration of the I-90 bridge.

c. A self-leveling rail vehicle would offer some advantage for ride comfort across the I-90 bridge.

d. Design every element of the track system to allow maximum vehicle speeds to recover of design headways after operations interuptions.

e. Guard rail should be used in the vicinity of special trackwork.

f. In addition to better than average insulation of the rails and bonding across rail joints, provision should be made for a grounding cable. There may be other protective measures which should be taken following a more specific evaluation of corrosion control requirements.

g. The transition span should be designed to meet the design specifications used by WSDOT in its design for the transition span.

h. The track system should be isolated from the bridge deck/structure through the joint and for a distance on either side of the joints.

TABLE OF CONTENTS

TITLE		PAGE
EXECUTIVE SUMMARY		
1.0	INTRODUCTION	1
2.0	I-90 FLOATING BRIDGE	3
2.1	Design Assumptions	3
2.2	Fixed Approach Structures	6
2.3	Transition Spans	6
2.4	Phase II Superstructure Pontoons	9
2.5	Phase I Roadway Pontoons	9
3.0	TRANSITWAY DESIGN	12
3.1	Design Alternatives	12
3.2	Operations	23
4.0	FINDINGS	25
4.1	I-90 Impacts	25
5.0	CONCLUSIONS AND RECOMMENDATIONS	28
5.1	Conclusions	28
5.2	Recommendations	28

LIST OF FIGURES

FIGURES		PAGE
2-1	I-90 Bridge Plan and Elevation	4
2-2	I-90 Transit Loads	5
2-3	I-90 Approach Structures	7
2-4	I-90 Transition Spans	8
2-5	I-90 Phase II Typical Section	10
2-6	I-90 Phase I Typical Section	11
3-1	Two Track with Joint Bus Use Alternative	13
3-2	I-90 Minimum Ballasted Track Cross Section with Joint Use	15
3-3	I-90 Direct Fixation Track Cross Section with Joint Use	16
3-4	I-90 Minimum Direct Fixation Cross Section	17
3-5	I-90 Minimum Ballasted Section - Joint Bus Use Option 1	18
3-6	I-90 Minimum Ballasted Section - Joint Bus Use Option 2	19
3-7	I-90 Minimum Ballasted Section - Low Profile Rail/Joint Bus Use Option 3	20

1.0 INTRODUCTION

Provision of high capacity transit service to the East Corridor requires crossing Lake Washington. The I-90 bridge was not designed by the Washington State Department of Transportation (WSDOT) to support joint rail transit and High Occupancy Vehicle (HOV) use for that crossing. As the concepts for enhanced transit service to the East Corridor have gained detail, the need to assess the I-90 bridge's ability to accommodate the current transit scenario of joint operations has led to this analysis. Building on previous studies and analysis, this study had two major objectives related to the I-90 bridge and its use to support projected transit needs;

1. Assess the ability of the floating bridge to support rail transit and High Occupancy Vehicle (HOV) operations simultaneously. This relates to the unique qualities of the floating bridge, including its buoyancy and structural limitations.

2. Evaluate the limitations of the bridge for rail transit and HOV joint usage; what restrictions, if any, would the bridge impose on design and operation.

This document provides a summary of the findings of senior professionals assembled by PB/KE to address these objectives. The panel assembled on Monday, July 29, 1991 and met over the balance of that week. The panel participants were:

1. Win Salter
2. Mike Abrahams
3. Rich Bionda[1]
4. Mike Lambert
5. Art Borst
6. Dick Rudolph[1]
7. Roberto Conrique
8. DeWitt Jensen[2]

The results of previous analyses and the knowledge of participants in those analyses were the point of departure in this assessment. The previous studies reviewed were:

1. I-90 Conversion Study, Raymond Kaiser Engineers and Tudor Engineering Company, March 1984.

2. I-90 Light Rail Conversion Feasibility Study - Final Report, Metro, May 1984. I-90 Light Rail Conversion Feasibility Study Issues for Further Consideration, John I. Williams, July 1984.

4. Analysis of the Third Lake Washington Floating Bridge for Selection of the Light Rail Transit Design Vehicle and its Effects on the Structure, Raymond Kaiser Engineers, Inc., March 28, 1985.

5. I-90 Third Lake Washington Floating Bridge Trackwork Considerations, Raymond Kaiser Engineers, Inc., October, 1985.

6. I-90 Floating Bridge - LRT Conversion, John I. Williams, January, 1986.

---

1 Limited

2 Resource person not in attendance

7. I-90 Floating Bridge LRT Conversion,(Minutes of Technical Meeting) Kaiser Engineers, March 1986.

8. I-90/Rainier Avenue Connection to Bus Tunnel, Sverdrup Corporation, July 1990.

9. Structural Assessment of the I-90 Bridge Crossing Lake Washington and Related Roadways for the LRT Vehicle Recommended by the Metro Rail Planning Study Design Guidelines, ABAM Engineers, July 1990.

An early conclusion of the panel participants was that while there was a steady stream of analyses since the mid-1980's, there is little or no new information on the I-90 bridge to support more detailed analysis, and that until the rail system entered later stages of design, there would be little additional information about the rail system which could be applied to the bridge. Specifically, while the design criteria and specifications for the bridge are known, the actual field conditions of the bridge which now exists (both the attained structural characteristics of the bridge and the behavior of the lake and the bridge) are not known. Thus, a distinct point of diminishing returns has been reached in the analysis of the I-90 bridge as a potential rail alignment. The panel therefore did not engage in recreating previous analyses, but sought to reach specific conclusions regarding the stated study objectives.

Because of the wealth of analysis which has preceded this work, and the consensus of the panel that the previous work has value, this paper utilizes former results. Thus, rather than "reinventing the wheel", this study attempts to use those previous studies to advance the work already completed.

In addition to directly addressing the I-90 bridge, it was deemed instructive to seek out examples of similar rail system/bridges to determine if anything analogous to the I-90 situation already exists. The following list of long span bridges was developed and is offered with the understanding that no current bridges replicate the I-90 situation totally, since there are very few floating bridges in the world and none are known to accommodate rail lines. However, the design issues related to placing rail lines over long-span bridges with wind and thermodynamic motion have been solved for numerous structures. The following bridges are analogous in some ways to the I-90 bridge situation.

1. Frazer River Rail Transit Bridge, Vancouver, British Columbia
2. Manhattan Bridge, New York
3. Williamsburg Bridge, New York
4. Queensboro Bridge, New York
5. Ben Franklin Bridge, Philadelphia
6. Honshu/Hokkaido Bridges, Japan
7. Tagus River Bridge, Portugal
8. San Francisco Bay Bridge, Oakland

The Frazer River Rail Transit Bridge is a cable stayed suspension bridge built solely for the use of the Vancouver rail transit system. Because suspension bridges may experience movements analogous to those of a pontoon bridge, as far as fixed to moving sections are concerned, this may be a most useful analogue to the I-90 bridge. Similarly, the San Francisco Bay Bridge, while not currently having a rail line across it, did accommodate a rail transit line from 1937 to 1958.

2.0 I-90 FLOATING BRIDGE

The I-90 floating bridge consists of four distinct structural systems:

- the fixed approach structures
- the transition spans between them
- the Phase II superstructure pontoons
- the Phase I roadway pontoons.

Each segment presents unique characteristics and has been addressed individually. In Figure 2-1, depicting plan and elevation views of the bridge, the symbol "L^L Line" denotes the approximate location of the westbound roadway, and the symbol "L^M Line" depicts the approximate location of the transitway. The symbol "LR" indicates the approximate location of the new floating bridge, a "replacement" bridge for its predecessor.

2.1 DESIGN ASSUMPTIONS

One of the root causes for concern regarding the bridge is the history of the guidelines used in its design to determine live load and dead load limits. Specifically, in developing design criteria and specifications for the I-90 bridge, WSDOT sought information from the Puget Sound Council of Governments[3] (PSCOG) as to the probable vehicle a rail system would likely use. At that time, the BART rail vehicle was recommended to WSDOT as representative of the vehicles that would be utilized. The BART rail vehicle is a "heavy" rail vehicle that differs in several important ways from the light rail vehicles currently under consideration. Specifically, the BART car -- at 70' in length (as opposed to a typical LRT vehicle of over 85' in length), being rigid (as opposed to articulated), and having but two trucks (as opposed to a LRT vehicle's three) -- presents a different set of loadings for structures than does an LRT vehicle. The differences in loadings resulting from the BART vehicle and the Metro LRT vehicle under consideration are illustrated in Figure 2-2.[4] While different for the two cars, the live load differences are not significant.

The "Metro Rail Planning Study Design Guidelines," (Gannett DeLeuw) dated March, 1990 recommended an LRT vehicle with defined guideway characteristics for the system. The tracks are to be spaced at minimum of 13' centers, resulting in a minimum guideway width (out to out) of 27'. The rails are to be standard AREA 115 rail and, at that time, were stipulated to be fastened to the bridge deck by direct fixation methods consisting of drilled-in-place anchor bolts, epoxy grout pads, and track fasteners.

The maximum design loadings (live loads) used in design of the I-90 bridge are:

• Gross Vehicle Weight:	100,000 lbs
• Axle Loadings:	25,000 lbs
• Weight per Lineal Foot:	1,429 lbs

---

3 PSCOG was the organization analyzing regional rail transit at that time

4 Structural Assessment of the I-90 Bridge Crossing Lake Washington Related Roadways for the LRT Vehicle Recommended by the Metro Rail Planning Study Design Guidelines, ABAM Engineers, July 1990

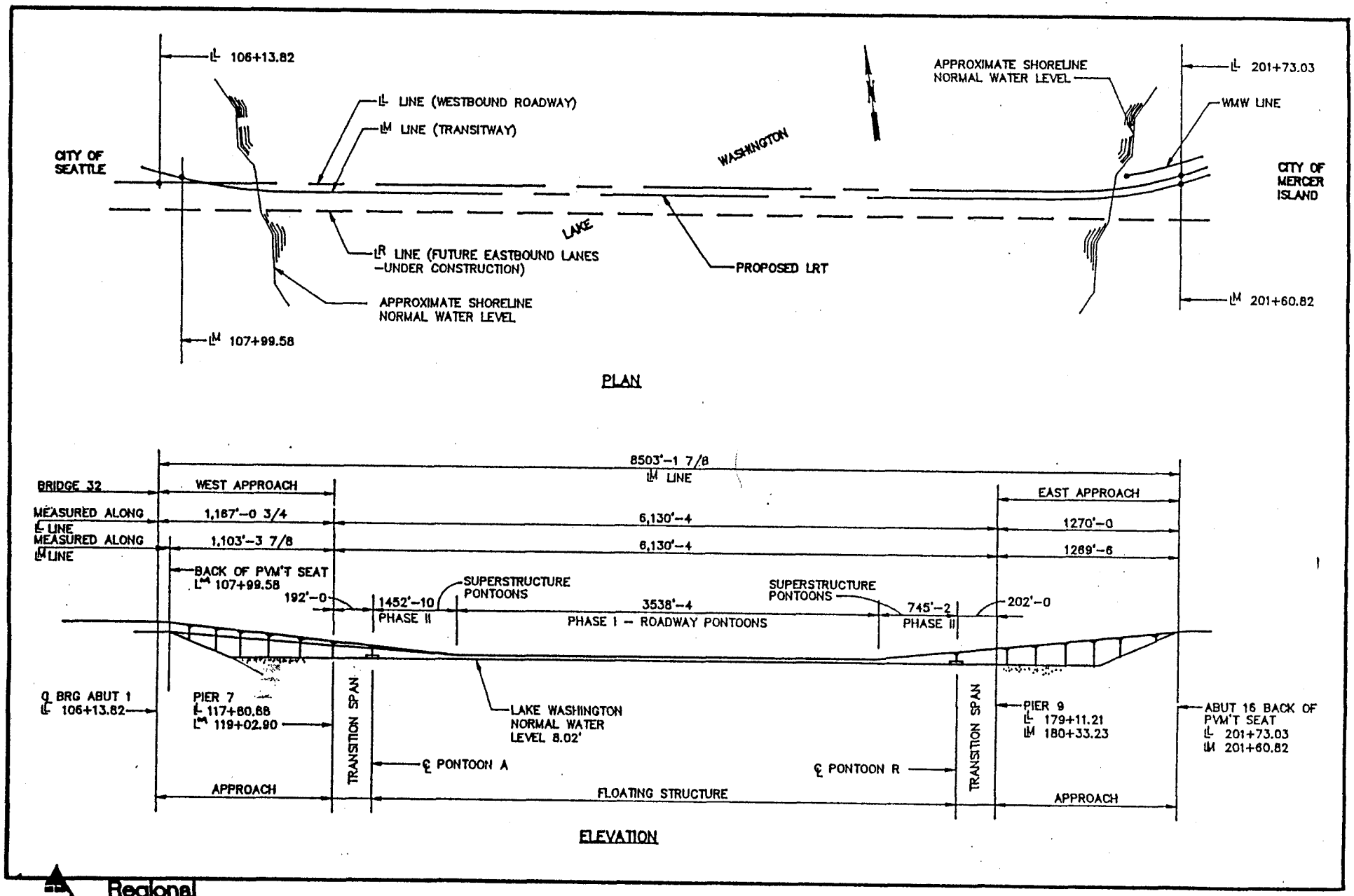

Regional Transit Project
KING COUNTY-PIERCE COUNTY-SNOHOMISH COUNTY

I-90 BRIDGE PLAN AND ELEVATION

USE OF I-90 BRIDGE FOR RAIL TRANSIT

Figure 2-1

METRO LRT VEHICLE

(4-90' CARS MAXIMUM PER TRAIN)

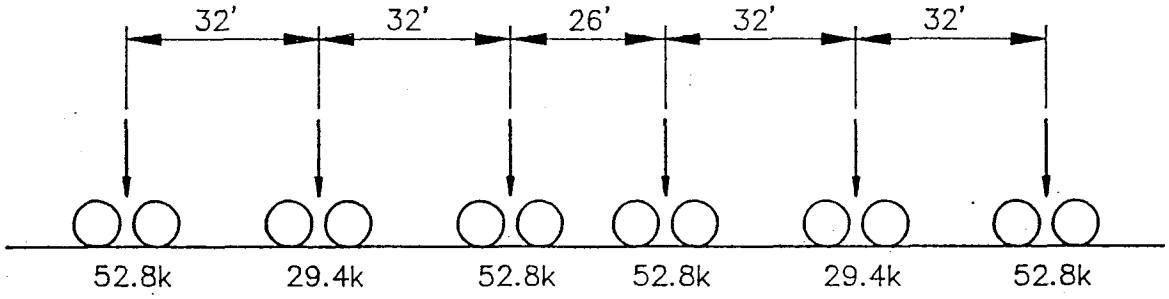

EQUIVALENT UNIFORM LOAD 1.5klf

PSCOG RAPID TRANSIT VEHICLE

(8-70' CARS MAXIMUM PER TRAIN)

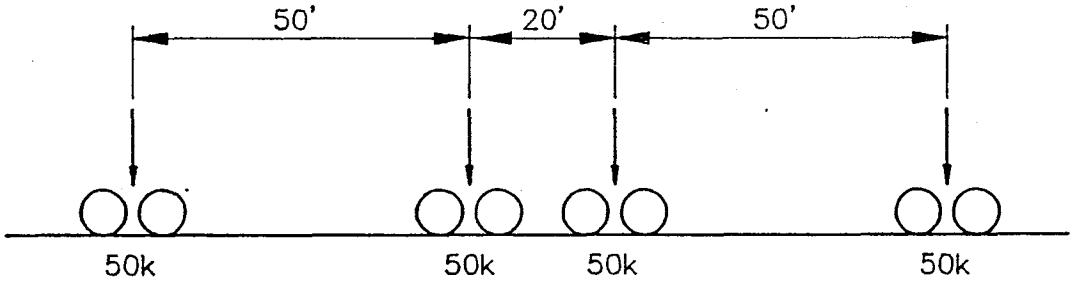

EQUIVALENT UNIFORM LOAD 1.43klf

I-90 TRANSIT LOADS

Regional Transit Project

KING COUNTY-PIERCE COUNTY-SNOHOMISH COUNTY

I-90 TRANSIT LOADS

USE OF I-90 BRIDGE FOR RAIL TRANSIT

Figure 2-2

In addition to live load limitations, WSDOT's criteria loadings included a nominal dead load of 133 lb/ft for running rails. The WSDOT criteria did not include dead load allowance for traction power requirements or the need for other support systems such as signals and communications. Any additional deadload above this amount will cause a reduction in the bridge's freeboard. Impacts resulting from the dead load estimates are discussed in Section 4.1.1.

2.2 FIXED APPROACH STRUCTURES

The approach structures are six- and seven-span continuous post-tensioned concrete segmental box girders. The substructures are concrete columns supported on pile-supported foundations or spread footings with abutments at the end of each structure.

Figure 2-3 provides a typical cross section of the approach structures.[5] Previous studies, particularly those performed by Raymond Kaiser Engineers and used in the later work performed by ABAM Engineers, concluded that the design superimposed dead load associated with the LRT system should total 293 pounds per lineal foot of structure resulting in a freeboard loss of 7/8". The dead load calculation included weight allowances of 200 pounds per lineal foot for four rails with hardware and fasteners, 8 pounds per lineal foot for pipe railing, and an equivalent uniform load for the catenary system of 85 pounds per lineal foot. ABAM also concluded that the maximum total LRT vehicle weight is 135 kips (thousands of pounds). ABAM's analysis also recognized that while it assumed the LRT system would be centered on the structures, offset load effects would need to be established when exact track alignments are known. Based on its analysis, ABAM reported that despite the differing assumptions between the PSCOG figures supplied to WSDOT in the design of the structures and the current design assumptions, there was "very little significant difference in live load effects on the structure".[6] Further analysis was called for regarding the possible effects of continuously welded rail (CWR) on the structures.

2.3 TRANSITION SPANS

The bridge transition spans from the land-based approach structures to the pontoon based floating structures consist of simple span steel box girder superstructures with concrete decks. (Figure 2-4) The west and east spans are 192 and 202 feet, respectively. ABAM's review of the effects of PSCOG versus Metro LRT and AASHTO loads concluded that the Metro LRT vehicle is acceptable for the transition spans, with the proviso that further study should be directed to the implications of LRT usage for structural fatigue, and for the possible effects of continuously welded rail on the structures.

The transition from fixed to floating segments of the bridge presents the most severe constraints to usage by rail transit, as would be expected. The specified behavior of the transitions was described by WSDOT in its specifications for the bridge and are included for reference in Appendix A.

---

5 Structural Assessment of the I-90 Bridge Crossing Lake Washington Related Roadways for the LRT Vehicle Recommended by the Metro Rail Planning Study Design Guidelines, ABAM Engineers, July 1990

6 ABAM Engineers, Op cit, p. 2

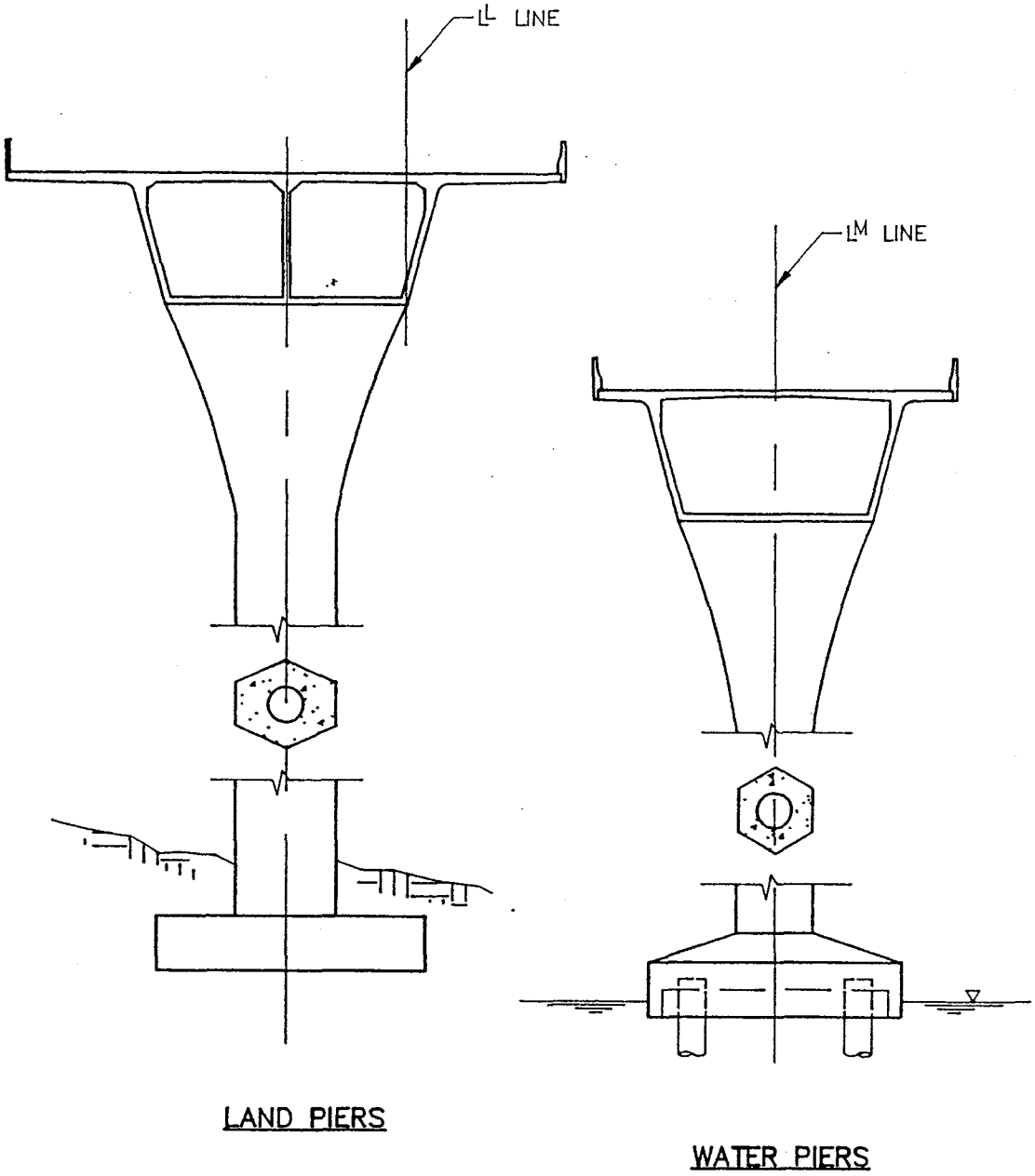

I-90 APPROACH STRUCTURES
TYPICAL SECTIONS-LOOKING EAST

Regional Transit Project
KING COUNTY • PIERCE COUNTY • SNOHOMISH COUNTY

I-90 APPROACH STRUCTURES
USE OF I-90 BRIDGE FOR RAIL TRANSIT
Figure 2-3

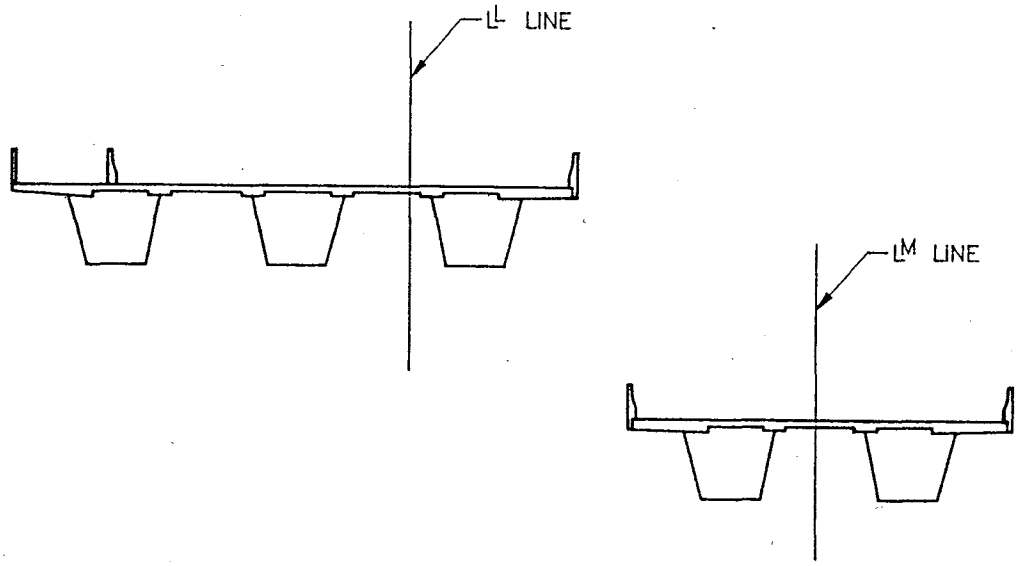

TYPICAL SECTION—LOOKING EAST

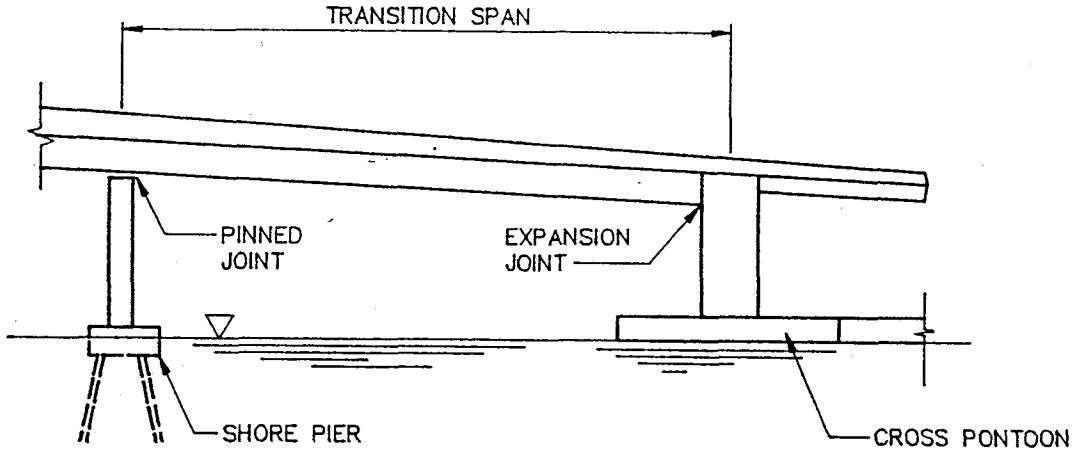

ELEVATION

I-90 TRANSITION SPANS
TYPICAL SECTION AND ELEVATION

Regional Transit Project
KING COUNTY • PIERCE COUNTY • SNOHOMISH COUNTY

I-90 TRANSITION SPANS
USE OF I-90 BRIDGE FOR RAIL TRANSIT
Figure 2-4

2.4 PHASE II SUPERSTRUCTURE PONTOONS

"The superstructure pontoons consist of floating concrete pontoons with an elevated superstructure of steel box girders with a concrete deck. Concrete columns and caps support the superstructure above the concrete pontoon deck"[7] (Figure 2-5). In examining the live load characteristics of the Metro LRT design vehicle versus previous analyses, ABAM concluded that no modifications should be required to the superstructure "except for rail attachments and catenary deck slab connections."[8]

2.5 PHASE I ROADWAY PONTOONS

In this segment the bridge consists of concrete floating pontoons (Figure 2-6) with a concrete deck forming the roadway surface. The bridge deck includes a 14' cantilever beyond the face of the outboard pontoons. The deck has a 40' wide path reserved for transit on the south side of the bridge deck. Among the factors to be considered in design of thisis section for use by LRT are the presence of access hatches and grates. Examination of the design of the deck indicates that the placement of these penetrations of the deck cannot easily be relocated, due to the density of reinforcing steel within the deck. The design of transit systems must address options of maintaining or relocating the existing hatches.

---

7 ABAM Engineers, Op cit, p.5

8 Ibid

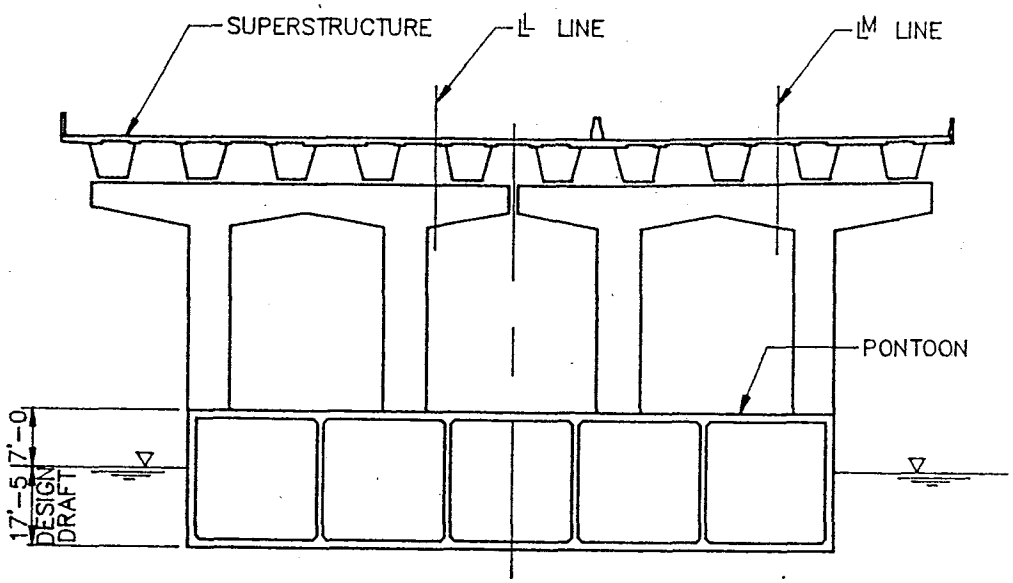

I-90 PHASE II SUPERSTRUCTURE PONTOONS
TYPICAL SECTION-LOOKING EAST

Regional Transit Project
KING COUNTY-PIERCE COUNTY-SNOHOMISH COUNTY

I-90 PHASE II TYPICAL SECTION
USE OF I-90 BRIDGE FOR RAIL TRANSIT
Figure 2-5

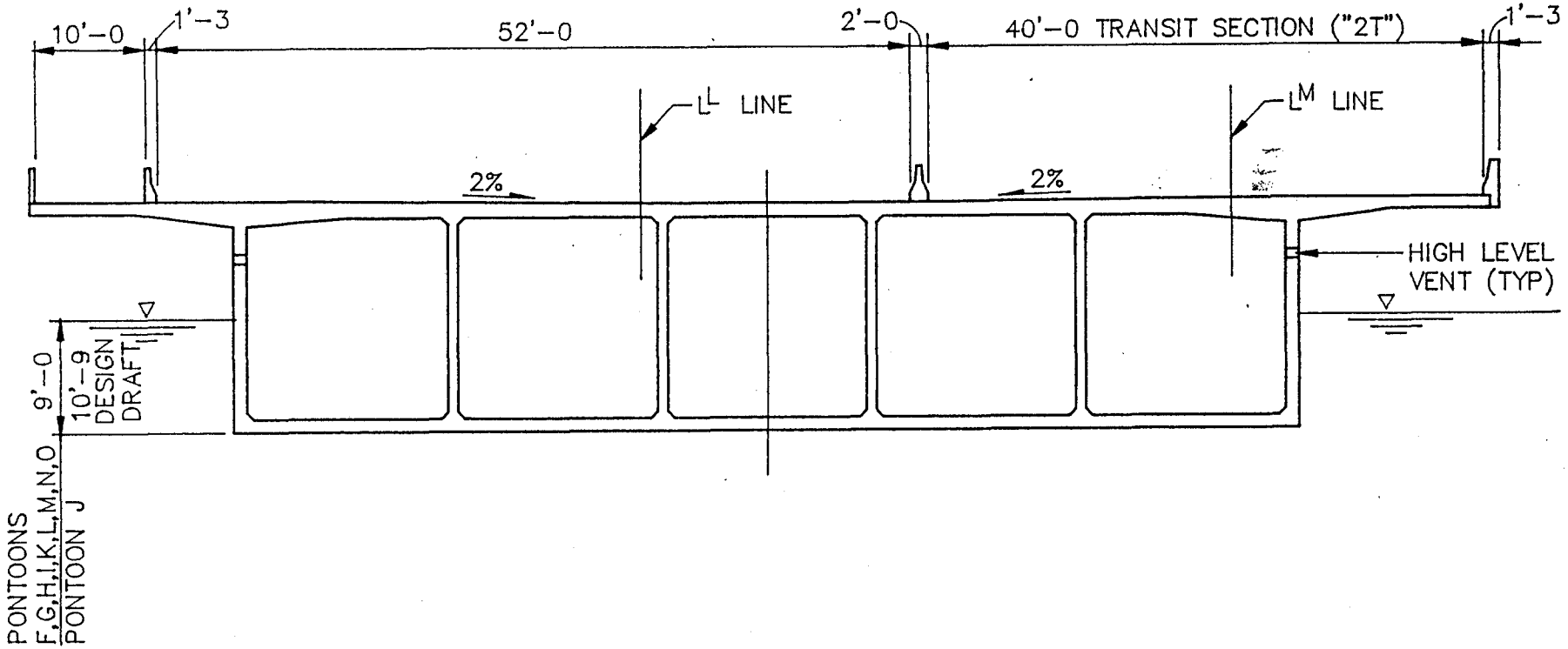

I-90 PHASE I ROADWAY PONTOONS
TYPICAL SECTION-LOOKING EAST

Regional Transit Project
KING COUNTY·PIERCE COUNTY·SNOHOMISH COUNTY

I-90 PHASE I TYPICAL SECTION
USE OF I-90 BRIDGE FOR RAIL TRANSIT
Figure 2-6

3.0 TRANSITWAY DESIGN

The review panel identified several alternative transit operation schemes for use of the 40' wide transitway. The alternatives recognized the potential multiple transportation system uses of the transitway. Based on an iterative definition / evaluation / refinement process the design for a joint use transitway was finally identified as a rail guideway using direct track fixation to the bridge deck, attaching a low profile rail to minimize the depth of overlay needed to run buses and HOV's on the same surface and then applying lightweight concrete overlay to the bridge deck to attain a running surface level with the top of the rails.

The concept of operating the LRT system with joint occupancy by buses and HOV's on the bridge entails a high degree of coordination of HOV, bus and rail system operations. It would allow buses and HOV's to pass through the Mercer Island/Island Crest Station and the Rainier Avenue Station. One of the options made possible by this alternative is to allow early partial implementation of the rail system, in order that its ultimate full implementation may proceed as rapidly as possible. Thus, in its pre-rail form, this alternative would entail installation of the track system for the rail system, and paving of the transitway to permit bus and HOV operations, but deferral of the catenary system, signals, etc. until a later time when full rail system operations would be initiated.

With regards to the design of the HOV/bus lanes, the location of the rails is offset to the north side of the transitway due to the design of the bridge. Operating cars and buses in that alignment results in an awkward location for the breakdown lane, on the south side of the bridge across the eastbound travel lane. This configuration may not be acceptable for safety reasons. If this proves to be the case, the feasibility of relocating the rails toward the center of the transitway should be examined. A center location would permit two 12 foot travel lanes and two 8 foot breakdown lanes. If it is determined that HOV's will not jointly use the transitway, bus and rail operations using the configuration shown in Figure 3-1 should be possible.

3.1 DESIGN ALTERNATIVES

A number of design issues and alternatives were examined in arriving at the transitway design. Issues addressed in this section are concerned with the supply of transit vehicle power, the means of attaching rails to the bridge, implications of transit related dead and live loads, and any implications the bridge's dynamic movement may have on the transition spans at each end of the bridge.

3.1.1 Catenary vs. Third Rail

The choice of a traction power distribution system should be made on a system-wide conceptual basis, and not be overly influenced by the bridge crossing. Despite the assumption of an overhead (catenary) system in the previous analyses, a third rail system across the bridge is also possible if the transitway is utilized solely by trains. The primary advantages of a third rail system would be some weight savings, a less obtrusive structure, and easier attachment to the bridge deck. Also, a third rail system could be gapped at the flexible bridge joints. However, a third rail system would be difficult with joint bus and not advised with HOV's using the transitway.

For an exclusive rail operation, another disadvantage of a third rail system is the need to provide greater protection of the public from third rail systems, which may include addition of a high fence on the barrier separating the trackway from the general purpose lanes on the bridge. This would offset much of the aesthetic advantage of third rail, and some of the weight savings.

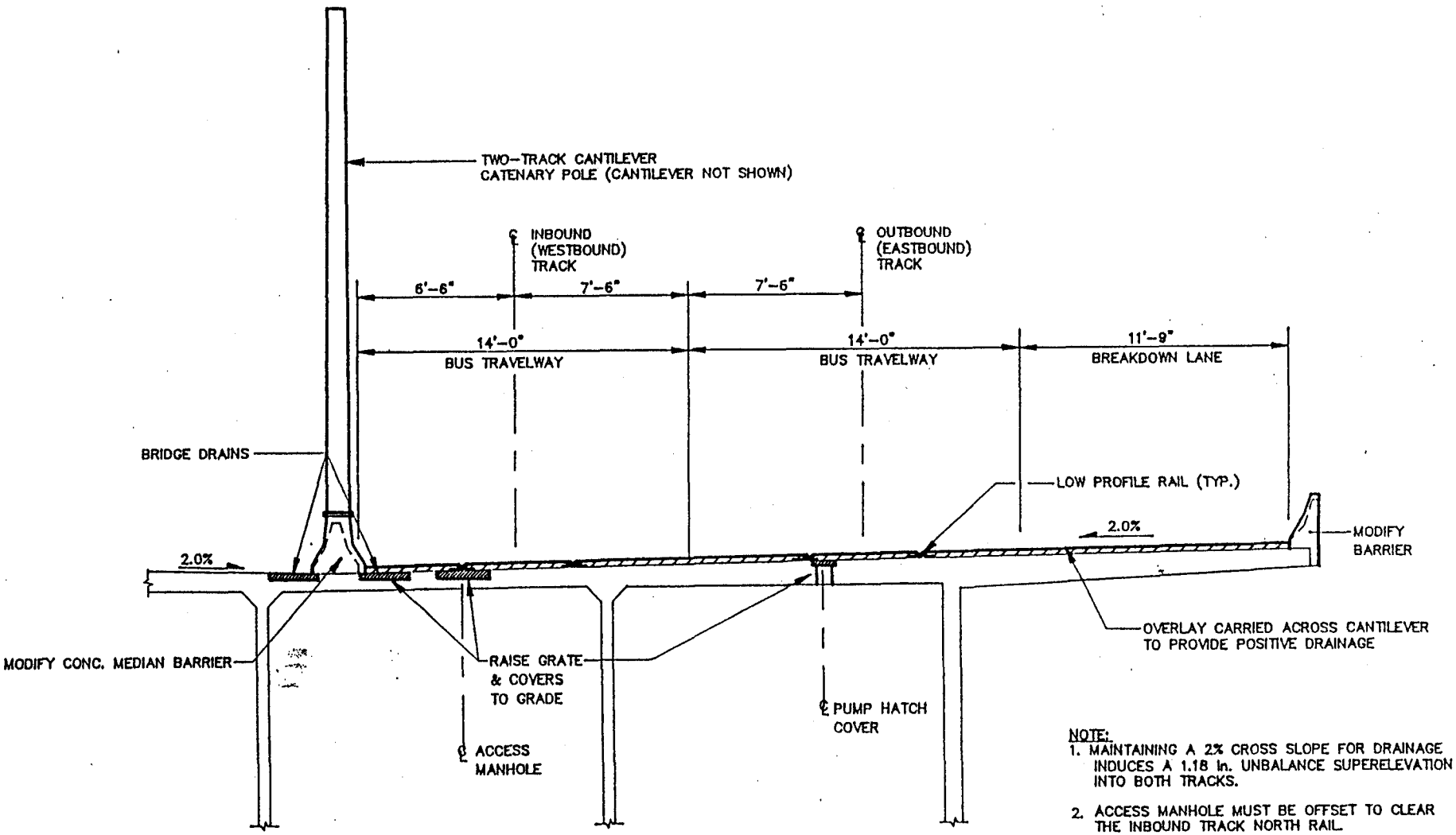

NOTE:
1. MAINTAINING A 2% CROSS SLOPE FOR DRAINAGE INDUCES A 1.18 in. UNBALANCE SUPERELEVATION INTO BOTH TRACKS.
2. ACCESS MANHOLE MUST BE OFFSET TO CLEAR THE INBOUND TRACK NORTH RAIL.

Regional Transit Project
KING COUNTY • PIERCE COUNTY • SNOHOMISH COUNTY

TWO TRACK WITH JOINT BUS USE ALTERNATIVE

USE OF I-90 BRIDGE FOR RAIL TRANSIT

Figure 3-1

There remains the option of a dual-power collection system in which the rail cars would be equipped with both the pantograph for use with a catenary system and a hot shoe for power collection for a third-rail power source. Analysis of that option is clearly beyond the scope of this analysis, but it is another alternative not precluded by the bridge, unless joint bus and HOV operations are to occur, in which case the catenary system offers a safer operating environment.

3.1.2 Track System

Two systems for installing the track on the bridge were evaluated, ballasted and direct fixation. Within these two broad categories, numerous refinements are available.

The ballasted track alternative offers the advantage of being relatively independent from the movements of the bridge deck and offers an alternative solution to bridging the transition span. This is an advantage because the effect of bridge deck movements on the tracks is not fully understood, and could cause maintenance and operational problems for the track over the life of the system. An unballasted rail and tie system is used on the Manhattan Bridge in New York, and while it does move relative to that bridge, it operates satisfactorily. Another advantage of a ballasted system is its protection of the bridge deck in the case of a derailment. While no claims of absolute protection are made, the ties and ballast would offer some ability to absorb the impact of a derailed rail car beyond that offered by a direct fixation system. The advantage of a ballasted system to isolate the track system from the bridge offers an alternative solution to bridging the transition span.

The primary disadvantage of the ballasted alternative is its weight. Alternatives to counter the additional dead weight are available, but the overall acceptability of those measures to WSDOT would need to be evaluated in subsequent design phases. The work done to date overall has not fully explored the potential of such options as using light-weight ballast, reducing the depth of ballast, etc. Figure 3-2 provides a schematic cross section of a ballasted track system.

The direct fixation alternative shown includes several refinements which have resulted from experience in Vancouver (Figure 3-3). The plinth pad is somewhat larger than common, and the reinforcing within it is more extensive. This is to avoid maintenance problems experienced in other systems. Among the reasons to choose direct fixation systems is their lower projected maintenance costs, a lower weight, and increasing use and acceptance in newer rail systems.

A variation on the more conventional direct fixation system is presented in Figure 3-4. It uses a low-profile rail to reduce the height of the rail head above the bridge deck as was used on the Waterfront Streetcar System crossing of the Main Street Bridge in Seattle. The objective of this design is to reduce the depth of overlay needed to provide a running surface for buses or HOV's on the I-90 transitway. Because the dead load placed on the bridge is prime a consideration on its ability to accommodate the transit usage, this design was evaluated to determine its abislity to reduce the net dead load on the bridge deck to its absolute minimum.

Based on the ballasted and direct fixation systems, designs were then developed which accommodate joint usage with buses and HOV's. Figures 3-5, 3-6 and 3-7 relate to the ballasted solution, with Figure 3-5 being for a standard profile rail on ties, Figure 3-6 using a gauge rod and a continuous cast-in-place elastomer in lieu of ties, and Figure 3-7 using a similar system with a low-profile rail, as was used with the Waterfront Streetcar System in Seattle.

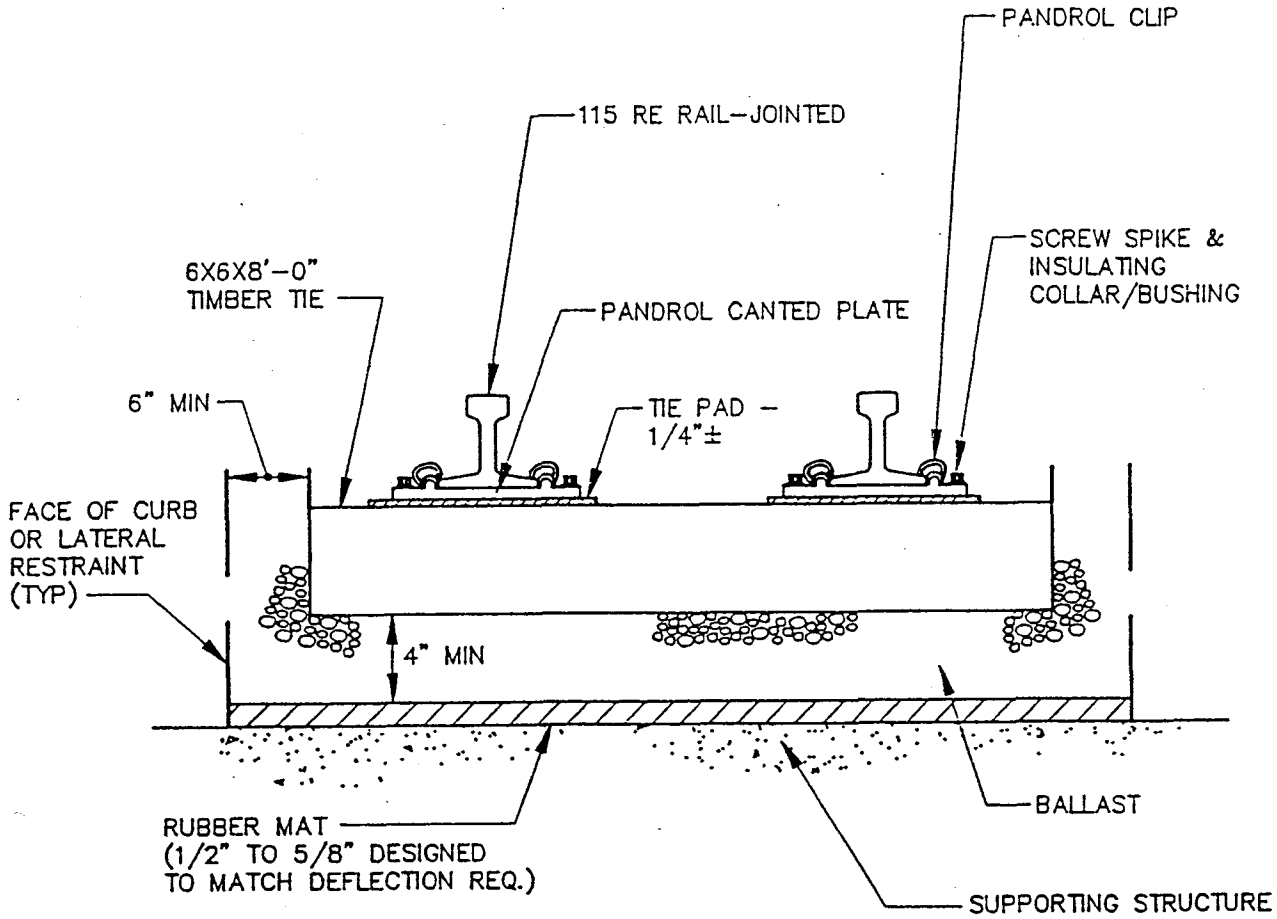

(1) TIE SPACING 24–28" DEPENDING UPON LOADS AND TRACK MODULUS REQUIRED.
(2) MATERIAL TO BE HARD BUT AS LIGHT AS POSSIBLE OR AVAILABLE.
(3) A SLIDING PLATE MAY BE REQUIRED UNDER THE BALLAST AND OVER THE BRIDGE'S EXPANSION JOINT TO PROTECT JOINT AND ISOLATION OF TRACK STRUCTURE FROM BRIDGE.

Regional Transit Project
KING COUNTY-PIERCE COUNTY-SNOHOMISH COUNTY

I-90 MINIMUM BALLASTED TRACK CROSS SECTION
USE OF I-90 BRIDGE FOR RAIL TRANSIT
Figure 3-2

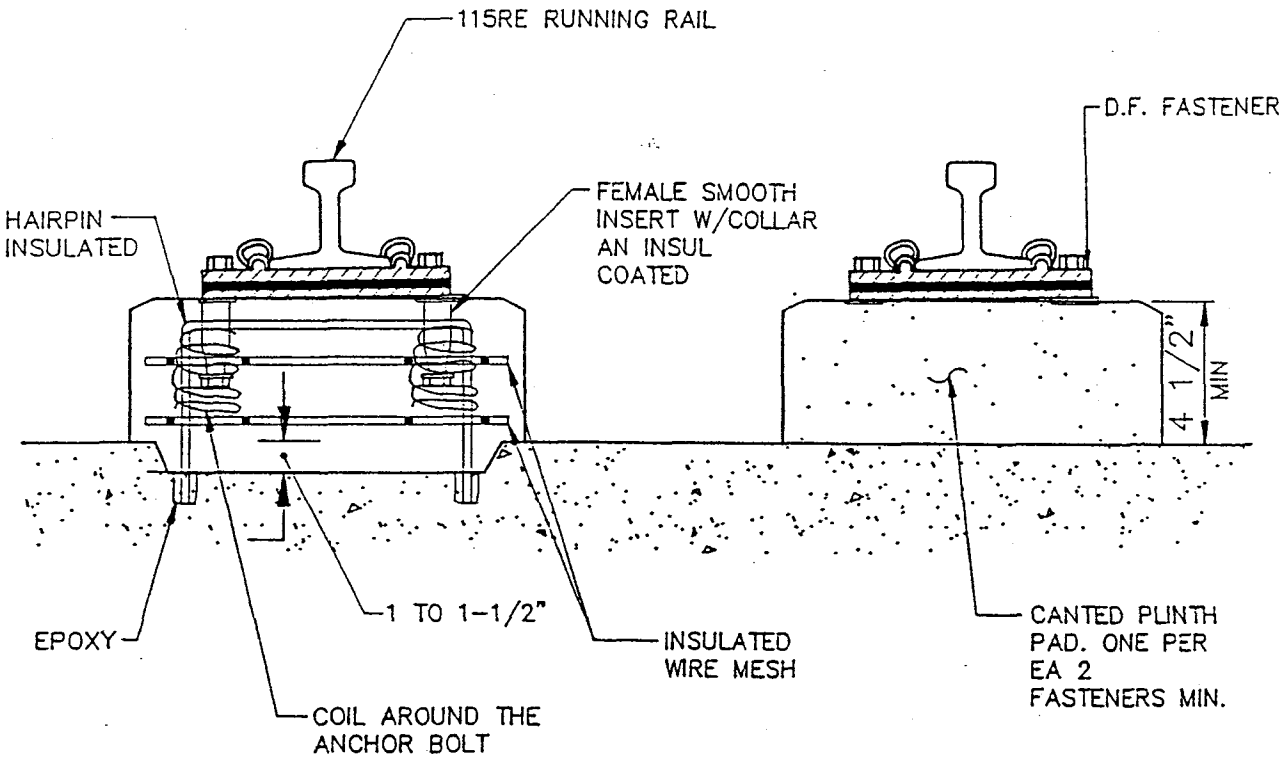

Regional Transit Project
KING COUNTY • PIERCE COUNTY • SNOHOMISH COUNTY

I-90 DIRECT FIXATION TRACK CROSS SECTION

USE OF I-90 BRIDGE FOR RAIL TRANSIT

Figure 3-3

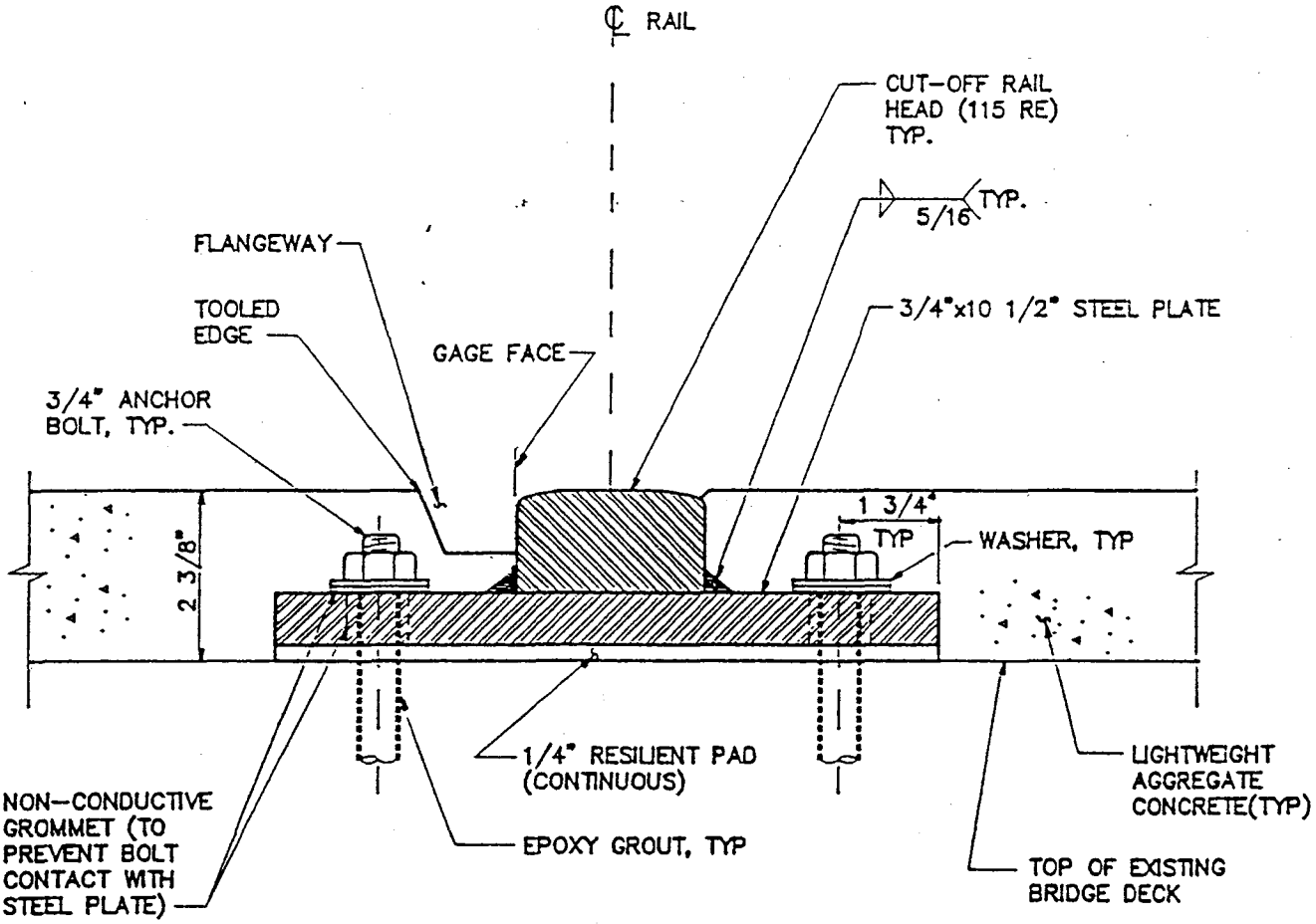

LOW-PROFILE RAIL SECTION

Regional Transit Project
KING COUNTY-PIERCE COUNTY-SNOHOMISH COUNTY

I-90 MINIMUM DIRECT FIXATION SECTION
JOINT BUS USE OPTION
Figure 3-4

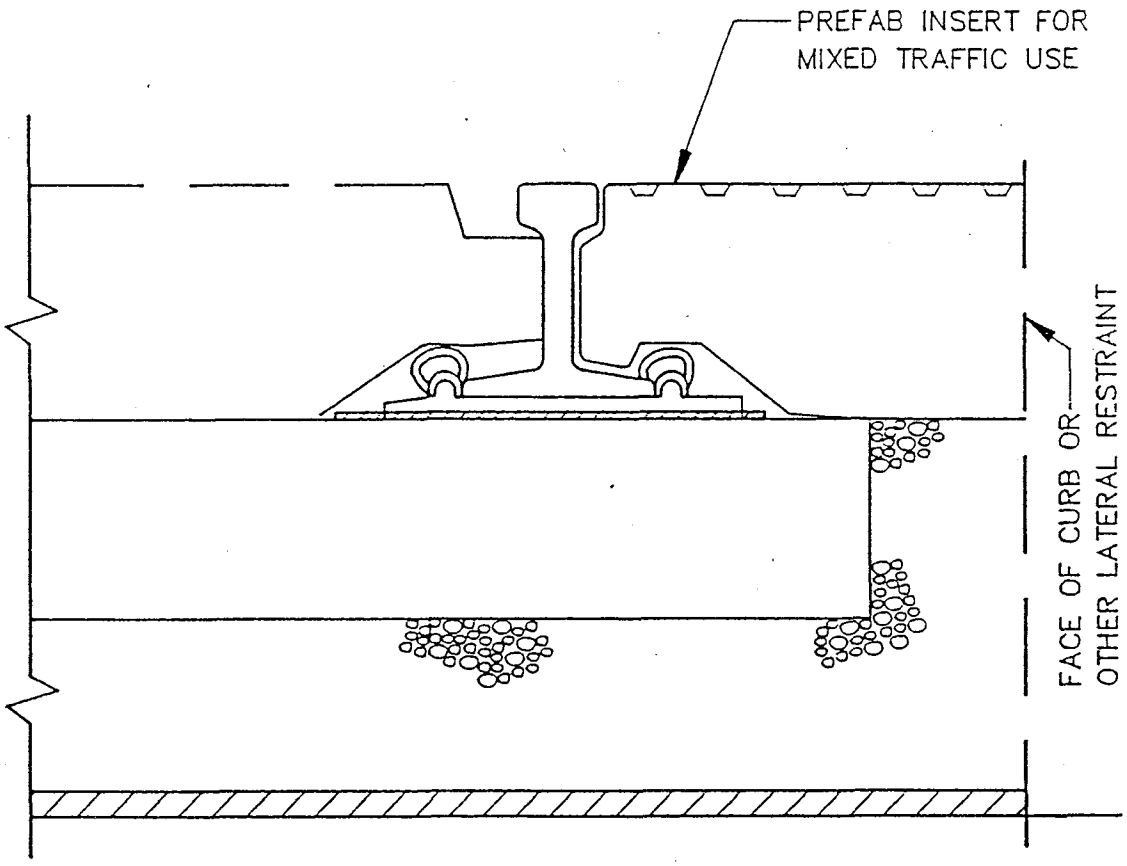

Regional Transit Project
KING COUNTY-PIERCE COUNTY-SNOHOMISH COUNTY

I-90 MINIMUM BALLASTED SECTION
- JOINT BUS USE OPTION 1
USE OF I-90 BRIDGE FOR RAIL TRANSIT
Figure 3-5

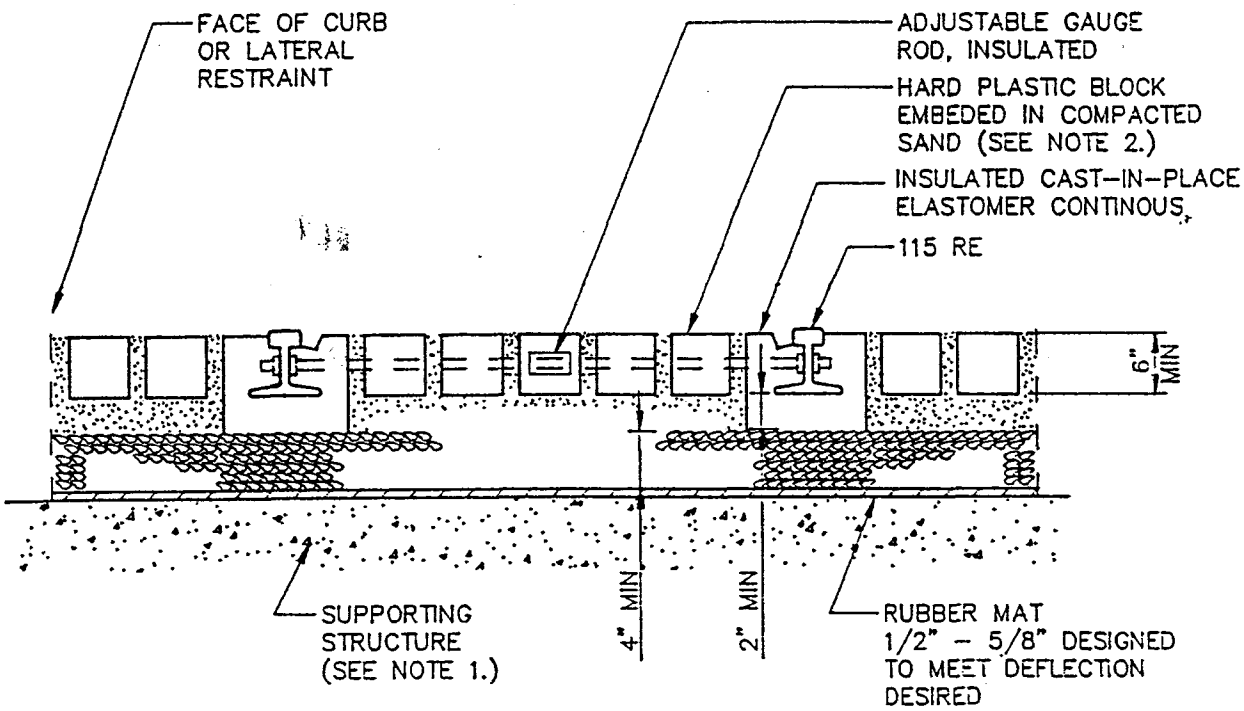

NOTES:

1. A SLIDING PLATE MAY BE REQUIRED UNDER THE BALLAST OVER THE BRIDGE'S EXPANSION JOINT.

2. A BREAKABLE STONE TO BE PLACED AT A REASONABLE SPACING TO AID POSSIBLE REMOVAL IN FUTURE. A LARGER SIZE BLOCK WILL PROVIDE A SMOOTHER RIDE.

Regional Transit Project
KING COUNTY · PIERCE COUNTY · SNOHOMISH COUNTY

I-90 MINIMUM BALLASTED SECTION
- JOINT BUS USE OPTION 2
USE OF I-90 BRIDGE FOR RAIL TRANSIT
Figure 3-6

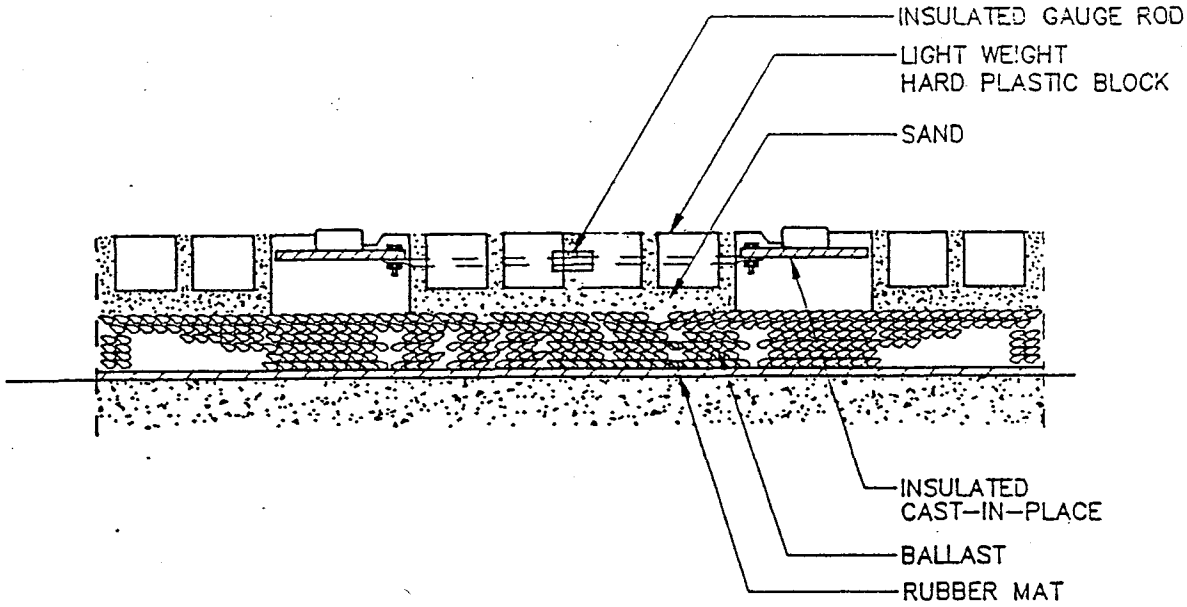

Regional Transit Project
KING COUNTY-PIERCE COUNTY-SNOHOMISH COUNTY

I-90 MINIMUM BALLASTED SECTION
- LOW PROFILE RAIL/JOINT BUS USE OPTION 3

USE OF I-90 BRIDGE FOR RAIL TRANSIT

Figure 3-7

For joint operation of the transitway, it will be necessary for the roadway surface to drain properly. The drainage requirement could be accomplished by a series of grates and runoffs in and under the roadway deck maintaining a level rail running surface or by introducing unbalance of 1" or so for the downside rail permitting runoff over the rail head to planned drains on the deck edges.

For buses and/or HOV's to use the transitway jointly with trains, the maintenance of positive drainage in this analysis used about 1" of unbalance between the rails, since the bridge is level longitudinally. Modern LRT vehicles can include self-leveling suspension provisions, in which case the riders of trains would not sense the difference in elevation of the rails. This would allow the road surface to drain, and would not impact the ride of the rail system. However, it should be noted that the lower rail will experience increased wear and will require more frequent maintenance. In addition, the risk of derailment is somewhat increased by the imbalance, as the weight distribution on the lower wheel will tend to be shifted to the wheel flange which could climb the rail in certain circumstances. No additional measures (such as guard rail) appear warranted based on the current level of design, but future design should include analysis of this factor.

Further design development is needed to determine if low profile rail will work with the Conley Joint needed to adjust the longitudinal forces associated with the I-90 crossing. If it proves necessary to use rail of standard depth through the Conley Joint, the weight advantages of the low profile rail would be lost in the vicinity of the joint, included on a relatively short segment of the floating portion of the bridge.

Finally, the relative merits of continuously welded rail (CWR) versus jointed rail were also evaluated. Continuously welded rail offers a smoother and quieter ride; provides better track circuit conductivity; increases rail life due to elimination of joint wear and batter; reduces wear and tear on equipment; eliminates the need for bonding cables to maintain conductivity across rail joints; and eliminates the point loads associated with rail joints. However, the use of CWR on direct fixation structures requires that the structure be protected from the large longitudinal forces which may exist in CWR. This can be accomplished by properly terminating the CWR off the structure and/or by using sliding joints. Jointed rail avoids the problems of longitudinal forces associated with CWR as it expands and contracts. These factors must be considered when the rail system to be used on the bridge is selected in subsequent design phases.

3.1.3 Dead Load and Live Load Conditions

Previous analyses of the trackway elements to be added to the bridge, constituting the dead load, did not explicitly include all of the items that would be involved. While a complete inventory and the identification of the final dead load will only be possible with final design, the following list is a more inclusive one.

- Ties, ballast, insulating pad and stray current mat (for the tie and ballast alternative); or bolts, pads and fixation hardware (for the direct fixation alternative)
- Dual track running rails - 115-RE
- Train control/signal system cables and wayside equipment
- Catenary and messenger[9] wires

---

9 It is assumed that traction power will be fed from both shores and, consequently, no traction power feeder cables will be needed

Catenary poles

- Catenary support system (bracket arms)
- SCADA wiring/cables, communications cables and cabinets, and signal cable duct bank
- Return ground cables
- Low voltage power cables
- Intrusion detection sensing equipment and related duct banks, pull boxes etc.

Based on this expanded list of fixed facilities that will contribute dead load to the bridge, the superimposed dead load associated with a two-track rail guideway using a low profile, embedded rail directly fixed to the bridge deck totals 1340 pounds per lineal foot (plf). This estimate is 1207 plf above the 133 plf assumed by WSDOT in their design. Calculations show that this increase of 1207 plf decreases the freeboard by approximately 4 7/8 inches. This assumes that pontoon ballast is added to restore "zero list" to the bridge and that the concrete traffic barriers adjacent to the transitway are replaced with steel plated barriers. This compares to a freeboard loss of approximately 21 1/2 inches for a more conventional embedded track design.

To partially offset this deadload, or any deadload that results in the loss of freeboard, it has been assumed that the concrete barriers will be replaced with equivalent steel ones, for a significant weight savings. It may also be possible to grind up to 1.5" off of the running surface of the bridge deck on the transitway, since the running surface for vehicles will be restored when the overlay is placed on the deck after rail installation. In addition, it may be possible to increase the buoyancy of the floating portion of the bridge by adding pontoons. Each of these measures would require approval by WSDOT.

3.1.4 Transition Section

The challenge presented by the transition section is development of a conceptual track design that accommodates the maximum movements anticipated between the fixed and floating portions of the bridge. Those movements include a maximum 1.5' longitudinal motion in both directions, a transverse or sideways motion of plus or minus 3' (equal to an approximate 1 degree angular change), a vertical rise and fall due to changing levels of the lake of plus 0.8' and minus 3.8', and a rotation (roll) of plus or minus 2 degrees.

To date the most definitive work on this problem has been by John I. Williams, of the MBTA, a summary of which is included in Appendix B. The method of accommodating movement proposed by Mr. Williams includes the use of an easement span to bridge the fixed to floating connection, and use of modified Conley joints to compensate for longitudinal motion.

The easement span would consist of track directly fixed to articulated steel beams, effectively separating the track system from the bridge deck. These articulated beams would allow the rail to flex over a 21' length to accommodate transverse and vertical movements. Installation of these beams and support structure will require modification of the existing bridge joints. The rail beam concept has not been designed to accommodate joint operations with buses and HOV's. The use of the rail beam may not be feasible with bus or HOV's on the transitway, in which case another design solution would be required for the transitway to be jointly operated with trains, buses and HOV's.

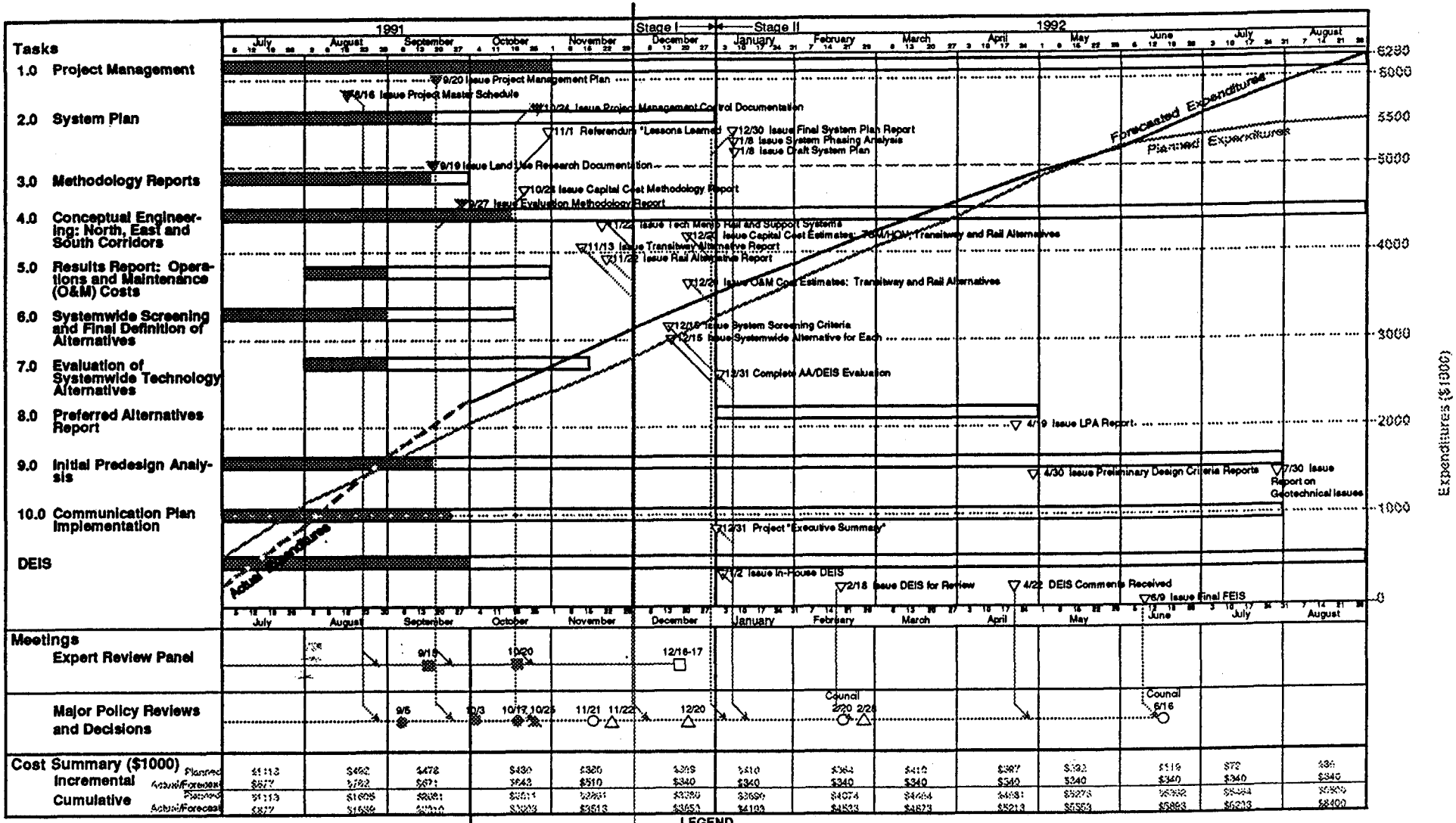

Regional Transit Project

Master Schedule and Cost Summary

As of October 31,1991 (Rev. #2)

Parsons Brinkerhoff/Kaiser Engineers Team

Conley joint consists of a half section of rail on two adjoining and overlapping rail ends in a bed plate with space for expansion at the rail ends. These joints would be placed at intervals of about 2500', resulting in two being needed on the floating portion of the bridge. The use of two such joints would allow for the 1.5' of anticipated longitudinal movement while still providing a solid support for the wheels at all times. This joint is now in service on the Dockland LRT line in London, England as well as numerous other locations. However, the Conley joint does not use the low profile rail configuration necessary for joint use of the I-90 bridge. If a low profile version of this joint cannot be fabricated, and another solution is not identified, it will be necessary for the rail to transition from the low profile to a standard configuration in the vicinity of the Conley joints. Thus, there is the possibility that in the vicinity of the joints the depth of paving needed to permit buses and HOV's to operate simultaneously with trains would increase substantially, increasing the deadload on the bridge and increasing the loss of freeboard to the bridge. That would, in turn, require use of some added measures to compensate for the loss of freeboard, possibly including the addition of pontoons to the bridge. WSDOT review of this condition will be necessary to assess its acceptability. The alternative to these solutions would involve several measures:

- Use jointed rail (with or without the Conley joint) to moderate the horizontal forces otherwise associated with CWR and contributing to the need for a Conley joint, and/or

- Use ballasted track, at least across the transition span with a rail beam type of support system.

These alternatives have not seen the same degree of design development as Williams' recommended solution, but have precedent with the Manhattan Bridge and the long history of experience with tie and ballast systems in this country. Unfortunately the ballasted track alternative has a weight penalty which has been calculated, when combined with the addition of a paved running surface for buses and HOV's to result in a loss of over one foot of freeboard.

Whichever system is ultimately selected, a higher than normal level of maintenance will be needed for the bridge segment of the rail system, as the track system can be expected to experience greater stress than other portions of the system.

3.2 OPERATIONS

Operation of trains and buses, including HOV's on the transitway would involve a number of operational consequences. First, the operating speed of the transitway for all vehicles would need to be restricted. Specifically, an exclusive rail operation permits top speeds of 50 to 65 mph, and sometimes higher. These speeds are possible while maintaining safe operations through use of a signal system that divides the track into blocks. Trains are allowed to enter and leave the blocks only if another train is not detected in the succeeding block of track at the same time. A vacant block is commonly required between any two trains as a buffer. Addition of buses onto the guideway negates this method of avoiding collisions, since the train signal system will not detect the presence of a bus in a block as it would a train. Therefore, the trains must be slowed to a speed at which the operator could see any vehicle stopped ahead of the train, and then be able to stop the train in time. Since trains require considerable distance to fully stop from high speeds, lower speeds (25 to 35 miles per hour) are typical of such mixed traffic operations.

The inclusion of HOV's creates another constraint on operations. Specifically, while buses are not an integral part of rail operations and do force a reduced level of service, they are operated by professional drivers who may be instructed in unique safety and operations procedures. This includes safe exiting instructions and signal system conventions unfamiliar to the general public.

Private cars in HOV lanes are operated by anyone who chooses to use them and has enough passengers to qualify as an HOV. Addition of HOV's to a busway increases the need for enforcement areas, breakdown areas and some communications capabilities. In short, the transitway becomes analogous to mixed traffic operations. At some point the number of buses and cars on the transitway would render it no quicker to use than the general traffic lanes, and it is entirely conceivable that the speed restrictions necessary for joint operations would yield the transitway a lower speed alternative to mixed traffic operations in all but rush hour conditions.

In normal operations, when visibility on the bridge is unimpaired, the trains may achieve 30 to 35 mph top speeds. However, unlike the DSTP which is protected from the weather and has artificial lighting, bridge operations will be exposed to fog, rain, and sleet conditions upon occasion, and in the dark during the evening hours in wintertime, reducing visibility at those times. There will also be some icy conditions in which safe braking distances will be increased as well. To avoid an increase in the risk of collisions at those times, the top speed for all vehicles will have to be reduced considerably. Because the HOV's will not be on a radio communications system as will the bus and rail systems, communicating this reduction in operations speeds will be through use of interactive signs (linked back to the operations control center, where messages for special conditions will be entered) and by the example of the buses and trains.

4.0 FINDINGS

4.1 I-90 IMPACTS

The potential effect of the alternatives on the bridge were analyzed by examining several different potential impacts. The impact most directly related to the usage alternatives is dead load and the resulting loss of freeboard. Two additional impacts resulting from derailment and stray current were also noted and are discussed in the following subsections.

4.1.1 Dead Load and Live Load Impacts

Previous studies indicated as little as 7/8" loss of freeboard would result from the addition of rail service to the bridge. This estimate was based on an added dead load of 293 pounds per lineal foot of structure and includes the fixed facilities described in Section 2.2. The current estimate for the transitway, as described in section 3.1.3, of 4.88" may be reduced to .91" by removing 1.5" of the wearing surface across the width of the transitway. The following table summarizes the basis for these estimates. The wearing surface would not be permanently removed, but would be replaced when the overlay for the transitway is added after trackwork installation. Finally, in the event the temporary removal of some of bridge running surface is unacceptable to WSDOT, the addition of increased floatation, possibly by adding pontoons to the floating bridge, should be examined.

BRIDGE DEAD LOAD IMPACTS SUMMARY

Alternative	LRT Added Weight (1) Lbs/linear ft	Total Added Weight (2) Lbs/linear ft	Decrease in Freeboard
2 track, low profile rail with direct fixation fastener and overlay	1340	1897	4.88"
2 track, low profile rail with direct fixation fastener with removal of 1.5" of bridge deck overlay	595	359	.91"

(1) Lbs/ft. within the transitway only.

(2) Lbs/linear ft. Total weight added includes pontoon ballast required to restore "zero list" to the bridge, plus replacement of concrete traffic barriers with steel plated barriers.

The maximum design live loads used in design of the I-90 bridge versus the current estimate of those loads are:

	WSDOT Allowance	Current Estimate
1. Gross Vehicle Weight:	100,000 lbs	135,000 lbs
2. Axle Loadings:	25,000 lbs	22,500 lbs
3. Weight per Lineal Foot	1,429 lbs	1,500 lbs

The results of the previous study conducted by ABAM Engineers indicated there would be a minimal difference in the live load effects between the PSCOG and AASHTO loads used by WSDOT in the original bridge design, and the current estimate of LRT live loads. ABAM concluded that "all structures studied are acceptable for support of two tracks of the Metro LRT system."[10]

4.1.2 Derailment

Rail transit operations experience derailments from time to time. A comprehensive review of the risks and design requirements should, therefore, deal with derailments. The derailments experienced by railroad operations over open right-of-way and old roadbeds have no parallel with rail transit operations over restricted right-of-way and modern trackwork. Most modern LRT system derailments occur at slow speeds on sharp curves and at switches as in storage yards, especially with articulated cars having lightly loaded unpowered center trucks. Broken running rail can also cause derailments. Railroads and transit systems have used guard rail mounted a foot or so from the running rail and set a bit higher. Guard rail is intended to entrap derailed wheels and contain them, keeping the affected car or cars moving in the direction of the track and upright until the kinetic energy is dissipated. In practice, as recorded in past Metro studies, guard rail is used less and less by transit systems, and it is placed only where derailments are more likely or consequences are greatest (e.g. over high bridges or retained fills.).

It does not appear to be cost effective to use guard rail on the I-90 bridge except at the special trackwork and its support over the flexible bridge joints. The alignment across the lake is tangent with no crossovers or switches on the bridge. As a general matter, trackwork and truck design should make provisions for the mitigation of the effects of a derailment. Further, the structural analysis suggested elsewhere herein should include analysis of the potential damage to the bridge a derailment could cause.

4.1.3 Stray Current

Direct current powered rail transit systems typically use the running rails as a return path for the DC current collected at the catenary wire. Should this return current find a path to ground offering lesser resistance, the current will take it and "stray." Stray current can accelerate corrosion of underground metal (e.g. iron water pipes, steel piles and rebar). The potential for stray current is increased as the cross section of the rail decreases, and low profile rail has an unusually small cross section. Design and installation of the rail support system includes dielectric materials to insulate the rails and limit stray currents, but these are not perfect as installed and some leakage is inevitable. In crossing the lake on the I-90 bridge, extra precautions should be taken to discourage stray currents, which might have serious impact on the integrity of the bridge, including corrosion

10 ABAM Engineers, Op cit. p. 1

of reinforcing steel and anchor cables. The design used in estimating the freeboard impact of the rail / HOV / bus guideway does not include provision for the addition of stray current protection measures. Such measures will be included in the design of the guideway as it progresses in design development.

Among the measures available to prevent and direct stray current from the bridge are the following:

1. Adequate drainage of the trackway must be maintained at all times. To do this a minimum cross slope of 2 percent is recommended. This is to prevent the accumulation of water between tracks and to minimize the conductive paths between rails and help maintain the return of negative current in the running rail.

2. If ballasted track is selected, an insulating pad should be placed beneath the ballast and the bridge deck. In addition, a continuous conductive net should be installed under the pad to collect and conduct any additional stray current to the substations located at either end of the bridge.

3. Stray current test and monitoring points should be installed on the bridge.

4. The individual pontoon bridge decks should be tied together with redundant jumpers.

5. Provide a cathode protection system.

5.0 CONCLUSIONS AND RECOMMENDATIONS

As stated at the beginning of this document, this study has two major objectives related to the I-90 bridge and its use to support projected transit needs:

1. Assess the ability of the floating bridge to support joint rail transit and bus operations/HOV's simultaneously. This relates to the unique qualities of the floating bridge, including its buoyancy and structural limitations.

2. Evaluate the operational limitations of the bridge for the joint operations. What restrictions, if any, would the bridge impose on its design and operation.

Based on the analysis described in the preceding sections of this document, the panel reached the following conclusions and offers the following recommendations.

5.1 CONCLUSIONS

The key conclusion of this analysis, at the conceptual level, is that the transitway can accommodate the rail system, buses and HOV's simultaneously. The impact of joint usage of the bridge includes a loss of almost 5" of freeboard on the floating portion of the bridge. Measures to restore that loss could include removal of 1.5" of running surface overlay, which would reduce the freeboard loss to less than 1", or the addition of more floatation. WSDOT will need to determine what loss of freeboard, if any, would be acceptable.

Joint use of the transitway by buses, HOV's and rail would result in a significant reduction in the speed of operations and would increase the risk of service interruptions.

Further analysis of the interaction between the rail, the bridge and the design of the transit system is required. However, until additional information is collected on the behavior of the bridge, and the rail alternative is further defined, the necessary design development will not be possible. The consensus of the expert panel is that the conditions encountered in using the bridge are technically manageable and the alternative remains feasible.

5.2 RECOMMENDATIONS

Based on this analysis the following recommendations are made:

1. Continue to use the I-90 bridge in planning for transit service to the East Corridor. Initiate further discussions with WSDOT and FHWA regarding the use of the I-90 bridge for enhanced transit service, including rail service.

2. Initiate further study of field conditions on the I-90 bridge as soon as possible. Further information is essential to advance the design of the bridge to accommodate transit requirements and for input to the transit design process. Appendix C provides an outline of an expanded design and analysis program of the I-90 bridge.

3. While the I-90 bridge should not dictate system design, it should consider:

    a. An LRT vehicle would accommodate the movements that will be encountered crossing the transition span.

b. Maximum axle loadings specified for the rail vehicle should reflect consideration of the I-90 bridge.

c. A self-leveling rail vehicle would offer some advantage for ride comfort across the I-90 bridge.

d. Design every element of the track system to allow maximum vehicle speeds to recover of design headways after operations interuptions.

e. Guard rail should be used in the vicinity of special trackwork.

f. In addition to better than average insulation of the rails and bonding across rail joints, provision should be made for a grounding cable which will offer return current a more attractive path to shoreline substations. There may be other protective measures which should be taken following a more specific evaluation of corrosion control requirements.

g. The transition span should be designed to meet the design specifications used by WSDOT in its design for the transition span.

h. The track system should be isolated from the bridge deck/structure through the joint and for a distance on either side of the joints.

APPENDIX A

Washington State
Department of Transportation
Transportation Building
Olympia, Washington 98504
206-753 6005

Duane Berentson, Secretary

December 19, 1985

Mr. Kevin J. Grigg
Principal Rail Transit Engineer
METRO
821 - 2nd Avenue
Seattle, Washington 98104

Re: I-90 Third Lake Washington Bridge Light Rail Transit Conversion

Dear Kevin:

My staff has prepared several sketches to illustrate the configuration of the floating bridge especially where motions occur in the transition to the first spans in each end. I am enclosing copies of these sketches for your information.

I plan to offer an explanation of how the floating bridge is restrained and the nature of the motions that occur at each end during the meeting scheduled for January 3 in Oakland. These sketches may be of some use to those attending that meeting for a more complete understanding of how this bridge works, so I am distributing copies to persons indicated as copy recipients.

Sincerely,

C. S. Gloyd

C. S. Gloyd
Bridge and Structures Engineer

CSG:ejf

Enclosures
cc: John I. Williams w/encl.
Robert Clemons w/encl.
John Bergerson w/encl.
Richard H. Rudolph w/encl.

Seal of the Great State of Washington

	Maximum (1) Design Movement	Loads Contributing to Movement									
		Temp.	(10) Damage (Flooding)	Live Load	Wind & Wave Longit.	Wind & Wave Transv.	Lake Level	Cable Tension	Extra Dead Load	(2) Dynamic Response to Waves	(3) Earth-Quake
LONGIT. HORIZ.	± 1.5' (4)	(5) ±0.43'		(6) (12) ±1.50'	(12) ± 2.03'		(7) ✓	(7) ✓			✓
TRANSV. HORIZ.	±3.0'					(8) (12) ± 3.0'	(7) ✓	(7) ✓		±0.37'	✓
VERT. {RISE / FALL	+0.8' / -3.8' = 4.6'		✓	(9) -0.40'			+0.8' / -3.8'		(11) ✓	±0.16'	
ROTATION (ROLL)	± 2°		✓	(9) ±1.7°		(12) ±0.2°			(11) ✓	±0.28°	

FLOATING STRUCTURE MOVEMENT
ULTIMATE EVENT (100 yr. Frequency)

	Maximum Movement (13)	Loads Contributing to Movement									
		Temp.	(10) Damage (Flooding)	Live Load	Wind & Wave Longit.	Wind & Wave Transv.	Lake Level	Cable Tension	Extra Dead Load	(2) Dynamic Response to Waves	(3) Earth-Quake
LONGIT. HORIZ.	± 1.5' (4)	(5) ±0.43'		(14) (16) ±0.77'	(15) (16) ±0.40'		(7) ✓	(7) ✓			✓
TRANSV. HORIZ.	± 0.61'					(15) (16) (17) ±0.60'	(7) ✓	(7) ✓		±0.01'	✓
VERT. {RISE / FALL	+0.8' / -1.0' = 1.8'		✓	(9) -0.40			+0.8' / -1.0'		(11) ✓	±0.06'	
ROTATION (ROLL)	± 1.8°		✓	(9) ±1.7°		(15) (16) ±0.06°			(11) ✓	±0.07°	

FLOATING STRUCTURE MOVEMENT
ANNUAL EVENT

Motion of Floating Structure	Max. Longit. Design Movement of Exp. Jt.	Maximum Angle Change	Loads Contributing to Movement								
			Temp.	Damage (Flooding)	Live Load	Wind & Wave Longit.	Wind & Wave Transv.	Lake Level	Cable Tension	Extra Dead Load	Earth-quake
LONGIT. HORIZ.	±1.5' (1)	0° Horiz. 0.8° Vert. (8)	+0.9' (open) -0.6' (close) (5)		±1.50'	±2.03'					±0.7' (3)
TRANSV. HORIZ.	±0.35' (2)	7° Horiz. (6) 0° Vert.					±0.35' (2)				Small
VERT {RISE FALL}	+0.04 (open) -0.20 (close)	0° Horiz. 1.25° Vert. (7)			-0.02'			+0.04' -0.18'			
ROTATION (ROLL) (4)	± 0.14	0.5° Horiz. (8) 0.5° Vert. (8)			±0.14		±0.02'				

(1) Limited by Longitudinal Restrainers.
(2) Longit. movement at curb lines on LM Structure. (20' from ℄ LM)
(3) EQ movement due to response of approach spans.
(4) Roll produces vertical and transverse motions and are a maximum at locations on the roadway which are farthest from C.G. of pontoon.
(5) Effects of approach spans included.
(6) See Fig. 4
(7) See Fig. 5
(8) See Fig. 6
(9) See Fig. 8

JOINT MOVEMENT
PONTOON A AND R
ULTIMATE EVENT

Motion of Floating Structure	Max. Longit. Design Movement of Exp. Jt.	Maximum Angle Change	Loads Contributing to Movement								
			Temp.	Damage (Flooding)	Live Load	Wind & Wave Longit.	Wind & Wave Transv.	Lake Level	Cable Tension	Extra Dead Load	Earth-quake
LONGIT. HORIZ.	± 1.5' (1)	0° Horiz. 0.8° Vert (4)	+0.9' (open) -0.6' (close) (5)		± 0.77'	± 0.40'					± 0.7' (5)
TRANSV. HORIZ.	± 0.06' (2)	0.2° Horiz. (6) 0° Vert.					± 0.06' (2)				Small
VERT {RISE FALL	+ 0.04' (open) - 0.05' (close)	0° Horiz. 0.4° Vert. (7)			- 0.02'			+0.04' -0.05'			
ROTATION (ROLL) (4)	± 0.14'	0.5° Horiz. (8) 0.5° Vert. (8)			± 0.14'		Small				

(1) Limited by Longitudinal Restrainers.
(2) Longit. movement at curb lines on LM Structure. (20' from ℄ LM)
(3) EQ movement due to response of approach spans.
(4) Roll produces vertical and transverse motions and are a maximum at locations on the roadway which are farthest from C.G. of pontoon.
(5) Effects of approach spans included.
(6) See Fig. 4
(7) See Fig. 5
(8) See Fig. 6
(9) See Fig. 8

JOINT MOVEMENT
PONTOON A AND R
ANNUAL EVENT

NOTES FOR SHEETS 1 and 1A

1) Floating structure movements used for design. Movements are relative to a fixed point. Values are computed at Pontoon A with values at Pontoon R equal to or less than.

2) Transient motions expected for ultimate or annual event.

3) Earthquake motions do not control the design of the floating structure. Motions assumed to be negligible.

4) Longitudinal motions are restricted by restrainers at Piers A1 & R1. Restrainers are designed for forces resulting from motions tending to exceed ±1.50'.

5) Daily effect = ±0.25'. Annual effect = ±0.18'. Total = .25 = .18 = ±0.43.

6) From 5 lanes of live load with 0.75 reduction factor. Includes longit. wind on live load = ±0.30'.

7) Lake level and anchor cable tension affect the amount floating structure movement. Cable tensions are seasonally adjusted to maintain standard forces.

8) Shown with one Pontoon A cable broken. Without the broken cable, transverse movement would be ±2.0'.

9) Effect of 3 northerly design lanes loaded with HS-20 lane load for full length of transition spans plus the floating structure. This is the maximum live load rotation and accompanying deflection at ℄ of Pontoon.

   No calculations are available for the effect of rapid transit (L.R.T.).

10) Damage loads were considered in the design of the floating structure but damage motions were not considered in the design of the expansion joints.

11) Transition spans and floating structure was designed for rail weight (100 lbs/yd/rail) only.

12) Values are shown at low water without cable adjustments for 3.8' drop in lake level.

13) Values computed at Pontoon A with values at Pontoon R equal to or less than.

14) From 3 lanes of live load with 0.90 reduction factor. Includes longitudinal wind on live load = ±0.20'.

15) One year wind and wave = 0.30 X 100 year wind and wave per design criteria.

16) Values are shown without cable adjustments for a 1.0' drop in lake level.

17) Shown with one Pontoon A cable broken. Without the broken cable, transverse movement would be ±0.38'.

I-90 FLOATING BRIDGE - LRT CONVERSION

John Insco Williams - January, 1986

During 1983, I studied the question of future conversion of the I-90 busway to light rail. A major focus of this effort was to determine the feasibility of constructing a track structure at the joints at the ends of the 200′ transition spans connecting the floating bridge to the fixed approaches. At the present time, design of the bridge has advanced and more information on bridge movements is available. Based on the new information furnished by Washington D.O.T., I have modified my original concept as described below.

The movements of the floating bridge with respect to the fixed approaches is defined in terms of the maximum annual event and the ultimate, or worst case event. The track structure at the joints must be able to cope with the latter. The floating bridge movements are as follows:

Movement	Annual Event	Ultimate Event
Longitudinal Horizontal	≠ 1.5′	≠ 1.5′
Transverse Horizontal	≠ 0.61′	≠ 3.0′
Vertical	+ 0.8′ rise	+ 0.8′ rise
	- 1.0′ fall	- 3.8′ fall
Rotation (Roll)	≠ 1.8°	≠ 2.0°

The transverse horizontal and vertical movement are seen as angular movements at the joints, as follows:

Movement	Annual Event	Ultimate Event
Transverse Horizontal	0.2°	1.0°
Vertical	0.4°	1.25°

Note that all movements or angles are given as deviations from a normal position. The movements at each end of a transition span are similar except for the ≠ 1.5′ longitudinal movement. This is handled at the end of the transition span which meets the floating bridge. (There is a small longitudinal movement at the opposite end resulting from the horizontal and vertical movements.) Some of the movements are greater than those used in the 1983 study, thus the concept I used then has been modified accordingly.

Proposed Solution:

In the original study, I used a ≠ 20′ long easement span at each joint. This would pivot and slide as required. The deflection angles at each end of the easement span would be half the deflection angle between transition span and its fixed or floating neighbor. The rails were to be attached to the easement span with proprietary very soft track fasteners.

My new proposal retains the easement span concept, but breaks it up into an articulated three span structure, still about 20′ long overall. By articulating the structure, the angles between the individual elements are reduced to one-fourth the angle between the transition span and its neighbors. Thus a 1° angle is seen by the easement span elements as a 0.25° angle (0° -15′). This can be compared with the switch angle of the No. 20 turnout which is 0°-25′.

The running rail is attached to each six foot long easement span element, or "rail beam" at two points. (For extra support, a pair of fasteners is used at each point spaced 8" o.c.) Thus

the theoretical fastener spacing is 3′-0" o.c., with a total length of 21′ between the last fasteners on the concrete bridge decks. Between the fastener groups the rail may bend or deflect vertically and horizontally to assume a circular curve configuration in either plane.

It is important to note that even in the ultimate or worst case, the movement is not very substantial. In the 21′ long curve, the maximum middle ordinate (M.O.) is about 5/8". In the 3′ space between fastener groups, the M.O. is less than 1/64 inch (easily handled by a relatively stiff elastomer pad). The worst case horizontal curve is about 1340′ radius, and vertical curve about 1060′ radius, assuming a curve 21′ long. For the annual event the horizontal radius is 6000′ and vertical 3000′.

The maximum annual event for horizontal movement of the bridge would have no effect on maximum speed. Assuming 3" unbalanced superelevation (there will be no superelevation of the easement span) a speed of 67 mph is allowable. The maximum ultimate event would require a speed restriction of about 30 mph.

The horizontal longitudinal movement would be handled by off-the-shelf Conley Sliding Joints. Because they can handle only 1′-4" movement each side of normal, it is necessary to use a set of joints at each end of the easement span at the joint between the transition span and floating bridge. They would be attached to the concrete bridge deck about 15′ from the end of the easement span. The rail will be clamped to the easement span and the easement span will always be <u>centered</u> over the joint by a

"summing linkage". Thus the worst case movement of rail through each Conley Joint will be about 9" each side of normal.

At the joint between the transition and fixed spans where the movement is alot less, a single set of Conley Joints is needed. This easement span is anchored at one end to the transition span. At both types of easement span, the rail must be free to run longitudinal over the short distance (15′ ≠) between the easement span and the Conley Joint. This is handled by a "zero toe load" fastening system, available off-the-shelf.

The easement span is made up of standard structural members and plates. Any good steel fabricator could build it. I have shown Pandrol clips, weld-on shoulders, and insulators as the rail fastening system as it has many years of use behind it. Other systems are possible.

As shown on the sketches, the easement span consists of a sub-frame with beams about 12′ long at each side of the track, resting on bearings on top of the adjacent bridge decks. These beams carry cross beams located below top-of-deck level in space vacated by removal of the highway expansion joint. These cross beams support the center rail beams by a fixed bearing and the end rail beams by a pivoting bearing. The outer ends of the end rail beams rest on sliding bearings on top of the concrete bridge deck. The sketches show "hard" bearings of steel. More modern resilient bearings and teflon sliding surfaces could be used if they can be squeezed into the limited vertical envelope available. I have assumed that the 1 1/2" topping would be removed in

critical areas to permit installation of the bearing plates, and to provide adequate vertical clearance between the bridge deck and rail beams.

While the easement span concept as described above may sound complex, it is relatively simple when compared with a railroad slip switch or drawbridge. My easement span is essentially a passive device which translates the vertical and horizontal bridge movements into a smooth circular curve. The rail is solidly supported by the fastener groups in both horizontal and vertical plans, at all times. Resilient pads are used to allow the rail to flex slightly, reduce noise and impact, and provide electrical isolation between rails and bridge. There are no breaks in the rail, no switch machines, no powered locks or wedges, and no signal circuit controllers required, as in the case of complex turnouts or drawbridges. The stiffness of the track structure at the easement span would be close to that of the direct fixation track elsewhere on the bridge. The rail is continuous across the easement span, but for ease of maintenance would probably be bolted to the sliding rail portion of the adjacent Conley Sliding Joints.

The loads on the easement span are not great. No more than one truck would occupy the structure at one time, and only one axle would occupy an individual rail beam at one time. Lateral force would be significant only in the ultimate lateral motion situation and this can be easily handled by the rail fastening system and the lateral stops on the sliding bearings.

This concept can be implemented without modification of the bridge design, and with only minor changes to the bridge when it would be installed. While it adds weight at the ends of the transition span, this would be compensated by removal of the highway expansion joint and related "second pour" concrete at the track area.

The one possible modification to the existing bridge design, discussed at the meeting in Oakland, is the design of the sliding bearing supporting the end of the transition span which meets the floating bridge. The current design results in a vertical movement of the transition span as it slides longitudinally. While my easement span concept can accommodate this to some extent - a bump or dip would still be apparent in extreme cases - it would be desirable from the highway users standpoint to modify the bearing design. (The bump or dip would be more pronounced for the highway vehicle because the highway expansion joint is much shorter than the rail easement span.)

No doubt there will be a considerable period of time available to measure the actual bridge movements before final designing of a rail system for the bridge. The design concept I have proposed could be developed further once more data is available. Other design concepts could be developed as well, which might be less complex than my proposal. Any hardware developed for monitoring the bridge could be continued in use after the LRT is built, and could tell when extreme movements might require a speed restriction.

Like any mechanical device, the easement span and related Conley Joints would need periodic inspection and maintenance. For instance, sliding surfaces would need lubrication, as is the case with turnouts. On the whole, it would require alot less attention than a turnout or a drawbridge track and signal installation.

Other Bridge Issues:

The method of installing track on the entire floating bridge and its approaches was discussed in my previous report of March 1983, and subsequent correspondence with Metro (to Renee Montgelas, November 6, 1983). As it was necessary to minimize dead load, my original proposal to use continuous supported rail on a second pour slab, was superseded by a proposal to use individual unbonded resilient fasteners attached directly to the bridge deck. To compensate for cross slope of 2%, I proposed to use a low profile fastener on the up-hill or south rail and thicker fastener on the opposite rail. The fasteners would be spaced about 31 1/2" o.c. to fall between the transverse post-tensioning tendons. I feel that this is still a valid proposal.

While some properties have had some problems with "direct fixation" (or "ballastless track") fasteners, we all know alot more about fasteners now and can avoid these difficulties. The fastener concept I proposed in my November 1983 memo has been tested in Boston, and the individual components or details (Pandrol clips, unbonded pads, etc.) have had years of successful service.

I would say that this bridge is an ideal place to use direct fixation. A quality finished surface will be available, there are no significant curves, and there would be plenty of room to work in when installation is under way.

It is still necessary to reduce dead load on the bridge because insufficient allowance was made for track dead load in the original bridge design. A solution which could save several hundred pounds per linear foot, would be to replace the Jersey Barrier between the transit and highway, and on the outside of the transit area, with a steel guard rail. If necessary, the one next to the roadway could be shaped like a Jersey Barrier but made up of galvanized steel plate.

An issue which came up at the Oakland meeting is the location of expansion and fixed bearings on the approach spans and the elevated deck on the floating bridge. In the latter situation, the decks are three span continuous (3 x 55′ = 165′) with expansion bearings at each end of a three span ensemble. Most modern transit aerial structures use short simple span 70′ to 90′ long, often with elastomeric expansion bearings at both ends. In this case, the rail does not expand or contract, but the bridge span does. Medium toe load fasteners let this all happen. In the case of the I-90 bridge, this concept probably would not do. It <u>may</u> be possible to anchor the rail tight over the center part of a three span element, and use zero toe load fasteners over the end units so that the structure is free to move relative to the rail. Another approach is to anchor the rail tight over the

entire structure and use Conley Sliding Joints at each expansion pier. As this is the most costly alternative, it should be the basis of the cost estimate.

Note that where the rail is fastened directly to the pontoon deck, it can be anchored firmly at every fastener. In normal CWR track at grade, the rail does not move and neither does the ground. Thus compression or tension forces build up in the rail as the temperature changes from the "base" value when the rail was anchored. The floating bridge will expand and contract in the same direction that the rail wants to go but at a lesser rate than the rail. Thus there will be forces in the rail but they will be less than the forces in CWR at grade.

Regarding location of tracks on the floating bridge, the work by other consultants (and a sketch by me of November 6, 1983) shows the tracks centered on a line 2′ north of the Lm baseline. <u>If</u> it would help the stability of the bridge as affected by dead and live transit loads, the tracks could be moved north by about 6′. This would make the westbound track straddle the pump hatchways. It puts it quite close to the Jersey Barrier which could be reconfigured to save space and weight. The transit safety walk would be between the tracks.

In conclusion, I am fully confident that the solutions described above are feasible. They have a minimal impact on the bridge and would be cost effective from the standpoint of capital and maintenance expense. These proposals would be safe and reliable. In fact, they are far less complex, and offer less

chance of failure than other elements found in railroad track, such as turnouts and drawbridges. I have yet to see any viable alternatives proposed by others. I'm sure that my proposals need further development and refinement, but if and when an LRT facility is placed on the bridge, there will be more definite information on bridge movements available, and time to test proposed solutions. Until then, the solutions I have developed show that it <u>is</u> possible to put tracks on the bridge, and they are sufficient to serve as a basis for a construction cost estimate.

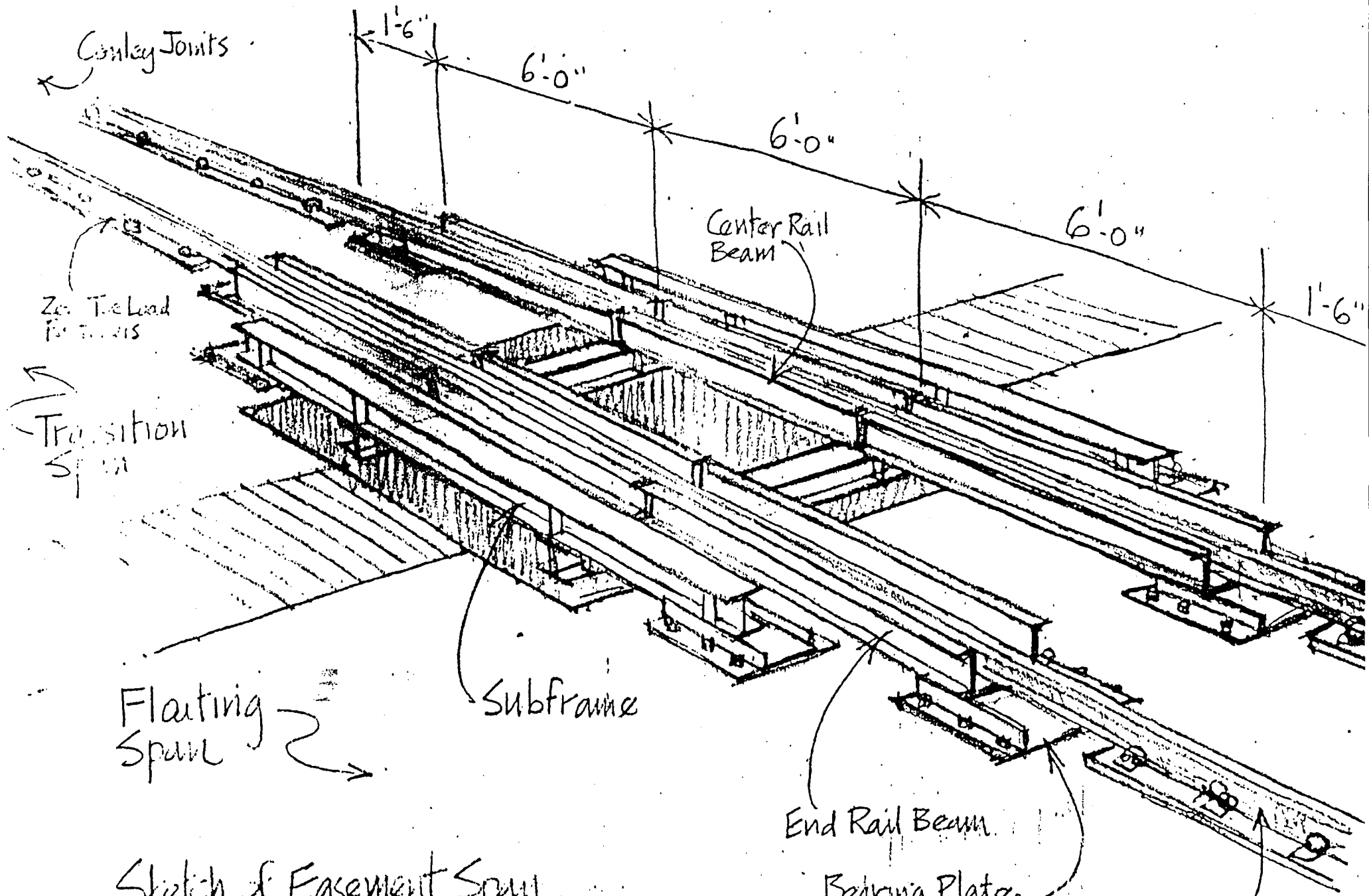

Sketch of Easement Span Assembly

JIW Jan 17, 1986

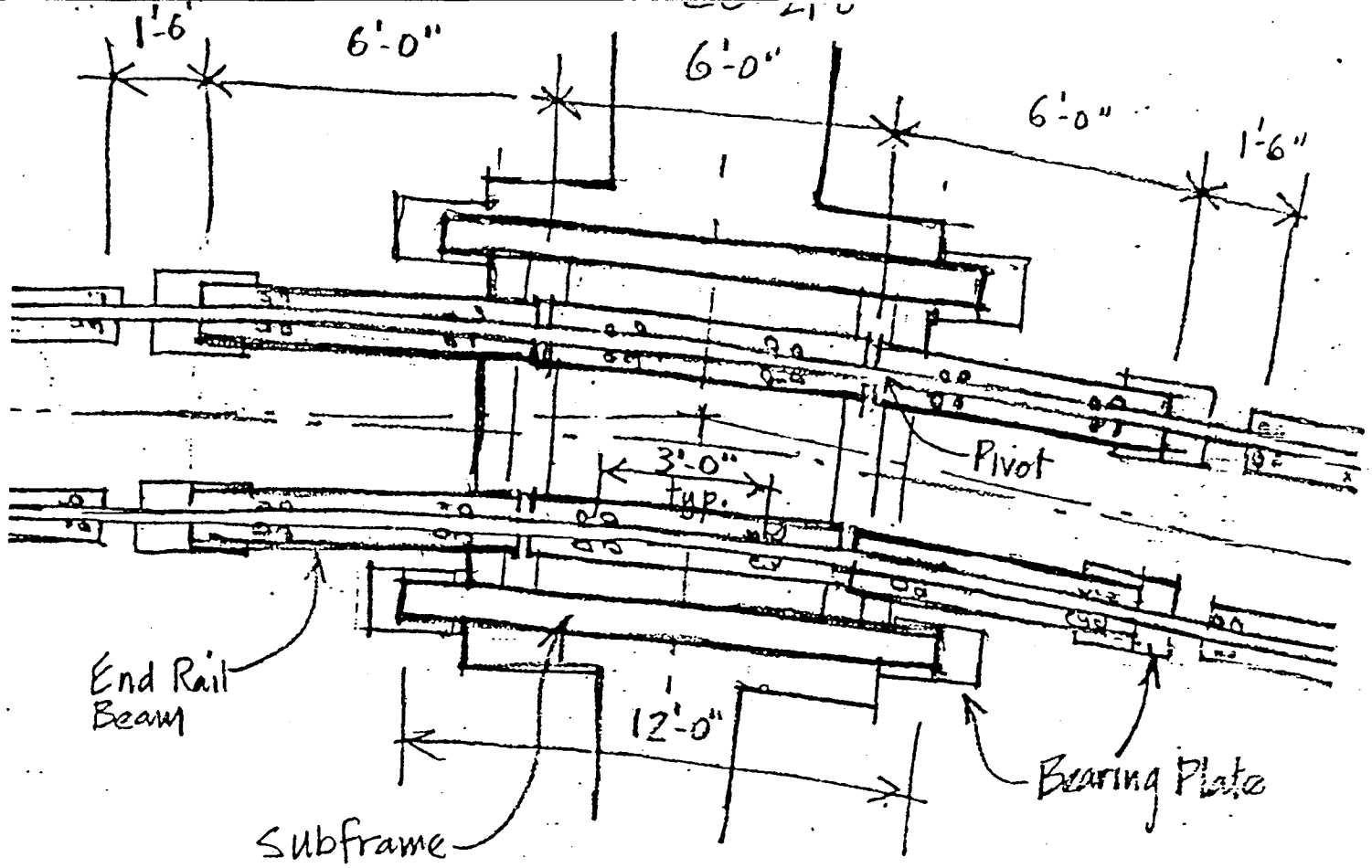

Plan View of Easement Span Showing Horizontal Curve Due to Lateral Movement of Floating Bridge

JIW Jan 17, 1986
Not to Scale

Section Showing Vertical Curve Due to Low Water

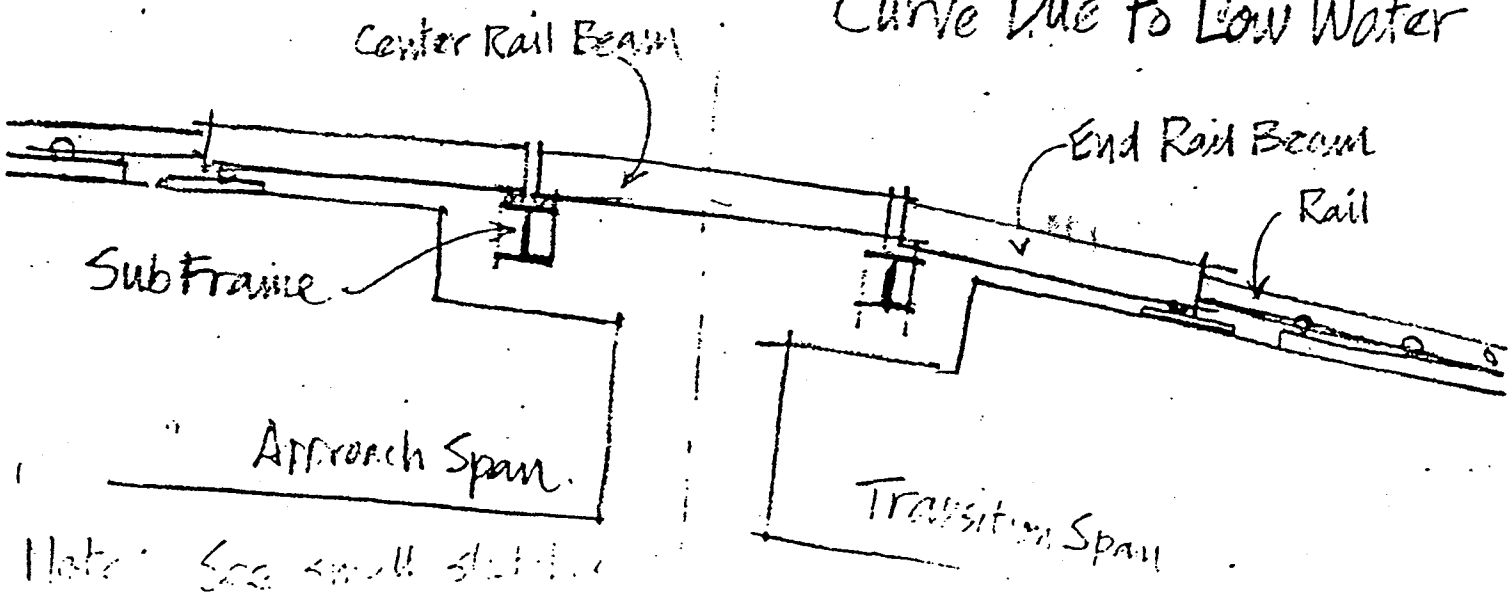

Note: See small sketch for [illegible]

Plan of Easement Span - at Sliding Bearing

Jan 1 '86

Rail Flexes over length of 21'

JOHN WILLIAMS

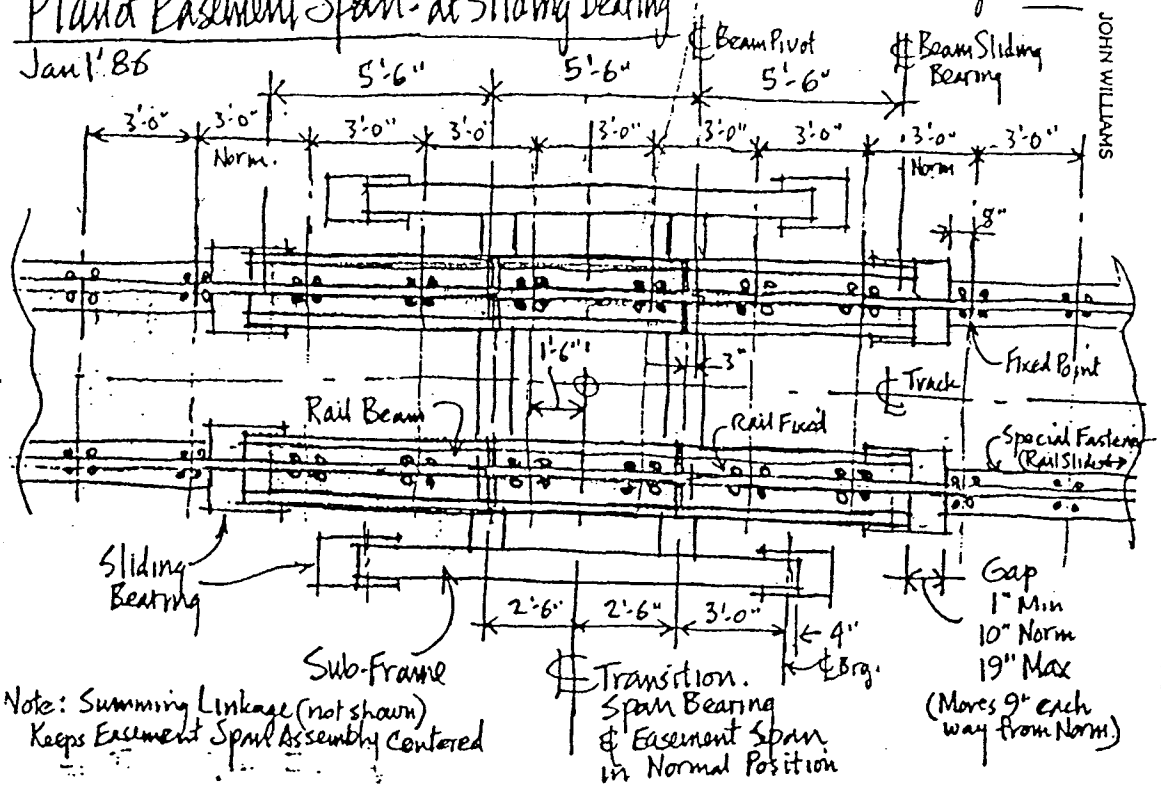

Note: Summing Linkage (not shown) Keeps Easement Span Assembly Centered

Sketch Showing Flexing at Easement Span

Rail Fastener Groups 3'-0" o.c.

Jan 1 '86

JOHN WILLIAMS

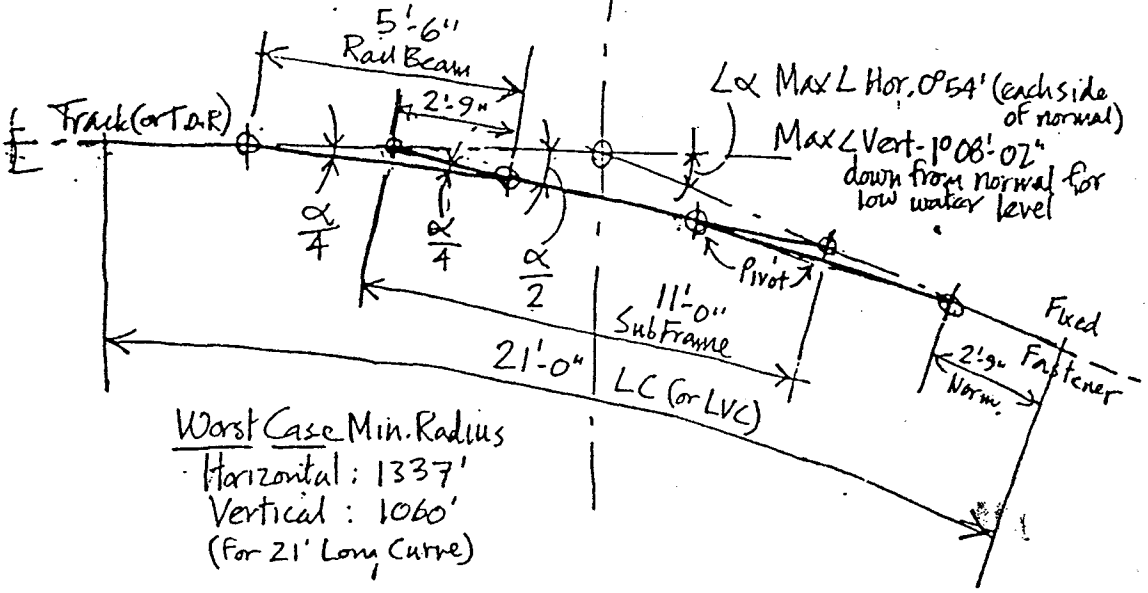

Worst Case Min. Radius
Horizontal: 1337'
Vertical: 1060'
(For 21' Long Curve)

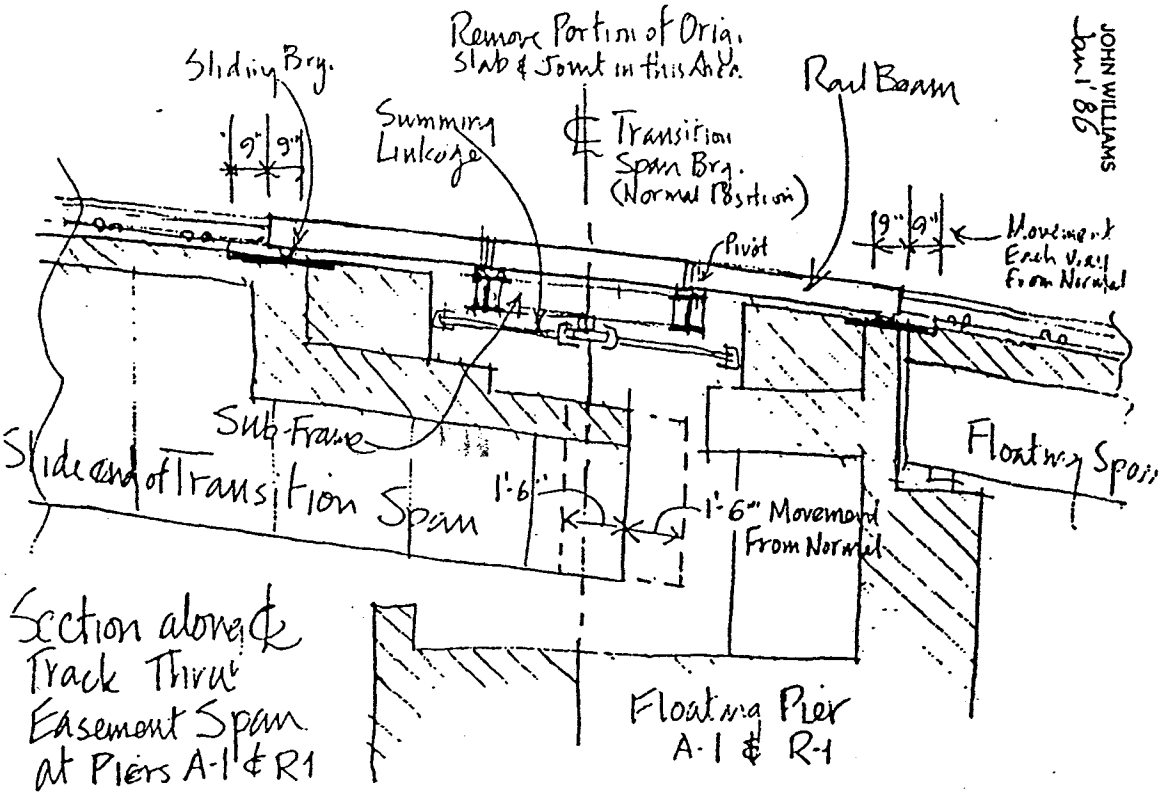

Section along ℄ Track Thru Easement Span at Piers A-1 & R1

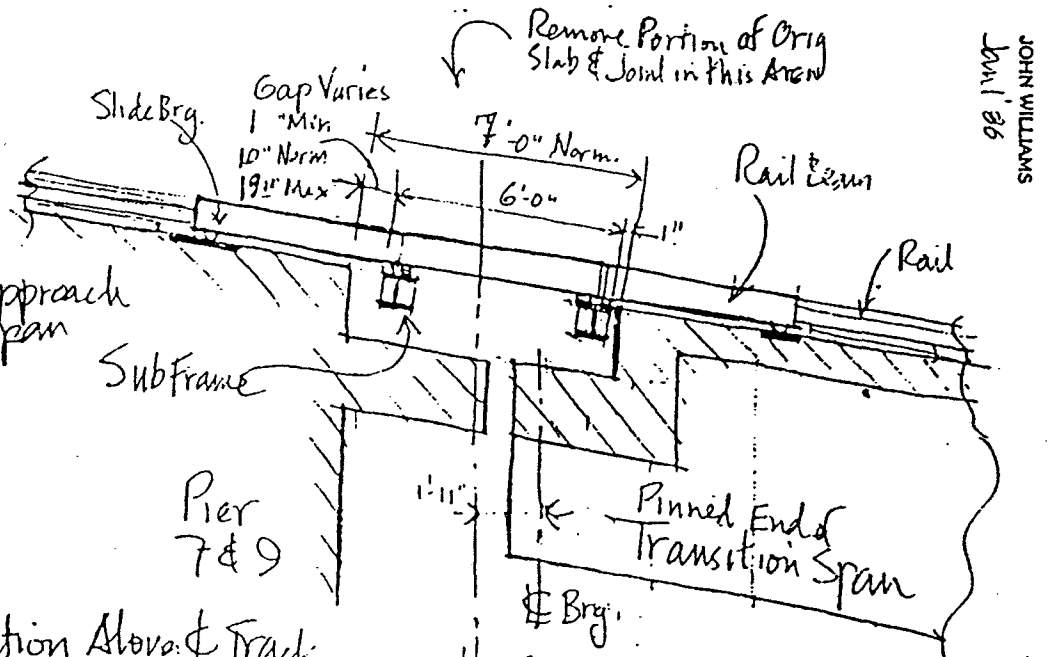

Section Above ℄ Track Thru Easement Span at Piers 7 & 9

Easement Span Assembly is Pin Connected to Transition Span & Slides with respect to the Approach Span.

JOHN WILLIAMS

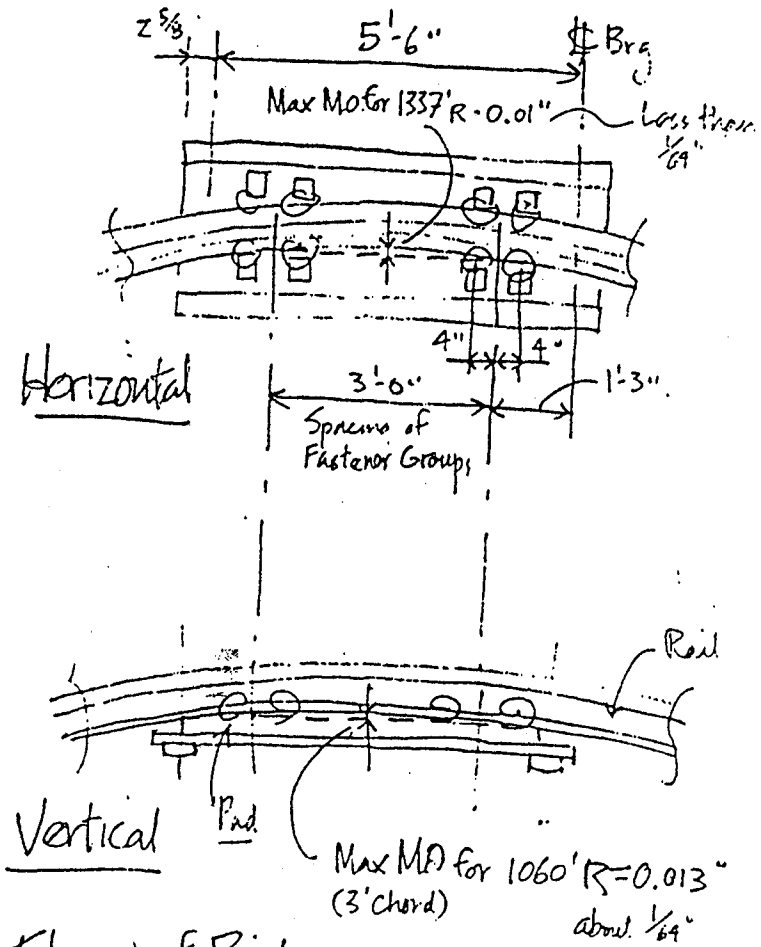

Flexing of Rail Within Rail Beam

JOHN WILLIAMS

Easement Span-Rail Beam

Jan 86

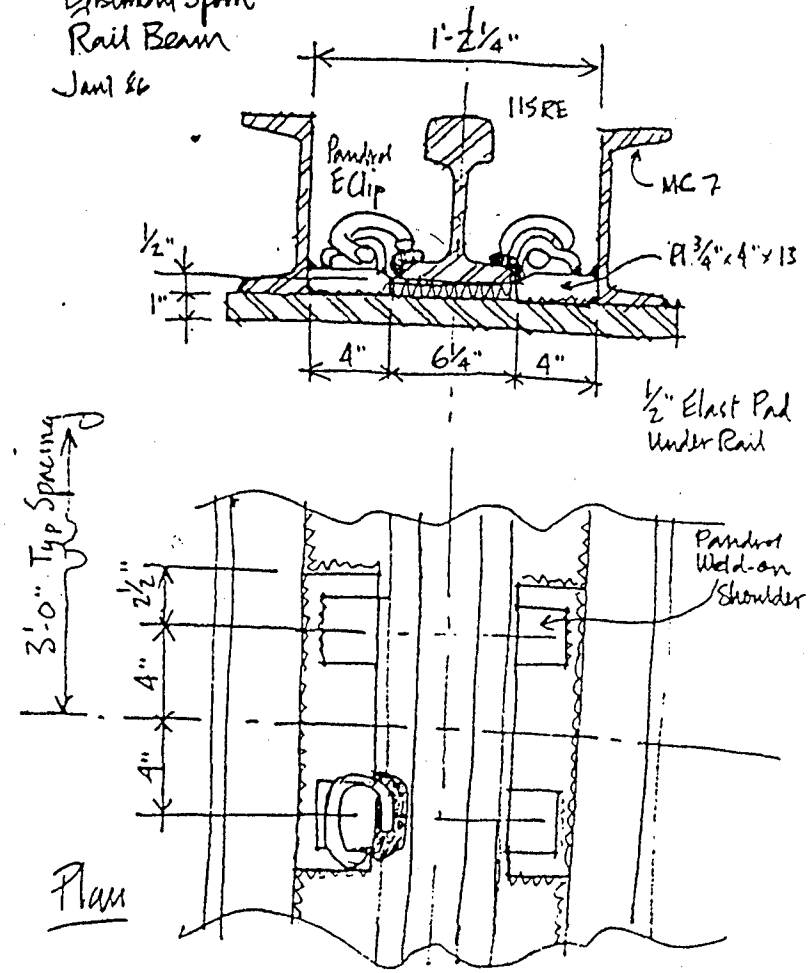

JOHN WILLIAMS

Easement Span - Sub-Frame
Jan 1 - 86

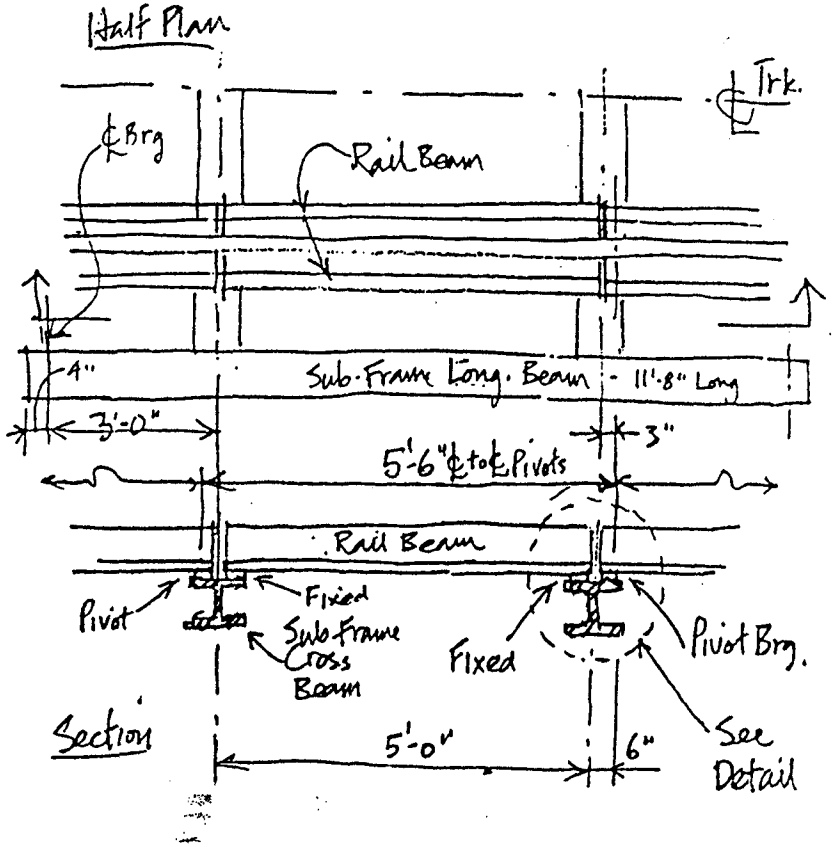

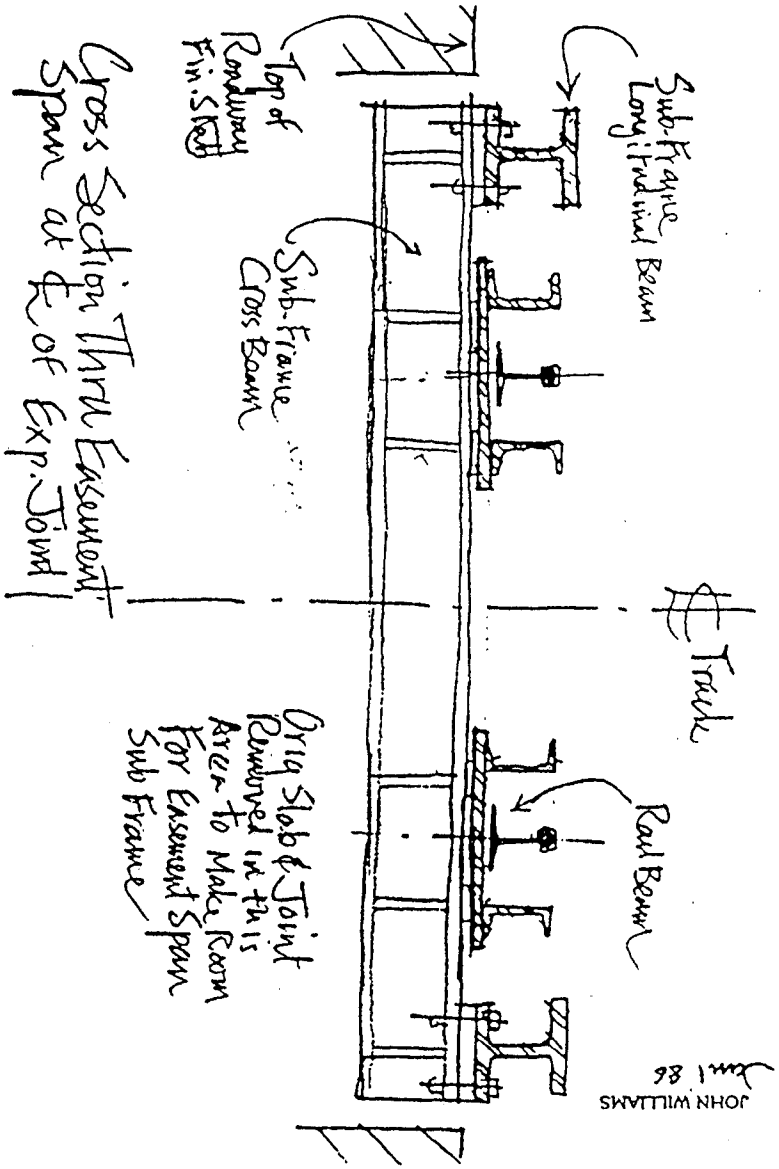

JOHN WILLIAMS

Sliding Bearing Pad for Sub-Frame

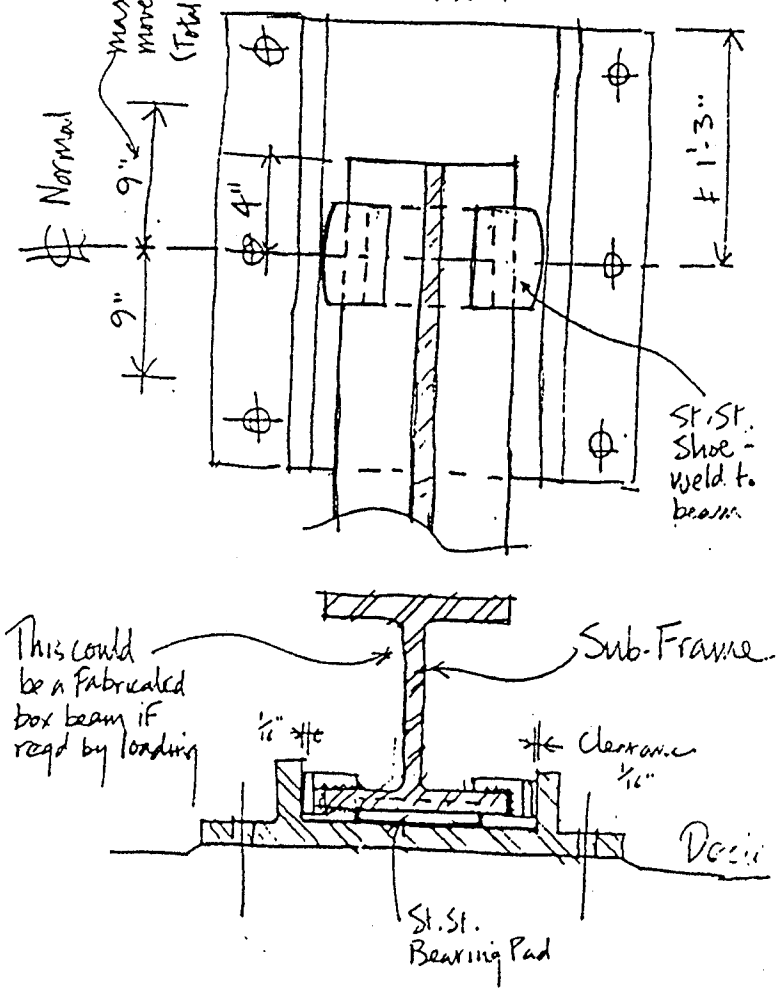

Dec 26 85

JOHN WILLIAMS

Ensemble Span-Rail Beam Sliding Bearing Detail

Jan 1 86

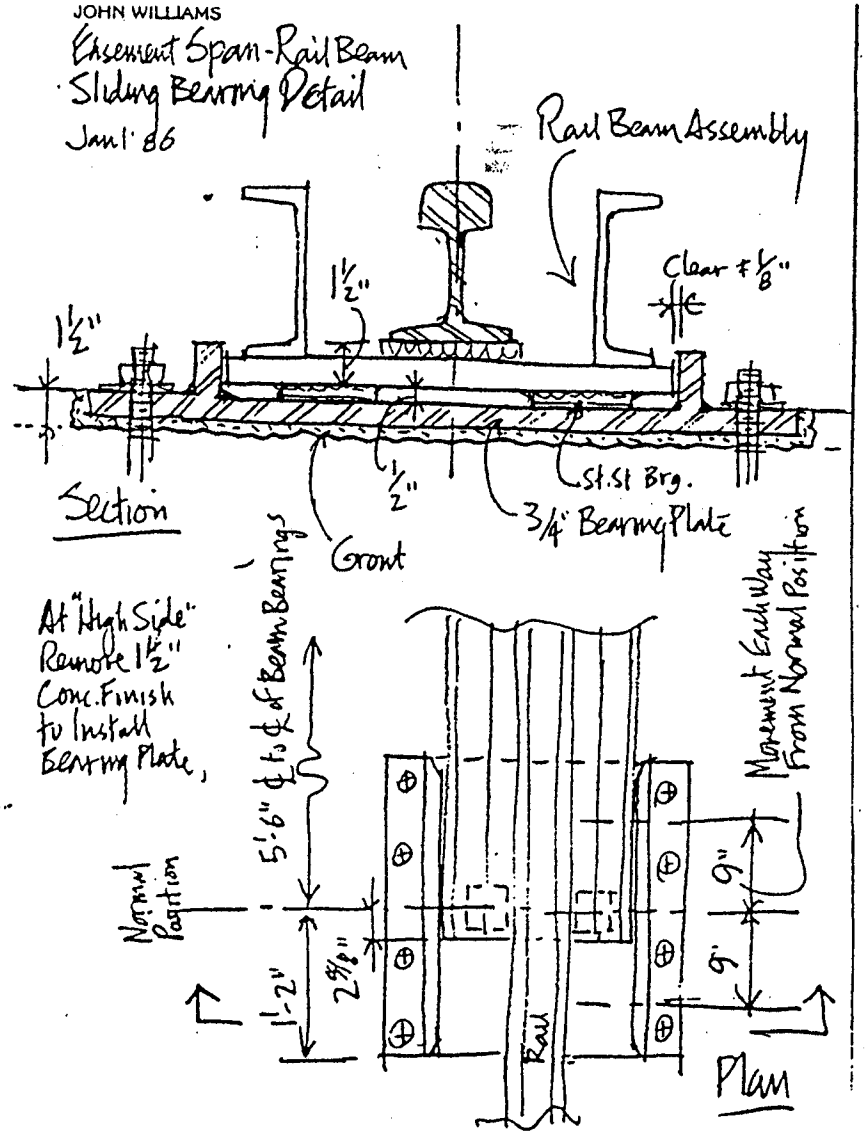

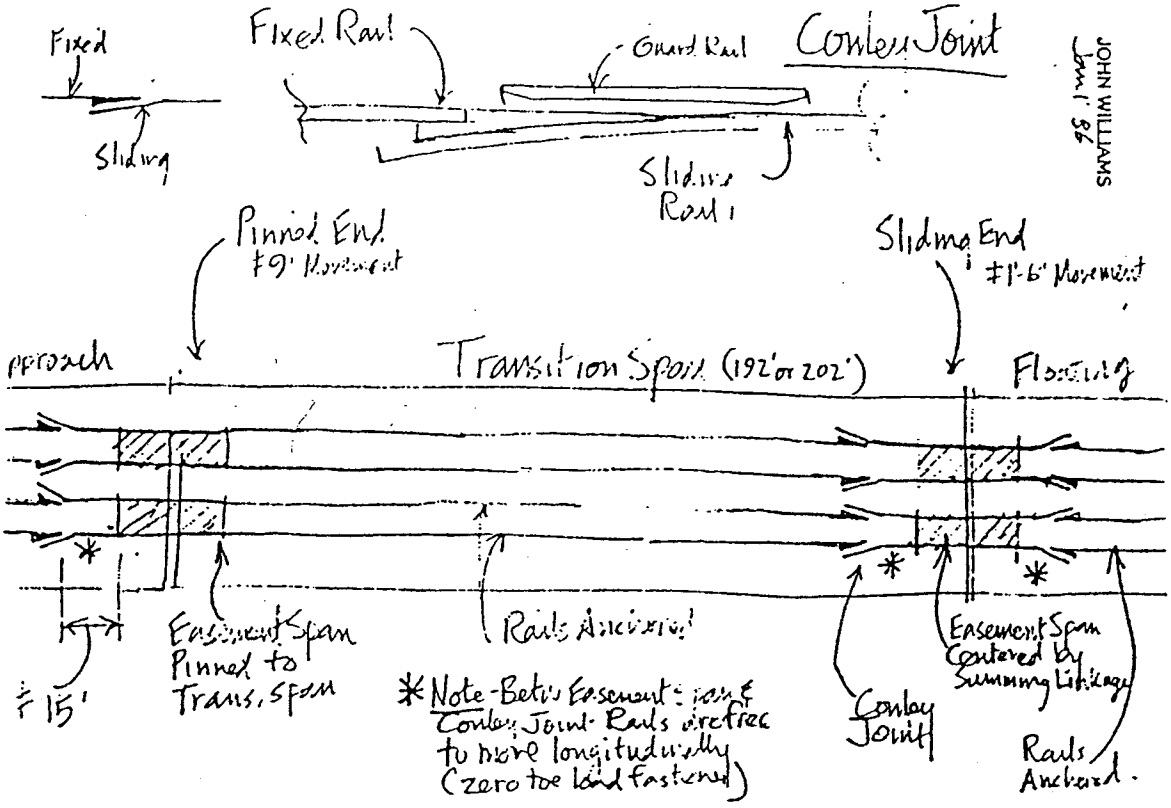

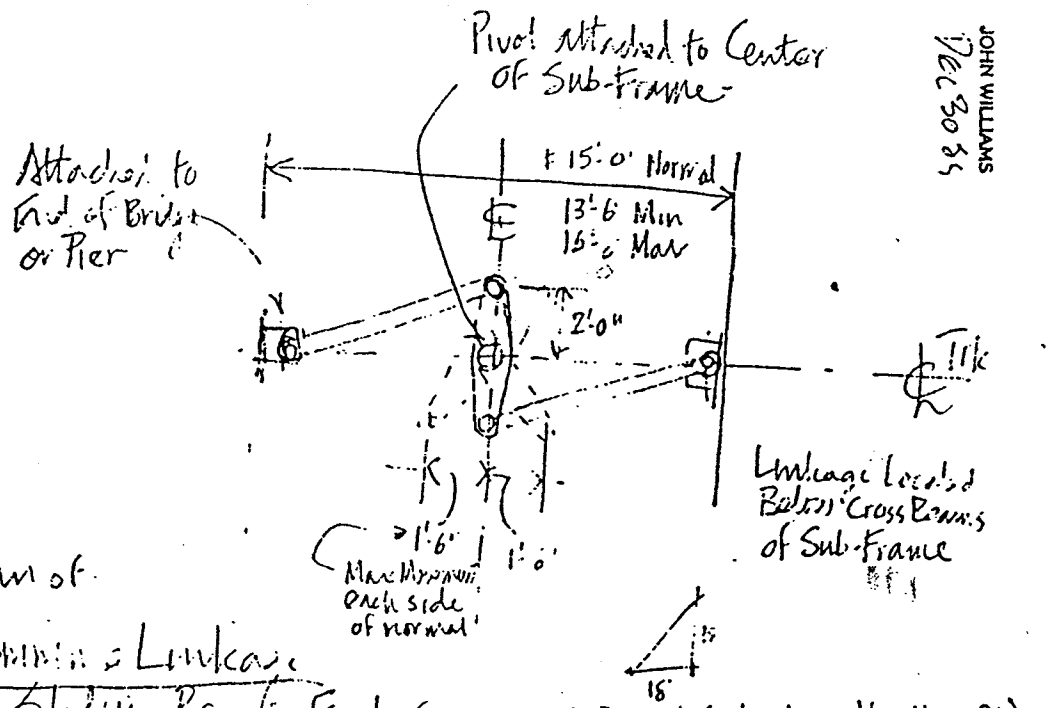

Plan of Summing Linkage for Sliding Bearing End (Not Reqd at Pinned End where Max Move = 9")

JOHN WILLIAMS

Horizontal Movement

For 3'-0" Movement off center, 192' Transition Span. Find R for ≠ 21'-0" Long Curve

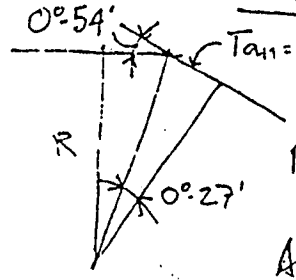

R: 1330.87 Say 1337'

At 3" En $\overset{3}{E} = \frac{4.01 V^2}{K}$ 1337

Find V = 31.6 Say 32 mph

Vertical Movement.

For 3.8' Drop in WL.

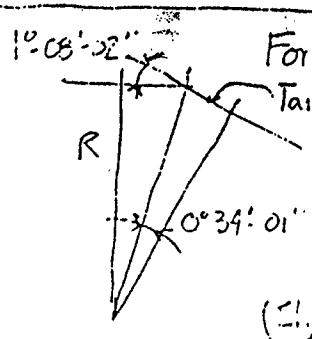

R = 1051.1' Say 1060'

OK

(Should Spec Min Vert [illegible] for Artic Vehicles)

JOHN WILLIAMS

Sub-Frame Detail

Long. Section Thru Rail Beam

Jan 1 '86

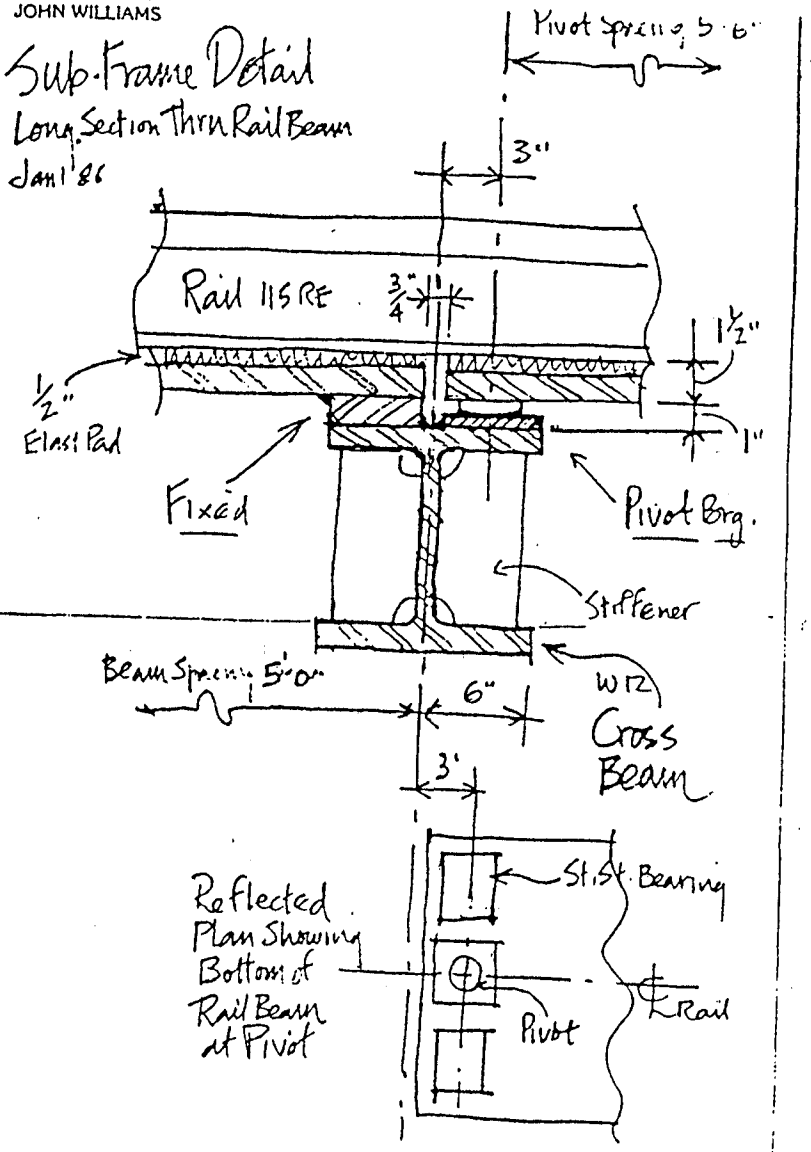

JOHN WILLIAMS

Vertical Movement

At Subframe

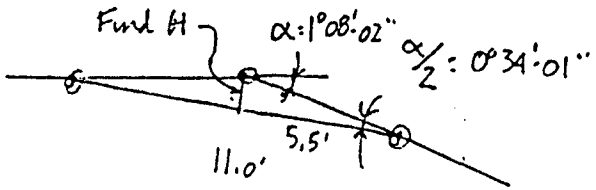

$\frac{O}{A}$: Tan 0.054' =

H = 0.65" = ± 5/8"

For Track Beams

L is half, thus H = ± 5/16"

Horizontal Movement

At Subframe: α: 0°54' α/2: 0°27'

H = 0.043'

0.52" = ± 1/2"

For Track Beams, H = ± 1/4"

(Length of Curve + 21'-0")

JOHN WILLIAMS

Check MO's for 21'-0' Long Curve

Vertical R: 1060'

$MO = \frac{C^2}{8R}$

Chord	MO		
21'	0.052'	= 0.62"	: 5/8" ±
3'	1.06×10^{-3}	0.0127"	: 1/64 ±
5'	.025	.035	1/32

Horizontal R: 1337'

Chord	MO		
21'	0.0412'	: 0.494"	: 1/2" ±
3'	8.414×10^{-4}	= 0.01"	: -1/64

APPENDIX C

Parsons Brinckerhoff

Memorandum

TO: Mike Lambert

FROM: Mike Abrahams *MJA*

DATE: August 1, 1991

SUBJECT: I-90 Lake Washington Bridge/LRT Access

As discussed this morning, the following is a suggested scope of work to advance the feasibility study of the subject project. The objective of this would be to conduct adequate engineering study to provide a substantive basis for the future use of the bridge by LRT.

The background of the bridge design is of some importance as it directly bears on the reasons for some parts of the study described below.

The Lake Washington Bridge was designed in a two stage process. Phase I, the central portion which carries traffic on the pontoon deck, was designed by WSDOT prior to PB/RTF design of the Hood Canal Bridge, while Phase II was designed after the Hood Canal Bridge design was completed. According to Myint Lwin, the Phase II design was pretty much a copy of the PB/RTF design. Based on a brief review of the plans furnished to us by Myint, it appears that there may be a number of differences between the Phase I and Phase II portions.

Based on the Phase II design criteria previously furnished by WSDOT and the notes on the Phase I and Phase II plans, the pontoons were designed for two LRT tracks, each track carrying 70 foot long cars with four 25^k axles per car, (equivalent to 1.43 kips per foot). And it appears that a 30% maximum impact and 15% braking force was used. According to minutes of a February 25, 1985 meeting, the pontoons were designed with the tracks placed transversely to produce the most severe loading, but it is not known how this was done.

After completion of the design of Phase II, WSDOT went back and conducted a dynamic analysis of the bridge using the analysis techniques we developed for the Hood Canal Bridge. Prior to that WSDOT only had some simple techniques available, although I understand from Myint that these techniques are still used for preliminary design.

AUG 0 7 1991

PARSONS, BRINCKERHOFF
QUADE & DOUGLAS, INC

As a result of the recent sinking of the old Lake Washington Bridge, the Governor's Commission has instituted a number of more conservative elements to the design of the replacement bridge. For example, the wind speed for the design wave has been increased, thus increasing the design wave. I would not be surprised if WSDOT is not going to be asked to go back and reanalyze the I-90 bridge using the more conservative criteria. If this happens it would be helpful to fold in the LRT loads and configuration produced by our study described below.

Scope of Services

Task 1 - Design Criteria

Develop design criteria for evaluation of Lake Washington Bridge. Criteria shall address the weight and arrangement of LRT track structure, catenary and railing as well as number and arrangement of traffic lanes derived as a result of our present work. If needed, consideration will be given to phased construction of LRT with one track at Stage 1 and two tracks at Stage 2. Design criteria shall include live loads, impact, traction and wind loads from LRT together with load combinations. This will essentially be an update of the 1982 Phase II design criteria prepared by WSDOT.

Task 2 - Trackwork

Develop conceptual design of trackwork structure including special trackwork of transition spans. Evaluate feasibility of CWR vs. Jointed Rail.

Task 3 - Catenary

Develop conceptual design of catenary structures.

Task 4 - Power and Signal

Develop conceptual design of power distribution and signal system.

Task 5 - Vehicles/Operations

Evaluate vehicle types and operating methodology.

Task 6 - Buoyancy Calculations

Evaluate effort on bridge buoyancy of dead load due to trackwork, catenary structure and other LRT features. Identify means of reducing existing dead load to achieve zero change in existing pontoon draft to compensate for addition of LRT trackwork and catenary structure.

Task 7 - Structural Evaluation

Conduct preliminary structural evaluation of pontoon for LRT loads. This will not include a dynamic analysis. Evaluation will include deck evaluation due to track and vehicle loads, including normal LRT load, derailment load, catenary pole loads and an initial assessment of CWR interaction loads.

Evaluate overall pontoon section due to combined LRT and vehicular loads including shear, bending and torsion of both the typical pontoon sections and at joints. Assess probable roll due to asymmetrical loading.

For the Phase II pontoons, evaluate deck, girders and piers for combined LRT/vehicular loads.

For the transition and approach spans, evaluate deck girders and piers for combined LRT/vehicular loads.

Task 8 - Construction/Cost Estimate/Schedule/Constructibility

Prepare construction cost estimate and schedule and evaluate constructibility constraints such as contractor access and staging. Note that with the completion of the adjacent replacement bridge, contractor access by water will be blocked.

Task 9 - Feasibility Report

Prepare feasibility report summarizing results of studies together with cost estimate, schedule, operating methodology and conceptual design sketches. It is anticipated that this design report would be at the 15%-20% design level and would be suitable to use as a basis of preparation for a preliminary and final design documents.

cc: Art Borst
D. Palmer
NAM/File

cb:MJA-37

APPENDIX B

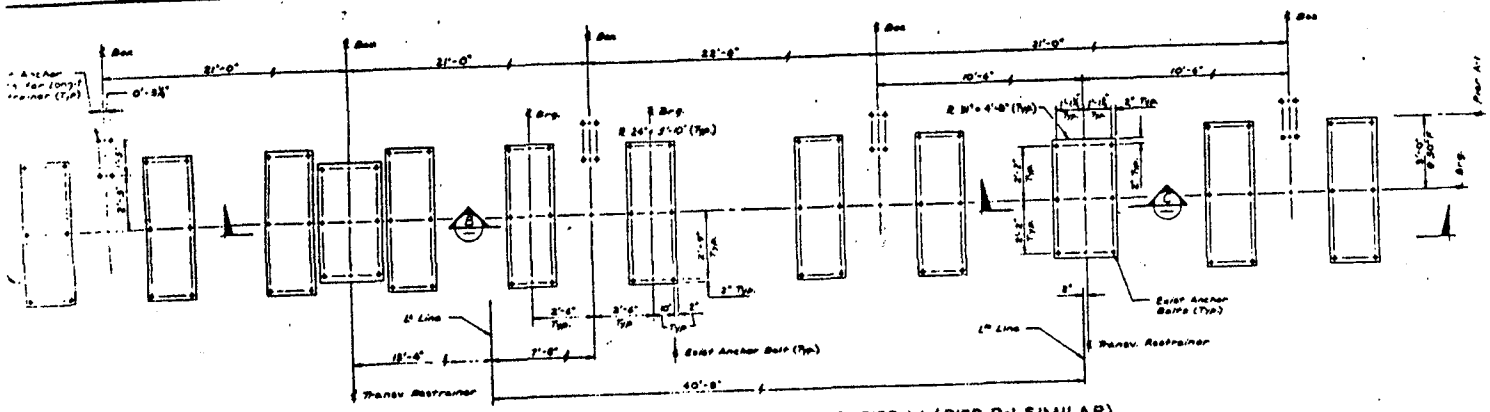

PLAN - BEARING ℞s, LONGIT & TRANSV. RESTRAINERS PIER A-1 (PIER R-1 SIMILAR)

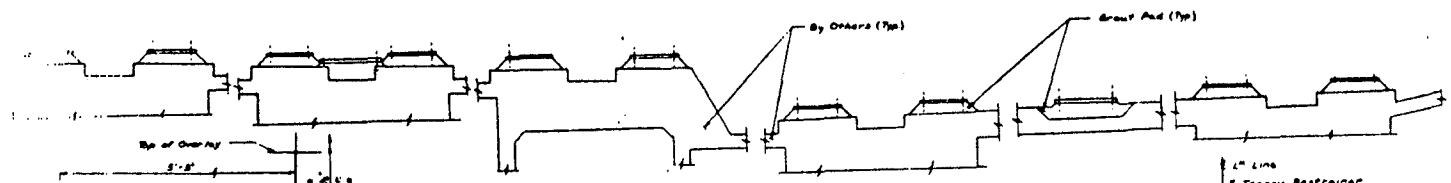

SECTION A

Pier A-1 Shown

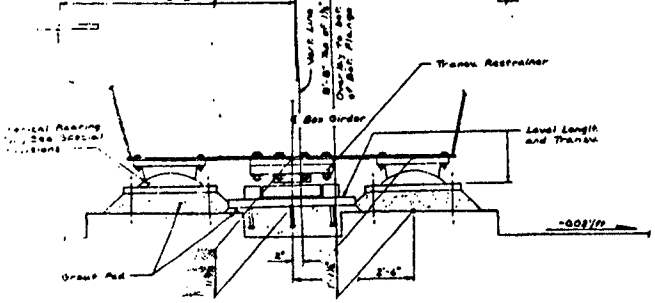

SECTION B

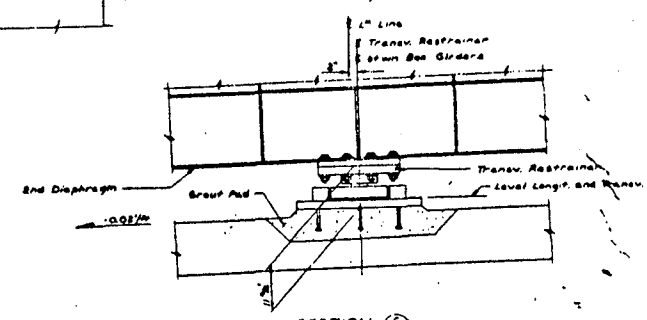

SECTION C

				STATE	FED. AID PROJ. NO.		
				15	WASH.	I-90-1(241)	
				JOB NUMBER			
				F-4W107			
				CONTRACT NO.			
	DATE	REVISION	BY	APP'D			

BRIDGES AND STRUCTURES

APPROVED

Washington State Department of Transportation

SR 90
3RD LAKE WASHINGTON FLOATING BR.
APPROACHES AND TRANSITION SPANS

LAYOUT - BEARINGS & RESTRAINERS
PIERS A-1 & R-1

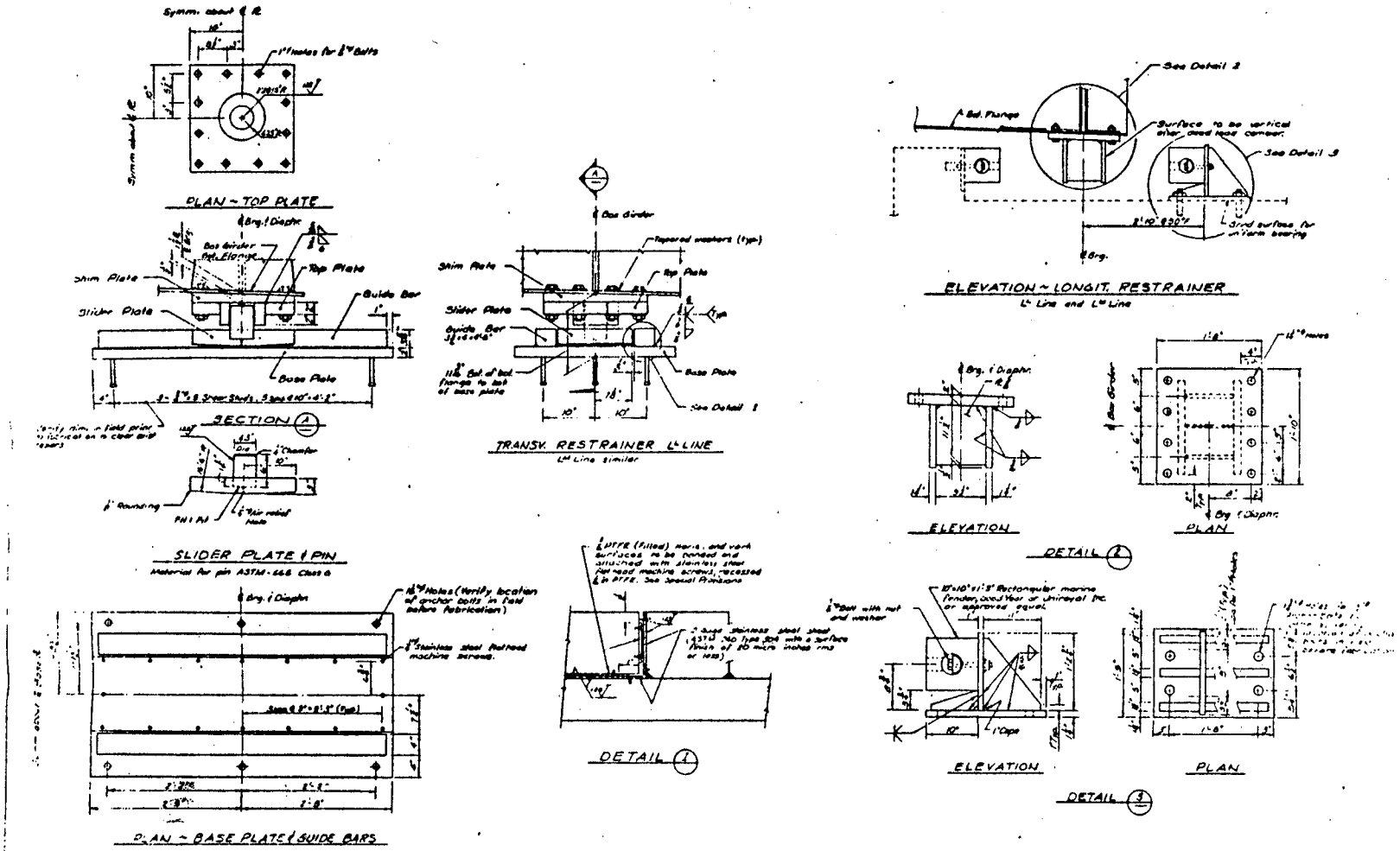

DATE	REVISION	BY	APP'D

STATE	FED. AID PROJ. NO.
WASH	I -90-1(242)

BRIDGES AND STRUCTURES

Washington State Department of Transportation

SR 90
3RD LAKE WASHINGTON FLOATING BR.
APPROACHES AND TRANSITION SPANS

TRANSV. & LONGIT. RESTRAINERS
PIERS A-(ER) ~ L^n & L^m LINES

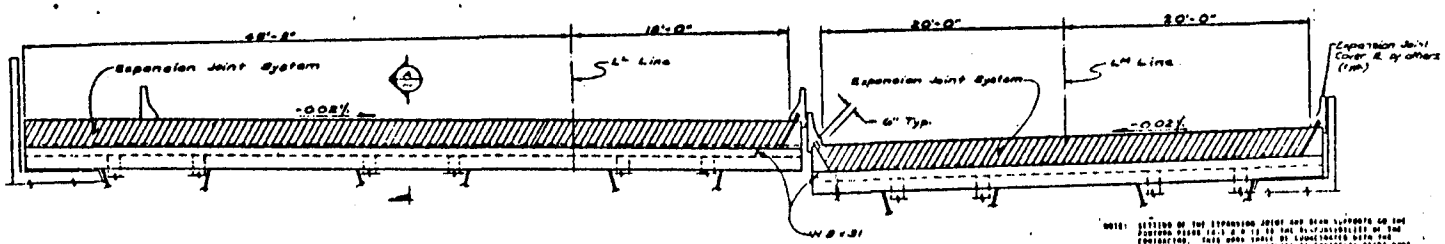

ELEVATION @ EXPANSION JOINT
PIERS A-1 & R-1
Shown @ Pier A-1, Pier R-1 similar

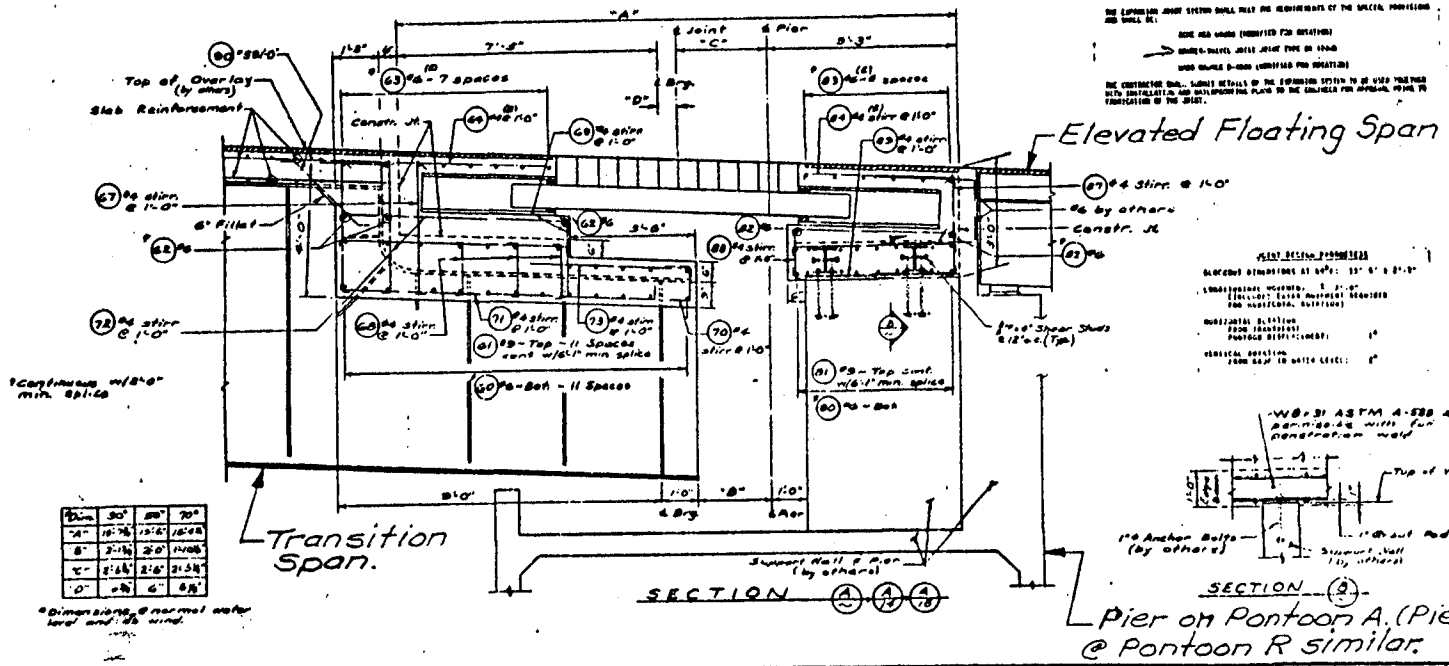

*Dim.	30°	50°	70°
"A"	18'-7½"	19'-6"	18'-6"
"B"	2'-1½"	2'-0"	1'-10½"
"C"	2'-6½"	2'-8"	2'-5½"
"D"	1'-7½"	6"	6½"

*Dimensions @ normal water level and 40 mph wind.

STATE	FED. AID PROJ. NO.
WASH	I-90-1(243)

BRIDGES AND STRUCTURES

Washington State Department of Transportation

SR 90
3RD LAKE WASHINGTON FLOATING BR.
APPROACHES AND TRANSITION SPANS

EXPANSION JTS & EDGE BEAMS
PIERS A-1 & R-1

SHEET 5 OF 18

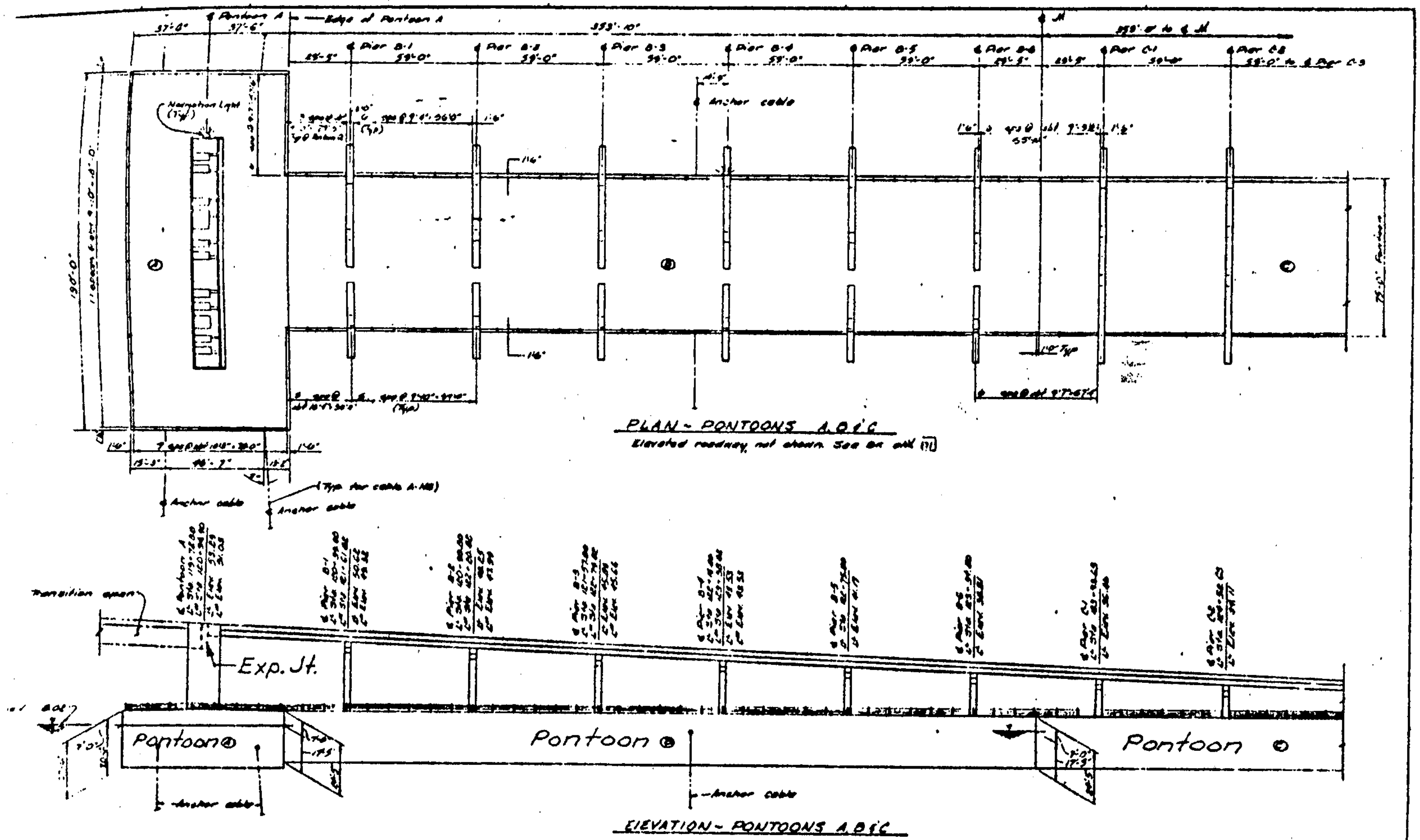

PLAN - PONTOONS A, B & C

Elevated roadway not shown. See Sht. 11

ELEVATION - PONTOONS A, B & C

6

REVISION	10 WASH	I-90-1(229)	BRIDGES AND STRUCTURES July 18, 1983 APPROVED	Washington State Department of Transportation

SR 90

3RD LAKE WASHINGTON FLOATING BRIDGE - PONTOONS - PHASE II

GENERAL LAYOUT PONTOONS A, B & C

5

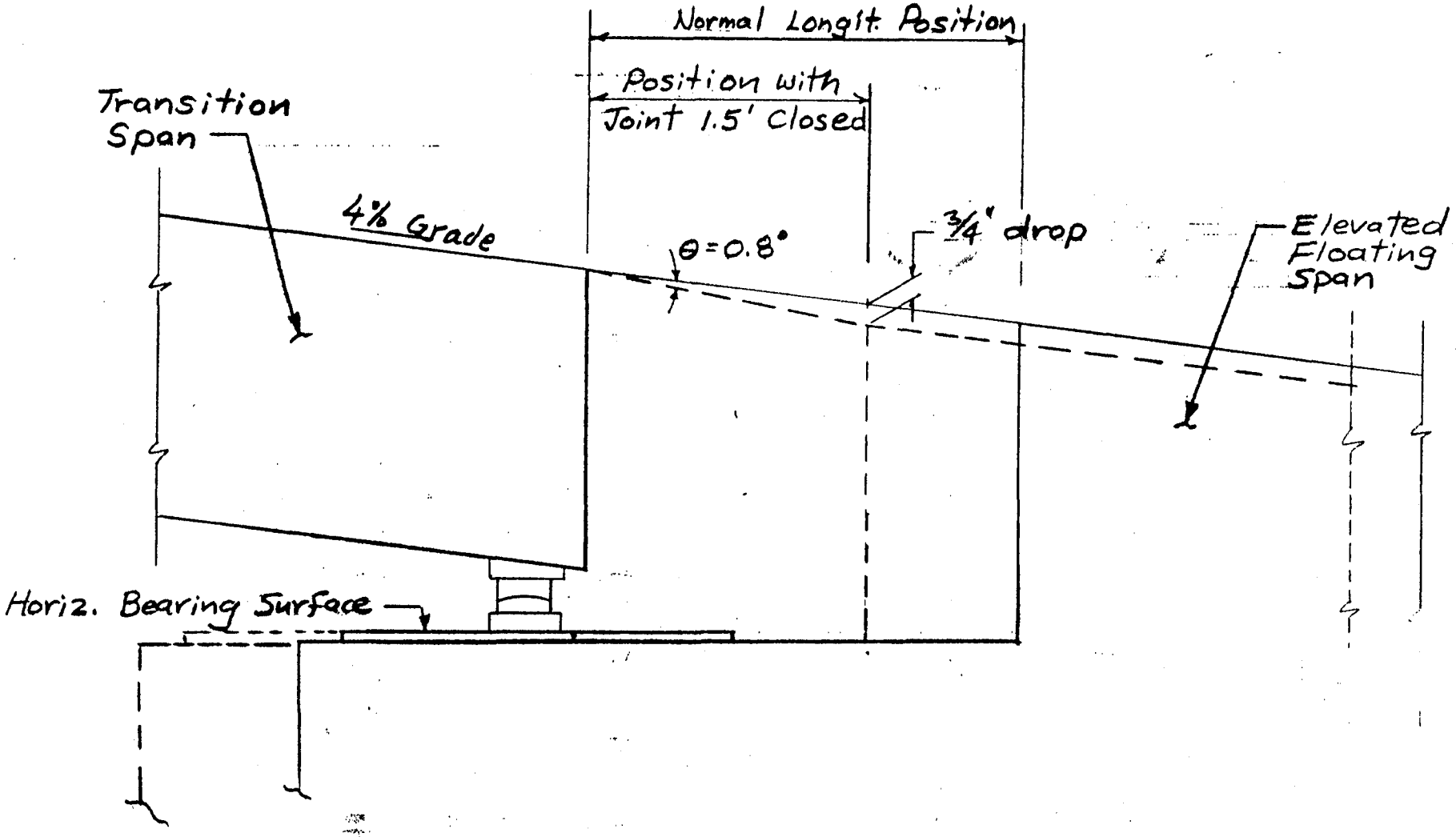

EFFECT OF HORIZONTAL BEARING

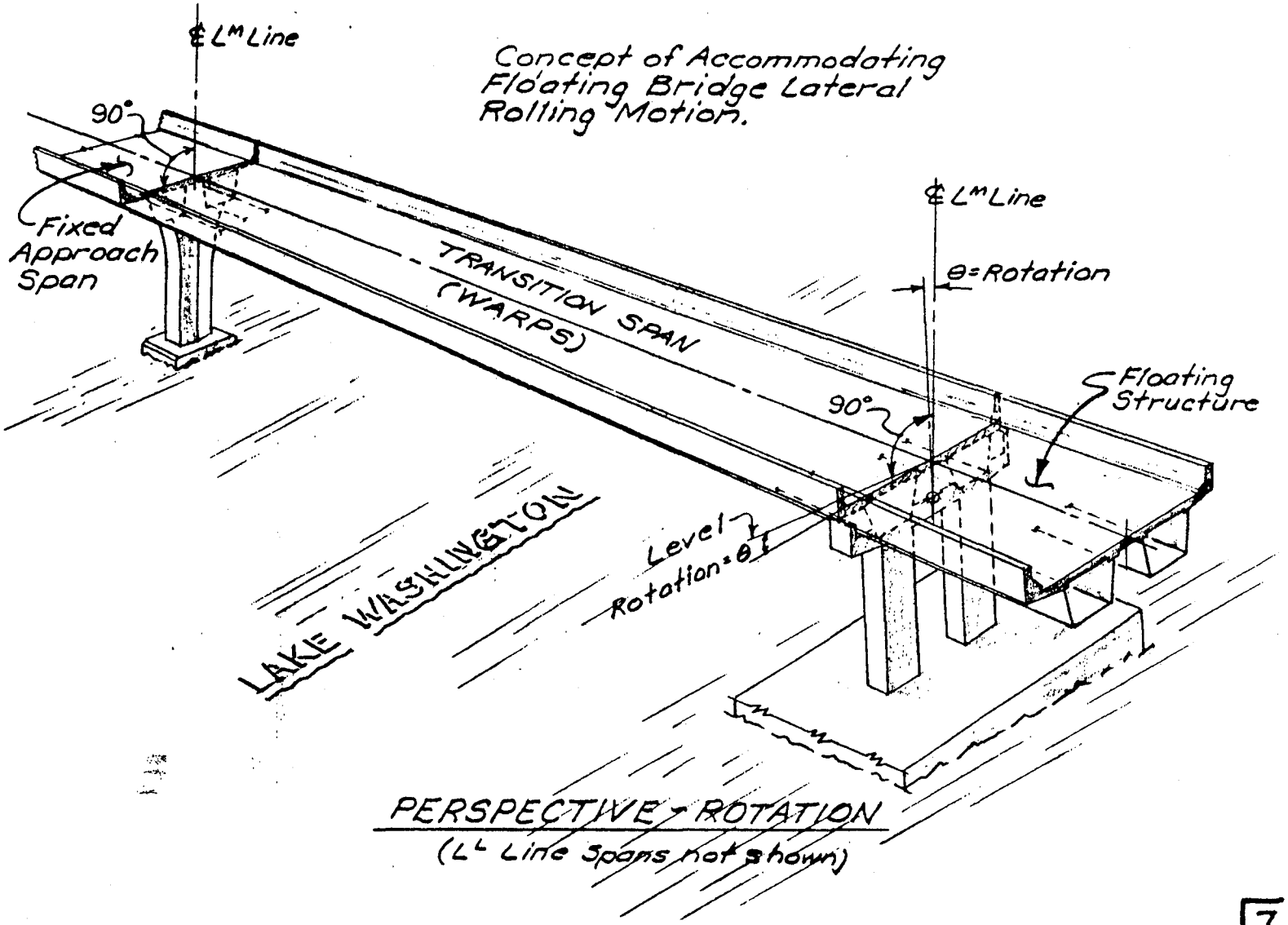
Concept of Accommodating Floating Bridge Lateral Rolling Motion.
℄ L^M Line
90°
Fixed Approach Span
TRANSITION SPAN (WARPS)
℄ L^M Line
θ = Rotation
90°
Floating Structure
Level
Rotation = θ
LAKE WASHINGTON
PERSPECTIVE - ROTATION
(L^L Line Spans not shown)

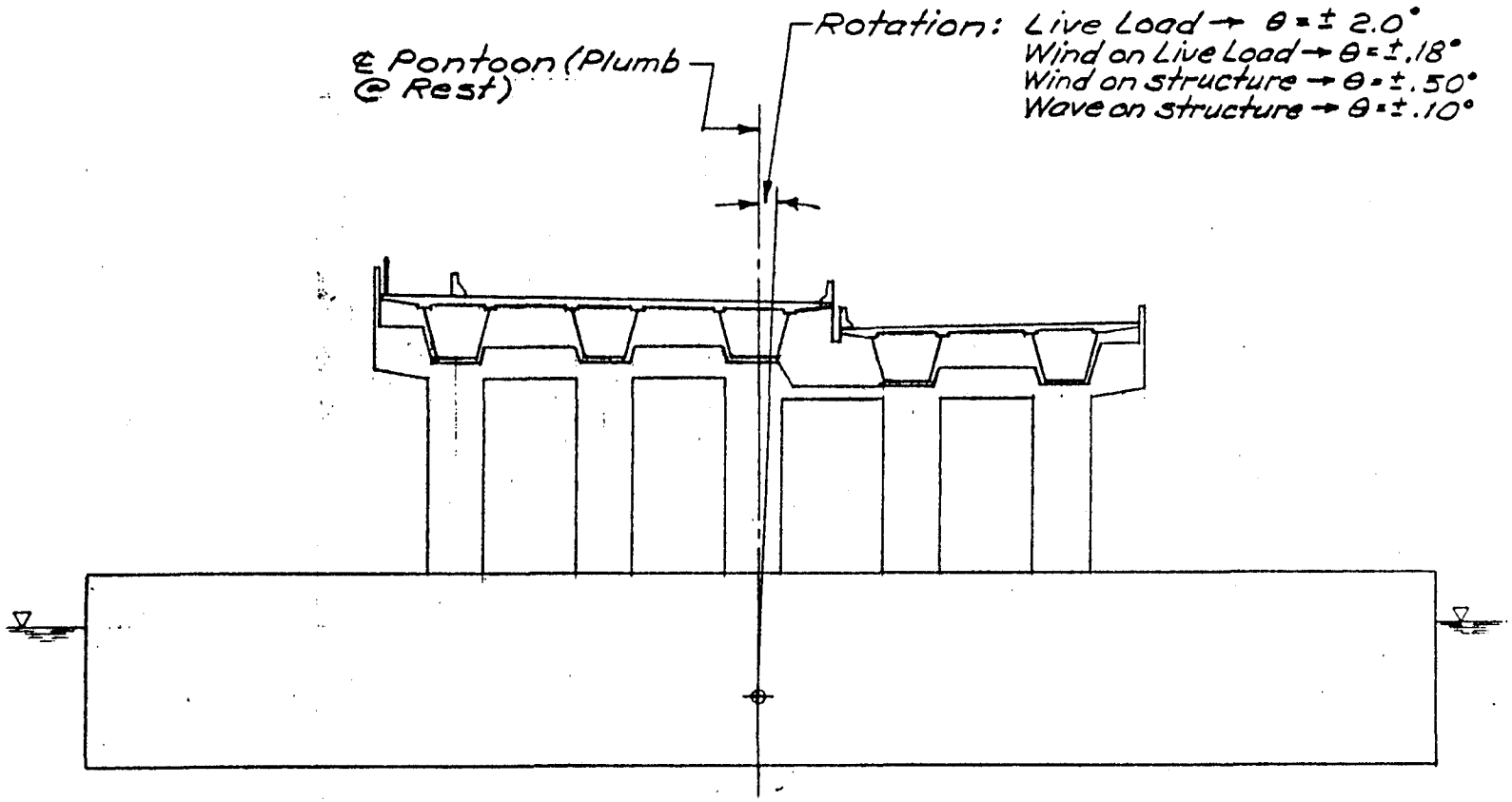

END ELEVATION - ROTATION

(Shown looking East @ Pontoon A)

SCALE 1" = 20'

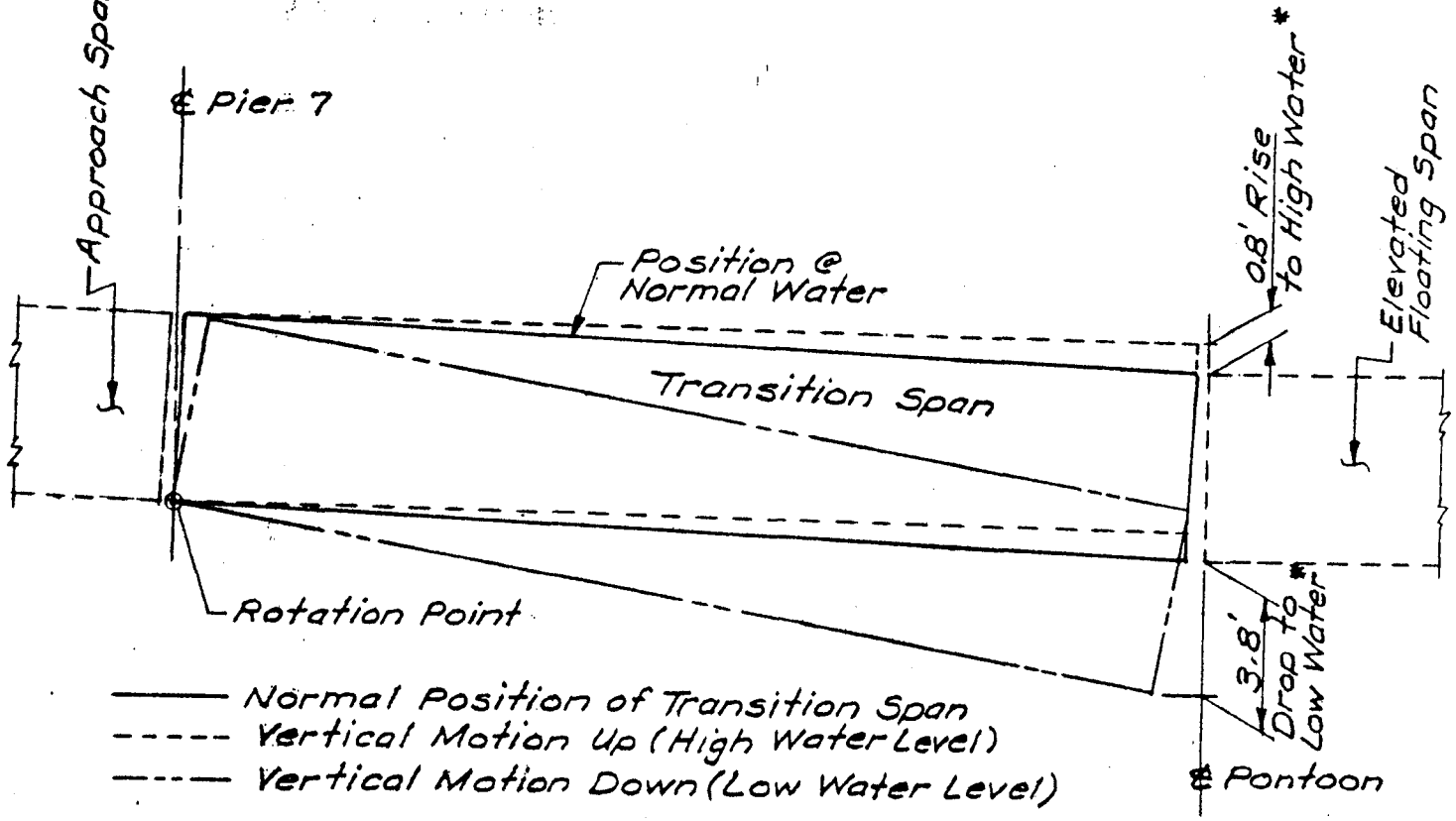

ELEVATION - VERTICAL MOTION

*Change in Lake level from Normal Water Elev. = 8.02
West Transition Span near Pier 7 shown.
East Transition Span near Pier 9 similar.

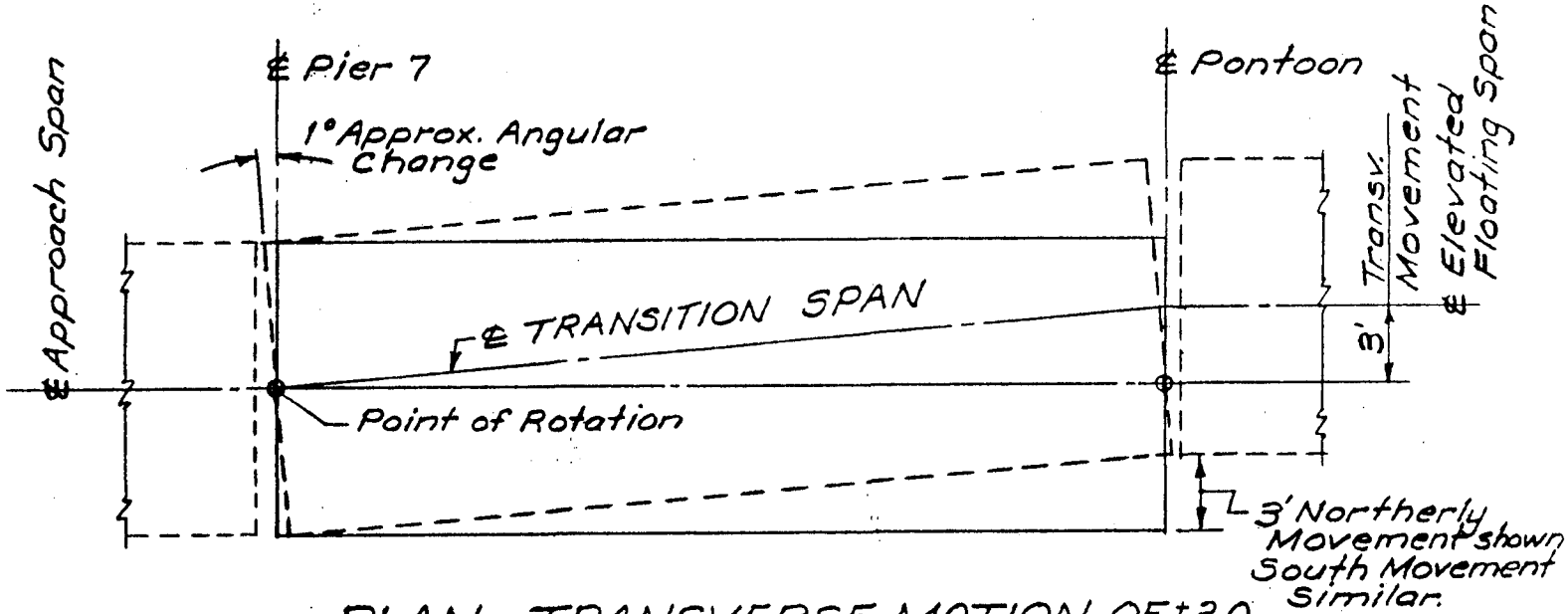

PLAN - TRANSVERSE MOTION OF ±3.0

West Transition Span near Pier 7 shown.
East Transition Span near Pier 9 similar.

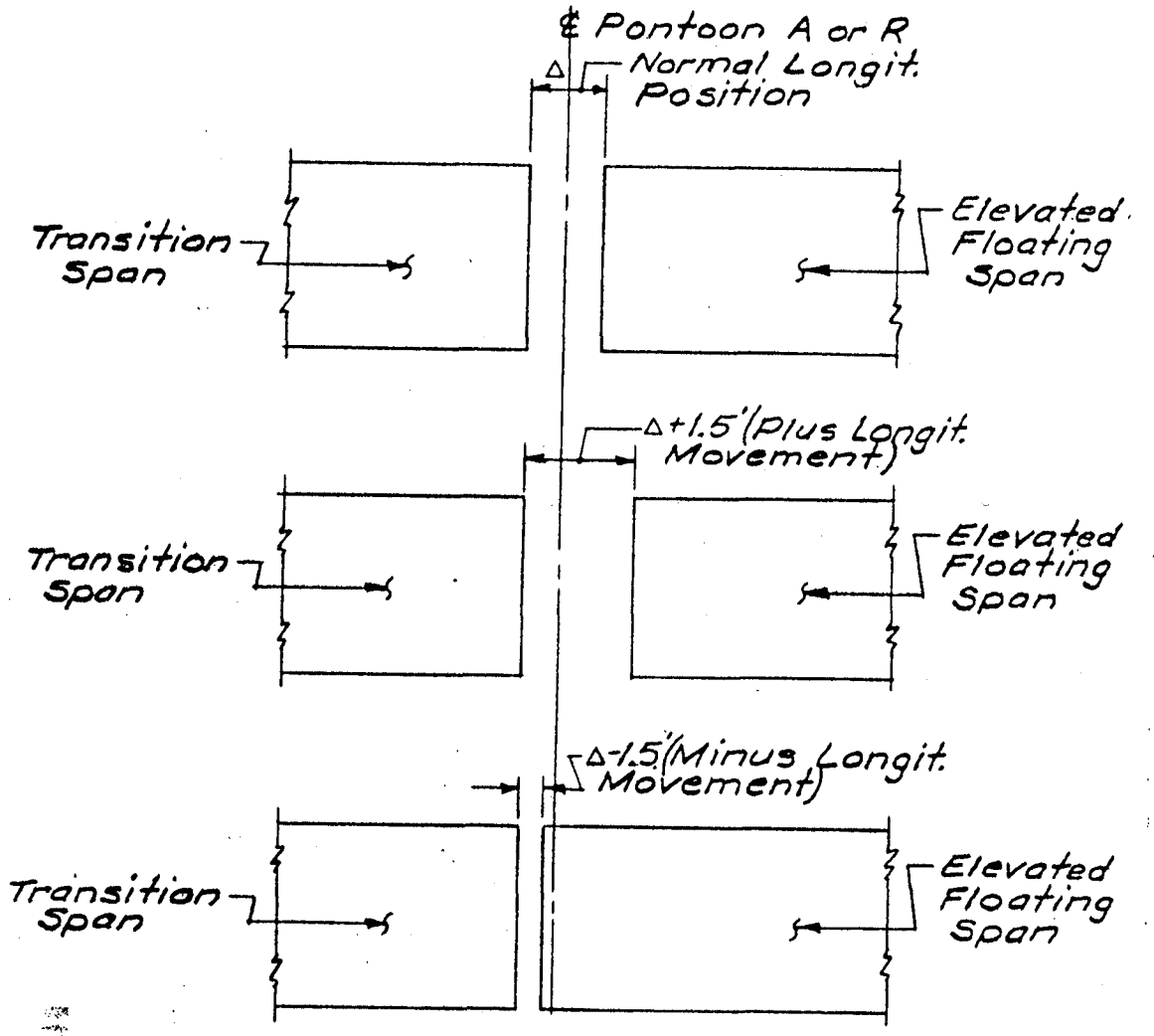

PLAN - LONGITUDINAL MOTION OF ±1.5

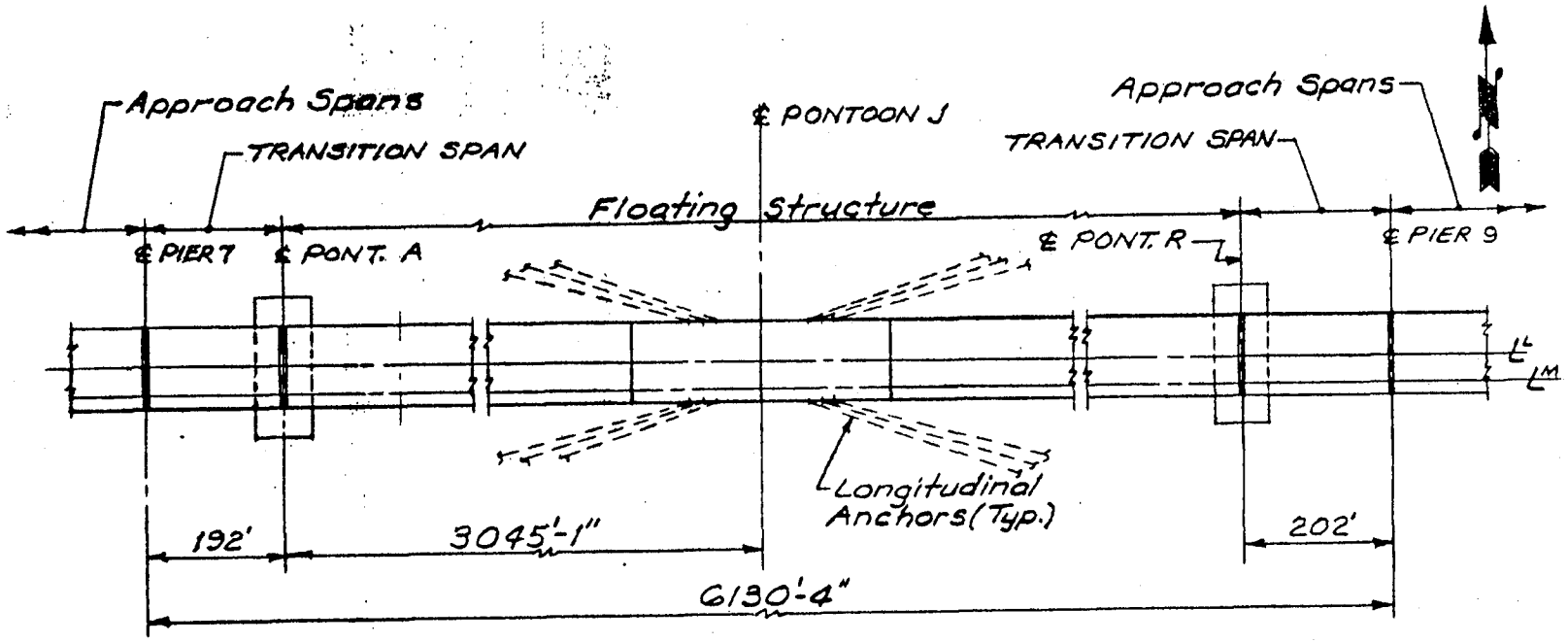

PLAN

3RD Lake Wash. Floating Bridge

Expansion Joint - Pontoon A & R - Design Motions

Longitudinal Motion →	± 1.5'	Motion of Floating Structure with respect to Approach Span.
Transverse Motion →	± 3.0'	
Vertical Motion →	0.8' Rise 3.8 Drop	