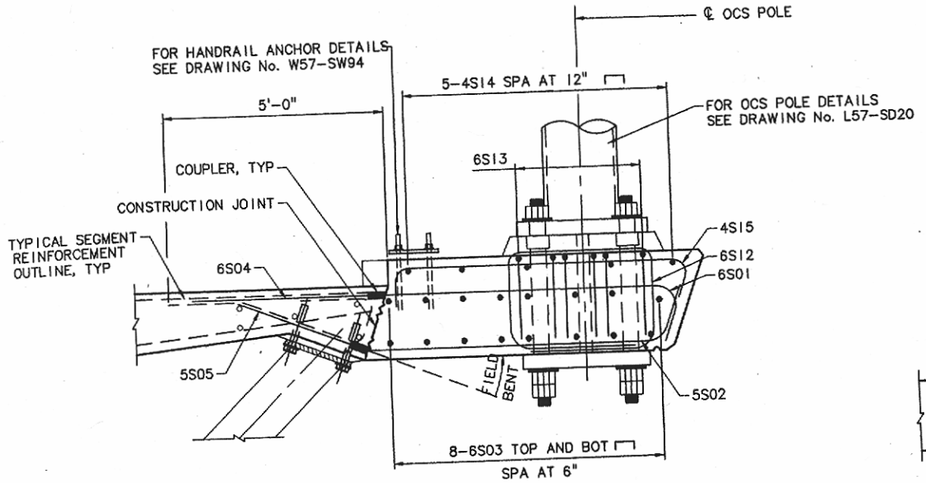


OCS POLE CANTILEVER SLAB
TRANSVERSE ELEVATION

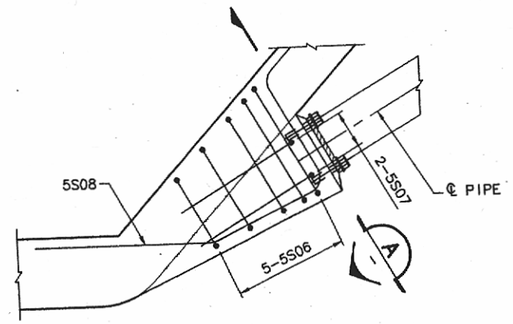


TYPICAL SEGMENT CIP BOTTOM STRUT SUPPORT
TRANSVERSE ELEVATION

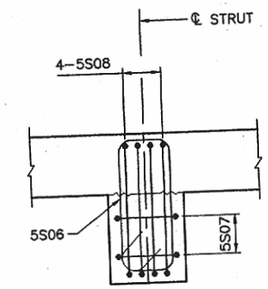


SECTION A

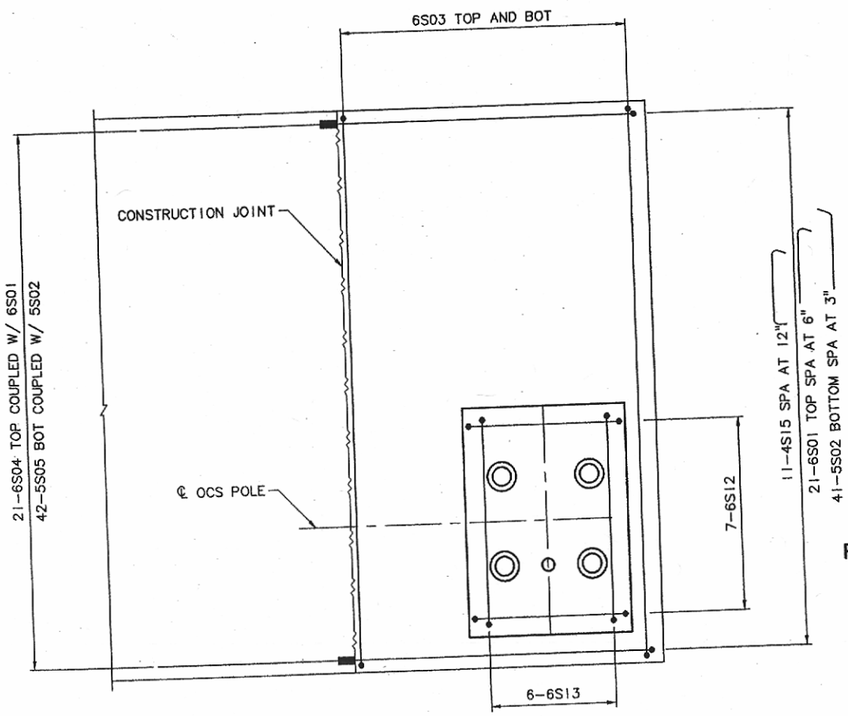


PLAN
(PIER SEGMENT SHOWN, TYPICAL SEGMENT SIMILAR)

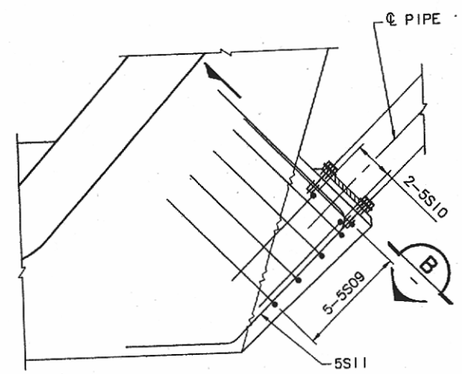


PIER SEGMENT CIP BOTTOM STRUT SUPPORT
TRANSVERSE ELEVATION

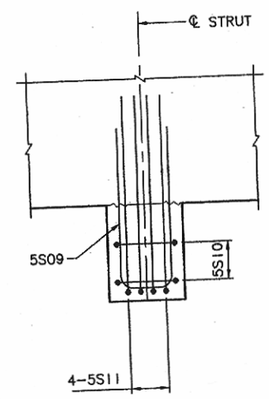


SECTION B

1 1/2 0 1 2
SCALE IN FEET

| BAR MARK |
|---|
| 6S01 |
| 5S02 |
| 6S03 |
| 6S04 |
| 5S05 |
| 5S06 |
| 5S07 |
| 5S08 |
| 5S09 |
| 5S10 |
| 5S11 |
| 6S12 |
| 6S13 |
| 4S14 |
| 4S15 |

THIS PRINT PROVIDED HALF SCALE

| | | | |
|---|---|---|---|
| Designed By: C. HALL | Hatch Mott MacDonald | International Bridge Technologies, Inc. | SoundTransit |
| Drawn By: R. MIRANDA | | | |
| Checked By: M. SMART | | | |
| Approved By: | Submitted: T. PURDON | Date: 03/15/05 | Approved: R. KEMPKES |

Scale: 1"=1'-0"
Filename: S55_L57_ST63.DWG
Contract No.: C 755
Date: 08/20/04

LINK LIGHT RAIL PROJECT
SOUTH CORRIDOR
GUIDEWAY STRUCTURE
STRUT SUPPORT AND OCS POLE CANTILEVER SLAB
REINFORCEMENT

Drawing No.: L57-ST63
Sheet No.: 1040
Rev.: 0

03/15/05 ISSUED FOR CONSTRUCTION

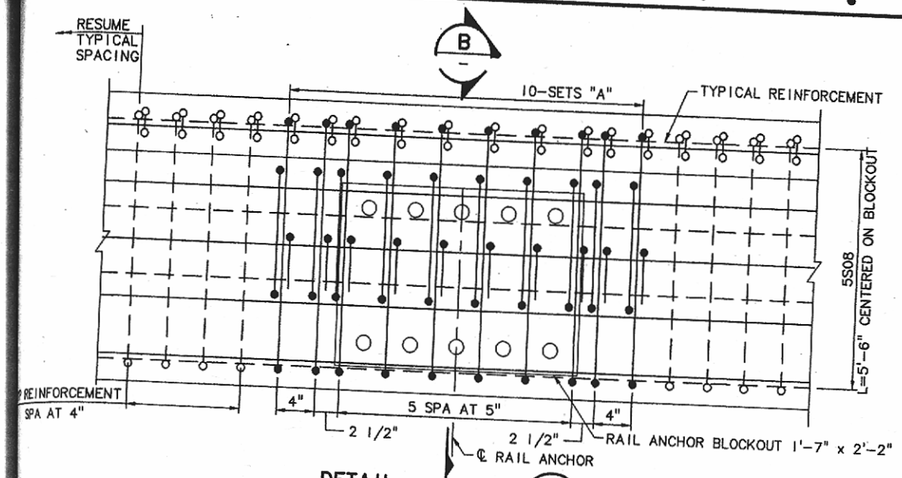


## DETAIL 1

SCALE: 3" = 1'-0"

SETS "A" CONSIST OF:
1-5S09
1-5S10
1-5S11

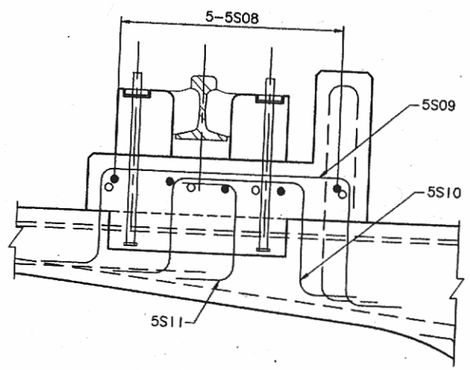


## SECTION B

SCALE: 3" = 1'-0"

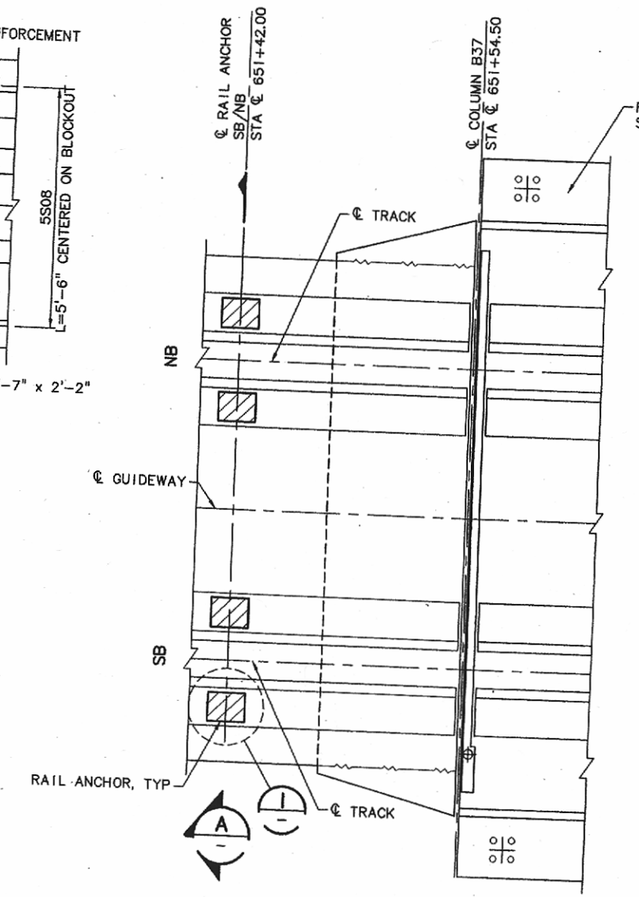


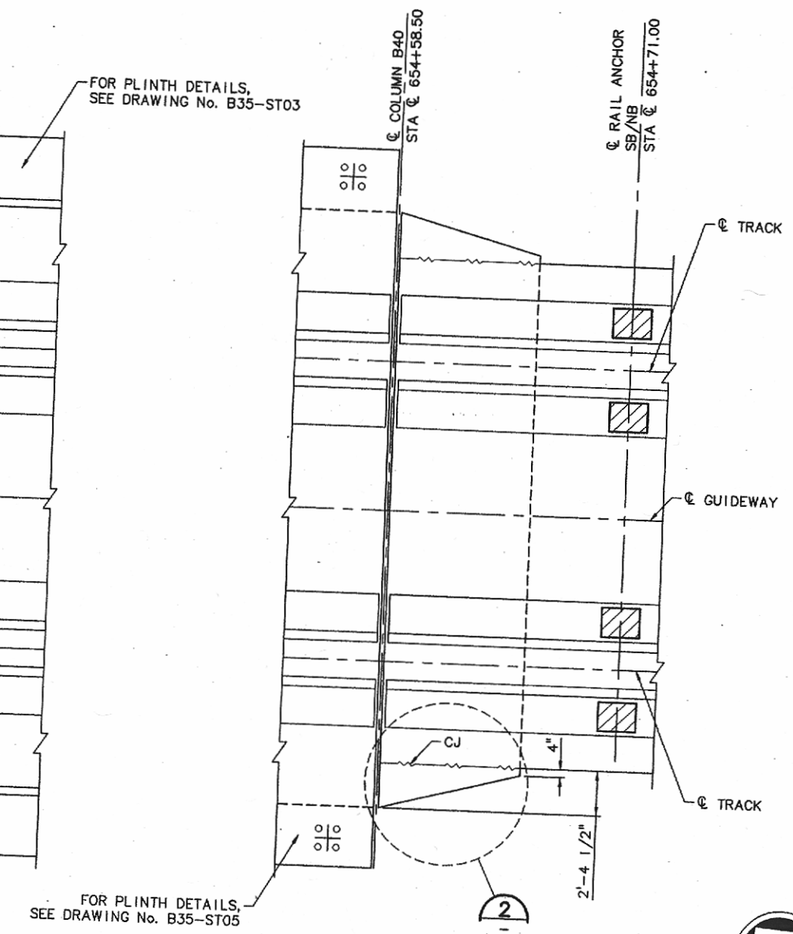


## GUIDEWAY - PLAN

SCALE: 1/4" = 1'-0"

| BAR MARK |
|---|
| 5S01 |
| 5S02 |
| 5S03 |
| 4S04 |
| 4S05 |
| 4S06 |
| 4S07 |
| 5S08 |
| 5S09 |
| 5S10 |
| 5S11 |

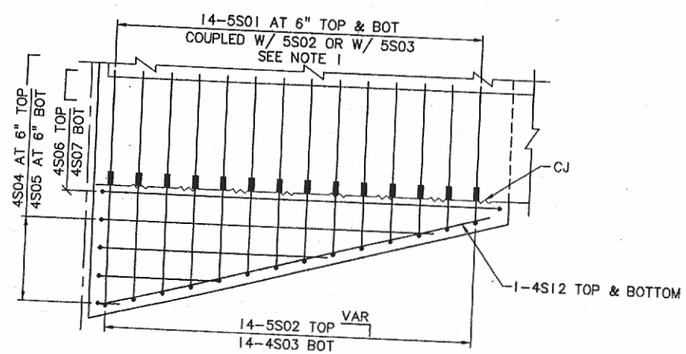


## DETAIL 2

SCALE: 3/4" = 1'-0"

NOTES:
1. FOR DETAILS OF EMBEDDED COUPLER BARS, SEE DRAWING No. L57-ST63.

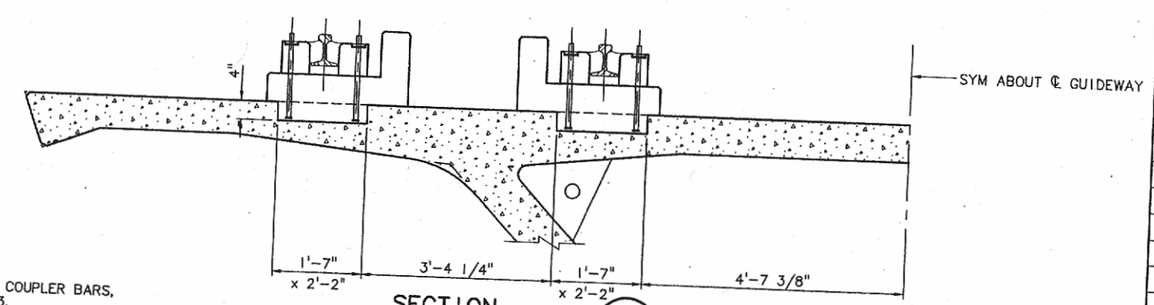


## SECTION A

SCALE: 3/4" = 1'-0"

| Dsn. | Chk. | App. | Revisions |
|---|---|---|---|
| | | | ISSUED FOR CONSTRUCTION |

Designed By: C. HALL
Drawn By: P. CONCEPCION
Checked By: E. ALLANIC
Approved By: D. TASSIN

DANIEL M. TASSIN, STATE OF WASHINGTON, 18339, REGISTERED PROFESSIONAL ENGINEER, EXPIRES 07/10/06

Hatch Mott MacDonald

INTERNATIONAL BRIDGE TECHNOLOGIES, Inc.

SOUNDTRANSIT

Submitted:
Date:

Scale: AS SHOWN
Filename: S55_B35_ST06.DWG
Contract No.: C-755

LINK LIGHT RAIL PROJECT
SOUTH CORRIDOR
GATEWAY DRIVE # 10 CROSSOVER

Drawing No.: B35-ST06

FILE PRINT REVISED HALF SCALE

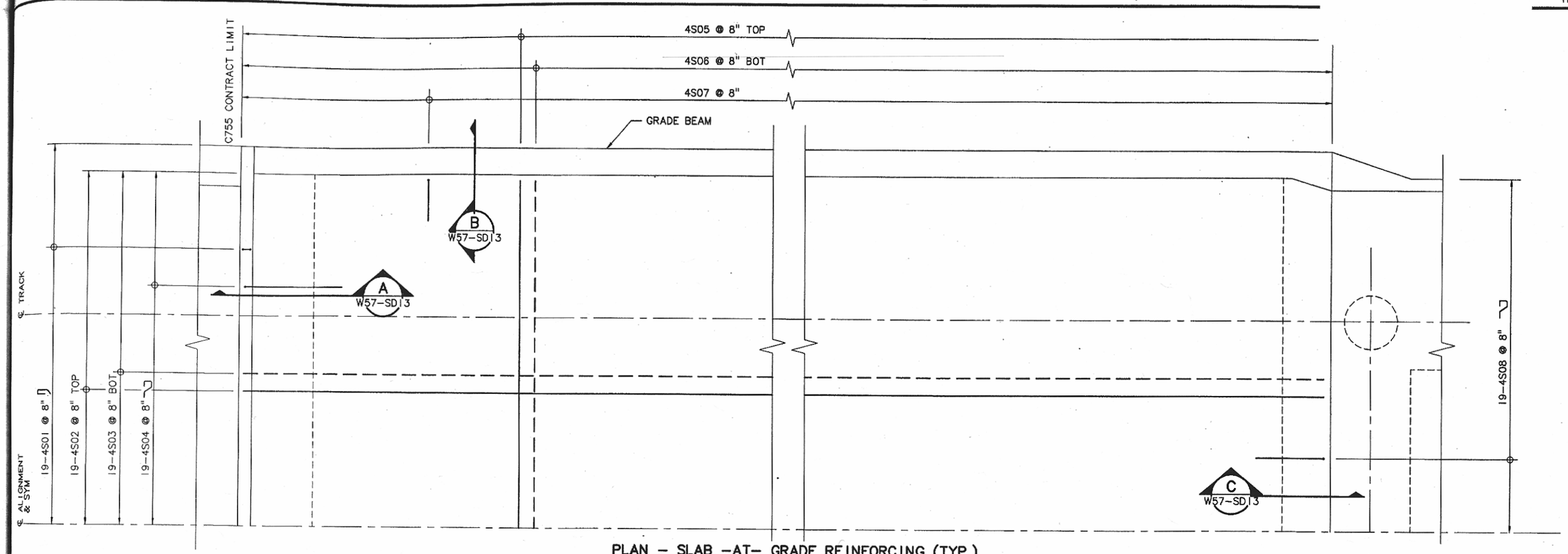


## PLAN – SLAB –AT– GRADE REINFORCING (TYP.)

SCALE: 1/2" = 1'-0"

| BAR NO. | | |
|---|---|---|
| 01 | X | |
| 02 | X | |
| 03 | X | |
| 04 | X | |
| 05 | X | |
| 06 | X | |
| 07 | X | |
| 08 | X | |
| 09 | X | |
| 10 | X | |
| 11 | X | |
| 12 | X | |
| 13 | X | |
| 14 | X | |
| 15 | X | |
| 16 | | |
| 17 | | |
| 18 | | |
| 19 | | |
| 20 | | |
| 21 | | |
| 22 | | |
| 23 | | |
| 24 | | |
| 25 | | |
| 26 | | |
| 27 | | |
| 28 | | |
| 29 | | |
| 30 | | |
| 31 | | |
| 32 | | |
| 33 | | |
| 34 | | |
| 35 | | |
| 36 | | |
| 37 | | |
| 38 | | |
| 39 | | |
| 40 | | |

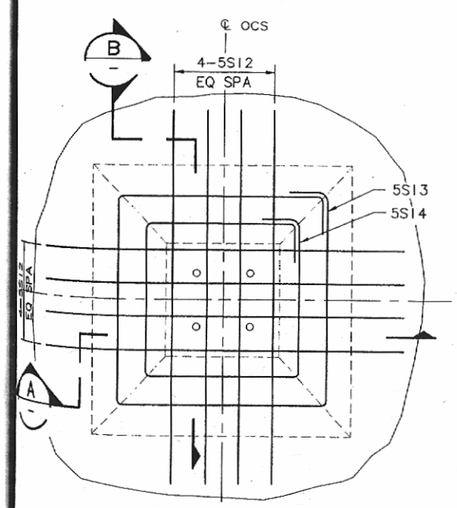


DETAIL I
SCALE: 3/4"=1'-0"
W57-SD09
W57-SD05

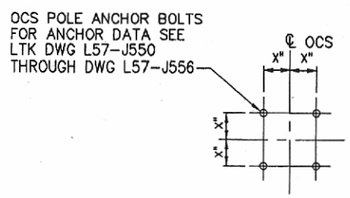


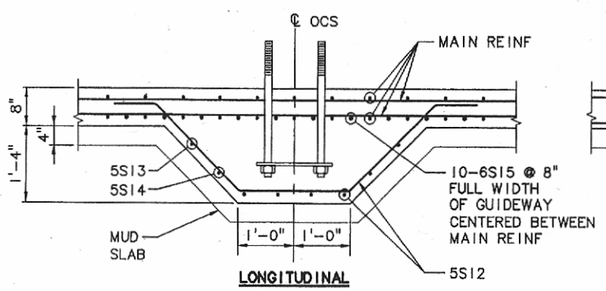


LONGITUDINAL

SECTION A
SCALE: 3/4"=1'-0"

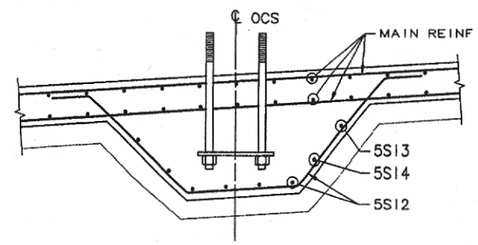


TRANSVERSE – SUPERELEVATED

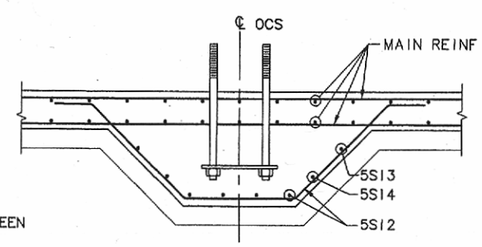


TRANSVERSE – HORIZONTAL

SECTION B
SCALE: 3/4"=1'-0"

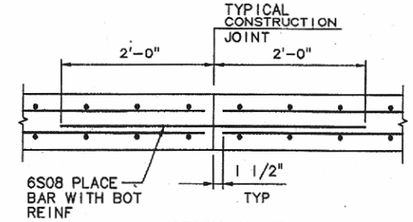


CONSTRUCTION JOINT

SECTION F
SCALE: 1"=1'-0"
W57-SD09
W57-SD05

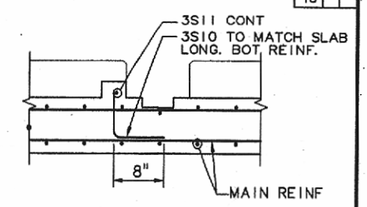


TYP. WEIR REBAR

DETAIL 6
SCALE: 1"=1'-0"
W57-SD09
W57-SD05

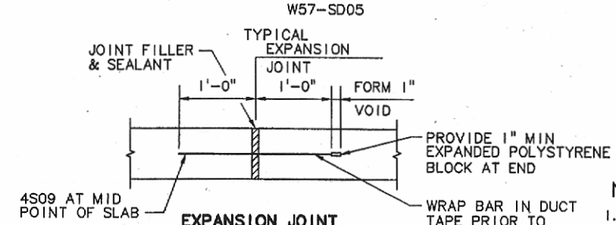


EXPANSION JOINT

SECTION G
SCALE: 1"=1'-0"
W57-SD09
W57-SD05

NOTES:

1. THIS DRAWING MUST BE READ IN CONJUNCTION WITH GENERAL ARRANGEMENTS DWGS W57-SW05 & W57-SW06.
2. SEE GENERAL NOTES ON DWG G57-02 THROUGH G57-SZ05.

| Date | Dsn. | Chk. | App. | Revisions |
|---|---|---|---|---|
| 03/15/05 | | | | ISSUED FOR CONSTRUCTION |

City of Seattle

Work Order No. | Approved:
Permit No. Y1435 | Inspector's Book:
Received:
Revised As Built:
SDOT:

Designed By: I. SOUDY
Drawn By: M. TEMPLE
Checked By: T. PURDON
Approved By: T. PURDON

IBRAHIM R. SOUDY, STATE OF WASHINGTON, 38805, REGISTERED PROFESSIONAL ENGINEER, 3/11/05, EXPIRES 08/20/06

Hatch Mott MacDonald
Submitted: T. PURDON Date: 03/15/05

SOUNDTRANSIT
Approved: R. KEMPKES Date: 03/15/05

Scale: AS SHOWN
Filename: S55_W57_SD09.dwg
Contract No.: C 755
Date: 4/29/04

THIS PRINT ADJUSTED HALF SCALE

LINK LIGHT RAIL PROJECT
SOUTH CORRIDOR
MLK TRANSITION STRUCTURE
APPROACH SLAB REINFORCING DETAILS
SHEET 1 OF 5

Drawing No.: W57-SD09
Vault Plan No. 231-755
Sheet No.: 810 Rev.: 0