8607

Contract Plans

For Construction of:

I-5 MP 132.84 TO MP 134.41

I-5
M ST TO PORTLAND AVE - HOV

PIERCE COUNTY

A STATE PROJECT

VOLUME 8 OF 10

Washington State Department of Transportation

INDEX

SHEET NO.	PLAN REFERENCE NO.	TITLE
		*** VOLUME 1 ***
1 - 4	IN1 - IN4	INDEX
5	VM1	VICINITY MAP
6	KM1	KEY MAP
7 - 38	SQ1 - SQ32	SUMMARY OF QUANTITIES
39	SI1	SHARED ITEM TABLE
40 - 86	RS1 - RS47	ROADWAY SECTIONS
87	RS48	ROADWAY SECTIONS - DETAILS
88 - 93	GD1 - GD6	GORE DETAILS
94 - 99	TRS1 - TRS6	TEMPORARY ROADWAY SECTIONS
100 - 109	CN1A - CN9	CONTOUR PLAN
		*** VOLUME 2 ***
110 - 113	IN5 - IN8	INDEX
114 - 123	SU1 - SU10	STAGED CONSTRUCTION
124 - 141	AL1A - AL14	ALIGNMENT AND RIGHT OF WAY
142 - 147	SA1-1 - SA1-6	STAGED ALIGNMENT - STAGE 1
148 - 157	SA1A-1 - SA1A-10	STAGED ALIGNMENT - STAGE 1A
158 - 163	SA1B-1 - SA1B-6	STAGED ALIGNMENT - STAGE 1B
164 - 167	SA1C-1 - SA1C-4	STAGED ALIGNMENT - STAGE 1C
168 - 174	SA1D-1 - SA1D-7	STAGED ALIGNMENT - STAGE 1D
175 - 181	SA2-1 - SA2-7	STAGED ALIGNMENT - STAGE 2
182 - 192	SA3A-1 - SA3A-11	STAGED ALIGNMENT - STAGE 3A
193 - 198	SA3B-1 - SA3B-6	STAGED ALIGNMENT - STAGE 3B

INDEX (CONTINUED)

SHEET NO.	PLAN REFERENCE NO.	TITLE
199 - 205	SA4-1 - SA4-7	STAGED ALIGNMENT - STAGE 4
206 - 210	SA5-1 - SA5-5	STAGED ALIGNMENT - STAGE 5
211 - 221	QTSP1 - QTSP11	QUANTITY TABULATION - SITE PREPARATION
222 - 235	SP1A - SP11	SITE PREPARATION
236 - 237	SPD1 - SPD2	SITE PREPARATION DETAILS
238 - 247	EU1A - EU9	EXISTING UTILITY PLAN
248 - 249	EUS1 - EUS2	EXISTING UTILITY SCHEDULE
250 - 286	RP1 - RP37	ROADWAY PROFILE
		*** VOLUME 3 ***
287 - 290	IN9 - IN12	INDEX
291	CWM1	CONTAMINATED WATER MANAGEMENT
292 - 300	VA1 - VA9	VAULT REMOVAL PLAN
301 - 310	SC1 - SC10	STAGED CONVEYANCE
311	QTEC1	QUANTITY TABULATION - TESC GENERAL NOTES
312 - 347	QTEC2 - QTEC37	QUANTITY TABULATION - TESC
348 - 359	EC1 - EC10	TESC PLAN - STAGE 1
360 - 371	EC11 - EC20	TESC PLAN - STAGE 1A
372 - 383	EC21 - EC30	TESC PLAN - STAGE 1B
384 - 395	EC31 - EC40	TESC PLAN - STAGE 1C
396 - 407	EC41 - EC50	TESC PLAN - STAGE 1D

PLAN REFERENCE NO.

SHEET OF SHEETS

NOTE: ALL SHEET REFERENCES, FIRST NOS. OF STRUCTURE CODE DESIGNATIONS AND MATCH LINE SHEET REFERENCES, ETC., THROUGHOUT THE PLANS, REFER TO THE ENTRY IN THE PLAN REFERENCE NUMBER BOX.

FILE NAME	PW:_XL3497\PS&E Sheets\Index\P3497_SH_IN_801.dgn
TIME	11:03:34 AM
DATE	3/14/2014
PLOTTED BY	SancheA
DESIGNED BY	S. SHYU
ENTERED BY	A. SANCHEZ
CHECKED BY	B. REGISTER
PROJ. ENGR.	J. PEREZ
REGIONAL ADM.	K. DAYTON

REVISION | DATE | BY

REGION NO. 10 | STATE WASH | FED.AID PROJ.NO.

JOB NUMBER 12C501

CONTRACT NO. | LOCATION NO. XL3497

P.E. STAMP BOX DATE

P.E. STAMP BOX DATE

Washington State Department of Transportation

I-5
M ST TO PORTLAND AVE - HOV

INDEX

PLAN REF NO IN29

SHEET 1195 OF 1763 SHEETS

INDEX

SHEET NO.	PLAN REFERENCE NO.	TITLE
408 - 419	EC51 - EC60	TESC PLAN - STAGE 2
420 - 431	EC61 - EC70	TESC PLAN - STAGE 3A
432 - 443	EC71 - EC80	TESC PLAN - STAGE 3B
444 - 455	EC81 - EC90	TESC PLAN - STAGE 4
456 - 467	EC91 - EC100	TESC PLAN - STAGE 5
468 - 469	ECP1 - ECP2	TESC PROFILE
470 - 473	ECD1 - ECD4	TESC DETAILS
		*** VOLUME 4 ***
474 - 477	IN13 - IN16	INDEX
478	NTDR1	STRUCTURE NOTES - DRAINAGE GENERAL NOTES
479 - 558	NTDR2 - NTDR81	STRUCTURE NOTES - DRAINAGE
559 - 561	DRST1 - DRST3	STAGED DRAINAGE TABLE
562 - 571	DR1A - DR9	DRAINAGE PLAN
572 - 596	DP1 - DP25	DRAINAGE PROFILE
597 - 601	DD1 - DD5	DRAINAGE DETAIL
602 - 612	PD1 - PD11	POND DETAILS
613	TNTDR1	STRUCTURE NOTES - TEMPORARY DRAINAGE GENERAL NOTES
614 - 629	TNTDR2 - TNTDR17	STRUCTURE NOTES - TEMPORARY DRAINAGE
630 - 631	TDRST1 - TDRST2	TEMPORARY STAGED DRAINAGE TABLE
632 - 641	TDR1A - TDR9	TEMPORARY DRAINAGE PLAN
642 - 646	TDP1 - TDP5	TEMPORARY DRAINAGE PROFILE
647 - 650	TDD1 - TDD4	TEMPORARY DRAINAGE DETAIL
651 - 662	LS1 - LS12	LANDSCAPING

INDEX (CONTINUED)

SHEET NO.	PLAN REFERENCE NO.	TITLE
		*** VOLUME 5 ***
663 - 666	IN17 - IN20	INDEX
667 - 677	QTPV1 - QTPV11	QUANTITY TABULATION - PAVING
678 - 687	PV1A - PV9	PAVING PLAN
688 - 712	PVD1 - PVD24	PAVING DETAILS
713 - 717	PRD1 - PRD5	ADA RAMP DETAILS
718 - 724	PJ1 - PJ8	PAVING JOINT PLAN
725 - 729	PVS1-1A - PVS1-9	PAVING PLAN - STAGE 1
730A - 737	PVS1A-1 - PVS1A-9	PAVING PLAN - STAGE 1A
738 - 745	PVS1B-1 - PVS1B-9	PAVING PLAN - STAGE 1B
746 - 753	PVS1C-1 - PVS1C-9	PAVING PLAN - STAGE 1C
753A - 761	PVS1D-1A - PVS1D-9	PAVING PLAN - STAGE 1D
762 - 768	PVS2-2 - PVS2-9	PAVING PLAN - STAGE 2
769 - 774	PVS3A-3 - PVS3A-8	PAVING PLAN - STAGE 3A
775 - 779	PVS3B-3 - PVS3B-8	PAVING PLAN - STAGE 3B
780 - 785	PVS4-2 - PVS4-8	PAVING PLAN - STAGE 4
786 - 794	PVS5-1A - PVS5-9	PAVING PLAN - STAGE 5
795 - 798	QTMK1 - QTMK4	QUANTITY TABULATION - PAVEMENT MARKINGS
799 - 812	MK1A - MK11	PAVEMENT MARKING PLAN
813 - 819	MKD1 - MKD7	PAVEMENT MARKING DETAILS

PLAN REFERENCE NO.

SHEET OF SHEETS

NOTE: ALL SHEET REFERENCES, FIRST NOS. OF STRUCTURE CODE DESIGNATIONS AND MATCH LINE SHEET REFERENCES, ETC., THROUGHOUT THE PLANS, REFER TO THE ENTRY IN THE PLAN REFERENCE NUMBER BOX.

FILE NAME	PW:_XL3497\PS&E Sheets\Index\ADD1_P3497_SH_IN_802.dgn
TIME	3:31:30 PM
DATE	4/23/2014
PLOTTED BY	SancheA
DESIGNED BY	S. SHYU
ENTERED BY	A. SANCHEZ
CHECKED BY	B. REGISTER
PROJ. ENGR.	J. PEREZ
REGIONAL ADM.	K. DAYTON

REVISION	DATE	BY
AD1 REVISED INDEX	05/02/2014	BR

REGION NO.	STATE	FED.AID PROJ.NO.
10	WASH	
JOB NUMBER 12C501		
CONTRACT NO.		LOCATION NO. XL3497

P.E. STAMP BOX DATE

P.E. STAMP BOX DATE

Washington State Department of Transportation

I-5
M ST TO PORTLAND AVE - HOV

INDEX

PLAN REF NO IN30

SHEET 1196 OF 1763 SHEETS

INDEX

SHEET NO.	PLAN REFERENCE NO.	TITLE
		*** VOLUME 6 ***
820 - 823	IN21 - IN24	INDEX
824 - 825	WR1 - WR2	WALL VICINITY MAP
826 - 837	WR3 - WR14	I5NB WALL-A
838 - 839	WR15 - WR16	I5SB WALL-A
840 - 848	WR17 - WR25	I5SB WALL-E
849 - 886	WR26 - WR63	NBN WALL-A & SNB WALL-A
887 - 889	WR64 - WR66	SSB WALL-A
890 - 894	WR67 - WR71	SSB WALL-B1 & SSB WALL-B2
895 - 896	WR72 - WR73	ARCHITECTURAL DETAILS MISCELLANEOUS
897 - 902	BM1 - BM6	I-5 OVER M STREET BRIDGE NO. 5/437
903 - 909	BE1 - BE7	I-5 OVER I-705 AND TACOMA RAIL BRIDGE NO. 5/445HOV
910 - 925	BW1 - BW16	I-5 OVER I-705 AND TACOMA RAIL BRIDGE NO. 5/445W
926 - 994	MC0 - MC68	MCKINLEY WAY OVER I-5 BRIDGE NO. 5/448
		*** VOLUME 7 ***
995 - 998	IN25 - IN28	INDEX
999 - 1103	PA0 - PA104	PACIFIC AVE OVER I-5 BRIDGE NO. 5/444
1104 - 1194	SR0 - SR90	I-5 OVER I-705 AND TACOMA RAIL BRIDGE NO. 5/445E

INDEX (CONTINUED)

SHEET NO.	PLAN REFERENCE NO.	TITLE
		*** VOLUME 8 ***
1195 - 1198	IN29 - IN32	INDEX
1199 - 1205	SS1 - SS7	SIGN SPECIFICATIONS
1206 - 1212	SE1 - SE8	SIGN REMOVAL PLAN
1213 - 1219	SN1 - SN8	SIGN PLAN
1220	SND1	SIGN DETAIL PLAN
1221 - 1222	SNSD1 - SNSD2	SIGN STAGING TABLE
1223 - 1225	SNSD3 - SNSD5	SIGN STAGING SPECIFICATIONS
1226 - 1267	SNS3 - SNS110	SIGN STAGING PLAN
1268 - 1291	TSB1 - TSB24	TEMPORARY SIGN STRUCTURE
1292 - 1320	SB1 - SB29	SIGN STRUCTURES
1321 - 1322	TILN1 - TILN2	TEMPORARY ILLUMINATION NOTES
1323 - 1335	TIL0 - TIL9	TEMPORARY ILLUMINATION PLAN
1336 - 1343	ILN1 - ILN8	ILLUMINATION NOTES AND SCHEDULES
1344 - 1353	IL1 - IL8	ILLUMINATION PLAN
1354	ILD1	ILLUMINATION AREA DETAIL
1355	ILD2	UNDERDECK HANGER DETAILS
1356 - 1359	ILC1 - ILC4	ILLUMINATION PLAN - CITY

PLAN REFERENCE NO.

SHEET OF SHEETS

NOTE: ALL SHEET REFERENCES, FIRST NOS. OF STRUCTURE CODE DESIGNATIONS AND MATCH LINE SHEET REFERENCES, ETC., THROUGHOUT THE PLANS, REFER TO THE ENTRY IN THE PLAN REFERENCE NUMBER BOX.

FILE NAME	PW:_XL3497\PS&E Sheets\Index\P3497_SH_IN_803.dgn
TIME	11:03:43 AM
DATE	3/14/2014
PLOTTED BY	SancheA
DESIGNED BY	S. SHYU
ENTERED BY	A. SANCHEZ
CHECKED BY	B. REGISTER
PROJ. ENGR.	J. PEREZ
REGIONAL ADM.	K. DAYTON

REVISION | DATE | BY

REGION NO.	STATE	FED.AID PROJ.NO.
10	WASH	
JOB NUMBER 12C501		
CONTRACT NO.		LOCATION NO. XL3497

P.E. STAMP BOX DATE

P.E. STAMP BOX DATE

Washington State Department of Transportation

I-5
M ST TO PORTLAND AVE - HOV

INDEX

PLAN REF NO IN31

SHEET 1197 OF 1763 SHEETS

INDEX

SHEET NO.	PLAN REFERENCE NO.	TITLE
1360	ITN1	ITS LEGEND AND GENERAL NOTES
1361 - 1366	ITTP1 - ITTP5	ITS TEMPORARY PLAN
1367 - 1385	ITAA - IT12	ITS PLAN
1386 - 1387	ITBX1 - ITBX2	BOX DETAIL
1388	ITCB1	CABINET EQUIPMENT DETAIL
1389 - 1393	ITCB2 - ITCB6	CABINET DETAIL
1394 - 1396	ITCD1 - ITCD3	CONDUIT DETAIL
1397	ITCF1	CABINET FOUNDATION
1398 - 1399	ITDS1 - ITDS2	DATA STATION DETAIL
1400	ITFD1	FENCING DETAIL
1401 - 1414	ITFO1 - ITFO14	FIBER OPTIC DETAIL
1415	ITND1	NETWORK DIAGRAM
1416 - 1417	ITRM1 - ITRM2	RAMP METER DETAIL
1418	ITTD1	TRANSFORMER DETAIL
1419	ITVC1	VIDEO CAMERA DETAIL
		*** VOLUME 9 ***
1420 - 1423	IN33 - IN36	INDEX
1424 - 1425	TCIN1 - TCIN2	TRAFFIC CONTROL INDEX
1426 - 1434	QTTC1 - QTTC9	QUANTITY TABULATION - TRAFFIC CONTROL
1435	TCS1	ADVANCE SIGN PLAN
1436 - 1444	TCS2 - TCS10	TRAFFIC CONTROL STAGING (STAGE 1)
1445 - 1454	TCS11 - TCS20	TRAFFIC CONTROL STAGING (STAGE 1A)
1455 - 1461	TCS21 - TCS27	TRAFFIC CONTROL STAGING (STAGE 1B)
1462 - 1468	TCS28 - TCS34	TRAFFIC CONTROL STAGING (STAGE 1C)
1469 - 1485	TCS35 - TCS51	TRAFFIC CONTROL STAGING (STAGE 1D)
1486 - 1504	TCS52 - TCS70	TRAFFIC CONTROL STAGING (STAGE 2)
1505 - 1529	TCS71 - TCS96	TRAFFIC CONTROL STAGING (STAGE 3A)
1530 - 1539	TCS97 - TCS106	TRAFFIC CONTROL STAGING (STAGE 3B)

INDEX (CONTINUED)

SHEET NO.	PLAN REFERENCE NO.	TITLE
1540 - 1549	TCS107 - TCS116	TRAFFIC CONTROL STAGING (STAGE 4)
1550 - 1558	TCS118 - TCS126	TRAFFIC CONTROL STAGING (STAGE 5)
		*** VOLUME 10 ***
1559 - 1562	IN37 - IN40	INDEX
1563 - 1564	TCIN3 - TCIN4	TRAFFIC CONTROL INDEX
1565 - 1580	TC1 - TC16	TRAFFIC CONTROL PLAN (STAGE 1A)
1581 - 1589	TC17 - TC25	TRAFFIC CONTROL PLAN (STAGE 1B)
1590 - 1596	TC26 - TC32	TRAFFIC CONTROL PLAN (STAGE 1C)
1597 - 1607	TC33 - TC43	TRAFFIC CONTROL PLAN (STAGE 1D)
1608 - 1623	TC44 - TC59	TRAFFIC CONTROL PLAN (STAGE 2)
1624 - 1638	TC60 - TC74	TRAFFIC CONTROL PLAN (STAGE 3A)
1639 - 1645	TC75 - TC81	TRAFFIC CONTROL PLAN (STAGE 3B)
1646 - 1655	TC82 - TC91	TRAFFIC CONTROL PLAN (STAGE 4)
1656 - 1663	TC92 - TC99	TRAFFIC CONTROL PLAN (STAGE 5)
1664 - 1712	TC100 - TC148	MISCELLANEOUS SITE SPECIFIC TRAFFIC CONTROL PLANS
1713 - 1724	TCD1 - TCD12	TRAFFIC CONTROL DETAIL
1725 - 1761	DU1 - DU37	DETOUR PLAN
1762 - 1763	DU38 - DU39	PEDESTRIAN DETOUR

PLAN REFERENCE NO.

SHEET OF SHEETS

NOTE: ALL SHEET REFERENCES, FIRST NOS. OF STRUCTURE CODE DESIGNATIONS AND MATCH LINE SHEET REFERENCES, ETC., THROUGHOUT THE PLANS, REFER TO THE ENTRY IN THE PLAN REFERENCE NUMBER BOX.

FILE NAME	PW:_XL3497\PS&E Sheets\Index\P3497_SH_IN_804.dgn
TIME	11:03:48 AM
DATE	3/14/2014
PLOTTED BY	SanchoA
DESIGNED BY	S. SHYU
ENTERED BY	A. SANCHEZ
CHECKED BY	B. REGISTER
PROJ. ENGR.	J. PEREZ
REGIONAL ADM.	K. DAYTON

REVISION | DATE | BY

REGION NO.	STATE	FED.AID PROJ.NO.
10	WASH	
JOB NUMBER 12C501		
CONTRACT NO.		LOCATION NO. XL3497

P.E. STAMP BOX DATE

P.E. STAMP BOX DATE

Washington State Department of Transportation

I-5
M ST TO PORTLAND AVE - HOV

INDEX

PLAN REF NO IN32

SHEET 1198 OF 1763 SHEETS

SIGN REMOVAL SPECIFICATIONS

SIGN NO.	SIGN CODE	SIGN DESCRIPTION	STA. LOC. (or MP)	SIGN SIZE X	SIGN SIZE Y	POST MATERIAL	POST SIZE	# OF POSTS	REMARKS
SE3-R1	D3-102	CROSSROADS NAME SIGN	NBN 12+05 RT	60"	16"	STEEL	2.5" SQ.	1	
SE3-R2	D9-101 MOD	FOOD - PHONE - GAS - LODGING - ETC	NBN 15+28 RT	96"	72"	STEEL	2.5" SQ.	2	
SE3-R3	W9-2L	LANE ENDS MERGE	NBN 16+42 LT	48"	48"	STEEL	2.5" SQ.	1	
SE3-R4	D3-102	CROSSROADS NAME SIGN	NBN 18+35 RT	48"	16"	STEEL	2.5" SQ.	1	
SE3-R5	W4-2L	PAVEMENT WIDTH TRANSITION	I5NB 128+50 RT	48"	48"	STEEL	2.5" SQ.	1	BARRIER MOUNTED
SE3-R6	W2-6P MOD	I-5 NORTH	I5NB 128+50 RT	24"	18"				BELOW REMOVAL SIGN #SE3-R5
SE3-R7	E4-501	EXIT ONLY GUIDE SIGN W/ARROW	I5SB 520+90 OH	216"	156"	BRIDGE MT			SEE NOTE #2
SE3-R8	D3-102	CROSSROADS NAME SIGN	I5SB 521+35 LT	60"	16"	STEEL	2.5" SQ.	1	
SE3-R9	D3-102	CROSSROADS NAME SIGN	SSB 85+67 LT	48"	16"	STEEL	2.5" SQ.	1	
SE3-R10	W4-1R	MERGING FROM RIGHT	SSB 88+20 LT	48"	48"	LT STD			
SE4-R1	W4-3R	ADDED LANE SYMBOL	I5SB 531+90 LT	48"	48"	WOOD	4x6	1	
SE4-R2	M8-401	ROUTE MARKER ASSEMBLY W/TWO SHIELDS	NBN 27+25 LT	60"	60"	WOOD	4x6	1	
SE4-R3	W9-2L	LANE ENDS MERGE	NBN 28+10 LT	48"	48"	STEEL	2.5" SQ.	1	BARRIER MOUNTED
SE4-R4	W4-2L	PAVEMENT WIDTH TRANSITION	I5NB 140+95 LT	48"	48"	STEEL	2.5" SQ.	1	
SE4-R5	E1-1 MOD	ADVANCE GUIDE SIGN	I5SB 539+15 OH	156"	156"	CANT			REMOVE CANTILEVER SEE NOTE #1
SE4-R6	W20-3 ALT	RAMP CLOSED AHEAD	I5NB 141+24 LT	48"	48"	STEEL	2.5" SQ.	1	(HINGED)
SE4-R7	W20-3 ALT	RAMP CLOSED AHEAD	NBN 32+86 LT	48"	48"	STEEL	2.5" SQ.	1	(HINGED)
SE4-R8	E6-101 MOD	EXIT DIRECTION	NBN 33+95 LT	84"	60"	WOOD	4x4	2	
SE4-R9	E6-101 MOD	EXIT DIRECTION	NBN 34+08 LT	84"	60"	WOOD	4x4	2	
SE4-R10	W1-2L	CURVE LEFT	NBN 34+77 LT	48"	48"	WOOD	4x6	1	
SE4-R11	W13-1	MPH	NBN 34+77 LT	24"	24"				BELOW REMOVAL SIGN #SE4-R10
SE4-R12	E3-101	DOUBLE EXIT OR NEXT RIGHT SECOND LEFT	I5NB 143+35 LT	120"	72"	WOOD	6x6	2	
SE4-R13	W1-2R	CURVE RIGHT	NBN 35+45 RT	48"	48"	WOOD	4x6	1	
SE4-R14	W13-1	MPH	NBN 35+45 RT	24"	24"				BELOW REMOVAL SIGN #SE4-R13
SE4-R15	W20 MOD	CAUTION SLOW MOVING TRUCKS AHEAD	PSSB 58+45 OH	192"	48"	BRIDGE MT			SEE NOTE #2
SE4-R16	E6-2	PULL THRU SIGN	PAC 10+50 OH	192"	144"	CANTILEVER			
SE5-R1	W12-401L	LATERAL CLEARANCE MARKER	I5SB 542+90 RT	12"	36"	STEEL	1.5" SQ.	1	
SE5-R2	I7-401 MOD	FIRE HYDRANT MARKER	NBN 37+55 RT	24"	30"				WALL MOUNT
SE5-R3	W12-1	DOUBLE ARROW	NBN 38+77 RT	48"	48"	WOOD	4x6	1	
SE5-R4	W1-8	CHEVRON ALIGNMENT SIGN	NBN 38+98 RT	24"	30"	WOOD	4x4	1	

CONSTRUCTION NOTES:

THE FIRST PART OF THE SIGN NUMBER IS THE SHEET NUMBER, THE SECOND NUMBER IS THE SIGN ON THAT SHEET.
FOR ALL CODE REFERENCES AND STANDARD DETAILS SEE WASHINGTON STATE SIGN FABRICATION MANUAL.
ALL CEMENT CONCRETE FOUNDATIONS AND SIGN SUPPORTS SHALL BE REMOVED, UNLESS OTHERWISE NOTED.

1: REMOVE FOUNDATION IN ACCORDANCE WITH STANDARD SPECIFICATION 8-21.3(4).
FILL AND COMPACT VOIDS IN ACCORDANCE WITH STANDARD SPECIFICATION 2-09.3(1)E.
2: REMOVE AND REPAIR ANCHOR BOLTS IN ACCORDANCE WITH STANDARD SPECIFICATION 8-21.3(4).

SIGN REMOVAL SPECIFICATIONS

SIGN NO.	SIGN CODE	SIGN DESCRIPTION	STA. LOC. (or MP)	SIGN SIZE X	SIGN SIZE Y	POST MATERIAL	POST SIZE	# OF POSTS	REMARKS
SE5-R5	I2-301 MOD	SOUND TRANSIT NEXT EXIT	NBN 39+00 LT	24"	30"	WOOD	4x6	1	
SE5-R6	W1-8	CHEVRON ALIGNMENT SIGN	NBN 39+22 RT	24"	30"	WOOD	4x4	1	
SE5-R7	W1-8	CHEVRON ALIGNMENT SIGN	NBN 39+48 RT	24"	30"	WOOD	4x4	1	
SE5-R8	M3-1B	NORTH	SNB 20+00 RT	30"	14"	WOOD	4x6	1	
SE5-R9	M1-1	INTERSTATE	SNB 20+00 RT	36"	30"				BELOW REMOVAL SIGN #SE5-R8
SE5-R10	W1-8	CHEVRON ALIGNMENT SIGN	NNB 10+50 LT	24"	30"	WOOD	4x4	1	
SE5-R11	W1-8	CHEVRON ALIGNMENT SIGN	NNB 11+50 LT	24"	30"	WOOD	4x4	1	
SE5-R12	W1-8	CHEVRON ALIGNMENT SIGN	NNB 12+55 LT	24"	30"	WOOD	4x4	1	
SE5-R13	W1-8	CHEVRON ALIGNMENT SIGN	NNB 13+60 LT	24"	30"	WOOD	4x4	1	
SE5-R14	E1-1 MOD	ADVANCE GUIDE SIGN	I5SB 553+30 OH	120"	132"	CANT			REMOVE SIGN AND 14' BEAM
SE7-R1	W1-8	CHEVRON ALIGNMENT SIGN	NNB 14+70 LT	24"	30"	STEEL	1.5" SQ.	1	
SE7-R2	W4-1R	MERGING FROM RIGHT	SNB 23+10 RT	48"	48"	STEEL	2.5" SQ.	1	
SE7-R3	W4-3R	ADDED LANE SYMBOL	I5NB 158+67 LT	36"	36"	WOOD	4x6	1	
SE7-R4	W9-2L	LANE ENDS MERGE	SNB 27+20 RT	36"	36"	LT STD			
SE7-R5	D10-3	MILE	I5NB 162+78 RT	12"	48"	WOOD	4x4	1	
SE7-R6	W4-2L	PAVEMENT WIDTH TRANSITION	I5NB 164+40 RT	36"	36"	LT STD			
SE7-R7	M1-701	STATE ROUTE	SBS 112+00 LT	36"	48"	WOOD	4x6	1	
SE7-R8	W1-1L	LEFT TURN	SBS 113+66 LT	36"	36"	LT STD			
SE7-R9	W13-1	MPH	SBS 113+66 LT	24"	24"				BELOW REMOVAL SIGN #SE7-R8
SE7-R10	E6-2	PULL THRU SIGN	SBN 64+90 OH	144"	96"	SIGN BR			REMOVE SIGN BRIDGE AND FOUNDATIONS SEE NOTE #1
SE7-R11	E6-101	EXIT DIRECTION	SBN 64+90 OH	144"	96"	SIGN BR			BESIDE REMOVAL SIGN #SE7-R10
SE7-R12	D10-3	MILE	SBN 69+00 RT	12"	48"	BARRIER MT			
SE7-R13	W12-401L	LATERAL CLEARANCE MARKER	I5SB 561+90 RT	12"	36"	STEEL	2.5" SQ.	1	
SE7-R14	I2-301 MOD	SOUND TRANSIT NEXT RIGHT	I5SB 565+15 LT	24"	30"	LT STD			
SE8-R1	R7-2A MOD	NO PARKING	I5NB 171+15 RT	30"	36"	WOOD	4x4	1	
SE8-R2	R9-4A	NO HITCHHIKING SYMBOL	I5NB 171+15 RT	30"	30"				BELOW REMOVAL SIGN #SE8-R1
SE8-R3	M3-1B	NORTH	I5NB 172+25 RT	30"	14"	WOOD	4x6	1	
SE8-R4	M1-1	INTERSTATE	I5NB 172+25 RT	24"	24"				BELOW REMOVAL SIGN #SE8-R3

CONSTRUCTION NOTES:

THE FIRST PART OF THE SIGN NUMBER IS THE SHEET NUMBER, THE SECOND NUMBER IS THE SIGN ON THAT SHEET.
FOR ALL CODE REFERENCES AND STANDARD DETAILS SEE WASHINGTON STATE SIGN FABRICATION MANUAL.
ALL CEMENT CONCRETE FOUNDATIONS AND SIGN SUPPORTS SHALL BE REMOVED, UNLESS OTHERWISE NOTED.

1: REMOVE FOUNDATION IN ACCORDANCE WITH STANDARD SPECIFICATION 8-21.3(4).
FILL AND COMPACT VOIDS IN ACCORDANCE WITH STANDARD SPECIFICATION 2-09.3(1)E.
2: REMOVE AND REPAIR ANCHOR BOLTS IN ACCORDANCE WITH STANDARD SPECIFICATION 8-21.3(4).

SIGN RELOCATION SPECIFICATIONS

SIGN NO.	SIGN CODE	SIGN DESCRIPTION	EXIST. STA. LOC. (or MP)	NEW STA. LOC. (or MP)	SIGN SIZE X	SIGN SIZE Y	POST MATERIAL	POST SIZE	POST LENGTH H1	POST LENGTH H2	POST LENGTH H3	POST LENGTH H4	CLEARANCE V	CLEARANCE W	REMARKS
SE2-L1	R3-8	(LEFT ARROW) ONLY (LEFT STRAIGHT ARROWS)	I5SB 513+45 LT	I5SB 513+45 LT	48"	48"	STEEL	2.5" SQ.	9'				4'	5'	
SE3-L1	R3-8	(LEFT ARROW) ONLY (LEFT STRAIGHT ARROWS)	I5SB 518+30 LT	I5SB 518+30 LT	48"	48"	STEEL	2.5" SQ.	9'				4'	5'	
SE3-L2	E6-2	PULL THRU SIGN	NBN 12+45 OH	NBN 11+11 OH	144"	144"	SIGN BR								INSTALL BESIDE NEW SIGN #SN2-1 SEE NOTE #3
SE3-L3	E6-2	PULL THRU SIGN	NBN 12+35 OH	NBN 11+11 OH	132"	144"	SIGN BR								INSTALL BESIDE RELOCATED SIGN #SE3-L2 SEE NOTE #3
SE4-L1	LG-R3	TOURIST ACTIVITIES (RAMP)	NBN 31+33 LT	NBN 13+75 RT	72"	72"	STEEL	2.5" SQ.	11'	10'			4'	4'	SEE NOTE #1
SE4-L2	LG-R1	GAS FOOD LODGING (RAMPS)	NBN 32+75 LT	NBN 15+00 RT	36"	72"	STEEL	2.5" SQ.	11'				3'	4'	
SE5-L1	D3-101	STREET NAME SIGN	PAC 15+30 RT	PAC 15+30 RT	30"	30"									INSTALL BEHIND RELOCATED SIGN #SE5-L2
SE5-L2	D3-101	STREET NAME SIGN	PAC 15+30 RT	PAC 15+30 RT	30"	30"									INSTALL ABOVE RELOCATED SIGN #SE5-L3
SE5-L3	R1-1	STOP	PAC 15+30 RT	PAC 15+30 RT	30"	30"	WOOD	4x4	14'				7'	50'	SEE NOTE #6
SE7-L1	W13-2	EXIT - MPH	SBN 65+75 LT	SBN 65+75 LT	48"	48"	STEEL	2.5" SQ.	13'				7'	13'	(HINGED)
SE7-L2	LG-R1	GAS FOOD LODGING (RAMPS)	SBN 66+39 LT	SBN 66+39 LT	36"	72"	STEEL	2.5" SQ.	15'				7'	13'	
SE7-L3	LG-R3	TOURIST ACTIVITIES (RAMP)	SBN 67+14 LT	SBN 67+17 LT	72"	72"	STEEL	2.5" SQ.	14'	12'			4'	4'	SEE NOTE #1
SE7-L4	LG-R1	GAS FOOD LODGING (RAMPS)	I5SB 563+30 LT	I5SB 563+00 LT	36"	72"	STEEL	2.5" SQ.	10'				4'	4'	
SE7-L5	LG-R3	TOURIST ACTIVITIES (RAMP)	I5SB 564+12 LT	I5SB 565+05 LT	72"	72"	STEEL	2.5" SQ.	14'	12'			4'	4'	
SE7-L6	R1-1	STOP	MCK 17+50 RT	MCK 17+52 RT	30"	30"									INSTALL ABOVE RELOCATED SIGN #SE7-L7
SE7-L7	R7-101	NO PARKING	MCK 17+50 RT	MCK 17+52 RT	12"	18"							5'	50'	MOVE SIGNS AND 4X4 WOOD POST (BEHIND SIDEWALK) SEE NOTE #5
SE7-L8	W1-1R	RIGHT TURN AHEAD	MCK 16+80 LT	MCK 17+25 LT	30"	30"									INSTALL ABOVE RELOCATED SIGN #SE7-L9
SE7-L9	W13-1	(25) MPH	MCK 16+80 LT	MCK 17+25 LT	18"	18"	STEEL	2.5" SQ.	10'				8'	10'	SEE NOTE #4
SE7-L10	R17-1	NO TRESPASSING	MCK 17+00 LT	MCK 17+00 LT	24"	18"							4'	20'	INSTALL ON RIGHT OF WAY FENCE
SE7-L11	SP-1	ECOLOGY - CLEAN UP	MCK 17+00 LT	MCK 17+00 LT	12"	18"							4'	22'	INSTALL ON RIGHT OF WAY FENCE
SE7-L12	R2-1	SPEED LIMIT (30)	MCK 15+95 RT	MCK 16+27 RT	12"	18"	LT STD						8'		SEE NOTE #7
SE7-L13	R17-1	NO TRESPASSING	MCK 13+70 LT	MCK 13+70 LT	24"	18"							4'	15'	INSTALL ON RIGHT OF WAY FENCE
SE7-L14	R3-17	RIGHT LANE (BICYCLE SYMBOL) ONLY	MCK 13+65 LT	MCK 13+65 LT	30"	24"									INSTALL ABOVE RELOCATED SIGN #SE7-L15
SE7-L15	R3-17A	AHEAD	MCK 13+65 LT	MCK 13+65 LT	30"	12"	STEEL	2.5" SQ.	14'				7'	14'	SEE NOTE #4
SE7-L16	M4-5	TO	MCK 13+60 LT	MCK 13+50 LT	18"	12"									INSTALL ABOVE RELOCATED SIGN #SE7-L17
SE7-L17	M1-1	INTERSTATE (5)	MCK 13+60 LT	MCK 13+50 LT	24"	24"									INSTALL ABOVE RELOCATED SIGN #SE7-L18
SE7-L18	M6-4	DIRECTIONAL ARROW W/TWO HEADS	MCK 13+60 LT	MCK 13+50 LT	24"	12"	SIG STD						7'		SEE NOTE #7
SE7-L19	D3-101	STREET NAME SIGN	MCK 13+55 RT	MCK 13+15 RT	30"	8"									INSTALL BEHIND RELOCATED SIGN #SE7-L20
SE7-L20	D3-101	STREET NAME SIGN	MCK 13+55 RT	MCK 13+15 RT	30"	8"									INSTALL ABOVE RELOCATED SIGN #SE7-L21
SE7-L21	D3-101	STREET NAME SIGN	MCK 13+55 RT	MCK 13+15 RT	30"	8"									INSTALL BEHIND RELOCATED SIGN #SE7-L22

CONSTRUCTION NOTES:

THE FIRST PART OF THE SIGN NUMBER IS THE SHEET NUMBER, THE SECOND NUMBER IS THE SIGN ON THAT SHEET.
FOR CODE REFERENCES AND STANDARD DETAILS SEE WASHINGTON STATE SIGN FABRICATION MANUAL UNLESS OTHERWISE NOTED.
ALL SINGLE POST SIGNS OVER 36" SHALL HAVE BRACING (SEE STANDARD PLAN G-50.10)
ALL W BEAM STEEL POSTS SHALL BE ASTM A36 STEEL.
WHEN SIGN IS PLACED BEHIND BARRIER OR WALL IN A CUT SECTION THE V-DIMENSION AND W-DIMENSION SHALL BE MEASURED FROM THE TOP FACE OF THE BARRIER OR WALL.

1: ADD 7' SLEEVE OF 12 GA. 2 1/4" POST (INSIDE 2 1/2" POST) USE STEEL SIGN SUPPORT TYPE SB-1 (SEE STANDARD PLAN G-24.40).
2: REUSE BOTH EXISTING 3" SQUARE STEEL SLIP BASES.
3: REMOVE AND REPAIR ANCHOR BOLTS IN ACCORDANCE WITH STANDARD SPECIFICATION 8-21.3(4).
4: W (OFFSET) IS MEASURED FROM FACE OF CURB.
5: W (OFFSET) IS MEASURED FROM MCK CENTERLINE.
6: W (OFFSET) IS MEASURED FROM PAC CENTERLINE.
7: SEE STANDARD PLAN G-30.10 FOR LIGHT AND SIGNAL STANDARD MOUNTING DETAILS.

SIGN RELOCATION SPECIFICATIONS

SIGN NO.	SIGN CODE	SIGN DESCRIPTION	EXIST. STA. LOC. (or MP)	NEW STA. LOC. (or MP)	SIGN SIZE		POST MATERIAL	POST SIZE	POST LENGTH				CLEARANCE		REMARKS
					X	Y			H1	H2	H3	H4	V	W	
SE7-L22	D3-101	STREET NAME SIGN	MCK 13+55 RT	MCK 13+15 RT	30"	8"	STEEL	2.5" SQ.	9'				7'	12'	SEE NOTE #4
SE8-L1	LG-M6	LODGING (FREEWAY DOUBLE EXIT)	I5NB 171+60 RT	I5NB 171+60 RT	156"	144"	WOOD	6x10	25'	25'	25'		7'	25'	
SE8-L2	E1-1 MOD	ADVANCE GUIDE SIGN	TI5NB 103+60 RT	TI5NB 103+60 RT	108"	72"	STEEL	3" SQ.	16'	18'			7'	30'	SEE NOTE #2
SE8-L3	E1-1 MOD	ADVANCE GUIDE SIGN	TI5NB 107+10 RT	TI5NB 107+10 RT	144"	120"	STEEL	W6x12	19.7'	19.9'			7'	29'	
SE8-L4	E1-1 MOD	ADVANCE GUIDE SIGN	TI5NB 108+80 RT	TI5NB 108+80 RT	120"	72"	STEEL	3" SQ.	14'	14'			7'	22'	SEE NOTE #2

CONSTRUCTION NOTES:

THE FIRST PART OF THE SIGN NUMBER IS THE SHEET NUMBER, THE SECOND NUMBER IS THE SIGN ON THAT SHEET.
FOR CODE REFERENCES AND STANDARD DETAILS SEE WASHINGTON STATE SIGN FABRICATION MANUAL UNLESS OTHERWISE NOTED.
ALL SINGLE POST SIGNS OVER 36" SHALL HAVE BRACING (SEE STANDARD PLAN G-50.10)
ALL W BEAM STEEL POSTS SHALL BE ASTM A36 STEEL.
WHEN SIGN IS PLACED BEHIND BARRIER OR WALL IN A CUT SECTION THE V-DIMENSION AND W-DIMENSION SHALL BE MEASURED FROM THE TOP FACE OF THE BARRIER OR WALL.

1: ADD 7' SLEEVE OF 12 GA. 2 1/4" POST (INSIDE 2 1/2" POST) USE STEEL SIGN SUPPORT TYPE SB-1 (SEE STANDARD PLAN G-24.40).
2: REUSE BOTH EXISTING 3" SQUARE STEEL SLIP BASES.
3: REMOVE AND REPAIR ANCHOR BOLTS IN ACCORDANCE WITH STANDARD SPECIFICATION 8-21.3(4).
4: W (OFFSET) IS MEASURED FROM FACE OF CURB.
5: W (OFFSET) IS MEASURED FROM MCK CENTERLINE.
6: W (OFFSET) IS MEASURED FROM PAC CENTERLINE.
7: SEE STANDARD PLAN G-30.10 FOR LIGHT AND SIGNAL STANDARD MOUNTING DETAILS.

SIGN INSTALLATION SPECIFICATIONS

SIGN NO.	SIGN CODE	SIGN DESCRIPTION	STA. LOC. (or MP)	SIGN SIZE X	SIGN SIZE Y	SHEETING TYPE	LETTER SIZE OR CODE	POST MATERIAL	POST SIZE	POST LENGTH H1	POST LENGTH H2	POST LENGTH H3	POST LENGTH H4	CLEARANCE V	CLEARANCE W	REMARKS
SN2-1	E6-2 MOD	PULL THRU SIGN	NBN 11+11 OH	216"	144"	**	SIGN DETAIL	SIGN BR								SEE SHEET SB7 FOR DETAILS
SN2-2	R13-301 MOD	TRUCKS STOP AT SCALES (HINGED)	NBN 11+11 RT	48"	48"	DETAIL	SIGN DETAIL	SIGN BR						7'		INSTALL ON SIGN BRIDGE COLUMN SEE NOTE #6 (HINGED)
SN3-1	D3-101	STREET NAME SIGN	NBN 12+00 RT	60"	16"	*	SIGN DETAIL	STEEL	2.5" SQ.	7'				4'	4'	
SN3-2	E1-1 MOD	TACOMA DOME STATION FOLLOW I-705	NBN 16+50 RT	156"	144"	*	SIGN DETAIL	STEEL	W6x16	19.3'	15.2'			5'	8'	SEE NOTE #4
SN3-3	W9-2L	LANE ENDS MERGE	I5NB 125+05 RT	48"	48"	III or IV		STEEL	2.5" SQ.	14'				7'	18'	
SN3-4	D3-101	STREET NAME SIGN	NBN 18+60 LT	48"	16"	*	SIGN DETAIL	STEEL	2.5" SQ.	10'				7'	15'	
SN3-5	W4-2L	PAVEMENT WIDTH TRANSITION	I5NB 128+10 RT	48"	48"	III or IV		STEEL	2.5" SQ.	15'				7'	16'	
SN3-6	W9-1R	RIGHT LANE ENDS	I5NB 131+10 RT	48"	48"	III or IV		STEEL	2.5" SQ.	14'				7'	15'	
SN3-7	D3-101	STREET NAME SIGN	I5SB 521+80 LT	60"	16"	*	SIGN DETAIL	STEEL	2.5" SQ.	8'				6'	4'	
SN3-8	R7-2A MOD	NO PARKING TOW AWAY ZONE	SSB 83+41 LT	24"	36"	III or IV	SIGN DETAIL	LT STD						14'		SEE NOTE #6
SN3-9	D3-101	STREET NAME SIGN	SSB 85+67 LT	48"	16"	*	SIGN DETAIL	STEEL	2.5" SQ.	10.0'				6'	2'	
SN3-10	W4-3R	ADDED LANE SYMBOL	SSB 86+00 RT	48"	48"	III or IV		STEEL	2.5" SQ.	14'				7'	9'	
SN4-1	R7-2A MOD	NO PARKING TOW AWAY ZONE	15NB 132+70 RT	24"	36"	III or IV	SIGN DETAIL	STEEL	2.5" SQ.	11'				7'	15'	
SN4-2	M3-1B	NORTH	I5NB 133+82 RT	30"	15"	*										INSTALL ABOVE SIGN #SN4-3 SEE NOTE #6
SN4-3	M1-1	INTERSTATE (5)	I5NB 133+82 RT	36"	36"	*		LT STD						7'		SEE NOTE #6
SN4-4	E9-1	CITY NEXT - EXITS	I5NB 138+00 RT	120"	72"	*	CODE C	STEEL	3" SQ.	13'	13'			7'	15'	SEE NOTES #3 & #5
SN4-5	W13-3	RAMP - MPH (35)	NBN 31+61 LT	48"	60"	III or IV		SIGN BR								INSTALL ON SIGN BRIDGE COLUMN SEE NOTE #6
SN4-6	E6-2 MOD	PULL THRU SIGN	NBN 31+61 OH	240"	156"	**	CODE D	SIGN BR								SEE SHEET SB3 FOR DETAILS
SN4-7	E4-501	EXIT ONLY GUIDE SIGN W/ARROW	NBN 31+61 OH	156"	132"	**	CODE E	SIGN BR								INSTALL BESIDE SIGN #SN4-6
SN4-8	W13-3	RAMP - MPH (35)	NBN 31+61 RT	48"	60"	III or IV		SIGN BR								INSTALL ON SIGN BRIDGE COLUMN SEE NOTE #6
SN4-9	E1-1	ADVANCE GUIDE SIGN	I5NB 143+00 OH	144"	168"	**	CODE E	SIGN BR								SEE SHEET SB4 FOR DETAILS
SN4-10	E1-1	ADVANCE GUIDE SIGN	I5NB 143+00 OH	168"	120"	**	CODE E	SIGN BR								INSTALL BESIDE SIGN #SN4-8
SN4-11	W9-2L MOD	LANE ENDS MERGE	I5NB 143+00 OH	144"	96"	VIII OR IX	SIGN DETAIL	SIGN BR								INSTALL BESIDE SIGN #SN4-9
SN4-12	W4-2L	PAVEMENT WIDTH TRANSITION	PSSB 53+50 LT	48"	48"	III or IV		STEEL	2.5" SQ.	14'				7'	20'	
SN4-13	W4-3R	ADDED LANE SYMBOL	SSB 98+00 LT	48"	48"	III or IV		STEEL	2.5" SQ.	14'				7'	14'	
SN4-14	W7-4 MOD	CAUTION SLOW MOVING TRUCKS AHEAD	PSSB 60+00 LT	54"	66"	III or IV	SIGN DETAIL	STEEL	2.5" SQ.	14'				7'	14'	
SN4-15	E12-201	FREEWAY ENTRANCE	PSSB 61+35 LT	36"	24"	II										INSTALL ABOVE SIGN #SN4-15
SN4-16	R5-1002	PEDS HITCHERS BICYCLES PROHIBITED	PSSB 61+35 LT	18"	18"	III or IV		STEEL	2.5" SQ.	14'				7'	13'	
SN4-17	E12-201	FREEWAY ENTRANCE	PSSB 61+35 RT	36"	24"	II										INSTALL ABOVE SIGN #SN4-17
SN4-18	R5-1002	PEDS HITCHERS BICYCLES PROHIBITED	PSSB 61+35 RT	18"	18"	III or IV		STEEL	2.5" SQ.	14'				7'	9'	

CONSTRUCTION NOTES:

THE FIRST PART OF THE SIGN NUMBER IS THE SHEET NUMBER, THE SECOND NUMBER IS THE SIGN ON THAT SHEET.
FOR CODE REFERENCES AND STANDARD DETAILS SEE WASHINGTON STATE SIGN FABRICATION MANUAL UNLESS OTHERWISE NOTED.
ALL SINGLE POST SIGNS OVER 36" SHALL HAVE BRACING (SEE STANDARD PLAN G-50.10)
ALL W BEAM STEEL POSTS SHALL BE ASTM A36 STEEL.
USE STEEL SIGN SUPPORT TYPE ST-4 (SEE STANDARD PLAN G-24.50), UNLESS OTHERWISE NOTED.
WHEN SIGN IS PLACED BEHIND CURB THE V-DIMENSION SHALL BE MEASURED FROM THE TOP OF THE CURB AND THE W-DIMENSION SHALL BE MEASURED FROM THE FACE OF CURB CLOSEST TO THE DIRECTION OF TRAFFIC THE SIGN IS FACING.
WHEN SIGN IS PLACED BEHIND BARRIER OR WALL IN A CUT SECTION THE V-DIMENSION AND W-DIMENSION SHALL BE MEASURED FROM THE TOP FACE OF THE BARRIER OR WALL.
*: TYPE II BACKGROUND; TYPE III OR IV FOR LETTERS BORDERS AND SYMBOLS.
**: TYPE III OR IV BACKGROUND; TYPE VIII OR IX FOR LETTERS BORDERS AND SYMBOLS.

FOR TYPE ST-4, SB-1, SB-2 AND SB-3 SIGN SUPPORT, THE CONTRACTOR MAY USE COMMERCIAL CONCRETE.
1: USE STEEL SIGN SUPPORT TYPE SB-1 (SEE STANDARD PLAN G-24.40)
2: ADD 7' SLEEVE OF 12 GA. 2 1/4" POST (INSIDE 2 1/2" POST); USE STEEL SIGN SUPPORT TYPE SB-1 (SEE STANDARD PLAN G-24.40)
3: USE 7 GA. 3" SQUARE STEEL POST WITH SB-1 AND 10" TRIANGULAR SLIP BASE; INSTALL IN ACCORDANCE WITH STANDARD PLAN G-24.40.
4: USE STEEL SIGN SUPPORT TP-A OR TP-B (SEE STANDARD PLAN G-24.60)
5: OUTSIDE POSTS SHALL BE A MINIMUM OF 7' APART. EXTEND WIND BEAM TO END OF SIGN.
6: SEE STANDARD PLAN G-30.10 FOR LIGHT AND SIGNAL STANDARD MOUNTING DETAILS.

SIGN INSTALLATION SPECIFICATIONS

SIGN NO.	SIGN CODE	SIGN DESCRIPTION	STA. LOC. (or MP)	SIGN SIZE X	SIGN SIZE Y	SHEETING TYPE	LETTER SIZE OR CODE	POST MATERIAL	POST SIZE	POST LENGTH H1	POST LENGTH H2	POST LENGTH H3	POST LENGTH H4	CLEARANCE V	CLEARANCE W	REMARKS
SN4-19	E6-2	PULL THRU SIGN	PAC 10+50 OH	144"	144"	III or IV	CODE D	CANTILEVER								INSTALL SIGN OVER CENTER OF LANE SEE NOTE #7
SN5-1	W1-2R	CURVE RIGHT	NBN 35+90 RT	48"	48"	III or IV										INSTALL ABOVE SIGN #SN5-2
SN5-2	W13-1	(35) MPH	NBN 35+90 RT	24"	24"	III or IV		WALL MT						14'		SEE SIGN BRACKET DETAIL #1 SHEET SB28
SN5-3	W1-2L	CURVE LEFT	NBN 35+90 LT	48"	48"	III or IV		STEEL	2.5" SQ.	15'				7'	10'	
SN5-4	W13-1	(35) MPH	NBN 35+90 LT	24"	24"	III or IV										INSTALL BELOW SIGN #SN5-3
SN5-5	I7-401 MOD	FIRE HYDRANT MARKER	NBN 37+48 RT	24"	30"	*	SIGN DETAIL	WALL MT						7'		INSTALL FLUSH ON WALL USING RESIN-BONDED ANCHORS
SN5-6	M8-401 MOD	ROUTE MARKER ASSEMBLY W/TWO ARROWS	NBS 12+65 LT	72"	78"	III OR IV	SIGN DETAIL	STEEL	2.5" SQ.	14'	14'			7'	15'	SEE NOTE #2
SN5-7	W1-8	CHEVRON ALIGNMENT SIGN	NBN 38+87 RT	30"	36"	III or IV		STEEL	2.5" SQ.	12'				7'	5'	
SN5-8	I2-301 MOD	SOUND TRANSIT NEXT RIGHT	NBN 39+00 LT	30"	36"	*	SIGN DETAIL	STEEL	2.5" SQ.	12'				7'	8'	
SN5-9	W1-8	CHEVRON ALIGNMENT SIGN	NBN 39+10 RT	30"	36"	III or IV		LT STD						7'		SEE NOTE #6
SN5-10	W1-8	CHEVRON ALIGNMENT SIGN	NBN 39+47 RT	30"	36"	III or IV		STEEL	2.5" SQ.	12'				7'	5'	
SN5-11	D3-101	STREET NAME SIGN	I5NB 145+05 RT	60"	16"	*	SIGN DETAIL	STEEL	2.5" SQ.	10'				7'	15'	
SN5-12	D3-101	STREET NAME SIGN	I5SB 544+40 LT	60"	16"	*	SIGN DETAIL	ELBOW MT								SEE BARRIER MOUNTED SIGN POST DETAIL SHEET SB27
SN5-13	W4-2L	PAVEMENT WIDTH TRANSITION	I5NB 149+50 RT	48"	48"	III OR IV		ELBOW MT								SEE BARRIER MOUNTED SIGN POST DETAIL SHEET SB27
SN5-14	E1-1	ADVANCE GUIDE SIGN	I5SB 553+30 OH	150"	192"	**	CODE E	SIGN BR								SEE SHEET SB5 FOR DETAILS
SN5-15	E1-1	ADVANCE GUIDE SIGN	I5SB 553+30 OH	162"	144"	**	CODE E	SIGN BR								INSTALL BESIDE SIGN #SN5-14
SN5-16	M3-1B	NORTH	SNB 19+85 RT	30"	15"	*										INSTALL ABOVE SIGN #SN5-17
SN5-17	M1-1	INTERSTATE (5)	SNB 19+85 RT	36"	36"	*		STEEL	2.5" SQ.	12'				7'	13'	
SN5-18	W1-8	CHEVRON ALIGNMENT SIGN	NNB 10+50 LT	30"	36"	III or IV		STEEL	2.5" SQ.	12'				7'	8'	
SN5-19	W1-8	CHEVRON ALIGNMENT SIGN	NNB 11+50 LT	30"	36"	III or IV		STEEL	2.5" SQ.	12'				7'	8'	
SN5-20	W1-8	CHEVRON ALIGNMENT SIGN	NNB 12+55 LT	30"	36"	III or IV		STEEL	2.5" SQ.	12'				7'	8'	
SN5-21	W1-8	CHEVRON ALIGNMENT SIGN	NNB 13+60 LT	30"	36"	III or IV		STEEL	2.5" SQ.	12'				7'	8'	
SN5-22	R7-9 MOD	NO PARKING ANY TIME	PAC 21+02 LT	12"	18"	III or IV	SIGN DETAIL	LT STD						7'		SEE NOTE #6
SN5-23	R7-9 MOD	NO PARKING ANY TIME	PAC 19+27 RT	12"	18"	III or IV	SIGN DETAIL	LT STD						7'		SEE NOTE #6
SN5-24	R7-9 MOD	NO PARKING ANY TIME	PAC 17+53 LT	12"	18"	III or IV	SIGN DETAIL	LT STD						7'		SEE NOTE #6
SN5-25	R7-9 MOD	NO PARKING ANY TIME	PAC 15+79 RT	12"	18"	III or IV	SIGN DETAIL	LT STD						7'		SEE NOTE #6
SN7-1	W1-8	CHEVRON ALIGNMENT SIGN	NNB 14+70 LT	30"	36"	III or IV		STEEL	2.5" SQ.	12'				7'	8'	
SN7-2	W4-1R	MERGING FROM RIGHT	SNB 22+90 RT	48"	48"	III or IV		STEEL	2.5" SQ.	15'				7'	17'	
SN7-3	W4-2L	PAVEMENT WIDTH TRANSITION	SNB 25+30 RT	48"	48"	III or IV		STEEL	2.5" SQ.	14'				7'	19'	
SN7-4	W4-3R	ADDED LANE SYMBOL	I5NB 159+00 RT	48"	48"	III or IV		STEEL	2.5" SQ.	14'				7'	17'	

CONSTRUCTION NOTES:

THE FIRST PART OF THE SIGN NUMBER IS THE SHEET NUMBER, THE SECOND NUMBER IS THE SIGN ON THAT SHEET.
FOR CODE REFERENCES AND STANDARD DETAILS SEE WASHINGTON STATE SIGN FABRICATION MANUAL UNLESS OTHERWISE NOTED.
ALL SINGLE POST SIGNS OVER 36" SHALL HAVE BRACING (SEE STANDARD PLAN G-50.10)
ALL W BEAM STEEL POSTS SHALL BE ASTM A36 STEEL.
USE STEEL SIGN SUPPORT TYPE ST-4 (SEE STANDARD PLAN G-24.50), UNLESS OTHERWISE NOTED.
WHEN SIGN IS PLACED BEHIND CURB THE V-DIMENSION SHALL BE MEASURED FROM THE TOP OF THE CURB AND THE W-DIMENSION SHALL BE MEASURED FROM THE FACE OF CURB CLOSEST TO THE DIRECTION OF TRAFFIC THE SIGN IS FACING.
WHEN SIGN IS PLACED BEHIND BARRIER OR WALL IN A CUT SECTION THE V-DIMENSION AND W-DIMENSION SHALL BE MEASURED FROM THE TOP FACE OF THE BARRIER OR WALL.
*: TYPE II BACKGROUND; TYPE III OR IV FOR LETTERS BORDERS AND SYMBOLS.
**: TYPE III OR IV BACKGROUND; TYPE VIII OR IX FOR LETTERS BORDERS AND SYMBOLS.

FOR TYPE ST-4, SB-1, SB-2 AND SB-3 SIGN SUPPORT, THE CONTRACTOR MAY USE COMMERCIAL CONCRETE.
1: USE STEEL SIGN SUPPORT TYPE SB-1 (SEE STANDARD PLAN G-24.40)
2: ADD 7' SLEEVE OF 12 GA. 2 1/4" POST (INSIDE 2 1/2" POST); USE STEEL SIGN SUPPORT TYPE SB-1 (SEE STANDARD PLAN G-24.40)
3: USE 7 GA. 3" SQUARE STEEL POST WITH SB-1 AND 10" TRIANGULAR SLIP BASE; INSTALL IN ACCORDANCE WITH STANDARD PLAN G-24.40.
4: USE STEEL SIGN SUPPORT TP-A OR TP-B (SEE STANDARD PLAN G-24.60)
5: OUTSIDE POSTS SHALL BE A MINIMUM OF 7' APART. EXTEND WIND BEAM TO END OF SIGN.
6: SEE STANDARD PLAN G-30.10 FOR LIGHT AND SIGNAL STANDARD MOUNTING DETAILS.
7: INSTALL WITH NEW MOUNTING HARDWARE IN ACCORDANCE WITH STANDARD PLAN G-90.10.

SIGN INSTALLATION SPECIFICATIONS

SIGN NO.	SIGN CODE	SIGN DESCRIPTION	STA. LOC. (or MP)	SIGN SIZE X	SIGN SIZE Y	SHEETING TYPE	LETTER SIZE OR CODE	POST MATERIAL	POST SIZE	POST LENGTH H1	POST LENGTH H2	POST LENGTH H3	POST LENGTH H4	CLEARANCE V	CLEARANCE W	REMARKS
SN7-5	D3-101	STREET NAME SIGN	I5NB 162+90 LT	60"	16"	*	SIGN DETAIL							7'		INSTALL ON BRIDGE COLUMN SEE NOTE #6
SN7-6	D10-3	MILE (134)	SNB 29+55 RT	12"	48"	*		WALL MT						14'		SEE SIGN BRACKET DETAIL #2 SHEET SB28
SN7-7	W1-1L	LEFT TURN	SBS 111+69 LT	48"	48"	III or IV		LT STD						7'		SEE NOTE #6
SN7-8	W13-1	(30) MPH	SBS 111+69 LT	24"	24"	III or IV										INSTALL BELOW SIGN #SN7-7
SN7-9	M1-701	(SOUTH) STATE ROUTE (7)	SBS 113+14 LT	36"	48"	*		LT STD						7'		SEE NOTE #6
SN7-10	I2-301 MOD	SOUND TRANSIT WITH ARROW	SBN 65+20 LT	24"	30"	*	SIGN DETAIL	STEEL	2.5" SQ.	12'				7'	13'	
SN7-11	E6-101	EXIT DIRECTION	SBN 65+15 OH	216"	84"	**	CODE E	SIGN BR								SEE SHEET SB6 FOR DETAILS
SN7-12	E6-2	PULL THRU SIGN	SBN 65+15 OH	216"	120"	**	CODE D	SIGN BR								INSTALL BESIDE SIGN #SN7-11
SN7-13	E6-101	EXIT DIRECTION	SBN 68+90 OH	180"	84"	**	CODE E	BRIDGE MT								SEE BRIDGE MOUNTED SIGN BRACKET DETAILS SHEET SB22
SN7-14	D3-101	STREET NAME SIGN	I5SB 561+74 LT	60"	16"	*	SIGN DETAIL	LT STD						14'		SEE NOTE #6
SN7-15	D10-3	MILE (134)	I5SB 561+74 LT	12"	48"	*								4'		INSTALL BELOW SIGN SN7-14 SEE NOTE #6
SN7-16	R7-9 MOD	NO PARKING	MCK 17+25 LT	12"	18"	III OR IV	SIGN DETAIL									INSTALL BELOW RELOCATED SIGN #SE7-L9
SN7-17	R7-9 MOD	NO PARKING	MCK 16+27 RT	12"	18"	III OR IV	SIGN DETAIL									INSTALL BELOW RELOCATED SIGN #SE7-L12 SEE NOTE #6
SN7-18	R7-9 MOD	NO PARKING	MCK 14+54 LT	12"	18"	III OR IV	SIGN DETAIL	LT STD						7'		SEE NOTE #6
SN8-1	I2-301 MOD	SOUND TRANSIT NEXT RIGHT	I5SB 566+25 LT	30"	36"	*	SIGN DETAIL	LT STD						7'		SEE NOTE #6
SN8-2	R7-2A MOD	NO PARKING TOW AWAY ZONE	I5NB 174+24 RT	24"	36"	III or IV	SIGN DETAIL	LT STD						7'		SEE NOTE #6

CONSTRUCTION NOTES:

THE FIRST PART OF THE SIGN NUMBER IS THE SHEET NUMBER, THE SECOND NUMBER IS THE SIGN ON THAT SHEET.
FOR CODE REFERENCES AND STANDARD DETAILS SEE WASHINGTON STATE SIGN FABRICATION MANUAL UNLESS OTHERWISE NOTED.
ALL SINGLE POST SIGNS OVER 36" SHALL HAVE BRACING (SEE STANDARD PLAN G-50.10)
ALL W BEAM STEEL POSTS SHALL BE ASTM A36 STEEL.
USE STEEL SIGN SUPPORT TYPE ST-4 (SEE STANDARD PLAN G-24.50), UNLESS OTHERWISE NOTED.
WHEN SIGN IS PLACED BEHIND CURB THE V-DIMENSION SHALL BE MEASURED FROM THE TOP OF THE CURB AND THE W-DIMENSION SHALL BE MEASURED FROM THE FACE OF CURB CLOSEST TO THE DIRECTION OF TRAFFIC THE SIGN IS FACING.
WHEN SIGN IS PLACED BEHIND BARRIER OR WALL IN A CUT SECTION THE V-DIMENSION AND W-DIMENSION SHALL BE MEASURED FROM THE TOP FACE OF THE BARRIER OR WALL.
*: TYPE II BACKGROUND; TYPE III OR IV FOR LETTERS BORDERS AND SYMBOLS.
**: TYPE III OR IV BACKGROUND; TYPE VIII OR IX FOR LETTERS BORDERS AND SYMBOLS.

FOR TYPE ST-4, SB-1, SB-2 AND SB-3 SIGN SUPPORT, THE CONTRACTOR MAY USE COMMERCIAL CONCRETE.
1: USE STEEL SIGN SUPPORT TYPE SB-1 (SEE STANDARD PLAN G-24.40)
2: ADD 7' SLEEVE OF 12 GA. 2 1/4" POST (INSIDE 2 1/2" POST); USE STEEL SIGN SUPPORT TYPE SB-1 (SEE STANDARD PLAN G-24.40)
3: USE 7 GA. 3" SQUARE STEEL POST WITH SB-1 AND 10" TRIANGULAR SLIP BASE; INSTALL IN ACCORDANCE WITH STANDARD PLAN G-24.40.
4: USE STEEL SIGN SUPPORT TP-A OR TP-B (SEE STANDARD PLAN G-24.60)
5: OUTSIDE POSTS SHALL BE A MINIMUM OF 7' APART. EXTEND WIND BEAM TO END OF SIGN.
6: SEE STANDARD PLAN G-30.10 FOR LIGHT AND SIGNAL STANDARD MOUNTING DETAILS.

LEGEND

	(EXISTING LOCATION)
L#	EXISTING SIGN TO BE RELOCATED
	(NEW LOCATION)
R-#	EXISTING SIGN ASSEMBLY TO BE REMOVED
	NEW SIGN ASSEMBLY
	EXISTING SIGN ASSEMBLY
	EXISTING SIGN ASSEMBLY (NOT INCLUDED IN PROJECT)
	NEW OVERHEAD SIGN
	EXISTING OVERHEAD SIGN
	EXISTING OVERHEAD SIGN (NOT INCLUDED IN PROJECT)
	NEW SIGN BRIDGE POST WITH TEMPORARY 14' BEAM
	NEW CANTIEVER (MONOTUBE)
	NEW SIGN BRIDGE (MONOTUBE)
	EXISTING CANTILEVER (TRUSS)
	EXISTING SIGN BRIDGE (TRUSS)
	EXISTING SIGN BRIDGE (MONOTUBE)
	EXISTING SIGN BRIDGE (NOT INCLUDED IN PROJECT)
	RETAINING WALL
	EXISTING RETAINING WALL
	CONCRETE BARRIER
	PRECAST CONCRETE BARRIER
	GUARDRAIL
	EXISTING GUARDRAIL

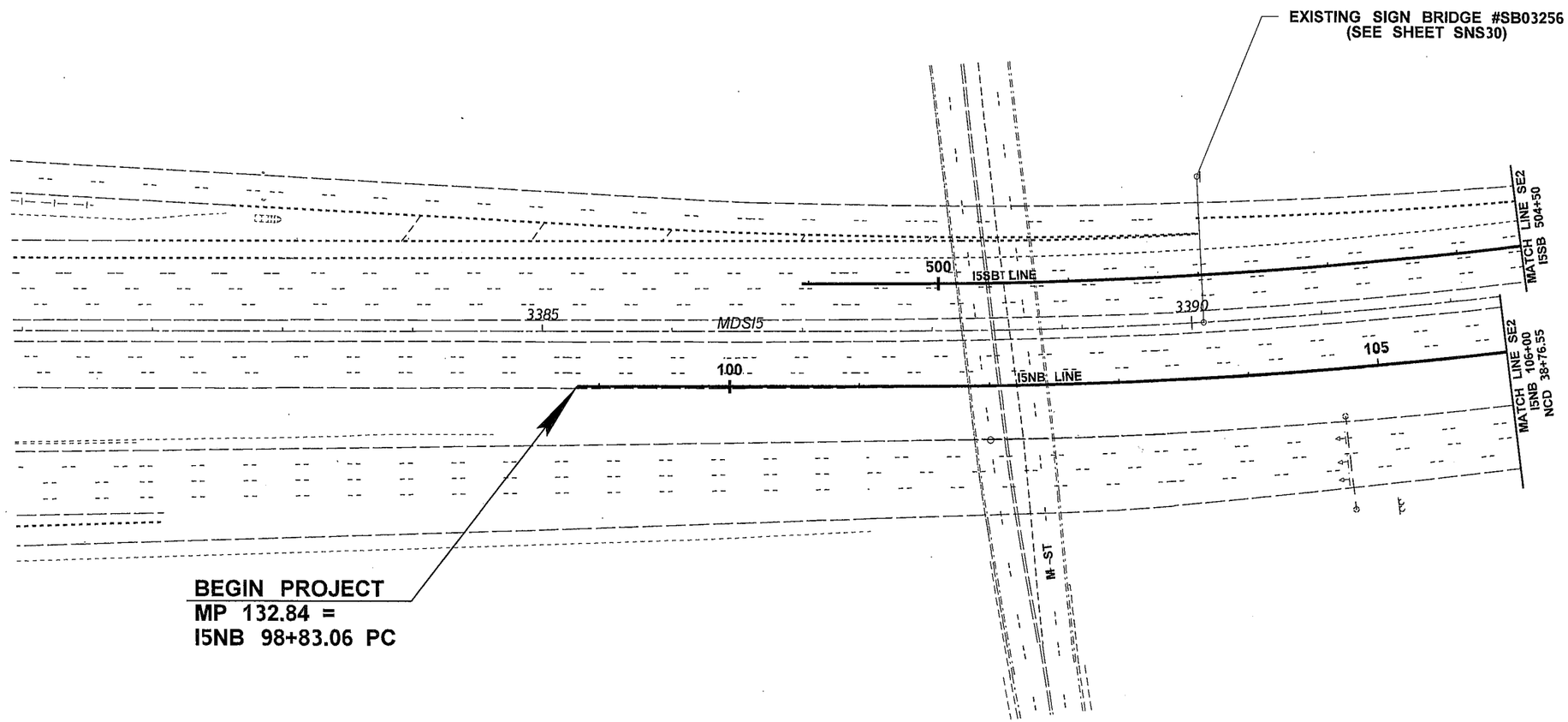

0 50 100
SCALE IN FEET

NOTE
1. SIGN SYMBOLS ARE NOT TO SCALE.
2. SIGN DETAILS ARE NOT TO SCALE.

SHEET SE1A INTENTIONALLY OMITTED

FILE NAME	PW:_XL3497\PS&E Sheets\Signing\Sign Removal Plans\pXL3497_SH_SN_REM 1.dgn			
TIME	11:18:51 AM			
DATE	2/18/2014			
PLOTTED BY	blakelf			
DESIGNED BY	F. BLAKELY			
ENTERED BY	F. BLAKELY			
CHECKED BY	J.VARADY			
PROJ. ENGR.	J. PEREZ			
REGIONAL ADM.	K. DAYTON	REVISION	DATE	BY

REGION NO.	STATE	FED.AID PROJ.NO.
10	WASH	
JOB NUMBER		
CONTRACT NO.		LOCATION NO.

DENNIS RAY CRUMBLEY, STATE OF WASHINGTON, 38765, REGISTERED PROFESSIONAL ENGINEER
2/18/14
DATE
P.E. STAMP BOX

DATE
P.E. STAMP BOX

Washington State Department of Transportation

I-5
M ST TO PORTLAND AVE - HOV

SIGN REMOVAL PLAN

PLAN REF NO
SE1

SHEET 1206 OF 1763 SHEETS

LEGEND

L#	(EXISTING LOCATION)
	EXISTING SIGN TO BE RELOCATED
	(NEW LOCATION)
R-#	EXISTING SIGN ASSEMBLY TO BE REMOVED
	NEW SIGN ASSEMBLY
	EXISTING SIGN ASSEMBLY
	EXISTING SIGN ASSEMBLY (NOT INCLUDED IN PROJECT)
	NEW OVERHEAD SIGN
	EXISTING OVERHEAD SIGN
	EXISTING OVERHEAD SIGN (NOT INCLUDED IN PROJECT)
	NEW SIGN BRIDGE POST WITH TEMPORARY 14' BEAM
	NEW CANTIEVER (MONOTUBE)
	NEW SIGN BRIDGE (MONOTUBE)
	EXISTING CANTILEVER (TRUSS)
	EXISTING SIGN BRIDGE (TRUSS)
	EXISTING SIGN BRIDGE (MONOTUBE)
	EXISTING SIGN BRIDGE (NOT INCLUDED IN PROJECT)
	RETAINING WALL
	EXISTING RETAINING WALL
	CONCRETE BARRIER
	PRECAST CONCRETE BARRIER
	GUARDRAIL
	EXISTING GUARDRAIL

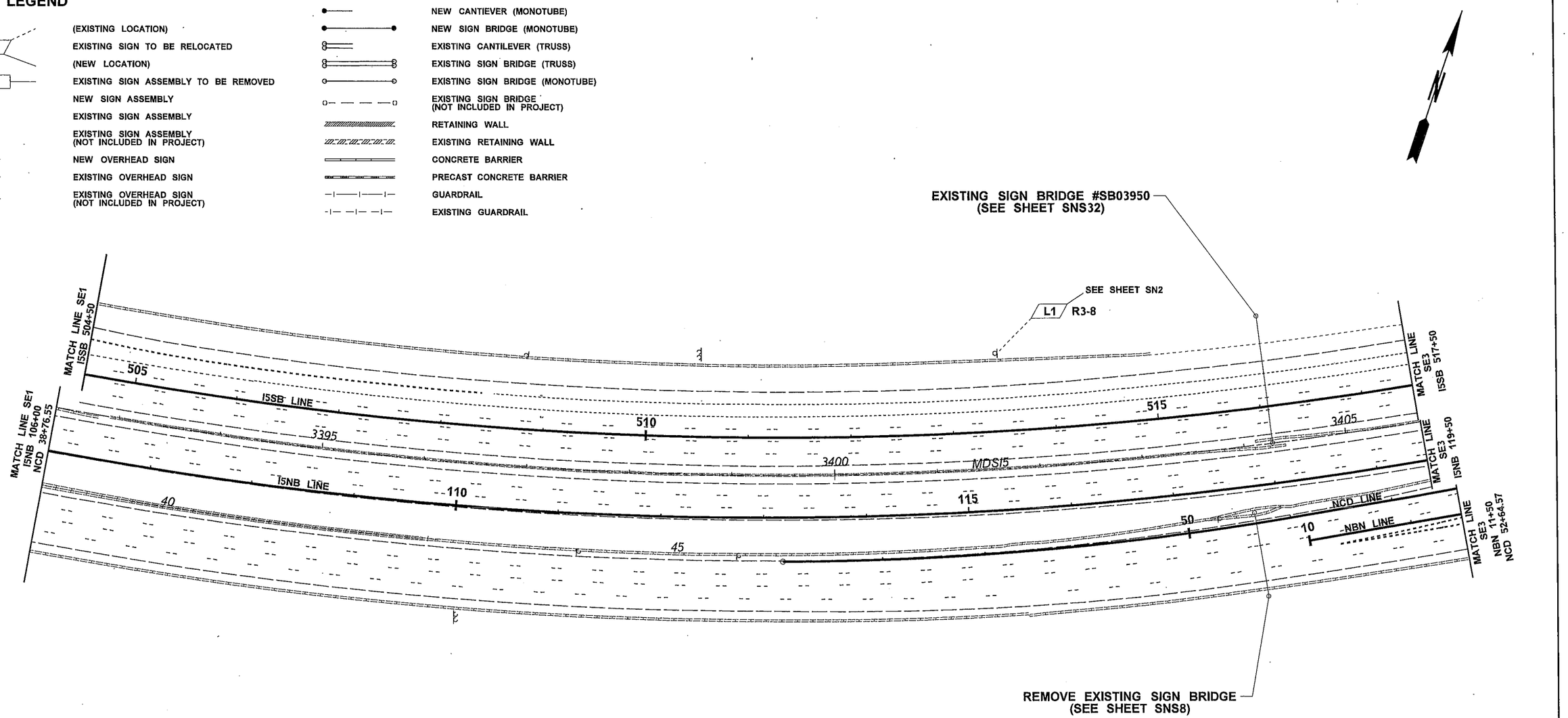

0 50 100
SCALE IN FEET

NOTE
1. SIGN SYMBOLS ARE NOT TO SCALE.
2. SIGN DETAILS ARE NOT TO SCALE.

FILE NAME	PW:_XL3497\PS&E Sheets\Signing\Sign Removal Plans\pXL3497_SH_SN_REM 2.dgn				REGION NO.	STATE	FED.AID PROJ.NO.		
TIME	11:19:02 AM				10	WASH			
DATE	2/18/2014				JOB NUMBER				
PLOTTED BY	blakelf				12C501				
DESIGNED BY	F. BLAKELY				CONTRACT NO.		LOCATION NO.		
ENTERED BY	F. BLAKELY						XL3497		
CHECKED BY	J.VARADY								
PROJ. ENGR.	J. PEREZ								
REGIONAL ADM.	K. DAYTON	REVISION	DATE	BY					

DENNIS RAY CRUMBLEY, STATE OF WASHINGTON, REGISTERED PROFESSIONAL ENGINEER
2/18/14
DATE
P.E. STAMP BOX

DATE
P.E. STAMP BOX

Washington State Department of Transportation

I-5
M ST TO PORTLAND AVE - HOV

SIGN REMOVAL PLAN

PLAN REF NO
SE2

SHEET 1207 OF 1763 SHEETS

LEGEND

- (EXISTING LOCATION)
- L# — EXISTING SIGN TO BE RELOCATED
- (NEW LOCATION)
- L# / TCS#-# — EXISTING SIGN TO BE RELOCATED AND PREVIOUS STAGE SIGN NUMBER
- R-# — EXISTING SIGN ASSEMBLY TO BE REMOVED
- NEW SIGN ASSEMBLY
- EXISTING SIGN ASSEMBLY
- EXISTING SIGN ASSEMBLY (NOT INCLUDED IN PROJECT)
- NEW OVERHEAD SIGN
- EXISTING OVERHEAD SIGN
- EXISTING OVERHEAD SIGN (NOT INCLUDED IN PROJECT)
- NEW SIGN BRIDGE POST WITH TEMPORARY 14' BEAM
- NEW CANTIEVER (MONOTUBE)
- NEW SIGN BRIDGE (MONOTUBE)
- EXISTING CANTILEVER (TRUSS)
- EXISTING SIGN BRIDGE (TRUSS)
- EXISTING SIGN BRIDGE (MONOTUBE)
- EXISTING SIGN BRIDGE (NOT INCLUDED IN PROJECT)
- RETAINING WALL
- EXISTING RETAINING WALL
- CONCRETE BARRIER
- PRECAST CONCRETE BARRIER
- GUARDRAIL
- EXISTING GUARDRAIL

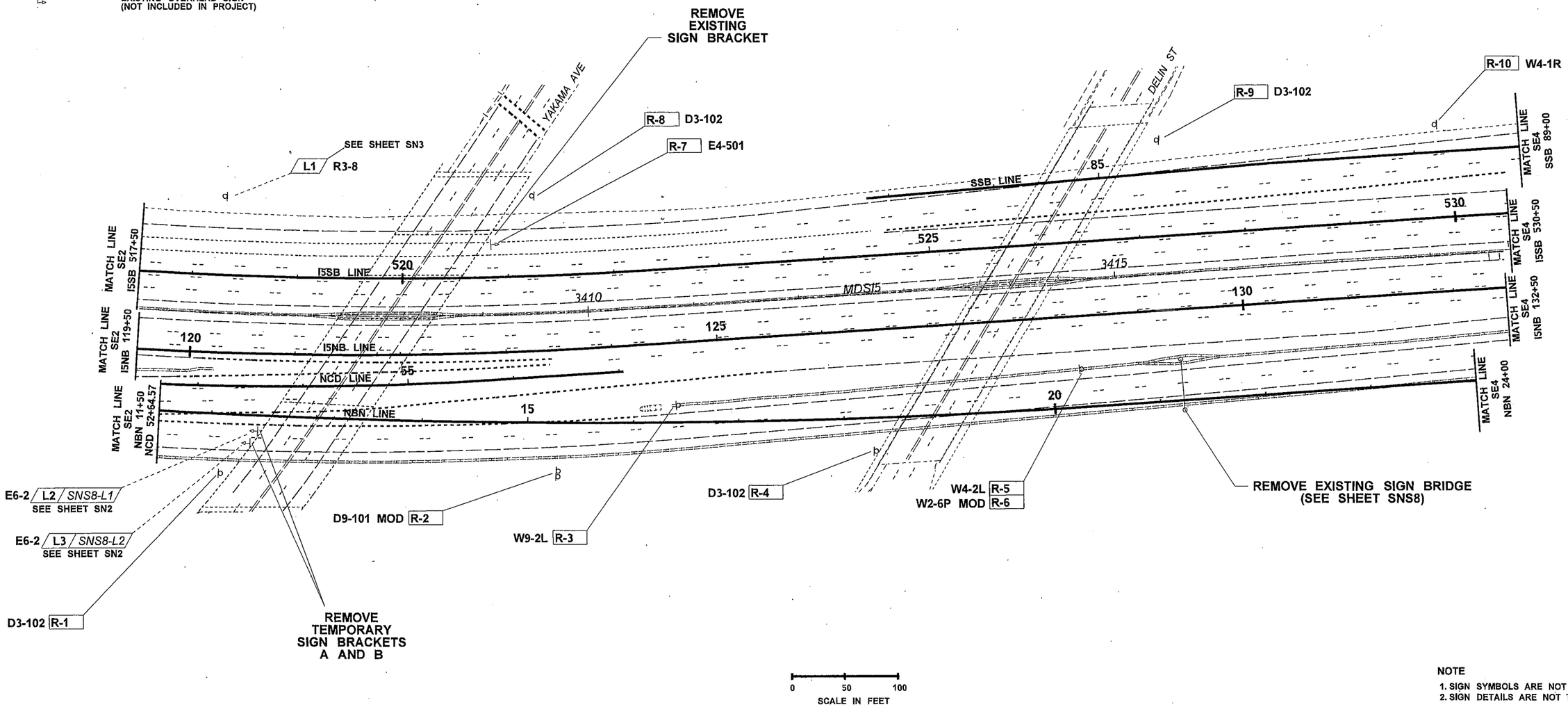

NOTE
1. SIGN SYMBOLS ARE NOT TO SCALE.
2. SIGN DETAILS ARE NOT TO SCALE.

FILE NAME	PW:_XL3497\PS&E Sheets\Signing\Sign Removal Plans\pXL3497_SH_SN_REM 3.dgn					
TIME	11:19:12 AM					
DATE	2/18/2014					
PLOTTED BY	blakelf					
DESIGNED BY	F. BLAKLEY					
ENTERED BY	F. BLAKLEY					
CHECKED BY	J.VARADY					
PROJ. ENGR.	J. PEREZ					
REGIONAL ADM.	K. DAYTON	REVISION	DATE	BY		

REGION NO.	STATE	FED.AID PROJ.NO.
10	WASH	
JOB NUMBER 12C501		
CONTRACT NO.		LOCATION NO. XL3497

DENNIS RAY CRUMBAY — STATE OF WASHINGTON — 38158 — REGISTERED PROFESSIONAL ENGINEER
2/18/14
DATE
P.E. STAMP BOX

DATE
P.E. STAMP BOX

Washington State Department of Transportation

I-5
M ST TO PORTLAND AVE- HOV

SIGN REMOVAL PLAN

PLAN REF NO SE3

SHEET 1208 OF 1763 SHEETS

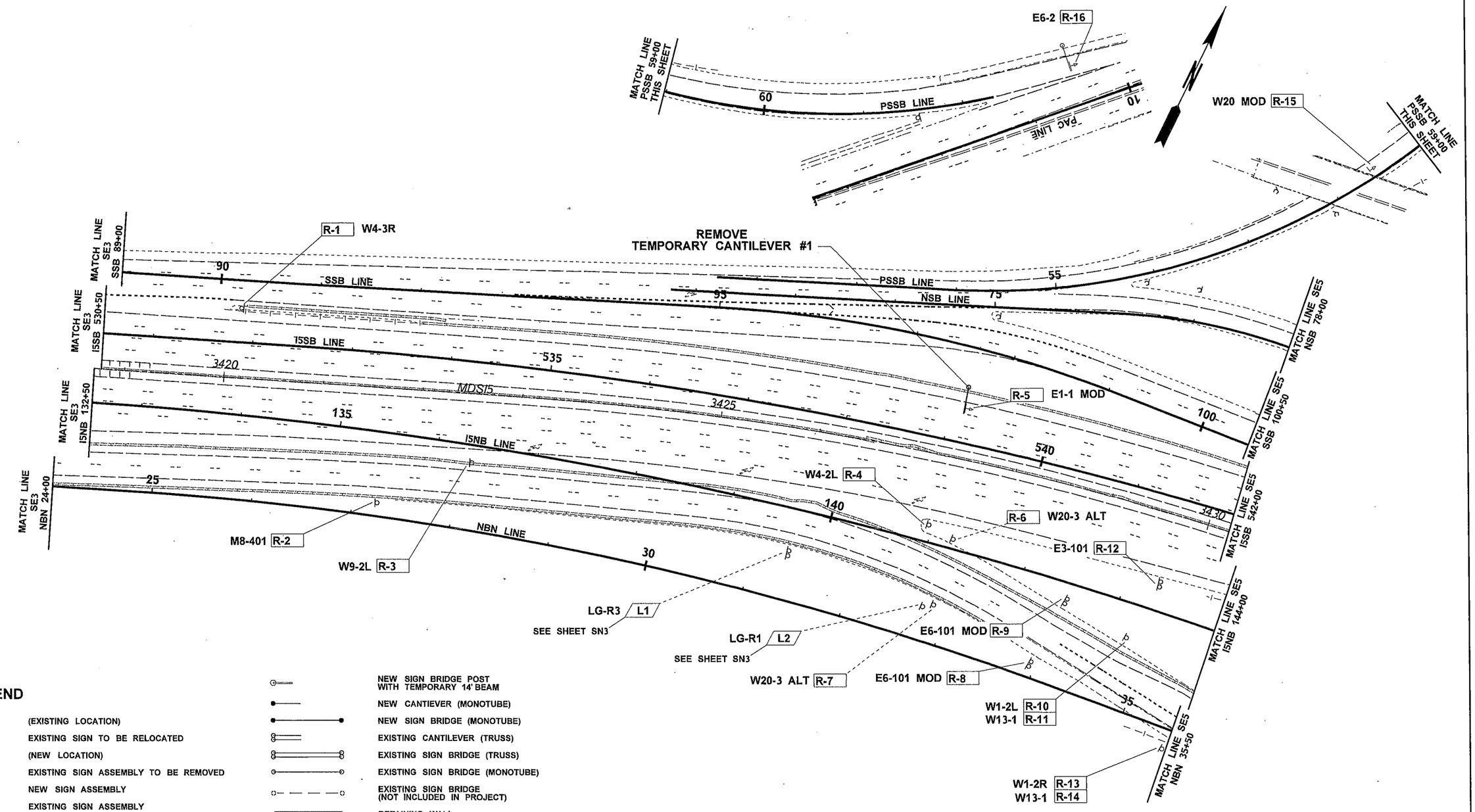

LEGEND

- (EXISTING LOCATION)
- L# — EXISTING SIGN TO BE RELOCATED
- (NEW LOCATION)
- R-# — EXISTING SIGN ASSEMBLY TO BE REMOVED
- NEW SIGN ASSEMBLY
- EXISTING SIGN ASSEMBLY
- EXISTING SIGN ASSEMBLY (NOT INCLUDED IN PROJECT)
- NEW OVERHEAD SIGN
- EXISTING OVERHEAD SIGN
- EXISTING OVERHEAD SIGN (NOT INCLUDED IN PROJECT)
- NEW SIGN BRIDGE POST WITH TEMPORARY 14' BEAM
- NEW CANTIEVER (MONOTUBE)
- NEW SIGN BRIDGE (MONOTUBE)
- EXISTING CANTILEVER (TRUSS)
- EXISTING SIGN BRIDGE (TRUSS)
- EXISTING SIGN BRIDGE (MONOTUBE)
- EXISTING SIGN BRIDGE (NOT INCLUDED IN PROJECT)
- RETAINING WALL
- EXISTING RETAINING WALL
- CONCRETE BARRIER
- PRECAST CONCRETE BARRIER
- GUARDRAIL
- EXISTING GUARDRAIL

NOTE
1. SIGN SYMBOLS ARE NOT TO SCALE.
2. SIGN DETAILS ARE NOT TO SCALE.

FILE NAME	PW:_XL3497\PS&E Sheets\Signing\Sign Removal Plans\pXL3497_SH_SN_REM 4.dgn				REGION NO. 10	STATE WASH	FED.AID PROJ.NO.
TIME	11:19:25 AM				JOB NUMBER 12C501		
DATE	2/18/2014				CONTRACT NO.		LOCATION NO. XL3497
PLOTTED BY	blakelf						
DESIGNED BY	F. BLAKELY						
ENTERED BY	F. BLAKELY						
CHECKED BY	J.VARADY						
PROJ. ENGR.	J. PEREZ						
REGIONAL ADM.	K. DAYTON	REVISION	DATE	BY			

DENIS RAY CRUMBAUGH — STATE OF WASHINGTON — REGISTERED PROFESSIONAL ENGINEER
2/18/14
DATE
P.E. STAMP BOX

DATE
P.E. STAMP BOX

Washington State Department of Transportation

I-5
M ST TO PORTLAND AVE - HOV

SIGN REMOVAL PLAN

PLAN REF NO SE4

SHEET 1209 OF 1763 SHEETS

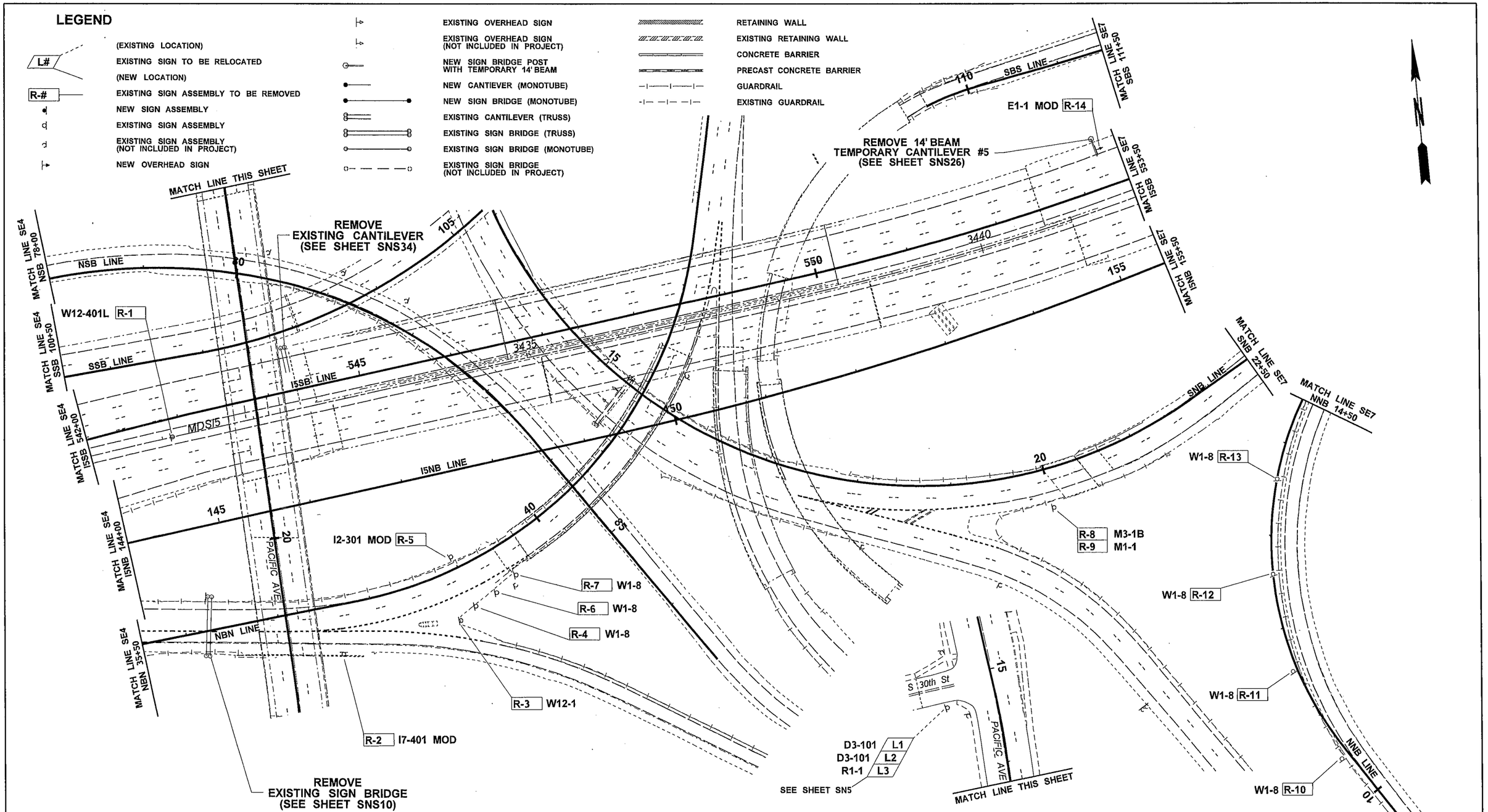

NOTE
1. SIGN SYMBOLS ARE NOT TO SCALE.
2. SIGN DETAILS ARE NOT TO SCALE.

SHEET SE5A, SE5B, SE6, SE6A INTENTIONALLY OMITTED

FILE NAME	PW:_XL3497\PS&E Sheets\Signing\Sign Removal Plans\pXL3497_SH_SN_REM 5.dgn			
TIME	11:19:36 AM			
DATE	2/18/2014			
PLOTTED BY	blakelf			
DESIGNED BY	F. BLAKELY			
ENTERED BY	F. BLAKELY			
CHECKED BY	J.VARADY			
PROJ. ENGR.	J. PEREZ			
REGIONAL ADM.	K. DAYTON	REVISION	DATE	BY

REGION NO.	STATE	FED.AID PROJ.NO.
10	WASH	
JOB NUMBER 12C501		
CONTRACT NO.		LOCATION NO. XL3497

DENNIS RAY CRUMBLEY, STATE OF WASHINGTON, REGISTERED PROFESSIONAL ENGINEER
2/18/14
DATE
P.E. STAMP BOX

DATE
P.E. STAMP BOX

Washington State Department of Transportation

I-5
M ST TO PORTLAND AVE - HOV

SIGN REMOVAL PLAN

PLAN REF NO SE5

SHEET 1210 OF 1763 SHEETS

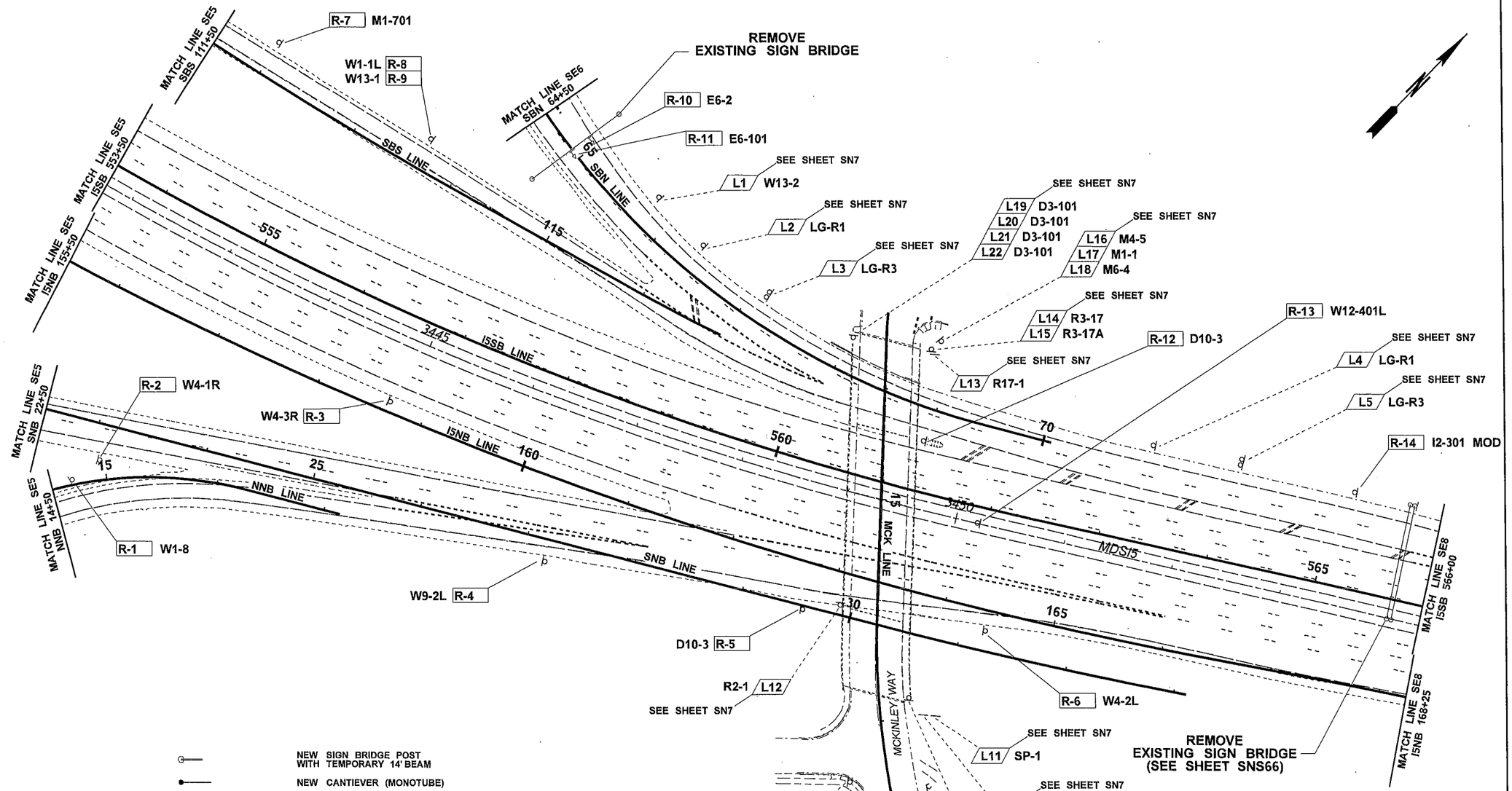

LEGEND

- (EXISTING LOCATION)
- L# — EXISTING SIGN TO BE RELOCATED
- (NEW LOCATION)
- R-# — EXISTING SIGN ASSEMBLY TO BE REMOVED
- NEW SIGN ASSEMBLY
- EXISTING SIGN ASSEMBLY
- EXISTING SIGN ASSEMBLY (NOT INCLUDED IN PROJECT)
- NEW OVERHEAD SIGN
- EXISTING OVERHEAD SIGN
- EXISTING OVERHEAD SIGN (NOT INCLUDED IN PROJECT)
- NEW SIGN BRIDGE POST WITH TEMPORARY 14' BEAM
- NEW CANTIEVER (MONOTUBE)
- NEW SIGN BRIDGE (MONOTUBE)
- EXISTING CANTILEVER (TRUSS)
- EXISTING SIGN BRIDGE (TRUSS)
- EXISTING SIGN BRIDGE (MONOTUBE)
- EXISTING SIGN BRIDGE (NOT INCLUDED IN PROJECT)
- RETAINING WALL
- EXISTING RETAINING WALL
- CONCRETE BARRIER
- PRECAST CONCRETE BARRIER
- GUARDRAIL
- EXISTING GUARDRAIL

0 50 100
SCALE IN FEET

NOTE
1. SIGN SYMBOLS ARE NOT TO SCALE.
2. SIGN DETAILS ARE NOT TO SCALE.

FILE NAME	PW:_XL3497\PS&E Sheets\Signing\Sign Removal Plans\pXL3497_SH_SN_REM 7.dgn				REGION NO. 10	STATE WASH	FED.AID PROJ.NO.
TIME	11:19:47 AM				JOB NUMBER 12C501		
DATE	2/18/2014				CONTRACT NO.		LOCATION NO. XL3497
PLOTTED BY	blakelf						
DESIGNED BY	F. BLAKELY						
ENTERED BY	F. BLAKELY						
CHECKED BY	J.VARADY						
PROJ. ENGR.	J. PEREZ						
REGIONAL ADM.	K. DAYTON	REVISION	DATE	BY			

DENNIS RAY CRUMBAKER — STATE OF WASHINGTON — REGISTERED PROFESSIONAL ENGINEER
2/18/14
DATE
P.E. STAMP BOX

DATE
P.E. STAMP BOX

Washington State
Department of Transportation

I-5
M ST TO PORTLAND AVE - HOV

SIGN REMOVAL PLAN

PLAN REF NO
SE7

SHEET 1211 OF 1763 SHEETS

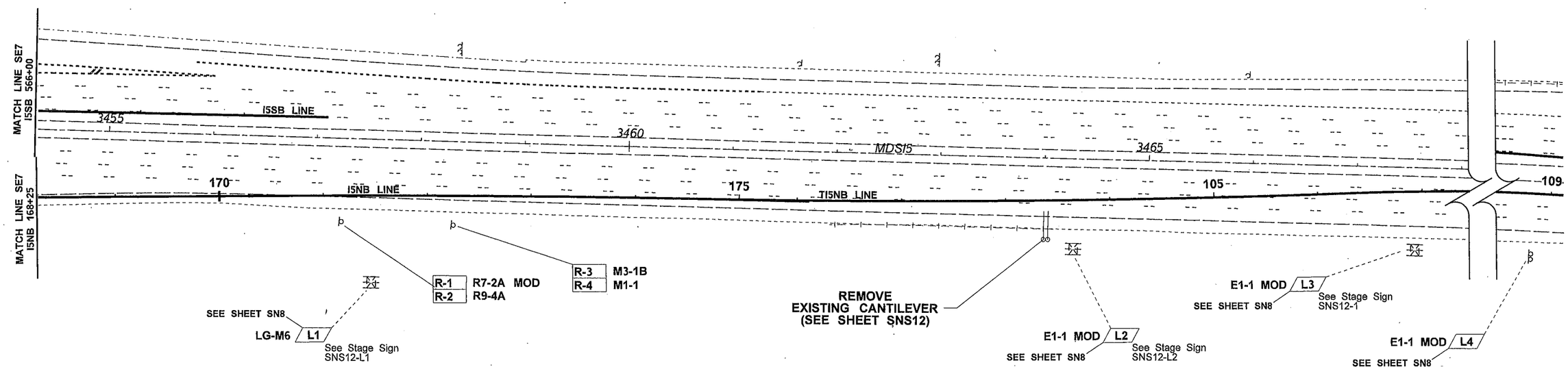

LEGEND

- (EXISTING LOCATION)
- L# — EXISTING SIGN TO BE RELOCATED
- (NEW LOCATION)
- R-# — EXISTING SIGN ASSEMBLY TO BE REMOVED
- NEW SIGN ASSEMBLY
- EXISTING SIGN ASSEMBLY
- EXISTING SIGN ASSEMBLY (NOT INCLUDED IN PROJECT)
- NEW OVERHEAD SIGN
- EXISTING OVERHEAD SIGN
- EXISTING OVERHEAD SIGN (NOT INCLUDED IN PROJECT)
- NEW SIGN BRIDGE POST WITH TEMPORARY 14' BEAM
- NEW CANTIEVER (MONOTUBE)
- NEW SIGN BRIDGE (MONOTUBE)
- EXISTING CANTILEVER (TRUSS)
- EXISTING SIGN BRIDGE (TRUSS)
- EXISTING SIGN BRIDGE (MONOTUBE)
- EXISTING SIGN BRIDGE (NOT INCLUDED IN PROJECT)
- RETAINING WALL
- EXISTING RETAINING WALL
- CONCRETE BARRIER
- PRECAST CONCRETE BARRIER
- GUARDRAIL
- EXISTING GUARDRAIL

0 50 100
SCALE IN FEET

NOTE
1. SIGN SYMBOLS ARE NOT TO SCALE.
2. SIGN DETAILS ARE NOT TO SCALE.

SHEET SE9, SE10, SE11 INTENTIONALLY OMITTED

FILE NAME	PW:_XL3497\PS&E Sheets\Signing\Sign Removal Plans\pXL3497_SH_SN_REM 8.dgn
TIME	11:19:57 AM
DATE	2/18/2014
PLOTTED BY	blakelf
DESIGNED BY	F. BLAKELY
ENTERED BY	F. BLAKELY
CHECKED BY	J.VARADY
PROJ. ENGR.	J. PEREZ
REGIONAL ADM.	K. DAYTON

REVISION | DATE | BY

REGION NO.	STATE	FED.AID PROJ.NO.
10	WASH	
JOB NUMBER 12C501		
CONTRACT NO.		LOCATION NO. XL3497

DENNIS RAY CRUMBLEY STATE OF WASHINGTON REGISTERED PROFESSIONAL ENGINEER
2/18/14
DATE
P.E. STAMP BOX

DATE
P.E. STAMP BOX

Washington State Department of Transportation

I-5
M ST TO PORTLAND AVE - HOV

SIGN REMOVAL PLAN

PLAN REF NO SE8

SHEET 1212 OF 1763 SHEETS

LEGEND

#	NEW SIGN
	(EXISTING LOCATION)
L#	EXISTING SIGN TO BE RELOCATED
	(NEW LOCATION)
	NEW SIGN ASSEMBLY
	EXISTING SIGN ASSEMBLY
	EXISTING SIGN ASSEMBLY (NOT INCLUDED IN PROJECT)
	NEW OVERHEAD SIGN
	EXISTING OVERHEAD SIGN
	EXISTING OVERHEAD SIGN (NOT INCLUDED IN PROJECT)
	EXISTING TEMPORARY PORATABLE SIGN MOUNT
	NEW SIGN BRIDGE POST WITH TEMPORARY 14' BEAM
	NEW CANTIEVER (MONOTUBE)
	NEW SIGN BRIDGE (MONOTUBE)
	EXISTING CANTILEVER (TRUSS)
	EXISTING SIGN BRIDGE (TRUSS)
	EXISTING SIGN BRIDGE (MONOTUBE)
	EXISTING SIGN BRIDGE (NOT INCLUDED IN PROJECT)
	RETAINING WALL
	EXISTING RETAINING WALL
	CONCRETE BARRIER
	PRECAST CONCRETE BARRIER
	GUARDRAIL
	EXISTING GUARDRAIL

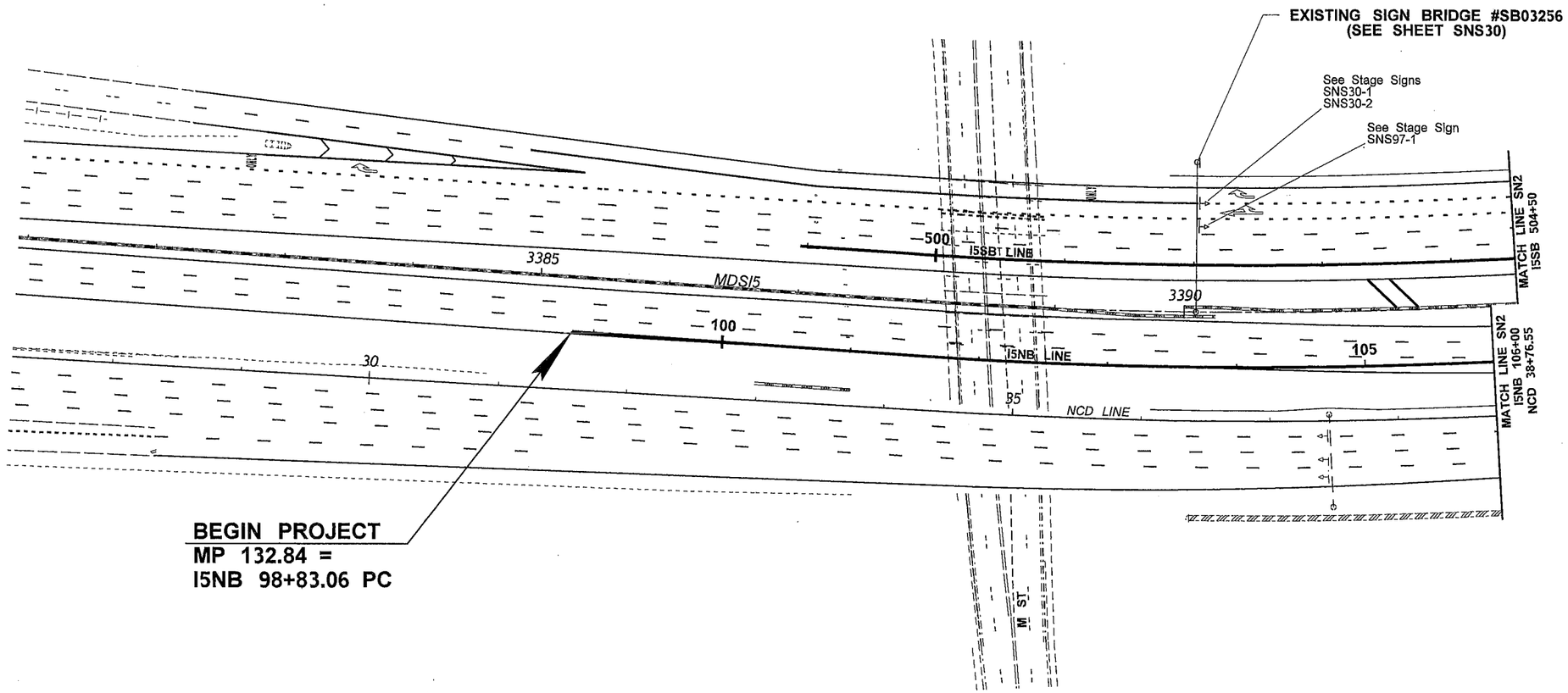

0 50 100
SCALE IN FEET

NOTE
1. SIGN SYMBOLS ARE NOT TO SCALE.
2. SIGN DETAILS ARE NOT TO SCALE.

SHEET SN1A INTENTIONALLY OMITTED

FILE NAME	PW:_XL3497\PS&E Sheets\Signing\pXL3497_SH_SN_10.dgn
TIME	11:20:09 AM
DATE	2/18/2014
PLOTTED BY	blakelf
DESIGNED BY	F. BLAKELY
ENTERED BY	F. BLAKELY
CHECKED BY	J. VARADY
PROJ. ENGR.	J. PEREZ
REGIONAL ADM.	K. DAYTON

REVISION	DATE	BY

REGION NO.	STATE	FED.AID PROJ.NO.
10	WASH	
JOB NUMBER 12C501		
CONTRACT NO.		LOCATION NO. XL3497

DENNIS RAY CRUMBLEY, STATE OF WASHINGTON, REGISTERED PROFESSIONAL ENGINEER
2/18/14
DATE
P.E. STAMP BOX

DATE
P.E. STAMP BOX

Washington State Department of Transportation

I-5
M ST TO PORTLAND AVE - HOV

SIGN PLAN

PLAN REF NO SN1

SHEET 1213 OF 1763 SHEETS

LEGEND

#	NEW SIGN
	(EXISTING LOCATION)
L#	EXISTING SIGN TO BE RELOCATED
	(NEW LOCATION)
	NEW SIGN ASSEMBLY
	EXISTING SIGN ASSEMBLY
	EXISTING SIGN ASSEMBLY (NOT INCLUDED IN PROJECT)
	NEW OVERHEAD SIGN
	EXISTING OVERHEAD SIGN
	EXISTING OVERHEAD SIGN (NOT INCLUDED IN PROJECT)
	EXISTING TEMPORARY PORATABLE SIGN MOUNT
	NEW SIGN BRIDGE POST WITH TEMPORARY 14' BEAM
	NEW CANTIEVER (MONOTUBE)
	NEW SIGN BRIDGE (MONOTUBE)
	EXISTING CANTILEVER (TRUSS)
	EXISTING SIGN BRIDGE (TRUSS)
	EXISTING SIGN BRIDGE (MONOTUBE)
	EXISTING SIGN BRIDGE (NOT INCLUDED IN PROJECT)
	RETAINING WALL
	EXISTING RETAINING WALL
	CONCRETE BARRIER
	PRECAST CONCRETE BARRIER
	GUARDRAIL
	EXISTING GUARDRAIL

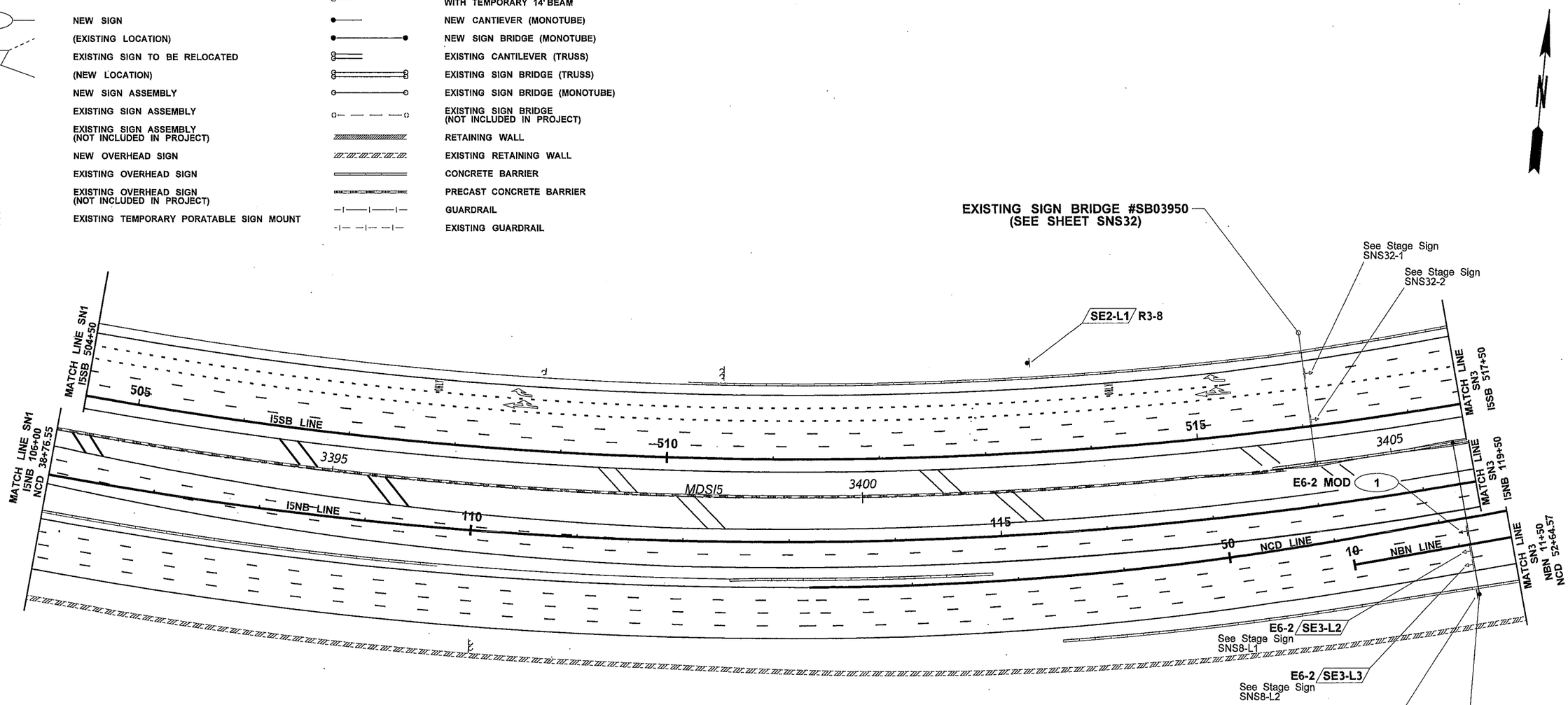

SIGN #1

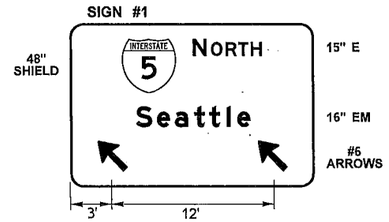

SIGN #2

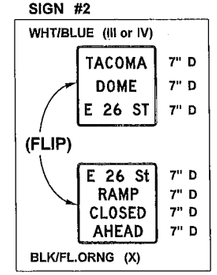

0 50 100
SCALE IN FEET

NOTE
1. SIGN SYMBOLS ARE NOT TO SCALE.
2. SIGN DETAILS ARE NOT TO SCALE.

FILE NAME	PW:_XL3497\PS&E Sheets\Signing\ADD1_pXL3497_SH_SN_11.dgn				REGION NO. 10	STATE WASH	FED.AID PROJ.NO.
TIME	4:25:23 PM				JOB NUMBER 12C501		
DATE	4/16/2014				CONTRACT NO.		LOCATION NO. XL3497
PLOTTED BY	blakelf						
DESIGNED BY	F. BLAKELY						
ENTERED BY	E. DONLEY						
CHECKED BY	J. VARADY						
PROJ. ENGR.	J. PEREZ	AD1 - NOTE CHANGE	04/25/2014	FB			
REGIONAL ADM.	K. DAYTON	REVISION	DATE	BY			

DENNIS RAY CRUMMETT, STATE OF WASHINGTON, REGISTERED PROFESSIONAL ENGINEER
4/17/14
DATE
P.E. STAMP BOX

DATE
P.E. STAMP BOX

Washington State Department of Transportation

I-5
M ST TO PORTLAND AVE - HOV

SIGN PLAN

PLAN REF NO SN2

SHEET 1214 OF 1763 SHEETS

LEGEND

#	NEW SIGN
	(EXISTING LOCATION)
L#	EXISTING SIGN TO BE RELOCATED
	(NEW LOCATION)
	NEW SIGN ASSEMBLY
	EXISTING SIGN ASSEMBLY
	EXISTING SIGN ASSEMBLY (NOT INCLUDED IN PROJECT)
	NEW OVERHEAD SIGN
	EXISTING OVERHEAD SIGN
	EXISTING OVERHEAD SIGN (NOT INCLUDED IN PROJECT)
	EXISTING TEMPORARY PORATABLE SIGN MOUNT
	NEW SIGN BRIDGE POST WITH TEMPORARY 14' BEAM
	NEW CANTIEVER (MONOTUBE)
	NEW SIGN BRIDGE (MONOTUBE)
	EXISTING CANTILEVER (TRUSS)
	EXISTING SIGN BRIDGE (TRUSS)
	EXISTING SIGN BRIDGE (MONOTUBE)
	EXISTING SIGN BRIDGE (NOT INCLUDED IN PROJECT)
	RETAINING WALL
	EXISTING RETAINING WALL
	CONCRETE BARRIER
	PRECAST CONCRETE BARRIER
	GUARDRAIL
	EXISTING GUARDRAIL

SIGN #8

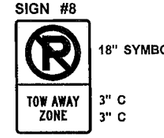

18" SYMBOL
3" C
3" C

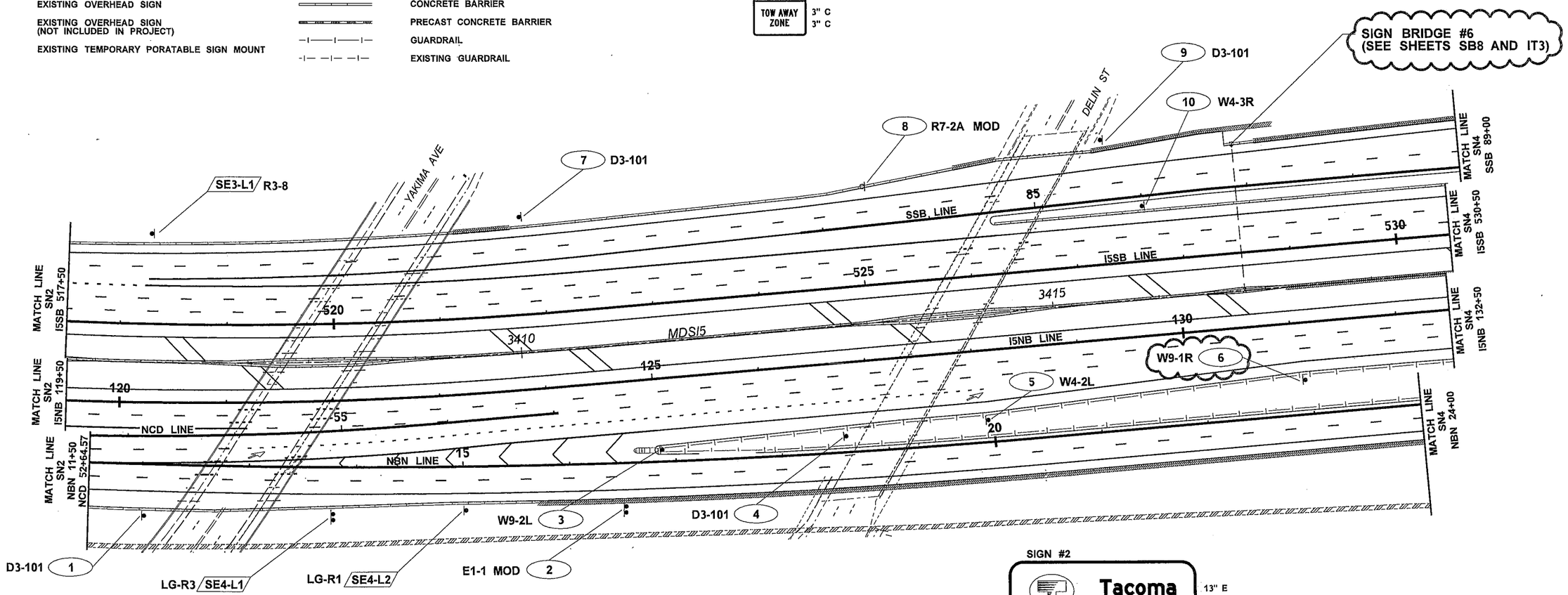

SIGN #4, 9

Delin St 8" D

SIGN #1, 7

Yakima Ave 8" D

SIGN #2

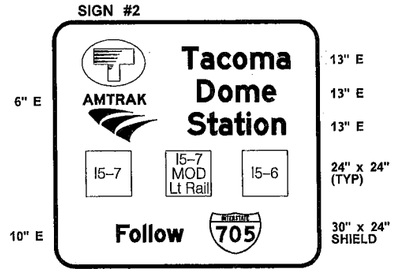

13" E
13" E
13" E
6" E
24" x 24" (TYP)
10" E
30" x 24" SHIELD

0 50 100
SCALE IN FEET

NOTE
1. SIGN SYMBOLS ARE NOT TO SCALE.
2. SIGN DETAILS ARE NOT TO SCALE.

FILE NAME	PW:_XL3497\PS&E Sheets\Signing\ADD1_pXL3497_SH_SN_12.dgn				REGION NO. 10	STATE WASH	FED.AID PROJ.NO.
TIME	4:25:36 PM				JOB NUMBER 12C501		
DATE	4/16/2014				CONTRACT NO.		LOCATION NO. XL3497
PLOTTED BY	blakelf						
DESIGNED BY	F. BLAKELY						
ENTERED BY	F. BLAKELY						
CHECKED BY	J. VARADY						
PROJ. ENGR.	J. PEREZ	AD1 NOTE CHANGE	04/25/2014	FB			
REGIONAL ADM.	K. DAYTON	REVISION	DATE	BY			

DENNIS RAY CRUMBER STATE OF WASHINGTON 38391 PROFESSIONAL ENGINEER
4/17/14
DATE
P.E. STAMP BOX

DATE
P.E. STAMP BOX

Washington State Department of Transportation

I-5
M ST TO PORTLAND AVE - HOV

SIGN PLAN

PLAN REF NO SN3

SHEET 1215 OF 1763 SHEETS

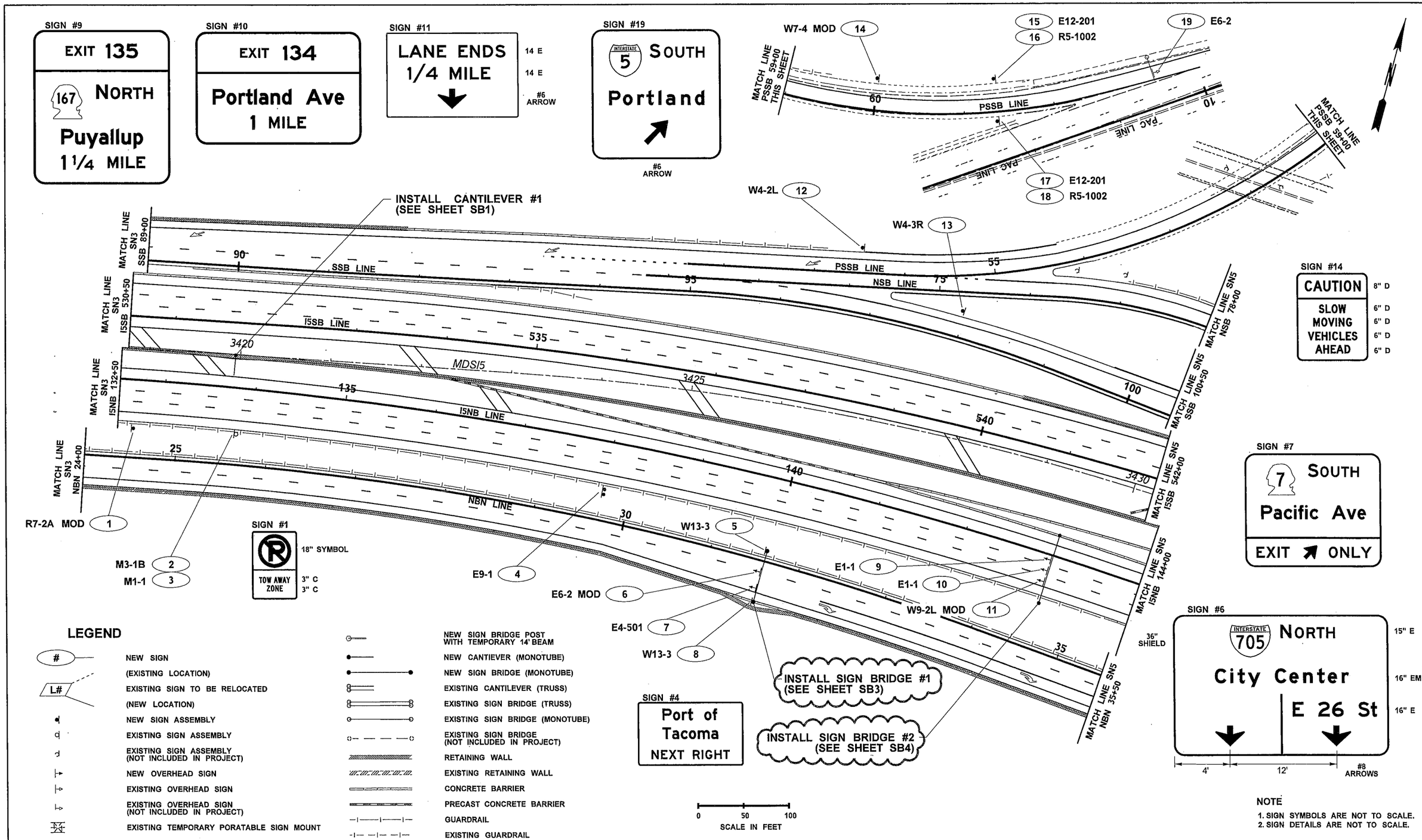

NOTE
1. SIGN SYMBOLS ARE NOT TO SCALE.
2. SIGN DETAILS ARE NOT TO SCALE.

FILE NAME	PW:_XL3497\PS&E Sheets\Signing\ADD1_pXL3497_SH_SN_13.dgn				REGION NO. 10	STATE WASH	FED.AID PROJ.NO.
TIME	4:25:51 PM						
DATE	4/16/2014						
PLOTTED BY	blakelf				JOB NUMBER 12C501		
DESIGNED BY	F. BLAKELY				CONTRACT NO.		
ENTERED BY	F. BLAKELY						
CHECKED BY	J. VARADY						
PROJ. ENGR.	J. PEREZ	AD1 - NOTE CHANGE	04/25/2014	FB			LOCATION NO. XL3497
REGIONAL ADM.	K. DAYTON	REVISION	DATE	BY			

DENNIS RAY CRUM, STATE OF WASHINGTON, REGISTERED PROFESSIONAL ENGINEER
4/17/14 DATE
P.E. STAMP BOX

DATE
P.E. STAMP BOX

Washington State Department of Transportation

I-5
M ST TO PORTLAND AVE - HOV

SIGN PLAN

PLAN REF NO SN4

SHEET 1216 OF 1763 SHEETS

LEGEND

#	NEW SIGN
	(EXISTING LOCATION)
L#	EXISTING SIGN TO BE RELOCATED
	(NEW LOCATION)
	NEW SIGN ASSEMBLY
	EXISTING SIGN ASSEMBLY
	EXISTING SIGN ASSEMBLY (NOT INCLUDED IN PROJECT)
	NEW OVERHEAD SIGN
	EXISTING OVERHEAD SIGN
	EXISTING OVERHEAD SIGN (NOT INCLUDED IN PROJECT)
	EXISTING TEMPORARY PORATABLE SIGN MOUNT
	NEW SIGN BRIDGE POST WITH TEMPORARY 14' BEAM
	NEW CANTIEVER (MONOTUBE)
	NEW SIGN BRIDGE (MONOTUBE)
	EXISTING CANTILEVER (TRUSS)
	EXISTING SIGN BRIDGE (TRUSS)
	EXISTING SIGN BRIDGE (MONOTUBE)
	EXISTING SIGN BRIDGE (NOT INCLUDED IN PROJECT)
	RETAINING WALL
	EXISTING RETAINING WALL
	CONCRETE BARRIER
	PRECAST CONCRETE BARRIER
	GUARDRAIL
	EXISTING GUARDRAIL

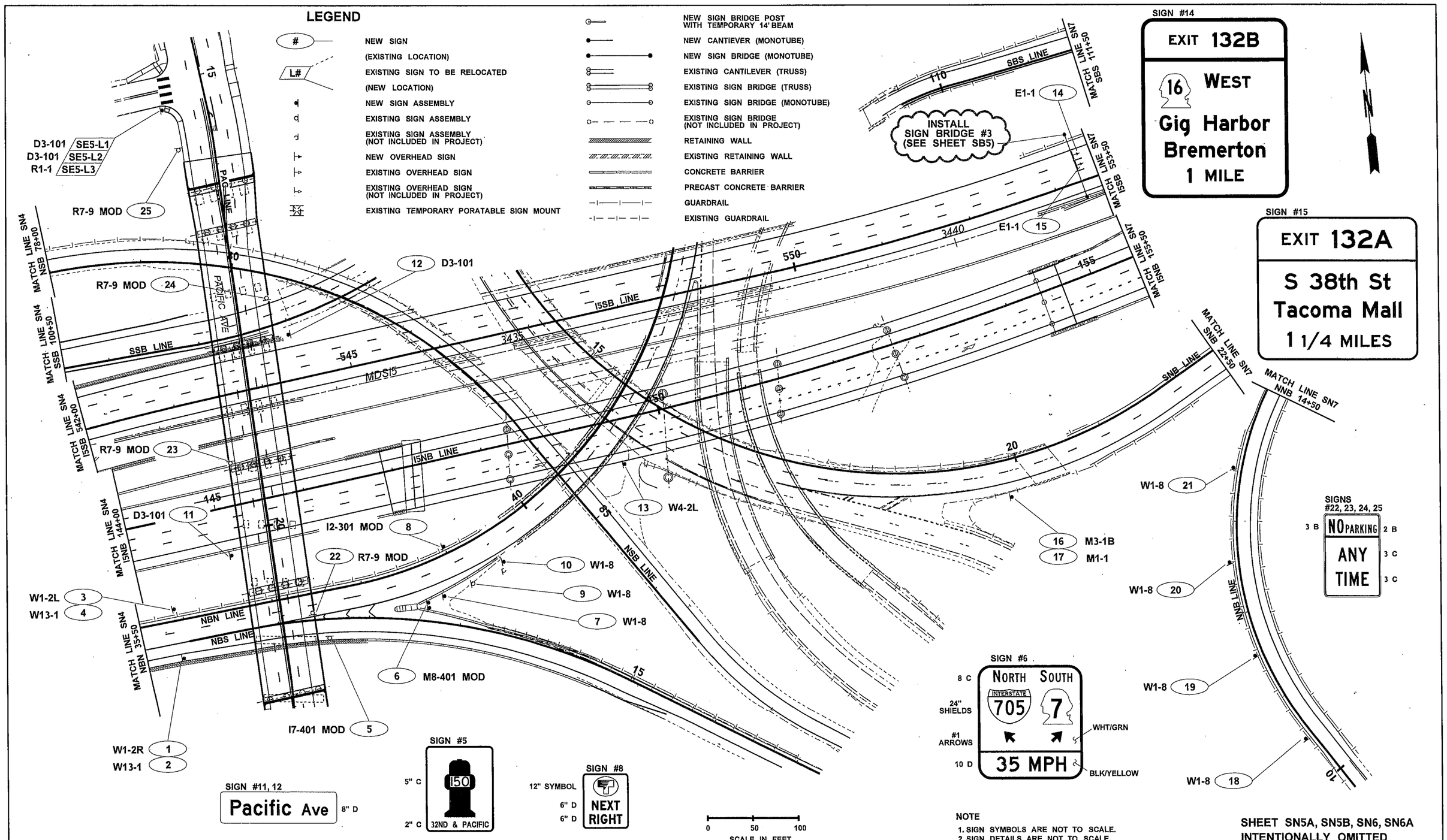

NOTE
1. SIGN SYMBOLS ARE NOT TO SCALE.
2. SIGN DETAILS ARE NOT TO SCALE.

SHEET SN5A, SN5B, SN6, SN6A INTENTIONALLY OMITTED

FILE NAME	PW:_XL3497\PS&E Sheets\Signing\ADD1_pXL3497_SH_SN_14.dgn				REGION NO. 10	STATE WASH	FED.AID PROJ.NO.
TIME	4:26:05 PM				JOB NUMBER 12C501		
DATE	4/16/2014				CONTRACT NO.		LOCATION NO. XL3497
PLOTTED BY	blakelf						
DESIGNED BY	F. BLAKELY						
ENTERED BY	F. BLAKELY						
CHECKED BY	J. VARADY						
PROJ. ENGR.	J. PEREZ	AD1 - NOTE CHANGE	04/25/14	FB			
REGIONAL ADM.	K. DAYTON	REVISION	DATE	BY			

DENNIS RAY CRUNDER, STATE OF WASHINGTON, REGISTERED PROFESSIONAL ENGINEER 38165
4/17/14 DATE
P.E. STAMP BOX

DATE
P.E. STAMP BOX

Washington State Department of Transportation

I-5
M ST TO PORTLAND AVE - HOV

SIGN PLAN

PLAN REF NO SN5

SHEET 1217 OF 1763 SHEETS

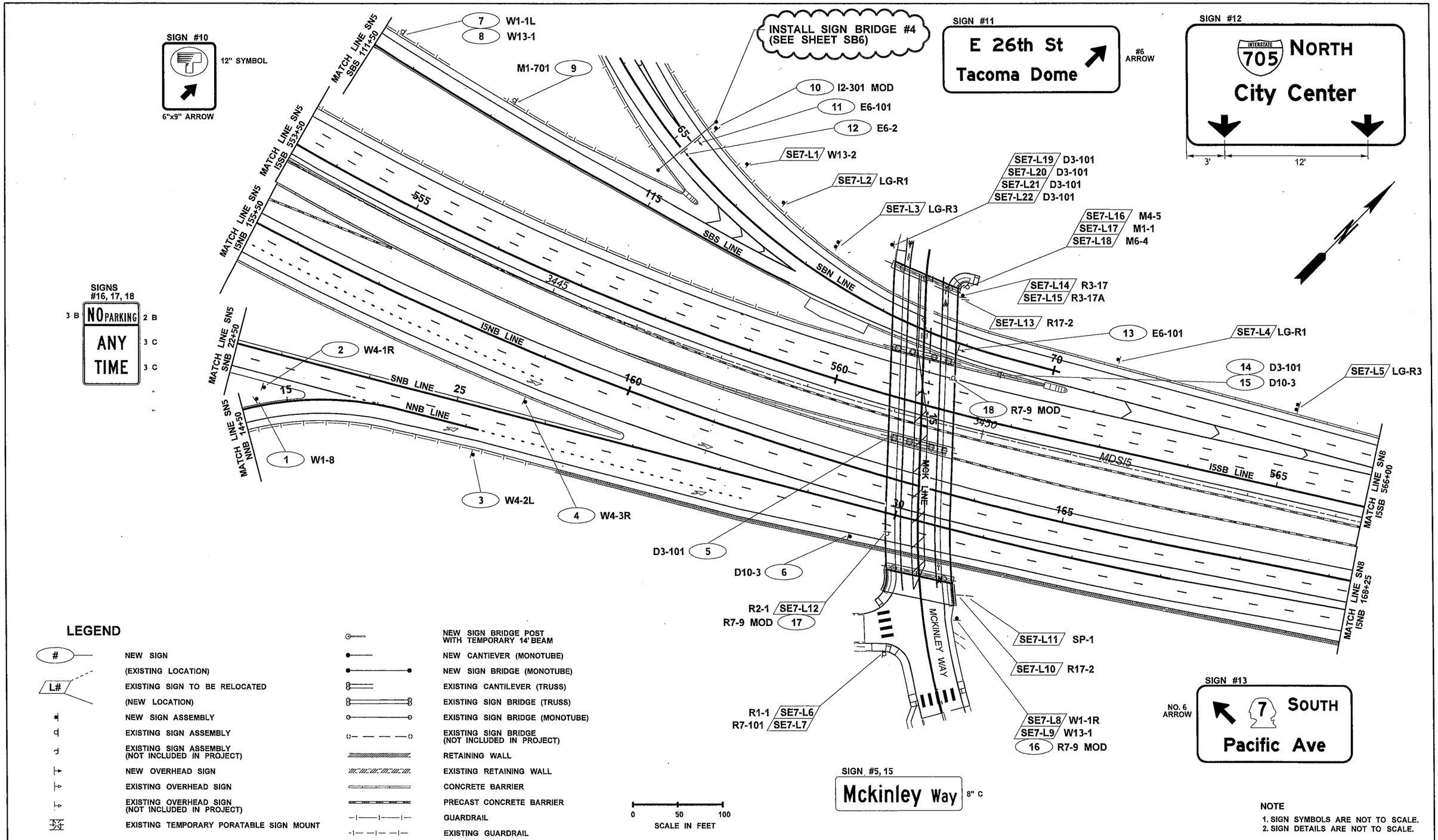

LEGEND

#	NEW SIGN
	(EXISTING LOCATION)
L#	EXISTING SIGN TO BE RELOCATED
	(NEW LOCATION)
	NEW SIGN ASSEMBLY
	EXISTING SIGN ASSEMBLY
	EXISTING SIGN ASSEMBLY (NOT INCLUDED IN PROJECT)
	NEW OVERHEAD SIGN
	EXISTING OVERHEAD SIGN
	EXISTING OVERHEAD SIGN (NOT INCLUDED IN PROJECT)
	EXISTING TEMPORARY PORATABLE SIGN MOUNT
	NEW SIGN BRIDGE POST WITH TEMPORARY 14' BEAM
	NEW CANTIEVER (MONOTUBE)
	NEW SIGN BRIDGE (MONOTUBE)
	EXISTING CANTILEVER (TRUSS)
	EXISTING SIGN BRIDGE (TRUSS)
	EXISTING SIGN BRIDGE (MONOTUBE)
	EXISTING SIGN BRIDGE (NOT INCLUDED IN PROJECT)
	RETAINING WALL
	EXISTING RETAINING WALL
	CONCRETE BARRIER
	PRECAST CONCRETE BARRIER
	GUARDRAIL
	EXISTING GUARDRAIL

NOTE
1. SIGN SYMBOLS ARE NOT TO SCALE.
2. SIGN DETAILS ARE NOT TO SCALE.

FILE NAME	PW:_XL3497\PS&E Sheets\Signing\ADD1_pXL3497_SH_SN_15.dgn			
TIME	4:26:19 PM			
DATE	4/16/2014			
PLOTTED BY	blakelf			
DESIGNED BY	F. BLAKELY			
ENTERED BY	F. BLAKELY			
CHECKED BY	J. VARADY			
PROJ. ENGR.	J. PEREZ	AD1 NOTE CHANGE	04/25/2014	FB
REGIONAL ADM.	K. DAYTON	REVISION	DATE	BY

REGION NO.	STATE	FED.AID PROJ.NO.
10	WASH	
JOB NUMBER 12C501		
CONTRACT NO.	LOCATION NO. XL3497	

DENNIS RAY CRUMRINE, STATE OF WASHINGTON, 18 36 1 9 1 3, PROFESSIONAL ENGINEER
4/17/14
DATE
P.E. STAMP BOX

DATE
P.E. STAMP BOX

Washington State Department of Transportation

I-5
M ST TO PORTLAND AVE - HOV

SIGN PLAN

PLAN REF NO SN7

SHEET 1218 OF 1763 SHEETS

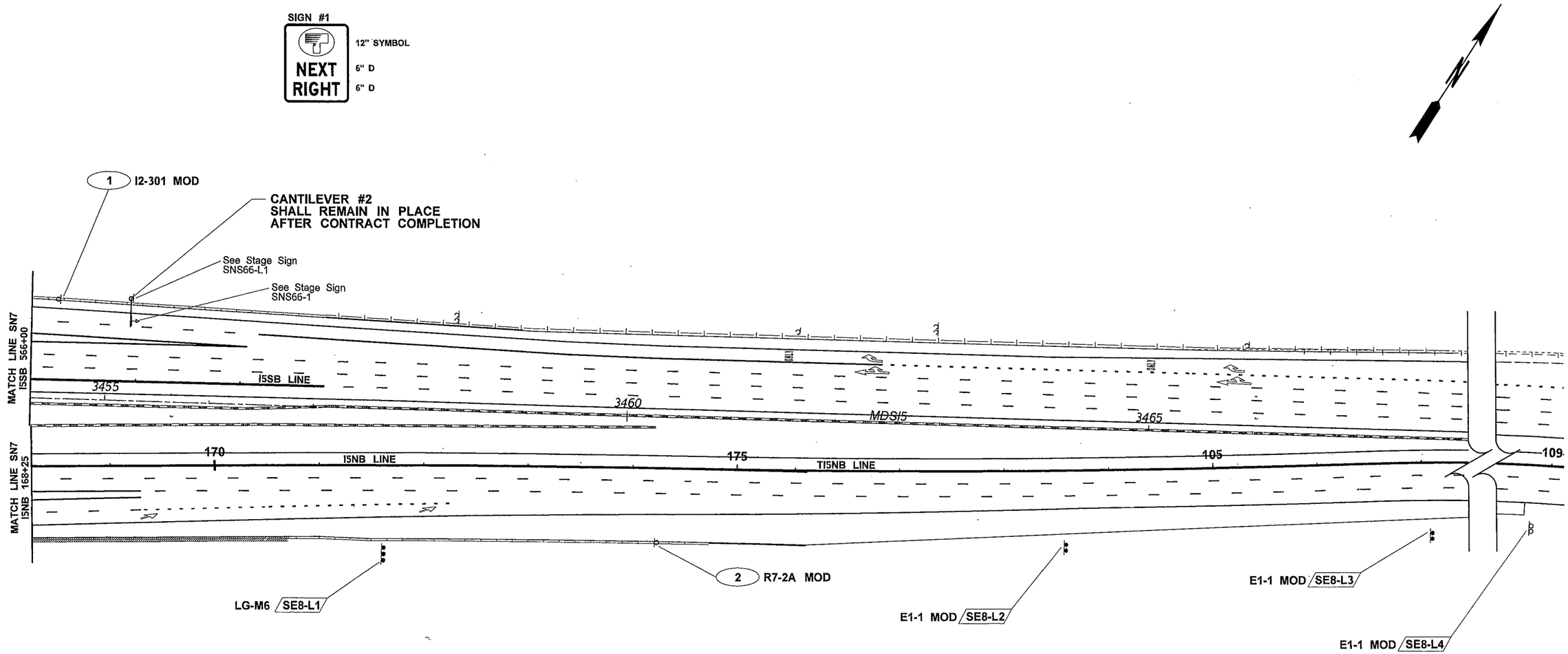

LEGEND

#	NEW SIGN
	(EXISTING LOCATION)
L#	EXISTING SIGN TO BE RELOCATED
	(NEW LOCATION)
	NEW SIGN ASSEMBLY
	EXISTING SIGN ASSEMBLY
	EXISTING SIGN ASSEMBLY (NOT INCLUDED IN PROJECT)
	NEW OVERHEAD SIGN
	EXISTING OVERHEAD SIGN
	EXISTING OVERHEAD SIGN (NOT INCLUDED IN PROJECT)
	EXISTING TEMPORARY PORATABLE SIGN MOUNT
	NEW SIGN BRIDGE POST WITH TEMPORARY 14' BEAM
	NEW CANTIEVER (MONOTUBE)
	NEW SIGN BRIDGE (MONOTUBE)
	EXISTING CANTILEVER (TRUSS)
	EXISTING SIGN BRIDGE (TRUSS)
	EXISTING SIGN BRIDGE (MONOTUBE)
	EXISTING SIGN BRIDGE (NOT INCLUDED IN PROJECT)
	RETAINING WALL
	EXISTING RETAINING WALL
	CONCRETE BARRIER
	PRECAST CONCRETE BARRIER
	GUARDRAIL
	EXISTING GUARDRAIL

SIGN #2

R

TOW AWAY ZONE

18" SYMBOL

3" C

3" C

0 50 100

SCALE IN FEET

NOTE

1. SIGN SYMBOLS ARE NOT TO SCALE.
2. SIGN DETAILS ARE NOT TO SCALE.

SHEET SN9, SN10, SN11 INTENTIONALLY OMITTED

FILE NAME	PW:_XL3497\PS&E Sheets\Signing\pXL3497_SH_SN_16.dgn			
TIME	11:21:31 AM			
DATE	2/18/2014			
PLOTTED BY	blakelf			
DESIGNED BY	F. BLAKELY			
ENTERED BY	F. BLAKELY			
CHECKED BY	J. VARADY			
PROJ. ENGR.	J. PEREZ			
REGIONAL ADM.	K. DAYTON	REVISION	DATE	BY

REGION NO.	STATE	FED.AID PROJ.NO.
10	WASH	
JOB NUMBER 12C501		
CONTRACT NO.		LOCATION NO. XL3497

DENNIS RAY CRUMBLEY, STATE OF WASHINGTON, REGISTERED PROFESSIONAL ENGINEER

2/18/14

DATE

P.E. STAMP BOX

DATE

P.E. STAMP BOX

Washington State Department of Transportation

I-5

M ST TO PORTLAND AVE - HOV

SIGN PLAN

PLAN REF NO SN8

SHEET 1219 OF 1763 SHEETS

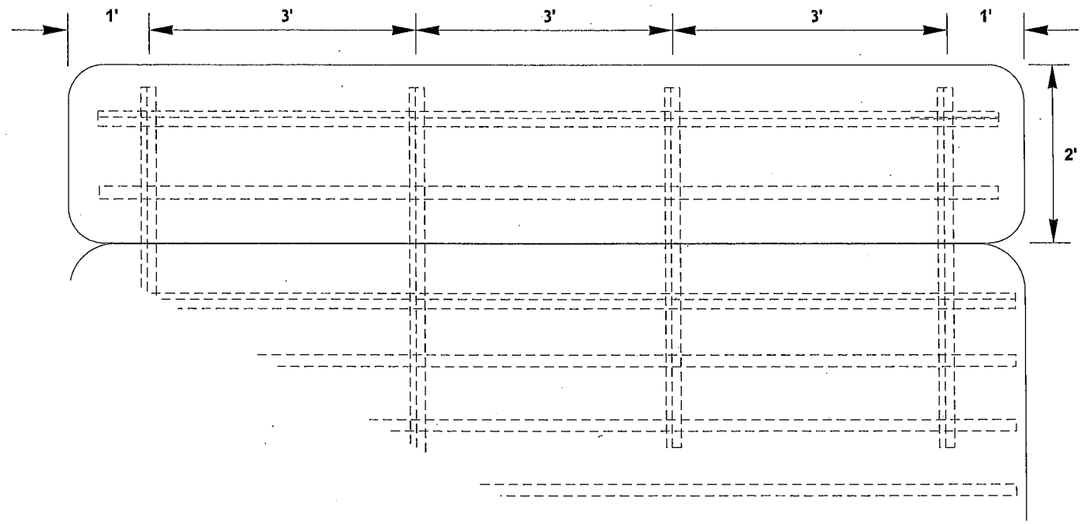

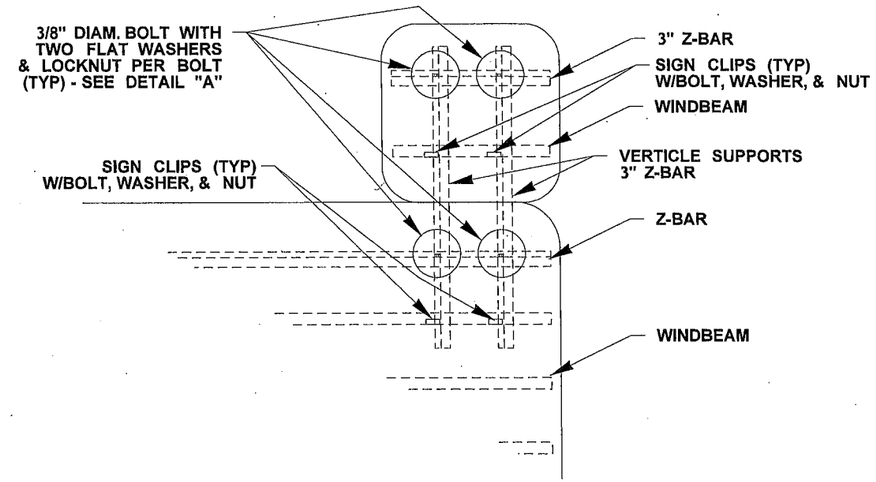

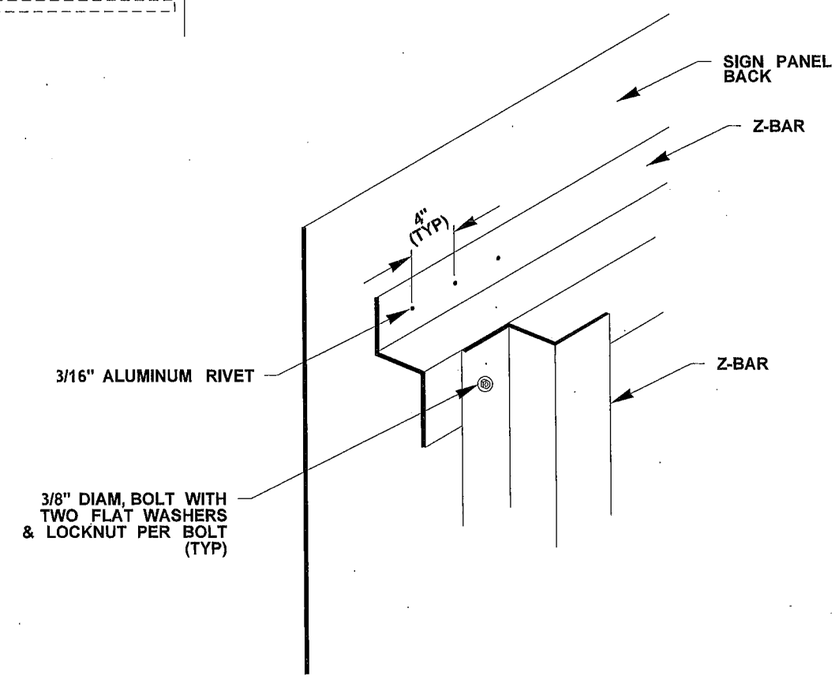

PANEL ATTACHMENT DETAILS
(ALL HARDWARE DETAILS - TYPICAL)

NOT TO SCALE

FILE NAME	PW:_XL3497\PS&E Sheets\Signing\pXL3497_SH_SND_01.dgn						
TIME	11:21:34 AM				REGION NO. 10	STATE WASH	FED.AID PROJ.NO.
DATE	2/18/2014						
PLOTTED BY	blakelf						
DESIGNED BY	F. BLAKELY				JOB NUMBER 12C501		
ENTERED BY	F. BLAKELY						
CHECKED BY	J. VARADY				CONTRACT NO.		LOCATION NO.
PROJ. ENGR.	J. PEREZ						XL3497
REGIONAL ADM.	K. DAYTON	REVISION	DATE	BY			

P.E. STAMP BOX DATE

P.E. STAMP BOX DATE

Washington State Department of Transportation

I-5
M ST TO PORTLAND AVE - HOV

SIGN DETAIL PLAN

PLAN REF NO SND1

SHEET 1220 OF 1763 SHEETS

SIGN NO.	STAGE 1	1A	1B	1C	1D	2	2 SNB-NNB STEP 2	3A	3A SBN-SBS STEP 3	3B	4	5	FINAL LOCATION (SEE NOTE 1)
SNS3-1	I												
SNS30-R1					RM								
SNS3-2	I												
SNS30-R2					RM								
SNS3-R1	RM												
SNS3-R2	RM												
SNS3-R3	RM												
SNS4-1	I												
SNS32-R1					RM								
SNS4-R1	RM												
SNS4-R2	RM												
SNS6-1		I-OL											
SNS6-2		I-OL											
SNS8-1		I											
SNS45-R1						RM							
SNS8-2		I											
SNS32-R2					RM								
SNS8-L1		RL											I5NB 119+35 OH
SE3-L2												RL	
SNS8-L2		RL											I5NB 119+35 OH
SE3-L3												RL	
SNS8-R1		RM											
SNS8-R2		RM											
SNS8-R3		RM											
SNS8-R4		RM											
SNS8-R5		RM											
SNS9-1		I											
SE4-R3												RM	
SNS9-2		I											
SE4-R8												RM	
SNS9-3		I											
SE4-R9												RM	

SIGN NO.	STAGE 1	1A	1B	1C	1D	2	2 SNB-NNB STEP 2	3A	3A SBN-SBS STEP 3	3B	4	5	FINAL LOCATION (SEE NOTE 1)
SNS10-1		I-OL											
SNS10-R1		RM											
SNS10-R2		RM											
SNS10-R3		RM											
SNS10A-1		I-OL											
SNS10A-2		I-OL											
SNS12-1		I											TI5NB 107+10 RT
SN8-L3												RL	
SNS12-L1		RL											I5NB 171+60 RT
SN8-L1												RL	
SNS12-L2		RL											TI5NB 103+60 RT
SN8-L2												RL	
SNS12-R1		RM											
SNS12-R2		RM											
SNS12A-1		I-OL											
SNS20-1													
SNS49-1							I-OL						
SNS24-1				I-OL									
SNS25-1				I									
SNS25-2				I									
SNS33-1					I-OL								
SNS64-NOTE								C					
SNS100-NOTE											UC		
SE4-R5												RM	
SNS26-1				I									
SNS34-1					I-OL								
SNS34-2					I-OL								
SNS65-NOTE								C					
SNS102-NOTE											UC		
SE5-R14												RM	

LEGEND

I	INSTALL
I-OL	INSTALL OVERLAY
C	COVER
UC	UN-COVER
RL	RELOCATE
RM	REMOVE

GENERAL NOTE:

1. ALL FINAL LOCATIONS ARE SHOWN ON THE PERMANENT SIGN PLANS (SN SHEETS) UNLESS OTHERWISE NOTED.

SIGN STAGING TABLE

FILE NAME	PW:_XL3497\PS&E Sheets\Signing\Stage Signs\ADD1_P3497_SH_SNSD_01.dgn			
TIME	4:23:07 PM			
DATE	4/16/2014			
PLOTTED BY	blakelf			
DESIGNED BY	F. BLAKELY			
ENTERED BY	F. BLAKELY			
CHECKED BY	J. VARADY			
PROJ. ENGR.	J. PEREZ	AD1 TABLE ADDITION	04/25/2014	FB
REGIONAL ADM.	K. DAYTON	REVISION	DATE	BY

REGION NO.	STATE	FED.AID PROJ.NO.
10	WASH	
JOB NUMBER 12C501		
CONTRACT NO.		LOCATION NO. XL3497

P.E. STAMP BOX DATE

P.E. STAMP BOX DATE

Washington State Department of Transportation

I-5
M ST TO PORTLAND AVE - HOV

SIGN STAGING TABLE

PLAN REF NO SNSD1

SHEET 1221 OF 1763 SHEETS

SIGN NO.	STAGE 1	1A	1B	1C	1D	2	2 SNB-NNB STEP 2	3A	3A SBN-SBS STEP 3	3B	4	5	FINAL LOCATION (SEE NOTE 1)
SNS30-1					I								I5SB 502+01 OH
SNS30-2					I								I5SB 502+01 OH
SNS32-1					I								I5SB 516+08 OH
SNS32-2					I								I5SB 516+08 OH
SNS32-NOTE					C								
SNS45-NOTE						UC							
SNS63-1								I-OL					
SNS63-2								I-OL					
SNS88-NOTE										C			
SNS99-NOTE											UC		
SNS34-R1					RM								
SNS48-1						I							
SNS66-R1								RM					
SNS48-R1						RM							
SNS61-1								I					I5SB 502+01 OH
SNS97-R1											RM		
SNS97-1											I		
SNS63-NOTE								C					
SNS110-NOTE												UC	
SNS66-1								I					I5SB 566+94 OH
SNS66-2								I-OL					
SNS79-1									I-OL				
SNS79-2									I-OL				
SNS103-R1											RM		
SNS103-R2											RM		
SNS103-R3											RM		
SNS66-L1								RL					I5SB 566+94 LT
SNS66-R2								RM					
SNS66-R3								RM					
SNS68-1								I-OL					
SNS80-1									I-OL				
SNS103-R4											RM		
SNS103-R5											RM		

SIGN NO.	STAGE 1	1A	1B	1C	1D	2	2 SNB-NNB STEP 2	3A	3A SBN-SBS STEP 3	3B	4	5	FINAL LOCATION (SEE NOTE 1)
SNS68-2								I					
SNS69-1								I					
SNS105-R1											RM		
SNS69-2								I					
SNS105-R2											RM		
SNS69-L1								RL					* MDSI5 3490+70 OH
SNS105-L1											RL		
SNS70-1								I					* MDSI5 3501+40 LT
SNS71-1								I					
SNS107-R1											RM		
SNS71-2								I					
SNS107-R2											RM		
SNS71-L1								RL					
SNS107-R3											RM		
SNS71-L2								RL					
SNS107-R4											RM		
SNS71-L3								RL					* MDSI5 3533+10 LT
SNS71-R1								RM					
SNS73-1								I					* NSB 101+13 OH
SNS73-2								I					* NSB 101+13 OH
SNS73-3								I					* NSB 101+13 OH
SNS73-4								I					* NSB 101+13 OH
SNS73-5								I-OL					
SNS73-6								I					* NSB 101+13 RT
SNS73-R1								RM					
SNS73-R2								RM					
SNS73-R3								RM					
SNS73-R4								RM					
SNS74-1								I-OL					
SNS94-1										I-OL			
SNS95-1										I-OL			
SNS107-1											I		* MDSI5 3514+80 OH
SNS107-2											I		* MDSI5 3527+55 OH
SNS107-3											I		* MDSI5 3527+55 OH

LEGEND

I	INSTALL
I-OL	INSTALL OVERLAY
C	COVER
UC	UN-COVER
RL	RELOCATE
RM	REMOVE

* FINAL STATIONS SHOWN ARE LOCATED ON THE SIGN STAGING PLANS (SNS SHEETS).

SIGN STAGING TABLE

GENERAL NOTE:

1. ALL FINAL LOCATIONS ARE SHOWN ON THE PERMANENT SIGN PLANS (SN SHEETS) UNLESS OTHERWISE NOTED.

FILE NAME	PW:_XL3497\PS&E Sheets\Signing\Stage Signs\ADD1_P3497_SH_SNSD_02.dgn
TIME	4:23:14 PM
DATE	4/16/2014
PLOTTED BY	blakelf
DESIGNED BY	F. BLAKELY
ENTERED BY	F. BLAKELY
CHECKED BY	J. VARADY
PROJ. ENGR.	J. PEREZ
REGIONAL ADM.	K. DAYTON

REVISION	DATE	BY
ADD1 - TABLE ADDITION	04/25/2014	FB

REGION NO. 10 | STATE WASH | FED.AID PROJ.NO.

JOB NUMBER 12C501

CONTRACT NO.

LOCATION NO. XL3497

P.E. STAMP BOX DATE

P.E. STAMP BOX DATE

Washington State Department of Transportation

I-5
M ST TO PORTLAND AVE - HOV

SIGN STAGING TABLE

PLAN REF NO SNSD2

SHEET 1222 OF 1763 SHEETS

SIGN STAGING REMOVAL SPECIFICATIONS

SIGN NO.	SIGN CODE	DESCRIPTION	LOCATION	SIGN SIZE X	SIGN SIZE Y	POST MATERIAL	POST SIZE	# OF POSTS	REMARKS
SNS3-R1	D9-2	SYMBOL - HOSPITAL	MDSI5 3390+10 OH	30"	30"	SIGN BR			SEE SPECIAL PROVISIONS "SIGN REMOVAL" SEE NOTE 2
SNS3-R2	E4-501 MOD	EXIT ONLY GUIDE SIGN W/ARROW	MDSI5 3390+10 OH	204"	180"	SIGN BR			
SNS3-R3	E4-501	EXIT ONLY GUIDE SIGN W/ARROW	MDSI5 3390+10 OH	168"	168"	SIGN BR			
SNS4-R1	E6-2	PULL THRU SIGN (OVERHEAD)	MDSI5 3404+30 OH	456"	204"	SIGN BR			SEE SPECIAL PROVISIONS "SIGN REMOVAL" SEE NOTE 3
SNS4-R2	E6-2	PULL THRU SIGN (OVERHEAD)	MDSI5 3404+30 OH	360"	108"	SIGN BR			
SNS8-R1	E1-1	ADVANCE GUIDE SIGN	TNCD1 95+56 OH	336"	120"	SIGN BR			SEE NOTE 1
SNS8-R2	W9-2L MOD	LANE ENDS MERGE LEFT ARROW	TNCD1 95+56 OH	60"	120"	SIGN BR			
SNS8-R3	D9-101 MOD	FOOD - PHONE - GAS - LODGING	TNBN 38+40 RT	96"	72"	STEEL	2.5" SQ.	2	
SNS8-R4	E6-2	PULL THRU SIGN (OVERHEAD)	TNBN 44+30 OH	198"	144"	SIGN BR			SEE NOTE 1
SNS8-R5	E6-2	PULL THRU SIGN (OVERHEAD)	TNBN 44+30 OH	132"	144"	SIGN BR			
SNS10-R1	E6-101 MOD	EXIT DIRECTION	TNBN 59+65 OH	168"	108"	SIGN BR			
SNS10-R2	E6-101 MOD	EXIT DIRECTION	TNBN 59+65 OH	204"	180"	SIGN BR			
SNS10-R3	W13-3	RAMP - MPH	TNBN 59+65 LT	48"	60"	SIGN BR			SEE NOTE 1
SNS12-R1	E6-101	EXIT DIRECTION	TNB1 99+75 OH	192"	120"	CANT			SEE NOTE 1
SNS30-R1	D9-2	SYMBOL - HOSPITAL	TSB3 34+75 OH	30"	30"	CANT			
SNS30-R2	E6-101 MOD	EXIT DIRECTION	TSB3 34+75 OH	180"	156"	CANT			SIGN AND 14' BEAM
SNS32-R1	E6-101 MOD	EXIT DIRECTION	TSB3 48+73 OH	360"	168"	CANT			SIGN AND 14' BEAM
SNS32-R2	E6-2	PULL THRU SIGN (OVERHEAD)	TSB3 53+15 OH	216"	120"	BR MOUNT			SIGN AND BRACKETS
SNS34-R1	E8-1	INTERCHANGE SEQUENCE SIGN	TSB3 76+90 OH	204"	168"	CANT			SEE NOTE 1
SNS45-R1	E6-2	PULL THRU SIGN (OVERHEAD)	TNBN 35+65 OH	144"	120"	BR MOUNT			SIGN AND BRACKETS
SNS48-R1	E6-101	EXIT DIRECTION	TSBN1 19+70 OH	144"	96"	BR MOUNT			
SNS66-R1	M8-101 MOD	ROUTE MARKER ASSEMBLY W/ARROW	TSBN1 16+90 RT	36"	72"	WOOD			
SNS66-R2	E6-2 MOD	PULL THRU SIGN (OVERHEAD)	TSBN1 24+20 OH	252"	144"	SIGN BR			SEE NOTE 1
SNS66-R3	W14-601 MOD	SLOW MOVING VEHICLE	TSBN1 24+20 OH	180"	90"	SIGN BR			
SNS71-R1	E8-1	INTERCHANGE SEQUENCE SIGN	MDSI5 3514+80 OH	192"	96"	SIGN BR			SIGN ONLY
SNS73-R1	M8-101 MOD	ROUTE MARKER ASSEMBLY W/ARROW	NSB 102+30 RT	48"	96"	WOOD	6 X 8	1	
SNS73-R2	M8-101 MOD	ROUTE MARKER ASSEMBLY W/ARROW	NSB 102+30 LT	48"	96"	WOOD	6 X 8	1	
SNS73-R3	M8-101 MOD	ROUTE MARKER ASSEMBLY W/ARROW	NSB 103+60 RT	48"	96"	WOOD	6 X 8	1	
SNS73-R4	M8-101 MOD	ROUTE MARKER ASSEMBLY W/ARROW	NSB 103+60 LT	48"	96"	WOOD	6 X 8	1	
SNS97-R1	E1-1 MOD	ADVANCE GUIDE SIGN	TSB6 11+83 OH	120"	120"	SIGN BR			SIGN ONLY
SNS103-R1	OL12	OVERLAY (GREEN)	TSB6 76+75 OH	84"	36"	CANT			OVERLAY ONLY
SNS103-R2	OL16	OVERLAY (CLOSED)	TSB6 76+75 OH	84"	36"	CANT			OVERLAY ONLY
SNS103-R3	OL17	OVERLAY (GREEN)	TSB6 76+75 OH	24"	36"	CANT			OVERLAY ONLY
SNS103-R4	OL13	OVERLAY (GREEN W/ARROW)	TSB6 90+50 OH	168"	36"	CANT			OVERLAY ONLY
SNS103-R5	OL18	OVERLAY (CLOSED)	TSB6 90+50 OH	84"	36"	CANT			OVERLAY ONLY
SNS105-R1	W4-3R	ADDED LANE SYMBOL RIGHT	TCD1 100+15 LT	48"	48"	WOOD	6 X 6	1	
SNS105-R2	E4-501	ADVANCE GUIDE SIGN	TCD1 107+40 OH	192"	168"	SIGN BR			SIGN ONLY
SNS107-R1	E4-501	EXIT ONLY GUIDE SIGN W/ARROW	MDSI5 3514+80 OH	168"	168"	SIGN BR			SIGN ONLY
SNS107-R2	E4-501	EXIT ONLY GUIDE SIGN W/ARROW	MDSI5 3527+55 OH	168"	168"	SIGN BR			SIGN ONLY
SNS107-R3	E4-301	NEXT RIGHT GUIDE SIGN	MDSI5 3530+15 LT	132"	84"	WOOD	6 X 8		
SNS107-R4	E9-1	TACOMA NEXT (5) EXIST	MDSI5 3532+30 LT	132"	60"	WOOD	6 X 8	3	

CONSTRUCTION NOTES:

THE FIRST PART OF THE SIGN NUMBER IS THE SHEET NUMBER, THE SECOND NUMBER IS THE SIGN ON THAT SHEET.
FOR CODE REFERENCES AND STANDARD DETAILS SEE WASHINGTON STATE SIGN FABRICATION MANUAL.
ALL CEMENT CONCRETE FOUNDATIONS AND SIGN SUPPORTS SHALL BE REMOVED, UNLESS OTHERWISE NOTED.

1. REMOVE FOUNDATIONS IN ACCORDANCE WITH STANDARD SPECIFICATION 8-21.3(4).
   FILL AND COMPACT VOID PER STANDARD SPECIFICATION 2-09.3(1)E.
2. REMOVE MEDIAN FOUNDATION IN ACCORDANCE WITH BRIDGE DETAILS SHEET TSB2 (OUTSIDE POST TO REMAIN).
3. REMOVE MEDIAN FOUNDATION IN ACCORDANCE WITH BRIDGE DETAILS SHEET TSB3 (OUTSIDE POST TO REMAIN).

FILE NAME	PW:_XL3497\PS&E Sheets\Signing\Stage Signs\ADD1_P3497_SH_SNSD_03.dgn
TIME	4:23:20 PM
DATE	4/16/2014
PLOTTED BY	blakelf
DESIGNED BY	F. BLAKELY
ENTERED BY	F. BLAKELY
CHECKED BY	J. VARADY
PROJ. ENGR.	J. PEREZ
REGIONAL ADM.	K. DAYTON

REVISION	DATE	BY
AD1 - SIGN REMOVAL CHANGE	04/25/2014	FB

REGION NO. 10 | STATE WASH | FED.AID PROJ.NO.

JOB NUMBER 12C501

CONTRACT NO.

LOCATION NO. XL3497

P.E. STAMP BOX DATE

P.E. STAMP BOX DATE

Washington State Department of Transportation

I-5
M ST TO PORTLAND AVE - HOV

SIGN STAGING SPECIFICATIONS

PLAN REF NO SNSD3

SHEET 1223 OF 1763 SHEETS

SIGN STAGING RELOCATION SPECIFICATIONS

SIGN NO.	SIGN CODE	DESCRIPTION	EXISTING LOCATION	NEW LOCATION	SIGN SIZE X	SIGN SIZE Y	POST MATERIAL	POST SIZE	POST LENGTH H 1	POST LENGTH H 2	POST LENGTH H 3	POST LENGTH H 4	CLEARANCE V	CLEARANCE W	REMARKS
SNS8-L1	E6-2	PULL THRU SIGN (OVERHEAD)	TNBN 32+60 OH	TNBN 35+55 OH	144"	144"	BR MOUNT								SIGN ONLY SEE NOTES #3, #6
SNS8-L2	E6-2	PULL THRU SIGN (OVERHEAD)	TNBN 32+60 OH	TNBN 35+45 OH	132"	144"	BR MOUNT								SIGN ONLY SEE NOTES #3, #6
SNS12-L1	LG-M6	LODGING (FREEWAY DOUBLE EXIT)	TNB1 91+45 RT	TNB1 91+45 RT	156"	144"							7		SIGN ONLY SEE NOTE #1
SNS12-L2	E1-1 MOD	ADVANCE GUIDE SIGN (AMTRAK)	TNB1 97+60 RT	TNB1 97+60 RT	108"	72"							7		SIGN ONLY SEE NOTE #1
SNS66-L1	D3-2 MOD	ADVANCE STREET NAME (TACOMA DOME)	TSBN1 24+20 LT	TSBN1 25+40 LT	48"	48"	SIGN BR						7		SIGN ONLY SEE NOTE #2 (FLIP SIGN)
SNS69-L1	E4-501	EXIT ONLY GUIDE SIGN W/ARROW	TCD1 107+40 OH	TCD1 107+40 OH	288"	144"									SEE SPECIAL PROVISION "SIGN RELOCATION"
SNS71-L1	E4-301	NEXT RIGHT GUIDE SIGN	MDSI5 3527+55 OH	MDSI5 3530+15 LT	132"	84"	WOOD	6 X 8	18	22	26		7	15'	SIGN ONLY
SNS71-L2	E9-1	CITY NEXT (5) EXITS	MDSI5 3527+55 OH	MDSI5 3532+30 LT	132"	60"	WOOD	6 X 8	16	20	22		7	15'	SIGN ONLY
SNS71-L3	R7-201	NO PARKING - TOW AWAY ZONE	MDSI5 3532+70 LT	MDSI5 3533+10 LT	24"	36"							7	13'	RELOCATE SIGN AND 4X4 POST

SIGN STAGING INSTALLATION SPECIFICATIONS

SIGN NO.	SIGN CODE	DESCRIPTION	LOCATION	SIGN SIZE X	SIGN SIZE Y	SHEETING TYPE	LETTER SIZE OR CODE	POST MATERIAL	POST SIZE	POST LENGTH H 1	POST LENGTH H 2	POST LENGTH H 3	POST LENGTH H 4	CLEARANCE V	CLEARANCE W	REMARKS
SNS3-1	D9-2	HOSPITAL SYMBOL	MDSI5 3390+10 OH	30"	30"	II										INSTALL ABOVE SIGN SNS3-2 SEE NOTE #7
SNS3-2	E6-101 MOD	EXIT DIRECTION	MDSI5 3390+10 OH	156"	156"	**	SIGN DETAIL									SEE NOTE #4 SEE BRIDGE SHEET TSB2
SNS4-1	E6-101 MOD	NEXT RIGHT GUIDE SIGN	MDSI5 3404+30 OH	180"	156"	**	SIGN DETAIL									SEE NOTE #4 SEE BRIDGE SHEET TSB3
SNS8-1	E6-2	PULL THRU SIGN (OVERHEAD)	TNCD1 98+60 OH	144"	120"	**	CODE D	BR MOUNT								SEE NOTE #6
SNS8-2	E6-2	PULL THRU SIGN (OVERHEAD)	TSB1 79+50 OH	216"	120"	**	CODE D	BR MOUNT								SEE NOTE #6
SNS9-1	M8-401	ROUTE MARKER ASSEMBLY W/TWO SHIELDS	TNBN 50+35 RT	60"	60"	*	SIGN DETAIL	WOOD	6 X 8	17'				7'	16'	
SNS9-2	E6-101 MOD	EXIT DIRECTION	TNBN 57+37 RT	84"	60"	*	SIGN DETAIL	WOOD	4 X 6	15'	15'			7'	15'	
SNS9-3	E6-101 MOD	EXIT DIRECTION	TNBN 57+37 LT	84"	60"	*	SIGN DETAIL	WOOD	4 X 6	15'	15'			7'	18'	
SNS12-1	E1-1 MOD	ADVANCE GUIDE SIGN	TNB1 99+25 LT	144"	120"	**	CODE C							7'	15'	SEE NOTE #1
SNS25-1	E5-1 MOD	EXIT (ARROW 45 DEG)	TNW2 52+70 RT	36"	60"	*	SIGN DETAIL	BARRIER MT						5'		REMOVE WITH BARRIER
SNS25-2	E4-501	EXIT ONLY GUIDE SIGN W/ARROW	TSB1 98+20 OH	156"	156"	**	CODE E	CANT								SEE BRIDGE SHEET TSB1
SNS26-1	E4-501 MOD	EXIT ONLY GUIDE SIGN W/ARROW	TSB3 85+92 OH	156"	180"	**	CODE E									SEE NOTE #5 SEE BRIDGE SHEET TSB4
SNS30-1	D9-2	HOSPITAL SYMBOL	TSB3 34+76 OH	30"	30"	*		SIGN BR								INSTALL ABOVE SIGN SNS30-2 SEE NOTE #7
SNS30-2	E4-301 MOD	NEXT RIGHT GUIDE SIGN	TSB3 34+76 OH	360"	168"	**	SIGN DETAIL	SIGN BR								SEE SHEET TSB2 FOR DETAILS
SNS32-1	E4-301 MOD	NEXT RIGHT GUIDE SIGN	TSB3 48+73 OH	360"	168"	**	SIGN DETAIL	SIGN BR								SEE SHEET TSB3 FOR DETAILS
SNS32-2	E6-2 MOD	PULL THRU SIGN (OVERHEAD)	TSB3 48+73 OH	360"	108"	**	SIGN DETAIL	SIGN BR								SEE SHEET TSB3 FOR DETAILS
SNS48-1	M8-101 MOD	ROUTE MARKER ASSEMBLEY W/ARROW	TSBN1 16+90 RT	36"	72"	**	SIGN DETAIL	WOOD	6 X 6	17'				7'	28'	
SNS61-1	E1-1 MOD	ADVANCE GUIDE SIGN	TCD1 6+85 OH	120"	120"	**	SIGN DETAIL	SIGN BR								SEE BRIDGE SHEET TSB2
SNS66-1	E6-101 MOD	EXIT DIRECTION	TSBN1 25+40 OH	180"	156"	**	SIGN DETAIL	CANT								SEE BRIDGE SHEET SB2
SNS68-2	E5-1 MOD	EXIT (ARROW 45 DEG)	TCD1 94+05 RT	36"	60"	*	SIGN DETAIL	BARRIER MT						5'		REMOVE WITH BARRIER
SNS69-1	W4-3R	ADDED LANE SYMBOL RIGHT	TCD1 100+15 LT	48"	48"	III OR IV		WOOD	6 X 6	16'				7'		INSTALL IN FRONT OF EXISTING LUMINAIRE
SNS69-2	E4-501	EXIT ONLY GUIDE SIGN W/ARROW	TCD1 107+40 OH	192"	168"	**	CODE C	SIGN BR								SEE NOTE #8
SNS70-1	LG-M10	TOURIST ACTIVITIES	TCD1 118+10 LT	132"	24"	II	SIGN DETAIL									
SNS71-1	E4-501	EXIT ONLY GUIDE SIGN W/ARROW	MDSI5 3514+80 OH	168"	168"	**	CODE C	SIGN BR								SEE NOTE #8
SNS71-2	E4-501	EXIT ONLY GUIDE SIGN W/ARROW	MDSI5 3527+55 OH	168"	168"	**	CODE C	SIGN BR								SEE NOTE #8
SNS97-1	W9-2L MOD	LANE ENDS MERGE LEFT	TSB6 11+83 OH	144"	96"	VIII OR IX	SIGN DETAIL	SIGN BR								
SNS107-1	E8-1	INTERCHANGE SEQUENCE SIGN	MDSI5 3514+80 OH	192"	96"	**	SIGN DETAIL	SIGN BR								SEE NOTE #8
SNS107-2	E4-301	NEXT RIGHT GUIDE SIGN	MDSI5 3527+55 OH	132"	84"	**	SIGN DETAIL	SIGN BR								SEE NOTE #8
SNS107-3	E9-1	TACOMA NEXT 5 EXITS	MDSI5 3527+55 OH	132"	60"	**	SIGN DETAIL	SIGN BR								SEE NOTE #8

CONSTRUCTION NOTES:

THE FIRST PART OF THE SIGN NUMBER IS THE SHEET NUMBER, THE SECOND NUMBER IS THE SIGN ON THAT SHEET.
FOR CODE REFERANCES AND STANDARD DETAILS SEE WASHINGTON STATE SIGN FABRICATION MANUAL.
ALL STAGE SIGNS SHALL MEET THE REQUIREMENTS OF STANDARD SPECIFICATION 8-21.

1. SIGNS SHALL BE INSTALLED ON TEMPORARY PORTABLE MOUNTS (AS APPROVED BY ENGINEER).
2. USE SIGN INSTALLATION ON SIGNAL AND LIGHT STANDARDS DETAILS (SEE STANDARD PLAN G-30.10).
3. TEMPORARY LOCATION (SEE SHEETS SE3 AND SN2 FOR PERMANENT LOCATION).
4. INSTALL SIGN ON TEMPORARY 14' BEAM.
5. INSTALL SIGN ON PERMANENT 14' BEAM.
6. INSTALL SIGN ON TEMPORARY SIGN BRACKET (SEE SHEET TSB19).
7. SEE ATTACHMENT DETAIL SHEET SND1.
8. SEE STANDARD PLAN G-90.30 FOR MOUNTING DETAILS.

* TYPE II BACKGROUND; TYPE III OR IV FOR LEGEND, BORDERS AND SYMBOLS.
** TYPE III OR IV BACKGROUND; VIII OR IX FOR LEGEND, BORDERS AND SYMBOLS.

FILE NAME	PW:_XL3497\PS&E Sheets\Signing\Stage Signs\ADD1_P3497_SH_SNSD_04.dgn
TIME	4:23:24 PM
DATE	4/16/2014
PLOTTED BY	blakelf
DESIGNED BY	F. BLAKELY
ENTERED BY	F. BLAKELY
CHECKED BY	J. VARADY
PROJ. ENGR.	J. PEREZ
REGIONAL ADM.	K. DAYTON

REVISION	DATE	BY
ADD1 REMARKS CHANGE	04/25/2014	FB

REGION NO. 10 | STATE WASH | FED.AID PROJ.NO.
JOB NUMBER 12C501
CONTRACT NO. | LOCATION NO. XL3497

P.E. STAMP BOX DATE
P.E. STAMP BOX DATE

Washington State Department of Transportation

I-5
M ST TO PORTLAND AVE - HOV

SIGN STAGING SPECIFICATIONS

PLAN REF NO SNSD4

SHEET 1224 OF 1763 SHEETS

SIGN STAGING INSTALLATION SPECIFICATIONS

SIGN NO.	SIGN CODE	DESCRIPTION	LOCATION	SIGN SIZE X	SIGN SIZE Y	SHEETING TYPE	LETTER SIZE OR CODE	POST MATERIAL	POST SIZE	POST LENGTH H 1	POST LENGTH H 2	POST LENGTH H 3	POST LENGTH H 4	CLEARANCE V	CLEARANCE W	REMARKS
SNS73-1	E4-501	EXIT ONLY GUIDE SIGN W/ARROW	NSB 101+18 OH	168"	132"	**	SIGN DETAIL	SIGN BR								SEE NOTE #8 SEE BRIDGE SHEET SB8A
SNS73-2	W9-2L MOD	LANE ENDS MERGE LEFT	NSB 101+18 OH	96"	120"	**	SIGN DETAIL	SIGN BR								SEE NOTE #8 SEE BRIDGE SHEET SB8A
SNS73-3	E6-2	PULL THRU SIGN (OVERHEAD)	NSB 101+18 OH	156"	156"	**	SIGN DETAIL	SIGN BR								SEE NOTE #8 SEE BRIDGE SHEET SB8A
SNS73-4	E6-2	PULL THRU SIGN (OVERHEAD)	NSB 101+18 OH	144"	156"	**	SIGN DETAIL	SIGN BR								SEE NOTE #8 SEE BRIDGE SHEET SB8A
SNS73-5	R2-1	SPEED LIMIT (55)	NSB 101+18 RT	48"	60"	**	SIGN DETAIL	SIGN BR								SEE NOTE #2

CONSTRUCTION NOTES: SEE SHEET SNSD4

SIGN STAGING OVERLAY PANEL SPECIFICATIONS

SIGN NO.	SIGN CODE	DESCRIPTION	LOCATION	SIGN SIZE X	SIGN SIZE Y	SHEETING TYPE	LETTER SIZE OR CODE	POST MATERIAL	POST SIZE	POST LENGTH H 1	POST LENGTH H 2	POST LENGTH H 3	POST LENGTH H 4	CLEARANCE V	CLEARANCE W	REMARKS
SNS6-1	OL1	(SOLID GREEN)	TNCD1 82+30 OH	36"	24"	III	SIGN DETAIL									SEE NOTE #1
SNS6-2	OL2	(SOLID GREEN)	TNCD1 82+30 OH	96"	24"	III	SIGN DETAIL									SEE NOTE #2
SNS10-1	OL3	(SOLID GREEN)	TSNB1 29+90 OH	36"	24"	III	SIGN DETAIL									SEE NOTE #1
SNS10A-1	OL21	CLOSED (BLK/ORNG)	TSNB1 29+90 OH	36"	24"	III	SIGN DETAIL									SEE NOTE #1
SNS10A-2	OL22	CLOSED (BLK/ORNG)	TSNB1 29+90 OH	84"	36"	III	SIGN DETAIL									SEE NOTE #1
SNS12A-1	OL23	CLOSED (BLK/ORNG)	TSNB1 29+90 OH	36"	24"	III	SIGN DETAIL									SEE NOTE #1
SNS20-1	OL4	(SOLID GREEN)	TSNB2 7+50 OH	36"	24"	III	SIGN DETAIL									SEE NOTE #1
SNS24-1	OL5	RIGHT 2 LANES (WHT/GRN)	TNW2 45+00 OH	216"	36"	**	SIGN DETAIL									REMOVED WITH SIGN
SNS33-1	OL6	RIGHT 2 LANES (WHT/GRN)	TSB3 71+75 OH	156"	36"	**	SIGN DETAIL									REMOVED WITH SIGN
SNS34-1	OL7	(SOLID GREEN)	TSB3 85+92 OH	96"	24"	III	SIGN DETAIL									REMOVED WITH TEMPORARY 14' BEAM
SNS34-2	OL8	RIGHT 2 LANES (WHT/GRN)	TSB3 85+92 OH	156"	36"	**	SIGN DETAIL									REMOVED WITH TEMPORARY 14' BEAM
SNS49-1	OL9	(SOLID GREEN)	TSNB2 7+50 OH	36"	24"	III	SIGN DETAIL									SEE NOTE #1
SNS63-1	OL10	(SOLID GREEN)	TCD1 20+80 OH	36"	24"	III	SIGN DETAIL									SEE NOTE #1
SNS63-2	OL11	(SOLID GREEN)	TCD1 20+80 OH	36"	24"	III	SIGN DETAIL									SEE NOTE #1
SNS66-2	OL12	(SOLID GREEN)	TSBN1 25+40 OH	84"	36"	III	SIGN DETAIL									SEE NOTE #2
SNS68-1	OL13	ARROW (BLK/YELL)	TCD1 85+35 OH	30"	24"	VIII OR IX	SIGN DETAIL									SEE NOTE #2
SNS73-5	OL14	CLOSED (BLK/ORNG)	NSB 101+18 OH	108"	48"	VIII OR IX	SIGN DETAIL									SEE NOTE #3
SNS74-1	OL15	CLOSED (BLK/ORNG)	NSB 111+72 OH	108"	48"	VIII OR IX	SIGN DETAIL									SEE NOTE #3
SNS79-1	OL16	CLOSED (BLK/ORNG)	TSBN3 45+25 OH	84"	36"	VIII OR IX	SIGN DETAIL									SEE NOTE #3
SNS79-2	OL17	(SOLID GREEN)	TSBN3 45+25 OH	36"	24"	III	SIGN DETAIL									SEE NOTE #3
SNS80-1	OL18	CLOSED (BLK/ORNG)	TCD1 85+40 OH	84"	36"	VIII OR IX	SIGN DETAIL									SEE NOTE #3
SNS94-1	OL19	CLOSED (BLK/ORNG)	NSB 101+12 OH	108"	48"	VIII OR IX	SIGN DETAIL									SEE NOTE #3
SNS95-1	OL20	CLOSED (BLK/ORNG)	NSB 111+72 OH	108"	48"	VIII OR IX	SIGN DETAIL									SEE NOTE #3

CONSTRUCTION NOTES:

THE FIRST PART OF THE SIGN NUMBER IS THE SHEET NUMBER, THE SECOND NUMBER IS THE SIGN ON THAT SHEET.
FOR CODE REFERANCES AND STANDARD DETAILS SEE WASHINGTON STATE SIGN FABRICATION MANUAL.
ALL STAGE SIGNS SHALL MEET THE REQUIREMENTS OF STANDARD SPECIFICATION 8-21.
ALL OVERLAY PANELS SHALL HAVE A MINIMUM OF 4 MOUNTING BOLTS (SEE BOLT DETAIL).

1. REMOVE OVERLAY PANEL WHEN LANE IS RETURNED TO SERVICE.
2. REMOVE OVERLAY PANEL WHEN ORIGINAL CHANNELIZATION IS RESTORED.
3. REMOVE OVERLAY PANEL WHEN CLOSURE IS NO LONGER ACTIVE.

** TYPE III OR IV BACKGROUND; VIII OR IX FOR LEGEND, BORDERS AND SYMBOLS.

ALL OVERLAY PANELS OVER 5' LONG
SHALL HAVE ADDITIONAL PERIMETER BOLTS
(EQUALLY SPACED - 2' MINIMUM & 4.5' MAXIMUM)

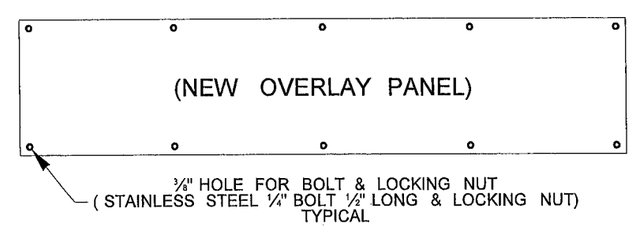

BOLT PATTERN DETAIL

FILE NAME	PW:_XL3497\PS&E Sheets\Signing\Stage Signs\ADD1_P3497_SH_SNSD_05.dgn
TIME	4:23:28 PM
DATE	4/16/2014
PLOTTED BY	blakelf
DESIGNED BY	F. BLAKELY
ENTERED BY	F. BLAKELY
CHECKED BY	J. VARADY
PROJ. ENGR.	J. PEREZ
REGIONAL ADM.	K. DAYTON

REVISION	DATE	BY
AD1 - SIGN INSTALL. & OVERLAY CHANGE	04/25/2014	FB

REGION NO. 10 | STATE WASH | FED.AID PROJ.NO.
JOB NUMBER 12C501
CONTRACT NO.
LOCATION NO. XL3497

P.E. STAMP BOX DATE

P.E. STAMP BOX DATE

Washington State Department of Transportation

I-5
M ST TO PORTLAND AVE - HOV

SIGN STAGING SPECIFICATIONS

PLAN REF NO SNSD5

SHEET 1225 OF 1763 SHEETS

STAGE 1

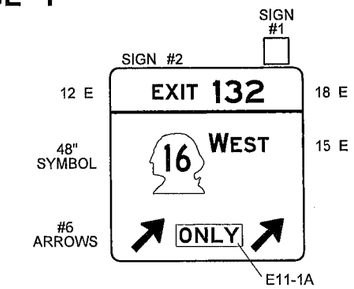

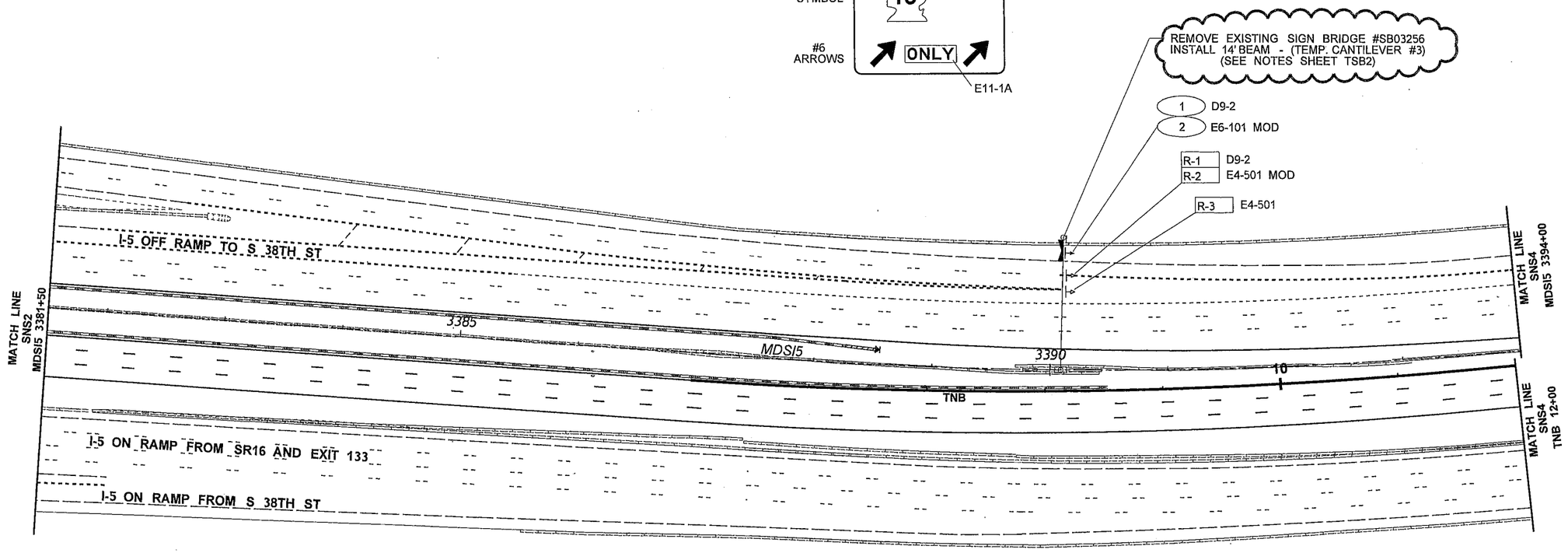

LEGEND

- # — NEW SIGN
- (EXISTING LOCATION)
- L# — EXISTING SIGN TO BE RELOCATED
- (NEW LOCATION)
- R-# — EXISTING SIGN ASSEMBLY TO BE REMOVED
- NEW SIGN ASSEMBLY
- EXISTING SIGN ASSEMBLY
- EXISTING SIGN ASSEMBLY (NOT INCLUDED IN PROJECT)
- NEW OVERHEAD SIGN
- EXISTING OVERHEAD SIGN
- EXISTING OVERHEAD SIGN (NOT INCLUDED IN PROJECT)
- SIGN BRIDGE POST WITH TEMPORARY 14' BEAM
- NEW CANTIEVER (MONOTUBE)
- NEW SIGN BRIDGE (MONOTUBE)
- EXISTING CANTILEVER (TRUSS)
- EXISTING SIGN BRIDGE (TRUSS)
- EXISTING SIGN BRIDGE (MONOTUBE)
- EXISTING SIGN BRIDGE (NOT INCLUDED IN PROJECT)
- RETAINING WALL
- EXISTING RETAINING WALL
- CONCRETE BARRIER
- TEMPORARY CONCRETE BARRIER
- TEMPORARY IMPACT ATTENUATOR
- EXISTING TEMPORARY PORATABLE SIGN MOUNT

0 50 100
SCALE IN FEET

SHEETS SNS1, SNS2 INTENTIONALLY OMITTED

FILE NAME	PW:_XL3497\PS&E Sheets\Signing\Stage Signs\ADD1_P3497_SH_SNS_003.dgn
TIME	4:23:37 PM
DATE	4/16/2014
PLOTTED BY	blakelf
DESIGNED BY	F. BLAKELY
ENTERED BY	F. BLAKELY
CHECKED BY	J. VARADY
PROJ. ENGR.	J. PEREZ
REGIONAL ADM.	K. DAYTON

REVISION	DATE	BY
AD1 NOTE CHANGE	04/25/2014	FB

REGION NO.	STATE	FED.AID PROJ.NO.
10	WASH	

JOB NUMBER 12C501

CONTRACT NO.

LOCATION NO. XL3497

DEANE RAY CRUMBER, STATE OF WASHINGTON, 38175, REGISTERED PROFESSIONAL ENGINEER
4/17/14
DATE
P.E. STAMP BOX

DATE
P.E. STAMP BOX

Washington State Department of Transportation

I-5
M ST TO PORTLAND AVE - HOV

SIGN STAGING PLAN

PLAN REF NO SNS3

SHEET 1226 OF 1763 SHEETS

STAGE 1

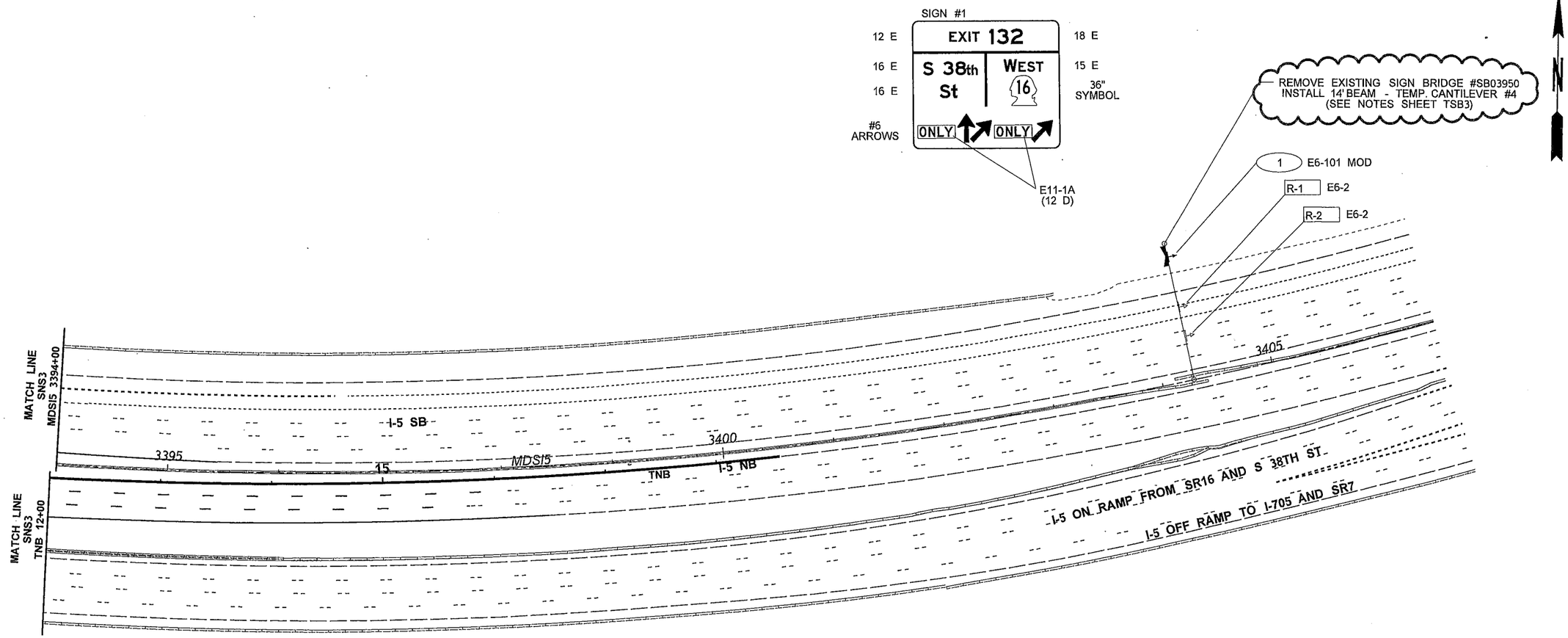

LEGEND

- # — NEW SIGN
- (EXISTING LOCATION)
- L# — EXISTING SIGN TO BE RELOCATED
- (NEW LOCATION)
- R-# — EXISTING SIGN ASSEMBLY TO BE REMOVED
- NEW SIGN ASSEMBLY
- EXISTING SIGN ASSEMBLY
- EXISTING SIGN ASSEMBLY (NOT INCLUDED IN PROJECT)
- NEW OVERHEAD SIGN
- EXISTING OVERHEAD SIGN
- EXISTING OVERHEAD SIGN (NOT INCLUDED IN PROJECT)
- SIGN BRIDGE POST WITH TEMPORARY 14' BEAM
- NEW CANTIEVER (MONOTUBE)
- NEW SIGN BRIDGE (MONOTUBE)
- EXISTING CANTILEVER (TRUSS)
- EXISTING SIGN BRIDGE (TRUSS)
- EXISTING SIGN BRIDGE (MONOTUBE)
- EXISTING SIGN BRIDGE (NOT INCLUDED IN PROJECT)
- RETAINING WALL
- EXISTING RETAINING WALL
- CONCRETE BARRIER
- TEMPORARY CONCRETE BARRIER
- TEMPORARY IMPACT ATTENUATOR
- EXISTING TEMPORARY PORATABLE SIGN MOUNT

0 50 100
SCALE IN FEET

FILE NAME	PW:_XL3497\PS&E Sheets\Signing\Stage Signs\ADD1_P3497_SH_SNS_004.dgn				REGION NO. 10	STATE WASH	FED.AID PROJ.NO.
TIME	4:23:44 PM						
DATE	4/16/2014						
PLOTTED BY	blakelf				JOB NUMBER 12C501		
DESIGNED BY	F. BLAKELY						
ENTERED BY	F. BLAKELY				CONTRACT NO.		LOCATION NO. XL3497
CHECKED BY	J. VARADY						
PROJ. ENGR.	J. PEREZ	AD1 - NOTE CHANGE	04/25/2014	FB			
REGIONAL ADM.	K. DAYTON	REVISION	DATE	BY			

DENNIS RAY CRUMBLEY — STATE OF WASHINGTON — REGISTERED PROFESSIONAL ENGINEER
4/17/14
DATE
P.E. STAMP BOX

DATE
P.E. STAMP BOX

Washington State Department of Transportation

I-5
M ST TO PORTLAND AVE - HOV

SIGN STAGING PLAN

PLAN REF NO SNS4

SHEET 1227 OF 1763 SHEETS

STAGE 1A

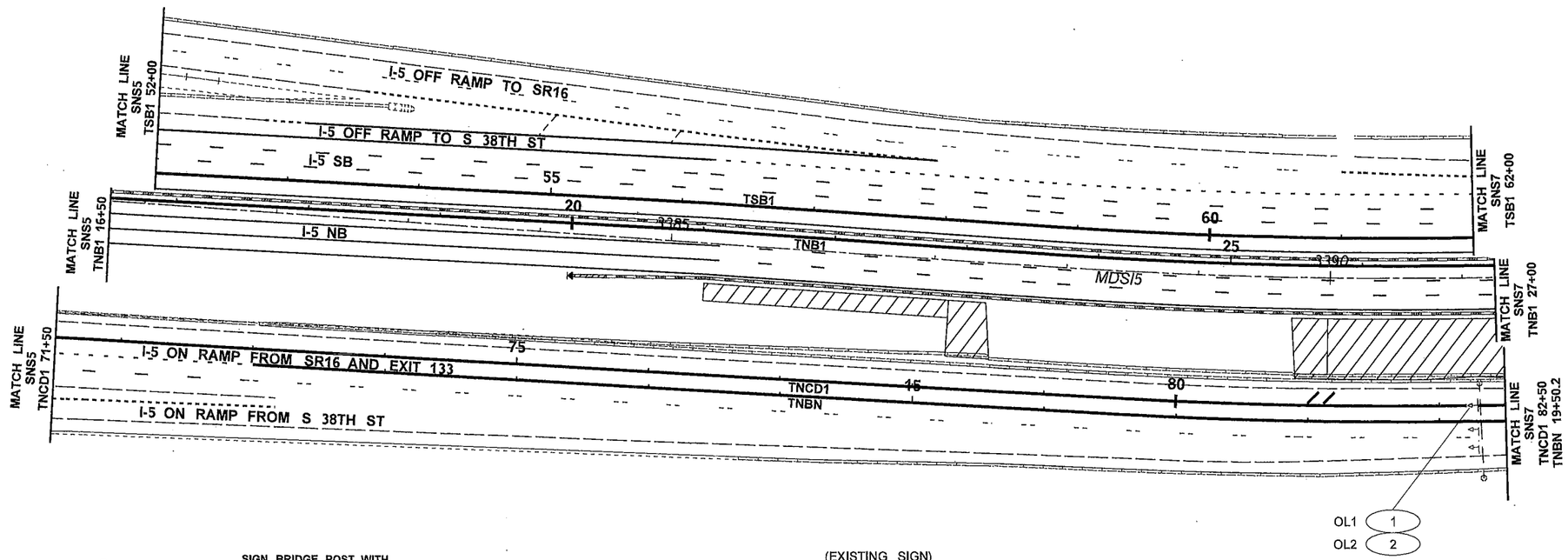

LEGEND

#	NEW SIGN
	(EXISTING LOCATION)
L#	EXISTING SIGN TO BE RELOCATED
	(NEW LOCATION)
R-#	EXISTING SIGN ASSEMBLY TO BE REMOVED
	NEW SIGN ASSEMBLY
	EXISTING SIGN ASSEMBLY
	EXISTING SIGN ASSEMBLY (NOT INCLUDED IN PROJECT)
	NEW OVERHEAD SIGN
	EXISTING OVERHEAD SIGN
	EXISTING OVERHEAD SIGN (NOT INCLUDED IN PROJECT)
	SIGN BRIDGE POST WITH TEMPORARY 14' BEAM
	NEW CANTIEVER (MONOTUBE)
	NEW SIGN BRIDGE (MONOTUBE)
	EXISTING CANTILEVER (TRUSS)
	EXISTING SIGN BRIDGE (TRUSS)
	EXISTING SIGN BRIDGE (MONOTUBE)
	EXISTING SIGN BRIDGE (NOT INCLUDED IN PROJECT)
	RETAINING WALL
	EXISTING RETAINING WALL
	CONCRETE BARRIER
	TEMPORARY CONCRETE BARRIER
	TEMPORARY IMPACT ATTENUATOR
	EXISTING TEMPORARY PORATABLE SIGN MOUNT

(EXISTING SIGN)

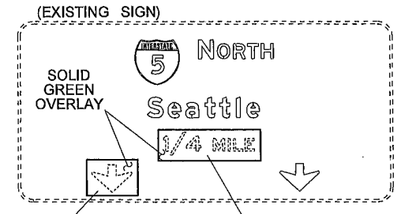

0 50 100
SCALE IN FEET

SHEET SNS5 INTENTIONALLY OMITTED

FILE NAME	PW:_XL3497\PS&E Sheets\Signing\Stage Signs\P3497_SH_SNS_006.dgn				REGION NO. 10	STATE WASH	FED.AID PROJ.NO.
TIME	11:22:09 AM				JOB NUMBER		
DATE	2/18/2014						
PLOTTED BY	blakelf						
DESIGNED BY	F. BLAKELY				CONTRACT NO.		LOCATION NO.
ENTERED BY	F. BLAKELY						XL3497
CHECKED BY	J. VARADY						
PROJ. ENGR.	J. PEREZ						
REGIONAL ADM.	K. DAYTON	REVISION	DATE	BY			

DENNIS RAY CRUMBLEY STATE OF WASHINGTON 38195 REGISTERED PROFESSIONAL ENGINEER
2/18/14
DATE
P.E. STAMP BOX

DATE
P.E. STAMP BOX

Washington State Department of Transportation

I-5
M ST TO PORTLAND AVE - HOV

SIGN STAGING PLAN

PLAN REF NO
SNS6

SHEET 1228 OF 1763 SHEETS

STAGE 1A

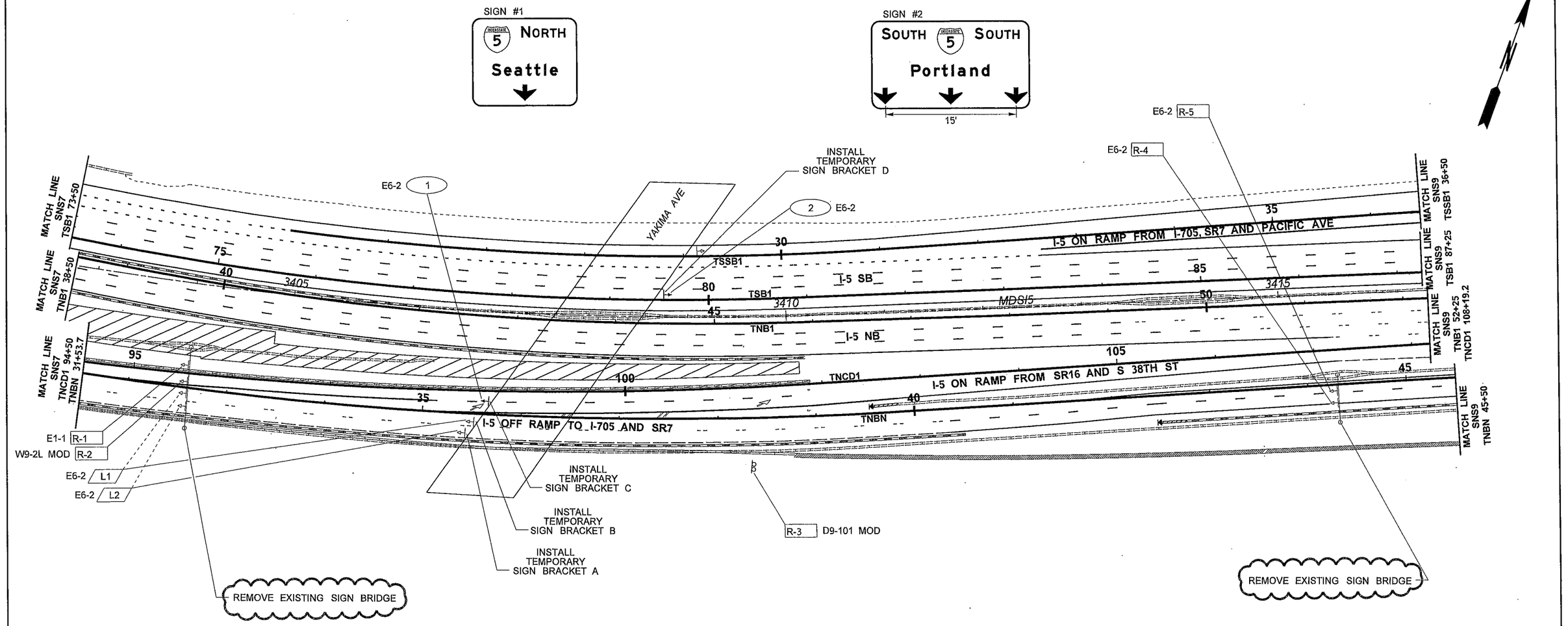

LEGEND

#	NEW SIGN
	(EXISTING LOCATION)
L#	EXISTING SIGN TO BE RELOCATED
	(NEW LOCATION)
R-#	EXISTING SIGN ASSEMBLY TO BE REMOVED
	NEW SIGN ASSEMBLY
	EXISTING SIGN ASSEMBLY
	EXISTING SIGN ASSEMBLY (NOT INCLUDED IN PROJECT)
	NEW OVERHEAD SIGN
	EXISTING OVERHEAD SIGN
	EXISTING OVERHEAD SIGN (NOT INCLUDED IN PROJECT)
	SIGN BRIDGE POST WITH TEMPORARY 14' BEAM
	NEW CANTIEVER (MONOTUBE)
	NEW SIGN BRIDGE (MONOTUBE)
	EXISTING CANTILEVER (TRUSS)
	EXISTING SIGN BRIDGE (TRUSS)
	EXISTING SIGN BRIDGE (MONOTUBE)
	EXISTING SIGN BRIDGE (NOT INCLUDED IN PROJECT)
	RETAINING WALL
	EXISTING RETAINING WALL
	CONCRETE BARRIER
	TEMPORARY CONCRETE BARRIER
	TEMPORARY IMPACT ATTENUATOR
	EXISTING TEMPORARY PORATABLE SIGN MOUNT

0 50 100
SCALE IN FEET

SHEET SNS7 INTENTIONALLY OMITTED

FILE NAME	PW:_XL3497\PS&E Sheets\Signing\Stage Signs\ADD1_P3497_SH_SNS_008.dgn					
TIME	4:23:52 PM					
DATE	4/16/2014					
PLOTTED BY	blakelf					
DESIGNED BY	F. BLAKELY					
ENTERED BY	F. BLAKELY					
CHECKED BY	J. VARADY					
PROJ. ENGR.	J. PEREZ	AD1 NOTE CHANGE	04/25/2014	FB		
REGIONAL ADM.	K. DAYTON	REVISION	DATE	BY		

REGION NO.	STATE	FED.AID PROJ.NO.
10	WASH	
JOB NUMBER 12C501		
CONTRACT NO.		LOCATION NO. XL3497

DENNIS RAY CRUMBER, STATE OF WASHINGTON, REGISTERED PROFESSIONAL ENGINEER
4/17/14
DATE
P.E. STAMP BOX

DATE
P.E. STAMP BOX

Washington State Department of Transportation

I-5
M ST TO PORTLAND AVE - HOV

SIGN STAGING PLAN

PLAN REF NO SNS8

SHEET 1229 OF 1763 SHEETS

STAGE 1A

SIGN #1

24" SHIELDS
6 D
6 D

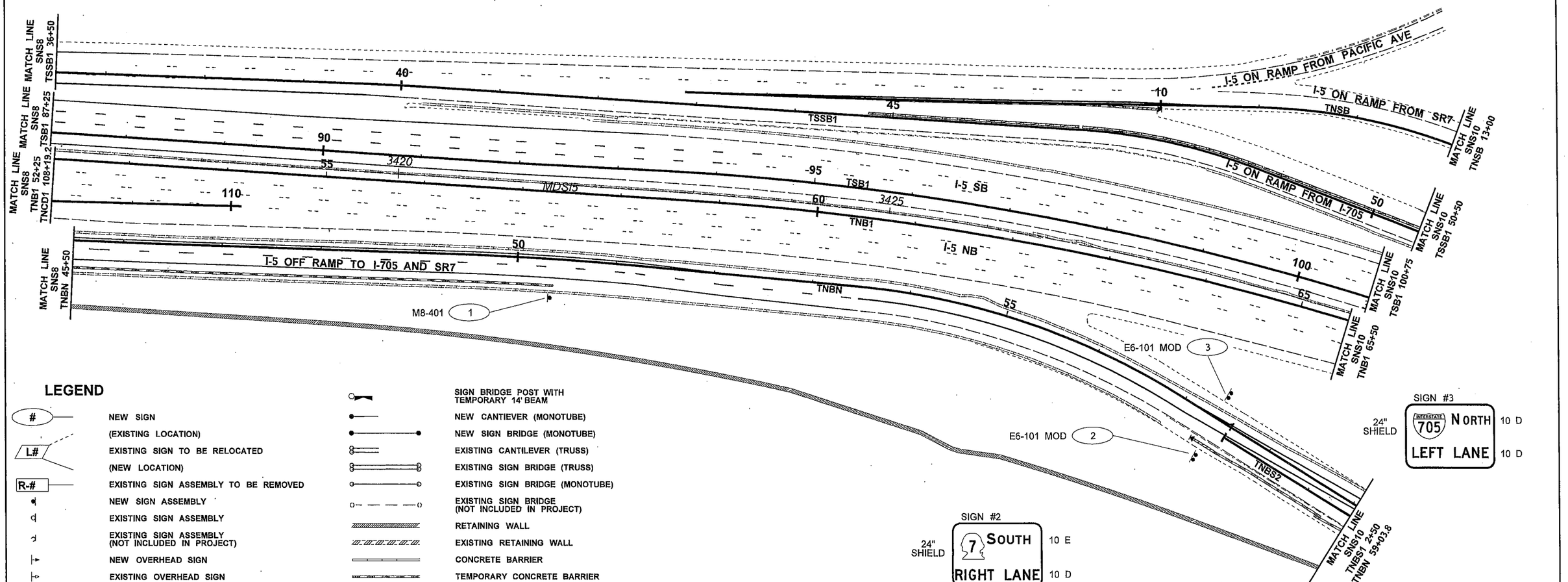

LEGEND

#	NEW SIGN
	(EXISTING LOCATION)
L#	EXISTING SIGN TO BE RELOCATED
	(NEW LOCATION)
R-#	EXISTING SIGN ASSEMBLY TO BE REMOVED
	NEW SIGN ASSEMBLY
	EXISTING SIGN ASSEMBLY
	EXISTING SIGN ASSEMBLY (NOT INCLUDED IN PROJECT)
	NEW OVERHEAD SIGN
	EXISTING OVERHEAD SIGN
	EXISTING OVERHEAD SIGN (NOT INCLUDED IN PROJECT)
	SIGN BRIDGE POST WITH TEMPORARY 14' BEAM
	NEW CANTIEVER (MONOTUBE)
	NEW SIGN BRIDGE (MONOTUBE)
	EXISTING CANTILEVER (TRUSS)
	EXISTING SIGN BRIDGE (TRUSS)
	EXISTING SIGN BRIDGE (MONOTUBE)
	EXISTING SIGN BRIDGE (NOT INCLUDED IN PROJECT)
	RETAINING WALL
	EXISTING RETAINING WALL
	CONCRETE BARRIER
	TEMPORARY CONCRETE BARRIER
	TEMPORARY IMPACT ATTENUATOR
	EXISTING TEMPORARY PORATABLE SIGN MOUNT

FILE NAME	PW:_XL3497\PS&E Sheets\Signing\Stage Signs\P3497_SH_SNS_009.dgn
TIME	11:22:25 AM
DATE	2/18/2014
PLOTTED BY	blakelf
DESIGNED BY	F. BLAKELY
ENTERED BY	F. BLAKELY
CHECKED BY	J. VARADY
PROJ. ENGR.	J. PEREZ
REGIONAL ADM.	K. DAYTON

REVISION | DATE | BY

REGION NO. 10 | STATE WASH | FED.AID PROJ.NO.

JOB NUMBER

CONTRACT NO. | LOCATION NO. XL3497

DENNIS RAY CRUMBLEY STATE OF WASHINGTON REGISTERED PROFESSIONAL ENGINEER

2/10/14 DATE

P.E. STAMP BOX

DATE

P.E. STAMP BOX

Washington State Department of Transportation

I-5
M ST TO PORTLAND AVE - HOV

SIGN STAGING PLAN

PLAN REF NO SNS9

SHEET 1230 OF 1763 SHEETS

STAGE 1A

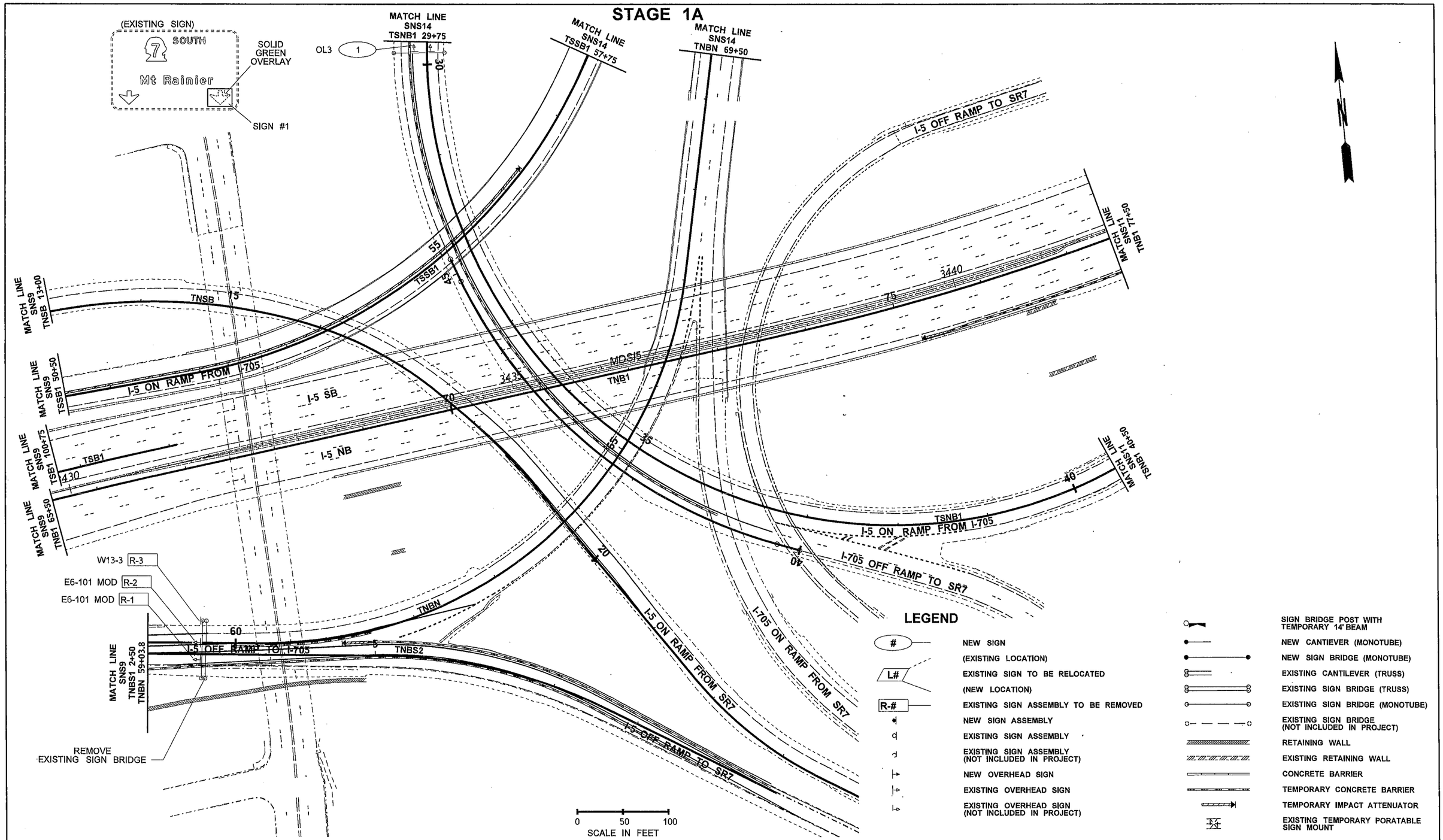

LEGEND

#	NEW SIGN
	(EXISTING LOCATION)
L#	EXISTING SIGN TO BE RELOCATED
	(NEW LOCATION)
R-#	EXISTING SIGN ASSEMBLY TO BE REMOVED
	NEW SIGN ASSEMBLY
	EXISTING SIGN ASSEMBLY
	EXISTING SIGN ASSEMBLY (NOT INCLUDED IN PROJECT)
	NEW OVERHEAD SIGN
	EXISTING OVERHEAD SIGN
	EXISTING OVERHEAD SIGN (NOT INCLUDED IN PROJECT)
	SIGN BRIDGE POST WITH TEMPORARY 14' BEAM
	NEW CANTIEVER (MONOTUBE)
	NEW SIGN BRIDGE (MONOTUBE)
	EXISTING CANTILEVER (TRUSS)
	EXISTING SIGN BRIDGE (TRUSS)
	EXISTING SIGN BRIDGE (MONOTUBE)
	EXISTING SIGN BRIDGE (NOT INCLUDED IN PROJECT)
	RETAINING WALL
	EXISTING RETAINING WALL
	CONCRETE BARRIER
	TEMPORARY CONCRETE BARRIER
	TEMPORARY IMPACT ATTENUATOR
	EXISTING TEMPORARY PORATABLE SIGN MOUNT

FILE NAME	PW:_XL3497\PS&E Sheets\Signing\Stage Signs\P3497_SH_SNS_010.dgn			
TIME	11:22:33 AM			
DATE	2/18/2014			
PLOTTED BY	blakelf			
DESIGNED BY	F. BLAKELY			
ENTERED BY	F. BLAKELY			
CHECKED BY	J. VARADY			
PROJ. ENGR.	J. PEREZ			
REGIONAL ADM.	K. DAYTON	REVISION	DATE	BY

REGION NO.	STATE	FED.AID PROJ.NO.
10	WASH	
JOB NUMBER		
CONTRACT NO.		LOCATION NO. XL3497

DENNIS RAY CRUMBLEY, STATE OF WASHINGTON, REGISTERED PROFESSIONAL ENGINEER

2/18/14 DATE

P.E. STAMP BOX

DATE

P.E. STAMP BOX

Washington State Department of Transportation

I-5

M ST TO PORTLAND AVE - HOV

SIGN STAGING PLAN

PLAN REF NO SNS10

SHEET 1231 OF 1763 SHEETS

STAGE 1A

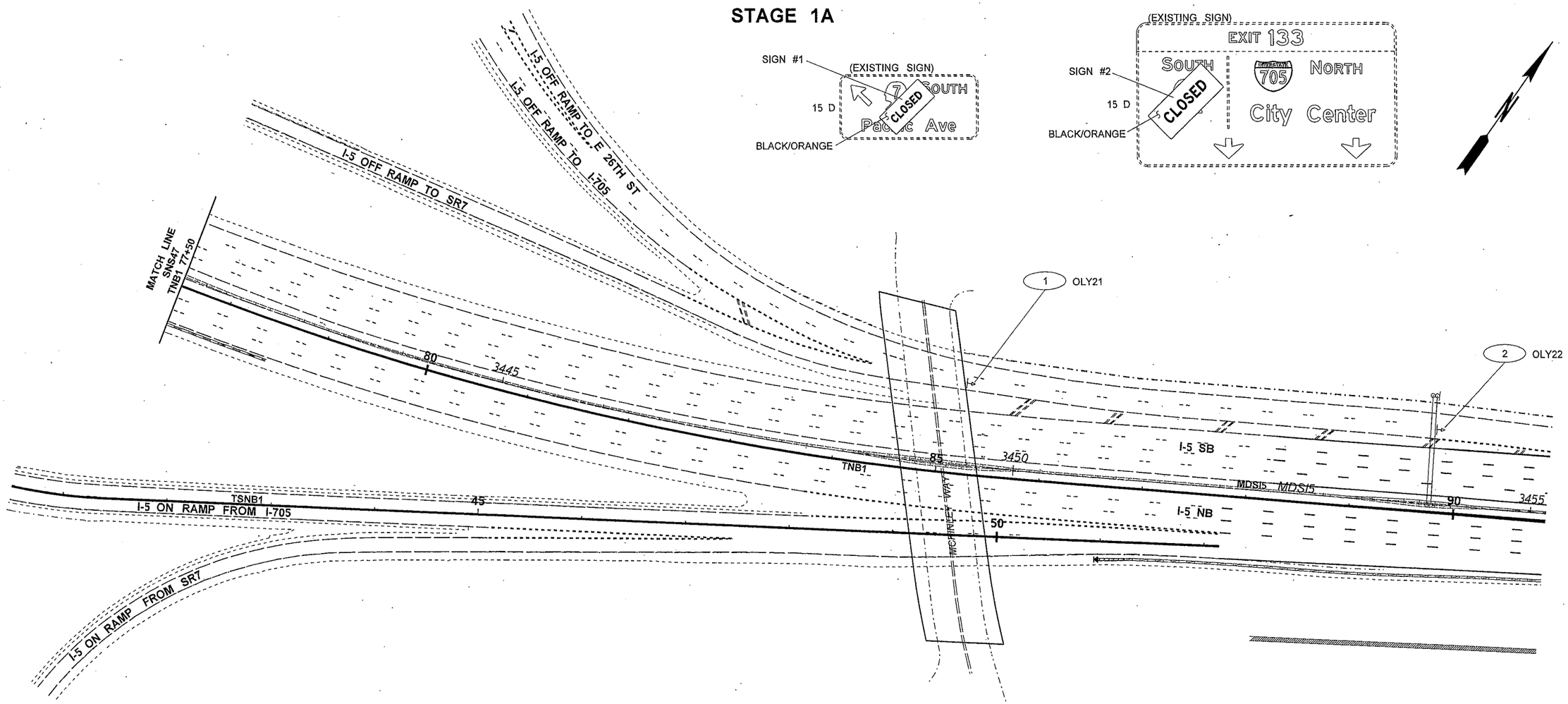

LEGEND

#	NEW SIGN
	(EXISTING LOCATION)
L#	EXISTING SIGN TO BE RELOCATED
	(NEW LOCATION)
R-#	EXISTING SIGN ASSEMBLY TO BE REMOVED
	NEW SIGN ASSEMBLY
	EXISTING SIGN ASSEMBLY
	EXISTING SIGN ASSEMBLY (NOT INCLUDED IN PROJECT)
	NEW OVERHEAD SIGN
	EXISTING OVERHEAD SIGN
	EXISTING OVERHEAD SIGN (NOT INCLUDED IN PROJECT)
	SIGN BRIDGE POST WITH TEMPORARY 14' BEAM
	NEW CANTIEVER (MONOTUBE)
	NEW SIGN BRIDGE (MONOTUBE)
	EXISTING CANTILEVER (TRUSS)
	EXISTING SIGN BRIDGE (TRUSS)
	EXISTING SIGN BRIDGE (MONOTUBE)
	EXISTING SIGN BRIDGE (NOT INCLUDED IN PROJECT)
	RETAINING WALL
	EXISTING RETAINING WALL
	CONCRETE BARRIER
	TEMPORARY CONCRETE BARRIER
	TEMPORARY IMPACT ATTENUATOR
	EXISTING TEMPORARY PORATABLE SIGN MOUNT

0 50 100
SCALE IN FEET

FILE NAME	PW:_XL3497\PS&E Sheets\Signing\Stage Signs\ADD1_P3497_SH_SNS_010A.dgn
TIME	2:04:54 PM
DATE	4/25/2014
PLOTTED BY	SancheA
DESIGNED BY	F. BLAKELY
ENTERED BY	F. BLAKELY
CHECKED BY	J. VARADY
PROJ. ENGR.	J. PEREZ
REGIONAL ADM.	K. DAYTON

REVISION	DATE	BY
AD1 ADDED SHEET	04/25/2014	FB

REGION NO.	STATE	FED.AID PROJ.NO.
10	WASH	
JOB NUMBER 12C501		
CONTRACT NO.		LOCATION NO. XL3497

DENNIS RAY CRUNDAL, STATE OF WASHINGTON, REGISTERED PROFESSIONAL ENGINEER
4/25/14
DATE
P.E. STAMP BOX

DATE
P.E. STAMP BOX

Washington State Department of Transportation

I-5
M ST TO PORTLAND AVE - HOV

SIGN STAGING PLAN

PLAN REF NO SNS10A

SHEET 1231A OF 1763 SHEETS

STAGE 1A

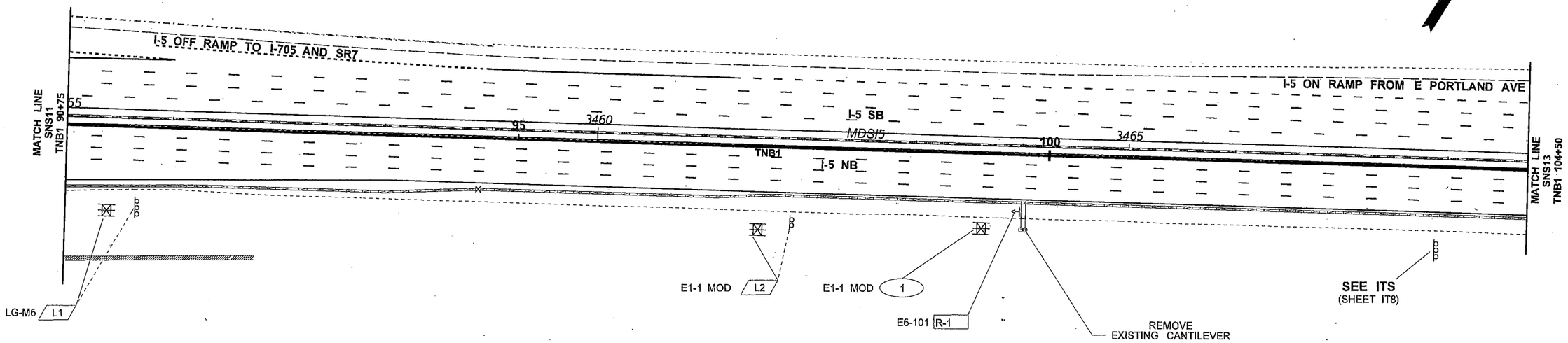

SIGN #1

12 E	EXIT 134	18 E
16 D	Portland Ave	
15 E	1/4 MILE	12 E

LEGEND

- # — NEW SIGN
- (EXISTING LOCATION)
- L# — EXISTING SIGN TO BE RELOCATED
- (NEW LOCATION)
- R-# — EXISTING SIGN ASSEMBLY TO BE REMOVED
- NEW SIGN ASSEMBLY
- EXISTING SIGN ASSEMBLY
- EXISTING SIGN ASSEMBLY (NOT INCLUDED IN PROJECT)
- NEW OVERHEAD SIGN
- EXISTING OVERHEAD SIGN
- EXISTING OVERHEAD SIGN (NOT INCLUDED IN PROJECT)
- SIGN BRIDGE POST WITH TEMPORARY 14' BEAM
- NEW CANTIEVER (MONOTUBE)
- NEW SIGN BRIDGE (MONOTUBE)
- EXISTING CANTILEVER (TRUSS)
- EXISTING SIGN BRIDGE (TRUSS)
- EXISTING SIGN BRIDGE (MONOTUBE)
- EXISTING SIGN BRIDGE (NOT INCLUDED IN PROJECT)
- RETAINING WALL
- EXISTING RETAINING WALL
- CONCRETE BARRIER
- TEMPORARY CONCRETE BARRIER
- TEMPORARY IMPACT ATTENUATOR
- EXISTING TEMPORARY PORATABLE SIGN MOUNT

0 50 100
SCALE IN FEET

SHEET SNS11 INTENTIONALLY OMITTED

FILE NAME	PW:_XL3497\PS&E Sheets\Signing\Stage Signs\P3497_SH_SNS_012.dgn
TIME	8:42:31 AM
DATE	3/4/2014
PLOTTED BY	blakelf
DESIGNED BY	F. BLAKELY
ENTERED BY	F. BLAKELY
CHECKED BY	J. VARADY
PROJ. ENGR.	J. PEREZ
REGIONAL ADM.	K. DAYTON

REVISION | DATE | BY

REGION NO. 10 | STATE WASH | FED.AID PROJ.NO.

JOB NUMBER

CONTRACT NO. | LOCATION NO. XL3497

DEANE RAY CRUMBLE — STATE OF WASHINGTON — PROFESSIONAL ENGINEER
3/4/14
DATE
P.E. STAMP BOX

DATE
P.E. STAMP BOX

Washington State Department of Transportation

I-5
M ST TO PORTLAND AVE - HOV

SIGN STAGING PLAN

PLAN REF NO SNS12

SHEET 1232 OF 1763 SHEETS

STAGE 1A

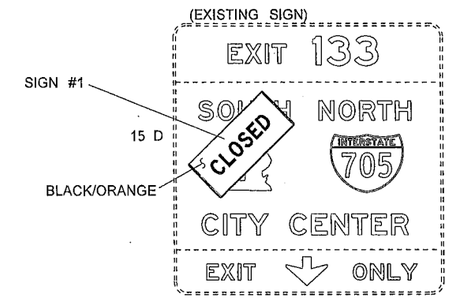

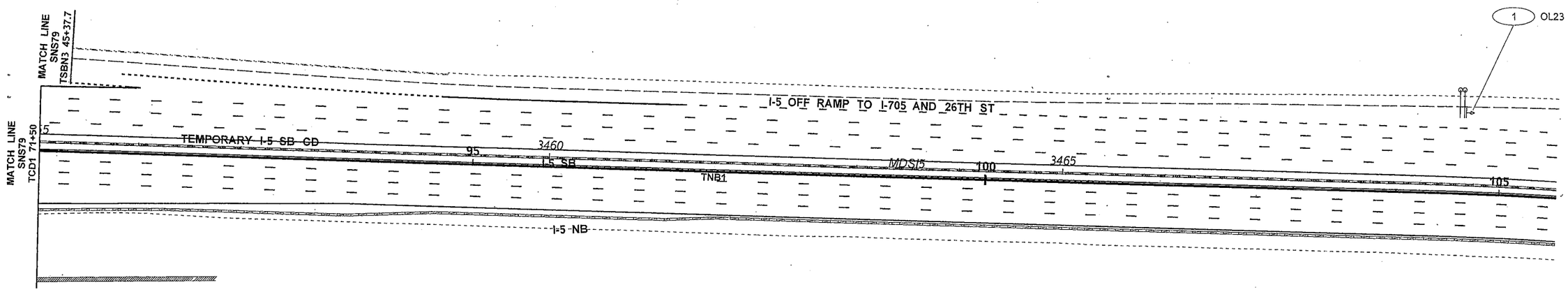

LEGEND

- # — NEW SIGN
- (EXISTING LOCATION)
- L# — EXISTING SIGN TO BE RELOCATED
- (NEW LOCATION)
- R-# — EXISTING SIGN ASSEMBLY TO BE REMOVED
- NEW SIGN ASSEMBLY
- EXISTING SIGN ASSEMBLY
- EXISTING SIGN ASSEMBLY (NOT INCLUDED IN PROJECT)
- NEW OVERHEAD SIGN
- EXISTING OVERHEAD SIGN
- EXISTING OVERHEAD SIGN (NOT INCLUDED IN PROJECT)
- SIGN BRIDGE POST WITH TEMPORARY 14' BEAM
- NEW CANTIEVER (MONOTUBE)
- NEW SIGN BRIDGE (MONOTUBE)
- EXISTING CANTILEVER (TRUSS)
- EXISTING SIGN BRIDGE (TRUSS)
- EXISTING SIGN BRIDGE (MONOTUBE)
- EXISTING SIGN BRIDGE (NOT INCLUDED IN PROJECT)
- RETAINING WALL
- EXISTING RETAINING WALL
- CONCRETE BARRIER
- TEMPORARY CONCRETE BARRIER
- TEMPORARY IMPACT ATTENUATOR
- EXISTING TEMPORARY PORATABLE SIGN MOUNT

0 50 100
SCALE IN FEET

FILE NAME	PW:_XL3497\PS&E Sheets\Signing\Stage Signs\ADD1_P3497_SH_SNS_012A.dgn						
TIME	2:07:58 PM				REGION NO. 10	STATE WASH	FED.AID PROJ.NO.
DATE	4/25/2014						
PLOTTED BY	SancheA				JOB NUMBER 12C501		
DESIGNED BY	F. BLAKELY						
ENTERED BY	F. BLAKELY						
CHECKED BY	J. VARADY				CONTRACT NO.		LOCATION NO.
PROJ. ENGR.	J. PEREZ	ADD1 ADDED SHEET	04/25/2014	EB			XL3497
REGIONAL ADM.	K. DAYTON	REVISION	DATE	BY			

DENNIS RAY CRUMBY — STATE OF WASHINGTON — 19402 — REGISTERED PROFESSIONAL ENGINEER
4/25/14
DATE
P.E. STAMP BOX

DATE
P.E. STAMP BOX

Washington State Department of Transportation

I-5
M ST TO PORTLAND AVE - HOV

SIGN STAGING PLAN

PLAN REF NO
SNS12A

SHEET 1232A OF 1763 SHEETS

STAGE 1B

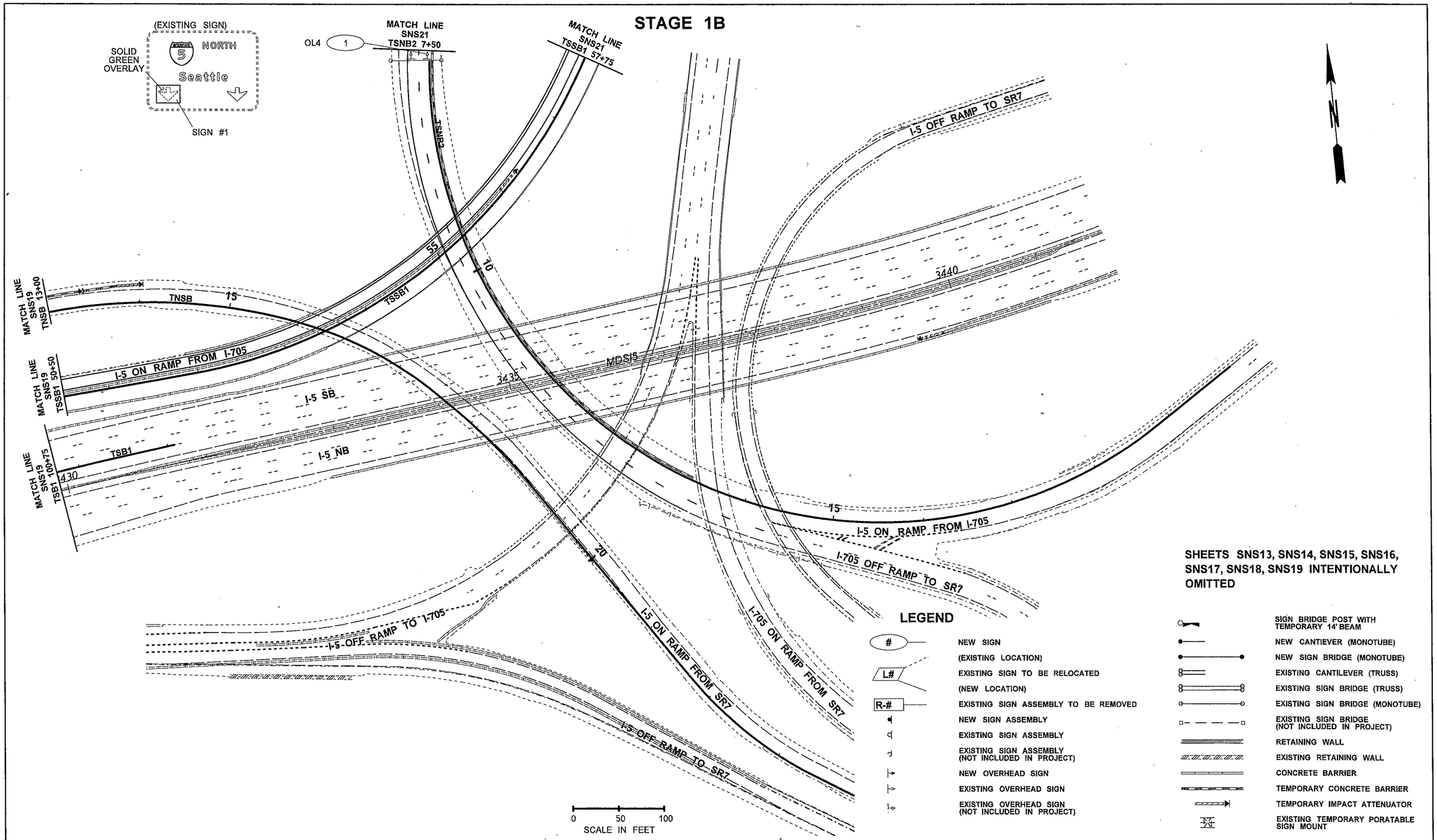

SHEETS SNS13, SNS14, SNS15, SNS16, SNS17, SNS18, SNS19 INTENTIONALLY OMITTED

LEGEND

#	NEW SIGN
	(EXISTING LOCATION)
L#	EXISTING SIGN TO BE RELOCATED
	(NEW LOCATION)
R-#	EXISTING SIGN ASSEMBLY TO BE REMOVED
	NEW SIGN ASSEMBLY
	EXISTING SIGN ASSEMBLY
	EXISTING SIGN ASSEMBLY (NOT INCLUDED IN PROJECT)
	NEW OVERHEAD SIGN
	EXISTING OVERHEAD SIGN
	EXISTING OVERHEAD SIGN (NOT INCLUDED IN PROJECT)
	SIGN BRIDGE POST WITH TEMPORARY 14' BEAM
	NEW CANTIEVER (MONOTUBE)
	NEW SIGN BRIDGE (MONOTUBE)
	EXISTING CANTILEVER (TRUSS)
	EXISTING SIGN BRIDGE (TRUSS)
	EXISTING SIGN BRIDGE (MONOTUBE)
	EXISTING SIGN BRIDGE (NOT INCLUDED IN PROJECT)
	RETAINING WALL
	EXISTING RETAINING WALL
	CONCRETE BARRIER
	TEMPORARY CONCRETE BARRIER
	TEMPORARY IMPACT ATTENUATOR
	EXISTING TEMPORARY PORATABLE SIGN MOUNT

FILE NAME	PW:_XL3497\PS&E Sheets\Signing\Stage Signs\P3497_SH_SNS_020.dgn			
TIME	11:22:48 AM			
DATE	2/18/2014			
PLOTTED BY	blakelf			
DESIGNED BY	F. BLAKELY			
ENTERED BY	F. BLAKELY			
CHECKED BY	J. VARADY			
PROJ. ENGR.	J. PEREZ			
REGIONAL ADM.	K. DAYTON	REVISION	DATE	BY

REGION NO.	STATE	FED.AID PROJ.NO.
10	WASH	
JOB NUMBER		
CONTRACT NO.		LOCATION NO. XL3497

DENNIS RAY CRUMBERT, STATE OF WASHINGTON, REGISTERED PROFESSIONAL ENGINEER
2/18/14
DATE
P.E. STAMP BOX

DATE
P.E. STAMP BOX

Washington State Department of Transportation

I-5
M ST TO PORTLAND AVE - HOV

SIGN STAGING PLAN

PLAN REF NO SNS20

SHEET 1233 OF 1763 SHEETS

STAGE 1C

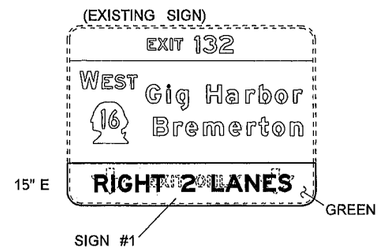

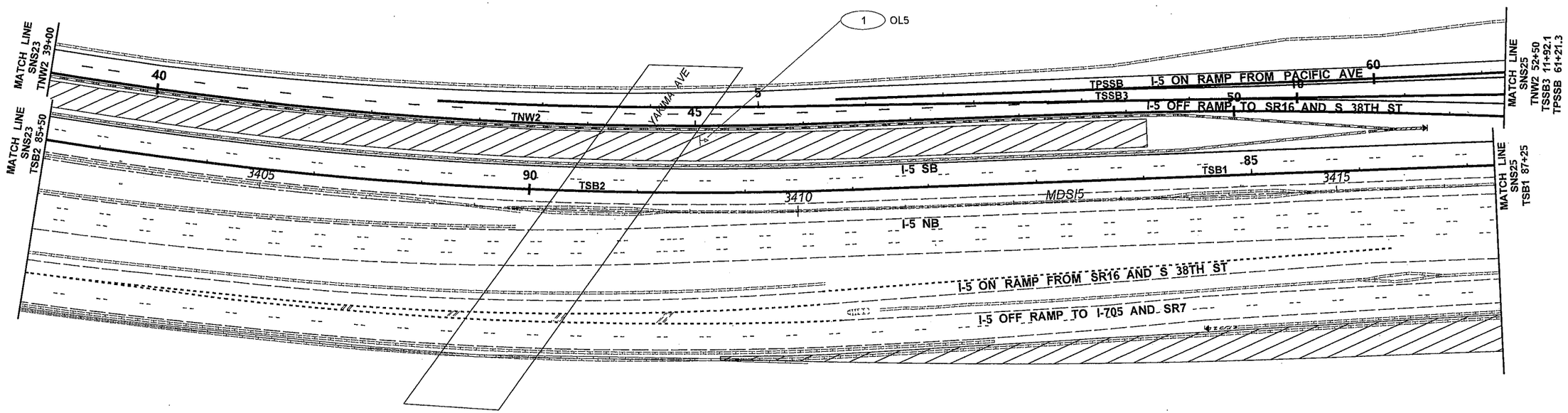

LEGEND

#	NEW SIGN
	(EXISTING LOCATION)
L#	EXISTING SIGN TO BE RELOCATED
	(NEW LOCATION)
R-#	EXISTING SIGN ASSEMBLY TO BE REMOVED
	NEW SIGN ASSEMBLY
	EXISTING SIGN ASSEMBLY
	EXISTING SIGN ASSEMBLY (NOT INCLUDED IN PROJECT)
	NEW OVERHEAD SIGN
	EXISTING OVERHEAD SIGN
	EXISTING OVERHEAD SIGN (NOT INCLUDED IN PROJECT)
	SIGN BRIDGE POST WITH TEMPORARY 14' BEAM
	NEW CANTIEVER (MONOTUBE)
	NEW SIGN BRIDGE (MONOTUBE)
	EXISTING CANTILEVER (TRUSS)
	EXISTING SIGN BRIDGE (TRUSS)
	EXISTING SIGN BRIDGE (MONOTUBE)
	EXISTING SIGN BRIDGE (NOT INCLUDED IN PROJECT)
	RETAINING WALL
	EXISTING RETAINING WALL
	CONCRETE BARRIER
	TEMPORARY CONCRETE BARRIER
	TEMPORARY IMPACT ATTENUATOR
	EXISTING TEMPORARY PORATABLE SIGN MOUNT

0 50 100
SCALE IN FEET

SHEETS SNS21, SNS22, SNS23, INTENTIONALLY OMITTED

FILE NAME	PW:_XL3497\PS&E Sheets\Signing\Stage Signs\P3497_SH_SNS_024.dgn
TIME	11:22:55 AM
DATE	2/18/2014
PLOTTED BY	blakelf
DESIGNED BY	F. BLAKELY
ENTERED BY	F. BLAKELY
CHECKED BY	J. VARADY
PROJ. ENGR.	J. PEREZ
REGIONAL ADM.	K. DAYTON

REVISION | DATE | BY

REGION NO. 10 | STATE WASH | FED.AID PROJ.NO.

JOB NUMBER

CONTRACT NO. | LOCATION NO. XL3497

DENNIS RAY CRUMBLEY, STATE OF WASHINGTON, REGISTERED PROFESSIONAL ENGINEER

2/18/14
DATE
P.E. STAMP BOX

DATE
P.E. STAMP BOX

Washington State Department of Transportation

I-5
M ST TO PORTLAND AVE - HOV

SIGN STAGING PLAN

PLAN REF NO SNS24

SHEET 1234 OF 1763 SHEETS

STAGE 1C

SIGN #1

12" D

#4 ARROW

SIGN #2

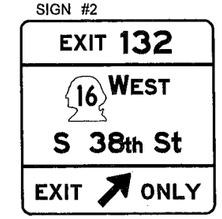

#6 ARROW

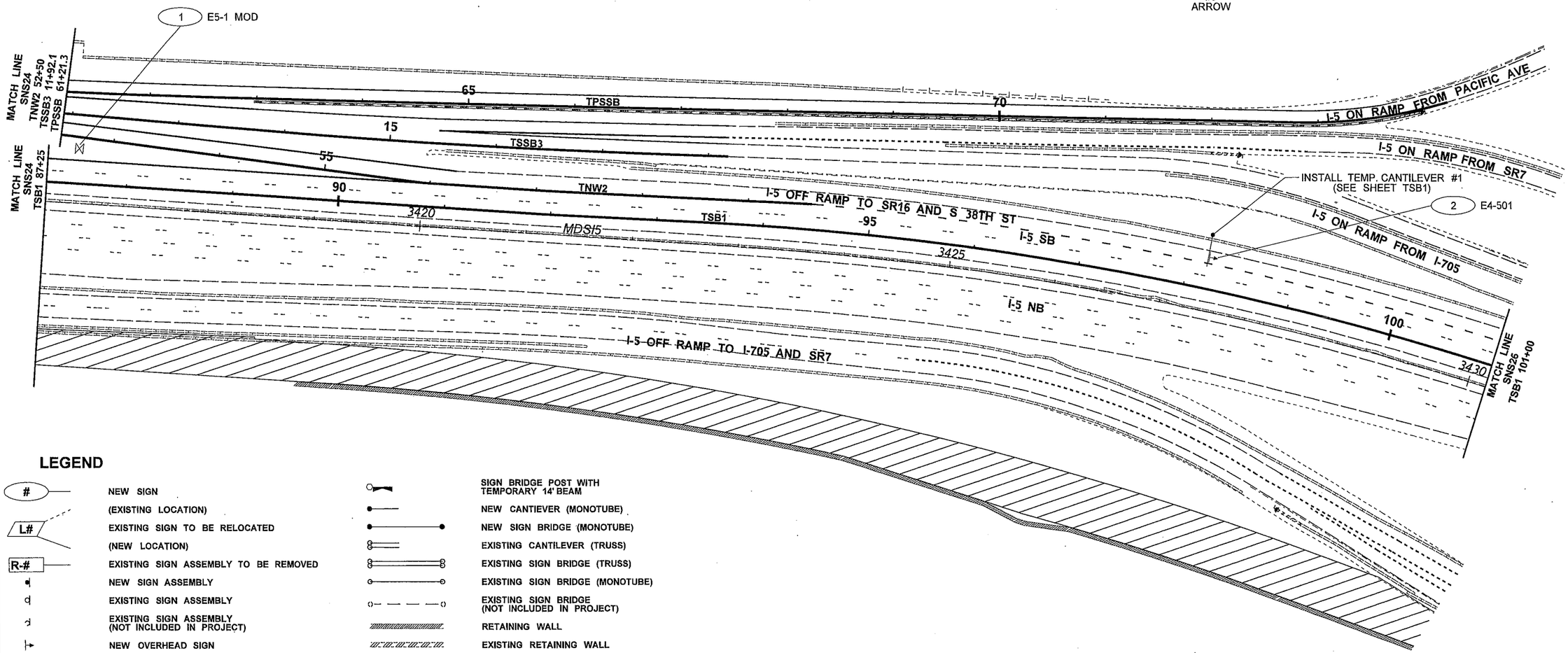

LEGEND

#	NEW SIGN		SIGN BRIDGE POST WITH TEMPORARY 14' BEAM
	(EXISTING LOCATION)		NEW CANTIEVER (MONOTUBE)
L#	EXISTING SIGN TO BE RELOCATED		NEW SIGN BRIDGE (MONOTUBE)
	(NEW LOCATION)		EXISTING CANTILEVER (TRUSS)
R-#	EXISTING SIGN ASSEMBLY TO BE REMOVED		EXISTING SIGN BRIDGE (TRUSS)
	NEW SIGN ASSEMBLY		EXISTING SIGN BRIDGE (MONOTUBE)
	EXISTING SIGN ASSEMBLY		EXISTING SIGN BRIDGE (NOT INCLUDED IN PROJECT)
	EXISTING SIGN ASSEMBLY (NOT INCLUDED IN PROJECT)		RETAINING WALL
	NEW OVERHEAD SIGN		EXISTING RETAINING WALL
	EXISTING OVERHEAD SIGN		CONCRETE BARRIER
	EXISTING OVERHEAD SIGN (NOT INCLUDED IN PROJECT)		TEMPORARY CONCRETE BARRIER
			TEMPORARY IMPACT ATTENUATOR
	SIGN LOCATION - BARRIER MOUNT		EXISTING TEMPORARY PORATABLE SIGN MOUNT

0 50 100
SCALE IN FEET

FILE NAME	PW:_XL3497\PS&E Sheets\Signing\Stage Signs\P3497_SH_SNS_025.dgn
TIME	11:23:03 AM
DATE	2/18/2014
PLOTTED BY	blakelf
DESIGNED BY	F. BLAKELY
ENTERED BY	F. BLAKELY
CHECKED BY	J. VARADY
PROJ. ENGR.	J. PEREZ
REGIONAL ADM.	K. DAYTON

REVISION | DATE | BY

REGION NO.	STATE	FED.AID PROJ.NO.
10	WASH	
JOB NUMBER		
CONTRACT NO.		LOCATION NO. XL3497

DENNIS RAY CRUMBER, STATE OF WASHINGTON, REGISTERED PROFESSIONAL ENGINEER
2/18/14
DATE
P.E. STAMP BOX

DATE
P.E. STAMP BOX

Washington State Department of Transportation

I-5
M ST TO PORTLAND AVE - HOV

SIGN STAGING PLAN

PLAN REF NO SNS25

SHEET 1235 OF 1763 SHEETS

STAGE 1C

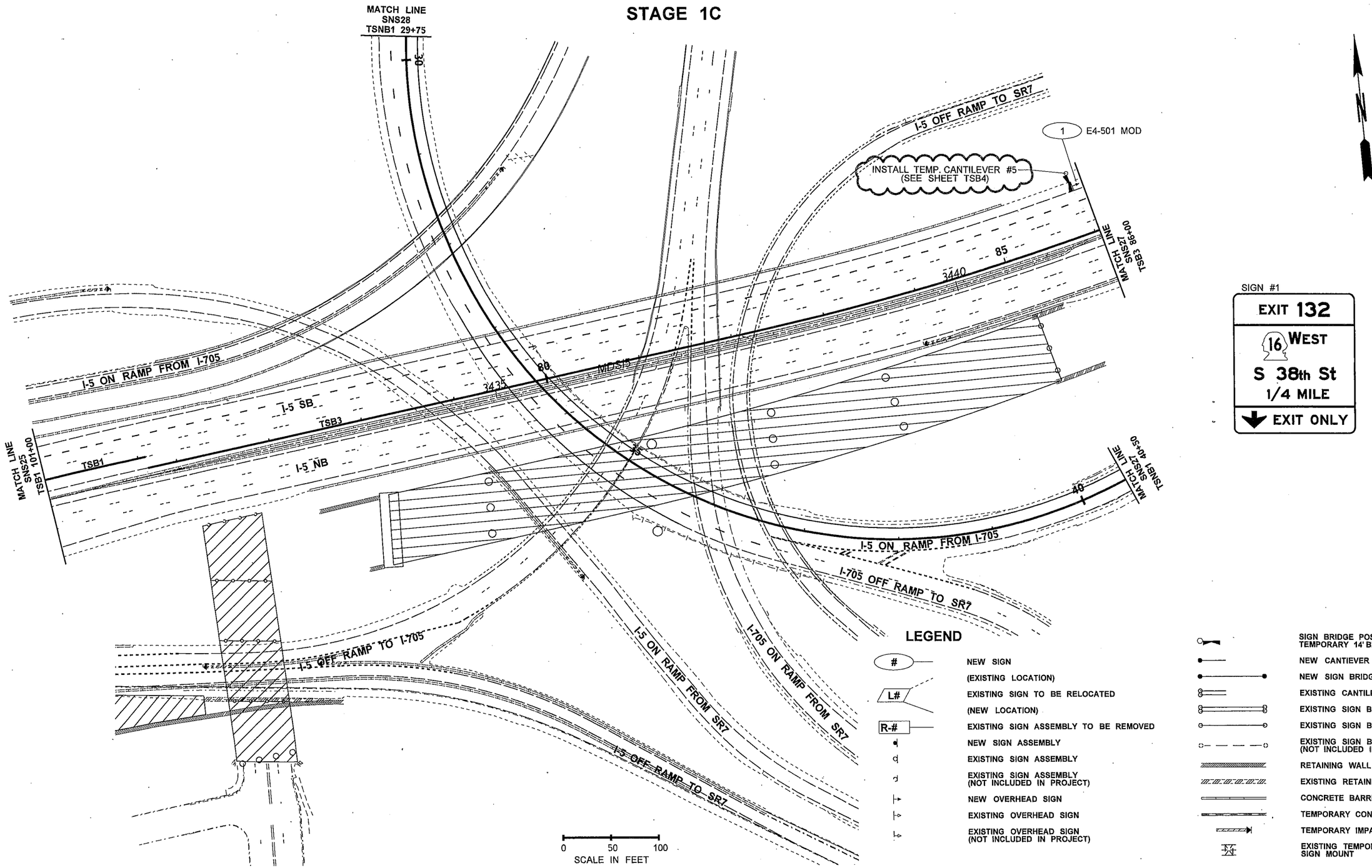

FILE NAME	PW:_XL3497\PS&E Sheets\Signing\Stage Signs\ADD1_P3497_SH_SNS_026.dgn				REGION NO. 10	STATE WASH	FED.AID PROJ.NO.
TIME	4:24:19 PM				JOB NUMBER 12C501		
DATE	4/16/2014						
PLOTTED BY	blakelf				CONTRACT NO.		LOCATION NO. XL3497
DESIGNED BY	F. BLAKELY						
ENTERED BY	F. BLAKELY						
CHECKED BY	J. VARADY						
PROJ. ENGR.	J. PEREZ	ADD1 - NOTE CHANGE	04/25/2014	FB			
REGIONAL ADM.	K. DAYTON	REVISION	DATE	BY			

DENNIS RAY CRUMBLEY STATE OF WASHINGTON PROFESSIONAL ENGINEER
4/17/14
DATE
P.E. STAMP BOX

DATE
P.E. STAMP BOX

Washington State
Department of Transportation

I-5
M ST TO PORTLAND AVE - HOV

SIGN STAGING PLAN

PLAN REF NO
SNS26

SHEET 1236 OF 1763 SHEETS

STAGE 1D

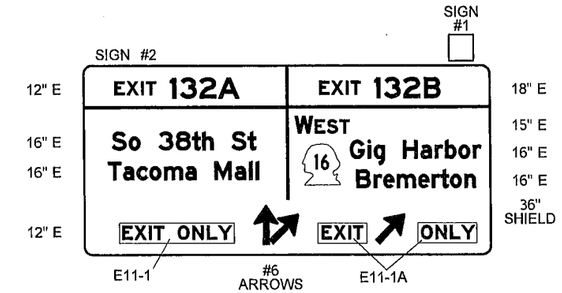

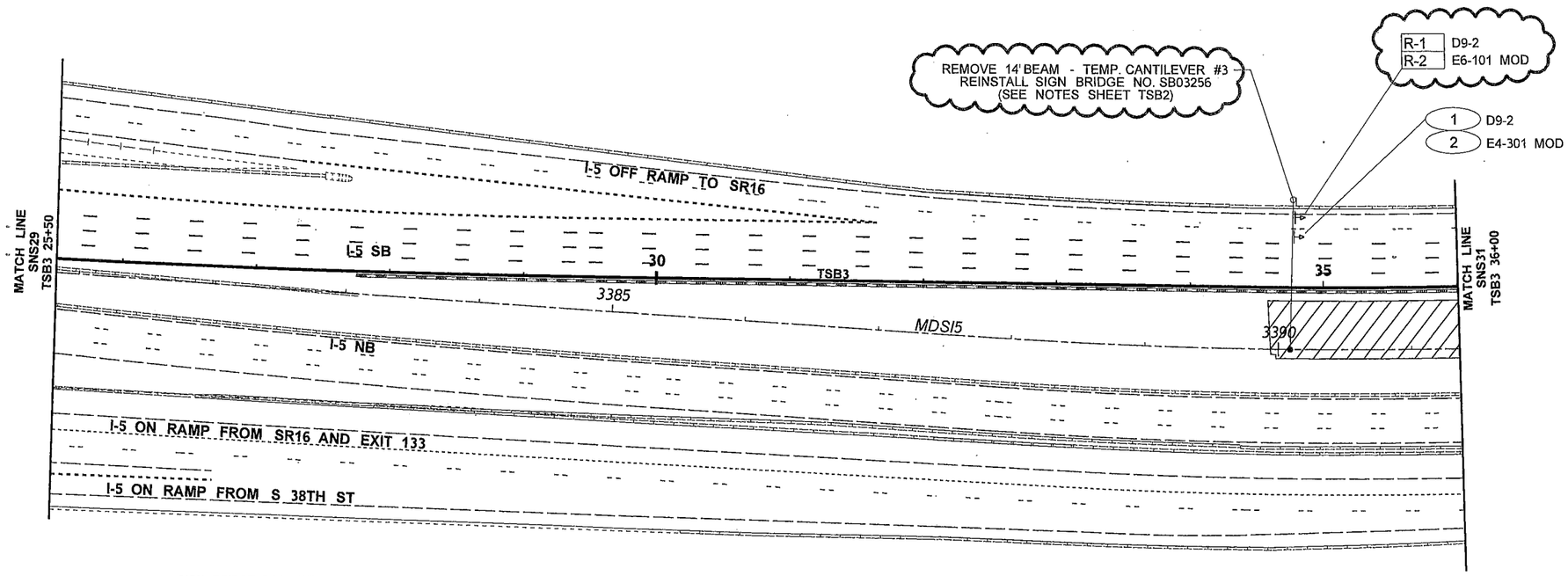

LEGEND

- # — NEW SIGN
- (EXISTING LOCATION)
- L# — EXISTING SIGN TO BE RELOCATED
- (NEW LOCATION)
- R-# — EXISTING SIGN ASSEMBLY TO BE REMOVED
- NEW SIGN ASSEMBLY
- EXISTING SIGN ASSEMBLY
- EXISTING SIGN ASSEMBLY (NOT INCLUDED IN PROJECT)
- NEW OVERHEAD SIGN
- EXISTING OVERHEAD SIGN
- EXISTING OVERHEAD SIGN (NOT INCLUDED IN PROJECT)
- SIGN BRIDGE POST WITH TEMPORARY 14' BEAM
- NEW CANTIEVER (MONOTUBE)
- NEW SIGN BRIDGE (MONOTUBE)
- EXISTING CANTILEVER (TRUSS)
- EXISTING SIGN BRIDGE (TRUSS)
- EXISTING SIGN BRIDGE (MONOTUBE)
- EXISTING SIGN BRIDGE (NOT INCLUDED IN PROJECT)
- RETAINING WALL
- EXISTING RETAINING WALL
- CONCRETE BARRIER
- TEMPORARY CONCRETE BARRIER
- TEMPORARY IMPACT ATTENUATOR
- EXISTING TEMPORARY PORATABLE SIGN MOUNT

0 50 100
SCALE IN FEET

SHEETS SNS27, SNS28, SNS29
INTENTIONALLY OMITTED

FILE NAME	PW:_XL3497\PS&E Sheets\Signing\Stage Signs\ADD1_P3497_SH_SNS_030.dgn				REGION NO. 10	STATE WASH	FED.AID PROJ.NO.
TIME	4:24:31 PM						
DATE	4/16/2014						
PLOTTED BY	blakelf				JOB NUMBER 12C501		
DESIGNED BY	F. BLAKELY						
ENTERED BY	F. BLAKELY						
CHECKED BY	J. VARADY				CONTRACT NO.		LOCATION NO. XL3497
PROJ. ENGR.	J. PEREZ	AD1 - NOTE CHANGES	04/25/2014	FB			
REGIONAL ADM.	K. DAYTON	REVISION	DATE	BY			

DENNIS RAY CRUMBLEY, STATE OF WASHINGTON, REGISTERED PROFESSIONAL ENGINEER
4/17/14
DATE
P.E. STAMP BOX

DATE
P.E. STAMP BOX

Washington State Department of Transportation

I-5
M ST TO PORTLAND AVE - HOV

SIGN STAGING PLAN

PLAN REF NO SNS30

SHEET 1237 OF 1763 SHEETS

STAGE 1D

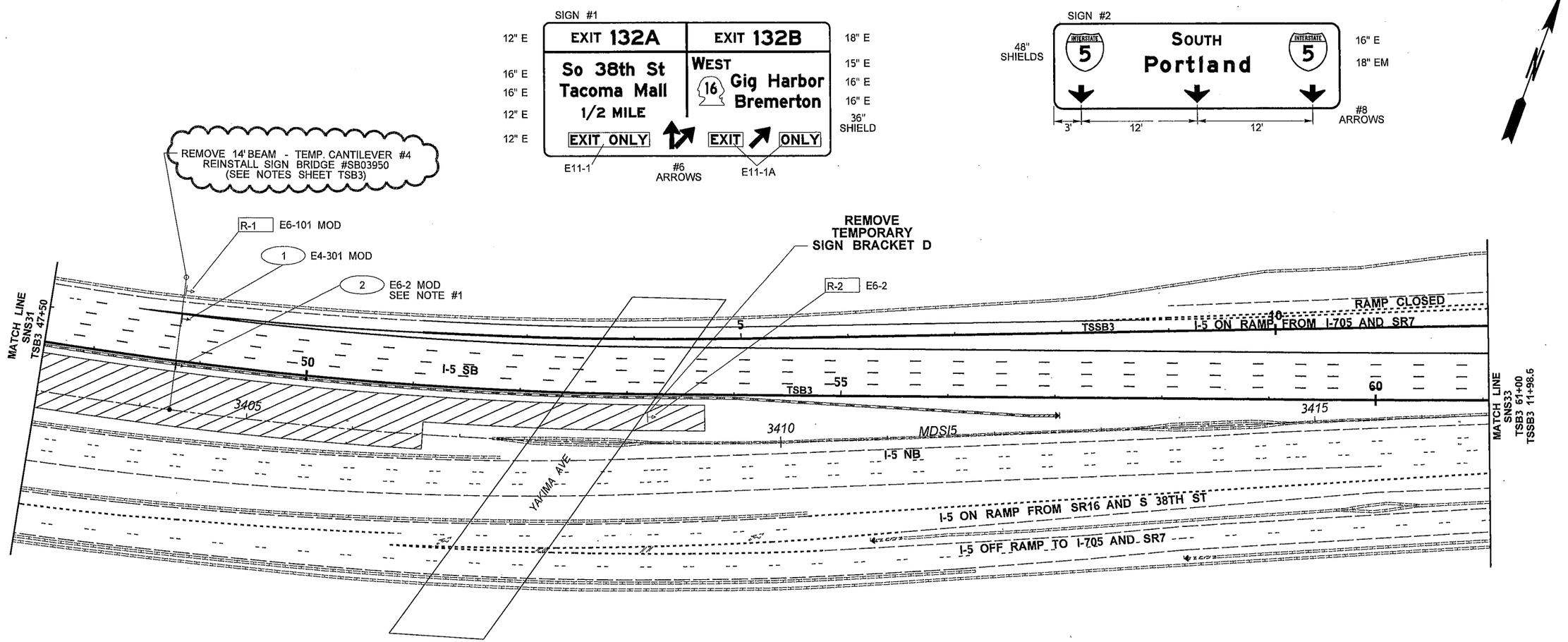

LEGEND

#	NEW SIGN
	(EXISTING LOCATION)
L#	EXISTING SIGN TO BE RELOCATED
	(NEW LOCATION)
R-#	EXISTING SIGN ASSEMBLY TO BE REMOVED
	NEW SIGN ASSEMBLY
	EXISTING SIGN ASSEMBLY
	EXISTING SIGN ASSEMBLY (NOT INCLUDED IN PROJECT)
	NEW OVERHEAD SIGN
	EXISTING OVERHEAD SIGN
	EXISTING OVERHEAD SIGN (NOT INCLUDED IN PROJECT)
	SIGN BRIDGE POST WITH TEMPORARY 14' BEAM
	NEW CANTIEVER (MONOTUBE)
	NEW SIGN BRIDGE (MONOTUBE)
	EXISTING CANTILEVER (TRUSS)
	EXISTING SIGN BRIDGE (TRUSS)
	EXISTING SIGN BRIDGE (MONOTUBE)
	EXISTING SIGN BRIDGE (NOT INCLUDED IN PROJECT)
	RETAINING WALL
	EXISTING RETAINING WALL
	CONCRETE BARRIER
	TEMPORARY CONCRETE BARRIER
	TEMPORARY IMPACT ATTENUATOR
	EXISTING TEMPORARY PORATABLE SIGN MOUNT

0 50 100
SCALE IN FEET

NOTE:
1. COVER SIGN, SEE STANDARD SPECIFICATION 8-21.3(3).

SHEET SNS31 INTENTIONALLY OMITTED

FILE NAME	PW:_XL3497\PS&E Sheets\Signing\Stage Signs\ADD1_P3497_SH_SNS_032.dgn			
TIME	4:24:39 PM			
DATE	4/16/2014			
PLOTTED BY	blakelf			
DESIGNED BY	F. BLAKELY			
ENTERED BY	F. BLAKELY			
CHECKED BY	J. VARADY			
PROJ. ENGR.	J. PEREZ	AD1 - NOTE CHANGE	04/25/2014	FB
REGIONAL ADM.	K. DAYTON	REVISION	DATE	BY

REGION NO.	STATE	FED.AID PROJ.NO.
10	WASH	
JOB NUMBER 12C501		
CONTRACT NO.		LOCATION NO. XL3497

DENNIS RAY CRUMBLE, STATE OF WASHINGTON, REGISTERED PROFESSIONAL ENGINEER
4/17/14
DATE
P.E. STAMP BOX

DATE
P.E. STAMP BOX

Washington State Department of Transportation

I-5
M ST TO PORTLAND AVE - HOV

SIGN STAGING PLAN

PLAN REF NO SNS32

SHEET 1238 OF 1763 SHEETS

STAGE 1D

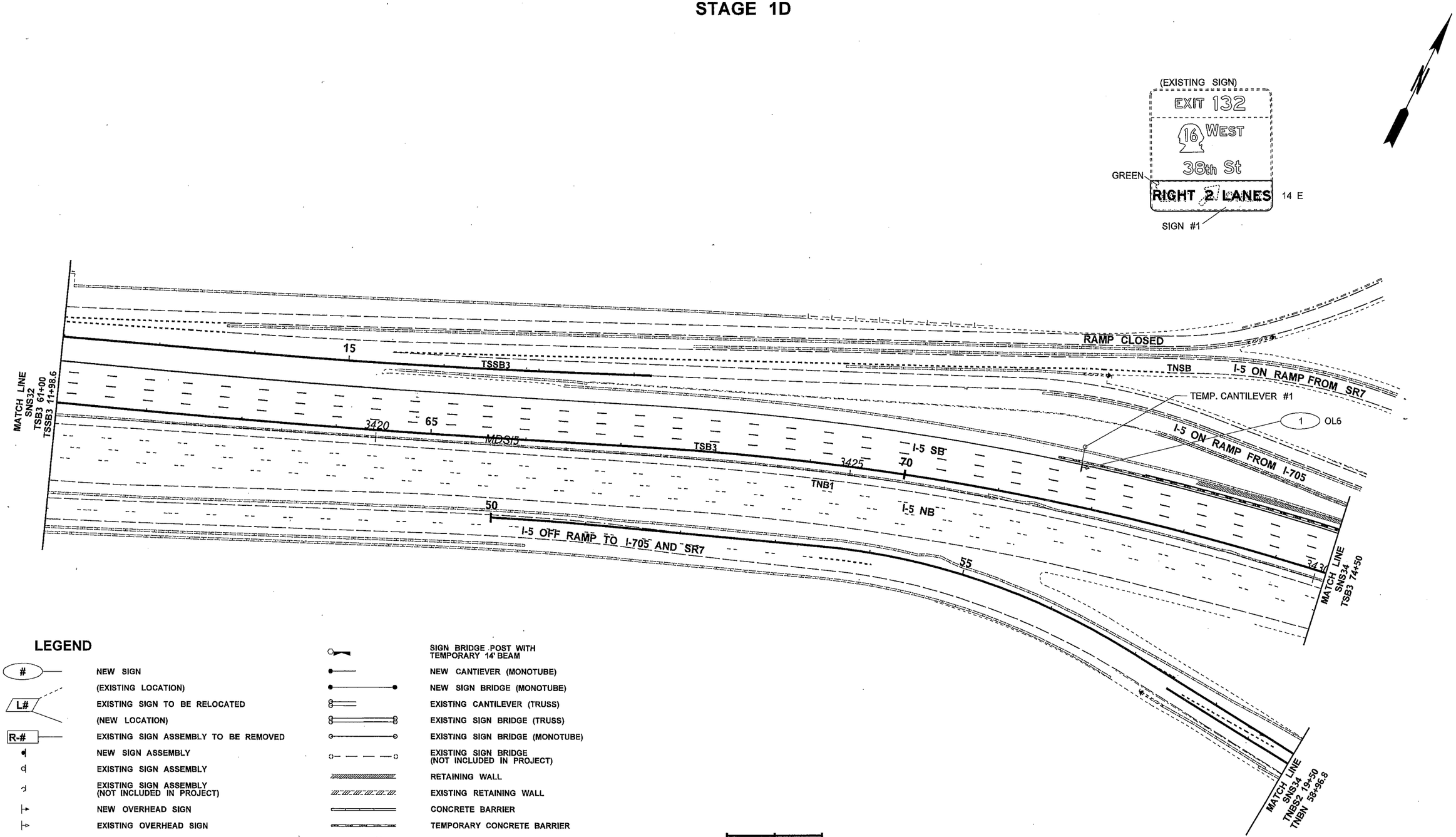

LEGEND

#	NEW SIGN
	(EXISTING LOCATION)
L#	EXISTING SIGN TO BE RELOCATED
	(NEW LOCATION)
R-#	EXISTING SIGN ASSEMBLY TO BE REMOVED
	NEW SIGN ASSEMBLY
	EXISTING SIGN ASSEMBLY
	EXISTING SIGN ASSEMBLY (NOT INCLUDED IN PROJECT)
	NEW OVERHEAD SIGN
	EXISTING OVERHEAD SIGN
	EXISTING OVERHEAD SIGN (NOT INCLUDED IN PROJECT)
	SIGN BRIDGE POST WITH TEMPORARY 14' BEAM
	NEW CANTIEVER (MONOTUBE)
	NEW SIGN BRIDGE (MONOTUBE)
	EXISTING CANTILEVER (TRUSS)
	EXISTING SIGN BRIDGE (TRUSS)
	EXISTING SIGN BRIDGE (MONOTUBE)
	EXISTING SIGN BRIDGE (NOT INCLUDED IN PROJECT)
	RETAINING WALL
	EXISTING RETAINING WALL
	CONCRETE BARRIER
	TEMPORARY CONCRETE BARRIER
	TEMPORARY IMPACT ATTENUATOR
	EXISTING TEMPORARY PORATABLE SIGN MOUNT

0 50 100
SCALE IN FEET

FILE NAME	PW:_XL3497\PS&E Sheets\Signing\Stage Signs\P3497_SH_SNS_033.dgn
TIME	11:23:31 AM
DATE	2/18/2014
PLOTTED BY	blakelf
DESIGNED BY	F. BLAKELY
ENTERED BY	F. BLAKELY
CHECKED BY	J. VARADY
PROJ. ENGR.	J. PEREZ
REGIONAL ADM.	K. DAYTON

REVISION | DATE | BY

REGION NO. 10 | STATE WASH | FED.AID PROJ.NO.

JOB NUMBER

CONTRACT NO. | LOCATION NO. XL3497

DENNIS RAY CRUMBAKER, STATE OF WASHINGTON, REGISTERED PROFESSIONAL ENGINEER — 2/18/14 DATE
P.E. STAMP BOX

DATE
P.E. STAMP BOX

Washington State Department of Transportation

I-5
M ST TO PORTLAND AVE - HOV

SIGN STAGING PLAN

PLAN REF NO SNS33

SHEET 1239 OF 1763 SHEETS

STAGE 1D

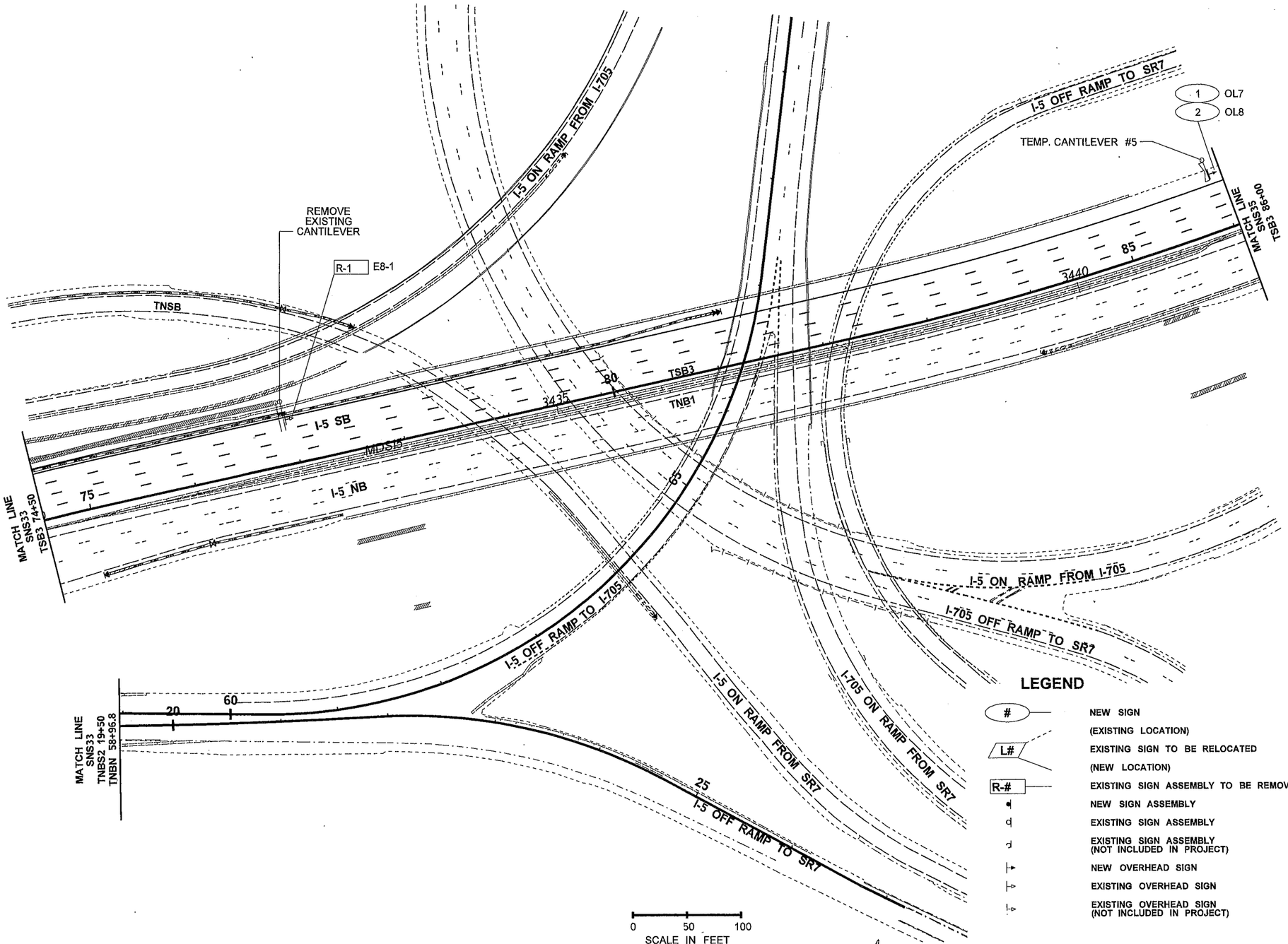

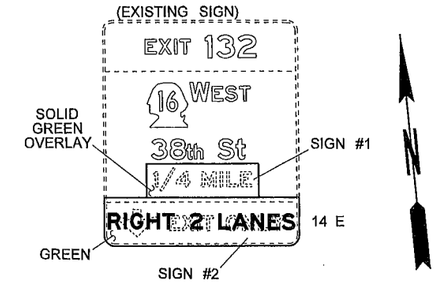

LEGEND

- # — NEW SIGN
- (EXISTING LOCATION)
- L# — EXISTING SIGN TO BE RELOCATED
- (NEW LOCATION)
- R-# — EXISTING SIGN ASSEMBLY TO BE REMOVED
- NEW SIGN ASSEMBLY
- EXISTING SIGN ASSEMBLY
- EXISTING SIGN ASSEMBLY (NOT INCLUDED IN PROJECT)
- NEW OVERHEAD SIGN
- EXISTING OVERHEAD SIGN
- EXISTING OVERHEAD SIGN (NOT INCLUDED IN PROJECT)
- SIGN BRIDGE POST WITH TEMPORARY 14' BEAM
- NEW CANTIEVER (MONOTUBE)
- NEW SIGN BRIDGE (MONOTUBE)
- EXISTING CANTILEVER (TRUSS)
- EXISTING SIGN BRIDGE (TRUSS)
- EXISTING SIGN BRIDGE (MONOTUBE)
- EXISTING SIGN BRIDGE (NOT INCLUDED IN PROJECT)
- RETAINING WALL
- EXISTING RETAINING WALL
- CONCRETE BARRIER
- TEMPORARY CONCRETE BARRIER
- TEMPORARY IMPACT ATTENUATOR
- EXISTING TEMPORARY PORATABLE SIGN MOUNT

FILE NAME	PW:_XL3497\PS&E Sheets\Signing\Stage Signs\P3497_SH_SNS_034.dgn
TIME	11:23:38 AM
DATE	2/18/2014
PLOTTED BY	blakelf
DESIGNED BY	F. BLAKELY
ENTERED BY	F. BLAKELY
CHECKED BY	J. VARADY
PROJ. ENGR.	J. PEREZ
REGIONAL ADM.	K. DAYTON

REVISION | DATE | BY

REGION NO. 10 | STATE WASH | FED.AID PROJ.NO.

JOB NUMBER

CONTRACT NO.

LOCATION NO. XL3497

P.E. STAMP BOX — DATE 2/18/14

P.E. STAMP BOX — DATE

Washington State Department of Transportation

I-5
M ST TO PORTLAND AVE - HOV

SIGN STAGING PLAN

PLAN REF NO SNS34

SHEET 1240 OF 1763 SHEETS

STAGE 2

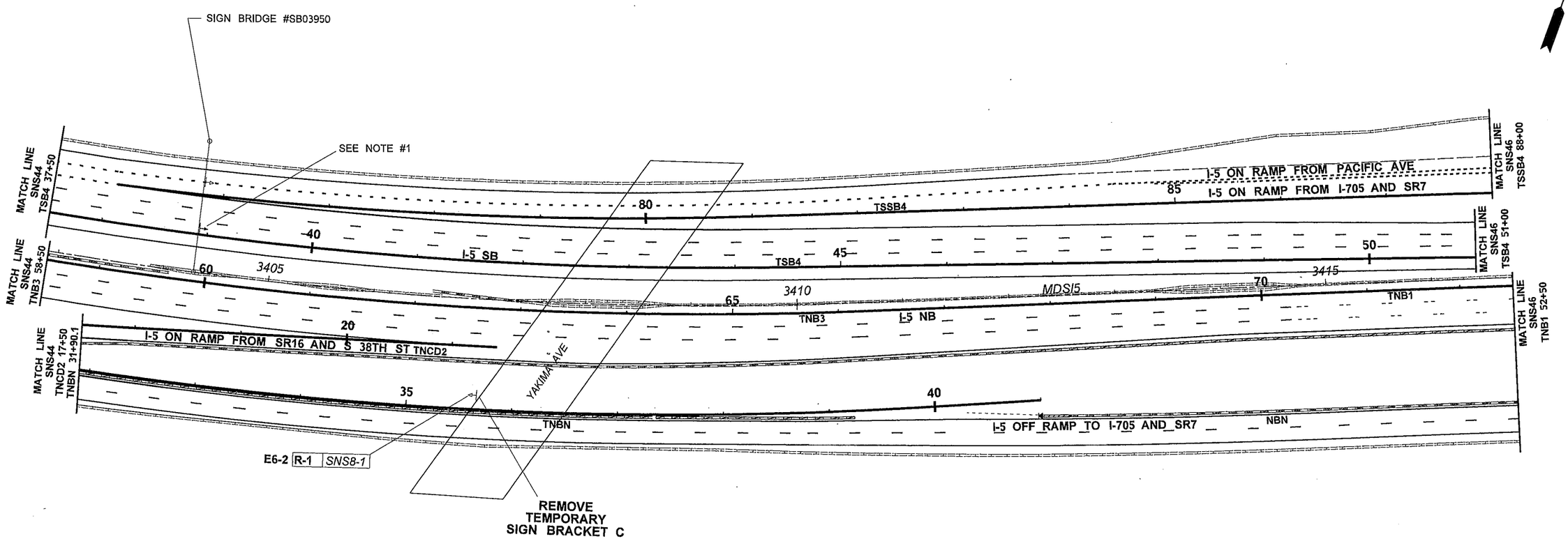

LEGEND

#	NEW SIGN
	(EXISTING LOCATION)
L#	EXISTING SIGN TO BE RELOCATED
	(NEW LOCATION)
R-#	EXISTING SIGN ASSEMBLY TO BE REMOVED
	NEW SIGN ASSEMBLY
	EXISTING SIGN ASSEMBLY
	EXISTING SIGN ASSEMBLY (NOT INCLUDED IN PROJECT)
	NEW OVERHEAD SIGN
	EXISTING OVERHEAD SIGN
	EXISTING OVERHEAD SIGN (NOT INCLUDED IN PROJECT)
	SIGN BRIDGE POST WITH TEMPORARY 14' BEAM
	NEW CANTIEVER (MONOTUBE)
	NEW SIGN BRIDGE (MONOTUBE)
	EXISTING CANTILEVER (TRUSS)
	EXISTING SIGN BRIDGE (TRUSS)
	EXISTING SIGN BRIDGE (MONOTUBE)
	EXISTING SIGN BRIDGE (NOT INCLUDED IN PROJECT)
	RETAINING WALL
	EXISTING RETAINING WALL
	CONCRETE BARRIER
	TEMPORARY CONCRETE BARRIER
	TEMPORARY IMPACT ATTENUATOR
	EXISTING TEMPORARY PORATABLE SIGN MOUNT

0 50 100
SCALE IN FEET

NOTES:
1. UNCOVER SIGN.

SHEETS SNS35, SNS36, SNS37, SNS38, SNS39, SNS40, SNS41, SNS42, SNS43, SNS44 INTENTIONALLY OMITTED

FILE NAME	PW:_XL3497\PS&E Sheets\Signing\Stage Signs\P3497_SH_SNS_045.dgn
TIME	11:23:47 AM
DATE	2/18/2014
PLOTTED BY	blakelf
DESIGNED BY	F. BLAKELY
ENTERED BY	F. BLAKELY
CHECKED BY	J. VARADY
PROJ. ENGR.	J. PEREZ
REGIONAL ADM.	K. DAYTON

REVISION | DATE | BY

REGION NO. 10 | STATE WASH | FED.AID PROJ.NO.

JOB NUMBER

CONTRACT NO. | LOCATION NO. XL3497

DENNIS RAY CRUMBAUGH, STATE OF WASHINGTON, REGISTERED PROFESSIONAL ENGINEER
2/18/14
DATE
P.E. STAMP BOX

DATE
P.E. STAMP BOX

Washington State Department of Transportation

I-5
M ST TO PORTLAND AVE - HOV

SIGN STAGING PLAN

PLAN REF NO SNS45

SHEET 1241 OF 1763 SHEETS

STAGE 2

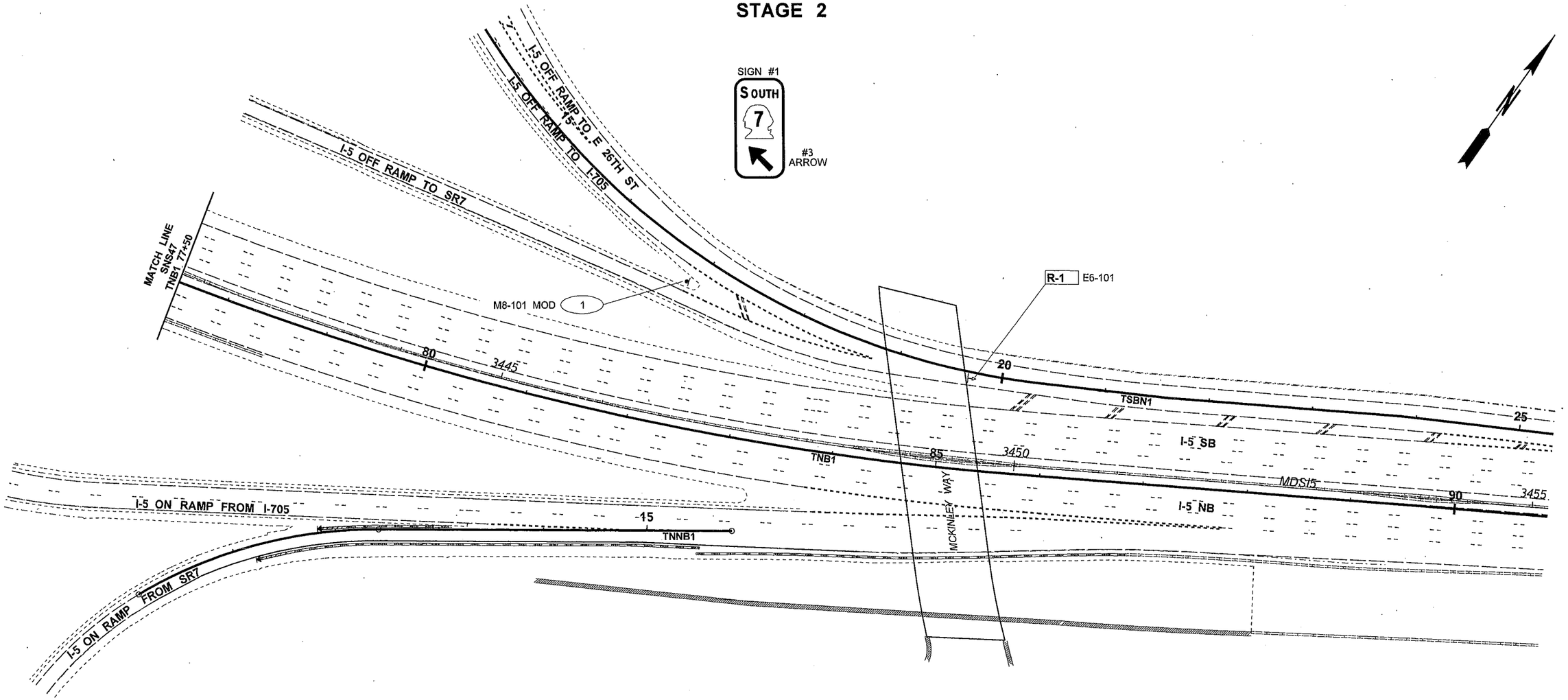

LEGEND

#	NEW SIGN
	(EXISTING LOCATION)
L#	EXISTING SIGN TO BE RELOCATED
	(NEW LOCATION)
R-#	EXISTING SIGN ASSEMBLY TO BE REMOVED
	NEW SIGN ASSEMBLY
	EXISTING SIGN ASSEMBLY
	EXISTING SIGN ASSEMBLY (NOT INCLUDED IN PROJECT)
	NEW OVERHEAD SIGN
	EXISTING OVERHEAD SIGN
	EXISTING OVERHEAD SIGN (NOT INCLUDED IN PROJECT)
	SIGN BRIDGE POST WITH TEMPORARY 14' BEAM
	NEW CANTIEVER (MONOTUBE)
	NEW SIGN BRIDGE (MONOTUBE)
	EXISTING CANTILEVER (TRUSS)
	EXISTING SIGN BRIDGE (TRUSS)
	EXISTING SIGN BRIDGE (MONOTUBE)
	EXISTING SIGN BRIDGE (NOT INCLUDED IN PROJECT)
	RETAINING WALL
	EXISTING RETAINING WALL
	CONCRETE BARRIER
	TEMPORARY CONCRETE BARRIER
	TEMPORARY IMPACT ATTENUATOR
	EXISTING TEMPORARY PORATABLE SIGN MOUNT

0 50 100
SCALE IN FEET

SHEETS SNS46, SNS47 INTENTIONALLY OMITTED

FILE NAME	PW:_XL3497\PS&E Sheets\Signing\Stage Signs\P3497_SH_SNS_048.dgn
TIME	11:23:55 AM
DATE	2/18/2014
PLOTTED BY	blakelf
DESIGNED BY	F. BLAKELY
ENTERED BY	F. BLAKELY
CHECKED BY	J. VARADY
PROJ. ENGR.	J. PEREZ
REGIONAL ADM.	K. DAYTON

REVISION | DATE | BY

REGION NO. 10 | STATE WASH | FED.AID PROJ.NO.

JOB NUMBER

CONTRACT NO. | LOCATION NO. XL3497

DENNIS RAY CROMBLEY, STATE OF WASHINGTON, REGISTERED PROFESSIONAL ENGINEER

2/18/14
DATE
P.E. STAMP BOX

DATE
P.E. STAMP BOX

Washington State Department of Transportation

I-5
M ST TO PORTLAND AVE - HOV

SIGN STAGING PLAN

PLAN REF NO SNS48

SHEET 1242 OF 1763 SHEETS

STAGE 2
SNB-NNB STEP 2

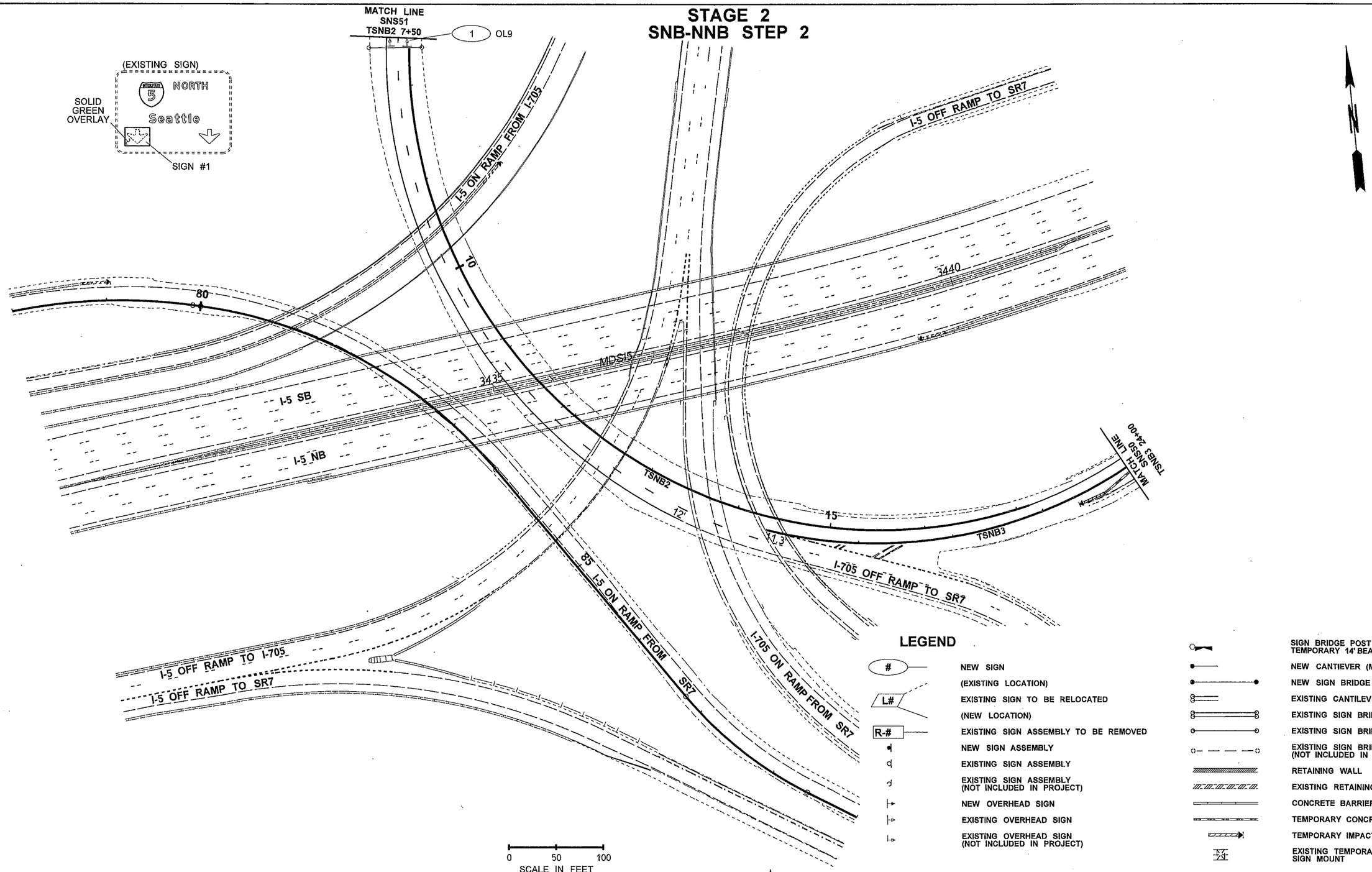

LEGEND

#	NEW SIGN
	(EXISTING LOCATION)
L#	EXISTING SIGN TO BE RELOCATED
	(NEW LOCATION)
R-#	EXISTING SIGN ASSEMBLY TO BE REMOVED
	NEW SIGN ASSEMBLY
	EXISTING SIGN ASSEMBLY
	EXISTING SIGN ASSEMBLY (NOT INCLUDED IN PROJECT)
	NEW OVERHEAD SIGN
	EXISTING OVERHEAD SIGN
	EXISTING OVERHEAD SIGN (NOT INCLUDED IN PROJECT)
	SIGN BRIDGE POST WITH TEMPORARY 14' BEAM
	NEW CANTIEVER (MONOTUBE)
	NEW SIGN BRIDGE (MONOTUBE)
	EXISTING CANTILEVER (TRUSS)
	EXISTING SIGN BRIDGE (TRUSS)
	EXISTING SIGN BRIDGE (MONOTUBE)
	EXISTING SIGN BRIDGE (NOT INCLUDED IN PROJECT)
	RETAINING WALL
	EXISTING RETAINING WALL
	CONCRETE BARRIER
	TEMPORARY CONCRETE BARRIER
	TEMPORARY IMPACT ATTENUATOR
	EXISTING TEMPORARY PORATABLE SIGN MOUNT

FILE NAME	PW:_XL3497\PS&E Sheets\Signing\Stage Signs\P3497_SH_SNS_049.dgn				REGION NO. 10	STATE WASH	FED.AID PROJ.NO.
TIME	11:24:04 AM				JOB NUMBER		
DATE	2/18/2014						
PLOTTED BY	blakelf						
DESIGNED BY	F. BLAKELY				CONTRACT NO.		LOCATION NO.
ENTERED BY	F. BLAKELY						XL3497
CHECKED BY	J. VARADY						
PROJ. ENGR.	J. PEREZ						
REGIONAL ADM.	K. DAYTON	REVISION	DATE	BY			

DENNIS RAY CRUMPACKER, STATE OF WASHINGTON, REGISTERED PROFESSIONAL ENGINEER

2/18/14
DATE
P.E. STAMP BOX

DATE
P.E. STAMP BOX

Washington State Department of Transportation

I-5
M ST TO PORTLAND AVE - HOV

SIGN STAGING PLAN

PLAN REF NO
SNS49

SHEET 1243 OF 1763 SHEETS

STAGE 3A

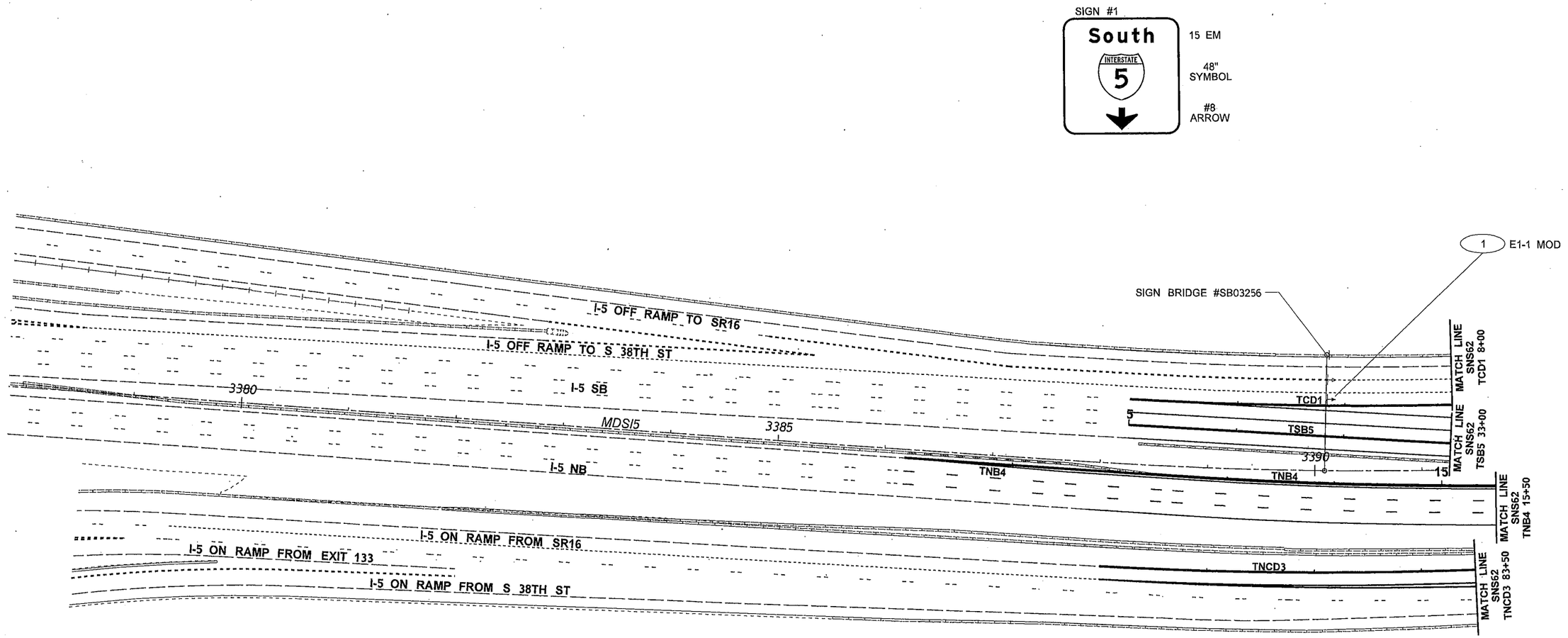

LEGEND

#	NEW SIGN
	(EXISTING LOCATION)
L#	EXISTING SIGN TO BE RELOCATED
	(NEW LOCATION)
R-#	EXISTING SIGN ASSEMBLY TO BE REMOVED
	NEW SIGN ASSEMBLY
	EXISTING SIGN ASSEMBLY
	EXISTING SIGN ASSEMBLY (NOT INCLUDED IN PROJECT)
	NEW OVERHEAD SIGN
	EXISTING OVERHEAD SIGN
	EXISTING OVERHEAD SIGN (NOT INCLUDED IN PROJECT)
	SIGN BRIDGE POST WITH TEMPORARY 14' BEAM
	NEW CANTIEVER (MONOTUBE)
	NEW SIGN BRIDGE (MONOTUBE)
	EXISTING CANTILEVER (TRUSS)
	EXISTING SIGN BRIDGE (TRUSS)
	EXISTING SIGN BRIDGE (MONOTUBE)
	EXISTING SIGN BRIDGE (NOT INCLUDED IN PROJECT)
	RETAINING WALL
	EXISTING RETAINING WALL
	CONCRETE BARRIER
	TEMPORARY CONCRETE BARRIER
	TEMPORARY IMPACT ATTENUATOR
	EXISTING TEMPORARY PORATABLE SIGN MOUNT

0 50 100
SCALE IN FEET

SHEETS SNS50, SNS51, SNS52, SNS53, SNS54, SNS55, SNS56, SNS57, SNS58, SNS59, SNS60 INTENTIONALLY OMITTED

FILE NAME	PW:_XL3497\PS&E Sheets\Signing\Stage Signs\P3497_SH_SNS_061.dgn
TIME	11:24:12 AM
DATE	2/18/2014
PLOTTED BY	blakelf
DESIGNED BY	F. BLAKELY
ENTERED BY	F. BLAKELY
CHECKED BY	J. VARADY
PROJ. ENGR.	J. PEREZ
REGIONAL ADM.	K. DAYTON

REVISION | DATE | BY

REGION NO. 10 | STATE WASH | FED.AID PROJ.NO.

JOB NUMBER

CONTRACT NO.

LOCATION NO. XL3497

DENNIS RAY CRUMBLEY STATE OF WASHINGTON REGISTERED PROFESSIONAL ENGINEER
2/18/14
DATE
P.E. STAMP BOX

DATE
P.E. STAMP BOX

Washington State Department of Transportation

I-5
M ST TO PORTLAND AVE - HOV

SIGN STAGING PLAN

PLAN REF NO SNS61

SHEET 1244 OF 1763 SHEETS

STAGE 3A

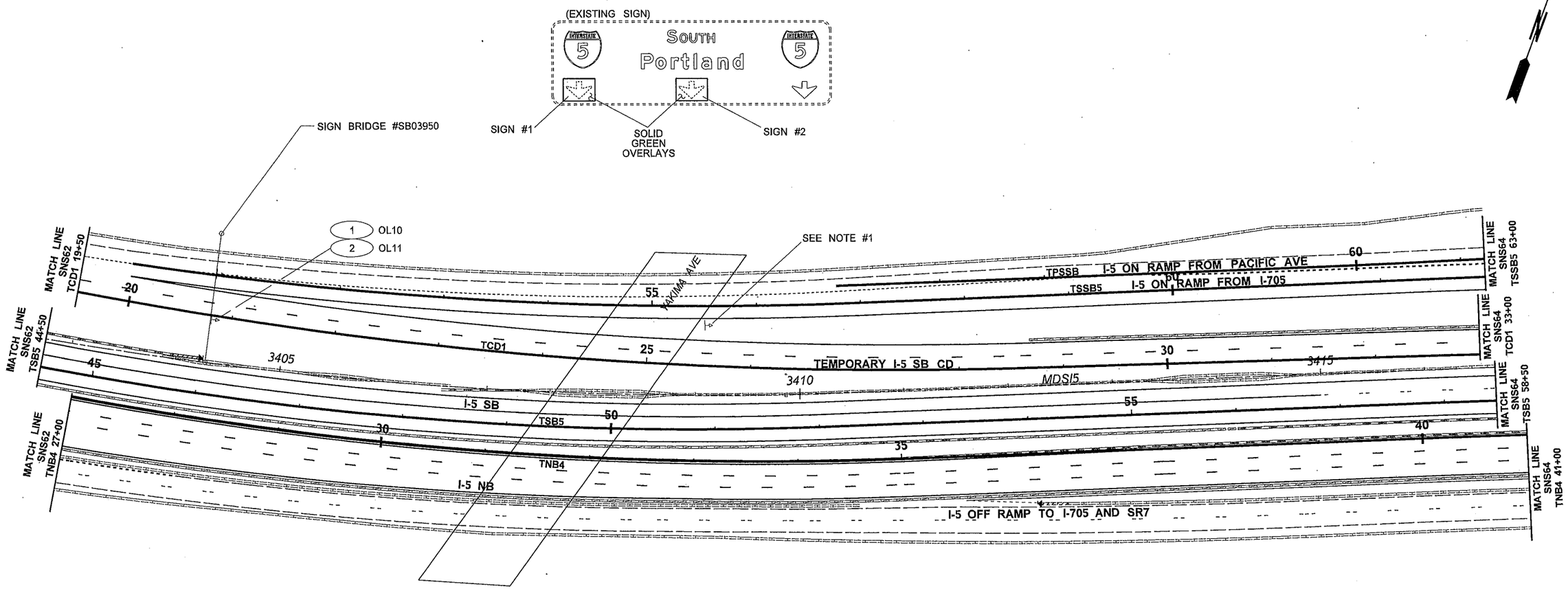

LEGEND

#	NEW SIGN
	(EXISTING LOCATION)
L#	EXISTING SIGN TO BE RELOCATED
	(NEW LOCATION)
R-#	EXISTING SIGN ASSEMBLY TO BE REMOVED
	NEW SIGN ASSEMBLY
	EXISTING SIGN ASSEMBLY
	EXISTING SIGN ASSEMBLY (NOT INCLUDED IN PROJECT)
	NEW OVERHEAD SIGN
	EXISTING OVERHEAD SIGN
	EXISTING OVERHEAD SIGN (NOT INCLUDED IN PROJECT)
	SIGN BRIDGE POST WITH TEMPORARY 14' BEAM
	NEW CANTIEVER (MONOTUBE)
	NEW SIGN BRIDGE (MONOTUBE)
	EXISTING CANTILEVER (TRUSS)
	EXISTING SIGN BRIDGE (TRUSS)
	EXISTING SIGN BRIDGE (MONOTUBE)
	EXISTING SIGN BRIDGE (NOT INCLUDED IN PROJECT)
	RETAINING WALL
	EXISTING RETAINING WALL
	CONCRETE BARRIER
	TEMPORARY CONCRETE BARRIER
	TEMPORARY IMPACT ATTENUATOR
	EXISTING TEMPORARY PORATABLE SIGN MOUNT

0 50 100
SCALE IN FEET

NOTE:
1. COVER SIGN, SEE SPECIAL PROVISION 8-21.3(3).

SHEET SNS62 INTENTIONALLY OMITTED

FILE NAME	PW:_XL3497\PS&E Sheets\Signing\Stage Signs\P3497_SH_SNS_063.dgn
TIME	11:24:20 AM
DATE	2/18/2014
PLOTTED BY	blakelf
DESIGNED BY	F. BLAKELY
ENTERED BY	F. BLAKELY
CHECKED BY	J. VARADY
PROJ. ENGR.	J. PEREZ
REGIONAL ADM.	K. DAYTON

REVISION | DATE | BY

REGION NO. 10 | STATE WASH | FED.AID PROJ.NO.

JOB NUMBER

CONTRACT NO.

LOCATION NO. XL3497

DELANO RAY CRUMBLEY STATE OF WASHINGTON REGISTERED PROFESSIONAL ENGINEER
2/18/14
DATE
P.E. STAMP BOX

DATE
P.E. STAMP BOX

Washington State Department of Transportation

I-5
M ST TO PORTLAND AVE - HOV

SIGN STAGING PLAN

PLAN REF NO SNS63

SHEET 1245 OF 1763 SHEETS

STAGE 3A

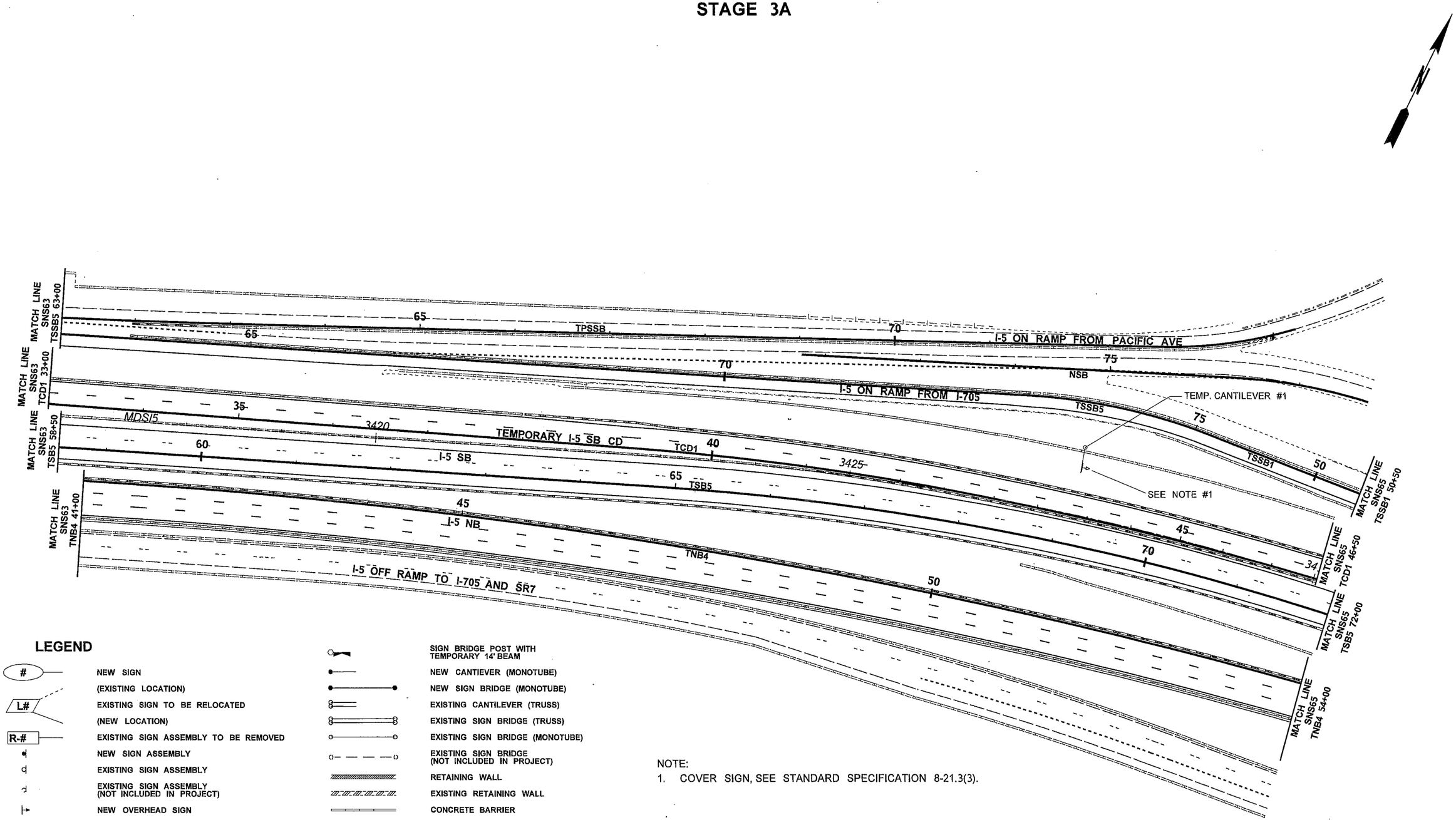

LEGEND

#	NEW SIGN
	(EXISTING LOCATION)
L#	EXISTING SIGN TO BE RELOCATED
	(NEW LOCATION)
R-#	EXISTING SIGN ASSEMBLY TO BE REMOVED
	NEW SIGN ASSEMBLY
	EXISTING SIGN ASSEMBLY
	EXISTING SIGN ASSEMBLY (NOT INCLUDED IN PROJECT)
	NEW OVERHEAD SIGN
	EXISTING OVERHEAD SIGN
	EXISTING OVERHEAD SIGN (NOT INCLUDED IN PROJECT)
	SIGN BRIDGE POST WITH TEMPORARY 14' BEAM
	NEW CANTIEVER (MONOTUBE)
	NEW SIGN BRIDGE (MONOTUBE)
	EXISTING CANTILEVER (TRUSS)
	EXISTING SIGN BRIDGE (TRUSS)
	EXISTING SIGN BRIDGE (MONOTUBE)
	EXISTING SIGN BRIDGE (NOT INCLUDED IN PROJECT)
	RETAINING WALL
	EXISTING RETAINING WALL
	CONCRETE BARRIER
	TEMPORARY CONCRETE BARRIER
	TEMPORARY IMPACT ATTENUATOR
	EXISTING TEMPORARY PORATABLE SIGN MOUNT

NOTE:
1. COVER SIGN, SEE STANDARD SPECIFICATION 8-21.3(3).

0 50 100
SCALE IN FEET

FILE NAME	PW:_XL3497\PS&E Sheets\Signing\Stage Signs\P3497_SH_SNS_064.dgn
TIME	11:24:28 AM
DATE	2/18/2014
PLOTTED BY	blakelf
DESIGNED BY	F. BLAKELY
ENTERED BY	F. BLAKELY
CHECKED BY	J. VARADY
PROJ. ENGR.	J. PEREZ
REGIONAL ADM.	K. DAYTON

REVISION | DATE | BY

REGION NO. 10 | STATE WASH | FED.AID PROJ.NO.

JOB NUMBER

CONTRACT NO. | LOCATION NO. XL3497

DENNIS RAY CRUMBLEY, STATE OF WASHINGTON, 38765, REGISTERED PROFESSIONAL ENGINEER
2/18/14
DATE
P.E. STAMP BOX

DATE
P.E. STAMP BOX

Washington State Department of Transportation

I-5
M ST TO PORTLAND AVE - HOV

SIGN STAGING PLAN

PLAN REF NO SNS64

SHEET 1246 OF 1763 SHEETS

STAGE 3A

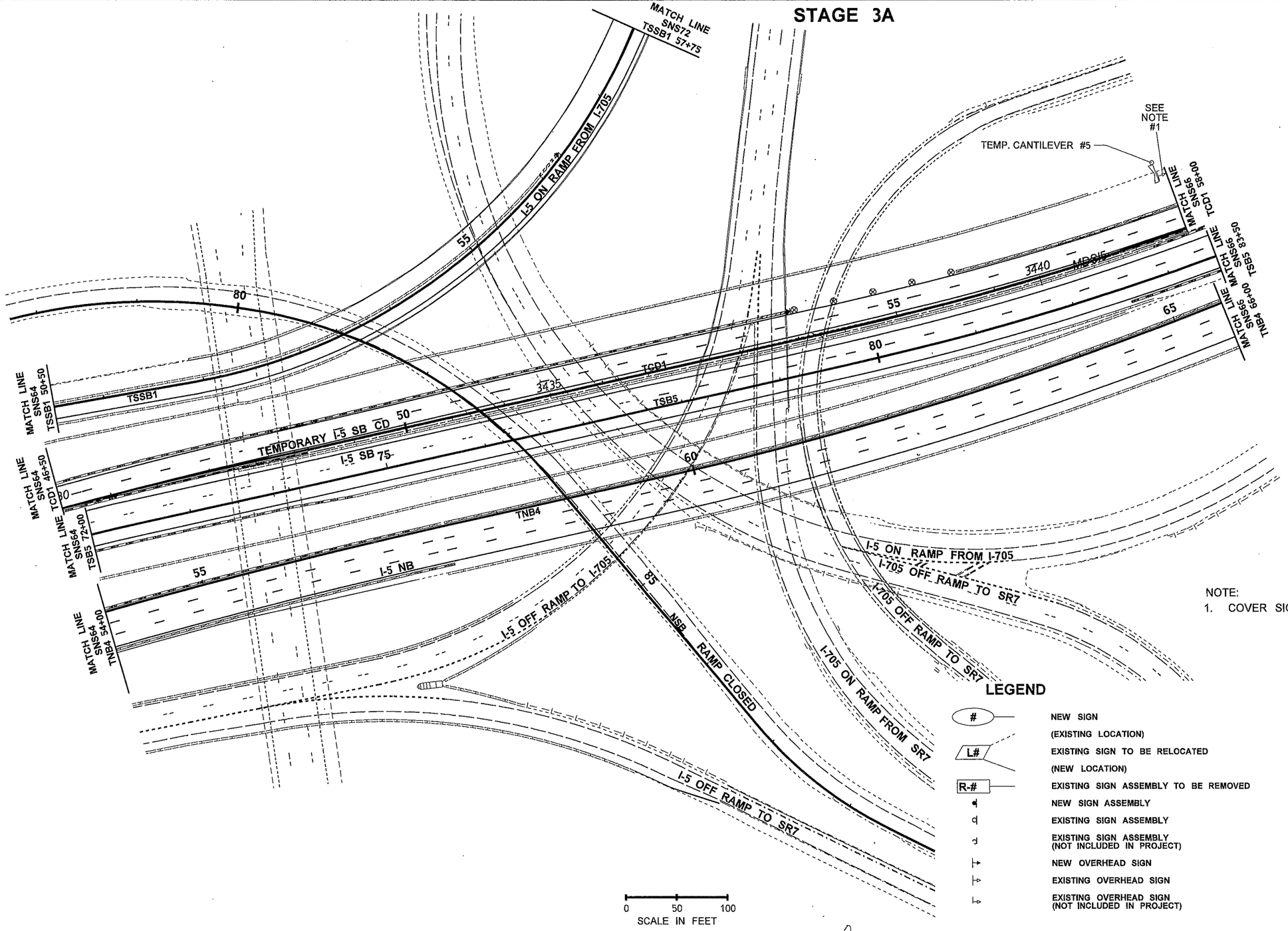

NOTE:

1. COVER SIGN, SEE STANDARD SPECIFICATION 8-21.3(3).

LEGEND

#	NEW SIGN
	(EXISTING LOCATION)
L#	EXISTING SIGN TO BE RELOCATED
	(NEW LOCATION)
R-#	EXISTING SIGN ASSEMBLY TO BE REMOVED
	NEW SIGN ASSEMBLY
	EXISTING SIGN ASSEMBLY
	EXISTING SIGN ASSEMBLY (NOT INCLUDED IN PROJECT)
	NEW OVERHEAD SIGN
	EXISTING OVERHEAD SIGN
	EXISTING OVERHEAD SIGN (NOT INCLUDED IN PROJECT)
	SIGN BRIDGE POST WITH TEMPORARY 14' BEAM
	NEW CANTIEVER (MONOTUBE)
	NEW SIGN BRIDGE (MONOTUBE)
	EXISTING CANTILEVER (TRUSS)
	EXISTING SIGN BRIDGE (TRUSS)
	EXISTING SIGN BRIDGE (MONOTUBE)
	EXISTING SIGN BRIDGE (NOT INCLUDED IN PROJECT)
	RETAINING WALL
	EXISTING RETAINING WALL
	CONCRETE BARRIER
	TEMPORARY CONCRETE BARRIER
	TEMPORARY IMPACT ATTENUATOR
	EXISTING TEMPORARY PORATABLE SIGN MOUNT

FILE NAME	PW:_XL3497\PS&E Sheets\Signing\Stage Signs\P3497_SH_SNS_065.dgn
TIME	11:24:37 AM
DATE	2/18/2014
PLOTTED BY	blakelf
DESIGNED BY	F. BLAKELY
ENTERED BY	F. BLAKELY
CHECKED BY	J. VARADY
PROJ. ENGR.	J. PEREZ
REGIONAL ADM.	K. DAYTON

REVISION | DATE | BY

REGION NO. 10 | STATE WASH | FED.AID PROJ.NO.

JOB NUMBER

CONTRACT NO. | LOCATION NO. XL3497

DENNIS RAY CRUMBLEY, STATE OF WASHINGTON, REGISTERED PROFESSIONAL ENGINEER

2/18/14

DATE

P.E. STAMP BOX

DATE

P.E. STAMP BOX

Washington State Department of Transportation

I-5
M ST TO PORTLAND AVE - HOV

SIGN STAGING PLAN

PLAN REF NO SNS65

SHEET 1247 OF 1763 SHEETS

STAGE 3A

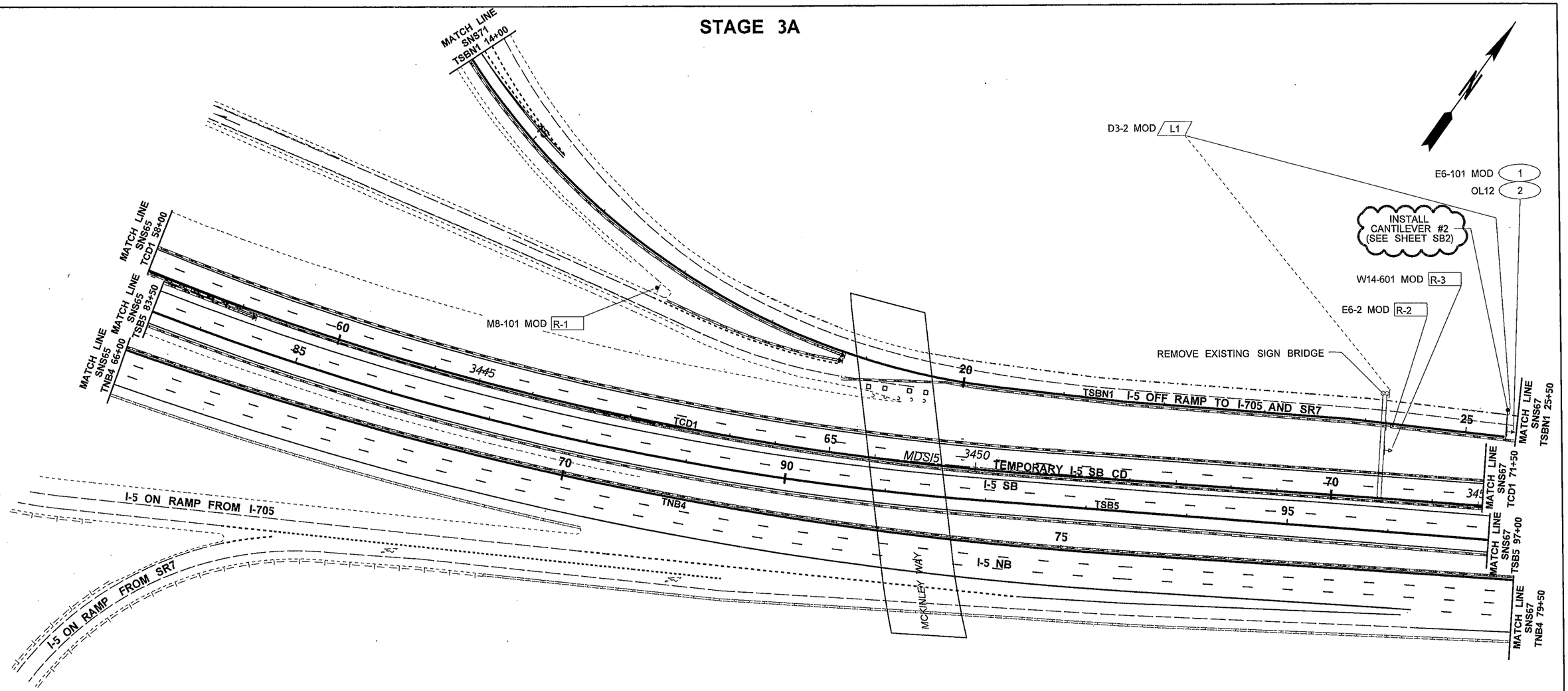

LEGEND

#	NEW SIGN
	(EXISTING LOCATION)
L#	EXISTING SIGN TO BE RELOCATED
	(NEW LOCATION)
R-#	EXISTING SIGN ASSEMBLY TO BE REMOVED
	NEW SIGN ASSEMBLY
	EXISTING SIGN ASSEMBLY
	EXISTING SIGN ASSEMBLY (NOT INCLUDED IN PROJECT)
	NEW OVERHEAD SIGN
	EXISTING OVERHEAD SIGN
	EXISTING OVERHEAD SIGN (NOT INCLUDED IN PROJECT)
	SIGN BRIDGE POST WITH TEMPORARY 14' BEAM
	NEW CANTIEVER (MONOTUBE)
	NEW SIGN BRIDGE (MONOTUBE)
	EXISTING CANTILEVER (TRUSS)
	EXISTING SIGN BRIDGE (TRUSS)
	EXISTING SIGN BRIDGE (MONOTUBE)
	EXISTING SIGN BRIDGE (NOT INCLUDED IN PROJECT)
	RETAINING WALL
	EXISTING RETAINING WALL
	CONCRETE BARRIER
	TEMPORARY CONCRETE BARRIER
	TEMPORARY IMPACT ATTENUATOR
	EXISTING TEMPORARY PORATABLE SIGN MOUNT

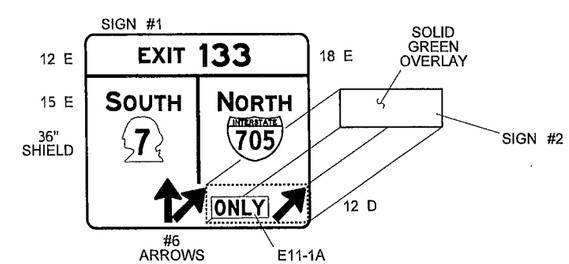

0 50 100
SCALE IN FEET

FILE NAME	PW:_XL3497\PS&E Sheets\Signing\Stage Signs\ADD1_P3497_SH_SNS_066.dgn			
TIME	4:24:48 PM			
DATE	4/16/2014			
PLOTTED BY	blakelf			
DESIGNED BY	F. BLAKELY			
ENTERED BY	F. BLAKELY			
CHECKED BY	J. VARADY			
PROJ. ENGR.	J. PEREZ	AD1 - NOTE CHANGE	04/25/2014	FB
REGIONAL ADM.	K. DAYTON	REVISION	DATE	BY

REGION NO.	STATE	FED.AID PROJ.NO.
10	WASH	
JOB NUMBER 12C501		
CONTRACT NO.		LOCATION NO. XL3497

DENNIS RAY CRUMBLEY, STATE OF WASHINGTON, REGISTERED PROFESSIONAL ENGINEER
4/17/14
DATE
P.E. STAMP BOX

DATE
P.E. STAMP BOX

Washington State Department of Transportation

I-5
M ST TO PORTLAND AVE - HOV

SIGN STAGING PLAN

PLAN REF NO SNS66

SHEET 1248 OF 1763 SHEETS

STAGE 3A

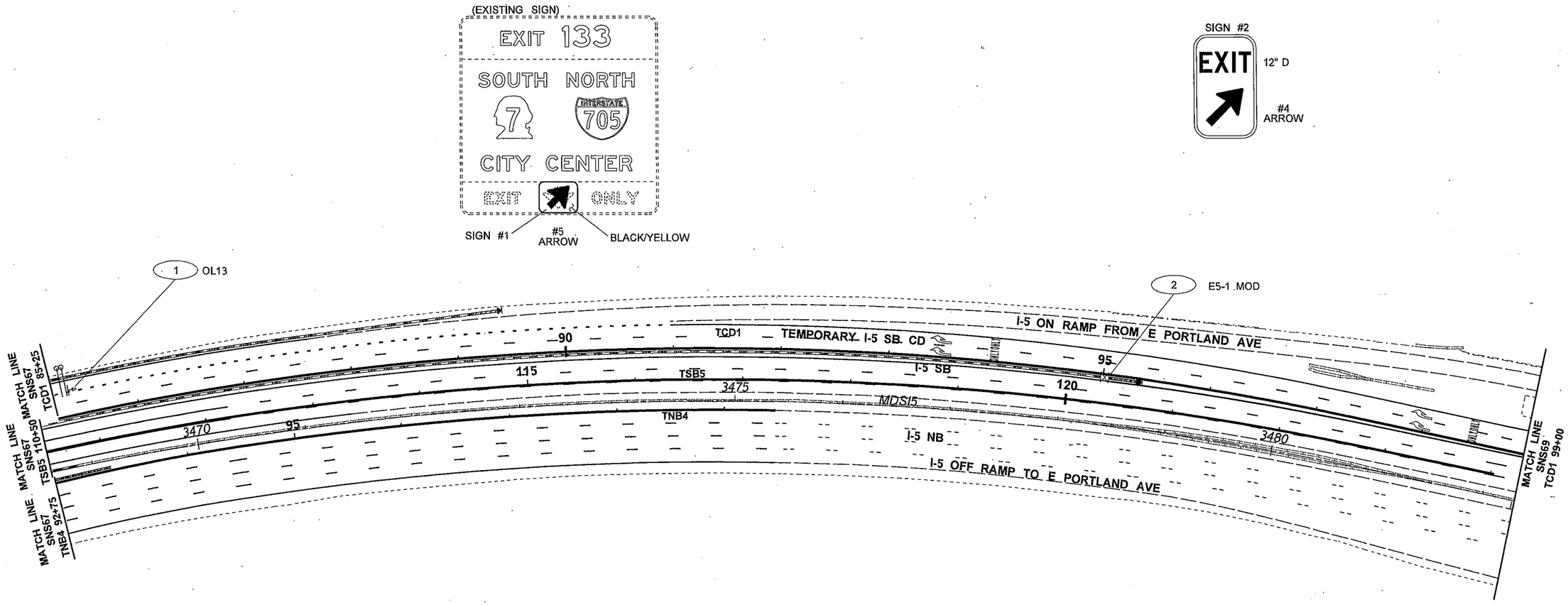

LEGEND

#	NEW SIGN		SIGN BRIDGE POST WITH TEMPORARY 14' BEAM
	(EXISTING LOCATION)		NEW CANTIEVER (MONOTUBE)
L#	EXISTING SIGN TO BE RELOCATED		NEW SIGN BRIDGE (MONOTUBE)
	(NEW LOCATION)		EXISTING CANTILEVER (TRUSS)
R-#	EXISTING SIGN ASSEMBLY TO BE REMOVED		EXISTING SIGN BRIDGE (TRUSS)
	NEW SIGN ASSEMBLY		EXISTING SIGN BRIDGE (MONOTUBE)
	EXISTING SIGN ASSEMBLY		EXISTING SIGN BRIDGE (NOT INCLUDED IN PROJECT)
	EXISTING SIGN ASSEMBLY (NOT INCLUDED IN PROJECT)		RETAINING WALL
	NEW OVERHEAD SIGN		EXISTING RETAINING WALL
	EXISTING OVERHEAD SIGN		CONCRETE BARRIER
	EXISTING OVERHEAD SIGN (NOT INCLUDED IN PROJECT)		TEMPORARY CONCRETE BARRIER
	SIGN LOCATION - BARRIER MOUNT		TEMPORARY IMPACT ATTENUATOR
			EXISTING TEMPORARY PORATABLE SIGN MOUNT

0 50 100
SCALE IN FEET

SHEET SNS67 INTENTIONALLY OMITTED

FILE NAME	PW:_XL3497\PS&E Sheets\Signing\Stage Signs\P3497_SH_SNS_068.dgn			
TIME	10:34:59 AM			
DATE	3/4/2014			
PLOTTED BY	blakelf			
DESIGNED BY	F. BLAKELY			
ENTERED BY	F. BLAKELY			
CHECKED BY	J. VARADY			
PROJ. ENGR.	J. PEREZ			
REGIONAL ADM.	K. DAYTON	REVISION	DATE	BY

REGION NO.	STATE	FED.AID PROJ.NO.
10	WASH	
JOB NUMBER		
CONTRACT NO.		LOCATION NO. XL3497

DENNIS RAY CRUMBLEY, STATE OF WASHINGTON, 38765, REGISTERED PROFESSIONAL ENGINEER
3/4/14
DATE
P.E. STAMP BOX

DATE
P.E. STAMP BOX

Washington State Department of Transportation

I-5
M ST TO PORTLAND AVE - HOV

SIGN STAGING PLAN

PLAN REF NO SNS68

SHEET 1249 OF 1763 SHEETS

STAGE 3A

SIGN #1

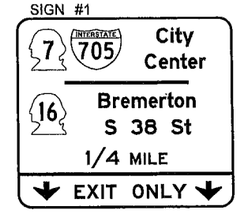

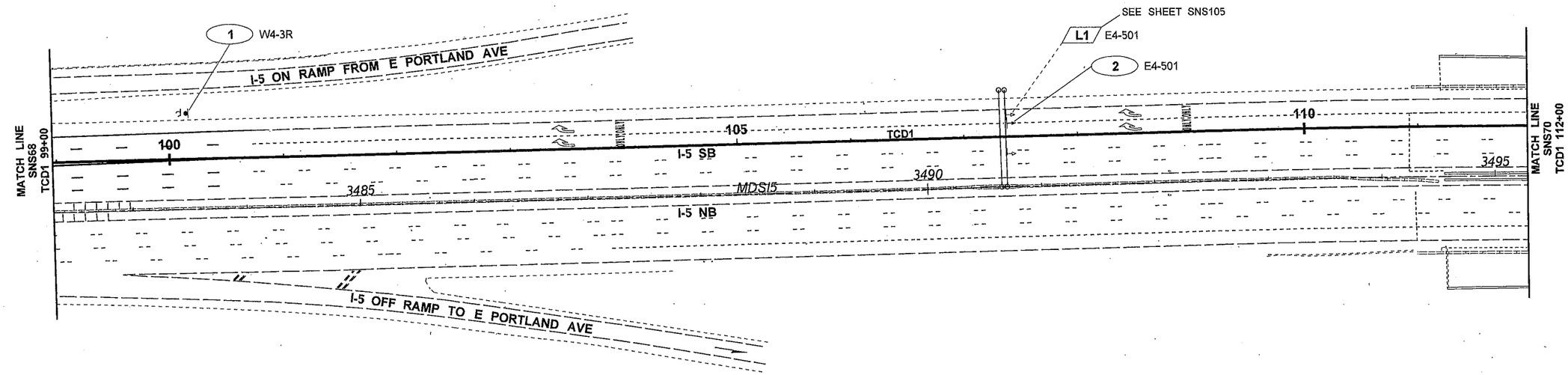

LEGEND

- # — NEW SIGN
- (EXISTING LOCATION)
- L# — EXISTING SIGN TO BE RELOCATED
- (NEW LOCATION)
- R-# — EXISTING SIGN ASSEMBLY TO BE REMOVED
- NEW SIGN ASSEMBLY
- EXISTING SIGN ASSEMBLY
- EXISTING SIGN ASSEMBLY (NOT INCLUDED IN PROJECT)
- NEW OVERHEAD SIGN
- EXISTING OVERHEAD SIGN
- EXISTING OVERHEAD SIGN (NOT INCLUDED IN PROJECT)
- SIGN BRIDGE POST WITH TEMPORARY 14' BEAM
- NEW CANTIEVER (MONOTUBE)
- NEW SIGN BRIDGE (MONOTUBE)
- EXISTING CANTILEVER (TRUSS)
- EXISTING SIGN BRIDGE (TRUSS)
- EXISTING SIGN BRIDGE (MONOTUBE)
- EXISTING SIGN BRIDGE (NOT INCLUDED IN PROJECT)
- RETAINING WALL
- EXISTING RETAINING WALL
- CONCRETE BARRIER
- TEMPORARY CONCRETE BARRIER
- TEMPORARY IMPACT ATTENUATOR
- EXISTING TEMPORARY PORATABLE SIGN MOUNT

0 50 100
SCALE IN FEET

FILE NAME	PW:_XL3497\PS&E Sheets\Signing\Stage Signs\P3497_SH_SNS_069.dgn				REGION NO. 10	STATE WASH	FED.AID PROJ.NO.
TIME	1:00:35 PM				JOB NUMBER		
DATE	3/5/2014						
PLOTTED BY	blakelf						
DESIGNED BY	F. BLAKELY				CONTRACT NO.		LOCATION NO. XL3497
ENTERED BY	F. BLAKELY						
CHECKED BY	J. VARADY						
PROJ. ENGR.	J. PEREZ						
REGIONAL ADM.	K. DAYTON	REVISION	DATE	BY			

DENNIS RAY CRUMBLEY, STATE OF WASHINGTON, REGISTERED PROFESSIONAL ENGINEER
4/6/14
DATE
P.E. STAMP BOX

DATE
P.E. STAMP BOX

Washington State
Department of Transportation

I-5
M ST TO PORTLAND AVE - HOV

SIGN STAGING PLAN

PLAN REF NO
SNS69

SHEET 1250 OF 1763 SHEETS

STAGE 3A

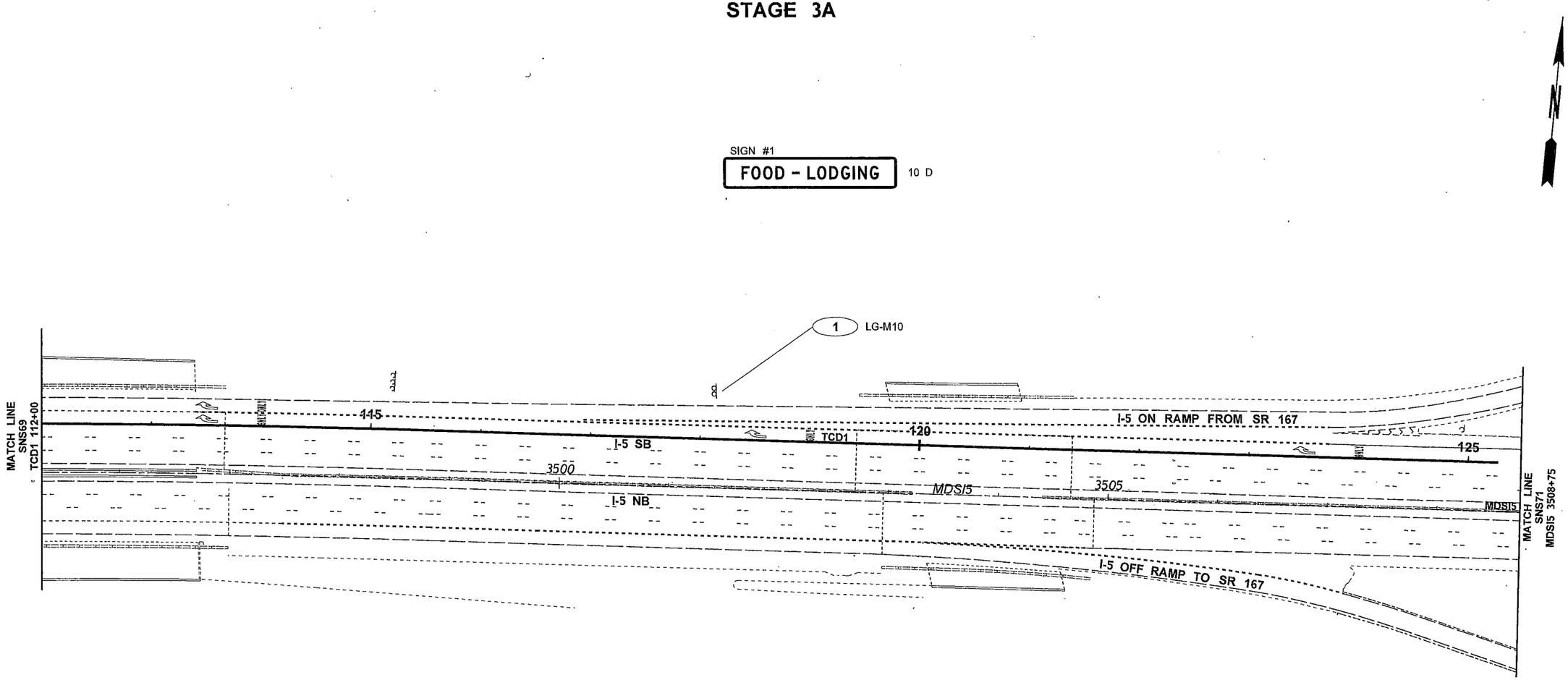

LEGEND

#	NEW SIGN
	(EXISTING LOCATION)
L#	EXISTING SIGN TO BE RELOCATED
	(NEW LOCATION)
R-#	EXISTING SIGN ASSEMBLY TO BE REMOVED
	NEW SIGN ASSEMBLY
	EXISTING SIGN ASSEMBLY
	EXISTING SIGN ASSEMBLY (NOT INCLUDED IN PROJECT)
	NEW OVERHEAD SIGN
	EXISTING OVERHEAD SIGN
	EXISTING OVERHEAD SIGN (NOT INCLUDED IN PROJECT)
	SIGN BRIDGE POST WITH TEMPORARY 14' BEAM
	NEW CANTIEVER (MONOTUBE)
	NEW SIGN BRIDGE (MONOTUBE)
	EXISTING CANTILEVER (TRUSS)
	EXISTING SIGN BRIDGE (TRUSS)
	EXISTING SIGN BRIDGE (MONOTUBE)
	EXISTING SIGN BRIDGE (NOT INCLUDED IN PROJECT)
	RETAINING WALL
	EXISTING RETAINING WALL
	CONCRETE BARRIER
	TEMPORARY CONCRETE BARRIER
	TEMPORARY IMPACT ATTENUATOR
	EXISTING TEMPORARY PORATABLE SIGN MOUNT

0 50 100
SCALE IN FEET

FILE NAME	PW:_XL3497\PS&E Sheets\Signing\Stage Signs\P3497_SH_SNS_070.dgn
TIME	11:25:11 AM
DATE	2/18/2014
PLOTTED BY	blakelf
DESIGNED BY	F. BLAKELY
ENTERED BY	F. BLAKELY
CHECKED BY	J. VARADY
PROJ. ENGR.	J. PEREZ
REGIONAL ADM.	K. DAYTON

REVISION | DATE | BY

REGION NO. 10 | STATE WASH | FED.AID PROJ.NO.

JOB NUMBER

CONTRACT NO.

LOCATION NO. XL3497

DENNIS RAY CRUMBLER, STATE OF WASHINGTON, REGISTERED PROFESSIONAL ENGINEER

2/18/14
DATE
P.E. STAMP BOX

DATE
P.E. STAMP BOX

Washington State Department of Transportation

I-5
M ST TO PORTLAND AVE - HOV

SIGN STAGING PLAN

PLAN REF NO SNS70

SHEET 1251 OF 1763 SHEETS

STAGE 3A

SIGN #1

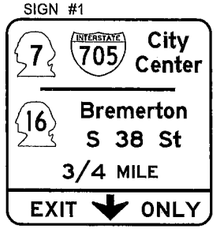

SIGN #2

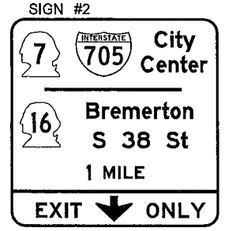

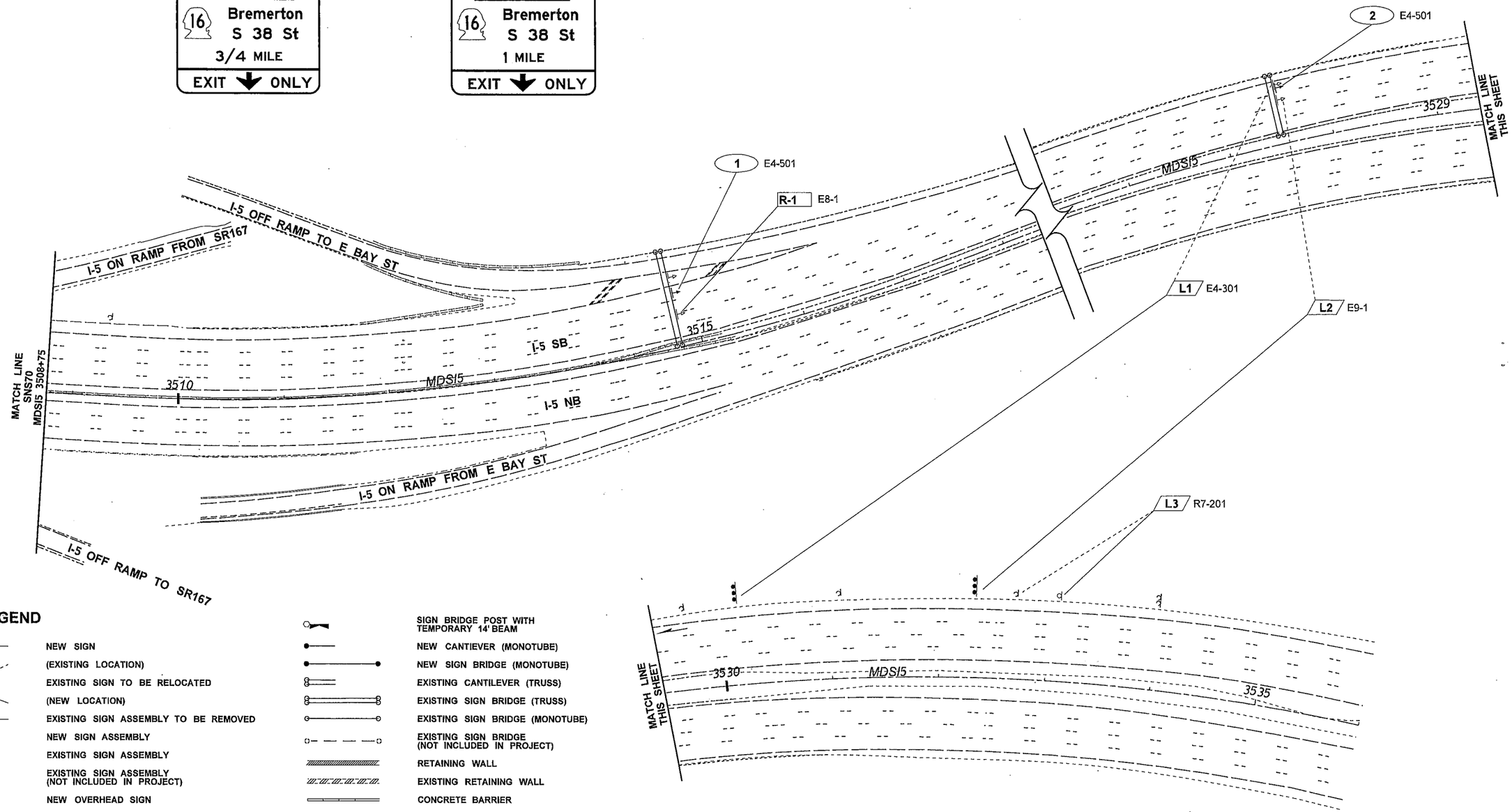

LEGEND

#	NEW SIGN
	(EXISTING LOCATION)
L#	EXISTING SIGN TO BE RELOCATED
	(NEW LOCATION)
R-#	EXISTING SIGN ASSEMBLY TO BE REMOVED
	NEW SIGN ASSEMBLY
	EXISTING SIGN ASSEMBLY
	EXISTING SIGN ASSEMBLY (NOT INCLUDED IN PROJECT)
	NEW OVERHEAD SIGN
	EXISTING OVERHEAD SIGN
	EXISTING OVERHEAD SIGN (NOT INCLUDED IN PROJECT)
	SIGN BRIDGE POST WITH TEMPORARY 14' BEAM
	NEW CANTIEVER (MONOTUBE)
	NEW SIGN BRIDGE (MONOTUBE)
	EXISTING CANTILEVER (TRUSS)
	EXISTING SIGN BRIDGE (TRUSS)
	EXISTING SIGN BRIDGE (MONOTUBE)
	EXISTING SIGN BRIDGE (NOT INCLUDED IN PROJECT)
	RETAINING WALL
	EXISTING RETAINING WALL
	CONCRETE BARRIER
	TEMPORARY CONCRETE BARRIER
	TEMPORARY IMPACT ATTENUATOR
	EXISTING TEMPORARY PORATABLE SIGN MOUNT

FILE NAME	PW:_XL3497\PS&E Sheets\Signing\Stage Signs\P3497_SH_SNS_071.dgn
TIME	11:25:21 AM
DATE	2/18/2014
PLOTTED BY	blakelf
DESIGNED BY	F. BLAKELY
ENTERED BY	F. BLAKELY
CHECKED BY	J. VARADY
PROJ. ENGR.	J. PEREZ
REGIONAL ADM.	K. DAYTON

REVISION | DATE | BY

REGION NO. 10 | STATE WASH | FED.AID PROJ.NO.

JOB NUMBER

CONTRACT NO.

LOCATION NO. XL3497

DEANE RAY CRUMB, STATE OF WASHINGTON, REGISTERED PROFESSIONAL ENGINEER

2/18/14 DATE

P.E. STAMP BOX

DATE

P.E. STAMP BOX

Washington State Department of Transportation

I-5
M ST TO PORTLAND AVE - HOV

SIGN STAGING PLAN

PLAN REF NO SNS71

SHEET 1252 OF 1763 SHEETS

LEGEND

#	NEW SIGN
	(EXISTING LOCATION)
L#	EXISTING SIGN TO BE RELOCATED
	(NEW LOCATION)
R-#	EXISTING SIGN ASSEMBLY TO BE REMOVED
	NEW SIGN ASSEMBLY
	EXISTING SIGN ASSEMBLY
	EXISTING SIGN ASSEMBLY (NOT INCLUDED IN PROJECT)
	NEW OVERHEAD SIGN
	EXISTING OVERHEAD SIGN
	EXISTING OVERHEAD SIGN (NOT INCLUDED IN PROJECT)
	SIGN BRIDGE POST WITH TEMPORARY 14' BEAM
	NEW CANTIEVER (MONOTUBE)
	NEW SIGN BRIDGE (MONOTUBE)
	EXISTING CANTILEVER (TRUSS)
	EXISTING SIGN BRIDGE (TRUSS)
	EXISTING SIGN BRIDGE (MONOTUBE)
	EXISTING SIGN BRIDGE (NOT INCLUDED IN PROJECT)
	RETAINING WALL
	EXISTING RETAINING WALL
	CONCRETE BARRIER
	TEMPORARY CONCRETE BARRIER
	TEMPORARY IMPACT ATTENUATOR
	EXISTING TEMPORARY PORATABLE SIGN MOUNT

STAGE 3A

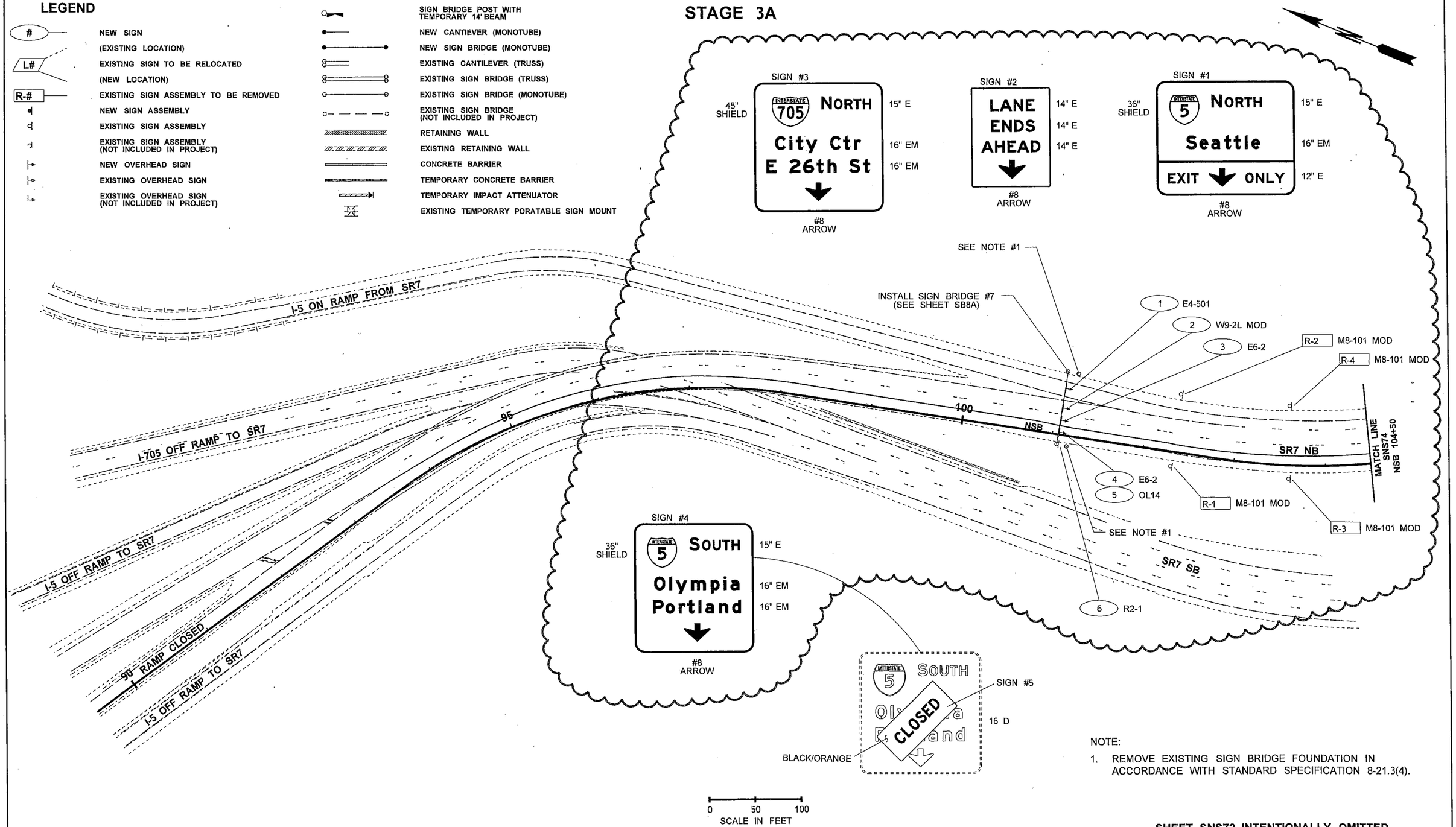

NOTE:

1. REMOVE EXISTING SIGN BRIDGE FOUNDATION IN ACCORDANCE WITH STANDARD SPECIFICATION 8-21.3(4).

SHEET SNS72 INTENTIONALLY OMITTED

FILE NAME	PW:_XL3497\PS&E Sheets\Signing\Stage Signs\ADD1_P3497_SH_SNS_073.dgn			
TIME	4:24:57 PM			
DATE	4/16/2014			
PLOTTED BY	blakelf			
DESIGNED BY	F. BLAKELY			
ENTERED BY	F. BLAKELY			
CHECKED BY	J. VARADY			
PROJ. ENGR.	J. PEREZ	AD1 - SIGNING CHANGE	04/25/2014	FB
REGIONAL ADM.	K. DAYTON	REVISION	DATE	BY

REGION NO.	STATE	FED.AID PROJ.NO.
10	WASH	
JOB NUMBER 12C501		
CONTRACT NO.		LOCATION NO. XL3497

P.E. STAMP BOX — DENNIS RAY CRUMLEY, STATE OF WASHINGTON, REGISTERED PROFESSIONAL ENGINEER — 4/17/14 DATE

P.E. STAMP BOX — DATE

Washington State Department of Transportation

I-5
M ST TO PORTLAND AVE - HOV

SIGN STAGING PLAN

PLAN REF NO SNS73

SHEET 1253 OF 1763 SHEETS

STAGE 3A

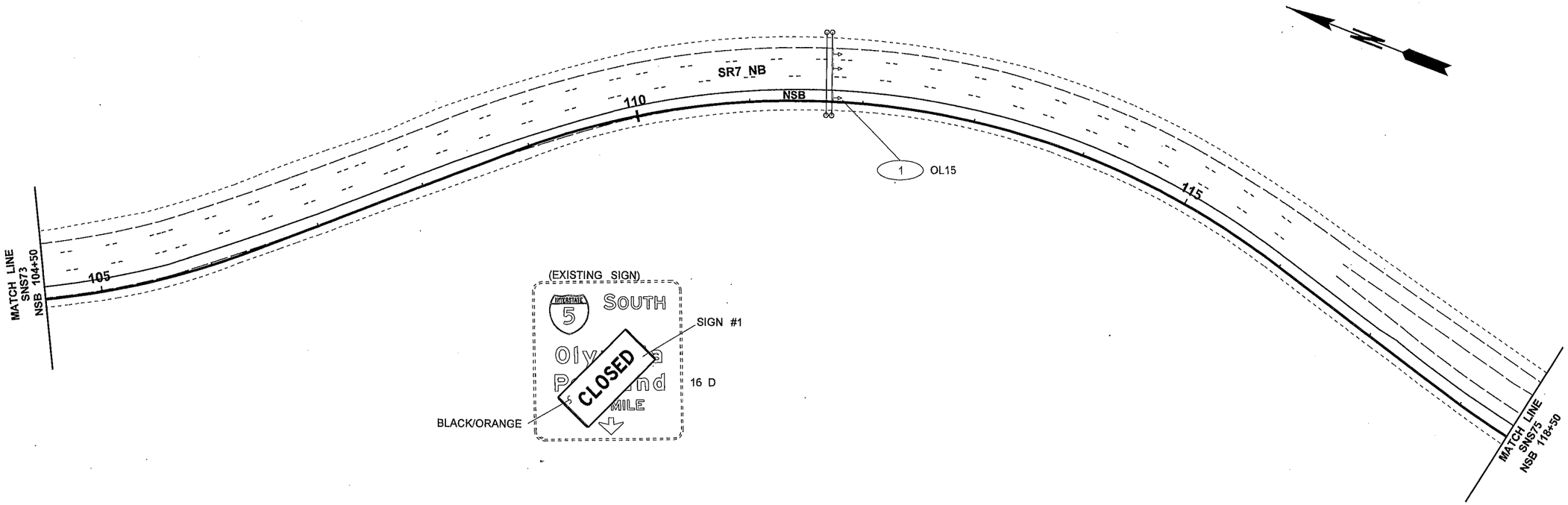

LEGEND

#	NEW SIGN
	(EXISTING LOCATION)
L#	EXISTING SIGN TO BE RELOCATED
	(NEW LOCATION)
R-#	EXISTING SIGN ASSEMBLY TO BE REMOVED
	NEW SIGN ASSEMBLY
	EXISTING SIGN ASSEMBLY
	EXISTING SIGN ASSEMBLY (NOT INCLUDED IN PROJECT)
	NEW OVERHEAD SIGN
	EXISTING OVERHEAD SIGN
	EXISTING OVERHEAD SIGN (NOT INCLUDED IN PROJECT)
	SIGN BRIDGE POST WITH TEMPORARY 14' BEAM
	NEW CANTIEVER (MONOTUBE)
	NEW SIGN BRIDGE (MONOTUBE)
	EXISTING CANTILEVER (TRUSS)
	EXISTING SIGN BRIDGE (TRUSS)
	EXISTING SIGN BRIDGE (MONOTUBE)
	EXISTING SIGN BRIDGE (NOT INCLUDED IN PROJECT)
	RETAINING WALL
	EXISTING RETAINING WALL
	CONCRETE BARRIER
	TEMPORARY CONCRETE BARRIER
	TEMPORARY IMPACT ATTENUATOR
	EXISTING TEMPORARY PORATABLE SIGN MOUNT

0 50 100
SCALE IN FEET

FILE NAME	PW:_XL3497\PS&E Sheets\Signing\Stage Signs\P3497_SH_SNS_074.dgn
TIME	11:25:38 AM
DATE	2/18/2014
PLOTTED BY	blakelf
DESIGNED BY	F. BLAKELY
ENTERED BY	F. BLAKELY
CHECKED BY	J. VARADY
PROJ. ENGR.	J. PEREZ
REGIONAL ADM.	K. DAYTON

REVISION | DATE | BY

REGION NO. 10 | STATE WASH | FED.AID PROJ.NO.

JOB NUMBER

CONTRACT NO.

LOCATION NO. XL3497

DENNIS RAY CRUMBLEY, STATE OF WASHINGTON, REGISTERED PROFESSIONAL ENGINEER

2/18/14
DATE
P.E. STAMP BOX

DATE
P.E. STAMP BOX

Washington State Department of Transportation

I-5
M ST TO PORTLAND AVE - HOV

SIGN STAGING PLAN

PLAN REF NO SNS74

SHEET 1254 OF 1763 SHEETS

STAGE 3A
SBN-SBS STEP 3

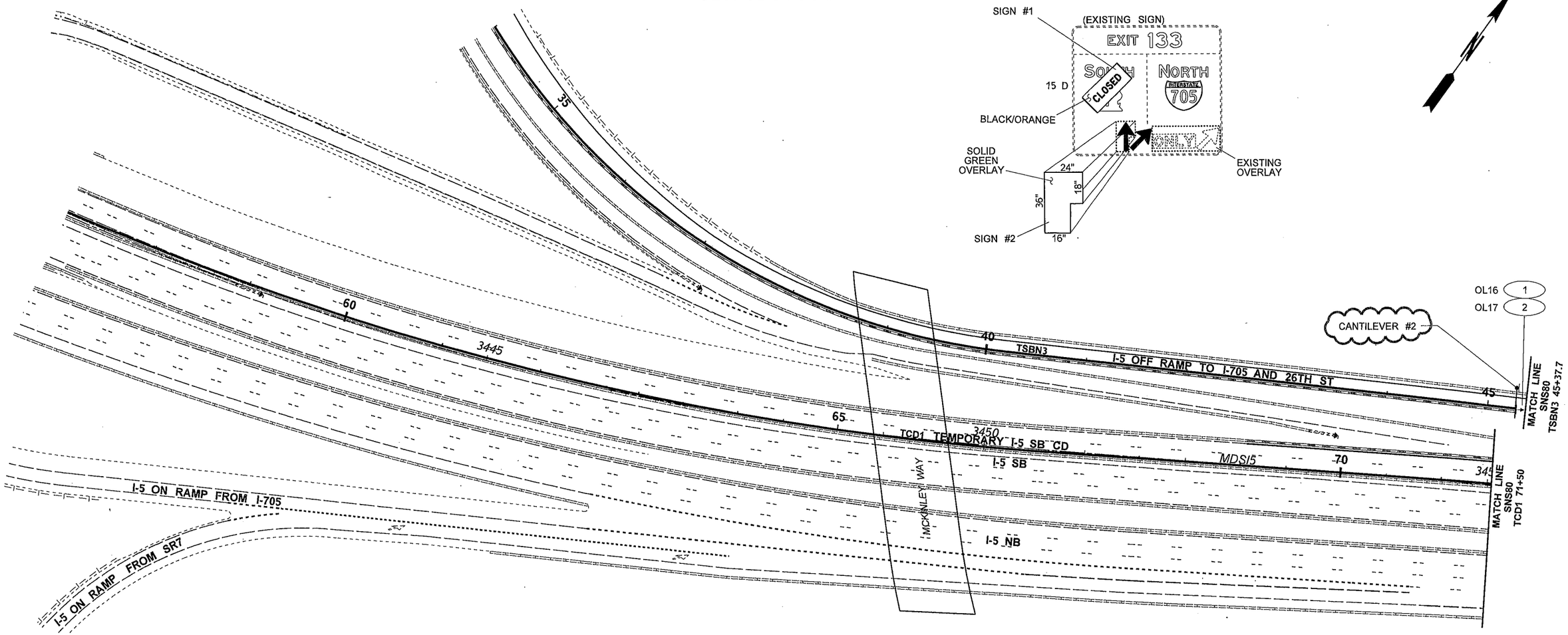

LEGEND

#	NEW SIGN
	(EXISTING LOCATION)
L#	EXISTING SIGN TO BE RELOCATED
	(NEW LOCATION)
R-#	EXISTING SIGN ASSEMBLY TO BE REMOVED
	NEW SIGN ASSEMBLY
	EXISTING SIGN ASSEMBLY
	EXISTING SIGN ASSEMBLY (NOT INCLUDED IN PROJECT)
	NEW OVERHEAD SIGN
	EXISTING OVERHEAD SIGN
	EXISTING OVERHEAD SIGN (NOT INCLUDED IN PROJECT)
	SIGN BRIDGE POST WITH TEMPORARY 14' BEAM
	NEW CANTIEVER (MONOTUBE)
	NEW SIGN BRIDGE (MONOTUBE)
	EXISTING CANTILEVER (TRUSS)
	EXISTING SIGN BRIDGE (TRUSS)
	EXISTING SIGN BRIDGE (MONOTUBE)
	EXISTING SIGN BRIDGE (NOT INCLUDED IN PROJECT)
	RETAINING WALL
	EXISTING RETAINING WALL
	CONCRETE BARRIER
	TEMPORARY CONCRETE BARRIER
	TEMPORARY IMPACT ATTENUATOR
	EXISTING TEMPORARY PORATABLE SIGN MOUNT

0 50 100
SCALE IN FEET

SHEETS SNS75, SNS76, SNS77, SNS78
INTENTIONALLY OMITTED

FILE NAME	PW:_XL3497\PS&E Sheets\Signing\Stage Signs\ADD1_P3497_SH_SNS_079.dgn
TIME	4:25:04 PM
DATE	4/16/2014
PLOTTED BY	blakelf
DESIGNED BY	F. BLAKELY
ENTERED BY	F. BLAKELY
CHECKED BY	J. VARADY
PROJ. ENGR.	J. PEREZ
REGIONAL ADM.	K. DAYTON

REVISION	DATE	BY
AD1 - NOTE CHANGE	04/25/2014	FB

REGION NO.	STATE	FED.AID PROJ.NO.
10	WASH	
JOB NUMBER 12C501		
CONTRACT NO.		LOCATION NO. XL3497

DENNIS RAY CRUMLEY STATE OF WASHINGTON REGISTERED PROFESSIONAL ENGINEER
4/16/14
DATE
P.E. STAMP BOX

DATE
P.E. STAMP BOX

Washington State Department of Transportation

I-5
M ST TO PORTLAND AVE - HOV

SIGN STAGING PLAN

PLAN REF NO SNS79

SHEET 1255 OF 1763 SHEETS

STAGE 3A
SBN-SBS STEP 3

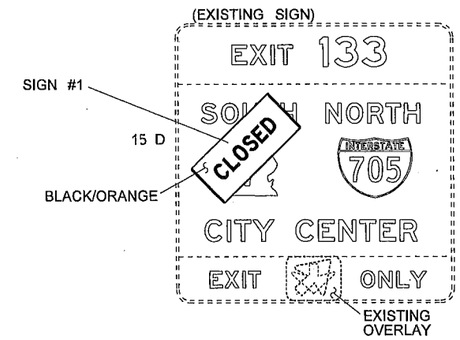

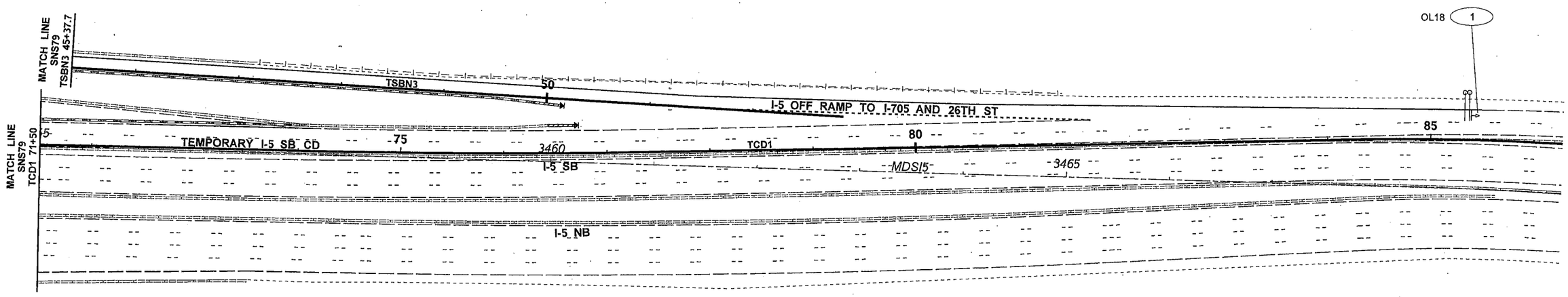

LEGEND

- # — NEW SIGN
- (EXISTING LOCATION)
- L# — EXISTING SIGN TO BE RELOCATED
- (NEW LOCATION)
- R-# — EXISTING SIGN ASSEMBLY TO BE REMOVED
- NEW SIGN ASSEMBLY
- EXISTING SIGN ASSEMBLY
- EXISTING SIGN ASSEMBLY (NOT INCLUDED IN PROJECT)
- NEW OVERHEAD SIGN
- EXISTING OVERHEAD SIGN
- EXISTING OVERHEAD SIGN (NOT INCLUDED IN PROJECT)
- SIGN BRIDGE POST WITH TEMPORARY 14' BEAM
- NEW CANTIEVER (MONOTUBE)
- NEW SIGN BRIDGE (MONOTUBE)
- EXISTING CANTILEVER (TRUSS)
- EXISTING SIGN BRIDGE (TRUSS)
- EXISTING SIGN BRIDGE (MONOTUBE)
- EXISTING SIGN BRIDGE (NOT INCLUDED IN PROJECT)
- RETAINING WALL
- EXISTING RETAINING WALL
- CONCRETE BARRIER
- TEMPORARY CONCRETE BARRIER
- TEMPORARY IMPACT ATTENUATOR
- EXISTING TEMPORARY PORATABLE SIGN MOUNT

0 50 100
SCALE IN FEET

FILE NAME	PW:_XL3497\PS&E Sheets\Signing\Stage Signs\P3497_SH_SNS_080.dgn
TIME	8:42:36 AM
DATE	3/4/2014
PLOTTED BY	blakelf
DESIGNED BY	F. BLAKELY
ENTERED BY	F. BLAKELY
CHECKED BY	J. VARADY
PROJ. ENGR.	J. PEREZ
REGIONAL ADM.	K. DAYTON

REVISION | DATE | BY

REGION NO. 10 | STATE WASH | FED.AID PROJ.NO.

JOB NUMBER

CONTRACT NO.

LOCATION NO. XL3497

DENNIS RAY CRUMMEY — STATE OF WASHINGTON — REGISTERED PROFESSIONAL ENGINEER
3/4/14
DATE
P.E. STAMP BOX

DATE
P.E. STAMP BOX

Washington State Department of Transportation

I-5
M ST TO PORTLAND AVE - HOV

SIGN STAGING PLAN

PLAN REF NO SNS80

SHEET 1256 OF 1763 SHEETS

STAGE 3B

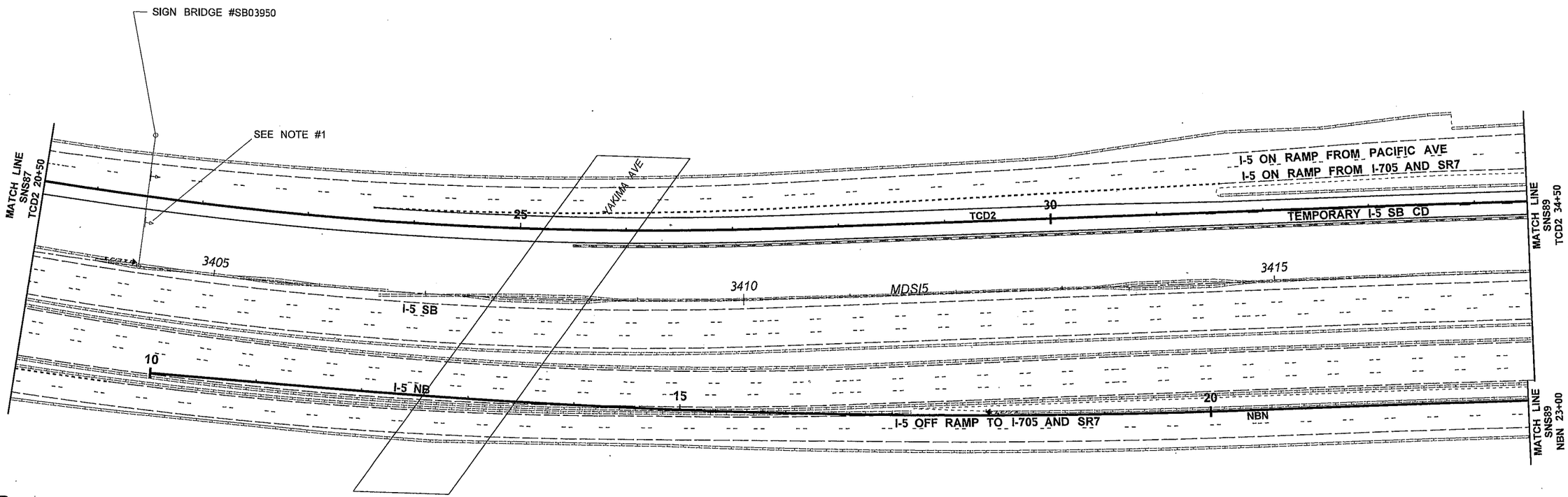

LEGEND

- # — NEW SIGN
- (EXISTING LOCATION)
- L# — EXISTING SIGN TO BE RELOCATED
- (NEW LOCATION)
- R-# — EXISTING SIGN ASSEMBLY TO BE REMOVED
- NEW SIGN ASSEMBLY
- EXISTING SIGN ASSEMBLY
- EXISTING SIGN ASSEMBLY (NOT INCLUDED IN PROJECT)
- NEW OVERHEAD SIGN
- EXISTING OVERHEAD SIGN
- EXISTING OVERHEAD SIGN (NOT INCLUDED IN PROJECT)
- SIGN BRIDGE POST WITH TEMPORARY 14' BEAM
- NEW CANTIEVER (MONOTUBE)
- NEW SIGN BRIDGE (MONOTUBE)
- EXISTING CANTILEVER (TRUSS)
- EXISTING SIGN BRIDGE (TRUSS)
- EXISTING SIGN BRIDGE (MONOTUBE)
- EXISTING SIGN BRIDGE (NOT INCLUDED IN PROJECT)
- RETAINING WALL
- EXISTING RETAINING WALL
- CONCRETE BARRIER
- TEMPORARY CONCRETE BARRIER
- TEMPORARY IMPACT ATTENUATOR
- EXISTING TEMPORARY PORATABLE SIGN MOUNT

0 50 100
SCALE IN FEET

NOTE:
1. COVER SIGN, SEE SPECIAL PROVISION 8-21.3(3).

SHEETS SNS81, SNS82, SNS83, SNS84, SNS85, SNS86, SNS87 INTENTIONALLY OMITTED

FILE NAME	PW:_XL3497\PS&E Sheets\Signing\Stage Signs\P3497_SH_SNS_088.dgn
TIME	11:25:59 AM
DATE	2/18/2014
PLOTTED BY	blakelf
DESIGNED BY	F. BLAKELY
ENTERED BY	F. BLAKELY
CHECKED BY	J. VARADY
PROJ. ENGR.	J. PEREZ
REGIONAL ADM.	K. DAYTON

REVISION	DATE	BY

REGION NO.	STATE	FED.AID PROJ.NO.
10	WASH	
JOB NUMBER		
CONTRACT NO.		LOCATION NO. XL3497

DENNIS RAY CRUMBLEY, STATE OF WASHINGTON, REGISTERED PROFESSIONAL ENGINEER
2/18/14
DATE
P.E. STAMP BOX

DATE
P.E. STAMP BOX

Washington State Department of Transportation

I-5
M ST TO PORTLAND AVE - HOV

SIGN STAGING PLAN

PLAN REF NO SNS88

SHEET 1257 OF 1763 SHEETS

LEGEND

#	NEW SIGN
	(EXISTING LOCATION)
L#	EXISTING SIGN TO BE RELOCATED
	(NEW LOCATION)
R-#	EXISTING SIGN ASSEMBLY TO BE REMOVED
	NEW SIGN ASSEMBLY
	EXISTING SIGN ASSEMBLY
	EXISTING SIGN ASSEMBLY (NOT INCLUDED IN PROJECT)
	NEW OVERHEAD SIGN
	EXISTING OVERHEAD SIGN
	EXISTING OVERHEAD SIGN (NOT INCLUDED IN PROJECT)
	SIGN BRIDGE POST WITH TEMPORARY 14' BEAM
	NEW CANTIEVER (MONOTUBE)
	NEW SIGN BRIDGE (MONOTUBE)
	EXISTING CANTILEVER (TRUSS)
	EXISTING SIGN BRIDGE (TRUSS)
	EXISTING SIGN BRIDGE (MONOTUBE)
	EXISTING SIGN BRIDGE (NOT INCLUDED IN PROJECT)
	RETAINING WALL
	EXISTING RETAINING WALL
	CONCRETE BARRIER
	TEMPORARY CONCRETE BARRIER
	TEMPORARY IMPACT ATTENUATOR
	EXISTING TEMPORARY PORATABLE SIGN MOUNT

STAGE 3B

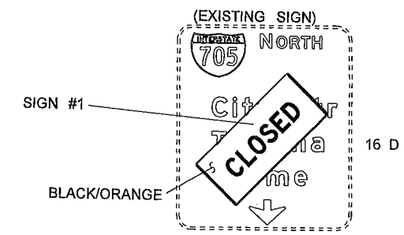

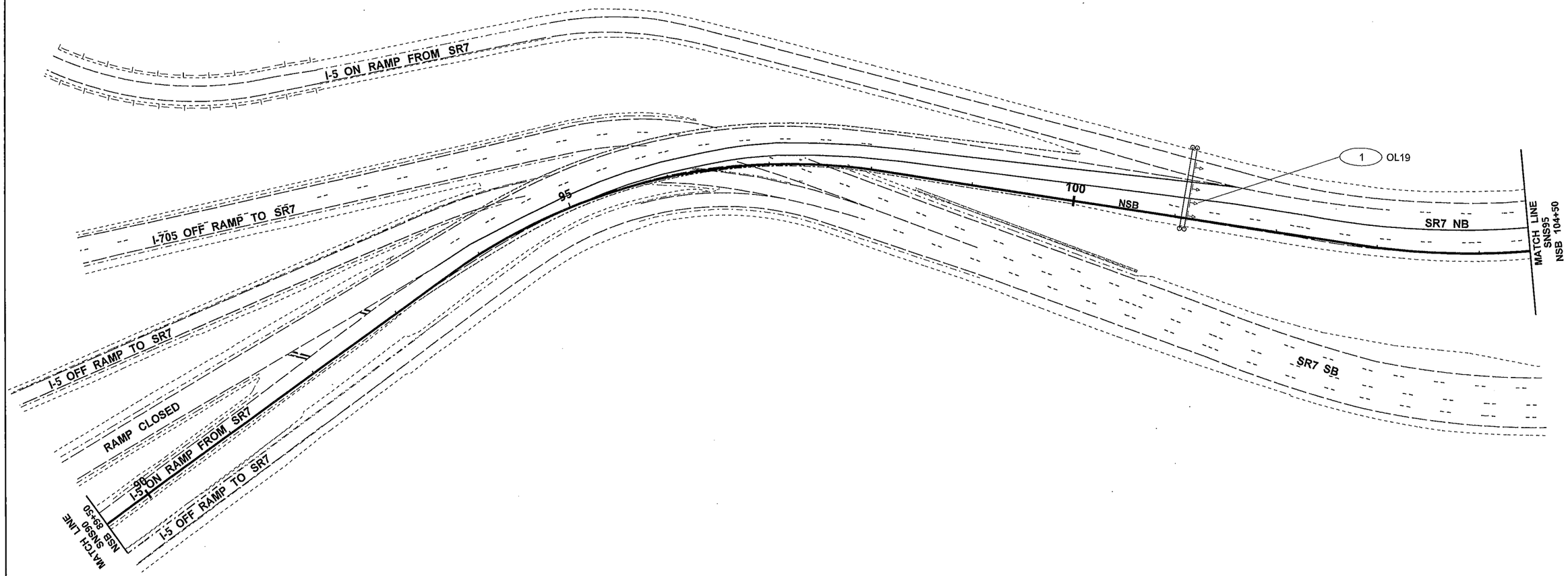

0 50 100
SCALE IN FEET

SHEETS SNS89, SNS90, SNS91, SNS92, SNS93 INTENTIONALLY OMITTED

FILE NAME	PW:_XL3497\PS&E Sheets\Signing\Stage Signs\P3497_SH_SNS_094.dgn
TIME	11:26:07 AM
DATE	2/18/2014
PLOTTED BY	blakelf
DESIGNED BY	F. BLAKELY
ENTERED BY	F. BLAKELY
CHECKED BY	J. VARADY
PROJ. ENGR.	J. PEREZ
REGIONAL ADM.	K. DAYTON

REVISION | DATE | BY

REGION NO. 10 | STATE WASH | FED.AID PROJ.NO.

JOB NUMBER

CONTRACT NO. | LOCATION NO. XL3497

DENNIS RAY CRUMBAKER, STATE OF WASHINGTON, REGISTERED PROFESSIONAL ENGINEER
2/18/14
DATE
P.E. STAMP BOX

DATE
P.E. STAMP BOX

Washington State Department of Transportation

I-5
M ST TO PORTLAND AVE - HOV

SIGN STAGING PLAN

PLAN REF NO SNS94

SHEET 1258 OF 1763 SHEETS

STAGE 3B

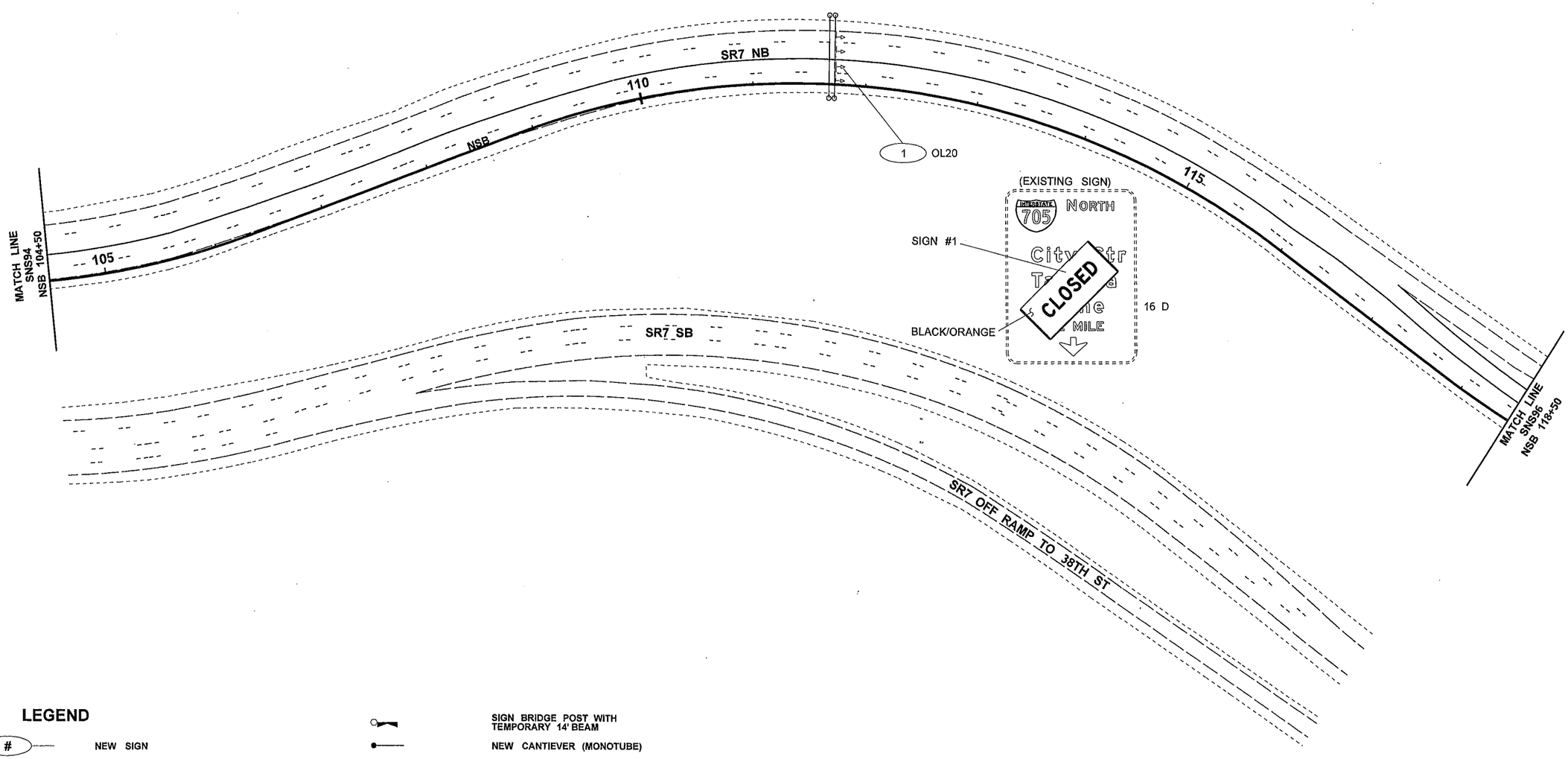

LEGEND

#	NEW SIGN
	(EXISTING LOCATION)
L#	EXISTING SIGN TO BE RELOCATED
	(NEW LOCATION)
R-#	EXISTING SIGN ASSEMBLY TO BE REMOVED
	NEW SIGN ASSEMBLY
	EXISTING SIGN ASSEMBLY
	EXISTING SIGN ASSEMBLY (NOT INCLUDED IN PROJECT)
	NEW OVERHEAD SIGN
	EXISTING OVERHEAD SIGN
	EXISTING OVERHEAD SIGN (NOT INCLUDED IN PROJECT)
	SIGN BRIDGE POST WITH TEMPORARY 14' BEAM
	NEW CANTIEVER (MONOTUBE)
	NEW SIGN BRIDGE (MONOTUBE)
	EXISTING CANTILEVER (TRUSS)
	EXISTING SIGN BRIDGE (TRUSS)
	EXISTING SIGN BRIDGE (MONOTUBE)
	EXISTING SIGN BRIDGE (NOT INCLUDED IN PROJECT)
	RETAINING WALL
	EXISTING RETAINING WALL
	CONCRETE BARRIER
	TEMPORARY CONCRETE BARRIER
	TEMPORARY IMPACT ATTENUATOR
	EXISTING TEMPORARY PORATABLE SIGN MOUNT

0 50 100
SCALE IN FEET

FILE NAME	PW:_XL3497\PS&E Sheets\Signing\Stage Signs\P3497_SH_SNS_095.dgn
TIME	11:26:15 AM
DATE	2/18/2014
PLOTTED BY	blakelf
DESIGNED BY	F. BLAKELY
ENTERED BY	F. BLAKELY
CHECKED BY	J. VARADY
PROJ. ENGR.	J. PEREZ
REGIONAL ADM.	K. DAYTON

REVISION | DATE | BY

REGION NO. 10 | STATE WASH | JOB NUMBER | CONTRACT NO.

FED.AID PROJ.NO.

LOCATION NO. XL3497

DENNIS RAY CRUMBER, STATE OF WASHINGTON, REGISTERED PROFESSIONAL ENGINEER
2/18/14
DATE
P.E. STAMP BOX

DATE
P.E. STAMP BOX

Washington State Department of Transportation

I-5
M ST TO PORTLAND AVE - HOV

SIGN STAGING PLAN

PLAN REF NO SNS95

SHEET 1259 OF 1763 SHEETS

STAGE 4

SIGN #1

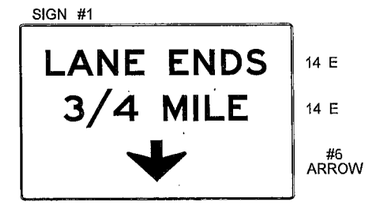

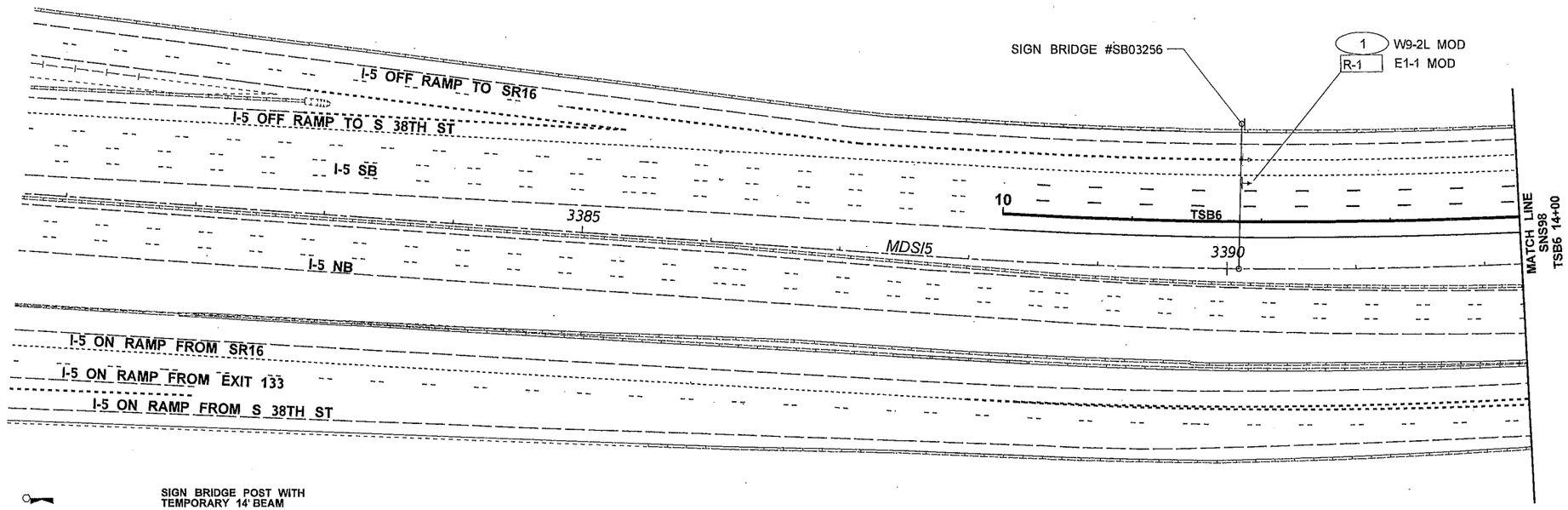

LEGEND

- # — NEW SIGN
- (EXISTING LOCATION)
- L# — EXISTING SIGN TO BE RELOCATED
- (NEW LOCATION)
- R-# — EXISTING SIGN ASSEMBLY TO BE REMOVED
- NEW SIGN ASSEMBLY
- EXISTING SIGN ASSEMBLY
- EXISTING SIGN ASSEMBLY (NOT INCLUDED IN PROJECT)
- NEW OVERHEAD SIGN
- EXISTING OVERHEAD SIGN
- EXISTING OVERHEAD SIGN (NOT INCLUDED IN PROJECT)
- SIGN BRIDGE POST WITH TEMPORARY 14' BEAM
- NEW CANTIEVER (MONOTUBE)
- NEW SIGN BRIDGE (MONOTUBE)
- EXISTING CANTILEVER (TRUSS)
- EXISTING SIGN BRIDGE (TRUSS)
- EXISTING SIGN BRIDGE (MONOTUBE)
- EXISTING SIGN BRIDGE (NOT INCLUDED IN PROJECT)
- RETAINING WALL
- EXISTING RETAINING WALL
- CONCRETE BARRIER
- TEMPORARY CONCRETE BARRIER
- TEMPORARY IMPACT ATTENUATOR
- EXISTING TEMPORARY PORATABLE SIGN MOUNT

0 50 100
SCALE IN FEET

SHEET SNS96 INTENTIONALLY OMITTED

FILE NAME	PW:_XL3497\PS&E Sheets\Signing\Stage Signs\P3497_SH_SNS_097.dgn				REGION NO. 10	STATE WASH	FED.AID PROJ.NO.
TIME	11:26:21 AM				JOB NUMBER	
DATE	2/18/2014					
PLOTTED BY	blakelf					
DESIGNED BY	F. BLAKELY				CONTRACT NO.	LOCATION NO. XL3497
ENTERED BY	F. BLAKELY					
CHECKED BY	J. VARADY					
PROJ. ENGR.	J. PEREZ					
REGIONAL ADM.	K. DAYTON	REVISION	DATE	BY		

DEANE RAY CRUMBLEY, STATE OF WASHINGTON, REGISTERED PROFESSIONAL ENGINEER
2/18/14
DATE
P.E. STAMP BOX

DATE
P.E. STAMP BOX

Washington State Department of Transportation

I-5
M ST TO PORTLAND AVE - HOV

SIGN STAGING PLAN

PLAN REF NO SNS97

SHEET 1260 OF 1763 SHEETS

STAGE 4

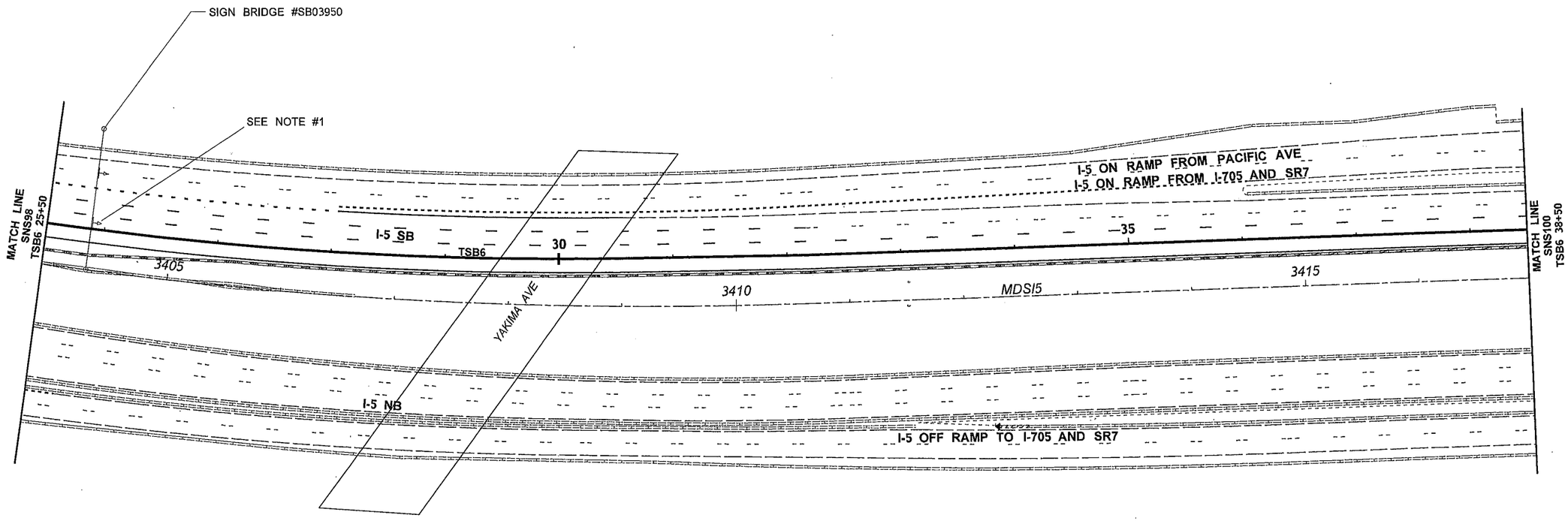

LEGEND

#	NEW SIGN
	(EXISTING LOCATION)
L#	EXISTING SIGN TO BE RELOCATED
	(NEW LOCATION)
R-#	EXISTING SIGN ASSEMBLY TO BE REMOVED
	NEW SIGN ASSEMBLY
	EXISTING SIGN ASSEMBLY
	EXISTING SIGN ASSEMBLY (NOT INCLUDED IN PROJECT)
	NEW OVERHEAD SIGN
	EXISTING OVERHEAD SIGN
	EXISTING OVERHEAD SIGN (NOT INCLUDED IN PROJECT)
	SIGN BRIDGE POST WITH TEMPORARY 14' BEAM
	NEW CANTIEVER (MONOTUBE)
	NEW SIGN BRIDGE (MONOTUBE)
	EXISTING CANTILEVER (TRUSS)
	EXISTING SIGN BRIDGE (TRUSS)
	EXISTING SIGN BRIDGE (MONOTUBE)
	EXISTING SIGN BRIDGE (NOT INCLUDED IN PROJECT)
	RETAINING WALL
	EXISTING RETAINING WALL
	CONCRETE BARRIER
	TEMPORARY CONCRETE BARRIER
	TEMPORARY IMPACT ATTENUATOR
	EXISTING TEMPORARY PORATABLE SIGN MOUNT

0 50 100
SCALE IN FEET

NOTE:
1. UNCOVER SIGN.

SHEET SNS98 INTENTIONALLY OMITTED

FILE NAME	PW:_XL3497\PS&E Sheets\Signing\Stage Signs\P3497_SH_SNS_099.dgn			
TIME	11:26:28 AM			
DATE	2/18/2014			
PLOTTED BY	blakelf			
DESIGNED BY	F. BLAKELY			
ENTERED BY	F. BLAKELY			
CHECKED BY	J. VARADY			
PROJ. ENGR.	J. PEREZ			
REGIONAL ADM.	K. DAYTON	REVISION	DATE	BY

REGION NO.	STATE	FED.AID PROJ.NO.
10	WASH	
JOB NUMBER		
CONTRACT NO.		LOCATION NO. XL3497

DENNIS RAY CRUMBLEY, STATE OF WASHINGTON, 38145, REGISTERED PROFESSIONAL ENGINEER
2/18/14
DATE
P.E. STAMP BOX

DATE
P.E. STAMP BOX

Washington State Department of Transportation

I-5
M ST TO PORTLAND AVE - HOV

SIGN STAGING PLAN

PLAN REF NO SNS99

SHEET 1261 OF 1763 SHEETS

STAGE 4

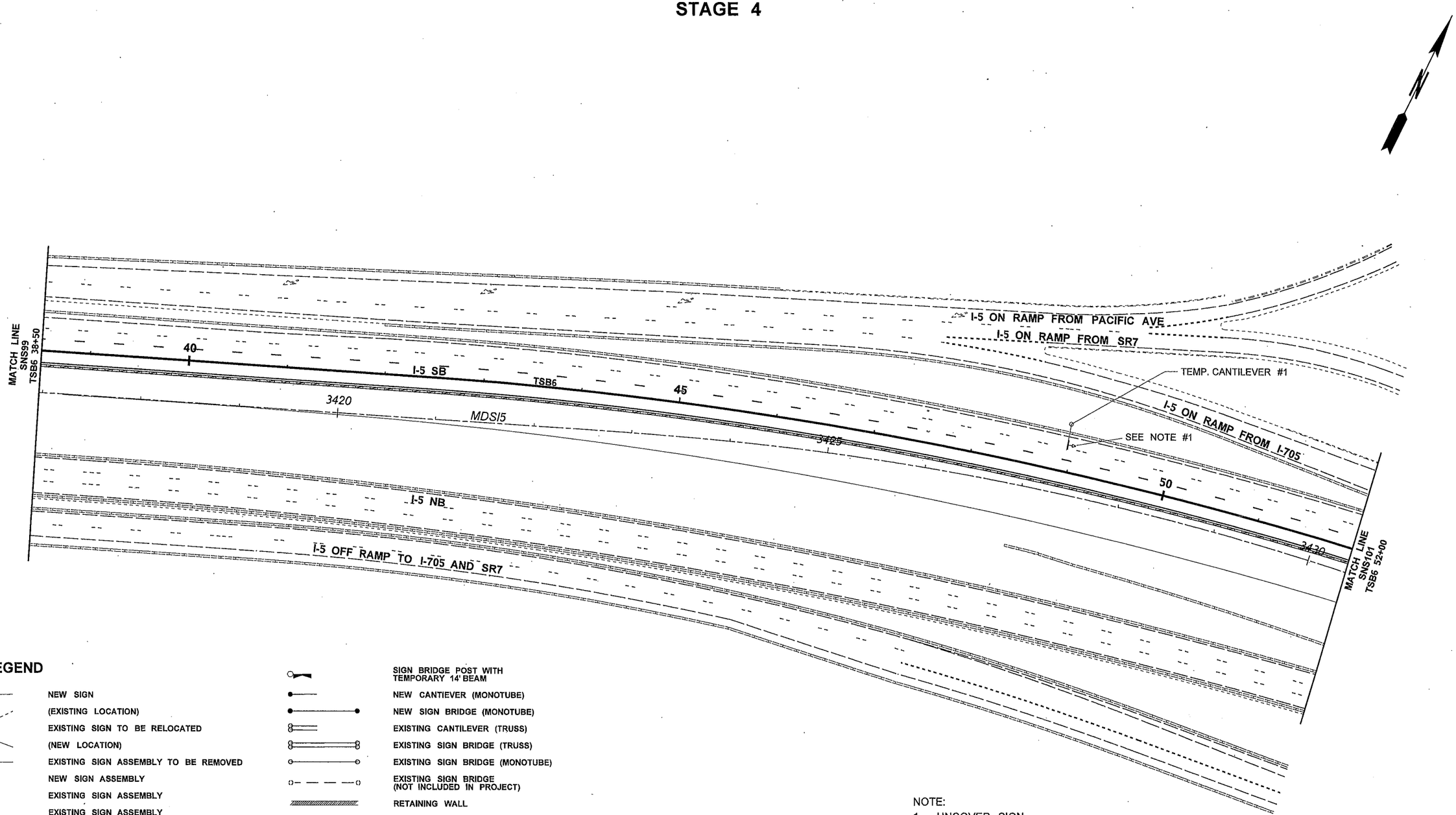

LEGEND

#	NEW SIGN
	(EXISTING LOCATION)
L#	EXISTING SIGN TO BE RELOCATED
	(NEW LOCATION)
R-#	EXISTING SIGN ASSEMBLY TO BE REMOVED
	NEW SIGN ASSEMBLY
	EXISTING SIGN ASSEMBLY
	EXISTING SIGN ASSEMBLY (NOT INCLUDED IN PROJECT)
	NEW OVERHEAD SIGN
	EXISTING OVERHEAD SIGN
	EXISTING OVERHEAD SIGN (NOT INCLUDED IN PROJECT)
	SIGN BRIDGE POST WITH TEMPORARY 14' BEAM
	NEW CANTIEVER (MONOTUBE)
	NEW SIGN BRIDGE (MONOTUBE)
	EXISTING CANTILEVER (TRUSS)
	EXISTING SIGN BRIDGE (TRUSS)
	EXISTING SIGN BRIDGE (MONOTUBE)
	EXISTING SIGN BRIDGE (NOT INCLUDED IN PROJECT)
	RETAINING WALL
	EXISTING RETAINING WALL
	CONCRETE BARRIER
	TEMPORARY CONCRETE BARRIER
	TEMPORARY IMPACT ATTENUATOR
	EXISTING TEMPORARY PORATABLE SIGN MOUNT

NOTE:
1. UNCOVER SIGN.

0 50 100
SCALE IN FEET

FILE NAME	PW:_XL3497\PS&E Sheets\Signing\Stage Signs\P3497_SH_SNS_100.dgn
TIME	11:26:35 AM
DATE	2/18/2014
PLOTTED BY	blakelf
DESIGNED BY	F. BLAKELY
ENTERED BY	F. BLAKELY
CHECKED BY	J. VARADY
PROJ. ENGR.	J. PEREZ
REGIONAL ADM.	K. DAYTON

REVISION | DATE | BY

REGION NO. 10 | STATE WASH | FED.AID PROJ.NO.

JOB NUMBER

CONTRACT NO. | LOCATION NO. XL3497

DENNIS RAY CRUMBLEY, STATE OF WASHINGTON, REGISTERED PROFESSIONAL ENGINEER

2/18/14
DATE
P.E. STAMP BOX

DATE
P.E. STAMP BOX

Washington State Department of Transportation

I-5
M ST TO PORTLAND AVE - HOV

SIGN STAGING PLAN

PLAN REF NO SNS100

SHEET 1262 OF 1763 SHEETS

STAGE 4

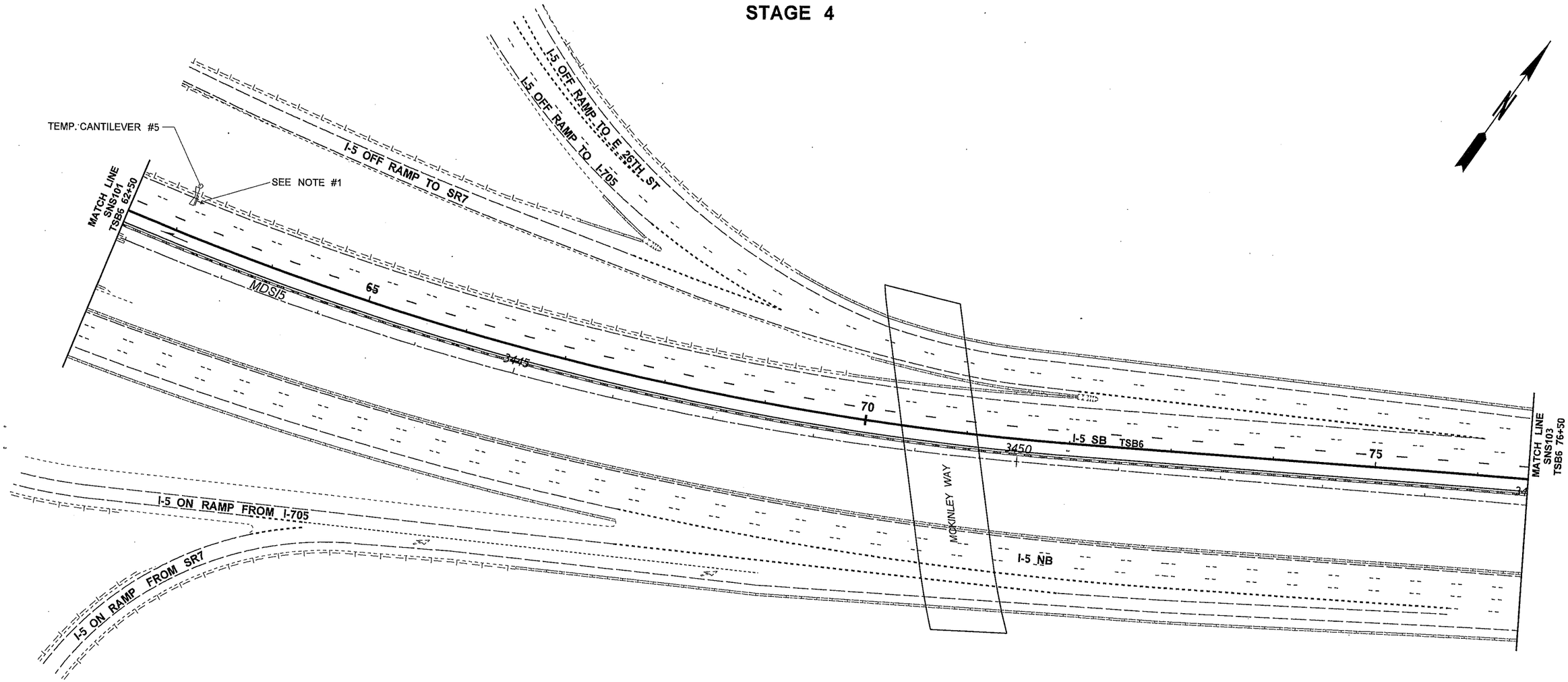

LEGEND

#	NEW SIGN
	(EXISTING LOCATION)
L#	EXISTING SIGN TO BE RELOCATED
	(NEW LOCATION)
R-#	EXISTING SIGN ASSEMBLY TO BE REMOVED
	NEW SIGN ASSEMBLY
	EXISTING SIGN ASSEMBLY
	EXISTING SIGN ASSEMBLY (NOT INCLUDED IN PROJECT)
	NEW OVERHEAD SIGN
	EXISTING OVERHEAD SIGN
	EXISTING OVERHEAD SIGN (NOT INCLUDED IN PROJECT)
	SIGN BRIDGE POST WITH TEMPORARY 14' BEAM
	NEW CANTIEVER (MONOTUBE)
	NEW SIGN BRIDGE (MONOTUBE)
	EXISTING CANTILEVER (TRUSS)
	EXISTING SIGN BRIDGE (TRUSS)
	EXISTING SIGN BRIDGE (MONOTUBE)
	EXISTING SIGN BRIDGE (NOT INCLUDED IN PROJECT)
	RETAINING WALL
	EXISTING RETAINING WALL
	CONCRETE BARRIER
	TEMPORARY CONCRETE BARRIER
	TEMPORARY IMPACT ATTENUATOR
	EXISTING TEMPORARY PORATABLE SIGN MOUNT

0 50 100
SCALE IN FEET

NOTES:
1. UNCOVER SIGN.

SHEET SNS101 INTENTIONALLY OMITTED

FILE NAME	PW:_XL3497\PS&E Sheets\Signing\Stage Signs\P3497_SH_SNS_102.dgn
TIME	11:26:41 AM
DATE	2/18/2014
PLOTTED BY	blakelf
DESIGNED BY	F. BLAKELY
ENTERED BY	F. BLAKELY
CHECKED BY	J. VARADY
PROJ. ENGR.	J. PEREZ
REGIONAL ADM.	K. DAYTON

REVISION | DATE | BY

REGION NO. 10 | STATE WASH | FED.AID PROJ.NO.

JOB NUMBER

CONTRACT NO. | LOCATION NO. XL3497

DENNIS RAY CHUMBLEY STATE OF WASHINGTON REGISTERED PROFESSIONAL ENGINEER

DATE 2/18/14

P.E. STAMP BOX

DATE

P.E. STAMP BOX

Washington State Department of Transportation

I-5
M ST TO PORTLAND AVE - HOV

SIGN STAGING PLAN

PLAN REF NO SNS102

SHEET 1263 OF 1763 SHEETS

STAGE 4

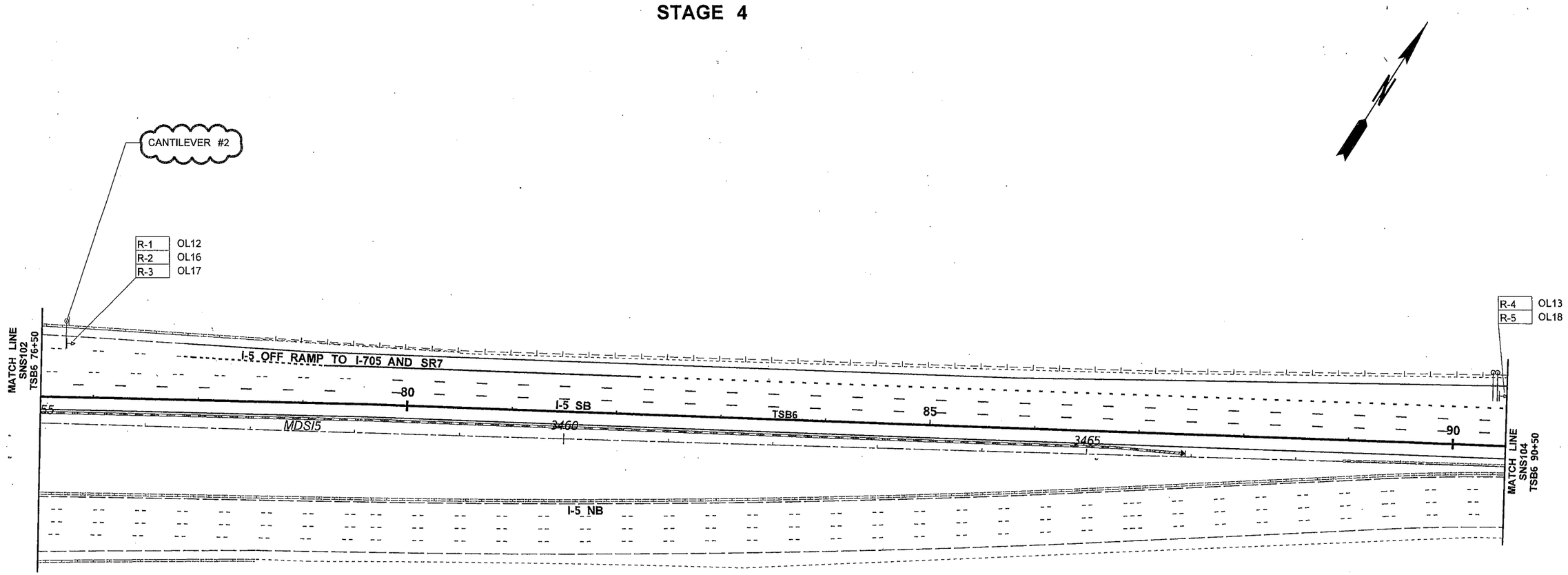

LEGEND

#	NEW SIGN
	(EXISTING LOCATION)
L#	EXISTING SIGN TO BE RELOCATED
	(NEW LOCATION)
R-#	EXISTING SIGN ASSEMBLY TO BE REMOVED
	NEW SIGN ASSEMBLY
	EXISTING SIGN ASSEMBLY
	EXISTING SIGN ASSEMBLY (NOT INCLUDED IN PROJECT)
	NEW OVERHEAD SIGN
	EXISTING OVERHEAD SIGN
	EXISTING OVERHEAD SIGN (NOT INCLUDED IN PROJECT)
	SIGN BRIDGE POST WITH TEMPORARY 14' BEAM
	NEW CANTIEVER (MONOTUBE)
	NEW SIGN BRIDGE (MONOTUBE)
	EXISTING CANTILEVER (TRUSS)
	EXISTING SIGN BRIDGE (TRUSS)
	EXISTING SIGN BRIDGE (MONOTUBE)
	EXISTING SIGN BRIDGE (NOT INCLUDED IN PROJECT)
	RETAINING WALL
	EXISTING RETAINING WALL
	CONCRETE BARRIER
	TEMPORARY CONCRETE BARRIER
	TEMPORARY IMPACT ATTENUATOR
	EXISTING TEMPORARY PORATABLE SIGN MOUNT

0 50 100
SCALE IN FEET

FILE NAME	PW:_XL3497\PS&E Sheets\Signing\Stage Signs\ADD1_P3497_SH_SNS_103.dgn
TIME	4:25:11 PM
DATE	4/16/2014
PLOTTED BY	blakelf
DESIGNED BY	F. BLAKELY
ENTERED BY	F. BLAKELY
CHECKED BY	J. VARADY
PROJ. ENGR.	J. PEREZ
REGIONAL ADM.	K. DAYTON

REVISION	DATE	BY
AD1 - NOTE CHANGE	04/25/2014	FB

REGION NO.	STATE	FED.AID PROJ.NO.
10	WASH	
JOB NUMBER 12C501		
CONTRACT NO.		LOCATION NO. XL3497

DENNIS RAY CRUMBER, STATE OF WASHINGTON, REGISTERED PROFESSIONAL ENGINEER
4/17/14
DATE
P.E. STAMP BOX

DATE
P.E. STAMP BOX

Washington State Department of Transportation

I-5
M ST TO PORTLAND AVE - HOV

SIGN STAGING PLAN

PLAN REF NO SNS103

SHEET 1264 OF 1763 SHEETS

STAGE 4

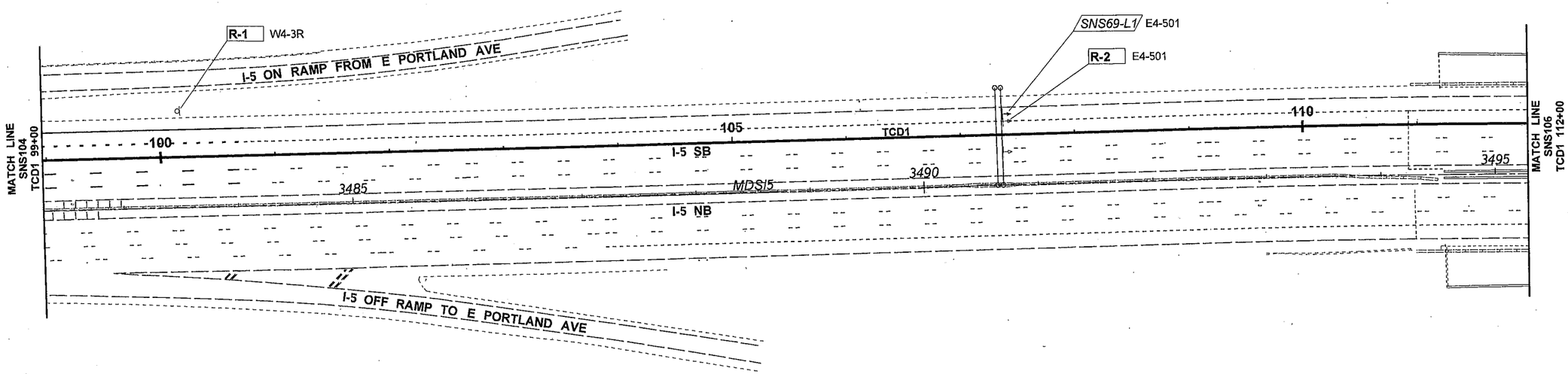

LEGEND

- # — NEW SIGN
- (EXISTING LOCATION)
- L# — EXISTING SIGN TO BE RELOCATED
- (NEW LOCATION)
- R-# — EXISTING SIGN ASSEMBLY TO BE REMOVED
- NEW SIGN ASSEMBLY
- EXISTING SIGN ASSEMBLY
- EXISTING SIGN ASSEMBLY (NOT INCLUDED IN PROJECT)
- NEW OVERHEAD SIGN
- EXISTING OVERHEAD SIGN
- EXISTING OVERHEAD SIGN (NOT INCLUDED IN PROJECT)
- SIGN BRIDGE POST WITH TEMPORARY 14' BEAM
- NEW CANTIEVER (MONOTUBE)
- NEW SIGN BRIDGE (MONOTUBE)
- EXISTING CANTILEVER (TRUSS)
- EXISTING SIGN BRIDGE (TRUSS)
- EXISTING SIGN BRIDGE (MONOTUBE)
- EXISTING SIGN BRIDGE (NOT INCLUDED IN PROJECT)
- RETAINING WALL
- EXISTING RETAINING WALL
- CONCRETE BARRIER
- TEMPORARY CONCRETE BARRIER
- TEMPORARY IMPACT ATTENUATOR
- EXISTING TEMPORARY PORATABLE SIGN MOUNT

0 50 100
SCALE IN FEET

SHEET SNS104 INTENTIONALLY OMITTED

FILE NAME	PW:_XL3497\PS&E Sheets\Signing\Stage Signs\P3497_SH_SNS_105.dgn
TIME	1:00:42 PM
DATE	3/5/2014
PLOTTED BY	blakelf
DESIGNED BY	F. BLAKELY
ENTERED BY	F. BLAKELY
CHECKED BY	J. VARADY
PROJ. ENGR.	J. PEREZ
REGIONAL ADM.	K. DAYTON

REVISION | DATE | BY

REGION NO.	STATE	FED.AID PROJ.NO.
10	WASH	
JOB NUMBER		
CONTRACT NO.		LOCATION NO. XL3497

DENNIS RAY CRUMBAY, STATE OF WASHINGTON, REGISTERED PROFESSIONAL ENGINEER
4/6/14
DATE
P.E. STAMP BOX

DATE
P.E. STAMP BOX

Washington State Department of Transportation

I-5
M ST TO PORTLAND AVE - HOV

SIGN STAGING PLAN

PLAN REF NO
SNS105

SHEET 1265 OF 1763 SHEETS

STAGE 4

SIGN #1

13 EM	City Center 1 1/4	13 EM
16" SYMBOL	(16) West 2 3/4	13 EM
13 EM	S 38th St 2 3/4	13 EM

SIGN #2

Bay St	16 E
River Rd	16 E
NEXT RIGHT	12 E

SIGN #3

Tacoma	16 E
NEXT 5 EXITS	10 EM

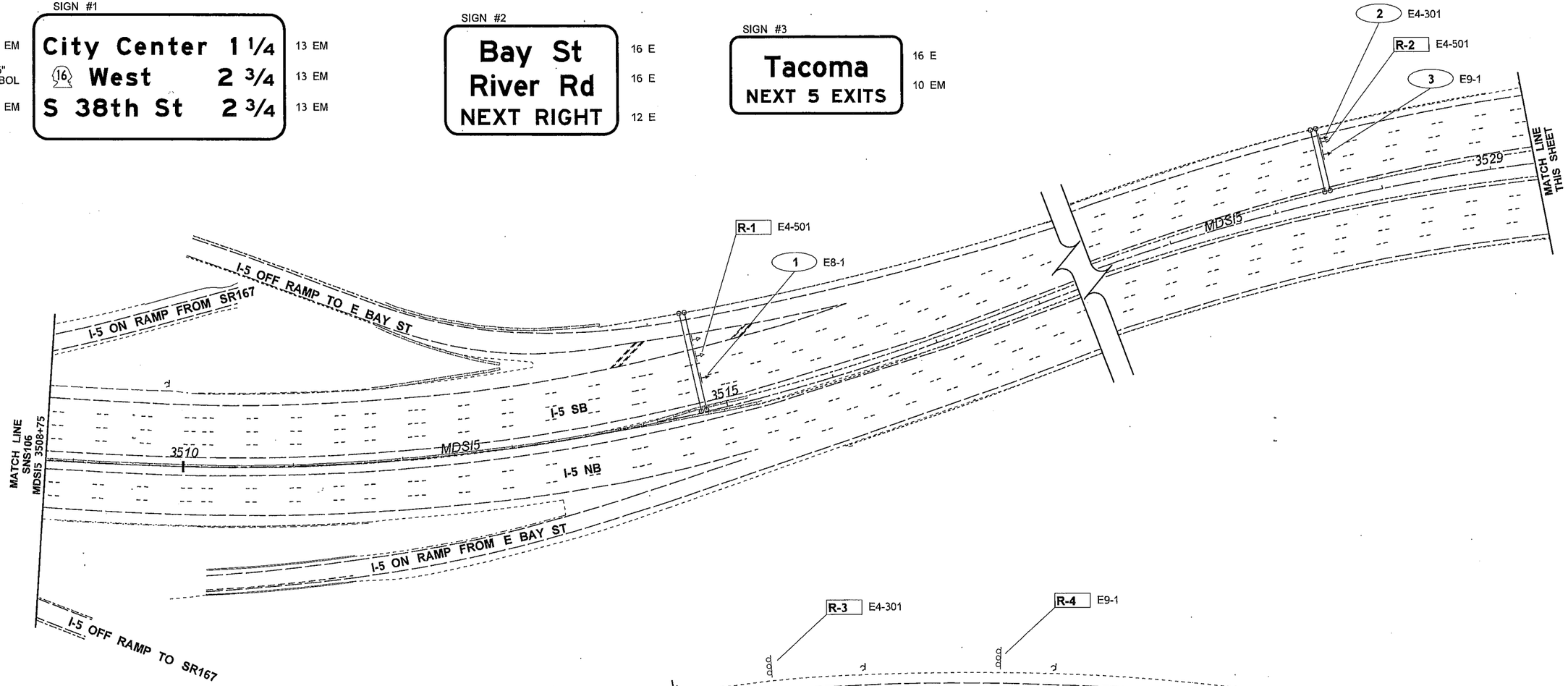

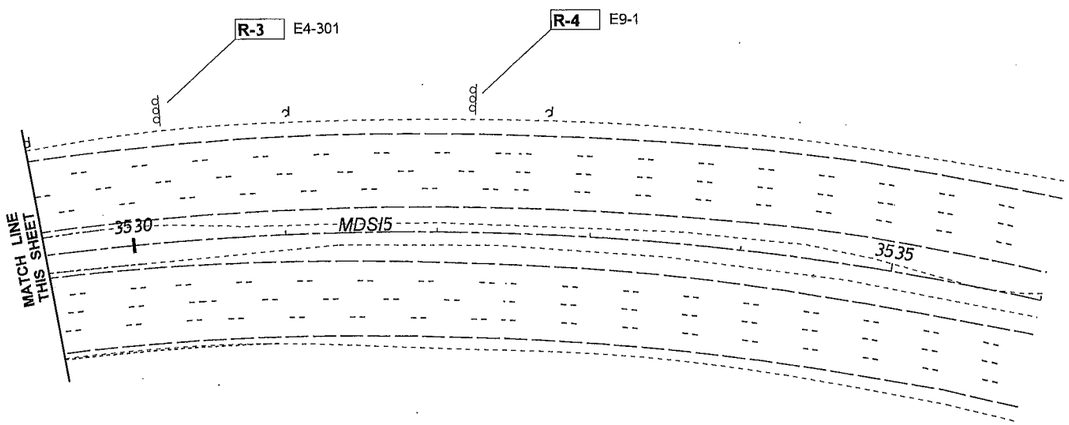

LEGEND

#	NEW SIGN
	(EXISTING LOCATION)
L#	EXISTING SIGN TO BE RELOCATED
	(NEW LOCATION)
R-#	EXISTING SIGN ASSEMBLY TO BE REMOVED
	NEW SIGN ASSEMBLY
	EXISTING SIGN ASSEMBLY
	EXISTING SIGN ASSEMBLY (NOT INCLUDED IN PROJECT)
	NEW OVERHEAD SIGN
	EXISTING OVERHEAD SIGN
	EXISTING OVERHEAD SIGN (NOT INCLUDED IN PROJECT)
	SIGN BRIDGE POST WITH TEMPORARY 14' BEAM
	NEW CANTIEVER (MONOTUBE)
	NEW SIGN BRIDGE (MONOTUBE)
	EXISTING CANTILEVER (TRUSS)
	EXISTING SIGN BRIDGE (TRUSS)
	EXISTING SIGN BRIDGE (MONOTUBE)
	EXISTING SIGN BRIDGE (NOT INCLUDED IN PROJECT)
	RETAINING WALL
	EXISTING RETAINING WALL
	CONCRETE BARRIER
	TEMPORARY CONCRETE BARRIER
	TEMPORARY IMPACT ATTENUATOR
	EXISTING TEMPORARY PORATABLE SIGN MOUNT

0 50 100
SCALE IN FEET

SHEET SNS106 INTENTIONALLY OMITTED

FILE NAME	PW:_XL3497\PS&E Sheets\Signing\Stage Signs\P3497_SH_SNS_107.dgn
TIME	11:27:02 AM
DATE	2/18/2014
PLOTTED BY	blakelf
DESIGNED BY	F. BLAKELY
ENTERED BY	F. BLAKELY
CHECKED BY	J. VARADY
PROJ. ENGR.	J. PEREZ
REGIONAL ADM.	K. DAYTON

REVISION | DATE | BY

REGION NO.	STATE	FED.AID PROJ.NO.
10	WASH	
JOB NUMBER		
CONTRACT NO.		LOCATION NO. XL3497

DRANE RAY CRUMBLEY, STATE OF WASHINGTON, 13 38784, PROFESSIONAL ENGINEER
2/18/14
DATE
P.E. STAMP BOX

DATE
P.E. STAMP BOX

Washington State Department of Transportation

I-5
M ST TO PORTLAND AVE - HOV

SIGN STAGING PLAN

PLAN REF NO SNS107

SHEET 1266 OF 1763 SHEETS

STAGE 5

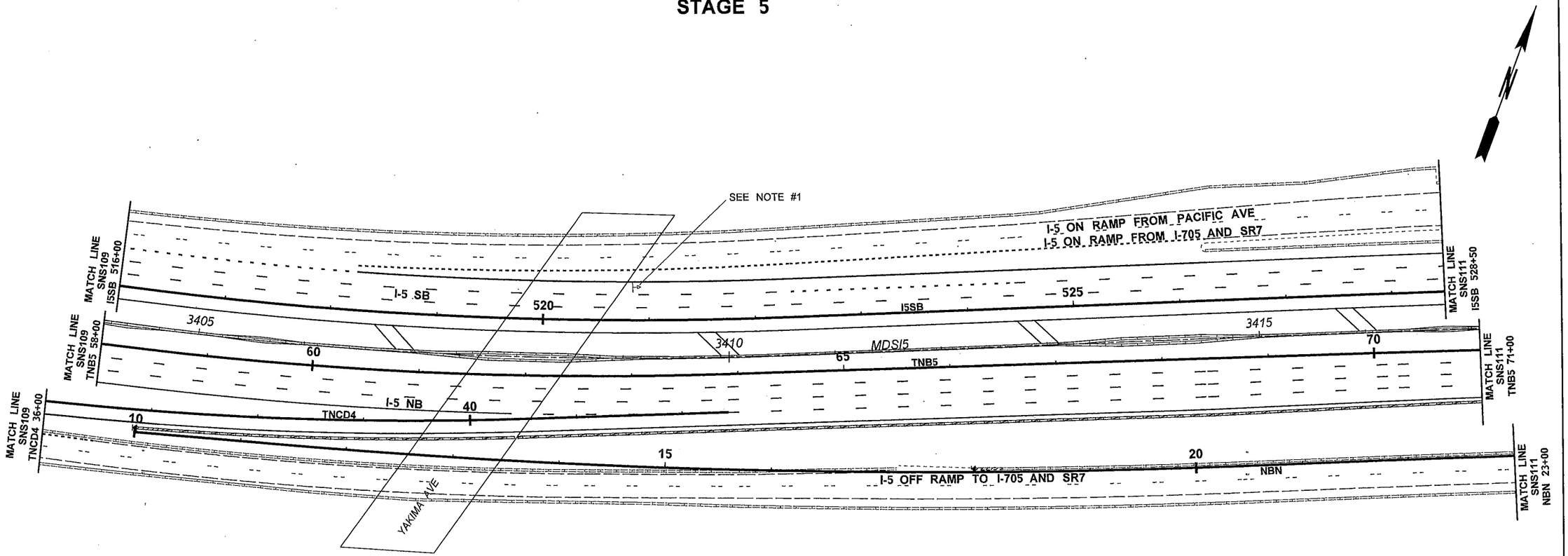

LEGEND

- # — NEW SIGN
- (EXISTING LOCATION)
- L# — EXISTING SIGN TO BE RELOCATED
- (NEW LOCATION)
- R-# — EXISTING SIGN ASSEMBLY TO BE REMOVED
- NEW SIGN ASSEMBLY
- EXISTING SIGN ASSEMBLY
- EXISTING SIGN ASSEMBLY (NOT INCLUDED IN PROJECT)
- NEW OVERHEAD SIGN
- EXISTING OVERHEAD SIGN
- EXISTING OVERHEAD SIGN (NOT INCLUDED IN PROJECT)
- SIGN BRIDGE POST WITH TEMPORARY 14' BEAM
- NEW CANTIEVER (MONOTUBE)
- NEW SIGN BRIDGE (MONOTUBE)
- EXISTING CANTILEVER (TRUSS)
- EXISTING SIGN BRIDGE (TRUSS)
- EXISTING SIGN BRIDGE (MONOTUBE)
- EXISTING SIGN BRIDGE (NOT INCLUDED IN PROJECT)
- RETAINING WALL
- EXISTING RETAINING WALL
- CONCRETE BARRIER
- TEMPORARY CONCRETE BARRIER
- TEMPORARY IMPACT ATTENUATOR
- EXISTING TEMPORARY PORATABLE SIGN MOUNT

0 50 100
SCALE IN FEET

NOTE:
1. UNCOVER SIGN.

SHEETS SNS108, SNS109 & SNS111, SNS112, SNS113, SNS114, SNS115, SNS116 INTENTIONALLY OMITTED

FILE NAME	PW:_XL3497\PS&E Sheets\Signing\Stage Signs\P3497_SH_SNS_110.dgn				REGION NO. 10	STATE WASH	FED.AID PROJ.NO.
TIME	11:27:08 AM				JOB NUMBER		
DATE	2/18/2014						
PLOTTED BY	blakelf						
DESIGNED BY	F. BLAKELY				CONTRACT NO.		LOCATION NO. XL3497
ENTERED BY	F. BLAKELY						
CHECKED BY	J. VARADY						
PROJ. ENGR.	J. PEREZ						
REGIONAL ADM.	K. DAYTON	REVISION	DATE	BY			

DENNIS RAY CRUMBLEY, STATE OF WASHINGTON, REGISTERED PROFESSIONAL ENGINEER
2/18/14
DATE
P.E. STAMP BOX

DATE
P.E. STAMP BOX

Washington State Department of Transportation

I-5
M ST TO PORTLAND AVE - HOV

SIGN STAGING PLAN

PLAN REF NO SNS110

SHEET 1267 OF 1763 SHEETS

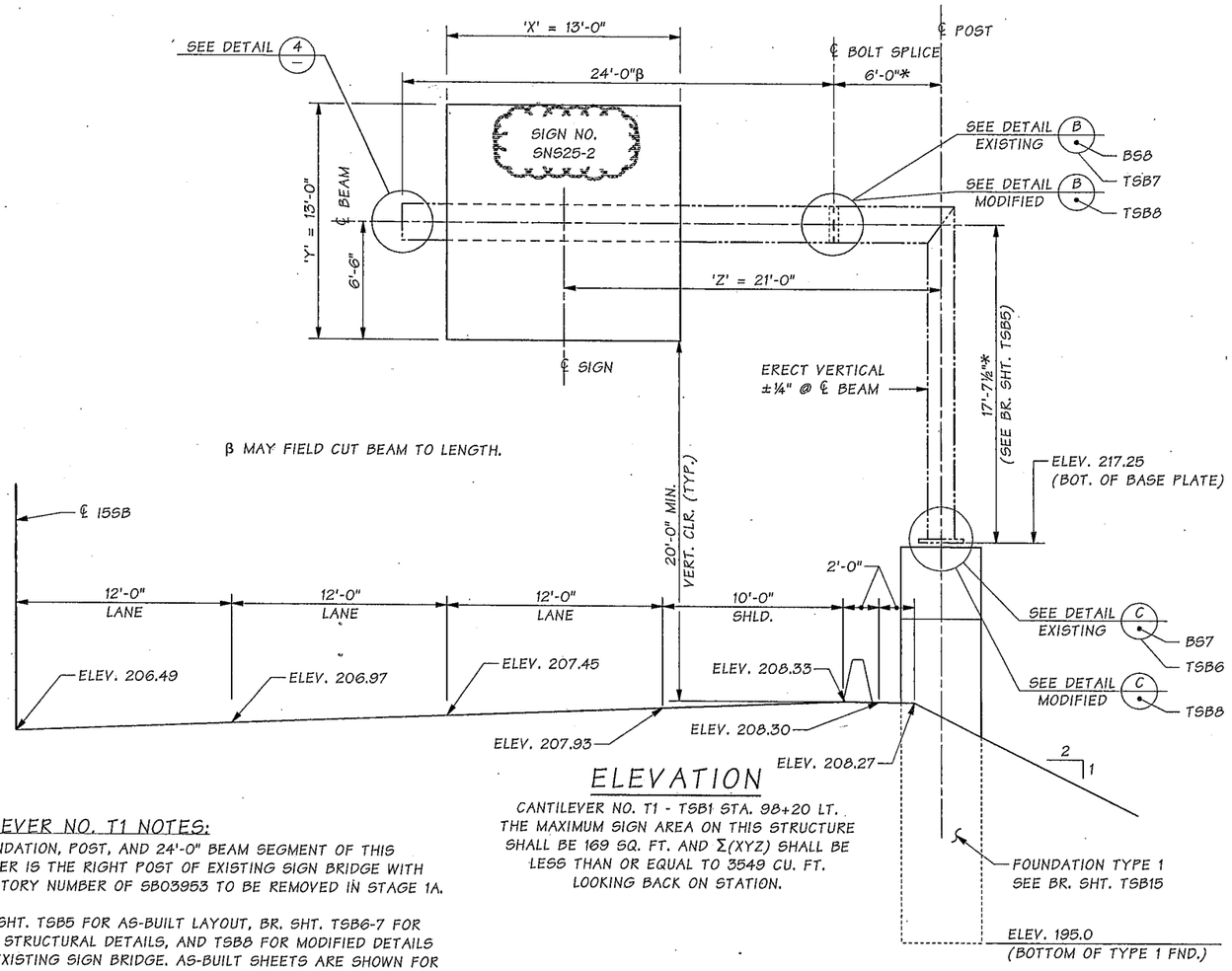

ELEVATION

CANTILEVER NO. T1 - TSB1 STA. 98+20 LT.
THE MAXIMUM SIGN AREA ON THIS STRUCTURE SHALL BE 169 SQ. FT. AND Σ(XYZ) SHALL BE LESS THAN OR EQUAL TO 3549 CU. FT.
LOOKING BACK ON STATION.

CANTILEVER NO. T1 NOTES:

1. THE FOUNDATION, POST, AND 24'-0" BEAM SEGMENT OF THIS CANTILEVER IS THE RIGHT POST OF EXISTING SIGN BRIDGE WITH AN INVENTORY NUMBER OF SB03953 TO BE REMOVED IN STAGE 1A.
2. SEE BR. SHT. TSB5 FOR AS-BUILT LAYOUT, BR. SHT. TSB6-7 FOR AS-BUILT STRUCTURAL DETAILS, AND TSB8 FOR MODIFIED DETAILS OF THE EXISTING SIGN BRIDGE. AS-BUILT SHEETS ARE SHOWN FOR INFORMATION ONLY AND STRUCTURE DETAILS SHALL BE FIELD VERIFIED BEFORE USE AS A TEMPORARY SIGN STRUCTURE.
3. ALL OF THE STRUCTURAL MODIFICATIONS MAY BE DONE IN THE FIELD. PIECES NOT USED FOR THE TEMPORARY CONFIGURATION, SHALL BE REMOVED IN ACCORDANCE WITH THE SPECIAL PROVISIONS.
4. FOR CONSTRUCTION IN STAGE 1A, PLACE TEMPORARY SIGN ON STRUCTURE IN ACCORDANCE WITH DETAILS ON THIS SHEET. FIELD VERIFY EXISTING POST HEIGHT AND ADJUST FOUNDATION CAP HEIGHT AS NEEDED TO ACHIEVE THE REQUIRED 20'-0" MIN. VERTICAL CLEARANCE.
5. THIS TEMPORARY SIGN STRUCTURE SHALL BE REMOVED IN ACCORDANCE WITH THE REQUIRED CONSTRUCTION STAGING. IF NO TIME IS SPECIFIED THEN IT SHALL BE REMOVED BEFORE COMPLETION OF PROJECT.
6. TEMPORARY ROADWAY SECTION SHOWN IS NOT TO SCALE AND DOES NOT REFERENCE SPECIFIC CONTRACT GEOMETRY. IT IS ONLY FOR REFERENCE TO DETERMINE RELATIVE MINIMUM VERTICAL CLEARANCE, LOCATION, AND STRUCTURAL DETAIL REFERENCES.

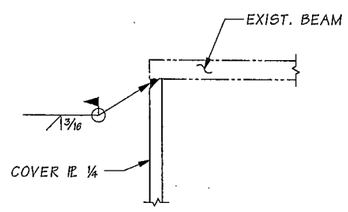

DETAIL 4

LEGEND

- B / TSB5 — IDENTIFIES SECTION, VIEW OR DETAIL; TAKEN OR SHOWN ON BRIDGE SHEET TSB5
- B / SB5 — IDENTIFIES SECTION, VIEW OR DETAIL; TAKEN FROM BRIDGE ORIGINAL CONTRACT SHEET SB5
- TSB8 — SHOWN ON THIS CONTRACT BRIDGE SHEET TSB8
- B / — TAKEN OR SHOWN ON THE SAME SHEET

GENERAL NOTES

1. ALL MATERIAL AND WORKMANSHIP SHALL BE IN ACCORDANCE WITH THE REQUIREMENTS OF THE WASHINGTON STATE DEPARTMENT OF TRANSPORTATION STANDARD SPECIFICATIONS FOR ROAD, BRIDGE, AND MUNICIPAL CONSTRUCTION DATED 2014 AND AMENDMENTS.
2. THE SIGN STRUCTURES DESIGN AND ANALYSIS HAS BEEN DONE IN ACCORDANCE WITH AASHTO STANDARD SPECIFICATIONS FOR STRUCTURAL SUPPORTS FOR HIGHWAY SIGNS, LUMINAIRES AND TRAFFIC SIGNALS - FOURTH EDITION - DATED 2009 AND INTERIMS, USING BASIC WIND SPEED OF 90 MPH AND 50 YEARS OF DESIGN LIFE. FATIGUE DESIGN OF THE STRUCTURE CONFORMS TO FATIGUE CATEGORY 1 OF THE SPECIFIED AASHTO STANDARD SPECIFICATIONS.
3. ALL BUTT JOINT WELDS SHALL BE FULL PENETRATION GROOVE WELDS WITH BACK-UP PLATES OF ¼" MIN. THICKNESS.
4. THE BACK-UP PLATES FOR ALL FULL PENETRATION WELDS SHALL BE WELDED CONTINUOUSLY TO THE JOINED PIECES. THIS CAN BE DONE BY EITHER A CONTINUOUS FILLET WELD ON THE BACK SIDE OF THE PIECE, OR BY A CONTINUOUS WELD IN THE ROOT OF THE FULL PENETRATION WELD, UNLESS OTHERWISE NOTED.
5. ALL BOLTS, RODS, AND RELATED HARDWARE SHALL BE GALVANIZED AFTER FABRICATION PER AASHTO M 232.
6. ALL EXTERIOR STEEL SURFACES SHALL BE PAINTED WITH PRIMER AFTER FABRICATION IN ACCORDANCE WITH STANDARD SPECIFICATIONS.
7. SIGN PANELS AS SHOWN IN THE CONTRACT PLANS SHALL BE INSTALLED WITH THE SIGN STRUCTURE OR IMMEDIATELY AFTER THE SIGN STRUCTURE IS ERECTED.
8. FOR CANTILEVERS, FABRICATE BEAM TO PROVIDE STRAIGHT CAMBER. SEE CAMBER DIAGRAM. DO NOT SHIM AT BOLTED SPLICES.
9. FABRICATE POST STRAIGHT.
10. MATERIALS SPECIFICATIONS:

ALL STRUCTURAL STEEL EXCEPT AS OTHERWISE NOTED	ASTM A 572 GR. 50 OR ASTM A 588
ANCHOR RODS	ASTM F 1554 GR. 105
HANDHOLE COVER SCREWS	ASTM F 593 GR. 1
SPLICE BOLTS	AASHTO M 164
SIGN BRACKET RODS	ASTM A 307
MOUNTING BEAM BOLTS	AASHTO M 164
COVER PLATES	ASTM A 36

11. BOTTOM OF BASE PLATE ELEVATIONS AND POST HEIGHTS SHOWN ARE APPROXIMATE. THE CONTRACTOR SHALL FIELD MEASURE ANCHOR ROD LOCATIONS, ELEVATIONS, CLEARANCES AND ALL STEEL STRUCTURE DIMENSIONS, AND SUBMIT TO ENGINEER FOR APPROVAL PRIOR TO COMPLETION OF FABRICATION. AS AN OPTION, CAP OF ONE FOUNDATION MAY BE PLACED WHILE COMPLETED SIGN BRIDGE IS TEMPORARILY SUPPORTED IN PLACE.
12. POSTS, BASE PLATES, BEAMS AND SPLICE PLATES ARE MAIN LOAD CARRYING TENSILE MEMBERS OR TENSION COMPONENTS OF FLEXURAL MEMBERS AND SHALL MEET THE LONGITUDINAL CHARPY V-NOTCH TEST AS DESCRIBED IN SECTION 6-03.2 FOR AASHTO M 270 MATERIAL. NON-DESTRUCTIVE TEST ACCEPTANCE CRITERIA TO CONFORM TO TENSILE MEMBERS WITH CYCLIC LOAD.
13. THE MAXIMUM SIGN AREA ON THE STRUCTURE SHALL BE AS NOTED.
14. FOR SIGN AND ATTACHMENT BRACKET DETAILS FOR MONOTUBES SEE STANDARD PLAN G-90.20. PAINT WITH PRIMER ENTIRE ATTACHMENT BRACKET TO MATCH EXISTING STRUCTURE EXCEPT FOR MOUNTING BEAM. SIGN, LIGHT, BEAM LENGTHS, SIZE AND SPACING SHALL BE DETERMINED FROM THE CONTRACT PLANS OR THE STANDARD PLANS.
15. THE TOTAL BEAM LENGTH "S" FOR CANTILEVERS SHALL NOT EXCEED 20'-0".
16. ALL WELDING SHALL BE DONE TO MINIMIZE DISTORTION. PERMISSIBLE MONOTUBE DIMENSION VARIATIONS FOR OUTSIDE DIMENSIONS, WALL THICKNESS, LENGTH, STRAIGHTNESS, (PARABOLICALLY-CAMBERED SIGN BRIDGE BEAMS EXCLUDED) SQUARENESS OF SIDES AND TWIST SHALL BE IN ACCORDANCE WITH SECTION 11 OF ASTM A500.
17. CANTILEVERS T1 SHALL NOT REMAIN IN PLACE AFTER THE COMPLETION OF THE PROJECT. SIGN BRIDGES SB03256 AND SB03950 USED AS TEMPORARY CANTILEVERS SHALL BE REPLACED TO MATCH THEIR ORIGINAL CONDITION.
18. EXISTING FEATURES AND DIMENSIONS ARE BASED ON INSPECTION REPORTS AND AS-BUILT PLANS. ALL DIMENSIONS NOTED WITH AN ASTERISK (*) SHALL BE FIELD MEASURED BY THE CONTRACTOR PRIOR TO ORDERING MATERIALS AND PROCEEDING WITH CONSTRUCTION.

SR ____ FILE NO. ____ SHEET TSB1

Bridge Design Engr.	Khaleghi, B	
Supervisor	Zeldenrust, RP	
Designed By	Rochon, MJ	04/14
Checked By	Gallagher, P	04/14
Detailed By	Davis, E	04/14
Bridge Projects Engr.		
Prelim. Plan By		
Architect/Specialist		

M:\SIGNS & MISC\XL3497 M St to Portland Temp Sign Struc\window files\001-TEMP CANTLVR NO 1 ADD 1.WND

DATE	REVISION	BY	APP'D
4/25/14	AD1 - CHANGED SIGN NUMBER	MJR	RPZ

REGION NO.	STATE	FED. AID PROJ. NO.	SHEET NO.	TOTAL SHEETS
10	WASH.			
JOB NUMBER 12C501				

Thu Apr 17 14:08:27 2014

BRIDGE AND STRUCTURES OFFICE

BIJAN KHALEGHI — STATE OF WASHINGTON — 27605 — STRUCTURAL ENGINEER — PROFESSIONAL ENGINEER — 4/17/14

Washington State Department of Transportation

I-5
M ST TO PORTLAND AVE - HOV

TEMPORARY SIGN STRUCTURE

CANTILEVER SIGN STRUCTURE NO. T1
LAYOUT AND GENERAL NOTES

BRIDGE SHEET NO. TSB1

SHEET 1268 OF 1763 SHEETS

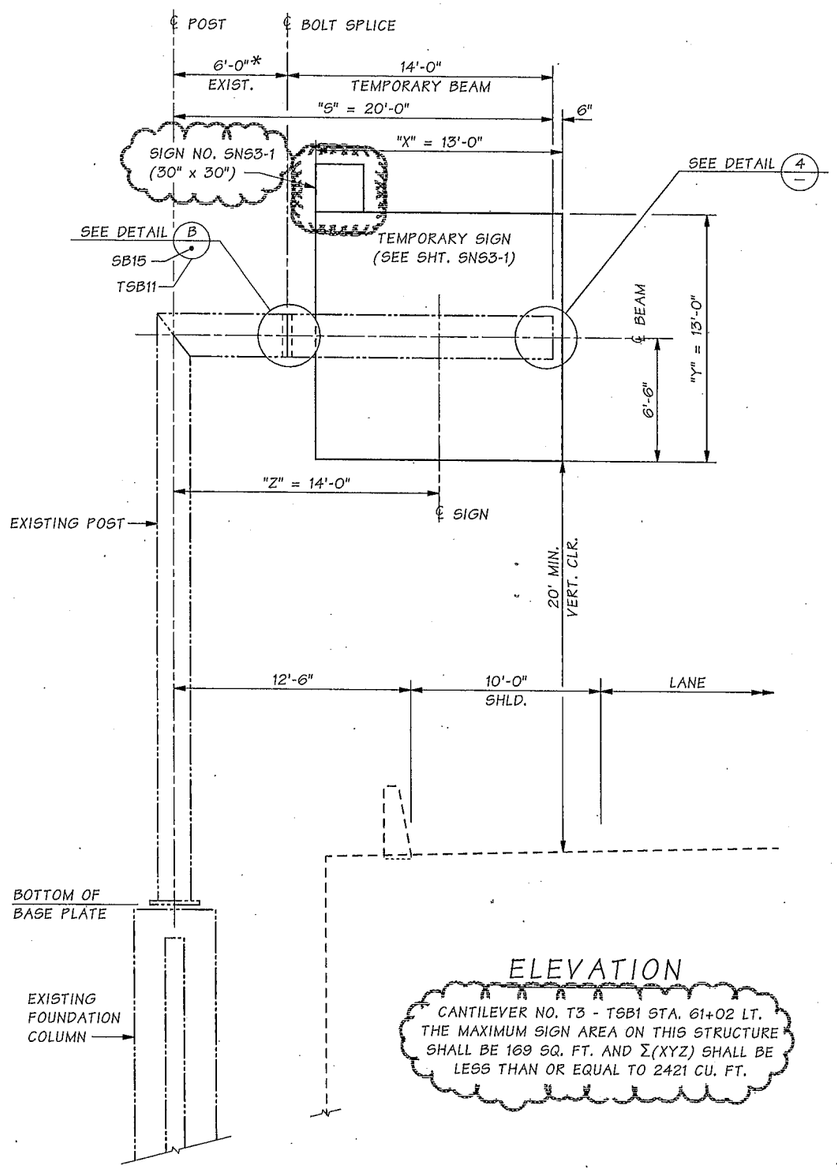

ELEVATION

CANTILEVER NO. T3 - TSB1 STA. 61+02 LT.
THE MAXIMUM SIGN AREA ON THIS STRUCTURE
SHALL BE 169 SQ. FT. AND Σ(XYZ) SHALL BE
LESS THAN OR EQUAL TO 2421 CU. FT.

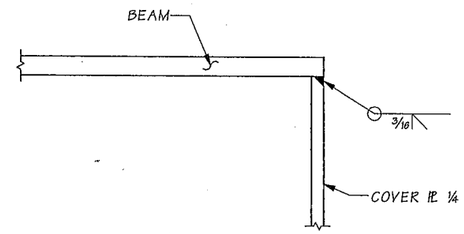

DETAIL 4

CANTILEVER NO. T3 NOTES:

1. THE FOUNDATION, POST, AND FIRST 6'-0" BEAM SEGMENT OF THIS CANTILEVER IS THE LEFT POST OF AN EXISTING SIGN BRIDGE WITH AN INVENTORY NUMBER OF SB03256. SEE BR. SHT. TSB9-11 FOR AS-BUILT LAYOUT AND DETAILS.
2. SEE BR. SHT. TSB9 FOR AS-BUILT LAYOUT AND BR. SHT. TSB10-11 FOR AS-BUILT STRUCTURAL DETAILS. AS-BUILT SHEETS ARE SHOWN FOR INFORMATION ONLY AND STRUCTURE DETAILS SHALL BE FIELD VERIFIED BEFORE USE AS A TEMPORARY SIGN STRUCTURE
3. FOR CONSTRUCTION STAGE 1A, REMOVE AND STORE IN ACCORDANCE WITH THE SPECIAL PROVISIONS ALL OF SB03256 EXCEPT THE LEFT POST AND FOUNDATION. THIS INCLUDES THE REMOVAL OF THE RIGHT TOP OF MODIFIED FOUNDATION TYPE 1 IN ACCORDANCE WITH BR. SHT. TSB17.
4. FOR CONSTRUCTION STAGE 1A, FABRICATE AND INSTALL 14'-0" BEAM SEGMENT IN ACCORDANCE DETAILS ON BR. SHT. TSB10 & TSB11. INCLUDE BEAM END CAP SHOWN IN DETAIL 4 ON THIS BR. SHEET.
5. IN ACCORDANCE WITH THE REQUIRED CONSTRUCTION STAGE, REMOVE SIGN AND 14'-0" BEAM SEGMENT AND REPLACE THE ORIGINAL SIGN STRUCTURE AND RIGHT FOUNDATION OF SIGN STRUCTURE SB03256, IN ACCORDANCE WITH THE FOUNDATION DETAILS ON BR. SHT. TSB17-18 AND STRUCTURE DETAILS ON BR. SHT. TSB9-11 USING NEW ANCHORAGE AND BOLT HARDWARE.
6. TEMPORARY ROADWAY SECTION SHOWN IS BASED ON AS-BUILT FINAL ROADWAY SECTION SHOWN ON SHEET TSB9. MINIMUM VERTICAL CLEARANCE SHALL NOT BE LESS THAN 20'-0".

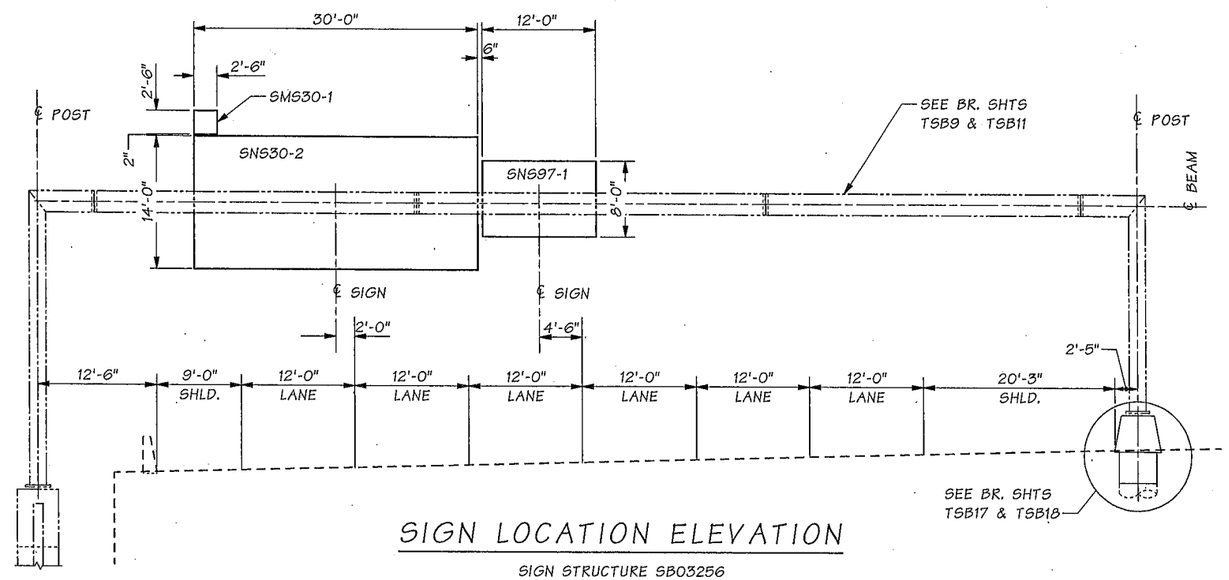

SIGN LOCATION ELEVATION

SIGN STRUCTURE SB03256
THE MAXIMUM SIGN AREA ON THIS
STRUCTURE SHALL BE AS SHOWN ON AS-BUILTS.

Bridge Design Engr.	Khaleghi, B		
Supervisor	Zeldenrust, RP		
Designed By	Rochon, MJ	04/14	
Checked By	Gallagher, P	04/14	
Detailed By	Davis, E	04/14	
Bridge Projects Engr.			
Prelim. Plan By			
Architect/Specialist			

M:\SIGNS & MISC\XL3497 M St to Portland Temp Sign Struc\window files\003-TEMP CANTLVR NO 3 add 1.WND

DATE	REVISION	BY	APP'D
4/25/14	AD1 - ADDED SIGN & CHANGED SIGN ORIENT.	MJR	RPZ

REGION NO.	STATE	FED. AID PROJ. NO.	SHEET NO.	TOTAL SHEETS
10	WASH.			

JOB NUMBER 12C501

Thu Apr 17 14:08:57 2014

BRIDGE AND STRUCTURES OFFICE

BILLAN KHALEGHI — STATE OF WASHINGTON — 27040 — PROFESSIONAL ENGINEER — 4/17/14

Washington State Department of Transportation

I-5
M ST TO PORTLAND AVE - HOV

TEMPORARY SIGN STRUCTURE

CANTILEVER SIGN STRUCTURE NO. T3 LAYOUT

BRIDGE SHEET NO. TSB2

SHEET 1269 OF 1763 SHEETS

SR ___ FILE NO. ___ SHEET TSB2

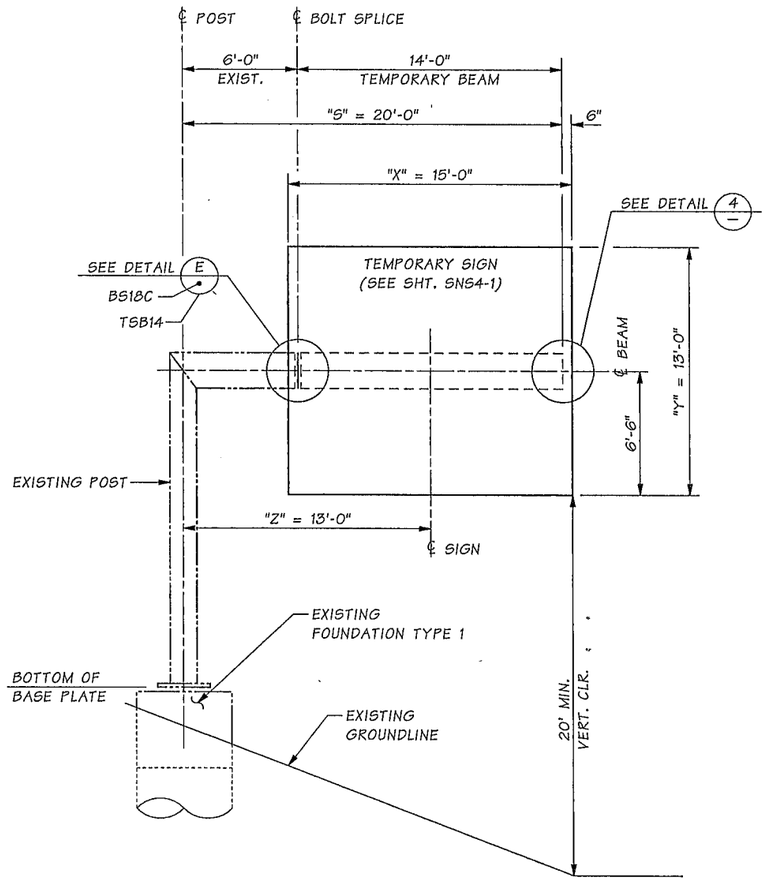

ELEVATION

CANTILEVER NO. T4 - TSB1 STA. 75+09 LT.
THE MAXIMUM SIGN AREA ON THIS STRUCTURE
SHALL BE 195 SQ. FT. AND Σ(XYZ) SHALL BE
LESS THAN OR EQUAL TO 2535 CU. FT.

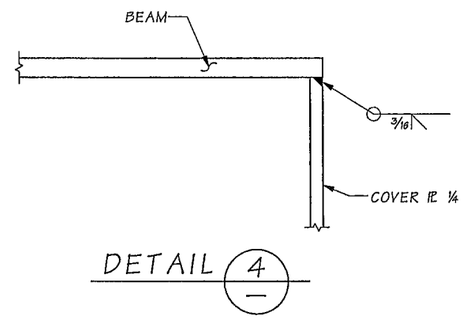

CANTILEVER NO. T4 NOTES:

1. THE FOUNDATION, POST, AND FIRST 6'-0" BEAM SEGMENT OF THIS CANTILEVER IS THE LEFT POST OF AN EXISTING SIGN BRIDGE WITH AN INVENTORY NUMBER OF SB03950. SEE BR. SHT. TSB12-14 FOR AS-BUILT LAYOUT AND DETAILS.
2. SEE BR. SHT. TSB12 FOR AS-BUILT LAYOUT AND BR. SHT. TSB13-14 FOR AS-BUILT STRUCTURAL DETAILS. AS-BUILT SHEETS ARE SHOWN FOR INFORMATION ONLY AND STRUCTURE DETAILS SHALL BE FIELD VERIFIED BEFORE USE AS A TEMPORARY SIGN STRUCTURE
3. FOR CONSTRUCTION STAGE 1A, REMOVE AND STORE IN ACCORDANCE WITH THE SPECIAL PROVISIONS ALL OF SB03950 EXCEPT THE LEFT POST AND FOUNDATION. THIS INCLUDES THE REMOVAL OF THE RIGHT TOP OF MODIFIED FOUNDATION TYPE 1 IN ACCORDANCE WITH BR. SHT. TSB17.
4. FOR CONSTRUCTION STAGE 1A, FABRICATE AND INSTALL 14'-0" BEAM SEGMENT IN ACCORDANCE DETAILS ON BR. SHT. TSB13 & TSB14. INCLUDE BEAM END CAP SHOWN IN DETAIL 4 ON THIS BR. SHEET.
5. IN ACCORDANCE WITH THE REQUIRED CONSTRUCTION STAGE, REMOVE SIGN AND 14'-0" BEAM SEGMENT AND REPLACE THE ORIGINAL SIGN STRUCTURE AND RIGHT FOUNDATION OF SIGN STRUCTURE SB03950. IN ACCORDANCE THE FOUNDATION DETAILS ON BR. SHT. TSB17-18 AND STRUCTURE DETAILS ON BR. SHT. TSB12-14 USING NEW ANCHORAGE AND BOLT HARDWARE.
6. TEMPORARY ROADWAY SECTION SHOWN IS BASED ON AS-BUILT FINAL ROADWAY SECTION SHOWN ON SHEET TSB12. MINIMUM VERTICAL CLEARANCE SHALL NOT BE LESS THAN 20'-0".

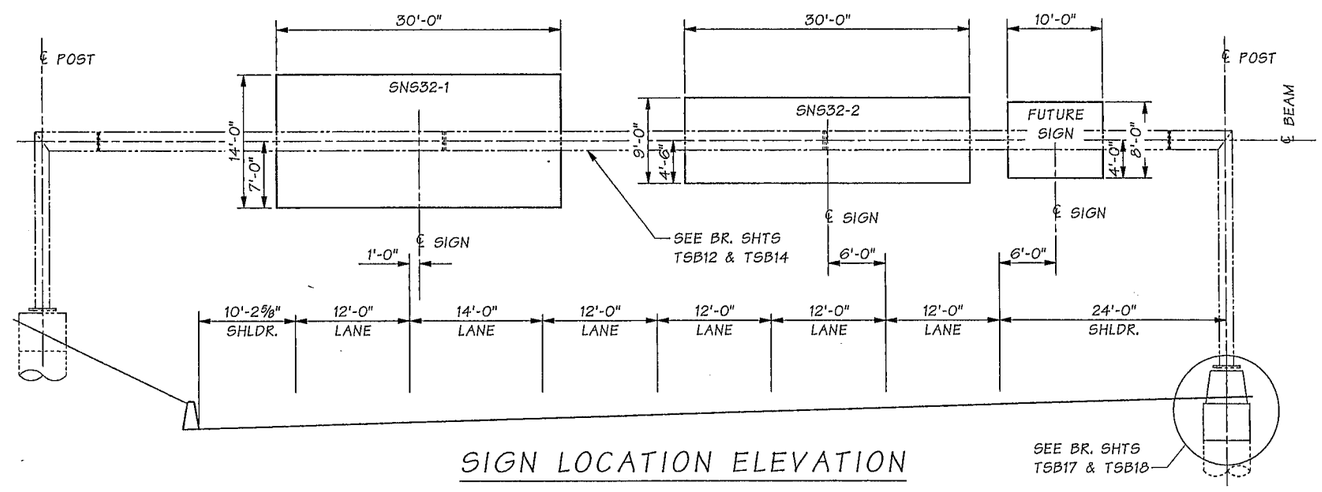

SIGN LOCATION ELEVATION

SIGN STRUCTURE SB03950
THE MAXIMUM SIGN AREA ON THIS
STRUCTURE SHALL BE AS SHOWN ON AS-BUILTS

SR ____ FILE NO. ____ SHEET TSB3

Bridge Design Engr.	Khaleghi, B		M:\SIGNS & MISC\XL3497 M St to Portland Temp Sign Struc\window files\004-TEMP CANTLVR NO 4.wnd							
Supervisor	Zeldenrust, RP									
Designed By	Rochon, MJ	10/13								
Checked By	Gallagher, P									
Detailed By	Davis, E	10/13								
Bridge Projects Engr.										
Prelim. Plan By										
Architect/Specialist			DATE	REVISION	BY	APP'D				

Wed Mar 19 07:46:06 2014

REGION NO.	STATE	FED. AID PROJ. NO.	SHEET NO.	TOTAL SHEETS
10	WASH.			
JOB NUMBER 12C501				

BRIDGE AND STRUCTURES OFFICE

BIJAN KHALEGHI — STATE OF WASHINGTON — 27695 — STRUCTURAL ENGINEER — PROFESSIONAL ENGINEER
3/19/14

Washington State Department of Transportation

I-5
M ST TO PORTLAND AVE - HOV

TEMPORARY SIGN STRUCTURE

CANTILEVER SIGN STRUCTURE NO. T4
LAYOUT

BRIDGE SHEET NO. TSB3

SHEET 1270 OF 1763 SHEETS

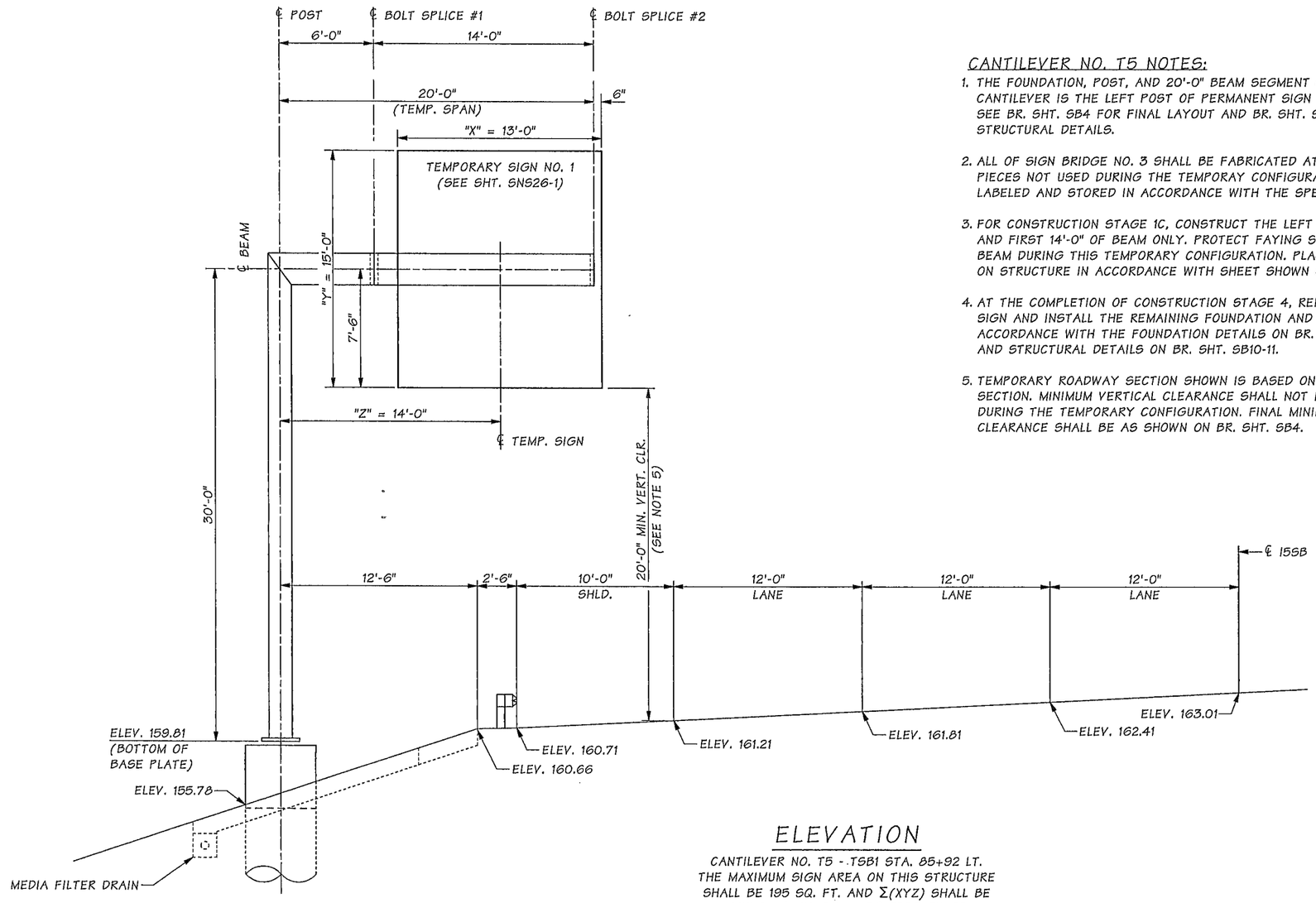

CANTILEVER NO. T5 NOTES:

1. THE FOUNDATION, POST, AND 20'-0" BEAM SEGMENT OF THIS CANTILEVER IS THE LEFT POST OF PERMANENT SIGN BRIDGE NO. 3. SEE BR. SHT. SB4 FOR FINAL LAYOUT AND BR. SHT. SB10-11 FOR STRUCTURAL DETAILS.
2. ALL OF SIGN BRIDGE NO. 3 SHALL BE FABRICATED AT THE SAME TIME. PIECES NOT USED DURING THE TEMPORAY CONFIGURATION, SHALL BE LABELED AND STORED IN ACCORDANCE WITH THE SPECIAL PROVISIONS.
3. FOR CONSTRUCTION STAGE 1C, CONSTRUCT THE LEFT FOUNDATION, POST, AND FIRST 14'-0" OF BEAM ONLY. PROTECT FAYING SURFACE AT END OF BEAM DURING THIS TEMPORARY CONFIGURATION. PLACE TEMPORARY SIGN ON STRUCTURE IN ACCORDANCE WITH SHEET SHOWN ON SIGN.
4. AT THE COMPLETION OF CONSTRUCTION STAGE 4, REMOVE TEMPORARY SIGN AND INSTALL THE REMAINING FOUNDATION AND SIGN BRIDGE NO. 3 IN ACCORDANCE WITH THE FOUNDATION DETAILS ON BR. SHT. SB14-15 & SB20 AND STRUCTURAL DETAILS ON BR. SHT. SB10-11.
5. TEMPORARY ROADWAY SECTION SHOWN IS BASED ON FINAL ROADWAY SECTION. MINIMUM VERTICAL CLEARANCE SHALL NOT BE LESS THAN SHOWN DURING THE TEMPORARY CONFIGURATION. FINAL MINIMUM VERTICAL CLEARANCE SHALL BE AS SHOWN ON BR. SHT. SB4.

ELEVATION

CANTILEVER NO. T5 - TSB1 STA. 85+92 LT.
THE MAXIMUM SIGN AREA ON THIS STRUCTURE SHALL BE 195 SQ. FT. AND Σ(XYZ) SHALL BE LESS THAN OR EQUAL TO 2730 CU. FT.

SR ____ FILE NO. ____ SHEET TSB4

Bridge Design Engr.	Khaleghi, B	M:\SIGNS & MISC\XL3497 M St to Portland Temp Sign Struc\window files\005-TEMP CANTLVR NO 5.wnd				REGION NO.	STATE	FED. AID PROJ. NO.	SHEET NO.	TOTAL SHEETS
Supervisor	Zeldenrust, RP					10	WASH.			
Designed By	Rochon, MJ 10/13									
Checked By	Gallagher, P									
Detailed By	Davis, E 10/13					JOB NUMBER 12C501				
Bridge Projects Engr.										
Prelim. Plan By										
Architect/Specialist		DATE	REVISION	BY	APP'D					

Wed Mar 19 07:46:07 2014

BRIDGE AND STRUCTURES OFFICE

BIJAN KHALEGHI STATE OF WASHINGTON 27695 REGISTERED PROFESSIONAL ENGINEER
3/19/14

Washington State Department of Transportation

I-5
M ST TO PORTLAND AVE - HOV

TEMPORARY SIGN STRUCTURE

CANTILEVER SIGN STRUCTURE NO. T5 LAYOUT

BRIDGE SHEET NO. TSB4

SHEET 1271 OF 1763 SHEETS

NOTES:
1. THIS SHEET FOR INFORMATION ONLY. FIELD VERIFY AND REFER TO ORIGINAL PLANS FOR ANY CHANGES.
2. RIGHT POST & 30'-0" OF BEAM TO BE USED FOR TEMPORARY SIGNAGE. SEE SHEET TSB1.
3. NEW BOLTED SPLICE HARDWARE AND ROD ARE REQUIRED FOR ANCHOR RE-ASSEMBLY OF STRUCTURE.
4. SEE BR. SHT. TSB8 FOR MODIFICATIONS TO STRUCTURE SB03950 FOR USE AS CANTILEVER NO. T1.
5. THE SIGN BRIDGE INVENTORY NO. IS SB03953 AND SIGN BRIDGE NO. 5 IN ORIGINAL CONTRACT.

BEAM TABLE

L1	1.830
L2	2.740 TO 5.800
L3	4.140 TO 10.670

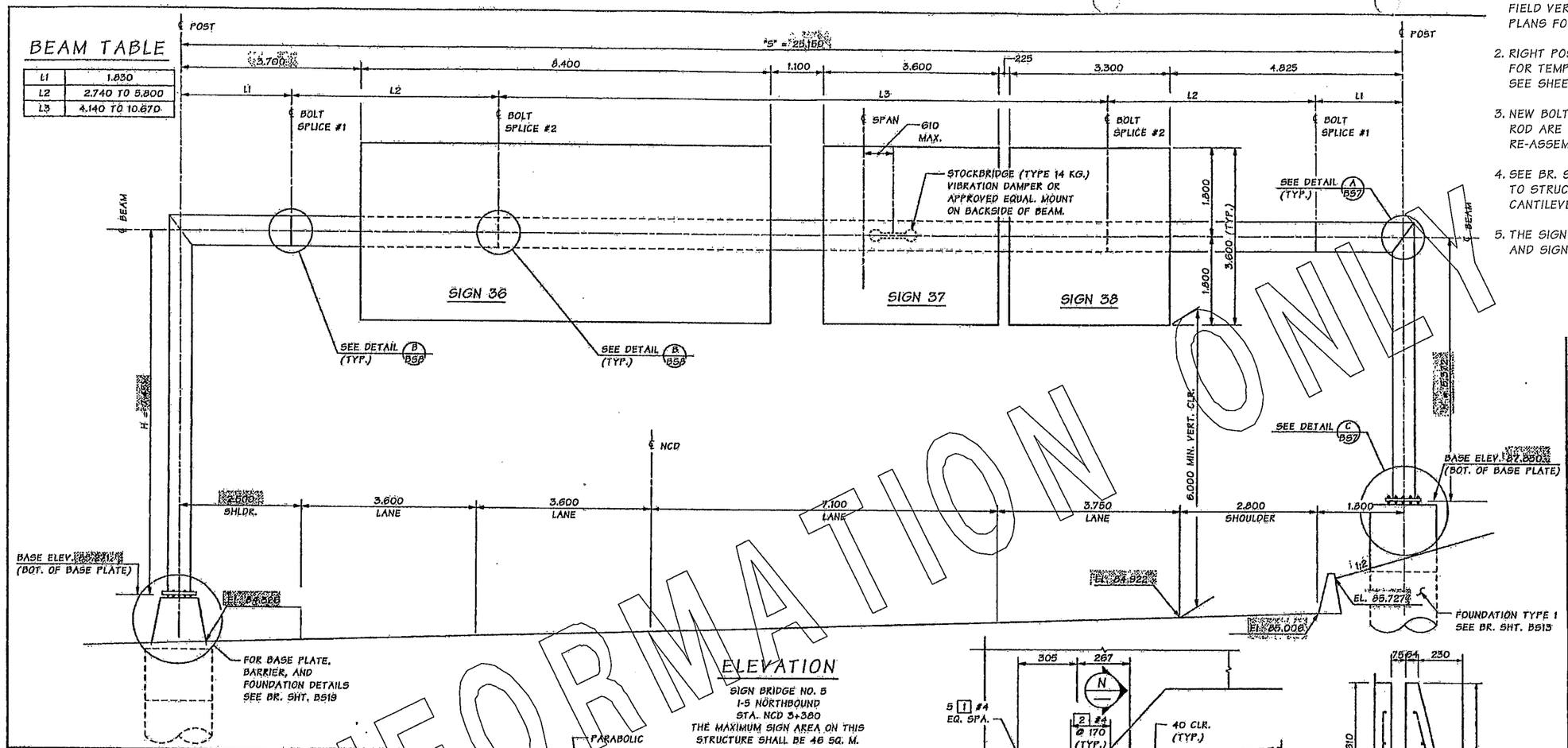

ELEVATION

SIGN BRIDGE NO. 5
I-5 NORTHBOUND
STA. NCD 3+380
THE MAXIMUM SIGN AREA ON THIS STRUCTURE SHALL BE 46 SQ. M.

BAR LIST

LOCATION:	MARK #	SIZE	NO.	LENGTH	
BARRIER - HORIZ.	1	#4	10	832	STR.
BARRIER - VERT.	2	#4	3	"A"	

BENDING DETAIL FOR QUANTITIES

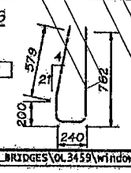

"A" DETERMINE FROM PLAN

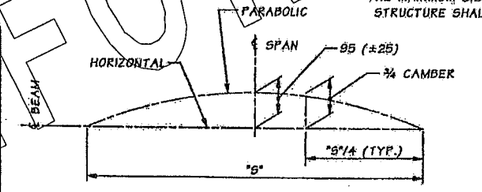

BEAM CAMBER DIAGRAM

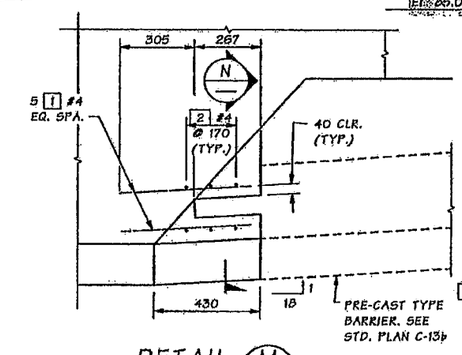

DETAIL M BS4

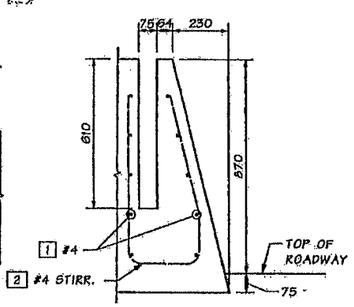

SECTION N

Bridge Design Engr.	Kapur, J		H:\SIGN_BRIDGES\XL3459\window files\SB5 LAYOUT.WND
Supervisor	Zeldenrust, RP		
Designed By	Gedi, G	12/02	
Checked By	Zeldenrust, RP	02/05	
Detailed By	Stytham, A	08/02	
Bridge Projects Engr.			
Prelim. Plan By			
Architect/Specialist			

Tue May 06 15:02:48 2003

DATE	REVISION	BY	APP'D

REGION NO.	STATE	FED. AID PROJ. NO.	SHEET NO.	TOTAL SHEETS
10	WASH.			
JOB NUMBER 02C515				

BRIDGE AND STRUCTURES OFFICE

Washington State Department of Transportation

15
SOUTH 48TH STREET TO PACIFIC AVENUE

SIGN BRIDGE 5 - LAYOUT

BRIDGE SHEET NO. BS5

SHEET 461 OF 1036 SHEETS

FOR INFORMATION ONLY

SR 5 JOB NO. 007 SHEET BS5

SR ___ FILE NO. ___ SHEET TSB5

Bridge Design Engr.	Khaleghi, B		M:\SIGNS & MISC\XL3497 M St to Portland Temp Sign Struc\window files\006-TEMP CANT 1&2 DET 1.wnd
Supervisor	Zeldenrust, RP		
Designed By	Rochon, MJ	12/14	
Checked By	Gallagher, P		
Detailed By	Davis, E	12/14	
Bridge Projects Engr.			
Prelim. Plan By			
Architect/Specialist			

Wed Mar 19 07:46:08 2014

DATE	REVISION	BY	APP'D

REGION NO.	STATE	FED. AID PROJ. NO.	SHEET NO.	TOTAL SHEETS
10	WASH.			
JOB NUMBER 12C501				

BRIDGE AND STRUCTURES OFFICE

Washington State Department of Transportation

I-5
M ST TO PORTLAND AVE - HOV

TEMPORARY SIGN STRUCTURE

CANTILEVER NO. T1
STRUCTURAL DETAILS 1 OF 4

BRIDGE SHEET NO. TSB5

SHEET 1272 OF 1763 SHEETS

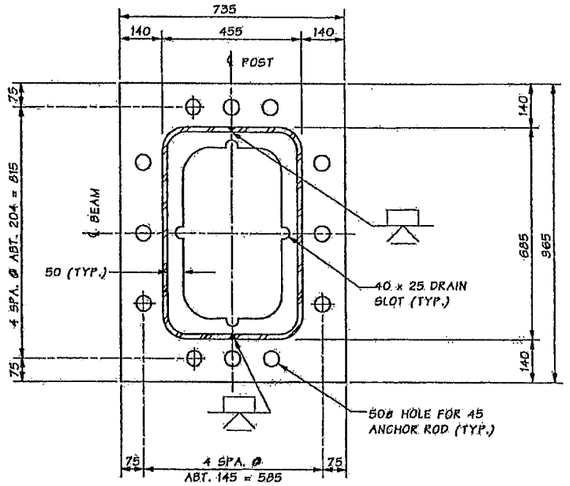

SECTION E

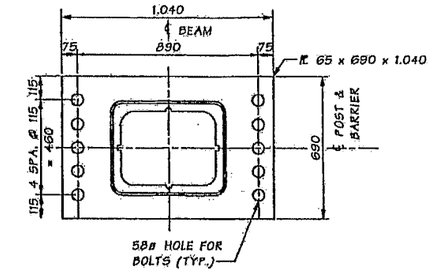

LEFT POST BASE PLATE

SIGN BRIDGE 4
FOR CALLOUTS NOT SHOWN
SEE SECTION E THIS SHEET

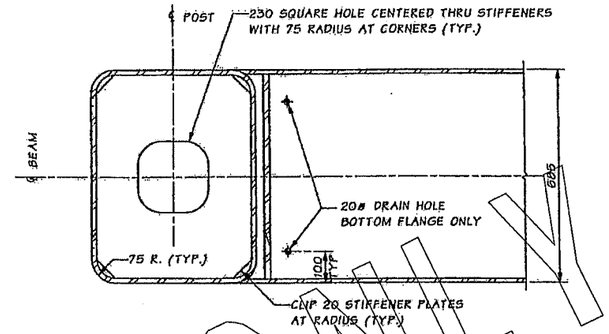

SECTION F

DIAGONAL STIFFENER NOT SHOWN.

NOTES:

1. THIS SHEET FOR INFORMATION ONLY. FIELD VERIFY AND REFER TO ORIGINAL PLANS FOR ANY CHANGES.

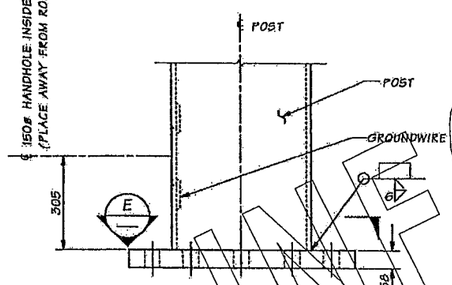

POST BASE DETAIL C

BS1, BS4, BS5 & BS6

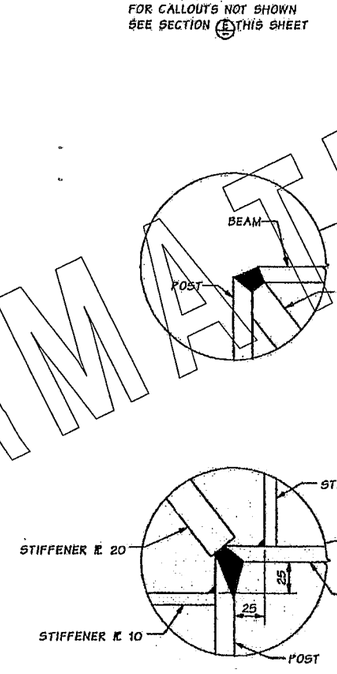

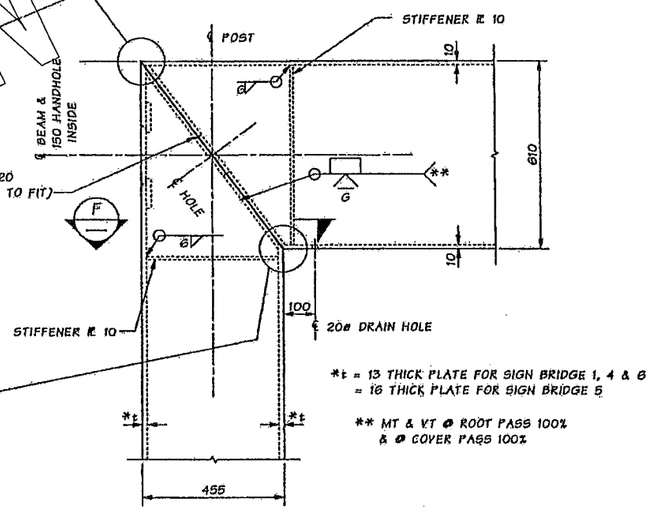

*t = 13 THICK PLATE FOR SIGN BRIDGE 1, 4 & 6
= 16 THICK PLATE FOR SIGN BRIDGE 5

** MT & VT @ ROOT PASS 100%
& @ COVER PASS 100%

DETAIL A

BS1, BS4, BS5 & BS6

FOR INFORMATION ONLY

Bridge Design Engr.	Kapur, J	M:\SIGN_BRIDGES\DL3459\Window files\SB145 STRUCT DETS.WND				REGION NO.	STATE	FED. AID PROJ. NO.	SHEET NO.	TOTAL SHEETS	
Supervisor	Zeldenrust, RP					10	WASH.				
Designed By	Redi, G 12/01					JOB NUMBER 60598					
Checked By	Zeldenrust, RP 02/05										
Detailed By	Stithan, A 08/02										
Bridge Projects Engr.											
Prelim. Plan By											
Architect/Specialist		DATE	REVISION	BY	APP'D						

Mon Feb 28 10:20:48 2005

BRIDGE AND STRUCTURES OFFICE

Washington State Department of Transportation

I 5
SOUTH 48TH STREET TO PACIFIC AVENUE

SIGN BRIDGE 1, 4, 5, & 6
STRUCTURAL DETAIL 1

BRIDGE SHEET NO. BS7

SHEET 463 OF 1036 SHEETS

SR 5 JOB NO. 667 SHEET BS7 SHEET TSB6 SR FILE NO.

Bridge Design Engr.	Khaleghi, B	M:\SIGNS & MISC\XL3497 M St to Portland Temp Sign Struc\window files\008-TEMP CANT 1&2 DET 1.wnd				REGION NO.	STATE	FED. AID PROJ. NO.	SHEET NO.	TOTAL SHEETS	
Supervisor	Zeldenrust, RP					10	WASH.				
Designed By	Rochon, MJ 08/13					JOB NUMBER 12C501					
Checked By	Gallagher, P										
Detailed By	Davis, EA 08/13										
Bridge Projects Engr.											
Prelim. Plan By											
Architect/Specialist		DATE	REVISION	BY	APP'D						

Wed Mar 19 07:46:11 2014

BRIDGE AND STRUCTURES OFFICE

Washington State Department of Transportation

I-5
M ST TO PORTLAND AVE - HOV

TEMPORARY SIGN STRUCTURE

CANTILEVER NO. T1
STRUCTURAL DETAILS 2 OF 4

BRIDGE SHEET NO. TSB6

SHEET 1273 OF 1763 SHEETS

NOTES:

1. THIS SHEET FOR INFORMATION ONLY. FIELD VERIFY AND REFER TO ORIGINAL PLANS FOR ANY CHANGES.

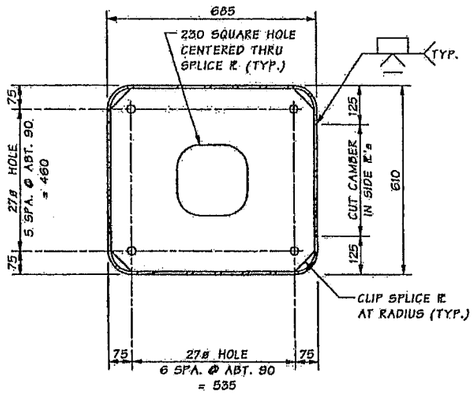

SECTION G

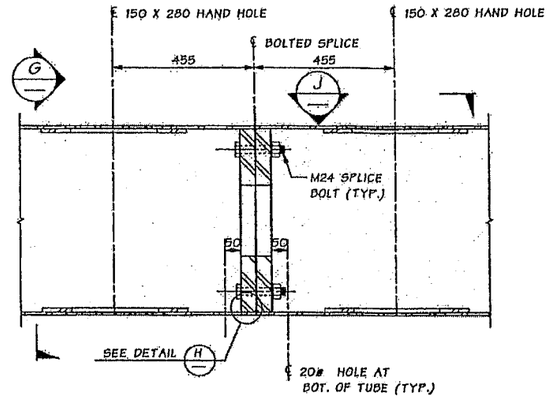

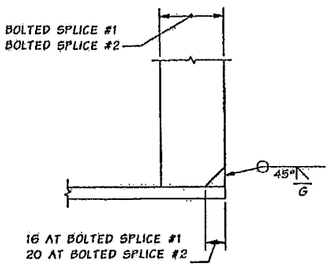

DETAIL H

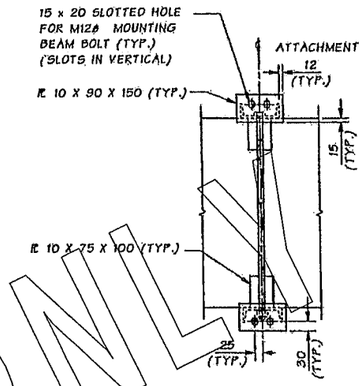

SECTION A

DETAIL B

SECTION THRU BEAM

BOLTED SPLICE #2 SHOWN
BOLTED SPLICE #1 SIMILAR, EXCEPT AS NOTED

BS1, BS4, BS5, & BS6

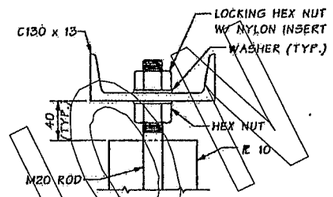

SECTION E

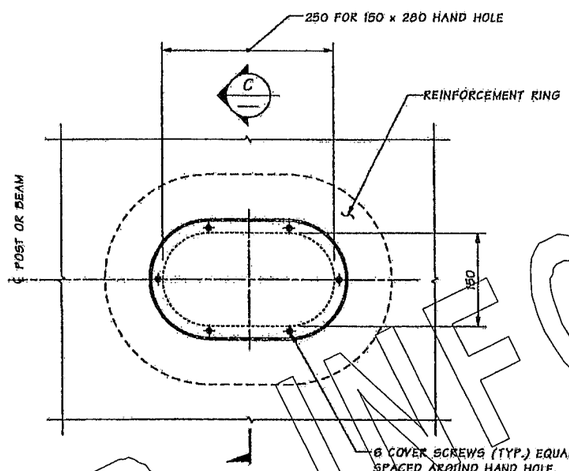

VIEW J

150 x 280 HAND HOLE SHOWN.
150ø HAND HOLE SIMILAR EXCEPT AS NOTED.

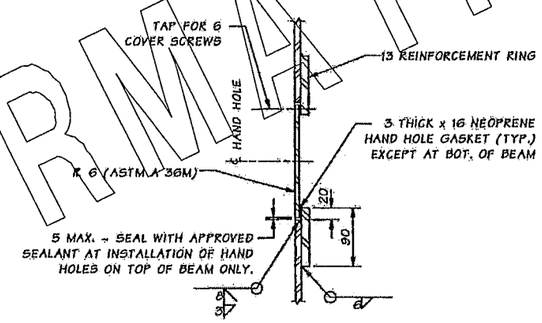

C SECTION

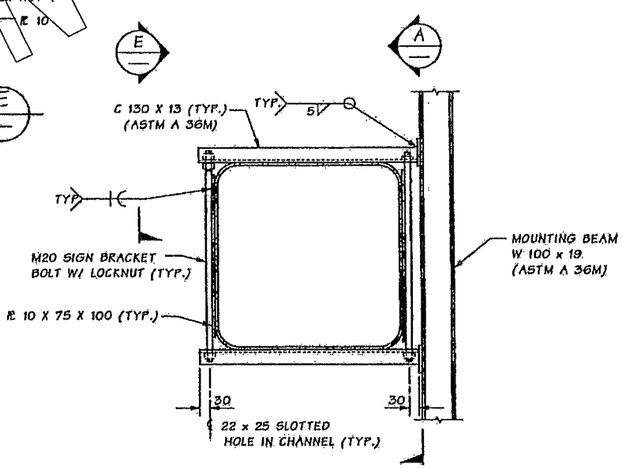

ATTACHMENT BRACKET DETAIL

PAINT ENTIRE ATTACHMENT BRACKET TO MATCH EXISTING STRUCTURE EXCEPT FOR MOUNTING BEAM. SIGN, LIGHT, BEAM LENGTHS, SIZE AND SPACING SHALL BE DETERMINED FROM THE CONTRACT PLANS OR THE STANDARD PLANS. VARIABLE MESSAGE SIGNS SHALL HAVE MOUNTING BEAMS @ 915 MAXIMUM.

FOR INFORMATION ONLY

Bridge Design Engr.	Kapur, J	H:\SIGN_BRIDGES\OL3459\Window files\SB145 STURCT DET 2.WND							
Supervisor	Zeldenrust, RP								
Designed By	Bedi, G 12/02								
Checked By	Zeldenrust, RP 02/2005								
Detailed By	Stithan, A 08/02								
Bridge Projects Engr.									
Prelim. Plan By									
Architect/Specialist		DATE	REVISION	BY	APP'D				

Wed Feb 28 10:28:51 2005

REGION NO. 10 | STATE WASH. | FED. AID PROJ. NO. | SHEET NO. | TOTAL SHEETS

JOB NUMBER 02C513

BRIDGE AND STRUCTURES OFFICE

Washington State Department of Transportation

I 5
SOUTH 48TH ST TO PACIFIC AVE.

SIGN BRIDGE 1, 4, 5, & 6
STRUCTURAL DETAIL 11

BRIDGE SHEET NO. BS8

SHEET 464 OF 1036 SHEETS

SR 5 JOB NO. 007 SHEET BS8

SR ___ FILE NO. ___ SHEET TSB7

Bridge Design Engr.	Khaleghi, B	M:\SIGNS & MISC\XL3497 M St to Portland Temp Sign Struc\window files\009-TEMP CANT 1&2 DET 4.wnd							
Supervisor	Zeldenrust, RP								
Designed By	Rochon, MJ 08/13								
Checked By	Gallagher, P								
Detailed By	Davis, E 08/13								
Bridge Projects Engr.									
Prelim. Plan By									
Architect/Specialist		DATE	REVISION	BY	APP'D				

Wed Mar 19 07:46:13 2014

REGION NO. 10 | STATE WASH. | FED. AID PROJ. NO. | SHEET NO. | TOTAL SHEETS

JOB NUMBER 12C501

BRIDGE AND STRUCTURES OFFICE

Washington State Department of Transportation

I-5
M ST TO PORTLAND AVE - HOV

TEMPORARY SIGN STRUCTURE

CANTILEVER NO. T1
STRUCTURAL DETAILS 3 OF 4

BRIDGE SHEET NO. TSB7

SHEET 1274 OF 1763 SHEETS

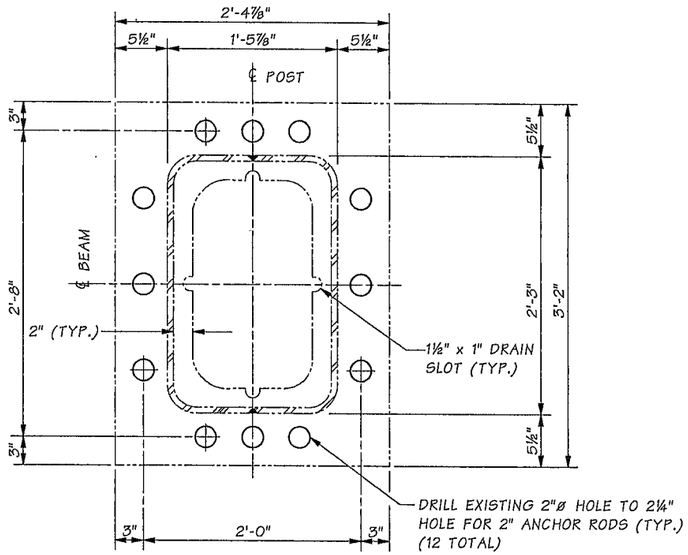

SECTION E

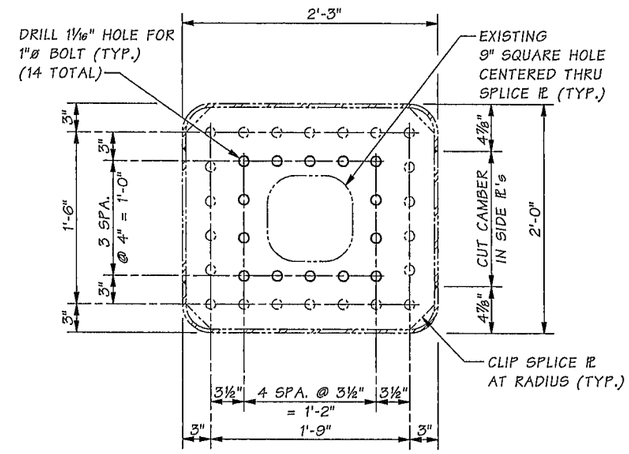

SECTION G

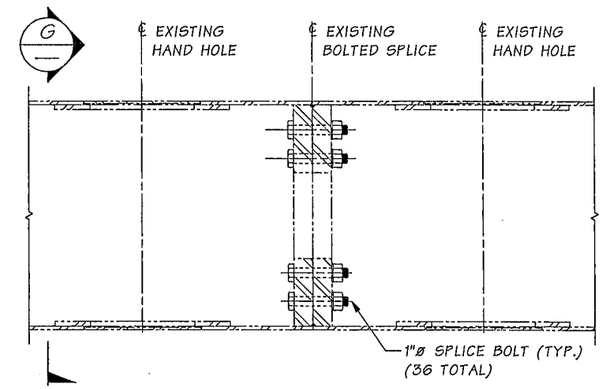

DETAIL B
SECTION THRU BEAM
TSB1

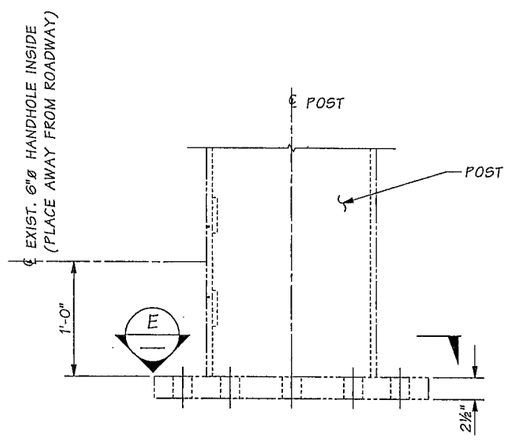

POST BASE DETAIL C
TSB1

SR ____ FILE NO. ____ SHEET TSB8

Bridge Design Engr.	Khaleghi, B	
Supervisor	Zeldenrust, RP	
Designed By	Rochon, MJ	01/14
Checked By	Gallagher, P	
Detailed By	Davis, E	01/14
Bridge Projects Engr.		
Prelim. Plan By		
Architect/Specialist		

M:\SIGNS & MISC\XL3497 M St to Portland Temp Sign Struc\window files\007-TEMP CANT 1&2 DET 2.wnd

DATE	REVISION	BY	APP'D

REGION NO.	STATE	FED. AID PROJ. NO.	SHEET NO.	TOTAL SHEETS
10	WASH.			
JOB NUMBER 12C501				

3/19/14

BRIDGE AND STRUCTURES OFFICE

3/20/14

Washington State Department of Transportation

I-5
M ST TO PORTLAND AVE - HOV

TEMPORARY SIGN STRUCTURE

CANTILEVER NO. T1
STRUCTURAL DETAILS 4 OF 4

BRIDGE SHEET NO. TSB8

SHEET 1275 OF 1763 SHEETS

Wed Mar 19 07:46:09 2014

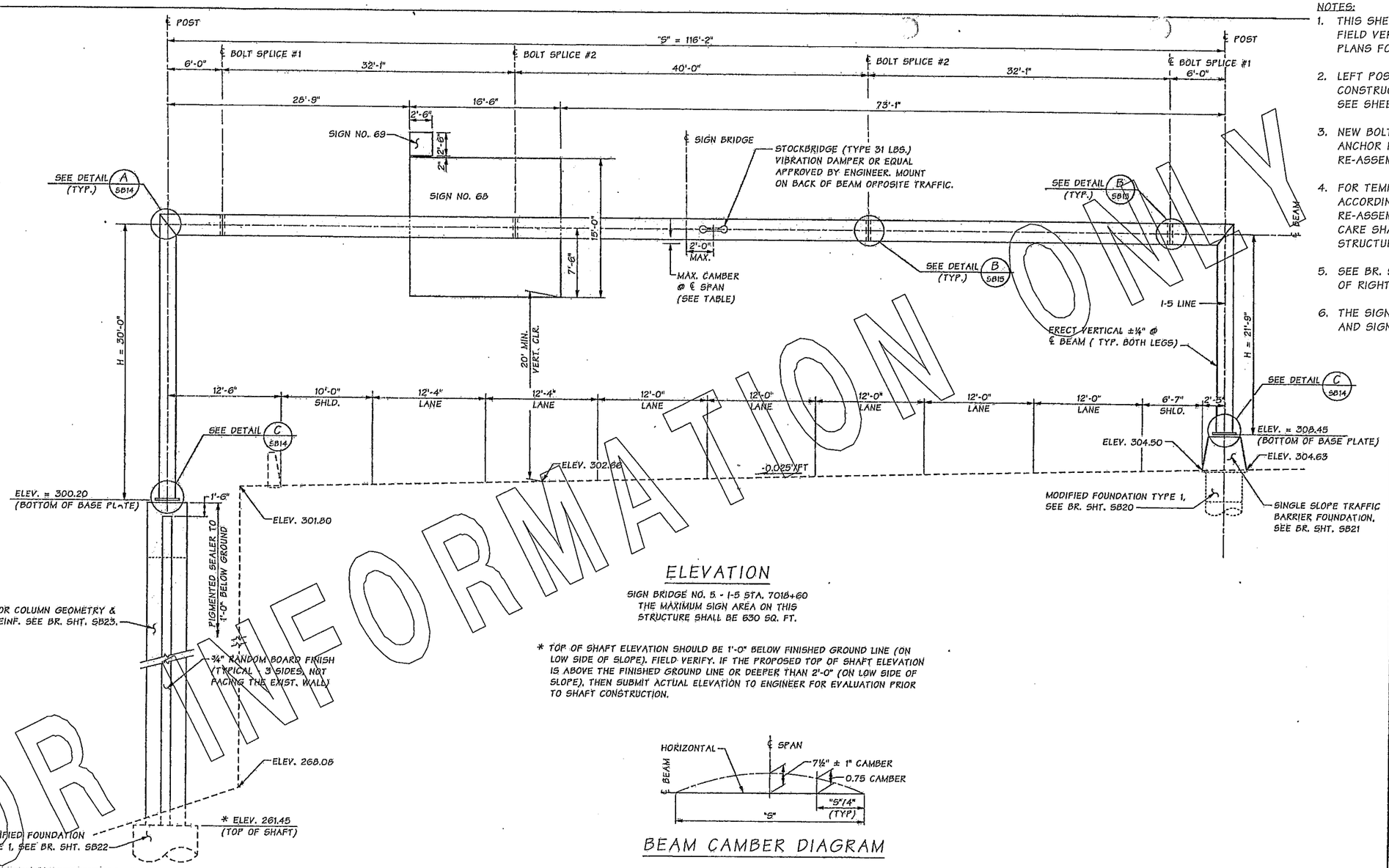

ELEVATION

SIGN BRIDGE NO. 5 - I-5 STA. 7018+60
THE MAXIMUM SIGN AREA ON THIS STRUCTURE SHALL BE 630 SQ. FT.

* TOP OF SHAFT ELEVATION SHOULD BE 1'-0" BELOW FINISHED GROUND LINE (ON LOW SIDE OF SLOPE). FIELD VERIFY. IF THE PROPOSED TOP OF SHAFT ELEVATION IS ABOVE THE FINISHED GROUND LINE OR DEEPER THAN 2'-0" (ON LOW SIDE OF SLOPE), THEN SUBMIT ACTUAL ELEVATION TO ENGINEER FOR EVALUATION PRIOR TO SHAFT CONSTRUCTION.

BEAM CAMBER DIAGRAM

NOTES:

1. THIS SHEET FOR INFORMATION ONLY. FIELD VERIFY AND REFER TO ORIGINAL PLANS FOR ANY CHANGES.
2. LEFT POST & FOUNDATION REMAIN DURING CONSTRUCTION FOR TEMPORARY SIGNAGE. SEE SHEET TSB3.
3. NEW BOLTED SPLICE HARDWARE AND ANCHOR ROD ARE REQUIRED FOR RE-ASSEMBLY OF STRUCTURE.
4. FOR TEMPORARY REMOVAL, LABEL PIECES ACCORDINGLY SUCH THAT IT CAN BE RE-ASSEMBLED EXACTLY THE SAME. CARE SHALL BE TAKEN NOT TO DAMAGE STRUCTURE WHILE IN STORAGE
5. SEE BR. SHEET TSB14 FOR PARTIAL REMOVAL OF RIGHT FOUNDATION.
6. THE SIGN BRIDGE INVENTORY NO. IS SB03256 AND SIGN BRIDGE NO. 5 IN ORIGINAL CONTRACT.

FOR INFORMATION ONLY

Bridge Design Engr.	Khaleghi, B		M:\SIGN_BRIDGES\OL3460NEW\window files\SB LAYOUT 5.WND
Supervisor	Stoddard, RB		
Designed By	Bennion, S	01/08	
Checked By	Young, J	06/08	
Detailed By	Andreotti, L	01/08	
Bridge Projects Engr.			
Prelim. Plan By			
Architect/Specialist			

DATE	REVISION	BY	APP'D

REGION NO.	STATE	FED. AID PROJ. NO.	SHEET NO.	TOTAL SHEETS
10	WASH.			
JOB NUMBER 07C546				

Mon Jun 16 13:27:16 2008

BRIDGE AND STRUCTURES OFFICE

JUGESH KAPUR — STATE OF WASHINGTON — REGISTERED PROFESSIONAL ENGINEER
6/16/08 EXPIRES 3/19/10

Washington State Department of Transportation

I-5 / SR16
WESTBOUND NALLEY VALLEY I/C

SIGN BRIDGE NO. 5
LAYOUT

BRIDGE SHEET NO. SB9
SHEET 470 OF 1360 SHEETS

Bridge Design Engr.	Khaleghi, B		M:\SIGNS & MISC\XL3497 M St to Portland Temp Sign Struc\window files\010-TEMP CANT NO 3 DET 1.wnd
Supervisor	Zeldenrust, RP		
Designed By	Rochon, MJ	08/13	
Checked By	Gallagher, P		
Detailed By	Davis, EA	08/13	
Bridge Projects Engr.			
Prelim. Plan By			
Architect/Specialist			

DATE	REVISION	BY	APP'D

REGION NO.	STATE	FED. AID PROJ. NO.	SHEET NO.	TOTAL SHEETS
10	WASH.			
JOB NUMBER 12C501				

Wed Mar 19 07:46:14 2014

BRIDGE AND STRUCTURES OFFICE

Washington State Department of Transportation

I-5
M ST TO PORTLAND AVE - HOV

TEMPORARY SIGN STRUCTURE

CANTILEVER NO. T3
STRUCTURAL DETAILS 1 OF 3

BRIDGE SHEET NO. TSB9
SHEET 1276 OF 1763 SHEETS

SR 16 FILE NO. 7344 SHEET TSB9

SR FILE NO. SHEET TSB9

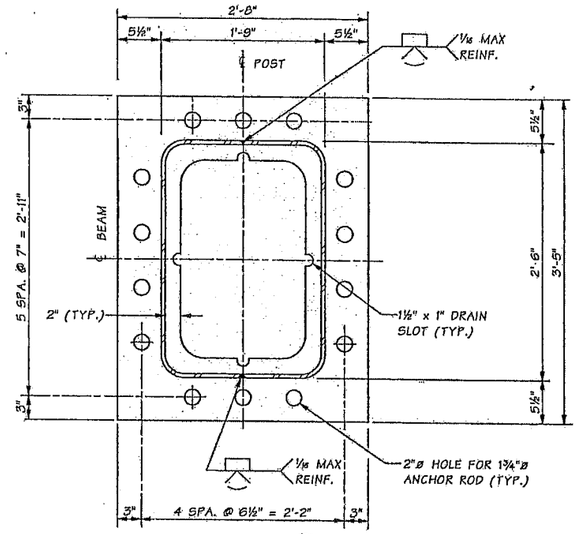

SECTION E

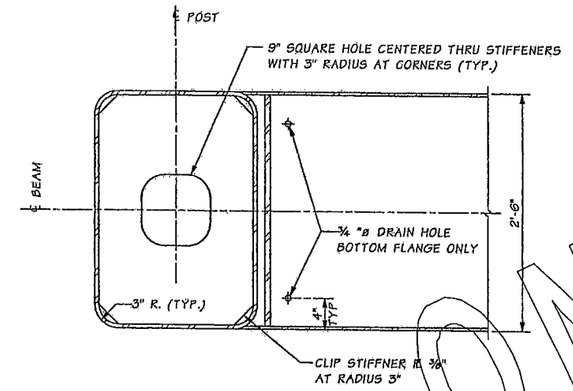

SECTION F

DIAGONAL STIFFENER NOT SHOWN.

NOTES:

1. THIS SHEET FOR INFORMATION ONLY. FIELD VERIFY AND REFER TO ORIGINAL PLANS FOR ANY CHANGES.

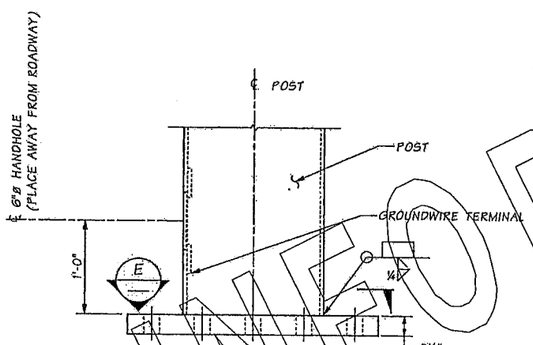

POST BASE DETAIL C SB9

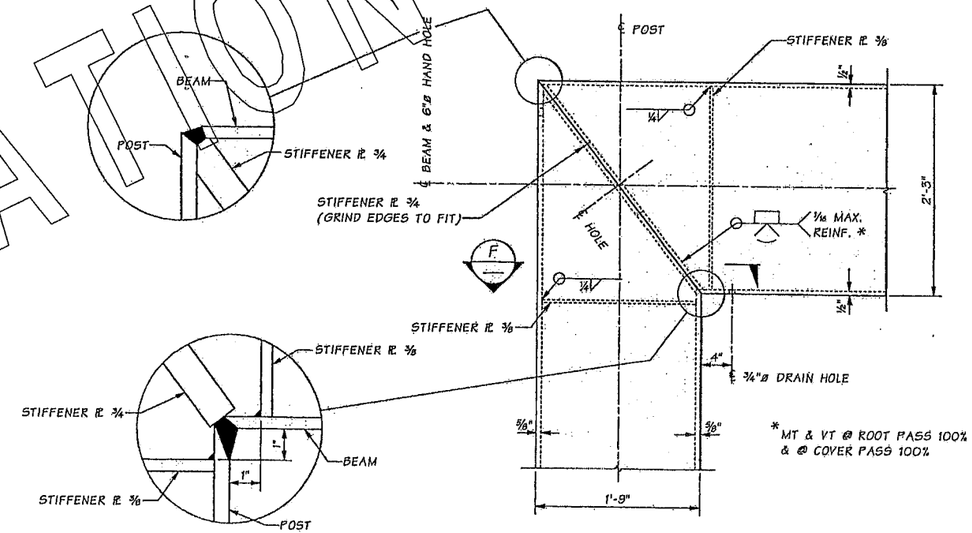

* MT & VT @ ROOT PASS 100% & @ COVER PASS 100%

DETAIL A SB9

FOR INFORMATION ONLY

Bridge Design Engr.	Khaleghi, B		M:\SIGN_BRIDGES\OL3460NEW\window files\SB 5 DETAIL 1.WND								
Supervisor	Stoddard, RB										
Designed By	Bennion, S	02/08									
Checked By	Young, J	06/08									
Detailed By	Andreotti, L	02/08									
Bridge Projects Engr.											
Prelim. Plan By											
Architect/Specialist			DATE	REVISION	BY	APP'D					

Mon Jun 16 13:35:09 2008

REGION NO.	STATE	FED. AID PROJ. NO.	SHEET NO.	TOTAL SHEETS
10	WASH.			

JOB NUMBER 07C546

STUART C. BENNION, STATE OF WASHINGTON, REGISTERED PROFESSIONAL ENGINEER, EXPIRES 4/14/10 — 2/16/08

BRIDGE AND STRUCTURES OFFICE

RICHARD P. ZELDENRUST, STATE OF WASHINGTON, REGISTERED PROFESSIONAL ENGINEER, EXPIRES 11/14/08 — 2/16/08

Washington State Department of Transportation

I-5 / SR16
WESTBOUND NALLEY VALLEY I/C

SIGN BRIDGE NO. 5
STRUCTURAL DETAILS 1 OF 2

BRIDGE SHEET NO. SB14

SHEET 475 OF 1360 SHEETS

SR 16 FILE NO. 7344 SHEET SB14

SR FILE NO. SHEET TSB10

Bridge Design Engr.	Khaleghi, B		M:\SIGNS & MISC\XL3497 M St to Portland Temp Sign Struc\window files\011-TEMP CANT NO 3 DET 2.wnd								
Supervisor	Zeldenrust, RP										
Designed By	Rochon, MJ	08/13									
Checked By	Gallagher, P										
Detailed By	Davis, E	08/13									
Bridge Projects Engr.											
Prelim. Plan By											
Architect/Specialist			DATE	REVISION	BY	APP'D					

Wed Mar 19 07:46:16 2014

REGION NO.	STATE	FED. AID PROJ. NO.	SHEET NO.	TOTAL SHEETS
10	WASH.			

JOB NUMBER 12C501

BRIDGE AND STRUCTURES OFFICE

Washington State Department of Transportation

I-5
M ST TO PORTLAND AVE - HOV

TEMPORARY SIGN STRUCTURE

CANTILEVER NO. T3
STRUCTURAL DETAILS 2 OF 3

BRIDGE SHEET NO. TSB10

SHEET 1277 OF 1763 SHEETS

NOTES:
1. THIS SHEET FOR INFORMATION ONLY. FIELD VERIFY AND REFER TO ORIGINAL PLANS FOR ANY CHANGES.

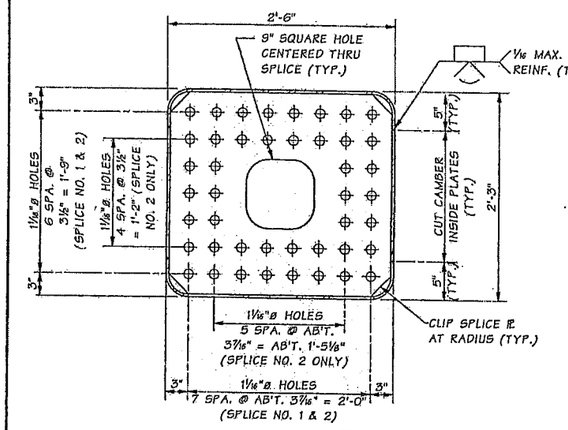

SECTION G

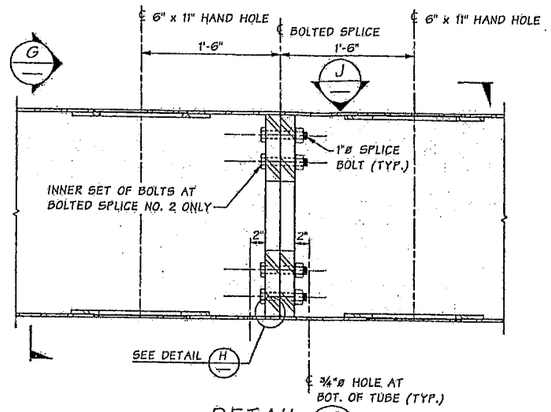

DETAIL B (SB9)

SECTION THRU BEAM BOLTED SPLICE NO. 2 SHOWN. BOLTED SPLICE NO. 1 SIMILAR.

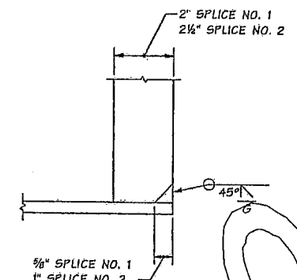

DETAIL H

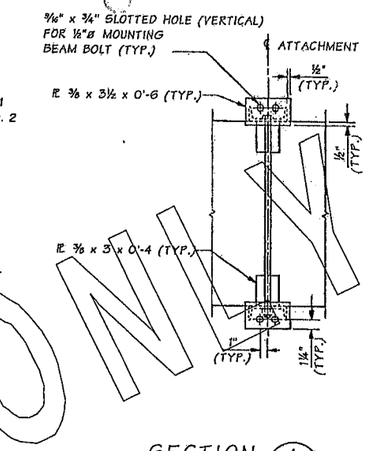

SECTION A

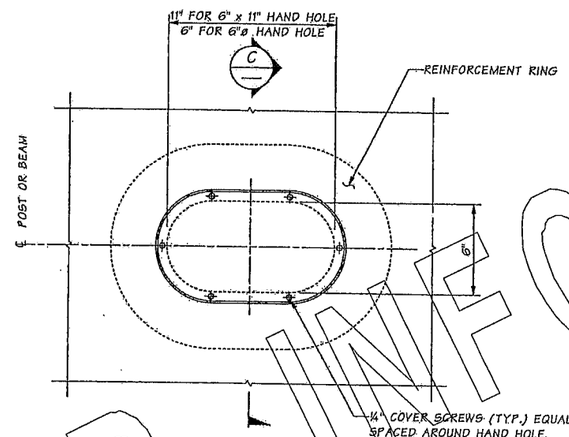

VIEW J

6" x 11" HAND HOLE SHOWN. 6"ø HAND HOLE SIMILAR EXCEPT AS NOTED.

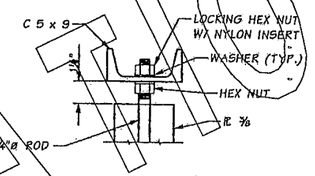

SECTION E

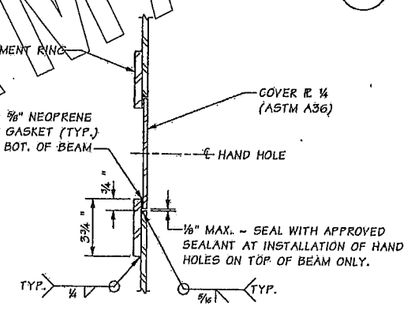

SECTION C

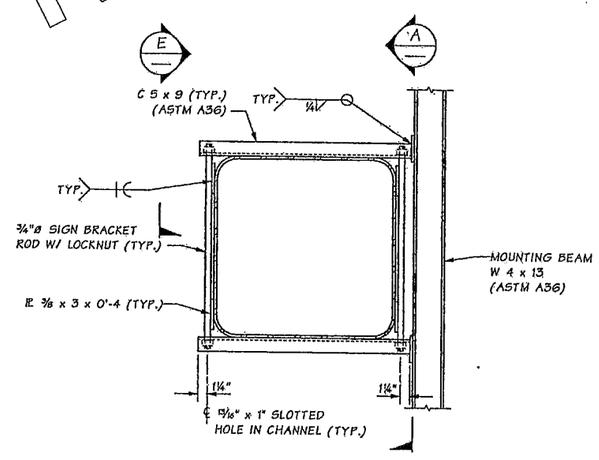

ATTACHMENT BRACKET DETAIL

PAINT ENTIRE ATTACHMENT BRACKET TO MATCH EXISTING STRUCTURE EXCEPT FOR MOUNTING BEAM. SIGN, BEAM LENGTHS, SIZE AND SPACING SHALL BE DETERMINED FROM THE CONTRACT PLANS OR THE STANDARD PLANS.

FOR INFORMATION ONLY

Bridge Design Engr.	Khaleghi, B	M:\SIGN_BRIDGES\OL3460NEW\Window files\SB 5 DETAIL 2.WND	
Supervisor	Stoddard, RB		
Designed By	Bennion, S.	02/08	
Checked By	Young, J	06/08	
Detailed By	Andreotti, L	02/08	
Bridge Projects Engr.			
Prelim. Plan By			
Architect/Specialist			

Mon Jun 16 15:27 07 2008

DATE	REVISION	BY	APP'D

REGION NO.	STATE	FED. AID PROJ. NO.	SHEET NO.	TOTAL SHEETS
10	WASH.			
JOB NUMBER 07C546				

STUART C. BENNION — STATE OF WASHINGTON — 18778 — REGISTERED PROFESSIONAL ENGINEER — EXPIRES 4/24/10 — 6/16/08

BRIDGE AND STRUCTURES OFFICE

RICHARD P. ZELDENRUST — STATE OF WASHINGTON — 15878 — REGISTERED PROFESSIONAL ENGINEER — EXPIRES 11/14/08 — 6/16/08

Washington State Department of Transportation

I-5 / SR16
WESTBOUND NALLEY VALLEY I/C

SIGN BRIDGE NO. 5
STRUCTURAL DETAILS 2 OF 2

BRIDGE SHEET NO. SB15

SHEET 476 OF 1360 SHEETS

SR 16 FILE NO. 7344 SHEET SB15 SHEET TSB11 SR FILE NO.

Bridge Design Engr.	Khaleghi, B	M:\SIGNS & MISC\XL3497 M St to Portland Temp Sign Struc\window files\012-TEMP CANT NO 3 DET 3.wnd	
Supervisor	Zeldenrust, RP		
Designed By	Rochon, MJ	08/13	
Checked By	Gallagher, P		
Detailed By	Davis, E	08/13	
Bridge Projects Engr.			
Prelim. Plan By			
Architect/Specialist			

Wed Mar 19 07:46:18 2014

DATE	REVISION	BY	APP'D

REGION NO.	STATE	FED. AID PROJ. NO.	SHEET NO.	TOTAL SHEETS
10	WASH.			
JOB NUMBER 12C501				

BRIDGE AND STRUCTURES OFFICE

Washington State Department of Transportation

I-5
M ST TO PORTLAND AVE - HOV

TEMPORARY SIGN STRUCTURE

CANTILEVER NO. T3
STRUCTURAL DETAILS 3 OF 3

BRIDGE SHEET NO. TSB11

SHEET 1278 OF 1763 SHEETS

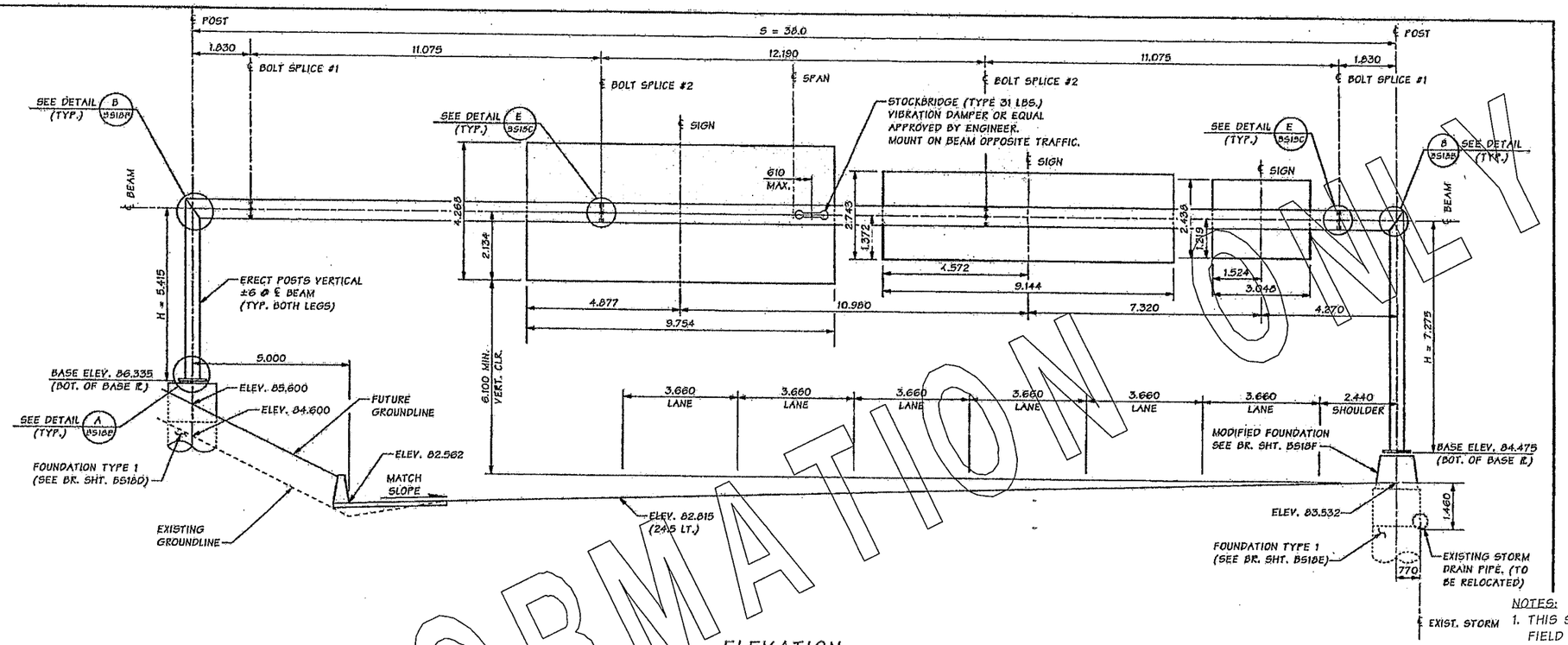

ELEVATION

SIGN BRIDGE NO. 7
I-5 SOUTHBOUND STA. 214+370
THE MAXIMUM SIGN AREA ON THIS STRUCTURE SHALL BE 74.32

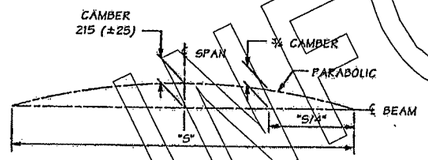

BEAM CAMBER DIAGRAM

NOTE
1. FOR GENERAL NOTES SEE BRIDGE SHEET BS1.

NOTES:

1. THIS SHEET FOR INFORMATION ONLY. FIELD VERIFY AND REFER TO ORIGINAL PLANS FOR ANY CHANGES.
2. LEFT POST & FOUNDATION REMAIN DURING CONSTRUCTION FOR TEMPORARY SIGNAGE. SEE SHEET TSB4.
3. NEW BOLTED SPLICE HARDWARE AND ANCHOR ROD ARE REQUIRED FOR RE-ASSEMBLY OF STRUCTURE.
4. FOR TEMPORARY REMOVAL, LABEL PIECES ACCORDINGLY SUCH THAT IT CAN BE RE-ASSEMBLED EXACTLY THE SAME. CARE SHALL BE TAKEN NOT TO DAMAGE STRUCTURE WHILE IN STORAGE
5. SEE BR. SHEET TSB14 FOR PARTIAL REMOVAL OF RIGHT FOUNDATION.
6. THE SIGN BRIDGE INVENTORY NO. IS SB03950 AND SIGN BRIDGE NO. 7 IN ORIGINAL CONTRACT.

FOR INFORMATION ONLY

SR ___ FILE NO. ___ SHEET TSB12

Bridge Design Engr.	Khaleghi, B		M:\SIGN_BRIDGES\C69S8A\Window files\LAYOUT.WND								
Supervisor	Zeldenrust, RP										
Designed By	Rochon, MJ	07/07									
Checked By	Bedi, G	08/07									
Detailed By	Andreotti, L	07/07									
Bridge Projects Engr.											
Prelim. Plan By			7/18/07	7	ADDED SHEET FOR CHANGE ORDER	LA	MJR				
Architect/Specialist			DATE		REVISION	BY	APP'D				

Fri Aug 03 14:47:39 2007

REGION NO.	STATE	FED. AID PROJ. NO.	SHEET NO.	TOTAL SHEETS
10	WASH.			
JOB NUMBER 02C513				

BRIDGE AND STRUCTURES OFFICE

Washington State Department of Transportation

I-5
SOUTH 48TH STREET TO PACIFIC AVENUE

SIGN BRIDGE 7 - LAYOUT

BRIDGE SHEET NO. BS18A
SHEET 474A OF 1036 SHEETS

SR ___ FILE NO. ___ SHEET TSB12

Bridge Design Engr.	Khaleghi, B		M:\SIGNS & MISC\XL3497 M St to Portland Temp Sign Struc\window files\013-TEMP CANT NO 4 DET 1.wnd								
Supervisor	Zeldenrust, RP										
Designed By	Rochon, MJ	08/13									
Checked By	Gallagher, P										
Detailed By	Davis, EA	08/13									
Bridge Projects Engr.											
Prelim. Plan By											
Architect/Specialist			DATE		REVISION	BY	APP'D				

Wed Mar 19 07:46:20 2014

REGION NO.	STATE	FED. AID PROJ. NO.	SHEET NO.	TOTAL SHEETS
10	WASH.			
JOB NUMBER 12C501				

BRIDGE AND STRUCTURES OFFICE

Washington State Department of Transportation

I-5
M ST TO PORTLAND AVE - HOV

TEMPORARY SIGN STRUCTURE

CANTILEVER NO. T4
STRUCTURAL DETAILS 1 OF 3

BRIDGE SHEET NO. TSB12
SHEET 1279 OF 1763 SHEETS

NOTES:
1. THIS SHEET FOR INFORMATION ONLY. FIELD VERIFY AND REFER TO ORIGINAL PLANS FOR ANY CHANGES.

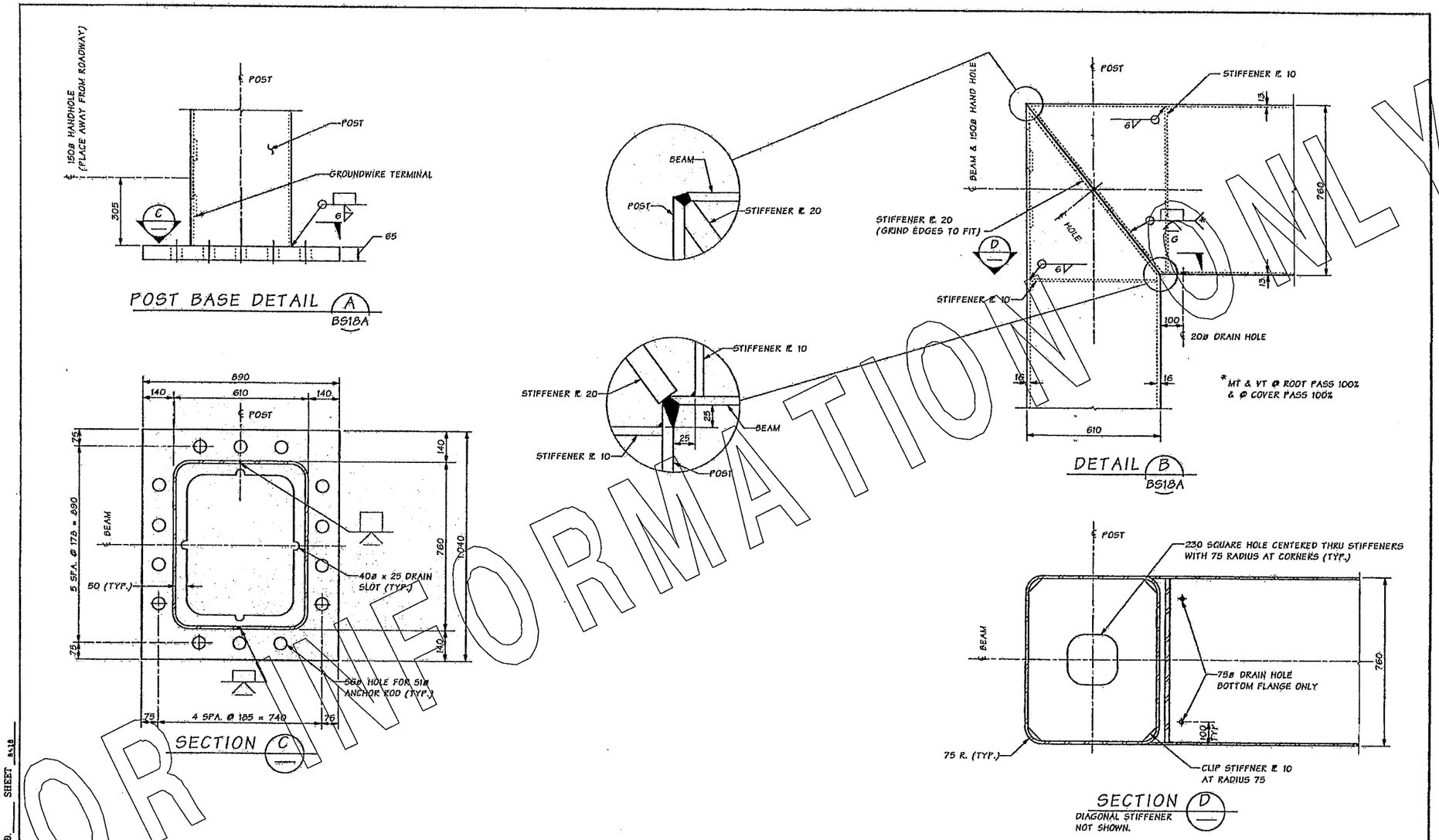

FOR INFORMATION ONLY

Bridge Design Engr.	Khaleghi, B		M:\SIGN_BRIDGES\C6958A\window files\STRUCT DET 1.WND						
Supervisor	Zeldenrust, RP								
Designed By	Rochon, MJ	07/07							
Checked By	Bedi, G	08/07							
Detailed By	Andreotti, L	07/07							
Bridge Projects Engr.									
Prelim. Plan By			7/18/07	1 ADDED SHEET FOR CHANGE ORDER	LA	MJR			
Architect/Specialist			DATE	REVISION	BY	APP'D			

Mon Aug 06 08:08:56 2007

REGION NO.	STATE	FED. AID PROJ. NO.	SHEET NO.	TOTAL SHEETS
10	WASH.			
JOB NUMBER 02C513				

BRIDGE AND STRUCTURES OFFICE

8/3/07 8/6/07

Washington State Department of Transportation

I-5
SOUTH 48TH STREET TO PACIFIC AVENUE

SIGN BRIDGE NO. 7
STRUCTURAL DETAILS 1

BRIDGE SHEET NO. BS18B
SHEET 474B OF 1036 SHEETS

SR I-5 FILE NO. SHEET BS18

Bridge Design Engr.	Khaleghi, B		M:\SIGNS & MISC\XL3497 M St to Portland Temp Sign Struc\window files\014-TEMP CANT NO 4 DET 2.wnd						
Supervisor	Zeldenrust, RP								
Designed By	Rochon, MJ	08/13							
Checked By	Gallagher, P								
Detailed By	Davis, E	08/13							
Bridge Projects Engr.									
Prelim. Plan By									
Architect/Specialist			DATE	REVISION	BY	APP'D			

Wed Mar 19 07:46:22 2014

REGION NO.	STATE	FED. AID PROJ. NO.	SHEET NO.	TOTAL SHEETS
10	WASH.			
JOB NUMBER 12C501				

BRIDGE AND STRUCTURES OFFICE

Washington State Department of Transportation

I-5
M ST TO PORTLAND AVE - HOV

TEMPORARY SIGN STRUCTURE

CANTILEVER NO. T4
STRUCTURAL DETAILS 2 OF 3

BRIDGE SHEET NO. TSB13
SHEET 1280 OF 1763 SHEETS

SR FILE NO. SHEET TSB13

NOTES:

1. THIS SHEET FOR INFORMATION ONLY. FIELD VERIFY AND REFER TO ORIGINAL PLANS FOR ANY CHANGES.

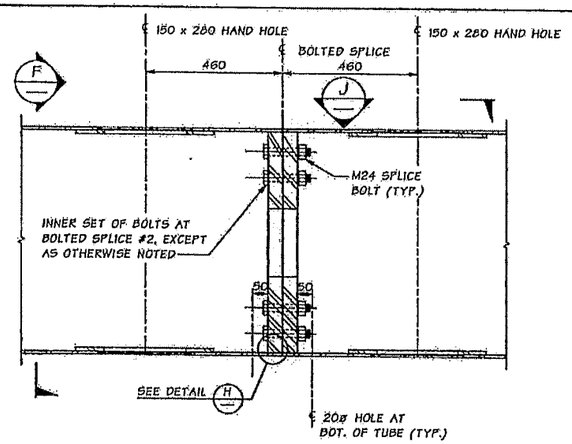

DETAIL E
SECTION THRU BEAM BOLTED SPLICE #2 SHOWN, BOLTED SPLICE #1 SIMILAR.
BS18A

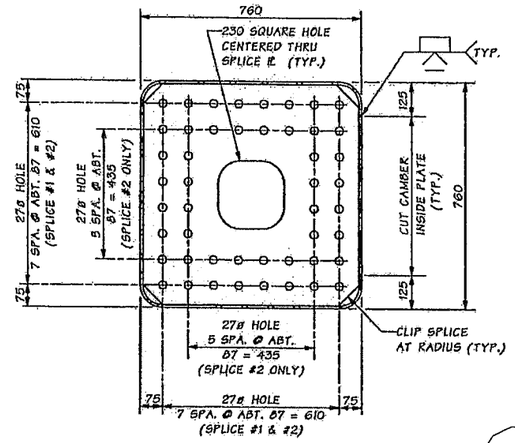

SECTION F

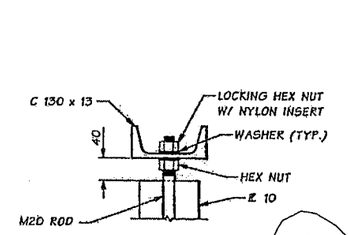

SECTION G

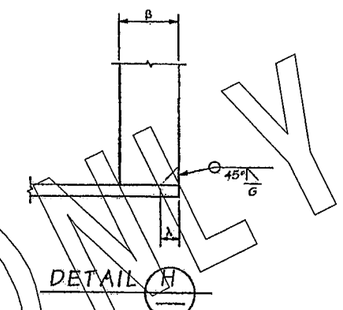

DETAIL H

β = 50 FOR BOLT SPLICE #1
= 65 FOR BOLT SPLICE #2

λ = 16 FOR BOLT SPLICE #1
= 25 FOR BOLT SPLICE #2

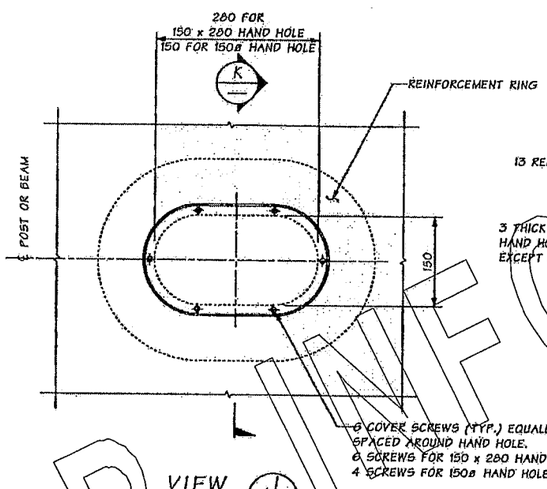

VIEW J

150 x 280 HAND HOLE SHOWN.
150ø HAND HOLE SIMILAR EXCEPT AS NOTED.

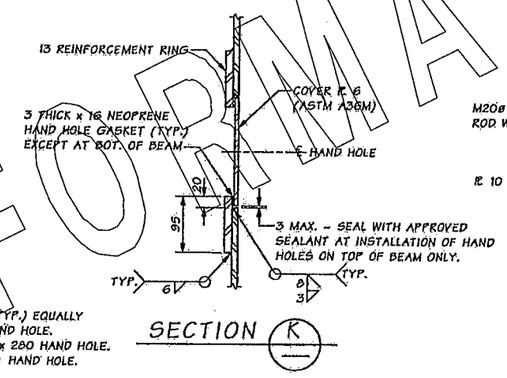

SECTION K

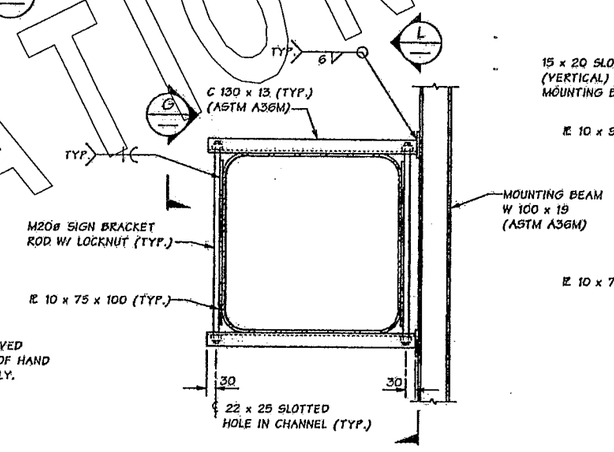

ATTACHMENT BRACKET DETAIL

PAINT ENTIRE ATTACHMENT BRACKET TO MATCH EXISTING STRUCTURE EXCEPT FOR MOUNTING BEAM. SIGN, LIGHT, BEAM LENGTHS, SIZE AND SPACING SHALL BE DETERMINED FROM THE CONTRACT PLANS OR THE STANDARD PLANS.

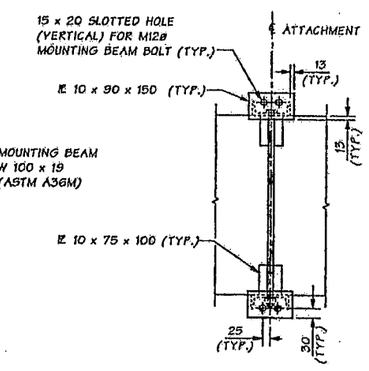

SECTION L

FOR INFORMATION ONLY

Bridge Design Engr.	Khaleghi, B	M:\SIGN_BRIDGES\C6958A\window files\STRUCT DET 2.WND			REGION NO.	STATE	FED. AID PROJ. NO.	SHEET NO.	TOTAL SHEETS
Supervisor	Zeldenrust, RP				10	WASH.			
Designed By	Rochon, MJ 07/07								
Checked By	Bedi, G 08/07								
Detailed By	Andreotti, L 07/07				JOB NUMBER 02C513				
Bridge Projects Engr.									
Prelim. Plan By		7/18/07 1 SHEET ADDED FOR CHANGE ORDER		LA	MJR				
Architect/Specialist		DATE	REVISION	BY	APP'D				

Fri Aug 03 14:47:49 2007

BRIDGE AND STRUCTURES OFFICE

Washington State Department of Transportation

I-5
SOUTH 48TH STREET TO PACIFIC AVENUE

SIGN BRIDGE NO. 7
STRUCTURAL DETAILS II

BRIDGE SHEET NO. BS18C
SHEET 474C OF 1036 SHEETS

SR ___ FILE NO. ___ SHEET BS18

Bridge Design Engr.	Khaleghi, B	M:\SIGNS & MISC\XL3497 M St to Portland Temp Sign Struc\window files\015-TEMP CANT NO 4 DET 3.wnd			REGION NO.	STATE	FED. AID PROJ. NO.	SHEET NO.	TOTAL SHEETS
Supervisor	Zeldenrust, RP				10	WASH.			
Designed By	Rochon, MJ 08/13								
Checked By	Gallagher, P								
Detailed By	Davis, E 08/13				JOB NUMBER 12C501				
Bridge Projects Engr.									
Prelim. Plan By									
Architect/Specialist		DATE	REVISION	BY	APP'D				

Wed Mar 19 07:46:24 2014

BRIDGE AND STRUCTURES OFFICE

Washington State Department of Transportation

I-5
M ST TO PORTLAND AVE - HOV

TEMPORARY SIGN STRUCTURE

CANTILEVER NO. T4
STRUCTURAL DETAILS 3 OF 3

BRIDGE SHEET NO. TSB14
SHEET 1281 OF 1763 SHEETS

SR ___ FILE NO. ___ SHEET TSB14

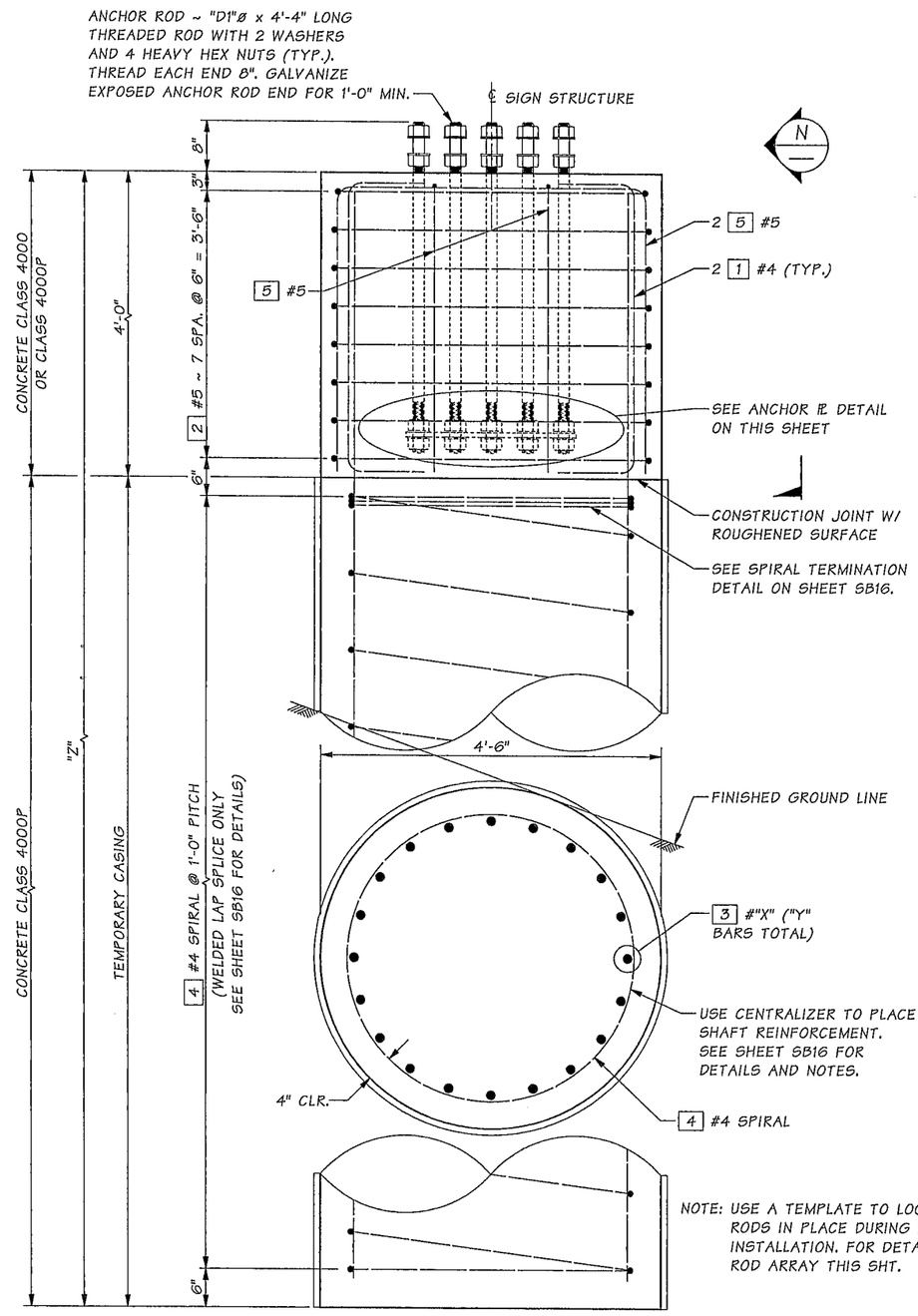

NOTE: USE A TEMPLATE TO LOCATE AND SECURE RODS IN PLACE DURING FOUNDATION INSTALLATION. FOR DETAILS, SEE ANCHOR ROD ARRAY THIS SHT.

ELEVATION

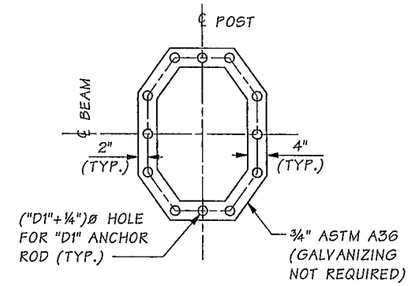

ANCHOR ⅊ DETAIL

SEE SIGN STRUCTURE BASE PLATE FOR ANCHOR ROD PATTERN

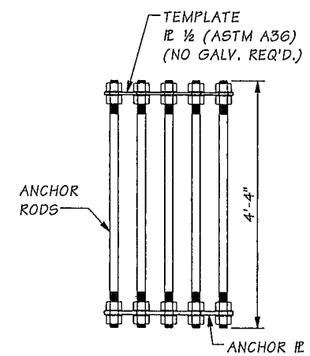

ANCHOR ROD ARRAY

SHIP THE ANCHOR ROD ARRAY ASSEMBLY AS A COMPLETE UNIT.

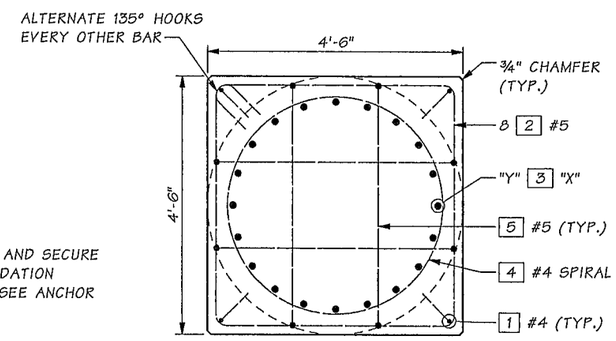

PLAN

ANCHOR RODS NOT SHOWN.

BENDING DIAGRAM

MARK	LOCATION	SIZE	NO. REQ'D.	LENGTH	
1	CAP VERTICAL	4	4	"A"	
2	CAP HOOPS	5	"A"	"A"	
3	SHAFT VERTICAL	"X"	"Y"	"Z"-6"	STR.
4	SHAFT SPIRAL	4	1	"A"	
5	CAP TOP	5	4	"A"	

NOTE: CONCRETE COVER SHALL BE 1½" UNLESS SHOWN OTHERWISE.

"A" ~ DETERMINE FROM PLANS

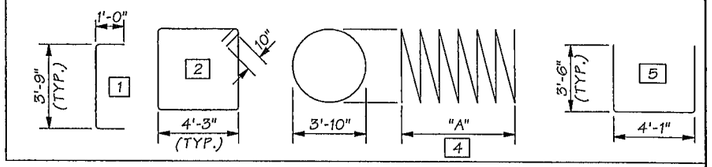

MODIFIED 4'-6" DIA. FOUNDATION TYPE 1 TABLE

FOUNDATION LOCATION	DEPTH ("Z")	REINFORCEMENT SIZE ("X")	REINFORCEMENT NUMBER ("Y")	"D1"	ALLOWABLE LATERAL BEARING PRESSURE (PSF)
CANT. NO. T1	22'-0"	9	16	2"	2500

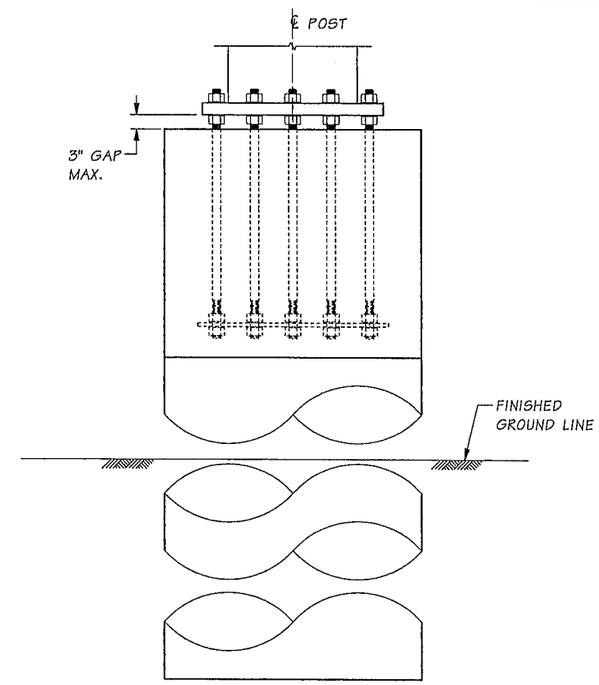

VIEW N

Bridge Design Engr.	Khaleghi, B	
Supervisor	Zeldenrust, RP	
Designed By	Rochon, MJ	12/14
Checked By	Gallagher, P	12/14
Detailed By	Davis, E	12/14
Bridge Projects Engr.		
Prelim. Plan By		
Architect/Specialist		

M:\SIGNS & MISC\XL3497 M St to Portland Temp Sign Struc\window files\016-MOD FND TYPE 1.wnd

DATE	REVISION	BY	APP'D

REGION NO.	STATE	FED. AID PROJ. NO.	SHEET NO.	TOTAL SHEETS
10	WASH.			
JOB NUMBER 12C501				

Wed Mar 19 07:46:26 2014

MATTHEW J. ROCHON — STATE OF WASHINGTON — 40414 — REGISTERED PROFESSIONAL ENGINEER — 3/19/14

BRIDGE AND STRUCTURES OFFICE

RICHARD P. ZELDENRUST — STATE OF WASHINGTON — 20810 — REGISTERED PROFESSIONAL ENGINEER — 3/20/14

Washington State Department of Transportation

I-5
M ST TO PORTLAND AVE - HOV

TEMPORARY SIGN STRUCTURE

MODIFIED FOUNDATION TYPE 1
4'-6" DIAMETER

BRIDGE SHEET NO. TSB15

SHEET 1282 OF 1763 SHEETS

SR ____ FILE NO. ____ SHEET TSB15

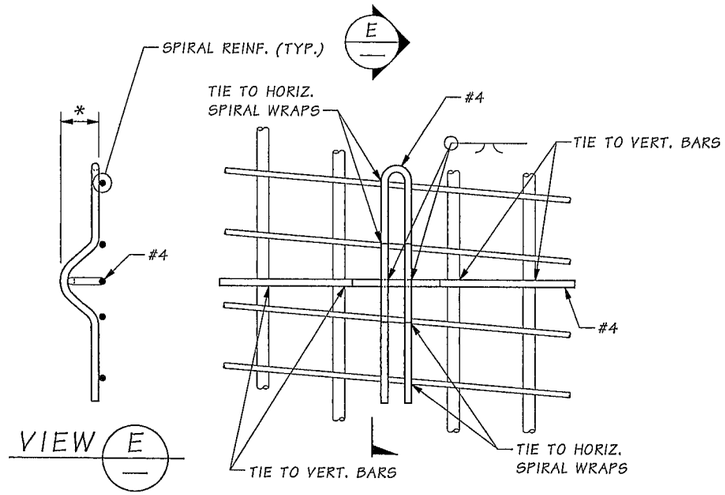

CENTRALIZER DETAIL

EPOXY COAT CENTRALIZER OR PAINT WITH INORGANIC ZINC AFTER FABRICATION (OPTION 1)

CENTRALIZER DETAIL NOTES:

EACH LEG SHALL BE TIED TO ONE VERTICAL BARS & TWO SPIRALS.

SEE SPECIAL PROVISIONS FOR SPACING REQUIREMENTS.

* CONCRETE COVER - MINUS ½"

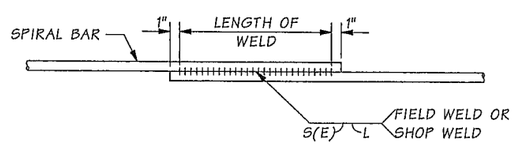

WELDED LAP SPLICE DETAIL

WELDING SHALL MEET THE REQUIREMENTS OF STD. SPEC. SECTION 6-02.3(24)E FOR WELD DIMENSIONS, SEE TABLE BELOW.

DEFORMED BAR	WELD DIMENSIONS (IN.)		
	S	E	LENGTH (L)
#4	¼	⅛	4

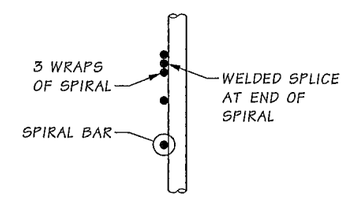

SPIRAL TERMINATION DETAIL

SR ____ FILE NO. ____ SHEET TSB16

Bridge Design Engr.	Khaleghi, B		M:\SIGNS & MISC\XL3497 M St to Portland Temp Sign Struc\window files\017-FND TYPE 1 DET.wnd							
Supervisor	Zeldenrust, RP									
Designed By	Rochon, MJ	12/14				REGION NO.	STATE	FED. AID PROJ. NO.	SHEET NO.	TOTAL SHEETS
Checked By	Gallagher, P	12/14				10	WASH.			
Detailed By	Davis, E	12/14				JOB NUMBER 12C501				
Bridge Projects Engr.										
Prelim. Plan By										
Architect/Specialist			DATE	REVISION	BY	APP'D				

Wed Mar 19 07:46:28 2014

MATTHEW J. ROCHON — STATE OF WASHINGTON — 40414 — REGISTERED PROFESSIONAL ENGINEER — 3/19/14

BRIDGE AND STRUCTURES OFFICE

RICHARD P. ZELDENRUST — STATE OF WASHINGTON — 25470 — REGISTERED PROFESSIONAL ENGINEER — 3/20/14

Washington State Department of Transportation

I-5
M ST TO PORTLAND AVE - HOV

TEMPORARY SIGN STRUCTURE

FOUNDATION TYPE 1 DETAILS

BRIDGE SHEET NO. TSB16

SHEET 1283 OF 1763 SHEETS

MODIFIED 5'-0" DIA. FOUNDATION TYPE 1 TABLE		
FOUNDATION LOCATION	REINFORCEMENT NUMBER ("Y")	"D1"
SIGN BR. SB03256 RT.	15	1¾
SIGN BR. SB03950 RT.	17	2

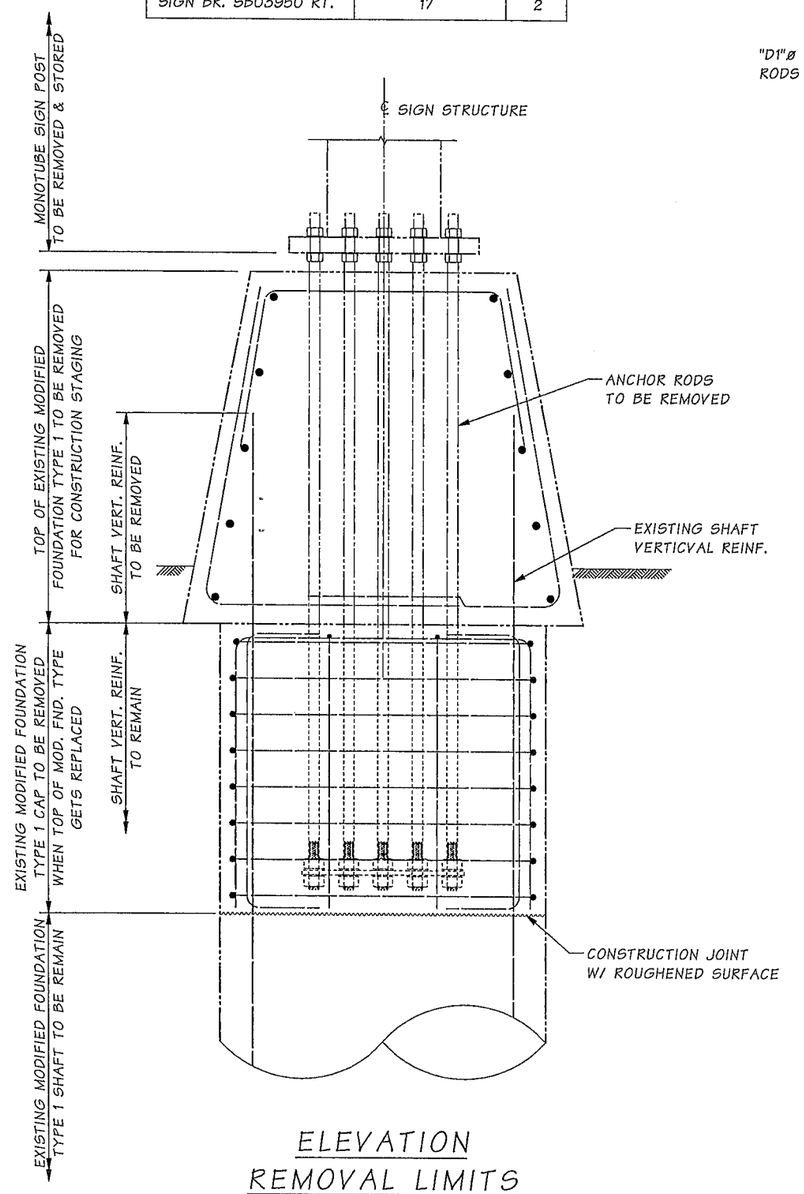

ELEVATION REMOVAL LIMITS

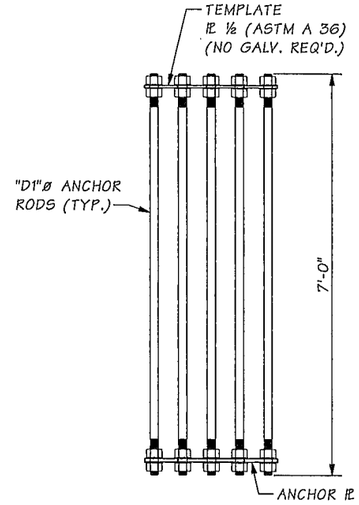

ANCHOR ROD ARRAY

SHIP THE ANCHOR ROD ARRAY ASSEMBLY AS A COMPLETE UNIT

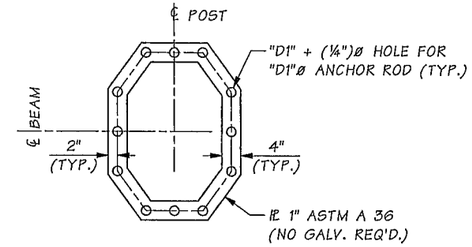

ANCHOR PL DETAIL

FOR ANCHOR ROD PATTERN SEE SIGN STRUCTURE BASE PLATE ON BR. SHEETS TSB10 FOR SB03256 & TSB13 FOR SB03950.

BENDING DIAGRAM

MARK	LOCATION	SIZE	NO. REQ'D.	LENGTH	
1	CAP VERTICAL	4	4	5'-6½"	
2	CAP HOOPS	5	8	"A"	
3	SHAFT VERTICAL	9	"Y"	7'-0"	STR.
5	CAP TOP	5	4	"A"	

NOTE: CONCRETE COVER SHALL BE 1½" UNLESS SHOWN OTHERWISE.

"A" ~ DETERMINE FROM PLANS

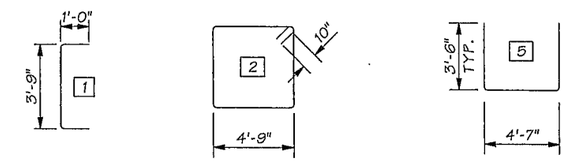

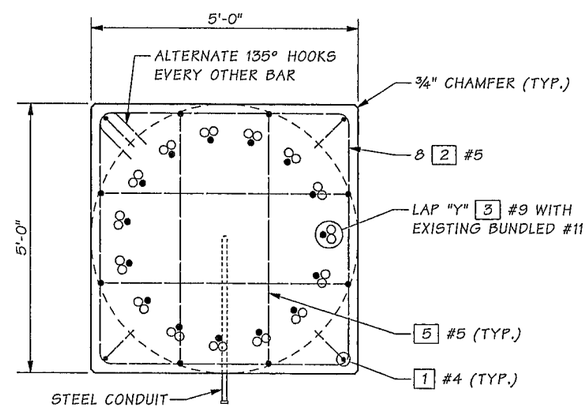

PLAN

ANCHOR RODS NOT SHOWN.

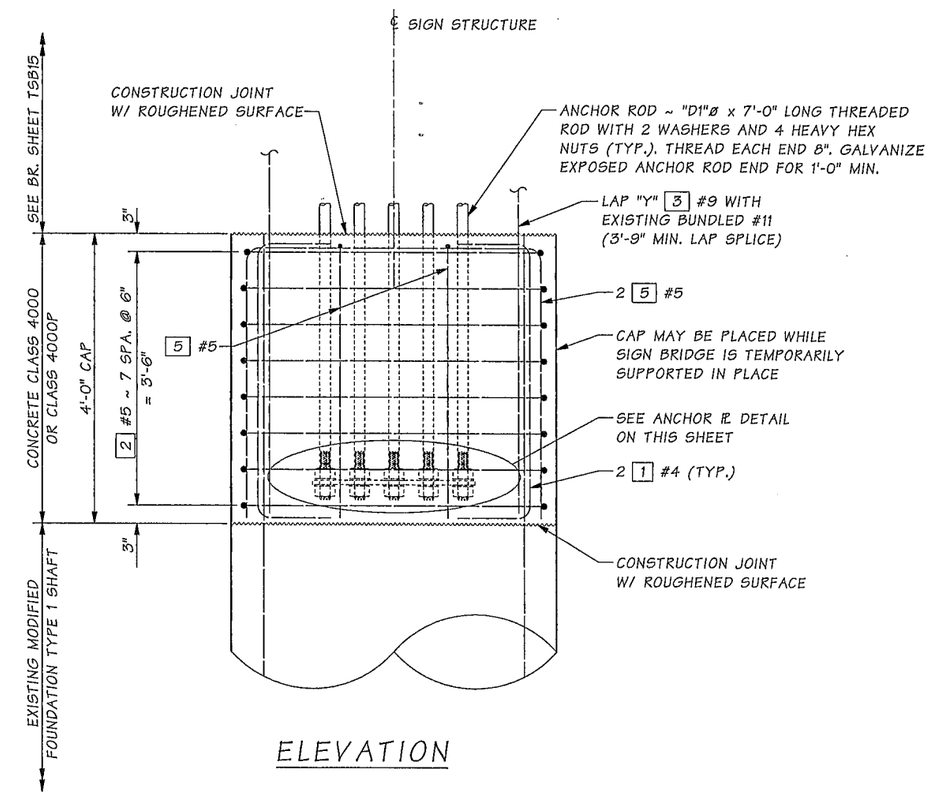

ELEVATION

Bridge Design Engr.	Khaleghi, B	M:\SIGNS & MISC\XL3497 M St to Portland Temp Sign Struc\window files\018-REMOVAL LIMITS EXIST FND.wnd			REGION NO.	STATE	FED. AID PROJ. NO.	SHEET NO.	TOTAL SHEETS
Supervisor	Zeldenrust, RP				10	WASH.			
Designed By	Rochon, MJ 08/13				JOB NUMBER 12C501				
Checked By									
Detailed By	Davis, E 08/13								
Bridge Projects Engr.									
Prelim. Plan By									
Architect/Specialist		DATE	REVISION	BY	APP'D				

Wed Mar 19 07:46:29 2014

SR ___ FILE NO. ___ SHEET TSB17

MATTHEW J. ROCHON — STATE OF WASHINGTON — 40414 — REGISTERED PROFESSIONAL ENGINEER — 3/19/14

BRIDGE AND STRUCTURES OFFICE

RICHARD P. ZELDENRUST — STATE OF WASHINGTON — 26470 — PROFESSIONAL ENGINEER — 3/20/14

Washington State Department of Transportation

I-5
M ST TO PORTLAND AVE - HOV

TEMPORARY SIGN STRUCTURE

MODIFIED FOUNDATION TYPE 1 REMOVAL LIMITS & DETAILS

BRIDGE SHEET NO. TSB17

SHEET 1284 OF 1763 SHEETS

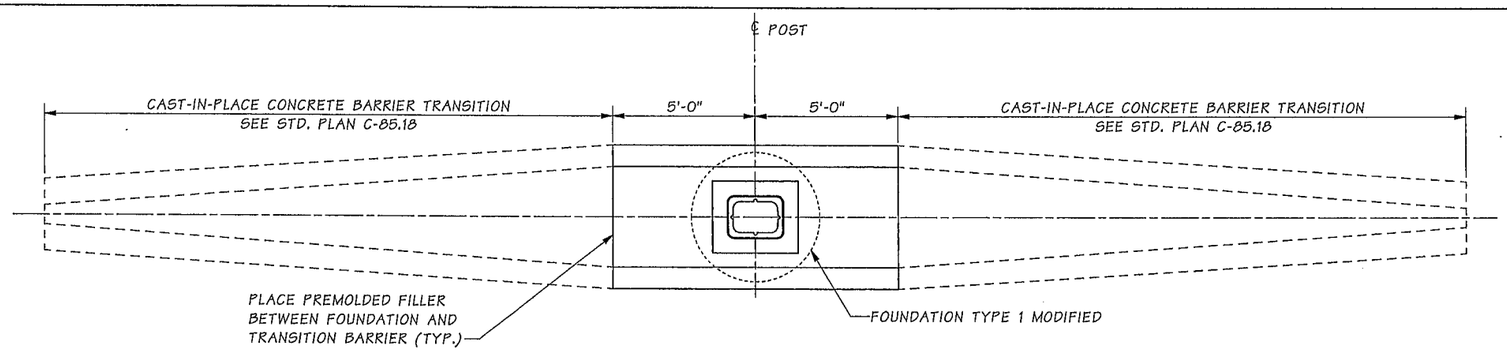

PLAN
BARRIER TRANSITION

ANCHOR RODS NOT SHOWN FOR CLARITY

BENDING DIAGRAM

MARK	LOCATION	SIZE	NO. REQ'D	LENGTH	
21	MEDIAN BARRIER HORIZONTAL	5	10	9'-9"	STR.
22	MEDIAN BARRIER VERTICAL	5	14	7'-10¼"	
23	MEDIAN BARRIER VERTICAL	5	28	7'-0¼"	

NOTE: CONCRETE COVER SHALL BE 1½" UNLESS SHOWN OTHERWISE.

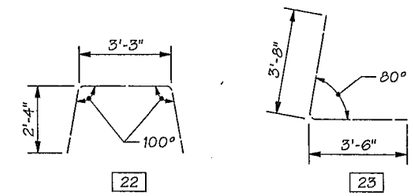

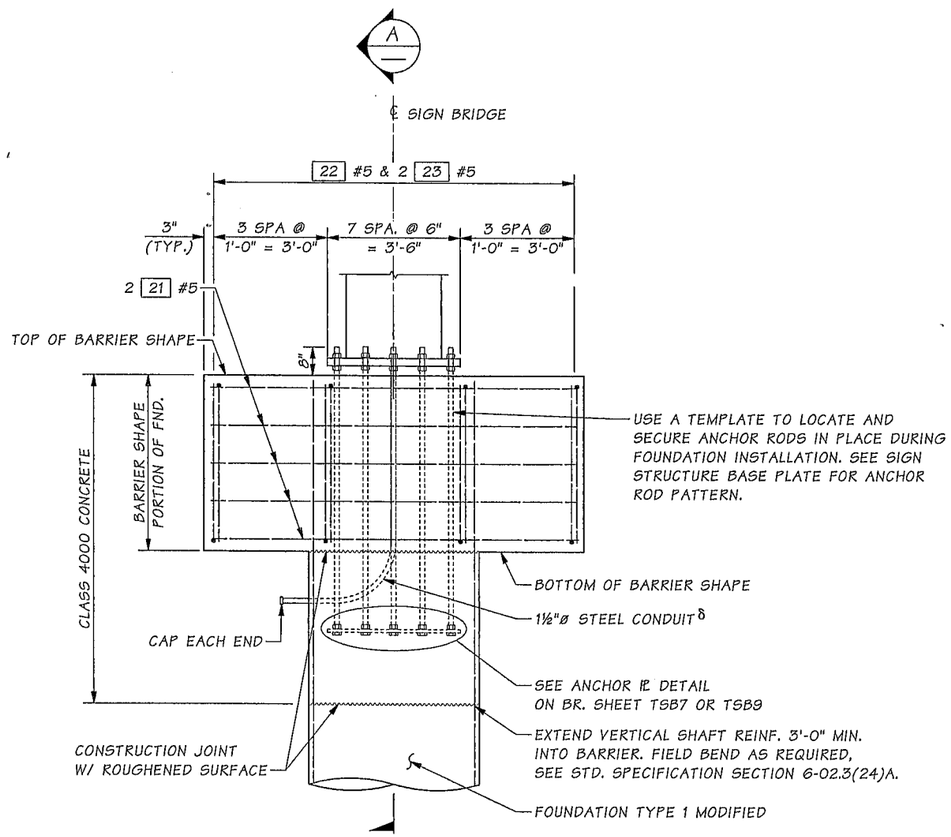

ELEVATION

δ COORDINATE SIZE AND NUMBER OF CONDUITS REQUIRED FOR LIGHTING AND VMS.

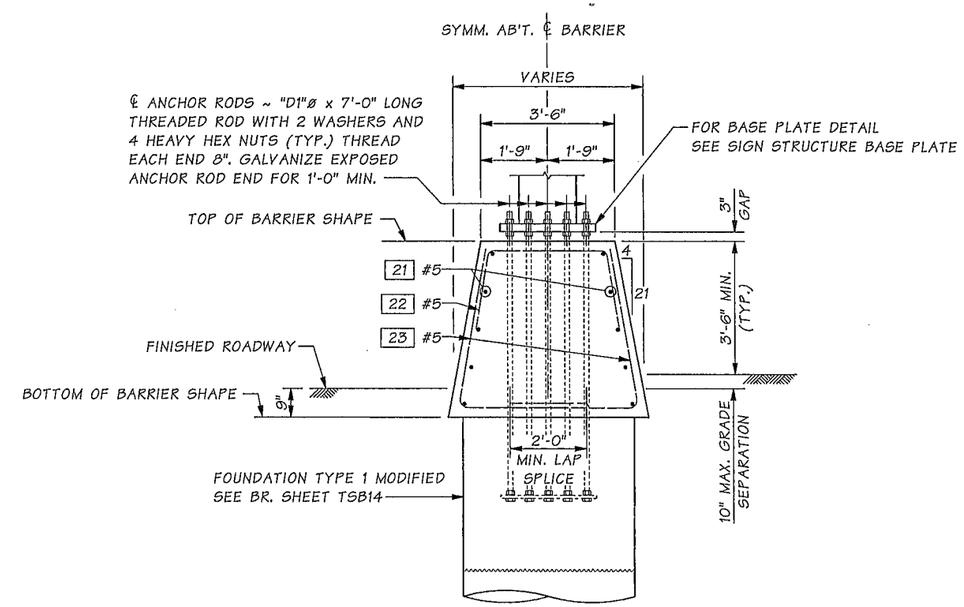

SECTION A

FOR "D1" SEE BR. SHEETS TSB9 OR TSB12 FOR ANCHOR ROD DIAMETER.

SR ____ FILE NO. ____ SHEET TSB18

Bridge Design Engr.	Khaleghi, B	
Supervisor	Zeldenrust, RP	
Designed By	Rochon, MJ	08/13
Checked By	Gallagher, P	
Detailed By	Davis, EA	08/13
Bridge Projects Engr.		
Prelim. Plan By		
Architect/Specialist		

M:\SIGNS & MISC\XL3497 M St to Portland Temp Sign Struc\window files\019-TOP MOD FND TYPE 1.wnd

DATE	REVISION	BY	APP'D

REGION NO.	STATE	FED. AID PROJ. NO.	SHEET NO.	TOTAL SHEETS
10	WASH.			

JOB NUMBER 12C501

3/19/14

BRIDGE AND STRUCTURES OFFICE

3/20/14

Washington State Department of Transportation

I-5
M ST TO PORTLAND AVE - HOV

TEMPORARY SIGN STRUCTURE

TOP OF MODIFIED FOUNDATION TYPE 1

BRIDGE SHEET NO. TSB18

SHEET 1285 OF 1763 SHEETS

Wed Mar 19 07:46:31 2014

SEC. 8, T.20N., R.3E., W.M.

CITY OF TACOMA

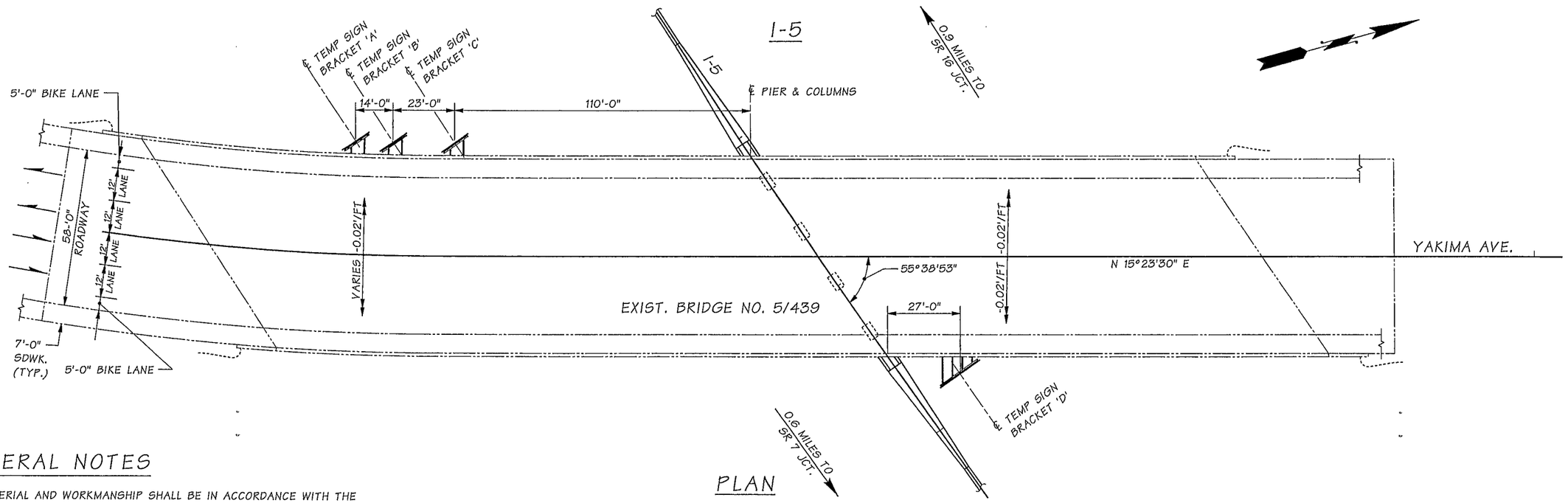

PLAN

GENERAL NOTES

1. ALL MATERIAL AND WORKMANSHIP SHALL BE IN ACCORDANCE WITH THE REQUIREMENTS OF THE WASHINGTION STATE DEPARTMENT OF TRANSPORTATION STANDARD SPECIFICATIONS FOR ROAD, BRIDGE AND MUNICIPAL CONSTRUCTION, DATED 2014 AND AMENDMENTS.

2. SIGN SUPPORT COMPONENTS HAVE BEEN DESIGNED TO MEET THE REQUIREMENTS OF AASHTO STANDARD SPECIFICATIONS FOR STRUCTURAL SUPPORTS FOR HIGHWAY SIGNS, LUMINAIRES, AND TRAFFIC SIGNALS, DATED 2009 AND INTERIMS, USING BASIC WIND SPEED OF 90 MPH AND 50 YEARS OF DESIGN LIFE.

3. MATERIAL SPECIFICATIONS:

PLATES AND BARS	ASTM A36
PIPES	ASTM A 53, GRADE B, OR ASTM A 500, GRADE B
BRACING ROD	ASTM A 307
BOLTS, NUTS & WASHERS (UNLESS OTHERWISE NOTED)	STD. SPEC. 9-06.5(1)
U-BOLTS, LOCKNUTS & WASHERS (UNLESS OTHERWISE NOTED)	STAINLESS STEEL CONFORMING TO STD. SPEC. 9-28.11
RESIN BONDED ANCHORS (ALL THREAD)	ALL THREADED ROD: ASTM F 593, TYPE 304 NUT: ASTM F 594, TYPE 304 WASHERS: ASTM A 240, TYPE 304
EPOXY BONDING AGENT	STD. SPEC. 9-26.1 (TYPE IV)

4. AN ACCEPTABLE ALTERNATIVE TO A LOCKNUT WITH A NYLON INSERT SHALL BE AS FOLLOWS:

   - NYLOCK BLUE PATCH
   - NYLOCK PRECOTE 30
   - ND 360° RING PATCH

   ALL PRODUCTS SHALL BE APPLIED THE FULL LENGTH OF THE BOLT THREADS WITH 360 DEGREE COVERAGE.

5. ALL NON-STAINLESS STEEL PARTS SHALL BE GALVANIZED IN ACCORDANCE WITH AASHTO M111 AFTER FABRICATION. BOLTS AND HARDWARE SHALL BE GALVANIZED IN ACCORDANCE WITH AASHTO M232.

6. SIZE OF FILLET WELDS SHALL BE ¼" MINIMUM EXCEPT WHERE NOTED OTHERWISE.

7. FOR W4X13 DETAILS SEE STANDARD PLAN G-90.10 AND G90.40. WHERE W4X13 SPACING CONFILCTS WITH THE VERTICAL AND HORIZONTAL PIPE CONNECTION, THE SPACING MAY BE MODIFIED SO THE MAXIMUM SPACING DOES NOT EXCEED 6 FEET AND THE EDGE DISTANCE DOES NOT EXCEED 3 FEET.

8. THE DIMENSIONS SHOWN IN THE PLANS ARE BASED ON CONTRACT RECORDS. THESE DIMENSIONS SHALL BE FIELD MEASURED AND VERIFIED BY THE CONTRACTOR PRIOR TO FABICATION.

9. TEMPORARY BRIDGE MOUNTED SIGN BRACKETS SHALL BE REMOVED IN ACCORDANCE WITH STANDARD SPECIFICATION SECTION 8-21.3(4).

10. RESIN BONDED ANCHOR HOLES SHALL NOT BE CORE DRILLED.

LEGEND

B / TSB28 — IDENTIFIES SECTION, VIEW OR DETAIL

TAKEN OR SHOWN ON BRIDGE SHEET TSB3

B / — TAKEN OR SHOWN ON THE SAME SHEET

SR ____ FILE NO. ____ SHEET TSB19

Bridge Design Engr.	Khaleghi, B	
Supervisor	Zeldenrust, RP	
Designed By	Rosa, M	08/13
Checked By	Leland, A	10/13
Detailed By	Davis, E	08/13
Bridge Projects Engr.		
Prelim. Plan By		
Architect/Specialist		

M:\SIGNS & MISC\XL3497 M St to Portland Temp Sign Struc\window files\020-TEMP SIGN BRKTS LAYOUT.wnd

DATE	REVISION	BY	APP'D

REGION NO.	STATE	FED. AID PROJ. NO.	SHEET NO.	TOTAL SHEETS
10	WASH.			
JOB NUMBER 12C501				

BRIDGE AND STRUCTURES OFFICE

BILAN KHALEGHI — STATE OF WASHINGTON — 27695 — STRUCTURAL ENGINEER — PROFESSIONAL ENGINEER — 3/19/14

Washington State Department of Transportation

I-5
M ST TO PORTLAND AVE - HOV

TEMPORARY SIGN STRUCTURE

TEMPORARY BRIDGE MOUNTED SIGN BRACKETS - LAYOUT

BRIDGE SHEET NO. TSB19

SHEET 1286 OF 1763 SHEETS

Wed Mar 19 07:46:33 2014

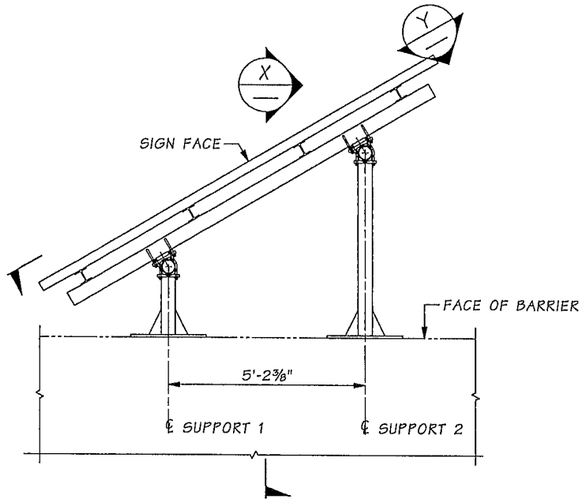

PLAN

BRIDGE MOUNTED SIGN
BRACKET 'A' SHOWN, 'B' & 'C' SIMILAR

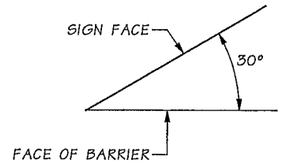

SIGN SKEW

TABLE OF DIMENSIONS

SIGN BRACKET	LOCATION	SIGN SKEW	SIGN LENGTH	SIGN HEIGHT	S_1	S_2	T
'A'	SEE PLAN	30°	11'-0"	12'-0"	2'-6"	3'-3"	3"
'B'	SEE PLAN	30°	12'-0"	12'-0"	3'-0"	3'-3"	3"
'C'	SEE PLAN	30°	12'-0"	10'-0"	3'-0"	1'-3"	0"

PIPE SIZE	TOP ARM LENGTHS		BOTTOM ARM LENGTHS	
	A1	A2	B1	B2
4"ø STD.	1'-9"	4'-9"	4'-10⅝"	7'-7¾"

BRACING LENGTHS	CANTILEVER LENGTHS		C	D	G
L2	E	F			
6'-7¼"	1'-0"	9"	6'-0"	9'-8⅛"	2'-6"

D & G DIMENSIONS ARE BASED ON PLANS AND SHALL BE FIELD MEASURED PRIOR TO FABRICATION OF BRACKET ARMS AND BRACE. (ADJUST E AND F DIMENSIONS TO PLACE SIGN HORIZONTALLY)

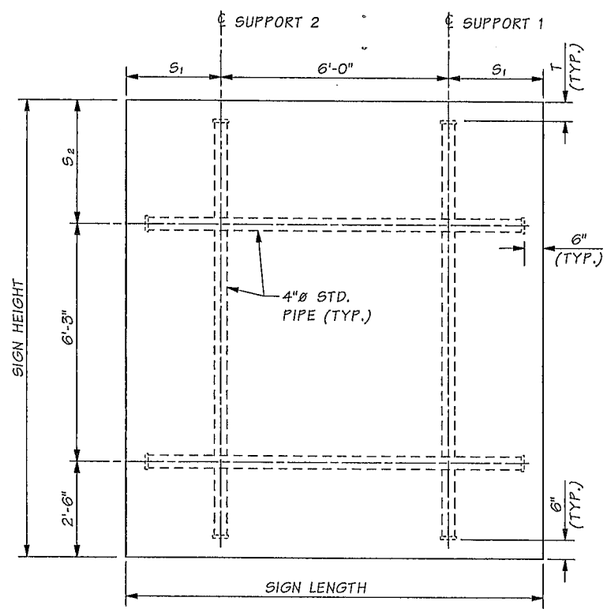

VIEW Y

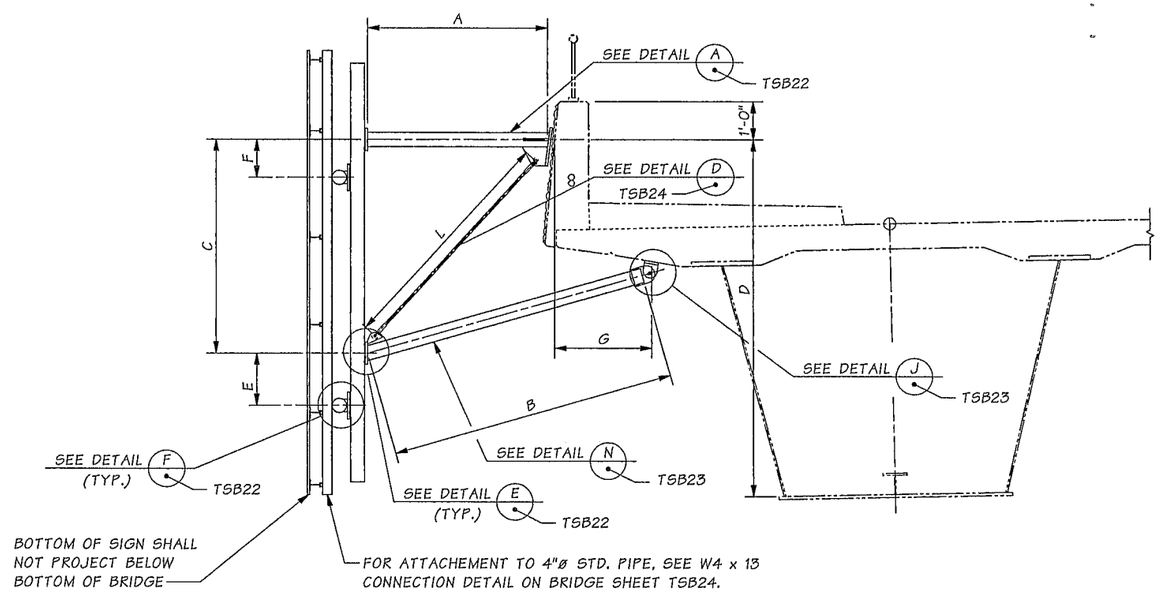

VIEW X

SHOWN AT SUPPORT 2
SUPPORT 1 SIMILAR

SR FILE NO. ____ SHEET TSB20

Bridge Design Engr.	Khaleghi, B	
Supervisor	Zeldenrust, RP	
Designed By	Rosa, M	08/13
Checked By	Leland, A	10/13
Detailed By	Davis, E	08/13
Bridge Projects Engr.		
Prelim. Plan By		
Architect/Specialist		

Wed Mar 19 07:46:34 2014

M:\SIGNS & MISC\XL3497 M St to Portland Temp Sign Struc\window files\021-TEMP SIGN BRKTS A B C GEO.wnd

DATE	REVISION	BY	APP'D

REGION NO.	STATE	FED. AID PROJ. NO.	SHEET NO.	TOTAL SHEETS
10	WASH.			
JOB NUMBER 12C501				

MICHAEL A. ROSA — STATE OF WASHINGTON — 43707 — REGISTERED PROFESSIONAL ENGINEER — 3/19/14

BRIDGE AND STRUCTURES OFFICE

RICHARD P. ZELDENRUST — STATE OF WASHINGTON — 36477 — REGISTERED PROFESSIONAL ENGINEER — 3/20/14

Washington State Department of Transportation

I-5
M ST TO PORTLAND AVE - HOV

TEMPORARY SIGN STRUCTURE

TEMPORARY BRIDGE MOUNTED SIGN BRACKETS 'A', 'B', AND 'C' GEOMETRY

BRIDGE SHEET NO. TSB20

SHEET 1287 OF 1763 SHEETS

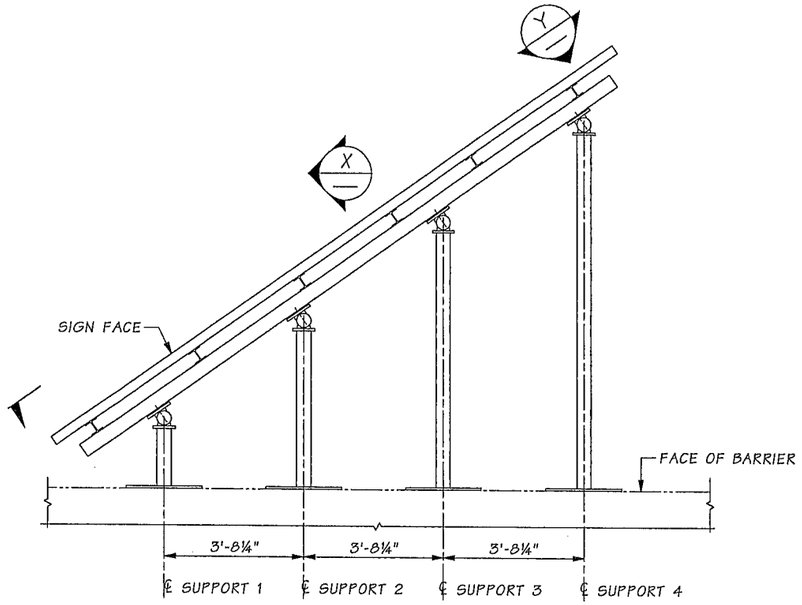

PLAN

SIGN BRACKET 'D'

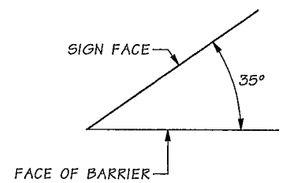

SIGN SKEW

TABLE OF DIMENSIONS

SIGN BRACKET	LOCATION	SIGN SKEW	SIGN LENGTH	SIGN HEIGHT
'D'	SEE PLAN	35°	18'-0"	12'-0"

PIPE SIZE	TOP ARM LENGTHS				BOTTOM ARM LENGTHS			
	A1	A2	A3	A4	B1	B2	B3	B4
4"ø STD.	1'-6"	4'-1"	6'-8"	9'-2⅞"	4'-8"	7'-0¼"	9'-5⅞"	12'-0"

BRACING LENGTHS			CANTILEVER LENGTHS		C	D	G
L2	L3	L4	E	F			
6'-2¼"	7'-11½"	10'-1"	1'-0"	9"	6'-0"	9'-8⅛"	2'-6"

D & G DIMENSIONS ARE BASED ON PLANS AND SHALL BE FIELD MEASURED PRIOR TO FABRICATION OF BRACKET ARMS AND BRACE. (ADJUST E AND F DIMENSIONS TO PLACE SIGN HORIZONTALLY)

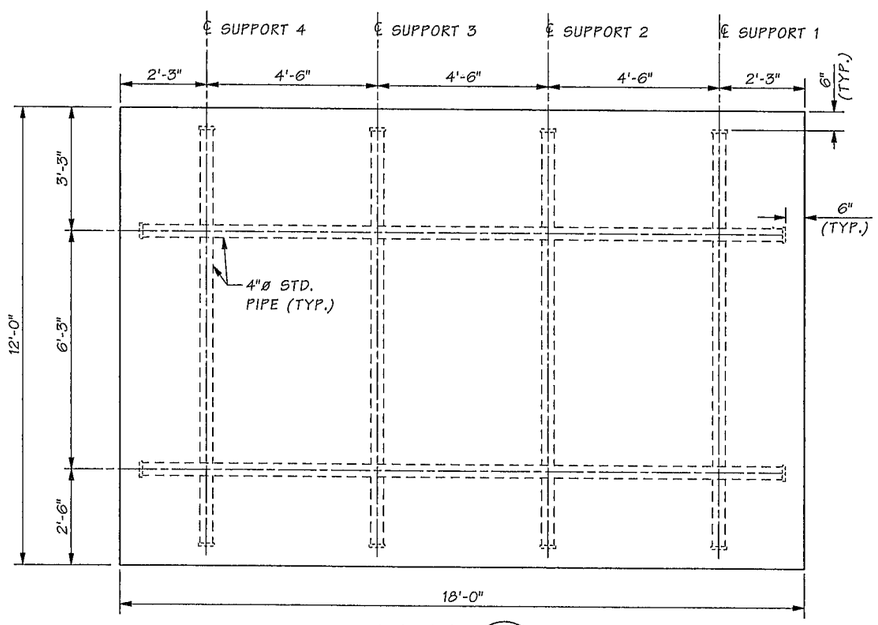

VIEW Y

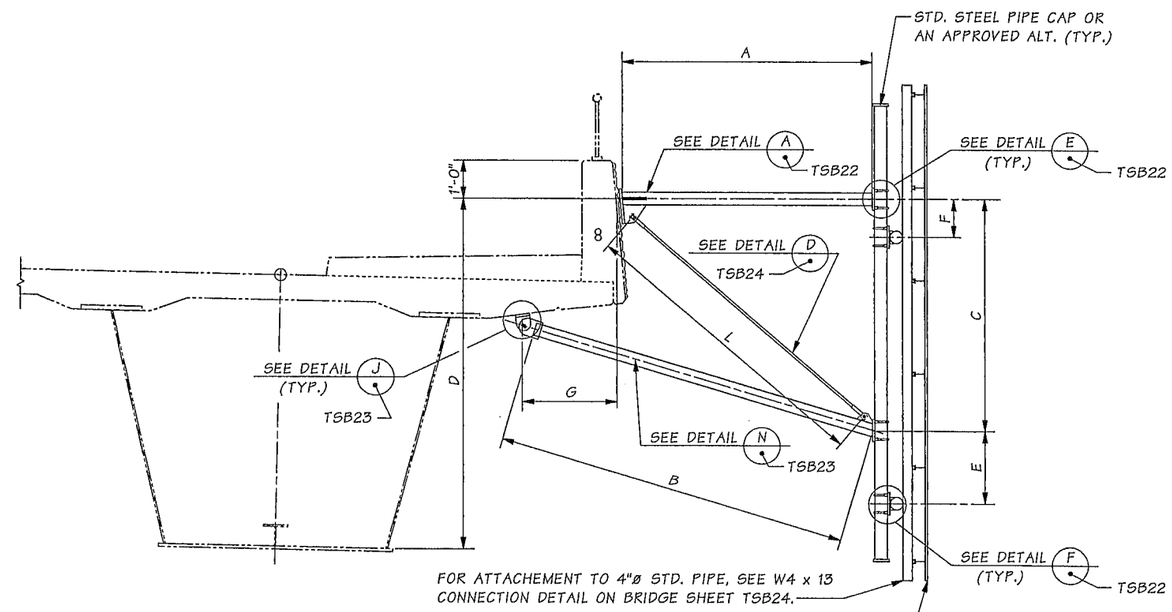

VIEW X

SHOWN AT SUPPORT 2
SUPPORT 1, 3, & 4 SIMILAR

Bridge Design Engr.	Khaleghi, B		M:\SIGNS & MISC\XL3497 M St to Portland Temp Sign Struc\window files\022-TEMP SIGN BRKT D GEO.wnd								
Supervisor	Zeldenrust, RP										
Designed By	Rosa, M	08/13									
Checked By	Leland, A	10/13									
Detailed By	Davis, E	08/13									
Bridge Projects Engr.											
Prelim. Plan By											
Architect/Specialist			DATE	REVISION	BY	APP'D					

REGION NO.	STATE	FED. AID PROJ. NO.	SHEET NO.	TOTAL SHEETS
10	WASH.			
JOB NUMBER 12C501				

MICHAEL A. ROSA, STATE OF WASHINGTON, 43707, REGISTERED PROFESSIONAL ENGINEER 3/19/14

BRIDGE AND STRUCTURES OFFICE

RICHARD P. ZELDENRUST, STATE OF WASHINGTON, REGISTERED PROFESSIONAL ENGINEER 3/20/14

Washington State Department of Transportation

I-5
M ST TO PORTLAND AVE - HOV

TEMPORARY SIGN STRUCTURE

TEMPORARY BRIDGE MOUNTED SIGN BRACKET 'D' GEOMETRY

BRIDGE SHEET NO. TSB21

SHEET 1288 OF 1763 SHEETS

SR ___ FILE NO. ___ SHEET TSB21

Wed Mar 19 07:46:36 2014

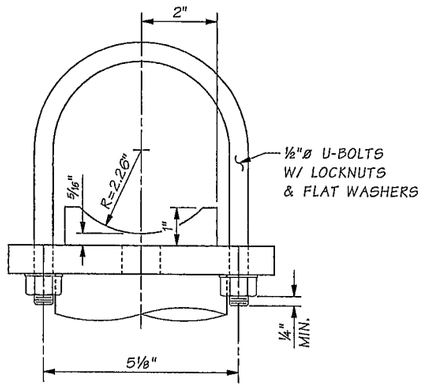

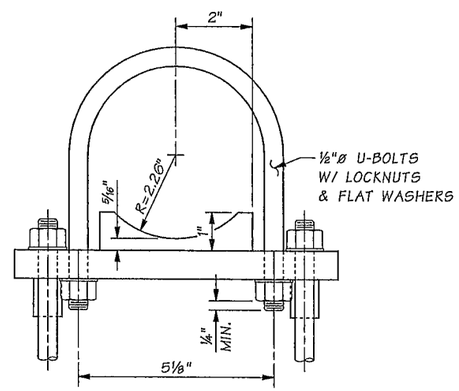

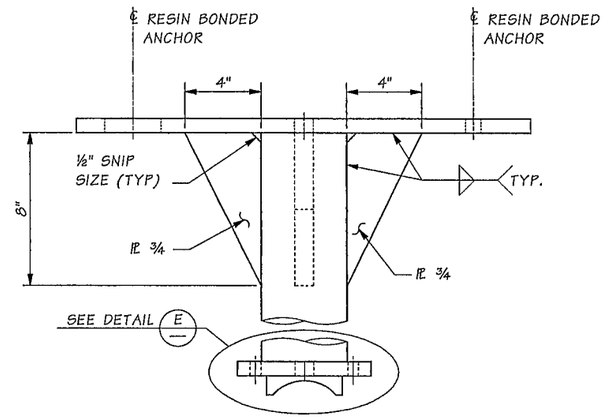

α EXISTING FRACTURED FIN FINISH TO REMAIN.

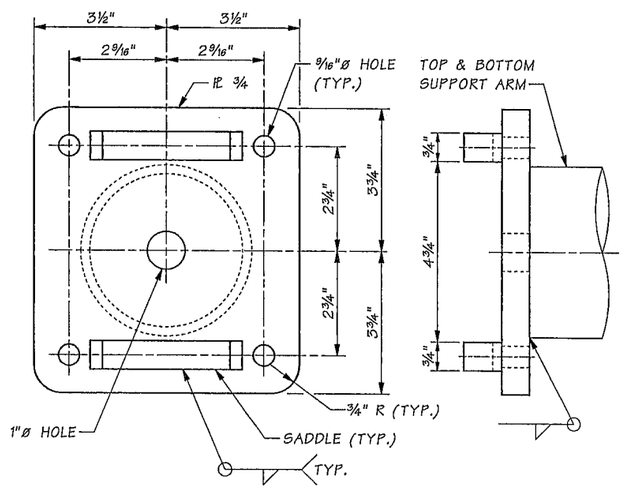

DETAIL E

TSB20, TSB21 & TSB23

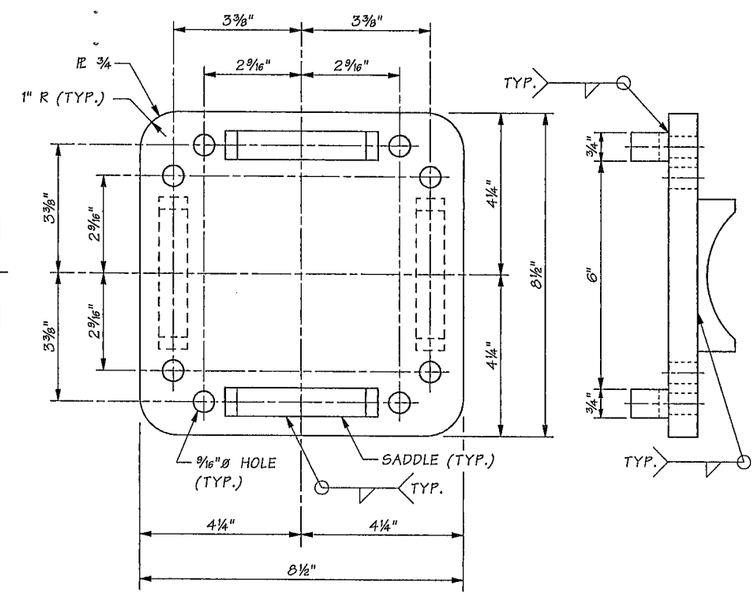

DETAIL F

TSB20 & TSB21

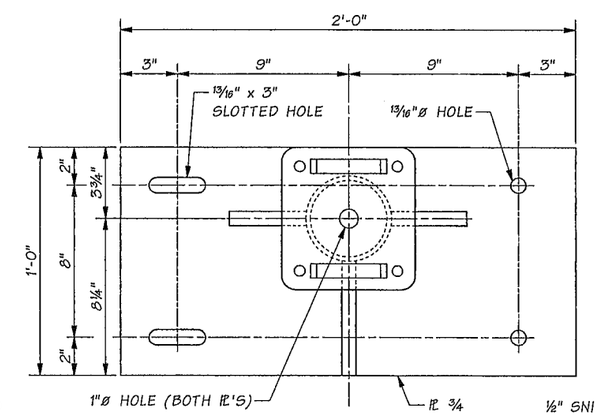

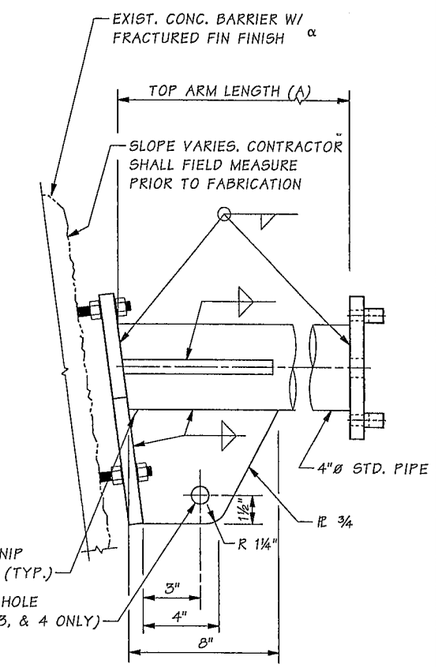

DETAIL A

TSB20 & TSB21

Bridge Design Engr.	Khaleghi, B		M:\SIGNS & MISC\XL3497 M St to Portland Temp Sign Struc\window files\023-TEMP SIGN BRKT DET 1.wnd								
Supervisor	Zeldenrust, RP										
Designed By	Rosa, M	08/13									
Checked By	Leland, A	10/13									
Detailed By	Davis, E	08/13									
Bridge Projects Engr.											
Prelim. Plan By											
Architect/Specialist			DATE	REVISION	BY	APP'D					

Wed Mar 19 07:46:38 2014

REGION NO.	STATE	FED. AID PROJ. NO.	SHEET NO.	TOTAL SHEETS
10	WASH.			
JOB NUMBER 12C501				

MICHAEL A. ROSA — STATE OF WASHINGTON — REGISTERED PROFESSIONAL ENGINEER — 3/19/14

BRIDGE AND STRUCTURES OFFICE

RICHARD P. ZELDENRUST — STATE OF WASHINGTON — REGISTERED PROFESSIONAL ENGINEER — 3/20/14

Washington State Department of Transportation

I-5
M ST TO PORTLAND AVE - HOV

TEMPORARY SIGN STRUCTURE

TEMPORARY SIGN BRACKET DETAILS 1 OF 3

BRIDGE SHEET NO. TSB22

SHEET 1289 OF 1763 SHEETS

SR ____ FILE NO. ____ SHEET TSB22

SIGN BRACKET NO.	Z° (CONTRACTOR TO VERIFY)			
	SUPPORT #1	SUPPORT #2	SUPPORT #3	SUPPORT #4
'A', 'B', & 'C'	61°	72°	N/A	N/A
'D'	60°	70°	75°	78°

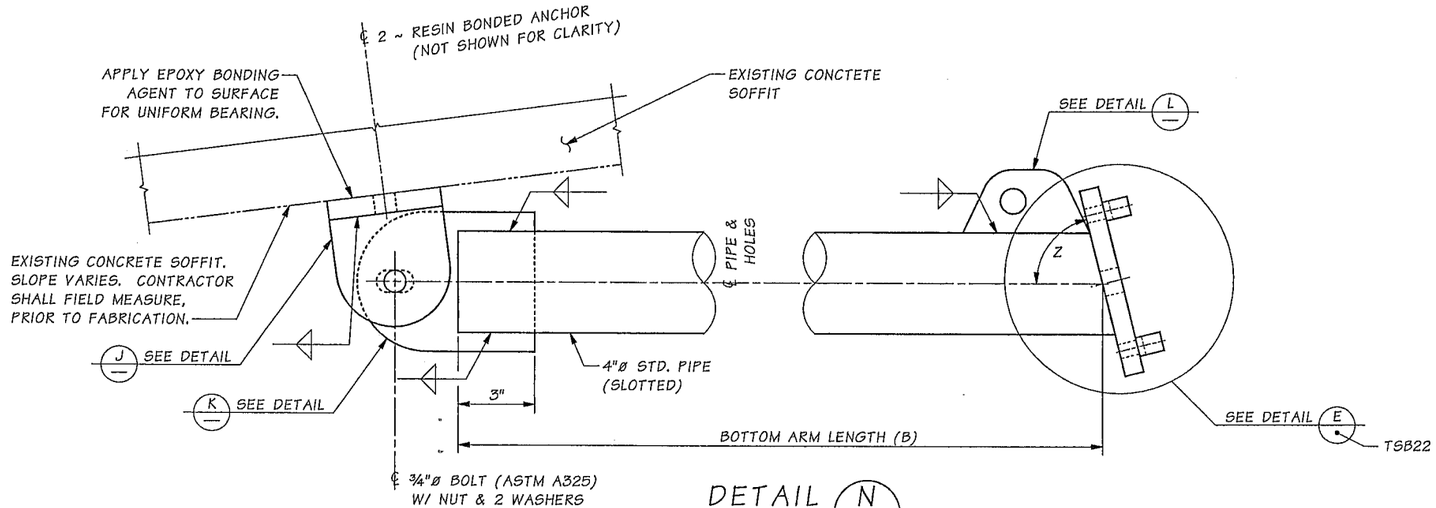

DETAIL N

TSB20 & TSB21

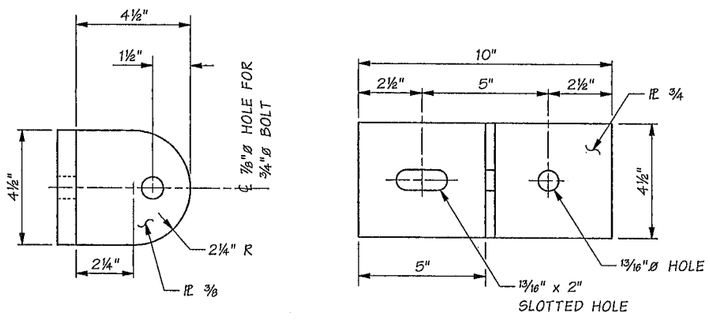

DETAIL J

TSB20 & TSB21

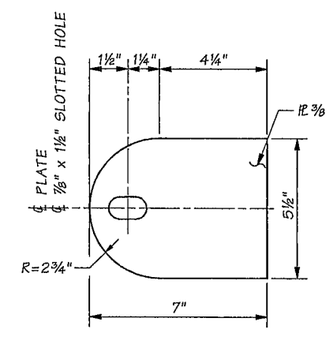

DETAIL K

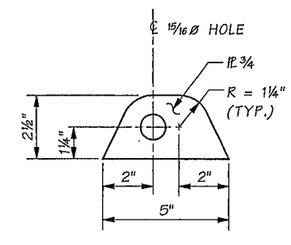

DETAIL L

FOR SUPPORTS 2, 3, & 4 ONLY

Bridge Design Engr.	Khaleghi, B		
Supervisor	Zeldenrust, RP		
Designed By	Rosa, M	08/13	
Checked By	Leland, A	10/13	
Detailed By	Davis, E	08/13	
Bridge Projects Engr.			
Prelim. Plan By			
Architect/Specialist			

M:\SIGNS & MISC\XL3497 M St to Portland Temp Sign Struc\window files\024-TEMP SIGN BRKT DET 2.wnd

DATE	REVISION	BY	APP'D

REGION NO.	STATE	FED. AID PROJ. NO.	SHEET NO.	TOTAL SHEETS
10	WASH.			
JOB NUMBER 12C501				

MICHAEL A. ROSA — STATE OF WASHINGTON — 43701 — REGISTERED PROFESSIONAL ENGINEER — 3/17/14

BRIDGE AND STRUCTURES OFFICE

RICHARD P. ZELDENRUST — STATE OF WASHINGTON — 20470 — PROFESSIONAL ENGINEER — 3/20/14

Washington State Department of Transportation

I-5
M ST TO PORTLAND AVE - HOV

TEMPORARY SIGN STRUCTURE

TEMPORARY SIGN BRACKET DETAILS 2 OF 3

BRIDGE SHEET NO. TSB23

SHEET 1290 OF 1763 SHEETS

SR ____ FILE NO. ____ SHEET TSB23

Wed Mar 19 07:46:40 2014

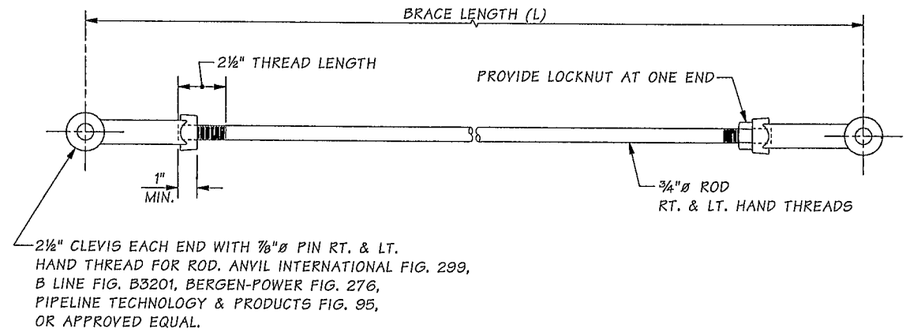

DETAIL D

FOR SUPPORTS 2, 3, & 4 ONLY

TSB20 & TSB21

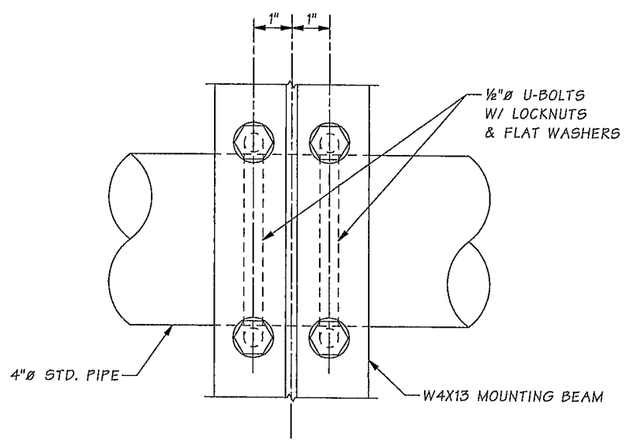

W4X13 CONNECTION DETAIL

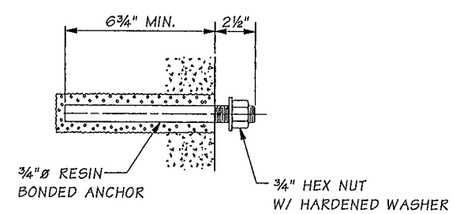

RESIN BONDED ANCHOR DETAIL - LOWER BRACKET

INSTALL RESIN BONDED ANCHOR NORMAL TO CONCRETE FACE.

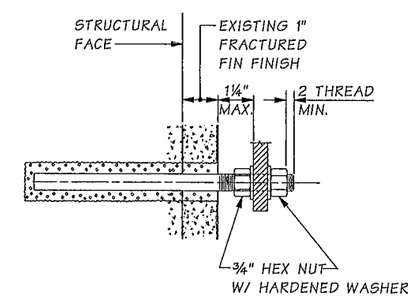

ANCHOR BOLT DETAIL UPPER BRACKET W/ ARCHITECTURAL FINISH

FOR DETAILS NOT SHOWN, SEE RESIN BONDED ANCHOR DETAIL FOR LOWER BRACKET.

SR ____ FILE NO. ____ SHEET TSB24

Bridge Design Engr.	Khaleghi, B	
Supervisor	Zeldenrust, RP	
Designed By	Rosa, M	08/13
Checked By	Leland, A	10/13
Detailed By	Davis, E	08/13
Bridge Projects Engr.		
Prelim. Plan By		
Architect/Specialist		

M:\SIGNS & MISC\XL3497 M St to Portland Temp Sign Struc\window files\025-TEMP SIGN BRKT DET 3.wnd

DATE	REVISION	BY	APP'D

REGION NO.	STATE	FED. AID PROJ. NO.	SHEET NO.	TOTAL SHEETS
10	WASH.			
JOB NUMBER 12C501				

Wed Mar 19 07:46:41 2014

MICHAEL A. ROSA — STATE OF WASHINGTON — 45707 — REGISTERED PROFESSIONAL ENGINEER — 3/19/14

BRIDGE AND STRUCTURES OFFICE

RICHARD P. ZELDENRUST — STATE OF WASHINGTON — 25179 — REGISTERED PROFESSIONAL ENGINEER — 3/20/14

Washington State Department of Transportation

I-5
M ST TO PORTLAND AVE - HOV

TEMPORARY SIGN STRUCTURE

TEMPORARY SIGN BRACKET DETAILS 3 OF 3

BRIDGE SHEET NO. TSB24

SHEET 1291 OF 1763 SHEETS

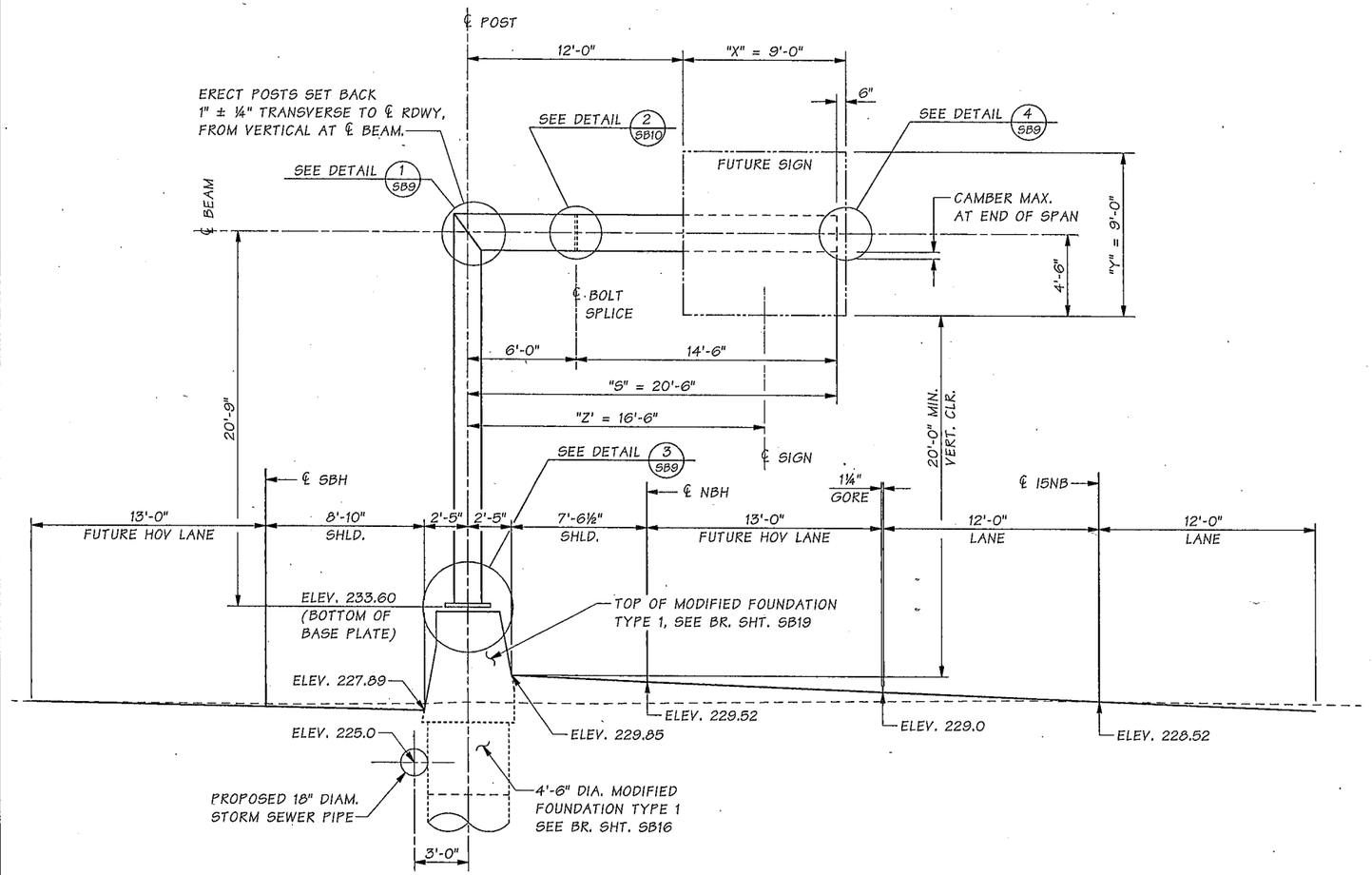

ELEVATION

CANTILEVER SIGN STRUCTURE NO. 1 - I5NB STA. 133+74
(SIGN NOT PLACED IN THIS CONTRACT)
THE MAXIMUM SIGN AREA ON THIS
STRUCTURE SHALL BE 252 SQ. FT.
AND Σ(XYZ) SHALL BE LESS THAN
OR EQUAL TO 4410 CU. FT.

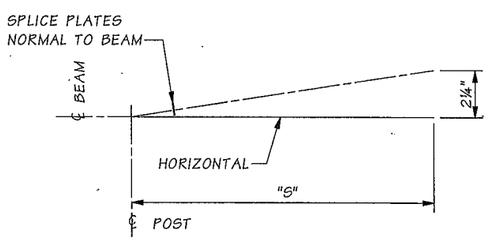

CAMBER DIAGRAM

LEGEND

B / SB5 — IDENTIFIES SECTION, VIEW OR DETAIL
TAKEN OR SHOWN ON BRIDGE SHEET SB5

B / — TAKEN OR SHOWN ON THE SAME SHEET

GENERAL NOTES

1. ALL MATERIAL AND WORKMANSHIP SHALL BE IN ACCORDANCE WITH THE REQUIREMENTS OF THE WASHINGTON STATE DEPARTMENT OF TRANSPORTATION STANDARD SPECIFICATIONS FOR ROAD, BRIDGE, AND MUNICIPAL CONSTRUCTION DATED 2014 AND AMENDMENTS.

2. THE SIGN STRUCTURES DESIGN AND ANALYSIS HAS BEEN DONE IN ACCORDANCE WITH AASHTO STANDARD SPECIFICATIONS FOR STRUCTURAL SUPPORTS FOR HIGHWAY SIGNS, LUMINAIRES AND TRAFFIC SIGNALS - FOURTH EDITION - DATED 2009 AND INTERIMS, USING BASIC WIND SPEED OF 90 MPH AND 50 YEARS OF DESIGN LIFE. FATIGUE DESIGN OF THE STRUCTURE CONFORMS TO FATIGUE CATEGORY 1 OF THE SPECIFIED AASHTO STANDARD SPECIFICATIONS.

3. ALL BUTT JOINT WELDS SHALL BE FULL PENETRATION GROOVE WELDS WITH BACK-UP PLATES OF ¼" MIN. THICKNESS.

4. THE BACK-UP PLATES FOR ALL FULL PENETRATION WELDS SHALL BE WELDED CONTINUOUSLY TO THE JOINED PIECES. THIS CAN BE DONE BY EITHER A CONTINUOUS FILLET WELD ON THE BACK SIDE OF THE PIECE, OR BY A CONTINUOUS WELD IN THE ROOT OF THE FULL PENETRATION WELD, UNLESS OTHERWISE NOTED.

5. ALL BOLTS, RODS, AND RELATED HARDWARE SHALL BE GALVANIZED AFTER FABRICATION PER AASHTO M 232.

6. ALL STEEL SURFACES SHALL BE GALVANIZED AFTER FABRICATION IN ACCORDANCE WITH AASHTO M 111. ALL EXTERIOR STEEL SURFACES SHALL BE PAINTED IN ACCORDANCE WITH THE SPECIAL PROVISIONS. THE MAINTENANCE PLATFORM AND ASSOCIATED HAND RAILINGS SHALL NOT BE PAINTED. FOR MAINTENANCE PLATFORM ATTACHMENT BRACKET DETAILS FOR MONOTUBES SEE STANDARD PLAN G-95.20. PAINT ENTIRE ATTACHMENT BRACKET TO MATCH EXISTING STRUCTURE EXCEPT FOR MOUNTING BEAM. MAINTENANCE WALKWAY DETAILS SHALL BE DETERMINED FROM THE CONTRACT PLANS OR THE STANDARD PLANS.

7. SIGN PANELS AS SHOWN IN THE CONTRACT PLANS SHALL BE INSTALLED WITH THE SIGN STRUCTURE OR IMMEDIATELY AFTER THE SIGN STRUCTURE IS ERECTED.

8. FOR CANTILEVERS, FABRICATE BEAM TO PROVIDE STRAIGHT CAMBER. SEE CAMBER DIAGRAM. FOR SIGN BRIDGES, FABRICATE BEAM TO PROVIDE PARABOLIC CAMBER. SEE CAMBER DIAGRAM. FOR BOTH DO NOT SHIM AT BOLTED SPLICES.

9. FABRICATE POST STRAIGHT.

10. MATERIALS SPECIFICATIONS:

ALL STRUCTURAL STEEL EXCEPT AS OTHERWISE NOTED	ASTM A 572 GR. 50 OR ASTM A 588
ANCHOR RODS	ASTM F 1554 GR. 105
HANDHOLE COVER SCREWS	ASTM F 593 GR. 1
SPLICE BOLTS	AASHTO M 164
SIGN BRACKET RODS	ASTM A 307
MOUNTING BEAM BOLTS	AASHTO M 164
COVER PLATES	ASTM A 36

11. BOTTOM OF BASE PLATE ELEVATIONS AND POST HEIGHTS SHOWN ARE APPROXIMATE. THE CONTRACTOR SHALL FIELD MEASURE ANCHOR ROD LOCATIONS, ELEVATIONS, CLEARANCES AND ALL STEEL STRUCTURE DIMENSIONS, AND SUBMIT TO ENGINEER FOR APPROVAL PRIOR TO COMPLETION OF FABRICATION. AS AN OPTION, CAP OF ONE FOUNDATION MAY BE PLACED WHILE COMPLETED SIGN BRIDGE IS TEMPORARILY SUPPORTED IN PLACE.

12. POSTS, BASE PLATES, BEAMS AND SPLICE PLATES ARE MAIN LOAD CARRYING TENSILE MEMBERS OR TENSION COMPONENTS OF FLEXURAL MEMBERS AND SHALL MEET THE LONGITUDINAL CHARPY V-NOTCH TEST AS DESCRIBED IN SECTION 6-03.2 FOR AASHTO M 270 MATERIAL. NON-DESTRUCTIVE TEST ACCEPTANCE CRITERIA TO CONFORM TO TENSILE MEMBERS WITH CYCLIC LOAD.

13. SEE OTHER PLANS FOR CONDUIT PENETRATION AND HAND HOLE LOCATIONS. REFER TO ELECTRICAL PLANS FOR INTERNAL ROUTING OF CONDUCTORS. CONDUIT CONDUCTORS SHALL NOT BE ATTACHED TO THE OUTSIDE OF THE SIGN STRUCTURE. ISOLATION SWITCH SHALL BE LOCATED NEAR THE SHOULDER OF ROADWAY ON THE OPPOSITE SIDE OF THE BEAM AS THE SIGNS. SEE NEMA 3R TERMINAL CABINET DETAIL ON BRIDGE SHEET SB12.

14. THE MAXIMUM SIGN AREA ON THE STRUCTURE SHALL BE AS NOTED.

15. FOR SIGN AND LIGHT ATTACHMENT BRACKET DETAILS FOR MONOTUBES SEE STANDARD PLAN G-90.20. PAINT ENTIRE ATTACHMENT BRACKET TO MATCH EXISTING STRUCTURE EXCEPT FOR MOUNTING BEAM. SIGN, LIGHT, BEAM LENGTHS, SIZE AND SPACING SHALL BE DETERMINED FROM THE CONTRACT PLANS OR THE STANDARD PLANS. VARIABLE MESSAGE SIGNS SHALL HAVE MOUNTING BEAMS @ 3'-0" MAXIMUM. NO VMS ALLOWED ON CANTILEVERS.

16. THE TOTAL BEAM LENGTH "S" FOR CANTILEVERS SHALL NOT EXCEED 30'-0".

17. ALL WELDING SHALL BE DONE TO MINIMIZE DISTORTION. PERMISSIBLE MONOTUBE DIMENSION VARIATIONS FOR OUTSIDE DIMENSIONS, WALL THICKNESS, LENGTH, STRAIGHTNESS, (PARABOLICALLY-CAMBERED SIGN BRIDGE BEAMS EXCLUDED) SQUARENESS OF SIDES AND TWIST SHALL BE IN ACCORDANCE WITH SECTION 11 OF ASTM A500.

Bridge Design Engr.	Khaleghi, B	
Supervisor	Zeldenrust, RP	
Designed By	Rochon, MJ	01/13
Checked By	Gallagher, P	01/14
Detailed By	Hanson, CE	01/13
Bridge Projects Engr.		
Prelim. Plan By		
Architect/Specialist		

M:\SIGNS & MISC\XL3497 M St to Portland Sign Br\window files\Cantilever No 1 Layout_ADD.WND

DATE	REVISION	BY	APP'D
04/25/14	AD1 - EDITED NOTE	MJR	RPZ

REGION NO.	STATE	FED. AID PROJ. NO.	SHEET NO.	TOTAL SHEETS
10	WASH.			

JOB NUMBER 12C501

BRIDGE AND STRUCTURES OFFICE

ALLAN KHALEGHI — STATE OF WASHINGTON — 37195 — PROFESSIONAL ENGINEER — 4/17/14

Washington State Department of Transportation

I-5
M ST TO PORTLAND AVE - HOV

SIGN STRUCTURES

CANTILEVER SIGN STRUCTURE NO. 1
LAYOUT

BRIDGE SHEET NO. SB1

SHEET 1292 OF 1763 SHEETS

SR 5 FILE NO. 3066 SHEET SB1

Thu Apr 17 14:09:28 2014

NOTES:

1. TEMPORARY ROADWAY SECTION SHOWN IS BASED ON FINAL ROADWAY SECTION. MINIMUM VERTICAL CLEARANCE SHALL NOT BE LESS THAN 16'-6" DURING THE TEMPORARY CONFIGURATION. FINAL MINIMUM VERTICAL CLEARANCE SHALL BE AS SHOWN ON BR. SHT. SB4.

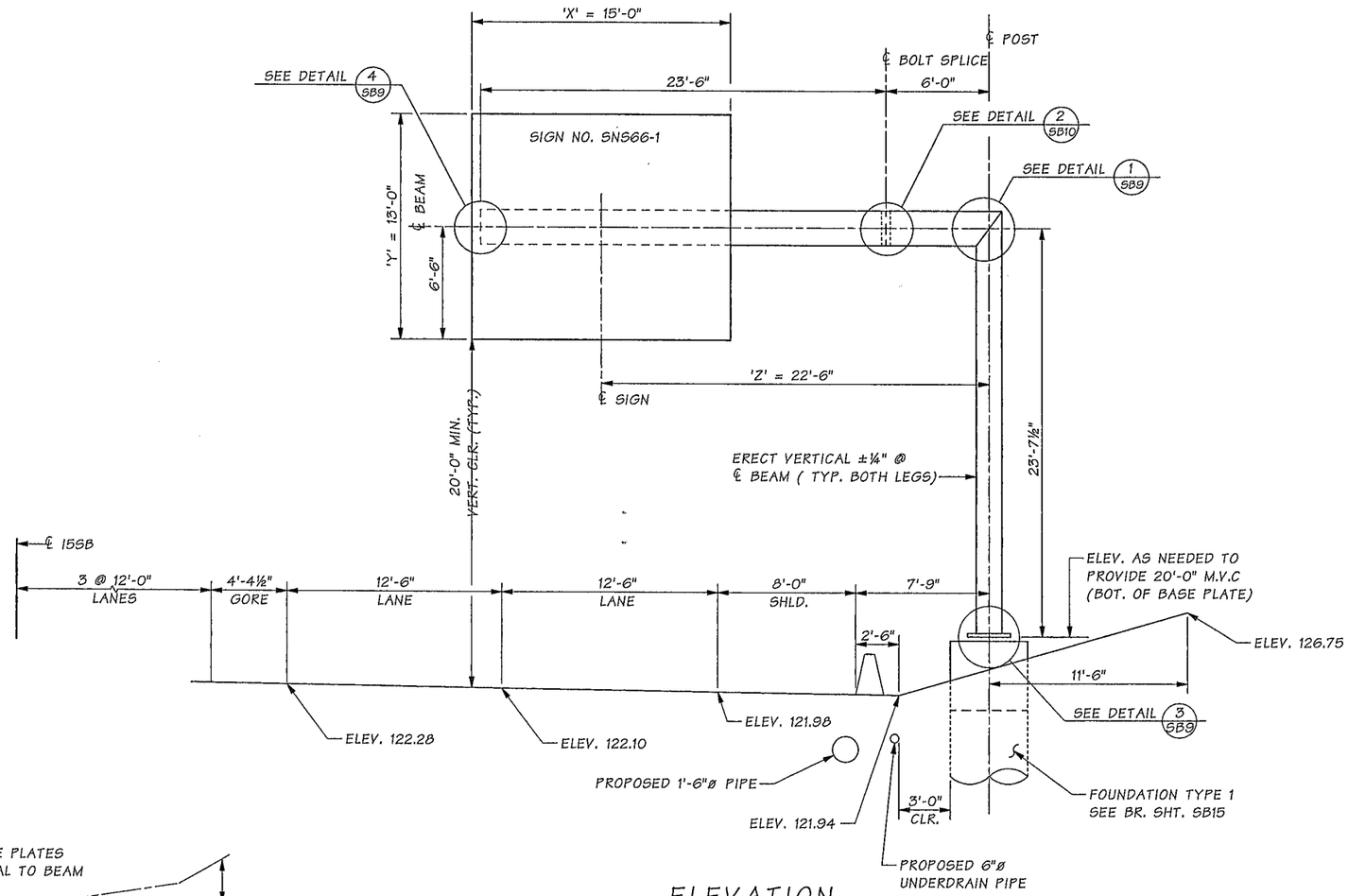

ELEVATION

CANTILEVER NO. 2 - 15SB STA. 566+94 LT.
THE MAXIMUM SIGN AREA ON THIS STRUCTURE SHALL BE 252 SQ. FT. AND Σ(XYZ) SHALL BE LESS THAN OR EQUAL TO 4410 CU. FT.
LOOKING BACK ON STATION.

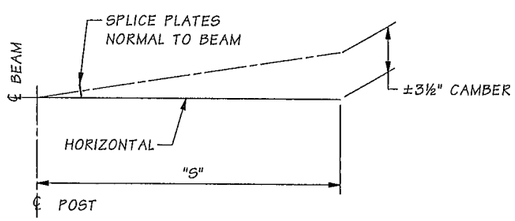

BEAM CAMBER DIAGRAM

TO BE DETERMINED FROM SURPLUS

SR 5 FILE NO. 3066 SHEET 582

Bridge Design Engr.	Khaleghi, B		M:\SIGNS & MISC\XL3497 M St to Portland Sign Br\window files\Cantilever No 2 Layout.wnd
Supervisor	Zeldenrust, RP		
Designed By	Rochon, MJ	01/13	
Checked By	Gallagher, P	01/14	
Detailed By	Hanson, CE	01/13	
Bridge Projects Engr.			
Prelim. Plan By			
Architect/Specialist			

DATE	REVISION	BY	APP'D

REGION NO.	STATE	FED. AID PROJ. NO.	SHEET NO.	TOTAL SHEETS
10	WASH.			
JOB NUMBER 12C501				

BRIDGE AND STRUCTURES OFFICE

BIJAN KHALEGHI — STATE OF WASHINGTON — 27695 — PROFESSIONAL ENGINEER — 3/19/14

Washington State Department of Transportation

I-5
M ST TO PORTLAND AVE - HOV

SIGN STRUCTURES

CANTILEVER SIGN STRUCTURE NO. 2 LAYOUT

BRIDGE SHEET NO. SB2

SHEET 1293 OF 1763 SHEETS

Wed Mar 19 07:49:11 2014

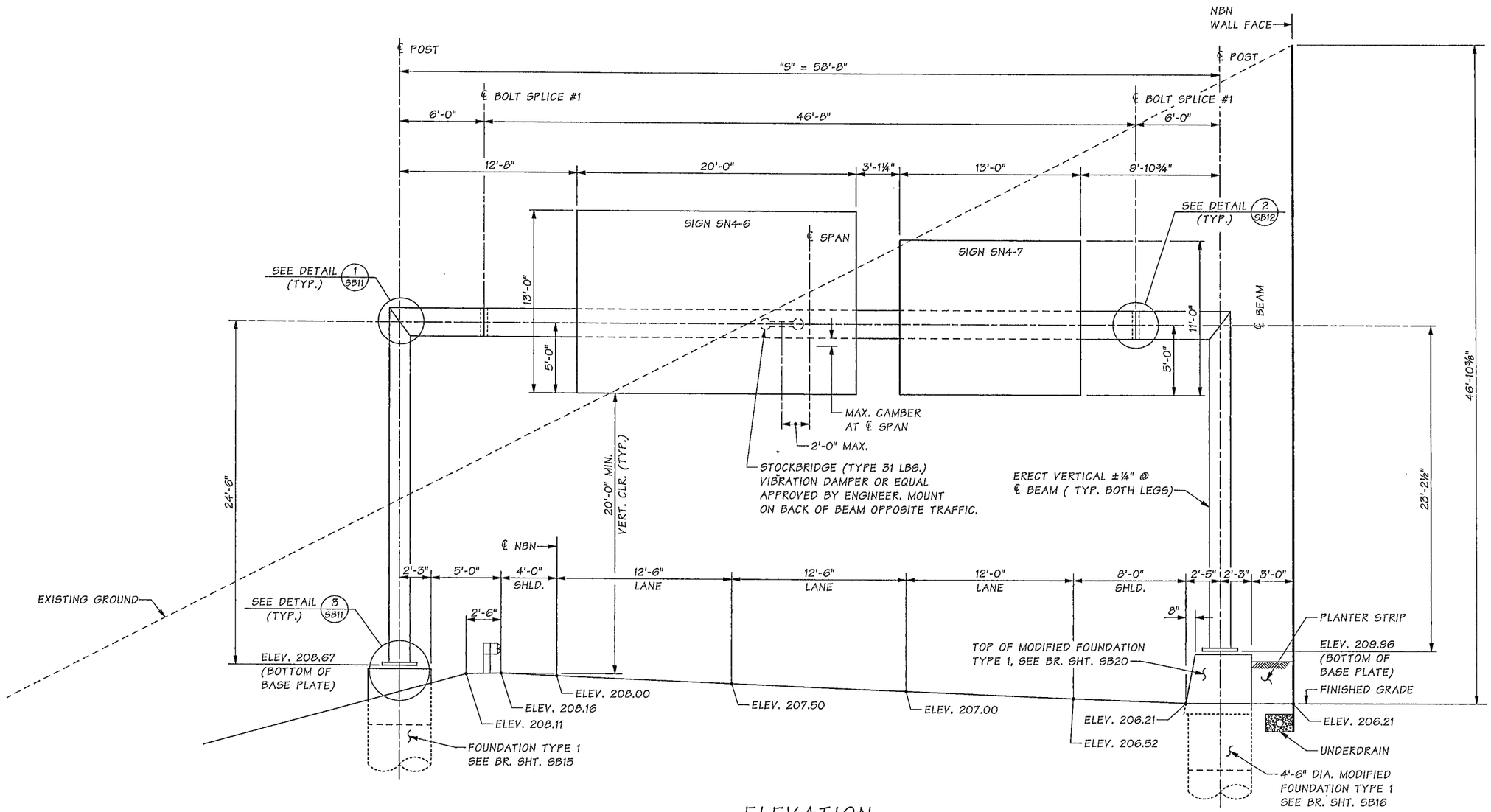

ELEVATION

SIGN BRIDGE NO. 1 - NBN STA. 31+60.74
THE MAXIMUM SIGN AREA ON THIS STRUCTURE SHALL BE 750 SQ. FT.

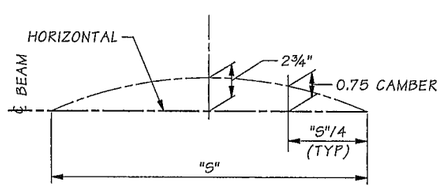

BEAM CAMBER DIAGRAM

Bridge Design Engr.	Khaleghi, B		M:\SIGNS & MISC\XL3497 M St to Portland Sign Br\window files\Sign Br No 1 Layout.wnd
Supervisor	Zeldenrust, RP		
Designed By	Rochon, MJ	01/13	
Checked By	Gallagher, P	01/14	
Detailed By	Hanson, CE	01/13	
Bridge Projects Engr.			
Prelim. Plan By			
Architect/Specialist			

DATE	REVISION	BY	APP'D

REGION NO.	STATE	FED. AID PROJ. NO.	SHEET NO.	TOTAL SHEETS
10	WASH.			
JOB NUMBER 12C501				

BRIDGE AND STRUCTURES OFFICE

BIJAN KHALEGHI — STATE OF WASHINGTON — 27695 — STRUCTURAL ENGINEER — PROFESSIONAL ENGINEER — 3/19/14

Washington State Department of Transportation

I-5
M ST TO PORTLAND AVE - HOV

SIGN STRUCTURES

SIGN BRIDGE NO. 1
LAYOUT

BRIDGE SHEET NO. SB3

SHEET 1294 OF 1763 SHEETS

SR 5 FILE NO. 3066 SHEET SB3

Wed Mar 19 07:49:12 2014

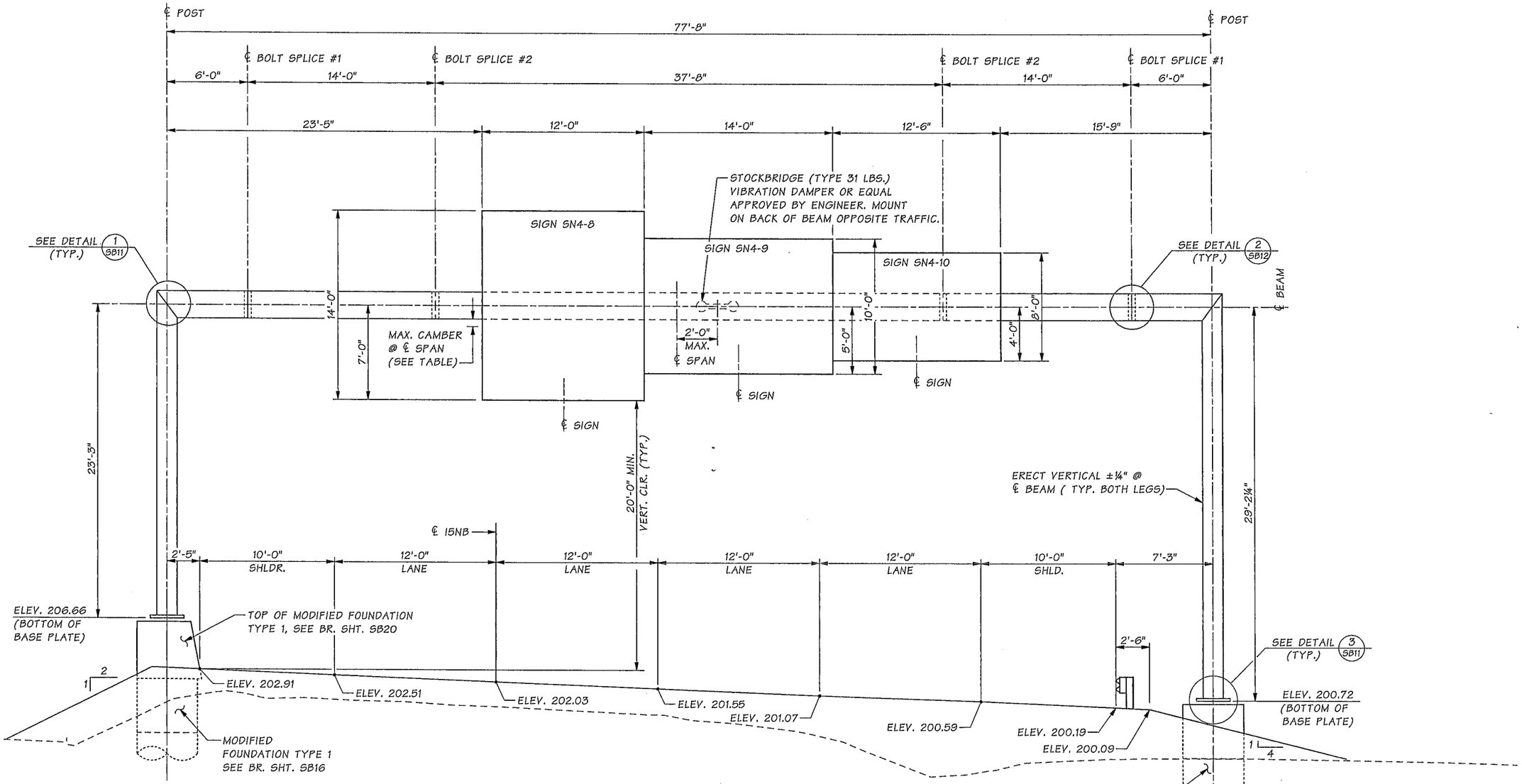

ELEVATION

SIGN BRIDGE NO. 2 - I5NB STA. 143+00
THE MAXIMUM SIGN AREA ON THIS STRUCTURE SHALL BE 750 SQ. FT.

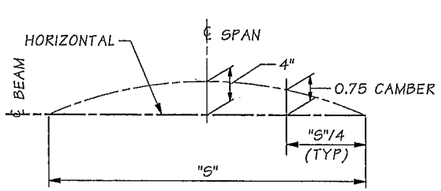

BEAM CAMBER DIAGRAM

SR 5 FILE NO. 3066 SHEET SB4

Bridge Design Engr.	Khaleghi, B	
Supervisor	Zeldenrust, RP	
Designed By	Rochon, MJ	01/13
Checked By	Gallagher, P	01/14
Detailed By	Hanson, CE	01/13
Bridge Projects Engr.		
Prelim. Plan By		
Architect/Specialist		

M:\SIGNS & MISC\XL3497 M St to Portland Sign Br\window files\Sign Br No 2 Layout.wnd

DATE	REVISION	BY	APP'D

REGION NO.	STATE	FED. AID PROJ. NO.	SHEET NO.	TOTAL SHEETS
10	WASH.			

JOB NUMBER 12C501

BRIDGE AND STRUCTURES OFFICE

BIJAN KHALEGHI STATE OF WASHINGTON 27695 PROFESSIONAL ENGINEER 3/19/14

Washington State Department of Transportation

I-5
M ST TO PORTLAND AVE - HOV

SIGN STRUCTURES

SIGN BRIDGE NO. 2 LAYOUT

BRIDGE SHEET NO. SB4

SHEET 1295 OF 1763 SHEETS

Wed Mar 19 07:49:14 2014

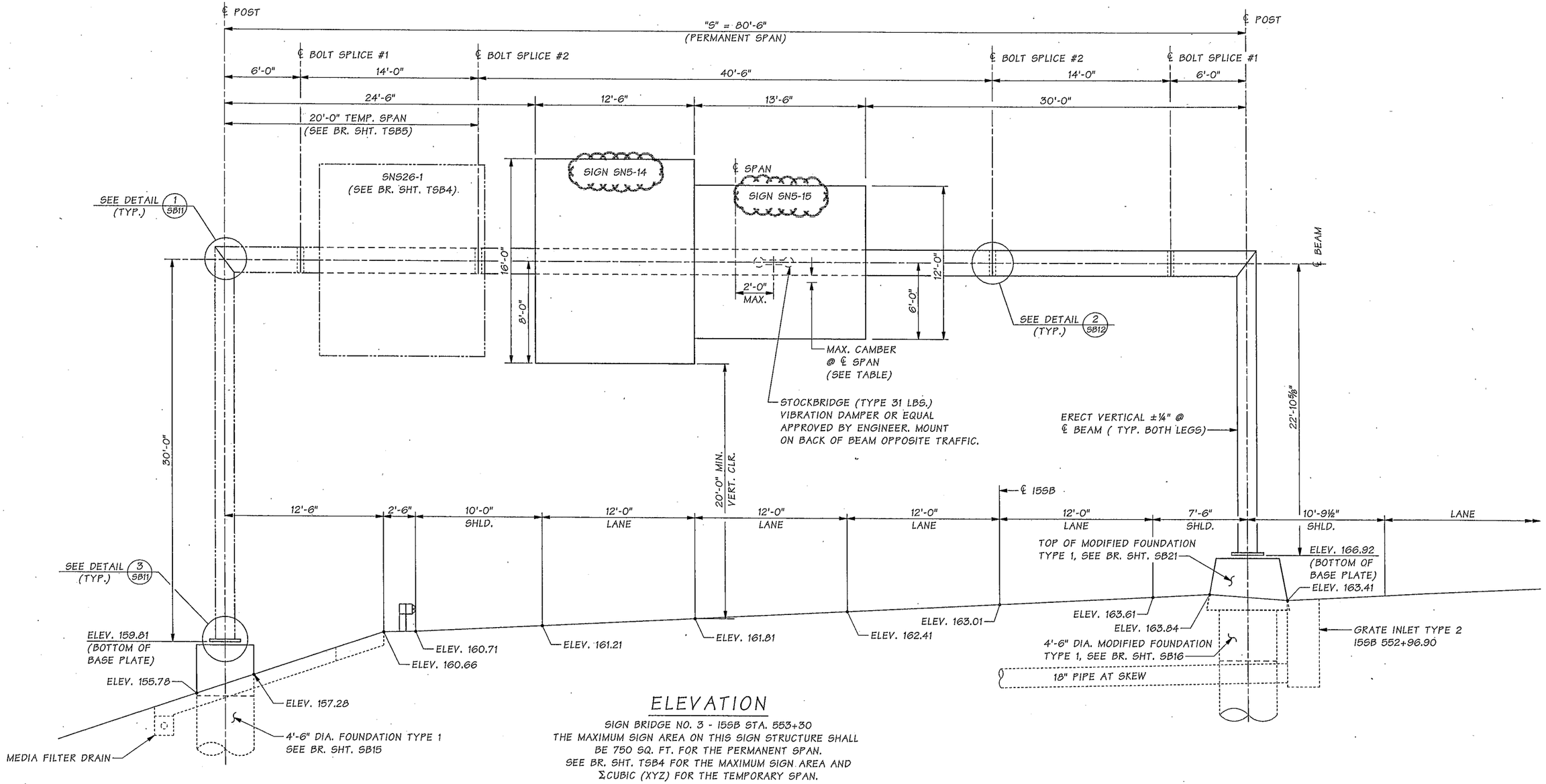

ELEVATION

SIGN BRIDGE NO. 3 - I5SB STA. 553+30
THE MAXIMUM SIGN AREA ON THIS SIGN STRUCTURE SHALL BE 750 SQ. FT. FOR THE PERMANENT SPAN.
SEE BR. SHT. TSB4 FOR THE MAXIMUM SIGN AREA AND ΣCUBIC (XYZ) FOR THE TEMPORARY SPAN.

NOTES:

1. FOR STAGED CONSTRUCTION, ONLY CONSTRUCT LEFT FOUNDATION AND INSTALL LEFT POST WITH FIRST 14'-0" BEAM SEGMENT.
2. CARE SHALL BE TAKEN TO PROTECT SURFACE OF SPLICE #2 OF 14'-0" BEAM SEGMENT DURING TEMPORARY CONSTRUCTION.

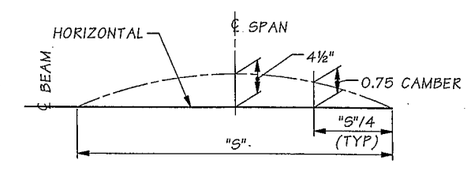

BEAM CAMBER DIAGRAM

Bridge Design Engr.	Khaleghi, B	
Supervisor	Zeldenrust, RP	
Designed By	Rochon, MJ	01/13
Checked By	Gallagher, P	01/14
Detailed By	Hanson, CE	01/13
Bridge Projects Engr.		
Prelim. Plan By		
Architect/Specialist		

M:\SIGNS & MISC\XL3497 M St to Portland Sign Br\window files\Sign Br No 3 Layout_ADD.WND

DATE	REVISION	BY	APP'D
04/25/14	AD1 - CHANGED SIGN NUMBER	MJR	RPZ

REGION NO.	STATE	FED. AID PROJ. NO.	SHEET NO.	TOTAL SHEETS
10	WASH.			

JOB NUMBER 12C501

BRIDGE AND STRUCTURES OFFICE

4/17/14

Washington State Department of Transportation

I-5
M ST TO PORTLAND AVE - HOV

SIGN STRUCTURES

SIGN BRIDGE NO. 3
LAYOUT

BRIDGE SHEET NO. SB5

SHEET 1296 OF 1763 SHEETS

SR 5 FILE NO. 3066 SHEET SB5

Thu Apr 17 14:09:50 2014

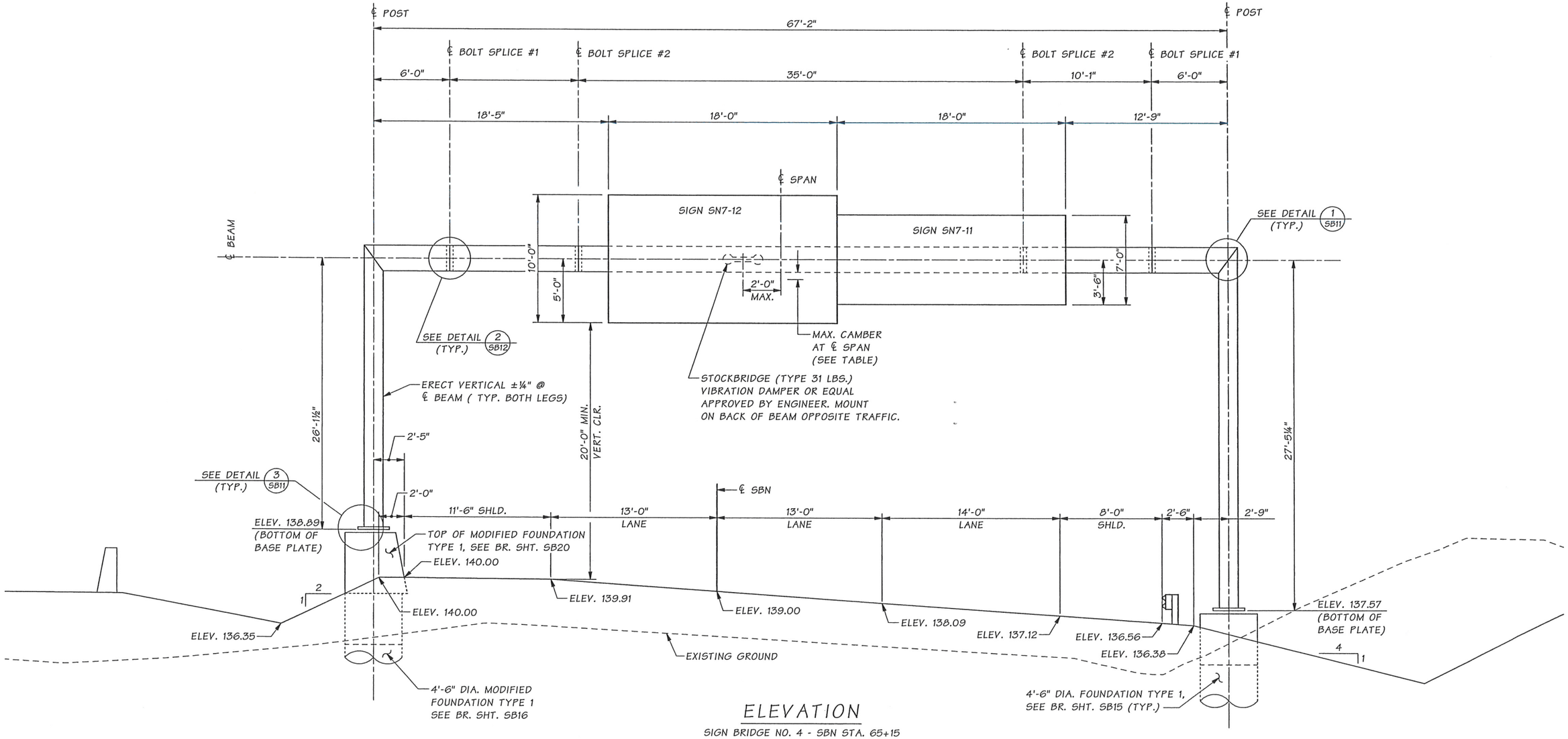

ELEVATION

SIGN BRIDGE NO. 4 - SBN STA. 65+15
THE MAXIMUM SIGN AREA ON THIS STRUCTURE SHALL BE 750 SQ. FT.
(LOOKING BACK ON STATIONING)

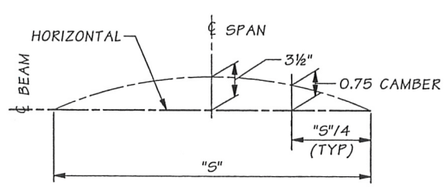

BEAM CAMBER DIAGRAM

Bridge Design Engr.	Khaleghi, B		
Supervisor	Zeldenrust, RP		
Designed By	Rochon, MJ	01/13	
Checked By	Gallagher, P	01/14	
Detailed By	Hanson, CE	01/13	
Bridge Projects Engr.			
Prelim. Plan By			
Architect/Specialist			

M:\SIGNS & MISC\XL3497 M St to Portland Sign Br\window files\Sign Br No 4 Layout.wnd

DATE	REVISION	BY	APP'D

REGION NO.	STATE	FED. AID PROJ. NO.	SHEET NO.	TOTAL SHEETS
10	WASH.			
JOB NUMBER 12C501				

Wed Mar 19 07:49:17 2014

BRIDGE AND STRUCTURES OFFICE

BRIAN KHALEGHI — STATE OF WASHINGTON — 27806 — STRUCTURAL ENGINEER — PROFESSIONAL ENGINEER — 3/19/14

Washington State Department of Transportation

I-5
M ST TO PORTLAND AVE - HOV

SIGN STRUCTURES

SIGN BRIDGE NO. 4
LAYOUT

BRIDGE SHEET NO. SB6

SHEET 1297 OF 1763 SHEETS

SR 5 FILE NO. 3066 SHEET SB6

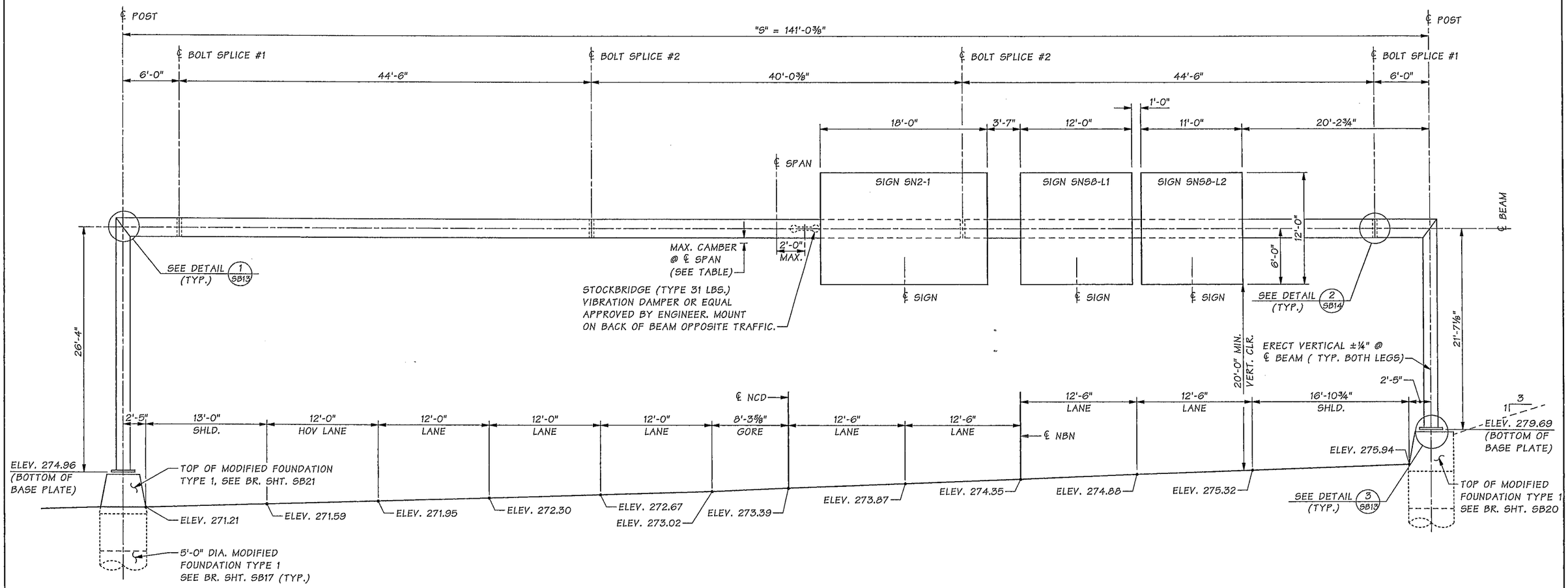

ELEVATION

SIGN BRIDGE NO. 5
NBN STA. 11+11 = 15NB STA. 119+35
THE MAXIMUM SIGN AREA ON THIS STRUCTURE SHALL BE 800 SQ. FT.

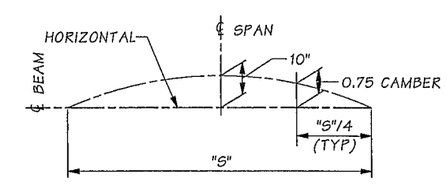

BEAM CAMBER DIAGRAM

SR 5 FILE NO. 3066 SHEET SB7

Bridge Design Engr.	Khaleghi, B		M:\SIGNS & MISC\XL3497 M St to Portland Sign Br\window files\Sign Br No 7 Layout.wnd							
Supervisor	Zeldenrust, RP									
Designed By	Rochon, MJ	01/13								
Checked By	Gallagher, P	01/14								
Detailed By	Hanson, CE	01/13								
Bridge Projects Engr.										
Prelim. Plan By										
Architect/Specialist			DATE	REVISION	BY	APP'D				

REGION NO.	STATE	FED. AID PROJ. NO.	SHEET NO.	TOTAL SHEETS
10	WASH.			
JOB NUMBER 12C501				

BRIDGE AND STRUCTURES OFFICE

BIJAN KHALEGHI STATE OF WASHINGTON 27695 REGISTERED PROFESSIONAL ENGINEER
3/19/14

Washington State Department of Transportation

I-5
M ST TO PORTLAND AVE - HOV
SIGN STRUCTURES
SIGN BRIDGE NO. 5
LAYOUT

BRIDGE SHEET NO. SB7
SHEET 1298 OF 1763 SHEETS

Wed Mar 19 07:49:18 2014

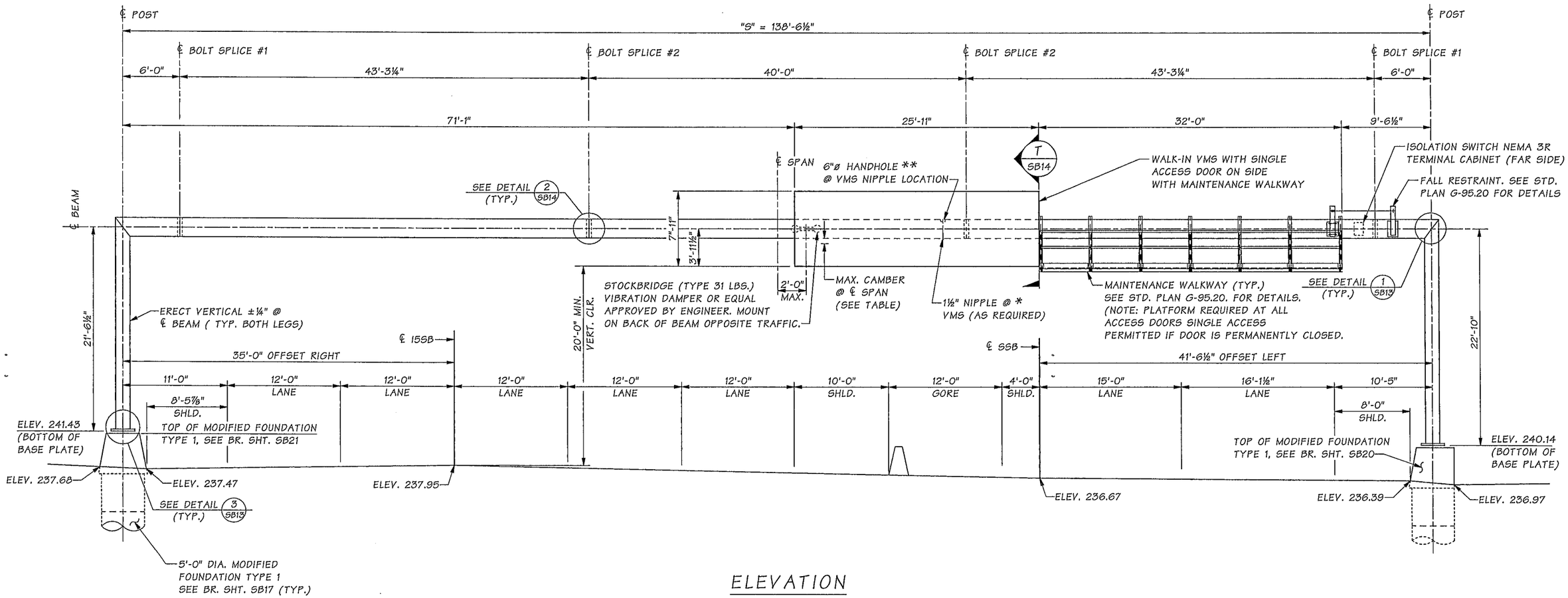

ELEVATION

SIGN BRIDGE NO. 6 15SB STA. 528+52.00
THE MAXIMUM SIGN AREA ON THIS
STRUCTURE SHALL BE 800 SQ. FT.
(LOOKING BACK ON STATIONING)

* CONTRACTOR TO VERIFY NIPPLE LOCATION TO MATCH VMS SIGN CONDUIT LOCATIONS, PRIOR TO SIGN STRUCTURE FABRICATION. NO FIELD WELDING OR DRILLING SHALL BE PERMITTED.

** HANDHOLE IS ONLY REQUIRED IF NIPPLE LOCATION IS GREATER THAN 1'-6" FROM ANOTHER HAND HOLE LOCATION.

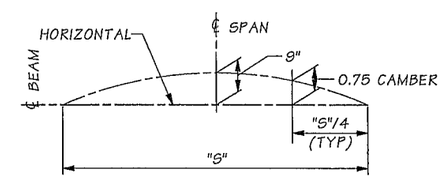

BEAM CAMBER DIAGRAM

Bridge Design Engr.	Khaleghi, B		M:\SIGNS & MISC\XL3497 M St to Portland Sign Br\window files\Sign Br No 8 Layout.wnd
Supervisor	Zeldenrust, RP		
Designed By	Rochon, MJ	01/13	
Checked By	Gallagher, P	01/14	
Detailed By	Hanson, CE	01/13	
Bridge Projects Engr.			
Prelim. Plan By			
Architect/Specialist			

DATE	REVISION	BY	APP'D

REGION NO.	STATE	FED. AID PROJ. NO.	SHEET NO.	TOTAL SHEETS
10	WASH.			
JOB NUMBER 12C501				

BRIDGE AND STRUCTURES OFFICE

BILLAN KHALEGHI — STATE OF WASHINGTON — STRUCTURAL ENGINEER — PROFESSIONAL ENGINEER — 3/19/14

Washington State Department of Transportation

I-5
M ST TO PORTLAND AVE - HOV

SIGN STRUCTURES

SIGN BRIDGE NO. 6
LAYOUT

BRIDGE SHEET NO. SB8

SHEET 1299 OF 1763 SHEETS

SR 5 FILE NO. 3066 SHEET SB8

Wed Mar 19 07:49:20 2014

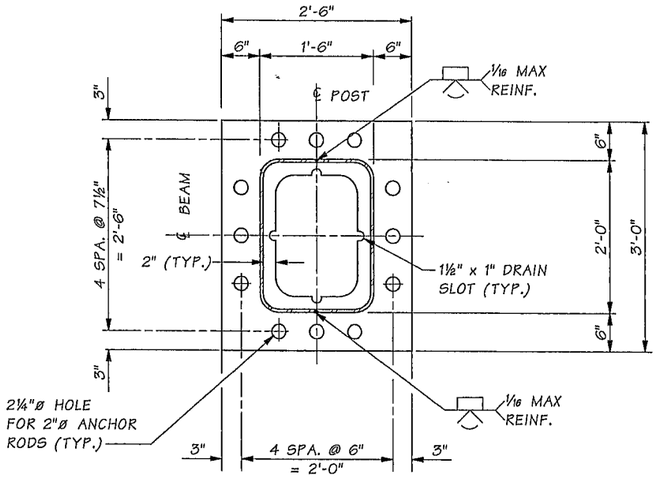

SECTION E

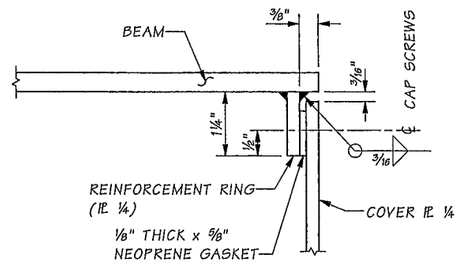

DETAIL 4

SB1 & SB2

¼" CAP SCREWS ASTM F-593 ~ TAP REINFORCEMENT RING WITH 8 TOTAL EQUALLY SPACED AROUND COVER PL

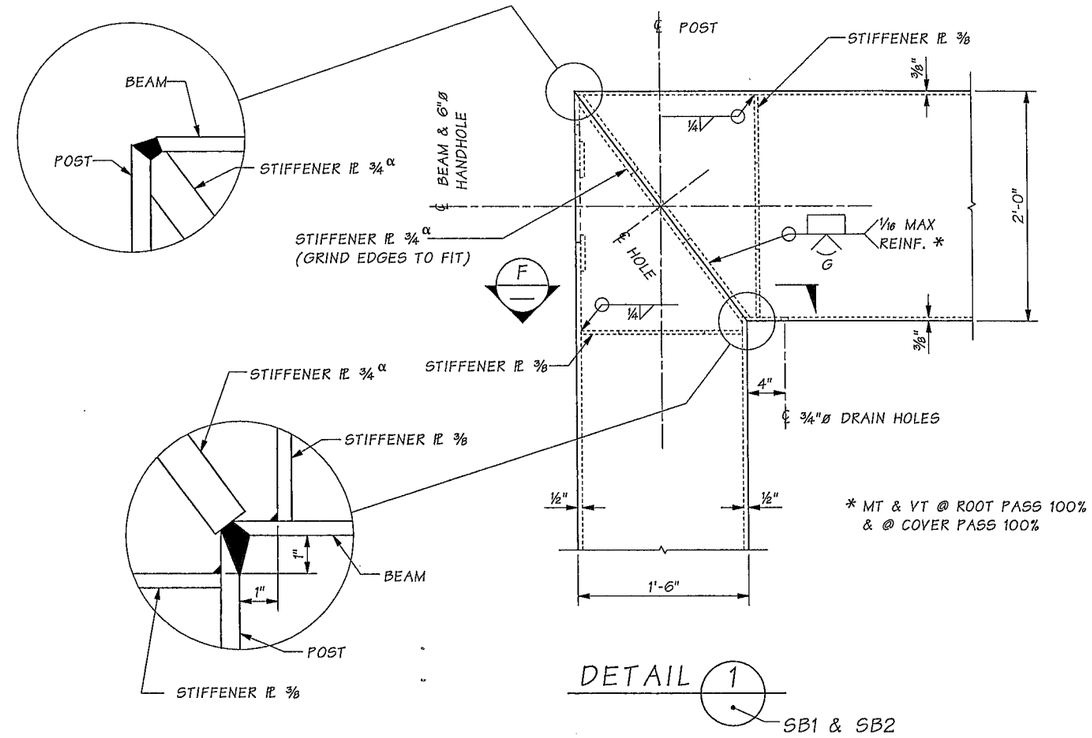

* MT & VT @ ROOT PASS 100% & @ COVER PASS 100%

DETAIL 1

SB1 & SB2

α PLACE VENT HOLES IN CORNERS OF STIFFENER PL ¾ AS REQUIRED FOR GALVANIZING PROCESS.

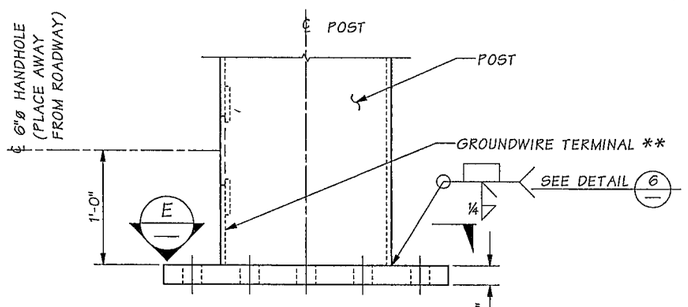

DETAIL 3

POST BASE

SB1 & SB2

** SEE STD PLAN J-75.40 SHEET 1 OF 2 DETAIL C FOR GROUND CONNECTION.

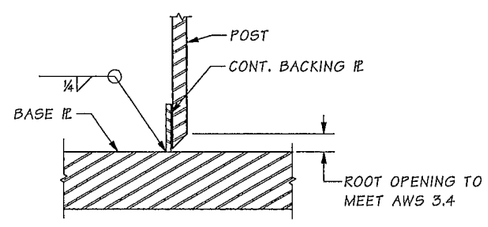

DETAIL 6

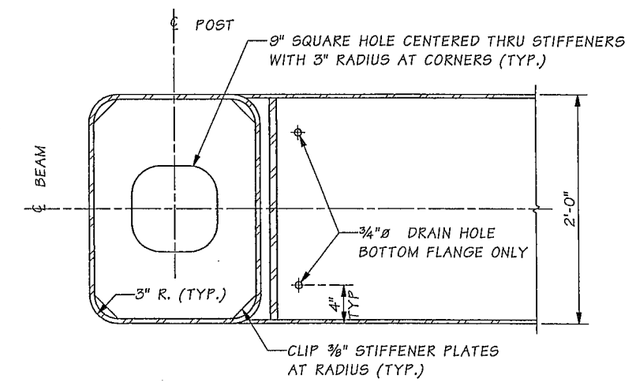

SECTION F

DIAGONAL STIFFENER NOT SHOWN.

SR 5 FILE NO. 3066 SHEET SB9

Bridge Design Engr.	Khaleghi, B		
Supervisor	Zeldenrust, RP		
Designed By	Rochon, MJ	01/13	
Checked By	Gallagher, P	01/14	
Detailed By	Hanson, CE	01/13	
Bridge Projects Engr.			
Prelim. Plan By			
Architect/Specialist			

M:\SIGNS & MISC\XL3497 M St to Portland Sign Br\window files\Cantilever 1 and 2 Dtls 1.wnd

DATE	REVISION	BY	APP'D

REGION NO.	STATE	FED. AID PROJ. NO.	SHEET NO.	TOTAL SHEETS
10	WASH.			
JOB NUMBER 12C501				

Wed Mar 19 07:49:22 2014

MATTHEW J. ROCHON — STATE OF WASHINGTON — 40414 — REGISTERED PROFESSIONAL ENGINEER — 3/19/14

BRIDGE AND STRUCTURES OFFICE

RICHARD P. ZELDENRUST — STATE OF WASHINGTON — 22340 — REGISTERED PROFESSIONAL ENGINEER — 3/20/14

Washington State Department of Transportation

I-5
M ST TO PORTLAND AVE - HOV

SIGN STRUCTURES

CANTILEVER
STRUCTURAL DETAILS 1 OF 2

BRIDGE SHEET NO. SB9

SHEET 1300 OF 1763 SHEETS

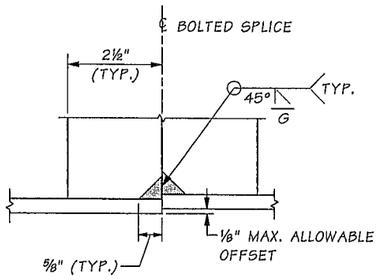

DETAIL 7

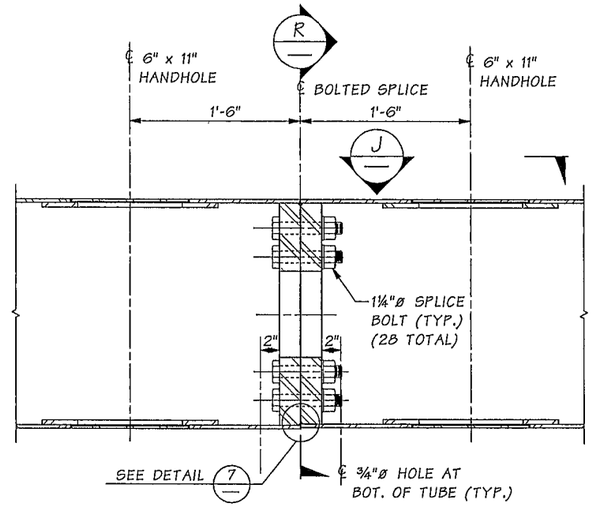

DETAIL 2
SECTION THRU BEAM
SB1 & SB2

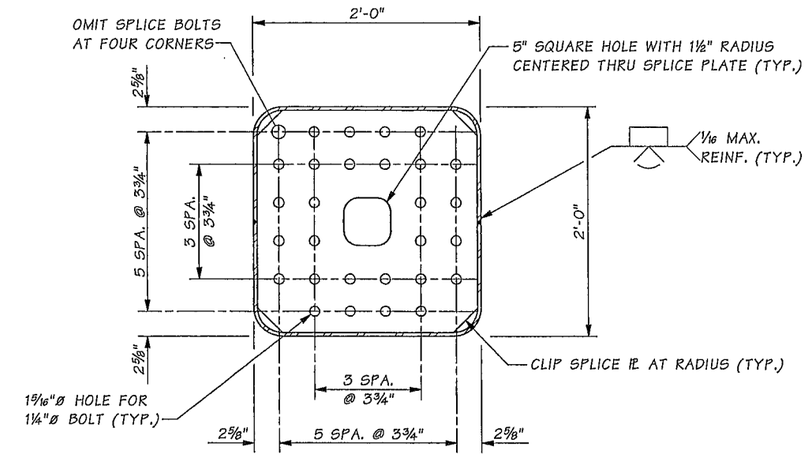

SECTION R

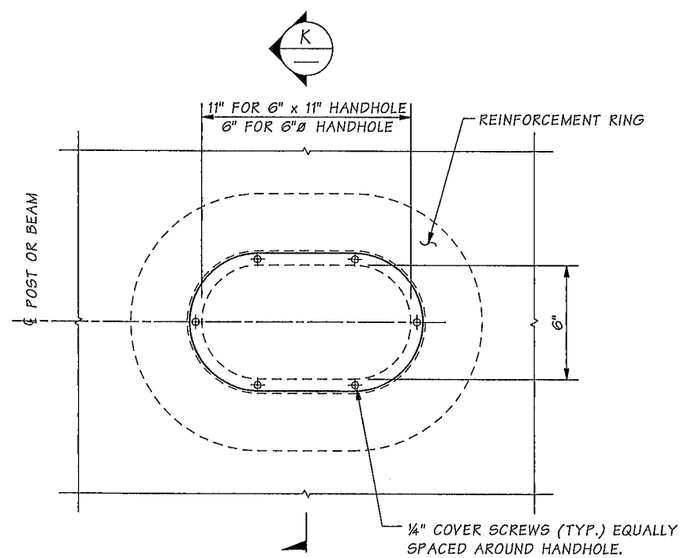

VIEW J

6" x 11" HANDHOLE SHOWN.
6"ø HANDHOLE SIMILAR
EXCEPT AS NOTED.

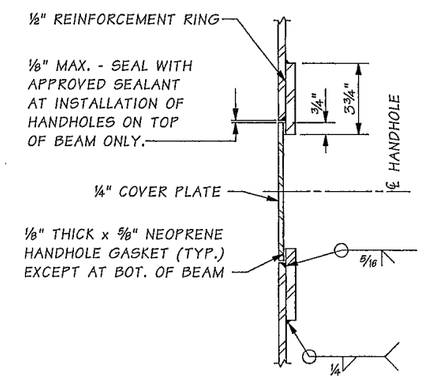

SECTION K

SR 5 FILE NO. 3066 SHEET SB10

Bridge Design Engr.	Khaleghi, B	
Supervisor	Zeldenrust, RP	
Designed By	Rochon, MJ	01/13
Checked By	Gallagher, P	01/14
Detailed By	Hanson, CE	01/13
Bridge Projects Engr.		
Prelim. Plan By		
Architect/Specialist		

M:\SIGNS & MISC\XL3497 M St to Portland Sign Br\window files\Cantilever 1 and 2 Dtls 2.wnd

DATE	REVISION	BY	APP'D

REGION NO.	STATE	FED. AID PROJ. NO.	SHEET NO.	TOTAL SHEETS
10	WASH.			

JOB NUMBER 12C501

3/19/14

BRIDGE AND STRUCTURES OFFICE

3/20/14

Washington State Department of Transportation

I-5
M ST TO PORTLAND AVE - HOV

SIGN STRUCTURES

CANTILEVER
STRUCTURAL DETAILS 2 OF 2

BRIDGE SHEET NO. SB10

SHEET 1301 OF 1763 SHEETS

Wed Mar 19 07:49:23 2014

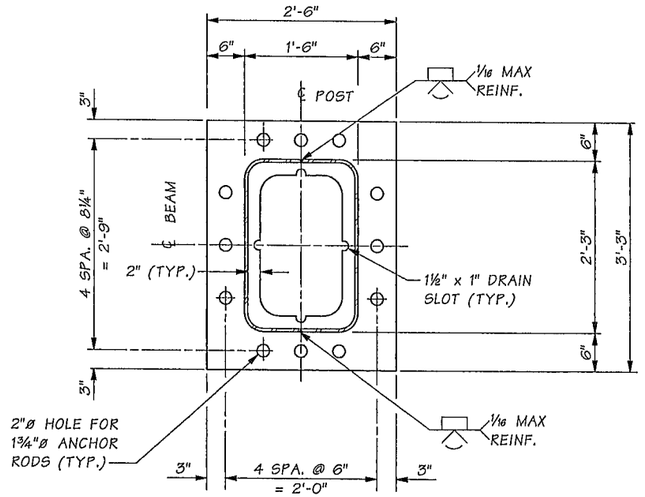

SECTION E

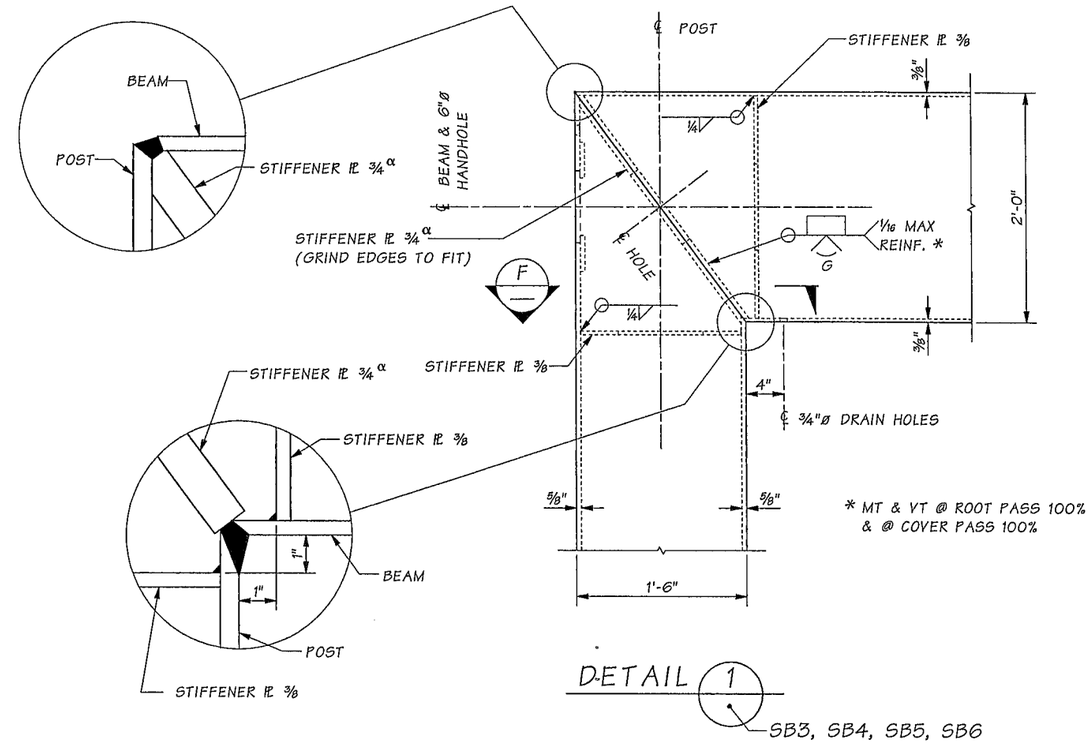

DETAIL 1

SB3, SB4, SB5, SB6

α PLACE VENT HOLES IN CORNERS OF STIFFENER PL ¾ AS REQUIRED FOR GALVANIZING PROCESS.

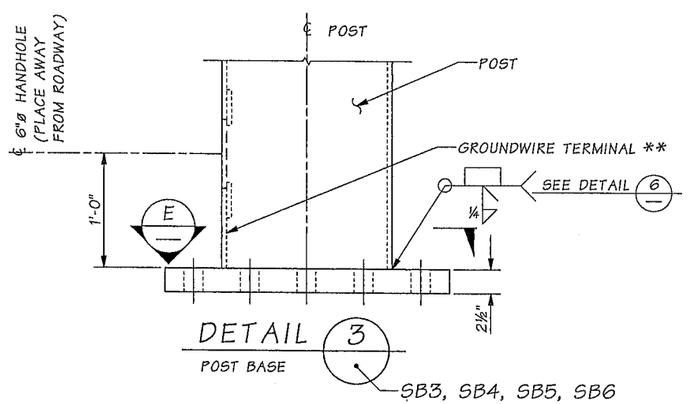

DETAIL 3

POST BASE

SB3, SB4, SB5, SB6

** SEE STD PLAN J-75.40 SHEET 1 OF 2 DETAIL C FOR GROUND CONNECTION.

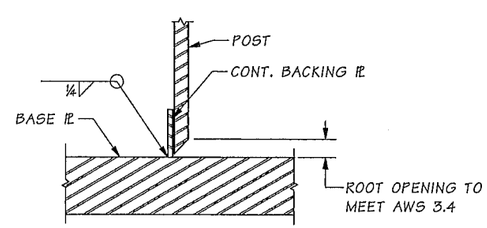

DETAIL 6

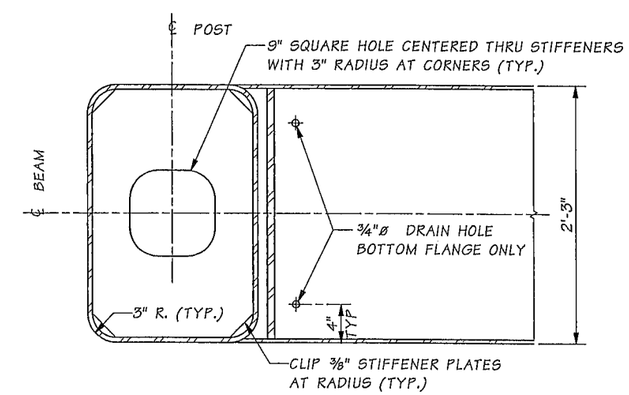

SECTION F

DIAGONAL STIFFENER NOT SHOWN.

SR 5 FILE NO. 3066 SHEET SB11

Bridge Design Engr.	Khaleghi, B	
Supervisor	Zeldenrust, RP	
Designed By	Rochon, MJ	01/13
Checked By		01/14
Detailed By	Hanson, CE	01/13
Bridge Projects Engr.		
Prelim. Plan By		
Architect/Specialist		

M:\SIGNS & MISC\XL3497 M St to Portland Sign Br\window files\Sign Br 1-2-3-4 Dtls 1.wnd

DATE	REVISION	BY	APP'D

REGION NO.	STATE	FED. AID PROJ. NO.	SHEET NO.	TOTAL SHEETS
10	WASH.			

JOB NUMBER 12C501

3/19/14

BRIDGE AND STRUCTURES OFFICE

3/20/14

Washington State Department of Transportation

I-5
M ST TO PORTLAND AVE - HOV

SIGN STRUCTURES

SIGN BRIDGE NO. 1, 2, 3, & 4
STRUCTURAL DETAILS 1 OF 2

BRIDGE SHEET NO. SB11

SHEET 1302 OF 1763 SHEETS

Wed Mar 19 07:49:25 2014

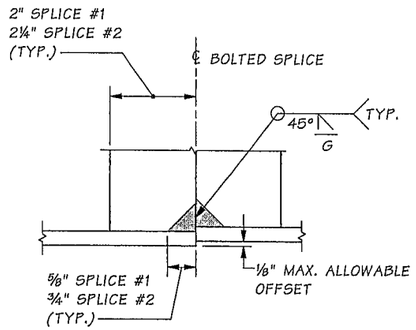

DETAIL 4

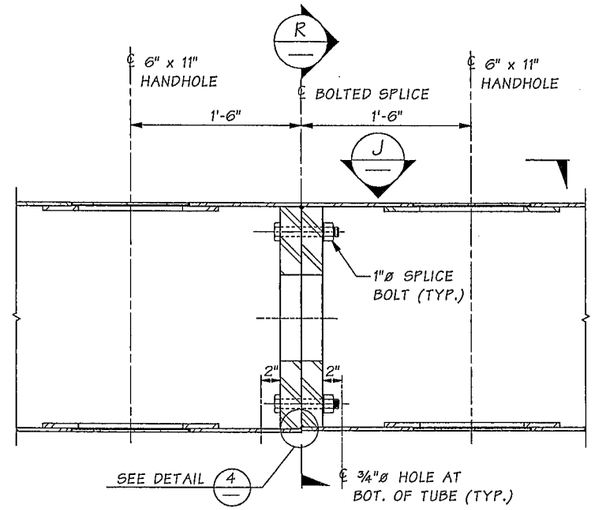

DETAIL 2

SECTION THRU BEAM
BOLTED SPLICE #2 SHOWN.
BOLTED SPLICE #1 SIMILAR.

SB3, SB4, SB5, SB6

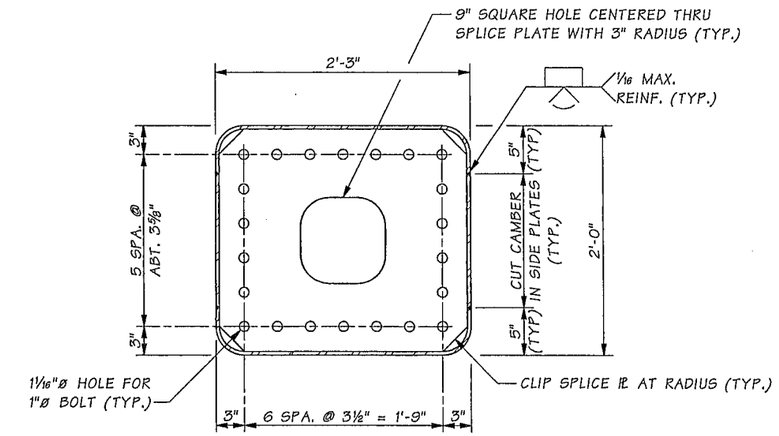

SECTION R

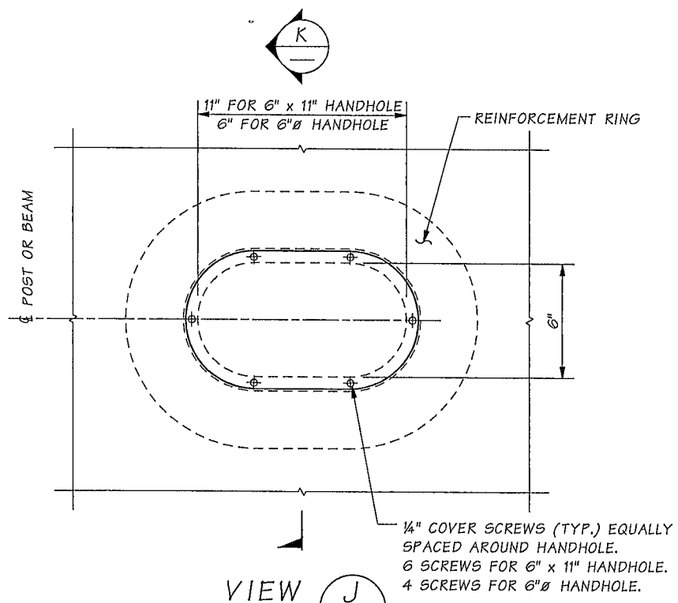

VIEW J

6" x 11" HANDHOLE SHOWN.
6"ø HANDHOLE SIMILAR
EXCEPT AS NOTED.

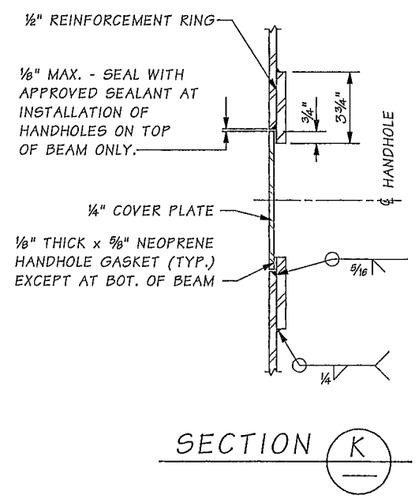

SECTION K

SR 5 FILE NO. 3066 SHEET SB12

Bridge Design Engr.	Khaleghi, B		M:\SIGNS & MISC\XL3497 M St to Portland Sign Br\window files\Sign Br 1-2-3-4 Dtls 2.wnd								
Supervisor	Zeldenrust, RP										
Designed By	Rochon, MJ	01/13									
Checked By	Gallagher, P	01/14									
Detailed By	Hanson, CE	01/13									
Bridge Projects Engr.											
Prelim. Plan By											
Architect/Specialist			DATE	REVISION	BY	APP'D					

Wed Mar 19 07:49:27 2014

REGION NO.	STATE	FED. AID PROJ. NO.	SHEET NO.	TOTAL SHEETS
10	WASH.			
JOB NUMBER 12C501				

MATTHEW J. ROCHON — STATE OF WASHINGTON — 40414 — REGISTERED PROFESSIONAL ENGINEER — 3/19/14

BRIDGE AND STRUCTURES OFFICE

RICHARD P. ZELDENRUST — STATE OF WASHINGTON — 15470 — REGISTERED PROFESSIONAL ENGINEER — 3/20/14

Washington State Department of Transportation

I-5
M ST TO PORTLAND AVE - HOV

SIGN STRUCTURES

SIGN BRIDGE NO. 1, 2, 3, & 4
STRUCTURAL DETAILS 2 OF 2

BRIDGE SHEET NO. SB12

SHEET 1303 OF 1763 SHEETS

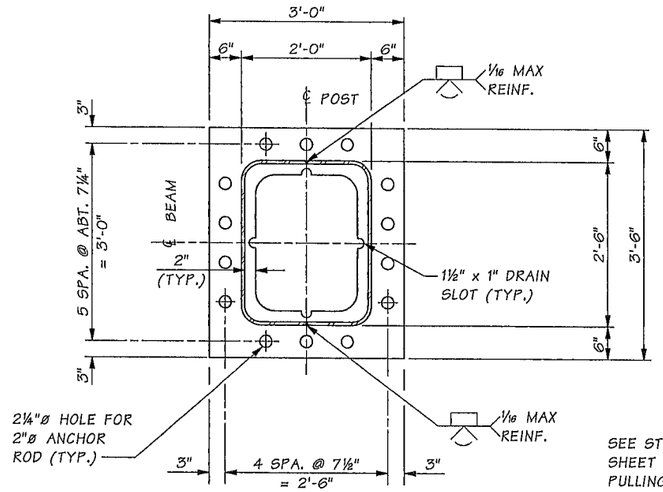

SECTION E

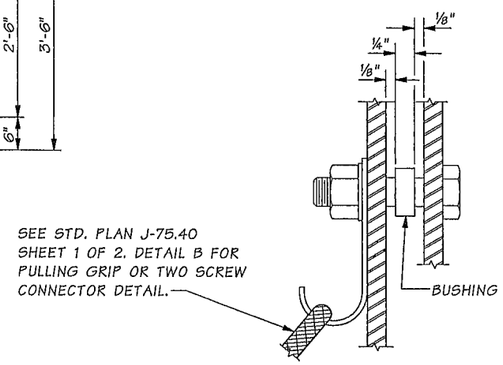

DETAIL 5

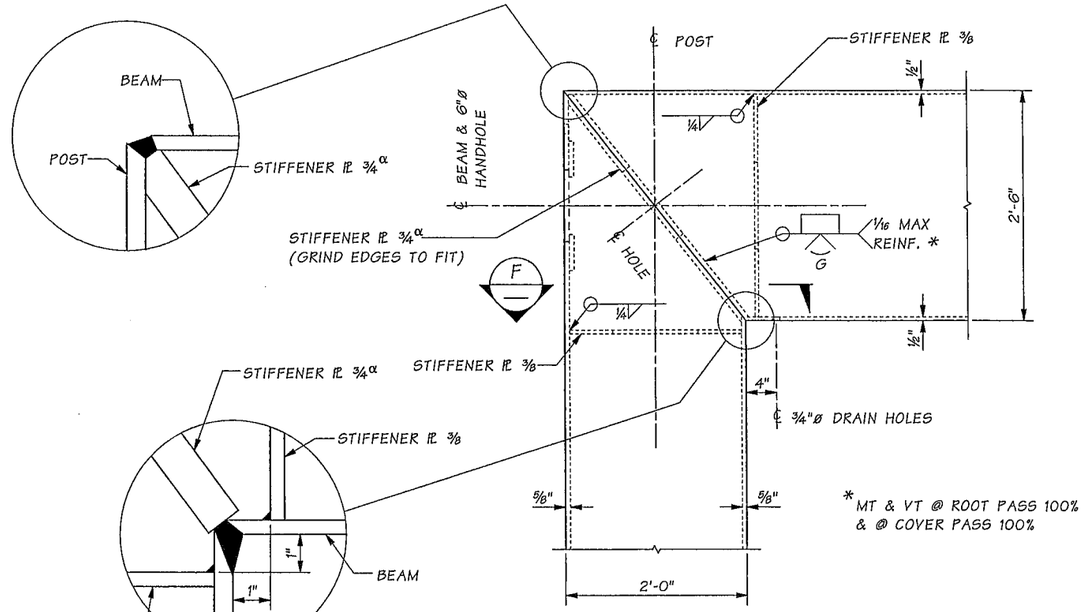

DETAIL 1

SB7 & SB8

α PLACE VENT HOLES IN CORNERS OF STIFFENER PL ¾ AS REQUIRED FOR GALVANIZING PROCESS.

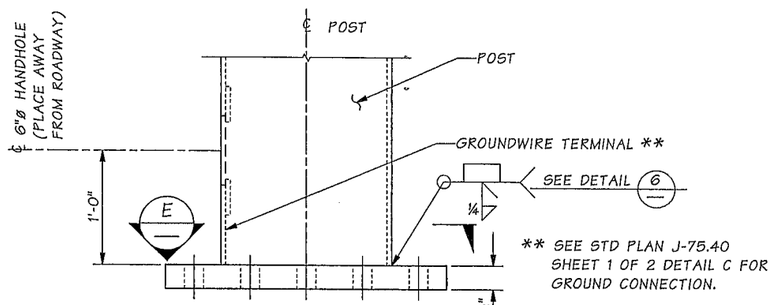

DETAIL 3

POST BASE

SB7 & SB8

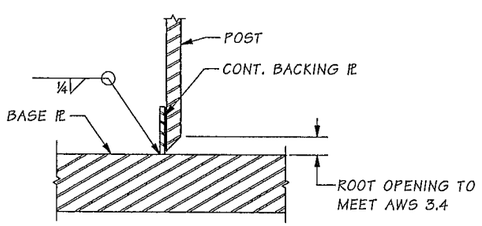

DETAIL 6

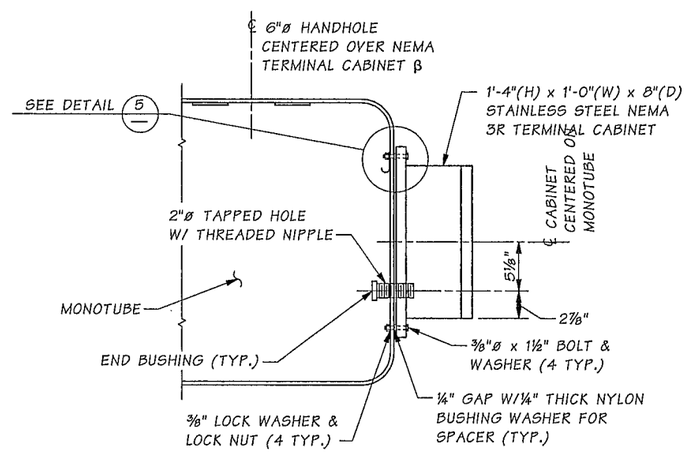

NEMA 3R TERMINAL CABINET DETAIL

β IF NO OTHER HANDHOLE IS WITHIN 1'-6" OF CABINET

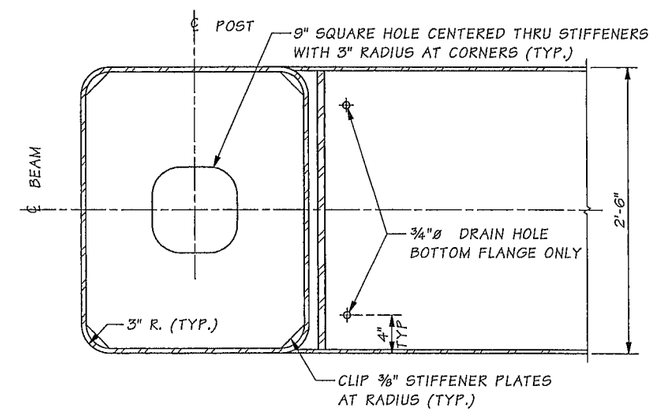

SECTION F

DIAGONAL STIFFENER NOT SHOWN.

SR 5 FILE NO. 3066 SHEET SB13

Bridge Design Engr.	Khaleghi, B		
Supervisor	Zeldenrust, RP		
Designed By	Rochon, MJ	01/13	
Checked By	Gallagher, P	01/14	
Detailed By	Hanson, CE	01/13	
Bridge Projects Engr.			
Prelim. Plan By			
Architect/Specialist			

M:\SIGNS & MISC\XL3497 M St to Portland Sign Br\window files\Sign Br 7-8 Dtls 1.wnd

DATE	REVISION	BY	APP'D

REGION NO.	STATE	FED. AID PROJ. NO.	SHEET NO.	TOTAL SHEETS
10	WASH.			
JOB NUMBER 12C501				

Wed Mar 19 07:49:28 2014

MATTHEW J. ROCHON — STATE OF WASHINGTON — 40144 — REGISTERED PROFESSIONAL ENGINEER — 3/19/14

BRIDGE AND STRUCTURES OFFICE

RICHARD P. ZELDENRUST — STATE OF WASHINGTON — 24878 — REGISTERED PROFESSIONAL ENGINEER — 3/20/14

Washington State Department of Transportation

I-5
M ST TO PORTLAND AVE - HOV

SIGN STRUCTURES

SIGN BRIDGE NO. 5 & 6
STRUCTURAL DETAILS 1 OF 2

BRIDGE SHEET NO. SB13

SHEET 1304 OF 1763 SHEETS

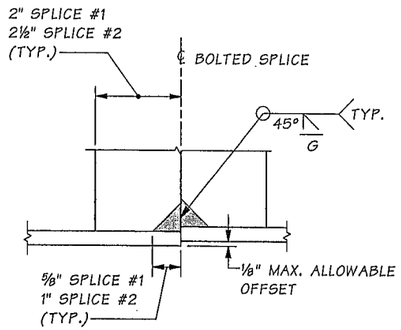

DETAIL 4

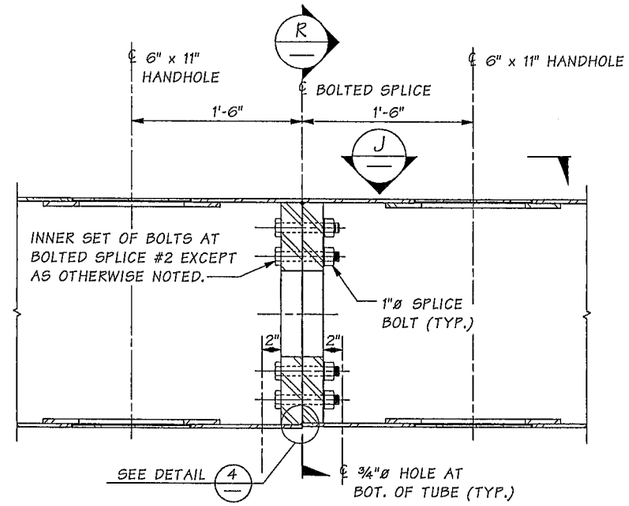

DETAIL 2

SECTION THRU BEAM
BOLTED SPLICE #2 SHOWN.
BOLTED SPLICE #1 SIMILAR.

SB7 & SB8

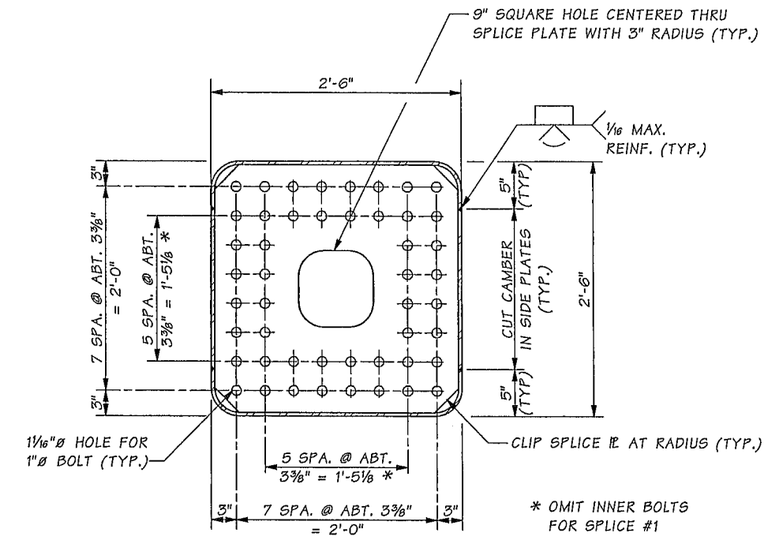

SECTION R

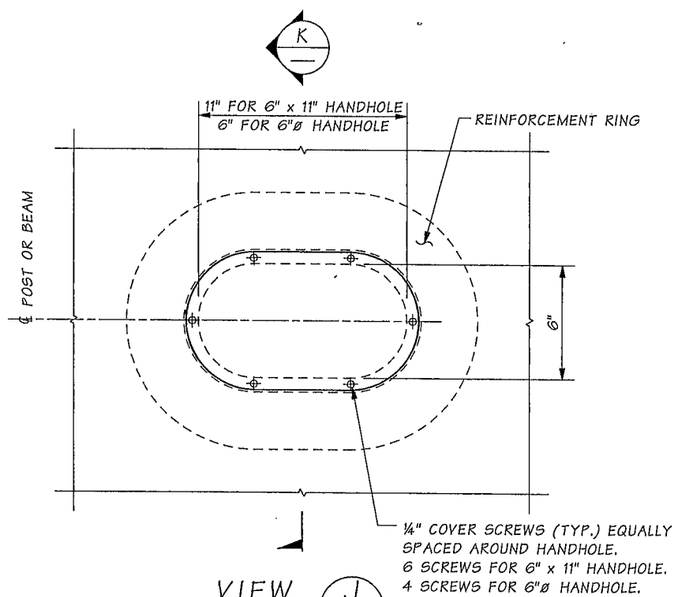

VIEW J

6" x 11" HANDHOLE SHOWN.
6"ø HANDHOLE SIMILAR
EXCEPT AS NOTED.

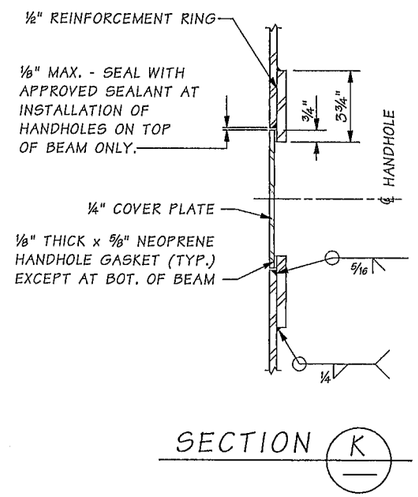

SECTION K

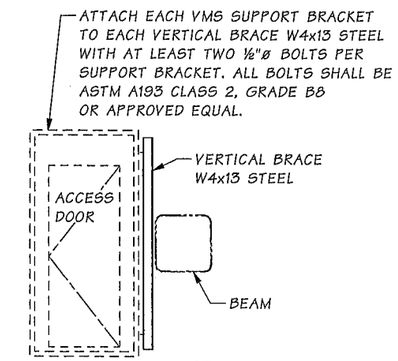

SECTION T

SUPPORT BRACKET
NOT SHOWN FOR CLARITY

SB8

SR 5 FILE NO. 3066 SHEET SB14

Bridge Design Engr.	Khaleghi, B		
Supervisor	Zeldenrust, RP		
Designed By	Rochon, MJ	01/13	
Checked By	Gallagher, P	01/14	
Detailed By	Hanson, CE	01/13	
Bridge Projects Engr.			
Prelim. Plan By			
Architect/Specialist			

M:\SIGNS & MISC\XL3497 M St to Portland Sign Br\window files\Sign Br 7-8 Dtls 2.wnd

DATE	REVISION	BY	APP'D

REGION NO.	STATE	FED. AID PROJ. NO.	SHEET NO.	TOTAL SHEETS
10	WASH.			
JOB NUMBER 12C501				

Wed Mar 19 07:49:30 2014

MATTHEW J. ROCHON STATE OF WASHINGTON 40414 PROFESSIONAL ENGINEER 3/19/14

BRIDGE AND STRUCTURES OFFICE

RICHARD P. ZELDENRUST STATE OF WASHINGTON 24170 PROFESSIONAL ENGINEER 3/20/14

Washington State Department of Transportation

I-5
M ST TO PORTLAND AVE - HOV

SIGN STRUCTURES

SIGN BRIDGE NO. 5 & 6
STRUCTURAL DETAILS 2 OF 2

BRIDGE SHEET NO. SB14

SHEET 1305 OF 1763 SHEETS

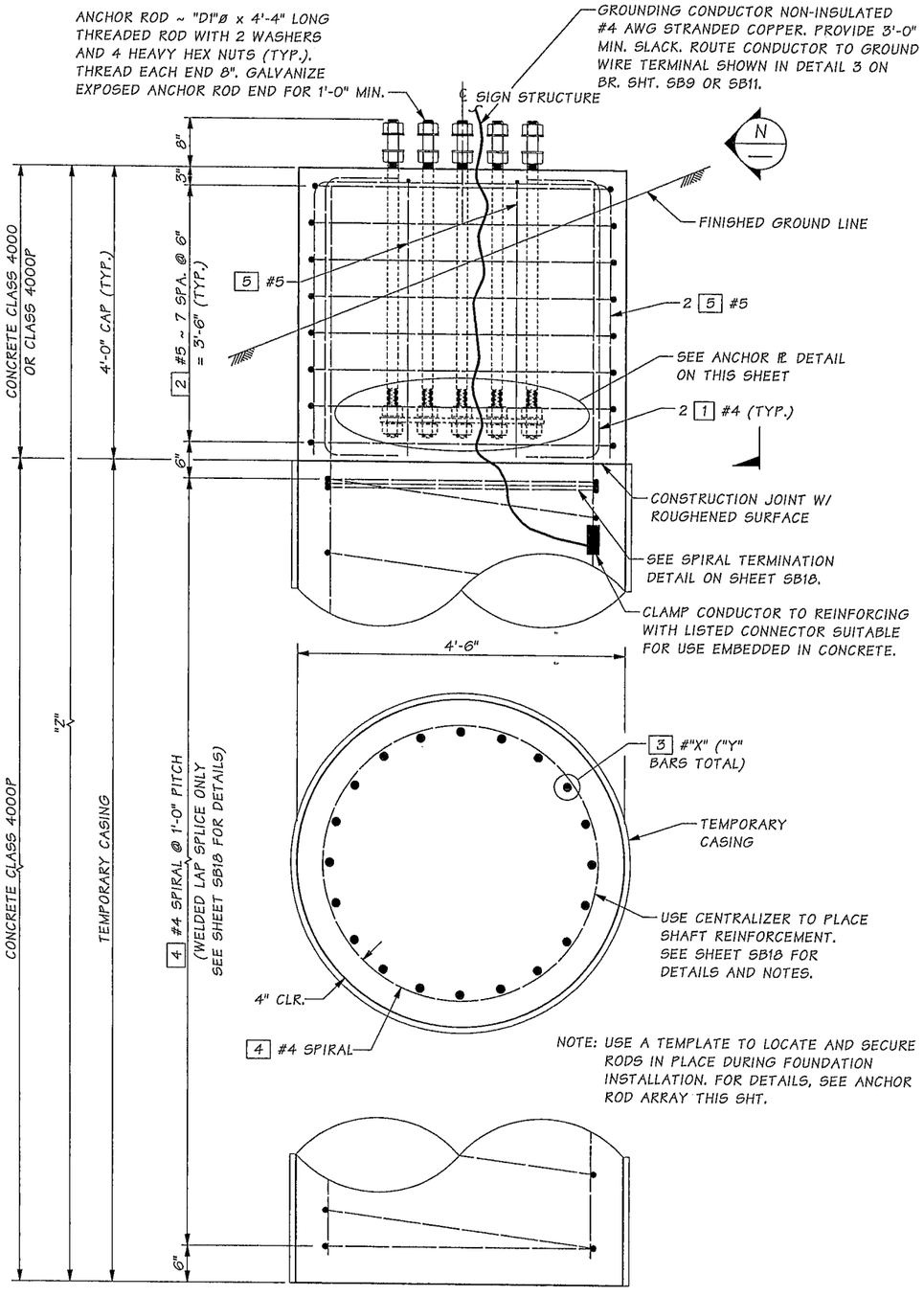

NOTE: USE A TEMPLATE TO LOCATE AND SECURE RODS IN PLACE DURING FOUNDATION INSTALLATION. FOR DETAILS, SEE ANCHOR ROD ARRAY THIS SHT.

ELEVATION

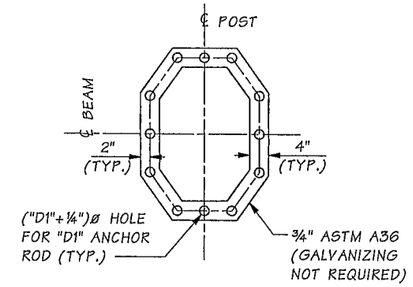

ANCHOR ⅊ DETAIL

SEE SIGN STRUCTURE BASE PLATE FOR ANCHOR ROD PATTERN

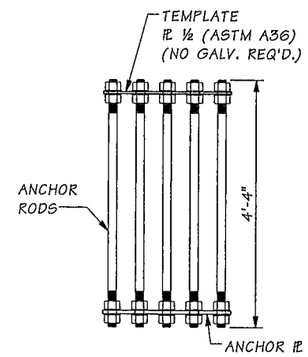

ANCHOR ROD ARRAY

SHIP THE ANCHOR ROD ARRAY ASSEMBLY AS A COMPLETE UNIT.

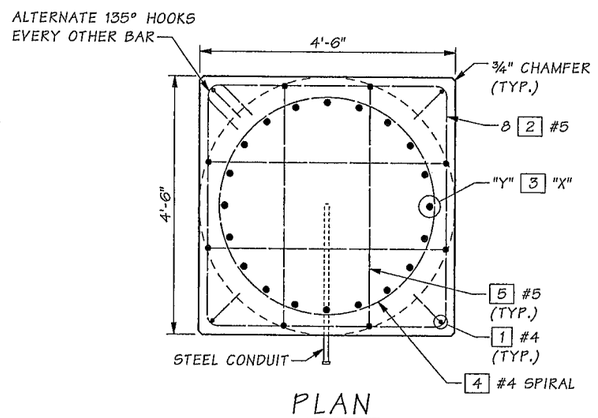

PLAN

ANCHOR RODS NOT SHOWN.

BENDING DIAGRAM

MARK	LOCATION	SIZE	NO. REQ'D.	LENGTH	
1	CAP VERTICAL	4	4	"A"	
2	CAP HOOPS	5	"A"	"A"	
3	SHAFT VERTICAL	"X"	"Y"	"Z"-6"	STR.
4	SHAFT SPIRAL	4	1	"A"	
5	CAP TOP	5	4	"A"	

NOTE: CONCRETE COVER SHALL BE 1½" UNLESS SHOWN OTHERWISE.

"A" ~ DETERMINE FROM PLANS

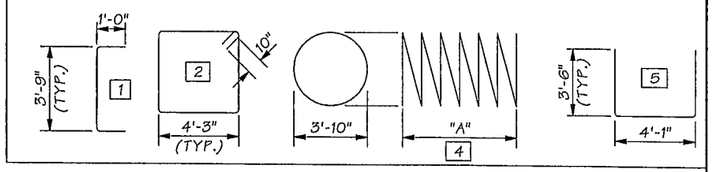

4'-6" DIA. FOUNDATION TYPE 1 TABLE

FOUNDATION LOCATION	DEPTH ("Z")	REINFORCEMENT SIZE ("X")	REINFORCEMENT NUMBER ("Y")	"D1"	ALLOWABLE LATERAL BEARING PRESSURE (PSF)	TEMPORARY CASING
CANTILEVER NO. 2	15'-0"	9	16	2"	2500	YES
SIGN BR. 1 LT.	15'-6"	9	18	1¾"	2500	YES
SIGN BR. 2 RT.	19'-0"	9	20	1¾"	2500	YES
SIGN BR. 3 LT.	21'-0"	9	20	1¾"	1500	YES
SIGN BR. 4 RT.	19'-0"	9	20	1¾"	2500	YES

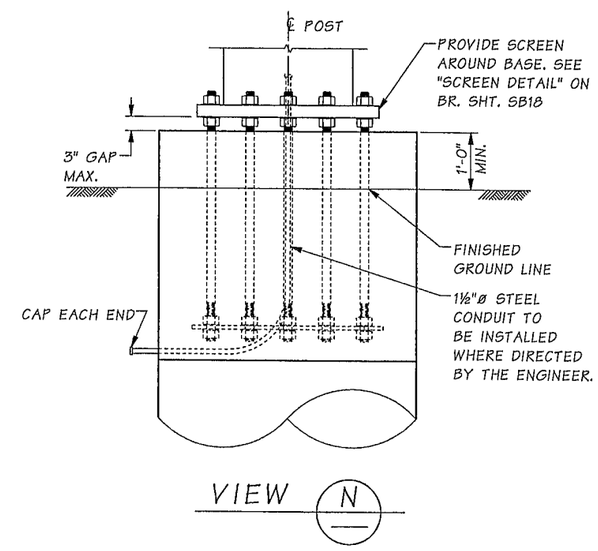

VIEW

Bridge Design Engr.	Khaleghi, B		
Supervisor	Zeldenrust, RP		
Designed By	Rochon, MJ	01/13	
Checked By	Gallagher, P	01/14	
Detailed By	Hanson, CE	01/13	
Bridge Projects Engr.			
Prelim. Plan By			
Architect/Specialist			

M:\SIGNS & MISC\XL3497 M St to Portland Sign Br\window files\Found Type 1 4ft 6in.wnd

DATE	REVISION	BY	APP'D

REGION NO.	STATE	FED. AID PROJ. NO.	SHEET NO.	TOTAL SHEETS
10	WASH.			
JOB NUMBER 12C501				

Wed Mar 19 07:48:31 2014

3/19/14

BRIDGE AND STRUCTURES OFFICE

3/20/14

Washington State Department of Transportation

I-5
M ST TO PORTLAND AVE - HOV

SIGN STRUCTURES

FOUNDATION TYPE 1
4'-6" DIAMETER

BRIDGE SHEET NO. SB15

SHEET 1306 OF 1763 SHEETS

SR 5 FILE NO. 3066 SHEET SB15

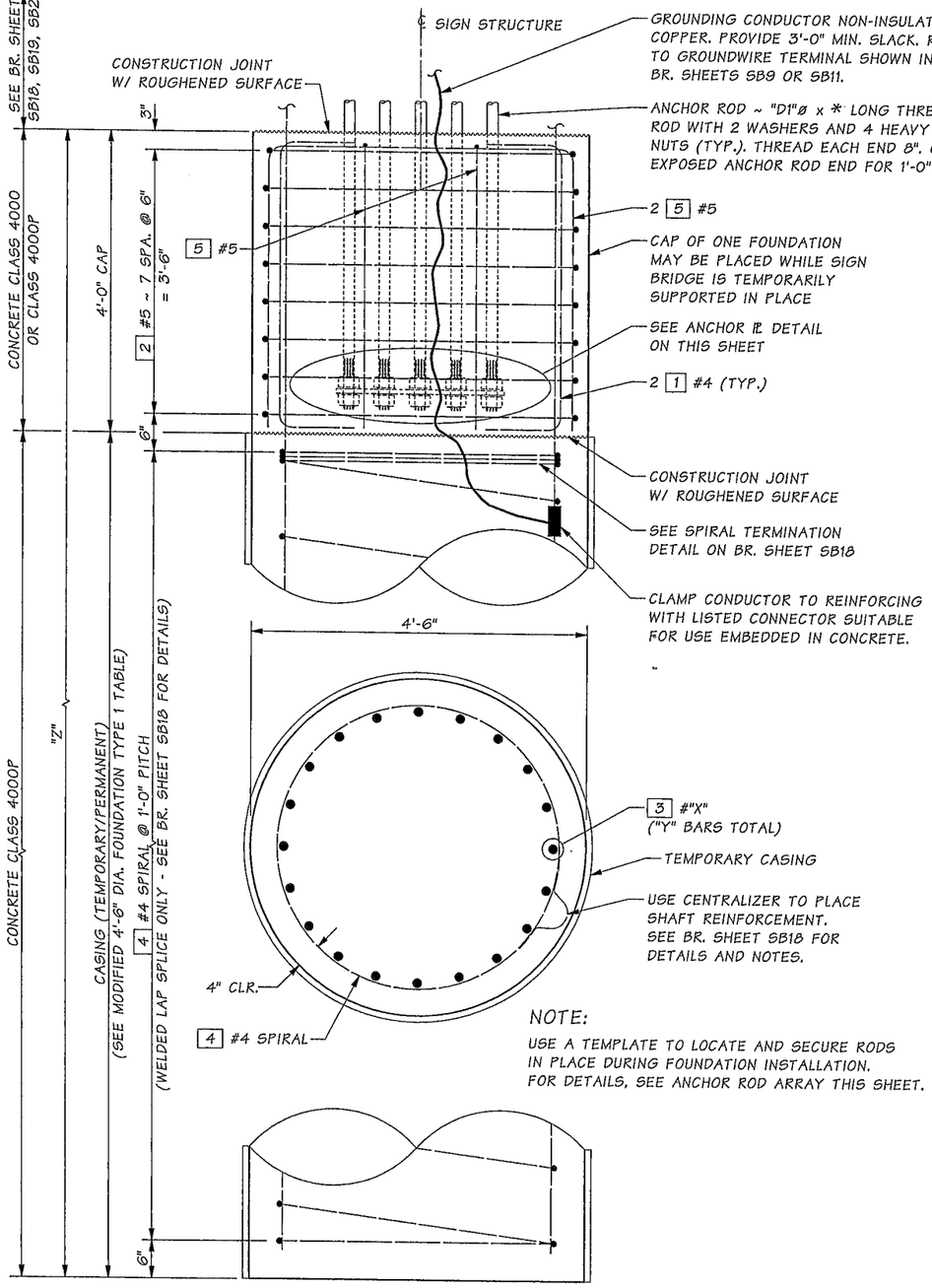

ELEVATION

NOTE:

USE A TEMPLATE TO LOCATE AND SECURE RODS IN PLACE DURING FOUNDATION INSTALLATION. FOR DETAILS, SEE ANCHOR ROD ARRAY THIS SHEET.

* FIELD VERIFY DEPTH OF GRADE SEPARATION SO THAT ANCHOR RODS EMBED SPECIFIED MIN. INTO SHAFT CAP AS SHOWN ON BR. SHT. SB19 & SB21.

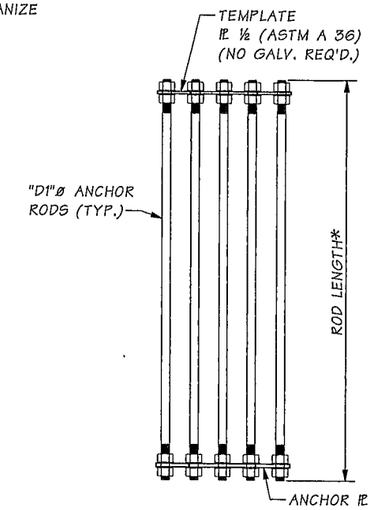

ANCHOR ROD ARRAY

SHIP THE ANCHOR ROD ARRAY ASSEMBLY AS A COMPLETE UNIT

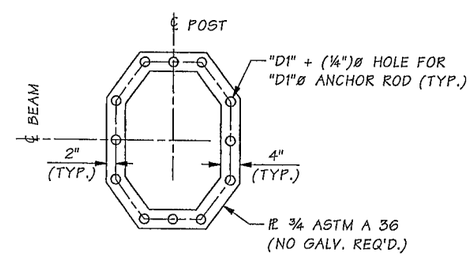

ANCHOR ℙ DETAIL

FOR ANCHOR ROD PATTERN SEE SIGN STRUCTURE BASE PLATE ON BR. SHEETS SB9 OR SB11.

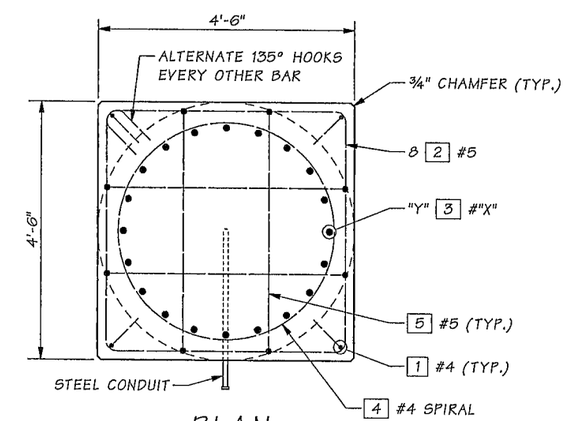

PLAN

ANCHOR RODS NOT SHOWN.

BENDING DIAGRAM

MARK	LOCATION	SIZE	NO. REQ'D.	LENGTH	
1	CAP VERTICAL	4	4	5'-6½"	
2	CAP HOOPS	5	8	14"	
3	SHAFT VERTICAL	"X"	"Y"	2" - 6"	STR.
4	SHAFT SPIRAL	4	1	"A"	
5	CAP TOP	5	4	"A"	

NOTE: CONCRETE COVER SHALL BE 1½" UNLESS SHOWN OTHERWISE.

"A" ~ DETERMINE FROM PLANS

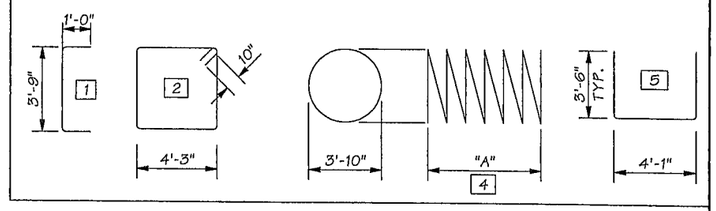

MODIFIED 4'-6" DIA. FOUNDATION TYPE 1 TABLE

FOUNDATION LOCATION	DEPTH ("Z")	REINFORCEMENT SIZE ("X")	REINFORCEMENT NUMBER ("Y")	"D1"	ALLOWABLE LATERAL BEARING PRESSURE (PSF)	CASING (TEMPORARY/ PERMANENT)
CANTILEVER 1	15'-0"	9	16	2"	2500	TEMPORARY
SIGN BR. 1 RT.	15'-6"	9	18	1¾"	2500	PERMANENT
SIGN BR. 2 LT.	19'-0"	9	20	1¾"	2500	TEMPORARY
SIGN BR. 3 RT.	21'-0"	9	20	1¾"	1500	TEMPORARY
SIGN BR. 4 LT.	19'-0"	9	20	1¾"	2500	TEMPORARY

SR 5 FILE NO. 3066 SHEET SB16

Bridge Design Engr.	Khaleghi, B	
Supervisor	Zeldenrust, RP	
Designed By	Rochon, MJ	01/13
Checked By	Gallagher, P	01/14
Detailed By	Hanson, CE	01/13
Bridge Projects Engr.		
Prelim. Plan By		
Architect/Specialist		

M:\SIGNS & MISC\XL3497 M St to Portland Sign Br\window files\Found Type 1 Mod 4ft 6in.wnd

DATE	REVISION	BY	APP'D

REGION NO.	STATE	FED. AID PROJ. NO.	SHEET NO.	TOTAL SHEETS
10	WASH.			
JOB NUMBER 12C501				

Wed Mar 19 07:49:34 2014

MATTHEW J. ROCHON, STATE OF WASHINGTON, 45414, REGISTERED PROFESSIONAL ENGINEER 3/19/14

BRIDGE AND STRUCTURES OFFICE

RICHARD P. ZELDENRUST, STATE OF WASHINGTON, 28170, REGISTERED PROFESSIONAL ENGINEER 3/20/14

Washington State Department of Transportation

I-5
M ST TO PORTLAND AVE - HOV

SIGN STRUCTURES

MODIFIED FOUNDATION TYPE 1
4'-6" DIAMETER

BRIDGE SHEET NO. SB16

SHEET 1307 OF 1763 SHEETS

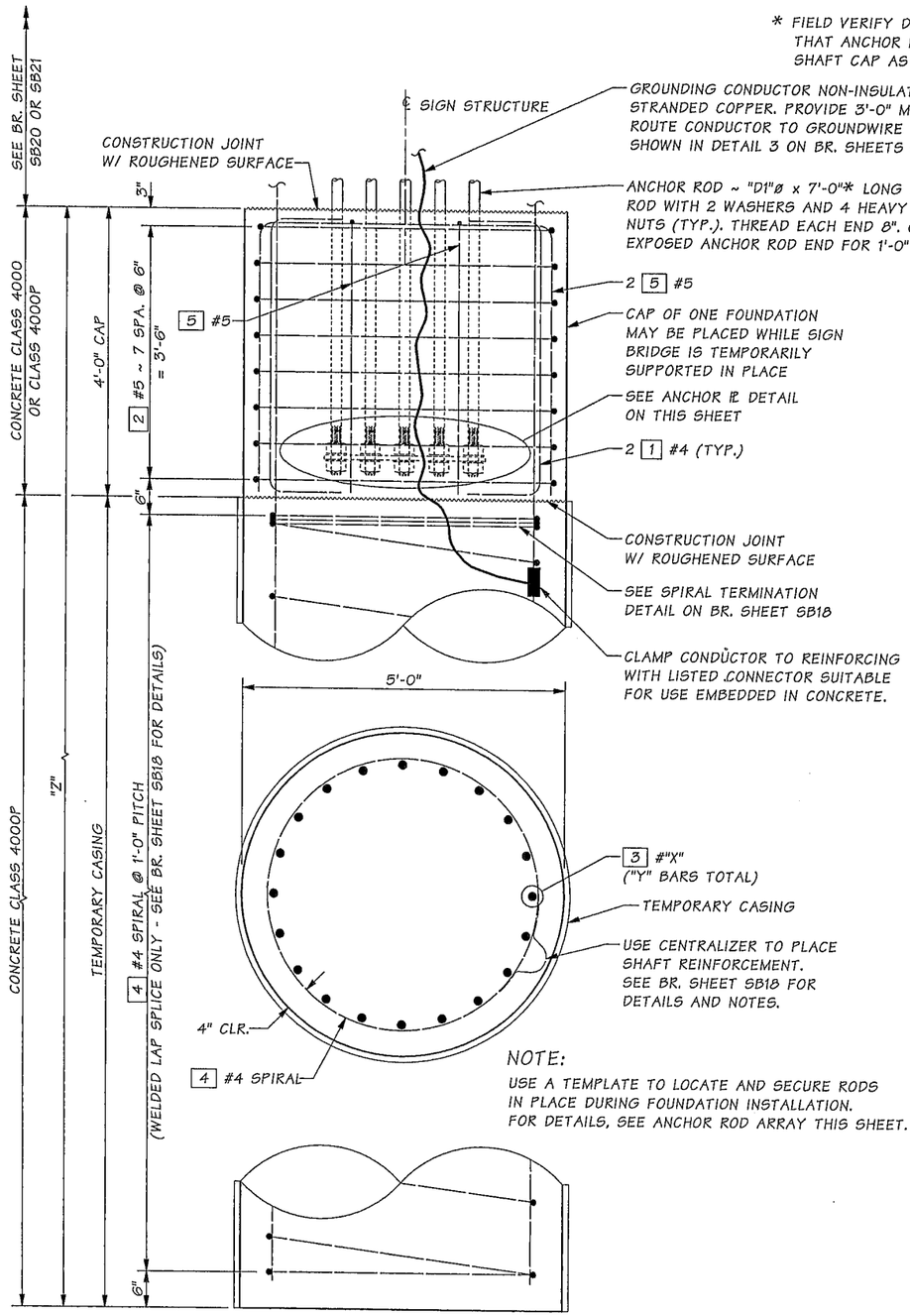

* FIELD VERIFY DEPTH OF GRADE SEPARATION SO THAT ANCHOR RODS EMBED SPECIFIED MIN. INTO SHAFT CAP AS SHOWN ON BR. SHT. SB20.

NOTE:
USE A TEMPLATE TO LOCATE AND SECURE RODS IN PLACE DURING FOUNDATION INSTALLATION. FOR DETAILS, SEE ANCHOR ROD ARRAY THIS SHEET.

ELEVATION

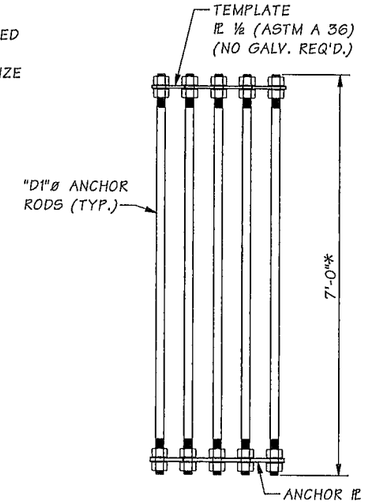

ANCHOR ROD ARRAY

SHIP THE ANCHOR ROD ARRAY ASSEMBLY AS A COMPLETE UNIT

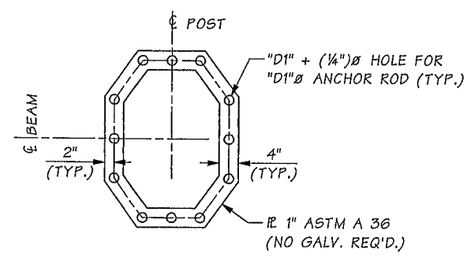

ANCHOR ℄ DETAIL

FOR ANCHOR ROD PATTERN SEE SIGN STRUCTURE BASE PLATE ON BR. SHEET SB13.

BENDING DIAGRAM

MARK	LOCATION	SIZE	NO. REQ'D.	LENGTH	
1	CAP VERTICAL	4	4	5'-6½"	
2	CAP HOOPS	5	8	"A"	
3	SHAFT VERTICAL	"X"	"Y"	2" - 6"	STR.
4	SHAFT SPIRAL	4	1	"A"	
5	CAP TOP	5	4	"A"	

NOTE: CONCRETE COVER SHALL BE 1½" UNLESS SHOWN OTHERWISE.

"A" ~ DETERMINE FROM PLANS

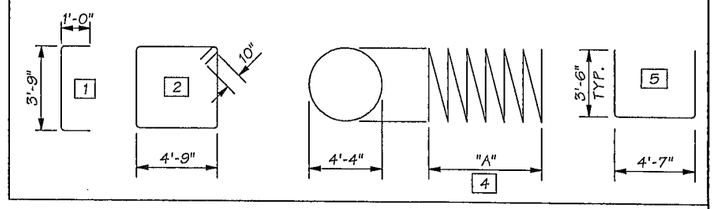

MODIFIED 5'-0" DIA. FOUNDATION TYPE 1 TABLE

FOUNDATION LOCATION	DEPTH ("Z")	REINFORCEMENT SIZE ("X")	REINFORCEMENT NUMBER ("Y")	"D1"	ALLOWABLE LATERAL BEARING PRESSURE (PSF)	TEMPORARY CASING
SIGN BR. 5 RT.	25'-0"	11	34α	2"	1500	YES
SIGN BR. 5 LT.	25'-0"	11	34α	2"	1500	YES
SIGN BR. 6 LT.	23'-6"	11	34α	2"	2500	YES
SIGN BR. 6 RT.	23'-6"	11	34α	2"	2500	YES

α BUNDLED PAIRS

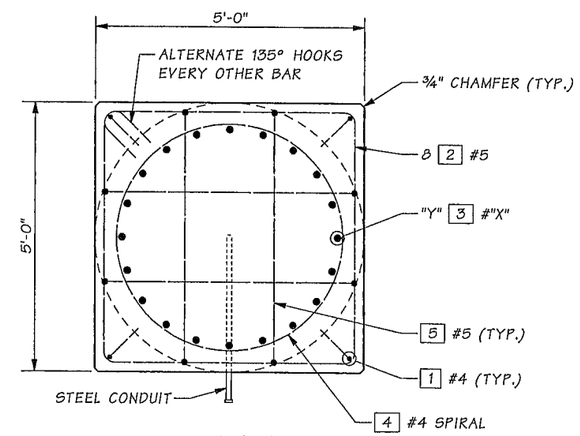

PLAN

ANCHOR RODS NOT SHOWN.

Bridge Design Engr.	Khaleghi, B	
Supervisor	Zeldenrust, RP	
Designed By	Rochon, MJ	01/13
Checked By	Gallagher, P	01/14
Detailed By	Hanson, CE	01/13
Bridge Projects Engr.		
Prelim. Plan By		
Architect/Specialist		

M:\SIGNS & MISC\XL3497 M St to Portland Sign Br\window files\Found Type 1 Mod 5ft 0in.wnd

DATE	REVISION	BY	APP'D

REGION NO.	STATE	FED. AID PROJ. NO.	SHEET NO.	TOTAL SHEETS
10	WASH.			
JOB NUMBER 12C501				

MATTHEW J. ROCHON, STATE OF WASHINGTON, 40414, REGISTERED PROFESSIONAL ENGINEER 3/19/14

BRIDGE AND STRUCTURES OFFICE

RICHARD P. ZELDENRUST, STATE OF WASHINGTON, 22344, REGISTERED PROFESSIONAL ENGINEER 3/20/14

Washington State Department of Transportation

I-5
M ST TO PORTLAND AVE - HOV

SIGN STRUCTURES

MODIFIED FOUNDATION TYPE 1
5'-0" DIAMETER

BRIDGE SHEET NO. SB17

SHEET 1308 OF 1763 SHEETS

SR 5 FILE NO. 3066 SHEET SB17

Wed Mar 19 07:49:36 2014

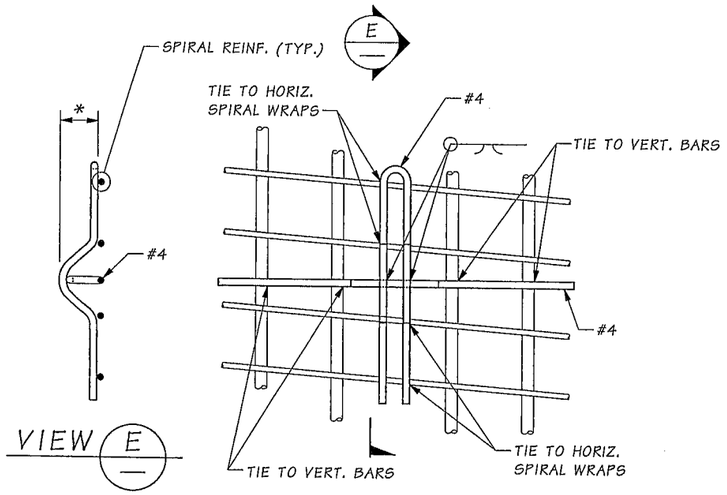

CENTRALIZER DETAIL

EPOXY COAT CENTRALIZER OR PAINT WITH INORGANIC ZINC AFTER FABRICATION (OPTION 1)

CENTRALIZER DETAIL NOTES:

EACH LEG SHALL BE TIED TO ONE VERTICAL BARS & TWO SPIRALS.

SEE SPECIAL PROVISIONS FOR SPACING REQUIREMENTS.

* CONCRETE COVER - MINUS ½"

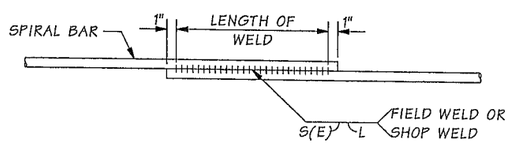

WELDED LAP SPLICE DETAIL

WELDING SHALL MEET THE REQUIREMENTS OF STD. SPEC. SECTION 6-02.3(24)E FOR WELD DIMENSIONS, SEE TABLE BELOW.

DEFORMED BAR	WELD DIMENSIONS (IN.)		
	S	E	LENGTH (L)
#4	¼	⅛	4

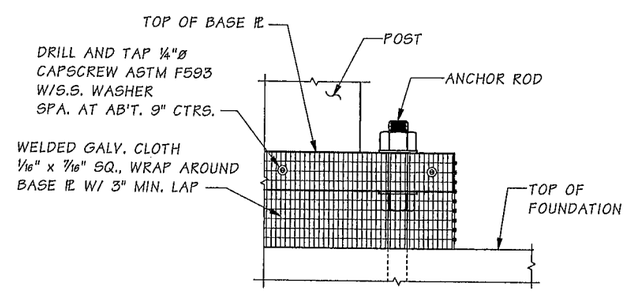

SCREEN DETAIL

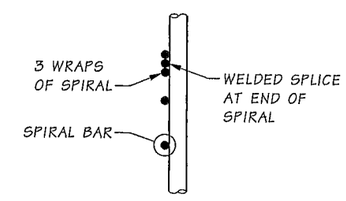

SPIRAL TERMINATION DETAIL

SR 5 FILE NO. 3066 SHEET SB18

Bridge Design Engr.	Khaleghi, B	
Supervisor	Zeldenrust, RP	
Designed By	Rochon, MJ	01/13
Checked By	Gallagher, P	01/14
Detailed By	Hanson, CE	01/13
Bridge Projects Engr.		
Prelim. Plan By		
Architect/Specialist		

M:\SIGNS & MISC\XL3497 M St to Portland Sign Br\window files\Found Type 1 Dtls.wnd

DATE	REVISION	BY	APP'D

REGION NO.	STATE	FED. AID PROJ. NO.	SHEET NO.	TOTAL SHEETS
10	WASH.			

JOB NUMBER 12C501

Wed Mar 19 07:49:38 2014

MATTHEW J. ROCHON, STATE OF WASHINGTON, 40414, REGISTERED PROFESSIONAL ENGINEER — 3/19/14

BRIDGE AND STRUCTURES OFFICE

RICHARD P. ZELDENRUST, STATE OF WASHINGTON, 38470, REGISTERED PROFESSIONAL ENGINEER — 3/20/14

Washington State Department of Transportation

I-5
M ST TO PORTLAND AVE - HOV

SIGN STRUCTURES

FOUNDATION TYPE 1 DETAILS

BRIDGE SHEET NO. SB18

SHEET 1309 OF 1763 SHEETS

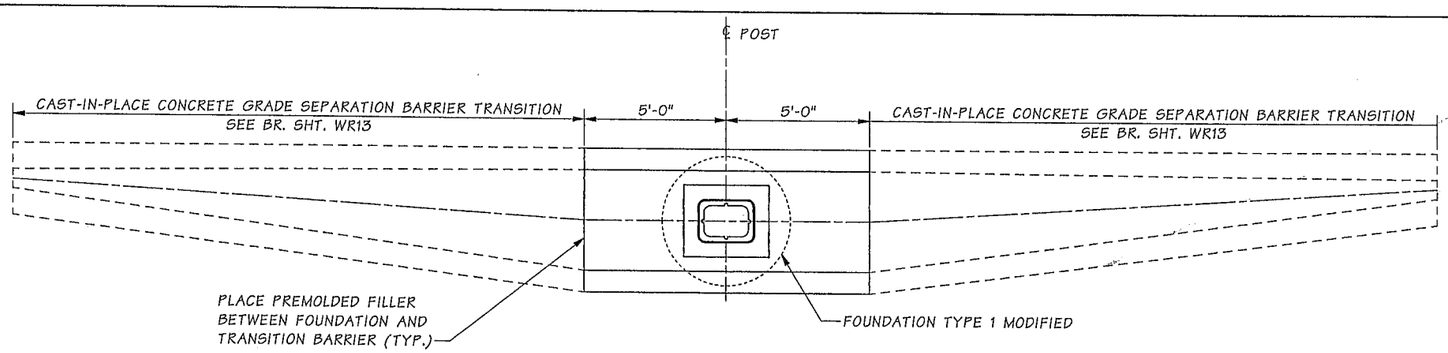

PLAN
BARRIER TRANSITION

ANCHOR RODS NOT SHOWN FOR CLARITY

BENDING DIAGRAM

MARK	LOCATION	SIZE	NO. REQ'D	LENGTH	
11	GSBS HORIZONTAL	5	14	9'-9"	STR.
12	GSBS VERTICAL TOP	5	14	7'-9¾"	
13	GSBS VERTICAL LT.	5	14	9'-1¼"	
14	GSBS VERTICAL RT.	5	14	9'-2¼"	

NOTE: CONCRETE COVER SHALL BE 1½" UNLESS SHOWN OTHERWISE.

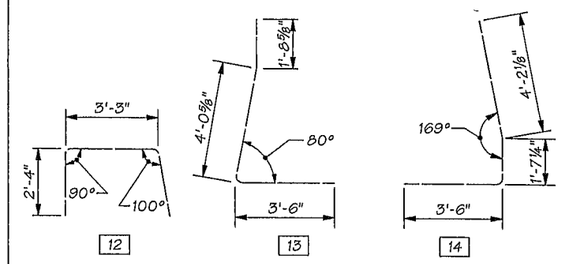

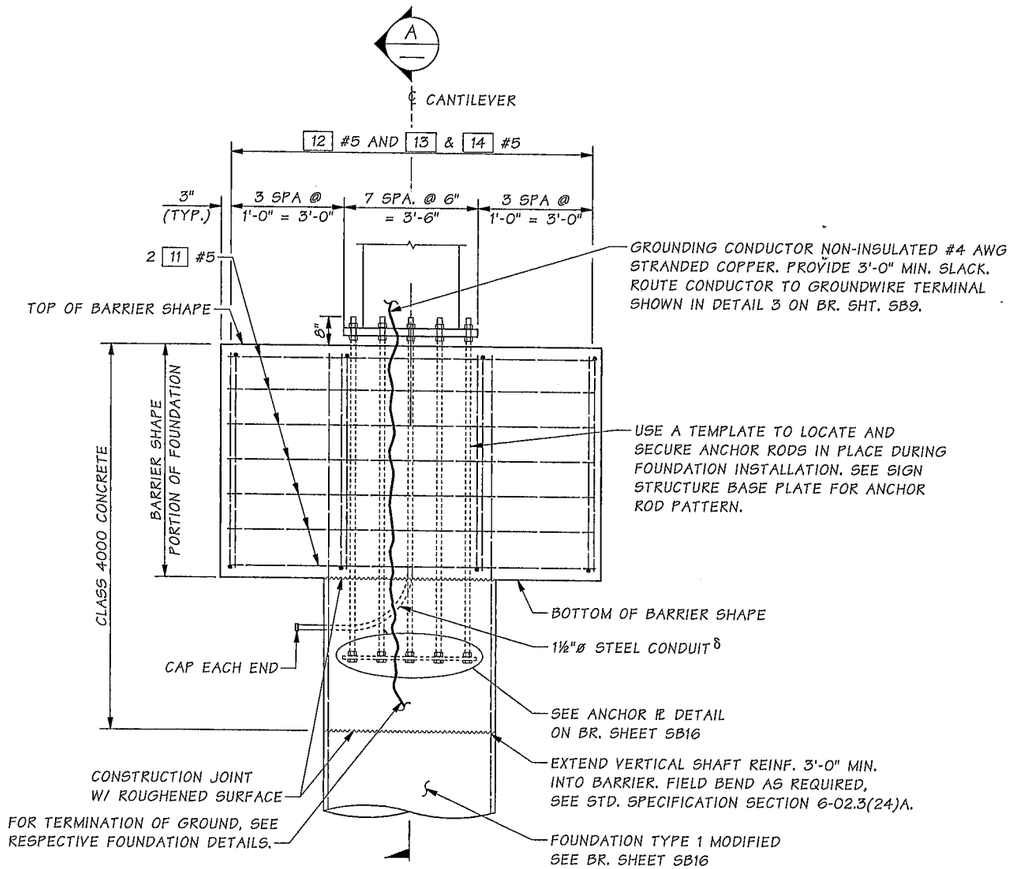

ELEVATION

δ COORDINATE SIZE AND NUMBER OF CONDUITS REQUIRED FOR LIGHTING AND VMS.

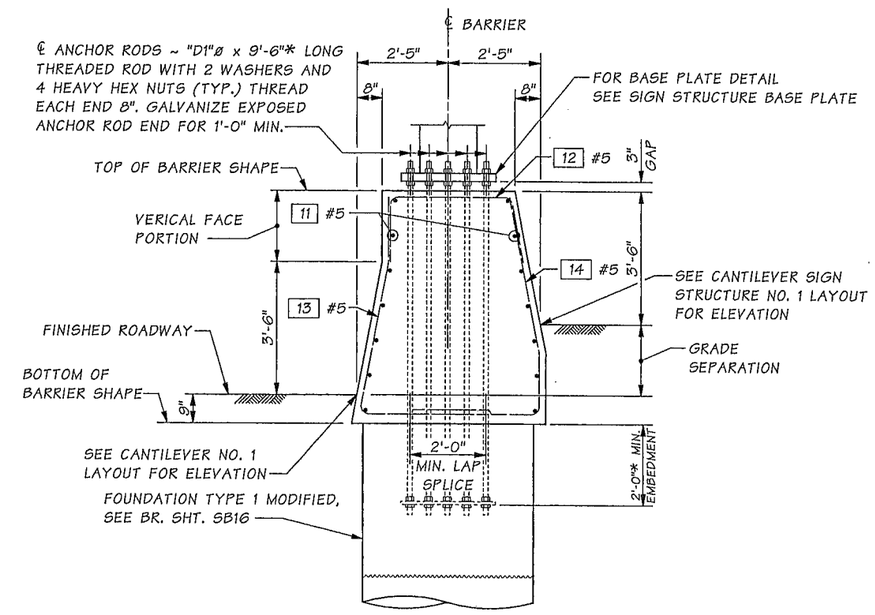

SECTION A

FOR "D1" SEE BR. SHT. SB15 FOR ANCHOR ROD DIAMETER.

* FIELD VERIFY DEPTH OF GRADE SEPARATION SO THAT ANCHOR RODS EMBED SPECIFIED MIN. INTO SHAFT CAP.

Bridge Design Engr.	Khaleghi, B	
Supervisor	Zeldenrust, RP	
Designed By	Rochon, MJ	01/13
Checked By	Gallagher, P	01/14
Detailed By	Hanson, CE	01/13
Bridge Projects Engr.		
Prelim. Plan By		
Architect/Specialist		

M:\SIGNS & MISC\XL3497 M St to Portland Sign Br\window files\Found Type 1 Mod Gr Sep Bar.wnd

DATE	REVISION	BY	APP'D

REGION NO.	STATE	FED. AID PROJ. NO.	SHEET NO.	TOTAL SHEETS
10	WASH.			
JOB NUMBER 12C501				

MATTHEW J. ROCHON — STATE OF WASHINGTON — 40414 — REGISTERED PROFESSIONAL ENGINEER — 3/19/14

BRIDGE AND STRUCTURES OFFICE

RICHARD P. ZELDENRUST — STATE OF WASHINGTON — REGISTERED PROFESSIONAL ENGINEER — 3/20/14

Washington State Department of Transportation

I-5
M ST TO PORTLAND AVE - HOV

SIGN STRUCTURES

TOP OF MODIFIED FOUNDATION TYPE 1 GRADE SEPARATION BARRIER SHAPE

BRIDGE SHEET NO. SB19

SHEET 1310 OF 1763 SHEETS

SR 5 FILE NO. 3066 SHEET SB19

Wed Mar 19 07:49:39 2014

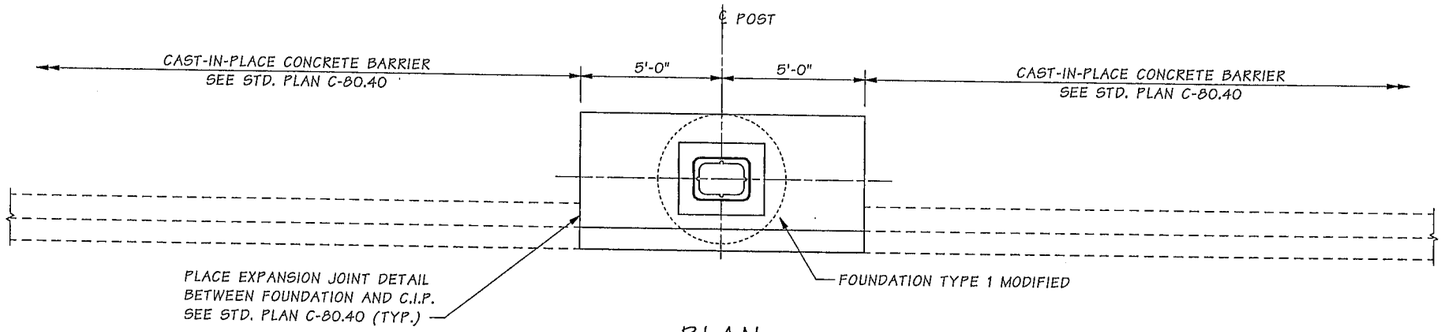

PLAN
BARRIER TRANSITION

ANCHOR RODS NOT SHOWN FOR CLARITY

BENDING DIAGRAM

MARK	LOCATION	SIZE	NO. REQ'D	LENGTH	
31	MEDIAN BARRIER HORIZONTAL	5	10	9'-9"	STR.
32	MEDIAN BARRIER VERTICAL TOP	5	14	"A"	
33	MEDIAN BARRIER VERTICAL LT.	5	14	7'-0¼"	
34	MEDIAN BARRIER VERTICAL RT.	5	14	7'-0¼"	

NOTE: CONCRETE COVER SHALL BE 1½" UNLESS SHOWN OTHERWISE.

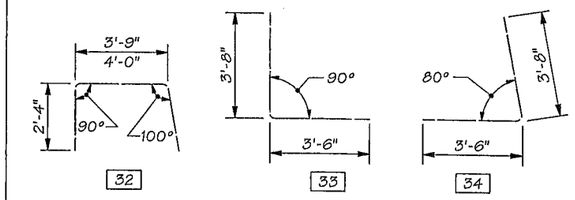

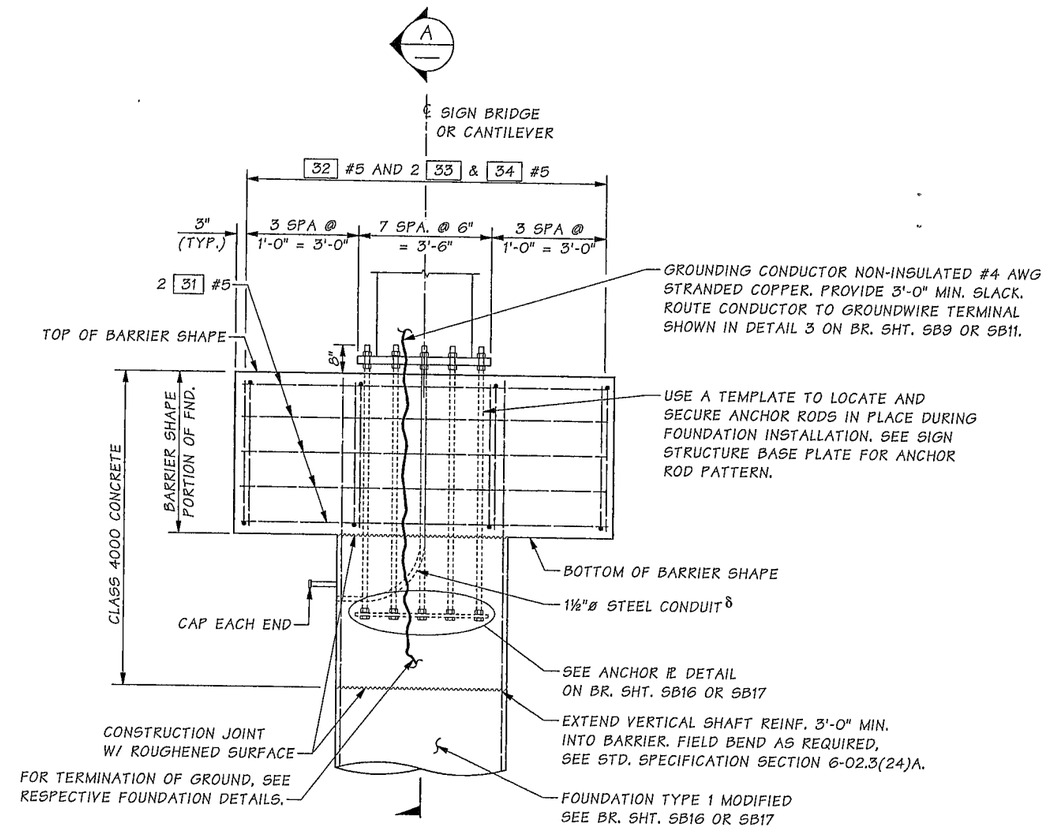

ELEVATION

δ COORDINATE SIZE AND NUMBER OF CONDUITS REQUIRED FOR LIGHTING AND VMS.

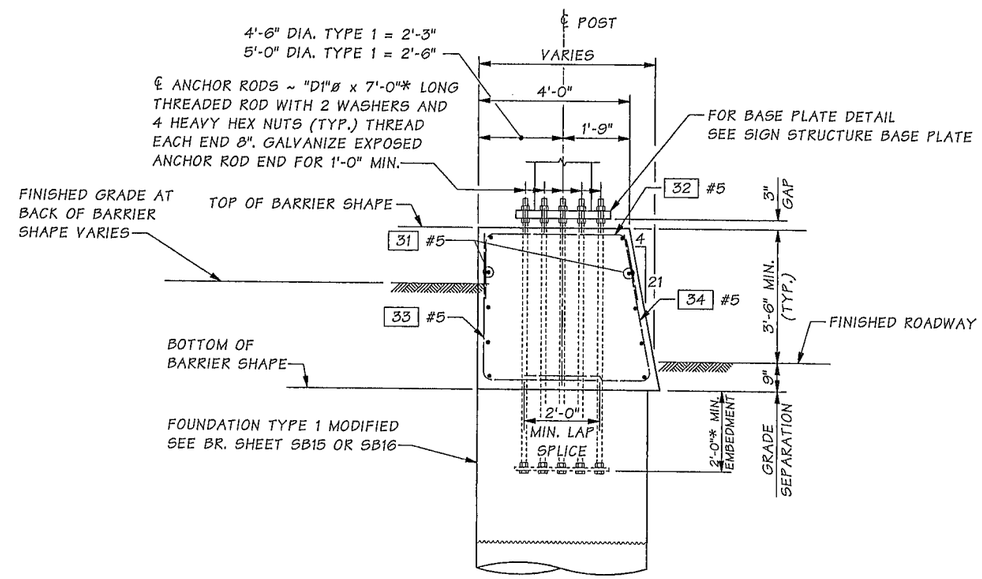

SECTION A

FOR "D1" SEE BR. SHEETS SB16 OR OR SB17 FOR ANCHOR ROD DIAMETER.

* FIELD VERIFY DEPTH OF GRADE SEPARATION SO THAT ANCHOR RODS EMBED SPECIFIED MIN. INTO SHAFT CAP.

SR 5 FILE NO. 3066 SHEET SB20

Bridge Design Engr.	Khaleghi, B	M:\SIGNS & MISC\XL3497 M St to Portland Sign Br\window files\Found Type 1 Mod Single Face Bar.wnd
Supervisor	Zeldenrust, RP	
Designed By	Rochon, MJ 01/13	
Checked By	Gallagher, P 01/14	
Detailed By	Hanson, CE 01/13	
Bridge Projects Engr.		
Prelim. Plan By		
Architect/Specialist		

Wed Mar 19 07:49:41 2014

DATE	REVISION	BY	APP'D

REGION NO.	STATE	FED. AID PROJ. NO.	SHEET NO.	TOTAL SHEETS
10	WASH.			
JOB NUMBER 12C501				

MATTHEW J. ROCHON — STATE OF WASHINGTON — 40414 — REGISTERED PROFESSIONAL ENGINEER — 3/19/14

BRIDGE AND STRUCTURES OFFICE

RICHARD P. ZELDENRUST — STATE OF WASHINGTON — 25470 — REGISTERED PROFESSIONAL ENGINEER — 3/20/14

Washington State Department of Transportation

I-5
M ST TO PORTLAND AVE - HOV

SIGN STRUCTURES

TOP OF MODIFIED FOUNDATION TYPE 1 SINGLE FACE BARRIER SHAPE

BRIDGE SHEET NO. SB20

SHEET 1311 OF 1763 SHEETS

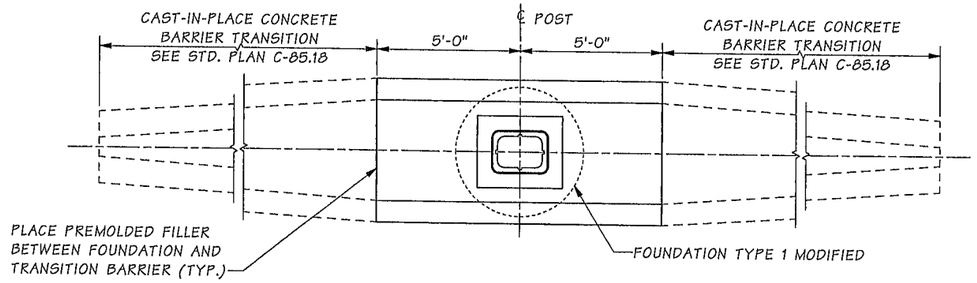

PLAN
BARRIER TRANSITION
ANCHOR RODS NOT SHOWN FOR CLARITY

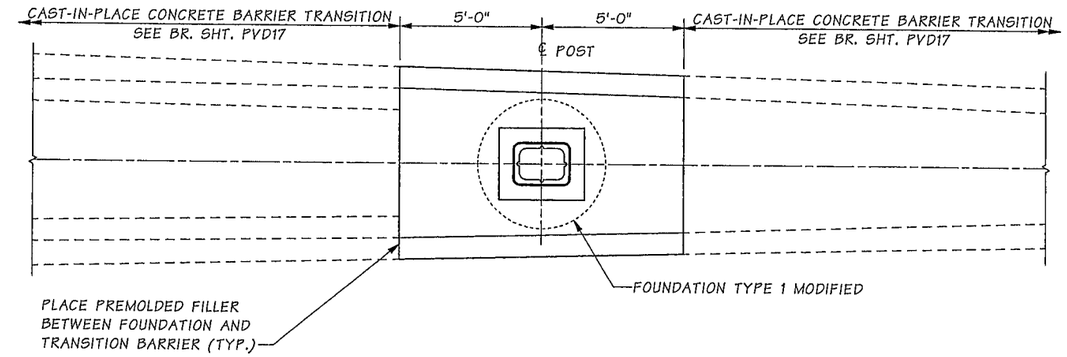

SIGN BRIDGE NO. 3 - PLAN
BARRIER TRANSITION
ANCHOR RODS NOT SHOWN FOR CLARITY

* FIELD VERIFY DEPTH OF GRADE SEPARATION SO THAT ANCHOR RODS EMBED SPECIFIED MIN. INTO SHAFT CAP AS SHOWN ON BR. SHT. SB19.

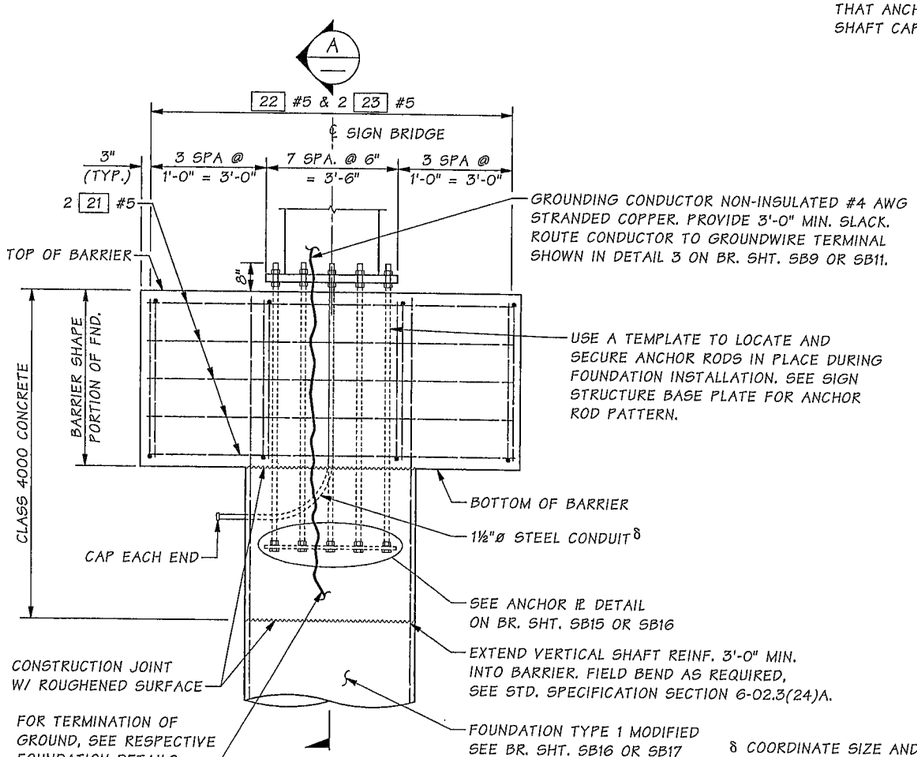

δ COORDINATE SIZE AND NUMBER OF CONDUITS REQUIRED FOR LIGHTING AND VMS.

ELEVATION

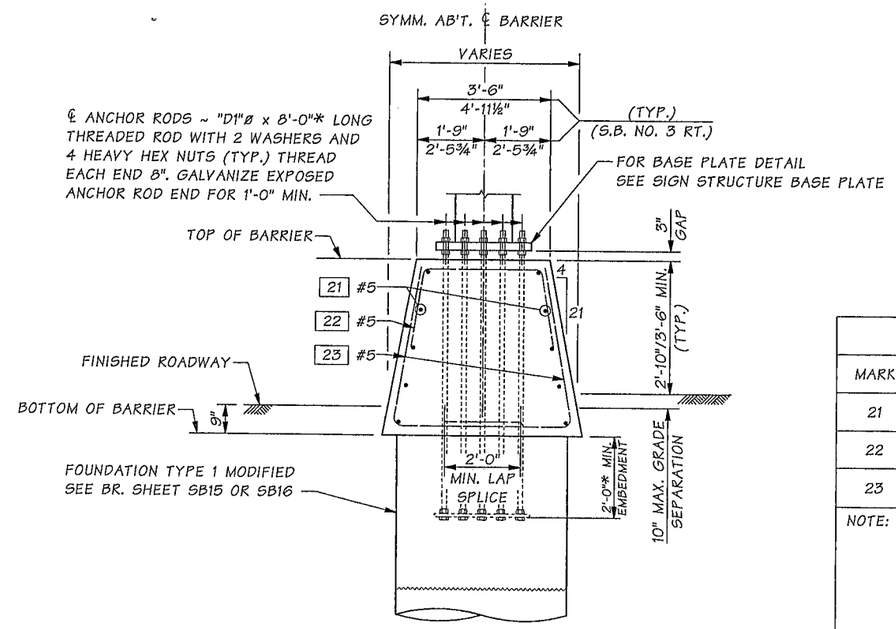

* FIELD VERIFY DEPTH OF GRADE SEPARATION SO THAT ANCHOR RODS EMBED SPECIFIED MIN. INTO SHAFT CAP.

SECTION A

FOR "D1" SEE BR. SHEETS SB16 OR SB17 FOR ANCHOR ROD DIAMETER.

BENDING DIAGRAM

MARK	LOCATION	SIZE	NO. REQ'D	LENGTH	
21	MEDIAN BARRIER HORIZONTAL	5	10	9'-9"	STR.
22	MEDIAN BARRIER VERTICAL	5	14	7'-10¼"	
23	MEDIAN BARRIER VERTICAL	5	28	"A"	

NOTE: CONCRETE COVER SHALL BE 1½" UNLESS SHOWN OTHERWISE.

"A" - DETERMINE FROM PLANS

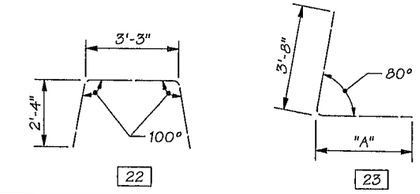

Bridge Design Engr.	Khaleghi, B		M:\SIGNS & MISC\XL3497 M St to Portland Sign Br\window files\Found Type 1 Mod Double Face Bar.wnd							
Supervisor	Zeldenrust, RP									
Designed By	Rochon, MJ	01/13								
Checked By	Gallagher, P	01/14								
Detailed By	Hanson, CE	01/13								
Bridge Projects Engr.										
Prelim. Plan By										
Architect/Specialist			DATE	REVISION	BY	APP'D				

Wed Mar 19 07:49:43 2014

REGION NO.	STATE	FED. AID PROJ. NO.	SHEET NO.	TOTAL SHEETS
10	WASH.			
JOB NUMBER 12C501				

MATTHEW J. ROCHON — STATE OF WASHINGTON — 40414 — REGISTERED PROFESSIONAL ENGINEER — 3/19/14

BRIDGE AND STRUCTURES OFFICE

RICHARD P. ZELDENRUST — STATE OF WASHINGTON — 15416 — REGISTERED PROFESSIONAL ENGINEER — 3/20/14

Washington State Department of Transportation

I-5
M ST TO PORTLAND AVE - HOV

SIGN STRUCTURES

TOP OF MODIFIED FOUNDATION TYPE 1 DOUBLE FACE BARRIER SHAPE

BRIDGE SHEET NO. SB21

SHEET 1312 OF 1763 SHEETS

SR 5 FILE NO. 3066 SHEET SB21

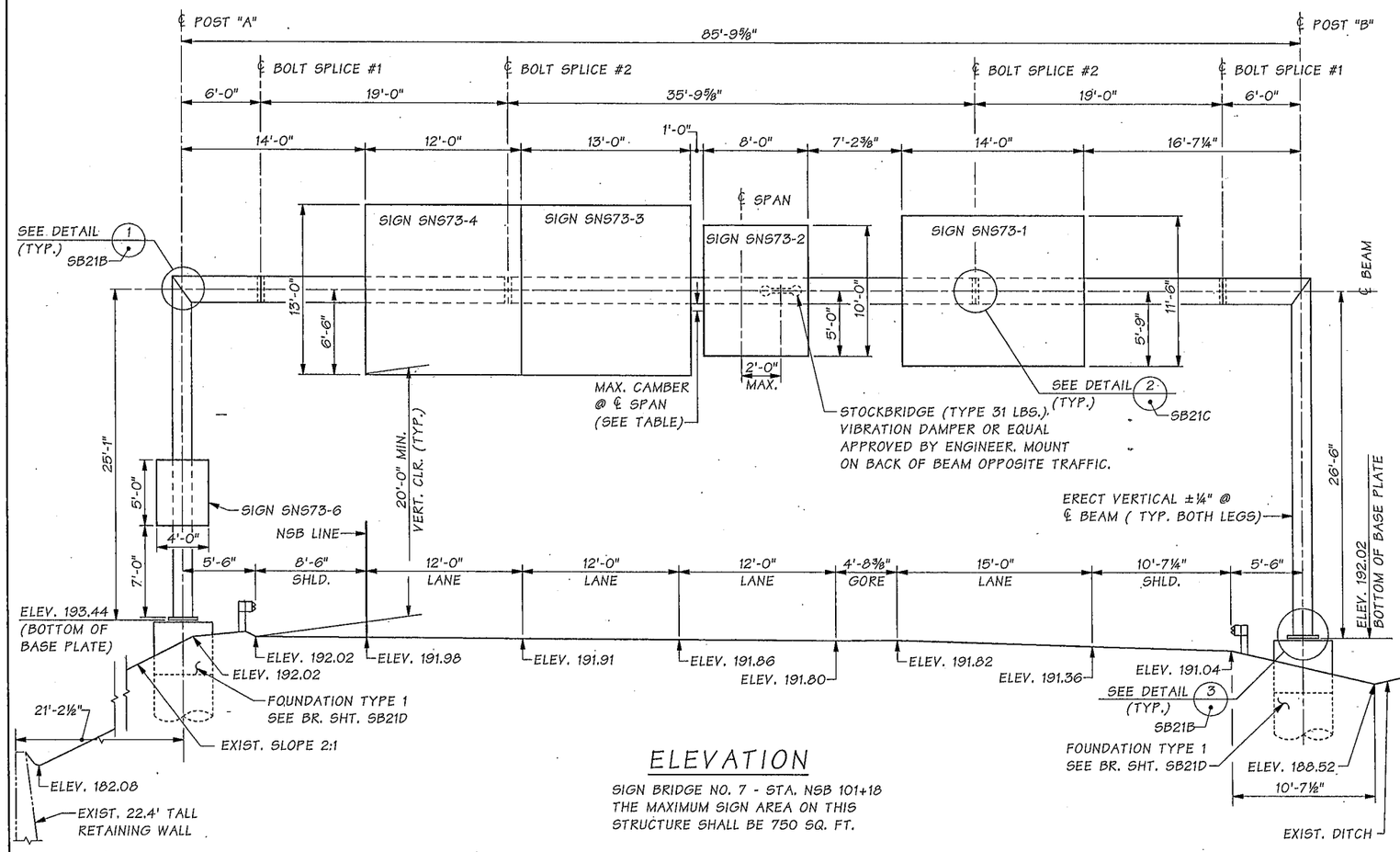

ELEVATION

SIGN BRIDGE NO. 7 - STA. NSB 101+18
THE MAXIMUM SIGN AREA ON THIS STRUCTURE SHALL BE 750 SQ. FT.

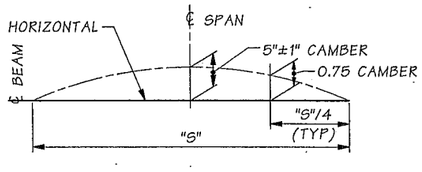

BEAM CAMBER DIAGRAM

LEGEND

B / SB6 — IDENTIFIES SECTION OR VIEW; TAKEN OR SHOWN ON BRIDGE SHEET SB6

1 / — IDENTIFIES DETAILS; TAKEN OR SHOWN ON THE SAME SHEET

GENERAL NOTES

1. ALL MATERIAL AND WORKMANSHIP SHALL BE IN ACCORDANCE WITH THE REQUIREMENTS OF THE WASHINGTON STATE DEPARTMENT OF TRANSPORTATION STANDARD SPECIFICATIONS FOR ROAD, BRIDGE, AND MUNICIPAL CONSTRUCTION DATED 2014 AND AMENDMENTS.
2. THE SIGN STRUCTURES DESIGN AND ANALYSIS HAS BEEN DONE IN ACCORDANCE WITH AASHTO STANDARD SPECIFICATIONS FOR STRUCTURAL SUPPORTS FOR HIGHWAY SIGNS, LUMINAIRES AND TRAFFIC SIGNALS - FOURTH EDITION - DATED 2009 AND INTERIMS, USING BASIC WIND SPEED OF 90 MPH AND 50 YEARS OF DESIGN LIFE. FATIGUE DESIGN OF THE STRUCTURE CONFORMS TO FATIGUE CATEGORY 1 OF THE SPECIFIED AASHTO STANDARD SPECIFICATIONS.
3. ALL BUTT JOINT WELDS SHALL BE FULL PENETRATION GROOVE WELDS WITH BACK-UP PLATES OF ¼" MIN. THICKNESS.
4. THE BACK-UP PLATES FOR ALL FULL PENETRATION WELDS SHALL BE WELDED CONTINUOUSLY TO THE JOINED PIECES. THIS CAN BE DONE BY EITHER A CONTINUOUS FILLET WELD ON THE BACK SIDE OF THE PIECE, OR BY A CONTINUOUS WELD IN THE ROOT OF THE FULL PENETRATION WELD, UNLESS OTHERWISE NOTED.
5. ALL BOLTS, RODS, AND RELATED HARDWARE SHALL BE GALVANIZED AFTER FABRICATION PER AASHTO M 232.
6. ALL STEEL SURFACES SHALL BE GALVANIZED AFTER FABRICATION IN ACCORDANCE WITH AASHTO M 111. ALL EXTERIOR STEEL SURFACES SHALL BE PAINTED IN ACCORDANCE WITH THE SPECIAL PROVISIONS. THE MAINTENANCE PLATFORM AND ASSOCIATED HAND RAILINGS SHALL NOT BE PAINTED. FOR MAINTENANCE PLATFORM ATTACHMENT BRACKET DETAILS FOR MONOTUBES SEE STANDARD PLAN G-95.20. PAINT ENTIRE ATTACHMENT BRACKET TO MATCH EXISTING STRUCTURE EXCEPT FOR MOUNTING BEAM. MAINTENANCE WALKWAY DETAILS SHALL BE DETERMINED FROM THE CONTRACT PLANS OR THE STANDARD PLANS.
7. SIGN PANELS AS SHOWN IN THE CONTRACT PLANS SHALL BE INSTALLED WITH THE SIGN STRUCTURE OR IMMEDIATELY AFTER THE SIGN STRUCTURE IS ERECTED.
8. FOR CANTILEVERS, FABRICATE BEAM TO PROVIDE STRAIGHT CAMBER. SEE CAMBER DIAGRAM. FOR SIGN BRIDGES, FABRICATE BEAM TO PROVIDE PARABOLIC CAMBER. SEE CAMBER DIAGRAM. FOR BOTH DO NOT SHIM AT BOLTED SPLICES.
9. FABRICATE POST STRAIGHT.
10. MATERIALS SPECIFICATIONS:

ALL STRUCTURAL STEEL EXCEPT AS OTHERWISE NOTED	ASTM A 572 GR. 50 OR ASTM A 588
ANCHOR RODS	ASTM F 1554 GR. 105
HANDHOLE COVER SCREWS	ASTM F 593 GR. 1
SPLICE BOLTS	AASHTO M 164
SIGN BRACKET RODS	ASTM A 307
MOUNTING BEAM BOLTS	AASHTO M 164
COVER PLATES	ASTM A 36

11. BOTTOM OF BASE PLATE ELEVATIONS AND POST HEIGHTS SHOWN ARE APPROXIMATE. THE CONTRACTOR SHALL FIELD MEASURE ANCHOR ROD LOCATIONS, ELEVATIONS, CLEARANCES AND ALL STEEL STRUCTURE DIMENSIONS, AND SUBMIT TO ENGINEER FOR APPROVAL PRIOR TO COMPLETION OF FABRICATION. AS AN OPTION, CAP OF ONE FOUNDATION MAY BE PLACED WHILE COMPLETED SIGN BRIDGE IS TEMPORARILY SUPPORTED IN PLACE.
12. POSTS, BASE PLATES, BEAMS AND SPLICE PLATES ARE MAIN LOAD CARRYING TENSILE MEMBERS OR TENSION COMPONENTS OF FLEXURAL MEMBERS AND SHALL MEET THE LONGITUDINAL CHARPY V-NOTCH TEST AS DESCRIBED IN SECTION 6-03.2 FOR AASHTO M 270 MATERIAL. NON-DESTRUCTIVE TEST ACCEPTANCE CRITERIA TO CONFORM TO TENSILE MEMBERS WITH CYCLIC LOAD.
13. SEE OTHER PLANS FOR CONDUIT PENETRATION AND HAND HOLE LOCATIONS. REFER TO ELECTRICAL PLANS FOR INTERNAL ROUTING OF CONDUCTORS. CONDUIT CONDUCTORS SHALL NOT BE ATTACHED TO THE OUTSIDE OF THE SIGN STRUCTURE. ISOLATION SWITCH SHALL BE LOCATED NEAR THE SHOULDER OF ROADWAY ON THE OPPOSITE SIDE OF THE BEAM AS THE SIGNS. SEE NEMA 3R TERMINAL CABINET DETAIL ON BRIDGE SHEET SB12.
14. THE MAXIMUM SIGN AREA ON THE STRUCTURE SHALL BE AS NOTED.
15. FOR SIGN AND LIGHT ATTACHMENT BRACKET DETAILS FOR MONOTUBES SEE STANDARD PLAN G-90.20. PAINT ENTIRE ATTACHMENT BRACKET TO MATCH EXISTING STRUCTURE EXCEPT FOR MOUNTING BEAM. SIGN, LIGHT, BEAM LENGTHS, SIZE AND SPACING SHALL BE DETERMINED FROM THE CONTRACT PLANS OR THE STANDARD PLANS. VARIABLE MESSAGE SIGNS SHALL HAVE MOUNTING BEAMS @ 3'-0" MAXIMUM. NO VMS ALLOWED ON CANTILEVERS.
16. THE TOTAL BEAM LENGTH "S" FOR CANTILEVERS SHALL NOT EXCEED 30'-0".
17. ALL WELDING SHALL BE DONE TO MINIMIZE DISTORTION. PERMISSIBLE MONOTUBE DIMENSION VARIATIONS FOR OUTSIDE DIMENSIONS, WALL THICKNESS, LENGTH, STRAIGHTNESS, (PARABOLICALLY-CAMBERED SIGN BRIDGE BEAMS EXCLUDED) SQUARENESS OF SIDES AND TWIST SHALL BE IN ACCORDANCE WITH SECTION 11 OF ASTM A500.

Bridge Design Engr.	Khaleghi, B	
Supervisor	Zeldenrust, RP	
Designed By	Bedi, G	04/14
Checked By	Rochon, MJ	04/14
Detailed By	Hanson, CE	04/14
Bridge Projects Engr.		
Prelim. Plan By		
Architect/Specialist		

M:\SIGNS & MISC\XL3497 M St to Port Sign Br Repl\window files\Layout.WND

DATE	REVISION	BY	APP'D
04/25/14	AD1 - NEW SHEET	GSB	RBZ

REGION NO.	STATE	FED. AID PROJ. NO.	SHEET NO.	TOTAL SHEETS
10	WASH.			

JOB NUMBER 12C501
CONTRACT NO.

BRIDGE AND STRUCTURES OFFICE

BAHAN KHALEGHI, STATE OF WASHINGTON, 27695, STRUCTURAL ENGINEER, PROFESSIONAL ENGINEER — 4/17/14

Washington State Department of Transportation

I-5
M ST TO PORTLAND AVE - HOV

SIGN BRIDGE NO. 7
LAYOUT

BRIDGE SHEET NO. SB21A

SHEET 1312A OF 1763 SHEETS

SR 5 FILE NO. 3204 SHEET SB21A

Thu Apr 17 06:21:28 2014

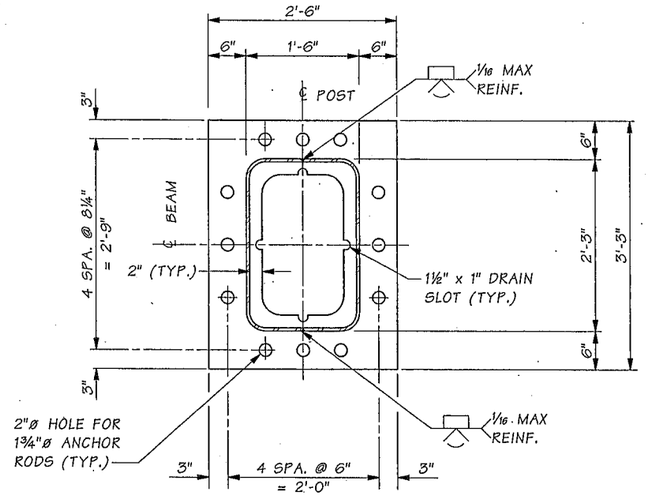

SECTION E

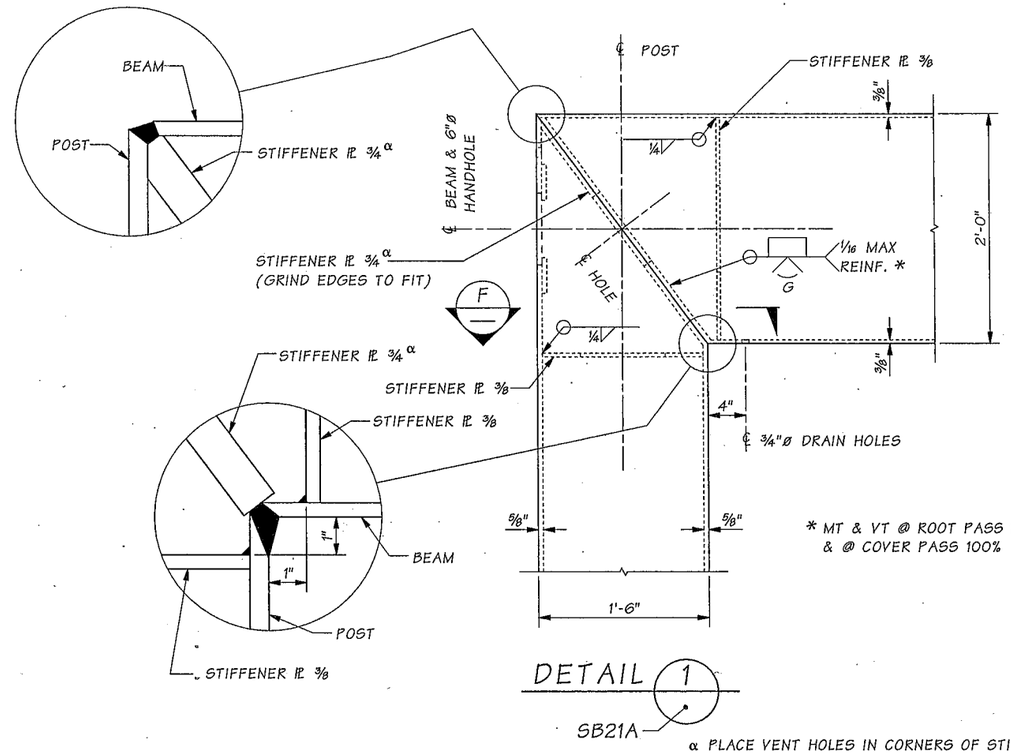

* MT & VT @ ROOT PASS 100% & @ COVER PASS 100%

DETAIL 1

SB21A

α PLACE VENT HOLES IN CORNERS OF STIFFENER PL ¾ AS REQUIRED FOR GALVANIZING PROCESS.

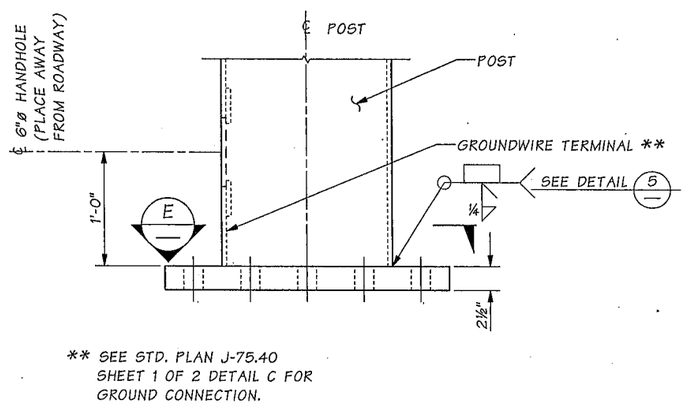

** SEE STD. PLAN J-75.40 SHEET 1 OF 2 DETAIL C FOR GROUND CONNECTION.

DETAIL 3

POST BASE

SB21A

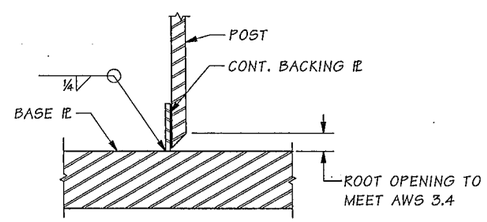

DETAIL 5

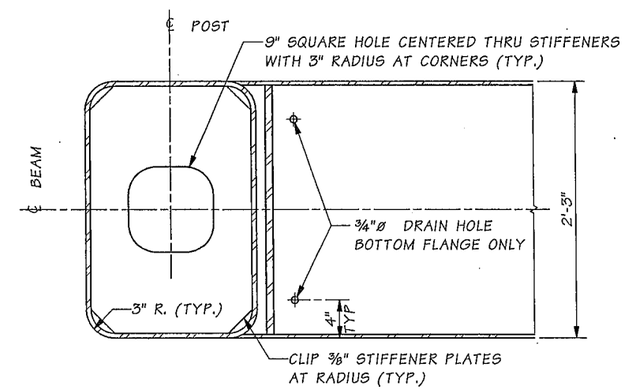

SECTION F

DIAGONAL STIFFENER NOT SHOWN.

Bridge Design Engr.	Khaleghi, B		M:\SIGNS & MISC\XL3497 M St to Port Sign Br Repl\window files\Str Dtls 1.wnd								
Supervisor	Zeldenrust, RP										
Designed By	Bedi, G	04/14									
Checked By	Rochon, MJ	04/14									
Detailed By	Hanson, CE	04/14									
Bridge Projects Engr.											
Prelim. Plan By			04/25/14	AD1 - NEW SHEET	GSB	RPZ					
Architect/Specialist			DATE	REVISION	BY	APP'D					

REGION NO.	STATE	FED. AID PROJ. NO.	SHEET NO.	TOTAL SHEETS
10	WASH.			
JOB NUMBER 120501				
CONTRACT NO.				

Wed Apr 16 11:25:23 2014

GURBACHAN S. BEDI — STATE OF WASHINGTON — 22285 — REGISTERED PROFESSIONAL ENGINEER — 4-16-14

BRIDGE AND STRUCTURES OFFICE

RICHARD P. ZELDENRUST — STATE OF WASHINGTON — 25470 — REGISTERED PROFESSIONAL ENGINEER — 4/16/14

Washington State Department of Transportation

I-5
M ST TO PORTLAND AVE - HOV

SIGN BRIDGE
STRUCTURAL DETAILS 1 OF 2

BRIDGE SHEET NO. SB21B

SHEET 1312B OF 1763 SHEETS

SR 5 FILE NO. 3204 SHEET SB21A

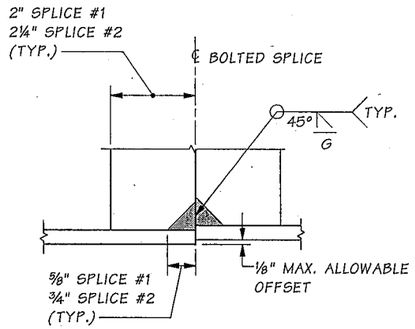

DETAIL 4

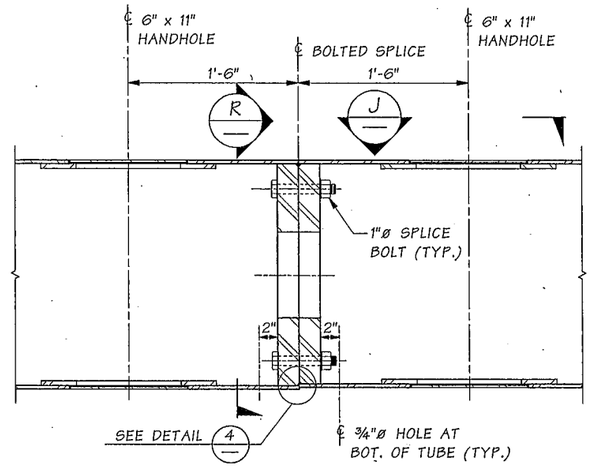

DETAIL 2

SECTION THRU BEAM
BOLTED SPLICE #2 SHOWN.
BOLTED SPLICE #1 SIMILAR.

SB21A

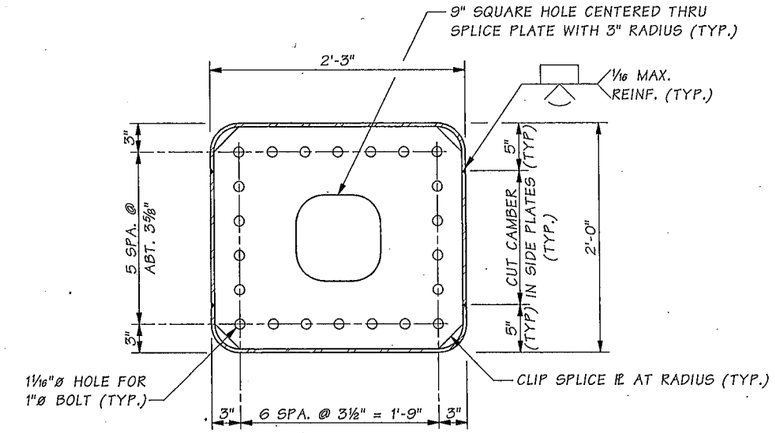

SECTION R

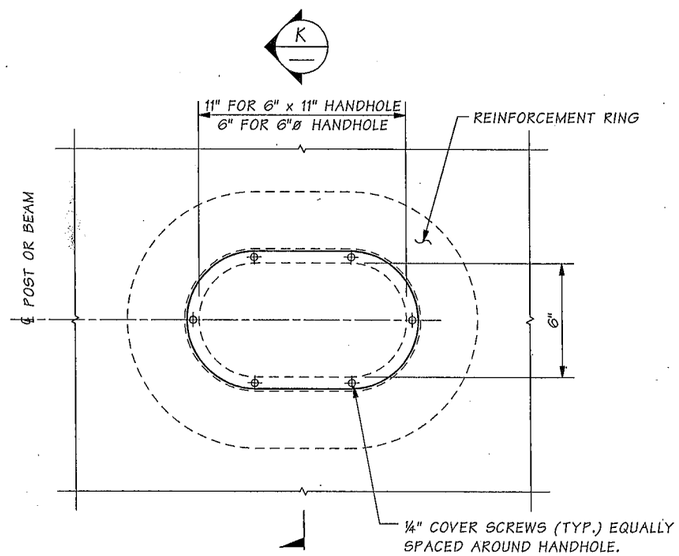

VIEW J

6" x 11" HANDHOLE SHOWN.
6"ø HANDHOLE SIMILAR
EXCEPT AS NOTED.

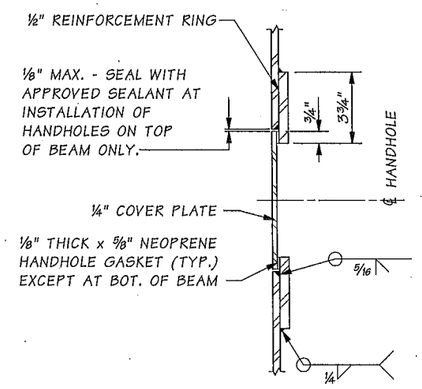

SECTION K

SR 5 FILE NO. 3204 SHEET SB21B

Bridge Design Engr.	Khaleghi, B		M:\SIGNS & MISC\XL3497 M St to Port Sign Br Repl\window files\Str Dtls 2.wnd								
Supervisor	Zeldenrust, RP										
Designed By	Bedi, G	04/14									
Checked By	Rochon, MJ	04/14									
Detailed By	Hanson, CE	04/14									
Bridge Projects Engr.											
Prelim. Plan By			04/25/14	ADI - NEW SHEET		GSB	RPZ				
Architect/Specialist			DATE	REVISION		BY	APP'D				

Wed Apr 16 11:25:24 2014

REGION NO.	STATE	FED. AID PROJ. NO.	SHEET NO.	TOTAL SHEETS
10	WASH.			
JOB NUMBER 12C501				
CONTRACT NO.				

GURBACHAN S. BEDI — STATE OF WASHINGTON — 22585 — REGISTERED PROFESSIONAL ENGINEER — 4-16-14

BRIDGE AND STRUCTURES OFFICE

RICHARD P. ZELDENRUST — STATE OF WASHINGTON — 25470 — REGISTERED PROFESSIONAL ENGINEER — 4/16/14

Washington State Department of Transportation

I-5
M ST TO PORTLAND AVE - HOV

SIGN BRIDGE
STRUCTURAL DETAILS 2 OF 2

BRIDGE SHEET NO. SB21C

SHEET 1312C OF 1763 SHEETS

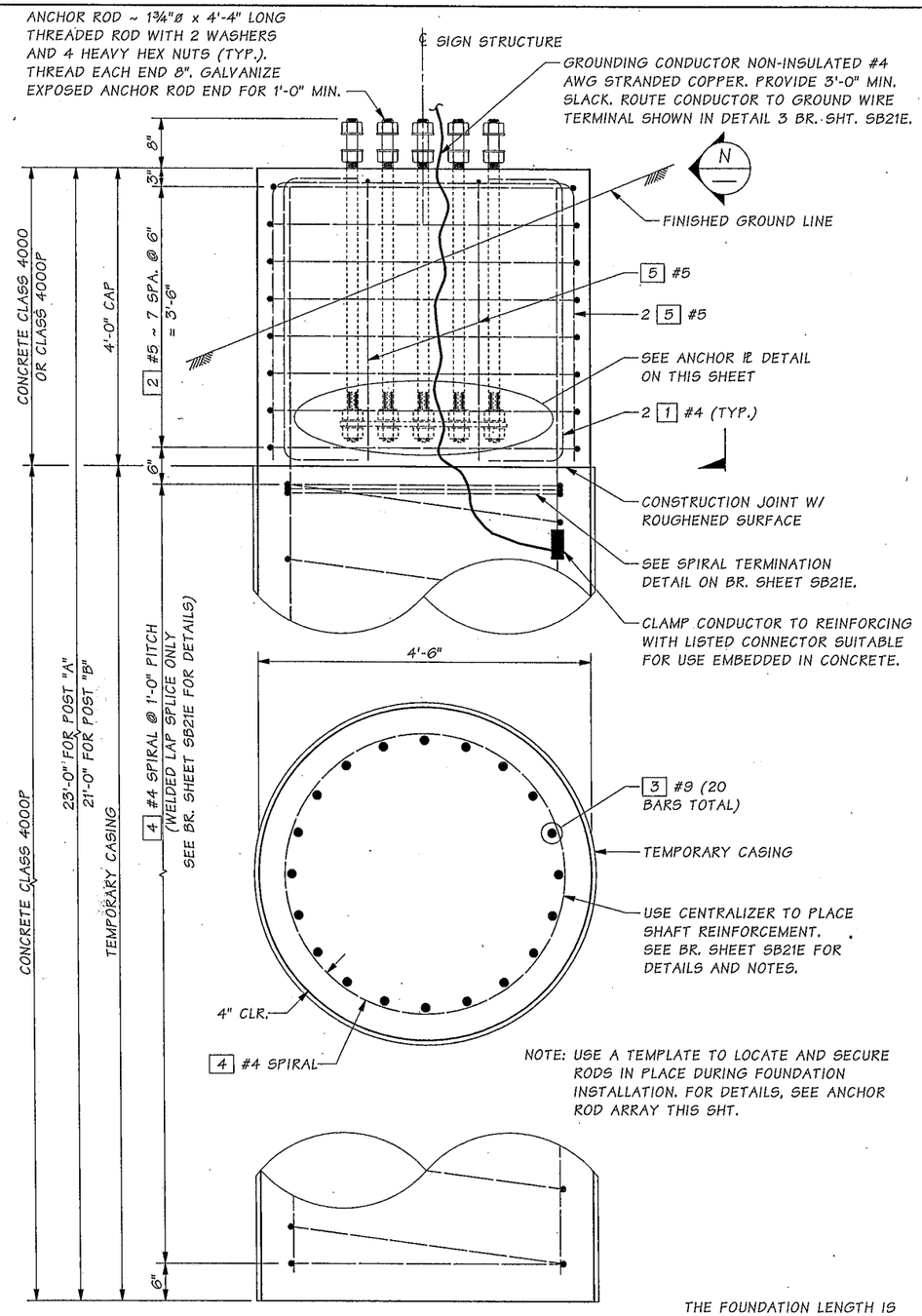

NOTE: USE A TEMPLATE TO LOCATE AND SECURE RODS IN PLACE DURING FOUNDATION INSTALLATION. FOR DETAILS, SEE ANCHOR ROD ARRAY THIS SHT.

ELEVATION

THE FOUNDATION LENGTH IS BASED ON AN ALLOWABLE LATERAL BEARING PRESSURE OF 1500 PSF.

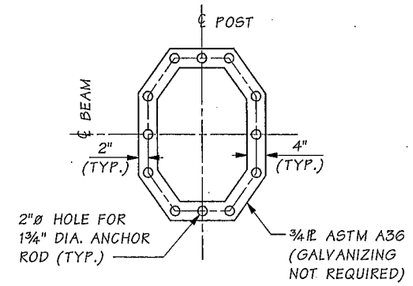

ANCHOR ⅊ DETAIL

SEE SIGN STRUCTURE BASE PLATE FOR ANCHOR ROD PATTERN

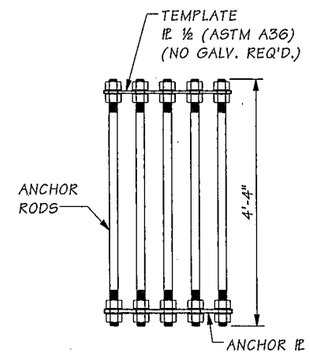

ANCHOR ROD ARRAY

SHIP THE ANCHOR ROD ARRAY ASSEMBLY AS A COMPLETE UNIT.

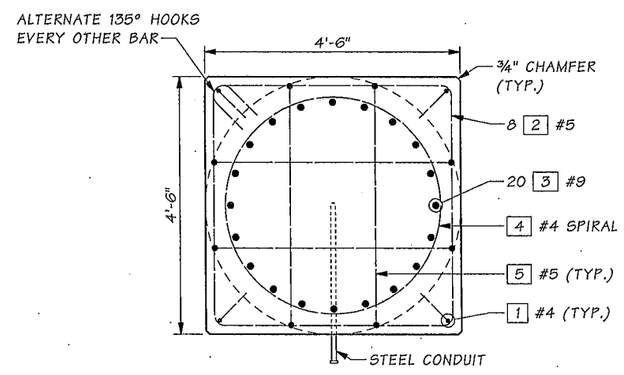

PLAN

ANCHOR RODS NOT SHOWN.

BENDING DIAGRAM

MARK	LOCATION	SIZE	NO. REQ'D.	LENGTH	
1	CAP VERTICAL	4	4	5'-6½"	
2	CAP HOOPS	5	8	"A"	
3	SHAFT VERTICAL	9	20	"A"	STR.
4	SHAFT SPIRAL	4	1	"A"	
5	CAP TOP	5	4	"A"	

NOTE: CONCRETE COVER SHALL BE 1½" UNLESS SHOWN OTHERWISE.

"A" ~ DETERMINE FROM PLANS

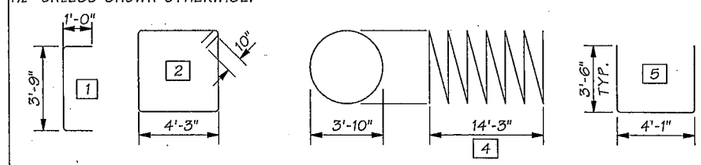

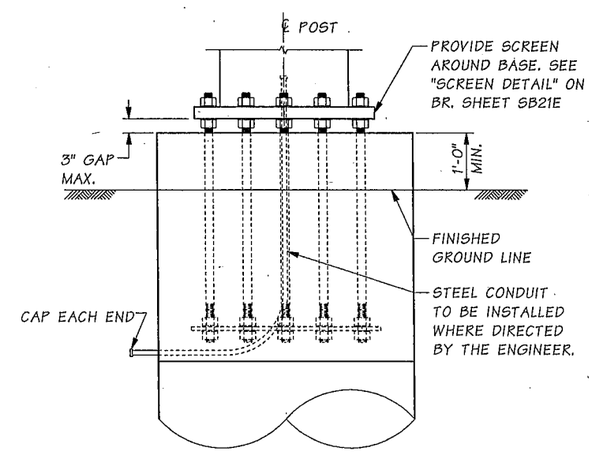

VIEW N

Bridge Design Engr.	Khaleghi, B	M:\SIGNS & MISC\XL3497 M St to Port Sign Br Repl\window files\Fnd Type 1 Dtls 1.wnd			REGION NO.	STATE	FED. AID PROJ. NO.	SHEET NO.	TOTAL SHEETS
Supervisor	Zeldenrust, RP				10	WASH.			
Designed By	Bedi, G 04/14				JOB NUMBER 12C501				
Checked By	Rochon, MJ 04/14								
Detailed By	Hanson, CE 04/14								
Bridge Projects Engr.									
Prelim. Plan By		04/25/14 AD1 - NEW SHEET	GSB	RPZ	CONTRACT NO.				
Architect/Specialist		DATE REVISION	BY	APP'D					

Wed Apr 16 11:25:20 2014

GURBACHAN S. BEDI — STATE OF WASHINGTON — 22506 — REGISTERED PROFESSIONAL ENGINEER — 4-16-14

BRIDGE AND STRUCTURES OFFICE

RICHARD P. ZELDENRUST — STATE OF WASHINGTON — 26470 — REGISTERED PROFESSIONAL ENGINEER — 4/16/14

Washington State Department of Transportation

I-5
M ST TO PORTLAND AVE - HOV

FOUNDATION TYPE 1
DETAILS 1 OF 2

BRIDGE SHEET NO. SB21D

SHEET 1312D OF 1763 SHEETS

SR 5 FILE NO. 3204 SHEET SB21C

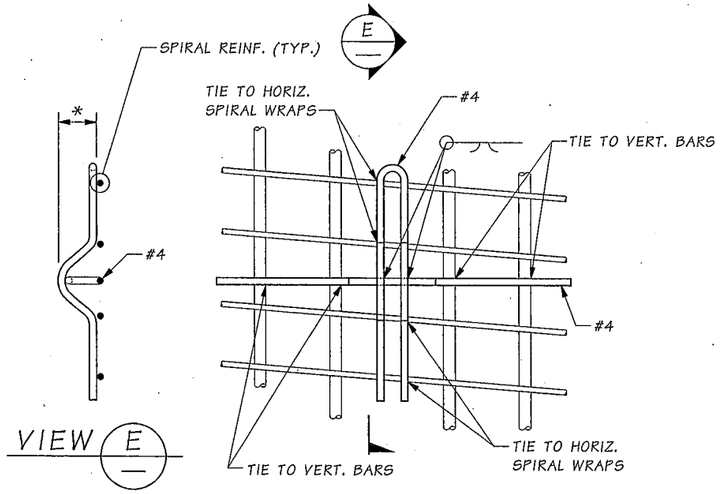

CENTRALIZER DETAIL

EPOXY COAT CENTRALIZER OR PAINT WITH INORGANIC ZINC AFTER FABRICATION (OPTION 1)

CENTRALIZER DETAIL NOTES:

EACH LEG SHALL BE TIED TO ONE VERTICAL BARS & TWO SPIRALS.

SEE SPECIAL PROVISIONS FOR SPACING REQUIREMENTS.

* CONCRETE COVER - MINUS ½"

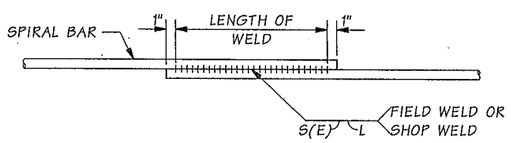

WELDED LAP SPLICE DETAIL

WELDING SHALL MEET THE REQUIREMENTS OF STD. SPEC. 6-02.3(24)E
FOR WELD DIMENSIONS, SEE TABLE BELOW.

DEFORMED BAR	WELD DIMENSIONS (IN.)		
	S	E	LENGTH (L)
#4	¼	⅛	4

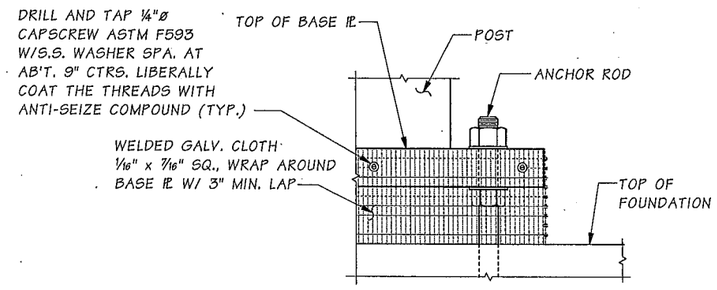

SCREEN DETAIL

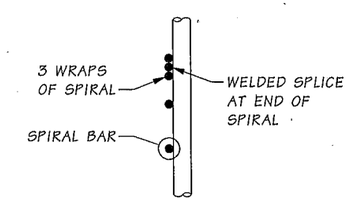

SPIRAL TERMINATION DETAIL

SR 5 FILE NO. 3204 SHEET SB21D

Bridge Design Engr.	Khaleghi, B		M:\SIGNS & MISC\XL3497 M St to Port Sign Br Repl\window files\Fnd Type 1 Dtls 2.wnd							
Supervisor	Zeldenrust, RP									
Designed By	Bedi, G	04/14								
Checked By	Rochon, MJ	04/14								
Detailed By	Hanson, CE	04/14								
Bridge Projects Engr.										
Prelim. Plan By			04/25/14	AD1 - NEW SHEET	GSB	RPZ				
Architect/Specialist			DATE	REVISION	BY	APP'D				

REGION NO.	STATE	FED. AID PROJ. NO.	SHEET NO.	TOTAL SHEETS
10	WASH.			
JOB NUMBER 12C501				
CONTRACT NO.				

GURBACHAN S. BEDI, STATE OF WASHINGTON, 22385, REGISTERED PROFESSIONAL ENGINEER
4-16-14

BRIDGE AND STRUCTURES OFFICE

RICHARD P. ZELDENRUST, STATE OF WASHINGTON, 25470, REGISTERED PROFESSIONAL ENGINEER
4/16/14

Washington State Department of Transportation

I-5
M ST TO PORTLAND AVE - HOV

FOUNDATION TYPE 1
DETAILS 2 OF 2

BRIDGE SHEET NO. SB21E

SHEET 1312E OF 1763 SHEETS

Wed Apr 16 11:25:21 2014

SEC. 9 T. 20N. R. 3E. W.M.
CITY OF TACOMA

I-5

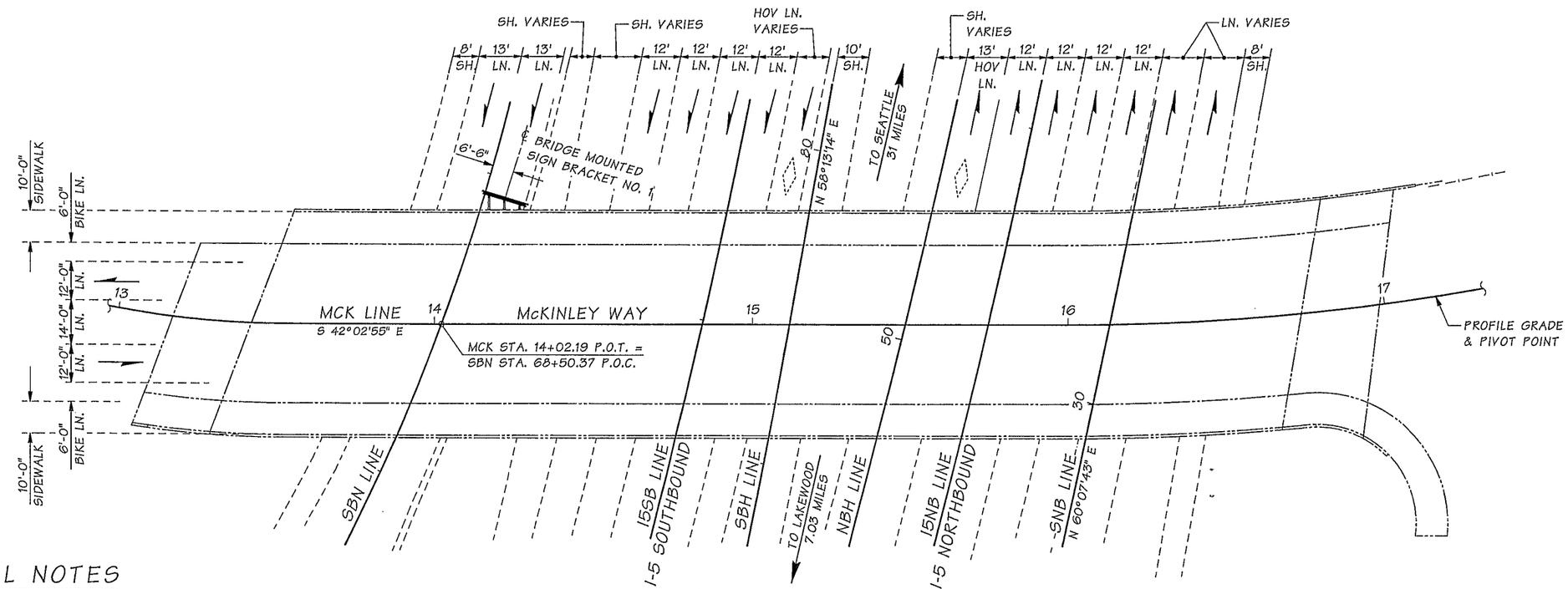

PLAN

GENERAL NOTES

1. ALL MATERIAL AND WORKMANSHIP SHALL BE IN ACCORDANCE WITH THE REQUIREMENTS OF THE WASHINGTON STATE DEPARTMENT OF TRANSPORTATION STANDARD SPECIFICATIONS FOR ROAD, BRIDGE AND MUNICIPAL CONSTRUCTION, DATED 2014 AND AMENDMENTS.

2. SIGN SUPPORT COMPONENTS HAVE BEEN DESIGNED TO MEET THE REQUIREMENTS OF AASHTO STANDARD SPECIFICATIONS FOR STRUCTURAL SUPPORTS FOR HIGHWAY SIGNS, LUMINAIRES, AND TRAFFIC SIGNALS, DATED 2009 AND INTERIMS, USING BASIC WIND SPEEN OF 90 PMH AND 50 YEAR DESIGN LIFE.

3. MATERIAL SPECIFICATIONS:

PLATES AND BARS	ASTM A36
PIPES	ASTM A 53, GRADE B, OR ASTM A 500, GRADE B
BRACING ROD	ASTM A 307
BOLTS, NUTS & WASHERS (UNLESS OTHERWISE NOTED)	STD. SPEC. 9-06.5(1)
U-BOLTS, LOCKNUTS & WASHERS (UNLESS OTHERWISE NOTED)	STAINLESS STEEL CONFORMING TO STD. SPEC. 9-28.11
RESIN BONDED ANCHORS (ALL THREAD)	ALL THREADED ROD: ASTM F 593, TYPE 304 NUT: ASTM F 594, TYPE 304 WASHERS: ASTM A 240, TYPE 304
EPOXY BONDING AGENT	STD. SPEC. 9-26.1 (TYPE IV)

4. AN ACCEPTABLE ALTERNATIVE TO A LOCKNUT WITH A NYLON INSERT SHALL BE AS FOLLOWS:

   - NYLOCK BLUE PATCH
   - NYLOCK PRECOTE 30
   - ND 360° RING PATCH

   ALL PRODUCTS SHALL BE APPLIED THE FULL LENGTH OF THE BOLT THREADS WITH 360 DEGREE COVERAGE.

5. ALL NON-STAINLESS STEEL PARTS SHALL BE GALVANIZED IN ACCORDANCE WITH AASHTO M111 AFTER FABRICATION. BOLTS AND HARDWARE SHALL BE GALVANIZED IN ACCORDANCE WITH AASHTO M232.

6. SIZE OF FILLET WELDS SHALL BE ¼" MINIMUM EXCEPT WHERE NOTED OTHERWISE.

7. FOR W4X13 DETAILS SEE STANDARD PLAN G-90.10 AND G90.40. WHERE W4X13 SPACING CONFLICTS WITH THE VERTICAL AND HORIZONTAL PIPE CONNECTION, THE SPACING MAY BE MODIFIED SO THE MAXIMUM SPACING DOES NOT EXCEED 6 FEET AND THE EDGE DISTANCE DOES NOT EXCEED 3 FEET.

8. THE DIMENSIONS SHOWN IN THE PLANS ARE BASED ON CONTRACT RECORDS. THESE DIMENSIONS SHALL BE FIELD MEASURED AND VERIFIED BY THE CONTRACTOR PRIOR TO FABRICATION.

9. RESIN BONDED ANCHOR HOLES SHALL NOT BE CORE DRILLED

LEGEND

B / SB22 — IDENTIFIES SECTION, VIEW OR DETAIL
TAKEN OR SHOWN ON BRIDGE SHEET SB3

B / — TAKEN OR SHOWN ON THE SAME SHEET

SR 5 FILE NO. 3098 SHEET SB22

Bridge Design Engr.	Khaleghi, B		
Supervisor	Zeldenrust, RP		
Designed By	Rosa, M	04/13	
Checked By	Leland, A	04/13	
Detailed By	Hanson, CE	04/13	
Bridge Projects Engr.			
Prelim. Plan By			
Architect/Specialist			

M:\SIGNS & MISC\XL3497 M St to Port Sign Brkt\window files\21-LAYOUT.WND

DATE	REVISION	BY	APP'D

REGION NO.	STATE	FED. AID PROJ. NO.	SHEET NO.	TOTAL SHEETS
10	WASH.			
JOB NUMBER 12C501				

Wed Mar 19 08:32:59 2014

BRIDGE AND STRUCTURES OFFICE

BIJAN KHALEGHI — STATE OF WASHINGTON — 37695 — STRUCTURAL ENGINEER — PROFESSIONAL ENGINEER
3/19/14

Washington State Department of Transportation

I-5
M ST TO PORTLAND AVE - HOV

McKINLEY WAY OVER I-5 BRIDGE NO. 5/448

BRIDGE MOUNTED SIGN BRACKET NO. 1
LAYOUT

BRIDGE SHEET NO. SB22

SHEET 1313 OF 1763 SHEETS

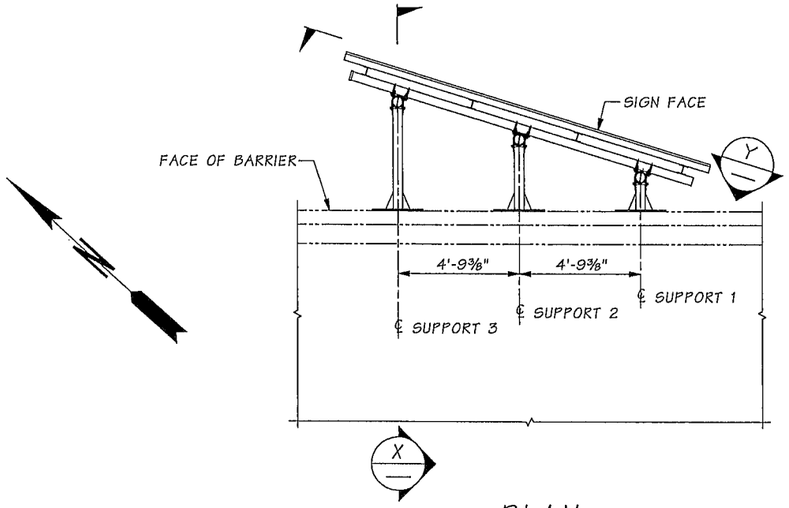

PLAN

BRIDGE MOUNTED SIGN BRACKET NO. 1

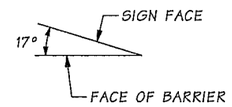

SIGN SKEW

TABLE OF DIMENSIONS

SIGN BRACKET	LOCATION	SIGN SKEW	SIGN NO.	SIGN LENGTH	SIGN HEIGHT
1	SEE PLAN	17°	SN7-13	15'-0"	7'-0"

PIPE SIZE	TOP ARM LENGTHS			BOTTOM ARM LENGTHS		
	A1	A2	A3	B1	B2	B3
4"ø	1'-0"	2'-5½"	3'-11⅛"	5'-1⅛"	6'-1¼"	7'-3⅛"

BRACING LENGTHS	CANTILEVER LENGTHS		C	D	G
L3	E	F			
5'-4½"	9"	9"	5'-0"	9'-6⅛"	3'-11⅞"

D & G DIMENSIONS ARE BASED ON PLANS AND SHALL BE FIELD MEASURED PRIOR TO FABRICATION OF BRACKET ARMS AND BRACE. (ADJUST E AND F DIMENSIONS TO PLACE SIGN HORIZONTALLY)

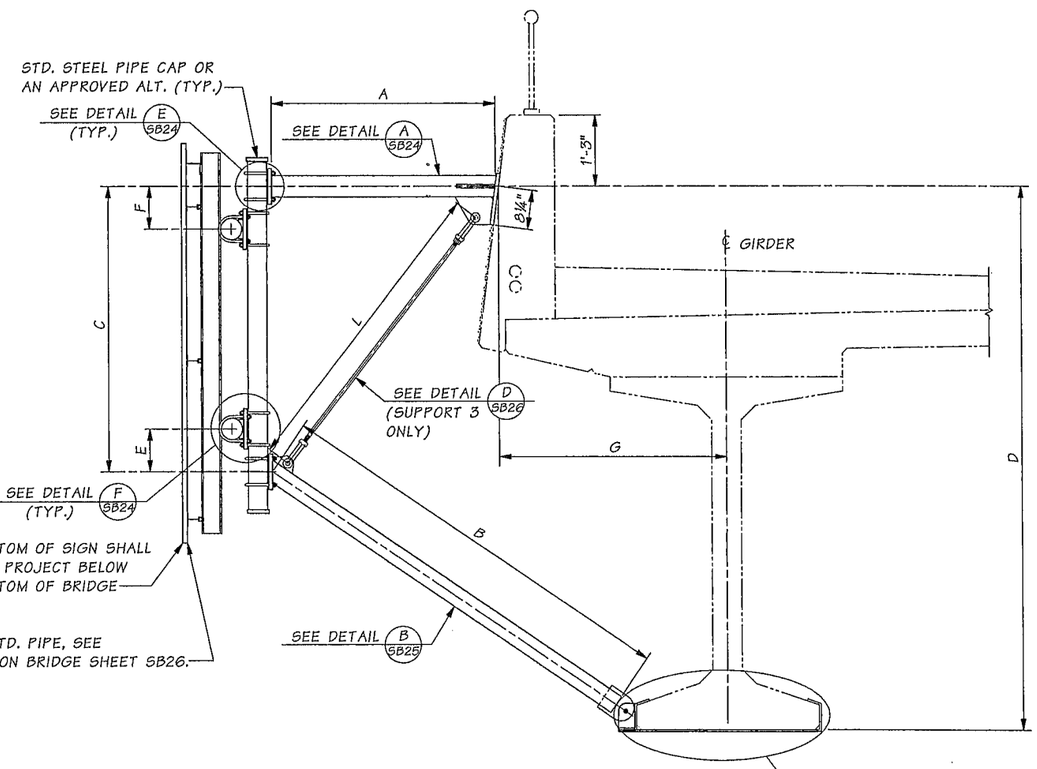

FOR ATTACHEMENT TO 4"ø STD. PIPE, SEE W4 x 13 CONNECTION DETAIL ON BRIDGE SHEET SB26.

SECTION X

SHOWN AT SUPPORT 3. DETAILS ARE SIMILAR AT SUPPORTS 1 & 2.

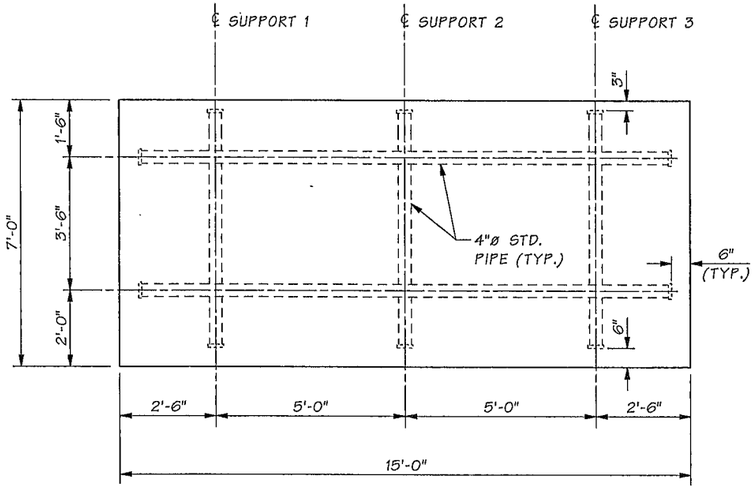

VIEW Y

Bridge Design Engr.	Khaleghi, B		M:\SIGNS & MISC\XL3497 M St to Port Sign Brkt\window files\22-SIGN BRKT GEO.wnd							
Supervisor	Zeldenrust, RP					REGION NO.	STATE	FED. AID PROJ. NO.	SHEET NO.	TOTAL SHEETS
Designed By	Rosa, M	04/13				10	WASH.			
Checked By	Leland, A	04/13								
Detailed By	Hanson, CE	04/13				JOB NUMBER 12C501				
Bridge Projects Engr.										
Prelim. Plan By										
Architect/Specialist			DATE	REVISION	BY	APP'D				

Wed Mar 19 08:33:00 2014

MICHAEL A. ROSA — STATE OF WASHINGTON — 45797 — REGISTERED PROFESSIONAL ENGINEER — 3/19/14

BRIDGE AND STRUCTURES OFFICE

RICHARD P. ZELDENRUST — STATE OF WASHINGTON — 25410 — REGISTERED PROFESSIONAL ENGINEER — 3/20/14

Washington State Department of Transportation

I-5
M ST TO PORTLAND AVE - HOV

McKINLEY WAY OVER I-5 BRIDGE NO. 5/448

BRIDGE MOUNTED SIGN BRACKET NO. 1
GEOMETRY

BRIDGE SHEET NO. SB23

SHEET 1314 OF 1763 SHEETS

SR 5 FILE NO. 3098 SHEET SB23

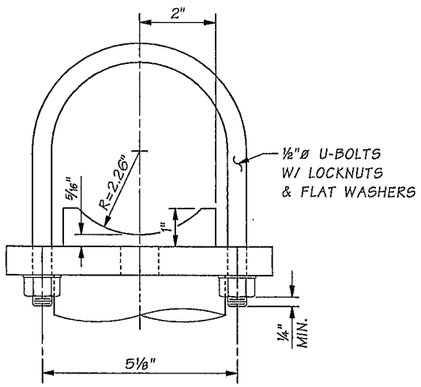

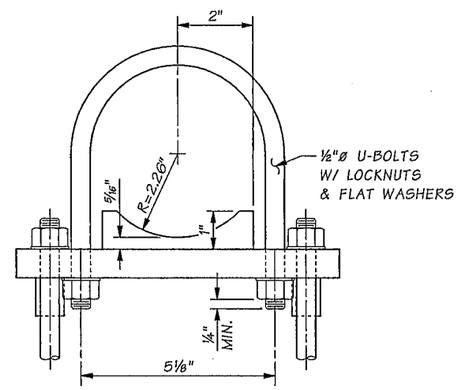

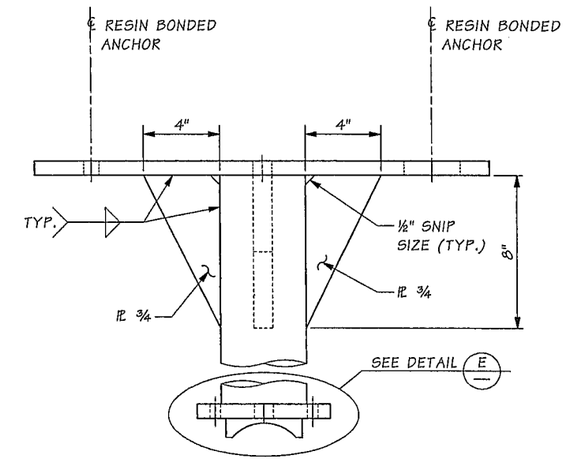

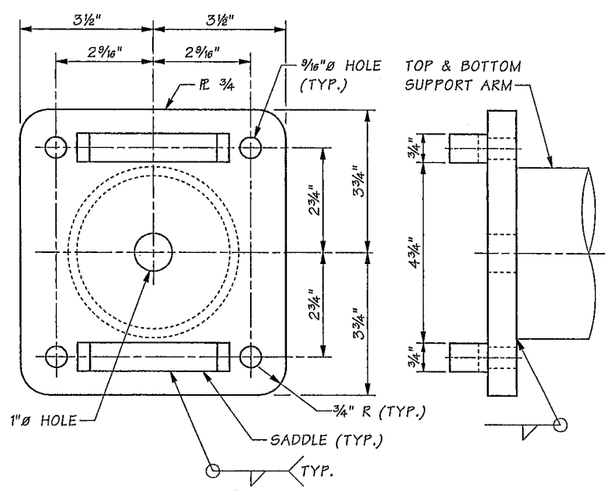

DETAIL E
SB23 & SB25

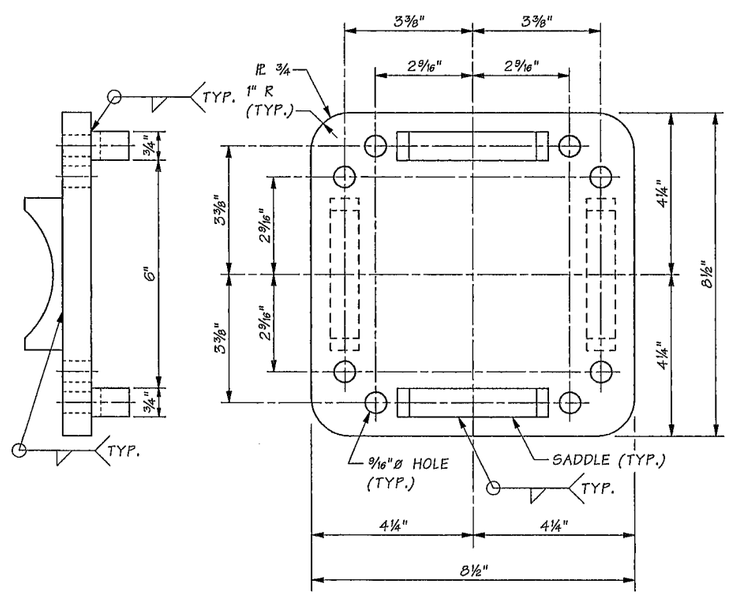

DETAIL F
SB23

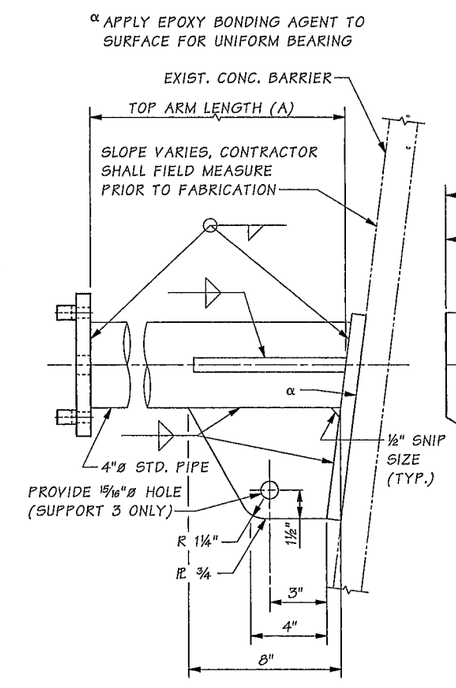

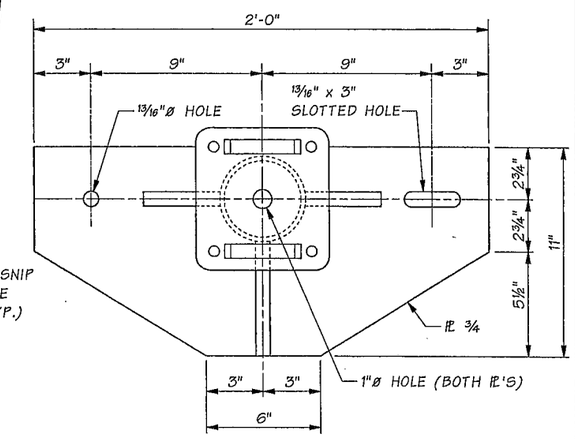

DETAIL A
SB23

Bridge Design Engr.	Khaleghi, B		M:\SIGNS & MISC\XL3497 M St to Port Sign Brkt\window files\23-SIGN BRKT DET 1.wnd							
Supervisor	Zeldenrust, RP									
Designed By	Rosa, M	04/13								
Checked By	Leland, A	04/13								
Detailed By	Hanson, CE	04/13								
Bridge Projects Engr.										
Prelim. Plan By										
Architect/Specialist			DATE	REVISION	BY	APP'D				

REGION NO.	STATE	FED. AID PROJ. NO.	SHEET NO.	TOTAL SHEETS
10	WASH.			
JOB NUMBER 122501				

Wed Mar 19 08:33:02 2014

MICHAEL A. ROSA — STATE OF WASHINGTON — 43707 — REGISTERED PROFESSIONAL ENGINEER — 3/19/14

BRIDGE AND STRUCTURES OFFICE

RICHARD P. ZELDENRUST — STATE OF WASHINGTON — 38470 — REGISTERED PROFESSIONAL ENGINEER — 3/20/14

Washington State Department of Transportation

I-5
M ST TO PORTLAND AVE - HOV

McKINLEY WAY OVER I-5 BRIDGE NO. 5/448

BRIDGE MOUNTED SIGN BRACKET DETAILS 1 OF 3

BRIDGE SHEET NO. SB24

SHEET 1315 OF 1763 SHEETS

SR 5 FILE NO. 3098 SHEET SB24

SIGN BRACKET NO.	Z° (CONTRACTOR TO VERIFY)		
	SUPPORT #1	SUPPORT #2	SUPPORT #3
1	38°	49°	56°

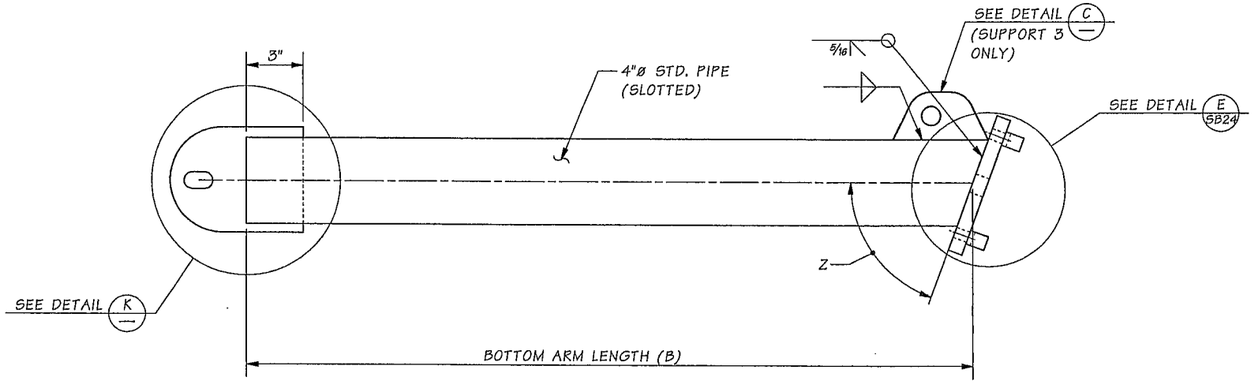

DETAIL B SB23

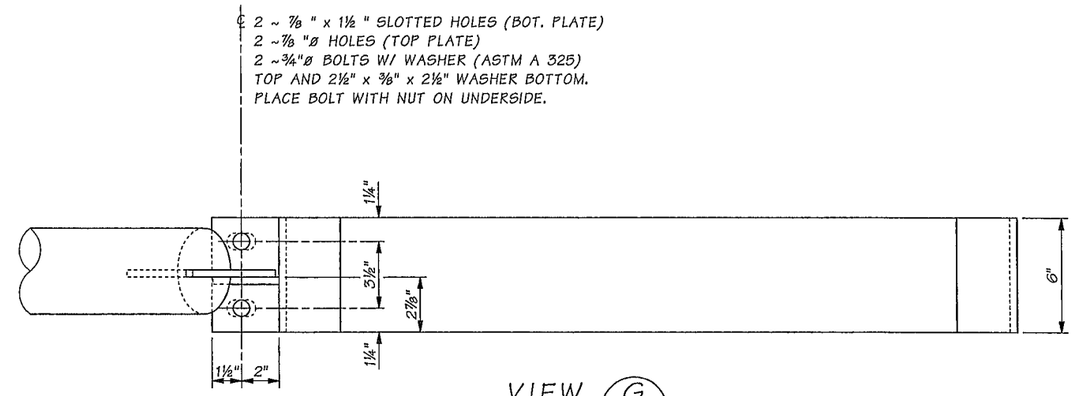

VIEW G

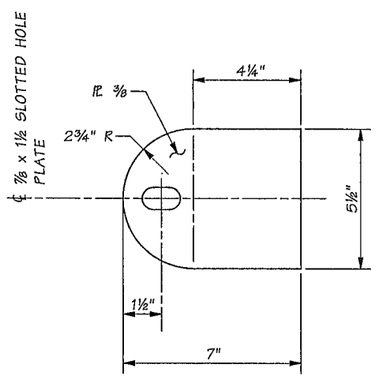

DETAIL K

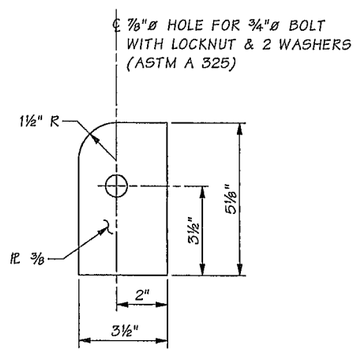

DETAIL M

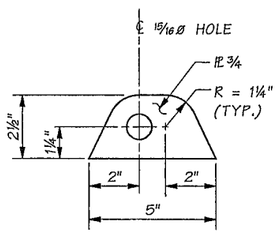

DETAIL C

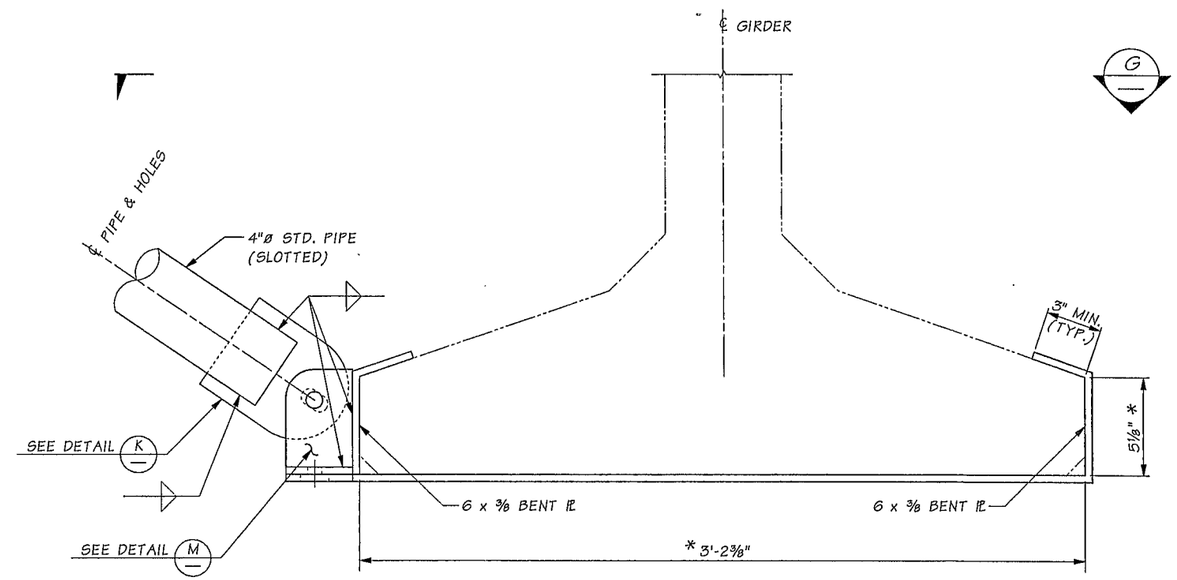

DETAIL G SB23

* CONTRACTOR TO FIELD VERIFY PRIOR TO FABRICATION

SR 5 FILE NO. 3098 SHEET SB25

Bridge Design Engr.	Khaleghi, B		
Supervisor	Zeldenrust, RP		
Designed By	Rosa, M	04/13	
Checked By	Leland, A	04/13	
Detailed By	Hanson, CE	04/13	
Bridge Projects Engr.			
Prelim. Plan By			
Architect/Specialist			

M:\SIGNS & MISC\XL3497 M St to Port Sign Brkt\window files\24-SIGN BRKT DET 2.wnd

DATE	REVISION	BY	APP'D

REGION NO.	STATE	FED. AID PROJ. NO.	SHEET NO.	TOTAL SHEETS
10	WASH.			

JOB NUMBER 12C501

MICHAEL A. ROSA, STATE OF WASHINGTON, 43707, REGISTERED PROFESSIONAL ENGINEER, 3/19/14

BRIDGE AND STRUCTURES OFFICE

RICHARD P. ZELDENRUST, STATE OF WASHINGTON, 43470, REGISTERED PROFESSIONAL ENGINEER, 3/20/14

Washington State Department of Transportation

I-5
M ST TO PORTLAND AVE - HOV

McKINLEY WAY OVER I-5 BRIDGE NO. 5/448

BRIDGE MOUNTED SIGN BRACKET DETAILS 2 OF 3

BRIDGE SHEET NO. SB25

SHEET 1316 OF 1763 SHEETS

Wed Mar 19 08:33:04 2014

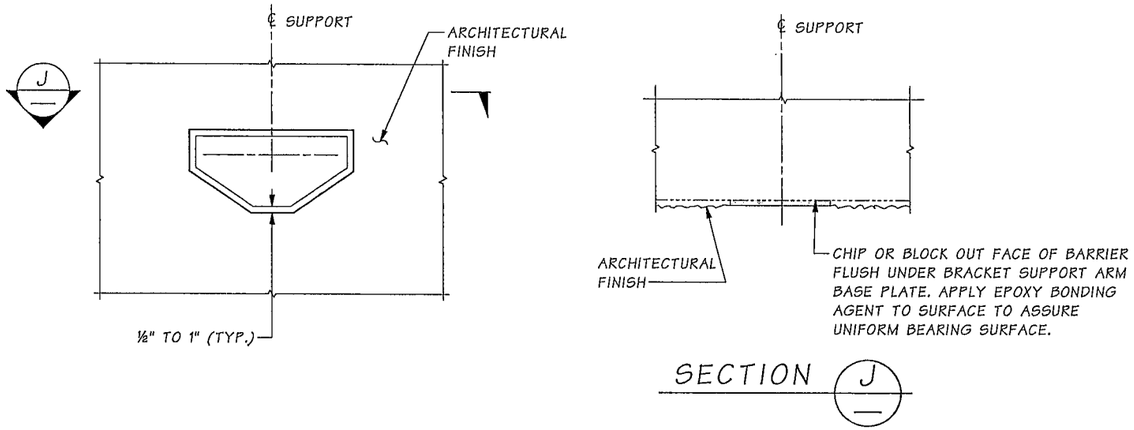

ARCHITECTURAL FINISH TREATMENT

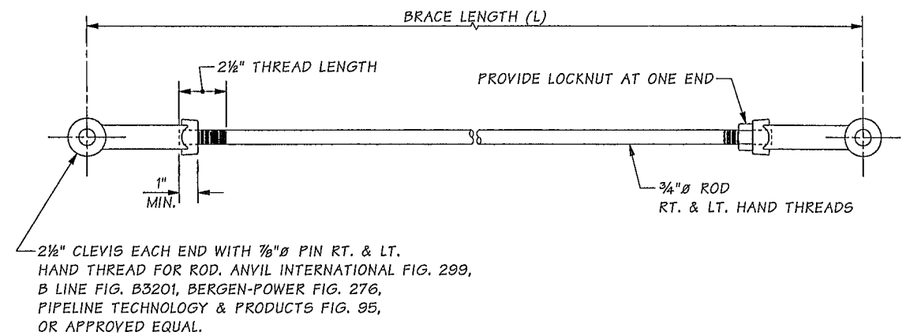

DETAIL D SB23
(SUPPORT 3 ONLY)

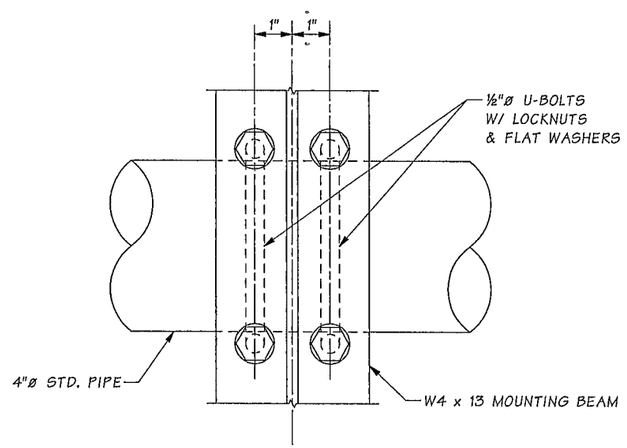

W4 x 13 CONNECTION DETAIL

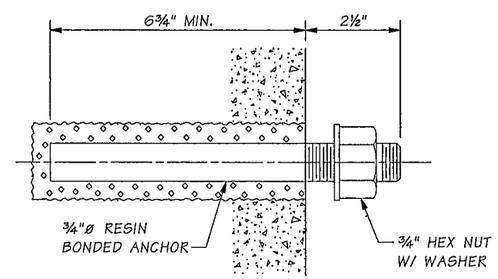

RESIN BONDED ANCHOR DETAIL

INSTALL RESIN BONDED ANCHOR NORMAL TO CONCRETE SURFACE.

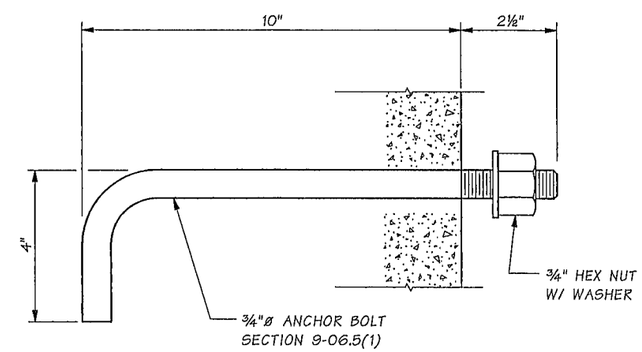

ALTERNATE ANCHOR DETAIL

INSTALL ANCHOR NORMAL TO CONCRETE SURFACE. FOR NEW CONSTRUCTION ONLY.

SR 5 FILE NO. 3098 SHEET SB26

Bridge Design Engr.	Khaleghi, B	
Supervisor	Zeldenrust, RP	
Designed By	Rosa, M	04/13
Checked By	Leland, A	04/13
Detailed By	Hanson, CE	04/13
Bridge Projects Engr.		
Prelim. Plan By		
Architect/Specialist		

M:\SIGNS & MISC\XL3497 M St to Port Sign Brkt\window files\25-SIGN BRKT DET 3.wnd

DATE	REVISION	BY	APP'D

REGION NO.	STATE	FED. AID PROJ. NO.	SHEET NO.	TOTAL SHEETS
10	WASH.			
JOB NUMBER 12C501				

Wed Mar 19 08:33:05 2014

MICHAEL A. ROSA STATE OF WASHINGTON 45707 PROFESSIONAL ENGINEER 3/19/14

BRIDGE AND STRUCTURES OFFICE

RICHARD P. ZELDENRUST STATE OF WASHINGTON 15476 PROFESSIONAL ENGINEER 3/20/14

Washington State Department of Transportation

I-5
M ST TO PORTLAND AVE - HOV

McKINLEY WAY OVER I-5 BRIDGE NO. 5/448

BRIDGE MOUNTED SIGN BRACKET DETAILS 3 OF 3

BRIDGE SHEET NO. SB26

SHEET 1317 OF 1763 SHEETS

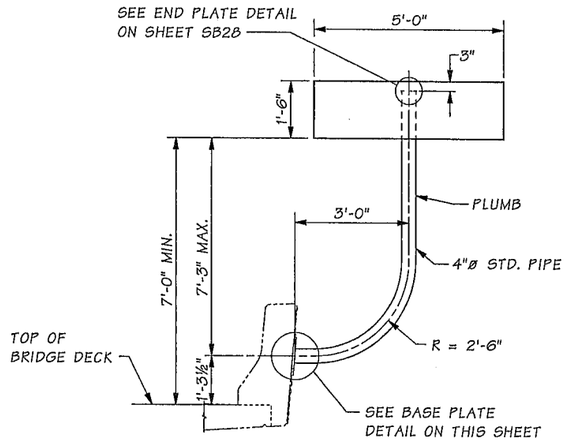

BARRIER MOUNTED SIGN POST NO. 1

STA. I-5 SB 544+40 LT.
(LOOKING SOUTHBOUND)

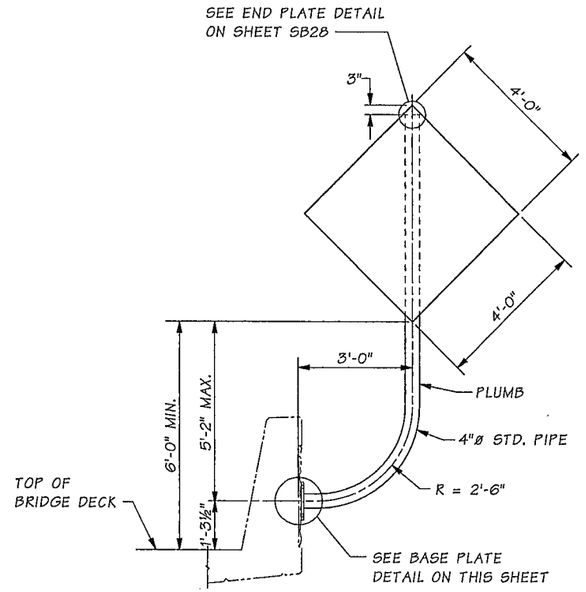

BARRIER MOUNTED SIGN POST NO. 2

STA. I-5 NB 149+50 RT.
(LOOKING NORTHBOUND)

GENERAL NOTES

(SEE SHEET SB22)

NOTES

1. THE MAXIMUM SIGN AREA ON EACH STRUCTURE SHALL BE 25 SQ. FT. AND THE MAXIMUM VERTICAL DISTANCE FROM ℄ OF SIGN TO ℄ OF SUPPORT SHALL BE 8 FT.
2. SIGN SHALL BE INSTALLED IN ACCORDANCE WITH STANDARD PLAN G-50.10.

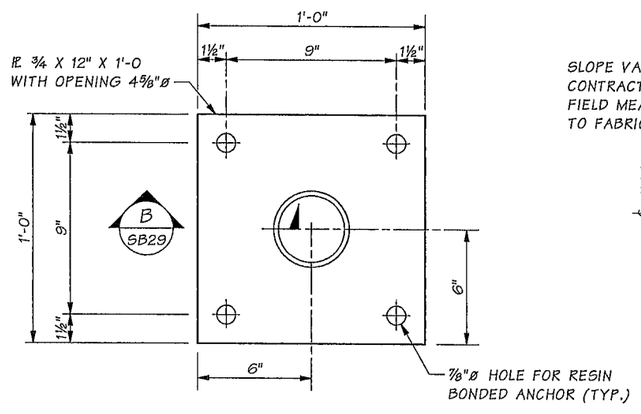

SECTION A

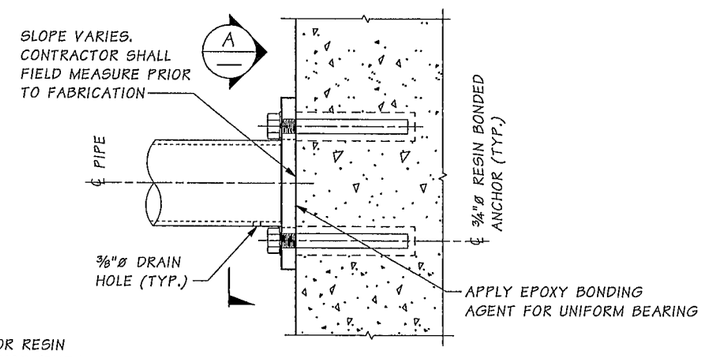

BASE PLATE DETAIL

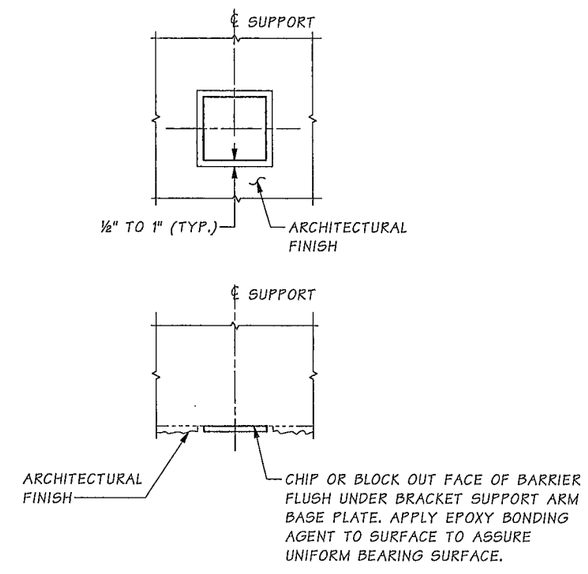

ARCHITECTURAL FINISH TREATMENT

Bridge Design Engr.	Khaleghi, B		
Supervisor	Zeldenrust, RP		
Designed By	Rosa, M	08/13	
Checked By	Bressan, M	08/13	
Detailed By	Davis, EA	08/13	
Bridge Projects Engr.			
Prelim. Plan By			
Architect/Specialist			

M:\SIGNS & MISC\XL3497 M St to Port Sign Brkt\window files\26-BAR MTD SIGN POST.wnd

DATE	REVISION	BY	APP'D

REGION NO.	STATE	FED. AID PROJ. NO.	SHEET NO.	TOTAL SHEETS
10	WASH.			
JOB NUMBER 12C501				

Wed Mar 19 08:33:06 2014

MICHAEL A. ROSA — STATE OF WASHINGTON — 43707 — REGISTERED PROFESSIONAL ENGINEER — 3/19/14

BRIDGE AND STRUCTURES OFFICE

RICHARD P. ZELDENRUST — STATE OF WASHINGTON — 43470 — REGISTERED PROFESSIONAL ENGINEER — 3/20/14

Washington State Department of Transportation

I-5
M ST TO PORTLAND AVE - HOV

SIGN STRUCTURES

BARRIER MOUNTED SIGN POST

BRIDGE SHEET NO. SB27

SHEET 1318 OF 1763 SHEETS

SR 5 FILE NO. 3098 SHEET SB27

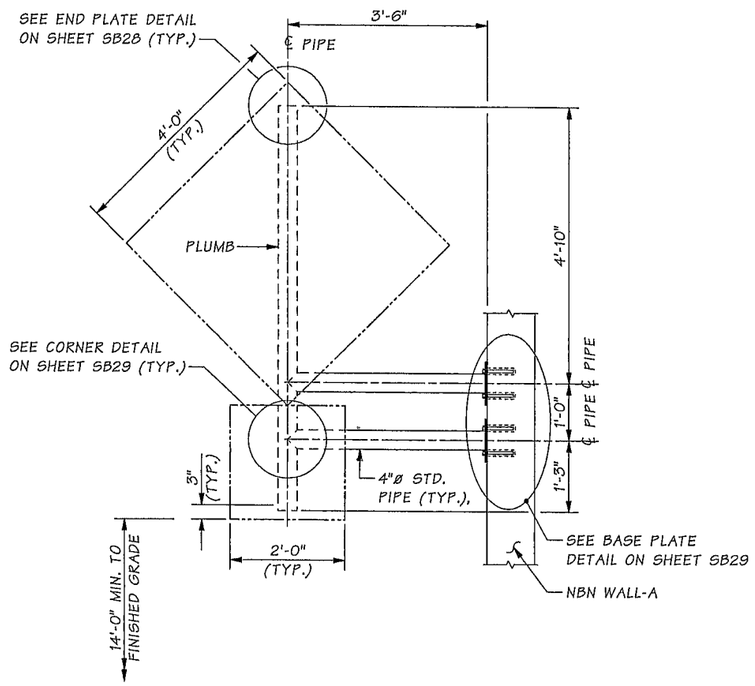

ELEVATION - SIGN BRACKET NO. 1

STA. NBN 35+90 RT.

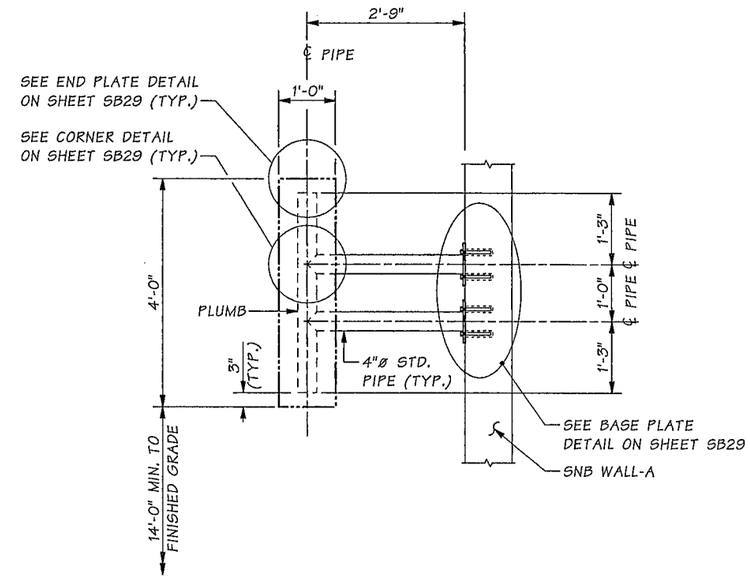

ELEVATION - SIGN BRACKET NO. 2

STA. SNB 29+55 RT.

NOTES:

1. SEE GENERAL NOTES ON SB22.
2. SEE ARCHITECTURAL FINISH TREATMENT ON SB27.

SR 5 FILE NO. 3098 SHEET SB28

Bridge Design Engr.	Khaleghi, B	
Supervisor	Zeldenrust, RP	
Designed By	Rosa, M	07/13
Checked By	Bressan, M	08/13
Detailed By	Davis, EA	07/13
Bridge Projects Engr.		
Prelim. Plan By		
Architect/Specialist		

Wed Mar 19 08:33:08 2014

M:\SIGNS & MISC\XL3497 M St to Port Sign Brkt\window files\27-NOISE WALL SIGN DET.wnd

DATE	REVISION	BY	APP'D

REGION NO.	STATE	FED. AID PROJ. NO.	SHEET NO.	TOTAL SHEETS
10	WASH.			
JOB NUMBER 12C501				

BRIDGE AND STRUCTURES OFFICE

3/19/14 3/20/14

Washington State Department of Transportation

I-5
M ST TO PORTLAND AVE - HOV

SIGN STRUCTURES

WALL MOUNTED SIGN POST DETAIL 1

BRIDGE SHEET NO. SB28

SHEET 1319 OF 1763 SHEETS

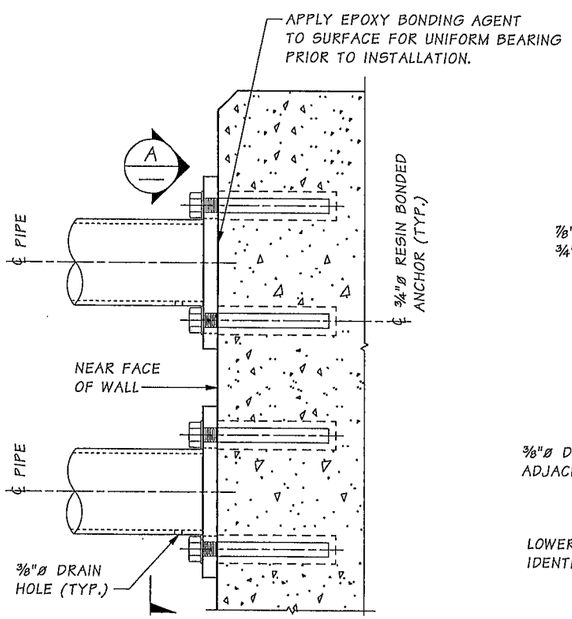

BASE PLATE DETAIL

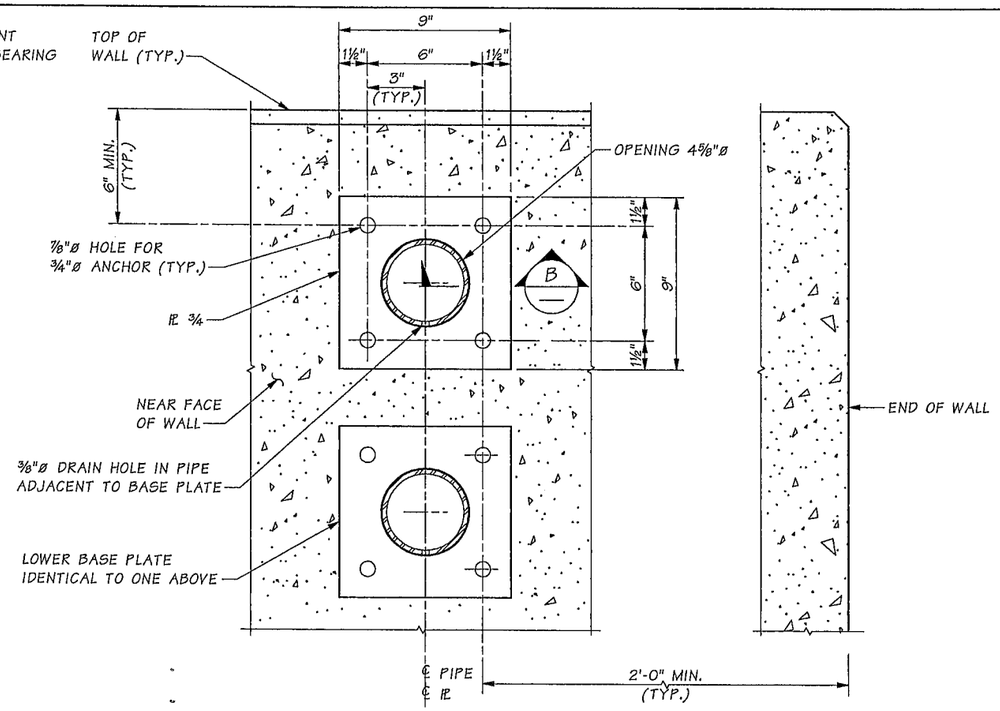

VIEW A

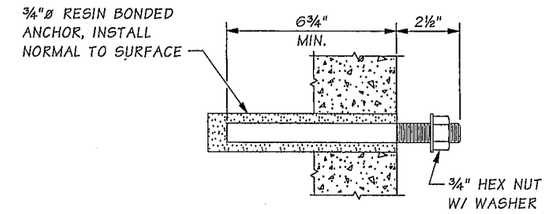

RESIN BONDED ANCHOR DETAIL

INSTALL RESIN BONDED ANCHOR NORMAL TO FACE OF CONCRETE

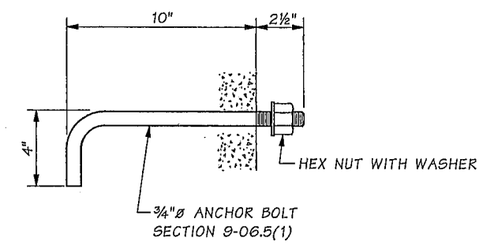

ALTERNATE ANCHOR DETAIL

INSTALL ANCHOR BOLT NORMAL TO FACE OF CONCRETE. FOR NEW CONSTRUCTION ONLY.

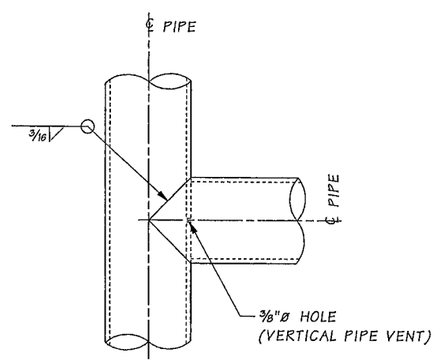

CORNER DETAIL

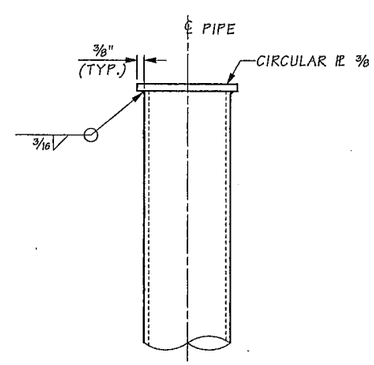

END PLATE DETAIL

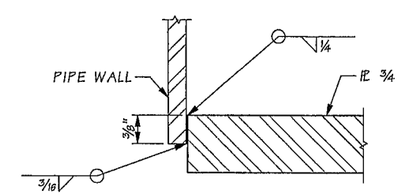

SECTION B

SB27

Bridge Design Engr.	Khaleghi, B		M:\SIGNS & MISC\XL3497 M St to Port Sign Brkt\window files\28-NOISE WALL SIGN DET.wnd								
Supervisor	Zeldenrust, RP						REGION NO.	STATE	FED. AID PROJ. NO.	SHEET NO.	TOTAL SHEETS
Designed By	Rosa, M	07/13					10	WASH.			
Checked By	Bressan, M	08/13					JOB NUMBER 12C501				
Detailed By	Davis, EA	07/13									
Bridge Projects Engr.											
Prelim. Plan By											
Architect/Specialist			DATE	REVISION	BY	APP'D					

Wed Mar 19 08:33:10 2014

MICHAEL A. ROSA, STATE OF WASHINGTON, 43707, REGISTERED PROFESSIONAL ENGINEER, 3/19/14

BRIDGE AND STRUCTURES OFFICE

RICHARD P. ZELDENRUST, STATE OF WASHINGTON, 22670, REGISTERED PROFESSIONAL ENGINEER, 3/20/14

Washington State Department of Transportation

I-5
M ST TO PORTLAND AVE - HOV

SIGN STRUCTURES

WALL MOUNTED SIGN POST DETAIL 2

BRIDGE SHEET NO. SB29

SHEET 1320 OF 1763 SHEETS

SR 5 FILE NO. 3098 SHEET SB29

LEGEND

EXISTING	NEW	
		TYPE 1 JUNCTION BOX
		TYPE 2 JUNCTION BOX
		NEMA JUNCTION BOX
		JUNCTION BOX TO BE REMOVED SEE **STANDARD SPECIFICATION 2-09.3(1)E** FOR BACKFILL REQUIREMENTS
		ELECTRICAL SERVICE CABINET
		TYPE 1 LIGHT STANDARD
		TYPE 1 TIMBER LIGHT STANDARD
		TWO UNIT TYPE 1 TIMBER LIGHT STANDARD
		THREE UNIT HIGH MAST TIMBER LIGHT STANDARD
		FOUR UNIT HIGH MAST TIMBER LIGHT STANDARD
		SIX UNIT HIGH MAST TIMBER LIGHT STANDARD

EXISTING	NEW	
		CONDUIT AND WIRING
		AERIAL CONDUCTORS
-R---R-		EXISTING CONDUIT AND WIRING TO BE REMOVED - REMOVE EXISTING WIRING AND CONDUIT ELBOWS; ABANDON REMAINING CONDUIT BELOW GRADE
		50 FT CLASS 5 TIMBER POLE
		POWER UTILITY POLE
	P##	CLASS 5 TIMBER POLE FLAG
	T##	TEMPORARY TIMBER LUMINAIRE FLAG; SEE TABLE SHEET TILN2
	R##	REMOVAL FLAG - REMOVE EXISTING LIGHT STANDARD; SEE SHEET TILN2 FOR ADDITIONAL DETAILS
	W##	REMOVAL FLAG - REMOVE EXISTING LIGHT STANDARD; EQUIPMENT TO REMAIN PROPERTY OF WSDOT (SEE SPECIAL PROVISIONS); SEE SHEET TILN2 FOR ADDITIONAL DETAILS
	T##	POWER REMOVAL NOTE - LIGHT STANDARD TO REMAIN BUT WILL LOSE POWER DURING CONSTRUCTION. NUMBER INSIDE FLAG DESIGNATES LUMINAIRE WHICH MUST BE OPERATIONAL PRIOR TO REMOVING POWER.
	#	CONSTRUCTION NOTE
	#	WIRE NOTE
	R1	REMOVE ONLY EXISTING CONDUCTORS; EXISTING CONDUIT TO REMAIN - INSTALL PULL STRING.
	R2	REMOVE EXISTING AERIAL CONDUCTORS

TEMPORARY ILLUMINATION SYSTEM GENERAL NOTES

1. TIMBER LUMINAIRES SHALL BE CONSTRUCTED AND INSTALLED IN ACCORDANCE WITH STANDARD SPECIFICATION 8-20.3(13)A AND STANDARD PLAN J-15.10.
2. INTERMEDIATE CLASS 5 TIMBER POLE LOCATIONS MAY BE FIELD ADJUSTED AS NEEDED PROVIDED THAT NO AERIAL SPAN EXCEEDS 300 FEET IN LENGTH AND THAT NO POLE IS LOCATED WITHIN WORK ZONE CLEAR ZONE WITHOUT BARRIER PROTECTION.
3. POLES HAVE BEEN PLACED TO AVOID CONSTRUCTION AND STAGING CONFLICTS.
4. SEE SPECIAL PROVISIONS FOR ADDITIONAL INFORMATION REGARDING EQUIPMENT TO REMAIN AFTER THE CONTRACT IS COMPLETE.
5. POLES WITH ITS CABLES MAY NOT BE REMOVED UNTIL AFTER THE ITS CABLES HAVE BEEN REMOVED. SEE ITS PLANS FOR ADDITIONAL DETAILS.

ABBREVIATIONS LEGEND (TIL SHEETS)

CKT	CIRCUIT
Ex.	EXISTING
HPS	HIGH PRESSURE SODIUM
ILL	ILLUMINATION
LT	LEFT
MH	METAL HALIDE
RT	RIGHT

CONSTRUCTION NOTES — TEMPORARY ILLUMINATION SYSTEM.

NO.	DESCRIPTION
1	EXISTING TYPE E SERVICE CABINET (**SCA 2661**) TO REMAIN.
2	SPLICE NEW CONDUCTORS TO EXISTING CONDUCTORS.
3	REMOVE EXISTING LIGHT STANDARD FOUNDATION. NO EXISTING LIGHT STANDARD AT THIS LOCATION.
4	INSTALL NEW SPLICES ON EXISTING CONDUCTORS TO REMAIN.
5	REMOVE EXISTING LIGHT STANDARD AND LUMINAIRE. INSTALL NEW PERMANENT LIGHT STANDARD AND LUMINAIRE(S) IN ACCORDANCE WITH ILLUMINATION PLANS.
6	INSTALL NEW LIGHT STANDARD ON EXISTING FOUNDATION IN ACCORDANCE WITH ILLUMINATION PLANS.
7	INSTALL NEW WIRING AND SPLICES AS SHOWN IN ILLUMINATION PLANS.
8	INSTALL CONDUIT, CONDUCTORS, RISER, AND WEATHERHEAD ON NEW TIMBER POLE.
9	TERMINATE NEW CONDUIT IN EXISTING JUNCTION BOX.
10	TERMINATE NEW CONDUCTORS IN EXISTING TYPE E SERVICE CABINET (**SCA 2647**). INSTALL NEW BREAKERS AND CONTACTORS IN ACCORDANCE WITH ILLUMINATION PLANS.
11	REMOVE EXISTING TIMBER POLE.
12	EXISTING TYPE E SERVICE CABINET (**SCA 2662**) TO REMAIN. SEE SHEET IL2 FOR BREAKER SCHEDULE.
13	RELAMP AND RECONNECT ALL EXISTING HIGH MAST LUMINAIRES.
14	PRESERVE END OF CONDUIT TO REMAIN FOR CONNECTION TO PERMANENT SYSTEM. SEE ILLUMINATION PLANS.
15	INTERCEPT EXISTING CONDUIT WITH NEW JUNCTION BOX AS SHOWN IN ILLUMINATION PLANS. PRESERVE EXISTING CONDUCTORS IN THIS RUN AND COIL IN NEW JUNCTION BOX.
16	INSTALL NEW GENERATOR TRANSFER SWITCH ON EXISTING BRIDGE INSPECTION LIGHTING SUB-PANEL. THIS IS NEW PERMANENT EQUIPMENT, AND MUST BE OPERATIONAL PRIOR TO REMOVING EXISTING POWER SUPPLY TO PANEL. SEE **SPECIAL PROVISIONS**.
17	SEE ITS PLANS FOR ADDITIONAL EQUIPMENT TO BE INSTALLED ON THIS POLE.
18	TERMINATE NEW CONDUCTORS IN EXISTING TYPE E SERVICE CABINET (**SCA 600**). REVISE BREAKERS (INCLUDING LABELS) AND CONTACTORS IN ACCORDANCE WITH BREAKER SCHEDULE SHEET TIL3. EXISTING UNUSED 2P-20A BREAKER MAY BE USED FOR TEMP ITS CIRCUIT D.
19	TERMINATE NEW CONDUCTORS IN EXISTING TYPE C SERVICE CABINET (**SCA 602**). REVISE BREAKERS IN CABINET IN ACCORDANCE WITH BREAKER SCHEDULE SHEET TIL4. REMOVE SERVICE CABINET WHEN PERMANENT ILLUMINATION IS OPERATIONAL. COORDINATE WITH SERVING UTILITY AND PROJECT ENGINEER FOR REMOVAL OF EXISTING SERVICE CONNECTION.
20	CONDUIT MAY BE INSTALLED LAYING ON GROUND. CONDUIT BODIES MAY BE INSTALLED TO ACCOMMODATE WIRE INSTALLATION. CONDUIT SHALL BE PAINTED RED IF IN THE VICINITY OF OTHER WORK TO BE PERFORMED.
21	REMOVE EXISTING LIGHT STANDARD AND LUMINAIRE. EQUIPMENT TO REMAIN PROPERTY OF THE CITY OF TACOMA - SEE **SPECIAL PROVISIONS** FOR DELIVERY REQUIREMENTS. SEE ILLUMINATION PLANS FOR SERVICE PANEL LOCATION.
22	INTERCEPT EXISTING CONDUIT WITH NEW JUNCTION BOX AS SHOWN IN ILLUMINATION PLANS. PRESERVE EXISTING CONDUCTORS TO REMAIN AND SPLICE TO NEW TEMPORARY CIRCUIT CONDUCTORS.
23	TERMINATE NEW CONDUCTORS IN EXISTING TYPE C SERVICE CABINET (**SCA 2395**). REVISE BREAKERS IN CABINET IN ACCORDANCE WITH BREAKER SCHEDULE SHEET TIL5. REMOVE SERVICE CABINET WHEN PERMANENT ILLUMINATION IS OPERATIONAL. COORDINATE WITH SERVING UTILITY AND PROJECT ENGINEER FOR REMOVAL OF EXISTING SERVICE CONNECTION.
24	REMOVE EXISTING LIGHT STANDARD AND REMOVE FROM PROJECT. PRESERVE FOUNDATION AND ANCHOR BOLT EQUIPMENT FOR INSTALLATION OF NEW LIGHT STANDARD (SEE ILLUMINATION PLANS).
25	TERMINATE NEW CONDUIT IN EXISTING JUNCTION BOX. SPLICE NEW CONDUCTORS TO EXISTING CONDUCTORS TO REMAIN.
26	SPAN EXCEEDS 300 FEET. GUY WIRES MUST BE INSTALLED ON POLES AT EACH END TO SUPPORT EXTENDED SPAN.
27	TERMINATE NEW CONDUIT AND CONDUCTORS IN EXISTING TYPE C SERVICE (**SCA 603**). REVISE BREAKERS IN ACCORDANCE WITH BREAKER SCHEDULE SHEET TIL6.
28	TERMINATE NEW CONDUCTORS IN EXISTING TYPE C SERVICE CABINET (**SCA 794**). REVISE BREAKERS IN CABINET IN ACCORDANCE WITH BREAKER SCHEDULE SHEET TIL7. REMOVE SERVICE CABINET WHEN PERMANENT ILLUMINATION IS OPERATIONAL. COORDINATE WITH SERVING UTILITY AND PROJECT ENGINEER FOR REMOVAL OF EXISTING SERVICE CONNECTION.
29	REMOVE EXISTING SPAN WIRE FLASHING BEACON AND AERIAL EQUIPMENT. PRESERVE TERMINAL CABINET ON EXISTING STEEL POLE. REMOVE EXISTING TIMBER POLE. FILL AND COMPACT VOIDS IN ACCCORDANCE WITH **STANDARD SPECIFICATION 2-09.3(1)E**.
30	WHEN BRIDGE CONSTRUCTION PERMITS, INSTALL PERMANENT ILLUMINATION SYSTEM CONDUIT (WIRE NOTE G26 SHEET IL7). USE CONDUIT FOR TEMPORARY ILLUMINATION CIRCUIT AS SHOWN AND REMOVE AERIAL CONDUCTORS OVER ROADWAY TO REMOVE AERIAL CONFLICT WITH BRIDGE CONSTRUCTION.
31	TERMINATE NEW CONDUCTORS IN EXISTING TYPE C SERVICE CABINET (**SCA 2720**). REVISE BREAKERS IN CABINET IN ACCORDANCE WITH BREAKER SCHEDULE SHEET TIL7. REMOVE SERVICE CABINET WHEN PERMANENT ILLUMINATION IS OPERATIONAL. COORDINATE WITH SERVING UTILITY AND PROJECT ENGINEER FOR REMOVAL OF EXISTING SERVICE CONNECTION.
32	REMOVE ALL EXISTING ELECTRICAL EQUIPMENT FROM SIGN STRUCTURE TO BE REMOVED.
33	INSTALL NEW TYPE C SERVICE CABINET (**SCX 3168**) IN ACCORDANCE WITH **STANDARD PLAN J-3** ON TIMBER POLE. INSTALL CONDUITS, CONDUCTORS, RISERS, AND WEATHERHEADS. THE POWER UTILITY STRIKE POINT SHALL BE A MINIMUM OF 10 FEET ABOVE ALL OTHER EQUIPMENT MOUNTED ON THE POLE. THE SERVICE CABINET IS CONSIDERED NEW MATERIAL AND IS SUBJECT TO ALL MATERIAL APPROVAL REQUIREMENTS FOR NEW EQUIPMENT.
34	SOURCE OF POWER IS AN EXISTING TACOMA POWER UTILITY POLE. COORDINATE WITH SERVING UTILITY AND PROJECT ENGINEER FOR SERVICE CONNECTION.
35	EXISTING TYPE C SERVICE CABINET (**SCA 2706**) TO REMAIN.
36	TERMINATE NEW CONDUIT IN EXISTING JUNCTION BOX. REMOVE JUNCTION BOX WHEN LOCATION NO LONGER REQUIRES POWER.
37	TERMINATE NEW CONDUCTORS ON LINE SIDE OF EXISTING TRANSFORMER CABINET. DISCONNECT EXISTING LINE SIDE CONDUCTORS AND REMOVE.
38	INSTALL NEW CONDUIT, CONDUCTORS, RISER, AND WEATHERHEAD ON EXISTING ITS TIMBER POLE.
39	REMOVE EXISTING TYPE C SERVICE CABINET ON EXISTING TIMBER POLE. AFTER TEMPORARY ILLUMINATION IS RESTORED, AND IS ABLE OPERATIONAL, COORDINATE WITH SERVING UTILITY TO REMOVAL OF EXISTING SERVICE CONNECTION.

FILE NAME	c:\aawork\pw_work\jacksfl\dms16714\ADD1_P3497_PS_TILN_001.dgn
TIME	11:03:31 AM
DATE	4/24/2014
PLOTTED BY	jacksfl
DESIGNED BY	F. JACKSON
ENTERED BY	F. JACKSON
CHECKED BY	R. CRUMBLEY
PROJ. ENGR.	J. PEREZ
REGIONAL ADM.	K. DAYTON

REVISION	DATE	BY
ADD1 - ADDED CONSTRUCTION NOTE 39	02MAY14	LFJ

REGION NO. 10 | STATE WASH | FED.AID PROJ.NO.

JOB NUMBER

CONTRACT NO.

LOCATION NO. XL3497

DENNIS RAY CRUMBLEY — STATE OF WASHINGTON — REGISTERED PROFESSIONAL ENGINEER

4/24/14 DATE

P.E. STAMP BOX

DATE

P.E. STAMP BOX

Washington State Department of Transportation

I-5
M ST TO PORTLAND AVE - HOV

TEMPORARY ILLUMINATION NOTES

PLAN REF NO TILN1

SHEET 1321 OF 1763 SHEETS

TEMPORARY LUMINAIRE SCHEDULE

LUMINAIRE NUMBER	SERVICE	CIRCUIT	LOCATION STATION	LOCATION OFFSET	TYPE - DISTRIBUTION - WATTAGE	H1	MAST ARM	NUMBER OF LIGHTS	ANGLE BETWEEN LIGHTS	COMMENTS
T1	SCA 2661	H	NCD 26+11	12 LT	V - MEDIUM CUTOFF - 750 HPS	50	D12	2	180	NOTE 4
T2	SCA 2647	D	I5SB 510+19	74 LT	V - SHORT CUTOFF - 1000 MH	80	N/A	6	60	
T3	SCA 2647	D	I5SB 514+50	78 LT	V - SHORT CUTOFF - 1000 MH	80	N/A	6	60	
T4	SCA 2647	D	I5SB 518+33	82 LT	V - SHORT CUTOFF - 1000 MH	70	N/A	3	120	
T5	SCA 2662	A	NCD 46+99	112 RT	V - SHORT CUTOFF - 1000 MH	100	N/A	3	60	EXISTING; NOTE 1
T6	SCA 2662	A	NBN 10+63	114 RT	V - SHORT CUTOFF - 1000 MH	100	N/A	3	60	EXISTING; NOTE 1
T7	SCA 2662	A	NBN 14+54	93 RT	V - SHORT CUTOFF - 1000 MH	100	N/A	3	60	EXISTING; NOTE 1
T8	SCA 2662	A	NBN 17+73	89 RT	V - SHORT CUTOFF - 1000 MH	100	N/A	3	60	NOTE 2, NOTE 3
T9	SCA 602	TA	I5SB 522+09	88 LT	V - SHORT CUTOFF - 1000 MH	70	N/A	3	120	
T10	SCA 602	TA	SSB 84+05	46 LT	V - SHORT CUTOFF - 1000 MH	70	N/A	3	120	
T11	SCA 602	TA	SSB 87+89	58 LT	V - SHORT CUTOFF - 1000 MH	70	N/A	4	60	NOTE 4
T12	SCA 602	TA	SSB 91+98	60 LT	V - SHORT CUTOFF - 1000 MH	90	N/A	6	60	
T13	SCA 602	TA	I5SB 537+80	60 LT	V - SHORT CUTOFF - 1000 MH	90	N/A	6	60	
T14	SCA 600	B	NBN 20+83	93 RT	V - SHORT CUTOFF - 1000 MH	100	N/A	3	60	EXISTING; NOTE 1
T15	SCA 600	B	NBN 23+06	109 RT	V - SHORT CUTOFF - 1000 MH	100	N/A	3	60	EXISTING; NOTE 1
T16	SCA 600	B	NBN 25+54	153 RT	V - SHORT CUTOFF - 1000 MH	100	N/A	6	60	NOTE 3
T17	SCA 600	C	NBN 29+56	139 RT	V - SHORT CUTOFF - 1000 MH	100	N/A	6	60	NOTE 3
T18	SCA 600	C	NBN 32+80	126 RT	V - SHORT CUTOFF - 1000 MH	100	N/A	6	60	NOTE 3
T19	SCA 600	C	NBS 10+42	97 RT	V - SHORT CUTOFF - 1000 MH	100	N/A	6	60	NOTE 3
T20	SCA 603	TA	NSB 78+15	20 RT	V - SHORT CUTOFF - 1000 MH	90	N/A	6	60	
T21	SCA 603	TA	PAC 14+59	71 RT	III - MEDIUM CUTOFF - 400 HPS	40	16	1	N/A	
T22	SCA 603	TA	PAC 14+71	71 LT	III - MEDIUM CUTOFF - 400 HPS	40	16	1	N/A	
T23	SCA 603	TA	SNB 14+82	59 RT	III - MEDIUM CUTOFF - 250 HPS	30	16	1	N/A	
T24	SCA 603	TA	NBN 45+68	16 LT	V - SHORT CUTOFF - 1000 MH	90	N/A	6	60	
T25	SCA 603	TA	SNB 9+71	101 RT	V - SHORT CUTOFF - 1000 MH	90	N/A	4	60	
T26	SCA 2395	TA	NBS 13+94	27 LT	V - SHORT CUTOFF - 1000 MH	90	N/A	4	60	
T27	SCA 2395	TA	SNB 16+60	60 RT	III - MEDIUM CUTOFF - 200 HPS	20	16	1	N/A	
T28	SCA 2395	TA	NSB 93+44	63 RT	V - SHORT CUTOFF - 1000 MH	80	N/A	3	120	
T29	SCA 2395	TA	NSB 97+40	69 RT	V - SHORT CUTOFF - 1000 MH	80	N/A	3	120	
T30	SCA 794	TA	NSB 103+23	17 LT	III - MEDIUM CUTOFF - 400 HPS	40	16	1	N/A	
T31	SCA 794	TA	NSB 101+59	16 RT	III - MEDIUM CUTOFF - 400 HPS	40	16	1	N/A	
T32	SCA 794	TA	NNB 11+64	16 RT	V - SHORT CUTOFF - 1000 MH	80	N/A	3	120	
T33	SCA 794	TA	SNB 18+07	17 LT	III - MEDIUM CUTOFF - 250 HPS	30	16	1	N/A	
T34	SCA 794	TA	SNB 21+21	43 RT	V - SHORT CUTOFF - 1000 MH	80	N/A	3	120	
T35	SCA 794	TA	SNB 24+50	33 LT	V - SHORT CUTOFF - 1000 MH	80	N/A	3	120	
T36	SCA 794	TA	SNB 29+64	106 RT	V - SHORT CUTOFF - 1000 MH	80	N/A	3	120	NOTE 3
T37	SCA 794	TA	SNB 32+08	66 RT	V - SHORT CUTOFF - 1000 MH	80	N/A	3	120	NOTE 3
T38	SCA 2720	TA	NBN 59+90	83 RT	III - MEDIUM CUTOFF - 400 HPS	40	16	1	N/A	
T39	SCA 2720	TA	NBN 58+28	53 RT	III - MEDIUM CUTOFF - 400 HPS	40	16	1	N/A	
T40	SCA 2720	TA	NBN 55+08	43 RT	V - SHORT CUTOFF - 1000 MH	90	N/A	6	60	
T41	SCA 2720	TA	SBN 59+04	30 RT	V - SHORT CUTOFF - 1000 MH	90	N/A	6	60	
T42	SCA 2720	TA	SBN 62+75	43 RT	V - SHORT CUTOFF - 1000 MH	80	N/A	3	120	
T43	SCA 2720	TB	I5SB 553+52	60 LT	V - SHORT CUTOFF - 1000 MH	80	N/A	3	120	
T44	SCA 2720	TB	I5SB 558+30	61 LT	V - SHORT CUTOFF - 1000 MH	90	N/A	6	60	
T45	SCA 2720	TB	I5SB 562+78	133 LT	V - SHORT CUTOFF - 1000 MH	90	N/A	4	60	
T46	SCA 2720	TB	I5SB 566+22	96 LT	V - SHORT CUTOFF - 1000 MH	90	N/A	6	60	
T47	SCA 3168	A	TI5SB 10+92	64 LT	V - SHORT CUTOFF - 1000 MH	90	N/A	6	60	NOTE 5
T48	SCA 3168	A	TI5SB 15+46	63 LT	V - SHORT CUTOFF - 1000 MH	90	N/A	6	60	NOTE 5
T49	SCA 3168	B	TI5SB 20+37	66 LT	V - SHORT CUTOFF - 1000 MH	90	N/A	6	60	NOTE 5
T50	SCA 3168	B	MDSI5 3472+23	116 LT	V - SHORT CUTOFF - 1000 MH	90	N/A	6	60	NOTE 5
T51	SCA 3168	B	MDSI5 3476+52	177 LT	V - SHORT CUTOFF - 1000 MH	90	N/A	6	60	NOTE 5
T52	SCA 3168	B	MDSI5 3479+25	158 LT	V - SHORT CUTOFF - 1000 MH	90	N/A	3	60	NOTE 5

NOTE 1: RELAMP AND RECONNECT ALL LUMINAIRES

NOTE 2: EXCAVATION IN VICINITY OF WALL REINFORCEMENT ANCHORS. EXCAVATION MUST BE PERFORMED USING VACUUM METHODS TO PREVENT POTENTIAL DAMAGE TO WALL ANCHORS.

NOTE 3: INSTALL HOUSE SIDE SHIELDS ON ALL LUMINAIRES.

NOTE 4: LOCATION IS APPROXIMATE. POLE SHALL BE SET A MINIMUM OF 6 FEET OUTSIDE ANY EXCAVATION LIMIT. BURIAL DEPTH SHALL BE EXTENDED BY PROPOSED ADJACENT WALL HEIGHT.

NOTE 5: EQUIPMENT TO REMAIN AFTER CONTRACT COMPLETE. MUST BE RE-LAMPED WITHIN SIX WEEKS OF CONTRACT TERMINATION.

GENERAL NOTE:

ALL TIMBER LIGHTING EQUIPMENT NOT DESIGNATED TO REMAIN AFTER CONTRACT COMPLETION, OR PART OF THE SYSTEM SUPPLYING EQUIPMENT DESIGNATED TO REMAIN AFTER CONTRACT COMPLETION, IS TO BE REMOVED AS PART OF THIS CONTRACT AFTER THE PERMANENT LIGHTING SYSTEM IS OPERATIONAL. THIS APPLIES ONLY TO THE EQUIPMENT LISTED ON THIS SHEET.

LUMINAIRE REMOVAL SCHEDULE

W SERIES NOTES

LUMINAIRE NUMBER	REPLACED BY * SHEET	REPLACED BY * LUMINAIRE #	COMMENTS
W1	TIL1	T1	NOTE 2
W2	IL1	B1	NOTE 2
W3	IL1	B2	NOTE 2
W4	IL1	B3	NOTE 2
W5	IL1	B4	NOTE 2
W6	IL1	B5	NOTE 2
W7	IL2	B6	NOTE 2
W8	IL2	B7	NOTE 2
W9	TIL2	T2	NOTE 1
W10	TIL2	T3	NOTE 1
W11	TIL3	T4	NOTE 1
W12	TIL2	T5	NOTE 2
W13	TIL2	T5	NOTE 2
W14	TIL2	T6	NOTE 2
W15	TIL4	T12	NOTE 1
W16	TIL4	T13	NOTE 1
W17	TIL4	T13	NOTE 1
W18	TIL5	T20	NOTE 1
W19	TIL5	T20	NOTE 1
W20	TIL4	T18	NOTE 1
W21	TIL5	T20	NOTE1
W22	N/A	N/A	NOTE 1
W23	TIL5	T26	NOTE 4
W24	TIL5	T23	NOTE 1
W25	TIL6	T25	NOTE 1
W26	TIL5	N/A	NOTE 1
W27	TIL5	T23	NOTE 1
W28	TIL5	T30	NOTE 1
W29	TIL5	T32, T34	NOTE 1
W30	TIL5	T32	NOTE 1
W31	TIL6	T25	NOTE 1
W32	TIL6	T42	NOTE 1
W33	TIL6	T42	NOTE 1
W34	N/A	N/A	NOTE 1
W35	TIL7	T44	NOTE 1
W36	N/A	N/A	NOTE 1
W37	TIL7	T44	NOTE 1
W38	TIL7	T44	NOTE 1
W39	TIL7	T45	NOTE 1
W40	N/A	N/A	NOTE 1
W41	N/A	N/A	NOTE 1
W42	TIL7	T35	NOTE 1
W43	TIL7	T37	NOTE 1
W44	TIL8	T47	NOTE 1
W45	TIL8	T47	NOTE 1
W46	TIL8	T48	NOTE 1
W47	TIL8	T48	NOTE 1
W48	TIL8	T49	NOTE 1

* DESIGNATES LUMINAIRE WHICH MUST BE OPERATIONAL PRIOR TO REMOVAL.

NOTE 1: REMOVE EXISTING FOUNDATION. SEE SPECIAL PROVISIONS FOR FOUNDATION REMOVAL REQUIREMENTS.

NOTE 2: EXISTING FOUNDATION TO REMAIN. CAP CONDUIT AND INSTALL PULL STRING BETWEEN CAP AND ADJACENT JUNCTION BOX.

NOTE 3: EXISTING STRUCTURE MOUNT TO BE REMOVED AND REPLACED AS PART OF BARRIER RECONSTRUCTION. SEE BRIDGE AND WALL PLANS FOR ADDITIONAL DETAILS.

R SERIES NOTES

LUMINAIRE NUMBER	REPLACED BY * SHEET	REPLACED BY * LUMINAIRE #	COMMENTS
R1	N/A	N/A	NOTE 1
R2	N/A	N/A	NOTE 1
R3	TIL1	T1	NOTE 1
	IL1	A2	
R4	IL1	A2, B1	NOTE 1
R5	IL1	A3, B2	NOTE 1
R6	IL1	A4, B3	NOTE 1
R7	IL1	B5	
R8	TIL3	T4	NOTE 1
R9	TIL3	T9	NOTE 1
R10	TIL3	T10	NOTE 1
R11	TIL3	T11	NOTE 1
R12	TIL3	T11	NOTE 1
R13	TIL4	T12	NOTE 1
R14	TIL4	T12	NOTE 1
R15	TIL4	T13	NOTE 1
R16	TIL5	T20	NOTE 1
R17	TIL5	T12	NOTE 1
R18	TIL4	T12	NOTE 1
R19	TIL4	T13	NOTE 1
R20	TIL4	T20	NOTE 1
R21	TIL4	T17	
R22	TIL4	T17, T18	
R23	TIL5	T19	
R24	IL5	F1	NOTE 3
R25	TIL5	T19	NOTE 1
R26	TIL5	T24	NOTE 1
R27	TIL5	T24	NOTE 1
R28	N/A	N/A	
R29	N/A	N/A	
R30	N/A	N/A	
R31	TIL5	T27	NOTE 1
R32	TIL5	T33	NOTE 1
R33	TIL5	T43	NOTE 1
R34	TIL5	T43	NOTE 1
R35	N/A	N/A	NOTE 1
R36	N/A	N/A	NOTE 1
R37	N/A	N/A	NOTE 1
R38	N/A	N/A	NOTE 1
R39	TIL7	T45	NOTE 1
R40	TIL8	T46	NOTE 1
R41	N/A	N/A	NOTE 1
R42	TIL7	T36	NOTE 1
R43	TIL7	T36	NOTE 1
R44	TIL7	T37	NOTE 1
R45	TIL8	T46	NOTE 1
R46	TIL8	T47	NOTE 1
R47	TIL8	T47	NOTE 1
R48	TIL8	T48	NOTE 1
R49	TIL8	T48	NOTE 1
R50	TIL8	T49	NOTE 1
R51	TIL8	T49	NOTE 1
R52	TIL8	T46	NOTE 1
R53	TIL8	T48, T49	NOTE 1

NOTE 4: REMOVE EXISTING FOUNDATION TO ALLOW FOR INSTALLATION OF NEW CONDUIT ELBOWS AND JUNCTION BOX IN ITS PLACE. SEE ILLUMINATION PLANS FOR ADDITIONAL DETAILS.

WIRING SCHEDULE			TEMPORARY ILLUMINATION SYSTEM		
			SCA 2661		
NO.	CONDUIT / RACEWAY	MATERIAL*	TEMP ILL CKT B #4	TEMP ILL CKT H #4	GROUND #8
A2	*AERIAL*	*N/A*		*Ex. 2*	
A3	*AERIAL*	*N/A*	*Ex. 2*	*Ex. 2*	
A4	*Ex. 2"*	*PVC80*	*Ex. 2*	*Ex. 2*	*Ex. 1*

AERIAL CONDUCTORS SHALL BE ALUMINUM TRIPLEX. AERIAL CONDUCTORS SHALL MAINTAIN A MINIMUM 25 FOOT CLEARANCE ABOVE ALL GROUND.

* DEFINITIONS: PVC80 = SCHEDULE 80 PVC.

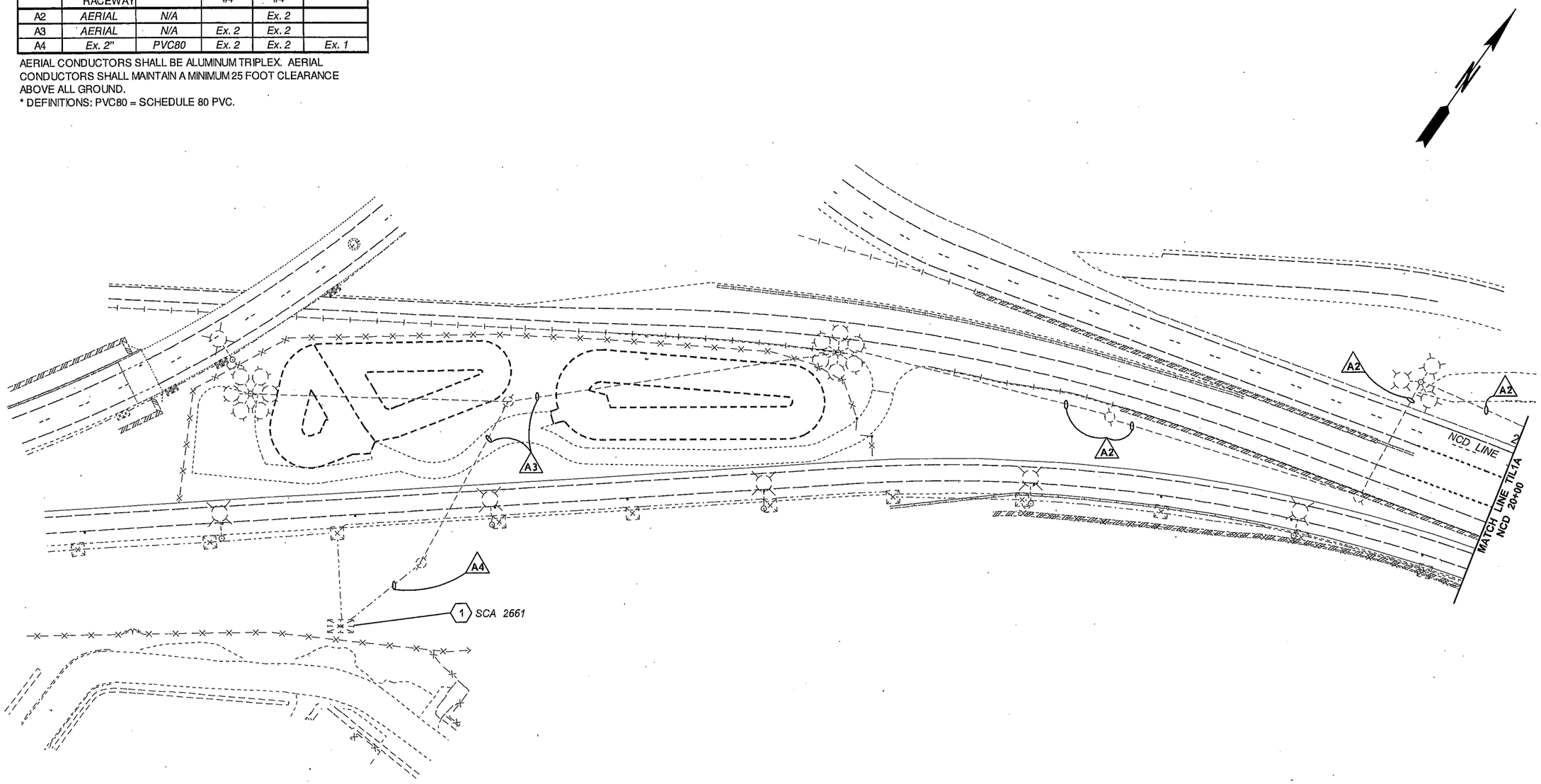

REFERENCE ITEM	SHEET
CONSTRUCTION NOTES	TILN1
LEGEND	TILN1

0 50 100
SCALE IN FEET

FILE NAME	c:\aawork\pw_work\jacksfl\dms16714\P3497_PS_TIL_000.dgn				REGION NO. 10	STATE WASH	FED.AID PROJ.NO.
TIME	4:00:33 PM				JOB NUMBER		
DATE	2/15/2014						
PLOTTED BY	jacksfl						
DESIGNED BY	F. JACKSON				CONTRACT NO.		LOCATION NO. XL3497
ENTERED BY	F. JACKSON						
CHECKED BY	R. CRUMBLEY						
PROJ. ENGR.	J. PEREZ						
REGIONAL ADM.	K. DAYTON	REVISION	DATE	BY			

DENNIS RAY CRUMBLEY
STATE OF WASHINGTON
38164
REGISTERED
PROFESSIONAL ENGINEER
2/19/14
DATE
P.E. STAMP BOX

DATE
P.E. STAMP BOX

Washington State Department of Transportation

I-5
M ST TO PORTLAND AVE - HOV

TEMPORARY ILLUMINATION PLAN

PLAN REF NO TIL0

SHEET 1323 OF 1763 SHEETS

WIRING SCHEDULE			TEMPORARY ILLUMINATION
NO.	CONDUIT / RACEWAY	MATERIAL	SCA 2661 TEMP ILL CKT H #4
A1	**AERIAL**	**N/A**	**2**
A2	*AERIAL*	*N/A*	*Ex. 2*

AERIAL CONDUCTORS SHALL BE ALUMINUM TRIPLEX.
AERIAL CONDUCTORS SHALL MAINTAIN A MINIMUM 25 FOOT CLEARANCE ABOVE ALL GROUND.

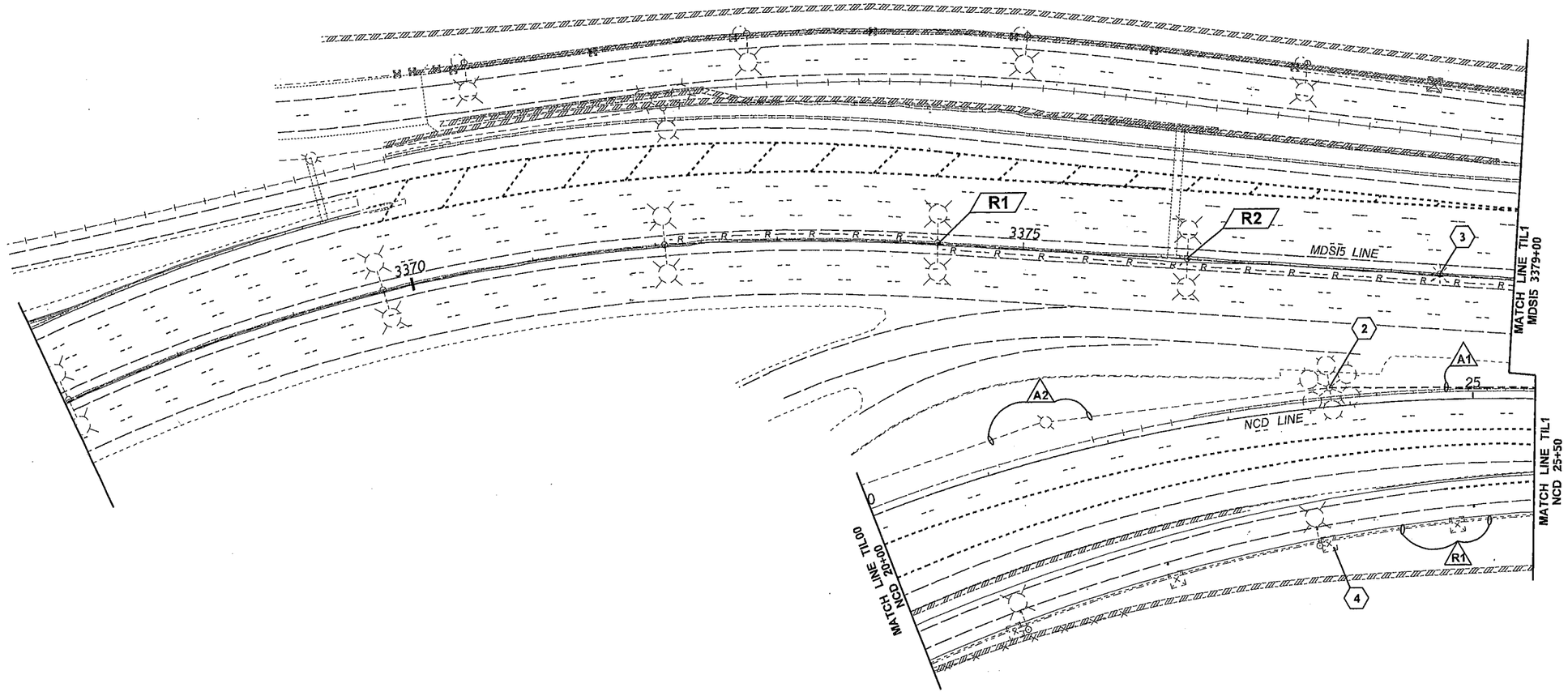

0 50 100
SCALE IN FEET

REFERENCE ITEM	SHEET
CONSTRUCTION NOTES	TILN1
LEGEND	TILN1

FILE NAME	c:\aawork\pw_work\jacksfl\dms16714\P3497_PS_TIL_001A.dgn
TIME	4:00:51 PM
DATE	2/15/2014
PLOTTED BY	jacksfl
DESIGNED BY	F. JACKSON
ENTERED BY	F. JACKSON
CHECKED BY	R. CRUMBLEY
PROJ. ENGR.	J. PEREZ
REGIONAL ADM.	K. DAYTON

REVISION | DATE | BY

REGION NO.	STATE	FED.AID PROJ.NO.
10	WASH	
JOB NUMBER		
CONTRACT NO.		LOCATION NO. XL3497

DENNIS RAY CRUMBLEY STATE OF WASHINGTON REGISTERED PROFESSIONAL ENGINEER
2/18/14
DATE
P.E. STAMP BOX

DATE
P.E. STAMP BOX

Washington State Department of Transportation

I-5
M ST TO PORTLAND AVE - HOV

TEMPORARY ILLUMINATION PLAN

PLAN REF NO TIL1A

SHEET 1324 OF 1763 SHEETS

CLASS 5 TIMBER POLE SCHEDULE

POLE NO.	CENTERLINE	STATION	OFFSET
P1	I5SB	499+66	144' LT
P2	I5SB	501+83	100' LT

NOTE: TIMBER POLE LOCATIONS MAY BE FIELD ADJUSTED AS NEEDED, PROVIDED THAT NO AERIAL SPAN EXCEEDS 300 FEET IN LENGTH.

WIRING SCHEDULE — TEMPORARY ILLUMINATION SYSTEM

NO.	CONDUIT / RACEWAY	MATERIAL*	SCA 2647 ILLUM. CKT A #4	ILLUM. CKT B #4	ILLUM. CKT C #4	TEMP ILL CKT D #2	GROUND #8
B2	AERIAL	N/A				2	
B3	2"	PVC80				2	1
B4	Ex. 2"	PVC80	Ex. 2	Ex. 2	Ex. 2	2	Ex. 1

AERIAL CONDUCTORS SHALL BE ALUMINUM TRIPLEX. AERIAL CONDUCTORS SHALL MAINTAIN A MINIMUM 25 FOOT CLEARANCE ABOVE ALL GROUND.
* DEFINITIONS: PVC80 = SCHEDULE 80 PVC.

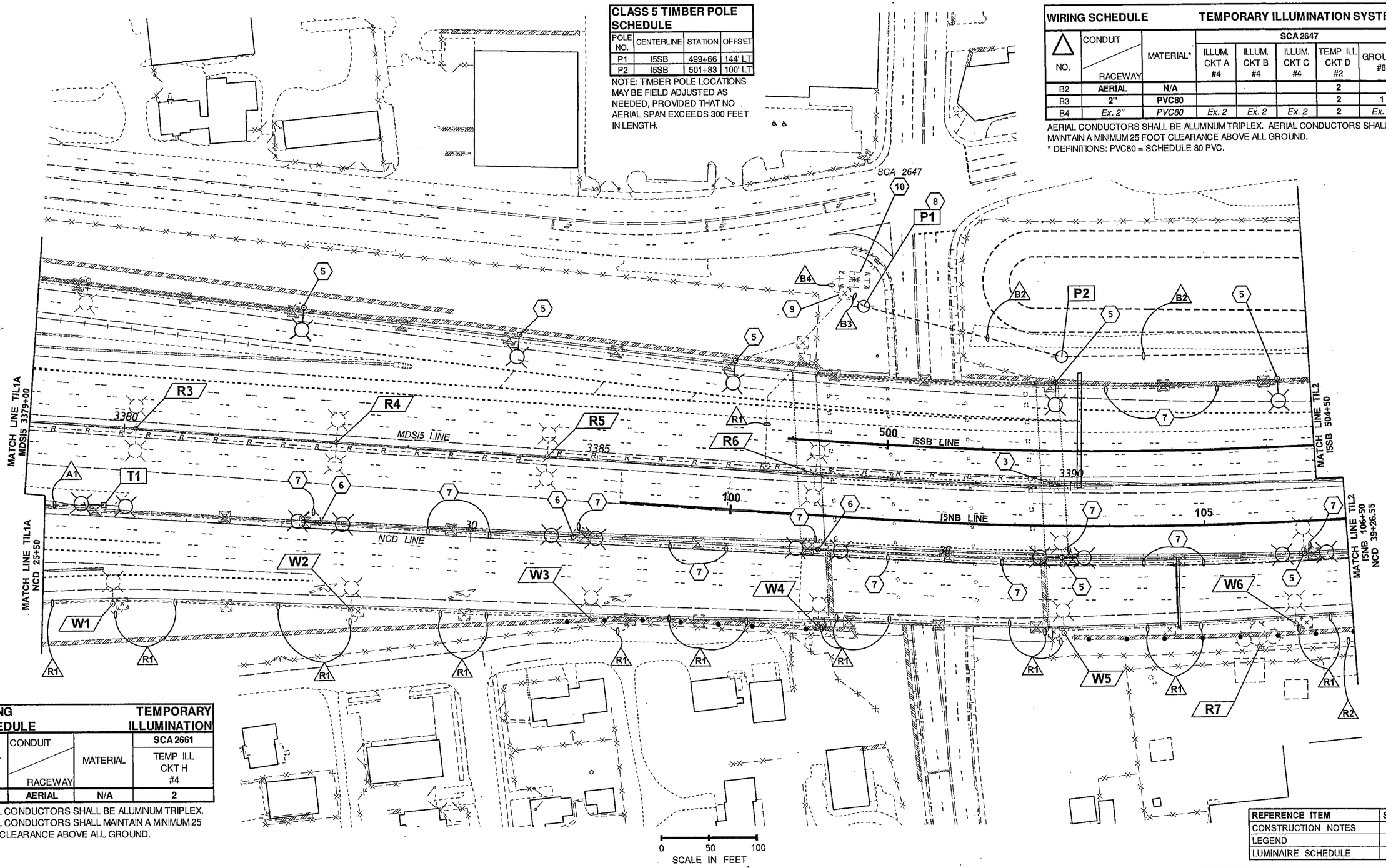

WIRING SCHEDULE — TEMPORARY ILLUMINATION

NO.	CONDUIT / RACEWAY	MATERIAL	SCA 2661 TEMP ILL CKT H #4
A1	AERIAL	N/A	2

AERIAL CONDUCTORS SHALL BE ALUMINUM TRIPLEX. AERIAL CONDUCTORS SHALL MAINTAIN A MINIMUM 25 FOOT CLEARANCE ABOVE ALL GROUND.

REFERENCE ITEM	SHEET
CONSTRUCTION NOTES	TILN1
LEGEND	TILN1
LUMINAIRE SCHEDULE	TILN2

FILE NAME	c:\aawork\pw_work\jacksfl\dms16714\P3497_PS_TIL_001.dgn
TIME	4:00:42 PM
DATE	2/15/2014
PLOTTED BY	jacksfl
DESIGNED BY	F. JACKSON
ENTERED BY	F. JACKSON
CHECKED BY	R. CRUMBLEY
PROJ. ENGR.	J. PEREZ
REGIONAL ADM.	K. DAYTON

REVISION | DATE | BY

REGION NO.	STATE	FED.AID PROJ.NO.
10	WASH	
JOB NUMBER		
CONTRACT NO.		LOCATION NO. XL3497

DRAINE RAY CRUMBLEY — STATE OF WASHINGTON — REGISTERED PROFESSIONAL ENGINEER
2/18/14
DATE
P.E. STAMP BOX

DATE
P.E. STAMP BOX

Washington State Department of Transportation

I-5
M ST TO PORTLAND AVE - HOV

TEMPORARY ILLUMINATION PLAN

PLAN REF NO TIL1

SHEET 1325 OF 1763 SHEETS

REFERENCE ITEM	SHEET
CONSTRUCTION NOTES	TILN1
LEGEND	TILN1
LUMINAIRE SCHEDULE	TILN2

WIRING SCHEDULE — TEMPORARY ILLUMINATION SYSTEM

NO.	CONDUIT / RACEWAY	MATERIAL	SCA 2647 TEMP ILL CKT D #6	SCA 2647 TEMP ILL CKT D #2
B1	AERIAL	N/A	2	
B2	AERIAL	N/A		2

AERIAL CONDUCTORS SHALL BE ALUMINUM TRIPLEX.
AERIAL CONDUCTORS SHALL MAINTAIN A MINIMUM 25 FOOT CLEARANCE ABOVE ALL GROUND.

CLASS 5 TIMBER POLE SCHEDULE

POLE NO.	CENTERLINE	STATION	OFFSET
P3	I5SB	504+79	95' LT
P4	I5SB	507+75	91' LT
P5	I5SB	512+34	82' LT
P6	I5SB	516+42	82' LT

NOTE: TIMBER POLE LOCATIONS MAY BE FIELD ADJUSTED AS NEEDED, PROVIDED THAT NO AERIAL SPAN EXCEEDS 300 FEET IN LENGTH.

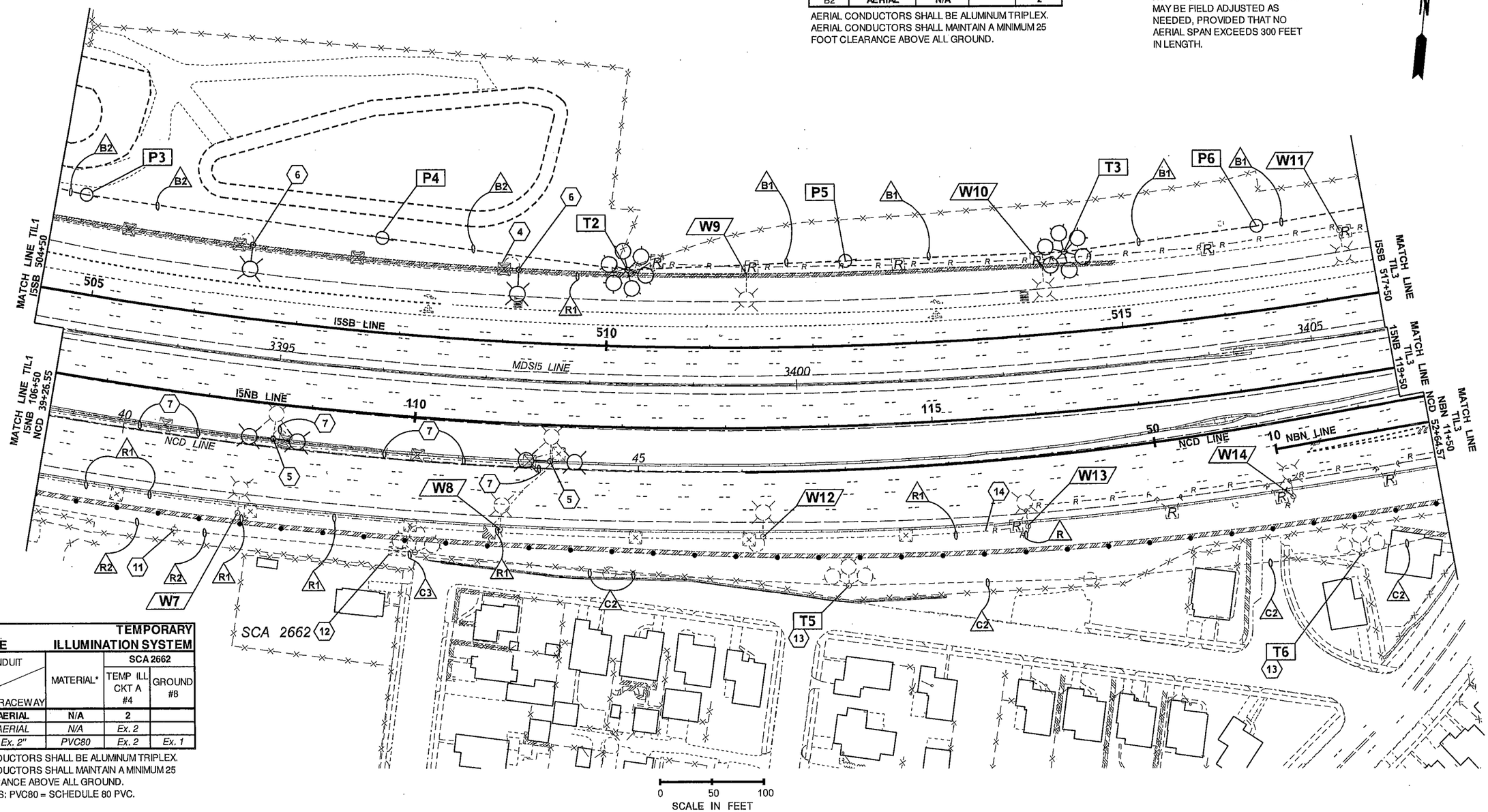

WIRING SCHEDULE — TEMPORARY ILLUMINATION SYSTEM

NO.	CONDUIT / RACEWAY	MATERIAL*	SCA 2662 TEMP ILL CKT A #4	SCA 2662 GROUND #8
C1	AERIAL	N/A	2	
C2	*AERIAL*	*N/A*	*Ex. 2*	
C3	*Ex. 2"*	*PVC80*	*Ex. 2*	*Ex. 1*

AERIAL CONDUCTORS SHALL BE ALUMINUM TRIPLEX.
AERIAL CONDUCTORS SHALL MAINTAIN A MINIMUM 25 FOOT CLEARANCE ABOVE ALL GROUND.
* DEFINITIONS: PVC80 = SCHEDULE 80 PVC.

FILE NAME	c:\aawork\pw_work\jacksfl\dms16714\P3497_PS_TIL_002.dgn
TIME	4:01:00 PM
DATE	2/15/2014
PLOTTED BY	jacksfl
DESIGNED BY	F. JACKSON
ENTERED BY	F. JACKSON
CHECKED BY	R. CRUMBLEY
PROJ. ENGR.	J. PEREZ
REGIONAL ADM.	K. DAYTON

REVISION | DATE | BY

REGION NO.	STATE	FED.AID PROJ.NO.
10	WASH	
JOB NUMBER		
CONTRACT NO.		LOCATION NO. XL3497

DENNIS RAY CRUMBLEY — STATE OF WASHINGTON — REGISTERED PROFESSIONAL ENGINEER
2/18/14 DATE
P.E. STAMP BOX

DATE
P.E. STAMP BOX

Washington State Department of Transportation

I-5
M ST TO PORTLAND AVE - HOV

TEMPORARY ILLUMINATION PLAN

PLAN REF NO TIL2

SHEET 1326 OF 1763 SHEETS

WIRING SCHEDULE			TEMPORARY ILLUMINATION SYSTEM
NO.	CONDUIT / RACEWAY	MATERIAL	SCA 2647 TEMP ILL CKT D #6
B1	AERIAL	N/A	2

AERIAL CONDUCTORS SHALL BE ALUMINUM TRIPLEX.
AERIAL CONDUCTORS SHALL MAINTAIN A MINIMUM 25 FOOT CLEARANCE ABOVE ALL GROUND.

CLASS 5 TIMBER POLE SCHEDULE			
POLE NO.	CENTERLINE	STATION	OFFSET
P7	I5SB	523+89	96' LT
P8	SSB	84+82	84' LT
P9	SSB	85+80	77' LT

NOTE: TIMBER POLE LOCATIONS MAY BE FIELD ADJUSTED AS NEEDED, PROVIDED THAT NO AERIAL SPAN EXCEEDS 300 FEET IN LENGTH.

REFERENCE ITEM	SHEET
CONSTRUCTION NOTES	TILN1
LEGEND	TILN1
LUMINAIRE SCHEDULE	TILN2

WIRING SCHEDULE			TEMPORARY ILLUMINATION SYSTEM	
NO.	CONDUIT / RACEWAY	MATERIAL*	SCA 602 TEMP ILL CKT TA #4	SCA 602 TEMP ITS CKT TB #6
D1	2"	PVC80	2	
D2	AERIAL	N/A	2	2
D3	AERIAL	N/A		
D4	2"	PVC80		2

AERIAL CONDUCTORS SHALL BE ALUMINUM TRIPLEX.
AERIAL CONDUCTORS SHALL MAINTAIN A MINIMUM 25 FOOT CLEARANCE ABOVE ALL GROUND.
* DEFINITIONS: PVC80 = SCHEDULE 80 PVC.

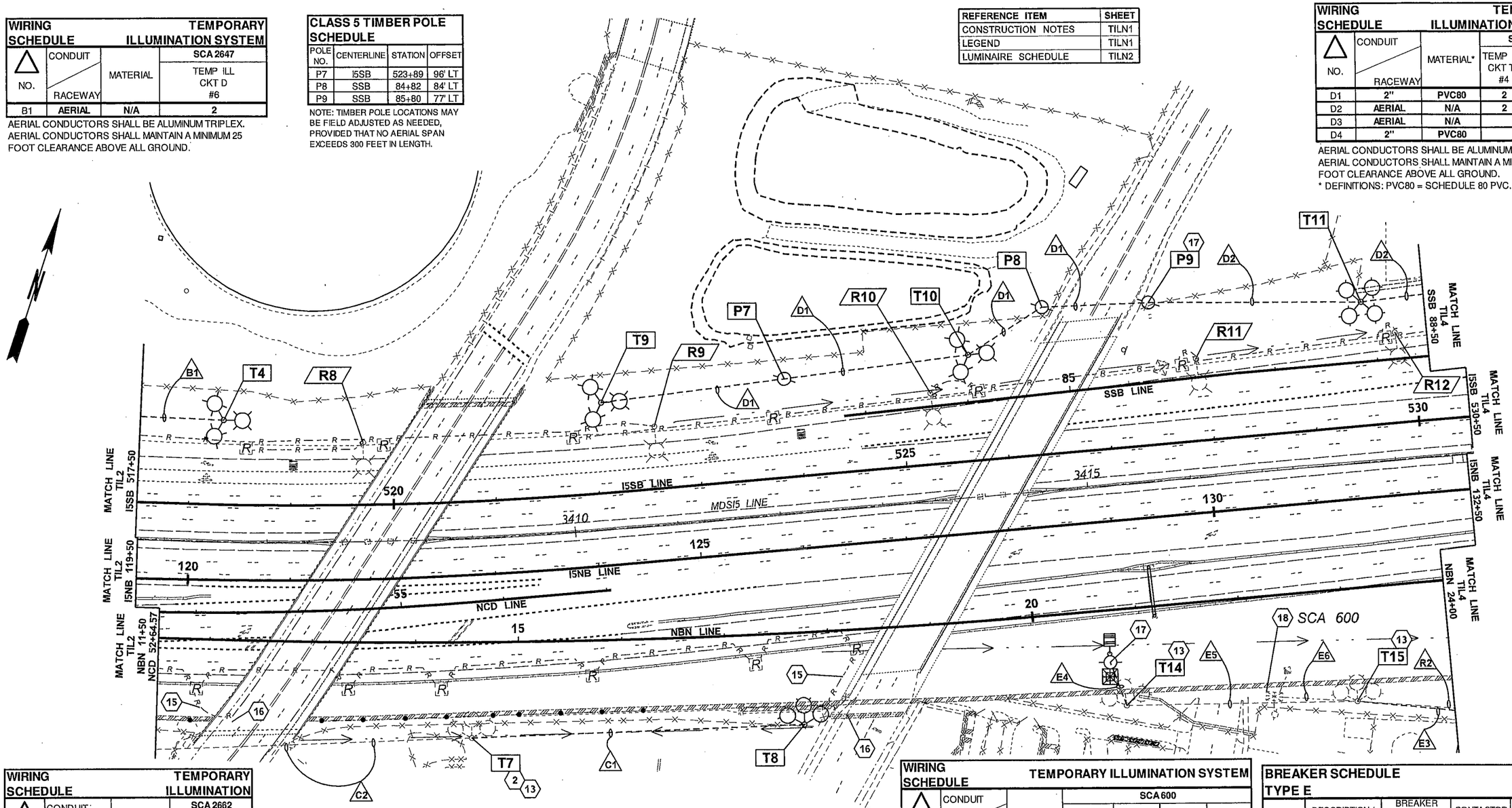

WIRING SCHEDULE			TEMPORARY ILLUMINATION	
NO.	CONDUIT / RACEWAY	MATERIAL*	SCA 2662 TEMP ILL CKT A #4	
C1	AERIAL	N/A	2	
C2	AERIAL	N/A	Ex. 2	

AERIAL CONDUCTORS SHALL BE ALUMINUM TRIPLEX.
AERIAL CONDUCTORS SHALL MAINTAIN A MINIMUM 25 FOOT CLEARANCE ABOVE ALL GROUND.
* DEFINITIONS: PVC80 = SCHEDULE 80 PVC.

0 50 100
SCALE IN FEET

WIRING SCHEDULE			TEMPORARY ILLUMINATION SYSTEM			
NO.	CONDUIT / RACEWAY	MATERIAL*	SCA 600 ILLUM. CKT B #4	SCA 600 TEMP ILL CKT C #2	SCA 600 TEMP ITS CKT D #6	SCA 600 GROUND #8
E3	AERIAL	N/A	2	2		
E4	AERIAL	N/A			2	
E5	AERIAL	N/A	Ex. 2		2	
E6	2"	PVC80	Ex. 2	2	2	Ex. 1

AERIAL CONDUCTORS SHALL BE ALUMINUM TRIPLEX. AERIAL CONDUCTORS SHALL MAINTAIN A MINIMUM 25 FOOT CLEARANCE ABOVE ALL GROUND.
* DEFINITIONS: PVC80 = SCHEDULE 80 PVC.

BREAKER SCHEDULE TYPE E						SCA 600 480 V
CIRCUIT	DESCRIPTION / LABEL	BREAKER RATING POLES	BREAKER RATING AMPS	CONTACTOR RATING	VOLTAGE	LOAD (kVA)
--	MAIN	2P	200A	---	---	--
A	ITS 005-XF-13338	2P	60A	---	480	18.5
B	TEMP ILLUM	2P	15A	60 AMP	480	5
C	TEMP ILLUM	2P	50A	60 AMP	480	15.2
D	TEMP ITS	2P	20A	60 AMP	480	3
BUSSWORK SHALL BE RATED AT 200 AMP MINIMUM					PEAK	42.7
					CONTINUOUS	41.7

FILE NAME	c:\aawork\pw_work\jacksfl\dms16714\P3497_PS_TIL_003.dgn
TIME	4:01:09 PM
DATE	2/15/2014
PLOTTED BY	jacksfl
DESIGNED BY	F. JACKSON
ENTERED BY	F. JACKSON
CHECKED BY	R. CRUMBLEY
PROJ. ENGR.	J. PEREZ
REGIONAL ADM.	K. DAYTON

REVISION | DATE | BY

REGION NO.	STATE	FED.AID PROJ.NO.
10	WASH	
JOB NUMBER		
CONTRACT NO.		LOCATION NO. XL3497

DENNIS RAY CRUMBLEY STATE OF WASHINGTON 38375 REGISTERED PROFESSIONAL ENGINEER
2/18/14
P.E. STAMP BOX DATE

P.E. STAMP BOX DATE

Washington State Department of Transportation

I-5
M ST TO PORTLAND AVE - HOV

TEMPORARY ILLUMINATION PLAN

PLAN REF NO TIL3

SHEET 1327 OF 1763 SHEETS

BREAKER SCHEDULE TYPE C						SCA 602 480 V
CIRCUIT	DESCRIPTION / LABEL	BREAKER RATING POLES	BREAKER RATING AMPS	CONTACTOR RATING	VOLTAGE	LOAD (kVA)
--	MAIN	2P	100A	---	---	--
TA	TEMP ILLUM	2P	60A	60 AMP	480	18.5
TB	TEMP ITS	2P	15A	—	480	5
BUSSWORK SHALL BE RATED AT 200 AMP MINIMUM					PEAK	24.5
					CONTINUOUS	23.5

WIRING SCHEDULE			TEMPORARY ILLUMINATION SYSTEM			
			SCA 602			
NO.	CONDUIT / RACEWAY	MATERIAL*	TEMP ILL CKT TA #6	TEMP ILL CKT TA #4	TEMP ITS CKT TB #6	GROUND #8
D2	AERIAL	N/A		2	2	
D3	AERIAL	N/A	2			
D4	2"	PVC80			2	1

AERIAL CONDUCTORS SHALL BE ALUMINUM TRIPLEX. AERIAL CONDUCTORS SHALL MAINTAIN A MINIMUM 25 FOOT CLEARANCE ABOVE ALL GROUND.
* DEFINITIONS: PVC80 = SCHEDULE 80 PVC.

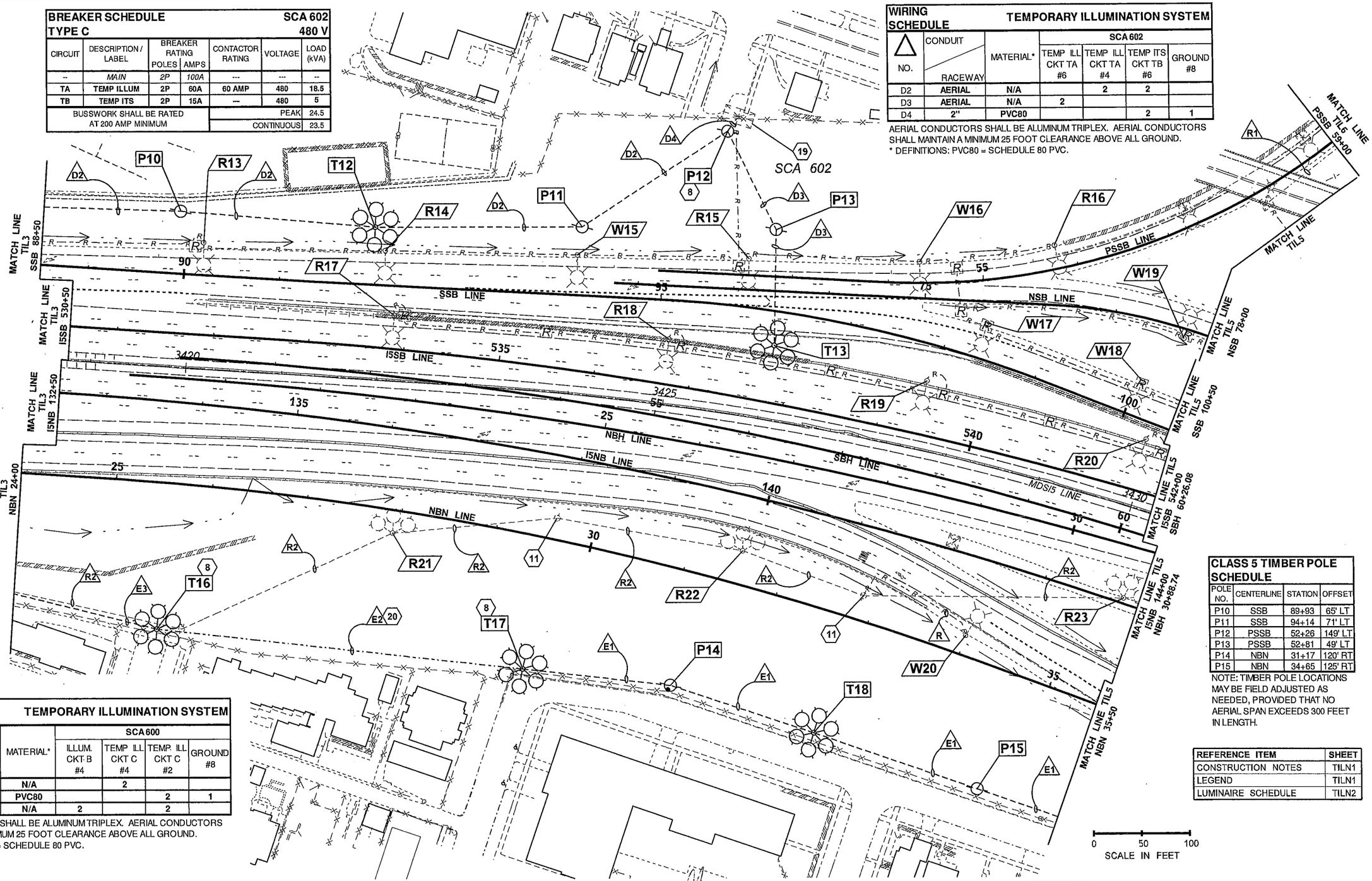

CLASS 5 TIMBER POLE SCHEDULE			
POLE NO.	CENTERLINE	STATION	OFFSET
P10	SSB	89+93	65' LT
P11	SSB	94+14	71' LT
P12	PSSB	52+26	149' LT
P13	PSSB	52+81	49' LT
P14	NBN	31+17	120' RT
P15	NBN	34+65	125' RT

NOTE: TIMBER POLE LOCATIONS MAY BE FIELD ADJUSTED AS NEEDED, PROVIDED THAT NO AERIAL SPAN EXCEEDS 300 FEET IN LENGTH.

WIRING SCHEDULE			TEMPORARY ILLUMINATION SYSTEM			
			SCA 600			
NO.	CONDUIT / RACEWAY	MATERIAL*	ILLUM. CKT B #4	TEMP ILL CKT C #4	TEMP. ILL CKT C #2	GROUND #8
E1	AERIAL	N/A		2		
E2	2"	PVC80			2	1
E3	AERIAL	N/A	2		2	

AERIAL CONDUCTORS SHALL BE ALUMINUM TRIPLEX. AERIAL CONDUCTORS SHALL MAINTAIN A MINIMUM 25 FOOT CLEARANCE ABOVE ALL GROUND.
* DEFINITIONS: PVC80 = SCHEDULE 80 PVC.

REFERENCE ITEM	SHEET
CONSTRUCTION NOTES	TILN1
LEGEND	TILN1
LUMINAIRE SCHEDULE	TILN2

FILE NAME	c:\aawork\pw_work\jacksfl\dms16714\P3497_PS_TIL_004.dgn
TIME	4:01:18 PM
DATE	2/15/2014
PLOTTED BY	jacksfl
DESIGNED BY	F. JACKSON
ENTERED BY	F. JACKSON
CHECKED BY	R. CRUMBLEY
PROJ. ENGR.	J. PEREZ
REGIONAL ADM.	K. DAYTON

REVISION | DATE | BY

REGION NO. 10 | STATE WASH | FED.AID PROJ.NO.

JOB NUMBER

CONTRACT NO. | LOCATION NO. XL3497

DENNIS RAY CRUMBLEY, STATE OF WASHINGTON, REGISTERED PROFESSIONAL ENGINEER

2/18/14 DATE

P.E. STAMP BOX

DATE

P.E. STAMP BOX

Washington State Department of Transportation

I-5
M ST TO PORTLAND AVE - HOV

TEMPORARY ILLUMINATION PLAN

PLAN REF NO TIL4

SHEET 1328 OF 1763 SHEETS

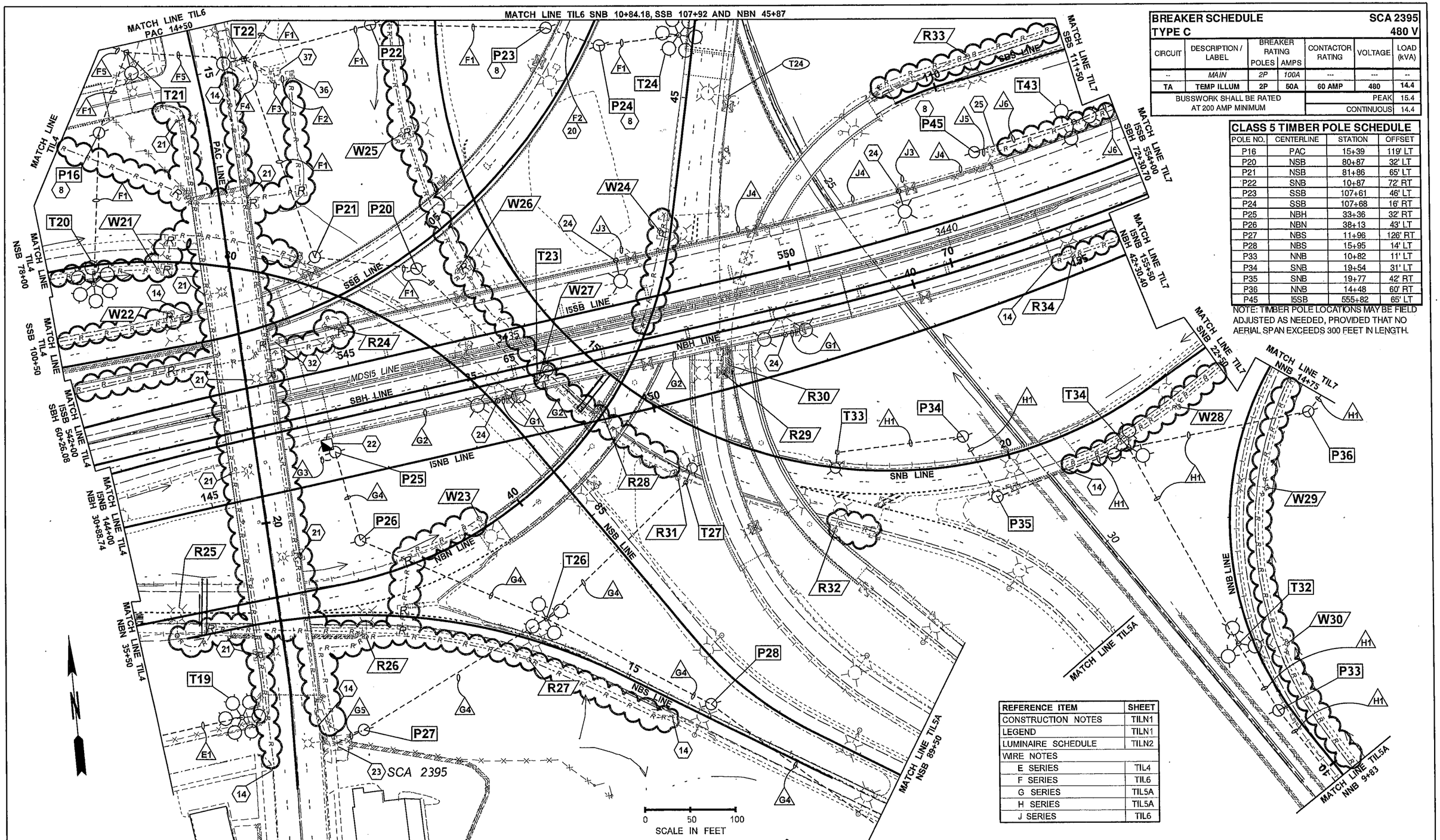

BREAKER SCHEDULE					SCA 2395
TYPE C					480 V
CIRCUIT	DESCRIPTION / LABEL	BREAKER RATING POLES	BREAKER RATING AMPS	CONTACTOR RATING	VOLTAGE	LOAD (kVA)
--	MAIN	2P	100A	---	---	--
TA	TEMP ILLUM	2P	50A	60 AMP	480	14.4
BUSSWORK SHALL BE RATED AT 200 AMP MINIMUM				PEAK		15.4
				CONTINUOUS		14.4

CLASS 5 TIMBER POLE SCHEDULE			
POLE NO.	CENTERLINE	STATION	OFFSET
P16	PAC	15+39	119' LT
P20	NSB	80+87	32' LT
P21	NSB	81+86	65' LT
P22	SNB	10+87	72' RT
P23	SSB	107+61	46' LT
P24	SSB	107+68	16' RT
P25	NBH	33+36	32' RT
P26	NBN	38+13	43' LT
P27	NBS	11+96	126' RT
P28	NBS	15+95	14' LT
P33	NNB	10+82	11' LT
P34	SNB	19+54	31' LT
P35	SNB	19+77	42' RT
P36	NNB	14+48	60' RT
P45	I5SB	555+82	65' LT

NOTE: TIMBER POLE LOCATIONS MAY BE FIELD ADJUSTED AS NEEDED, PROVIDED THAT NO AERIAL SPAN EXCEEDS 300 FEET IN LENGTH.

REFERENCE ITEM	SHEET
CONSTRUCTION NOTES	TILN1
LEGEND	TILN1
LUMINAIRE SCHEDULE	TILN2
WIRE NOTES	
E SERIES	TIL4
F SERIES	TIL6
G SERIES	TIL5A
H SERIES	TIL5A
J SERIES	TIL6

FILE NAME	c:\aawork\pw_work\jacksfl\dms16714\ADD1_P3497_PS_TIL_005.dgn					
TIME	10:53:12 AM					
DATE	4/24/2014					
PLOTTED BY	jacksfl					
DESIGNED BY	F. JACKSON					
ENTERED BY	F. JACKSON					
CHECKED BY	R. CRUMBLEY	ADD1 - REVISED LINE STYLE TO SHOW	02MAY14	FJ		
PROJ. ENGR.	J. PEREZ	CONDUIT AND WIRING REMOVALS				
REGIONAL ADM.	K. DAYTON	REVISION	DATE	BY		

REGION NO.	STATE	FED.AID PROJ.NO.
10	WASH	
JOB NUMBER		
CONTRACT NO.		LOCATION NO. XL3497

DRAWING RAY CRUMBLEY STATE OF WASHINGTON REGISTERED PROFESSIONAL ENGINEER

P.E. STAMP BOX DATE

P.E. STAMP BOX DATE

Washington State Department of Transportation

I-5
M ST TO PORTLAND AVE - HOV

TEMPORARY ILLUMINATION PLAN

PLAN REF NO TIL5

SHEET 1329 OF 1763 SHEETS

WIRING SCHEDULE			TEMPORARY ILLUMINATION SYSTEM
			SCA 794
NO.	CONDUIT / RACEWAY	MATERIAL*	TEMP ILL CKT TA #6
H1	AERIAL	N/A	2

AERIAL CONDUCTORS SHALL BE ALUMINUM TRIPLEX. AERIAL CONDUCTORS SHALL MAINTAIN A MINIMUM 25 FOOT CLEARANCE ABOVE ALL GROUND.

REFERENCE ITEM	SHEET
CONSTRUCTION NOTES	TILN1
LEGEND	TILN1
LUMINAIRE SCHEDULE	TILN2

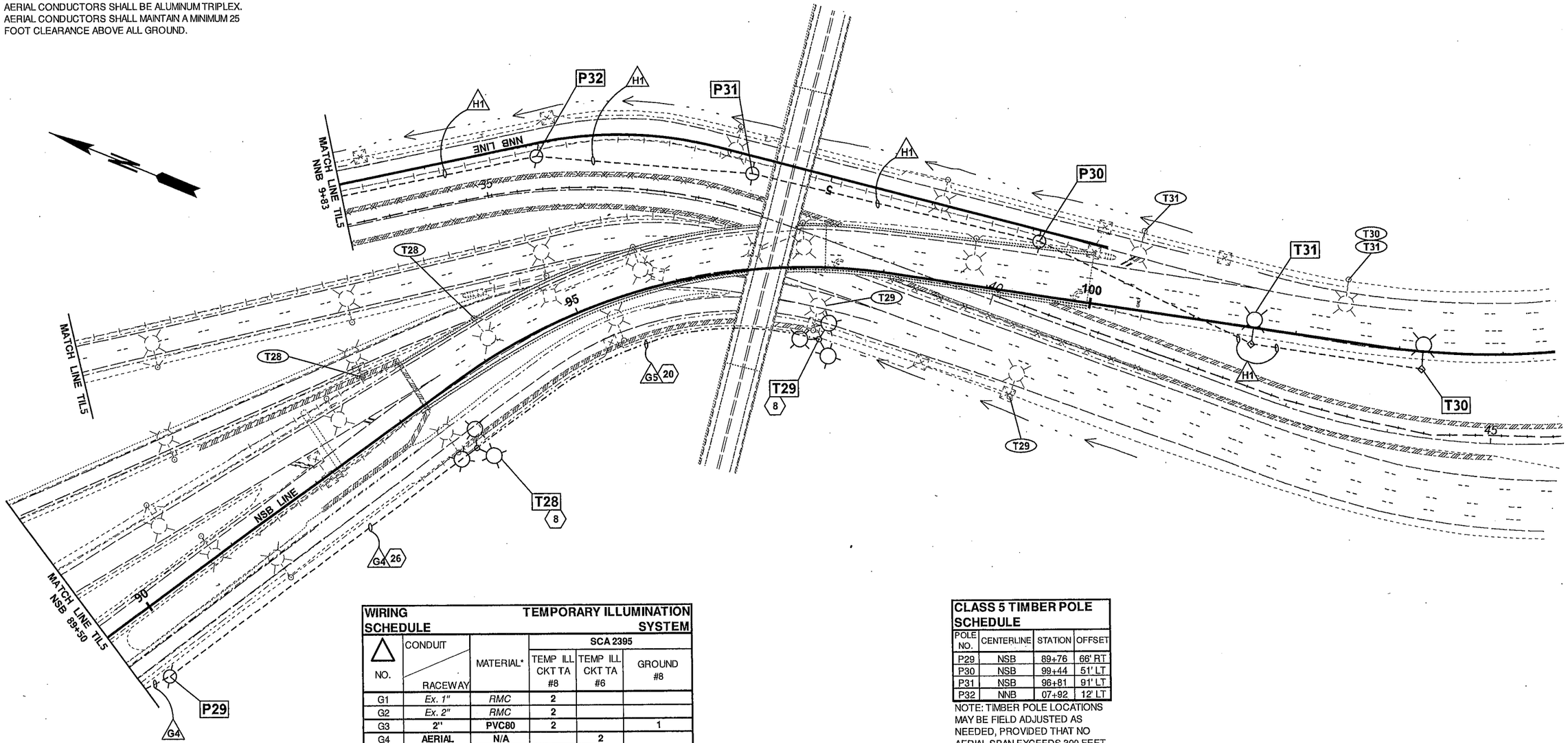

WIRING SCHEDULE			TEMPORARY ILLUMINATION SYSTEM		
			SCA 2395		
NO.	CONDUIT / RACEWAY	MATERIAL*	TEMP ILL CKT TA #8	TEMP ILL CKT TA #6	GROUND #8
G1	*Ex. 1"*	*RMC*	2		
G2	*Ex. 2"*	*RMC*	2		
G3	2"	PVC80	2		1
G4	AERIAL	N/A		2	
G5	2"	PVC80		2	1

AERIAL CONDUCTORS SHALL BE ALUMINUM TRIPLEX. AERIAL CONDUCTORS SHALL MAINTAIN A MINIMUM 25 FOOT CLEARANCE ABOVE ALL GROUND.
* DEFINITIONS: PVC80 = SCHEDULE 80 PVC; RMC = RIGID METAL

CLASS 5 TIMBER POLE SCHEDULE			
POLE NO.	CENTERLINE	STATION	OFFSET
P29	NSB	89+76	66' RT
P30	NSB	99+44	51' LT
P31	NSB	96+81	91' LT
P32	NNB	07+92	12' LT

NOTE: TIMBER POLE LOCATIONS MAY BE FIELD ADJUSTED AS NEEDED, PROVIDED THAT NO AERIAL SPAN EXCEEDS 300 FEET IN LENGTH.

0 50 100
SCALE IN FEET

SHEET TIL5B INTENTIONALLY OMITTED

FILE NAME	c:\aawork\pw_work\jacksfl\dms16714\P3497_PS_TIL_005A.dgn
TIME	4:01:36 PM
DATE	2/15/2014
PLOTTED BY	jacksfl
DESIGNED BY	F. JACKSON
ENTERED BY	F. JACKSON
CHECKED BY	R. CRUMBLEY
PROJ. ENGR.	J. PEREZ
REGIONAL ADM.	K. DAYTON

REVISION	DATE	BY

REGION NO.	STATE	FED.AID PROJ.NO.
10	WASH	
JOB NUMBER		
CONTRACT NO.		LOCATION NO. XL3497

DENNIS RAY CRUMBLEY, STATE OF WASHINGTON, REGISTERED PROFESSIONAL ENGINEER
2/18/14 DATE
P.E. STAMP BOX

DATE
P.E. STAMP BOX

Washington State Department of Transportation

I-5
M ST TO PORTLAND AVE - HOV

TEMPORARY ILLUMINATION PLAN

PLAN REF NO TIL5A

SHEET 1330 OF 1763 SHEETS

WIRING SCHEDULE — TEMPORARY ILLUMINATION SYSTEM

NO.	CONDUIT / RACEWAY	MATERIAL*	SCA 603 TEMP ILL CKT TA #6	SCA 603 ITS CKT B #6	SCA 603 GROUND #8	REMARKS
F1	AERIAL	N/A	2			
F2	Ex. 2"	RMC		2	1	REMOVE EXISTING POWER CONDUCTORS
F3	2"	PVC80		2	1	
F4	AERIAL	N/A		2		
F5	AERIAL	N/A	2	2		
F6	2"	PVC80	2	2	1	

AERIAL CONDUCTORS SHALL BE ALUMINUM TRIPLEX. AERIAL CONDUCTORS SHALL MAINTAIN A MINIMUM 25 FOOT CLEARANCE ABOVE ALL GROUND.

* DEFINITIONS: PVC80 = SCHEDULE 80 PVC; RMC = GALVANIZED RIGID METAL CONDUIT.

WIRING SCHEDULE — TEMPORARY ILLUMINATION SYSTEM

NO.	CONDUIT / RACEWAY	MATERIAL*	SCX 2720 TEMP ILL CKT TA #6	SCX 2720 TEMP ILL CKT TA #2	SCX 2720 TEMP ILL CKT TB #8	SCX 2720 TEMP ILL CKT TB #6	SCX 2720 GROUND #8
J1	AERIAL	N/A	2				
J2	AERIAL	N/A		2			
J3	Ex. 1.25	RMC			Ex. 2		Ex. 1
J4	Ex. 2.00	RMC			Ex. 2		Ex. 1
J5	2"	PVC80			2		1
J6	AERIAL	N/A				2	
J7	AERIAL	N/A		2		2	

AERIAL CONDUCTORS SHALL BE ALUMINUM TRIPLEX. AERIAL CONDUCTORS SHALL MAINTAIN A MINIMUM 25 FOOT CLEARANCE ABOVE ALL GROUND.

* DEFINITIONS: PVC80 = SCHEDULE 80 PVC; RMC = GALVANIZED RIGID METAL CONDUIT.

BREAKER SCHEDULE — SCA 603

TYPE C — 480 V

CIRCUIT	DESCRIPTION / LABEL	BREAKER RATING POLES	BREAKER RATING AMPS	CONTACTOR RATING	VOLTAGE	LOAD (kVA)
--	MAIN	2P	100A	---	---	--
A	ILLUMINATION	2P	15A	30 AMP	480	2.1
B	ITS	2P	15A	---	480	5
TA	TEMP ILLUM	2P	60A	30 AMP	480	18.6
BUSSWORK SHALL BE RATED AT 200 AMP MINIMUM					PEAK	19.6
					CONTINUOUS	18.6

CLASS 5 TIMBER POLE SCHEDULE

POLE NO.	CENTERLINE	STATION	OFFSET
P17	PSSB	59+29	43' LT
P18	PSSB	61+19	57' LT
P19	PSSB	**	
P42	NBN	53+59	94' RT
P43	SBN	58+64	80' LT
P44	SBN	60+93	56' RT
P47	SBN	64+25	51' RT

NOTE: TIMBER POLE LOCATIONS MAY BE FIELD ADJUSTED AS NEEDED, PROVIDED THAT NO AERIAL SPAN EXCEEDS 300 FEET IN LENGTH.

** LOCATE POLE AS CLOSE TO EXISTING SERVICE CABINET AS POSSIBLE.

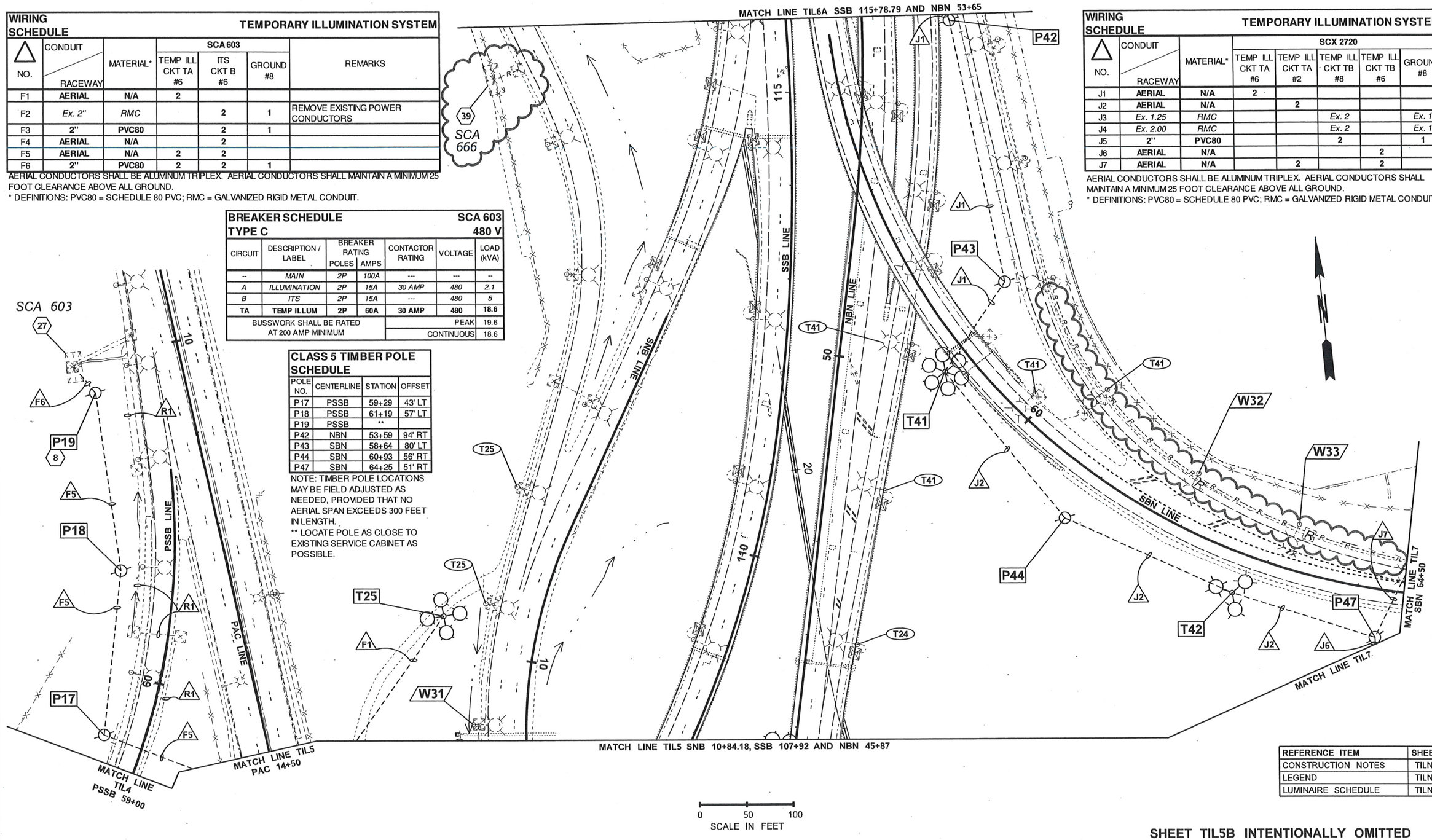

REFERENCE ITEM	SHEET
CONSTRUCTION NOTES	TILN1
LEGEND	TILN1
LUMINAIRE SCHEDULE	TILN2

SHEET TIL5B INTENTIONALLY OMITTED

FILE NAME	c:\aawork\pw_work\jacksfl\dms16714\ADD1_P3497_PS_TIL_006.dgn
TIME	10:55:06 AM
DATE	4/24/2014
PLOTTED BY	Jacksfl
DESIGNED BY	F. JACKSON
ENTERED BY	F. JACKSON
CHECKED BY	R. CRUMBLEY
PROJ. ENGR.	J. PEREZ
REGIONAL ADM.	K. DAYTON

REVISION	DATE	BY
ADD1 - ADDED CONSTRUCTION NOTE 39. REVISED LINE STYLE TO SHOW CONDUIT AND WIRING REMOVALS.	02MAY14	FJ

REGION NO. 10 — STATE WASH — FED.AID PROJ.NO. — JOB NUMBER — CONTRACT NO. — LOCATION NO. XL3497

DENNIS RAY CRUMBLEY, STATE OF WASHINGTON, 36360, REGISTERED PROFESSIONAL ENGINEER — 4/24/14 DATE — P.E. STAMP BOX

DATE — P.E. STAMP BOX

Washington State Department of Transportation

I-5
M ST TO PORTLAND AVE - HOV

TEMPORARY ILLUMINATION PLAN

PLAN REF NO TIL6

SHEET 1331 OF 1763 SHEETS

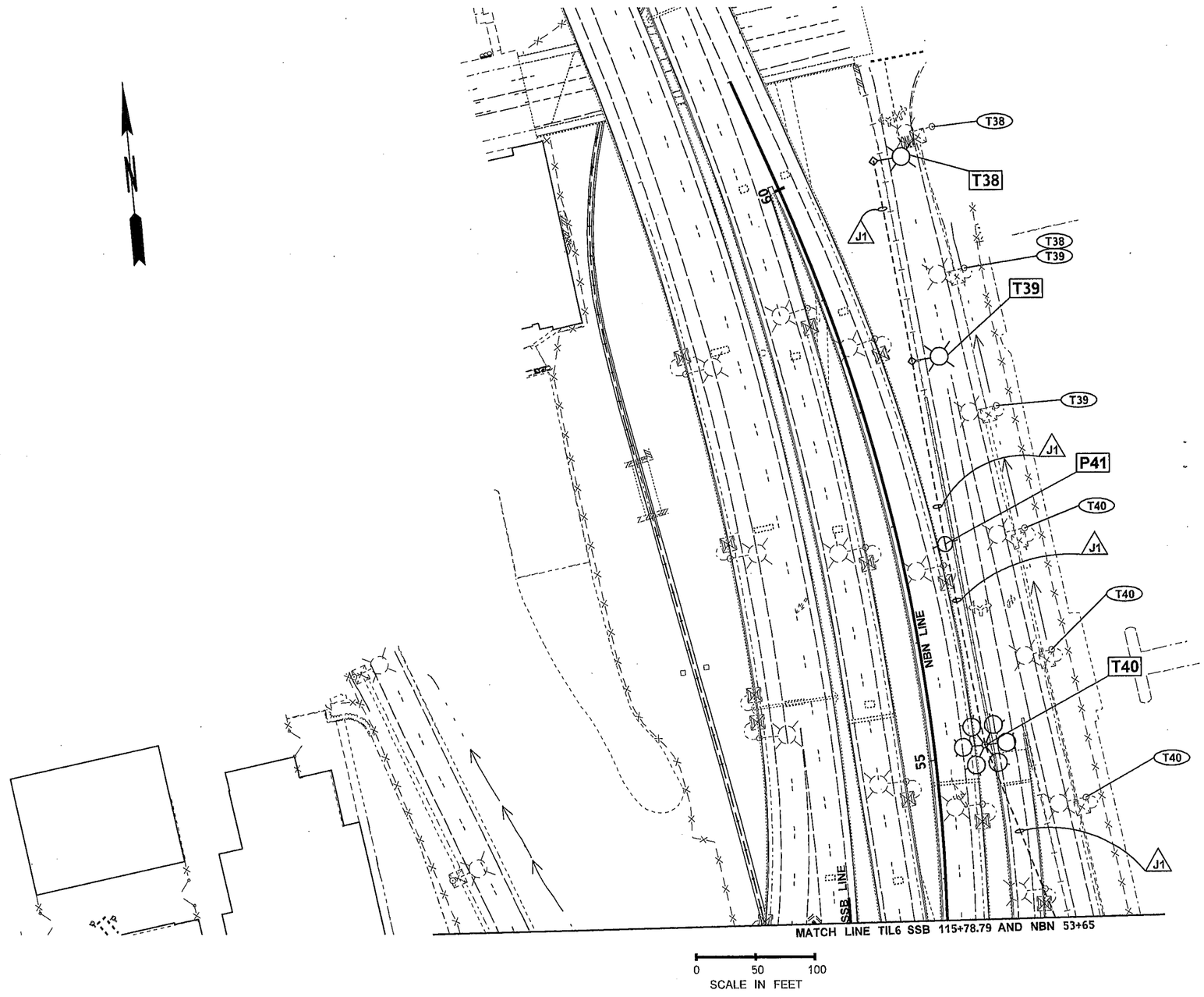

WIRING SCHEDULE			TEMPORARY ILLUMINATION
NO.	CONDUIT / RACEWAY	MATERIAL*	SCX 2720 TEMP ILL CKT TA #6
J1	AERIAL	N/A	2

AERIAL CONDUCTORS SHALL BE ALUMINUM TRIPLEX. AERIAL CONDUCTORS SHALL MAINTAIN A MINIMUM 25 FOOT CLEARANCE ABOVE ALL GROUND.

CLASS 5 TIMBER POLE SCHEDULE

POLE NO.	CENTERLINE	STATION	OFFSET
P41	NBN	56+76	39' RT

NOTE: TIMBER POLE LOCATIONS MAY BE FIELD ADJUSTED AS NEEDED, PROVIDED THAT NO AERIAL SPAN EXCEEDS 300 FEET IN LENGTH.

REFERENCE ITEM	SHEET
LEGEND	TILN1
LUMINAIRE SCHEDULE	TILN2

FILE NAME	c:\aawork\pw_work\jacksfl\dms16714\P3497_PS_TIL_006A.dgn
TIME	4:01:57 PM
DATE	2/15/2014
PLOTTED BY	jacksfl
DESIGNED BY	F. JACKSON
ENTERED BY	F. JACKSON
CHECKED BY	R. CRUMBLEY
PROJ. ENGR.	J. PEREZ
REGIONAL ADM.	K. DAYTON

REVISION | DATE | BY

REGION NO. 10 | STATE WASH | FED.AID PROJ.NO.

JOB NUMBER

CONTRACT NO.

LOCATION NO. XL3497

DENNIS RAY CRUMBLEY, STATE OF WASHINGTON, REGISTERED PROFESSIONAL ENGINEER

2/18/14 DATE

P.E. STAMP BOX

DATE

P.E. STAMP BOX

Washington State Department of Transportation

I-5
M ST TO PORTLAND AVE - HOV

TEMPORARY ILLUMINATION PLAN

PLAN REF NO TIL6A

SHEET 1332 OF 1763 SHEETS

REFERENCE ITEM	SHEET
CONSTRUCTION NOTES	TILN1
LEGEND	TILN1
LUMINAIRE SCHEDULE	TILN2

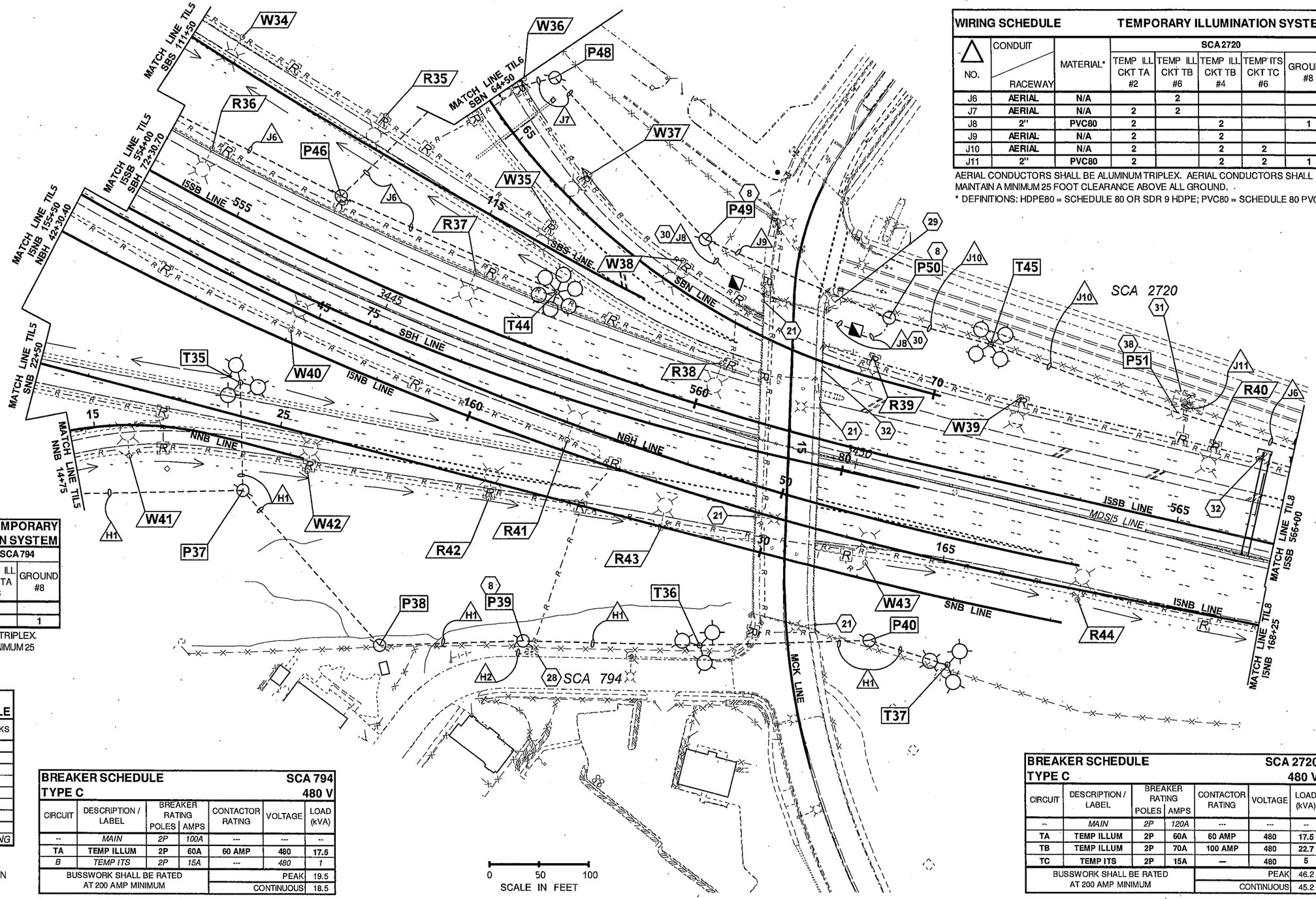

WIRING SCHEDULE			TEMPORARY ILLUMINATION SYSTEM				
			SCA 2720				
NO.	CONDUIT / RACEWAY	MATERIAL*	TEMP ILL CKT TA #2	TEMP ILL CKT TB #6	TEMP ILL CKT TB #4	TEMP ITS CKT TC #6	GROUND #8
J6	AERIAL	N/A		2			
J7	AERIAL	N/A	2	2			
J8	2"	PVC80	2		2		1
J9	AERIAL	N/A	2		2		
J10	AERIAL	N/A	2		2	2	
J11	2"	PVC80	2		2	2	1

AERIAL CONDUCTORS SHALL BE ALUMINUM TRIPLEX. AERIAL CONDUCTORS SHALL MAINTAIN A MINIMUM 25 FOOT CLEARANCE ABOVE ALL GROUND.
* DEFINITIONS: HDPE80 = SCHEDULE 80 OR SDR 9 HDPE; PVC80 = SCHEDULE 80 PVC.

WIRING SCHEDULE			TEMPORARY ILLUMINATION SYSTEM	
			SCA 794	
NO.	CONDUIT / RACEWAY	MATERIAL*	TEMP ILL CKT TA #6	GROUND #8
H1	AERIAL	N/A	2	
H2	2"	PVC80	2	1

AERIAL CONDUCTORS SHALL BE ALUMINUM TRIPLEX.
AERIAL CONDUCTORS SHALL MAINTAIN A MINIMUM 25 FOOT CLEARANCE ABOVE ALL GROUND.
* DEFINITIONS: PVC80 = SCHEDULE 80 PVC.

CLASS 5 TIMBER POLE SCHEDULE				
POLE NO.	CENTERLINE	STATION	OFFSET	REMARKS
P37	NNB	16+63	47' RT	
P38	SNB	26+52	188' RT	
P39	SNB	27+91	147' RT	
P40	SNB	31+27	59' RT	
P46	I5SB	555+87	65' LT	
P48	SBN	64+70	67' LT	
P49	SBN	67+15	56' LT	
P50	SBN	69+36	63' LT	
P51	*I5SB*	*564+77*	*108' LT*	*EXISTING*

NOTE: TIMBER POLE LOCATIONS MAY BE FIELD ADJUSTED AS NEEDED, PROVIDED THAT NO AERIAL SPAN EXCEEDS 300 FEET IN LENGTH.

BREAKER SCHEDULE						SCA 794
TYPE C						480 V
CIRCUIT	DESCRIPTION / LABEL	BREAKER RATING POLES	BREAKER RATING AMPS	CONTACTOR RATING	VOLTAGE	LOAD (kVA)
--	*MAIN*	*2P*	*100A*	---	---	--
TA	TEMP ILLUM	2P	60A	60 AMP	480	17.5
B	*TEMP ITS*	*2P*	*15A*	---	*480*	*1*
BUSSWORK SHALL BE RATED AT 200 AMP MINIMUM					PEAK	19.5
					CONTINUOUS	18.5

BREAKER SCHEDULE						SCA 2720
TYPE C						480 V
CIRCUIT	DESCRIPTION / LABEL	BREAKER RATING POLES	BREAKER RATING AMPS	CONTACTOR RATING	VOLTAGE	LOAD (kVA)
--	*MAIN*	*2P*	*120A*	---	---	--
TA	TEMP ILLUM	2P	60A	60 AMP	480	17.5
TB	TEMP ILLUM	2P	70A	100 AMP	480	22.7
TC	TEMP ITS	2P	15A	—	480	5
BUSSWORK SHALL BE RATED AT 200 AMP MINIMUM					PEAK	46.2
					CONTINUOUS	45.2

FILE NAME	c:\aawork\pw_work\jacksfl\dms16714\P3497_PS_TIL_007.dgn
TIME	11:28:00 AM
DATE	3/13/2014
PLOTTED BY	jacksfl
DESIGNED BY	F. JACKSON
ENTERED BY	F. JACKSON
CHECKED BY	R. CRUMBLEY
PROJ. ENGR.	J. PEREZ
REGIONAL ADM.	K. DAYTON

REVISION | DATE | BY

REGION NO.	STATE	FED.AID PROJ.NO.
10	WASH	
JOB NUMBER		
CONTRACT NO.		LOCATION NO. XL3497

DENNIS RAY CRUMBLEY STATE OF WASHINGTON REGISTERED PROFESSIONAL ENGINEER
3/11/14 DATE
P.E. STAMP BOX

DATE
P.E. STAMP BOX

Washington State Department of Transportation

I-5
M ST TO PORTLAND AVE - HOV

TEMPORARY ILLUMINATION PLAN

PLAN REF NO TIL7

SHEET 1333 OF 1763 SHEETS

CLASS 5 TIMBER POLE SCHEDULE			
POLE NO.	CENTERLINE	STATION	OFFSET
P52	TI5SB	13+18	64' LT
P53	TI5SB	17+89	63' LT

NOTE: TIMBER POLE LOCATIONS MAY BE FIELD ADJUSTED AS NEEDED, PROVIDED THAT NO AERIAL SPAN EXCEEDS 300 FEET IN LENGTH.

WIRING SCHEDULE			TEMPORARY ILLUMINATION SYSTEM		
			SCX 3168		
NO.	CONDUIT / RACEWAY	MATERIAL*	TEMP ILL CKT TA #6	TEMP ILL CKT TA #2	TEMP ILL CKT TB #4
K1	AERIAL	N/A	2		
K2	AERIAL	N/A		2	
K3	AERIAL	N/A		2	2

AERIAL CONDUCTORS SHALL BE ALUMINUM TRIPLEX. AERIAL CONDUCTORS SHALL MAINTAIN A MINIMUM 25 FOOT CLEARANCE ABOVE ALL GROUND.

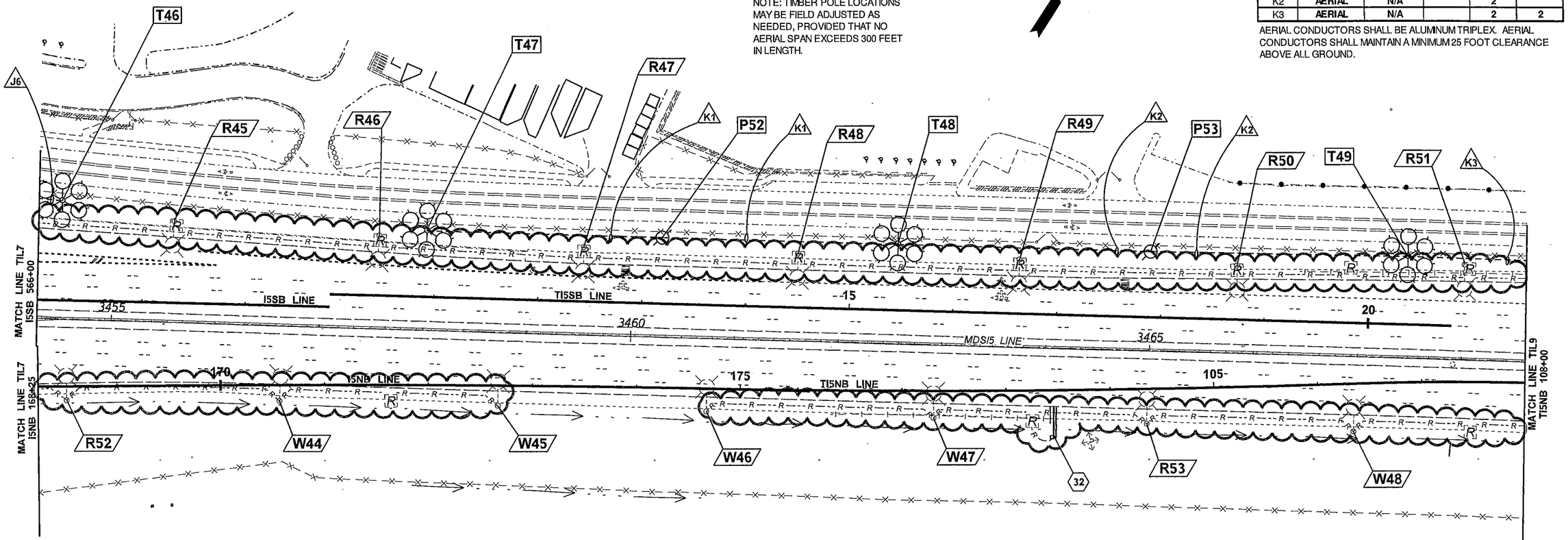

0 50 100
SCALE IN FEET

REFERENCE ITEM	SHEET
CONSTRUCTION NOTES	TILN1
LEGEND	TILN1
LUMINAIRE SCHEDULE	TILN2

FILE NAME	c:\aawork\pw_work\jacksfl\dms16714\ADD1_P3497_PS_TIL_008.dgn						
TIME	10:52:18 AM				REGION NO. 10	STATE WASH	FED.AID PROJ.NO.
DATE	4/24/2014				JOB NUMBER		
PLOTTED BY	jacksfl						
DESIGNED BY	F. JACKSON						
ENTERED BY	F. JACKSON						
CHECKED BY	R. CRUMBLEY	ADD1 - REVISED LINE STYLE TO SHOW CONDUIT AND WIRING REMOVALS	02MAY14	FJ	CONTRACT NO.	LOCATION NO. XL3497	
PROJ. ENGR.	J. PEREZ						
REGIONAL ADM.	K. DAYTON	REVISION	DATE	BY			

DENNIS RAY CRUMBLEY, STATE OF WASHINGTON, 37765, REGISTERED PROFESSIONAL ENGINEER
4/24/14
DATE
P.E. STAMP BOX

DATE
P.E. STAMP BOX

Washington State Department of Transportation

I-5
M ST TO PORTLAND AVE - HOV

TEMPORARY ILLUMINATION PLAN

PLAN REF NO TIL8

SHEET 1334 OF 1763 SHEETS

BREAKER SCHEDULE						SCX 3168
TYPE C						480 V
CIRCUIT	DESCRIPTION / LABEL	BREAKER RATING		CONTACTOR RATING	VOLTAGE	LOAD (kVA)
		POLES	AMPS			
--	*MAIN*	*2P*	*150A*	---	---	--
TA	TEMP ILLUM	2P	40A	60 AMP	480	13.3
TB	TEMP ILLUM	2P	60A	60 AMP	480	17.7
BUSSWORK SHALL BE RATED AT 200 AMP MINIMUM					PEAK	32
					CONTINUOUS	31

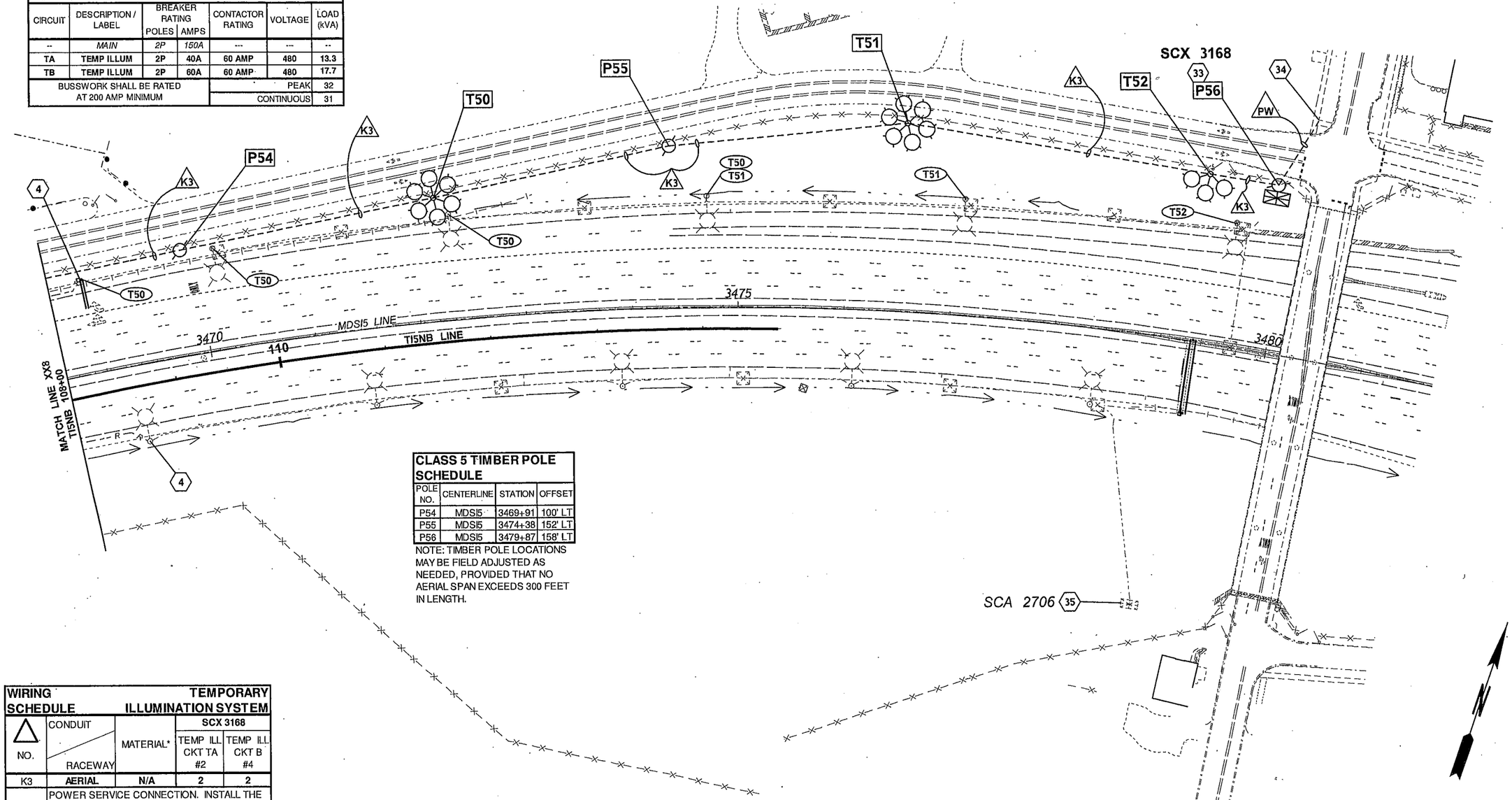

CLASS 5 TIMBER POLE SCHEDULE			
POLE NO.	CENTERLINE	STATION	OFFSET
P54	MDSI5	3469+91	100' LT
P55	MDSI5	3474+38	152' LT
P56	MDSI5	3479+87	158' LT

NOTE: TIMBER POLE LOCATIONS MAY BE FIELD ADJUSTED AS NEEDED, PROVIDED THAT NO AERIAL SPAN EXCEEDS 300 FEET IN LENGTH.

WIRING SCHEDULE			TEMPORARY ILLUMINATION SYSTEM	
	CONDUIT / RACEWAY	MATERIAL*	SCX 3168	
NO.			TEMP ILL CKT TA #2	TEMP ILL CKT B #4
K3	AERIAL	N/A	2	2
PW	POWER SERVICE CONNECTION. INSTALL THE FOLLOWING UNLESS OTHERWISE DIRECTED BY THE SERVING UTILITY: 2" SHCEDULE 80 PVC CONDUIT, RISER, AND WEATHERHEAD, AND (3) #2 CONDUCTORS.			

AERIAL CONDUCTORS SHALL MAINTAIN A MINIMUM 25 FOOT CLEARANCE ABOVE ALL GROUND.

REFERENCE ITEM	SHEET
CONSTRUCTION NOTES	TILN1
LEGEND	TILN1
LUMINAIRE SCHEDULE	TILN2

0 50 100
SCALE IN FEET

SHEETS TIL10 & TIL11 INTENTIONALLY OMITTED

FILE NAME	c:\aawork\pw_work\jacksfl\dms16714\P3497_PS_TIL_009.dgn
TIME	4:02:29 PM
DATE	2/15/2014
PLOTTED BY	jacksfl
DESIGNED BY	F. JACKSON
ENTERED BY	F. JACKSON
CHECKED BY	R. CRUMBLEY
PROJ. ENGR.	J. PEREZ
REGIONAL ADM.	K. DAYTON

REVISION | DATE | BY

REGION NO.	STATE	FED.AID PROJ.NO.
10	WASH	
JOB NUMBER		
CONTRACT NO.		LOCATION NO. XL3497

DRAINE RAY CRUMBLEY, STATE OF WASHINGTON, 38166, REGISTERED PROFESSIONAL ENGINEER
2/10/14
DATE
P.E. STAMP BOX

DATE
P.E. STAMP BOX

Washington State Department of Transportation

I-5
M ST TO PORTLAND AVE - HOV

TEMPORARY ILLUMINATION PLAN

PLAN REF NO TIL9

SHEET 1335 OF 1763 SHEETS

LEGEND

EXISTING	NEW	
		TYPE 1 JUNCTION BOX
		TYPE 2 JUNCTION BOX
		TYPE 8 JUNCTION BOX
		TYPE 4 JUNCTION BOX
		TYPE 5 JUNCTION BOX
		NEMA BARRIER MOUNTED JUNCTION BOX
	PB	PULL BOX - SHALL BE LABELED "SVC"
	T	TRANSFORMER CABINET
	M	METER PEDESTAL
		ELECTRICAL SERVICE CABINET
		TYPE 1 LIGHT STANDARD AND LUMINAIRE
		DOUBLE ARM TYPE 1 LIGHT STANDARD AND LUMINAIRE
		"WALLPACK" TYPE LUMINAIRE
		"UNDERDECK" TYPE LUMINAIRE
		TIMBER TYPE 1 LIGHT STANDARD AND LUMINAIRE
		HIGH MAST LIGHT STANDARD AND LUMINAIRE
		CONDUIT AND WIRING
		OVERHEAD VARIABLE MESSAGE SIGN (VMS)
		CLASS 5 TIMBER POLE
		POWER UTILITY POLE
	?	LUMINAIRE NUMBER (SEE LUMINAIRE SCHEDULE)
	?	CONSTRUCTION NOTE
	?	WIRE NOTE
	ITS	ITS CONDUIT AND WIRING - SEE ITS PLANS

CONSTRUCTION NOTES — ILLUMINATION SYSTEM

NO.	DESCRIPTION
1	INSTALL NEW LIGHT STANDARD AND LUMINAIRE ON EXISTING ELBOW MOUNT IN ACCORDANCE WITH LUMINAIRE SCHEDULE.
2	EXISTING SERVICE CABINET (**SCA 2647**) TO REMAIN.
3	SPLICE NEW CONDUCTORS TO EXISTING CONDUCTORS TO REMAIN.
4	REPLACE EXISTING TYPE 1 JUNCTION BOX WITH NEW TYPE 5 JUNCTION BOX.
5	INSTALL NEW LIGHT STANDARD AND LUMINAIRE ON EXISTING BARRIER MOUNT.
6	REMOVE EXISTING LIGHT STANDARD AND RETURN TO WSDOT (SEE **SPECIAL PROVISIONS**). INSTALL NEW LIGHT STANDARD AND LUMINAIRE ON EXISTING BARRIER MOUNT IN ACCORDANCE WITH LUMINAIRE SCHEDULE.
7	TERMINATE NEW CONDUCTORS IN EXISTING SERVICE CABINET (**SCA 2662**). INSTALL NEW BREAKERS AS SHOWN IN BREAKER SCHEDULE SHEET IL2.
8	INSTALL EXPANSION FITTING ON CONDUITS AT JOINT BETWEEN EXISTING BARRIER AND NEW BARRIER. EXTEND EXISTING CONDUITS TO NEW NEMA JUNCTION BOX.
9	INSTALL DEFLECTION FITTING AT CONDUIT TRANSITION FROM GROUND TO TRAFFIC BARRIER. SEE **STANDARD PLAN J-60.11**.
10	CONDUIT TO BE INSTALLED IN TRAFFIC BARRIER (SEE **STANDARD PLAN J-60.11**, **STANDARD PLAN J-60.12**, OR **BRIDGE PLANS** AS APPLICABLE)
11	TERMINATE NEW CONDUIT IN EXISTING JUNCTION BOX. SPLICE NEW CONDUCTORS TO EXISTING CONDUCTORS TO REMAIN.
12	INTERCEPT EXISTING CONDUIT WITH NEW JUNCTION BOX. PRESERVE EXISTING CONDUCTORS IN CONDUIT RUN AND SPLICE TO NEW CONDUCTORS.
13	INSTALL NEW MODIFIED TYPE B SERVICE CABINET (**SCA 3167**) IN ACCORDANCE WITH DETAIL SHEET ITCF1 AND BREAKER SCHEDULE SHEET IL3. SEE ITS PLANS FOR ADDITIONAL CONDUIT AND CABINET INFORMATION.
14	INSTALL NEW METER PEDESTAL IN ACCORDANCE WITH **TACOMA POWER STANDARD C-MR-0020**. INSTALL SINGLE MAIN BREAKER IN PLACE OF LOAD CENTER IN BOTTOM OF PEDESTAL. BREAKER SIZE SHALL MATCH MAIN BREAKER SIZE IN THE SERVICE OR TRANSFORMER CABINET (AS APPLICABLE)BEING FED BY THE METER PEDESTAL.
15	SOURCE OF POWER IS AN EXISTING TACOMA POWER UTILITY POLE. INSTALL CONDUIT, CONDUCTORS, RISER, WEATHERHEAD, AND SECONDARY SERVICE EQUIPMENT IN ACCORDANCE WITH **TACOMA POWER STANDARD C-SV-3200** AND ANY ASSOCIATED TACOMA POWER STANDARDS.
16	INSTALL NEW 25 KVA PAD MOUNT TRANSFORMER (**005-XF-13359**) AND TYPE D SERVICE CABINET (**SCA 602**) IN ACCORDANCE WITH **STANDARD PLAN J-10.10** AND BREAKER SCHEDULES SHEET IL4.
17	CONDUIT SHALL BE INSTALLED USING DIRECTIONAL BORING.
18	INSTALL NEW 35 KVA PAD MOUNT TRANSFORMER (**005-XF-13374**) AND TYPE D SERVICE CABINET (**SCA 2395**) IN ACCORDANCE WITH **STANDARD PLAN J-10.10** AND BREAKER SCHEDULES SHEET IL5.
19	TERMINATE NEW CONDUIT AND CONDUCTORS IN NEW TRANSFORMER CABINET **005-XF-13371**. SEE ITS PLANS FOR ADDITIONAL DETAILS.
20	INTERCEPT EXISTING CONDUIT WITH NEW JUNCTION BOX.
21	EXISTING LIGHT STANDARD TO REMAIN. REMOVE EXISTING LUMINAIRE AND INSTALL NEW 240V LUMINAIRE IN ACCORDANCE WITH LUMINAIRE SCHEDULE.
22	TERMINATE CONDUIT FROM UNDERDECK LUMINAIRE IN THIS JUNCTION BOX. SEE ADDITIONAL DETAILS SHEET ILD1 AND BRIDGE PLANS.
23	INSTALL NEW JUNCTION BOX IN PLACE OF REMOVED LIGHT STANDARD FOUNDATION. RESTORE EXISTING CONDUIT ELBOW AND STUBOUT.
24	REMOVE EXISTING CONDUCTORS AND REPLACE WITH NEW IN ACCORDANCE WITH WIRE SCHEDULE.
25	REMOVE EXISTING LIGHT STANDARD AND RETURN TO WSDOT (SEE **SPECIAL PROVISIONS**). INSTALL NEW LIGHT STANDARD AND LUMINAIRE ON EXISTING FOUNDATION OR ELBOW MOUNT IN ACCORDANCE WITH LUMINAIRE SCHEDULE.
26	INSTALL NEW 20 KVA PAD MOUNT TRANSFORMER (**005-XF-13394**) AND TYPE D SERVICE CABINET (**SCA 794**) IN ACCORDANCE WITH **STANDARD PLAN J-10.10** AND BREAKER SCHEDULES SHEET IL7.
27	INSTALL NEW 30 KVA PAD MOUNT TRANSFORMER (**005-XF-13399**) AND TYPE D SERVICE CABINET (**SCA 2720**) IN ACCORDANCE WITH **STANDARD PLAN J-10.10** AND BREAKER SCHEDULES SHEET IL7. SEE ITS PLANS FOR ADDITIONAL CONDUIT AND CABINET INFORMATION.
28	TERMINATE NEW CONDUIT AND CONDUCTORS IN NEW TRANSFORMER CABINET **005-XF-13402**. SEE ITS PLANS FOR ADDITIONAL DETAILS.
29	CONDUIT SHALL BE ROUTED UP THROUGH WALL IN ACCORDANCE WITH WALL PLANS AND DETAIL SHEET IL7.
30	REPLACE EXISTING TYPE 1 JUNCTION BOX WITH NEW TYPE 2 JUNCTION BOX. SPLICE NEW CONDUCTORS TO EXISTING CONDUCTORS TO REMAIN.
31	REMOVE EXISTING UNDERDECK LUMINAIRE AND REPLACE WITH NEW IN ACCORDANCE WITH LUMINAIRE SCHEDULE. REQUIRES NEW ANCHORS TO BE INSTALLED IN UNDERSIDE OF BRIDGE DECK.
32	INSTALL NEW UNDERDECK LUMINAIRE IN ACCORDANCE WITH LUMINAIRE SCHEDULE AND DETAILS SHEET ILD2.
33	CONDUIT ROUTES TO BARRIER MOUNTED NEMA JUNCTION BOX. SEE BRIDGE PLANS FOR DETAILS. CONDUIT MAY ENTER BOTTOM OF NEMA JUNCTION BOX.
34	SURFACE MOUNT CONDUIT AND WALLPACK LUMINAIRE TO BRIDGE COLUMN AND CROSSBEAM IN ACCORDANCE WITH **STANDARD PLAN J-60.13**, **STANDARD PLAN J-60.14**, AND DETAIL SHEET ILD2.
35	TERMINATE NEW CONDUIT AND CONDUCTORS IN NEW TRANSFORMER CABINET **005-XF-13376**. SEE ITS PLANS FOR ADDITIONAL DETAILS.
36	REPLACE EXISTING TYPE 1 JUNCTION BOX WITH NEW TYPE 1 JUNCTION BOX.
37	INSTALL LUMINAIRE IN CORNER OF FENCED AREA FOR ITS CABINETS. LUMINAIRE ARM SHALL BE ORIENTED DIAGONALLY AWAY FROM THE CORNER OF THE FENCE AS SHOWN.
38	SOURCE OF POWER IS AN EXISTING TACOMA POWER PAD MOUNTED TRANSFORMER. INSTALL CONDUIT, CONDUCTORS, AND SECONDARY SERVICE IN ACCORDANCE WITH **TACOMA POWER STANDARD C-SV-3200** AND ANY ASSOCIATED TACOMA POWER STANDARDS.
39	REPLACE EXISTING TYPE 1 JUNCTION BOX WITH NEW TYPE 4 JUNCTION BOX.
40	INSTALL NEW POST MOUNT MODIFIED TYPE B SERVICE CABINET (**SCA 666**) IN ACCORDANCE WITH **STANDARD PLAN J-3b** AND BREAKER SCHEDULE SHEET IL6.
41	INSTALL NEW CLASS 5 TIMBER POLE. POLE SHOULD LINE UP WITH EXISTING TACOMA POWER POLE LINE TO NORTH. INSTALL NEW CONDUIT, CONDUCTORS, RISER, WEATHERHEAD, GUY WIRE, AND STRIKE POINT FOR AERIAL SERVICE CONNECTION. COORDINATE WITH THE ENGINEER AND THE SERVING UTILITY FOR METER PLACEMENT. COIL TEN FEET OF ADDITIONAL WIRE AT TOP OF POLE FOR SERVING UTILITY TO SPLICE AERIAL FEEDER. AERIAL CONDUCTORS TO BE SUPPLIED BY SERVING UTILITY.

WIRING SCHEDULE — ILLUMINATION SYSTEM

△ NO.	CONDUIT / RACEWAY	MATERIAL*	SCA 2647					
			ILLUM. CKT A #8	ILLUM. CKT A #6	ILLUM. CKT B #8	ILLUM. CKT B #4	ITS CKT C #6	GROUND #8
A1	Ex. 1"	RMC			Ex. 2			Ex. 1
A2	Ex. 2"	PVC80				Ex. 2		Ex. 1
	Ex. 2"	PVC80	SPARE					
A3	Ex. 2"	PVC80				Ex. 2		Ex. 1
A4	Ex. 2"	PVC80	SPARE					
A5	Ex. 1"	RMC	Ex. 2					Ex. 1
A6	Ex. 2"	PVC80		Ex. 2				Ex. 1
	Ex. 2"	PVC80	SPARE					
A7	Ex. 2"	PVC80		2				1
	Ex. 2"	PVC80	SPARE					
A8	Ex. 2"	PVC80		Ex. 2			Ex. 2	Ex. 1
A9	Ex. 2"	PVC80		Ex. 2		Ex. 2	Ex. 2	Ex. 1

* DEFINITIONS: PVC80 = SCHEDULE 80 PVC; RMC = GALVANIZED RIGID METAL CONDUIT.

WIRING SCHEDULE — ILLUMINATION SYSTEM

△ NO.	CONDUIT / RACEWAY	MATERIAL*	SCA 2662					
			ILLUM. CKT B #8	ILLUM. CKT B #2	ILLUM. CKT C #8	ILLUM. CKT E #6	ILLUM. CKT F #4	GROUND #8
B1	Ex. 1"	RMC	2					1
B2	Ex. 2"	PVC80	2					1
	Ex. 2"	PVC80						
B3	Ex. 1"	RMC	Ex. 2					Ex. 1
B4	Ex. 2"	PVC80	Ex. 2					Ex. 1
B5	Ex. 1"	RMC			Ex. 2			Ex. 1
B6	1"	RMC			2			1
B7	2"	RMC			2			1
B8	Ex. 2"	RMC		2	Ex. 2			Ex. 1
B9	Ex. 2"	RMC					Ex. 2	Ex. 1
B10	2"	RMC					2	1
B11	2"	RMC			2		2	1
B12	Ex. 2"	RMC				Ex. 2		Ex. 1
B13	2"	RMC				2		1
B14	2"	RMC			2	2	2	1
B15	Ex. 2"	PVC80			Ex. 2	Ex. 2	Ex. 2	Ex. 1
B16	Ex. 2"	PVC80		2	Ex. 2	Ex. 2	Ex. 2	Ex. 1

* DEFINITIONS: PVC80 = SCHEDULE 80 PVC; RMC = GALVANIZED RIGID METAL CONDUIT.

WIRING SCHEDULE — ILLUMINATION SYSTEM

△ NO.	CONDUIT / RACEWAY	MATERIAL*	SCA 3167				
			ILLUM. CKT A #8	ILLUM. CKT A #4	SERVICE CKT #4/0	GROUND #8	GROUND #2
C1	1"	RMC	2			1	
C2	2"	RMC		2		1	
	2"	RMC	SPARE				
P1	3"	RMC			3		1
CP	POWER SERVICE CONNECTION. INSTALL THE FOLLOWING UNLESS OTHERWISE DIRECTED BY THE SERVING UTILITY: 3" SHCEDULE 80 PVC CONDUIT, RISER, AND WEATHERHEAD, AND (3) #4/0 CONDUCTORS.						

* DEFINITIONS: PVC80 = SCHEDULE 80 PVC; RMC = GALVANIZED RIGID METAL CONDUIT.

WIRING SCHEDULE — ILLUMINATION SYSTEM

△ NO.	CONDUIT / RACEWAY	MATERIAL*	SCA 2395											005-XF-12345		
			ILLUM. CKT A #8	ILLUM. CKT A #1/0	ILLUM. CKT B #8	ILLUM. CKT B #2	ILLUM. CKT C #8	ILLUM. CKT C #2	ILLUM. CKT D #8	ILLUM. CKT E #8	ILLUM. CKT F #8	ITS CKT G #4	SERVICE CKT #3/0	ILLUM. CKT TC #8	GROUND #8	GROUND #6	GROUND #2
D1	1"	RMC	2												1		
D2	2"	PVC80		2												1	
D3	1"	RMC			2										1		
D4	2"	PVC80		2		2										1	
D5	Ex. 1"	RMC			Ex. 2										Ex. 1		
D6	Ex. 2"	RMC			Ex. 2										Ex. 1		
D7	Ex. 2"	RMC			2										1		
D8	1"	RMC					2								1		
D9	2"	RMC					2									1	
D10	2"	RMC			2		2								1		
	2"	RMC	SPARE														
D11	2"	PVC80		2												1	
	2"	PVC80				2	2								1		
D12	Ex. 1.25"	RMC					Ex. 2								Ex. 1		
D13	Ex. 2"	RMC					Ex. 2								Ex. 1		
D14	Ex. 2"	RMC					2								1		
D15	Ex. 1.25"	RMC					2								1		
D16	2"	PVC80					2								1		
D17	Ex. 1.5"	RMC					Ex. 2								Ex. 1		
D18	2"	RMC		2												1	
	2"	RMC				2		2							1		
D19	1"	RMC												2	1		
D20	2"	RMC										2			1		
D21	2"	PVC80										2			1		
D22	Ex. 1"	RMC							Ex. 2						Ex. 1		
D23	1"	RMC							2						1		
D24	2"	RMC							2						1		
D25	Ex. 1"	RMC								Ex. 2					Ex. 1		
D26	Ex. 1.25"	RMC								Ex. 2					Ex. 1		
D27	2"	PVC80								2					1		
D28	Ex. 1"	RMC									Ex. 2				Ex. 1		
D29	Ex. 1.5"	RMC									Ex. 2				Ex. 1		
D30	2"	RMC									2				1		
	2"	RMC															
D31	2"	RMC								2	2				1		
	2"	RMC										2			1		
D32	2"	RMC		2		2										1	
	2"	RMC						2		2	2	2			1		
D33	2"	RMC							2						1		
D34	2"	RMC		2		2										1	
	2"	RMC						2	2	2					1		
	2"	RMC									2	2			1		
D35	2"	RMC											3				1
P2	3"	RMC											3				1
DP	POWER SERVICE CONNECTION. INSTALL THE FOLLOWING UNLESS OTHERWISE DIRECTED BY THE SERVING UTILITY: 3" SHCEDULE 80 PVC CONDUIT, RISER, AND WEATHERHEAD, AND (3) #3/0 CONDUCTORS.																

* DEFINITIONS: PVC80 = SCHEDULE 80 PVC; RMC = GALVANIZED RIGID METAL CONDUIT.

FILE NAME	c:\aawork\pw_work\jacksfl\dms02678\P3497_PS_ILN_002_WN1.dgn
TIME	1:35:16 PM
DATE	3/10/2014
PLOTTED BY	jacksfl
DESIGNED BY	F. JACKSON
ENTERED BY	F. JACKSON
CHECKED BY	R. CRUMBLEY
PROJ. ENGR.	J. PEREZ
REGIONAL ADM.	K. DAYTON

REVISION | DATE | BY

REGION NO. 10 | STATE WASH | FED.AID PROJ.NO.

JOB NUMBER

CONTRACT NO.

LOCATION NO. XL3497

DENNIS RAY CRUMBLEY — STATE OF WASHINGTON — REGISTERED PROFESSIONAL ENGINEER

3/11/14 DATE

P.E. STAMP BOX

DATE

P.E. STAMP BOX

Washington State Department of Transportation

I-5
M ST TO PORTLAND AVE - HOV

ILLUMINATION NOTES AND SCHEDULES

PLAN REF NO ILN2

SHEET 1337 OF 1763 SHEETS

WIRING SCHEDULE — ILLUMINATION SYSTEM

△ NO.	CONDUIT / RACEWAY	MATERIAL*	SCA 602									005-XF-13371		
			ILLUM. CKT A #8	ILLUM. CKT A #4	ILLUM. CKT B #8	ILLUM. CKT B #6	ILLUM. CKT C #8	ILLUM. CKT D #8	ILLUM. CKT D #2	ITS CKT E #2	SERVICE CKT #2/0	ILLUM. CKT #8	GROUND #8	GROUND #2
E1	1"	RMC	2										1	
E2	2"	PVC80		2									1	
E3	Ex. 1.25"	RMC			2								1	
E4	Ex. 2"	RMC				2							1	
E5	1"	RMC			2								1	
E6	2"	RMC				2							1	
E7	2"	RMC		2		2							1	
E8	2"	RMC		2		2							1	
	2"	RMC	SPARE											
E9	Ex. 1"	RMC					Ex. 2						Ex. 1	
E10	2"	RMC					2						1	
E11	1"	RMC					2						1	
E12	2"	RMC								2			1	
E13	2"	PVC80					2			2			1	
E14	2"	RMC					2			2			1	
	2"	RMC	SPARE											
E15	Ex. 1.25"	RMC						Ex. 2					Ex. 1	
E16	Ex. 2"	RMC						Ex. 2					Ex. 1	
E17	Ex. 2"	RMC							2				1	
E18	2"	PVC80							2				1	
E19	2"	RMC							2				1	
	2"	RMC	SPARE											
E20	2"	PVC80					2		2	2			1	
E21	2"	RMC		2		2							1	
	2"	RMC					2		2				1	
	2"	RMC								2			1	
E22	2"	RMC									3			1
E23	1"	RMC										2	1	
E24	2"	RMC										2	1	
P3	3"	RMC									3			1
EP	POWER SERVICE CONNECTION. INSTALL THE FOLLOWING UNLESS OTHERWISE DIRECTED BY THE SERVING UTILITY: 3" SHCEDULE 80 PVC CONDUIT, RISER, AND WEATHERHEAD, AND (3) #2/0 CONDUCTORS.													

* DEFINITIONS: PVC80 = SCHEDULE 80 PVC; RMC = GALVANIZED RIGID METAL CONDUIT.

WIRING SCHEDULE — ILLUMINATION SYSTEM

△ NO.	CONDUIT / RACEWAY	MATERIAL*	SCA 794										
			ILLUM. CKT A #8	ILLUM. CKT B #8	ILLUM. CKT C #8	ILLUM. CKT D #10	ILLUM. CKT D #8	ILLUM. CKT D #2	ILLUM. CKT E #8	ILLUM. CKT E #4	SERVICE CKT #2/0	GROUND #8	GROUND #4
F1	1"	RMC	2									1	
F2	2"	RMC	2									1	
F3	2"	RMC	2									1	
	2"	RMC	SPARE										
F4	Ex. 1"	RMC		Ex. 2								Ex. 1	
F5	Ex. 1.25"	RMC		Ex. 2								Ex. 1	
F6	Ex. 1.5"	RMC		2								1	
F7	1"	RMC		2								1	
F8	2"	PVC80		2								1	
F9	2"	RMC		2								1	
	2"	RMC	SPARE										
F10	Ex. 0.75"	RMC				Ex. 2						Ex. 1	
F11	Ex. 1.5"	RMC					Ex. 2					Ex. 1	
F12	Ex. 1.5"	RMC				Ex. 2	Ex. 2					Ex. 1	
F13	Ex. 1.25"	RMC					Ex. 2					Ex. 1	
F14	Ex. 1"	RMC			Ex. 2							Ex. 1	
F15	Ex. 1.5"	RMC			Ex. 2		Ex. 2					Ex. 1	
F16	Ex. 1.5"	RMC			Ex. 2			2				1	
F17	1"	RMC			2							1	
F18	2"	PVC80			2			2				1	
F19	2"	PVC80		2	2			2				1	
F20	1"	RMC							2			1	
F21	2"	RMC								2		1	
F22	2"	RMC	2	2								1	
	2"	RMC			2			2				1	
	2"	RMC								2		1	
F23	2"	RMC									3		1
P4	3"	RMC									3		1
FP	POWER SERVICE CONNECTION. INSTALL THE FOLLOWING UNLESS OTHERWISE DIRECTED BY THE SERVING UTILITY: 3" SHCEDULE 80 PVC CONDUIT, RISER, AND WEATHERHEAD, AND (3) #2/0 CONDUCTORS.												

* DEFINITIONS: PVC80 = SCHEDULE 80 PVC; RMC = GALVANIZED RIGID METAL CONDUIT.

WIRING SCHEDULE — ILLUMINATION SYSTEM

△ NO.	CONDUIT / RACEWAY	MATERIAL*	SCA 2720															
			ILLUM. CKT A #8	ILLUM. CKT A #2	ILLUM. CKT B #8	ILLUM. CKT B #2	ILLUM. CKT C #8	ILLUM. CKT C #2	ILLUM. CKT D #8	ILLUM. CKT D #6	ILLUM. CKT E #8	ILLUM. CKT E #6	ILLUM. CKT E #2	ITS CKT F #2	ITS CKT G #6	SERVICE CKT #4/0	GROUND #8	GROUND #2
G1	*Ex. 1"*	*RMC*					*Ex. 2*										*Ex. 1*	
G2	*Ex. 1.5"*	*RMC*					*Ex. 2*										*Ex. 1*	
G3	**1"**	**RMC**					**2**										**1**	
G4	**2"**	**RMC**					**2**										**1**	
G5	**2"**	**PVC80**						**2**									**1**	
G6	**2"**	**RMC**						**2**									**1**	
	2"	**RMC**	**SPARE**															
G7	*Ex. 1.25"*	*RMC*							*Ex. 2*								*Ex. 1*	
G8	*Ex. 2"*	*RMC*							*Ex. 2*								*Ex. 1*	
G9	**1"**	**RMC**							**2**								**1**	
G10	**2"**	**PVC80**							**2**								**1**	
G11	**2"**	**RMC**						**2**	**2**								**1**	
G12	**2"**	**RMC**							**2**								**1**	
G13	*Ex. 1"*	*RMC*	*Ex. 2*														*Ex. 1*	
G14	*Ex. 2"*	*RMC*	*Ex. 2*														*Ex. 1*	
G15	*Ex. 1.25"*	*RMC*	*Ex. 2*														*Ex. 1*	
G16	*Ex. 1"*	*RMC*			*Ex. 2*												*Ex. 1*	
G17	**2"**	**PVC80**				**2**											**1**	
G18	**1"**	**RMC**			**2**												**1**	
G19	**2"**	**PVC80**		**2**		**2**											**1**	
G20	**1"**	**RMC**									**2**						**1**	
G21	**2"**	**PVC80**										**2**					**1**	
G22	**2"**	**PVC80**											**2**				**1**	
G23	**2"**	**RMC**											**2**				**1**	
G24	**2"**	**RMC**												**2**			**1**	
G25	**2"**	**PVC80**												**2**			**1**	
G26	**2"**	**RMC**		**2**		**2**											**1**	
	2"	**RMC**											**2**	**2**			**1**	
	2"	**RMC**	**SPARE**															
G27	**2"**	**RMC**		**2**		**2**											**1**	
	2"	**RMC**						**2**		**2**							**1**	
	2"	**RMC**											**2**	**2**			**1**	
G28	**2"**	**RMC**													**2**		**1**	
G29	**2"**	**RMC**														**3**		**1**
P5	**3"**	**RMC**														**3**		**1**
GP	POWER SERVICE CONNECTION. INSTALL THE FOLLOWING UNLESS OTHERWISE DIRECTED BY THE SERVING UTILITY: 3" SHCEDULE 80 PVC CONDUIT, RISER, AND WEATHERHEAD, AND (3) #4/0 CONDUCTORS.																	

* DEFINITIONS: PVC80 = SCHEDULE 80 PVC; RMC = GALVANIZED RIGID METAL CONDUIT.

WIRING SCHEDULE — ILLUMINATION SYSTEM

△ NO.	CONDUIT / RACEWAY	MATERIAL*	SCA 666	
			ILLUM. CKT A #8	GROUND #8
H1	*Ex. 1.25"*	*RMC*	*Ex. 2*	*Ex. 1*
H2	*Ex. 2"*	*RMC*	*Ex. 2*	*Ex. 1*
H3	**1"**	**RMC**	**2**	**1**
H4	**2"**	**PVC80**	**2**	**1**
H5	*Ex. 1"*	*RMC*	*Ex. 2*	*Ex. 1*
H6	**2"**	**RMC**	**2**	**1**
	2"	**RMC**	**SPARE**	
HP	POWER SERVICE CONNECTION. INSTALL THE FOLLOWING UNLESS OTHERWISE DIRECTED BY THE SERVING UTILITY: 2" SHCEDULE 80 PVC CONDUIT, RISER, AND WEATHERHEAD, AND (3) #2/0 CONDUCTORS.			

* DEFINITIONS: PVC80 = SCHEDULE 80 PVC; RMC = GALVANIZED RIGID METAL CONDUIT.

WIRING SCHEDULE — ILLUMINATION SYSTEM

△ NO.	CONDUIT / RACEWAY	MATERIAL*	SPARE CONDUITS
S1	*Ex. 1"*	*RMC*	SPARE
S2	*Ex. 2"*	*PVC80*	SPARE
S3	*Ex. 2"*	*PVC80*	SPARE
	Ex. 2"	*PVC80*	SPARE
S4	**2"**	**RMC**	**SPARE**
S5	*Ex. 2"*	*RMC*	SPARE
S6	*Ex. 1.5"*	*RMC*	SPARE
S7	*Ex. 1.25"*	*RMC*	SPARE

* DEFINITIONS: PVC80 = SCHEDULE 80 PVC; RMC = GALVANIZED RIGID METAL CONDUIT.

LUMINAIRE SCHEDULE

LUMINAIRE NUMBER	CIRCUIT	LOCATION CENTERLINE	STATION	OFFSET	TYPE - DISTRIBUTION - WATTAGE	MAST ARM	H1	BASE TYPE	FOUNDATION STANDARD PLAN & CASE	FOUNDATION TYPE (J-28.30)	COMMENTS
SCA 2647											
A1	*B*	*MDSI5*	*3379+52*	*153 LT*	*III - MEDIUM CUTOFF - 400 HPS*	*12*	*50*	*ELBOW*	*J-28.45*	*N/A*	*EXISTING*
A2	*B*	*MDSI5*	*3381+81*	*140 LT*	**III - MEDIUM CUTOFF - 750 HPS**	**12**	**50**	*ELBOW*	*J-28.45*	*N/A*	**NOTE 1, NOTE 2**
A3	*B*	*MDSI5*	*3384+10*	*127 LT*	**III - MEDIUM CUTOFF - 750 HPS**	**12**	**50**	*ELBOW*	*J-28.45*	*N/A*	**NOTE 1, NOTE 2**
A4	*B*	*MDSI5*	*3386+38*	*114 LT*	**III - MEDIUM CUTOFF - 750 HPS**	**12**	**50**	*ELBOW*	*J-28.45*	*N/A*	**NOTE 1, NOTE 2**
A5	**A**	**I5SB**	**501+76**	**72 LT**	**III - MEDIUM CUTOFF - 750 HPS**	**12**	**50**	*ELBOW*	*J-28.45*	*N/A*	**NOTE 1, NOTE 2**
A6	**A**	**I5SB**	**504+15**	**72 LT**	**III - MEDIUM CUTOFF - 750 HPS**	**12**	**50**	*ELBOW*	*J-28.45*	*N/A*	**NOTE 1, NOTE 2**
A7	**A**	**I5SB**	**506+49**	**71 LT**	**III - MEDIUM CUTOFF - 750 HPS**	**12**	**50**	*ELBOW*	*J-28.45*	*N/A*	**NOTE 1, NOTE 2**
A8	**A**	**I5SB**	**509+12**	**70 LT**	**III - MEDIUM CUTOFF - 750 HPS**	**12**	**50**	*ELBOW*	*J-28.45*	*N/A*	**NOTE 1, NOTE 2**
SCA 2662											
B1	**B**	*NCD*	*28+41*	*6 LT*	**V - MEDIUM CUTOFF - 750 HPS**	**D16**	**50**	*BARRIER*	*C-85.15*	*N/A*	**NOTE 2, NOTE 3**
B2	**B**	*NCD*	*31+08*	*6 LT*	**V - MEDIUM CUTOFF - 750 HPS**	**D16**	**50**	*BARRIER*	*C-85.15*	*N/A*	**NOTE 2, NOTE 3**
B3	**B**	*NCD*	*33+67*	*6 LT*	**V - MEDIUM CUTOFF - 750 HPS**	**D16**	**50**	*BARRIER*	*C-85.15*	*N/A*	**NOTE 2, NOTE 3**
B4	**B**	*NCD*	*36+24*	*6 LT*	**V - MEDIUM CUTOFF - 750 HPS**	**D16**	**50**	*BARRIER*	*C-85.15*	*N/A*	**NOTE 2, NOTE 3**
B5	**B**	*NCD*	*38+81*	*6 LT*	**V - MEDIUM CUTOFF - 750 HPS**	**D16**	**50**	*BARRIER*	*C-85.15*	*N/A*	**NOTE 2, NOTE 3**
B6	**B**	*NCD*	*41+45*	*6 LT*	**V - MEDIUM CUTOFF - 750 HPS**	**D16**	**50**	*BARRIER*	*C-85.15*	*N/A*	**NOTE 2, NOTE 3**
B7	**C**	*NCD*	*44+14*	*6 LT*	**V - MEDIUM CUTOFF - 750 HPS**	**D16**	**50**	*BARRIER*	*C-85.15*	*N/A*	**NOTE 2, NOTE 3**
B8	**C**	**NCD**	**46+87**	**8 LT**	**V - MEDIUM CUTOFF - 750 HPS**	**D16**	**50**	**BARRIER**	**C-85.15**	**N/A**	**NOTE 2**
B9	**C**	**NCD**	**49+88**	**62 RT**	**V - MEDIUM CUTOFF - 750 HPS**	**16**	**50**	**BARRIER**	**C-85.15**	**N/A**	**NOTE 2**
B10	**C**	**NBN**	**11+73**	**42 RT**	**V - MEDIUM CUTOFF - 750 HPS**	**16**	**50**	**BARRIER**	**C-85.15**	**N/A**	**NOTE 2**
B11	**C**	**NBN**	**14+75**	**34 RT**	**V - MEDIUM CUTOFF - 750 HPS**	**16**	**50**	**BARRIER**	**C-85.15**	**N/A**	**NOTE 2**
SCA 3167											
C1	**A**	**I5SB**	**511+64**	**70 LT**	**III - MEDIUM CUTOFF - 750 HPS**	**12**	**50**	**BARRIER**	**C-85.15**	**N/A**	**NOTE 2**
C2	**A**	**I5SB**	**514+17**	**70 LT**	**III - MEDIUM CUTOFF - 750 HPS**	**12**	**50**	**BARRIER**	**C-85.15**	**N/A**	**NOTE 2**
C3	**A**	**I5SB**	**516+81**	**72 LT**	**III - MEDIUM CUTOFF - 750 HPS**	**12**	**50**	**BARRIER**	**C-85.15**	**N/A**	**NOTE 2**
C4	**A**	**I5SB**	**519+41**	**77 LT**	**III - MEDIUM CUTOFF - 750 HPS**	**12**	**50**	**BARRIER**	**C-85.15**	**N/A**	**NOTE 2**
C5	**A**	**I5SB**	**522+24**	**83 LT**	**III - MEDIUM CUTOFF - 750 HPS**	**12**	**50**	**BARRIER**	**C-85.15**	**N/A**	**NOTE 2**
C6	**A**	**SSB**	**83+41**	**37 LT**	**III - MEDIUM CUTOFF - 750 HPS**	**16**	**50**	**BARRIER**	**C-85.15**	**N/A**	**NOTE 2**
SCA 666											
H1	**A**	*SSB*	*114+43*	*103 LT*	**III - MEDIUM CUTOFF - 250 HPS**	**12**	**30**	*ELBOW*	*J-28.45*	*N/A*	**NOTE 1**
H2	**A**	*SSB*	*112+91*	*154 LT*	**III - MEDIUM CUTOFF - 250 HPS**	**12**	**30**	*ELBOW*	*J-28.45*	*N/A*	**NOTE 1**
H3	**A**	*SNB*	*7+23*	*42 RT*	**III - MEDIUM CUTOFF - 250 HPS**	**12**	**30**	*SLIP*	*J-28.22 CASE B*	*B*	**NOTE 5**
H4	**A**	*NBN*	*56+75*	*474 LT*	**III - MEDIUM CUTOFF - 250 HPS**	**12**	**30**	*SLIP*	*J-28.22 CASE B*	*B*	**NOTE 5**
H5	**A**	*NBN*	*54+25*	*416 LT*	**III - MEDIUM CUTOFF - 250 HPS**	**12**	**30**	*SLIP*	*J-28.22 CASE B*	*B*	**NOTE 5**
H6	**A**	*SSB*	*114+48*	*262 LT*	**III - MEDIUM CUTOFF - 250 HPS**	**12**	**30**	*SLIP*	*J-28.22 CASE B*	*B*	**NOTE 5**
H7	**A**	*SNB*	*6+04*	*117 RT*	**III - MEDIUM CUTOFF - 250 HPS**	**12**	**30**	*SLIP*	*J-28.22 CASE B*	*B*	**NOTE 5**
H8	**A**	*SNB*	*8+33*	*70 RT*	**III - MEDIUM CUTOFF - 250 HPS**	**12**	**30**	*SLIP*	*J-28.22 CASE B*	*B*	**NOTE 5**
H9	**A**	*SNB*	*9+51*	*60 RT*	**III - MEDIUM CUTOFF - 400 HPS**	**16**	**40**	*SLIP*	*J-28.22 CASE B*	*B*	**NOTE 5**
H10	**A**	**SNB**	**11+53**	**57 RT**	**III - MEDIUM CUTOFF - 400 HPS**	**16**	**40**	**SLIP**	**J-28.22 CASE C**	**B**	
H11	**A**	**SNB**	**13+49**	**63 RT**	**III - MEDIUM CUTOFF - 400 HPS**	**16**	**40**	**SLIP**	**J-28.26 CASE K**	**B**	
H12	**A**	**SNB**	**14+90**	**60 RT**	**III - MEDIUM CUTOFF - 200 HPS**	**16**	**30**	**SLIP**	**J-28.26 CASE K**	**B**	
H13	**A**	**SNB**	**16+17**	**62 RT**	**III - MEDIUM CUTOFF - 250 HPS**	**16**	**30**	**SLIP**	**J-28.26 CASE K**	**B**	
H14	**A**	**SNB**	**17+29**	**59 RT**	**III - MEDIUM CUTOFF - 200 HPS**	**12**	**20**	**FIXED**	**J-28.24 CASE E**	**B**	**NOTE 9**

NOTE 1: NEW LIGHT STANDARD INSTALLED ON EXISTING ELBOW MOUNT. HAND HOLES SHALL COMPLY WITH THE REQUIREMENTS OF **STANDARD PLAN J-28.45** FOR STRUCTURE MOUNTED LIGHT STANDARDS.
NOTE 2: HIGH-MAST TYPE LUMINAIRE. SEE SPECIAL PROVISIONS FOR LUMINAIRE SPECIFICATIONS.
NOTE 3: NEW LIGHT STANDARD INSTALLED ON EXISTING BARRIER MOUNT. HAND HOLES SHALL COMPLY WITH THE REQUIREMENTS OF **STANDARD PLAN J-28.60** FOR STRUCTURE MOUNTED LIGHT STANDARDS
NOTE 4: INSTALL WALLPACK LUMINAIRE ON FACE OF BRIDGE PIER CROSSBEAM. LUMINAIRE SHALL BE CENTERED HORIZONTALLY OVER THE COLUMN AND VERTICALLY ON THE CROSSBEAM.
NOTE 5: NEW LIGHT STANDARD INSTALLED ON EXISTING FOUNDATION.
NOTE 6: SEE WALL PLANS FOR ADDITIONAL MOUNTING DETAILS. H1 IS DISTANCE FROM BASE PLATE TO LUMINAIRE AS SHOWN IN **STANDARD PLAN J-28.10.**
NOTE 7: REPLACE EXISTING LUMINAIRE WITH NEW 240V LUMINAIRE AS DEFINED HERE. EXISTING LIGHT STANDARD TO REMAIN.
NOTE 8: LOCATION IS APPROXIMATE. BRIDGE PLAN LOCATION SUPERCEDES IF DIFFERENT.

LUMINAIRE SCHEDULE

LUMINAIRE NUMBER	CIRCUIT	LOCATION CENTERLINE	LOCATION STATION	LOCATION OFFSET	TYPE - DISTRIBUTION - WATTAGE	MAST ARM	H1	BASE TYPE	FOUNDATION STANDARD PLAN & CASE	FOUNDATION TYPE (J-28.30)	COMMENTS
SCA 2395											
D1	A	I5NB	125+83	65 RT	V - MEDIUM CUTOFF - 750 HPS	D16	50	FIXED	J-28.24 CASE E	B	NOTE 2
D2	A	I5NB	128+72	60 RT	V - MEDIUM CUTOFF - 750 HPS	D16	50	FIXED	J-28.24 CASE E	B	NOTE 2
D3	A	I5NB	131+26	51 RT	V - MEDIUM CUTOFF - 750 HPS	D16	50	FIXED	J-28.24 CASE E	B	NOTE 2
D4	A	I5NB	133+82	51 RT	V - MEDIUM CUTOFF - 750 HPS	D16	50	FIXED	J-28.24 CASE E	B	NOTE 2
D5	B	I5NB	136+37	51 RT	V - MEDIUM CUTOFF - 750 HPS	D16	50	FIXED	J-28.24 CASE E	B	NOTE 2
D6	B	I5NB	138+92	51 RT	V - MEDIUM CUTOFF - 750 HPS	D16	50	FIXED	J-28.24 CASE E	B	NOTE 2
D7	B	I5NB	141+50	51 RT	V - MEDIUM CUTOFF - 750 HPS	D16	50	FIXED	J-28.24 CASE E	B	NOTE 2
D8	B	I5NB	144+08	47 RT	V - MEDIUM CUTOFF - 750 HPS	D16	50	FIXED	J-28.24 CASE E	B	NOTE 2
D9	B	I5NB	146+60	47 RT	III - MEDIUM CUTOFF - 750 HPS	12	40	BARRIER	C-85.15	N/A	NOTE 2
D10	B	NBH	35+23	19 RT	V - MEDIUM CUTOFF - 400 HPS	D8	40	*ELBOW*	*J-28.45*	*N/A*	NOTE 1, NOTE 2
D11	B	NBH	38+49	19 RT	V - MEDIUM CUTOFF - 400 HPS	D8	40	*ELBOW*	*J-28.45*	*N/A*	NOTE 1, NOTE 2
D12	C	NBN	39+10	42 RT	III - MEDIUM CUTOFF - 250 HPS	12	30	FIXED	J-28.24 CASE E	B	
D13	C	I5NB	149+39	RT	IV - MEDIUM CUTOFF - 250 HPS	N/A	N/A	UNDERDECK	N/A	N/A	
D14	C	I5NB	149+94	LT	IV - MEDIUM CUTOFF - 250 HPS	N/A	N/A	UNDERDECK	N/A	N/A	
D15	C	I5NB	150+79	LT	III - MEDIUM CUTOFF - 250 HPS	N/A	N/A	UNDERDECK	N/A	N/A	
D16	C	NBN	43+65	57 RT	III - MEDIUM CUTOFF - 250 HPS	16	30	FIXED	J-28.24 CASE E	B	
D17	C	*NBN*	*45+07*	*46 RT*	III - MEDIUM CUTOFF - 400 HPS	12	40	*ELBOW*	*J-28.45*	*N/A*	NOTE 1
D18	C	*NBN*	*46+95*	*53 RT*	III - MEDIUM CUTOFF - 400 HPS	12	40	*ELBOW*	*J-28.45*	*N/A*	NOTE 1
D19	C	*NBN*	*48+63*	*65 RT*	III - MEDIUM CUTOFF - 400 HPS	12	40	*ELBOW*	*J-28.45*	*N/A*	NOTE 1
D20	C	*NBN*	*50+22*	*76 RT*	III - MEDIUM CUTOFF - 400 HPS	12	40	*ELBOW*	*J-28.45*	*N/A*	NOTE 1
D21	C	*NBN*	*51+83*	*84 RT*	III - MEDIUM CUTOFF - 400 HPS	12	40	*ELBOW*	*J-28.45*	*N/A*	NOTE 1
D22	C	*NBN*	*53+88*	*84 RT*	III - MEDIUM CUTOFF - 400 HPS	12	40	*ELBOW*	*J-28.45*	*N/A*	NOTE 1
D23	D	NBS	11+72	24 RT	III - MEDIUM CUTOFF - 250 HPS	12	20	ELBOW	J-28.45	N/A	NOTE 6
D24	D	NBS	13+18	24 RT	III - MEDIUM CUTOFF - 250 HPS	12	30	BARRIER	C-85.15	N/A	
D25	D	NBS	14+65	27 RT	III - MEDIUM CUTOFF - 250 HPS	12	30	SLIP	J-28.22 CASE B	B	
D26	*D*	*NSB*	*87+44*	*75 RT*	III - MEDIUM CUTOFF - 250 HPS	*12*	*30*	*BREAKAWAY*			NOTE 7
D27	*D*	*NSB*	*89+27*	*58 RT*	III - MEDIUM CUTOFF - 250 HPS	*12*	*30*	*BREAKAWAY*			NOTE 7
D28	*D*	*NSB*	*91+27*	*58 RT*	III - MEDIUM CUTOFF - 250 HPS	*12*	*30*	*BREAKAWAY*			NOTE 7
D29	*D*	*NSB*	*93+27*	*56 RT*	III - MEDIUM CUTOFF - 250 HPS	*12*	*30*	*BREAKAWAY*			NOTE 7
D30	*D*	*NSB*	*95+33*	*40 RT*	III - MEDIUM CUTOFF - 250 HPS	*12*	*30*	*WALL*			NOTE 7
D31	*D*	*NSB*	*97+33*	*60 RT*	III - MEDIUM CUTOFF - 250 HPS	*12*	*30*	*BREAKAWAY*			NOTE 7
D32	*D*	*NSB*	*99+37*	*100 RT*	III - MEDIUM CUTOFF - 250 HPS	*12*	*30*	*BREAKAWAY*			NOTE 7
D33	*E*	*NSB*	*82+75*	*26 LT*	III - MEDIUM CUTOFF - 250 HPS	*12*	*30*	*BREAKAWAY*			NOTE 7
D34	*E*	*NSB*	*84+78*	*26 LT*	III - MEDIUM CUTOFF - 250 HPS	*12*	*30*	*BREAKAWAY*			NOTE 7
D35	*E*	*NSB*	*86+94*	*25 LT*	III - MEDIUM CUTOFF - 250 HPS	*12*	*30*	*BREAKAWAY*			NOTE 7
D36	*E*	*NSB*	*88+88*	*25 LT*	III - MEDIUM CUTOFF - 250 HPS	*12*	*30*	*BREAKAWAY*			NOTE 7
D37	*E*	*NSB*	*90+80*	*25 LT*	III - MEDIUM CUTOFF - 250 HPS	*12*	*30*	*BREAKAWAY*			NOTE 7
D38	*F*	*NSB*	*86+26*	*132 LT*	III - MEDIUM CUTOFF - 250 HPS	*12*	*30*	*BRIDGE*			NOTE 7
D39	*F*	*NSB*	*88+59*	*102 LT*	III - MEDIUM CUTOFF - 250 HPS	*12*	*30*	*BREAKAWAY*			NOTE 7
D40	*F*	*NSB*	*90+55*	*80 LT*	III - MEDIUM CUTOFF - 250 HPS	*12*	*30*	*BREAKAWAY*			NOTE 7
D41	*F*	*NSB*	*92+55*	*60 LT*	III - MEDIUM CUTOFF - 250 HPS	*12*	*30*	*BREAKAWAY*			NOTE 7
D42	IL	NSB	85+81	87 LT	III - MEDIUM CUTOFF - 100 HPS	8	20	FIXED	J-28.24 CASE E	B	

NOTE 1: NEW LIGHT STANDARD INSTALLED ON EXISTING ELBOW MOUNT. HAND HOLES SHALL COMPLY WITH THE REQUIREMENTS OF **STANDARD PLAN J-28.45** FOR STRUCTURE MOUNTED LIGHT STANDARDS.
NOTE 2: HIGH-MAST TYPE LUMINAIRE. SEE SPECIAL PROVISIONS FOR LUMINAIRE SPECIFICATIONS.
NOTE 3: NEW LIGHT STANDARD INSTALLED ON EXISTING BARRIER MOUNT. HAND HOLES SHALL COMPLY WITH THE REQUIREMENTS OF **STANDARD PLAN J-28.60** FOR STRUCTURE MOUNTED LIGHT STANDARDS.
NOTE 4: INSTALL WALLPACK LUMINAIRE ON FACE OF BRIDGE PIER CROSSBEAM. LUMINAIRE SHALL BE CENTERED HORIZONTALLY OVER THE COLUMN AND VERTICALLY ON THE CROSSBEAM.
NOTE 5: NEW LIGHT STANDARD INSTALLED ON EXISTING FOUNDATION.
NOTE 6: SEE WALL PLANS FOR ADDITIONAL MOUNTING DETAILS. H1 IS DISTANCE FROM BASE PLATE TO LUMINAIRE AS SHOWN IN **STANDARD PLAN J-28.10**.
NOTE 7: REPLACE EXISTING LUMINAIRE WITH NEW 240V LUMINAIRE AS DEFINED HERE. EXISTING LIGHT STANDARD TO REMAIN.
NOTE 8: LOCATION IS APPROXIMATE. BRIDGE PLAN LOCATION SUPERCEDES IF DIFFERENT.
NOTE 9: ROTATE LUMINAIRE ARM 45 DEGREES CLOCKWISE FROM PERPENDICULAR TO ROADWAY EDGE LINE TO ORIENTATION SHOWN IN THE PLANS.

LUMINAIRE SCHEDULE

LUMINAIRE NUMBER	CIRCUIT	LOCATION CENTERLINE	LOCATION STATION	LOCATION OFFSET	TYPE - DISTRIBUTION - WATTAGE	MAST ARM	H1	BASE TYPE	FOUNDATION STANDARD PLAN & CASE	FOUNDATION TYPE (J-28.30)	COMMENTS
SCA 602											
E1	A	I5SB	527+61	47 LT	V - MEDIUM CUTOFF - 750 HPS	D16	50	BARRIER	C-85.15	N/A	NOTE 2
E2	A	I5SB	530+16	47 LT	V - MEDIUM CUTOFF - 750 HPS	D16	50	BARRIER	C-85.15	N/A	NOTE 2
E3	A	I5SB	532+77	47 LT	V - MEDIUM CUTOFF - 750 HPS	D16	50	BARRIER	C-85.15	N/A	NOTE 2
E4	A	I5SB	535+34	47 LT	V - MEDIUM CUTOFF - 750 HPS	D16	50	BARRIER	C-85.15	N/A	NOTE 2
E5	A	I5SB	537+72	47 LT	V - MEDIUM CUTOFF - 750 HPS	D16	50	BARRIER	C-85.15	N/A	NOTE 2
E6	B	I5SB	540+06	47 LT	V - MEDIUM CUTOFF - 750 HPS	D16	50	BARRIER	C-85.15	N/A	NOTE 2
E7	B	I5SB	542+82	47 LT	V - MEDIUM CUTOFF - 750 HPS	D16	50	BARRIER			NOTE 2, NOTE 6
E8	B	I5SB	544+84	48 LT	V - MEDIUM CUTOFF - 750 HPS	12	40	ELBOW	J-28.45	N/A	NOTE 2, NOTE 8
E9	B	I5SB	548+14	48 LT	V - MEDIUM CUTOFF - 750 HPS	12	40	*ELBOW*	*J-28.45*	*N/A*	NOTE 1, NOTE 2
E10	C	PSSB	55+41	39 LT	III - MEDIUM CUTOFF - 400 HPS	16	40	SLIP	J-28.22 CASE B	B	
E11	C	NSB	77+72	27 LT	III - MEDIUM CUTOFF - 250 HPS	12	30	FIXED	J-28.24 CASE E	B	
E12	C	NSB	79+19	33 LT	III - MEDIUM CUTOFF - 250 HPS	12	30	FIXED	J-28.24 CASE E	B	
E13	*C*	*NSB*	*80+73*	*27 LT*	III - MEDIUM CUTOFF - 250 HPS	*12*	*30*	*BREAKAWAY*			NOTE 7
E14	*D*	*SSB*	*103+40*	*35 LT*	III - MEDIUM CUTOFF - 400 HPS	12	40	*ELBOW*	*J-28.45*	*N/A*	NOTE 1
E15	*D*	*SSB*	*105+27*	*36 LT*	III - MEDIUM CUTOFF - 400 HPS	12	40	*ELBOW*	*J-28.45*	*N/A*	NOTE 1
E16	*D*	*SSB*	*107+09*	*37 LT*	III - MEDIUM CUTOFF - 400 HPS	12	40	*ELBOW*	*J-28.45*	*N/A*	NOTE 1
E17	*D*	*SSB*	*108+94*	*37 LT*	III - MEDIUM CUTOFF - 400 HPS	12	40	*ELBOW*	*J-28.45*	*N/A*	NOTE 1
E18	*D*	*SSB*	*110+75*	*37 LT*	III - MEDIUM CUTOFF - 400 HPS	12	40	*ELBOW*	*J-28.45*	*N/A*	NOTE 1
E19	*D*	*SSB*	*112+54*	*37 LT*	III - MEDIUM CUTOFF - 400 HPS	12	40	*ELBOW*	*J-28.45*	*N/A*	NOTE 1
E20	*D*	*SSB*	*114+41*	*43 LT*	III - MEDIUM CUTOFF - 400 HPS	12	40	*ELBOW*	*J-28.45*	*N/A*	NOTE 1
E21	IL	NSB	78+81	149 LT	III - MEDIUM CUTOFF - 100 HPS	8	20	FIXED	J-28.24 CASE E	B	
SCA 794											
F1	A	I5NB	150+04	47 RT	III - MEDIUM CUTOFF - 750 HPS	12	40	ELBOW	J-28.45	N/A	NOTE 8
F2	A	I5NB	153+94	47 RT	III - MEDIUM CUTOFF - 750 HPS	12	40	ELBOW	J-28.45	N/A	NOTE 8
F3	A	I5NB	156+58	47 RT	III - MEDIUM CUTOFF - 750 HPS	D16	50	BARRIER	C-85.15	N/A	NOTE 2
F4	A	I5NB	159+78	47 RT	III - MEDIUM CUTOFF - 750 HPS	D16	50	BARRIER	C-85.15	N/A	NOTE 2
F5	B	SNB	18+37	77 RT	III - MEDIUM CUTOFF - 400 HPS	16	40	SLIP	J-28.22 CASE D	B	
F6	*B*	*SNB*	*19+69*	*144 RT*	III - MEDIUM CUTOFF - 250 HPS	*12*	*30*	*BREAKAWAY*			NOTE 7
F7	*B*	*NNB*	*11+50*	*154 LT*	III - MEDIUM CUTOFF - 250 HPS	*12*	*30*	*BREAKAWAY*			NOTE 7
F8	*B*	*NSB*	*93+18*	*105 LT*	III - MEDIUM CUTOFF - 250 HPS	*12*	*30*	*BREAKAWAY*			NOTE 7
F9	*B*	*NSB*	*94+87*	*44 LT*	III - MEDIUM CUTOFF - 250 HPS	*12*	*30*	*BREAKAWAY*			NOTE 7
F10	*B*	*SNB*	*20+00*	*37 RT*	III - MEDIUM CUTOFF - 250 HPS	*12*	*30*	*FIXED*			NOTE 7
F11	B	SNB	21+59	40 RT	III - MEDIUM CUTOFF - 250 HPS	12	30	FIXED	J-28.24 CASE E	B	
F12	*C*	*NSB*	*102+42*	*59 LT*	III - MEDIUM CUTOFF - 250 HPS	*12*	*30*	*BREAKAWAY*			NOTE 7
F13	*C*	*NSB*	*100+42*	*76 LT*	III - MEDIUM CUTOFF - 250 HPS	*12*	*30*	*BREAKAWAY*			NOTE 7
F14	*C*	*NSB*	*98+49*	*97 LT*	III - MEDIUM CUTOFF - 250 HPS	*12*	*30*	*BREAKAWAY*			NOTE 7
F15	*C*	*NSB*	*96+75*	*137 LT*	III - MEDIUM CUTOFF - 250 HPS	*12*	*30*	*BREAKAWAY*			NOTE 7
F16	C	NNB	11+04	31 RT	III - MEDIUM CUTOFF - 250 HPS	12	30	FIXED	J-28.24 CASE E	B	
F17	C	NNB	12+38	31 RT	III - MEDIUM CUTOFF - 250 HPS	12	30	FIXED	J-28.24 CASE E	B	
F18	C	NNB	13+76	31 RT	III - MEDIUM CUTOFF - 250 HPS	12	30	FIXED	J-28.24 CASE E	B	
F19	*D*	*NSB*	*98+83*	*45 LT*	III - MEDIUM CUTOFF - 250 HPS	*8*	*30*	*BRIDGE*			NOTE 7
F20	*D*	*NSB*	*97+23*	*43 LT*	III - MEDIUM CUTOFF - 250 HPS	*8*	*30*	*BRIDGE*			NOTE 7
F21	*D*	*NSB*	*96+78*	*19 LT*	SYMMETRICAL - 100 HPS	N/A	N/A	UNDERDECK	N/A	N/A	
F22	*D*	*NSB*	*95+84*	*11 LT*	SYMMETRICAL - 100 HPS	N/A	N/A	UNDERDECK	N/A	N/A	
F23	*D*	*NSB*	*95+68*	*43 LT*	III - MEDIUM CUTOFF - 250 HPS	*8*	*30*	*BRIDGE*			NOTE 7
F24	*D*	*NSB*	*94+82*	*26 LT*	SYMMETRICAL - 100 HPS	N/A	N/A	UNDERDECK	N/A	N/A	
F25	*D*	*NSB*	*94+12*	*41 LT*	III - MEDIUM CUTOFF - 250 HPS	*8*	*30*	*BRIDGE*			NOTE 7
F26	E	SNB	28+59	46 RT	III - MEDIUM CUTOFF - 750 HPS	16	35	ELBOW			NOTE 2, NOTE 6
F27	E	SNB	31+52	35 RT	III - MEDIUM CUTOFF - 750 HPS	16	35	ELBOW			NOTE 2, NOTE 6
F28	E	I5NB	167+49	70 RT	III - MEDIUM CUTOFF - 750 HPS	16	35	ELBOW			NOTE 2, NOTE 6
F29	E	I5NB	169+76	71 RT	III - MEDIUM CUTOFF - 750 HPS	16	40	ELBOW			NOTE 2, NOTE 6
F30	E	I5NB	171+89	71 RT	III - MEDIUM CUTOFF - 750 HPS	16	50	BARRIER	C-85.15	N/A	NOTE 2
F31	E	I5NB	174+24	71 RT	III - MEDIUM CUTOFF - 750 HPS	16	50	BARRIER	C-85.15	N/A	NOTE 2

NOTE 1: NEW LIGHT STANDARD INSTALLED ON EXISTING ELBOW MOUNT. HAND HOLES SHALL COMPLY WITH THE REQUIREMENTS OF **STANDARD PLAN J-28.45** FOR STRUCTURE MOUNTED LIGHT STANDARDS.
NOTE 2: HIGH-MAST TYPE LUMINAIRE. SEE SPECIAL PROVISIONS FOR LUMINAIRE SPECIFICATIONS.
NOTE 3: NEW LIGHT STANDARD INSTALLED ON EXISTING BARRIER MOUNT. HAND HOLES SHALL COMPLY WITH THE REQUIREMENTS OF **STANDARD PLAN J-28.60** FOR STRUCTURE MOUNTED LIGHT STANDARDS.
NOTE 4: INSTALL WALLPACK LUMINAIRE ON FACE OF BRIDGE PIER CROSSBEAM. LUMINAIRE SHALL BE CENTERED HORIZONTALLY OVER THE COLUMN AND VERTICALLY ON THE CROSSBEAM.
NOTE 5: NEW LIGHT STANDARD INSTALLED ON EXISTING FOUNDATION.
NOTE 6: SEE WALL PLANS FOR ADDITIONAL MOUNTING DETAILS. H1 IS DISTANCE FROM BASE PLATE TO LUMINAIRE AS SHOWN IN **STANDARD PLAN J-28.10**.
NOTE 7: REPLACE EXISTING LUMINAIRE WITH NEW 240V LUMINAIRE AS DEFINED HERE. EXISTING LIGHT STANDARD TO REMAIN.
NOTE 8: LOCATION IS APPROXIMATE. BRIDGE PLAN LOCATION SUPERCEDES IF DIFFERENT.
NOTE 9: ROTATE LUMINAIRE ARM 45 DEGREES CLOCKWISE FROM PERPENDICULAR TO ROADWAY EDGE LINE TO ORIENTATION SHOWN IN THE PLANS.

LUMINAIRE SCHEDULE

LUMINAIRE NUMBER	CIRCUIT	LOCATION CENTERLINE	LOCATION STATION	LOCATION OFFSET	TYPE - DISTRIBUTION - WATTAGE	MAST ARM	H1	BASE TYPE	FOUNDATION STANDARD PLAN & CASE	FOUNDATION TYPE (J-28.30)	COMMENTS
SCA 2720											
G1	A	NBN	58+98	16 LT	III - MEDIUM CUTOFF - 400 HPS	12	40	ELBOW	J-28.45	N/A	NOTE 1
G2	A	NBN	56+88	28 LT	III - MEDIUM CUTOFF - 400 HPS	12	40	ELBOW	J-28.45	N/A	NOTE 1
G3	A	NBN	54+85	27 LT	III - MEDIUM CUTOFF - 400 HPS	12	40	ELBOW	J-28.45	N/A	NOTE 1
G4	A	SBN	55+85	23 LT	III - MEDIUM CUTOFF - 400 HPS	12	40	ELBOW	J-28.45	N/A	NOTE 1
G5	A	SBN	57+91	24 LT	III - MEDIUM CUTOFF - 400 HPS	12	40	ELBOW	J-28.45	N/A	NOTE 1
G6	A	SBN	59+86	25 LT	III - MEDIUM CUTOFF - 400 HPS	12	40	SLIP	N/A		NOTE 5
G7	B	NBN	59+96	140 RT	III - MEDIUM CUTOFF - 250 HPS	12	30	SLIP	N/A		NOTE 5
G8	B	NBN	58+85	121 RT	III - MEDIUM CUTOFF - 250 HPS	12	30	SLIP	N/A		NOTE 5
G9	B	NBN	57+74	111 RT	III - MEDIUM CUTOFF - 250 HPS	12	30	SLIP	N/A		NOTE 5
G10	B	NBN	56+75	108 RT	III - MEDIUM CUTOFF - 250 HPS	12	30	SLIP	N/A		NOTE 5
G11	B	NBN	55+77	110 RT	III - MEDIUM CUTOFF - 250 HPS	12	30	SLIP	N/A		NOTE 5
G12	B	NBN	54+58	123 RT	III - MEDIUM CUTOFF - 250 HPS	12	30	SLIP	N/A		NOTE 5
G13	B	NBN	53+39	146 RT	III - MEDIUM CUTOFF - 250 HPS	12	30	SLIP	N/A		NOTE 5
G14	B	SBN	57+40	166 LT	III - MEDIUM CUTOFF - 250 HPS	12	30	SLIP	N/A		NOTE 5
G15	B	SBN	58+97	123 LT	III - MEDIUM CUTOFF - 250 HPS	12	30	SLIP	N/A		NOTE 5
G16	B	SBN	60+45	81 LT	III - MEDIUM CUTOFF - 250 HPS	12	30	SLIP	N/A		NOTE 5
G17	B	SBN	61+60	59 LT	III - MEDIUM CUTOFF - 400 HPS	12	40	SLIP	J-28.22 CASE B	B	
G18	B	SBN	63+56	52 LT	III - MEDIUM CUTOFF - 400 HPS	12	40	SLIP	J-28.22 CASE B	B	
G19	B	SBN	65+07	43 LT	III - MEDIUM CUTOFF - 400 HPS	12	40	FIXED	J-28.24 CASE E	B	
G20	C	NSB	92+95	56 LT	III - MEDIUM CUTOFF - 400 HPS	12	30	WALL			NOTE 7
G21	C	NSB	91+03	99 LT	III - MEDIUM CUTOFF - 400 HPS	12	30	BREAKAWAY			NOTE 7
G22	C	NSB	89+08	142 LT	III - MEDIUM CUTOFF - 400 HPS	12	30	BREAKAWAY			NOTE 7
G23	C	SNB	17+64	59 RT	III - MEDIUM CUTOFF - 250 HPS	12	30	BRIDGE			NOTE 7
G24	C	NBN	42+51	139 RT	III - SHORT NON-CUTOFF - 250 HPS	N/A	N/A	WALLPACK	N/A		NOTE 4
G25	C	NBN	43+75	95 RT	III - MEDIUM CUTOFF - 250 HPS	12	30	BREAKAWAY			NOTE 7
G26	C	I5SB	551+01	145 LT	III - MEDIUM CUTOFF - 250 HPS	12	30	BREAKAWAY			NOTE 7
G27	C	SBS	110+23	25 LT	III - MEDIUM CUTOFF - 250 HPS	12	30	FIXED	J-28.24 CASE E	B	
G28	C	SBS	111+69	29 LT	III - MEDIUM CUTOFF - 250 HPS	12	30	FIXED	J-28.24 CASE E	B	
G29	C	SBS	113+14	29 LT	III - MEDIUM CUTOFF - 250 HPS	12	30	FIXED	J-28.24 CASE E	B	
G30	C	SBS	114+62	32 LT	III - MEDIUM CUTOFF - 250 HPS	12	30	FIXED	J-28.24 CASE E	B	
G31	D	I5SB	551+40	48 LT	III - MEDIUM CUTOFF - 750 HPS	12	40	ELBOW	J-28.45	N/A	NOTE 1, NOTE 2
G32	D	I5SB	553+92	52 LT	III - MEDIUM CUTOFF - 750 HPS	16	50	FIXED	J-28.24 CASE E	B	
G33	D	I5SB	556+43	52 LT	III - MEDIUM CUTOFF - 750 HPS	16	50	FIXED	J-28.24 CASE E	B	
G34	D	I5SB	559+11	52 LT	III - MEDIUM CUTOFF - 750 HPS	16	50	FIXED	J-28.24 CASE E	B	
G35	D	I5SB	561+74	52 LT	III - MEDIUM CUTOFF - 750 HPS	16	50	BARRIER	C-85.15	N/A	
G36	E	SBN	67+15	26 LT	III - MEDIUM CUTOFF - 400 HPS	16	40	BARRIER	C-85.15	N/A	
G37	E	SBN	69+14	22 LT	III - MEDIUM CUTOFF - 400 HPS	16	40	BARRIER	C-85.15	N/A	
G38	E	I5SB	563+99	87 LT	III - MEDIUM CUTOFF - 750 HPS	16	50	BARRIER	C-85.15	N/A	NOTE 2
G39	E	I5SB	566+25	77 LT	III - MEDIUM CUTOFF - 750 HPS	16	50	BARRIER	C-85.15	N/A	NOTE 2
G40	E	I5SB	568+55	68 LT	III - MEDIUM CUTOFF - 750 HPS	16	50	BARRIER	C-85.15	N/A	NOTE 2
G41	E	TI5SB	12+03	53 LT	III - MEDIUM CUTOFF - 750 HPS	12	50	FIXED	J-28.24 CASE E	B	NOTE 2
G42	E	TI5SB	14+35	53 LT	III - MEDIUM CUTOFF - 750 HPS	12	50	FIXED	J-28.24 CASE E	B	NOTE 2
G43	E	TI5SB	16+71	53 LT	III - MEDIUM CUTOFF - 750 HPS	12	50	FIXED	J-28.24 CASE E	B	NOTE 2
G44	E	TI5SB	19+06	53 LT	III - MEDIUM CUTOFF - 750 HPS	12	50	FIXED	J-28.24 CASE E	B	NOTE 2

NOTE 1: NEW LIGHT STANDARD INSTALLED ON EXISTING ELBOW MOUNT. HAND HOLES SHALL COMPLY WITH THE REQUIREMENTS OF **STANDARD PLAN J-28.45** FOR STRUCTURE MOUNTED LIGHT STANDARDS.
NOTE 2: HIGH-MAST TYPE LUMINAIRE. SEE SPECIAL PROVISIONS FOR LUMINAIRE SPECIFICATIONS.
NOTE 3: NEW LIGHT STANDARD INSTALLED ON EXISTING BARRIER MOUNT. HAND HOLES SHALL COMPLY WITH THE REQUIREMENTS OF **STANDARD PLAN J-28.60** FOR STRUCTURE MOUNTED LIGHT STANDARDS.
NOTE 4: INSTALL WALLPACK LUMINAIRE ON FACE OF BRIDGE PIER CROSSBEAM. LUMINAIRE SHALL BE CENTERED HORIZONTALLY OVER THE COLUMN AND VERTICALLY ON THE CROSSBEAM.
NOTE 5: NEW LIGHT STANDARD INSTALLED ON EXISTING FOUNDATION.
NOTE 6: SEE WALL PLANS FOR ADDITIONAL MOUNTING DETAILS. H1 IS DISTANCE FROM BASE PLATE TO LUMINAIRE AS SHOWN IN **STANDARD PLAN J-28.10**.
NOTE 7: REPLACE EXISTING LUMINAIRE WITH NEW 240V LUMINAIRE AS DEFINED HERE. EXISTING LIGHT STANDARD TO REMAIN.
NOTE 8: LOCATION IS APPROXIMATE. BRIDGE PLAN LOCATION SUPERCEDES IF DIFFERENT.
NOTE 9: ROTATE LUMINAIRE ARM 45 DEGREES CLOCKWISE FROM PERPENDICULAR TO ROADWAY EDGE LINE TO ORIENTATION SHOWN IN THE PLANS.

REFERENCE ITEM	SHEET
CONSTRUCTION NOTES	ILN1
LEGEND	ILN1
WIRE NOTES	ILN2 - ILN4
LUMINAIRE SCHEDULES	ILN5 - ILN8

BREAKER SCHEDULE **SCA 2647**
TYPE E **480 V**

CIRCUIT	DESCRIPTION / LABEL	BREAKER RATING POLES	BREAKER RATING AMPS	CONTACTOR RATING	VOLTAGE	LOAD (kVA)
--	MAIN	2P	150A	---	---	--
A	ILLUMINATION	2P	40A	60 AMP	480	1.9
B	ILLUMINATION	2P	30A	30 AMP	480	8.7
C	ITS	2P	30A	---	480	5
TD	TEMP ILLUM.	2P	40A	60 AMP	480	12.6
BUSSWORK SHALL BE RATED AT 200 AMP MINIMUM					PEAK	29.2
					CONTINUOUS	28.2

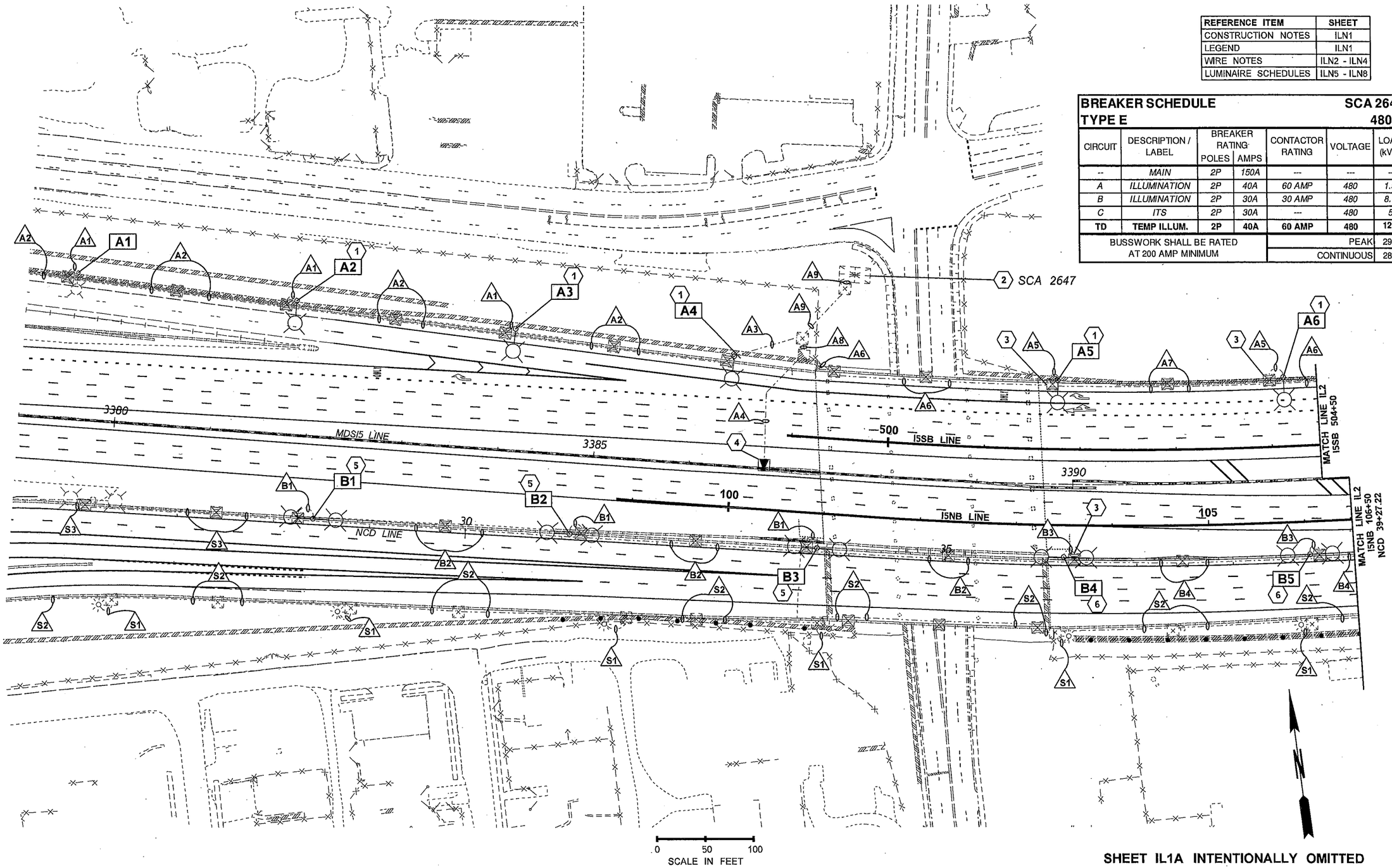

SHEET IL1A INTENTIONALLY OMITTED

FILE NAME	c:\aawork\pw_work\jacksfl\dms02678\P3497_PS_IL_001.dgn
TIME	1:40:29 PM
DATE	3/10/2014
PLOTTED BY	jacksfl
DESIGNED BY	F. JACKSON
ENTERED BY	F. JACKSON
CHECKED BY	R. CRUMBLEY
PROJ. ENGR.	J. PEREZ
REGIONAL ADM.	K. DAYTON

REVISION | DATE | BY

REGION NO.	STATE	FED.AID PROJ.NO.
10	WASH	
JOB NUMBER		
CONTRACT NO.		LOCATION NO. XL3497

DENNIS RAY CRUMBLEY, STATE OF WASHINGTON, REGISTERED PROFESSIONAL ENGINEER
3/11/14
DATE
P.E. STAMP BOX

DATE
P.E. STAMP BOX

Washington State Department of Transportation

I-5
M ST TO PORTLAND AVE - HOV

ILLUMINATION PLAN

PLAN REF NO IL1

SHEET 1344 OF 1763 SHEETS

REFERENCE ITEM	SHEET
CONSTRUCTION NOTES	ILN1
LEGEND	ILN1
WIRE NOTES	ILN2 - ILN4
LUMINAIRE SCHEDULES	ILN5 - ILN8

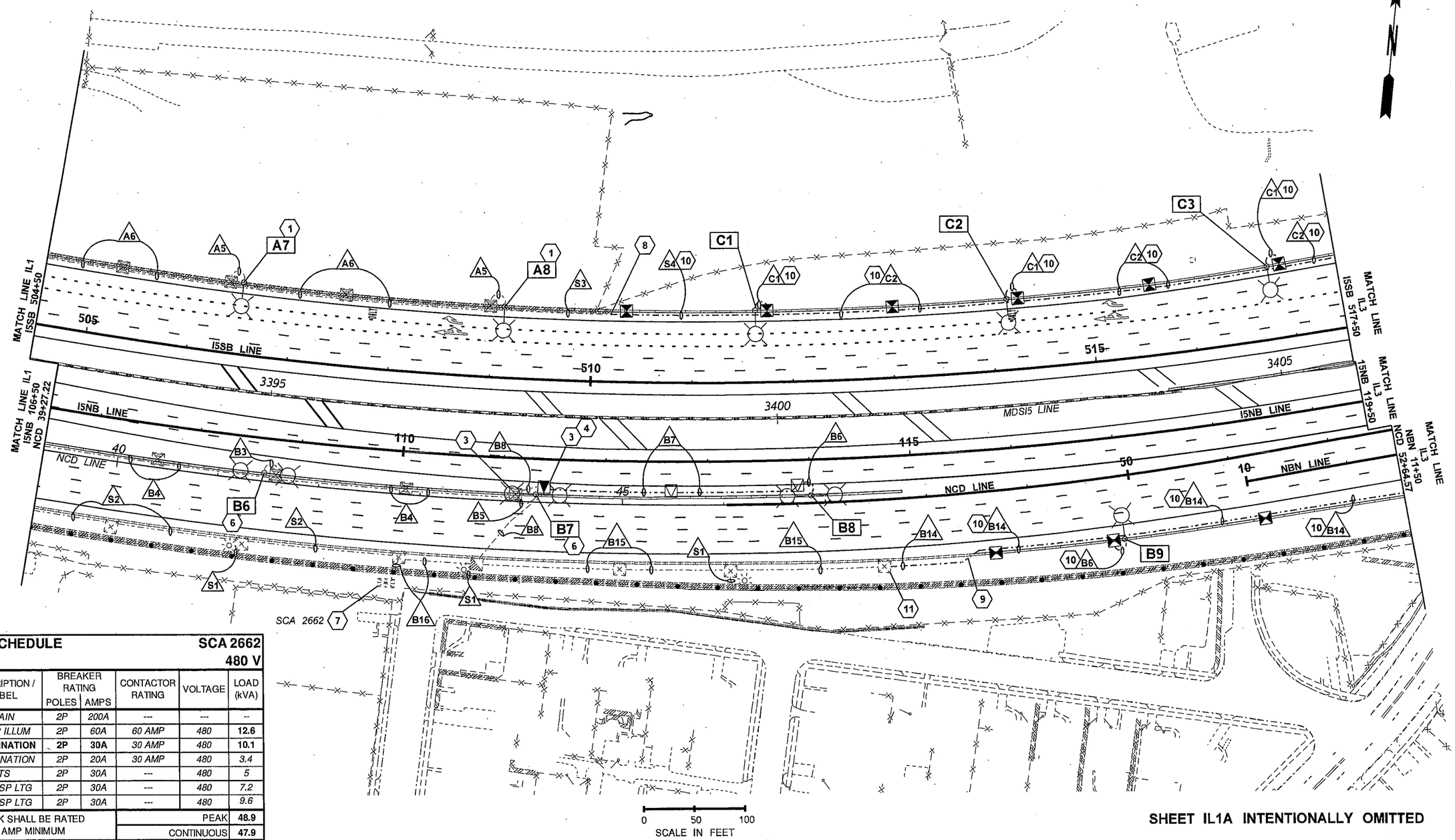

SHEET IL1A INTENTIONALLY OMITTED

BREAKER SCHEDULE **SCA 2662**
TYPE E **480 V**

CIRCUIT	DESCRIPTION / LABEL	BREAKER RATING POLES	BREAKER RATING AMPS	CONTACTOR RATING	VOLTAGE	LOAD (kVA)
--	MAIN	2P	200A	---	---	--
A	TEMP ILLUM	2P	60A	60 AMP	480	12.6
B	ILLUMINATION	2P	30A	30 AMP	480	10.1
C	ILLUMINATION	2P	20A	30 AMP	480	3.4
D	ITS	2P	30A	---	480	5
E	BR INSP LTG	2P	30A	---	480	7.2
F	BR INSP LTG	2P	30A	---	480	9.6
BUSSWORK SHALL BE RATED AT 200 AMP MINIMUM					PEAK	48.9
					CONTINUOUS	47.9

FILE NAME	c:\aawork\pw_work\jacksfl\dms02678\P3497_PS_IL_002.dgn
TIME	1:43:39 PM
DATE	3/10/2014
PLOTTED BY	jacksfl
DESIGNED BY	F. JACKSON
ENTERED BY	F. JACKSON
CHECKED BY	R. CRUMBLEY
PROJ. ENGR.	J. PEREZ
REGIONAL ADM.	K. DAYTON

REVISION | DATE | BY

REGION NO.	STATE	FED.AID PROJ.NO.
10	WASH	
JOB NUMBER		
CONTRACT NO.		LOCATION NO. XL3497

DENNIS RAY CRUMBLEY STATE OF WASHINGTON 38765 REGISTERED PROFESSIONAL ENGINEER
3/11/14 DATE
P.E. STAMP BOX

DATE
P.E. STAMP BOX

Washington State Department of Transportation

I-5
M ST TO PORTLAND AVE - HOV

ILLUMINATION PLAN

PLAN REF NO IL2

SHEET 1345 OF 1763 SHEETS

REFERENCE ITEM	SHEET
CONSTRUCTION NOTES	ILN1
LEGEND	ILN1
WIRE NOTES	ILN2 - ILN4
LUMINAIRE SCHEDULES	ILN5 - ILN8

BREAKER SCHEDULE — **SCA 3167**
TYPE B MODIFIED — **120 / 240 V**

CIRCUIT	DESCRIPTION / LABEL	BREAKER RATING POLES	BREAKER RATING AMPS	CONTACTOR RATING	VOLTAGE	LOAD (kVA)
--	MAIN	2P	100A	--	--	--
A	ILLUMINATION	2P	30A	30 AMP	240	5.1
B	ITS 005DS13341	1P	30A	--	120	2
C	ITS 005PT13341	1P	30A	--	120	2
D	ITS 005VM13341	2P	15A	--	240	2
BUSSWORK SHALL BE RATED AT 200 AMP MINIMUM					PEAK	12.1
					CONTINUOUS	11.1

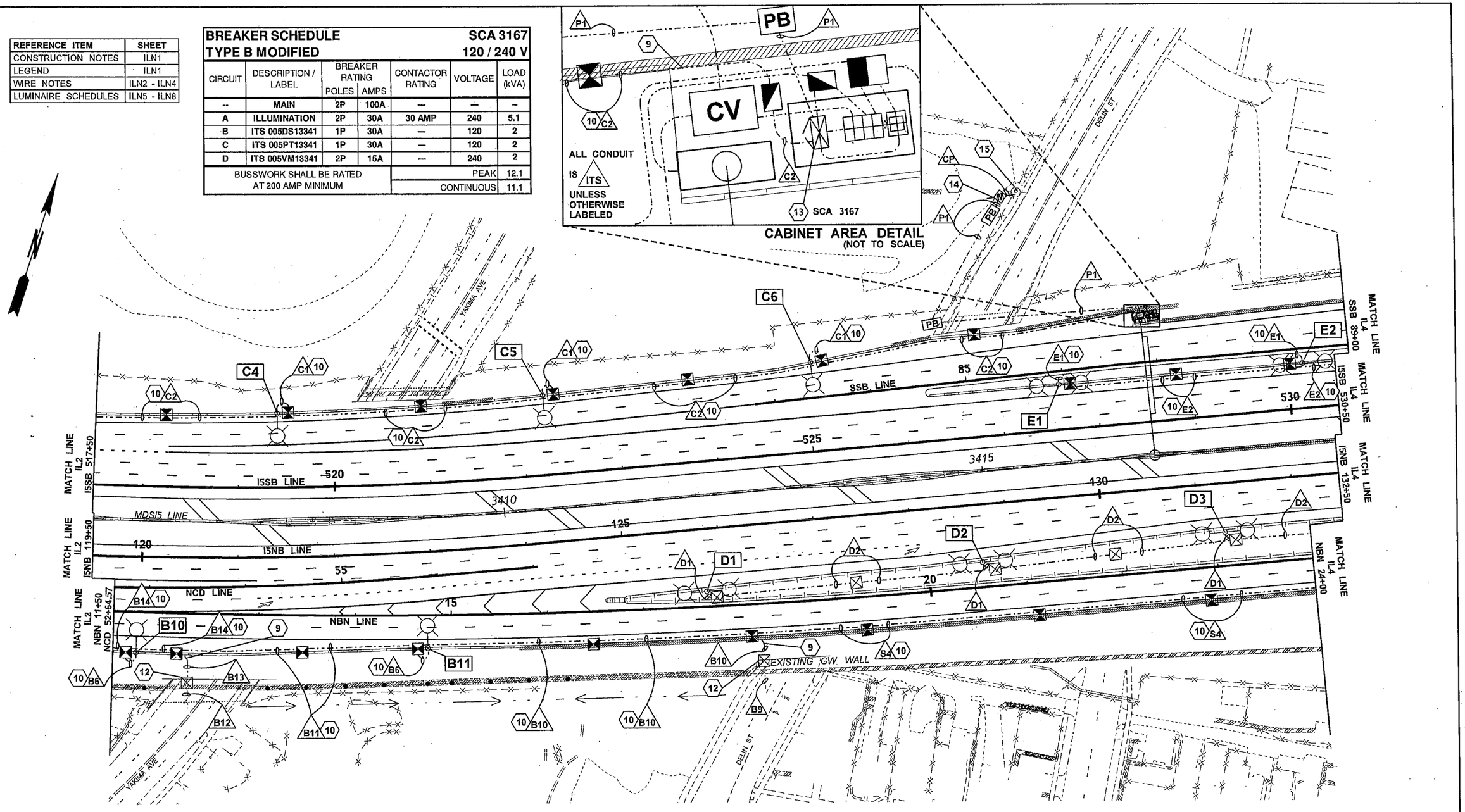

NOTE: YAKIMA AVE AND DELIN ST BRIDGES NOT SHOWN FOR CLARITY

0 50 100
SCALE IN FEET

FILE NAME	c:\aawork\pw_work\jacksfl\dms02678\P3497_PS_IL_003.dgn
TIME	2:03:18 PM
DATE	3/10/2014
PLOTTED BY	jacksfl
DESIGNED BY	F. JACKSON
ENTERED BY	F. JACKSON
CHECKED BY	R. CRUMBLEY
PROJ. ENGR.	J. PEREZ
REGIONAL ADM.	K. DAYTON

REVISION | DATE | BY

REGION NO.	STATE	FED.AID PROJ.NO.
10	WASH	
JOB NUMBER		
CONTRACT NO.		LOCATION NO. XL3497

DENNIS RAY CRUMBLEY — STATE OF WASHINGTON — REGISTERED PROFESSIONAL ENGINEER
3/4/14
DATE
P.E. STAMP BOX

DATE
P.E. STAMP BOX

Washington State Department of Transportation

I-5
M ST TO PORTLAND AVE - HOV

ILLUMINATION PLAN

PLAN REF NO IL3

SHEET 1346 OF 1763 SHEETS

BREAKER SCHEDULE TRANSFORMER CABINET 005-XF-13359				SOURCE: METER CIRCUIT: P INPUT VOLTAGE: 480 V	
CIRCUIT	DESCRIPTION / LABEL	BREAKER RATING POLES	BREAKER RATING AMPS	VOLTAGE	LOAD (kVA)
--	MAIN	2P	150A	---	--
1	SCA 602	2P	150A	240	23.3
BUSSWORK SHALL BE RATED AT 200 AMP MINIMUM				PEAK:	24.3
				CONTINUOUS:	23.3

BREAKER SCHEDULE TYPE D				SCA 602 120 / 240 V		
CIRCUIT	DESCRIPTION / LABEL	BREAKER RATING POLES	BREAKER RATING AMPS	CONTACTOR RATING	VOLTAGE	LOAD (kVA)
--	MAIN	2P	150A	—	—	–
A	ILLUMINATION	2P	50A	60 AMP	240	8.4
B	ILLUMINATION	2P	30A	30 AMP	240	5.1
C	ILLUMINATION	2P	15A	30 AMP	240	1.4
D	ILLUMINATION	2P	20A	30 AMP	240	3.4
E	ITS	2P	30A	—	240	5
BUSSWORK SHALL BE RATED AT 200 AMP MINIMUM					PEAK	24.3
					CONTINUOUS	23.3

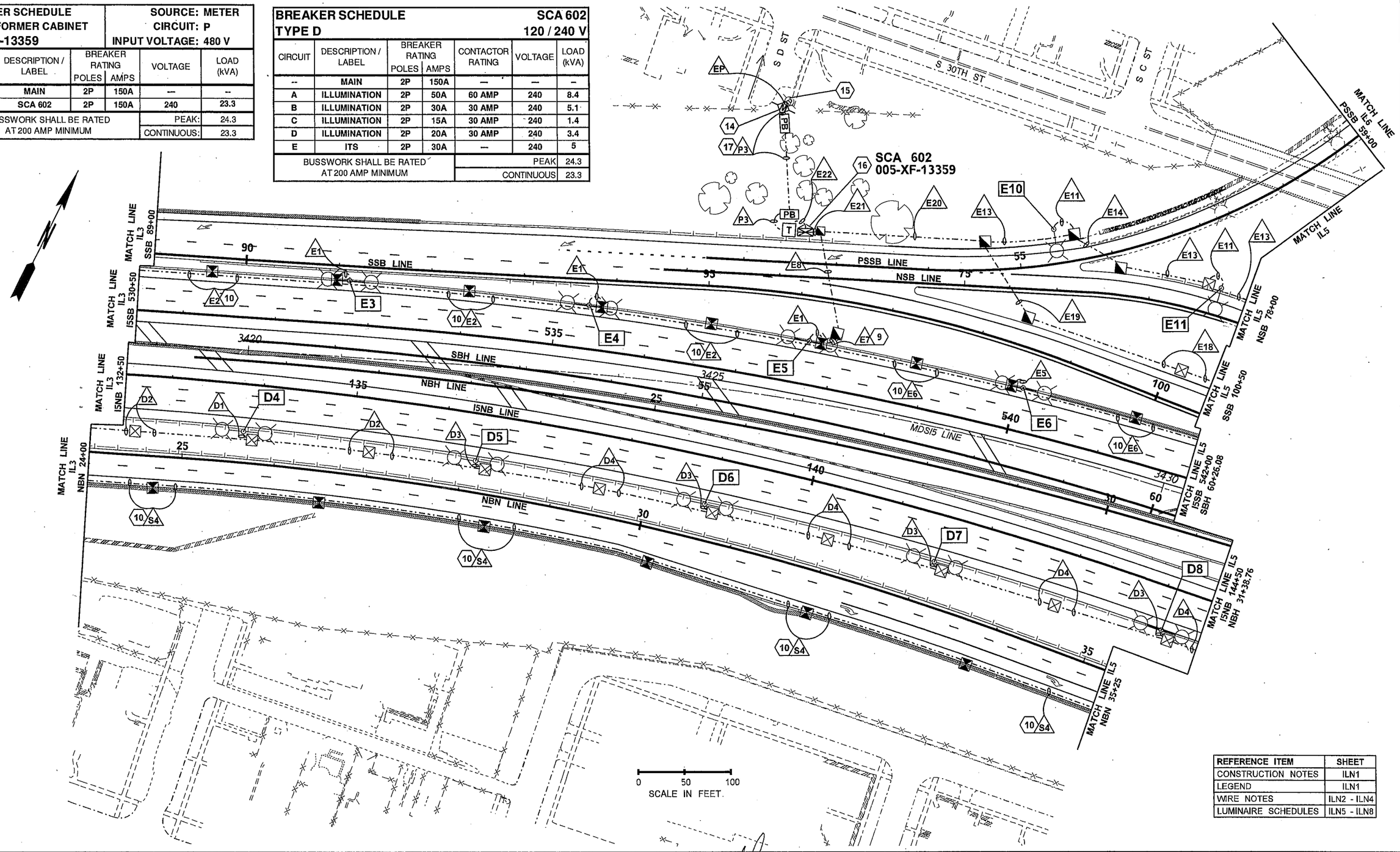

REFERENCE ITEM	SHEET
CONSTRUCTION NOTES	ILN1
LEGEND	ILN1
WIRE NOTES	ILN2 - ILN4
LUMINAIRE SCHEDULES	ILN5 - ILN8

FILE NAME	c:\aawork\pw_work\jacksfl\dms02678\P3497_PS_IL_004.dgn
TIME	2:04:52 PM
DATE	3/10/2014
PLOTTED BY	jacksfl
DESIGNED BY	F. JACKSON
ENTERED BY	F. JACKSON
CHECKED BY	R. CRUMBLEY
PROJ. ENGR.	J. PEREZ
REGIONAL ADM.	K. DAYTON

REVISION | DATE | BY

REGION NO.	STATE	FED.AID PROJ.NO.
10	WASH	
JOB NUMBER		
CONTRACT NO.		LOCATION NO. XL3497

DENNIS RAY CRUMBLEY STATE OF WASHINGTON REGISTERED PROFESSIONAL ENGINEER

3/11/14 DATE

P.E. STAMP BOX

DATE

P.E. STAMP BOX

Washington State Department of Transportation

I-5
M ST TO PORTLAND AVE - HOV

ILLUMINATION PLAN

PLAN REF NO IL4

SHEET 1347 OF 1763 SHEETS

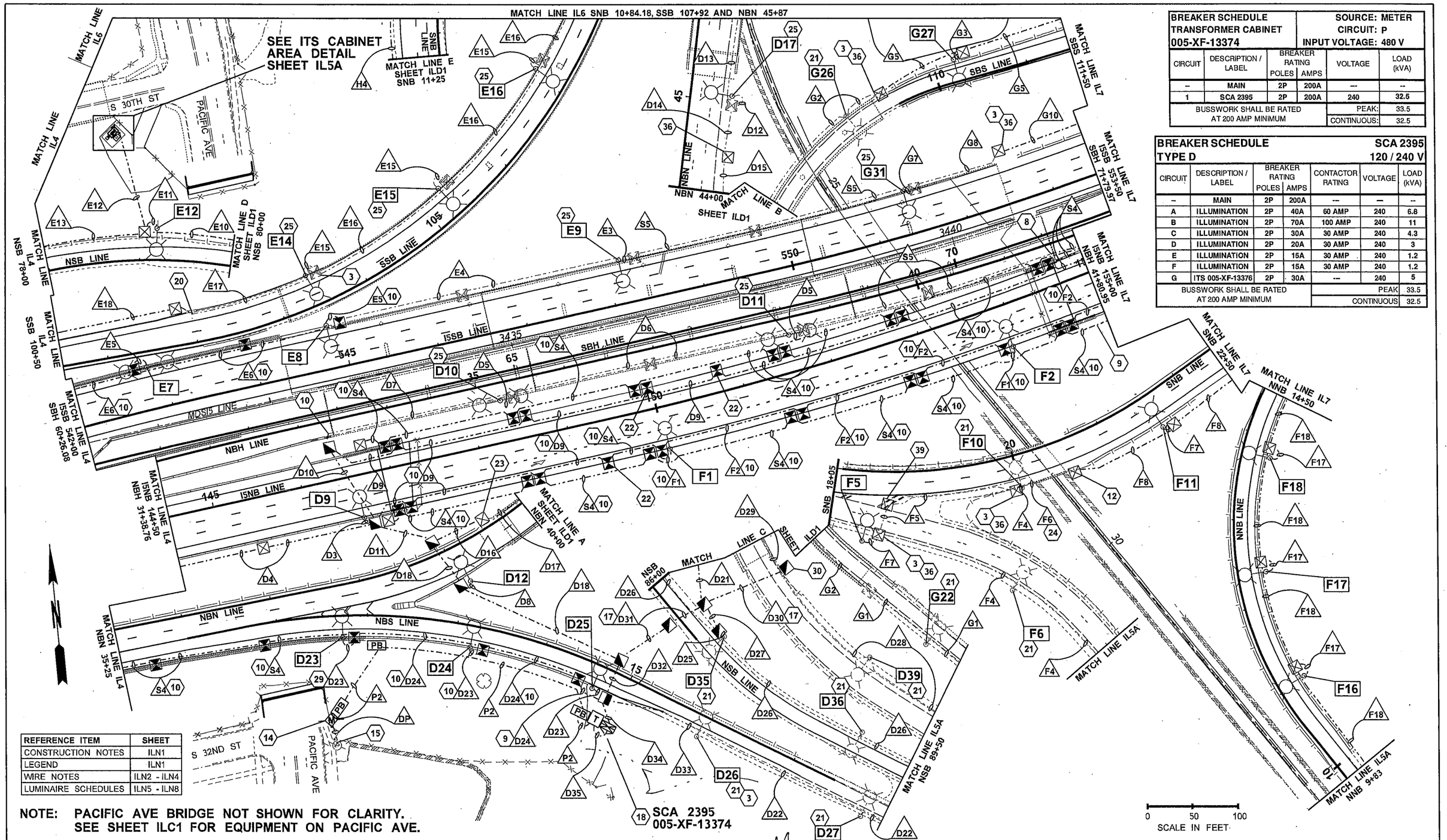

BREAKER SCHEDULE TRANSFORMER CABINET 005-XF-13374				SOURCE: METER CIRCUIT: P INPUT VOLTAGE: 480 V	
CIRCUIT	DESCRIPTION / LABEL	BREAKER RATING POLES	BREAKER RATING AMPS	VOLTAGE	LOAD (kVA)
--	MAIN	2P	200A	---	--
1	SCA 2395	2P	200A	240	32.5
BUSSWORK SHALL BE RATED AT 200 AMP MINIMUM				PEAK:	33.5
				CONTINUOUS:	32.5

BREAKER SCHEDULE TYPE D					SCA 2395 120 / 240 V	
CIRCUIT	DESCRIPTION / LABEL	BREAKER RATING POLES	BREAKER RATING AMPS	CONTACTOR RATING	VOLTAGE	LOAD (kVA)
--	MAIN	2P	200A	---	---	--
A	ILLUMINATION	2P	40A	60 AMP	240	6.8
B	ILLUMINATION	2P	70A	100 AMP	240	11
C	ILLUMINATION	2P	30A	30 AMP	240	4.3
D	ILLUMINATION	2P	20A	30 AMP	240	3
E	ILLUMINATION	2P	15A	30 AMP	240	1.2
F	ILLUMINATION	2P	15A	30 AMP	240	1.2
G	ITS 005-XF-13376	2P	30A	---	240	5
BUSSWORK SHALL BE RATED AT 200 AMP MINIMUM					PEAK	33.5
					CONTINUOUS	32.5

REFERENCE ITEM	SHEET
CONSTRUCTION NOTES	ILN1
LEGEND	ILN1
WIRE NOTES	ILN2 - ILN4
LUMINAIRE SCHEDULES	ILN5 - ILN8

NOTE: PACIFIC AVE BRIDGE NOT SHOWN FOR CLARITY.
SEE SHEET ILC1 FOR EQUIPMENT ON PACIFIC AVE.

FILE NAME	c:\aawork\pw_work\jacksfl\dms02678\P3497_PS_IL_005.dgn
TIME	2:06:54 PM
DATE	3/10/2014
PLOTTED BY	jacksfl
DESIGNED BY	F. JACKSON
ENTERED BY	F. JACKSON
CHECKED BY	R. CRUMBLEY
PROJ. ENGR.	J. PEREZ
REGIONAL ADM.	K. DAYTON

REVISION | DATE | BY

REGION NO.	STATE	FED.AID PROJ.NO.
10	WASH	
JOB NUMBER		
CONTRACT NO.		LOCATION NO. XL3497

DENNIS RAY CRUMBLEY STATE OF WASHINGTON REGISTERED PROFESSIONAL ENGINEER
3/11/14 DATE
P.E. STAMP BOX

DATE
P.E. STAMP BOX

Washington State Department of Transportation

I-5
M ST TO PORTLAND AVE - HOV

ILLUMINATION PLAN

PLAN REF NO IL5

SHEET 1348 OF 1763 SHEETS

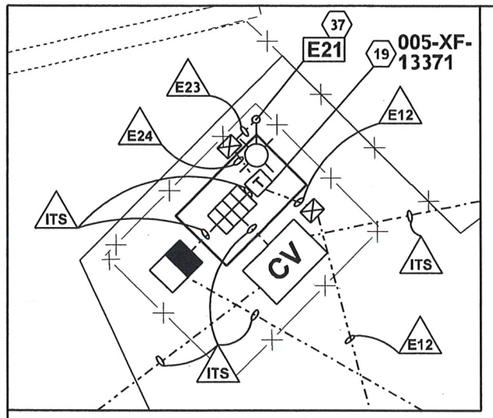

ITS CABINET AREA DETAIL - FROM SHEET IL5
(NOT TO SCALE)

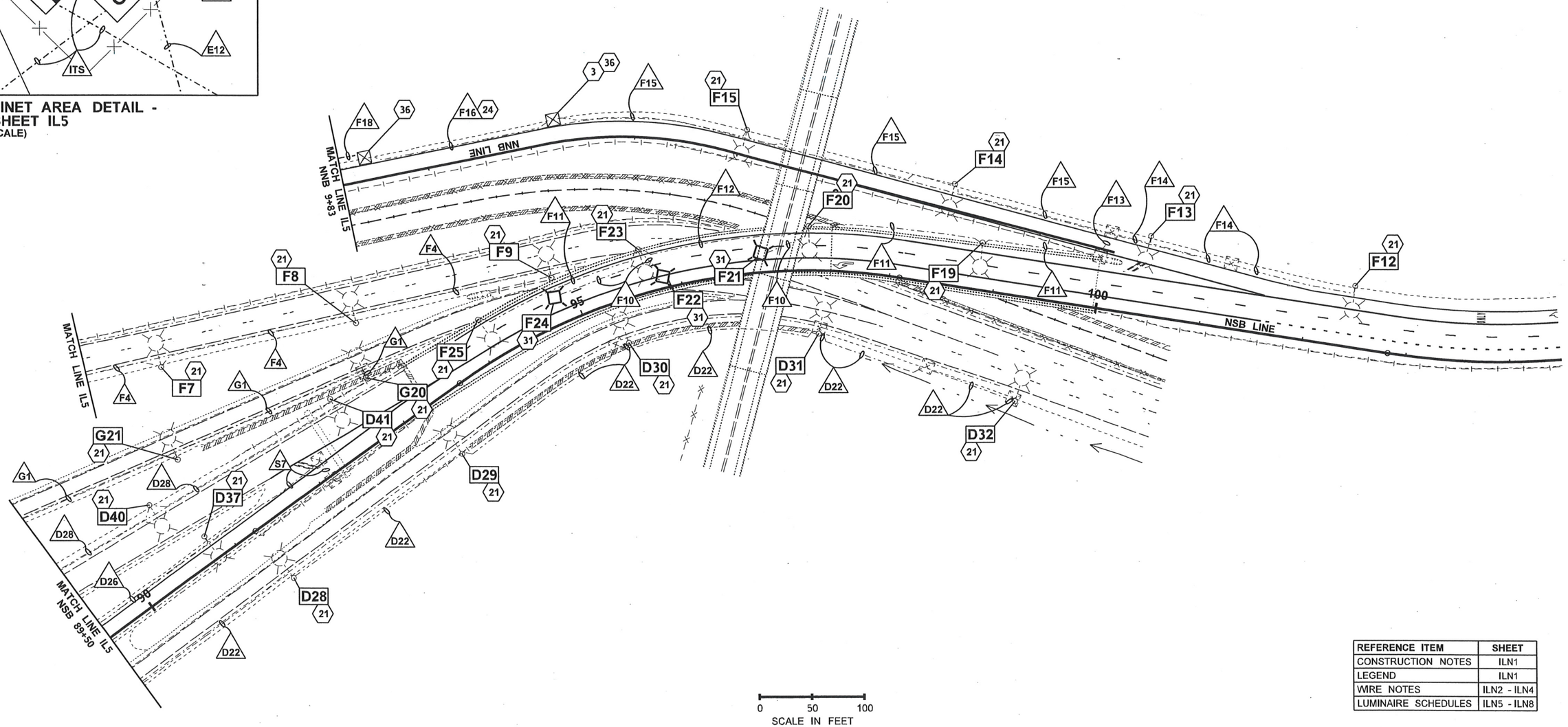

REFERENCE ITEM	SHEET
CONSTRUCTION NOTES	ILN1
LEGEND	ILN1
WIRE NOTES	ILN2 - ILN4
LUMINAIRE SCHEDULES	ILN5 - ILN8

SHEET IL5B INTENTIONALLY OMITTED

FILE NAME	c:\aawork\pw_work\jacksfl\dms02678\P3497_PS_IL_005A.dgn						
TIME	2:11:23 PM				REGION NO. 10	STATE WASH	FED.AID PROJ.NO.
DATE	3/10/2014				JOB NUMBER		
PLOTTED BY	jacksfl						
DESIGNED BY	F. JACKSON						
ENTERED BY	F. JACKSON				CONTRACT NO.		LOCATION NO. XL3497
CHECKED BY	R. CRUMBLEY						
PROJ. ENGR.	J. PEREZ						
REGIONAL ADM.	K. DAYTON	REVISION	DATE	BY			

DENNIS RAY CRUMBLEY, STATE OF WASHINGTON, REGISTERED PROFESSIONAL ENGINEER
3/11/14
DATE
P.E. STAMP BOX

DATE
P.E. STAMP BOX

Washington State Department of Transportation

I-5
M ST TO PORTLAND AVE - HOV

ILLUMINATION PLAN

PLAN REF NO IL5A

SHEET 1349 OF 1763 SHEETS

BREAKER SCHEDULE						SCA 666
TYPE B MODIFIED						120 / 240 V
CIRCUIT	DESCRIPTION / LABEL	BREAKER RATING POLES	BREAKER RATING AMPS	CONTACTOR RATING	VOLTAGE	LOAD (kVA)
–	MAIN	2P	100A	--	--	--
A	ILLUMINATION	2P	30A	30 AMP	240	4.5
BUSSWORK SHALL BE RATED AT 200 AMP MINIMUM					PEAK	5.5
					CONTINUOUS	4.5

REFERENCE ITEM	SHEET
CONSTRUCTION NOTES	ILN1
LEGEND	ILN1
WIRE NOTES	ILN2 - ILN4
LUMINAIRE SCHEDULES	ILN5 - ILN8

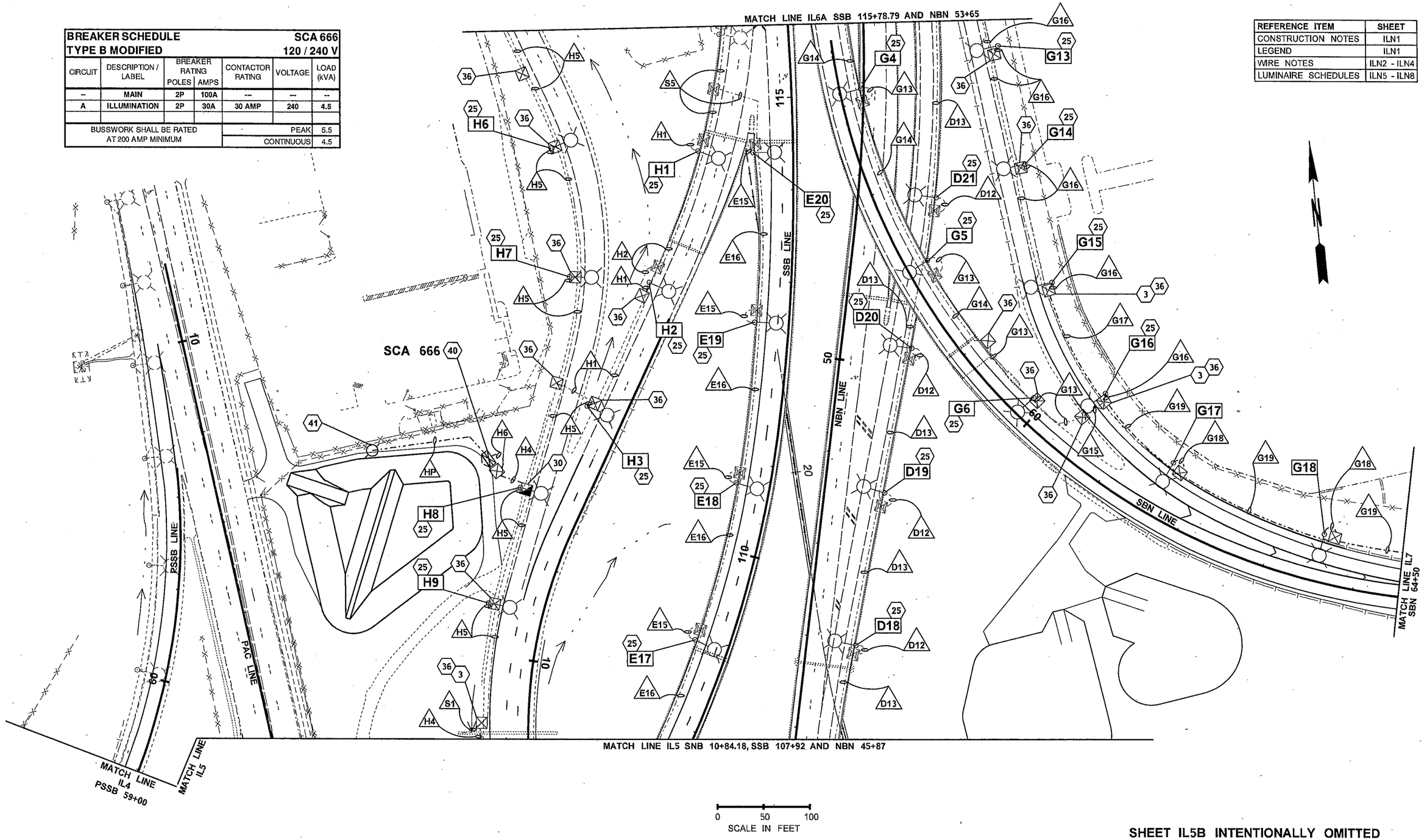

SHEET IL5B INTENTIONALLY OMITTED

FILE NAME	c:\aawork\pw_work\jacksfl\dms02678\P3497_PS_IL_006.dgn						
TIME	2:13:04 PM				REGION NO. 10	STATE WASH	FED.AID PROJ.NO.
DATE	3/10/2014				JOB NUMBER		
PLOTTED BY	jacksfl						
DESIGNED BY	F. JACKSON				CONTRACT NO.		LOCATION NO. XL3497
ENTERED BY	F. JACKSON						
CHECKED BY	R. CRUMBLEY						
PROJ. ENGR.	J. PEREZ						
REGIONAL ADM.	K. DAYTON	REVISION	DATE	BY			

P.E. STAMP BOX — DATE 3/4/14

P.E. STAMP BOX — DATE

Washington State Department of Transportation

I-5
M ST TO PORTLAND AVE - HOV

ILLUMINATION PLAN

PLAN REF NO IL6

SHEET 1350 OF 1763 SHEETS

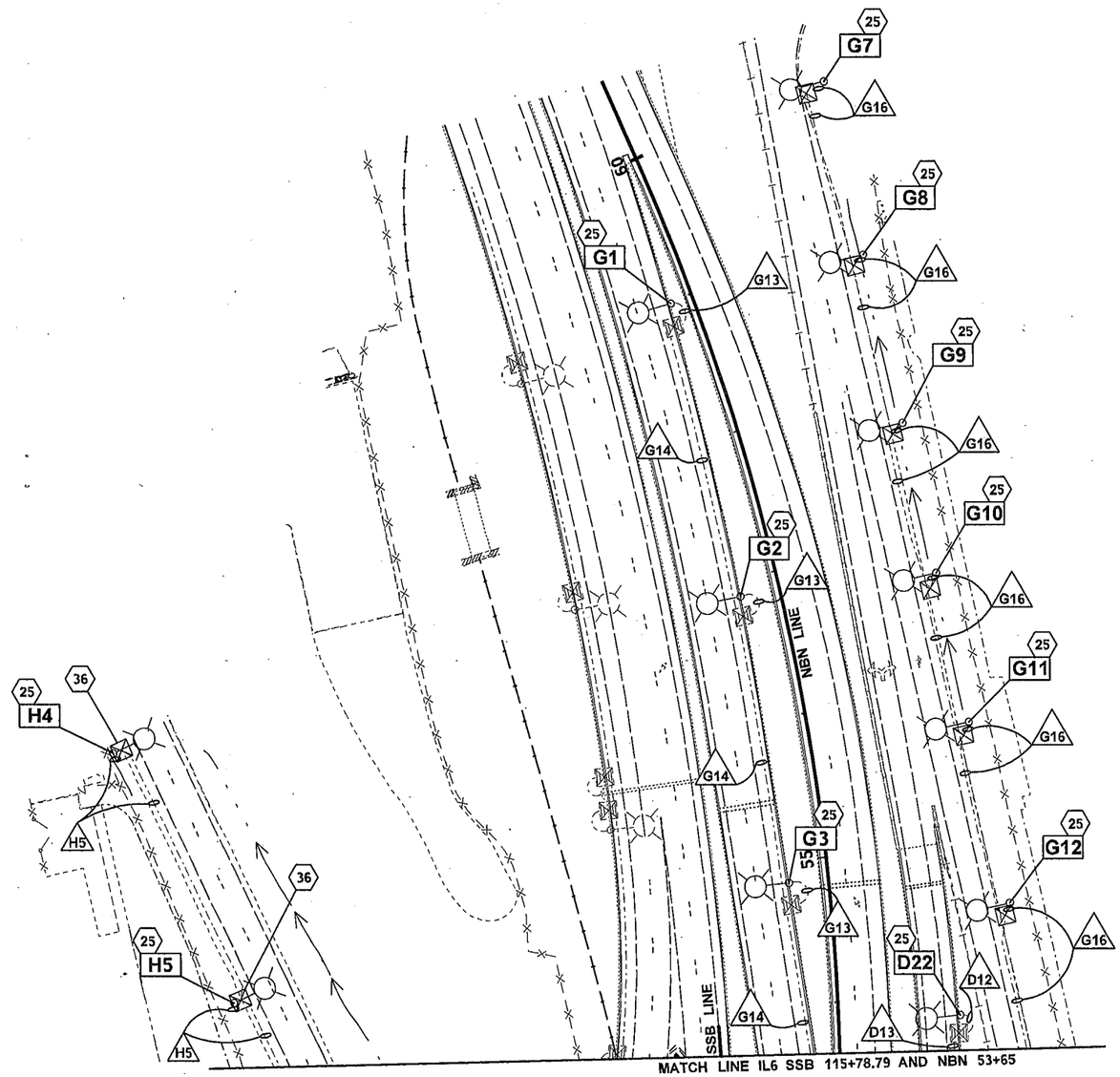

REFERENCE ITEM	SHEET
CONSTRUCTION NOTES	ILN1
LEGEND	ILN1
WIRE NOTES	ILN2 - ILN4
LUMINAIRE SCHEDULES	ILN5 - ILN8

0 50 100
SCALE IN FEET

FILE NAME	c:\aawork\pw_work\jacksfl\dms02678\IP3497_PS_IL_006A.dgn						
TIME	2:13:50 PM				REGION NO. 10	STATE WASH	FED.AID PROJ.NO.
DATE	3/10/2014				JOB NUMBER		
PLOTTED BY	jacksfl						
DESIGNED BY	F. JACKSON				CONTRACT NO.		LOCATION NO. XL3497
ENTERED BY	F. JACKSON						
CHECKED BY	R. CRUMBLEY						
PROJ. ENGR.	J. PEREZ						
REGIONAL ADM.	K. DAYTON	REVISION	DATE	BY			

DENNIS RAY CRUMBLEY, STATE OF WASHINGTON, 38765, REGISTERED PROFESSIONAL ENGINEER
3/11/14
DATE
P.E. STAMP BOX

DATE
P.E. STAMP BOX

Washington State Department of Transportation

I-5
M ST TO PORTLAND AVE - HOV

ILLUMINATION PLAN

PLAN REF NO IL6A

SHEET 1351 OF 1763 SHEETS

BREAKER SCHEDULE TRANSFORMER CABINET 005-XF-13397			SOURCE: METER CIRCUIT: P INPUT VOLTAGE: 480 V		
CIRCUIT	DESCRIPTION / LABEL	BREAKER RATING POLES	BREAKER RATING AMPS	VOLTAGE	LOAD (kVA)
--	MAIN	2P	175A	—	--
1	SCA 2720	2P	175A	240	28.8
BUSSWORK SHALL BE RATED AT 200 AMP MINIMUM				PEAK:	29.8
				CONTINUOUS:	28.8

BREAKER SCHEDULE TYPE D					SCA 2720 120 / 240 V	
CIRCUIT	DESCRIPTION / LABEL	BREAKER RATING POLES	BREAKER RATING AMPS	CONTACTOR RATING	VOLTAGE	LOAD (kVA)
--	MAIN	2P	200A	---	—	--
A	ILLUMINATION	2P	20A	30 AMP	240	2.9
B	ILLUMINATION	2P	30A	30 AMP	240	4.5
C	ILLUMINATION	2P	20A	30 AMP	240	3.3
D	ILLUMINATION	2P	30A	30 AMP	240	4.2
E	ILLUMINATION	2P	50A	60 AMP	240	6.9
F	ITS 005-DS-13397	1P	30A	---	120	2
G	ITS 005-XF-13402	2P	30A	---	240	5
BUSSWORK SHALL BE RATED AT 200 AMP MINIMUM					PEAK	29.8
					CONTINUOUS	28.8

CABINET AREA DETAIL
(NOT TO SCALE)

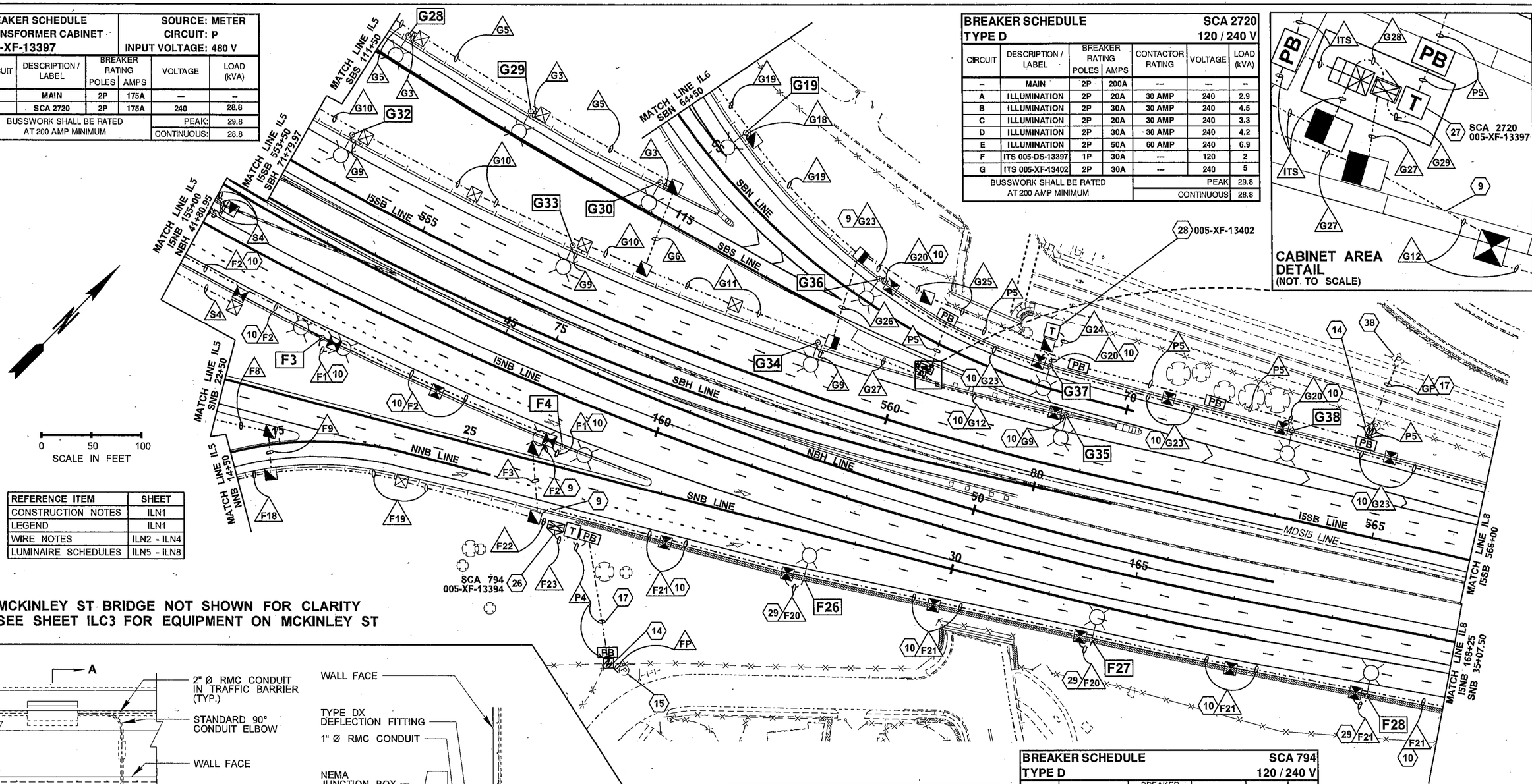

REFERENCE ITEM	SHEET
CONSTRUCTION NOTES	ILN1
LEGEND	ILN1
WIRE NOTES	ILN2 - ILN4
LUMINAIRE SCHEDULES	ILN5 - ILN8

MCKINLEY ST BRIDGE NOT SHOWN FOR CLARITY
SEE SHEET ILC3 FOR EQUIPMENT ON MCKINLEY ST

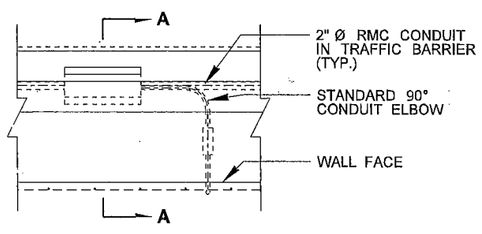

PLAN VIEW

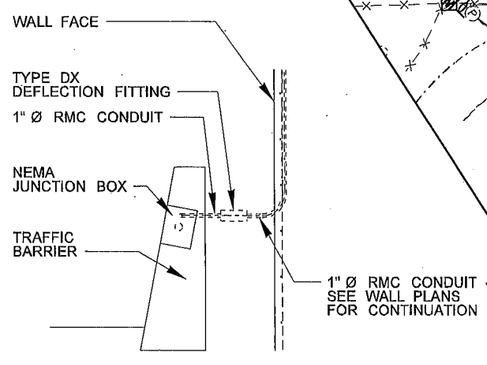

SECTION A-A

BARRIER TO WALL CONDUIT TRANSITION DETAIL
(NOT TO SCALE)

BREAKER SCHEDULE TRANSFORMER CABINET 005-XF-13394			SOURCE: METER CIRCUIT: P INPUT VOLTAGE: 480 V		
CIRCUIT	DESCRIPTION / LABEL	BREAKER RATING POLES	BREAKER RATING AMPS	VOLTAGE	LOAD (kVA)
--	MAIN	2P	125A	—	--
1	SCA 2395	2P	100A	240	16.4
BUSSWORK SHALL BE RATED AT 200 AMP MINIMUM				PEAK:	17.4
				CONTINUOUS:	16.4

BREAKER SCHEDULE TYPE D					SCA 794 120 / 240 V	
CIRCUIT	DESCRIPTION / LABEL	BREAKER RATING POLES	BREAKER RATING AMPS	CONTACTOR RATING	VOLTAGE	LOAD (kVA)
--	MAIN	2P	125A	---	—	--
A	ILLUMINATION	2P	30A	30 AMP	240	5.1
B	ILLUMINATION	2P	15A	30 AMP	240	2.1
C	ILLUMINATION	2P	15A	30 AMP	240	2.1
D	ILLUMINATION	2P	15A	30 AMP	240	2
E	ILLUMINATION	2P	30A	30 AMP	240	5.1
BUSSWORK SHALL BE RATED AT 200 AMP MINIMUM					PEAK	17.4
					CONTINUOUS	16.4

FILE NAME	c:\aawork\pw_work\jacksfl\dms02678\P3497_PS_IL_007.dgn					
TIME	2:15:16 PM					
DATE	3/10/2014					
PLOTTED BY	jacksfl					
DESIGNED BY	F. JACKSON					
ENTERED BY	F. JACKSON					
CHECKED BY	R. CRUMBLEY					
PROJ. ENGR.	J. PEREZ					
REGIONAL ADM.	K. DAYTON	REVISION	DATE	BY		

REGION NO.	STATE	FED.AID PROJ.NO.
10	WASH	
JOB NUMBER		
CONTRACT NO.		LOCATION NO. XL3497

DENNIS RAY CRUMBLEY STATE OF WASHINGTON 38386 REGISTERED PROFESSIONAL ENGINEER
3/10/14
DATE
P.E. STAMP BOX

DATE
P.E. STAMP BOX

Washington State Department of Transportation

I-5
M ST TO PORTLAND AVE - HOV

ILLUMINATION PLAN

PLAN REF NO IL7

SHEET 1352 OF 1763 SHEETS

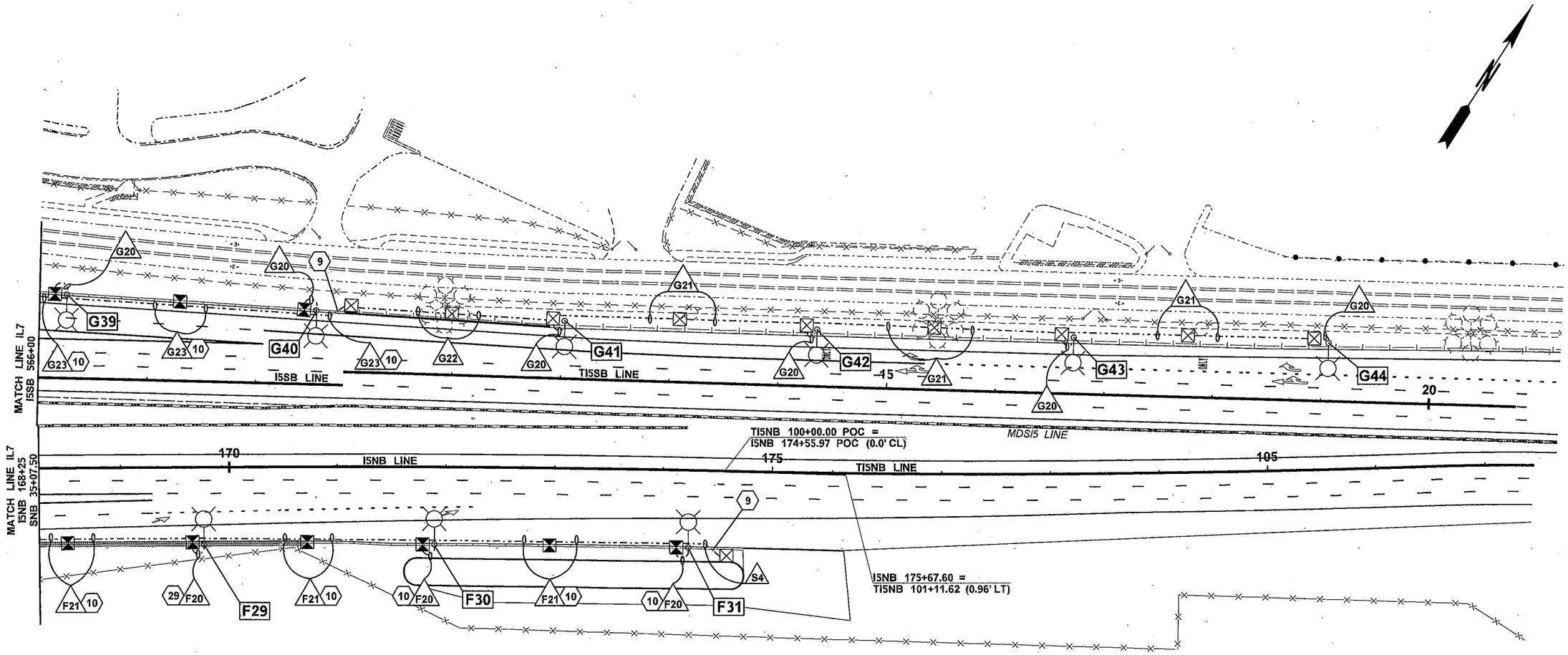

REFERENCE ITEM	SHEET
CONSTRUCTION NOTES	ILN1
LEGEND	ILN1
WIRE NOTES	ILN2 - ILN4
LUMINAIRE SCHEDULES	ILN5 - ILN8

SHEETS IL9 - IL11 INTENTIONALLY OMITTED

FILE NAME	c:\aawork\pw_work\jacksfl\dms02678\P3497_PS_IL_008.dgn
TIME	2:17:00 PM
DATE	3/10/2014
PLOTTED BY	jacksfl
DESIGNED BY	F. JACKSON
ENTERED BY	F. JACKSON
CHECKED BY	R. CRUMBLEY
PROJ. ENGR.	J. PEREZ
REGIONAL ADM.	K. DAYTON

REVISION | DATE | BY

REGION NO.	STATE	FED.AID PROJ.NO.
10	WASH	

JOB NUMBER

CONTRACT NO.

LOCATION NO. XL3497

DENNIS RAY CRUMBLEY, STATE OF WASHINGTON, REGISTERED PROFESSIONAL ENGINEER

3/11/14 DATE

P.E. STAMP BOX

P.E. STAMP BOX DATE

Washington State Department of Transportation

I-5
M ST TO PORTLAND AVE - HOV

ILLUMINATION PLAN

PLAN REF NO IL8

SHEET 1353 OF 1763 SHEETS

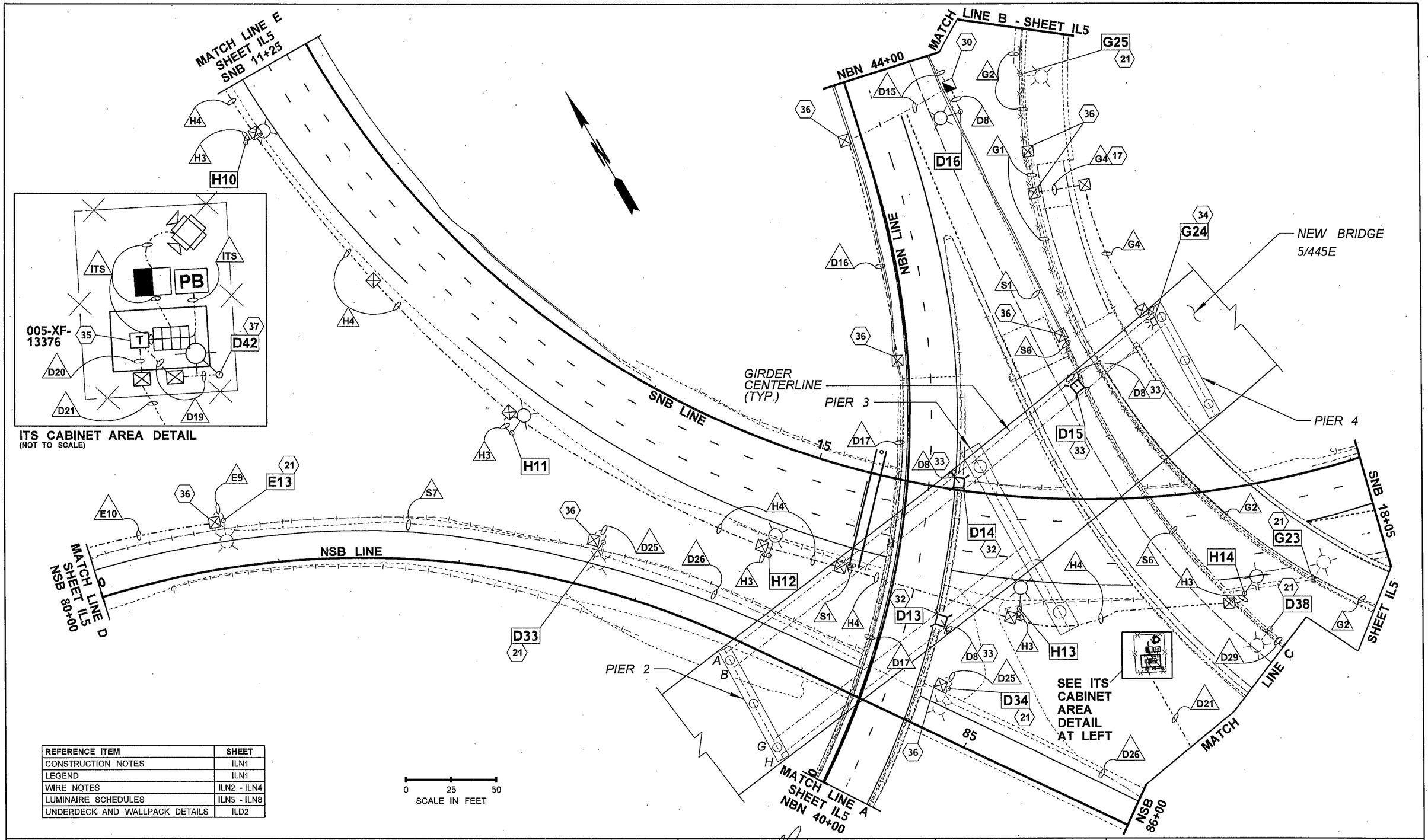

REFERENCE ITEM	SHEET
CONSTRUCTION NOTES	ILN1
LEGEND	ILN1
WIRE NOTES	ILN2 - ILN4
LUMINAIRE SCHEDULES	ILN5 - ILN8
UNDERDECK AND WALLPACK DETAILS	ILD2

FILE NAME	c:\aawork\pw_work\jacksfl\dms02678\P3497_PS_ILD_001.dgn
TIME	8:50:36 AM
DATE	3/12/2014
PLOTTED BY	jacksfl
DESIGNED BY	F. JACKSON
ENTERED BY	F. JACKSON
CHECKED BY	R. CRUMBLEY
PROJ. ENGR.	J. PEREZ
REGIONAL ADM.	K. DAYTON

REVISION | DATE | BY

REGION NO.	STATE	FED.AID PROJ.NO.
10	WASH	
JOB NUMBER		
CONTRACT NO.		LOCATION NO. XL3497

DENNIS RAY CRUMBLEY
STATE OF WASHINGTON
REGISTERED PROFESSIONAL ENGINEER
3/11/14
DATE
P.E. STAMP BOX

DATE
P.E. STAMP BOX

Washington State
Department of Transportation

I-5
M ST TO PORTLAND AVE - HOV

ILLUMINATION AREA DETAIL

PLAN REF NO
ILD1

SHEET 1354 OF 1763 SHEETS

UPPER CHANNEL STEEL HANGER DETAIL

(FOR LUMINAIRES D13, D14 AND D15. NOT TO SCALE)

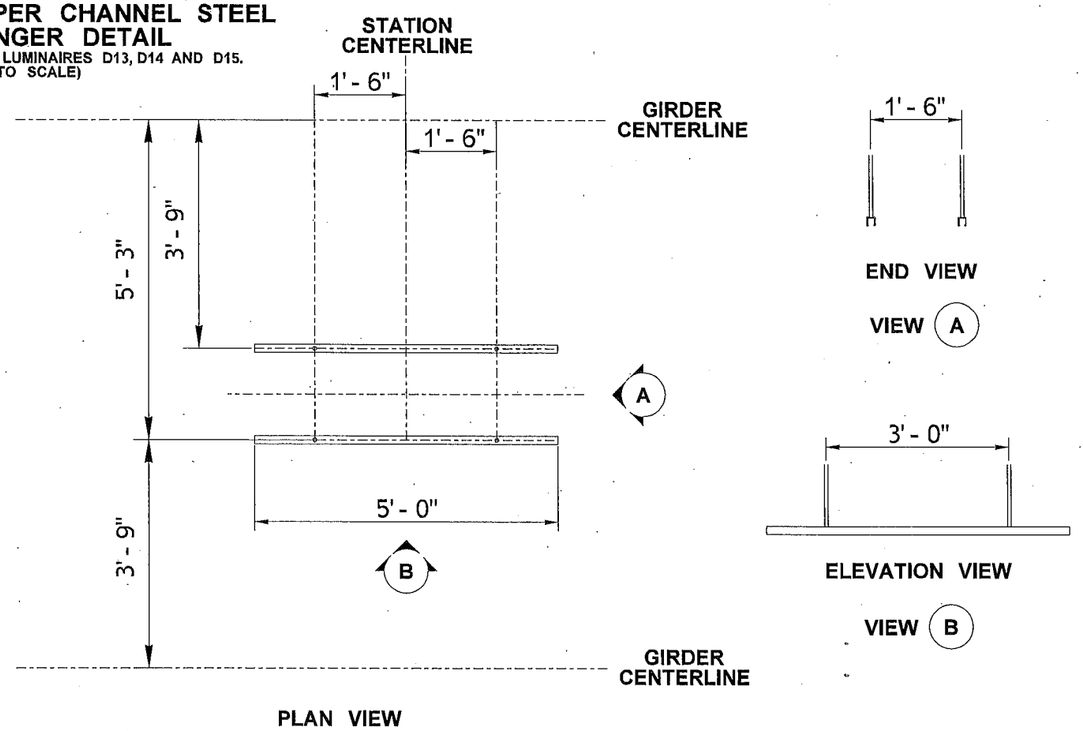

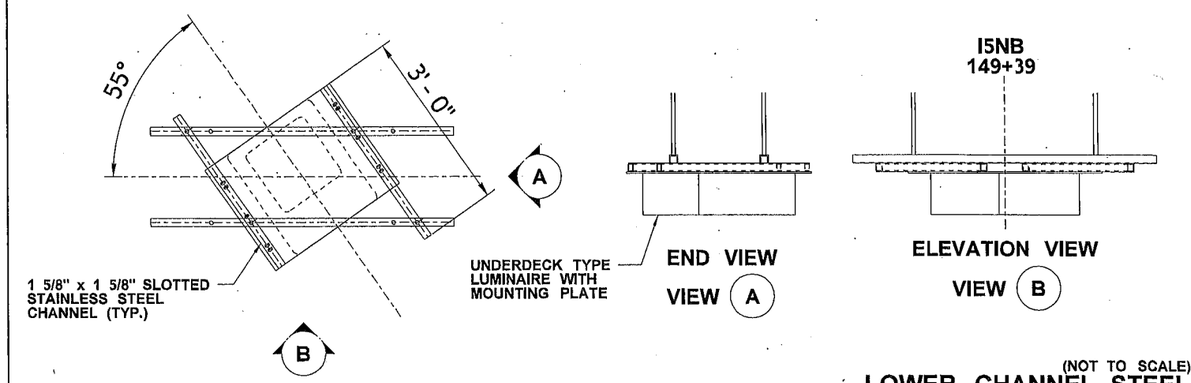

(NOT TO SCALE)

LOWER CHANNEL STEEL BRACKET AND LUMINAIRE LUMINAIRE D13 (I5NB 149+39 RT)

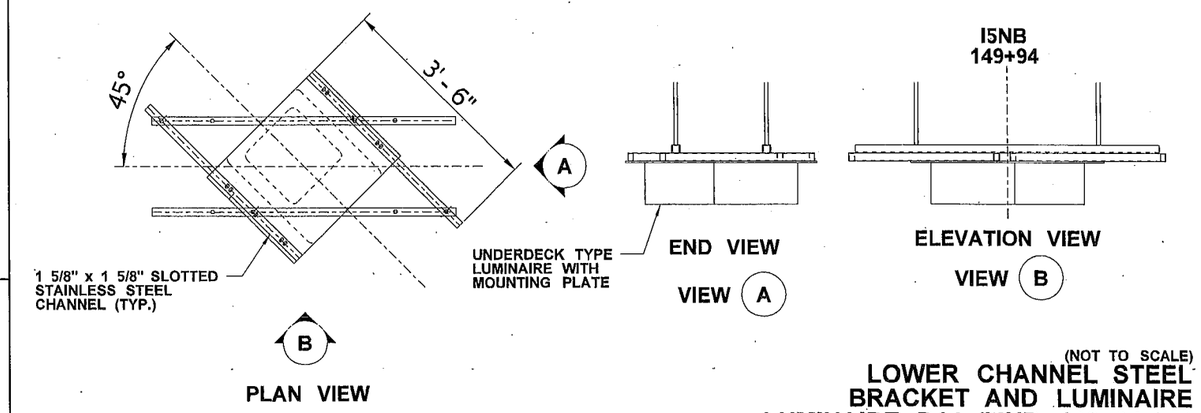

(NOT TO SCALE)

LOWER CHANNEL STEEL BRACKET AND LUMINAIRE LUMINAIRE D14 (I5NB 149+94 LT)

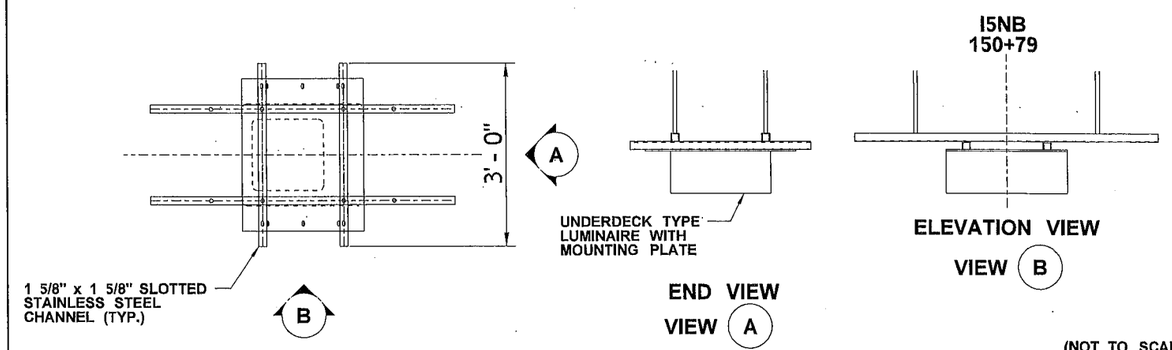

(NOT TO SCALE)

LOWER CHANNEL STEEL BRACKET AND LUMINAIRE LUMINAIRE D15 (I5NB 150+79 LT)

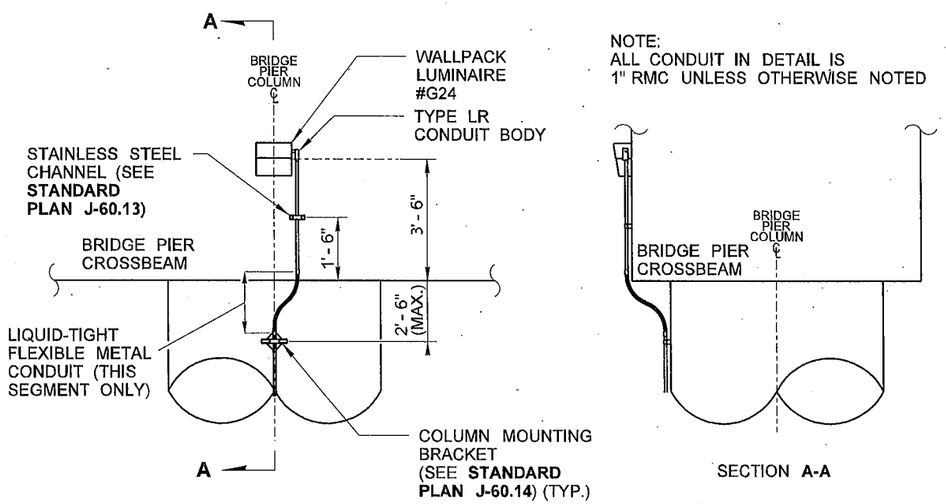

(NOT TO SCALE)

WALLPACK LUMINAIRE MOUNTING AND CONDUIT COLUMN TRANSITION DETAIL

FILE NAME	c:\aawork\pw_work\jacksfl\dms02678\P3497_PS_ILD_002.dgn				REGION NO.	STATE	FED.AID PROJ.NO.
TIME	2:27:53 PM				10	WASH	
DATE	3/10/2014				JOB NUMBER		
PLOTTED BY	jacksfl						
DESIGNED BY	F. JACKSON				CONTRACT NO.		LOCATION NO.
ENTERED BY	F. JACKSON						XL3497
CHECKED BY	R. CRUMBLEY						
PROJ. ENGR.	J. PEREZ						
REGIONAL ADM.	K. DAYTON	REVISION	DATE	BY			

DENNIS RAY CRUMBLEY, STATE OF WASHINGTON, REGISTERED PROFESSIONAL ENGINEER

3/11/14
DATE
P.E. STAMP BOX

DATE
P.E. STAMP BOX

Washington State Department of Transportation

I-5
M ST TO PORTLAND AVE - HOV

UNDERDECK HANGER DETAILS

PLAN REF NO
ILD2

SHEET 1355 OF 1763 SHEETS

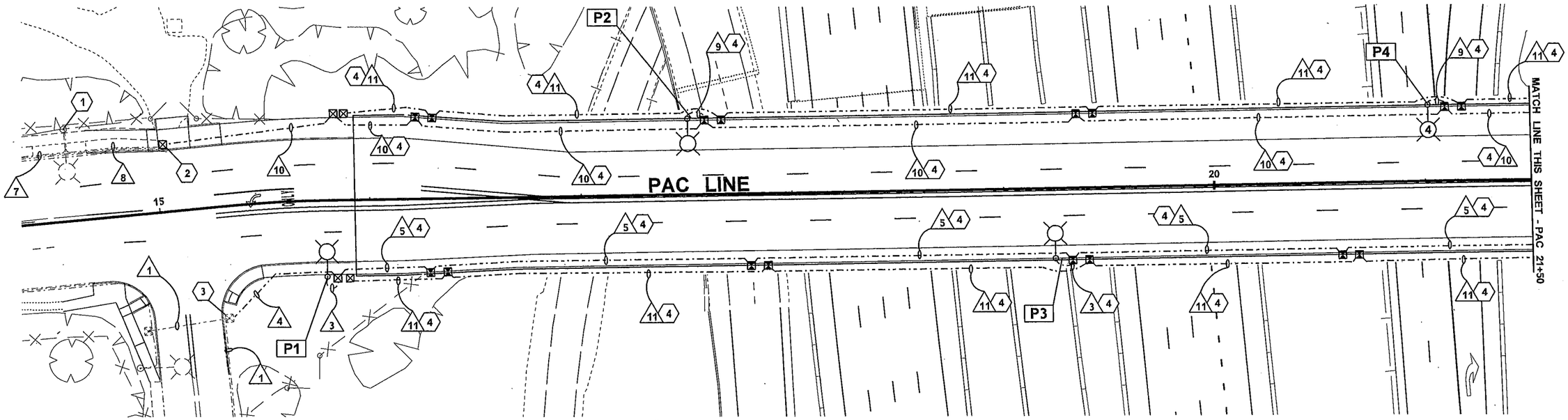

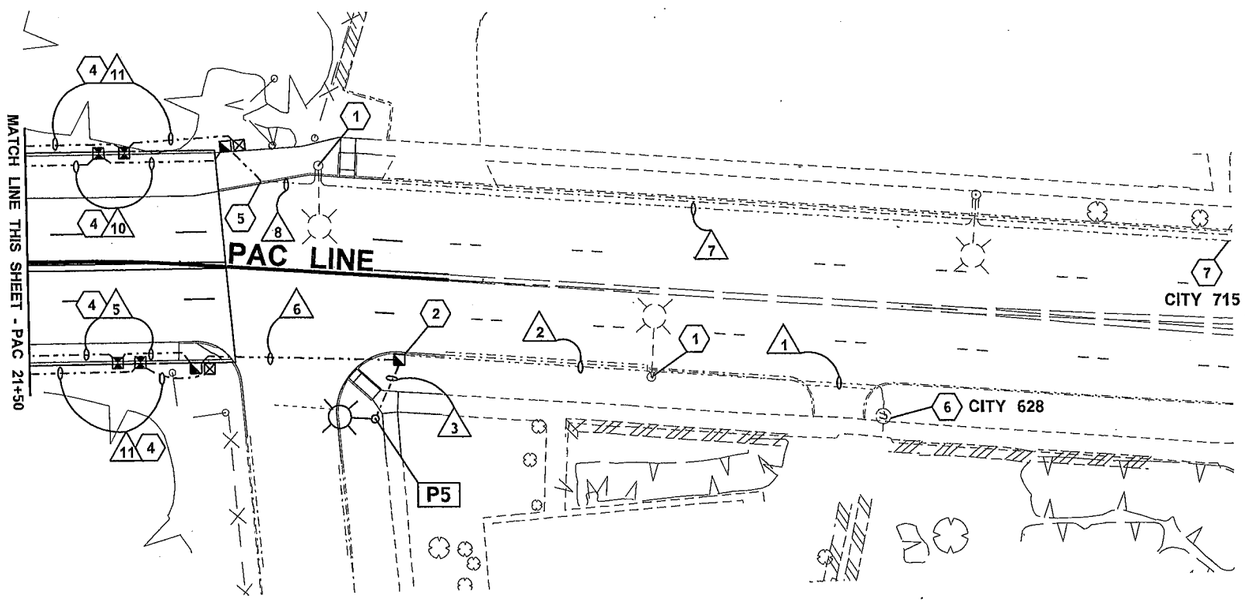

REFERENCE ITEM	SHEET
CONSTRUCTION NOTES	ILC2
LEGEND	ILC2
LUMINAIRE SCHEDULE	ILC2

WIRING SCHEDULE — **ILLUMINATION SYSTEM PACIFIC AVE**

NO.	CONDUIT / RACEWAY	MATERIAL*	CITY 628 ILLUM. CKT A #8	CITY 715 ILLUM. CKT A #8	GROUND #8
1	*Ex. 2"*	*PVC80*	*Ex. 2*		*Ex. 1*
2	*Ex. 2"*	*PVC80*	2		1
3	1"	RMC	2		1
4	2"	PVC80	2		1
5	2"	RMC	2		1
6	2"	RMC	2		1
	2"	RMC	SPARE		
7	*Ex. 2"*	*RMC*		*Ex. 2*	*Ex. 1*
8	*Ex. 2"*	*RMC*		2	1
9	1"	RMC		2	1
10	2"	RMC		2	1
11	2"	RMC	SPARE		

* DEFINITIONS: PVC80 = SCHEDULE 80 PVC; RMC = GALVANIZED RIGID METAL CONDUIT.

0 25 50
SCALE IN FEET

FILE NAME	c:\aawork\pw_work\jacksfl\dms02678\P3497_PS_ILC_001.dgn
TIME	11:51:12 AM
DATE	2/15/2014
PLOTTED BY	jacksfl
DESIGNED BY	F. JACKSON
ENTERED BY	F. JACKSON
CHECKED BY	R. CRUMBLEY
PROJ. ENGR.	J. PEREZ
REGIONAL ADM.	K. DAYTON

REVISION | DATE | BY

REGION NO. 10 | STATE WASH | FED.AID PROJ.NO.

JOB NUMBER

CONTRACT NO.

LOCATION NO. XL3497

DENNIS RAY CRUMBLEY, STATE OF WASHINGTON, REGISTERED PROFESSIONAL ENGINEER — 2/13/14 DATE — P.E. STAMP BOX

DATE — P.E. STAMP BOX

Washington State Department of Transportation

I-5
M ST TO PORTLAND AVE - HOV

ILLUMINATION PLAN - CITY

PLAN REF NO ILC1

SHEET 1356 OF 1763 SHEETS

LUMINAIRE SCHEDULE — PACIFIC AVE

LUMINAIRE NUMBER	CIRCUIT	LOCATION CENTERLINE	LOCATION STATION	LOCATION OFFSET	TYPE - DISTRIBUTION - WATTAGE	MAST ARM	H1	BASE TYPE	FOUNDATION STANDARD PLAN & CASE	FOUNDATION TYPE (J-28.30)	COMMENTS
P1	A	PAC	15+79	36 RT	III - MEDIUM CUTOFF - 400 HPS	8	40	FIXED	J-28.26 CASE J	B	NOTE 1, NOTE 2
P2	A	PAC	17+51	36 LT	III - MEDIUM CUTOFF - 400 HPS	8	40	ELBOW	J-28.45	N/A	NOTE 2, NOTE 3
P3	A	PAC	19+24	33 RT	III - MEDIUM CUTOFF - 400 HPS	8	40	ELBOW	J-28.45	N/A	NOTE 2, NOTE 3
P4	A	PAC	21+02	36 LT	III - MEDIUM CUTOFF - 400 HPS	8	40	ELBOW	J-28.45	N/A	NOTE 2, NOTE 3
P5	A	PAC	22+67	47 RT	III - MEDIUM CUTOFF - 200 HPS	8	30	FIXED	J-28.26 CASE J	B	NOTE 1, NOTE 2

NOTE 1: ANCHOR BOLT PATTERN SHALL BE A FOUR BOLT PATTERN FOR CITY OF TACOMA LIGHT STANDARDS.
NOTE 2: SEE SPECIAL PROVISIONS FOR CITY LUMINAIRE SPECIFICATIONS.
NOTE 3: BRIDGE ELBOW MOUNTED LIGHT STANDARDS SHALL HAVE STANDARD BASE PLATES AS SHOWN IN **STANDARD PLAN J-28.50.**

LEGEND

EXISTING	NEW	
		TYPE 1 JUNCTION BOX
		TYPE 2 JUNCTION BOX
		NEMA BARRIER MOUNTED JUNCTION BOX
		TYPE 1 LIGHT STANDARD AND LUMINAIRE
		CONDUIT AND WIRING
		POWER UTILITY POLE
	?	LUMINAIRE NUMBER
	?	CONSTRUCTION NOTE
	?	WIRE NOTE

CONSTRUCTION NOTES — ILLUMINATION SYSTEM - PACIFIC AVE

NO.	DESCRIPTION
1	SPLICE NEW CONDUCTORS TO EXISTING CONDCTORS TO REMAIN IN BASE OF LIGHT STANDARD.
2	INTERCEPT EXISTING CONDUIT WITH NEW JUNCTION BOX.
3	TERMINATE NEW CONDUIT IN EXISTING JUNCTION BOX.
4	CONDUIT TO BE INSTALLED IN TRAFFIC BARRIER. SEE **BRIDGE PLANS** FOR ADDITIONAL DETAILS.
5	INTERCEPT EXISTING CONDUIT AND EXTEND TO NEW JUNCTION BOX.
6	CITY LIGHTING SERVICE 628. SOURCE OF POWER FOR LIGHTING ON WEST SIDE OF PACIFIC AVE.
7	CITY LIGHTING SERVICE 715 LOCATED AT NORTHEAST CORNER OF PACIFIC AVE AND ALLEY BETWEEN SOUTH 34TH AND SOUTH 35TH STREETS. SOURCE OF POWER FOR LIGHTING ON EAST SIDE OF PACIFIC AVE.

FILE NAME	c:\aawork\pw_work\jacksfl\dms02678\P3497_PS_ILC_002.dgn
TIME	11:51:16 AM
DATE	2/15/2014
PLOTTED BY	jacksfl
DESIGNED BY	F. JACKSON
ENTERED BY	F. JACKSON
CHECKED BY	R. CRUMBLEY
PROJ. ENGR.	J. PEREZ
REGIONAL ADM.	K. DAYTON

REVISION | DATE | BY

REGION NO. 10 | STATE WASH | JOB NUMBER | CONTRACT NO.

FED.AID PROJ.NO.

LOCATION NO. XL3497

DENNIS RAY CRUMBLEY — STATE OF WASHINGTON — REGISTERED PROFESSIONAL ENGINEER
2/18/14
DATE
P.E. STAMP BOX

DATE
P.E. STAMP BOX

Washington State Department of Transportation

I-5
M ST TO PORTLAND AVE - HOV

ILLUMINATION PLAN - CITY

PLAN REF NO ILC2

SHEET 1357 OF 1763 SHEETS

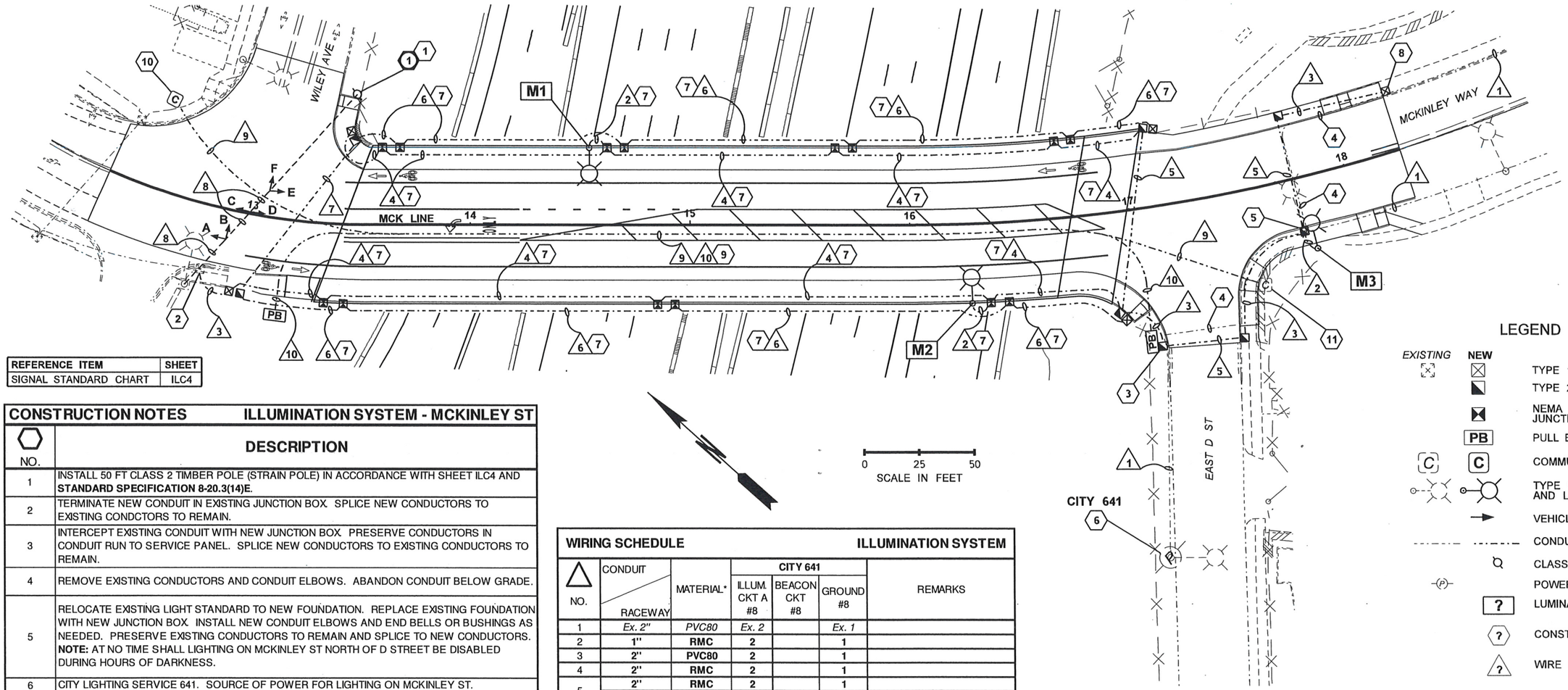

REFERENCE ITEM	SHEET
SIGNAL STANDARD CHART	ILC4

CONSTRUCTION NOTES — ILLUMINATION SYSTEM - MCKINLEY ST

NO.	DESCRIPTION
1	INSTALL 50 FT CLASS 2 TIMBER POLE (STRAIN POLE) IN ACCORDANCE WITH SHEET ILC4 AND **STANDARD SPECIFICATION 8-20.3(14)E.**
2	TERMINATE NEW CONDUIT IN EXISTING JUNCTION BOX. SPLICE NEW CONDUCTORS TO EXISTING CONDCTORS TO REMAIN.
3	INTERCEPT EXISTING CONDUIT WITH NEW JUNCTION BOX. PRESERVE CONDUCTORS IN CONDUIT RUN TO SERVICE PANEL. SPLICE NEW CONDUCTORS TO EXISTING CONDUCTORS TO REMAIN.
4	REMOVE EXISTING CONDUCTORS AND CONDUIT ELBOWS. ABANDON CONDUIT BELOW GRADE.
5	RELOCATE EXISTING LIGHT STANDARD TO NEW FOUNDATION. REPLACE EXISTING FOUNDATION WITH NEW JUNCTION BOX. INSTALL NEW CONDUIT ELBOWS AND END BELLS OR BUSHINGS AS NEEDED. PRESERVE EXISTING CONDUCTORS TO REMAIN AND SPLICE TO NEW CONDUCTORS. **NOTE:** AT NO TIME SHALL LIGHTING ON MCKINLEY ST NORTH OF D STREET BE DISABLED DURING HOURS OF DARKNESS.
6	CITY LIGHTING SERVICE 641. SOURCE OF POWER FOR LIGHTING ON MCKINLEY ST.
7	CONDUIT TO BE INSTALLED IN TRAFFIC BARRIER. SEE BRIDGE PLANS.
8	INTERCEPT EXISTING CONDUIT WITH NEW JUNCTION BOX. PRESERVE CONDUCTORS IN CONDUIT TO REMAIN AND SPLICE TO NEW CONDUCTORS.
9	CONDUITS FOR FUTURE COMMUNICATION SYSTEM USE. SEE BRIDGE PLANS FOR CONDUIT SUPPORT SYSTEM AND REQUIRED FITTINGS FOR INSTALLATION ACROSS BRIDGE. THIS WORK IS PART OF BID ITEM "**MCKINLEY WAY CONDUIT SYSTEM**".
10	INSTALL UTILITY SUPPLIED COMMUNICATION VAULT (SEE **SPECIAL PROVISIONS**). THIS WORK IS PART OF THE BID ITEM "**MCKINLEY WAY CONDUIT SYSTEM**".
11	TERMINATE NEW COMMUNICATION CONDUIT IN EXISTING COMMUNICATION VAULT.

WIRING SCHEDULE — ILLUMINATION SYSTEM

NO.	CONDUIT / RACEWAY	MATERIAL*	CITY 641 ILLUM. CKT A #8	CITY 641 BEACON CKT #8	CITY 641 GROUND #8	REMARKS
1	*Ex. 2"*	*PVC80*	*Ex. 2*		*Ex. 1*	
2	**1"**	**RMC**	**2**		**1**	
3	**2"**	**PVC80**	**2**		**1**	
4	**2"**	**RMC**	**2**		**1**	
5	**2"**	**RMC**	**2**		**1**	
	2"	**RMC**	**SPARE**			
6	**2"**	**RMC**	**SPARE**			
7	**2"**	**RMC**	**SPARE**			
	2"	**RMC**	**SPARE**			
8	**SPAN WIRE**	**N/A**		**2**	**1**	
9	**4"**	**PVC80**	**SPARE**			SEE CONSTRUCTION NOTE 9
	4"	**PVC80**	**SPARE**			SEE CONSTRUCTION NOTE 9
10	**3"**	**PVC80**	**SPARE**			SEE CONSTRUCTION NOTE 9

* DEFINITIONS: PVC80 = SCHEDULE 80 PVC; RMC = GALVANIZED RIGID METAL CONDUIT.

LUMINAIRE SCHEDULE — MCKINLEY ST

LUMINAIRE NUMBER	CIRCUIT	LOCATION CENTERLINE	LOCATION STATION	LOCATION OFFSET	TYPE - DISTRIBUTION - WATTAGE	MAST ARM	H1	BASE TYPE	FOUNDATION STANDARD PLAN & CASE	FOUNDATION TYPE (J-28.30)	COMMENTS
M1	**A**	**MCK**	**14+54**	**35 LT**	**III - MEDIUM CUTOFF - 400 HPS**	**8**	**40**	**ELBOW**	**J-28.45**	**N/A**	**NOTE 1, NOTE 2**
M2	**A**	**MCK**	**16+27**	**36 RT**	**III - MEDIUM CUTOFF - 400 HPS**	**8**	**40**	**ELBOW**	**J-28.45**	**N/A**	**NOTE 1, NOTE 2**
M3	**A**	**MCK**	**17+79**	**33 RT**	*III - MEDIUM CUTOFF - 200 HPS*	*8*	*30*	**FIXED**	**J-28.26 CASE J**	**B**	**NOTE 3**

NOTE 1: SEE SPECIAL PROVISIONS FOR CITY LUMINAIRE SPECIFICATIONS.
NOTE 2: BRIDGE ELBOW MOUNTED LIGHT STANDARDS SHALL HAVE STANDARD BASE PLATES AS SHOWN IN **STANDARD PLAN J-28.50**.
NOTE 3: INSTALL RELOCATED LIGHT STANDARD ON NEW FOUNDATION. ANCHOR BOLT PATTERN SHALL BE A FOUR BOLT PATTERN FOR CITY OF TACOMA LIGHT STANDARDS. SEE SPECIAL PROVISIONS FOR ADDITIONAL FOUNDATION REQUIREMENTS.

LEGEND

EXISTING	NEW	
		TYPE 1 JUNCTION BOX
		TYPE 2 JUNCTION BOX
		NEMA BARRIER MOUNTED JUNCTION BOX
	PB	PULL BOX
C	C	COMMUNICATION VAULT
		TYPE 1 LIGHT STANDARD AND LUMINAIRE
		VEHICLE SIGNAL DISPLAY
		CONDUIT AND WIRING
		CLASS 2 TIMBER POLE
P		POWER UTILITY POLE
	?	LUMINAIRE NUMBER
	?	CONSTRUCTION NOTE
	?	WIRE NOTE

SIGNAL DISPLAYS

DISPLAY TYPE	R	Y
DISPLAY NUMBERS	B, F	A, C, D, E

SIGNAL DISPLAY MOUNTINGS

STANDARD PLAN	J-75.20
MOUNT TYPE	Q
DISPLAY NUMBERS	A, B, C, D, E, F

SIGNAL DISPLAY NOTES

1. ALL VEHICLE HEADS SHALL BE ALUMINUM.
2. ALL LENSES SHALL BE 12" LED TYPE.
3. ALL VISORS SHALL BE 12" ALUMINUM TUNNEL TYPE.

FILE NAME	c:\aawork\pw_work\jacksfl\dms02678\P3497_PS_ILC_003.dgn
TIME	1:54:03 PM
DATE	2/20/2014
PLOTTED BY	Jacksfl
DESIGNED BY	F. JACKSON
ENTERED BY	F. JACKSON
CHECKED BY	R. CRUMBLEY
PROJ. ENGR.	J. PEREZ
REGIONAL ADM.	K. DAYTON

REVISION | DATE | BY

REGION NO. 10 | STATE WASH | FED.AID PROJ.NO.
JOB NUMBER
CONTRACT NO. | LOCATION NO. XL3497

DENNIS RAY CRUMBLEY — STATE OF WASHINGTON — PROFESSIONAL ENGINEER
2/20/14
P.E. STAMP BOX — DATE

P.E. STAMP BOX — DATE

Washington State Department of Transportation

I-5
M ST TO PORTLAND AVE - HOV

ILLUMINATION PLAN - CITY

PLAN REF NO ILC3
SHEET 1358 OF 1763 SHEETS

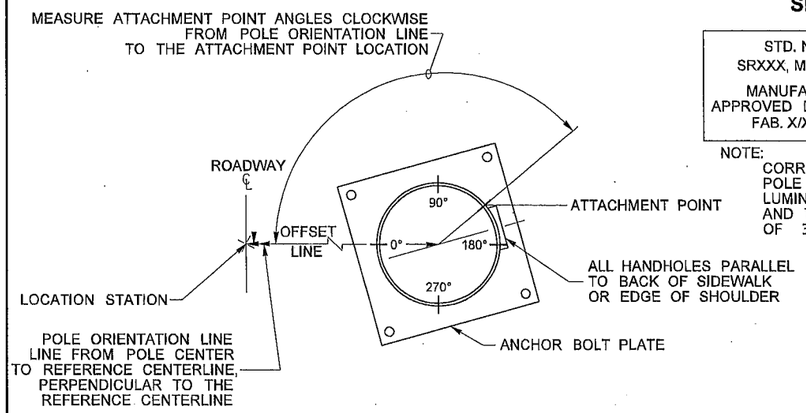

POLE ORIENTATION AND ATTACHMENT POINT DETAIL

NOTE:
TYPE E MOUNTS SHALL BE USED FOR PEDESTRIAN DISPLAYS ON TYPE II OR III SIGNAL STANDARDS, WITH THE FOLLOWING EXCEPTION. PEDESTRIAN DISPLAYS MOUNTED ON OCTAGONAL (8 SIDED) SIGNAL STANDARDS AT AN ANGLE OTHER THAN A 45 DEGREE INCREMENT SHALL USE A TYPE A MOUNT FOR TWO PEDESTRIAN DISPLAYS, OR A TYPE B MOUNT FOR A SINGLE PEDESTRIAN DISPLAY.

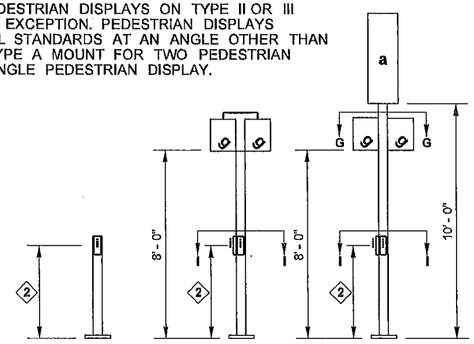

TYPE PPB PPB POST | TYPE PS PED. HEAD STANDARD | TYPE I VEHICLE HEAD STANDARD

SIGNAL STANDARD IDENTIFICATION TAG DETAIL

STD. NO. XX	SIGNAL STANDARD NO.
SRXXX, MP XXX.XX	STATE ROUTE AND MILE POST NO.
MANUFACTURER APPROVED DWG. XXXXXX	APPROVED DRAWING NO.
FAB. X/XX/XXXX	FABRICATION DATE

EXAMPLE

STD. NO. 02
SR97, MP 069.09
MANUFACTURER
APPROVED DWG. AB12345
FAB. 6/14/2002

NOTE:
CORROSION RESISTANT METAL TAG SECURED WITH (2) 0.125" RIVETS AS FOLLOWS: POLE SHAFT - LOCATED WITHIN 6" ABOVE HAND HOLE (TYPE II & III). SIGNAL AND LUMINAIRE MAST ARM (TYPE II & III) - LOCATED WITHIN 6" OF THE LUMINAIRE ARM AND THE POLE SHAFT CONNECTION POINT (TYPE III). TEXT SHALL BE A MINIMUM OF 3/16" HIGH, STAMPED OR EMBOSSED.

LEGEND

a. VEHICLE DISPLAY
b. SIGN
c. STREET NAME SIGN
d. PRE-EMPT DETECTOR
e. NOT USED
f. NOT USED
g. PEDESTRIAN DISPLAY
h. AERIAL JUNCTION BOX
i. APS PPB-M
j. HANDHOLE

1. AERIAL JUNCTION BOX SHALL EITHER BE CENTERED BETWEEN POLE AND FIRST PIECE OF EQUIPMENT OR A MAXIMUM OF 6 FEET FROM POLE CENTERLINE, WHICHEVER IS SHORTER.

2. PEDESTRIAN PUSHBUTTON MOUNTING HEIGHT (MEASURED TO CENTER OF BUTTON):
   3' - 6" RECOMMENDED (TYPICAL)
   2' - 8" MINIMUM
   4' - 0" MAXIMUM

3. MINIMUM DISTANCE FROM FACE OF POLE AS MEASURED FROM:
   FACE OF CURB OR EDGE OF SHOULDER: 2' - 0"
   FACE OF GUARDRAIL: 3' - 0"
   TOE (WHERE THE BARRIER BASE MEETS THE ROAD OR SHOULDER SURFACE, TRAFFIC SIDE) OF TYPE 2 CONC. BARRIER: 4' - 0"

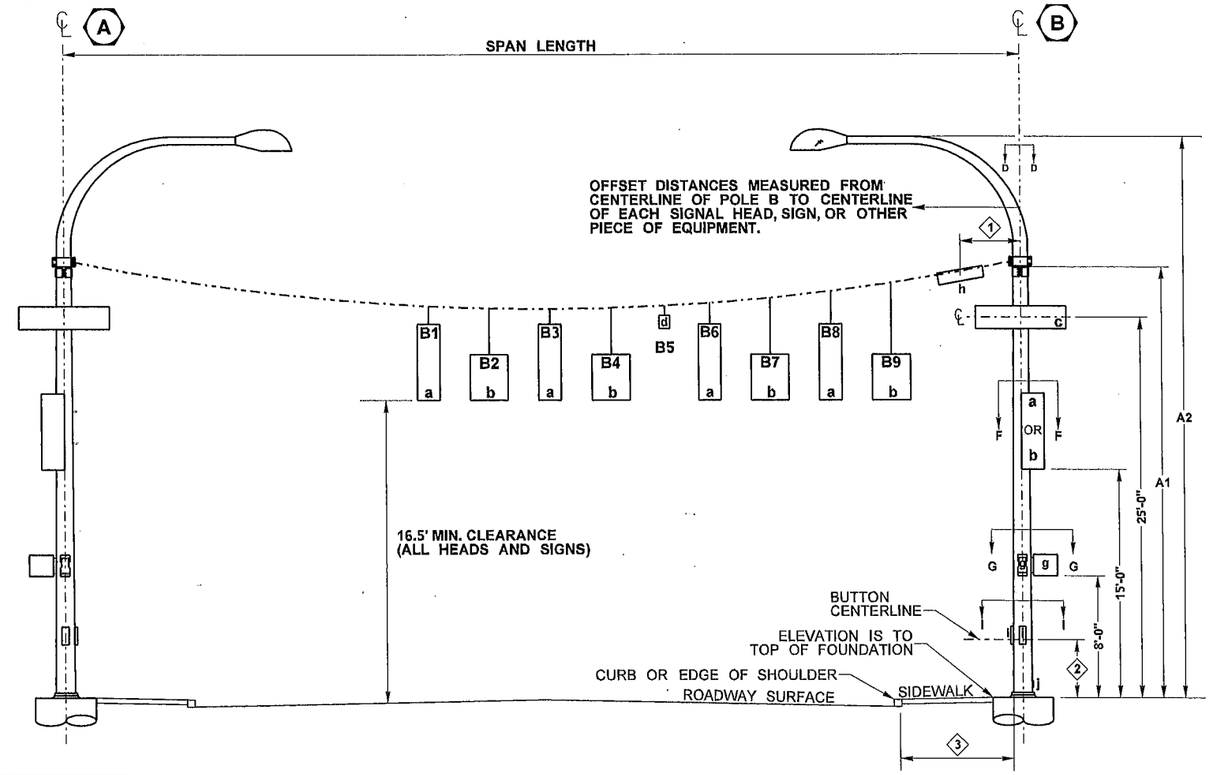

STD. No.	SR No.	SRMP	FIELD LOCATION STATION	OFFSET	LT	RT	ELEV. *	TYPE	MOUNTING HEIGHT (FT) A1	A2	LUMINAIRE ARM (FT) C	POLE ATTACHMENT POINT ANGLES (DEGREES) D	F	G1	G2	I1	I2	ANGLE BETWEEN SPANS	POLE TENSION (P.L.)	POLE CLASS TIMBER	STEEL	SOIL BEARING PRESSURE (PSF)	STEEL POLE FOUNDATION DEPTH (DT) (FEET) 3' RD.	3' SQ.	4' RD.	REMARKS
1	N/A	N/A	13+48	59	X			IV	28										1920	2	N/A	1500	N/A	N/A	N/A	
2	N/A	N/A	12+78	38		X		V	28	40									1920	N/A	2700	1500	11	11	9	EXISTING

POLE A	POLE B	LENGTH (FT)	OFFSET DISTANCES (FT) B1	B2	B3	B4	B5	B6	B7	B8	B9	WEIGHT (LBS) B1	B2	B3	B4	B6	B7	B8	B9	TOTAL WEIGHT (LBS) (P)	n	G (P/n)	TENSION (LBS) (T)
1	2	107	64		48			29				40		120		80				240	3	80	1920
																						N/A	
																						N/A	
																						N/A	

NOTE: OFFSET DISTANCES MEASURED FROM POLE B

FILE NAME	c:\aawork\pw_work\jacksfl\dms02678\P3497_PS_ILC_004.dgn
TIME	11:51:25 AM
DATE	2/15/2014
PLOTTED BY	jacksfl
DESIGNED BY	F. JACKSON
ENTERED BY	F. JACKSON
CHECKED BY	R. CRUMBLEY
PROJ. ENGR.	J. PEREZ
REGIONAL ADM.	K. DAYTON

REVISION | DATE | BY

REGION NO.	STATE	FED.AID PROJ.NO.
10	WASH	
JOB NUMBER		
CONTRACT NO.		LOCATION NO. XL3497

DENNIS RAY CRUMBLEY STATE OF WASHINGTON 38115 REGISTERED PROFESSIONAL ENGINEER
2/10/14
DATE
P.E. STAMP BOX

DATE
P.E. STAMP BOX

Washington State Department of Transportation

I-5
M ST TO PORTLAND AVE - HOV

ILLUMINATION PLAN - CITY

PLAN REF NO ILC4

SHEET 1359 OF 1763 SHEETS

GENERAL NOTES:

1. THE LOCATIONS OF THE INTELLIGENT TRANSPORTATION SYSTEM (ITS) ELEMENTS SHOWN IN THE PLANS ARE APPROXIMATE. THEY SHALL BE VERIFIED IN THE FIELD BY THE CONTRACTOR AND BE APPROVED BY THE ENGINEER. SYMBOLS/CELLS OF ITS ELEMENTS SHOWN IN THE PLANS ARE NOT TO SCALE. THE SYMBOL/CELLS ARE SHOWN LARGER THAN THEY APPEAR FOR VISIBILITY/ LEGIBILITY.
2. THE CONTRACTOR SHALL LABEL ALL ITS EQUIPMENT. SEE SPECIAL PROVISIONS AND ITS EQUIPMENT IDENTIFICATION LABELING LOCATED ON THIS SHEET. USE THE EQUIPMENT LABELS SHOWN IN PLANS FOR EACH PARTICULAR PIECE OF ITS EQUIPMENT OR ITEM. FOR FIBER OPTIC CABLE LABELING DETAILS, SEE ITFO10.
3. THE CONTRACTOR SHALL INSTALL ORANGE FLEXIBLE GUIDE POST AS SHOWN IN THE PLANS. SEE SPECIAL PROVISIONS, FIBER OPTIC CABLE MARKER. FOR GUIDE POST DECAL SEE FIBER OPTIC DETAIL SHEET ITFO10.
4. THE CONTRACTOR SHALL INSTALL PULL BOXES, AND CABLE VAULT IN ACCORDANCE WITH STANDARD PLAN J-90.10, AND J-90.20. COIL AND RACK 100 FEET OF EACH FIBER OPTIC CABLE. INSTALL SPLICE ENCLOSURE ON THE MOUNTING RACK AT SPLICE LOCATIONS.
5. THE CONTRACTOR SHALL INSTALL A PLASTIC PAVEMENT MARKING AT EACH JUNCTION BOX, PULL BOX AND CABLE VAULT AS SHOWN IN STANDARD PLAN M-24.60. SEE STANDARD SPECIFICATION 8-22.
6. THE CONTRACTOR SHALL UTILIZE THE PROPER USE OF LOCKOUT / TAGOUT PROCEDURES.
7. ALL DETAIL SHEETS ARE IN ALPHA-NUMERIC ORDER.
8. TEMPORARY ITS FIBER OPTIC SYSTEM SHALL BE REMOVED AFTER THE PERMANENT FIBER OPTIC SYSTEM IS INSTALLED, TESTED, AND OPERATIONAL. REMOVE ITS TEMPORARY POLES. SEE TEMPORARY ILLUMINATION PLANS FOR REMOVAL OF JOINT USE POLES. REMOVE FIBER OPTIC CABLE AND ABANDON CONDUIT BELOW GRADE.

ITS LEGEND

EXISTING	NEW	
		TYPE 1 JUNCTION BOX
		TYPE 2 JUNCTION BOX
		TYPE 4 JUNCTION BOX
		TYPE 5 JUNCTION BOX
		TYPE 6 JUNCTION BOX
		TYPE 8 JUNCTION BOX
CV	CV	ITS CABLE VAULT
PB	PB	ITS PULLBOX
CH	CH	ITS COMMUNICATION HUB
T	T	TRANSFORMER CABINET
		TYPE 334 ITS CABINET
		TYPE 334 RAMP METER CABINET
		TYPE 334D ITS CABINET CABINET
		TYPE 334D RAMP METER CABINET
		WAVETRONIX CABINET
		VMS CABINET
		CCTV CAMERA
		WAVETRONIX SENSOR
		RAMP METER SIGNAL
		RAMP METER ADVANCE FLASHING BEACON
		CANTILEVER SIGN STRUCTURE
		SIGN BRIDGE STRUCTURE
	VMS	WALK-IN VMS SIGN
		CONDUIT AND WIRING
		TIMBER POLE
BF		BURIED FIBER OPTIC CONDUIT
OF	OF	AERIAL FIBER OPTIC CONDUIT
		FENCE
		ORANGE FLEXIBLE GUIDE POST

EXISTING	NEW	
HAR	HAR	HIGHWAY ADVISORY RADIO SIGN
		MICROWAVE RADIO
	OR	THREE UNIT HIGH MAST TIMBER LIGHT STANDARD (INSTALLED BY TEMPORARY ILLUMINATION)
		FOUR UNIT HIGH MAST TIMBER LIGHT STANDARD (INSTALLED BY TEMPORARY ILLUMINATION)
		SIX UNIT HIGH MAST TIMBER LIGHT STANDARD (INSTALLED BY TEMPORARY ILLUMINATION)
	P-#	CLASS 5 TIMBER POLE FLAG (TEMPORARY ILLUMINATION)
	T-#	TEMPORARY TIMBER LUMINAIRE FLAG; SEE TABLE SHEET TILN2
	TP-##	CLASS 5 TIMBER POLE FLAG (TEMPORARY ITS)
	PB-##	PULL BOX FLAG
	CV-##	CABLE VAULT FLAG

ITS Equipment Identification Labeling

ITS EQUIPMENT LABEL (COMPOSED OF 3 PARTS - A, B, & C)

EXAMPLE: (A) (B) (C)
005 - VC - 13245

(A): FIRST THREE CHARACTERS DENOTE THE STATE ROUTE

(B): NEXT TWO CHARACTERS ARE THE EQUIPEMENT TYPE, SEE LEGEND BELOW.

(C): LAST FIVE CHARACTERS REPRESENT THE MILEPOST, THE LAST DIGIT BEING THE NEAREST HUNDREDTH OF A MILE.

ITS EQUIPMENT TYPE LABEL

CH - COMMUNICATION HUB
DS - DATA STATION
PT - PERMANENT TRAFFIC RECORDER
RM - RAMP METER
XF - TRANSFORMER
VC - VIDEO CAMERA
VM - VARIABLE MESSAGE SIGN

FILE NAME	PW:_XL3497\PS&E Sheets\ITS\P3497_SH_ITN_01.dgn				REGION NO.	STATE	FED.AID PROJ.NO.
TIME	10:33:04 AM				10	WASH	
DATE	3/16/2014				JOB NUMBER		
PLOTTED BY	dizonj						
DESIGNED BY	A. DORROUGH/J. DIZON				CONTRACT NO.		LOCATION NO.
ENTERED BY	A. DORROUGH/J. DIZON						
CHECKED BY	C. LANGFORD						
PROJ. ENGR.	J. PEREZ						
REGIONAL ADM.	K. DAYTON	REVISION	DATE	BY			

DENNIS RAY CRUMBER, STATE OF WASHINGTON, REGISTERED PROFESSIONAL ENGINEER
3/17/14
DATE
P.E. STAMP BOX

DATE
P.E. STAMP BOX

Washington State Department of Transportation

I-5
M ST TO PORTLAND AVE - HOV

ITS LEGEND AND GENERAL NOTES

ITN1

SHEET 1360 OF 1763 SHEETS

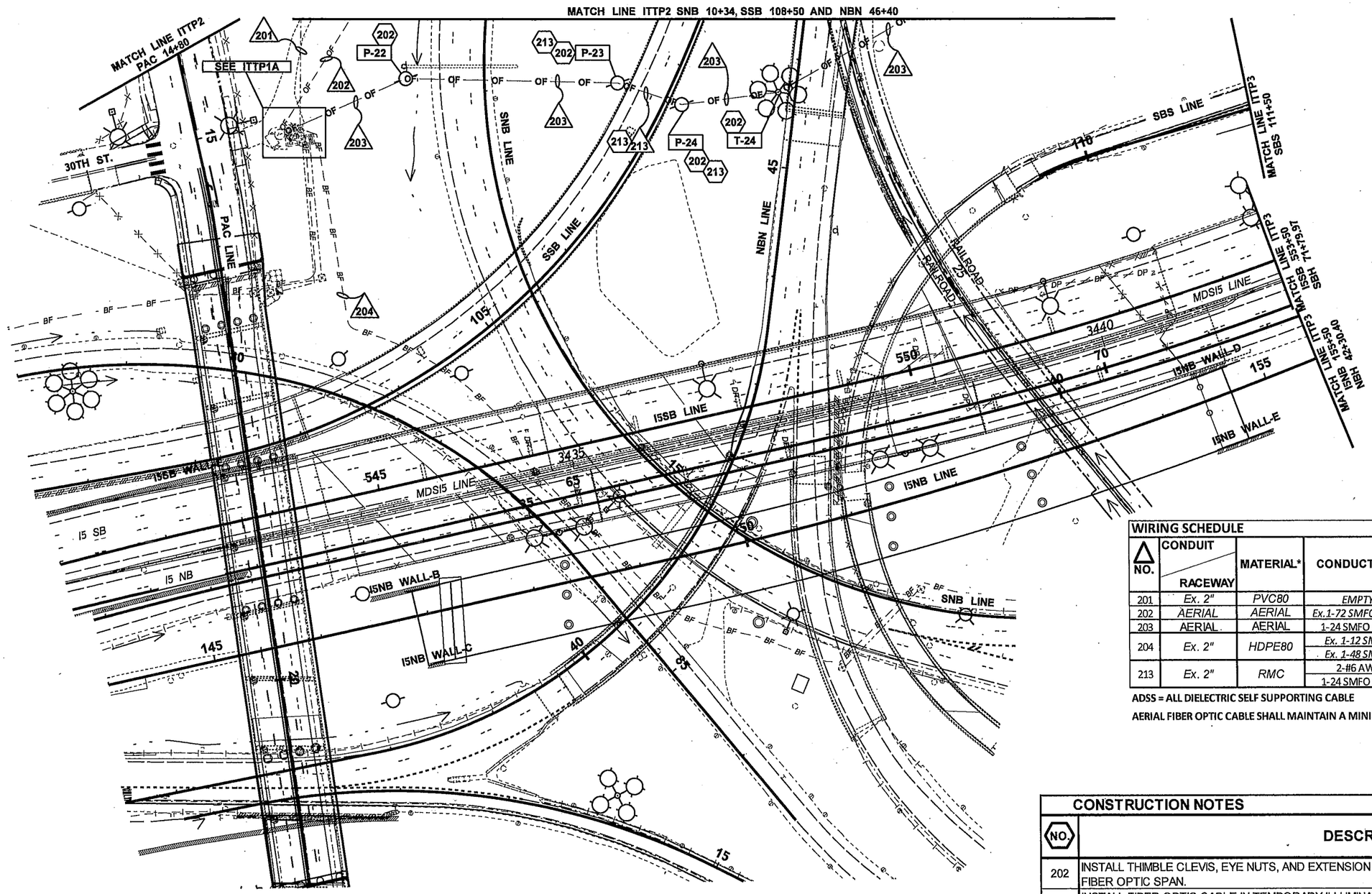

WIRING SCHEDULE				ITS SYSTEM
NO.	CONDUIT / RACEWAY	MATERIAL*	CONDUCTORS	REMARKS
201	Ex. 2"	PVC80	EMPTY	ABANDONED CONDUIT
202	AERIAL	AERIAL	Ex.1-72 SMFO ADSS	SMFO TACOMA FIRE DEP'T.
203	AERIAL	AERIAL	1-24 SMFO ADSS	SMFO I-5 DISTRIBUTION NB
204	Ex. 2"	HDPE80	Ex. 1-12 SMFO	SMFO I-5 DISTRIBUTION NB
			Ex. 1-48 SMFO	SMFO I-5 LONGHAUL NB
213	Ex. 2"	RMC	2-#6 AWG	SEE TEMPORARY ILLUMINATION
			1-24 SMFO ADSS	SMFO I-5 DISTRIBUTION NB

ADSS = ALL DIELECTRIC SELF SUPPORTING CABLE

AERIAL FIBER OPTIC CABLE SHALL MAINTAIN A MINIMUM 25 FOOT CLEARANCE ABOVE ALL GROUND.

CONSTRUCTION NOTES	SHEET ITTP1
NO.	DESCRIPTION
202	INSTALL THIMBLE CLEVIS, EYE NUTS, AND EXTENSION LINKS ON ILLUMINATION TIMBER POLE TO SUPPORT FIBER OPTIC SPAN.
213	INSTALL FIBER OPTIC CABLE IN TEMPORARY ILLUMINATION CONDUIT. SEE TEMPORARY ILLUMINATION SHEET, TIL5.

NOTES:

1. FOR LEGEND AND GENERAL NOTES SEE ITN1.
2. FOR TEMPORARY ILLUMINATION POLE, SEE TEMPORARY ILLUMINATION PLANS.

FILE NAME	PW:_XL3497\PS&E Sheets\ITS\P3497_SH_ITTP_01A.dgn					
TIME	1:05:14 PM				REGION NO. 10	STATE WASH
DATE	3/18/2014				JOB NUMBER	FED.AID PROJ.NO.
PLOTTED BY	LangfoC					
DESIGNED BY	J. DIZON					
ENTERED BY	J. DIZON					
CHECKED BY	C. LANGFORD				CONTRACT NO.	LOCATION NO.
PROJ. ENGR.	J. PEREZ					
REGIONAL ADM.	K. DAYTON	REVISION	DATE	BY		

DENNIS RAY CRUMMER, STATE OF WASHINGTON, REGISTERED PROFESSIONAL ENGINEER

3/17/14 DATE

P.E. STAMP BOX

DATE

P.E. STAMP BOX

Washington State Department of Transportation

I-5
M ST TO PORTLAND AVENUE - HOV

ITS TEMPORARY PLAN

PLAN REF NO ITTP1

SHEET 1361 OF 1763 SHEETS

CONSTRUCTION NOTES	SHEET ITTP1A
NO.	DESCRIPTION
203	INSTALL THIMBLE CLEVIS, EYE NUTS, AND EXTENSION LINKS ON EXISTING CAMERA POLE *(TP-03)* TO SUPPORT FIBER OPTIC SPAN.
204	FUSION SPLICE FACTORY CONNECTORIZED ST PIGTAILS ON THE NEW ADSS CABLE AS SHOWN ON FIBER OPTIC DETAIL SHEET ITFO12. TERMINATE NEW CONNECTORS ON EXISTING PATCH PANEL TO REPLACE EXISTING CONNECTORS.

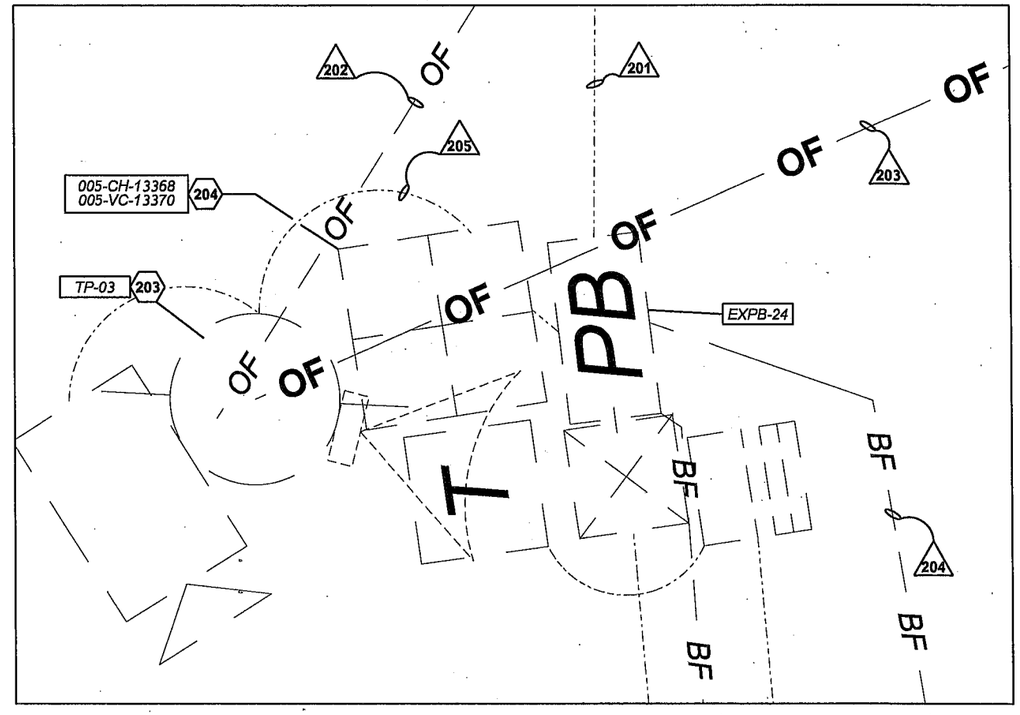

WIRING SCHEDULE				ITS SYSTEM
NO.	CONDUIT / RACEWAY	MATERIAL*	CONDUCTORS	REMARKS
201	*Ex. 2"*	*PVC80*	*EMPTY*	*ABANDONED CONDUIT*
202	*AERIAL*	*AERIAL*	*Ex. 1-72 SMFO*	*SMFO TACOMA FIRE DEP'T.*
203	AERIAL	AERIAL	1-24 SMFO ADSS	SMFO I-5 DISTRIBUTION NB
204	*Ex. 2"*	*HDPE80*	*Ex. 1-12 SMFO*	*SMFO I-5 DISTRIBUTION NB*
			Ex. 1-48 SMFO	*SMFO I-5 LONGHAUL NB*
205	*Ex. 2"*	*RMC*	*Ex. 1-72 SMFO*	*SMFO TACOMA FIRE DEP'T.*
			1-24 SMFO ADSS	SMFO I-5 DISTRIBUTION NB

ADSS = ALL DIELECTRIC SELF SUPPORTING CABLE

AERIAL FIBER OPTIC CABLE SHALL MAINTAIN A MINIMUM 25 FOOT CLEARANCE ABOVE ALL GROUND.

TEMPORARY TIMBER POLE SCHEDULE						
POLE NO.	LINE	STATION / MILEPOST	OFFSET	POLE HEIGHT	SHEET NO.	NOTES
TP-03	PAC	15+12	75'LT	60'	ITTP1	*Ex. CAMERA POLE*

MEASUREMENT IS TO CENTER OF POLE. TFD - TACOMA FIRE DEPARTMENT

NOTES:

1. FOR LEGEND AND GENERAL NOTES SEE ITN1.
2. FOR PULL BOX / CABLE VAULT SCHEDULE SEE ITBX1.

NOT TO SCALE

FILE NAME	PW:_XL3497\PS&E Sheets\ITS\P3497_SH_ITTP_01B.dgn					
TIME	1:05:28 PM				REGION NO. 10	STATE WASH
DATE	3/18/2014					
PLOTTED BY	LangfoC				JOB NUMBER	FED.AID PROJ.NO.
DESIGNED BY	J. DIZON					
ENTERED BY	J. DIZON					
CHECKED BY	C. LANGFORD				CONTRACT NO.	LOCATION NO.
PROJ. ENGR.	J. PEREZ					
REGIONAL ADM.	K. DAYTON	REVISION	DATE	BY		

P.E. STAMP BOX — DATE 3/17/14

P.E. STAMP BOX — DATE

Washington State Department of Transportation

I-5
M ST TO PORTLAND AVENUE - HOV

ITS TEMPORARY PLAN

PLAN REF NO ITTP1A

SHEET 1362 OF 1763 SHEETS

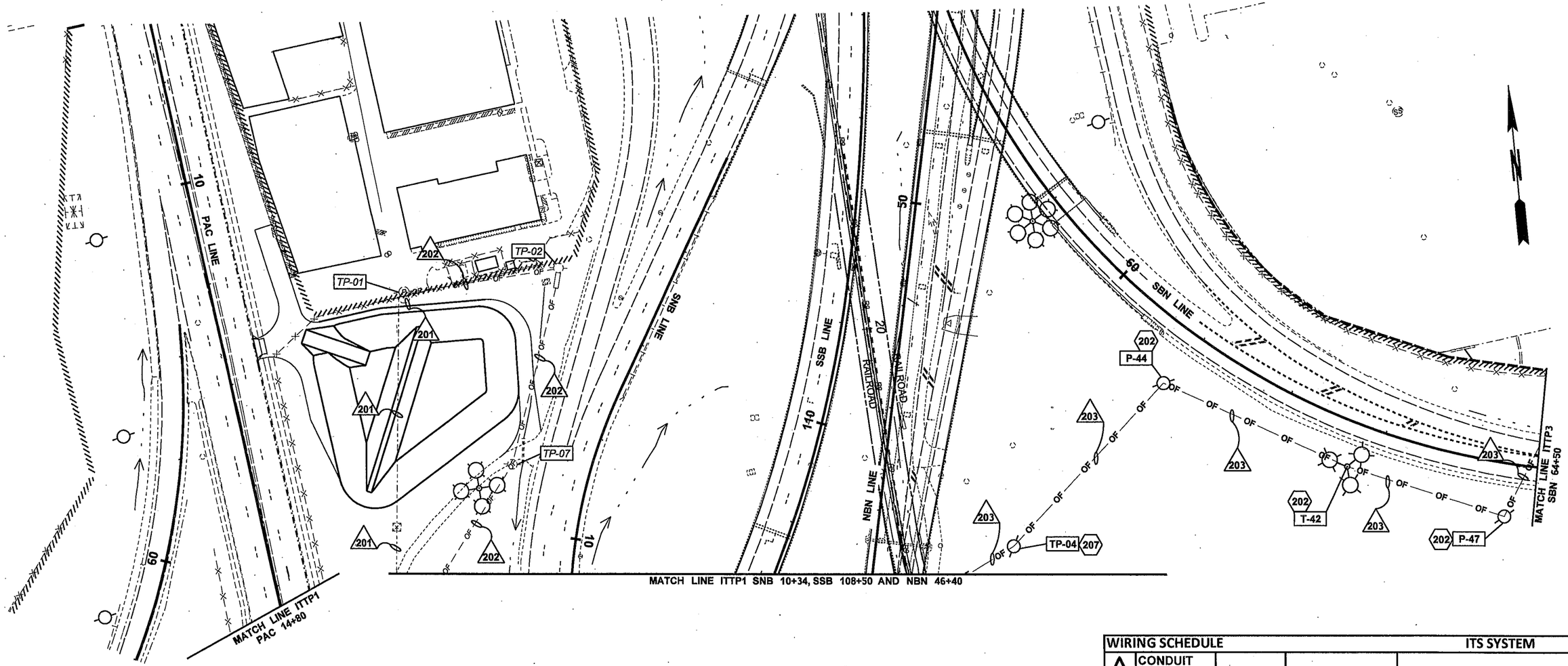

TEMPORARY TIMBER POLE SCHEDULE						
POLE NO.	LINE	STATION / MILEPOST	OFFSET	POLE HEIGHT	SHEET NO.	NOTES
TP-01	PAC	11+48	184'LT	40'	ITTP2	*Ex. TFD POLE*
TP-02	PAC	11+56	327'LT	50'	ITTP2	*Ex. TFD POLE*
TP-04	NBN	46+81	132'RT	50'	ITTP2	NEW
TP-07	*PAC*	13+34	251'RT	50'	ITTP2	*Ex. TFD POLE*

MEASUREMENT IS TO CENTER OF POLE. TFD - TACOMA FIRE DEPARTMENT

CONSTRUCTION NOTES	SHEET ITTP2
NO.	DESCRIPTION
202	INSTALL THIMBLE CLEVIS, EYE NUTS, AND EXTENSION LINKS ON ILLUMINATION TIMBER POLE TO SUPPORT FIBER OPTIC SPAN.
207	INSTALL 50' CLASS 5 TIMBER POLE, THIMBLE CLEVIS, EYE NUTS, AND EXTENSION LINKS TO SUPPORT FIBER OPTIC SPAN.

WIRING SCHEDULE				ITS SYSTEM
NO.	CONDUIT / RACEWAY	MATERIAL*	CONDUCTORS	REMARKS
201	*Ex. 2"*	*PVC80*	*EMPTY*	*ABANDONED CONDUIT*
202	*AERIAL*	*AERIAL*	*Ex. 1-72 SMFO*	*SMFO TACOMA FIRE DEP'T.*
203	AERIAL	AERIAL	1-24 SMFO ADSS	SMFO I-5 DISTRIBUTION NB

ADSS = ALL DIELECTRIC SELF SUPPORTING CABLE

AERIAL FIBER OPTIC CABLE SHALL MAINTAIN A MINIMUM 25 FOOT CLEARANCE ABOVE ALL GROUND.

NOTES:

1. FOR LEGEND AND GENERAL NOTES SEE ITN1.
2. FOR TEMPORARY ILLUMINATION POLE SCHEDULE, SEE TEMPORARY ILLUMINATION PLANS.

0 50 100
SCALE IN FEET

FILE NAME	PW:_XL3497\PS&E Sheets\ITS\P3497_SH_ITTP_02.dgn
TIME	1:05:41 PM
DATE	3/18/2014
PLOTTED BY	LangfoC
DESIGNED BY	J. DIZON
ENTERED BY	J. DIZON
CHECKED BY	C. LANGFORD
PROJ. ENGR.	J. PEREZ
REGIONAL ADM.	K. DAYTON

REVISION | DATE | BY

REGION NO. 10 | STATE WASH | FED.AID PROJ.NO.

JOB NUMBER

CONTRACT NO. | LOCATION NO.

DENNIS RAY CRUMBAUGH — STATE OF WASHINGTON — 38259 — REGISTERED PROFESSIONAL ENGINEER
3/17/14
DATE
P.E. STAMP BOX

DATE
P.E. STAMP BOX

Washington State Department of Transportation

I-5
M ST TO PORTLAND AVENUE - HOV

ITS TEMPORARY PLAN

PLAN REF NO ITTP2

SHEET 1363 OF 1763 SHEETS

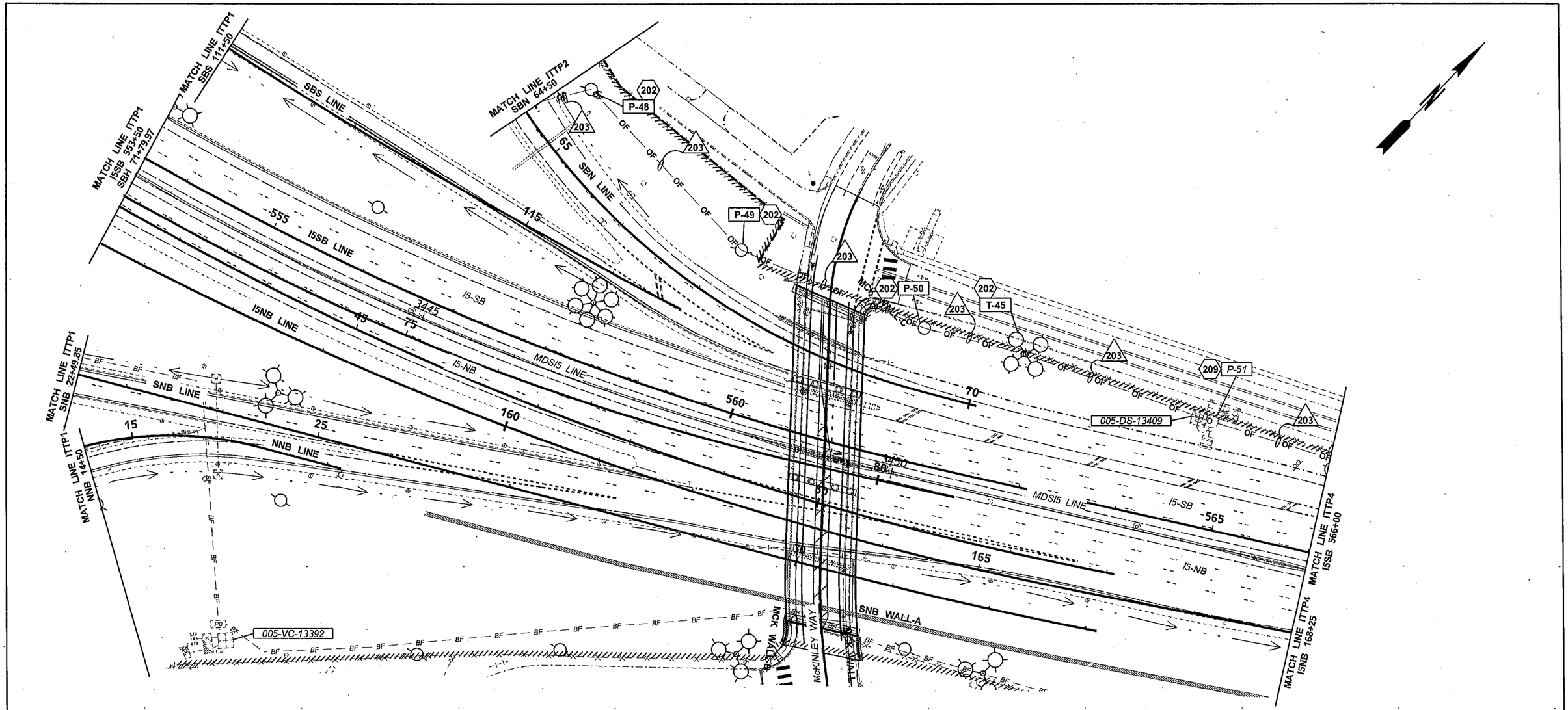

CONSTRUCTION NOTES	SHEET ITTP3
NO.	DESCRIPTION
202	INSTALL THIMBLE CLEVIS, EYE NUTS, AND EXTENSION LINKS ON ILLUMINATION TIMBER POLE TO SUPPORT FIBER OPTIC SPAN.
209	INSTALL THIMBLE CLEVIS, EYE NUTS, AND EXTENSION LINKS ON EXISTING WAVETRONIX TIMBER POLE TO SUPPORT FIBER OPTIC SPAN.

WIRING SCHEDULE				ITS SYSTEM
NO.	CONDUIT / RACEWAY	MATERIAL*	CONDUCTORS	REMARKS
203	AERIAL	AERIAL	1-24 SMFO ADSS	SMFO I-5 DISTRIBUTION NB

ADSS = ALL DIELECTRIC SELF SUPPORTING CABLE

AERIAL FIBER OPTIC CABLE SHALL MAINTAIN A MINIMUM 25 FOOT CLEARANCE ABOVE ALL GROUND.

NOTES:

1. FOR LEGEND AND GENERAL NOTES SEE ITN1.
2. FOR TEMPORARY ILLUMINATION POLE SCHEDULE, SEE TEMPORARY ILLUMINATION PLANS.

0 50 100
SCALE IN FEET

FILE NAME	PW:_XL3497\PS&E Sheets\ITS\P3497_SH_ITTP_03.dgn				REGION NO. 10	STATE WASH	FED.AID PROJ.NO.
TIME	10:33:52 AM				JOB NUMBER		
DATE	3/16/2014						
PLOTTED BY	dizonj						
DESIGNED BY	J. DIZON				CONTRACT NO.		LOCATION NO.
ENTERED BY	J. DIZON						
CHECKED BY	C. LANGFORD						
PROJ. ENGR.	J. PEREZ						
REGIONAL ADM.	K. DAYTON	REVISION	DATE	BY			

DENNIS RAY CRUMLEY, STATE OF WASHINGTON, REGISTERED PROFESSIONAL ENGINEER
3/17/14
DATE
P.E. STAMP BOX

DATE
P.E. STAMP BOX

Washington State
Department of Transportation

I-5
M ST TO PORTLAND AVENUE - HOV

ITS TEMPORARY PLAN

PLAN REF NO
ITTP3

SHEET 1364 OF 1763 SHEETS

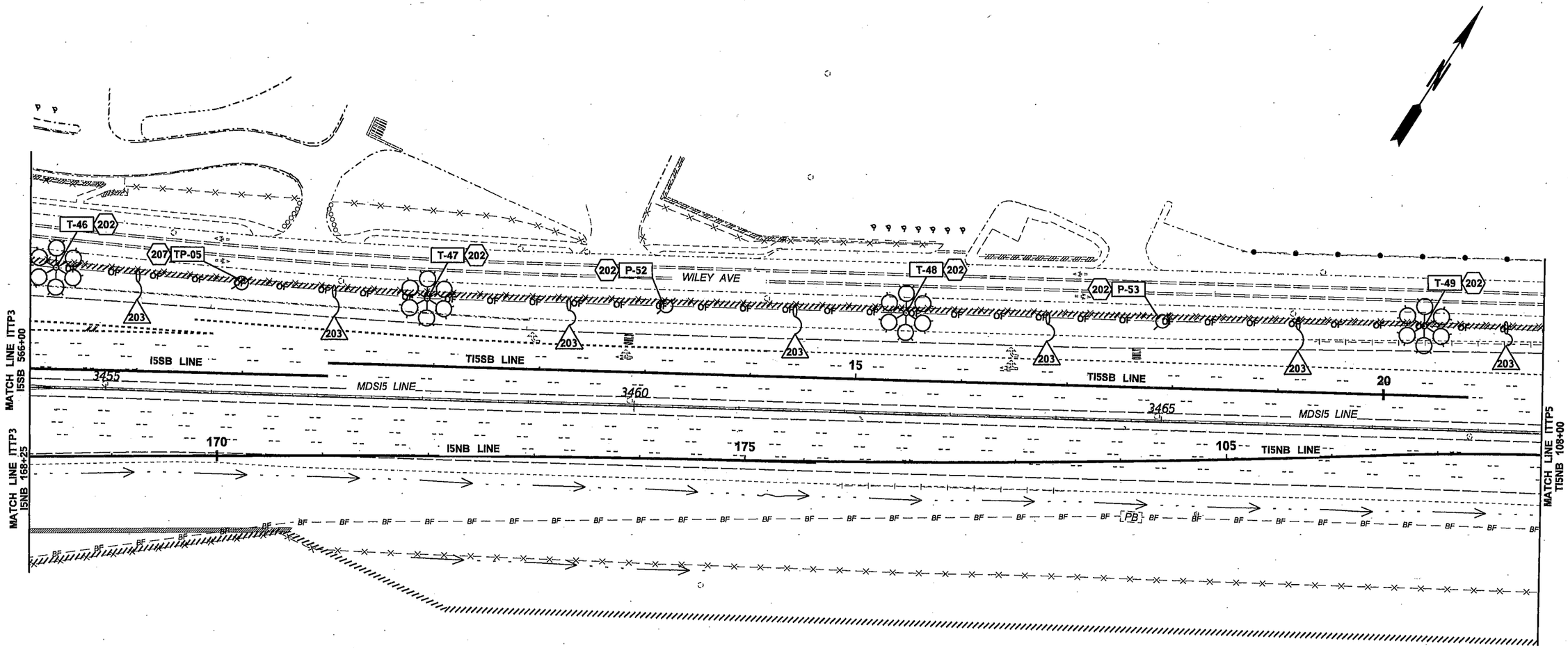

CONSTRUCTION NOTES	SHEET ITTP4
NO.	DESCRIPTION
202	INSTALL THIMBLE CLEVIS, EYE NUTS, AND EXTENSION LINKS ON ILLUMINATION TIMBER POLE TO SUPPORT FIBER OPTIC SPAN.
207	INSTALL 50' CLASS 5 TIMBER POLE, THIMBLE CLEVIS, EYE NUTS, AND EXTENSION LINKS TO SUPPORT FIBER OPTIC SPAN.

WIRING SCHEDULE				ITS SYSTEM
NO.	CONDUIT / RACEWAY	MATERIAL*	CONDUCTORS	REMARKS
203	AERIAL	AERIAL	1-24 SMFO ADSS	SMFO I-5 DISTRIBUTION NB

ADSS = ALL DIELECTRIC SELF SUPPORTING CABLE

AERIAL FIBER OPTIC CABLE SHALL MAINTAIN A MINIMUM 25 FOOT CLEARANCE ABOVE ALL GROUND.

TEMPORARY TIMBER POLE SCHEDULE

POLE NO.	LINE	STATION / MILEPOST	OFFSET	POLE HEIGHT	SHEET NO.	NOTES
TP-05	I5SB	567+98	86'LT	50'	ITTP4	NEW

MEASUREMENT IS TO CENTER OF POLE.

NOTES:

1. FOR LEGEND AND GENERAL NOTES SEE ITN1.
2. FOR TEMPORARY ILLUMINATION POLE SCHEDULE, SEE TEMPORARY ILLUMINATION PLANS.

0 50 100
SCALE IN FEET

FILE NAME	PW:_XL3497\PS&E Sheets\ITS\P3497_SH_ITTP_04.dgn
TIME	1:05:53 PM
DATE	3/18/2014
PLOTTED BY	LangfoC
DESIGNED BY	J. DIZON
ENTERED BY	J. DIZON
CHECKED BY	C. LANGFORD
PROJ. ENGR.	J. PEREZ
REGIONAL ADM.	K. DAYTON

REVISION | DATE | BY

REGION NO. 10 | STATE WASH | FED.AID PROJ.NO.

JOB NUMBER

CONTRACT NO. | LOCATION NO.

DENNIS RAY CRUMLEY, STATE OF WASHINGTON, REGISTERED PROFESSIONAL ENGINEER
3/17/14
DATE
P.E. STAMP BOX

DATE
P.E. STAMP BOX

Washington State Department of Transportation

I-5
M ST TO PORTLAND AVENUE - HOV

ITS TEMPORARY PLAN

PLAN REF NO ITTP4

SHEET 1365 OF 1763 SHEETS

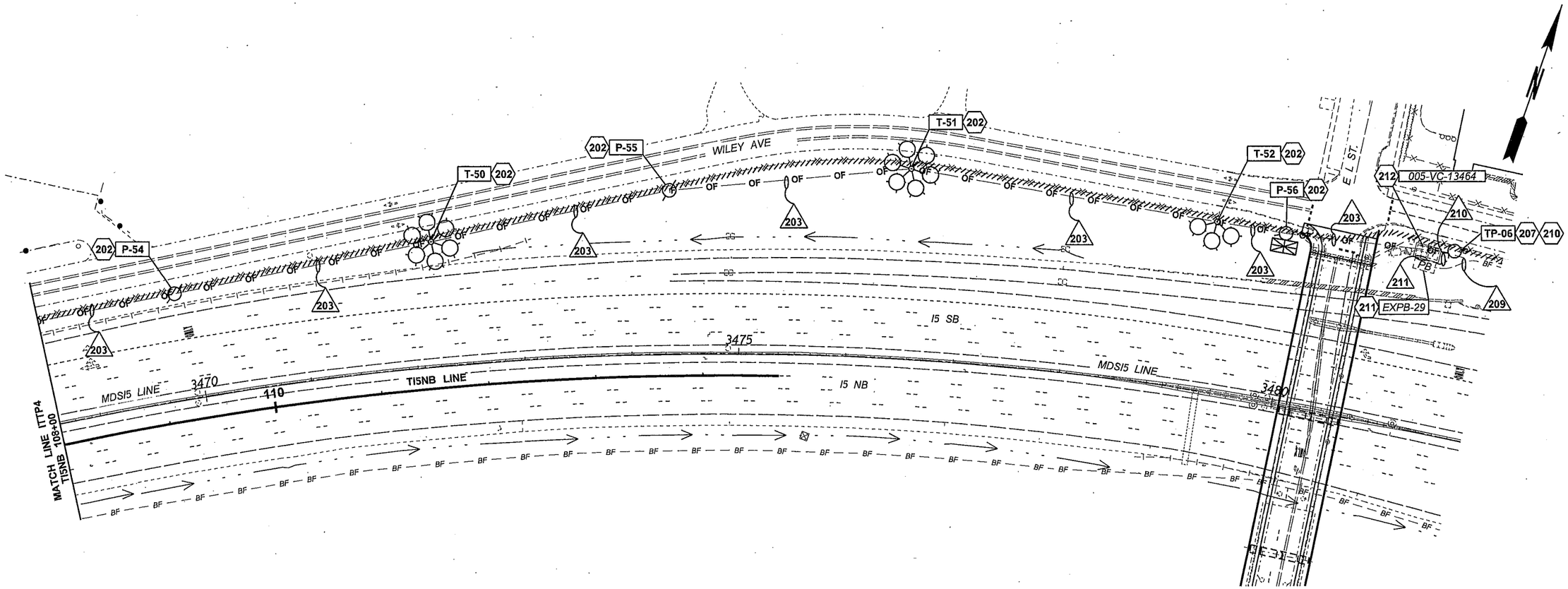

CONSTRUCTION NOTES	SHEET ITTP5
NO.	DESCRIPTION
202	INSTALL THIMBLE CLEVIS, EYE NUTS, AND EXTENSION LINKS ON ILLUMINATION TIMBER POLE TO SUPPORT FIBER OPTIC SPAN.
207	INSTALL 50' CLASS 5 TIMBER POLE, THIMBLE CLEVIS, EYE NUTS, AND EXTENSION LINKS TO SUPPORT FIBER OPTIC SPAN.
210	INSTALL CONDUIT RISER ON TIMBER POLE (TP-06) AND TERMINATE IN EXISTING PULL BOX *(EXPB-29)*.
211	PULL BACK EXISTING 2-12 CT SMFO CABLE INTO THE PULLBOX *(EXPB-29)*. FUSION SPLICE A PRE-TERMINATED CABLE WITH THE NEW 24 CT ADSS SMFO CABLE AND THE EXISTING 2- 12 CT SMFO AS SHOWN ON FIBER DETAIL SHEET ITFO12. TERMINATE CONNECTORS IN PATCH PANEL.
212	INSTALL 144-COUNT PATCH PANEL. TERMINATE THE PRE-TERMINATED FIBER OPTIC CABLE IN PATCH PANEL AS SHOWN ON FIBER OPTIC DETAIL, ITFO12.

WIRING SCHEDULE				ITS SYSTEM
203	AERIAL	AERIAL	1-24 SMFO ADSS	SMFO CABLE I-5 DISTRIBUTION NB
209	*Ex. 2"*	*HDPE80*	*Ex. 2-12 SMFO*	*SMFO CABLE I-5 DISTRIBUTION NB*
210	**2"**	PVC80	1-24 SMFO ADSS	SMFO CABLE I-5 DISTRIBUTION NB
211	*Ex. 2"*	*PVC80*	*Ex. 2-12 SMFO*	*PULL BACK TO PULLBOX (EXPB29)*
			2-24 SMFO	SMFO CABLE (PRE-TERMINATED)

ADSS = ALL DIELECTRIC SELF SUPPORTING CABLE

AERIAL FIBER OPTIC CABLE SHALL MAINTAIN A MINIMUM 25 FOOT CLEARANCE ABOVE ALL GROUND.

TEMPORARY TIMBER POLE SCHEDULE						
POLE NO.	LINE	STATION / MILEPOST	OFFSET	POLE HEIGHT	SHEET NO.	NOTES
TP-06	*MDSI5*	3481+38	172'LT	50'	ITTP5	NEW

MEASUREMENT IS TO CENTER OF POLE.

NOTES:

1. FOR LEGEND AND GENERAL NOTES SEE ITN1.
2. FOR PULLBOX/CABLE VAULT SCHEDULE, SEE ITBX1.
3. FOR TEMPORARY ILLUMINATION POLE SCHEDULE, SEE TEMPORARY ILLUMINATION PLANS.

0 50 100
SCALE IN FEET

FILE NAME	PW:_XL3497\PS&E Sheets\ITS\P3497_SH_ITTP_05.dgn					
TIME	10:34:12 AM					
DATE	3/16/2014					
PLOTTED BY	dizonj					
DESIGNED BY	J. DIZON					
ENTERED BY	J. DIZON					
CHECKED BY	C. LANGFORD					
PROJ. ENGR.	J. PEREZ					
REGIONAL ADM.	K. DAYTON	REVISION	DATE	BY		

REGION NO.	STATE	FED.AID PROJ.NO.
10	WASH	
JOB NUMBER		
CONTRACT NO.		LOCATION NO.

DENNIS RAY CHUMBLEY, STATE OF WASHINGTON, REGISTERED PROFESSIONAL ENGINEER
3/17/14
DATE
P.E. STAMP BOX

DATE
P.E. STAMP BOX

Washington State Department of Transportation

I-5
M ST TO PORTLAND AVENUE - HOV

ITS TEMPORARY PLAN

PLAN REF NO
ITTP5

SHEET 1366 OF 1763 SHEETS

WIRING SCHEDULE				ITS SYSTEM
NO.	CONDUIT / RACEWAY	MATERIAL*	CONDUCTORS	REMARKS
1	Ex. 4" with (4) 1" INNERDUCT	1	Ex. 1-12 SMFO	SMFO CABLE (SR-16 DISTRIBUTION)
		2	Ex. 1-96 SMFO	SMFO CABLE (SR-16 LONG HAUL)
		3	Ex. 1-12 SMFO	SMFO CABLE (I-5 DISTRIBUTION)
		4	Ex. 1-6 SMFO	SMFO CABLE (005-VC-13182)
	Ex. 4" with (4) 1" INNERDUCT	1	Ex. 1-72 SMFO	SMFO CABLE (TACOMA FIRE NORTH)
		2	Ex. 1-72 SMFO	SMFO CABLE (TACOMA FIRE SOUTH)
		3	1-96 SMFO	SMFO CABLE (I-5 LONG HAUL)
		4	EMPTY	FUTURE
2	Ex. 4 - 4" with (4) 1" INNERDUCT	1	Ex. 1-96 SMFO	SMFO CABLE (SR-16 LONG HAUL)
		2	Ex. 1-12 SMFO	SMFO CABLE (SR-16 DISTRIBUTION)
		3	Ex. 1-12 SMFO	SMFO CABLE (I-5 DISTRIBUTION)
		4	1-96 SMFO	SMFO CABLE (I-5 LONG HAUL)
3	Ex. 4" with (4) 1" INNERDUCT	1	Ex. 1-72 SMFO	SMFO CABLE (TACOMA FIRE NORTH)
		2	Ex. 1-96 SMFO	SMFO CABLE (SR-16 LONG HAUL)
		3	Ex. 1-12 SMFO	SMFO CABLE (SR-16 DISTRIBUTION)
		4	Ex. 1-12 SMFO	SMFO CABLE (I-5 DISTRIBUTION)
	Ex. 4" with (4) 1" INNERDUCT	1	1-96 SMFO	SMFO CABLE (I-5 LONG HAUL)
		2	EMPTY	FUTURE
		3	EMPTY	FUTURE
		4	EMPTY	FUTURE

CONSTRUCTION NOTES	SHEET ITAA
NO.	DESCRIPTION
1	TERMINATE THE 96-COUNT PRE-TERMINATED FIBER OPTIC CABLE IN PATCH PANEL AS SHOWN ON FIBER OPTIC DETAIL SHEET ITFO1.
2	FUSION SPLICE A PRE-TERMINATED FIBER OPTIC CABLE TO THE NEW FIBER OPTIC CABLE AS SHOWN ON FIBER OPTIC DETAIL SHEET ITFO1.

WIRING SCHEDULE				ITS SYSTEM
NO.	CONDUIT / RACEWAY	MATERIAL*	CONDUCTORS	REMARKS
4	Ex. 4" RMC with (4) 1" INNERDUCT	1	Ex. 1-72 SMFO	SMFO CABLE (TACOMA FIRE NORTH)
		2	Ex. 1-96 SMFO	SMFO CABLE (SR-16 LONG HAUL)
		3	Ex. 1-12 SMFO	SMFO CABLE (SR-16 DISTRIBUTION)
		4	Ex. 1-12 SMFO	SMFO CABLE (I-5 DISTRIBUTION)
	Ex. 4" RMC with (4) 1" INNERDUCT	1	1-96 SMFO	SMFO CABLE (I-5 LONG HAUL)
		2	EMPTY	FUTURE
		3	EMPTY	FUTURE
		4	EMPTY	FUTURE
5	Ex. 4" with (4) 1" INNERDUCT	1	Ex. 1-96 SMFO	SMFO CABLE (SR-16 LONG HAUL)
		2	Ex. 1-12 SMFO	SMFO CABLE (SR-16 DISTRIBUTION)
		3	Ex. 1-12 SMFO	SMFO CABLE (I-5 DISTRIBUTION)
		4	1-96 SMFO	SMFO CABLE (I-5 LONG HAUL)
	Ex. 4" with (4) 1" INNERDUCT	1	EMPTY	FUTURE
		2	EMPTY	FUTURE
		3	EMPTY	FUTURE
		4	EMPTY	FUTURE

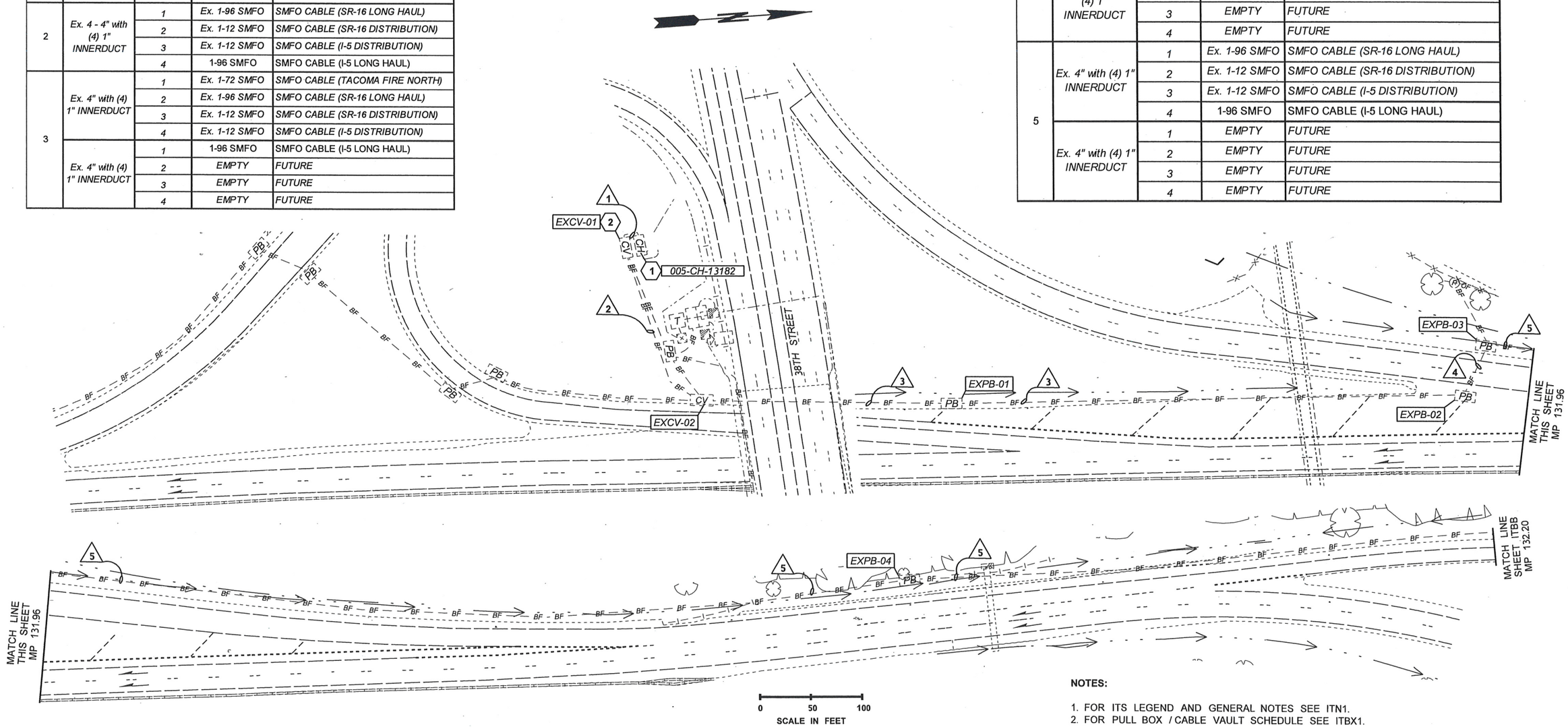

NOTES:

1. FOR ITS LEGEND AND GENERAL NOTES SEE ITN1.
2. FOR PULL BOX / CABLE VAULT SCHEDULE SEE ITBX1.

FILE NAME	PW:_XL3497\PS&E Sheets\ITS\P3497_SH_IT_AA.dgn					
TIME	10:34:21 AM					
DATE	3/16/2014					
PLOTTED BY	dizonj					
DESIGNED BY	A. DORROUGH/J. DIZON					
ENTERED BY	A. DORROUGH/J. DIZON					
CHECKED BY	C. LANGFORD					
PROJ. ENGR.	J. PEREZ					
REGIONAL ADM.	K. DAYTON	REVISION	DATE	BY		

REGION NO.	STATE	FED.AID PROJ.NO.
10	WASH	
JOB NUMBER		
CONTRACT NO.		LOCATION NO.

DENNIS RAY CRUMLEY STATE OF WASHINGTON PROFESSIONAL ENGINEER

3/17/14 DATE

P.E. STAMP BOX

DATE

P.E. STAMP BOX

Washington State Department of Transportation

I-5
M ST TO PORTLAND AVE - HOV

ITS PLAN

PLAN REF NO ITAA

SHEET 1367 OF 1763 SHEETS

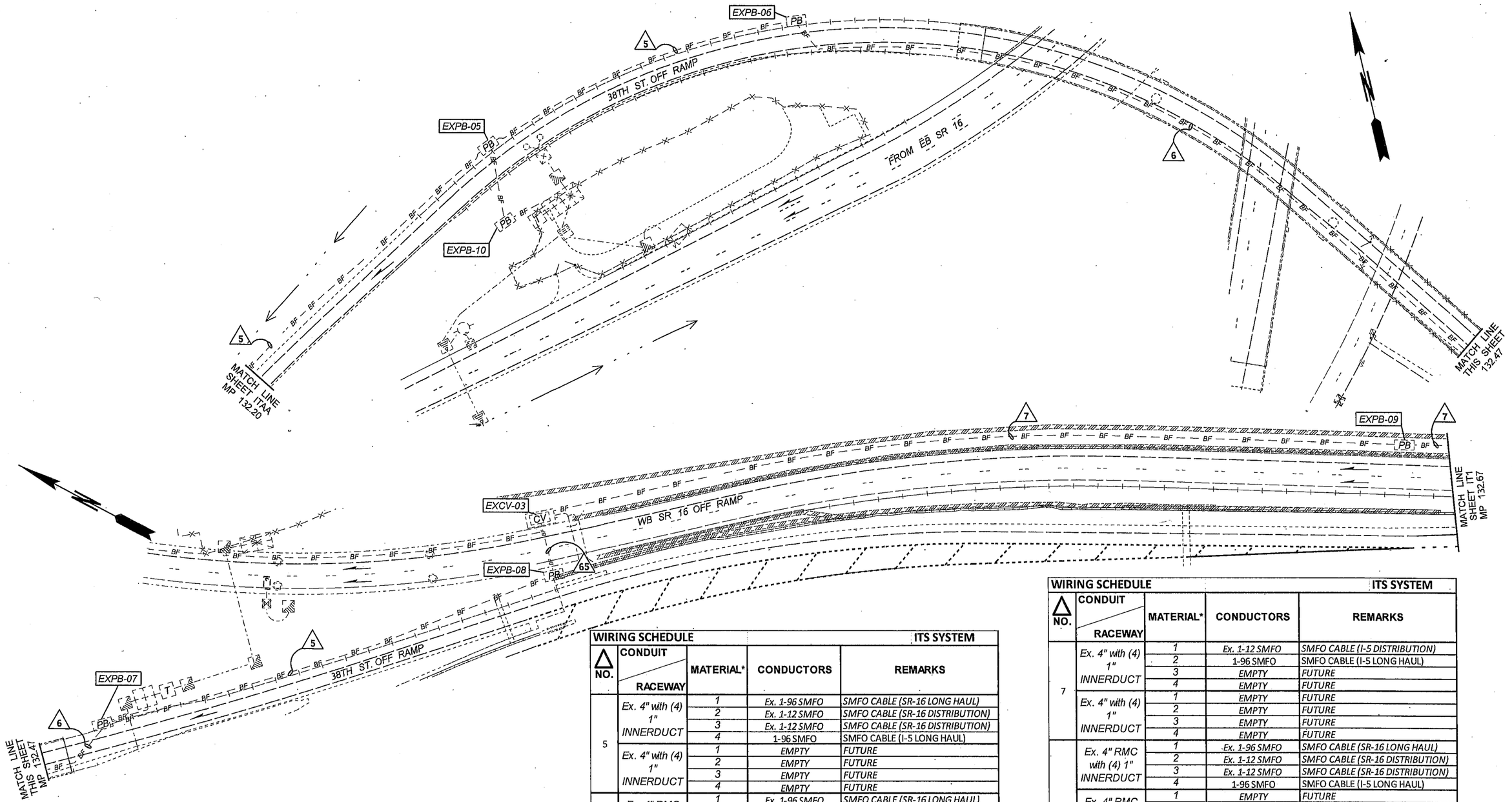

WIRING SCHEDULE — **ITS SYSTEM**

NO.	CONDUIT / RACEWAY	MATERIAL*	CONDUCTORS	REMARKS
5	Ex. 4" with (4) 1" INNERDUCT	1	Ex. 1-96 SMFO	SMFO CABLE (SR-16 LONG HAUL)
		2	Ex. 1-12 SMFO	SMFO CABLE (SR-16 DISTRIBUTION)
		3	Ex. 1-12 SMFO	SMFO CABLE (SR-16 DISTRIBUTION)
		4	1-96 SMFO	SMFO CABLE (I-5 LONG HAUL)
	Ex. 4" with (4) 1" INNERDUCT	1	EMPTY	FUTURE
		2	EMPTY	FUTURE
		3	EMPTY	FUTURE
		4	EMPTY	FUTURE
6	Ex. 4" RMC with (4) 1" INNERDUCT	1	Ex. 1-96 SMFO	SMFO CABLE (SR-16 LONG HAUL)
		2	Ex. 1-12 SMFO	SMFO CABLE (SR-16 DISTRIBUTION)
		3	Ex. 1-12 SMFO	SMFO CABLE (SR-16 DISTRIBUTION)
		4	1-96 SMFO	SMFO CABLE (I-5 LONG HAUL)
	Ex. 4" RMC with (4) 1" INNERDUCT	1	EMPTY	FUTURE
		2	EMPTY	FUTURE
		3	EMPTY	FUTURE
		4	EMPTY	FUTURE

WIRING SCHEDULE — **ITS SYSTEM**

NO.	CONDUIT / RACEWAY	MATERIAL*	CONDUCTORS	REMARKS
7	Ex. 4" with (4) 1" INNERDUCT	1	Ex. 1-12 SMFO	SMFO CABLE (I-5 DISTRIBUTION)
		2	1-96 SMFO	SMFO CABLE (I-5 LONG HAUL)
		3	EMPTY	FUTURE
		4	EMPTY	FUTURE
	Ex. 4" with (4) 1" INNERDUCT	1	EMPTY	FUTURE
		2	EMPTY	FUTURE
		3	EMPTY	FUTURE
		4	EMPTY	FUTURE
65	Ex. 4" RMC with (4) 1" INNERDUCT	1	Ex. 1-96 SMFO	SMFO CABLE (SR-16 LONG HAUL)
		2	Ex. 1-12 SMFO	SMFO CABLE (SR-16 DISTRIBUTION)
		3	Ex. 1-12 SMFO	SMFO CABLE (SR-16 DISTRIBUTION)
		4	1-96 SMFO	SMFO CABLE (I-5 LONG HAUL)
	Ex. 4" RMC with (4) 1" INNERDUCT	1	EMPTY	FUTURE
		2	EMPTY	FUTURE
		3	EMPTY	FUTURE
		4	EMPTY	FUTURE
	Ex. 4" RMC with (4) 1" INNERDUCT	1	EMPTY	FUTURE
		2	EMPTY	FUTURE
		3	EMPTY	FUTURE
		4	EMPTY	FUTURE

NOTES:

1. FOR ITS LEGEND AND GENERAL NOTES SEE ITN1.
2. FOR PULL BOX / CABLE SCHEDULE SEE ITBX1.

0 50 100
SCALE IN FEET

FILE NAME	PW:_XL3497\PS&E Sheets\ITS\P3497_SH_IT_BB.dgn
TIME	10:34:33 AM
DATE	3/16/2014
PLOTTED BY	dizonj
DESIGNED BY	A. DORROUGH/J.DIZON
ENTERED BY	A. DORROUGH/J. DIZON
CHECKED BY	C. LANGFORD
PROJ. ENGR.	J. PEREZ
REGIONAL ADM.	K. DAYTON

REVISION | DATE | BY

REGION NO. 10 | STATE WASH | FED.AID PROJ.NO.

JOB NUMBER

CONTRACT NO. | LOCATION NO.

DENNIS RAY CRUMBLEY, STATE OF WASHINGTON, REGISTERED PROFESSIONAL ENGINEER

3/17/14 DATE

P.E. STAMP BOX

DATE

P.E. STAMP BOX

Washington State Department of Transportation

I-5
M ST TO PORTLAND AVE - HOV

ITS PLAN

PLAN REF NO ITBB

SHEET 1368 OF 1763 SHEETS

CONSTRUCTION NOTES	SHEET IT1
NO.	DESCRIPTION
7	FUSION SPLICE THE EXISTING FIBER OPTIC CABLE TO NEW FIBER OPTIC CABLE AS SHOWN ON FIBER OPTIC DETAIL SHEET ITFO1.
47	RE- SPLICE THE EXISTING FIBER OPTIC CABLES AS SHOWN ON FIBER OPTIC DETAIL SHEET ITFO1.
59	REMOVE EXISTING FIBER OPTIC CABLE.

WIRING SCHEDULE				ITS SYSTEM
NO.	CONDUIT / RACEWAY	MATERIAL*	CONDUCTORS	REMARKS
7	Ex. 4" with (4) 1" INNERDUCT	1	Ex. 1-12 SMFO	SMFO CABLE (I-5 DISTRIBUTION)
		2	1-96 SMFO	SMFO CABLE (I-5 LONG HAUL)
		3	EMPTY	FUTURE
		4	EMPTY	FUTURE
	Ex. 4" with (4) 1" INNERDUCT	1	EMPTY	FUTURE
		2	EMPTY	FUTURE
		3	EMPTY	FUTURE
		4	EMPTY	FUTURE

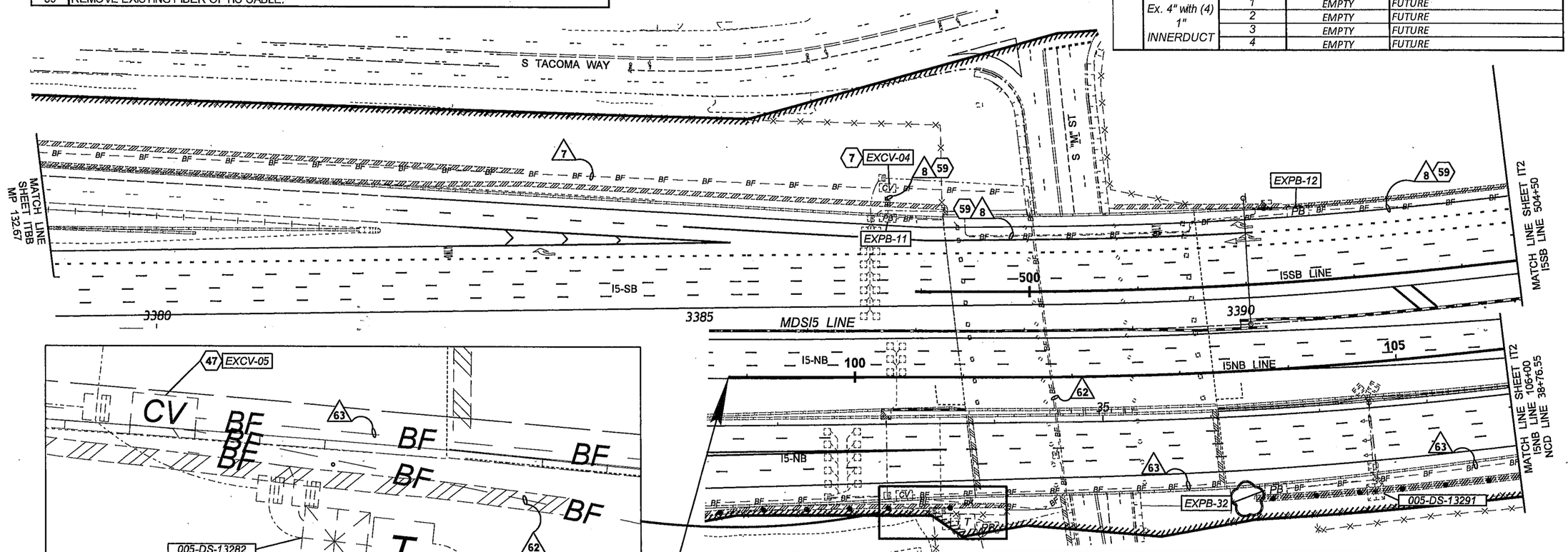

WIRING SCHEDULE				ITS SYSTEM
NO.	CONDUIT / RACEWAY	MATERIAL*	CONDUCTORS	REMARKS
8	Ex. 4" with (4) 1" INNERDUCT	1	Ex. 1-12 SMFO	SMFO CABLE (TO BE REMOVED)
		2	1-96 SMFO	SMFO CABLE (I-5 LONG HAUL)
		3	1-12 SMFO	SMFO CABLE (NEW I-5 DISTRIBUTION)
		4	EMPTY	FUTURE
	Ex. 4" with (4) 1" INNERDUCT	1	EMPTY	FUTURE
		2	EMPTY	FUTURE
		3	EMPTY	FUTURE
		4	EMPTY	FUTURE
62	Ex. 2"	HDPE80		
			1-12 SMFO	SMFO CABLE (I-5 DISTRIBUTION NB)
			1-12 SMFO	SMFO CABLE (I-5 DISTRIBUTION SB)
63	Ex. 2"	HDPE80		
			1-12 SMFO	SMFO CABLE (I-5 DISTRIBUTION NB)
			1-12 SMFO	SMFO CABLE (I-5 DISTRIBUTION SB)

BEGIN PROJECT
MP 132.84
I5NB 98+83.067

0 50 100
SCALE IN FEET

NOTES:

1. FOR ITS LEGEND AND GENERAL NOTES SEE ITN1
2. FOR PULL BOX / CABLE VAULT SCHEDULE SEE ITBX1.

FILE NAME	PW:_XL3497\PS&E Sheets\ITS\ADD1_P3497_SH_IT_01.dgn
TIME	9:15:39 AM
DATE	4/25/2014
PLOTTED BY	LangfoC
DESIGNED BY	A. DORROUGH/J. DIZON
ENTERED BY	A. DORROUGH/J. DIZON
CHECKED BY	C. LANGFORD
PROJ. ENGR.	J. PEREZ
REGIONAL ADM.	K. DAYTON

REVISION	DATE	BY
AD1 REVISE WN #62 & #63 DELETED CN #47	04/25/2014	CL

REGION NO.	STATE	FED.AID PROJ.NO.
10	WASH	
JOB NUMBER		
CONTRACT NO.		LOCATION NO.

DENNIS RAY CRUMBLEY STATE OF WASHINGTON 38375 REGISTERED PROFESSIONAL ENGINEER
4/25/14
DATE
P.E. STAMP BOX

DATE
P.E. STAMP BOX

Washington State Department of Transportation

I-5
M ST TO PORTLAND AVENUE - HOV

ITS PLAN

PLAN REF NO IT1

SHEET 1369 OF 1763 SHEETS

CONSTRUCTION NOTES — SHEET IT2

NO.	DESCRIPTION
4	FUSION SPLICE A PRE-TERMINATED FIBER OPTIC CABLE TO EXISTING FIBER OPTIC CABLE AS SHOWN ON FIBER OPTIC DETAIL SHEET ITFO1.
5	REMOVE EXISTING PULL BOX. EXTEND CONDUIT AND RE-ROUTE FIBER OPTIC CABLE TO NEW PULL BOX PB-01. FILL AND COMPACT VOIDS IN ACCORDANCE WITH STANDARD SPECIFICATION SECTION 2-09.3(1)E.
6	SEE BOX DETAIL SHEET, ITBX1 FOR PLACEMENT.
48	INSTALL 24 CT. PATCH PANEL AND ASSOCIATED EQUIPMENT AS SHOWN IN EQUIPMENT SCHEDULE, ITCB1.
59	REMOVE EXISTING FIBER OPTIC CABLE. EXISTING FIBER OPTIC CABLE INACTIVE.
60	REMOVE EXISTING CABLE, AND 4" PVC CONDUITS. FILL AND COMPACT VOIDS IN ACCORDANCE WITH STANDARD SPECIFICATIONS 2-09.3(1)E. EXISTING FIBER OPTIC CABLE INACTIVE.

WIRING SCHEDULE — ITS SYSTEM

NO.	CONDUIT / RACEWAY	MATERIAL*	CONDUCTORS	REMARKS
8	Ex. 4" with (4) 1" INNERDUCT	1	Ex. 1-12 SMFO	SMFO CABLE (TO BE REMOVED)
		2	1-96 SMFO	SMFO CABLE (I-5 LONG HAUL)
		3	1-12 SMFO	SMFO CABLE (I-5 NEW DISTRIBUTION)
		4	EMPTY	FUTURE
	Ex. 4" with (4) 1" INNERDUCT	1	EMPTY	FUTURE
		2	EMPTY	FUTURE
		3	EMPTY	FUTURE
		4	EMPTY	FUTURE
9	1 - 4" with (4) 1" INNERDUCT	1	1-12 SMFO	SMFO CABLE (I-5 DISTRIBUTION)
		2	1-96 SMFO	SMFO CABLE (I-5 LONG HAUL)
		3	EMPTY	FUTURE
		4	EMPTY	FUTURE
	1 - 4" with (4) 1" INNERDUCT	1	EMPTY	FUTURE
		2	EMPTY	FUTURE
		3	EMPTY	FUTURE
		4	EMPTY	FUTURE

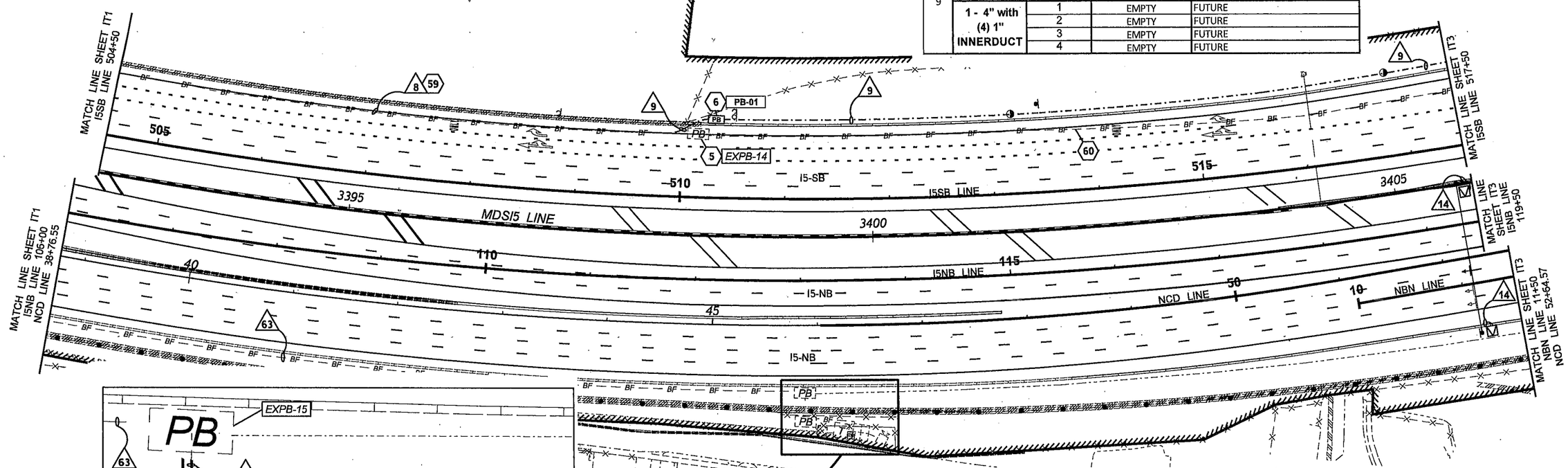

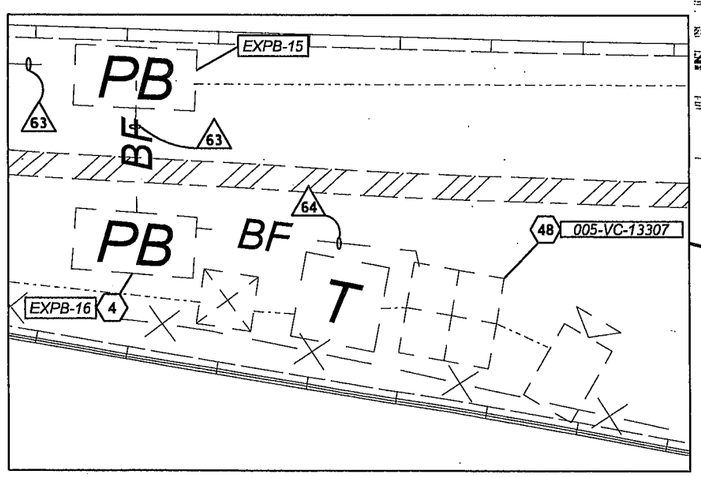

WIRING SCHEDULE — ITS SYSTEM

NO.	CONDUIT / RACEWAY	MATERIAL*	CONDUCTORS	REMARKS
14	1.5"	RMC	EMPTY	FUTURE
	1.5"	RMC	EMPTY	FUTURE
63	Ex. 2"	HDPE80	Ex. 1-12 SMFO	SMFO CABLE (I-5 DISTRIBUTION NB)
			Ex. 1-12 SMFO	SMFO CABLE (I-5 DISTRIBUTION SB)
64	Ex. 2"	RMC	1-24 SMFO	SMFO CABLE (PRE-TERMINATED)
			Ex. 2-12 SMFO	SMFO CABLE (I-5 DIST. TO BE REMOVED)

NOTES:

1. FOR ITS LEGEND AND GENERAL NOTES SEE ITN1.
2. FOR PULL BOX / CABLE VAULT SCHEDULE SEE ITBX1.
3. FOR CONDUIT PLACEMENT AROUND EXISTING TRAFFIC AND ROADWAY DEVICES, SEE ITCD3.

0 50 100
SCALE IN FEET

FILE NAME	PW:_XL3497\PS&E Sheets\ITS\ADD1_P3497_SH_IT_02.dgn
TIME	9:16:20 AM
DATE	4/25/2014
PLOTTED BY	LangfoC
DESIGNED BY	A. DORROUGH/J.DIZON
ENTERED BY	A. DORROUGH/J. DIZON
CHECKED BY	C. LANGFORD
PROJ. ENGR.	J. PEREZ
REGIONAL ADM.	K. DAYTON

REVISION	DATE	BY
AD1 REVISE WIRE NOTE #63	04/25/2014	CL

REGION NO. 10 | STATE WASH | FED.AID PROJ.NO.
JOB NUMBER
CONTRACT NO. | LOCATION NO.

DENNIS RAY CRUMBAUGH, STATE OF WASHINGTON, 38760, REGISTERED PROFESSIONAL ENGINEER
4/25/14 DATE
P.E. STAMP BOX

DATE
P.E. STAMP BOX

Washington State Department of Transportation

I-5
M ST TO PORTLAND AVENUE - HOV

ITS PLAN

PLAN REF NO IT2
SHEET 1370 OF 1763 SHEETS

NOTES:

1. FOR ITS LEGEND AND GENERAL NOTES SEE ITN1.
2. FOR PULL BOX / CABLE VAULT SCHEDULE SEE ITBX1.
3. FOR CONDUIT PLACEMENT AROUND EXISTING TRAFFIC AND ROADWAY DEVICES, SEE ITCD3.

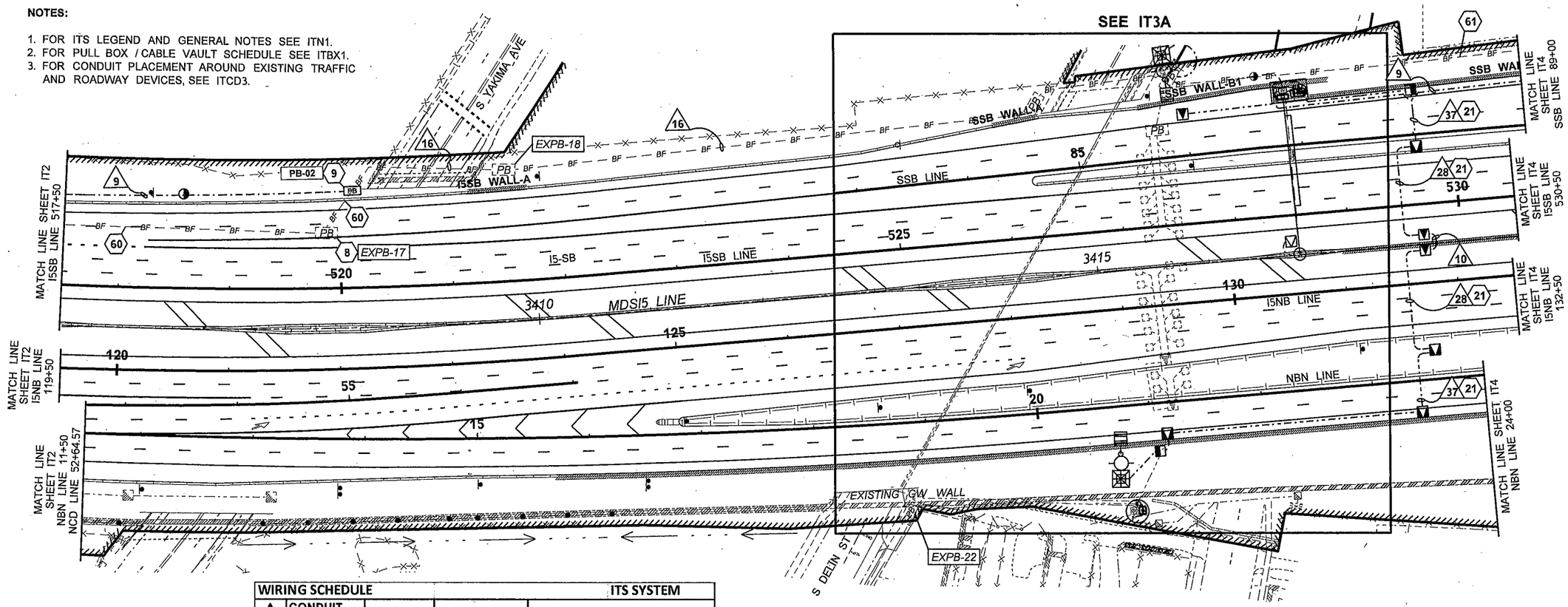

WIRING SCHEDULE				ITS SYSTEM
NO.	CONDUIT / RACEWAY	MATERIAL*	CONDUCTORS	REMARKS
9	1 - 4" with (4) 1" INNERDUCT	1	1-12 SMFO	SMFO CABLE (I-5 DISTRIBUTION)
		2	1-96 SMFO	SMFO CABLE (I-5 LONG HAUL)
		3	EMPTY	FUTURE
		4	EMPTY	FUTURE
	1 - 4" with (4) 1" INNERDUCT	1	EMPTY	FUTURE
		2	EMPTY	FUTURE
		3	EMPTY	FUTURE
		4	EMPTY	FUTURE
10	2"	RMC	EMPTY	FUTURE
	2"	RMC	EMPTY	FUTURE
16	*Ex.4" with (4) 1" INNERDUCT*	*1*	*Ex. 1-12 SMFO*	*SMFO CABLE (TO BE REMOVED)*
		2	1-12 SMFO	SMFO CABLE (I-5 DISTRIBUTION)
		3	1-96 SMFO	SMFO CABLE (I-5 LONG HAUL)
		4	*EMPTY*	*FUTURE*
	Ex. 4" with (4) 1" INNERDUCT	*1*	*EMPTY*	*FUTURE*
		2	*EMPTY*	*FUTURE*
		3	*EMPTY*	*FUTURE*
		4	*EMPTY*	*FUTURE*
28	2"	RMC	EMPTY	FUTURE
	2"	RMC	EMPTY	FUTURE
	2"	RMC	EMPTY	FUTURE
37	2"	RMC	EMPTY	FUTURE
	3"	RMC	EMPTY	FUTURE
	2"	RMC	EMPTY	FUTURE

CONSTRUCTION NOTES	SHEET IT3
NO.	DESCRIPTION
8	REMOVE EXISTING PULL BOX AND CONDUITS. FILL AND COMPACT VOIDS IN ACCORDANCE WITH STANDARD SPECIFICATIONS 2-09.3(1)E. SEE SPECIAL PROVISIONS FOR LIQUIDATED DAMAGES.
9	INTERCEPT EXISTING CONDUITS AND INSTALL PULL BOX AS SHOWN ON DETAIL SHEET ITBX1.
21	INSTALL CONDUITS PRIOR TO PLACEMENT OF NEW ROADWAY.
60	REMOVE EXISTING CABLE, AND 4" PVC CONDUITS. FILL AND COMPACT VOIDS IN ACCORDANCE WITH STANDARD SPECIFICATIONS 2-09.3(1)E. EXISTING FIBER OPTIC CABLE INACTIVE.
61	REMOVE EXISTING CABLE AND ABANDON CONDUITS BELOW GRADE. EXISTING FIBER OPTIC CABLE INACTIVE.

0 50 100
SCALE IN FEET

FILE NAME	PW:_XL3497\PS&E Sheets\ITS\P3497_SH_IT_03.dgn
TIME	10:35:08 AM
DATE	3/16/2014
PLOTTED BY	dizonj
DESIGNED BY	A. DORROUGH/J. DIZON
ENTERED BY	A. DORROUGH/J. DIZON
CHECKED BY	C. LANGFORD
PROJ. ENGR.	J. PEREZ
REGIONAL ADM.	K. DAYTON

REVISION | DATE | BY

REGION NO. 10 | STATE WASH | FED.AID PROJ.NO.

JOB NUMBER

CONTRACT NO. | LOCATION NO.

DENNIS RAY CRUMBER, STATE OF WASHINGTON, REGISTERED PROFESSIONAL ENGINEER
3/17/14
DATE
P.E. STAMP BOX

DATE
P.E. STAMP BOX

Washington State Department of Transportation

I-5
M ST TO PORTLAND AVENUE - HOV

ITS PLAN

PLAN REF NO IT3

SHEET 1371 OF 1763 SHEETS

NOTES:

1. FOR ITS LEGEND AND GENERAL NOTES SEE ITN1.
2. FOR PULL BOX / CABLE VAULT SCHEDULE SEE ITBX1.
3. FOR CONDUIT PLACEMENT AROUND EXISTING TRAFFIC AND ROADWAY DEVICES, SEE ITCD3.

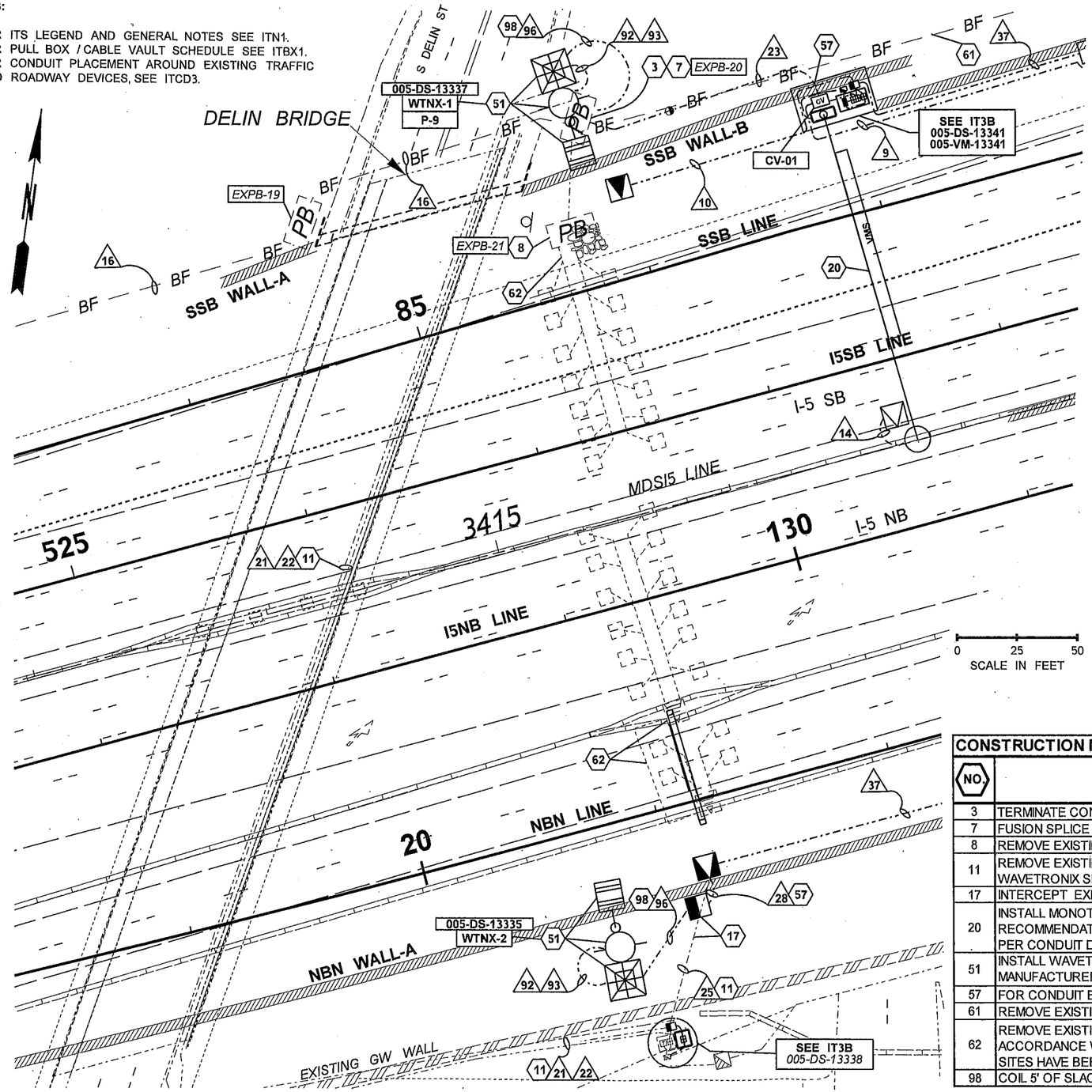

WIRING SCHEDULE				ITS SYSTEM
△ NO.	CONDUIT / RACEWAY	MATERIAL*	CONDUCTORS	REMARKS
9	1 - 4" with (4) 1" INNERDUCT	1	1-12 SMFO	SMFO CABLE (I-5 DISTRIBUTION)
		2	1-96 SMFO	SMFO CABLE (I-5 LONG HAUL)
		3	EMPTY	FUTURE
		4	EMPTY	FUTURE
	1 - 4" with (4) 1" INNERDUCT	1	EMPTY	FUTURE
		2	EMPTY	FUTURE
		3	EMPTY	FUTURE
		4	EMPTY	FUTURE
10	2"	RMC	EMPTY	FUTURE
	2"	RMC	EMPTY	FUTURE
14	1.5"	RMC	EMPTY	FUTURE
	1.5"	RMC	EMPTY	FUTURE
16	*Ex. 2 - 4" with (4) 1" INNERDUCT*	*1*	*Ex. 1-12 SMFO*	*SMFO CABLE (TO BE REMOVED)*
		2	1-12 SMFO	SMFO CABLE (I-5 DISTRIBUTION)
		3	1-96 SMFO	SMFO CABLE (I-5 LONG HAUL)
		4	*EMPTY*	*FUTURE*
21	*Ex. 2"*	*RMC*	*Ex. 1-12 SMFO*	*SMFO CABLE (I-5 DISTRIBUTION SB)*
			Ex. 1-12 SMFO	*SMFO CABLE (I-5 DISTRIBUTION NB)*
22	*Ex. 2"*	*HDPE80*	*Ex. 6 -2CS*	*LOOP LEAD-IN CABLE(TO BE REMOVED)*
	Ex. 2"	*HDPE80*	*Ex. 6 -2CS*	*LOOP LEAD-IN CABLE(TO BE REMOVED)*
	Ex. 2"	*HDPE80*	*EMPTY*	*FUTURE*
23	4" RMC with (4) 1" INNERDUCT	1	1-12 SMFO	SMFO CABLE (I-5 DISTRIBUTION)
		2	1-96 SMFO	SMFO CABLE (I-5 LONG HAUL)
		3	MULTI CONDUCTOR	WAVETRONIX HOMERUN CABLE(TERMINATE BY OTHERS)
		4	EMPTY	FUTURE
	4" RMC with (4) 1" INNERDUCT	1	EMPTY	FUTURE
		2	EMPTY	FUTURE
		3	EMPTY	FUTURE
		4	EMPTY	FUTURE
25	*Ex. 2"*	*HDPE80*	MULTI CONDUCTOR	WAVETRONIX HOMERUN CABLE(TERMINATE BY OTHERS)
			Ex. 6 -2CS	*LOOP LEAD-IN CABLE(TO BE REMOVED)*
	Ex. 2"	*HDPE80*	*Ex. 6 -2CS*	*LOOP LEAD-IN CABLE(TO BE REMOVED)*
	Ex. 2"	*HDPE80*	*Ex. 4 -2CS*	*LOOP LEAD-IN CABLE(TO BE REMOVED)*
28	2"	RMC	EMPTY	FUTURE
	2"	RMC	EMPTY	FUTURE
	2"	RMC	EMPTY	FUTURE
37	2"	RMC	EMPTY	FUTURE
	3"	RMC	EMPTY	FUTURE
	2"	RMC	EMPTY	FUTURE
92	1"	PVC80	MULTI CONDUCTOR	WAVETRONIX CABLE
93	1"	PVC80	2- #10 AWG	480V AC POWER
96	2"	PVC80	MULTI CONDUCTOR	WAVETRONIX HOMERUN CABLE(TERMINATE BY OTHERS)

CONSTRUCTION NOTES	SHEET IT3A
NO.	DESCRIPTION
3	TERMINATE CONDUITS IN EXISTING PULL BOX. SEE WIRE NOTES.
7	FUSION SPLICE THE EXISTING FIBER OPTIC CABLE TO NEW FIBER OPTIC CABLE AS SHOWN ON FIBER OPTIC DETAIL SHEET ITFO1.
8	REMOVE EXISTING PULL BOX AND CONDUITS. FILL AND COMPACT VOIDS IN ACCORDANCE WITH STANDARD SPECIFICATIONS 2-09.3(1)E.
11	REMOVE EXISTING 2C/SH LOOP LEAD-IN CABLES FOR CABINET *005-DS-1333*.REMOVE ONLY AFTER BOTH 005-DS-13335 AND 005-DS-13337 WAVETRONIX SITES HAVE BEEN INSTALLED AND OPERATIONAL.
17	INTERCEPT EXISTING CONDUITS AND INSTALL TYPE 8 JUNCTION BOX.
20	INSTALL MONOTUBE SIGN BRIDGE IN ACCORDANCE WITH BRIDGE PLANS. INSTALL VMS IN ACCORDANCE WITH MANUFACTURERS RECOMMENDATION. INSTALL MAINTENANCE WALKWAY IN ACCORDANCE WITH G-95.20-01. INSTALL (VMS) CABLES IN FLEXIBLE CONDUIT PER CONDUIT DETAIL SHEET AND MONOTUBE MEDIAN BARRIER INTERCONNECT ON CONDUIT DETAIL SHEET ITCD2.
51	INSTALL WAVETRONIX SMART SENSOR, CABLE, CABINET AND ASSOCIATED EQUIPMENT ON TIMBER POLE IN ACCORDANCE WITH MANUFACTURER'S RECOMMENDATIONS, AND DATA STATION DETAIL SHEET ITDS1. FOR POWER SOURCE SEE ILLUMINATION PLAN, TIL3.
57	FOR CONDUIT BLOCK OUT, SEE WALL PLAN.
61	REMOVE EXISTING CABLE AND ABANDON CONDUITS BELOW GRADE. EXISTING FIBER OPTIC CABLE INACTIVE.
62	REMOVE EXISTING LEAD-IN CABLES, JUNCTION BOXES, AND ABANDON CONDUITS BELOW GRADE. FILL AND COMPACT VOIDS IN ACCORDANCE WITH STANDARD SPECIFICATIONS 2-09.3(1)E. REMOVE ONLY AFTER BOTH 005-DS-13335 AND 005-DS-13337 WAVETRONIX SITES HAVE BEEN INSTALLED AND OPERATIONAL.
98	COIL 5' OF SLACK OF CABLE IN EACH CABINET TO BE TERMINATED BY OTHERS.

FILE NAME	PW:_XL3497\PS&E Sheets\ITS\P3497_SH_IT_03A.dgn				REGION NO. 10	STATE WASH	FED.AID PROJ.NO.
TIME	10:35:20 AM				JOB NUMBER		
DATE	3/16/2014						
PLOTTED BY	dizonj						
DESIGNED BY	A. DORROUGH/J. DIZON				CONTRACT NO.		LOCATION NO.
ENTERED BY	A. DORROUGH/J. DIZON						
CHECKED BY	C. LANGFORD						
PROJ. ENGR.	J. PEREZ						
REGIONAL ADM.	K. DAYTON	REVISION	DATE	BY			

DENNIS RAY CRUMLEY — STATE OF WASHINGTON — REGISTERED PROFESSIONAL ENGINEER
3/17/14
DATE
P.E. STAMP BOX

DATE
P.E. STAMP BOX

Washington State Department of Transportation

I-5
M ST TO PORTLAND AVENUE - HOV

ITS PLAN

PLAN REF NO IT3A

SHEET 1372 OF 1763 SHEETS

CONSTRUCTION NOTES — SHEET IT3A

NO.	DESCRIPTION
2	FUSION SPLICE A PRE-TERMINATED FIBER OPTIC CABLE TO THE NEW FIBER OPTIC CABLE AS SHOWN ON FIBER OPTIC DETAIL SHEET ITFO1.
6	SEE BOX DETAIL SHEET, ITBX1 FOR PLACEMENT.
10	INSTALL THREE CABINET FOUNDATION FOR SERVICE CABINET, TYPE 334D, AND TYPE 332 CABINETS IN ACCORDANCE WITH STANDARD PLAN J-10.10, AND CABINET FOUNDATION DETAIL SHEET, ITCF1.
11	REMOVE EXISTING 2C/SH LOOP LEAD-IN CABLES FOR CABINET *005-DS-13338* ONLY AFTER BOTH 005-DS-13335 AND 005-DS-13337 WAVETRONIX SITES HAVE BEEN INSTALLED AND OPERATIONAL.
12	INSTALL (16TWPR/SH) DATA CABLE IN EXISTING DATA STATION CABINET (*005-DS-13338*). DATA CABLE SHALL BE TERMINATED BY OTHERS. REMOVE EXISTING 2C/SH LOOP LEAD-IN CABLES AFTER THE BOTH WAVETRONIX SITES HAVE BEEN INSTALLED AND OPERATIONAL.
14	REPLACE EXISTING TYPE 2 JUNCTION BOX WITH NEW TYPE 8 JUNCTION BOX AND TERMINATE CONDUITS AS SHOWN ON WIRE NOTES.
15	INSTALL SINGLE CABINET FOUNDATION IN ACCORDANCE WITH STANDARD PLAN CABINET FOUNDATION DETAIL J-10.10.
16	INSTALL TYPE 334 ITS CABINET FOR PTR IN ACCORDANCE WITH STANDARD PLAN J-10.10.
20	INSTALL MONOTUBE SIGN BRIDGE IN ACCORDANCE WITH BRIDGE PLANS. INSTALL VMS IN ACCORDANCE WITH MANUFACTURERS RECOMMENDATION. INSTALL MAINTENANCE WALKWAY IN ACCORDANCE WITH G-95.20-01. INSTALL (VMS) CABLES IN FLEXIBLE CONDUIT PER CONDUIT DETAIL SHEET, ITCD2 AND MONOTUBE MEDIAN BARRIER INTERCONNECT ON CONDUIT DETAIL SHEET ITCD2.
23	TERMINATE POWER WIRES IN TRANSFORMER BREAKER PANEL.
25	INSTALL TYPE 334D ITS CABINET AND ASSOCIATED EQUIPMENT IN ACCORDANCE WITH STANDARD PLAN J-10.10 AND CABINET DETAIL SHEET ITCB1. TERMINATE NEW PRE-TERMINATED CABLE IN PATCH PANEL AS SHOWN ON FIBER OPTIC DETAIL SHEET ITFO1.
31	SEE ILLUMINATION PLAN FOR SERVICE INSTALLATIONS AND CIRCUIT BREAKER DESIGNATION.
46	RE-SPLICE FIBER OPTIC CABLE AS SHOWN ON FIBER DETAIL SHEET ITFO1.
48	INSTALL 24 CT. PATCH PANEL AND ASSOCIATED EQUIPMENT AS SHOWN IN EQUIPMENT SCHEDULE, ITCB1.
57	FOR CONDUIT BLOCK OUT, SEE WALL PLAN.

FROM IT3A
005-DS-13341 / 005-VM-13341

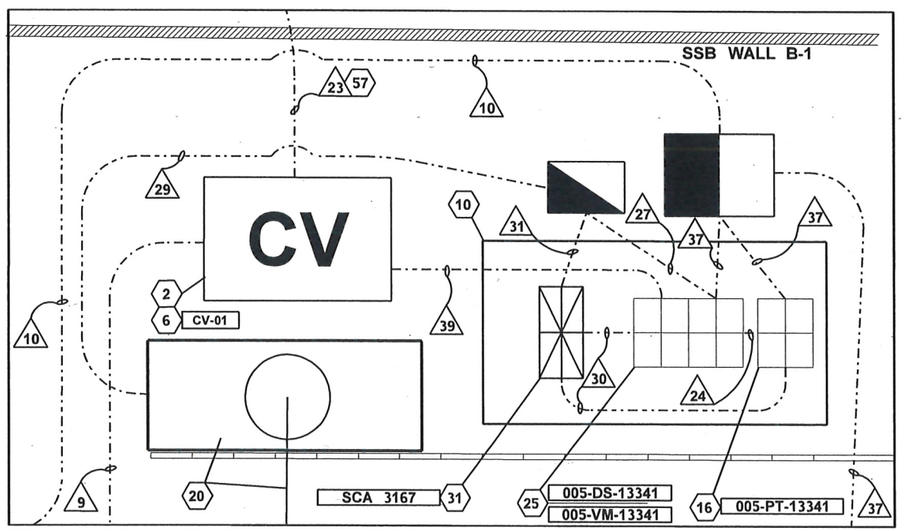

WIRING SCHEDULE — ITS SYSTEM

NO.	CONDUIT / RACEWAY	MATERIAL*	CONDUCTORS	REMARKS
9	1 - 4" with (4) 1" INNERDUCT	1	1-12 SMFO	SMFO CABLE (I-5 DISTRIBUTION)
		2	1-96 SMFO	SMFO CABLE (I-5 LONG HAUL)
		3	EMPTY	FUTURE
		4	EMPTY	FUTURE
	1 - 4" with (4) 1" INNERDUCT	1	EMPTY	FUTURE
		2	EMPTY	FUTURE
		3	EMPTY	FUTURE
		4	EMPTY	FUTURE
10	2"	RMC	EMPTY	FUTURE
	2"	RMC	EMPTY	FUTURE
21	*Ex. 2"*	*RMC*	*Ex. 1-12 SMFO*	*SMFO CABLE (I-5 DISTRIBUTION SB)*
			Ex. 1-12 SMFO	*SMFO CABLE (I-5 DISTRIBUTION NB)*
22	*Ex. 2"*	*HDPE80*	*Ex. 6-2CS*	*LOOP LEAD-IN CABLE(TO BE REMOVED)*
	Ex. 2"	*HDPE80*	*Ex. 6-2CS*	*LOOP LEAD-IN CABLE(TO BE REMOVED)*
	Ex. 2"	*HDPE80*	*EMPTY*	*FUTURE*
23	4" RMC with (4) 1" INNERDUCT	1	1-12 SMFO	SMFO CABLE (I-5 DISTRIBUTION)
		2	1-96 SMFO	SMFO CABLE (I-5 LONG HAUL)
		3	MULTICONDUCTOR	WAVETRONIX HOMERUN CABLE (TERMINATE BY OTHERS)
		4	EMPTY	FUTURE
	4" RMC with (4) 1" INNERDUCT	1	EMPTY	FUTURE
		2	EMPTY	FUTURE
		3	EMPTY	FUTURE
		4	EMPTY	FUTURE
24	2"	RMC	1-16TWPR	DATA CABLE
25	*Ex. 2"*	*HDPE80*	MULTICONDUCTOR	WAVETRONIX HOMERUN CABLE (TERMINATE BY OTHERS)
			Ex. 6-2CS	*LOOP LEAD-IN CABLE(TO BE REMOVED)*
	Ex. 2"	*HDPE80*	*Ex. 6-2CS*	*LOOP LEAD-IN CABLE(TO BE REMOVED)*
	Ex. 2"	*HDPE80*	*Ex. 4-2CS*	*LOOP LEAD-IN CABLE(TO BE REMOVED)*
27	2"	RMC	EMPTY	FUTURE
	2"	RMC	VMS CABLE	VMS NETWORK CABLE
28	2"	RMC	1-16TWPR	DATA CABLE (TERMINATE BY OTHERS)
	2"	RMC	EMPTY	FUTURE
	2"	RMC	EMPTY	FUTURE
29	1.5"	RMC	3-#8 AWG	VMS POWER CABLE 240V AC
	1.5"	RMC	VMS CABLE	VMS NETWORK CABLE
	1.5"	RMC	EMPTY	FUTURE
30	2"	RMC	2-#8 AWG	120V AC POWER
31	2"	RMC	3-#8 AWG	240V AC POWER
37	2"	RMC	EMPTY	FUTURE
	3"	RMC	EMPTY	FUTURE
	2"	RMC	EMPTY	FUTURE
39	2"	RMC	1-24 SMFO	PRE-TERMINATED CABLE (I-5 DIST.)
			MULTICONDUCTOR	WAVETRONIX HOMERUN CABLE (TERMINATE BY OTHERS)
	2"	RMC	EMPTY	FUTURE
50	*Ex. 2"*	*RMC*	*Ex. 2- #4 AWG*	*480V AC POWER*
			2- #8 AWG	120V AC POWER
51	*Ex. 2"*	*RMC*	1-16TWPR	DATA CABLE (TERMINATE BY OTHERS)
			MULTICONDUCTOR	WAVETRONIX HOMERUN CABLE (TERMINATE BY OTHERS)

FROM IT3A
005-DS-13338

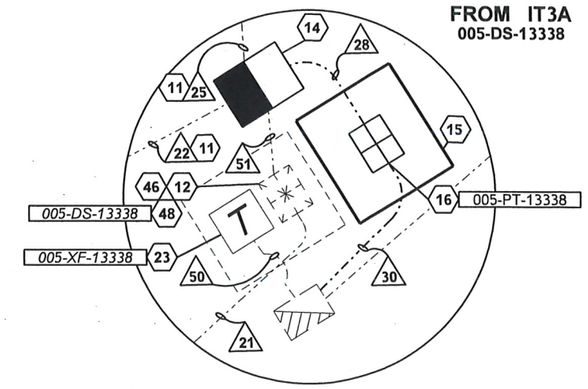

005-XF-13338

BREAKER SCHEDULE TRANSFORMER CABINET				SOURCE: SCA 0600 CIRCUIT: C INPUT VOLTAGE:	
CIRCUIT	DESCRIPTION / LABEL	BREAKER RATING POLES	BREAKER RATING AMPS	VOLTAGE	LOAD (kVA)
--	MAIN	2P	50A	---	--
1	*005-DS-13338*	*1P*	*30A*	*120*	*2.3*
2	005-PT-13338	1P	30A	120	2.1
BUSSWORK SHALL BE RATED AT 200 AMP MINIMUM				PEAK:	5.4
				CONTINUOUS:	4.4

NOTES:

1. FOR ITS LEGEND AND GENERAL NOTES SEE ITN1.
2. FOR PULL BOX / CABLE VAULT SCHEDULE SEE ITBX1.

NOT TO SCALE

FILE NAME	PW:_XL3497\PS&E Sheets\ITS\P3497_SH_IT_03B2.dgn
TIME	10:35:25 AM
DATE	3/16/2014
PLOTTED BY	dizonj
DESIGNED BY	A. DORROUGH/J. DIZON
ENTERED BY	A. DORROUGH/J. DIZON
CHECKED BY	C. LANGFORD
PROJ. ENGR.	J. PEREZ
REGIONAL ADM.	K. DAYTON

REVISION | DATE | BY

REGION NO. 10 | STATE WASH | FED.AID PROJ.NO.
JOB NUMBER
CONTRACT NO. | LOCATION NO.

DENNIS RAY CRUMBER — STATE OF WASHINGTON — REGISTERED PROFESSIONAL ENGINEER
3/17/14 DATE
P.E. STAMP BOX

DATE
P.E. STAMP BOX

Washington State Department of Transportation

I-5
M ST TO PORTLAND AVE - HOV

ITS PLAN

PLAN REF NO IT3B

SHEET 1373 OF 1763 SHEETS

CONSTRUCTION NOTES	SHEET IT4
NO.	DESCRIPTION
3	TERMINATE CONDUITS IN EXISTING PULL BOX / CABLE VAULT. SEE WIRE NOTES.
6	SEE BOX DETAIL SHEET, ITBX1 FOR PLACEMENT.
21	INSTALL CONDUITS PRIOR TO PLACEMENT OF NEW ROADWAY.
61	REMOVE EXISTING CABLE AND ABANDON CONDUITS BELOW GRADE. EXISTING FIBER OPTIC CABLE INACTIVE.
68	REMOVE JUNCTION BOX, PULL BOX, CABLE VAULT, AND CONCRETE FOUNDATION. FILL AND COMPACT VOIDS IN ACCORDANCE WITH STANDARD SPECIFICATIONS 2-09.3(1)E.

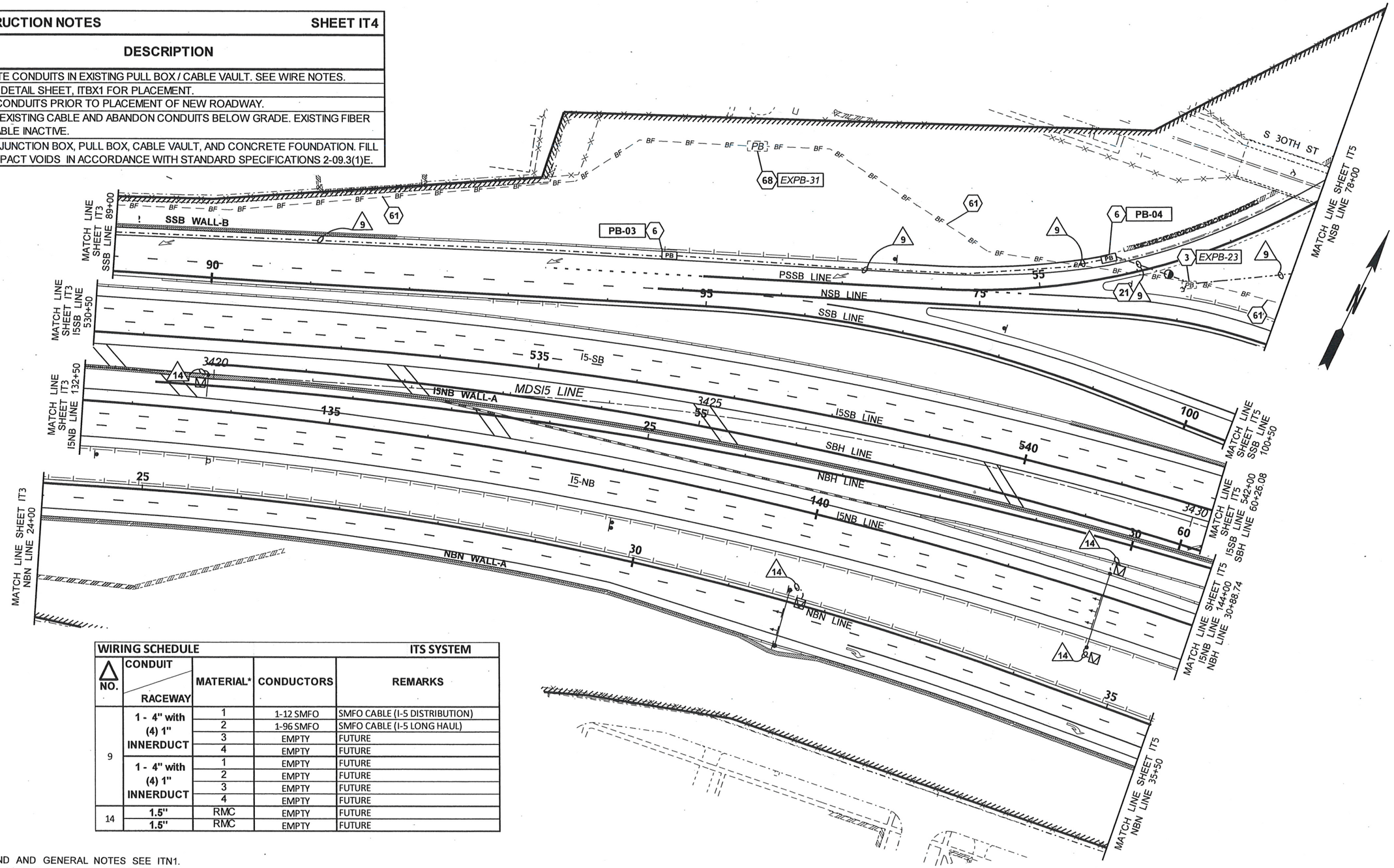

WIRING SCHEDULE				ITS SYSTEM
NO.	CONDUIT / RACEWAY	MATERIAL*	CONDUCTORS	REMARKS
9	1 - 4" with (4) 1" INNERDUCT	1	1-12 SMFO	SMFO CABLE (I-5 DISTRIBUTION)
		2	1-96 SMFO	SMFO CABLE (I-5 LONG HAUL)
		3	EMPTY	FUTURE
		4	EMPTY	FUTURE
	1 - 4" with (4) 1" INNERDUCT	1	EMPTY	FUTURE
		2	EMPTY	FUTURE
		3	EMPTY	FUTURE
		4	EMPTY	FUTURE
14	1.5"	RMC	EMPTY	FUTURE
	1.5"	RMC	EMPTY	FUTURE

NOTES:

1. FOR ITS LEGEND AND GENERAL NOTES SEE ITN1.
2. FOR PULL BOX / CABLE VAULT SCHEDULE SEE ITBX1.
3. FOR CONDUIT PLACEMENT AROUND EXISTING TRAFFIC AND ROADWAY DEVICES, SEE ITCD3.

FILE NAME	PW:_XL3497\PS&E Sheets\ITS\P3497_SH_IT_04.dgn
TIME	10:35:35 AM
DATE	3/16/2014
PLOTTED BY	dizonj
DESIGNED BY	A. DORROUGH/J. DIZON
ENTERED BY	A. DORROUGH/J. DIZON
CHECKED BY	C. LANGFORD
PROJ. ENGR.	J. PEREZ
REGIONAL ADM.	K. DAYTON

REVISION | DATE | BY

REGION NO.	STATE	FED.AID PROJ.NO.
10	WASH	
JOB NUMBER		
CONTRACT NO.		LOCATION NO.

DEANE RAY CRUMBLE, STATE OF WASHINGTON, REGISTERED PROFESSIONAL ENGINEER

3/17/14 DATE

P.E. STAMP BOX

DATE

P.E. STAMP BOX

Washington State Department of Transportation

I-5
M ST TO PORTLAND AVENUE - HOV

ITS PLAN

PLAN REF NO IT4

SHEET 1374 OF 1763 SHEETS

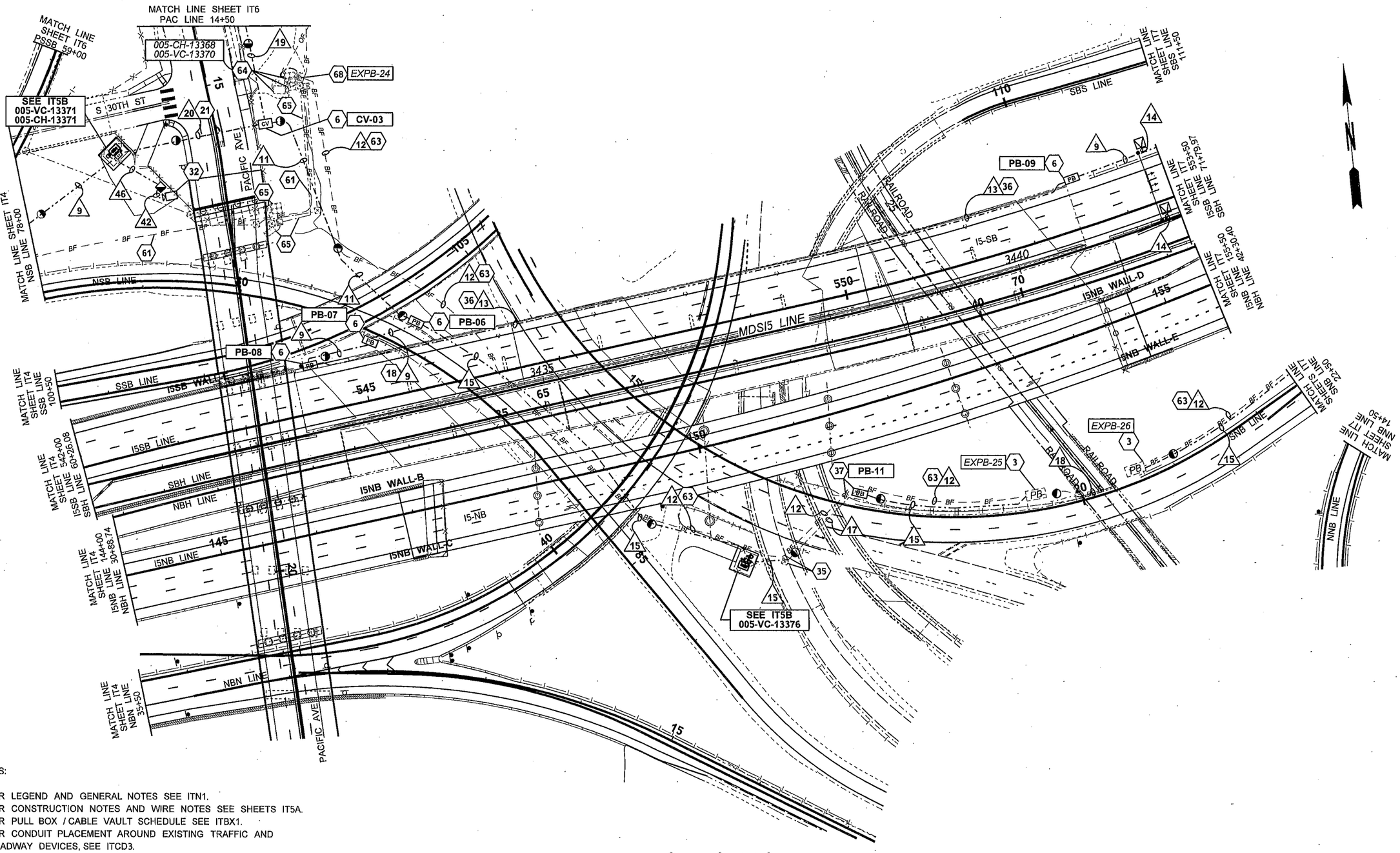

NOTES:

1. FOR LEGEND AND GENERAL NOTES SEE ITN1.
2. FOR CONSTRUCTION NOTES AND WIRE NOTES SEE SHEETS IT5A.
3. FOR PULL BOX / CABLE VAULT SCHEDULE SEE ITBX1.
4. FOR CONDUIT PLACEMENT AROUND EXISTING TRAFFIC AND ROADWAY DEVICES, SEE ITCD3.

FILE NAME	PW:_XL3497\PS&E Sheets\ITS\P3497_SH_IT_05.dgn				REGION NO. 10	STATE WASH	FED.AID PROJ.NO.
TIME	10:35:44 AM				JOB NUMBER		
DATE	3/16/2014						
PLOTTED BY	dizonj						
DESIGNED BY	A. DORROUGH/J. DIZON				CONTRACT NO.		LOCATION NO.
ENTERED BY	A. DORROUGH/J. DIZON						
CHECKED BY	C. LANGFORD						
PROJ. ENGR.	J. PEREZ						
REGIONAL ADM.	K. DAYTON	REVISION	DATE	BY			

DEANE RAY CRUMBEE, STATE OF WASHINGTON, REGISTERED PROFESSIONAL ENGINEER

3/17/14
DATE
P.E. STAMP BOX

DATE
P.E. STAMP BOX

Washington State Department of Transportation

I-5
M ST TO PORTLAND AVE - HOV

ITS PLAN

PLAN REF NO IT5

SHEET 1375 OF 1763 SHEETS

CONSTRUCTION NOTES — SHEET IT5

NO.	DESCRIPTION
3	TERMINATE CONDUITS IN EXISTING PULL BOX / CABLE VAULT. SEE WIRE NOTES.
6	SEE BOX DETAIL SHEET, ITBX1 FOR PLACEMENT.
18	INSTALL CONDUIT UNDER ROADWAY USING APPROVED DIRECTIONAL BORING METHODS.
21	INSTALL CONDUITS PRIOR TO PLACEMENT OF NEW ROADWAY OR DIRECTIONAL BORE UNDER ROADWAY.
32	INSTALL CAMERA WITH PAN AND TILT UNIT, CABLE, 50-FT CAMERA POLE, FOUNDATION, AND ASSOCIATED EQUIPMENT IN ACCORDANCE WITH SPECIAL PROVISIONS, STANDARD PLAN J-29.10, J-29.15, AND VIDEO CAMERA DETAIL, ITVC1.
35	REMOVE TYPE 1 JUNCTION BOX. INTERCEPT EXISTING TWO CONDUITS (EMPTY AND WITH FIBER OPTIC CABLE) AND EXTEND TO NEW PULL BOX.
36	ATTACH CONDUIT ON BRIDGE STRUCTURE AS PER STANDARD PLAN J-60.13. SEE CONDUIT MOUNTING DETAIL SHEET ITCD1.
37	REPLACE EXISTING TYPE 1 JUCNTION BOX WITH NEW PULL BOX. TERMINATE TWO EXISTING CONDUITS (EMPTY AND WITH FIBER OPTIC CABLE) IN THE NEW PULL BOX. FOR PULL BOX PLACEMENT AND SCHEDULE, SEE BOX DETAIL SHEET ITBX1.
61	REMOVE EXISTING FIBER OPTIC CABLE AND ABANDON CONDUITS BELOW GRADE. EXISTING FIBER OPTIC CABLE INACTIVE.
63	REMOVE EXISTING FIBER OPTIC CABLE AND ABANDON CONDUITS BELOW GRADE. REMOVE ONLY AFTER THE TEMPORARY FIBER OPTIC CABLE HAS BEEN INSTALLED AND OPERATIONAL.
64	REMOVE EXISTING COMMUNICATION HUB CABINET, TRANSFORMER, FOUNDATION, CAMERA, MICROWAVE, AND TIMBER POLE. THE NEW COMMUNICATION HUB CABINET (005-CH-13371 / 005-VC-13371), CAMERA CABINETS (005-VC-13376 & 005-VC-13402), NEW VIDEO CAMERAS, AND FIBER OPTIC CONNECTION SHALL BE INSTALLED, AND OPERATIONAL PRIOR TO REMOVAL. DELIVER REMOVED DEVICES AND EQUIPMENT TO OLYMPIC REGION SIGNAL SHOP.
65	REMOVE CAMERA CABLE, POLE, CABINETS, AND ABANDON FOUNDATIONS, CONDUITS BELOW GRADE. DELIVER REMOVED DEVICES AND EQUIPMENT TO OLYMPIC REGION SIGNAL SHOP.
68	REMOVE JUNCTION BOX, PULL BOX, CABLE VAULT, AND CONCRETE FOUNDATION. FILL AND COMPACT VOIDS IN ACCORDANCE WITH STANDARD SPECIFICATIONS 2-09.3(1)E.

WIRING SCHEDULE — ITS SYSTEM

NO.	CONDUIT / RACEWAY	MATERIAL*	CONDUCTORS	REMARKS
9	1 - 4" with (4) 1" INNERDUCT	1	1-12 SMFO	SMFO CABLE (I-5 DISTRIBUTION SB)
		2	1-96 SMFO	SMFO CABLE (I-5 LONG HAUL SB)
		3	EMPTY	FUTURE
		4	EMPTY	FUTURE
	1 - 4" with (4) 1" INNERDUCT	1	EMPTY	FUTURE
		2	EMPTY	FUTURE
		3	EMPTY	FUTURE
		4	EMPTY	FUTURE
11	1 - 4" with (4) 1" INNERDUCT	1	1-12 SMFO	SMFO CABLE (I-5 DISTRIBUTION SB)
		2	1-96 SMFO	SMFO CABLE (I-5 LONG HAUL SB)
		3	1-12 SMFO	SMFO CABLE (I-5 DISTRIBUTION NB)
		4	1-48 SMFO	SMFO CABLE (I-5 LONG HAUL NB)
	1 - 4" with (4) 1" INNERDUCT	1	EMPTY	FUTURE
		2	EMPTY	FUTURE
		3	EMPTY	FUTURE
		4	EMPTY	FUTURE
12	*Ex. 2"*	*HDPE80*	*Ex. 1-12 SMFO*	*SMFO CABLE (TO BE REMOVED)*
			Ex. 1-48 SMFO	*SMFO CABLE (TO BE REMOVED)*
13	1 - 4" RMC with (4) 1" INNERDUCT	1	1-12 SMFO	SMFO CABLE (I-5 DISTRIBUTION SB)
		2	1-96 SMFO	SMFO CABLE (I-5 LONG HAUL SB)
		3	EMPTY	FUTURE
		4	EMPTY	FUTURE
	1 - 4" RMC with (4) 1" INNERDUCT	1	EMPTY	FUTURE
		2	EMPTY	FUTURE
		3	EMPTY	FUTURE
		4	EMPTY	FUTURE
14	1.5"	RMC	EMPTY	FUTURE
	1.5"	RMC	EMPTY	FUTURE
15	2"	HDPE80	1-12 SMFO	SMFO CABLE (I-5 DISTRIBUTION NB)
			1-48 SMFO	SMFO CABLE (I-5 LONG HAUL NB)
	2"	HDPE80	EMPTY	FUTURE
17	*Ex. 2"*	*HDPE80*	1- 12 SMFO	SMFO CABLE (I-5 DISTRIBUTION NB)
			1-48 SMFO	SMFO CABLE (I-5 LONG HAUL NB)
18	*Ex. 2"*	*RMC*	1- 12 SMFO	SMFO CABLE (I-5 DISTRIBUTION NB)
			1-48 SMFO	SMFO CABLE (I-5 LONG HAUL NB)
			Ex. 1- 12 SMFO	*SMFO CABLE (TO BE REMOVED)*
			Ex. 1- 48 SMFO	*SMFO CABLE (TO BE REMOVED)*
19	2"	HDPE80	1- 72 SMFO	SMFO CABLE (TACOMA FIRE DEP'T.)
20	1 - 4" RMC with (4) 1" INNERDUCT	1	1-12 SMFO	SMFO CABLE (I-5 DISTRIBUTION SB)
		2	1-12 SMFO	SMFO CABLE (I-5 DISTRIBUTION NB)
		3	1-96 SMFO	SMFO CABLE (I-5 LONG HAUL SB)
		4	1-48 SMFO	SMFO CABLE (I-5 LONG HAUL NB)
	1 - 4" RMC with (4) 1" INNERDUCT	1	1-72 SMFO	SMFO CABLE (TACOMA FIRE DEP'T)
		2	EMPTY	FUTURE
		3	EMPTY	FUTURE
		4	EMPTY	FUTURE
	2"	RMC	EMPTY	FUTURE
42	2"	RMC	MULTI CONDUCTOR	CAMERA CABLE
	2"	RMC	EMPTY	FUTURE
46	2"	PVC80	MULTI CONDUCTOR	CAMERA CABLE
	2"	PVC80	EMPTY	FUTURE

FILE NAME	PW:_XL3497\PS&E Sheets\ITS\P3497_SH_IT_05A.dgn
TIME	1:05:57 PM
DATE	3/18/2014
PLOTTED BY	LangfoC
DESIGNED BY	A. DORROUGH/J. DIZON
ENTERED BY	A. DORROUGH/J. DIZON
CHECKED BY	C. LANGFORD
PROJ. ENGR.	J. PEREZ
REGIONAL ADM.	K. DAYTON

REVISION | DATE | BY

REGION NO. 10 | STATE WASH | FED.AID PROJ.NO.

JOB NUMBER

CONTRACT NO. | LOCATION NO.

DENNIS RAY CRUMBER — STATE OF WASHINGTON — REGISTERED PROFESSIONAL ENGINEER

3/17/14 DATE

P.E. STAMP BOX

DATE

P.E. STAMP BOX

Washington State Department of Transportation

I-5
M ST TO PORTLAND AVE - HOV

ITS PLAN

PLAN REF NO IT5A

SHEET 1376 OF 1763 SHEETS

FROM IT5
005-CH-13371 / 005-VC-13371

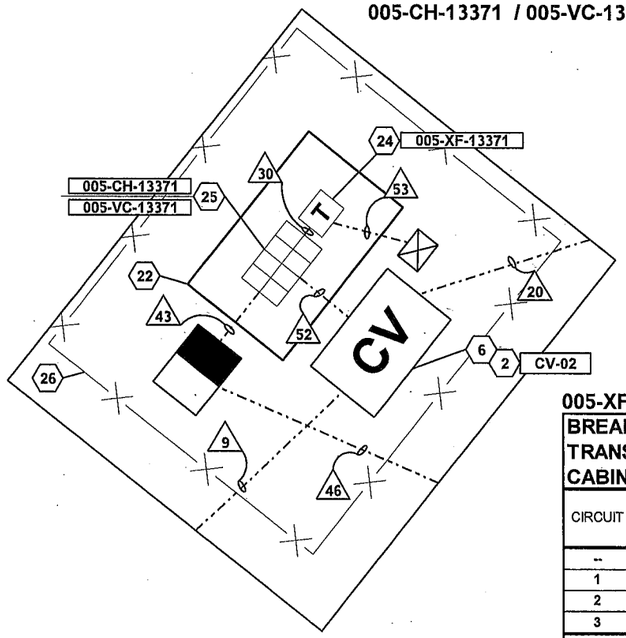

005-XF-13371

BREAKER SCHEDULE TRANSFORMER CABINET				SOURCE: SCA 0602 CIRCUIT: E INPUT VOLTAGE: 240 V	
CIRCUIT	DESCRIPTION / LABEL	BREAKER RATING POLES	BREAKER RATING AMPS	VOLTAGE	LOAD (kVA)
--	MAIN	2P	50A	---	--
1	005-CH-13371	1P	30A	120	2.3
2	ILLUMINATION	1P	15A	120	0.3
3	FUTURE	1P	15A	120	
BUSSWORK SHALL BE RATED AT 200 AMP MINIMUM				PEAK:	3.6
				CONTINUOUS:	2.6

FROM IT5
005-VC-13376

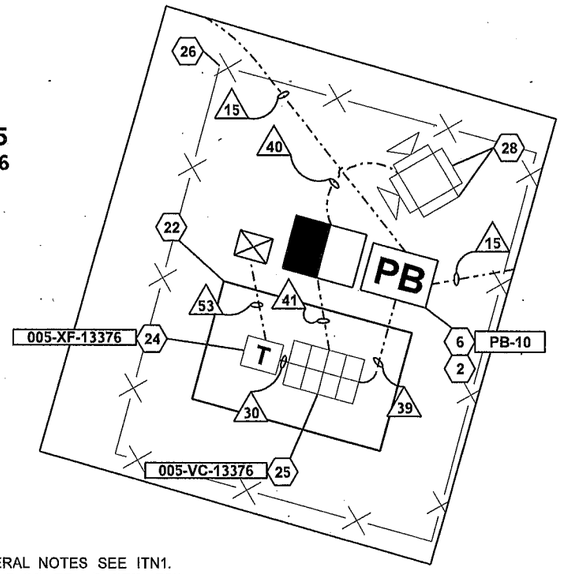

005-XF-13376

BREAKER SCHEDULE TRANSFORMER CABINET				SOURCE: SCA 2345 CIRCUIT: H INPUT VOLTAGE: 240 V	
CIRCUIT	DESCRIPTION / LABEL	BREAKER RATING POLES	BREAKER RATING AMPS	VOLTAGE	LOAD (kVA)
--	MAIN	2P	50A	---	--
1	005-VC-13376	1P	30A	120	2.3
2	ILLUMINATION	1P	15A	120	0.3
3	FUTURE	1P	15A	120	
BUSSWORK SHALL BE RATED AT 200 AMP MINIMUM				PEAK:	3.6
				CONTINUOUS:	2.6

NOTES:

1. FOR ITS LEGEND AND GENERAL NOTES SEE ITN1.
2. FOR PULL BOX / CABLE VAULT SCHEDULE SEE ITBX1.

NOT TO SCALE

CONSTRUCTION NOTES — SHEET IT5B

NO.	DESCRIPTION
2	FUSION SPLICE A PRE-TERMINATED FIBER OPTIC CABLE TO THE NEW FIBER OPTIC CABLE AS SHOWN ON FIBER OPTIC DETAIL SHEET ITFO1.
6	SEE BOX DETAIL SHEET, ITBX1 FOR PLACEMENT.
22	INSTALL TWO CABINET FOUNDATION FOR TYPE 334D AND TRANSFORMER CABINETS IN ACCORDANCE WITH STANDARD PLAN J-10.10.
24	INSTALL CABINET WITH 5 KVA (240 / 120 VAC) TRANSFORMER FOR ITS EQUIPMENT IN ACCORDANCE WITH STANDARD PLAN J-10.10, AND TRANSFORMER DETAIL SHEET ITTD1. FOR SOURCE OF POWER SEE ILLUMINATION PLANS.
25	INSTALL TYPE 334D ITS CABINET AND ASSOCIATED EQUIPMENT IN ACCORDANCE WITH STANDARD PLAN J-10.10 AND CABINET DETAIL SHEET ITCB1. TERMINATE NEW PRE-TERMINATED CABLE IN PATCH PANEL AS SHOWN ON FIBER OPTIC DETAIL SHEET ITFO1.
26	SEE FENCING DETAIL SHEET ITFD1.
28	INSTALL A PEDESTAL AND DOME CAMERAS WITH PAN AND TILT UNIT, CABLES, 50-FT CAMERA POLE, FOUNDATION AND ASSOCIATED EQUIPMENT IN ACCORDANCE WITH SPECIAL PROVISIONS, STANDARD PLAN J-29.10, J-29.15, AND VIDEO CAMERA DETAIL SHEET ITVC1.

WIRING SCHEDULE — ITS SYSTEM

NO.	CONDUIT / RACEWAY	MATERIAL*	CONDUCTORS	REMARKS
9	1 - 4" with (4) 1" INNERDUCT	1	1-12 SMFO	SMFO CABLE (I-5 DISTRIBUTION SB)
		2	1-96 SMFO	SMFO CABLE (I-5 LONG HAUL SB)
		3	EMPTY	FUTURE
		4	EMPTY	FUTURE
	1 - 4" with (4) 1" INNERDUCT	1	EMPTY	FUTURE
		2	EMPTY	FUTURE
		3	EMPTY	FUTURE
		4	EMPTY	FUTURE
15	2"	HDPE80	1-12 SMFO	SMFO CABLE (I-5 DISTRIBUTION NB)
			1-48 SMFO	SMFO CABLE (I-5 LONG HAUL NB)
	2"	HDPE80	EMPTY	FUTURE
20	1 - 4" RMC with (4) 1" INNERDUCT	1	1-12 SMFO	SMFO CABLE (I-5 DISTRIBUTION SB)
		2	1-12 SMFO	SMFO CABLE (I-5 DISTRIBUTION NB)
		3	1-96 SMFO	SMFO CABLE (I-5 LONG HAUL)
		4	1-48 SMFO	SMFO CABLE (I-5 LONG HAUL NB)
	1 - 4" RMC with (4) 1" INNERDUCT	1	1-72 SMFO	SMFO CABLE (TACOMA FIRE DEP'T)
		2	EMPTY	FUTURE
		3	EMPTY	FUTURE
		4	EMPTY	FUTURE
	1 - 4" RMC with (4) 1" INNERDUCT	1	EMPTY	FUTURE
		2	EMPTY	FUTURE
		3	EMPTY	FUTURE
		4	EMPTY	FUTURE
30	2"	RMC	2-#8 AWG	120V AC POWER
39	2"	RMC	1-24 SMFO	SMFO PRE-TERMINATED CABLE
	2"	RMC	EMPTY	FUTURE
40	2"	RMC	2-MULTI CONDUCTOR	CAMERA CABLE
	2"	RMC	EMPTY	FUTURE
41	2"	RMC	2-MULTI CONDUCTOR	CAMERA CABLE
	2"	RMC	EMPTY	FUTURE
	3"	RMC	EMPTY	FUTURE
43	2"	RMC	MULTI CONDUCTOR	CAMERA CABLE
	2"	RMC	EMPTY	FUTURE
	3"	RMC	EMPTY	FUTURE
46	2"	PVC80	MULTI CONDUCTOR	CAMERA CABLE
	2"	PVC80	EMPTY	FUTURE
52	3"	RMC	1-144 SMFO	SMFO PRE-TERMINATED CABLE
	3"	RMC	1-144 SMFO	SMFO PRE-TERMINATED CABLE
	2"	RMC	MULTI CONDUCTOR	CAMERA CABLE
53	2"	RMC	EMPTY	FUTURE

FILE NAME	PW:_XL3497\PS&E Sheets\ITS\P3497_SH_IT_05B.dgn				REGION NO. 10	STATE WASH
TIME	10:35:54 AM					FED.AID PROJ.NO.
DATE	3/16/2014				JOB NUMBER	
PLOTTED BY	dizonj					
DESIGNED BY	A. DORROUGH/J. DIZON				CONTRACT NO.	LOCATION NO.
ENTERED BY	A. DORROUGH/J. DIZON					
CHECKED BY	C. LANGFORD					
PROJ. ENGR.	J. PEREZ					
REGIONAL ADM.	K. DAYTON	REVISION	DATE	BY		

DENNIS RAY CRUMLEY — STATE OF WASHINGTON — REGISTERED PROFESSIONAL ENGINEER
3/17/14
DATE
P.E. STAMP BOX

DATE
P.E. STAMP BOX

Washington State Department of Transportation

I-5
M ST TO PORTLAND AVE - HOV

ITS PLAN

PLAN REF NO IT5B

SHEET 1377 OF 1763 SHEETS

CONSTRUCTION NOTES	SHEET IT6
NO.	DESCRIPTION
6	SEE BOX DETAIL SHEET, ITBX1 FOR PLACEMENT.
7	FUSION SPLICE THE EXISTING FIBER OPTIC CABLE TO NEW FIBER OPTIC CABLE AS SHOWN ON FIBER OPTIC DETAIL SHEET ITFO1.
59	REMOVE AND REPLACE EXISTING EMPTY CONDUIT RISER AND TERMINATE INTO NEW CABLE VAULT.
97	DISCONNECT AND PULL BACK EXISTING FIBER OPTIC CABLE FROM AERIAL SPLICE AT EXISTING POLE *(TP-02)* TO EXISTING POLE *(TP-01)*. RE-ROUTE FIBER OPTIC INTO NEW CABLE VAULT ONLY AFTER THE NEW FIBER OPTIC CABLE AND CONDUITS BETWEEN CABLE VAULTS (CV-03 AND CV-04), AND (CV-03 AND CV-02), AND NEW COMMUNICATION HUB CABINET (005-CH-13371) HAS BEEN INSTALLED, OPERATIONAL, AND COMMUNICATION HAS BEEN RESTORED WITH THE EXISTING CABINET *(005-VC-13464)*, AND CAMERA CABINETS (005-VC-13346 & 005-VC-13402) HAVE BEEN INSTALLED AND OPERATIONAL.
98	REMOVE TIE WRAPS, CABLE, MESSENGER CABLE, AND TIMBER POLE. FILL AND COMPACT VOIDS IN ACCORDANCE WITH STANDARD SPECIFICATIONS 2-09.3(1)E.

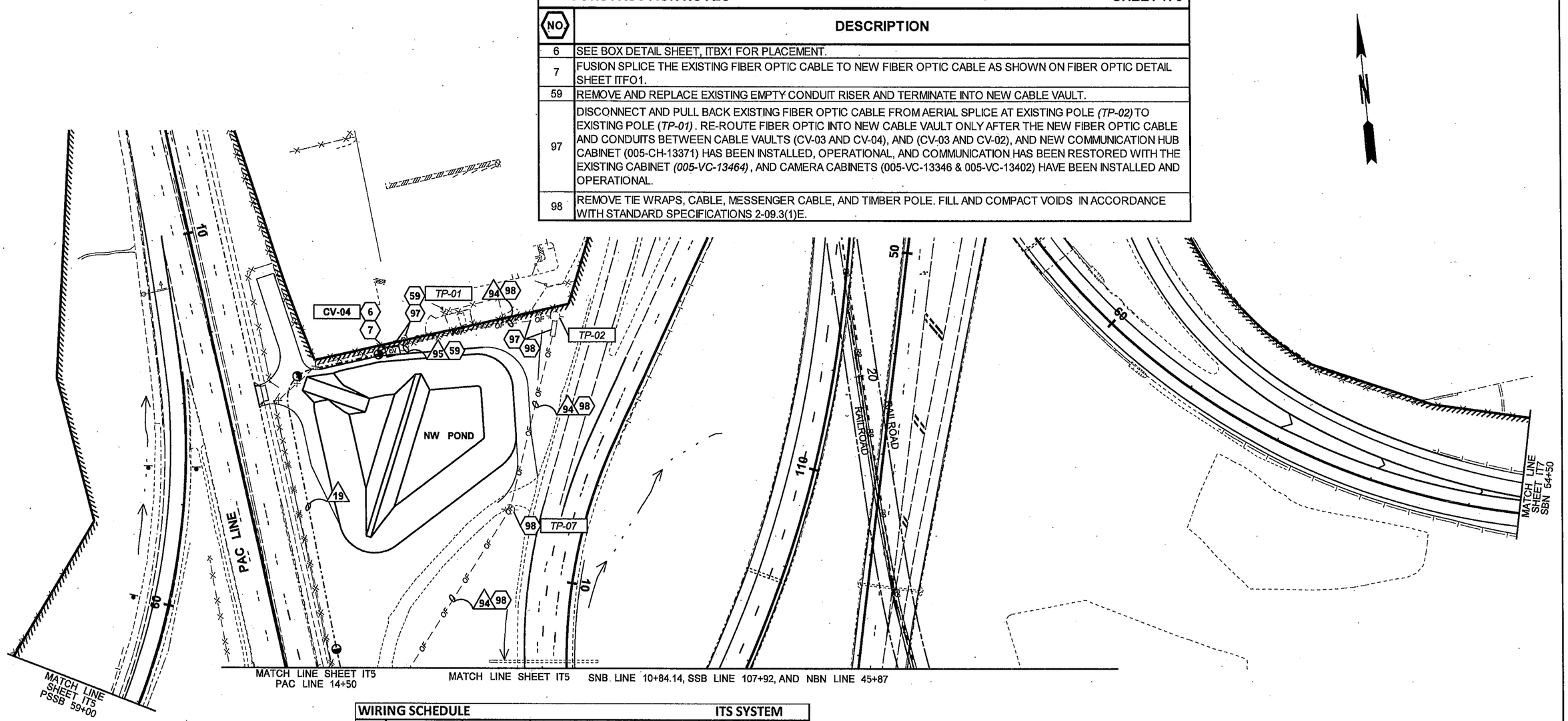

WIRING SCHEDULE				ITS SYSTEM
NO.	CONDUIT / RACEWAY	MATERIAL*	CONDUCTORS	REMARKS
19	2"	HDPE80	1- 72 SMFO	SMFO CABLE (TACOMA FIRE DEP'T.)
94	*AERIAL*	*AERIAL*	*EX. 1- 72 SMFO*	*SMFO CABLE (TACOMA FIRE DEP'T)*
95	2"	PVC80	*EX. 1- 72 SMFO*	*SMFO CABLE (TACOMA FIRE DEP'T)*

NOTES:

1. FOR ITS LEGEND AND GENERAL NOTES SEE ITN1.
2. FOR PULL BOX / CABLE VAULT SCHEDULE, SEE ITBX1.

0 50 100
SCALE IN FEET

FILE NAME	PW:_XL3497\PS&E Sheets\ITS\P3497_SH_IT_06.dgn			
TIME	1:06:08 PM			
DATE	3/18/2014			
PLOTTED BY	LangfoC			
DESIGNED BY	A. DORROUGH/J. DIZON			
ENTERED BY	A. DORROUGH/J. DIZON			
CHECKED BY	C. LANGFORD			
PROJ. ENGR.	J. PEREZ			
REGIONAL ADM.	K. DAYTON	REVISION	DATE	BY

REGION NO.	STATE	FED.AID PROJ.NO.
10	WASH	
JOB NUMBER		
CONTRACT NO.		LOCATION NO.

DENNIS RAY CRUMBLEY, STATE OF WASHINGTON, REGISTERED PROFESSIONAL ENGINEER

3/17/14
DATE
P.E. STAMP BOX

DATE
P.E. STAMP BOX

Washington State Department of Transportation

I-5
M ST TO PORTLAND AVE - HOV

ITS PLAN

PLAN REF NO IT6

SHEET 1378 OF 1763 SHEETS

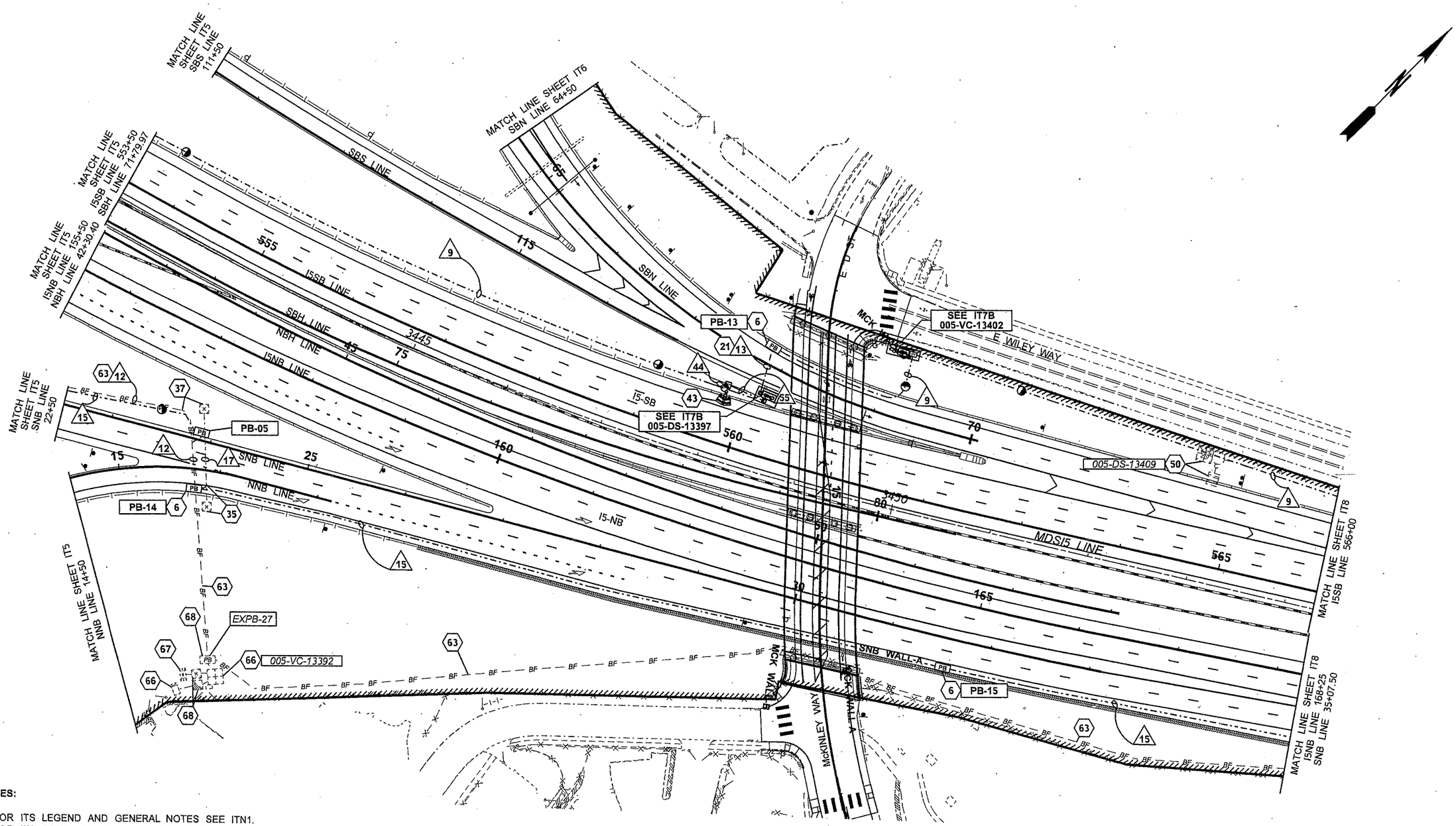

NOTES:

1. FOR ITS LEGEND AND GENERAL NOTES SEE ITN1.
2. FOR ITS CONSTRUCTION AND WIRE NOTES, SEE IT7A.
3. FOR PULL BOX / CABLE VAULT SCHEDULE SEE ITBX1.
4. FOR CONDUIT PLACEMENT AROUND EXISTING TRAFFIC AND ROADWAY DEVICES, SEE ITCD3.

0 50 100
SCALE IN FEET

FILE NAME	PW:_XL3497\PS&E Sheets\ITS\P3497_SH_IT_07.dgn				REGION NO.	STATE	FED.AID PROJ.NO.
TIME	9:30:34 AM				10	WASH	
DATE	3/16/2014				JOB NUMBER		
PLOTTED BY	dizonj						
DESIGNED BY	A. DORROUGH/J. DIZON				CONTRACT NO.		LOCATION NO.
ENTERED BY	A. DORROUGH/J. DIZON						
CHECKED BY	C. LANGFORD						
PROJ. ENGR.	J. PEREZ						
REGIONAL ADM.	K. DAYTON	REVISION	DATE	BY			

DONNA RAY CRUMBLEY STATE OF WASHINGTON REGISTERED PROFESSIONAL ENGINEER
3/17/14
DATE
P.E. STAMP BOX

DATE
P.E. STAMP BOX

Washington State Department of Transportation

I-5
M ST TO PORTLAND AVE - HOV

ITS PLAN

PLAN REF NO
IT7

SHEET 1379 OF 1763 SHEETS

CONSTRUCTION NOTES — SHEET IT7

NO.	DESCRIPTION
6	SEE BOX DETAIL SHEET, ITBX1 FOR PLACEMENT.
21	INSTALL CONDUITS PRIOR TO PLACEMENT OF NEW ROADWAY.
35	REMOVE TYPE 1 JUNCTION BOX. INTERCEPT EXISTING TWO CONDUITS (EMPTY AND WITH FIBER OPTIC CABLE) AND EXTEND TO NEW PULL BOX.
37	REPLACE EXISTING TYPE 1 JUNCTION BOX WITH NEW PULL BOX. EXTEND AND TERMINATE TWO EXISTING CONDUITS (EMPTY AND WITH FIBER OPTIC CABLE) IN THE NEW PULL BOX. FOR PULL BOX PLACEMENT AND SCHEDULE, SEE BOX DETAIL SHEET ITBX1.
43	INSTALL (2) WAVETRONX SMART SENSORS, CABLES, AND ASSOCIATED EQUIPMENT ON NEW LUMINAIRE STANDARD IN ACCORDANCE WITH MANUFACTURER'S RECOMMENDATIONS, SPECIAL PROVSIONS AND DATA STATION DETAIL SHEET ITDS2.
50	REMOVE WAVETRONIX SMART SENSOR, CABLE, CABINET AND ASSOCIATED EQUIPMENT, AND TIMBER POLE. REMOVE ONLY AFTER THE NEW DATA STATION (005-DS-13397) IS INSTALLED, TESTED, AND OPERATIONAL. DELIVER REMOVED DEVICES, POLE AND EQUIPMENT TO OLYMPIC REGION SIGNAL SHOP.
63	REMOVE EXISTING FIBER OPTIC CABLE AND ABANDON CONDUITS BELOW GRADE. REMOVE ONLY AFTER THE TEMPORARY FIBER OPTIC CABLE HAS BEEN INSTALLED AND OPERATIONAL.
66	REMOVE CAMERA, MICROWAVE, CABLES, POLE, CABINET, AND ABANDON CONDUITS BELOW GRADE. DELIVER REMOVED DEVICES AND EQUIPMENT TO OLYMPIC REGION SIGNAL SHOP. VIDEO CAMERA SITES 005-VC-13376 AND 005-VC-13402 SHALL BE INSTALLED AND OPERATIONAL PRIOR TO REMOVAL.
67	COORDINATE SERVICE DISCONNECT WITH TACOMA PUD. REMOVE POLE, SERVICE CABINET, AND ABANDON CONDUITS BELOW GRADE. DELIVER REMOVED EQUIPMENT TO OLYMPIC REGION SIGNAL SHOP,
68	REMOVE JUNCTION BOX, PULL BOX, CABLE VAULT, AND CONCRETE FOUNDATION. FILL AND COMPACT VOIDS IN ACCORDANCE WITH STANDARD SPECIFICATIONS 2-09.3(1)E.

WIRING SCHEDULE — ITS SYSTEM

NO.	CONDUIT / RACEWAY	MATERIAL*	CONDUCTORS	REMARKS
9	1 - 4" with (4) 1" INNERDUCT	1	1-12 SMFO	SMFO CABLE (I-5 DISTRIBUTION)
		2	1-96 SMFO	SMFO CABLE (I-5 LONG HAUL)
		3	EMPTY	FUTURE
		4	EMPTY	FUTURE
	1 - 4" with (4) 1" INNERDUCT	1	EMPTY	FUTURE
		2	EMPTY	FUTURE
		3	EMPTY	FUTURE
		4	EMPTY	FUTURE
12	*Ex. 2"*	*HDPE80*	*Ex. 1-12 SMFO*	*SMFO CABLE (TO BE REMOVED)*
			Ex. 1-48 SMFO	*SMFO CABLE (TO BE REMOVED)*
13	1 - 4" RMC with (4) 1" INNERDUCT	1	1-12 SMFO	SMFO CABLE (I-5 DISTRIBUTION)
		2	1-96 SMFO	SMFO CABLE (I-5 LONG HAUL)
		3	EMPTY	FUTURE
		4	EMPTY	FUTURE
	1 - 4" RMC with (4) 1" INNERDUCT	1	EMPTY	FUTURE
		2	EMPTY	FUTURE
		3	EMPTY	FUTURE
		4	EMPTY	FUTURE
15	2"	HDPE80	1-12 SMFO	SMFO CABLE (I-5 DISTRIBUTION NB)
			1-48 SMFO	SMFO CABLE (I-5 LONG HAUL NB)
	2"	HDPE80	EMPTY	FUTURE
17	*Ex. 2"*	*HDPE80*	1- 12 SMFO	SMFO CABLE (I-5 DISTRIBUTION NB)
			1-48 SMFO	SMFO CABLE (I-5 LONG HAUL NB)
44	2"	RMC	MULTI CONDUCTOR	WAVETRONIX CABLES
	2"	RMC	EMPTY	FUTURE
55	2"	PVC80	MULTI CONDUCTOR	WAVETRONIX CABLES
	2"	PVC80	EMPTY	FUTURE

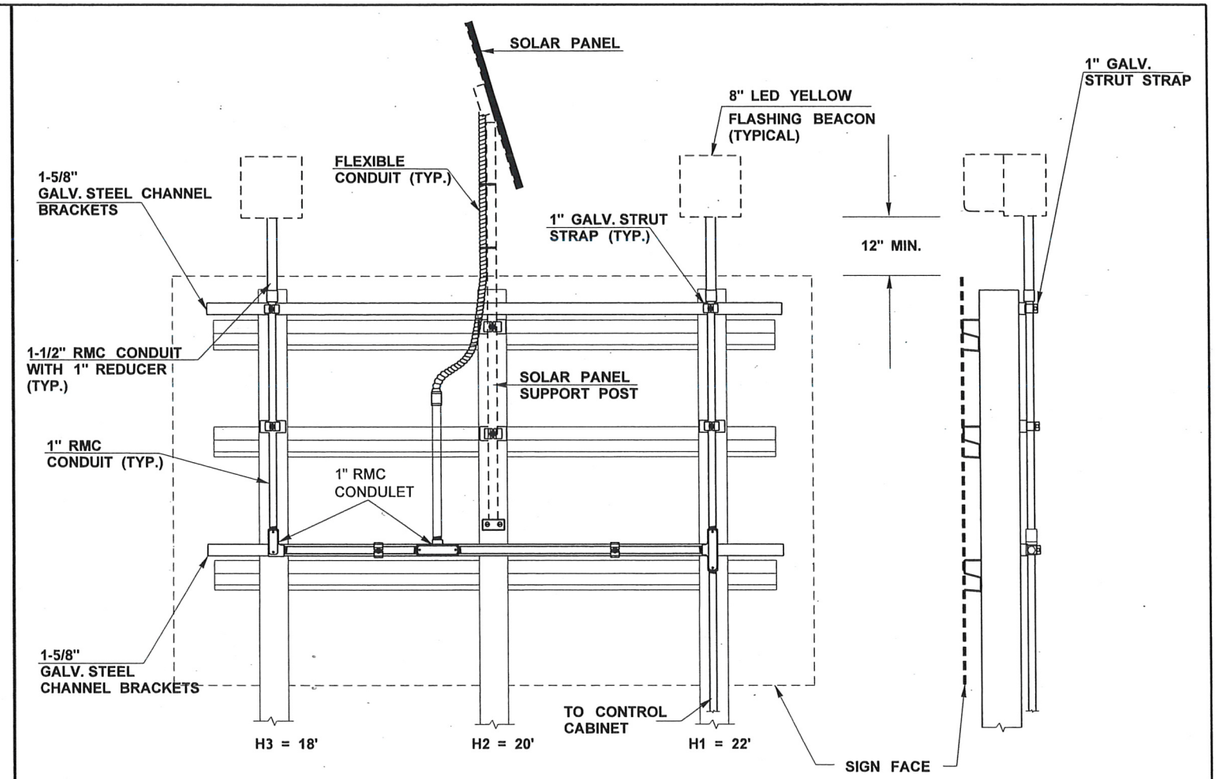

HAR SIGN INSTALLATION DETAILS

NOTES:

1. SIGN SUPPORT SHALL BE 3 - 6" X 8" TIMBER POSTS AND INSTALLED IN ACCORDANCE WITH **STANDARD PLAN G-22.10**.

   DIMENSIONS ARE AS FOLLOWS:

   LOCATION = MDSI5 LINE, STA. 3474+80 RT.

   V = 11 FT
   W = 30 FT
   H1 = 22 FT
   H2 = 20 FT
   H3 = 18 FT

2. ALL CONDUITS AND HARDWARE SHALL BE GALVANIZED STEEL.

3. FOR GROUNDING CONNECTIONS SEE **STANDARD PLAN J-60.05**.

4. FOR POST MOUNT CABINET MOUNTING SEE **STANDARD PLAN J-3b**. MOUNT CABINET ON THE SIGN POST H1.

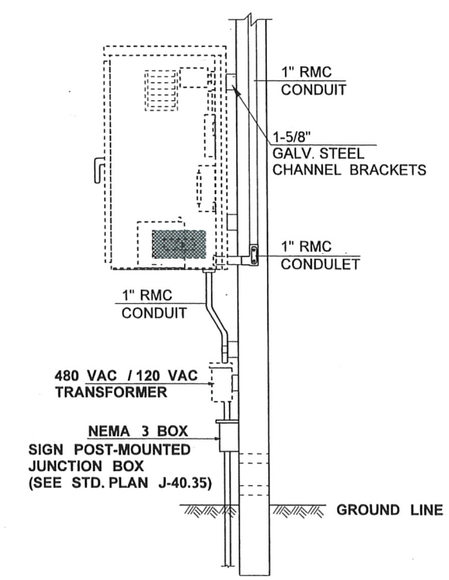

NOT TO SCALE

FILE NAME	PW:_XL3497\PS&E Sheets\ITS\P3497_SH_IT_07A.dgn
TIME	10:36:16 AM
DATE	3/16/2014
PLOTTED BY	dizonj
DESIGNED BY	A. DORROUGH/J. DIZON
ENTERED BY	A. DORROUGH/J. DIZON
CHECKED BY	C. LANGFORD
PROJ. ENGR.	J. PEREZ
REGIONAL ADM.	K. DAYTON

REVISION | DATE | BY

REGION NO. 10 | STATE WASH | FED.AID PROJ.NO.

JOB NUMBER

CONTRACT NO. | LOCATION NO.

DENNIS RAY CRUMBAKER, STATE OF WASHINGTON, REGISTERED PROFESSIONAL ENGINEER

DATE — P.E. STAMP BOX

DATE — P.E. STAMP BOX

Washington State Department of Transportation

I-5
M ST TO PORTLAND AVE - HOV

ITS PLAN

PLAN REF NO IT7A

SHEET 1380 OF 1763 SHEETS

FROM IT7
005-DS-13397

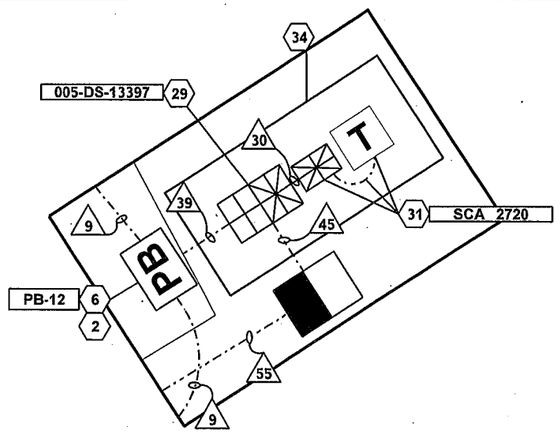

CONSTRUCTION NOTES	SHEET IT7B
NO.	DESCRIPTION
2	FUSION SPLICE A PRE-TERMINATED FIBER OPTIC CABLE TO THE NEW FIBER OPTIC CABLE AS SHOWN ON FIBER OPTIC DETAIL SHEET ITFO1.
6	SEE BOX DETAIL SHEET, ITBX1 FOR PLACEMENT.
22	INSTALL TWO CABINET FOUNDATION FOR TYPE 334D AND TRANSFORMER CABINETS IN ACCORDANCE WITH STANDARD PLAN J-10.10.
24	INSTALL CABINET WITH TRANSFORMER FOR ITS EQUIPMENT IN ACCORDANCE WITH STANDARD PLAN J-10.10, AND TRANSFORMER DETAIL SHEET ITTD1. FOR SOURCE OF POWER SEE ILLUMINATION PLANS.
25	INSTALL TYPE 334D ITS CABINET AND ASSOCIATED EQUIPMENT IN ACCORDANCE WITH STANDARD PLAN J-10.10 AND CABINET DETAIL SHEET ITCB1. TERMINATE NEW PRE-TERMINATED CABLE IN PATCH PANEL AS SHOWN ON FIBER OPTIC DETAIL SHEET ITFO1.
29	INSTALL TYPE 334D RAMP METER CABINET AND ASSOCIATED EQUIPMENT IN ACCORDANCE WITH STANDARD PLAN J-10.10, AND CABINET DETAIL SHEET ITCB1. TERMINATE THE NEW PRE-TERMINATED CABLES IN PATCH PANELS AS SHOWN ON FIBER OPTIC DETAIL SHEET ITFO1.
31	SEE ILLUMINATION PLAN FOR SERVICE INSTALLATIONS AND CIRCUIT BREAKER DESIGNATION.
32	INSTALL CAMERA WITH PAN AND TILT UNIT, CABLE, 50-FT CAMERA POLE, FOUNDATION, AND ASSOCIATED EQUIPMENT IN ACCORDANCE WITH SPECIAL PROVISIONS, STANDARD PLAN J-29.10, J-29.15, AND VIDEO CAMERA DETAIL SHEET ITVC1.
34	INSTALL THREE CABINET FOUNDATION FOR TYPE 334D, TYPE D SERVICE, AND TRANSFORMER CABINETS IN ACCORDANCE WITH STANDARD PLAN J-10.10.

WIRING SCHEDULE				ITS SYSTEM
NO.	CONDUIT / RACEWAY	MATERIAL*	CONDUCTORS	REMARKS
9	1 - 4" with (4) 1" INNERDUCT	1	1-12 SMFO	SMFO CABLE (I-5 DISTRIBUTION)
		2	1-96 SMFO	SMFO CABLE (I-5 LONG HAUL)
		3	EMPTY	FUTURE
		4	EMPTY	FUTURE
	1 - 4" with (4) 1" INNERDUCT	1	EMPTY	FUTURE
		2	EMPTY	FUTURE
		3	EMPTY	FUTURE
		4	EMPTY	FUTURE
30	2"	RMC	2-#8 AWG	120V AC POWER
39	2"	RMC	1-24 SMFO	SMFO PRE-TERMINATED CABLE
	2"	RMC	EMPTY	FUTURE
42	2"	RMC	MULTI CONDUCTOR	CAMERA CABLE
	2"	RMC	EMPTY	FUTURE
43	2"	RMC	MULTI CONDUCTOR	CAMERA CABLE
	2"	RMC	EMPTY	FUTURE
	3"	RMC	EMPTY	FUTURE
45	2"	RMC	MULTI CONDUCTOR	WAVETRONIX CABLES
	2"	RMC	EMPTY	FUTURE
	3"	RMC	EMPTY	FUTURE
53	2"	RMC	EMPTY	FUTURE
55	2"	PVC80	MULTI CONDUCTOR	WAVETRONIX CABLES
	2"	PVC80	EMPTY	FUTURE

FROM IT7
005-VC-13402

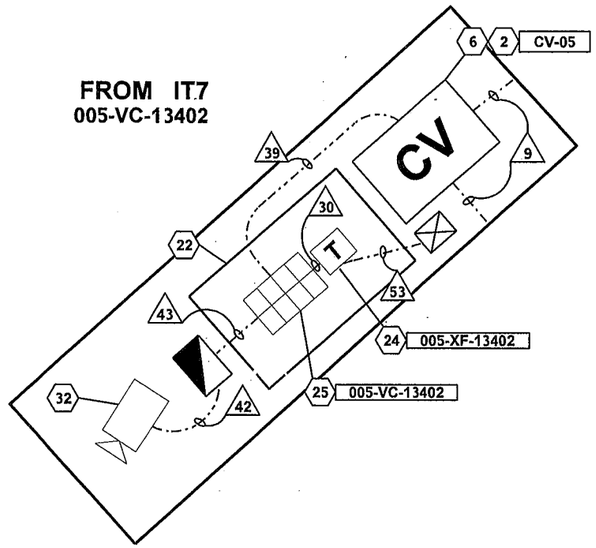

005-XF-13402

BREAKER SCHEDULE TRANSFORMER CABINET				SOURCE: SCA 2720 CIRCUIT: F INPUT VOLTAGE: 240 V	
CIRCUIT	DESCRIPTION / LABEL	BREAKER RATING POLES	BREAKER RATING AMPS	VOLTAGE	LOAD (kVA)
--	*MAIN*	*2P*	*50A*	---	--
1	005-VC-13402	1P	30A	120	2.3
2	FUTURE	1P	15A	120	
BUSSWORK SHALL BE RATED AT 200 AMP MINIMUM				PEAK:	3.3
				CONTINUOUS:	2.3

NOTES:

1. FOR ITS LEGEND AND GENERAL NOTES SEE ITN1.
2. FOR PULL BOX / CABLE VAULT SCHEDULE SEE ITBX1.

NOT TO SCALE

FILE NAME	PW:_XL3497\PS&E Sheets\ITS\P3497_SH_IT_07B.dgn			
TIME	10:36:21 AM			
DATE	3/16/2014			
PLOTTED BY	dizonj			
DESIGNED BY	A. DORROUGH/J. DIZON			
ENTERED BY	A. DORROUGH/J. DIZON			
CHECKED BY	C. LANGFORD			
PROJ. ENGR.	J. PEREZ			
REGIONAL ADM.	K. DAYTON	REVISION	DATE	BY

REGION NO.	STATE	FED.AID PROJ.NO.
10	WASH	
JOB NUMBER		
CONTRACT NO.		LOCATION NO.

DENNIS RAY CRUMBAUGH STATE OF WASHINGTON REGISTERED PROFESSIONAL ENGINEER
3/17/14
DATE
P.E. STAMP BOX

DATE
P.E. STAMP BOX

Washington State Department of Transportation

I-5
M ST TO PORTLAND AVE - HOV

ITS PLAN

PLAN REF NO IT7B

SHEET 1381 OF 1763 SHEETS

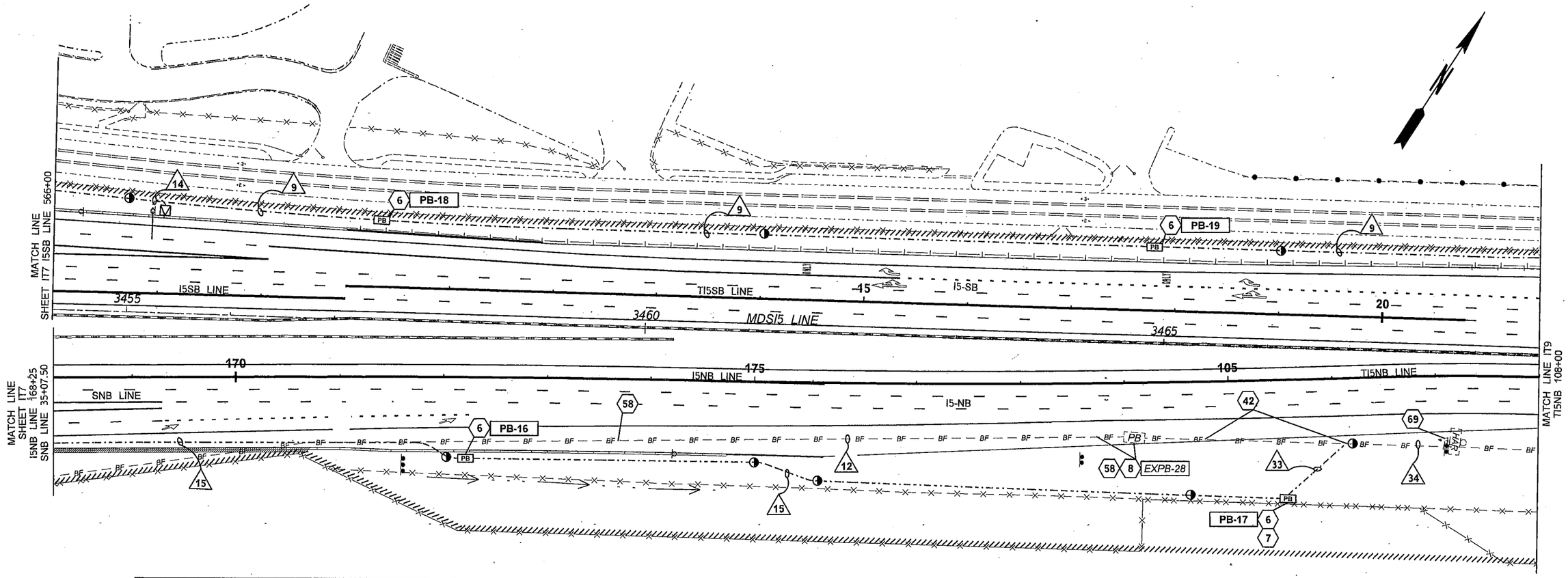

CONSTRUCTION NOTES — SHEET IT8

NO.	DESCRIPTION
6	SEE BOX DETAIL SHEET, ITBX1 FOR PLACEMENT.
7	FUSION SPLICE THE EXISTING FIBER OPTIC CABLE TO NEW FIBER OPTIC CABLE AS SHOWN ON FIBER OPTIC DETAIL SHEET ITFO1.
8	REMOVE EXISTING PULL BOX AND CONDUITS. FILL AND COMPACT VOIDS IN ACCORDANCE WITH STANDARD SPECIFICATIONS 2-09.3(1)E.
42	INTERCEPT EXISTING CONDUITS, AND FIBER OPTIC CABLE. RE-ROUTE AND TERMINATE INTO THE NEW PULL BOX.
58	REMOVE EXISTING CABLE, AND EXISTING CONDUITS. FILL AND COMPACT VOIDS IN ACCORDANCE WITH STANDARD SPECIFICATIONS 2-09.3(1)E. TEMPORARY FIBER OPTIC CABLE SHALL BE OPERATIONAL PRIOR TO REMOVAL.
69	RELOCATE HAR SIGN, FLASHING BEACON, CONTROL CABINET, AND ASSOCIATED EQUIPMENT TO STATIONS MDSI5 3474+80 RIGHT. SEE IT9 FOR PLACEMENT LOCATION.

WIRING SCHEDULE — ITS SYSTEM

NO.	CONDUIT / RACEWAY	MATERIAL*	CONDUCTORS	REMARKS
9	2 - 4" with (4) 1" INNERDUCT	1	1-12 SMFO	SMFO CABLE (I-5 DISTRIBUTION)
		2	1-96 SMFO	SMFO CABLE (I-5 LONG HAUL)
		3	EMPTY	FUTURE
		4	EMPTY	FUTURE
12	*Ex. 2"*	*HDPE80*	*Ex. 1-12 SMFO*	*SMFO CABLE (TO BE REMOVED)*
			Ex. 1-48 SMFO	*SMFO CABLE (TO BE REMOVED)*
14	1.5"	RMC	EMPTY	FUTURE
	1.5"	RMC	EMPTY	FUTURE
15	2"	HDPE80	1-12 SMFO	SMFO CABLE (I-5 DISTRIBUTION NB)
			1-48 SMFO	SMFO CABLE (I-5 LONG HAUL NB)
	2"	HDPE80	EMPTY	FUTURE
33	2"	HDPE80	*Ex. 1-12 SMFO*	*SMFO CABLE (I-5 DISTRIBUTION NB)*
			Ex. 1-48 SMFO	*SMFO CABLE (I-5 LONG HAUL NB)*
34	*Ex. 2"*	*HDPE80*	*Ex. 1-12 SMFO*	*SMFO CABLE (I-5 DISTRIBUTION NB)*
			Ex. 1-48 SMFO	*SMFO CABLE (I-5 LONG HAUL NB)*

NOTES:

1. FOR ITS LEGEND AND GENERAL NOTES SEE ITN1.
2. FOR PULL BOX / CABLE VAULT SCHEDULE SEE ITBX1.
3. FOR CONDUIT PLACEMENT AROUND EXISTING TRAFFIC AND ROADWAY DEVICES, SEE ITCD3.

0 50 100
SCALE IN FEET

FILE NAME	PW:_XL3497\PS&E Sheets\ITS\P3497_SH_IT_08.dgn
TIME	10:36:31 AM
DATE	3/16/2014
PLOTTED BY	dizonj
DESIGNED BY	A. DORROUGH/J. DIZON
ENTERED BY	A. DORROUGH/J. DIZON
CHECKED BY	C. LANGFORD
PROJ. ENGR.	J. PEREZ
REGIONAL ADM.	K. DAYTON

REVISION | DATE | BY

REGION NO. 10 | STATE WASH | FED.AID PROJ.NO.
JOB NUMBER
CONTRACT NO. | LOCATION NO.

DENNIS RAY CRUMBER — STATE OF WASHINGTON — REGISTERED PROFESSIONAL ENGINEER
3/17/14 DATE
P.E. STAMP BOX

DATE
P.E. STAMP BOX

Washington State Department of Transportation

I-5
M ST TO PORTLAND AVE - HOV

ITS PLAN

PLAN REF NO IT8
SHEET 1382 OF 1763 SHEETS

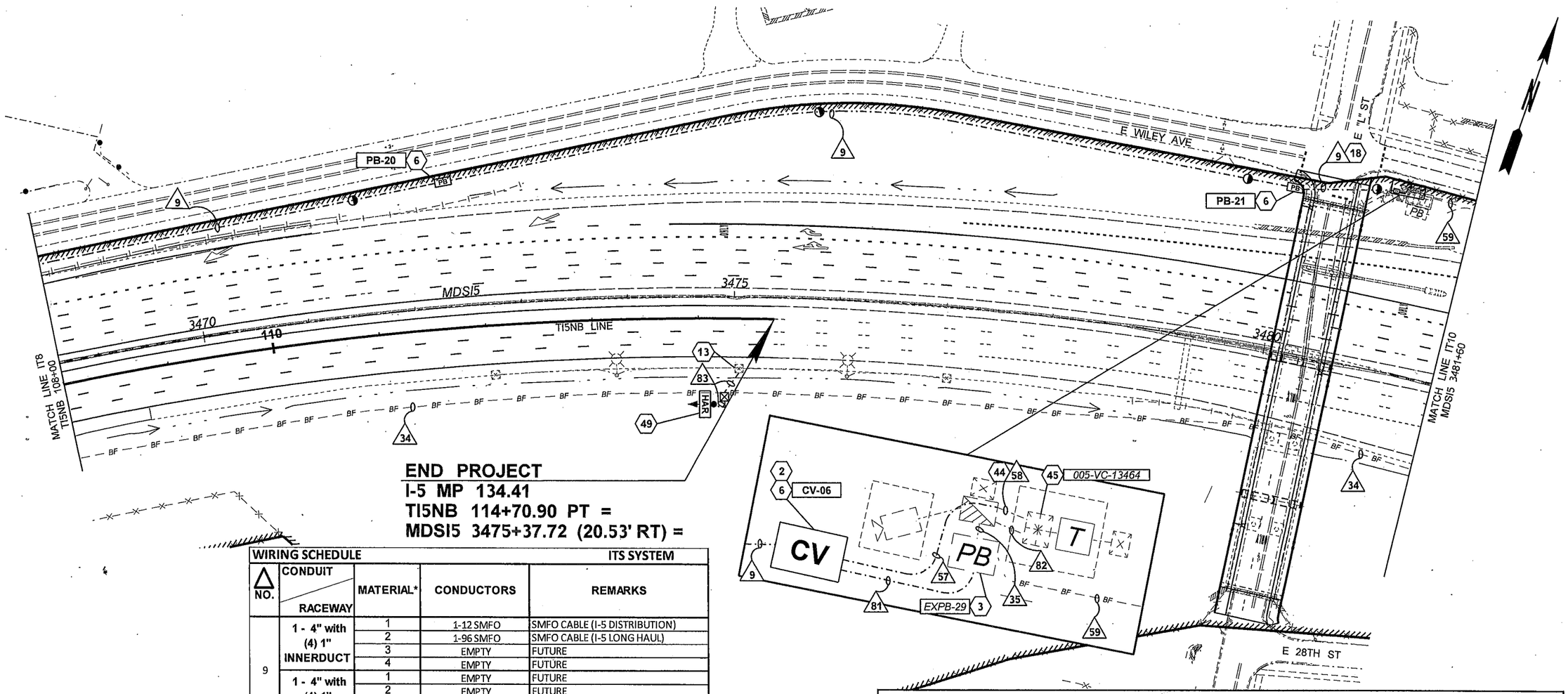

END PROJECT
I-5 MP 134.41
TI5NB 114+70.90 PT =
MDSI5 3475+37.72 (20.53' RT) =

WIRING SCHEDULE				ITS SYSTEM
NO.	CONDUIT / RACEWAY	MATERIAL*	CONDUCTORS	REMARKS
9	1 - 4" with (4) 1" INNERDUCT	1	1-12 SMFO	SMFO CABLE (I-5 DISTRIBUTION)
		2	1-96 SMFO	SMFO CABLE (I-5 LONG HAUL)
		3	EMPTY	FUTURE
		4	EMPTY	FUTURE
	1 - 4" with (4) 1" INNERDUCT	1	EMPTY	FUTURE
		2	EMPTY	FUTURE
		3	EMPTY	FUTURE
		4	EMPTY	FUTURE
34	2"	HDPE80	Ex. 1-12 SMFO	SMFO CABLE (I-5 DISTRIBUTION NB)
			Ex. 1-48 SMFO	SMFO CABLE (I-5 LONG HAUL NB)
35	Ex. 2"	PVC80	1-24 SMFO	PRE-TERMINATED (I-5 DISTRIBUTION)
57	3"	RMC	1-24 SMFO	PRE-TERMINATED (I-5 DISTRIBUTION)
			1-96 SMFO	PRE-TERMINATED (I-5 LONG HAUL)
58	Ex. 3"	RMC	1-24 SMFO	PRE-TERMINATED (I-5 DISTRIBUTION)
			1-96 SMFO	PRE-TERMINATED (I-5 LONG HAUL)
59	Ex. 2"	PVC80	Ex. 1-12 SMFO	SMFO CABLE (I-5 DISTRIBUTION NB)
			Ex. 1-12 SMFO	SMFO CABLE (I-5 DISTRIBUTION SB)
			1-6 SMFO	SMFO CABLE (RAMP METER COMM)
81	2"	RMC	1-6 SMFO	SMFO CABLE (RAMP METER COMM)
	2"	RMC	EMPTY	FUTURE
82	Ex. 3"	RMC	1-24 SMFO	PRE-TERMINATED (I-5 DISTRIBUTION)
			Ex. MULTICONDUCTOR	MICROWAVE CABLE
			Ex. MULTICONDUCTOR	CAMERA CABLE
83	1"	RMC	2 - #8 AWG	480 VAC POWER

NOTES:

1. FOR ITS LEGEND AND GENERAL NOTES SEE ITN1.
2. FOR PULL BOX / CABLE VAULT SCHEDULE SEE ITBX1.
3. FOR CONDUIT PLACEMENT AROUND EXISTING TRAFFIC AND ROADWAY DEVICES, SEE ITCD3.

0 50 100
SCALE IN FEET

CONSTRUCTION NOTES	SHEET IT9
NO.	DESCRIPTION
2	FUSION SPLICE A PRE-TERMINATED FIBER OPTIC CABLE TO THE NEW FIBER OPTIC CABLE AS SHOWN ON FIBER OPTIC DETAIL SHEET ITFO1.
3	TERMINATE CONDUITS IN EXISTING PULL BOX / CABLE VAULT. SEE WIRE NOTES.
6	SEE BOX DETAIL SHEET, ITBX1 FOR PLACEMENT.
13	TERMINATE NEW CONDUIT IN EXISTING JUNCTION BOX. SEE WIRE NOTES.
18	INSTALL CONDUIT UNDER ROADWAY USING APPROVED DIRECTIONAL BORING METHODS.
44	INTERCEPT EXISTING 3" RMC SPARE CONDUIT AND EXTEND TO NEW CABLE VAULT.
45	TERMINATE THE PRE-TERMINATED FIBER OPTIC CABLE IN PATCH PANEL AS SHOWN ON FIBER OPTIC DETAIL SHEET ITFO1. INSTALL COMMUNICATION DEVICES AS SHOWN IN EQUIPMENT SCHEDULE, ITCB1.
49	INSTALL RELOCATED HAR SIGN, FLASHING BEACON, AND CONTROL CABINET ON NEW TIMBER POSTS IN ACCORDANCE WITH STANDARD PLAN G-22.10. INSTALL CONTROL CABINET ON INSIDE POST. SEE IT7A FOR ADDITIONAL DETAIL. FOR POWER SOURCE SPLICE IN NEW FEEDER WIRE WITH EXISTING ILLUMINATION CIRCUIT.

FILE NAME	PW:_XL3497\PS&E Sheets\ITS\P3497_SH_IT_09.dgn
TIME	10:36:40 AM
DATE	3/16/2014
PLOTTED BY	dizonj
DESIGNED BY	A. DORROUGH/J. DIZON
ENTERED BY	A. DORROUGH/J. DIZON
CHECKED BY	C. LANGFORD
PROJ. ENGR.	J. PEREZ
REGIONAL ADM.	K. DAYTON

REVISION | DATE | BY

REGION NO.	STATE	FED.AID PROJ.NO.
10	WASH	
JOB NUMBER		
CONTRACT NO.		LOCATION NO.

DENNIS RAY CHURCHILL — STATE OF WASHINGTON — REGISTERED PROFESSIONAL ENGINEER
3/14/14
DATE
P.E. STAMP BOX

DATE
P.E. STAMP BOX

Washington State Department of Transportation

I-5
M ST TO PORTLAND AVE - HOV

ITS PLAN

PLAN REF NO IT9

SHEET 1383 OF 1763 SHEETS

BREAKER SCHEDULE — SCX-3044

TYPE C — **480 V**

CIRCUIT	DESCRIPTION / LABEL	BREAKER RATING POLES	BREAKER RATING AMPS	CONTACTOR RATING	VOLTAGE	LOAD (kVA)
–	MAIN	2P	100A	—	—	–
A	ILLUMINATION	2P	40A	60 AMP	480	1.5
B	ILLUMINATION	2P	40A	60 AMP	480	5
C	XFMR	2P	15A	—	480	
D	ITS XFMR	2P	15A	—	480	
E	RM XFMR	2P	15A	---	480	3
F	CONTROL	1P	15A	—	120	
G	GFI	1P	15A	—	120	
BUSSWORK SHALL BE RATED AT 200 AMP MINIMUM				PEAK		10.5
				CONTINUOUS		9.5

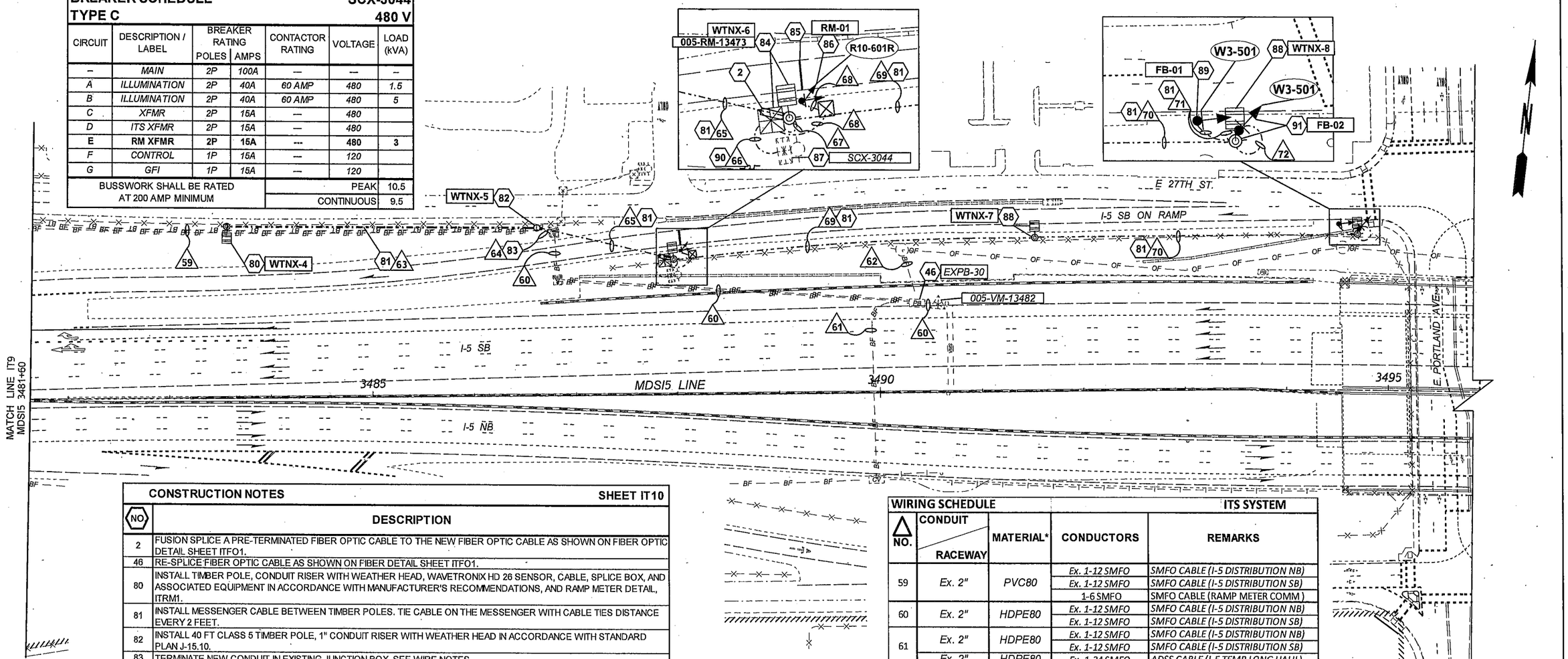

CONSTRUCTION NOTES — SHEET IT10

NO.	DESCRIPTION
2	FUSION SPLICE A PRE-TERMINATED FIBER OPTIC CABLE TO THE NEW FIBER OPTIC CABLE AS SHOWN ON FIBER OPTIC DETAIL SHEET ITFO1.
46	RE-SPLICE FIBER OPTIC CABLE AS SHOWN ON FIBER DETAIL SHEET ITFO1.
80	INSTALL TIMBER POLE, CONDUIT RISER WITH WEATHER HEAD, WAVETRONIX HD 26 SENSOR, CABLE, SPLICE BOX, AND ASSOCIATED EQUIPMENT IN ACCORDANCE WITH MANUFACTURER'S RECOMMENDATIONS, AND RAMP METER DETAIL, ITRM1.
81	INSTALL MESSENGER CABLE BETWEEN TIMBER POLES. TIE CABLE ON THE MESSENGER WITH CABLE TIES DISTANCE EVERY 2 FEET.
82	INSTALL 40 FT CLASS 5 TIMBER POLE, 1" CONDUIT RISER WITH WEATHER HEAD IN ACCORDANCE WITH STANDARD PLAN J-15.10.
83	TERMINATE NEW CONDUIT IN EXISTING JUNCTION BOX. SEE WIRE NOTES.
84	INSTALL TIMBER POLE, CONDUIT RISER WITH WEATHER HEAD, WAVETRONIX MATRIX SENSOR, CABLE, TYPE 336 RAMP METER POLE MOUNT CABINET, AND ASSOCIATED EQUIPMENT IN ACCORDANCE WITH MANUFACTURER'S RECOMMENDATIONS, CABINET DETAIL, ITCB1, AND RAMP METER DETAIL, ITRM1.
85	SEE PAVEMENT MARKING PLANS FOR STOP BAR INSTALLATION.
86	INSTALL RAMP METER SIGNAL STANDARD ON 6" X 6" X 20' TIMBER POST, TWO LED VEHICLE HEADS, R10-601R SIGN IN ACCORDANCE WITH J-22.15 AND RAMP METER DETAIL SHEET, ITRM2.
87	INSTALL CONDUIT. TERMINATE FEEDER WIRES ON A NEW 15 AMP DPST CIRCUIT BREAKER ON EXISTING SERVICE PANEL (SCX-3044), AND LABEL. SEE WIRE NOTE AND SERVICE BREAKER SCHEDULE.
88	INSTALL TIMBER POLE, WAVETRONIX MATRIX SENSOR, CABLE, SPLICE BOX, AND ASSOCIATED EQUIPMENT IN ACCORDANCE WITH MANUFACTURER'S RECOMMENDATIONS, AND RAMP METER DETAIL, ITRM1.
89	INSTALL FLASHING BEACON STANDARD ON 6" X 6" X 20' TIMBER POST, LED BEACON HEAD, AND W3-501 SIGN IN ACCORDANCE WITH J-21.16 AND RAMP METER DETAIL SHEET, ITRM2.
90	INSTALL 3 KVA (480/120 VAC) POLE MOUNT TRANSFORMER WITH FUSE DISCONNECT ON THE INPUT SIDE. SEE CABINET DETAIL, ITCB6.
91	INSTALL FLASHING BEACON STANDARD ON TIMBER POLE, LED BEACON HEAD, AND W3-501 SIGN IN ACCORDANCE WITH J-21.16 AND RAMP METER DETAIL SHEET, ITRM2.

WIRING SCHEDULE — ITS SYSTEM

NO.	CONDUIT / RACEWAY	MATERIAL*	CONDUCTORS	REMARKS
59	Ex. 2"	PVC80	Ex. 1-12 SMFO	SMFO CABLE (I-5 DISTRIBUTION NB)
			Ex. 1-12 SMFO	SMFO CABLE (I-5 DISTRIBUTION SB)
			1-6 SMFO	SMFO CABLE (RAMP METER COMM)
60	Ex. 2"	HDPE80	Ex. 1-12 SMFO	SMFO CABLE (I-5 DISTRIBUTION NB)
			Ex. 1-12 SMFO	SMFO CABLE (I-5 DISTRIBUTION SB)
61	Ex. 2"	HDPE80	Ex. 1-12 SMFO	SMFO CABLE (I-5 DISTRIBUTION NB)
			Ex. 1-12 SMFO	SMFO CABLE (I-5 DISTRIBUTION SB)
	Ex. 2"	HDPE80	Ex. 1-24 SMFO	ADSS CABLE (I-5 TEMP LONG HAUL)
62	Ex. 2"	PVC80	Ex. 1-24 SMFO	ADSS CABLE (I-5 TEMP LONG HAUL)
63	AERIAL	AERIAL	MULTI CONDUCTOR	WAVETRONIX HOME RUN CABLE
64	1"	PVC80	1-6 SMFO	SMFO CABLE (RM COMM)
65	AERIAL	AERIAL	MULTI CONDUCTOR	WAVETRONIX HOME RUN CABLE
			1-6 SMFO	SMFO CABLE (RM COMM)
66	1"	PVC80	2 - #8 AWG	480 VAC (RM XFMR POWER)
67	2.5"	PVC80	1-6 SMFO	PRE-TERMINATED CABLE (RM COMM)
			3-MULTI CONDUCTOR	WAVETRONIX HOME RUN CABLE
			1-MULTI CONDUCTOR	WAVETRONIX CABLE
			2-2C(SH)	RAMP METER AHEAD FLASHER CABLE
68	1"	PVC80	1-5C	RAMP METER SIGNAL DISPLAY CABLE
69	AERIAL	AERIAL	2-MULTI CONDUCTOR	WAVETRONIX HOME RUN CABLE
			2-2C(SH)	RAMP METER AHEAD FLASHER CABLE
70	AERIAL	AERIAL	1-MULTI CONDUCTOR	WAVETRONIX HOME RUN CABLE
			2-2C(SH)	RAMP METER AHEAD FLASHER CABLE
71	AERIAL	AERIAL	1-2C(SH)	RAMP METER AHEAD FLASHER CABLE
72	AERIAL	AERIAL	1-MULTI CONDUCTOR	WAVETRONIX HOME RUN CABLE

0 50 100
SCALE IN FEET

NOTES:

1. FOR ITS LEGEND AND GENERAL NOTES SEE ITN1.

IT11 INTENTIONALLY OMITTED

FILE NAME	PW:_XL3497\PS&E Sheets\ITS\P3497_SH_IT_010.dgn
TIME	10:36:55 AM
DATE	3/16/2014
PLOTTED BY	dizonj
DESIGNED BY	J. DIZON
ENTERED BY	J. DIZON
CHECKED BY	C. LANGFORD
PROJ. ENGR.	J. PEREZ
REGIONAL ADM.	K. DAYTON

REVISION | DATE | BY

REGION NO. 10 | STATE WASH | FED.AID PROJ.NO.

JOB NUMBER

CONTRACT NO. | LOCATION NO.

DENNIS RAY CRANFORD — STATE OF WASHINGTON — PROFESSIONAL ENGINEER
3/17/14
DATE
P.E. STAMP BOX

DATE
P.E. STAMP BOX

Washington State Department of Transportation

I-5
M ST TO PORTLAND AVE - HOV

ITS PLAN

PLAN REF NO IT10

SHEET 1384 OF 1763 SHEETS

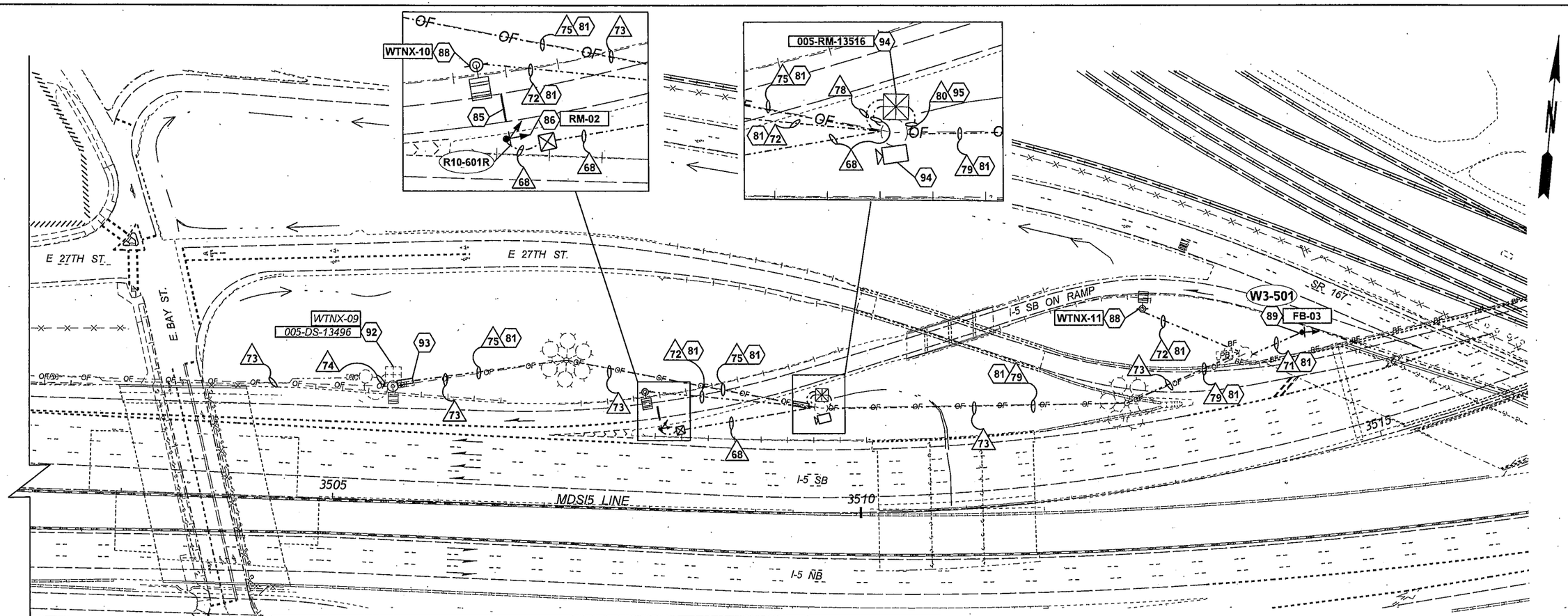

CONSTRUCTION NOTES — SHEET IT12

NO.	DESCRIPTION
81	INSTALL MESSENGER CABLE BETWEEN TIMBER POLES. TIE CABLE ON THE MESSENGER WITH CABLE TIES DISTANCE EVERY 2 FEET.
85	SEE PAVEMENT MARKING PLANS FOR STOP BAR INSTALLATION.
86	INSTALL RAMP METER SIGNAL STANDARD ON 6" X 6" X 20' TIMBER POST, TWO LED VEHICLE HEADS, R10-601R SIGN IN ACCORDANCE WITH J-22.15 AND RAMP METER DETAIL SHEET, ITRM2.
88	INSTALL TIMBER POLE, WAVETRONIX MATRIX SENSOR, CABLE, SPLICE BOX, AND ASSOCIATED EQUIPMENT IN ACCORDANCE WITH MANUFACTURER'S RECOMMENDATIONS, AND RAMP METER DETAIL, ITRM1.
89	INSTALL FLASHING BEACON STANDARD ON 6" X 6" X 20' TIMBER POST, LED BEACON HEAD, AND W3-501 SIGN IN ACCORDANCE WITH J-21.16 AND RAMP METER DETAIL SHEET, ITRM2.
92	TERMINATE NEW WAVETRONIX HOME RUN CABLE CABLE ON EXISTING WAVETRONIX CLICK DEVICE (CLICK 200).
93	RE-SPLICE AERIAL FIBER OPTIC CABLE AS SHOWN ON FIBER OPTIC DETAIL, ITFO1.
94	INSTALL CONDUIT RISER WITH WEATHER HEAD, CAMERA WITH PAN AND TILT UNIT, CABLE, TYPE 336 RAMP METER POLE MOUNT CABINET, AND ASSOCIATED EQUIPMENT ON EXISTING TIMBER POLE IN ACCORDANCE WITH MANUFACTURER'S RECOMMENDATIONS, CABINET DETAIL, ITCB1, AND RAMP METER DETAIL, ITRM1.
95	INSTALL 3 KVA (480/120 VAC) POLE MOUNT TRANSFORMER WITH FUSE DISCONNECT ON THE INPUT SIDE. SOURCE OF POWER IS FROM EXISTING SEVICE (SCX-3044), ITS CIRCUIT. SPLICE IN #8 AWG ON THE EXISTING #6 ASCR TRIPLEX AND TERMINATE ON FUSE DISCONNECT. SEE CABINET DETAIL, ITCB6.

WIRING SCHEDULE — ITS SYSTEM

NO.	CONDUIT / RACEWAY	MATERIAL*	CONDUCTORS	REMARKS
68	1"	PVC80	1-5C	RAMP METER SIGNAL DISPLAY CABLE
71	AERIAL	AERIAL	1-2C(SH)	RAMP METER AHEAD FLASHER CABLE
72	AERIAL	AERIAL	1-MULTI CONDUCTOR	WAVETRONIX HOME RUN CABLE
73	*AERIAL*	*AERIAL*	*Ex.1-24SMFO*	*ADSS CABLE (I-5 TEMP LONG HAUL)*
			Ex. 1-#6 ASCR TRIPLEX	*480V AC POWER*
74	*Ex. 2"*	*PVC80*	*Ex. 1-2 SMFO*	*PRE-TERMINATED SMFO CABLE*
			Ex. 1-MULTICONDUCTOR	*WAVETRONIX CABLE*
			1-MULTI CONDUCTOR	WAVETRONIX HOME RUN CABLE
75	AERIAL	AERIAL	1-MULTI CONDUCTOR	WAVETRONIX HOME RUN CABLE
			1-12 SMFO	PRE-TERMINATED SMFO CABLE
78	2.5"	PVC80	1-12 SMFO	PRE-TERMINATED SMFO CABLE
			3-MULTI CONDUCTOR	WAVETRONIX HOME RUN CABLE
			1-2C(SH)	RAMP METER AHEAD FLASHER CABLE
79	AERIAL	AERIAL	1-MULTI CONDUCTOR	WAVETRONIX HOME RUN CABLE
			1-2C(SH)	RAMP METER AHEAD FLASHER CABLE
80	1"	PVC80	2 - #8 AWG	480V AC POWER

NOTES:

1. FOR ITS LEGEND AND GENERAL NOTES SEE ITN1.

0 50 100
SCALE IN FEET

FILE NAME	PW:_XL3497\PS&E Sheets\ITS\P3497_SH_IT_012.dgn				REGION NO. 10	STATE WASH	FED.AID PROJ.NO.
TIME	10:37:08 AM				JOB NUMBER		
DATE	3/16/2014						
PLOTTED BY	dizonj						
DESIGNED BY	J. DIZON				CONTRACT NO.		LOCATION NO.
ENTERED BY	J. DIZON						
CHECKED BY	C. LANGFORD						
PROJ. ENGR.	J. PEREZ						
REGIONAL ADM.	K. DAYTON	REVISION	DATE	BY			

DENNIS RAY CRUMBER, STATE OF WASHINGTON, REGISTERED PROFESSIONAL ENGINEER
3/17/14
DATE
P.E. STAMP BOX

DATE
P.E. STAMP BOX

Washington State Department of Transportation

I-5
M ST TO PORTLAND AVE - HOV

ITS PLAN

PLAN REF NO
IT12

SHEET 1385 OF 1763 SHEETS

EXISTING PULL BOX SCHEDULE

BOX NO.	LINE	STATION / MILEPOST	OFFSET	SHEET NO.	NOTES
EXPB-01	I-5	131.86	20' LT	ITAA	
EXPB-02	I-5	131.95	12' LT	ITAA	
EXPB-03	I-5	131.95	15' LT	ITAA	
EXPB-04	I-5	132.12	22'LT	ITAA	
EXPB-05	I-5	132.33	16'LT	ITBB	
EXPB-06	I-5	132.39	12'LT	ITBB	
EXPB-07	I-5	132.48	13'LT	ITBB	
EXPB-08	I-5	132.57	22'LT	ITBB	
EXPB-09	I-5	132.66	20'LT	ITBB	
EXPB-10	I-5	132.31	19'RT	ITBB	
EXPB-11	I5SB	498+70	68'LT	IT1	
EXPB-12	I5SB	502+53	65'LT	IT1	
EXPB-13	I5NB	101+22	139'RT	IT1	
EXPB-14	I5SB	510+16	60'LT	IT2	
EXPB-15	NCD	45+88	64'RT	IT2	
EXPB-16	NCD	45+89	91'RT	IT2	
EXPB-17	I5SB	519+87	49'LT	IT3	
EXPB-18	I5SB	521+51	99'LT	IT3	
EXPB-19	SSB	84+66	60'LT	IT3A	
EXPB-20	SSB	85+89	70'LT	IT3A	
EXPB-21	SSB	85+73	25'LT	IT3A	
EXPB-22	NBN	18+80	80'RT	IT3	
EXPB-23	NSB	77+08	41'LT	IT4	
EXPB-24	PAC	15+12	95'LT	IT5	
EXPB-25	SNB	19+53	16'LT	IT5	
EXPB-26	SNB	20+61	13'LT	IT5	
EXPB-27	NNB	16+40	213'RT	IT7	
EXPB-28	TI5NB	104+12	53'RT	IT8	
EXPB-29	MDSI5	3481+04	172'LT	IT9	
EXPB-30	MDSI5	3490+32	88'LT	IT10	
EXPB-31	PSBB	52+08	134'LT	IT4	
EXPB-32	I5NB	103+82	110'RT	IT1	

MEASUREMENT IS TO CENTER OF BOX.
STATION AND OFFSET IS APROXIMATE.
ALL MILE POST LOCATIONS ON ON RAMP ARE BASED OFF OF I-5 MAINLINE.

PULL BOX SCHEDULE

BOX NO.	LINE	STATION / MILEPOST	OFFSET	SHEET NO.	NOTES
PB-01	I5SB	510+33	75' LT	IT2	CASE 1
PB-02	I5SB	520+12	86' LT	IT3	CASE 1
PB-03	SSB	94+60	49' LT	IT4	HEAVY DUTY LID
PB-04	PSSB	55+74	19'LT	IT4	HEAVY DUTY LID
PB-05	SNB	23+89	11'LT	1T7	HEAVY DUTY LID
PB-06	NSB	81+75	29'LT	IT5	CASE 3
PB-07	NSB	81+42	10'RT	IT5	CASE 3
PB-08	I5SB	544+49	48'LT	IT5	CASE 3
PB-09	I5SB	552+57	52'LT	IT5	CASE 3
PB-10	SNB	16+83	84'RT	IT5B	
PB-11	SNB	17+63	15'LT	IT5	CASE 2
PB-12	I5SB	560+14	61'LT	IT7B	
PB-13	SBN	67+81	18'LT	IT7	HEAVY DUTY LID
PB-14	NNB	15+76	19'RT	IT7	HEAVY DUTY LID
PB-15	SNB	31+57	30'RT	IT7	HEAVY DUTY LID
PB-16	I5NB	172+21	78'RT	IT8	CASE 3
PB-17	TI5NB	104+06	106'RT	IT8	
PB-18	TI5SB	10+34	64'LT	IT8	CASE 3
PB-19	TI5SB	17+79	61'LT	IT8	CASE 3
PB-20	MDSI5	3472+36	117'LT	IT9	
PB-21	MDSI5	3480+01	153'LT	IT9	CASE 3

MEASUREMENT IS TO CENTER OF BOX.

CABLE VAULT SCHEDULE

BOX NO.	LINE	STATION / MILEPOST	OFFSET	SHEET NO.	NOTES
CV-01	SSB	86+87	49'LT	IT3A	HEAVY DUTY LID
CV-02	NSB	78+83	136'LT	IT5B	
CV-03	PAC	15+50	56'LT	IT5	HEAVY DUTY LID
CV-04	PAC	11+54	172'LT	IT6	
CV-05	SBN	69+21	29'RT	IT7B	CASE 2
CV-06	MDSI5	3481+13	169'LT	IT9	

MEASUREMENT IS TO CENTER OF BOX.

EXISTING CABLE VAULT SCHEDULE

BOX NO.	LINE	STATION / MILEPOST	OFFSET	SHEET NO.	NOTES
EXCV-01	I-5	131.80	158'LT	ITAA	
EXCV-02	I-5	131.81	18'LT	ITAA	
EXCV-03	I-5	132.57	20'LT	ITBB	
EXCV-04	I5SB	498+69	96'LT	IT1	
EXCV-05	I5NB	100+46	109'RT	IT1	

MEASUREMENT IS TO CENTER OF BOX.
STATION AND OFFSET IS APROXIMATE.
ALL MILE POST LOCATIONS ON ON RAMP ARE BASED OFF OF I-5 MAINLINE.
ALL OFFSET LOCATIONS ARE TAKEN FROM THE ADJACENT FOG LINE.

NOTES

1. SEE STANDARD PLAN J-90.10 FOR PULL BOX INSTALLATION DETAILS, CONSTRUCTION METHODS, AND CABLE RACKING SCHEME.
2. SEE STANDARD PLAN J-90.20 FOR CABLE VAULT INSTALLATION DETAILS, CONSTRUCTION METHODS, AND CABLE RACKING SCHEME.
3. SEE ITBX2 FOR ADDITIONAL PULL BOX / CABLE VAULT PLACEMENT DETAILS.

DITCH / BACK SLOPE
CASE 1

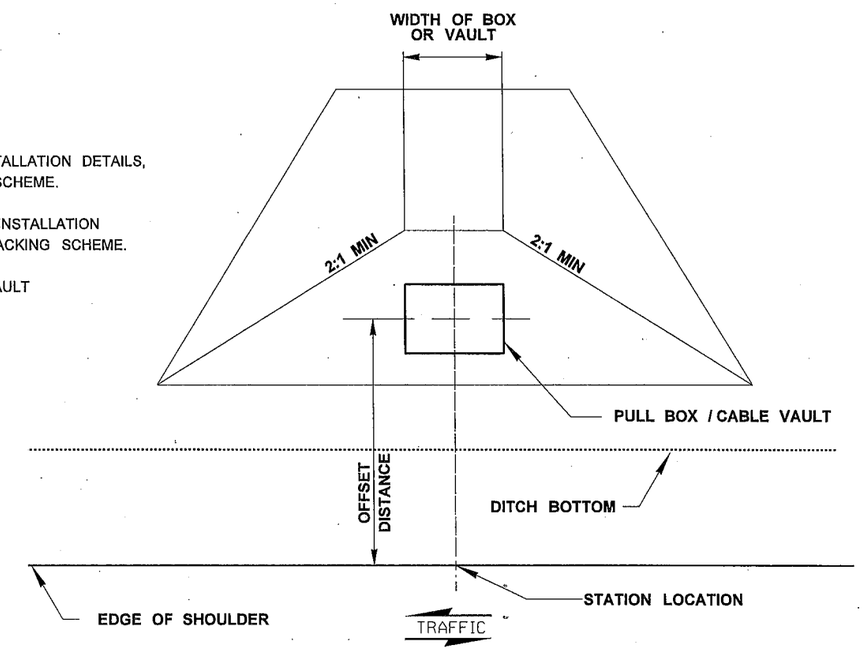

PLAN VIEW

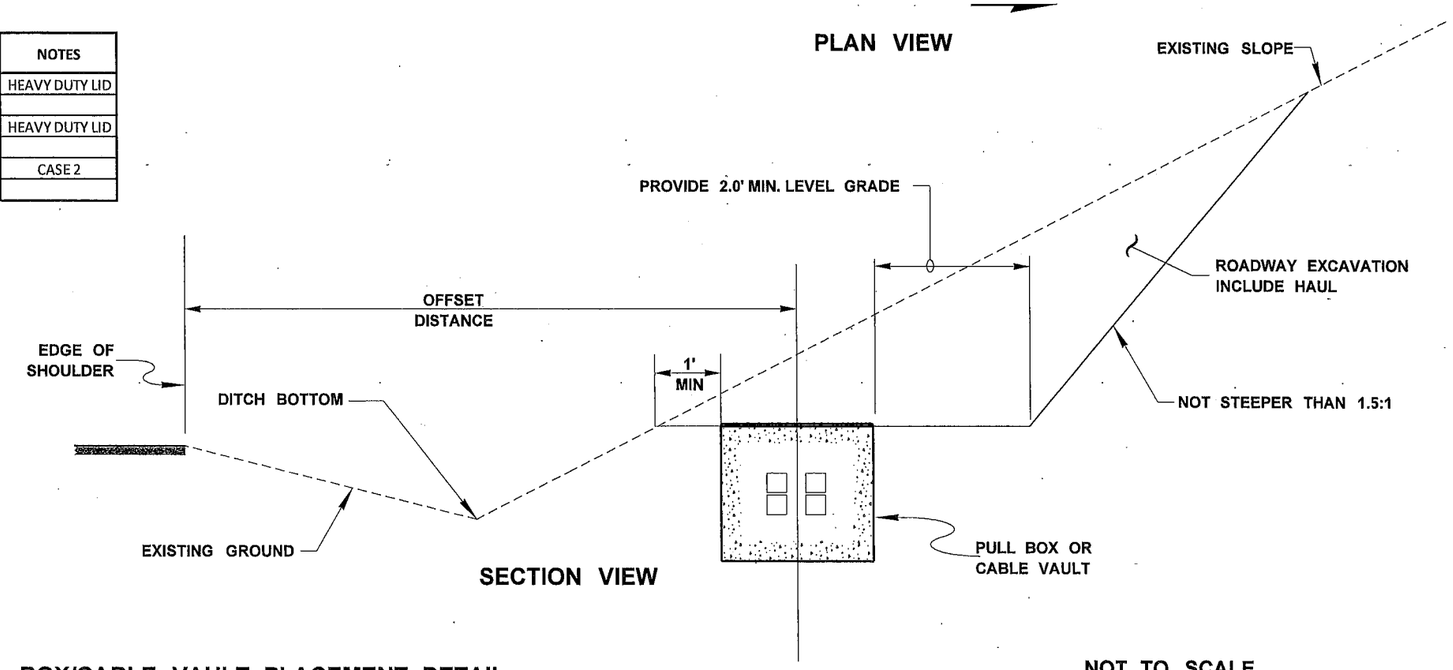

SECTION VIEW

NOT TO SCALE

PULL BOX/CABLE VAULT PLACEMENT DETAIL

FILE NAME	PW:_XL3497\PS&E Sheets\ITS\P3497_SH_ITBX_01.dgn					
TIME	10:37:12 AM				REGION NO. 10	STATE WASH
DATE	3/16/2014					FED.AID PROJ.NO.
PLOTTED BY	dizonj				JOB NUMBER	
DESIGNED BY	J. DIZON					
ENTERED BY	J. DIZON				CONTRACT NO.	LOCATION NO.
CHECKED BY	C. LANGFORD					
PROJ. ENGR.	J. PEREZ					
REGIONAL ADM.	K. DAYTON	REVISION	DATE	BY		

DENNIS RAY CRUMBER, STATE OF WASHINGTON, REGISTERED PROFESSIONAL ENGINEER — 3/17/14 DATE — P.E. STAMP BOX

DATE — P.E. STAMP BOX

Washington State Department of Transportation

I-5
M ST TO PORTLAND AVE - HOV

BOX DETAIL

PLAN REF NO ITBX1

SHEET 1386 OF 1763 SHEETS

EMBANKMENTS
CASE 2

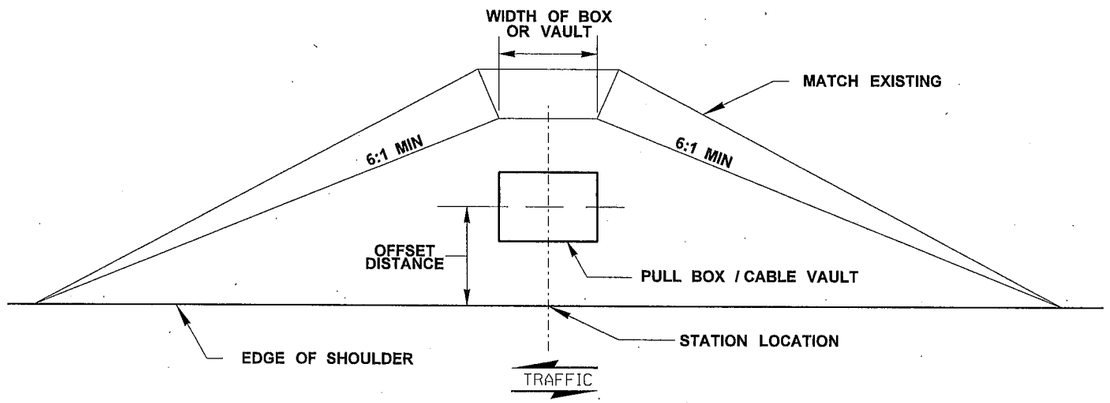

PLAN VIEW

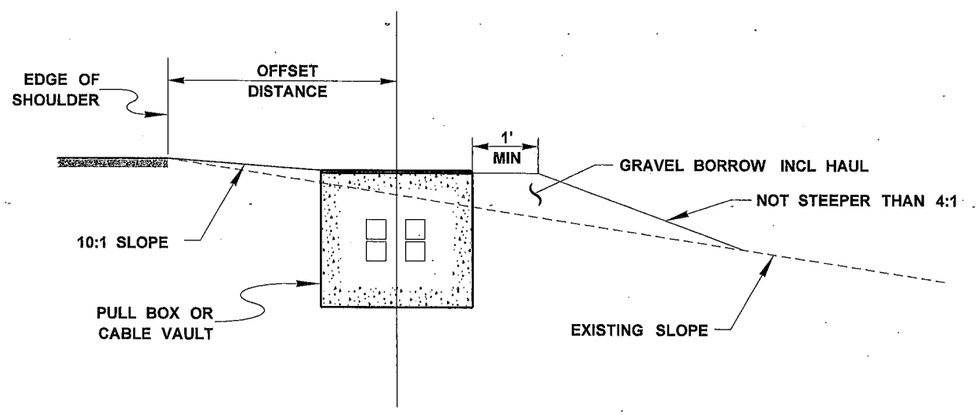

SECTION VIEW

EMBANKMENTS BEHIND GUARDRAIL
CASE 3

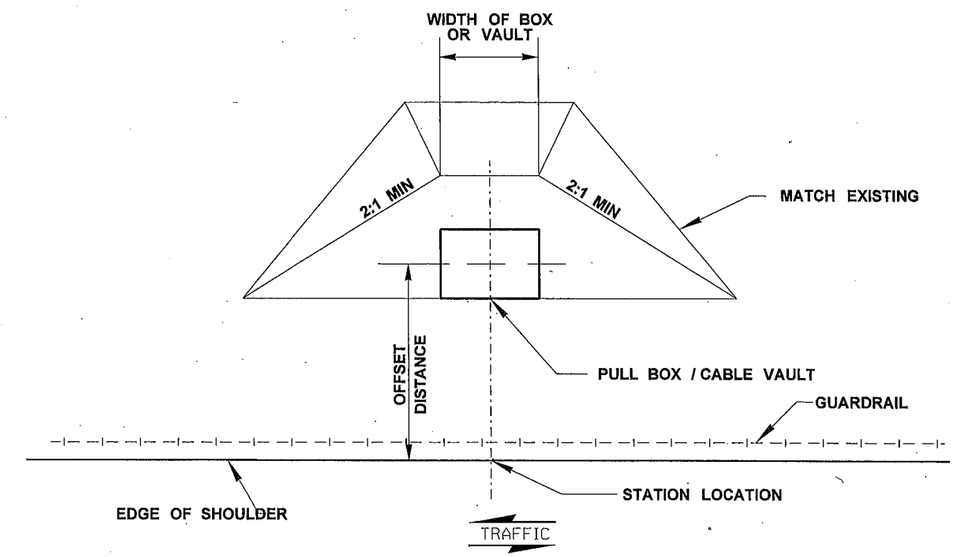

PLAN VIEW

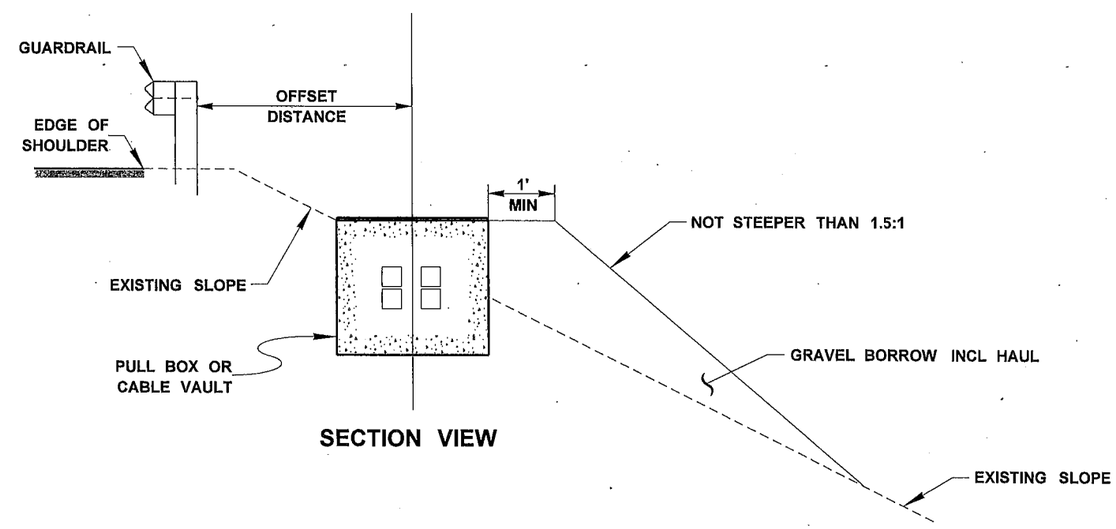

SECTION VIEW

NOT TO SCALE

NOTES

1. SEE STANDARD PLAN J-90.10 FOR PULL BOX INSTALLATION DETAILS, CONSTRUCTION METHODS, AND CABLE RACKING SCHEME.
2. SEE STANDARD PLAN J-90.20 FOR CABLE VAULT INSTALLATION DETAILS, CONSTRUCTION METHODS, AND CABLE RACKING SCHEME.
3. SEE ITBX1 FOR ADDITIONAL PLACEMENT DETAIL, STATIONS AND OFFSET DISTANCES.

PULL BOX/CABLE VAULT PLACEMENT DETAIL

FILE NAME	PW:_XL3497\PS&E Sheets\ITS\P3497_SH_ITBX_02.dgn				REGION NO.	STATE	FED.AID PROJ.NO.
TIME	10:37:17 AM				10	WASH	
DATE	3/16/2014				JOB NUMBER		
PLOTTED BY	dizonj						
DESIGNED BY	J. DIZON				CONTRACT NO.		LOCATION NO.
ENTERED BY	J. DIZON						
CHECKED BY	C. LANGFORD						
PROJ. ENGR.	J. PEREZ						
REGIONAL ADM.	K. DAYTON	REVISION	DATE	BY			

DENNIS RAY CRUMBAUGH, STATE OF WASHINGTON, REGISTERED PROFESSIONAL ENGINEER

3/17/14
DATE
P.E. STAMP BOX

DATE
P.E. STAMP BOX

Washington State Department of Transportation

I-5
M ST TO PORTLAND AVE - HOV

BOX DETAIL

PLAN REF NO
ITBX2

SHEET 1387 OF 1763 SHEETS

CABINET EQUIPMENT SCHEDULE

SHEET	EQUIPMENT ↓ CABINET IDENTIFICATION ↓	FOUNDATION LOCATION LINE STATION / MILE POST	OFFSET	DETAIL SHEET	VMS CONTROLLER	RUGGEDCOM RS900GP	RUGGEDCOM RX 1500	RUGGEDCOM RMC30	WIRELESS RAVEN	IFS D7430 WDM	IFS D7130 WDM	LOAD SWITCHES	170 CONTROLLER	CLICK 200	CLICK 112	CLICK 202	CLICK 222	CLICK 230	VIDEO ENCODER	SEE GENERAL NOTES
ITAA	*005-CH-13182 (EXISTING)*	I5 SB MP131.81	109' LT	ITFO1			1													
IT2	*005-VC-13307 (EXISTING)*	I5NB 113+54	145' RT	ITCB5		1														
IT3	005-DS-13335 (WVTNX-2)			ITDS1					1					1		1		1		
IT3	005-DS-13337 (WVTNX-1)			ITDS1					1					1		1		1		
IT3	*005-DS-13338 (EXISTING)*	NBN 20+80	93' RT	ITCB5		1		1						1	4					
IT3	005-PT-13338	NBN 20+86	93' RT																	
IT3	005-DS-13341 / 005-VM-13341	SSB 87+00	46' LT	ITCB2	1	1		1					1	1	4					
IT3	005-PT-13341	SSB 87+00	46' LT																	
IT5	005-VC-13371 / 005-CH-13371	NSB 78+80	142' LT	ITCB4		1													1	
IT5	005-VC-13376	SNB 16+80	91'RT	ITCB3		1													2	
IT7	005-DS-13397	I5SB 560+23	60'LT	ITCB2		1		2					2	2	8					
IT7	005-VC-13402	SBN 69+11	65'LT	ITCB3		1													1	
IT9	*005-VC-13464 (EXISTING)*	MDSI5 3481+08	174'LT	ITCB5		1														
IT10	005-RM-13473	MDSI5 3488+00	133'LT	ITCB6				1			1	2	1	2	7		2			
IT12	005-RM-13516	MDSI5 3509+62	99'LT	ITCB6				1		1	1	2	1	1	6		1		1	
	SHEET TOTAL				1	8	1	6	2	1	2	4	5	9	29	2	3	2	5	

GENERAL NOTES:

FILE NAME	PW:_XL3497\PS&E Sheets\ITS\P3497_SH_ITCB_01.dgn
TIME	8:37:25 AM
DATE	3/17/2014
PLOTTED BY	dizonj
DESIGNED BY	J. DIZON
ENTERED BY	J. DIZON
CHECKED BY	C. LANGFORD
PROJ. ENGR.	J. PEREZ
REGIONAL ADM.	K. DAYTON

REVISION | DATE | BY

REGION NO. 10 | STATE WASH | FED.AID PROJ.NO.

JOB NUMBER

CONTRACT NO. | LOCATION NO.

DENNIS RAY CRUMLEY, STATE OF WASHINGTON, REGISTERED PROFESSIONAL ENGINEER

3/17/14 DATE

P.E. STAMP BOX

DATE

P.E. STAMP BOX

Washington State Department of Transportation

I-5
M ST TO PORTLAND AVE -HOV

CABINET EQUIPMENT DETAIL

PLAN REF NO ITCB1

SHEET 1388 OF 1763 SHEETS

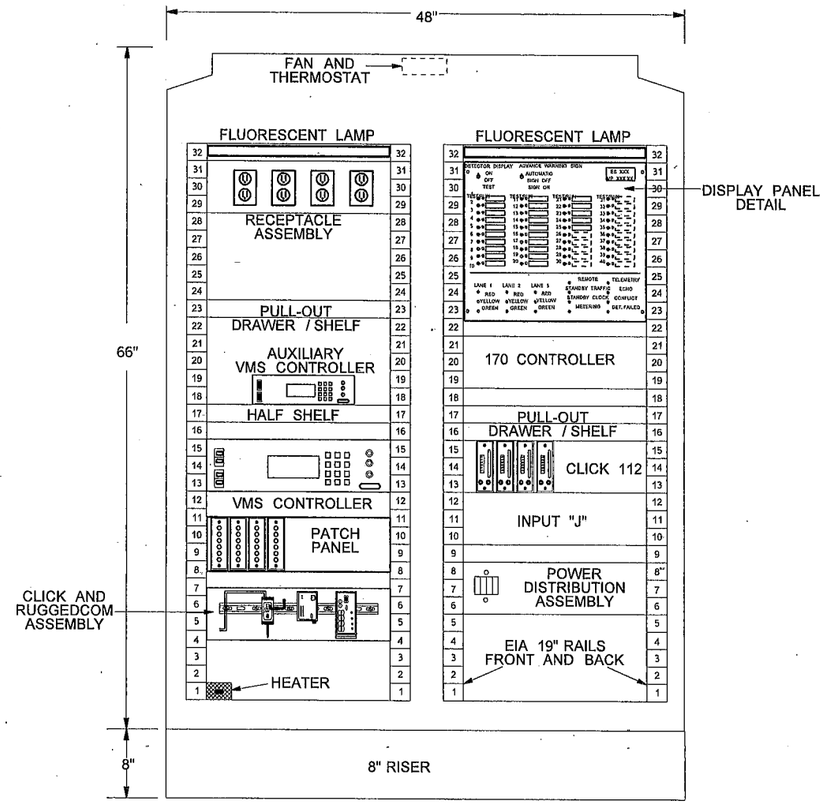

FRONT
SECTION B-B

VMS / RAMP METER
RACK ELEVATION

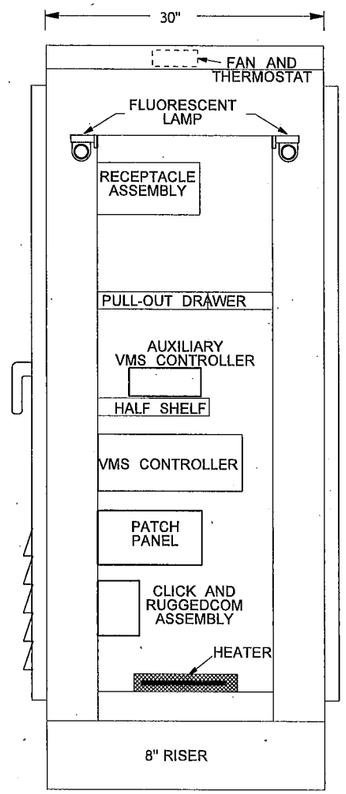

SIDE
SECTION A-A

VMS CABINET RACK

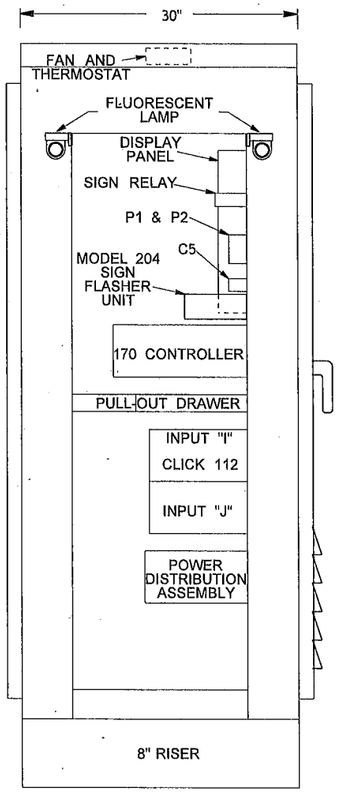

SIDE
SECTION C-C

RAMP METER
CABINET RACK

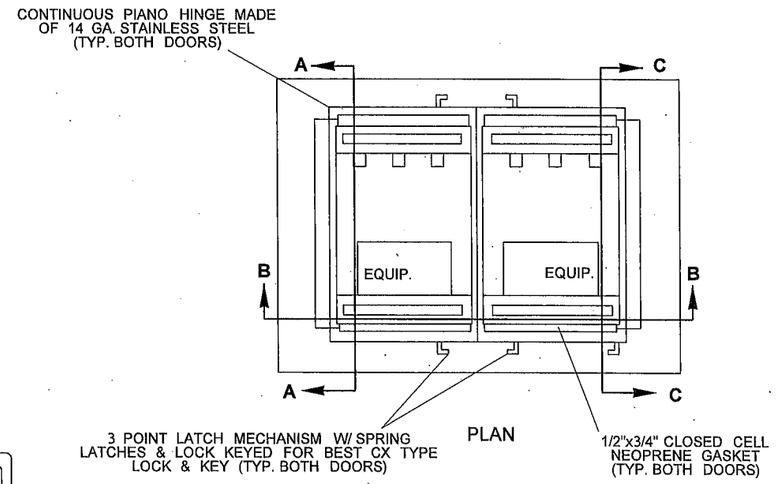

PLAN

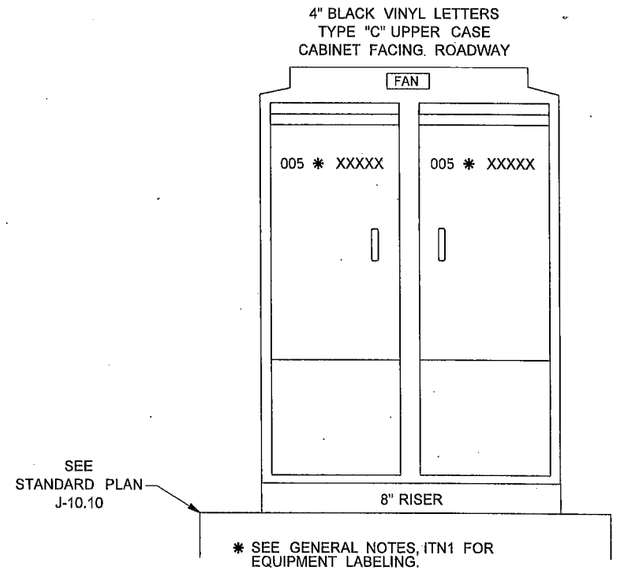

NOTES:

1. FOR CLICK AND RUGGEDCOM ASSEMBLY INFORMATION SEE DATA STATION DETAIL ITDS2.
2. IN ADDITION TO REQUIREMENTS OF STANDARD SPECIFICATION AND SPECIAL PROVISIONS, THE CONTRACTOR SHALL INSTALL ONLY THE EQUIPMENT SHOWN ON CABINET EQUIPMENT SCHEDULE ITCB1.
3. ORIENT CABINET SUCH THAT THE FRONT SIDE IS FACING AWAY FROM THE ROADWAY.

TYPE 334D RAMP METER CABINET DETAIL

NOT TO SCALE

FILE NAME	PW:_XL3497\PS&E Sheets\ITS\P3497_SH_ITCB_02.dgn						
TIME	10:37:23 AM						
DATE	3/16/2014						
PLOTTED BY	dizonj						
DESIGNED BY	A. DORROUGH/J. DIZON						
ENTERED BY	A. DORROUGH/J. DIZON						
CHECKED BY	C. LANGFORD						
PROJ. ENGR.	J. PEREZ						
REGIONAL ADM.	K. DAYTON	REVISION	DATE	BY			

REGION NO.	STATE	FED.AID PROJ.NO.
10	WASH	
JOB NUMBER		
CONTRACT NO.		LOCATION NO.

DENNIS RAY CRUMBERY, STATE OF WASHINGTON, REGISTERED PROFESSIONAL ENGINEER

3/17/14
DATE
P.E. STAMP BOX

DATE
P.E. STAMP BOX

Washington State Department of Transportation

I-5
M ST TO PORTLAND AVE -HOV

CABINET DETAIL

PLAN REF NO
ITCB2

SHEET 1389 OF 1763 SHEETS

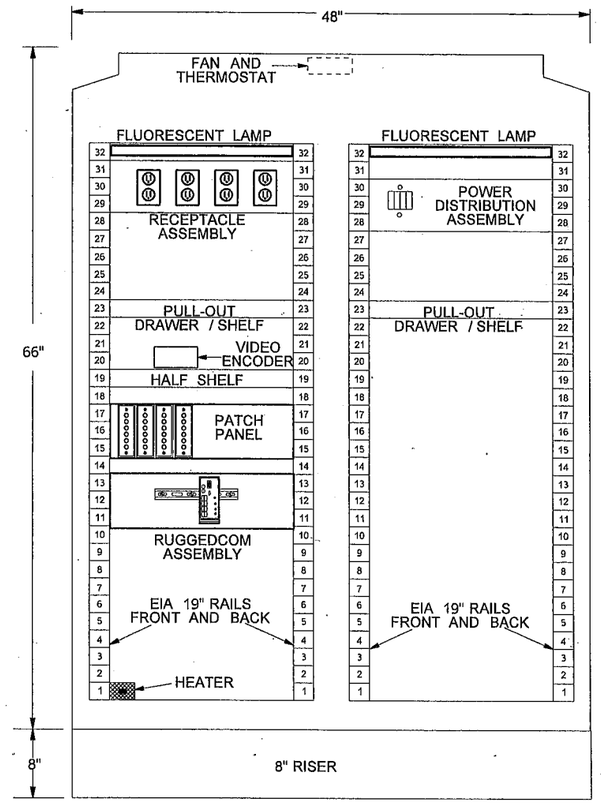

FRONT
SECTION B-B

VIDEO
RACK ELEVATION

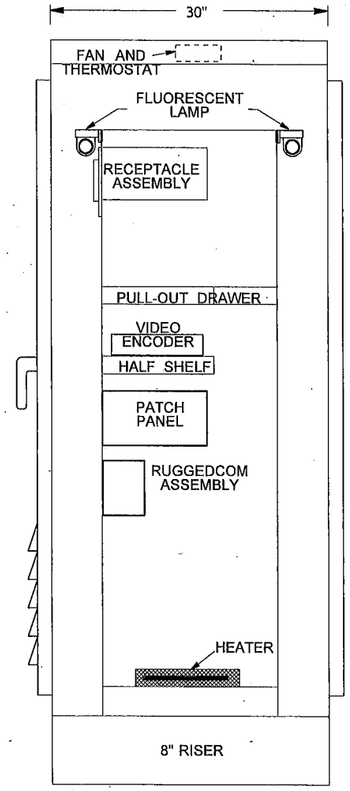

SIDE
SECTION A-A

VIDEO / PATCH PANEL
CABINET RACK

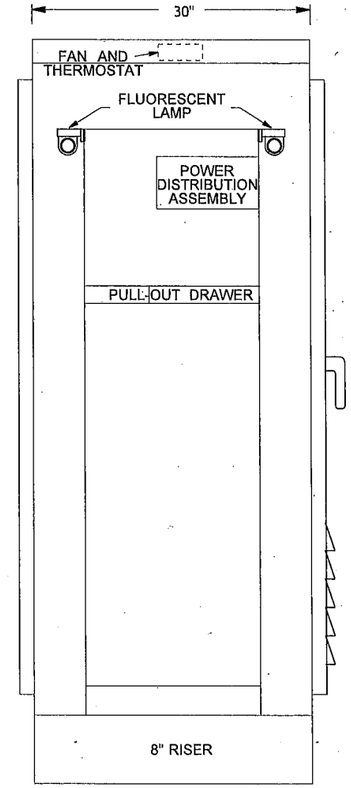

SIDE
SECTION C-C

FUTURE

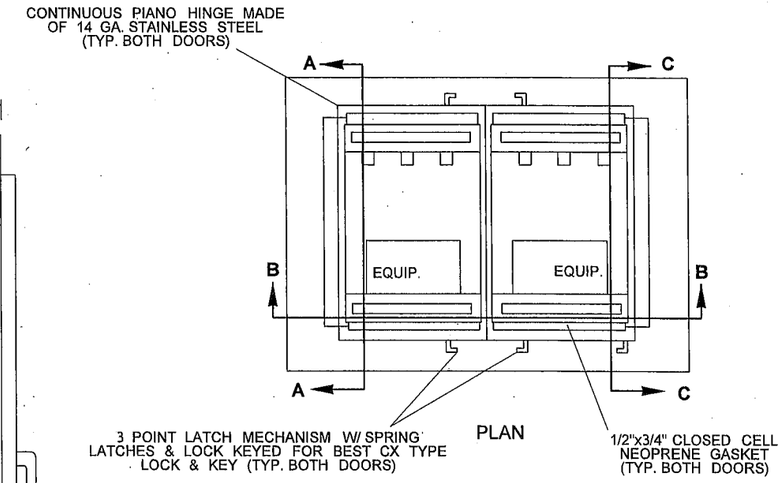

PLAN

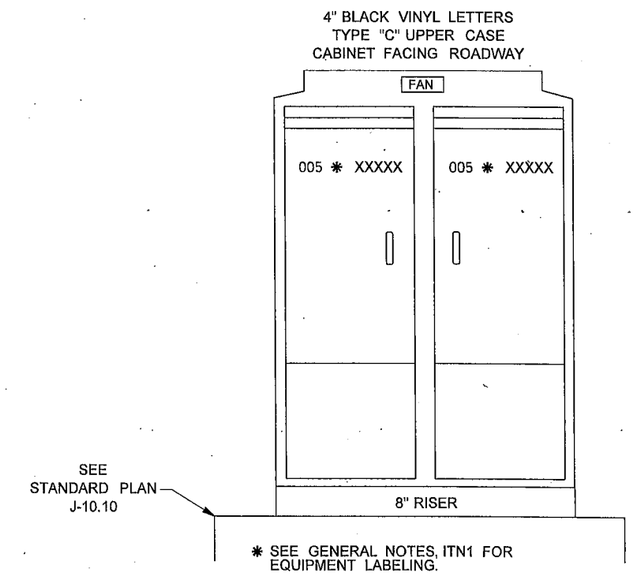

NOTES:

1. FOR RUGGEDCOM ASSEMBLY INFORMATION SEE DATA STATION DETAIL ITDS2.
2. FOR CAMERA CABINET WIRING DIAGRAM INFORMATION SEE VIDEO CABINET DETAIL ITVC1.
3. IN ADDITION TO REQUIREMENTS OF STANDARD SPECIFICATION AND SPECIAL PROVISIONS, THE CONTRACTOR SHALL INSTALL ONLY THE EQUIPMENT SHOWN ON CABINET EQUIPMENT SCHEDULE ITCB1.
4. ORIENT CABINET SUCH THAT THE FRONT SIDE IS FACING AWAY FROM THE ROADWAY.
5. SEE FIBER OPTIC DETAIL, ITFO1 FOR PATCH PANEL COUNT.

TYPE 334D ITS CABINET DETAIL

NOT TO SCALE

FILE NAME	PW:_XL3497\PS&E Sheets\ITS\P3497_SH_ITCB_03.dgn						
TIME	10:37:27 AM				REGION NO. 10	STATE WASH	FED.AID PROJ.NO.
DATE	3/16/2014				JOB NUMBER		
PLOTTED BY	dizonj						
DESIGNED BY	A. DORROUGH/J. DIZON				CONTRACT NO.		LOCATION NO.
ENTERED BY	A. DORROUGH/J. DIZON						
CHECKED BY	C. LANGFORD						
PROJ. ENGR.	J. PEREZ						
REGIONAL ADM.	K. DAYTON	REVISION	DATE	BY			

DENNIS RAY CRUMBER — STATE OF WASHINGTON — REGISTERED PROFESSIONAL ENGINEER
3/17/14
DATE
P.E. STAMP BOX

DATE
P.E. STAMP BOX

Washington State Department of Transportation

I-5
M ST TO PORTLAND AVE -HOV

CABINET DETAIL

PLAN REF NO
ITCB3

SHEET 1390 OF 1763 SHEETS

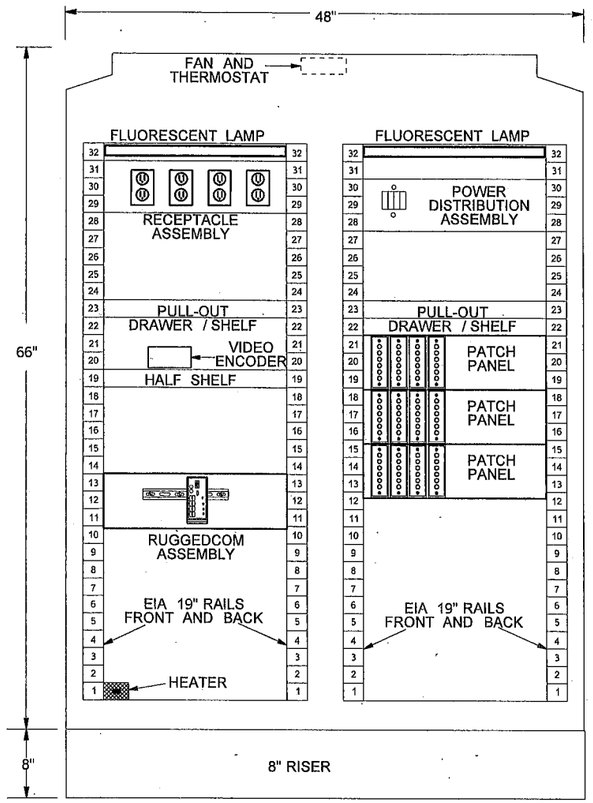

FRONT
SECTION B-B

VIDEO / COMM HUB
RACK ELEVATION

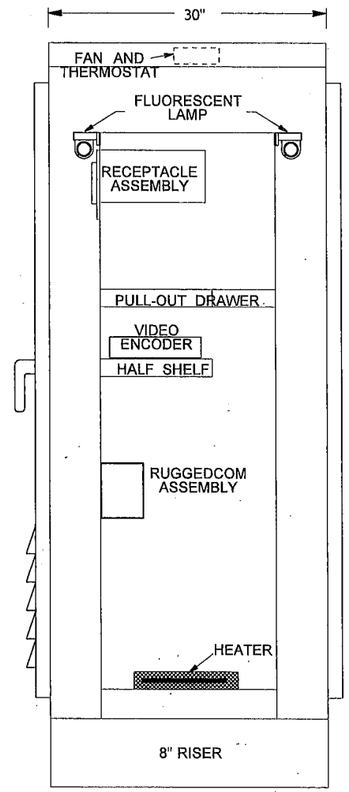

SIDE
SECTION A-A

VIDEO
CABINET RACK

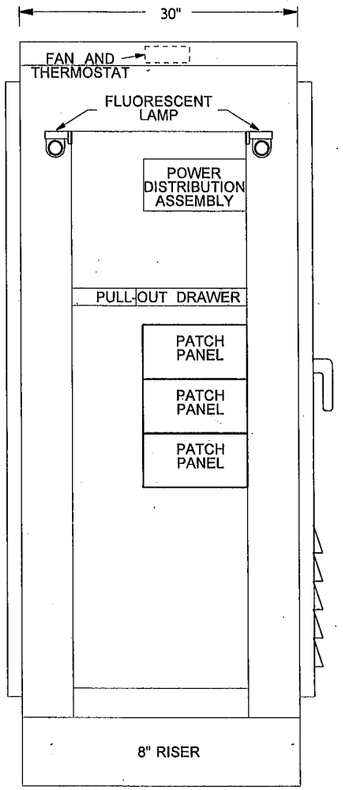

SIDE
SECTION C-C

COMM HUB
CABINET RACK

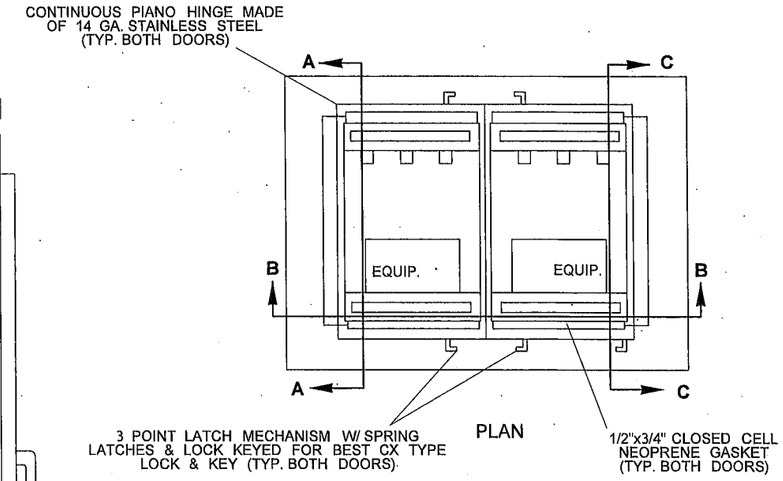

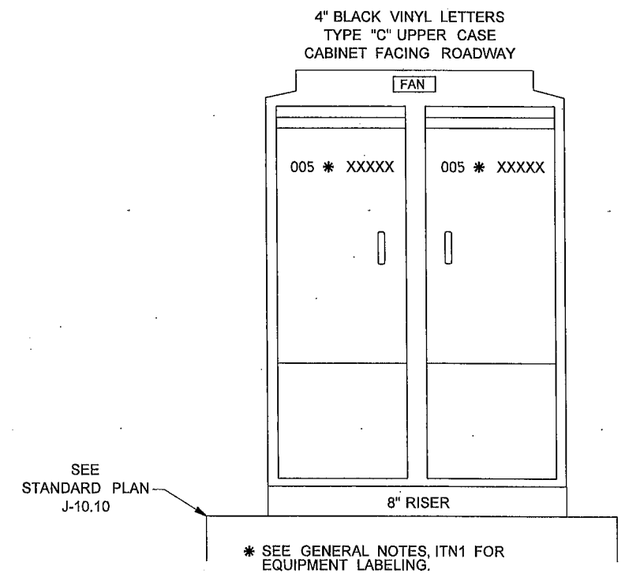

NOTES:

1. FOR RUGGEDCOM ASSEMBLY INFORMATION SEE DATA STATION DETAIL ITDS2.
2. IN ADDITION TO REQUIREMENTS OF STANDARD SPECIFICATION AND SPECIAL PROVISIONS, THE CONTRACTOR SHALL INSTALL ONLY THE EQUIPMENT SHOWN ON CABINET EQUIPMENT SCHEDULE ITCB1.
3. ORIENT CABINET SUCH THAT THE FRONT SIDE IS FACING AWAY FROM THE ROADWAY.
4. SEE FIBER OPTIC DETAIL, ITFO1 FOR PATCH PANEL COUNT.

TYPE 334D ITS CABINET DETAIL

NOT TO SCALE

FILE NAME	PW:_XL3497\PS&E Sheets\ITS\P3497_SH_ITCB_04.dgn				REGION NO. 10	STATE WASH	FED.AID PROJ.NO.	P.E. STAMP BOX 3/17/14 DATE	Washington State Department of Transportation	I-5 M ST TO PORTLAND AVE -HOV	PLAN REF NO ITCB4
TIME	10:37:30 AM										
DATE	3/16/2014				JOB NUMBER						SHEET 1391 OF 1763 SHEETS
PLOTTED BY	dizonj										
DESIGNED BY	A. DORROUGH/J. DIZON										
ENTERED BY	A. DORROUGH/J. DIZON										
CHECKED BY	C. LANGFORD				CONTRACT NO.		LOCATION NO.			CABINET DETAIL	
PROJ. ENGR.	J. PEREZ										
REGIONAL ADM.	K. DAYTON	REVISION	DATE	BY				P.E. STAMP BOX DATE			

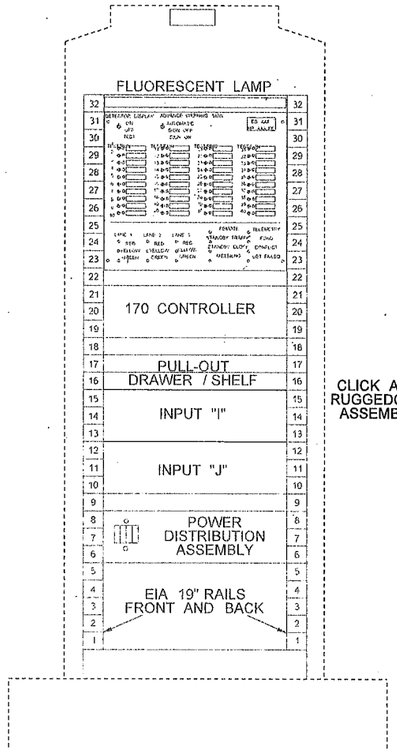

FRONT
SECTION A-A

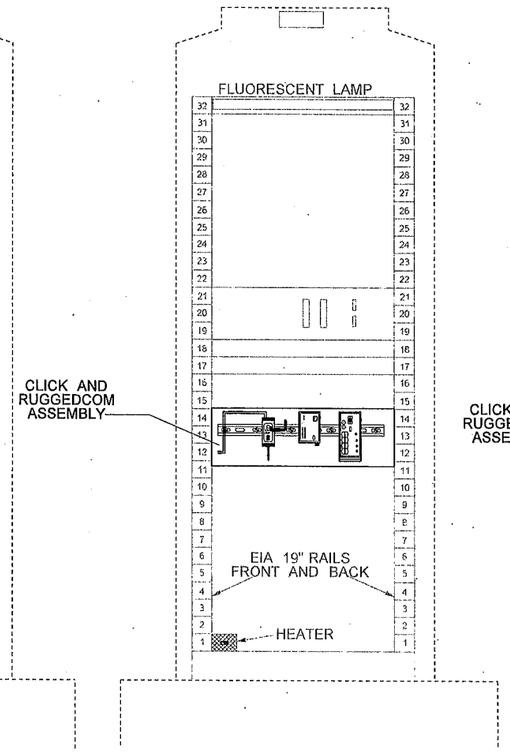

BACK
SECTION B-B

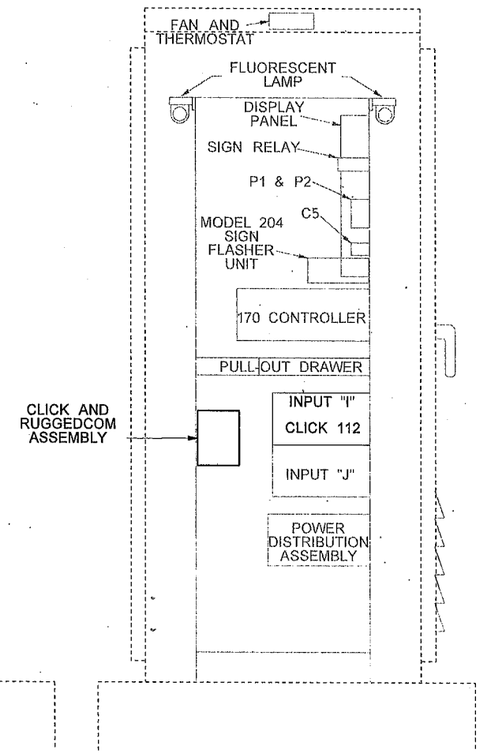

SIDE
SECTION C-C

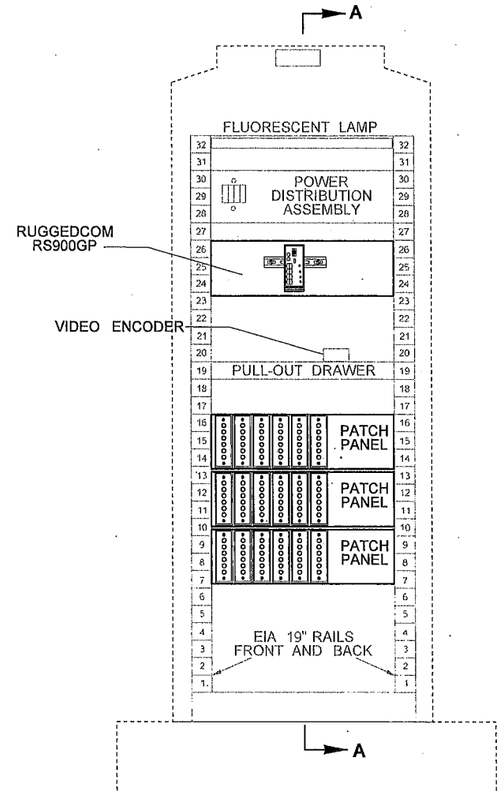

FRONT

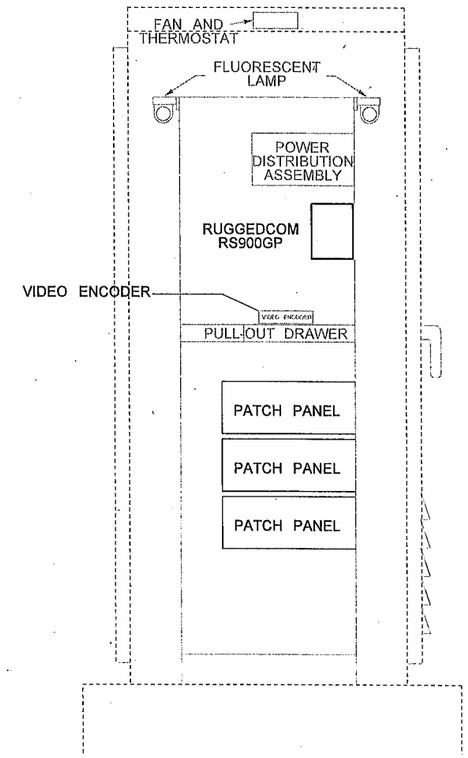

SIDE
SECTION A-A

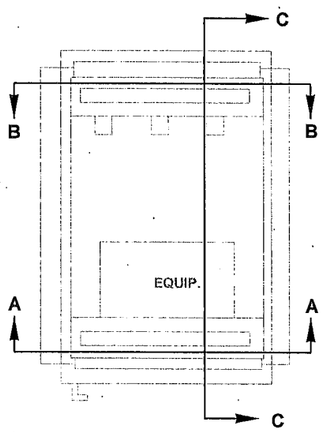

TYPE 334 RAMP METER CABINET DETAIL

005-DS-13338

TYPE 334 VIDEO CABINET DETAIL

005-VC-13307
005-VC-13464

NOTES:

1. FOR CLICK AND RUGGEDCOM ASSEMBLY SEE DATA STATION DETAIL ITDS2.
2. IN ADDITION TO REQUIREMENTS OF STANDARD SPECIFICATION AND SPECIAL PROVISIONS, THE CONTRACTOR SHALL INSTALL ONLY THE EQUIPMENT SHOWN ON CABINET EQUIPMENT SCHEDULE ITCB1.
3. ORIENT CABINET SUCH THAT THE FRONT SIDE IS FACING AWAY FROM THE ROADWAY.
4. SEE FIBER OPTIC DETAIL, ITFO1 FOR PATCH PANEL COUNT.

NOT TO SCALE

FILE NAME	PW:_XL3497\PS&E Sheets\ITS\P3497_SH_ITCB_05.dgn						
TIME	10:37:40 AM				REGION NO. 10	STATE WASH	FED.AID PROJ.NO.
DATE	3/16/2014				JOB NUMBER		
PLOTTED BY	dizonj						
DESIGNED BY	J. DIZON				CONTRACT NO.		LOCATION NO.
ENTERED BY	J. DIZON						
CHECKED BY	C. LANGFORD						
PROJ. ENGR.	J. PEREZ						
REGIONAL ADM.	K. DAYTON	REVISION	DATE	BY			

DENNIS RAY CRUMBY, STATE OF WASHINGTON, REGISTERED PROFESSIONAL ENGINEER
3/17/14
DATE
P.E. STAMP BOX

DATE
P.E. STAMP BOX

Washington State Department of Transportation

I-5
M ST TO PORTLAND AVE -HOV

CABINET DETAIL

PLAN REF NO
ITCB5

SHEET 1392 OF 1763 SHEETS

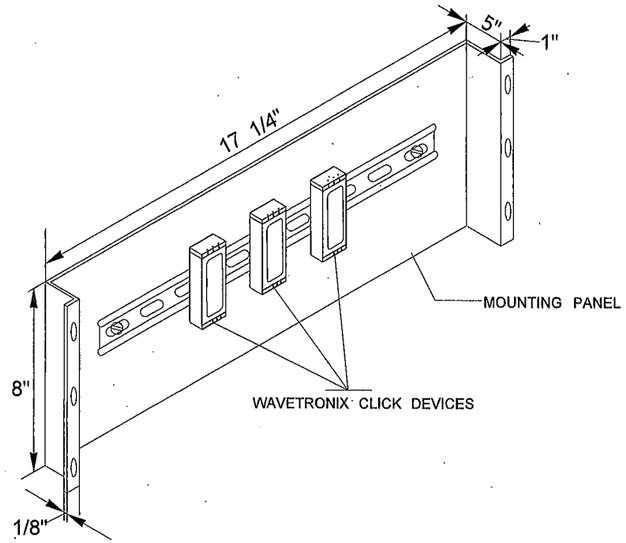

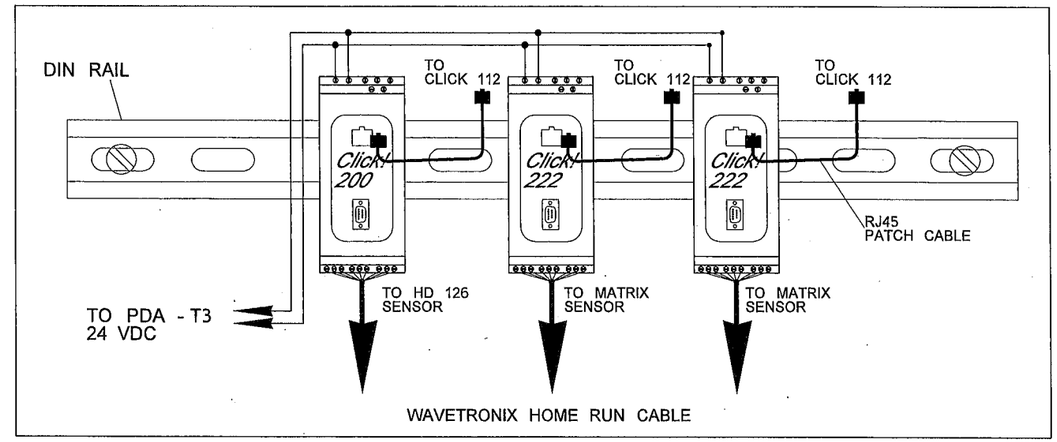

SENSOR CABINET WIRING DETAIL

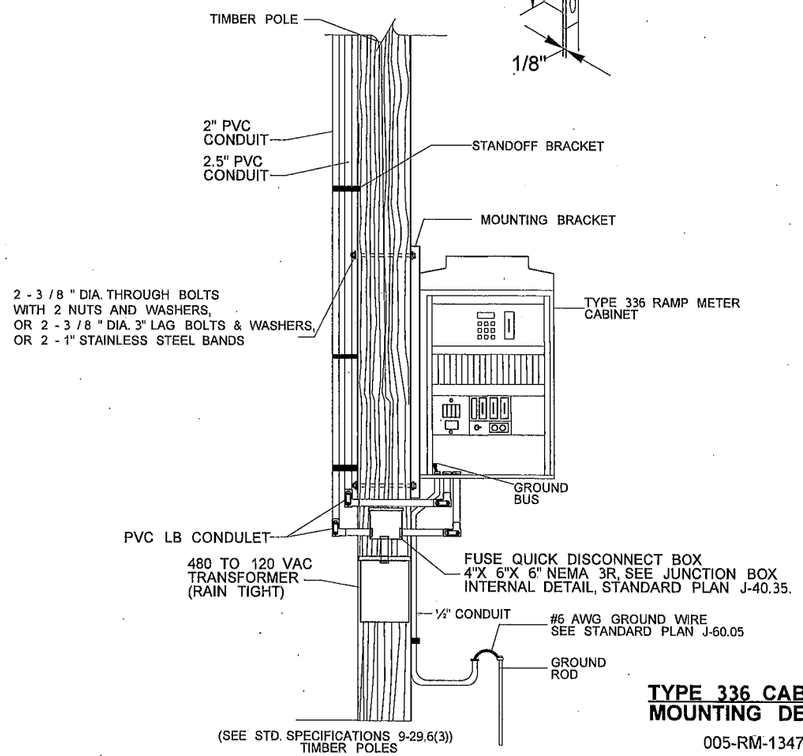

TYPE 336 CABINET MOUNTING DETAIL

005-RM-13473
005-RM-13516

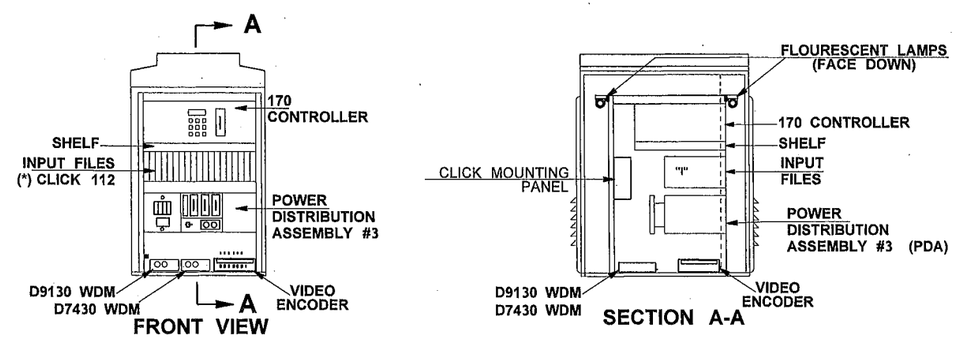

RAMP METER CABINET DETAIL

005-RM-13473
005-RM-13516

NOTES:

1. IN ADDITION TO REQUIREMENTS OF STANDARD SPECIFICATION AND SPECIAL PROVISIONS, THE CONTRACTOR SHALL INSTALL ONLY THE EQUIPMENT SHOWN ON CABINET EQUIPMENT SCHEDULE ITCB1.
2. SEE FIBER OPTIC DETAIL, ITFO1 FOR PATCH PANEL COUNT.
3. ALL HARDWARE SHALL BE STAINLESS STEEL OR GALVANIZED.

NOT TO SCALE

FILE NAME	PW:_XL3497\PS&E Sheets\ITS\P3497_SH_ITCB_06.dgn						
TIME	10:37:44 AM				REGION NO. 10	STATE WASH	FED.AID PROJ.NO.
DATE	3/16/2014						
PLOTTED BY	dizonj				JOB NUMBER		
DESIGNED BY	J. DIZON						
ENTERED BY	J. DIZON						
CHECKED BY	C. LANGFORD				CONTRACT NO.		LOCATION NO.
PROJ. ENGR.	J. PEREZ						
REGIONAL ADM.	K. DAYTON	REVISION	DATE	BY			

DENNIS RAY CRUMBER, STATE OF WASHINGTON, REGISTERED PROFESSIONAL ENGINEER
3/17/14
DATE
P.E. STAMP BOX

DATE
P.E. STAMP BOX

Washington State Department of Transportation

I-5
M ST TO PORTLAND AVE -HOV

CABINET DETAIL

ITCB6

SHEET 1393 OF 1763 SHEETS

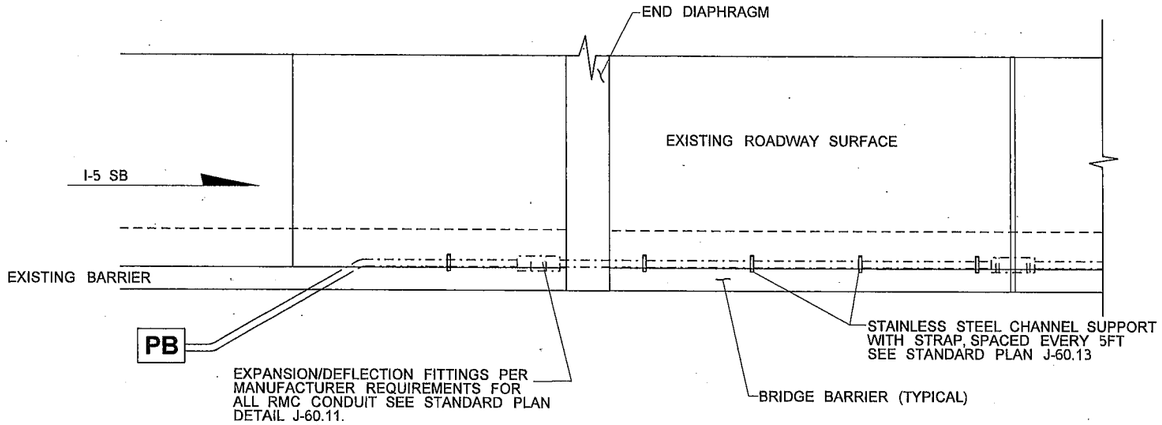

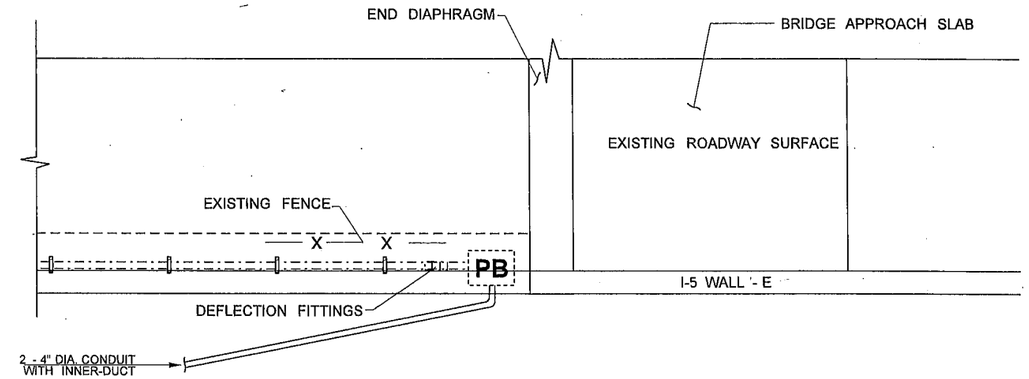

PLAN VIEW

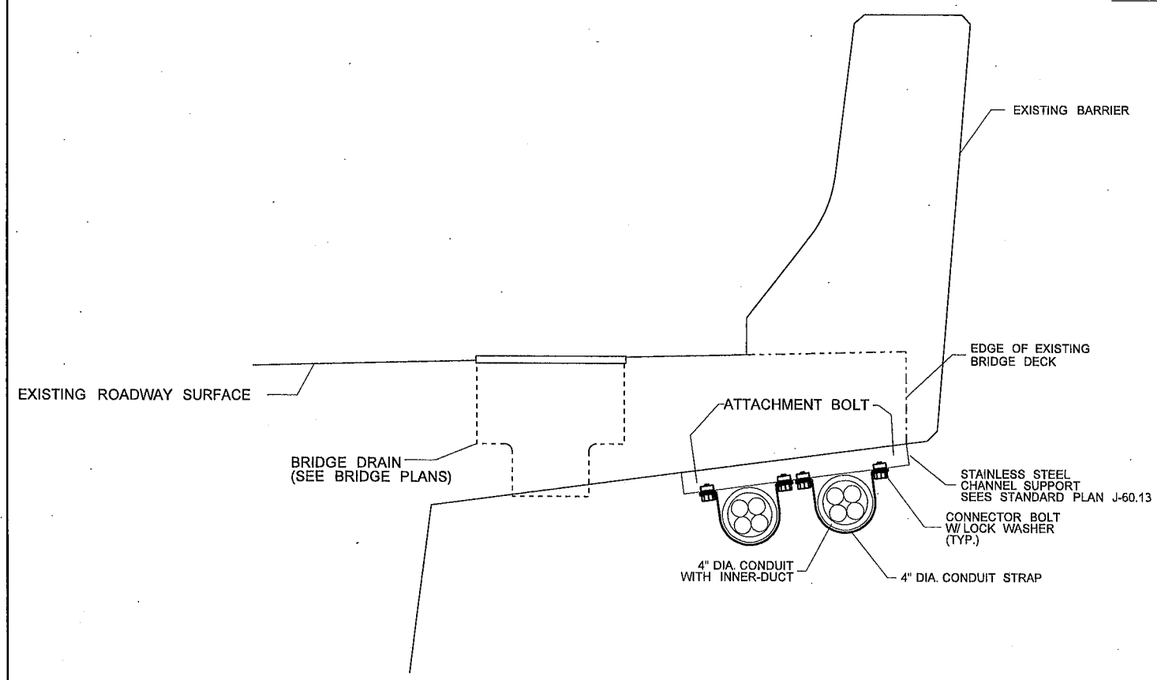

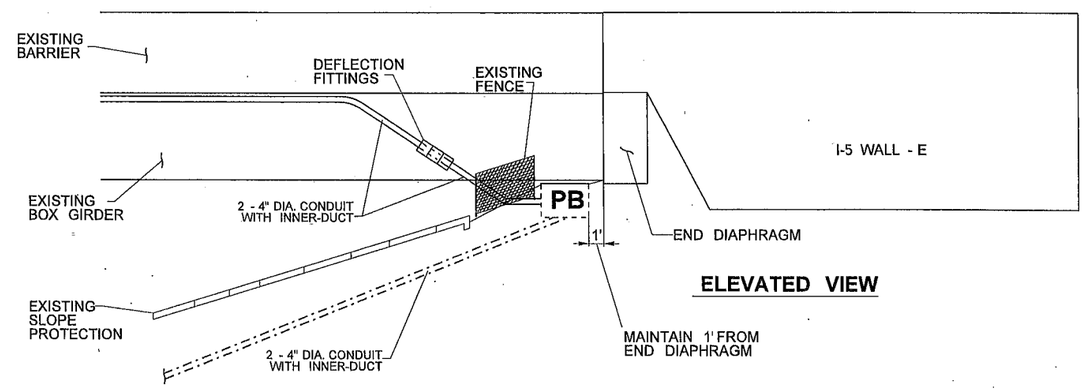

ELEVATED VIEW

NOTES:

1. EXTREME CAUTION SHALL BE USED BY THE CONTRACTOR WHEN EXCAVATING NEAR THE BRIDGE ABUTMENT AND PIER.

   DRILLING THROUGH REINFORCING STEEL SHALL NOT BE PERMITTED. IF STEEL IS HIT WHEN DRILLING, THE ANCHORING LOCATION SHALL BE MOVED AND THE ABANDONED
2. HOLE SHALL BE FILLED WITH NON-SHRINK GROUT CONFORMING TO THE STANDARD SPECIFICATIONS 6-02.3(20).
3. THERE SHALL BE A MINIMUM OF (3) INCHES OF EDGE DISTANCE TO THE CENTER LINE OF BOLT HOLES IN CONCRETE.
4. INSTALL EXPANSION/ DEFLECTION FITTINGS IN GROUND TO BRIDGE APPROACHES IN ACCORDANCE WITH THE MANUFACTURER'S REQUIREMENTS FOR ALL RMC CONDUIT, SEE STANDARD PLAN DETAIL J-60.11.
5. BRIDGE DRAINS TO BE INSTALLED AFTER CONDUIT. MOUNT STAINLESS STEEL CHANNEL SUPPORT WITH 2.5' OFFSET FROM BRIDGE DRAINS. SEE BRIDGE PLANS FOR LOCATIONS.

CONDUIT MOUNTING BRIDGE DETAIL

BRIDGE 005/445W SR 705 INTERCHANGE (MP 133.71)

NOT TO SCALE

FILE NAME	PW:_XL3497\PS&E Sheets\ITS\P3497_SH_ITCD_01.dgn						
TIME	10:37:50 AM				REGION NO. 10	STATE WASH	FED.AID PROJ.NO.
DATE	3/16/2014						
PLOTTED BY	dizonj				JOB NUMBER		
DESIGNED BY	A. DORROUGH/J. DIZON						
ENTERED BY	A. DORROUGH/J. DIZON						
CHECKED BY	C. LANGFORD				CONTRACT NO.		LOCATION NO.
PROJ. ENGR.	J PEREZ						
REGIONAL ADM.	K. DAYTON	REVISION	DATE	BY			

DENNIS RAY CRUMBER — STATE OF WASHINGTON — REGISTERED PROFESSIONAL ENGINEER
3/17/14
DATE
P.E. STAMP BOX

DATE
P.E. STAMP BOX

Washington State Department of Transportation

I-5
M ST TO PORTLAND AVE - HOV

CONDUIT DETAIL

PLAN REF NO ITCD1

SHEET 1394 OF 1763 SHEETS

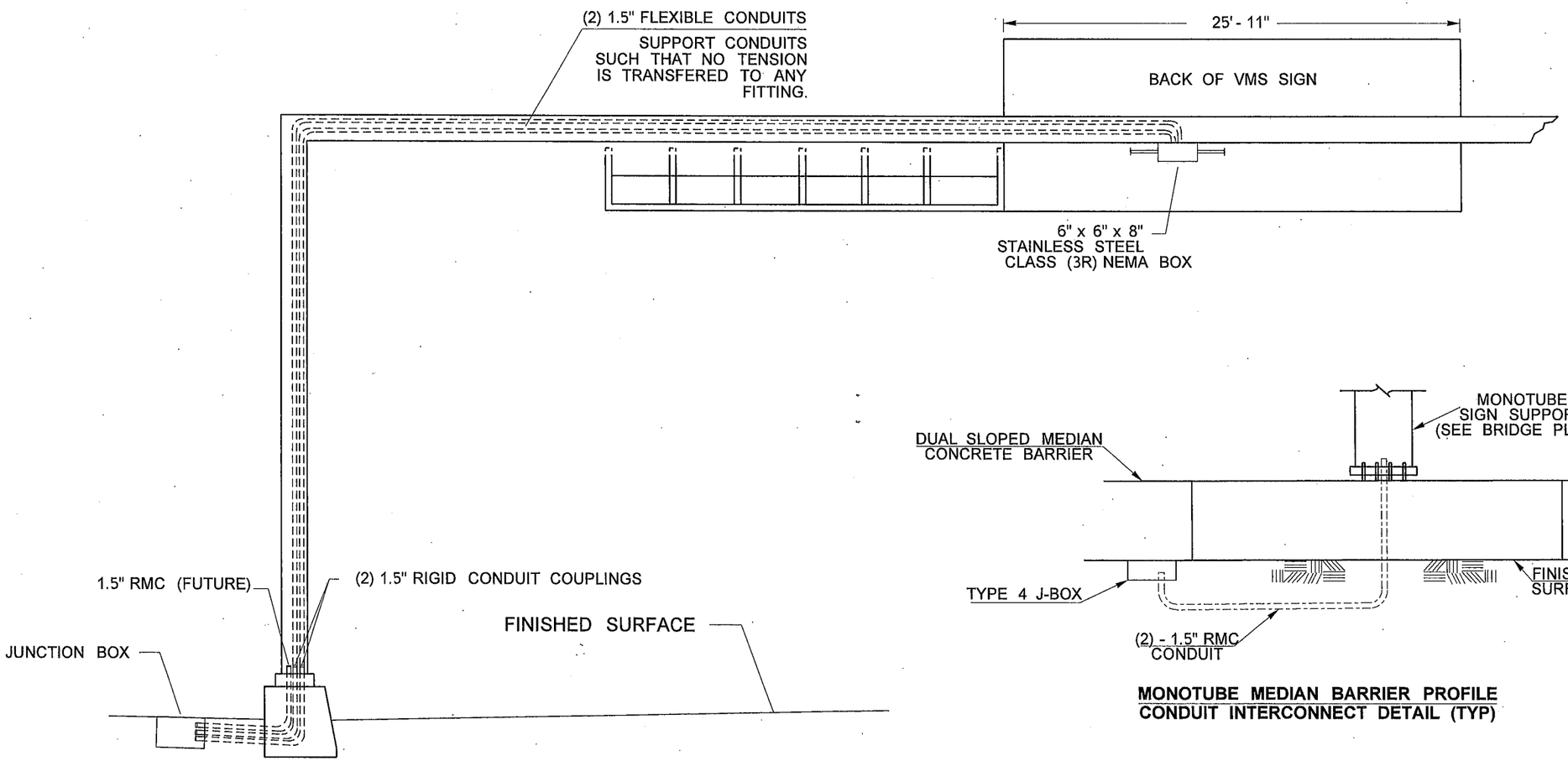

MONOTUBE MEDIAN BARRIER PROFILE
CONDUIT INTERCONNECT DETAIL (TYP)

NOTES:

1. SEE SIGN BRIDGE NO.6

SIGN BRIDGE STRUCTURE I5SB 528+52.00

(VMS FACING SOUTHBOUND TRAFFIC)

NOT TO SCALE

FILE NAME	PW:_XL3497\PS&E Sheets\ITS\P3497_SH_ITCD_02.dgn				REGION NO. 10	STATE WASH	FED.AID PROJ.NO.
TIME	10:37:54 AM						
DATE	3/16/2014						
PLOTTED BY	dizonj				JOB NUMBER		
DESIGNED BY	A. DORROUGH/J. DIZON						
ENTERED BY	A. DORROUGH/J. DIZON						
CHECKED BY	C. LANGFORD				CONTRACT NO.		LOCATION NO.
PROJ. ENGR.	J. PEREZ						
REGIONAL ADM.	K. DAYTON	REVISION	DATE	BY			

DENNIS RAY CRUMBAY, STATE OF WASHINGTON, REGISTERED PROFESSIONAL ENGINEER
3/17/14
DATE
P.E. STAMP BOX

DATE
P.E. STAMP BOX

Washington State Department of Transportation

I-5
M ST TO PORTLAND AVE - HOV

CONDUIT DETAIL

PLAN REF NO
ITCD2

SHEET 1395 OF 1763 SHEETS

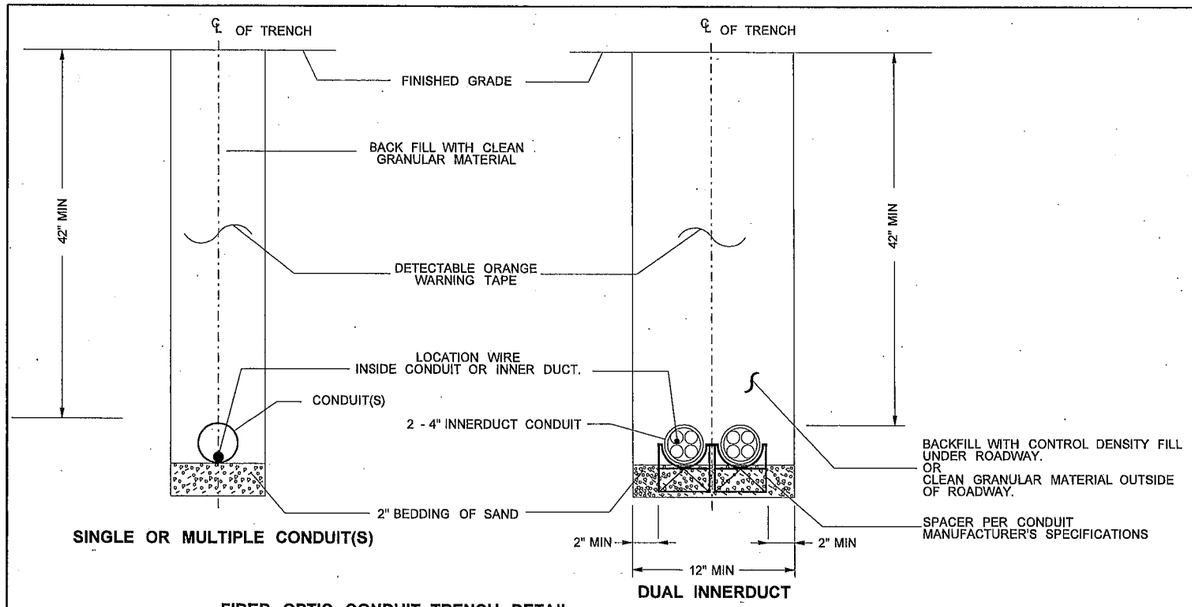

FIBER OPTIC CONDUIT TRENCH DETAIL

NOTES:

1. UNLESS OTHERWISE SPECIFIED, LINEAR DIMENSIONS ARE BASED ON ROADWAY STATIONING
2. WARNING TAPE SHALL BE LABELED "WARNING - FIBER OPTIC CABLE BELOW"
3. SECURE CONDUIT IN TRENCH BEFORE BACKFILLING TO PREVENT FLOATING
4. BACKFILL SHALL CONFORM WITH STANDARD SPEC. SECTION 2-09.3(1) E. SAND SHALL CONFORM WITH STANDARD SPEC. SECTION 9-03.1(2) CLASS 2 OR AS APPROVED BY THE ENGINEER.

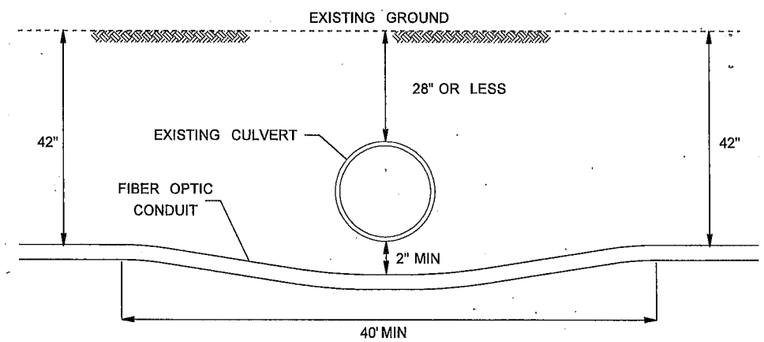

FIBER OPTIC CONDUIT UNDER CULVERT

- THE MAXIMUM DEFLECTION ANGLE SHALL BE 10:1.

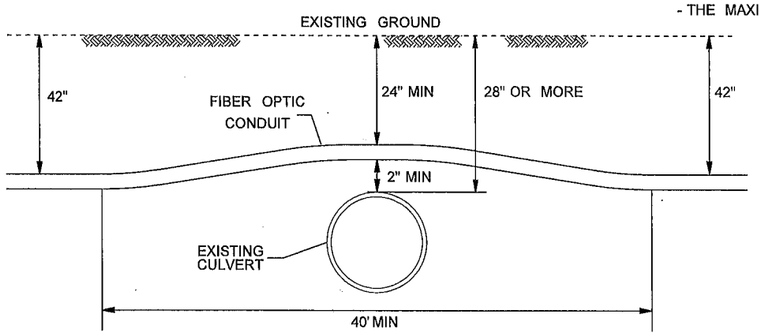

FIBER OPTIC CONDUIT OVER CULVERT

- THE MAXIMUM DEFLECTION ANGLE SHALL BE 10:1.

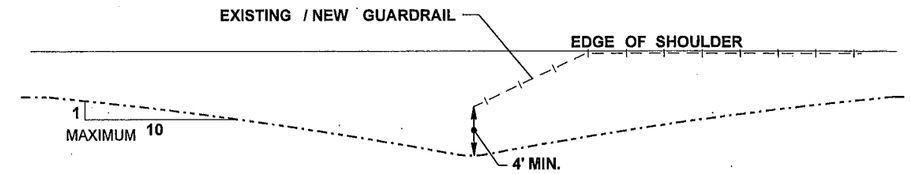

GUARDRAIL
FIBER OPTIC CONDUIT DETAIL

- THE MAXIMUM DEFLECTION ANGLE SHALL BE 10:1.
- CONDUIT SHALL BE INSTALLED A MINIMUM OF FOUR (4) FT. FROM THE GUARDRAIL.
- WHERE LATERAL CONDUIT CROSSES UNDER GUARDRAIL, CONDUIT SHALL BE INSTALLED AT A MINIMUM DEPTH OF FIVE (5) FT WITHIN FOUR (4) FT OF GUARDRAIL.

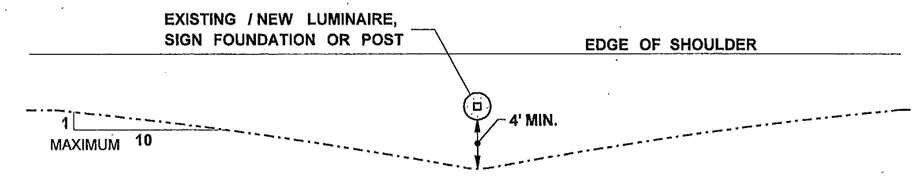

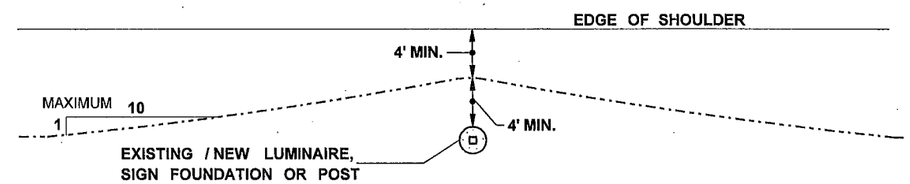

SIGN FOUNDATION/ POST
FIBER OPTIC CONDUIT DETAIL

- THE MAXIMUM DEFLECTION ANGLE SHALL BE 10:1.
- CONDUIT SHALL NOT BE PLACED BETWEEN SIGN POSTS

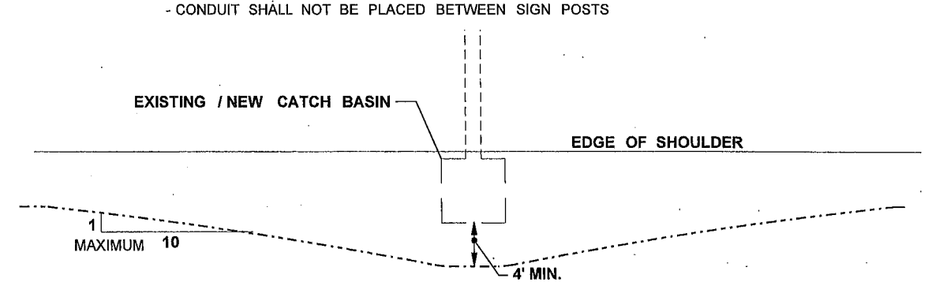

CATCH BASIN
FIBER OPTIC CONDUIT DETAIL

- THE MAXIMUM DEFLECTION ANGLE SHALL BE 10:1.
- CONDUIT SHALL MAINTAIN A FOUR (4) FT. MINIMUM CLEARANCE FROM ALL DRAINAGE STRUCTURES.

FIBER CONDUIT PLACEMENT DETAIL

NOT TO SCALE

FILE NAME	PW:_XL3497\PS&E Sheets\ITS\P3497_SH_ITCD_03.dgn				REGION NO. 10	STATE WASH	FED.AID PROJ.NO.
TIME	10:37:57 AM						
DATE	3/16/2014						
PLOTTED BY	dizonj				JOB NUMBER		
DESIGNED BY	A. DORROUGH/J. DIZON						
ENTERED BY	A. DORROUGH/J. DIZON						
CHECKED BY	C. LANGFORD				CONTRACT NO.		LOCATION NO. XL3497
PROJ. ENGR.	J. PEREZ						
REGIONAL ADM.	K. DAYTON	REVISION	DATE	BY			

DENNIS RAY CRUMB, STATE OF WASHINGTON, REGISTERED PROFESSIONAL ENGINEER
3/17/14
DATE
P.E. STAMP BOX

DATE
P.E. STAMP BOX

Washington State Department of Transportation

I-5
M ST TO PORTLAND AVE - HOV

CONDUIT DETAIL

ITCD3

SHEET 1396 OF 1763 SHEETS

NOTES:

1. ALL REINFORCING STEEL SHALL HAVE A MIN. OF 2" CLEAR COVER.
2. ALL CONDUITS SHALL BE CLUSTERED TOWARD THE CENTER OF THE CABINETS. INSTALL CONDUITS PER WIRE NOTES.
3. SLOPE CONTROLLER PAD ¼"/FT. TO THE SUMP IN CENTER.
4. ALL CONDUITS SHALL EXTEND 2" ABOVE CABINET PAD.
5. ALL CONDUITS SHALL BE HOT DIPPED GALVANIZED.
6. PLACE A SILICONE SEAL BETWEEN THE CABINET PAD AND THE CABINET.
7. BOLT PATTERN IS PROVIDED BY CABINET MANUFACTURER. BOLTS SHALL BE ½" DIA. AND EXTEND A MIN. OF 1 ½" ABOVE CONCRETE PAD. BOLTS SHALL BE CAST IN PLACE OR PLACED WITH EPOXY RESIN. SEE SPECIAL PROVISION.
8. ALL ANCHOR BOLTS SHALL BE STAINLESS STEEL.
9. CONCRETE SHALL BE COMMERCIAL CLASS.
10. ANY OTHER DIMENSION MUST BE APPROVED BY THE ENGINEER.
11. ORIENT THE CONTROL CABINET SUCH THAT THE COMMUNICATION SIDE IS AWAY FROM TRAFFIC LANES.

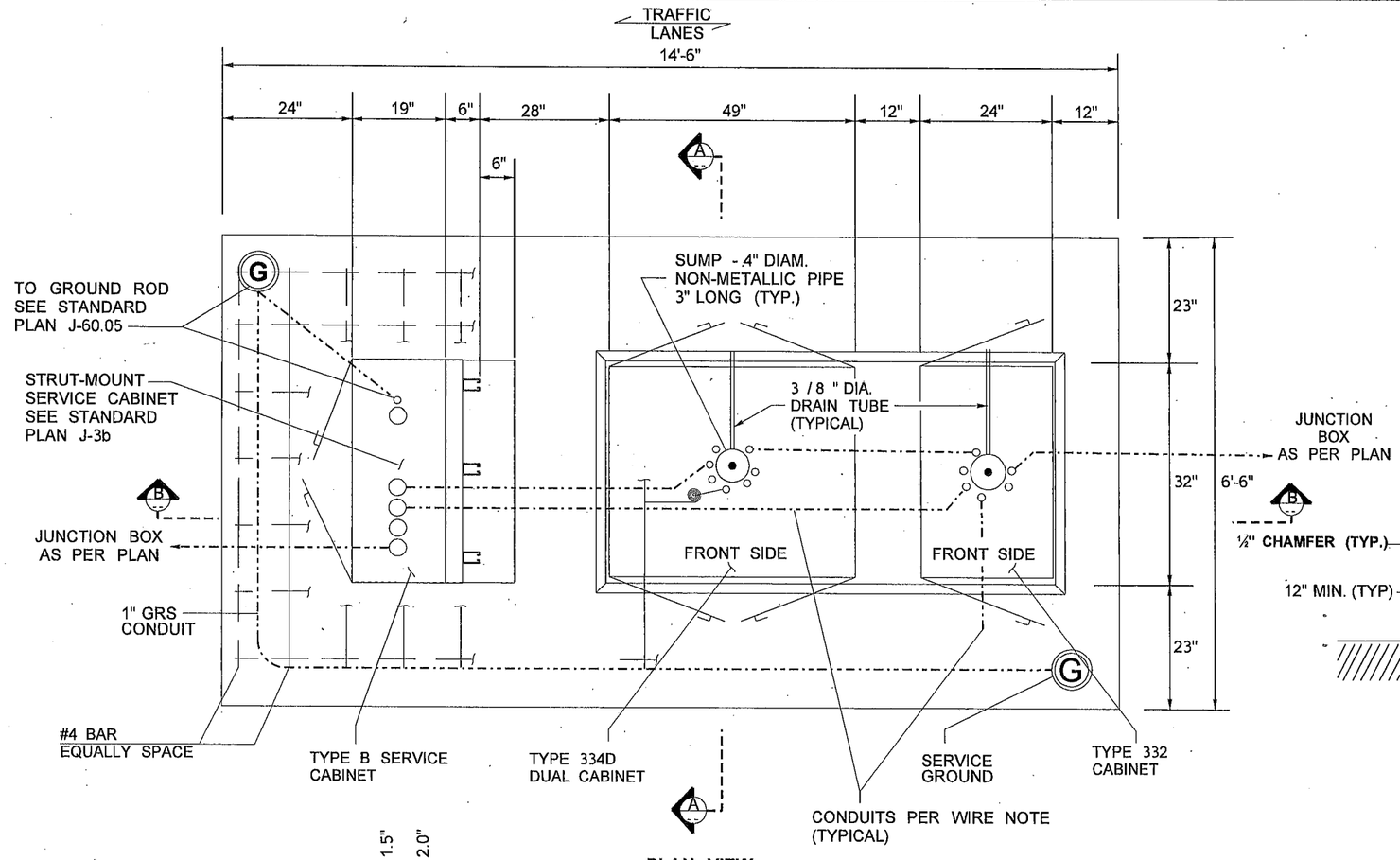

PLAN VIEW

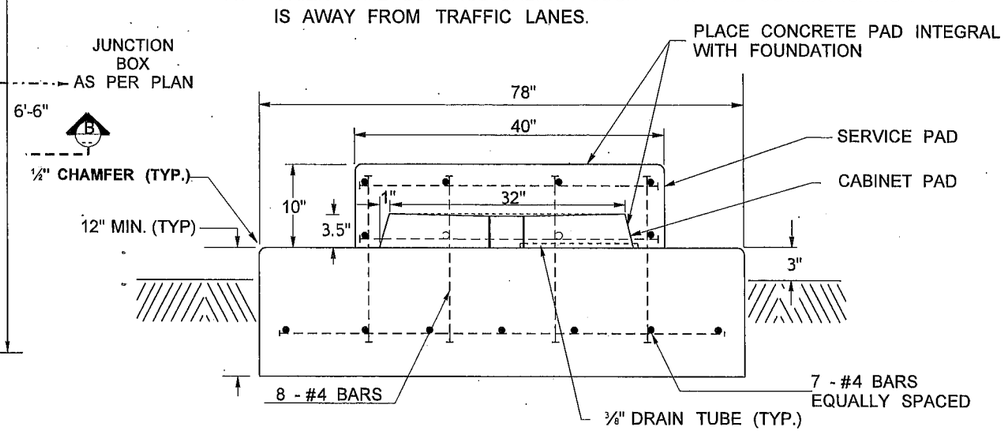

SECTION A

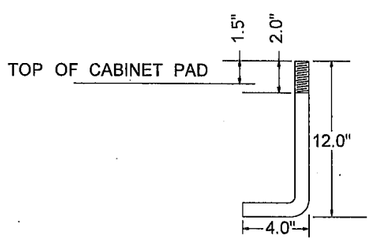

1/ 2" DIA. ANCHOR BOLT DETAIL

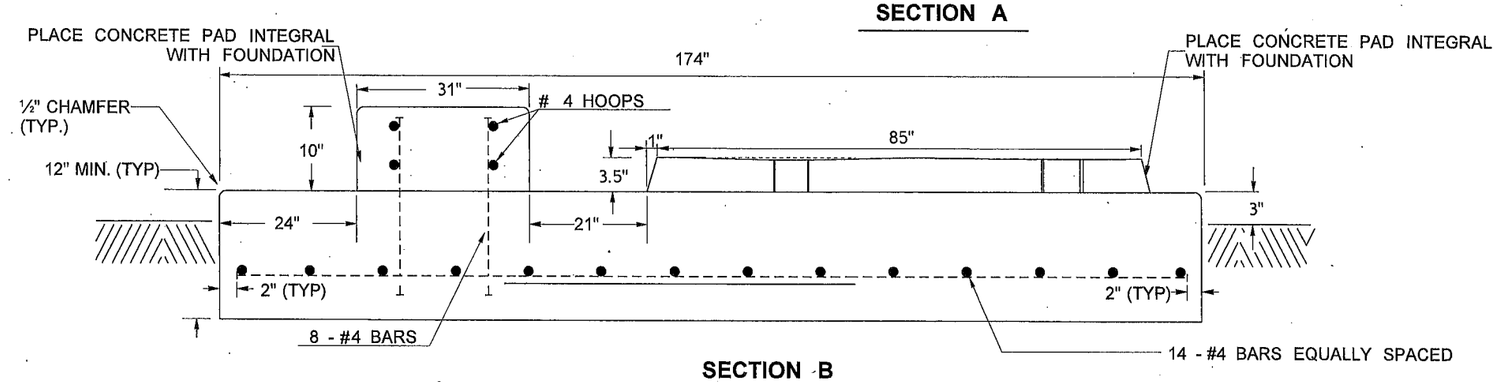

SECTION B

STATION AND OFFSET DISTANCE MEASURED AT THE CENTER OF FOUNDATION.

LINE	STATIONS	OFFSET	EQUIPMENT NUMBER	SHEET
SSB	87+00	46' LT	005-VM-13341 / 005-DS-13341	IT3

THREE CABINET FOUNDATION DETAIL

WITH TYPE B SERVICE, TYPE 334D, AND ITS CABINET

NOT TO SCALE

FILE NAME	PW:_XL3497\PS&E Sheets\ITS\P3497_SH_ITCF_01.dgn
TIME	10:38:00 AM
DATE	3/16/2014
PLOTTED BY	dizonj
DESIGNED BY	J. DIZON
ENTERED BY	J. DIZON
CHECKED BY	C. LANGFORD
PROJ. ENGR.	J. PEREZ
REGIONAL ADM.	K. DAYTON

REVISION | DATE | BY

REGION NO. 10 | STATE WASH | FED.AID PROJ.NO.

JOB NUMBER

CONTRACT NO. | LOCATION NO.

P.E. STAMP BOX — DATE 3/17/14

P.E. STAMP BOX — DATE

Washington State Department of Transportation

I-5
M ST TO PORTLAND AVE - HOV

CABINET FOUNDATION

PLAN REF NO ITCF1

SHEET 1397 OF 1763 SHEETS

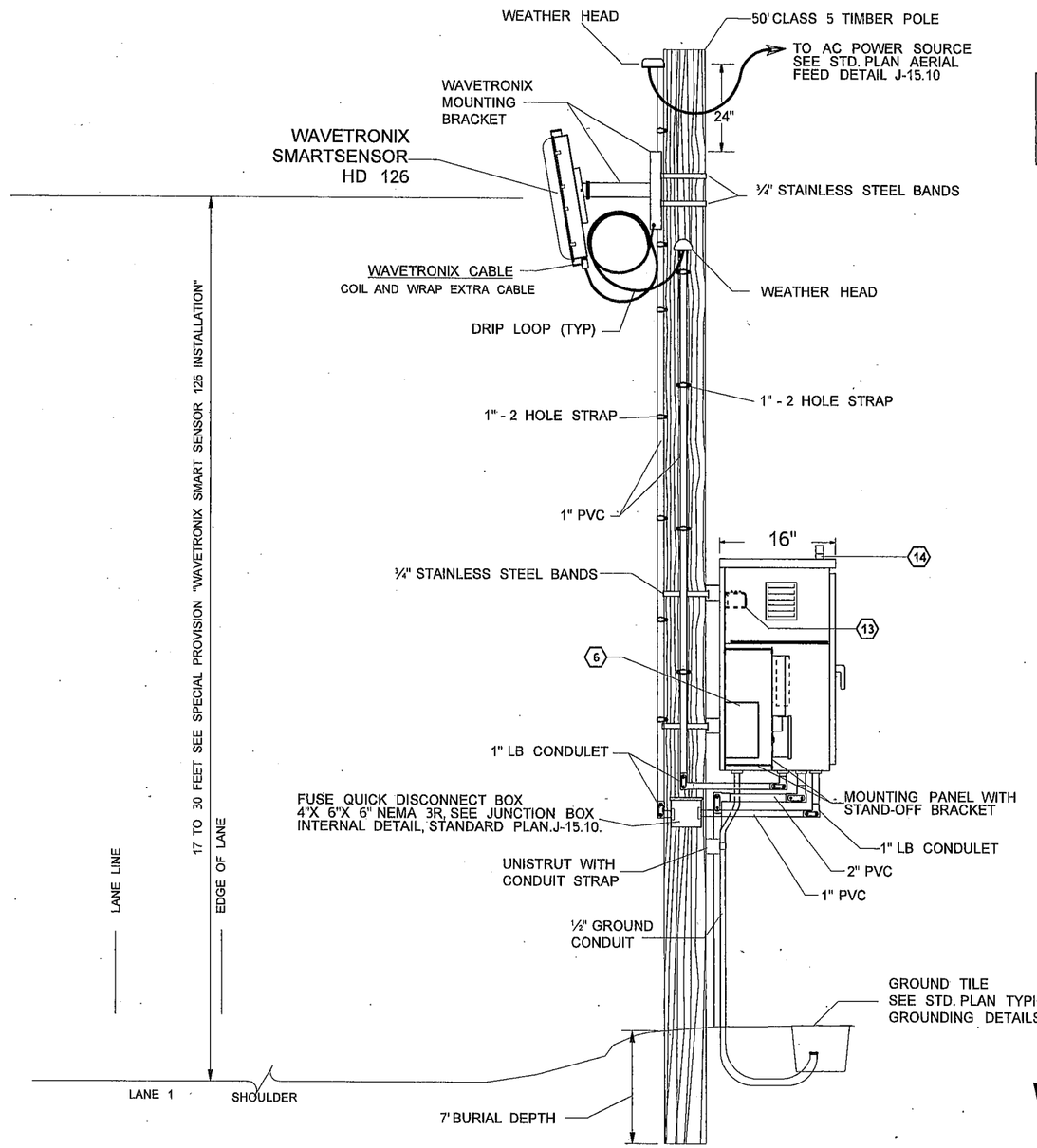

WAVETRONIX TIMBER POLE SCHEDULE

POLE NO.	LINE	STATION / MILEPOST	OFFSET	SHEET NO.	ILUMINATION	
					POLE NO.	SHEET NO.
WTNX-1	SSB	85+80	69'LT	IT3B	P9	TIL3
WTNX-2	NBN	20+70	50'RT	IT3B		

MEASUREMENT IS TO CENTER OF POLE.

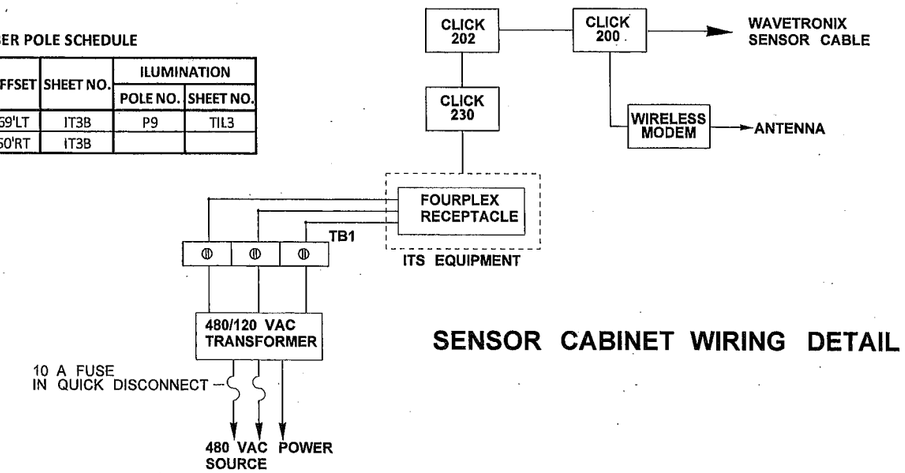

SENSOR CABINET WIRING DETAIL

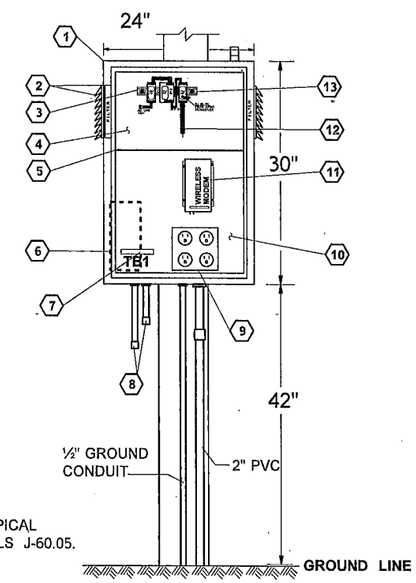

WAVETRONIX CABINET DETAIL

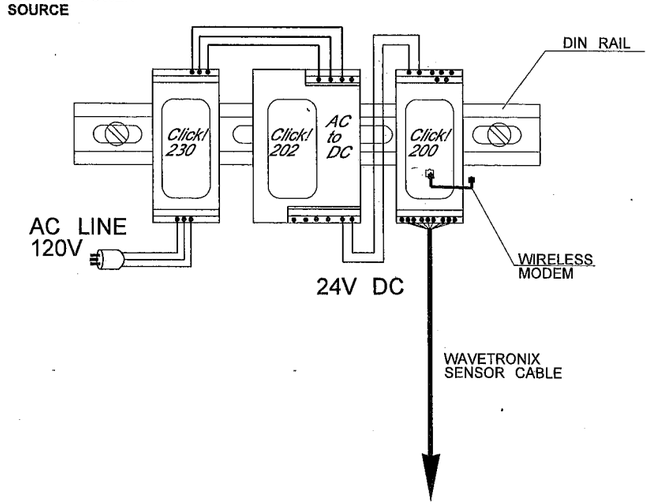

NOTES:

1. 30" X 24" X 16" ALUMINUM CABINET
2. LOUVER VENTS AND REPLACEABLE FILTER
3. DIN RAIL
4. MOUNTING BACK PANEL
5. SHELF
6. 480 / 120 VAC TRANSFORMER 500VA
7. AC TERMINAL BLOCK
8. AC LINE, AND WAVETRONIX CABLE CONDUIT
9. AC FOURPLEX RECEPTACLE
10. MOUNTING PANEL WITH STAND OFF BRACKET
11. WIRELESS MODEM (SEE ITCB1)
12. WAVETRONIX CABLE
13. CLICK DEVICES
14. ANTENNA

NOTES:

1. ALL HARDWARE SHALL BE STAINLESS STEEL OR GALVANIZED AND SHALL MEET REQUIREMENTS OF SECTION 9-28.11.
2. TIMBER POLES SHALL MEET REQUIREMENTS OF SECTION 9-28.14(1).

WAVETRONIX SMART SENSOR WOOD POLE DETAIL

NOT TO SCALE

FILE NAME	PW:_XL3497\PS&E Sheets\ITS\P3497_SH_ITDS_01.dgn				REGION NO. 10	STATE WASH	FED.AID PROJ.NO.
TIME	10:38:04 AM						
DATE	3/16/2014						
PLOTTED BY	dizonj						
DESIGNED BY	J.DIZON				JOB NUMBER 09C519		
ENTERED BY	J. DIZON						
CHECKED BY	C. LANGFORD				CONTRACT NO.		LOCATION NO.
PROJ. ENGR.	J. PEREZ						
REGIONAL ADM.	K. DAYTON	REVISION	DATE	BY			XL3497

DENNIS RAY CRUMB, STATE OF WASHINGTON, REGISTERED PROFESSIONAL ENGINEER

3/17/14 DATE

P.E. STAMP BOX

DATE

P.E. STAMP BOX

Washington State Department of Transportation

I-5
M ST TO PORTLAND AVE - HOV

DATA STATION DETAIL

ITDS1

SHEET 1398 OF 1763 SHEETS

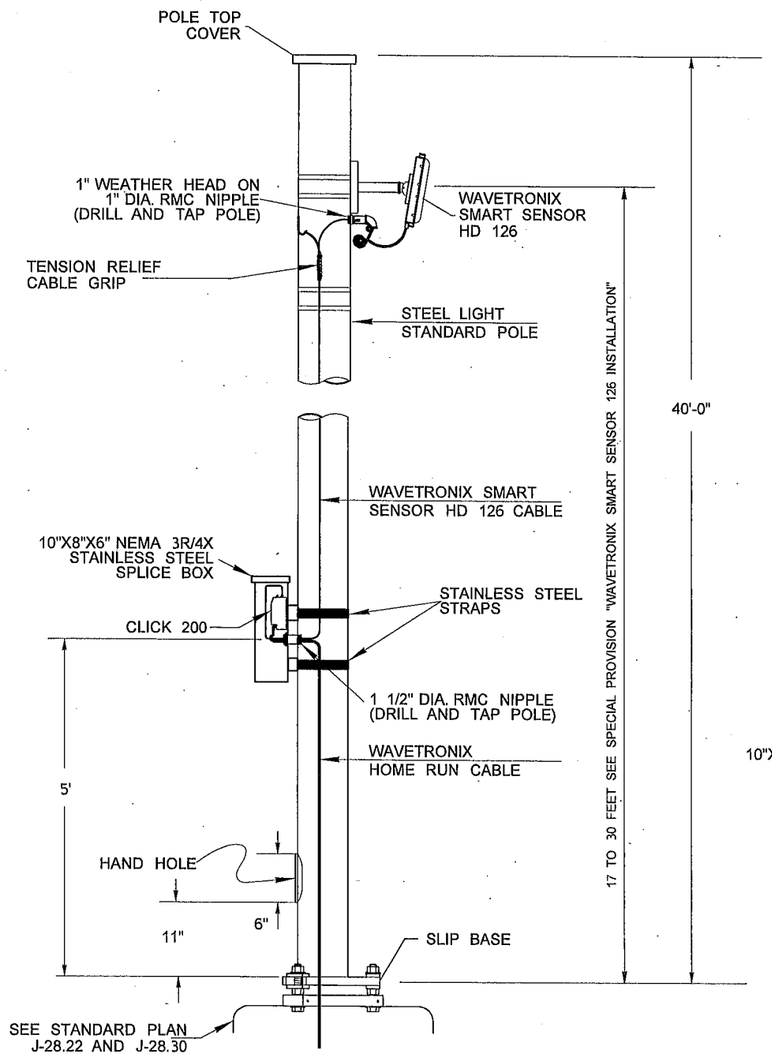

MAINLINE DETECTION

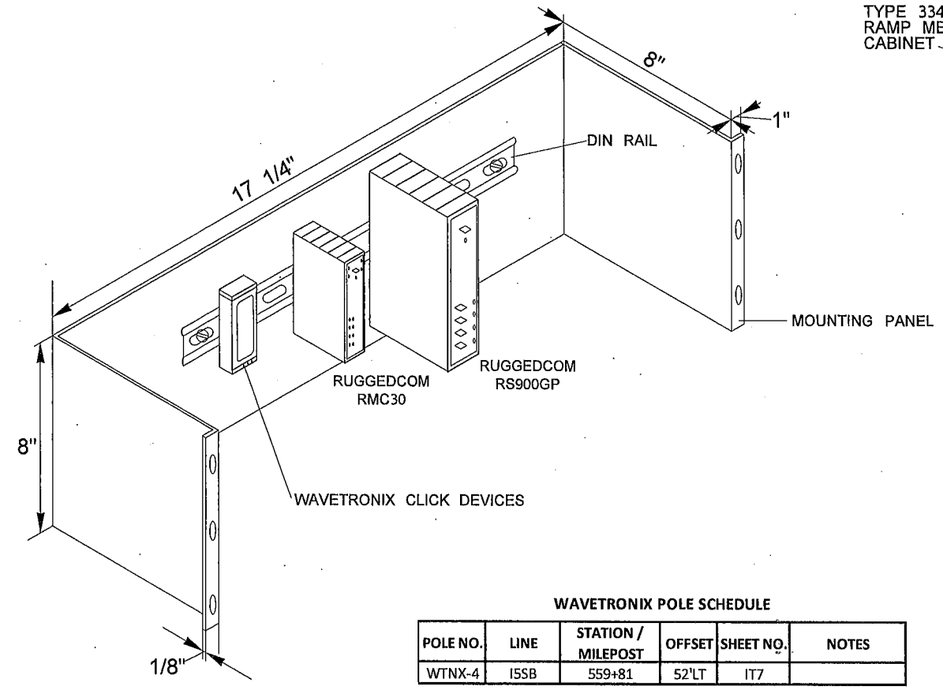

WAVETRONIX POLE SCHEDULE

POLE NO.	LINE	STATION / MILEPOST	OFFSET	SHEET NO.	NOTES
WTNX-4	I5SB	559+81	52'LT	IT7	

MEASUREMENT IS TO CENTER OF POLE.

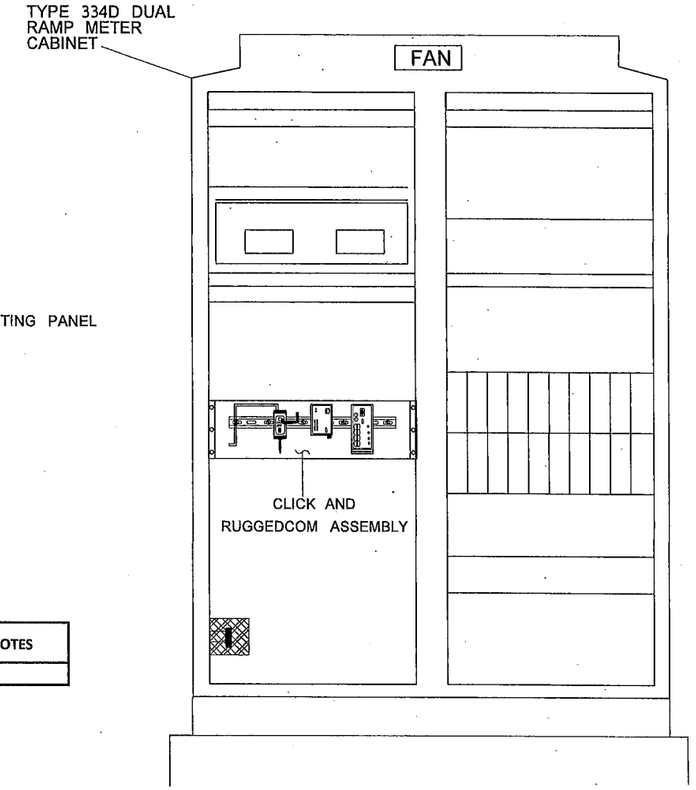

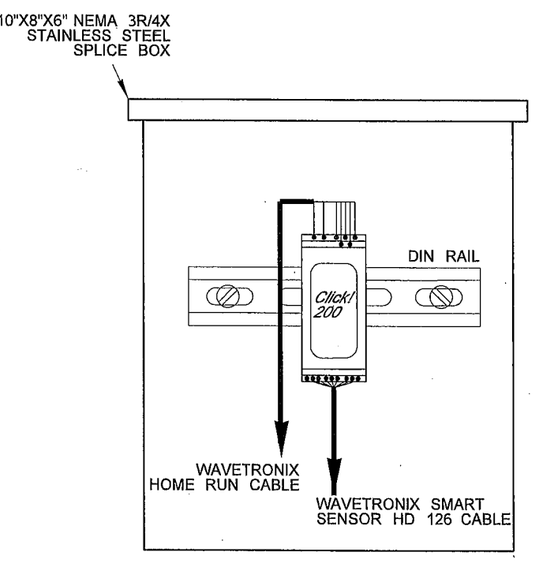

NOTES:

1. FOR NUMBER OF CLICK ASSEMBLY AND RUGGEDCOM EQUIPMENT PER CABINET SEE CABINET DETAIL ITCB1.

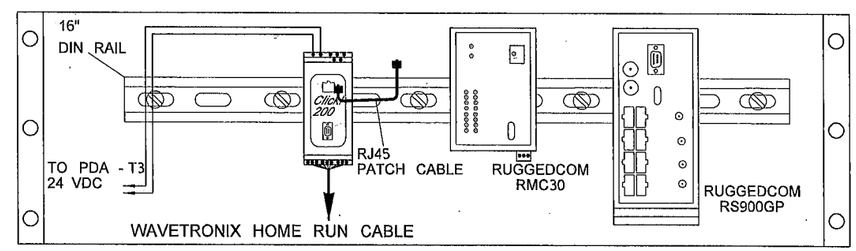

CLICK AND RUGGEDCOM ASSEMBLY

DIN RAIL PANEL DETAIL

WAVETRONIX SMART SENSOR LUMINAIRE POLE DETAIL

NOT TO SCALE

FILE NAME	PW:_XL3497\PS&E Sheets\ITS\P3497_SH_ITDS_02.dgn				REGION NO. 10	STATE WASH	FED.AID PROJ.NO.
TIME	10:38:10 AM						
DATE	3/16/2014						
PLOTTED BY	dizonj				JOB NUMBER		
DESIGNED BY	J. DIZON						
ENTERED BY	J. DIZON						
CHECKED BY	C. LANGFORD				CONTRACT NO.		LOCATION NO.
PROJ. ENGR.	J. PEREZ						XL3497
REGIONAL ADM.	K. DAYTON	REVISION	DATE	BY			

P.E. STAMP BOX — DATE 3/17/14

P.E. STAMP BOX — DATE

Washington State Department of Transportation

I-5
M ST TO PORTLAND AVE - HOV

DATA STATION DETAIL

ITDS2

SHEET 1399 OF 1763 SHEETS

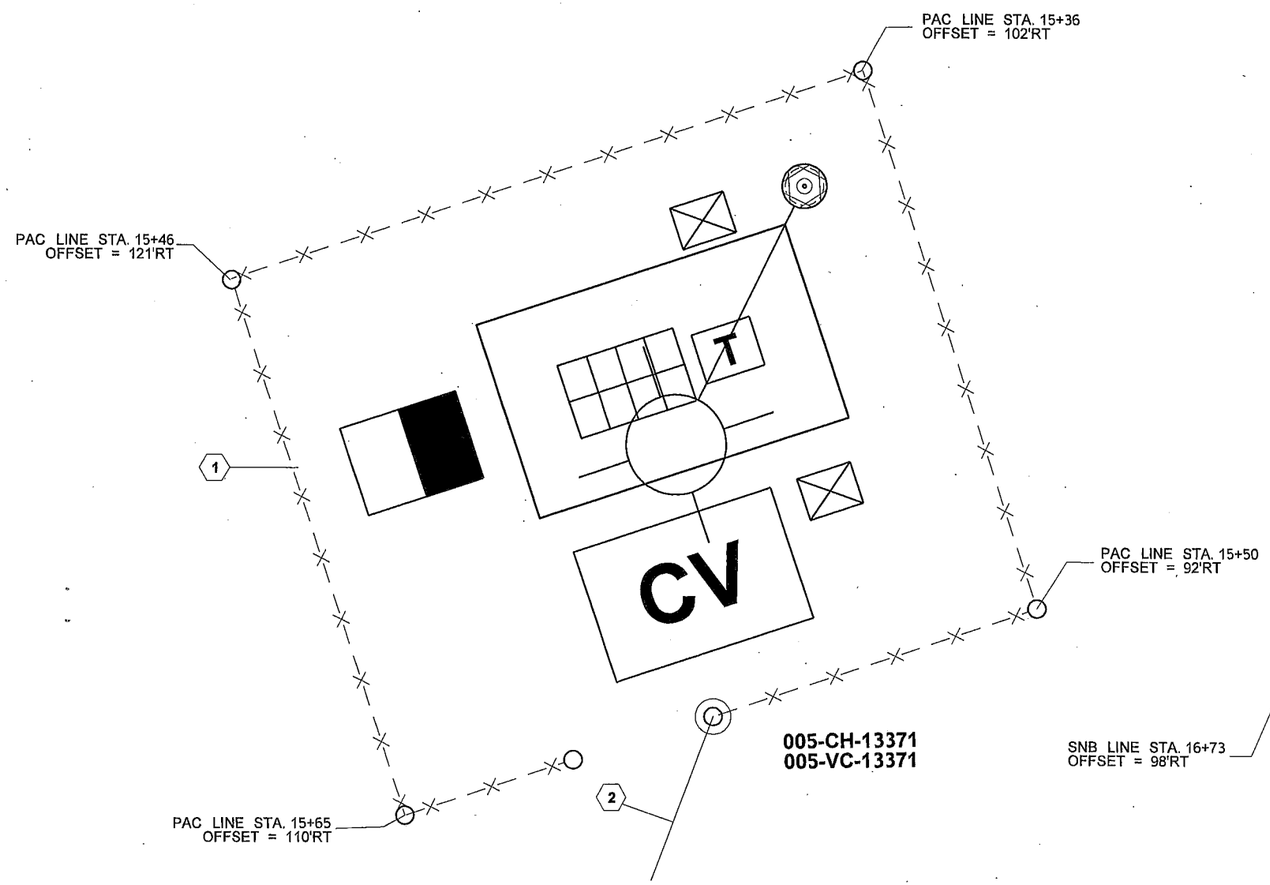

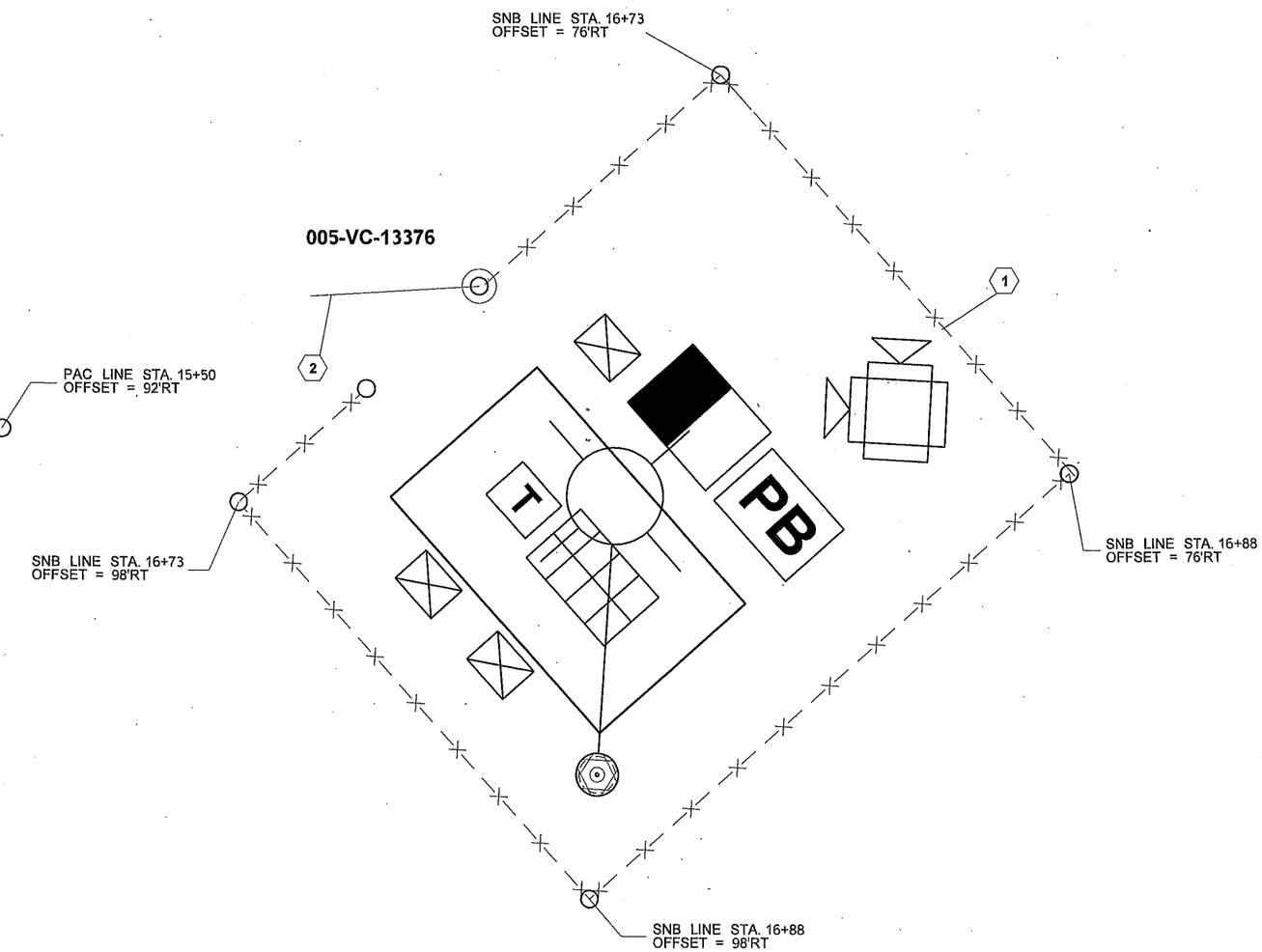

CONSTRUCTION NOTES

1. INSTALL TYPE 3 SECURITY CHAIN LINK FENCE IN ACCORDANCE WITH STANDARD PLAN L-20.10 AND SPECIAL PROVISIONS.
2. INSTALL SECURITY CHAIN LINK SINGLE GATE IN ACCORDANCE WITH STANDARD PLAN L-30.10.

SECURITY FENCING ENCLOSURE INSTALLATION DETAILS

NOT TO SCALE

FILE NAME	PW:_XL3497\PS&E Sheets\ITS\P3497_SH_ITFD_03.dgn						
TIME	10:38:15 AM						
DATE	3/16/2014						
PLOTTED BY	dizonj						
DESIGNED BY	A. DORROUGH/J. DIZON						
ENTERED BY	A. DORROUGH/J. DIZON						
CHECKED BY	C. LANGFORD						
PROJ. ENGR.	J. PEREZ						
REGIONAL ADM.	K. DAYTON	REVISION	DATE	BY			

REGION NO.	STATE	FED.AID PROJ.NO.
10	WASH	
JOB NUMBER		
CONTRACT NO.		LOCATION NO.

DENNIS RAY CRUMBAKER, STATE OF WASHINGTON, REGISTERED PROFESSIONAL ENGINEER
3/27/14
DATE
P.E. STAMP BOX

DATE
P.E. STAMP BOX

Washington State Department of Transportation

I-5
M ST TO PORTLAND AVE - HOV

FENCING DETAIL

PLAN REF NO
ITFD1

SHEET 1400 OF 1763 SHEETS

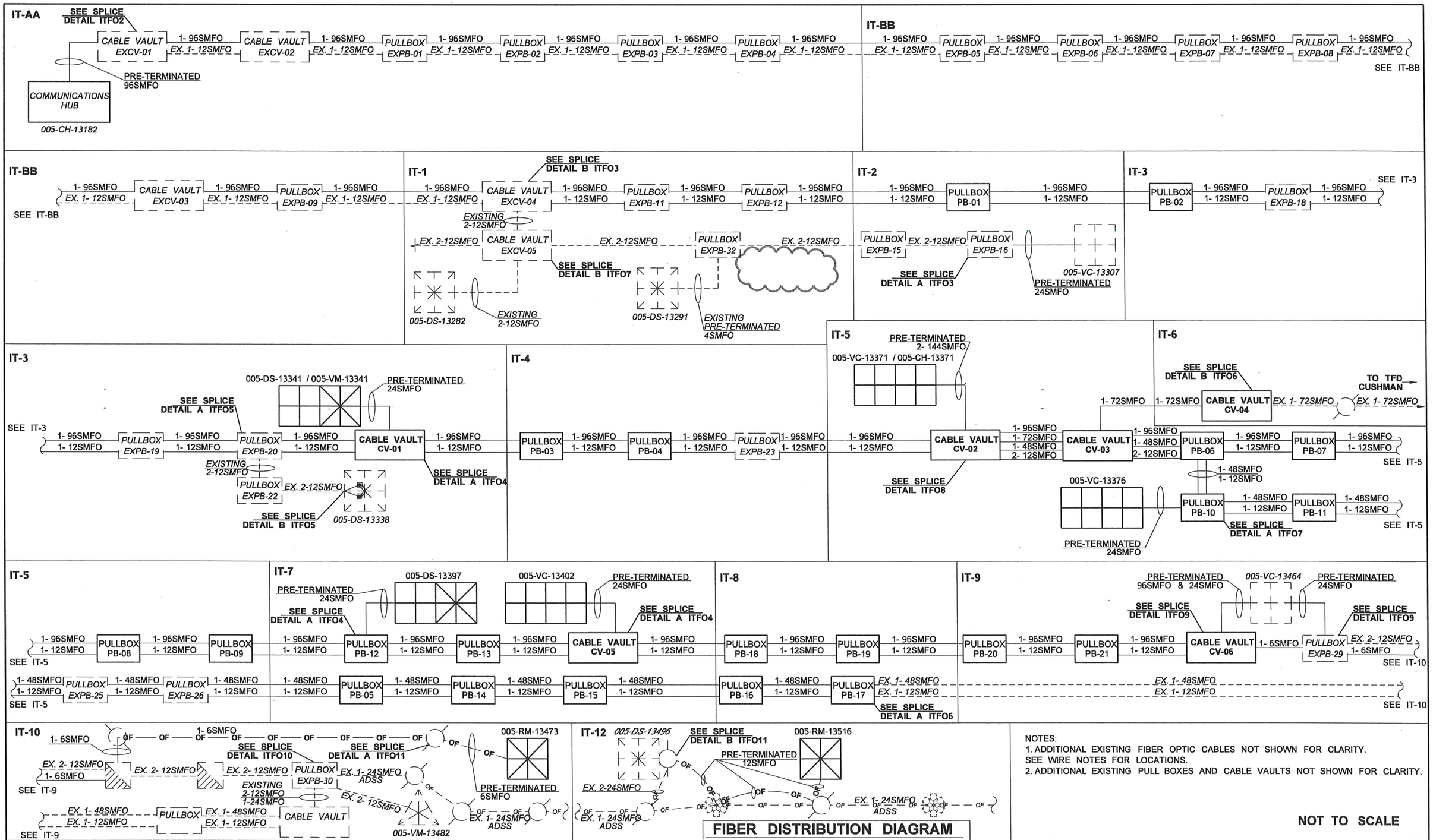

NOTES:
1. ADDITIONAL EXISTING FIBER OPTIC CABLES NOT SHOWN FOR CLARITY. SEE WIRE NOTES FOR LOCATIONS.
2. ADDITIONAL EXISTING PULL BOXES AND CABLE VAULTS NOT SHOWN FOR CLARITY.

NOT TO SCALE

FIBER DISTRIBUTION DIAGRAM

FILE NAME	PW:_XL3497\PS&E Sheets\ITS\ADD1_P3497_SH_ITFO_01.dgn
TIME	9:33:58 AM
DATE	4/25/2014
PLOTTED BY	LangfoC
DESIGNED BY	C. LANGFORD
ENTERED BY	C. LANGFORD
CHECKED BY	R. CRUMBLEY
PROJ. ENGR.	J. PEREZ
REGIONAL ADM.	K. DAYTON

REVISION	DATE	BY
AD1-REMOVED SPLICE NOTE	04/25/2014	CL

REGION NO.	STATE	FED.AID PROJ.NO.
10	WASH	
JOB NUMBER		
CONTRACT NO.		LOCATION NO.

P.E. STAMP BOX — DATE 4/25/14

P.E. STAMP BOX — DATE

Washington State Department of Transportation

I-5
M ST TO PORTLAND AVE - HOV

FIBER OPTIC DETAIL

PLAN REF NO ITFO1

SHEET 1401 OF 1763 SHEETS

CABINET	PULLBOX / CABLE VAULT	LABEL A	LABEL B
005-CH-13182	*EXCV-01*	005-VC-13371 / 005-CH-13371	005-VC-13464 - CABLE VALUT

*SUPPLY 48 FUTURE ST TO ST SMFO PATCH CORDS OF 1 METER LENGTH IN CABINET

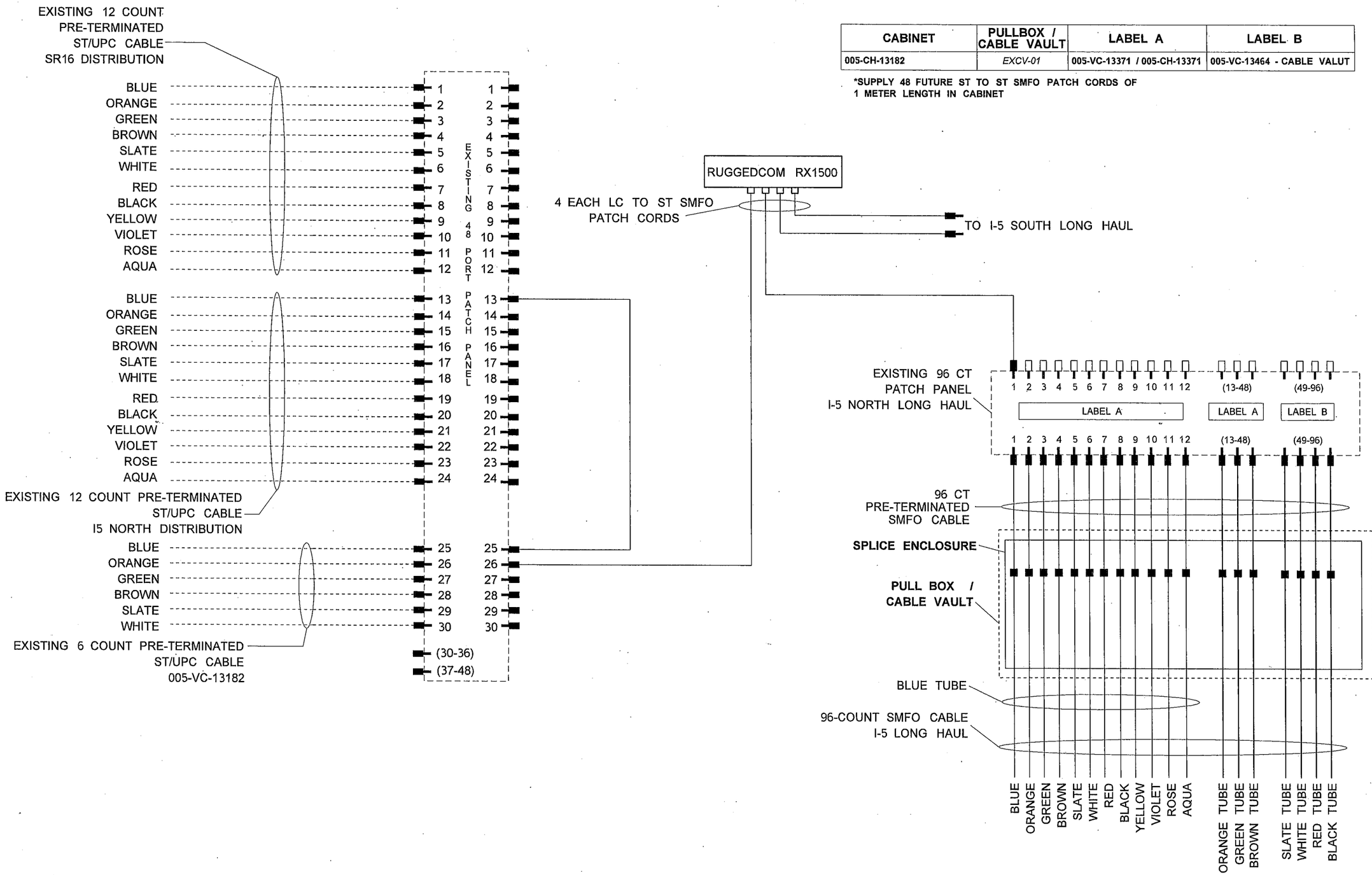

FILE NAME	PW:_XL3497\PS&E Sheets\ITS\P3497_SH_ITFO_02.dgn				REGION NO. 10	STATE WASH	FED.AID PROJ.NO.
TIME	10:38:22 AM				JOB NUMBER		
DATE	3/16/2014				CONTRACT NO.		LOCATION NO.
PLOTTED BY	dizonj						
DESIGNED BY	C. LANGFORD						
ENTERED BY	C. LANGFORD						
CHECKED BY	R. CRUMBLEY						
PROJ. ENGR.	J. PEREZ						
REGIONAL ADM.	K. DAYTON	REVISION	DATE	BY			

DENNIS RAY CRUMBLEY STATE OF WASHINGTON REGISTERED PROFESSIONAL ENGINEER 38376

3/17/14 DATE

P.E. STAMP BOX

DATE

P.E. STAMP BOX

Washington State Department of Transportation

I-5
M ST TO PORTLAND AVE - HOV

FIBER OPTIC DETAIL

PLAN REF NO ITFO2

SHEET 1402 OF 1763 SHEETS

CABINET	PULLBOX / CABLE VAULT	LABEL A	LABEL B	SHEET NO.	NOTES
005-VC-13307	*EXPB-16*	005-DS-13291	005-DS-13338	IT-2	

*SUPPLY 11 FUTURE ST TO ST SMFO PATCH CORDS OF 1 METER LENGTH IN CABINET

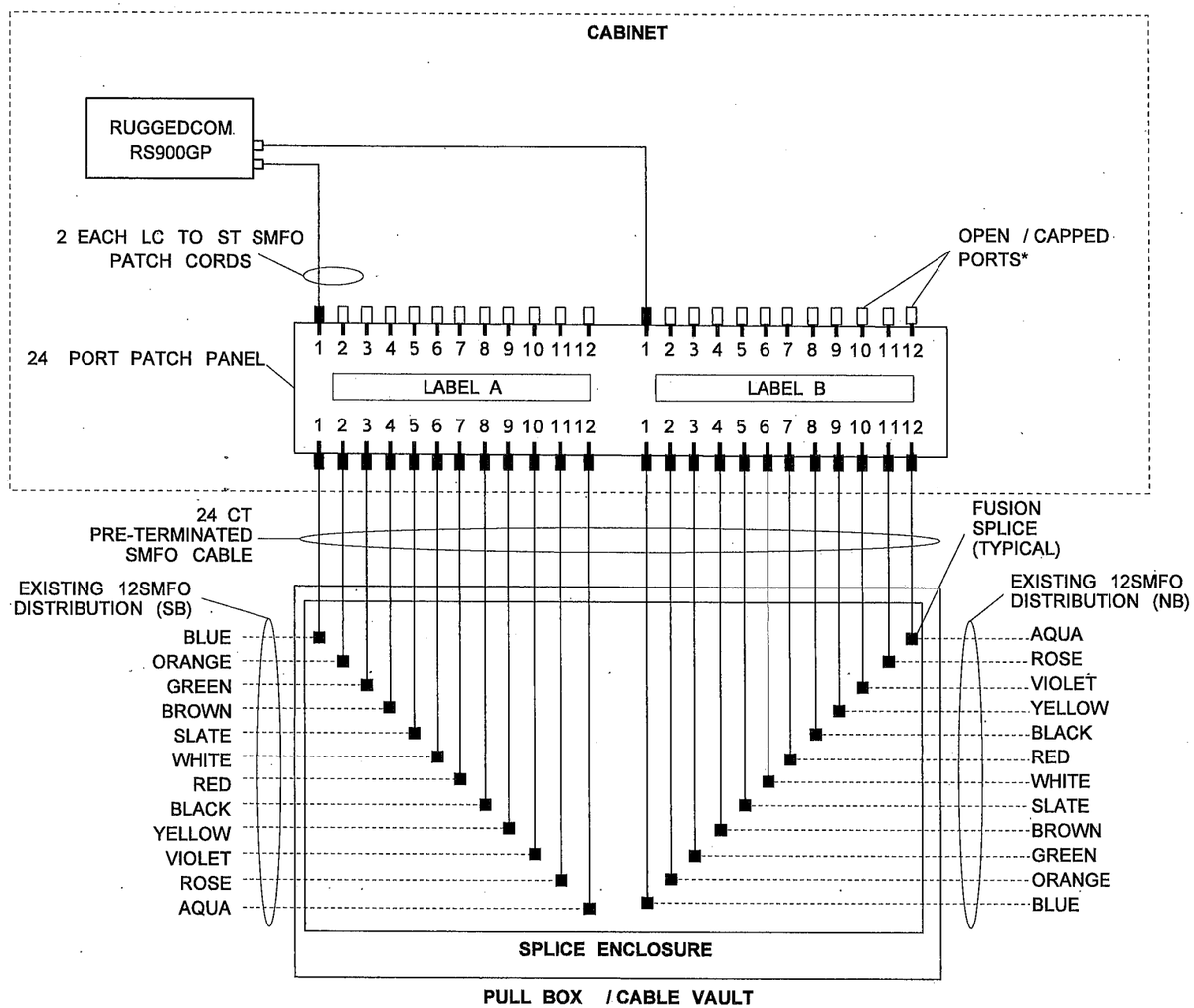

DETAIL A

PULLBOX / CABLE VAULT	SHEET NO.
EXCV-04	IT-1

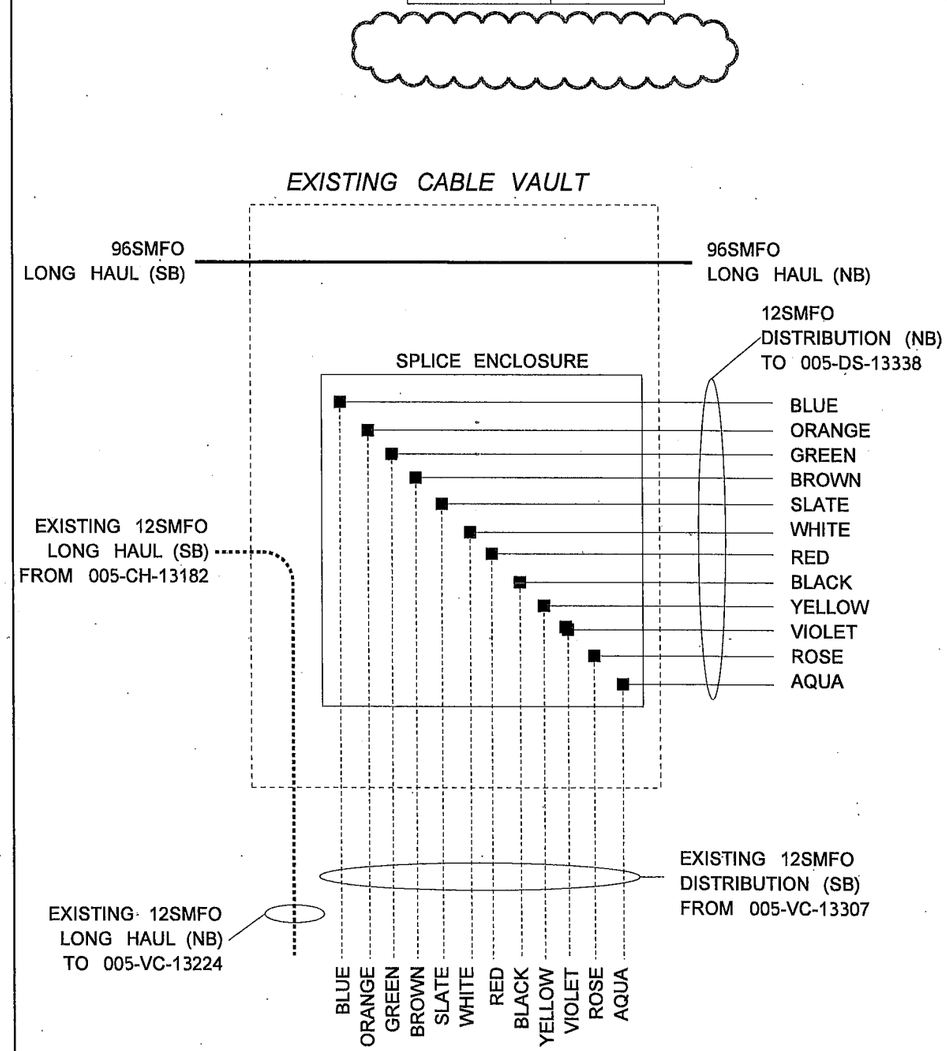

DETAIL B

FILE NAME	PW:_XL3497\PS&E Sheets\ITS\AD1_P3497_SH_ITFO_03.dgn						
TIME	9:16:27 AM				REGION NO. 10	STATE WASH	FED.AID PROJ.NO.
DATE	4/25/2014						
PLOTTED BY	LangfoC				JOB NUMBER		
DESIGNED BY	C. LANGFORD						
ENTERED BY	C. LANGFORD						
CHECKED BY	R. CRUMBLEY				CONTRACT NO.		LOCATION NO.
PROJ. ENGR.	J. PEREZ	AD1-REMOVED SPLICE NOTE	04/25/2014	CL			
REGIONAL ADM.	K. DAYTON	REVISION	DATE	BY			

DRAKE RAY CRUMBLEY STATE OF WASHINGTON REGISTERED PROFESSIONAL ENGINEER
4/25/14
DATE
P.E. STAMP BOX

DATE
P.E. STAMP BOX

Washington State Department of Transportation

I-5
M ST TO PORTLAND AVE - HOV

FIBER OPTIC DETAIL

PLAN REF NO ITFO3

SHEET 1403 OF 1763 SHEETS

CABINET	PULLBOX / CABLE VAULT	LABEL A	LABEL B	SHEET NO.
005-DS-13341 / 005-VM-13341	CV-01	005-DS-13338	005-VC-13371 / 005-CH-13371	IT-3
005-DS-13397	PB-12	005-VC-13371 / 005-CH-13371	005-VC-13402	IT-7
005-VC-13402	CV-05	005-DS-13397	005-VC-13464	IT-7

*SUPPLY 11 FUTURE ST TO ST SMFO PATCH CORDS OF 1 METER LENGTH IN CABINET

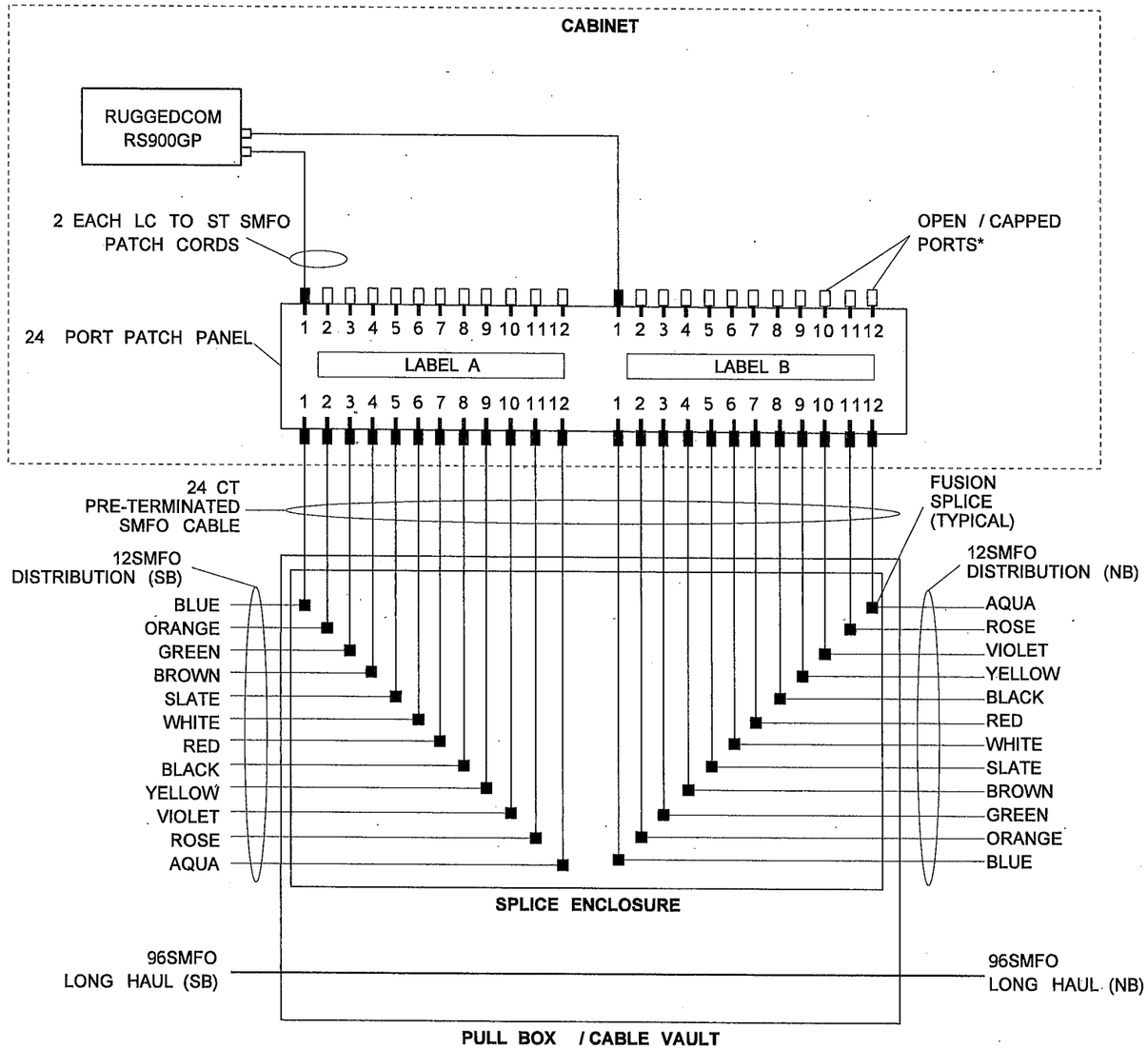

DETAIL A

FILE NAME	PW:_XL3497\PS&E Sheets\ITS\ADD1_P3497_SH_ITFO_04.dgn
TIME	9:16:31 AM
DATE	4/25/2014
PLOTTED BY	LangfoC
DESIGNED BY	C. LANGFORD
ENTERED BY	C. LANGFORD
CHECKED BY	R. CRUMBLEY
PROJ. ENGR.	J. PEREZ
REGIONAL ADM.	K. DAYTON

REVISION	DATE	BY
AD1:REMOVED SPLICE DETAIL B	04/25/2014	CL

REGION NO.	STATE	FED.AID PROJ.NO.
10	WASH	
JOB NUMBER		
CONTRACT NO.		LOCATION NO.

P.E. STAMP BOX — DATE 4/25/14

P.E. STAMP BOX — DATE

Washington State Department of Transportation

I-5
M ST TO PORTLAND AVE - HOV

FIBER OPTIC DETAIL

PLAN REF NO ITFO4

SHEET 1404 OF 1763 SHEETS

PULLBOX / CABLE VAULT	TO CABINET	SHEET NO.
EXPB-20	005-DS-13338	IT-3

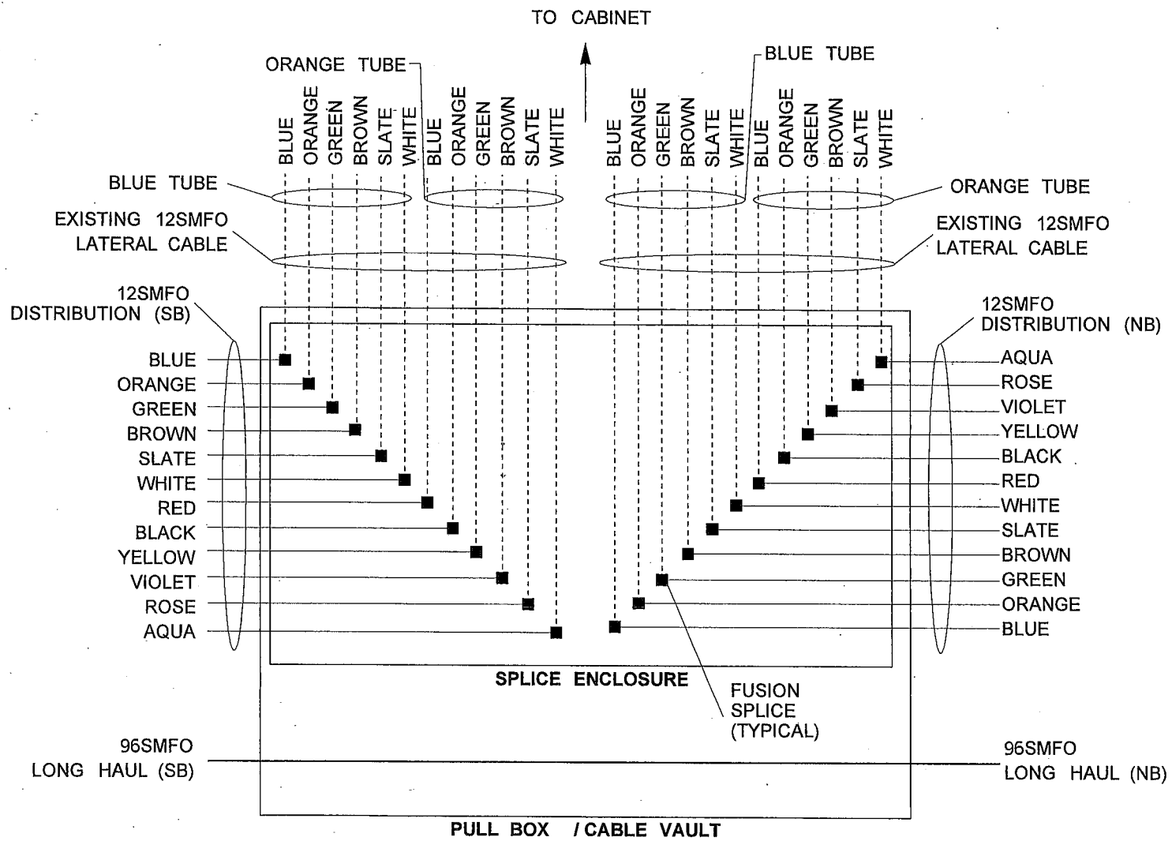

DETAIL A

CABINET	LABEL A	LABEL B	SHEET NO.
005-DS-13338	005-VC-13307	005-DS-13341 / 005-VM-13341	IT-3

*SUPPLY 11 FUTURE ST TO ST SMFO PATCH CORDS OF 1 METER LENGTH IN CABINET

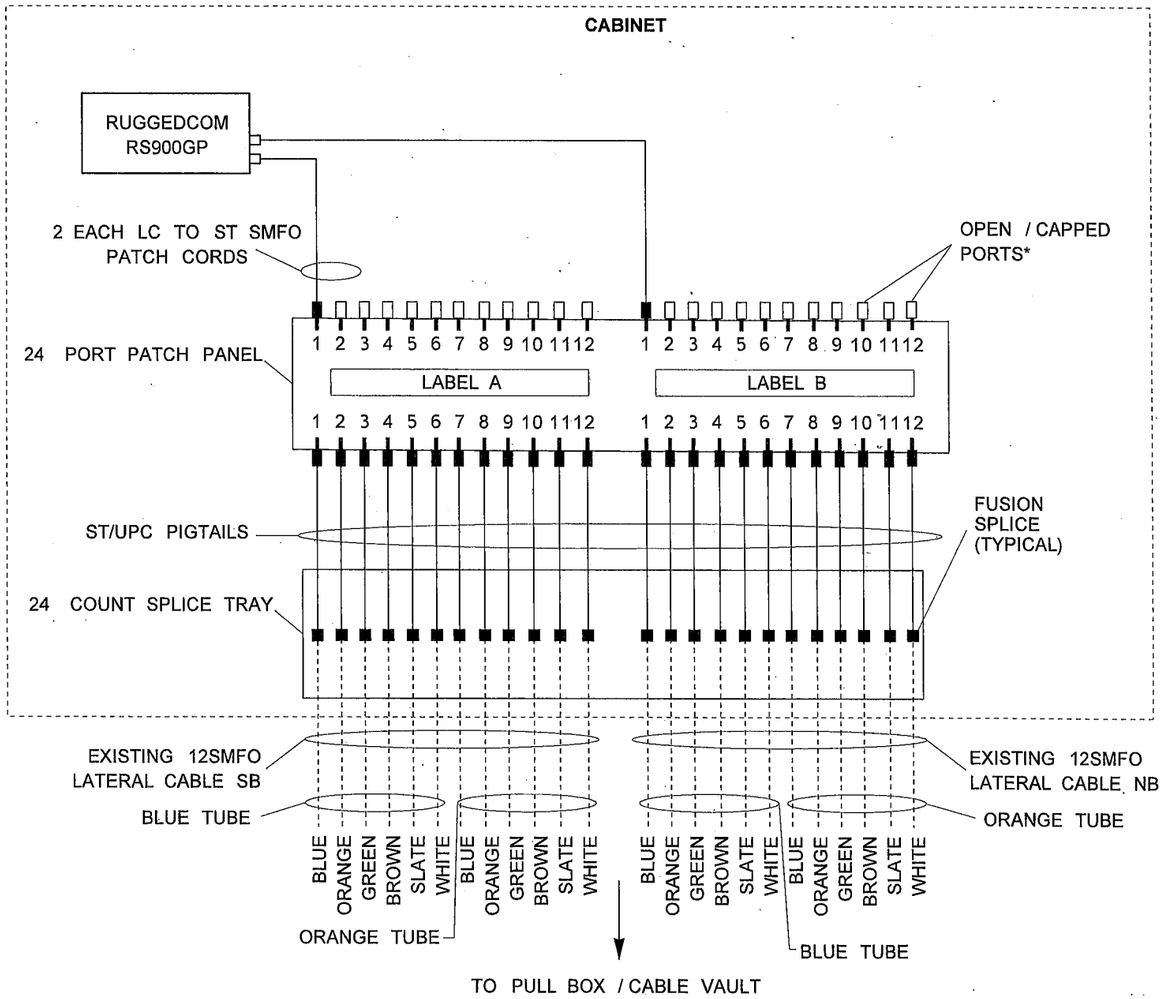

DETAIL B

FILE NAME	PW:_XL3497\PS&E Sheets\ITS\P3497_SH_ITFO_05.dgn
TIME	10:38:34 AM
DATE	3/16/2014
PLOTTED BY	dizonj
DESIGNED BY	C. LANGFORD
ENTERED BY	C. LANGFORD
CHECKED BY	R. CRUMBELY
PROJ. ENGR.	J. PEREZ
REGIONAL ADM.	K. DAYTON

REVISION | DATE | BY

REGION NO. 10 | STATE WASH | FED.AID PROJ.NO.

JOB NUMBER

CONTRACT NO. | LOCATION NO.

DENNIS RAY CRUMBELY STATE OF WASHINGTON REGISTERED PROFESSIONAL ENGINEER 3/17/14 DATE

P.E. STAMP BOX

DATE

P.E. STAMP BOX

Washington State Department of Transportation

I-5
M ST TO PORTLAND AVE - HOV

FIBER OPTIC DETAIL

PLAN REF NO ITFO5

SHEET 1405 OF 1763 SHEETS

PULLBOX / CABLE VAULT	SHEET NO.
PB-17	IT-8

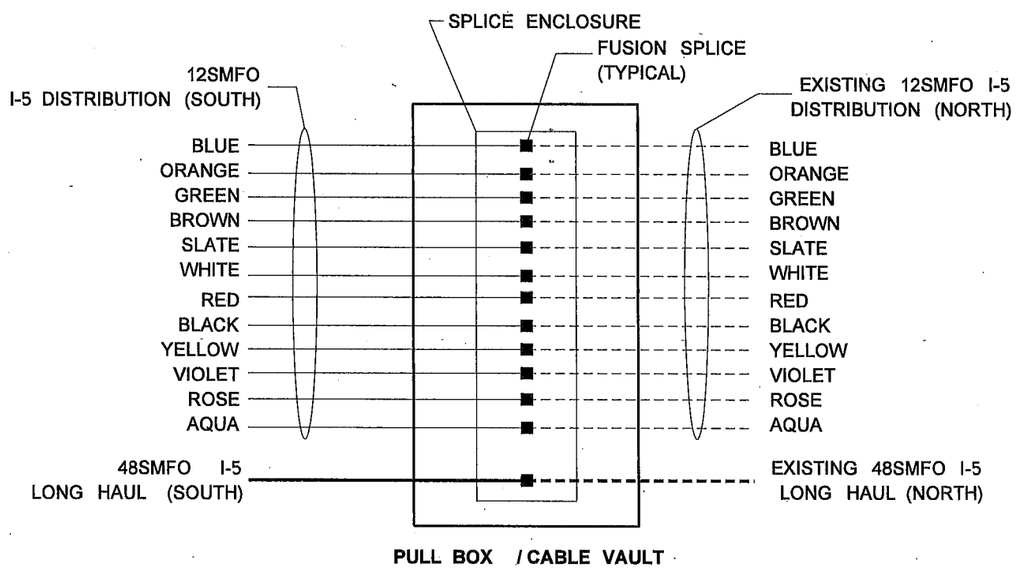

DETAIL A

PULLBOX / CABLE VAULT	SHEET NO.
CV-04	IT-6

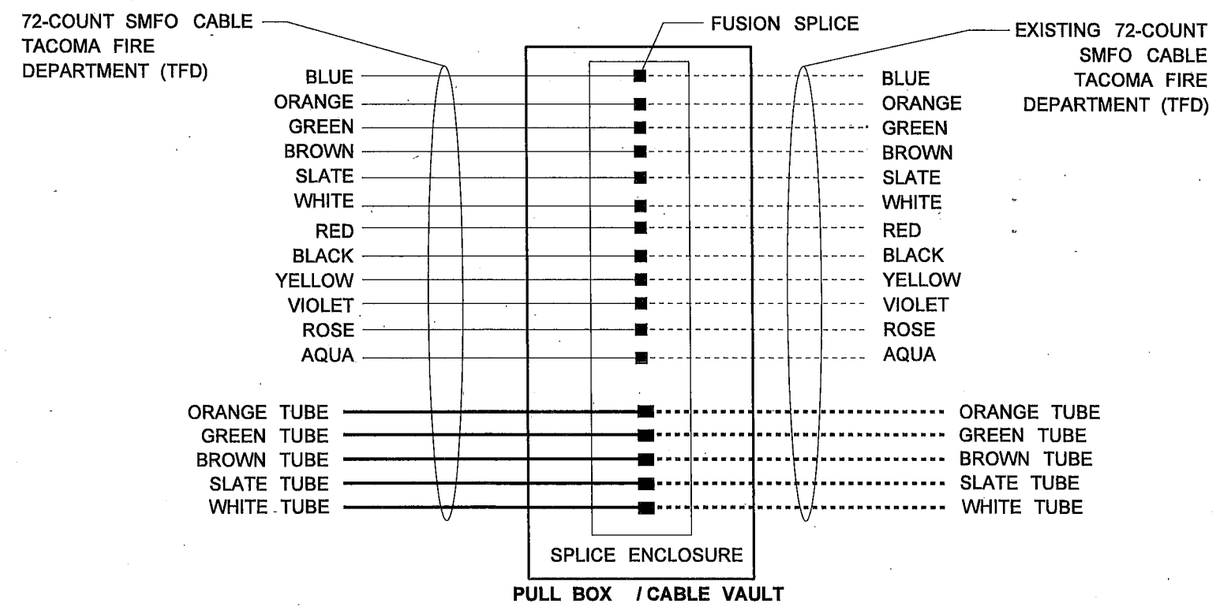

DETAIL B

FILE NAME	PW:_XL3497\PS&E Sheets\ITS\P3497_SH_ITFO_06.dgn
TIME	1:06:13 PM
DATE	3/18/2014
PLOTTED BY	LangfoC
DESIGNED BY	C. LANGFORD
ENTERED BY	C. LANGFORD
CHECKED BY	R. CRUMBLEY
PROJ. ENGR.	J. PEREZ
REGIONAL ADM.	K. DAYTON

REVISION	DATE	BY

REGION NO.	STATE	FED.AID PROJ.NO.
10	WASH	
JOB NUMBER		
CONTRACT NO.		LOCATION NO.

DENNIS RAY CRUMBLEY, STATE OF WASHINGTON, REGISTERED PROFESSIONAL ENGINEER

3/17/14

P.E. STAMP BOX DATE

P.E. STAMP BOX DATE

Washington State Department of Transportation

I-5
M ST TO PORTLAND AVE - HOV

FIBER OPTIC DETAIL

PLAN REF NO ITFO6

SHEET 1406 OF 1763 SHEETS

CABINET	PULLBOX / CABLE VAULT	LABEL A	LABEL B	SHEET NO.
005-VC-13376	PB-10	005-VC-13371	12 DISTRIBUTION NORTH	IT-5

*SUPPLY 11 FUTURE ST TO ST SMFO PATCH CORDS OF 1 METER LENGTH IN CABINET

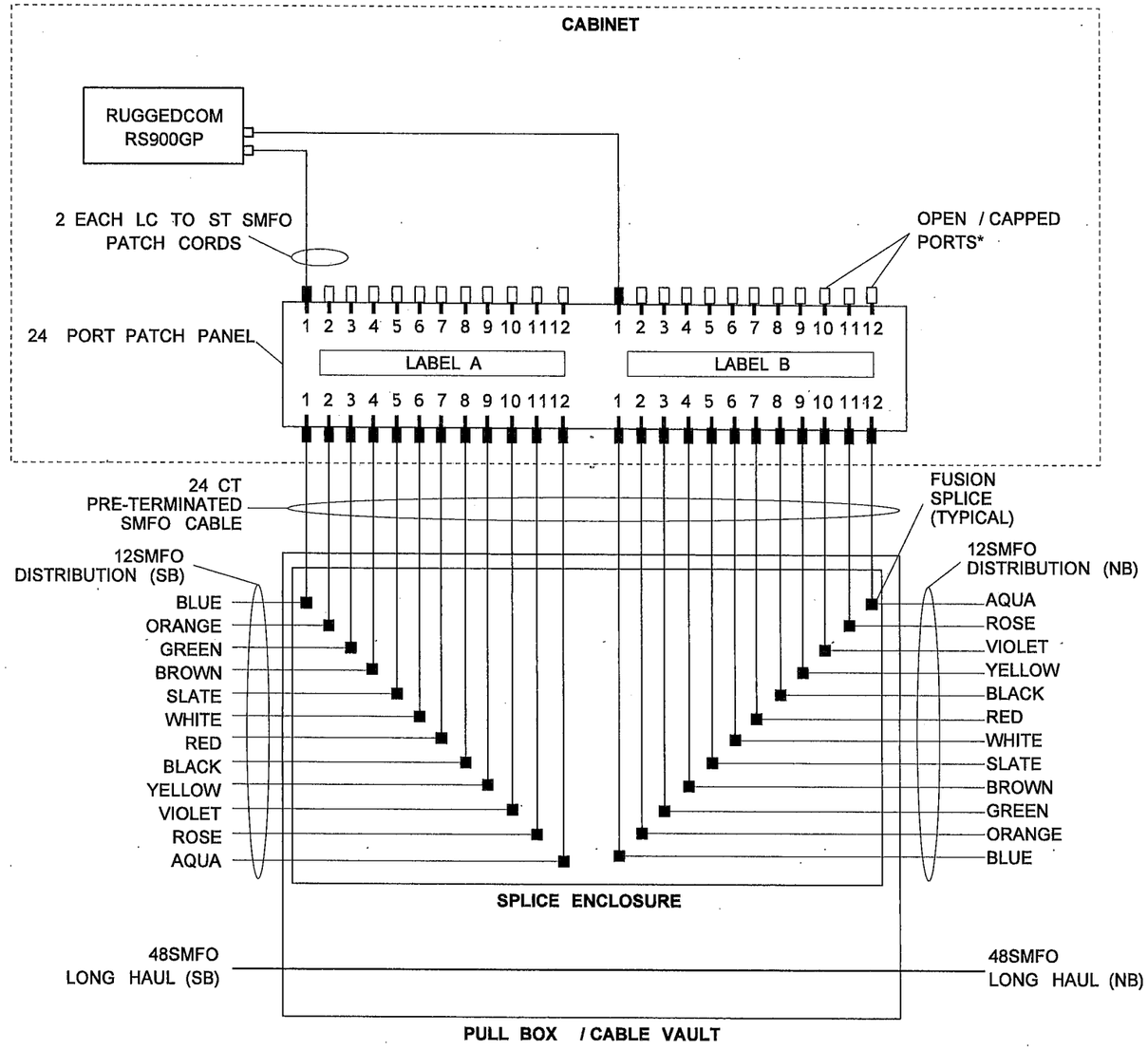

DETAIL A

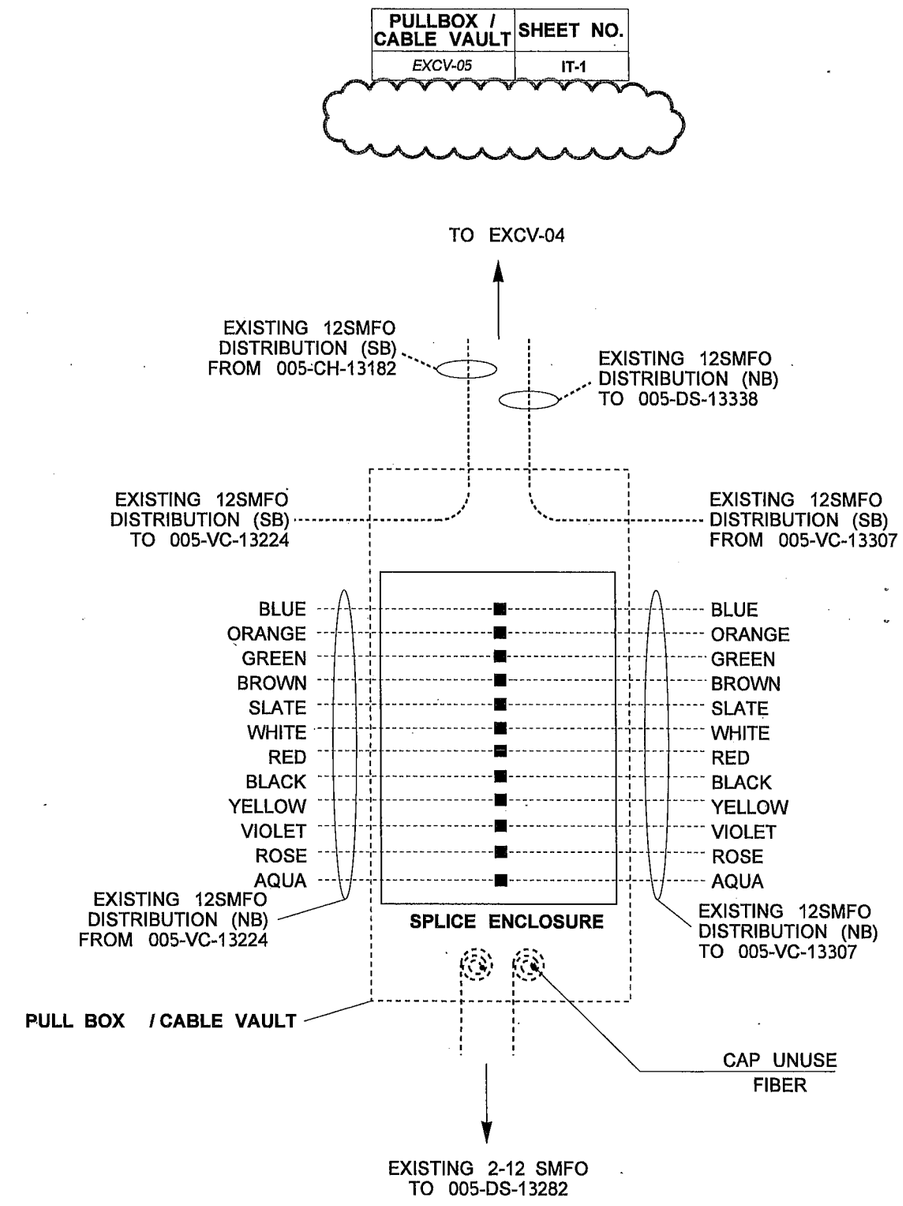

DETAIL B

FILE NAME	PW:_XL3497\PS&E Sheets\ITS\ADD1_P3497_SH_ITFO_07.dgn				REGION NO. 10	STATE WASH	FED.AID PROJ.NO.
TIME	9:16:35 AM						
DATE	4/25/2014				JOB NUMBER		
PLOTTED BY	LangfoC						
DESIGNED BY	C. LANGFORD						
ENTERED BY	C. LANGFORD				CONTRACT NO.		LOCATION NO.
CHECKED BY	R. CRUMBLEY						
PROJ. ENGR.	J. PEREZ	AD1-REMOVED SPLICE NOTE	04/25/2014	CL			
REGIONAL ADM.	K. DAYTON	REVISION	DATE	BY			

DENNIS RAY CRUMBLEY, STATE OF WASHINGTON, REGISTERED PROFESSIONAL ENGINEER
4/25/14
DATE
P.E. STAMP BOX

DATE
P.E. STAMP BOX

Washington State Department of Transportation

I-5
M ST TO PORTLAND AVE - HOV

FIBER OPTIC DETAIL

PLAN REF NO ITFO7

SHEET 1407 OF 1763 SHEETS

CABINET	PULLBOX / CABLE VAULT	LABEL A	LABEL B	LABEL C	LABEL D	LABEL E	LABEL F	LABEL G	LABEL H	SHEET NO.
005-VC-13371 / 005-CH-13371	CV-02	005-DS-13341 / 005-VM-13341	005-CH-13182	T.F.D. CUSHMAN	EMPTY	005-DS-13397	005-VC-13464	48CT NORTH (NB)	005-VC-13376	IT-5

*SUPPLY 144 FUTURE ST TO ST SMFO PATCH CORDS OF 1 METER LENGTH IN CABINET

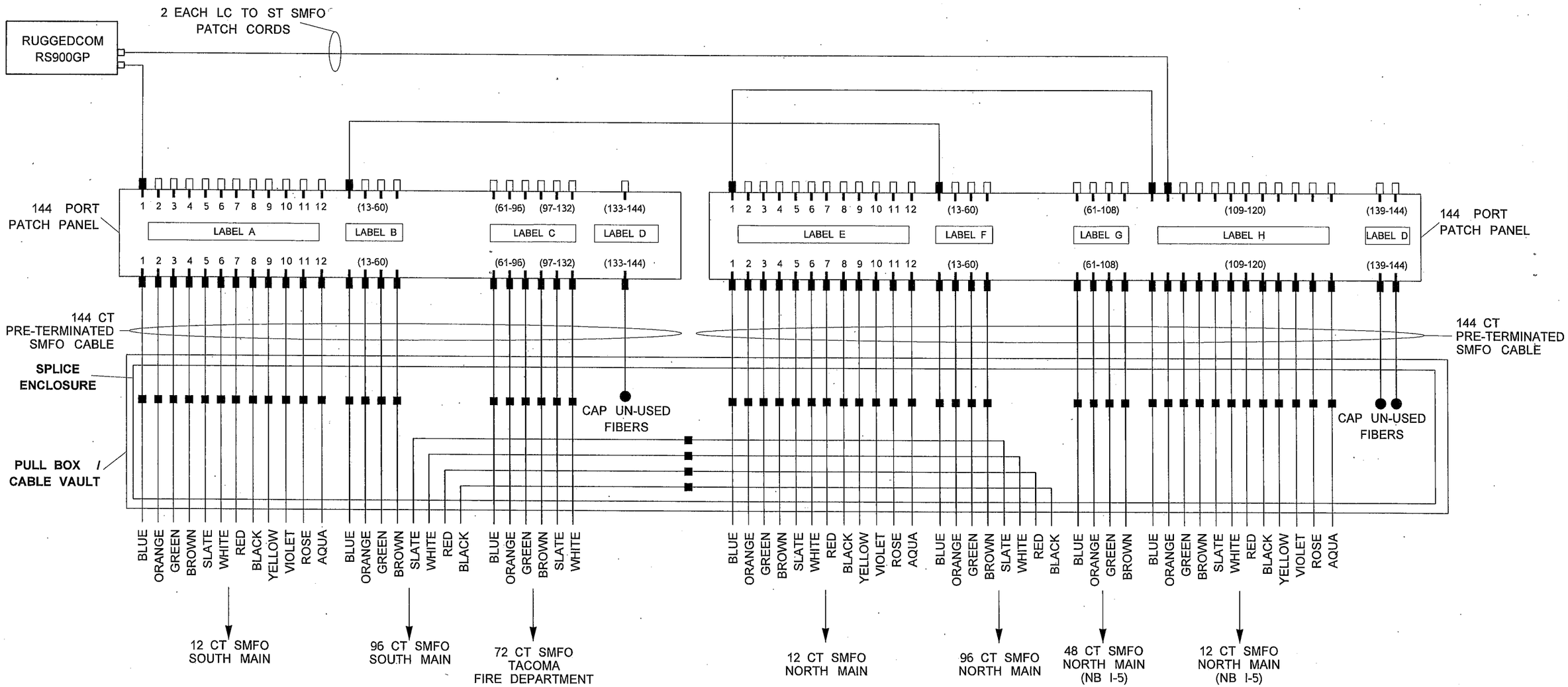

FILE NAME	PW:_XL3497\PS&E Sheets\ITS\P3497_SH_ITFO_08.dgn
TIME	10:38:45 AM
DATE	3/16/2014
PLOTTED BY	dizonj
DESIGNED BY	C. LANGFORD
ENTERED BY	C. LANGFORD
CHECKED BY	R. CRUMBLEY
PROJ. ENGR.	J. PEREZ
REGIONAL ADM.	K. DAYTON

REVISION | DATE | BY

REGION NO. 10 | STATE WASH | FED.AID PROJ.NO.

JOB NUMBER

CONTRACT NO. | LOCATION NO.

DENNIS RAY CRUMBLEY STATE OF WASHINGTON REGISTERED PROFESSIONAL ENGINEER

3/17/14 DATE

P.E. STAMP BOX

DATE

P.E. STAMP BOX

Washington State Department of Transportation

I-5
M ST TO PORTLAND AVE - HOV

FIBER OPTIC DETAIL

PLAN REF NO ITFO8

SHEET 1408 OF 1763 SHEETS

CABINET	PULLBOX / CABLE VAULT	LABEL A	LABEL B	LABEL C	LABEL D	LABEL E	LABEL F	SHEET NO.
005-VC-13464	CV-06 & EXPB-29	005-VC-13371 / 005-CH-13371	EMPTY	005-VC-13402	005-RM-13473	005-VM-13482	005-CH-13715	IT-9

*SUPPLY 48 FUTURE ST TO ST SMFO PATCH CORDS OF 1 METER LENGTH IN CABINET

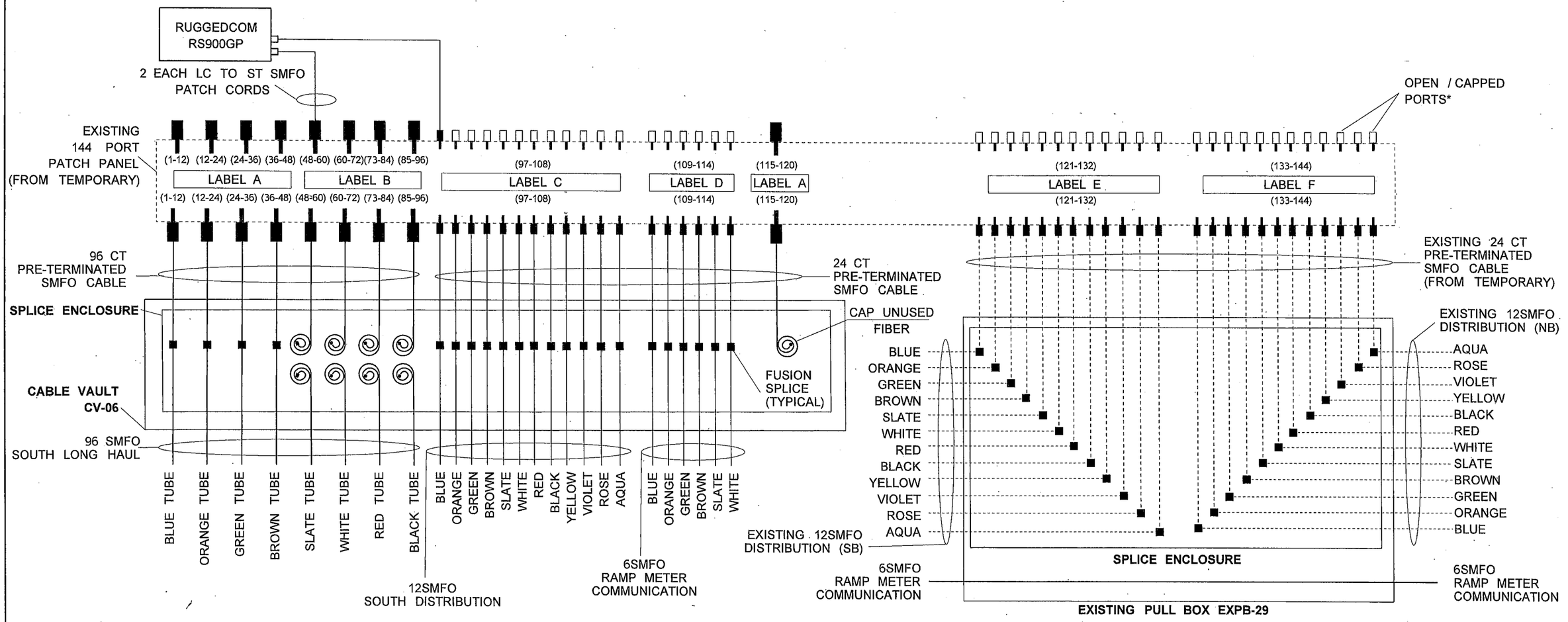

FILE NAME	PW:_XL3497\PS&E Sheets\ITS\P3497_SH_ITFO_09.dgn
TIME	10:38:50 AM
DATE	3/16/2014
PLOTTED BY	dizonj
DESIGNED BY	C. LANGFORD
ENTERED BY	C. LANGFORD
CHECKED BY	R. CRUMBLEY
PROJ. ENGR.	J. PEREZ
REGIONAL ADM.	K. DAYTON

REVISION | DATE | BY

REGION NO. 10 | STATE WASH | FED.AID PROJ.NO.

JOB NUMBER

CONTRACT NO. | LOCATION NO.

DENNIS RAY CRUMBLEY, STATE OF WASHINGTON, REGISTERED PROFESSIONAL ENGINEER

3/12/14 DATE

P.E. STAMP BOX

DATE

P.E. STAMP BOX

Washington State Department of Transportation

I-5
M ST TO PORTLAND AVE - HOV

FIBER OPTIC DETAIL

PLAN REF NO ITFO9

SHEET 1409 OF 1763 SHEETS

PULLBOX / CABLE VAULT	SHEET NO.
EXPB-30	IT-10

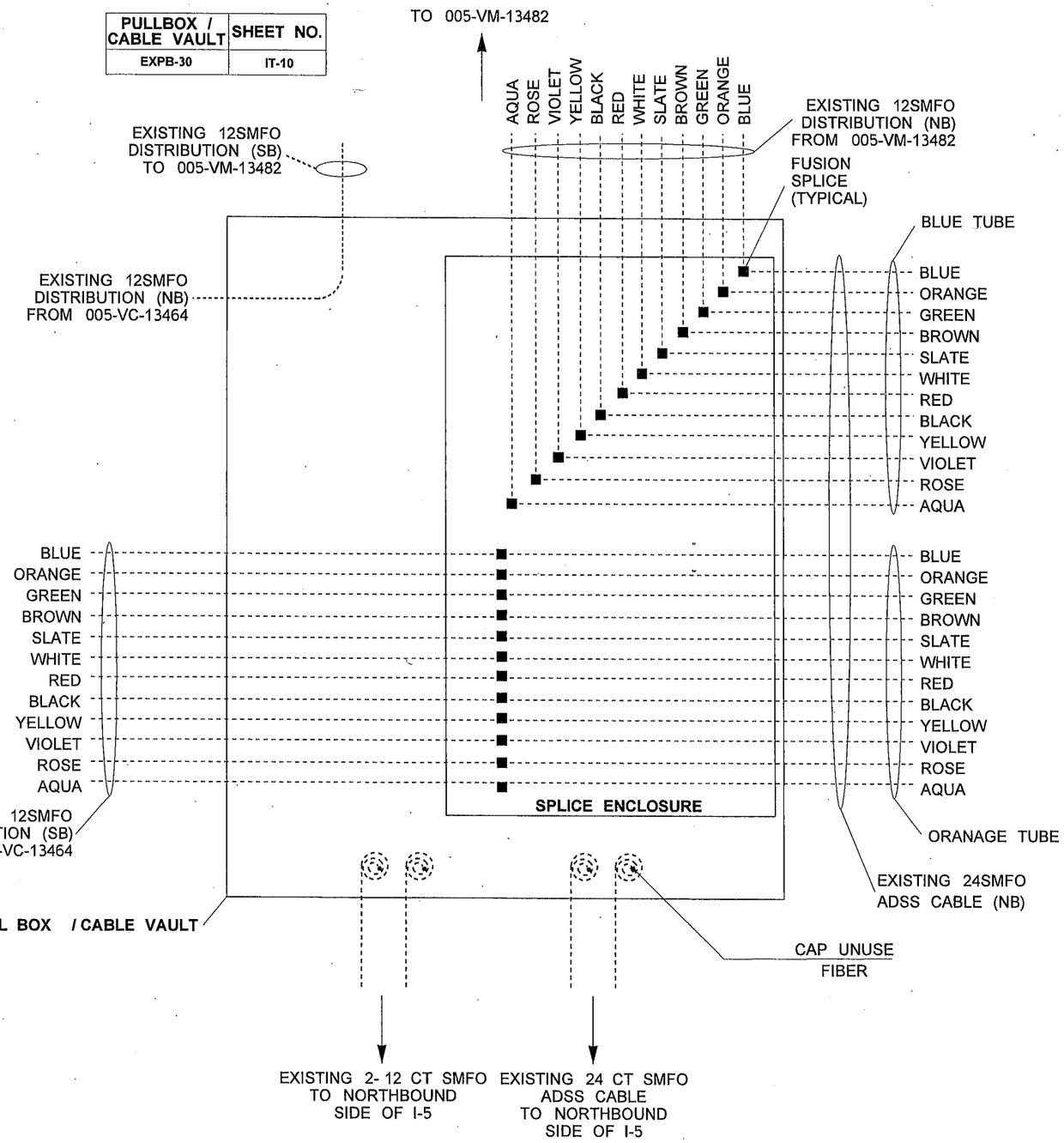

F/O CABLE LABELING DETAILS

CAUTION
FIBER OPTIC CABLE
FIBER COUNT:____ FIBER TYPE:____
SR/DIRECTION:____ CABLE FOOTAGE:____
EQUIPMENT ID:____

APPROX. 4" X 2"
BLACK ON YELLOW

FIBER COUNT - NUMBER OF FIBER IN A CABLE (EXAMPLE: 144 CT = 144 FIBERS)
SR/DIRECTION - STATE ROUTE LOCATION AND DIRECTION (EXAMPLE: I-5 NB = SR 5 NORTHBOUND)
FIBER TYPE- LONGHAUL OR DISTRIBUTION.
CABLE FOOTAGE - SEQUENTIAL NUMBER FOOTAGE OF CABLE (EXAMPLE: 3085 FT)
EQUIPMENT # - ITS DEVICE IDENTIFICATION FOR CABLE TERMINATION (EXAMPLE : 005-VC-12345)✱
✱SEE SHEET ITN1.

WSDOT
BURIED FIBER CABLE

APPROX. 3" X 8"
BLACK ON WHITE

FLEXIBLE GUIDEPOST DECAL
CONTRACTOR TO PROVIDE AND INSTALL DECALS ON GUIDEPOSTS

FILE NAME	PW:_XL3497\PS&E Sheets\ITS\P3497_SH_ITFO_10.dgn						
TIME	10:38:54 AM				REGION NO. 10	STATE WASH	FED.AID PROJ.NO.
DATE	3/16/2014				JOB NUMBER		
PLOTTED BY	dizonj						
DESIGNED BY	C. LANGFORD				CONTRACT NO.	LOCATION NO.	
ENTERED BY	C. LANGFORD						
CHECKED BY	R. CRUMBLEY						
PROJ. ENGR.	J. PEREZ						
REGIONAL ADM.	K. DAYTON	REVISION	DATE	BY			

DENNIS RAY CRUMBLEY, STATE OF WASHINGTON, REGISTERED PROFESSIONAL ENGINEER
3/17/14
DATE
P.E. STAMP BOX

DATE
P.E. STAMP BOX

Washington State Department of Transportation

I-5
M ST TO PORTLAND AVE - HOV

FIBER OPTIC DETAIL

PLAN REF NO ITFO10

SHEET 1410 OF 1763 SHEETS

CABINET	LABEL A	SHEET NO.
005-RM-13473	005-VC-13464	IT-10

*SUPPLY 2 FUTURE ST TO ST SMFO PATCH CORDS OF 1 METER LENGTH IN CABINET

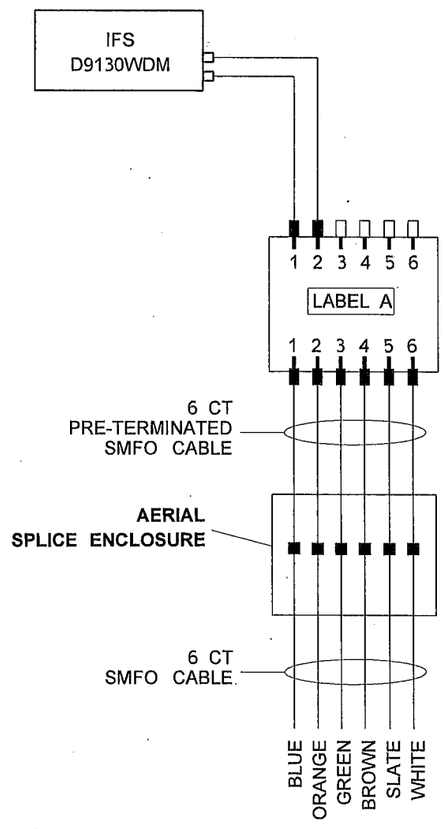

DETAIL A

CABINET	LABEL A	LABEL B	SHEET NO.
005-DS-13496 & 005-RM-13516	005-VM-13482	005-VC-13558	IT-12

*SUPPLY 4 FUTURE ST TO ST SMFO PATCH CORDS OF 1 METER LENGTH IN CABINET

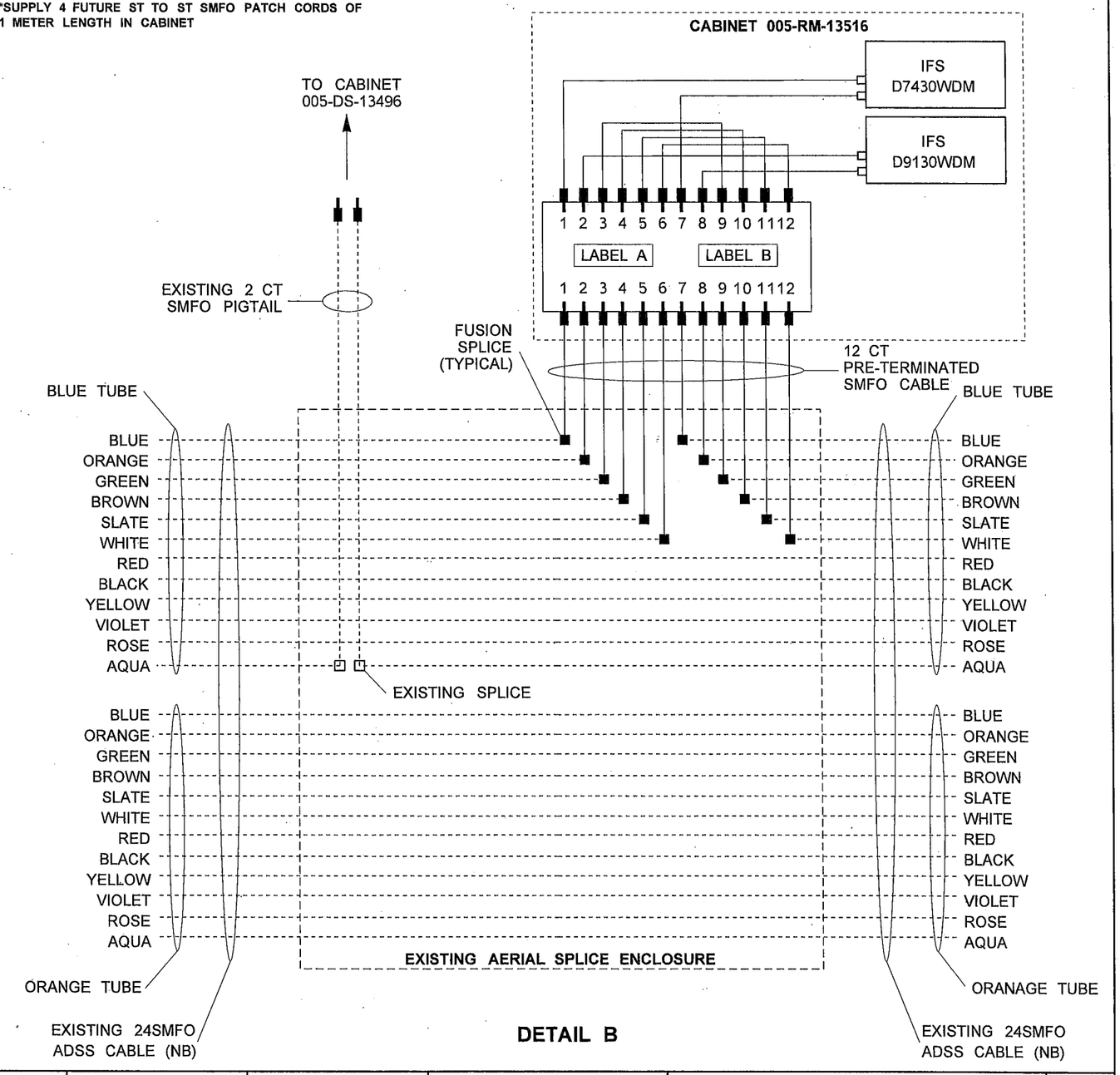

DETAIL B

FILE NAME	PW:_XL3497\PS&E Sheets\ITS\P3497_SH_ITFO_11.dgn					
TIME	10:38:58 AM					
DATE	3/16/2014					
PLOTTED BY	dizonj					
DESIGNED BY	C. LANGFORD					
ENTERED BY	C. LANGFORD					
CHECKED BY	R. CRUMBLEY					
PROJ. ENGR.	J. PEREZ					
REGIONAL ADM.	K. DAYTON	REVISION	DATE	BY		

REGION NO.	STATE	FED.AID PROJ.NO.
10	WASH	
JOB NUMBER		
CONTRACT NO.		LOCATION NO.

DEANE RAY CRUMBLEY, STATE OF WASHINGTON, REGISTERED PROFESSIONAL ENGINEER

3/17/14
DATE
P.E. STAMP BOX

DATE
P.E. STAMP BOX

Washington State
Department of Transportation

I-5
M ST TO PORTLAND AVE - HOV

FIBER OPTIC DETAIL

PLAN REF NO
ITFO11

SHEET 1411 OF 1763 SHEETS

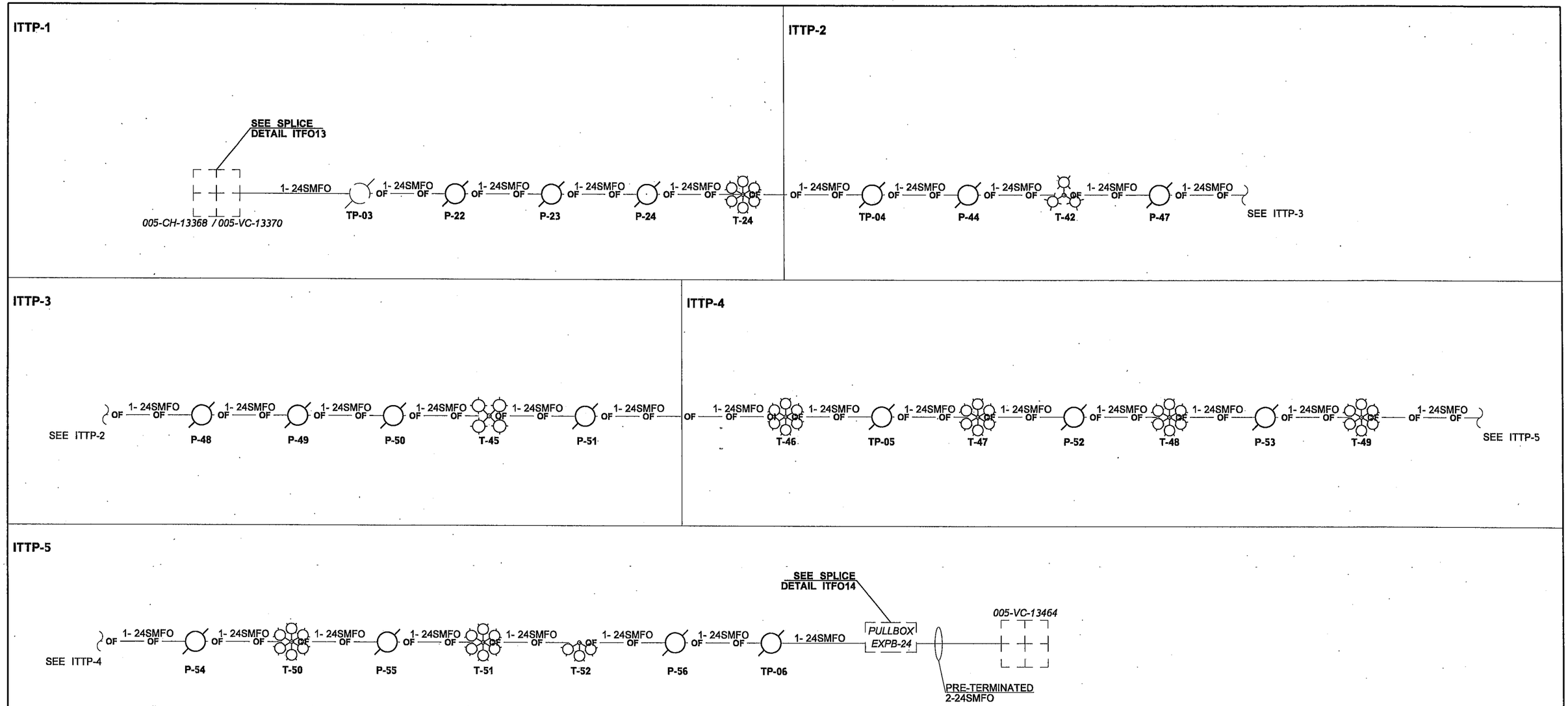

NOTES:
1. ADDITIONAL EXISTING FIBER OPTIC CABLES NOT SHOWN FOR CLARITY. SEE WIRE NOTES FOR LOCATIONS.
2. ADDITIONAL EXISTING PULL BOXES, CABLE VAULTS, AND POLES NOT SHOWN FOR CLARITY.

TEMPORARY FIBER DISTRIBUTION DIAGRAM

NOT TO SCALE

FILE NAME	PW:_XL3497\PS&E Sheets\ITS\P3497_SH_ITFO_12.dgn				REGION NO. 10	STATE WASH	FED.AID PROJ.NO.
TIME	1:06:17 PM				JOB NUMBER		
DATE	3/18/2014						
PLOTTED BY	LangfoC				CONTRACT NO.		LOCATION NO.
DESIGNED BY	C. LANGFORD						
ENTERED BY	C. LANGFORD						
CHECKED BY	R. CRUMBLEY						
PROJ. ENGR.	J. PEREZ						
REGIONAL ADM.	K. DAYTON	REVISION	DATE	BY			

DENNIS RAY CRUMBLEY, STATE OF WASHINGTON, REGISTERED PROFESSIONAL ENGINEER
3/17/14
DATE
P.E. STAMP BOX

DATE
P.E. STAMP BOX

Washington State Department of Transportation

I-5
M ST TO PORTLAND AVE - HOV

FIBER OPTIC DETAIL

PLAN REF NO ITFO12

SHEET 1412 OF 1763 SHEETS

CABINET	LABEL A	SHEET NO.
005-CH-13368 / 005-VC-13370	005-VC-13464	ITTP-1

*SUPPLY 24 FUTURE ST TO ST SMFO PATCH CORDS OF 1 METER LENGTH IN CABINET

*ALL EXISTING LABELS TO REMAIN

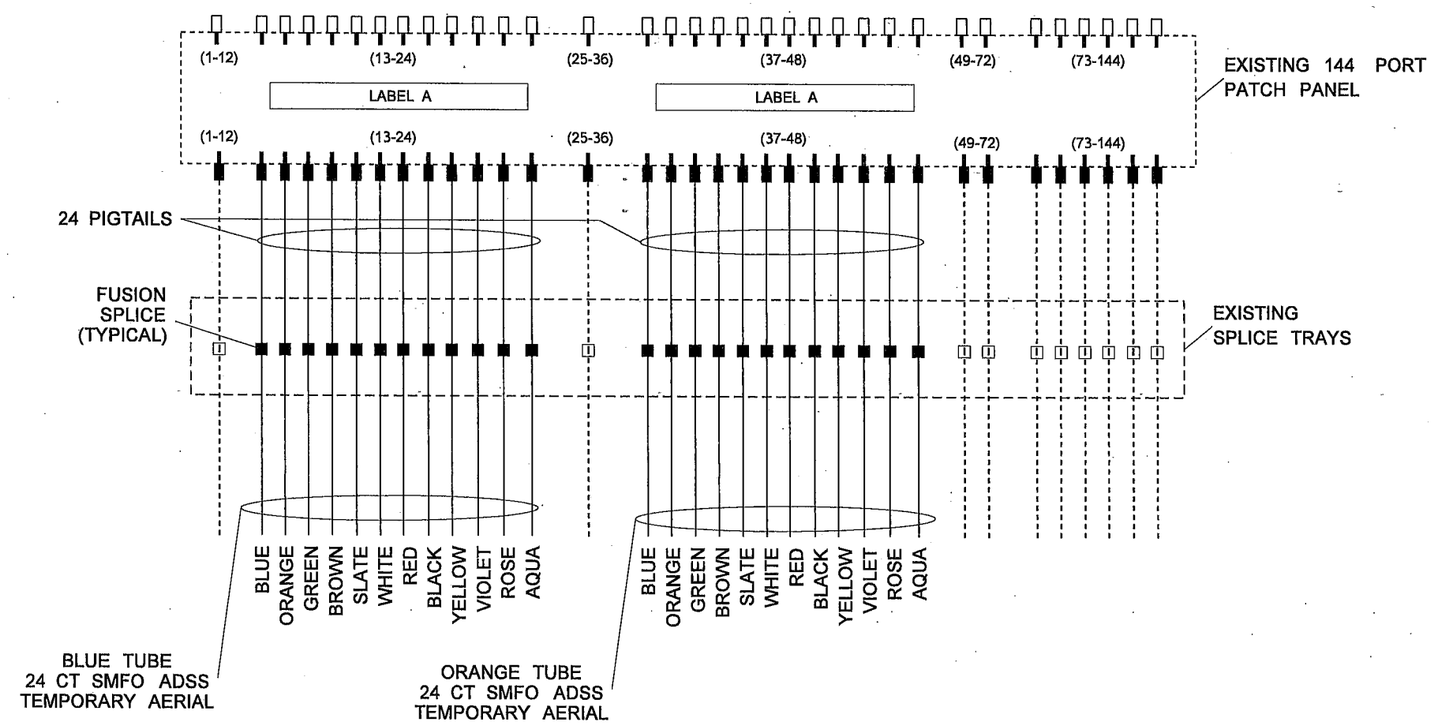

FILE NAME	PW:_XL3497\PS&E Sheets\ITS\P3497_SH_ITFO_13.dgn
TIME	1:06:20 PM
DATE	3/18/2014
PLOTTED BY	LangfoC
DESIGNED BY	C. LANGFORD
ENTERED BY	C. LANGFORD
CHECKED BY	R. CRUMBLEY
PROJ. ENGR.	J. PEREZ
REGIONAL ADM.	K. DAYTON

REVISION	DATE	BY

REGION NO.	STATE	FED.AID PROJ.NO.
10	WASH	
JOB NUMBER		
CONTRACT NO.		LOCATION NO.

P.E. STAMP BOX — DATE 3/19/14

P.E. STAMP BOX — DATE

Washington State Department of Transportation

I-5
M ST TO PORTLAND AVE - HOV

FIBER OPTIC DETAIL

PLAN REF NO ITFO13

SHEET 1413 OF 1763 SHEETS

CABINET	PULLBOX / CABLE VAULT	LABEL A	LABEL B	LABEL C	SHEET NO.
005-VC-13464	EXPB-29	005-CH-13368 / 005-VC-13370	005-VM-13482	005-CH-13715	IT-9

*SUPPLY 24 FUTURE ST TO ST SMFO PATCH CORDS OF
1 METER LENGTH IN CABINET

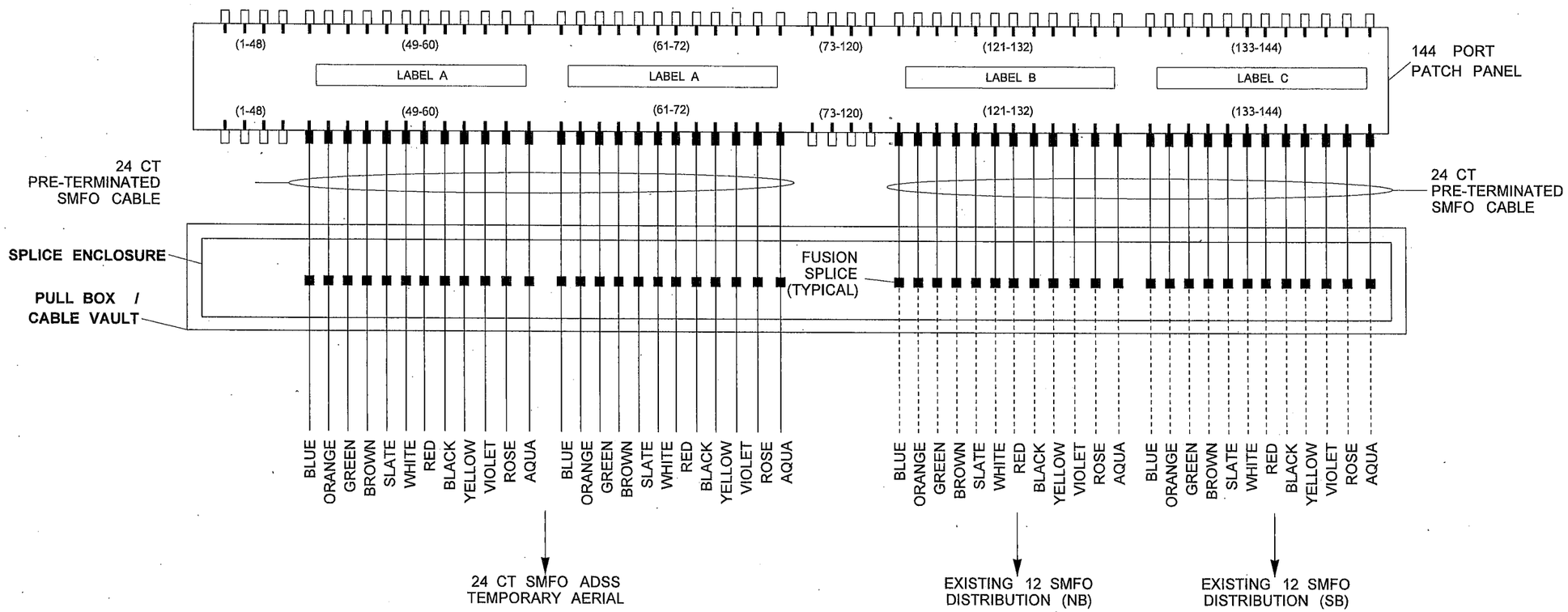

FILE NAME	PW:_XL3497\PS&E Sheets\ITS\P3497_SH_ITFO_14.dgn
TIME	10:39:12 AM
DATE	3/16/2014
PLOTTED BY	dlzonj
DESIGNED BY	C. LANGFORD
ENTERED BY	C. LANGFORD
CHECKED BY	R. CRUMBLEY
PROJ. ENGR.	J. PEREZ
REGIONAL ADM.	K. DAYTON

REVISION	DATE	BY

REGION NO.	STATE	FED.AID PROJ.NO.
10	WASH	
JOB NUMBER		
CONTRACT NO.		LOCATION NO.

DENNIS RAY CRUMBLEY
STATE OF WASHINGTON
REGISTERED
PROFESSIONAL ENGINEER
3/17/14
DATE
P.E. STAMP BOX

DATE
P.E. STAMP BOX

Washington State
Department of Transportation

I-5
M ST TO PORTLAND AVE - HOV

FIBER OPTIC DETAIL

PLAN REF NO
ITFO14

SHEET
1414
OF
1763
SHEETS

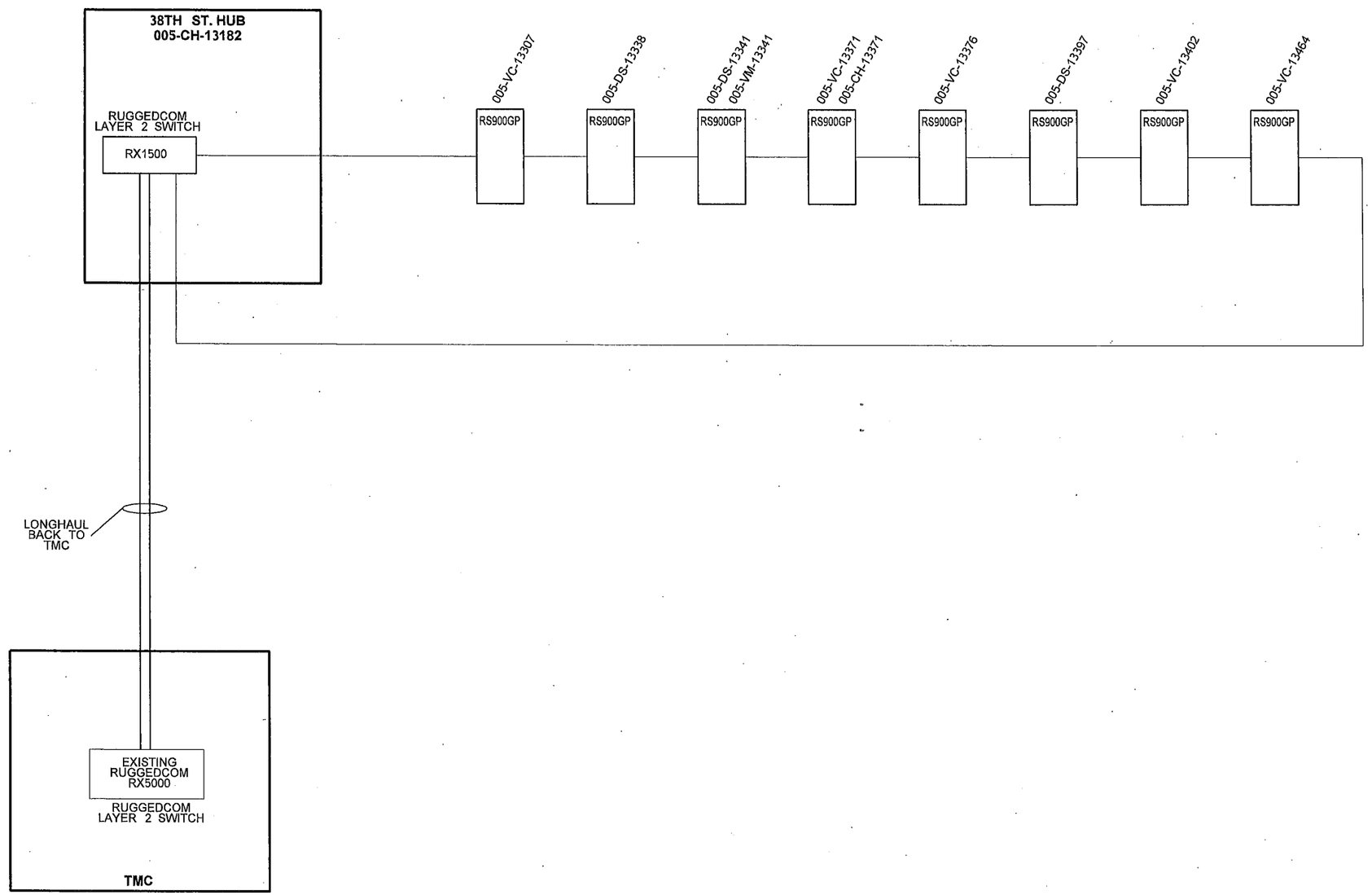

FILE NAME	PW:_XL3497\PS&E Sheets\ITS\P3497_SH_ITND_01.dgn				REGION NO. 10	STATE WASH	FED.AID PROJ.NO.
TIME	10:39:15 AM				JOB NUMBER		
DATE	3/16/2014						
PLOTTED BY	dlzonj						
DESIGNED BY	C. LANGFORD						
ENTERED BY	C. LANGFORD						
CHECKED BY	R. CRUMBLEY				CONTRACT NO.		LOCATION NO.
PROJ. ENGR.	J. PEREZ						
REGIONAL ADM.	K. DAYTON	REVISION	DATE	BY			

DONNIE RAY CRUMBLEY
STATE OF WASHINGTON
PROFESSIONAL ENGINEER
3/13/14
DATE
P.E. STAMP BOX

DATE
P.E. STAMP BOX

Washington State
Department of Transportation

I-5
M ST TO PORTLAND AVE - HOV

NETWORK DIAGRAM

PLAN REF NO
ITND1

SHEET
1415
OF
1763
SHEETS

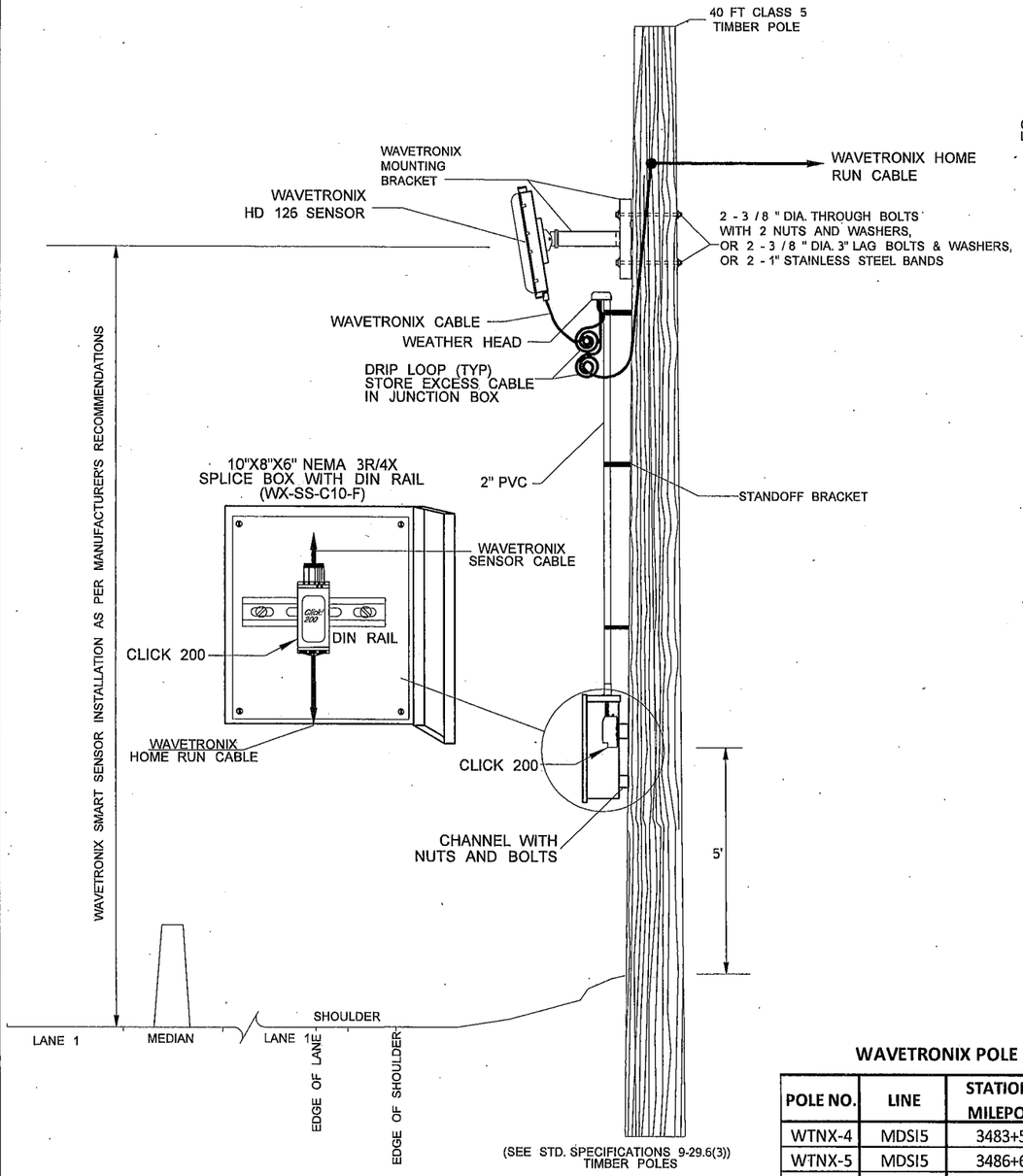

TIMBER POLE WITH WAVETRONIX SENSOR DETAIL

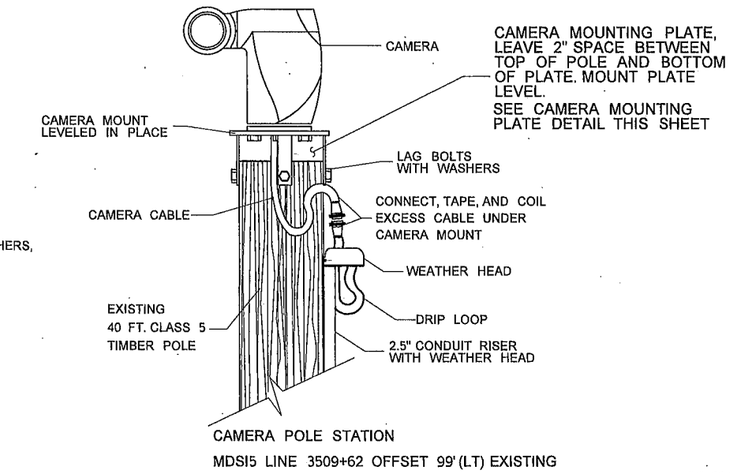

CAMERA MOUNTING DETAIL

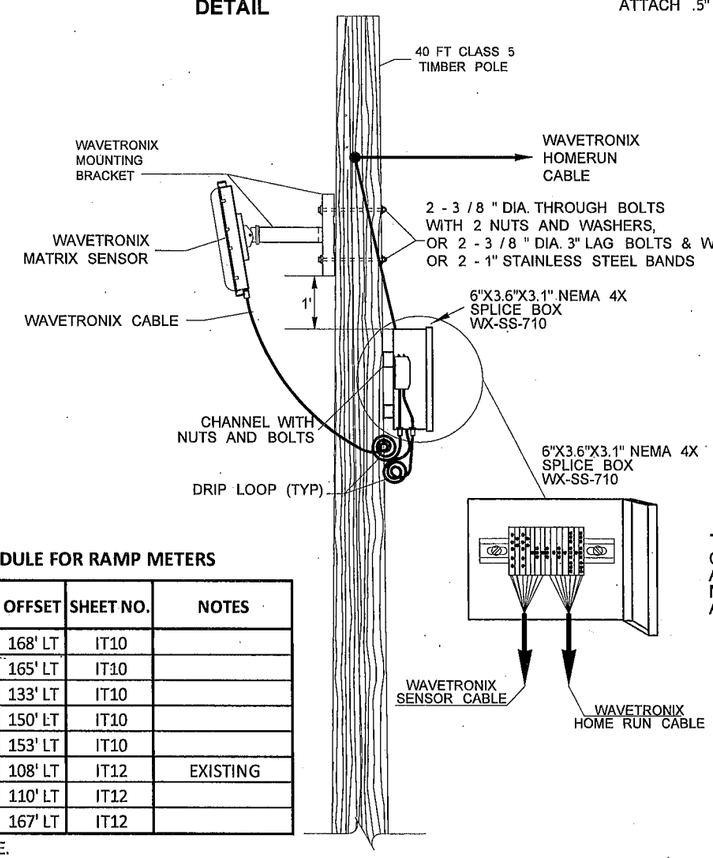

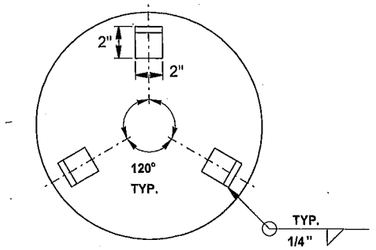

SECTION "A-A"

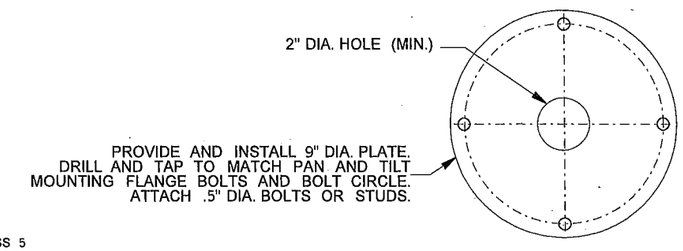

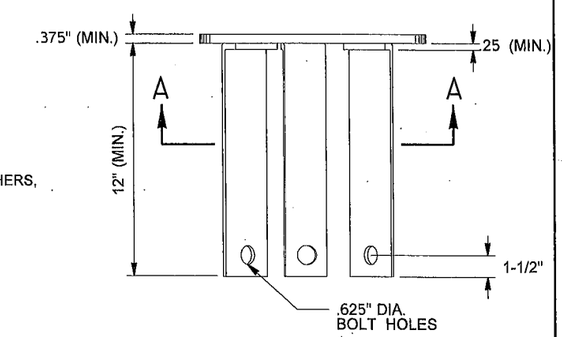

NOTE:
PRE-DRILL FOR (3) 3"x 1/2" LAG BOLTS WITH WASHERS

CAMERA MOUNTING PLATE DETAIL

CAMERA MOUNTING PLATE SHALL BE FABRICATED IN ACCORDANCE WITH STANDARD SPECIFICATIONS SECTION 6-03. MOUNTING PLATE SHALL CONFORM WITH AASHTO M-270. ALL STEEL SHALL BE GALVANIZED.

WAVETRONIX POLE SCHEDULE FOR RAMP METERS

POLE NO.	LINE	STATION / MILEPOST	OFFSET	SHEET NO.	NOTES
WTNX-4	MDSI5	3483+56	168' LT	IT10	
WTNX-5	MDSI5	3486+63	165' LT	IT10	
WTNX-6	MDSI5	3488+00	133' LT	IT10	
WTNX-7	MDSI5	3491+54	150' LT	IT10	
WTNX-8	MDSI5	3494+70	153' LT	IT10	
WTNX-9	MDSI5	3505+54	108' LT	IT12	EXISTING
WTNX-10	MDSI5	3507+92	110' LT	IT12	
WTNX-11	MDSI5	3513+00	167' LT	IT12	

MEASUREMENT IS TO CENTER OF POLE.

NOTES:

1. TIMBER POLE SHALL BE SET IN ACCORDANCE WITH STANDARD SPEC 8-20.3(14)E.
2. ALL HARDWARE SHALL BE STAINLESS STEEL OR GALVANIZED.

NOT TO SCALE

FILE NAME	PW:_XL3497\PS&E Sheets\ITS\P3497_SH_ITRM_01.dgn
TIME	10:39:19 AM
DATE	3/16/2014
PLOTTED BY	dizonj
DESIGNED BY	J. DIZON
ENTERED BY	J. DIZON
CHECKED BY	C. LANGFORD
PROJ. ENGR.	J. PEREZ
REGIONAL ADM.	K. DAYTON

REVISION | DATE | BY

REGION NO. 10 | STATE WASH | FED.AID PROJ.NO.

JOB NUMBER

CONTRACT NO.

LOCATION NO. XL3497

DENNIS RAY CRUMMY, STATE OF WASHINGTON, REGISTERED PROFESSIONAL ENGINEER, 31763

3/12/14 DATE

P.E. STAMP BOX

DATE

P.E. STAMP BOX

Washington State Department of Transportation

I-5
M ST TO PORTLAND AVE - HOV

RAMP METER DETAIL

ITRM1

SHEET 1416 OF 1763 SHEETS

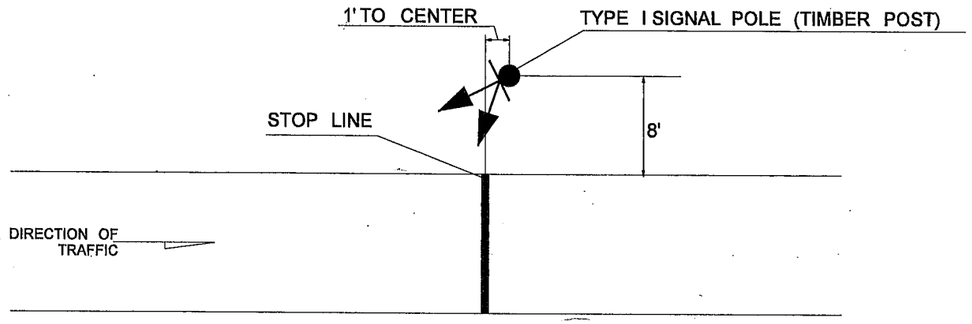

TYPICAL TYPE 1 SIGNAL POLE PLACEMENT

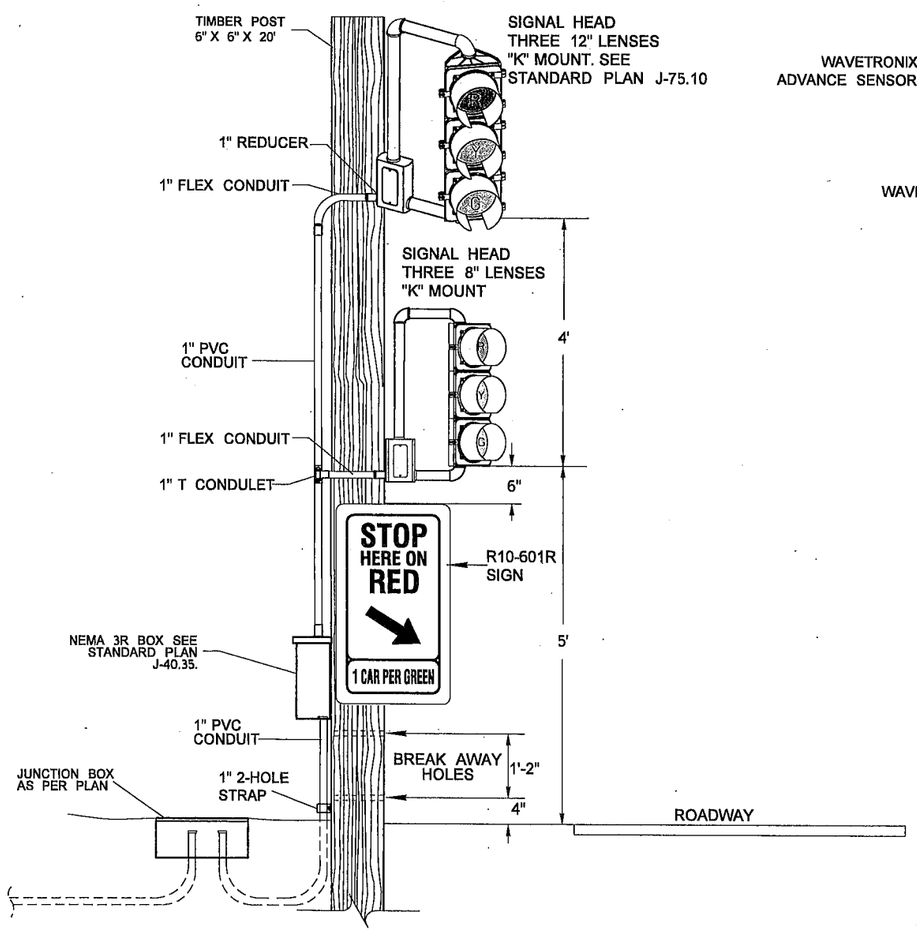

RAMP METER SIGNAL DISPLAY DETAIL

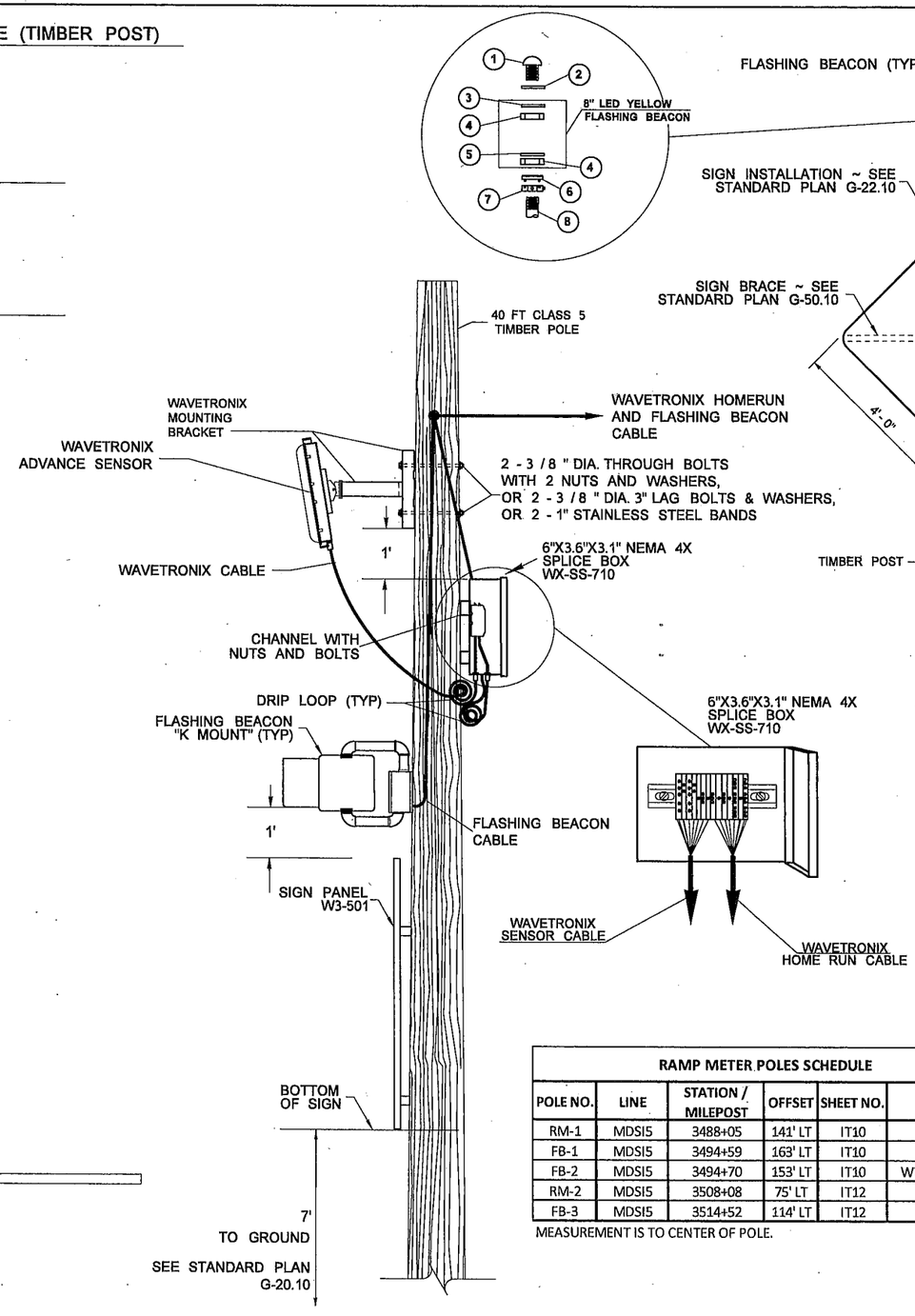

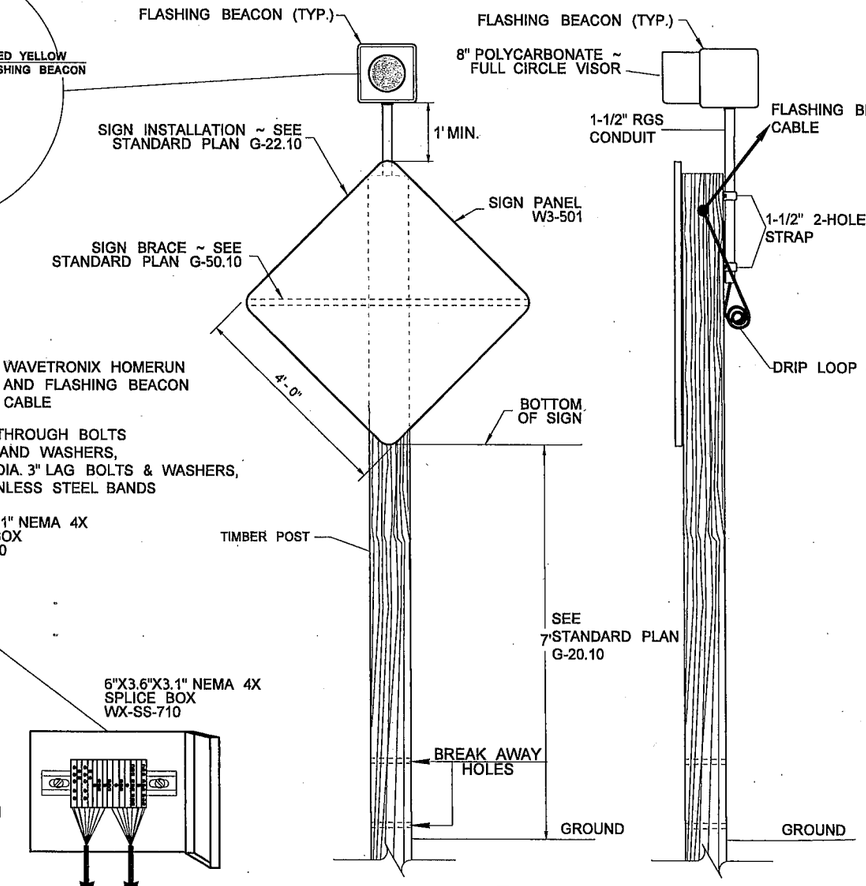

KEY:

1. END CAP
2. NEOPRENE GASKET
3. STEEL WASHER
4. CONDUIT LOCKNUT, 1 ½" DIA
5. CONDUIT BUSHING, 1 ½" DIA
6. SERRATED RING WITH PIN
7. HEX LOCKNUT WITH:
   - -TWO ALLEN HEAD STAINLESS STEEL SET SCREW
   - -PIN RECEPTACLE
8. CONDUIT WITH 2 ½" (MAX) THREAD, 1 ½" DIA

FLASHING BEACON DETAIL

RAMP METER POLES SCHEDULE

POLE NO.	LINE	STATION / MILEPOST	OFFSET	SHEET NO.	NOTES
RM-1	MDSI5	3488+05	141' LT	IT10	
FB-1	MDSI5	3494+59	163' LT	IT10	
FB-2	MDSI5	3494+70	153' LT	IT10	WTNX-8 POLE
RM-2	MDSI5	3508+08	75' LT	IT12	
FB-3	MDSI5	3514+52	114' LT	IT12	

MEASUREMENT IS TO CENTER OF POLE.

NOT TO SCALE

FILE NAME	PW:_XL3497\PS&E Sheets\ITS\P3497_SH_ITRM_02.dgn
TIME	11:20:57 AM
DATE	3/17/2014
PLOTTED BY	LangfoC
DESIGNED BY	J. DIZON
ENTERED BY	J. DIZON
CHECKED BY	C. LANGFORD
PROJ. ENGR.	J. PEREZ
REGIONAL ADM.	K. DAYTON

REVISION | DATE | BY

REGION NO. 10 | STATE WASH | FED.AID PROJ.NO.

JOB NUMBER

CONTRACT NO.

LOCATION NO. XL3497

P.E. STAMP BOX — DATE 3/17/14

P.E. STAMP BOX — DATE

Washington State Department of Transportation

I-5
M ST TO PORTLAND AVE - HOV

RAMP METER DETAIL

ITRM2

SHEET 1417 OF 1763 SHEETS

KEY

1. PRIMARY POWER.
2. MAIN BREAKER.
3. SECONDARY BRANCH BREAKERS, 6 CIRCUIT PANEL.
4. TRANSFORMER.
5. NEUTRAL BUSS.
6. GROUND BUSS.
7. RECEPTACLE GROUNDED (GFCI 20 AMP, 120 VOLTS).
8. PERMANENTLY AFFIXED COMPARTMENT SEPARATOR.
9. SEE FOUNDATION DETAILS, SHEET ITF02 AND ITF03.
10. ENCLOSED WIREWAY FOR 120v CIRCUITS.
11. GROUNDING ELECTRODE.
12. MAIN BONDING JUMPER.
13. CABINET BONDING JUMPER.
14. SUPPLEMENT GROUND (FROM REBAR TO GROUND BUSS).
15. GROUND CONDUIT.
16. POWER OUT CONDUIT.
17. POWER IN CONDUIT.
18. ENGRAVED PHENOLIC NAMEPLATE

NOTES:

1. CABINET SIZE FOR 3 KVA - 12.5 KVA TRANSFORMERS SHALL BE 48" HIGH X 24" WIDE X 20" DEEP CABINET SIZE FOR TRANSFORMER LARGER THAN 12.5 KVA SHALL BE PER. SECTION 9.29.25. CABINET SHALL BE FABRICATED OF MILL FINISHED ALUMINUM. PAINTING OR ANODIZED ALUMINUM IS NOT ALLOWED.
2. THE SECONDARY BRANCH BREAKERS SHALL BE BOLT IN TYPE, MOUNTED ON COPPER BUSSWORK RATED 100 AMPS.
3. ALL CIRCUIT BREAKERS INSTALLED SHALL BE PERMANENTLY MARKED WITH APPLICABLE CIRCUIT NAME.
4. THE DEAD FRONT SHALL BE FABRICATED IN TWO PARTS, ONE FOR EACH COMPARTMENT.
5. CABINET DOOR SHALL BE THREE HINGED. THE DOOR HINGE SHALL BE MOUNTED ON THE LEFT SIDE. CONSTRUCTION CORES SHALL BE GREEN WITH TWO MASTER KEYS AND ONE CORE KEY PER LOCK.
6. BOLT PATTERN IS PROVIDED BY CABINET MANUFACTURER. ALL ANCHOR BOLTS SHALL BE HOT DIP GALVANIZED OR AS AN ALTERNATE: STAINLESS STEEL CINCH BOLTS PER. MANUFACTURERS RECOMMENDATION. BOLT SHALL EXTEND A MINIMUM 1.5 INCHES ABOVE THE CONCRETE PAD.
7. SEE SECTION 9-29.24 OF THE STANDARD SPECIFICATIONS FOR ADDITIONAL REQUIREMENT.
8. TRANSFORMER TYPE, VOLTAGE AND KVA REQUIREMENTS ARE AS SHOWN IN THE PLANS AND PER. SECTION 9.29.9. TRANSFORMERS 7.5 KVA AND LARGER SHALL BE SUPPLIED WITH TWO FULL CAPACITY TAPS, ONE AT 5% AND ONE AT 10% BELOW NORMAL CAPACITY.
9. SEE ITS BREAKER SCHEDULE FOR SIZE AND QUANTITY OF BREAKERS.
10. ENGRAVED PHENOLIC NAMEPLATE ATTACHED WITH SCREW OR RIVETS. PLATE SHALL READ: "CIRCUIT IS FED FROM SERVICE CABINET ###".

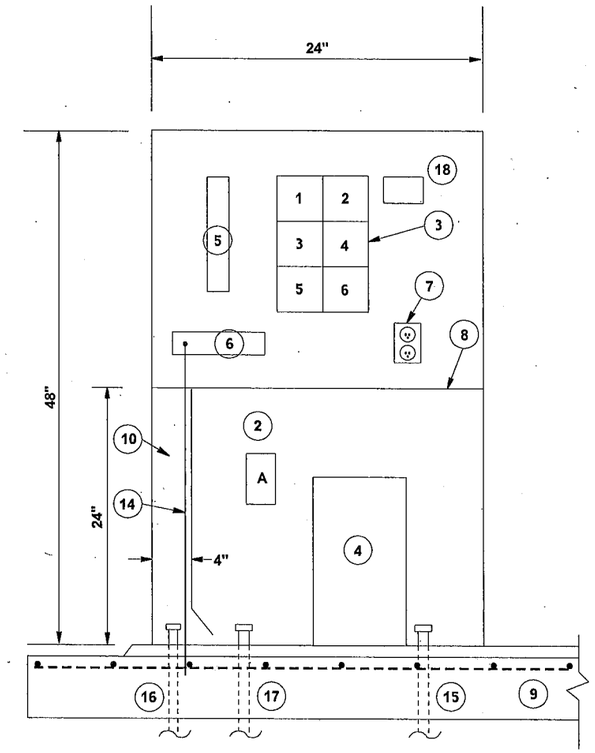

INTERIOR DETAILS
(WITH DEAD FRONTS REMOVED)

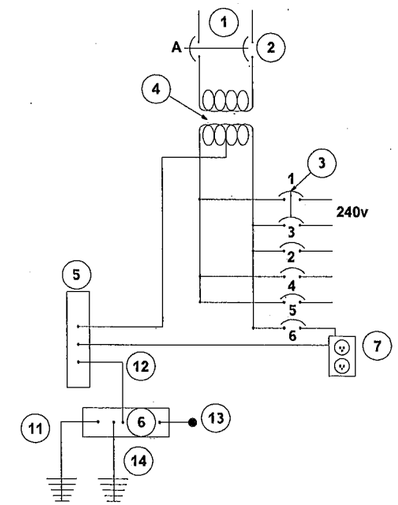

240V / 240V-120V
CIRCUIT DIAGRAM

240V / 240V-120V
TRANSFORMER DETAIL

NOT TO SCALE

FILE NAME	PW:_XL3497\PS&E Sheets\ITS\P3497_SH_ITTD_01.dgn				REGION NO.	STATE	FED.AID PROJ.NO.
TIME	10:39:26 AM				10	WASH	
DATE	3/16/2014				JOB NUMBER		
PLOTTED BY	dizonj						
DESIGNED BY	A. DORROUGH/J. DIZON				CONTRACT NO.		LOCATION NO.
ENTERED BY	A. DORROUGH/J. DIZON						
CHECKED BY	C. LANGFORD						
PROJ. ENGR.	J. PEREZ						
REGIONAL ADM.	K. DAYTON	REVISION	DATE	BY			

DENNIS RAY CRUMBLEY, STATE OF WASHINGTON, REGISTERED PROFESSIONAL ENGINEER
3/17/14
DATE
P.E. STAMP BOX

DATE
P.E. STAMP BOX

Washington State Department of Transportation

I-5
M ST TO PORTLAND AVE - HOV

TRANSFORMER DETAIL

PLAN REF NO
ITTD1

SHEET 1418 OF 1763 SHEETS

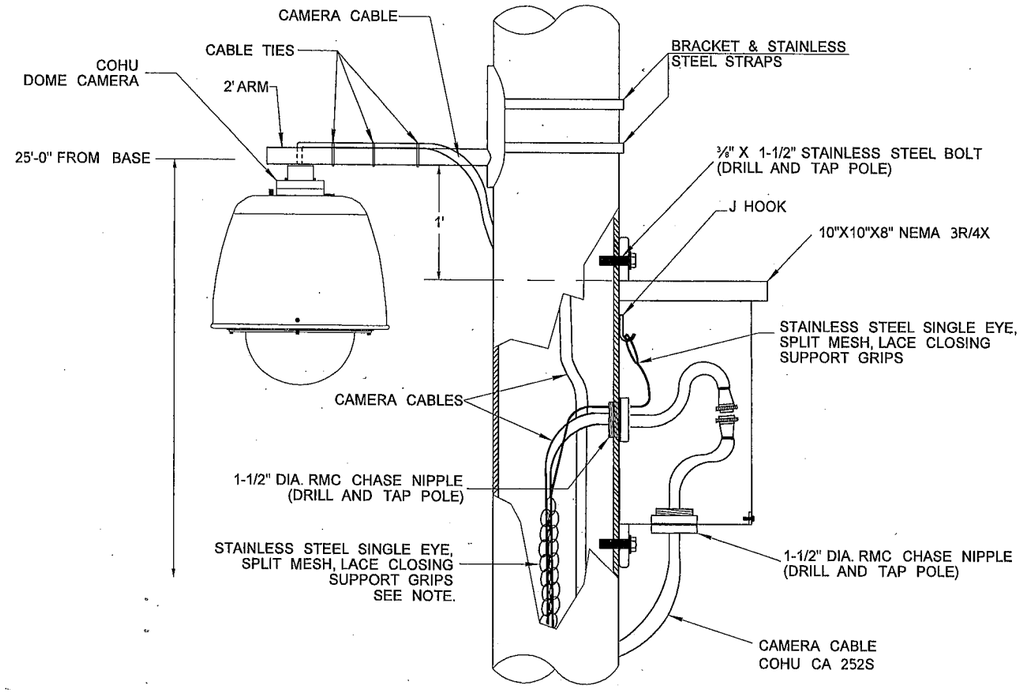

DIGITAL DOME CAMERA MOUNTING DETAIL

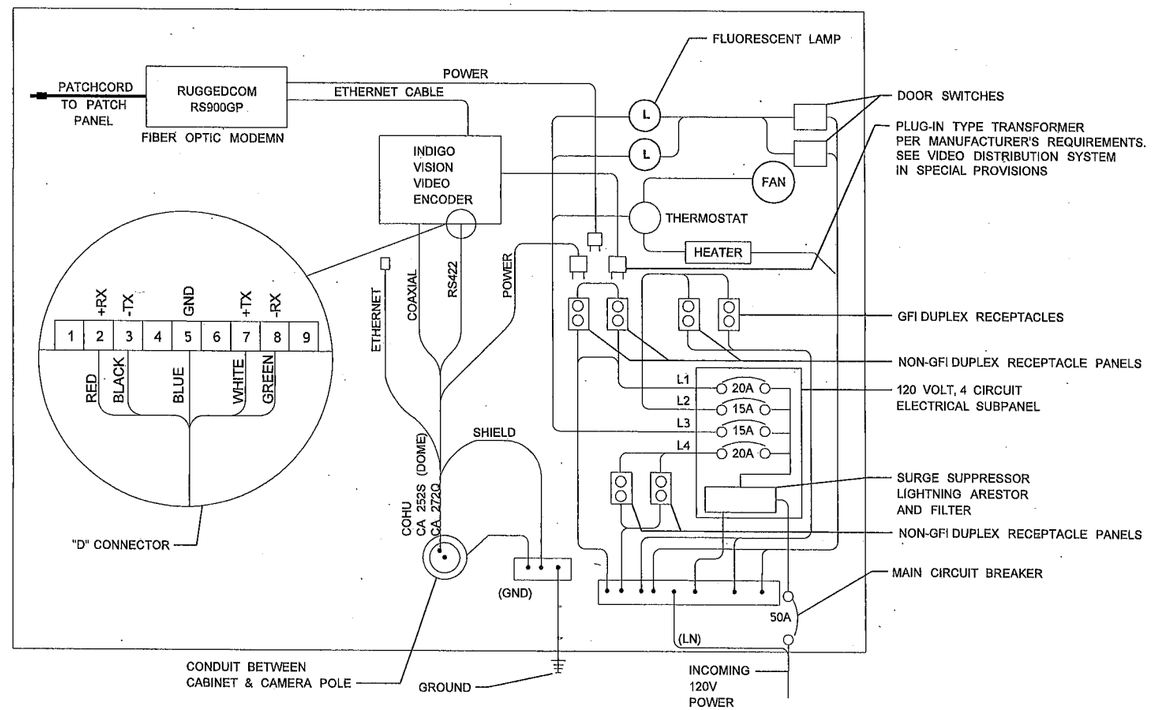

WIRING DETAIL

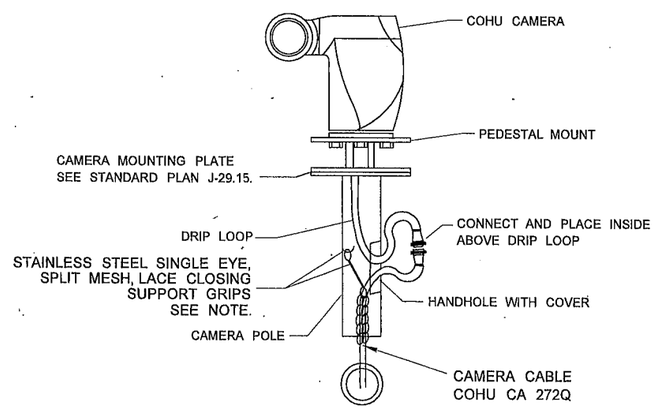

TYPICAL DIGITAL CAMERA MOUNTING DETAIL

NOTES:

CABLES INSIDE THE POLE SHALL BE SUSPENDED SUCH THAT NONE OF THE CABLE WEIGHT IS TRANSFERED TO THE CABLE CONNECTIONS OR TERMINATIONS.

CAMERA POLE SCHEDULE

POLE NO.	LINE	STATION / MILEPOST	OFFSET	POLE HEIGHT	SHEET NO.	NOTES
005-VC-13371	PAC	16+06	56'RT	50'	IT5	
005-VC-13376	SNB	16+84	79'RT	50'	IT5	
005-VC-13402	SBN	68+98	65'LT	50'	IT7	

MEASUREMENT IS TO CENTER OF POLE.

VIDEO CAMERA WIRING AND MOUNTING DETAIL

NOT TO SCALE

FILE NAME	PW:_XL3497\PS&E Sheets\ITS\P3497_SH_ITVC_01.dgn				REGION NO. 10	STATE WASH	FED.AID PROJ.NO.
TIME	10:39:29 AM				JOB NUMBER		
DATE	3/16/2014						
PLOTTED BY	dizonj						
DESIGNED BY	A. DORROUGH/J. DIZON				CONTRACT NO.		LOCATION NO. XL3497
ENTERED BY	A. DORROUGH/J. DIZON						
CHECKED BY	C. LANGFORD						
PROJ. ENGR.	J. PEREZ						
REGIONAL ADM.	K. DAYTON	REVISION	DATE	BY			

DENNIS RAY CRUMBER, STATE OF WASHINGTON, REGISTERED PROFESSIONAL ENGINEER
3/17/14
DATE
P.E. STAMP BOX

DATE
P.E. STAMP BOX

Washington State
Department of Transportation

I-5
M ST TO PORTLAND AVE - HOV

VIDEO CAMERA DETAIL

ITVC1

SHEET 1419 OF 1763 SHEETS