8607

Contract Plans

For Construction of:

I-5 MP 132.84 TO MP 134.41

I-5
M ST TO PORTLAND AVE - HOV

PIERCE COUNTY

A STATE PROJECT

VOLUME 7 OF 10

Washington State Department of Transportation

INDEX

SHEET NO.	PLAN REFERENCE NO.	TITLE
		*** VOLUME 1 ***
1 - 4	IN1 - IN4	INDEX
5	VM1	VICINITY MAP
6	KM1	KEY MAP
7 - 38	SQ1 - SQ32	SUMMARY OF QUANTITIES
39	SI1	SHARED ITEM TABLE
40 - 86	RS1 - RS47	ROADWAY SECTIONS
87	RS48	ROADWAY SECTIONS - DETAILS
88 - 93	GD1 - GD6	GORE DETAILS
94 - 99	TRS1 - TRS6	TEMPORARY ROADWAY SECTIONS
100 - 109	CN1A - CN9	CONTOUR PLAN
		*** VOLUME 2 ***
110 - 113	IN5 - IN8	INDEX
114 - 123	SU1 - SU10	STAGED CONSTRUCTION
124 - 141	AL1A - AL14	ALIGNMENT AND RIGHT OF WAY
142 - 147	SA1-1 - SA1-6	STAGED ALIGNMENT - STAGE 1
148 - 157	SA1A-1 - SA1A-10	STAGED ALIGNMENT - STAGE 1A
158 - 163	SA1B-1 - SA1B-6	STAGED ALIGNMENT - STAGE 1B
164 - 167	SA1C-1 - SA1C-4	STAGED ALIGNMENT - STAGE 1C
168 - 174	SA1D-1 - SA1D-7	STAGED ALIGNMENT - STAGE 1D
175 - 181	SA2-1 - SA2-7	STAGED ALIGNMENT - STAGE 2
182 - 192	SA3A-1 - SA3A-11	STAGED ALIGNMENT - STAGE 3A
193 - 198	SA3B-1 - SA3B-6	STAGED ALIGNMENT - STAGE 3B

INDEX (CONTINUED)

SHEET NO.	PLAN REFERENCE NO.	TITLE
199 - 205	SA4-1 - SA4-7	STAGED ALIGNMENT - STAGE 4
206 - 210	SA5-1 - SA5-5	STAGED ALIGNMENT - STAGE 5
211 - 221	QTSP1 - QTSP11	QUANTITY TABULATION - SITE PREPARATION
222 - 235	SP1A - SP11	SITE PREPARATION
236 - 237	SPD1 - SPD2	SITE PREPARATION DETAILS
238 - 247	EU1A - EU9	EXISTING UTILITY PLAN
248 - 249	EUS1 - EUS2	EXISTING UTILITY SCHEDULE
250 - 286	RP1 - RP37	ROADWAY PROFILE
		*** VOLUME 3 ***
287 - 290	IN9 - IN12	INDEX
291	CWM1	CONTAMINATED WATER MANAGEMENT
292 - 300	VA1 - VA9	VAULT REMOVAL PLAN
301 - 310	SC1 - SC10	STAGED CONVEYANCE
311	QTEC1	QUANTITY TABULATION - TESC GENERAL NOTES
312 - 347	QTEC2 - QTEC37	QUANTITY TABULATION - TESC
348 - 359	EC1 - EC10	TESC PLAN - STAGE 1
360 - 371	EC11 - EC20	TESC PLAN - STAGE 1A
372 - 383	EC21 - EC30	TESC PLAN - STAGE 1B
384 - 395	EC31 - EC40	TESC PLAN - STAGE 1C
396 - 407	EC41 - EC50	TESC PLAN - STAGE 1D

PLAN REFERENCE NO.

SHEET OF SHEETS

NOTE: ALL SHEET REFERENCES, FIRST NOS. OF STRUCTURE CODE DESIGNATIONS AND MATCH LINE SHEET REFERENCES, ETC., THROUGHOUT THE PLANS, REFER TO THE ENTRY IN THE PLAN REFERENCE NUMBER BOX.

FILE NAME	PW:_XL3497\PS&E Sheets\Index\P3497_SH_IN_701.dgn
TIME	11:03:15 AM
DATE	3/14/2014
PLOTTED BY	SancheA
DESIGNED BY	S. SHYU
ENTERED BY	A. SANCHEZ
CHECKED BY	B. REGISTER
PROJ. ENGR.	J. PEREZ
REGIONAL ADM.	K. DAYTON

REVISION | DATE | BY

REGION NO. 10 | STATE WASH | FED.AID PROJ.NO.

JOB NUMBER 12C501

CONTRACT NO.

LOCATION NO. XL3497

P.E. STAMP BOX DATE

P.E. STAMP BOX DATE

Washington State Department of Transportation

I-5
M ST TO PORTLAND AVE - HOV

INDEX

PLAN REF NO IN25

SHEET 995 OF 1763 SHEETS

INDEX

SHEET NO.	PLAN REFERENCE NO.	TITLE
408 - 419	EC51 - EC60	TESC PLAN - STAGE 2
420 - 431	EC61 - EC70	TESC PLAN - STAGE 3A
432 - 443	EC71 - EC80	TESC PLAN - STAGE 3B
444 - 455	EC81 - EC90	TESC PLAN - STAGE 4
456 - 467	EC91 - EC100	TESC PLAN - STAGE 5
468 - 469	ECP1 - ECP2	TESC PROFILE
470 - 473	ECD1 - ECD4	TESC DETAILS
		*** VOLUME 4 ***
474 - 477	IN13 - IN16	INDEX
478	NTDR1	STRUCTURE NOTES - DRAINAGE GENERAL NOTES
479 - 558	NTDR2 - NTDR81	STRUCTURE NOTES - DRAINAGE
559 - 561	DRST1 - DRST3	STAGED DRAINAGE TABLE
562 - 571	DR1A - DR9	DRAINAGE PLAN
572 - 596	DP1 - DP25	DRAINAGE PROFILE
597 - 601	DD1 - DD5	DRAINAGE DETAIL
602 - 612	PD1 - PD11	POND DETAILS
613	TNTDR1	STRUCTURE NOTES - TEMPORARY DRAINAGE GENERAL NOTES
614 - 629	TNTDR2 - TNTDR17	STRUCTURE NOTES - TEMPORARY DRAINAGE
630 - 631	TDRST1 - TDRST2	TEMPORARY STAGED DRAINAGE TABLE
632 - 641	TDR1A - TDR9	TEMPORARY DRAINAGE PLAN
642 - 646	TDP1 - TDP5	TEMPORARY DRAINAGE PROFILE
647 - 650	TDD1 - TDD4	TEMPORARY DRAINAGE DETAIL
651 - 662	LS1 - LS12	LANDSCAPING

INDEX (CONTINUED)

SHEET NO.	PLAN REFERENCE NO.	TITLE
		*** VOLUME 5 ***
663 - 666	IN17 - IN20	INDEX
667 - 677	QTPV1 - QTPV11	QUANTITY TABULATION - PAVING
678 - 687	PV1A - PV9	PAVING PLAN
688 - 712	PVD1 - PVD24	PAVING DETAILS
713 - 717	PRD1 - PRD5	ADA RAMP DETAILS
718 - 724	PJ1 - PJ8	PAVING JOINT PLAN
725 - 729	PVS1-1A - PVS1-9	PAVING PLAN - STAGE 1
730A - 737	PVS1A-1 - PVS1A-9	PAVING PLAN - STAGE 1A
738 - 745	PVS1B-1 - PVS1B-9	PAVING PLAN - STAGE 1B
746 - 753	PVS1C-1 - PVS1C-9	PAVING PLAN - STAGE 1C
753A - 761	PVS1D-1A - PVS1D-9	PAVING PLAN - STAGE 1D
762 - 768	PVS2-2 - PVS2-9	PAVING PLAN - STAGE 2
769 - 774	PVS3A-3 - PVS3A-8	PAVING PLAN - STAGE 3A
775 - 779	PVS3B-3 - PVS3B-8	PAVING PLAN - STAGE 3B
780 - 785	PVS4-2 - PVS4-8	PAVING PLAN - STAGE 4
786 - 794	PVS5-1A - PVS5-9	PAVING PLAN - STAGE 5
795 - 798	QTMK1 - QTMK4	QUANTITY TABULATION - PAVEMENT MARKINGS
799 - 812	MK1A - MK11	PAVEMENT MARKING PLAN
813 - 819	MKD1 - MKD7	PAVEMENT MARKING DETAILS

PLAN REFERENCE NO.

SHEET OF SHEETS

NOTE: ALL SHEET REFERENCES, FIRST NOS. OF STRUCTURE CODE DESIGNATIONS AND MATCH LINE SHEET REFERENCES, ETC., THROUGHOUT THE PLANS, REFER TO THE ENTRY IN THE PLAN REFERENCE NUMBER BOX.

FILE NAME	PW:_XL3497\PS&E Sheets\Index\ADD1_P3497_SH_IN_702.dgn				
TIME	3:31:23 PM				
DATE	4/23/2014				
PLOTTED BY	SancheA				
DESIGNED BY	S. SHYU				
ENTERED BY	A. SANCHEZ				
CHECKED BY	B. REGISTER				
PROJ. ENGR.	J. PEREZ	AD1 - REVISED INDEX	05/02/2014	BR	
REGIONAL ADM.	K. DAYTON	REVISION	DATE	BY	

REGION NO.	STATE	FED.AID PROJ.NO.
10	WASH	
JOB NUMBER 12C501		
CONTRACT NO.		LOCATION NO. XL3497

P.E. STAMP BOX DATE

P.E. STAMP BOX DATE

Washington State Department of Transportation

I-5
M ST TO PORTLAND AVE - HOV

INDEX

PLAN REF NO IN26

SHEET 996 OF 1763 SHEETS

INDEX

SHEET NO.	PLAN REFERENCE NO.	TITLE
		*** VOLUME 6 ***
820 - 823	IN21 - IN24	INDEX
824 - 825	WR1 - WR2	WALL VICINITY MAP
826 - 837	WR3 - WR14	I5NB WALL-A
838 - 839	WR15 - WR16	I5SB WALL-A
840 - 848	WR17 - WR25	I5SB WALL-E
849 - 886	WR26 - WR63	NBN WALL-A & SNB WALL-A
887 - 889	WR64 - WR66	SSB WALL-A
890 - 894	WR67 - WR71	SSB WALL-B1 & SSB WALL-B2
895 - 896	WR72 - WR73	ARCHITECTURAL DETAILS MISCELLANEOUS
897 - 902	BM1 - BM6	I-5 OVER M STREET BRIDGE NO. 5/437
903 - 909	BE1 - BE7	I-5 OVER I-705 AND TACOMA RAIL BRIDGE NO. 5/445HOV
910 - 925	BW1 - BW16	I-5 OVER I-705 AND TACOMA RAIL BRIDGE NO. 5/445W
926 - 994	MC0 - MC68	MCKINLEY WAY OVER I-5 BRIDGE NO. 5/448
		*** VOLUME 7 ***
995 - 998	IN25 - IN28	INDEX
999 - 1103	PA0 - PA104	PACIFIC AVE OVER I-5 BRIDGE NO. 5/444
1104 - 1194	SR0 - SR90	I-5 OVER I-705 AND TACOMA RAIL BRIDGE NO. 5/445E

INDEX (CONTINUED)

SHEET NO.	PLAN REFERENCE NO.	TITLE
		*** VOLUME 8 ***
1195 - 1198	IN29 - IN32	INDEX
1199 - 1205	SS1 - SS7	SIGN SPECIFICATIONS
1206 - 1212	SE1 - SE8	SIGN REMOVAL PLAN
1213 - 1219	SN1 - SN8	SIGN PLAN
1220	SND1	SIGN DETAIL PLAN
1221 - 1222	SNSD1 - SNSD2	SIGN STAGING TABLE
1223 - 1225	SNSD3 - SNSD5	SIGN STAGING SPECIFICATIONS
1226 - 1267	SNS3 - SNS110	SIGN STAGING PLAN
1268 - 1291	TSB1 - TSB24	TEMPORARY SIGN STRUCTURE
1292 - 1320	SB1 - SB29	SIGN STRUCTURES
1321 - 1322	TILN1 - TILN2	TEMPORARY ILLUMINATION NOTES
1323 - 1335	TIL0 - TIL9	TEMPORARY ILLUMINATION PLAN
1336 - 1343	ILN1 - ILN8	ILLUMINATION NOTES AND SCHEDULES
1344 - 1353	IL1 - IL8	ILLUMINATION PLAN
1354	ILD1	ILLUMINATION AREA DETAIL
1355	ILD2	UNDERDECK HANGER DETAILS
1356 - 1359	ILC1 - ILC4	ILLUMINATION PLAN - CITY

PLAN REFERENCE NO.

SHEET OF SHEETS

NOTE: ALL SHEET REFERENCES, FIRST NOS. OF STRUCTURE CODE DESIGNATIONS AND MATCH LINE SHEET REFERENCES, ETC., THROUGHOUT THE PLANS, REFER TO THE ENTRY IN THE PLAN REFERENCE NUMBER BOX.

FILE NAME	PW:_XL3497\PS&E Sheets\Index\P3497_SH_IN_703.dgn
TIME	11:03:24 AM
DATE	3/14/2014
PLOTTED BY	SancheA
DESIGNED BY	S. SHYU
ENTERED BY	A. SANCHEZ
CHECKED BY	B. REGISTER
PROJ. ENGR.	J. PEREZ
REGIONAL ADM.	K. DAYTON

REVISION | DATE | BY

REGION NO. 10 | STATE WASH | FED.AID PROJ.NO.

JOB NUMBER 12C501

CONTRACT NO.

LOCATION NO. XL3497

P.E. STAMP BOX DATE

P.E. STAMP BOX DATE

Washington State Department of Transportation

I-5
M ST TO PORTLAND AVE - HOV

INDEX

PLAN REF NO IN27

SHEET 997 OF 1763 SHEETS

INDEX

SHEET NO.	PLAN REFERENCE NO.	TITLE
1360	ITN1	ITS LEGEND AND GENERAL NOTES
1361 - 1366	ITTP1 - ITTP5	ITS TEMPORARY PLAN
1367 - 1385	ITAA - IT12	ITS PLAN
1386 - 1387	ITBX1 - ITBX2	BOX DETAIL
1388	ITCB1	CABINET EQUIPMENT DETAIL
1389 - 1393	ITCB2 - ITCB6	CABINET DETAIL
1394 - 1396	ITCD1 - ITCD3	CONDUIT DETAIL
1397	ITCF1	CABINET FOUNDATION
1398 - 1399	ITDS1 - ITDS2	DATA STATION DETAIL
1400	ITFD1	FENCING DETAIL
1401 - 1414	ITFO1 - ITFO14	FIBER OPTIC DETAIL
1415	ITND1	NETWORK DIAGRAM
1416 - 1417	ITRM1 - ITRM2	RAMP METER DETAIL
1418	ITTD1	TRANSFORMER DETAIL
1419	ITVC1	VIDEO CAMERA DETAIL
		*** VOLUME 9 ***
1420 - 1423	IN33 - IN36	INDEX
1424 - 1425	TCIN1 - TCIN2	TRAFFIC CONTROL INDEX
1426 - 1434	QTTC1 - QTTC9	QUANTITY TABULATION - TRAFFIC CONTROL
1435	TCS1	ADVANCE SIGN PLAN
1436 - 1444	TCS2 - TCS10	TRAFFIC CONTROL STAGING (STAGE 1)
1445 - 1454	TCS11 - TCS20	TRAFFIC CONTROL STAGING (STAGE 1A)
1455 - 1461	TCS21 - TCS27	TRAFFIC CONTROL STAGING (STAGE 1B)
1462 - 1468	TCS28 - TCS34	TRAFFIC CONTROL STAGING (STAGE 1C)
1469 - 1485	TCS35 - TCS51	TRAFFIC CONTROL STAGING (STAGE 1D)
1486 - 1504	TCS52 - TCS70	TRAFFIC CONTROL STAGING (STAGE 2)
1505 - 1529	TCS71 - TCS96	TRAFFIC CONTROL STAGING (STAGE 3A)
1530 - 1539	TCS97 - TCS106	TRAFFIC CONTROL STAGING (STAGE 3B)

INDEX (CONTINUED)

SHEET NO.	PLAN REFERENCE NO.	TITLE
1540 - 1549	TCS107 - TCS116	TRAFFIC CONTROL STAGING (STAGE 4)
1550 - 1558	TCS118 - TCS126	TRAFFIC CONTROL STAGING (STAGE 5)
		*** VOLUME 10 ***
1559 - 1562	IN37 - IN40	INDEX
1563 - 1564	TCIN3 - TCIN4	TRAFFIC CONTROL INDEX
1565 - 1580	TC1 - TC16	TRAFFIC CONTROL PLAN (STAGE 1A)
1581 - 1589	TC17 - TC25	TRAFFIC CONTROL PLAN (STAGE 1B)
1590 - 1596	TC26 - TC32	TRAFFIC CONTROL PLAN (STAGE 1C)
1597 - 1607	TC33 - TC43	TRAFFIC CONTROL PLAN (STAGE 1D)
1608 - 1623	TC44 - TC59	TRAFFIC CONTROL PLAN (STAGE 2)
1624 - 1638	TC60 - TC74	TRAFFIC CONTROL PLAN (STAGE 3A)
1639 - 1645	TC75 - TC81	TRAFFIC CONTROL PLAN (STAGE 3B)
1646 - 1655	TC82 - TC91	TRAFFIC CONTROL PLAN (STAGE 4)
1656 - 1663	TC92 - TC99	TRAFFIC CONTROL PLAN (STAGE 5)
1664 - 1712	TC100 - TC148	MISCELLANEOUS SITE SPECIFIC TRAFFIC CONTROL PLANS
1713 - 1724	TCD1 - TCD12	TRAFFIC CONTROL DETAIL
1725 - 1761	DU1 - DU37	DETOUR PLAN
1762 - 1763	DU38 - DU39	PEDESTRIAN DETOUR

PLAN REFERENCE NO.

SHEET OF SHEETS

NOTE: ALL SHEET REFERENCES, FIRST NOS. OF STRUCTURE CODE DESIGNATIONS AND MATCH LINE SHEET REFERENCES, ETC., THROUGHOUT THE PLANS, REFER TO THE ENTRY IN THE PLAN REFERENCE NUMBER BOX.

FILE NAME	PW:_XL3497\PS&E Sheets\Index\P3497_SH_IN_704.dgn
TIME	11:03:29 AM
DATE	3/14/2014
PLOTTED BY	SancheA
DESIGNED BY	S. SHYU
ENTERED BY	A. SANCHEZ
CHECKED BY	B. REGISTER
PROJ. ENGR.	J. PEREZ
REGIONAL ADM.	K. DAYTON

REVISION | DATE | BY

REGION NO. 10 | STATE WASH | FED.AID PROJ.NO.

JOB NUMBER 12C501

CONTRACT NO.

LOCATION NO. XL3497

P.E. STAMP BOX DATE

P.E. STAMP BOX DATE

Washington State Department of Transportation

I-5
M ST TO PORTLAND AVE - HOV

INDEX

PLAN REF NO IN28

SHEET 998 OF 1763 SHEETS

SHEET INDEX

BRIDGE SHEET NO.	SHEET TITLE
PA0	INDEX
PA1	LAYOUT 1 OF 2
PA2	LAYOUT 2 OF 2
PA3	GENERAL NOTES & GEOMETRIC DATA
PA4	GEOMETRIC DATA
PA5	CONSTRUCTION OPENINGS
PA6 - PA7	SUGGESTED REMOVAL SEQUENCE (2 SHEETS)
PA8	CONSTRUCTION SEQUENCE
PA9 - PA10	SUGGESTED GIRDER ERECTION PLAN (2 SHEETS)
PA11	FOUNDATION LAYOUT
PA12	PIER 1 SHAFT DETAILS
PA13	PIER 2 SHAFT DETAILS
PA14	PIER 3 SHAFT DETAILS
PA15	PIER 4 SHAFT DETAILS
PA16	PIER 5 SHAFT DETAILS
PA17	PIER 6 SHAFT DETAILS
PA18 - PA19	PIER 2 COLUMN DETAILS (2 SHEETS)
PA20 - PA21	PIER 3 COLUMN DETAILS (2 SHEETS)
PA22 - PA23	PIER 4 COLUMN DETAILS (2 SHEETS)
PA24 - PA25	PIER 5 COLUMN DETAILS (2 SHEETS)
PA26	PIER 1 PLAN
PA27 - PA28	PIER 1 ELEVATION (2 SHEETS)
PA29 - PA32	PIER 1 DETAILS (4 SHEETS)
PA33 - PA34	PIER 1 WINGWALL DETAILS (2 SHEETS)
PA35	PIER 2 PLAN AND ELEVATION
PA36 - PA38	PIER 2 DETAILS (3 SHEETS)
PA39	PIER 3 PLAN AND ELEVATION
PA40 - PA42	PIER 3 DETAILS (3 SHEETS)
PA43	PIER 4 PLAN AND ELEVATION
PA44 - PA46	PIER 4 DETAILS (3 SHEETS)
PA47	PIER 5 PLAN AND ELEVATION
PA48 - PA50	PIER 5 DETAILS (3 SHEETS)
PA51	PIER 6 PLAN
PA52 - PA53	PIER 6 ELEVATION (2 SHEETS)
PA54 - PA57	PIER 6 DETAILS (4 SHEETS)
PA58 - PA59	PIER 6 WINGWALL DETAILS (2 SHEETS)
PA60	TRAPEZOIDAL TUB GIRDER PIER 1 ELASTOMERIC BEARING DETAILS
PA61	TRAPEZOIDAL TUB GIRDER PIER 6 ELASTOMERIC BEARING DETAILS
PA62 - PA64	FRAMING PLAN (3 SHEETS)
PA65	TYPICAL SECTION
PA66 - PA69	TUB GIRDER DETAILS (4 SHEETS)
PA70	TUB GIRDER SCHEDULE AND NOTES
PA71	INTERMEDIATE DIAPHRAGM DETAILS
PA72 - PA74	END DIAPHRAGM DETAILS (3 SHEETS)

BRIDGE SHEET NO.	SHEET TITLE
PA75	BRIDGE DECK REINFORCEMENT PLAN PIER 1 - BOTTOM MAT
PA76	BRIDGE DECK REINFORCEMENT PLAN PIER 2 - BOTTOM MAT
PA77	BRIDGE DECK REINFORCEMENT PLAN PIER 3 - BOTTOM MAT
PA78	BRIDGE DECK REINFORCEMENT PLAN PIER 4 - BOTTOM MAT
PA79	BRIDGE DECK REINFORCEMENT PLAN PIER 5 - BOTTOM MAT
PA80	BRIDGE DECK REINFORCEMENT PLAN PIER 6 - BOTTOM MAT
PA81	BRIDGE DECK REINFORCEMENT PLAN PIER 1 - TOP MAT
PA82	BRIDGE DECK REINFORCEMENT PLAN PIER 2 - TOP MAT
PA83	BRIDGE DECK REINFORCEMENT PLAN PIER 3 - TOP MAT
PA84	BRIDGE DECK REINFORCEMENT PLAN PIER 4 - TOP MAT
PA85	BRIDGE DECK REINFORCEMENT PLAN PIER 5 - TOP MAT
PA86	BRIDGE DECK REINFORCEMENT PLAN PIER 6 - TOP MAT
PA87 - PA88	BRIDGE DECK REINFORCEMENT SECTION (2 SHEETS)
PA89 - PA90	EXPANSION JOINT (2 SHEETS)
PA91 - PA94	PEDESTRIAN BARRIER DETAILS (4 SHEETS)
PA95	LUMINAIRE ANCHORAGE DETAILS PEDESTRIAN BARRIER
PA96 - PA97	BRIDGE RAILING TYPE BP DETAILS (2 SHEETS)
PA98 - PA100	BRIDGE APPROACH SLAB DETAILS (3 SHEETS)
PA101 - PA104	BARLIST (4 SHEETS)

SR 5 FILE NO. 7451 SHEET PA0

Bridge Design Engr. Khaleghi, B	M:\Y-Team\M ST TO PORTLAND\PACIFIC AVE BR\window files\INDEX.wnd				REGION NO.	STATE	FED. AID PROJ. NO.	SHEET NO.	TOTAL SHEETS
Supervisor Khaleghi, B					10	WASH.			
Designed By					JOB NUMBER 12C501				
Checked By									
Detailed By									
Bridge Projects Engr.									
Prelim. Plan By									
Architect/Specialist	DATE	REVISION	BY	APP'D					

Tue Feb 11 09:00:09 2014

BRIDGE AND STRUCTURES OFFICE

Washington State Department of Transportation

I-5
M ST TO PORTLAND AVE - HOV

PACIFIC AVE OVER I-5 BRIDGE No. 5/444

INDEX

BRIDGE SHEET NO. PA0

SHEET 999 OF 1763 SHEETS

SEC. 9, T.20N., R.3E., W.M.

CITY OF TACOMA

I-5

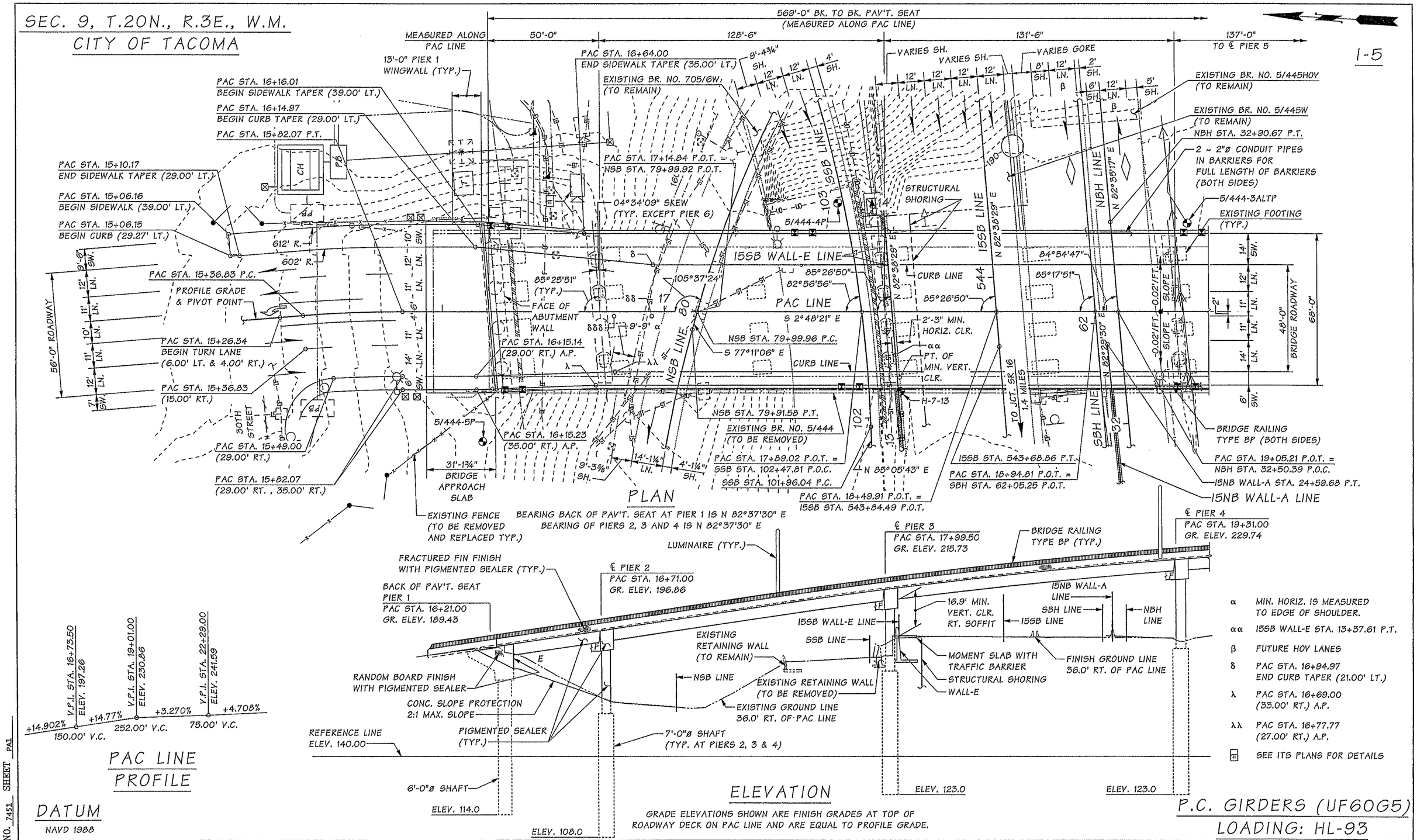

SR 5 FILE NO. 7451 SHEET PA1

Bridge Design Engr.	Khaleghi, B		M:\Y-Team\M ST TO PORTLAND\PACIFIC AVE BR\window files\LAYOUT 1.wnd							
Supervisor	Khaleghi, B									
Designed By	Olson, DE	10/12								
Checked By	Mizumori, A	11/13								
Detailed By	Bontemps, W	10/12								
Bridge Projects Engr.	Lewis, RA	05/08								
Prelim. Plan By	CH2MHILL	05/08								
Architect/Specialist	Kinderman, P	05/08	DATE	REVISION	BY	APP'D				

REGION NO.	STATE	FED. AID PROJ. NO.	SHEET NO.	TOTAL SHEETS
10	WASH.			
JOB NUMBER 12C501				

Tue Feb 11 09:00:11 2014

BRIDGE AND STRUCTURES OFFICE

BRIAN KHALEGHI STATE OF WASHINGTON 21905 PROFESSIONAL ENGINEER 2/11/14

Washington State Department of Transportation

I-5
M ST TO PORTLAND AVE - HOV

PACIFIC AVE OVER I-5 BRIDGE No. 5/444

LAYOUT 1 OF 2

BRIDGE SHEET NO. PA1

SHEET 1000 OF 1763 SHEETS

SEC. 9, T.20N., R.3E., W.M.

CITY OF TACOMA

I-5

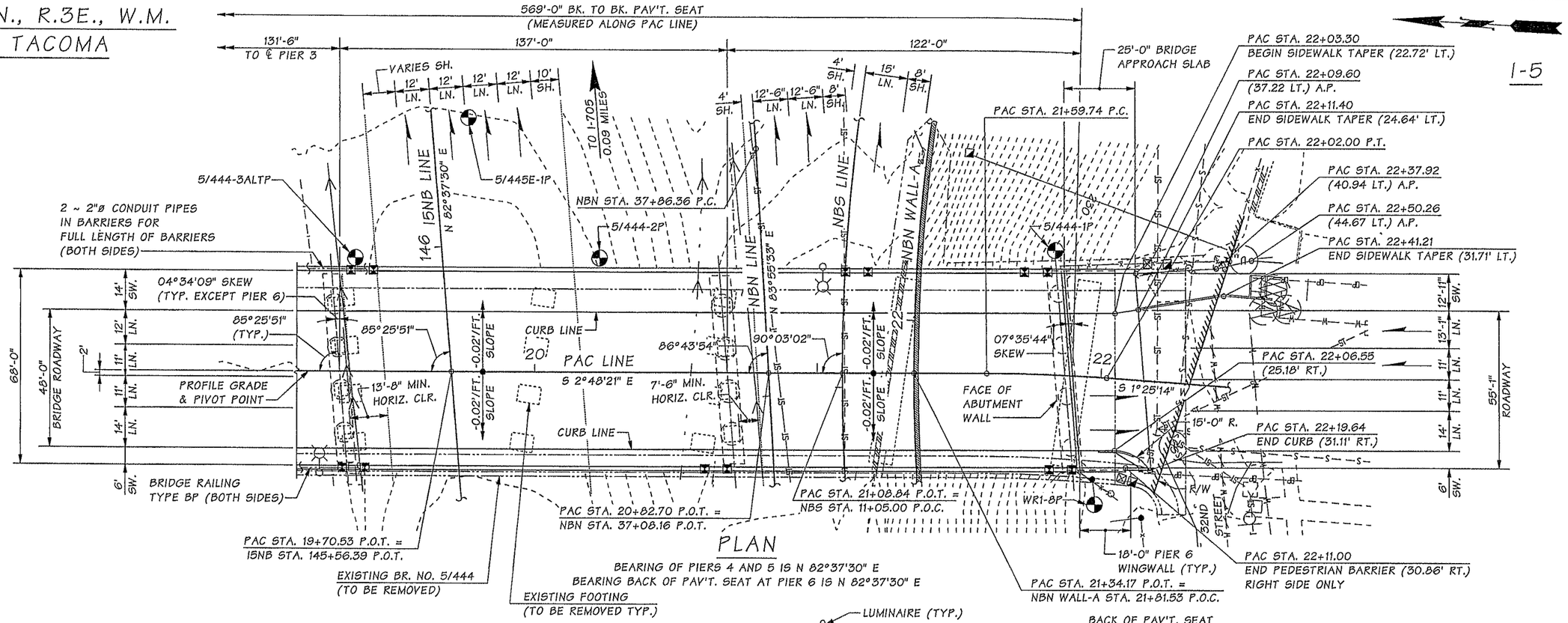

PLAN

BEARING OF PIERS 4 AND 5 IS N 82°37'30" E
BEARING BACK OF PAV'T. SEAT AT PIER 6 IS N 82°37'30" E

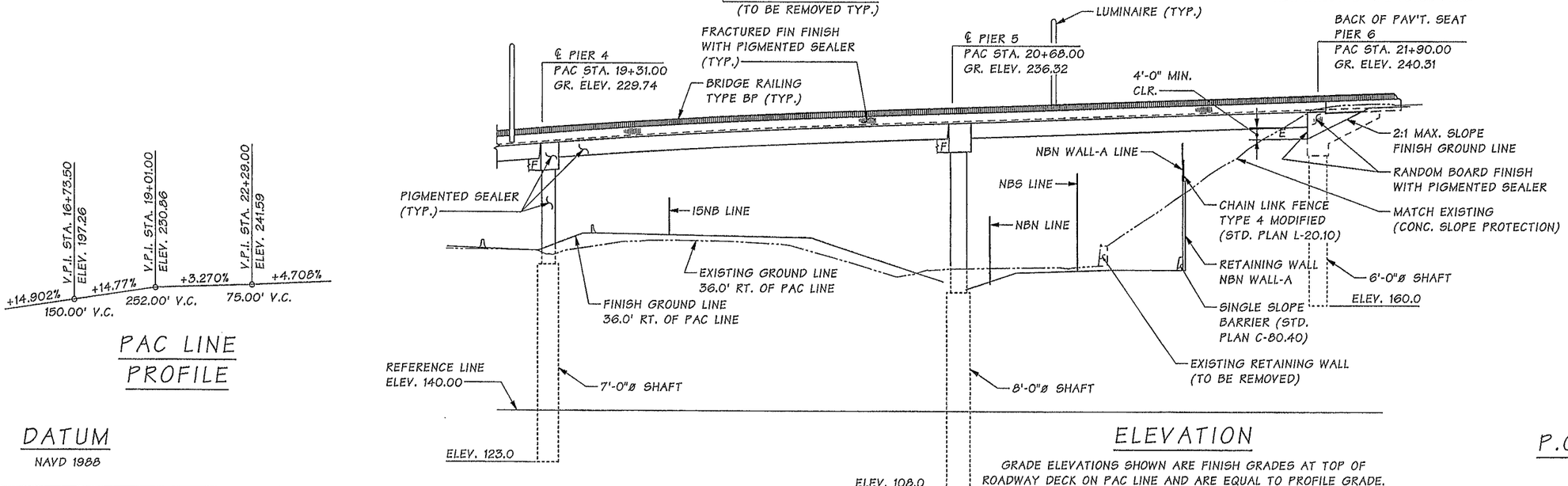

ELEVATION

GRADE ELEVATIONS SHOWN ARE FINISH GRADES AT TOP OF ROADWAY DECK ON PAC LINE AND ARE EQUAL TO PROFILE GRADE.

PAC LINE
PROFILE

DATUM

NAVD 1988

P.C. GIRDERS (UF60G5)

LOADING: HL-93

Bridge Design Engr.	Khaleghi, B		M:\Y-Team\M ST TO PORTLAND\PACIFIC AVE BR\window files\LAYOUT2.wnd							
Supervisor	Khaleghi, B									
Designed By	Olson, DE	10/12								
Checked By	Mizumori, A	11/13								
Detailed By	Bontemps, W	10/12								
Bridge Projects Engr.	Lewis, RA	05/08								
Prelim. Plan By	CH2MHILL	05/08								
Architect/Specialist	Kinderman, P	05/08	DATE	REVISION	BY	APP'D				

REGION NO.	STATE	FED. AID PROJ. NO.	SHEET NO.	TOTAL SHEETS
10	WASH.			
JOB NUMBER 12C501				

Tue Feb 18 11:37:48 2014

BRIDGE AND STRUCTURES OFFICE

BILIAN KHALEGHI STATE OF WASHINGTON 27895 PROFESSIONAL ENGINEER 2/18/14

Washington State Department of Transportation

I-5
M ST TO PORTLAND AVE - HOV

PACIFIC AVE OVER I-5 BRIDGE No. 5/444

LAYOUT
2 OF 2

BRIDGE SHEET NO. PA2

SHEET 1001 OF 1763 SHEETS

SR 5 FILE NO. 7451 SHEET PA2

GENERAL NOTES

1. ALL MATERIAL AND WORKMANSHIP SHALL BE IN ACCORDANCE WITH THE REQUIREMENTS OF THE WASHINGTON STATE DEPARTMENT OF TRANSPORTATION STANDARD SPECIFICATIONS FOR ROAD, BRIDGE, AND MUNICIPAL CONSTRUCTION DATED 2014, AND AMENDMENTS.
2. THIS STRUCTURE HAS BEEN DESIGNED IN ACCORDANCE WITH THE REQUIREMENTS OF THE AASHTO LRFD BRIDGE DESIGN SPECIFICATIONS 6TH EDITION 2012 AND 2013 INTERIMS. DEAD LOAD INCLUDES ADDITIONAL FUTURE WEARING SURFACE OF 25 POUNDS PER SQUARE FOOT.
3. THE SEISMIC DESIGN OF THIS STRUCTURE HAS BEEN COMPLETED IN ACCORDANCE WITH THE REQUIREMENTS OF THE AASHTO GUIDE SPECIFICATIONS FOR LRFD SEISMIC BRIDGE DESIGN 2ND EDITION 2011, USING SEISMIC DESIGN CATEGORY C, SITE CLASS C, A PEAK GROUND ACCELERATION OF 0.41g, AND 0.2 SECOND AND 1.0 SECOND SPECTRAL ACCELERATION OF 0.93g AND 0.45g, RESPECTIVELY, ON SITE CLASS B.
4. THE CONCRETE IN BRIDGE DECKS SHALL BE CLASS 4000D. THE CONCRETE IN BRIDGE APPROACH SLABS SHALL BE CLASS 4000A. THE CONCRETE IN SHAFTS SHALL BE CLASS 4000P. ALL OTHER CAST-IN-PLACE CONCRETE SHALL BE CLASS 4000.
5. THE BACKFILL BEHIND THE ABUTMENTS MAY BE PLACED PRIOR TO PLACEMENT OF THE SUPERSTRUCTURE, IN ACCORDANCE WITH SECTION 2-09.3(1)E.
6. UNLESS OTHERWISE SHOWN IN THE PLANS, CONCRETE COVER MEASURED FROM THE FACE OF CONCRETE TO THE FACE OF ANY REINFORCING STEEL SHALL BE 2½" AT THE TOP OF THE BRIDGE DECK, 1" AT THE BOTTOM OF THE BRIDGE DECK, 3" AT THE BOTTOM OF SHAFT CAP, 2" AT THE TOP OF SHAFT CAP AND 1½" AT ALL OTHER LOCATIONS.
7. FALSEWORK SHALL BE CAREFULLY RELEASED TO PREVENT IMPACT OR UNDUE STRESS IN THE STRUCTURE.
8. CONDUITS, JUNCTION BOXES, AND UTILITIES ARE SHOWN FOR REFERENCE ONLY. THE CONTRACTOR SHALL COORDINATE THESE PLANS WITH THE ELECTRICAL, I.T.S. AND OTHER CIVIL PLANS.
9. NOMINAL SHAFT RESISTANCE SHALL BE TAKEN AS FOLLOWS:

SERVICE LIMIT STATE		
PIER NO.	SKIN FRICTION RESISTANCE	END BEARING RESISTANCE
1	3300 KIP	700 KIP
2	3200 KIP	800 KIP
3	3100 KIP	800 KIP
4	3600 KIP	800 KIP
5	4700 KIP	950 KIP
6	3300 KIP	700 KIP

STRENGTH LIMIT STATE		
PIER NO.	SKIN FRICTION RESISTANCE	END BEARING RESISTANCE
1	4550 KIP	1700 KIP
2	4500 KIP	2300 KIP
3	4350 KIP	2300 KIP
4	5250 KIP	2300 KIP
5	7000 KIP	3000 KIP
6	4300 KIP	1700 KIP

EXTREME EVENT LIMIT STATE		
PIER NO.	SKIN FRICTION RESISTANCE	END BEARING RESISTANCE
1	4450 KIP	1700 KIP
2	4500 KIP	2300 KIP
3	4350 KIP	2300 KIP
4	5250 KIP	2300 KIP
5	7000 KIP	3000 KIP
6	4300 KIP	1700 KIP

LEGEND

B/15 — IDENTIFIES SECTION OR VIEW; TAKEN OR SHOWN ON BRIDGE SHEET 15

1/— IDENTIFIES DETAIL; TAKEN OR SHOWN ON THE SAME SHEET

CURVE DATA

P.I. STATION	Δ	RADIUS	TANGENT	LENGTH	BK. TANGENT BRG.
PAC 15+59.46	4°31'26" RT.	572.96'	22.63'	45.24'	S 07°19'47" E
PAC 21+80.88	4°13'35" RT.	572.96'	21.14'	42.26'	S 02°48'21" E
NBS 12+88.29	37°32'51" RT.	650.00'	220.95'	425.96'	N 83°55'33" E
NBN 41+11.39	71°19'08" LT.	453.00'	325.03'	563.87'	N 83°55'33" E
NBH 26+56.58	15°13'41" RT.	4800.00'	641.65'	1275.74'	N 67°21'36" E
15SB 538+12.12	15°16'52" RT.	4200.00'	563.43'	1120.17'	N 67°21'37" E
SSB 105+02.82	54°14'26" LT.	598.98'	306.78'	567.04'	N 85°05'43" E
NSB 78+17.18	36°03'19" RT.	574.00'	186.81'	361.21'	N 66°45'35" E
NSB 81+91.46	42°30'47" RT.	492.29'	191.51'	365.28'	S 77°11'06" E
15SB WALL-E 11+68.89	4°33'16" RT.	4247.08'	168.89'	337.61'	N 78°05'13" E

EXISTING ELEVATIONS			
NSB STA.	ELEV. AT ℄	LT. OFFSET (FT.)	ELEV.
78+50.00	170.26	14.06	171.23
78+60.00	169.51	14.02	170.48
78+70.00	168.77	14.06	169.72
78+80.00	168.04	14.03	168.99
78+90.00	167.32	14.05	168.27
79+00.00	166.61	14.06	167.57
79+10.00	165.90	14.20	166.86
79+20.00	165.21	14.46	166.14
79+30.00	164.51	14.67	165.37
79+40.00	163.80	14.80	164.61
79+50.00	163.04	14.90	163.86
79+60.00	162.23	15.06	163.10
79+70.00	161.44	15.31	162.35
79+80.00	160.71	15.45	161.60
79+90.00	159.98	15.47	160.90
80+00.00	159.35	15.43	160.25
80+10.00	158.73	15.30	159.51
80+20.00	158.04	15.30	158.75
80+30.00	157.29	15.16	158.03
80+40.00	156.56	15.14	157.33
80+50.00	155.76	14.96	156.58
80+60.00	154.98	14.95	155.84
80+70.00	154.25	14.83	155.10
80+80.00	153.54	14.88	154.35
80+90.00	153.52	14.81	153.63
81+00.00	152.27	14.88	152.91

EXISTING ELEVATIONS			
SSB STA.	ELEV. AT ℄	LT. OFFSET (FT.)	ELEV.
102+00.00	184.05	23.93	182.72
102+10.00	183.91	24.13	182.54
102+20.00	183.75	24.16	182.35
102+30.00	183.61	24.08	182.17
102+40.00	183.47	24.22	181.97
102+50.00	183.33	24.20	181.77
102+60.00	183.17	24.03	181.58
102+70.00	183.00	24.18	181.38
102+80.00	182.82	24.17	181.18
102+90.00	182.61	24.00	180.98
103+00.00	182.39	24.10	180.77

LEGEND

DITCH BOTTOM
RETAINING WALL
STORM SEWER LINE
EXISTING ABOVEGROUND POWER
EXISTING CONDUIT AND WIRING
EXISTING DITCH BOTTOM
EXISTING DRAIN PIPE
EXISTING FENCE
EXISTING GUARDRAIL
EXISTING RETAINING WALL
EXISTING SAN SEWER LINE
EXISTING STORM SEWER LINE
EXISTING UNDERGROUND DRAIN LINE
EXISTING UNDERGROUND FIBER OPTIC
EXISTING UNDERGROUND POWER LINE
EXISTING UNDERGROUND TELEPHONE CABLE
EXISTING WATER LINE
DROP INLET
GRATE INLET
MANHOLE NEW
CCTV CONTROL CABINET
TRANSFORMER CABINET
J BOX 1
J BOX NEMA
CCTV CAMERA
COMMUNICATION HUB
LIGHT STD SNGL METAL
MONOTUBE SIGN BRIDGE
CONDUIT AND WIRING
J BOX 2
PULL BOX
SIGN NEW
EXISTING OVERHEAD SIGN
EXISTING BORE HOLE
EXISTING BRIDGE PIER COLUMN
EXISTING CATCH BASIN
EXISTING CCTV CONTROL CABINET
EXISTING CCTV CAMERA
EXISTING CONCRETE INLET
EXISTING DRAIN BRIDGE
EXISTING ELEC BOX
EXISTING GUIDE POST
EXISTING J BOX
EXISTING J BOX 2
EXISTING J BOX UNKNOWN
EXISTING LUMINAIRE
EXISTING MANHOLE
EXISTING MONOTUBE CANTILEVER
EXISTING PULL BOX
EXISTING SAN SEWER MANHOLE
EXISTING SIGN
EXISTING TRANSFORMER CABINET
EXISTING TRUSS SIGN BRIDGE
EXISTING VALVE BOX WATER
EXISTING WATER METER BOX

SR 5 FILE NO. 7451 SHEET PA3

Bridge Design Engr.	Khaleghi, B	
Supervisor	Khaleghi, B	
Designed By	Olson, DE	01/12
Checked By	Mizumori, A	11/13
Detailed By	Bontemps, W	10/12
Bridge Projects Engr.	Lewis, RA	05/08
Prelim. Plan By	CH2MHILL	05/08
Architect/Specialist	Kinderman, P	05/08

M:\Y-Team\M ST TO PORTLAND\PACIFIC AVE BR\window files\GENERAL NOTES&GEOMETRIC DATA.wnd

DATE	REVISION	BY	APP'D

REGION NO.	STATE	FED. AID PROJ. NO.	SHEET NO.	TOTAL SHEETS
10	WASH.			
JOB NUMBER 12C501				

DOUGLAS EUGENE OLSON — STATE OF WASHINGTON — 36104 — REGISTERED PROFESSIONAL ENGINEER — 02/11/14

BRIDGE AND STRUCTURES OFFICE

BIJAN KHALEGHI — STATE OF WASHINGTON — 21705 — PROFESSIONAL ENGINEER — 2/11/14

Washington State Department of Transportation

I-5
M ST TO PORTLAND AVE - HOV

PACIFIC AVE OVER I-5 BRIDGE No. 5/444

GENERAL NOTES & GEOMETRIC DATA

BRIDGE SHEET NO. PA3

SHEET 1002 OF 1763 SHEETS

Tue Feb 11 09:00:28 2014

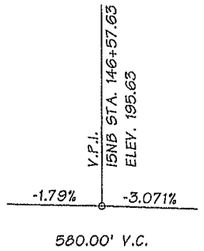

15NB LINE
PROFILE

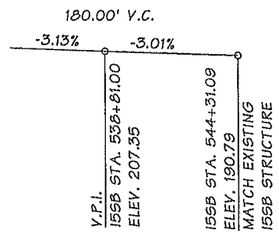

15SB LINE
PROFILE

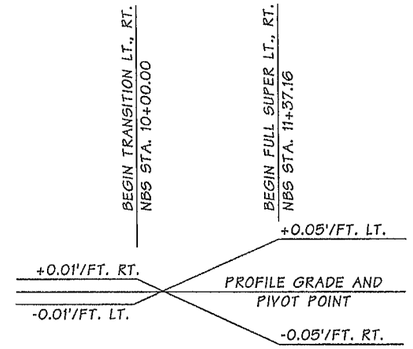

NBS LINE
SUPERELEVATION DIAGRAM

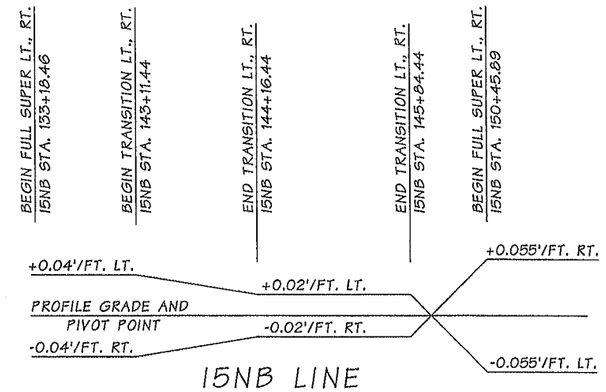

15NB LINE
SUPERELEVATION DIAGRAM

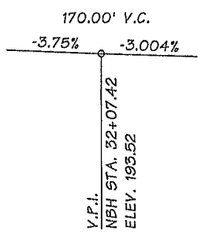

NBH LINE
PROFILE

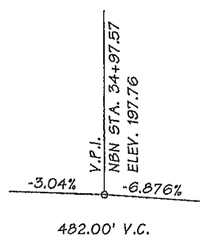

NBN LINE
PROFILE

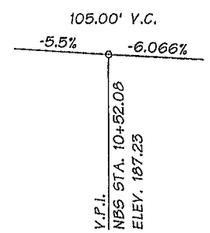

NBS LINE
PROFILE

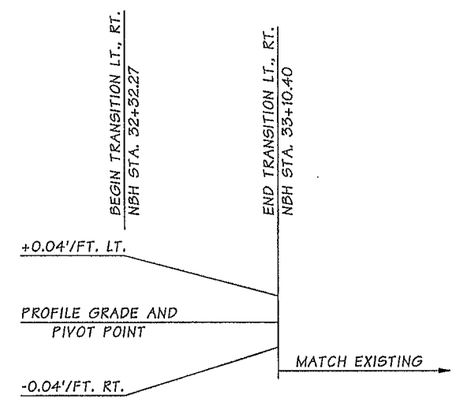

NBH LINE
SUPERELEVATION DIAGRAM

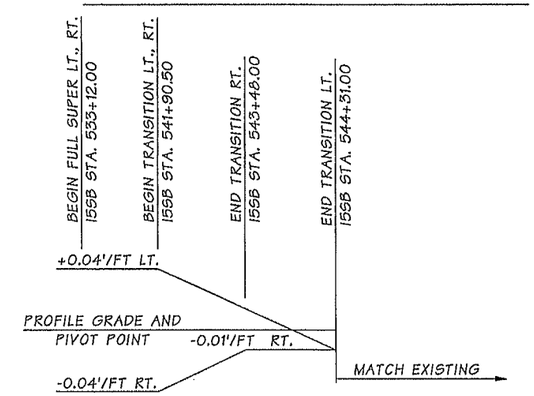

15SB LINE
SUPERELEVATION DIAGRAM

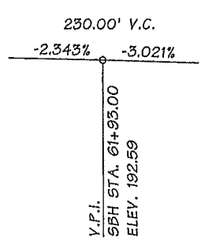

SBH LINE
PROFILE

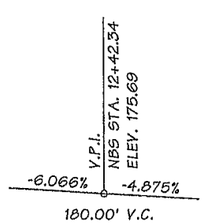

NBS LINE
PROFILE

NOTES:

SEE BR. SHT. PA3 FOR EXISTING ELEVATIONS AND OFFSETS FOR NSB AND SSB LINES.

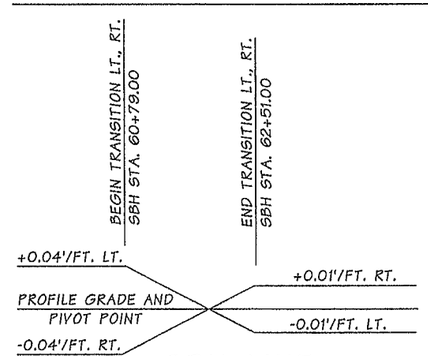

SBH LINE
SUPERELEVATION DIAGRAM

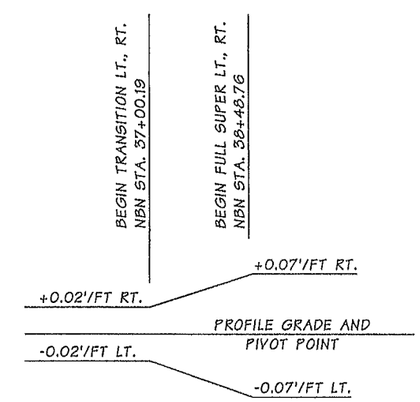

NBN LINE
SUPERELEVATION DIAGRAM

SR 5 FILE NO. 7451 SHEET PA4

Bridge Design Engr.	Khaleghi, B		M:\Y-Team\M ST TO PORTLAND\PACIFIC AVE BR\window files\GEOMETRIC DATA.wnd				REGION NO.	STATE	FED. AID PROJ. NO.	SHEET NO.	TOTAL SHEETS
Supervisor	Khaleghi, B						10	WASH.			
Designed By	Olson, DE	08/12									
Checked By	Mizumori, A	11/13					JOB NUMBER 12C501				
Detailed By	Bontemps, W	10/12									
Bridge Projects Engr.	Lewis, RA	05/08									
Prelim. Plan By	CH2MHILL	05/08									
Architect/Specialist	Kinderman, P	05/08	DATE	REVISION	BY	APP'D					

Tue Feb 11 09:00:31 2014

DOUGLAS EUGENE OLSON — STATE OF WASHINGTON — 40406 — REGISTERED PROFESSIONAL ENGINEER — 02/11/14

BRIDGE AND STRUCTURES OFFICE

BIJAN KHALEGHI — STATE OF WASHINGTON — 27595 — REGISTERED PROFESSIONAL ENGINEER — 2/12/14

Washington State Department of Transportation

I-5
M ST TO PORTLAND AVE - HOV

PACIFIC AVE OVER I-5 BRIDGE No. 5/444

GEOMETRIC DATA

BRIDGE SHEET NO. PA4

SHEET 1003 OF 1763 SHEETS

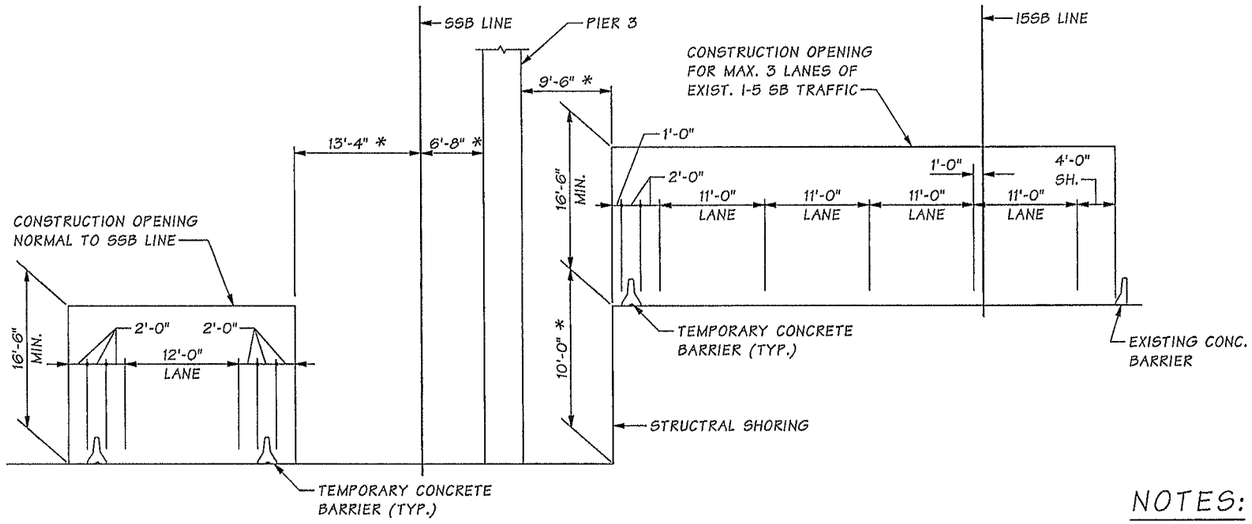

CONSTRUCTION OPENING DIAGRAM

FOR CONSTRUCTION OF PIER 3
DURING TRAFFIC STAGE 1D.
* DIMENSION IS APPROXIMATE.

NOTES:

CONSTRUCTION OPENING DIAGRAMS REFER TO APPLICABLE TRAFFIC STAGES DURING CONSTRUCTION OF NEW BRIDGE.

REFER TO REMOVAL SEQUENCE PLANS AND TRAFFIC STAGING FOR REQUIREMENTS DURING DEMOLITION OF EXISTING BRIDGE.

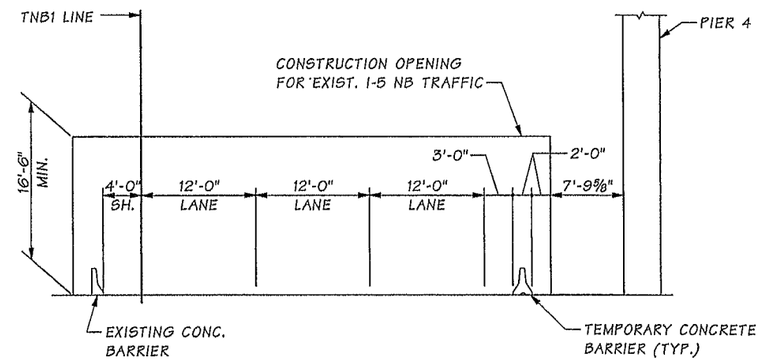

CONSTRUCTION OPENING DIAGRAM

FOR CONSTRUCTION OF PIER 4
DURING TRAFFIC STAGE 1D.
* DIMENSION IS APPROXIMATE

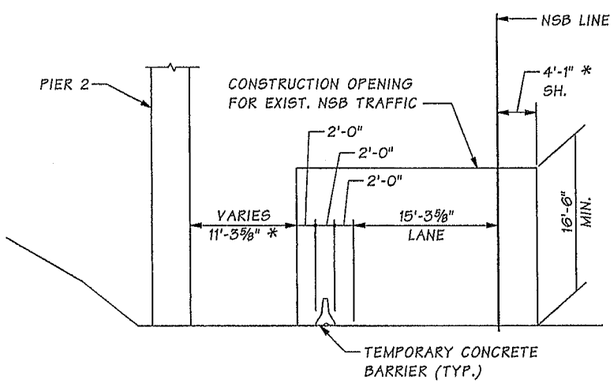

CONSTRUCTION OPENING DIAGRAM

FOR CONSTRUCTION OF PIER 2
DURING TRAFFIC STAGE 1D
* DIMENSION IS APPROXIMATE.

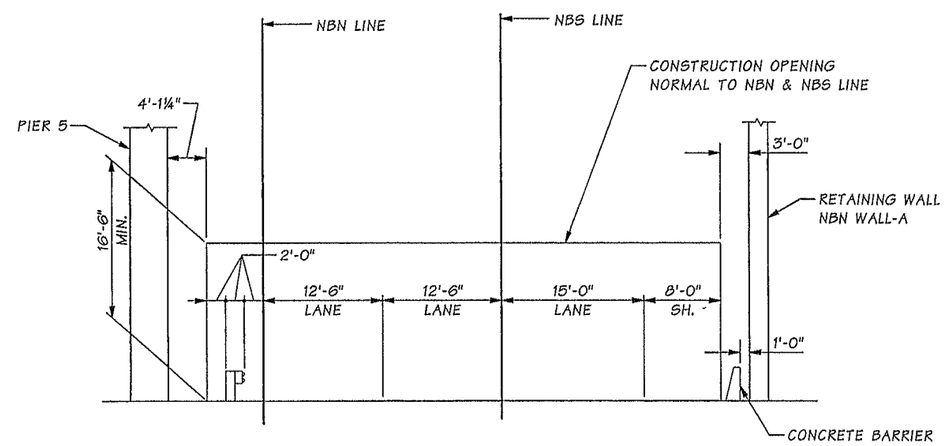

CONSTRUCTION OPENING DIAGRAM

FOR CONSTRUCTION OF PIER 5
DURING TRAFFIC STAGE 2
* DIMENSION IS APPROXIMATE

SR 5 FILE NO. 7451 SHEET PA5

Bridge Design Engr.	Khaleghi, B		M:\Y-Team\M ST TO PORTLAND\PACIFIC AVE BR\window files\CONSTRUCTION OPENING.wnd
Supervisor	Khaleghi, B		
Designed By	Olson, DE	01/14	
Checked By	Tran, LH	01/14	
Detailed By	LA/WB	01/14	
Bridge Projects Engr.			
Prelim. Plan By			
Architect/Specialist			

DATE	REVISION	BY	APP'D

REGION NO.	STATE	FED. AID PROJ. NO.	SHEET NO.	TOTAL SHEETS
10	WASH.			
JOB NUMBER 12C501				

BRIDGE AND STRUCTURES OFFICE

02/11/14 2/12/14

Washington State Department of Transportation

I-5
M ST TO PORTLAND AVE - HOV

PACIFIC AVE OVER I-5 BRIDGE No. 5/444

CONSTRUCTION OPENINGS

BRIDGE SHEET NO. PA5

SHEET 1004 OF 1763 SHEETS

Tue Feb 11 09:00:33 2014

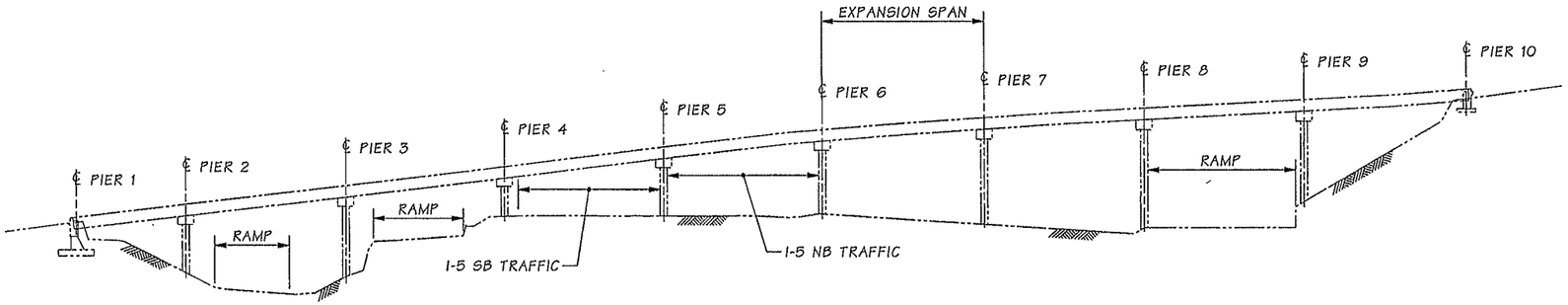

ROADWAY CONFIGURATION

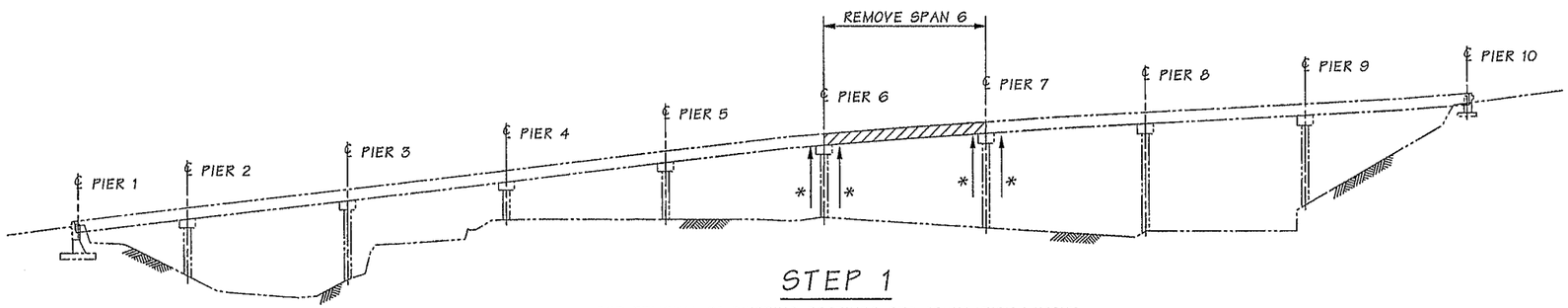

STEP 1

FOR REMOVAL OF EXISTING FOOTINGS SEE FOUNDATION LAYOUT

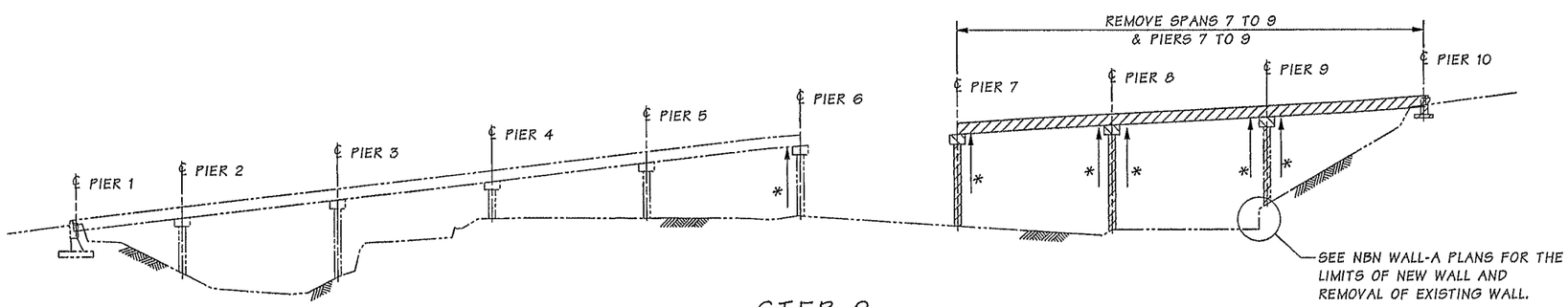

STEP 2

FOR REMOVAL OF EXISTING FOOTINGS SEE FOUNDATION LAYOUT

SUGGESTED REMOVAL SEQUENCE

HATCH AREA (TO BE REMOVED)

DEMOLITION NOTES:

1. THE DEMOLITION PLANS SHOWN ARE ONLY SUGGESTED SCHEMATIC CONCEPT. THE CONTRACTOR SHALL DESIGN AND DETAIL ALL ELEMENTS OF THE FALSEWORK AND THE DECK REMOVAL SYSTEM TO MEET THE MINIMUM CONSTRUCTION OPENING SHOWN IN THE PLANS AND THE TRAFFIC CONTROL RESTRICTIONS IN THE SPECIAL PROVISIONS.
2. THE FALSEWORK SHALL BE DESIGNED IN ACCORDANCE WITH THE REQUIREMENTS OF THE WASHINGTON STATE DEPARTMENT OF TRANSPORTATION STANDARD SPECIFICATIONS FOR ROAD, BRIDGE, AND MUNICIPAL CONSTRUCTION - ENGLISH DATED 2014 AND AMENDMENTS. THE FALSEWORK AND DEMOLITION PLANS SHALL ALSO MEET THE ADDITIONAL REQUIREMENTS IN THE SPECIAL PROVISIONS.
3. IN PREPARATION OF THE FALSEWORK AND DEMOLITION PLANS, THE CONTRACTOR SHALL REFERENCE THE AS-BUILT PLANS AND SHALL MAKE ANY NECESSARY FIELD MEASUREMENTS FOR VERIFICATION. COPIES OF THE AS-BUILT PLANS WILL BE AVAILABLE AT THE PROJECT ENGINEER'S OFFICE.
4. THE EXISTING FOUNDATION SHALL BE REMOVED BY CONTRACTOR AS REQUIRED IN ACCORDANCE WITH STANDARD SPECIFICATION 2-02 IN ORDER TO CONSTRUCT NEW BRIDGE FOUNDATION. PROVIDE MINIMUM 1'-0" HORIZONTAL GAP BETWEEN EXISTING FOUNDATIONS AND PERIMETER OF NEW FOUNDATIONS, OR AS INDICATED BY THE ENGINEER.
5. THE CONTRACTOR SHALL PROVIDE ANY SHORING PLAN IN REMOVAL OF THE EXISTING ABUTMENTS OR PIER FOUNDATIONS TO THE ENGINEER FOR APPROVAL.
6. SEE TRAFFIC CONTROL PLANS FOR ADDITIONAL STAGING REQUIREMENTS THAT MAY AFFECT THE DEMOLITIONS.

* TEMPORARY SUPPORT, SEE SPECIAL PROVISIONS.

SR 5 FILE NO. 7451 SHEET PA6

Bridge Design Engr.	Khaleghi, B	
Supervisor	Khaleghi, B	
Designed By	Tran, LH	01/13
Checked By	Olson, DE	11/13
Detailed By	LHT / WB	01/13
Bridge Projects Engr.		
Prelim. Plan By		
Architect/Specialist		

M:\Y-Team\M ST TO PORTLAND\PACIFIC AVE BR\window files\REMOVAL SEQUENCE 1.wnd

DATE	REVISION	BY	APP'D

REGION NO.	STATE	FED. AID PROJ. NO.	SHEET NO.	TOTAL SHEETS
10	WASH.			

JOB NUMBER 12C501

BRIDGE AND STRUCTURES OFFICE

2/11/14 2/12/14

Washington State Department of Transportation

I-5
M ST TO PORTLAND AVE - HOV

PACIFIC AVE OVER I-5 BRIDGE No. 5/444

SUGGESTED REMOVAL SEQUENCE
1 OF 2

BRIDGE SHEET NO. PA6

SHEET 1005 OF 1763 SHEETS

Tue Feb 11 09:00:34 2014

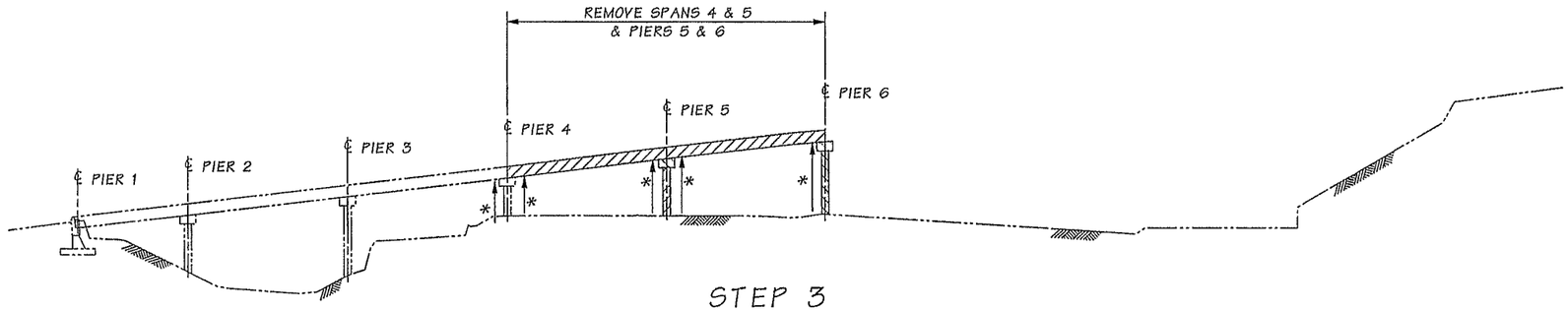

STEP 3

FOR REMOVAL OF EXISTING FOOTINGS SEE FOUNDATION LAYOUT

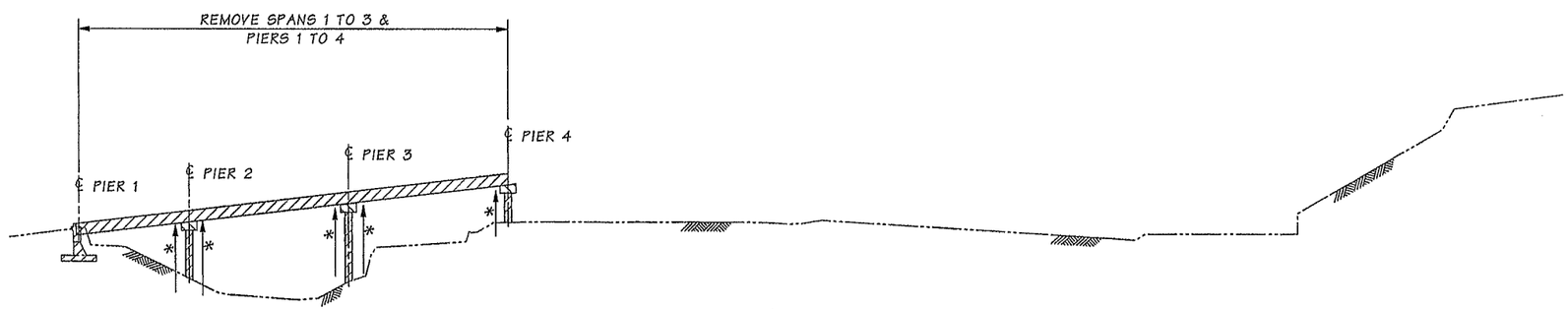

STEP 4

FOR REMOVAL OF EXISTING FOOTINGS SEE FOUNDATION LAYOUT

SUGGESTED REMOVAL SEQUENCE

* TEMPORARY SUPPORT, SEE SPECIAL PROVISIONS.

HATCH AREA (TO BE REMOVED)

SR 5 FILE NO. 7451 SHEET PA7

Bridge Design Engr.	Khaleghi, B		M:\Y-Team\M ST TO PORTLAND\PACIFIC AVE BR\window files\REMOVAL SEQUENCE 2.wnd								
Supervisor	Khaleghi, B					REGION NO.	STATE	FED. AID PROJ. NO.	SHEET NO.	TOTAL SHEETS	
Designed By	Tran, LH	01/13				10	WASH.				
Checked By	Olson, DE	11/13									
Detailed By	LHT / WB	01/13				JOB NUMBER 12C501					
Bridge Projects Engr.											
Prelim. Plan By											
Architect/Specialist			DATE	REVISION	BY	APP'D					

Tue Feb 11 09:00:36 2014

LONG HUU TRAN STATE OF WASHINGTON REGISTERED PROFESSIONAL ENGINEER 2/11/14

BRIDGE AND STRUCTURES OFFICE

BIJAN KHALEGHI STATE OF WASHINGTON REGISTERED PROFESSIONAL ENGINEER 2/12/14

Washington State Department of Transportation

I-5
M ST TO PORTLAND AVE - HOV

PACIFIC AVE OVER I-5 BRIDGE No. 5/444

SUGGESTED REMOVAL SEQUENCE
2 OF 2

BRIDGE SHEET NO. PA7

SHEET 1006 OF 1763 SHEETS

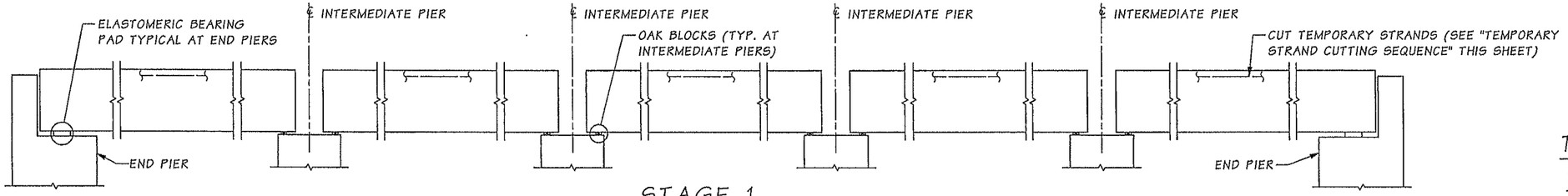

STAGE 1
SET GIRDERS IN PLACE

INSTALL TEMPORARY BRACING IN TRANSVERSE AND LONGITUDINAL DIRECTIONS FOR ERECTION IN ACCORDANCE WITH STD. SPEC. SECTION 6-02.3(17)F.

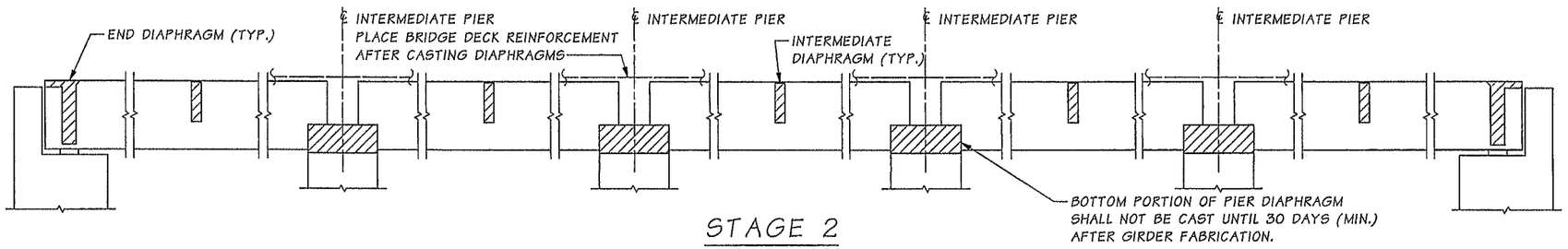

STAGE 2
CAST DIAPHRAGMS AND PLACE BRIDGE DECK REINFORCEMENT

INSTALL TEMPORARY BRACING FOR DIAPHRAGM AND DECK PLACEMENT IN ACCORDANCE WITH STD. SPEC. SECTION 6-02.3(17)F.

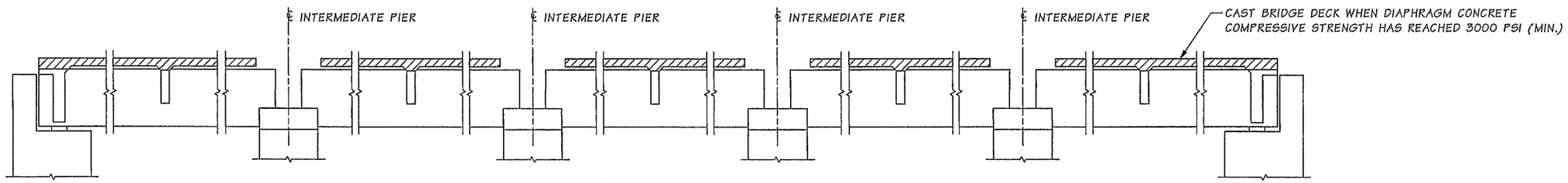

STAGE 3
CAST BRIDGE DECK

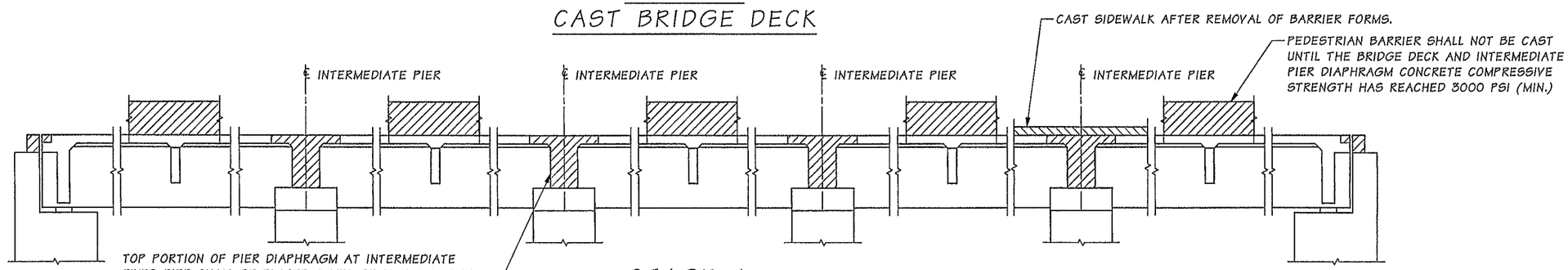

STAGE 4
COMPLETE DIAPHRAGMS

TEMPORARY STRAND CUTTING SEQUENCE

1. ERECT AND BRACE GIRDERS.
2. REMOVE EXPANDED POLYSTYRENE IN 2" x 6" RECESSES IN TOP FLANGE OF GIRDERS.
3. CUT STRANDS IN 2" x 6" RECESSES. STRANDS MAY BE CUT BY USING A CUTTING TORCH AND MOVING THE FLAME BACK AND FORTH OVER THE LENGTH OF EXPOSED STRAND TO LET INDIVIDUAL WIRES BREAK ONE AT A TIME TO LESSEN THE SHOCK TO THE GIRDER. STRANDS SHALL BE RELEASED IN A SYMMETRICAL MANNER AROUND THE GIRDER CENTERLINE STARTING WITH THOSE NEAREST THE CENTERLINE AND WORKING OUTWARDS.
4. REMOVE ALL MOISTURE IN RECESS PRIOR TO FILLING RECESS WITH GROUT.

CONSTRUCTION SEQUENCE ~ SUPERSTRUCTURE

NOTE:
NO LIVE LOAD SHALL BE ALLOWED ON THE SPANS UNTIL THE COMPRESSIVE STRENGTH OF THE TOP PORTION OF THE PIER DIAPHRAGM HAS REACHED 3000 PSI (MIN.).

Bridge Design Engr.	Khaleghi, B	
Supervisor	Khaleghi, B	
Designed By	Olson, DE	12/12
Checked By	Mizumori, A	11/13
Detailed By	Bontemps, W	10/12
Bridge Projects Engr.		
Prelim. Plan By		
Architect/Specialist		

M:\Y-Team\M ST TO PORTLAND\PACIFIC AVE BR\window files\CONSTRU SEQUENCE.wnd

DATE	REVISION	BY	APP'D

REGION NO.	STATE	FED. AID PROJ. NO.	SHEET NO.	TOTAL SHEETS
10	WASH.			
JOB NUMBER 12C501				

Tue Feb 11 09:00:37 2014

DOUGLAS EUGENE OLSON, STATE OF WASHINGTON, 40406, REGISTERED PROFESSIONAL ENGINEER, 02/11/14

BRIDGE AND STRUCTURES OFFICE

BIJAN KHALEGHI, STATE OF WASHINGTON, 17896, PROFESSIONAL ENGINEER, 2/12/14

Washington State Department of Transportation

I-5
M ST TO PORTLAND AVE - HOV

PACIFIC AVE OVER I-5 BRIDGE No. 5/444

CONSTRUCTION SEQUENCE

BRIDGE SHEET NO. PA8

SHEET 1007 OF 1763 SHEETS

SR 5 FILE NO. 7451 SHEET PA8

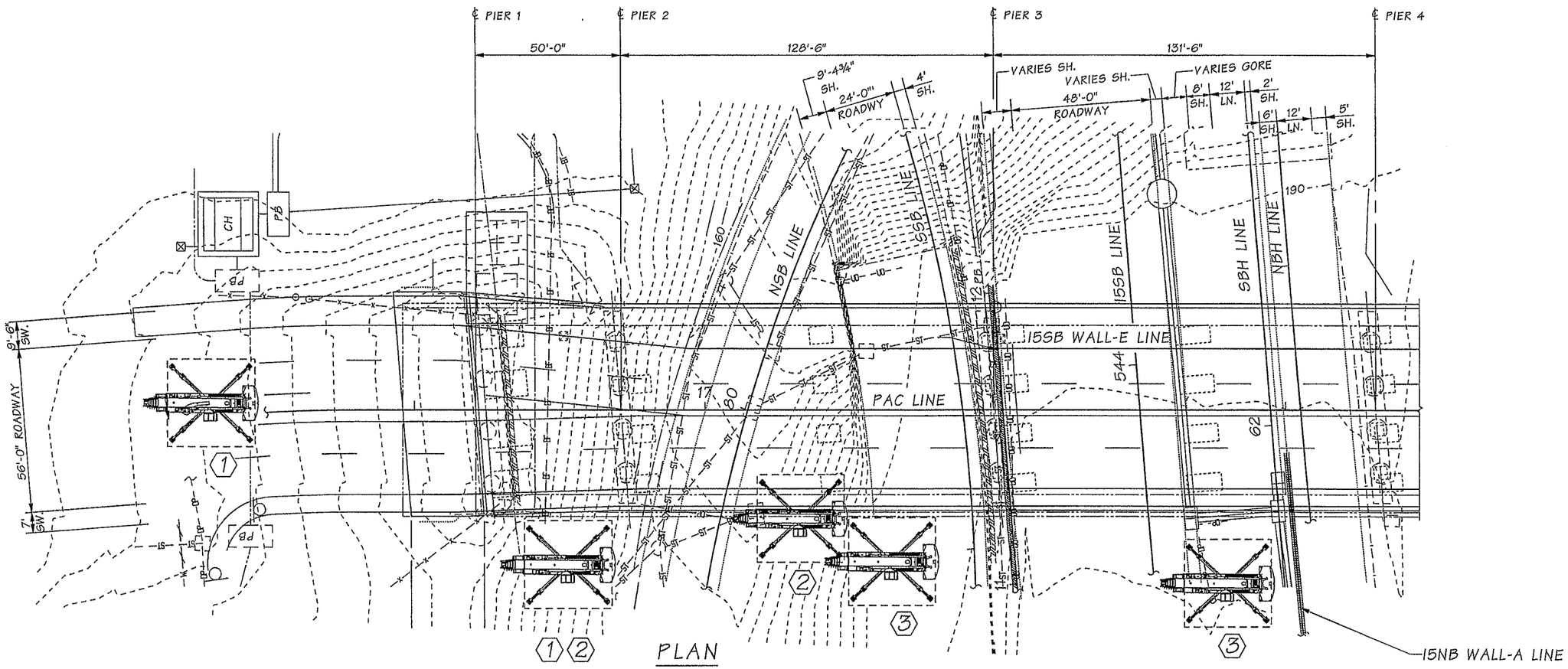

PLAN

LEGEND

⬡ CRANE LOCATION FOR GIRDER ERECTION AT DESIGNATED SPAN.

▭ CRANE LEVELING PAD, ASSUME 45' X 45'

NOTES:

1. THE CRANE SIZE DEMAG AC 1600 IS USED FOR THIS SUGGESTED GIRDER ERECTION PLAN.
2. FOR OTHER INFORMATION NOT SHOWN, SEE LAYOUT SHEET.

ERECTION NOTES:

1. THE GIRDER ERECTION PLANS SHOWN ARE ONLY A SUGGESTED SCHEMATIC CONCEPT. THE CONTRACTOR IS REQUIRED TO SUBMIT THE GIRDER ERECTION PLANS TO THE ENGINEER FOR APPROVAL. THESE PLANS SHOULD INCLUDE ANY BUILDING UP OR LEVELING EXISTING GROUND AREAS.
2. THE CONTRACTOR SHALL VERIFY ALL EXISTING UTILITIES BEFORE PLACING THE CRANES AND TAKE APPROPRIATE MEASURES TO PROTECT THEM.
3. CRANES USED FOR THE GIRDER ERECTION SHALL NOT BE PLACED ON THE EXISTING STRUCTURES.
4. SEE TRAFFIC CONTROL PLANS FOR ADDITIONAL STAGING REQUIREMENTS THAT MAY AFFECT THE DEMOLITIONS.

SR 5 FILE NO. 7451 SHEET PA9

Bridge Design Engr.	Khaleghi, B	M:\Y-Team\M ST TO PORTLAND\PACIFIC AVE BR\window files\GIRDER ERECTION PLAN.wnd
Supervisor	Khaleghi, B	
Designed By	Tran, LH 05/13	
Checked By	Olson, DE 11/13	
Detailed By	Plesha, GM 05/13	
Bridge Projects Engr.		
Prelim. Plan By		
Architect/Specialist		

DATE	REVISION	BY	APP'D

REGION NO.	STATE	FED. AID PROJ. NO.	SHEET NO.	TOTAL SHEETS
10	WASH.			
JOB NUMBER 12C501				

HUNG HUU TRAN STATE OF WASHINGTON REGISTERED PROFESSIONAL ENGINEER 2/12/14

BRIDGE AND STRUCTURES OFFICE

BIJAN KHALEGHI STATE OF WASHINGTON REGISTERED PROFESSIONAL ENGINEER 2/12/14

Washington State Department of Transportation

I-5
M ST TO PORTLAND AVE - HOV

PACIFIC AVE OVER I-5 BRIDGE No. 5/444

SUGGESTED GIRDER ERECTION PLAN
SHEET 1 OF 2

BRIDGE SHEET NO. PA9

SHEET 1008 OF 1763 SHEETS

Tue Feb 11 09:00:38 2014

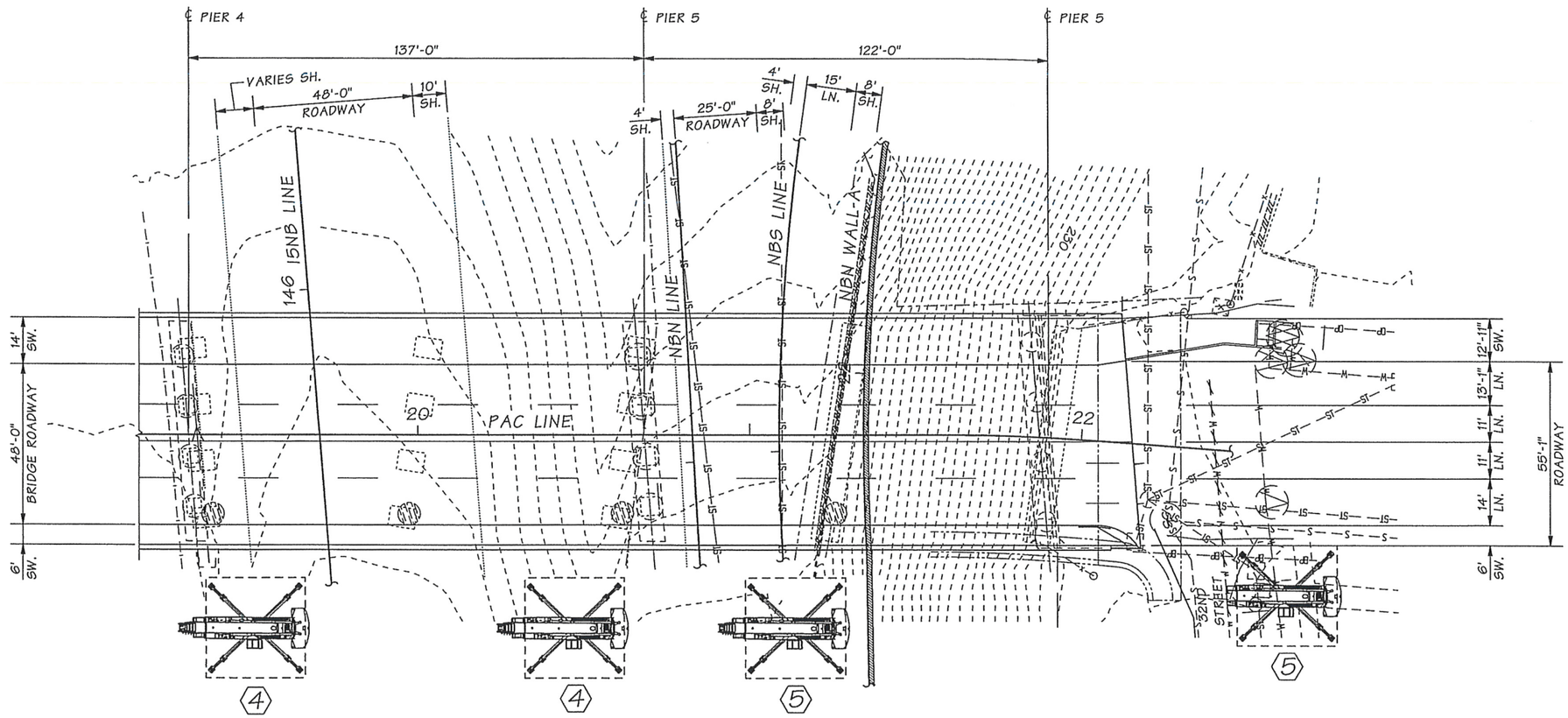

PLAN

LEGEND

CRANE LOCATION FOR GIRDER ERECTION AT DESIGNATED SPAN.

CRANE LEVELING PAD, ASSUME 45' X 45'

NOTES:

1. THE CRANE SIZE DEMAG AC 1600 IS USED FOR THIS SUGGESTED GIRDER ERECTION PLAN.
2. FOR OTHER INFORMATION NOT SHOWN, SEE LAYOUT SHEET.

ERECTION NOTES:

1. THE GIRDER ERECTION PLANS SHOWN ARE ONLY A SUGGESTED SCHEMATIC CONCEPT. THE CONTRACTOR IS REQUIRED TO SUBMIT THE GIRDER ERECTION PLANS TO THE ENGINEER FOR APPROVAL. THESE PLANS SHOULD INCLUDE ANY BUILDING UP OR LEVELING EXISTING GROUND AREAS.
2. THE CONTRACTOR SHALL VERIFY ALL EXISTING UTILITIES BEFORE PLACING THE CRANES AND TAKE APPROPRIATE MEASURES TO PROTECT THEM.
3. CRANES USED FOR THE GIRDER ERECTION SHALL NOT BE PLACED ON THE EXISTING STRUCTURES.
4. SEE TRAFFIC CONTROL PLANS FOR ADDITIONAL STAGING REQUIREMENTS THAT MAY AFFECT THE DEMOLITIONS.

SR 5 FILE NO. 7451 SHEET PA10

Bridge Design Engr.	Khaleghi, B	
Supervisor	Khaleghi, B	
Designed By	Tran, LH	05/13
Checked By	Olson, DE	11/13
Detailed By	Plesha, GM	05/13
Bridge Projects Engr.		
Prelim. Plan By		
Architect/Specialist		

M:\Y-Team\M ST TO PORTLAND\PACIFIC AVE BR\window files\GIRDER ERECTION PLAN 1.WND

DATE	REVISION	BY	APP'D

REGION NO.	STATE	FED. AID PROJ. NO.	SHEET NO.	TOTAL SHEETS
10	WASH.			
JOB NUMBER 12C501				

LIONG HUU TRAN STATE OF WASHINGTON 27695 PROFESSIONAL ENGINEER 2/13/14

BRIDGE AND STRUCTURES OFFICE

BILIAN KHALEGHI STATE OF WASHINGTON 27695 PROFESSIONAL ENGINEER 2/13/14

Washington State Department of Transportation

I-5
M ST TO PORTLAND AVE - HOV

PACIFIC AVE OVER I-5 BRIDGE No. 5/444

SUGGESTED GIRDER ERECTION PLAN
SHEET 2 OF 2

BRIDGE SHEET NO. PA10

SHEET 1009 OF 1763 SHEETS

Thu Feb 13 09:17:23 2014

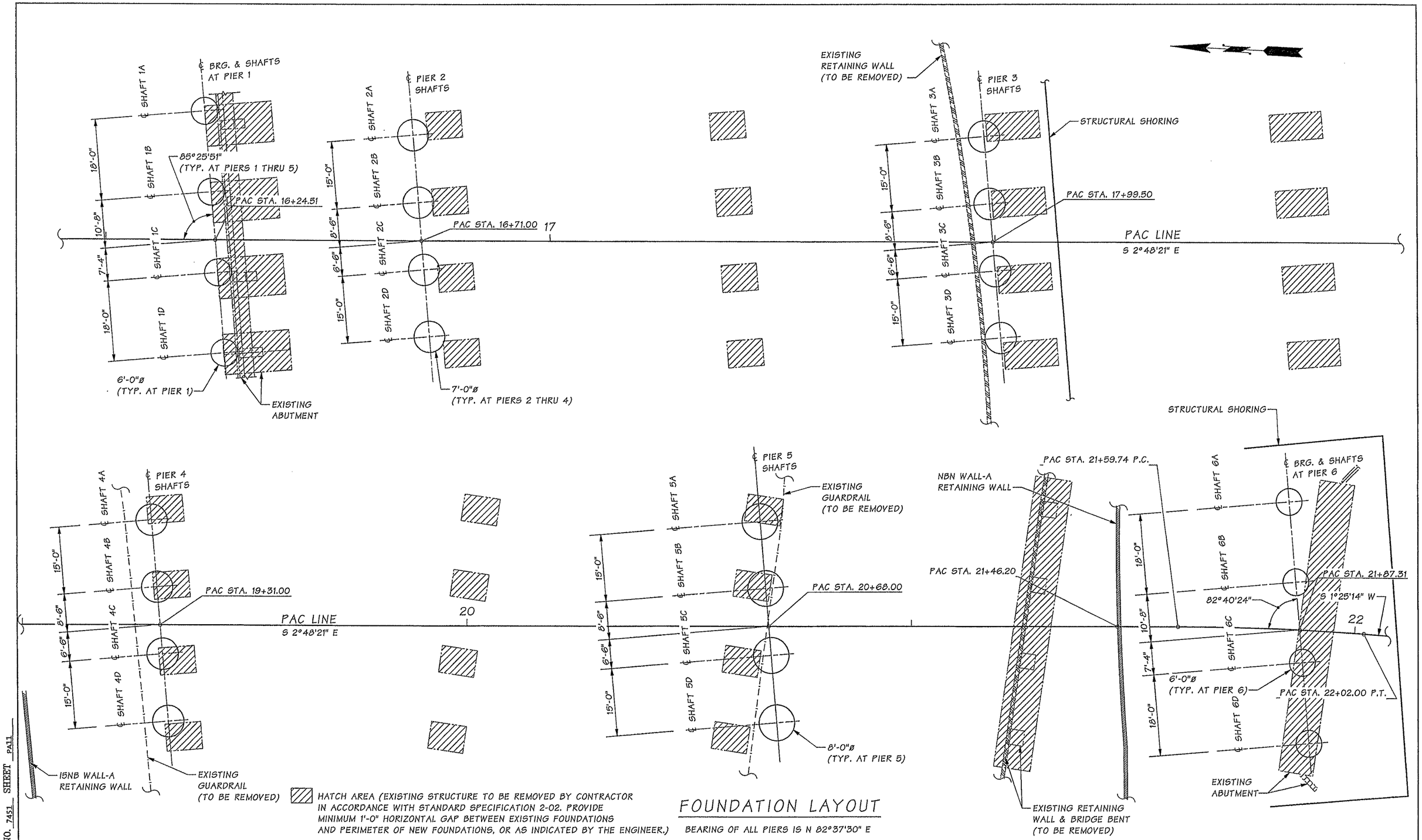

HATCH AREA (EXISTING STRUCTURE TO BE REMOVED BY CONTRACTOR IN ACCORDANCE WITH STANDARD SPECIFICATION 2-02. PROVIDE MINIMUM 1'-0" HORIZONTAL GAP BETWEEN EXISTING FOUNDATIONS AND PERIMETER OF NEW FOUNDATIONS, OR AS INDICATED BY THE ENGINEER.)

FOUNDATION LAYOUT

BEARING OF ALL PIERS IS N 82°37'30" E

Bridge Design Engr.	Khaleghi, B		
Supervisor	Khaleghi, B		
Designed By	Olson, DE	08/12	
Checked By	Lee, CS	11/13	
Detailed By	LA/WB	10/12	
Bridge Projects Engr.			
Preliminary Plan By			
Architect/Specialist			

M:\Y-Team\M ST TO PORTLAND\PACIFIC AVE BR\window files\FOUNDATION LAYOUT2.wnd

DATE	REVISION	BY	APP'D

REGION NO.	STATE	FED. AID PROJ. NO.	SHEET NO.	TOTAL SHEETS
10	WASH.			
JOB NUMBER 12C501				

DOUGLAS EUGENE OLSON — STATE OF WASHINGTON — 40406 — REGISTERED PROFESSIONAL ENGINEER — 02/11/14

BRIDGE AND STRUCTURES OFFICE

BIJAN KHALEGHI — STATE OF WASHINGTON — 27695 — REGISTERED PROFESSIONAL ENGINEER — 2/12/14

Washington State Department of Transportation

I-5
M ST TO PORTLAND AVE - HOV

PACIFIC AVE OVER I-5 BRIDGE No. 5/444

FOUNDATION LAYOUT

BRIDGE SHEET NO. PA11

SHEET 1010 OF 1763 SHEETS

SR 5 FILE NO. 7451 SHEET PA11

Tue Feb 11 09:00:44 2014

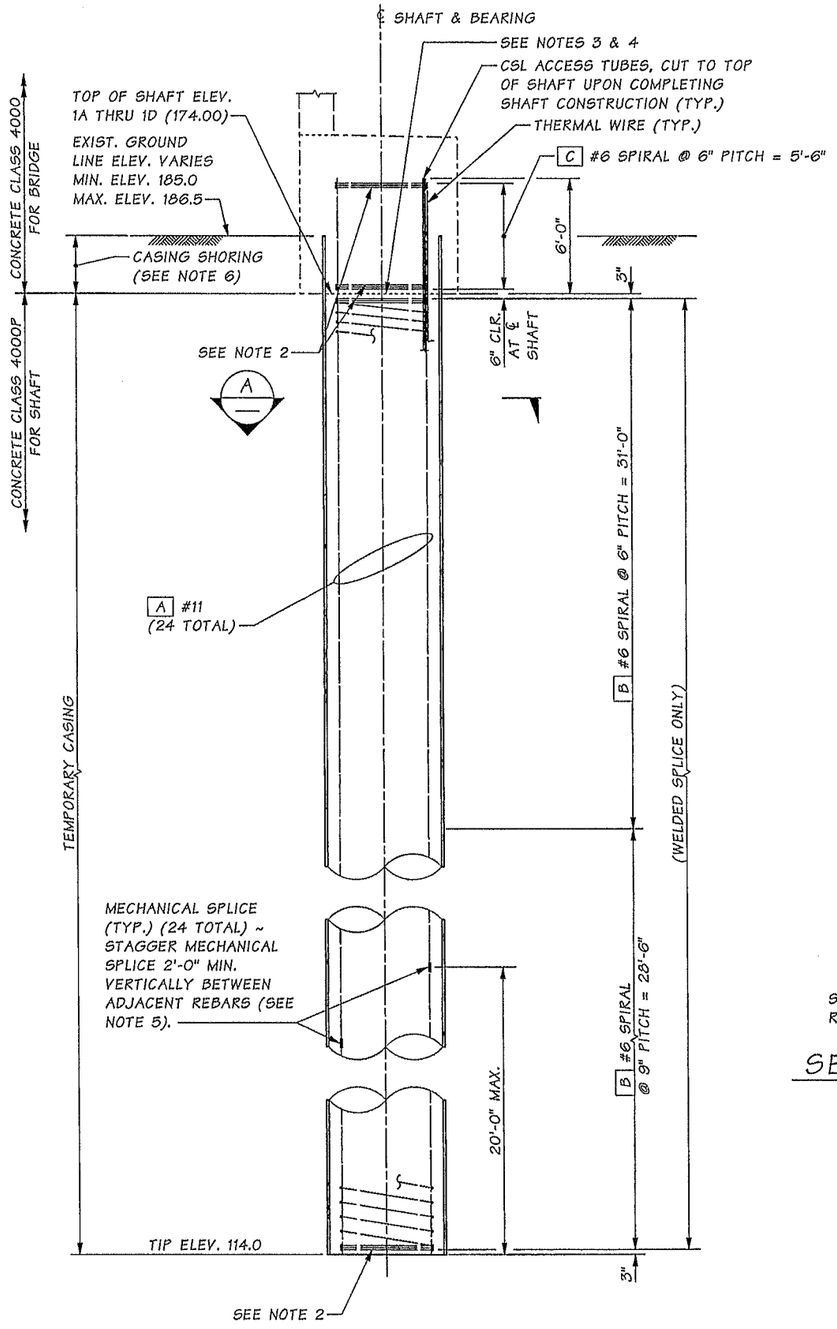

ELEVATION

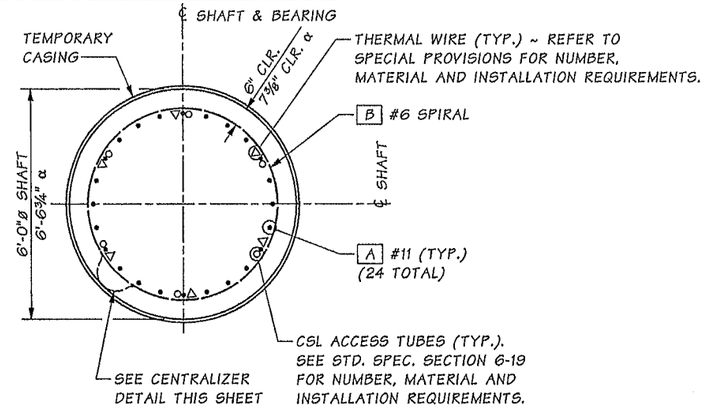

SECTION A

α OSCILLATOR METHOD (SEE NOTE 1)

SHAFT BAR LIST

MARK	SIZE	NO.	LENGTH	BEND TYPE	WT. (lbs.)
A	#11	24	65'-10"	STR.	8,395
B	#6	1	1641'-2"	67	2,465
C	#6	1	235'-11"	67	350
				TOTAL PER SHAFT	11,210

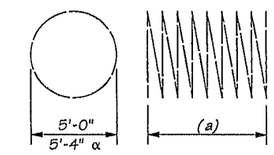

(a) ~ DETERMINED FROM PLANS
WEIGHT INCLUDES SPLICES

SPIRAL (BEND TYPE 67)

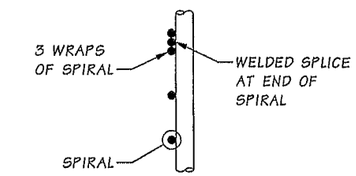

SPIRAL TERMINATION DETAIL

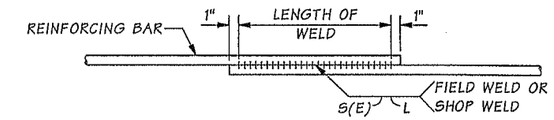

WELDED LAP SPLICE DETAIL

WELDING SHALL MEET THE REQUIREMENTS OF STD. SPEC. SECTION 6-02.3(24)E. FOR WELD DIMENSIONS, SEE TABLE BELOW.

	WELD DIMENSIONS (IN)		
BAR SIZE	S	E	L (LENGTH)
#6	⅜	3/16	6

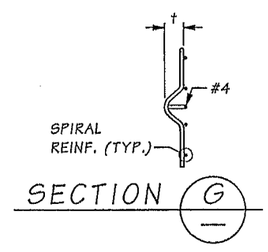

SECTION G

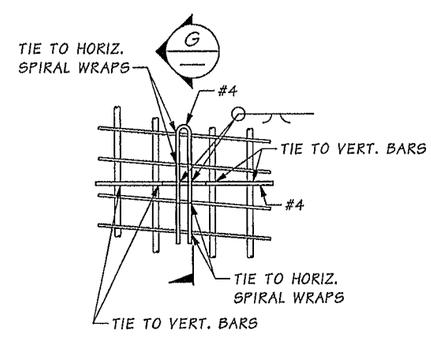

CENTRALIZER DETAIL

CENTRALIZER DETAIL NOTES:

1. EPOXY COAT CENTRALIZER OR PAINT WITH INORGANIC ZINC AFTER FABRICATION.
2. EACH LEG SHOULD BE TIED TO TWO VERTICAL BARS OR TWO SPIRALS.
3. SEE STD. SPEC. SECTION 6-19.3(5)B FOR SPACING REQUIREMENTS.
4. † CONCRETE COVER MINUS ½"

NOTES:

1. THE SHAFT BAR LIST WEIGHTS DO NOT REFLECT THE OSCILLATOR METHOD.
2. SEE SPIRAL TERMINATION DETAIL THIS SHEET.
3. REMOVE SEDIMENT LAITANCE & WEAK CONCRETE TO SOUND CONCRETE PRIOR TO CASTING CONCRETE CLASS 4000 FOR BRIDGE.
4. CONST. JOINT WITH ROUGHENED SURFACE.
5. MECHANICAL SPLICE SHALL MEET THE REQUIREMENTS OF STD. SPEC. SECTION 6-02.3(24)F.
6. CASING SHORING MAY BE DELETED IF THE CONTRACTOR SHORES AND EXCAVATES FOR THE SHAFT CAP PRIOR TO THE SHAFT EXCAVATION.

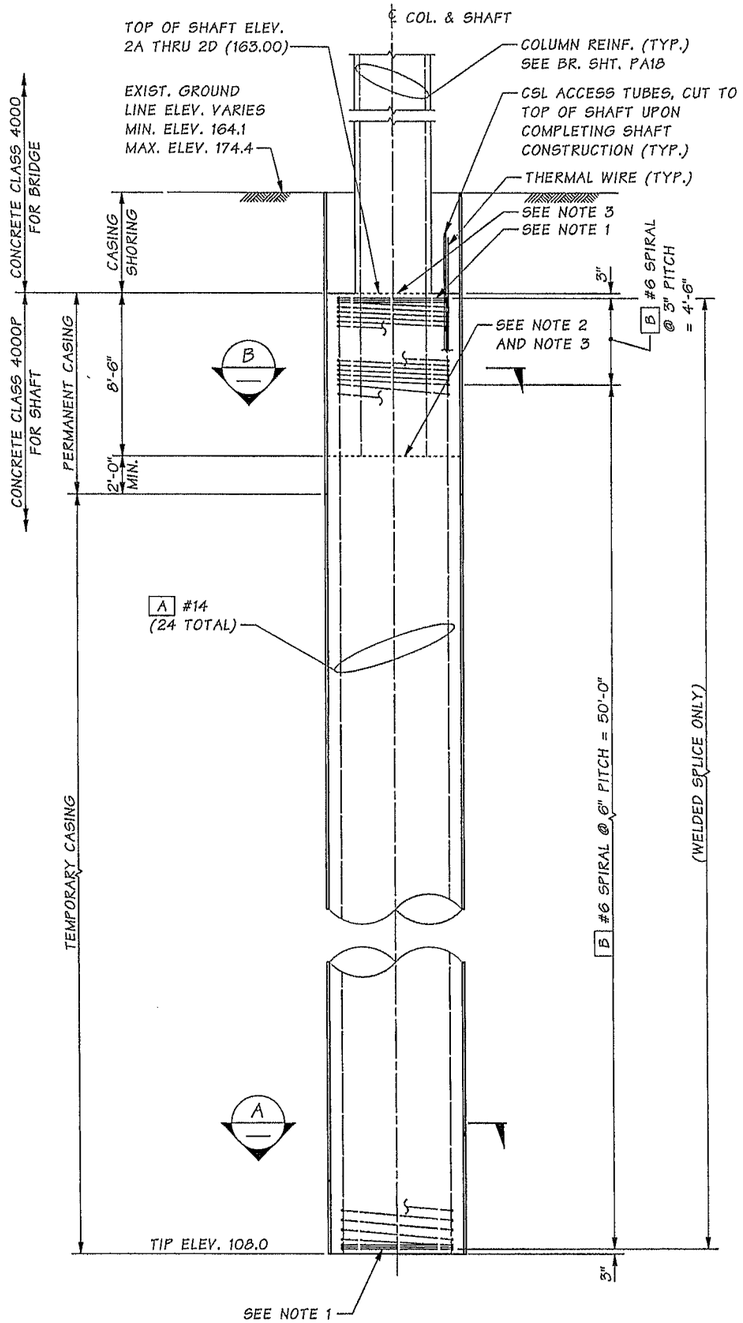

ELEVATION

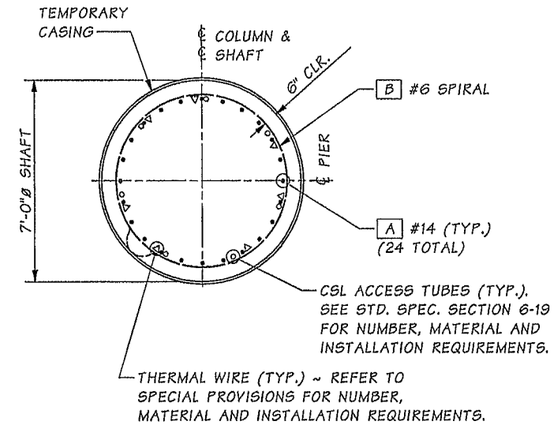

SECTION A

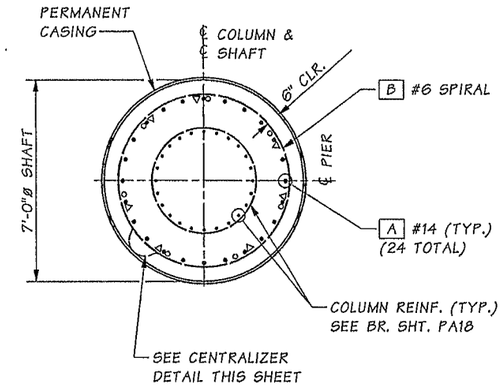

SECTION B

SHAFT BAR LIST

MARK	SIZE	NO.	LENGTH	BEND TYPE	WT. (lbs.)
A	#14	24	54'-8"	STR.	10,040
B	#6	1	2309'-1"	67	3,470
			TOTAL PER SHAFT		13,510

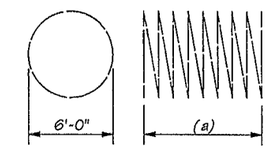

(a) ~ DETERMINED FROM PLANS
WEIGHT INCLUDES SPLICES

SPIRAL (BEND TYPE 67)

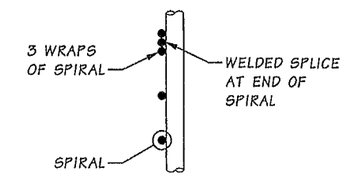

SPIRAL TERMINATION DETAIL

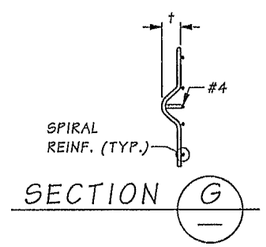

SECTION G

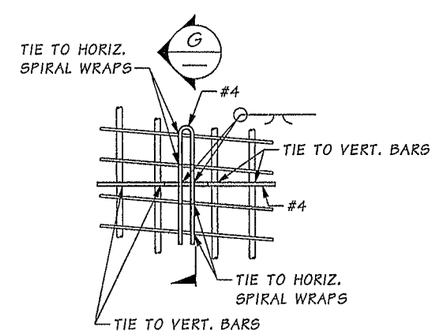

CENTRALIZER DETAIL

CENTRALIZER DETAIL NOTES:

1. EPOXY COAT CENTRALIZER OR PAINT WITH INORGANIC ZINC AFTER FABRICATION.
2. EACH LEG SHOULD BE TIED TO TWO VERTICAL BARS OR TWO SPIRALS.
3. SEE STD. SPEC. SECTION 6-19.3(5)B FOR SPACING REQUIREMENTS.
4. t CONCRETE COVER MINUS ½"

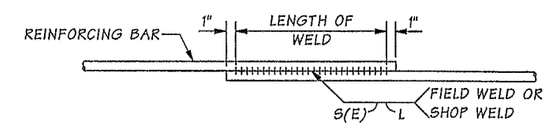

WELDED LAP SPLICE DETAIL

WELDING SHALL MEET THE REQUIREMENTS OF STD. SPEC. SECTION 6-02.3(24)E. FOR WELD DIMENSIONS, SEE TABLE BELOW.

	WELD DIMENSIONS (IN)		
BAR SIZE	S	E	L (LENGTH)
#6	3/8	3/16	6

NOTES:

1. SEE SPIRAL TERMINATION DETAIL THIS SHEET.
2. REMOVE SEDIMENT LAITANCE & WEAK CONCRETE TO SOUND CONCRETE PRIOR TO SETTING COLUMN REINFORCEMENT.
3. CONST. JOINT WITH ROUGHENED SURFACE.

SR 5 FILE NO. 7451 SHEET PA13

Bridge Design Engr.	Khaleghi, B		M:\Y-Team\M ST TO PORTLAND\PACIFIC AVE BR\window files\PIER02SHAFTDTLS.wnd							
Supervisor	Khaleghi, B									
Designed By	Olson, DE	01/13				REGION NO.	STATE	FED. AID PROJ. NO.	SHEET NO.	TOTAL SHEETS
Checked By	Lee, CS	11/13				10	WASH.			
Detailed By	Bontemps, W	10/12				JOB NUMBER 12C501				
Bridge Projects Engr.										
Prelim. Plan By										
Architect/Specialist			DATE	REVISION	BY	APP'D				

Tue Feb 11 09:00:48 2014

BRIDGE AND STRUCTURES OFFICE

Washington State Department of Transportation

I-5
M ST TO PORTLAND AVE - HOV

PACIFIC AVE OVER I-5 BRIDGE No. 5/444

PIER 2 SHAFT DETAILS

BRIDGE SHEET NO. PA13

SHEET 1012 OF 1763 SHEETS

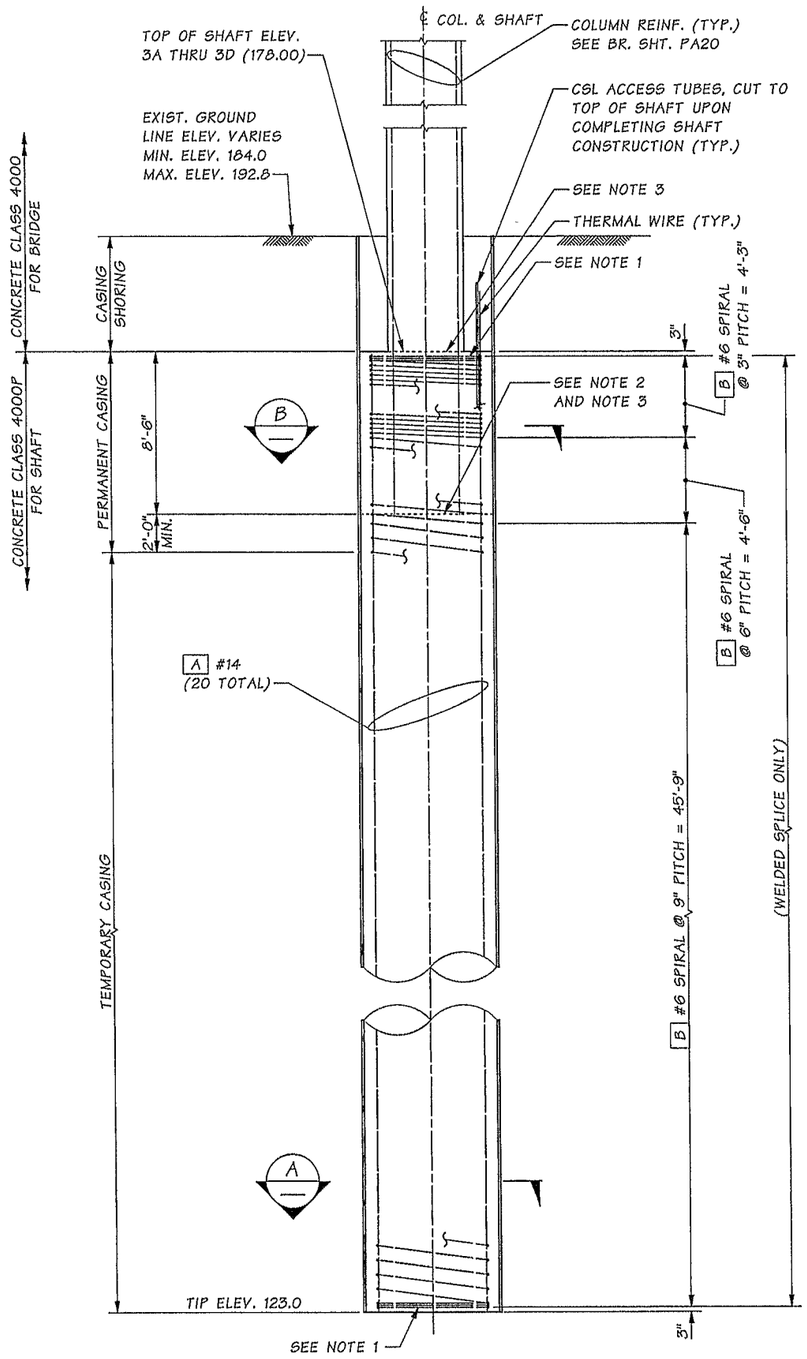

ELEVATION

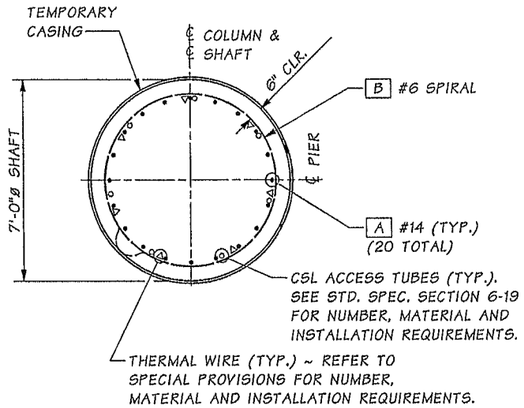

SECTION A

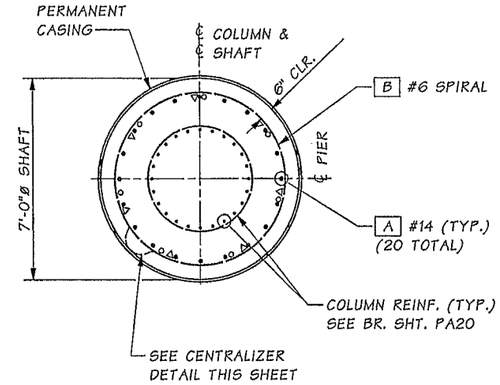

SECTION B

SHAFT BAR LIST

MARK	SIZE	NO.	LENGTH	BEND TYPE	WT. (lbs.)
A	#14	20	54'-8"	STR.	8,360
B	#6	1	1724'-10"	67	2,590
			TOTAL PER SHAFT		10,950

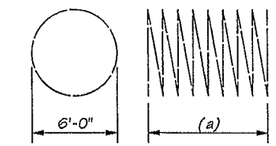

(a) ~ DETERMINED FROM PLANS
WEIGHT INCLUDES SPLICES

SPIRAL (BEND TYPE 67)

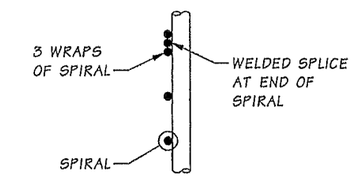

SPIRAL TERMINATION DETAIL

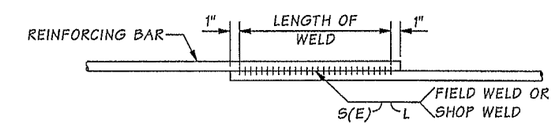

WELDED LAP SPLICE DETAIL

WELDING SHALL MEET THE REQUIREMENTS OF STD. SPEC. SECTION 6-02.3(24)E. FOR WELD DIMENSIONS, SEE TABLE BELOW.

	WELD DIMENSIONS (IN)		
BAR SIZE	S	E	L (LENGTH)
#6	3/8	3/16	6

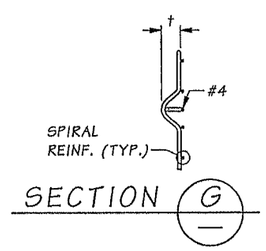

SECTION G

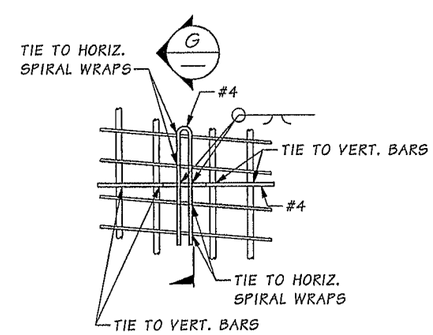

CENTRALIZER DETAIL

CENTRALIZER DETAIL NOTES:

1. EPOXY COAT CENTRALIZER OR PAINT WITH INORGANIC ZINC AFTER FABRICATION.
2. EACH LEG SHOULD BE TIED TO TWO VERTICAL BARS OR TWO SPIRALS.
3. SEE STD. SPEC. SECTION 6-19.3(5)B FOR SPACING REQUIREMENTS.
4. † CONCRETE COVER MINUS ½"

NOTES:

1. SEE SPIRAL TERMINATION DETAIL THIS SHEET.
2. REMOVE SEDIMENT LAITANCE & WEAK CONCRETE TO SOUND CONCRETE PRIOR TO SETTING COLUMN REINFORCEMENT.
3. CONST. JOINT WITH ROUGHENED SURFACE.

SR 5 FILE NO. 7451 SHEET PA14

Bridge Design Engr.	Khaleghi, B		
Supervisor	Khaleghi, B		
Designed By	Olson, DE	01/13	
Checked By	Lee, CS	11/13	
Detailed By	Bontemps, W	10/12	
Bridge Projects Engr.			
Prelim. Plan By			
Architect/Specialist			

M:\Y-Team\M ST TO PORTLAND\PACIFIC AVE BR\window files\PIER03SHAFTDTLS.wnd

DATE	REVISION	BY	APP'D

REGION NO.	STATE	FED. AID PROJ. NO.	SHEET NO.	TOTAL SHEETS
10	WASH.			
JOB NUMBER 12C501				

DOUGLAS EUGENE OLSON STATE OF WASHINGTON 40400 REGISTERED PROFESSIONAL ENGINEER 02/11/14

BRIDGE AND STRUCTURES OFFICE

BIJAN KHALEGHI STATE OF WASHINGTON 27695 REGISTERED PROFESSIONAL ENGINEER 2/12/14

Washington State Department of Transportation

I-5
M ST TO PORTLAND AVE - HOV

PACIFIC AVE OVER I-5 BRIDGE No. 5/444

PIER 3 SHAFT DETAILS

BRIDGE SHEET NO. PA14

SHEET 1013 OF 1763 SHEETS

Tue Feb 11 09:00:49 2014

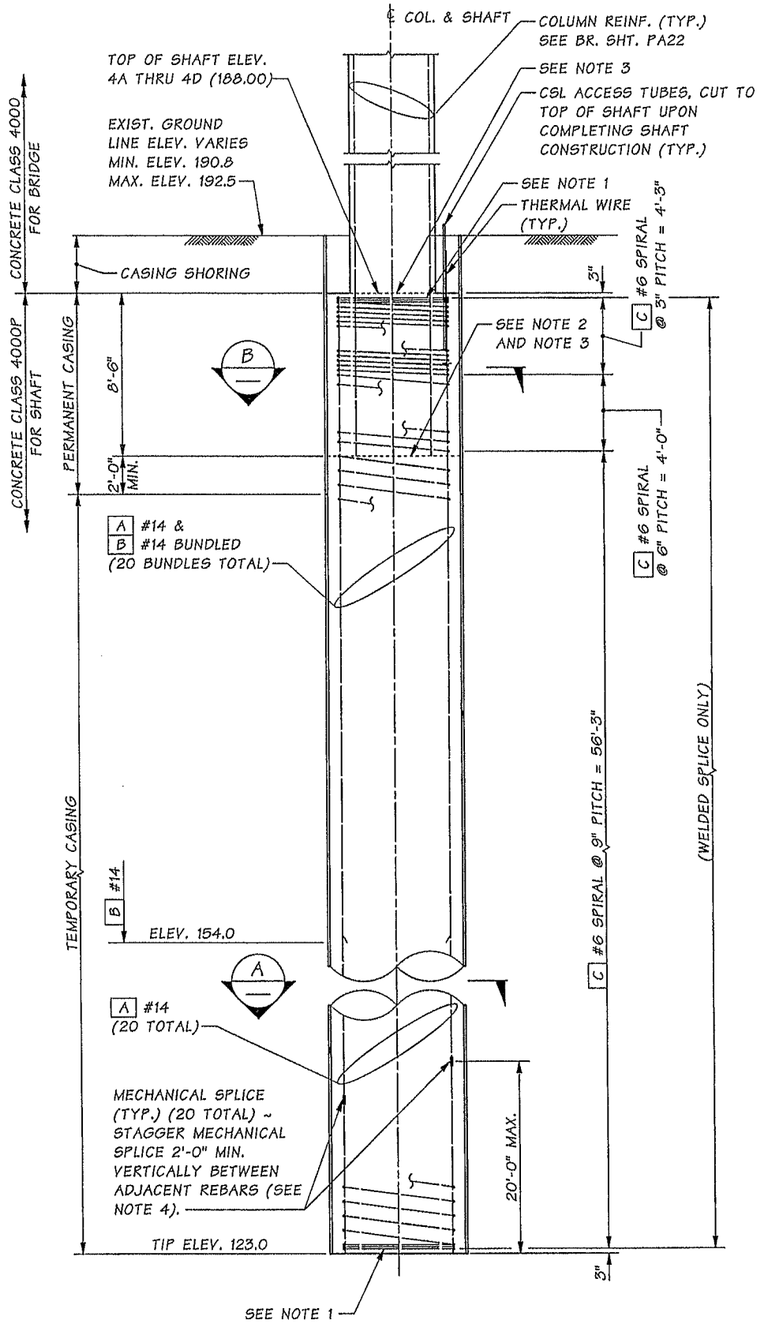

ELEVATION

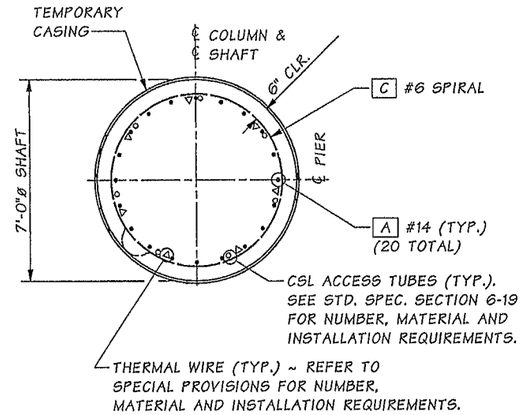

SECTION A

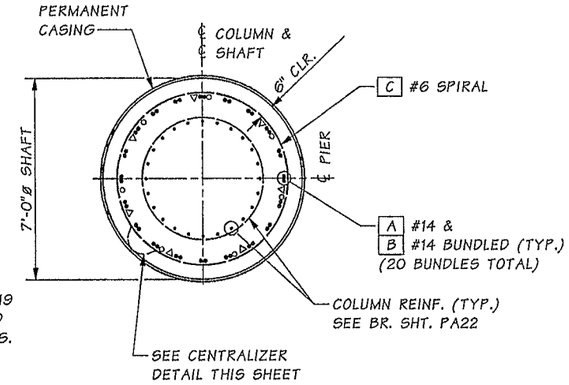

SECTION B

SHAFT BAR LIST

MARK	SIZE	NO.	LENGTH	BEND TYPE	WT. (lbs.)
A	#14	20	64'-8"	STR.	9,900
B	#14	20	33'-10"	STR.	5,180
C	#6	1	1971'-8"	67	2,960
				TOTAL PER SHAFT	18,040

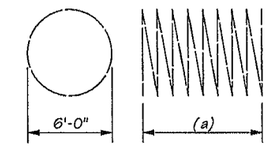

(a) ~ DETERMINED FROM PLANS
WEIGHT INCLUDES SPLICES

SPIRAL (BEND TYPE 67)

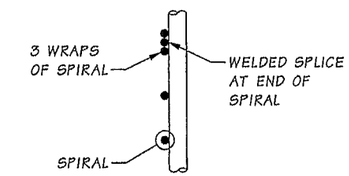

SPIRAL TERMINATION DETAIL

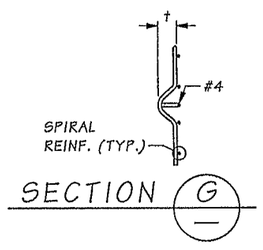

SECTION G

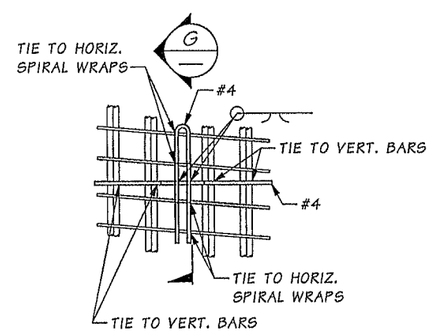

CENTRALIZER DETAIL

CENTRALIZER DETAIL NOTES:

1. EPOXY COAT CENTRALIZER OR PAINT WITH INORGANIC ZINC AFTER FABRICATION.
2. EACH LEG SHOULD BE TIED TO TWO VERTICAL BAR BUNDLES OR TWO SPIRALS.
3. SEE STD. SPEC. SECTION 6-19.3(5)B FOR SPACING REQUIREMENTS.
4. † CONCRETE COVER MINUS ½"

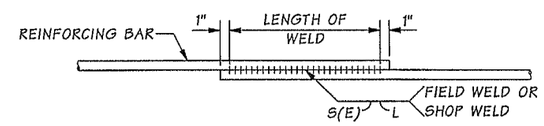

WELDED LAP SPLICE DETAIL

WELDING SHALL MEET THE REQUIREMENTS OF STD. SPEC. SECTION 6-02.3(24)E. FOR WELD DIMENSIONS, SEE TABLE BELOW.

	WELD DIMENSIONS (IN)		
BAR SIZE	S	E	L (LENGTH)
#6	3/8	3/16	6

NOTES:

1. SEE SPIRAL TERMINATION DETAIL THIS SHEET.
2. REMOVE SEDIMENT LAITANCE & WEAK CONCRETE TO SOUND CONCRETE PRIOR TO SETTING COLUMN REINFORCEMENT.
3. CONST. JOINT WITH ROUGHENED SURFACE.
4. MECHANICAL SPLICE SHALL MEET THE REQUIREMENTS OF STD. SPEC. SECTION 6-02.3(24)F

SR 5 FILE NO. 7451 SHEET PA15

Bridge Design Engr.	Khaleghi, B	M:\Y-Team\M ST TO PORTLAND\PACIFIC AVE BR\window files\PIER04SHAFTDTLS.wnd			REGION NO.	STATE	FED. AID PROJ. NO.	SHEET NO.	TOTAL SHEETS
Supervisor	Khaleghi, B				10	WASH.			
Designed By	Olson, DE 01/13				JOB NUMBER 120501				
Checked By	Lee, CS 11/13								
Detailed By	Bontemps, W 10/12								
Bridge Projects Engr.									
Prelim. Plan By									
Architect/Specialist		DATE	REVISION	BY	APP'D				

Tue Feb 11 09:00:51 2014

BRIDGE AND STRUCTURES OFFICE

Washington State Department of Transportation

I-5
M ST TO PORTLAND AVE - HOV

PACIFIC AVE OVER I-5 BRIDGE No. 5/444

PIER 4 SHAFT DETAILS

BRIDGE SHEET NO. PA15

SHEET 1014 OF 1763 SHEETS

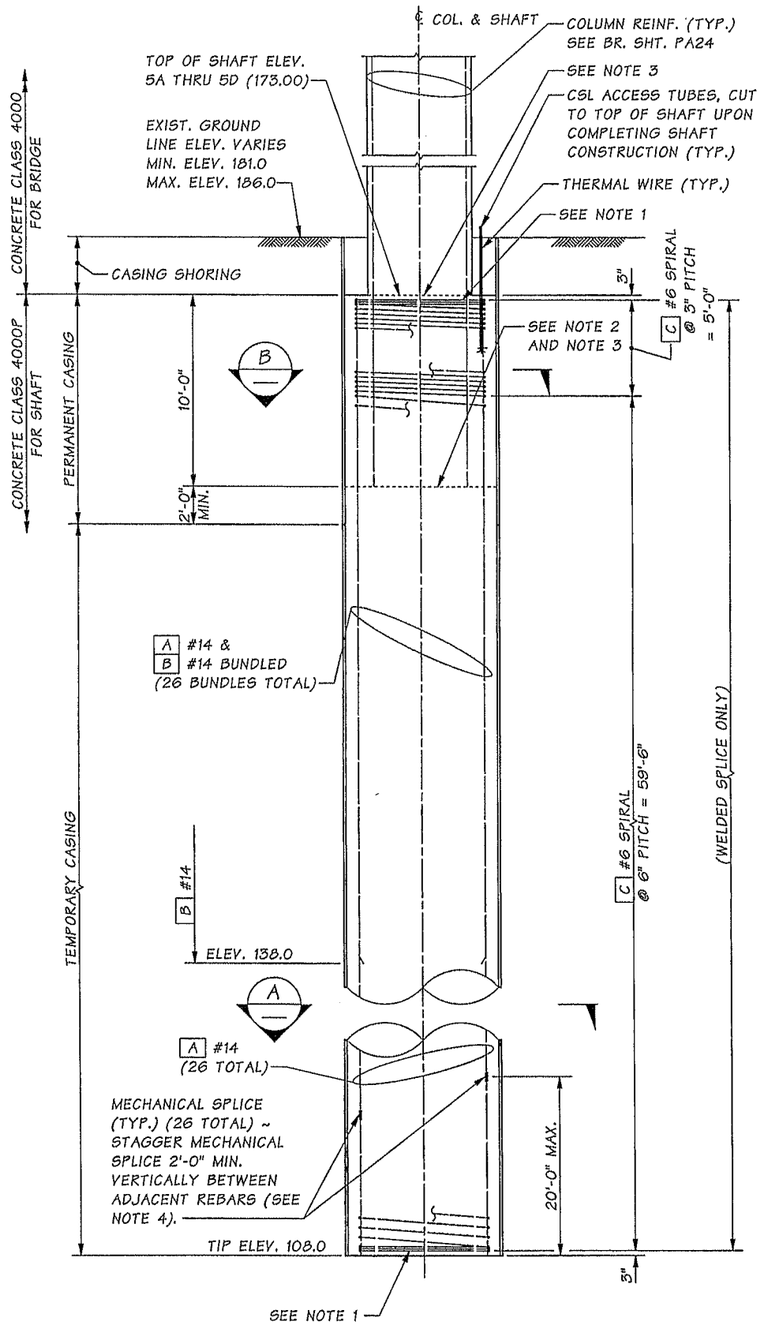

ELEVATION

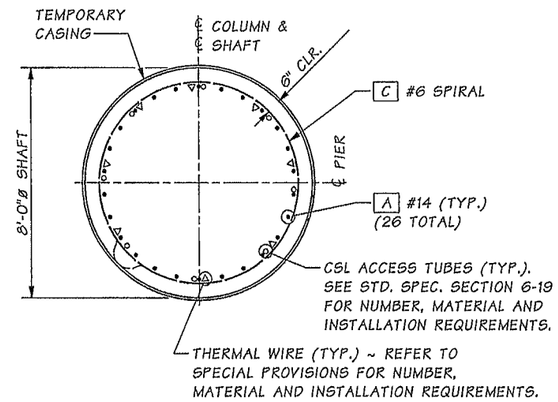

SECTION A

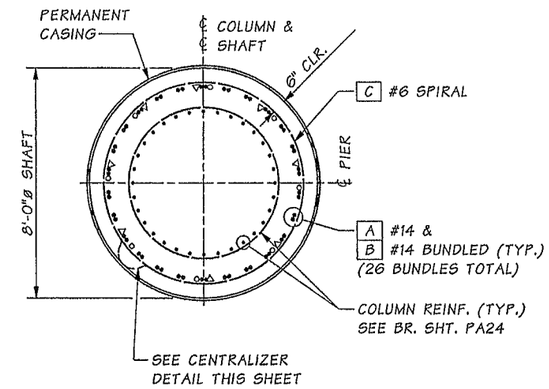

SECTION B

SHAFT BAR LIST

MARK	SIZE	NO.	LENGTH	BEND TYPE	WT. (lbs.)
A	#14	26	64'-8"	STR.	12,860
B	#14	26	34'-10"	STR.	6,930
C	#6	1	3156'-0"	67	4,740
			TOTAL PER SHAFT		24,530

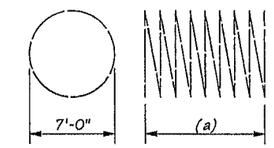

(a) ~ DETERMINED FROM PLANS
WEIGHT INCLUDES SPLICES

SPIRAL (BEND TYPE 67)

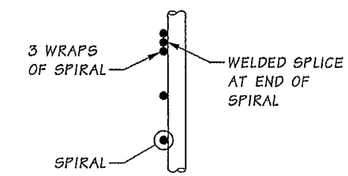

SPIRAL TERMINATION DETAIL

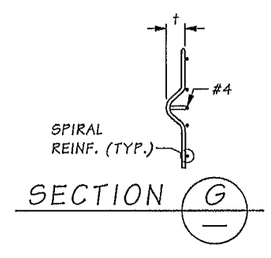

SECTION G

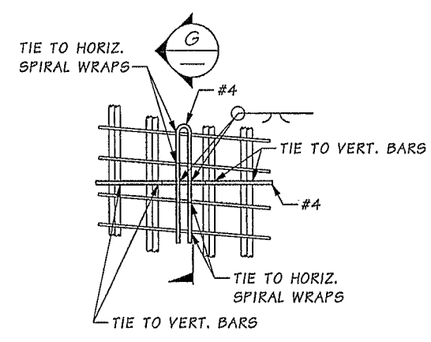

CENTRALIZER DETAIL

CENTRALIZER DETAIL NOTES:

1. EPOXY COAT CENTRALIZER OR PAINT WITH INORGANIC ZINC AFTER FABRICATION.
2. EACH LEG SHOULD BE TIED TO TWO VERTICAL BAR BUNDLES OR TWO SPIRALS.
3. SEE STD. SPEC. SECTION 6-19.3(5)B FOR SPACING REQUIREMENTS.
4. † CONCRETE COVER MINUS ½"

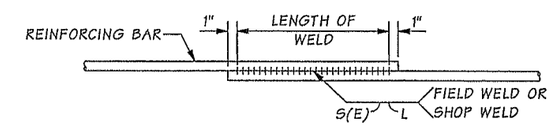

WELDED LAP SPLICE DETAIL

WELDING SHALL MEET THE REQUIREMENTS OF STD. SPEC. SECTION 6-02.3(24)E. FOR WELD DIMENSIONS, SEE TABLE BELOW.

	WELD DIMENSIONS (IN)		
BAR SIZE	S	E	L (LENGTH)
#6	3/8	3/16	6

NOTES:

1. SEE SPIRAL TERMINATION DETAIL THIS SHEET.
2. REMOVE SEDIMENT LAITANCE & WEAK CONCRETE TO SOUND CONCRETE PRIOR TO SETTING COLUMN REINFORCEMENT.
3. CONST. JOINT WITH ROUGHENED SURFACE.
4. MECHANICAL SPLICE SHALL MEET THE REQUIREMENTS OF STD. SPEC. SECTION 6-02.3(24)F

SR 5 FILE NO. 7451 SHEET PA16

Bridge Design Engr.	Khaleghi, B		
Supervisor	Khaleghi, B		
Designed By	Olson, DE	01/13	
Checked By	Lee, CS	11/13	
Detailed By	Bontemps, W	10/12	
Bridge Projects Engr.			
Prelim. Plan By			
Architect/Specialist			

M:\Y-Team\M ST TO PORTLAND\PACIFIC AVE BR\window files\PIER05SHAFTDTLS.wnd

DATE	REVISION	BY	APP'D

REGION NO.	STATE	FED. AID PROJ. NO.	SHEET NO.	TOTAL SHEETS
10	WASH.			
JOB NUMBER 12C501				

DOUGLAS EUGENE OLSON, STATE OF WASHINGTON, REGISTERED PROFESSIONAL ENGINEER, 24406 — 02/11/14

BRIDGE AND STRUCTURES OFFICE

BIJAN KHALEGHI, STATE OF WASHINGTON, REGISTERED PROFESSIONAL ENGINEER — 2/12/14

Washington State Department of Transportation

I-5
M ST TO PORTLAND AVE - HOV

PACIFIC AVE OVER I-5 BRIDGE No. 5/444

PIER 5 SHAFT DETAILS

BRIDGE SHEET NO. PA16

SHEET 1015 OF 1763 SHEETS

Tue Feb 11 09:00:53 2014

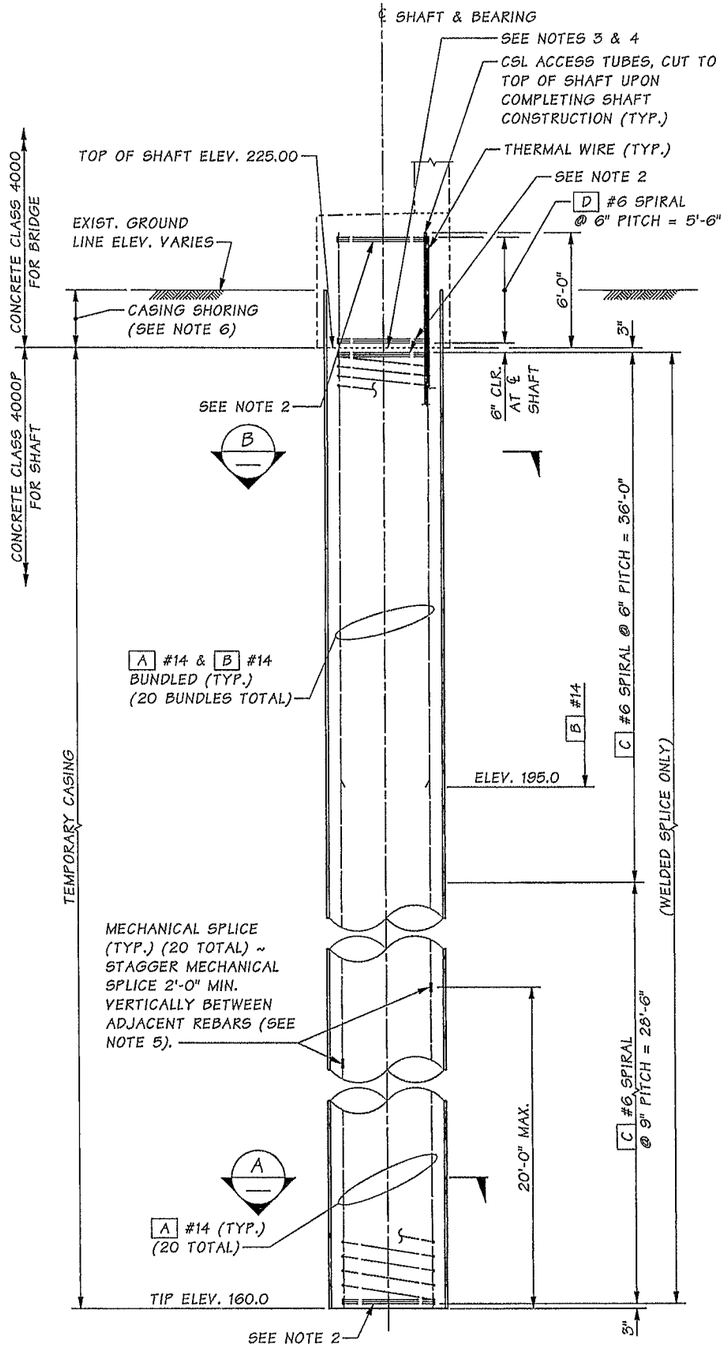

ELEVATION

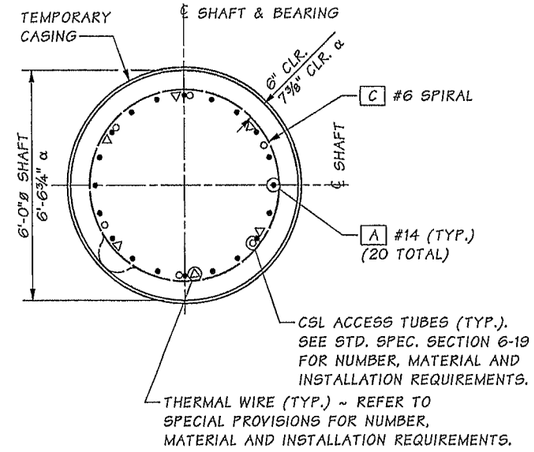

SECTION A

α OSCILLATOR METHOD (SEE NOTE 1)

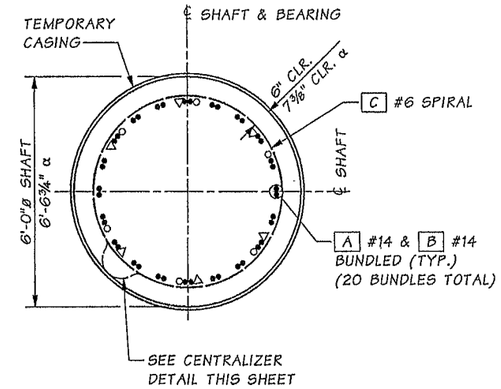

SECTION B

SHAFT BAR LIST

MARK	SIZE	NO.	LENGTH	BEND TYPE	WT. (lbs.)
A	#14	20	70'-10"	STR.	10,840
B	#14	20	36'-0"	STR.	5,510
C	#6	1	1790'-9"	67	2,690
D	#6	1	235'-11"	67	350
				TOTAL PER SHAFT	19,390

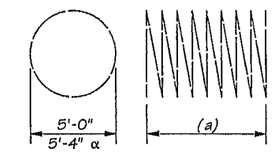

(a) ~ DETERMINED FROM PLANS
WEIGHT INCLUDES SPLICES

SPIRAL (BEND TYPE 67)

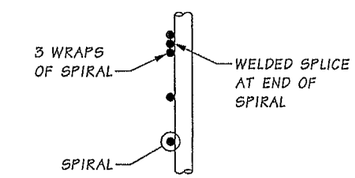

SPIRAL TERMINATION DETAIL

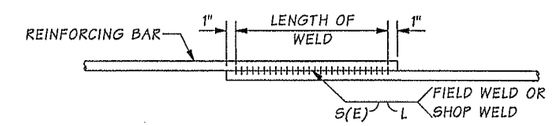

WELDED LAP SPLICE DETAIL

WELDING SHALL MEET THE REQUIREMENTS OF STD. SPEC. SECTION 6-02.3(24)E. FOR WELD DIMENSIONS, SEE TABLE BELOW.

	WELD DIMENSIONS (IN)		
BAR SIZE	S	E	L (LENGTH)
#6	⅜	3/16	6

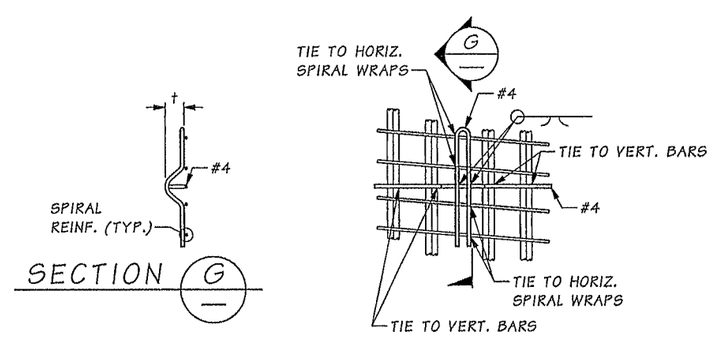

SECTION G

CENTRALIZER DETAIL

CENTRALIZER DETAIL NOTES:

1. EPOXY COAT CENTRALIZER OR PAINT WITH INORGANIC ZINC AFTER FABRICATION.
2. EACH LEG SHOULD BE TIED TO TWO VERTICAL BAR BUNDLES OR TWO SPIRALS.
3. SEE STD. SPEC. SECTION 6-19.3(5)B FOR SPACING REQUIREMENTS.
4. † CONCRETE COVER MINUS ½"

NOTES:

1. THE SHAFT BAR LIST WEIGHTS DO NOT REFLECT THE OSCILLATOR METHOD.
2. SEE SPIRAL TERMINATION DETAIL THIS SHEET.
3. REMOVE SEDIMENT LAITANCE & WEAK CONCRETE TO SOUND CONCRETE PRIOR TO CASTING CONCRETE CLASS 4000 FOR BRIDGE.
4. CONST. JOINT WITH ROUGHENED SURFACE.
5. MECHANICAL SPLICE SHALL MEET THE REQUIREMENTS OF STD. SPEC. SECTION 6-02.3(24)F.
6. CASING SHORING MAY BE DELETED IF THE CONTRACTOR SHORES AND EXCAVATES FOR THE SHAFT CAP PRIOR TO THE SHAFT EXCAVATION.

SR 5 FILE NO. 7451 SHEET PA17

Bridge Design Engr.	Khaleghi, B	M:\Y-Team\M ST TO PORTLAND\PACIFIC AVE BR\window files\PIER06SHAFTDTLS.wnd								
Supervisor	Khaleghi, B									
Designed By	Olson, DE	01/13								
Checked By	Lee, CS	11/13								
Detailed By	Bontemps, W	10/12								
Bridge Projects Engr.										
Prelim. Plan By										
Architect/Specialist		DATE	REVISION	BY	APP'D					

Tue Feb 11 09:00:55 2014

REGION NO.	STATE	FED. AID PROJ. NO.	SHEET NO.	TOTAL SHEETS
10	WASH.			
JOB NUMBER 12C501				

DOUGLAS EUGENE OLSON, STATE OF WASHINGTON, 36106, REGISTERED PROFESSIONAL ENGINEER — 02/11/14

BRIDGE AND STRUCTURES OFFICE

BRIAN KHALEGHI, STATE OF WASHINGTON, 27692, PROFESSIONAL ENGINEER — 2/12/14

Washington State Department of Transportation

I-5
M ST TO PORTLAND AVE - HOV

PACIFIC AVE OVER I-5 BRIDGE No. 5/444

PIER 6 SHAFT DETAILS

BRIDGE SHEET NO. PA17

SHEET 1016 OF 1763 SHEETS

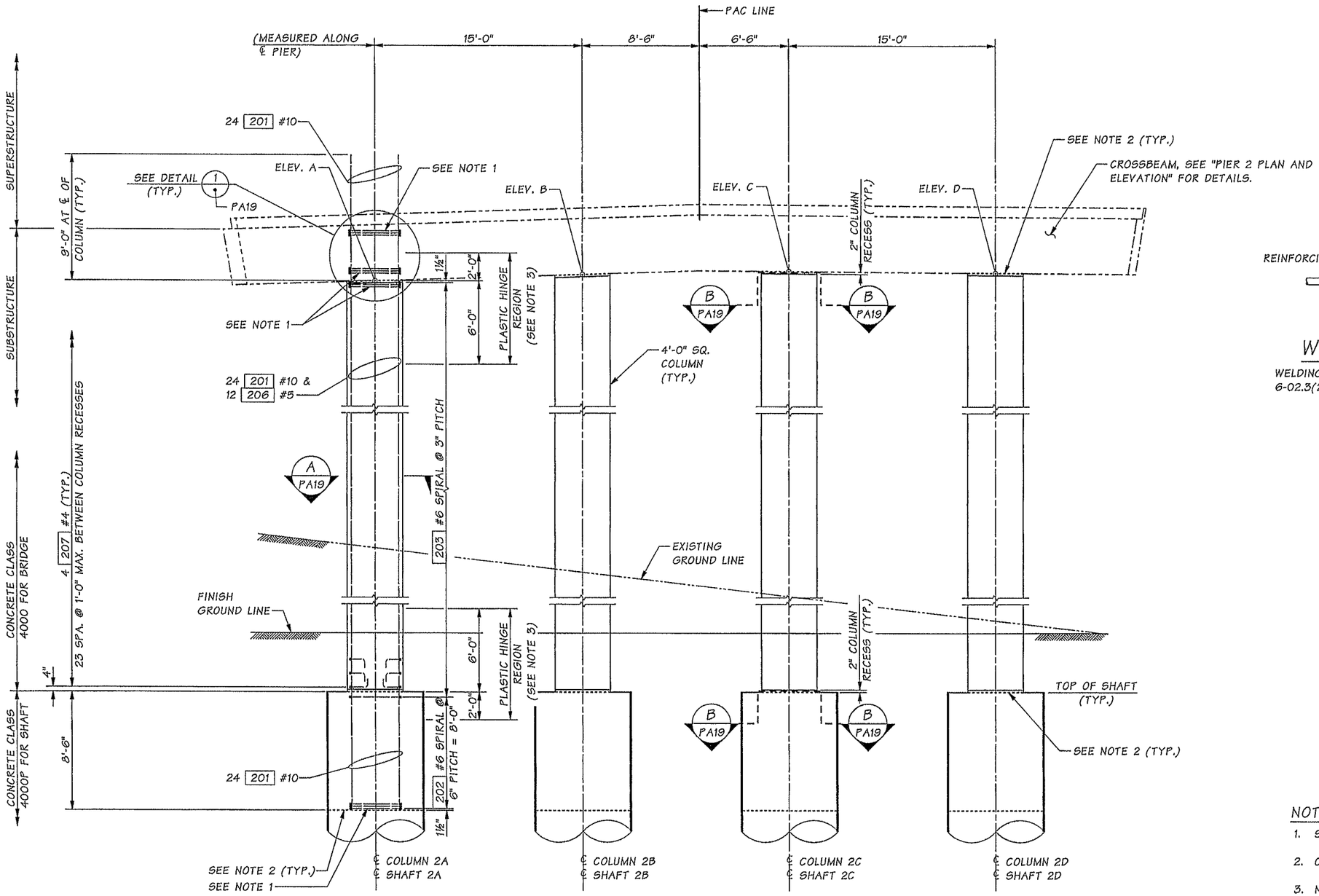

ELEVATION

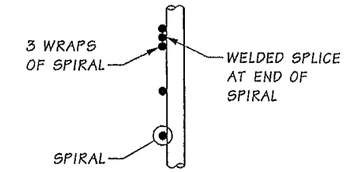

SPIRAL TERMINATION DETAIL

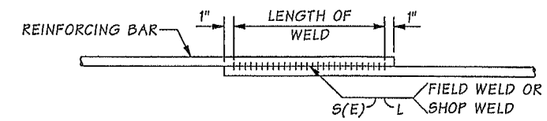

WELDED LAP SPLICE DETAIL

WELDING SHALL MEET THE REQUIREMENTS OF STD. SPEC. SECTION 6-02.3(24)E. FOR WELD DIMENSIONS, SEE TABLE BELOW.

	WELD DIMENSIONS (IN)		
BAR SIZE	S	E	L (LENGTH)
#6	3/8	3/16	6

TABLE OF ELEVATIONS AT TOP OF COLUMN	
ELEV. A	185.61
ELEV. B	186.08
ELEV. C	186.30
ELEV. D	186.18

NOTES:

1. SEE SPIRAL TERMINATION DETAIL ON THIS SHEET.
2. CONST. JOINT WITH ROUGHENED SURFACE.
3. NO WELDING OF SPIRALS IS PERMITTED IN THE PLASTIC HINGE REGION AFTER THE COLUMN CAGE IS ASSEMBLED. SPIRALS SHALL BE FIELD OR SHOP WELDED INDEPENDENTLY AND THEN ASSEMBLED AROUND THE COLUMN LONGITUDINAL STEEL AFTER WELDING. BAR MARKS 202 AND 203 SHALL BE ONE CONTINUOUS SPIRAL THROUGH PLASTIC HINGE REGIONS.
4. COLUMN DETAILS & REINFORCING TYPICAL FOR ALL COLUMNS.

SR 5 FILE NO. 7451 SHEET PA18

Bridge Design Engr.	Khaleghi, B	
Supervisor	Khaleghi, B	
Designed By	Olson, DE	11/12
Checked By	Lee, CS	11/13
Detailed By	Bontemps, W	11/12
Bridge Projects Engr.		
Prelim. Plan By		
Architect/Specialist		

M:\Y-Team\M ST TO PORTLAND\PACIFIC AVE BR\window files\PIER2COLUMNDTLS.wnd

DATE	REVISION	BY	APP'D

REGION NO.	STATE	FED. AID PROJ. NO.	SHEET NO.	TOTAL SHEETS
10	WASH.			

JOB NUMBER 12C501

DOUGLAS EUGENE OLSON, STATE OF WASHINGTON, 40408, REGISTERED PROFESSIONAL ENGINEER, 02/11/14

BRIDGE AND STRUCTURES OFFICE

BIJAN KHALEGHI, STATE OF WASHINGTON, 21695, REGISTERED PROFESSIONAL ENGINEER, 2/12/14

Washington State Department of Transportation

I-5
M ST TO PORTLAND AVE - HOV

PACIFIC AVE OVER I-5 BRIDGE No. 5/444

PIER 2 COLUMN
1 OF 2 DETAILS

BRIDGE SHEET NO. PA18

SHEET 1017 OF 1763 SHEETS

Tue Feb 11 09:00:57 2014

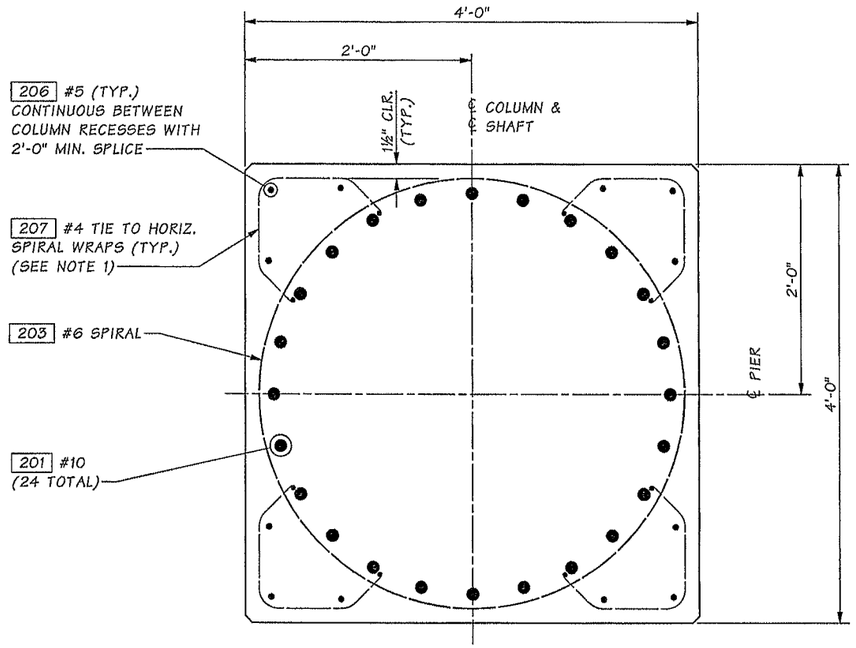

SECTION A
PA18

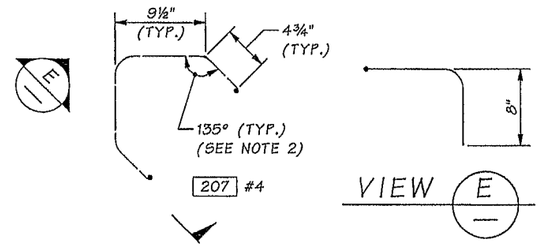

VIEW E

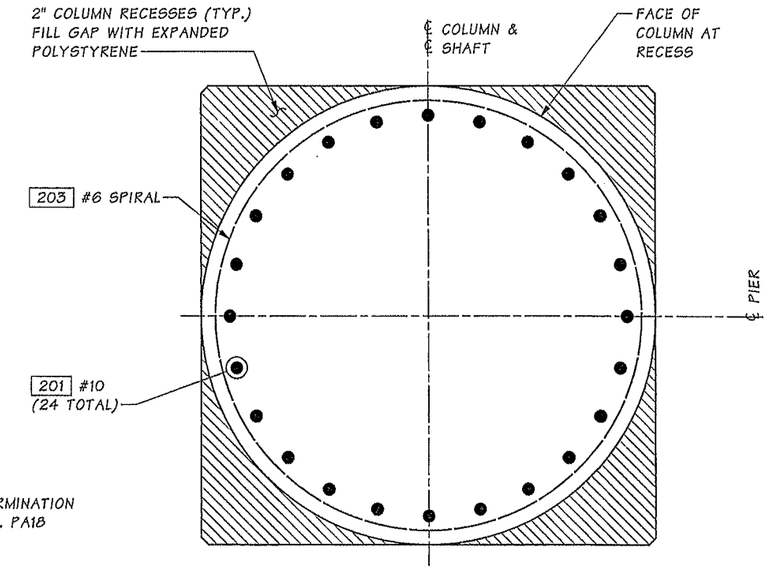

SECTION B
PA18

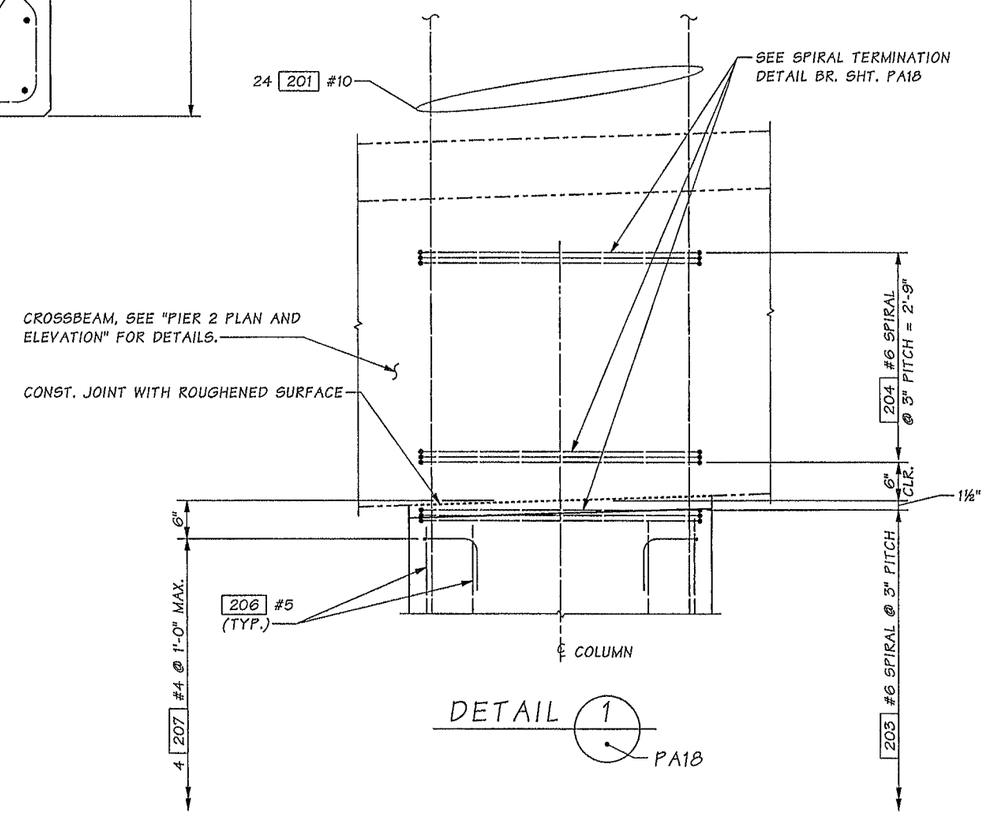

DETAIL 1
PA18

NOTES:

1. EACH LEG SHALL BE TIED TO TWO SPIRAL WRAPS MINIMUM.
2. ADJUST ANGLE AS NEEDED TO CLEAR COLUMN LONGITUDINAL BARS.

SR 5 FILE NO. 7451 SHEET PA19

Bridge Design Engr.	Khaleghi, B		M:\Y-Team\M ST TO PORTLAND\PACIFIC AVE BR\window files\PIER2COLUMNDTLS2.wnd								
Supervisor	Khaleghi, B										
Designed By	Olson, DE	11/12									
Checked By	Lee, CS	11/13									
Detailed By	Bontemps, W	11/12									
Bridge Projects Engr.											
Prelim. Plan By											
Architect/Specialist			DATE	REVISION	BY	APP'D					

REGION NO.	STATE	FED. AID PROJ. NO.	SHEET NO.	TOTAL SHEETS
10	WASH.			
JOB NUMBER 12C501				

BRIDGE AND STRUCTURES OFFICE

02/11/14 2/12/14

Washington State Department of Transportation

I-5
M ST TO PORTLAND AVE - HOV

PACIFIC AVE OVER I-5 BRIDGE No. 5/444

PIER 2 COLUMN
2 OF 2 DETAILS

BRIDGE SHEET NO. PA19

SHEET 1018 OF 1763 SHEETS

Tue Feb 11 09:00:59 2014

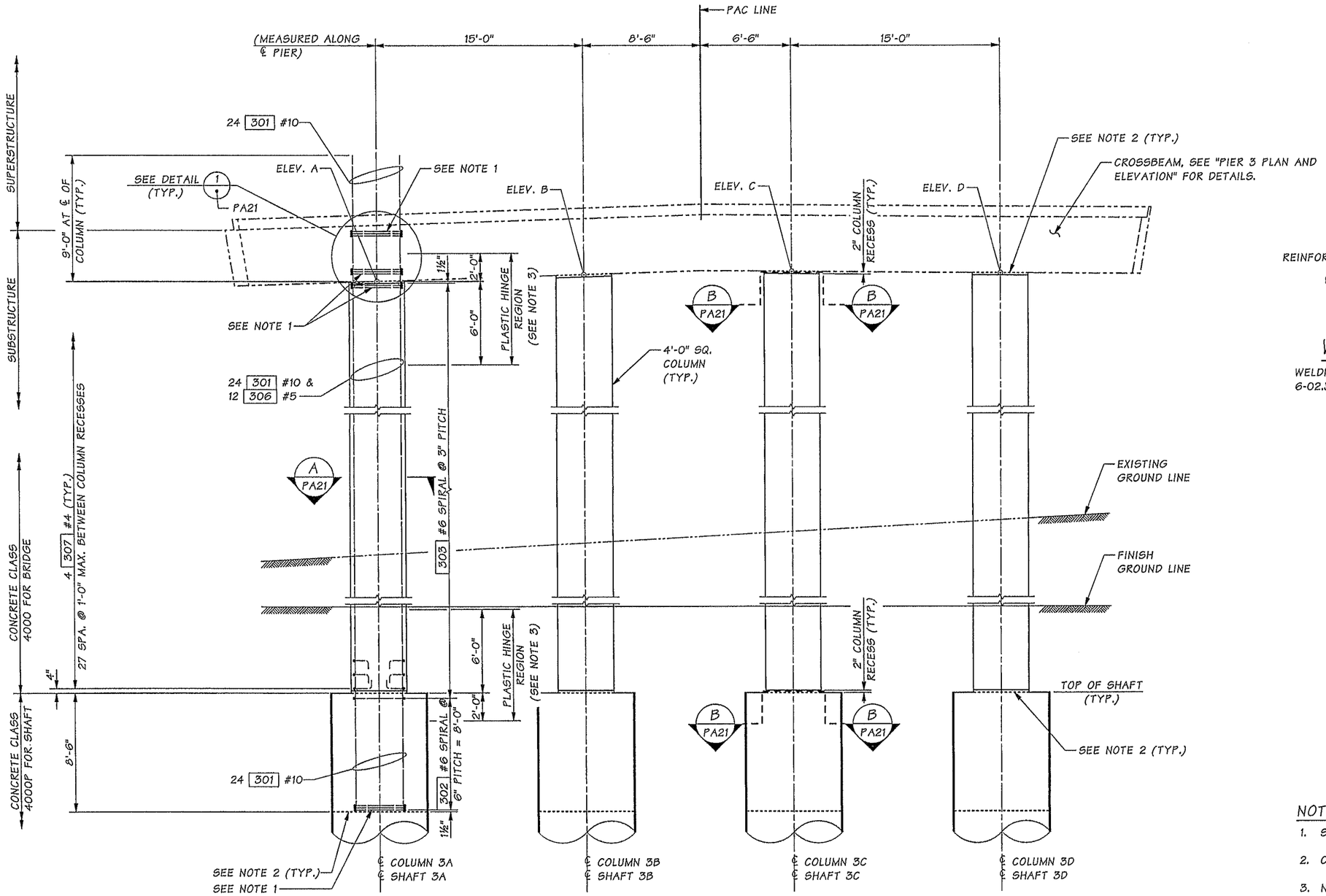

ELEVATION

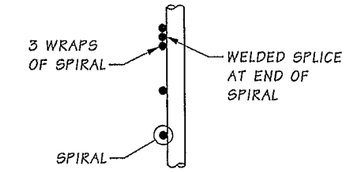

SPIRAL TERMINATION DETAIL

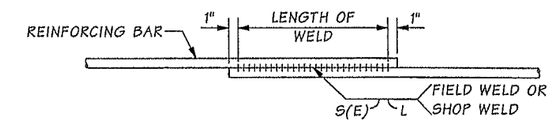

WELDED LAP SPLICE DETAIL

WELDING SHALL MEET THE REQUIREMENTS OF STD. SPEC. SECTION 6-02.3(24)E. FOR WELD DIMENSIONS, SEE TABLE BELOW.

	WELD DIMENSIONS (IN)		
BAR SIZE	S	E	L (LENGTH)
#6	3/8	3/16	6

TABLE OF ELEVATIONS AT TOP OF COLUMN	
ELEV. A	204.51
ELEV. B	204.97
ELEV. C	205.17
ELEV. D	205.04

NOTES:

1. SEE SPIRAL TERMINATION DETAIL ON THIS SHEET.
2. CONST. JOINT WITH ROUGHENED SURFACE.
3. NO WELDING OF SPIRALS IS PERMITTED IN THE PLASTIC HINGE REGION AFTER THE COLUMN CAGE IS ASSEMBLED. SPIRALS SHALL BE FIELD OR SHOP WELDED INDEPENDENTLY AND THEN ASSEMBLED AROUND THE COLUMN LONGITUDINAL STEEL AFTER WELDING. BAR MARKS 302 AND 303 SHALL BE ONE CONTINUOUS SPIRAL THROUGH PLASTIC HINGE REGIONS.
4. COLUMN DETAILS & REINFORCING TYPICAL FOR ALL COLUMNS.

SR 5 FILE NO. 7451 SHEET PA20

Bridge Design Engr.	Khaleghi, B	
Supervisor	Khaleghi, B	
Designed By	Olson, DE	11/12
Checked By	Lee, CS	11/13
Detailed By	Bontemps, W	11/12
Bridge Projects Engr.		
Prelim. Plan By		
Architect/Specialist		

M:\Y-Team\M ST TO PORTLAND\PACIFIC AVE BR\window files\PIER3COLUMNDTLS.wnd

DATE	REVISION	BY	APP'D

REGION NO.	STATE	FED. AID PROJ. NO.	SHEET NO.	TOTAL SHEETS
10	WASH.			
JOB NUMBER 12C501				

DOUGLAS EUGENE OLSON STATE OF WASHINGTON 40406 REGISTERED PROFESSIONAL ENGINEER 02/11/14

BRIDGE AND STRUCTURES OFFICE

BRIAN KHALEGHI STATE OF WASHINGTON 27695 REGISTERED PROFESSIONAL ENGINEER 2/12/14

Washington State Department of Transportation

I-5
M ST TO PORTLAND AVE - HOV

PACIFIC AVE OVER I-5 BRIDGE No. 5/444

PIER 3 COLUMN
1 OF 2 DETAILS

BRIDGE SHEET NO. PA20

SHEET 1019 OF 1763 SHEETS

Tue Feb 11 09:01:00 2014

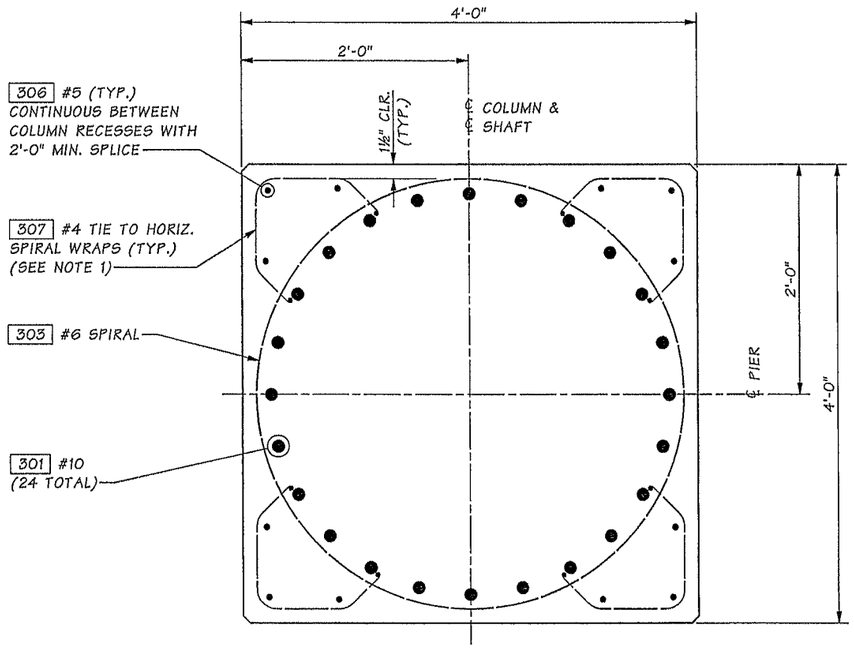

SECTION A — PA20

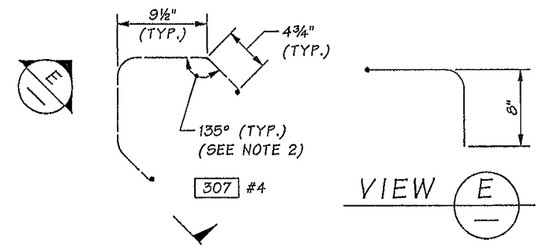

VIEW E

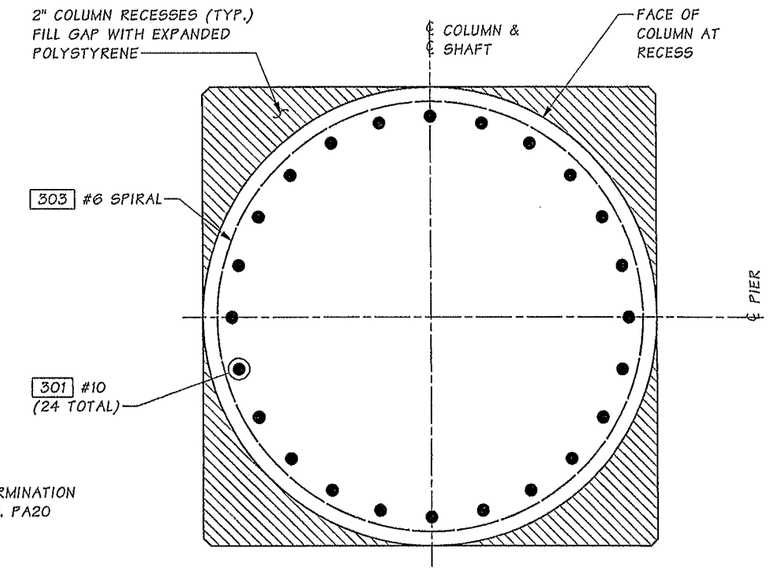

SECTION B — PA20

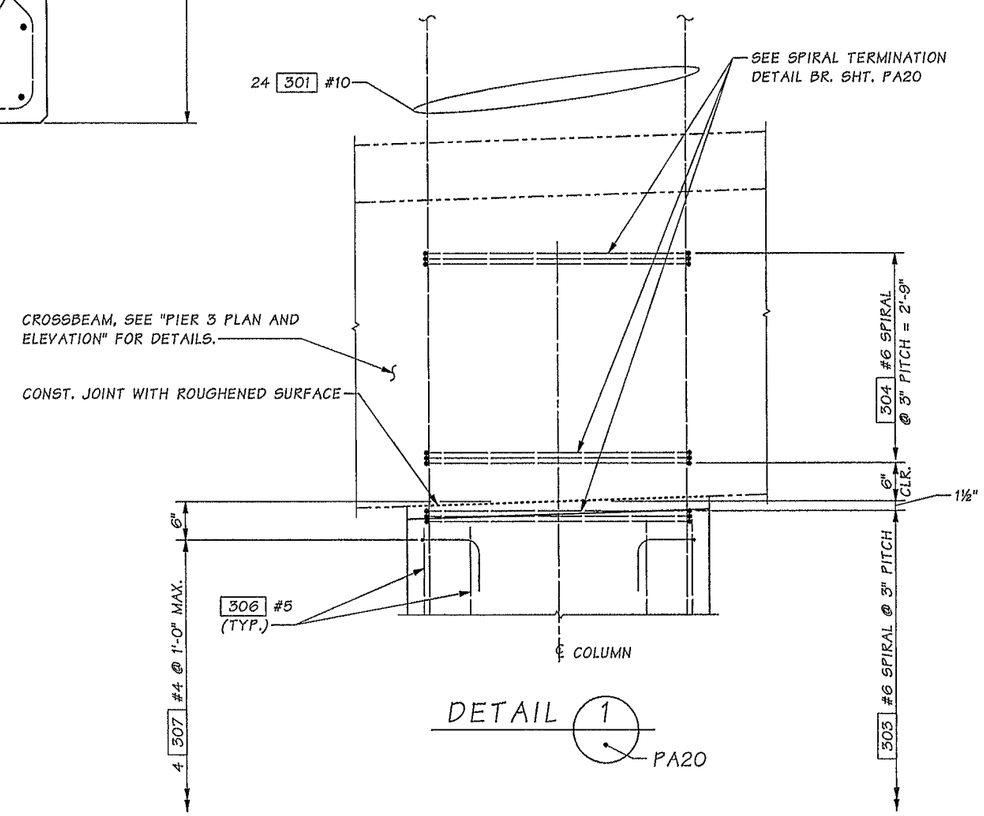

DETAIL 1 — PA20

NOTES:

1. EACH LEG SHALL BE TIED TO TWO SPIRAL WRAPS MINIMUM.
2. ADJUST ANGLE AS NEEDED TO CLEAR COLUMN LONGITUDINAL BARS.

SR 5 FILE NO. 7451 SHEET PA21

Bridge Design Engr.	Khaleghi, B		
Supervisor	Khaleghi, B		
Designed By	Olson, DE	11/12	
Checked By	Lee, CS	11/13	
Detailed By	Bontemps, W	11/12	
Bridge Projects Engr.			
Prelim. Plan By			
Architect/Specialist			

M:\Y-Team\M ST TO PORTLAND\PACIFIC AVE BR\window files\PIER3COLUMNDTLS2.wnd

DATE	REVISION	BY	APP'D

REGION NO.	STATE	FED. AID PROJ. NO.	SHEET NO.	TOTAL SHEETS
10	WASH.			
JOB NUMBER 12C501				

NICHOLAS EUGENE OLSON — STATE OF WASHINGTON — 40408 — REGISTERED PROFESSIONAL ENGINEER — 02/4/14

BRIDGE AND STRUCTURES OFFICE

BIJAN KHALEGHI — STATE OF WASHINGTON — 20695 — REGISTERED PROFESSIONAL ENGINEER — 2/12/14

Washington State Department of Transportation

I-5
M ST TO PORTLAND AVE - HOV

PACIFIC AVE OVER I-5 BRIDGE No. 5/444

PIER 3 COLUMN
2 OF 2 DETAILS

BRIDGE SHEET NO. PA21

SHEET 1020 OF 1763 SHEETS

Tue Feb 11 09:01:02 2014

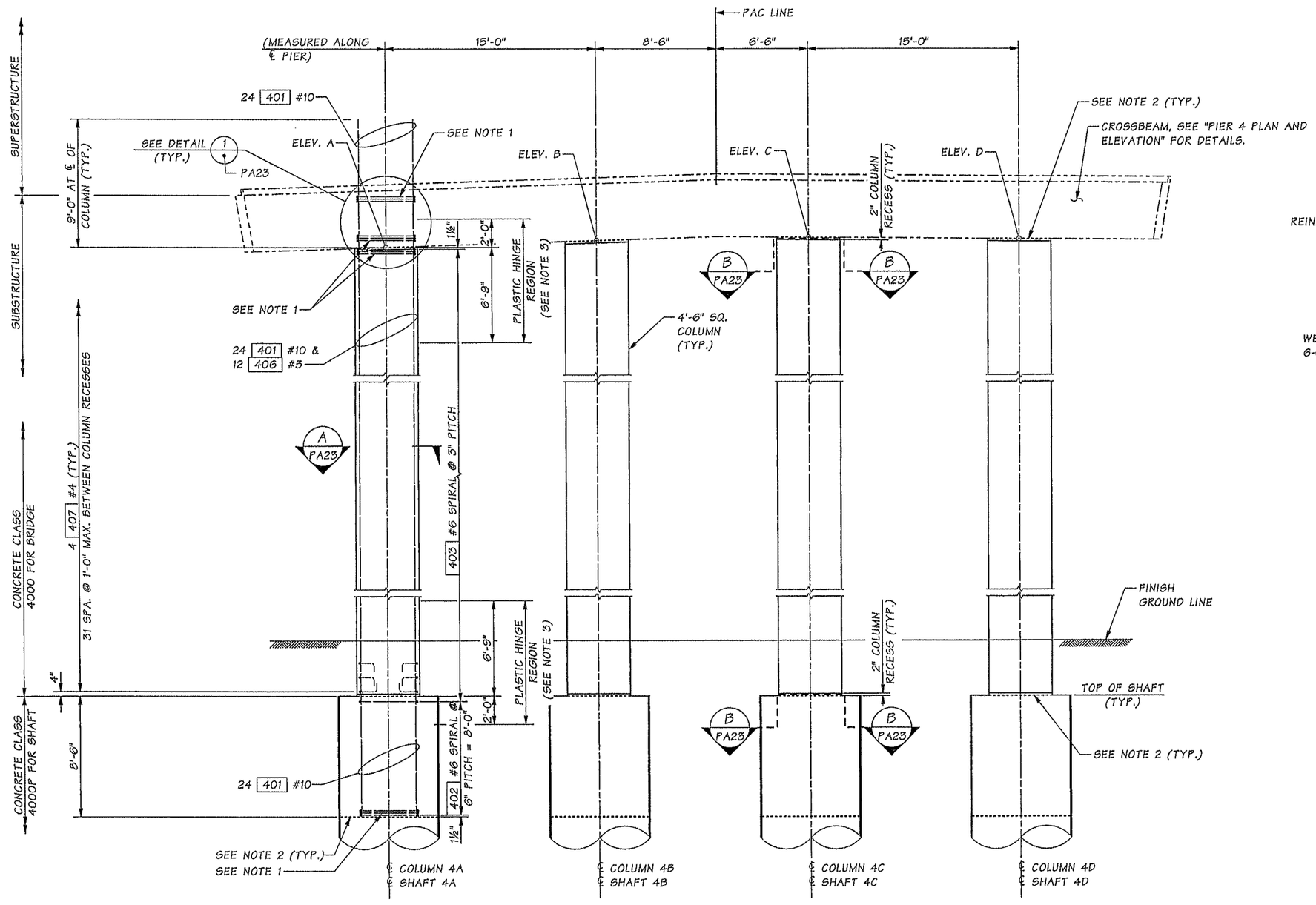

ELEVATION

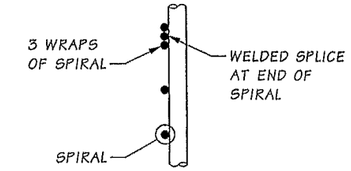

SPIRAL TERMINATION DETAIL

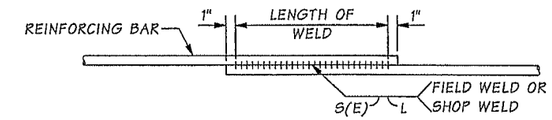

WELDED LAP SPLICE DETAIL

WELDING SHALL MEET THE REQUIREMENTS OF STD. SPEC. SECTION 6-02.3(24)E. FOR WELD DIMENSIONS, SEE TABLE BELOW.

	WELD DIMENSIONS (IN)		
BAR SIZE	S	E	L (LENGTH)
#6	3/8	3/16	6

TABLE OF ELEVATIONS AT TOP OF COLUMN	
ELEV. A	218.84
ELEV. B	219.23
ELEV. C	219.36
ELEV. D	219.15

NOTES:

1. SEE SPIRAL TERMINATION DETAIL ON THIS SHEET.
2. CONST. JOINT WITH ROUGHENED SURFACE.
3. NO WELDING OF SPIRALS IS PERMITTED IN THE PLASTIC HINGE REGION AFTER THE COLUMN CAGE IS ASSEMBLED. SPIRALS SHALL BE FIELD OR SHOP WELDED INDEPENDENTLY AND THEN ASSEMBLED AROUND THE COLUMN LONGITUDINAL STEEL AFTER WELDING. BAR MARKS 402 AND 403 SHALL BE ONE CONTINUOUS SPIRAL THROUGH PLASTIC HINGE REGIONS.
4. COLUMN DETAILS & REINFORCING TYPICAL FOR ALL COLUMNS.

Bridge Design Engr.	Khaleghi, B		
Supervisor	Khaleghi, B		
Designed By	Olson, DE	11/12	
Checked By	Lee, CS	11/13	
Detailed By	Bontemps, W	11/12	
Bridge Projects Engr.			
Prelim. Plan By			
Architect/Specialist			

M:\Y-Team\M ST TO PORTLAND\PACIFIC AVE BR\window files\PIER4COLUMNDTLS.wnd

DATE	REVISION	BY	APP'D

REGION NO.	STATE	FED. AID PROJ. NO.	SHEET NO.	TOTAL SHEETS
10	WASH.			
JOB NUMBER 12C501				

DOUGLAS EUGENE OLSON, STATE OF WASHINGTON, 40404, REGISTERED PROFESSIONAL ENGINEER — 02/11/14

BRIDGE AND STRUCTURES OFFICE

BRIAN KHALEGHI, STATE OF WASHINGTON, 27855, PROFESSIONAL STRUCTURAL ENGINEER — 2/12/14

Washington State Department of Transportation

I-5
M ST TO PORTLAND AVE - HOV

PACIFIC AVE OVER I-5 BRIDGE No. 5/444

PIER 4 COLUMN
1 OF 2 DETAILS

BRIDGE SHEET NO. PA22

SHEET 1021 OF 1763 SHEETS

SR 5 FILE NO. 7451 SHEET PA22

Tue Feb 11 09:01:03 2014

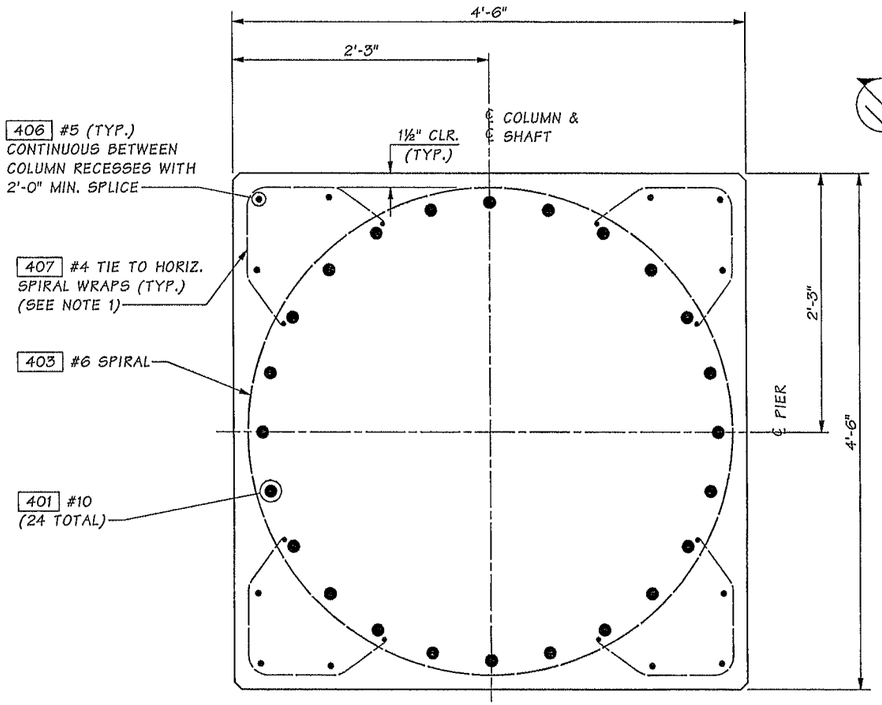

SECTION A — PA22

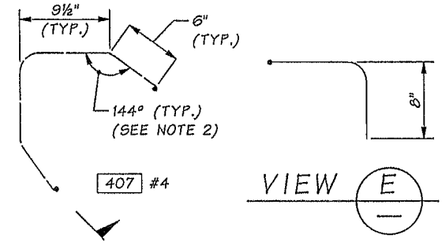

VIEW E

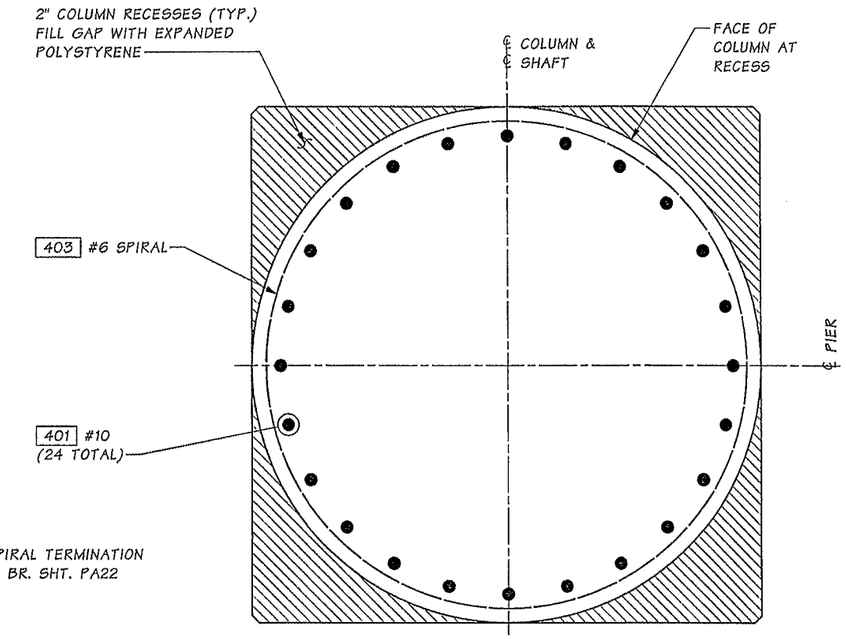

SECTION B — PA22

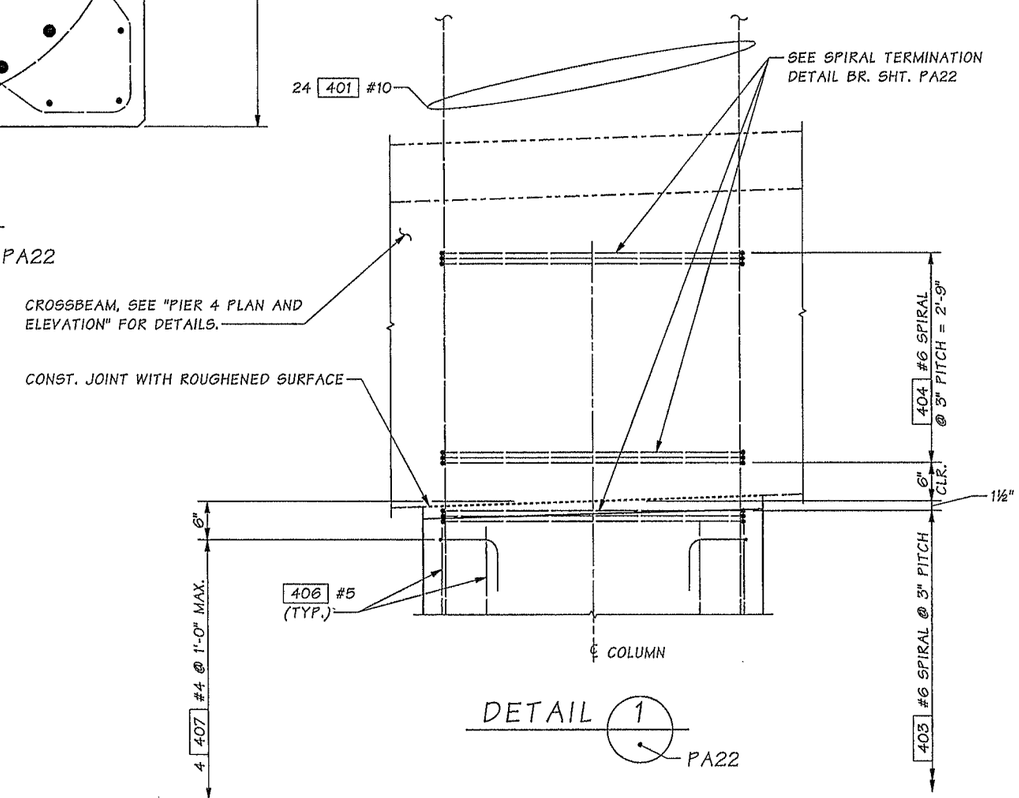

DETAIL 1 — PA22

NOTES:

1. EACH LEG SHALL BE TIED TO TWO SPIRAL WRAPS MINIMUM.
2. ADJUST ANGLE AS NEEDED TO CLEAR COLUMN LONGITUDINAL BARS.

SR 5 FILE NO. 7451 SHEET PA23

Bridge Design Engr.	Khaleghi, B		M:\Y-Team\M ST TO PORTLAND\PACIFIC AVE BR\window files\PIER4COLUMNDTLS2.wnd
Supervisor	Khaleghi, B		
Designed By	Olson, DE	11/12	
Checked By	Lee, CS	11/13	
Detailed By	Bontemps, W	11/12	
Bridge Projects Engr.			
Prelim. Plan By			
Architect/Specialist			

DATE	REVISION	BY	APP'D

REGION NO.	STATE	FED. AID PROJ. NO.	SHEET NO.	TOTAL SHEETS
10	WASH.			
JOB NUMBER 12C501				

Tue Feb 11 09:01:05 2014

BRIDGE AND STRUCTURES OFFICE

DOUGLAS EUGENE OLSON — STATE OF WASHINGTON — 40406 — REGISTERED PROFESSIONAL ENGINEER — 02/11/14

BIJAN KHALEGHI — STATE OF WASHINGTON — 27695 — REGISTERED PROFESSIONAL ENGINEER — 2/12/14

Washington State Department of Transportation

I-5
M ST TO PORTLAND AVE - HOV

PACIFIC AVE OVER I-5 BRIDGE No. 5/444

PIER 4 COLUMN
2 OF 2 DETAILS

BRIDGE SHEET NO. PA23

SHEET 1022 OF 1763 SHEETS

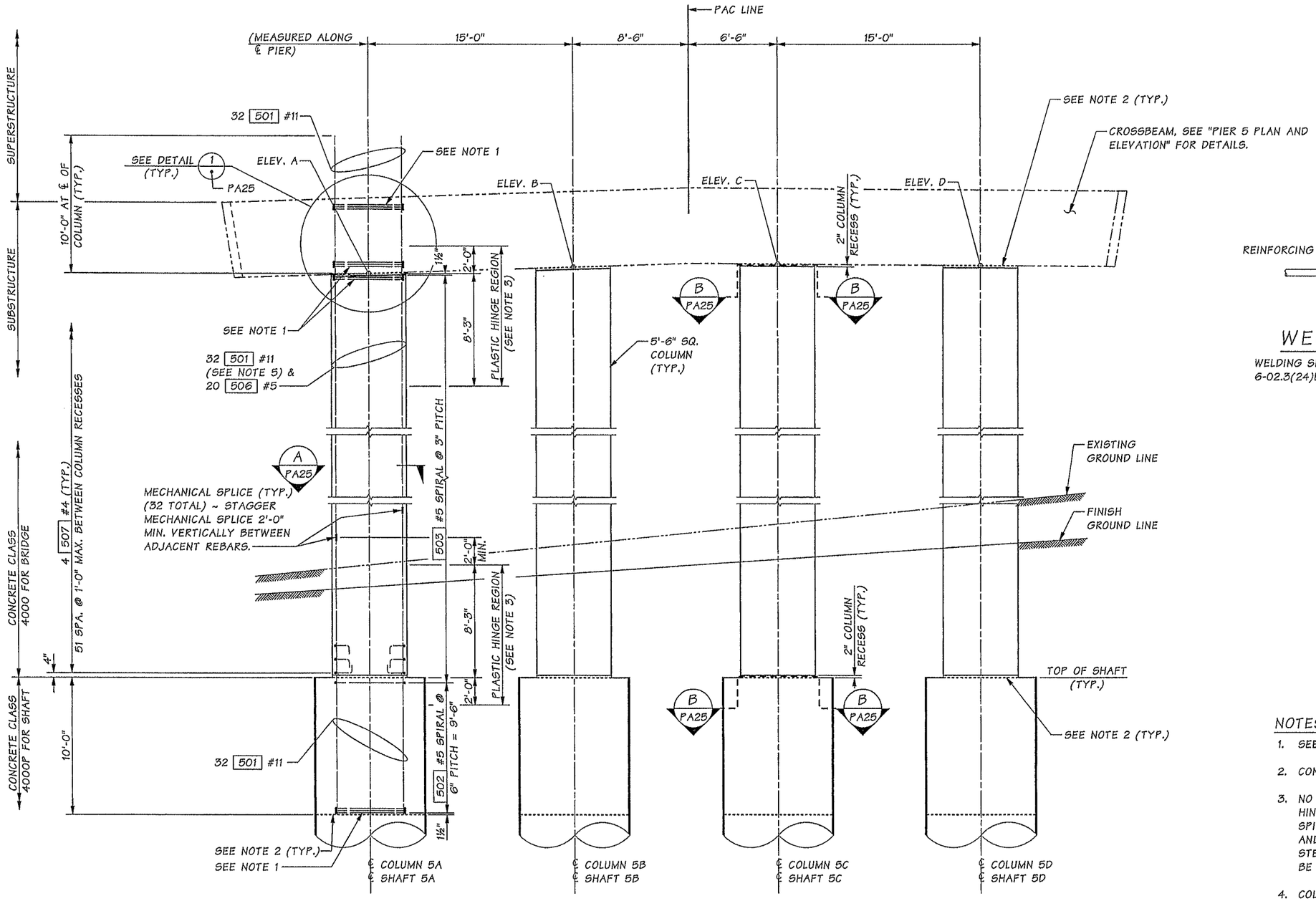

ELEVATION

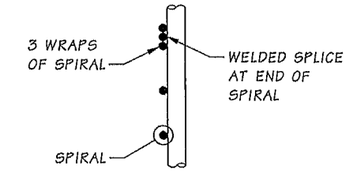

SPIRAL TERMINATION DETAIL

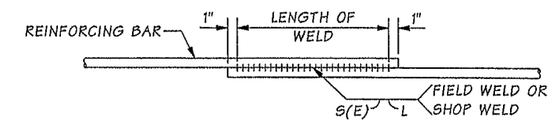

WELDED LAP SPLICE DETAIL

WELDING SHALL MEET THE REQUIREMENTS OF STD. SPEC. SECTION 6-02.3(24)E. FOR WELD DIMENSIONS, SEE TABLE BELOW.

	WELD DIMENSIONS (IN)		
BAR SIZE	S	E	L (LENGTH)
#5	5/16	3/16	6

TABLE OF ELEVATIONS AT TOP OF COLUMN	
ELEV. A	224.17
ELEV. B	224.51
ELEV. C	224.59
ELEV. D	224.31

NOTES:

1. SEE SPIRAL TERMINATION DETAIL ON THIS SHEET.
2. CONST. JOINT WITH ROUGHENED SURFACE.
3. NO WELDING OF SPIRALS IS PERMITTED IN THE PLASTIC HINGE REGION AFTER THE COLUMN CAGE IS ASSEMBLED. SPIRALS SHALL BE FIELD OR SHOP WELDED INDEPENDENTLY AND THEN ASSEMBLED AROUND THE COLUMN LONGITUDINAL STEEL AFTER WELDING. BAR MARKS 502 AND 503 SHALL BE ONE CONTINUOUS SPIRAL THROUGH PLASTIC HINGE REGIONS.
4. COLUMN DETAILS & REINFORCING TYPICAL FOR ALL COLUMNS.
5. NO LAP SPLICE ALLOWED. ALL SPLICES SHALL BE OUTSIDE THE PLASTIC HINGE REGIONS AS SHOWN IN ELEVATION WITH MECHANICAL SPLICES THAT MEET THE REQUIREMENTS OF STD. SPEC. SECTION 6-02.3(24)F.

SR 5 FILE NO. 7451 SHEET PA24

Bridge Design Engr.	Khaleghi, B	
Supervisor	Khaleghi, B	
Designed By	Olson, DE	11/12
Checked By	Lee, CS	11/13
Detailed By	Bontemps, W	11/12
Bridge Projects Engr.		
Prelim. Plan By		
Architect/Specialist		

M:\Y-Team\M ST TO PORTLAND\PACIFIC AVE BR\window files\PIER5COLUMNDTLS.wnd

DATE	REVISION	BY	APP'D

REGION NO.	STATE	FED. AID PROJ. NO.	SHEET NO.	TOTAL SHEETS
10	WASH.			
JOB NUMBER 12C501				

DOUGLAS EUGENE OLSON STATE OF WASHINGTON 40106 REGISTERED PROFESSIONAL ENGINEER 02/11/14

BRIDGE AND STRUCTURES OFFICE

BIJAN KHALEGHI STATE OF WASHINGTON GENERAL ENGINEER PROFESSIONAL ENGINEER 2/12/14

Washington State Department of Transportation

I-5
M ST TO PORTLAND AVE - HOV

PACIFIC AVE OVER I-5 BRIDGE No. 5/444

PIER 5 COLUMN
1 OF 2 DETAILS

BRIDGE SHEET NO. PA24

SHEET 1023 OF 1763 SHEETS

Tue Feb 11 09:01:07 2014

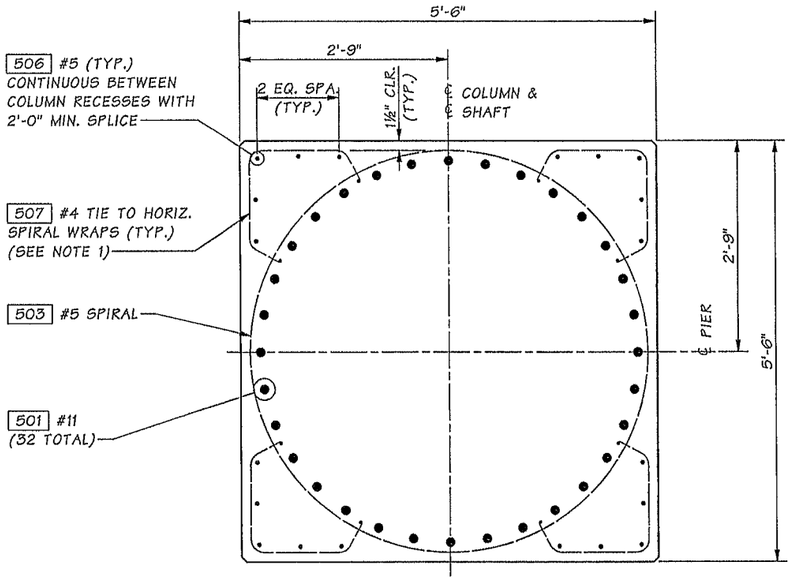

SECTION A
PA24

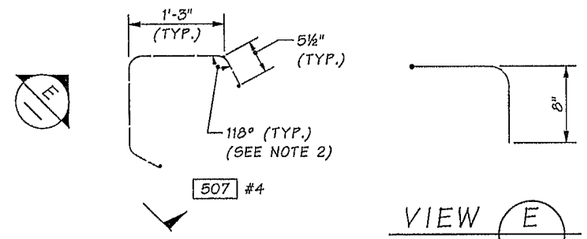

VIEW E

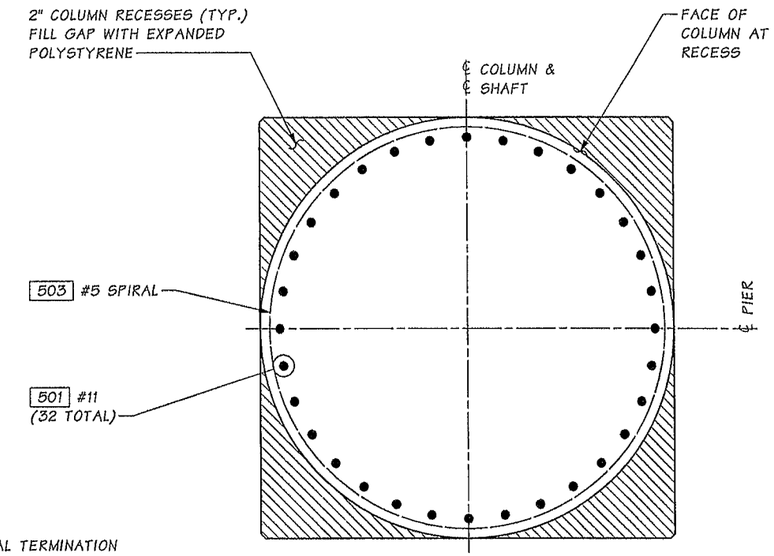

SECTION B
PA24

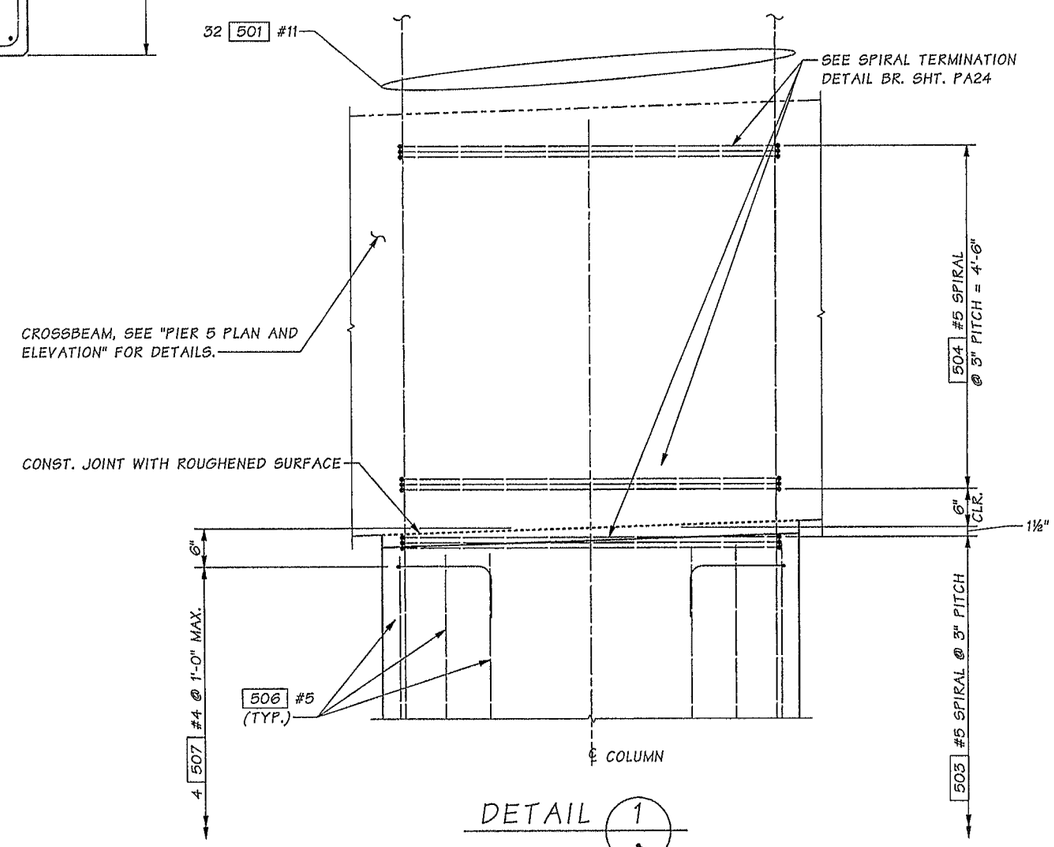

DETAIL 1
PA24

NOTES:

1. EACH LEG SHALL BE TIED TO TWO SPIRAL WRAPS MINIMUM.
2. ADJUST ANGLE AS NEEDED TO CLEAR COLUMN LONGITUDINAL BARS.

SR 5 FILE NO. 7451 SHEET PA25

Bridge Design Engr.	Khaleghi, B		
Supervisor	Khaleghi, B		
Designed By	Olson, DE	11/12	
Checked By	Lee, CS	11/13	
Detailed By	Bontemps, W	11/12	
Bridge Projects Engr.			
Prelim. Plan By			
Architect/Specialist			

M:\Y-Team\M ST TO PORTLAND\PACIFIC AVE BR\window files\PIER5COLUMNDTLS2.wnd

DATE	REVISION	BY	APP'D

REGION NO.	STATE	FED. AID PROJ. NO.	SHEET NO.	TOTAL SHEETS
10	WASH.			
JOB NUMBER 12C501				

DOUGLAS EUGENE OLSON STATE OF WASHINGTON 40406 REGISTERED PROFESSIONAL ENGINEER 02/11/14

BRIDGE AND STRUCTURES OFFICE

BIJAN KHALEGHI STATE OF WASHINGTON 17878 STRUCTURAL ENGINEER PROFESSIONAL ENGINEER 2/12/14

Washington State Department of Transportation

I-5
M ST TO PORTLAND AVE - HOV

PACIFIC AVE OVER I-5 BRIDGE No. 5/444

PIER 5 COLUMN
2 OF 2 DETAILS

BRIDGE SHEET NO. PA25

SHEET 1024 OF 1763 SHEETS

Tue Feb 11 09:01:08 2014

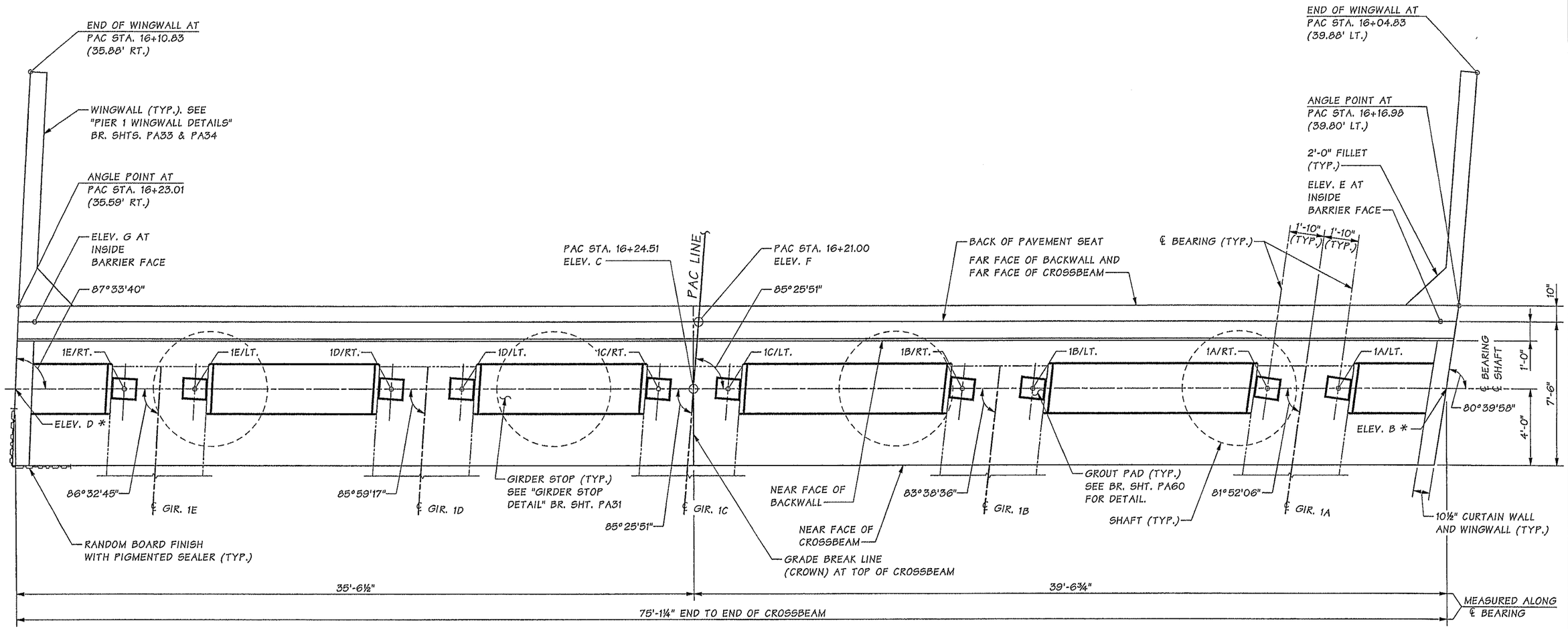

PLAN

NOTES:

1. SEE FRAMING PLAN FOR GIRDER SPACING.
2. FOR ELEVATIONS AT TOP OF CROSSBEAM AND TOP OF BACKWALL SEE BR. SHTS. PA27 & PA28.

TABLE OF ELEVATIONS AT TOP OF GROUT PAD

BEARING	1A/LT.	1A/RT.	1B/LT.	1B/RT.	1C/LT.	1C/RT.	1D/LT.	1D/RT.	1E/LT.	1E/RT.
ELEVATION	182.55	182.67	183.06	183.18	183.57	183.61	183.53	183.50	183.42	183.39

Bridge Design Engr.	Khaleghi, B	
Supervisor	Khaleghi, B	
Designed By	Olson, DE	12/12
Checked By	Lee, CS	11/13
Detailed By	Bontemps, W	12/12
Bridge Projects Engr.		
Prelim. Plan By		
Architect/Specialist		

M:\Y-Team\M ST TO PORTLAND\PACIFIC AVE BR\window files\PIER 1-1.wnd

DATE	REVISION	BY	APP'D

REGION NO.	STATE	FED. AID PROJ. NO.	SHEET NO.	TOTAL SHEETS
10	WASH.			
JOB NUMBER 12C501				

DOUGLAS EUGENE OLSON, STATE OF WASHINGTON, 40406, REGISTERED PROFESSIONAL ENGINEER — 02/11/14

BRIDGE AND STRUCTURES OFFICE

BRIAN KHALEGHI, STATE OF WASHINGTON, PROFESSIONAL ENGINEER — 2/12/14

Washington State Department of Transportation

I-5
M ST TO PORTLAND AVE - HOV

PACIFIC AVE OVER I-5 BRIDGE No. 5/444

PIER 1
PLAN

BRIDGE SHEET NO. PA26

SHEET 1025 OF 1763 SHEETS

SR 5 FILE NO. 7451 SHEET PA26

Tue Feb 11 09:01:10 2014

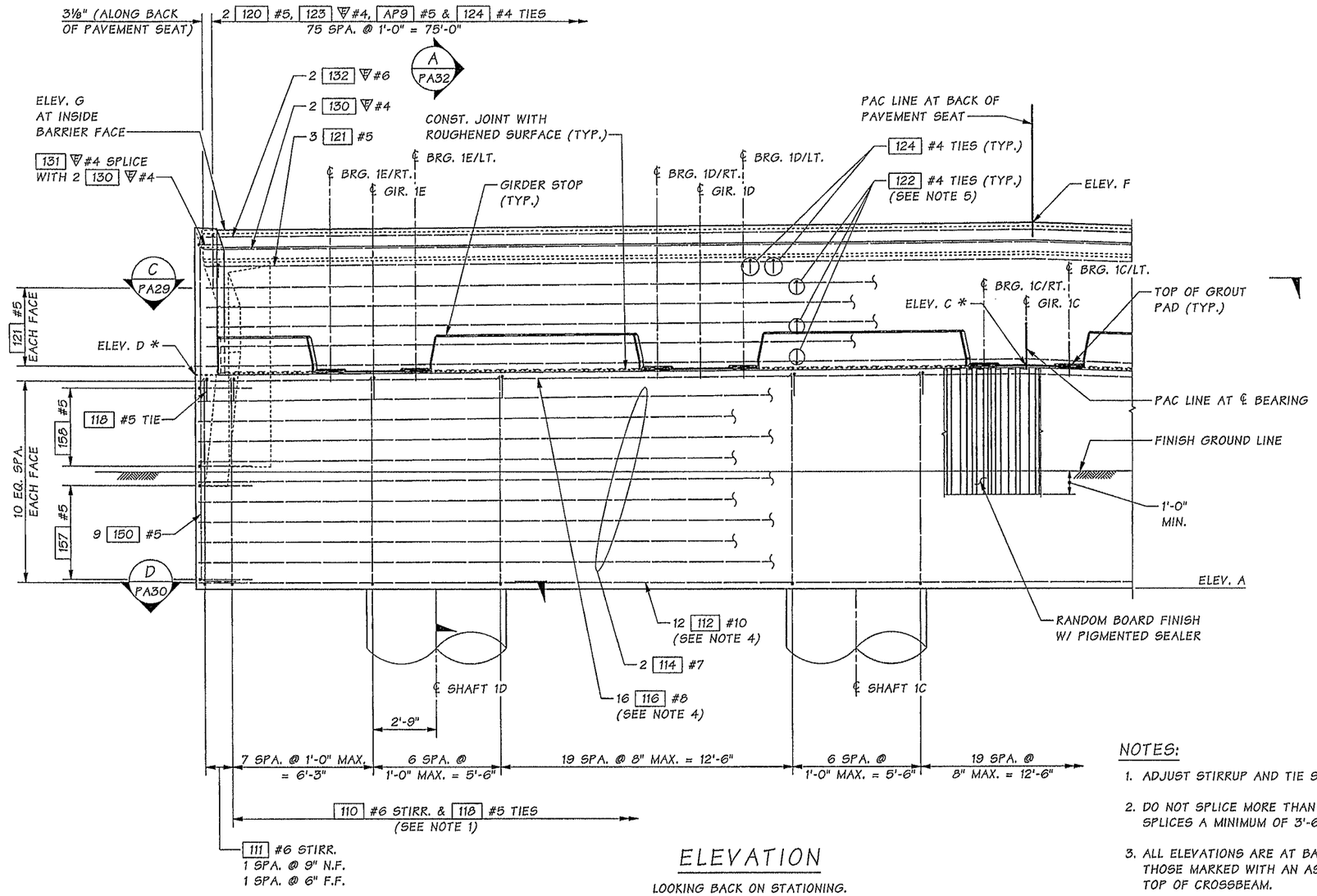

ELEVATION

LOOKING BACK ON STATIONING.
FOR TOP OF GROUT PAD ELEVATIONS, SEE BR. SHT. PA26.
SEE WINGWALL DETAILS FOR WALL REINFORCEMENT NOT SHOWN.
N.F. = NEAR FACE
F.F. = FAR FACE

TABLE OF ELEVATIONS	
ELEV. A	174.00
ELEV. C *	183.50
ELEV. D *	183.20
ELEV. F	189.43
ELEV. G	189.15

NOTES:

1. ADJUST STIRRUP AND TIE SPACING AS REQUIRED TO CLEAR SHAFT REINFORCEMENT.
2. DO NOT SPLICE MORE THAN 50% OF BARS AT ANY ONE LOCATION. STAGGER ALL SPLICES A MINIMUM OF 3'-6".
3. ALL ELEVATIONS ARE AT BACK OF PAVEMENT SEAT AND TOP OF BACKWALL EXCEPT THOSE MARKED WITH AN ASTERISK (*) WHICH ARE AT CENTER LINE BEARING AND TOP OF CROSSBEAM.
4. NO LAP SPLICE ALLOWED. ALL SPLICES SHALL BE MECHANICAL SPLICES AND MEET THE REQUIREMENTS OF STD. SPEC. SECTION 6-02.3(24)F. DO NOT SPLICE MORE THAN 50% OF BARS AT ANY ONE LOCATION. STAGGER ALL MECHANICAL SPLICES A MINIMUM OF 2'-6".
5. FOR TIE BAR DETAIL AND TIE BAR SPACING, SEE BR. SHT. PA32.
6. MIN. REBAR SPLICE LENGTH UNLESS NOTED OTHERWISE:
   ▽#4 ~ 2'-0"
   ▽#6 ~ 3'-0"
   #5 ~ 2'-4"
   #7 ~ 3'-6"

SR 5 FILE NO. 7451 SHEET PA27

Bridge Design Engr.	Khaleghi, B		
Supervisor	Khaleghi, B		
Designed By	Olson, DE	12/12	
Checked By	Lee, CS	11/13	
Detailed By	Bontemps, W	12/12	
Bridge Projects Engr.			
Prelim. Plan By			
Architect/Specialist			

M:\Y-Team\M ST TO PORTLAND\PACIFIC AVE BR\window files\PIER 1-2.wnd

DATE	REVISION	BY	APP'D

REGION NO.	STATE	FED. AID PROJ. NO.	SHEET NO.	TOTAL SHEETS
10	WASH.			
JOB NUMBER 12C501				

DOUGLAS EUGENE OLSON, STATE OF WASHINGTON, 20104, REGISTERED PROFESSIONAL ENGINEER — 02/11/14

BRIDGE AND STRUCTURES OFFICE

BIJAN KHALEGHI, STATE OF WASHINGTON, 18799, REGISTERED PROFESSIONAL ENGINEER — 2/12/14

Washington State Department of Transportation

I-5
M ST TO PORTLAND AVE - HOV

PACIFIC AVE OVER I-5 BRIDGE No. 5/444

PIER 1 ELEVATION
1 OF 2

BRIDGE SHEET NO. PA27

SHEET 1026 OF 1763 SHEETS

Tue Feb 11 09:01:12 2014

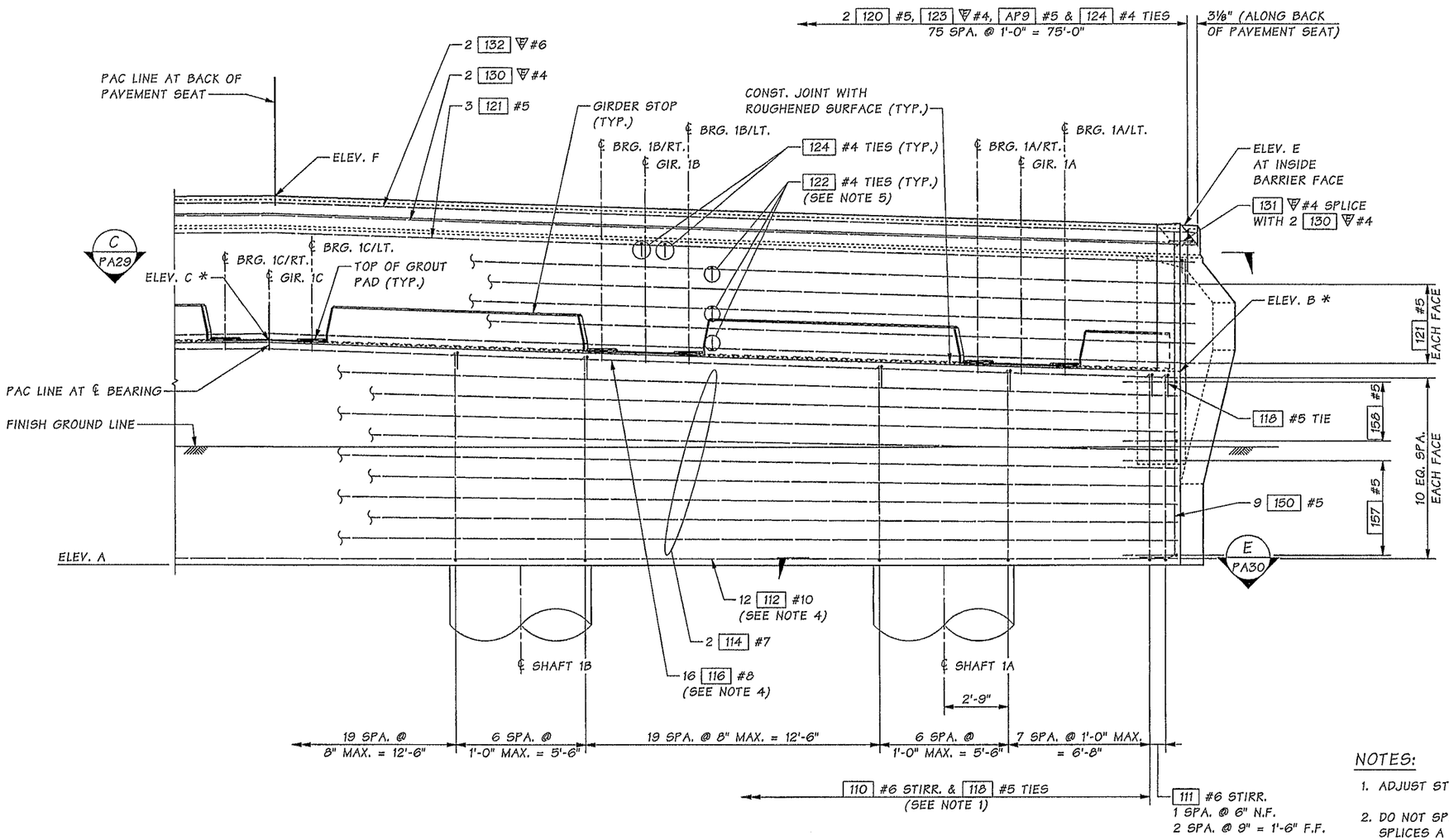

ELEVATION

LOOKING BACK ON STATIONING.
FOR TOP OF GROUT PAD ELEVATIONS, SEE BR. SHT. PA26.
SEE WINGWALL DETAILS FOR WALL REINFORCEMENT NOT SHOWN.
N.F. = NEAR FACE
F.F. = FAR FACE

TABLE OF ELEVATIONS	
ELEV. A	174.00
ELEV. B *	182.24
ELEV. C *	183.50
ELEV. E	188.20
ELEV. F	189.43

NOTES:

1. ADJUST STIRRUP AND TIE SPACING AS REQUIRED TO CLEAR SHAFT REINFORCEMENT.
2. DO NOT SPLICE MORE THAN 50% OF BARS AT ANY ONE LOCATION. STAGGER ALL SPLICES A MINIMUM OF 3'-6".
3. ALL ELEVATIONS ARE AT BACK OF PAVEMENT SEAT AND TOP OF BACKWALL EXCEPT THOSE MARKED WITH AN ASTERISK (*) WHICH ARE AT CENTER LINE BEARING AND TOP OF CROSSBEAM.
4. NO LAP SPLICE ALLOWED. ALL SPLICES SHALL BE MECHANICAL SPLICES AND MEET THE REQUIREMENTS OF STD. SPEC. SECTION 6-02.3(24)F. DO NOT SPLICE MORE THAN 50% OF BARS AT ANY ONE LOCATION. STAGGER ALL MECHANICAL SPLICES A MINIMUM OF 2'-6".
5. FOR TIE BAR DETAIL AND TIE BAR SPACING, SEE BR. SHT. PA32.
6. MIN. REBAR SPLICE LENGTH UNLESS NOTED OTHERWISE:
   ∇#4 ~ 2'-0"
   ∇#6 ~ 3'-0"
   #5 ~ 2'-4"
   #7 ~ 3'-6"

SR 5 FILE NO. 7451 SHEET PA28

Bridge Design Engr.	Khaleghi, B		M:\Y-Team\M ST TO PORTLAND\PACIFIC AVE BR\window files\PIER 1-2-2.wnd
Supervisor	Khaleghi, B		
Designed By	Olson, DE	12/12	
Checked By	Lee, CS	11/13	
Detailed By	Bontemps, W	12/12	
Bridge Projects Engr.			
Prelim. Plan By			
Architect/Specialist			

DATE	REVISION	BY	APP'D

REGION NO.	STATE	FED. AID PROJ. NO.	SHEET NO.	TOTAL SHEETS
10	WASH.			
JOB NUMBER 12C501				

DOUGLAS EUGENE OLSON — STATE OF WASHINGTON — 40406 — REGISTERED PROFESSIONAL ENGINEER — 02/11/14

BRIDGE AND STRUCTURES OFFICE

BRIAN KHALEGHI — STATE OF WASHINGTON — 27093 — STRUCTURAL ENGINEER — PROFESSIONAL ENGINEER — 2/12/14

Washington State Department of Transportation

I-5
M ST TO PORTLAND AVE - HOV

PACIFIC AVE OVER I-5 BRIDGE No. 5/444

PIER 1 ELEVATION
2 OF 2

BRIDGE SHEET NO. PA28

SHEET 1027 OF 1763 SHEETS

Tue Feb 11 09:01:13 2014

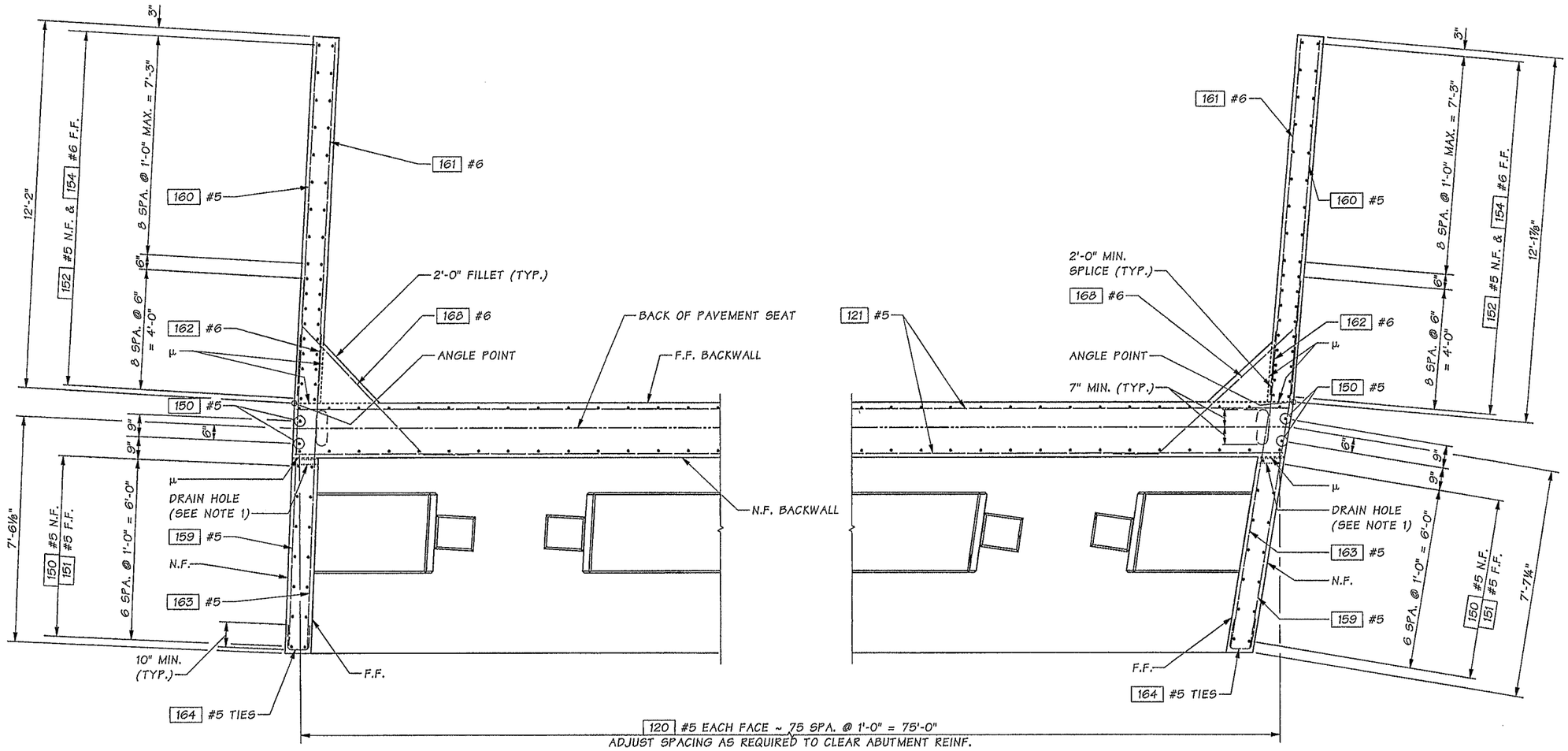

SECTION C

PA27 & PA28

N.F. = NEAR FACE
F.F. = FAR FACE

μ = OPTIONAL CONSTRUCTION JOINT

NOTES:

1. ADJUST REINFORCING TO CLEAR DRAIN HOLE AT BOTTOM OF CURTAIN WALL. SEE BR. SHT. PA33 FOR OUTSIDE ELEVATION WINGWALL.

SR 5 FILE NO. 7451 SHEET PA29

Bridge Design Engr.	Khaleghi, B	M:\Y-Team\M ST TO PORTLAND\PACIFIC AVE BR\window files\PIER 1X-BEAMDTLS1.wnd				REGION NO.	STATE	FED. AID PROJ. NO.	SHEET NO.	TOTAL SHEETS
Supervisor	Khaleghi, B					10	WASH.			
Designed By	Olson, DE 12/12									
Checked By	Lee, CS 11/13					JOB NUMBER 12C501				
Detailed By	Bontemps, W 12/12									
Bridge Projects Engr.										
Prelim. Plan By										
Architect/Specialist		DATE	REVISION	BY	APP'D					

Tue Feb 11 09:01:15 2014

BRIDGE AND STRUCTURES OFFICE

Washington State Department of Transportation

I-5
M ST TO PORTLAND AVE - HOV

PACIFIC AVE OVER I-5 BRIDGE No. 5/444

PIER 1
DETAILS 1 OF 4

BRIDGE SHEET NO. PA29

SHEET 1028 OF 1763 SHEETS

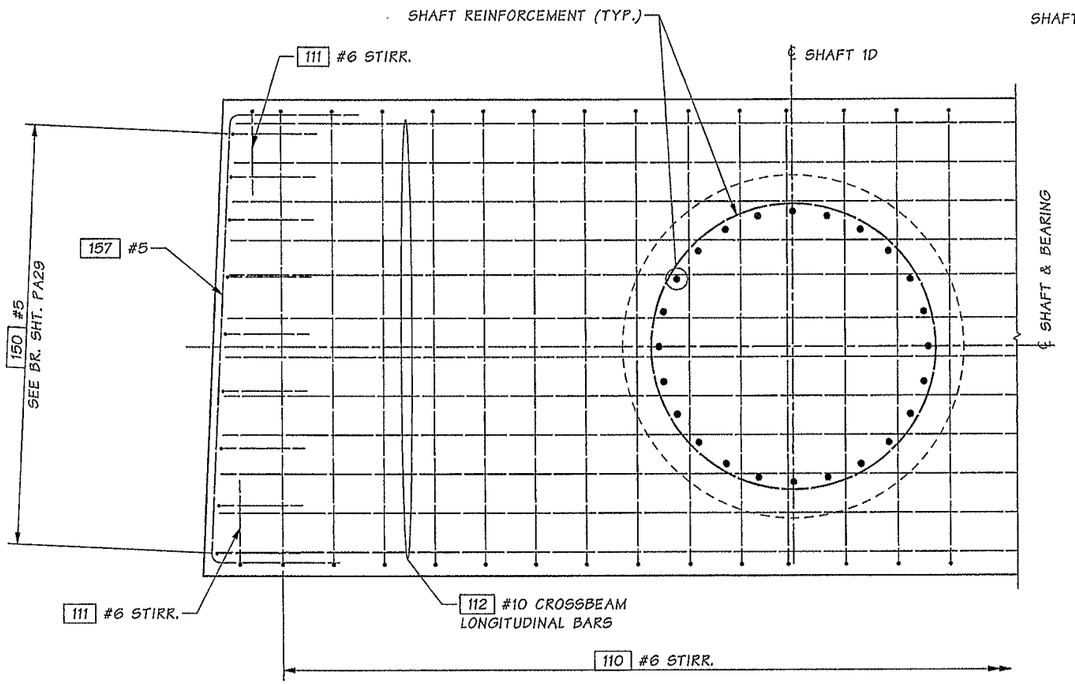

SECTION D
PA27

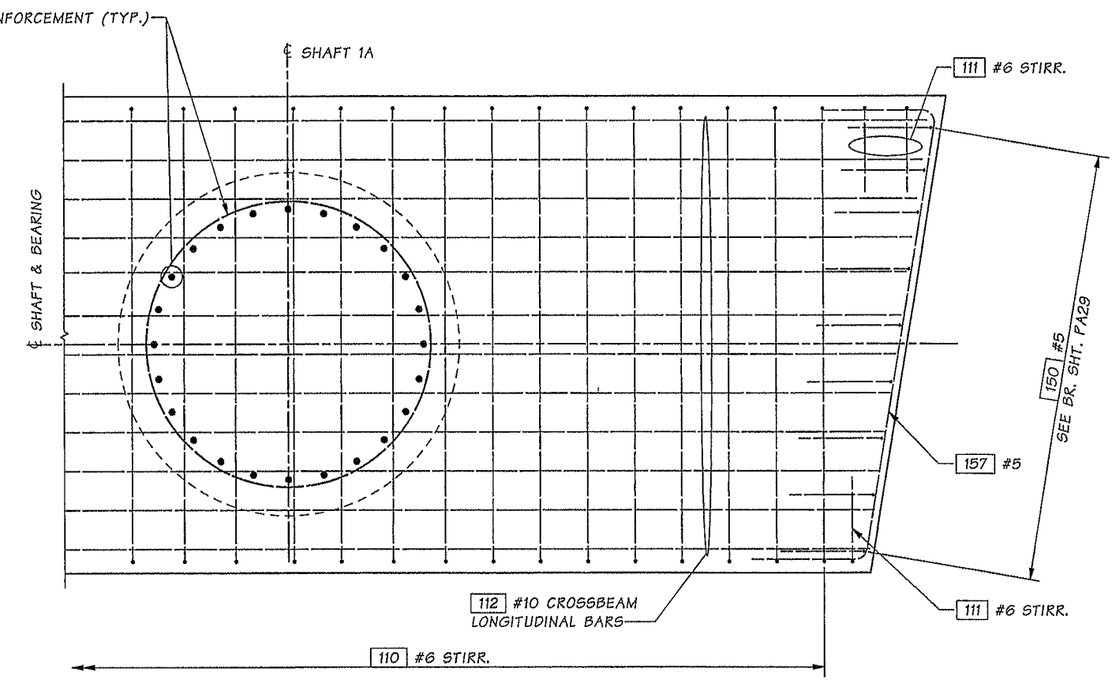

SECTION E
PA28

SR 5 FILE NO. 7451 SHEET PA30

Bridge Design Engr.	Khaleghi, B		
Supervisor	Khaleghi, B		
Designed By	Olson, DE	12/12	
Checked By	Lee, CS	11/13	
Detailed By	Bontemps, W	12/12	
Bridge Projects Engr.			
Prelim. Plan By			
Architect/Specialist			

M:\Y-Team\M ST TO PORTLAND\PACIFIC AVE BR\window files\PIER 1X-BEAMDTLS2.wnd

DATE	REVISION	BY	APP'D

REGION NO.	STATE	FED. AID PROJ. NO.	SHEET NO.	TOTAL SHEETS
10	WASH.			
JOB NUMBER 12C601				

Tue Feb 11 09:01:16 2014

NICHOLAS EUGENE OLSON STATE OF WASHINGTON 40406 REGISTERED PROFESSIONAL ENGINEER 02/11/14

BRIDGE AND STRUCTURES OFFICE

BIJAN KHALEGHI STATE OF WASHINGTON 27695 REGISTERED PROFESSIONAL ENGINEER 2/12/14

Washington State Department of Transportation

I-5
M ST TO PORTLAND AVE - HOV

PACIFIC AVE OVER I-5 BRIDGE No. 5/444

PIER 1
DETAILS 2 OF 4

BRIDGE SHEET NO. PA30

SHEET 1029 OF 1763 SHEETS

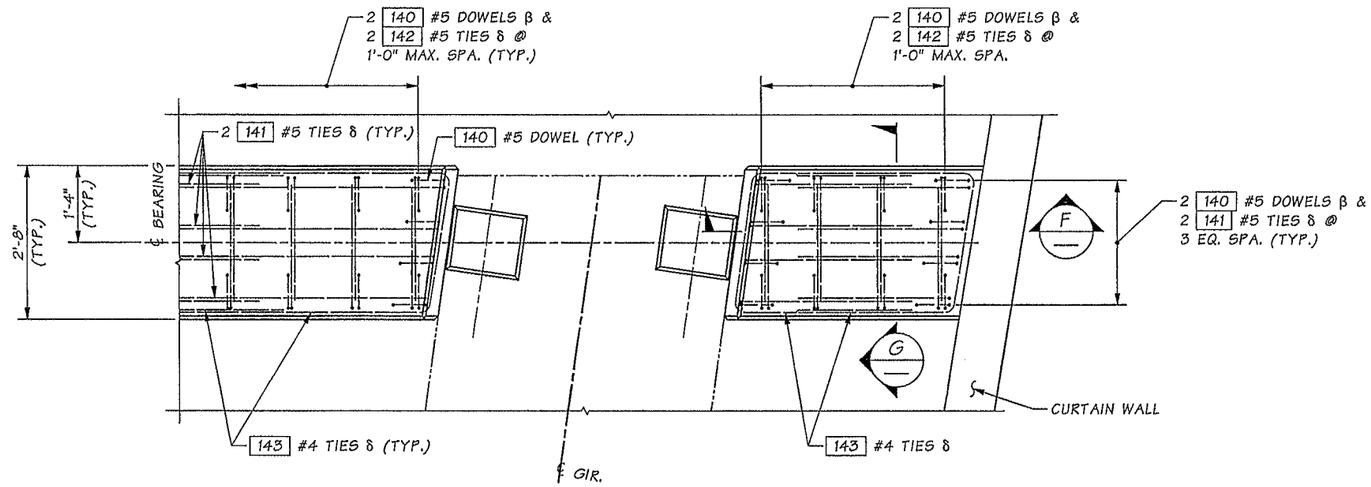

GIRDER STOP DETAIL

SEE "SECTION A" ON BR. SHT. PA60
FOR ADDITIONAL INFORMATION.

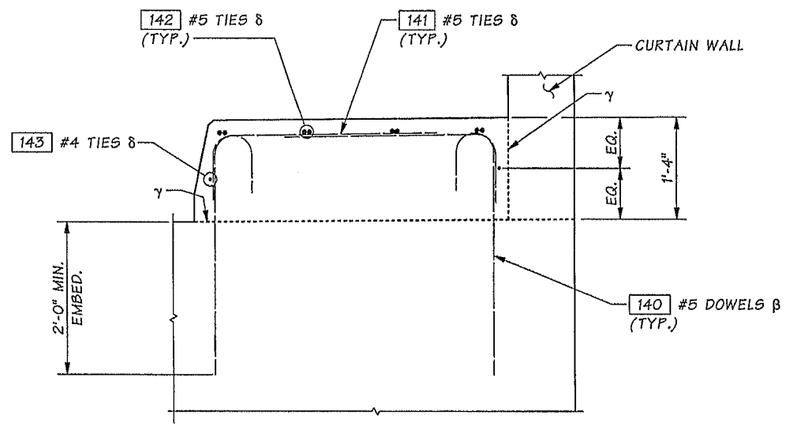

SECTION F

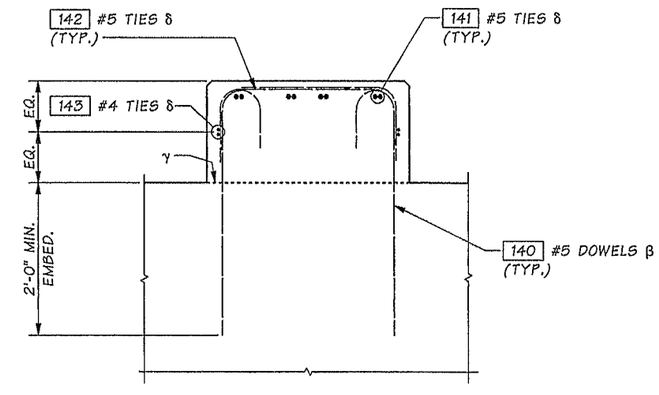

SECTION G

γ CONST. JOINT WITH ROUGHENED SURFACE.

β ADJUST DOWEL LOCATION TO CLEAR ABUTMENT REINF.

δ WITH 2'-0" MIN. SPLICE.

SR 5 FILE NO. 7451 SHEET PA31

Bridge Design Engr.	Khaleghi, B		M:\Y-Team\M ST TO PORTLAND\PACIFIC AVE BR\window files\PIER 1X-BEAMDTLS3.wnd								
Supervisor	Khaleghi, B						REGION NO.	STATE	FED. AID PROJ. NO.	SHEET NO.	TOTAL SHEETS
Designed By	Olson, DE	12/12					10	WASH.			
Checked By	Lee, CS	11/13									
Detailed By	Bontemps, W	12/12					JOB NUMBER 12C501				
Bridge Projects Engr.											
Prelim. Plan By											
Architect/Specialist			DATE	REVISION	BY	APP'D					

Tue Feb 11 09:01:17 2014

STATE OF WASHINGTON DOUGLAS EUGENE OLSON 40406 REGISTERED PROFESSIONAL ENGINEER 02/11/14

BRIDGE AND STRUCTURES OFFICE

STATE OF WASHINGTON BIJAN KHALEGHI 27695 REGISTERED PROFESSIONAL ENGINEER 2/12/14

Washington State Department of Transportation

I-5
M ST TO PORTLAND AVE - HOV

PACIFIC AVE OVER I-5 BRIDGE No. 5/444

PIER 1
DETAILS 3 OF 4

BRIDGE SHEET NO. PA31

SHEET 1030 OF 1763 SHEETS

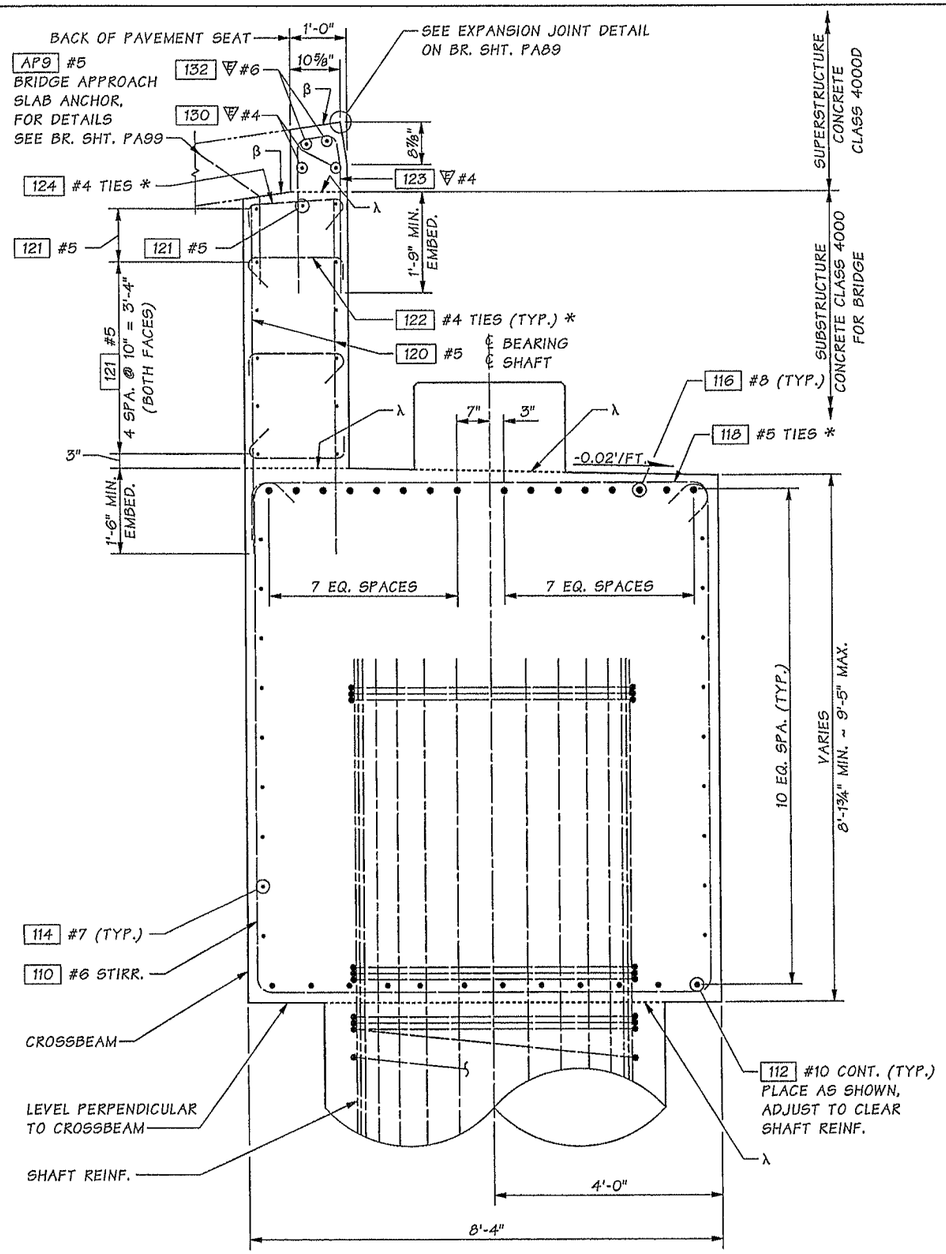

SECTION A

PA27

* ALTERNATE 135° HOOK EVERY OTHER TIE BAR.

λ CONST. JOINT WITH ROUGHENED SURFACE.

β PARALLEL TO GRADE.

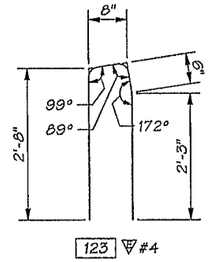

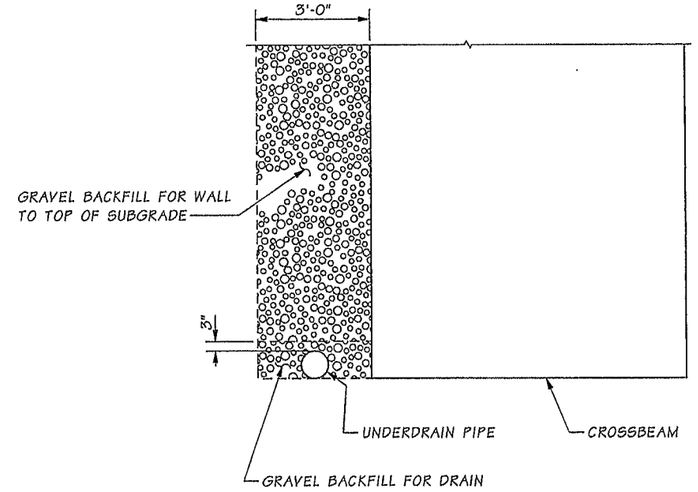

DRAINAGE DETAIL

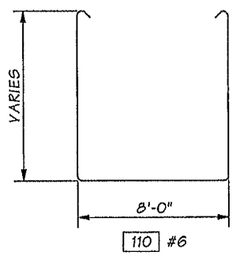

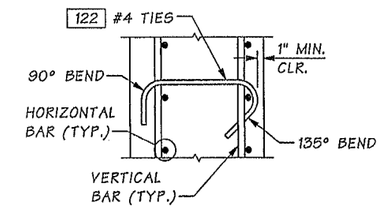

TIE BAR DETAIL

ALTERNATE 135° HOOK EVERY OTHER TIE BAR

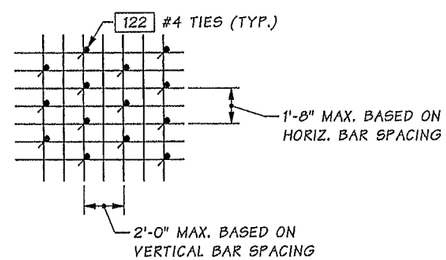

TIE BAR SPACING DETAIL

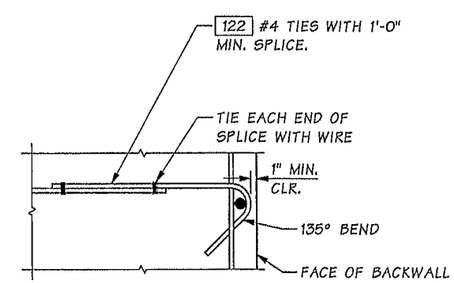

TIE BAR SPLICE DETAIL OPTION

NOTES:

1. LONGITUDINAL DIMENSIONS ARE NORMAL TO SKEW.
2. FOR CONCRETE PLACEMENT PROCEDURE, SEE "CONSTRUCTION SEQUENCE" SHEET.

Bridge Design Engr.	Khaleghi, B		M:\Y-Team\M ST TO PORTLAND\PACIFIC AVE BR\window files\PIER 1X-BEAMDTLS4.wnd
Supervisor	Khaleghi, B		
Designed By	Olson, DE	12/12	
Checked By	Lee, CS	11/13	
Detailed By	Bontemps, W	12/12	
Bridge Projects Engr.			
Prelim. Plan By			
Architect/Specialist			

DATE	REVISION	BY	APP'D

REGION NO.	STATE	FED. AID PROJ. NO.	SHEET NO.	TOTAL SHEETS
10	WASH.			
JOB NUMBER 12C501				

DOUGLAS EUGENE OLSON, STATE OF WASHINGTON, 40406, REGISTERED PROFESSIONAL ENGINEER — 02/4/14

BRIDGE AND STRUCTURES OFFICE

BRIAN KHALEGHI, STATE OF WASHINGTON, 27095, REGISTERED PROFESSIONAL ENGINEER — 2/12/14

Washington State Department of Transportation

I-5
M ST TO PORTLAND AVE - HOV

PACIFIC AVE OVER I-5 BRIDGE No. 5/444

PIER 1
DETAILS 4 OF 4

BRIDGE SHEET NO. PA32

SHEET 1031 OF 1763 SHEETS

SR 5 FILE NO. 7451 SHEET PA32

Tue Feb 11 09:01:18 2014

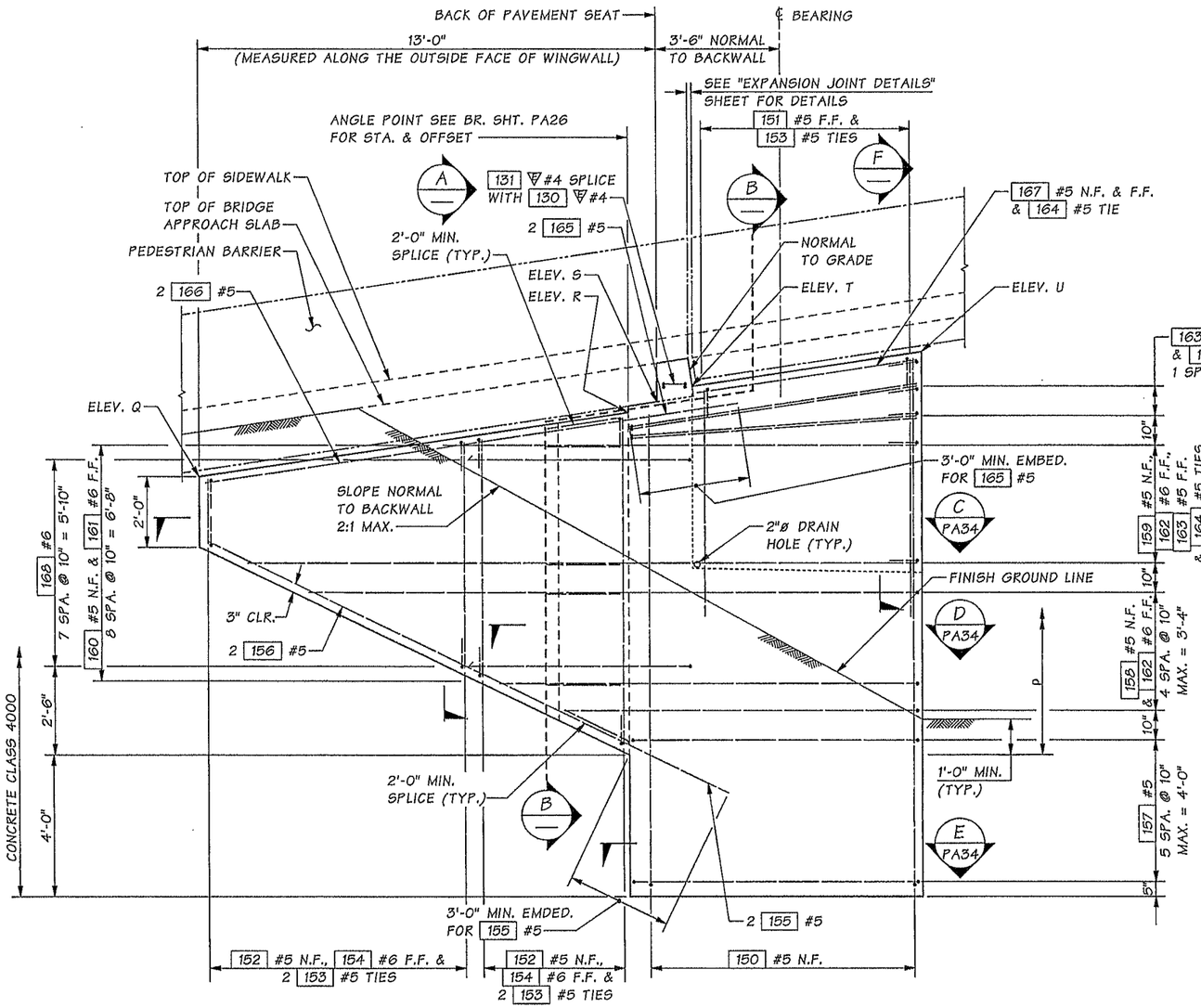

OUTSIDE ELEVATION WINGWALL

PIER 1 RIGHT SHOWN, PIER 1 LEFT SIMILAR,
FOR REINFORCEMENT NOT SHOWN SEE PIER 1 PLAN & ELEVATION PLANS.

N.F. = NEAR FACE
F.F. = FAR FACE

ρ LIMITS OF RANDOM BOARD FINISH & PIGMENTED SEALER AT FACE AND AT ENDS OF ABUTMENT.

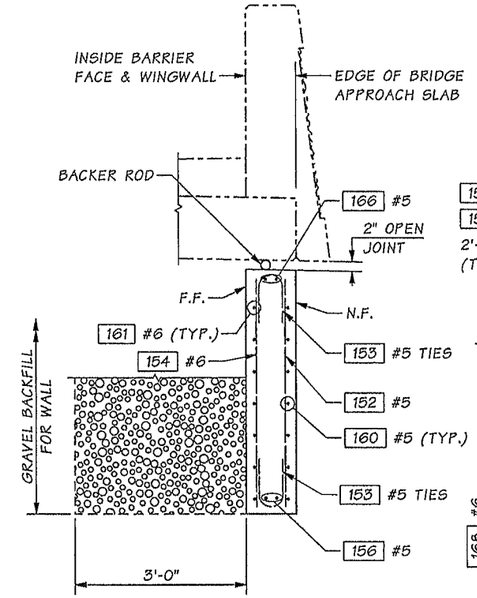

SECTION A

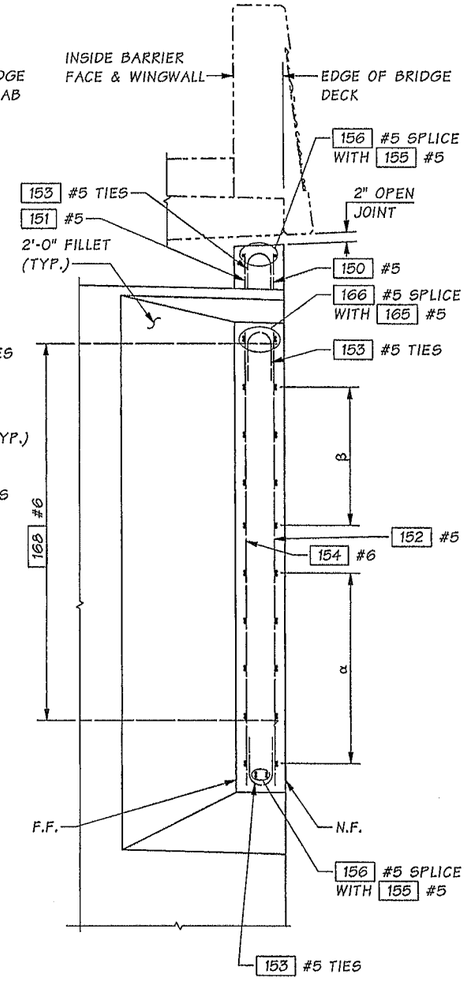

SECTION B

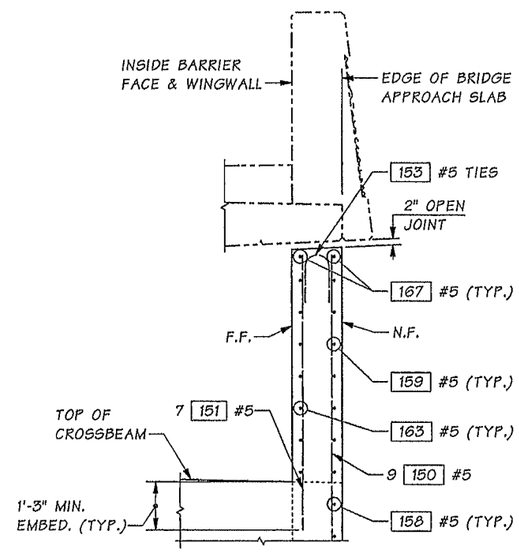

SECTION F

α 160 #5 N.F. SPLICE WITH 158 #5
161 #6 F.F. SPLICE WITH 162 #6

β 160 #5 N.F. SPLICE WITH 159 #5
161 #6 F.F. SPLICE WITH 162 #6

WINGWALL ELEVATIONS

WINGWALL LOCATION	ELEVATION POINT AT N.F. OF WINGWALL				
	Q	R	S	T	U
PIER 1 RIGHT	185.93	187.75	188.05	188.50	189.46
PIER 1 LEFT	184.96	186.77	187.07	187.53	188.50

Bridge Design Engr.	Khaleghi, B		M:\Y-Team\M ST TO PORTLAND\PACIFIC AVE BR\window files\PIER 1 WINGWALL 1.wnd
Supervisor	Khaleghi, B		
Designed By	Olson, DE	01/13	
Checked By	Lee, CS	11/13	
Detailed By	Bontemps, W	12/12	
Bridge Projects Engr.			
Prelim. Plan By			
Architect/Specialist			

DATE	REVISION	BY	APP'D

REGION NO.	STATE	FED. AID PROJ. NO.	SHEET NO.	TOTAL SHEETS
10	WASH.			
JOB NUMBER 12C501				

DOUGLAS EUGENE OLSON, STATE OF WASHINGTON, 40406, REGISTERED PROFESSIONAL ENGINEER — 02/11/14

BRIDGE AND STRUCTURES OFFICE

BRIAN KHALEGHI, STATE OF WASHINGTON, 27696, PROFESSIONAL ENGINEER — 2/12/14

Washington State Department of Transportation

I-5
M ST TO PORTLAND AVE - HOV

PACIFIC AVE OVER I-5 BRIDGE No. 5/444

PIER 1 WINGWALL DETAILS 1 OF 2

BRIDGE SHEET NO. PA33

SHEET 1032 OF 1763 SHEETS

SR 5 FILE NO. 7451 SHEET PA33

Tue Feb 11 09:01:20 2014

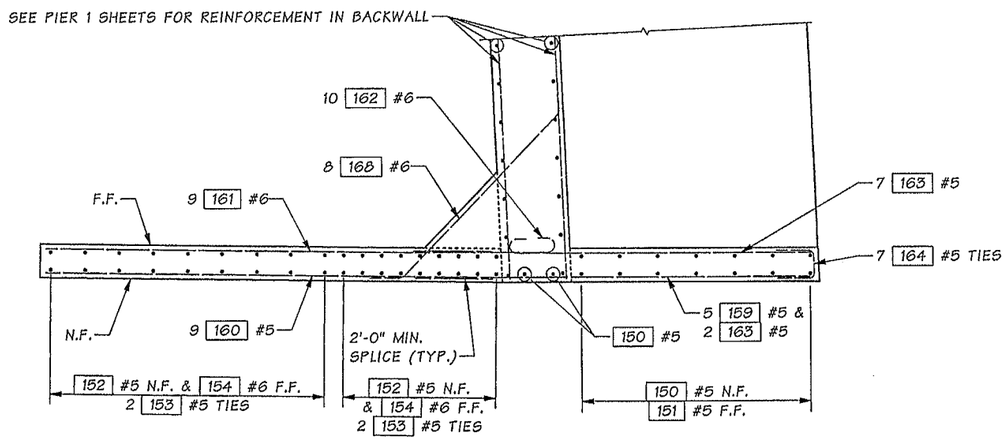

SECTION C PA33
RIGHT WINGWALL SHOWN, LEFT WINGWALL SIMILAR

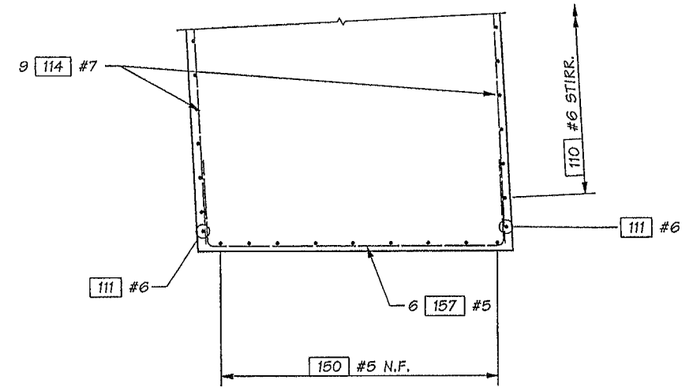

SECTION E PA33
RIGHT ABUTMENT SHOWN, LEFT ABUTMENT SIMILAR

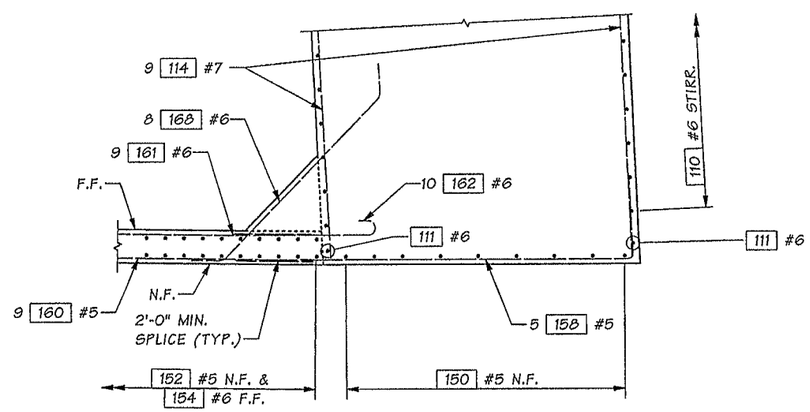

SECTION D PA33
RIGHT WINGWALL & ABUTMENT SHOWN, LEFT WINGWALL & ABUTMENT SIMILAR

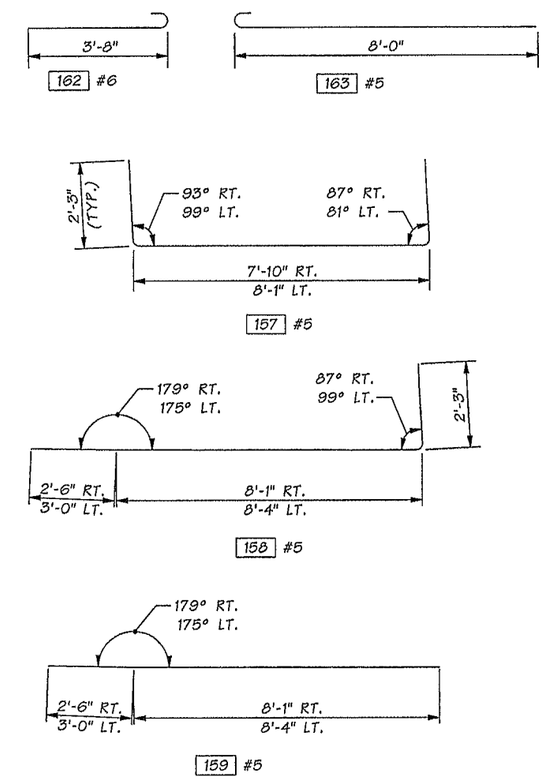

N.F. = NEAR FACE
F.F. = FAR FACE

SR 5 FILE NO. 7451 SHEET PA34

Bridge Design Engr.	Khaleghi, B	
Supervisor	Khaleghi, B	
Designed By	Olson, DE	01/13
Checked By	Lee, CS	11/13
Detailed By	Bontemps, W	12/12
Bridge Projects Engr.		
Prelim. Plan By		
Architect/Specialist		

M:\Y-Team\M ST TO PORTLAND\PACIFIC AVE BR\window files\PIER 1 WINGWALL 2.wnd

DATE	REVISION	BY	APP'D

REGION NO.	STATE	FED. AID PROJ. NO.	SHEET NO.	TOTAL SHEETS
10	WASH.			

JOB NUMBER 12C501

DOUGLAS EUGENE OLSON, STATE OF WASHINGTON, 40406, REGISTERED PROFESSIONAL ENGINEER — 02/11/14

BRIDGE AND STRUCTURES OFFICE

BRIAN KHALEGHI, STATE OF WASHINGTON, 27595, REGISTERED PROFESSIONAL ENGINEER — 2/12/14

Washington State Department of Transportation

I-5
M ST TO PORTLAND AVE - HOV

PACIFIC AVE OVER I-5 BRIDGE No. 5/444

PIER 1 WINGWALL
DETAILS 2 OF 2

BRIDGE SHEET NO. PA34

SHEET 1033 OF 1763 SHEETS

Tue Feb 11 09:01:22 2014

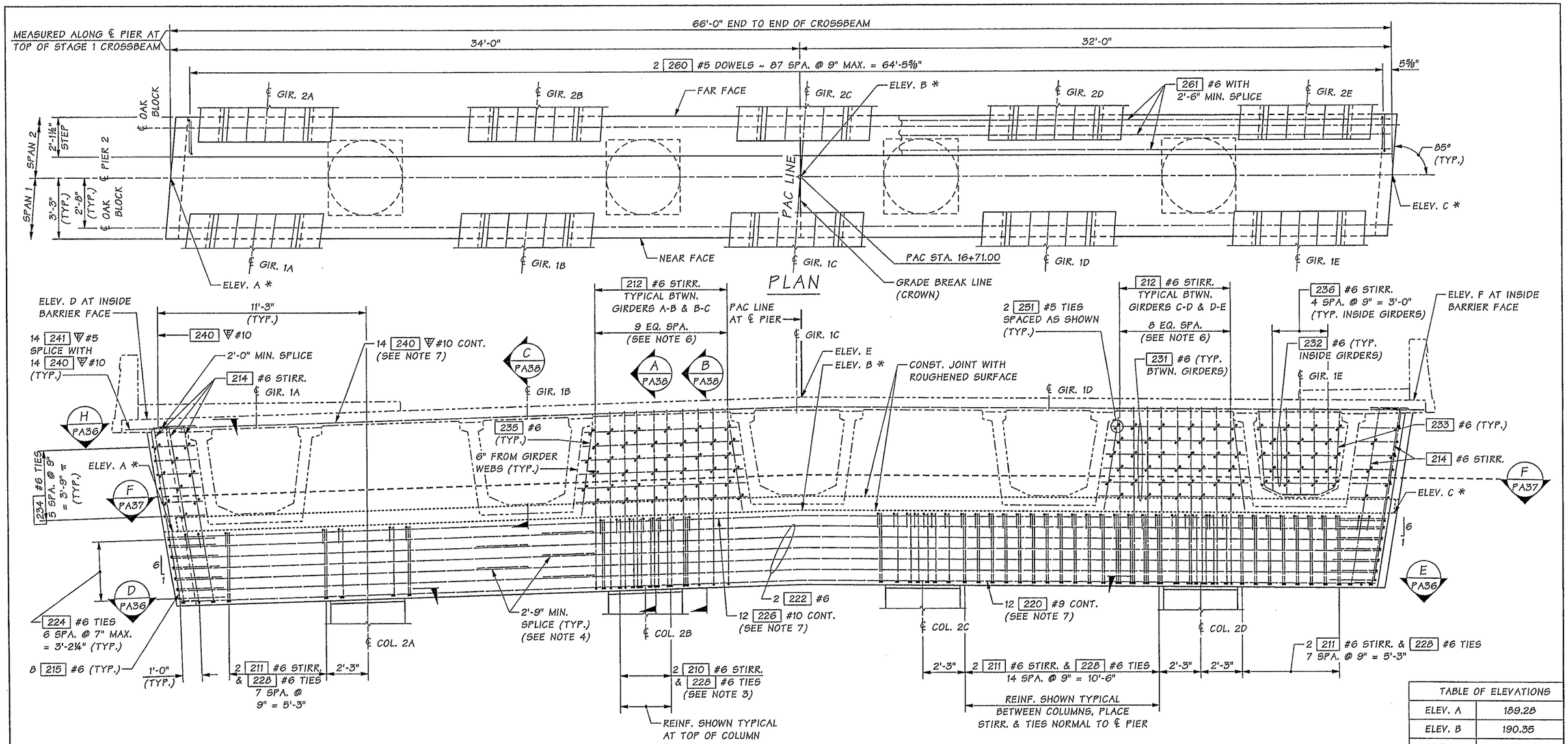

ELEVATION

ELEVATION SHOWN NEAR FACE OF CROSSBEAM

π FIELD CUT TO FIT, PLACE TIES PARALLEL TO ROADWAY LONGITUDINAL SLOPE.

TABLE OF ELEVATIONS	
ELEV. A	189.28
ELEV. B	190.35
ELEV. C	190.09
ELEV. D	195.75
ELEV. E	196.86
ELEV. F	196.60

TABLE OF ELEVATIONS AT TOP OF OAK BLOCK					
GIRDER	2A	2B	2C	2D	2E
ELEVATION	190.49	190.95	191.41	191.31	191.20
GIRDER	1A	1B	1C	1D	1E
ELEVATION	189.73	190.20	190.66	190.55	190.44

NOTES:

1. SEE FRAMING PLAN FOR GIRDER SPACING.
2. BRIDGE DECK REINFORCING NOT SHOWN FOR CLARITY.
3. ADJUST STIRRUP AND TIE SPACING AS REQUIRED TO CLEAR COLUMN VERTICAL BARS.
4. DO NOT SPLICE MORE THAN 50% OF BARS AT ANY ONE LOCATION. STAGGER SPLICES A MINIMUM OF 2'-9".
5. ALL ELEVATIONS ARE TOP OF BRIDGE DECK ELEVATIONS AT CENTER LINE OF PIER EXCEPT THOSE MARKED WITH AN ASTERISK (*) WHICH ARE TOP OF CROSSBEAM ELEVATIONS AT CENTER LINE OF PIER.
6. ADJUST DIAPHRAGM STIRRUP AND TIE SPACING AS REQUIRED TO CLEAR CROSSBEAM STIRRUPS AND COLUMN VERTICAL BARS.
7. NO LAP SPLICE ALLOWED. ALL SPLICES SHALL BE MECHANICAL SPLICES THAT MEET THE REQUIREMENTS OF STD. SPEC. SECTION 6-02.3(24)F. DO NOT SPLICE MORE THAN 50% OF BARS AT ANY ONE LOCATION. STAGGER SPLICES A MINIMUM OF 2'-6".
8. DIAPHRAGM REINFORCING SHOWN FOR NEAR FACE ONLY. SEE SECTION A PA38, SEE SECTION B PA38 & SEE SECTION C PA38 FOR DETAILS.

Bridge Design Engr.	Khaleghi, B	
Supervisor	Khaleghi, B	
Designed By	Olson, DE	11/12
Checked By	Lee, CS	11/13
Detailed By	Bontemps, W	11/12
Bridge Projects Engr.		
Prelim. Plan By		
Architect/Specialist		

M:\Y-Team\M ST TO PORTLAND\PACIFIC AVE BR\window files\PIER 2.wnd

DATE	REVISION	BY	APP'D

REGION NO.	STATE	FED. AID PROJ. NO.	SHEET NO.	TOTAL SHEETS
10	WASH.			
JOB NUMBER 12C501				

DOUGLAS EUGENE OLSON, STATE OF WASHINGTON, 40406, REGISTERED PROFESSIONAL ENGINEER, 02/12/14

BRIDGE AND STRUCTURES OFFICE

RAMIN KHALEGHI, STATE OF WASHINGTON, 27695, PROFESSIONAL ENGINEER, 2/12/14

Washington State Department of Transportation

I-5
M ST TO PORTLAND AVE - HOV

PACIFIC AVE OVER I-5 BRIDGE No. 5/444

PIER 2
PLAN AND ELEVATION

BRIDGE SHEET NO. PA35

SHEET 1034 OF 1763 SHEETS

SR 5 FILE NO. 7451 SHEET PA35

Tue Feb 11 09:01:23 2014

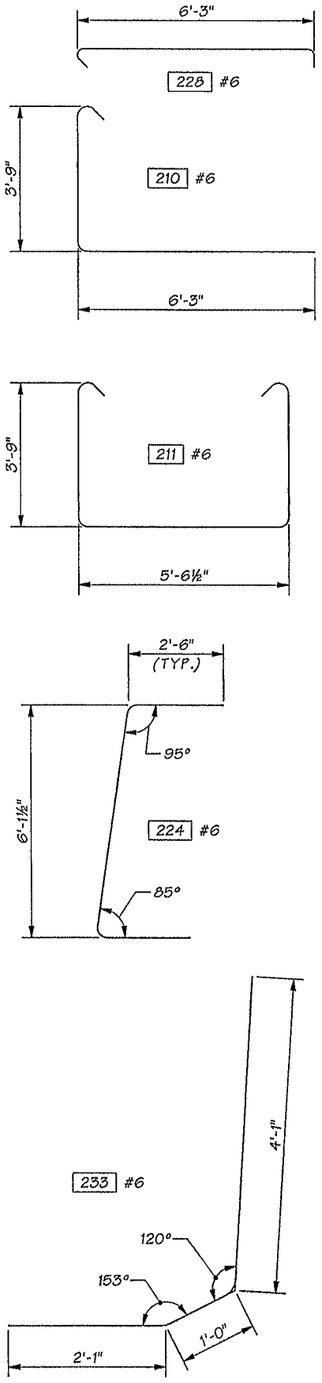

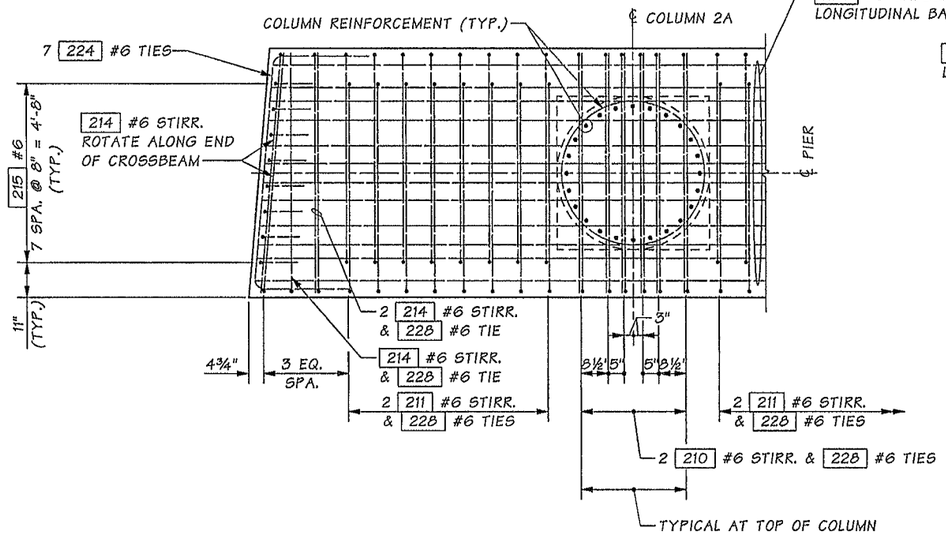

SECTION D

ADJUST CROSSBEAM LONGITUDINAL BAR, TRANSVERSE STIRRUP, AND TIE SPACING AS REQUIRED TO CLEAR COLUMN VERTICAL BARS. DIAPHRAGM STIRRUPS NOT SHOWN, SEE SECTION F FOR DETAILS.

D — PA35; F — PA37

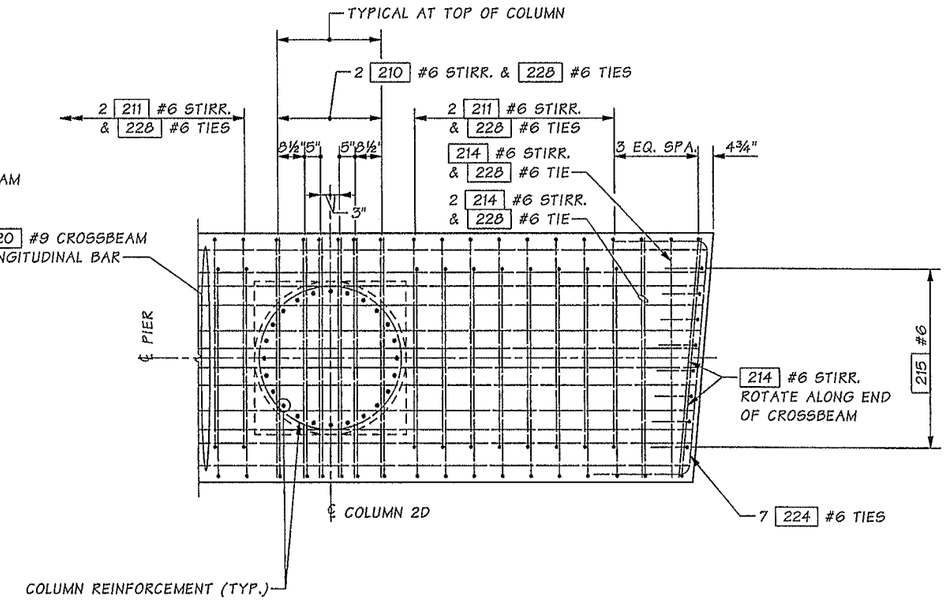

SECTION E

ADJUST CROSSBEAM LONGITUDINAL BAR, TRANSVERSE STIRRUP, AND TIE SPACING AS REQUIRED TO CLEAR COLUMN VERTICAL BARS. DIAPHRAGM STIRRUPS NOT SHOWN, SEE SECTION F FOR DETAILS.

E — PA35; F — PA37

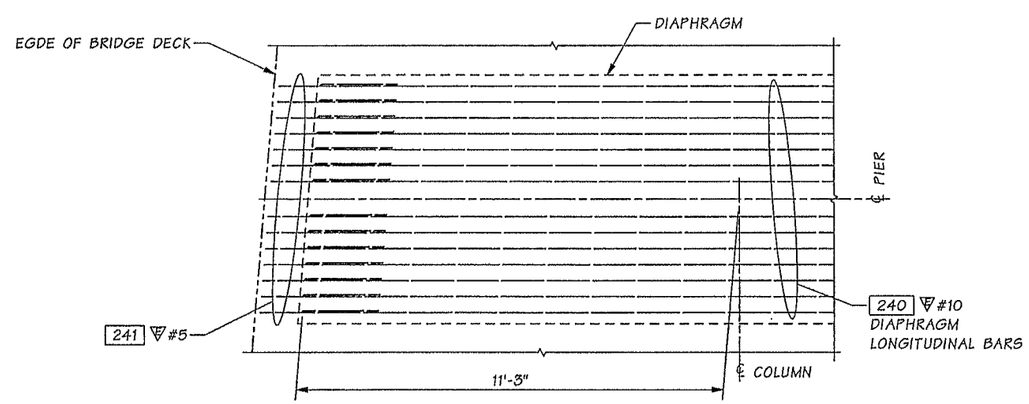

SECTION H

LEFT SHOWN, RIGHT SIMILAR

H — PA35

Bridge Design Engr.	Khaleghi, B		M:\Y-Team\M ST TO PORTLAND\PACIFIC AVE BR\window files\PIER 2X-BEAMDTLS1.wnd							
Supervisor	Khaleghi, B									
Designed By	Olson, DE	11/12								
Checked By	Lee, CS	12/13								
Detailed By	Bontemps, W	11/12								
Bridge Projects Engr.										
Prelim. Plan By										
Architect/Specialist			DATE	REVISION	BY	APP'D				

REGION NO.	STATE	FED. AID PROJ. NO.	SHEET NO.	TOTAL SHEETS
10	WASH.			
JOB NUMBER 12C501				

Tue Feb 11 09:01:26 2014

NICHOLAS EUGENE OLSON — STATE OF WASHINGTON — 40406 — REGISTERED PROFESSIONAL ENGINEER — 02/11/14

BRIDGE AND STRUCTURES OFFICE

BIJAN KHALEGHI — STATE OF WASHINGTON — 27695 — REGISTERED PROFESSIONAL ENGINEER — 2/11/14

Washington State Department of Transportation

I-5
M ST TO PORTLAND AVE - HOV

PACIFIC AVE OVER I-5 BRIDGE No. 5/444

PIER 2
DETAILS 1 OF 3

BRIDGE SHEET NO. PA36

SHEET 1035 OF 1763 SHEETS

SR 5 FILE NO. 7451 SHEET PA36

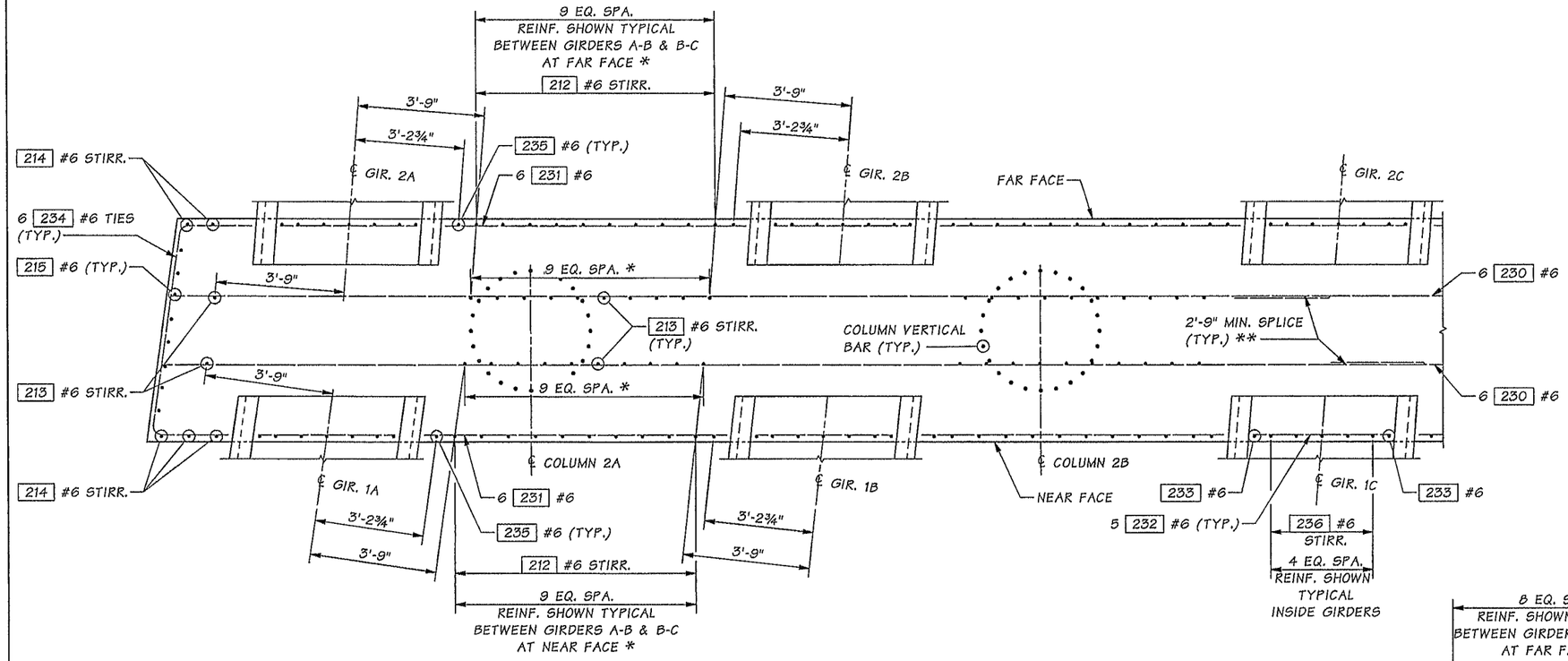

NOTES:

* ADJUST SPACING AS REQUIRED TO CLEAR CROSSBEAM STIRRUPS AND COLUMN VERTICAL BARS.

** DO NOT SPLICE MORE THAN 50% OF BARS AT ANY ONE LOCATION. STAGGER SPLICES A MINIMUM OF 2'-9".

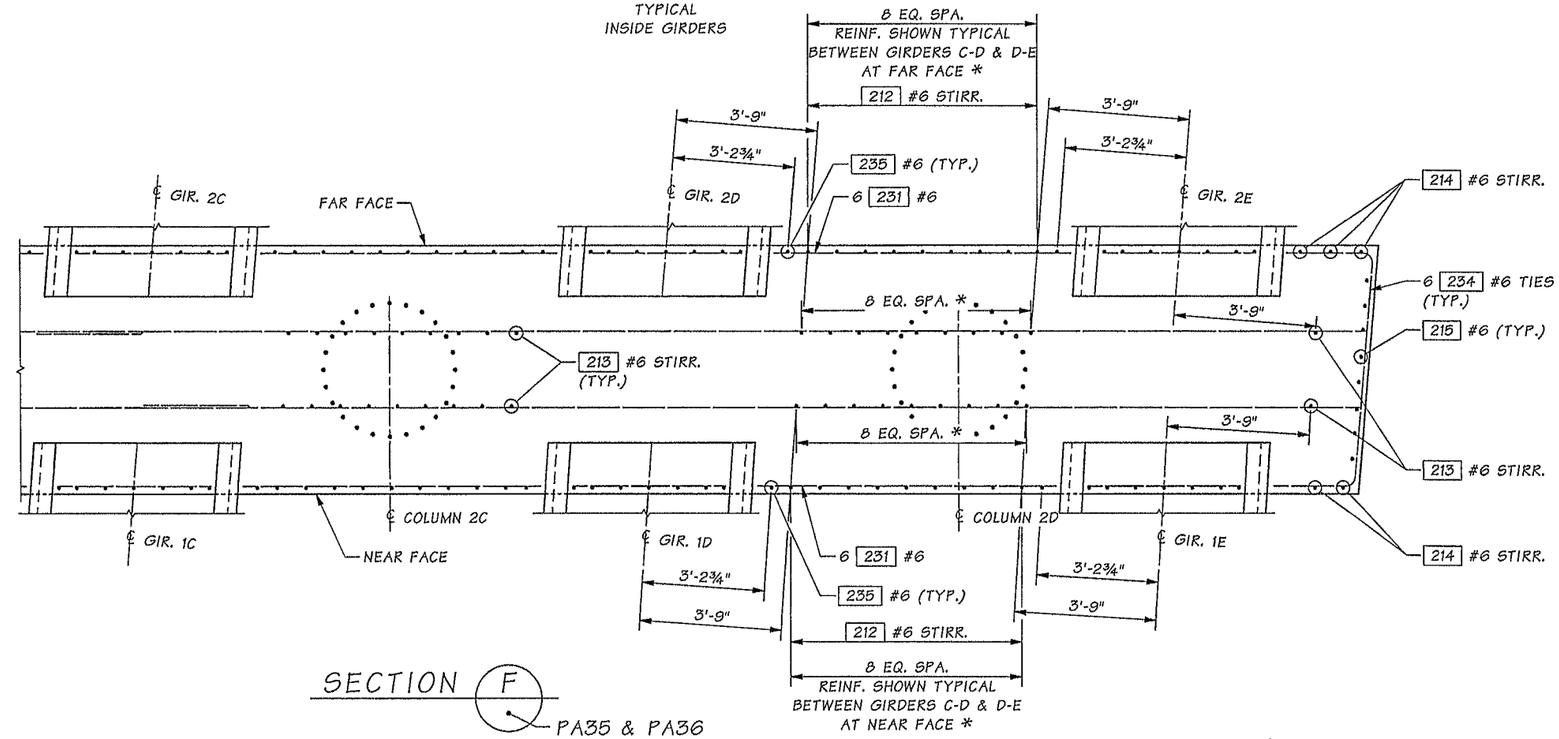

SECTION F

PA35 & PA36

Bridge Design Engr.	Khaleghi, B		
Supervisor	Khaleghi, B		
Designed By	Olson, DE	11/12	
Checked By	Lee, CS	12/13	
Detailed By	Bontemps, W	11/12	
Bridge Projects Engr.			
Prelim. Plan By			
Architect/Specialist			

M:\Y-Team\M ST TO PORTLAND\PACIFIC AVE BR\window files\PIER 2X-BEAMDTLS1A.wnd

DATE	REVISION	BY	APP'D

REGION NO.	STATE	FED. AID PROJ. NO.	SHEET NO.	TOTAL SHEETS
10	WASH.			
JOB NUMBER 12C501				

DOUGLAS EUGENE PORTER, STATE OF WASHINGTON, 40406, REGISTERED PROFESSIONAL ENGINEER, 02/11/14

BRIDGE AND STRUCTURES OFFICE

ALAN KHALEGHI, STATE OF WASHINGTON, 27896, PROFESSIONAL ENGINEER, 2/11/14

Washington State Department of Transportation

I-5
M ST TO PORTLAND AVE - HOV

PACIFIC AVE OVER I-5 BRIDGE No. 5/444

PIER 2
DETAILS 2 OF 3

BRIDGE SHEET NO. PA37

SHEET 1036 OF 1763 SHEETS

SR 5 FILE NO. 7451 SHEET PA37

Tue Feb 11 09:01:27 2014

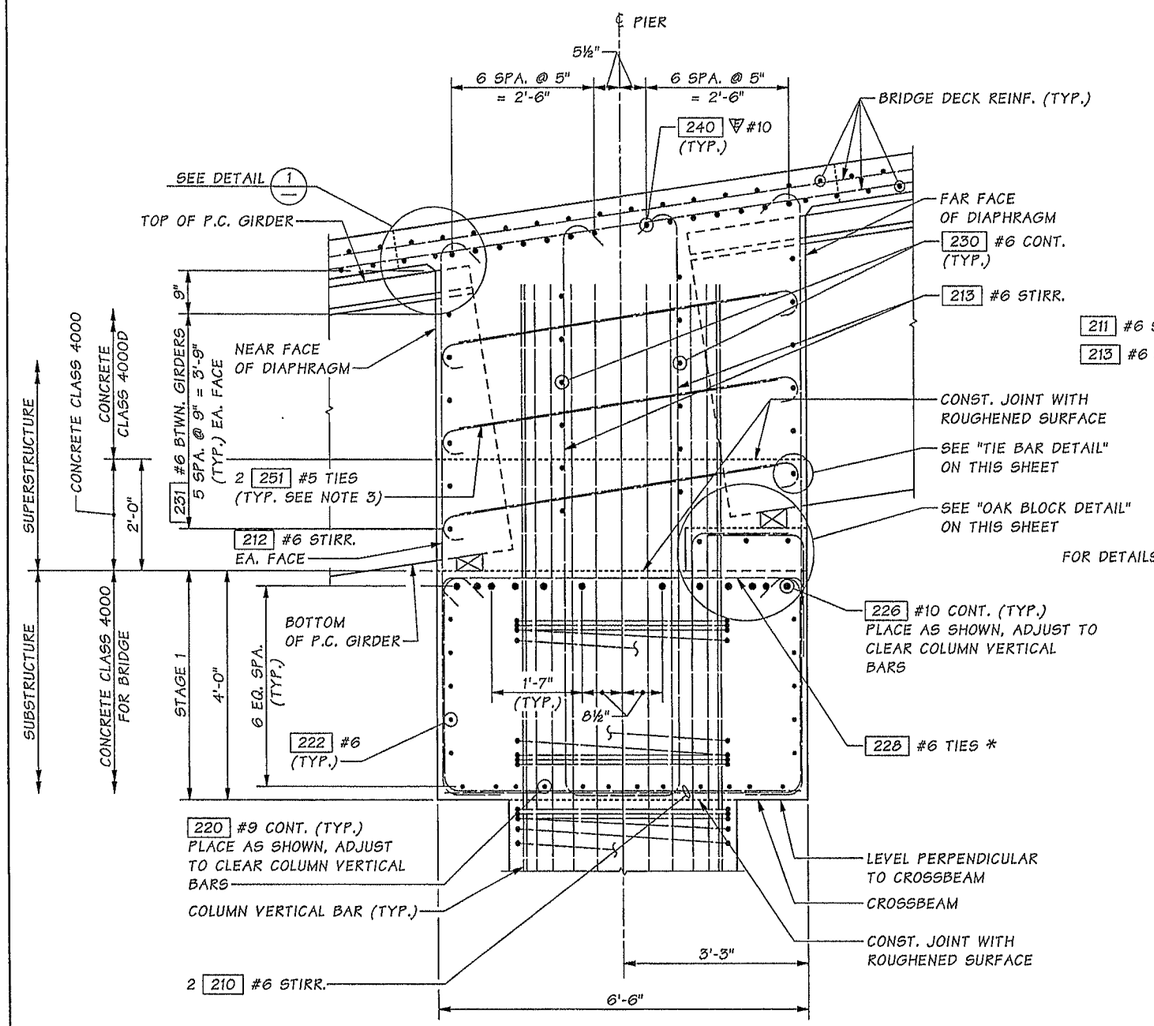

* ALTERNATE 135° HOOK EVERY OTHER BAR.

SECTION A — PA35

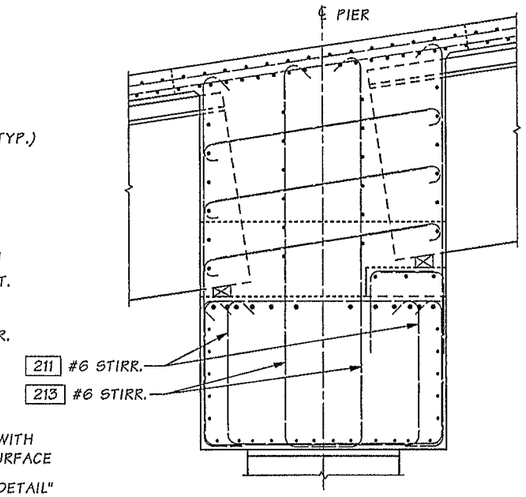

SECTION B — PA35

FOR DETAILS NOT SHOWN SEE SECTION A

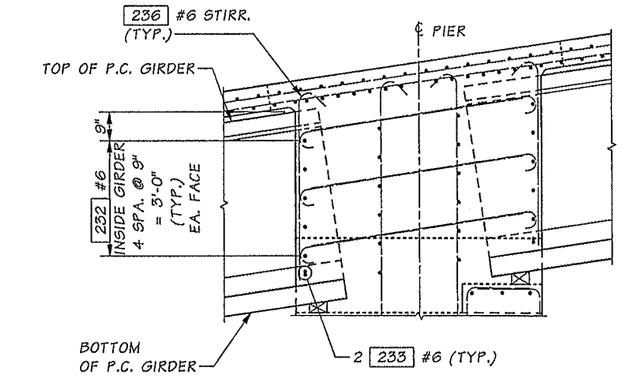

SECTION C — PA35

FOR DETAILS NOT SHOWN SEE SECTION A

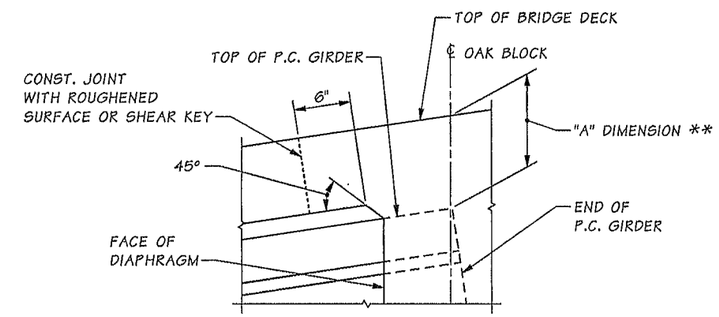

** SEE "GIRDER SCHEDULE" SHEETS

DETAIL 1

REINFORCING NOT SHOWN FOR CLARITY

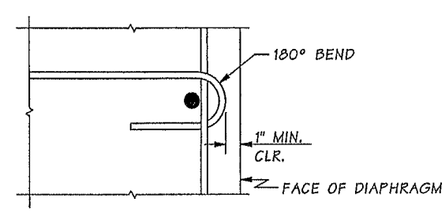

TIE BAR DETAIL

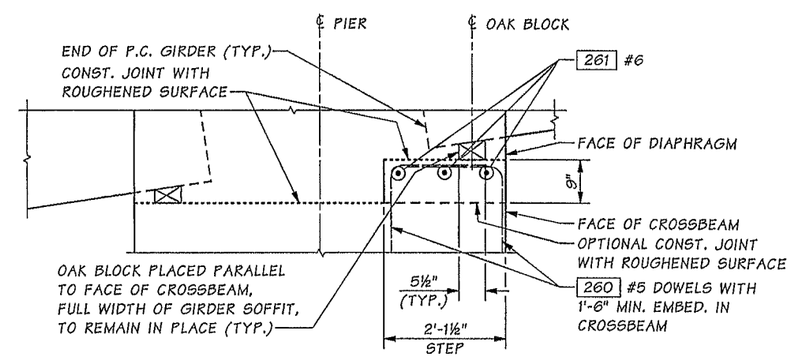

OAK BLOCK DETAIL

LONGITUDINAL DIMENSIONS ARE NORMAL TO SKEW

NOTES:

1. LONGITUDINAL DIMENSIONS ARE NORMAL TO SKEW.
2. FOR CONCRETE PLACEMENT PROCEDURE, SEE "CONSTRUCTION SEQUENCE" SHEET.
3. TIE EACH END OF SPLICE WITH WIRE. (3'-6" MIN. SPLICE)

Bridge Design Engr.	Khaleghi, B		M:\Y-Team\M ST TO PORTLAND\PACIFIC AVE BR\window files\PIER 2X-BEAMDTLS2.wnd								
Supervisor	Khaleghi, B										
Designed By	Olson, DE	11/12									
Checked By	Lee, CS	12/13									
Detailed By	Bontemps, W	11/12									
Bridge Projects Engr.											
Prelim. Plan By											
Architect/Specialist			DATE	REVISION	BY	APP'D					

REGION NO.	STATE	FED. AID PROJ. NO.	SHEET NO.	TOTAL SHEETS
10	WASH.			
JOB NUMBER 12C501				

DOUGLAS EUGENE OLSON — STATE OF WASHINGTON — 16466 — REGISTERED PROFESSIONAL ENGINEER — 02/11/14

BRIDGE AND STRUCTURES OFFICE

ALAN KHALEGHI — STATE OF WASHINGTON — 27805 — REGISTERED PROFESSIONAL ENGINEER — 2/12/14

Washington State Department of Transportation

I-5
M ST TO PORTLAND AVE - HOV

PACIFIC AVE OVER I-5 BRIDGE No. 5/444

PIER 2
DETAILS 3 OF 3

BRIDGE SHEET NO. PA38

SHEET 1037 OF 1763 SHEETS

SR 5 FILE NO. 7451 SHEET PA38

Tue Feb 11 09:01:29 2014

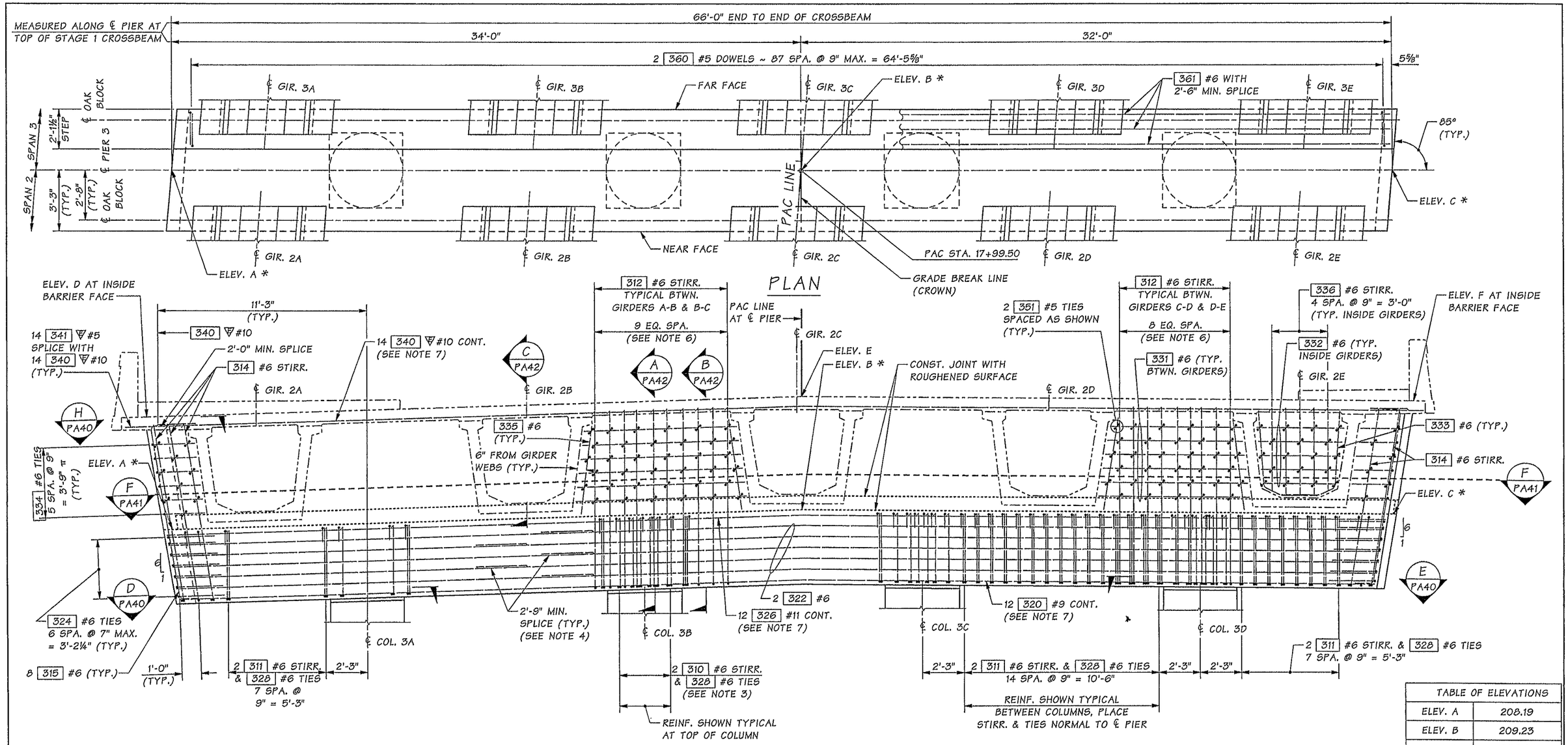

ELEVATION

ELEVATION SHOWN NEAR FACE OF CROSSBEAM

π FIELD CUT TO FIT, PLACE TIES PARALLEL TO ROADWAY LONGITUDINAL SLOPE.

TABLE OF ELEVATIONS	
ELEV. A	208.19
ELEV. B	209.23
ELEV. C	208.94
ELEV. D	214.65
ELEV. E	215.73
ELEV. F	215.43

TABLE OF ELEVATIONS AT TOP OF OAK BLOCK					
GIRDER	3A	3B	3C	3D	3E
ELEVATION	209.40	209.85	210.30	210.17	210.05
GIRDER	2A	2B	2C	2D	2E
ELEVATION	208.62	209.07	209.52	209.40	209.28

NOTES:

1. SEE FRAMING PLAN FOR GIRDER SPACING.
2. BRIDGE DECK REINFORCING NOT SHOWN FOR CLARITY.
3. ADJUST STIRRUP AND TIE SPACING AS REQUIRED TO CLEAR COLUMN VERTICAL BARS.
4. DO NOT SPLICE MORE THAN 50% OF BARS AT ANY ONE LOCATION. STAGGER SPLICES A MINIMUM OF 2'-9".
5. ALL ELEVATIONS ARE TOP OF BRIDGE DECK ELEVATIONS AT CENTER LINE OF PIER EXCEPT THOSE MARKED WITH AN ASTERISK (*) WHICH ARE TOP OF CROSSBEAM ELEVATIONS AT CENTER LINE OF PIER.
6. ADJUST DIAPHRAGM STIRRUP AND TIE SPACING AS REQUIRED TO CLEAR CROSSBEAM STIRRUPS AND COLUMN VERTICAL BARS.
7. NO LAP SPLICE ALLOWED. ALL SPLICES SHALL BE MECHANICAL SPLICES THAT MEET THE REQUIREMENTS OF STD. SPEC. SECTION 6-02.3(24)F. DO NOT SPLICE MORE THAN 50% OF BARS AT ANY ONE LOCATION. STAGGER SPLICES A MINIMUM OF 2'-6".
8. DIAPHRAGM REINFORCING SHOWN FOR NEAR FACE ONLY. SEE SECTION A PA42, SEE SECTION B PA42 & SEE SECTION C PA42 FOR DETAILS.

Bridge Design Engr.	Khaleghi, B	M:\Y-Team\M ST TO PORTLAND\PACIFIC AVE BR\window files\PIER 3.wnd								
Supervisor	Khaleghi, B									
Designed By	Olson, DE	11/12								
Checked By	Lee, CS	12/13								
Detailed By	Bontemps, W	11/12								
Bridge Projects Engr.										
Prelim. Plan By										
Architect/Specialist		DATE	REVISION	BY	APP'D					

REGION NO.	STATE	FED. AID PROJ. NO.	SHEET NO.	TOTAL SHEETS
10	WASH.			
JOB NUMBER 12C501				

Douglas Eugene Olson, State of Washington, 40406, Registered Professional Engineer, 02/14/14

BRIDGE AND STRUCTURES OFFICE

Bijan Khaleghi, State of Washington, 27905, Registered Professional Engineer, 2/12/14

Washington State Department of Transportation

I-5
M ST TO PORTLAND AVE - HOV

PACIFIC AVE OVER I-5 BRIDGE No. 5/444

PIER 3
PLAN AND ELEVATION

BRIDGE SHEET NO. PA39

SHEET 1038 OF 1763 SHEETS

SR 5 FILE NO. 7451 SHEET PA39

Tue Feb 11 09:01:31 2014

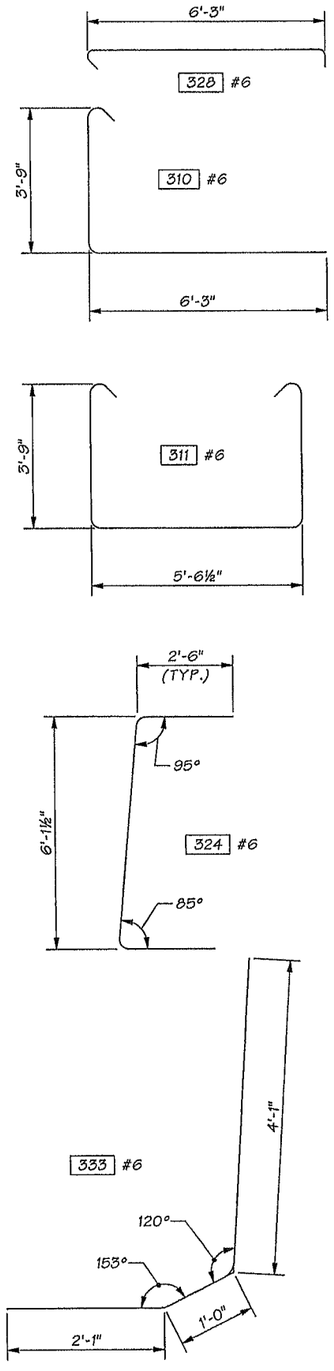

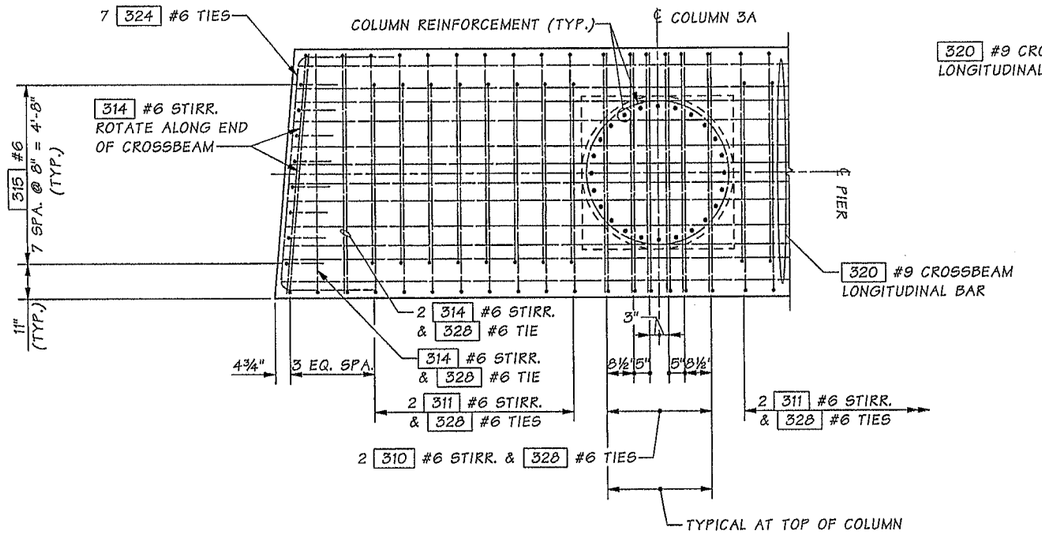

SECTION D PA39

ADJUST CROSSBEAM LONGITUDINAL BAR, TRANSVERSE STIRRUP, AND TIE SPACING AS REQUIRED TO CLEAR COLUMN VERTICAL BARS. DIAPHRAGM STIRRUPS NOT SHOWN, SEE SECTION F FOR DETAILS. PA41

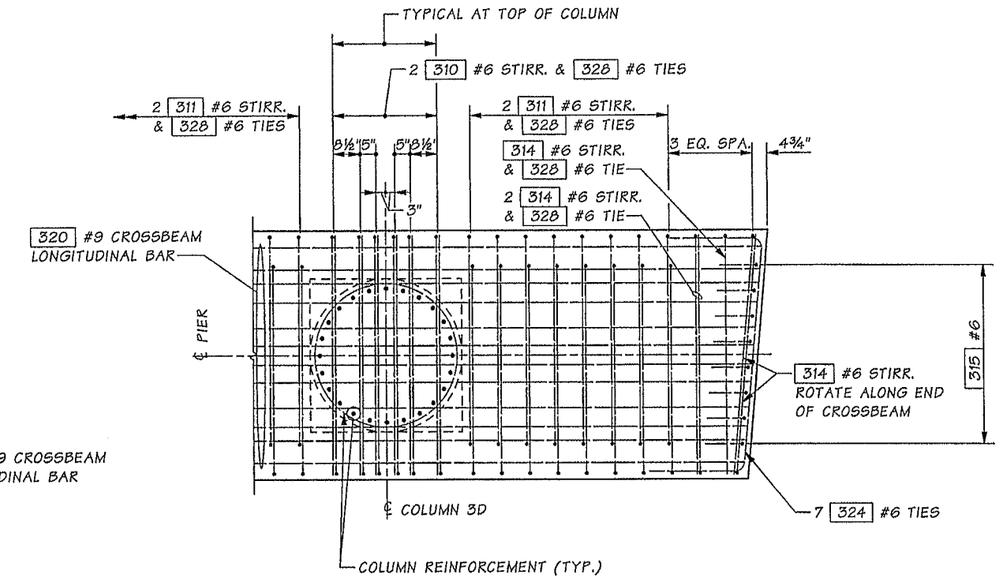

SECTION E PA39

ADJUST CROSSBEAM LONGITUDINAL BAR, TRANSVERSE STIRRUP, AND TIE SPACING AS REQUIRED TO CLEAR COLUMN VERTICAL BARS. DIAPHRAGM STIRRUPS NOT SHOWN, SEE SECTION F FOR DETAILS. PA41

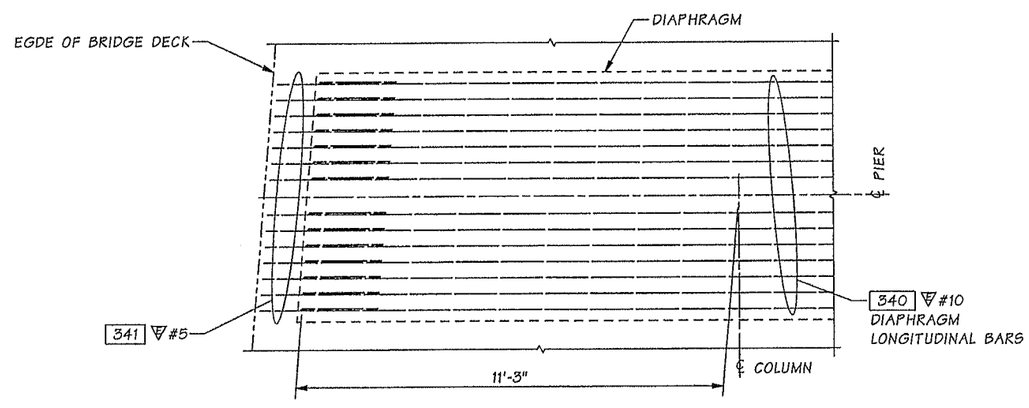

SECTION H PA39

LEFT SHOWN, RIGHT SIMILAR

Bridge Design Engr.	Khaleghi, B		M:\Y-Team\M ST TO PORTLAND\PACIFIC AVE BR\window files\PIER 3X-BEAMDTLS1.wnd								
Supervisor	Khaleghi, B										
Designed By	Olson, DE	11/12									
Checked By	Lee, CS	12/13									
Detailed By	Bontemps, W	11/12									
Bridge Projects Engr.											
Prelim. Plan By											
Architect/Specialist			DATE	REVISION	BY	APP'D					

REGION NO.	STATE	FED. AID PROJ. NO.	SHEET NO.	TOTAL SHEETS
10	WASH.			
JOB NUMBER 12C501				

BRIDGE AND STRUCTURES OFFICE

02/11/14 7/12/14

Washington State Department of Transportation

I-5
M ST TO PORTLAND AVE - HOV

PACIFIC AVE OVER I-5 BRIDGE No. 5/444

PIER 3
DETAILS 1 OF 3

BRIDGE SHEET NO. PA40

SHEET 1039 OF 1763 SHEETS

SR 5 FILE NO. 7451 SHEET PA40

Tue Feb 11 09:01:34 2014

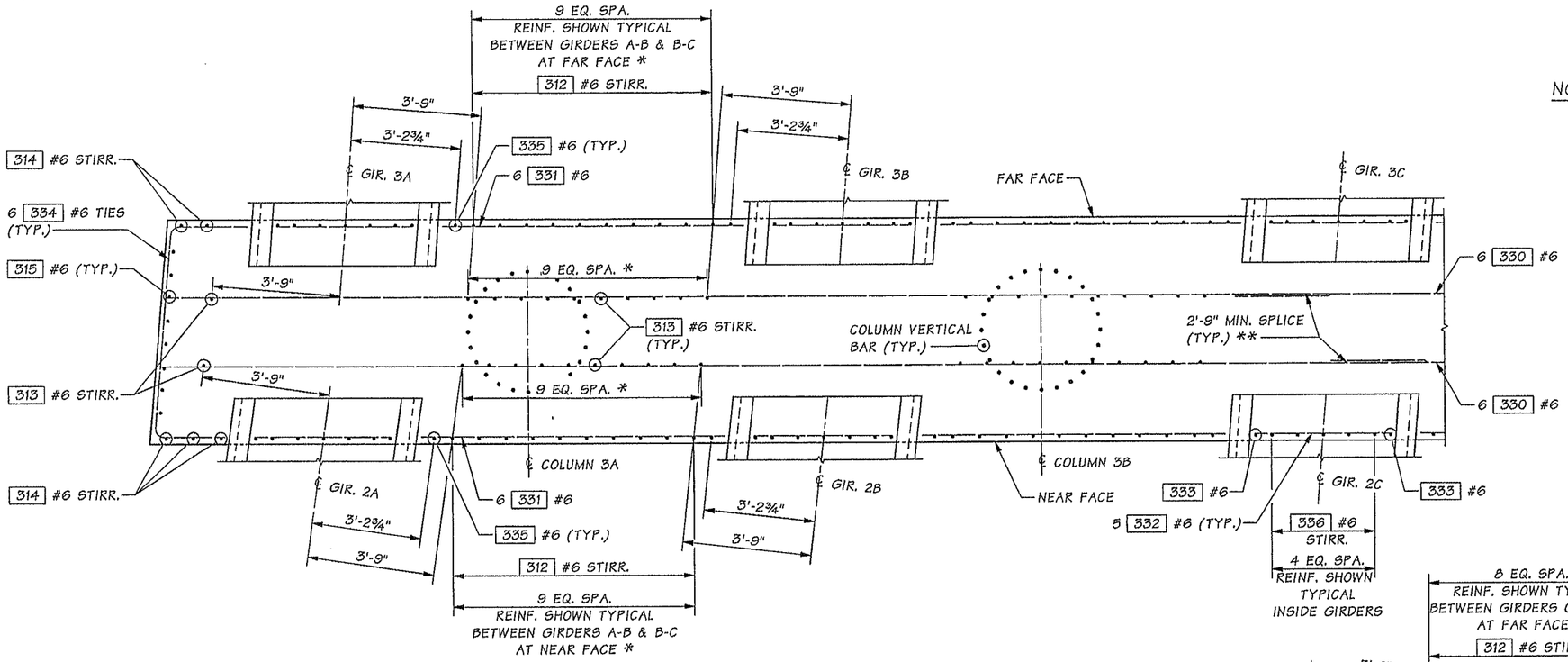

NOTES:

* ADJUST SPACING AS REQUIRED TO CLEAR CROSSBEAM STIRRUPS AND COLUMN VERTICAL BARS.

** DO NOT SPLICE MORE THAN 50% OF BARS AT ANY ONE LOCATION. STAGGER SPLICES A MINIMUM OF 2'-9".

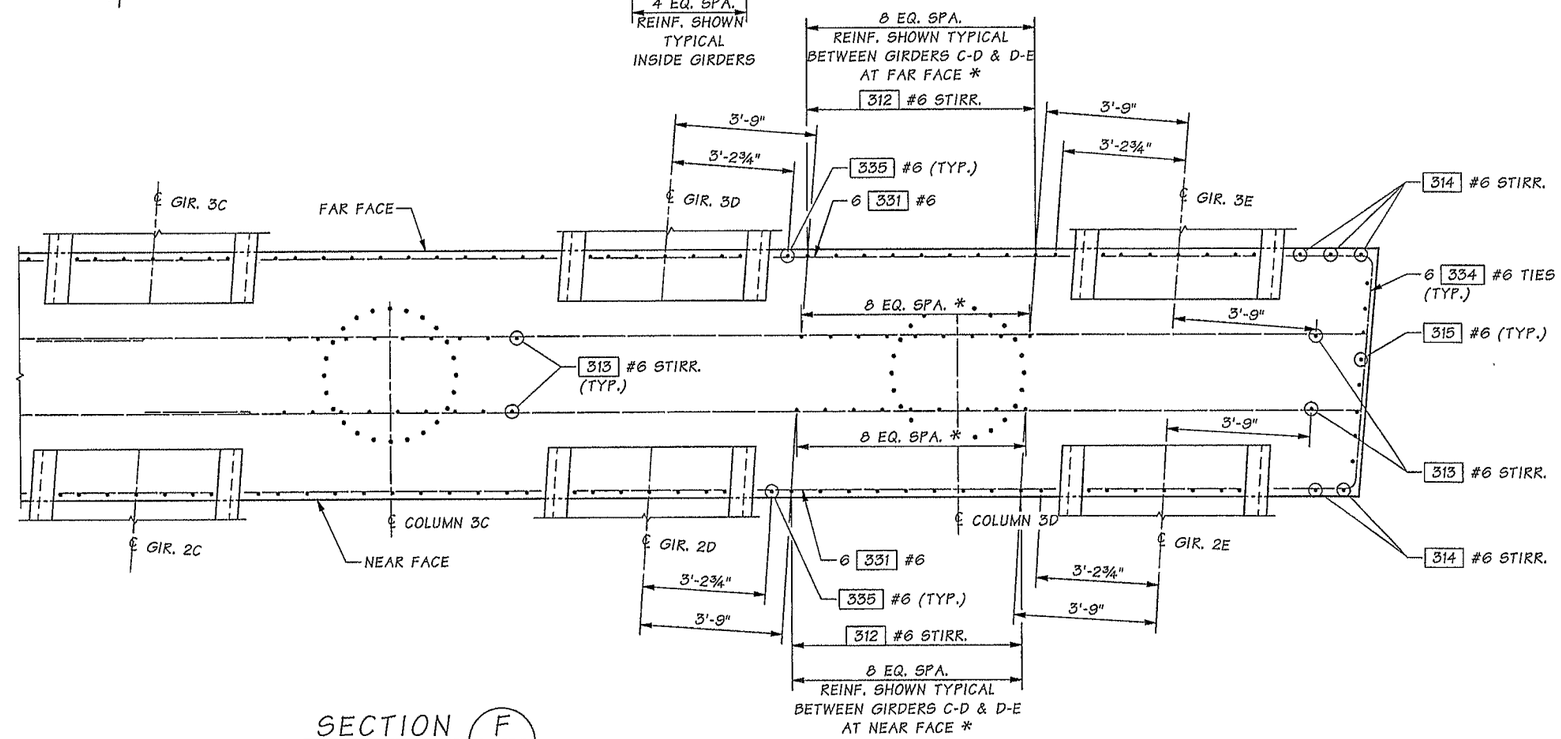

SECTION F

PA39 & PA40

Bridge Design Engr.	Khaleghi, B		M:\Y-Team\M ST TO PORTLAND\PACIFIC AVE BR\window files\PIER 3X-BEAMDTLS1A.wnd				REGION NO.	STATE	FED. AID PROJ. NO.	SHEET NO.	TOTAL SHEETS
Supervisor	Khaleghi, B						10	WASH.			
Designed By	Olson, DE	11/12					JOB NUMBER 12C501				
Checked By	Lee, CS	12/13									
Detailed By	Bontemps, W	11/12									
Bridge Projects Engr.											
Prelim. Plan By											
Architect/Specialist			DATE	REVISION	BY	APP'D					

BRIDGE AND STRUCTURES OFFICE

02/11/14 2/12/14

Washington State Department of Transportation

I-5
M ST TO PORTLAND AVE - HOV

PACIFIC AVE OVER I-5 BRIDGE No. 5/444

PIER 3
DETAILS 2 OF 3

BRIDGE SHEET NO. PA41

SHEET 1040 OF 1763 SHEETS

SR 5 FILE NO. 7451 SHEET PA41

Tue Feb 11 09:01:35 2014

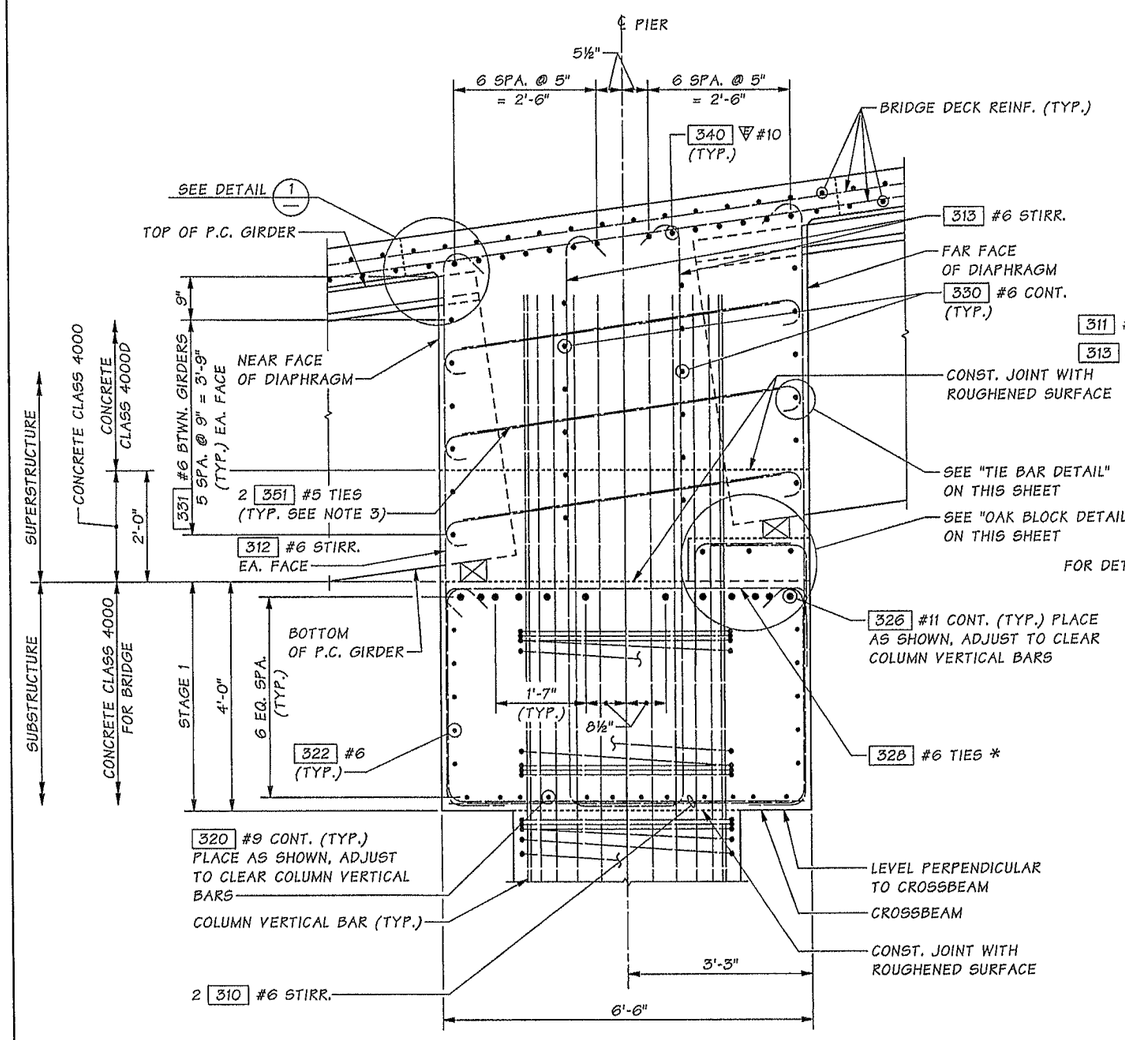

* ALTERNATE 135° HOOK EVERY OTHER BAR.

SECTION A — PA39

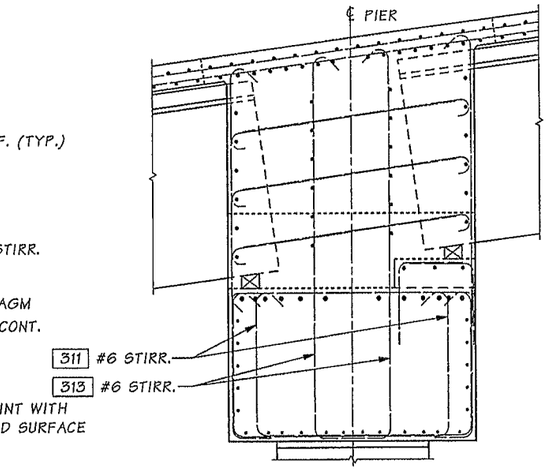

SECTION B — PA39

FOR DETAILS NOT SHOWN SEE SECTION A

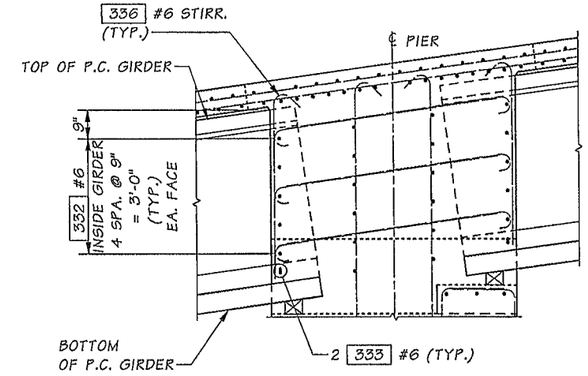

SECTION C — PA39

FOR DETAILS NOT SHOWN SEE SECTION A

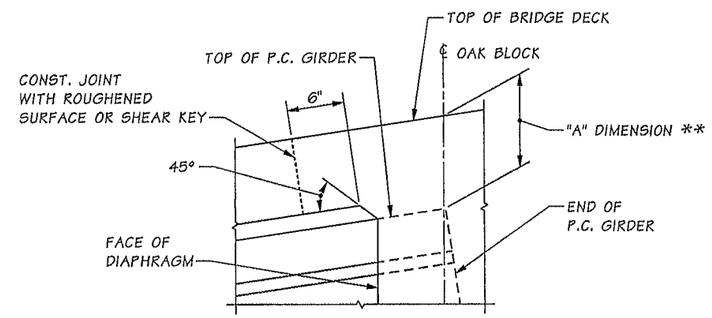

** SEE "GIRDER SCHEDULE" SHEETS

DETAIL 1

REINFORCING NOT SHOWN FOR CLARITY

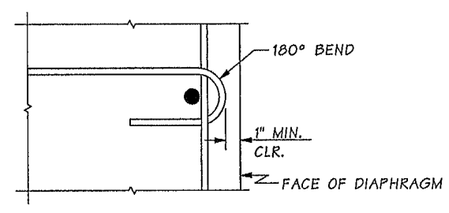

TIE BAR DETAIL

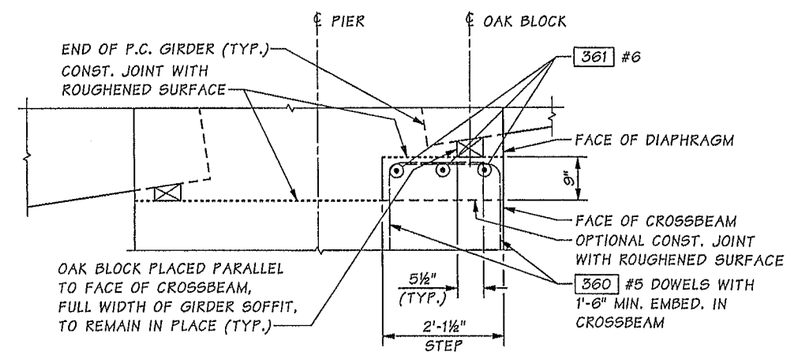

OAK BLOCK DETAIL

LONGITUDINAL DIMENSIONS ARE NORMAL TO SKEW

NOTES:

1. LONGITUDINAL DIMENSIONS ARE NORMAL TO SKEW.
2. FOR CONCRETE PLACEMENT PROCEDURE, SEE "CONSTRUCTION SEQUENCE" SHEET.
3. TIE EACH END OF SPLICE WITH WIRE. (3'-6" MIN. SPLICE)

Bridge Design Engr.	Khaleghi, B		M:\Y-Team\M ST TO PORTLAND\PACIFIC AVE BR\window files\PIER 3X-BEAMDTLS2.wnd							
Supervisor	Khaleghi, B					REGION NO.	STATE	FED. AID PROJ. NO.	SHEET NO.	TOTAL SHEETS
Designed By	Olson, DE	11/12				10	WASH.			
Checked By	Lee, CS	12/13				JOB NUMBER 12C501				
Detailed By	Bontemps, W	11/12								
Bridge Projects Engr.										
Prelim. Plan By										
Architect/Specialist			DATE	REVISION	BY	APP'D				

Tue Feb 11 08:01:37 2014

NICHOLAS EUGENE OLSON — STATE OF WASHINGTON — 40404 — REGISTERED PROFESSIONAL ENGINEER — 02/11/14

BRIDGE AND STRUCTURES OFFICE

BLAN KHALEGHI — STATE OF WASHINGTON — 27486 — REGISTERED PROFESSIONAL ENGINEER — 2/12/14

Washington State Department of Transportation

I-5
M ST TO PORTLAND AVE - HOV

PACIFIC AVE OVER I-5 BRIDGE No. 5/444

PIER 3
DETAILS 3 OF 3

BRIDGE SHEET NO. PA42

SHEET 1041 OF 1763 SHEETS

SR 5 FILE NO. 7451 SHEET PA42

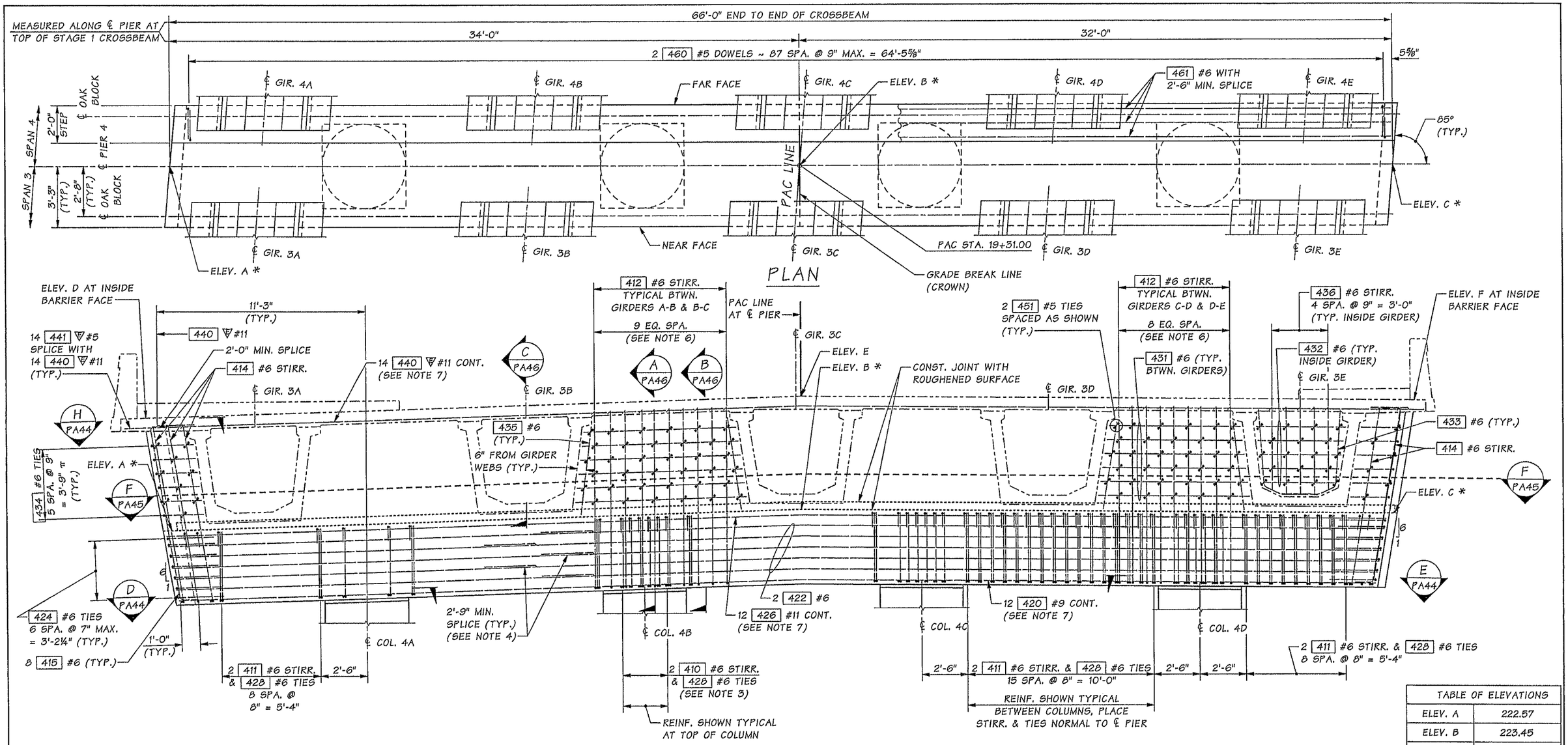

ELEVATION

ELEVATION SHOWN NEAR FACE OF CROSSBEAM

π FIELD CUT TO FIT, PLACE TIES PARALLEL TO ROADWAY LONGITUDINAL SLOPE.

TABLE OF ELEVATIONS	
ELEV. A	222.57
ELEV. B	223.45
ELEV. C	223.00
ELEV. D	228.82
ELEV. E	229.74
ELEV. F	229.28

NOTES:

1. SEE FRAMING PLAN FOR GIRDER SPACING.
2. BRIDGE DECK REINFORCING NOT SHOWN FOR CLARITY.
3. ADJUST STIRRUP AND TIE SPACING AS REQUIRED TO CLEAR COLUMN VERTICAL BARS.
4. DO NOT SPLICE MORE THAN 50% OF BARS AT ANY ONE LOCATION. STAGGER SPLICES A MINIMUM OF 2'-9".
5. ALL ELEVATIONS ARE TOP OF BRIDGE DECK ELEVATIONS AT CENTER LINE OF PIER EXCEPT THOSE MARKED WITH AN ASTERISK (*) WHICH ARE TOP OF CROSSBEAM ELEVATIONS AT CENTER LINE OF PIER.
6. ADJUST DIAPHRAGM STIRRUP AND TIE SPACING AS REQUIRED TO CLEAR CROSSBEAM STIRRUPS AND COLUMN VERTICAL BARS.
7. NO LAP SPLICE ALLOWED. ALL SPLICES SHALL BE MECHANICAL SPLICES THAT MEET THE REQUIREMENTS OF STD. SPEC. SECTION 6-02.3(24)F. DO NOT SPLICE MORE THAN 50% OF BARS AT ANY ONE LOCATION. STAGGER SPLICES A MINIMUM OF 2'-6".
8. DIAPHRAGM REINFORCING SHOWN FOR NEAR FACE ONLY. SEE SECTION A PA46, SEE SECTION B PA46 & SEE SECTION C PA46 FOR DETAILS.

TABLE OF ELEVATIONS AT TOP OF OAK BLOCK					
GIRDER	4A	4B	4C	4D	4E
ELEVATION	223.44	223.82	224.20	224.00	223.82
GIRDER	3A	3B	3C	3D	3E
ELEVATION	223.00	223.39	223.77	223.58	223.39

Bridge Design Engr.	Khaleghi, B		M:\Y-Team\M ST TO PORTLAND\PACIFIC AVE BR\window files\PIER 4.wnd			REGION NO.	STATE	FED. AID PROJ. NO.	SHEET NO. / TOTAL SHEETS
Supervisor	Khaleghi, B					10	WASH.		
Designed By	Olson, DE	11/12				JOB NUMBER 12C501			
Checked By	Lee, CS	12/13							
Detailed By	Bontemps, W	11/12							
Bridge Projects Engr.									
Prelim. Plan By									
Architect/Specialist			DATE	REVISION	BY	APP'D			

Tue Feb 11 09:01:39 2014

BRIDGE AND STRUCTURES OFFICE

Washington State Department of Transportation

I-5
M ST TO PORTLAND AVE - HOV

PACIFIC AVE OVER I-5 BRIDGE No. 5/444

PIER 4
PLAN AND ELEVATION

BRIDGE SHEET NO. PA43

SHEET 1042 OF 1763 SHEETS

SR 5 FILE NO. 7451 SHEET PA43

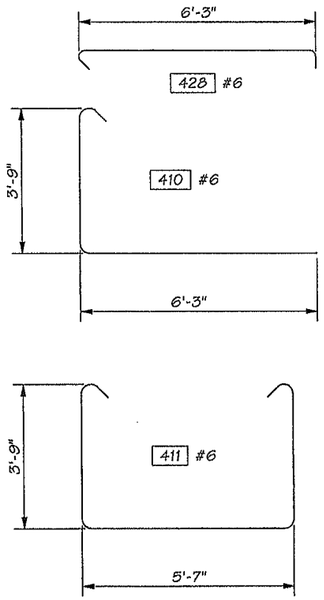

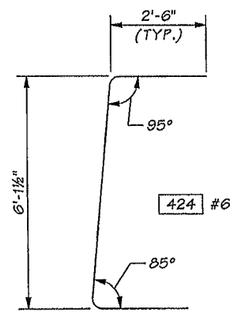

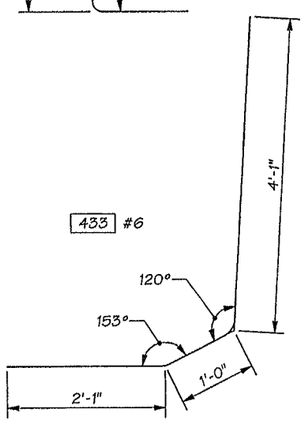

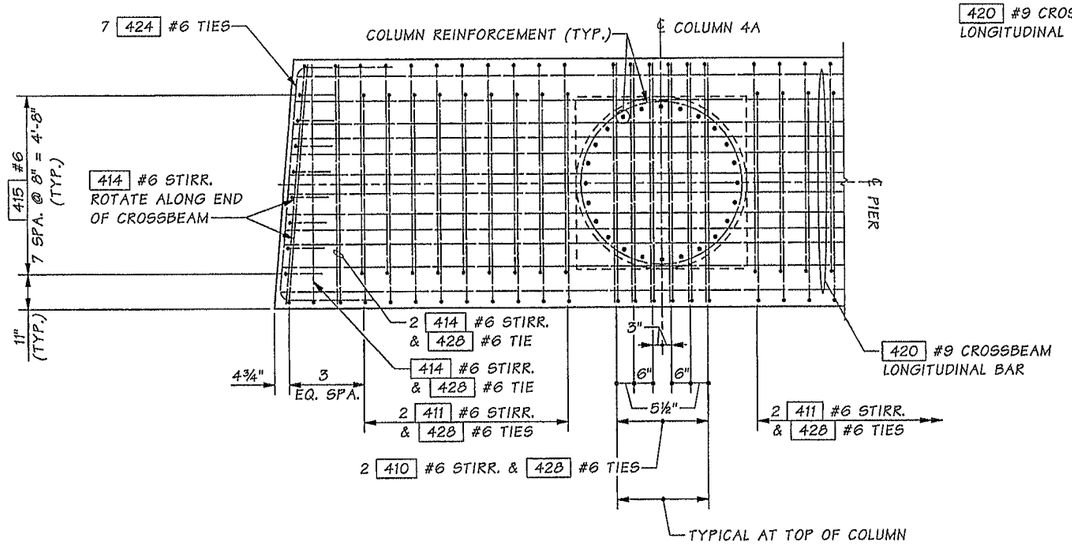

SECTION D — PA43

ADJUST CROSSBEAM LONGITUDINAL BAR, TRANSVERSE STIRRUP, AND TIE SPACING AS REQUIRED TO CLEAR COLUMN VERTICAL BARS. DIAPHRAGM STIRRUPS NOT SHOWN, SEE SECTION F FOR DETAILS. — PA45

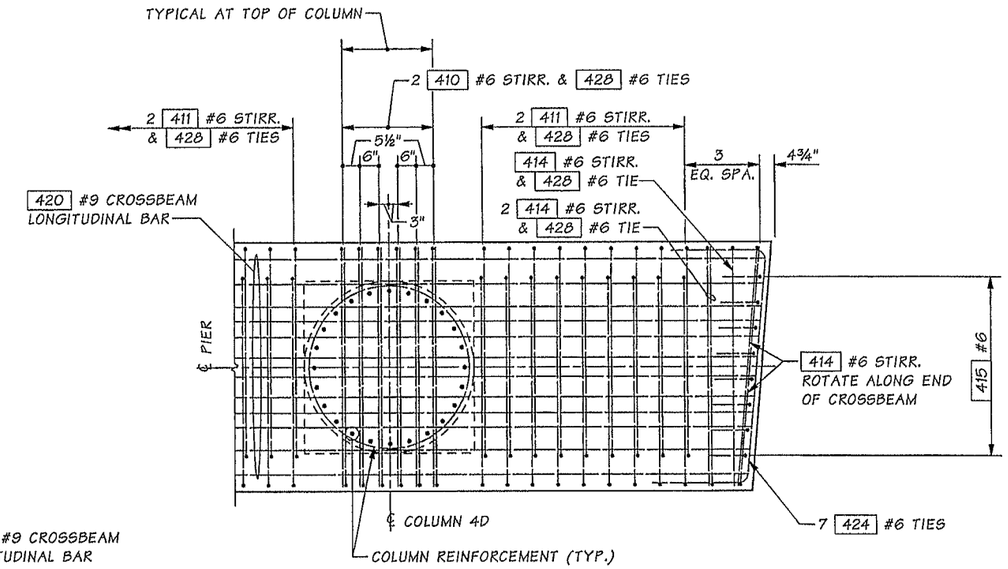

SECTION E — PA43

ADJUST CROSSBEAM LONGITUDINAL BAR, TRANSVERSE STIRRUP, AND TIE SPACING AS REQUIRED TO CLEAR COLUMN VERTICAL BARS. DIAPHRAGM STIRRUPS NOT SHOWN, SEE SECTION F FOR DETAILS. — PA45

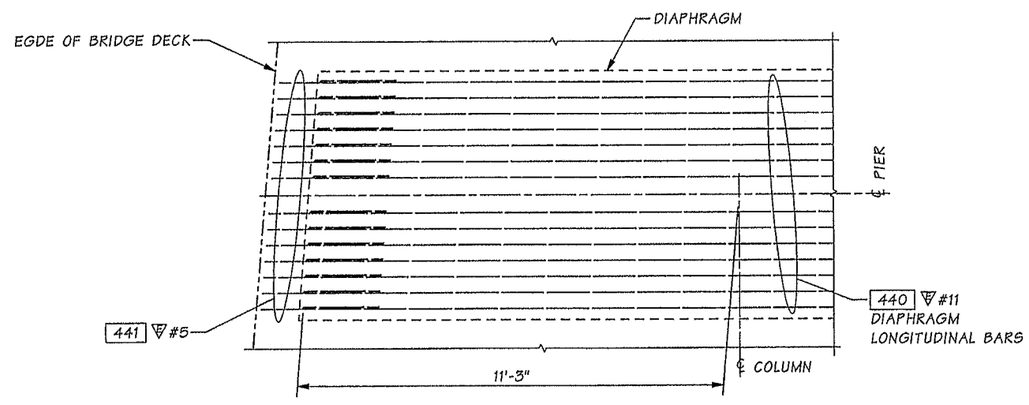

SECTION H — PA43

LEFT SHOWN, RIGHT SIMILAR

Bridge Design Engr.	Khaleghi, B		M:\Y-Team\M ST TO PORTLAND\PACIFIC AVE BR\window files\PIER 4X-BEAMDTLS1.wnd							
Supervisor	Khaleghi, B									
Designed By	Olson, DE	11/12								
Checked By	Lee, CS	12/13								
Detailed By	Bontemps, W	11/12								
Bridge Projects Engr.										
Prelim. Plan By										
Architect/Specialist			DATE	REVISION	BY	APP'D				

REGION NO.	STATE	FED. AID PROJ. NO.	SHEET NO.	TOTAL SHEETS
10	WASH.			
JOB NUMBER 12C501				

Tue Feb 11 09:01:41 2014

DOUGLAS EUGENE OLSON — STATE OF WASHINGTON — 40406 — REGISTERED PROFESSIONAL ENGINEER — 02/11/14

BRIDGE AND STRUCTURES OFFICE

BIJAN KHALEGHI — STATE OF WASHINGTON — 21595 — REGISTERED PROFESSIONAL ENGINEER — 2/12/14

Washington State Department of Transportation

I-5
M ST TO PORTLAND AVE - HOV

PACIFIC AVE OVER I-5 BRIDGE No. 5/444

PIER 4
DETAILS 1 OF 3

BRIDGE SHEET NO. PA44

SHEET 1043 OF 1763 SHEETS

SR 5 FILE NO. 7451 SHEET PA44

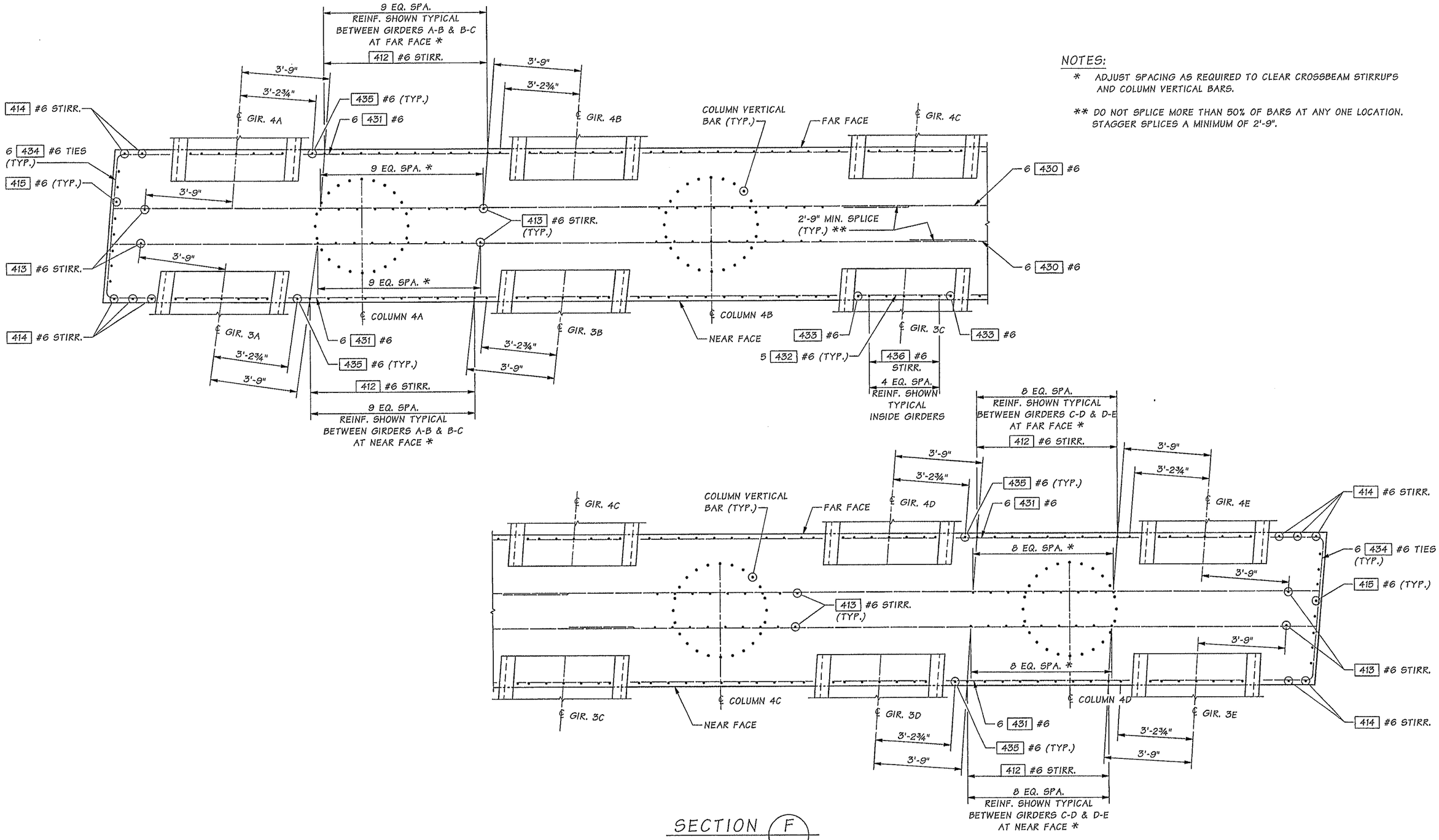

NOTES:

* ADJUST SPACING AS REQUIRED TO CLEAR CROSSBEAM STIRRUPS AND COLUMN VERTICAL BARS.

** DO NOT SPLICE MORE THAN 50% OF BARS AT ANY ONE LOCATION. STAGGER SPLICES A MINIMUM OF 2'-9".

SECTION F

PA43 & PA44

Bridge Design Engr.	Khaleghi, B		
Supervisor	Khaleghi, B		
Designed By	Olson, DE	11/12	
Checked By	Lee, CS	12/13	
Detailed By	Bontemps, W	11/12	
Bridge Projects Engr.			
Prelim. Plan By			
Architect/Specialist			

M:\Y-Team\M ST TO PORTLAND\PACIFIC AVE BR\window files\PIER 4X-BEAMDTLS1A.wnd

DATE	REVISION	BY	APP'D

REGION NO.	STATE	FED. AID PROJ. NO.	SHEET NO.	TOTAL SHEETS
10	WASH.			
JOB NUMBER 12C501				

DOUGLAS EUGENE OLSON — STATE OF WASHINGTON — 40606 — REGISTERED PROFESSIONAL ENGINEER — 02/04/14

BRIDGE AND STRUCTURES OFFICE

BRIAN KHALEGHI — STATE OF WASHINGTON — 27063 — REGISTERED PROFESSIONAL ENGINEER — 2/12/14

Washington State Department of Transportation

I-5
M ST TO PORTLAND AVE - HOV

PACIFIC AVE OVER I-5 BRIDGE No. 5/444

PIER 4
DETAILS 2 OF 3

BRIDGE SHEET NO. PA45

SHEET 1044 OF 1763 SHEETS

SR 5 FILE NO. 7451 SHEET PA45

Tue Feb 11 09:01:43 2014

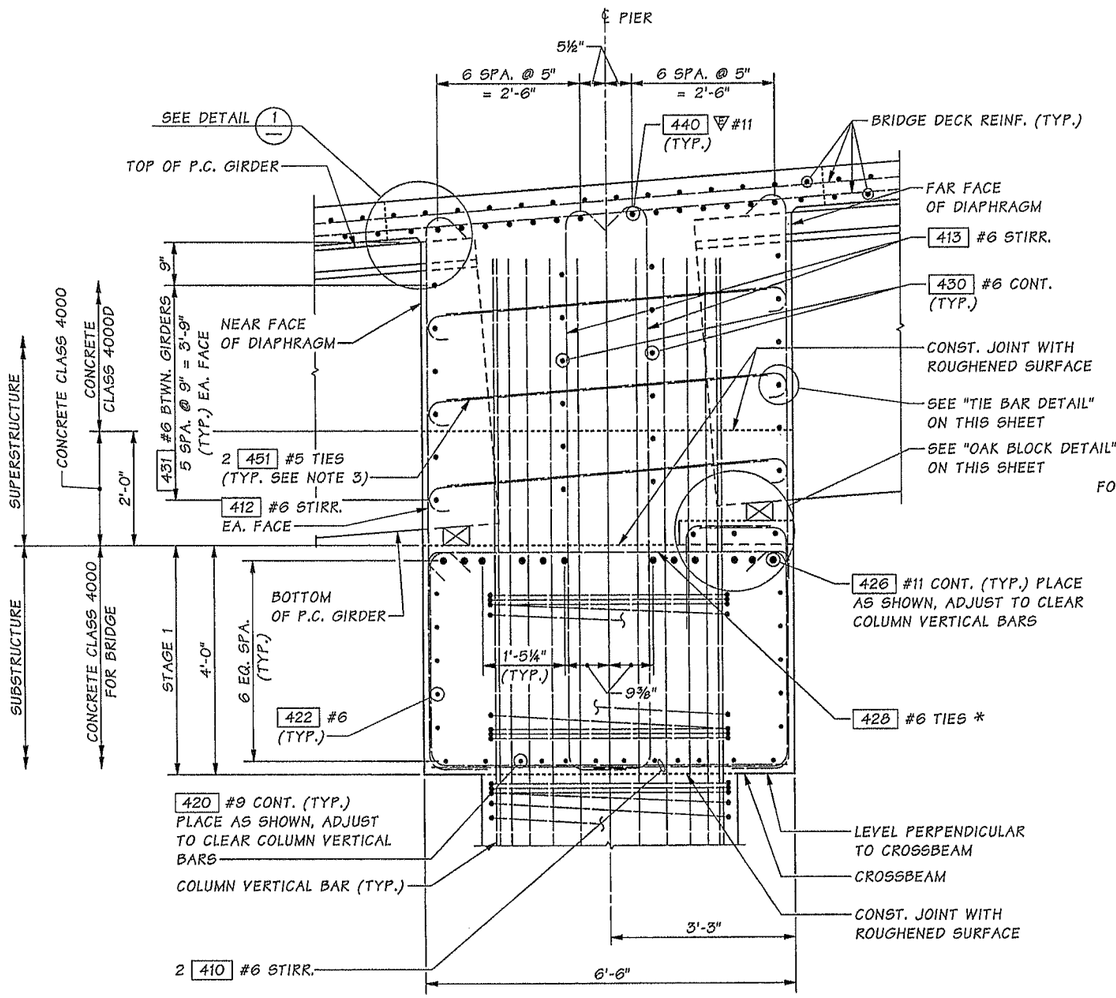

* ALTERNATE 135° HOOK EVERY OTHER BAR.

SECTION A — PA43

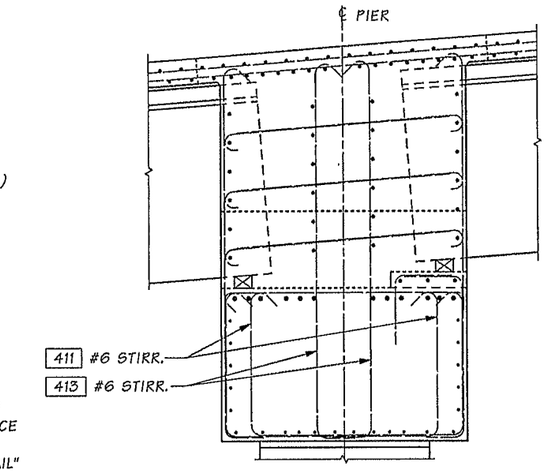

SECTION B — PA43

FOR DETAILS NOT SHOWN SEE SECTION A

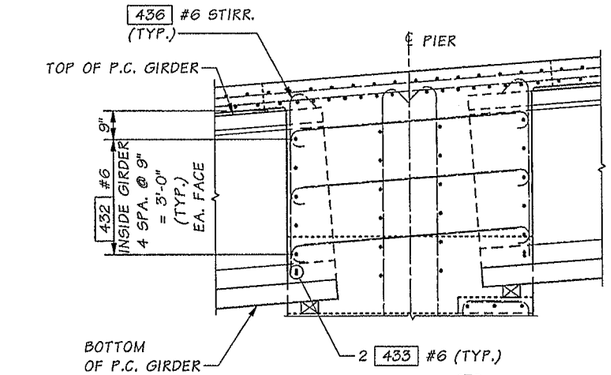

SECTION C — PA43

FOR DETAILS NOT SHOWN SEE SECTION A

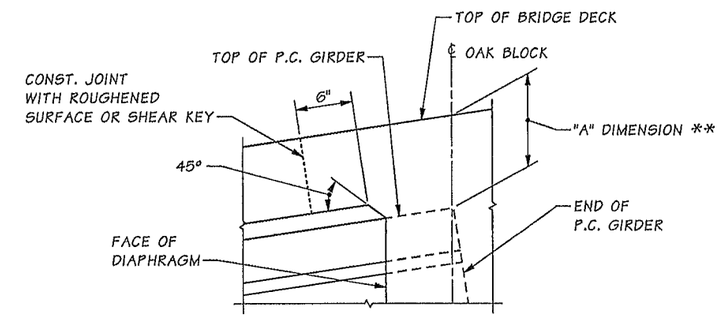

** SEE "GIRDER SCHEDULE" SHEETS

DETAIL 1

REINFORCING NOT SHOWN FOR CLARITY

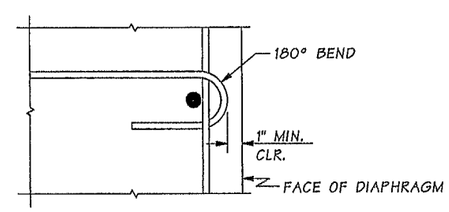

TIE BAR DETAIL

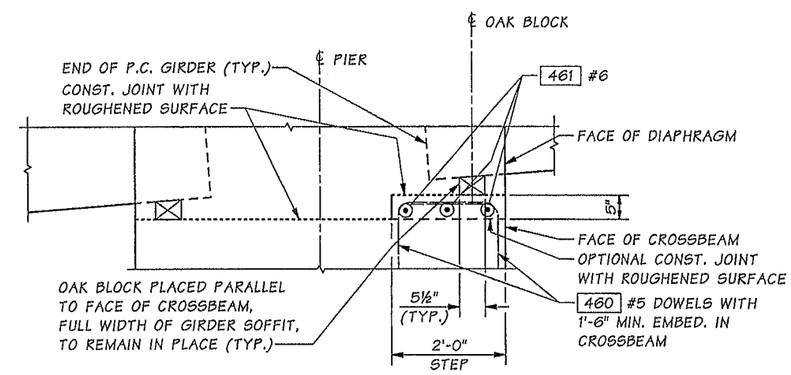

OAK BLOCK DETAIL

LONGITUDINAL DIMENSIONS ARE NORMAL TO SKEW

NOTES:

1. LONGITUDINAL DIMENSIONS ARE NORMAL TO SKEW.
2. FOR CONCRETE PLACEMENT PROCEDURE, SEE "CONSTRUCTION SEQUENCE" SHEET.
3. TIE EACH END OF SPLICE WITH WIRE. (3'-6" MIN. SPLICE)

Bridge Design Engr.	Khaleghi, B		M:\Y-Team\M ST TO PORTLAND\PACIFIC AVE BR\window files\PIER 4X-BEAMDTLS2.wnd							
Supervisor	Khaleghi, B									
Designed By	Olson, DE	11/12								
Checked By	Lee, CS	12/13								
Detailed By	Bontemps, W	11/12								
Bridge Projects Engr.										
Prelim. Plan By										
Architect/Specialist			DATE	REVISION	BY	APP'D				

REGION NO.	STATE	FED. AID PROJ. NO.	SHEET NO.	TOTAL SHEETS
10	WASH.			
JOB NUMBER 12C501				

Tue Feb 11 09:01:45 2014

DOUGLAS EUGENE OLSON — STATE OF WASHINGTON — 40406 — REGISTERED PROFESSIONAL ENGINEER — 02/11/14

BRIDGE AND STRUCTURES OFFICE

BIJAN KHALEGHI — STATE OF WASHINGTON — 27605 — REGISTERED PROFESSIONAL ENGINEER — 2/11/14

Washington State Department of Transportation

I-5
M ST TO PORTLAND AVE - HOV

PACIFIC AVE OVER I-5 BRIDGE No. 5/444

PIER 4
DETAILS 3 OF 3

BRIDGE SHEET NO. PA46

SHEET 1045 OF 1763 SHEETS

SR 5 FILE NO. 7451 SHEET PA46

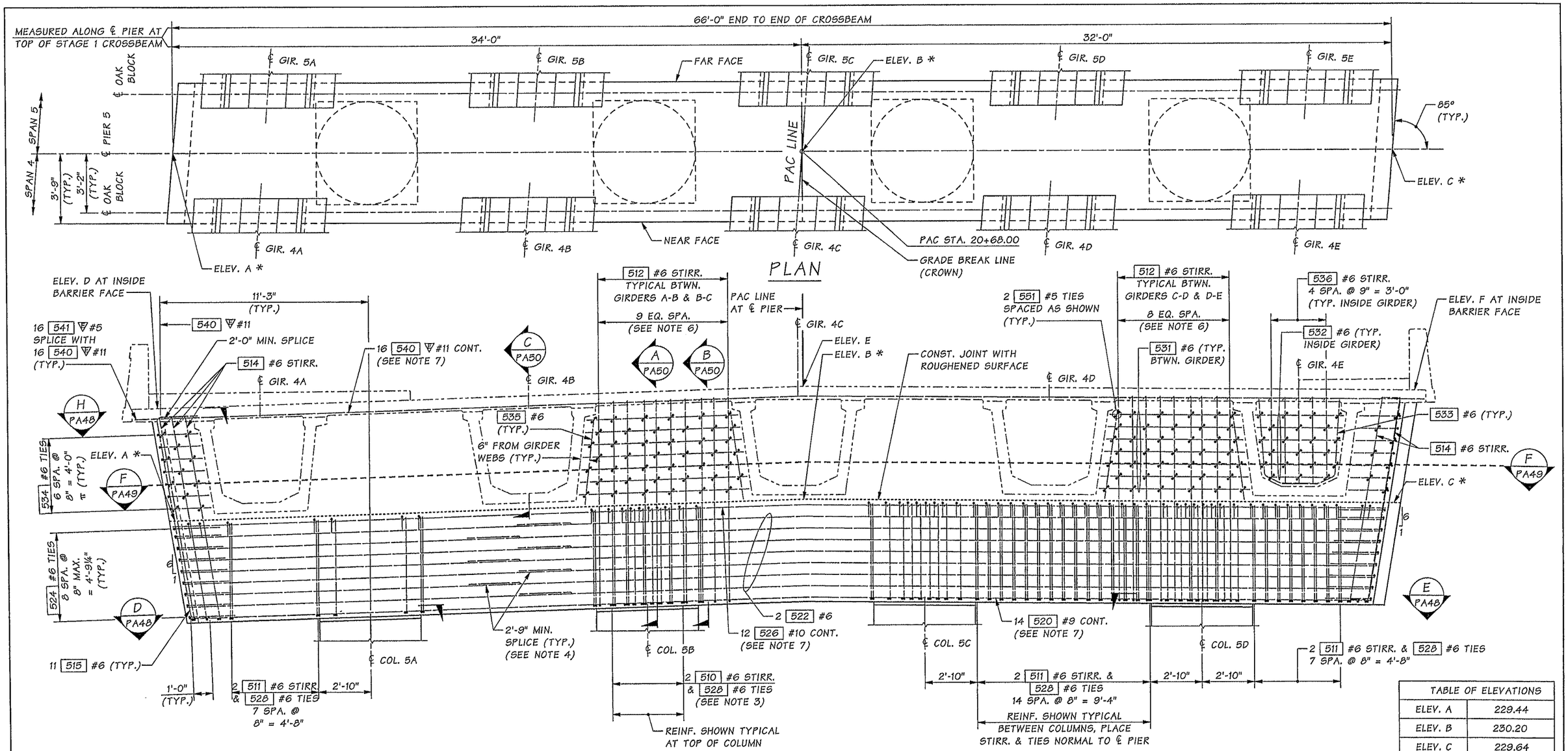

ELEVATION

ELEVATION SHOWN NEAR FACE OF CROSSBEAM

π FIELD CUT TO FIT, PLACE TIES PARALLEL TO ROADWAY LONGITUDINAL SLOPE.

TABLE OF ELEVATIONS	
ELEV. A	229.44
ELEV. B	230.20
ELEV. C	229.64
ELEV. D	235.53
ELEV. E	236.32
ELEV. F	235.75

TABLE OF ELEVATIONS AT TOP OF OAK BLOCK					
GIRDER	5A	5B	5C	5D	5E
ELEVATION	229.91	230.24	230.57	230.33	230.10
GIRDER	4A	4B	4C	4D	4E
ELEVATION	229.83	230.16	230.49	230.25	230.02

NOTES:

1. SEE FRAMING PLAN FOR GIRDER SPACING.
2. BRIDGE DECK REINFORCING NOT SHOWN FOR CLARITY.
3. ADJUST STIRRUP AND TIE SPACING AS REQUIRED TO CLEAR COLUMN VERTICAL BARS.
4. DO NOT SPLICE MORE THAN 50% OF BARS AT ANY ONE LOCATION. STAGGER SPLICES A MINIMUM OF 2'-9".
5. ALL ELEVATIONS ARE TOP OF BRIDGE DECK ELEVATIONS AT CENTER LINE OF PIER EXCEPT THOSE MARKED WITH AN ASTERISK (*) WHICH ARE TOP OF CROSSBEAM ELEVATIONS AT CENTER LINE OF PIER.
6. ADJUST DIAPHRAGM STIRRUP AND TIE SPACING AS REQUIRED TO CLEAR CROSSBEAM STIRRUPS AND COLUMN VERTICAL BARS.
7. NO LAP SPLICE ALLOWED. ALL SPLICES SHALL BE MECHANICAL SPLICES THAT MEET THE REQUIREMENTS OF STD. SPEC. SECTION 6-02.3(24)F. DO NOT SPLICE MORE THAN 50% OF BARS AT ANY ONE LOCATION. STAGGER SPLICES A MINIMUM OF 2'-6".
8. DIAPHRAGM REINFORCING SHOWN FOR NEAR FACE ONLY. SEE SECTION A/PA50, SEE SECTION B/PA50 & SEE SECTION C/PA50 FOR DETAILS.

Bridge Design Engr.	Khaleghi, B	M:\Y-Team\M ST TO PORTLAND\PACIFIC AVE BR\window files\PIER 5.wnd									
Supervisor	Khaleghi, B										
Designed By	Olson, DE	11/12									
Checked By	Lee, CS	12/13									
Detailed By	Bontemps, W	11/12									
Bridge Projects Engr.											
Prelim. Plan By											
Architect/Specialist			DATE	REVISION	BY	APP'D					

REGION NO.	STATE	FED. AID PROJ. NO.	SHEET NO.	TOTAL SHEETS
10	WASH.			
JOB NUMBER 12C501				

DOUGLAS EUGENE OLSON — STATE OF WASHINGTON — 40406 — REGISTERED PROFESSIONAL ENGINEER — 02/11/14

BRIDGE AND STRUCTURES OFFICE

ALIAN KHALEGHI — STATE OF WASHINGTON — 27695 — STRUCTURAL ENGINEER — PROFESSIONAL ENGINEER — 2/12/14

Washington State Department of Transportation

I-5
M ST TO PORTLAND AVE - HOV

PACIFIC AVE OVER I-5 BRIDGE No. 5/444

PIER 5
PLAN AND ELEVATION

BRIDGE SHEET NO. PA47

SHEET 1046 OF 1763 SHEETS

SR 5 FILE NO. 7451 SHEET PA47

Tue Feb 11 09:01:46 2014

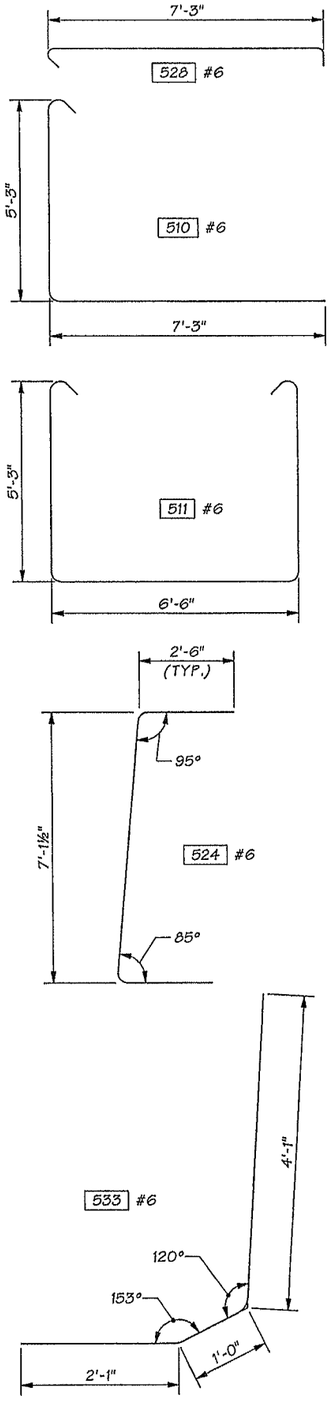

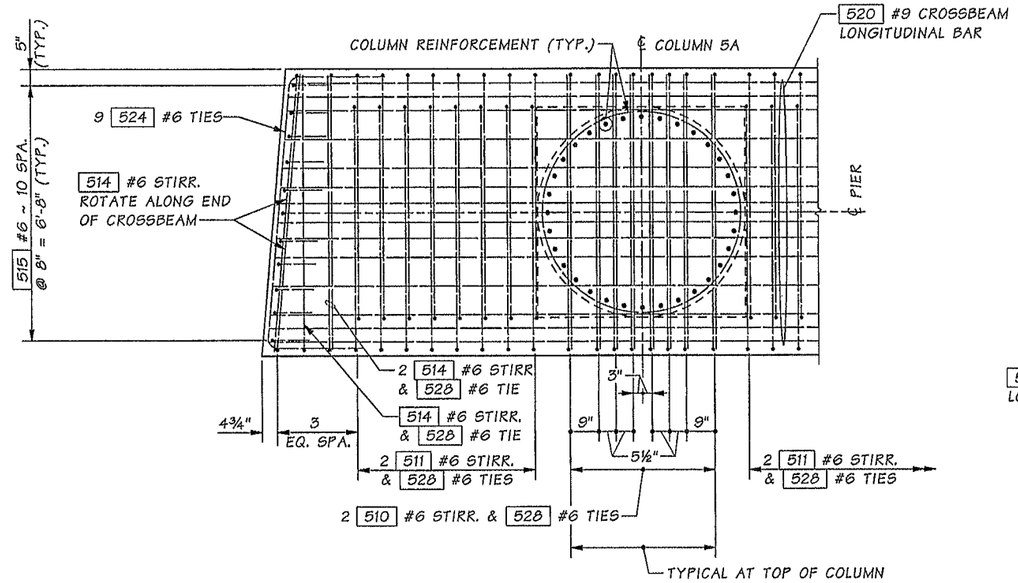

SECTION D (PA47)

ADJUST CROSSBEAM LONGITUDINAL BAR, TRANSVERSE STIRRUP, AND TIE SPACING AS REQUIRED TO CLEAR COLUMN VERTICAL BARS. DIAPHRAGM STIRRUPS NOT SHOWN, SEE SECTION F (PA49) FOR DETAILS.

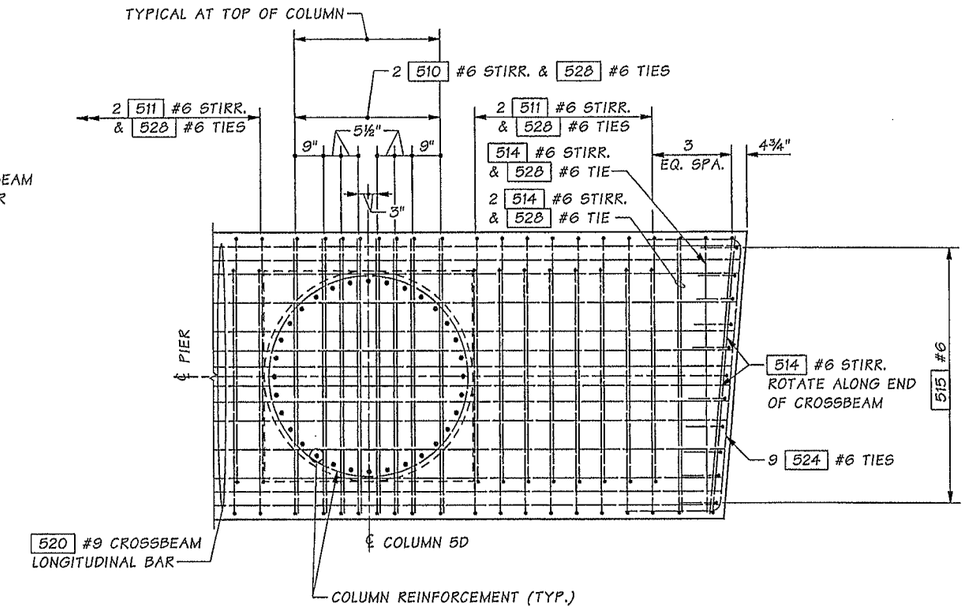

SECTION E (PA47)

ADJUST CROSSBEAM LONGITUDINAL BAR, TRANSVERSE STIRRUP, AND TIE SPACING AS REQUIRED TO CLEAR COLUMN VERTICAL BARS. DIAPHRAGM STIRRUPS NOT SHOWN, SEE SECTION F (PA49) FOR DETAILS.

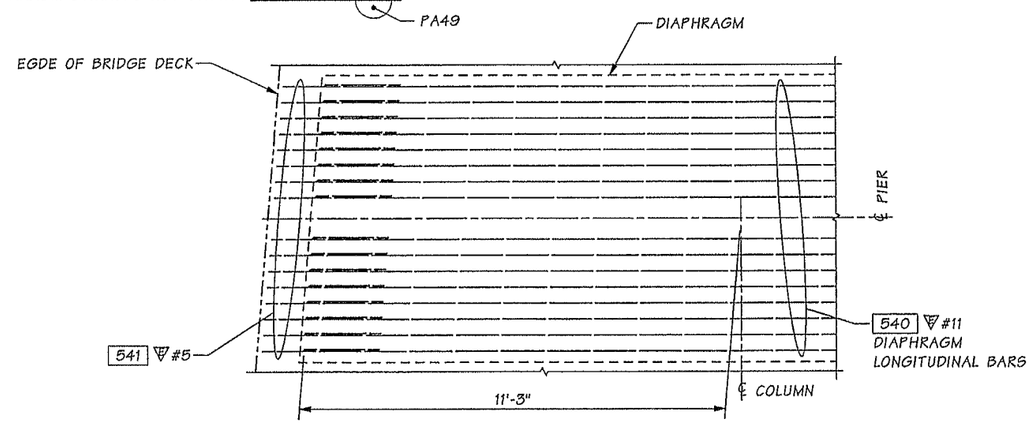

SECTION H (PA47)

LEFT SHOWN, RIGHT SIMILAR

Bridge Design Engr.	Khaleghi, B		
Supervisor	Khaleghi, B		
Designed By	Olson, DE	11/12	
Checked By	Lee, CS	12/13	
Detailed By	Bontemps, W	11/12	
Bridge Projects Engr.			
Prelim. Plan By			
Architect/Specialist			

M:\Y-Team\M ST TO PORTLAND\PACIFIC AVE BR\window files\PIER 5X-BEAMDTLS1.wnd

DATE	REVISION	BY	APP'D

REGION NO.	STATE	FED. AID PROJ. NO.	SHEET NO.	TOTAL SHEETS
10	WASH.			
JOB NUMBER 12C501				

Tue Feb 11 09:01:49 2014

DOUGLAS EUGENE OLSON, STATE OF WASHINGTON, 40406, REGISTERED PROFESSIONAL ENGINEER — 02/11/14

BRIDGE AND STRUCTURES OFFICE

ALIAN KHALEGHI, STATE OF WASHINGTON, 27696, PROFESSIONAL ENGINEER — 2/12/14

Washington State Department of Transportation

I-5
M ST TO PORTLAND AVE - HOV

PACIFIC AVE OVER I-5 BRIDGE No. 5/444

PIER 5
DETAILS 1 OF 3

BRIDGE SHEET NO. PA48

SHEET 1047 OF 1763 SHEETS

SR 5 FILE NO. 7451 SHEET PA48

NOTES:

* ADJUST SPACING AS REQUIRED TO CLEAR CROSSBEAM STIRRUPS AND COLUMN VERTICAL BARS.

** DO NOT SPLICE MORE THAN 50% OF BARS AT ANY ONE LOCATION. STAGGER SPLICES A MINIMUM OF 2'-9".

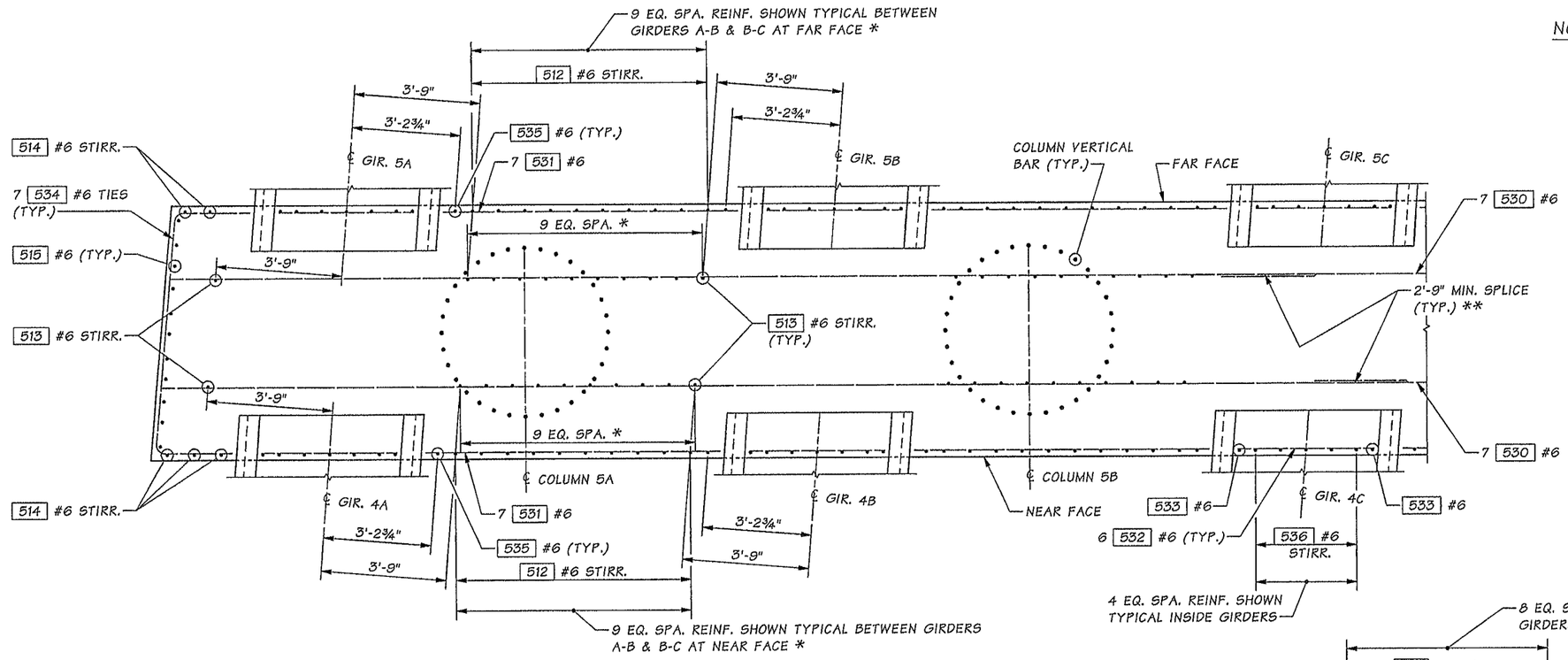

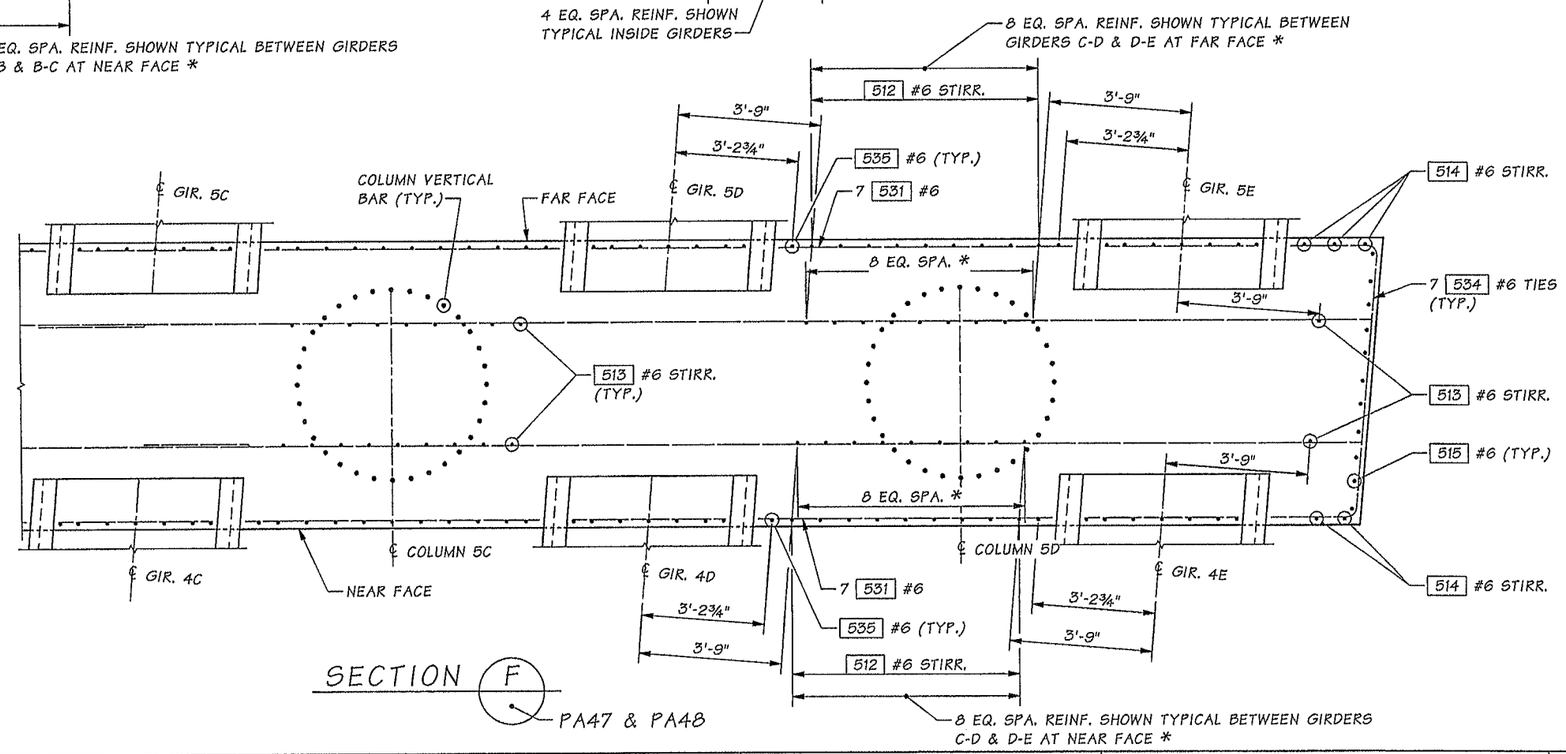

Bridge Design Engr.	Khaleghi, B		
Supervisor	Khaleghi, B		
Designed By	Olson, DE	11/12	
Checked By	Lee, CS	12/13	
Detailed By	Bontemps, W	11/12	
Bridge Projects Engr.			
Prelim. Plan By			
Architect/Specialist			

M:\Y-Team\M ST TO PORTLAND\PACIFIC AVE BR\window files\PIER 5X-BEAMDTLS1A.wnd

DATE	REVISION	BY	APP'D

REGION NO.	STATE	FED. AID PROJ. NO.	SHEET NO.	TOTAL SHEETS
10	WASH.			
JOB NUMBER 12C501				

DOUGLAS EUGENE OLSON — STATE OF WASHINGTON — 40106 — REGISTERED PROFESSIONAL ENGINEER — 02/11/14

BRIDGE AND STRUCTURES OFFICE

BEHAN KHALEGHI — STATE OF WASHINGTON — 27695 — PROFESSIONAL ENGINEER — 2/12/14

Washington State Department of Transportation

I-5
M ST TO PORTLAND AVE - HOV

PACIFIC AVE OVER I-5 BRIDGE No. 5/444

PIER 5
DETAILS 2 OF 3

BRIDGE SHEET NO. PA49

SHEET 1048 OF 1763 SHEETS

SR 5 FILE NO. 7451 SHEET PA49

Tue Feb 11 09:01:50 2014

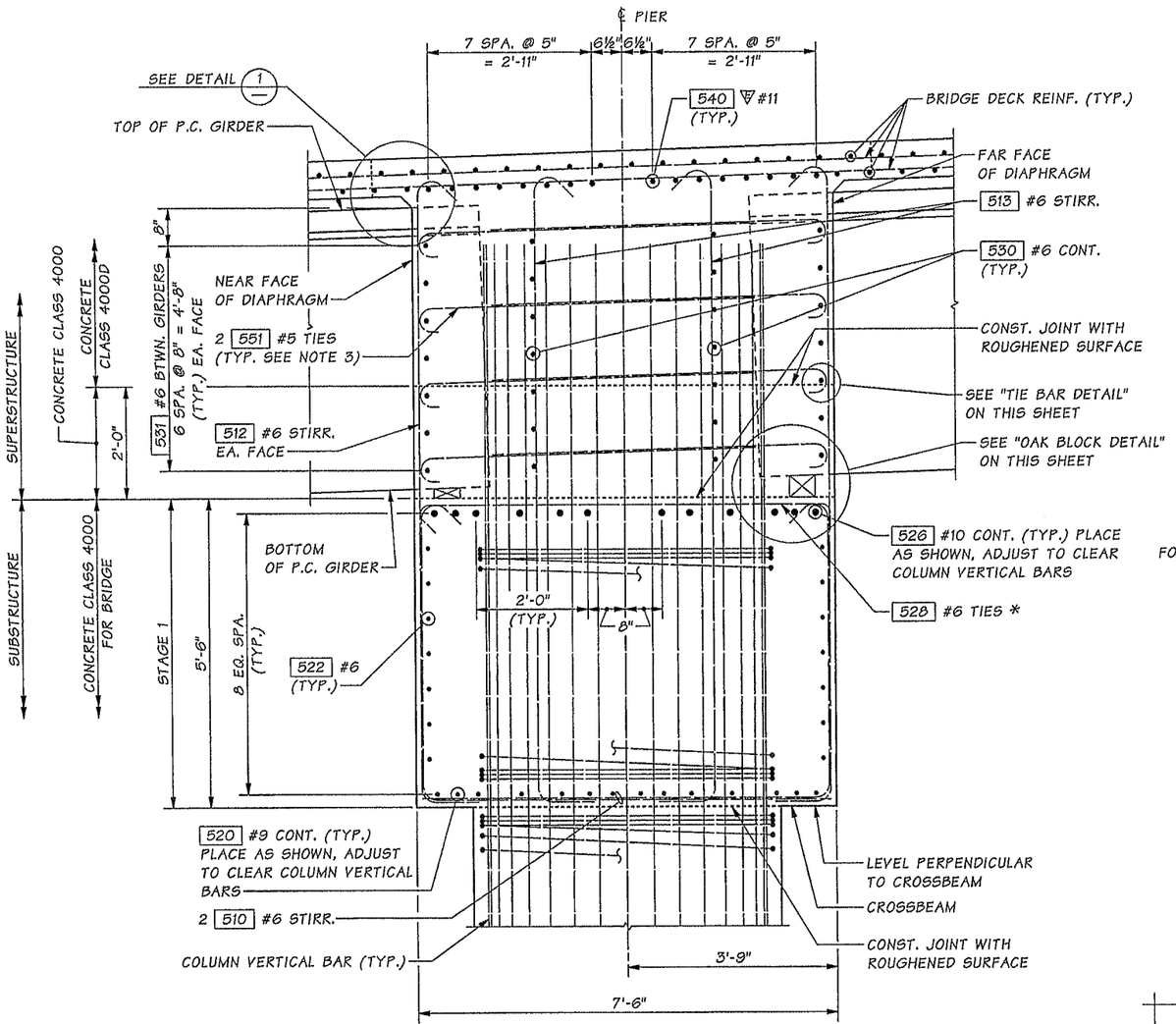

* ALTERNATE 135° HOOK EVERY OTHER BAR.

SECTION A — PA47

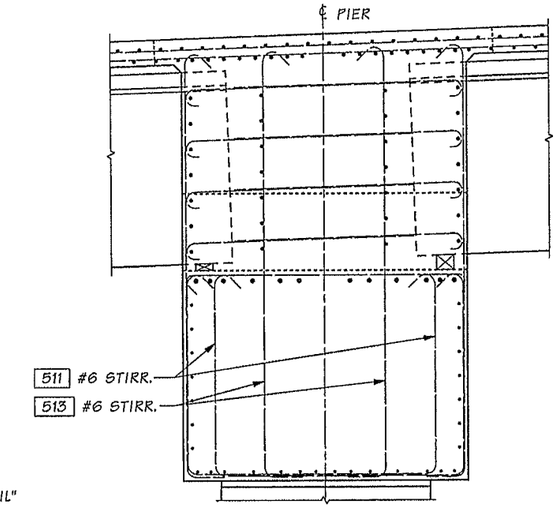

SECTION B — PA47

FOR DETAILS NOT SHOWN SEE SECTION A

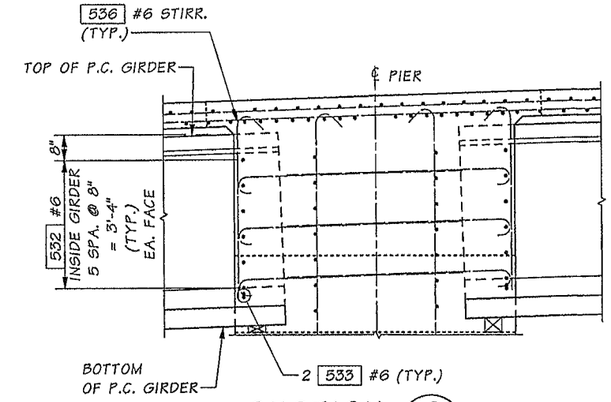

SECTION C — PA47

FOR DETAILS NOT SHOWN SEE SECTION A

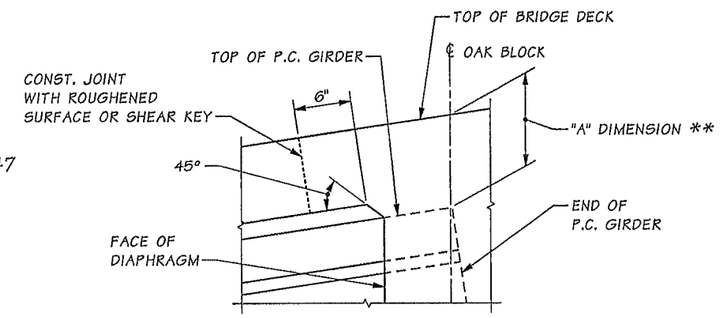

** SEE "GIRDER SCHEDULE" SHEETS

DETAIL 1

REINFORCING NOT SHOWN FOR CLARITY

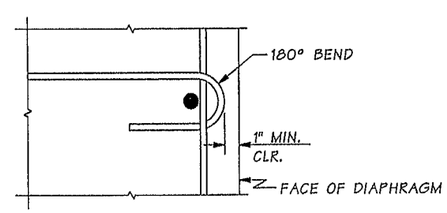

TIE BAR DETAIL

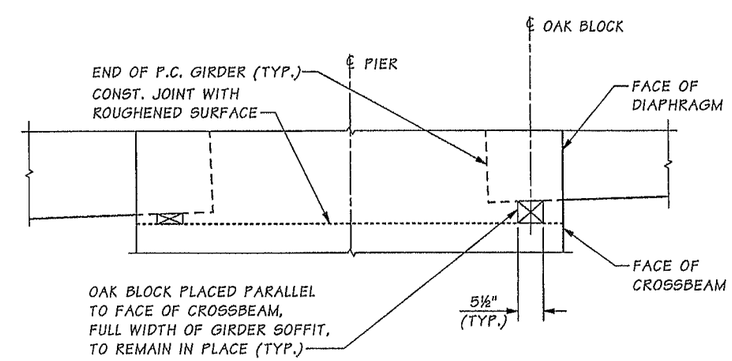

OAK BLOCK DETAIL

LONGITUDINAL DIMENSIONS ARE NORMAL TO SKEW

NOTES:

1. LONGITUDINAL DIMENSIONS ARE NORMAL TO SKEW.
2. FOR CONCRETE PLACEMENT PROCEDURE, SEE "CONSTRUCTION SEQUENCE" SHEET.
3. TIE EACH END OF SPLICE WITH WIRE. (3'-6" MIN. SPLICE)

Bridge Design Engr.	Khaleghi, B		
Supervisor	Khaleghi, B		
Designed By	Olson, DE	11/12	
Checked By	Lee, CS	12/13	
Detailed By	Bontemps, W	11/12	
Bridge Projects Engr.			
Prelim. Plan By			
Architect/Specialist			

M:\Y-Team\M ST TO PORTLAND\PACIFIC AVE BR\window files\PIER 5X-BEAMDTLS2.wnd

DATE	REVISION	BY	APP'D

REGION NO.	STATE	FED. AID PROJ. NO.	SHEET NO.	TOTAL SHEETS
10	WASH.			
JOB NUMBER 12C501				

DOUGLAS EUGENE OLSON — STATE OF WASHINGTON — 40406 — REGISTERED PROFESSIONAL ENGINEER — 02/11/14

BRIDGE AND STRUCTURES OFFICE

ALLAN KHALEGHI — STATE OF WASHINGTON — 27694 — REGISTERED PROFESSIONAL ENGINEER — 2/12/14

Washington State Department of Transportation

I-5
M ST TO PORTLAND AVE - HOV

PACIFIC AVE OVER I-5 BRIDGE No. 5/444

PIER 5
DETAILS 3 OF 3

BRIDGE SHEET NO. PA50

SHEET 1049 OF 1763 SHEETS

SR 5 FILE NO. 7451 SHEET PA50

Tue Feb 11 09:01:52 2014

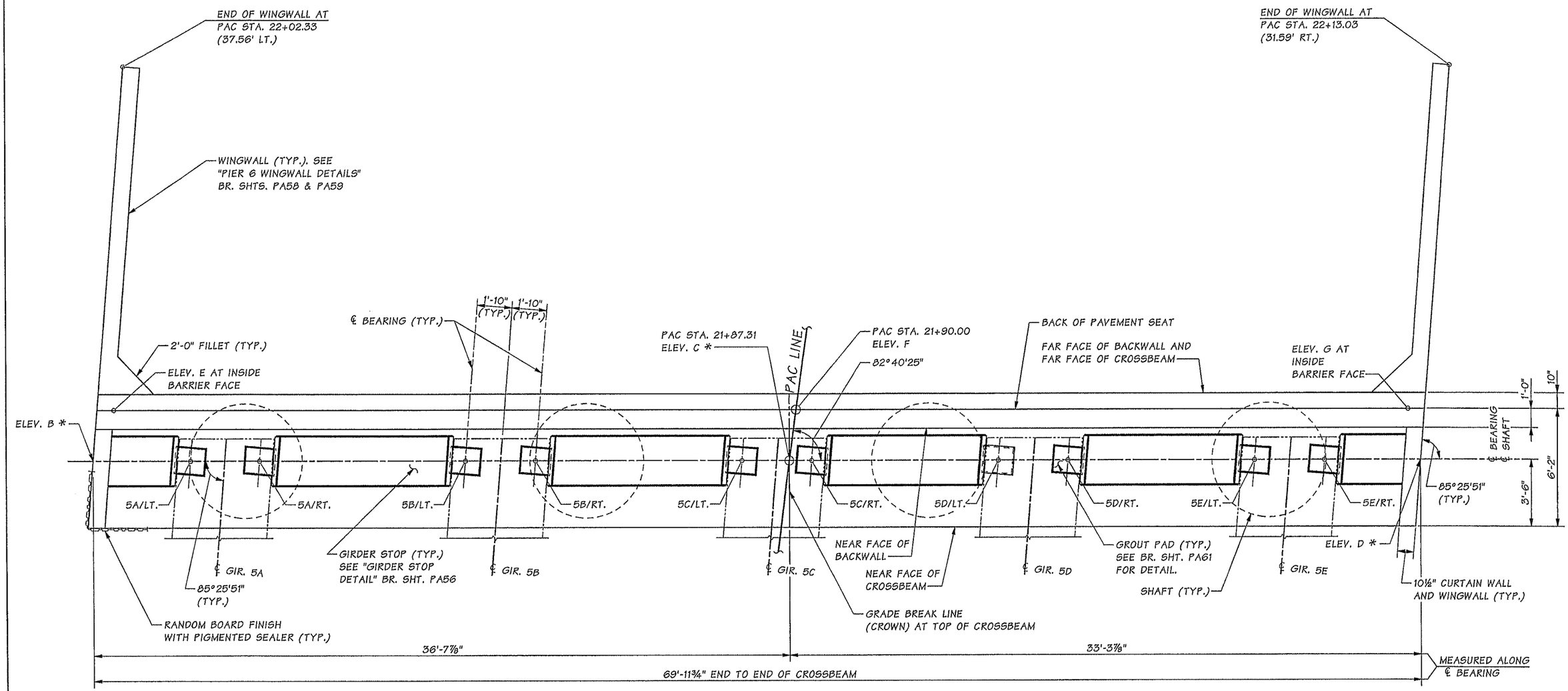

PLAN

NOTES:

1. SEE FRAMING PLAN FOR GIRDER SPACING.
2. FOR ELEVATIONS AT TOP OF CROSSBEAM AND TOP OF BACKWALL SEE BR. SHTS. PA52 & PA53.

TABLE OF ELEVATIONS AT TOP OF GROUT PAD

BEARING	5A/LT.	5A/RT.	5B/LT.	5B/RT.	5C/LT.	5C/RT.	5D/LT.	5D/RT.	5E/LT.	5E/RT.
ELEVATION	233.25	233.34	233.60	233.69	233.95	233.99	233.83	233.78	233.63	233.57

Bridge Design Engr.	Khaleghi, B	
Supervisor	Khaleghi, B	
Designed By	Olson, DE	01/13
Checked By	Lee, CS	11/13
Detailed By	Bontemps, W	01/13
Bridge Projects Engr.		
Prelim. Plan By		
Architect/Specialist		

M:\Y-Team\M ST TO PORTLAND\PACIFIC AVE BR\window files\PIER 6-1.wnd

DATE	REVISION	BY	APP'D

REGION NO.	STATE	FED. AID PROJ. NO.	SHEET NO.	TOTAL SHEETS
10	WASH.			

JOB NUMBER 12C501

DOUGLAS EUGENE OLSON, STATE OF WASHINGTON, 40106, REGISTERED PROFESSIONAL ENGINEER — 02/11/14

BRIDGE AND STRUCTURES OFFICE

BIJAN KHALEGHI, STATE OF WASHINGTON, 27696, PROFESSIONAL ENGINEER — 2/12/14

Washington State Department of Transportation

I-5
M ST TO PORTLAND AVE - HOV

PACIFIC AVE OVER I-5 BRIDGE No. 5/444

PIER 6
PLAN

BRIDGE SHEET NO. PA51

SHEET 1050 OF 1763 SHEETS

SR 5 FILE NO. 7451 SHEET PA51

Tue Feb 11 09:01:54 2014

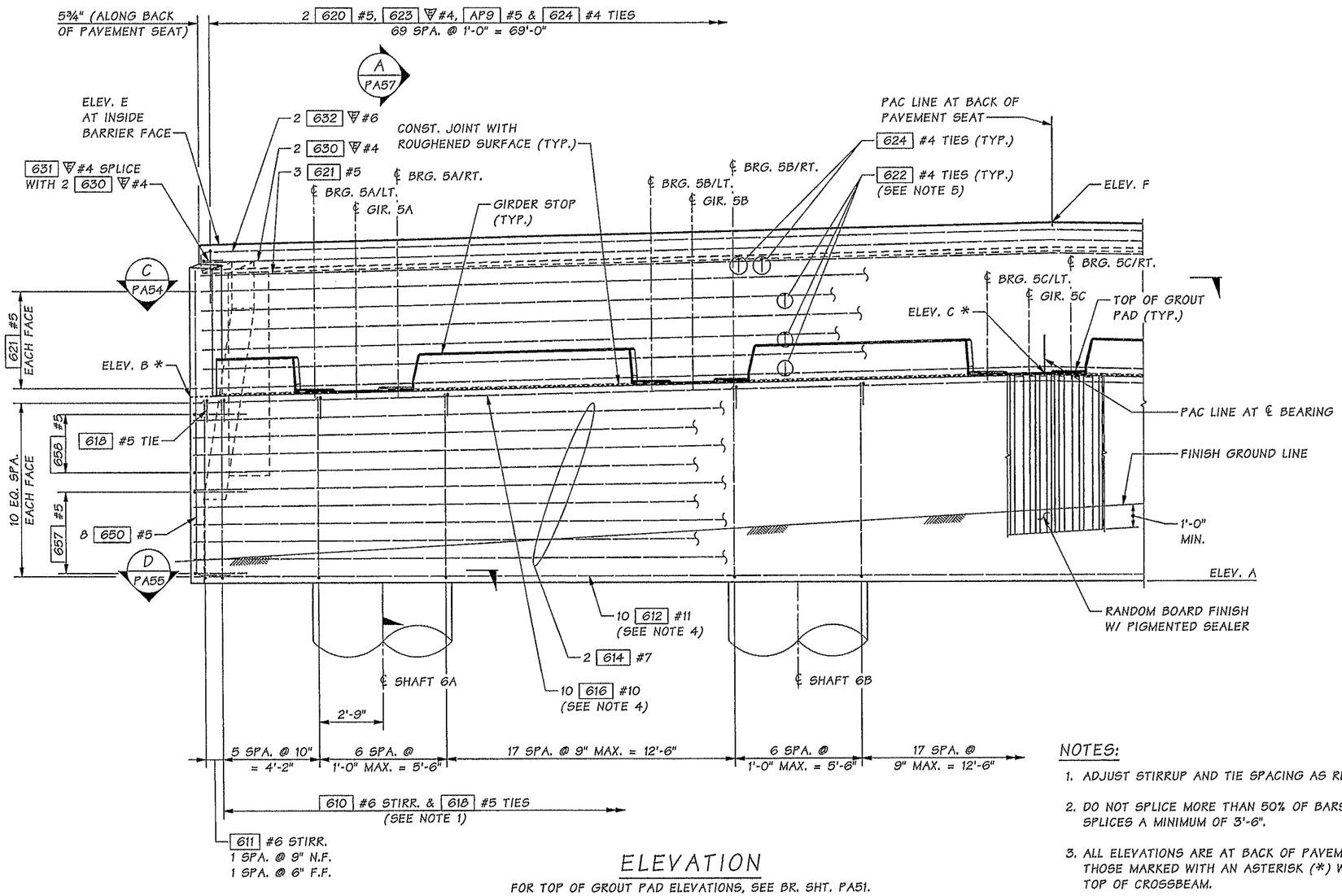

ELEVATION

FOR TOP OF GROUT PAD ELEVATIONS, SEE BR. SHT. PA51.
SEE WINGWALL DETAILS FOR WALL REINFORCEMENT NOT SHOWN.
N.F. = NEAR FACE
F.F. = FAR FACE

TABLE OF ELEVATIONS	
ELEV. A	225.00
ELEV. B *	233.00
ELEV. C *	233.87
ELEV. E	239.45
ELEV. F	240.31

NOTES:

1. ADJUST STIRRUP AND TIE SPACING AS REQUIRED TO CLEAR SHAFT REINFORCEMENT.
2. DO NOT SPLICE MORE THAN 50% OF BARS AT ANY ONE LOCATION. STAGGER ALL SPLICES A MINIMUM OF 3'-6".
3. ALL ELEVATIONS ARE AT BACK OF PAVEMENT SEAT AND TOP OF BACKWALL EXCEPT THOSE MARKED WITH AN ASTERISK (*) WHICH ARE AT CENTER LINE BEARING AND TOP OF CROSSBEAM.
4. NO LAP SPLICE ALLOWED. ALL SPLICES SHALL BE MECHANICAL SPLICES AND MEET THE REQUIREMENTS OF STD. SPEC. SECTION 6-02.3(24)F. DO NOT SPLICE MORE THAN 50% OF BARS AT ANY ONE LOCATION. STAGGER ALL MECHANICAL SPLICES A MINIMUM OF 2'-6".
5. FOR TIE BAR DETAIL AND TIE BAR SPACING, SEE BR. SHT. PA57.
6. MIN. REBAR SPLICE LENGTH UNLESS NOTED OTHERWISE:
   #4 ~ 2'-0"
   #6 ~ 3'-0"
   #5 ~ 2'-4"
   #7 ~ 3'-6"

SR 5 FILE NO. 7451 SHEET PA52

Bridge Design Engr.	Khaleghi, B		M:\Y-Team\M ST TO PORTLAND\PACIFIC AVE BR\window files\PIER 6-2.wnd			REGION NO.	STATE	FED. AID PROJ. NO.	SHEET NO.	TOTAL SHEETS
Supervisor	Khaleghi, B					10	WASH.			
Designed By	Olson, DE	01/13				JOB NUMBER 12C501				
Checked By	Lee, CS	11/13								
Detailed By	Bontemps, W	01/13								
Bridge Projects Engr.										
Prelim. Plan By										
Architect/Specialist			DATE	REVISION	BY	APP'D				

Tue Feb 11 09:01:55 2014

DOUGLAS EUGENE OLSON — STATE OF WASHINGTON — 40496 — REGISTERED PROFESSIONAL ENGINEER — 02/11/14

BRIDGE AND STRUCTURES OFFICE

BIJAN KHALEGHI — STATE OF WASHINGTON — 27605 — REGISTERED PROFESSIONAL ENGINEER — 2/12/14

Washington State Department of Transportation

I-5
M ST TO PORTLAND AVE - HOV

PACIFIC AVE OVER I-5 BRIDGE No. 5/444

PIER 6 ELEVATION
1 OF 2

BRIDGE SHEET NO. PA52

SHEET 1051 OF 1763 SHEETS

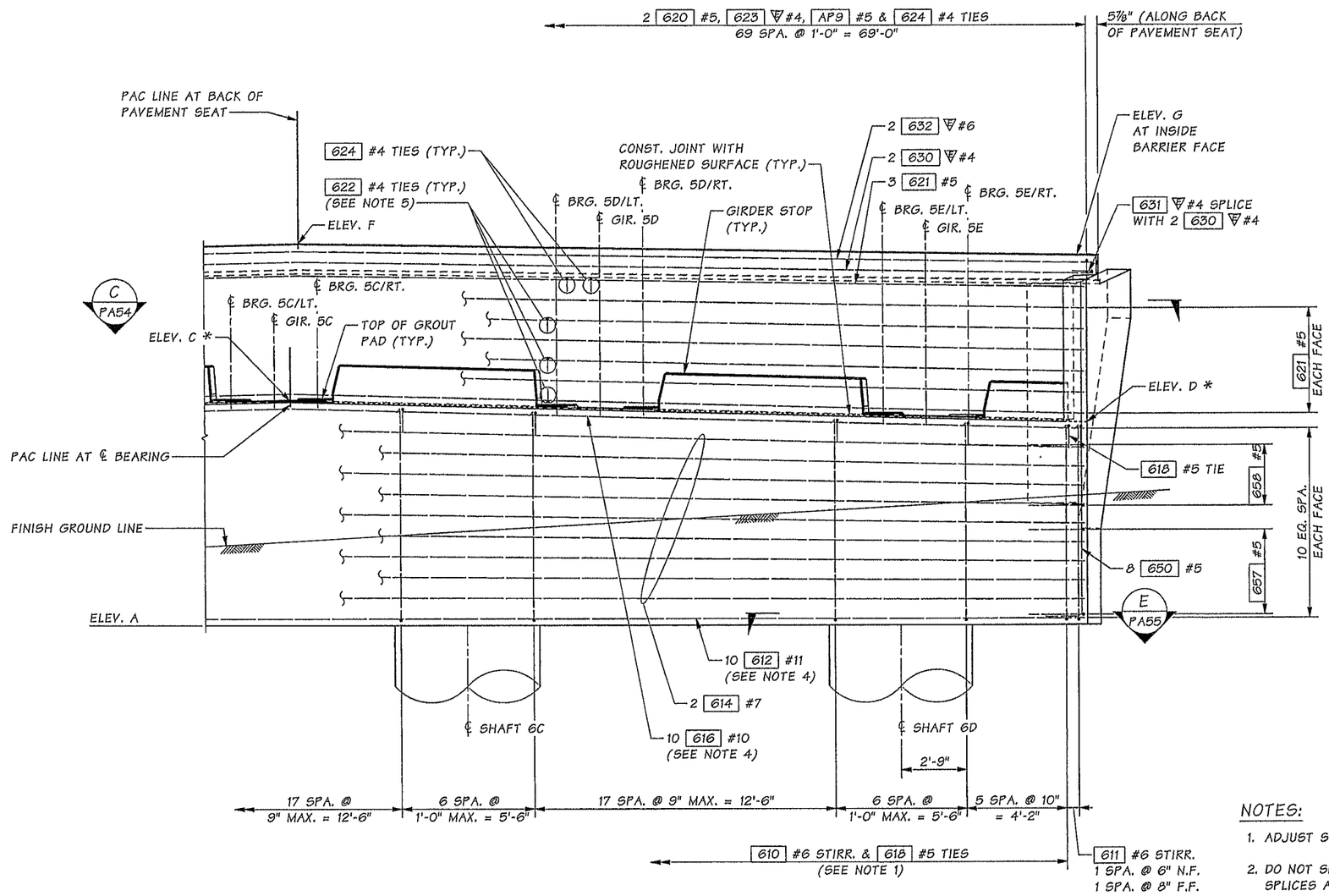

ELEVATION

FOR TOP OF GROUT PAD ELEVATIONS, SEE BR. SHT. PA51.
SEE WINGWALL DETAILS FOR WALL REINFORCEMENT NOT SHOWN.

N.F. = NEAR FACE
F.F. = FAR FACE

TABLE OF ELEVATIONS	
ELEV. A	225.00
ELEV. C *	233.87
ELEV. D *	233.37
ELEV. F	240.31
ELEV. G	239.82

NOTES:

1. ADJUST STIRRUP AND TIE SPACING AS REQUIRED TO CLEAR SHAFT REINFORCEMENT.
2. DO NOT SPLICE MORE THAN 50% OF BARS AT ANY ONE LOCATION. STAGGER ALL SPLICES A MINIMUM OF 3'-6".
3. ALL ELEVATIONS ARE AT BACK OF PAVEMENT SEAT AND TOP OF BACKWALL EXCEPT THOSE MARKED WITH AN ASTERISK (*) WHICH ARE AT CENTER LINE BEARING AND TOP OF CROSSBEAM.
4. NO LAP SPLICE ALLOWED. ALL SPLICES SHALL BE MECHANICAL SPLICES AND MEET THE REQUIREMENTS OF STD. SPEC. SECTION 6-02.3(24)F. DO NOT SPLICE MORE THAN 50% OF BARS AT ANY ONE LOCATION. STAGGER ALL MECHANICAL SPLICES A MINIMUM OF 2'-6".
5. FOR TIE BAR DETAIL AND TIE BAR SPACING, SEE BR. SHT. PA57.
6. MIN. REBAR SPLICE LENGTH UNLESS NOTED OTHERWISE:
   ∇#4 ~ 2'-0"
   ∇#6 ~ 3'-0"
   #5 ~ 2'-4"
   #7 ~ 3'-6"

SR 5 FILE NO. 7451 SHEET PA53

Bridge Design Engr.	Khaleghi, B	M:\Y-Team\M ST TO PORTLAND\PACIFIC AVE BR\window files\PIER 6-2-2.wnd								
Supervisor	Khaleghi, B									
Designed By	Olson, DE	01/13								
Checked By	Lee, CS	11/13								
Detailed By	Bontemps, W	01/13								
Bridge Projects Engr.										
Prelim. Plan By										
Architect/Specialist		DATE	REVISION	BY	APP'D					

REGION NO.	STATE	FED. AID PROJ. NO.	SHEET NO.	TOTAL SHEETS
10	WASH.			
JOB NUMBER 12C501				

Tue Feb 11 09:01:57 2014

BRIDGE AND STRUCTURES OFFICE

Washington State Department of Transportation

I-5
M ST TO PORTLAND AVE - HOV

PACIFIC AVE OVER I-5 BRIDGE No. 5/444

PIER 6 ELEVATION
2 OF 2

BRIDGE SHEET NO. PA53

SHEET 1052 OF 1763 SHEETS

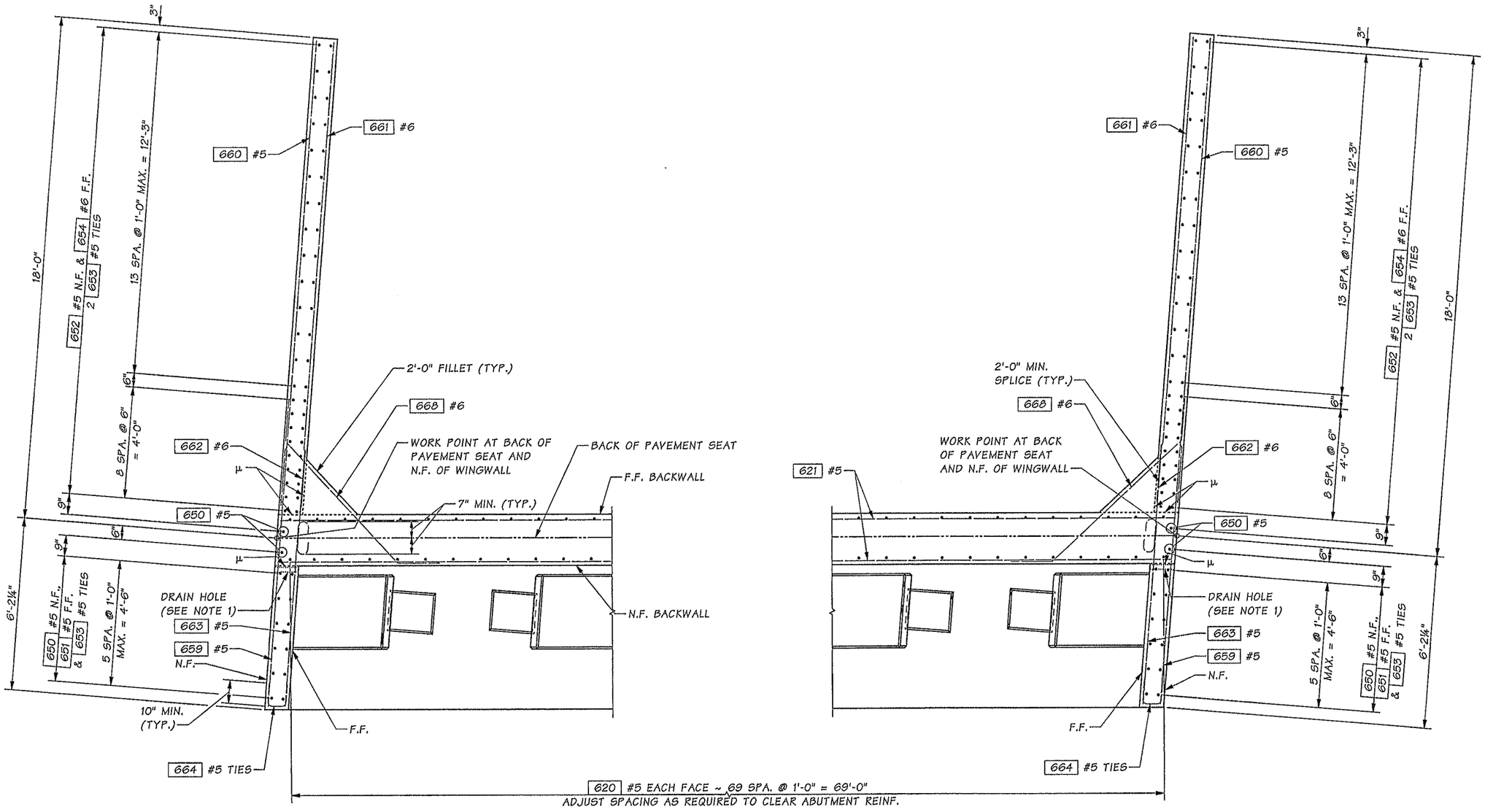

SECTION C

PA52 & PA53

N.F. = NEAR FACE
F.F. = FAR FACE

μ = OPTIONAL CONSTRUCTION JOINT

NOTES:

1. ADJUST REINFORCING TO CLEAR DRAIN HOLE AT BOTTOM OF CURTAIN WALL. SEE BR. SHT. PA58 FOR OUTSIDE ELEVATION WINGWALL.

SR 5 FILE NO. 7451 SHEET PA54

Bridge Design Engr.	Khaleghi, B		M:\Y-Team\M ST TO PORTLAND\PACIFIC AVE BR\window files\PIER 6X-BEAMDTLS1.wnd
Supervisor	Khaleghi, B		
Designed By	Olson, DE	01/13	
Checked By	Lee, CS	11/13	
Detailed By	Bontemps, W	01/13	
Bridge Projects Engr.			
Prelim. Plan By			
Architect/Specialist			

DATE	REVISION	BY	APP'D

REGION NO.	STATE	FED. AID PROJ. NO.	SHEET NO.	TOTAL SHEETS
10	WASH.			
JOB NUMBER 12C501				

DOUGLAS EUGENE OLSON, STATE OF WASHINGTON, 40106, REGISTERED PROFESSIONAL ENGINEER, 02/4/14

BRIDGE AND STRUCTURES OFFICE

BRIAN KHALEGHI, STATE OF WASHINGTON, 27586, PROFESSIONAL ENGINEER, 2/12/14

Washington State Department of Transportation

I-5
M ST TO PORTLAND AVE - HOV

PACIFIC AVE OVER I-5 BRIDGE No. 5/444

PIER 6
DETAILS 1 OF 4

BRIDGE SHEET NO. PA54

SHEET 1053 OF 1763 SHEETS

Tue Feb 11 09:01:58 2014

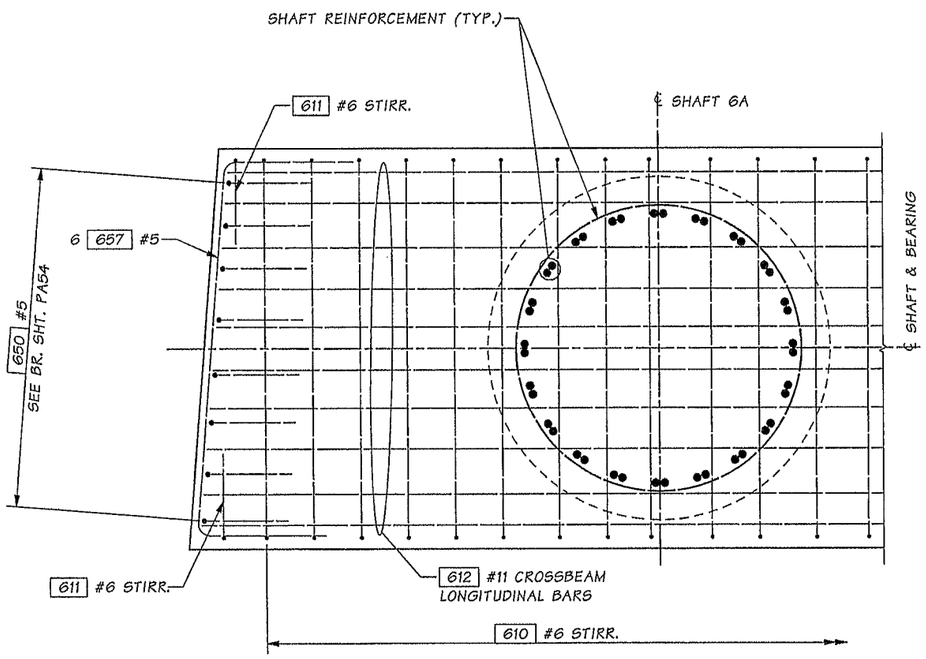

SECTION D — PA52

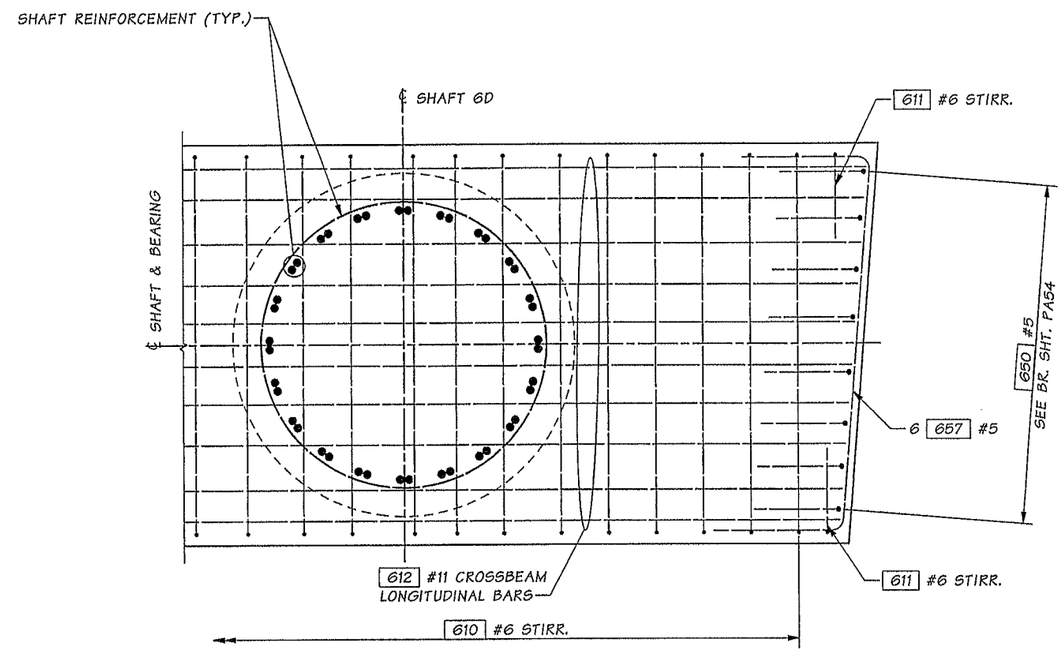

SECTION E — PA53

SR 5 FILE NO. 7451 SHEET PA55

Bridge Design Engr.	Khaleghi, B		
Supervisor	Khaleghi, B		
Designed By	Olson, DE	01/13	
Checked By	Lee, CS	11/13	
Detailed By	Bontemps, W	01/13	
Bridge Projects Engr.			
Prelim. Plan By			
Architect/Specialist			

M:\Y-Team\M ST TO PORTLAND\PACIFIC AVE BR\window files\PIER 6X-BEAMDTLS2.wnd

DATE	REVISION	BY	APP'D

REGION NO.	STATE	FED. AID PROJ. NO.	SHEET NO.	TOTAL SHEETS
10	WASH.			
JOB NUMBER 12C501				

DOUGLAS EUGENE OLSON — STATE OF WASHINGTON — 40106 — REGISTERED PROFESSIONAL ENGINEER — 02/11/14

BRIDGE AND STRUCTURES OFFICE

BIJAN KHALEGHI — STATE OF WASHINGTON — 27605 — REGISTERED PROFESSIONAL ENGINEER — 2/12/14

Washington State Department of Transportation

I-5
M ST TO PORTLAND AVE - HOV

PACIFIC AVE OVER I-5 BRIDGE No. 5/444

PIER 6
DETAILS 2 OF 4

BRIDGE SHEET NO. PA55

SHEET 1054 OF 1763 SHEETS

Tue Feb 11 09:01:59 2014

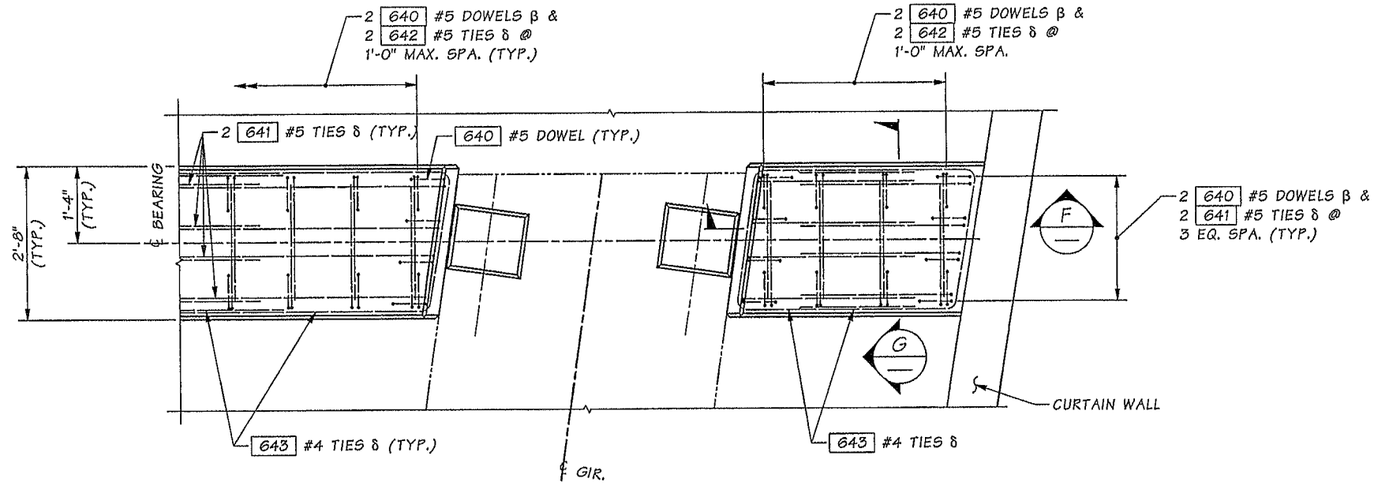

GIRDER STOP DETAIL

SEE "SECTION A" ON BR. SHT. PA61
FOR ADDITIONAL INFORMATION.

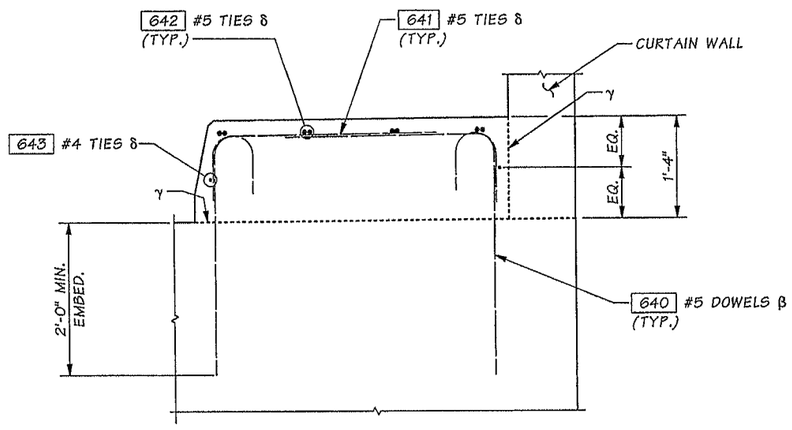

SECTION F

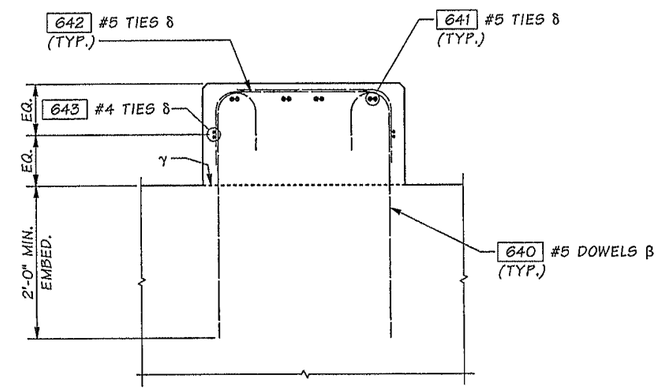

SECTION G

γ CONST. JOINT WITH ROUGHENED SURFACE.

β ADJUST DOWEL LOCATION TO CLEAR ABUTMENT REINF.

δ WITH 2'-0" MIN. SPLICE.

SR 5 FILE NO. 7451 SHEET PA56

Bridge Design Engr.	Khaleghi, B	
Supervisor	Khaleghi, B	
Designed By	Olson, DE	01/13
Checked By	Lee, CS	11/13
Detailed By	Bontemps, W	01/13
Bridge Projects Engr.		
Prelim. Plan By		
Architect/Specialist		

M:\Y-Team\M ST TO PORTLAND\PACIFIC AVE BR\window files\PIER 6X-BEAMDTLS3.wnd

DATE	REVISION	BY	APP'D

REGION NO.	STATE	FED. AID PROJ. NO.	SHEET NO.	TOTAL SHEETS
10	WASH.			

JOB NUMBER 12C501

BRIDGE AND STRUCTURES OFFICE

02/11/14 2/12/14

Washington State Department of Transportation

I-5
M ST TO PORTLAND AVE - HOV

PACIFIC AVE OVER I-5 BRIDGE No. 5/444

PIER 6
DETAILS 3 OF 4

BRIDGE SHEET NO. PA56

SHEET 1055 OF 1763 SHEETS

Tue Feb 11 09:02:01 2014

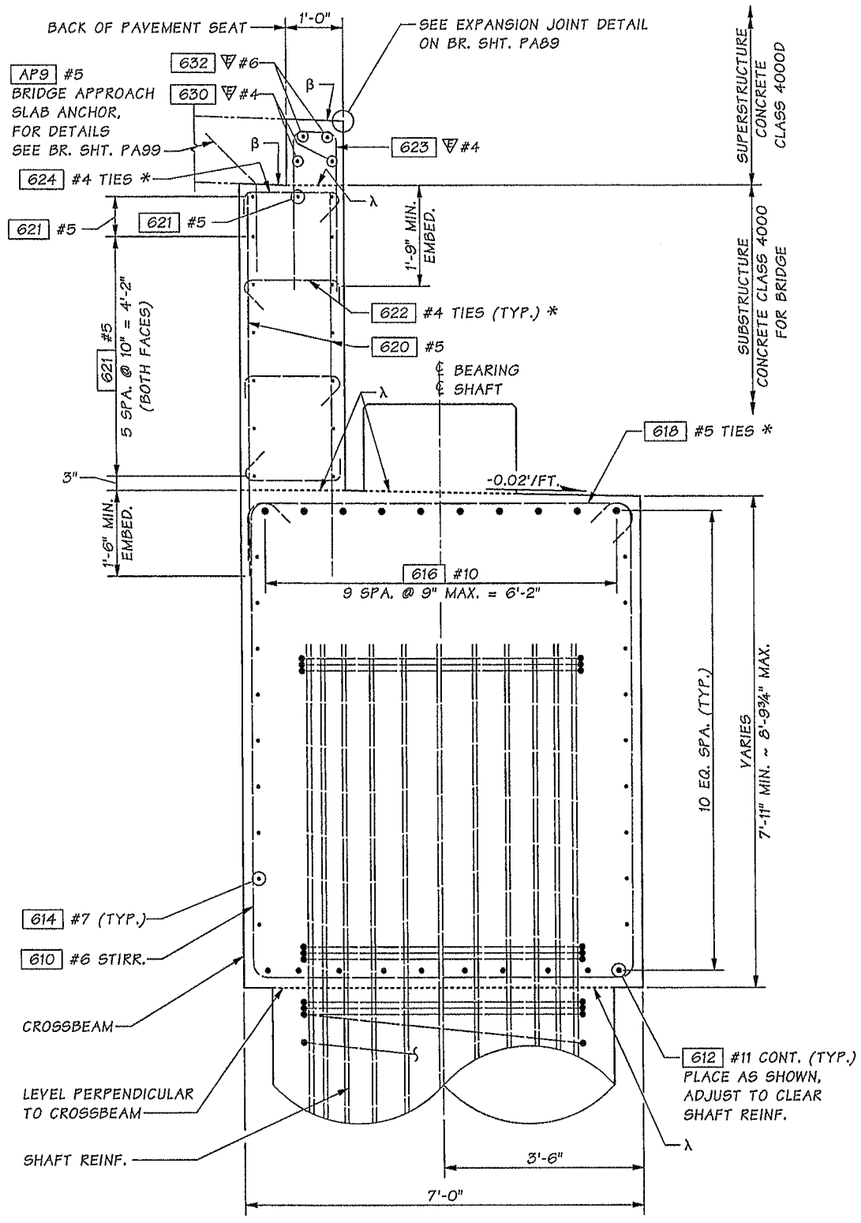

SECTION A PA52

* ALTERNATE 135° HOOK EVERY OTHER TIE BAR.

λ CONST. JOINT WITH ROUGHENED SURFACE

β PARALLEL TO GRADE.

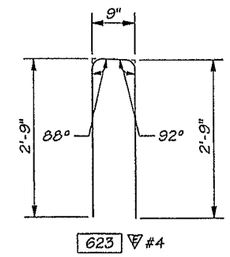

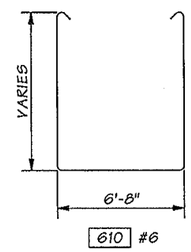

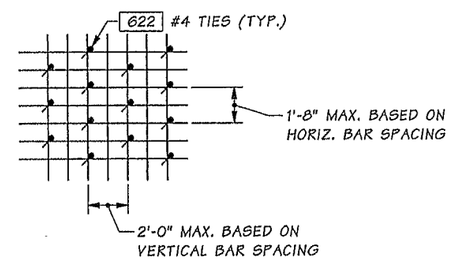

TIE BAR SPACING DETAIL

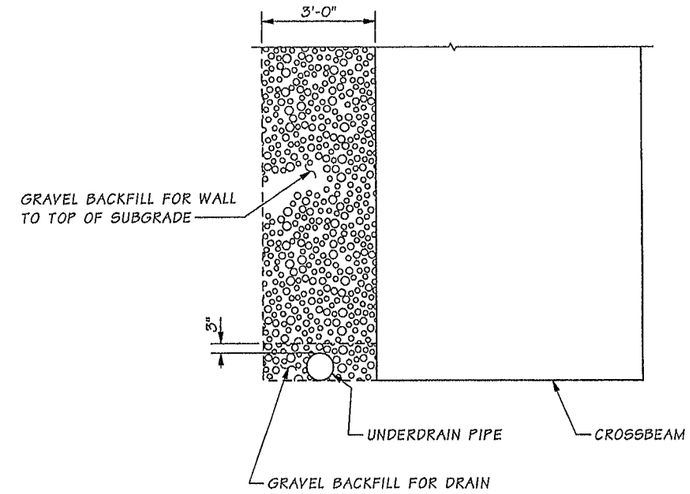

DRAINAGE DETAIL

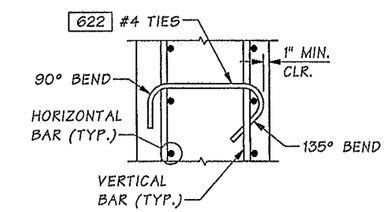

TIE BAR DETAIL

ALTERNATE 135° HOOK EVERY OTHER TIE BAR

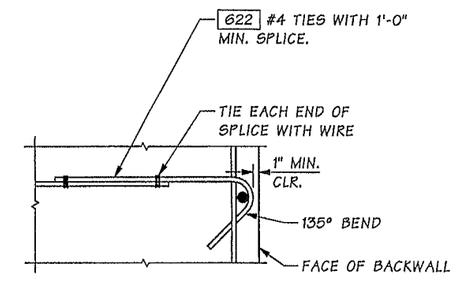

TIE BAR SPLICE DETAIL OPTION

NOTES:

1. LONGITUDINAL DIMENSIONS ARE NORMAL TO SKEW.
2. FOR CONCRETE PLACEMENT PROCEDURE. SEE "CONSTRUCTION SEQUENCE" SHEET.

SR 5 FILE NO. 7451 SHEET PA57

Bridge Design Engr.	Khaleghi, B		M:\Y-Team\M ST TO PORTLAND\PACIFIC AVE BR\window files\PIER 6X-BEAMDTLS4.wnd								
Supervisor	Khaleghi, B										
Designed By	Olson, DE	01/13									
Checked By	Lee, CS	11/13									
Detailed By	Bontemps, W	01/13									
Bridge Projects Engr.											
Prelim. Plan By											
Architect/Specialist			DATE	REVISION	BY	APP'D					

REGION NO.	STATE	FED. AID PROJ. NO.	SHEET NO.	TOTAL SHEETS
10	WASH.			
JOB NUMBER 12C501				

BRIDGE AND STRUCTURES OFFICE

02/11/14 2/12/14

Washington State Department of Transportation

I-5
M ST TO PORTLAND AVE - HOV

PACIFIC AVE OVER I-5 BRIDGE No. 5/444

PIER 6
DETAILS 4 OF 4

BRIDGE SHEET NO. PA57

SHEET 1056 OF 1763 SHEETS

Tue Feb 11 09:02:02 2014

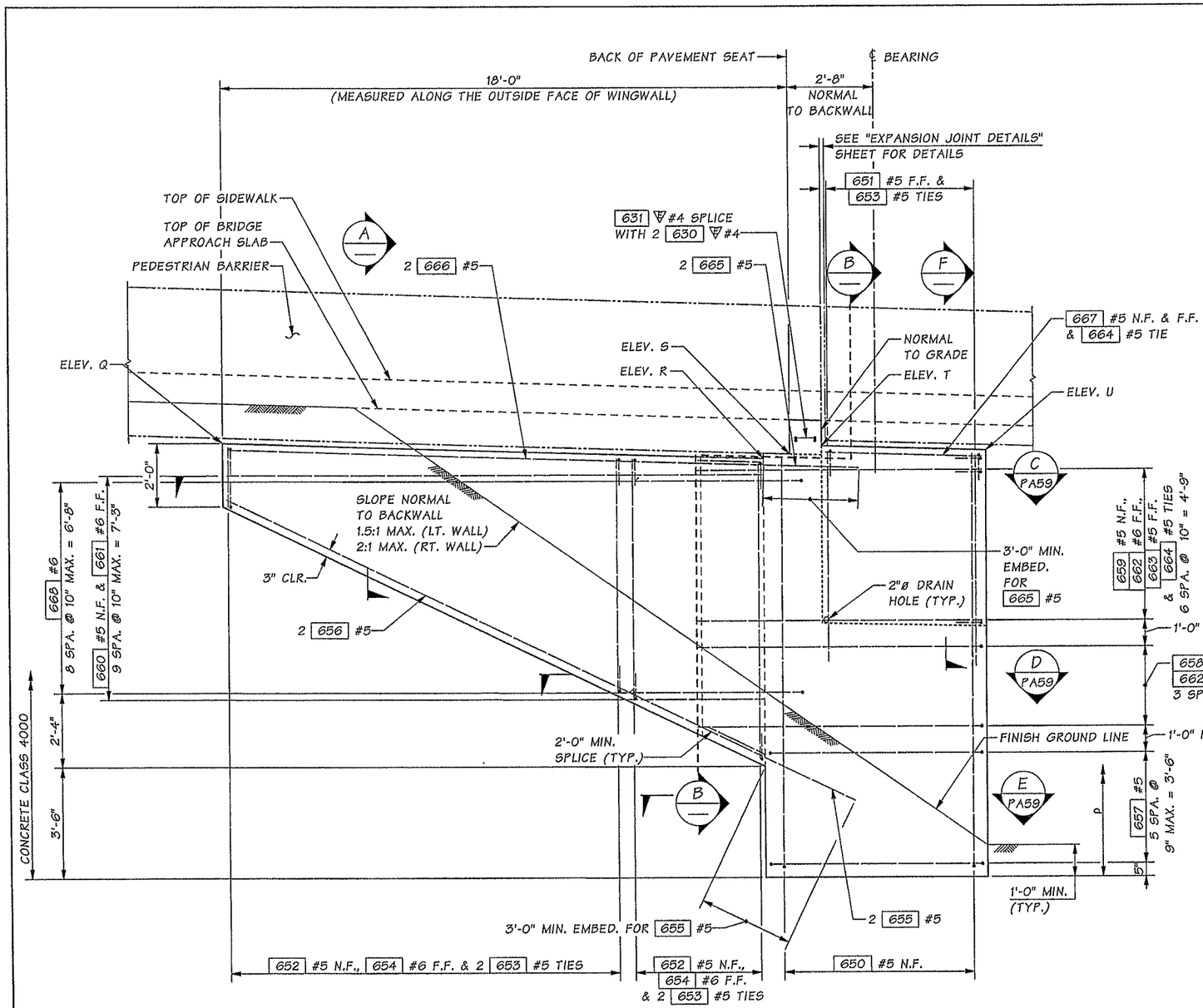

OUTSIDE ELEVATION
WINGWALL

PIER 6 LEFT SHOWN, PIER 6 RIGHT SIMILAR,
FOR REINFORCEMENT NOT SHOWN SEE PIER 6 PLAN & ELEVATION PLANS.
N.F. = NEAR FACE
F.F. = FAR FACE
ρ LIMITS OF RANDOM BOARD FINISH &
PIGMENTED SEALER AT FACE OF
AND AT ENDS OF ABUTMENT.

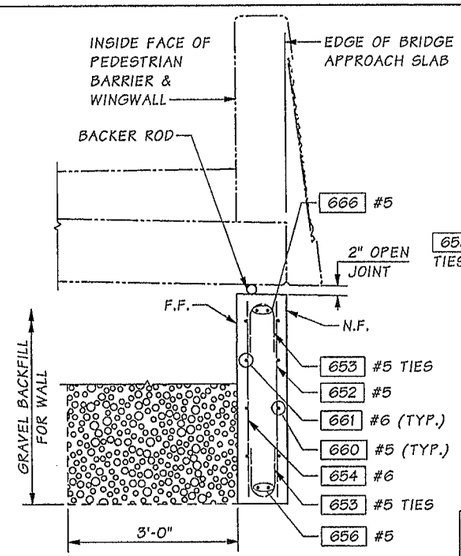

SECTION A

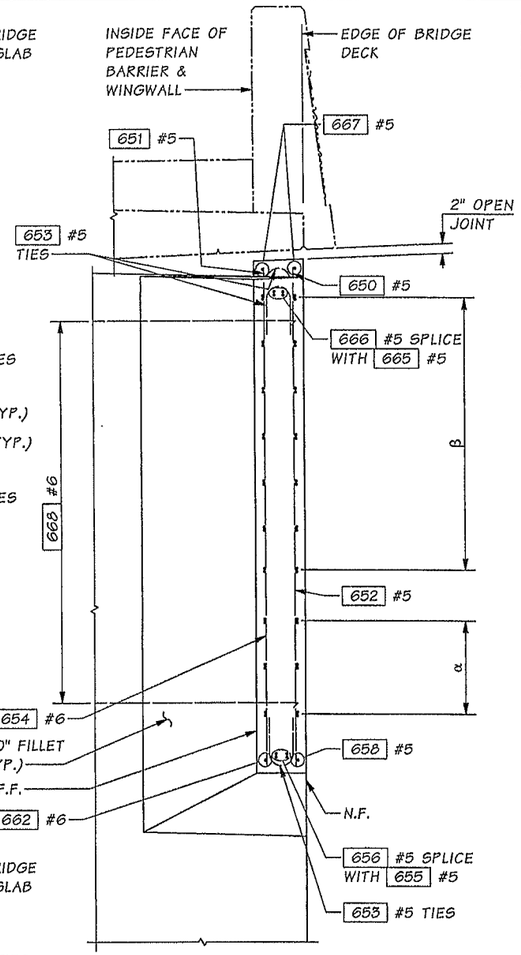

SECTION B

α 660 #5 N.F. SPLICE WITH 658 #5
661 #6 F.F. SPLICE WITH 662 #6

β 660 #5 N.F. SPLICE WITH 659 #5
661 #6 F.F. SPLICE WITH 662 #6

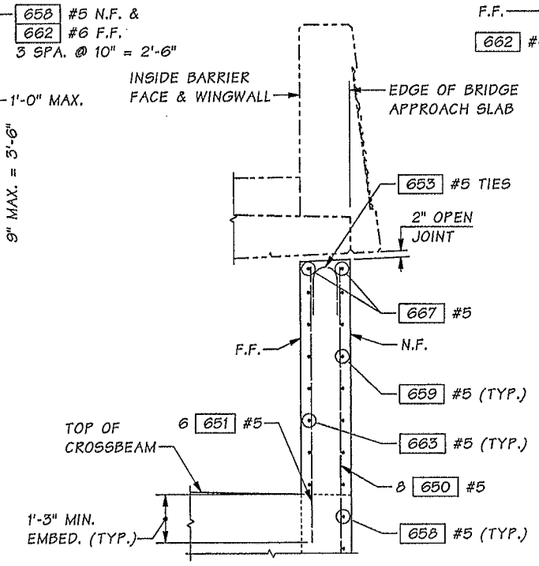

SECTION F

WINGWALL ELEVATIONS

WINGWALL LOCATION	ELEVATION POINT AT N.F. OF WINGWALL				
	Q	R	S	T	U
PIER 6 LEFT	238.72	238.20	238.34	238.60	238.45
PIER 6 RIGHT	239.22	238.59	238.72	238.98	238.79

Bridge Design Engr.	Khaleghi, B		M:\Y-Team\M ST TO PORTLAND\PACIFIC AVE BR\window files\PIER 6 WINGWALL 1.wnd
Supervisor	Khaleghi, B		
Designed By	Olson, DE	01/13	
Checked By	Lee, CS	11/13	
Detailed By	Bontemps, W	01/13	
Bridge Projects Engr.			
Prelim. Plan By			
Architect/Specialist			

DATE	REVISION	BY	APP'D

REGION NO.	STATE	FED. AID PROJ. NO.	SHEET NO.	TOTAL SHEETS
10	WASH.			
JOB NUMBER 12C501				

DOUGLAS EUGENE OLSON — STATE OF WASHINGTON — 40404 — REGISTERED PROFESSIONAL ENGINEER — 02/11/14

BRIDGE AND STRUCTURES OFFICE

BRIAN KHALEGHI — STATE OF WASHINGTON — 27695 — STRUCTURAL ENGINEER — PROFESSIONAL ENGINEER — 2/12/14

Washington State Department of Transportation

I-5
M ST TO PORTLAND AVE - HOV

PACIFIC AVE OVER I-5 BRIDGE No. 5/444

PIER 6 WINGWALL
DETAILS 1 OF 2

BRIDGE SHEET NO. PA58

SHEET 1057 OF 1763 SHEETS

SR 5 FILE NO. 7451 SHEET PA58

Tue Feb 11 09:02:03 2014

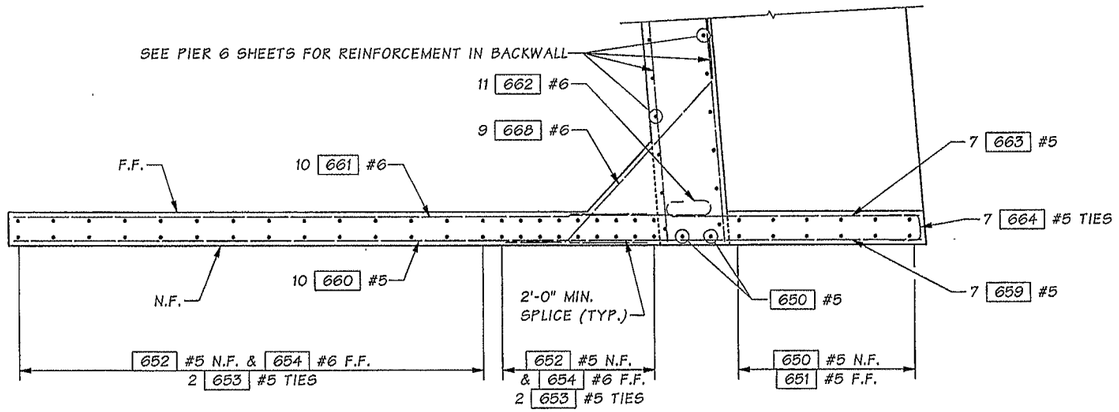

SECTION C
LEFT WINGWALL SHOWN, RIGHT WINGWALL SIMILAR
PA58

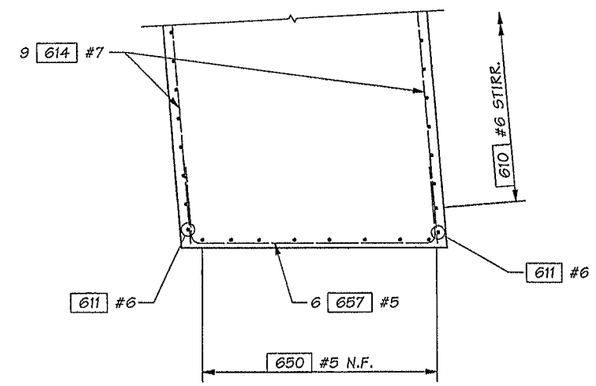

SECTION E
LEFT WINGWALL SHOWN, RIGHT WINGWALL SIMILAR
PA58

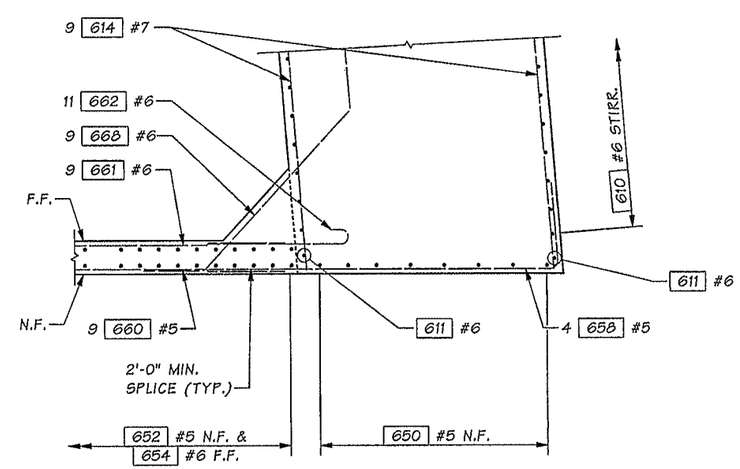

SECTION D
LEFT WINGWALL SHOWN, RIGHT WINGWALL SIMILAR
PA58

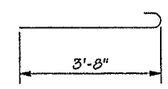

662 #6

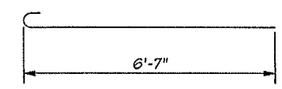

663 #5

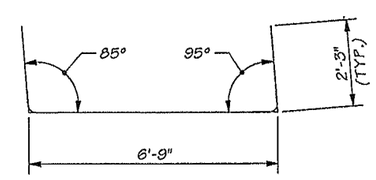

657 #5

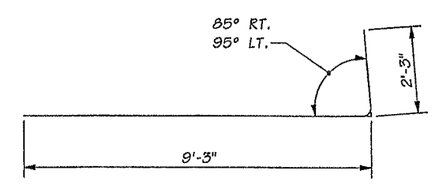

658 #5

N.F. = NEAR FACE
F.F. = FAR FACE

SR 5 FILE NO. 7451 SHEET PA59

Bridge Design Engr.	Khaleghi, B		
Supervisor	Khaleghi, B		
Designed By	Olson, DE	01/13	
Checked By	Lee, CS	11/13	
Detailed By	Bontemps, W	01/13	
Bridge Projects Engr.			
Prelim. Plan By			
Architect/Specialist			

M:\Y-Team\M ST TO PORTLAND\PACIFIC AVE BR\window files\PIER 6 WINGWALL 2.wnd

DATE	REVISION	BY	APP'D

REGION NO.	STATE	FED. AID PROJ. NO.	SHEET NO.	TOTAL SHEETS
10	WASH.			
JOB NUMBER 12C501				

DOUGLAS EUGENE OLSON, STATE OF WASHINGTON, 21106, REGISTERED PROFESSIONAL ENGINEER, 02/11/14

BRIDGE AND STRUCTURES OFFICE

BIJAN KHALEGHI, STATE OF WASHINGTON, 27885, PROFESSIONAL ENGINEER, 2/12/14

Washington State Department of Transportation

I-5
M ST TO PORTLAND AVE - HOV

PACIFIC AVE OVER I-5 BRIDGE No. 5/444

PIER 6 WINGWALL DETAILS 2 OF 2

BRIDGE SHEET NO. PA59

SHEET 1058 OF 1763 SHEETS

Tue Feb 11 09:02:06 2014

SKEW ANGLE TABLE	
GIRDER	ANGLE
1A	8°08'
1B	6°21'
1C	4°34'
1D	4°02'
1E	3°27'

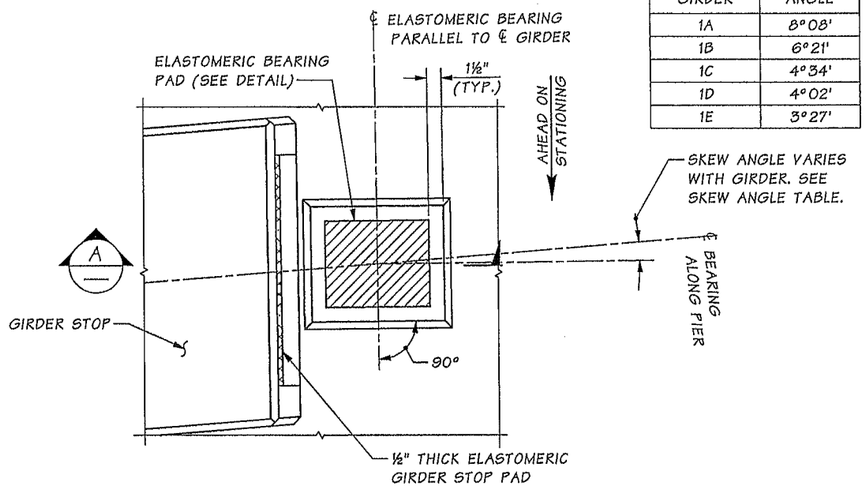

GROUT PAD DETAIL

GIRDER NOT SHOWN FOR CLARITY.
GIRDER 1C ELASTOMERIC BEARING RIGHT SHOWN, OTHERS SIMILAR.

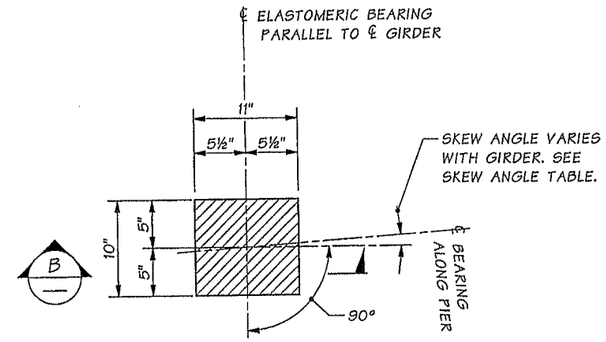

ELASTOMERIC BEARING PAD

LAMINATED ELASTOMERIC BEARING PAD (9 SHIMS)

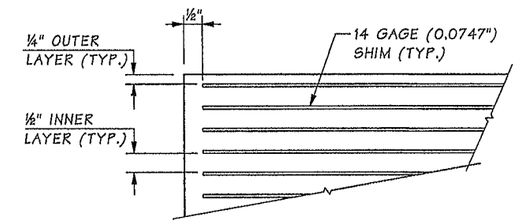

SECTION B

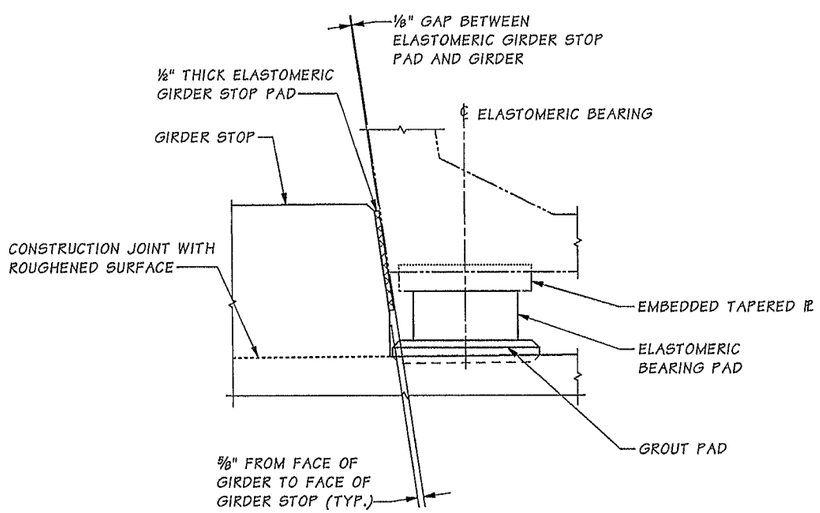

SECTION A

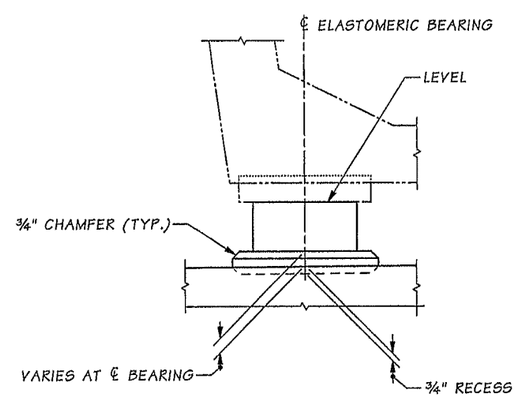

GROUT PAD ELEVATION

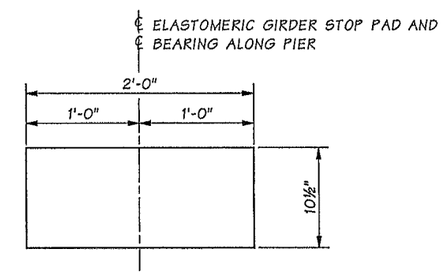

ELASTOMERIC GIRDER STOP PAD

SHEAR MODULUS = 165 PSI AT 73° F

NOTES:

1. GIRDER STOPS SHALL BE CONSTRUCTED AFTER GIRDER PLACEMENT.
2. THE ELASTOMERIC GIRDER STOP PADS SHALL BE BONDED TO THE GIRDER STOPS WITH AN APPROVED ADHESIVE.

PIER 1 BEARING DESIGN TABLE AASHTO METHOD B DESIGN	
SERVICE - I LIMIT STATE	
DEAD LOAD (DL) REACTION	60 KIPS
LIVE LOAD REACTION (W/O IMPACT)	56 KIPS
UNLOADED HEIGHT	5.17 IN.
LOADED HEIGHT (DL)	5.01 IN.
SHEAR MODULUS AT 73° F	165 PSI

SR 5 FILE NO. 7451 SHEET PA60

Bridge Design Engr.	Khaleghi, B		
Supervisor	Khaleghi, B		
Designed By	Olson, DE	12/12	
Checked By	Mizumori, A	11/13	
Detailed By	Bontemps, W	10/12	
Bridge Projects Engr.			
Prelim. Plan By			
Architect/Specialist			

M:\Y-Team\M ST TO PORTLAND\PACIFIC AVE BR\window files\BEARING1.wnd

DATE	REVISION	BY	APP'D

REGION NO.	STATE	FED. AID PROJ. NO.	SHEET NO.	TOTAL SHEETS
10	WASH.			
JOB NUMBER 12C501				

DOUGLAS EUGENE OLSON — STATE OF WASHINGTON — 40405 — REGISTERED PROFESSIONAL ENGINEER — 02/11/14

BRIDGE AND STRUCTURES OFFICE

BILAN KHALEGHI — STATE OF WASHINGTON — 27695 — PROFESSIONAL ENGINEER — 2/12/14

Washington State Department of Transportation

I-5
M ST TO PORTLAND AVE - HOV

PACIFIC AVE OVER I-5 BRIDGE No. 5/444

TRAPEZOIDAL TUB GIRDER
PIER 1 ELASTOMERIC BEARING DETAILS

BRIDGE SHEET NO. PA60

SHEET 1059 OF 1763 SHEETS

Tue Feb 11 09:02:07 2014

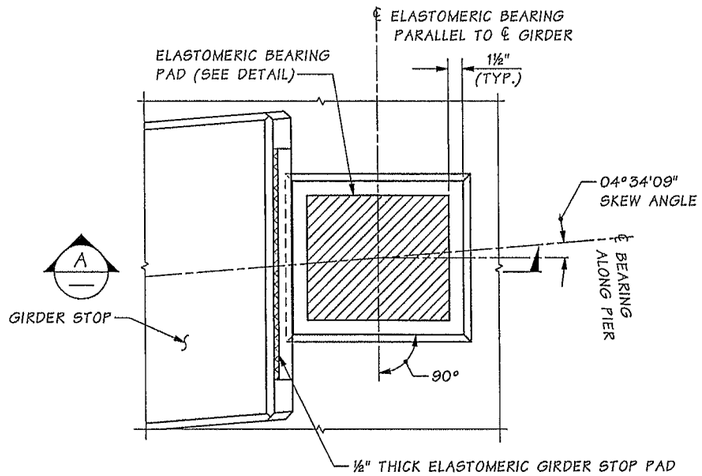

GROUT PAD DETAIL

GIRDER NOT SHOWN FOR CLARITY.
GIRDER 5B ELASTOMERIC BEARING LEFT SHOWN, OTHERS SIMILAR.

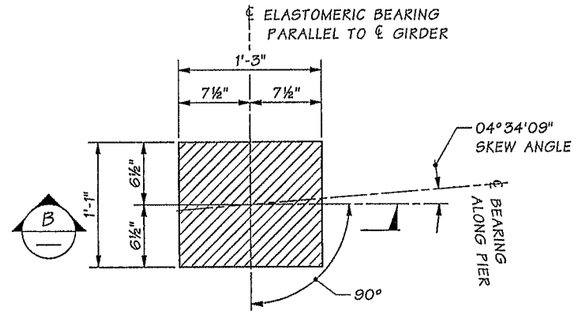

ELASTOMERIC BEARING PAD

LAMINATED ELASTOMERIC BEARING PAD (9 SHIMS)

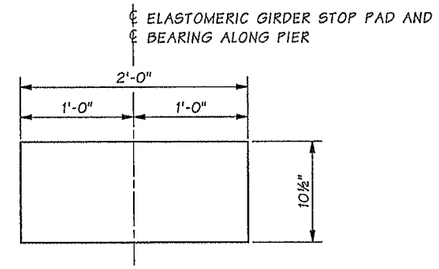

ELASTOMERIC GIRDER STOP PAD

SHEAR MODULUS = 165 PSI AT 73° F

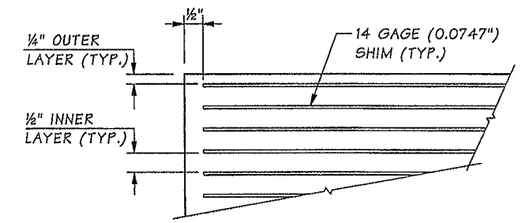

SECTION B

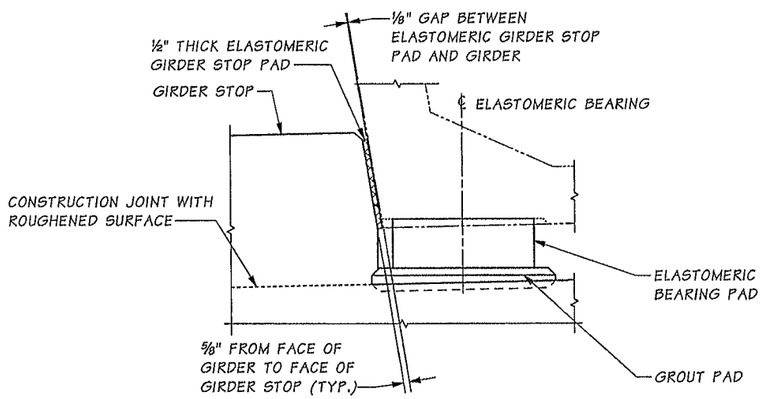

SECTION A

GIRDER 5B ELASTOMERIC BEARING
LEFT SHOWN, OTHERS SIMILAR OR OPPOSITE.

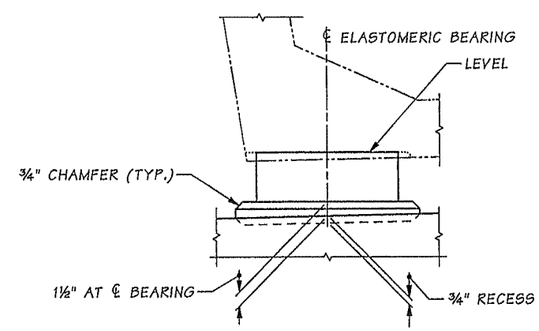

GROUT PAD ELEVATION

GIRDER 5B ELASTOMERIC BEARING
LEFT SHOWN, OTHERS SIMILAR OR OPPOSITE.

NOTES:

1. GIRDER STOPS SHALL BE CONSTRUCTED AFTER GIRDER PLACEMENT.
2. THE ELASTOMERIC GIRDER STOP PADS SHALL BE BONDED TO THE GIRDER STOPS WITH AN APPROVED ADHESIVE.

PIER 6 BEARING DESIGN TABLE AASHTO METHOD B DESIGN	
SERVICE - I LIMIT STATE	
DEAD LOAD (DL) REACTION	141 KIPS
LIVE LOAD REACTION (W/O IMPACT)	76 KIPS
UNLOADED HEIGHT	5.17 IN
LOADED HEIGHT (DL)	5.05 IN
SHEAR MODULUS AT 73° F	165 PSI

Bridge Design Engr.	Khaleghi, B		M:\Y-Team\M ST TO PORTLAND\PACIFIC AVE BR\window files\BEARING6.wnd							
Supervisor	Khaleghi, B					REGION NO.	STATE	FED. AID PROJ. NO.	SHEET NO.	TOTAL SHEETS
Designed By	Olson, DE	12/12				10	WASH.			
Checked By	Mizumori, A	11/13								
Detailed By	Bontemps, W	10/12				JOB NUMBER 12C501				
Bridge Projects Engr.										
Prelim. Plan By										
Architect/Specialist			DATE	REVISION	BY	APP'D				

Tue Feb 11 09:02:08 2014

DOUGLAS EUGENE OLSON — STATE OF WASHINGTON — 40406 — REGISTERED PROFESSIONAL ENGINEER — 02/11/14

BRIDGE AND STRUCTURES OFFICE

BRIAN KHALEGHI — STATE OF WASHINGTON — 27695 — STRUCTURAL ENGINEER — PROFESSIONAL ENGINEER — 2/12/14

Washington State Department of Transportation

I-5
M ST TO PORTLAND AVE - HOV

PACIFIC AVE OVER I-5 BRIDGE No. 5/444

TRAPEZOIDAL TUB GIRDER
PIER 6 ELASTOMERIC BEARING DETAILS

BRIDGE SHEET NO. PA61

SHEET 1060 OF 1763 SHEETS

SR 5 FILE NO. 7451 SHEET PA61

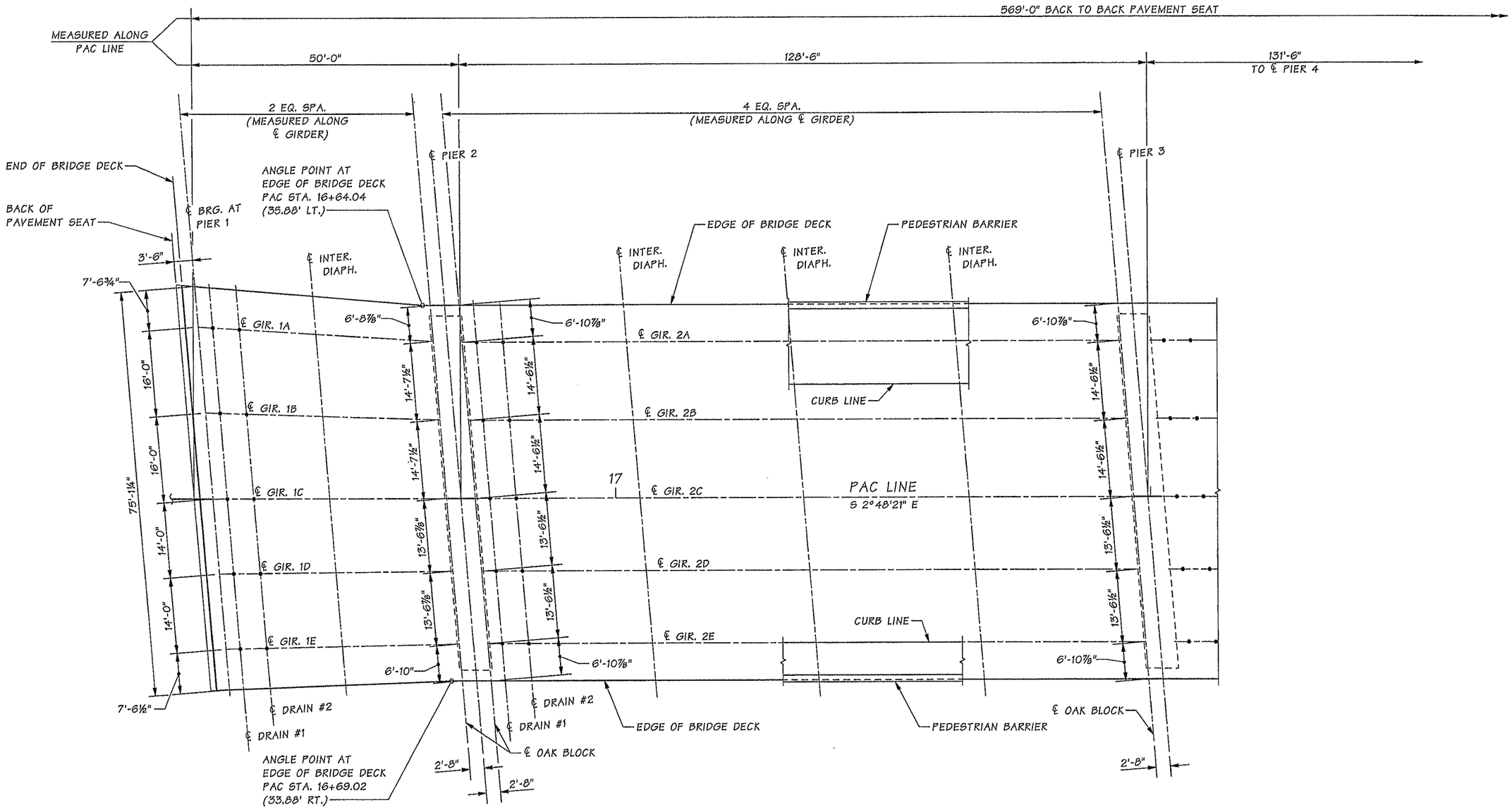

FRAMING PLAN

TRANSVERSE DIMENSION ARE MEASURED ALONG ℄ BRG. & ℄ OAK BLOCK.
BEARING OF ALL PIERS IS N 82°37'30" E.

NOTES:

1. SEE GIRDER SCHEDULE FOR LOCATIONS OF ℄ DRAINS A & B FOR EACH GIRDER.

Bridge Design Engr.	Khaleghi, B	
Supervisor	Khaleghi, B	
Designed By	Olson, DE	11/12
Checked By	Mizumori, A	03/13
Detailed By	Bontemps, W	10/12
Bridge Projects Engr.		
Prelim. Plan By		
Architect/Specialist		

M:\Y-Team\M ST TO PORTLAND\PACIFIC AVE BR\window files\FRAMINGPLAN1.wnd

DATE	REVISION	BY	APP'D

REGION NO.	STATE	FED. AID PROJ. NO.	SHEET NO.	TOTAL SHEETS
10	WASH.			
JOB NUMBER 12C501				

NICHOLAS EUGENE OLSON — STATE OF WASHINGTON — 40406 — REGISTERED PROFESSIONAL ENGINEER — 02/11/14

BRIDGE AND STRUCTURES OFFICE

BIJAN KHALEGHI — STATE OF WASHINGTON — 27696 — PROFESSIONAL ENGINEER — 2/12/14

Washington State Department of Transportation

I-5
M ST TO PORTLAND AVE - HOV

PACIFIC AVE OVER I-5 BRIDGE No. 5/444

FRAMING PLAN
1 OF 3

BRIDGE SHEET NO. PA62

SHEET 1061 OF 1763 SHEETS

SR 5 FILE NO. 7451 SHEET PA62

Tue Feb 11 09:02:10 2014

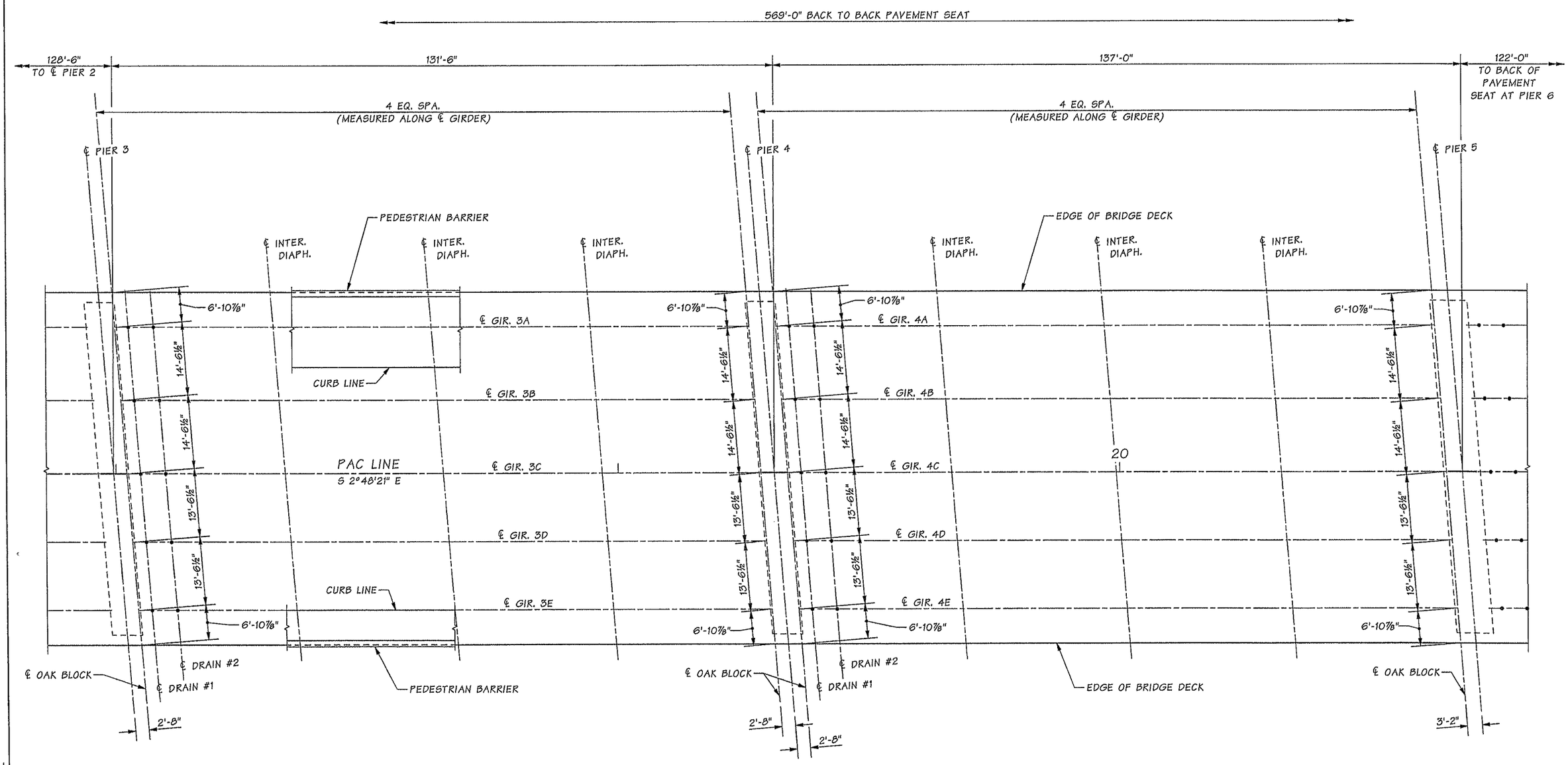

FRAMING PLAN

TRANSVERSE DIMENSION ARE MEASURED ALONG ℄ BRG. & ℄ OAK BLOCK.
BEARING OF ALL PIERS IS N 82°37'30" E.

NOTES:

1. SEE GIRDER SCHEDULE FOR LOCATIONS OF ℄ DRAINS A & B FOR EACH GIRDER.

Bridge Design Engr.	Khaleghi, B		
Supervisor	Khaleghi, B		
Designed By	Olson, DE	11/12	
Checked By	Mizumori, A	03/13	
Detailed By	Bontemps, W	10/12	
Bridge Projects Engr.			
Prelim. Plan By			
Architect/Specialist			

M:\Y-Team\M ST TO PORTLAND\PACIFIC AVE BR\window files\FRAMINGPLAN2.wnd

DATE	REVISION	BY	APP'D

REGION NO.	STATE	FED. AID PROJ. NO.	SHEET NO.	TOTAL SHEETS
10	WASH.			
JOB NUMBER 12C501				

DOUGLAS EUGENE OLSON, STATE OF WASHINGTON, 40106, REGISTERED PROFESSIONAL ENGINEER — 02/11/14

BRIDGE AND STRUCTURES OFFICE

ELIAN KHALEGHI, STATE OF WASHINGTON, 27695, PROFESSIONAL ENGINEER — 2/12/14

Washington State Department of Transportation

I-5
M ST TO PORTLAND AVE - HOV

PACIFIC AVE OVER I-5 BRIDGE No. 5/444

FRAMING PLAN
2 OF 3

BRIDGE SHEET NO. PA63

SHEET 1062 OF 1763 SHEETS

SR 5 FILE NO. 7451 SHEET PA63

Tue Feb 11 09:02:11 2014

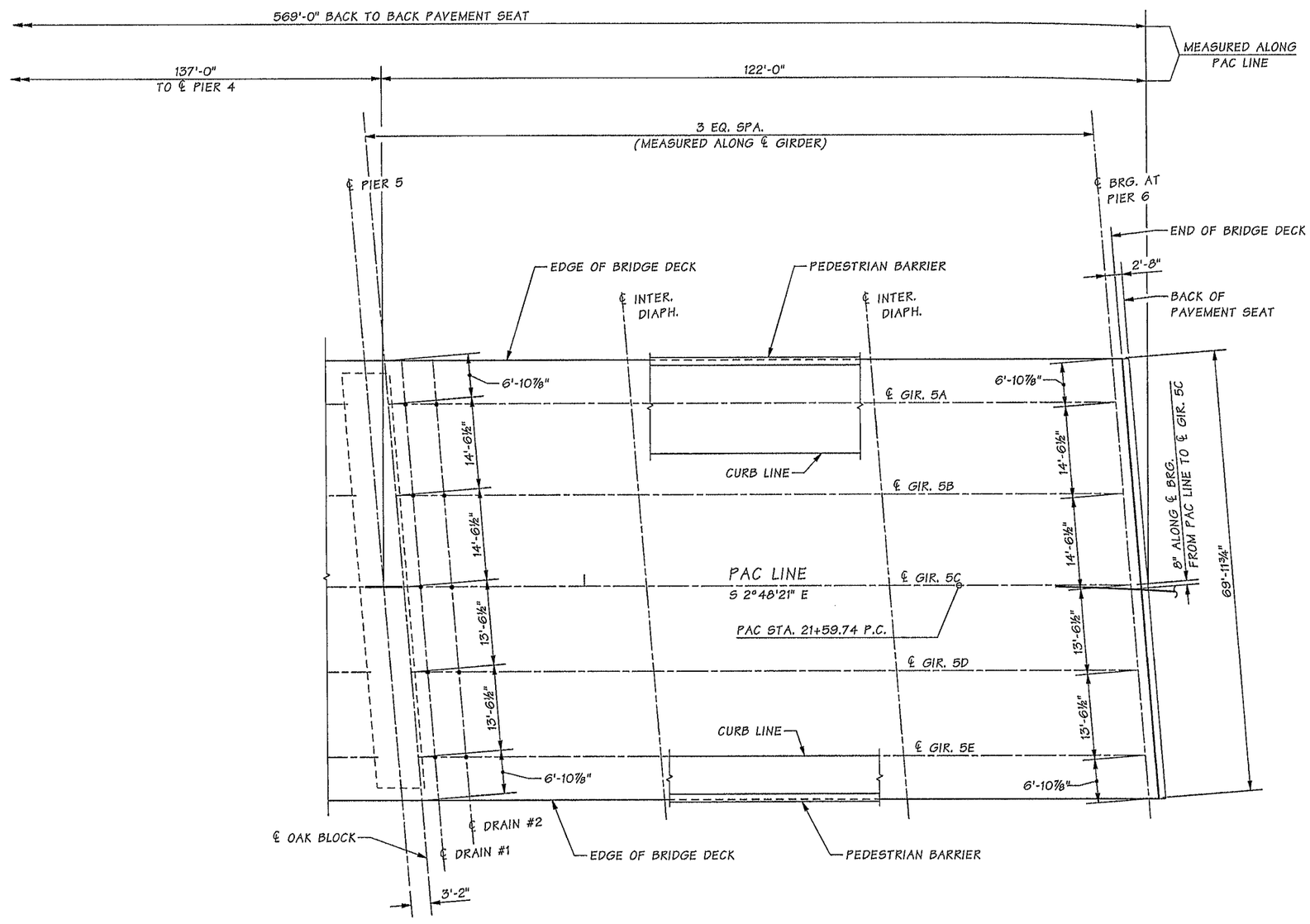

FRAMING PLAN

TRANSVERSE DIMENSION ARE MEASURED ALONG ℄ BRG. & ℄ OAK BLOCK.
BEARING OF ALL PIERS IS N 82°37'30" E.

NOTES:

1. SEE GIRDER SCHEDULE FOR LOCATIONS OF ℄ DRAINS A & B FOR EACH GIRDER.

SR 5 FILE NO. 7451 SHEET PA64

Bridge Design Engr.	Khaleghi, B	
Supervisor	Khaleghi, B	
Designed By	Olson, DE	11/12
Checked By	Mizumori, A	03/13
Detailed By	Bontemps, W	10/12
Bridge Projects Engr.		
Prelim. Plan By		
Architect/Specialist		

M:\Y-Team\M ST TO PORTLAND\PACIFIC AVE BR\window files\FRAMINGPLAN3.wnd

DATE	REVISION	BY	APP'D

REGION NO.	STATE	FED. AID PROJ. NO.	SHEET NO.	TOTAL SHEETS
10	WASH.			

JOB NUMBER 12C501

BRIDGE AND STRUCTURES OFFICE

02/11/14 2/12/14

Washington State Department of Transportation

I-5
M ST TO PORTLAND AVE - HOV
PACIFIC AVE OVER I-5 BRIDGE No. 5/444
FRAMING PLAN
3 OF 3

BRIDGE SHEET NO. PA64
SHEET 1063 OF 1763 SHEETS

Tue Feb 11 09:02:13 2014

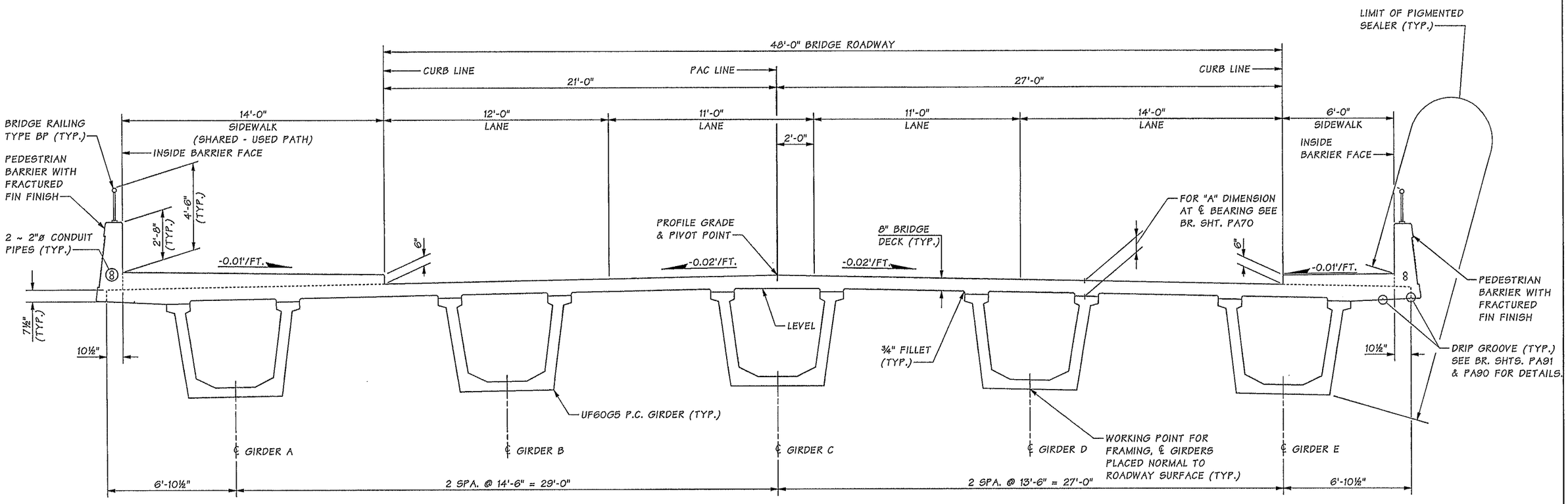

TYPICAL SECTION

SHOWN NEAR SPAN 3
SPAN 1 DIMENSIONS VARY FOR
GIRDER SPACING, OVERHANG WIDTH,
ROADWAY WIDTH AND SIDEWALK WIDTH.

SR 5 FILE NO. 7451 SHEET PA65

Bridge Design Engr.	Khaleghi, B		
Supervisor	Khaleghi, B		
Designed By	Olson, DE	08/13	
Checked By	Mizumori, A	10/13	
Detailed By	Bontemps, W	10/12	
Bridge Projects Engr.			
Prelim. Plan By			
Architect/Specialist			

M:\Y-Team\M ST TO PORTLAND\PACIFIC AVE BR\window files\TYPICAL SECTION.wnd

DATE	REVISION	BY	APP'D

REGION NO.	STATE	FED. AID PROJ. NO.	SHEET NO.	TOTAL SHEETS
10	WASH.			
JOB NUMBER 12C501				

DOUGLAS EUGENE OLSON STATE OF WASHINGTON 40406 REGISTERED PROFESSIONAL ENGINEER 02/11/14

BRIDGE AND STRUCTURES OFFICE

BRIAN KHALEGHI STATE OF WASHINGTON 27095 REGISTERED PROFESSIONAL ENGINEER 2/12/14

Washington State Department of Transportation

I-5
M ST TO PORTLAND AVE - HOV

PACIFIC AVE OVER I-5 BRIDGE No. 5/444

TYPICAL SECTION

BRIDGE SHEET NO. PA65

SHEET 1064 OF 1763 SHEETS

Tue Feb 11 09:02:14 2014

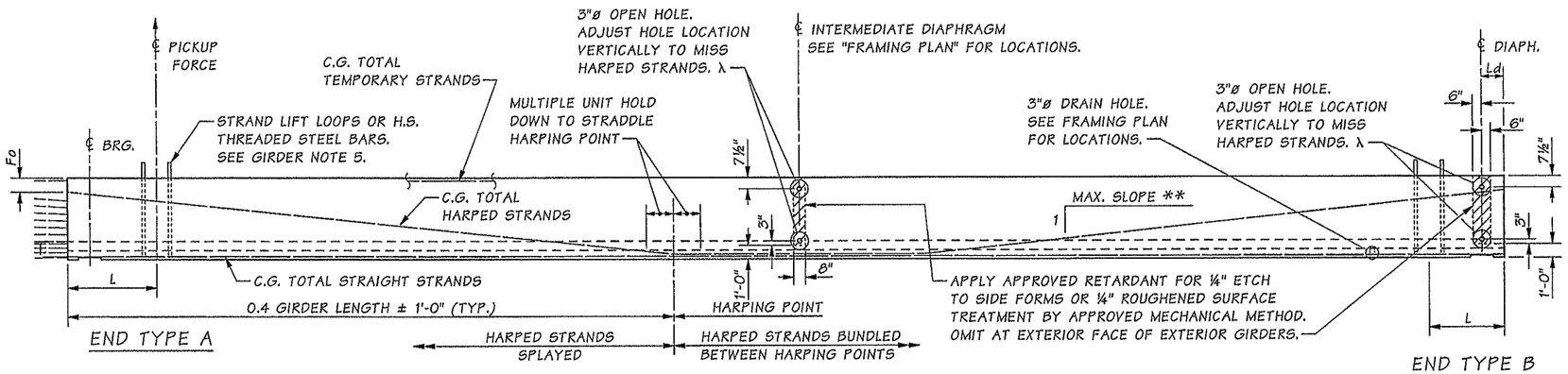

GIRDER ELEVATION

** - 8 : 1 MAXIMUM SLOPE FOR EACH HARPED STRAND

λ - SEE GIRDER NOTE 9.

β - ADJUST BAR POSITION THROUGH STRANDS

GIRDER SERIES TABLE

GIRDER SERIES	H GIRDER HEIGHT	W GIRDER SOFFIT WIDTH	TOP FLANGE	R1 EQUAL SPACES FOR G5
U54G4	4'-6"	4'-0"	NO	6
U54G5	4'-6"	5'-0"	NO	6
U66G4	5'-6"	4'-0"	NO	8
U66G5	5'-6"	5'-0"	NO	8
U78G4	6'-6"	4'-0"	NO	10
U78G5	6'-6"	5'-0"	NO	10
UF60G4	5'-0"	4'-0"	YES	7
UF60G5	5'-0"	5'-0"	YES	7
UF72G4	6'-0"	4'-0"	YES	9
UF72G5	6'-0"	5'-0"	YES	9
UF84G4	7'-0"	4'-0"	YES	11
UF84G5	7'-0"	5'-0"	YES	11

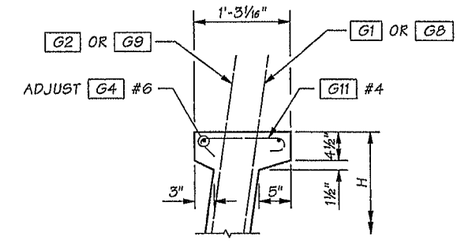

TOP FLANGE DETAIL

SYMMETRICAL ABOUT ℄ GIRDER

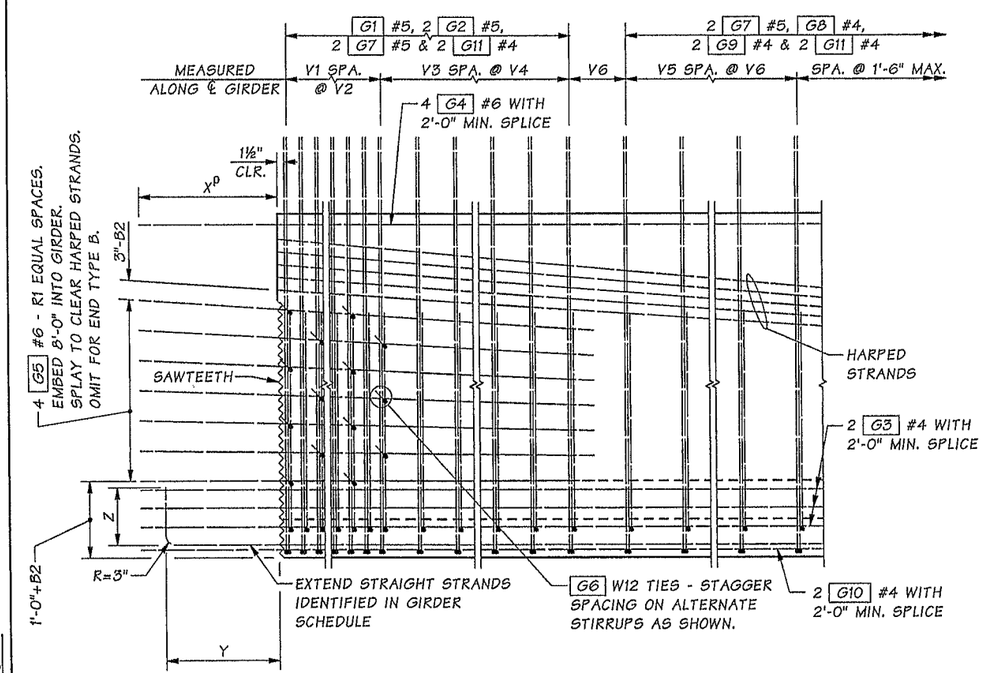

TYPICAL END ELEVATION

END TYPE C SHOWN, OTHER END TYPES SIMILAR.
U54G4 SHOWN, OTHER SERIES SIMILAR.

ρ X DIMENSION SHALL BE 1'-4" FOR G4 AT END TYPE A ONLY.

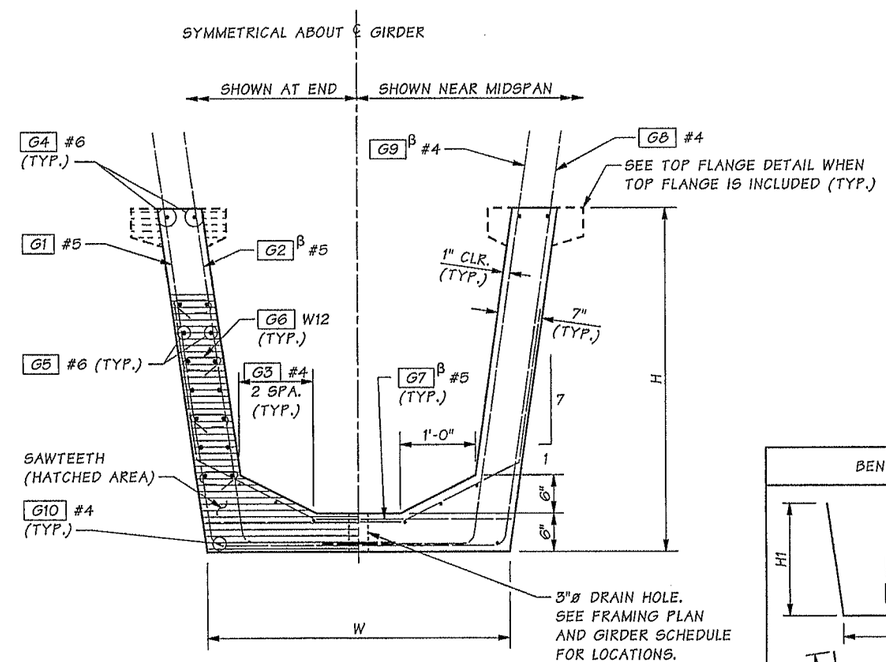

TYPICAL SECTION

STRANDS NOT SHOWN.
U54G4 SHOWN, OTHER SERIES SIMILAR.

END TYPE PROPERTIES

END TYPE	BEARING RECESS	X	Y	Z	SAWTEETH
A	YES	1'-10"ρ	1'-6"	9"	YES
B	YES	0"	0"	0"	NO
C	NO	1'-10"	1'-6"	9"	YES
D	NO	1'-10"	SEE "STRAND EXTENSION DETAIL"		YES

BAR END PLACEMENT FOR END TYPE C

ENDS AHEAD ON STATION	ENDS BACK ON STATION
B2 = 0" FOR G5	B2 = 2" FOR G5

BENDING DIAGRAM (ALL DIMENSIONS ARE OUT TO OUT)

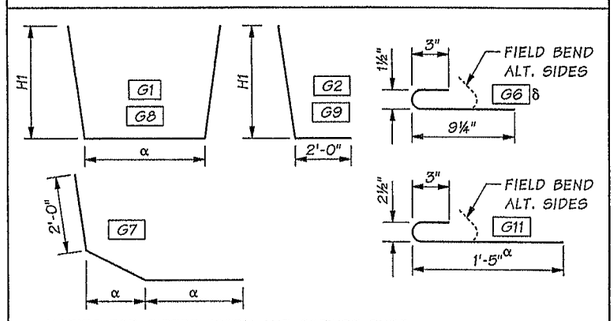

α - VARIES FOR GIRDER WIDTH AND SKEWED ENDS.
δ - #3 OR #4 MAY BE SUBSTITUTED. FIELD BENDING IS OPTIONAL.

SR 5 FILE NO. 7451 SHEET PA66

Bridge Design Engr.	Khaleghi, B		
Supervisor	Khaleghi, B		
Designed By	Olson, DE	12/12	
Checked By	Mizumori, A	10/13	
Detailed By	Bontemps, W	10/12	
Bridge Projects Engr.			
Prelim. Plan By			
Architect/Specialist			

M:\Y-Team\M ST TO PORTLAND\PACIFIC AVE BR\window files\UF60G5-1.wnd

DATE	REVISION	BY	APP'D

REGION NO.	STATE	FED. AID PROJ. NO.	SHEET NO.	TOTAL SHEETS
10	WASH.			
JOB NUMBER 12C501				

NICHOLAS EUGENE OLSON, STATE OF WASHINGTON, 40406, REGISTERED PROFESSIONAL ENGINEER — 02/11/14

BRIDGE AND STRUCTURES OFFICE

BILLAN KHALEGHI, STATE OF WASHINGTON, 27696, PROFESSIONAL ENGINEER — 2/12/14

Washington State Department of Transportation

I-5
M ST TO PORTLAND AVE - HOV

PACIFIC AVE OVER I-5 BRIDGE No. 5/444

TUB GIRDER DETAILS 1 OF 4

BRIDGE SHEET NO. PA66

SHEET 1065 OF 1763 SHEETS

Tue Feb 11 09:02:15 2014

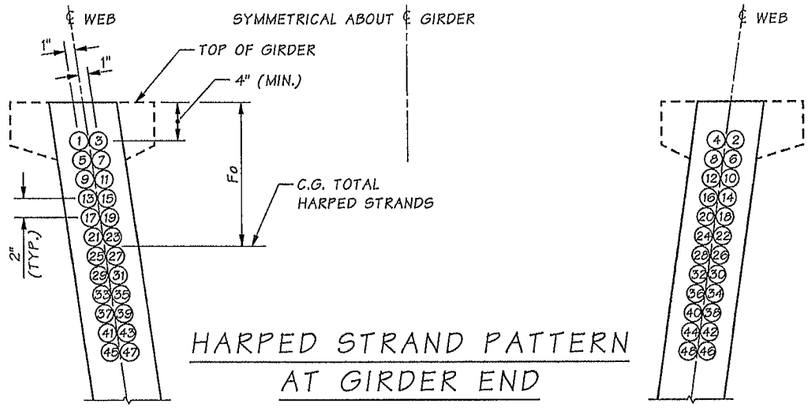

HARPED STRAND PATTERN AT GIRDER END

HARPED STRAND LOCATION SEQUENCE SHALL BE AS SHOWN (1), (2) ETC.

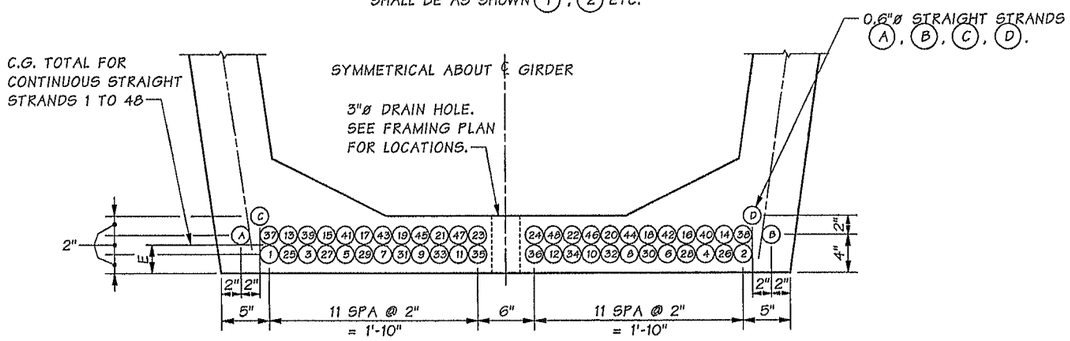

STRAIGHT STRAND PATTERN AT GIRDER END

STRAIGHT STRAND LOCATION SEQUENCE SHALL BE AS SHOWN (1), (2), ..., (48), (A), (B), (C), (D), 5 FOOT WIDE BOTTOM FLANGE SHOWN.

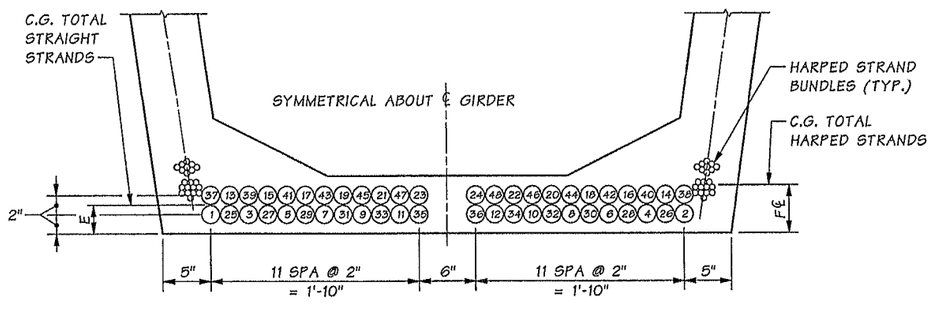

STRAND PATTERN AT ℄ SPAN

STRAIGHT STRAND LOCATION SEQUENCE SHALL BE AS SHOWN (1), (2) ETC. 5 FOOT WIDE BOTTOM FLANGE SHOWN.

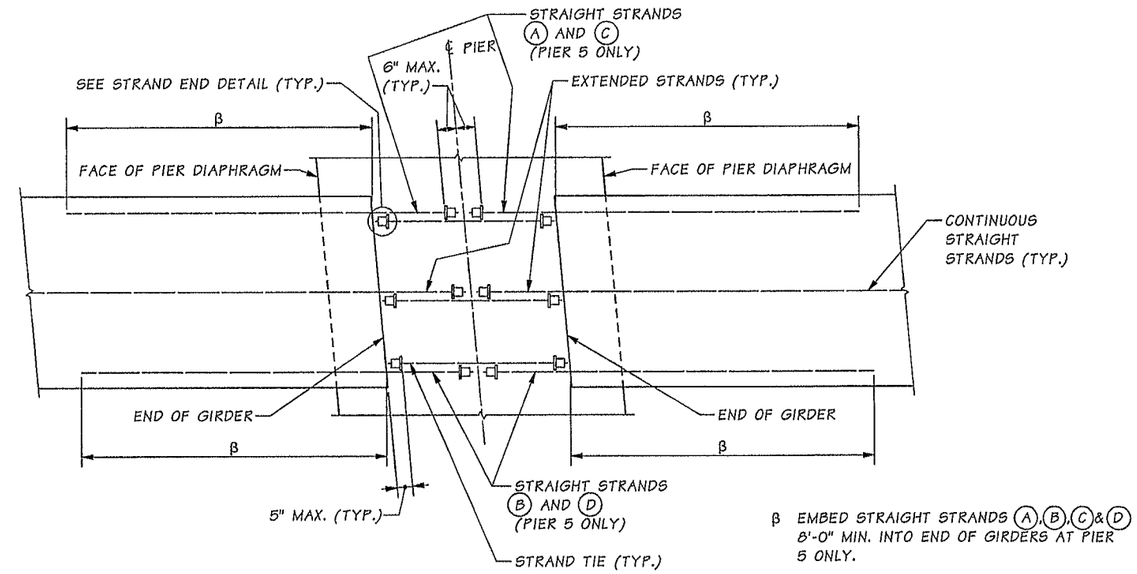

β EMBED STRAIGHT STRANDS (A), (B), (C) & (D) 8'-0" MIN. INTO END OF GIRDERS AT PIER 5 ONLY.

STRAND EXTENSION DETAIL

ANCHOR STRAND WITH TWO PIECE WEDGES BEFORE GIRDER ERECTION. VERIFY WEDGES ARE SEATED TIGHTLY IMMEDIATELY BEFORE PLACING DIAPHRAGM CONCRETE. SEE GIRDER SCHEDULE FOR EXTENDED STRANDS PATTERNS FOR EACH GIRDER END.

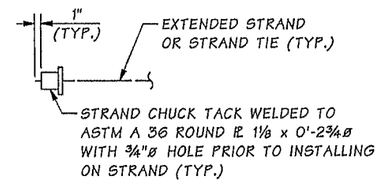

STRAND END DETAIL

STRAND TIES SHALL BE 0.6"ø AASHTO M 203 GRADE 270 LOW RELAXATION STRANDS. STRAND TIES SHALL BE ATTACHED TO AND SHIPPED WITH ONE OF THE CORRESPONDING GIRDERS.

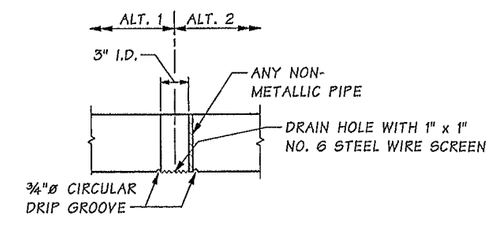

BOTTOM SLAB DRAIN HOLE DETAIL

SR 5 FILE NO. 7451 SHEET PA67

Bridge Design Engr.	Khaleghi, B		M:\Y-Team\M ST TO PORTLAND\PACIFIC AVE BR\window files\UF60G5-1A.wnd								
Supervisor	Khaleghi, B										
Designed By	Olson, DE	10/13									
Checked By	Mizumori, A	10/13									
Detailed By	Bontemps, W	10/13									
Bridge Projects Engr.											
Prelim. Plan By											
Architect/Specialist			DATE	REVISION	BY	APP'D					

REGION NO.	STATE	FED. AID PROJ. NO.	SHEET NO.	TOTAL SHEETS
10	WASH.			
JOB NUMBER 12C501				

Tue Feb 11 09:02:10 2014

DOUGLAS EUGENE OLSON — STATE OF WASHINGTON — 40106 — REGISTERED PROFESSIONAL ENGINEER — 02/4/14

BRIDGE AND STRUCTURES OFFICE

BILAN KHALEGHI — STATE OF WASHINGTON — 27695 — REGISTERED PROFESSIONAL ENGINEER — 2/12/14

Washington State Department of Transportation

I-5
M ST TO PORTLAND AVE - HOV

PACIFIC AVE OVER I-5 BRIDGE No. 5/444

TUB GIRDER DETAILS 2 OF 4

BRIDGE SHEET NO. PA67

SHEET 1066 OF 1763 SHEETS

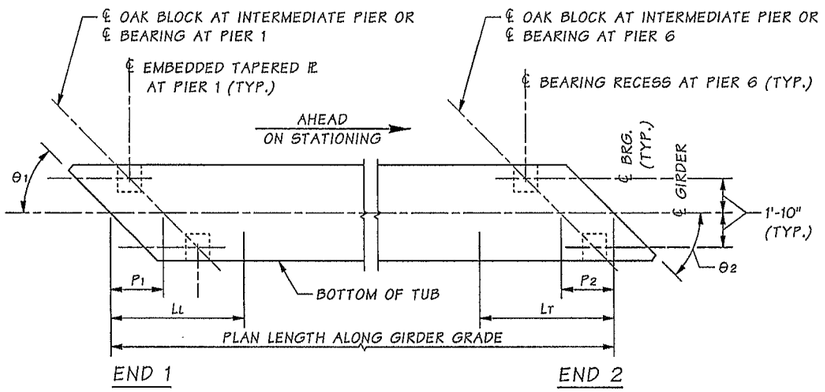

GIRDER SCHEDULE LEGEND

LL AND LT ARE SHIPPING SUPPORT LOCATIONS AT LEADING AND TRAILING ENDS, RESPECTIVELY.

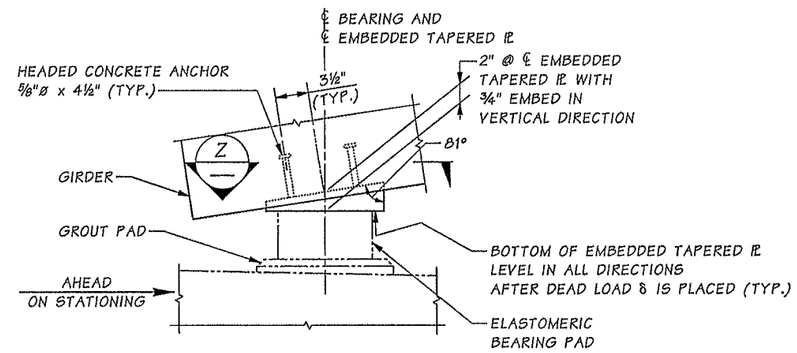

ELEVATION
EMBEDDED TAPERED PL AT PIER 1

δ DEAD LOAD IS BRIDGE DECK, TRAFFIC BARRIERS AND SIDEWALK.

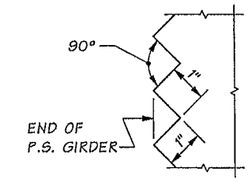

SAWTOOTH DETAILS

SAWTEETH ARE FULL WIDTH - USE SAWTOOTH KEYS FROM BOTTOM OF BOTTOM FLANGE TO BOTTOM OF LOWEST HARPED STRAND AS WELL AS TOP FLANGE ADJACENT TO HARPED STRANDS.

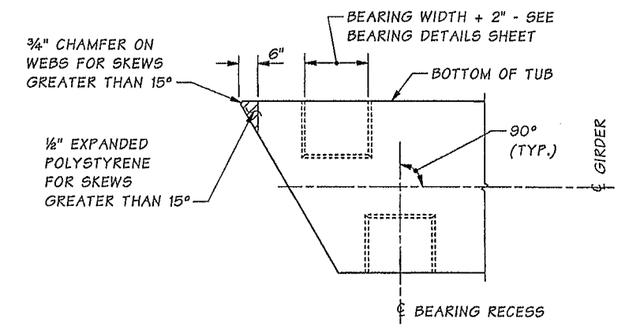

PLAN

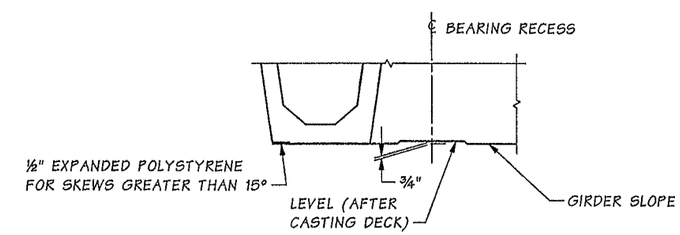

ELEVATION

BEARING RECESS AND BOTTOM FLANGE SPALL PROTECTION DETAIL

BEARING RECESSES IN GIRDERS 5A, 5B, 5C, 5D AND 5E ONLY.
SEE EMBEDDING PLATE DETAILS FOR GIRDERS 1A, 1B, 1C, 1D AND 1E.

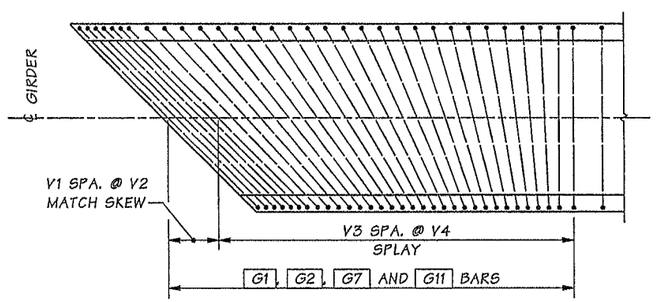

TRANSVERSE REINFORCING SKEWED ENDS

LENGTH OF G1 AND G7 VARY WITH SKEW.
ONLY TRANSVERSE REINFORCEMENT SHOWN.

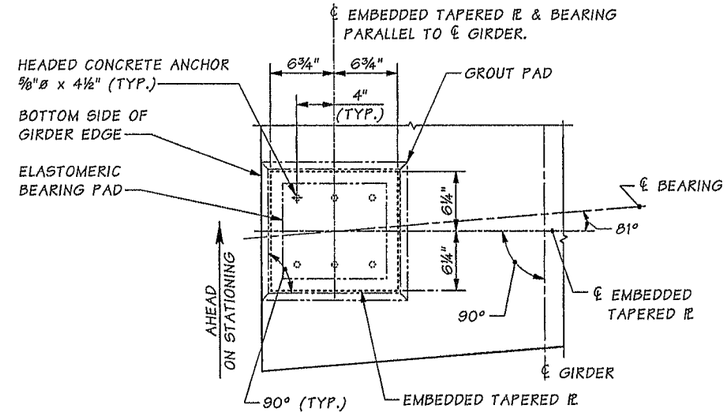

VIEW Z

SR 5 FILE NO. 7451 SHEET PA68

Bridge Design Engr.	Khaleghi, B		M:\Y-Team\M ST TO PORTLAND\PACIFIC AVE BR\window files\UF60G5-2.wnd								
Supervisor	Khaleghi, B					REGION NO.	STATE	FED. AID PROJ. NO.	SHEET NO.	TOTAL SHEETS	
Designed By	Olson, DE	12/12				10	WASH.				
Checked By	Mizumori, A	10/13									
Detailed By	Bontemps, W	10/12				JOB NUMBER 12C501					
Bridge Projects Engr.											
Prelim. Plan By											
Architect/Specialist			DATE	REVISION	BY	APP'D					

Tue Feb 11 09:02:20 2014

DOUGLAS EUGENE OLSON, STATE OF WASHINGTON, 40106, REGISTERED PROFESSIONAL ENGINEER, 02/11/14

BRIDGE AND STRUCTURES OFFICE

BRIAN KHALEGHI, STATE OF WASHINGTON, 27692, REGISTERED PROFESSIONAL ENGINEER, 2/12/14

Washington State Department of Transportation

I-5
M ST TO PORTLAND AVE - HOV

PACIFIC AVE OVER I-5 BRIDGE No. 5/444

TUB GIRDER
DETAILS 3 OF 4

BRIDGE SHEET NO. PA68

SHEET 1067 OF 1763 SHEETS

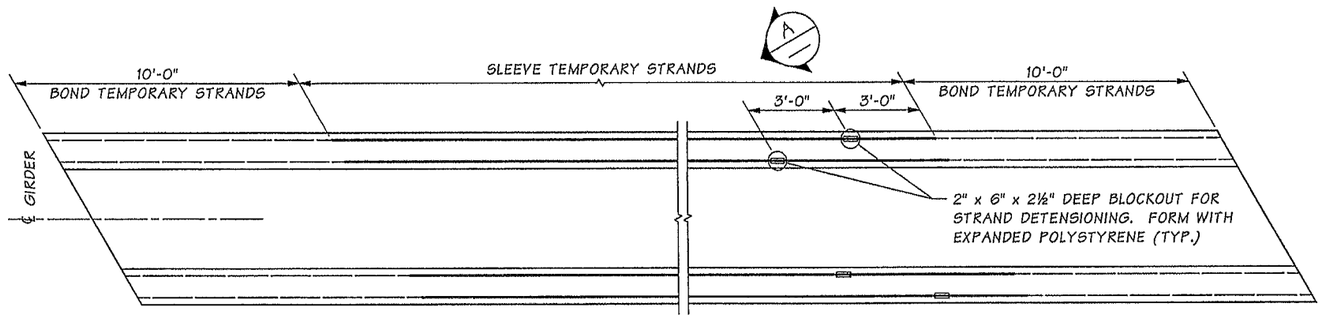

PLAN
PRETENSIONED TEMPORARY TOP STRANDS ALTERNATE

SEE "GIRDER SCHEDULE" FOR NUMBER OF TEMPORARY STRANDS REQUIRED.

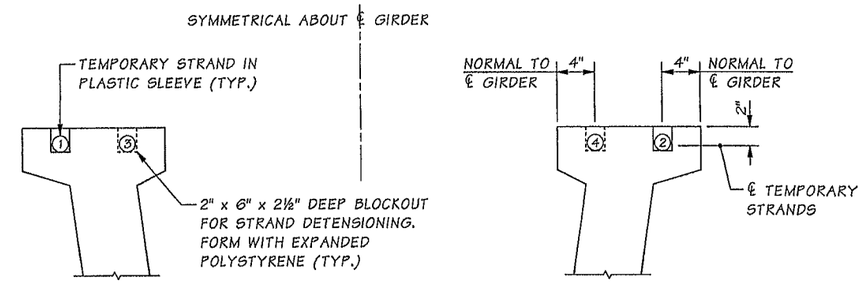

SECTION A

TEMPORARY STRAND LOCATION SEQUENCE SHALL BE AS SHOWN 1, 2 ETC.

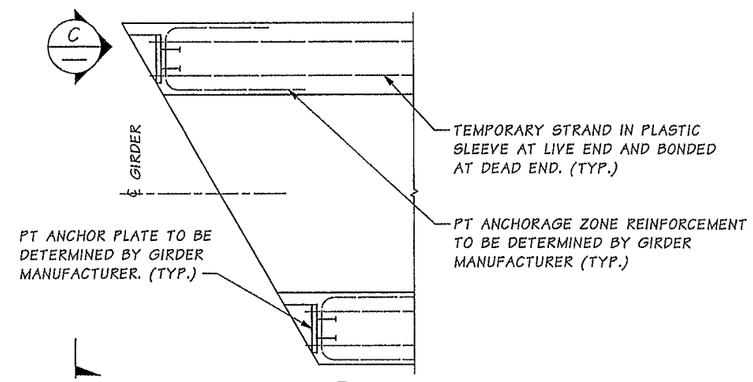

DETAIL B

LIVE END SHOWN
DEAD END SIMILAR.

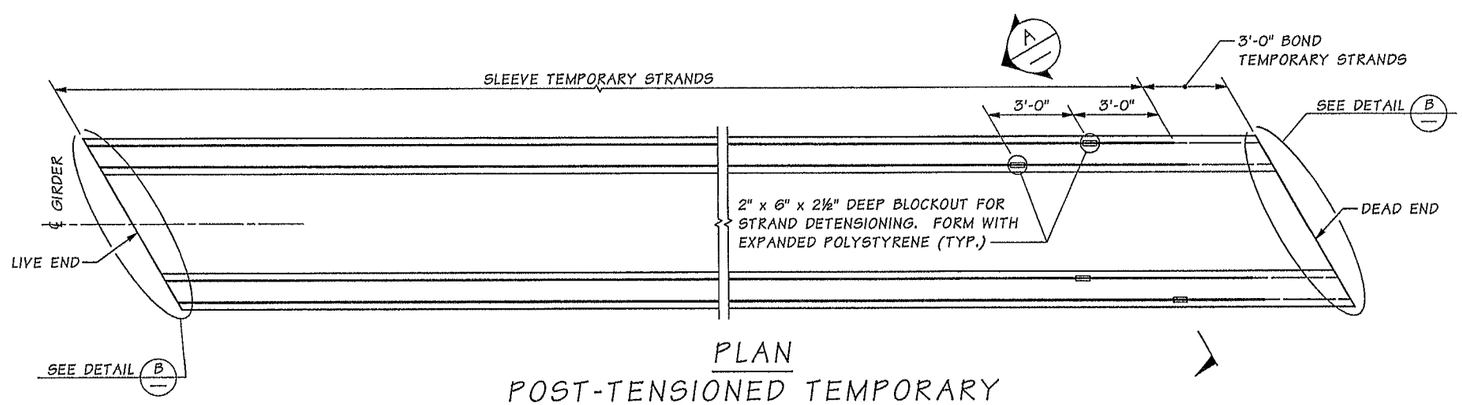

PLAN
POST-TENSIONED TEMPORARY TOP STRANDS ALTERNATE

SEE "GIRDER SCHEDULE" FOR NUMBER OF TEMPORARY STRANDS REQUIRED.

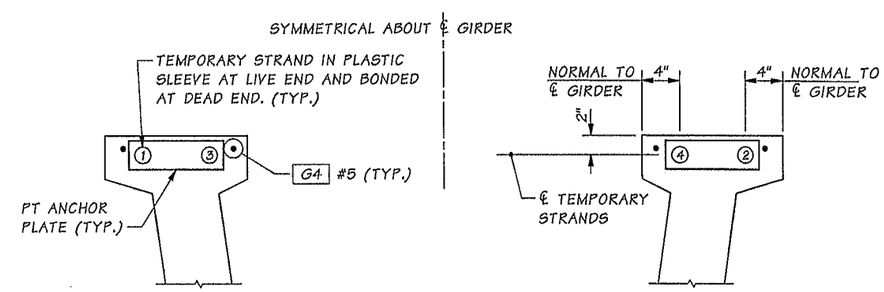

VIEW C

TEMPORARY STRAND LOCATION SEQUENCE SHALL BE AS SHOWN 1, 2 ETC.

SR 5 FILE NO. 7451 SHEET PA69

Bridge Design Engr.	Khaleghi, B		
Supervisor	Khaleghi, B		
Designed By	Olson, DE	12/12	
Checked By	Mizumori, A	10/13	
Detailed By	Bontemps, W	10/12	
Bridge Projects Engr.			
Prelim. Plan By			
Architect/Specialist			

M:\Y-Team\M ST TO PORTLAND\PACIFIC AVE BR\window files\UF60G5-3.wnd

DATE	REVISION	BY	APP'D

REGION NO.	STATE	FED. AID PROJ. NO.	SHEET NO.	TOTAL SHEETS
10	WASH.			
JOB NUMBER 12C501				

Tue Feb 11 09:02:22 2014

BRIDGE AND STRUCTURES OFFICE

Washington State Department of Transportation

I-5
M ST TO PORTLAND AVE - HOV

PACIFIC AVE OVER I-5 BRIDGE No. 5/444

TUB GIRDER DETAILS 4 OF 4

BRIDGE SHEET NO. PA69

SHEET 1068 OF 1763 SHEETS

GIRDER SCHEDULE

SPAN	GIRDER	GIRDER SERIES	END 1 TYPE	END 2 TYPE	"A" DIMENSION AT ℄ BEARINGS	L	Ld	LL	LT	θ1	θ2	P1	P2	PLAN LENGTH (ALONG GIRDER GRADE)	MIN. CONC. COMP. STRENGTH @ 28-DAYS F'C (KSI)	MIN. CONC. COMP. STRENGTH @ RELEASE F'CI (KSI)	NUMBER OF STRAIGHT STRANDS	NUMBER OF HARPED STRANDS	NUMBER OF TEMP. STRANDS	LOCATION OF C.G. STRANDS E	LOCATION OF C.G. STRANDS F℄	LOCATION OF C.G. STRANDS Fo	STRAIGHT STR. TO EXTEND END 1	STRAIGHT STR. TO EXTEND END 2	DECK SCREED CAMBER C	D LOWER BOUND @ 40 DAYS	D UPPER BOUND @ 120 DAYS	REINFORCEMENT DETAILS V1	V2	V3	V4	V5	V6	H1	DRAIN LOCATION (SEE NOTE 11) ℄ DRAIN #1	℄ DRAIN #2
1	A	UF60G5	B	D	9"	5'-0"	1'-0"	5'-0"	5'-0"	82°	82°	1'-2"	9"	46'-7¼"	4.5	4.0	14	0	2	2¼"	-	-	-	PATTERN 3	⅛"	⅛"	¼"	6	3½"	12	6"	1	6"	6'-2"	2'-8"	7'-7½"
1	B									84°	84°			46'-5"							-	-	-													
1	C									85°	85°			46'-3½"							-	-	-													
1	D									86°	86°			46'-3"							-	-	-													
1	E									87°	87°			46'-2¾"							-	-	-													
2	A		D		9½"		-			85°	85°	9"		126'-0"	8.4	7.0	48	36	0	3"	5½"	1'-0"	PATTERN 3	PATTERN 1	3¼"	2"	4⅝"								2'-8"	7'-7½"
2	B						-							126'-0"				36				1'-0"				2"	4⅝"									
2	C						-							126'-0"				32				11"				1⅞"	4⅜"									
2	D						-							126'-0"				32				11"				1⅞"	4⅜"									
2	E						-							126'-0"				36				1'-0"				2"	4⅝"									
3	A				9"		-							128'-4¾"	9.4	7.7		44				1'-2"	PATTERN 1	PATTERN 2	3⅞"	2⅛"	4⅞"							6'-10"	2'-8"	7'-7½"
3	B						-							128'-4⅝"				44				1'-2"				2⅛"	4⅞"									
3	C						-							128'-4½"				40				1'-1"				2"	4⅝"									
3	D						-							128'-4½"				40				1'-1"				2"	4⅝"									
3	E						-							128'-4⅜"				44				1'-2"				2⅛"	4⅞"									
4	A				8¾"		-							132'-9¾"	10.0	7.8		48			5"	1'-3"	PATTERN 2	PATTERN 4	4¼"	2⅜"	5¼"								2'-8"	7'-7½"
4	B						-							132'-9¾"				48			5"	1'-3"				2⅜"	5¼"									
4	C						-							132'-9¾"				44			5½"	1'-2"				2⅛"	4⅞"									
4	D						-							132'-9¾"				44			5½"	1'-2"				2⅛"	4⅞"									
4	E						-							132'-9¾"				48			5"	1'-3"				2⅜"	5¼"									
5	A			B	10¼"		1'-0"						1'-2"	118'-0⅝"	7.6	6.6	44	30		2⅞"	5¾"	11½"	PATTERN 4	-	2⅞"	1¾"	3⅞"							6'-2"	2'-8"	7'-7½"
5	B													118'-0⅝"			44	30		2⅞"	5¾"	11½"		-		1¾"	3⅞"									
5	C													118'-0⅝"			44	24		2⅞"	4"	9"		-		1⅝"	3¾"									
5	D													118'-0⅝"			42	24		2⅞"	4"	9"		-		1½"	3½"									
5	E													118'-0⅝"			42	24		2⅞"	4"	9"		-		1½"	3½"									

STRAIGHT STRAND EXTENSION PATTERN	STRANDS
1	1 TO 14, 23 & 24
2	1 TO 16, 23 & 24
3	1 TO 16, 21 TO 24
4	1 TO 24, A, B, C & D

GIRDER NOTES:

1. PLAN LENGTH SHALL BE INCREASED AS NECESSARY TO COMPENSATE FOR SHORTENING DUE TO PRESTRESS AND SHRINKAGE.
2. ALL PRETENSIONED AND TEMPORARY STRANDS SHALL BE 0.6"ø AASHTO M203 GRADE 270 LOW RELAXATION STRANDS, JACKED TO 202.5 KSI.
3. FOR END TYPE D CUT ALL STRANDS FLUSH WITH THE GIRDER ENDS AND PAINT WITH AN APPROVED EPOXY RESIN, EXCEPT FOR EXTENDED STRANDS AS SHOWN. FOR END TYPE B CUT ALL STRANDS 1" BELOW CONCRETE SURFACE AND GROUT WITH AN APPROVED EPOXY GROUT.
4. THE TOP SURFACE OF THE GIRDER FLANGE SHALL BE ROUGHENED IN ACCORDANCE WITH SECTION 6-02.3(25)H OF THE STANDARD SPECIFICATIONS.
5. LIFTING EMBEDMENTS SHALL BE INSTALLED IN ACCORDANCE WITH SECTION 6-02.3(25)L OF THE STANDARD SPECIFICATIONS.
6. CAUTION SHALL BE EXERCISED IN HANDLING AND PLACING GIRDERS. ALL GIRDERS SHALL BE CHECKED BY THE CONTRACTOR TO ENSURE THAT THEY ARE BRACED ADEQUATELY TO PREVENT TIPPING AND TO CONTROL LATERAL BENDING DURING SHIPPING. ONCE ERECTED, ALL GIRDERS SHALL BE BRACED LATERALLY TO PREVENT TIPPING UNTIL THE DIAPHRAGMS ARE CAST AND CURED.
7. FORMS FOR BEARING PAD RECESSES AND EMBED PLATES SHALL BE CONSTRUCTED AND FASTENED IN SUCH A MANNER AS TO NOT CAUSE DAMAGE TO THE GIRDER DURING THE STRAND RELEASE OPERATION.
8. TEMPORARY TOP STRANDS SHALL BE EITHER PRETENSIONED OR POST-TENSIONED IN ACCORDANCE WITH SECTION 6-02.3(25)L OF THE STANDARD SPECIFICATIONS AND THE GIRDER DETAILS SHEETS. THE LIFTING LOCATION "L" AND CONCRETE RELEASE STRENGTH "F'CI" SHOWN IN THE GIRDER SCHEDULE ASSUME THAT THE TEMPORARY TOP STRANDS ARE PRETENSIONED. ALTERNATIVELY, POST-TENSIONED TEMPORARY TOP STRANDS MAY BE USED IF THE LIFTING POINTS IN THE GIRDER SCHEDULE ARE MAINTAINED AND THE STRANDS ARE STRESSED PRIOR TO LIFTING THE GIRDER FROM THE FORM.
9. FOR DIAPHRAGMS, OMIT HOLES AND PLACE INSERTS ON THE INTERIOR FACE OF THE EXTERIOR WEB OF EXTERIOR GIRDERS. PLACE HOLES AND INSERTS PARALLEL TO SKEW. INSERTS SHALL BE 1"ø MEADOWBURKE MX-3 HI-TENSILE, 1"ø x 5½" WILLIAMS F22 OPEN FERRULE INSERT, 1"ø x 4⅝" DAYTON-SUPERIOR F-62 FLARED THIN SLAB FERRULE INSERT OR APPROVED EQUAL.
10. DEFORMED WELDED WIRE REINFORCEMENT CONFORMING TO SECTION 9-07.7 WITH DEFORMED WIRE CONFORMING TO SECTION 9-07.8 MAY BE SUBSTITUTED FOR MILD STEEL REINFORCEMENT IF AASHTO LRFD BRIDGE DESIGN SPECIFICATION REQUIREMENTS (INCLUDING DEVELOPMENT AND ANCHORAGE) ARE MET. WELDED WIRE REINFORCEMENT SHALL HAVE THE SAME AREA AND SPACING AS THE MILD STEEL REINFORCEMENT THAT IT REPLACES AND THE YIELD STRENGTH SHALL BE GREATER THAN OR EQUAL TO 60 KSI. SHEAR STIRRUP LONGITUDINAL WIRES AND TACK WELDS SHALL BE EXCLUDED FROM GIRDER WEBS. LONGITUDINAL WIRES FOR ANCHORAGE OF WELDED WIRE REINFORCEMENT SHALL HAVE AN AREA OF 40% OR MORE OF THE AREA OF THE WIRE BEING ANCHORED BUT SHALL NOT BE LESS THAN D4.
11. DRAINS A AND B ARE LOCATED FROM THE START OF GIRDER ALONG ℄ BOTTOM FLANGE. ADJUST DRAIN LOCATIONS AS NEEDED TO CENTER BETWEEN TRANSVERSE REINFORCEMENT IN BOTTOM FLANGE.
12. FOR EMBEDDED TAPERED PLATES IN GIRDER BOTTOM FLANGE, USE ASTM A 36 OR ASTM A 572 GRADE 50. HEADED CONCRETE ANCHORS (TYPE A) SHALL BE WELDED TO EMBEDDED PLATE AND SHALL CONFORM TO CLAUSE 7 (STUD WELDING) OF AWS D1.1/D1.1M STRUCTURAL WELDING CODE. GALVANIZE ASSEMBLIES BEFORE CASTING IN GIRDER BOTTOM FLANGE.

SR 5 FILE NO. 7451 SHEET PA70

Bridge Design Engr.	Khaleghi, B		M:\Y-Team\M ST TO PORTLAND\PACIFIC AVE BR\window files\UF60G5-4 SCH1.wnd
Supervisor	Khaleghi, B		
Designed By	Olson, DE	12/12	
Checked By	Mizumori, A	10/13	
Detailed By	Bontemps, W	10/12	
Bridge Projects Engr.			
Prelim. Plan By			
Architect/Specialist			

DATE	REVISION	BY	APP'D

REGION NO.	STATE	FED. AID PROJ. NO.	SHEET NO.	TOTAL SHEETS
10	WASH.			
JOB NUMBER 12C501				

Douglas Eugene Olson, State of Washington, 40406, Registered Professional Engineer, 02/14/14

BRIDGE AND STRUCTURES OFFICE

Bijan Khaleghi, State of Washington, 27695, Structural Engineer, 2/14/14

Washington State Department of Transportation

I-5
M ST TO PORTLAND AVE - HOV

PACIFIC AVE OVER I-5 BRIDGE No. 5/444

TUB GIRDER SCHEDULE AND NOTES

BRIDGE SHEET NO. PA70

SHEET 1069 OF 1763 SHEETS

Tue Feb 11 09:02:23 2014

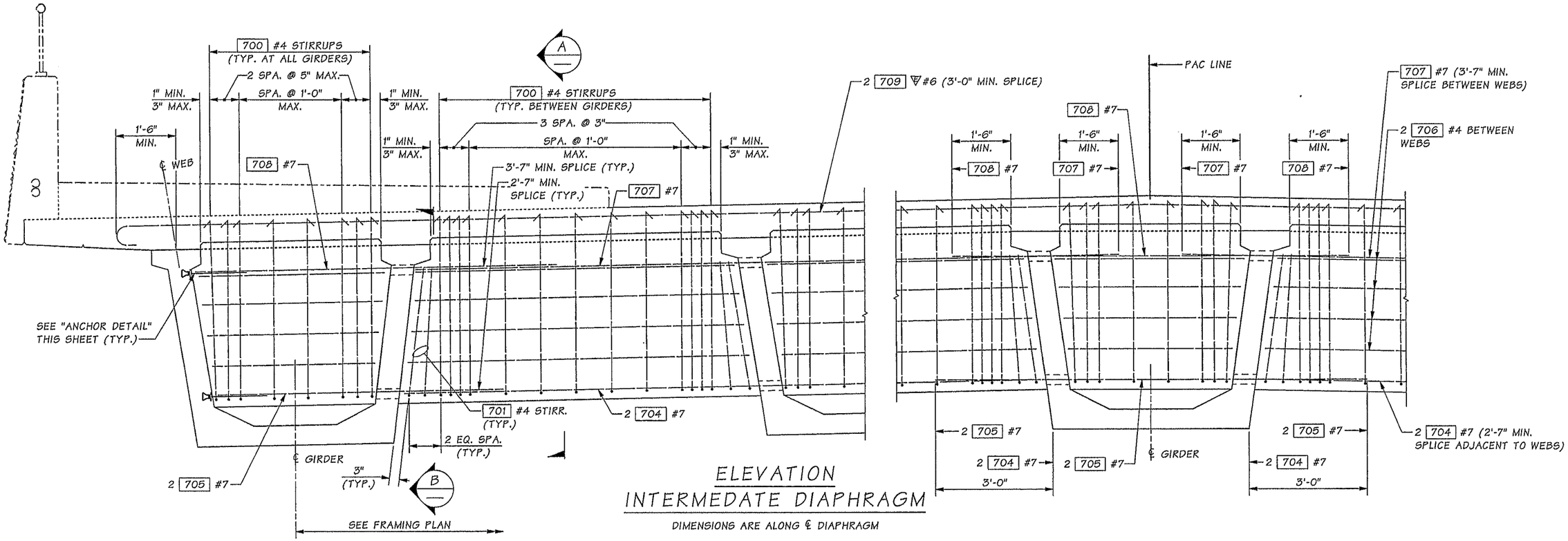

ELEVATION
INTERMEDATE DIAPHRAGM

DIMENSIONS ARE ALONG ℄ DIAPHRAGM

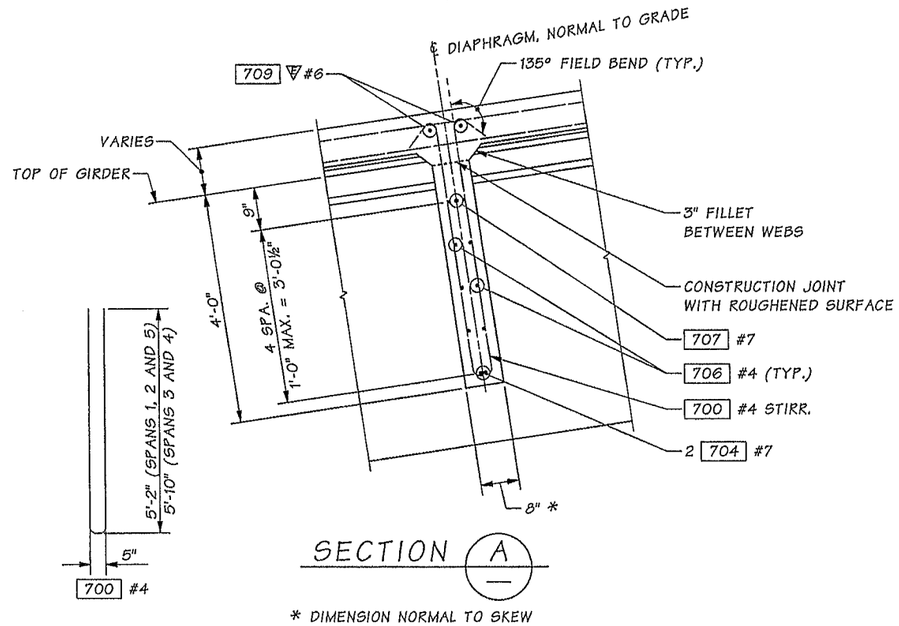

SECTION A

* DIMENSION NORMAL TO SKEW

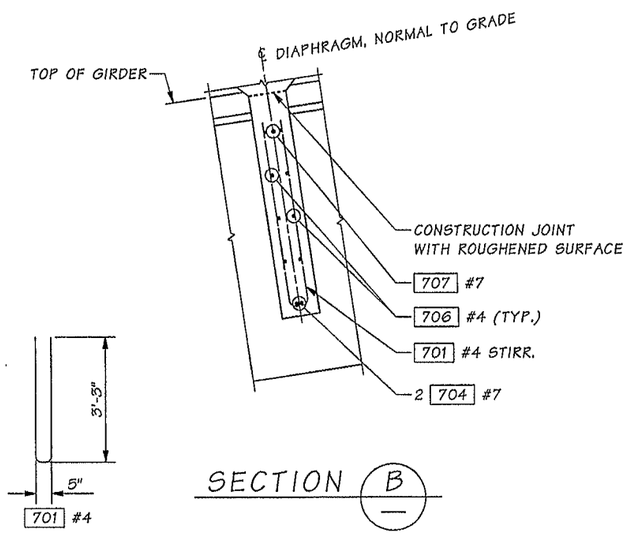

SECTION B

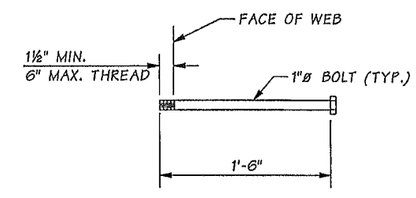

ANCHOR DETAIL

ASTM A 307

NOTES:

1. GIRDERS SHALL BE HELD RIGIDLY IN PLACE WHEN DIAPHRAGMS ARE PLACED.
2. IT MAY BE NECESSARY TO THREAD #7 REINFORCING BARS THROUGH HOLES IN GIRDERS PRIOR TO PLACING EXTERIOR GIRDERS.
3. CUT/RELEASE GIRDER TEMPORARY STRANDS BEFORE CASTING DIAPHRAGM. SEE TEMPORARY STRAND CUTTING SEQUENCE.
4. FOR CONCRETE PLACEMENT PROCEDURE SEE CONSTRUCTION SEQUENCE SHEETS.

Bridge Design Engr.	Khaleghi, B		
Supervisor	Khaleghi, B		
Designed By	Olson, DE	11/12	
Checked By	Mizumori, A	01/14	
Detailed By	Bontemps, W	10/12	
Bridge Projects Engr.			
Prelim. Plan By			
Architect/Specialist			

M:\Y-Team\M ST TO PORTLAND\PACIFIC AVE BR\window files\INTERMEDDIADTLS.wnd

DATE	REVISION	BY	APP'D

REGION NO.	STATE	FED. AID PROJ. NO.	SHEET NO.	TOTAL SHEETS
10	WASH.			
JOB NUMBER 12C501				

DOUGLAS EUGENE OLSON — STATE OF WASHINGTON — 40406 — REGISTERED PROFESSIONAL ENGINEER — 02/11/14

BRIDGE AND STRUCTURES OFFICE

BRIAN KHALEGHI — STATE OF WASHINGTON — 27695 — REGISTERED PROFESSIONAL ENGINEER — 2/12/14

Washington State Department of Transportation

I-5
M ST TO PORTLAND AVE - HOV

PACIFIC AVE OVER I-5 BRIDGE No. 5/444

INTERMEDIATE DIAPHRAGM DETAILS

BRIDGE SHEET NO. PA71

SHEET 1070 OF 1763 SHEETS

SR 5 FILE NO. 7451 SHEET PA71

Tue Feb 11 09:02:27 2014

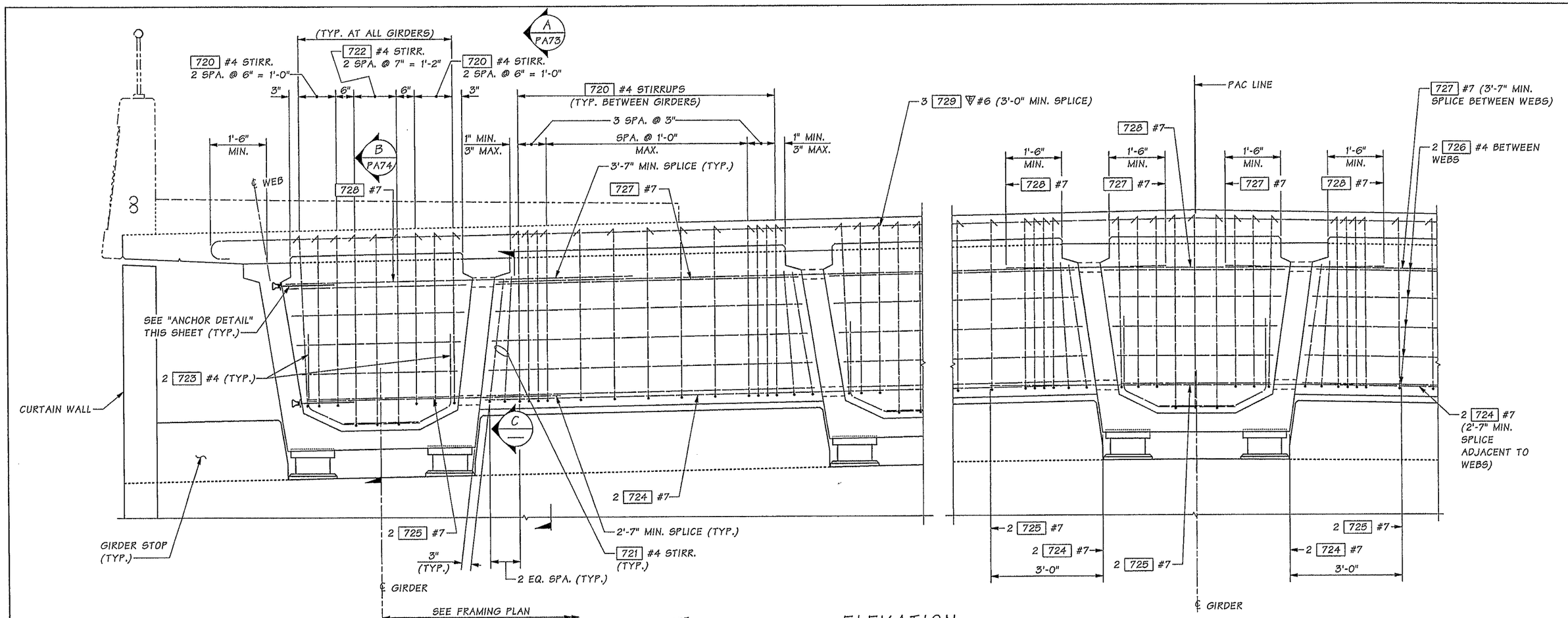

ELEVATION
END DIAPHRAGM

DIMENSIONS ARE ALONG ℄ DIAPHRAGM

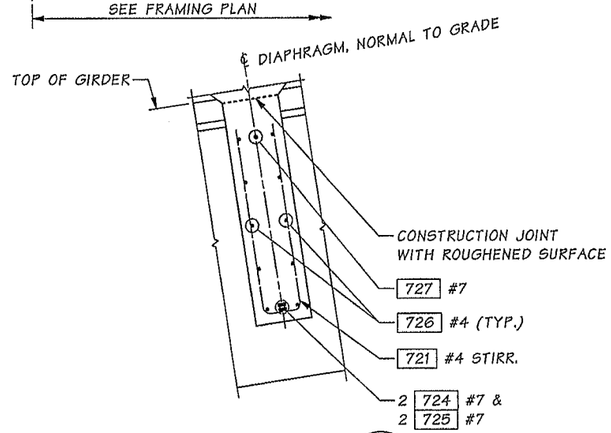

SECTION C

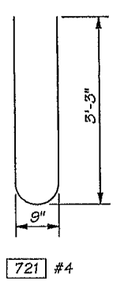

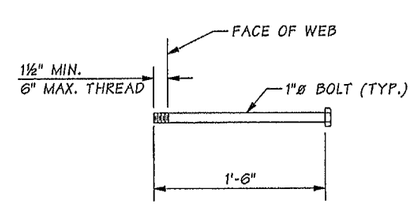

ANCHOR DETAIL

ASTM A 307

NOTES:

1. GIRDERS SHALL BE HELD RIGIDLY IN PLACE WHEN DIAPHRAGMS ARE PLACED.
2. IT MAY BE NECESSARY TO THREAD #7 REINFORCING BARS THROUGH HOLES IN GIRDERS PRIOR TO PLACING EXTERIOR GIRDERS.
3. CUT/RELEASE GIRDER TEMPORARY STRANDS BEFORE CASTING DIAPHRAGM. SEE TEMPORARY STRAND CUTTING SEQUENCE.
4. FOR CONCRETE PLACEMENT PROCEDURE SEE CONSTRUCTION SEQUENCE SHEETS.

SR 5 FILE NO. 7451 SHEET PA72

Bridge Design Engr.	Khaleghi, B		M:\Y-Team\M ST TO PORTLAND\PACIFIC AVE BR\window files\ENDDIADTLS.wnd								
Supervisor	Khaleghi, B										
Designed By	Olson, DE	10/12									
Checked By	Mizumori, A	01/14									
Detailed By	Bontemps, W	10/12									
Bridge Projects Engr.											
Prelim. Plan By											
Architect/Specialist			DATE	REVISION	BY	APP'D					

REGION NO.	STATE	FED. AID PROJ. NO.	SHEET NO.	TOTAL SHEETS
10	WASH.			
JOB NUMBER 12C501				

DOUGLAS EUGENE OLSON, STATE OF WASHINGTON, 40406, REGISTERED PROFESSIONAL ENGINEER — 02/4/14

BRIDGE AND STRUCTURES OFFICE

BIJAN KHALEGHI, STATE OF WASHINGTON, REGISTERED PROFESSIONAL ENGINEER — 2/12/14

Washington State Department of Transportation

I-5
M ST TO PORTLAND AVE - HOV

PACIFIC AVE OVER I-5 BRIDGE No. 5/444

END DIAPHRAGM
DETAILS 1 OF 3

BRIDGE SHEET NO. PA72

SHEET 1071 OF 1763 SHEETS

Tue Feb 11 09:02:29 2014

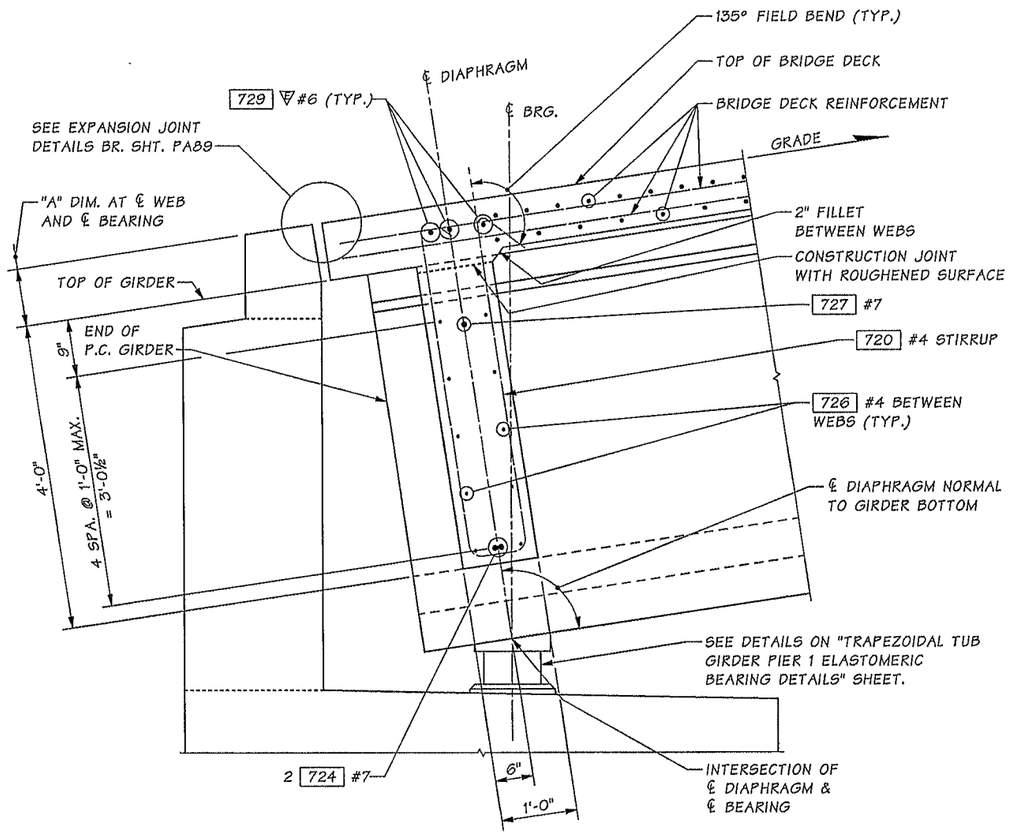

PIER 1

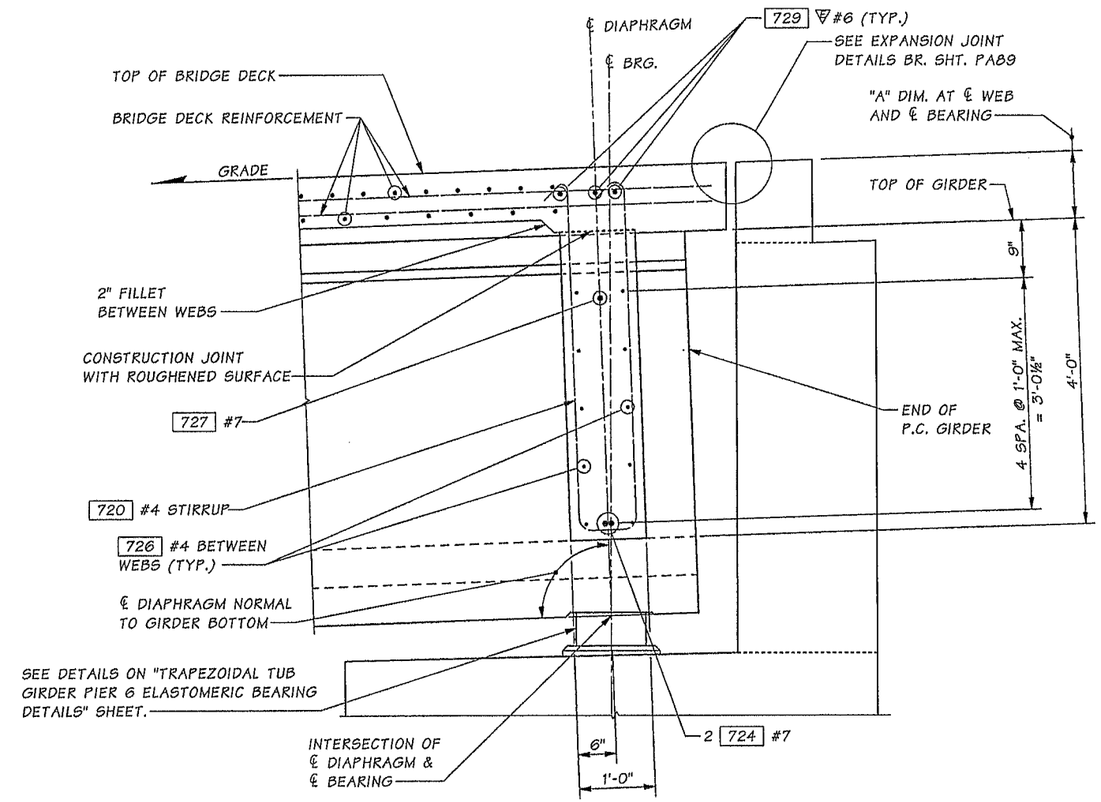

PIER 6

SECTION A
PA72

LONGITUDINAL DIMENSIONS ARE NORMAL TO DIAPHRAGM.
GIRDER STOP NOT SHOWN FOR CLARITY.

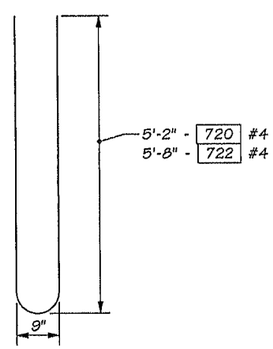

SR 5 FILE NO. 7451 SHEET PA73

Bridge Design Engr.	Khaleghi, B		M:\Y-Team\M ST TO PORTLAND\PACIFIC AVE BR\window files\ENDDIADTLS2.wnd				REGION NO.	STATE	FED. AID PROJ. NO.	SHEET NO.	TOTAL SHEETS
Supervisor	Khaleghi, B						10	WASH.			
Designed By	Olson, DE	10/12					JOB NUMBER 12C501				
Checked By	Mizumori, A	01/14									
Detailed By	Bontemps, W	10/12									
Bridge Projects Engr.											
Prelim. Plan By											
Architect/Specialist			DATE	REVISION	BY	APP'D					

Tue Feb 11 09:02:30 2014

DOUGLAS EUGENE OLSON, STATE OF WASHINGTON, 40406, REGISTERED PROFESSIONAL ENGINEER — 02/11/14

BRIDGE AND STRUCTURES OFFICE

BRIAN KHALEGHI, STATE OF WASHINGTON, 27695, REGISTERED PROFESSIONAL ENGINEER — 2/12/14

Washington State Department of Transportation

I-5
M ST TO PORTLAND AVE - HOV

PACIFIC AVE OVER I-5 BRIDGE No. 5/444

END DIAPHRAGM
DETAILS 2 OF 3

BRIDGE SHEET NO. PA73

SHEET 1072 OF 1763 SHEETS

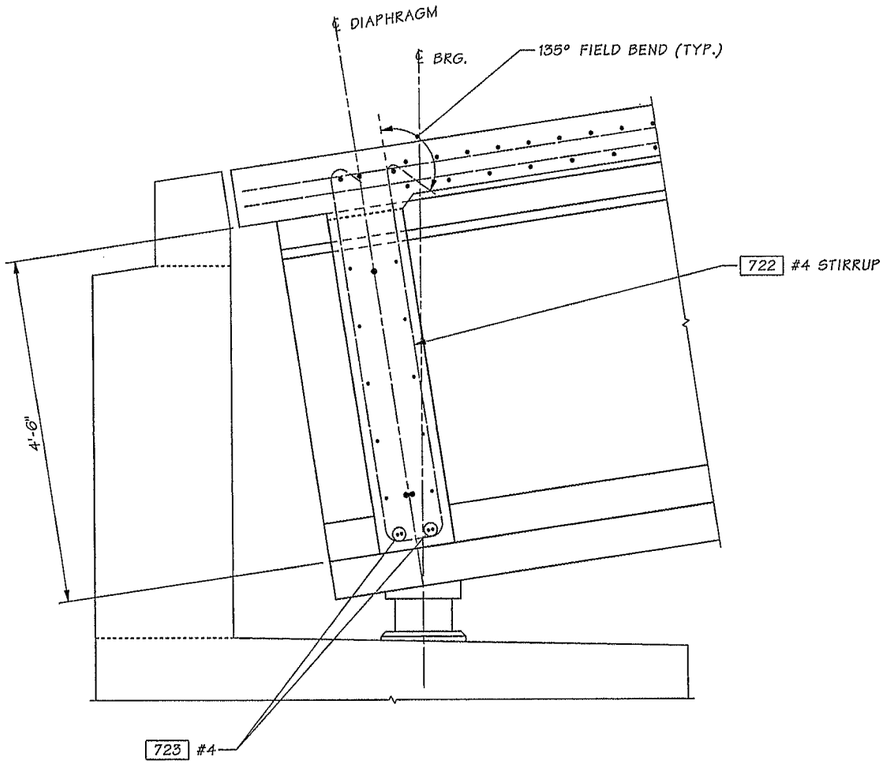

PIER 1

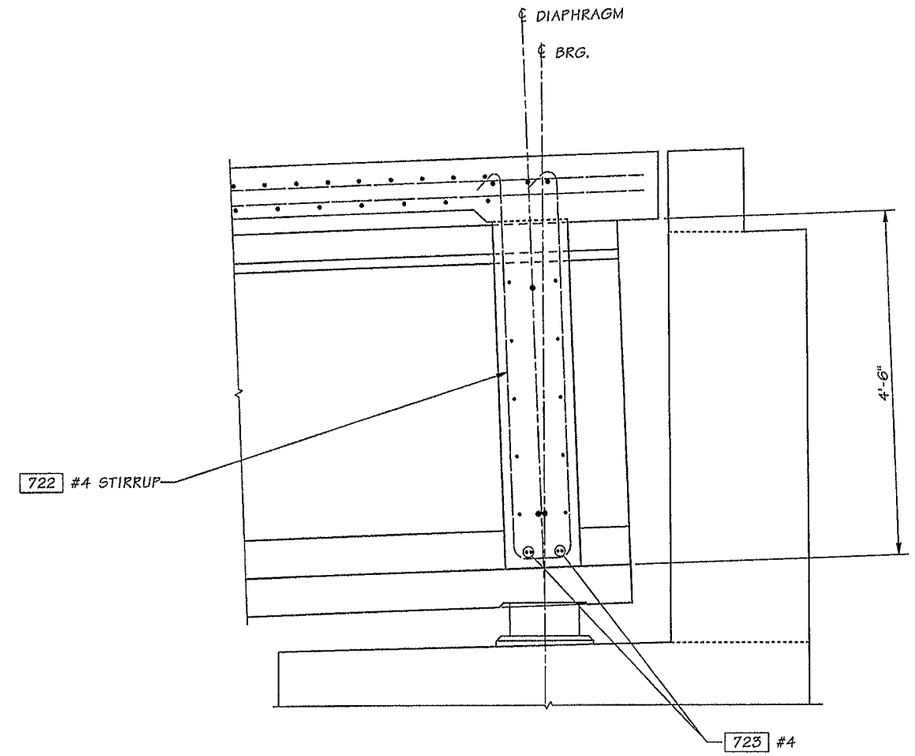

PIER 6

SECTION B — PA72

LONGITUDINAL DIMENSIONS ARE NORMAL TO DIAPHRAGM.
FOR DETAILS NOT SHOWN, SEE SECTION A ON BR. SHT. PA73.

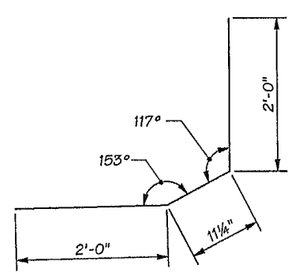

723 #4

SR 5 FILE NO. 7451 SHEET PA74

Bridge Design Engr.	Khaleghi, B		
Supervisor	Khaleghi, B		
Designed By	Olson, DE	10/12	
Checked By	Mizumori, A	01/14	
Detailed By	Bontemps, W	10/12	
Bridge Projects Engr.			
Prelim. Plan By			
Architect/Specialist			

M:\Y-Team\M ST TO PORTLAND\PACIFIC AVE BR\window files\ENDDIADTLS3.wnd

DATE	REVISION	BY	APP'D

REGION NO.	STATE	FED. AID PROJ. NO.	SHEET NO.	TOTAL SHEETS
10	WASH.			
JOB NUMBER 12C501				

Tue Feb 11 09:02:32 2014

DOUGLAS EUGENE OLSON — STATE OF WASHINGTON — 40406 — REGISTERED PROFESSIONAL ENGINEER — 02/11/14

BRIDGE AND STRUCTURES OFFICE

BILIAN KHALEGHI — STATE OF WASHINGTON — 27695 — REGISTERED PROFESSIONAL ENGINEER — 2/12/14

Washington State Department of Transportation

I-5
M ST TO PORTLAND AVE - HOV

PACIFIC AVE OVER I-5 BRIDGE No. 5/444

END DIAPHRAGM DETAILS 3 OF 3

BRIDGE SHEET NO. PA74

SHEET 1073 OF 1763 SHEETS

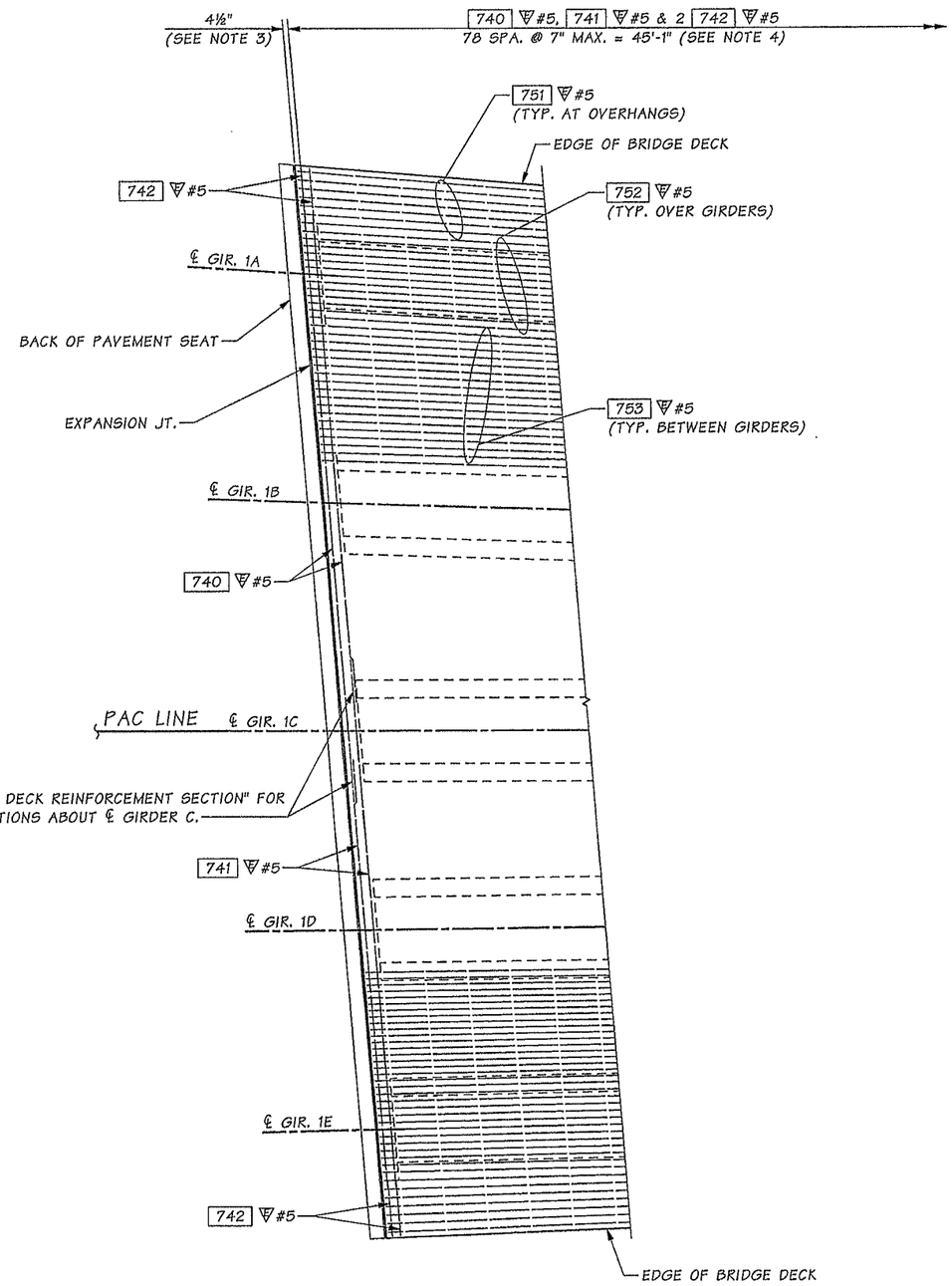

BRIDGE DECK REINFORCEMENT PLAN AT PIER 1 ~ BOTTOM MAT

NOTES:

1. MIN. REBAR SPLICE LENGTH UNLESS NOTED.
   #5 - 2'-6", #6 - 3'-3", #7 - 3'-9"
2. DO NOT SPLICE MORE THAN 50% OF BARS AT ANY ONE LOCATION UNLESS AS NOTED. STAGGER SPLICES A MINIMUM OF 2'-6".
3. AT 64°F FOR TEMPERATURE ADJUSTMENT, SEE EXPANSION JOINT DETAILS" BR. SHT. PA89.
4. SPACED ALONG ℄ GIRDER C AND PLACED PARALLEL TO BACK OF PAVEMENT SEAT.

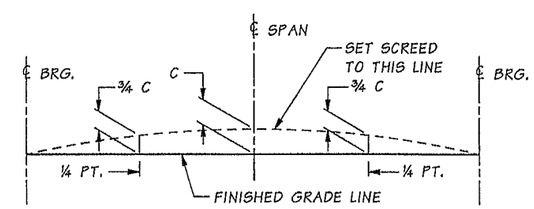

SCREED SETTING DIMENSIONS

FOR DIMENSION "C" SEE GIRDER SCHEDULE

Bridge Design Engr.	Khaleghi, B		M:\Y-Team\M ST TO PORTLAND\PACIFIC AVE BR\window files\BR DECK REINF BOT1.wnd
Supervisor	Khaleghi, B		
Designed By	Olson, DE	10/12	
Checked By	Mizumori, A	10/13	
Detailed By	Bontemps, W	10/12	
Bridge Projects Engr.			
Prelim. Plan By			
Architect/Specialist			

DATE	REVISION	BY	APP'D

REGION NO.	STATE	FED. AID PROJ. NO.	SHEET NO.	TOTAL SHEETS
10	WASH.			
JOB NUMBER 12C501				

DOUGLAS EUGENE OLSON, STATE OF WASHINGTON, 40404, REGISTERED PROFESSIONAL ENGINEER — 02/14/14

BRIDGE AND STRUCTURES OFFICE

BIJAN KHALEGHI, STATE OF WASHINGTON, 27600, STRUCTURAL ENGINEER, PROFESSIONAL ENGINEER — 2/12/14

Washington State Department of Transportation

I-5
M ST TO PORTLAND AVE - HOV

PACIFIC AVE OVER I-5 BRIDGE No. 5/444

BRIDGE DECK REINFORCEMENT PLAN AT PIER 1 ~ BOTTOM MAT

BRIDGE SHEET NO. PA75

SHEET 1074 OF 1763 SHEETS

SR 5 FILR NO. 7451 SHEET PA75

Tue Feb 11 09:02:33 2014

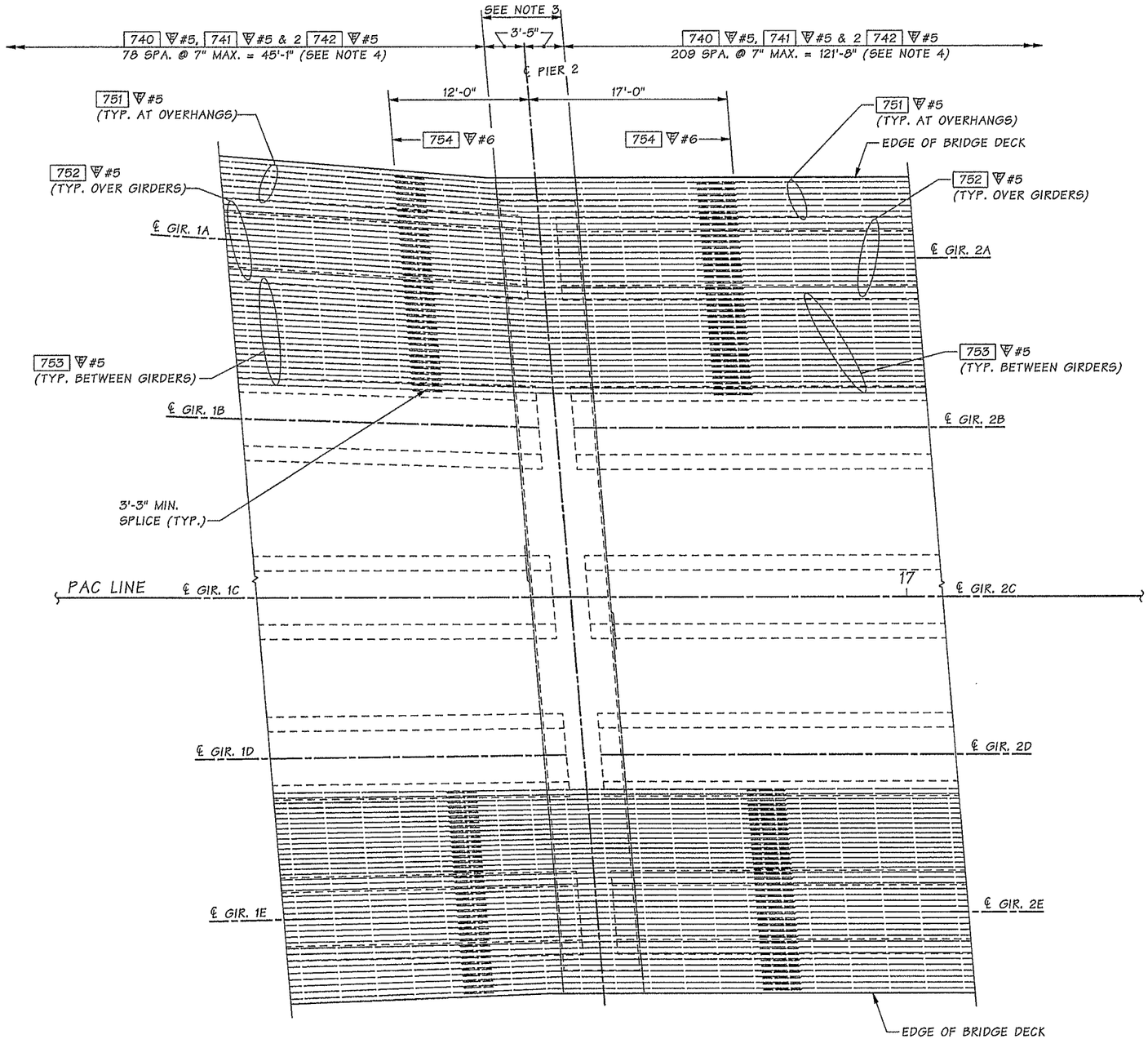

BRIDGE DECK REINFORCEMENT PLAN
AT PIER 2 ~ BOTTOM MAT

NOTES:

1. MIN. REBAR SPLICE LENGTH UNLESS NOTED.
   #5 - 2'-6", #6 - 3'-3", #7 - 3'-9"
2. DO NOT SPLICE MORE THAN 50% OF BARS AT ANY ONE LOCATION UNLESS AS NOTED. STAGGER SPLICES A MINIMUM OF 2'-6".
3. SEE PIER 2 SECTION DETAILS FOR REINFORCING SIZE AND PLACEMENT.
4. SPACED ALONG ℄ GIRDER C AND PLACED PARALLEL TO BACK OF PAVEMENT SEAT.
5. SEE "BRIDGE DECK REINFORCEMENT PLAN PIER 1 - BOTTOM MAT" FOR SCREED SETTING DIMENSIONS.

SR 5 FILE NO. 7451 SHEET PA76

Bridge Design Engr.	Khaleghi, B		
Supervisor	Khaleghi, B		
Designed By	Olson, DE	10/12	
Checked By	Mizumori, A	10/13	
Detailed By	Bontemps, W	10/12	
Bridge Projects Engr.			
Prelim. Plan By			
Architect/Specialist			

M:\Y-Team\M ST TO PORTLAND\PACIFIC AVE BR\window files\BR DECK REINF BOT2.wnd

DATE	REVISION	BY	APP'D

REGION NO.	STATE	FED. AID PROJ. NO.	SHEET NO.	TOTAL SHEETS
10	WASH.			
JOB NUMBER 12C501				

DOUGLAS EUGENE OLSON STATE OF WASHINGTON 40408 PROFESSIONAL ENGINEER 02/11/14

BRIDGE AND STRUCTURES OFFICE

BIJAN KHALEGHI STATE OF WASHINGTON 27695 PROFESSIONAL ENGINEER 2/12/14

Washington State Department of Transportation

I-5
M ST TO PORTLAND AVE - HOV

PACIFIC AVE OVER I-5 BRIDGE No. 5/444

BRIDGE DECK REINFORCEMENT PLAN AT PIER 2 ~ BOTTOM MAT

BRIDGE SHEET NO. PA76

SHEET 1075 OF 1763 SHEETS

Tue Feb 11 09:02:34 2014

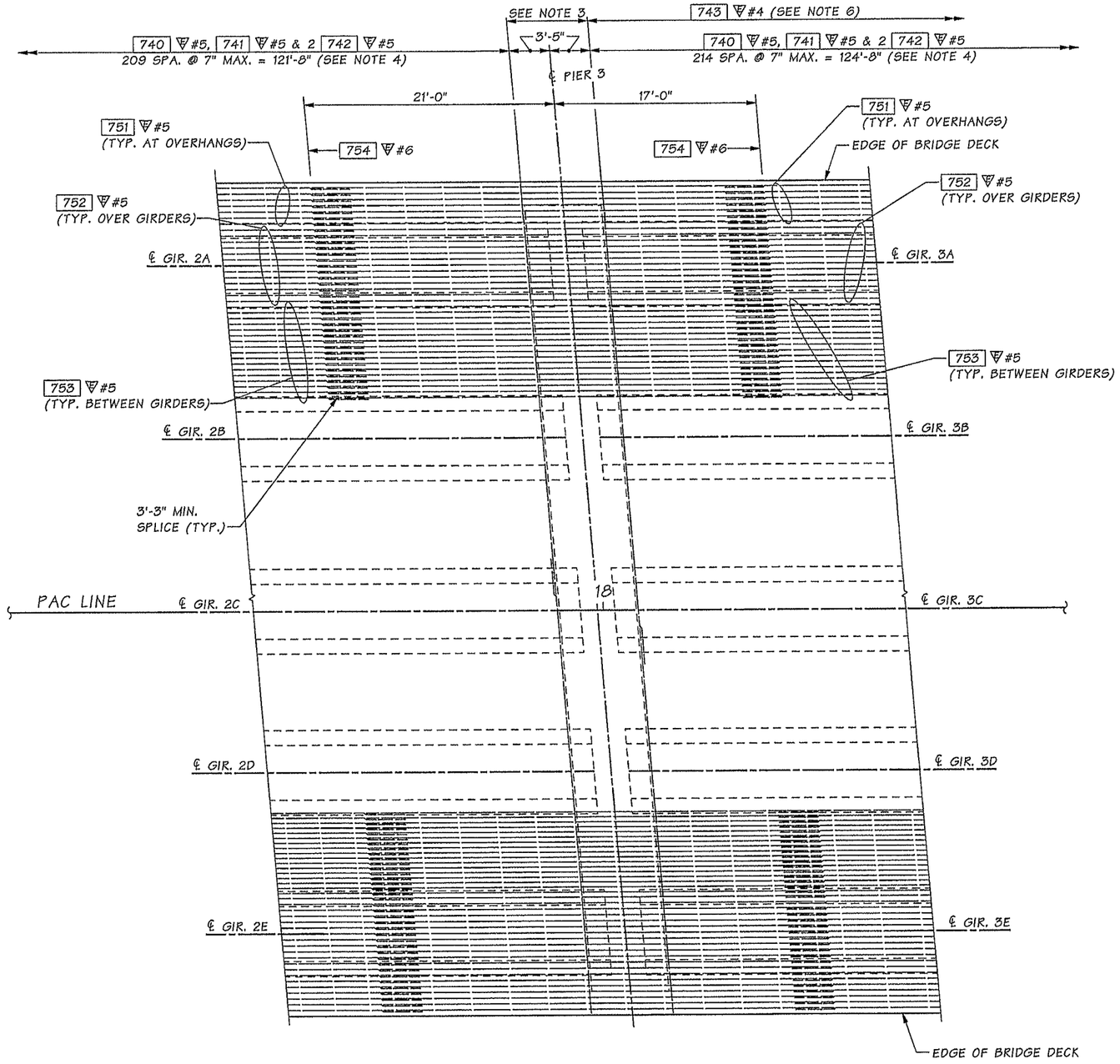

BRIDGE DECK REINFORCEMENT PLAN AT PIER 3 ~ BOTTOM MAT

NOTES:

1. MIN. REBAR SPLICE LENGTH UNLESS NOTED. #5 - 2'-6", #6 - 3'-3", #7 - 3'-9"
2. DO NOT SPLICE MORE THAN 50% OF BARS AT ANY ONE LOCATION UNLESS AS NOTED. STAGGER SPLICES A MINIMUM OF 2'-6".
3. SEE PIER 3 SECTION DETAILS FOR REINFORCING SIZE AND PLACEMENT.
4. SPACED ALONG ℄ GIRDER C AND PARALLEL TO ℄ PIER.
5. SEE "BRIDGE DECK REINFORCEMENT PLAN PIER 1 - BOTTOM MAT" FOR SCREED SETTING DIMENSIONS.
6. ADD SUPPLEMENTAL REINFORCEMENT PER NOTES 4 & 5 ON BR. SHT. PA87.

SR 5 FILE NO. 7451 SHEET PA77

Bridge Design Engr.	Khaleghi, B		M:\Y-Team\M ST TO PORTLAND\PACIFIC AVE BR\window files\BR DECK REINF BOT3.wnd								
Supervisor	Khaleghi, B										
Designed By	Olson, DE	10/12					REGION NO.	STATE	FED. AID PROJ. NO.	SHEET NO.	TOTAL SHEETS
Checked By	Mizumori, A	10/13					10	WASH.			
Detailed By	Bontemps, W	10/12					JOB NUMBER 12C501				
Bridge Projects Engr.											
Prelim. Plan By											
Architect/Specialist			DATE	REVISION	BY	APP'D					

Tue Feb 11 09:02:36 2014

NICHOLAS EUGENE OLSON STATE OF WASHINGTON 40406 REGISTERED PROFESSIONAL ENGINEER 02/11/14

BRIDGE AND STRUCTURES OFFICE

BILAN KHALEGHI STATE OF WASHINGTON 27680 REGISTERED PROFESSIONAL ENGINEER 2/12/14

Washington State Department of Transportation

I-5
M ST TO PORTLAND AVE - HOV

PACIFIC AVE OVER I-5 BRIDGE No. 5/444

BRIDGE DECK REINFORCEMENT PLAN AT PIER 3 ~ BOTTOM MAT

BRIDGE SHEET NO. PA77

SHEET 1076 OF 1763 SHEETS

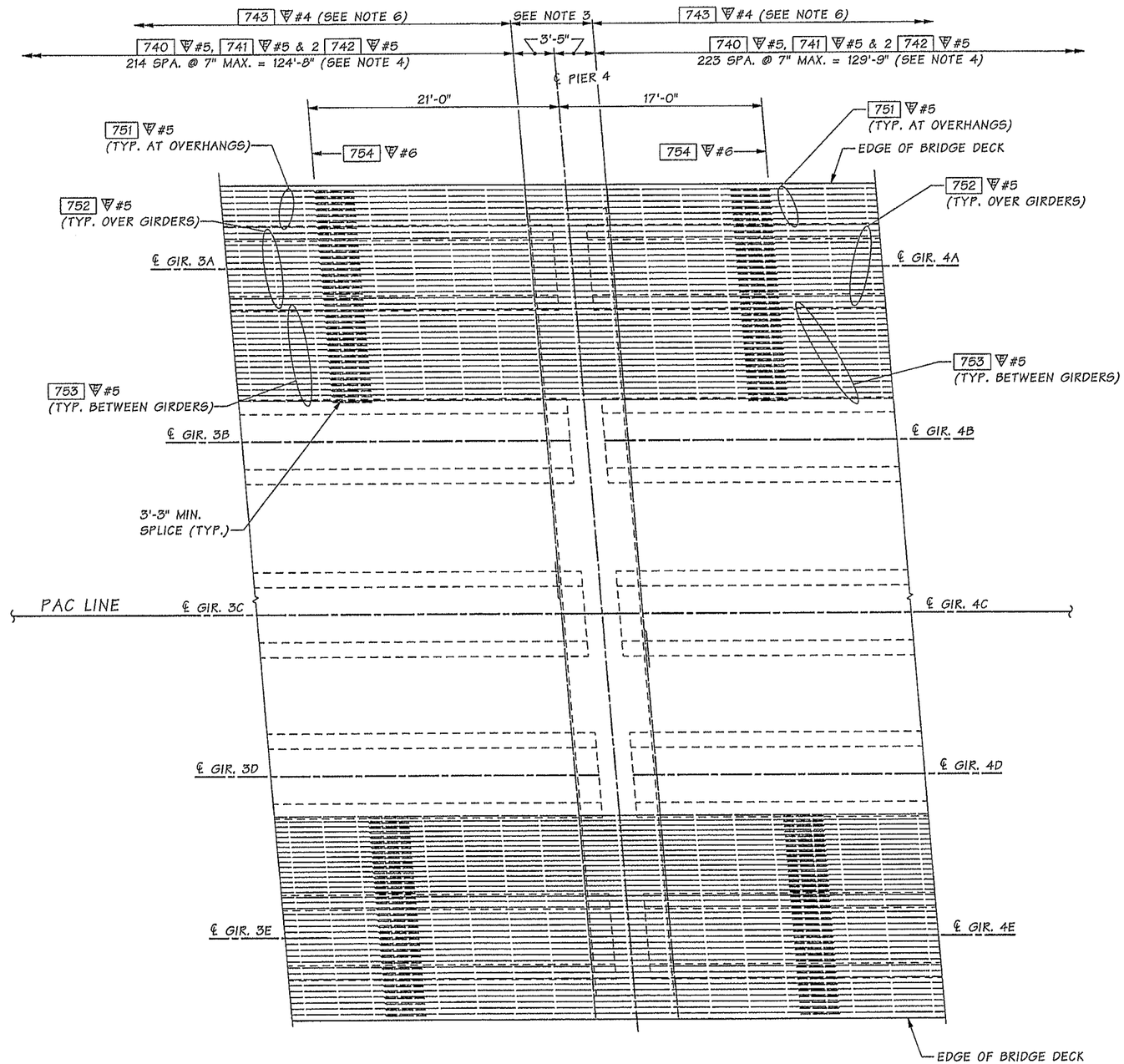

BRIDGE DECK REINFORCEMENT PLAN AT PIER 4 ~ BOTTOM MAT

NOTES:

1. MIN. REBAR SPLICE LENGTH UNLESS NOTED. #5 - 2'-6", #6 - 3'-3", #7 - 3'-9"
2. DO NOT SPLICE MORE THAN 50% OF BARS AT ANY ONE LOCATION UNLESS AS NOTED. STAGGER SPLICES A MINIMUM OF 2'-6".
3. SEE PIER 4 SECTION DETAILS FOR REINFORCING SIZE AND PLACEMENT.
4. SPACED ALONG ℄ GIRDER C AND PARALLEL TO ℄ PIER.
5. SEE "BRIDGE DECK REINFORCEMENT PLAN PIER 1 - BOTTOM MAT" FOR SCREED SETTING DIMENSIONS.
6. ADD SUPPLEMENTAL REINFORCEMENT PER NOTES 4 & 5 ON BR. SHT. PA87.

SR 5 FILE NO. 7451 SHEET PA78

Bridge Design Engr.	Khaleghi, B	
Supervisor	Khaleghi, B	
Designed By	Olson, DE	10/12
Checked By	Mizumori, A	10/13
Detailed By	Bontemps, W	10/12
Bridge Projects Engr.		
Prelim. Plan By		
Architect/Specialist		

M:\Y-Team\M ST TO PORTLAND\PACIFIC AVE BR\window files\BR DECK REINF BOT4.wnd

DATE	REVISION	BY	APP'D

REGION NO.	STATE	FED. AID PROJ. NO.	SHEET NO.	TOTAL SHEETS
10	WASH.			

JOB NUMBER 12C501

DOUGLAS EUGENE OLSON, STATE OF WASHINGTON, 40406, REGISTERED PROFESSIONAL ENGINEER — 02/11/14

BRIDGE AND STRUCTURES OFFICE

JULIAN KHALEGHI, STATE OF WASHINGTON, 27695, REGISTERED PROFESSIONAL ENGINEER — 2/12/14

Washington State Department of Transportation

I-5
M ST TO PORTLAND AVE - HOV

PACIFIC AVE OVER I-5 BRIDGE No. 5/444

BRIDGE DECK REINFORCEMENT PLAN AT PIER 4 ~ BOTTOM MAT

BRIDGE SHEET NO. PA78

SHEET 1077 OF 1763 SHEETS

Tue Feb 11 09:02:37 2014

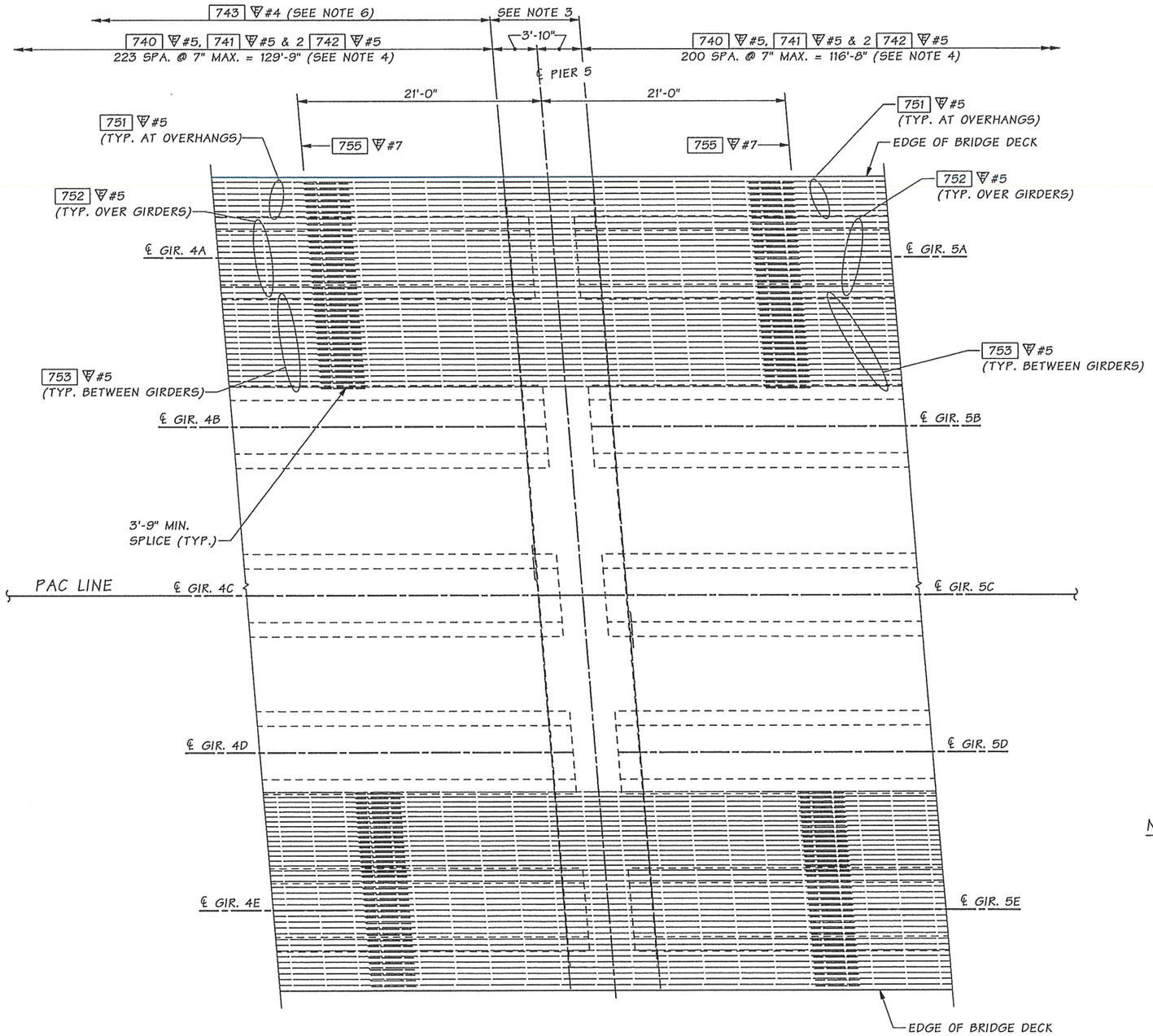

BRIDGE DECK REINFORCEMENT PLAN AT PIER 5 ~ BOTTOM MAT

NOTES:

1. MIN. REBAR SPLICE LENGTH UNLESS NOTED. #5 - 2'-6", #6 - 3'-3", #7 - 3'-9"
2. DO NOT SPLICE MORE THAN 50% OF BARS AT ANY ONE LOCATION UNLESS AS NOTED. STAGGER SPLICES A MINIMUM OF 2'-6".
3. SEE PIER 5 SECTION DETAILS FOR REINFORCING SIZE AND PLACEMENT.
4. SPACED ALONG ℄ GIRDER C AND PARALLEL TO ℄ PIER.
5. SEE "BRIDGE DECK REINFORCEMENT PLAN PIER 1 - BOTTOM MAT" FOR SCREED SETTING DIMENSIONS.
6. ADD SUPPLEMENTAL REINFORCEMENT PER NOTES 4 & 5 ON BR. SHT. PA87.

SR 5 FILE NO. 7451 SHEET PA79

Bridge Design Engr.	Khaleghi, B		M:\Y-Team\M ST TO PORTLAND\PACIFIC AVE BR\window files\BR DECK REINF BOT5.wnd							
Supervisor	Khaleghi, B					REGION NO.	STATE	FED. AID PROJ. NO.	SHEET NO.	TOTAL SHEETS
Designed By	Olson, DE	10/12				10	WASH.			
Checked By	Mizumori, A	10/13				JOB NUMBER 12C501				
Detailed By	Bontemps, W	10/12								
Bridge Projects Engr.										
Prelim. Plan By										
Architect/Specialist			DATE	REVISION	BY	APP'D				

Tue Feb 11 09:02:39 2014

DOUGLAS EUGENE OLSON STATE OF WASHINGTON 40404 REGISTERED PROFESSIONAL ENGINEER 02/11/14

BRIDGE AND STRUCTURES OFFICE

BILLIAN KHALEGHI STATE OF WASHINGTON 27045 REGISTERED PROFESSIONAL ENGINEER 2/12/14

Washington State Department of Transportation

I-5
M ST TO PORTLAND AVE - HOV

PACIFIC AVE OVER I-5 BRIDGE No. 5/444

BRIDGE DECK REINFORCEMENT PLAN AT PIER 5 ~ BOTTOM MAT

BRIDGE SHEET NO. PA79

SHEET 1078 OF 1763 SHEETS

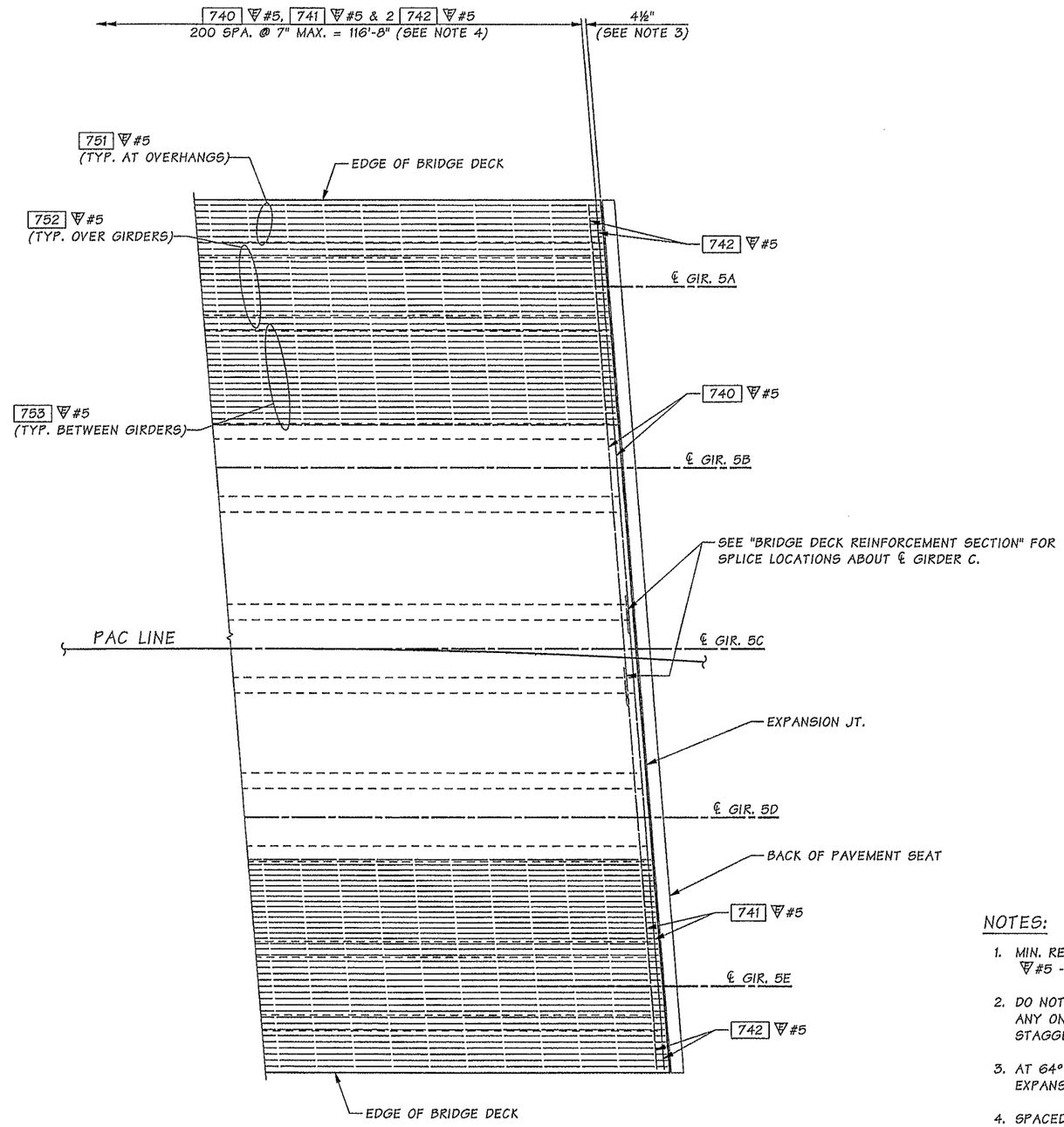

BRIDGE DECK REINFORCEMENT PLAN AT PIER 6 ~ BOTTOM MAT

NOTES:

1. MIN. REBAR SPLICE LENGTH UNLESS NOTED. #5 - 2'-6", #6 - 3'-3", #7 - 3'-9"
2. DO NOT SPLICE MORE THAN 50% OF BARS AT ANY ONE LOCATION UNLESS AS NOTED. STAGGER SPLICES A MINIMUM OF 2'-6".
3. AT 64°F FOR TEMPERATURE ADJUSTMENT, SEE EXPANSION JOINT DETAILS" BR. SHT. PA89.
4. SPACED ALONG ℄ GIRDER C AND PLACED PARALLEL TO BACK OF PAVEMENT SEAT.
5. SEE "BRIDGE DECK REINFORCEMENT PLAN PIER 1 - BOTTOM MAT" FOR SCREED SETTING DIMENSIONS.

SR 5 FILE NO. 7451 SHEET PA80

Bridge Design Engr.	Khaleghi, B		
Supervisor	Khaleghi, B		
Designed By	Olson, DE	10/12	
Checked By	Mizumori, A	10/13	
Detailed By	Bontemps, W	10/12	
Bridge Projects Engr.			
Prelim. Plan By			
Architect/Specialist			

M:\Y-Team\M ST TO PORTLAND\PACIFIC AVE BR\window files\BR DECK REINF BOT6.wnd

DATE	REVISION	BY	APP'D

REGION NO.	STATE	FED. AID PROJ. NO.	SHEET NO.	TOTAL SHEETS
10	WASH.			
JOB NUMBER 12C501				

Tue Feb 11 09:02:40 2014

THOMAS EUGENE OLSON STATE OF WASHINGTON 40406 REGISTERED PROFESSIONAL ENGINEER 02/11/14

BRIDGE AND STRUCTURES OFFICE

SUAN KHALEGHI STATE OF WASHINGTON 27595 REGISTERED PROFESSIONAL ENGINEER 2/12/14

Washington State Department of Transportation

I-5
M ST TO PORTLAND AVE - HOV

PACIFIC AVE OVER I-5 BRIDGE No. 5/444

BRIDGE DECK REINFORCEMENT PLAN AT PIER 6 ~ BOTTOM MAT

BRIDGE SHEET NO. PA80

SHEET 1079 OF 1763 SHEETS

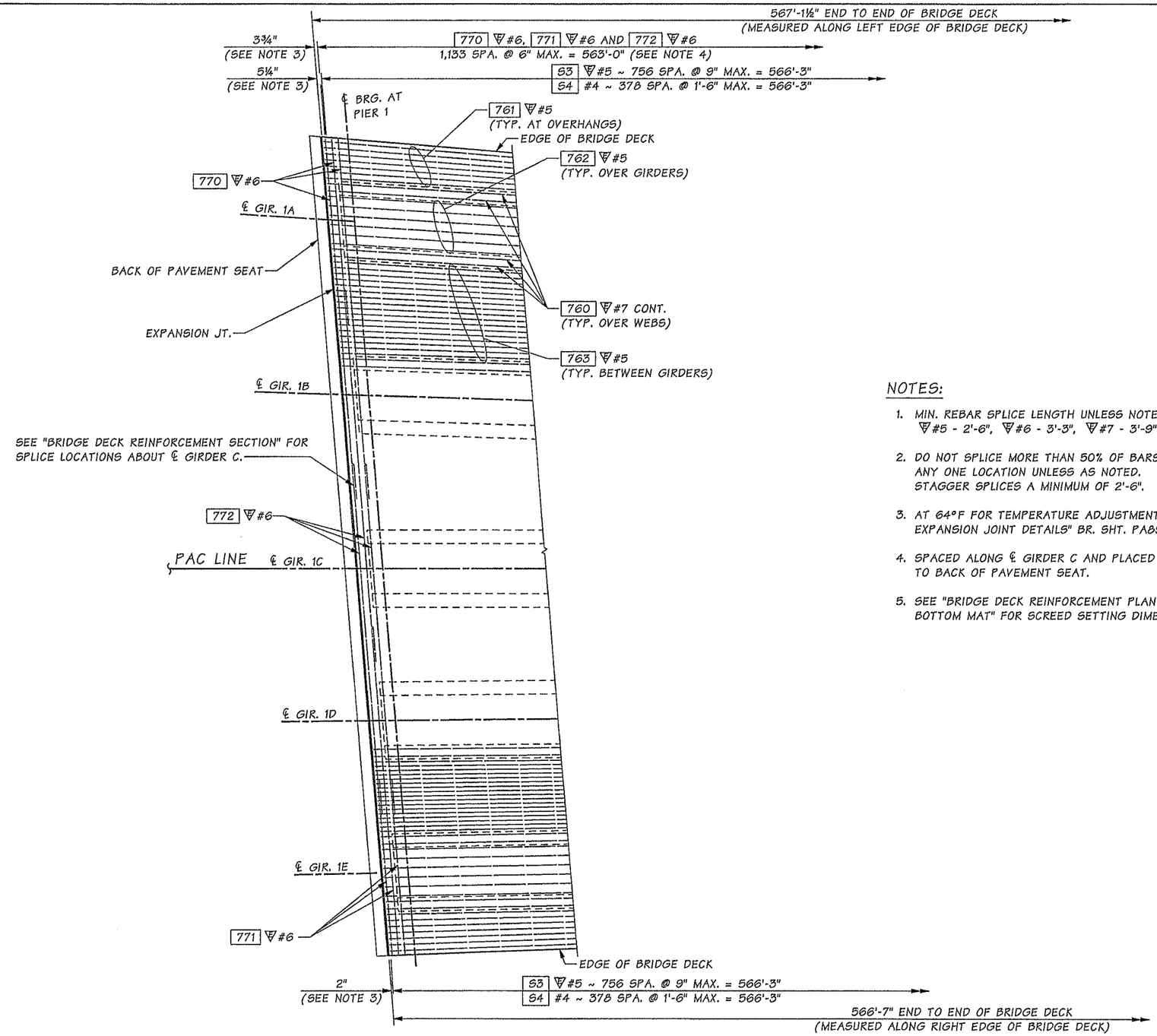

NOTES:

1. MIN. REBAR SPLICE LENGTH UNLESS NOTED. #5 - 2'-6", #6 - 3'-3", #7 - 3'-9"
2. DO NOT SPLICE MORE THAN 50% OF BARS AT ANY ONE LOCATION UNLESS AS NOTED. STAGGER SPLICES A MINIMUM OF 2'-6".
3. AT 64°F FOR TEMPERATURE ADJUSTMENT, SEE EXPANSION JOINT DETAILS" BR. SHT. PA89.
4. SPACED ALONG ℄ GIRDER C AND PLACED PARALLEL TO BACK OF PAVEMENT SEAT.
5. SEE "BRIDGE DECK REINFORCEMENT PLAN PIER 1 - BOTTOM MAT" FOR SCREED SETTING DIMENSIONS.

BRIDGE DECK REINFORCEMENT PLAN AT PIER 1 ~ TOP MAT

SR 5 FILE NO. 7451 SHEET PA81

Bridge Design Engr.	Khaleghi, B		M:\Y-Team\M ST TO PORTLAND\PACIFIC AVE BR\window files\BR DECK REINF TOP1.wnd								
Supervisor	Khaleghi, B						REGION NO.	STATE	FED. AID PROJ. NO.	SHEET NO.	TOTAL SHEETS
Designed By	Olson, DE	10/12					10	WASH.			
Checked By	Mizumori, A	10/13									
Detailed By	Bontemps, W	10/12					JOB NUMBER 12C501				
Bridge Projects Engr.											
Prelim. Plan By											
Architect/Specialist			DATE	REVISION	BY	APP'D					

Tue Feb 11 09:02:41 2014

BRIDGE AND STRUCTURES OFFICE

02/11/14 2/12/14

Washington State Department of Transportation

I-5
M ST TO PORTLAND AVE - HOV

PACIFIC AVE OVER I-5 BRIDGE No. 5/444

BRIDGE DECK REINFORCEMENT PLAN AT PIER 1 ~ TOP MAT

BRIDGE SHEET NO. PA81

SHEET 1080 OF 1763 SHEETS

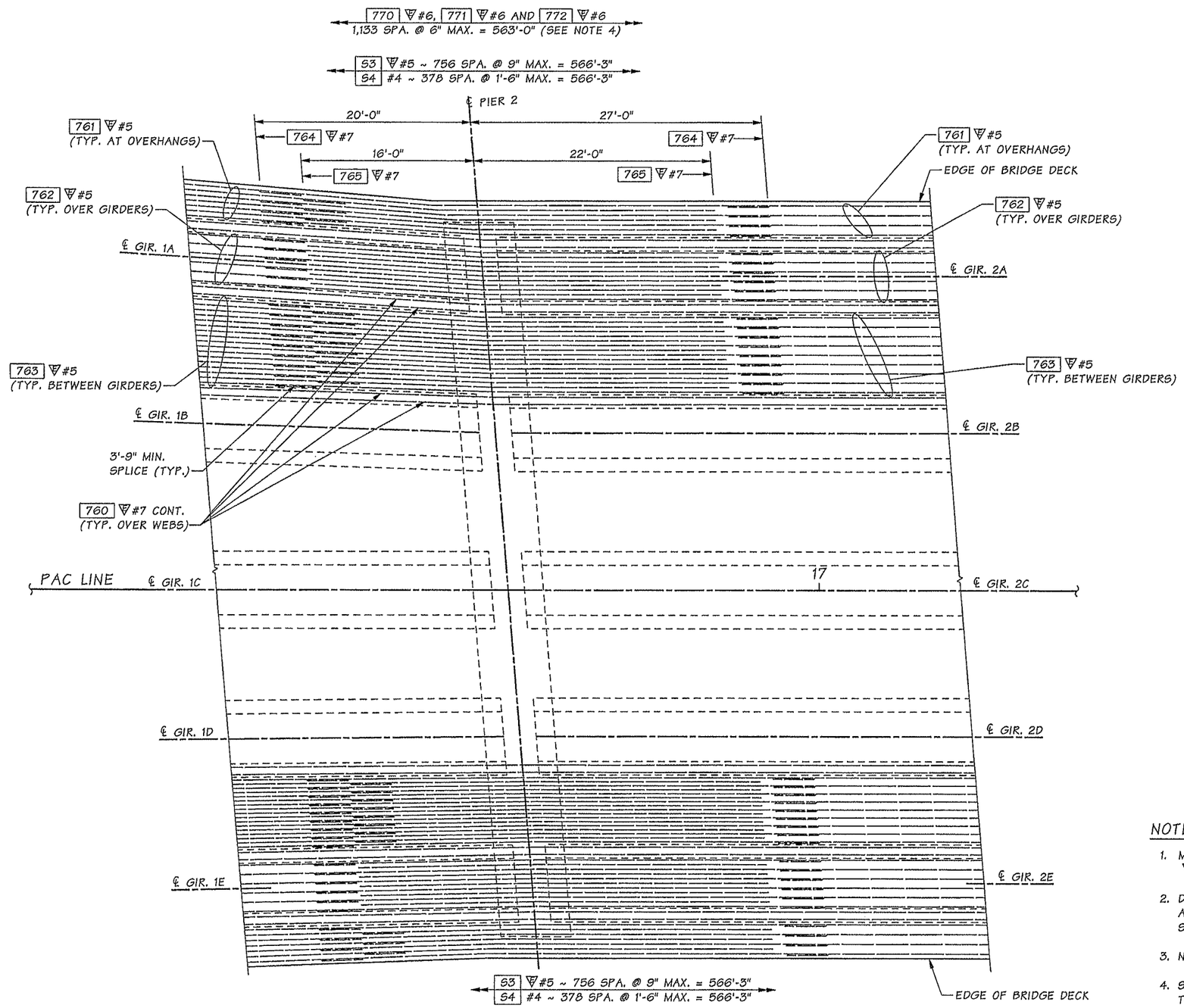

BRIDGE DECK REINFORCEMENT PLAN
AT PIER 2 ~ TOP MAT

NOTES:

1. MIN. REBAR SPLICE LENGTH UNLESS NOTED. #5 - 2'-6", #6 - 3'-3", #7 - 3'-9"
2. DO NOT SPLICE MORE THAN 50% OF BARS AT ANY ONE LOCATION UNLESS AS NOTED. STAGGER SPLICES A MINIMUM OF 2'-6".
3. NO SPLICE ALLOWED CLOSER THAN 15'-0" FROM ℄ PIER.
4. SPACED ALONG ℄ GIRDER C AND PLACED PARALLEL TO BACK OF PAVEMENT SEAT.
5. SEE "BRIDGE DECK REINFORCEMENT PLAN PIER 1 - BOTTOM MAT" FOR SCREED SETTING DIMENSIONS.

Bridge Design Engr.	Khaleghi, B	
Supervisor	Khaleghi, B	
Designed By	Olson, DE	10/12
Checked By	Mizumori, A	10/13
Detailed By	Bontemps, W	10/12
Bridge Projects Engr.		
Prelim. Plan By		
Architect/Specialist		

M:\Y-Team\M ST TO PORTLAND\PACIFIC AVE BR\window files\BR DECK REINF TOP2.wnd

DATE	REVISION	BY	APP'D

REGION NO.	STATE	FED. AID PROJ. NO.	SHEET NO.	TOTAL SHEETS
10	WASH.			
JOB NUMBER 12C501				

NICHOLAS EUGENE OLSON, STATE OF WASHINGTON, 40104, REGISTERED PROFESSIONAL ENGINEER, 02/4/14

BRIDGE AND STRUCTURES OFFICE

BLAIN KHALEGHI, STATE OF WASHINGTON, 27966, REGISTERED PROFESSIONAL ENGINEER, 2/12/14

Washington State Department of Transportation

I-5
M ST TO PORTLAND AVE - HOV

PACIFIC AVE OVER I-5 BRIDGE No. 5/444

BRIDGE DECK REINFORCMENT PLAN AT PIER 2 ~ TOP MAT

BRIDGE SHEET NO. PA82

SHEET 1081 OF 1763 SHEETS

SR 5 FILE NO. 7451 SHEET PA82

Tue Feb 11 09:02:43 2014

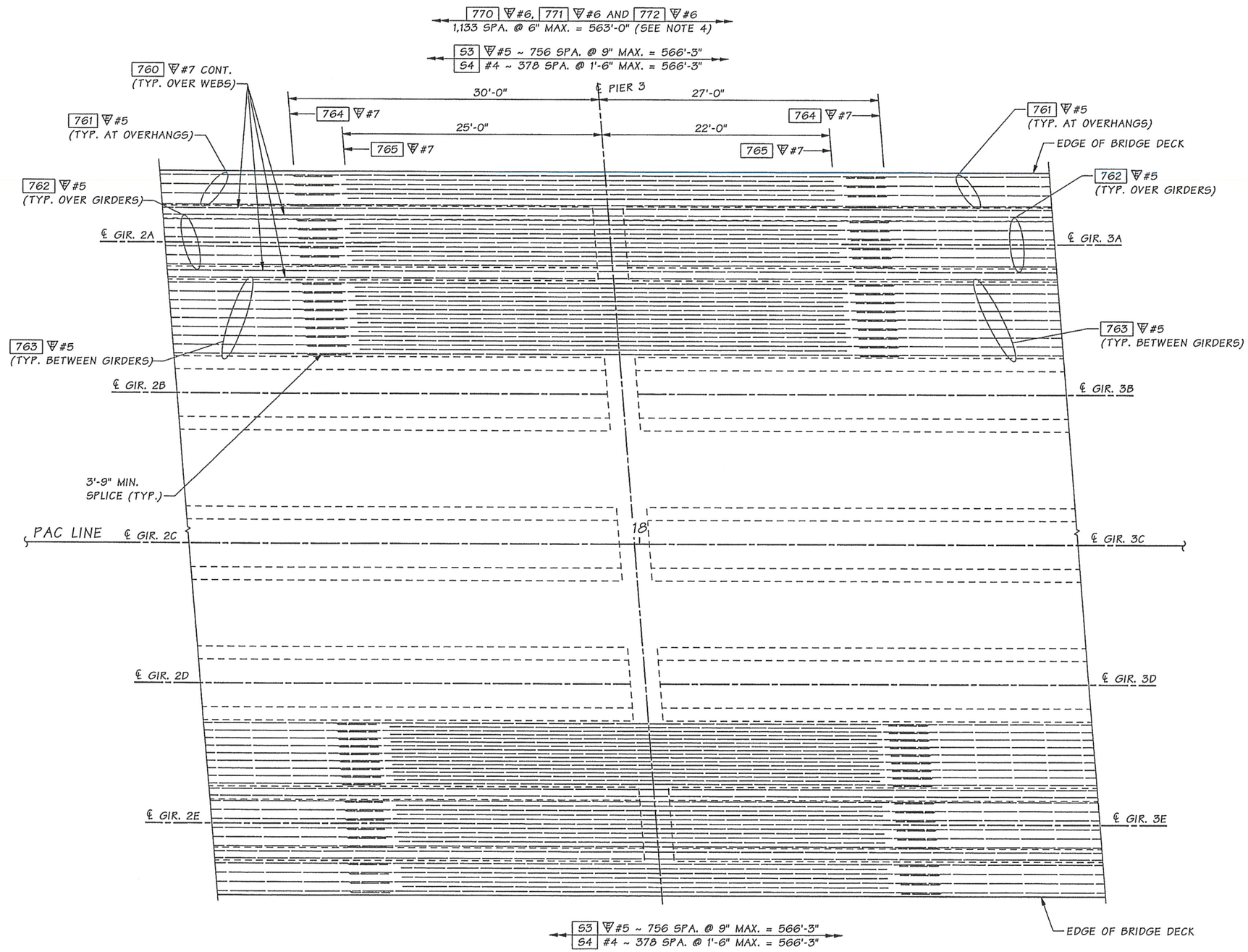

NOTES:

1. MIN. REBAR SPLICE LENGTH UNLESS NOTED. #5 - 2'-6", #6 - 3'-3", #7 - 3'-9"
2. DO NOT SPLICE MORE THAN 50% OF BARS AT ANY ONE LOCATION UNLESS AS NOTED. STAGGER SPLICES A MINIMUM OF 2'-6".
3. NO SPLICE ALLOWED CLOSER THAN 15'-0" FROM ℄ PIER.
4. SPACED ALONG ℄ GIRDER C AND PLACED PARALLEL TO BACK OF PAVEMENT SEAT.
5. SEE "BRIDGE DECK REINFORCEMENT PLAN PIER 1 - BOTTOM MAT" FOR SCREED SETTING DIMENSIONS.

BRIDGE DECK REINFORCEMENT PLAN AT PIER 3 ~ TOP MAT

Bridge Design Engr.	Khaleghi, B	
Supervisor	Khaleghi, B	
Designed By	Olson, DE	10/12
Checked By	Mizumori, A	10/13
Detailed By	Bontemps, W	10/12
Bridge Projects Engr.		
Prelim. Plan By		
Architect/Specialist		

M:\Y-Team\M ST TO PORTLAND\PACIFIC AVE BR\window files\BR DECK REINF TOP3.wnd

DATE	REVISION	BY	APP'D

REGION NO.	STATE	FED. AID PROJ. NO.	SHEET NO.	TOTAL SHEETS
10	WASH.			

JOB NUMBER 12C501

BRIDGE AND STRUCTURES OFFICE

02/11/14 2/12/14

Washington State Department of Transportation

I-5
M ST TO PORTLAND AVE - HOV

PACIFIC AVE OVER I-5 BRIDGE No. 5/444

BRIDGE DECK REINFORCEMENT PLAN AT PIER 3 ~ TOP MAT

BRIDGE SHEET NO. PA83

SHEET 1082 OF 1763 SHEETS

SR 5 FILE NO. 7451 SHEET PA83

Tue Feb 11 09:02:44 2014

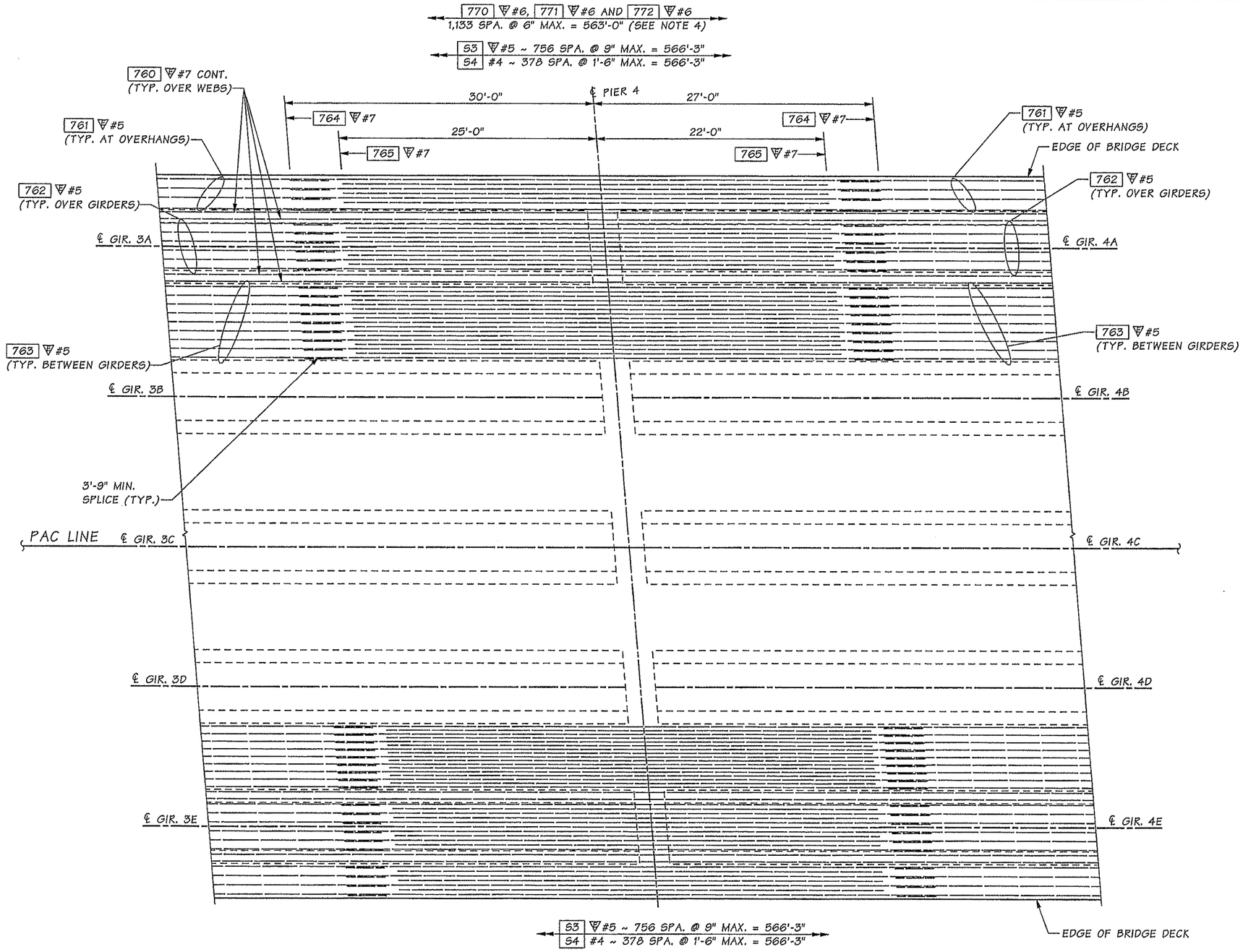

NOTES:

1. MIN. REBAR SPLICE LENGTH UNLESS NOTED. #5 - 2'-6", #6 - 3'-3", #7 - 3'-9"
2. DO NOT SPLICE MORE THAN 50% OF BARS AT ANY ONE LOCATION UNLESS AS NOTED. STAGGER SPLICES A MINIMUM OF 2'-6".
3. NO SPLICE ALLOWED CLOSER THAN 15'-0" FROM ℄ PIER.
4. SPACED ALONG ℄ GIRDER C AND PLACED PARALLEL TO BACK OF PAVEMENT SEAT.
5. SEE "BRIDGE DECK REINFORCEMENT PLAN PIER 1 - BOTTOM MAT" FOR SCREED SETTING DIMENSIONS.

BRIDGE DECK REINFORCEMENT PLAN AT PIER 4 ~ TOP MAT

SR 5 FILE NO. 7451 SHEET PA84

Bridge Design Engr.	Khaleghi, B	
Supervisor	Khaleghi, B	
Designed By	Olson, DE	10/12
Checked By	Mizumori, A	10/13
Detailed By	Bontemps, W	10/12
Bridge Projects Engr.		
Prelim. Plan By		
Architect/Specialist		

M:\Y-Team\M ST TO PORTLAND\PACIFIC AVE BR\window files\BR DECK REINF TOP4.wnd

DATE	REVISION	BY	APP'D

REGION NO.	STATE	FED. AID PROJ. NO.	SHEET NO.	TOTAL SHEETS
10	WASH.			

JOB NUMBER 12C501

DOUGLAS EUGENE OLSON, STATE OF WASHINGTON, 40406, REGISTERED PROFESSIONAL ENGINEER — 02/4/14

BRIDGE AND STRUCTURES OFFICE

BIJAN KHALEGHI, STATE OF WASHINGTON, 27695, REGISTERED PROFESSIONAL ENGINEER — 2/12/14

Washington State Department of Transportation

I-5
M ST TO PORTLAND AVE - HOV

PACIFIC AVE OVER I-5 BRIDGE No. 5/444

BRIDGE DECK REINFORCEMENT PLAN AT PIER 4 ~ TOP MAT

BRIDGE SHEET NO. PA84

SHEET 1083 OF 1763 SHEETS

Tue Feb 11 09:02:46 2014

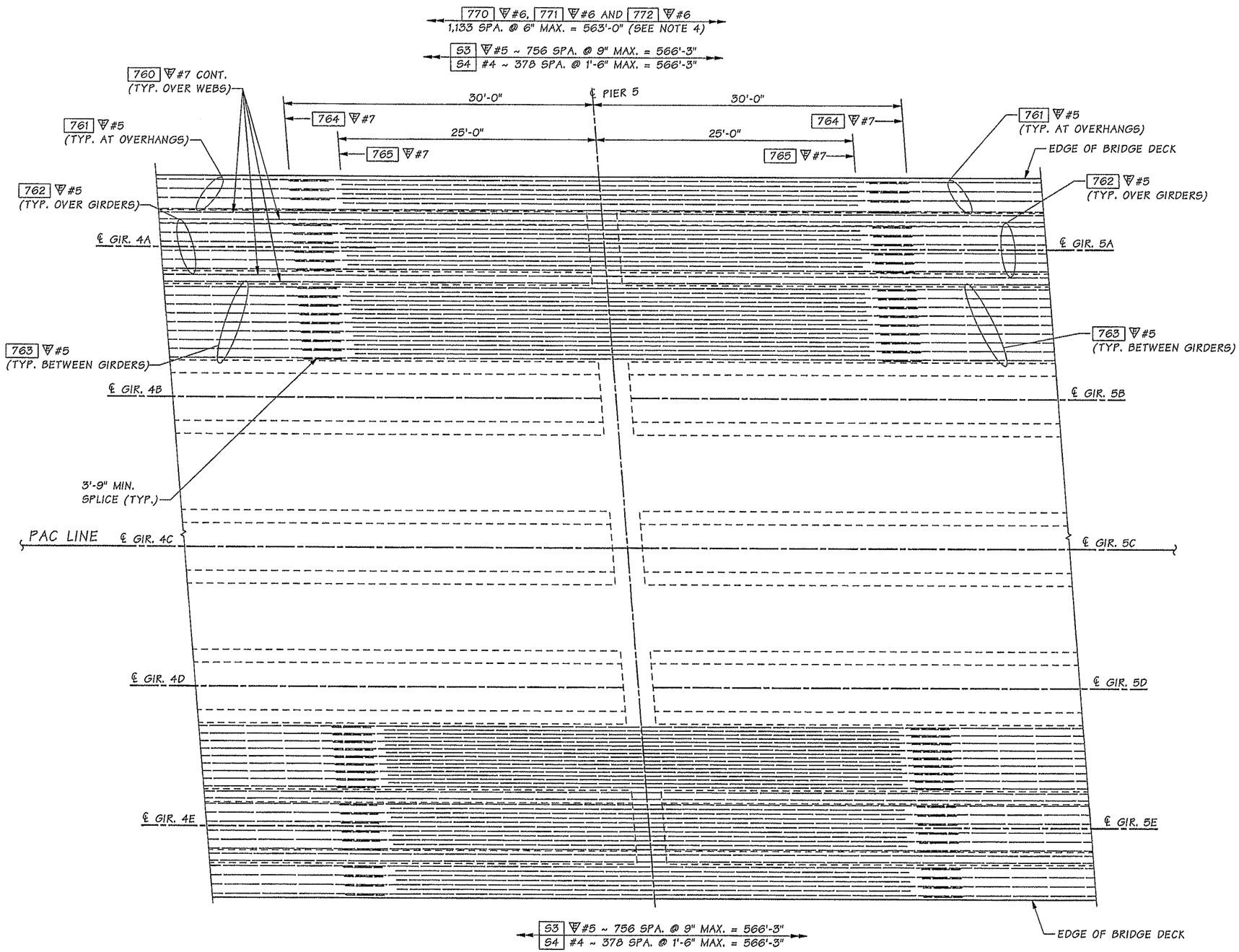

BRIDGE DECK REINFORCEMENT PLAN
AT PIER 5 ~ TOP MAT

NOTES:

1. MIN. REBAR SPLICE LENGTH UNLESS NOTED.
   #5 - 2'-6", #6 - 3'-3", #7 - 3'-9"
2. DO NOT SPLICE MORE THAN 50% OF BARS AT ANY ONE LOCATION UNLESS AS NOTED. STAGGER SPLICES A MINIMUM OF 2'-6".
3. NO SPLICE ALLOWED CLOSER THAN 15'-0" FROM ℄ PIER.
4. SPACED ALONG ℄ GIRDER C AND PLACED PARALLEL TO BACK OF PAVEMENT SEAT.
5. SEE "BRIDGE DECK REINFORCEMENT PLAN PIER 1 - BOTTOM MAT" FOR SCREED SETTING DIMENSIONS.

Bridge Design Engr.	Khaleghi, B		M:\Y-Team\M ST TO PORTLAND\PACIFIC AVE BR\window files\BR DECK REINF TOP5.wnd								
Supervisor	Khaleghi, B										
Designed By	Olson, DE	10/12									
Checked By	Mizumori, A	10/13									
Detailed By	Bontemps, W	10/12									
Bridge Projects Engr.											
Prelim. Plan By											
Architect/Specialist			DATE	REVISION	BY	APP'D					

REGION NO.	STATE	FED. AID PROJ. NO.	SHEET NO.	TOTAL SHEETS
10	WASH.			
JOB NUMBER 12C501				

Tue Feb 11 09:02:47 2014

DOUGLAS EUGENE OLSON, STATE OF WASHINGTON, 40408, REGISTERED PROFESSIONAL ENGINEER, 02/11/14

BRIDGE AND STRUCTURES OFFICE

BIJAN KHALEGHI, STATE OF WASHINGTON, 27695, REGISTERED PROFESSIONAL ENGINEER, 2/12/14

Washington State Department of Transportation

I-5
M ST TO PORTLAND AVE - HOV

PACIFIC AVE OVER I-5 BRIDGE No. 5/444

BRIDGE DECK REINFORCEMENT PLAN
AT PIER 5 ~ TOP MAT

BRIDGE SHEET NO. PA85

SHEET 1084 OF 1763 SHEETS

SR 5 FILE NO. 7451 SHEET PA85

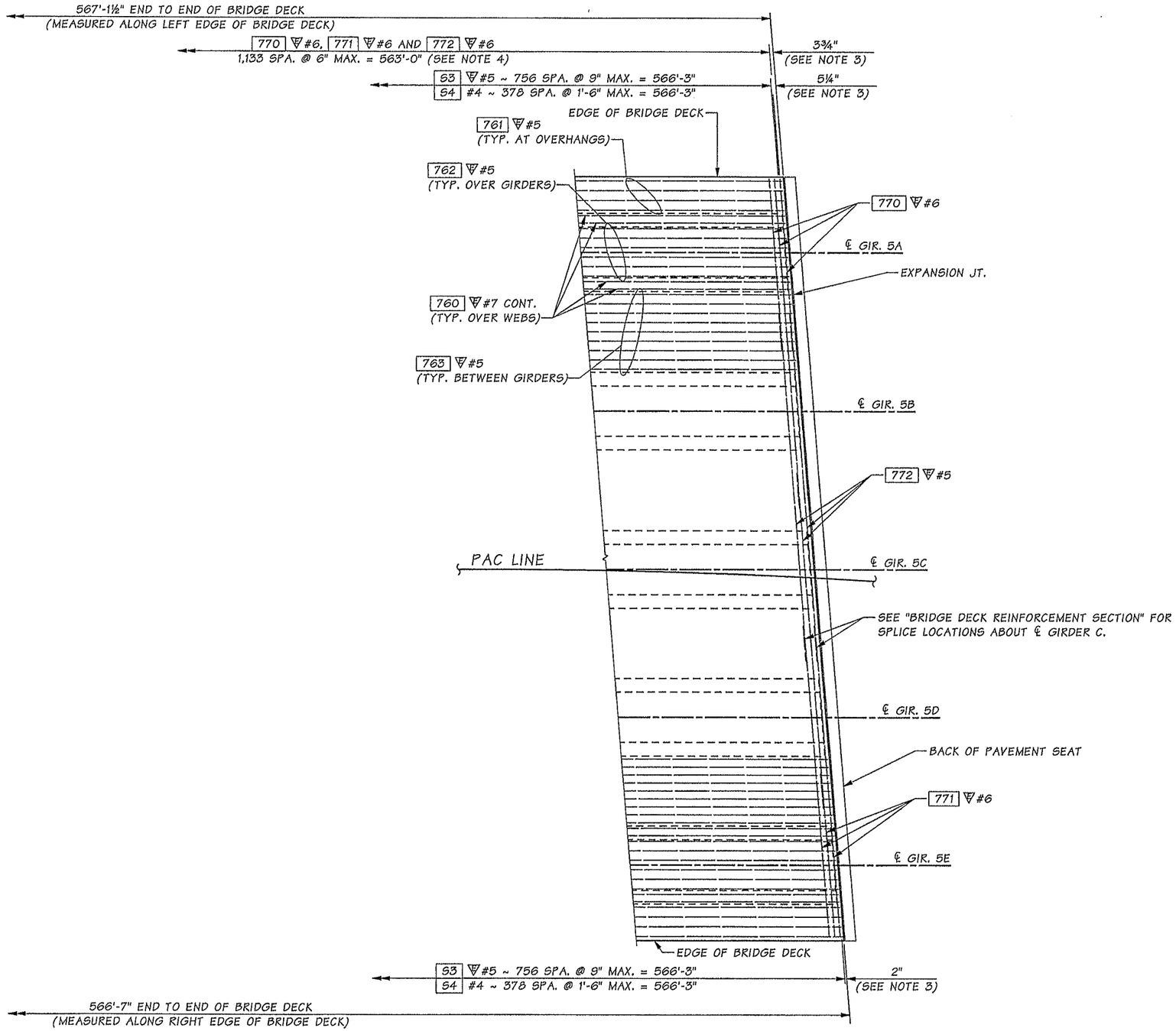

BRIDGE DECK REINFORCEMENT PLAN AT PIER 6 ~ TOP MAT

NOTES:

1. MIN. REBAR SPLICE LENGTH UNLESS NOTED. ▽#5 - 2'-6", ▽#6 - 3'-3", ▽#7 - 3'-9"
2. DO NOT SPLICE MORE THAN 50% OF BARS AT ANY ONE LOCATION UNLESS AS NOTED. STAGGER SPLICES A MINIMUM OF 2'-6".
3. AT 64°F FOR TEMPERATURE ADJUSTMENT, SEE EXPANSION JOINT DETAILS" BR. SHT. PA89.
4. SPACED ALONG ℄ GIRDER C AND PLACED PARALLEL TO BACK OF PAVEMENT SEAT.
5. SEE "BRIDGE DECK REINFORCEMENT PLAN PIER 1 - BOTTOM MAT" FOR SCREED SETTING DIMENSIONS.

SR 5 FILE NO. 7451 SHEET PA86

Bridge Design Engr.	Khaleghi, B	
Supervisor	Khaleghi, B	
Designed By	Olson, DE	10/12
Checked By	Mizumori, A	10/13
Detailed By	Bontemps, W	10/12
Bridge Projects Engr.		
Prelim. Plan By		
Architect/Specialist		

M:\Y-Team\M ST TO PORTLAND\PACIFIC AVE BR\window files\BR DECK REINF TOP6.wnd

DATE	REVISION	BY	APP'D

REGION NO.	STATE	FED. AID PROJ. NO.	SHEET NO.	TOTAL SHEETS
10	WASH.			

JOB NUMBER 12C501

BRIDGE AND STRUCTURES OFFICE

02/11/14 2/12/14

Washington State Department of Transportation

I-5
M ST TO PORTLAND AVE - HOV

PACIFIC AVE OVER I-5 BRIDGE No. 5/444

BRIDGE DECK REINFORCEMENT PLAN AT PIER 6 ~ TOP MAT

BRIDGE SHEET NO. PA86

SHEET 1085 OF 1763 SHEETS

Tue Feb 11 09:02:49 2014

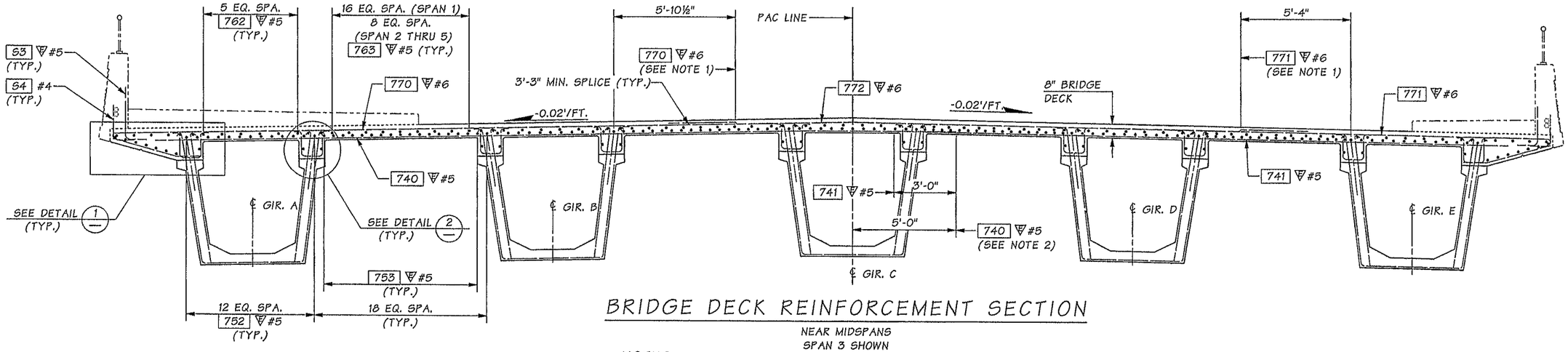

BRIDGE DECK REINFORCEMENT SECTION

NEAR MIDSPANS
SPAN 3 SHOWN

NOTES:

1. ALTERNATE ADJACENT TOP TRANSVERSE BAR SPLICES ABOUT ℄ GIRDER C, BETWEEN GIRDER B & C, BETWEEN GIRDER C & D, BETWEEN GIRDER B & C, ETC.
2. ALTERNATE ADJACENT BOTTOM TRANSVERSE BAR SPLICES ABOUT ℄ GIRDER C OVER WEBS.
3. ROTATE END HOOK TO PROVIDE NECESSARY CONCRETE COVER.
4. WHERE HAUNCH DIMENSION EXCEEDS 6 INCHES, ADD HAUNCH STIRRUPS AND MATCH SPACING OF GIRDER STIRRUPS EXTENDING INTO BRIDGE DECK. HAUNCH STIRRUPS TO EXTEND UP TO DECK TOP MAT.
5. ADD HAUNCH BARS IN EACH SPAN WHERE HAUNCH STIRRUPS ARE ADDED. EXTEND HAUNCH BARS 1'-0" MIN. BEYOND HAUNCH STIRRUPS. PLACE HAUNCH BARS AT MID-HEIGHT OF HAUNCH.

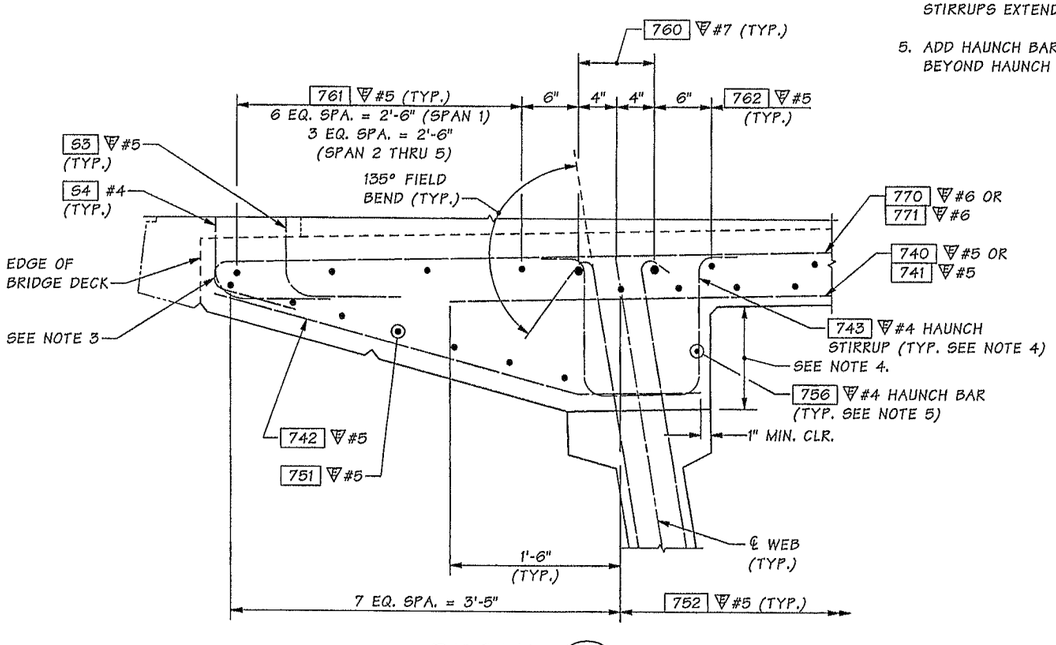

DETAIL 1 (TYP.)

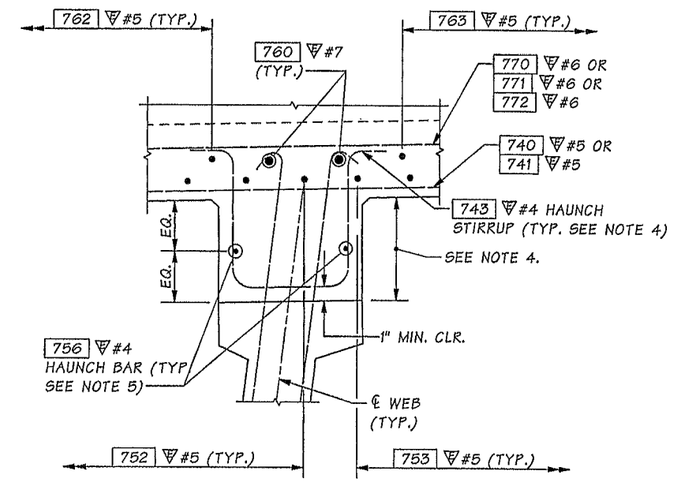

DETAIL 2 (TYP.)

Bridge Design Engr.	Khaleghi, B		
Supervisor	Khaleghi, B		
Designed By	Olson, DE	11/12	
Checked By	Mizumori, A	10/13	
Detailed By	Bontemps, W	10/12	
Bridge Projects Engr.			
Prelim. Plan By			
Architect/Specialist			

M:\Y-Team\M ST TO PORTLAND\PACIFIC AVE BR\window files\BRDECKSECTION2.wmd

DATE	REVISION	BY	APP'D

REGION NO.	STATE	FED. AID PROJ. NO.	SHEET NO.	TOTAL SHEETS
10	WASH.			
JOB NUMBER 12C501				

Tue Feb 11 09:02:50 2014

BRIDGE AND STRUCTURES OFFICE

Washington State Department of Transportation

I-5
M ST TO PORTLAND AVE - HOV

PACIFIC AVE OVER I-5 BRIDGE No. 5/444

BRIDGE DECK REINFORCEMENT SECTION
1 OF 2

BRIDGE SHEET NO. PA87

SHEET 1086 OF 1763 SHEETS

SR 5 FILE NO. 7451 SHEET PA87

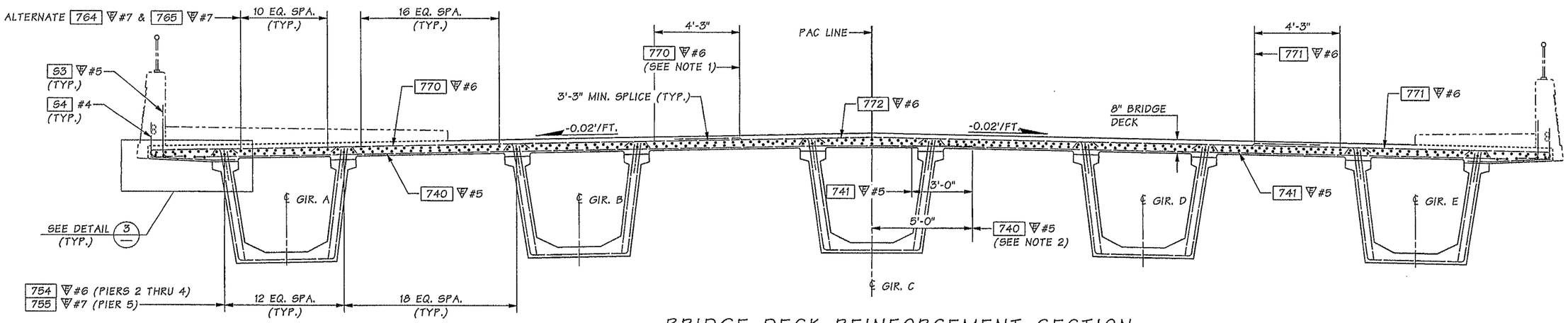

BRIDGE DECK REINFORCEMENT SECTION

NEAR INTERMEDIATE PIERS

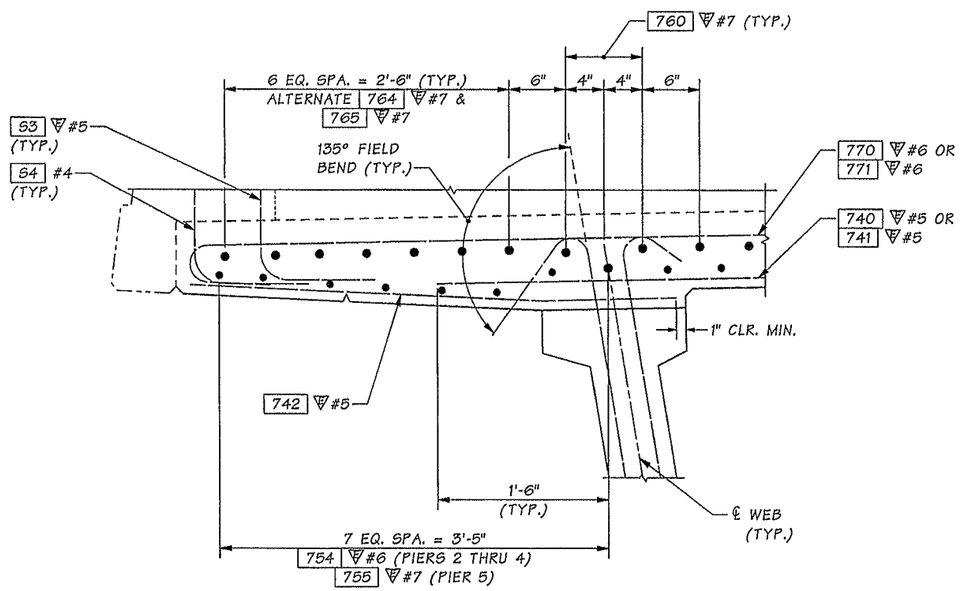

DETAIL 3 (TYP.)

NOTES:

1. ALTERNATE ADJACENT TOP TRANSVERSE BAR SPLICES ABOUT ℄ GIRDER C, BETWEEN GIRDER B & C, BETWEEN GIRDER C & D, BETWEEN GIRDER B & C, ETC.
2. ALTERNATE ADJACENT BOTTOM TRANSVERSE BAR SPLICES ABOUT ℄ GIRDER C OVER WEBS.
3. ROTATE END HOOK TO PROVIDE NECESSARY CONCRETE COVER.

SR 5 FILE NO. 7451 SHEET PA88

Bridge Design Engr.	Khaleghi, B		M:\Y-Team\M ST TO PORTLAND\PACIFIC AVE BR\window files\BRDECKSECTION1.wnd
Supervisor	Khaleghi, B		
Designed By	Olson, DE	11/12	
Checked By	Mizumori, A	10/13	
Detailed By	Bontemps, W	10/12	
Bridge Projects Engr.			
Prelim. Plan By			
Architect/Specialist			

DATE	REVISION	BY	APP'D

Tue Feb 11 09:02:51 2014

REGION NO.	STATE	FED. AID PROJ. NO.	SHEET NO.	TOTAL SHEETS
10	WASH.			
JOB NUMBER 12C501				

DOUGLAS EUGENE OLSON, STATE OF WASHINGTON, 40408, REGISTERED PROFESSIONAL ENGINEER 02/11/14

BRIDGE AND STRUCTURES OFFICE

BILLIAN KHALEGHI, STATE OF WASHINGTON, 27966, REGISTERED PROFESSIONAL ENGINEER 2/12/14

Washington State Department of Transportation

I-5
M ST TO PORTLAND AVE - HOV

PACIFIC AVE OVER I-5 BRIDGE No. 5/444

BRIDGE DECK REINFORCEMENT SECTION
2 OF 2

BRIDGE SHEET NO. PA88

SHEET 1087 OF 1763 SHEETS

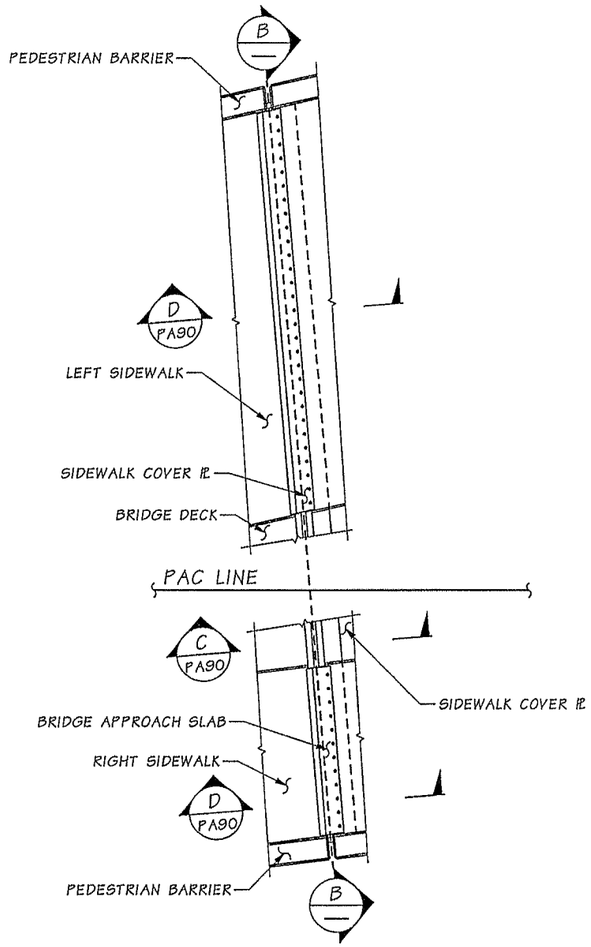

PLAN
EXPANSION JOINT

JOINT AT PIER 1 SHOWN, PIER 6 SIMILAR

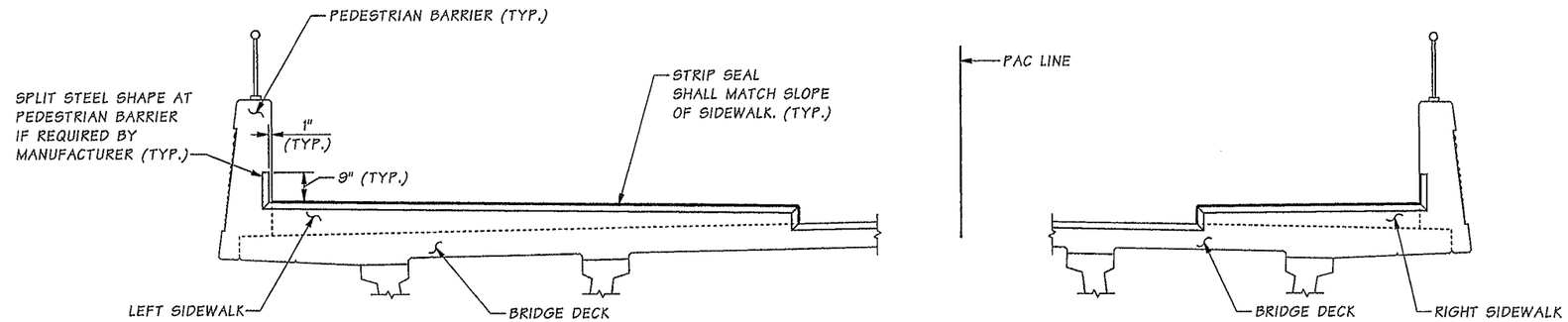

SECTION B
FOR STRIP SEAL AT PEDESTRIAN BARRIERS AND SIDEWALKS

STEEL SHAPE TYPES

MANUFACTURER	ITEM NAME	BRIDGE DECK AND SIDEWALKS			PEDESTRIAN BARRIERS					
		TYPE	S	T	TYPE	V	W	TYPE	X	Y
D. S. BROWN	DSB STRIP SEAL	SSCM2	1¼"	3¾"	SSA2 α	1¼"	2"	SSE2 α	1"	1½"
WATSON BOWMAN ACME	WABO STRIP SEAL	M, R, P	2¾"	3¼"	A	1¼"	2"	E	1½"	1½"
R.J. WATSON, INC.	RJ STRIP SEAL	RJM	2¾"	3¼"	RJA	1¼"	2"	RJE	1¼"	1½"
ENGINEERED DYNAMIC SYSTEMS LLC	TYFO STRIP SEAL	C	2½"	3"	A	1⅜"	2"	E	1⅜"	1⅜"

α TRIM VERTICAL LEG OF SSCM2 SHAPE FOR USE IN PEDESTRIAN BARRIERS

4" MOTION RANGE

MANUFACTURER	ITEM NAME	OPENING "G" NORMAL TO JT.		MIN. INSTALLATION WIDTH NORMAL TO JOINT	OPENING "G" NORMAL TO JT.		
		MIN.	MAX.		@40°F	@64°F	@80°F
D. S. BROWN	DSB STRIP SEAL A2R-400	½"	4½"	1½"	2¼"	1½"	1¼"
WATSON BOWMAN ACME	WABO STRIP SEAL SE-400	0"	4"	1½"	2¼"	1½"	1¼"
R.J. WATSON, INC.	R.J. STRIP SEAL 400	0"	4"	1½"	2¼"	1½"	1¼"
ENGINEERED DYNAMIC SYSTEMS LLC	TYFO STRIP SEAL FS400	¼"	4¾"	1½"	2¼"	1½"	1¼"

SR 5 FILE NO. 7451 SHEET PA89

Bridge Design Engr.	Khaleghi, B	
Supervisor	Khaleghi, B	
Designed By	Olson, DE	12/12
Checked By	Mizumori, A	01/14
Detailed By	Bontemps, W	10/12
Bridge Projects Engr.		
Prelim. Plan By		
Architect/Specialist		

M:\Y-Team\M ST TO PORTLAND\PACIFIC AVE BR\window files\EXP JOINT.wnd

DATE	REVISION	BY	APP'D

REGION NO.	STATE	FED. AID PROJ. NO.	SHEET NO.	TOTAL SHEETS
10	WASH.			

JOB NUMBER 12C501

Tue Feb 11 09:02:53 2014

NICHOLAS EUGENE OLSON — STATE OF WASHINGTON — 40106 — REGISTERED PROFESSIONAL ENGINEER — 02/11/14

BRIDGE AND STRUCTURES OFFICE

BRIAN KHALEGHI — STATE OF WASHINGTON — 27625 — REGISTERED PROFESSIONAL ENGINEER — 2/12/14

Washington State Department of Transportation

I-5
M ST TO PORTLAND AVE - HOV

PACIFIC AVE OVER I-5 BRIDGE No. 5/444

EXPANSION JOINT DETAILS 1 OF 2

BRIDGE SHEET NO. PA89

SHEET 1088 OF 1763 SHEETS

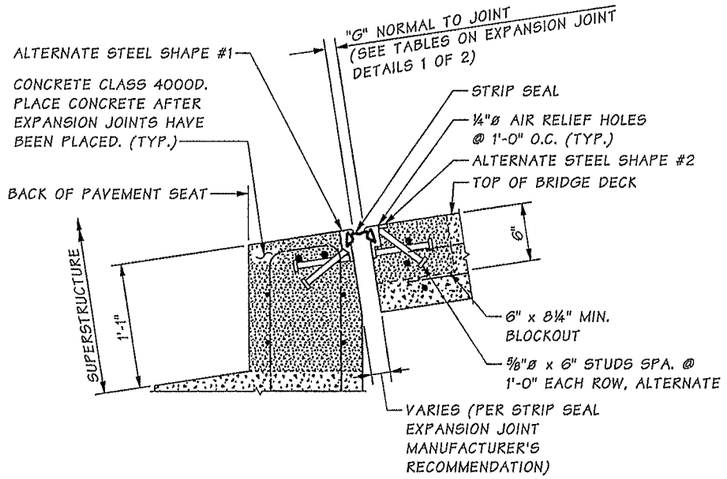

STRIP SEAL AT PIER 1

EXTEND BRIDGE DECK STEEL INTO THE BLOCKOUT.

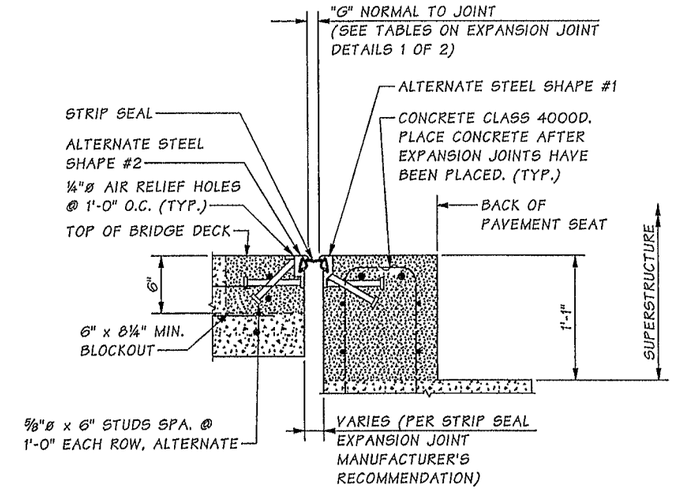

STRIP SEAL AT PIER 6

EXTEND BRIDGE DECK STEEL INTO THE BLOCKOUT.

SECTION C — PA89

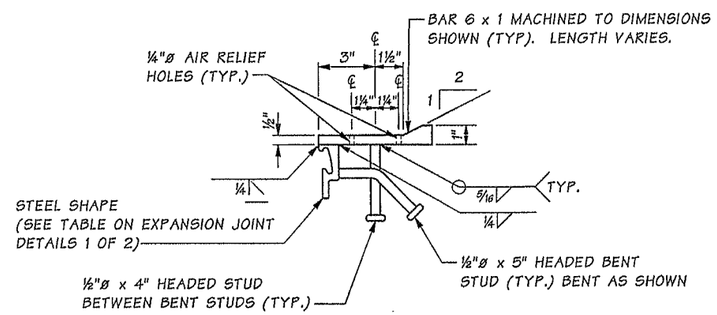

STRIP SEAL ASSEMBLY AT SIDEWALK

STRIP SEAL STEEL ASSEMBLIES SHALL BE GALVANIZED AFTER FABRICATION. ASSEMBLY SHOWN WITHOUT TAPPED HOLES. SEE STRIP SEAL ASSEMBLY LAYOUT THIS SHEET FOR HOLE AND STUD SPACING ALONG LENGTH OF STRIP SEAL ASSEMBLY.

NOTES:

1. PLATE AND BARS SHALL BE ASTM A36 OR BETTER.
2. COUNTERSUNK BOLTS SHALL BE ASTM A449 OR BETTER. PROVIDE BOLT WITH SLOT FOR TIGHTENING BOLT.
3. ANCHOR THE COVER PLATE ON THE UPHILL SIDE OF THE JOINT. APPLY EPOXY RESIN BASED OUTDOOR SLIP RESISTANT FINISH TO THE TOP SURFACE OF THE COVER PLATE EXCEPT AT COUNTERSUNK BOLT LOCATIONS. DO NOT APPLY SLIP RESISTANT FINISH TO THE STRIP SEAL ASSEMBLIES. THE COLOR OF NON-SLIP COATING SHALL BE CEMENT GREY.

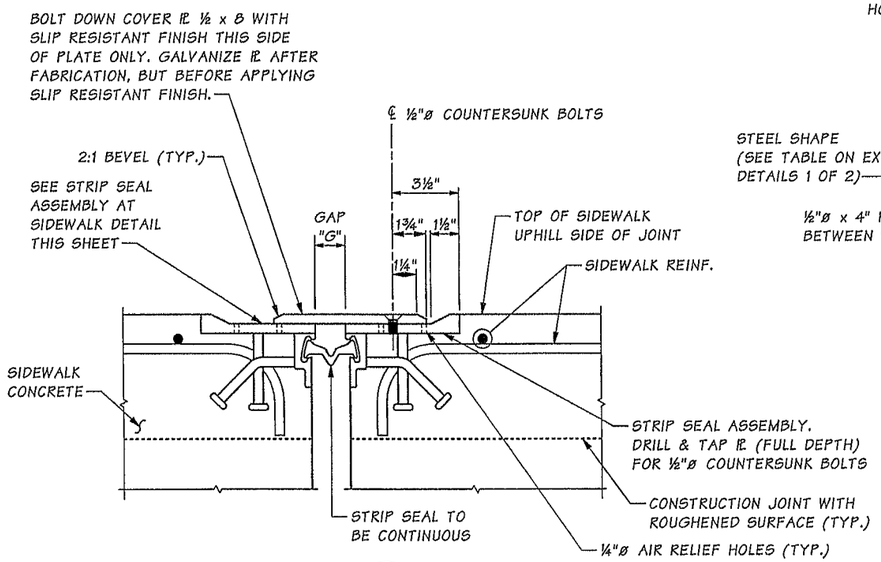

SECTION D — PA89

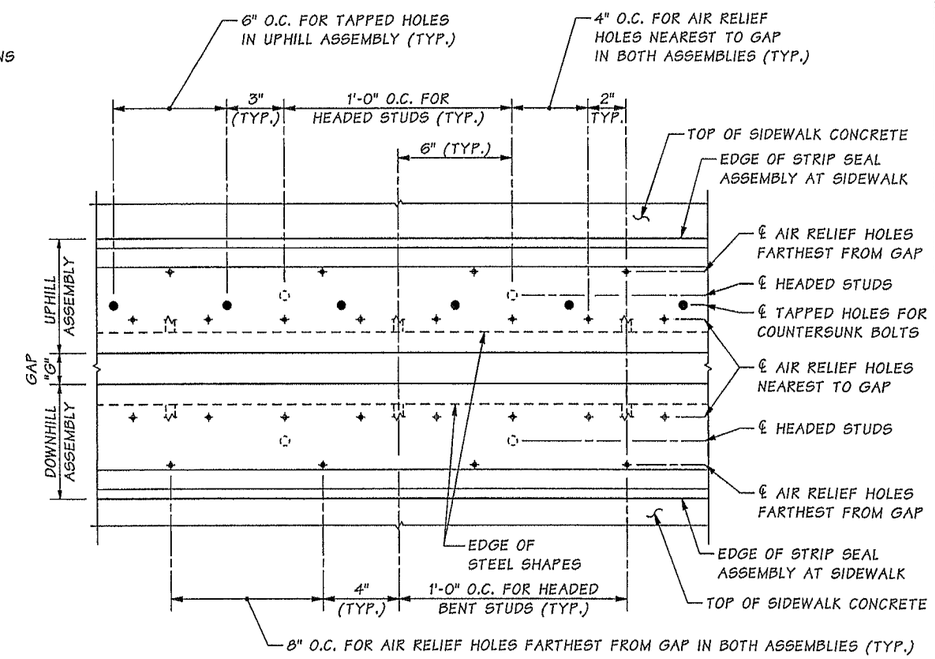

STRIP SEAL ASSEMBLY LAYOUT

COVER ℞ NOT SHOWN FOR CLARITY.
SEE STRIP SEAL ASSEMBLY AT SIDEWALK THIS SHEET FOR HOLE AND STUD SPACING PERPENDICULAR TO LENGTH OF STRIP SEAL ASSEMBLY.

SR 5 FILE NO. 7451 SHEET PA90

Bridge Design Engr.	Khaleghi, B		M:\Y-Team\M ST TO PORTLAND\PACIFIC AVE BR\window files\EXP JOINT 2.wnd			REGION NO.	STATE	FED. AID PROJ. NO.	SHEET NO.	TOTAL SHEETS
Supervisor	Khaleghi, B					10	WASH.			
Designed By	Olson, DE	05/13				JOB NUMBER 12C501				
Checked By	Mizumori, A	10/13								
Detailed By	Bontemps, W	05/13								
Bridge Projects Engr.										
Prelim. Plan By										
Architect/Specialist			DATE	REVISION	BY	APP'D				

Tue Feb 11 09:02:55 2014

DOUGLAS EUGENE OLSON — STATE OF WASHINGTON — 40406 — REGISTERED PROFESSIONAL ENGINEER — 02/11/14

BRIDGE AND STRUCTURES OFFICE

ALLAN KHALEGHI — STATE OF WASHINGTON — 27695 — REGISTERED PROFESSIONAL ENGINEER — 2/11/14

Washington State Department of Transportation

I-5
M ST TO PORTLAND AVE - HOV

PACIFIC AVE OVER I-5 BRIDGE No. 5/444

EXPANSION JOINT DETAILS 2 OF 2

BRIDGE SHEET NO. PA90

SHEET 1089 OF 1763 SHEETS

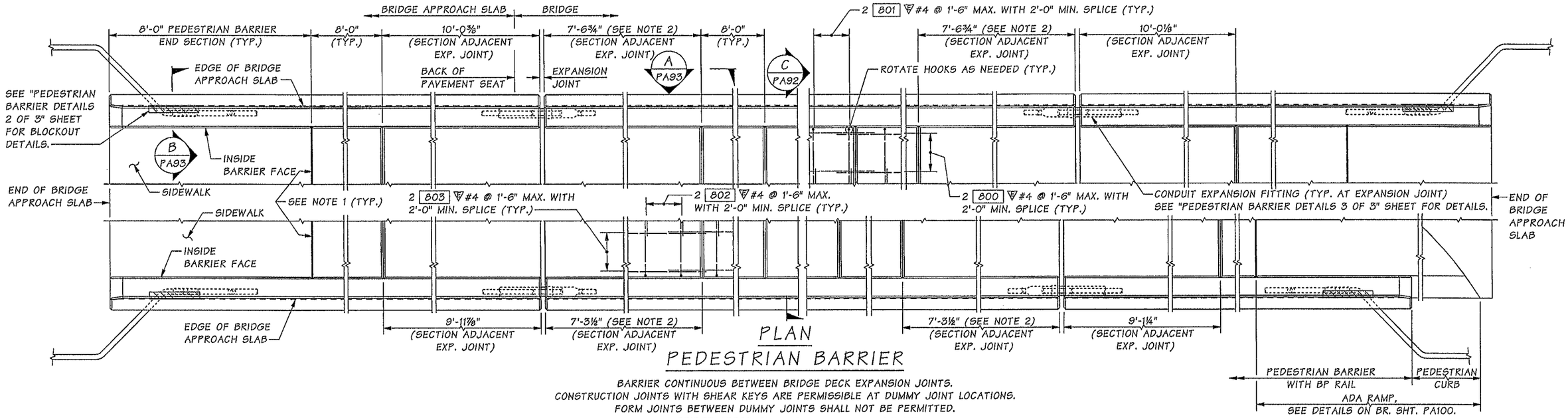

PLAN
PEDESTRIAN BARRIER

BARRIER CONTINUOUS BETWEEN BRIDGE DECK EXPANSION JOINTS.
CONSTRUCTION JOINTS WITH SHEAR KEYS ARE PERMISSIBLE AT DUMMY JOINT LOCATIONS.
FORM JOINTS BETWEEN DUMMY JOINTS SHALL NOT BE PERMITTED.

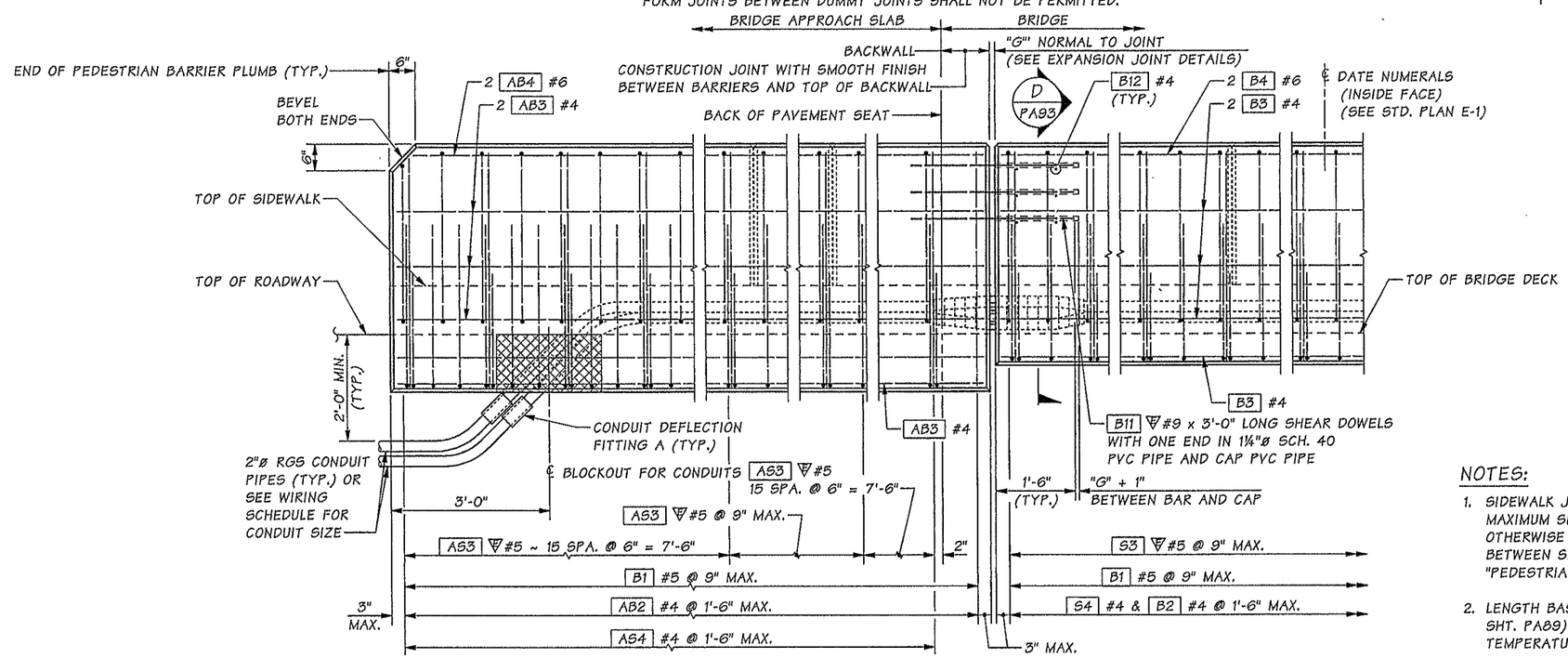

OUTSIDE ELEVATION
END OF PEDESTRIAN BARRIER

NOTES:

1. SIDEWALK JOINTS WITH ½" PREMOLDED JOINT FILLER AT 24'-0" MAXIMUM SPACING. ALIGN WITH BARRIER JOINTS (TYP.) OTHERWISE DUMMY JOINT IN TOP OF SIDEWALK CENTERED BETWEEN SIDEWALK JOINTS WITH PREMOLDED JOINT FILLER. SEE "PEDESTRIAN BARRIER DETAILS 2 OF 3" SHEET FOR DETAILS.
2. LENGTH BASED ON EXPANSION JOINT OPENING AT 64° (SEE BR. SHT. PA89) ADJUST LENGTH AS NECESSARY IF DIFFERENT TEMPERATURE AT TIME OF CONSTRUCTION.
3. BARS AS3, AB2, AS4, B1, B2, S3 & S4 SHALL BE ORIENTED PLUMB IN EACH BARRIER.

Bridge Design Engr.	Khaleghi, B		M:\Y-Team\M ST TO PORTLAND\PACIFIC AVE BR\window files\PED BARRIER 1.wnd							
Supervisor	Khaleghi, B									
Designed By	Olson, DE	12/12								
Checked By	Mizumori, A	10/13								
Detailed By	Bontemps, W	10/12								
Bridge Projects Engr.										
Prelim. Plan By										
Architect/Specialist			DATE	REVISION	BY	APP'D				

REGION NO.	STATE	FED. AID PROJ. NO.	SHEET NO.	TOTAL SHEETS
10	WASH.			
JOB NUMBER 12C501				

DOUGLAS EUGENE OLSON, STATE OF WASHINGTON, 40406, REGISTERED PROFESSIONAL ENGINEER — 02/11/14

BRIDGE AND STRUCTURES OFFICE

BIJAN KHALEGHI, STATE OF WASHINGTON, 27695, REGISTERED PROFESSIONAL ENGINEER — 2/12/14

Washington State Department of Transportation

I-5
M ST TO PORTLAND AVE - HOV

PACIFIC AVE OVER I-5 BRIDGE No. 5/444

PEDESTRIAN BARRIER DETAILS 1 OF 4

BRIDGE SHEET NO. PA91

SHEET 1090 OF 1763 SHEETS

SR 5 FILE NO. 7451 SHEET PA91

Tue Feb 11 09:02:57 2014

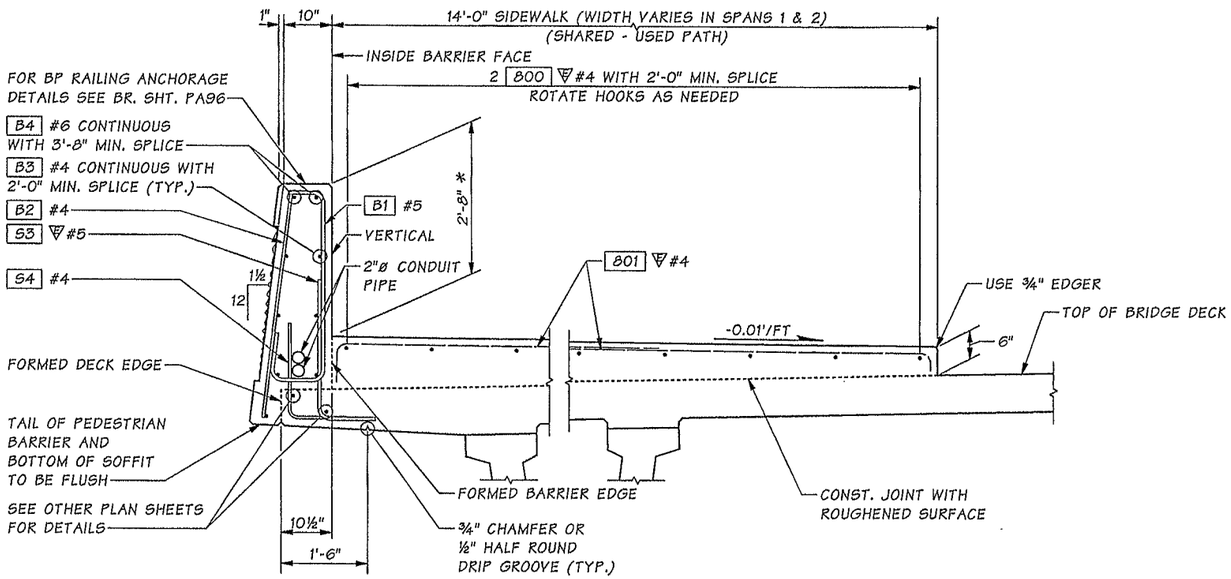

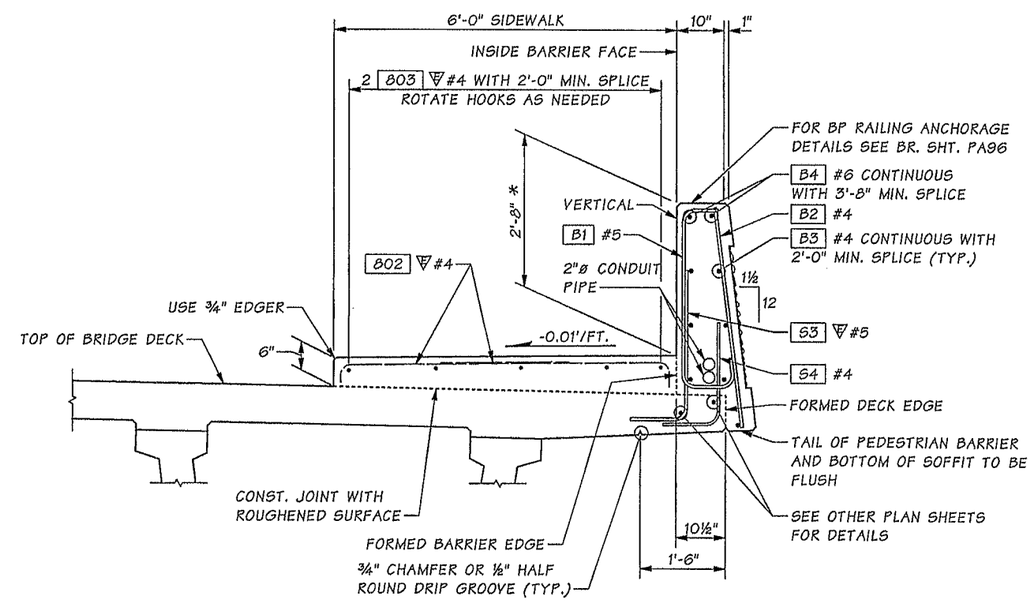

SECTION C
PA91

* MIN. HEIGHT. PEDESTRIAN BARRIER HEIGHT MAY VARY IF REQUIRED TO PROVIDE A SMOOTH PROFILE.

SR 5 FILE NO. 7451 SHEET PA92

Bridge Design Engr.	Khaleghi, B		M:\Y-Team\M ST TO PORTLAND\PACIFIC AVE BR\window files\PED BARRIER 1A.wnd
Supervisor	Khaleghi, B		
Designed By	Olson, DE	04/13	
Checked By	Mizumori, A	10/13	
Detailed By	Bontemps, W	04/13	
Bridge Projects Engr.			
Prelim. Plan By			
Architect/Specialist			

DATE	REVISION	BY	APP'D

REGION NO.	STATE	FED. AID PROJ. NO.	SHEET NO.	TOTAL SHEETS
10	WASH.			
JOB NUMBER 12C501				

Tue Feb 11 09:02:59 2014

DOUGLAS EUGENE OLSON — STATE OF WASHINGTON — 46405 — REGISTERED PROFESSIONAL ENGINEER — 02/11/14

BRIDGE AND STRUCTURES OFFICE

BILLAN KHALEGHI — STATE OF WASHINGTON — 27695 — PROFESSIONAL ENGINEER — 2/12/14

Washington State Department of Transportation

I-5
M ST TO PORTLAND AVE - HOV

PACIFIC AVE OVER I-5 BRIDGE No. 5/444

PEDESTRIAN BARRIER DETAILS 2 OF 4

BRIDGE SHEET NO. PA92

SHEET 1091 OF 1763 SHEETS

JUNCTION BOX LOCATIONS

PAC STATION	OFFSET	"TS" OR "LT"
16+22	LEFT	"LT"
16+30	LEFT	"TS"
17+59	LEFT	"LT"
17+67	LEFT	"TS"
19+35	LEFT	"LT"
19+43	LEFT	"TS"
21+10	LEFT	"LT"
21+18	LEFT	"TS"
21+73	LEFT	"LT"
21+81	LEFT	"TS"
16+28	RIGHT	"LT"
16+36	RIGHT	"TS"
17+80	RIGHT	"LT"
17+88	RIGHT	"TS"
19+32	RIGHT	"LT"
19+40	RIGHT	"TS"
20+60	RIGHT	"LT"
20+68	RIGHT	"TS"
21+80	RIGHT	"LT"
21+88	RIGHT	"TS"

"TS" = TRAFFIC SYSTEM
"LT" = LIGHTING SYSTEM

JUNCTION BOX LOCATIONS SHOWN ARE APPROXIMATE. CENTER JUNCTION BOX INSTALLATION BETWEEN BARRIER DUMMY JOINTS.

INSTALL ALL CONDUIT RUNS TO DRAIN TO A BRIDGE END OR PROVIDE DRAIN AT ALL LOW POINTS IN CONDUIT RUN ON BRIDGE.

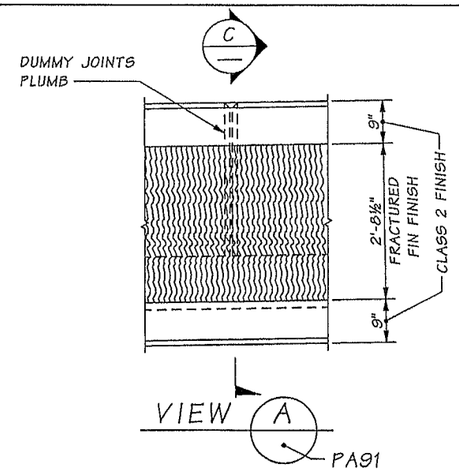

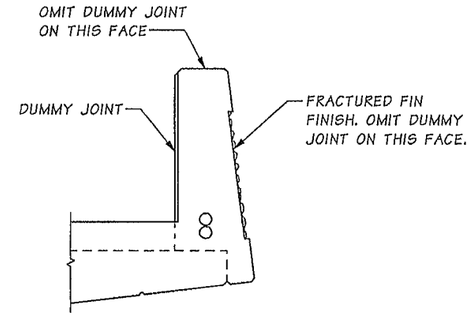

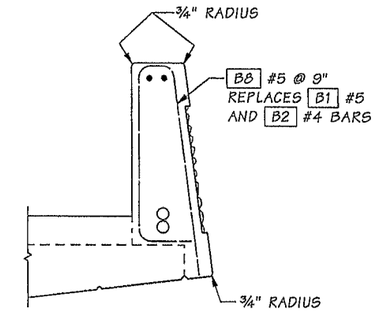

SLIPFORM ALTERNATE

SEE TYPICAL SECTION - PEDESTRIAN BARRIER FOR ADDITIONAL DETAILS

THE CONTRACTOR IS ADVISED THAT THE SLIPFORM CONSTRUCTION METHOD IS A PATENTED PROPRIETARY PROCESS FOR BARRIERS WITH A FRACTURED FIN FINISH.

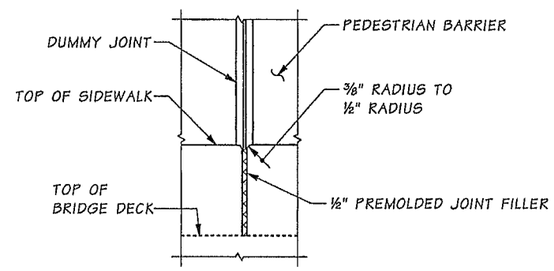

SIDEWALK JOINT DETAIL

REINFORCING STEEL NOT SHOWN FOR CLARITY.

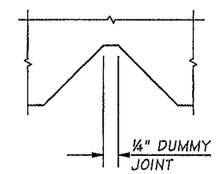

DUMMY JOINT DETAIL

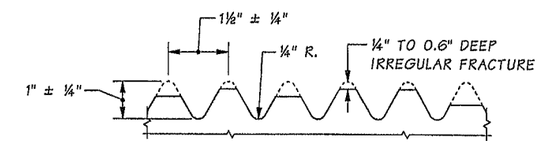

FRACTURED FIN FINISH

BENDING DIAGRAM

ALL DIMENSIONS ARE OUT TO OUT
▽ = EPOXY COATED REINFORCING STEEL
δ OPTIONAL 2'-0" MIN. SPLICE

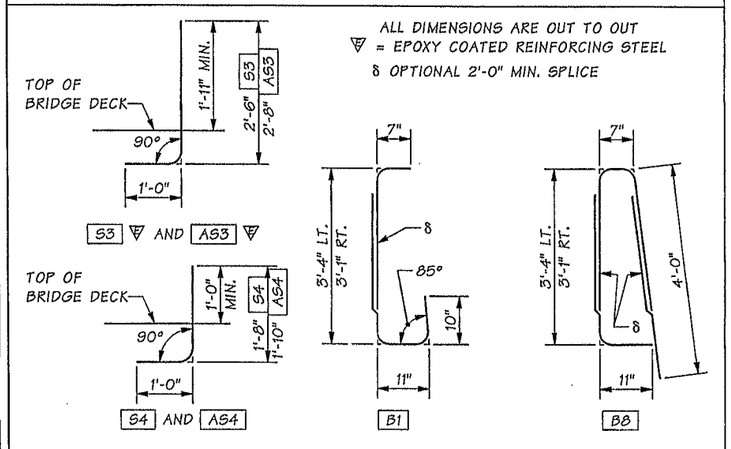

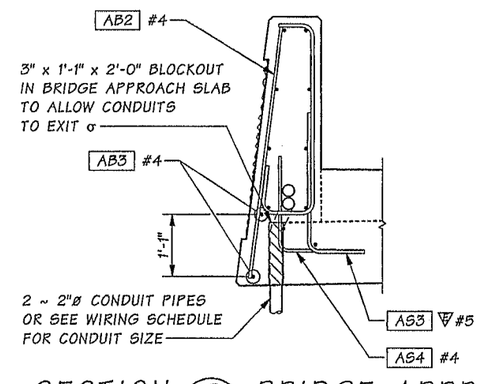

SECTION B BRIDGE APPROACH SLAB
PA91

FOR DETAILS NOT SHOWN SEE "OUTSIDE ELEVATION" AND "TYPICAL SECTION ~ PEDESTRIAN BARRIER"

σ BLOCKOUT WIDTH MAY BE INCREASED TO 6" TO ALLOW CONDUITS OF A LARGER DIAMETER THAN 2" TO EXIT BARRIER OR WALL WITHOUT REBAR STEEL CONFLICT

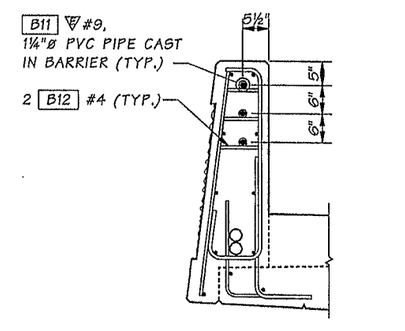

SECTION D
PA91

SR 5 FILE NO. 7451 SHEET PA93

Bridge Design Engr.	Khaleghi, B		M:\Y-Team\M ST TO PORTLAND\PACIFIC AVE BR\window files\PED BARRIER 2.wnd
Supervisor	Khaleghi, B		
Designed By	Olson, DE	10/12	
Checked By	Mizumori, A	10/13	
Detailed By	Bontemps, W	10/12	
Bridge Projects Engr.			
Prelim. Plan By			
Architect/Specialist			

DATE	REVISION	BY	APP'D

REGION NO.	STATE	FED. AID PROJ. NO.	SHEET NO.	TOTAL SHEETS
10	WASH.			
JOB NUMBER 12C501				

Tue Feb 11 09:03:00 2014

DOUGLAS EUGENE OLSON, STATE OF WASHINGTON, 40406, REGISTERED PROFESSIONAL ENGINEER — 02/11/14

BRIDGE AND STRUCTURES OFFICE

BRIAN KHALEGHI, STATE OF WASHINGTON, 27605, REGISTERED PROFESSIONAL ENGINEER — 2/12/14

Washington State Department of Transportation

I-5
M ST TO PORTLAND AVE - HOV

PACIFIC AVE OVER I-5 BRIDGE No. 5/444

PEDESTRIAN BARRIER DETAILS 3 OF 4

BRIDGE SHEET NO. PA93

SHEET 1092 OF 1763 SHEETS

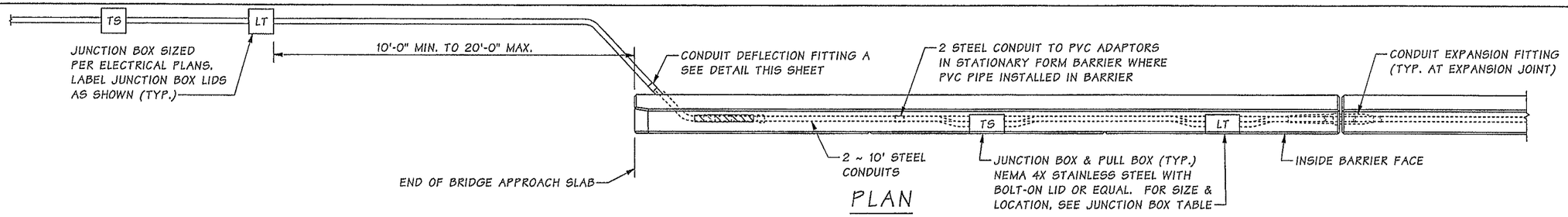

PLAN

PEDESTRIAN BARRIER

TYPICAL AT END OF MODIFIED PEDESTRIAN BARRIER END SECTION.

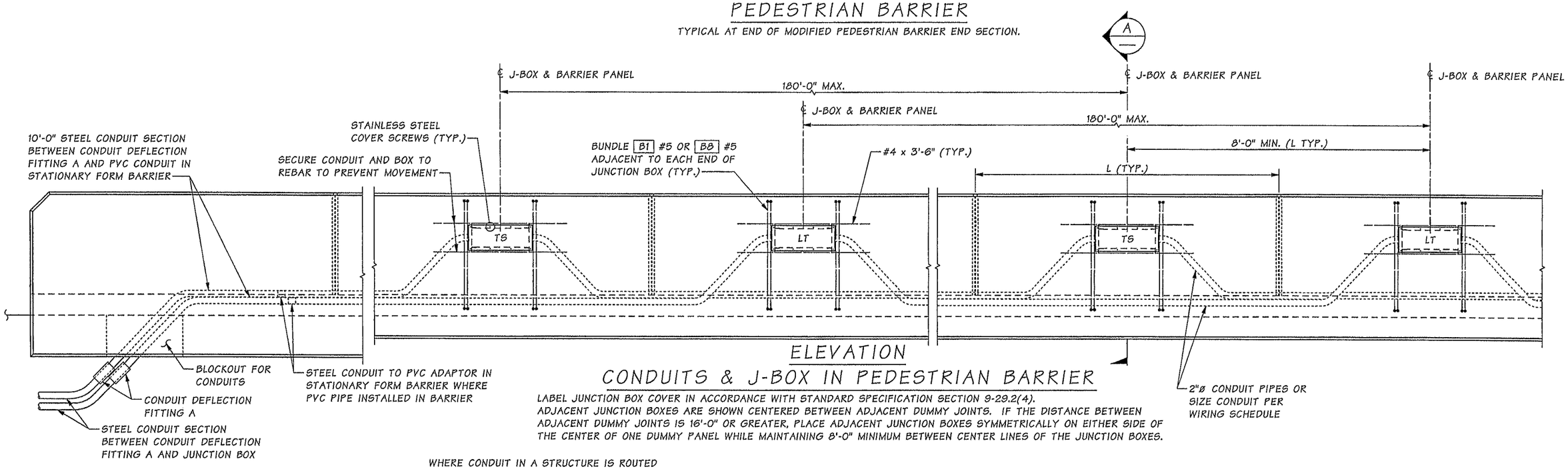

ELEVATION

CONDUITS & J-BOX IN PEDESTRIAN BARRIER

LABEL JUNCTION BOX COVER IN ACCORDANCE WITH STANDARD SPECIFICATION SECTION 9-29.2(4).
ADJACENT JUNCTION BOXES ARE SHOWN CENTERED BETWEEN ADJACENT DUMMY JOINTS. IF THE DISTANCE BETWEEN ADJACENT DUMMY JOINTS IS 16'-0" OR GREATER, PLACE ADJACENT JUNCTION BOXES SYMMETRICALLY ON EITHER SIDE OF THE CENTER OF ONE DUMMY PANEL WHILE MAINTAINING 8'-0" MINIMUM BETWEEN CENTER LINES OF THE JUNCTION BOXES.

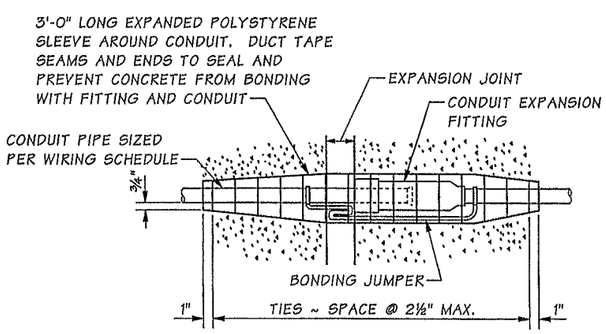

CONDUIT EXPANSION FITTING

CONDUIT FITTING - (TYPE AX FOR MOVEMENT OF ± 2") AT BRIDGE EXPANSION JOINTS

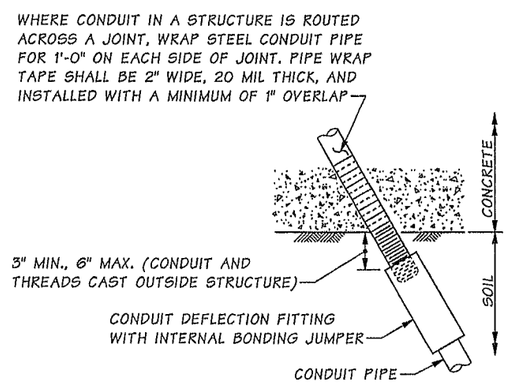

CONDUIT DEFLECTION FITTING A

CONDUIT FITTING - TYPE DX FOR DEFLECTION OF 30° AND ¾" MOVEMENT. PLACE AT CONDUIT PIPE EXIT FROM STRUCTURE

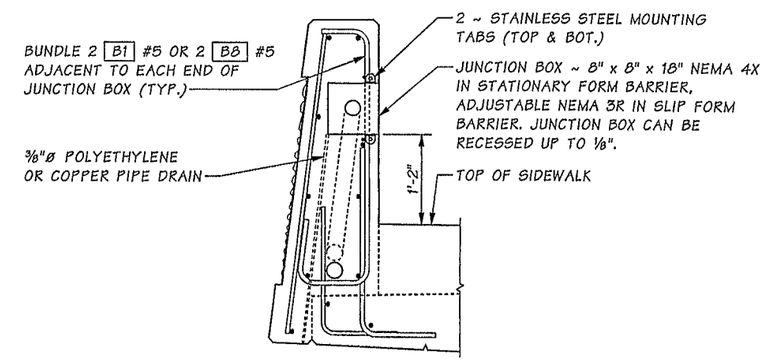

SECTION A

Bridge Design Engr.	Khaleghi, B		M:\Y-Team\M ST TO PORTLAND\PACIFIC AVE BR\window files\PED BARRIER 3.wnd							
Supervisor	Khaleghi, B									
Designed By	Olson, DE	10/12								
Checked By	Mizumori, A	10/13								
Detailed By	Bontemps, W	10/12								
Bridge Projects Engr.										
Prelim. Plan By										
Architect/Specialist			DATE	REVISION	BY	APP'D				

REGION NO.	STATE	FED. AID PROJ. NO.	SHEET NO.	TOTAL SHEETS
10	WASH.			
JOB NUMBER 12C501				

Tue Feb 11 09:03:02 2014

DOUGLAS EUGENE OLSON — STATE OF WASHINGTON — 40404 — REGISTERED PROFESSIONAL ENGINEER — 02/11/14

BRIDGE AND STRUCTURES OFFICE

BIJAN KHALEGHI — STATE OF WASHINGTON — 27895 — PROFESSIONAL ENGINEER — 2/12/14

Washington State Department of Transportation

I-5
M ST TO PORTLAND AVE - HOV

PACIFIC AVE OVER I-5 BRIDGE No. 5/444

PEDESTRIAN BARRIER DETAILS 4 OF 4

BRIDGE SHEET NO. PA94

SHEET 1093 OF 1763 SHEETS

SR 5 FILE NO. 7451 SHEET PA94

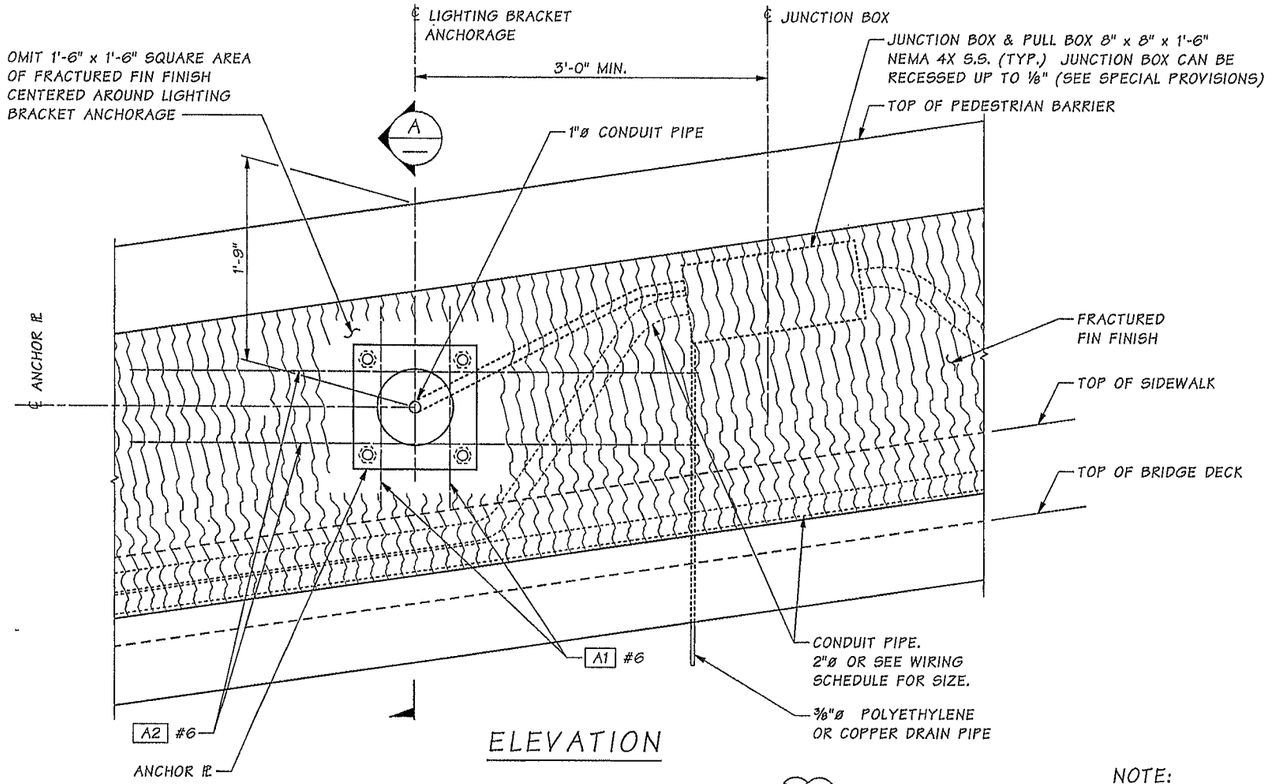

ELEVATION

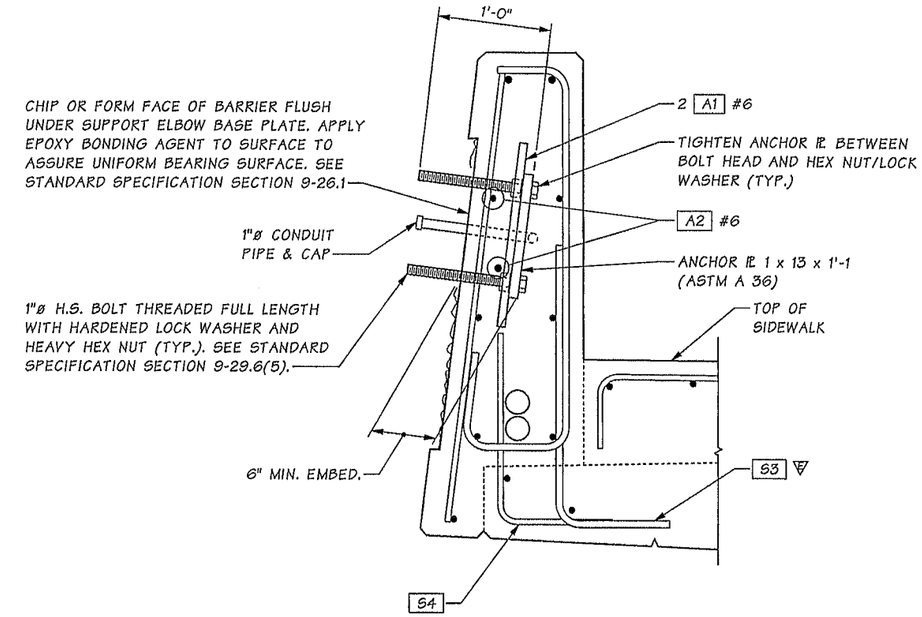

SECTION A

SEE PEDESTRIAN BARRIER SHEETS FOR INFORMATION NOT SHOWN.

NOTE:

INSTALL ALL CONDUIT RUNS TO DRAIN TO A BRIDGE END OR PROVIDE DRAIN AT ALL LOW POINTS WITHIN CONDUIT RUN. SEE "PEDESTRIAN BARRIER SHEETS" FOR BARRIER DIMENSIONS.

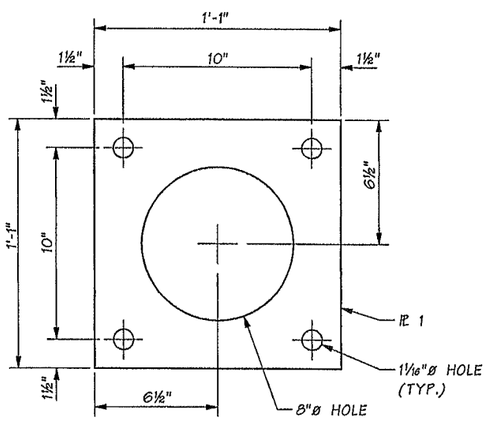

ANCHOR PLATE

GALVANIZE IN ACCORDANCE WITH AASHTO M 111

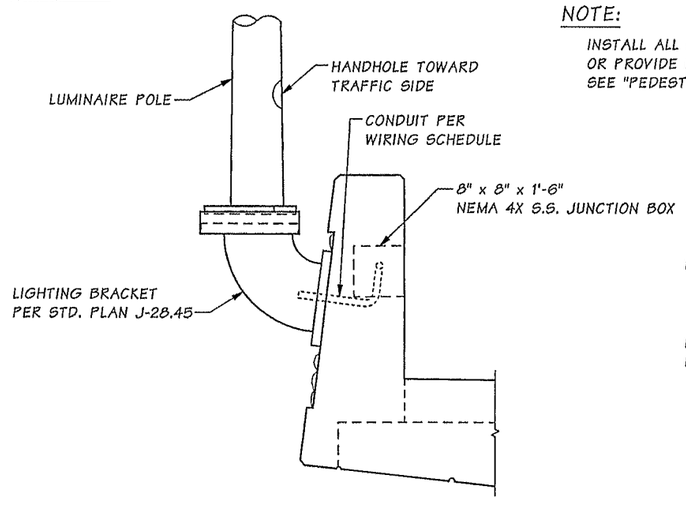

ELEVATION PROFILE
LUMINAIRE SUPPORT

SHOWN FOR BRIDGE, WALLS ARE SIMILAR

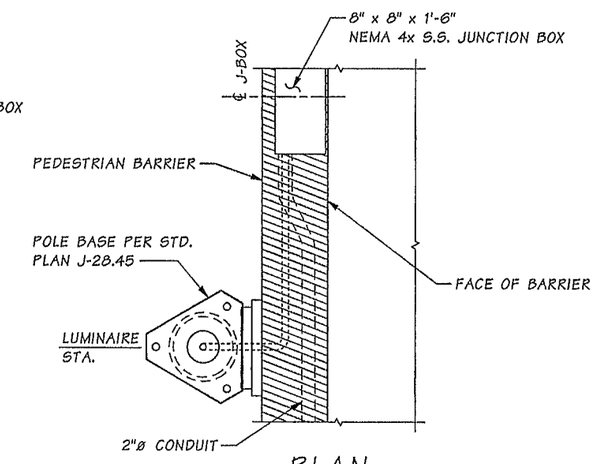

PLAN

LUMINAIRE POLE LOCATIONS ON BRIDGE & WALLS	
STATION	OFFSET
PAC STA. 17+53	LT.
PAC STA. 21+02	LT.
PAC STA. 19+27	RT.

ANCHORAGE BARLIST			
MARK #	SIZE	LENGTH	BEND TYPE
A1	6	1'-9"	STRAIGHT
A2	6	5'-0"	STRAIGHT

Bridge Design Engr.	Khaleghi, B	
Supervisor	Khaleghi, B	
Designed By	Olson, DE	10/12
Checked By	Mizumori, A	10/13
Detailed By	Bontemps, W	10/12
Bridge Projects Engr.		
Prelim. Plan By		
Architect/Specialist		

M:\Y-Team\M ST TO PORTLAND\PACIFIC AVE BR\window files\LUMINAIRE1.wnd

DATE	REVISION	BY	APP'D

REGION NO.	STATE	FED. AID PROJ. NO.	SHEET NO.	TOTAL SHEETS
10	WASH.			

JOB NUMBER 12C501

Tue Feb 11 09:03:04 2014

NICHOLAS EUGENE OLSON — STATE OF WASHINGTON — 40404 — REGISTERED PROFESSIONAL ENGINEER — 02/11/14

BRIDGE AND STRUCTURES OFFICE

ELIAN KHALEGHI — STATE OF WASHINGTON — 27595 — REGISTERED PROFESSIONAL ENGINEER — 2/12/14

Washington State Department of Transportation

I-5
M ST TO PORTLAND AVE - HOV

PACIFIC AVE OVER I-5 BRIDGE No. 5/444

LUMINAIRE ANCHORAGE DETAILS
PEDESTRIAN BARRIER

BRIDGE SHEET NO. PA95

SHEET 1094 OF 1763 SHEETS

SR 5 FILE NO. 7451 SHEET PA95

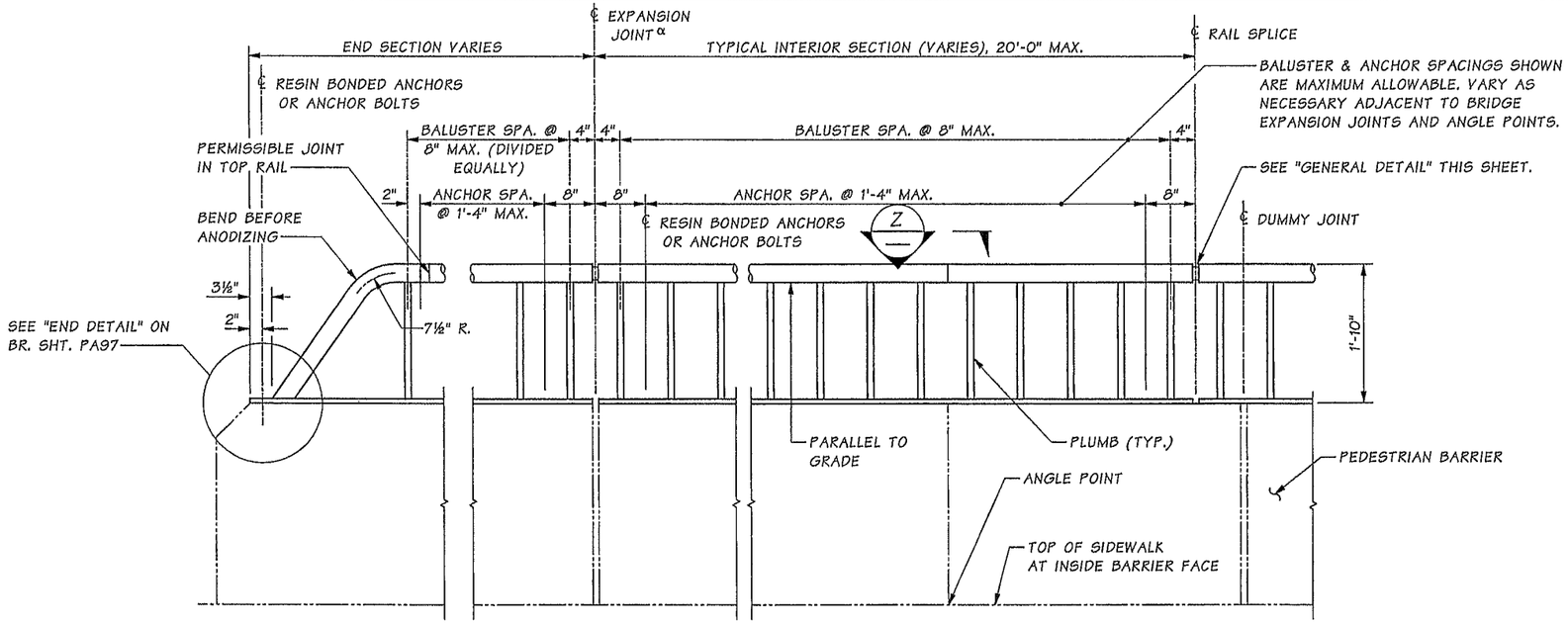

ELEVATION

BALUSTER AND GUARDRAIL SECTION ATTACHMENT DETAILS NOT SHOWN.

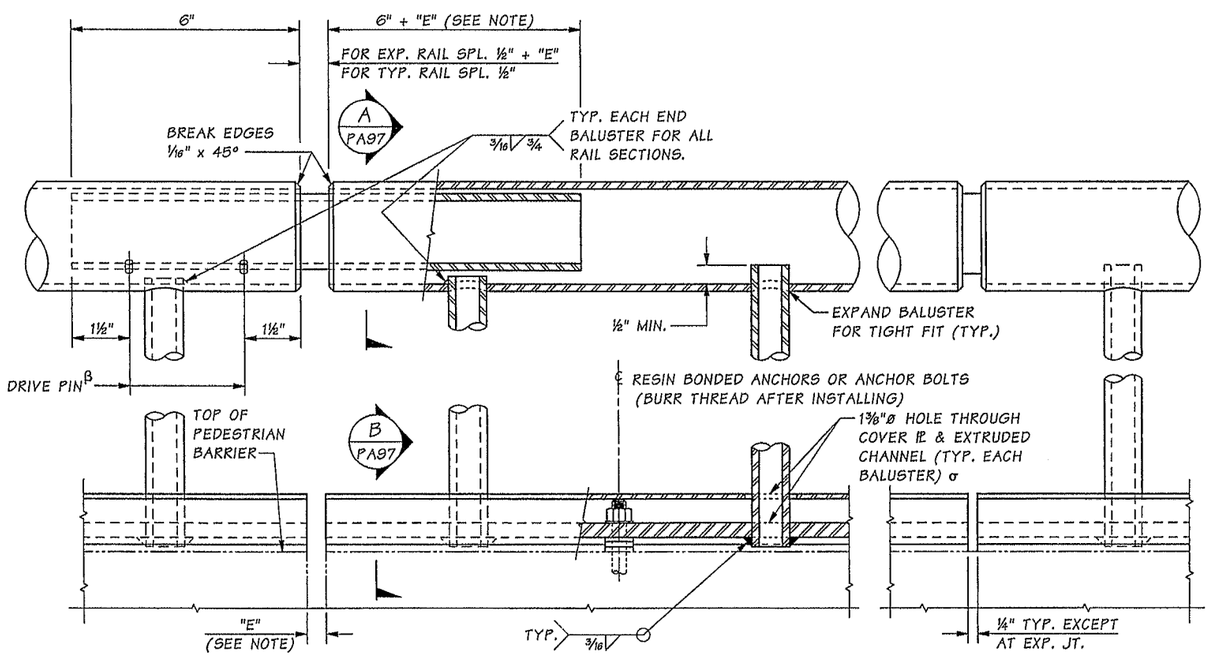

GENERAL DETAIL

NOTES:

1. PIPE RAILING, PIPE RAILING SPLICES, COVER PLATES AND BOTTOM EXTRUDED CHANNELS SHALL BE BENT TO THE HORIZONTAL CURVE WHERE THE RADIUS OF CURVATURE IS LESS THAN 200'. THESE ITEMS MAY BE HEATED TO NOT MORE THAN 400°F FOR A PERIOD NOT TO EXCEED 30 MINUTES TO FACILITATE FORMING OR BENDING TO HORIZONTAL CURVATURE.
2. SHOP DRAWINGS OF RAILING SHALL BE SUBMITTED FOR APPROVAL SHOWING COMPLETE DIMENSIONS AND DETAILS OF FABRICATION AND INCLUDING AN ERECTION DIAGRAM. MATERIAL SPECIFICATIONS SHALL BE PROVIDED IN THE SHOP DRAWINGS FOR ALL COMPONENTS.
3. CUTTING SHALL BE DONE BY SAWING OR MILLING AND ALL CUTS SHALL BE TRUE AND SMOOTH. FLAME CUTTING WILL NOT BE PERMITTED.
4. WELDING OF ALUMINUM SHALL CONFORM TO STD. SPEC. SECTION 9-28.14(3).
5. ALL ALUMINUM PARTS SHALL BE GIVEN A CLEAR ANODIC COATING OF AT LEAST 0.0006" THICK AND SEALED TO MEET THE REQUIREMENTS OF ASTM B 580 WITH A UNIFORM FINISH.
6. PIPE RAILING, PIPE BALUSTERS AND PIPE RAILING SPLICES SHALL BE ADEQUATELY WRAPPED TO INSURE SURFACE PROTECTION DURING HANDLING AND TRANSPORTATION TO THE JOB SITE.

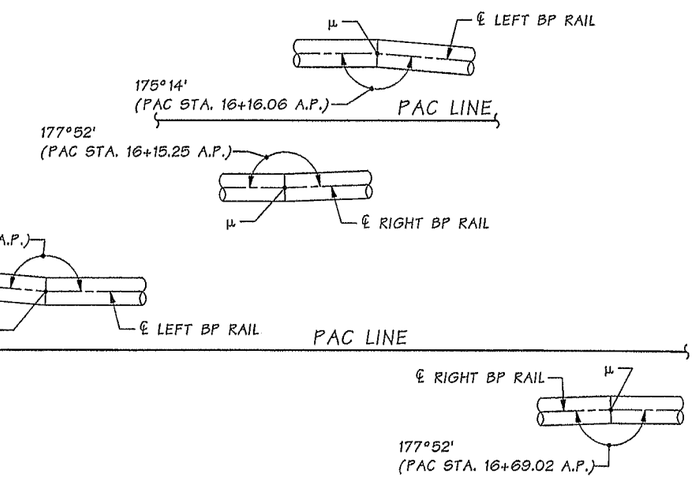

VIEW Z

μ BEFORE ANODIZING, WELD ANGLE POINT IN COVER PLATE, EXTRUDED CHANNEL AND PIPE RAILING.

α PROVIDE EXPANSION RAIL SPLICE AT PEDESTRIAN BARRIER EXPANSION JOINTS. RAIL SPLICE JOINTS ARE NOT REQUIRED AT PEDESTRIAN BARRIER DUMMY JOINTS.

β LOCATE ON OPPOSITE SIDE OF TRAFFIC. DRIVE PINS SHALL BE DRIVEN FLUSH WITH THE OUTSIDE FACE OF THE RAILING.

σ DRILL THE HOLES AT ANGLE THAT WILL ALLOW THE BALUSTER TO REMAIN PLUMB WHEN THE COVER PLATE, EXTRUDED CHANNEL AND 2½"ø PIPE RAILING ARE INSTALLED PARALLEL TO TOP FACE OF PEDESTRIAN BARRIER.

NOTE:

"E" DIMENSION SHALL BE EQUAL TO OPENING OF PEDESTRIAN BARRIER EXPANSION JOINTS.

SR 5 FILE NO. 7451 SHEET PA96

Bridge Design Engr.	Khaleghi, B		M:\Y-Team\M ST TO PORTLAND\PACIFIC AVE BR\window files\BP1.wnd
Supervisor	Khaleghi, B		
Designed By	Olson, DE	12/12	
Checked By	Mizumori, A	10/13	
Detailed By	Bontemps, W	10/12	
Bridge Projects Engr.			
Preliim. Plan By			
Architect/Specialist			

DATE	REVISION	BY	APP'D

REGION NO.	STATE	FED. AID PROJ. NO.	SHEET NO.	TOTAL SHEETS
10	WASH.			
JOB NUMBER 12C501				

DOUGLAS EUGENE OLSON — STATE OF WASHINGTON — 40404 — REGISTERED PROFESSIONAL ENGINEER — 02/11/14

BRIDGE AND STRUCTURES OFFICE

ALAN KHALEGHI — STATE OF WASHINGTON — 27595 — REGISTERED PROFESSIONAL ENGINEER — 2/12/14

Washington State Department of Transportation

I-5
M ST TO PORTLAND AVE - HOV

PACIFIC AVE OVER I-5 BRIDGE No. 5/444

BRIDGE RAILING TYPE BP
DETAILS 1 OF 2

BRIDGE SHEET NO. PA96

SHEET 1095 OF 1763 SHEETS

Tue Feb 11 09:03:06 2014

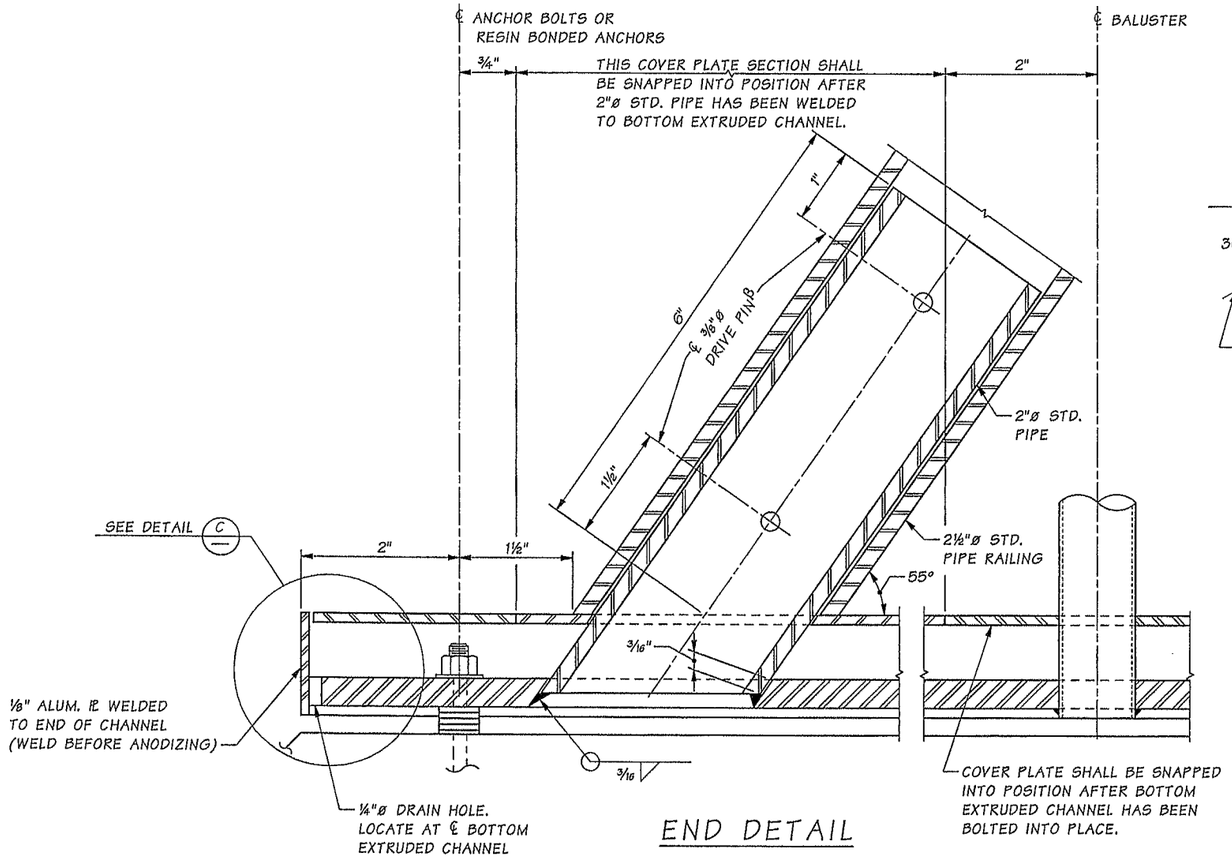

END DETAIL

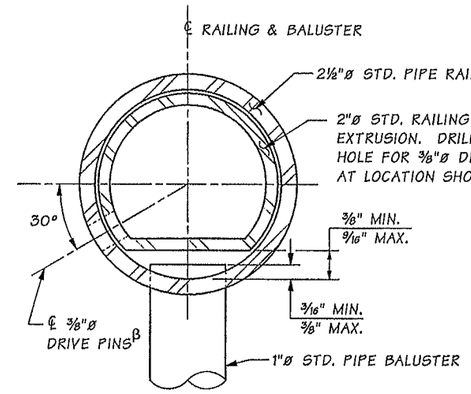

SECTION A — OPTION #1 — PA96

β LOCATE ON OPPOSITE SIDE OF TRAFFIC. DRIVE PINS SHALL BE DRIVEN FLUSH WITH THE OUTSIDE FACE OF THE RAILING.

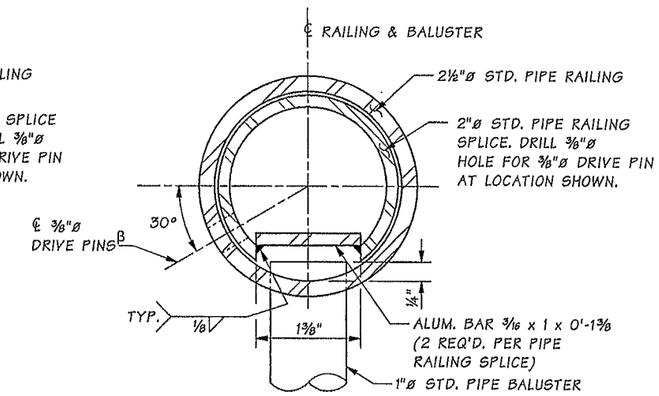

SECTION A — OPTION #2 — PA96

β LOCATE ON OPPOSITE SIDE OF TRAFFIC. DRIVE PINS SHALL BE DRIVEN FLUSH WITH THE OUTSIDE FACE OF THE RAILING.

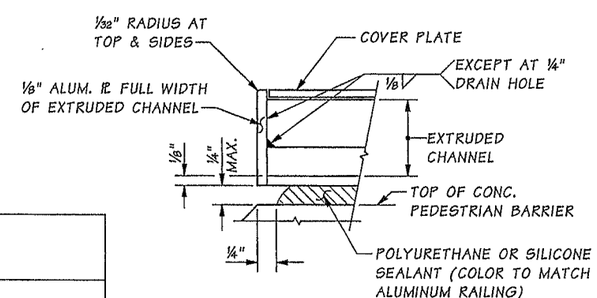

DETAIL C — DRAIN HOLES NOT SHOWN

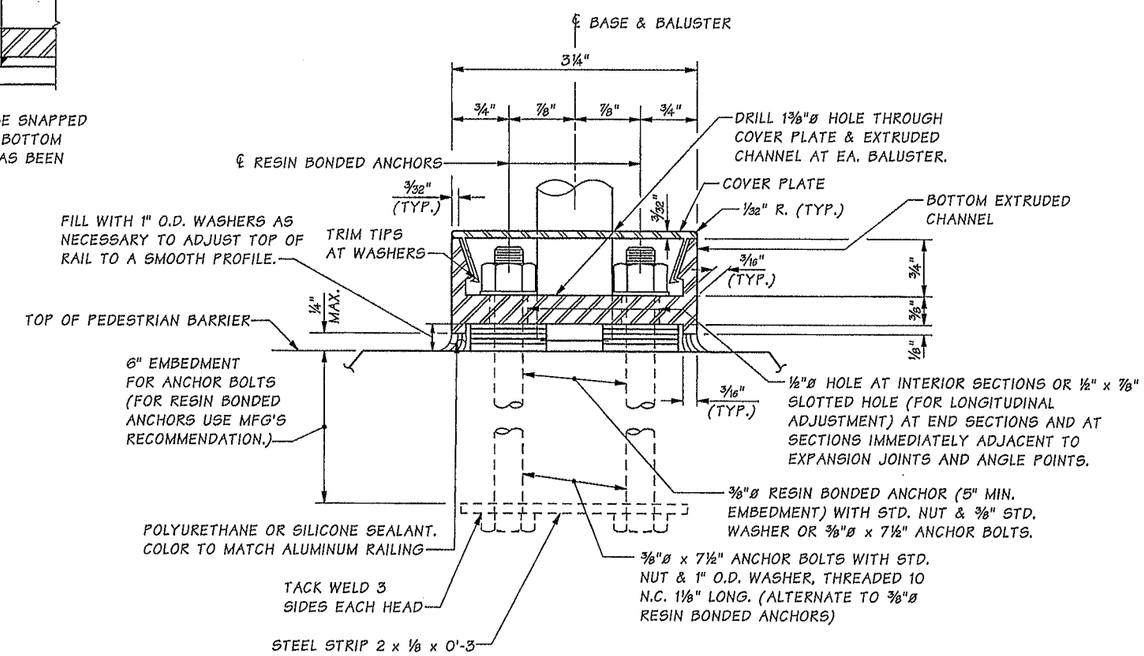

SECTION B — ANCHOR BOLTS SHALL BE POSITIONED IN A JIG DURING WELDING. — PA96

MAT'L	PART	MATERIAL SPECIFICATION
ALUMINUM	PIPES	ASTM B 221- 6005-T5 OR 6005A-T5 ASTM B 241 OR B 429 6061-T6
	EXTRUDED CHANNELS, COVER PLATES & BAR	ASTM B 221- 6005-T5
STEEL	ANCHOR BOLTS, NUTS & WASHERS	STANDARD SPECIFICATION SECTION 9-06.5(4) (GALVANIZE IN ACCORDANCE WITH AASHTO SPECIFICATION M 232)
	STRIP	ASTM A 36
	DRIVE PINS	ASTM A 276 TYPE 302 STAINLESS STEEL

Bridge Design Engr.	Khaleghi, B	
Supervisor	Khaleghi, B	
Designed By	Olson, DE	12/12
Checked By	Mizumori, A	10/13
Detailed By	Bontemps, W	10/12
Bridge Projects Engr.		
Prelim. Plan By		
Architect/Specialist		

M:\Y-Team\M ST TO PORTLAND\PACIFIC AVE BR\window files\BP2.wnd

DATE	REVISION	BY	APP'D

REGION NO.	STATE	FED. AID PROJ. NO.	SHEET NO.	TOTAL SHEETS
10	WASH.			
JOB NUMBER 12C501				

Douglas Eugene Olson — State of Washington — 40406 — Registered Professional Engineer — 02/11/14

BRIDGE AND STRUCTURES OFFICE

Brian Khaleghi — State of Washington — 37945 — Registered Professional Engineer — 2/12/14

Washington State Department of Transportation

I-5
M ST TO PORTLAND AVE - HOV

PACIFIC AVE OVER I-5 BRIDGE No. 5/444

BRIDGE RAILING TYPE BP
DETAILS 2 OF 2

BRIDGE SHEET NO. PA97

SHEET 1096 OF 1763 SHEETS

SR 5 FILE NO. 7451 SHEET PA97

Tue Feb 11 09:03:07 2014

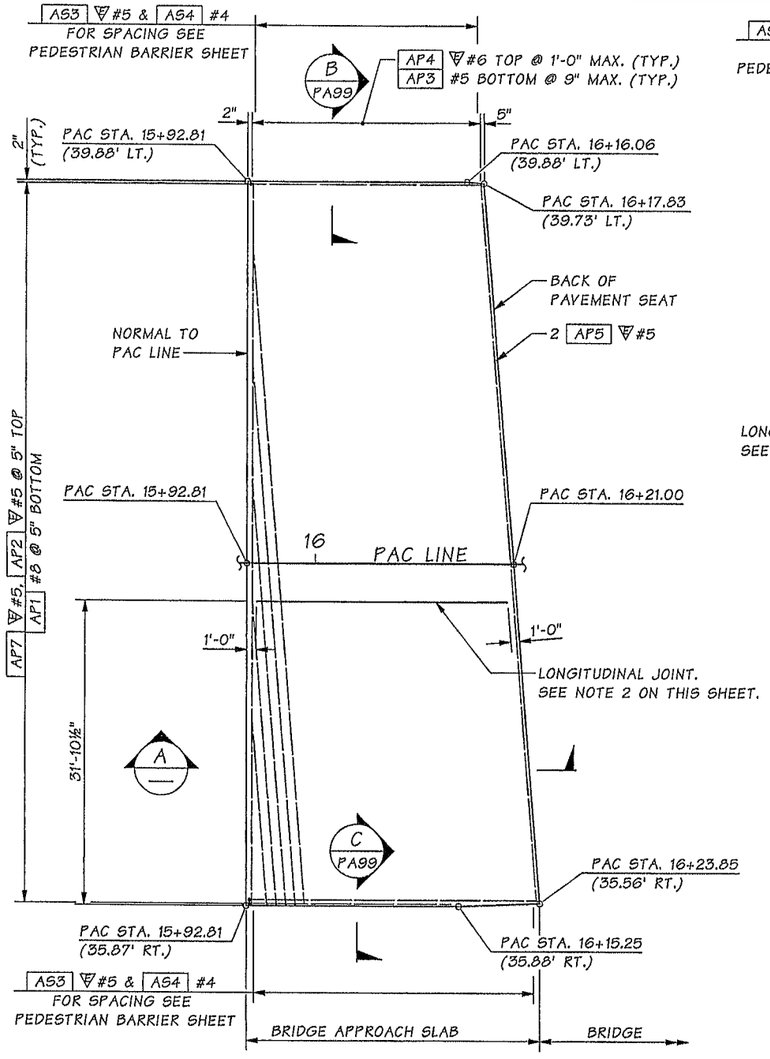

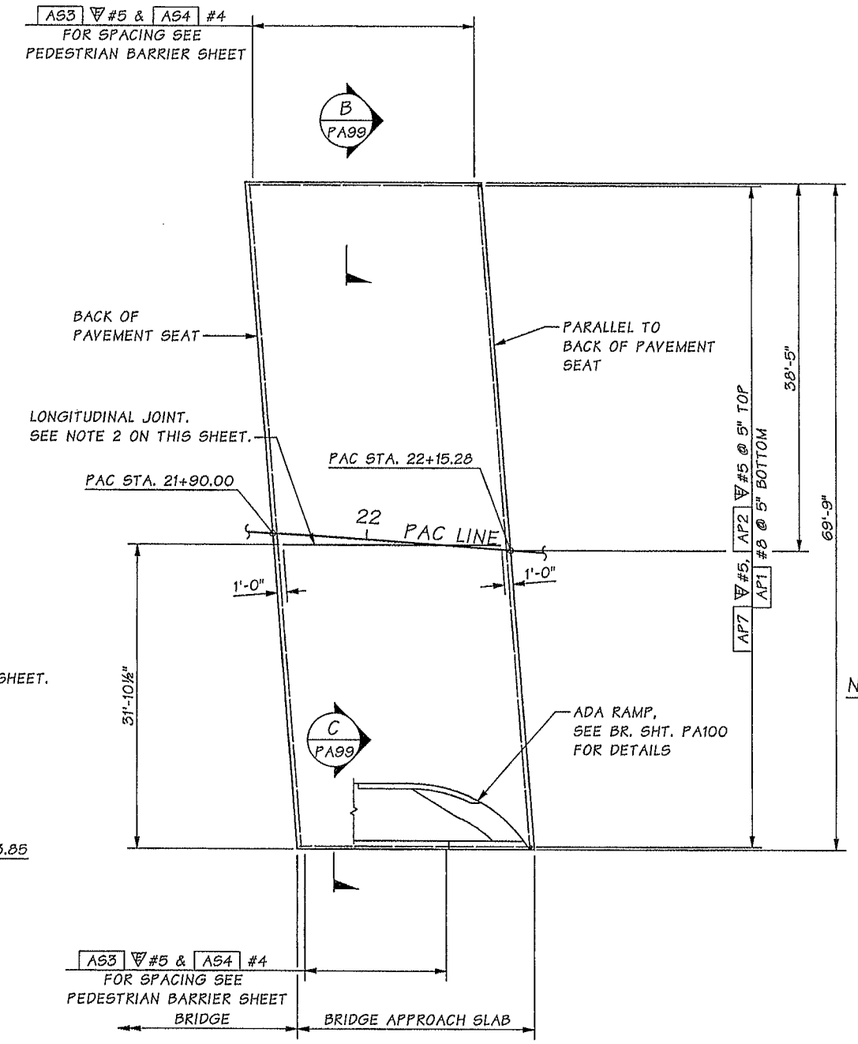

PLAN

PEDESTRIAN BARRIERS NOT SHOWN FOR CLARITY.

NOTES:

1. ALL EDGES OF BRIDGE APPROACH SLAB SHALL HAVE ½" RADIUS EXCEPT AT LONGITUDINAL JOINTS AND ADJACENT TO L-TYPE ABUTMENTS.
2. LONGITUDINAL JOINTS SHALL BE CONSTRUCTED AND SEALED IN ACCORDANCE WITH STD. SPEC. SECTION 5-05.3(8). JOINTS MAY BE EITHER A SAWCUT CRACK CONTROL JOINT OR A CONSTRUCTION JOINT. SAWCUT JOINTS SHALL TERMINATE 1'-0" BEFORE REACHING EDGE OF SLAB AND MUST BE SAW CUT AS SOON AS POSSIBLE AFTER PLACEMENT OF CONCRETE. SEE "LONGITUDINAL JOINT DETAIL" ON BRIDGE APPROACH SLAB DETAILS 2 OF 3.
3. THE MINIMUM LAP SPLICE OF #5 IS 2'-0", #5 IS 2'-6", #6 IS 3'-0", AND #8 IS 3'-3". ALL LAP SPLICES SHALL BE STAGGERED SO THAT NO MORE THAN 50% OF REBAR IS SPLICED AT THE SAME LOCATION. LAP SPLICES SHALL BE LOCATED WITHIN THE MIDDLE HALF OF THE BRIDGE APPROACH SLAB. OPTIONAL SPLICES ARE ALLOWED FOR AP4 #6.
4. FOR PEDESTRIAN BARRIER DETAILS, INCLUDING ANY BRIDGE APPROACH SLAB BLOCKOUT INFORMATION, SEE PEDESTRIAN BARRIER SHEETS.

BENDING DIAGRAM

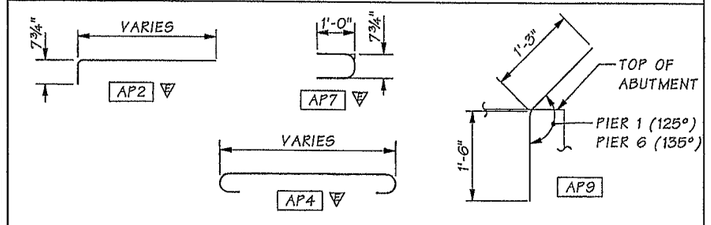

= EPOXY COATED REINFORCING STEEL

NOTE: ALL DIMENSIONS ARE OUT TO OUT

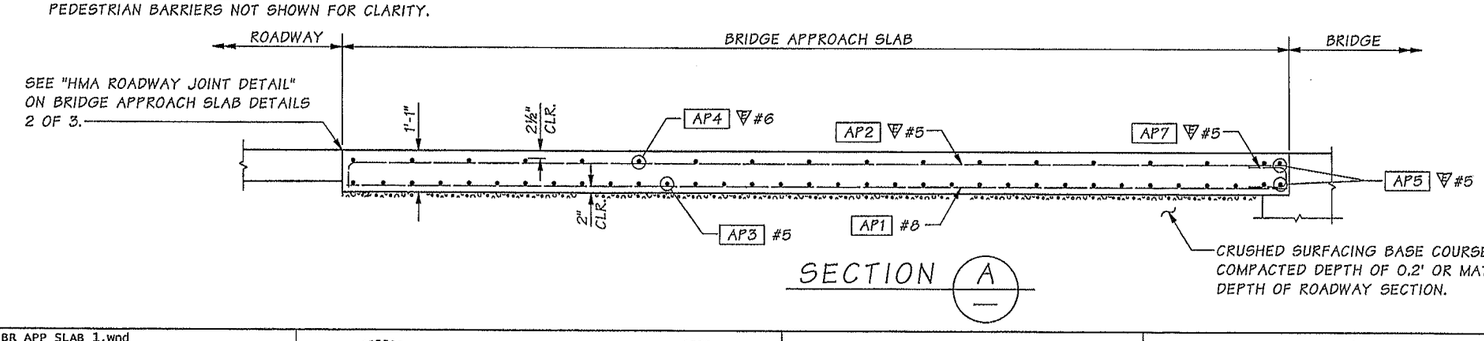

SECTION A

Bridge Design Engr.	Khaleghi, B		
Supervisor	Khaleghi, B		
Designed By	Olson, DE	08/13	
Checked By	Mizumori, A	10/13	
Detailed By	Bontemps, W	10/12	
Bridge Projects Engr.			
Prelim. Plan By			
Architect/Specialist			

M:\Y-Team\M ST TO PORTLAND\PACIFIC AVE BR\window files\BR APP SLAB 1.wnd

DATE	REVISION	BY	APP'D

REGION NO.	STATE	FED. AID PROJ. NO.	SHEET NO.	TOTAL SHEETS
10	WASH.			
JOB NUMBER 12C501				

DOUGLAS EUGENE OLSON, STATE OF WASHINGTON, 40406, REGISTERED PROFESSIONAL ENGINEER 2/18/14

BRIDGE AND STRUCTURES OFFICE

BRIAN KHALEGHI, STATE OF WASHINGTON, 22605, PROFESSIONAL ENGINEER 2/18/14

Washington State Department of Transportation

I-5
M ST TO PORTLAND AVE - HOV

PACIFIC AVE OVER I-5 BRIDGE No. 5/444

BRIDGE APPROACH SLAB DETAILS 1 OF 3

BRIDGE SHEET NO. PA98

SHEET 1097 OF 1763 SHEETS

SR 5 FILE NO. 7451 SHEET PA98

Tue Feb 18 11:37:43 2014

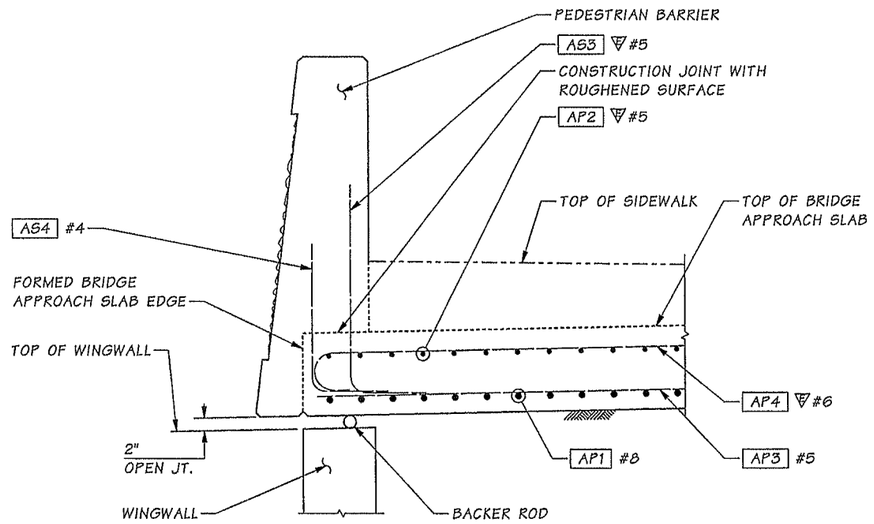

SECTION B
PA98

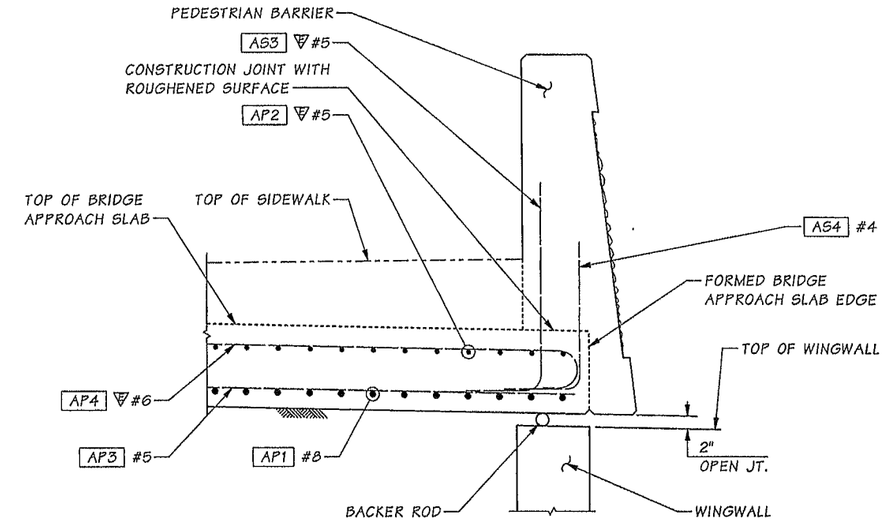

SECTION C
PA98

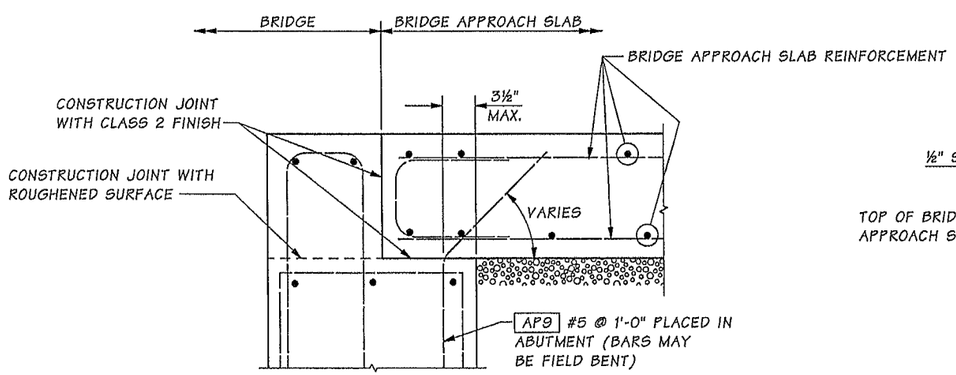

ANCHOR DETAIL

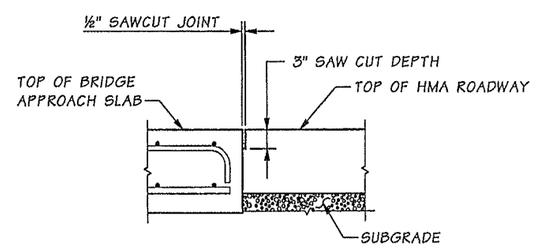

HMA ROADWAY JOINT DETAIL

SAWCUT SHALL BE FILLED WITH HOT-POURED COMPONENT IN ACCORDANCE WITH STANDARD SPECIFICATION SECTION 9-04.2(1) AND SEALED IN ACCORDANCE WITH STANDARD SPECIFICATION SECTION 5-05.3(8)B.

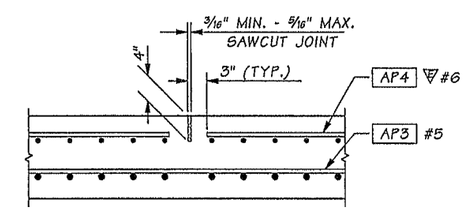

LONGITUDINAL JOINT DETAIL

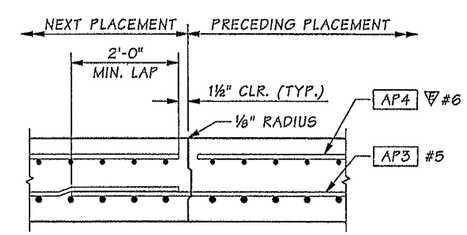

ALTERNATE LONGITUDINAL JOINT DETAIL

EDGE PRECEDING PLACEMENT ONLY WITH ⅛" RADIUS.

Bridge Design Engr.	Khaleghi, B		M:\Y-Team\M ST TO PORTLAND\PACIFIC AVE BR\window files\BR APP SLAB 2.wnd
Supervisor	Khaleghi, B		
Designed By	Olson, DE	10/12	
Checked By	Mizumori, A	10/13	
Detailed By	Bontemps, W	10/12	
Bridge Projects Engr.			
Prelim. Plan By			
Architect/Specialist			

DATE	REVISION	BY	APP'D

REGION NO.	STATE	FED. AID PROJ. NO.	SHEET NO.	TOTAL SHEETS
10	WASH.			
JOB NUMBER 12C501				

DOUGLAS EUGENE OLSON, STATE OF WASHINGTON, 40100, REGISTERED PROFESSIONAL ENGINEER, 02/11/14

BRIDGE AND STRUCTURES OFFICE

BIJAN KHALEGHI, STATE OF WASHINGTON, 17704, REGISTERED PROFESSIONAL ENGINEER, 2/12/14

Washington State Department of Transportation

I-5
M ST TO PORTLAND AVE - HOV

PACIFIC AVE OVER I-5 BRIDGE No. 5/444

BRIDGE APPROACH SLAB DETAILS 2 OF 3

BRIDGE SHEET NO. PA99

SHEET 1098 OF 1763 SHEETS

SR 5 FILE NO. 7451 SHEET PA99

Tue Feb 11 09:03:10 2014

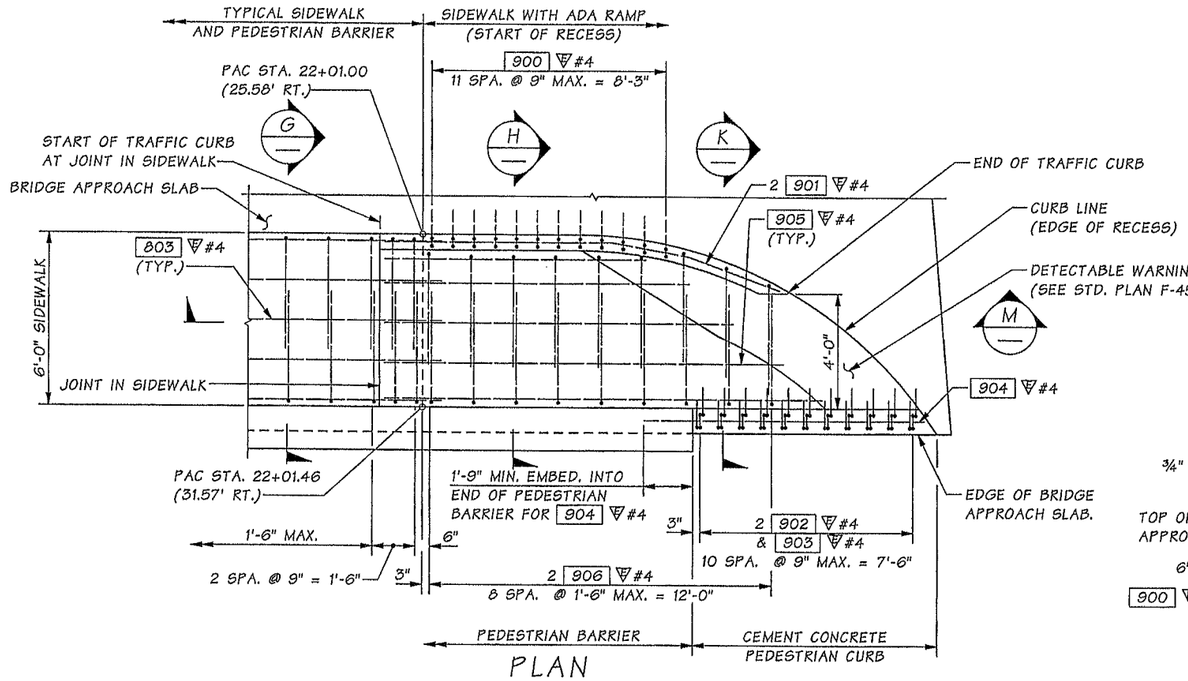

PLAN
ADA RAMP

SEE SHEET PRD1 FOR ADDITIONAL ADA RAMP INFORMATION.

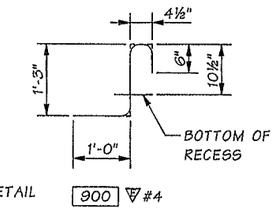

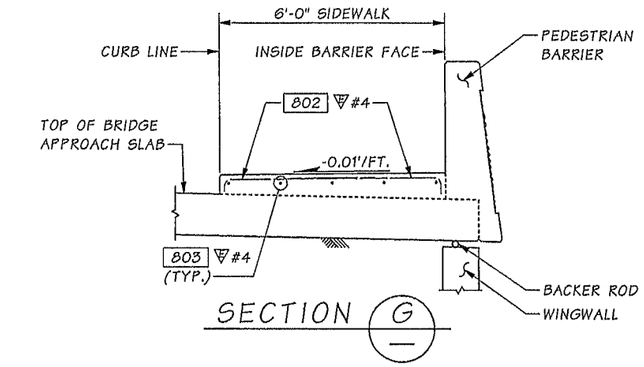

SECTION G

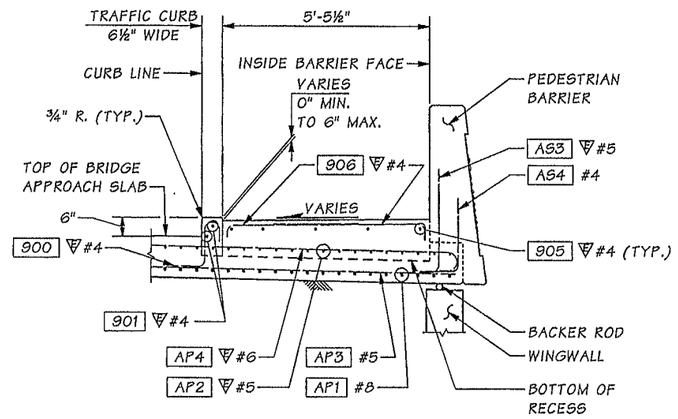

SECTION H

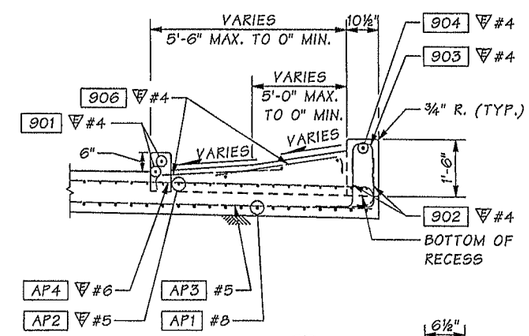

SECTION K

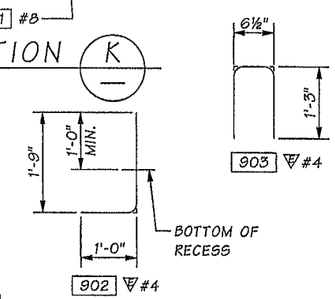

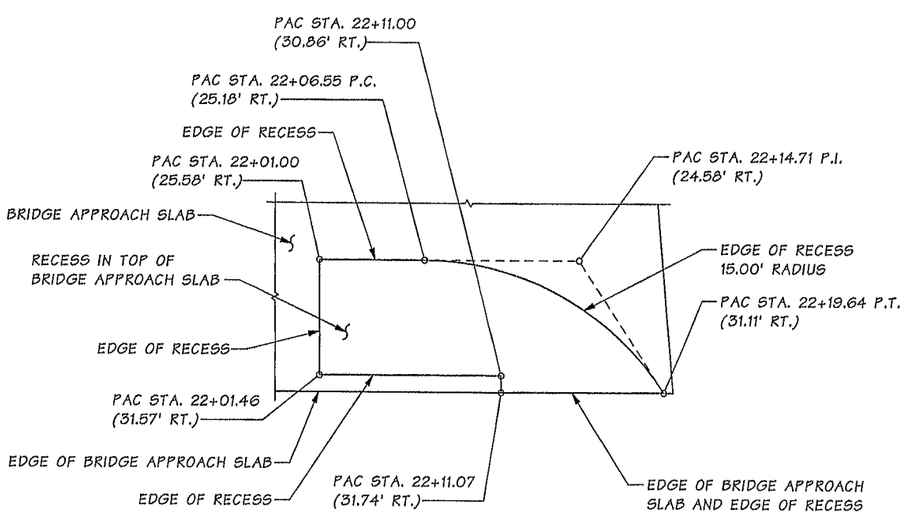

TOP RECESS IN BRIDGE APPROACH SLAB

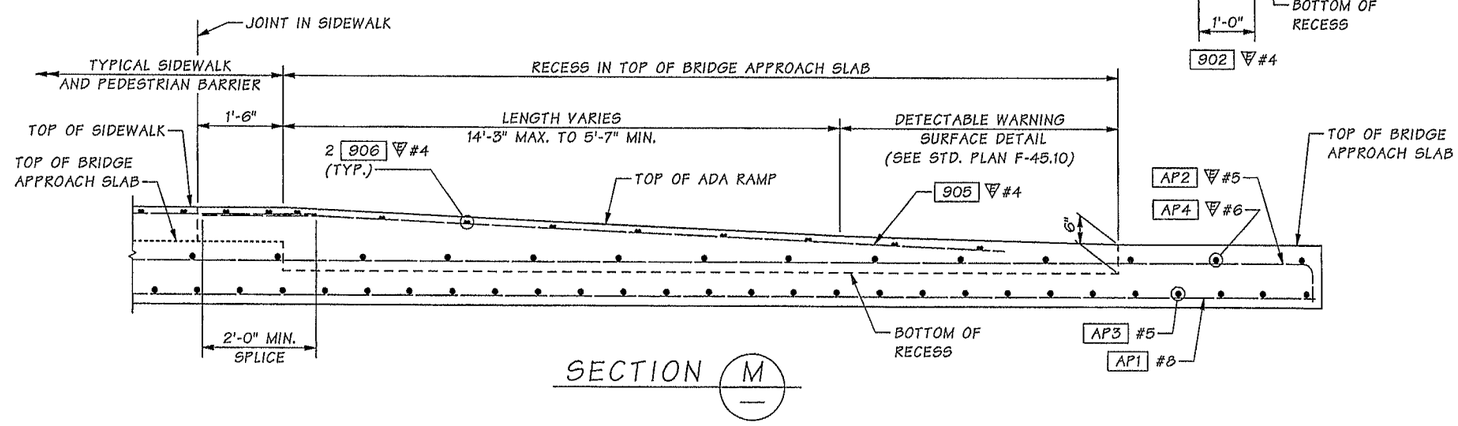

SECTION M

Bridge Design Engr.	Khaleghi, B		
Supervisor	Khaleghi, B		
Designed By	Olson, DE	07/13	
Checked By	Mizumori, A	10/13	
Detailed By	Bontemps, W	07/13	
Bridge Projects Engr.			
Prelim. Plan By			
Architect/Specialist			

M:\Y-Team\M ST TO PORTLAND\PACIFIC AVE BR\window files\BR APP SLAB 3.wnd

DATE	REVISION	BY	APP'D

REGION NO.	STATE	FED. AID PROJ. NO.	SHEET NO.	TOTAL SHEETS
10	WASH.			
JOB NUMBER 122501				

Douglas Eugene Olson, State of Washington, 40406, Registered Professional Engineer, 02/18/14

BRIDGE AND STRUCTURES OFFICE

Bijan Khaleghi, State of Washington, 27695, Registered Professional Engineer, 2/18/14

Washington State Department of Transportation

I-5
M ST TO PORTLAND AVE - HOV

PACIFIC AVE OVER I-5 BRIDGE No. 5/444

BRIDGE APPROACH SLAB DETAILS 3 OF 3

BRIDGE SHEET NO. PA100

SHEET 1099 OF 1763 SHEETS

SR 5 FILE NO. 7451 SHEET PA100

Tue Feb 18 11:37:40 2014

S = Bar is included in substructure quantities.
L = Lump sum quantity.
T = Transverse or S = Seismic
E = Bar is to be epoxy coated.
V = Bar dimensions vary between dimensions shown on this line and the following line.

MARK NO.	LOCATION	SIZE	NO REQ'D	BEND TYPE	TIE OR STIR.	LUMP SUM	SUBSTR.	EPOXY COAT	VARIES	NO. EACH	U Ft.	U In.	W Ft.	W In.	X Ft.	X In.	Y Ft.	Y In.	Z Ft.	Z In.	θ_1 Deg.	θ_2 Deg.	LENGTH Ft.	LENGTH In.	WEIGHT Lbs.
	SUBSTRUCTURE																								
	~ PIER 1 ABUTMENT																								
110	XB Stirrups LT End to Peak	6	47	72	T		S		V	1	8	1.0	7	9.0	7	9.0							24	7	
											8	1.0	9	0.0	9	0.0							27	1	1821
110	XB Stirrups RT End to Peak	6	48	72	T		S		V	1	8	1.0	8	9.0	8	9.0							26	7	
											8	1.0	9	0.0	9	0.0							27	1	1932
111	XB Stirrups at LT End	6	3	72	T		S				1	6.0	7	9.0									9	9	44
111	XB Stirrups at RT End	6	2	72	T		S				1	6.0	8	9.0									10	9	32
112	XB Bottom Longitudinal	10	12	89			S		V	1	73	10.0											73	10	
											74	10.0											74	10	3839
114	XB Side Longitudinal	7	18	89			S		V	9	74	0.0	2	6.0									76	6	
											75	0.0	2	6.0									77	6	2833
116	XB Top Longitudinal	8	16	89			S		V	1	74	0.0											74	0	
											75	0.0											75	0	3182
118	XB Ties	5	98	58	T		S				8	2.0											8	12	919
120	Backwall Verticals	5	152	50			S				6	6.0											6	6	1030
121	Backwall Longitudinal	5	13	89			S				75	2.0	2	0.0									77	2	1046
122	Backwall Lower Ties	4	117	57	T		S				1	7.0											1	12	153
123	Custom (See Pier1 Details)	4	76	90	T		S	E															6	7	334
124	Backwall Upper Ties	4	76	58	T		S				1	8.0											2	4	118
130	Backwall Top Longitudinal	4	2	89				E			75	0.0											75	0	100
131	Abut. End Top Horiz. Tie	4	2	74	T			E			0	8.0	1	0.0	1	0.0							2	6	3
132	Backwall Top Longitudinal	6	2	89				E			75	0.0											75	0	225
140	Gir.Stops Exterior(Dowels)	5	32	51			S				3	3.0											3	10	128
140	Gir.Stops Interior(Dowels)	5	98	51			S				3	3.0											3	10	391
141	Gir.Stops Exterior(TopTies)	5	16	54			S				3	1.0											3	10	63
141	Gir.Stops Interior (TopTies)	5	32	54			S				6	6.0											7	2	240
142	Gir.Stops Exterior(TopTies)	5	16	54			S				2	4.0											3	0	51
142	Gir.Stops Interior(TopTies)	5	98	54			S				2	4.0											3	0	310
143	Gir.Stops Exterior(SideTies)	4	4	80			S		V	2	2	5.0	3	0.0	3	0.0	0	2.0	0	2.0	99	81	8	2	
											2	5.0	3	0.0	3	0.0	0	2.0	0	2.0	93	87	8	2	22
143	Gir.Stops 1A-1C (SideTies)	4	4	80			S		V	2	2	5.0	3	0.0	9	7.0	0	2.0	0	2.0	97	82	14	9	1034
											2	5.0	3	0.0	9	7.0	0	2.0	0	2.0	95	84	14	9	39
143	Gir.Stops 1C-1E (SideTies)	4	4	80			S				2	5.0	3	0.0	7	7.0	0	2.0	0	2.0	94	86	12	10	34
150	Abut. LT End Verticals	5	9	74			S		V	1	1	6.0	12	3.0									13	7	
											1	6.0	14	0.0									15	4	136
150	Abut. RT End Verticals	5	9	74			S		V	1	1	6.0	13	3.0									14	7	
											1	6.0	15	0.0									16	4	145
151	CW F.F. Verticals	5	14	50			S		V	2	6	4.0											6	4	
											7	4.0											7	4	100
152	LT WW N.F. Verticals	5	18	50			S		V	1	2	0.0											2	0	
											8	4.0											8	4	97
152	RT WW N.F. Verticals	5	18	50			S		V	1	2	0.0											2	0	
											9	4.0											9	4	106
153	WW Vertical Ties	5	72	74	T		S				0	8.0	0	10.0	0	10.0							2	1	159
153	CW Vertical Ties	5	14	74	T		S				0	8.0	0	10.0	0	10.0							2	1	31
154	LT WW F.F. Verticals	6	18	50			S		V	1	2	0.0											2	0	
											8	4.0											8	4	140
154	RT WW F.F. Verticals	6	18	50			S		V	1	2	0.0											2	0	
											9	4.0											9	4	153
155	WW Btm Diag. Embed	5	4	50			S				6	0.0											6	0	25
156	WW Btm Diag.	5	4	50			S		V	2	12	9.0											12	9	
											13	1.0											13	1	54
157	Abut. End Lower Horiz.	5	12	80	T		S		V	6	8	1.0	2	3.0	2	3.0	0	1.5	0	1.5	93	87	12	5	
											8	3.0	2	3.0	2	3.0	0	1.5	0	1.5	99	81	12	7	156
158	Abut. End Mid Horiz.	5	10	80	T		S		V	5	8	1.0	2	6.0	2	3.0	0	1.5	0	1.5	179	87	12	9	
											8	4.0	3	0.0	2	3.0	0	1.5	0	1.5	175	99	13	6	137
159	Abut. End Upper Horiz.	5	10	80	T		S		V	5	8	1.0	2	6.0			0	1.5			179		10	7	
											8	4.0	3	0.0			0	1.5			175		11	4	114
160	WW N.F. Upper Horiz.	5	2	50			S				5	2.0											5	2	11
160	WW N.F. Middle Horiz.	5	4	50			S				11	10.0											11	10	49
160	LT WW N.F. Lower Horiz.	5	6	50			S		V	1	5	0.0											5	0	
											11	10.0											11	10	53
160	RT WW N.F. Lower Horiz.	5	6	50			S		V	1	4	0.0											4	0	
											11	10.0											11	10	50
161	WW F.F. Upper Horiz.	6	2	50			S				5	2.0											5	2	16
161	WW F.F. Middle Horiz.	6	4	50			S				11	10.0											11	10	71
161	LT WW F.F. Lower Horiz.	6	6	50			S		V	1	5	0.0											5	0	
											11	10.0											11	10	76
161	RT WW F.F. Lower Horiz.	6	6	50			S		V	1	4	0.0											4	0	
											11	10.0											11	10	71
162	WW F.F. Hooked	6	10	51			S				3	8.0											4	4	65
163	CW Horiz. Hookad	5	18	51			S				8	0.0											8	7	161
164	CW Horiz. Ties	5	16	80	T		S		V	8	0	8.5	1	0.0	1	0.0	0	1.5	0	1.5	99	81	2	6	
											0	8.5	1	0.0	1	0.0	0	1.5	0	1.5	93	87	2	6	42
165	WW Top Diag. Embed	5	4	50			S				6	0.0											6	0	25
166	WW Top Diag.	5	4	50			S				12	0.0											12	0	50
167	CW Top Diag.	5	4	50			S				6	3.0											6	3	26
168	Abut.-WW Fillet Bars	6	16	80			S		V	8	5	9.0	1	6.0	1	6.0	0	3.0	0	3.0	133	133	8	8	
											6	1.0	1	6.0	1	6.0	0	3.0	0	3.0	137	137	9	0	213
	~ PIER 2 COLUMNS																								
201	Col. A Vertical Bars	10	24	50			S				40	0.0											40	0	4131
201	Col. B Vertical Bars	10	24	50			S				40	6.0											40	6	4183
201	Col. C Vertical Bars	10	24	50			S				40	9.0											40	9	4209

S = Bar is included in substructure quantities.
L = Lump sum quantity.
T = Transverse or S = Seismic
E = Bar is to be epoxy coated.
V = Bar dimensions vary between dimensions shown on this line and the following line.

MARK NO.	LOCATION	SIZE	NO REQ'D	BEND TYPE	TIE OR STIR.	LUMP SUM	SUBSTR.	EPOXY COAT	VARIES	NO. EACH	U Ft.	U In.	W Ft.	W In.	X Ft.	X In.	Y Ft.	Y In.	Z Ft.	Z In.	θ_1 Deg.	θ_2 Deg.	LENGTH Ft.	LENGTH In.	WEIGHT Lbs.
201	Col. D Vertical Bars	10	24	50			S				40	7.5											40	8	4196
202	Spirals Within Shaft	6	4	67			S				3	9.0	8	0.0	0	6.0	0	8.0	60	0.0			187	7	1127
203	Col. A ColumnSpiral	6	1	67			S				3	9.0	22	10.0	0	3.0	0	8.0	60	0.0			1070	0	1607
203	Col. B ColumnSpiral	6	1	67			S				3	9.0	23	3.5	0	3.0	0	8.0	60	0.0			1091	6	1639
203	Col. C ColumnSpiral	6	1	67			S				3	9.0	23	6.0	0	3.0	0	8.0	60	0.0			1101	3	1654
203	Col. D ColumnSpiral	6	1	67			S				3	9.0	23	4.5	0	3.0	0	8.0	60	0.0			1095	5	1645
204	Spirals WithinCrossbeam	6	4	67			S				3	9.0	2	9.0	0	3.0	0	8.0	60	0.0			128	10	774
206	Col. A Corner Verticals	5	12	50			S				21	11.0											21	11	274
206	Col. B Corner Verticals	5	12	50			S				22	5.0											22	5	281
206	Col. C Corner Verticals	5	12	50			S				22	8.0											22	8	284
206	Col. D Corner Verticals	5	12	50			S				22	6.0											22	6	282
207	Custom (See Column Details)	4	384	99			S																3	8	940
	~ PIER 2 XBEAM/DIAPHRAGM																								
210	XB Stirrups at Columns	6	48	72	S		S				6	3.0	3	9.0									12	7	909
211	XB Stirrups	6	122	72	S		S				5	6.5	3	9.0	3	9.0							18	3	3346
212	N.F. Diaphragm Stirrups	6	38	58	T		S				9	6.0											10	12	627
212	F.F. Diaphragm Stirrups	6	38	58	T		S				10	5.0											11	11	679
213	Interior Stirrups	6	80	58	T		S		V	40	9	10.0											11	4	
											10	1.5											11	7	1378
214	N.F. Diaphragm Stirrups	6	5	72	S		S				6	3.0	9	8.0									18	6	139
214	F.F. Diaphragm Stirrups	6	5	72	S		S				6	3.0	10	7.0									19	5	146
215	XB LT End Verticals	6	8	80	T		S		V	1	10	3.0	1	0.0	1	0.0	0	3.0	0	3.0	98	82	11	11	
											9	7.0	1	0.0	1	0.0	0	3.0	0	3.0	98	82	11	3	139
215	XB RT End Verticals	6	8	80	T		S		V	1	10	3.0	1	0.0	1	0.0	0	3.0	0	3.0	81	99	11	11	
											9	7.0	1	0.0	1	0.0	0	3.0	0	3.0	81	99	11	3	139
220	XB Bottom Longitudinal	9	12	89			S				64	6.0											64	6	2632
222	N.F. XB Side Longitudinal	6	5	89			S		V	1	65	5.5	2	9.0									68	2	
											64	8.5	2	9.0									67	6	509
222	F.F. XB Side Longitudinal	6	5	89			S		V	1	65	5.5	2	9.0									68	2	
											64	8.5	2	9.0									67	6	509
224	XB LT End Ties	6	7	80	T		S				6	1.5	2	6.0	2	6.0	0	3.0	0	3.0	85	95	10	10	114
224	XB RT End Ties	6	7	80	T		S				6	1.5	2	6.0	2	6.0	0	3.0	0	3.0	85	95	10	10	114
226	XB Top Longitudinal	10	12	89			S				65	8.0											65	8	3391
228	XB Top Ties	6	89	58	T		S				6	3.0											7	9	1034
230	Diaph. Interior Continuous	6	12	89							67	4.5	2	9.0									70	2	1264
231	N.F. Diaph. Btwn Gir. A to C	6	12	50					V	2	9	2.5											9	2	
											8	1.5											8	2	156
231	N.F. Diaph. Btwn Gir. C to E	6	12	50					V	2	8	2.0											8	2	
											7	1.0											7	1	137
231	F.F. Diaph. Btwn Gir. A to C	6	12	50					V	2	9	2.5											9	2	
											8	1.5											8	2	156
231	F.F. Diaph. Btwn Gir. C to E	6	12	50					V	2	8	2.0											8	2	
											7	1.0											7	1	137
232	Diaph. Horiz. Over Girders	6	50	50					V	10	4	0.0											4	0	
											4	10.0											4	10	332
233	Diaph. Over Girders at Web	6	20	80	T						1	0.0	4	1.0	2	1.0	0	3.0	0	3.0	120	153	7	1	213
234	Diaph. LT End Ties	6	6	80	T						6	2.5	2	3.0	2	3.0	0	3.0	0	3.0	85	95	10	5	94
234	Diaph. RT End Ties	6	6	80	T						6	2.5	2	3.0	2	3.0	0	3.0	0	3.0	95	85	10	5	94
235	Diaph. Btwn Girders at Webs	6	16	50							4	9.0											4	9	114
236	Diaph. Over Girders Vert.	6	50	51							4	9.0											5	5	408
240	Diaph. Top Longit. in Deck	10	14	89				E			67	6.0											67	6	4067
241	Diaph. Top Longit. OH	5	28	50				E			3	2.0											3	2	92
251	Diaph. Ties	5	486	51							5	6.0											6	1	3078
260	XB Step Dowels	5	176	74	T		S				1	10.0	2	2.0									3	11	714
261	XB Step Longitudinal	6	3	89							65	9.0	2	6.0									68	3	308
	~ PIER 3 COLUMNS																								
301	Col. A Vertical Bars	10	24	50			S				43	10.5											43	10	4531
301	Col. B Vertical Bars	10	24	50			S				44	4.5											44	4	4583
301	Col. C Vertical Bars	10	24	50			S				44	7.5											44	8	4609
301	Col. D Vertical Bars	10	24	50			S				44	5.5											44	6	4592
302	Spirals Within Shaft	6	4	67			S				3	9.0	8	0.0	0	6.0	0	8.0	60	0.0			187	7	1127
303	Col. A ColumnSpiral	6	1	67			S				3	9.0	26	8.5	0	3.0	0	8.0	60	0.0			1251	7	1880
303	Col. B ColumnSpiral	6	1	67			S				3	9.0	27	2.0	0	3.0	0	8.0	60	0.0			1273	1	1912
303	Col. C ColumnSpiral	6	1	67			S				3	9.0	27	4.5	0	3.0	0	8.0	60	0.0			1282	10	1927
303	Col. D ColumnSpiral	6	1	67			S				3	9.0	27	3.0	0	3.0	0	8.0	60	0.0			1276	12	1918
304	Spirals WithinCrossbeam	6	4	67			S				3	9.0	2	9.0	0	3.0	0	8.0	60	0.0			128	10	774
306	Col. A Corner Verticals	5	12	50			S				25	9.5											25	10	323
306	Col. B Corner Verticals	5	12	50			S				26	3.5											26	4	329
306	Col. C Corner Verticals	5	12	50			S				26	6.5											26	6	332
306	Col. D Corner Verticals	5	12	50			S				26	4.5											26	4	330
307	Custom (See Column Details)	4	448	99			S																3	8	1097
	~ PIER 3 XBEAM/DIAPHRAGM																								
310	XB Stirrups at Columns	6	48	72	S		S				6	3.0	3	9.0									12	7	909
311	XB Stirrups	6	122	72	S		S				5	6.5	3	9.0	3	9.0							18	3	3346
312	N.F. Diaphragm Stirrups	6	38	58	T		S				9	6.5											11	0	629
312	F.F. Diaphragm Stirrups	6	38	58	T		S				10	4.5											11	10	677
313	Interior Stirrups	6	80	58	T		S		V	40	9	10.0											11	4	
											10	1.5											11	7	1378
314	N.F. Diaphragm Stirrups	6	5	72	S		S				6	3.0	9	8.0									18	6	139
314	F.F. Diaphragm Stirrups	6	5	72	S		S				6	3.0	10	7.0									19	5	146
315	XB LT End Verticals	6	8	80	T		S		V	1	10	3.0	1	0.0	1	0.0	0	3.0	0	3.0	98	82	11	11	
											9	7.0	1	0.0	1	0.0	0	3.0	0	3.0	98	82	11	3	139
315	XB RT End Verticals	6	8	80	T		S		V	1	10	3.0	1	0.0	1	0.0	0	3.0	0	3.0	81	99	11	11	
											9	7.0	1	0.0	1	0.0	0	3.0	0	3.0	81	99	11	3	139

BENDING DIAGRAMS

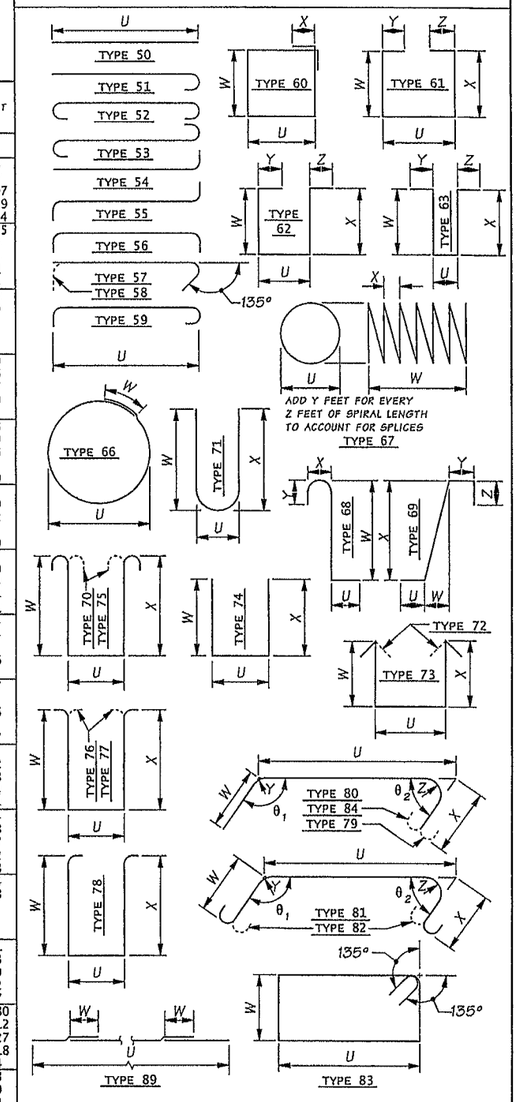

NOTES:

1. SEE PLANS FOR REINFORCEMENT NOT SHOWN.
2. BEND FOR TRANSVERSE BARS DUE TO ROADWAY CROWN CONDITIONS HAS NOT BEEN SHOWN. THESE BARS SHALL BE BENT AS REQUIRED TO CONFORM TO THE CONFIGURATION OF THE STRUCTURE.
3. BARLIST IS FOR QUANTITY ESTIMATION ONLY. REINFORCEMENT FABRICATION DETAILS SHALL BE DETERMINED FROM THE PLANS.

SR 5 FILE NO. 7451 SHEET PA101

Bridge Design Engr. Khaleghi, B	M:\Y-Team\M ST TO PORTLAND\PACIFIC AVE BR\window files\Barlist1.wnd						
Supervisor Khaleghi, B		REGION NO.	STATE	FED. AID PROJ. NO.	SHEET NO.	TOTAL SHEETS	
Designed By		10	WASH.				
Checked By							
Detailed By		JOB NUMBER 12C501					
Bridge Projects Engr.							
Prelim. Plan By							
Architect/Specialist	DATE REVISION BY APP'D						

Tue Feb 11 09:03:14 2014

BRIDGE AND STRUCTURES OFFICE

Washington State Department of Transportation

I-5
M ST TO PORTLAND AVE - HOV

PACIFIC AVE OVER I-5 BRIDGE No. 5/444

BARLIST 1 OF 4

BRIDGE SHEET NO. PA101

SHEET 1100 OF 1763 SHEETS

S = Bar is included in substructure quantities.
L = Lump sum quantity.
T = Transverse or S = Seismic
E = Bar is to be epoxy coated.
V = Bar dimensions vary between dimensions shown on this line and the following line.

MARK NO.	LOCATION	SIZE	NO REQ'D	BEND TYPE	TIE OR STIR.	LUMP SUM	SUBSTR.	EPOXY COAT	VARIES	NO. EACH	U Ft.	U In.	W Ft.	W In.	X Ft.	X In.	Y Ft.	Y In.	Z Ft.	Z In.	θ_1 Deg.	θ_2 Deg.	LENGTH Ft.	LENGTH In.	WEIGHT Lbs.
320	XB Bottom Longitudinal	9	12	89			S				64	6.0											64	6	2632
322	N.F. XB Side Longitudinal	6	5	89			S		V	1	65	5.5	2	9.0									68	2	
											64	8.5	2	9.0									67	6	509
322	F.F. XB Side Longitudinal	6	5	89			S		V	1	65	5.5	2	9.0									68	2	
											64	8.5	2	9.0									67	6	509
324	XB LT End Ties	6	7	80	T		S				6	1.5	2	6.0	2	6.0	0	3.0	0	3.0	85	95	10	10	114
324	XB RT End Ties	6	7	80	T		S				6	1.5	2	6.0	2	6.0	0	3.0	0	3.0	85	95	10	10	114
326	XB Top Longitudinal	11	12	89			S				65	8.0											65	8	4187
328	XB Top Ties	6	89	58	T		S				6	3.0											7	9	1034
330	Diaph. Interior Continuous	6	12	89							67	4.5	2	9.0									70	2	1264
331	N.F. Diaph. Btwn Gir. A to C	6	12	50					V	2	9	2.5											9	2	
											8	1.5											8	2	156
331	N.F. Diaph. Btwn Gir. C to E	6	12	50					V	2	8	2.0											8	2	
											7	1.0											7	1	137
331	F.F. Diaph. Btwn Gir. A to C	6	12	50					V	2	9	2.5											9	2	
											8	1.5											8	2	156
331	F.F. Diaph. Btwn Gir. C to E	6	12	50					V	2	8	2.0											8	2	
											7	1.0											7	1	137
332	Diaph. Horiz. Over Girders	6	50	50					V	10	4	0.0											4	0	
											4	10.0											4	10	332
333	Diaph. Over Girders at Web	6	20	80	T						1	0.0	4	1.0	2	1.0	0	3.0	0	3.0	120	153	7	1	213
334	Diaph. LT End Ties	6	6	80	T						6	2.5	2	3.0	2	3.0	0	3.0	0	3.0	85	95	10	5	94
334	Diaph. RT End Ties	6	6	80	T						6	2.5	2	3.0	2	3.0	0	3.0	0	3.0	95	85	10	5	94
335	Diaph. Btwn Girders at Webs	6	16	50							4	9.0											4	9	114
336	Diaph. Over Girders Vert.	6	50	51							4	9.0											5	5	408
340	Diaph. Top Longit. in Deck	10	14	89				E			67	6.0											67	6	4067
341	Diaph. Top Longit. OH	5	28	50				E			3	2.0											3	2	92
351	Diaph. Ties	5	486	51							5	6.0											6	1	3078
360	XB Step Dowels	5	176	74	T		S				1	10.0	2	2.0									3	11	714
361	XB Step Longitudinal	6	3	89							65	9.0	2	6.0									68	3	308
	~ PIER 4 COLUMNS																								
401	Col. A Vertical Bars	10	24	50			S				48	3.0											48	3	4983
401	Col. B Vertical Bars	10	24	50			S				48	7.5											48	8	5022
401	Col. C Vertical Bars	10	24	50			S				48	9.5											48	10	5039
401	Col. D Vertical Bars	10	24	50			S				48	7.0											48	7	5018
402	Spirals Within Shaft	6	4	67			S				4	3.0	8	0.0	0	6.0	0	8.0	60	0.0			212	12	1279
403	Col. A ColumnSpiral	6	1	67			S				4	3.0	31	0.5	0	3.0	0	8.0	60	0.0			165	1 10	2481
403	Col. B ColumnSpiral	6	1	67			S				4	3.0	31	5.5	0	3.0	0	8.0	60	0.0			167	4 0	2514
403	Col. C ColumnSpiral	6	1	67			S				4	3.0	31	7.0	0	3.0	0	8.0	60	0.0			168	0 8	2524
403	Col. D ColumnSpiral	6	1	67			S				4	3.0	31	4.5	0	3.0	0	8.0	60	0.0			166	9 7	2507
404	Spirals WithinCrossbeam	6	4	67			S				4	3.0	2	9.0	0	3.0	0	8.0	60	0.0			146	4	879
406	Col. A Corner Verticals	5	12	50			S				30	2.0											30	2	378
406	Col. B Corner Verticals	5	12	50			S				30	6.5											30	6	382
406	Col. C Corner Verticals	5	12	50			S				30	8.5											30	8	384
406	Col. D Corner Verticals	5	12	50			S				30	6.0											30	6	382
407	Custom (See Column Details)	4	512	99			S																3	10	1311
	~ PIER 4 XBEAM/DIAPHRAGM																								
410	XB Stirrups at Columns	6	48	72	S		S				6	3.0	3	9.0									12	7	909
411	XB Stirrups	6	132	72	S		S				5	6.5	3	9.0	3	9.0							18	3	3620
412	N.F. Diaphragm Stirrups	6	38	58	T		S				9	6.0											10	12	627
412	F.F. Diaphragm Stirrups	6	38	58	T		S				9	11.5											11	5	653
413	Interior Stirrups	6	80	58	T		S		V	40	9	8.0											11	2	
											9	9.5											11	3	1348
414	N.F. Diaphragm Stirrups	6	5	72	S		S				6	3.0	9	8.0									18	6	139
414	F.F. Diaphragm Stirrups	6	5	72	S		S				6	3.0	10	1.5									18	12	143
415	XB LT End Verticals	6	8	80	T		S		V	1	9	10.5	1	0.0	1	0.0	0	3.0	0	3.0	98	82	11	7	
											9	6.5	1	0.0	1	0.0	0	3.0	0	3.0	98	82	11	3	137
415	XB RT End Verticals	6	8	80	T		S		V	1	9	10.5	1	0.0	1	0.0	0	3.0	0	3.0	81	99	11	7	
											9	6.5	1	0.0	1	0.0	0	3.0	0	3.0	81	99	11	3	137
420	XB Bottom Longitudinal	9	12	89			S				64	6.0											64	6	2632
422	N.F. XB Side Longitudinal	6	5	89			S		V	1	65	5.5	2	9.0									68	2	
											64	8.5	2	9.0									67	6	509
422	F.F. XB Side Longitudinal	6	5	89			S		V	1	65	5.5	2	9.0									68	2	
											64	8.5	2	9.0									67	6	509
424	XB LT End Ties	6	7	80	T		S				6	1.5	2	6.0	2	6.0	0	3.0	0	3.0	85	95	10	10	114
424	XB RT End Ties	6	7	80	T		S				6	1.5	2	6.0	2	6.0	0	3.0	0	3.0	85	95	10	10	114
426	XB Top Longitudinal	11	12	89			S				65	8.0											65	8	4187
428	XB Top Ties	6	94	58	T		S				6	3.0											7	9	1092
430	Diaph. Interior Continuous	6	12	89							67	4.5	2	9.0									70	2	1264
431	N.F. Diaph. Btwn Gir. A to C	6	12	50					V	2	9	2.5											9	2	
											8	1.5											8	2	156
431	N.F. Diaph. Btwn Gir. C to E	6	12	50					V	2	8	2.0											8	2	
											7	1.0											7	1	137
431	F.F. Diaph. Btwn Gir. A to C	6	12	50					V	2	9	2.5											9	2	
											8	1.5											8	2	156
431	F.F. Diaph. Btwn Gir. C to E	6	12	50					V	2	8	2.0											8	2	
											7	1.0											7	1	137
432	Diaph. Horiz. Over Girders	6	50	50					V	10	4	0.0											4	0	
											4	10.0											4	10	332
433	Diaph. Over Girders at Web	6	20	80	T						1	0.0	4	1.0	2	1.0	0	3.0	0	3.0	120	153	7	1	213
434	Diaph. LT End Ties	6	6	80	T						6	2.5	2	3.0	2	3.0	0	3.0	0	3.0	85	95	10	5	94
434	Diaph. RT End Ties	6	6	80	T						6	2.5	2	3.0	2	3.0	0	3.0	0	3.0	95	85	10	5	94
435	Diaph. Btwn Girders at Webs	6	16	50							4	9.0											4	9	114
436	Diaph. Over Girders Vert.	6	50	51							4	9.0											5	5	408
440	Diaph. Top Longit. in Deck	11	14	89				E			67	6.0											67	6	5021
441	Diaph. Top Longit. OH	5	28	50				E			3	2.0											3	2	92

S = Bar is included in substructure quantities.
L = Lump sum quantity.
T = Transverse or S = Seismic
E = Bar is to be epoxy coated.
V = Bar dimensions vary between dimensions shown on this line and the following line.

MARK NO.	LOCATION	SIZE	NO REQ'D	BEND TYPE	TIE OR STIR.	LUMP SUM	SUBSTR.	EPOXY COAT	VARIES	NO. EACH	U Ft.	U In.	W Ft.	W In.	X Ft.	X In.	Y Ft.	Y In.	Z Ft.	Z In.	θ_1 Deg.	θ_2 Deg.	LENGTH Ft.	LENGTH In.	WEIGHT Lbs.
451	Diaph. Ties	5	486	51							5	6.0											6	1	3078
460	XB Step Dowels	5	176	74	T		S				1	10.0	1	10.0									3	7	653
461	XB Step Longitudinal	6	3	89							65	9.0	2	6.0									68	3	308
	~ PIER 5 COLUMNS																								
501	Col. A Vertical Bars	11	32	89			S				68	6.5											68	6	11654
501	Col. B Vertical Bars	11	32	89			S				68	10.5											68	10	11710
501	Col. C Vertical Bars	11	32	89			S				69	0.0											69	0	11732
501	Col. D Vertical Bars	11	32	89			S				68	8.5											68	8	11682
502	Spirals Within Shaft	5	4	67			S				5	3.0	9	6.0	0	6.0	0	8.0	60	0.0			313	10	1309
503	Col. A ColumnSpiral	5	1	67			S				5	3.0	52	10.5	0	3.0	0	8.0	60	0.0			349	2 6	3642
503	Col. B ColumnSpiral	5	1	67			S				5	3.0	53	2.5	0	3.0	0	8.0	60	0.0			351	4 6	3665
503	Col. C ColumnSpiral	5	1	67			S				5	3.0	53	3.5	0	3.0	0	8.0	60	0.0			351	9 12	3671
503	Col. D ColumnSpiral	5	1	67			S				5	3.0	53	0.5	0	3.0	0	8.0	60	0.0			350	3 6	3654
504	Spirals WithinCrossbeam	5	4	67			S				5	3.0	4	6.0	0	3.0	0	8.0	60	0.0			297	3	1240
506	Col. A Corner Verticals	5	20	50			S				50	5.5											50	6	1052
506	Col. B Corner Verticals	5	20	50			S				50	9.5											50	10	1059
506	Col. C Corner Verticals	5	20	50			S				50	11.0											50	11	1062
506	Col. D Corner Verticals	5	20	50			S				50	7.5											50	8	1056
507	Custom (See Column Details)	4	832	99			S																4	8	2570
	~ PIER 5 XBEAM/DIAPHRAGM																								
510	XB Stirrups at Columns	6	48	72	S		S				7	3.0	5	3.0									15	1	1089
511	XB Stirrups	6	122	72	S		S				6	6.0	5	3.0	5	3.0							22	3	4071
512	N.F. Diaphragm Stirrups	6	38	58	T		S				10	11.5											12	5	710
512	F.F. Diaphragm Stirrups	6	38	58	T		S				11	2.5											12	8	725
513	Interior Stirrups	6	72	58	T		S		V	36	11	0.5											12	6	
											11	2.0											12	8	1362
514	N.F. Diaphragm Stirrups	6	5	72	S		S				7	3.0	11	1.5									20	12	158
514	F.F. Diaphragm Stirrups	6	5	72	S		S				7	3.0	11	4.5									21	3	159
515	XB LT End Verticals	6	11	80	T		S		V	1	11	2.5	1	0.0	1	0.0	0	3.0	0	3.0	98	82	12	11	
											10	11.5	1	0.0	1	0.0	0	3.0	0	3.0	98	82	12	8	211
515	XB RT End Verticals	6	11	80	T		S		V	1	11	2.5	1	0.0	1	0.0	0	3.0	0	3.0	82	98	12	11	
											10	11.5	1	0.0	1	0.0	0	3.0	0	3.0	82	98	12	8	211
520	XB Bottom Longitudinal	9	14	89			S				64	6.0											64	6	3070
522	N.F. XB Side Longitudinal	6	7	89			S		V	1	65	5.5	2	9.0									68	2	
											64	2.5	2	9.0									66	12	711
522	F.F. XB Side Longitudinal	6	7	89			S		V	1	65	5.5	2	9.0									68	2	
											64	2.5	2	9.0									66	12	711
524	XB LT End Ties	6	9	80	T		S				7	1.5	2	6.0	2	6.0	0	3.0	0	3.0	85	95	11	10	160
524	XB RT End Ties	6	9	80	T		S				7	1.5	2	6.0	2	6.0	0	3.0	0	3.0	85	95	11	10	160
526	XB Top Longitudinal	10	12	89			S				65	8.0											65	8	3391
528	XB Top Ties	6	97	58	T		S				7	3.0											8	9	1273
530	Diaph. Interior Continuous	6	14	89							67	4.5	2	9.0									70	2	1474
531	N.F. Diaph. Btwn Gir. A to C	6	14	50					V	2	9	2.5											9	2	
											8	1.5											8	2	182
531	N.F. Diaph. Btwn Gir. C to E	6	14	50					V	2	8	2.0											8	2	
											7	1.0											7	1	160
531	F.F. Diaph. Btwn Gir. A to C	6	14	50					V	2	9	2.5											9	2	
											8	1.5											8	2	182
531	F.F. Diaph. Btwn Gir. C to E	6	14	50					V	2	8	2.0											8	2	
											7	1.0											7	1	160
532	Diaph. Horiz. Over Girders	6	60	50					V	10	3	10.5											3	10	
											4	10.0											4	10	392
533	Diaph. Over Girders at Web	6	20	80	T						1	0.0	4	1.0	2	1.0	0	3.0	0	3.0	120	153	7	1	213
534	Diaph. LT End Ties	6	7	80	T						7	1.5	2	3.0	2	3.0	0	3.0	0	3.0	85	95	11	4	119
534	Diaph. RT End Ties	6	7	80	T						7	1.5	2	3.0	2	3.0	0	3.0	0	3.0	95	85	11	4	119
535	Diaph. Btwn Girders at Webs	6	16	50							4	9.0											4	9	114
536	Diaph. Over Girders Vert.	6	50	51							4	9.0											5	5	408
540	Diaph. Top Longit. in Deck	11	16	89				E			67	6.0											67	6	5738
541	Diaph. Top Longit. OH	5	32	50				E			3	2.0											3	2	106
551	Diaph. Ties	5	360	51							6	0.0											6	7	2468
	~ PIER 6 ABUTMENT																								
610	XB Stirrups LT End to Peak	6	43	72	T		S		V	1	6	8.0	7	6.0	7	6.0							22	8	
											6	8.0	8	4.0	8	4.0							24	4	1516
610	XB Stirrups RT End to Peak	6	42	72	T		S		V	1	6	8.0	7	10.0	7	10.0							23	4	
											6	8.0	8	4.0	8	4.0							24	4	1501
611	XB Stirrups at LT End	6	2	72	T		S				1	6.0	7	6.0									9	6	28
611	XB Stirrups at RT End	6	2	72	T		S				1	6.0	7	10.0									9	10	29
612	XB Bottom Longitudinal	11	10	89			S				69	8.0											69	8	3702
614	XB Side Longitudinal	7	18	89			S				69	8.0	2	6.0									72	2	2655
616	XB Top Longitudinal	10	10	89			S				69	8.0											69	8	2998
618	XB Ties	5	87	58	T		S				6	8.0											7	6	680
620	Backwall Verticals	5	140	50			S				6	9.0											6	9	986
621	Backwall Longitudinal	5	15	89			S				69	8.0	2	0.0									71	8	1121
622	Backwall Lower Ties	4	108	57	T		S				1	7.0											1	12	141
623	Custom (See Pier6 Details)	4	70	90	T		S	E															6	1	284
624	Backwall Upper Ties	4	70	58	T		S				1	7.0											2	3	105
630	Backwall Top Longitudinal	4	2	89				E			69	8.0											69	8	93
631	Abut. End Top Horiz. Tie	4	2	74	T			E			0	8.0	1	0.0	1	0.0							2	6	3
632	Backwall Top Longitudinal	6	2	89				E			69	8.0											69	8	209
640	Gir.Stops Exterior(Dowels)	5	32	51			S				3	3.0											3	10	128
640	Gir.Stops Interior(Dowels)	5	108	51			S				3	3.0											3	10	431
641	Gir.Stops Exterior(TopTies)	5	16	54			S				2	9.0											3	6	58
641	Gir.Stops Interior(TopTies)	5	32	54			S				5	9.0											6	6	215
642	Gir.Stops Exterior(TopTies)	5	16	54			S				2	4.0											3	0	51

BENDING DIAGRAMS

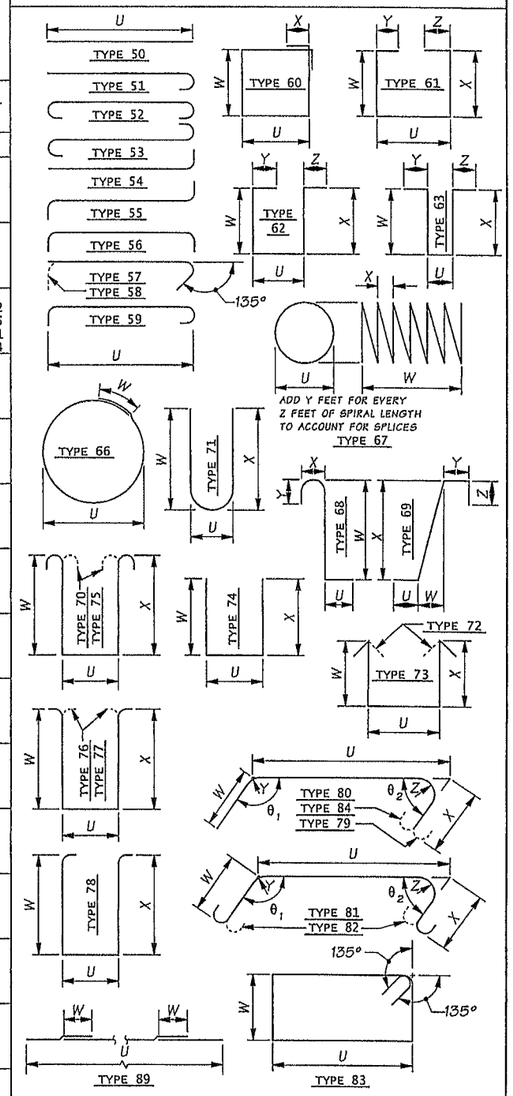

NOTES:

1. SEE PLANS FOR REINFORCEMENT NOT SHOWN.
2. BEND FOR TRANSVERSE BARS DUE TO ROADWAY CROWN CONDITIONS HAS NOT BEEN SHOWN. THESE BARS SHALL BE BENT AS REQUIRED TO CONFORM TO THE CONFIGURATION OF THE STRUCTURE.
3. BARLIST IS FOR QUANTITY ESTIMATION ONLY. REINFORCEMENT FABRICATION DETAILS SHALL BE DETERMINED FROM THE PLANS.

Bridge Design Engr. Khaleghi, B	M:\Y-Team\M ST TO PORTLAND\PACIFIC AVE BR\window files\Barlist2.wnd				
Supervisor Khaleghi, B		REGION NO.	STATE	FED. AID PROJ. NO.	SHEET NO. / TOTAL SHEETS
Designed By		10	WASH.		
Checked By					
Detailed By		JOB NUMBER 12C501			
Bridge Projects Engr.					
Prelim. Plan By					
Architect/Specialist	DATE / REVISION / BY / APP'D				

Tue Feb 11 09:03:18 2014

BRIDGE AND STRUCTURES OFFICE

Washington State Department of Transportation

I-5
M ST TO PORTLAND AVE - HOV

PACIFIC AVE OVER I-5 BRIDGE No. 5/444

BARLIST 2 OF 4

BRIDGE SHEET NO. PA102

SHEET 1101 OF 1763 SHEETS

SR 5 FILE NO. 7451 SHEET PA102

S = Bar is included in substructure quantities.
L = Lump sum quantity.
T = Transverse or S = Seismic
E = Bar is to be epoxy coated.
V = Bar dimensions vary between dimensions shown on this line and the following line.

Mark No.	Location	Size	No Req'd	Bend Type	Tie or Stir.	Lump Sum	Substr.	Epoxy Coat	Varies	No. Each	U Ft.	U In.	W Ft.	W In.	X Ft.	X In.	Y Ft.	Y In.	Z Ft.	Z In.	θ1 Deg.	θ2 Deg.	Length Ft.	Length In.	Weight Lbs.
642	Gir.Stops Interior(TopTies)	5	76	54			S				2	4.0											3	0	241
643	Gir.Stops Exterior(SideTies)	4	4	80			S				2	5.0	2	5.0	2	11.0	0	2.0	0	2.0	94	85	7	6	20
643	Gir.Stops Interior(SideTies)	4	8	80			S				2	5.0	2	5.0	8	7.0	0	2.0	0	2.0	94	85	13	2	71
650	Abut. LT End Verticals	5	8	74			S		V	1	1	6.0	12	9.0									14	1	
											1	6.0	13	0.0									14	4	119
650	Abut. RT End Verticals	5	8	74			S		V	1	1	6.0	13	1.0									14	5	
											1	6.0	13	3.0									14	7	121
651	CW F.F. Verticals	5	12	50			S				6	7.0											6	7	82
652	LT WW N.F. Verticals	5	23	50			S		V	1	2	0.0											2	0	
											9	4.0											9	4	136
652	RT WW N.F. Verticals	5	23	50			S		V	1	2	0.0											2	0	
											9	7.0											9	7	139
653	WW Vertical Ties	5	46	74	T		S				0	8.0	0	10.0	0	10.0							2	1	102
653	CW Vertical Ties	5	12	74	T		S				0	8.0	0	10.0	0	10.0							2	1	26
654	LT WW F.F. Verticals	6	23	50			S		V	1	2	0.0											2	0	
											9	4.0											9	4	196
654	RT WW F.F. Verticals	6	23	50			S		V	1	2	0.0											2	0	
											9	7.0											9	7	200
655	WW Btm Diag. Embed	5	4	50			S				6	0.0											6	0	25
656	WW Btm Diag.	5	4	50			S		V	2	18	6.0											18	6	
											18	9.0											18	9	78
657	Abut. End Lower Horiz.	5	12	80	T		S				6	7.0	2	3.0	2	3.0	0	1.5	0	1.5	95	85	10	11	136
658	Abut. End Mid Horiz.	5	8	80	T		S		V	4	9	3.0			2	3.0			0	1.5		85	11	5	
											9	3.0			2	3.0			0	1.5		95	11	5	95
659	Abut. End Upper Horiz.	5	7	50	T		S				8	9.0											8	9	64
660	WW N.F. Upper Horiz.	5	2	50			S				16	10.0											16	10	35
660	LT WW N.F. Lower Horiz.	5	9	50			S		V	1	4	0.0											4	0	
											16	10.0											16	10	98
660	RT WW N.F. Lower Horiz.	5	9	50			S		V	1	4	4.0											4	4	
											16	10.0											16	10	99
661	WW F.F. Upper Horiz.	6	2	50			S				16	10.0											16	10	51
661	LT WW F.F. Lower Horiz.	6	9	50			S		V	1	4	0.0											4	0	
											16	10.0											16	10	141
661	RT WW F.F. Lower Horiz.	6	9	50			S		V	1	4	4.0											4	4	
											16	10.0											16	10	143
662	WW F.F. Hooked	6	11	51			S				3	8.0											4	4	72
663	CW Horiz. Hooked	5	14	51			S				6	7.0											7	2	104
664	CW Horiz. Ties	5	16	80	T		S				0	8.5	1	0.0	1	0.0	0	1.5	0	1.5	95	85	2	6	42
665	WW Top Diag. Embed	5	4	50			S				6	0.0											6	0	25
666	WW Top Diag.	5	4	50			S				17	0.0											17	0	71
667	CW Top Diag.	5	4	50			S				5	0.0											5	0	21
668	Abut.-WW Fillet Bars	6	18	80			S		V	9	5	7.0	1	6.0	1	6.0	0	3.5	0	3.5	132	132	8	6	
											6	3.0	1	6.0	1	6.0	0	3.5	0	3.5	137	137	9	2	239
	SUPERSTRUCTURE																								
	~ INTERMEDIATE DIAPHRAGMS																								
700	Stirrups-Spans 1 2 5	4	542	71							0	5.0	5	2.0	5	2.0							10	6	3803
700	Stirrups-Spans 3 4	4	540	71							0	5.0	5	10.0	5	10.0							11	10	4270
701	Ties-All Spans	4	192	71							0	5.0	3	3.0	3	3.0							6	8	856
704	Btm Long.-Span 1	7	4	50					V	2	22	0.0											22	0	
											25	0.0											25	0	192
704	Btm Long.-Spans 2to5	7	44	50					V	22	21	5.0											21	5	
											23	5.0											23	5	2016
705	Btm Long Gir. C-All Spans	7	24	50							11	4.0											11	4	556
705	Btm Long Gir. A E-All Spans	7	48	50							7	11.0											7	11	777
706	Side Long.-Spans 1 5	4	120	50					V	30	4	1.0											4	1	
											4	8.0											4	8	351
706	Side Long.-Spans 2to4	4	360	50					V	90	4	1.0											4	1	
											4	8.0											4	8	1052
706	Side Long. Gir. AtoC-Span 1	4	16	50					V	4	8	10.0											8	10	
											9	5.0											9	5	98
706	Side Long. Gir. AtoC-Span 2	4	48	50					V	12	8	0.0											8	0	
											8	7.0											8	7	266
706	Side Long. Gir. AtoC-Span 3	4	48	50					V	12	8	0.0											8	0	
											8	7.0											8	7	266
706	Side Long. Gir. AtoC-Span 4	4	48	50					V	12	8	0.0											8	0	
											8	7.0											8	7	266
706	Side Long. Gir. AtoC-Span 5	4	32	50					V	8	8	0.0											8	0	
											8	7.0											8	7	177
706	Side Long. Gir. CtoE-Span 1	4	16	50					V	4	7	4.0											7	4	
											7	11.0											7	11	81
706	Side Long. Gir. CtoE-Span 2	4	48	50					V	12	7	0.0											7	0	
											7	7.0											7	7	234
706	Side Long. Gir. CtoE-Span 3	4	48	50					V	12	7	0.0											7	0	
											7	7.0											7	7	234
706	Side Long. Gir. CtoE-Span 4	4	48	50					V	12	7	0.0											7	0	
											7	7.0											7	7	234
706	Side Long. Gir. CtoE-Span 5	4	32	50					V	8	7	0.0											7	0	
											7	7.0											7	7	156
707	Top Long-Span 1	7	2	50					V	1	23	3.0											23	3	
											26	3.0											26	3	101
707	Top Long-Spans 2to5	7	22	50					V	11	22	8.0											22	8	
											24	8.0											24	8	1064
708	Top Long Gir. C-All Spans	7	12	50							9	2.0											9	2	225
708	Top Long Gir. A E-All Spans	7	24	50							9	9.0											9	9	478
709	Top Long. in Deck-Span 1	6	4	51				E			35	5.0											36	1	217
709	Top Long. in Deck-Spans 2to5	6	44	51				E			34	4.0											35	0	2314

Mark No.	Location	Size	No Req'd	Bend Type	Tie or Stir.	Lump Sum	Substr.	Epoxy Coat	Varies	No. Each	U Ft.	U In.	W Ft.	W In.	X Ft.	X In.	Y Ft.	Y In.	Z Ft.	Z In.	θ1 Deg.	θ2 Deg.	Length Ft.	Length In.	Weight Lbs.
	~ END DIAPHRAGMS																								
720	Stirrups	4	166	71							0	9.0	5	2.0	5	2.0							10	8	1186
721	Ties	4	32	71							0	9.0	3	3.0	3	3.0							6	10	147
722	Stirrups	4	30	71							0	9.0	5	8.0	5	8.0							11	8	234
723	Bars Near Girder Btm Flange	4	40	80							0	11.3	2	0.0	2	0.0	0	2.0	0	2.0	153	117	4	11	130
724	Btm Long.-Pier 1	7	4	50					V	2	22	8.0											22	8	
											26	8.0											26	8	202
724	Btm Long.-Pier 6	7	4	50					V	2	21	9.0											21	9	
											23	9.0											23	9	186
725	Btm Long Gir. C-Piers 1 6	7	4	50							11	4.0											11	4	93
725	Btm Long Gir. A E-Piers 1 6	7	8	50							7	11.0											7	11	129
726	Side Long. at Girders-Pier 1	4	50	50					V	10	3	10.0											3	10	
											4	8.0											4	8	142
726	Side Long. at Girders-Pier 6	4	50	50					V	10	3	10.0											3	10	
											4	8.0											4	8	142
726	Side Long. Gir. AtoC -Pier 1	4	20	50					V	4	9	10.0											9	10	
											10	8.0											10	8	137
726	Side Long. Gir. AtoC -Pier 6	4	20	50					V	4	8	4.0											8	4	
											9	3.0											9	3	117
726	Side Long. Gir. CtoE -Pier 1	4	20	50					V	4	7	10.0											7	10	
											8	8.0											8	8	110
726	Side Long. Gir. CtoE-Pier 6	4	20	50					V	4	7	4.0											7	4	
											8	3.0											8	3	104
727	Top Long-Pier 1	7	2	50					V	1	20	1.0											20	1	
											24	1.0											24	1	90
727	Top Long-Pier 6	7	2	50					V	1	19	2.0											19	2	
											21	2.0											21	2	82
728	Top Long Gir. C-Piers 1 6	7	2	50							9	2.0											9	2	37
728	Top Long Gir. A E-Piers 1 6	7	4	50							9	9.0											9	9	80
729	Top Long. in Deck-Pier 1	6	6	51				E			36	3.0											36	11	333
729	Top Long. in Deck-Pier 6	6	6	51				E			34	4.0											35	0	316
	~ DECK BTM REINFORCEMENT																								
740	Btm LT Transv. W-Span 1	5	39	80				E	V	1	30	6.0	9	0.0			0	3.0			179		39	6	
											33	6.0	9	0.0			0	3.0			179		42	6	1668
740	Btm LT Transv. X-Span 1	5	40	50				E	V	1	29	6.0											29	6	
											32	6.0											32	6	1293
740	Btm LT Transv. Y-Spans2to5	5	425	80				E			30	6.0	9	0.0			0	3.0			179		39	6	17507
740	Btm LT Transv. Z-Spans2to5	5	425	50				E			32	6.0											32	6	14405
741	Btm RT Transv. W-Span 1	5	39	50				E	V	1	37	6.0											37	6	
											38	6.0											38	6	1546
741	Btm RT Transv. X-Span 1	5	40	80				E	V	1	28	6.0	9	0.0			0	3.0			179		37	6	
											29	6.0	9	0.0			0	3.0			179		38	6	1585
741	Btm RT Transv. Y-Spans2to5	5	425	50				E			30	0.0											30	0	13297
741	Btm RT Transv. Z-Spans2to5	5	425	80				E			30	6.0	9	0.0			0	3.0			179		39	6	17507
742	Btm LT Transv.-Spans1to5	5	929	80				E			3	0.0	1	2.0			0	3.0			176		4	2	4035
742	Btm RT Transv.-Spans1to5	5	929	80				E			3	0.0	1	2.0			0	3.0			176		4	2	4035
743	Btm Suppl. Transv.-Gir3A 3B	4	240	63				E	V	60	1	0.0	1	0.0	1	0.0	0	6.0	0	6.0			3	7	
											1	0.0	1	3.0	1	3.0	0	6.0	0	6.0			4	1	614
743	Btm Suppl. Transv.-Gir3C	4	120	63				E	V	30	1	0.0	1	0.0	1	0.0	0	6.0	0	6.0			3	7	
											1	0.0	1	3.0	1	3.0	0	6.0	0	6.0			4	1	307
743	Btm Suppl. Transv.-Gir3D 3E	4	240	63				E	V	60	1	0.0	1	0.0	1	0.0	0	6.0	0	6.0			3	7	
											1	0.0	1	3.0	1	3.0	0	6.0	0	6.0			4	1	614
743	Btm Suppl. Transv.-Gir4A 4B	4	160	63				E	V	80	1	0.0	1	0.0	1	0.0	0	6.0	0	6.0			3	7	
											1	0.0	1	1.0	1	1.0	0	6.0	0	6.0			3	9	392
743	Btm Suppl. Transv.-Gir4C	4	80	63				E	V	40	1	0.0	1	0.0	1	0.0	0	6.0	0	6.0			3	7	
											1	0.0	1	1.0	1	1.0	0	6.0	0	6.0			3	9	196
743	Btm Suppl. Transv.-Gir4D 4E	4	160	63				E	V	80	1	0.0	1	0.0	1	0.0	0	6.0	0	6.0			3	7	
											1	0.0	1	1.0	1	1.0	0	6.0	0	6.0			3	9	392
751	Btm Long. Overhangs-Span 1	5	14	50				E			40	0.0											40	0	584
751	Btm Long. Overhangs-Span 2	5	14	89				E			97	0.0	2	6.0									99	6	1453
751	Btm Long. Overhangs-Span 3	5	14	89				E			100	0.0	2	6.0									102	6	1497
751	Btm Long. Overhangs-Span 4	5	14	89				E			106	0.0	2	6.0									108	6	1584
751	Btm Long. Overhangs-Span 5	5	14	89				E			103	0.0	2	6.0									105	6	1540
752	Btm Long. over Gir.-Span 3	5	65	89				E			100	0.0	2	6.0									102	6	6948
752	Btm Long. over Gir.-Span 4	5	65	89				E			106	0.0	2	6.0									108	6	7355
752	Btm Long. over Gir.-Span 5	5	65	89				E			103	0.0	2	6.0									105	6	7152
752	Btm Long. over Gir.-Span 1	5	65	50				E			40	0.0											40	0	2712
752	Btm Long. over Gir.-Span 2	5	65	89				E			97	0.0	2	6.0									99	6	6745
753	Btm Long. btwn Gir.-Span 2	5	68	89				E			97	0.0	2	6.0									99	6	7056
753	Btm Long. btwn Gir.-Span 3	5	68	89				E			100	0.0	2	6.0									102	6	7269
753	Btm Long. btwn Gir.-Span 4	5	68	89				E			106	0.0	2	6.0									108	6	7694
753	Btm Long. btwn Gir.-Span 5	5	68	89				E			103	0.0	2	6.0									105	6	7482
753	Btm Long. btwn Gir.-Span 1	5	68	50				E			40	0.0											40	0	2837
754	Btm Long. btwn Gir.BC-Pier 2	6	17	80				E			17	0.0	12	1.0			0	3.0			179		29	1	743
754	Btm Long. over Gir. C-Pier 2	6	13	50				E			29	0.0											29	0	566
754	Btm Long. btwn Gir.CD-Pier 2	6	17	80				E			17	0.0	12	1.0			0	3.0			179		29	1	743
754	Btm Long. over Gir. D-Pier 2	6	13	80				E			17	0.0	12	1.0			0	3.0			179		29	1	568
754	Btm Long Overhangs.-Pier 2	6	14	80				E	V	7	17	0.0	12	1.0			0	3.0			176		29	1	
											17	0.0	12	1.0			0	3.0			179		29	1	611
754	Btm Long. over Gir. E-Pier 2	6	13	80				E			17	0.0	12	1.0			0	3.0			179		29	1	568
754	Btm Long. btwn Gir.DE-Pier 2	6	17	80				E			17	0.0	12	1.0			0	3.0			179		29	1	743
754	Btm Long. over Gir. A-Pier 2	6	13	80				E			17	0.0	12	1.0			0	3.0			176		29	1	568
754	Btm Long. btwn Gir.AB-Pier 2	6	17	80				E			17	0.0	12	1.0			0	3.0			177		29	1	742
754	Btm Long. over Gir. B-Pier 2	6	13	80				E			17	0.0	12	1.0			0	3.0			178		29	1	568
754	Btm Long.-Piers 3 4	6	294	50				E			38	0.0											38	0	16779
755	Btm Long.-Pier 5	7	147	50				E			42	0.0											42	0	12620

BENDING DIAGRAMS

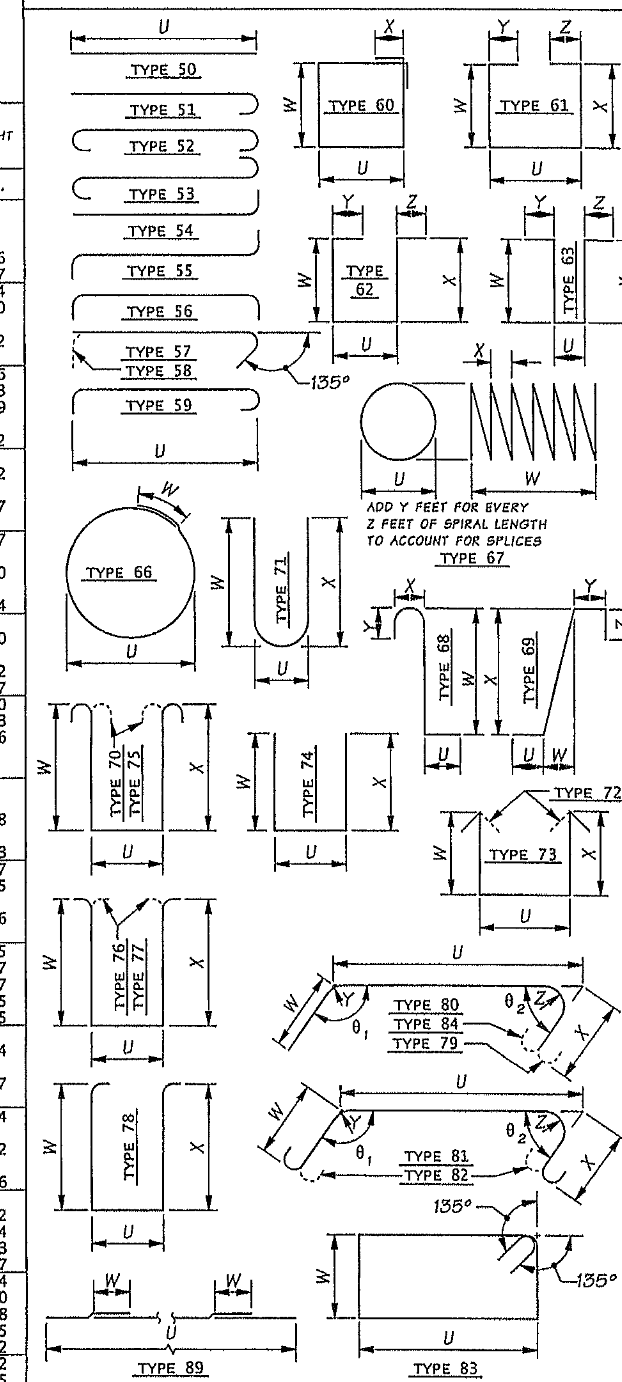

NOTES:

1. SEE PLANS FOR REINFORCEMENT NOT SHOWN.
2. BEND FOR TRANSVERSE BARS DUE TO ROADWAY CROWN CONDITIONS HAS NOT BEEN SHOWN. THESE BARS SHALL BE BENT AS REQUIRED TO CONFORM TO THE CONFIGURATION OF THE STRUCTURE.
3. BARLIST IS FOR QUANTITY ESTIMATION ONLY. REINFORCEMENT FABRICATION DETAILS SHALL BE DETERMINED FROM THE PLANS.

SR 5 FILE NO. 7451 SHEET PA103

Bridge Design Engr.	Khaleghi, B	M:\Y-Team\M ST TO PORTLAND\PACIFIC AVE BR\window files\Barlist3.wnd			
Supervisor	Khaleghi, B				
Designed By					
Checked By					
Detailed By					
Bridge Projects Engr.					
Prelim. Plan By					
Architect/Specialist	DATE	REVISION	BY	APP'D	

REGION NO.	STATE	FED. AID PROJ. NO.	SHEET NO.	TOTAL SHEETS
10	WASH.			

JOB NUMBER 12C501

BRIDGE AND STRUCTURES OFFICE

Washington State Department of Transportation

I-5
M ST TO PORTLAND AVE - HOV

PACIFIC AVE OVER I-5 BRIDGE No. 5/444

BARLIST 3 OF 4

BRIDGE SHEET NO. PA103

SHEET 1102 OF 1763 SHEETS

Tue Feb 11 09:03:21 2014

S = Bar is included in substructure quantities.
L = Lump sum quantity.
T = Transverse or S = Seismic
E = Bar is to be epoxy coated.
V = Bar dimensions vary between dimensions shown on this line and the following line.

MARK NO.	LOCATION	SIZE	NO REQ'D	BEND TYPE	TIE OR STIR.	LUMP SUM.	SUBSTR.	EPOXY COAT	VARIES	NO. EACH	U Ft.	U In.	W Ft.	W In.	X Ft.	X In.	Y Ft.	Y In.	Z Ft.	Z In.	θ_1 Deg.	θ_2 Deg.	LENGTH Ft.	LENGTH In.	WEIGHT Lbs.
756	Btm Suppl. Long. Span 3	4	20	89				E			80	0.0	2	0.0									84	0	1122
756	Btm Suppl. Long. Span 4	4	20	89				E			70	0.0	2	0.0									72	0	962
	~ DECK TOP REINFORCEMENT																								
760	Top Long. Cont. over Webs	7	20	89				E			565	0.0	3	9.0									598	9	24478
761	Top Long. Overhangs-Span 1	5	8	50				E			32	0.0											32	0	267
761	Top Long. Overhangs-Span 1	5	6	50				E			36	0.0											36	0	225
761	Top Long. Overhangs-Span 2	5	8	89				E			79	0.0	2	6.0									81	6	680
761	Top Long. Overhangs-Span 3	5	8	89				E			82	0.0	2	6.0									84	6	705
761	Top Long. Overhangs-Span 4	5	8	89				E			88	0.0	2	6.0									90	6	755
761	Top Long. Overhangs-Span 5	5	8	89				E			94	0.0	2	6.0									96	6	805
762	Top Long. over Gir.-Span 1	5	30	50				E			32	0.0											32	0	1001
762	Top Long. over Gir.-Span 2	5	30	89				E			79	0.0	2	6.0									81	6	2550
762	Top Long. over Gir.-Span 4	5	30	89				E			88	0.0	2	6.0									90	6	2831
762	Top Long. over Gir.-Span 3	5	30	89				E			82	0.0	2	6.0									84	6	2644
762	Top Long. over Gir.-Span 5	5	30	89				E			95	0.0	2	6.0									97	6	3050
763	Top Long. btwn Gir.-Span 1	5	36	50				E			32	0.0											32	0	1201
763	Top Long. btwn Gir.-Span 1	5	32	50				E			36	0.0											36	0	1201
763	Top Long. btwn Gir.-Span 2	5	36	89				E			79	0.0	2	6.0									81	6	3060
763	Top Long. btwn Gir.-Span 3	5	36	89				E			82	0.0	2	6.0									84	6	3172
763	Top Long. btwn Gir.-Span 4	5	36	89				E			88	0.0	2	6.0									90	6	3398
763	Top Long. btwn Gir.-Span 5	5	36	89				E			95	0.0	2	6.0									97	6	3661
764	Top Long overhangs.-Pier 2	7	8	80				E	V	4	27	0.0	20	1.0			0	4.0			176		47	1	
											27	0.0	20	1.0			0	4.0			179		47	1	770
764	Top Long. over Gir. A-Pier 2	7	6	80				E			27	0.0	20	1.0			0	4.0			176		47	1	577
764	Top Long. btwn Gir.AB-Pier 2	7	9	80				E			27	0.0	20	1.0			0	4.0			177		47	1	866
764	Top Long. over Gir. B-Pier 2	7	6	80				E			27	0.0	20	1.0			0	4.0			178		47	1	577
764	Top Long. btwn Gir.BC-Pier 2	7	9	80				E			27	0.0	20	1.0			0	4.0			179		47	1	866
764	Top Long. over Gir. C-Pier 2	7	6	50				E			47	0.0											47	0	576
764	Top Long. btwn Gir.CD-Pier 2	7	9	80				E			27	0.0	20	1.0			0	4.0			179		47	1	866
764	Top Long. over Gir. D-Pier 2	7	6	80				E			27	0.0	20	1.0			0	4.0			179		47	1	577
764	Top Long. btwn Gir.DE-Pier 2	7	9	80				E			27	0.0	20	1.0			0	4.0			179		47	1	866
764	Top Long. over Gir. E-Pier 2	7	6	80				E			27	0.0	20	1.0			0	4.0			179		47	1	577
764	Top Long.-Piers 3 4	7	148	50				E			57	0.0											57	0	17244
764	Top Long.-Pier 5	7	74	50				E			60	0.0											60	0	9076
765	Top Long overhangs.-Pier 2	7	6	80				E	V	3	22	0.0	16	1.0			0	4.0			176		38	1	
											22	0.0	16	1.0			0	4.0			179		38	1	467
765	Top Long. over Gir. A-Pier 2	7	5	80				E			22	0.0	16	1.0			0	4.0			176		38	1	389
765	Top Long. btwn Gir.AB-Pier 2	7	8	80				E			22	0.0	16	1.0			0	4.0			177		38	1	623
765	Top Long. over Gir. B-Pier 2	7	5	80				E			22	0.0	16	1.0			0	4.0			178		38	1	389
765	Top Long. btwn Gir.BC-Pier 2	7	8	80				E			22	0.0	16	1.0			0	4.0			179		38	1	623
765	Top Long. over Gir. C-Pier 2	7	5	50				E			38	0.0											38	0	388
765	Top Long. btwn Gir.CD-Pier 2	7	8	80				E			22	0.0	16	1.0			0	4.0			179		38	1	623
765	Top Long. over Gir. D-Pier 2	7	5	80				E			22	0.0	16	1.0			0	4.0			179		38	1	389
765	Top Long. btwn Gir.DE-Pier 2	7	8	80				E			22	0.0	16	1.0			0	4.0			179		38	1	623
765	Top Long. over Gir. E-Pier 2	7	5	80				E			22	0.0	16	1.0			0	4.0			179		38	1	389
765	Top Long.-Piers 3 4	7	126	50				E			47	0.0											47	0	12105
765	Top Long.-Pier 5	7	63	50				E			50	0.0											50	0	6439
770	Top LT Transv. AA-Span 1	6	39	51				E			31	0.0											31	8	1856
770	Top LT Transv. BB-Span 1	6	39	51				E			15	0.0											15	8	919
770	Top LT Transv. CC-Spans2to5	6	528	51				E			30	0.0											30	8	24336
770	Top LT Transv. DD-Spans2to5	6	528	51				E			15	0.0											15	8	12441
771	Top RT Transv. AA-Span 1	6	39	51				E			15	0.0											15	8	919
771	Top RT Transv. BB-Span 1	6	39	51				E			29	0.0											29	8	1739
771	Top RT Transv. CC-Spans2to5	6	528	51				E			15	0.0											15	8	12441
771	Top RT Transv. DD-Spans2to5	6	528	51				E			30	0.0											30	8	24336
772	Top CTR Transv. AA-Span 1	6	39	50				E	V	1	32	7.0											32	7	
											34	11.0											34	11	1977
772	Top CTR Transv. BB-Span 1	6	39	50				E	V	1	33	7.0											33	7	
											36	11.0											36	11	2065
772	Top CTR Transv. CC-Spans2to5	6	528	80				E			22	6.0	10	0.0			0	3.0			177		32	6	25770
772	Top CTR Transv. DD-Spans2to5	6	528	80				E			24	6.0	9	0.0			0	3.0			177		33	6	26563
S3	Barrier Vertical Bar	5	1514	80				E			2	6.0	1	0.0			0	3.0			90		3	4	5292
S4	Barrier Vertical Bar	4	758	80				E			1	8.0	1	0.0			0	3.0			90		2	6	1279
	~ DECK SIDEWALKS																								
800	LT S/W-Longitudinal	4	480	54				E			14	0.0											14	7	4669
801	LT S/W-Transverse	4	768	54				E			8	3.0											8	10	4521
802	RT S/W-Transverse	4	768	54				E			4	3.0											4	10	2469
803	RT S/W-Longitudinal	4	480	54				E			12	0.0											12	7	4028
	~ APPROACH SIDEWALKS																								
800	LT S/W-Longitudinal	4	44	54				E			14	0.0											14	7	428
801	LT S/W-Transverse	4	72	54				E			8	3.0											8	10	424
802	RT S/W-Transverse	4	56	54				E			4	3.0											4	10	180
803	RT S/W-Longitudinal	4	24	54				E	V	12	6	0.0											6	7	
											17	0.0											17	7	193
	~ SIDEWALK WITH ADA RAMP																								
900	Traffic Curb Verticals	4	12	69				E			1	0.0			1	3.0	0	4.5	0	6.0			2	10	23
901	Traffic Curb Longitudinals	4	2	80				E			2	9.0	8	0.0	3	5.0	0	3.0	0	3.0	170	170	14	2	19
902	Ped Curb Verticals	4	22	74				E			1	8.0	1	0.0									2	7	38
903	Ped Curb Ties	4	11	74				E			0	6.5	1	3.0	1	3.0							2	10	21
904	Ped Curb Longitudinals	4	1	50				E			9	11.0											9	11	7
905	Ramp Longitudinals	4	5	80				E	V	1	6	9.0	2	0.0			0	2.0			177		8	9	
											12	9.0	2	0.0			0	2.0			177		14	9	39

S = Bar is included in substructure quantities.
L = Lump sum quantity.
T = Transverse or S = Seismic
E = Bar is to be epoxy coated.
V = Bar dimensions vary between dimensions shown on this line and the following line.

MARK NO.	LOCATION	SIZE	NO REQ'D	BEND TYPE	TIE OR STIR.	LUMP SUM.	SUBSTR.	EPOXY COAT	VARIES	NO. EACH	U Ft.	U In.	W Ft.	W In.	X Ft.	X In.	Y Ft.	Y In.	Z Ft.	Z In.	θ_1 Deg.	θ_2 Deg.	LENGTH Ft.	LENGTH In.	WEIGHT Lbs.
906	Ramp Transverse	4	18	54				E			3	9.0											4	4	52

BENDING DIAGRAMS

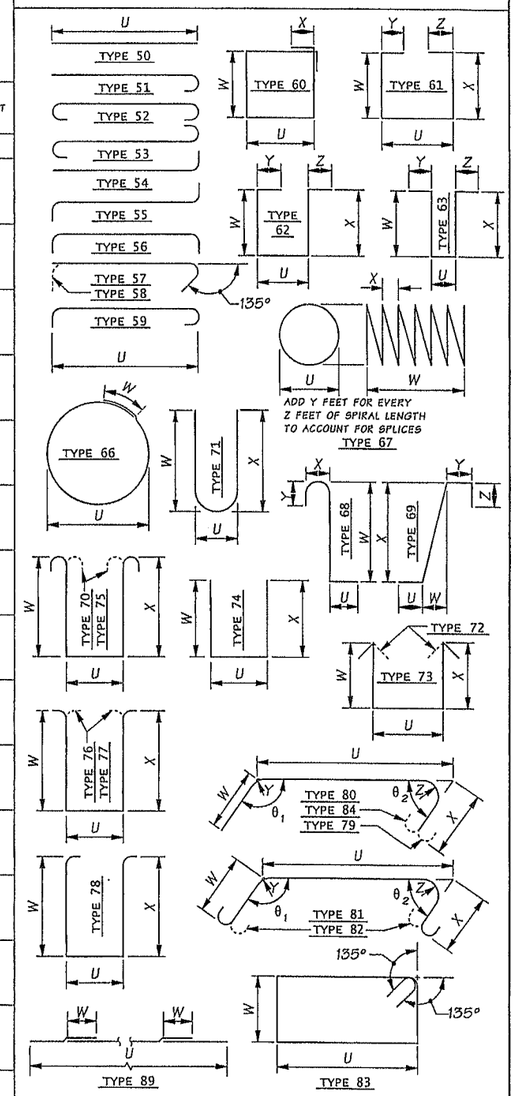

NOTES:

1. SEE PLANS FOR REINFORCEMENT NOT SHOWN.
2. BEND FOR TRANSVERSE BARS DUE TO ROADWAY CROWN CONDITIONS HAS NOT BEEN SHOWN. THESE BARS SHALL BE BENT AS REQUIRED TO CONFORM TO THE CONFIGURATION OF THE STRUCTURE.
3. BARLIST IS FOR QUANTITY ESTIMATION ONLY. REINFORCEMENT FABRICATION DETAILS SHALL BE DETERMINED FROM THE PLANS.

SR 5 FILE NO. 7451 SHEET PA104

Bridge Design Engr.	Khaleghi, B	M:\Y-Team\M ST TO PORTLAND\PACIFIC AVE BR\window files\Barlist4.wnd
Supervisor	Khaleghi, B	
Designed By		
Checked By		
Detailed By		
Bridge Projects Engr.		
Prelim. Plan By		
Architect/Specialist		DATE / REVISION / BY / APP'D

Tue Feb 18 11:37:45 2014

REGION NO.	STATE	FED. AID PROJ. NO.	SHEET NO.	TOTAL SHEETS
10	WASH.			
JOB NUMBER 12C501				

BRIDGE AND STRUCTURES OFFICE

Washington State Department of Transportation

I-5
M ST TO PORTLAND AVE - HOV

PACIFIC AVE OVER I-5 BRIDGE No. 5/444

BARLIST 4 OF 4

BRIDGE SHEET NO. PA104

SHEET 1103 OF 1763 SHEETS

SHEET INDEX

BRIDGE SHEET NO.	SHEET TITLE
SR0	INDEX
SR1	LAYOUT
SR2	GEOMETRIC DATA
SR3	GENERAL NOTES
SR4	CONSTRUCTION OPENING
SR5	CONSTRUCTION SEQUENCE
SR6	CONSTRUCTION SEQUENCE PIER 3 OPTION 1
SR7	CONSTRUCTION SEQUENCE PIER 3 OPTION 2
SR8 - SR10	SUGGESTED GIRDER ERECTION (3 SHEETS)
SR11	FOUNDATION PLAN
SR12	PIER 2 SHAFT A & B DETAILS
SR13	PIER 2 SHAFT C DETAILS
SR14	PIER 3 SHAFT DETAILS
SR15	PIER 4 SHAFT DETAILS
SR16	PIER 5 SHAFT DETAILS
SR17	PIER 6 SHAFT DETAILS
SR18	SHAFT DETAILS
SR19	COLUMN SILO DETAILS
SR20	PIER 1 PLAN
SR21	PIER 1 ELEVATION
SR22	PIER 1 DETAILS
SR23 - SR24	PIER 1 CURTAIN WALL DETAILS (2 SHEETS)
SR25 - SR26	15NB WALL-B & 15NB WALL-C DETAILS (2 SHEETS)
SR27	PIER 2 COLUMN DETAILS
SR28	PIER 3 COLUMN DETAILS
SR29	PIER 4 COLUMN DETAILS
SR30	PIER 5 COLUMN DETAILS
SR31	COLUMN DETAILS
SR32	PIER 6 PLAN
SR33	PIER 6 ELEVATION
SR34	PIER 6 DETAILS
SR35	PIER 6 CURTAIN WALL
SR36	15NB WALL-D DETAILS
SR37 - SR38	15NB WALL-E DETAILS (2 SHEETS)
SR39	PIER 2 CROSSBEAM GEOMETRY
SR40 - SR41	PIER 2 CROSSBEAM DETAILS (2 SHEETS)
SR42	PIER 3 CROSSBEAM GEOMETRY
SR43	PIER 3 CROSSBEAM POST-TENSIONING DETAILS
SR44 - SR47	PIER 3 CROSSBEAM DETAILS (4 SHEETS)
SR48	PIER 4 CROSSBEAM GEOMETRY
SR49 - SR50	PIER 4 CROSSBEAM DETAILS (2 SHEETS)
SR51	PIER 5 CROSSBEAM GEOMETRY
SR52 - SR53	PIER 5 CROSSBEAM DETAILS (2 SHEETS)
SR54	CROSSBEAM DETAILS
SR55	ELASTOMERIC BEARING PAD PIER 1
SR56	ELASTOMERIC BEARING PAD PIER 6
SR57 - SR58	FRAMING PLAN (2 SHEETS)
SR59	TYPICAL SECTION
SR60 - SR65	WF83G GIRDER DETAILS (6 SHEETS)
SR66	INTERMEDIATE DIAPHRAGM DETAILS
SR67	END DIAPHRAGM DETAILS
SR68	SCREED SETTING DIMENSIONS
SR69 - SR71	BRIDGE DECK REINFORCEMENT BOTTOM MAT (3 SHEETS)
SR72 - SR74	BRIDGE DECK REINFORCEMENT TOP MAT (3 SHEETS)
SR75	BRIDGE DECK REINFORCEMENT SECTION
SR76	EXPANSION JOINT DETAILS
SR77	LIGHT FIXTURE SUPPORT DETAILS
SR78 - SR80	TRAFFIC BARRIER DETAILS (3 SHEETS)
SR81 - SR82	BRIDGE RAIL TYPE WIRE FABRIC FENCE DETAILS (2 SHEETS)
SR83	LUMINAIRE SUPPORT DETAILS
SR84 - SR85	BRIDGE APPROACH SLAB DETAILS (2 SHEETS)
SR86 - SR87	TRAFFIC BARRIER WITH MOMENT SLAB DETAILS (2 SHEETS)
SR88 - SR90	BARLIST (3 SHEETS)

SR 5 FILE NO. 7454 SHEET SR0

Bridge Design Engr. Khaleghi, B	M:\Y-Team\M ST TO PORTLAND\CWRR OC\window files\INDEX.wnd								
Supervisor Khaleghi, B					REGION NO.	STATE	FED. AID PROJ. NO.	SHEET NO.	TOTAL SHEETS
Designed By					10	WASH.			
Checked By									
Detailed By					JOB NUMBER 12C501				
Bridge Projects Engr.									
Prelim. Plan By									
Architect/Specialist	DATE	REVISION	BY	APP'D					

Tue Feb 11 07:15:02 2014

BRIDGE AND STRUCTURES OFFICE

Washington State Department of Transportation

I-5
M STREET TO PORTLAND AVENUE - HOV

I-5 OVER I-705 AND TACOMA RAIL BRIDGE NO. 5/445E

INDEX

BRIDGE SHEET NO. SR0

SHEET 1104 OF 1763 SHEETS

NOTE: ALL EXISTING TO REMAIN UNLESS OTHERWISE NOTED

SEC. 9, T.20N., R.3E., W.M. CITY OF TACOMA I-705 SR 7 I-5

≠ 9°05'05" SKEW
Ø 9°05'05" SKEW
Φ 10°00'00" SKEW
ρ 12°01'34" SKEW
Θ 2°40'44" SKEW

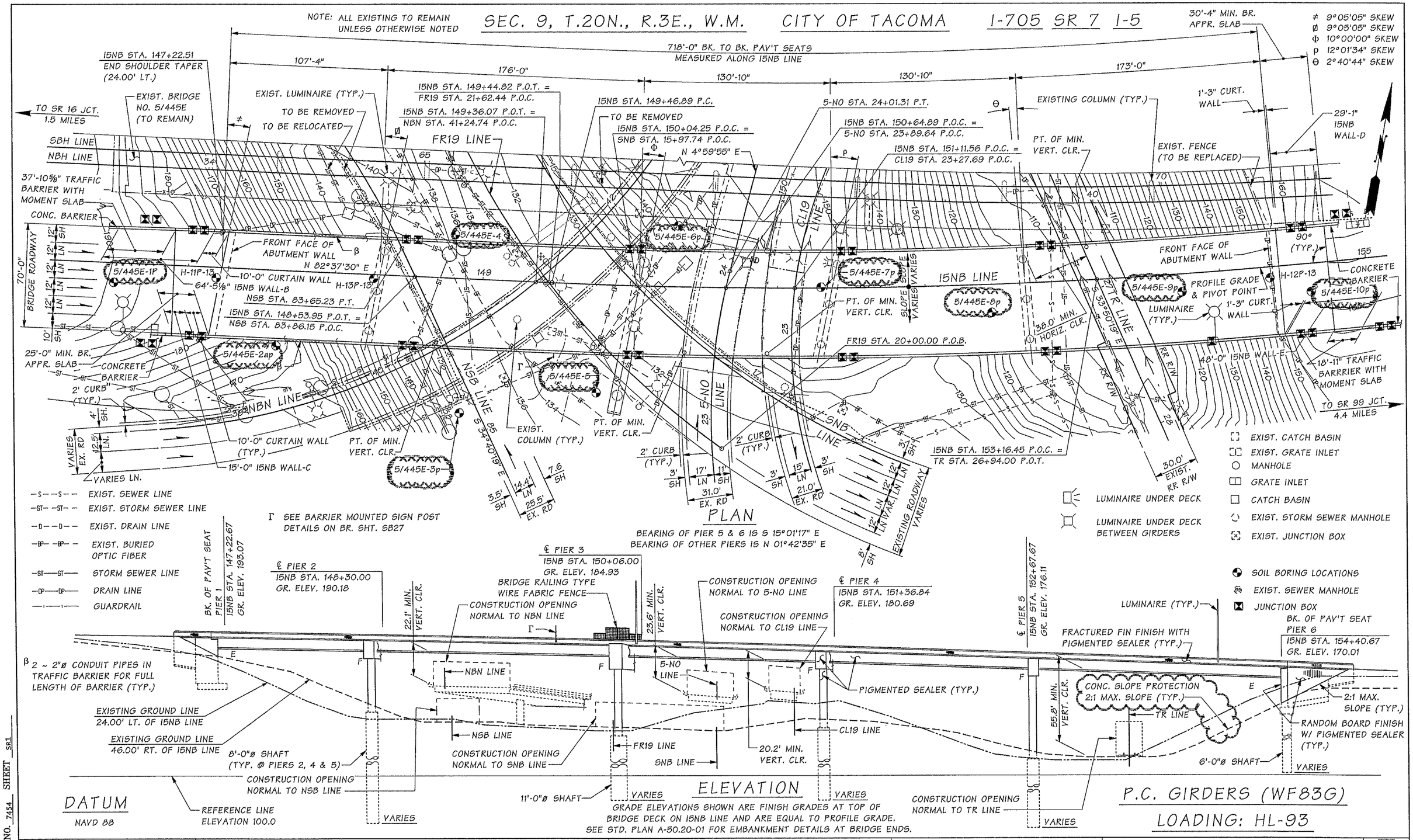

Bridge Design Engr.	Khaleghi, B		M:\Y-Team\M ST TO PORTLAND\CWRR OC\window files\ADD-2 LAYOUT.WND			REGION NO.	STATE	FED. AID PROJ. NO.	SHEET NO.	TOTAL SHEETS
Supervisor	Khaleghi, B					10	WASH.			
Designed By	LHT, JB, TDS	02/13				JOB NUMBER 12C501				
Checked By	LHT, JB, TDS	10/13								
Detailed By	Plesha, GM	02/13								
Bridge Projects Engr.	Lewis, RA	02/13	05/02/14	ADD-2 CHANDED TO CONC. SLOPE PROTECTION	LHT	BK				
Prelim. Plan By	Wei , J	01/13	05/02/14	AND SOIL BORING CALLOUTS	LHT	BK				
Architect/Specialist	PDK/BSA/GAW	01/13	DATE	REVISION	BY	APP'D				

Wed Apr 30 11:30:01 2014

BRIDGE AND STRUCTURES OFFICE

JALIAN KHALEGHI, STATE OF WASHINGTON, 27096, PROFESSIONAL ENGINEER
4/30/14

Washington State Department of Transportation

I-5
M STREET TO PORTLAND AVENUE - HOV

I-5 OVER I-705 AND TACOMA RAIL BRIDGE NO. 5/445E

LAYOUT

BRIDGE SHEET NO. SR1

SHEET 1105 OF 1763 SHEETS

SR 5 FILE NO. 7454 SHEET SR1

CURVE DATA

P.I. STATIONS	DELTA	RADIUS	TANGENT	LENGTH	BK. TAN. BEARING
I5NB 158+03.03	26°03'23" LT.	3700.00'	856.13'	1682.65'	N 82°37'30" E
5-NO 22+30.61	54°44'18" RT.	390.00'	201.89'	372.59'	N 49°44'23" W
NBN 41+11.39	71°19'08" LT.	453.00'	325.03	563.87	N 83°55'33" E
SNB 19+96.16	120°21'34" LT.	500.00'	872.33'	1050.33'	S 0°29'17" W
CL19 23+77.03	85°13'55" RT.	300.00'	276.02'	446.27'	N 46°10'00" W
NSB 81+91.46	42°30'47" RT.	492.29'	191.51'	365.28'	S 77°11'06" E
FR19 21+90.09	38°57'56" RT.	537.06'	190.00'	365.24'	N 64°44'58" W

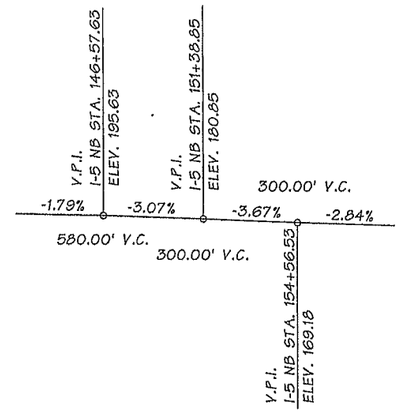

I-5 NB LINE PROFILE

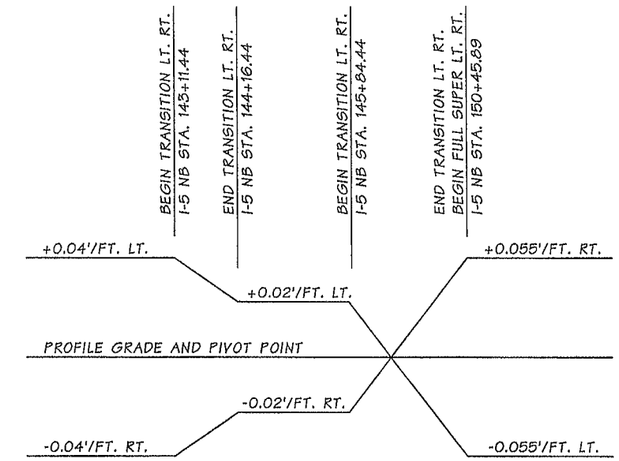

I-5 NB LINE SUPERELEVATION DIAGRAM

EXISTING ELEVATIONS

CL19 STA.	LT. OFFSET (FT.)	ELEV.	RT. OFFSET (FT.)	ELEV.
22+00.00	-14.35	158.5	3.97	157.4
22+10.00	-14.21	158.3	3.86	157.3
22+20.00	-13.94	158.1	3.91	156.6
22+30.00	-13.76	158.0	4.04	156.4
22+40.00	-13.81	157.6	4.05	156.2
22+50.00	-13.69	157.4	4.03	155.9
22+60.00	-13.51	157.1	4.07	155.6
22+70.00	-13.43	156.7	4.17	155.3
22+80.00	-13.44	156.3	4.25	154.9
22+90.00	-13.44	155.9	4.32	154.5
23+00.00	-13.49	155.4	4.40	153.0
23+10.00	-13.55	155.0	4.43	153.6
23+20.00	-13.63	154.6	4.45	153.1
23+30.00	-13.72	154.2	4.45	152.7
23+40.00	-13.83	153.8	4.41	152.3
23+50.00	-14.01	153.4	4.04	151.7
23+60.00	-14.09	152.9	3.53	151.4
23+70.00	-14.10	152.4	3.54	151.1

EXISTING ELEVATIONS

NSB STA.	LT. OFFSET (FT.)	ELEV.	RT. OFFSET (FT.)	ELEV.
83+29.76	-12.66	139.4	0.00	138.9
83+39.76	-12.79	139.3	0.00	138.7
83+49.76	-12.87	139.0	0.00	138.4
83+59.76	13.01	138.7	0.00	138.2
83+69.76	-13.20	138.4	0.00	138.1
83+79.76	-13.42	138.2	0.00	137.9
83+89.76	-13.61	137.9	0.00	137.7
83+99.76	-13.81	137.7	0.00	137.5
84+09.76	-13.96	137.5	0.00	137.4
84+19.76	-14.10	137.3	0.00	137.2
84+29.76	-14.19	137.2	0.00	137.1
84+39.76	-14.28	137.1	0.00	137.2
84+49.76	-14.26	137.0	0.00	137.2
84+59.76	-14.29	136.9	0.00	137.3
84+69.76	-14.39	136.9	0.00	137.4
84+79.76	-14.46	136.8	0.00	137.5
84+89.76	-14.46	136.9	0.00	137.5
84+99.76	-14.46	137.0	0.00	137.5
85+09.76	-14.46	137.0	0.00	137.5
85+19.76	-14.49	137.1	0.00	137.5
85+27.24	-14.53	137.2	0.00	137.5

EXISTING ELEVATIONS

TR STA.	2.5' LT. ELEV. (FT.)	2.5' RT. ELEV. (FT.)
25+72.03	106.3	106.5
25+82.03	106.6	106.8
25+92.03	106.9	107.1
26+02.03	107.2	107.4
26+12.03	107.5	107.6
26+22.03	107.8	107.9
26+32.03	108.0	108.2
26+42.03	108.3	108.5
26+52.02	108.6	108.8
26+62.03	108.9	109.1
26+72.03	109.2	109.4
26+82.03	109.5	109.6
26+92.03	109.9	110.0
27+02.03	110.2	110.3
27+12.03	110.5	110.6
27+22.03	110.8	110.8
27+32.03	111.1	111.1
27+42.03	111.4	111.3
27+52.03	111.8	111.6
27+62.03	112.1	111.9
27+72.03	112.3	112.2
27+82.03	112.6	112.5
27+92.03	112.8	112.8
28+02.03	113.1	113.2
28+12.02	113.5	113.5
28+22.03	113.8	113.8
28+32.03	114.0	114.1
28+42.03	114.3	114.4
28+52.03	114.6	114.7
28+62.03	115.0	115.1
28+72.03	115.4	115.4

EXISTING ELEVATIONS

SNB STA.	RT. OFFSET (FT.)	ELEV.	SNB STA.	RT. OFFSET (FT.)	ELEV.
14+78.92	0.03	130.4	14+78.74	39.67	133.2
14+88.70	0.13	130.3	14+88.52	39.96	133.3
14+98.49	0.13	130.2	14+98.29	40.28	133.1
15+08.27	0.18	130.0	15+08.06	40.65	132.9
15+18.05	0.17	129.9	15+17.83	41.08	132.8
15+27.83	0.22	129.8	15+27.60	41.55	132.7
15+37.61	0.22	129.7	15+37.37	41.89	132.5
15+47.39	0.33	129.6	15+47.14	42.29	132.4
15+57.17	0.37	129.7	15+56.91	42.71	132.4
15+66.94	0.45	129.6	15+66.67	43.20	132.3
15+76.72	0.41	129.5	15+76.43	43.49	132.4
15+86.49	0.55	129.5	15+86.20	43.92	132.4
15+96.26	0.50	129.5	15+95.96	44.40	132.5
16+06.03	0.46	129.5	16+05.72	44.75	132.6
16+15.80	0.28	129.5	16+15.48	44.64	132.6
16+25.57	0.21	129.6	16+25.23	45.13	132.7
16+35.34	0.12	129.7	16+34.99	45.42	132.8
16+45.10	0.19	129.7	16+44.74	45.75	132.9
16+54.86	0.15	129.8	16+54.50	46.16	133.0
16+64.62	0.22	129.9	16+64.25	46.51	133.1
16+74.38	0.25	130.0	16+73.99	46.94	133.2
16+84.14	0.02	130.2	16+83.74	47.21	133.3
16+93.90	0.25	130.3	16+93.49	47.57	133.4

EXISTING ELEVATIONS

NBN STA.	LT. OFFSET (FT.)	ELEV.	RT. OFFSET (FT.)	ELEV.
39+70.00	-3.77	164.9	27.96	167.2
39+80.00	-3.83	164.2	28.03	166.5
39+90.00	-3.82	163.5	28.08	165.7
40+00.00	-3.81	162.8	28.06	165.1
40+10.00	-3.59	162.1	28.05	164.4
40+20.00	-3.85	161.6	28.10	163.7
40+30.00	-3.81	160.9	28.10	163.0
40+40.00	-3.50	160.3	28.02	162.3
40+50.00	-2.96	159.6	27.99	161.6
40+60.00	-2.21	158.9	28.12	160.9
40+70.00	-1.52	158.2	28.21	160.3
40+80.00	-2.38	157.5	28.19	159.6
40+90.00	-3.01	156.8	28.14	158.9
41+00.00	-3.45	156.0	28.31	158.2
41+10.00	-3.62	155.3	28.10	157.6
41+20.00	-3.72	154.6	28.10	156.9
41+30.00	-3.86	154.0	28.10	156.2
41+40.00	-3.78	153.3	28.30	155.5
41+50.00	-3.77	152.7	28.21	154.8
41+60.00	-3.71	152.0	28.17	154.1
41+70.00	-3.74	151.3	28.06	153.5
41+80.00	-3.67	150.6	28.19	152.8
41+90.00	3.54	149.9	28.32	152.1
42+00.00	-3.75	149.2	28.23	151.4
42+10.00	-3.71	148.6	28.11	150.8
42+20.00	-3.57	147.9	28.21	150.1
42+30.00	-3.56	147.3	27.98	149.4
42+40.00	-5.70	146.7	27.92	148.7
42+50.00	-7.00	145.9	27.78	148.0
42+60.00	-6.40	145.2	27.89	147.3

EXISTING ELEVATIONS

5-NO STA.	LT. OFFSET (FT.)	LT. ELEV.	RT. OFFSET (FT.)	RT. ELEV.
22+10.00	-17.94	157.7	10.49	156.2
22+20.00	-17.76	157.4	10.46	156.1
22+30.00	-17.63	157.2	10.63	155.8
22+40.00	-17.56	156.9	10.75	155.5
22+50.00	-17.47	156.7	10.96	155.3
22+60.00	-17.40	156.5	11.16	155.1
22+70.00	-17.33	156.3	11.33	154.9
22+80.00	-17.19	156.0	11.31	154.7
22+90.00	-17.11	155.8	11.51	154.4
23+00.00	-17.10	155.5	11.71	154.1
23+10.00	-17.08	155.2	11.99	153.7
23+20.00	-17.06	154.9	12.11	153.4
23+30.00	-17.02	154.6	12.16	152.1
23+40.00	-16.81	154.2	12.21	152.6
23+50.00	-16.55	153.7	12.27	152.2
23+60.00	-16.51	153.3	12.32	151.8
23+70.00	-16.54	152.9	12.38	151.5
23+80.00	-16.57	152.4	12.35	151.1
23+90.00	-16.51	151.8	12.28	15.07
24+00.00	-16.68	151.3	12.34	150.7
24+10.00	-16.77	150.8	12.34	150.4
24+20.00	-16.89	150.4	12.57	150.0
24+30.00	-16.92	149.8	12.45	149.6
24+40.00	-16.77	149.2	14.66	148.4
24+50.00	-16.58	148.7	14.37	147.6
24+60.00	-16.38	147.1	14.27	147.2

SR 5 FILE NO. 7454 SHEET SR2

Bridge Design Engr.	Khaleghi, B	
Supervisor	Khaleghi, B	
Designed By	JB, LHT, TDS	02/13
Checked By	LHT, JB, TDS	10/13
Detailed By	Plesha, GM	01/13
Bridge Projects Engr.	Lewis, R	02/13
Prelim. Plan By	Wei, J	01/13
Architect/Specialist	PDK/BSA/GAW	01/13

Wed Feb 12 09:40:59 2014

M:\Y-Team\M ST TO PORTLAND\CWRR OC\window files\ELEVATIONS.WND

DATE	REVISION	BY	APP'D

REGION NO.	STATE	FED. AID PROJ. NO.	SHEET NO.	TOTAL SHEETS
10	WASH.			

JOB NUMBER 12C501

JEDEDIAH BINGER — STATE OF WASHINGTON — 38190 — PROFESSIONAL ENGINEER — 2-12-14

BRIDGE AND STRUCTURES OFFICE

BILLAN KHALEGHI — STATE OF WASHINGTON — 27605 — PROFESSIONAL ENGINEER — 2/12/14

Washington State Department of Transportation

I-5
M STREET TO PORTLAND AVENUE - HOV

I-5 OVER I-705 AND TACOMA RAIL BRIDGE NO. 5/445E

GEOMETRIC DATA

BRIDGE SHEET NO. SR2

SHEET 1106 OF 1763 SHEETS

GENERAL NOTES

1. ALL MATERIAL AND WORKMANSHIP SHALL BE IN ACCORDANCE WITH THE REQUIREMENTS OF THE WASHINGTON STATE DEPARTMENT OF TRANSPORTATION STANDARD SPECIFICATIONS FOR ROAD, BRIDGE, AND MUNICIPAL CONSTRUCTION DATED 2014, AND AMENDMENTS.

2. THIS STRUCTURE HAS BEEN DESIGNED IN ACCORDANCE WITH THE REQUIREMENTS OF THE AASHTO LRFD BRIDGE DESIGN SPECIFICATIONS 6TH EDITION 2012 AND 2013 INTERIM. DEAD LOAD INCLUDES ADDITIONAL FUTURE WEARING SURFACE OF 25 POUNDS PER SQUARE FOOT.

3. THE SEISMIC DESIGN OF THIS STRUCTURE HAS BEEN COMPLETED IN ACCORDANCE WITH THE REQUIREMENTS OF THE AASHTO GUIDE SPECIFICATIONS FOR LRFD SEISMIC BRIDGE DESIGN 2ND EDITION 2011, USING SEISMIC DESIGN CATEGORY C, SITE CLASS C, A PEAK GROUND ACCELERATION OF 0.41, AND 0.2 SECOND AND 1.0 SECOND SPECTRAL ACCELERATION OF 0.90 AND 0.30, RESPECTIVELY, ON SITE CLASS B.

4. THE CONCRETE IN BRIDGE DECKS SHALL BE CLASS 4000D. THE CONCRETE IN BRIDGE APPROACH SLABS SHALL BE CLASS 4000A. THE CONCRETE IN PIER 3 COLUMNS AND CROSSBEAM SHALL BE CLASS 5000. THE CONCRETE IN SHAFTS SHALL BE CLASS 4000P. ALL OTHER CAST-IN-PLACE CONCRETE SHALL BE CLASS 4000. THE MINIMUM MODULUS OF ELASTICITY AT 28 DAYS FOR THE CONCRETE IN PIER 3 CROSSBEAM SHALL BE 4,300,000 POUNDS PER SQUARE INCH.

5. THE BACKFILL BEHIND THE ABUTMENTS MAY BE PLACED PRIOR TO PLACEMENT OF THE SUPERSTRUCTURE.

6. UNLESS OTHERWISE SHOWN IN THE PLANS, CONCRETE COVER MEASURED FROM THE FACE OF CONCRETE TO THE FACE OF ANY REINFORCING STEEL SHALL BE 2½" AT THE TOP OF THE BRIDGE DECK, 1" AT THE BOTTOM OF THE BRIDGE DECK, 3" AT THE BOTTOM OF FOOTING, 2" AT THE TOP OF FOOTING, 3" AT THE BOTTOM OF SHAFT CAP, 2" AT THE TOP OF SHAFT CAP AND 1½" AT ALL OTHER LOCATIONS.

7. FALSEWORK SHALL BE CAREFULLY RELEASED TO PREVENT IMPACT OR UNDUE STRESS IN THE STRUCTURE.

8. CONDUITS, JUNCTION BOXES, AND UTILITIES ARE SHOWN FOR REFERENCE ONLY. THE CONTRACTOR SHALL COORDINATE THESE PLANS WITH THE ELECTRICAL, I.T.S. AND OTHER CIVIL PLANS.

9. NOMINAL BEARING RESISTANCE OF SPREAD FOOTING SHALL BE TAKEN AS FOLLOWS:

PIER NO.	SERVICE LIMIT STATE	STRENGTH LIMIT STATE	EXTREME LIMIT STATE
1	6.7 KSF	61.2 KSF	48.3 KSF

10. NOMINAL SHAFT RESISTANCE SHALL BE TAKEN AS FOLLOWS:

SERVICE LIMIT STATE		
PIER NO.	SKIN FRICTION CAPACITY	END BEARING CAPACITY
2	2000 KIPS	1000 KIPS
3A	4800 KIPS	1400 KIPS
3B	4000 KIPS	1400 KIPS
4	2600 KIPS	1000 KIPS
5	3200 KIPS	1000 KIPS
6	2170 KIPS	2030 KIPS

STRENGTH AND EXTREME LIMIT STATES		
PIER NO.	SKIN FRICTION CAPACITY	END BEARING CAPACITY
2	3000 KIPS	3000 KIPS
3A	6700 KIPS	5700 KIPS
3B	5200 KIPS	5700 KIPS
4	3500 KIPS	3000 KIPS
5	4300 KIPS	3000 KIPS
6	3600 KIPS	1740 KIPS

LEGEND

B / SR15 — IDENTIFIES SECTION OR VIEW
TAKEN OR SHOWN ON BRIDGE SHEET SR15

1 / — IDENTIFIES DETAIL
TAKEN OR SHOWN ON THE SAME SHEET

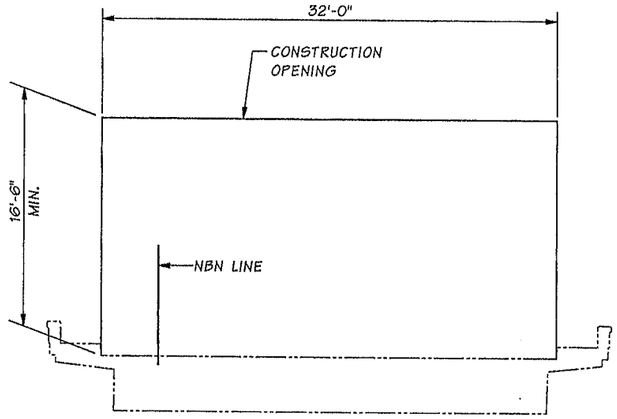

CONSTRUCTION OPENING

5/445N-N RAMP
HORIZONTAL DIMENSION IS NORMAL TO NBN LINE.

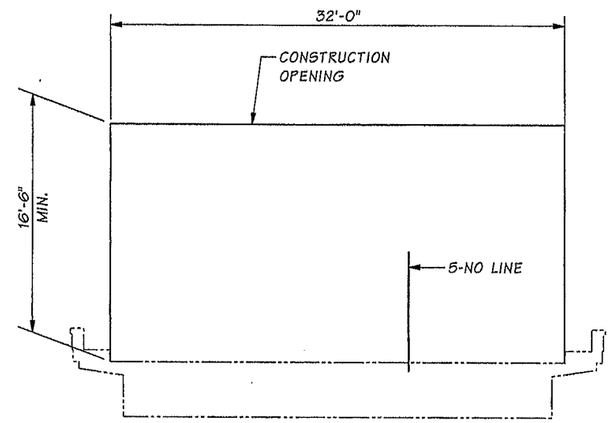

CONSTRUCTION OPENING

7/133N-N RAMP
HORIZONTAL DIMENSION IS NORMAL TO 5-NO LINE.

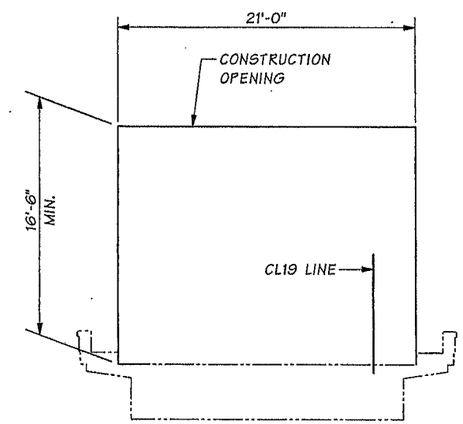

CONSTRUCTION OPENING

5/445S-S RAMP
HORIZONTAL DIMENSION IS NORMAL TO CL19 LINE.

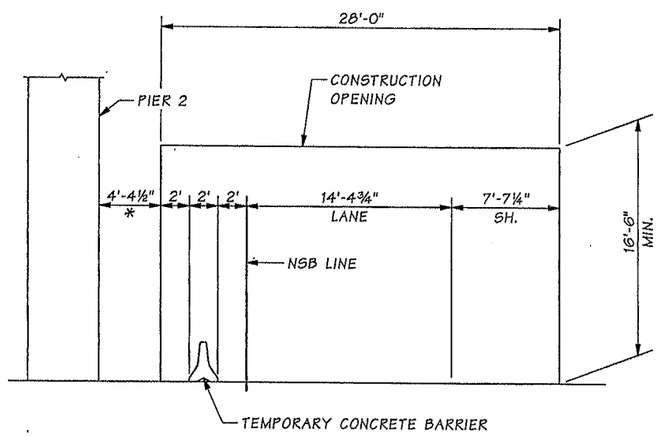

CONSTRUCTION OPENING

TO I-5 SB
HORIZONTAL DIMENSION IS NORMAL TO CR19 LINE.
* DIMENSION SHOWN ARE APPROXIMATE AND NORMAL TO CR19 LINE.

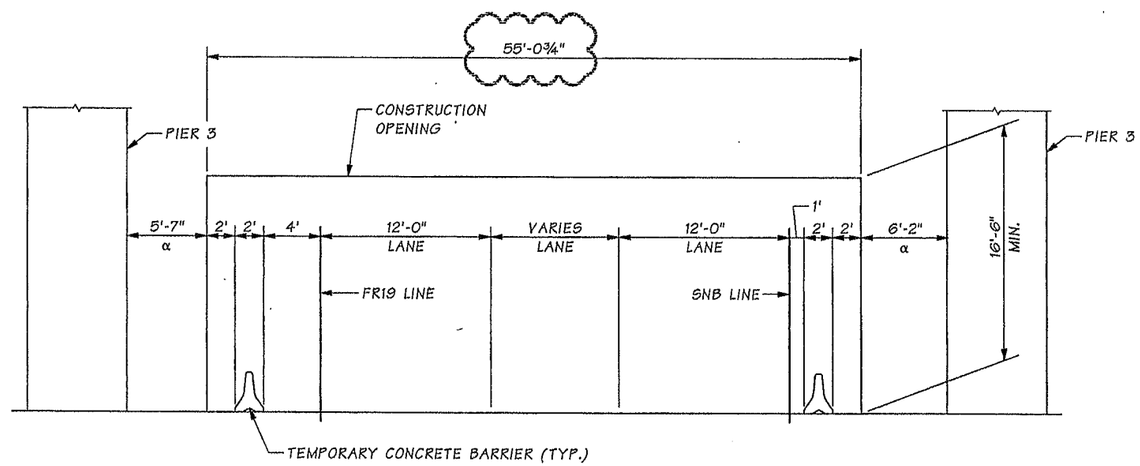

CONSTRUCTION OPENING

TO SR 705 NB
HORIZONTAL DIMENSION IS NORMAL TO SNB LINE.
α DIMENSION SHOWN ARE APPROXIMATE AND NORMAL TO FR19 OR NSB LINES.

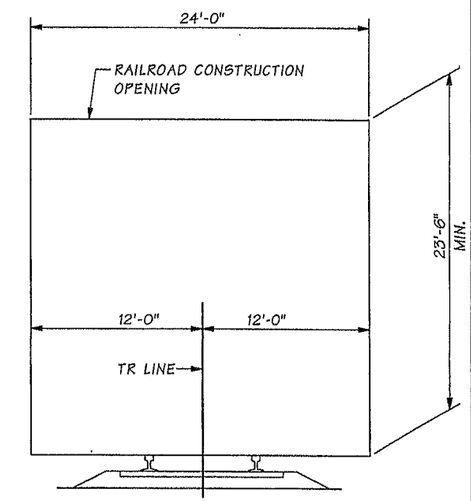

RAILROAD CONSTRUCTION OPENING

HORIZONTAL DIMENSION IS NORMAL TO TR LINE.

SR 5 FILE NO. 7454 SHEET SR4

Bridge Design Engr.	Khaleghi, B		M:\Y-Team\M ST TO PORTLAND\CWRR OC\window files\CONSTRUCTION OPENING.WND								
Supervisor	Khaleghi, B										
Designed By	Tran, LH	10/13					REGION NO.	STATE	FED. AID PROJ. NO.	SHEET NO.	TOTAL SHEETS
Checked By	Bingle, J	12/13					10	WASH.			
Detailed By	Bontemps, W	10/13					JOB NUMBER 12C501				
Bridge Projects Engr.											
Prelim. Plan By			06/14	REVISED DIMENSION	LT	DS					
Architect/Specialist			DATE	REVISION	BY	APP'D					

Tue Jun 10 14:37:02 2014

BRIDGE AND STRUCTURES OFFICE

6/10/14

6/10/14

Washington State Department of Transportation

I-5
M STREET TO PORTLAND AVENUE - HOV

I-5 OVER I-705 AND TACOMA RAIL BRIDGE NO. 5/445E

CONSTRUCTION OPENING

BRIDGE SHEET NO. SR4

SHEET 1108 OF 1763 SHEETS

TEMPORARY STRAND CUTTING SEQUENCE

1. ERECT AND BRACE GIRDERS.
2. REMOVE EXPANDED POLYSTYRENE IN 2" x 6" RECESSES IN TOP FLANGE OF GIRDERS.
3. CUT STRANDS IN 2" x 6" RECESSES. STRANDS MAY BE CUT BY USING A CUTTING TORCH AND MOVING THE FLAME BACK AND FORTH OVER THE LENGTH OF EXPOSED STRAND TO LET INDIVIDUAL WIRES BREAK ONE AT A TIME TO LESSEN THE SHOCK TO THE GIRDER. STRANDS SHALL BE RELEASED IN A SYMMETRICAL MANNER AROUND THE GIRDER CENTERLINE STARTING WITH THOSE NEAREST THE CENTERLINE AND WORKING OUTWARDS.
4. REMOVE ALL MOISTURE IN RECESS PRIOR TO FILLING RECESS WITH GROUT.

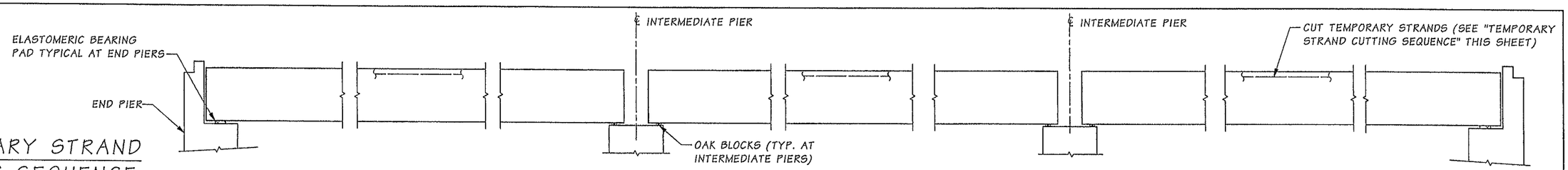

STAGE 1
SET GIRDERS IN PLACE

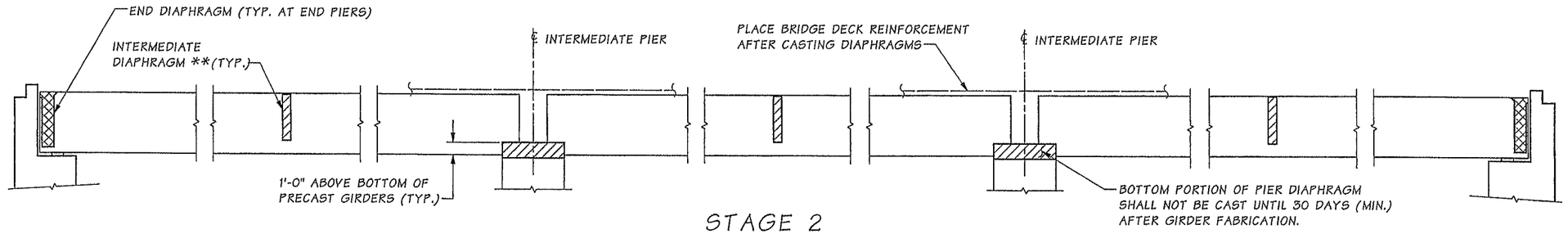

STAGE 2
CAST DIAPHRAGMS AND PLACE BRIDGE DECK REINFORCEMENT

** SEE POST-TENSIONING SEQUENCE FOR CONSTRUCTING THE INTERMEDIATE DIAPHARGMS OF SPANS 2 AND 3

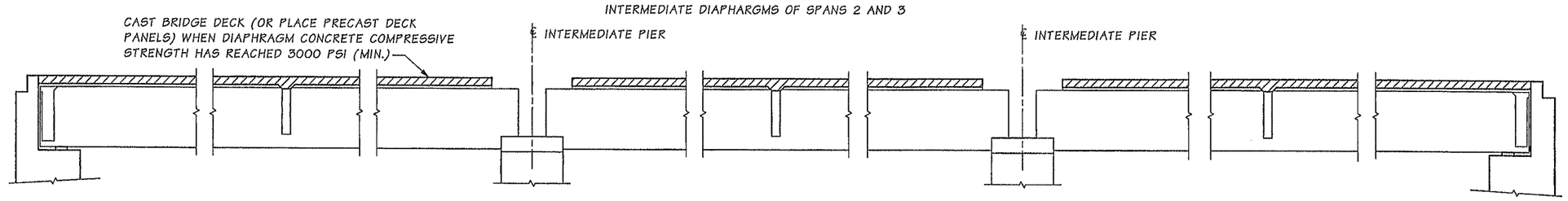

STAGE 3
CAST BRIDGE DECK

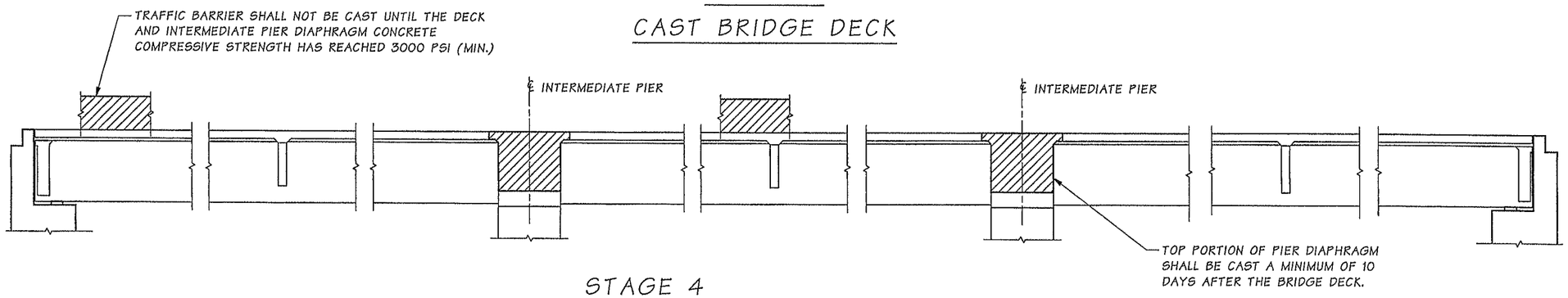

STAGE 4
COMPLETE DIAPHRAGMS & CAST TRAFFIC BARRIER

NOTE:

NO LIVE LOAD SHALL BE ALLOWED ON THE SPANS UNTIL THE COMPRESSIVE STRENGTH OF THE TOP PORTION OF THE PIER DIAPHRAGM HAS REACHED 3000 PSI (MIN.).

CONSTRUCTION SEQUENCE ~ SUPERSTRUCTURE

SR 5 FILE NO. 7454 SHEET SR5

Bridge Design Engr.	Khaleghi, B		M:\Y-Team\M ST TO PORTLAND\CWRR OC\window files\CONSTR SEQUENCE.wnd
Supervisor	Khaleghi, B		
Designed By	JB, LHT, DS	01/13	
Checked By	Mizumori, A	10/13	
Detailed By	Plesha, GM	01/13	
Bridge Projects Engr.			
Prelim. Plan By			
Architect/Specialist			

DATE	REVISION	BY	APP'D

Tue Feb 11 07:15:26 2014

REGION NO.	STATE	FED. AID PROJ. NO.	SHEET NO.	TOTAL SHEETS
10	WASH.			

JOB NUMBER 12C501

BRIDGE AND STRUCTURES OFFICE

2/12/14 2/12/14

Washington State Department of Transportation

I-5
M STREET TO PORTLAND AVENUE - HOV

I-5 OVER I-705 AND TACOMA RAIL BRIDGE NO. 5/445E

CONSTRUCTION SEQUENCE

BRIDGE SHEET NO. SR5

SHEET 1109 OF 1763 SHEETS

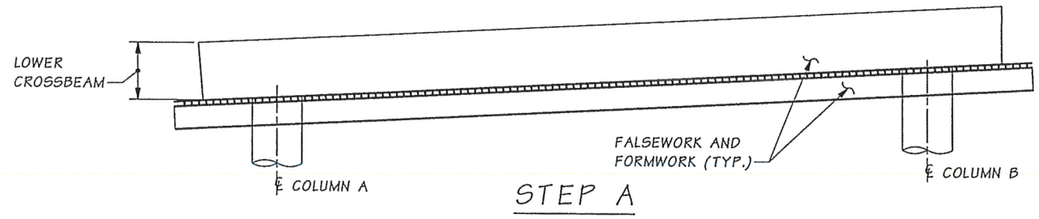

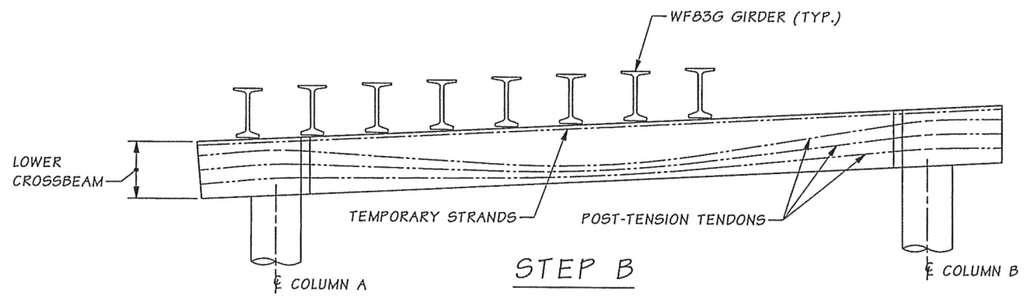

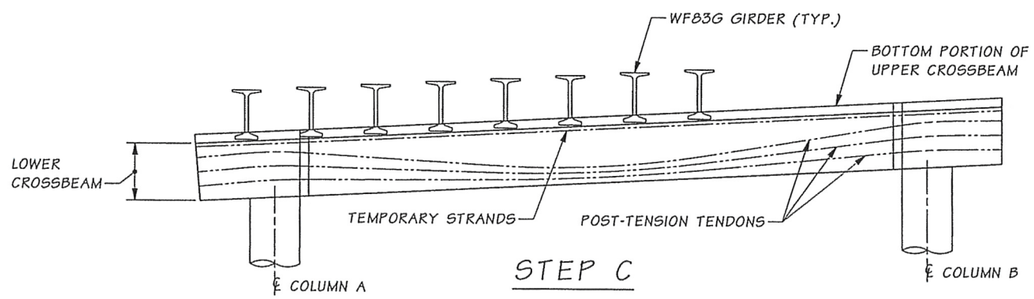

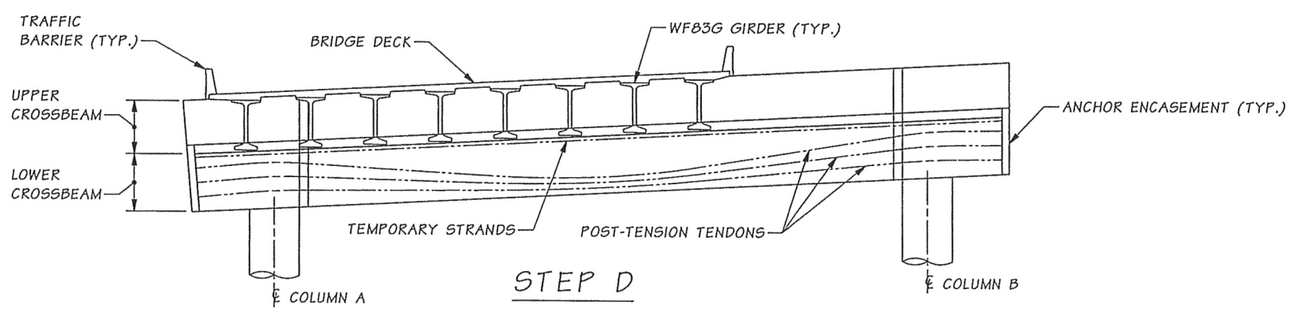

PIER 3 CONSTRUCTION SEQUENCE WITH TEMPORARY STRANDS

SEE "CONSTRUCTION SEQUENCE" SHEET FOR ADDITIONAL REQUIREMENTS.
SEE "PIER 3 CROSSBEAM GEOMETRY" SHEET FOR TENDON STRESSING SEQUENCE.
SEE SPECIAL PROVISIONS FOR MASS CONCRETE REQUIREMENTS.

STEP A

1. CONSTRUCT SHAFTS AND COLUMNS.
2. CONSTRUCT FALSEWORK AND FORMWORK FOR THE LOWER CROSSBEAM.
3. CAST CONCRETE FOR THE LOWER CROSSBEAM.
4. REMOVE SIDE FORMWORK TO SUFFICIENTLY INSPECT THE CONCRETE FOR THE LOWER CROSSBEAM.
5. SURVEY TOP OF LOWER CROSSBEAM AT EACH INTERSECTION OF ℄ OAK BLOCK AND ℄ GIRDER (16 PLACES) AND SUBMIT TO THE ENGINEER.

STEP B

1. STRESS POST-TENSIONING TENDONS AND TEMPORARY STRANDS AND GROUT POST-TENSIONING TENDONS AFTER THE LOWER CROSSBEAM CONCRETE HAS ATTAINED THE SPECIFIED MINIMUM STRENGTH. THE TENDONS AND TEMPORARY STRANDS SHALL BE STRESSED IN THE SEQUENCE SHOWN ON "PIER 3 CROSSBEAM GEOMETRY" SHEET SR42.
2. REMOVE FALSEWORK SUPPORTING THE LOWER CROSSBEAM.
3. RESURVEY TOP OF LOWER CROSSBEAM AT EACH INTERSECTION OF ℄ OAK BLOCK AND ℄ GIRDER (16 PLACES) AND SUBMIT TO THE ENGINEER. THE ERECTION OF THE GIRDERS SHALL NOT PROCEED WITHOUT APPROVAL FROM THE ENGINEER, SUBSEQUENT TO THE REVIEW OF THE SURVEY RESULTS.
4. ERECT AND BRACE GIRDERS FOR SPANS 2 AND 3.

STEP C

1. CAST CONCRETE FOR THE BOTTOM PORTION OF THE UPPER CROSSBEAM.
2. CONSTRUCT FORMWORK AND CAST CONCRETE FOR THE INTERMEDIATE DIAPHRAGMS IN SPANS 2 AND 3.
3. CONSTRUCT FORMWORK FOR THE BRIDGE DECK IN SPANS 2 AND 3.
4. PLACE REINFORCEMENT FOR THE BRIDGE DECK.

STEP D

1. CAST CONCRETE FOR THE BRIDGE DECK.
2. DETENSION LOWER CROSSBEAM TEMPORARY STRANDS.
3. CAST CONCRETE FOR THE ENCASEMENT OF POST-TENSION ANCHORAGE.
4. CAST CONCRETE FOR THE UPPER PORTION OF THE CROSSBEAM.
5. CAST TRAFFIC BARRIER.

SR 5 FILE NO. 7454 SHEET SR6

Bridge Design Engr.	Khaleghi, B	
Supervisor	Khaleghi, B	
Designed By	Bingle, J	05/13
Checked By	Mizumori, A	10/13
Detailed By	Bingle, J	05/13
Bridge Projects Engr.		
Prelim. Plan By		
Architect/Specialist		

M:\Y-Team\M ST TO PORTLAND\CWRR OC\window files\PIER 3 CONSTR SEQUENCE.wnd

DATE	REVISION	BY	APP'D

REGION NO.	STATE	FED. AID PROJ. NO.	SHEET NO.	TOTAL SHEETS
10	WASH.			
JOB NUMBER 12C501				

JEDEDIAH BINGLE STATE OF WASHINGTON 18890 STRUCTURAL ENGINEER PROFESSIONAL ENGINEER 2-11-14

BRIDGE AND STRUCTURES OFFICE

BRIAN KHALEGHI STATE OF WASHINGTON 27896 STRUCTURAL ENGINEER PROFESSIONAL ENGINEER 2/12/14

Washington State Department of Transportation

I-5
M STREET TO PORTLAND AVENUE - HOV
I-5 OVER I-705 AND TACOMA RAIL BRIDGE NO. 5/445E
CONSTRUCTION SEQUENCE
PIER 3 OPTION 1

BRIDGE SHEET NO. SR6
SHEET 1110 OF 1763 SHEETS

Tue Feb 11 07:15:27 2014

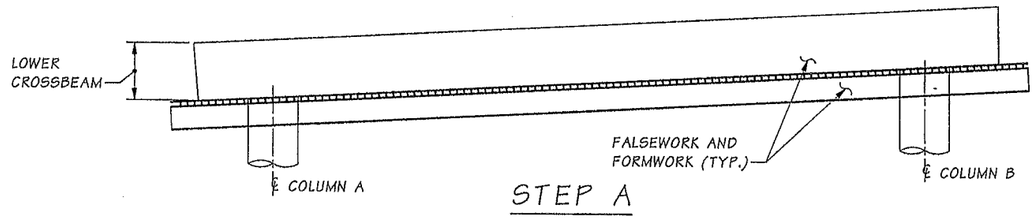

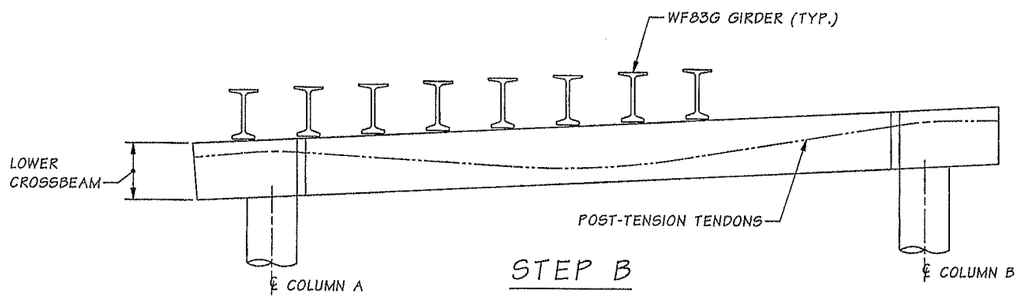

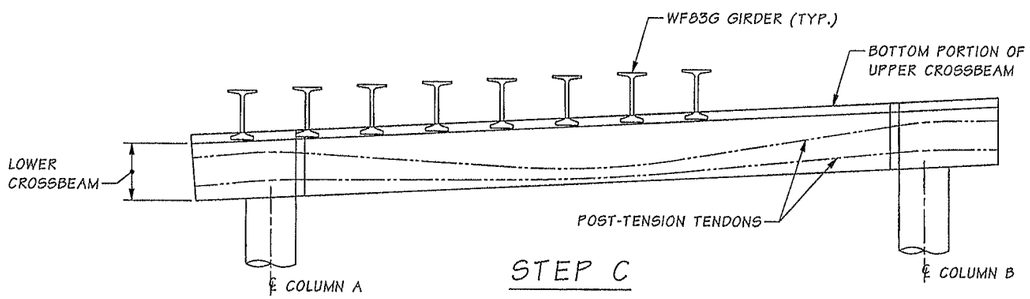

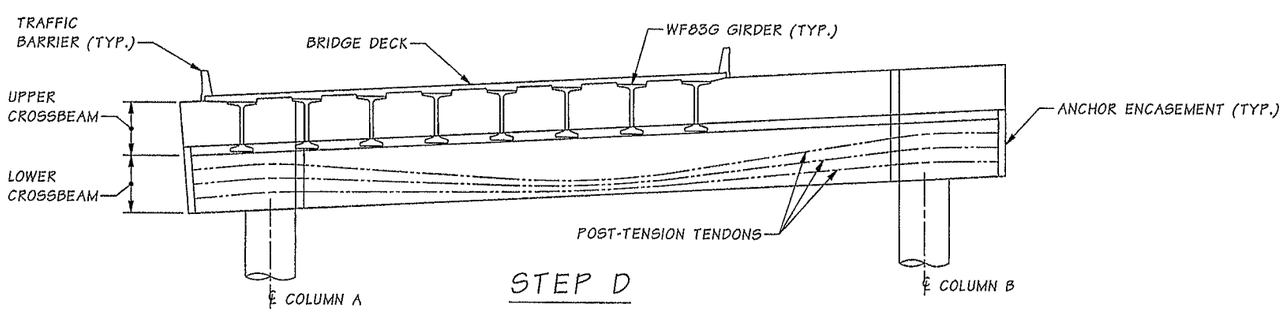

PIER 3 CONSTRUCTION SEQUENCE WITH STAGED POST-TENSION STRESSING

SEE "CONSTRUCTION SEQUENCE" SHEET FOR ADDITIONAL REQUIREMENTS.
SEE "PIER 3 CROSSBEAM GEOMETRY" SHEET FOR TENDON STRESSING SEQUENCE.
SEE SPECIAL PROVISIONS FOR MASS CONCRETE REQUIREMENTS.

STEP A

1. CONSTRUCT SHAFTS AND COLUMNS.
2. CONSTRUCT FALSEWORK AND FORMWORK FOR THE LOWER CROSSBEAM.
3. CAST CONCRETE FOR THE LOWER CROSSBEAM.
4. REMOVE SIDE FORMWORK TO SUFFICIENTLY INSPECT THE CONCRETE FOR THE LOWER CROSSBEAM.
5. SURVEY TOP OF LOWER CROSSBEAM AT EACH INTERSECTION OF ℄ OAK BLOCK AND ℄ GIRDER (16 PLACES) AND SUBMIT TO THE ENGINEER.

STEP B

1. STRESS AND GROUT THE FIRST ROW OF POST-TENSIONING TENDONS AFTER THE LOWER CROSSBEAM CONCRETE HAS ATTAINED THE SPECIFIED MINIMUM STRENGTH. THE TENDONS SHALL BE STRESSED IN THE SEQUENCE SHOWN ON "PIER 3 CROSSBEAM GEOMETRY" SHEET SR42.
2. REMOVE FALSEWORK SUPPORTING THE LOWER CROSSBEAM.
3. RESURVEY TOP OF LOWER CROSSBEAM AT EACH INTERSECTION OF ℄ OAK BLOCK AND ℄ GIRDER (16 PLACES) AND SUBMIT TO THE ENGINEER. THE ERECTION OF THE GIRDERS SHALL NOT PROCEED WITHOUT APPROVAL FROM THE ENGINEER, SUBSEQUENT TO THE REVIEW OF THE SURVEY RESULTS.
4. ERECT AND BRACE GIRDERS FOR SPANS 2 AND 3.

STEP C

1. CAST CONCRETE FOR THE BOTTOM PORTION OF THE UPPER CROSSBEAM.
2. STRESS AND GROUT THE SECOND ROW OF POST-TENSIONING TENDONS.
3. CONSTRUCT FORMWORK AND CAST CONCRETE FOR THE INTERMEDIATE DIAPHRAGMS IN SPANS 2 AND 3.
4. CONSTRUCT FORMWORK FOR THE BRIDGE DECK IN SPANS 2 AND 3.
5. PLACE REINFORCEMENT FOR THE BRIDGE DECK.

STEP D

1. CAST CONCRETE FOR THE BRIDGE DECK.
2. STRESS AND GROUT THE THIRD ROW OF POST-TENSIONING TENDONS.
3. CAST CONCRETE FOR THE ENCASEMENT OF POST-TENSION ANCHORAGE.
4. CAST CONCRETE FOR THE UPPER PORTION OF THE CROSSBEAM.
5. CAST TRAFFIC BARRIER.

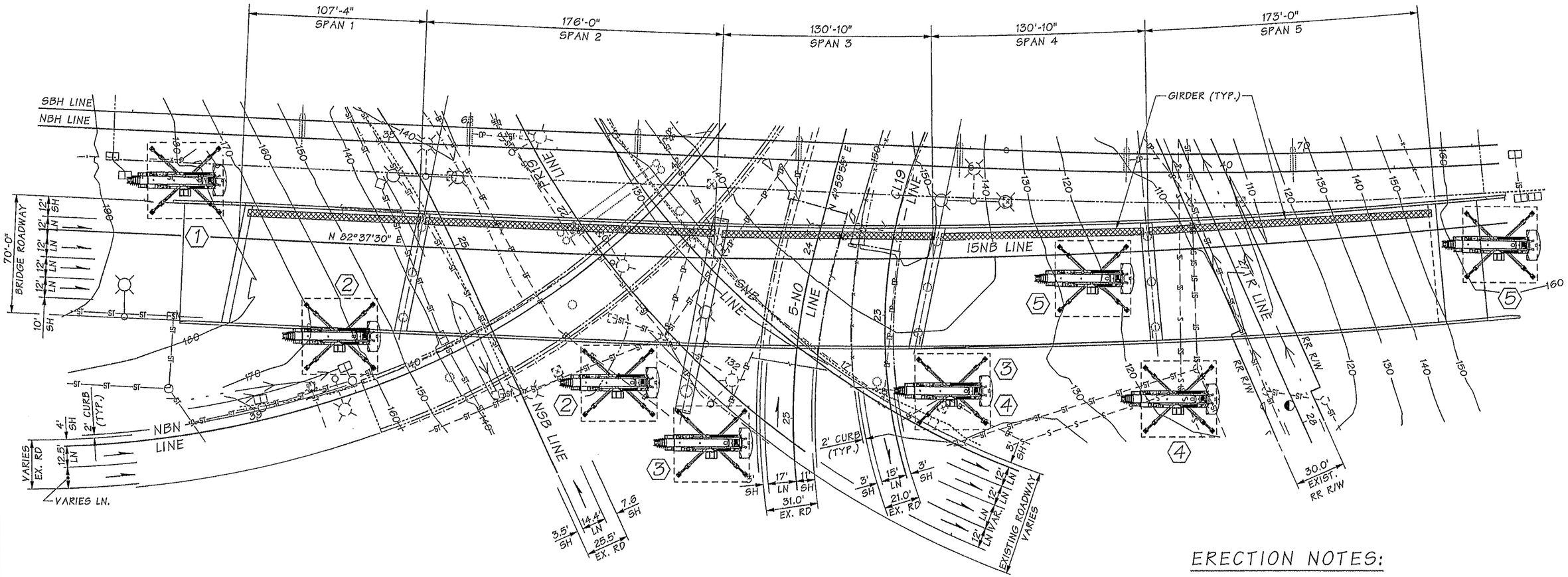

PLAN

ERECTION NOTES:

1. THE GIRDER ERECTION PLANS SHOWN ARE ONLY SUGGESTED SCHEMATIC CONCEPT. THE CONTRACTOR SHALL SUBMIT THE GIRDER ERECTION PLANS TO THE ENGINEER FOR APPROVAL. THESE PLANS SHOULD INCLUDE ANY BUILDING UP OR LEVELING EXISTING GROUND AREAS.
2. THE CONTRACTOR SHALL VERIFY ALL EXISTING UTILITIES BEFORE PLACING THE CRANES.
3. CRANES USED FOR THE GIRDER ERECTION SHALL NOT BE PLACED ON THE EXISTING STRUCTURES.
4. THE CONTRACTOR SHALL CONTACT THE RAILROAD AUTHORITY BEFORE PERFORMING ANY WORK OVER THE RAILROAD.
5. SEE TRAFFIC CONTROL PLANS FOR ADDITIONAL STAGING REQUIREMENTS THAT MAY AFFECT THE DEMOLITION.

LEGEND

CRANE LOCATION FOR GIRDER ERECTION FOR THE DESIGNATED SPAN.

CRANE LEVELING PAD, ASSUME 45' X 45'

NOTES:

1. THE CRANE SIZE DEMAG AC 1600 IS USED FOR THIS SUGGESTED GIRDER ERECTION PLAN.
2. FOR OTHER INFORMATION NOT SHOWN, SEE THE LAYOUT SHEET.

SR 5 FILE NO. 7454 SHEET SR8

Bridge Design Engr.	Khaleghi, B	
Supervisor	Khaleghi, B	
Designed By	Tran, LH	05/13
Checked By	Sawahata, D	10/13
Detailed By	Plesha, GM	05/13
Bridge Projects Engr.		
Prelim. Plan By		
Architect/Specialist		

M:\Y-Team\M ST TO PORTLAND\CWRR OC\window files\GIRDER ERECTION 11.wnd

DATE	REVISION	BY	APP'D

REGION NO.	STATE	FED. AID PROJ. NO.	SHEET NO.	TOTAL SHEETS
10	WASH.			

JOB NUMBER 12C501

BRIDGE AND STRUCTURES OFFICE

2/12/14 2/12/14

Washington State Department of Transportation

I-5
M STREET TO PORTLAND AVENUE - HOV

I-5 OVER I-705 AND TACOMA RAIL BRIDGE NO. 5/445E

SUGGESTED GIRDER ERECTION
SHEET 1 OF 3

BRIDGE SHEET NO. SR8

SHEET 1112 OF 1763 SHEETS

Wed Feb 12 06:12:19 2014

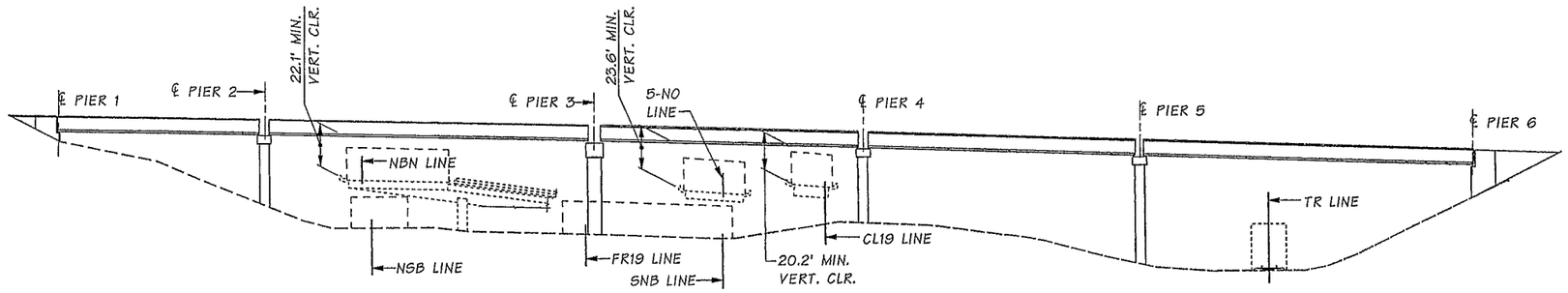

ROADWAY CONFIGURATION

NOTES:
FOR CONSTRUCTION OPENING DIMENSIONS, SEE BR. SHT. SR4

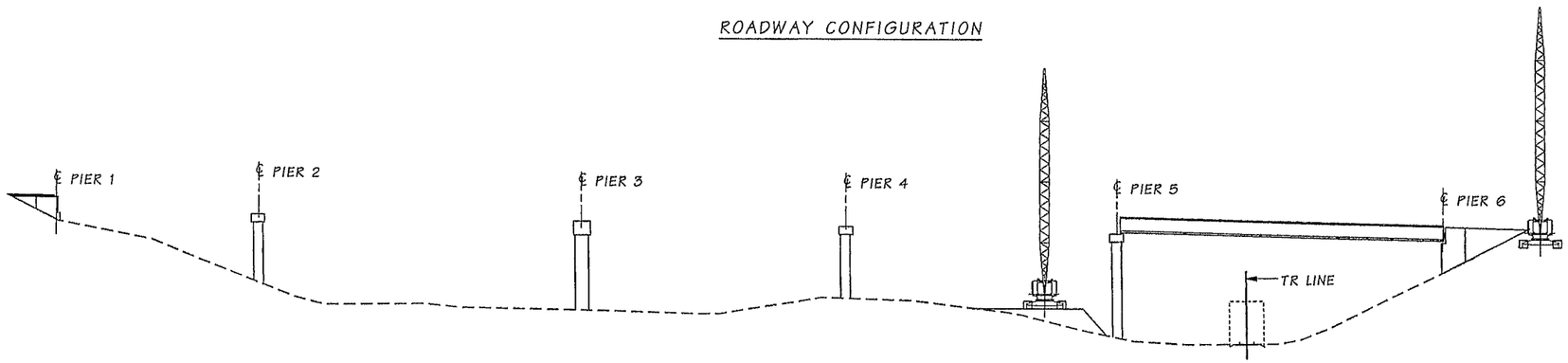

STEP 1 - ERECTING SPAN 5 GIRDERS

ASSUMING THE GIRDERS ARE DELIVEVERED FROM THE I-5 NORTHBOUND MAIN LINE

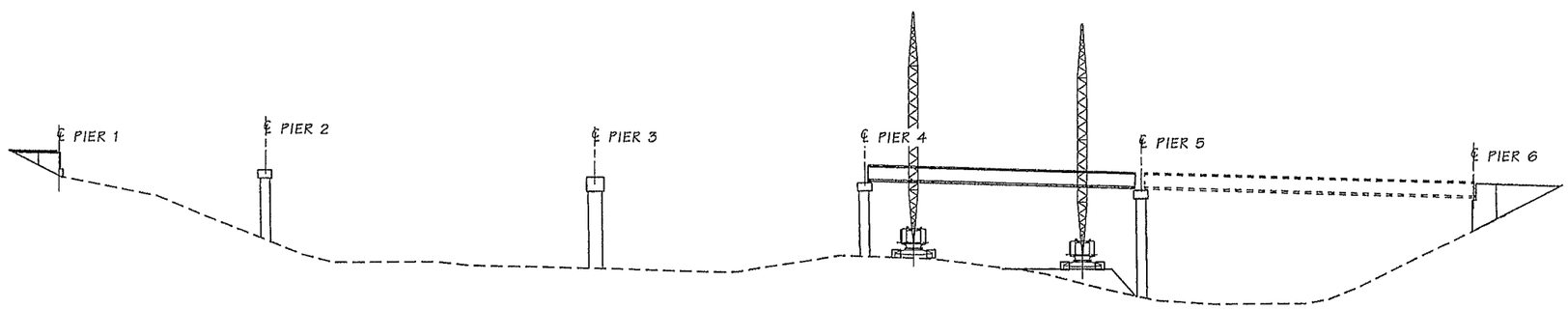

STEP 2 - ERECTING SPAN 4 GIRDERS

ASSUMING THE GIRDERS ARE DELIVEVERED FROM THE SNB LINE RAMP

SR 5 FILE NO. 7454 SHEET SR9

Bridge Design Engr.	Khaleghi, B		M:\Y-Team\M ST TO PORTLAND\CWRR OC\window files\GIRDER ERECTION 2.wnd								
Supervisor	Khaleghi, B					REGION NO.	STATE	FED. AID PROJ. NO.	SHEET NO.	TOTAL SHEETS	
Designed By	Tran, LH	05/13				10	WASH.				
Checked By	Sawahata, D	10/13				JOB NUMBER 12C501					
Detailed By	Plesha, GM	05/13									
Bridge Projects Engr.											
Prelim. Plan By											
Architect/Specialist			DATE	REVISION	BY	APP'D					

Tue Feb 11 07:15:35 2014

BRIDGE AND STRUCTURES OFFICE

Washington State Department of Transportation

I-5
M STREET TO PORTLAND AVENUE - HOV

I-5 OVER I-705 AND TACOMA RAIL BRIDGE NO. 5/445E

SUGGESTED GIRDER ERECTION
SHEET 2 OF 3

BRIDGE SHEET NO. SR9

SHEET 1113 OF 1763 SHEETS

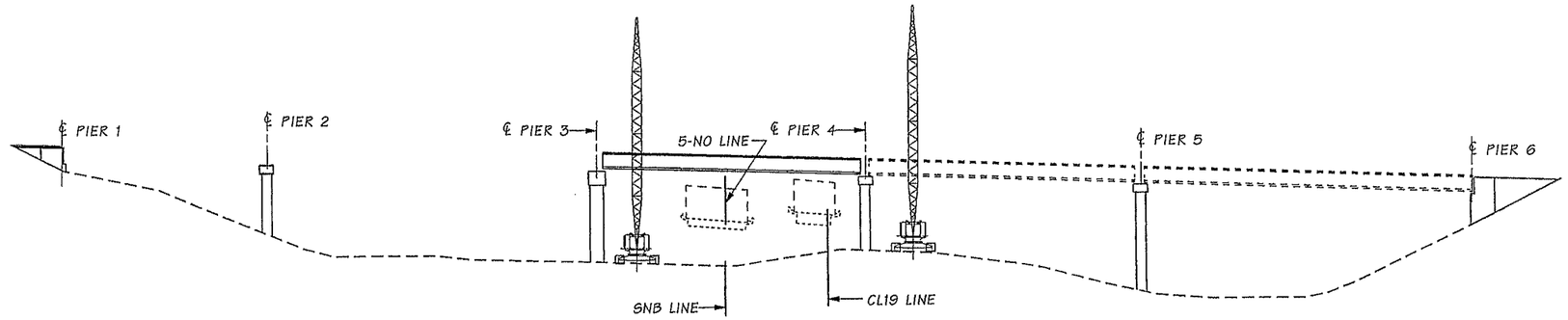

STEP 3 - ERECTING SPAN 3 GIRDERS

ASSUMING THE GIRDERS ARE DELIVEVERED FROM THE 5-NO LINE RAMP

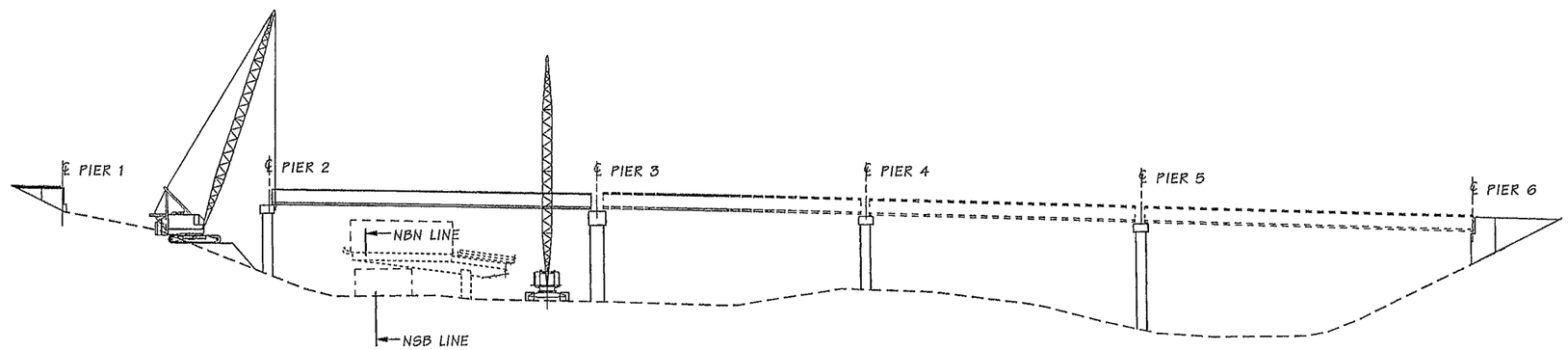

STEP 4 - ERECTING SPAN 2 GIRDERS

ASSUMING THE GIRDERS ARE DELIVEVERED FROM THE NBN LINE RAMP

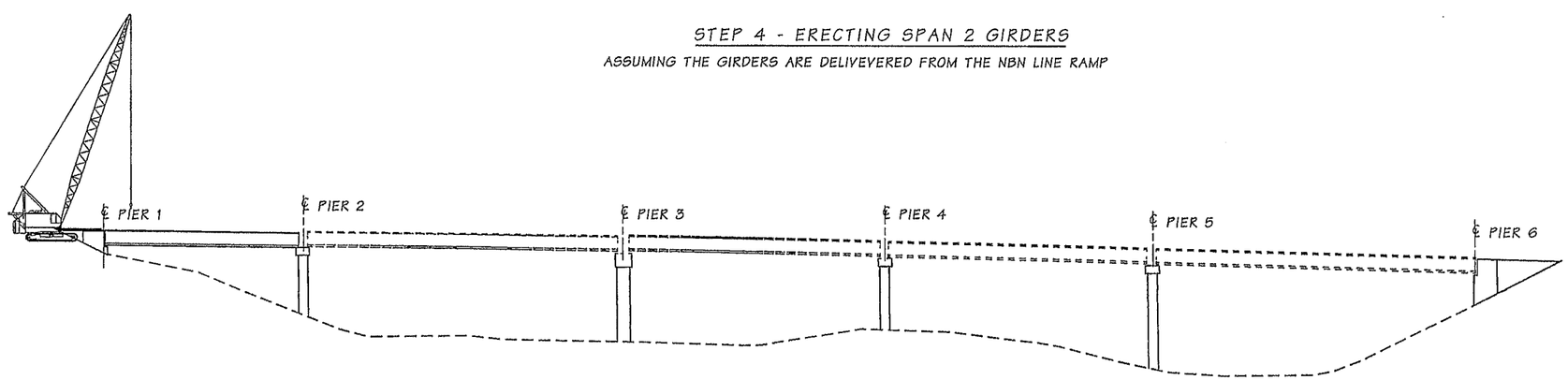

STEP 5 - ERECTING SPAN 1 GIRDERS

ASSUMING THE GIRDERS ARE DELIVEVERED FROM THE NBN LINE RAMP

SR 5 FILE NO. 7454 SHEET SR10

Bridge Design Engr.	Khaleghi, B		M:\Y-Team\M ST TO PORTLAND\CWRR OC\window files\GIRDER ERECTION 3.wnd								
Supervisor	Khaleghi, B										
Designed By	Tran, LH	05/13					REGION NO.	STATE	FED. AID PROJ. NO.	SHEET NO.	TOTAL SHEETS
Checked By	Sawahata, D	10/13					10	WASH.			
Detailed By	Plesha, GM	05/13					JOB NUMBER 12C501				
Bridge Projects Engr.											
Prelim. Plan By											
Architect/Specialist			DATE	REVISION	BY	APP'D					

Tue Feb 11 07:15:37 2014

BRIDGE AND STRUCTURES OFFICE

2/12/14

2/12/14

Washington State Department of Transportation

I-5
M STREET TO PORTLAND AVENUE - HOV

I-5 OVER I-705 AND TACOMA RAIL BRIDGE NO. 5/445E

SUGGESTED GIRDER ERECTION
SHEET 3 OF 3

BRIDGE SHEET NO. SR10

SHEET 1114 OF 1763 SHEETS

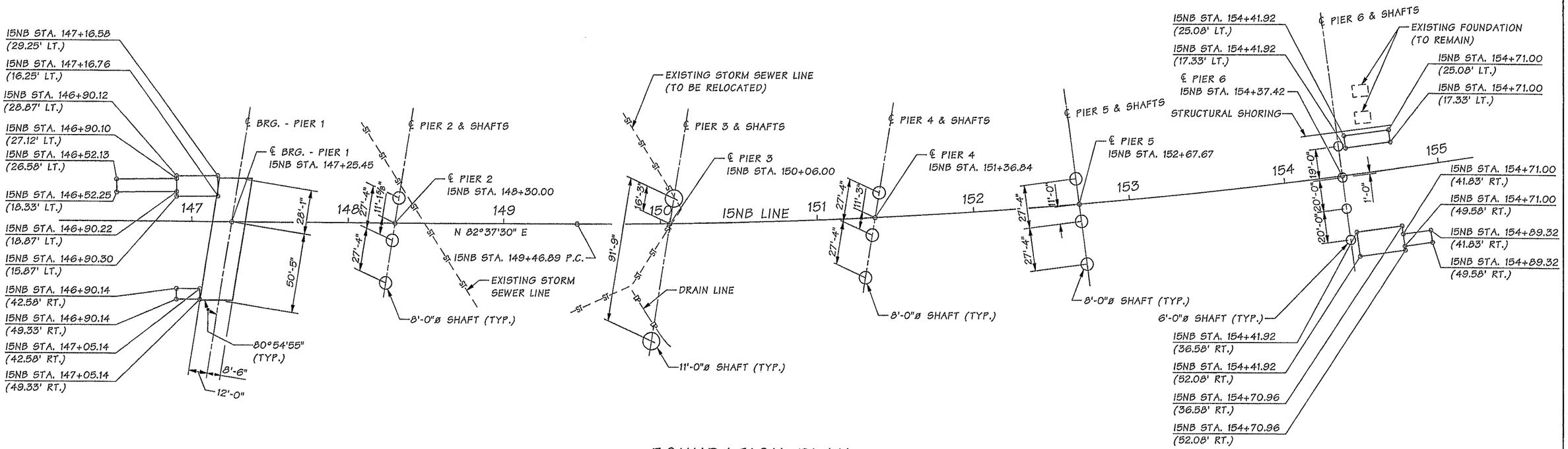

FOUNDATION PLAN

BEARING OF PIERS 1, 2 3. & 4 IS N 01°42'35" E
BEARING OF PIER 5 IS N 15°01'17" W
BEARING OF PIER 6 IS NORMAL TO 15NB LINE.
THE CONTRACTOR SHALL VERIFY THE LOCATIONS OF
EXISTING AND NEW UTILITIES AND EXISTING FOOTINGS.

SR 5 FILE NO. 7454 SHEET SR11

Bridge Design Engr.	Khaleghi, B	
Supervisor	Khaleghi, B	
Designed By	JB/LHT/TDS	04/13
Checked By	LHT, JB, TDS	10/13
Detailed By	Plesha, GM	01/13
Bridge Projects Engr.		
Prelim. Plan By		
Architect/Specialist		

M:\Y-Team\M ST TO PORTLAND\CWRR OC\window files\FOUNDATION PLAN.wnd

DATE	REVISION	BY	APP'D

REGION NO.	STATE	FED. AID PROJ. NO.	SHEET NO.	TOTAL SHEETS
10	WASH.			
JOB NUMBER 122501				

Tue Feb 11 07:15:38 2014

BRIDGE AND STRUCTURES OFFICE

2-11-14 2/12/14

Washington State Department of Transportation

I-5
M STREET TO PORTLAND AVENUE - HOV

I-5 OVER I-705 AND TACOMA RAIL BRIDGE NO. 5/445E

FOUNDATION PLAN

BRIDGE SHEET NO. SR11

SHEET 1115 OF 1763 SHEETS

SHAFT ELEVATIONS		
SHAFT	TOP	BOTTOM
2A	136.0	86.0
2B	136.0	86.0

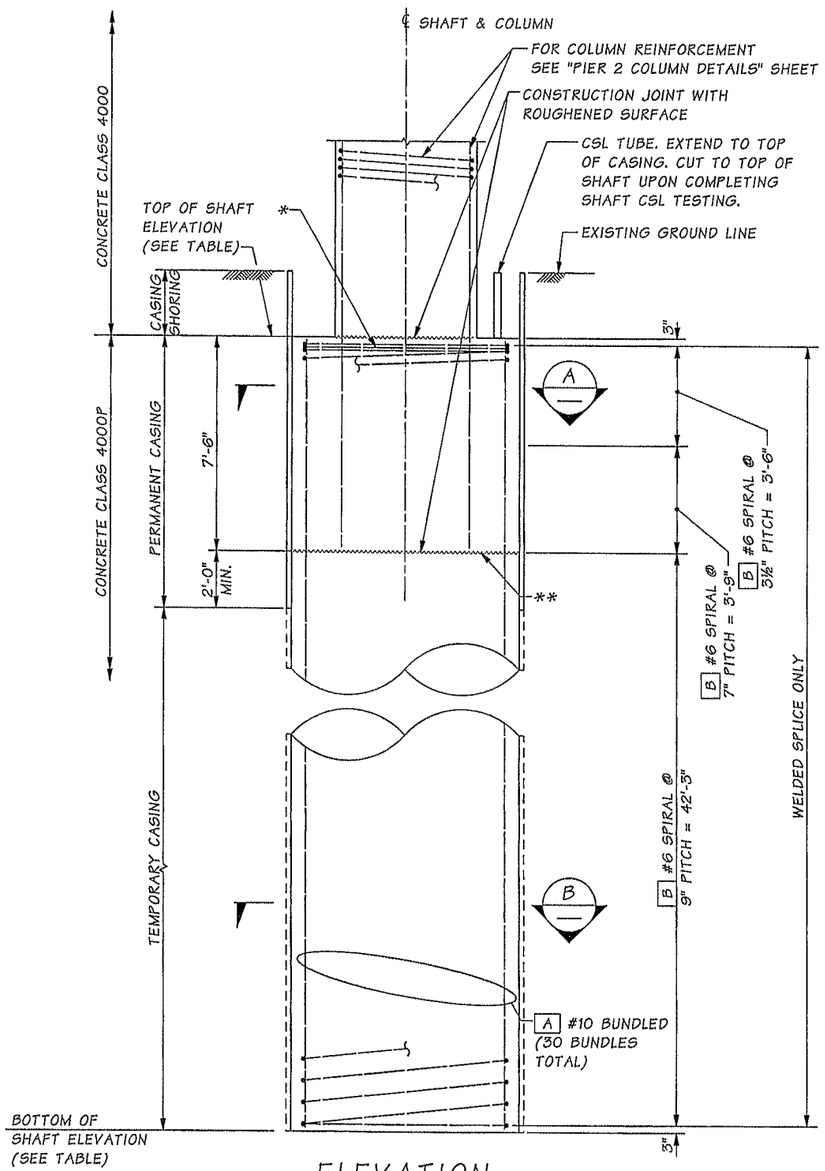

ELEVATION

SHAFT 2A SHOWN
SHAFT 2B SIMILAR

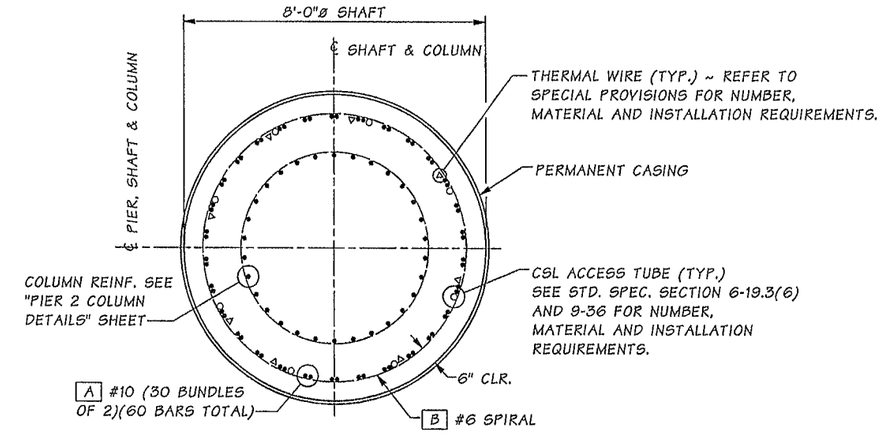

SECTION A

NOTE:

1. SEE "SHAFT DETAILS" SHEET FOR "CENTRALIZER DETAILS", "WELDED LAP SPLICE DETAIL" AND "SHAFT SPIRAL/HOOP OPTIONS".

* SEE "SHAFT DETAILS" SHEET FOR "SPIRAL TEMINATION DETAIL".

** REMOVE SEDIMENT LAITANCE AND WEAK CONCRETE TO SOUND CONCRETE PRIOR TO SETTING COLUMN REINFORCEMENT.

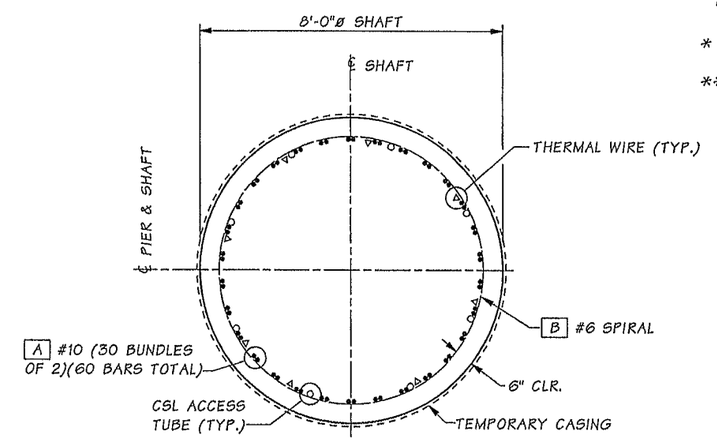

SECTION B

SHAFT BAR LIST

MARK	SIZE	NO.	LENGTH	BEND TYPE	WT. (lbs.)
A	#10	60	49'-7"	STRAIGHT	12,800
B	#6	1	(a)	SPIRAL	2,555
				TOTAL PER SHAFT	15,355

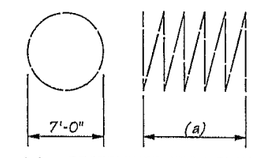

(a) ~ DETERMINED FROM PLANS
WEIGHT DOES NOT INCLUDE SPICES

SPIRAL

Bridge Design Engr.	Khaleghi, B	
Supervisor	Khaleghi, B	
Designed By	Bingle, J	04/13
Checked By	Mizumori, A	10/13
Detailed By	Plesha, GM	04/13
Bridge Projects Engr.		
Prelim. Plan By		
Architect/Specialist		

M:\Y-Team\M ST TO PORTLAND\CWRR OC\window files\PIER 2 SHAFT.wnd

DATE	REVISION	BY	APP'D

REGION NO.	STATE	FED. AID PROJ. NO.	SHEET NO.	TOTAL SHEETS
10	WASH.			

JOB NUMBER 12C501

BRIDGE AND STRUCTURES OFFICE

2-11-14

2/12/14

Washington State Department of Transportation

I-5
M STREET TO PORTLAND AVENUE - HOV

I-5 OVER I-705 AND TACOMA RAIL BRIDGE NO. 5/445E

PIER 2 SHAFT A & B DETAILS

BRIDGE SHEET NO. SR12

SHEET 1116 OF 1763 SHEETS

SR 5 FILE NO. 7454 SHEET SR12

Tue Feb 11 07:15:39 2014

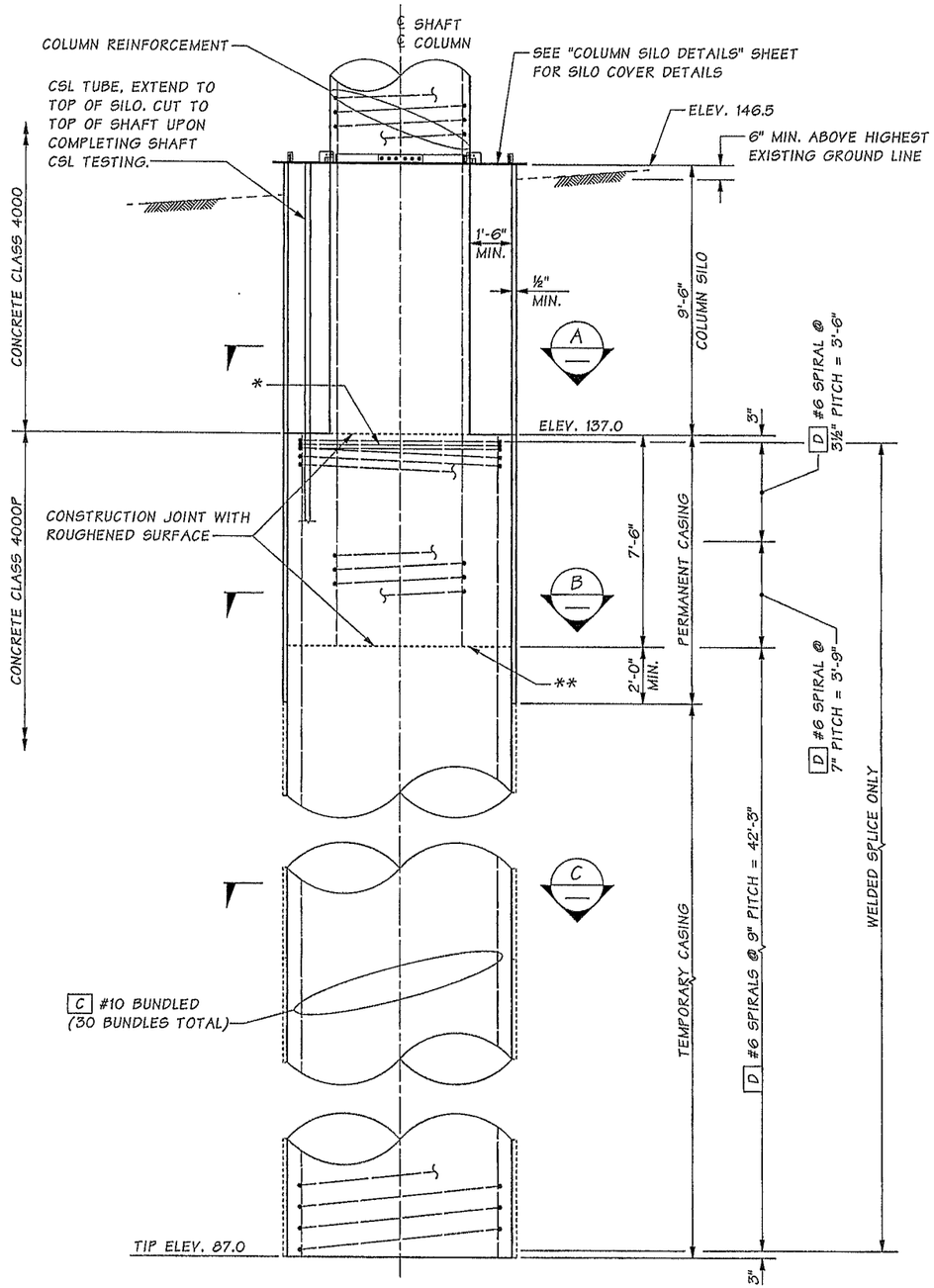

ELEVATION

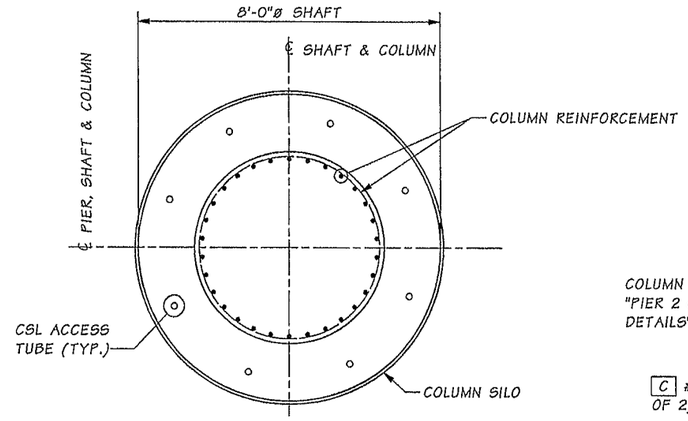

SECTION A

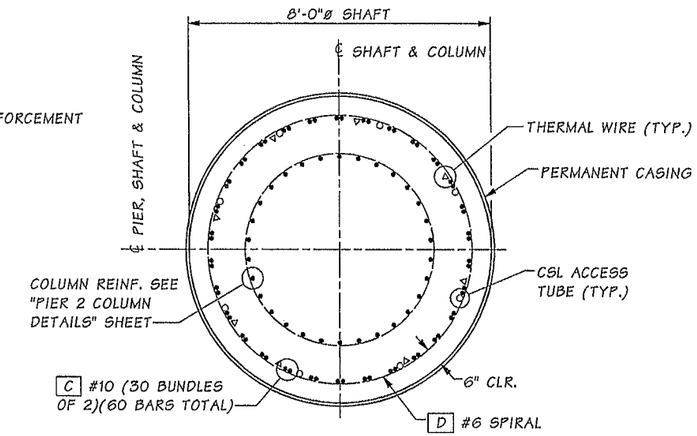

SECTION B

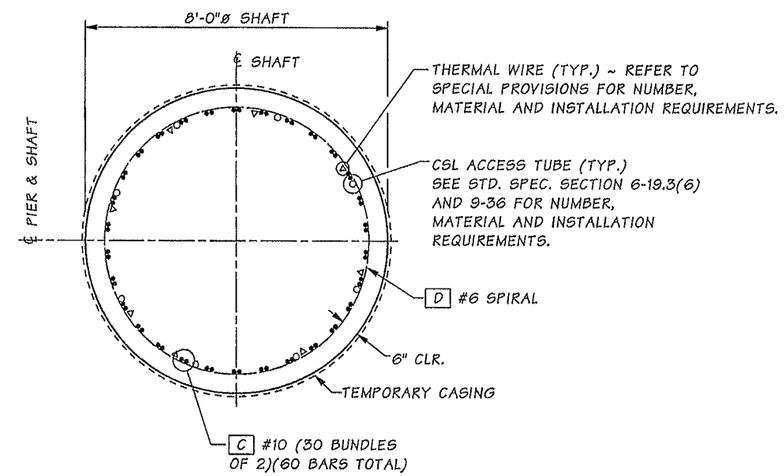

SECTION C

NOTES:

1. THE UPPER LIMITS OF COLUMN SILO SHALL EXTEND 6" MINIMUM ABOVE THE TOP OF THE FINISHED GROUND LINE.
2. SEE "SHAFT DETAILS" SHEET FOR "CENTRALIZER DETAILS", "WELDED LAP SPLICE DETAILS", AND "SHAFT SPIRAL/HOOP OPTIONS".

* SEE "SHAFT DETAILS" SHEET FOR "SPIRAL TERMINATION DETAIL".

** REMOVE SEDIMENT LAITANCE AND WEAK CONCRETE TO SOUND CONCRETE PRIOR TO SETTING COLUMN REINFORCEMENT.

SHAFT BAR LIST

MARK	SIZE	NO.	LENGTH	BEND TYPE	WT. (lbs.)
C	#10	60	49'-7"	STRAIGHT	12,800
D	#6	1	(a)	SPIRAL	2,555
				TOTAL PER SHAFT	15,355

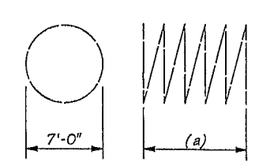

(a) ~ DETERMINED FROM PLANS
WEIGHT DOES NOT INCLUDE SPLICES

SPIRAL

Bridge Design Engr.	Khaleghi, B		
Supervisor	Khaleghi, B		
Designed By	Bingle, J	04/13	
Checked By	Mizumori, A	10/13	
Detailed By	Plesha, GM	04/13	
Bridge Projects Engr.			
Prelim. Plan By			
Architect/Specialist			

M:\Y-Team\M ST TO PORTLAND\CWRR OC\window files\PIER 2 COLUMN SILO.wnd

DATE	REVISION	BY	APP'D

REGION NO.	STATE	FED. AID PROJ. NO.	SHEET NO.	TOTAL SHEETS
10	WASH.			
JOB NUMBER 12C501				

Tue Feb 11 07:15:41 2014

BRIDGE AND STRUCTURES OFFICE

2-11-14

2/12/14

Washington State Department of Transportation

I-5
M STREET TO PORTLAND AVENUE - HOV

I-5 OVER I-705 AND TACOMA RAIL BRIDGE NO. 5/445E

PIER 2 SHAFT C DETAILS

BRIDGE SHEET NO. SR13

SHEET 1117 OF 1763 SHEETS

SR 5 FILE NO. 7454 SHEET SR13

SHAFT ELEVATIONS

SHAFT	A	B	C
3A	130.5	115.5	49.5
3B	133.5	118.5	61.5

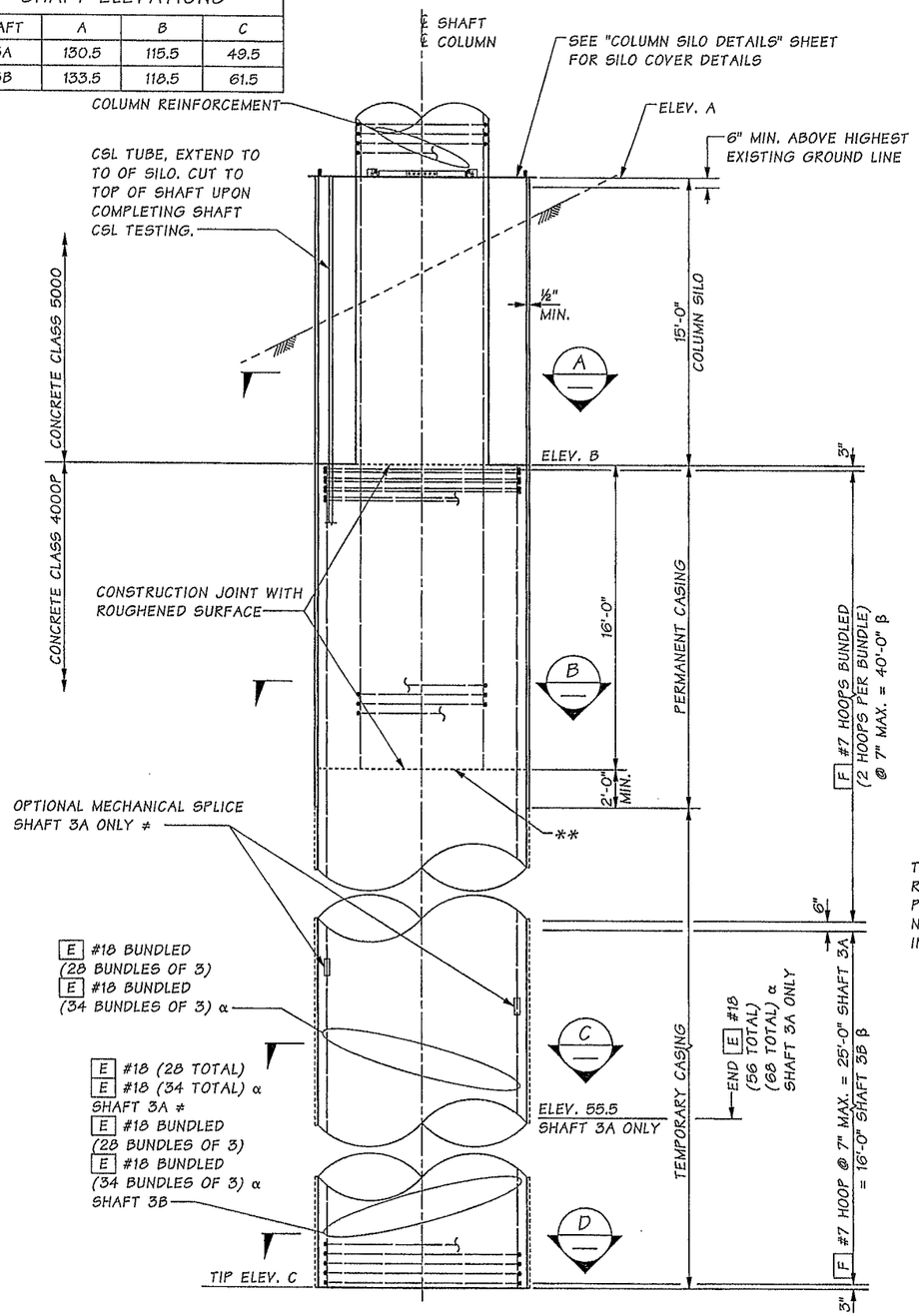

ELEVATION

SHAFT 3A SHOWN
SHAFT 3B SIMILAR

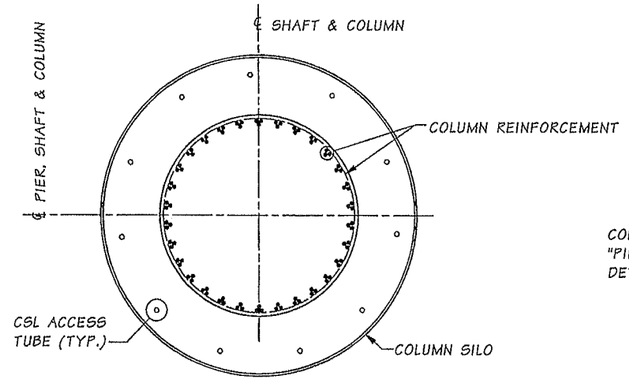

SECTION A

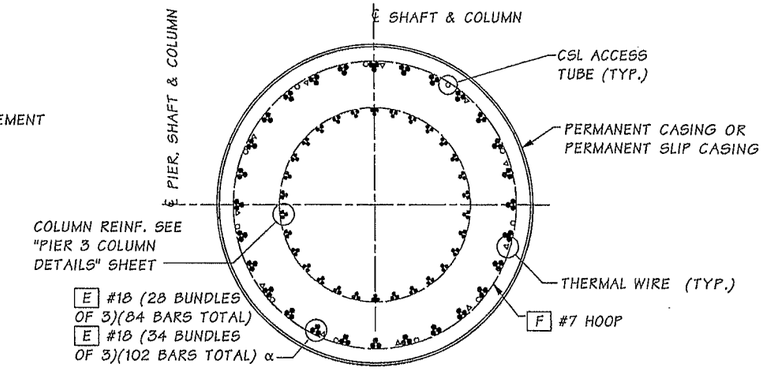

SECTION B

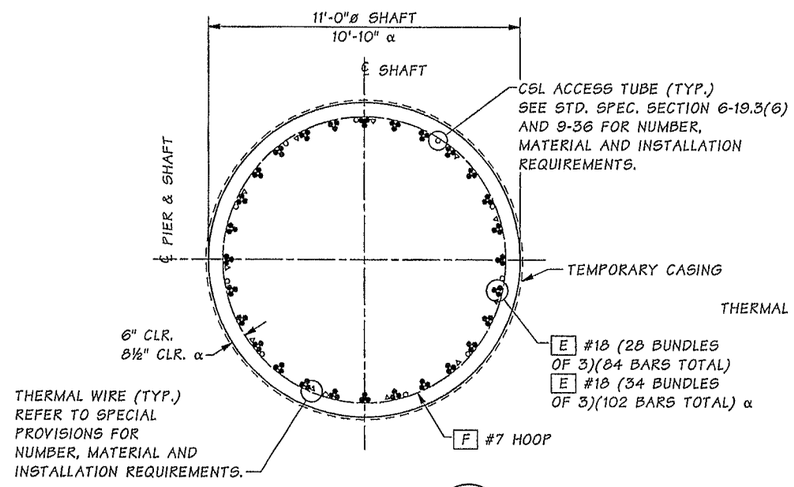

SECTION C

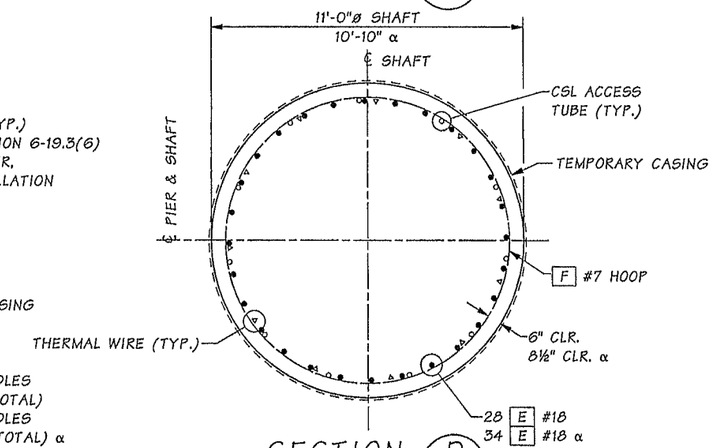

SECTION D

SHAFT 3A ONLY

NOTES:

1. THE UPPER LIMITS OF COLUMN SILO SHALL EXTEND 6" MINIMUM ABOVE THE TOP OF THE FINISHED GROUND LINE.
2. SEE "SHAFT DETAILS" SHEET FOR "CENTRALIZER DETAILS", "WELDED LAP SPLICE DETAILS", AND "SHAFT SPIRAL/HOOP OPTIONS".
3. FOR CONCRETE COVER REQUIREMENTS NOT SPECIFIED SEE STD. SPEC. SECTION 6-19.3(5)C.

** REMOVE SEDIMENT LAITANCE AND WEAK CONCRETE TO SOUND CONCRETE PRIOR TO SETTING COLUMN REINFORCEMENT.

≠ OPTIONAL MECHANICAL SPLICES IN VERTICAL REINFORCEMENT OF SHAFT 3A WILL NOT BE ALLOWED BETWEEN ELEVATIONS 115.5 - 75.5. DO NOT SPLICE MORE THAN 50% OF REBAR AT ANY ONE LOCATION. STAGGER SPLICES A MINIMUM OF 2'-0".

β WELDED SPLICE ONLY. STAGGER SPLICES SO THAT NO TWO SPLICES ARE AT THE SAME LOCATION FOR ADJACIENT HOOPS.

α INFORMATION PROVIDED FOR OSCILLATOR METHOD. THE SHAFT BAR LIST WEIGHTS DO NOT REFLECT THE OSCILLATOR METHOD.

SHAFT BAR LIST

SHAFT 3A					
MARK	SIZE	NO.	LENGTH	BEND TYPE	WT. (lbs.)
E	#18	56	59'-10"	STRAIGHT	45,570
E	#18	28	65'-7"	STRAIGHT	24,975
F	#7	184	32'-0"	HOOP	12,010
				TOTAL PER SHAFT	82,555

SHAFT 3B					
MARK	SIZE	NO.	LENGTH	BEND TYPE	WT. (lbs.)
E	#18	84	56'-7"	STRAIGHT	64,640
F	#7	169	32'-0"	HOOP	11,035
				TOTAL PER SHAFT	75,675

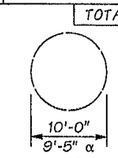

HOOP

Bridge Design Engr.	Khaleghi, B	
Supervisor	Khaleghi, B	
Designed By	Bingle, J	04/13
Checked By	Mizumori, A	10/13
Detailed By	Plesha, GM	04/13
Bridge Projects Engr.		
Prelim. Plan By		
Architect/Specialist		

M:\Y-Team\M ST TO PORTLAND\CWRR OC\window files\PIER 3 SHAFTS.wnd

DATE	REVISION	BY	APP'D

REGION NO.	STATE	FED. AID PROJ. NO.	SHEET NO.	TOTAL SHEETS
10	WASH.			
JOB NUMBER 12C501				

JEDEDIAH BINGLE, STATE OF WASHINGTON, 27695, PROFESSIONAL ENGINEER 2-11-14

BRIDGE AND STRUCTURES OFFICE

BRIAN KHALAGHI, STATE OF WASHINGTON, 27695, PROFESSIONAL ENGINEER 2/12/14

Washington State Department of Transportation

I-5
M STREET TO PORTLAND AVENUE - HOV

I-5 OVER I-705 AND TACOMA RAIL BRIDGE NO. 5/445E

PIER 3 SHAFT DETAILS

BRIDGE SHEET NO. SR14

SHEET 1118 OF 1763 SHEETS

SR 5 FILE NO. 7454 SHEET SR14

Tue Feb 11 07:15:42 2014

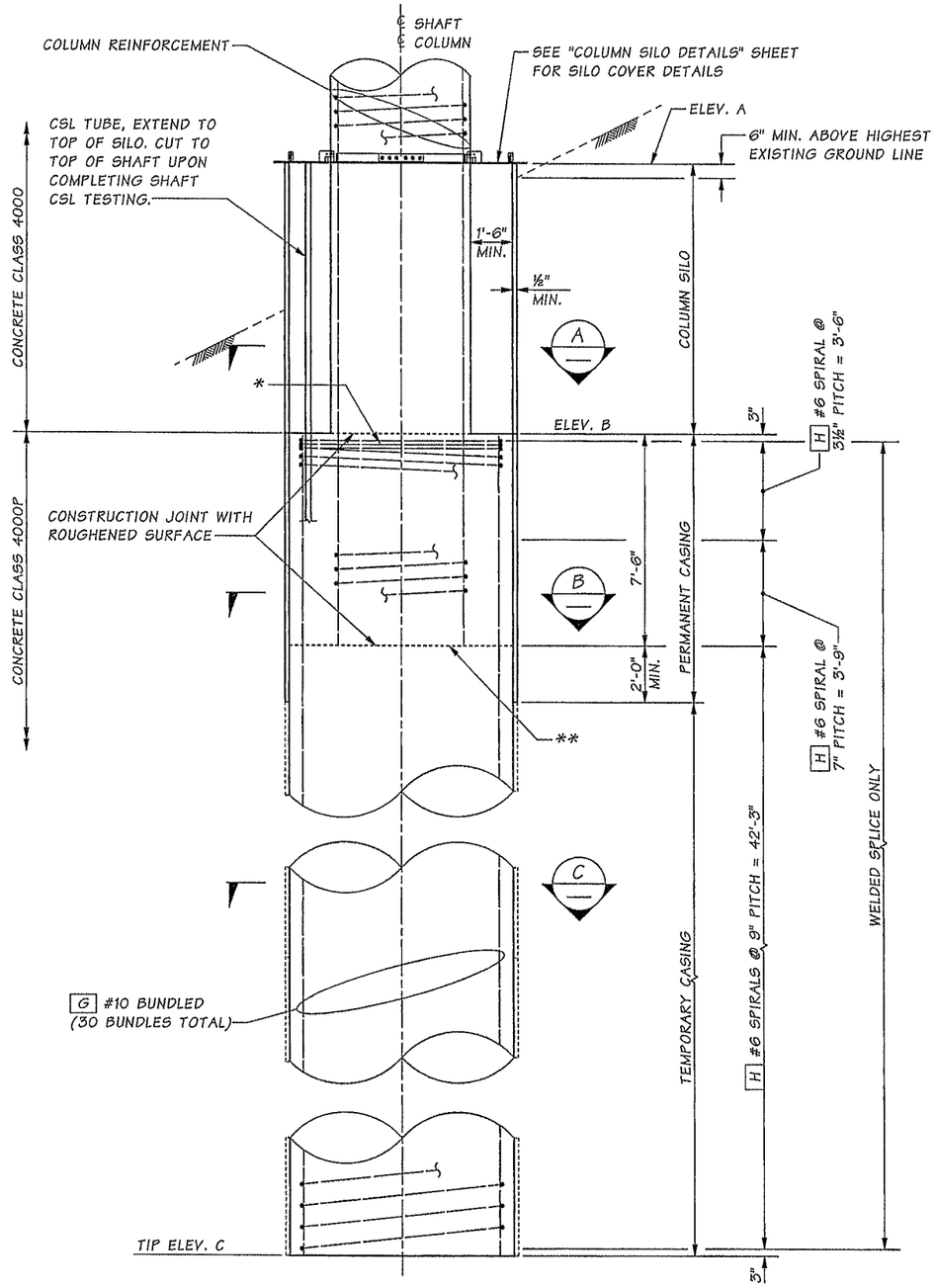

ELEVATION

SHAFT 4A SHOWN
SHAFT 4B AND 4C SIMILAR

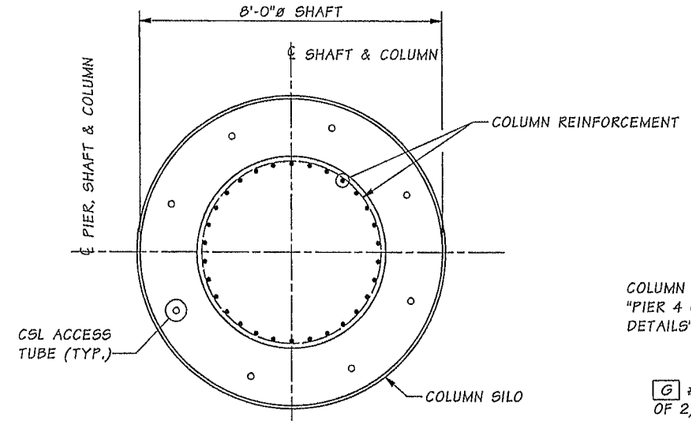

SECTION A

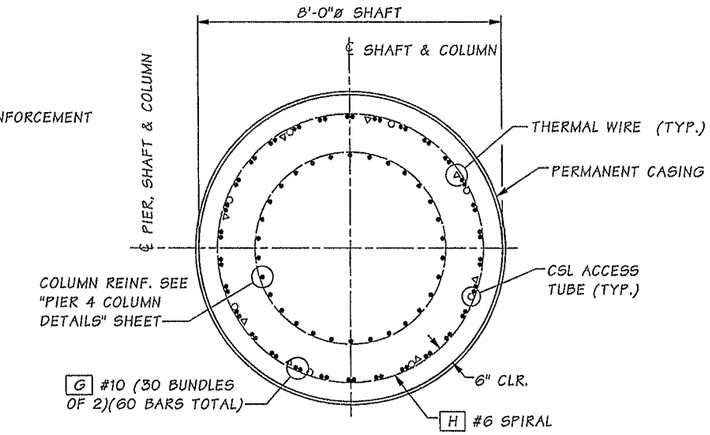

SECTION B

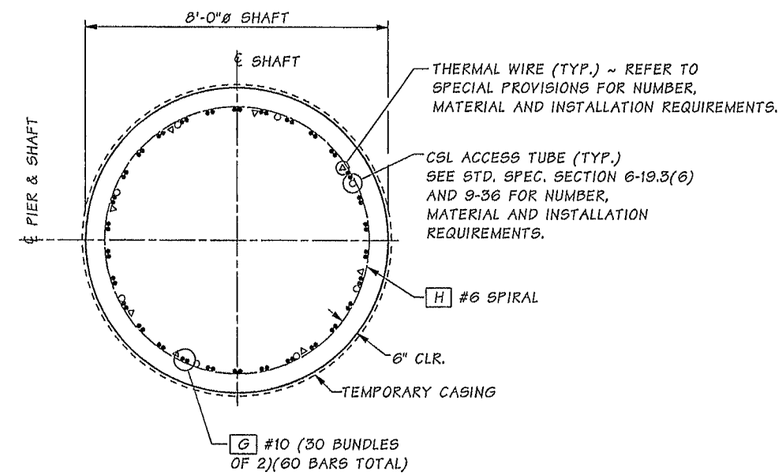

SECTION C

SHAFT ELEVATIONS			
SHAFT	A	B	C
4A	150.5	135.5	85.5
4B	146.5	134.5	84.5
4C	141.5	131.5	81.5

SHAFT BAR LIST

MARK	SIZE	NO.	LENGTH	BEND TYPE	WT. (lbs.)
G	#10	60	49'-7"	STRAIGHT	12,800
H	#6	1	(a)	SPIRAL	2,555
				TOTAL PER SHAFT	15,355

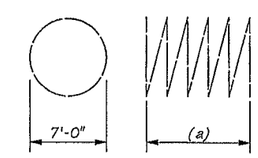

(a) ~ DETERMINED FROM PLANS
WEIGHT DOES NOT INCLUDE SPLICES

SPIRAL

NOTES:

1. THE UPPER LIMITS OF COLUMN SILO SHALL EXTEND 6" MINIMUM ABOVE THE TOP OF THE FINISHED GROUND LINE.
2. SEE "SHAFT DETAILS" SHEET FOR "CENTRALIZER DETAILS", "WELDED LAP SPLICE DETAILS", AND "SHAFT SPIRAL/HOOP OPTIONS".

* SEE "SHAFT DETAILS" SHEET FOR "SPIRAL TERMINATION DETAIL".

** REMOVE SEDIMENT LAITANCE AND WEAK CONCRETE TO SOUND CONCRETE PRIOR TO SETTING COLUMN REINFORCEMENT.

Bridge Design Engr.	Khaleghi, B		M:\Y-Team\M ST TO PORTLAND\CWRR OC\window files\PIER 4 SHAFT.wnd
Supervisor	Khaleghi, B		
Designed By	Bingle, J	04/13	
Checked By	Mizumori, A	10/13	
Detailed By	Plesha, GM	04/13	
Bridge Projects Engr.			
Prelim. Plan By			
Architect/Specialist			

DATE	REVISION	BY	APP'D

REGION NO.	STATE	FED. AID PROJ. NO.	SHEET NO.	TOTAL SHEETS
10	WASH.			
JOB NUMBER 12C501				

Tue Feb 11 07:15:44 2014

BRIDIAH BINGLE — STATE OF WASHINGTON — 35196 — PROFESSIONAL ENGINEER — 2-11-14

BRIDGE AND STRUCTURES OFFICE

BEHZAD KHALEGHI — STATE OF WASHINGTON — 27665 — PROFESSIONAL ENGINEER — 2/12/14

Washington State Department of Transportation

I-5
M STREET TO PORTLAND AVENUE - HOV

I-5 OVER I-705 AND TACOMA RAIL BRIDGE NO. 5/445E

PIER 4 SHAFT DETAILS

BRIDGE SHEET NO. SR15

SHEET 1119 OF 1763 SHEETS

SR 5 FILE NO. 7454 SHEET SR15

SHAFT ELEVATIONS		
SHAFT	TOP	BOTTOM
5A	110.0	50.0
5B	112.0	52.0
5C	113.0	53.0

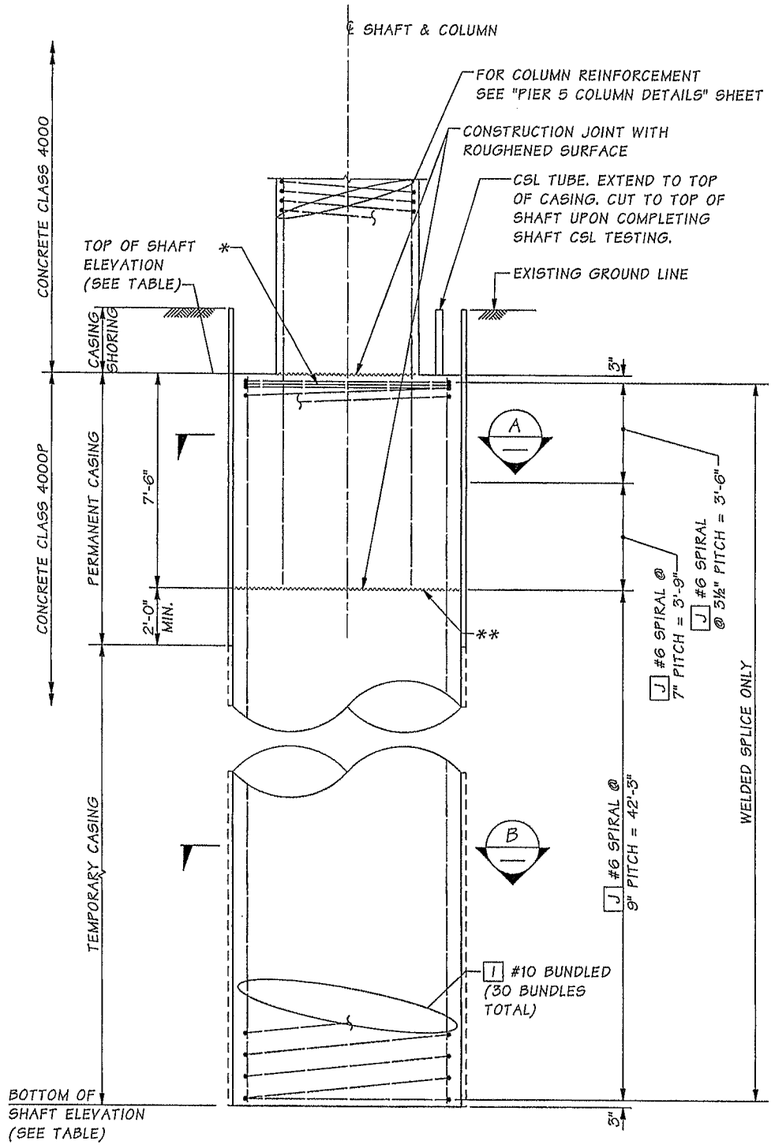

ELEVATION

SHAFT 5A SHOWN
SHAFT 5B & 5C SIMILAR

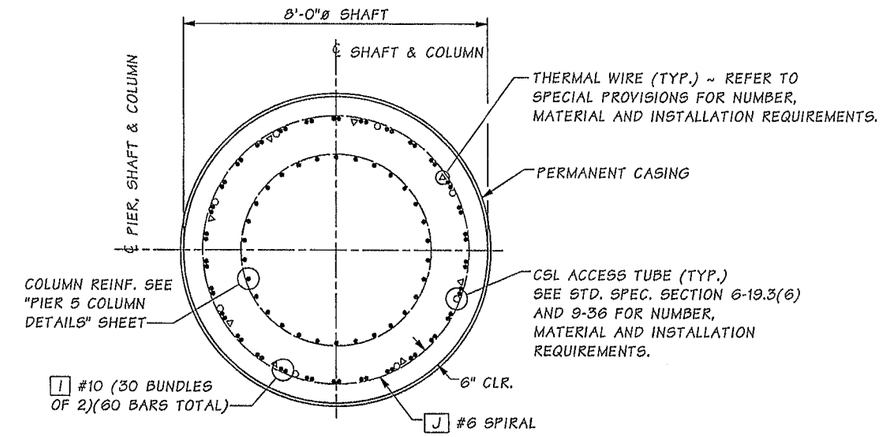

SECTION A

NOTE:

1. SEE "SHAFT DETAILS" SHEET FOR "CENTRALIZER DETAILS", "WELDED LAP SPLICE DETAIL" AND "SHAFT SPIRAL/HOOP OPTIONS".

* SEE "SHAFT DETAILS" SHEET FOR "SPIRAL TEMINATION DETAIL".

** REMOVE SEDIMENT LAITANCE AND WEAK CONCRETE TO SOUND CONCRETE PRIOR TO SETTING COLUMN REINFORCEMENT.

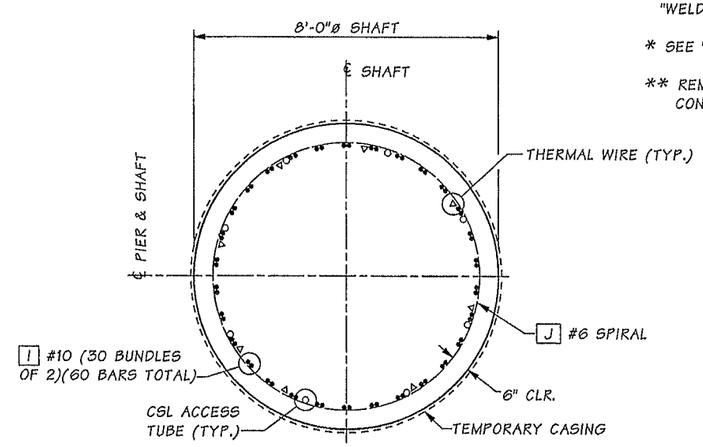

SECTION B

SHAFT BAR LIST

MARK	SIZE	NO.	LENGTH	BEND TYPE	WT. (lbs.)
I	#10	60	59'-7"	STRAIGHT	15,385
J	#6	1	(a)	SPIRAL	2,990
				TOTAL PER SHAFT	18,375

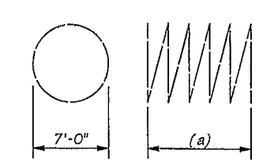

(a) ~ DETERMINED FROM PLANS
WEIGHT DOES NOT INCLUDE SPICES

SPIRAL

Bridge Design Engr.	Khaleghi, B		M:\Y-Team\M ST TO PORTLAND\CWRR OC\window files\PIER 5 SHAFT.wnd
Supervisor	Khaleghi, B		
Designed By	Bingle, J	04/13	
Checked By	Mizumori, A	10/13	
Detailed By	Plesha, GM	04/13	
Bridge Projects Engr.			
Prelim. Plan By			
Architect/Specialist			

DATE	REVISION	BY	APP'D

Tue Feb 11 07:15:46 2014

REGION NO.	STATE	FED. AID PROJ. NO.	SHEET NO.	TOTAL SHEETS
10	WASH.			
JOB NUMBER 120501				

BRIDGE AND STRUCTURES OFFICE

2-11-14

2/12/14

Washington State Department of Transportation

I-5
M STREET TO PORTLAND AVENUE - HOV

I-5 OVER I-705 AND TACOMA RAIL BRIDGE NO. 5/445E

PIER 5 SHAFT DETAILS

BRIDGE SHEET NO. SR16

SHEET 1120 OF 1763 SHEETS

SR 5 FILE NO. 7454 SHEET SR16

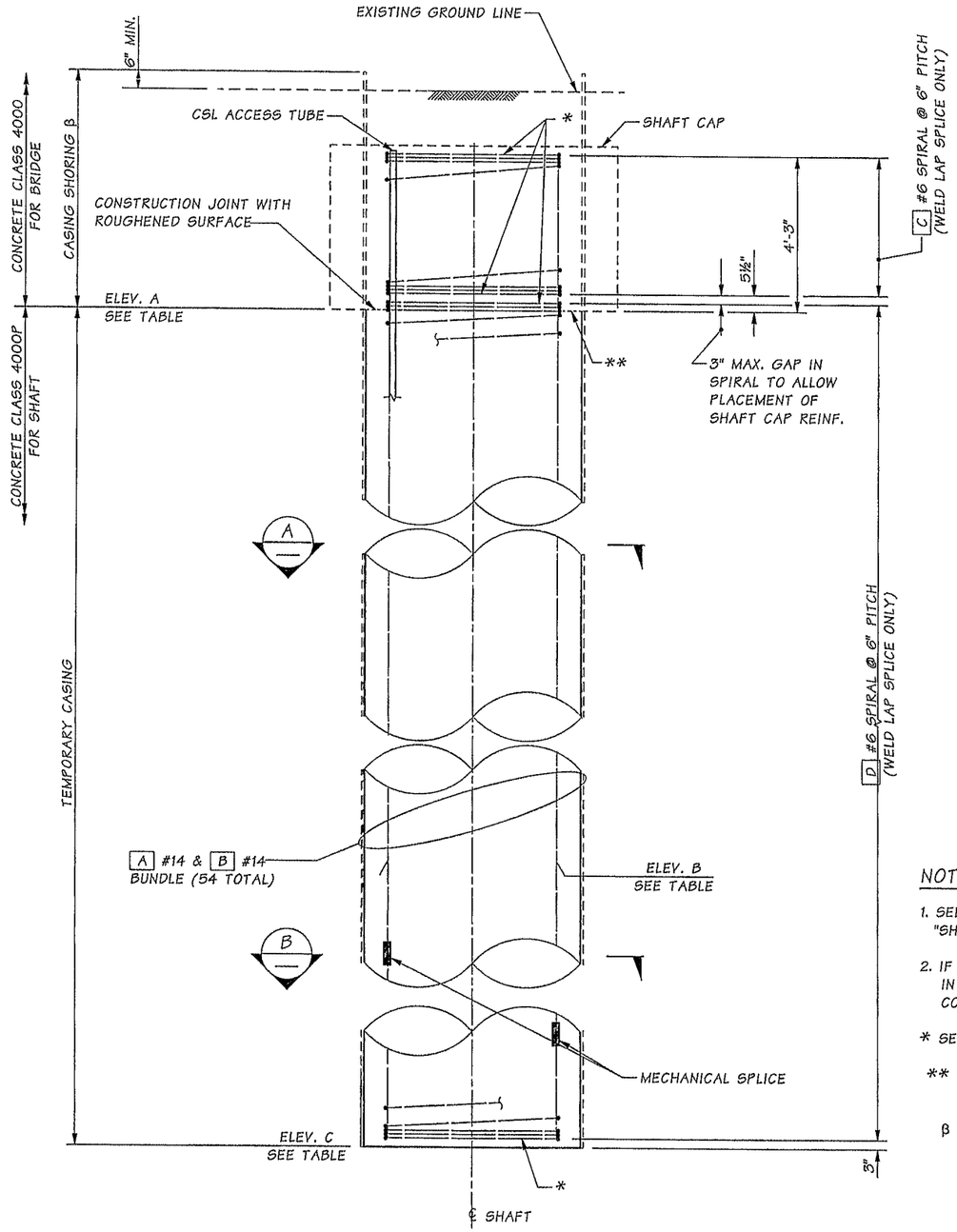

ELEVATION

SHAFTS 6A SHOWN,
SHAFTS 6B, 6C, AND 6D ARE SIMILAR

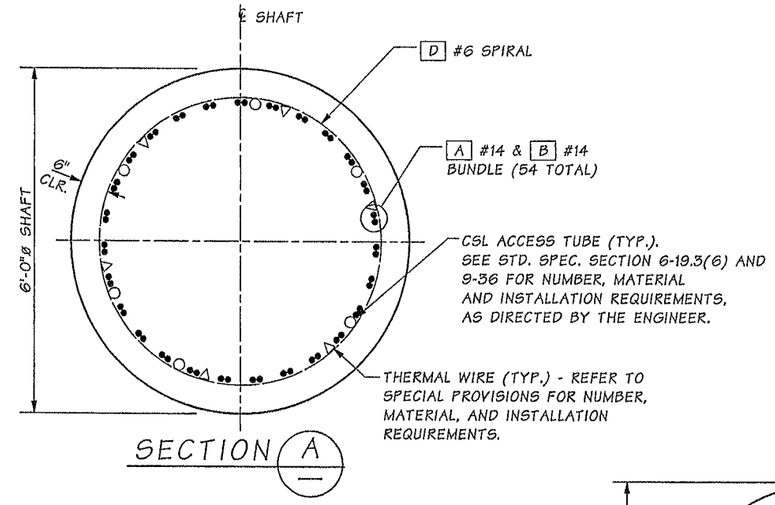

SECTION A

SHAFT ELEVATIONS			
SHAFT	ELEV. A	ELEV. B	ELEV. C
6A	151.24	112.2	91.2
6B	148.08	108.1	80.1
6C	144.92	104.9	84.9
6D	141.77	101.8	81.8

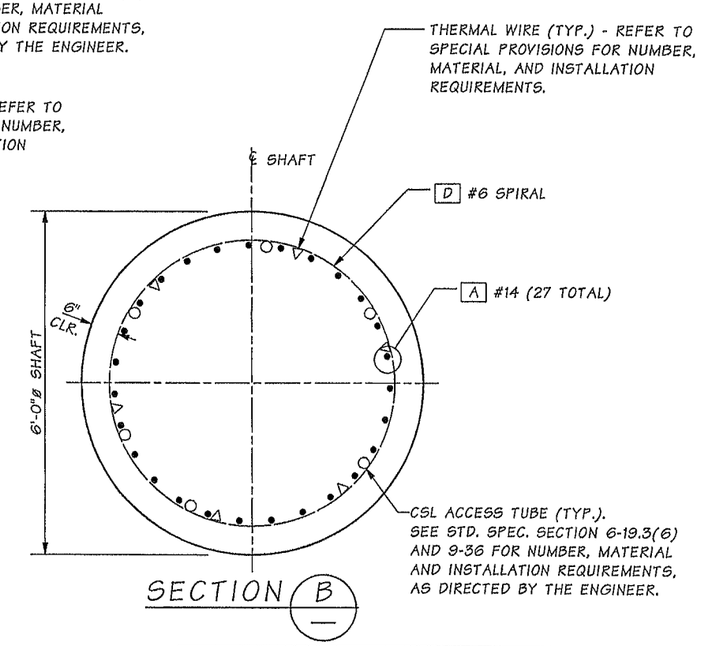

SECTION B

NOTES:

1. SEE "SHAFT DETAILS" SHEET FOR "CENTRALIZER DETAILS", "WELDED LAP SPLICE DETAIL" AND "SHAFT SPIRAL/HOOP OPTIONS".
2. IF THE CONTRACTOR ELECTS TO USE THE MECHANICAL SPLICE FOR BARS GREATER THAN 60' IN LENGTH, THE MECHANICAL SPLICE SHALL BE LENTON "A2" OR AN APPROVED EQUAL. THE MECHANICAL COUPLERS SHALL BE STAGGER VERTICAL LOCATION OF SPLICE 2'-0" MIN. BETWEEN ADJACENT BARS.

* SEE "SHAFT DETAILS" SHEET FOR "SPIRAL TERMINATION DETAIL".

** REMOVE SEDIMENT LAITENCE & WEAK CONCRETE TO SOUND CONCRETE PRIOR TO SETTING ABUTMENT REINFORCEMENT.

β CASING SHORING MAY BE DELETED IF THE CONTRACTOR SHORES AND EXCAVATES THE SHAFT CAP PRIOR TO SHAFT EXCAVATION.

SHAFT BAR LIST

	MARK	SIZE	NO.	LENGTH	BEND TYPE	WT. (lbs.)
PIER 6	A	#14	27	VARIES	STRAIGHT	13,271
	B	#14	27	VARIES	STRAIGHT	8881
	C	#6	1	(a)	67	176
	D	#6	1	(a)	67	2,820
					TOTAL PER SHAFT	25,147

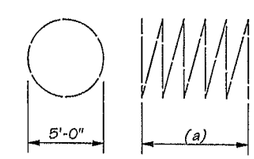

(a) ~ DETERMINED FROM PLANS
WEIGHT DOES NOT INCLUDE SPLICES

SPIRAL
BEND TYPE 67

Bridge Design Engr.	Khaleghi, B	M:\Y-Team\M ST TO PORTLAND\CWRR OC\window files\PIER 6 SHAFT.wnd								
Supervisor	Khaleghi, B									
Designed By	Tran, LH	03/13								
Checked By	Sawahata, D	10/13								
Detailed By	Plesha, GM	03/13								
Bridge Projects Engr.										
Prelim. Plan By										
Architect/Specialist		DATE	REVISION	BY	APP'D					

Tue Feb 11 07:15:48 2014

REGION NO.	STATE	FED. AID PROJ. NO.	SHEET NO.	TOTAL SHEETS
10	WASH.			
JOB NUMBER 12C501				

LIANG HUI TRAN, STATE OF WASHINGTON, REGISTERED PROFESSIONAL ENGINEER — 2-12-14

BRIDGE AND STRUCTURES OFFICE

BRIAN KHALEGHI, STATE OF WASHINGTON, 27696, PROFESSIONAL ENGINEER — 2/12/14

Washington State Department of Transportation

I-5
M STREET TO PORTLAND AVENUE - HOV

I-5 OVER I-705 AND TACOMA RAIL BRIDGE NO. 5/445E

PIER 6 SHAFT DETAILS

BRIDGE SHEET NO. SR17

SHEET 1121 OF 1763 SHEETS

SR 5 FILE NO. 7454 SHEET SR17

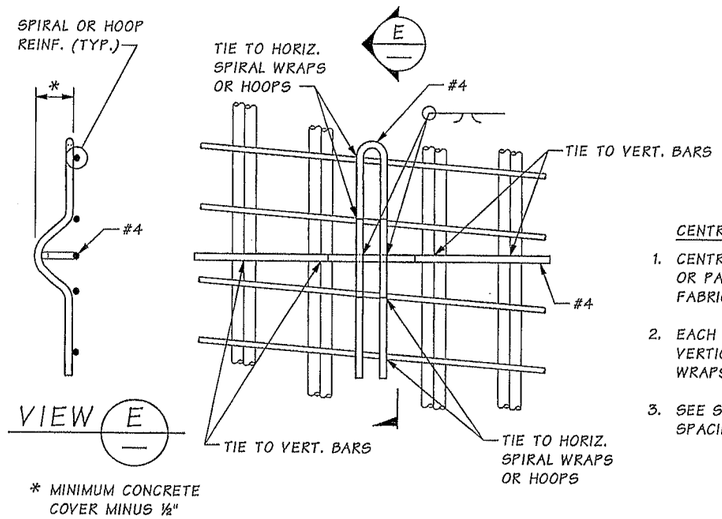

CENTRALIZER DETAIL

CENTRALIZER NOTES:

1. CENTRALIZERS SHALL BE EPOXY COATED OR PAINTED WITH INORGANIC ZINC AFTER FABRICATION.
2. EACH LEG SHALL BE TIED TO TWO VERTICAL BAR BUNDLES AND TWO SPIRAL WRAPS OR TWO HOOPS.
3. SEE STD. SPEC. SECTION 6-19.3(5)B FOR SPACING REQUIREMENTS.

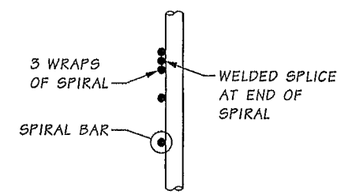

SPIRAL TERMINATION DETAIL

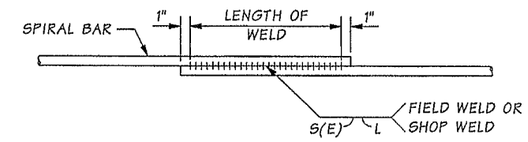

WELDED LAP SPLICE DETAIL

WELDING SHALL MEET THE REQUIREMENTS OF STD. SPEC. SECTION 6-02.3(24)E

SHAFT SPIRAL

DEFORMED BAR	WELD DIMENSIONS		
	S	E	LENGTH (L)
#5	5/16	3/16	6
#6	3/8	3/16	6

SHAFT HOOP

DEFORMED BAR	WELD DIMENSIONS		
	S	E	LENGTH (L)
#7	7/16	¼	7

SR 5 FILE NO. 7454 SHEET SR18

Bridge Design Engr.	Khaleghi, B	
Supervisor	Khaleghi, B	
Designed By	Bingle, J	04/13
Checked By	LHT, TDS	10/13
Detailed By	Plesha, GM	04/13
Bridge Projects Engr.		
Prelim. Plan By		
Architect/Specialist		

M:\Y-Team\M ST TO PORTLAND\CWRR OC\window files\SHAFT 2.wnd

DATE	REVISION	BY	APP'D

REGION NO.	STATE	FED. AID PROJ. NO.	SHEET NO.	TOTAL SHEETS
10	WASH.			
JOB NUMBER 12C501				

Tue Feb 11 07:15:49 2014

BRIDGE AND STRUCTURES OFFICE

2-11-14 2/12/14

Washington State Department of Transportation

I-5
M STREET TO PORTLAND AVENUE - HOV

I-5 OVER I-705 AND TACOMA RAIL BRIDGE NO. 5/445E

SHAFT DETAILS

BRIDGE SHEET NO. SR18

SHEET 1122 OF 1763 SHEETS

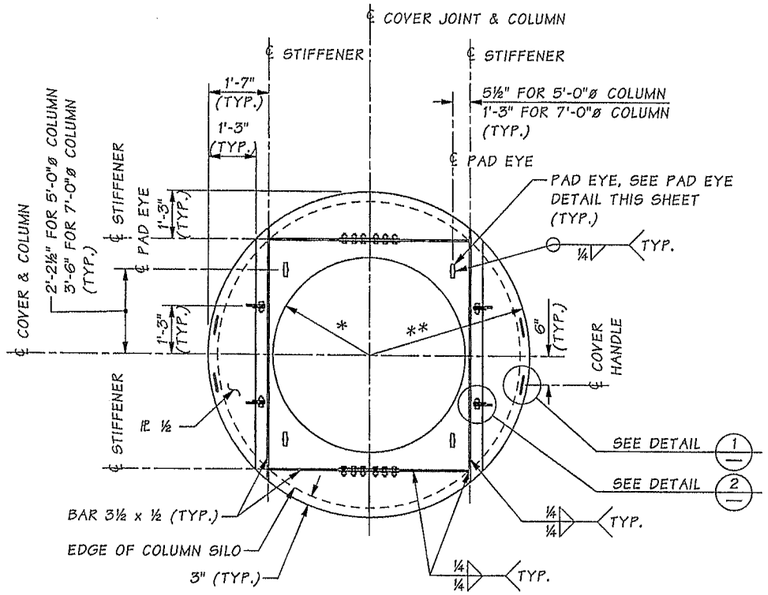

PLAN - COLUMN SILO COVER

REQUIRED AT COLUMN
2C, 3A, 3B, 4A, 4B AND 4C

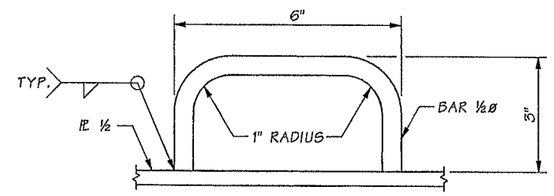

DETAIL 1

HANDLE 4 EACH

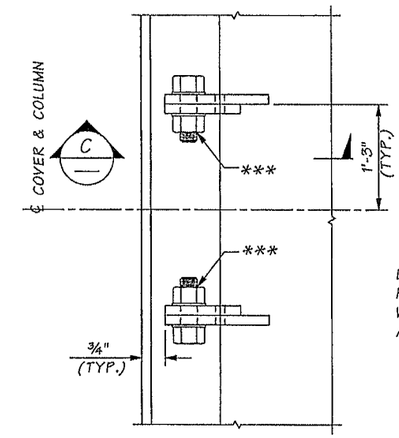

DETAIL 2

HINGE

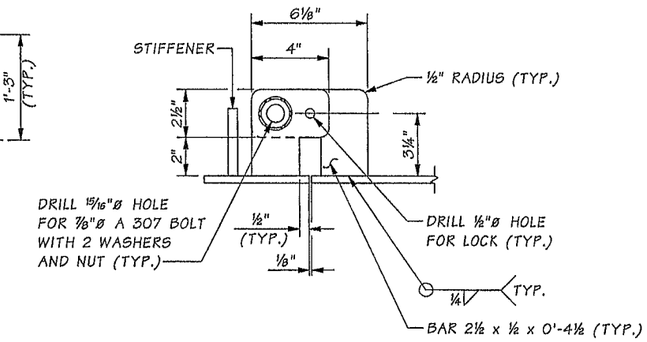

SECTION C

NOTES:

1. THE CONTRACTOR SHALL VERIFY THAT THE COVER FITS OVER THE COLUMN SILO.
2. FOR COLUMN 4A SILO COVER, ORIENT COVER SO CONDUIT DOES NOT INTERFERE WITH ACCESS HATCH OPENING.

*** INSTALL NUT SO THAT HATCH OPENS FREELY. TACK WELD NUT TO BOLT. APPLY TWO COATS OF GALVANIZING REPAIR PAINT CONFORMING TO STD. SPEC SECTION 9-08.1(2)B APPLIED IN ACCORDANCE WITH STD. SPEC SECTION 6-07.3(9)I.

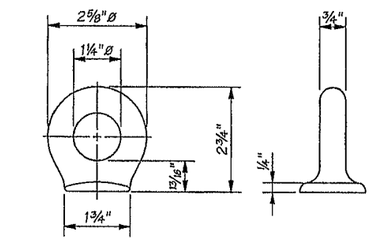

PAD EYE DETAIL

MINIMUM WORKING LOAD LIMIT FOR THE EYE OF THE PAD EYE SHALL BE 7200 LBS. PAD EYE SHALL BE FORGED FROM 1035 CARBON STEEL AND SHALL BE QUENCHED AND TEMPERED.

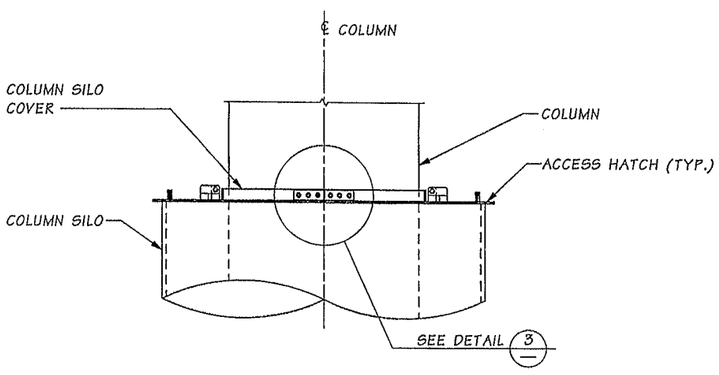

COLUMN SILO COVER DETAIL

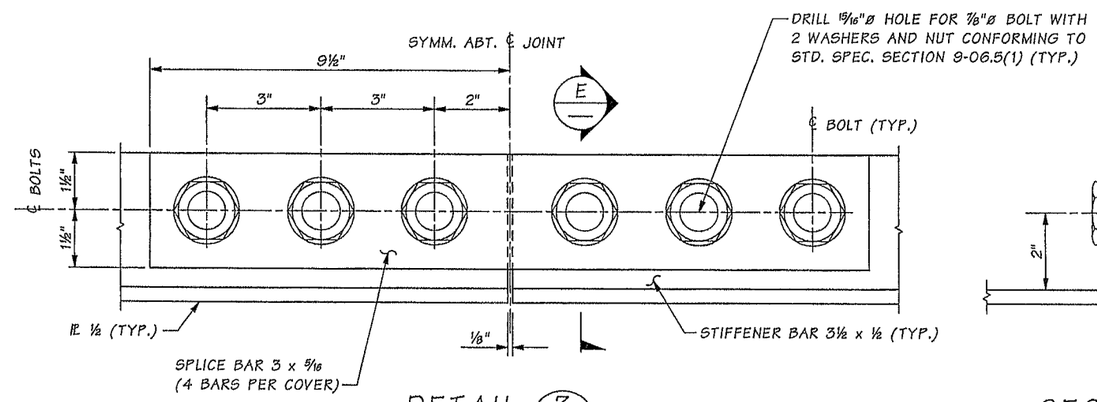

DETAIL 3

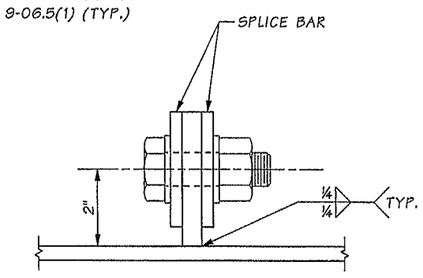

SECTION E

Bridge Design Engr.	Khaleghi, B		M:\Y-Team\M ST TO PORTLAND\CWRR OC\window files\SILO COVER.wnd							
Supervisor	Khaleghi, B					REGION NO.	STATE	FED. AID PROJ. NO.	SHEET NO.	TOTAL SHEETS
Designed By	Bingle, J	04/13				10	WASH.			
Checked By	LHT, TDS	10/13								
Detailed By	Plesha, GM	04/13				JOB NUMBER 12C501				
Bridge Projects Engr.										
Prelim. Plan By										
Architect/Specialist			DATE	REVISION	BY	APP'D				

Tue Feb 11 07:15:50 2014

JEDEDIAH BINGLE — STATE OF WASHINGTON — 45100 — PROFESSIONAL ENGINEER — 2-11-14

BRIDGE AND STRUCTURES OFFICE

BILAN KHALEGHI — STATE OF WASHINGTON — 27606 — PROFESSIONAL ENGINEER — 2/12/14

Washington State Department of Transportation

I-5
M STREET TO PORTLAND AVENUE - HOV

I-5 OVER I-705 AND TACOMA RAIL BRIDGE NO. 5/445E

COLUMN SILO DETAILS

BRIDGE SHEET NO. SR19

SHEET 1123 OF 1763 SHEETS

SR 5 FILE NO. 7454 SHEET SR19

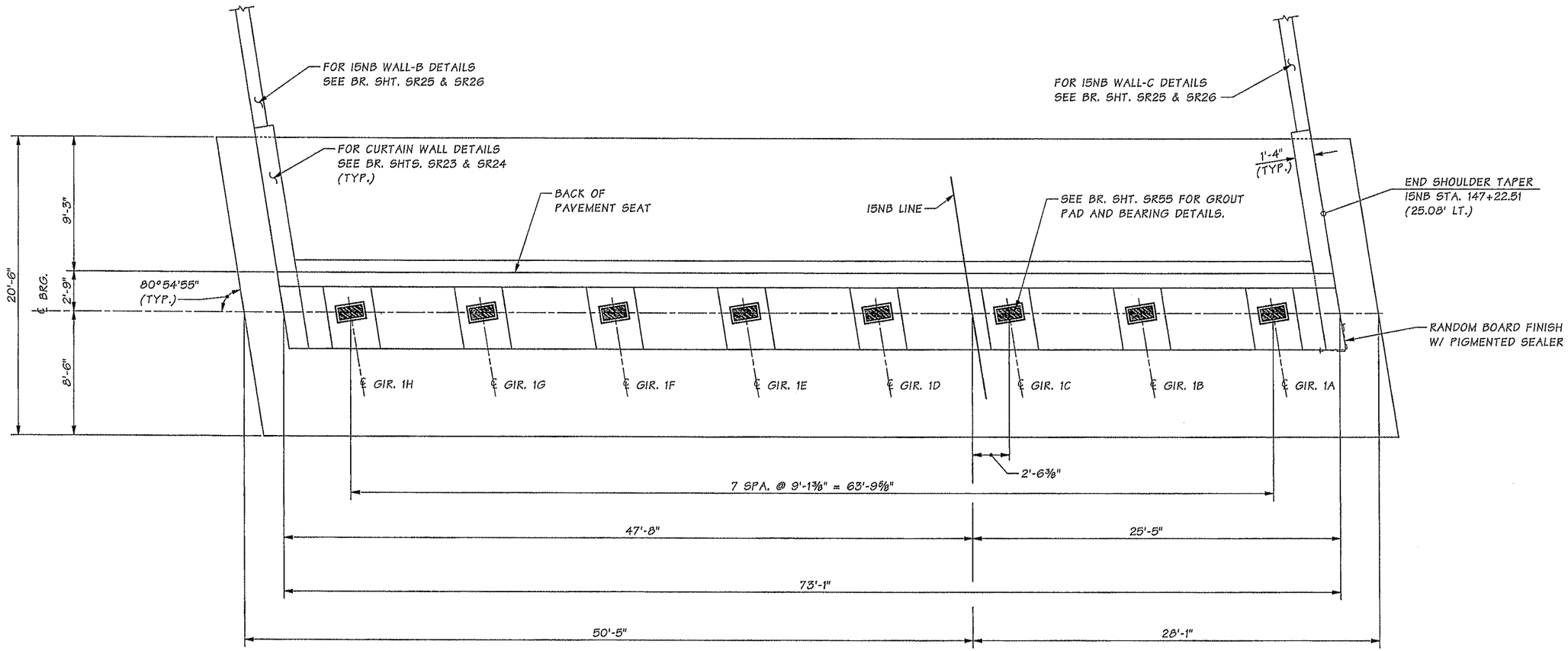

PLAN

SR 5 FILE NO. 7454 SHEET SR20

Bridge Design Engr.	Khaleghi, B	
Supervisor	Khaleghi, B	
Designed By	Sawahata, D	03/13
Checked By	Tran, LH	10/13
Detailed By	Plesha, GM	03/13
Bridge Projects Engr.		
Prelim. Plan By		
Architect/Specialist		

M:\Y-Team\M ST TO PORTLAND\CWRR OC\window files\PIER 1 PLAN.wnd

DATE	REVISION	BY	APP'D

REGION NO.	STATE	FED. AID PROJ. NO.	SHEET NO.	TOTAL SHEETS
10	WASH.			
JOB NUMBER 12C501				

Tue Feb 11 07:15:52 2014

TAKAO DAVID SAWAHATA, STATE OF WASHINGTON, 16562, REGISTERED PROFESSIONAL ENGINEER 2-11-14

BRIDGE AND STRUCTURES OFFICE

ALAN KHALEGHI, STATE OF WASHINGTON, 27695, PROFESSIONAL ENGINEER 2/12/14

Washington State Department of Transportation

I-5
M STREET TO PORTLAND AVENUE - HOV

I-5 OVER I-705 AND TACOMA RAIL BRIDGE NO. 5/445E

PIER 1 PLAN

BRIDGE SHEET NO. SR20

SHEET 1124 OF 1763 SHEETS

TOP OF GROUT PAD ELEVATIONS

(ELEVATIONS TAKEN AT ℄ BEARING AT TOP OF GROUT PAD)

GIRDER	A	B	C	D	E	F	G	H
ELEVATION	184.91	184.99	185.05	185.11	185.17	185.23	185.28	185.32

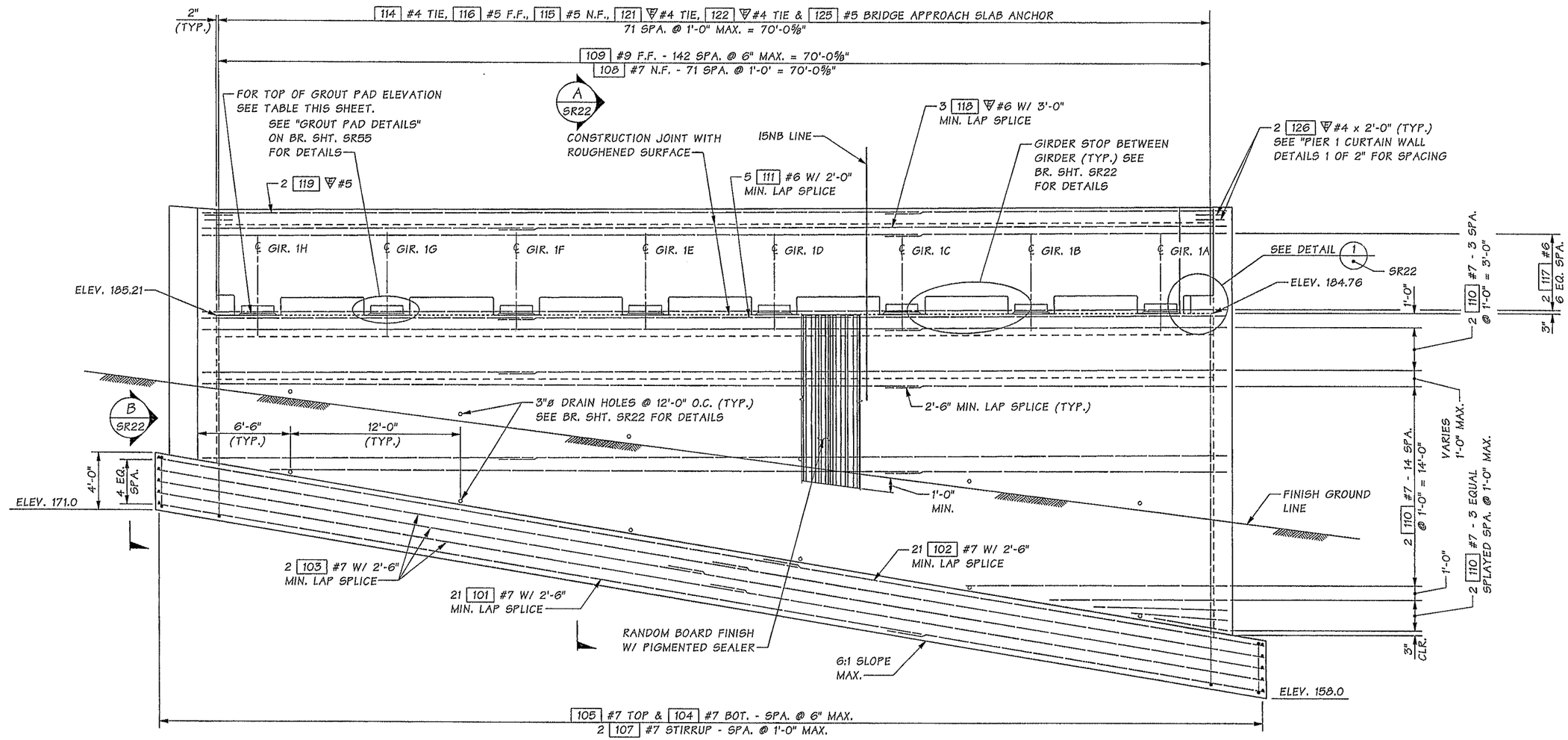

ELEVATION

LOOKING BACK ON STATION
N.F. = NEAR FACE
F.F. = FAR FACE

NOTES:

1. DO NOT SPLICE MORE THAN 50% OF REBAR AT ANY ONE LOCATION UNLESS NOTED OTHERWISE. STAGGER ALL SPLICES AT A MINIMUM OF 2'-6".

Bridge Design Engr.	Khaleghi, B		M:\Y-Team\M ST TO PORTLAND\CWRR OC\window files\PIER 1 ELEVATION.wnd
Supervisor	Khaleghi, B		
Designed By	Sawahata, D	04/13	
Checked By	Tran, LH	10/13	
Detailed By	Plesha, GM	04/13	
Bridge Projects Engr.			
Prelim. Plan By			
Architect/Specialist			

DATE	REVISION	BY	APP'D

REGION NO.	STATE	FED. AID PROJ. NO.	SHEET NO.	TOTAL SHEETS
10	WASH.			
JOB NUMBER 122501				

Tue Feb 11 07:15:53 2014

BRIDGE AND STRUCTURES OFFICE

Washington State Department of Transportation

I-5
M STREET TO PORTLAND AVENUE - HOV

I-5 OVER I-705 AND TACOMA RAIL BRIDGE NO. 5/445E

PIER 1 ELEVATION

BRIDGE SHEET NO. SR21

SHEET 1125 OF 1763 SHEETS

SR 5 FILE NO. 7454 SHEET SR21

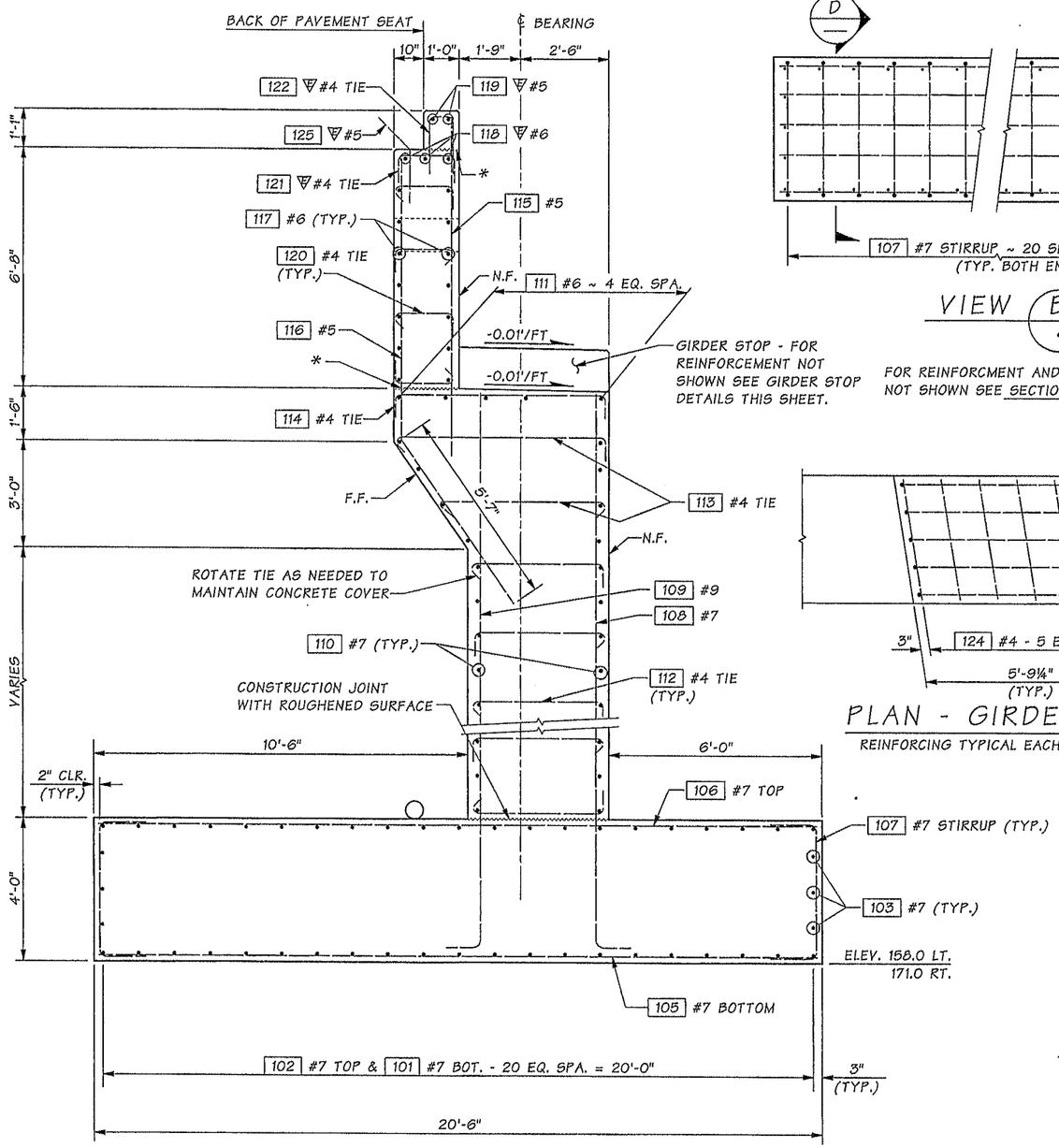

SECTION A
SR21

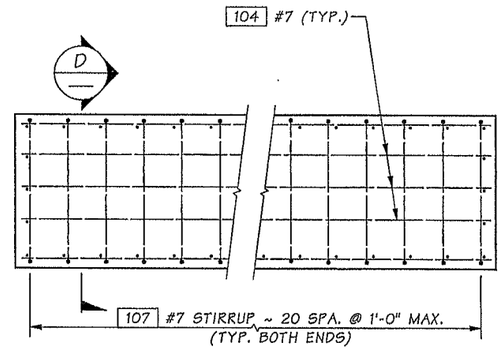

VIEW B
SR21

FOR REINFORCMENT AND CALLOUTS NOT SHOWN SEE SECTION A

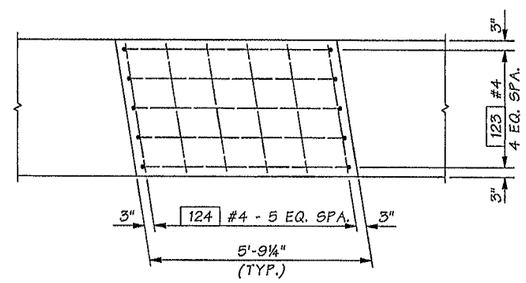

PLAN - GIRDER STOP
REINFORCING TYPICAL EACH GIRDER STOP

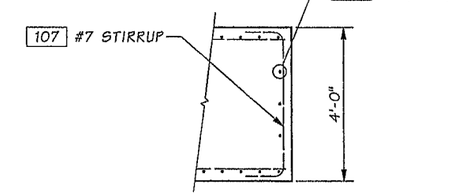

SECTION D

NOTES:

* CONSTRUCTION JOINT WITH ROUGHENED SURFACE

N.F. = NEAR FACE
F.F. = FAR FACE

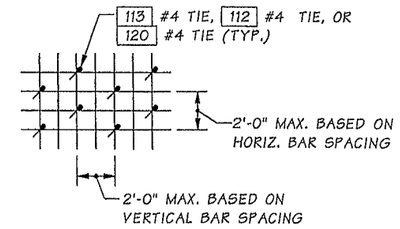

TIE BAR SPACING DETAIL

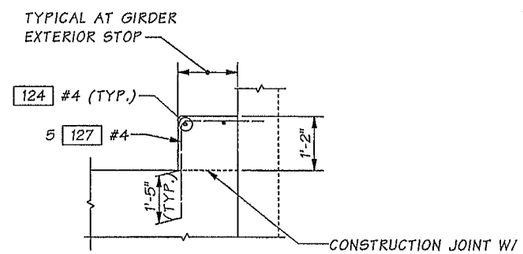

DETAIL 1
SR21

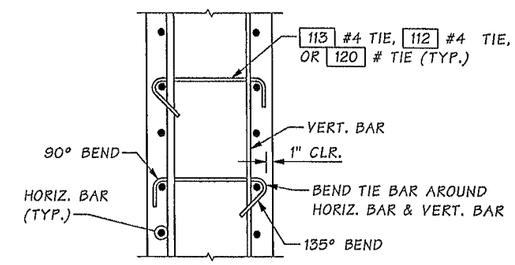

TIE BAR DETAIL
ALTERNATE 135° HOOK EVERY OTHER TIE BAR

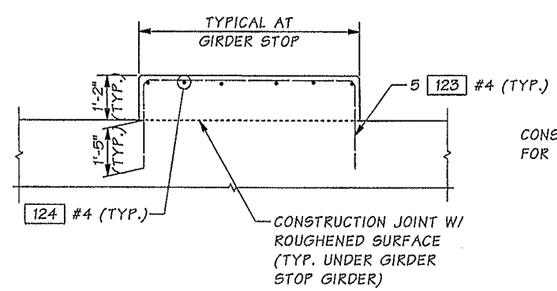

ELEVATION
GIRDER STOP DETAILS

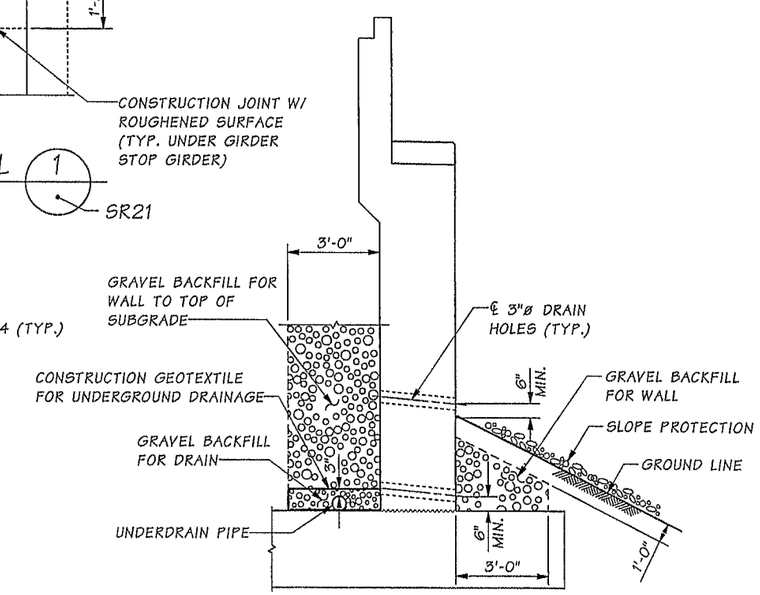

DRAINAGE DETAIL

Bridge Design Engr.	Khaleghi, B		
Supervisor	Khaleghi, B		
Designed By	Sawahata, D	03/13	
Checked By	Tran, LH	10/13	
Detailed By	Plesha, GM	03/13	
Bridge Projects Engr.			
Prelim. Plan By			
Architect/Specialist			

M:\Y-Team\M ST TO PORTLAND\CWRR OC\window files\PIER 1 DETAILS.wnd

DATE	REVISION	BY	APP'D

REGION NO.	STATE	FED. AID PROJ. NO.	SHEET NO.	TOTAL SHEETS
10	WASH.			
JOB NUMBER 12C501				

Tue Feb 11 07:15:55 2014

TAKAO DAVID SAWAHATA, STATE OF WASHINGTON, 22022, REGISTERED PROFESSIONAL ENGINEER — 2-11-14

BRIDGE AND STRUCTURES OFFICE

BLIAN KHALEGHI, STATE OF WASHINGTON, 27805, STRUCTURAL ENGINEER, PROFESSIONAL ENGINEER — 2/12/14

Washington State Department of Transportation

I-5
M STREET TO PORTLAND AVENUE - HOV
I-5 OVER I-705 AND TACOMA RAIL BRIDGE NO. 5/445E
PIER 1 DETAILS

BRIDGE SHEET NO. SR22
SHEET 1126 OF 1763 SHEETS

SR 5 FILE NO. 7454 SHEET SR22

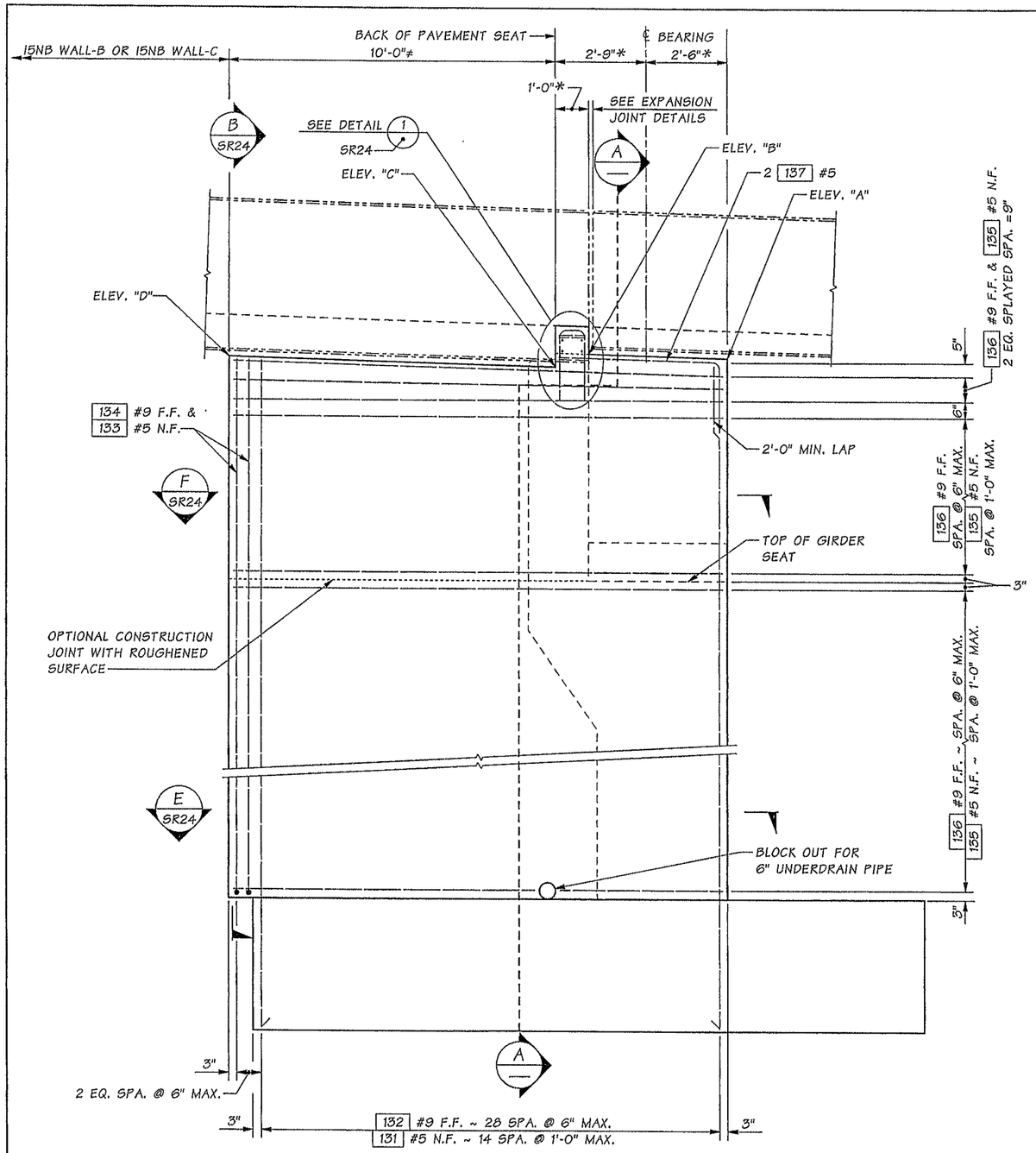

CURTAIN WALL OUTSIDE ELEVATION

PIER 1 RIGHT SHOWN, PIER 1 LEFT SIMILAR.

NOTES:

≠ MEASURED ALONG N.F.

* MEASURED NORMAL TO PIER WALL

N.F. = NEAR FACE
F.F. = FAR FACE

CURTAIN WALL ELEVATION TABLE

THE ELEVATION IS TAKEN AT NEAR FACE OF THE CURTAIN WALLS

LOCATION	ELEV. "A"	ELEV. "B"	ELEV. "C"	ELEV. "D"
PIER 1 LEFT	191.90	192.03	191.64	191.94
PIER 1 RIGHT	192.40	192.48	192.08	192.25

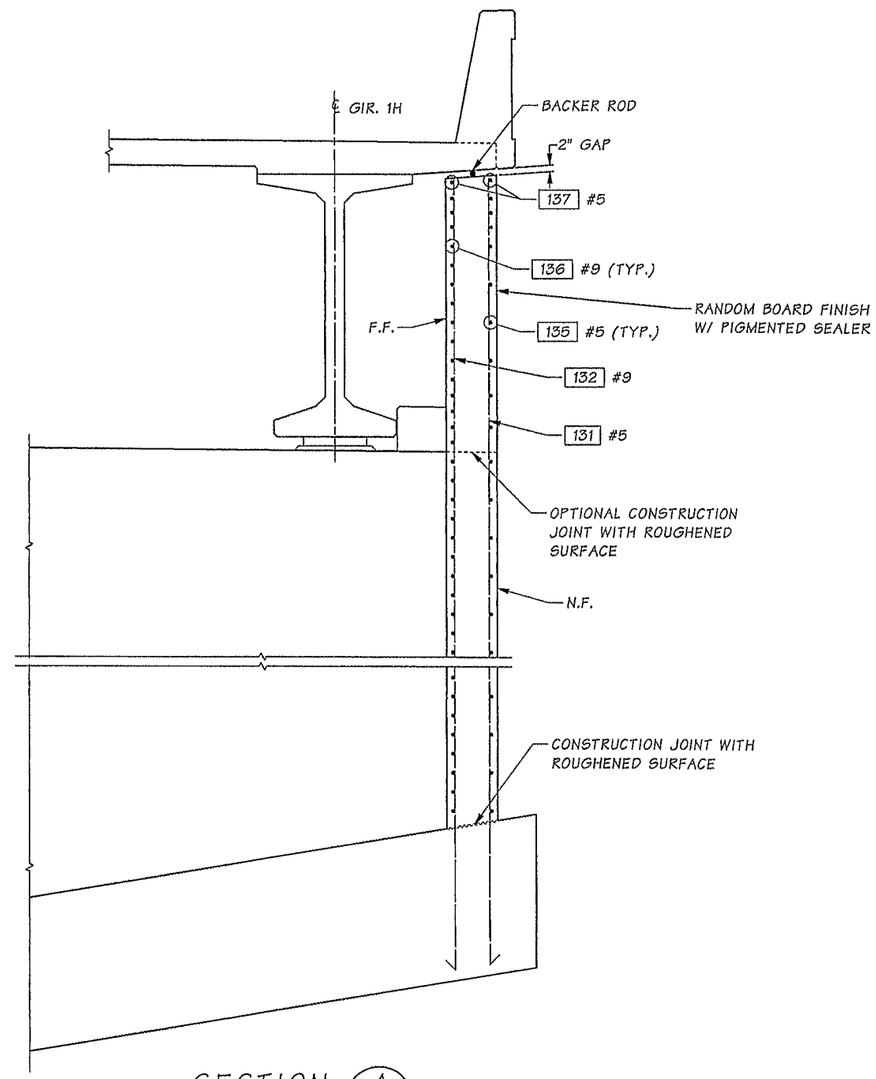

SECTION A

Bridge Design Engr.	Khaleghi, B		M:\Y-Team\M ST TO PORTLAND\CWRR OC\window files\PIER 1 CURTAIN WALL 1.wnd
Supervisor	Khaleghi, B		
Designed By	Sawahata, D	05/13	
Checked By	Tran, LH	10/13	
Detailed By	Plesha, GM	05/13	
Bridge Projects Engr.			
Prelim. Plan By			
Architect/Specialist			

DATE	REVISION	BY	APP'D

REGION NO.	STATE	FED. AID PROJ. NO.	SHEET NO.	TOTAL SHEETS
10	WASH.			
JOB NUMBER 12C501				

TAKAO DAVID SAWAHATA, STATE OF WASHINGTON, 45562, REGISTERED PROFESSIONAL ENGINEER — 2-11-14

BRIDGE AND STRUCTURES OFFICE

BRIAN KHALEGHI, STATE OF WASHINGTON, 27695, PROFESSIONAL ENGINEER — 2/12/14

Washington State Department of Transportation

I-5
M STREET TO PORTLAND AVENUE - HOV

I-5 OVER I-705 AND TACOMA RAIL BRIDGE NO. 5/445E

PIER 1 CURTAIN WALL DETAILS 1 OF 2

BRIDGE SHEET NO. SR23

SHEET 1127 OF 1763 SHEETS

SR 5 FILE NO. 7454 SHEET SR23

Tue Feb 11 07:15:57 2014

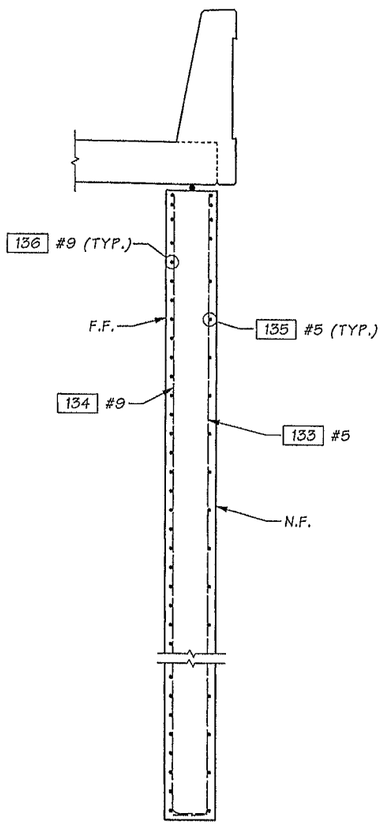

SECTION B
SR23

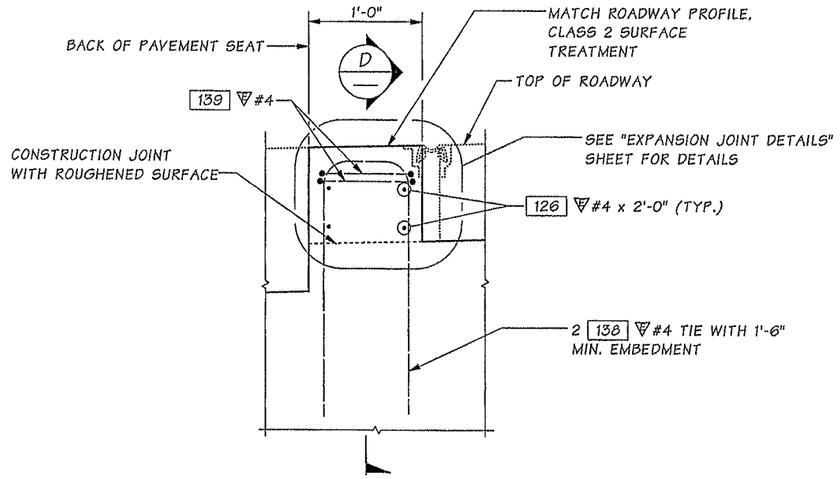

DETAIL 1
SR23

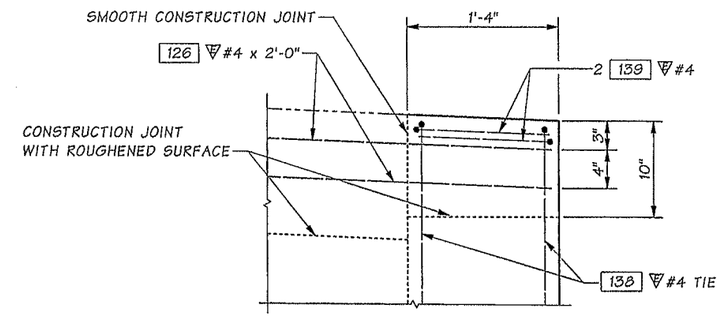

SECTION D

FOR DETAILS NOT SHOWN ~ SEE "CURTAIN WALL ELEVATION" DETAIL ON BR. SHT. SR23.

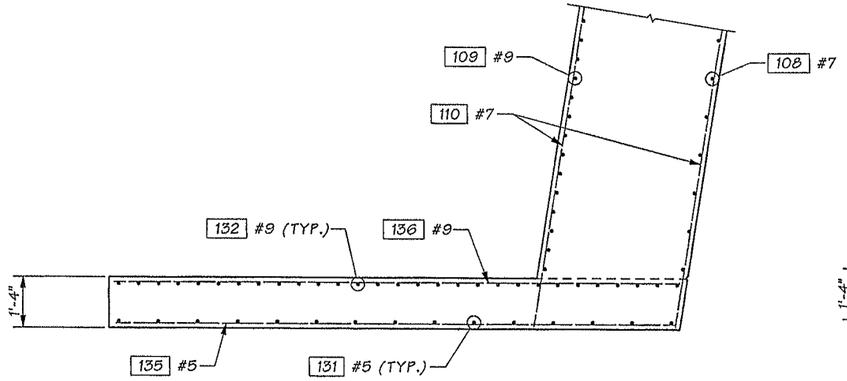

SECTION E
SR23

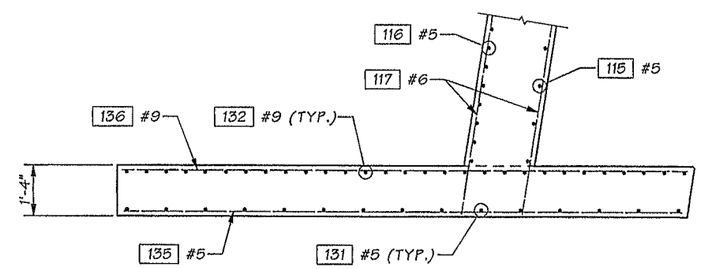

SECTION F
SR23

SR 5 FILE NO. 7454 SHEET SR24

Bridge Design Engr.	Khaleghi, B		M:\Y-Team\M ST TO PORTLAND\CWRR OC\window files\PIER 1 CURTAIN WALL 2.wnd								
Supervisor	Khaleghi, B										
Designed By	Sawahata, D	05/13					REGION NO.	STATE	FED. AID PROJ. NO.	SHEET NO.	TOTAL SHEETS
Checked By	Tran, LH	10/13					10	WASH.			
Detailed By	Plesha, GM	05/13					JOB NUMBER 12C501				
Bridge Projects Engr.											
Prelim. Plan By											
Architect/Specialist			DATE	REVISION	BY	APP'D					

Tue Feb 11 07:15:58 2014

TAKAO DAVID SAWAHATA, STATE OF WASHINGTON, 46852, REGISTERED PROFESSIONAL ENGINEER 2-11-14

BRIDGE AND STRUCTURES OFFICE

SIJAN KHALEGHI, STATE OF WASHINGTON, 27695, REGISTERED PROFESSIONAL ENGINEER 2/12/14

Washington State Department of Transportation

I-5
M STREET TO PORTLAND AVENUE - HOV

I-5 OVER I-705 AND TACOMA RAIL BRIDGE NO. 5/445E

PIER 1 CURTAIN WALL
DETAILS 2 OF 2

BRIDGE SHEET NO. SR24

SHEET 1128 OF 1763 SHEETS

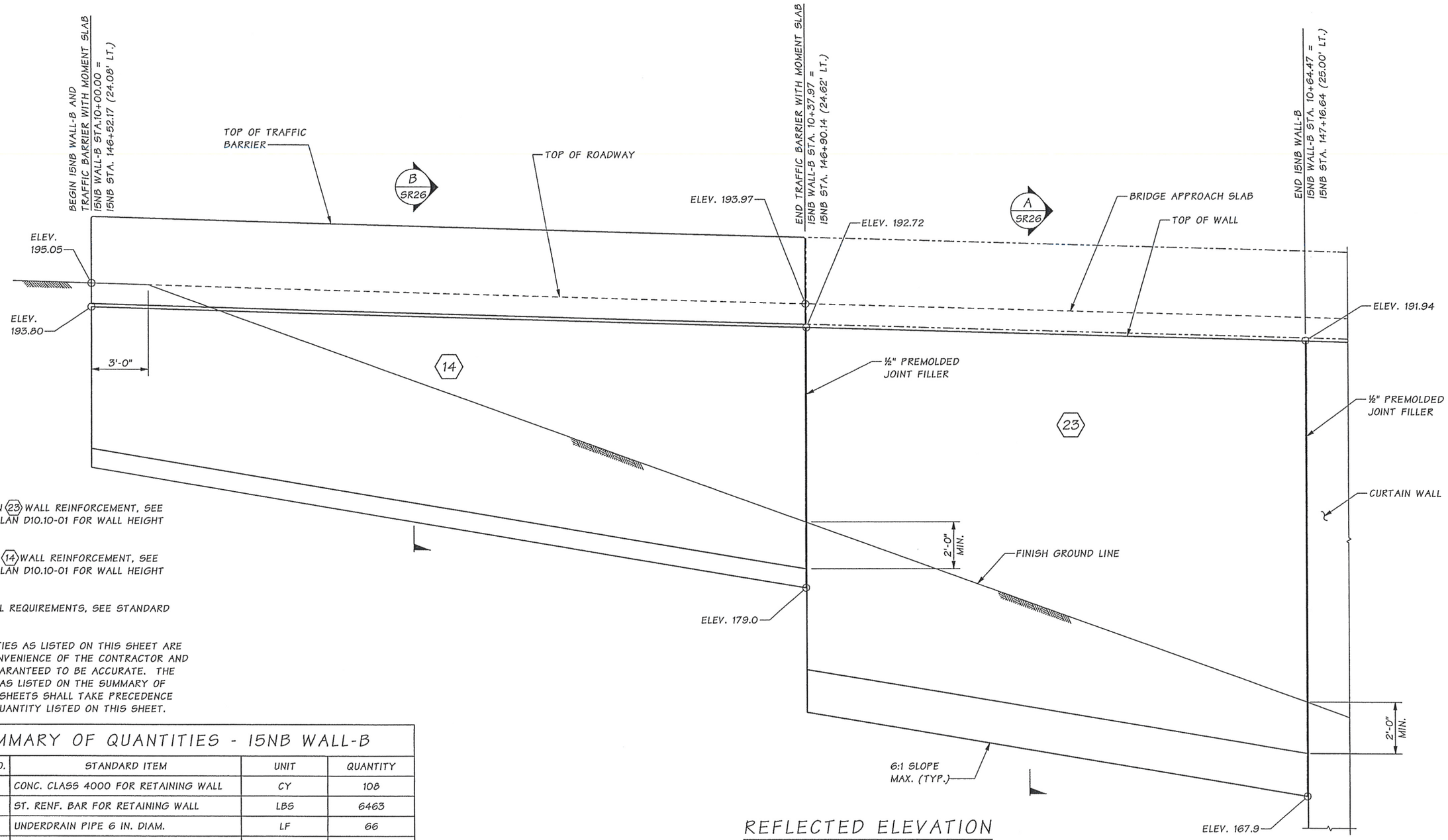

REFLECTED ELEVATION
15NB WALL-B

NOTES:

1. FOR SECTION (23) WALL REINFORCEMENT, SEE STANDARD PLAN D10.10-01 FOR WALL HEIGHT OF 23'.
2. FOR SECTION (14) WALL REINFORCEMENT, SEE STANDARD PLAN D10.10-01 FOR WALL HEIGHT OF 14'.
3. FOR BACKFILL REQUIREMENTS, SEE STANDARD PLAN D-4.
4. THE QUANTITIES AS LISTED ON THIS SHEET ARE FOR THE CONVENIENCE OF THE CONTRACTOR AND ARE NOT GUARANTEED TO BE ACCURATE. THE QUANTITIES AS LISTED ON THE SUMMARY OF QUANTITIES SHEETS SHALL TAKE PRECEDENCE OVER ANY QUANTITY LISTED ON THIS SHEET.

SUMMARY OF QUANTITIES - 15NB WALL-B

STND. ITEM NO.	STANDARD ITEM	UNIT	QUANTITY
4139	CONC. CLASS 4000 FOR RETAINING WALL	CY	108
4150	ST. RENF. BAR FOR RETAINING WALL	LBS	6463
1160	UNDERDRAIN PIPE 6 IN. DIAM.	LF	66
4006	STRUCTURE EXCAVATION CLASS A INCL HAUL	CY	240
4025	GRAVEL BACKFILL WALLS	CY	244
7014	GRAVEL BACKFILL DRAIN	CY	2
7550	CONST. GEOTEXTILE	SY	50

SR 5 FILE NO. 7454 SHEET SR25

Bridge Design Engr.	Khaleghi, B	
Supervisor	Khaleghi, B	
Designed By	Sawahata, D	05/13
Checked By	Tran, LH	10/13
Detailed By	Sawahata, D	05/13
Bridge Projects Engr.		
Prelim. Plan By		
Architect/Specialist		

M:\Y-Team\M ST TO PORTLAND\CWRR OC\window files\PIER 1 RETAINING WALLS.wnd

DATE	REVISION	BY	APP'D

REGION NO.	STATE	FED. AID PROJ. NO.	SHEET NO.	TOTAL SHEETS
10	WASH.			
JOB NUMBER 12C501				

Tue Feb 11 07:15:59 2014

TAKAO DAVID SAWAHATA, STATE OF WASHINGTON, 40022, REGISTERED PROFESSIONAL ENGINEER 2-11-14

BRIDGE AND STRUCTURES OFFICE

BIJAN KHALEGHI, STATE OF WASHINGTON, 21905, PROFESSIONAL ENGINEER 2/12/14

Washington State Department of Transportation

I-5
M STREET TO PORTLAND AVENUE - HOV

I-5 OVER I-705 AND TACOMA RAIL BRIDGE NO. 5/445E

15NB WALL-B & 15NB WALL-C
DETAILS 1 OF 2

BRIDGE SHEET NO. SR25

SHEET 1129 OF 1763 SHEETS

SUMMARY OF QUANTITIES - 15NB WALL-C

STND. ITEM NO.	STANDARD ITEM	UNIT	QUANTITY
4139	CONC. CLASS 4000 FOR RETAINING WALL	CY	9
4150	ST. RENF. BAR FOR RETAINING WALL	LBS	507
1160	UNDERDRAIN PIPE 6 IN. DIAM.	LF	50
4025	GRAVEL BACKFILL WALLS	CY	17
7014	GRAVEL BACKFILL DRAIN	CY	2
7550	CONST. GEOTEXTILE	SY	30

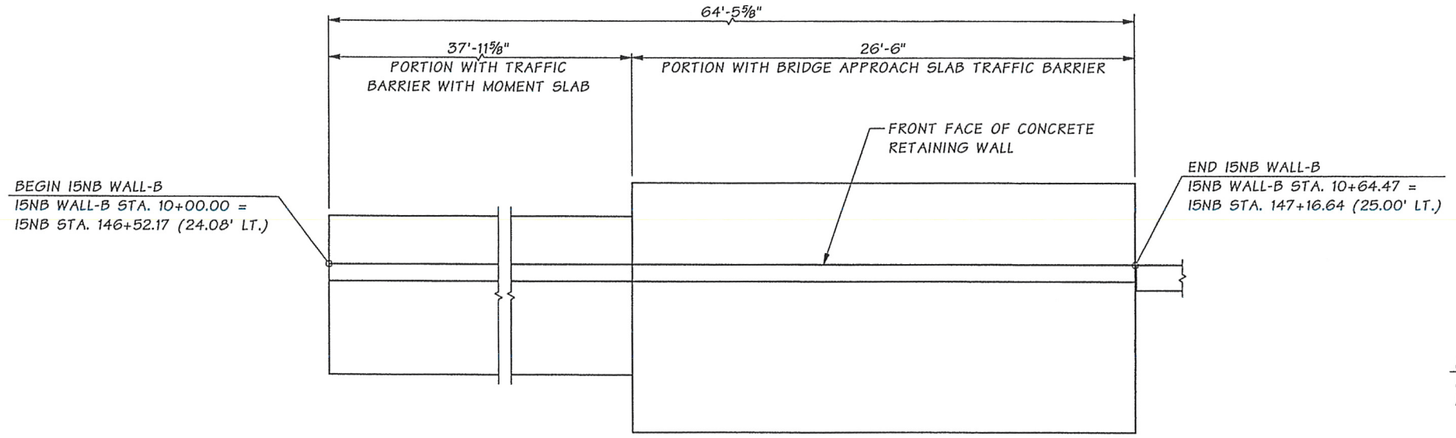

PLAN
15NB WALL-B

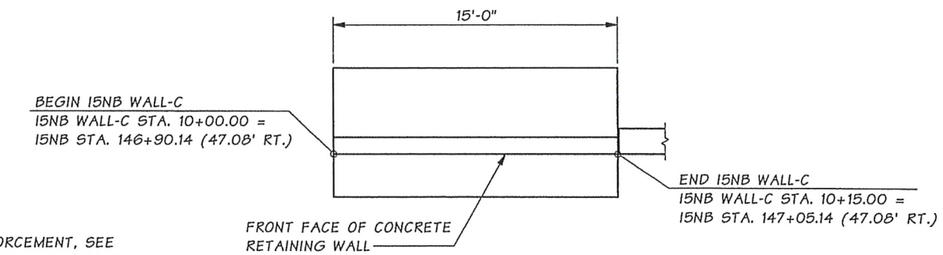

PLAN
15NB WALL-C

NOTES:

1. FOR SECTION (8) WALL REINFORCEMENT, SEE STANDARD PLAN D10.10-01 FOR WALL HEIGHT OF 8'.
2. FOR BACKFILL REQUIREMENTS, SEE STANDARD PLAN D-4.
3. THE QUANTITIES AS LISTED ON THIS SHEET ARE FOR THE CONVENIENCE OF THE CONTRACTOR AND ARE NOT GUARANTEED TO BE ACCURATE. THE QUANTITIES AS LISTED ON THE SUMMARY OF QUANTITIES SHEETS SHALL TAKE PRECEDENCE OVER ANY QUANTITY LISTED ON THIS SHEET.

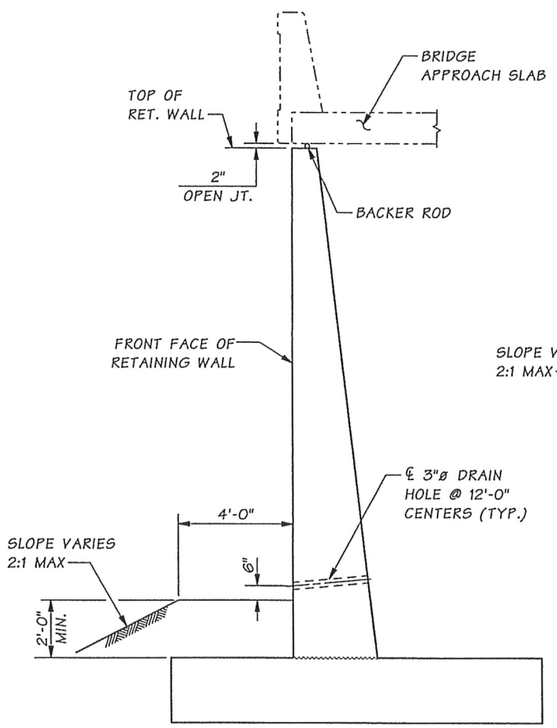

SECTION (A) SR25

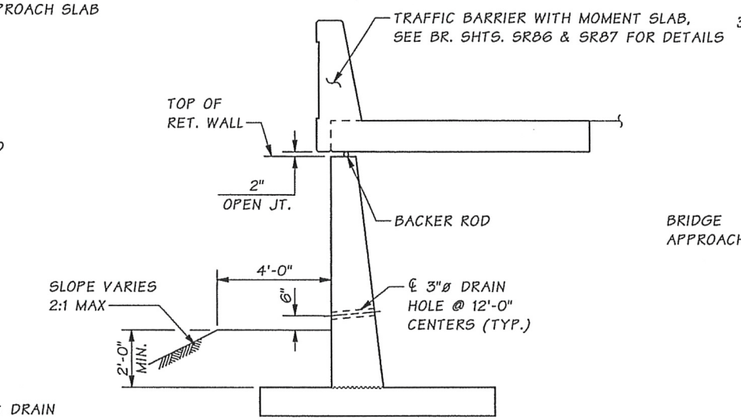

SECTION (B) SR25

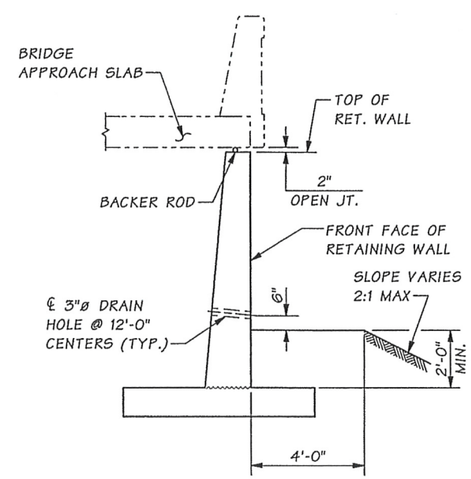

SECTION (C)

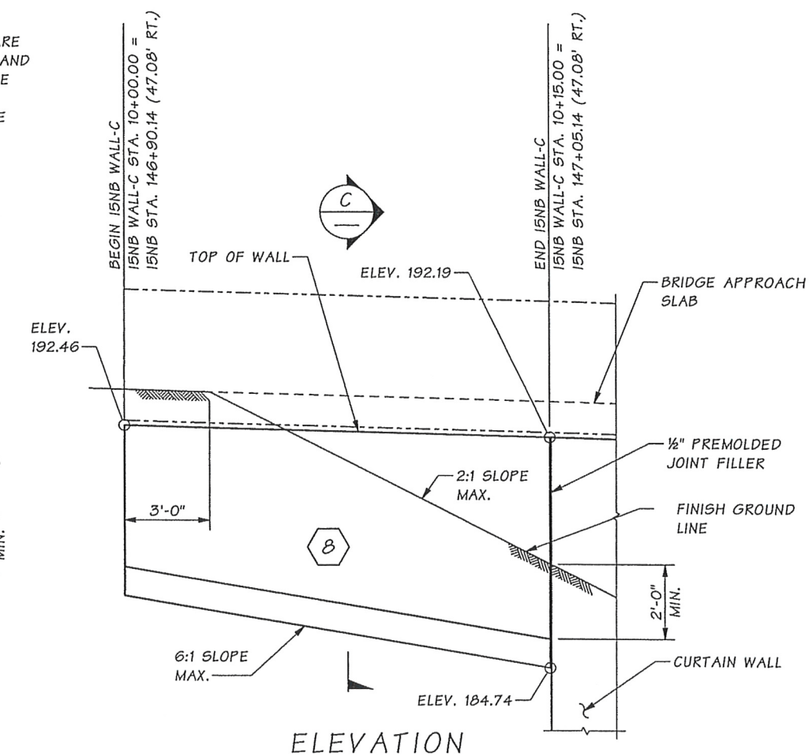

ELEVATION
15NB WALL-C

Bridge Design Engr.	Khaleghi, B		M:\Y-Team\M ST TO PORTLAND\CWRR OC\window files\PIER 1 RETAINING WALL DET.wnd			REGION NO.	STATE	FED. AID PROJ. NO.	SHEET NO.	TOTAL SHEETS
Supervisor	Khaleghi, B					10	WASH.			
Designed By	Sawahata, D	03/13				JOB NUMBER 12C501				
Checked By	Tran, LH	10/13								
Detailed By	Sawahata, D	03/13								
Bridge Projects Engr.										
Prelim. Plan By										
Architect/Specialist			DATE	REVISION	BY	APP'D				

Tue Feb 11 07:16:00 2014

TAKAO DAVID SAWAHATA — STATE OF WASHINGTON — 40062 — REGISTERED PROFESSIONAL ENGINEER — 2-11-14

BRIDGE AND STRUCTURES OFFICE

BRIAN KHALEGHI — STATE OF WASHINGTON — REGISTERED PROFESSIONAL ENGINEER — 2/12/14

Washington State Department of Transportation

I-5
M STREET TO PORTLAND AVENUE - HOV

I-5 OVER I-705 AND TACOMA RAIL BRIDGE NO. 5/445E

15NB WALL-B & 15NB WALL-C
DETAILS 2 OF 2

BRIDGE SHEET NO. SR26

SHEET 1130 OF 1763 SHEETS

SR 5 FILE NO. 7454 SHEET SR26

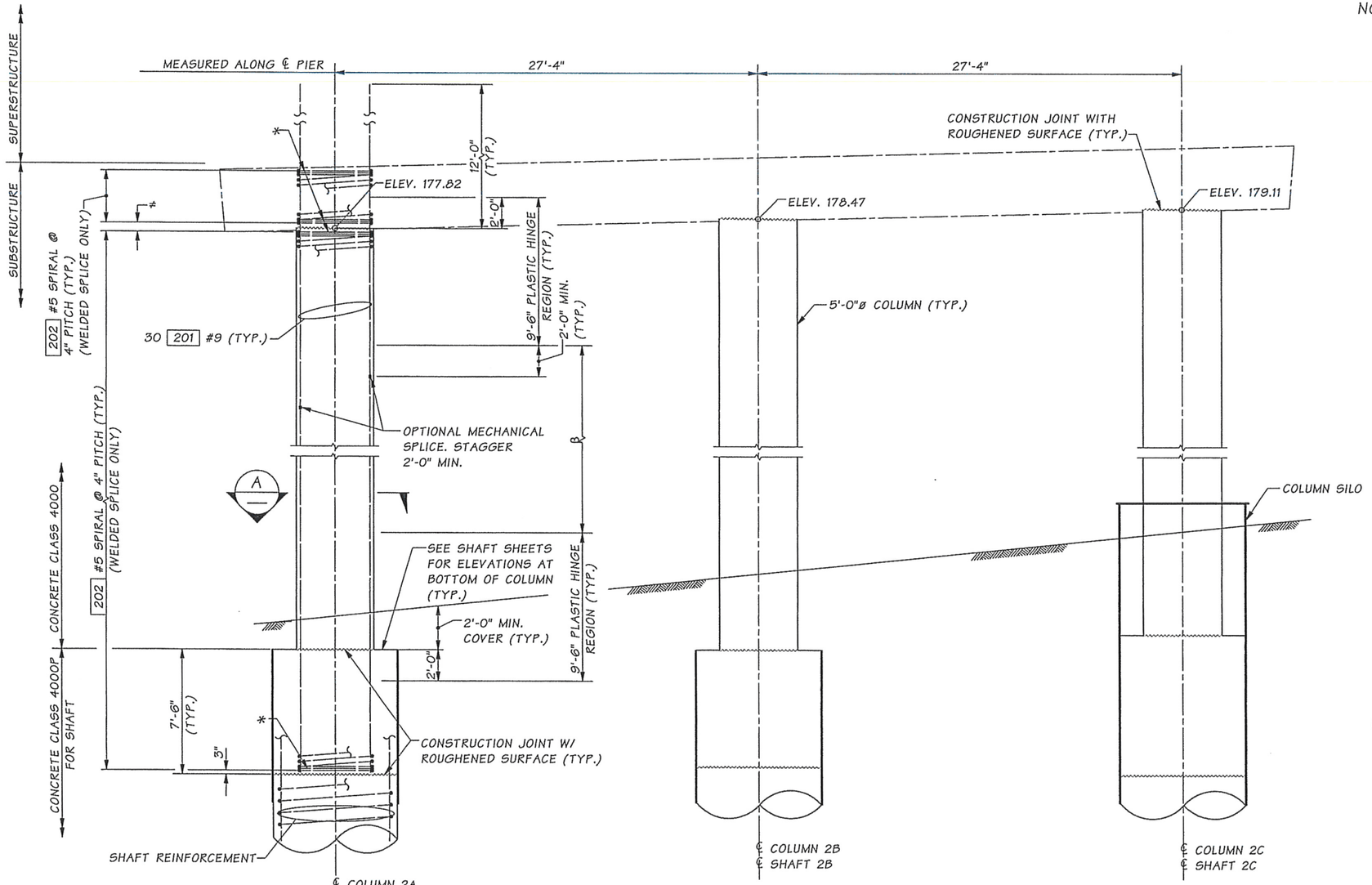

ELEVATION

CROSSBEAM REINFORCING NOT SHOWN FOR CLARITY.

NOTE:

1. SEE "COLUMN DETAILS" SHEET FOR "WELDED LAP SPLICE DETAIL".
2. NO WELDING OF SPIRALS IS PERMITTED IN THE PLASTIC HINGE REGION AFTER THE COLUMN CAGE IS ASSEMBLED. SPIRALS SHALL BE FIELD OR SHOP WELDED INDEPENDENTLY AND THEN ASSEMBLED AROUND THE COLUMN LONGITUDINAL STEEL AFTER WELDING.

* SEE "COLUMN DETAILS" SHEET FOR "SPIRAL TERMIINATION DETAIL"

≠ PROVIDE 1½" CLEAR FROM TOP OF SPIRAL TO LOWEST POINT OF CONSTRUCTION JOINT. PROVIDE 4" TO 6" VERTICAL BREAK IN SPIRAL TO ALLOW PLACEMENT OF BOTTOM MAT OF CROSSBEAM REINFORCEMENT.

β OPTIONAL CONSTRUCTION JOINT WITH ROUGHENED SURFACE AND COLUMN LAP SPLICE PERMISSIBLE WITH IN THESE LIMITS. SEE "COLUMN DETAILS" SHEET FOR "TYPICAL COLUMN LAP SPLICE DEAILS".

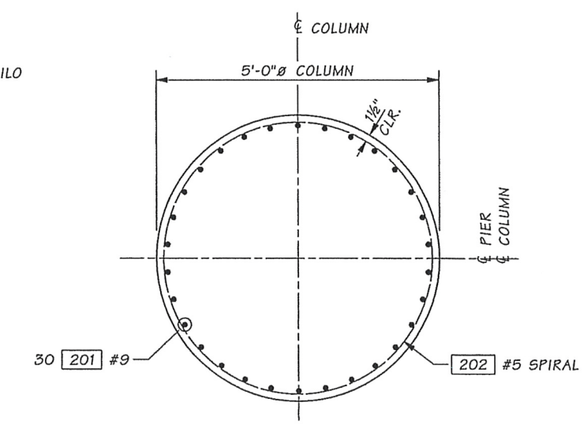

SECTION A

SR 5 FILE NO. 7454 SHEET SR27

Bridge Design Engr.	Khaleghi, B		M:\Y-Team\M ST TO PORTLAND\CWRR OC\window files\PIER 2 COLUMN.wnd				REGION NO.	STATE	FED. AID PROJ. NO.	SHEET NO.	TOTAL SHEETS
Supervisor	Khaleghi, B						10	WASH.			
Designed By	Bingle, J	04/13					JOB NUMBER 12C501				
Checked By	Mizumori, A	10/13									
Detailed By	Plesha, GM	04/13									
Bridge Projects Engr.											
Prelim. Plan By											
Architect/Specialist			DATE	REVISION	BY	APP'D					

Tue Feb 11 07:16:02 2014

BRIDGE AND STRUCTURES OFFICE

2-11-14

2/12/14

Washington State Department of Transportation

I-5
M STREET TO PORTLAND AVENUE - HOV

I-5 OVER I-705 AND TACOMA RAIL BRIDGE NO. 5/445E

PIER 2 COLUMN DETAILS

BRIDGE SHEET NO. SR27

SHEET 1131 OF 1763 SHEETS

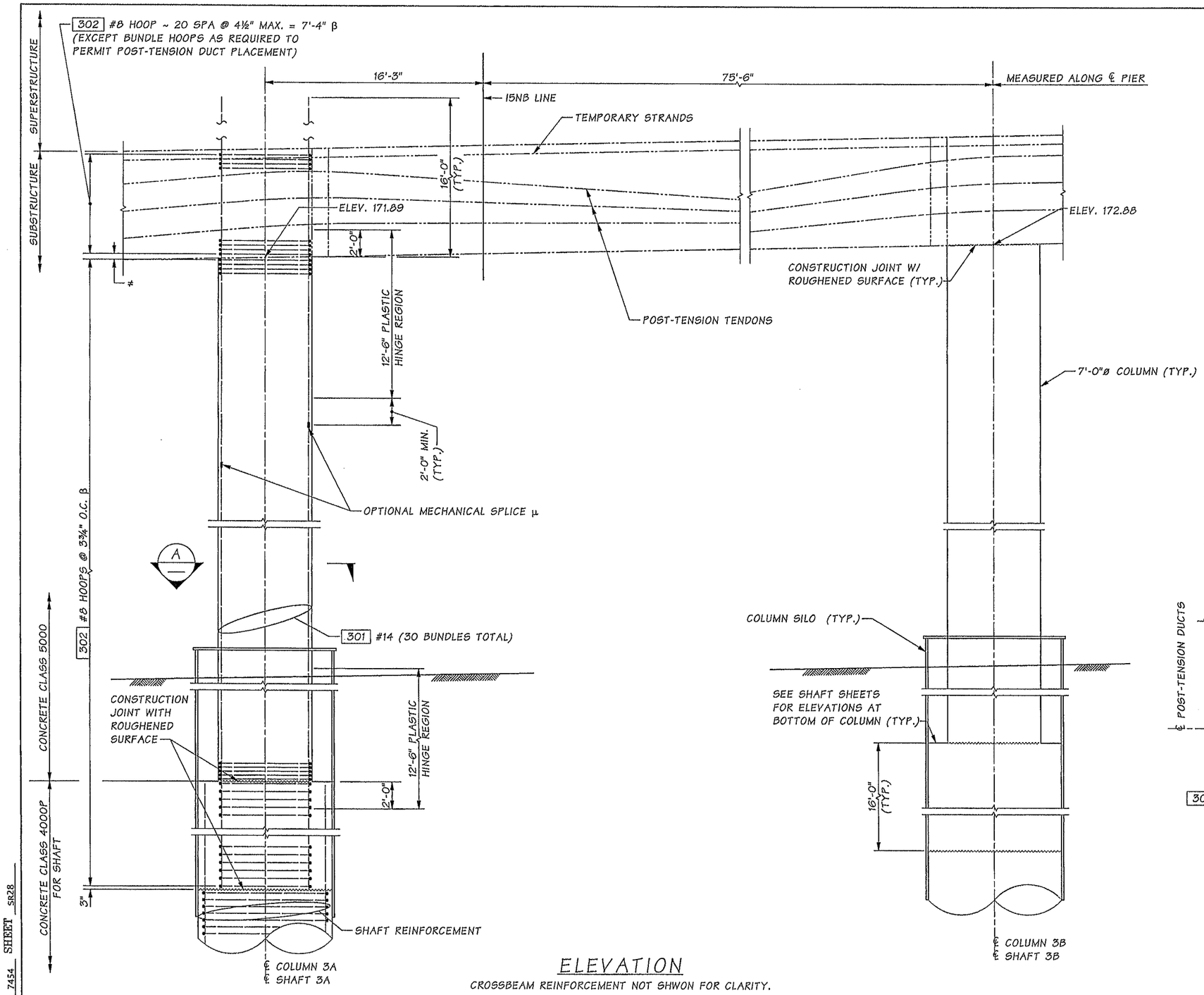

ELEVATION

CROSSBEAM REINFORCEMENT NOT SHWON FOR CLARITY.

NOTES:

β COLUMN HOOPS SHALL BE BUTT WELDED ONLY. THE LOCATION OF THE BUTT WELD FOR ADJACENT HOOPS SHALL BE STAGGERED SO THAT NO TWO BUTT WELDS ARE LOCATED AT THE SAME LOCATION. SEE "COLUMN DETAILS" SHEET FOR "RESISTANCE BUTT JOINT DETAIL" OR "MANUAL DIRECT BUTT JOINT DETAILS"

≠ PROVIDE 1½" CLEAR FROM TOP OF HOOP TO LOWEST POINT OF CONSTRUCTION JOINT. PROVIDE 4" TO 6" VERTICAL SPACING BETWEEN HOOPS TO ALLOW PLACEMENT OF BOTTOM MAT OF CROSSBEAM REINFORCEMENT.

α PROVIDE SUFFICIENT GAP BETWEEN COLUMN BUNDLES AT ℄ DUCT IN LOWER CROSSBEAM TO ALLOW PLACEMENT OF DUCT WITHOUT INTERFERENCE.

μ IF PROVIDED, MECHANICAL SPLICES SHALL BE SPACED SO THAT NO SPLICE IS CLOSER THAN 2'-0" FROM AN ADJACENT SPLICE IN EACH BUNDLE.

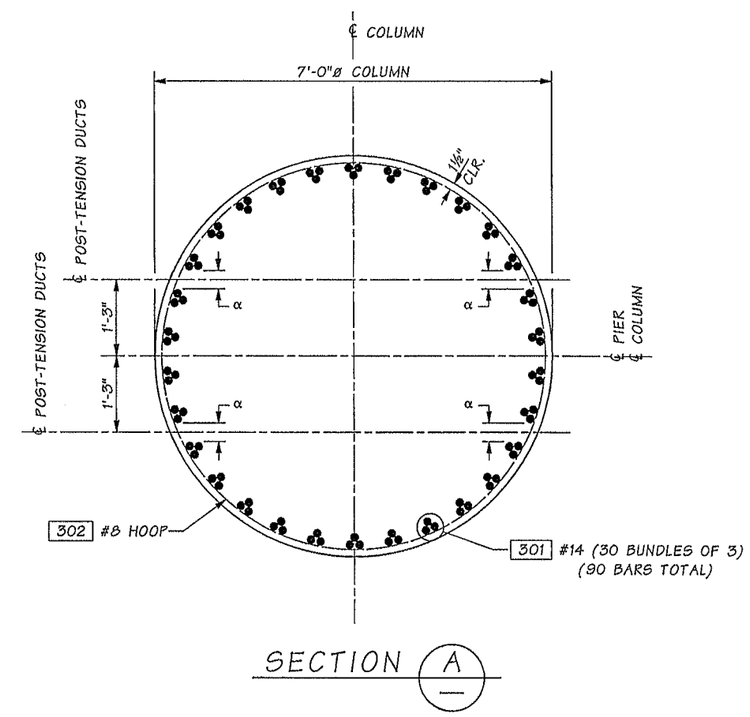

SECTION A

Bridge Design Engr.	Khaleghi, B		M:\Y-Team\M ST TO PORTLAND\CWRR OC\window files\PIER 3 COLUMN.wnd							
Supervisor	Khaleghi, B					REGION NO.	STATE	FED. AID PROJ. NO.	SHEET NO.	TOTAL SHEETS
Designed By	Bingle, J	04/13				10	WASH.			
Checked By	Mizumori, A	10/13								
Detailed By	Plesha, GM	04/13				JOB NUMBER 12C501				
Bridge Projects Engr.										
Prelim. Plan By										
Architect/Specialist			DATE	REVISION	BY	APP'D				

Tue Feb 11 07:16:03 2014

SR 5 FILE NO. 7454 SHEET SR28

JEDEDIAH BINGLE — STATE OF WASHINGTON — 25190 — PROFESSIONAL ENGINEER — 2-11-14

BRIDGE AND STRUCTURES OFFICE

BIJAN KHALEGHI — STATE OF WASHINGTON — 27695 — PROFESSIONAL ENGINEER — 2/12/14

Washington State Department of Transportation

I-5
M STREET TO PORTLAND AVENUE - HOV

I-5 OVER I-705 AND TACOMA RAIL BRIDGE NO. 5/445E

PIER 3 COLUMN DETAILS

BRIDGE SHEET NO. SR28

SHEET 1132 OF 1763 SHEETS

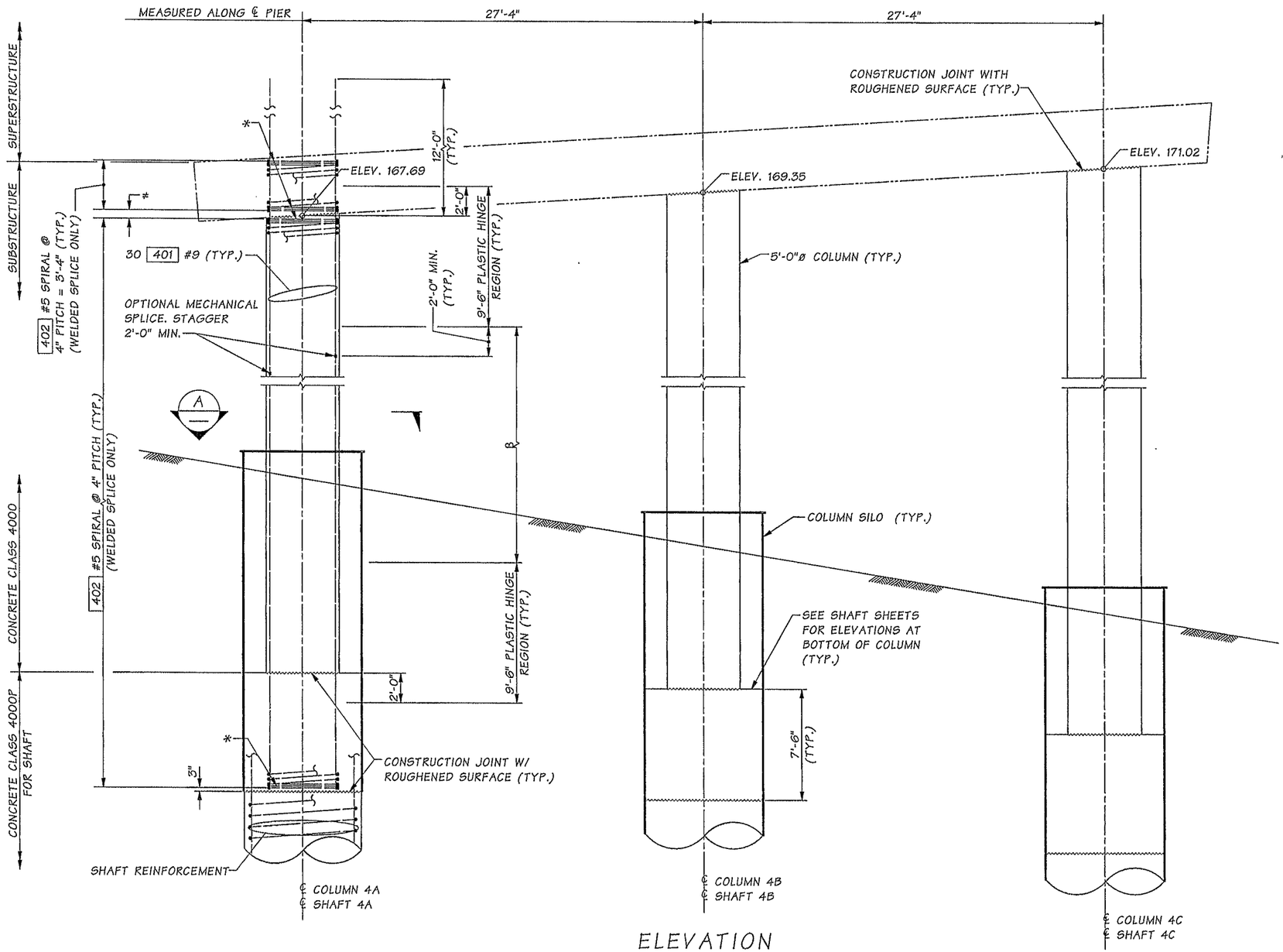

ELEVATION

CROSSBEAM REINFORCING NOT SHOWN FOR CLARITY.

NOTES:

1. SEE "COLUMN DETAILS" SHEET FOR "WELDED LAP SPLICE DETAIL".
2. NO WELDING OF SPIRALS IS PERMITTED IN THE PLASTIC HINGE REGION AFTER THE COLUMN CAGE IS ASSEMBLED. SPIRALS SHALL BE FIELD OR SHOP WELDED INDEPENDENTLY AND THEN ASSEMBLED AROUND THE COLUMN LONGITUDINAL STEEL AFTER WELDING.
3. SEE STANDARD PLAN J-60.14 AND SHEET ILD1 FOR CONDUIT MOUNTING DETAILS ON COLUMN 4A.

* SEE "COLUMN DETAILS" SHEET FOR "SPIRAL TERMIINATION DETAIL"

≠ PROVIDE 1½" CLEAR FROM TOP OF SPIRAL TO LOWEST POINT OF CONSTRUCTION JOINT. PROVIDE 4" TO 6" VERTICAL BREAK IN SPIRAL TO ALLOW PLACEMENT OF BOTTOM MAT OF CROSSBEAM REINFORCEMENT.

β OPTIONAL CONSTRUCTION JOINT WITH ROUGHENED SURFACE AND COLUMN LAP SPLICE PERMISSIBLE WITH IN THESE LIMITS. SEE "COLUMN DETAILS" SHEET FOR "TYPICAL COLUMN LAP SPLICE DEAILS".

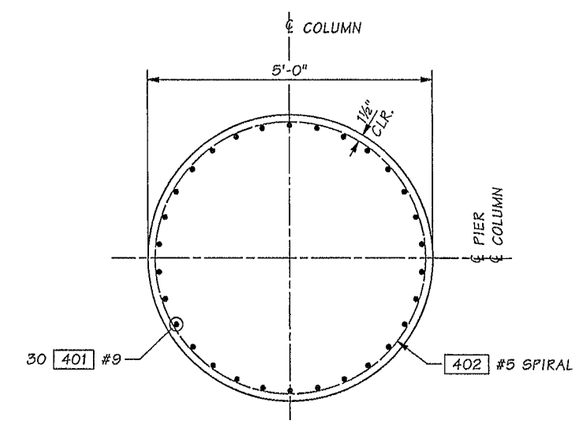

SECTION A

Bridge Design Engr.	Khaleghi, B		M:\Y-Team\M ST TO PORTLAND\CWRR OC\window files\PIER 4 COLUMN.wnd								
Supervisor	Khaleghi, B										
Designed By	Bingle, J	04/13									
Checked By	Mizumori, A	10/13									
Detailed By	Plesha, GM	04/13									
Bridge Projects Engr.											
Prelim. Plan By											
Architect/Specialist			DATE	REVISION	BY	APP'D					

REGION NO.	STATE	FED. AID PROJ. NO.	SHEET NO.	TOTAL SHEETS
10	WASH.			
JOB NUMBER 12C501				

BRIDGE AND STRUCTURES OFFICE

2-11-14

2/12/14

Washington State Department of Transportation

I-5
M STREET TO PORTLAND AVENUE - HOV

I-5 OVER I-705 AND TACOMA RAIL BRIDGE NO. 5/445E

PIER 4 COLUMN DETAILS

BRIDGE SHEET NO. SR29

SHEET 1133 OF 1763 SHEETS

SR 5 FILE NO. 7454 SHEET SR29

Tue Feb 11 07:16:04 2014

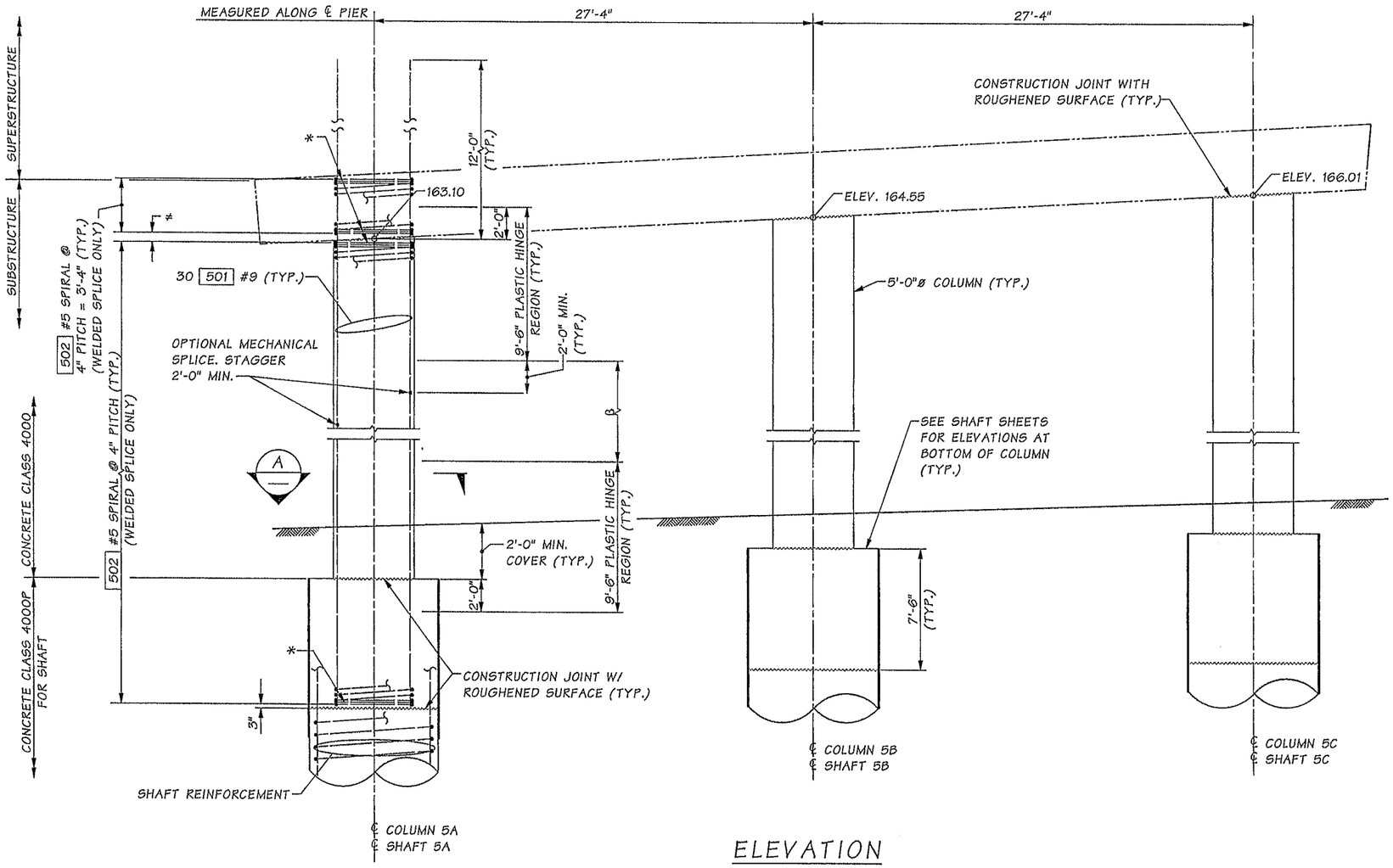

ELEVATION

CROSSBEAM REINFORCING NOT SHOWN FOR CLARITY.

NOTE:

1. SEE "COLUMN DETAILS" SHEET FOR "WELDED LAP SPLICE DETAIL".
2. NO WELDING OF SPIRALS IS PERMITTED IN THE PLASTIC HINGE REGION AFTER THE COLUMN CAGE IS ASSEMBLED. SPIRALS SHALL BE FIELD OR SHOP WELDED INDEPENDENTLY AND THEN ASSEMBLED AROUND THE COLUMN LONGITUDINAL STEEL AFTER WELDING.

* SEE "COLUMN DETAILS" SHEET FOR "SPIRAL TERMIINATION DETAIL"

≠ PROVIDE 1½" CLEAR FROM TOP OF SPIRAL TO LOWEST POINT OF CONSTRUCTION JOINT. PROVIDE 4" TO 6" VERTICAL BREAK IN SPIRAL TO ALLOW PLACEMENT OF BOTTOM MAT OF CROSSBEAM REINFORCEMENT.

β OPTIONAL CONSTRUCTION JOINT WITH ROUGHENED SURFACE AND COLUMN LAP SPLICE PERMISSIBLE WITH IN THESE LIMITS. SEE "COLUMN DETAILS" SHEET FOR "TYPICAL COLUMN LAP SPLICE DEAILS".

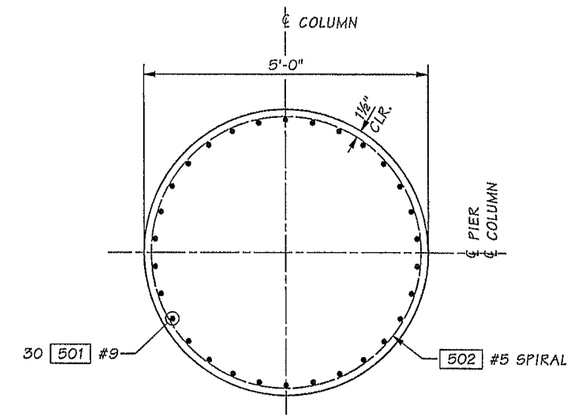

SECTION A

SR 5 FILE NO. 7454 SHEET SR30

Bridge Design Engr.	Khaleghi, B		
Supervisor	Khaleghi, B		
Designed By	Bingle, J	04/13	
Checked By	Mizumori, A	10/13	
Detailed By	Plesha, GM	04/13	
Bridge Projects Engr.			
Prelim. Plan By			
Architect/Specialist			

M:\Y-Team\M ST TO PORTLAND\CWRR OC\window files\PIER 5 COLUMN.wnd

DATE	REVISION	BY	APP'D

REGION NO.	STATE	FED. AID PROJ. NO.	SHEET NO.	TOTAL SHEETS
10	WASH.			
JOB NUMBER 12C501				

Tue Feb 11 07:16:06 2014

BRIDGE AND STRUCTURES OFFICE

2-11-14 2/12/14

Washington State Department of Transportation

I-5
M STREET TO PORTLAND AVENUE - HOV

I-5 OVER I-705 AND TACOMA RAIL BRIDGE NO. 5/445E

PIER 5 COLUMN DETAILS

BRIDGE SHEET NO. SR30

SHEET 1134 OF 1763 SHEETS

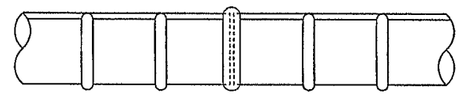

RESISTANCE BUTT JOINT DETAIL

SEE SPECIAL PROVISIONS FOR APPROVAL AND TESTING REQUIRMENTS

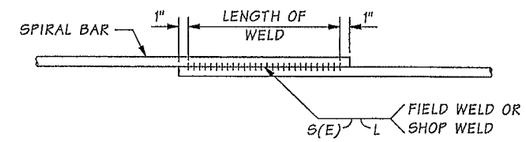

WELDED LAP SPLICE DETAIL

WELDING SHALL MEET THE REQUIREMENTS OF STD. SPEC. SECTION 6-02.3(24)E

COLUMN SPIRAL

DEFORMED BAR	WELD DIMENSIONS		
	S	E	LENGTH (L)
#5	5/16	3/16	6

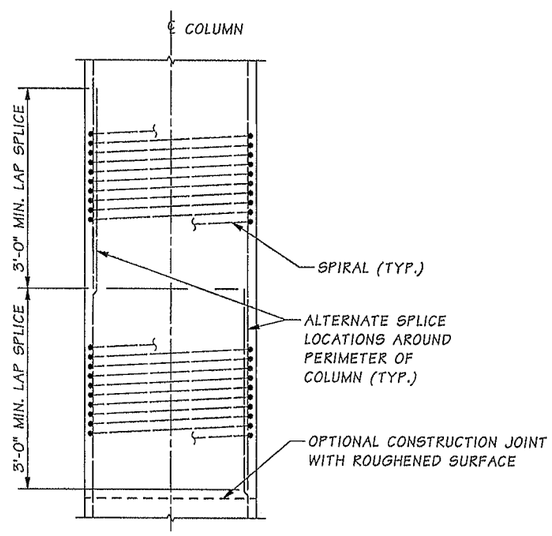

TYPICAL COLUMN LAP SPLICE DETAIL

FOR COLUMNS AT PIERS 2, 4 AND 5 ONLY

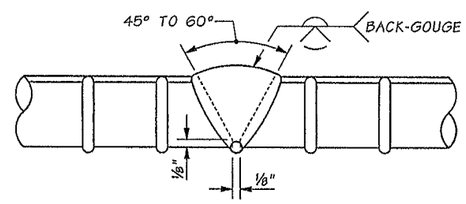

SINGLE V-GROOVE WELD

AWS D1.4 FIGURE 3.2(A)

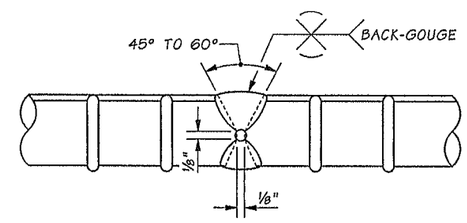

DOUBLE V-GROOVE WELD

AWS D1.4 FIGURE 3.2(B)

MANUAL DIRECT BUTT JOINT DETAILS

ALL BACKING SHALL BE REMOVED.
SEE SPECIAL PROVISIONS FOR RT TESTING FREQUENCY

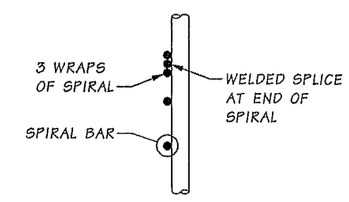

SPIRAL TERMINATION DETAIL

SR 5 FILE NO. 7454 SHEET SR31

Bridge Design Engr.	Khaleghi, B		
Supervisor	Khaleghi, B		
Designed By	Bingle, J	04/13	
Checked By	Mizumori, A	10/13	
Detailed By	Plesha, GM	04/13	
Bridge Projects Engr.			
Prelim. Plan By			
Architect/Specialist			

M:\Y-Team\M ST TO PORTLAND\CWRR OC\window files\COLUMN DETS.wnd

DATE	REVISION	BY	APP'D

REGION NO.	STATE	FED. AID PROJ. NO.	SHEET NO.	TOTAL SHEETS
10	WASH.			
JOB NUMBER 12C501				

Tue Feb 11 07:16:07 2014

DEDEIAH BINGLE — STATE OF WASHINGTON — 45190 — PROFESSIONAL ENGINEER — 2-11-14

BRIDGE AND STRUCTURES OFFICE

BILLAN KHALEGHI — STATE OF WASHINGTON — 27695 — PROFESSIONAL ENGINEER — 2/12/14

Washington State Department of Transportation

I-5
M STREET TO PORTLAND AVENUE - HOV

I-5 OVER I-705 AND TACOMA RAIL BRIDGE NO. 5/445E

COLUMN DETAILS

BRIDGE SHEET NO. SR31

SHEET 1135 OF 1763 SHEETS

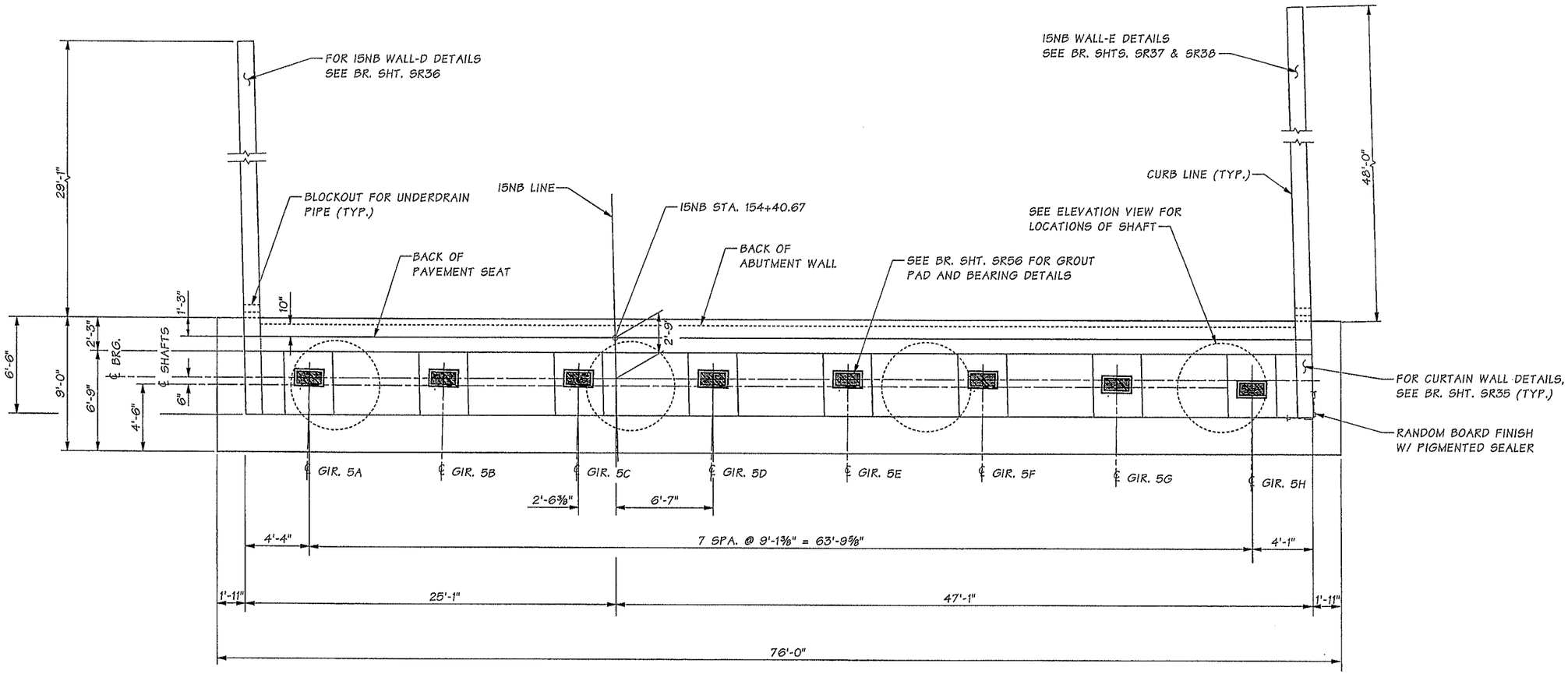

PLAN

SR 5 FILE NO. 7454 SHEET SR32

Bridge Design Engr.	Khaleghi, B		M:\Y-Team\M ST TO PORTLAND\CWRR OC\window files\PIER 6 PLAN.wnd			REGION NO.	STATE	FED. AID PROJ. NO.	SHEET NO.	TOTAL SHEETS
Supervisor	Khaleghi, B					10	WASH.			
Designed By	Tran, LH	04/13								
Checked By	Sawahata, D	10/13				JOB NUMBER				
Detailed By	Plesha, GM	04/13				120501				
Bridge Projects Engr.										
Prelim. Plan By										
Architect/Specialist			DATE	REVISION	BY	APP'D				

Tue Feb 11 07:16:08 2014

LONG HUU TRAN — STATE OF WASHINGTON — 14904 — REGISTERED PROFESSIONAL ENGINEER — 2/12/14

BRIDGE AND STRUCTURES OFFICE

BIJAN KHALEGHI — STATE OF WASHINGTON — 27688 — STRUCTURAL ENGINEER — PROFESSIONAL ENGINEER — 2/12/14

Washington State Department of Transportation

I-5
M STREET TO PORTLAND AVENUE - HOV

I-5 OVER I-705 AND TACOMA RAIL BRIDGE NO. 5/445E

PIER 6 PLAN

BRIDGE SHEET NO. SR32

SHEET 1136 OF 1763 SHEETS

TOP OF GROUT PAD ELEVATIONS

(ELEVATIONS TAKEN AT ℄ BEARING AT TOP OF GROUT PAD)

GIRDER	5A	5B	5C	5D	5E	5F	5H	5G
ELEVATION	160.51	161.01	161.51	162.01	162.52	163.02	163.52	164.02

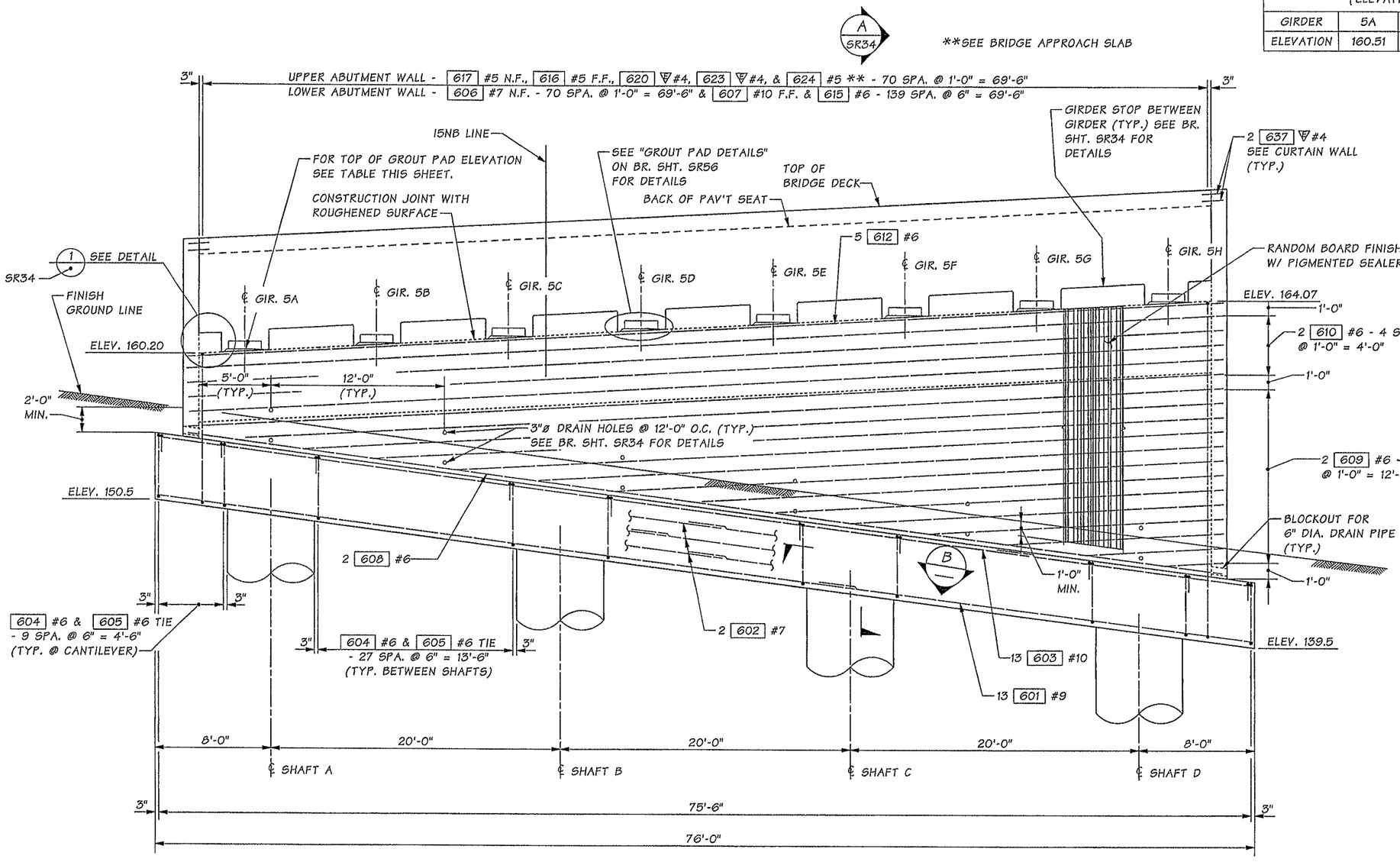

ELEVATION

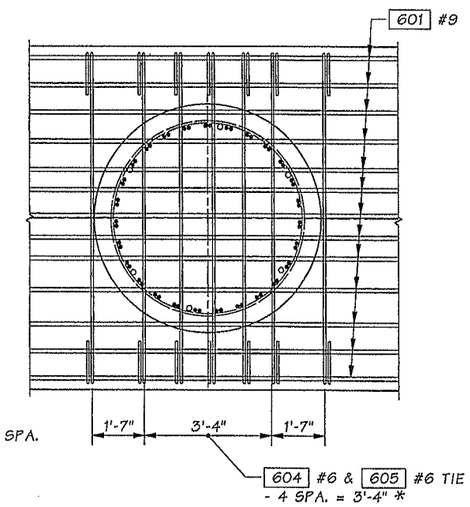

SECTION B

TYPICAL AT EACH SHAFT

* ADJUST THE SPACING TO CLEAR VERTICAL SHAFT REINFORCEMENT

NOTE:

MIN. LAP SLICE LENGTH FOR:
#5 REBAR IS 2'-0"
#6 REBAR IS 2'-0"
#7 REBAR IS 2'-6"
#9 REBAR IS 4'-6"
#10 REBAR IS 5'-8"

NOTES:

1. DO NOT SPLICE MORE THAN 50% OF REBAR AT ANY ONE LOCATION UNLESS NOTED OTHERWISE. STAGGER ALL SPLICES AT A MINIMUM OF 2'-6".

SR 5 FILE NO. 7454 SHEET SR33

Bridge Design Engr.	Khaleghi, B	
Supervisor	Khaleghi, B	
Designed By	Tran, LH	04/13
Checked By	Sawahata, D	10/13
Detailed By	Plesha, GM	04/13
Bridge Projects Engr.		
Prelim. Plan By		
Architect/Specialist		

M:\Y-Team\M ST TO PORTLAND\CWRR OC\window files\PIER 6 ELEVATION.wnd

DATE	REVISION	BY	APP'D

REGION NO.	STATE	FED. AID PROJ. NO.	SHEET NO.	TOTAL SHEETS
10	WASH.			
JOB NUMBER 12C501				

Tue Feb 11 07:16:09 2014

LHONG HUU TRAN, STATE OF WASHINGTON, REGISTERED PROFESSIONAL ENGINEER 2/12/14

BRIDGE AND STRUCTURES OFFICE

SIAMAK KHALEGHI, STATE OF WASHINGTON, REGISTERED PROFESSIONAL ENGINEER 2/12/14

Washington State Department of Transportation

I-5
M STREET TO PORTLAND AVENUE - HOV

I-5 OVER I-705 AND TACOMA RAIL BRIDGE NO. 5/445E

PIER 6 ELEVATION

BRIDGE SHEET NO. SR33

SHEET 1137 OF 1763 SHEETS

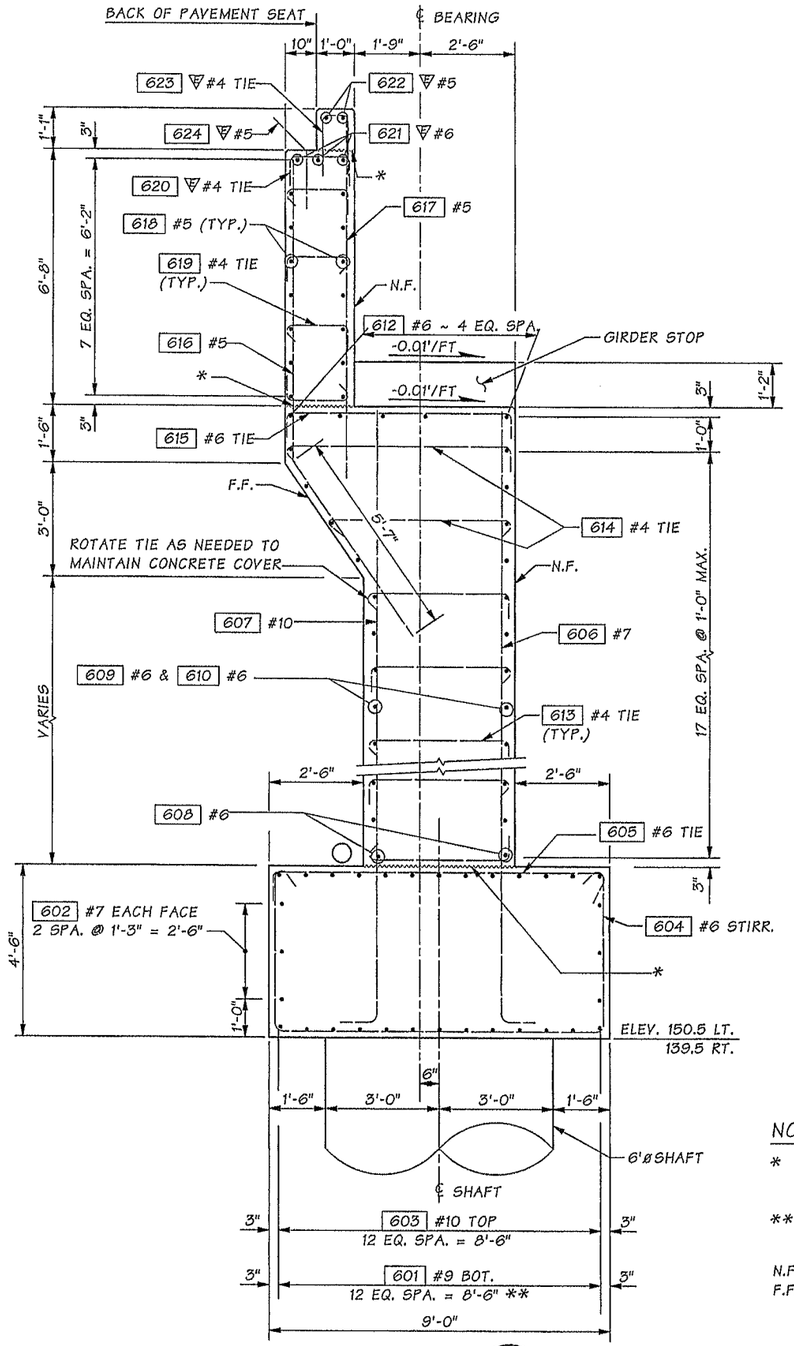

SECTION A — SR33

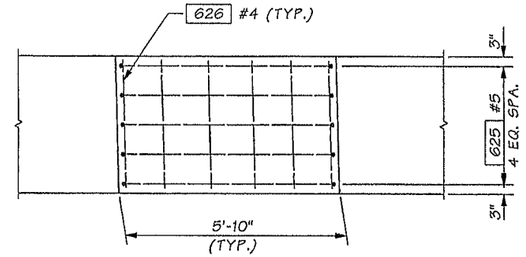

PLAN - GIRDER STOP

REINFORCING TYPICAL EACH GIRDER STOP BETWEEN GIRDERS

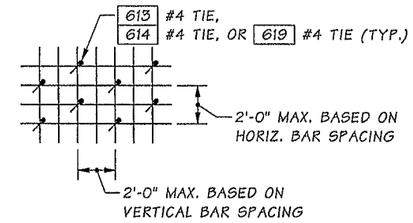

TIE BAR SPACING DETAIL

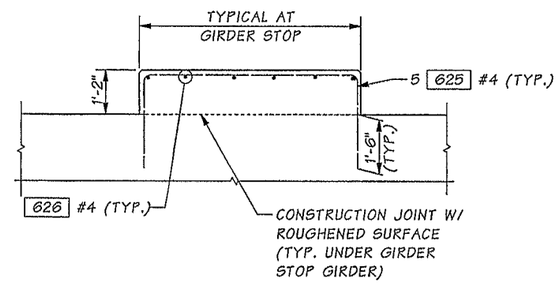

ELEVATION
GIRDER STOP DETAILS

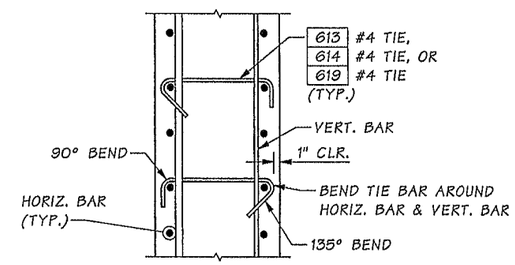

TIE BAR DETAIL

ALTERNATE 135° HOOK EVERY OTHER TIE BAR

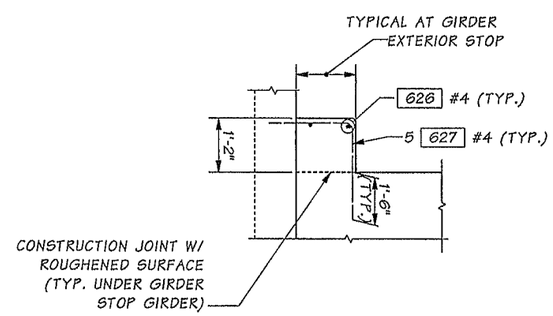

DETAIL 1 — SR33

NOTES:

* CONSTRUCTION JOINT WITH ROUGHENED SURFACE

** ADJUST THE BOTTOM REINFORCEMENT TO CLEAR THE SHAFT REINFORCEMENT

N.F. = NEAR FACE
F.F. = FAR FACE

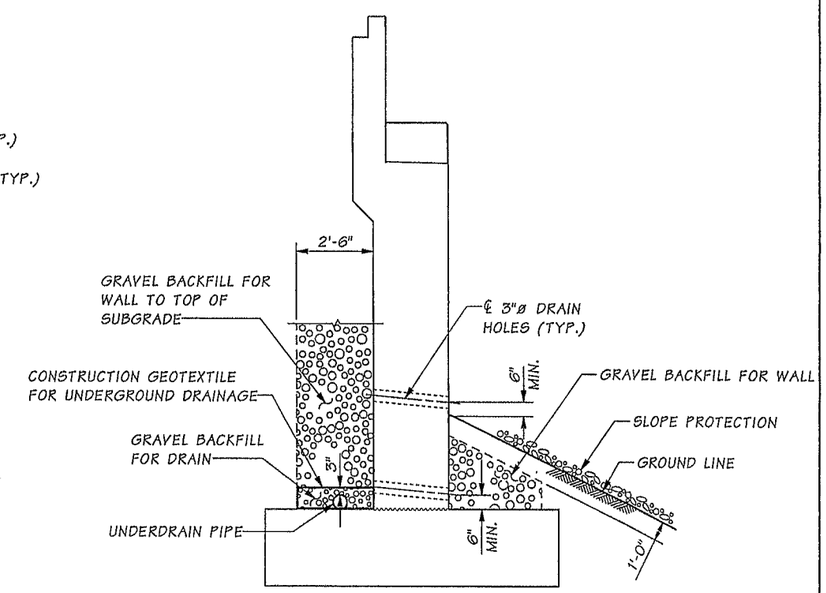

DRAINAGE DETAIL

Bridge Design Engr.	Khaleghi, B		
Supervisor	Khaleghi, B		
Designed By	Tran, LH	04/13	
Checked By	Sawahata, D	10/13	
Detailed By	Plesha, GM	04/13	
Bridge Projects Engr.			
Prelim. Plan By			
Architect/Specialist			

M:\Y-Team\M ST TO PORTLAND\CWRR OC\window files\PIER 6 DETAILS.wnd

DATE	REVISION	BY	APP'D

REGION NO.	STATE	FED. AID PROJ. NO.	SHEET NO.	TOTAL SHEETS
10	WASH.			
JOB NUMBER 12C501				

LHONG HUU TRAN — STATE OF WASHINGTON — 38192 — REGISTERED PROFESSIONAL ENGINEER — 2/12/14

BRIDGE AND STRUCTURES OFFICE

DILIAN KHALEGHI — STATE OF WASHINGTON — 27692 — PROFESSIONAL ENGINEER — 2/12/14

Washington State Department of Transportation

I-5
M STREET TO PORTLAND AVENUE - HOV

I-5 OVER I-705 AND TACOMA RAIL BRIDGE NO. 5/445E

PIER 6 DETAILS

BRIDGE SHEET NO. SR34

SHEET 1138 OF 1763 SHEETS

SR 5 FILE NO. 7454 SHEET SR34

Tue Feb 11 07:16:11 2014

CURTAIN WALL ELEVATION TABLE

THE ELEVATION IS TAKEN AT NEAR FACE OF THE CURTAIN WALLS

LOCATION	ELEV. "A"	ELEV. "B"	ELEV. "C"	ELEV. "D"
LEFT	167.98	167.86	167.38	167.34
RIGHT	171.94	171.80	171.34	171.32

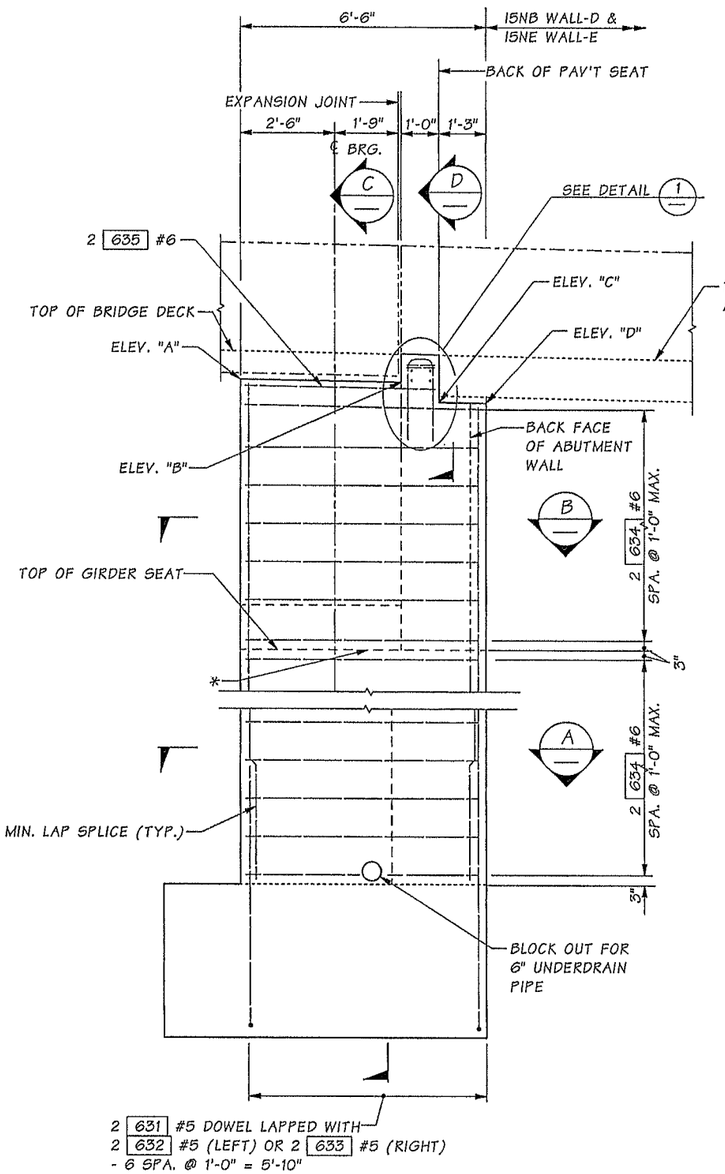

CURTAIN WALL ELEVATION

RIGHT WALL SHOWN, LEFT WALL SIMILAR
FOUNDATION REINFORCEMENT NOT SHOWN FOR CLARITY

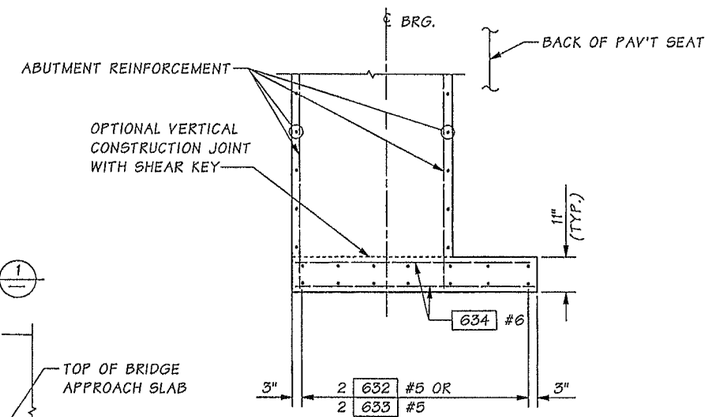

SECTION A

* OPTIONAL CONSTRUCTION JOINT WITH ROUGHENED SURFACE

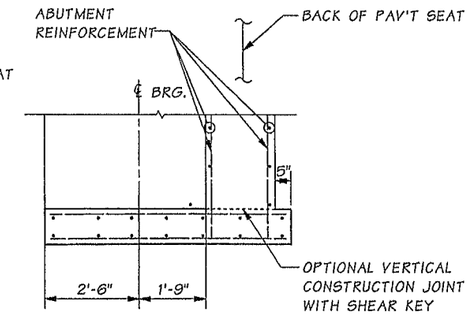

SECTION B

FOR DETAILS NOT SHOWN SEE SECTION A

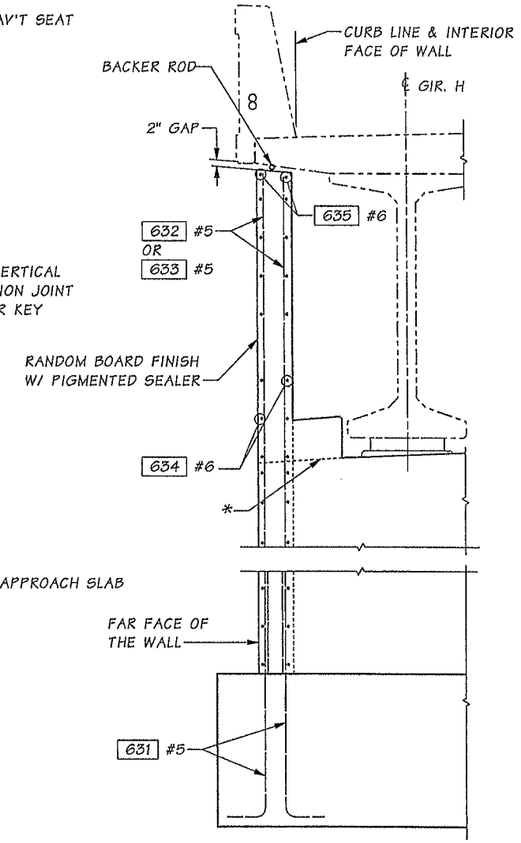

SECTION C

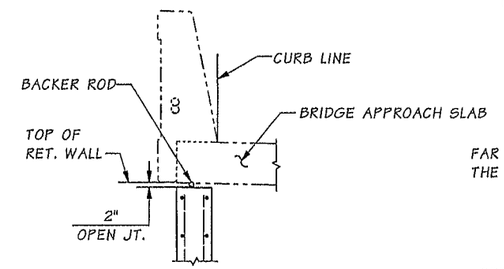

SECTION D

FOR DETAILS NOT SHOWN SEE SECTION C

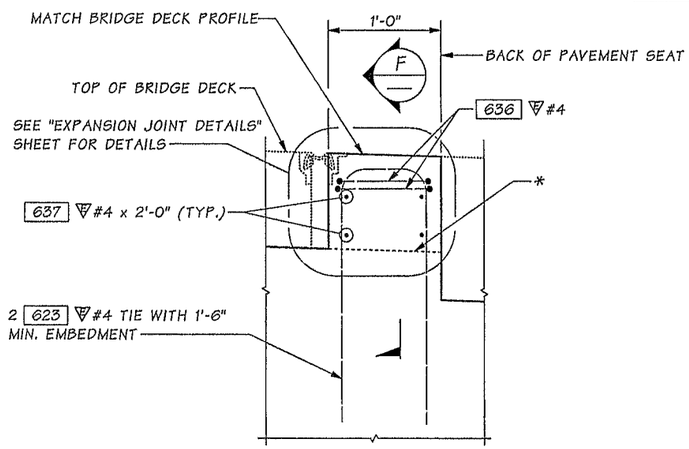

DETAIL 1

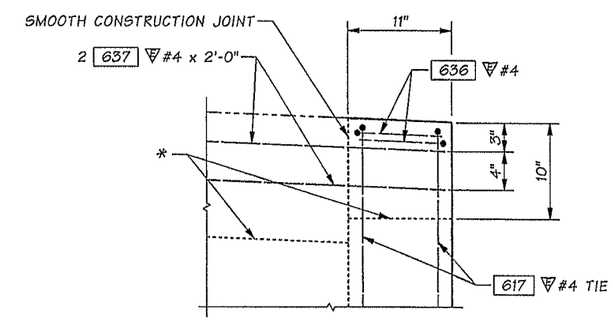

SECTION F

FOR DETAILS NOT SHOWN ~ SEE "CURTAIN WALL ELEVATION" DETAIL THIS SHEET.

Bridge Design Engr.	Khaleghi, B		
Supervisor	Khaleghi, B		
Designed By	Tran, LH	04/13	
Checked By	Sawahata, D	10/13	
Detailed By	Plesha, GM	04/13	
Bridge Projects Engr.			
Prelim. Plan By			
Architect/Specialist			

M:\Y-Team\M ST TO PORTLAND\CWRR OC\window files\PIER 6 CURTAIN WALL.wnd

DATE	REVISION	BY	APP'D

REGION NO.	STATE	FED. AID PROJ. NO.	SHEET NO.	TOTAL SHEETS
10	WASH.			
JOB NUMBER 12C501				

BRIDGE AND STRUCTURES OFFICE

Washington State Department of Transportation

I-5
M STREET TO PORTLAND AVENUE - HOV
I-5 OVER I-705 AND TACOMA RAIL BRIDGE NO. 5/445E
PIER 6 CURTAIN WALL

BRIDGE SHEET NO. SR35
SHEET 1139 OF 1763 SHEETS

SR 5 FILE NO. 7454 SHEET SR35

Tue Feb 11 07:16:13 2014

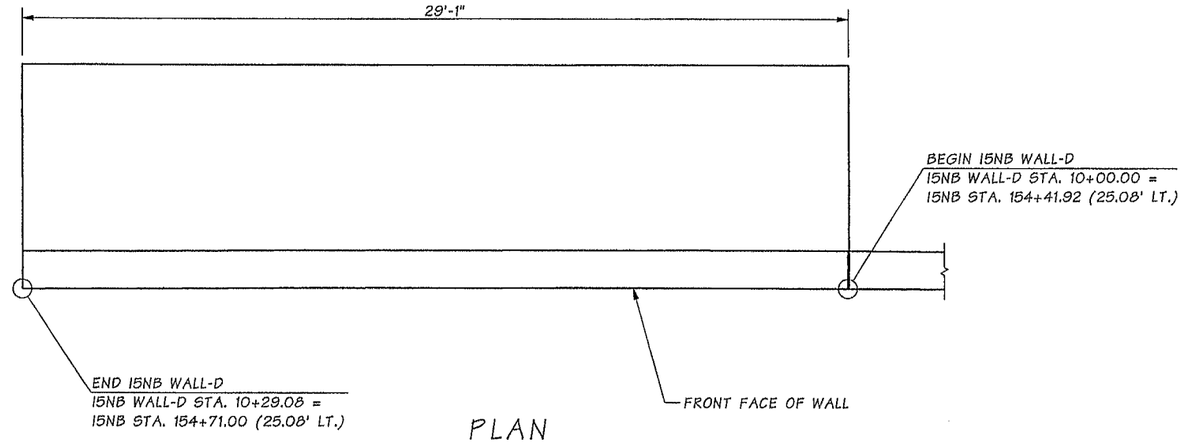

PLAN
15NB WALL-D

SUMMARY OF QUANTITIES 15NB WALL-D			
STD. ITEM NO.	ITEM	UNIT	QUANTITY
1160	UNDERDRAIN PIPE 6 IN. DIA.	L.F.	29
4006	STRUCTURAL EXC CLASS A	C.Y.	40
4025	GRAVEL BACKFILL FOR WALLS	C.Y.	36
7014	GRAVEL BACKFILL FOR DRAIN	C.Y.	1
7550	CONSTRUCT. GEOTEXTILE	S.Y.	20
*	CONCRETE CLASS 4000 FOR RETAINING WALL	C.Y.	26
*	STEEL REINFORCMENT FOR RETAINING WALL	LBS.	1542

NOTES:

1. FOR SECTION (12) WALL REINFORCEMENT, SEE STANDARD PLANS D10.10-01 WALL HEIGHT OF 12' FOR ALL DIMENSIONS, EXCEPT Cv = 0', AND ADDITIONAL REINFORCEMENT TO BAR F AS DESCRIBE BELOW.
2. FOR BACKFILL REQUIREMENT, SEE STANDARD PLANS D-4.
3. THE QUANTITIES AS LISTED ON THIS SHEET ARE FOR THE CONVENIENCE OF THE CONTRACTOR AND ARE NOT GUARANTEED TO BE ACCURATE. THE QUANTITIES AS LISTED ON THE SUMMARY OF QUANTITIES SHEETS SHALL TAKE PRECEDENCE OVER ANY QUANTITY LISTED ON THIS SHEET.

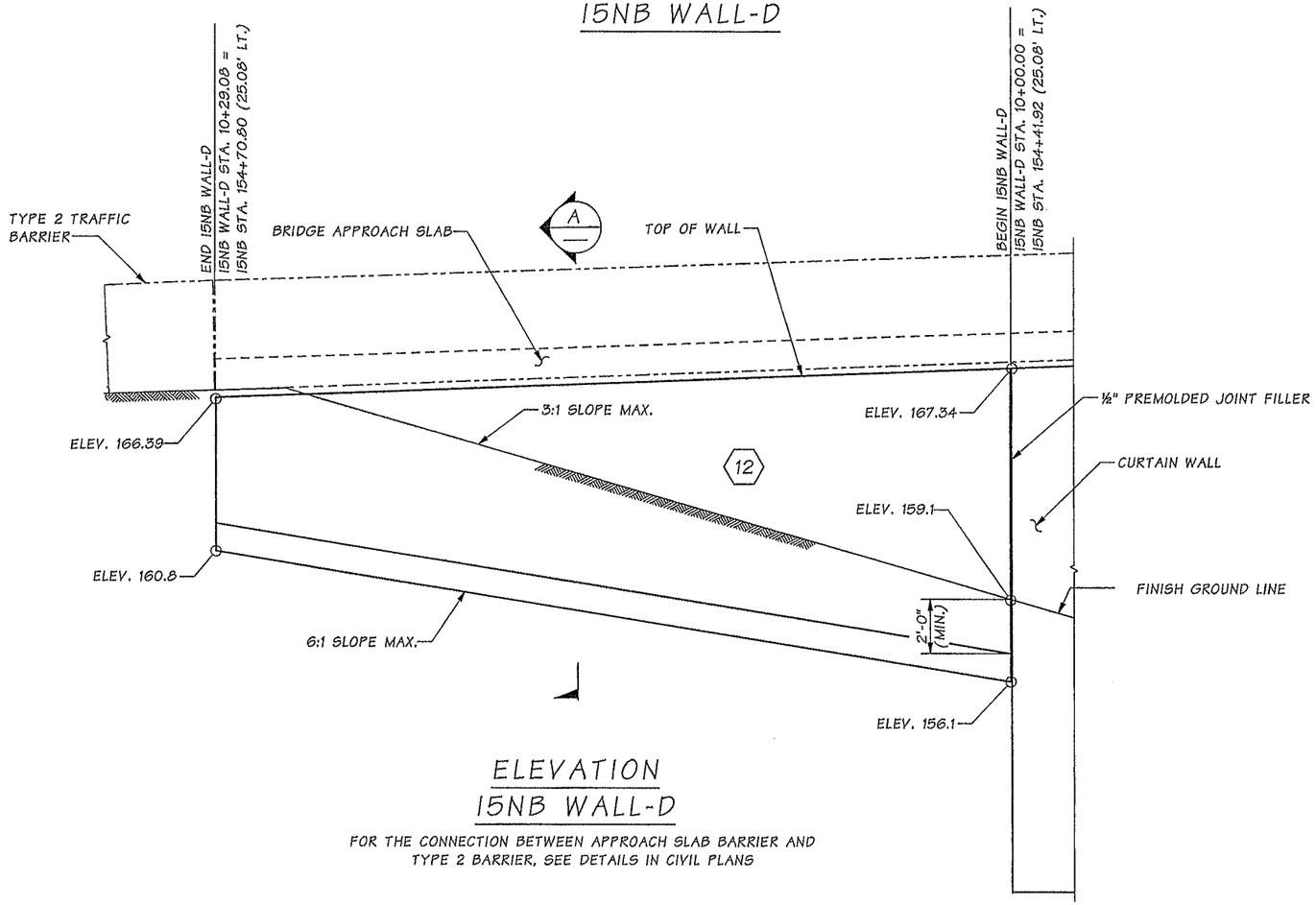

ELEVATION
15NB WALL-D

FOR THE CONNECTION BETWEEN APPROACH SLAB BARRIER AND TYPE 2 BARRIER, SEE DETAILS IN CIVIL PLANS

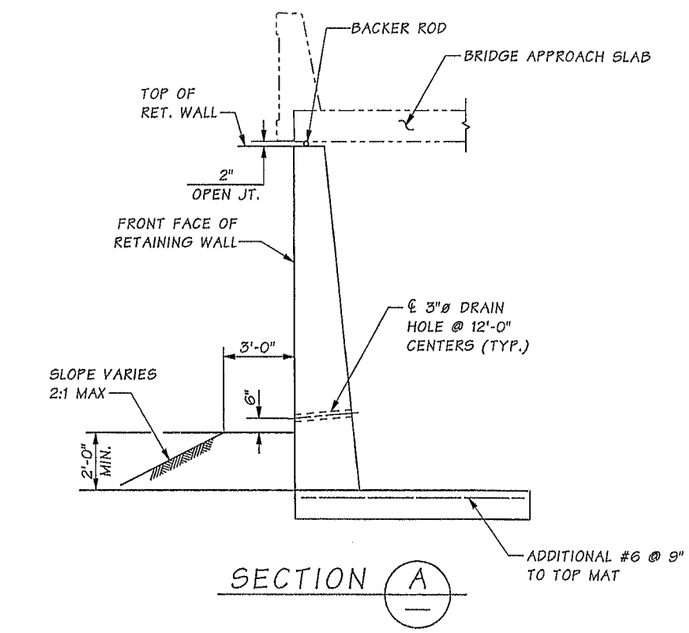

SECTION A

Bridge Design Engr.	Khaleghi, B		M:\Y-Team\M ST TO PORTLAND\CWRR OC\window files\RETAINING WALL DD.wnd							
Supervisor	Khaleghi, B									
Designed By	Tran, LH	05/13				REGION NO.	STATE	FED. AID PROJ. NO.	SHEET NO.	TOTAL SHEETS
Checked By	Sawahata, D	10/13				10	WASH.			
Detailed By	Plesha, GM	05/13				JOB NUMBER 120501				
Bridge Projects Engr.										
Prelim. Plan By										
Architect/Specialist			DATE	REVISION	BY	APP'D				

Tue Feb 11 07:16:14 2014

LIVING HUU TRAN — STATE OF WASHINGTON — 36497 — REGISTERED PROFESSIONAL ENGINEER — 2-12-14

BRIDGE AND STRUCTURES OFFICE

BIJAN KHALEGHI — STATE OF WASHINGTON — 21992 — REGISTERED PROFESSIONAL ENGINEER — 2/12/14

Washington State Department of Transportation

I-5
M STREET TO PORTLAND AVENUE - HOV

I-5 OVER I-705 AND TACOMA RAIL BRIDGE NO. 5/445E

15NB WALL-D DETAILS

BRIDGE SHEET NO. SR36

SHEET 1140 OF 1763 SHEETS

SR 5 FILE NO. 7454 SHEET SR36

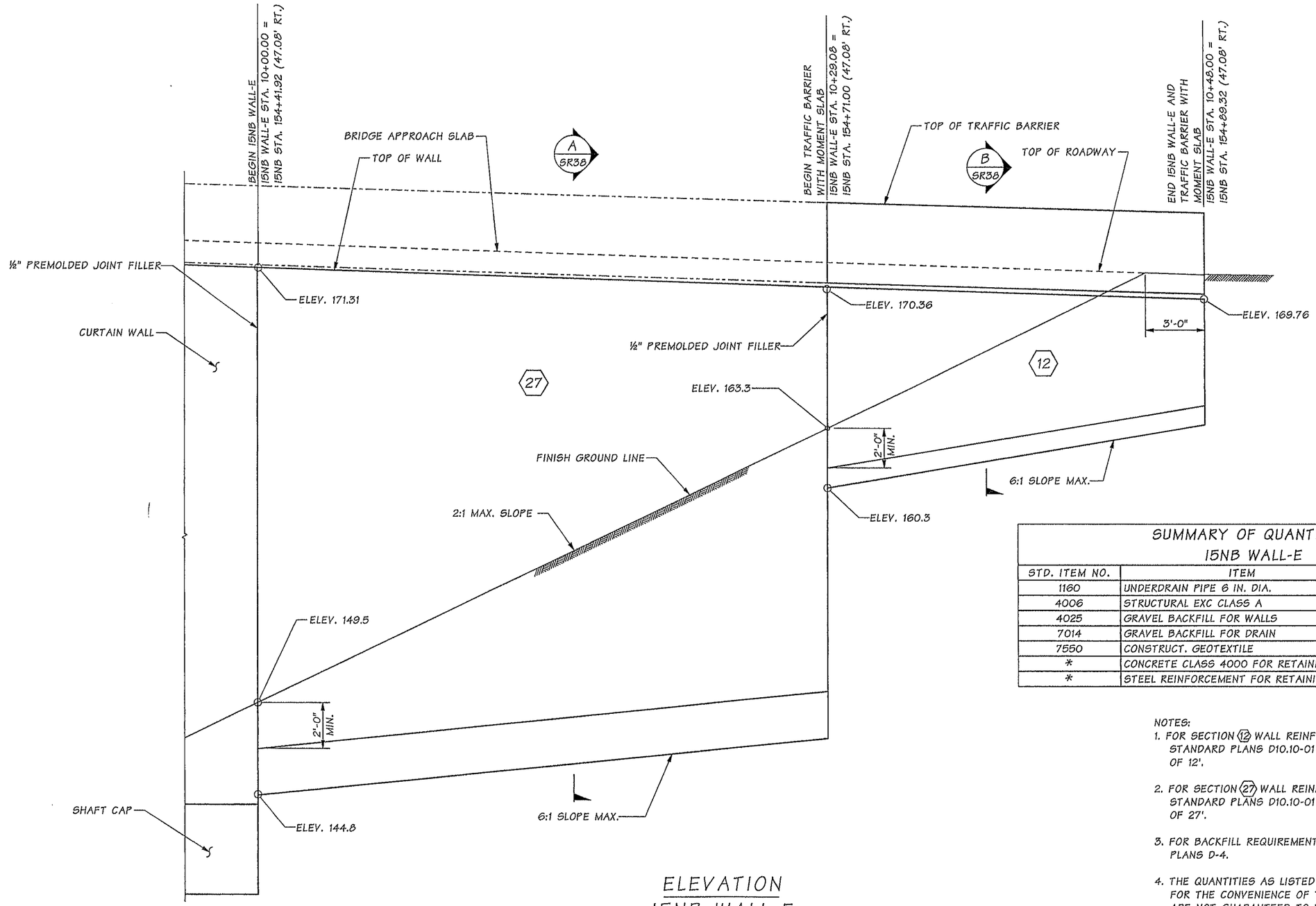

ELEVATION
15NB WALL-E

SUMMARY OF QUANTITIES 15NB WALL-E			
STD. ITEM NO.	ITEM	UNIT	QUANTITY
1160	UNDERDRAIN PIPE 6 IN. DIA.	L.F.	48
4006	STRUCTURAL EXC CLASS A	C.Y.	160
4025	GRAVEL BACKFILL FOR WALLS	C.Y.	228
7014	GRAVEL BACKFILL FOR DRAIN	C.Y.	2
7550	CONSTRUCT. GEOTEXTILE	S.Y.	30
*	CONCRETE CLASS 4000 FOR RETAINING WALL	C.Y.	118
*	STEEL REINFORCEMENT FOR RETAINING WALL	LBS.	7207

NOTES:

1. FOR SECTION (12) WALL REINFORCEMENT, SEE STANDARD PLANS D10.10-01 FOR WALL HEIGHT OF 12'.
2. FOR SECTION (27) WALL REINFORCEMENT, SEE STANDARD PLANS D10.10-01 FOR WALL HEIGHT OF 27'.
3. FOR BACKFILL REQUIREMENT, SEE STANDARD PLANS D-4.
4. THE QUANTITIES AS LISTED ON THIS SHEET ARE FOR THE CONVENIENCE OF THE CONTRACTOR AND ARE NOT GUARANTEED TO BE ACCURATE. THE QUANTITIES AS LISTED ON THE SUMMARY OF QUANTITIES SHEETS SHALL TAKE PRECEDENCE OVER ANY QUANTITY LISTED ON THIS SHEET.

SR 5 FILE NO. 7454 SHEET SR37

Bridge Design Engr.	Khaleghi, B	
Supervisor	Khaleghi, B	
Designed By	Tran, LH	04/13
Checked By	Sawahata, D	10/13
Detailed By	Plesha, GM	04/13
Bridge Projects Engr.		
Prelim. Plan By		
Architect/Specialist		

M:\Y-Team\M ST TO PORTLAND\CWRR OC\window files\RETAINING WALL E ELEV.wnd

DATE	REVISION	BY	APP'D

REGION NO.	STATE	FED. AID PROJ. NO.	SHEET NO.	TOTAL SHEETS
10	WASH.			

JOB NUMBER 12C501

Tue Feb 11 07:16:17 2014

HAONG HUU TRAN — STATE OF WASHINGTON — 38382 — PROFESSIONAL ENGINEER — 2/12/14

BRIDGE AND STRUCTURES OFFICE

BIJAN KHALEGHI — STATE OF WASHINGTON — 27905 — PROFESSIONAL ENGINEER — 2/12/14

Washington State Department of Transportation

I-5
M STREET TO PORTLAND AVENUE - HOV

I-5 OVER I-705 AND TACOMA RAIL BRIDGE NO. 5/445E

15NB WALL-E
DETAILS 1 OF 2

BRIDGE SHEET NO. SR37

SHEET 1141 OF 1763 SHEETS

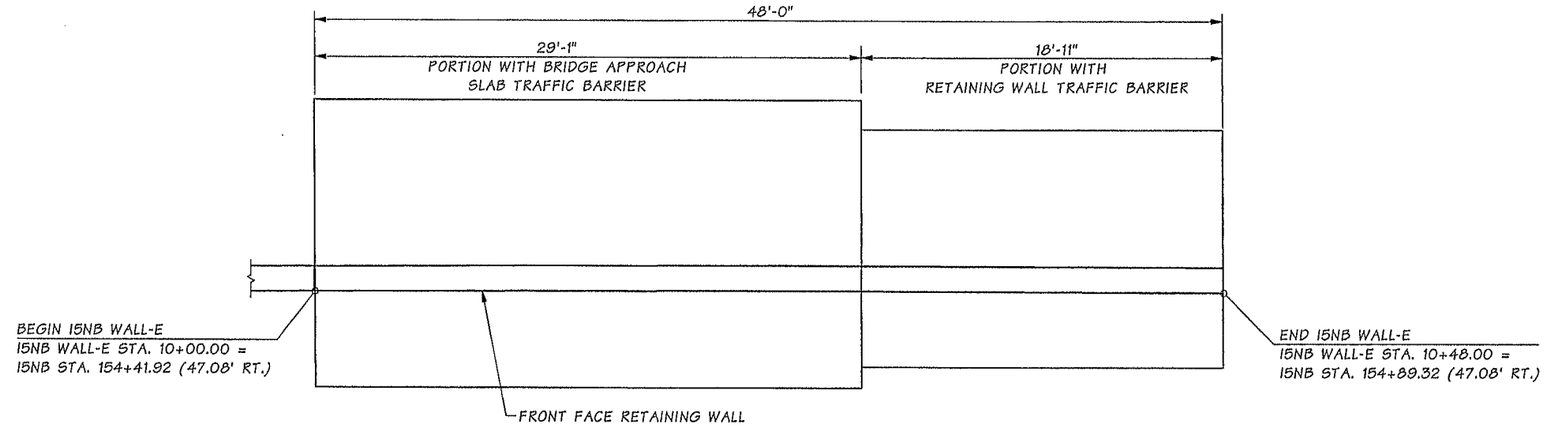

PLAN
15NB WALL-E

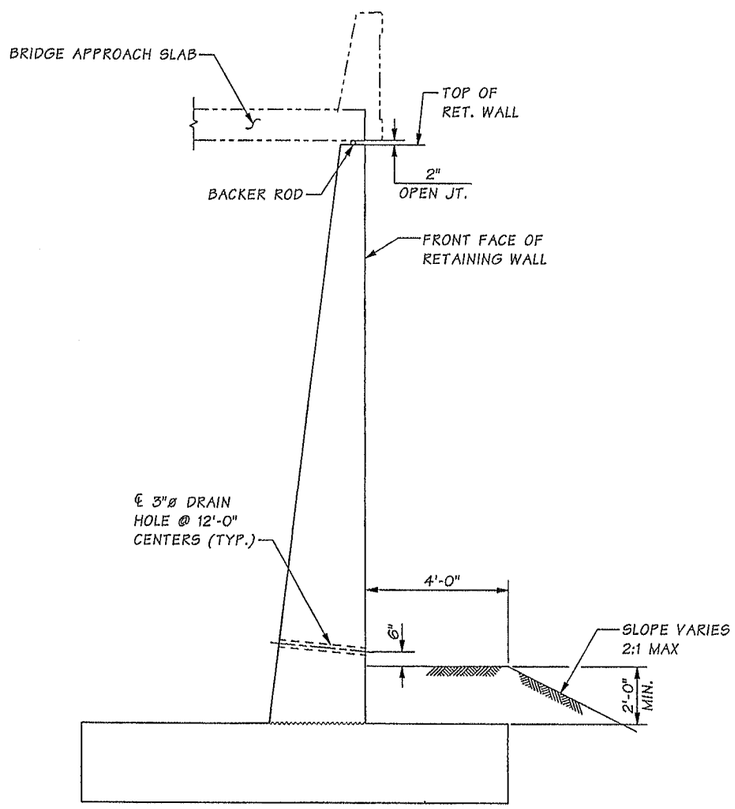

SECTION A
SR37

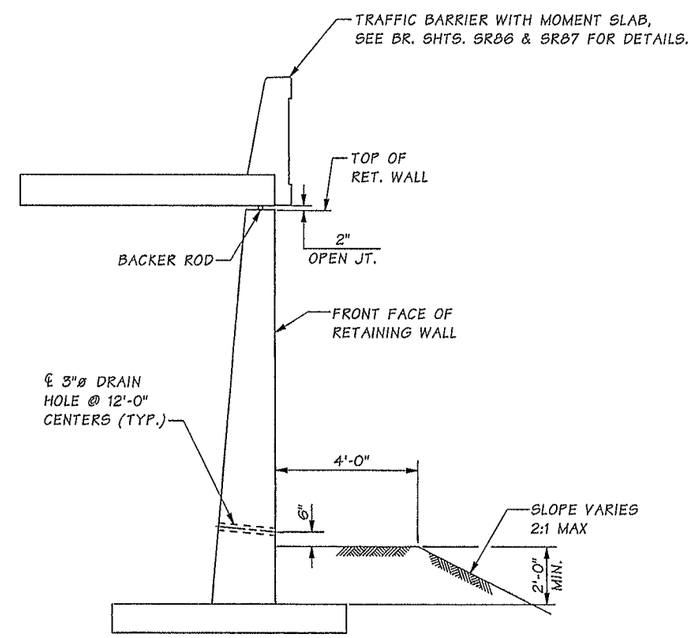

SECTION B
SR37

Bridge Design Engr.	Khaleghi, B		M:\Y-Team\M ST TO PORTLAND\CWRR OC\window files\RETAINING WALL E DETAILS.wnd								
Supervisor	Khaleghi, B										
Designed By	Tran, LH	04/13									
Checked By	Sawahata, D	10/13									
Detailed By	Plesha, GM	04/13									
Bridge Projects Engr.											
Prelim. Plan By											
Architect/Specialist			DATE	REVISION	BY	APP'D					

REGION NO.	STATE	FED. AID PROJ. NO.	SHEET NO.	TOTAL SHEETS
10	WASH.			
JOB NUMBER 12C501				

LUONG HUU TRAN — STATE OF WASHINGTON — 27595 — REGISTERED PROFESSIONAL ENGINEER
2/12/14

BRIDGE AND STRUCTURES OFFICE

BIJAN KHALEGHI — STATE OF WASHINGTON — 27595 — REGISTERED PROFESSIONAL ENGINEER
2/12/14

Washington State Department of Transportation

I-5
M STREET TO PORTLAND AVENUE - HOV
I-5 OVER I-705 AND TACOMA RAIL BRIDGE NO. 5/445E
15NB WALL-E
DETAILS 2 OF 2

BRIDGE SHEET NO. SR38
SHEET 1142 OF 1763 SHEETS

SR 5 FILE NO. 7454 SHEET SR38

Tue Feb 11 07:16:18 2014

TABLE OF ELEVATIONS		
LOCATION	ELEVATION - SPAN 1	ELEVATION - SPAN 2
GIR. A	182.03	181.80
GIR. B	182.25	182.03
GIR. C	182.47	182.26
GIR. D	182.68	182.48
GIR. E	182.89	182.70
GIR. F	183.10	182.91
GIR. G	183.30	183.12
GIR. H	183.50	183.33

ELEVATIONS ARE TAKEN AT TOP OF OAK BLOCK AT INTERSECTION OF ℄ OAK BLOCK. AND ℄ GIRDER.

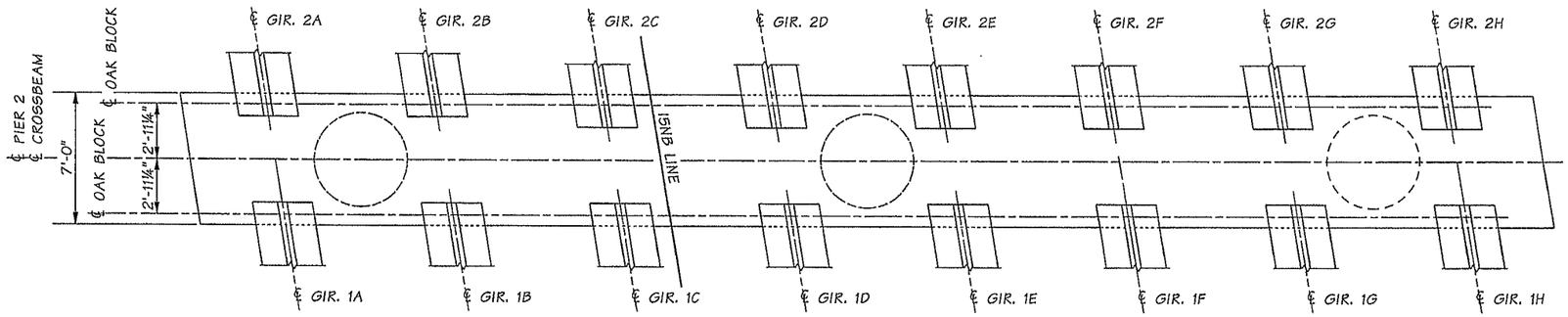

SECTION A

FOR GIRDER LAYOUT SEE "FRAMING PLAN"

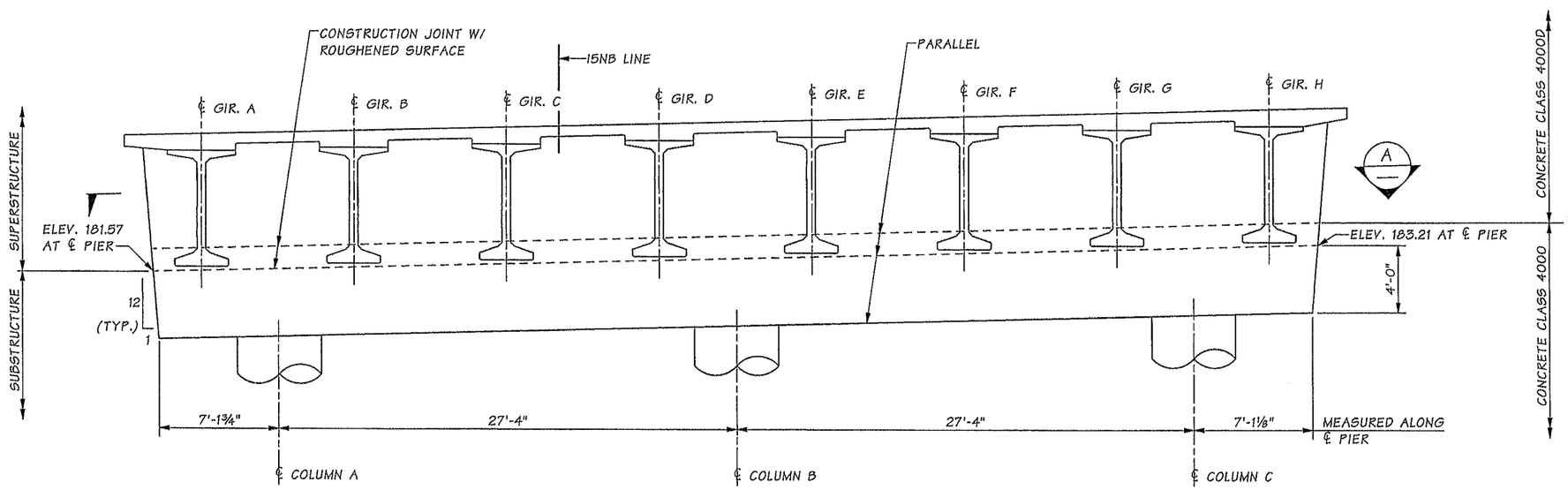

ELEVATION

SR 5 FILE NO. 7454 SHEET SR39

Bridge Design Engr.	Khaleghi, B		
Supervisor	Khaleghi, B		
Designed By	Bingle, J	04/13	
Checked By	Mizumori, A	10/13	
Detailed By	Plesha, GM	04/13	
Bridge Projects Engr.			
Prelim. Plan By			
Architect/Specialist			

M:\Y-Team\M ST TO PORTLAND\CWRR OC\window files\PIER 2 CROSSBEAM.wnd

DATE	REVISION	BY	APP'D

REGION NO.	STATE	FED. AID PROJ. NO.	SHEET NO.	TOTAL SHEETS
10	WASH.			
JOB NUMBER 12C501				

Tue Feb 11 07:16:19 2014

BRIDGE AND STRUCTURES OFFICE

2-11-14 2/12/14

Washington State Department of Transportation

I-5
M STREET TO PORTLAND AVENUE - HOV

I-5 OVER I-705 AND TACOMA RAIL BRIDGE NO. 5/445E

PIER 2 CROSSBEAM GEOMETRY

BRIDGE SHEET NO. SR39

SHEET 1143 OF 1763 SHEETS

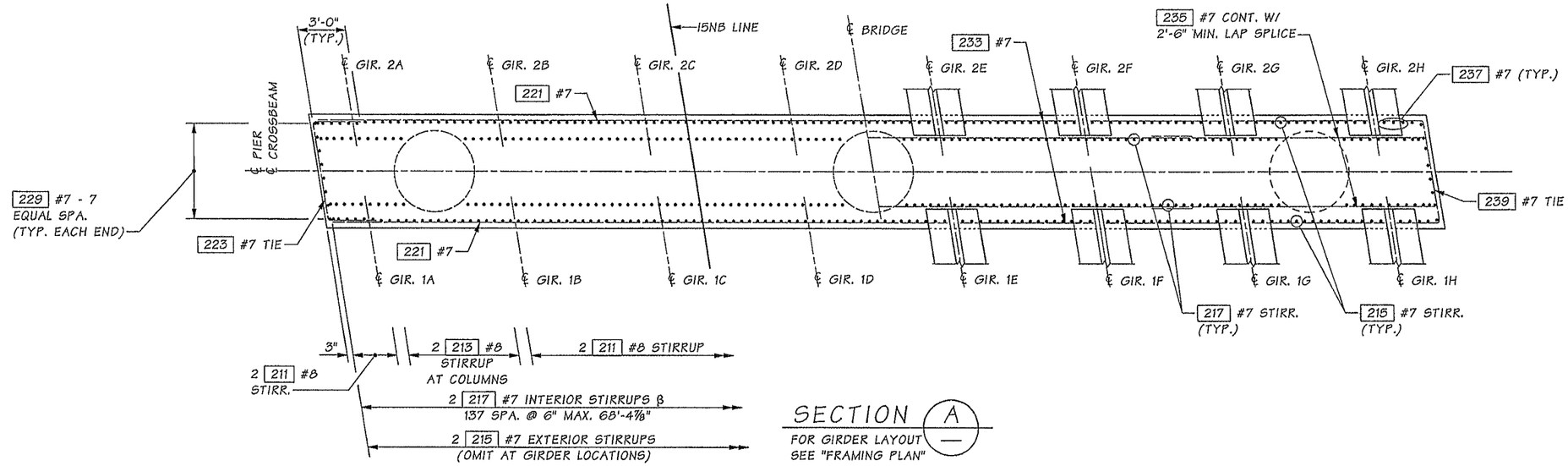

SECTION A

FOR GIRDER LAYOUT SEE "FRAMING PLAN"

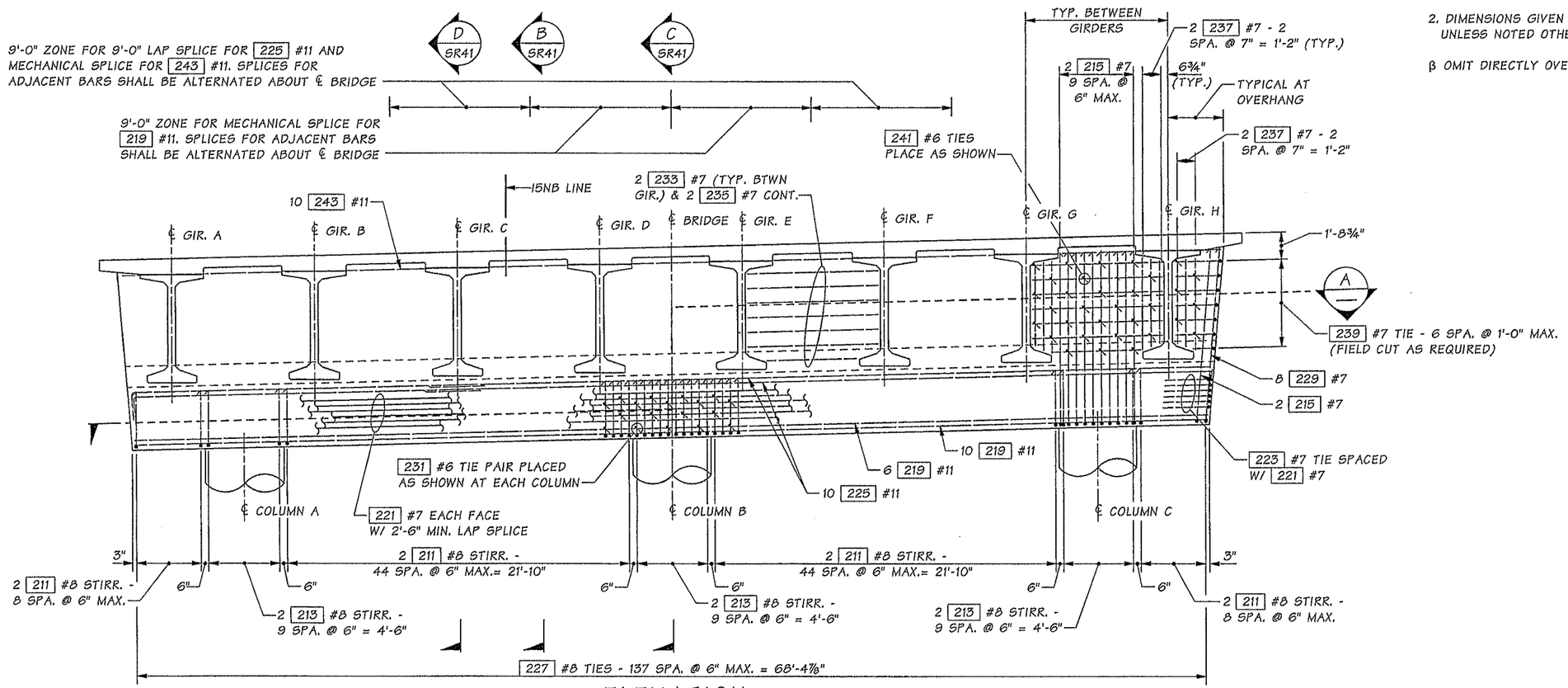

ELEVATION

NOTES:

1. BRIDGE DECK AND COLUMN REINFORCEMENT NOT SHOWN FOR CLARITY.
2. DIMENSIONS GIVEN ALONG ℄ PIER, UNLESS NOTED OTHERWISE.

β OMIT DIRECTLY OVER COLUMNS.

Bridge Design Engr.	Khaleghi, B		M:\Y-Team\M ST TO PORTLAND\CWRR OC\window files\PIER 2 CROSSBEAM 2.wnd								
Supervisor	Khaleghi, B										
Designed By	Bingle, J	05/13									
Checked By	Mizumori, A	10/13									
Detailed By	Plesha, GM	05/13									
Bridge Projects Engr.											
Prelim. Plan By											
Architect/Specialist			DATE	REVISION	BY	APP'D					

REGION NO.	STATE	FED. AID PROJ. NO.	SHEET NO.	TOTAL SHEETS
10	WASH.			
JOB NUMBER 12C501				

Tue Feb 11 07:16:21 2014

JEDEDIAH BINGLE — STATE OF WASHINGTON — 45190 — PROFESSIONAL ENGINEER — 2-11-14

BRIDGE AND STRUCTURES OFFICE

BIJAN KHALEGHI — STATE OF WASHINGTON — 21690 — PROFESSIONAL ENGINEER — 2/12/14

Washington State Department of Transportation

I-5
M STREET TO PORTLAND AVENUE - HOV

I-5 OVER I-705 AND TACOMA RAIL BRIDGE NO. 5/445E

PIER 2 CROSSBEAM DETAILS 1 OF 2

BRIDGE SHEET NO. SR40

SHEET 1144 OF 1763 SHEETS

SR 5 FILE NO. 7454 SHEET SR40

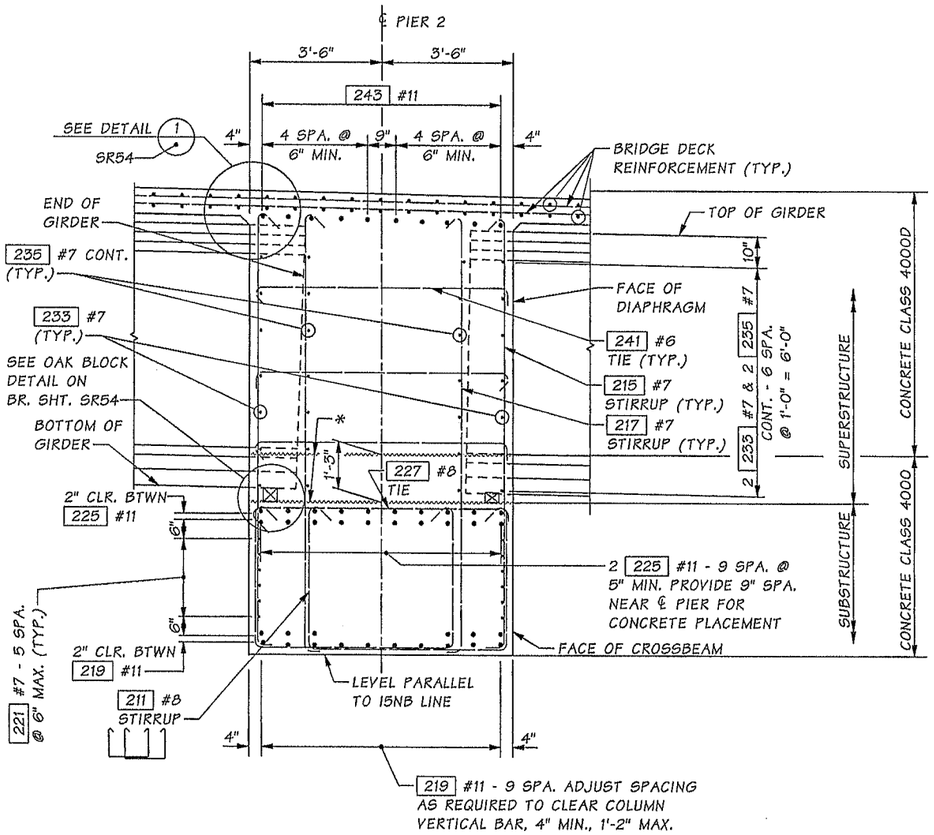

SECTION B SR40

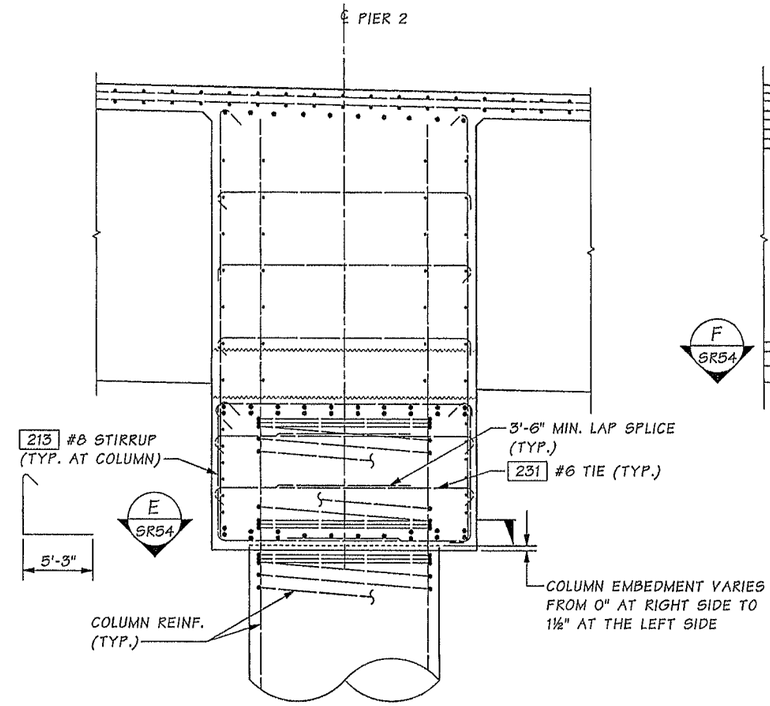

SECTION C SR40

FOR DETAILS NOT SHOWN SEE SECTION B

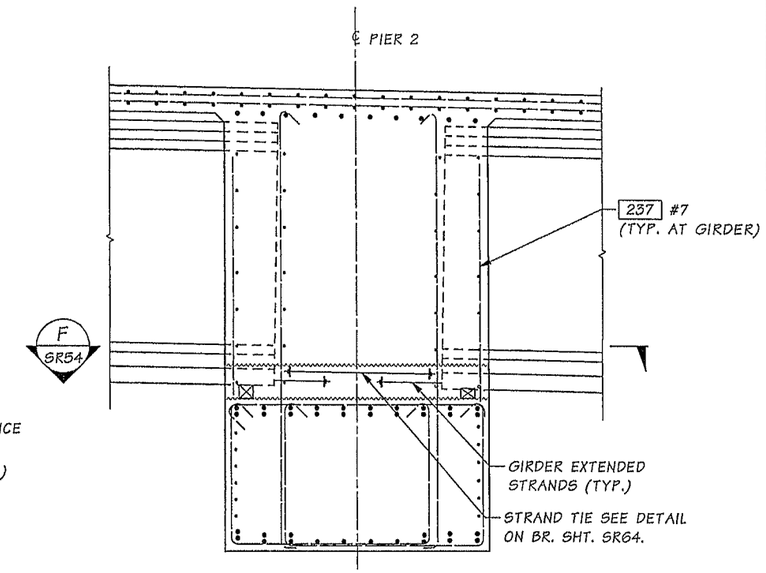

SECTION D SR40

FOR DETAILS NOT SHOWN SEE SECTION B

* CONSTRUCTION JOINT WITH ROUGHENED SURFACE. TOP SURFACE LEVEL PARALLEL TO I5NB LINE.

NOTES

1. LONGITUDINAL DIMENSIONS ARE NORMAL TO ℄ PIER.
2. FOR CONCRETE PLACEMENT PROCEDURE SEE "CONSTRUCTION SEQUENCE" SHEET.

SR 5 FILE NO. 7454 SHEET SR41

Bridge Design Engr.	Khaleghi, B		M:\Y-Team\M ST TO PORTLAND\CWRR OC\window files\PIER 2 CROSSBEAM DETAILS 1.wnd
Supervisor	Khaleghi, B		
Designed By	Bingle, J	05/13	
Checked By	Mizumori, A	10/13	
Detailed By	Plesha, GM	05/13	
Bridge Projects Engr.			
Prelim. Plan By			
Architect/Specialist			

DATE	REVISION	BY	APP'D

REGION NO.	STATE	FED. AID PROJ. NO.	SHEET NO.	TOTAL SHEETS
10	WASH.			
JOB NUMBER 12C501				

BRIDGE AND STRUCTURES OFFICE

2-11-14

2/12/14

Washington State Department of Transportation

I-5
M STREET TO PORTLAND AVENUE - HOV
I-5 OVER I-705 AND TACOMA RAIL BRIDGE NO. 5/445E

PIER 2 CROSSBEAM DETAILS 2 OF 2

BRIDGE SHEET NO. SR41

SHEET 1145 OF 1763 SHEETS

Tue Feb 11 07:16:22 2014

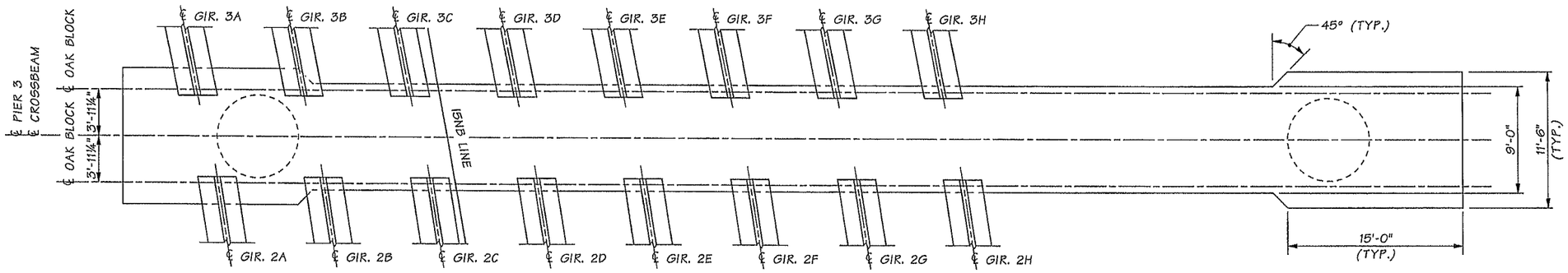

SECTION A

FOR GIRDER LAYOUT SEE "FRAMING PLAN"

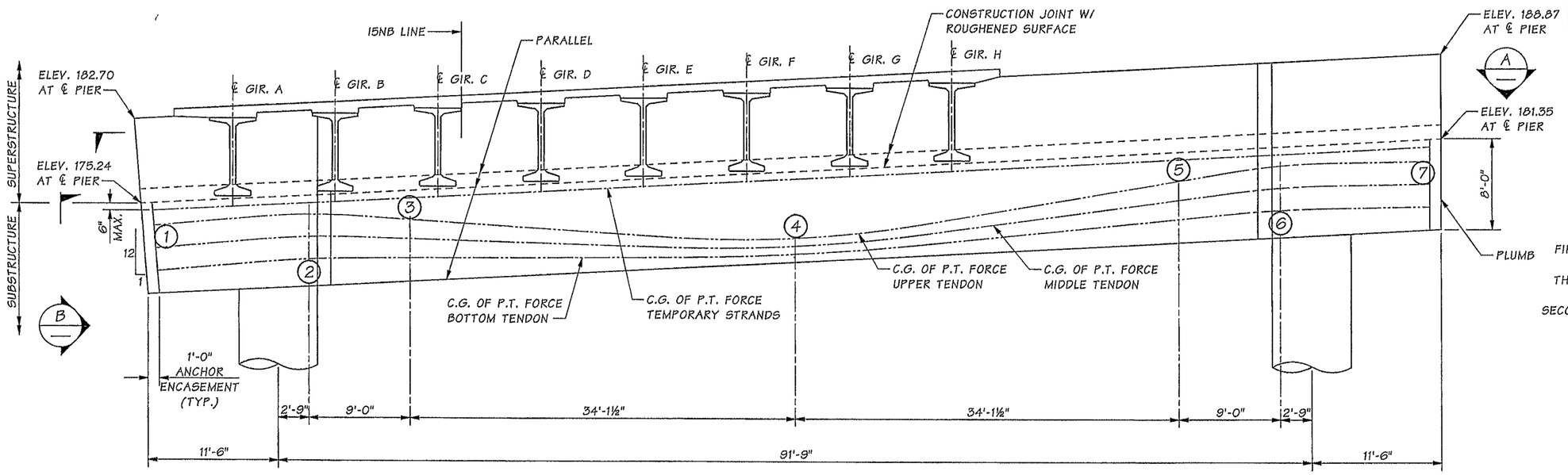

ELEVATION

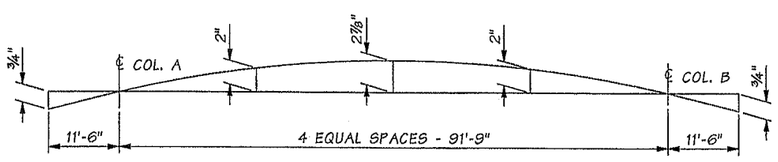

CAMBER DIAGRAM

DIAGRAM SHOW DEAD LOAD PLUS PRESTRESS CAMBER ONLY AND SHALL BE MODIFIED BY THE AMOUNT OF TAKEUP ANTICIPATED IN FALSEWORK.

CONTROL POINTS	1	2	3	4	5	6	7
UPPER TENDON	6'-0"	6'-6"	5'-1"	1'-7⅝"	5'-1"	6'-6"	6'-0"
MIDDLE TENDON	4'-0"	4'-6"	3'-4½"	1'-0¾"	3'-4½"	4'-6"	4'-0"
LOWER TENDON	2'-0"	2'-6"	1'-1½"	5⅞"	1'-1½"	2'-6"	2'-0"

TENDON LAYOUT DATA

MEASURED VERTICALLY FROM THE BOTTOM OF THE CROSSBEAM

TABLE OF ELEVATIONS

LOCATION	ELEVATION SPAN 2	ELEVATION SPAN 3
OPTION 1		
GIR. A	176.15	175.76
GIR. B	176.69	176.31
GIR. C	177.24	176.86
GIR. D	177.79	177.40
GIR. E	178.27	177.92
GIR. F	178.76	178.42
GIR. G	179.22	178.89
GIR. H	179.65	179.34
OPTION 2		
GIR. A	176.15	175.76
GIR. B	176.69	176.31
GIR. C	177.23	176.85
GIR. D	177.77	177.38
GIR. E	178.24	177.89
GIR. F	178.73	178.39
GIR. G	179.19	178.86
GIR. H	179.62	179.31

ELEVATIONS ARE TAKEN AT TOP OF OAK BLOCK AT INTERSECTION OF ℄ OAK BLOCK AND ℄ GIRDER. ELEVATIONS HAVE BEEN ADJUSTED FOR ANTICIPATED DEFLECTION DUE TO LOADS DURING AND AFTER GIRDER ERECTION.

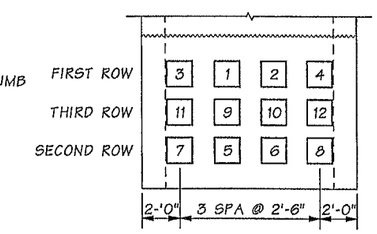

VIEW B — OPTION 2

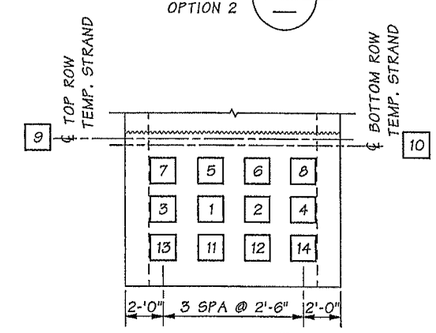

VIEW B — OPTION 1

NOTES:

1. SEE "PIER 3 CROSSBEAM POST-TENSIONING DETAILS" SHEET FOR POST-TENSION NOTES.
2. SEE "PIER 3 CONSTRUCTION SEQUENCE" SHEETS FOR CONSTRUCTION SEQUENCE.

☐ = SEQUENCE OF TENDONS / STRAND STRESSING

Bridge Design Engr.	Khaleghi, B		
Supervisor	Khaleghi, B		
Designed By	Bingle, J	05/13	
Checked By	Mizumori, A	10/13	
Detailed By	Plesha, GM	05/13	
Bridge Projects Engr.			
Prelim. Plan By			
Architect/Specialist			

M:\Y-Team\M ST TO PORTLAND\CWRR OC\window files\PIER 3 GEOMETRY.wnd

DATE	REVISION	BY	APP'D

REGION NO.	STATE	FED. AID PROJ. NO.	SHEET NO.	TOTAL SHEETS
10	WASH.			
JOB NUMBER 12C501				

Tue Feb 11 07:16:24 2014

MEREDIAH BINGLE — STATE OF WASHINGTON — 37195 — PROFESSIONAL ENGINEER — 2-11-14

BRIDGE AND STRUCTURES OFFICE

SUAN KHALEGHI — STATE OF WASHINGTON — 37195 — PROFESSIONAL ENGINEER — 2/11/14

Washington State Department of Transportation

I-5
M STREET TO PORTLAND AVENUE - HOV

I-5 OVER I-705 AND TACOMA RAIL BRIDGE NO. 5/445E

PIER 3 CROSSBEAM GEOMETRY

BRIDGE SHEET NO. SR42

SHEET 1146 OF 1763 SHEETS

SR 5 FILE NO. 7454 SHEET SR42

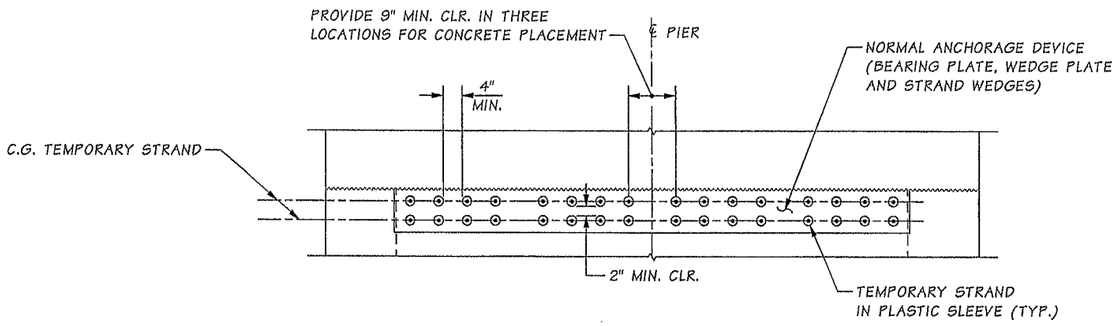

TEMPORARY STRAND AT TOP OF LOWER CROSSBEAM

TEMPORARY STRAND PATTERN SHALL BE SYMMETRIC ABOUT ℄ PIER

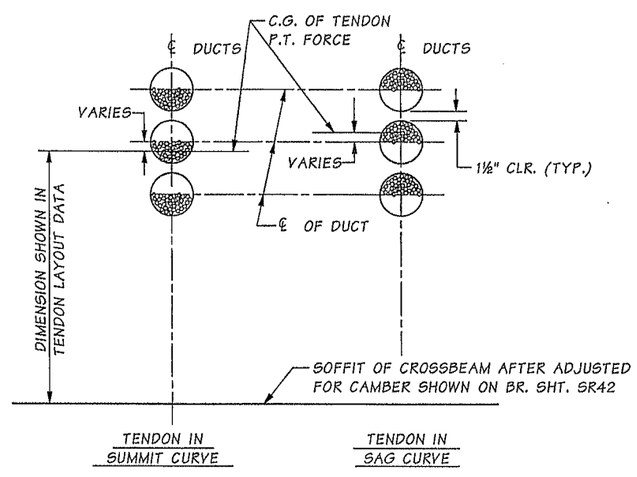

STRAND LOCATION DETAIL

POST-TENSIONING TABLE

ROW	TOTAL PRESTRESSING LOAD PER ROW		OPTION 1		OPTION 2	
	JACKING KIP	AFTER SEATING KIP	ADDITIONAL SHORT-TERM ESTIMATED PRESTRESS GAIN KSI (EG-ES)	ADDIONAL LONG-TERM ESTIMATED PRESTRESS LOSS KSI (R+CR+SH)	ADDITIONAL SHORT-TERM ESTIMATED PRESTRESS GAIN KSI (EG-ES)	ADDITIONAL LONG-TERM ESTIMATED PRESTESS LOSS KSI (R+CR+SH)
TEMPORARY	915	860	-	-	-	-
TOP	4746	4127	2	34	3	34
MIDDLE	4746	4199	3	37	4	38
BOTTOM	4746	4287	5	41	5	42

POST-TENSIONING NOTES

1. THE CAST-IN-PLACE CONCRETE IN THE CROSSBEAM SHALL BE CLASS 5000. THE MINIMUM COMPRESSIVE STRENGTH OF THE CAST-IN-PLACE CONCRETE AT THE TIME OF POST-TENSIONING SHALL BE 5000 PSI.
2. THE MINIMUM PRESTRESSSING LOAD AFTER SEATING SHALL BE AS SHOWN IN THE POST-TENSIONING TABLE.
3. THE DESIGN IS BASED ON A TOTAL OF 12 PERMANENT TENDONS CONSISTING OF 0.6 INCH DIAMETER LOW RELAXATION STRANDS WITH A JACKING LOAD SHOWN IN THE POST-TENSIONING TABLE, 32 TEMPORARY STRANDS CONSISTING OF 0.7 INCH DIAMETER LOW RELAXATION STRANDS WITH A JACKING LOAD SHOWN IN THE POST-TENSIONING TABLE, AN ANCHOR SET OF ⅜ INCH, A CURVATURE FRICTION COEFFICIENT μ = 0.23 AND A WOBBLE FRICTION COEFFICIENT K = 0.0002 / FT. THE ACTUAL ANCHOR SET SHALL BE SPECIFIED IN THE SHOP PLANS AND INCLUDED IN THE TRANSFER FORCE CALCULATIONS.
4. THE DESIGN IS BASED ON THE ADDITIONAL ESTIMATED SHORT-TERM TIME-DEPENDENT PRESTRESS GAIN OF POST-TENSIONING STRANDS SHOWN IN THE POST-TENSIONING TABLE DUE TO ELASTIC GAIN ADJUSTED FOR ELASTIC SHORTENING. THE DESIGN IS ALSO BASED ON THE ADDITIONAL ESTIMATED LONG-TERM TIME-DEPENDENT PRESTRESS LOSS OF POST-TENSIONING STRANDS SHOWN IN THE POST-TENSIONING TABLE DUE TO STEEL RELAXATION, CREEP AND SHRINKAGE OF CONCRETE. THESE LOSSES VARY ALONG THE LENGTH OF THE POST-TENSIONING STRANDS AND THE MAXIMUM LOSS IS PROVIDED.
5. THE CONTRACTOR SHALL SUBMIT THE STRESSING SEQUENCE AND ELONGATION CALCULATIONS TO THE ENGINEER FOR APPROVAL. ALL LOSSES DUE TO TENDON VERTICAL AND HORIZONTAL CURVATURE SHALL BE INCLUDED IN ELONGATION CALCULATIONS.
   A. EACH TENDON SHALL BE STRESSED AT THE LEFT END OF THE CROSSBEAM ONLY.
   B. THE SEQUENCE STRESSING SHALL BE AS SHOWN ON "PIER 3 GEOMETRY" SHEET.
6. SIDE FORMS FOR THE LOWER CROSSBEAM SHALL BE REMOVED PRIOR TO POST-TENSIONING.
7. DUCTS SHALL CONFORM TO SECTION 6-02.3(26)E REQUIREMENTS FOR INTERNAL EMBEDDED INSTALLATION.
8. CAPS FOR GROUTING AS REQUIRED BY SECTION 6-02.3(26)E4 SHALL REMAIN IN PLACE AND BE PERMANENT AFTER GROUTING.

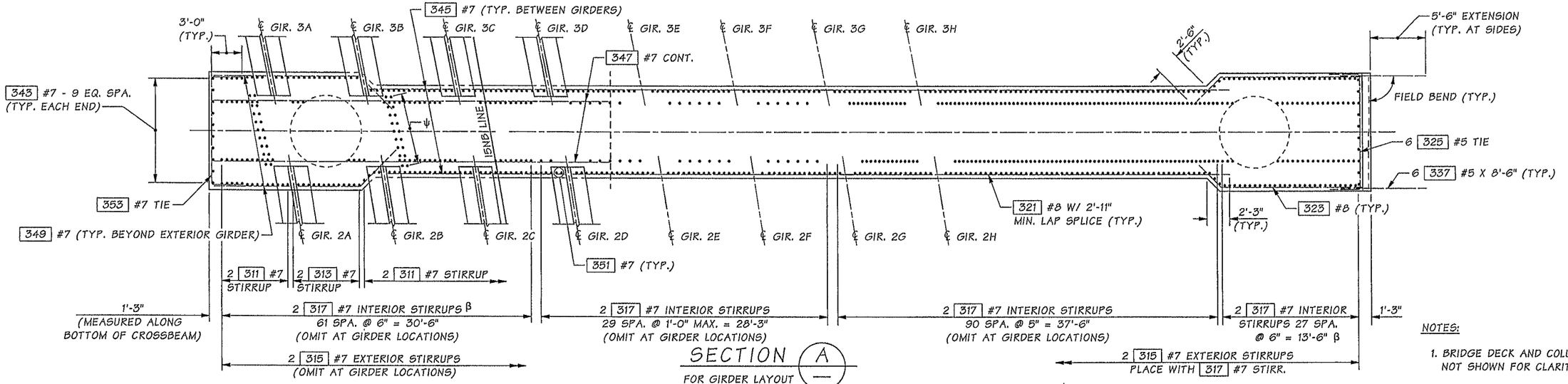

SECTION A

FOR GIRDER LAYOUT SEE "FRAMING PLAN"

NOTES:

1. BRIDGE DECK AND COLUMN REINFORCEMENT NOT SHOWN FOR CLARITY.
2. DIMENSIONS GIVEN ALONG ℄ PIER, UNLESS NOTED OTHERWISE.
3. SEE SPECIAL PROVISIONS FOR MASS CONCRETE REQUIREMENTS.

β OMIT DIRECTLY OVER COLUMNS.

λ MECHANICAL SPLICE FOR ADJACENT BARS SHALL BE ALTERNATED ABOUT CROSSBEAM MIDSPAN AND SHALL BE SPACED AT LEAST 2'-0".

ψ 316 #9 ~ 8 SPA. @ 1'-6" MAX. PLACED BETWEEN CROSSBEAM LONGITUDINAL REINFORCEMENT

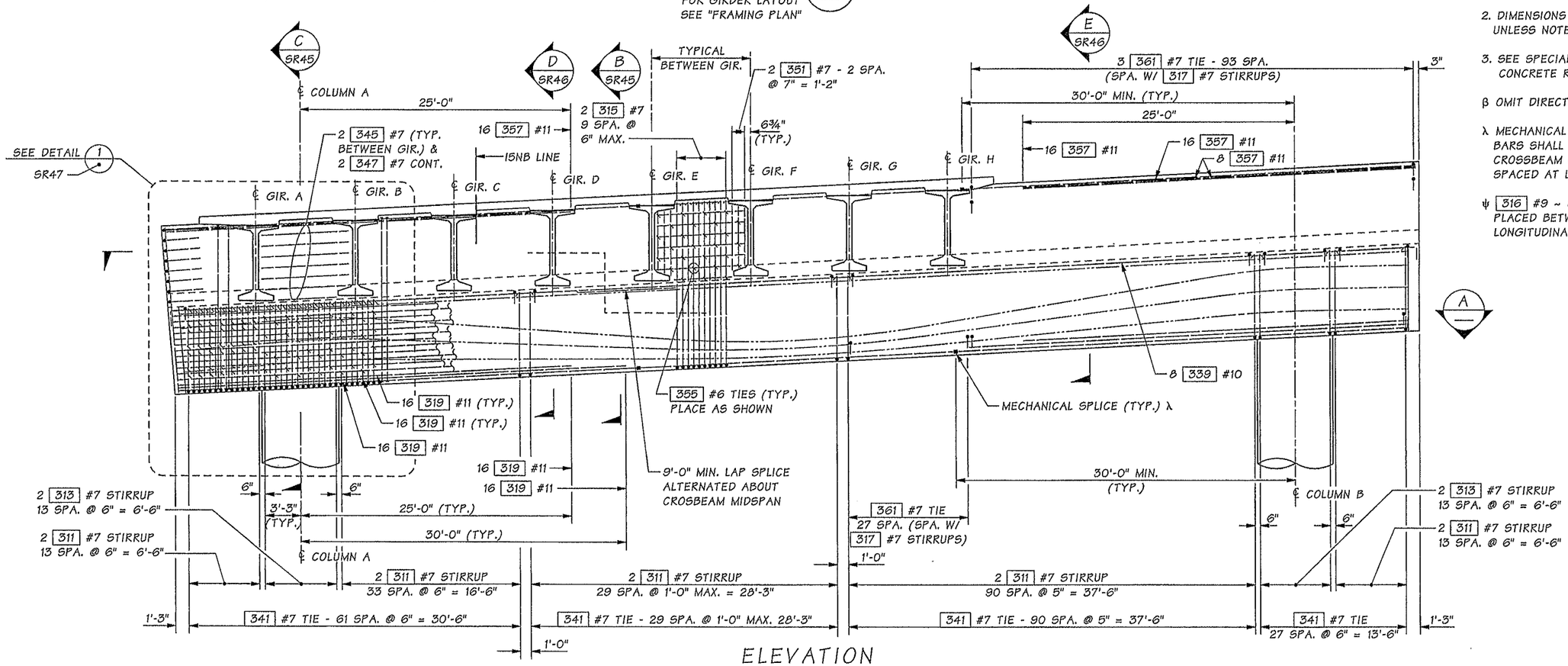

ELEVATION

Bridge Design Engr.	Khaleghi, B		
Supervisor	Khaleghi, B		
Designed By	Bingle, J	05/13	
Checked By	Mizumori, A	10/13	
Detailed By	Plesha, GM	05/13	
Bridge Projects Engr.			
Prelim. Plan By			
Architect/Specialist			

M:\Y-Team\M ST TO PORTLAND\CWRR OC\window files\PIER 3 CROSSBEAM 2.wnd

DATE	REVISION	BY	APP'D

REGION NO.	STATE	FED. AID PROJ. NO.	SHEET NO.	TOTAL SHEETS
10	WASH.			
JOB NUMBER 12C501				

BRIDGE AND STRUCTURES OFFICE

2-11-14

2/12/14

Washington State Department of Transportation

I-5
M STREET TO PORTLAND AVENUE - HOV

I-5 OVER I-705 AND TACOMA RAIL BRIDGE NO. 5/445E

PIER 3 CROSSBEAM DETAILS 1 OF 4

BRIDGE SHEET NO. SR44

SHEET 1148 OF 1763 SHEETS

SR 5 FILE NO. 7454 SHEET SR44

Tue Feb 11 07:16:28 2014

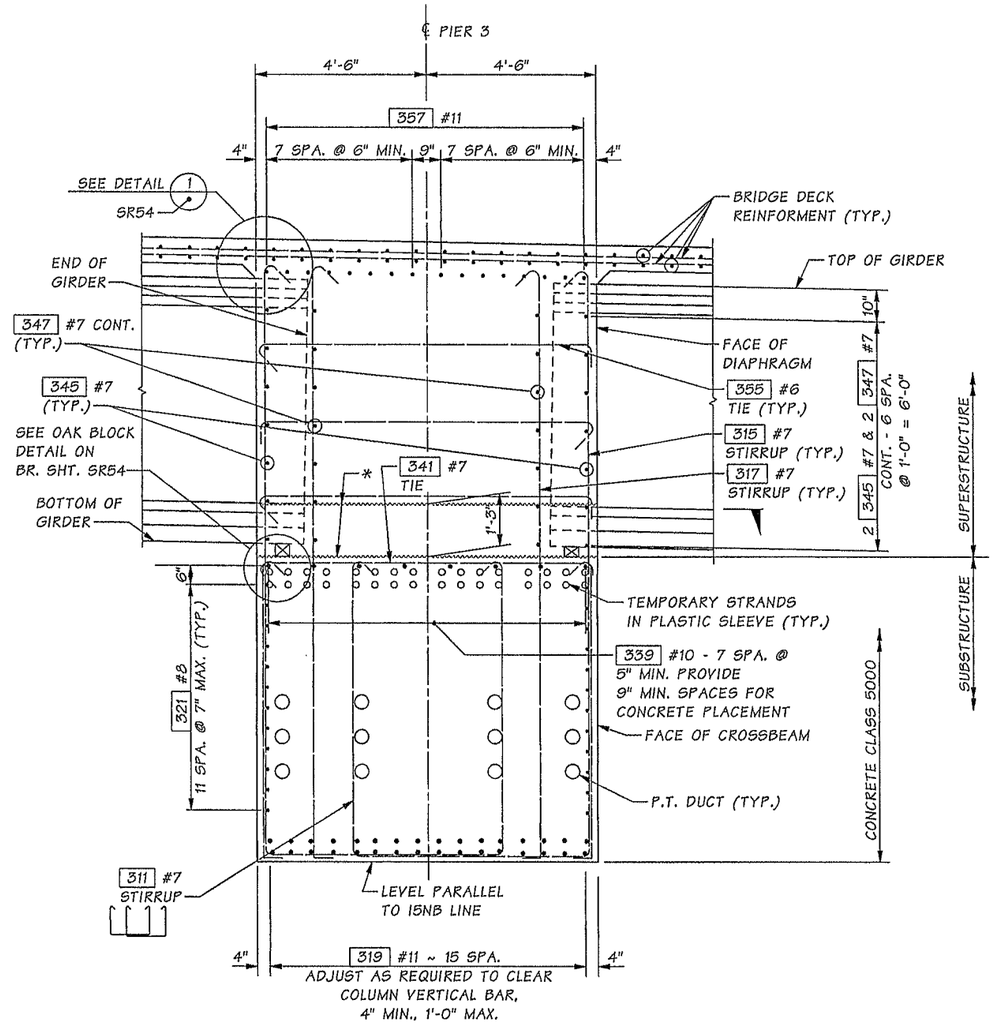

SECTION B
SR44

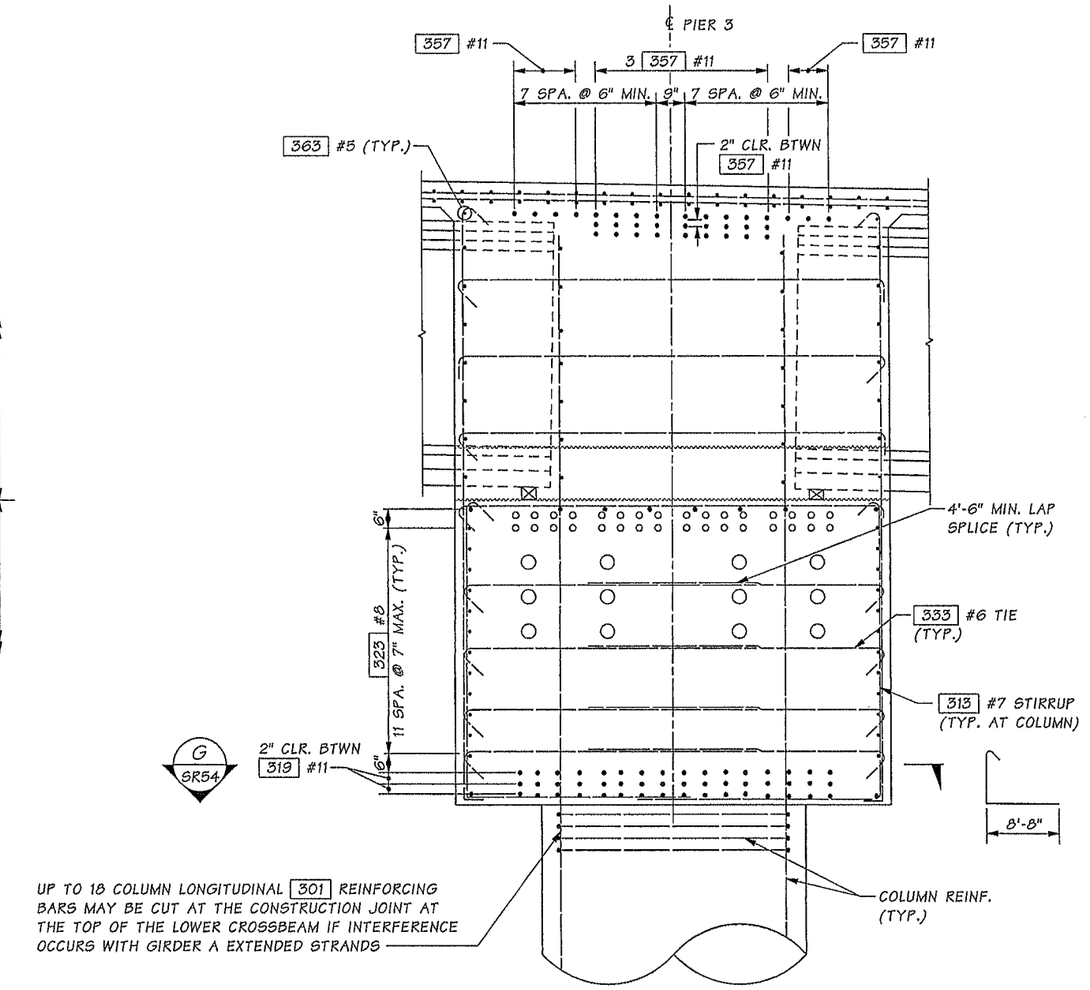

SECTION C
SR44

FOR DETAILS NOT SHOWN SEE SECTION B

NOTES:

1. LONGITUDINAL DIMENSIONS ARE NORMAL TO PIER.
2. FOR CONCRETE PLACEMENT PROCEDURE SEE "CONSTRUCTION SEQUENCE" AND "CONSTRUCTION SEQUENCE PIER 3 OPTION 1 AND OPTION 2" SHEETS.

* CONSTRUCTION JOINT WITH ROUGHENED SURFACE TOP SURFACE LEVEL AND PARALLEL TO 15NB LINE.

SR 5 FILE NO. 7454 SHEET SR45

Bridge Design Engr.	Khaleghi, B	
Supervisor	Khaleghi, B	
Designed By	Bingle, J	04/13
Checked By	Mizumori, A	10/13
Detailed By	Plesha, GM	04/13
Bridge Projects Engr.		
Prelim. Plan By		
Architect/Specialist		

M:\Y-Team\M ST TO PORTLAND\CWRR OC\window files\PIER 3 CROSSBEAM DETAILS 1.wnd

DATE	REVISION	BY	APP'D

REGION NO.	STATE	FED. AID PROJ. NO.	SHEET NO.	TOTAL SHEETS
10	WASH.			

JOB NUMBER 12C501

JEDEDIAH BINGLE, STATE OF WASHINGTON, 45490, PROFESSIONAL ENGINEER — 2-11-14

BRIDGE AND STRUCTURES OFFICE

BIJAN KHALEGHI, STATE OF WASHINGTON, 27695, PROFESSIONAL ENGINEER — 2/12/14

Washington State Department of Transportation

I-5
M STREET TO PORTLAND AVENUE - HOV

I-5 OVER I-705 AND TACOMA RAIL BRIDGE NO. 5/445E

PIER 3 CROSSBEAM DETAILS 2 OF 4

BRIDGE SHEET NO. SR45

SHEET 1149 OF 1763 SHEETS

Tue Feb 11 07:16:30 2014

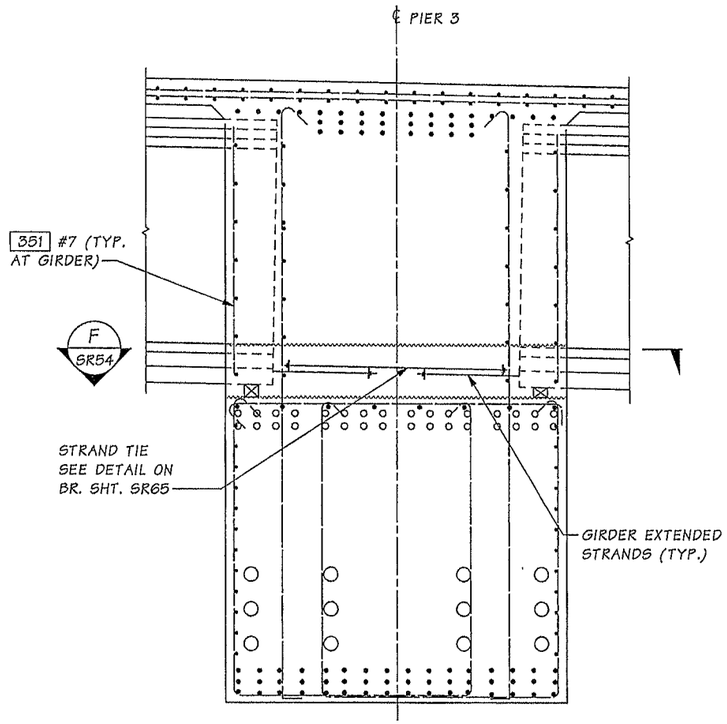

SECTION D
FOR DETAILS NOT SHOWN SEE SECTION B
SR44
SR45

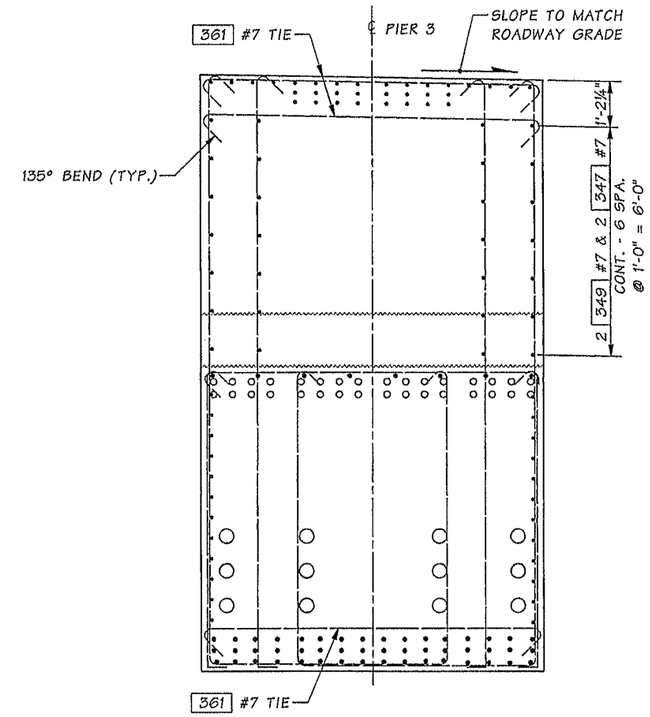

SECTION E
FOR DETAILS NOT SHOWN SEE SECTION B
SR44
SR45

NOTES:

1. LONGITUDINAL DIMENSIONS ARE NORMAL TO PIER.
2. FOR CONCRETE PLACEMENT PROCEDURE SEE "CONSTRUCTION SEQUENCE" AND "CONSTRUCTION SEQUENCE PIER 3 OPTION 1 AND OPTION 2" SHEETS.

SR 5 FILE NO. 7454 SHEET SR46

Bridge Design Engr.	Khaleghi, B	
Supervisor	Khaleghi, B	
Designed By	Bingle, J	04/13
Checked By	Mizumori, A	10/13
Detailed By	Plesha, GM	04/13
Bridge Projects Engr.		
Prelim. Plan By		
Architect/Specialist		

M:\Y-Team\M ST TO PORTLAND\CWRR OC\window files\PIER 3 CROSSBEAM DETAILS 2.wnd

DATE	REVISION	BY	APP'D

REGION NO.	STATE	FED. AID PROJ. NO.	SHEET NO.	TOTAL SHEETS
10	WASH.			
JOB NUMBER 12C501				

BRIDGE AND STRUCTURES OFFICE

2-11-14 2/12/14

Washington State Department of Transportation

I-5
M STREET TO PORTLAND AVENUE - HOV
I-5 OVER I-705 AND TACOMA RAIL BRIDGE NO. 5/445E
PIER 3 CROSSBEAM DETAILS 3 OF 4

BRIDGE SHEET NO. SR46
SHEET 1150 OF 1763 SHEETS

Tue Feb 11 07:16:31 2014

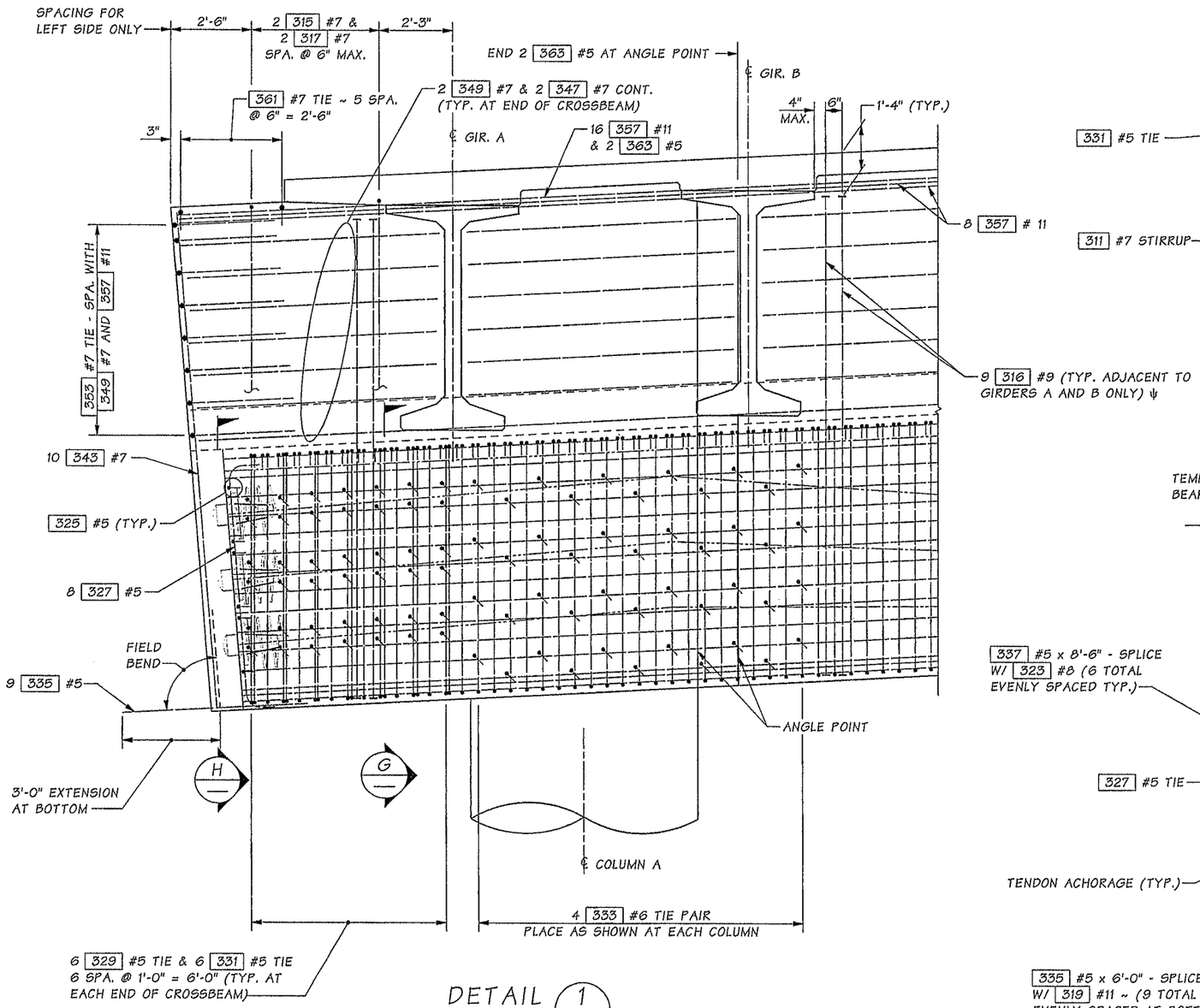

DETAIL 1 — SR44

COLUMN A SHOWN, COLUMN B SIMILAR
FOR DETAILS NOT SHOWN, SEE 'ELEVATION' ON BR. SHEET SR44

ψ 316 #9 SHALL BE HEADED AT BOTH ENDS PER ASTM A 970 CLASS HA

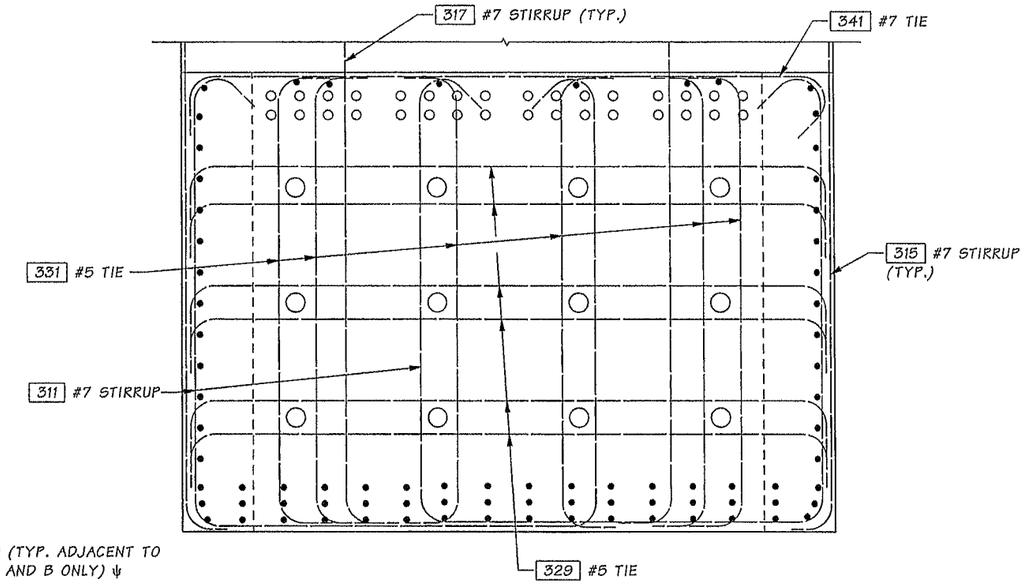

SECTION G

FOR DETAILS NOT SHOWN SEE SECTION B — SR45

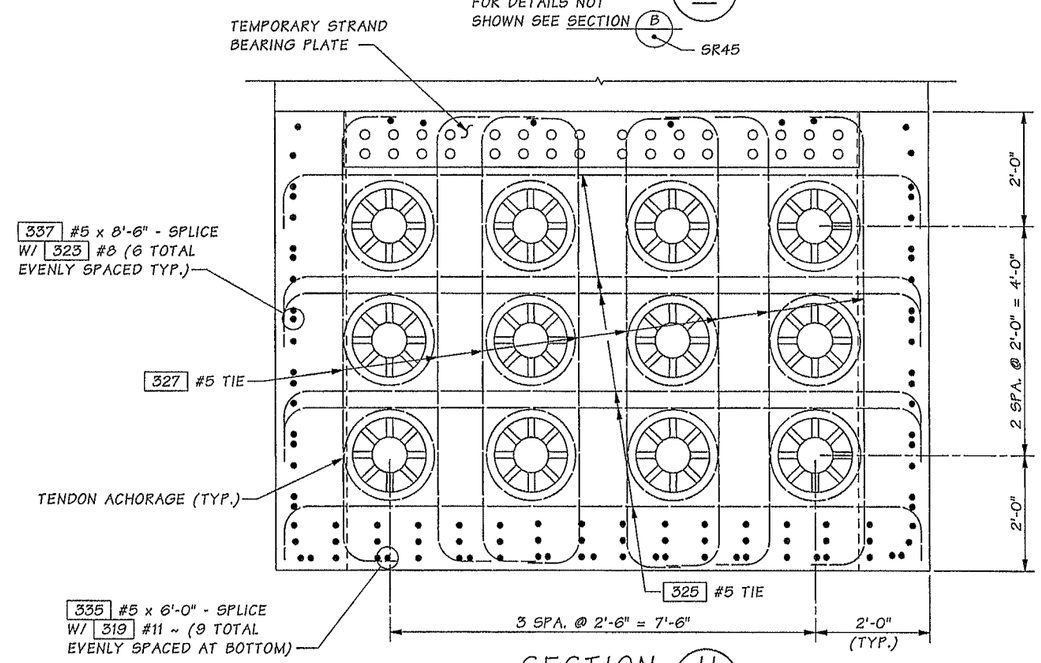

SECTION H

FOR DETAILS NOT SHOWN SEE SECTION B — SR45

Bridge Design Engr.	Khaleghi, B		M:\Y-Team\M ST TO PORTLAND\CWRR OC\window files\PIER 3 PT SECTIONS.wnd							
Supervisor	Khaleghi, B									
Designed By	Bingle, J	05/13								
Checked By	Mizumori, A	10/13								
Detailed By	Plesha, GM	05/13								
Bridge Projects Engr.										
Prelim. Plan By										
Architect/Specialist			DATE	REVISION	BY	APP'D				

REGION NO.	STATE	FED. AID PROJ. NO.	SHEET NO.	TOTAL SHEETS
10	WASH.			
JOB NUMBER 12C501				

BRIDGE AND STRUCTURES OFFICE

2-11-14 2/12/14

Washington State Department of Transportation

I-5
M STREET TO PORTLAND AVENUE - HOV

I-5 OVER I-705 AND TACOMA RAIL BRIDGE NO. 5/445E

PIER 3 CROSSBEAM DETAILS 4 OF 4

BRIDGE SHEET NO. SR47

SHEET 1151 OF 1763 SHEETS

SR 5 FILE NO. 7454 SHEET SR47

Tue Feb 11 07:16:32 2014

TABLE OF ELEVATIONS		
LOCATION	ELEVATION - SPAN 3	ELEVATION - SPAN 4
GIR. A	171.62	171.44
GIR. B	172.18	171.99
GIR. C	172.73	172.55
GIR. D	173.29	173.10
GIR. E	173.84	173.66
GIR. F	174.40	174.21
GIR. G	174.95	174.77
GIR. H	175.50	175.32

ELEVATIONS ARE TAKEN AT TOP OF OAK BLOCK AT INTERSECTION OF ℄ OAK BLOCK AND ℄ GIRDER.

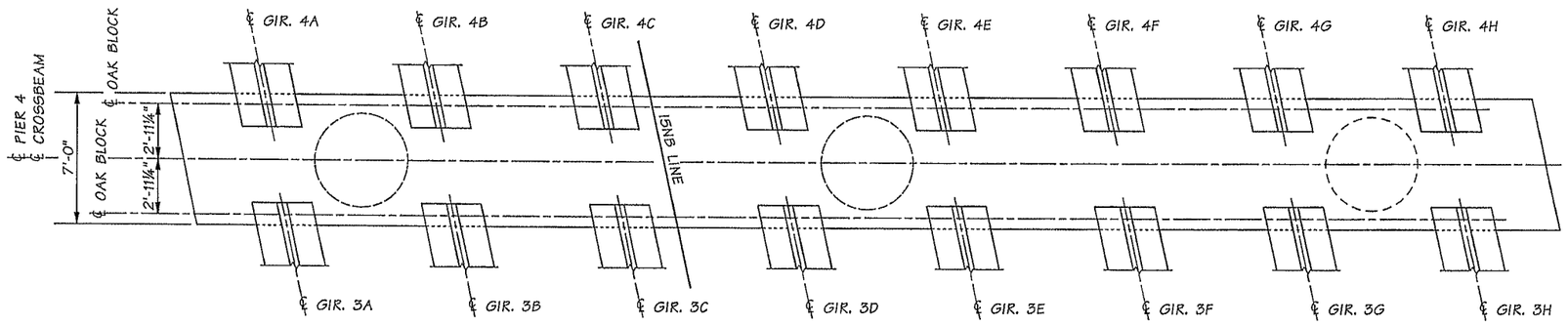

SECTION A

FOR GIRDER LAYOUT SEE "FRAMING PLAN"

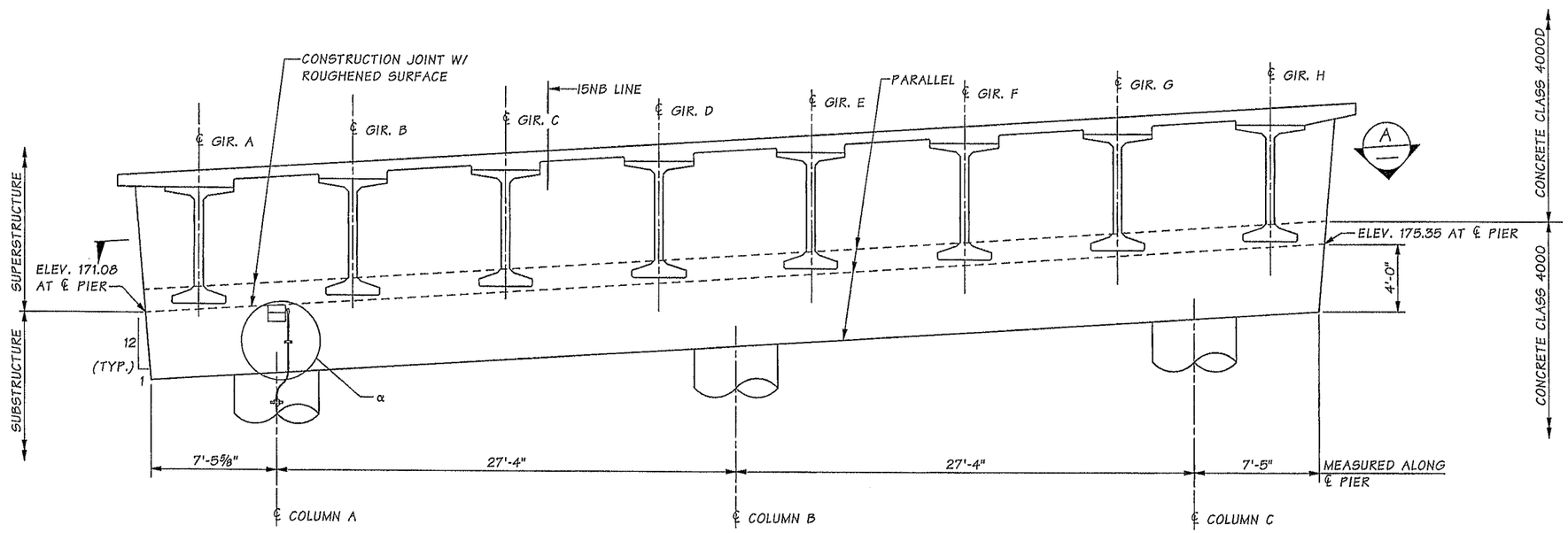

ELEVATION

α SEE STANDARD PLAN J-60.13 AND CIVIL PLAN SHEET ILD1 FOR CONDUIT AND LUMINAIRE MOUNTING DETAILS. HOLES FOR RESIN BONDED ANCHORS SHALL NOT BE CORE DRILLED.

SR 5 FILE NO. 7454 SHEET SR48

Bridge Design Engr.	Khaleghi, B	
Supervisor	Khaleghi, B	
Designed By	Bingle, J	04/13
Checked By	Mizumori, A	10/13
Detailed By	Plesha, GM	04/13
Bridge Projects Engr.		
Prelim. Plan By		
Architect/Specialist		

M:\Y-Team\M ST TO PORTLAND\CWRR OC\window files\PIER 4 CROSSBEAM.wnd

DATE	REVISION	BY	APP'D

REGION NO.	STATE	FED. AID PROJ. NO.	SHEET NO.	TOTAL SHEETS
10	WASH.			

JOB NUMBER 12C501

BRIDGE AND STRUCTURES OFFICE

2-11-14

2/12/14

Washington State Department of Transportation

I-5
M STREET TO PORTLAND AVENUE - HOV

I-5 OVER I-705 AND TACOMA RAIL BRIDGE NO. 5/445E

PIER 4 CROSSBEAM GEOMETRY

BRIDGE SHEET NO. SR48

SHEET 1152 OF 1763 SHEETS

Tue Feb 11 07:16:34 2014

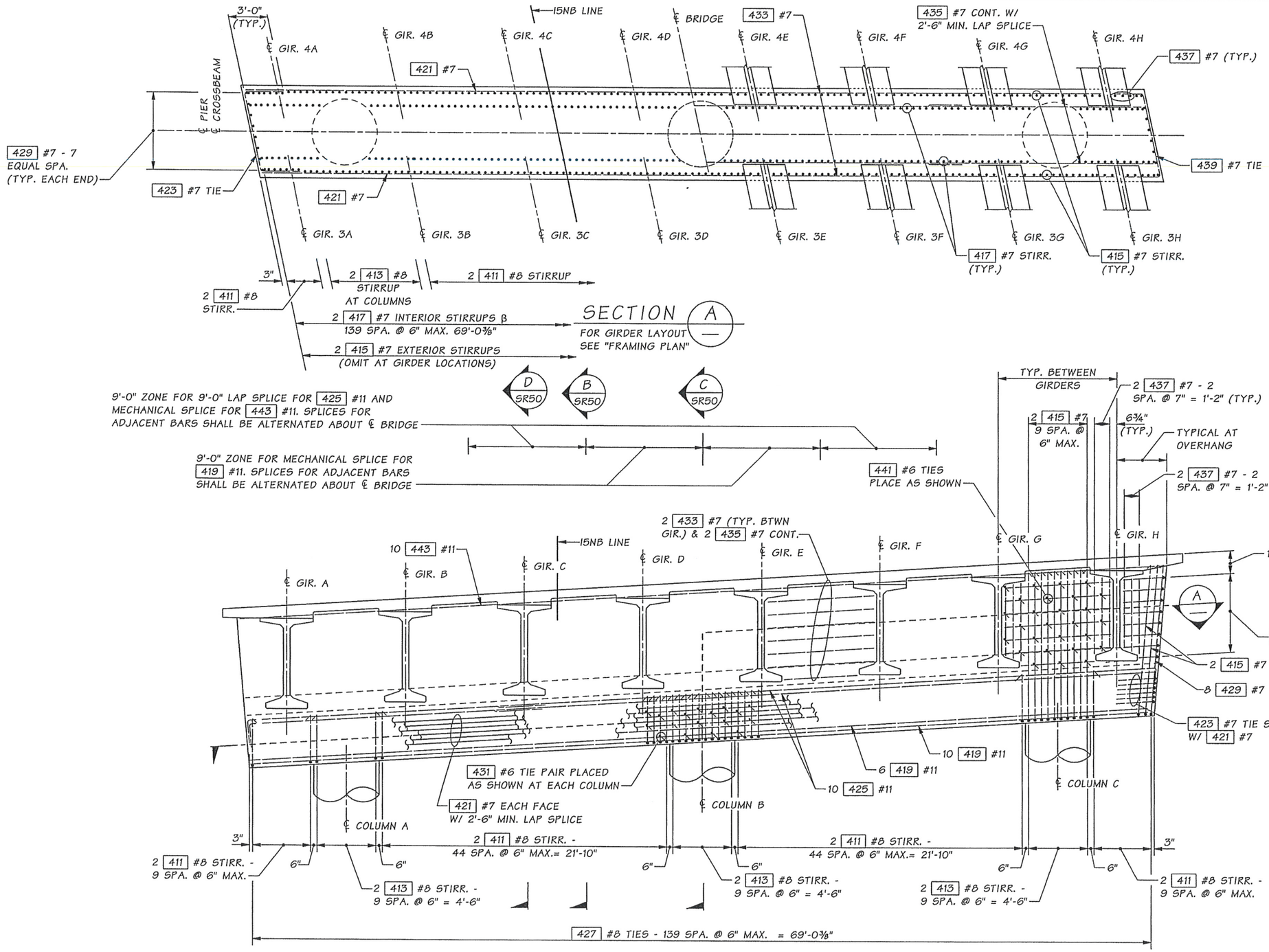

ELEVATION

NOTES:

1. BRIDGE DECK AND COLUMN REINFORCEMENT NOT SHOWN FOR CLARITY.
2. DIMENSIONS GIVEN ALONG ℄ PIER, UNLESS NOTED OTHERWISE.

β OMIT DIRECTLY OVER COLUMNS.

Bridge Design Engr.	Khaleghi, B		
Supervisor	Khaleghi, B		
Designed By	Bingle, J	04/13	
Checked By	Mizumori, A	10/13	
Detailed By	Plesha, GM	04/13	
Bridge Projects Engr.			
Prelim. Plan By			
Architect/Specialist			

M:\Y-Team\M ST TO PORTLAND\CWRR OC\window files\PIER 4 CROSSBEAM 2.wnd

DATE	REVISION	BY	APP'D

REGION NO.	STATE	FED. AID PROJ. NO.	SHEET NO.	TOTAL SHEETS
10	WASH.			
JOB NUMBER 12C501				

JEDEDIAH BINGLE — STATE OF WASHINGTON — 43190 — PROFESSIONAL ENGINEER — 2-11-14

BRIDGE AND STRUCTURES OFFICE

JUAN KHALEGHI — STATE OF WASHINGTON — 27695 — PROFESSIONAL ENGINEER — 2/12/14

Washington State Department of Transportation

I-5
M STREET TO PORTLAND AVENUE - HOV

I-5 OVER I-705 AND TACOMA RAIL BRIDGE NO. 5/445E

PIER 4 CROSSBEAM DETAILS 1 OF 2

BRIDGE SHEET NO. SR49

SHEET 1153 OF 1763 SHEETS

SR 5 FILE NO. 7454 SHEET SR49

Tue Feb 11 07:16:35 2014

NOTES
1. LONGITUDINAL DIMENSIONS ARE NORMAL TO ℄ PIER.
2. FOR CONCRETE PLACEMENT PROCEDURE SEE "CONSTRUCTION SEQUENCE" SHEET.

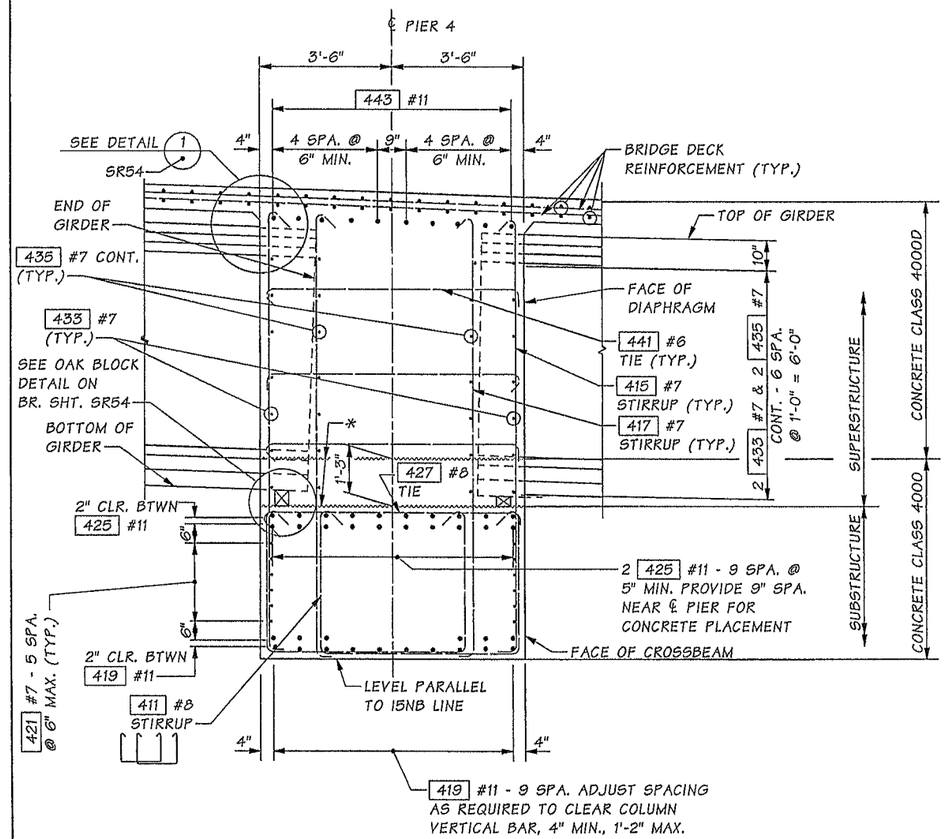

SECTION B SR49

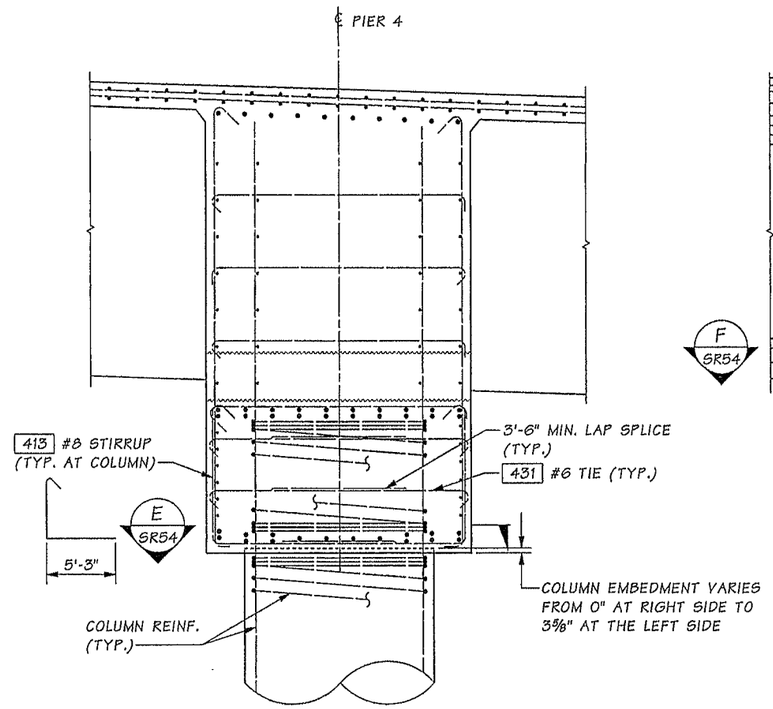

SECTION C SR49

FOR DETAILS NOT SHOWN SEE SECTION B

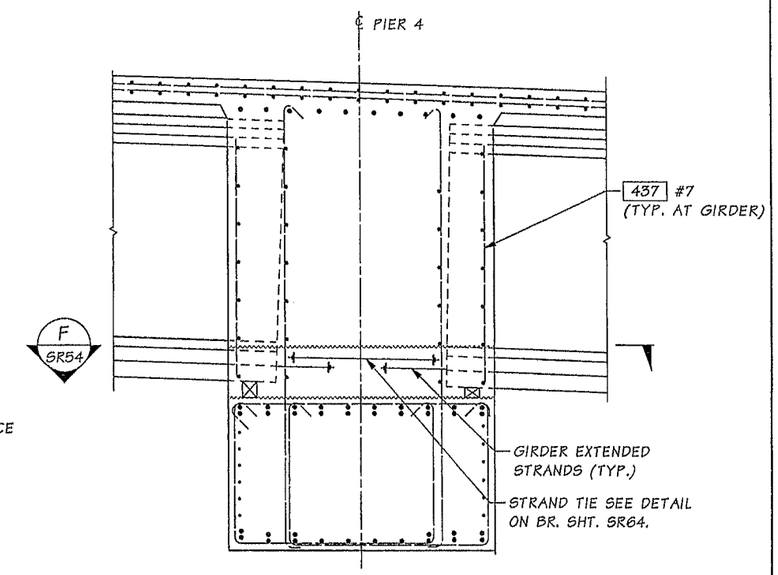

SECTION D SR49

FOR DETAILS NOT SHOWN SEE SECTION B

* CONSTRUCTION JOINT WITH ROUGHENED SURFACE. TOP SURFACE LEVEL PARALLEL TO 15NB LINE.

SR 5 FILE NO. 7454 SHEET SR50

Bridge Design Engr.	Khaleghi, B		M:\Y-Team\M ST TO PORTLAND\CWRR OC\window files\PIER 4 CROSSBEAM DETAILS 1.wnd				REGION NO.	STATE	FED. AID PROJ. NO.	SHEET NO.	TOTAL SHEETS
Supervisor	Khaleghi, B						10	WASH.			
Designed By	Bingle, J	05/13					JOB NUMBER 12C501				
Checked By	Mizumori, A	10/13									
Detailed By	Plesha, GM	05/13									
Bridge Projects Engr.											
Prelim. Plan By											
Architect/Specialist			DATE	REVISION	BY	APP'D					

Tue Feb 11 07:16:37 2014

BRIDGE AND STRUCTURES OFFICE

2-11-14 2/12/14

Washington State Department of Transportation

I-5
M STREET TO PORTLAND AVENUE - HOV
I-5 OVER I-705 AND TACOMA RAIL BRIDGE NO. 5/445E
PIER 4 CROSSBEAM DETAILS 2 OF 2

BRIDGE SHEET NO. SR50
SHEET 1154 OF 1763 SHEETS

TABLE OF ELEVATIONS

LOCATION	ELEVATION - SPAN 4	ELEVATION - SPAN 5
GIR. A	167.23	166.89
GIR. B	167.71	167.37
GIR. C	168.20	167.86
GIR. D	168.68	168.34
GIR. E	169.16	168.83
GIR. F	169.65	169.31
GIR. G	170.13	169.80
GIR. H	170.61	170.28

ELEVATIONS ARE TAKEN AT TOP OF OAK BLOCK AT INTERSECTION OF ℄ OAK BLOCK AND ℄ GIRDER.

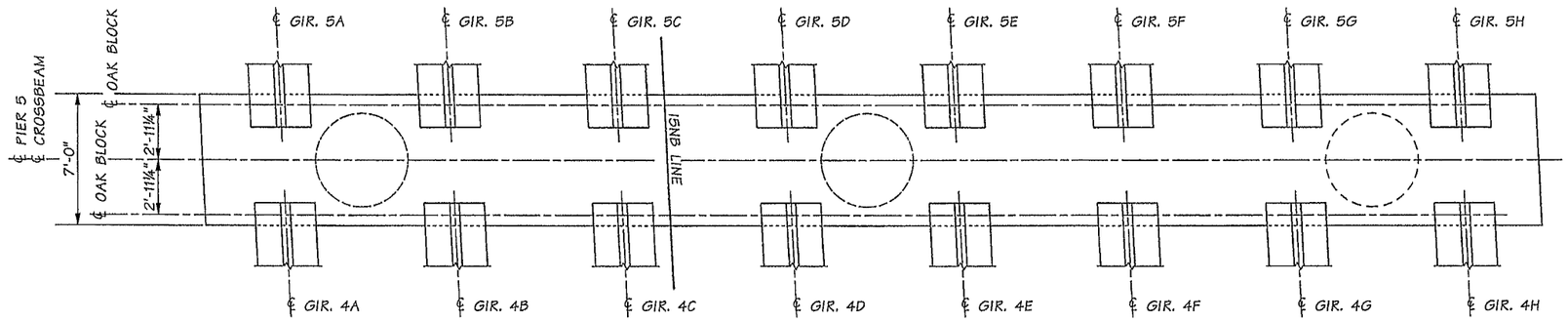

SECTION A

FOR GIRDER LAYOUT SEE "FRAMING PLAN"

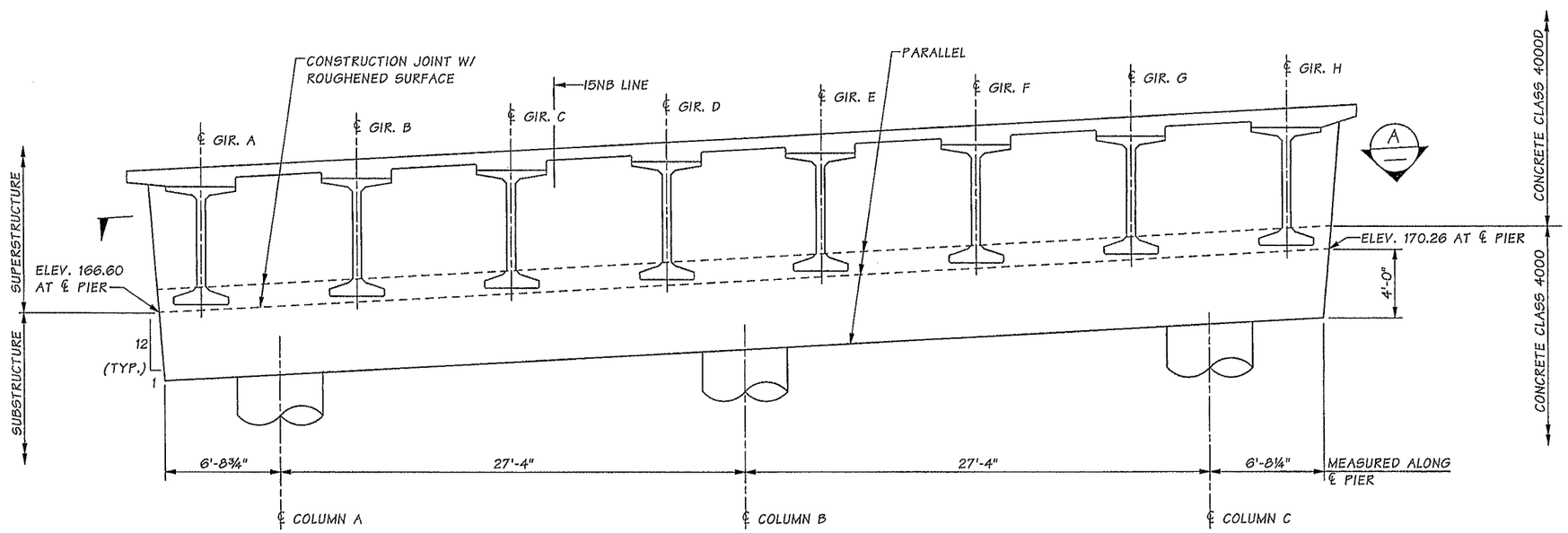

ELEVATION

SR 5 FILE NO. 7454 SHEET SR51

Bridge Design Engr.	Khaleghi, B		M:\Y-Team\M ST TO PORTLAND\CWRR OC\window files\PIER 5 CROSSBEAM.wnd							
Supervisor	Khaleghi, B									
Designed By	Bingle, J	04/13								
Checked By	Mizumori, A	10/13								
Detailed By	Plesha, GM	04/13								
Bridge Projects Engr.										
Prelim. Plan By										
Architect/Specialist			DATE	REVISION	BY	APP'D				

REGION NO.	STATE	FED. AID PROJ. NO.	SHEET NO.	TOTAL SHEETS
10	WASH.			
JOB NUMBER 12C501				

BRIDGE AND STRUCTURES OFFICE

2-1-14 2/12/14

Washington State Department of Transportation

I-5
M STREET TO PORTLAND AVENUE - HOV

I-5 OVER I-705 AND TACOMA RAIL BRIDGE NO. 5/445E

PIER 5 CROSSBEAM GEOMETRY

BRIDGE SHEET NO. SR51

SHEET 1155 OF 1763 SHEETS

Tue Feb 11 07:16:39 2014

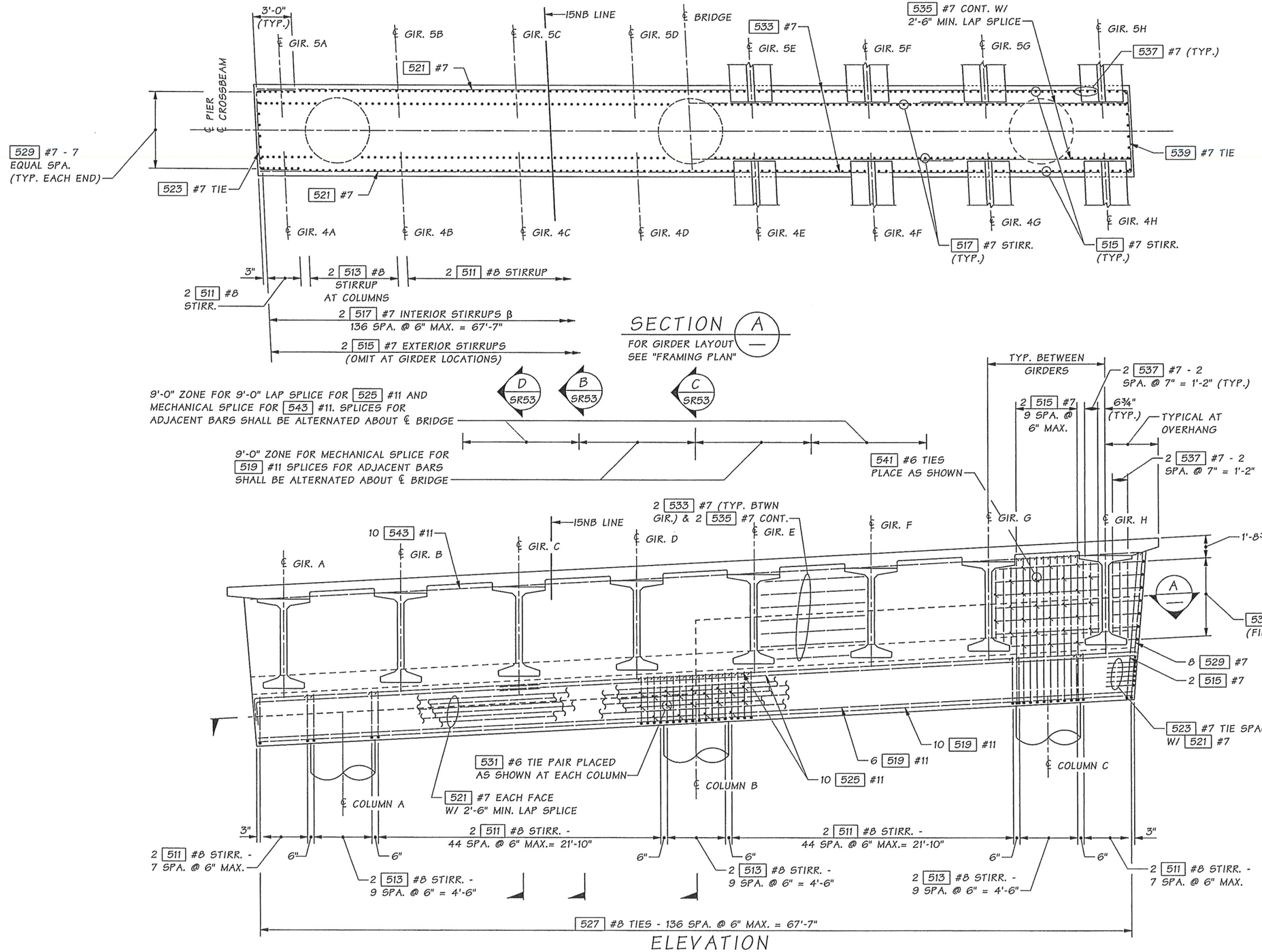

NOTES:

1. BRIDGE DECK AND COLUMN REINFORCEMENT NOT SHOWN FOR CLARITY.
2. DIMENSIONS GIVEN ALONG ℄ PIER, UNLESS NOTED OTHERWISE.

β OMIT DIRECTLY OVER COLUMNS.

SR 5 FILE NO. 7454 SHEET SR52

Bridge Design Engr.	Khaleghi, B	
Supervisor	Khaleghi, B	
Designed By	Bingle, J	04/13
Checked By	Mizumori, A	10/13
Detailed By	Plesha, GM	04/13
Bridge Projects Engr.		
Prelim. Plan By		
Architect/Specialist		

M:\Y-Team\M ST TO PORTLAND\CWRR OC\window files\PIER 5 CROSSBEAM 2.wnd

DATE	REVISION	BY	APP'D

REGION NO.	STATE	FED. AID PROJ. NO.	SHEET NO.	TOTAL SHEETS
10	WASH.			

JOB NUMBER 12C501

BRIDGE AND STRUCTURES OFFICE

2-11-14

2/12/14

Washington State Department of Transportation

I-5
M STREET TO PORTLAND AVENUE - HOV

I-5 OVER I-705 AND TACOMA RAIL BRIDGE NO. 5/445E

PIER 5 CROSSBEAM
DETAILS 1 OF 2

BRIDGE SHEET NO. SR52

SHEET 1156 OF 1763 SHEETS

Tue Feb 11 07:16:40 2014

NOTES
1. LONGITUDINAL DIMENSIONS ARE NORMAL TO ℄ PIER.
2. FOR CONCRETE PLACEMENT PROCEDURE SEE "CONSTRUCTION SEQUENCE" SHEET.

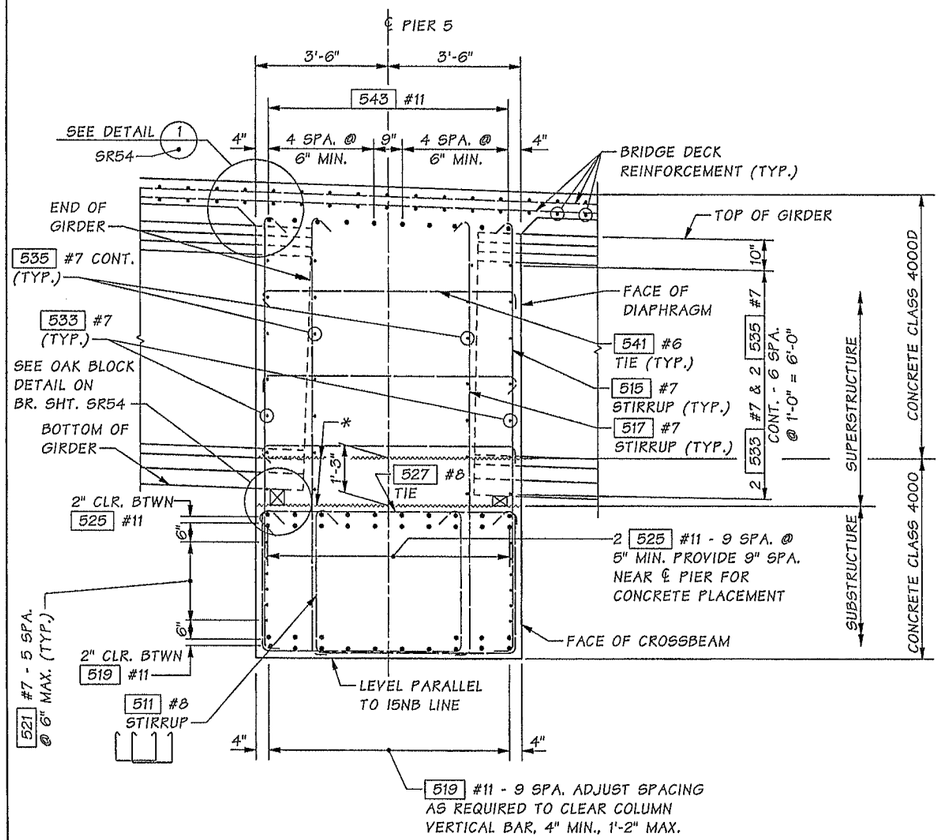

SECTION B SR52

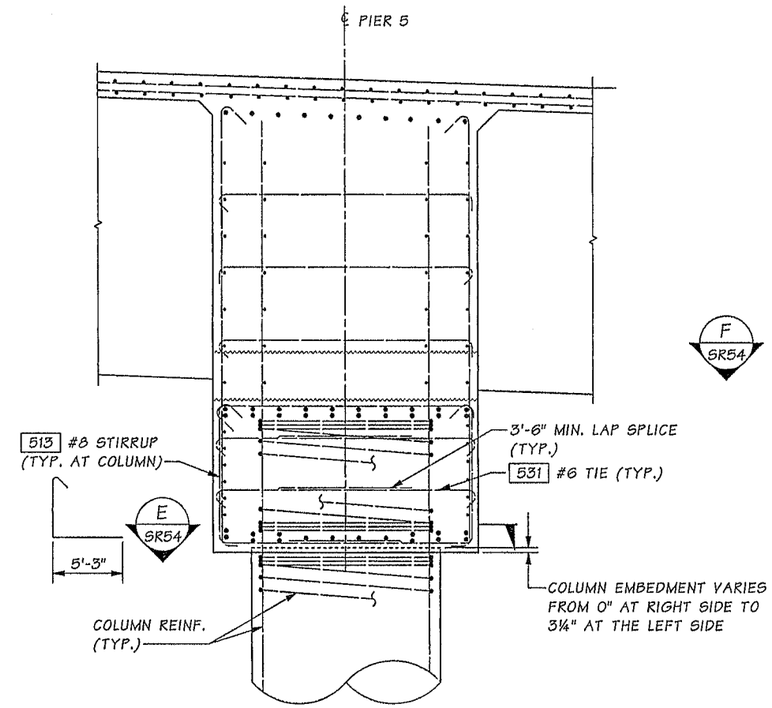

SECTION C SR52

FOR DETAILS NOT SHOWN SEE SECTION B

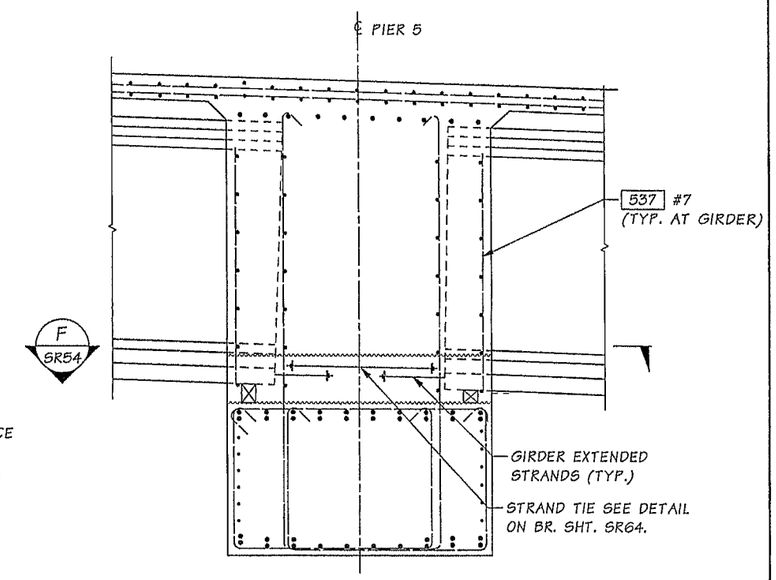

SECTION D SR52

FOR DETAILS NOT SHOWN SEE SECTION B

* CONSTRUCTION JOINT WITH ROUGHENED SURFACE TOP SURFACE LEVEL PARALLEL TO 15NB LINE.

SR 5 FILE NO. 7454 SHEET SR53

Bridge Design Engr.	Khaleghi, B		
Supervisor	Khaleghi, B		
Designed By	Bingle, J	05/13	
Checked By	Mizumori, A	10/13	
Detailed By	Plesha, GM	05/13	
Bridge Projects Engr.			
Prelim. Plan By			
Architect/Specialist			

M:\Y-Team\M ST TO PORTLAND\CWRR OC\window files\PIER 5 CROSSBEAM DETAILS 1.wnd

DATE	REVISION	BY	APP'D

REGION NO.	STATE	FED. AID PROJ. NO.	SHEET NO.	TOTAL SHEETS
10	WASH.			
JOB NUMBER 12C501				

Tue Feb 11 07:16:42 2014

BRIDGE AND STRUCTURES OFFICE

2-11-14 2/12/14

Washington State Department of Transportation

I-5
M STREET TO PORTLAND AVENUE - HOV
I-5 OVER I-705 AND TACOMA RAIL BRIDGE NO. 5/445E
PIER 5 CROSSBEAM DETAILS 2 OF 2

BRIDGE SHEET NO. SR53

SHEET 1157 OF 1763 SHEETS

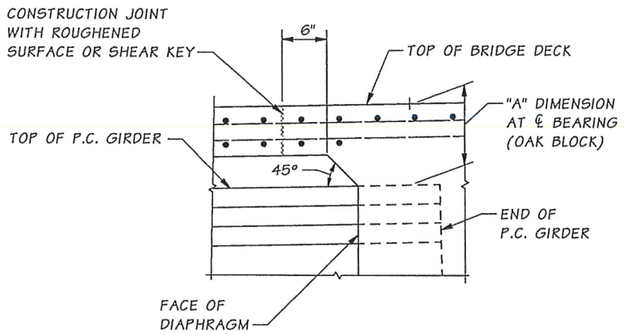

DETAIL 1

DIAPHRAGM REINFORCING NOT SHOWN FOR CLARITY

SR41, SR45 SR50 & SR53

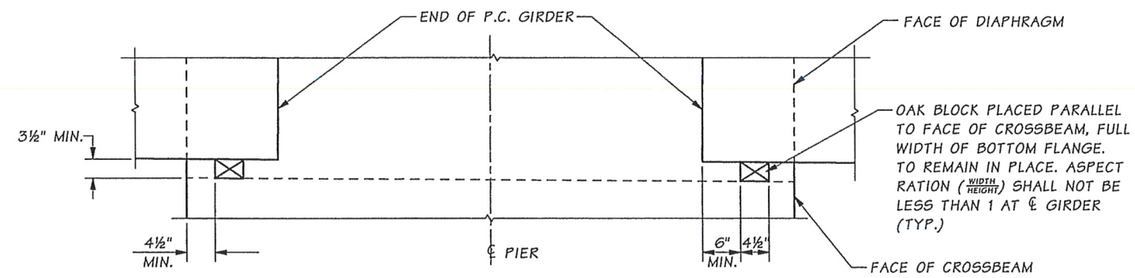

OAK BLOCK DETAIL

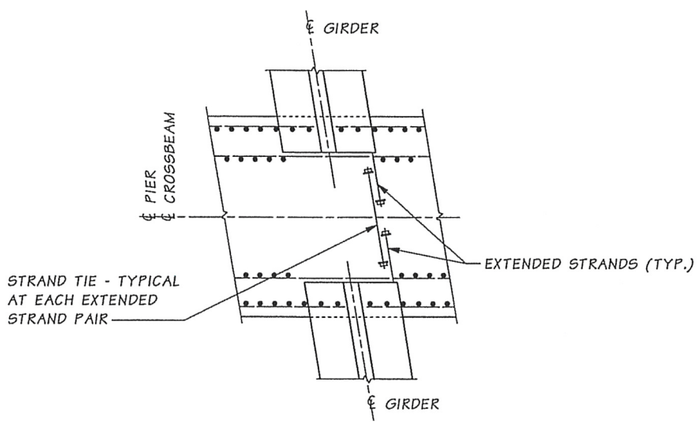

SECTION F

PIER 2 OPTION 1 SHOWN
PIERS 3, 4 & 5 SIMILAR
FOR DETAILS SEE
BR. SHTS. SR64 & SR65

SR41, SR46
SR50 & SR53

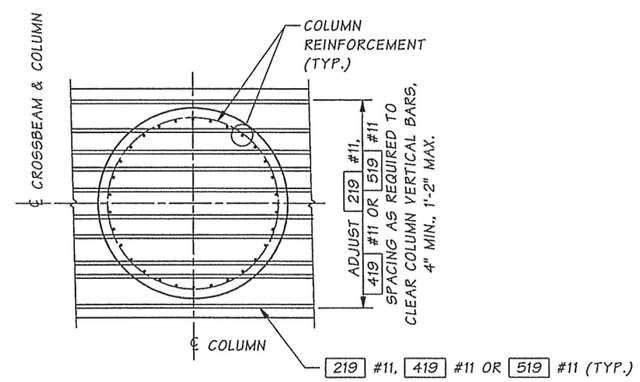

SECTION E

COLUMN A SHOWN,
COLUMN B SIMILAR

SR41,
SR50 & SR53

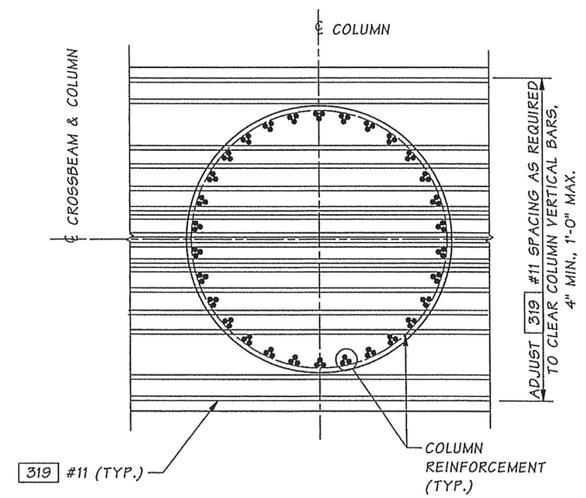

SECTION G

COLUMN A SHOWN,
COLUMN B SIMILAR

SR45

SR 5 FILE NO. 7454 SHEET SR54

Bridge Design Engr.	Khaleghi, B		M:\Y-Team\M ST TO PORTLAND\CWRR OC\window files\PIER 2 CROSSBEAM DETAILS.wnd								
Supervisor	Khaleghi, B						REGION NO.	STATE	FED. AID PROJ. NO.	SHEET NO.	TOTAL SHEETS
Designed By	Bingle, J	05/13					10	WASH.			
Checked By	Mizumori, A	10/13									
Detailed By	Plesha, GM	05/13					JOB NUMBER 12C501				
Bridge Projects Engr.											
Prelim. Plan By											
Architect/Specialist			DATE	REVISION	BY	APP'D					

Tue Feb 11 07:16:44 2014

JEDEDIAH BINGLE STATE OF WASHINGTON 25190 PROFESSIONAL ENGINEER 2-11-14

BRIDGE AND STRUCTURES OFFICE

BIJAN KHALEGHI STATE OF WASHINGTON 27695 PROFESSIONAL ENGINEER 2/12/14

Washington State Department of Transportation

I-5
M STREET TO PORTLAND AVENUE - HOV

I-5 OVER I-705 AND TACOMA RAIL BRIDGE NO. 5/445E

CROSSBEAM DETAILS

BRIDGE SHEET NO. SR54

SHEET 1158 OF 1763 SHEETS

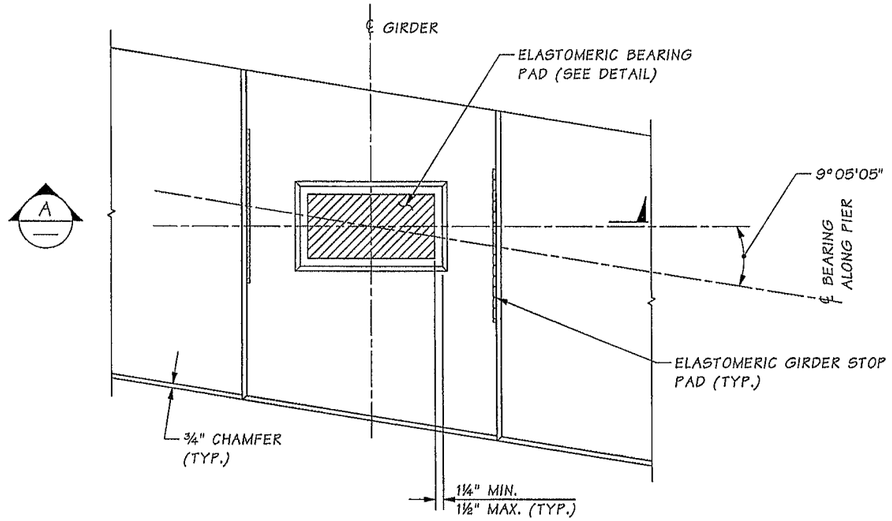

GROUT PAD DETAIL

GIRDER NOT SHOWN FOR CLARITY

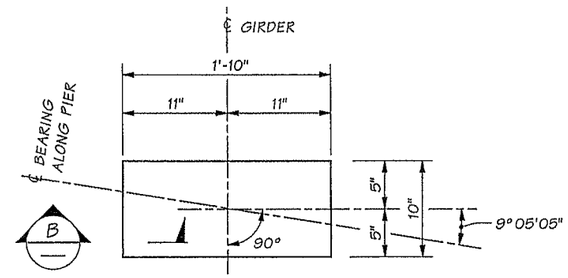

ELASTOMERIC BEARING PAD

LAMINATED ELASTOMERIC BEARING PAD
(5 SHIMS).

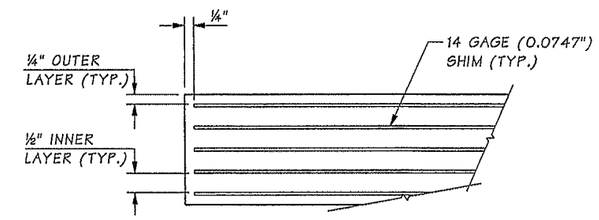

SECTION B

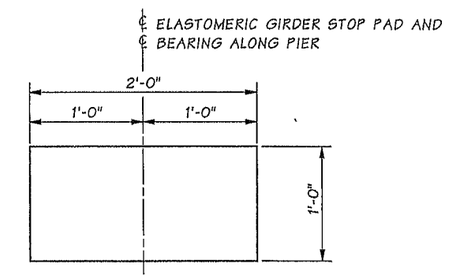

ELASTOMERIC GIRDER STOP PAD

SHEAR MODULUS = 165 PSI

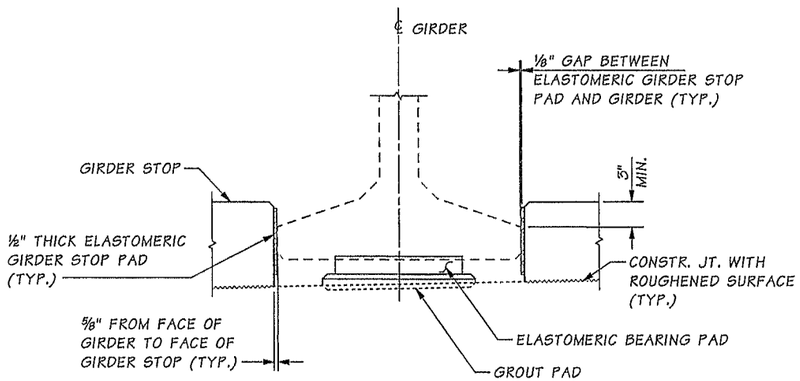

SECTION A

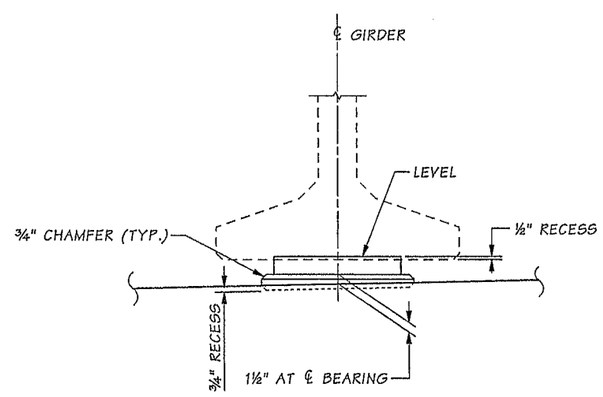

GROUT PAD ELEVATION

NOTES:

1. GIRDER STOPS SHALL BE CONSTRUCTED AFTER GIRDER PLACEMENT.
2. THE ELASTOMERIC GIRDERSTOP PADS SHALL BE BONDED TO THE GIRDER STOPS WITH AN APPROVED ADHESIVE.

BEARING DESIGN TABLE AASHTO METHOD B DESIGN	
SERVICE - I LIMIT STATE	
DEAD LOAD (DL) REACTION	150 KIPS
LIVE LOAD REACTION (W/O IMPACT)	78 KIPS
UNLOADED HEIGHT	2.87 IN
LOADED HEIGHT (DL)	2.82 IN
SHEAR MODULUS	165 PSI

SR 5 FILE NO. 7454 SHEET SR55

Bridge Design Engr.	Khaleghi, B		M:\Y-Team\M ST TO PORTLAND\CWRR OC\window files\BEARING PIER 1.wnd								
Supervisor	Khaleghi, B						REGION NO.	STATE	FED. AID PROJ. NO.	SHEET NO.	TOTAL SHEETS
Designed By	Tran, LH	02/13					10	WASH.			
Checked By	Sawahata, D	10/13									
Detailed By	Plesha, GM	02/13					JOB NUMBER 12C501				
Bridge Projects Engr.											
Prelim. Plan By											
Architect/Specialist			DATE	REVISION	BY	APP'D					

Tue Feb 11 07:16:45 2014

LIVONG HUU TRAN STATE OF WASHINGTON REGISTERED PROFESSIONAL ENGINEER 2/12/14

BRIDGE AND STRUCTURES OFFICE

SIJAN KHALEGHI STATE OF WASHINGTON REGISTERED PROFESSIONAL ENGINEER 2/12/14

Washington State Department of Transportation

I-5
M STREET TO PORTLAND AVENUE - HOV

I-5 OVER I-705 AND TACOMA RAIL BRIDGE NO. 5/445E

ELASTOMERIC BEARING PAD
PIER 1

BRIDGE SHEET NO. SR55

SHEET 1159 OF 1763 SHEETS

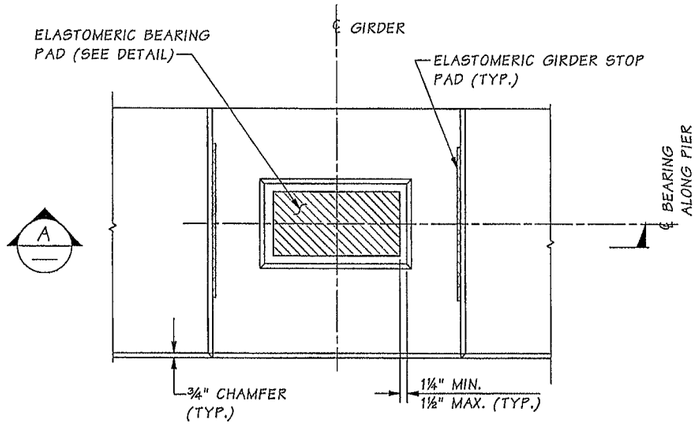

GROUT PAD DETAIL

GIRDER NOT SHOWN FOR CLARITY

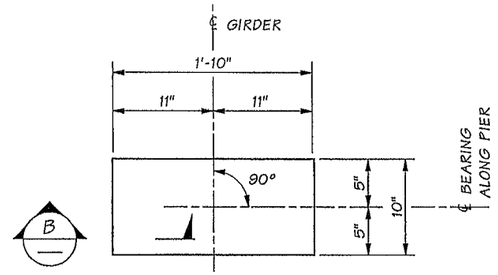

ELASTOMERIC BEARING PAD

LAMINATED ELASTOMERIC BEARING PAD (6 SHIMS).

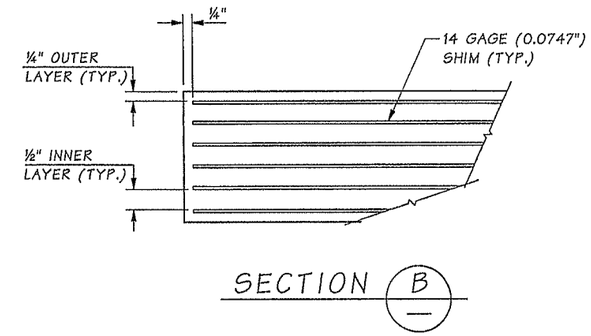

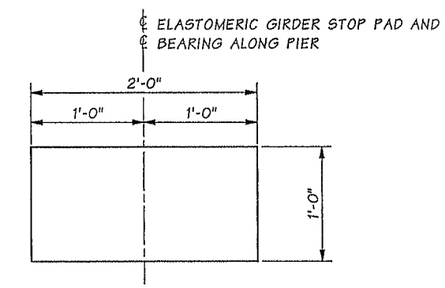

ELASTOMERIC GIRDER STOP PAD

SHEAR MODULUS = 165 PSI

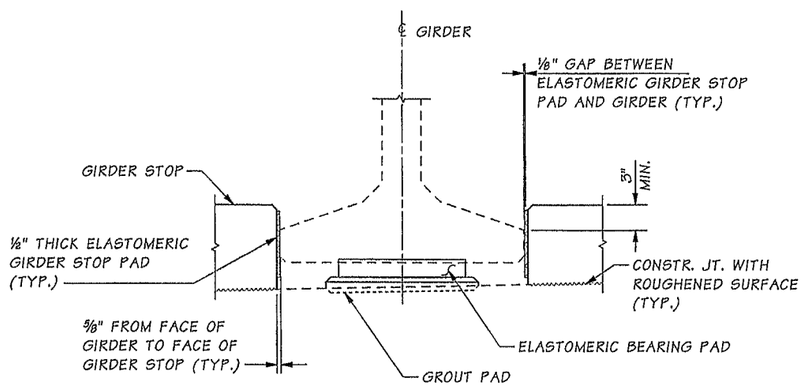

SECTION A

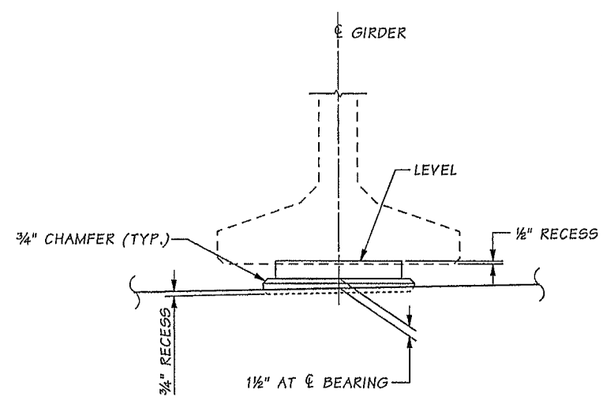

GROUT PAD ELEVATION

BEARING DESIGN TABLE AASHTO METHOD B DESIGN	
SERVICE - I LIMIT STATE	
DEAD LOAD (DL) REACTION	250 KIPS
LIVE LOAD REACTION (W/O IMPACT)	114 KIPS
UNLOADED HEIGHT	3.45 IN
LOADED HEIGHT (DL)	3.39 IN
SHEAR MODULUS	165 PSI

NOTES:

1. GIRDER STOPS SHALL BE CONSTRUCTED AFTER GIRDER PLACEMENT.
2. THE ELASTOMERIC GIRDER STOP PADS SHALL BE BONDED TO THE GIRDER STOPS WITH AN APPROVED ADHESIVE.

SR 5 FILE NO. 7454 SHEET SR56

Bridge Design Engr.	Khaleghi, B	
Supervisor	Khaleghi, B	
Designed By	Tran, LH	02/13
Checked By	Sawahata, D	10/13
Detailed By	Plesha, GM	02/13
Bridge Projects Engr.		
Prelim. Plan By		
Architect/Specialist		

M:\Y-Team\M ST TO PORTLAND\CWRR OC\window files\BEARING PIER 6.wnd

DATE	REVISION	BY	APP'D

REGION NO.	STATE	FED. AID PROJ. NO.	SHEET NO.	TOTAL SHEETS
10	WASH.			
JOB NUMBER 12C501				

Tue Feb 11 07:16:47 2014

BRIDGE AND STRUCTURES OFFICE

Washington State Department of Transportation

I-5
M STREET TO PORTLAND AVENUE - HOV

I-5 OVER I-705 AND TACOMA RAIL BRIDGE NO. 5/445E

ELASTOMERIC BEARING PAD
PIER 6

BRIDGE SHEET NO. SR56

SHEET 1160 OF 1763 SHEETS

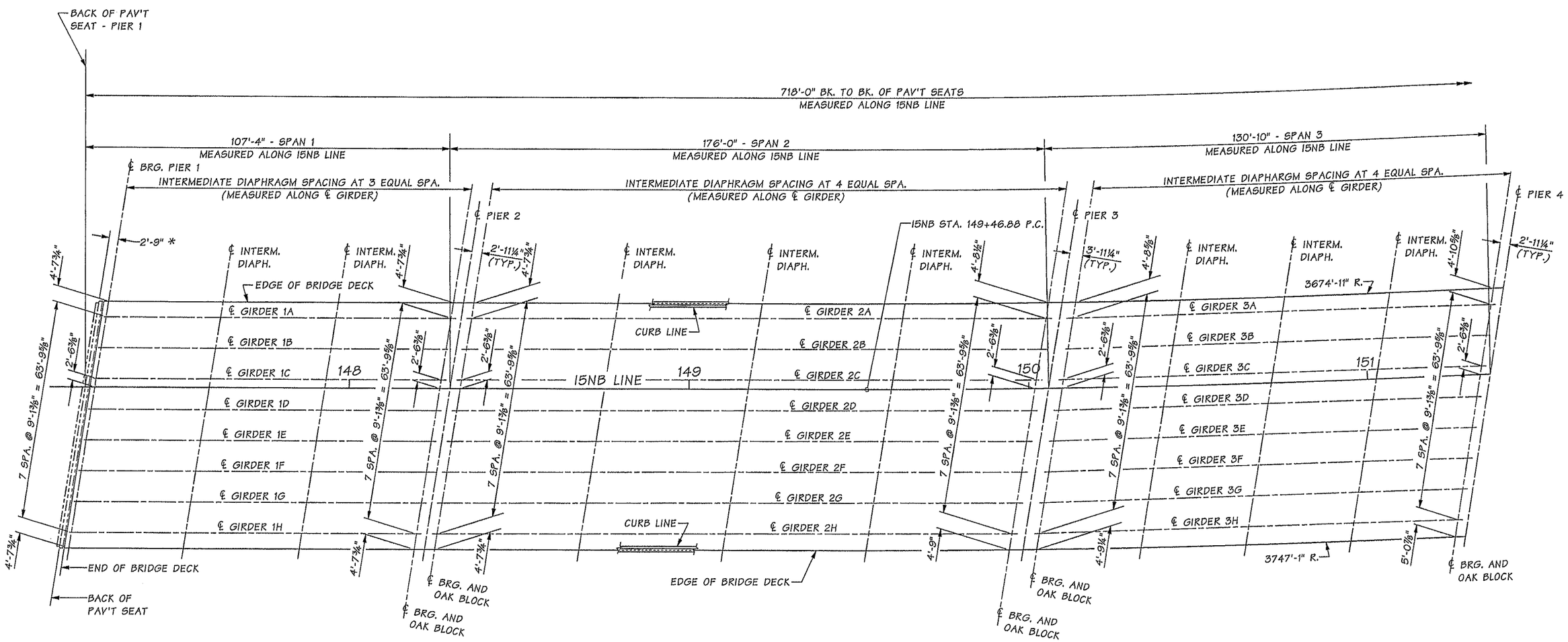

FRAMING PLAN

BEARING OF PIER 1, 2, 3 & 4 N 01°42'35" E
BEARING OF PIER 5 & 6 N 15°01'17" W

* DIMENSION IS NORMAL TO BACK OF PAVEMENT SEAT.

SR 5 FILE NO. 7454 SHEET SR57

Bridge Design Engr.	Khaleghi, B	
Supervisor	Khaleghi, B	
Designed By	Tran, LH	03/13
Checked By	LHT, JB, TDS	10/13
Detailed By	Plesha, GM	03/13
Bridge Projects Engr.		
Prelim. Plan By		
Architect/Specialist		

M:\Y-Team\M ST TO PORTLAND\CWRR OC\Window files\FRAMING PLAN 1.WND

DATE	REVISION	BY	APP'D

REGION NO.	STATE	FED. AID PROJ. NO.	SHEET NO.	TOTAL SHEETS
10	WASH.			

JOB NUMBER 12C501

BRIDGE AND STRUCTURES OFFICE

3/12/14 3/12/14

Washington State Department of Transportation

I-5
M STREET TO PORTLAND AVENUE - HOV
I-5 OVER I-705 AND TACOMA RAIL BRIDGE NO. 5/445E
FRAMING PLAN
SHEET 1 OF 2

BRIDGE SHEET NO. SR57
SHEET 1161 OF 1763 SHEETS

Wed Mar 12 09:23:03 2014

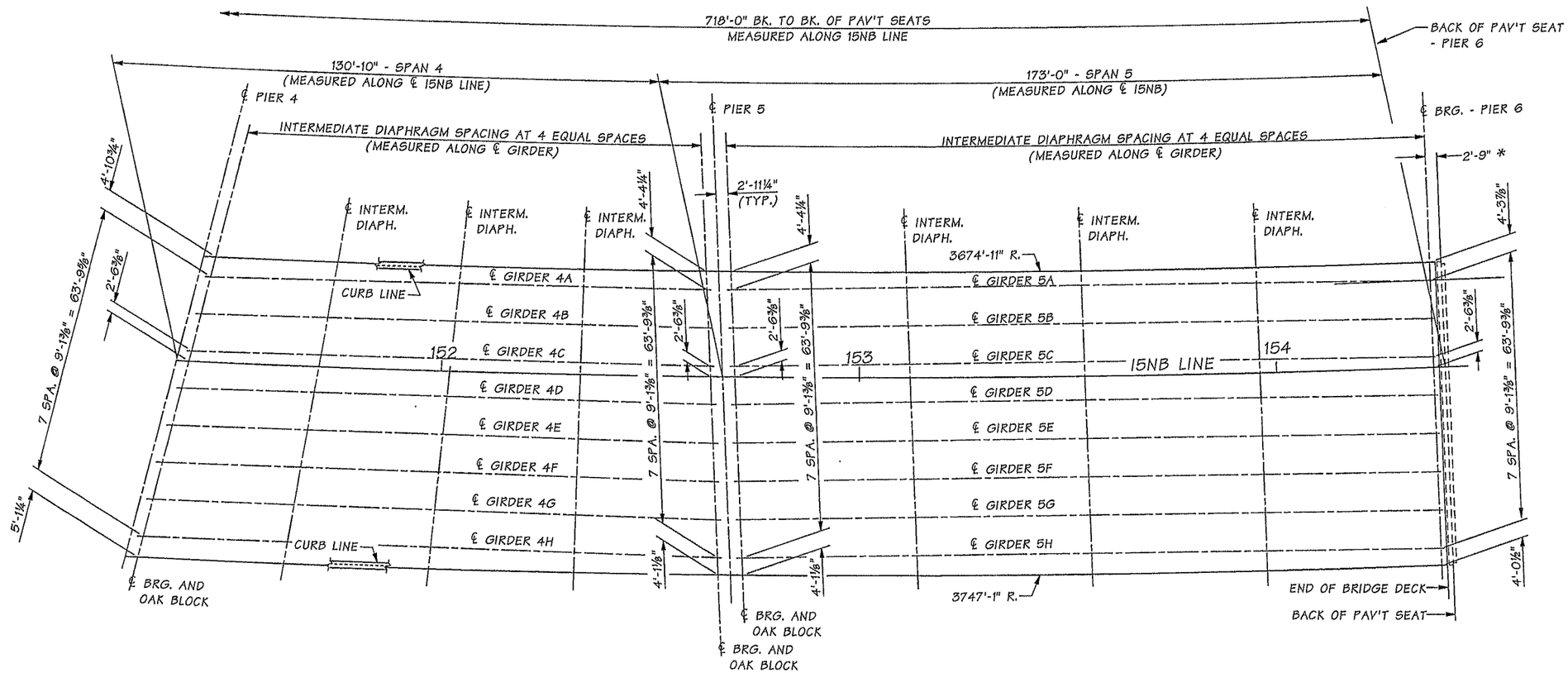

FRAMING PLAN

BEARING OF PIER 1, 2, 3 & 4 N 01°42'35" E
BEARING OF PIER 5 & 6 N 15°01'17" W

* DIMENSION IS NORMAL TO BACK OF PAVEMENT SEAT.

SR 5 FILE NO. 7454 SHEET SR58

Bridge Design Engr.	Khaleghi, B	
Supervisor	Khaleghi, B	
Designed By	Tran, LH	03/13
Checked By	LHT, JB, TDS	10/13
Detailed By	Plesha, GM	03/13
Bridge Projects Engr.		
Prelim. Plan By		
Architect/Specialist		

M:\Y-Team\M ST TO PORTLAND\CWRR OC\Window files\FRAMING PLAN 2.WND

DATE	REVISION	BY	APP'D

REGION NO.	STATE	FED. AID PROJ. NO.	SHEET NO.	TOTAL SHEETS
10	WASH.			

JOB NUMBER 12C501

BRIDGE AND STRUCTURES OFFICE

3/12/14 3/12/14

Washington State Department of Transportation

I-5
M STREET TO PORTLAND AVENUE - HOV
I-5 OVER I-705 AND TACOMA RAIL BRIDGE NO. 5/445E

FRAMING PLAN
SHEET 2 OF 2

BRIDGE SHEET NO. SR58

SHEET 1162 OF 1763 SHEETS

Wed Mar 12 09:23:05 2014

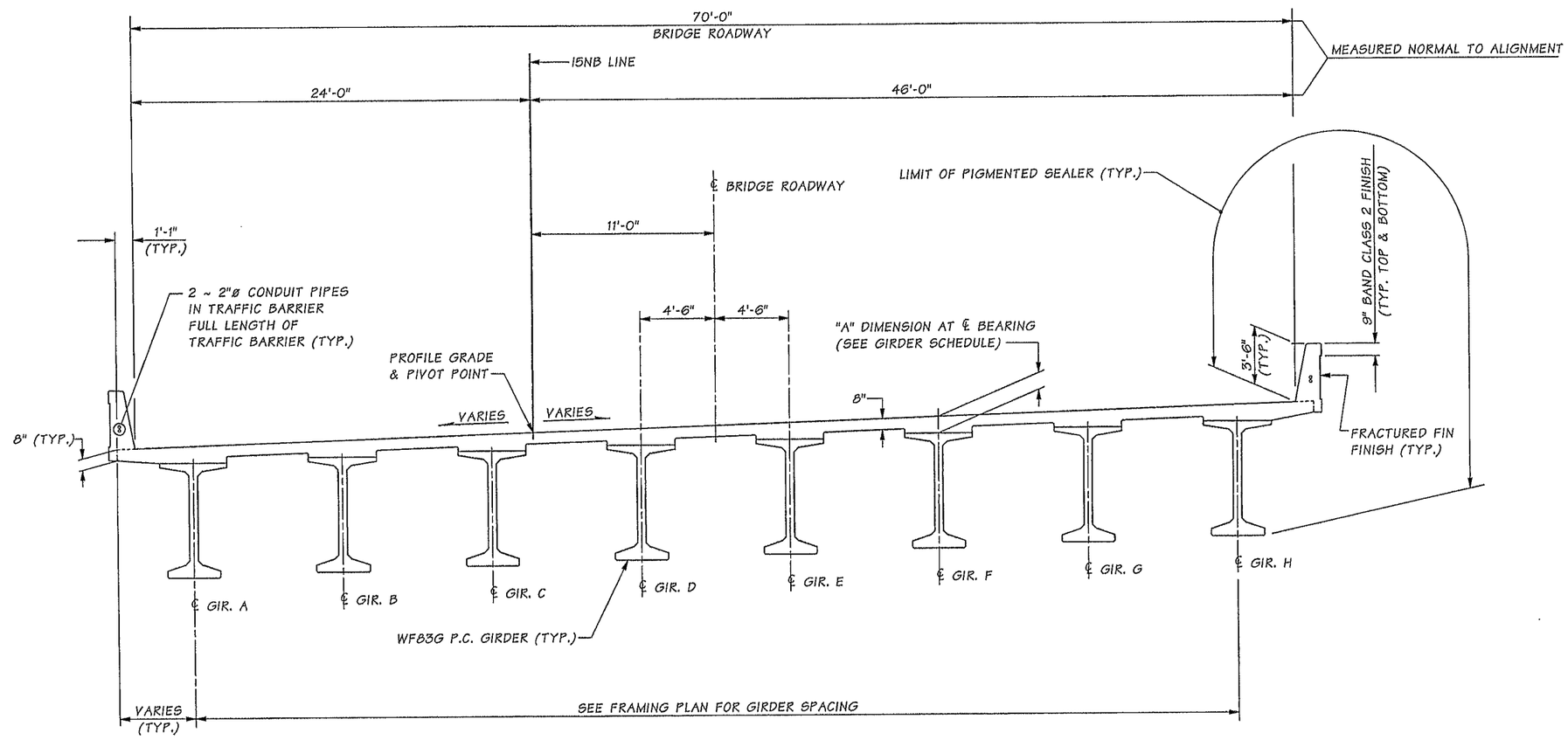

TYPICAL SECTION

SHOWN NEAR PIER 2

SR 5 FILE NO. 7454 SHEET SR59

Bridge Design Engr.	Khaleghi, B	
Supervisor	Khaleghi, B	
Designed By	Tran, LH	01/13
Checked By	LHT, JB, TDS	10/13
Detailed By	Plesha, GM	01/13
Bridge Projects Engr.		
Prelim. Plan By		
Architect/Specialist		

M:\Y-Team\M ST TO PORTLAND\CWRR OC\window files\TYPICAL SECTION.wnd

DATE	REVISION	BY	APP'D

REGION NO.	STATE	FED. AID PROJ. NO.	SHEET NO.	TOTAL SHEETS
10	WASH.			

JOB NUMBER 12C501

LIONG HUU TRAN, STATE OF WASHINGTON, REGISTERED PROFESSIONAL ENGINEER — 2/12/14

BRIDGE AND STRUCTURES OFFICE

BIJAN KHALEGHI, STATE OF WASHINGTON, REGISTERED PROFESSIONAL ENGINEER — 2/12/14

Washington State Department of Transportation

I-5
M STREET TO PORTLAND AVENUE - HOV
I-5 OVER I-705 AND TACOMA RAIL BRIDGE NO. 5/445E
TYPICAL SECTION

BRIDGE SHEET NO. SR59
SHEET 1163 OF 1763 SHEETS

Tue Feb 11 07:16:51 2014

GIRDER SCHEDULE

SPAN	GIRDER	GIRDER SERIES	END 1 TYPE	END 2 TYPE	"A" DIMENSION AT ℄ BEARINGS	INT. DIAPHRAGM TYPE (FULL OR PARTIAL)	L	Ld	LL	LT	θ1	θ2	P1	P2	PLAN LENGTH (ALONG GIRDER GRADE)	MIN. CONC. COMP. STRENGTH @ 28-DAYS F'C (KSI)	MIN. CONC. COMP. STRENGTH @ RELEASE F'CI (KSI)	NUMBER OF STRAIGHT STRANDS	NUMBER OF HARPED STRANDS	NUMBER OF TEMP. STRANDS	LOCATION OF C.G. STRANDS E	LOCATION OF C.G. STRANDS F℄	LOCATION OF C.G. STRANDS Fo	STRAIGHT STR. TO EXTEND END 1	STRAIGHT STR. TO EXTEND END 2	DECK SCREED CAMBER C	D LOWER BOUND @ 40 DAYS	D UPPER BOUND @ 120 DAYS	REINFORCEMENT DETAILS V1	V2	V3	V4	V5	V6	H1
1	ALL	WF83G	B	C	10¼"	PARTIAL	3'		7'	7'	99°	99°	1'-0⅛"	-	103'-3⅞"	7	5.5	24	8	2	2¾"	4"	1'-9"	-	③ TO ⑳	⅝"	1"	2¼"	12	2½"	24	6"	0	9"	-
2	ALL	WF83G	C	C	11"	PARTIAL	8'	-	15'	21'	99°	99°	-	-	170'-6¼"	10	8.5	44	24	6	3⅞"	5"	1'-3"	③ TO ⑳	③ TO ㉜	*	2⅝"	5⅝"	12	2½"	24	6"	0	9"	-
3	ALL	WF83G	C	C	12¼"	PARTIAL	3'	-	10'	10'	101°	101°	-	-	125'-3½"	8	6.5	28	13	4	2⅞"	4"	1'-1"	③ TO ㉜	③ TO ⑳	*	1¼"	2¾"	12	2½"	24	6"	0	9"	-
4	A	WF83G	C	C	12"	PARTIAL	3'	-	10'	10'	103°	86°	-	-	120'-3¾"	8	6.5	28	12	4	3"	4"	1'-0"	③ TO ⑳	③ TO ⑳	1½"	1⅜"	3"	12	2½"	24	6"	0	9"	-
4	B	WF83G	C	C	12"	PARTIAL	3'	-	10'	10'	103°	86°	-	-	122'-11½"	8	6.5	30	12	4	3"	4"	1'-0"	③ TO ⑳	③ TO ⑳	1½"	1⅜"	3"	12	2½"	24	6"	0	9"	-
4	C	WF83G	C	C	12"	PARTIAL	3'	-	10'	10'	103°	86°	-	-	125'-7¼"	8	6.5	30	12	4	3"	4"	1'-0"	③ TO ⑳	③ TO ⑳	1½"	1⅜"	3"	12	2½"	24	6"	0	9"	-
4	D	WF83G	C	C	12"	PARTIAL	3'	-	10'	10'	103°	86°	-	-	128'-3"	8	6.5	32	12	4	3"	4"	1'-0"	③ TO ⑳	③ TO ⑳	1½"	1⅜"	3¼"	12	2½"	24	6"	0	9"	-
4	E	WF83G	C	C	12"	PARTIAL	3'	-	10'	10'	103°	86°	-	-	130'-11¾"	8	6.5	32	12	4	3"	4"	1'-0"	③ TO ⑳	③ TO ⑳	1½"	1⅜"	3¼"	12	2½"	24	6"	0	9"	-
4	F	WF83G	C	C	12"	PARTIAL	3'	-	10'	10'	103°	86°	-	-	133'-6¼"	8	6.5	34	12	4	3"	4"	1'-0"	③ TO ⑳	③ TO ⑳	1½"	1½"	3⅝"	12	2½"	24	6"	0	9"	-
4	G	WF83G	C	C	12"	PARTIAL	3'	-	10'	10'	103°	86°	-	-	136'-2"	8	6.5	34	12	4	3⅜"	4"	1'-0"	③ TO ⑳	③ TO ⑳	1½"	1½"	3⅝"	12	2½"	24	6"	0	9"	-
4	H	WF83G	C	C	12"	PARTIAL	3'	-	10'	10'	103°	86°	-	-	138'-9¾"	8	6.5	36	12	4	3⅜"	4"	1'-1"	③ TO ⑳	③ TO ⑳	1½"	1¾"	4"	12	2½"	24	6"	0	9"	-
5	A	WF83G	C	B	13¾"	PARTIAL	8'	-	15'	21'	89°	89°	-	1'-0"	169'-1"	10.5	8.5	46	17	6	4⅛"	4½"	0'-11"	③ TO ⑳	-	3½"	5⅜"	5¾"	12	2½"	24	6"	0	9"	-
5	B	WF83G	C	B	13¾"	PARTIAL	8'	-	15'	21'	89°	89°	-	1'-0"	169'-1"	10.5	8.5	46	18	6	4⅛"	4⅝"	1'-0"	③ TO ⑳	-	3½"	5⅜"	5¾"	12	2½"	24	6"	0	9"	-
5	C	WF83G	C	B	13¾"	PARTIAL	8'	-	15'	21'	89°	89°	-	1'-0"	169'-1"	10.5	8.5	46	18	6	4⅛"	4¾"	1'-0½"	③ TO ⑳	-	3½"	5⅜"	5¾"	12	2½"	24	6"	0	9"	-
5	D	WF83G	C	B	13¾"	PARTIAL	8'	-	15'	21'	89°	89°	-	1'-0"	169'-1"	10.5	8.5	46	19	6	4⅛"	4¾"	1'-0½"	③ TO ⑳	-	3½"	5⅜"	5¾"	12	2½"	24	6"	0	9"	-
5	E	WF83G	C	B	13¾"	PARTIAL	8'	-	15'	21'	89°	89°	-	1'-0"	169'-1"	10.5	8.5	46	20	6	4⅛"	4¾"	1'-0½"	③ TO ⑳	-	3½"	5⅜"	5¾"	12	2½"	24	6"	0	9"	-
5	F	WF83G	C	B	13¾"	PARTIAL	8'	-	15'	21'	89°	89°	-	1'-0"	169'-1"	10.5	8.5	46	21	6	4⅛"	4¾"	1'-1"	③ TO ⑳	-	3½"	5⅜"	5¾"	12	2½"	24	6"	0	9"	-
5	G	WF83G	C	B	13¾"	PARTIAL	8'	-	15'	21'	89°	89°	-	1'-0"	169'-1"	10.5	8.5	46	21	6	4⅛"	4⅞"	1'-2"	③ TO ⑳	-	3½"	5⅜"	5¾"	12	2½"	24	6"	0	9"	-
5	H	WF83G	C	B	13¾"	PARTIAL	8'	-	15'	21'	89°	89°	-	1'-0"	169'-1"	10.5	8.5	46	23	6	4⅛"	5"	1'-2"	③ TO ⑳	-	3½"	5⅜"	5¾"	12	2½"	24	6"	0	9"	-

GIRDER NOTES

1. PLAN LENGTH SHALL BE INCREASED AS NECESSARY TO COMPENSATE FOR SHORTENING DUE TO PRESTRESS AND SHRINKAGE.
2. ALL PRETENSIONED AND TEMPORARY STRANDS SHALL BE 0.6"ø AASHTO M203 GRADE 270 LOW RELAXATION STRANDS, JACKED TO 202.5 KSI.
3. FOR END TYPES A, C AND D CUT ALL STRANDS FLUSH WITH THE GIRDER ENDS AND PAINT WITH AN APPROVED EPOXY RESIN, EXCEPT FOR EXTENDED STRANDS AS SHOWN. FOR END TYPE B CUT ALL STRANDS 1" BELOW CONCRETE SURFACE AND GROUT WITH AN APPROVED EPOXY GROUT.
4. THE TOP SURFACE OF THE GIRDER FLANGE SHALL BE ROUGHENED IN ACCORDANCE WITH SECTION 6-02.3(25)H OF THE STANDARD SPECIFICATIONS.
5. LIFTING EMBEDMENTS SHALL BE INSTALLED IN ACCORDANCE WITH SECTION 6-02.3(25)L OF THE STANDARD SPECIFICATIONS.
6. CAUTION SHALL BE EXERCISED IN HANDLING AND PLACING GIRDERS. ALL GIRDERS SHALL BE CHECKED BY THE CONTRACTOR TO ENSURE THAT THEY ARE BRACED ADEQUATELY TO PREVENT TIPPING AND TO CONTROL LATERAL BENDING DURING SHIPPING. ONCE ERECTED, ALL GIRDERS SHALL BE BRACED LATERALLY TO PREVENT TIPPING UNTIL THE DIAPHRAGMS ARE CAST AND CURED.
7. FORMS FOR BEARING PAD RECESSES SHALL BE CONSTRUCTED AND FASTENED IN SUCH A MANNER AS TO NOT CAUSE DAMAGE TO THE GIRDER DURING THE STRAND RELEASE OPERATION.
8. TEMPORARY TOP STRANDS SHALL BE EITHER PRETENSIONED OR POST-TENSIONED IN ACCORDANCE WITH SECTION 6-02.3(25)L OF THE STANDARD SPECIFICATIONS AND THE GIRDER DETAILS SHEETS. THE LIFTING LOCATION "L" AND CONCRETE RELEASE STRENGTH "F'CI" SHOWN IN THE GIRDER SCHEDULE ASSUME THAT THE TEMPORARY TOP STRANDS ARE PRETENSIONED. ALTERNATIVELY, POST-TENSIONED TEMPORARY TOP STRANDS MAY BE USED IF THE LIFTING POINTS IN THE GIRDER SCHEDULE ARE MAINTAINED AND THE STRANDS ARE STRESSED PRIOR TO LIFTING THE GIRDER FROM THE FORM.
9. FOR DIAPHRAGMS, OMIT HOLES AND PLACE INSERTS ON THE INTERIOR FACE OF EXTERIOR GIRDERS. PLACE HOLES AND INSERTS PARALLEL TO SKEW. INSERTS SHALL BE 1"ø MEADOWBURKE MX-3 HI-TENSILE, 1"ø x 5½" WILLIAMS F22 OPEN FERRULE INSERT, 1"ø x 4⅝" DAYTON-SUPERIOR F-62 FLARED THIN SLAB FERRULE INSERT OR APPROVED EQUAL.
10. DEFORMED WELDED WIRE REINFORCEMENT CONFORMING TO SECTION 9-07.7 WITH DEFORMED WIRE CONFORMING TO SECTION 9-07.8 MAY BE SUBSTITUTED FOR MILD STEEL REINFORCEMENT IF AASHTO LRFD BRIDGE DESIGN SPECIFICATION REQUIREMENTS (INCLUDING DEVELOPMENT AND ANCHORAGE) ARE MET. WELDED WIRE REINFORCEMENT SHALL HAVE THE SAME AREA AND SPACING AS THE MILD STEEL REINFORCEMENT THAT IT REPLACES AND THE YIELD STRENGTH SHALL BE GREATER THAN OR EQUAL TO 60 KSI. SHEAR STIRRUP LONGITUDINAL WIRES AND TACK WELDS SHALL BE EXCLUDED FROM GIRDER WEBS. LONGITUDINAL WIRES FOR ANCHORAGE OF WELDED WIRE REINFORCEMENT SHALL HAVE AN AREA OF 40% OR MORE OF THE AREA OF THE WIRE BEING ANCHORED BUT SHALL NOT BE LESS THAN D4.

* SEE SCREED SETTING DIMENSION DETAILS FOR SPANS 2 AND 3 ON BR. SHT. SR68.

SR 5 FILE NO. 7454 SHEET SR60

Bridge Design Engr.	Khaleghi, B	
Supervisor	Khaleghi, B	
Designed By	Tran, LH	02/13
Checked By	Sawahata, D	10/13
Detailed By	Piesha, GM	02/13
Bridge Projects Engr.		
Prelim. Plan By		
Architect/Specialist		

M:\Y-Team\M ST TO PORTLAND\CWRR OC\window files\GIRDER 1.wnd

DATE	REVISION	BY	APP'D

REGION NO.	STATE	FED. AID PROJ. NO.	SHEET NO.	TOTAL SHEETS
10	WASH.			
JOB NUMBER 12C501				

HUONG HUU TRAN — STATE OF WASHINGTON — 22551 — REGISTERED PROFESSIONAL ENGINEER — 2/12/14

BRIDGE AND STRUCTURES OFFICE

BRIAN KHALEGHI — STATE OF WASHINGTON — 19965 — REGISTERED PROFESSIONAL ENGINEER — 2/12/14

Washington State Department of Transportation

I-5
M STREET TO PORTLAND AVENUE - HOV

I-5 OVER I-705 AND TACOMA RAIL BRIDGE NO. 5/445E

WF83G GIRDER DETAILS 1 OF 6

BRIDGE SHEET NO. SR60

SHEET 1164 OF 1763 SHEETS

Wed Feb 12 08:12:12 2014

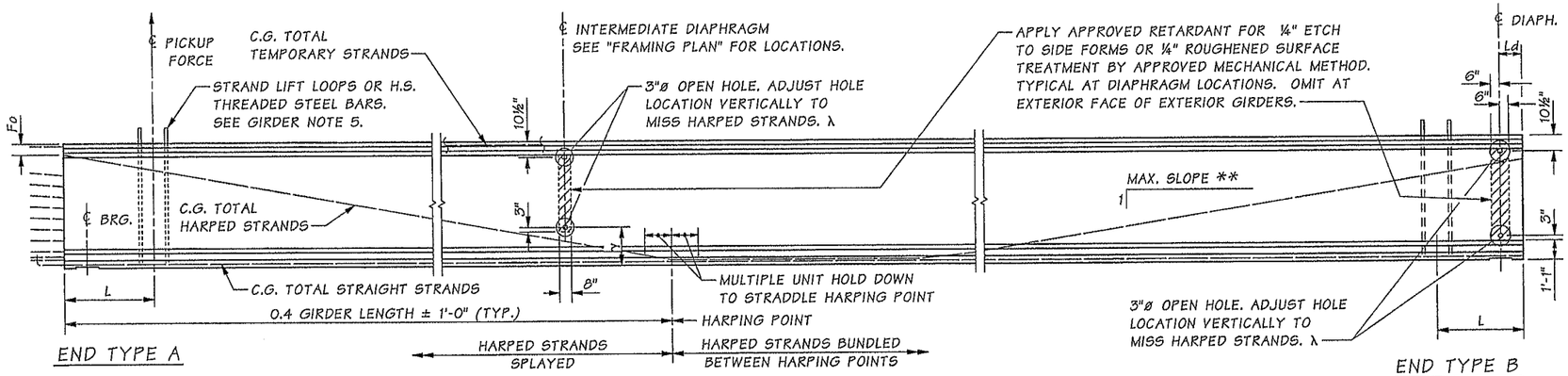

GIRDER ELEVATION

** 8 : 1 MAXIMUM SLOPE FOR EACH HARPED STRAND

λ SEE GIRDER NOTE 9.

γ PARTIAL DEPTH INT. DIAPHRAGM	γ FULL DEPTH INT. DIAPHRAGM
2'-1⅝"	1'-2⅛"

END TYPE PROPERTIES					
END TYPE	BEARING RECESS	X	Y	Z	SAWTEETH
A	YES	1'-10"ρ	1'-6"	9"	YES
B	YES	0"	0"	0"	NO
C	NO	1'-10"	1'-6"	9"	YES
D	NO	1'-10"	SEE "STRAND EXTENSION DETAIL"		YES

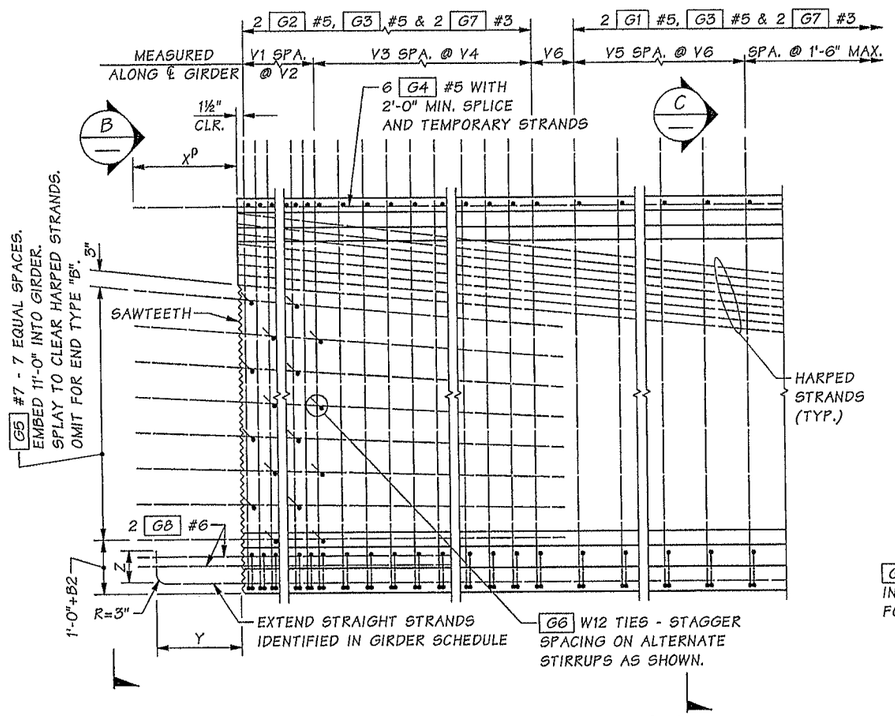

TYPICAL END ELEVATION

END TYPE C SHOWN, OTHER END TYPES SIMILAR.

ρ - X DIMENSION SHALL BE 1'-4" FOR G4 AT END TYPE A ONLY.

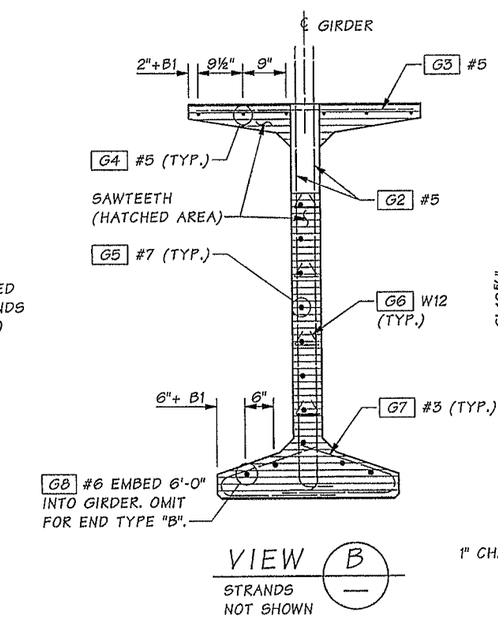

VIEW B

STRANDS NOT SHOWN

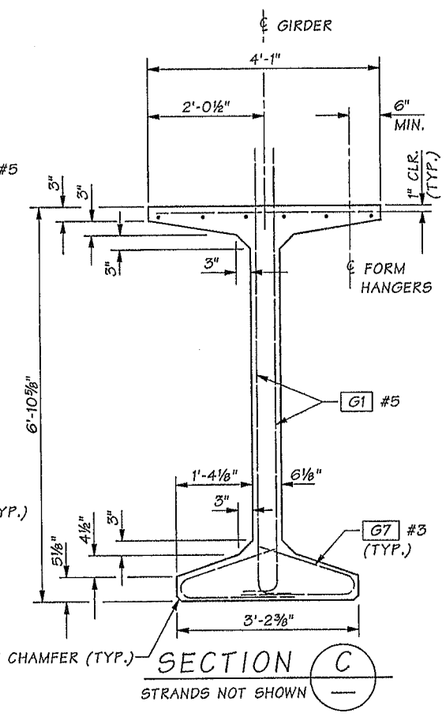

SECTION C

STRANDS NOT SHOWN

BAR END PLACEMENT FOR END TYPE C	
ENDS AHEAD ON STATION	ENDS BACK ON STATION
G5 BARS LEFT OF ℄	G5 BARS RIGHT OF ℄
B1 = 0" (G4 , G8)	B1 = 1½" (G4 , G8)
B2 = 0" (G5)	B2 = 3" (G5)

BENDING DIAGRAM (ALL DIMENSIONS ARE OUT TO OUT)

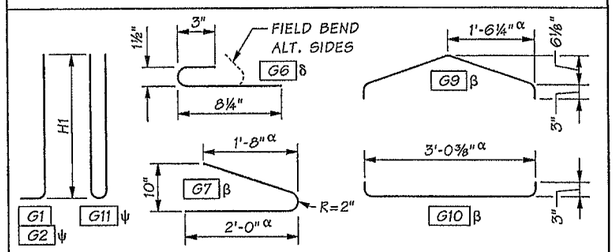

α - VARIES FOR SKEWED ENDS.
δ - #3 OR #4 MAY BE SUBSTITUTED. FIELD BENDING IS OPTIONAL.
β - PAIRS OF G7 BARS, OR G9 AND G10 BARS, MAY BE USED INTERCHANGEABLY AS BOTTOM FLANGE TIES.
ψ - 1 G11 MAY BE SUBSTITUTED FOR 2 G2 WITHIN THE V1 SPA. @ V2.

SR 5 FILE NO. 7454 SHEET SR61

Bridge Design Engr.	Khaleghi, B	M:\Y-Team\M ST TO PORTLAND\CWRR OC\window files\GIRDER 2.wnd	
Supervisor	Khaleghi, B		
Designed By	Tran, LH	02/13	
Checked By	Sawahata, D	10/13	
Detailed By	Plesha, GM	02/13	
Bridge Projects Engr.			
Prelim. Plan By			
Architect/Specialist			

DATE	REVISION	BY	APP'D

REGION NO.	STATE	FED. AID PROJ. NO.	SHEET NO.	TOTAL SHEETS
10	WASH.			
JOB NUMBER 12C501				

LUONG HUU TRAN, STATE OF WASHINGTON, REGISTERED PROFESSIONAL ENGINEER — 2-12-14

BRIDGE AND STRUCTURES OFFICE

BRIAN KHALEGHI, STATE OF WASHINGTON, 27692, PROFESSIONAL ENGINEER — 2/12/14

Washington State Department of Transportation

I-5
M STREET TO PORTLAND AVENUE - HOV

I-5 OVER I-705 AND TACOMA RAIL BRIDGE NO. 5/445E

WF83G GIRDER DETAILS 2 OF 6

BRIDGE SHEET NO. SR61

SHEET 1165 OF 1763 SHEETS

Tue Feb 11 07:16:58 2014

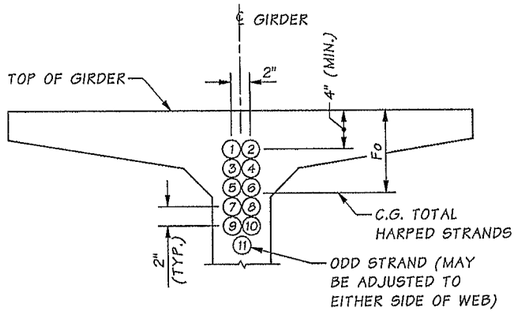

STRAND PATTERN AT GIRDER END

HARPED STRAND LOCATION SEQUENCE SHALL BE AS SHOWN (1), (2) ETC.

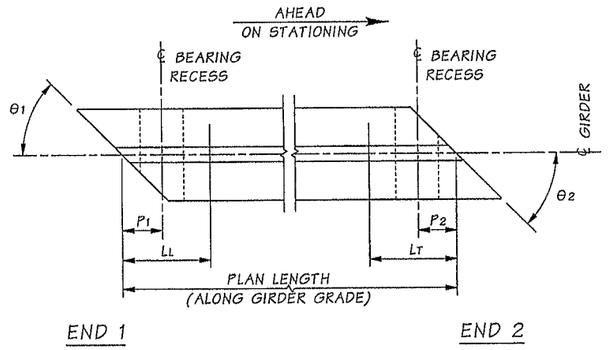

GIRDER SCHEDULE LEGEND

LL AND LT ARE SHIPPING SUPPORT LOCATIONS AT LEADING AND TRAILING ENDS, RESPECTIVELY.

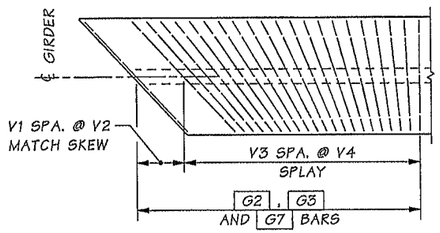

TRANSVERSE REINFORCING SKEWED ENDS

LENGTH OF G3 AND G7 VARY WITH SKEW.
ONLY TRANSVERSE REINFORCEMENT SHOWN.

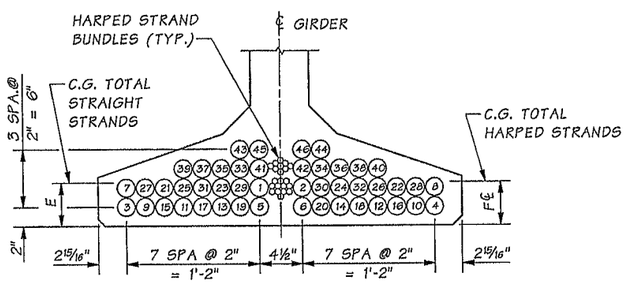

STRAND PATTERN AT ℄ SPAN

STRAIGHT STRAND LOCATION SEQUENCE SHALL BE AS SHOWN (1), (2) ETC.

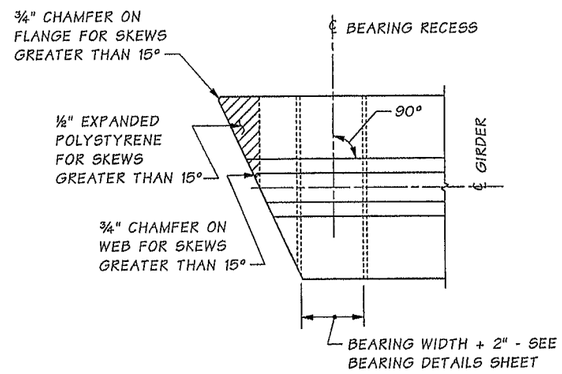

PLAN

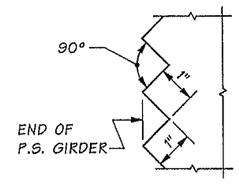

SAWTOOTH DETAILS

SAWTEETH ARE FULL WIDTH - USE SAWTOOTH KEYS FROM BOTTOM OF BOTTOM FLANGE TO BOTTOM OF LOWEST HARPED STRAND AS WELL AS TOP FLANGE ADJACENT TO HARPED STRANDS.

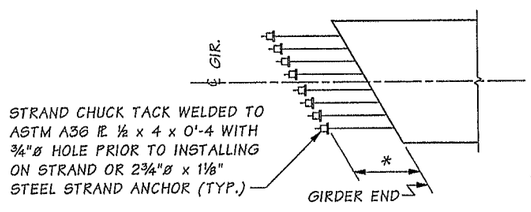

* SEE EXTENSION STRAND DETAIL ON BR. SHTS. SR64 AND SR65

STRAND EXTENSION DETAIL

ANCHOR STRAND WITH TWO PIECE WEDGES BEFORE GIRDER ERECTION. VERIFY WEDGES ARE SEATED TIGHTLY IMMEDIATELY BEFORE PLACING DIAPHRAGM CONCRETE.

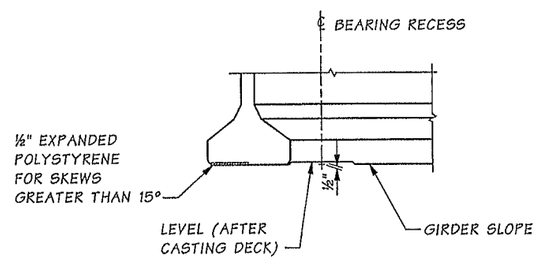

ELEVATION

BEARING RECESS AND BOTTOM FLANGE SPALL PROTECTION DETAIL

SR 5 FILE NO. 7454 SHEET SR62

Bridge Design Engr.	Khaleghi, B		
Supervisor	Khaleghi, B		
Designed By	Tran, LH	02/13	
Checked By	Sawahata, D	10/13	
Detailed By	Plesha, GM	02/13	
Bridge Projects Engr.			
Prelim. Plan By			
Architect/Specialist			

M:\Y-Team\M ST TO PORTLAND\CWRR OC\window files\GIRDER 3.wnd

DATE	REVISION	BY	APP'D

REGION NO.	STATE	FED. AID PROJ. NO.	SHEET NO.	TOTAL SHEETS
10	WASH.			
JOB NUMBER 12C501				

Tue Feb 11 07:17:00 2014

LONG HUU TRAN STATE OF WASHINGTON 21791 REGISTERED PROFESSIONAL ENGINEER 2-12-14

BRIDGE AND STRUCTURES OFFICE

BRIAN KHALEGHI STATE OF WASHINGTON 37696 PROFESSIONAL ENGINEER 2/12/14

Washington State Department of Transportation

I-5
M STREET TO PORTLAND AVENUE - HOV

I-5 OVER I-705 AND TACOMA RAIL BRIDGE NO. 5/445E

WF83G GIRDER DETAILS 3 OF 6

BRIDGE SHEET NO. SR62

SHEET 1166 OF 1763 SHEETS

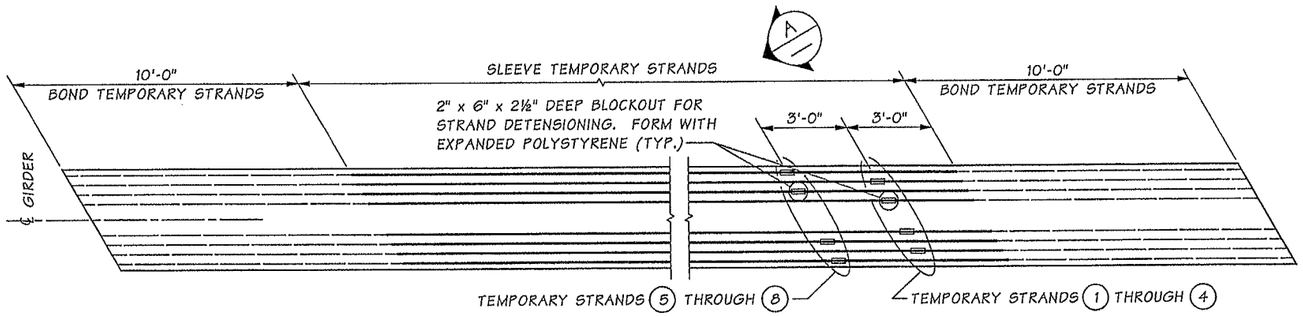

PLAN
PRETENSIONED TEMPORARY TOP STRANDS ALTERNATE

SEE "GIRDER SCHEDULE" FOR NUMBER OF TEMPORARY STRANDS REQUIRED.

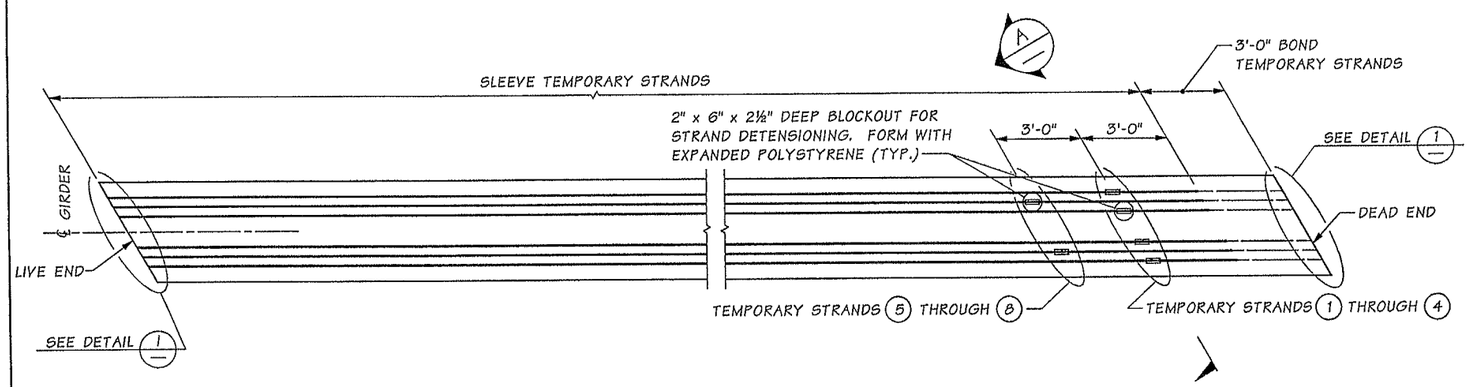

PLAN
POST-TENSIONED TEMPORARY TOP STRANDS ALTERNATE

SEE "GIRDER SCHEDULE" FOR NUMBER OF TEMPORARY STRANDS REQUIRED. POST-TENSIONED ALTERNATE ONLY AVAILABLE FOR 6 OR FEWER TEMPORARY STRANDS.

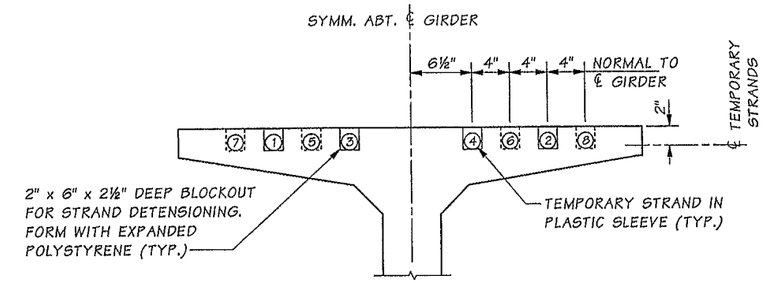

SECTION A

NOTES:

1. TEMPORARY STRAND LOCATION SEQUENCE SHALL BE AS SHOWN 1, 2 ETC.
2. STRANDS 7 AND 8 ARE NOT AVAILABLE FOR POST-TENSIONED ALTERNATE.

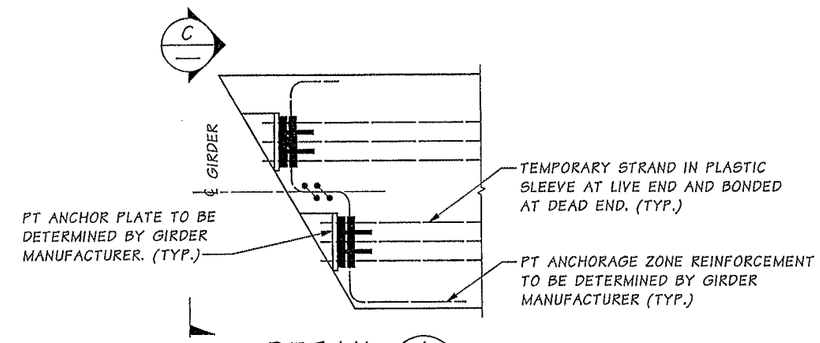

DETAIL 1

LIVE END SHOWN
DEAD END SIMILAR.

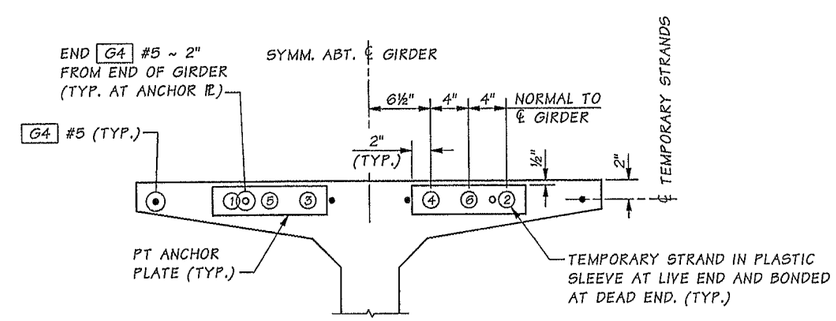

VIEW C

TEMPORARY STRAND LOCATION SEQUENCE SHALL BE AS SHOWN 1, 2 ETC.

Bridge Design Engr.	Khaleghi, B		M:\Y-Team\M ST TO PORTLAND\CWRR OC\window files\GIRDER 4.wnd			REGION NO.	STATE	FED. AID PROJ. NO.	SHEET NO.	TOTAL SHEETS
Supervisor	Khaleghi, B					10	WASH.			
Designed By	Tran, LH	02/13				JOB NUMBER 12C501				
Checked By	Sawahata, D	10/13								
Detailed By	Plesha, GM	02/13								
Bridge Projects Engr.										
Prelim. Plan By										
Architect/Specialist			DATE	REVISION	BY	APP'D				

Tue Feb 11 07:17:02 2014

SR 5 FILE NO. 7454 SHEET SR63

BRIDGE AND STRUCTURES OFFICE

2-12-14 2/12/14

Washington State Department of Transportation

I-5
M STREET TO PORTLAND AVENUE - HOV

I-5 OVER I-705 AND TACOMA RAIL BRIDGE NO. 5/445E

WF83G GIRDER DETAILS 4 OF 6

BRIDGE SHEET NO. SR63

SHEET 1167 OF 1763 SHEETS

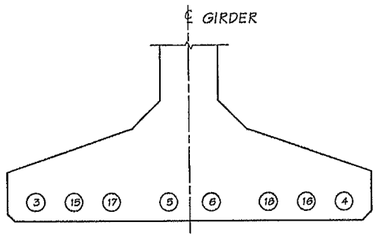

EXTENDED STRANDS FOR GIRDERS
AT PIERS 2, 4, AND 5
OPTION I - STRAND TIE

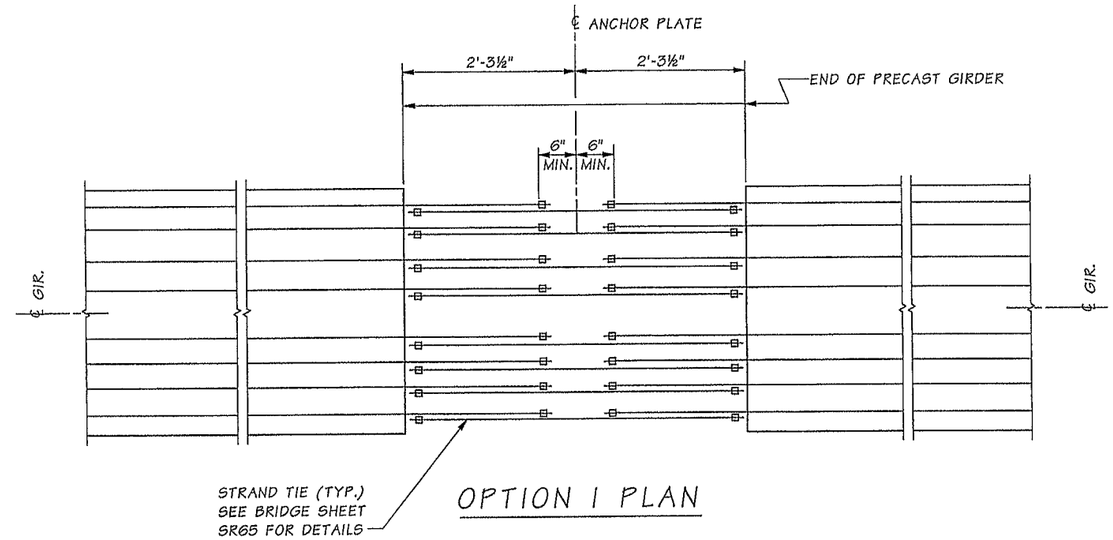

OPTION I PLAN

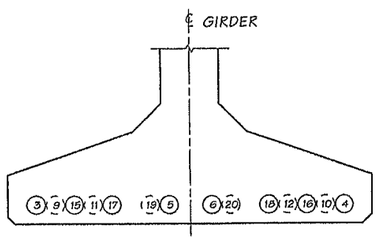

EXTENDED STRANDS FOR GIRDERS
AT PIERS 2, 4, AND 5
OPTION II - OVERLAPING STRAND

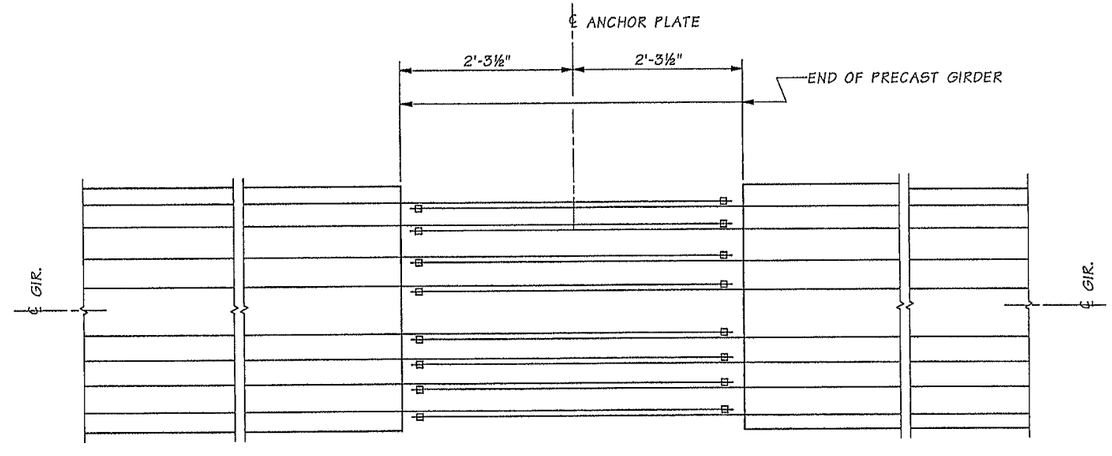

OPTION II PLAN

SR 5 FILE NO. 7454 SHEET SR64

Bridge Design Engr.	Khaleghi, B		M:\Y-Team\M ST TO PORTLAND\CWRR OC\window files\GIRDER 5.wnd								
Supervisor	Khaleghi, B										
Designed By	Tran, LH	05/13									
Checked By	Sawahata, D	10/13									
Detailed By	Plesha, GM	05/13									
Bridge Projects Engr.											
Prelim. Plan By											
Architect/Specialist			DATE	REVISION	BY	APP'D					

REGION NO.	STATE	FED. AID PROJ. NO.	SHEET NO.	TOTAL SHEETS
10	WASH.			
JOB NUMBER 12C501				

Tue Feb 11 07:17:04 2014

LINONG HUU TRAN — STATE OF WASHINGTON — REGISTERED PROFESSIONAL ENGINEER
2/12/14

BRIDGE AND STRUCTURES OFFICE

BILIAN KHALEGHI — STATE OF WASHINGTON — 27695 — REGISTERED PROFESSIONAL ENGINEER
2/12/14

Washington State Department of Transportation

I-5
M STREET TO PORTLAND AVENUE - HOV

I-5 OVER I-705 AND TACOMA RAIL BRIDGE NO. 5/445E

WF83G GIRDER
DETAILS 5 OF 6

BRIDGE SHEET NO. SR64

SHEET 1168 OF 1763 SHEETS

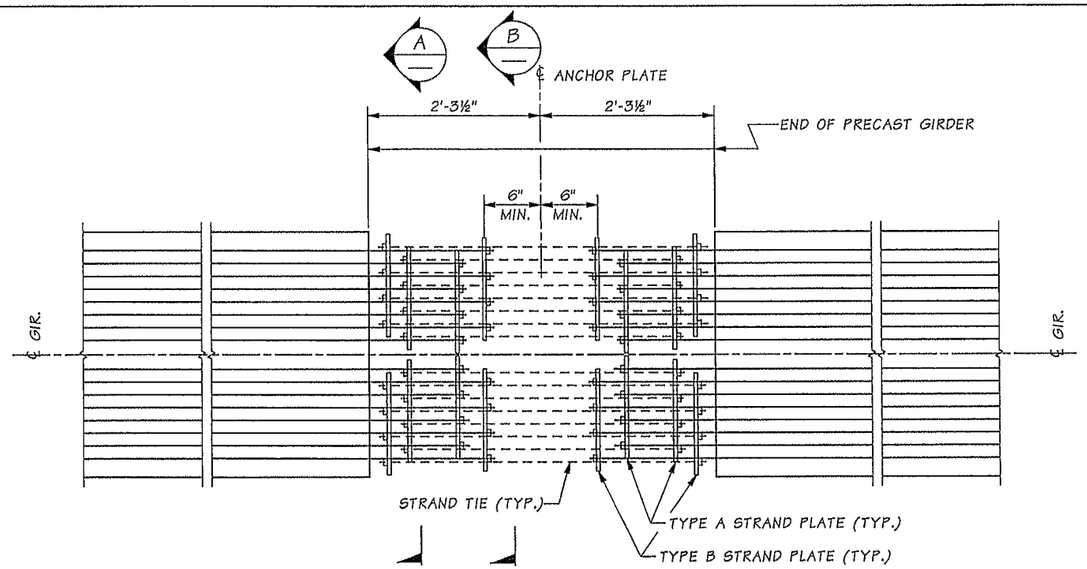

EXTENDED STRANDS FOR GIRDERS AT PIER 3

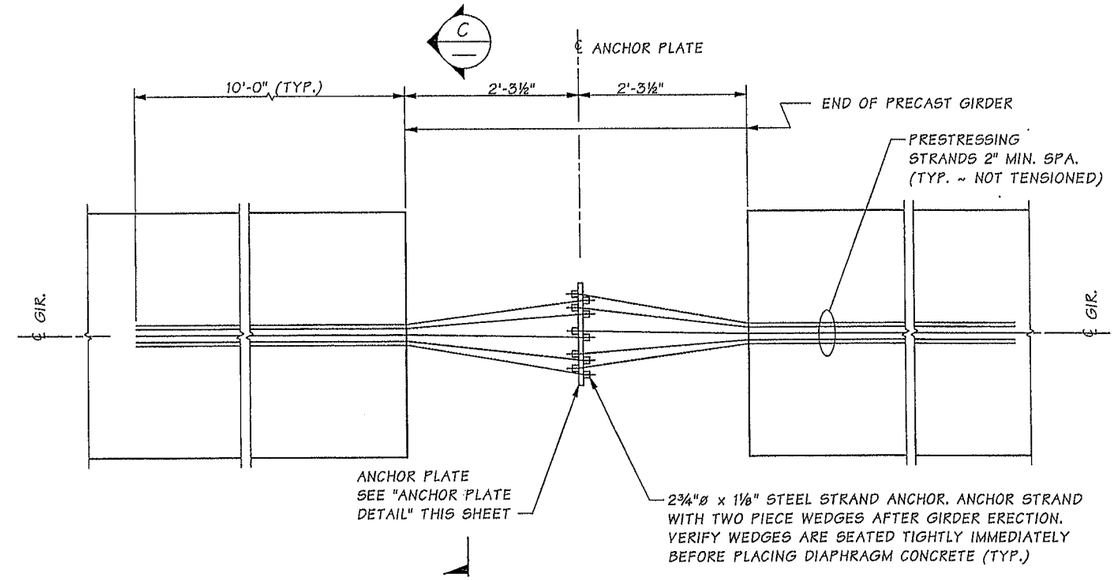

ADDITIONAL STRAND EXTENSION DETAIL AT PIER 3

5 ADDITIONAL EXTENDED STRANDS PER EACH GIRDER END
EXTENSION OF THE STRAIGTH STRANDS NOT SHOWN FOR CLARITY

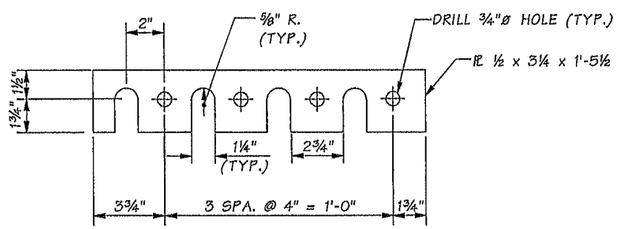

TYPE A TIE PLATE

4 REQUIRED

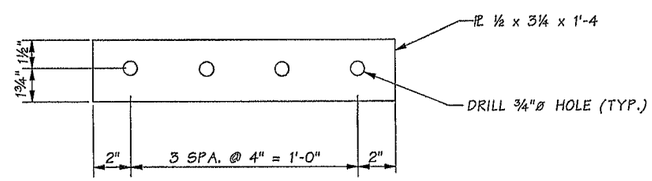

TYPE B TIE PLATE

4 REQUIRED

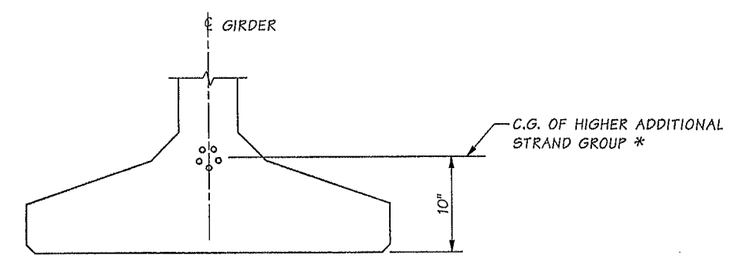

VIEW C

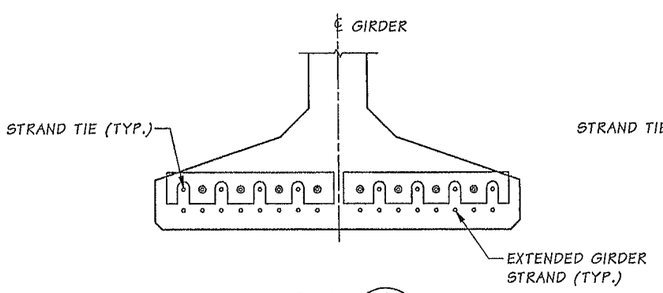

VIEW A

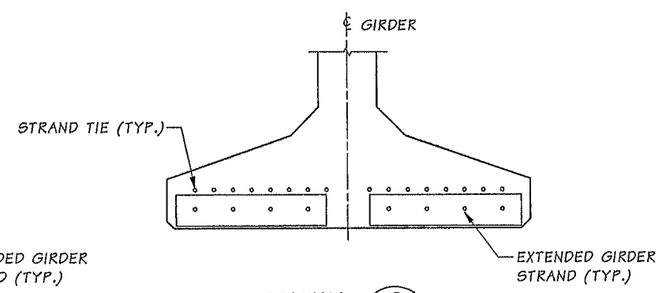

VIEW B

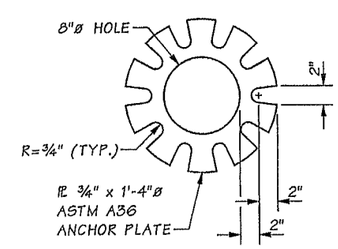

ANCHOR PLATE DETAIL

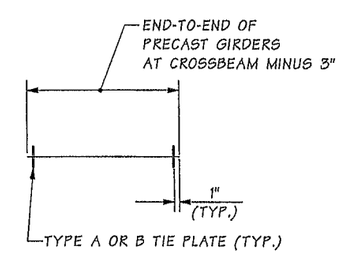

STRAND TIE DETAIL

Bridge Design Engr.	Khaleghi, B		M:\Y-Team\M ST TO PORTLAND\CWRR OC\window files\GIRDER 6.wnd								
Supervisor	Khaleghi, B										
Designed By	Tran, LH	05/13					REGION NO.	STATE	FED. AID PROJ. NO.	SHEET NO.	TOTAL SHEETS
Checked By	Sawahata, D	10/13					10	WASH.			
Detailed By	Plesha, GM	05/13					JOB NUMBER 12C501				
Bridge Projects Engr.											
Prelim. Plan By											
Architect/Specialist			DATE	REVISION	BY	APP'D					

LUONG HUU TRAN, STATE OF WASHINGTON, REGISTERED PROFESSIONAL ENGINEER

BRIDGE AND STRUCTURES OFFICE

2-12-14

BIJAN KHALEGHI, STATE OF WASHINGTON, 27695, REGISTERED PROFESSIONAL ENGINEER

2/12/14

Washington State Department of Transportation

I-5
M STREET TO PORTLAND AVENUE - HOV

I-5 OVER I-705 AND TACOMA RAIL BRIDGE NO. 5/445E

WF83G GIRDER
DETAILS 6 OF 6

BRIDGE SHEET NO. SR65

SHEET 1169 OF 1763 SHEETS

SR 5 FILE NO. 7454 SHEET SR65

Wed Feb 12 08:54:57 2014

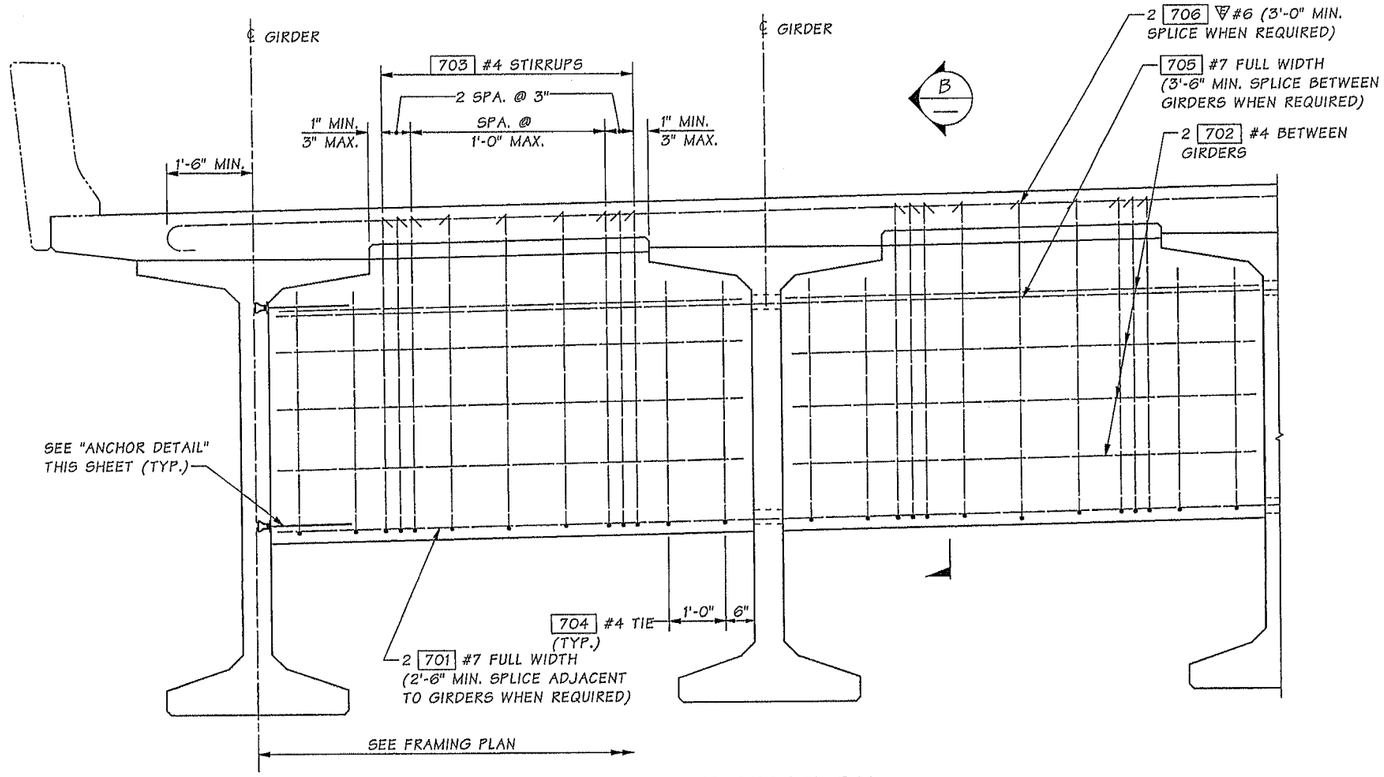

ELEVATION
INTERMEDIATE DIAPHRAGM

DIMENSIONS ARE ALONG DIAPHRAGM

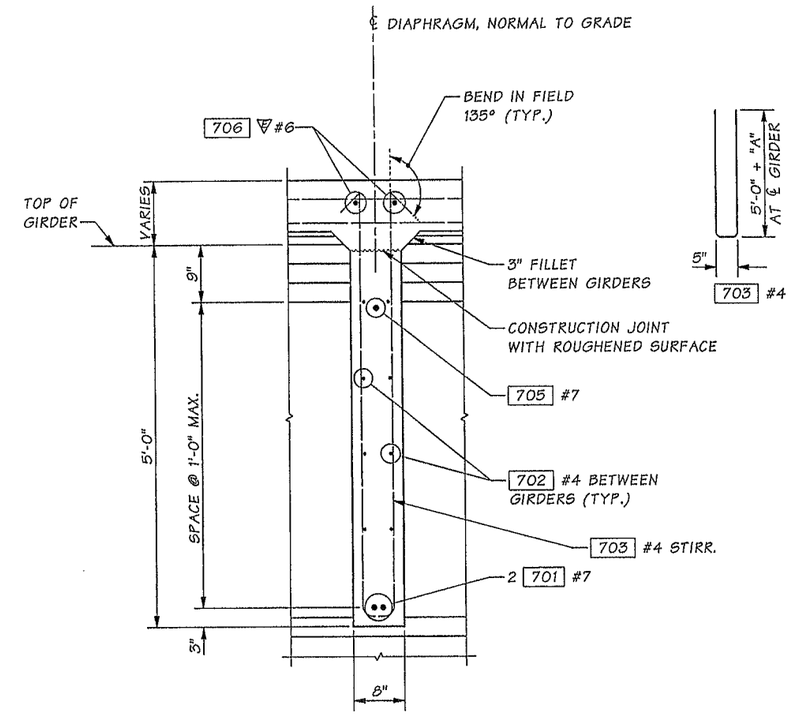

SECTION B

SEE "GIRDER DETAILS" SHEET FOR DIMENSION "A".

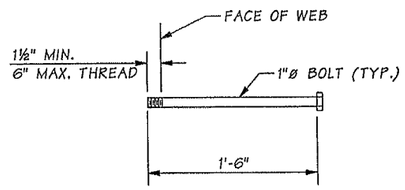

ANCHOR DETAIL

ASTM A 307

NOTES:

1. GIRDERS SHALL BE HELD RIGIDLY IN PLACE WHEN DIAPHRAGMS ARE PLACED.
2. IT MAY BE NECESSARY TO THREAD #7 REINFORCING BARS THROUGH HOLES IN GIRDERS PRIOR TO PLACING EXTERIOR GIRDERS.
3. CUT/RELEASE GIRDER TEMPORARY STRANDS BEFORE CASTING DIAPHRAGM. SEE TEMPORARY STRAND CUTTING SEQUENCE.
4. LONGITUDINAL DIMENSIONS ARE NORMAL TO SKEW.
5. FOR CONCRETE PLACEMENT PROCEDURE SEE "CONSTRUCTION SEQUENCE" SHEET.

SR 5 FILE NO. 7454 SHEET SR66

Bridge Design Engr.	Khaleghi, B	
Supervisor	Khaleghi, B	
Designed By	Tran, LH	03/13
Checked By	Sawahata, D	10/13
Detailed By	Plesha, GM	03/13
Bridge Projects Engr.		
Prelim. Plan By		
Architect/Specialist		

M:\Y-Team\M ST TO PORTLAND\CWRR OC\window files\INTER DIAPHRAGM.wnd

DATE	REVISION	BY	APP'D

REGION NO.	STATE	FED. AID PROJ. NO.	SHEET NO.	TOTAL SHEETS
10	WASH.			
JOB NUMBER 12C501				

BRIDGE AND STRUCTURES OFFICE

Washington State Department of Transportation

I-5
M STREET TO PORTLAND AVENUE - HOV
I-5 OVER I-705 AND TACOMA RAIL BRIDGE NO. 5/445E

INTERMEDIATE DIAPHRAGM DETAILS

BRIDGE SHEET NO. SR66

SHEET 1170 OF 1763 SHEETS

Tue Feb 11 07:17:06 2014

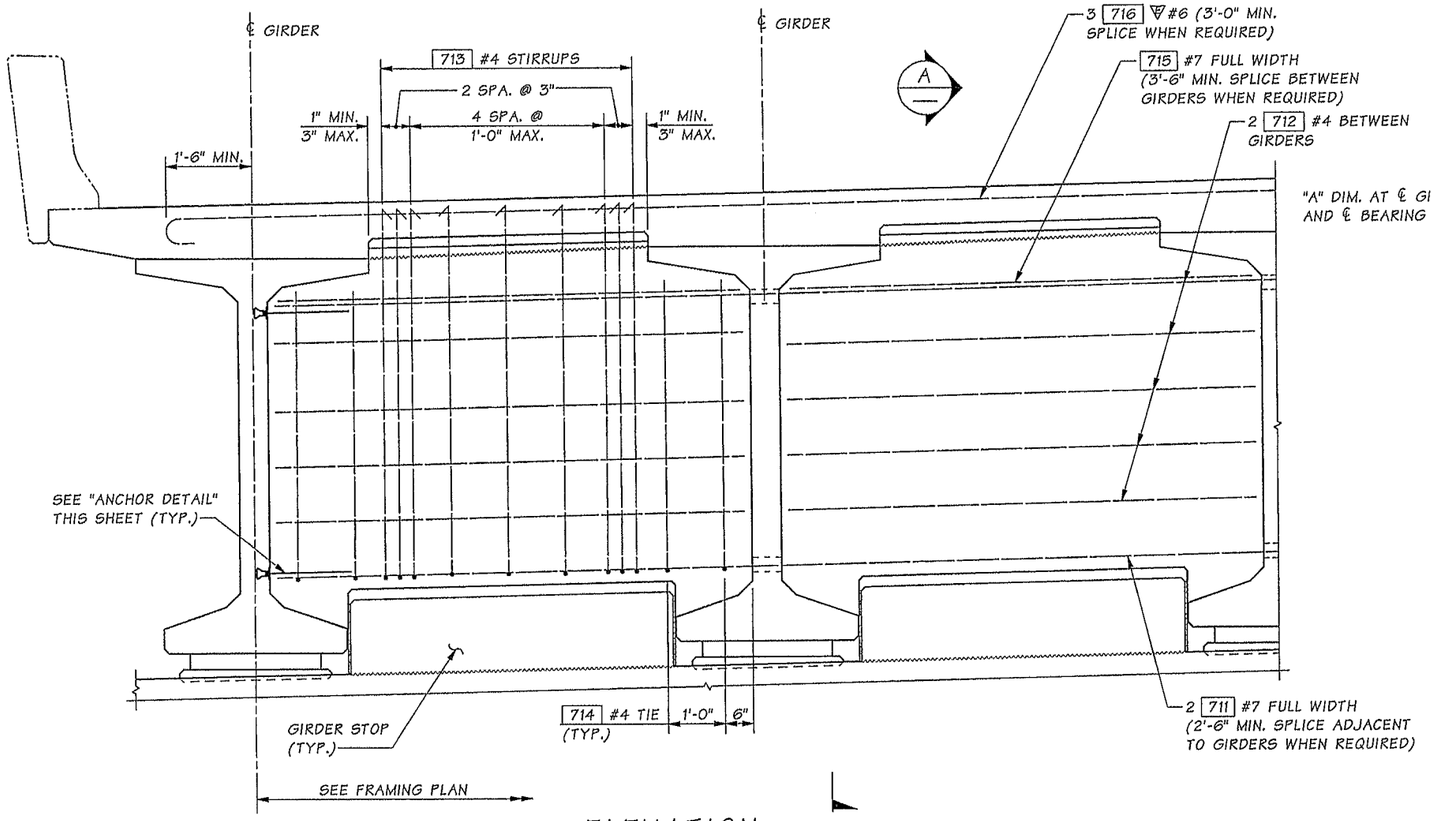

ELEVATION
END DIAPHRAGM

DIMENSIONS ARE ALONG ℄ DIAPHRAGM

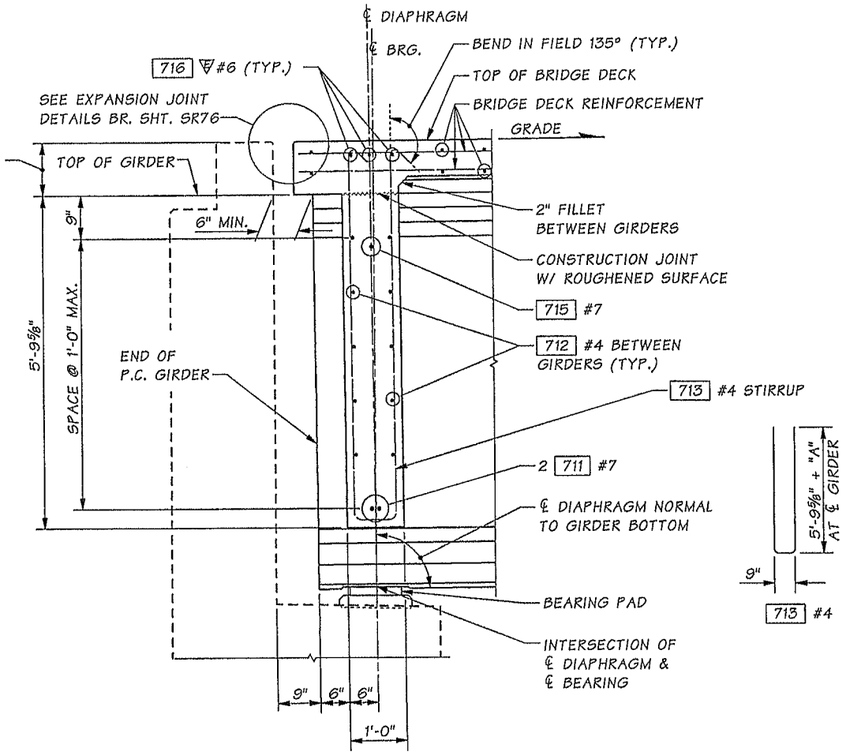

SECTION A

LONGITUDINAL DIMENSIONS ARE NORMAL TO DIAPHRAGM.
GIRDER STOP NOT SHOWN FOR CLARITY.
+ GRADE SHOWN, -GRADE SIMILAR.

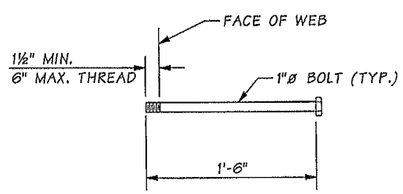

ANCHOR DETAIL

ASTM A 307

NOTES:

1. GIRDERS SHALL BE HELD RIGIDLY IN PLACE WHEN DIAPHRAGMS ARE PLACED.
2. IT MAY BE NECESSARY TO THREAD #7 REINFORCING BARS THROUGH HOLES IN GIRDERS PRIOR TO PLACING EXTERIOR GIRDERS.
3. CUT/RELEASE GIRDER TEMPORARY STRANDS BEFORE CASTING DIAPHRAGM. SEE TEMPORARY STRAND CUTTING SEQUENCE.
4. FOR CONCRETE PLACEMENT PROCEDURE SEE CONSTRUCTION SEQUENCE SHEETS.

SR 5 FILE NO. 7454 SHEET SR67

Bridge Design Engr.	Khaleghi, B	
Supervisor	Khaleghi, B	
Designed By	Tran, LH	03/13
Checked By	Sawahata, D	10/13
Detailed By	Plesha, GM	03/13
Bridge Projects Engr.		
Prelim. Plan By		
Architect/Specialist		

M:\Y-Team\M ST TO PORTLAND\CWRR OC\window files\END DIAPHRAGM.wnd

DATE	REVISION	BY	APP'D

REGION NO.	STATE	FED. AID PROJ. NO.	SHEET NO.	TOTAL SHEETS
10	WASH.			
JOB NUMBER 12C501				

Tue Feb 11 07:17:07 2014

LHONG HUU TRAN — STATE OF WASHINGTON — 22930 — REGISTERED PROFESSIONAL ENGINEER — 3/3/14

BRIDGE AND STRUCTURES OFFICE

BILLAN KHALEGHI — STATE OF WASHINGTON — 27695 — PROFESSIONAL ENGINEER — 2/12/14

Washington State Department of Transportation

I-5
M STREET TO PORTLAND AVENUE - HOV
I-5 OVER I-705 AND TACOMA RAIL BRIDGE NO. 5/445E

END DIAPHRAGM DETAILS

BRIDGE SHEET NO. SR67

SHEET 1171 OF 1763 SHEETS

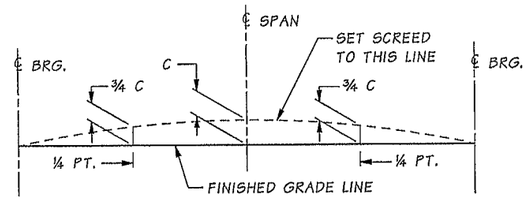

SCREED SETTING DIMENSIONS
SPANS 1, 4 AND 5

FOR DIMENSION "C" SEE GIRDER SCHEDULE

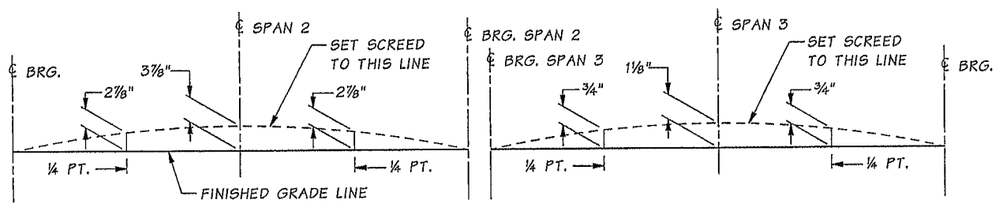

LEFT SCREED SETTING DIMENSIONS
SPANS 2 AND 3

RIGHT SCREED DIMENSION TABLE					
SPAN 2			SPAN 3		
POINT	PIER 3 OPTION 1	PIER 3 OPTION 2	POINT	PIER 3 OPTION 1	PIER 3 OPTION 2
0.0	0"	0"	0.0	1½"	1⅜"
0.1	1½"	1½"	0.1	1¾"	1⅝"
0.2	2¾"	2¾"	0.2	1⅞"	1¾"
0.3	3¾"	3⅝"	0.3	2"	1⅞"
0.4	4¼"	4¼"	0.4	2"	1⅞"
0.5	4⅝"	4½"	0.5	1⅞"	1¾"
0.6	4⅝"	4½"	0.6	1⅝"	1⅝"
0.7	4¼"	4¼"	0.7	1⅜"	1⅜"
0.8	3⅝"	3½"	0.8	1"	1"
0.9	2¾"	2⅝"	0.9	½"	½"
1.0	1½"	1⅜"	1.0	0"	0"

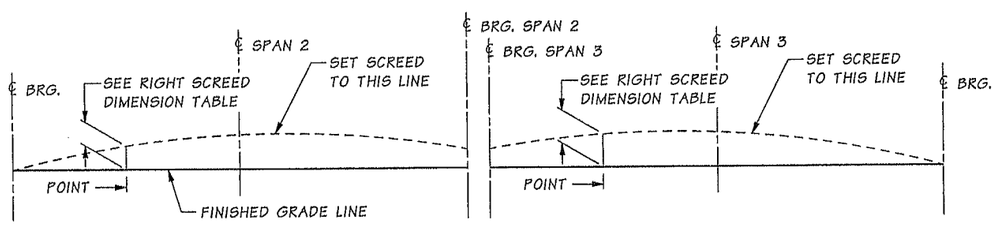

RIGHT SCREED SETTING DIMENSIONS
SPANS 2 AND 3

NOTE:
FOR SPANS 1, 4 AND 5, SCREED SETTING DIMENSIONS ARE PROVIDED TO ADJUST SCREED RAIL ELEVATIONS DUE TO GIRDER DEFLECTION CAUSED BY THE SELF-WEIGHT OF THE BRIDGE DECK AND TRAFFIC BARRIER. AT SPANS 2 AND 3, LEFT AND RIGHT SCREED SETTING DIMENSIONS ARE PROVIDED TO ADJUST SCREED RAIL ELEVATIONS DUE TO GIRDER AND CROSSBEAM DEFLECTION CAUSED BY THE SELF-WEIGHT OF THE BRIDGE DECK, UPPER PORTION OF THE PIER 3 CROSSBEAM AND TRAFFIC BARRIER, AS WELL AS DEFLECTIONS DUE TO POST-TENSIONING.

SR 5 FILE NO. 7454 SHEET SR68

Bridge Design Engr.	Khaleghi, B	
Supervisor	Khaleghi, B	
Designed By	Bingle, J	07/13
Checked By	Tran, LH	10/13
Detailed By	Bingle, J	07/13
Bridge Projects Engr.		
Prelim. Plan By		
Architect/Specialist		

M:\Y-Team\M ST TO PORTLAND\CWRR OC\window files\SCREED DETAILS.wnd

DATE	REVISION	BY	APP'D

REGION NO.	STATE	FED. AID PROJ. NO.	SHEET NO.	TOTAL SHEETS
10	WASH.			
JOB NUMBER 12C501				

Tue Feb 11 07:17:09 2014

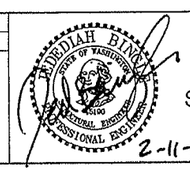

2-11-14

BRIDGE AND STRUCTURES OFFICE

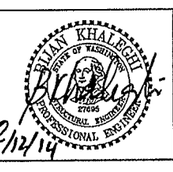

2/12/14

Washington State Department of Transportation

I-5
M STREET TO PORTLAND AVENUE - HOV

I-5 OVER I-705 AND TACOMA RAIL BRIDGE NO. 5/445E

SCREED SETTING DIMENSIONS

BRIDGE SHEET NO. SR68

SHEET 1172 OF 1763 SHEETS

NOTES

1. ALL TRANVS. REINF. ARE PLACED NORMAL TO GIRDER ℄ LINE UNLESS NOTED OTHERWISE. [53] & [54] BARS PLACED NORMAL TO CURB LINE.

2. MIN. REBAR SPLICE LENGTH UNLESS NOTED OTHERWISE:
   - #4 ~ 2'-0"
   - #5 ~ 2'-6"
   - #6 ~ 3'-0"
   - #7 ~ 3'-9"

   WHEN SPLICING DIFFERENT SIZES REBARS, THE MIN. SPICE LENGTH OF THE SMALLER BAR MAY BE USED.

3. DO NOT SPLICE MORE THAN 50% OF REBAR AT ANY ONE LOCATION UNLESS NOTED OTHERWISE. STAGGER SPLICES AT MINIMUM OF 2'-6".

4. CUT EPOXY COATED REBAR SHALL BE REPAIRED PER STD. SPEC. SECTION 6-02.3(24)H.

5. FIELD BEND THE REINFORCEMENT TO ACCOUNT FOR THE CURVE RADIUS AS NEEDED.

6. TRANSVERSE SPLICE FOR BOTTOM MAT SHALL BE CENTERED ON GIRDERS UNLESS SHOWN OTHERWISE (ALTERNATE LOCATION EVERY OTHER BAR).

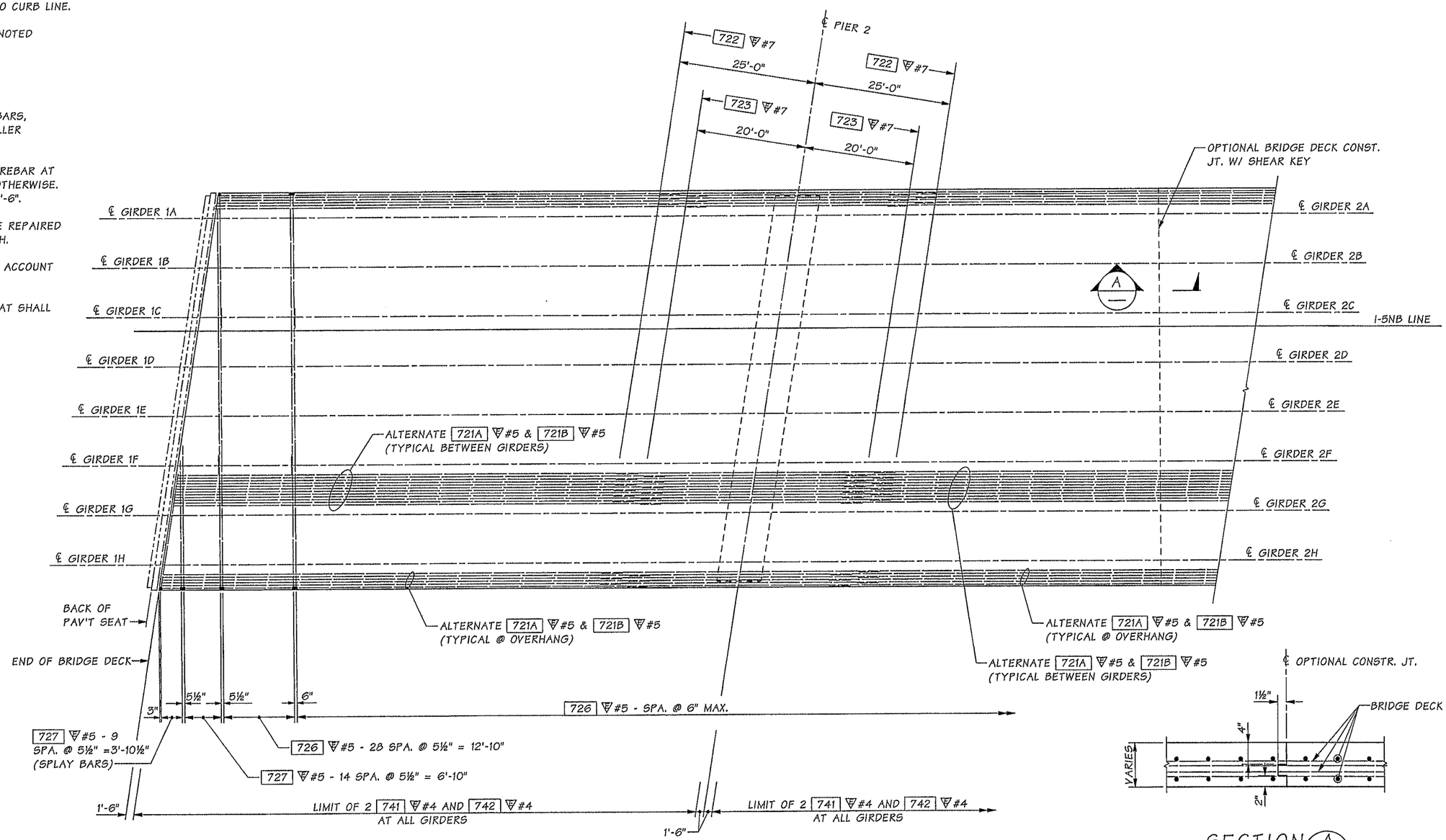

BRIDGE DECK REINFORCEMENT PLAN
BOTTOM MAT - SPAN 1 AND PART SPAN 2

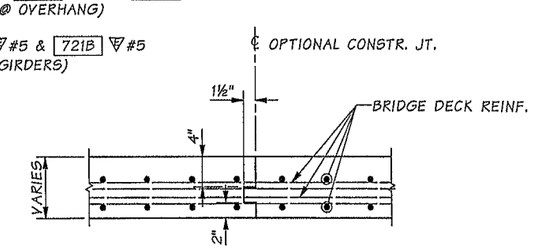

SECTION A

CONTRACTOR SHALL SUBMIT LOCATION OF ANY BRIDGE DECK CONSTRUCTION JOINT W/ SHEAR KEY AND SEQUENCE OF BRIDGE DECK POUR FOR APPROVAL BY ENGINEER

Bridge Design Engr.	Khaleghi, B	
Supervisor	Khaleghi, B	
Designed By	Sawahata, D	02/13
Checked By	Tran, LH	10/13
Detailed By	Plesha, GM	02/13
Bridge Projects Engr.		
Prelim. Plan By		
Architect/Specialist		

M:\Y-Team\M ST TO PORTLAND\CWRR OC\window files\BOTTOM SLAB 1.wnd

DATE	REVISION	BY	APP'D

REGION NO.	STATE	FED. AID PROJ. NO.	SHEET NO.	TOTAL SHEETS
10	WASH.			
JOB NUMBER 12C501				

TAKAO DAVID SAWAHATA, STATE OF WASHINGTON, 16002, REGISTERED PROFESSIONAL ENGINEER 2-11-14

BRIDGE AND STRUCTURES OFFICE

BIJAN KHALEGHI, STATE OF WASHINGTON, STRUCTURAL ENGINEER 2/12/14

Washington State Department of Transportation

I-5
M STREET TO PORTLAND AVENUE - HOV

I-5 OVER I-705 AND TACOMA RAIL BRIDGE NO. 5/445E

BRIDGE DECK REINFORCEMENT
BOTTOM MAT 1 OF 3

BRIDGE SHEET NO. SR69

SHEET 1173 OF 1763 SHEETS

SR 5 FILE NO. 7454 SHEET SR69

Tue Feb 11 07:17:11 2014

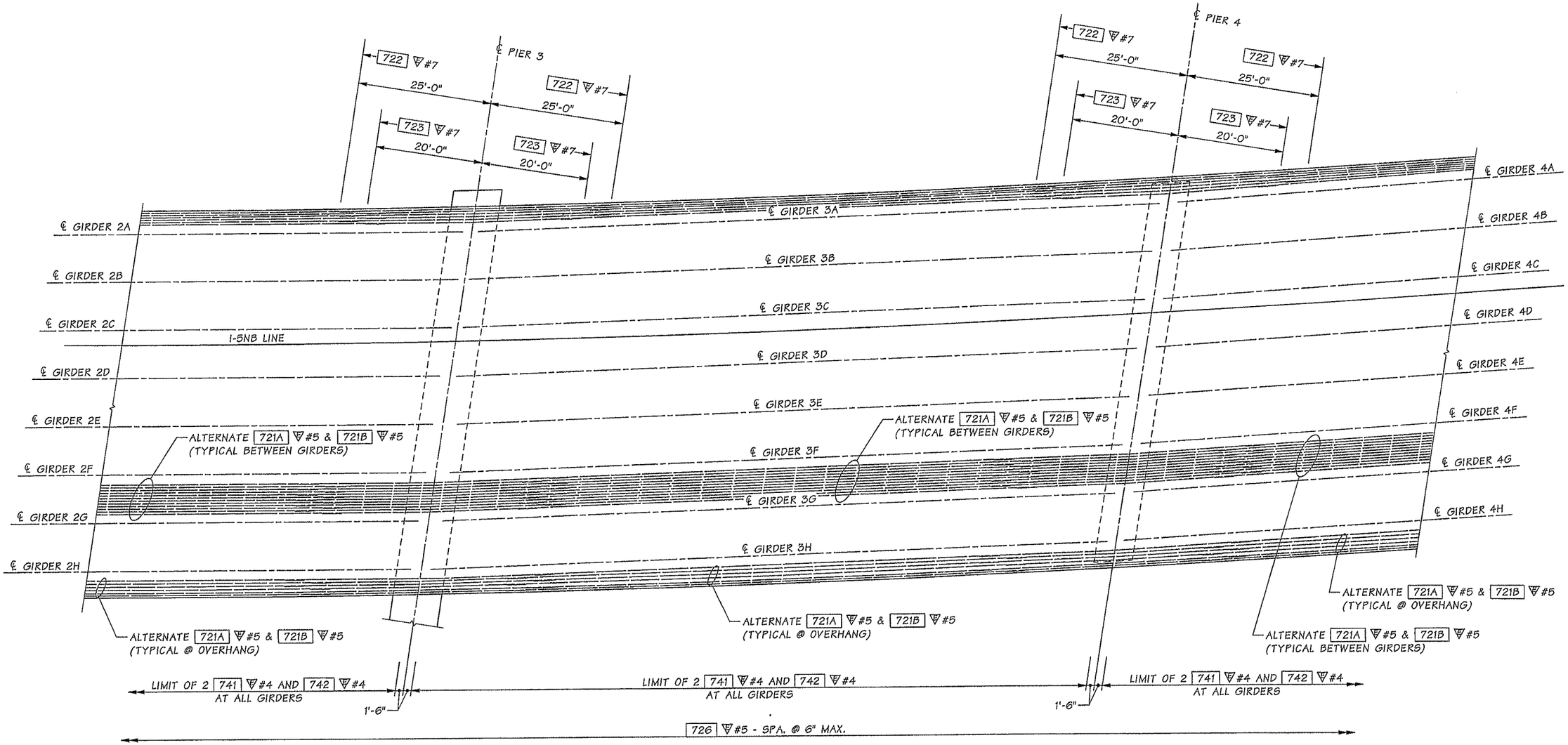

BRIDGE DECK REINFORCEMENT PLAN
BOTTOM MAT - PART SPAN 2, SPAN 3 AND PART SPAN 4

Bridge Design Engr.	Khaleghi, B		M:\Y-Team\M ST TO PORTLAND\CWRR OC\window files\BOTTOM SLAB 2.wnd
Supervisor	Khaleghi, B		
Designed By	Sawahata, D	02/13	
Checked By	Tran, LH	10/13	
Detailed By	Plesha, GM	02/13	
Bridge Projects Engr.			
Prelim. Plan By			
Architect/Specialist			

DATE	REVISION	BY	APP'D

Tue Feb 11 07:17:12 2014

REGION NO.	STATE	FED. AID PROJ. NO.	SHEET NO.	TOTAL SHEETS
10	WASH.			
JOB NUMBER 12C501				

TAKAO DAVID SAWAHATA, STATE OF WASHINGTON, 20632, REGISTERED PROFESSIONAL ENGINEER — 2-11-14

BRIDGE AND STRUCTURES OFFICE

BEHJAT KHALEGHI, STATE OF WASHINGTON, 27505, PROFESSIONAL ENGINEER — 2/12/14

Washington State Department of Transportation

I-5
M STREET TO PORTLAND AVENUE - HOV

I-5 OVER I-705 AND TACOMA RAIL BRIDGE NO. 5/445E

BRIDGE DECK REINFORCEMENT
BOTTOM MAT 2 OF 3

BRIDGE SHEET NO. SR70

SHEET 1174 OF 1763 SHEETS

SR 5 FILE NO. 7454 SHEET SR70

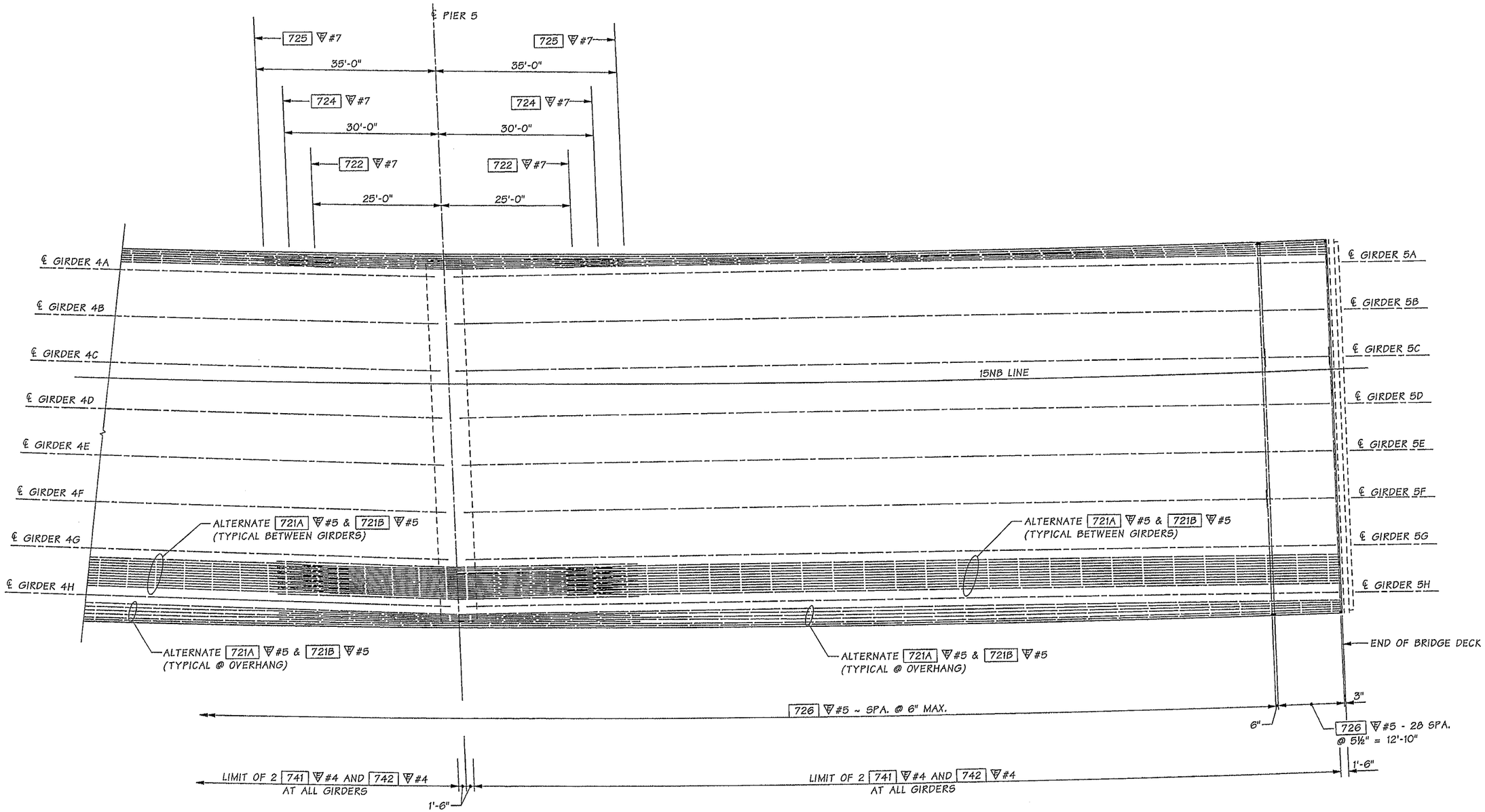

BRIDGE DECK REINFORCEMENT PLAN
BOTTOM MAT - PART SPAN 4 AND SPAN 5

SR 5 FILE NO. 7454 SHEET SR71

Bridge Design Engr.	Khaleghi, B		M:\Y-Team\M ST TO PORTLAND\CWRR OC\window files\BOTTOM SLAB 3.wnd							
Supervisor	Khaleghi, B									
Designed By	Sawahata, D	02/13								
Checked By	Tran, LH	10/13								
Detailed By	Plesha, GM	02/13								
Bridge Projects Engr.										
Prelim. Plan By										
Architect/Specialist			DATE	REVISION	BY	APP'D				

REGION NO.	STATE	FED. AID PROJ. NO.	SHEET NO.	TOTAL SHEETS
10	WASH.			
JOB NUMBER 12C501				

TAKAO DAVID SAWAHATA, STATE OF WASHINGTON, 18062, REGISTERED PROFESSIONAL ENGINEER — 2-11-14

BRIDGE AND STRUCTURES OFFICE

BIJAN KHALEGHI, STATE OF WASHINGTON, 27005, STRUCTURAL ENGINEER, PROFESSIONAL ENGINEER — 2/12/14

Washington State Department of Transportation

I-5
M STREET TO PORTLAND AVENUE - HOV

I-5 OVER I-705 AND TACOMA RAIL BRIDGE NO. 5/445E

BRIDGE DECK REINFORCEMENT
BOTTOM MAT 3 OF 3

BRIDGE SHEET NO. SR71

SHEET 1175 OF 1763 SHEETS

Tue Feb 11 07:17:13 2014

NOTES

1. ALL TRANVS. REINF. ARE PLACED NORMAL TO GIRDER ℄ LINE UNLESS NOTED OTHERWISE. [S3] & [S4] BARS PLACED NORMAL TO CURB LINE.

2. MIN. REBAR SPLICE LENGTH UNLESS NOTED OTHERWISE:
   #5 ~ 2'-6"
   #6 ~ 3'-0"
   #7 ~ 3'-9"
   WHEN SPLICING DIFFERENT SIZES REBARS, THE MIN. SPICE LENGTH OF THE SMALLER BAR MAY BE USED.

3. DO NOT SPLICE MORE THAN 50% OF REBAR AT ANY ONE LOCATION UNLESS NOTED OTHERWISE. STAGGER SPLICES AT MINIMUM OF 2'-6".

4. CUT EPOXY COATED REBAR SHALL BE REPAIRED PER STD. SPEC. SECTION 6-02.3(24)H.

5. FIELD BEND THE REINFORCEMENT TO ACCOUNT FOR THE CURVE RADIUS AS NEEDED.

6. TRANSVERSE SPLICE FOR TOP MAT SHALL BE CENTERED BETWEEN GIRDERS UNLESS SHOWN OTHERWISE (ALTERNATE LOCATION EVERY OTHER BAR).

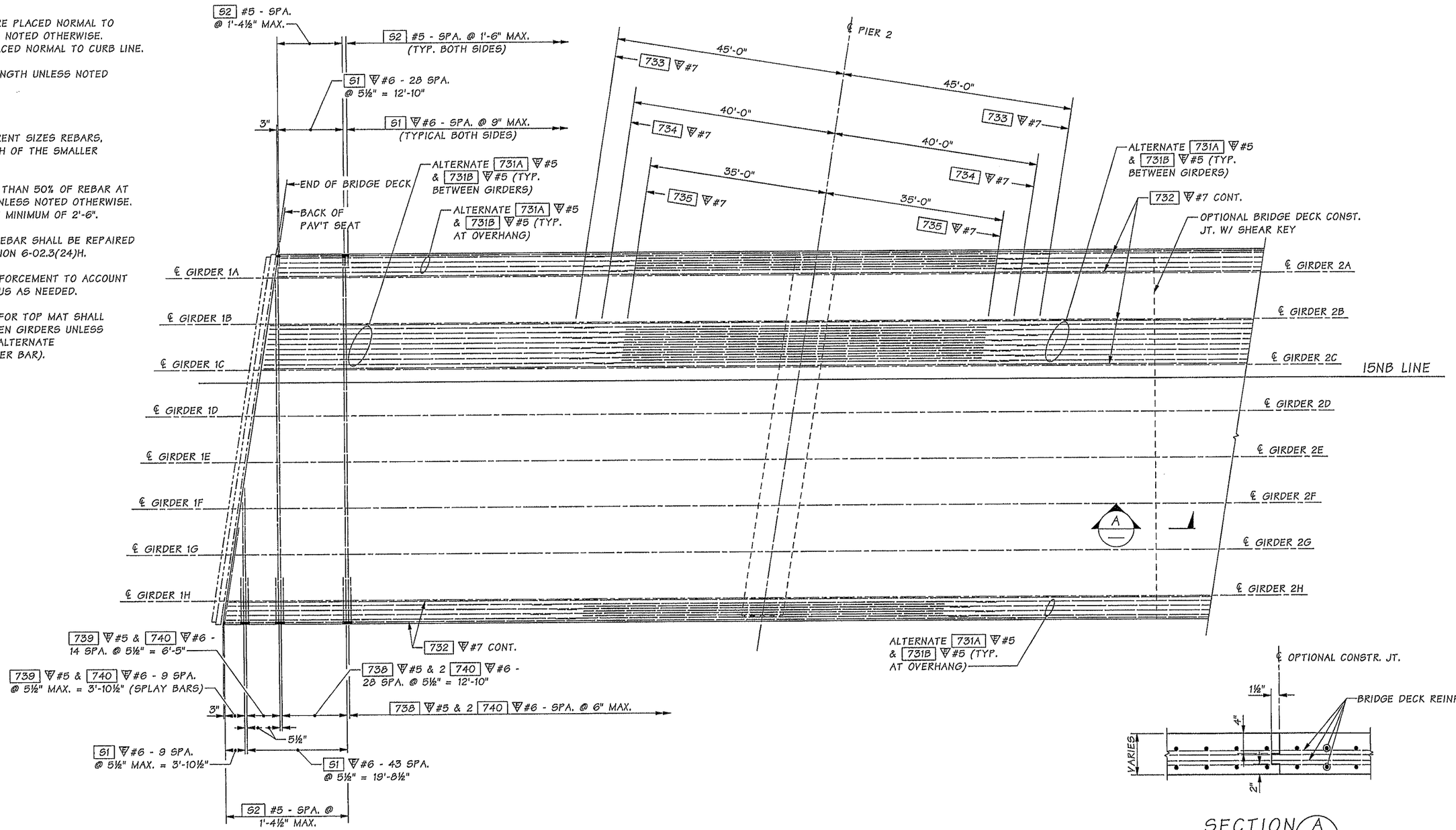

BRIDGE DECK REINFORCEMENT PLAN
TOP MAT - SPAN 1 AND PART 2

SECTION A

CONTRACTOR SHALL SUBMIT LOCATION OF ANY BRIDGE DECK CONSTRUCTION JOINT W/ SHEAR KEY AND SEQUENCE OF BRIDGE DECK POUR FOR APPROVAL BY ENGINEER

Bridge Design Engr.	Khaleghi, B	
Supervisor	Khaleghi, B	
Designed By	Sawahata, D	02/13
Checked By	Tran, LH	10/13
Detailed By	Plesha, GM	02/13
Bridge Projects Engr.		
Prelim. Plan By		
Architect/Specialist		

M:\Y-Team\M ST TO PORTLAND\CWRR OC\window files\TOP SLAB 1.wnd

DATE	REVISION	BY	APP'D

REGION NO.	STATE	FED. AID PROJ. NO.	SHEET NO.	TOTAL SHEETS
10	WASH.			
JOB NUMBER 12C501				

TAKAO DAVID SAWAHATA, STATE OF WASHINGTON, 45563, REGISTERED PROFESSIONAL ENGINEER — 2.11.14

BRIDGE AND STRUCTURES OFFICE

ALLAN KHALEGHI, STATE OF WASHINGTON, 27046, PROFESSIONAL ENGINEER — 2/12/14

Washington State Department of Transportation

I-5
M STREET TO PORTLAND AVENUE - HOV
I-5 OVER I-705 AND TACOMA RAIL BRIDGE NO. 5/445E
BRIDGE DECK REINFORCEMENT TOP MAT 1 OF 3

BRIDGE SHEET NO. SR72

SHEET 1176 OF 1763 SHEETS

SR 5 FILE NO. 7454 SHEET SR72

Tue Feb 11 07:17:15 2014

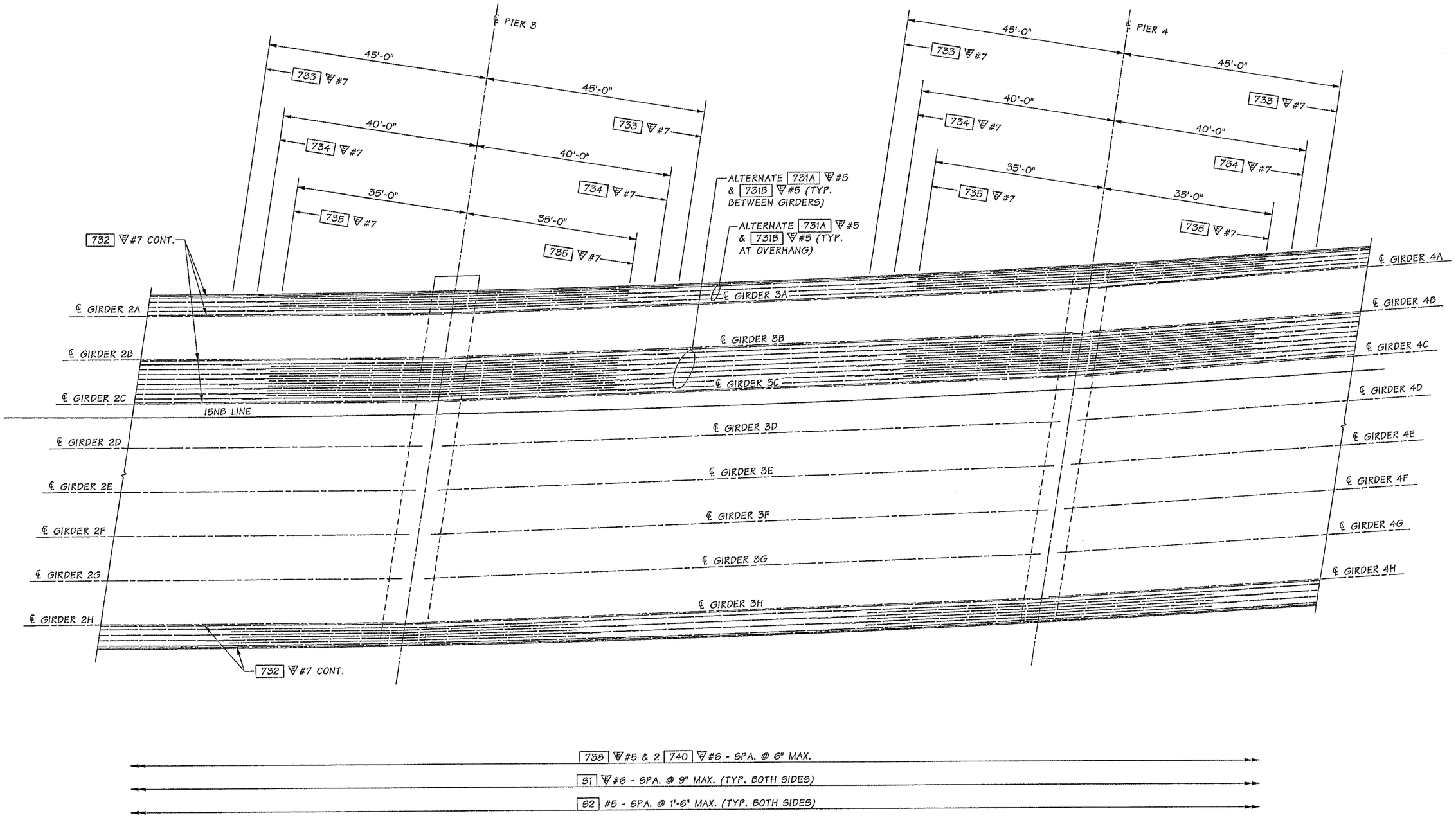

BRIDGE DECK REINFORCEMENT PLAN
TOP MAT - PART SPAN 2, SPAN 3 AND PART SPAN 4

SR 5 FILE NO. 7454 SHEET SR73

Bridge Design Engr.	Khaleghi, B		M:\Y-Team\M ST TO PORTLAND\CWRR OC\window files\TOP SLAB 2.wnd
Supervisor	Khaleghi, B		
Designed By	Sawahata, D	02/13	
Checked By	Tran, LH	10/13	
Detailed By	Plesha, GM	02/13	
Bridge Projects Engr.			
Prelim. Plan By			
Architect/Specialist			

DATE	REVISION	BY	APP'D

REGION NO.	STATE	FED. AID PROJ. NO.	SHEET NO.	TOTAL SHEETS
10	WASH.			
JOB NUMBER 12C501				

TAKAO DAVID SAWAHATA, STATE OF WASHINGTON, 45562, REGISTERED PROFESSIONAL ENGINEER 2-11-14

BRIDGE AND STRUCTURES OFFICE

BEHAN KHALEGHI, STATE OF WASHINGTON, 42905, PROFESSIONAL ENGINEER 2/12/14

Washington State Department of Transportation

I-5
M STREET TO PORTLAND AVENUE - HOV

I-5 OVER I-705 AND TACOMA RAIL BRIDGE NO. 5/445E

BRIDGE DECK REINFORCEMENT
TOP MAT 2 OF 3

BRIDGE SHEET NO. SR73

SHEET 1177 OF 1763 SHEETS

Tue Feb 11 07:17:16 2014

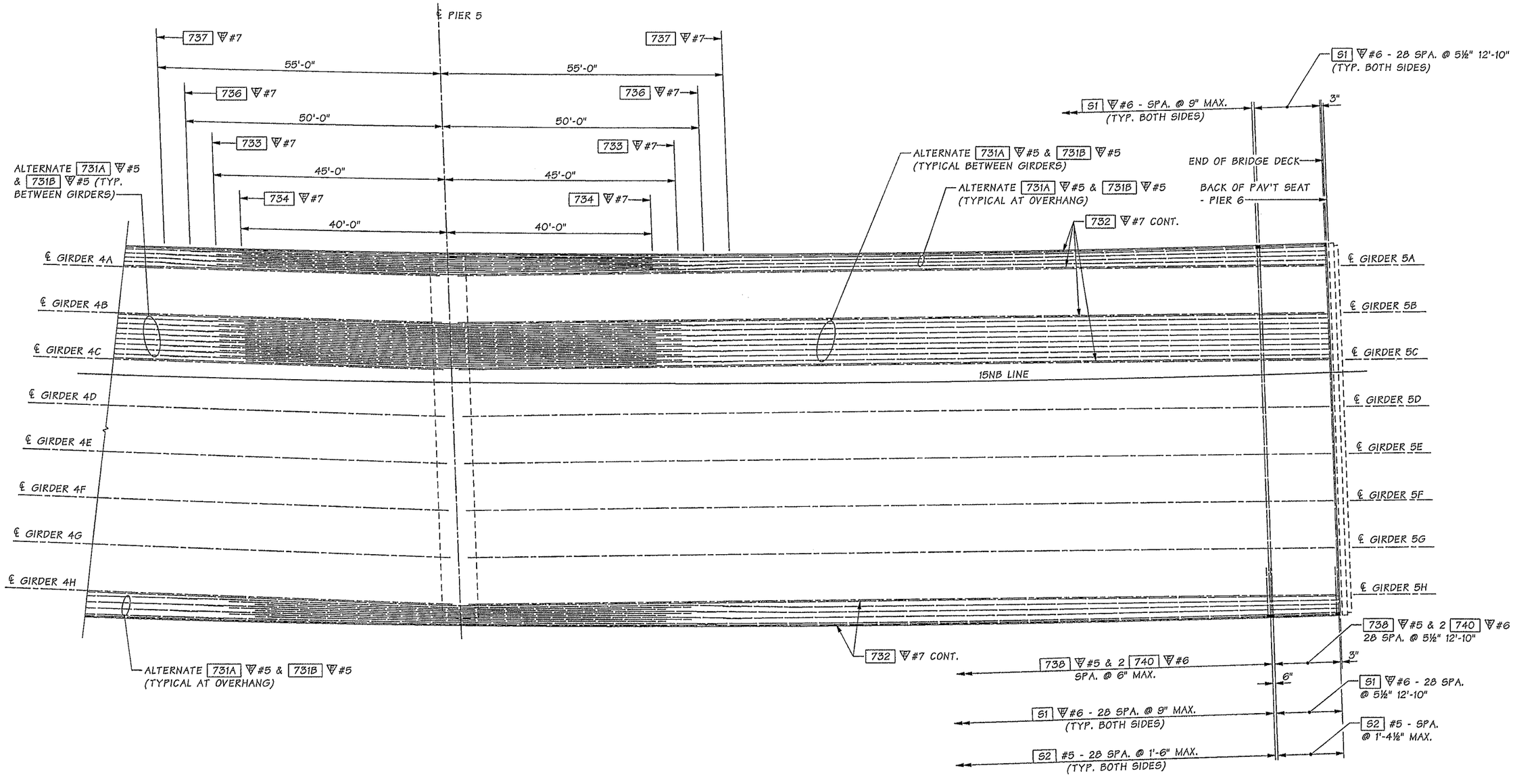

BRIDGE DECK REINFORCEMENT PLAN
TOP MAT - PART SPAN 4 AND SPAN 5

SR 5 FILE NO. 7454 SHEET SR74

Bridge Design Engr.	Khaleghi, B	
Supervisor	Khaleghi, B	
Designed By	Sawahata, D	02/13
Checked By	Tran, LH	10/13
Detailed By	Plesha, GM	02/13
Bridge Projects Engr.		
Prelim. Plan By		
Architect/Specialist		

M:\Y-Team\M ST TO PORTLAND\CWRR OC\window files\TOP SLAB 3.wnd

DATE	REVISION	BY	APP'D

REGION NO.	STATE	FED. AID PROJ. NO.	SHEET NO.	TOTAL SHEETS
10	WASH.			

JOB NUMBER 12C501

TAKAO DAVID SAWAHATA, STATE OF WASHINGTON, 48662, REGISTERED PROFESSIONAL ENGINEER — 2-11-14

BRIDGE AND STRUCTURES OFFICE

BIJAN KHALEGHI, STATE OF WASHINGTON, 21605, REGISTERED PROFESSIONAL ENGINEER — 2/12/14

Washington State Department of Transportation

I-5
M STREET TO PORTLAND AVENUE - HOV
I-5 OVER I-705 AND TACOMA RAIL BRIDGE NO. 5/445E
BRIDGE DECK REINFORCEMENT
TOP MAT 3 OF 3

BRIDGE SHEET NO. SR74
SHEET 1178 OF 1763 SHEETS

Tue Feb 11 07:17:17 2014

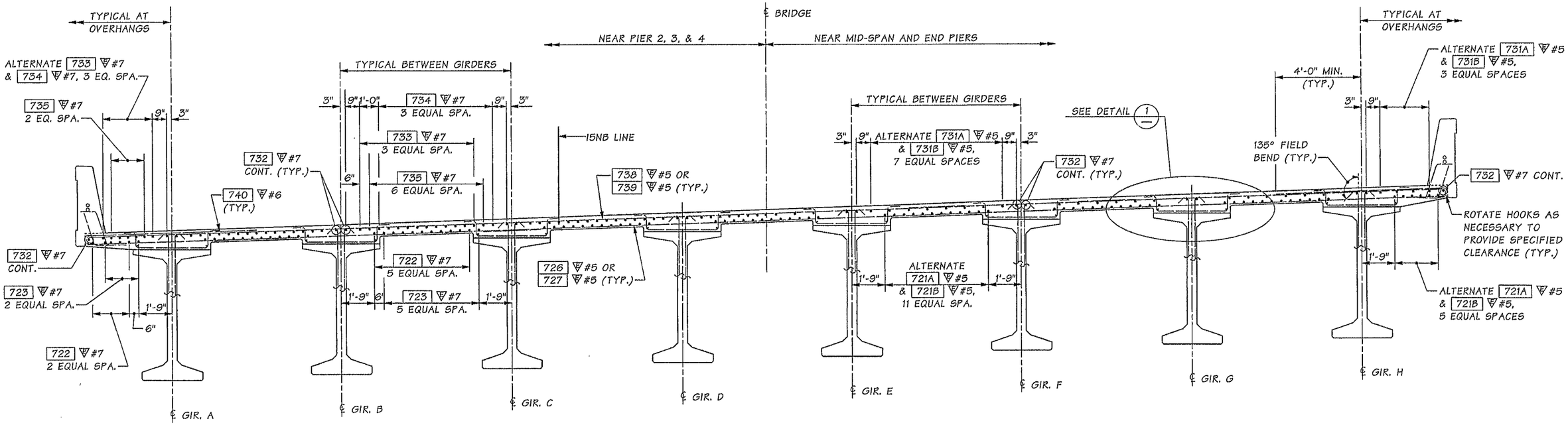

TYPICAL BRIDGE DECK REINFORCING SECTION

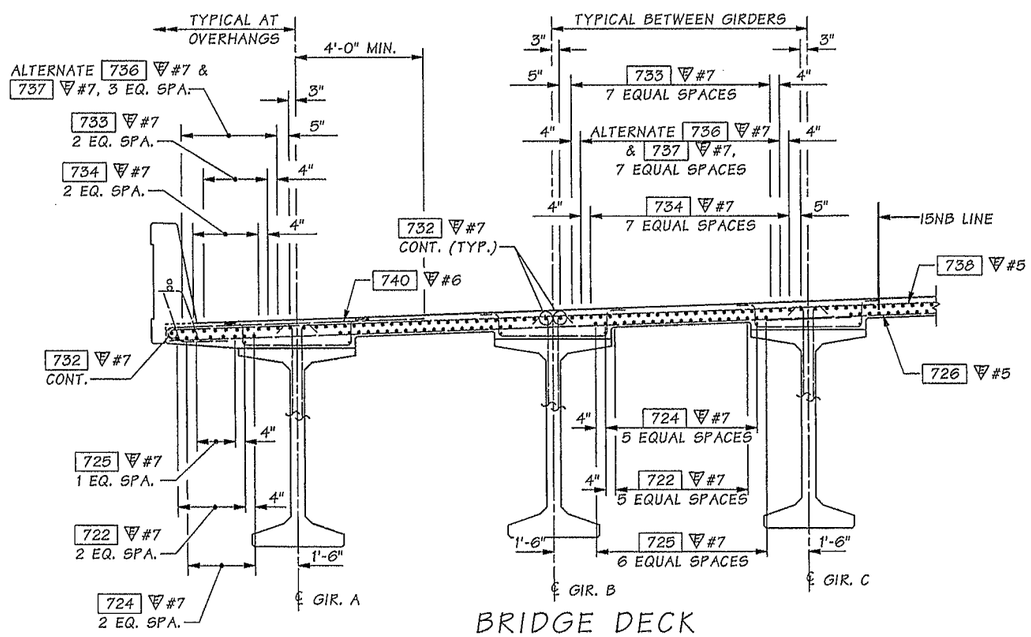

BRIDGE DECK REINFORCEMENT SECTION NEAR PIER 5

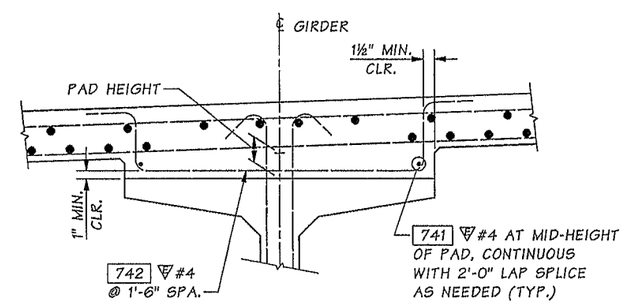

DETAIL 1

TYPICAL AT GIRDERS, ALL SPANS

Bridge Design Engr.	Khaleghi, B	M:\Y-Team\M ST TO PORTLAND\CWRR OC\window files\REINFORCEMENT SECTION.wnd								
Supervisor	Khaleghi, B									
Designed By	Sawahata, D	02/13								
Checked By	Tran, LH	10/13								
Detailed By	Plesha, GM	02/13								
Bridge Projects Engr.										
Prelim. Plan By										
Architect/Specialist		DATE	REVISION	BY	APP'D					

REGION NO.	STATE	FED. AID PROJ. NO.	SHEET NO.	TOTAL SHEETS
10	WASH.			
JOB NUMBER 12C501				

Tue Feb 11 07:17:19 2014

SR 5 FILE NO. 7454 SHEET SR75

BRIDGE AND STRUCTURES OFFICE

Washington State Department of Transportation

I-5
M STREET TO PORTLAND AVENUE - HOV

I-5 OVER I-705 AND TACOMA RAIL BRIDGE NO. 5/445E

BRIDGE DECK REINFORCEMENT SECTION

BRIDGE SHEET NO. SR75

SHEET 1179 OF 1763 SHEETS

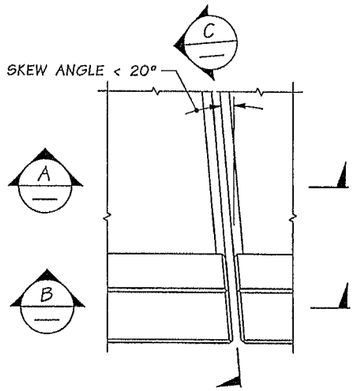

PLAN
EXPANSION JOINT

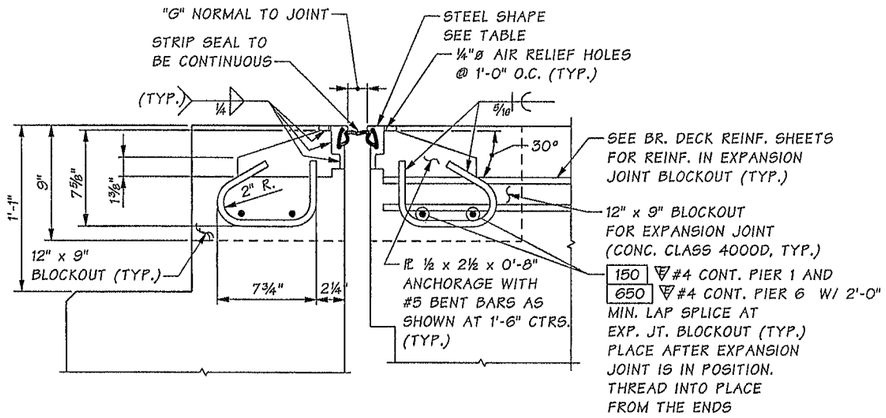

SECTION A

SEE ABUTMENT DETAILS FOR REBAR ARRANGEMENT IN THE BLOCKOUT AREA.

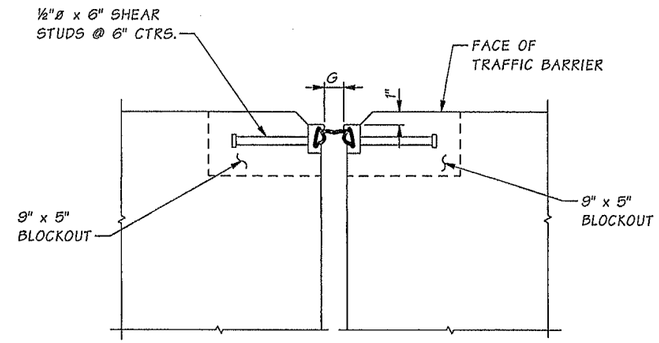

SECTION B

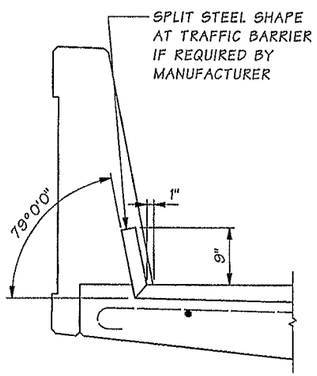

SECTION C

STRIP SEAL NOTES:

1. SEE STRIP SEAL TABLE FOR APPROVED MANUFACTURERS.
2. THE ENTIRE STRIP SEAL ASSEMBLY SHALL BE CONSTRUCTED SO THAT THE STRIP SEAL MAY BE REMOVED AND REPLACED.
3. FABRICATE STRIP SEALS AND STEEL SHAPES TO ACCOMMODATE GRADE BREAKS AT PIERS 1 & 6.

STEEL SHAPE TYPES

MANUFACTURER	ITEM NAME	S, T			V, W			X, Y		
		TYPE	S	T	TYPE	V	W	TYPE	X	Y
D. S. BROWN	DSB STRIP SEAL	SSCM2	1½"	3¾"	SSA2 α	1¼"	2"	SSE2 α	1"	1½"
WATSON BOWMAN ACME	WABO STRIP SEAL	M, R, P	2¾"	3¼"	A	1¼"	2"	E	1½"	1½"
R.J. WATSON, INC.	RJ STRIP SEAL	RJM	2¾"	3¼"	RJA	1¼"	2"	RJE	1¼"	1½"
ENGINEERED DYNAMIC SYSTEMS LLC	TYFO STRIP SEAL	C	2½"	3"	A	1⅜"	2"	E	1⅜"	1⅜"

5' MOTION RANGE

MANUFACTURER	ITEM NAME	OPENING "G" NORMAL TO JT.		MIN. INSTALLATION WIDTH NORMAL TO JOINT	OPENING "G" NORMAL TO JT.		
		MIN.	MAX.		@40°F	@64°F	@80°F
D. S. BROWN	DSB STRIP SEAL A2R-XTRA	0"	5"	2"	½"	1½"	2"
WATSON BOWMAN ACME	WABO STRIP SEAL SE-500	0"	5"	1½"	½"	1½"	2"
R.J. WATSON, INC.	R.J. STRIP SEAL 500	½"	5"	1½"	1⅛"	1¾"	2 9/16"
ENGINEERED DYNAMIC SYSTEMS LLC	TYFO STRIP SEAL FS500	¼"	5½"	1½"	1⅛"	1¾"	2 9/16"

α TRIM VERTICAL LEG OF SSCM2 SHAPE FOR USE IN TRAFFIC BARRIER

SR 5 FILE NO. 7454 SHEET SR76

Bridge Design Engr.	Khaleghi, B		
Supervisor	Khaleghi, B		
Designed By	Tran, LH	02/13	
Checked By	Sawahata, D	10/13	
Detailed By	Plesha, GM	02/13	
Bridge Projects Engr.			
Prelim. Plan By			
Architect/Specialist			

M:\Y-Team\M ST TO PORTLAND\CWRR OC\window files\EXPANSION JOINT.wnd

DATE	REVISION	BY	APP'D

REGION NO.	STATE	FED. AID PROJ. NO.	SHEET NO.	TOTAL SHEETS
10	WASH.			
JOB NUMBER 12C501				

Tue Feb 11 07:17:21 2014

BRIDGE AND STRUCTURES OFFICE

2-12-14 2/12/14

Washington State Department of Transportation

I-5
M STREET TO PORTLAND AVENUE - HOV

I-5 OVER I-705 AND TACOMA RAIL BRIDGE NO. 5/445E

EXPANSION JOINT DETAILS

BRIDGE SHEET NO. SR76

SHEET 1180 OF 1763 SHEETS

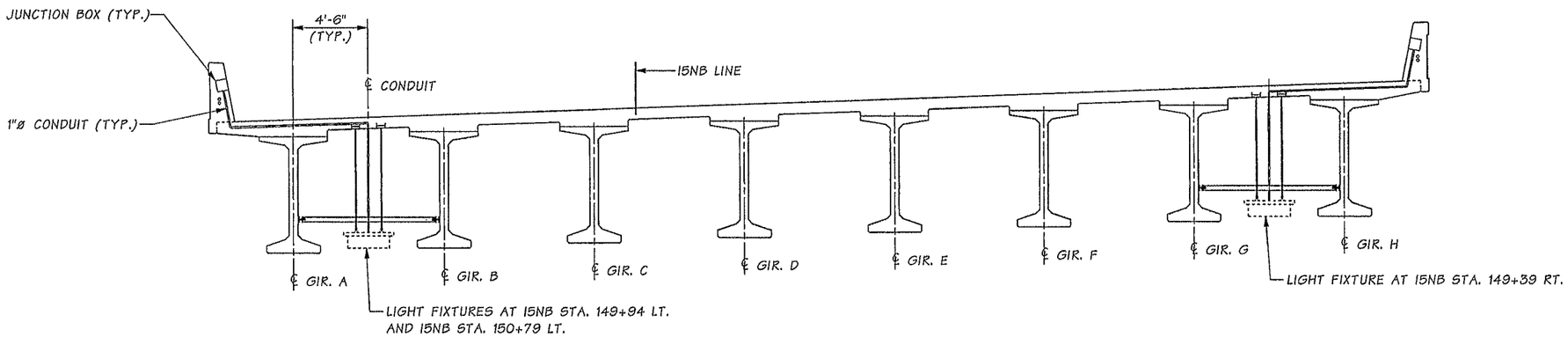

ELEVATION ~ LIGHT LOCATIONS

1"ø CONDUIT TO BE PLACED BETWEEN TRANSVERSE MATS.

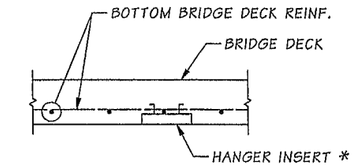

DETAIL 2

* COOPER B-LINE B22-I-6, POWERSTRUT PS 349-6", UNISTRUT P3251, OR APPROVED EQUAL (TYP.) WITH SPRING NUT. CHASE THREADS ON HANGER ROD FOR THREAD COMPATIBILITY WITH SPRING NUT. INSERT TO BE INSTALLED LEVEL LONGITUDINALLY AND TRANSVERSELY. PLACE INSERT TO PROVIDE FOR TRANSVERSE ADJUSTMENT OF HANGER RODS. HANGER RODS SHALL NOT BE WITHIN 2" OF THE END OF THE INSERT.

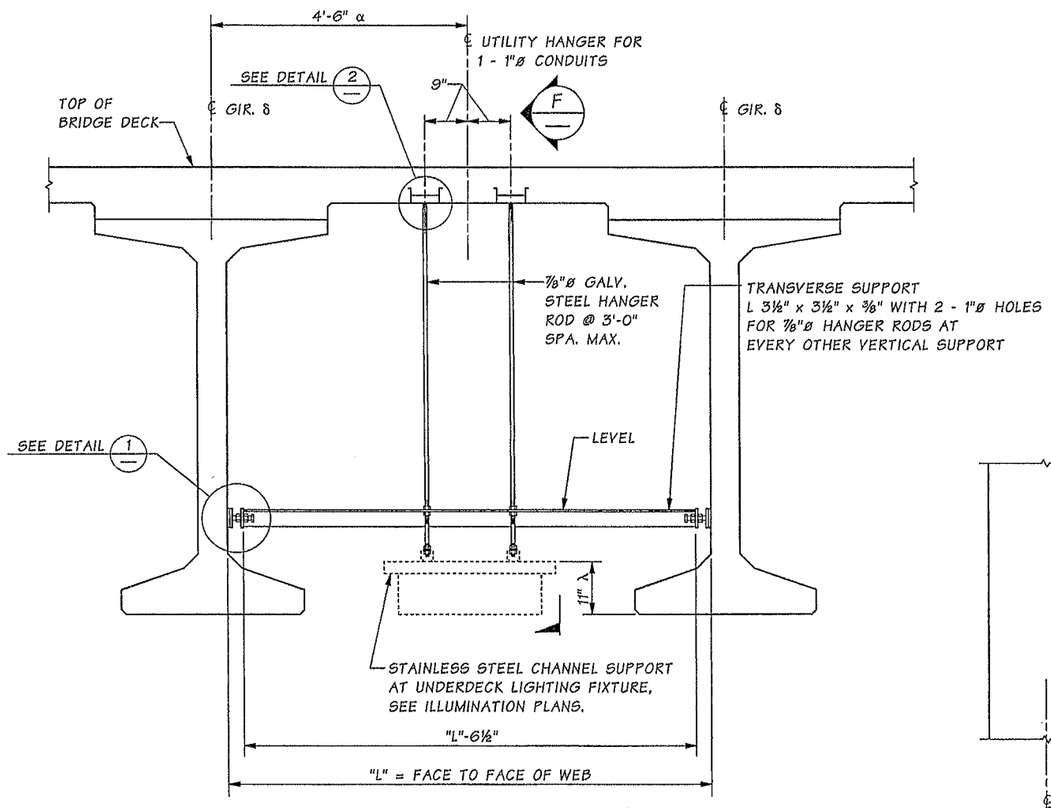

LIGHT FIXTURE SUPPORT

δ SEE ELEVATION ~ LIGHT LOCATIONS
α DIMENSION NORMAL TO 15NB LINE
λ DIMENSION FROM HIGHEST GIRDER

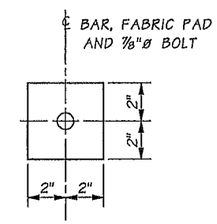

SECTION B

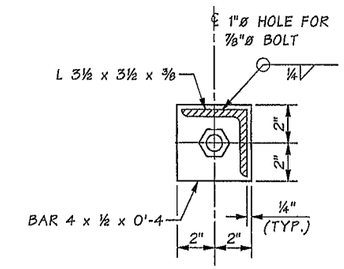

SECTION C

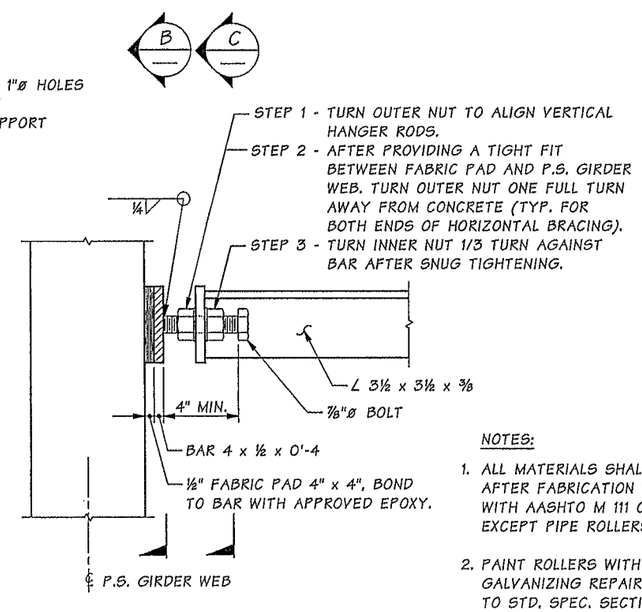

DETAIL 1

NOTES:

1. ALL MATERIALS SHALL BE GALVANIZED AFTER FABRICATION IN ACCOERDANCE WITH AASHTO M 111 OR AASHTO M 232 EXCEPT PIPE ROLLERS.
2. PAINT ROLLERS WITH THREE COATS OF GALVANIZING REPAIR PAINT. CONFORMING TO STD. SPEC. SECTION 9-08.1(2)B, APPLIED IN ACCORDANCE WITH STD. SPEC. SECTION 6-07.3(4)I.

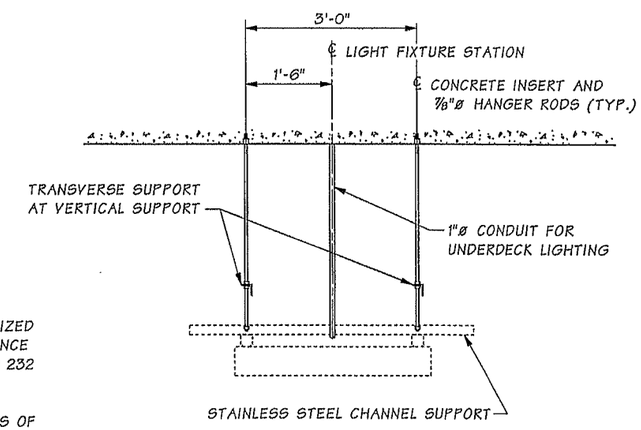

SECTION F

RGS OR PVC CONDUIT

Bridge Design Engr.	Khaleghi, B		M:\Y-Team\M ST TO PORTLAND\CWRR OC\window files\UTILITY SUPPORT FOR LIGHT.wnd			REGION NO.	STATE	FED. AID PROJ. NO.	SHEET NO.	TOTAL SHEETS
Supervisor	Khaleghi, B					10	WASH.			
Designed By	Tran, L.H	01/14								
Checked By	Sawahata, D	01/14								
Detailed By	Bontemps, W	01/14				JOB NUMBER 12C501				
Bridge Projects Engr.										
Prelim. Plan By										
Architect/Specialist			DATE	REVISION	BY	APP'D				

Tue Feb 11 07:17:23 2014

BRIDGE AND STRUCTURES OFFICE

Washington State Department of Transportation

I-5
M STREET TO PORTLAND AVENUE - HOV

I-5 OVER I-705 AND TACOMA RAIL BRIDGE NO. 5/445E

LIGHT FIXTURE SUPPORT DETAILS

BRIDGE SHEET NO. SR77

SHEET 1181 OF 1763 SHEETS

SR 5 FILE NO. 7454 SHEET SR77

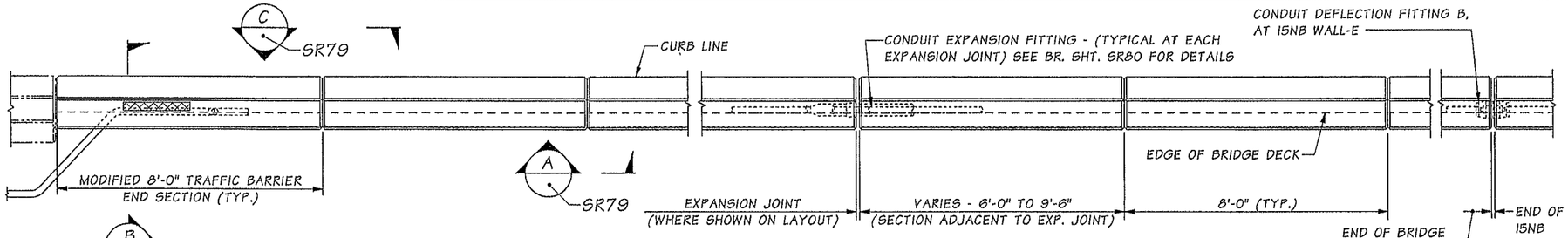

PLAN
TRAFFIC BARRIER

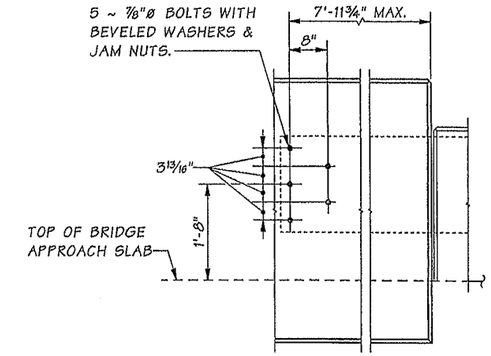

THRIE BEAM END SECTION DESIGN "F"
(SEE STD. PLAN C-7a)

OUTSIDE ELEVATION
TRAFFIC BARRIER
GUARDRAIL CONNECTION

SEE "GUARDRAIL CONNECTION TYPE 1" IN CIVIL SHEETS FOR ADDITIONAL DETAILS.

BARRIER CONTINUOUS BETWEEN BRIDGE DECK EXPANSION JOINTS.
CONSTRUCTION JOINTS WITH SHEAR KEYS ARE PERMISSIBLE AT DUMMY JOINT LOCATIONS.
FORM JOINTS BETWEEN DUMMY JOINTS SHALL NOT BE PERMITTED.

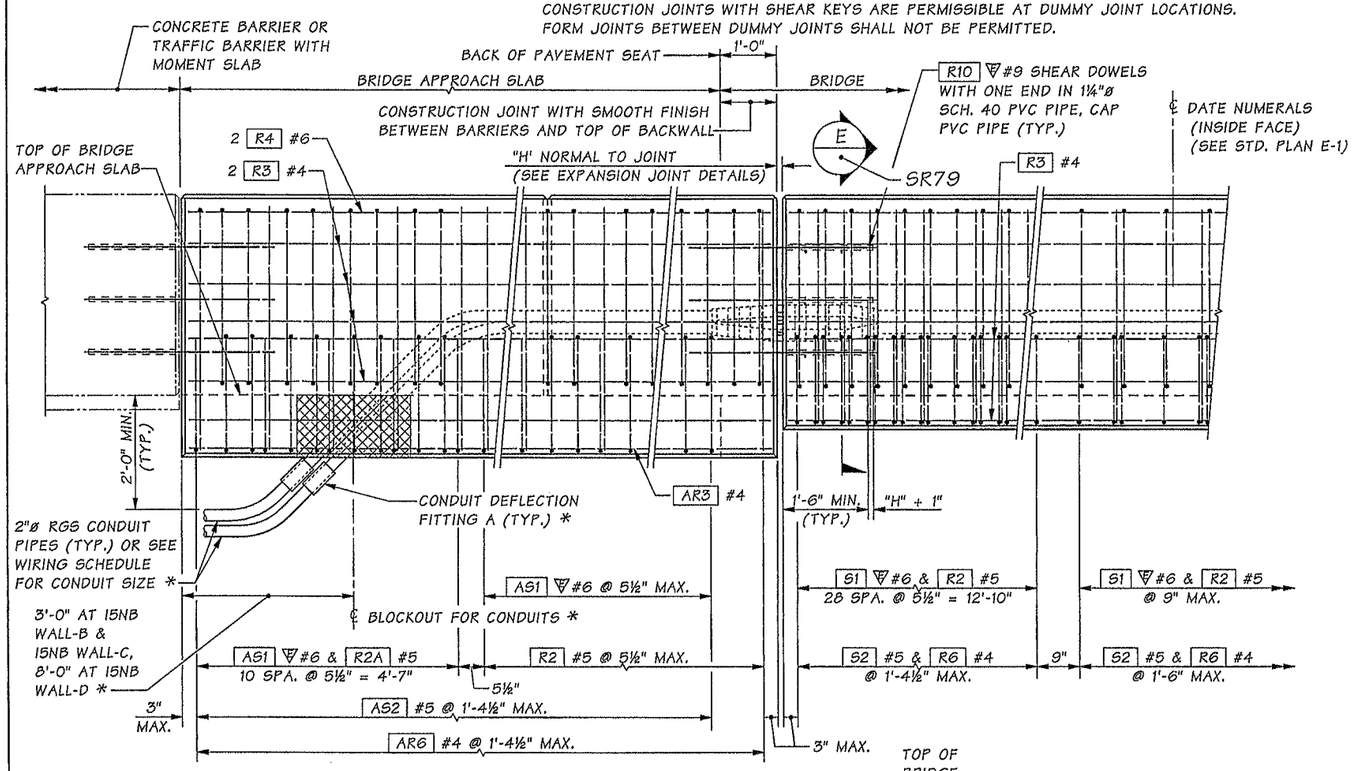

OUTSIDE ELEVATION
END OF TRAFFIC BARRIER

* CONDUITS EXITING BARRIER SHOWN NEAR 15NB WALL-B, 15NB WALL-C & 15NB WALL-D. CONTINUE CONDUIT THROUGH TRAFFIC BARRIER WITH MOMENT SLAB AT 15NB WALL-E.

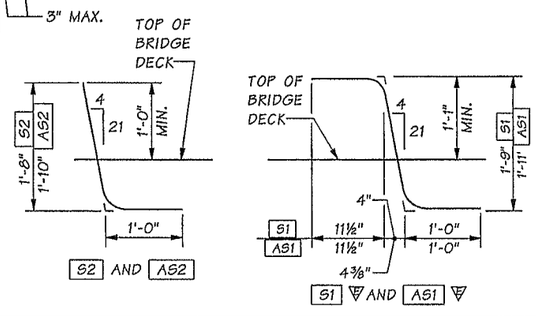

SEE BR. SHT SB27 FOR BARRIER MOUNTED SIGN POST NO. 2 DETAILS,
BR. SHT. SR83 FOR LUMINAIRE SUPPORT DETAILS AND BR. SHTS.
SR81 & SR82 FOR BRIDGE RAILING TYPE WIRE FABRIC DETAILS.

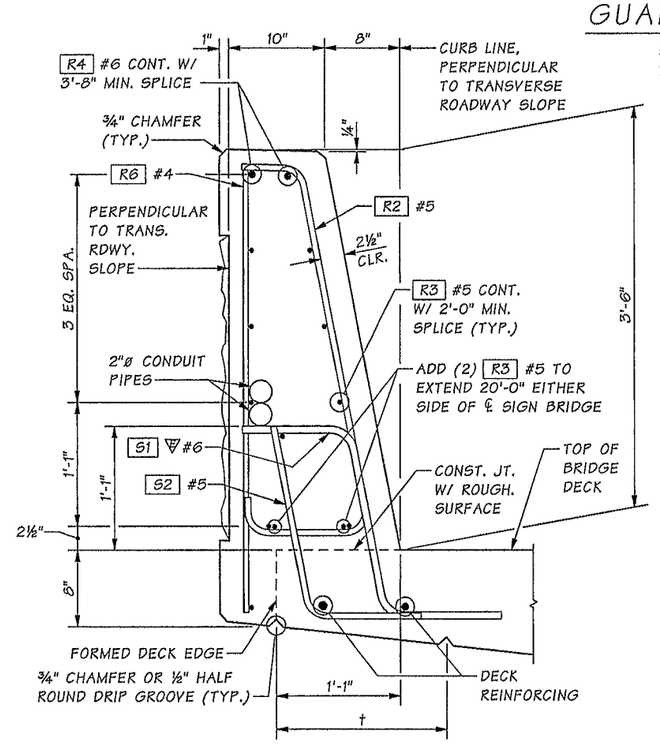

TYPICAL SECTION
TRAFFIC BARRIER

SHOWN ON BRIDGE.

† HALF THE DISTANCE BETWEEN THE EDGE OF DECK AND THE EDGE OF THE GIRDER TOP FLANGE WITH A MAXIMUM OF 1'-6".

Bridge Design Engr.	Khaleghi, B		
Supervisor	Khaleghi, B		
Designed By	Sawahata, D	01/13	
Checked By	Tran, LH	10/13	
Detailed By	Plesha, GM	01/13	
Bridge Projects Engr.			
Prelim. Plan By			
Architect/Specialist			

M:\Y-Team\M ST TO PORTLAND\CWRR OC\window files\TRAFFIC BARRIER 1.wnd

DATE	REVISION	BY	APP'D

REGION NO.	STATE	FED. AID PROJ. NO.	SHEET NO.	TOTAL SHEETS
10	WASH.			
JOB NUMBER 12C501				

TAKAO DAVID SAWAHATA, STATE OF WASHINGTON, 14805, REGISTERED PROFESSIONAL ENGINEER — 2-11-14

BRIDGE AND STRUCTURES OFFICE

BRIAN KHALEGHI, STATE OF WASHINGTON, 37656, PROFESSIONAL ENGINEER — 2/12/14

Washington State Department of Transportation

I-5
M STREET TO PORTLAND AVENUE - HOV

I-5 OVER I-705 AND TACOMA RAIL BRIDGE NO. 5/445E

TRAFFIC BARRIER DETAILS 1 OF 3

BRIDGE SHEET NO. SR78

SHEET 1182 OF 1763 SHEETS

SR 5 FILE NO. 7454 SHEET SR78

Tue Feb 11 07:17:24 2014

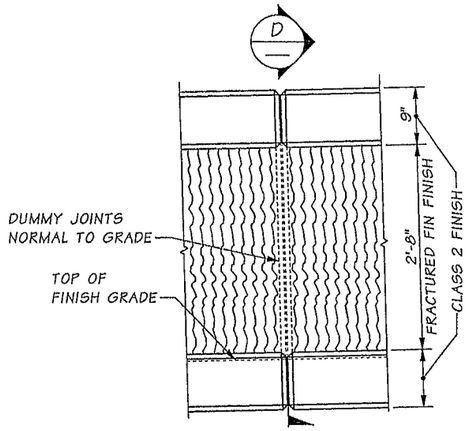

VIEW A SR78

ALL CHAMFERS ¾"

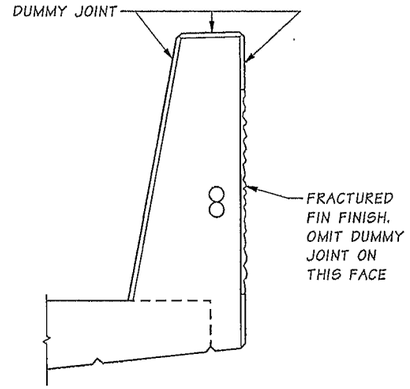

SECTION D

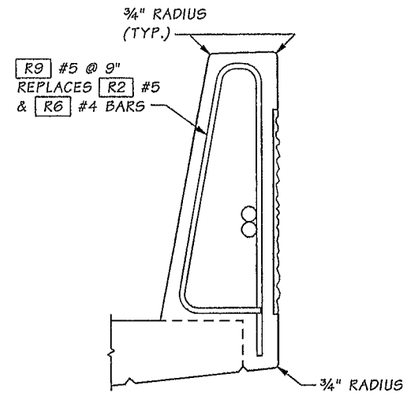

SLIPFORM ALTERNATE

FOR ADDITIONAL DETAILS SEE "TYPICAL SECTION - TRAFFIC BARRIER"

THE CONTRACTOR IS ADVISED THAT THE SLIPFORM CONSTRUCTION METHOD IS A PATENTED PROPRIETARY PROCESS FOR BARRIERS WITH A FRACTURED FIN FINISH.

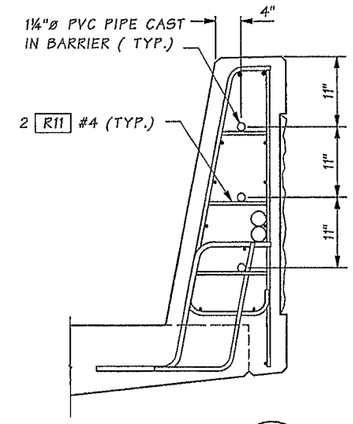

SECTION E SR78

TYPICAL AT ALL EXPANSION JOINTS INCLUDING JOINT BETWEEN TRAFFIC BARRIER OR TRAFFIC BARRIER WITH MOMENT SLAB & APPROACH SLAB BARRIER

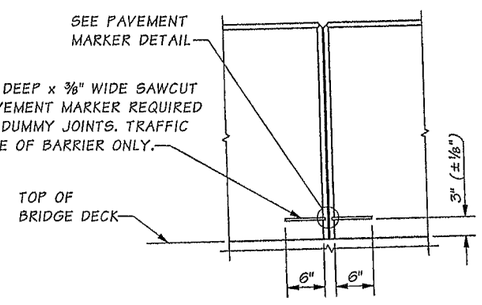

VIEW C SR78

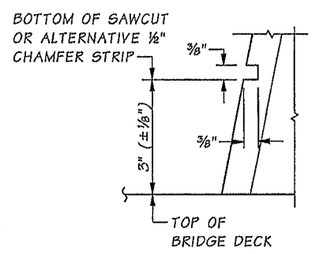

PAVEMENT MARKER DETAIL

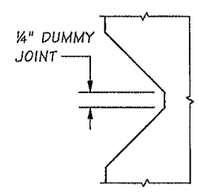

DUMMY JOINT DETAIL

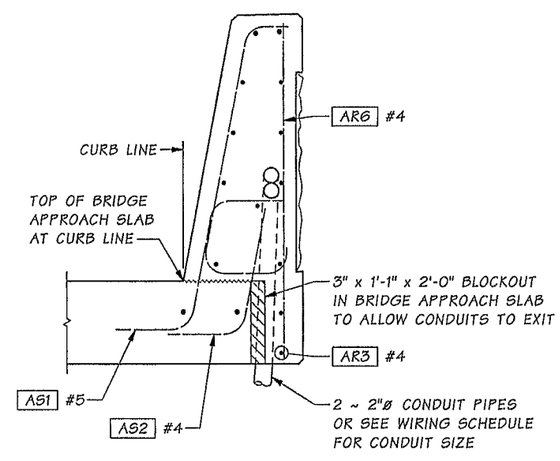

SECTION B BRIDGE APPROACH SLAB SR78

FOR DETAILS NOT SHOWN SEE "OUTSIDE ELEVATION" AND "TYPICAL SECTION - TRAFFIC BARRIER". AT 15NB WALL-E, CONTINUE CONDUIT PIPES THROUGH TRAFFIC BARRIER WITH MOMENT SLAB.

JUNCTION BOX LOCATIONS

15NB STA.	OFFSET	LABEL
147+02.1	RIGHT	TS
147+02.1	LEFT	TS
147+10.6	RIGHT	LT
147+10.1	LEFT	LT
148+47.0	RIGHT	TS
148+47.0	LEFT	TS
148+55.0	RIGHT	LT
148+55.0	LEFT	LT
149+35.0	RIGHT	LT
149+91.0	LEFT	TS
149+99.0	RIGHT	TS
149+99.0	LEFT	LT
150+07.0	RIGHT	LT
150+75.0	LEFT	LT
151+43.0	RIGHT	TS
151+43.0	LEFT	TS
151+51.0	RIGHT	LT
151+51.0	LEFT	LT
152+79.0	RIGHT	TS
152+79.0	LEFT	TS
152+87.0	RIGHT	LT
152+87.0	LEFT	LT
153+91.0	RIGHT	LT
154+51.0	RIGHT	TS
154+51.0	LEFT	TS
154+59.0	RIGHT	LT
154+59.0	LEFT	LT

JUNCTION BOX LOCATIONS ARE APPROXIMATE. CENTER JUNCTION BOX INSTALLATION BETWEEN BARRIER DUMMY JOINTS. INSTALL ALL CONDUIT RUNS TO DRAIN TO A BRIDGE END OR PROVIDE DRAIN AT ALL LOW POINTS IN CONDUIT RUN ON BRIDGE.
TS = TRAFFIC SYSTEM
LT = LIGHTING SYSTEM

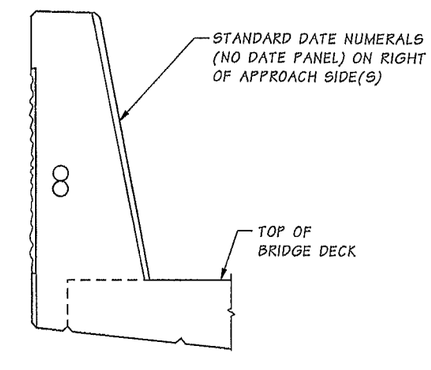

END VIEW

TRAFFIC BARRIER BENDING DIAGRAM

MARK	SIZE	LENGTH	
R2	5	5'-1"	
R2A	5	(A)	
R3	4	(A)	STR.
R4	6	(A)	STR.
R6	4	3'-10"	STR.
R9	5	8'-11"	
R10	9	(A)	STR.
R11	4	(A)	STR.
AR3	4	(A)	STR.
AR6	4	4'-3"	STR.

BENDING DIAGRAM (ALL DIMENSIONS ARE OUT TO OUT) ▽ DENOTES EPOXY COATED

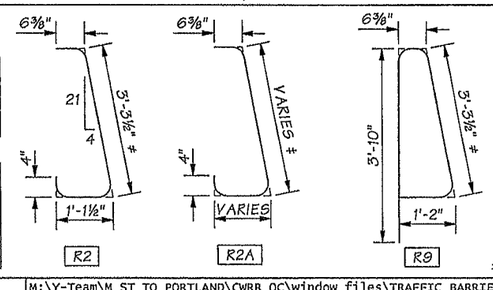

(A) DETERMINE FROM PLANS
‡ DIMENSIONS TO POINTS OF INTERSECTION.

Bridge Design Engr.	Khaleghi, B		
Supervisor	Khaleghi, B		
Designed By	Sawahata, D	01/13	
Checked By	Tran, LH	10/13	
Detailed By	Plesha, GM	01/13	
Bridge Projects Engr.			
Prelim. Plan By			
Architect/Specialist			

M:\Y-Team\M ST TO PORTLAND\CWRR OC\window files\TRAFFIC BARRIER 2.wnd

DATE	REVISION	BY	APP'D

REGION NO.	STATE	FED. AID PROJ. NO.	SHEET NO.	TOTAL SHEETS
10	WASH.			
JOB NUMBER 12C501				

TAKAO DAVID SAWAHATA STATE OF WASHINGTON 15052 REGISTERED PROFESSIONAL ENGINEER 2.11.14

BRIDGE AND STRUCTURES OFFICE

SILIAN KHALEGHI STATE OF WASHINGTON 27095 PROFESSIONAL ENGINEER 2/12/14

Washington State Department of Transportation

I-5
M STREET TO PORTLAND AVENUE - HOV
I-5 OVER I-705 AND TACOMA RAIL BRIDGE NO. 5/445E
TRAFFIC BARRIER DETAILS 2 OF 3

BRIDGE SHEET NO. SR79
SHEET 1183 OF 1763 SHEETS

SR 5 FILE NO. 7454 SHEET SR79

Tue Feb 11 07:17:26 2014

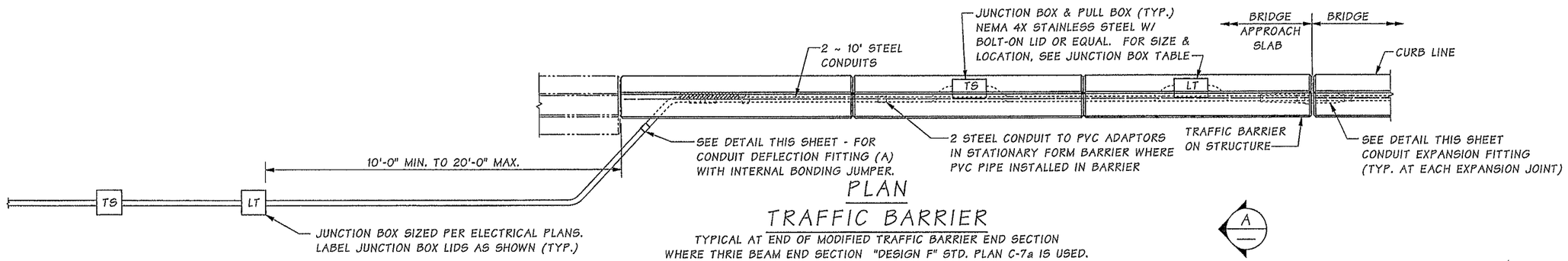

PLAN
TRAFFIC BARRIER

TYPICAL AT END OF MODIFIED TRAFFIC BARRIER END SECTION WHERE THRIE BEAM END SECTION "DESIGN F" STD. PLAN C-7a IS USED.

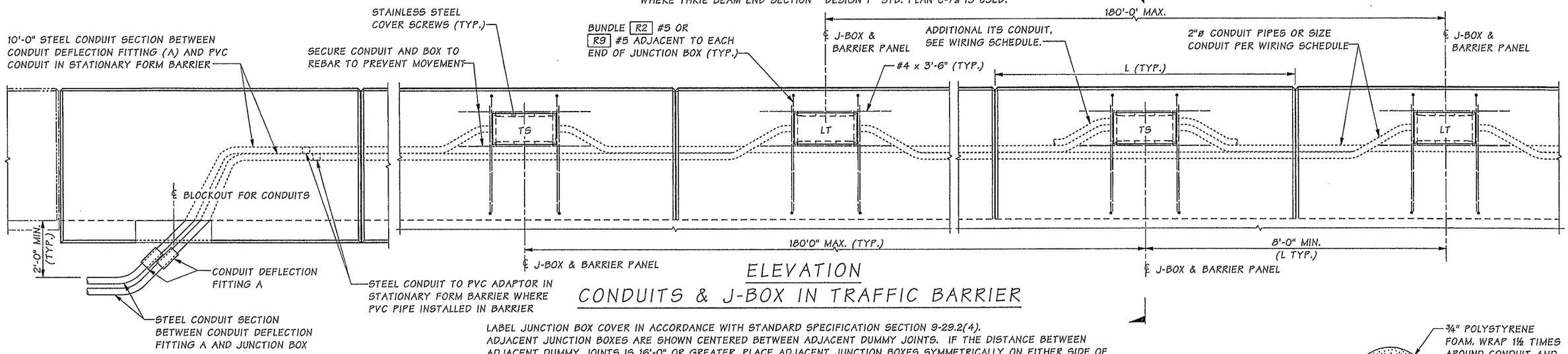

ELEVATION
CONDUITS & J-BOX IN TRAFFIC BARRIER

LABEL JUNCTION BOX COVER IN ACCORDANCE WITH STANDARD SPECIFICATION SECTION 9-29.2(4). ADJACENT JUNCTION BOXES ARE SHOWN CENTERED BETWEEN ADJACENT DUMMY JOINTS. IF THE DISTANCE BETWEEN ADJACENT DUMMY JOINTS IS 16'-0" OR GREATER, PLACE ADJACENT JUNCTION BOXES SYMMETRICALLY ON EITHER SIDE OF THE CENTER OF ONE DUMMY PANEL WHILE MAINTAINING 8'-0" MINIMUM BETWEEN CENTER LINES OF THE JUNCTION BOXES. PROVIDE MIN. 1'-6" BETWEEN ℄ J-BOX AND ℄ FENCE POSTS.

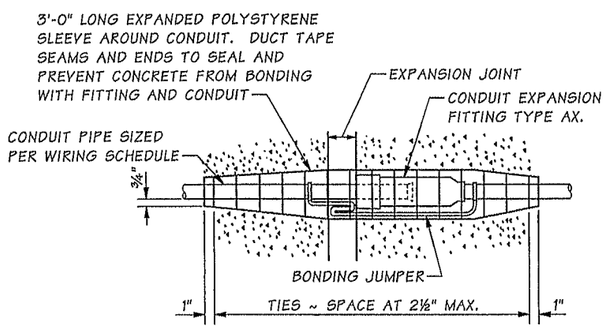

CONDUIT EXPANSION FITTING

SEE TABLE FOR MOVEMENT RANGES.

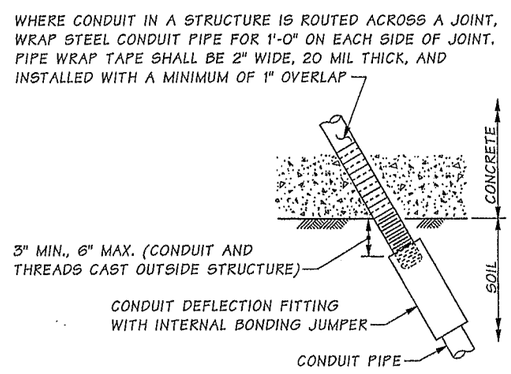

CONDUIT DEFLECTION FITTING A

CONDUIT FITTING - TYPE DX FOR DEFLECTION OF 30° AND ¾" MOVEMENT. PLACE AT CONDUIT PIPE EXIT FROM STRUCTURE AND SHALL BE IN NEUTRAL STATE AFTER INSTALLATION.

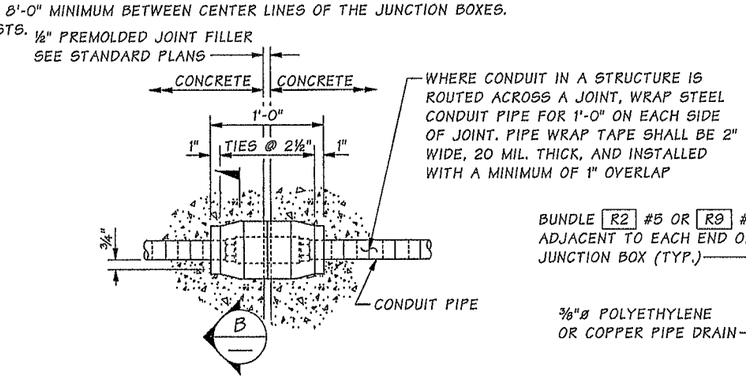

CONDUIT DEFLECTION FITTING B

CONDUIT FITTING - TYPE DX FOR DEFLECTION OF 30° AND ¾" MOVEMENT. CONDUIT PIPES PLACED THROUGH TRAFFIC BARRIER WITH MOMENT SLAB SHALL BE FITTED WITH DEFLECTION FITTINGS AT A MAXIMUM SPACING OF 120'. THE DEFLECTION FITTINGS SHALL BE PLACED AT THE TRAFFIC BARRIER OPEN JOINT THAT COINCIDES WITH THE RETAINING WALL STEM EXPANSION JOINT NEAREST TO THE TRANSVERSE CONSTRUCTION JOINT IN THE WALL FOOTING.

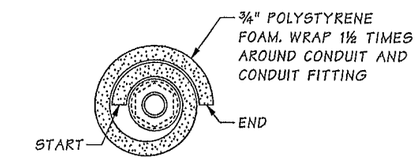

SECTION B

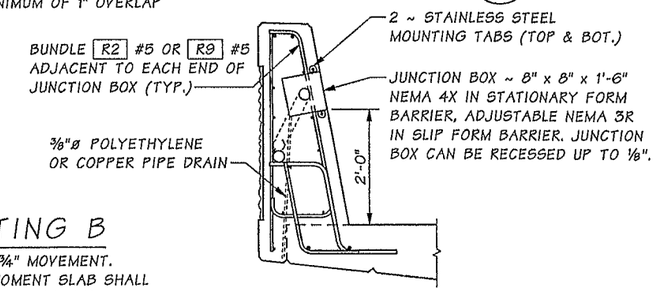

SECTION A

Bridge Design Engr.	Khaleghi, B	M:\Y-Team\M ST TO PORTLAND\CWRR OC\window files\TRAFFIC BARRIER 3.wnd								
Supervisor	Khaleghi, B									
Designed By	Sawahata, D	01/13								
Checked By	Tran, LH	10/13								
Detailed By	Plesha, GM	01/13								
Bridge Projects Engr.										
Prelim. Plan By										
Architect/Specialist		DATE	REVISION	BY	APP'D					

REGION NO.	STATE	FED. AID PROJ. NO.	SHEET NO.	TOTAL SHEETS
10	WASH.			
JOB NUMBER 12C501				

TAKAO DAVID SAWAHATA, STATE OF WASHINGTON, 45032, REGISTERED PROFESSIONAL ENGINEER — 2-11-14

BRIDGE AND STRUCTURES OFFICE

LUAN KHALEGHI, STATE OF WASHINGTON, 27695, PROFESSIONAL ENGINEER — 2/12/14

Washington State Department of Transportation

I-5
M STREET TO PORTLAND AVENUE - HOV

I-5 OVER I-705 AND TACOMA RAIL BRIDGE NO. 5/445E

TRAFFIC BARRIER DETAILS 3 OF 3

BRIDGE SHEET NO. SR80

SHEET 1184 OF 1763 SHEETS

SR 5 FILE NO. 7454 SHEET SR80

Tue Feb 11 07:17:29 2014

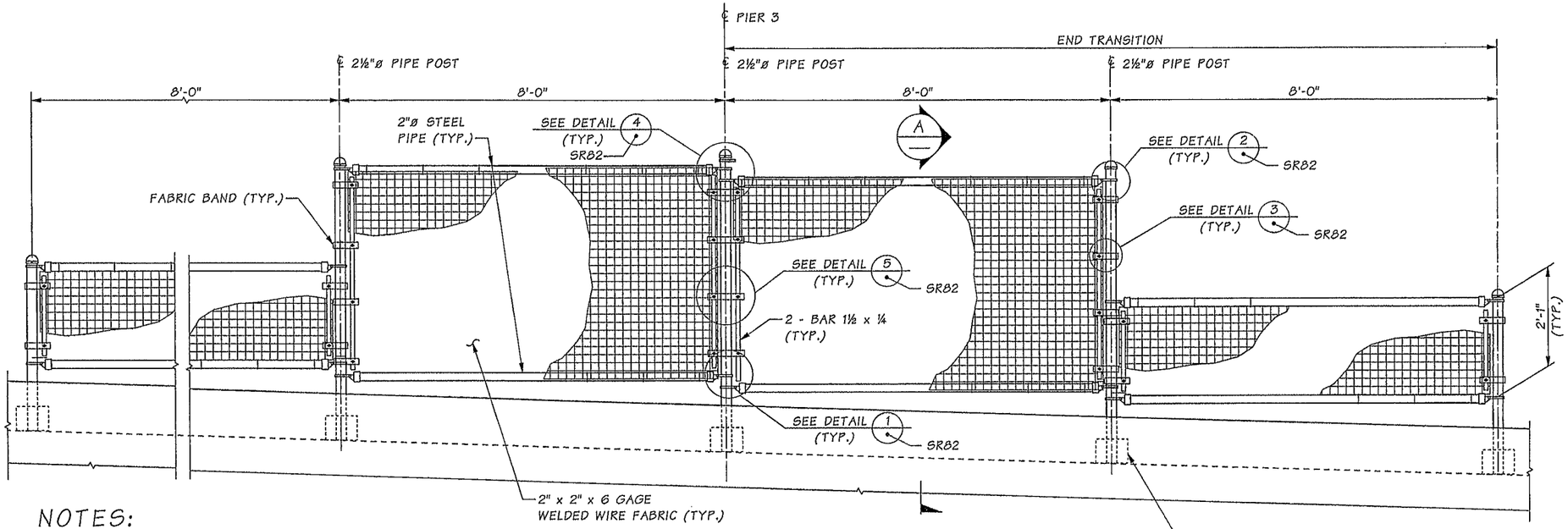

15NB LINE BRIDGE ELEVATION

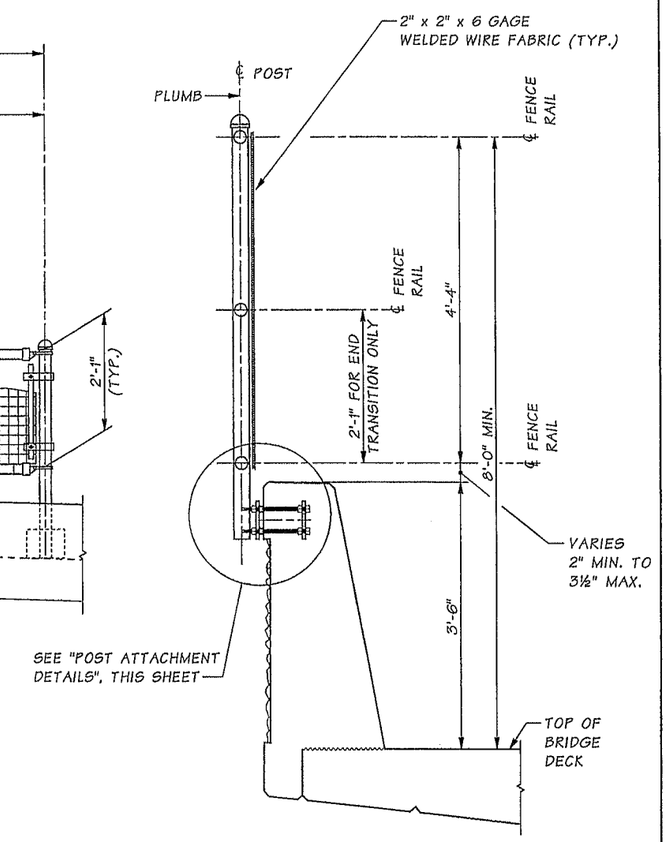

SECTION A

NOTES:

ALL ELEMENTS OF BRIDGE RAILING SHALL BE HOT DIPPED GALVANIZED AFTER FABRICATION. ALL ELEMENTS SHALL BE PAINTED IN ACCORDANCE WITH STD. SPEC. SECTION 6-07.3(11) WITH A FINISH COAT COLOR OF FEDERAL STANDARD 595 - #20045.

STEEL PIPES FOR POSTS AND LONGITUDINAL MEMBERS SHALL CONFORM TO ASTM A53 GRADE B GALV. .

ALL HARDWARE SHALL CONFORM TO ASTM A 36 GALV. IN ACCORDANCE WITH AASHTO M 111 & M 232 UNLESS NOTED OTHERWISE.

FABRIC TIES SHALL BE INSTALLED TO ALL FRAMES IN ACCORDANCE WITH GOOD TRADE PRACTICES AT 14" CENTERS MAXIMUM SPACING.

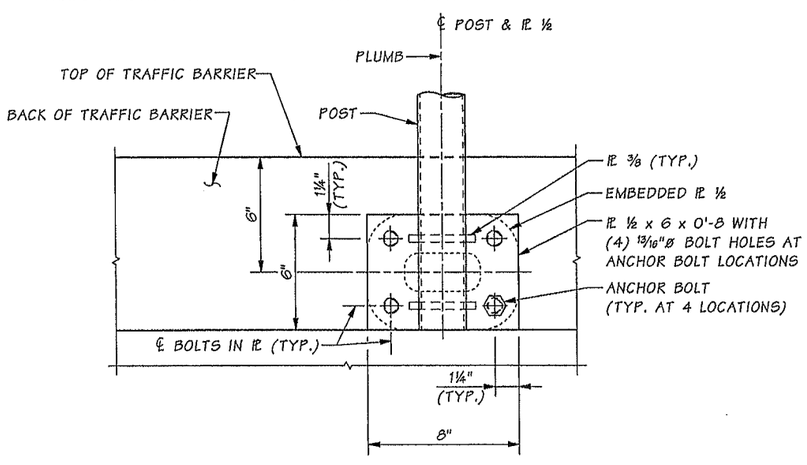

ELEVATION

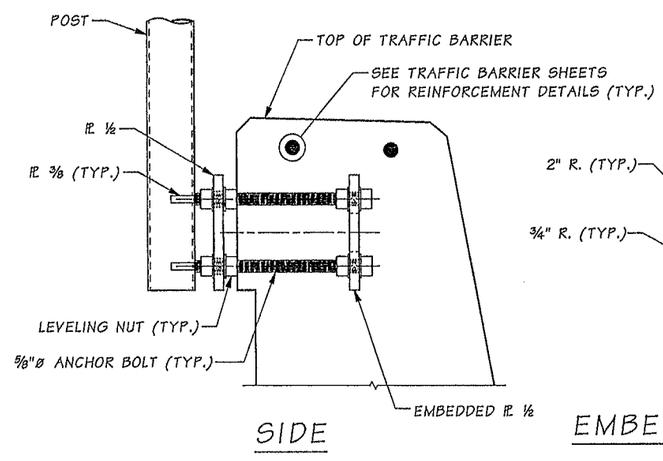

SIDE

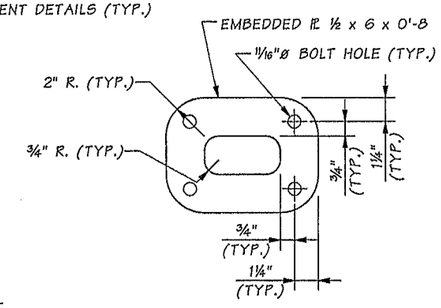

EMBEDDED PLATE DETAILS

NEED NOT BE GALVANIZED

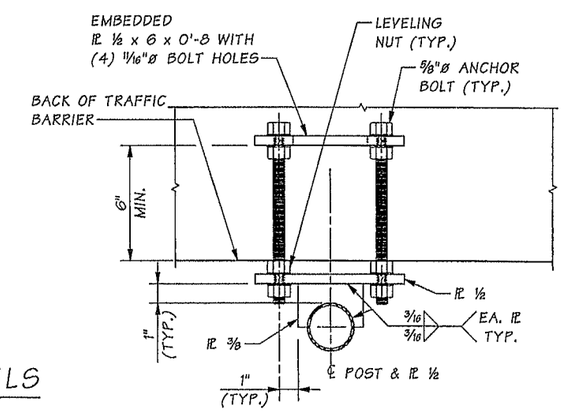

PLAN

POST ATTACHMENT DETAILS

Bridge Design Engr.	Khaleghi, B		M:\Y-Team\M ST TO PORTLAND\CWRR OC\window files\FENCE 1.wnd			REGION NO.	STATE	FED. AID PROJ. NO.	SHEET NO.	TOTAL SHEETS
Supervisor	Khaleghi, B					10	WASH.			
Designed By	Sawahata, D	03/13								
Checked By	Tran, LH	10/13				JOB NUMBER 12C501				
Detailed By	Plesha, GM	03/13								
Bridge Projects Engr.										
Prelim. Plan By										
Architect/Specialist			DATE	REVISION	BY	APP'D				

Tue Feb 11 07:17:30 2014

BRIDGE AND STRUCTURES OFFICE

Washington State Department of Transportation

I-5
M STREET TO PORTLAND AVENUE - HOV

I-5 OVER I-705 AND TACOMA RAIL BRIDGE NO. 5/445E

BRIDGE RAILING TYPE WIRE FABRIC DETAILS 1 OF 2

BRIDGE SHEET NO. SR81

SHEET 1185 OF 1763 SHEETS

SR 5 FILE NO. 7454 SHEET SR81

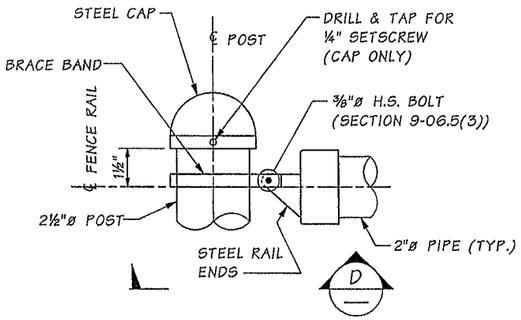

DETAIL 2 — SR81

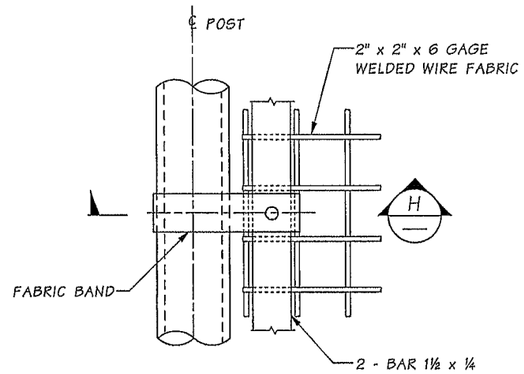

DETAIL 3 — SR81
SINGLE CONNECTION BAND

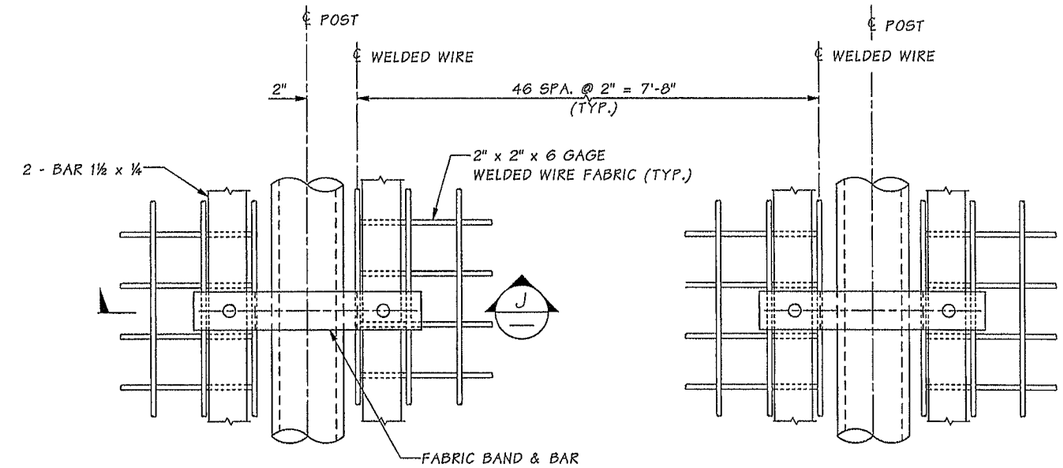

DETAIL 5 — SR81
DOUBLE CONNECTION BAND

FABRIC BAND DETAILS

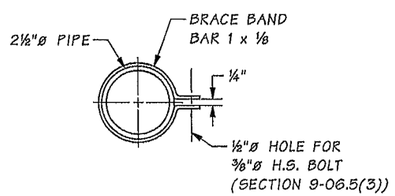

SECTION D

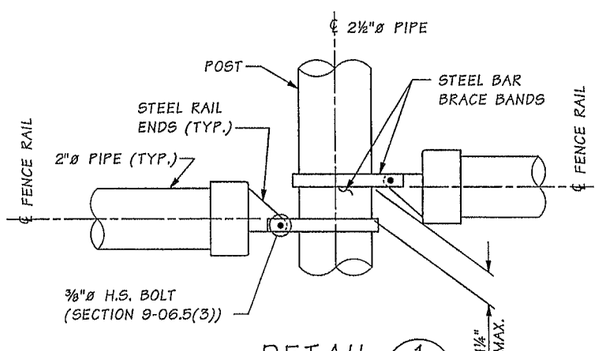

DETAIL 1 — SR81

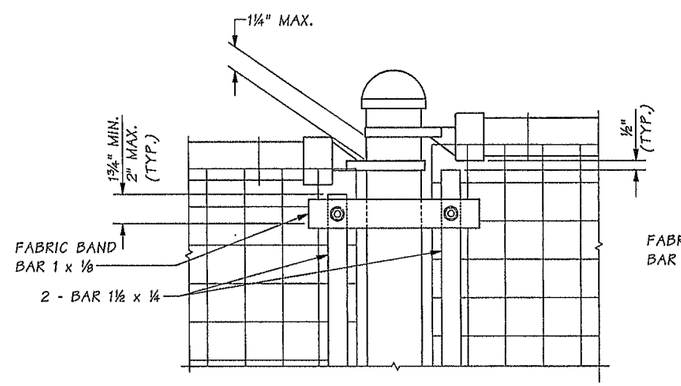

DETAIL 4 — SR81

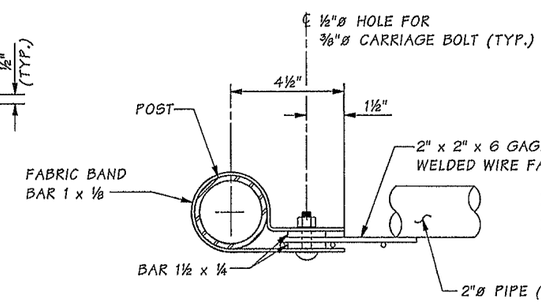

SECTION H

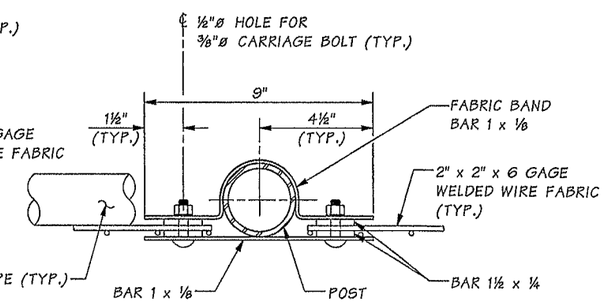

SECTION J

Bridge Design Engr.	Khaleghi, B		M:\Y-Team\M ST TO PORTLAND\CWRR OC\window files\FENCE 2.wnd			REGION NO.	STATE	FED. AID PROJ. NO.	SHEET NO.	TOTAL SHEETS
Supervisor	Khaleghi, B					10	WASH.			
Designed By	Sawahata, D	03/13				JOB NUMBER 12C501				
Checked By	Tran, LH	10/13								
Detailed By	Plesha, GM	03/13								
Bridge Projects Engr.										
Prelim. Plan By										
Architect/Specialist			DATE	REVISION	BY	APP'D				

Tue Feb 11 07:17:32 2014

BRIDGE AND STRUCTURES OFFICE

Washington State Department of Transportation

I-5
M STREET TO PORTLAND AVENUE - HOV

I-5 OVER I-705 AND TACOMA RAIL BRIDGE NO. 5/445E

BRIDGE RAILING TYPE WIRE FABRIC DETAILS 2 OF 2

BRIDGE SHEET NO. SR82

SHEET 1186 OF 1763 SHEETS

SR 5 FILE NO. 7454 SHEET SR82

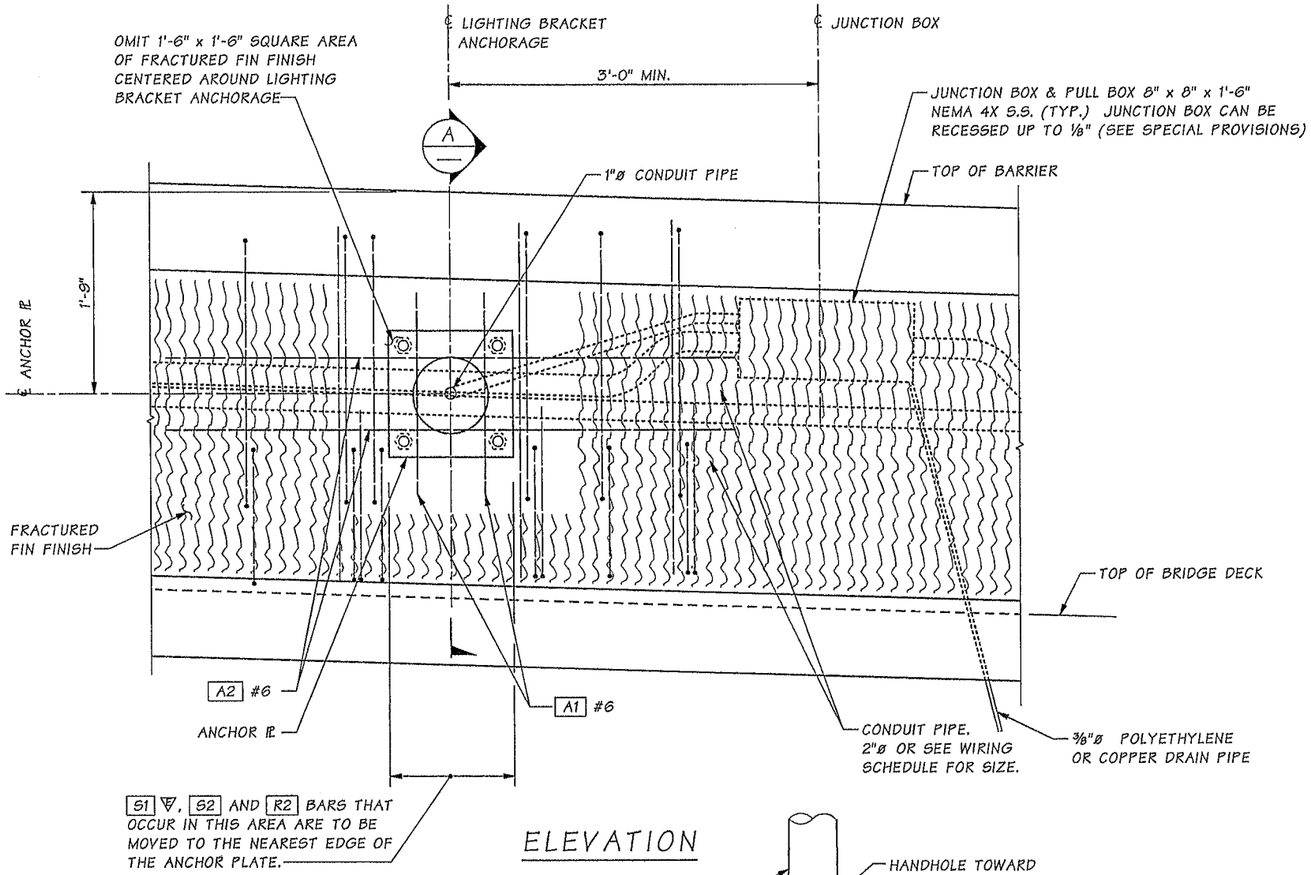

ELEVATION

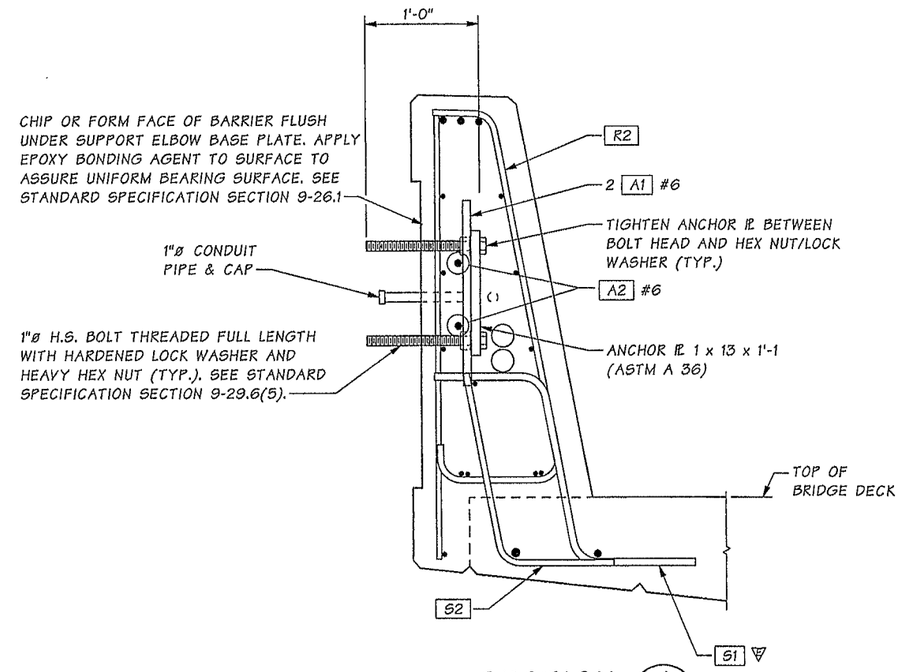

SECTION A

SEE TRAFFIC BARRIER SHEETS FOR INFORMATION NOT SHOWN.

NOTE:
INSTALL ALL CONDUIT RUNS TO DRAIN TO A BRIDGE END OR PROVIDE DRAIN AT ALL LOW POINTS WITHIN CONDUIT RUN. SEE "TRAFFIC BARRIER SHEETS" FOR BARRIER DIMENSIONS.

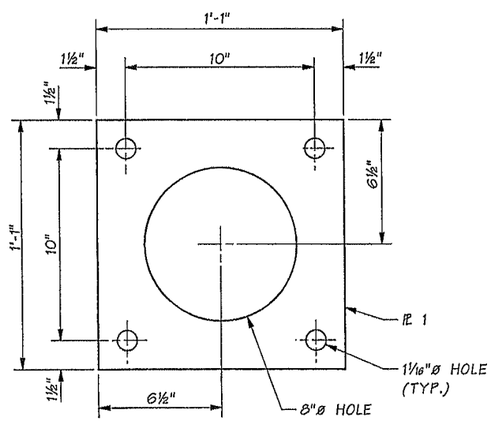

ANCHOR PLATE

GALVANIZE IN ACCORDANCE WITH AASHTO M 111

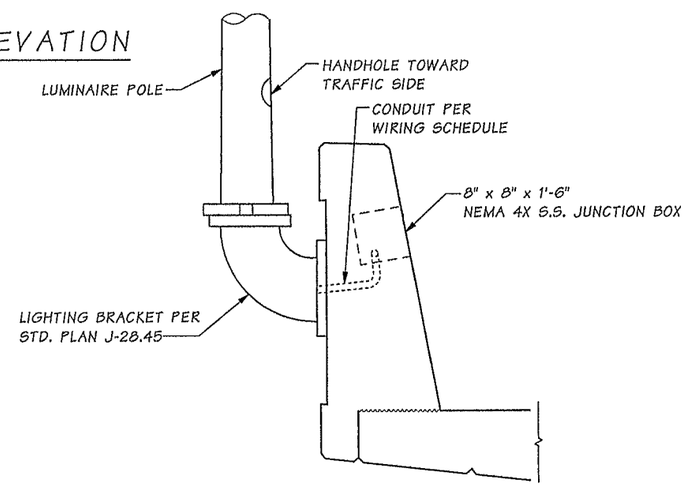

ELEVATION PROFILE
LUMINAIRE SUPPORT

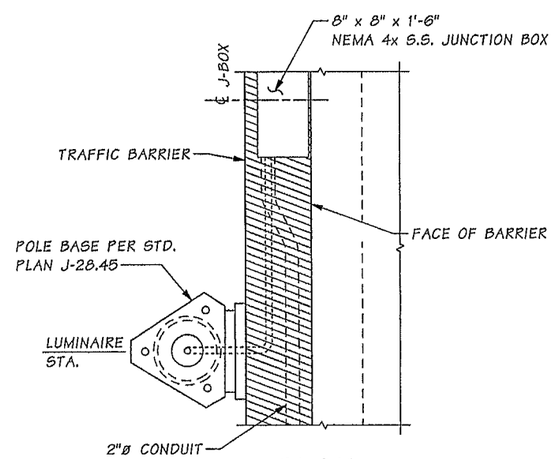

PLAN

LUMINAIRE POLE LOCATIONS	
15NB STA.	OFFSET
150+04.0	RIGHT
153+94.0	RIGHT

ANCHORAGE BARLIST

MARK #	SIZE	LENGTH	BEND TYPE
A1	6	1'-9"	STRAIGHT
A2	6	5'-0"	STRAIGHT

Bridge Design Engr.	Khaleghi, B	M:\Y-Team\M ST TO PORTLAND\CWRR OC\window files\LUMINAIRE SUPPORT.wnd									
Supervisor	Khaleghi, B										
Designed By	Sawahata, D	02/13									
Checked By	Tran, LH	10/13									
Detailed By	Plesha, GM	01/13									
Bridge Projects Engr.											
Prelim. Plan By											
Architect/Specialist		DATE	REVISION	BY	APP'D						

REGION NO.	STATE	FED. AID PROJ. NO.	SHEET NO.	TOTAL SHEETS
10	WASH.			
JOB NUMBER 12C501				

Tue Feb 11 07:17:34 2014

TAKAO DAVID SAWAHATA, STATE OF WASHINGTON, 12002, REGISTERED PROFESSIONAL ENGINEER — 2-11-14

BRIDGE AND STRUCTURES OFFICE

BIJAN KHALEGHI, STATE OF WASHINGTON, 27893, PROFESSIONAL ENGINEER — 2/12/14

Washington State Department of Transportation

I-5
M STREET TO PORTLAND AVENUE - HOV

I-5 OVER I-705 AND TACOMA RAIL BRIDGE NO. 5/445E

LUMINAIRE SUPPORT DETAILS

BRIDGE SHEET NO. SR83

SHEET 1187 OF 1763 SHEETS

SR 5 FILE NO. 7454 SHEET SR83

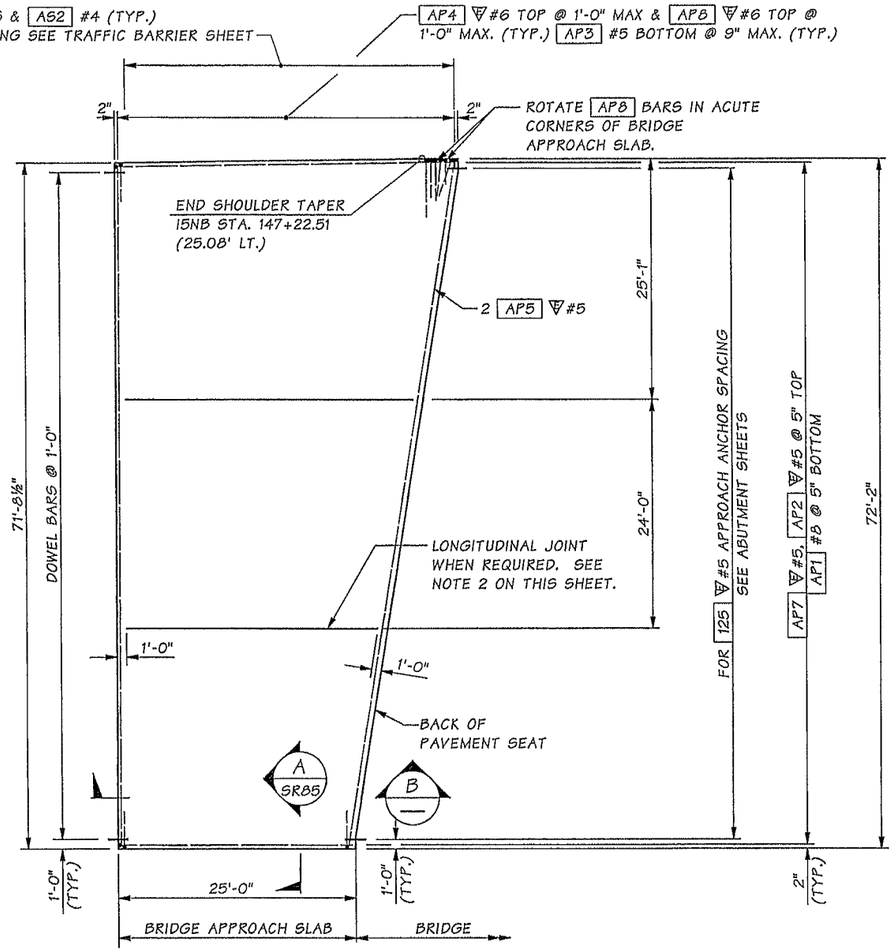

PIER 1

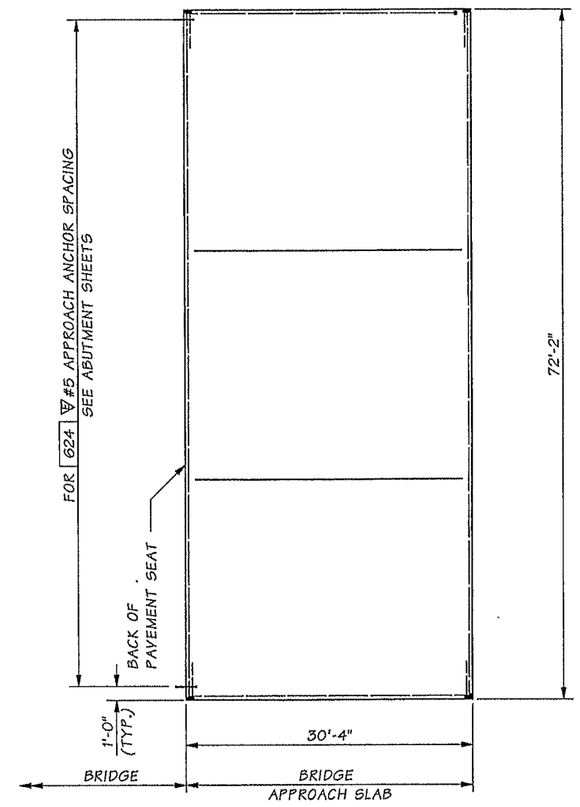

PIER 6

SEE PIER 1 FOR REINFORCEMENT DETAILS

PLAN

NOTES:

1. ALL EDGES OF BRIDGE APPROACH SLAB SHALL HAVE ½" RADIUS EXCEPT AT LONGITUDINAL JOINTS AND ADJACENT TO L-TYPE ABUTMENTS.
2. LONGITUDINAL JOINTS SHALL BE PLACED ON LANE LINES AND SHALL BE CONSTRUCTED AND SEALED IN ACCORDANCE WITH STD. SPEC. SECTION 5-05.3(8). JOINTS MAY BE EITHER A SAWCUT CRACK CONTROL JOINT OR A CONSTRUCTION JOINT. SAWCUT JOINTS SHALL TERMINATE 1'-0" BEFORE REACHING EDGE OF SLAB AND MUST BE SAW CUT AS SOON AS POSSIBLE AFTER PLACEMENT OF CONCRETE. SEE "LONGITUDINAL JOINT DETAIL" ON BRIDGE APPROACH SLAB DETAILS 2 OF 2.
3. THE MINIMUM LAP SPLICE OF #5 IS 2'-0", #5 IS 2'-6", #6 IS 3'-0", AND #8 IS 3'-3". ALL LAP SPLICES SHALL BE STAGGERED SO THAT NO MORE THAN 50% OF REBAR IS SPLICED AT THE SAME LOCATION. LAP SPLICES SHALL BE LOCATED WITHIN THE MIDDLE HALF OF THE BRIDGE APPROACH SLAB. OPTIONAL SPLICES ARE ALLOWED FOR AP4 #6.
4. FOR TRAFFIC BARRIER DETAILS, INCLUDING ANY BRIDGE APPROACH SLAB BLOCKOUT INFORMATION, SEE TRAFFIC BARRIER SHEETS.

BENDING DIAGRAM

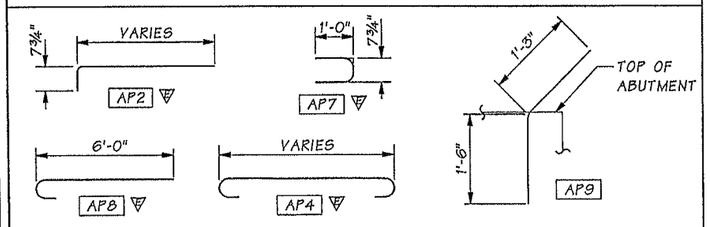

= EPOXY COATED REINFORCING STEEL

NOTE: ALL DIMENSIONS ARE OUT TO OUT

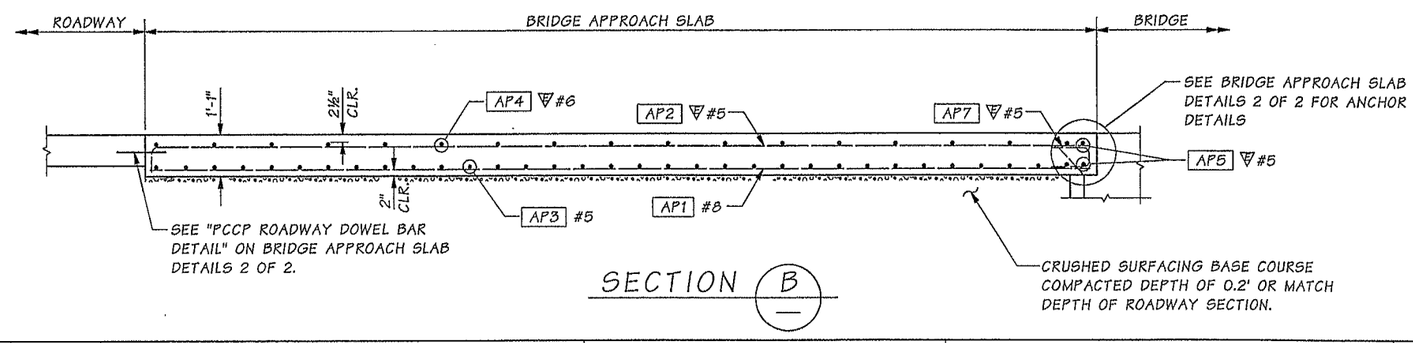

SECTION B

Bridge Design Engr.	Khaleghi, B	M:\Y-Team\M ST TO PORTLAND\CWRR OC\window files\APPROACH SLAB 1.wnd								
Supervisor	Khaleghi, B									
Designed By	Tran, LH	01/13								
Checked By	Sawahata, D	10/13								
Detailed By	Plesha, GM	01/13								
Bridge Projects Engr.										
Prelim. Plan By										
Architect/Specialist		DATE	REVISION	BY	APP'D					

REGION NO.	STATE	FED. AID PROJ. NO.	SHEET NO.	TOTAL SHEETS
10	WASH.			
JOB NUMBER 12C501				

Tue Feb 11 07:17:35 2014

BRIDGE AND STRUCTURES OFFICE

Washington State Department of Transportation

I-5
M STREET TO PORTLAND AVENUE - HOV
I-5 OVER I-705 AND TACOMA RAIL BRIDGE NO. 5/445E

BRIDGE APPROACH SLAB DETAILS 1 OF 2

BRIDGE SHEET NO. SR84

SHEET 1188 OF 1763 SHEETS

SR 5 FILE NO. 7454 SHEET SR84

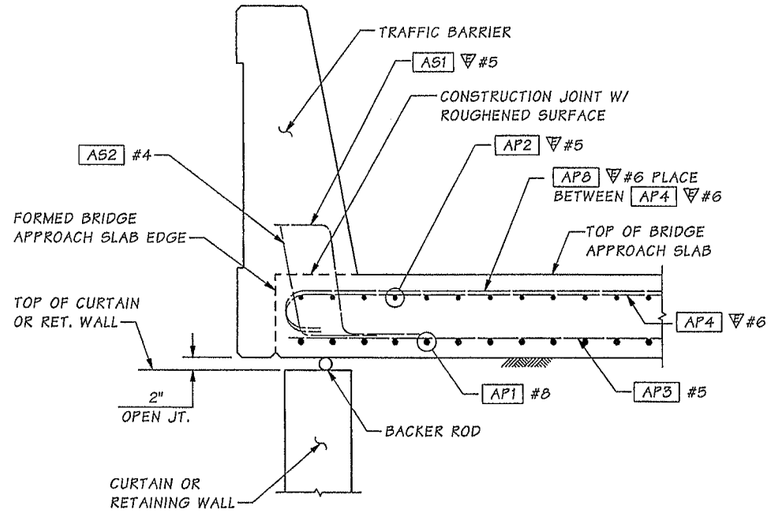

SECTION A
SR84

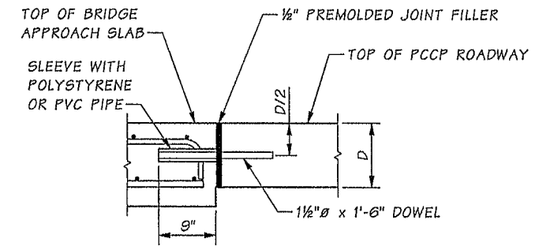

PCCP ROADWAY DOWEL BAR DETAIL

INSERT DOWELS PARALLEL TO CENTER LINE ALONG TRANSVERSE CONSTRUCTION JOINT.

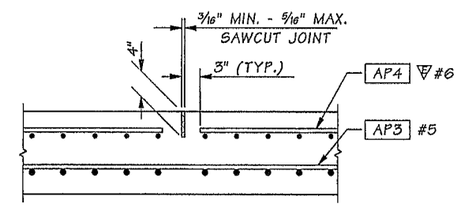

LONGITUDINAL JOINT DETAIL

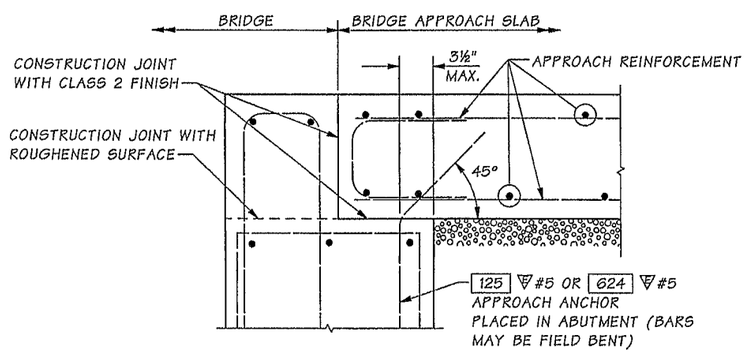

ANCHOR DETAIL

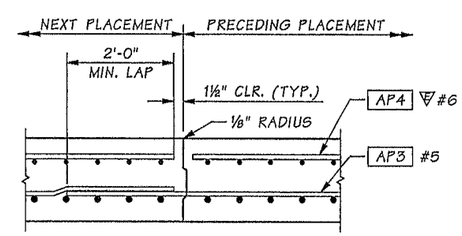

ALTERNATE LONGITUDINAL JOINT DETAIL

EDGE PRECEDING PLACEMENT ONLY WITH ⅛" RADIUS.

SR 5 FILE NO. 7454 SHEET SR85

Bridge Design Engr.	Khaleghi, B	
Supervisor	Khaleghi, B	
Designed By	Tran, LH	01/13
Checked By	Sawahata, D	10/13
Detailed By	Plesha, GM	01/13
Bridge Projects Engr.		
Prelim. Plan By		
Architect/Specialist		

M:\Y-Team\M ST TO PORTLAND\CWRR OC\window files\APPROACH SLAB 2.wnd

DATE	REVISION	BY	APP'D

REGION NO.	STATE	FED. AID PROJ. NO.	SHEET NO.	TOTAL SHEETS
10	WASH.			

JOB NUMBER 12C501

BRIDGE AND STRUCTURES OFFICE

2/12/14 2/12/14

Washington State Department of Transportation

I-5
M STREET TO PORTLAND AVENUE - HOV

I-5 OVER I-705 AND TACOMA RAIL BRIDGE NO. 5/445E

BRIDGE APPROACH SLAB DETAILS 2 OF 2

BRIDGE SHEET NO. SR85

SHEET 1189 OF 1763 SHEETS

Tue Feb 11 07:17:37 2014

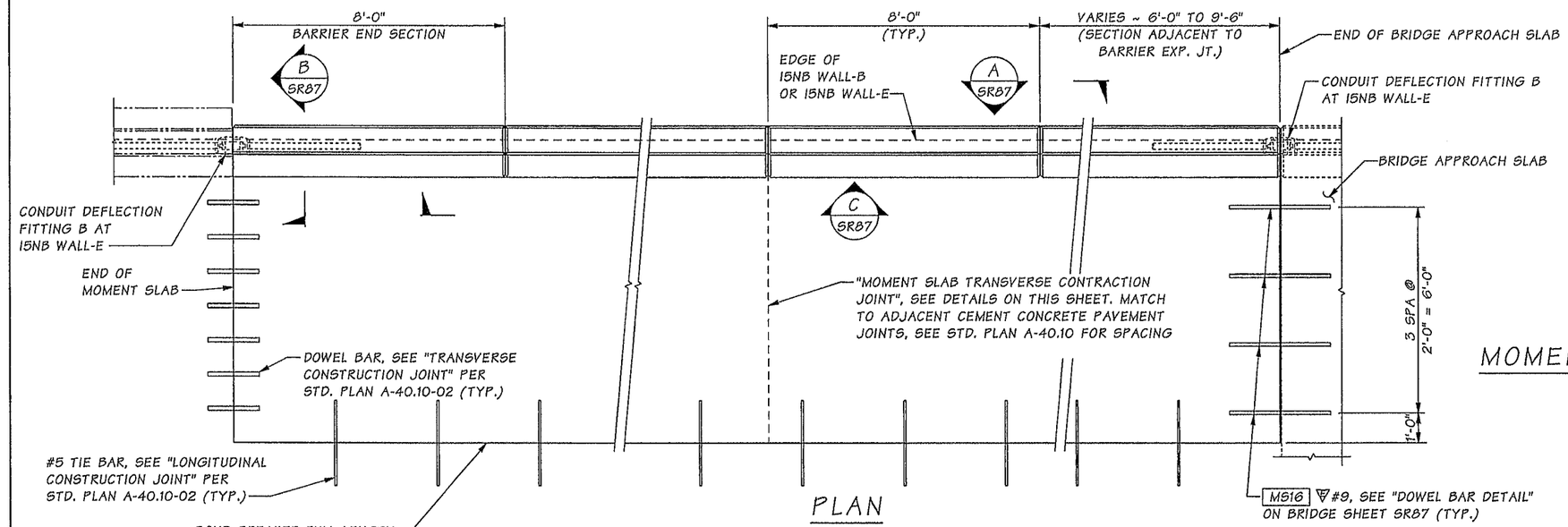

PLAN
TRAFFIC BARRIER WITH MOMENT SLAB

CONSTRUCTION JOINTS WITH SHEAR KEYS ARE PERMISSIBLE AT DUMMY JOINT LOCATIONS.
FORM JOINTS BETWEEN DUMMY JOINTS SHALL NOT BE PERMITTED.

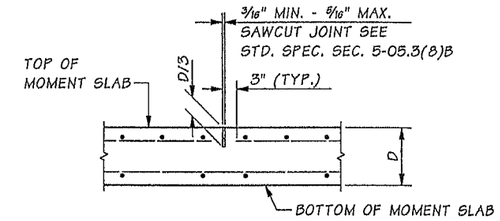

MOMENT SLAB TRANSVERSE CONTRACTION JOINT DETAIL

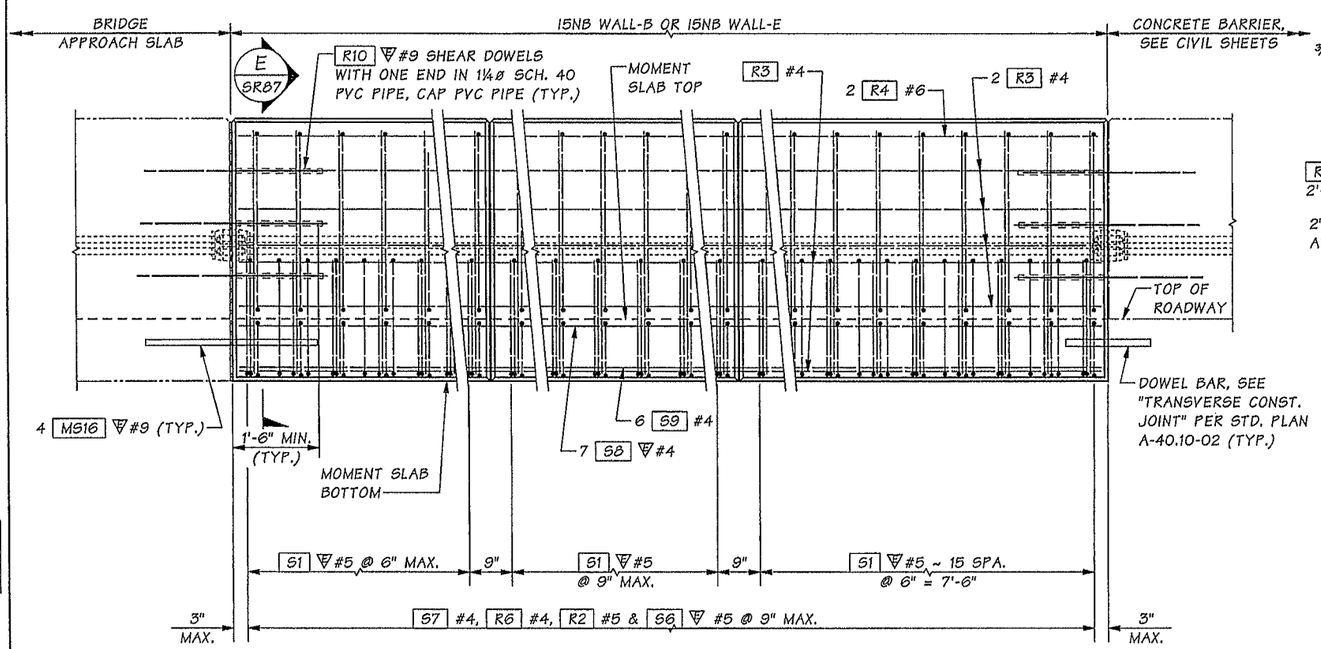

OUTSIDE ELEVATION
TRAFFIC BARRIER WITH MOMENT SLAB

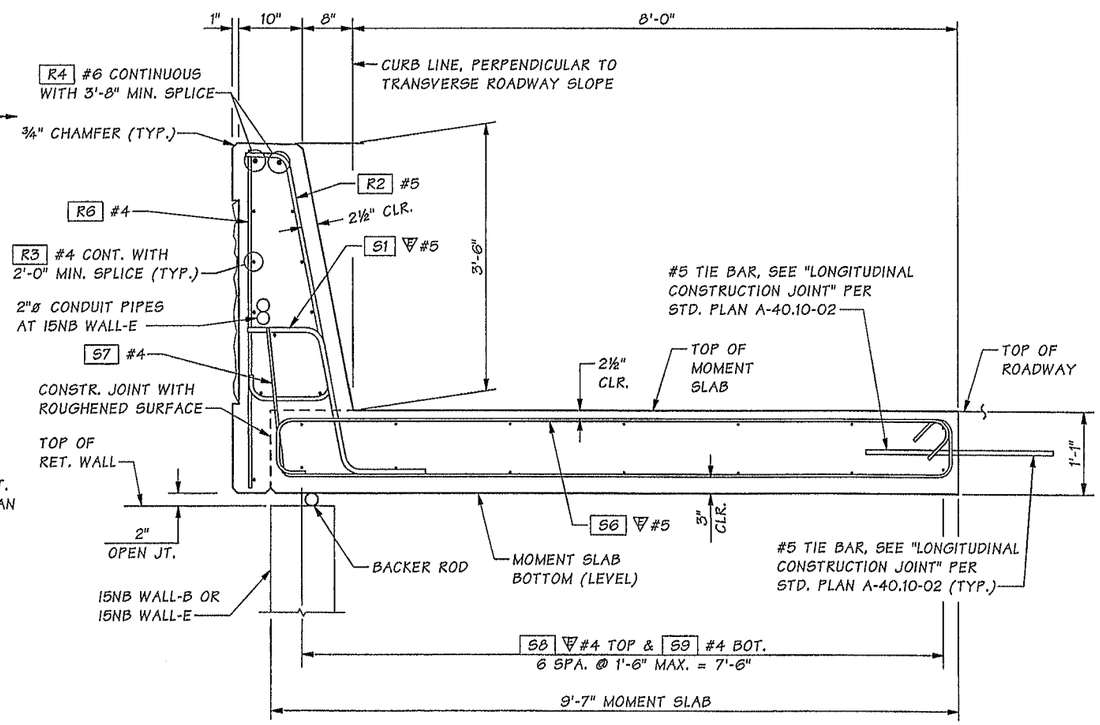

TYPICAL SECTION
TRAFFIC BARRIER WITH MOMENT SLAB

Bridge Design Engr.	Khaleghi, B		M:\Y-Team\M ST TO PORTLAND\CWRR OC\window files\MOMENT SLAB 1.WND			REGION NO.	STATE	FED. AID PROJ. NO.	SHEET NO.	TOTAL SHEETS
Supervisor	Khaleghi, B					10	WASH.			
Designed By	Sawahata, D	05/13				JOB NUMBER 12C501				
Checked By	Tran, LH	10/13								
Detailed By	Sawahata, D	05/13								
Bridge Projects Engr.										
Prelim. Plan By										
Architect/Specialist			DATE	REVISION	BY	APP'D				

Tue Feb 11 11:59:54 2014

YAKAO DAVID SAWAHATA, STATE OF WASHINGTON, 35622, REGISTERED PROFESSIONAL ENGINEER — 2.11.14

BRIDGE AND STRUCTURES OFFICE

BIJAN KHALEGHI, STATE OF WASHINGTON, 27695, PROFESSIONAL ENGINEER — 2/12/14

Washington State Department of Transportation

I-5
M STREET TO PORTLAND AVENUE - HOV

I-5 OVER I-705 AND TACOMA RAIL BRIDGE NO. 5/445E

TRAFFIC BARRIER WITH MOMENT SLAB
DETAILS 1 OF 2

BRIDGE SHEET NO. SR86

SHEET 1190 OF 1763 SHEETS

SR 5 FILE NO. 7454 SHEET SR86

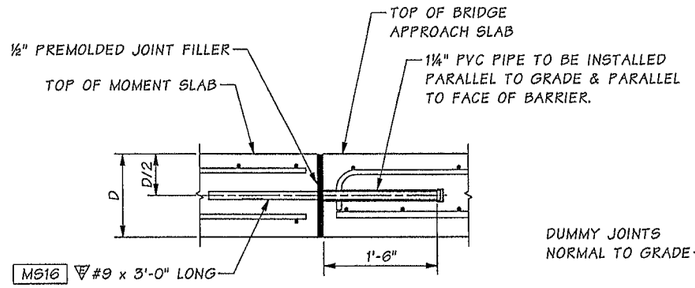

DOWEL BAR DETAIL

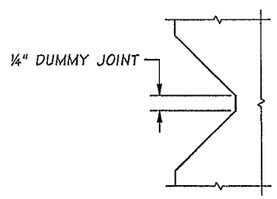

DUMMY JOINT DETAIL

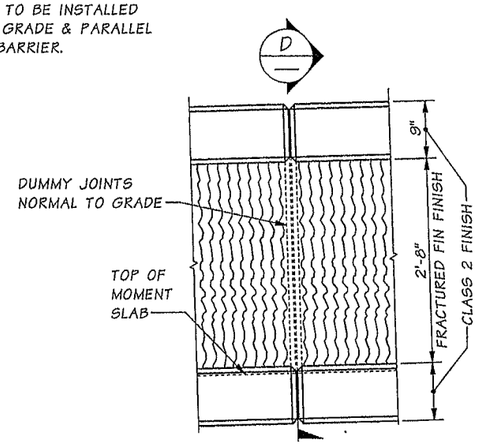

VIEW A SR86

ALL CHAMFERS ¾"

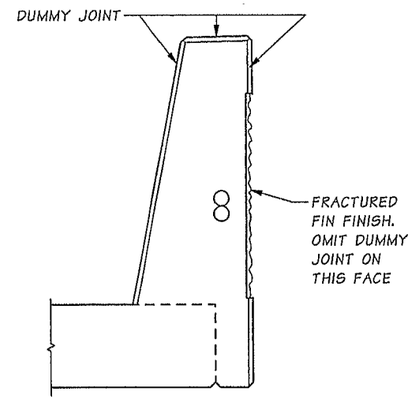

SECTION D

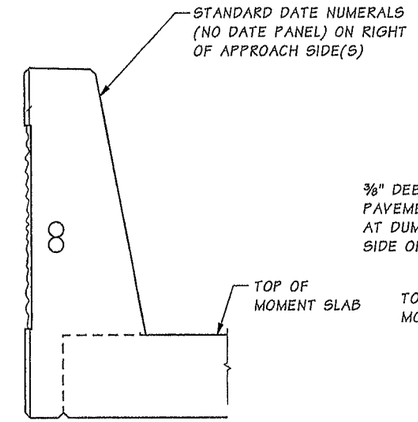

END VIEW

THRIE BEAM SHOWN WITH "D" CONNECTION

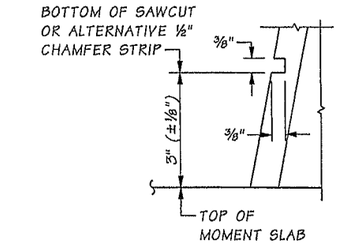

PAVEMENT MARKER DETAIL

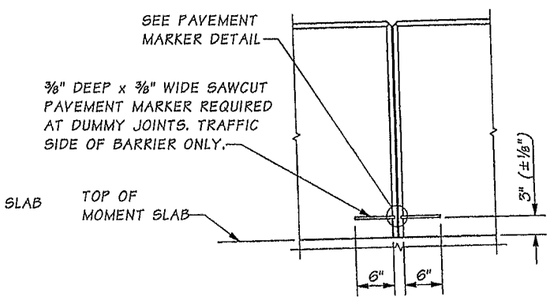

VIEW C SR86

BENDING DIAGRAM

ALL DIMENSIONS ARE OUT TO OUT
≠ = DIMENSIONS TO POINTS OF INTERSECTION
▽ = EPOXY COATED

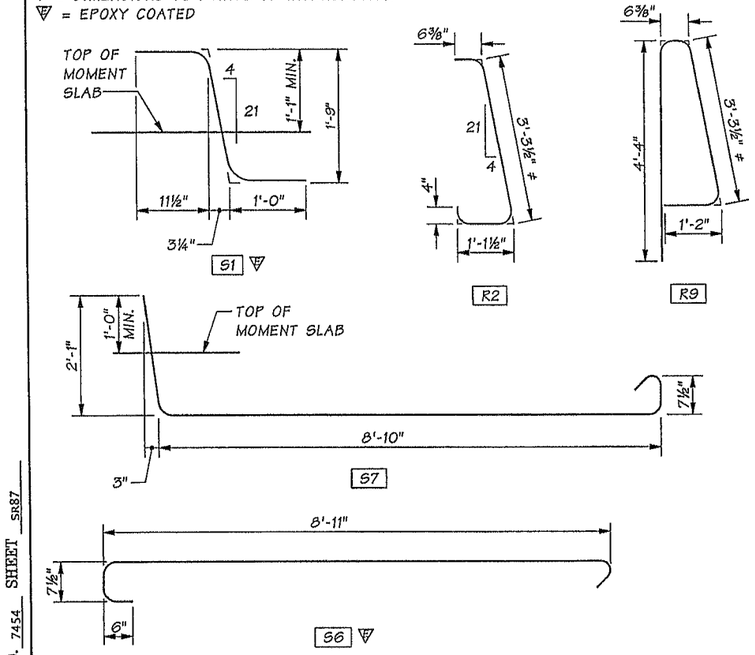

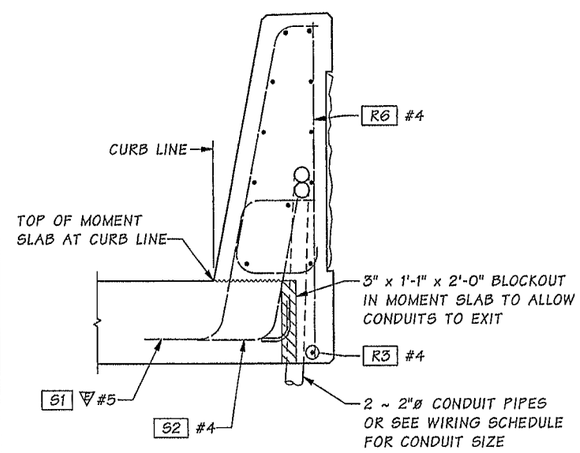

SECTION B SR86

FOR DETAILS NOT SHOWN SEE "OUTSIDE ELEVATION" AND "TYPICAL SECTION - TRAFFIC BARRIER WITH MOMENT SLAB". NO CONDUIT PIPES OR BLOCKOUT AT 15NB WALL-B.

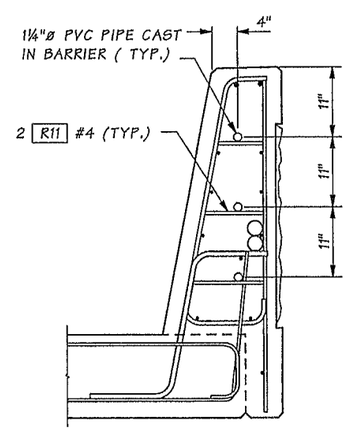

SECTION E SR86

TYPICAL AT ALL EXPANSION JOINTS INCLUDING JOINT BETWEEN TRAFFIC BARRIER OR TRAFFIC BARRIER WITH MOMENT SLAB AND APPROACH SLAB BARRIER.

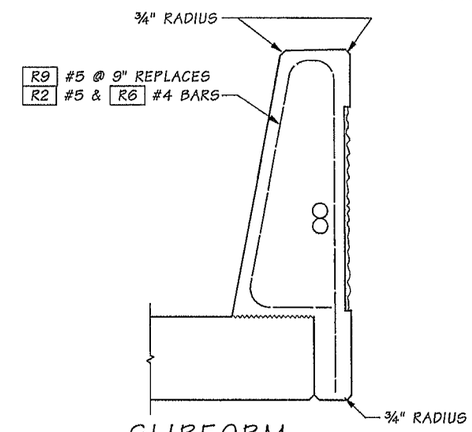

SLIPFORM ALTERNATE

SEE "TYPICAL SECTION - TRAFFIC BARRIER" FOR ADDITIONAL DETAILS.

THE CONTRACTOR IS ADVISED THAT THE SLIPFORM CONSTRUCTION METHOD IS A PATENTED PROPRIETARY PROCESS FOR BARRIERS WITH A FRACTURED FIN FINISH.

Bridge Design Engr.	Khaleghi, B		M:\Y-Team\M ST TO PORTLAND\CWRR OC\window files\MOMENT SLAB 2.WND			REGION NO.	STATE	FED. AID PROJ. NO.	SHEET NO.	TOTAL SHEETS
Supervisor	Khaleghi, B					10	WASH.			
Designed By	Sawahata, D	05/13				JOB NUMBER 12C501				
Checked By	Tran, LH	10/13								
Detailed By	Sawahata, D	05/13								
Bridge Projects Engr.										
Prelim. Plan By										
Architect/Specialist			DATE	REVISION	BY	APP'D				

Tue Feb 11 12:02:01 2014

TAKAO DAVID SAWAHATA, STATE OF WASHINGTON, 43665, REGISTERED PROFESSIONAL ENGINEER 2-11-14

BRIDGE AND STRUCTURES OFFICE

BIJAN KHALEGHI, STATE OF WASHINGTON, 27596, PROFESSIONAL ENGINEER 2/12/14

Washington State Department of Transportation

I-5
M STREET TO PORTLAND AVENUE - HOV

I-5 OVER I-705 AND TACOMA RAIL BRIDGE NO. 5/445E

TRAFFIC BARRIER WITH MOMENT SLAB DETAILS 2 OF 2

BRIDGE SHEET NO. SR87

SHEET 1191 OF 1763 SHEETS

SR 5 FILE NO. 7454 SHEET SR87

S = Bar is included in substructure quantities.
L = Lump sum quantity.
T = Transverse or S = Seismic
E = Bar is to be epoxy coated.
V = Bar dimensions vary between dimensions shown on this line and the following line.

MARK NO.	LOCATION	SIZE	NO REQ'D	BEND TYPE	TIE OR STIR.	LUMP SUM	SUBSTR.	EPOXY COAT	VARIES	NO. EACH	U Ft.	U In.	W Ft.	W In.	X Ft.	X In.	Y Ft.	Y In.	Z Ft.	Z In.	θ_1 Deg.	θ_2 Deg.	LENGTH Ft.	LENGTH In.	WEIGHT Lbs.
	PIER 1 ABUTMENT																								
101	Footing Bot Long	7	21	89			S				79	4.0	3	6.0									82	10	3556
102	Footing Top Long	7	21	89			S				79	4.0	3	6.0									82	10	3556
103	Footing Side Long	7	6	89			S				79	4.0	3	6.0									82	10	1016
104	Footing Side Tran	7	6	50			S				20	6.0											20	6	251
105	Footing Bot Tran	7	158	50			S				20	6.0											20	6	6621
106	Footing Top Tran	7	79	50			S				20	6.0											20	6	3310
107	Footing Side Stirrup	7	198	56			S				3	6.0											5	6	2212
108	Abut Vert NF	7	72	54			S		V	1	14	3.0											15	3	
											25	9.0											26	9	3088
109	Abut Vert FF	9	143	54			S		V	1	14	3.0											15	7	
											25	9.0											27	1	10369
110	Abut Horiz NF	7	46	89			S		V	1	3	6.0	2	6.0									3	6	
											72	10.0	2	6.0									75	4	3706
111	Abut Horiz NF	6	5	89			S				72	10.0	2	0.0									74	10	562
112	Abut Tie	4	216	58	T		S				3	9.0											4	5	636
113	Abut Tie	4	72	58	T		S		V	36	5	10.0											6	6	
											4	9.0											5	5	286
114	Abut Tie	4	72	58	T		S				5	10.0											6	6	312
115	Stem Vert NF	5	72	54			S				9	6.0											10	2	766
116	Stem Vert FF	5	72	69			S				7	11.0	4	6.0	3	2.0							13	5	1006
117	Stem Horiz	6	14	89			S				72	10.0	2	0.0									74	10	1573
118	Stem Horiz	6	3	89			S	E			72	10.0	3	0.0									75	10	342
119	Stem Horiz	5	2	89			S	E			72	10.0	2	6.0									75	4	157
120	Stem Tie	4	108	58	T		S				1	7.0											2	3	162
121	Stem Tie	4	72	56	T		S	E			1	7.0											2	2	104
122	Stem Tie	4	72	56	T		S	E			0	9.0											1	4	64
123	Girder Stop Long	4	35	74	T		S				5	6.3	2	5.5	2	5.5							10	3	240
124	Girder Stop Short	4	46	50	T		S				3	4.5											3	4	104
125	Approach Slab Anchor	5	72	69			S				1	6.0	0	9.0	0	9.0							2	6	190
126	Stem Horiz End	4	8	50			S	E			2	0.0											2	0	11
127	Girder Stop End	4	10	74	T		S				2	6.0	2	5.5									4	10	33
150	Expansion Joint	4	4	89	T			E			2	0.0	72	10.0									2	0	5
	PIER 1 LT CURTAIN WALL																								
131	LT Wall Vert NF	5	15	54			S		V	1	32	6.0											33	2	
											32	0.0											32	8	516
132	LT Wall Vert FF	9	29	54			S		V	1	32	6.0											33	10	
											32	0.0											33	4	3311
133	LT Wall Vert NF	5	2	54			S				28	9.0											29	6	61
134	LT Wall Vert FF	9	2	54			S				28	9.0											30	1	205
135	LT Wall Horiz NF	5	14	50			S				15	0.5											15	0	220
136	LT Wall Horiz FF	9	24	50			S				15	3.5											15	4	1248
137	LT Wall Top	5	2	74			S				5	1.0	2	3.0									7	2	15
138	LT Header Horiz Tie	4	2	74			S	E			0	8.0	2	4.0	2	4.0							5	2	7
139	LT Header Horiz Top	4	2	74			S	E			0	9.0	0	8.0	0	8.0							1	10	3
	PIER 1 RT CURTAIN WALL																								
131	RT Wall Vert NF	5	15	54			S		V	1	20	6.0											21	2	
											21	0.0											21	8	336
132	RT Wall Vert FF	9	29	54			S		V	1	20	6.0											21	10	
											21	0.0											22	4	2177
133	RT Wall Vert NF	5	2	54			S				18	0.0											18	8	39
134	RT Wall Vert FF	9	2	54			S				18	0.0											19	4	131
135	RT Wall Horiz NF	5	26	50			S				15	3.5											15	4	415
136	RT Wall Horiz FF	9	46	50			S				15	0.5											15	0	2353
137	RT Wall Top	5	2	74			S				5	1.0	2	3.0									7	2	15
138	RT Header Horiz Tie	4	2	74			S	E			0	8.0	2	4.0	2	4.0							5	2	7
139	RT Header Horiz Top	4	2	74			S	E			0	9.0	0	8.0	0	8.0							1	10	3
	PIER 2																								
201	Column 2A Longitudinal	9	30	89			S				61	4.0	3	3.0									64	7	6588
202	Column 2A Spiral	5	1	67			S				4	9.0	51	1.0	0	4.0							226	2 4	2359
202	Column 2A Spiral	5	1	67			S				4	9.0	5	4.0	0	4.0							236	2	246
201	Column 2B Longitudinal	9	30	89			S				62	0.0	3	3.0									65	3	6656
202	Column 2B Spiral	5	1	67			S				4	9.0	51	9.0	0	4.0							229	1 10	2390
202	Column 2B Spiral	5	1	67			S				4	9.0	5	4.0	0	4.0							236	2	246
201	Column 2C Longitudinal	9	30	89			S				61	8.0	3	3.0									64	11	6622
202	Column 2C Spiral	5	1	67			S				4	9.0	51	5.0	0	4.0							227	7 1	2375
202	Column 2C Spiral	5	1	67			S				4	9.0	5	4.0	0	4.0							236	2	246
211	Crossbeam Stirrup	8	216	72	T		S				5	5.0	3	9.0	3	9.0							14	2	8193
213	Crossbeam Column Stirrup	8	60	72	T		S				5	3.0	3	9.0									9	8	1545
215	Crossbeam Exterior Stirrup	7	72	58	T		S				11	2.0											12	11	1898
215	Crossbeam Exterior Stirrup	7	72	58	T		S				11	4.0											13	1	1923
217	Crossbeam Interior Stirrup	7	117	58	T		S				11	2.0											12	11	3084
217	Crossbeam Interior Stirrup	7	117	58	T		S				11	4.0											13	1	3124
219	Crossbeam Bottom Longit	11	16	50			S				29	10.0											29	10	2536
219	Crossbeam Bottom Longit	11	16	50			S				38	10.0											38	10	3301
221	Crossbeam Bottom Side	7	12	89			S		V	2	68	9.0	2	6.0									71	3	
											69	2.0	2	6.0									71	8	1753
223	Crossbeam End Tie	7	12	80	T		S				6	10.0	3	0.0	3	0.0	0	5.3	0	5.3	81	99	12	4	302
225	Crossbeam Middle Longit	11	20	54			S				48	3.0											49	11	5303
225	Crossbeam Middle Longit	11	20	54			S				30	3.0											31	11	3390
227	Crossbeam Tie	8	138	58	T		S				6	10.0											8	10	3247
229	Crossbeam End Stirrup	7	16	54	T		S				11	1.0											12	1	395

S = Bar is included in substructure quantities.
L = Lump sum quantity.
T = Transverse or S = Seismic
E = Bar is to be epoxy coated.
V = Bar dimensions vary between dimensions shown on this line and the following line.

MARK NO.	LOCATION	SIZE	NO REQ'D	BEND TYPE	TIE OR STIR.	LUMP SUM	SUBSTR.	EPOXY COAT	VARIES	NO. EACH	U Ft.	U In.	W Ft.	W In.	X Ft.	X In.	Y Ft.	Y In.	Z Ft.	Z In.	θ_1 Deg.	θ_2 Deg.	LENGTH Ft.	LENGTH In.	WEIGHT Lbs.
231	Crossbeam Lower Tie	6	108	51			S				5	0.0											5	8	923
233	Crossbeam Btwn Girder	7	98	50							8	5.0											8	5	1686
235	Crossbeam Interior Longit	7	14	89					V	2	70	5.0	2	6.0									72	11	
											69	5.0	2	6.0									71	11	2072
237	Crossbeam Vertical at Girder	7	96	50					V	32	5	4.0											5	4	
											6	2.0											6	2	1128
239	Crossbeam End Tie	7	14	80	T						6	10.0	3	0.0	3	0.0	0	5.3	0	5.3	81	99	12	4	353
241	Crossbeam Upper Tie	6	201	58	T						6	10.0											8	4	2512
243	Crossbeam Top Longit	11	10	50							48	10.0											48	10	2595
243	Crossbeam Top Longit	11	10	50							21	10.0											21	10	1160
	PIER 3																								
301	Column 3A Longitudinal	14	90	89			S				88	5.0											88	5	60872
302	Column 3A Hoop	8	253	66			S				6	9.0											20	11	14146
301	Column 3B Longitudinal	14	90	89			S				86	5.0											86	5	59496
302	Column 3B Hoop	8	247	66			S				6	9.0											20	11	13811
311	Crossbeam Stirrup	7	302	72	T		S				6	4.0	7	9.0	7	9.0							22	12	14175
311	Crossbeam Stirrup	7	8	72	T		S		V	4	6	4.0	7	9.0	7	9.0							22	12	
											7	7.0	7	9.0	7	9.0							24	2	386
311	Crossbeam Stirrup	7	56	72	T		S				7	7.0	7	9.0	7	9.0							24	2	2772
313	Crossbeam Column Stirrup	7	56	72	T		S				8	8.0	7	9.0									16	12	1944
315	Crossbeam Exterior Stirrup	7	149	58	T		S				15	3.0											16	12	5172
315	Crossbeam Exterior Stirrup	7	149	58	T		S				15	6.0											17	3	5248
316	Crossbeam Vertical Column	9	36	50			S				14	6.0											14	6	1775
317	Crossbeam Interior Stirrup	7	169	58	T		S				15	4.0											17	1	5894
317	Crossbeam Interior Stirrup	7	169	58	T		S				15	5.0											17	2	5923
319	Crossbeam Bottom Longit	11	16	50			S				42	5.0											42	5	3606
319	Crossbeam Bottom Longit	11	16	50			S				44	5.0											44	5	3776
319	Crossbeam Bottom Longit	11	8	50			S				27	8.0											27	8	1176
319	Crossbeam Bottom Longit	11	8	50			S				23	8.0											23	8	1006
319	Crossbeam Bottom Longit	11	32	50			S				35	5.0											35	5	6022
319	Crossbeam Bottom Longit	11	32	50			S				40	5.0											40	5	6872
321	Crossbeam Bottom Side	8	24	89			S				86	9.0	2	11.0									89	8	5745
323	Crossbeam Bottom Side End	8	48	80			S				13	10.0	4	3.0			0	6.0			135		18	0	2310
325	Crossbeam Bottom End Tie	5	12	56	T		S				11	3.0											11	12	150
327	Crossbeam Bottom End Tie	5	16	56	T		S				7	9.0											8	6	141
329	Crossbeam Bottom Tie	5	84	56	T		S				11	3.0											11	12	1049
331	Crossbeam Bottom Tie	5	84	56	T		S				7	9.0											8	6	742
333	Crossbeam Bottom Column Tie	6	176	57	T		S				7	11.0											8	7	2262
335	Crossbeam Bottom Extension	5	18	50			S				6	0.0											6	0	113
337	Crossbeam Side Extension	5	24	50			S				8	6.0											8	6	213
339	Crossbeam Middle Longit	10	8	89			S				112	9.0	9	0.0									121	9	4191
341	Crossbeam Tie	7	56	58	T		S				11	3.0											12	12	1486
341	Crossbeam Tie	7	4	58	T		S		V	2	11	3.0											12	12	
341	Crossbeam Tie	7	151	58	T		S				8	9.0											10	6	96
343	Crossbeam End Vertical	7	20	50			S				8	9.0											10	6	3235
345	Crossbeam Between Girder	7	98	50							15	3.0											15	3	623
347	Crossbeam Interior Longit	7	14	89					V	2	8	5.0											8	5	1686
											115	8.5	2	6.0									118	2	
											115	2.5	2	6.0									117	8	3376
349	Crossbeam Horizontal	7	14	50					V	2	8	2.0											8	2	
											6	4.0											6	4	207
349	Crossbeam Horizontal	7	14	50					V	2	43	0.0											43	0	
											41	8.0											41	8	1211
351	Crossbeam Vertical at Girder	7	96	50					V	32	5	4.0											5	4	
											6	2.0											6	2	1128
353	Crossbeam End Tie	7	16	74	T						11	3.0	3	0.0	3	0.0							16	11	552
355	Crossbeam Upper Tie	6	168	58	T						8	11.0											10	5	2625
355	Crossbeam Upper Tie	6	33	58	T						11	5.0											12	11	640
357	Crossbeam Top Longitudinal	11	16	50							42	9.0											42	9	3634
357	Crossbeam Top Longitudinal	11	16	50							44	9.0											44	9	3804
357	Crossbeam Top Longitudinal	11	8	50							30	4.0											30	4	1289
357	Crossbeam Top Longitudinal	11	8	50							26	4.0											26	4	1119
357	Crossbeam Top Longitudinal	11	16	50							37	9.0											37	9	3209
357	Crossbeam Top Longitudinal	11	16	50							36	5.0											36	5	3096
361	Crossbeam Top Tie	7	90	58	T						11	3.0											12	12	2388
361	Crossbeam Top Tie	7	6	58	T				V	3	11	3.0											12	12	
											8	9.0											10	6	144
361	Crossbeam Top Tie	7	220	58	T						8	9.0											10	6	4713
363	Crossbeam Top Tie	5	4	80							14	9.0	3	6.0			0	4.0			135		18	3	76
	PIER 4																								
401	Column 4A Longitudinal	9	30	50			S				51	9.0											51	9	5279
402	Column 4A Spiral	5	1	67			S				4	9.0	41	6.0	0	4.0							183	7 11	1917
402	Column 4A Spiral	5	1	67			S				4	9.0	5	4.0	0	4.0							236	2	246
401	Column 4B Longitudinal	9	30	50			S				54	5.0											54	5	5551
402	Column 4B Spiral	5	1	67			S				4	9.0	44	2.0	0	4.0							195	6 0	2040
402	Column 4B Spiral	5	1	67			S				4	9.0	5	4.0	0	4.0							236	2	246
401	Column 4C Longitudinal	9	30	50			S				59	1.0											59	1	6027
402	Column 4C Spiral	5	1	67			S				4	9.0	48	10.0	0	4.0							216	2 8	2255
402	Column 4C Spiral	5	1	67			S				4	9.0	5	4.0	0	4.0							236	2	246
411	Crossbeam Stirrup	8	220	72	T		S				5	6.0	3	9.0	3	9.0							14	4	8394
413	Crossbeam Column Stirrup	8	60	72	T		S				5	3.0	3	9.0									9	8	1545
415	Crossbeam Exterior Stirrup	7	74	58	T		S				11	3.0											12	12	1963
415	Crossbeam Exterior Stirrup	7	74	58	T		S				11	6.0											13	3	2001
417	Crossbeam Interior Stirrup	7	119	58	T		S				11	4.0											13	1	3178
417	Crossbeam Interior Stirrup	7	119	58	T		S				11	5.0											13	2	3198
419	Crossbeam Bottom Longit	11	16	50			S				39	2.0											39	2	3330

BENDING DIAGRAMS

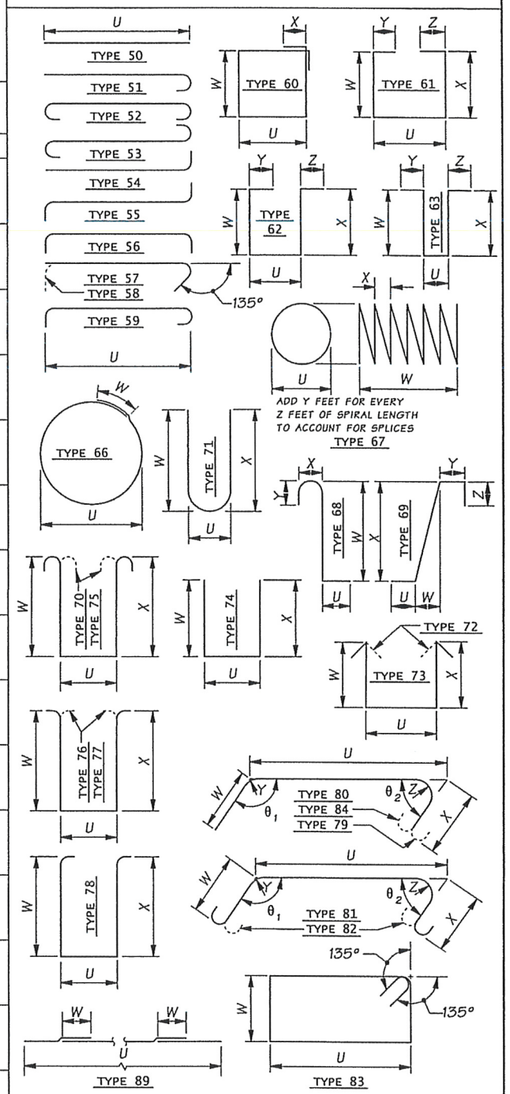

NOTES:

1. SEE PLANS FOR REINFORCEMENT NOT SHOWN.
2. BEND FOR TRANSVERSE BARS DUE TO ROADWAY CROWN CONDITIONS HAS NOT BEEN SHOWN. THESE BARS SHALL BE BENT AS REQUIRED TO CONFORM TO THE CONFIGURATION OF THE STRUCTURE.
3. BARLIST IS FOR QUANTITY ESTIMATION ONLY. REINFORCEMENT FABRICATION DETAILS SHALL BE DETERMINED FROM THE PLANS.

SR 5 FILE NO. 7454 SHEET SR88

Bridge Design Engr.	Khaleghi, B		M:\Y-Team\M ST TO PORTLAND\CWRR OC\window files\Barlist1.wnd
Supervisor	Khaleghi, B		
Designed By	LHT, JB, TDS	10/13	
Checked By	LHT, TDS, AJM	10/13	
Detailed By			
Bridge Projects Engr.			
Prelim. Plan By			
Architect/Specialist			

DATE | REVISION | BY | APP'D

REGION NO.	STATE	FED. AID PROJ. NO.	SHEET NO.	TOTAL SHEETS
10	WASH.			

JOB NUMBER 12C501

BRIDGE AND STRUCTURES OFFICE

Washington State Department of Transportation

I-5
M STREET TO PORTLAND AVENUE - HOV
I-5 OVER I-705 AND TACOMA RAIL BRIDGE NO. 5/445E
BARLIST 1

BRIDGE SHEET NO. SR88

SHEET 1192 OF 1763 SHEETS

Tue Feb 11 07:17:41 2014

S = Bar is included in substructure quantities.
L = Lump sum quantity.
T = Transverse or S = Seismic
E = Bar is to be epoxy coated.
V = Bar dimensions vary between dimensions shown on this line and the following line.

MARK NO.	LOCATION	SIZE	NO REQ'D	BEND TYPE	TIE OR STIR.	LUMP SUM	SUBSTR.	EPOXY COAT	VARIES	NO. EACH	U Ft.	U In.	W Ft.	W In.	X Ft.	X In.	Y Ft.	Y In.	Z Ft.	Z In.	θ_1 Deg.	θ_2 Deg.	LENGTH Ft.	LENGTH In.	WEIGHT Lbs.
419	Crossbeam Bottom Longit	11	16	50			S				30	2.0											30	2	2565
421	Crossbeam Bottom Side	7	12	89			S		V	2	69	5.0	2	6.0									71	11	
											69	10.0	2	6.0									72	5	1769
423	Crossbeam End Tie	7	12	80	T		S				6	11.0	3	0.0	3	0.0	0	5.3	0	5.3	78	102	12	5	304
425	Crossbeam Middle Longit	11	20	54			S				48	7.0											50	3	5338
425	Crossbeam Middle Longit	11	20	54			S				30	7.0											32	3	3426
427	Crossbeam Tie	8	140	58	T		S				6	11.0											8	11	3325
429	Crossbeam End Stirrup	7	16	54	T		S				11	3.0											12	3	400
431	Crossbeam Lower Tie	6	108	51			S				5	0.0											5	8	923
433	Crossbeam Btwn Girder	7	98	50							8	5.0											8	5	1686
435	Crossbeam Interior Longit	7	14	89					V	2	71	1.0	2	6.0									73	7	
											70	1.0	2	6.0									72	7	2091
437	Crossbeam Vertical at Girder	7	96	50					V	32	5	4.0											5	4	
											6	2.0											6	2	1128
439	Crossbeam End Tie	7	14	80	T						6	11.0	3	0.0	3	0.0	0	5.3	0	5.3	78	102	12	5	354
441	Crossbeam Upper Tie	6	201	58	T						6	11.0											8	5	2537
443	Crossbeam Top Longit	11	10	50							49	2.0											49	2	2612
443	Crossbeam Top Longit	11	10	50							22	2.0											22	2	1178
	PIER 5																								
501	Column 5A Longitudinal	9	30	89			S				72	8.0	3	3.0									75	11	7744
502	Column 5A Spiral	5	1	67			S				4	9.0	62	5.0	0	4.0							2764	3	2883
502	Column 5A Spiral	5	1	67			S				4	9.0	5	4.0	0	4.0							236	2	246
501	Column 5B Longitudinal	9	30	89			S				72	1.0	3	3.0									75	4	7684
502	Column 5B Spiral	5	1	67			S				4	9.0	61	10.0	0	4.0							2738	5	2856
502	Column 5B Spiral	5	1	67			S				4	9.0	5	4.0	0	4.0							236	2	246
501	Column 5C Longitudinal	9	30	89			S				72	7.0	3	3.0									75	10	7735
502	Column 5C Spiral	5	1	67			S				4	9.0	62	4.0	0	4.0							2760	7	2879
502	Column 5C Spiral	5	1	67			S				4	9.0	5	4.0	0	4.0							236	2	246
511	Crossbeam Stirrup	8	212	72	T		S				5	4.0	3	9.0	3	9.0							14	2	7994
513	Crossbeam Column Stirrup	8	60	72	T		S				5	3.0	3	9.0									9	8	1545
515	Crossbeam Exterior Stirrup	7	72	58	T		S				11	4.0											13	1	1923
515	Crossbeam Exterior Stirrup	7	72	58	T		S				11	7.0											13	4	1959
517	Crossbeam Interior Stirrup	7	116	58	T		S				11	5.0											13	2	3117
517	Crossbeam Interior Stirrup	7	116	58	T		S				11	6.0											13	3	3137
519	Crossbeam Bottom Longit	11	16	50			S				38	5.0											38	5	3266
519	Crossbeam Bottom Longit	11	16	50			S				29	5.0											29	5	2501
521	Crossbeam Bottom Side	7	12	89			S		V	2	67	11.0	2	6.0									70	5	
											68	4.0	2	6.0									70	10	1732
523	Crossbeam End Tie	7	12	80	T		S				6	9.0	3	0.0	3	0.0	0	5.3	0	5.3	87	93	12	3	301
525	Crossbeam Middle Longit	11	20	54			S				47	10.0											49	6	5259
525	Crossbeam Middle Longit	11	20	54			S				29	10.0											31	6	3346
527	Crossbeam Tie	8	137	58	T		S				6	9.0											8	9	3193
529	Crossbeam End Stirrup	7	16	54	T		S				11	4.0											12	4	403
531	Crossbeam Lower Tie	6	108	51			S				5	0.0											5	8	923
533	Crossbeam Btwn Girder	7	98	50							8	5.0											8	5	1686
535	Crossbeam Interior Longit	7	14	89					V	2	69	7.0	2	6.0									72	1	
											68	7.0	2	6.0									71	1	2049
537	Crossbeam Vertical at Girder	7	96	50					V	32	5	4.0											5	4	
											6	2.0											6	2	1128
539	Crossbeam End Tie	7	14	80	T						6	9.0	3	0.0	3	0.0	0	5.3	0	5.3	87	93	12	3	351
541	Crossbeam Upper Tie	6	201	58	T						6	9.0											8	3	2487
543	Crossbeam Top Longit	11	10	50							48	5.0											48	5	2573
543	Crossbeam Top Longit	11	10	50							21	5.0											21	5	1138
	PIER 6																								
601	Bottom Cap Long	9	13	89			S				76	7.0	4	2.0									80	9	3569
602	SideCap Long.	7	6	89			S				76	7.0	2	6.0									78	1	970
603	Top Cap Long.	10	13	89			S				76	7.0	7	4.0									83	11	4695
604	Cap Stirrup	6	124	72	T		S				8	9.0	4	1.0	4	1.0							17	11	3331
605	Cap Tie	6	124	56			S				8	9.0											10	5	1945
606	Abutment Vertical	7	71	54			S		V	1	9	3.0											10	3	
											24	0.0											24	12	2556
607	Abutment Vertical	10	140	54			S		V	1	9	3.0											10	9	
											24	0.0											25	6	10914
608	Bottom Abut. Long	6	2	89			S				72	0.0	2	0.0									74	0	222
609	Side Abut. Long	6	26	89			S		V	1	71	9.0	2	0.0									73	9	
											4	0.0	2	0.0									4	0	1518
610	Side Abut. Long	6	10	89			S				71	9.0	2	0.0									73	9	1108
612	Top Abut. Long.	6	5	89			S				71	9.0	1	0.0									72	9	546
613	Abutment Tie	4	134	58	T		S				3	9.0											4	5	395
614	Abutment Tie	4	86	58	T		S		V	1	3	9.0											4	5	
											5	10.0											6	6	313
615	Cap Tie	6	140	56			S				5	10.0											7	6	1582
616	Upper Abutment Vertical	5	71	80			S				8	1.0	5	7.0			0	1.8			145		13	8	1011
617	Upper Abutment Vertical	5	71	50			S				9	0.0											9	0	666
618	Side Abut. Long Upper	5	14	89			S				71	9.0	2	0.0									73	9	1077
619	Abutment Tie	4	121	58	T		S				1	7.0											2	3	181
620	Cap Tie	4	71	56			S	E			1	7.0											2	8	128
621	Top Abut. Long.	6	3	89			S	E			71	9.0	2	0.0									73	9	332
622	Top Abut. Long.	5	2	89			S	E			71	9.0	2	0.0									73	9	154
623	Top tie	4	71	71	T		S	E			0	9.0	2	6.0	2	6.0							5	4	254
624	Approach Slab Anchor	5	71	80			S	E			1	0.0	1	0.0			0	1.8			135		1	12	146
625	Girder Stop Tie	6	35	72	T		S				5	7.0	2	7.0	2	7.0							11	9	616
626	Girder Stop Horiz.	4	46	50			S				3	9.0											3	9	115
627	Girder Stop Corner Tie	4	8	80	T		S				2	6.0	2	3.0			0	1.5			90		4	8	25
631	Curtain Vertical Dowel	5	28	54			S				7	0.0											7	8	225
632	Lt. Curtain Vertical	5	14	54			S				12	2.0											12	10	188

S = Bar is included in substructure quantities.
L = Lump sum quantity.
T = Transverse or S = Seismic
E = Bar is to be epoxy coated.
V = Bar dimensions vary between dimensions shown on this line and the following line.

MARK NO.	LOCATION	SIZE	NO REQ'D	BEND TYPE	TIE OR STIR.	LUMP SUM	SUBSTR.	EPOXY COAT	VARIES	NO. EACH	U Ft.	U In.	W Ft.	W In.	X Ft.	X In.	Y Ft.	Y In.	Z Ft.	Z In.	θ_1 Deg.	θ_2 Deg.	LENGTH Ft.	LENGTH In.	WEIGHT Lbs.
633	Rt. Curtain Vertical	5	14	50			S				25	6.0											25	6	372
634	Lt. Horizontal Bar	5	54	50			S				6	3.0											6	3	352
635	Horizontal Top Bar	6	4	50			S				5	0.0											5	0	30
634	Rt. Horizontal Bar	5	24	50			S				6	3.0											6	3	156
636	Top Tie	4	4	71	T		S	E			0	9.0	0	8.0	0	8.0							1	8	5
637	Top long	4	4	50	T		S	E			2	6.0											2	6	7
650	Expansion Joint	4	4	89			S	E			71	9.0	1	0.0									72	9	194
	BRIDGE DECK																								
721A	Bot Long Span 1	5	48	89				E			84	7.0	2	6.0									87	1	4359
721A	Bot Long Span 2	5	48	89				E	V	1	129	11.0	2	6.0									134	11	
											131	1.0	2	6.0									136	1	6783
721A	Bot Long Span 3	5	48	89				E	V	1	84	0.0	2	6.0									86	6	
											86	8.0	2	6.0									89	2	4397
721A	Bot Long Span 4	5	48	89				E	V	1	63	0.0	2	6.0									65	6	
											81	9.0	2	6.0									84	3	3748
721A	Bot Long Span 5	5	48	89				E	V	1	139	4.0	2	6.0									144	4	
											142	8.0	2	6.0									147	8	7309
721B	Bot Long Span 1	5	48	89				E			89	7.0	2	6.0									92	1	4610
721B	Bot Long Span 2	5	48	89				E	V	1	140	0.0	2	6.0									145	0	
											141	3.0	2	6.0									146	3	7290
721B	Bot Long Span 3	5	48	89				E	V	1	94	2.0	2	6.0									96	8	
											96	10.0	2	6.0									99	4	4906
721B	Bot Long Span 4	5	48	89				E	V	1	73	1.0	2	6.0									75	7	
											91	11.0	2	6.0									94	5	4255
721B	Bot Long Span 5	5	48	89				E	V	1	144	3.0	2	6.0									149	3	
											147	8.0	2	6.0									152	8	7557
722	Bot Long Pier 2	7	48	89				E			50	8.0	3	9.0									50	8	4971
722	Bot Long Pier 3	7	48	89				E			50	9.0	3	9.0									50	9	4979
722	Bot Long Pier 4	7	48	89				E			51	2.0	3	9.0									51	2	5020
722	Bot Long Pier 5	7	48	89				E			50	1.0	3	9.0									50	1	4914
723	Bot Long Pier 2	7	48	89				E			40	6.0	3	9.0									40	6	3974
723	Bot Long Pier 3	7	48	89				E			40	8.0	3	9.0									40	8	3990
723	Bot Long Pier 4	7	48	89				E			40	11.0	3	9.0									40	11	4015
724	Bot Long Pier 5	7	48	89				E			60	1.0	3	9.0									63	10	6263
725	Bot Long Pier 5	7	53	89				E			70	1.0	3	9.0									73	10	7999
726	Bot Transv	5	1451	89				E			72	0.0	2	6.0									74	6	112737
727	Bot Transv at Pier 1	5	25	89				E	V	1	72	0.0	2	6.0									74	6	
											15	0.0	2	6.0									15	0	1167
731A	Top Long Span 1	5	32	89				E			64	4.0	2	6.0									66	10	2230
731A	Top Long Span 2	5	32	89				E	V	1	89	4.0	2	6.0									91	10	
											90	7.0	2	6.0									93	1	3086
731A	Top Long Span 3	5	32	89				E	V	1	43	2.0	2	6.0									43	2	
											45	11.0	2	6.0									45	11	1486
731A	Top Long Span 4	5	32	89				E	V	1	22	6.0	2	6.0									22	6	
											41	4.0	2	6.0									41	4	1065
731A	Top Long Span 5	5	32	89				E	V	1	119	3.0	2	6.0									121	9	
											122	8.0	2	6.0									127	8	4162
731B	Top Long Span 1	5	32	89				E			69	4.0	2	6.0									71	10	2397
731B	Top Long Span 2	5	32	89				E	V	1	99	6.0	2	6.0									102	0	
											100	8.0	2	6.0									103	2	3423
731B	Top Long Span 3	5	32	89				E	V	1	53	4.0	2	6.0									53	4	
											56	1.0	2	6.0									56	1	1826
731B	Top Long Span 4	5	32	89				E	V	1	32	8.0	2	6.0									32	8	
											51	4.0	2	6.0									51	4	1402
731B	Top Long Span 5	5	32	89				E	V	1	124	3.0	2	6.0									129	3	
											127	8.0	2	6.0									132	8	4370
732	Top Long Cont	7	18	89				E	V	2	709	0.0	3	9.0									750	3	
											732	9.0	3	9.0									777	9	28111
733	Top Long Pier 2	7	32	89				E			91	2.0	3	9.0									94	11	6209
733	Top Long Pier 3	7	32	89				E			91	5.0	3	9.0									95	2	6225
733	Top Long Pier 4	7	32	89				E			92	1.0	3	9.0									95	10	6269
733	Top Long Pier 5	7	32	89				E			90	2.0	3	9.0									93	11	6143
734	Top Long Pier 2	7	32	89				E			81	1.0	3	9.0									84	10	5549
734	Top Long Pier 3	7	32	89				E			71	1.0	3	9.0									74	10	4895
734	Top Long Pier 4	7	32	89				E			81	10.0	3	9.0									85	7	5598
734	Top Long Pier 5	7	62	89				E			80	2.0	3	9.0									83	11	10635
735	Top Long Pier 2	7	55	89				E			70	11.0	3	9.0									74	8	8395
735	Top Long Pier 3	7	55	89				E			71	1.0	3	9.0									74	10	8413
735	Top Long Pier 4	7	55	89				E			71	7.0	3	9.0									75	4	8470
736	Top Long Pier 5	7	32	89				E			100	2.0	3	9.0									103	11	6797
737	Top Long Pier 5	7	32	89				E			110	2.0	3	9.0									113	11	7452
738	Top Transv	5	1451	89				E			72	0.0	2	6.0									74	6	112737
739	Top Transv at Pier 1	5	25	89				E	V	1	72	0.0	2	6.0									74	6	
											15	0.0	2	6.0									15	0	1167
740	Top Transv Cantilever	6	2931	51				E			9	0.0											9	8	42650
741	Girder Pad Span 1	4	16	89				E			104	4.0	2	0.0									108	4	1158
741	Girder Pad Span 2	4	16	89				E	V	1	172	8.0	2	0.0									180	8	
											173	9.0	2	0.0									181	9	1937
741	Girder Pad Span 3	4	16	89				E	V	1	127	0.0	2	0.0									133	0	
											129	5.0	2	0.0									135	5	1434
741	Girder Pad Span 4	4	16	89				E	V	1	116	9.0	2	0.0									120	9	
											133	9.0	2	0.0									139	9	1392
741	Girder Pad Span 5	4	16	89				E	V	1	169	0.0	2	0.0									177	0	
											172	0.0	2	0.0									180	0	1908
742	Girder Pad Span 1	4	560	77				E	V	1	3	10.0	0	9.5	0	11.0							6	6	
											3	10.0	0	8.3	0	9.8							6	3	2378
742	Girder Pad Span 2	4	928	77				E	V	1	3	10.0	0	10.3	0	11.8							6	7	
											3	10.0	0	8.9	0	10.5							6	4	4016

BENDING DIAGRAMS

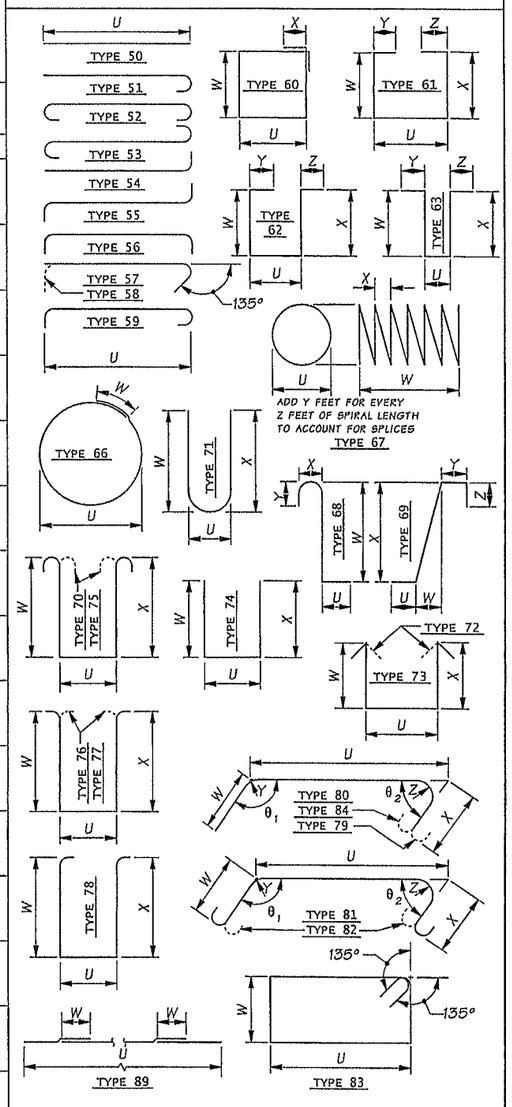

NOTES:

1. SEE PLANS FOR REINFORCEMENT NOT SHOWN.
2. BEND FOR TRANSVERSE BARS DUE TO ROADWAY CROWN CONDITIONS HAS NOT BEEN SHOWN. THESE BARS SHALL BE BENT AS REQUIRED TO CONFORM TO THE CONFIGURATION OF THE STRUCTURE.
3. BARLIST IS FOR QUANTITY ESTIMATION ONLY. REINFORCEMENT FABRICATION DETAILS SHALL BE DETERMINED FROM THE PLANS.

Bridge Design Engr.	Khaleghi, B	M:\Y-Team\M ST TO PORTLAND\CWRR OC\window files\Barlist2.wnd
Supervisor	Khaleghi, B	
Designed By	LHT, JB, TDS 10/13	
Checked By	LHT, TDS, AJM 10/13	
Detailed By		
Bridge Projects Engr.		
Prelim. Plan By		
Architect/Specialist		

DATE | REVISION | BY | APP'D

Tue Feb 11 07:17:45 2014

REGION NO.	STATE	FED. AID PROJ. NO.	SHEET NO.	TOTAL SHEETS
10	WASH.			
JOB NUMBER 12C501				

BRIDGE AND STRUCTURES OFFICE

Washington State Department of Transportation

I-5
M STREET TO PORTLAND AVENUE - HOV
I-5 OVER I-705 AND TACOMA RAIL BRIDGE NO. 5/445E
BARLIST 2

BRIDGE SHEET NO. SR89
SHEET 1193 OF 1763 SHEETS

SR 5 FILE NO. 7454 SHEET SR89

S = Bar is included in substructure quantities.
L = Lump sum quantity.
T = Transverse or S = Seismic
E = Bar is to be epoxy coated.
V = Bar dimensions vary between dimensions shown on this line and the following line.

MARK NO.	LOCATION	SIZE	NO REQ'D	BEND TYPE	TIE OR STIR.	LUMP SUM.	SUBSTR.	EPOXY COAT	VARIES	NO. EACH	DIMENSIONS (Out to Out) U Ft.	U In.	W Ft.	W In.	X Ft.	X In.	Y Ft.	Y In.	Z Ft.	Z In.	θ_1 Deg.	θ_2 Deg.	LENGTH Ft.	LENGTH In.	WEIGHT Lbs.
742	Girder Pad Span 3	4	688	77				E	V	1	3	10.0	0	11.5	1	1.0							6	10	
											3	10.0	0	10.3	0	11.8							6	7	3075
742	Girder Pad Span 4	4	672	77				E	V	1	3	10.0	0	11.2	1	1.0							6	9	
											3	10.0	0	9.2	0	10.8							6	5	2959
742	Girder Pad Span 4	4	912	77				E	V	1	3	10.0	1	1.0	1	2.5							7	0	
											3	10.0	0	9.2	0	10.8							6	5	4099
S1	Traffic Barrier	6	1998	69				E			1	0.0	0	4.0	1	9.0	0	11.5					3	6	10552
S2	Traffic Barrier	5	977	69							1	0.0	0	4.0	1	8.0							2	7	2658
	INTERMEDIATE DIAPHARGM																								
701	Long Bottom	7	28	89							63	3.0	2	6.0									65	9	3763
702	Side Bar	4	784	50							8	3.0											8	3	4320
703	Strirrup	4	882	71							0	5.0	6	9.0	6	9.0							13	8	8055
704	Strirrup	4	392	71							0	5.0	4	4.0	4	4.0							8	10	2314
705	Long Top	7	14	89							63	3.0	2	6.0									65	9	1882
706	Long. Deck	6	56	51				E			35	0.0											35	8	3002
	END DIAPHARGM																								
711	Long Bottom	7	4	89							63	3.0	2	6.0									65	9	538
712	Side Bar	4	140	50							8	3.0											8	3	771
713	Strirrup	4	126	71							0	9.0	7	5.0	7	5.0							15	2	1279
714	Strirrup	4	56	71							0	5.0	5	9.0	5	0.0							10	11	409
715	Long Top	7	2	89							63	3.0	2	6.0									65	9	269
716	Long. Deck	6	12	51				E			35	0.0											35	8	643

S = Bar is included in substructure quantities.
L = Lump sum quantity.
T = Transverse or S = Seismic
E = Bar is to be epoxy coated.
V = Bar dimensions vary between dimensions shown on this line and the following line.

MARK NO.	LOCATION	SIZE	NO REQ'D	BEND TYPE	TIE OR STIR.	LUMP SUM.	SUBSTR.	EPOXY COAT	VARIES	NO. EACH	DIMENSIONS (Out to Out) U Ft.	U In.	W Ft.	W In.	X Ft.	X In.	Y Ft.	Y In.	Z Ft.	Z In.	θ_1 Deg.	θ_2 Deg.	LENGTH Ft.	LENGTH In.	WEIGHT Lbs.

BENDING DIAGRAMS

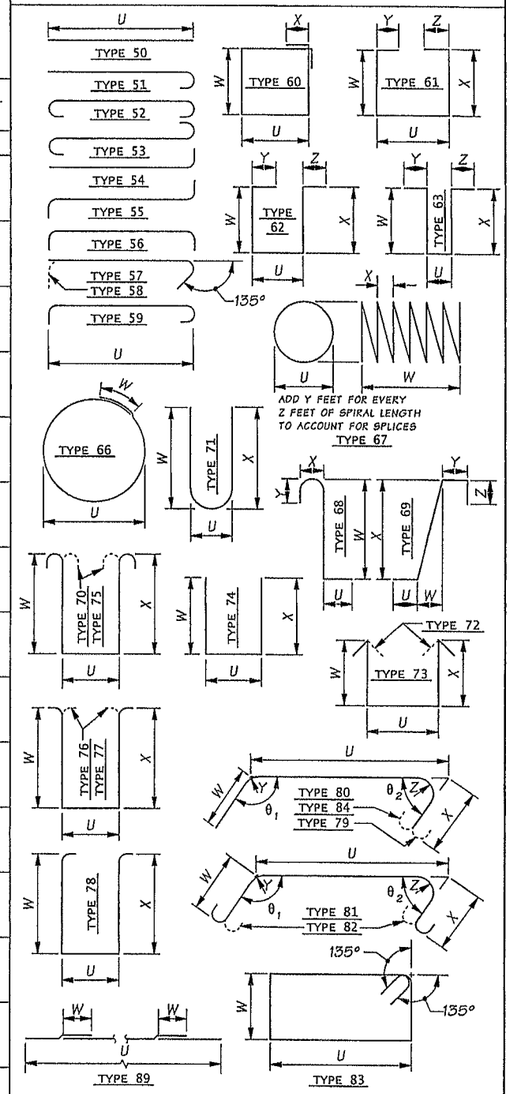

NOTES:

1. SEE PLANS FOR REINFORCEMENT NOT SHOWN.
2. BEND FOR TRANSVERSE BARS DUE TO ROADWAY CROWN CONDITIONS HAS NOT BEEN SHOWN. THESE BARS SHALL BE BENT AS REQUIRED TO CONFORM TO THE CONFIGURATION OF THE STRUCTURE.
3. BARLIST IS FOR QUANTITY ESTIMATION ONLY. REINFORCEMENT FABRICATION DETAILS SHALL BE DETERMINED FROM THE PLANS.

SR 5 FILE NO. 7454 SHEET 90

Bridge Design Engr.	Khaleghi, B	M:\Y-Team\M ST TO PORTLAND\CWRR OC\window files\Barlist3.wnd
Supervisor	Khaleghi, B	
Designed By	LHT, JB, TDS 10/13	
Checked By	LHT, TDS, AJM 10/13	
Detailed By		
Bridge Projects Engr.		
Prelim. Plan By		
Architect/Specialist		

DATE | REVISION | BY | APP'D

Tue Feb 11 07:17:49 2014

REGION NO.	STATE	FED. AID PROJ. NO.	SHEET NO.	TOTAL SHEETS
10	WASH.			
JOB NUMBER 12C501				

BRIDGE AND STRUCTURES OFFICE

Washington State Department of Transportation

I-5
M STREET TO PORTLAND AVENUE - HOV

I-5 OVER I-705 AND TACOMA RAIL BRIDGE NO. 5/445E

BARLIST 3

BRIDGE SHEET NO. SR90

SHEET 1194 OF 1763 SHEETS