8607

Contract Plans

For Construction of:

I-5 MP 132.84 TO MP 134.41

I-5
M ST TO PORTLAND AVE - HOV

PIERCE COUNTY

A STATE PROJECT

VOLUME 6 OF 10

Washington State Department of Transportation

INDEX

SHEET NO.	PLAN REFERENCE NO.	TITLE
		*** VOLUME 1 ***
1 - 4	IN1 - IN4	INDEX
5	VM1	VICINITY MAP
6	KM1	KEY MAP
7 - 38	SQ1 - SQ32	SUMMARY OF QUANTITIES
39	SI1	SHARED ITEM TABLE
40 - 86	RS1 - RS47	ROADWAY SECTIONS
87	RS48	ROADWAY SECTIONS - DETAILS
88 - 93	GD1 - GD6	GORE DETAILS
94 - 99	TRS1 - TRS6	TEMPORARY ROADWAY SECTIONS
100 - 109	CN1A - CN9	CONTOUR PLAN
		*** VOLUME 2 ***
110 - 113	IN5 - IN8	INDEX
114 - 123	SU1 - SU10	STAGED CONSTRUCTION
124 - 141	AL1A - AL14	ALIGNMENT AND RIGHT OF WAY
142 - 147	SA1-1 - SA1-6	STAGED ALIGNMENT - STAGE 1
148 - 157	SA1A-1 - SA1A-10	STAGED ALIGNMENT - STAGE 1A
158 - 163	SA1B-1 - SA1B-6	STAGED ALIGNMENT - STAGE 1B
164 - 167	SA1C-1 - SA1C-4	STAGED ALIGNMENT - STAGE 1C
168 - 174	SA1D-1 - SA1D-7	STAGED ALIGNMENT - STAGE 1D
175 - 181	SA2-1 - SA2-7	STAGED ALIGNMENT - STAGE 2
182 - 192	SA3A-1 - SA3A-11	STAGED ALIGNMENT - STAGE 3A
193 - 198	SA3B-1 - SA3B-6	STAGED ALIGNMENT - STAGE 3B

INDEX (CONTINUED)

SHEET NO.	PLAN REFERENCE NO.	TITLE
199 - 205	SA4-1 - SA4-7	STAGED ALIGNMENT - STAGE 4
206 - 210	SA5-1 - SA5-5	STAGED ALIGNMENT - STAGE 5
211 - 221	QTSP1 - QTSP11	QUANTITY TABULATION - SITE PREPARATION
222 - 235	SP1A - SP11	SITE PREPARATION
236 - 237	SPD1 - SPD2	SITE PREPARATION DETAILS
238 - 247	EU1A - EU9	EXISTING UTILITY PLAN
248 - 249	EUS1 - EUS2	EXISTING UTILITY SCHEDULE
250 - 286	RP1 - RP37	ROADWAY PROFILE
		*** VOLUME 3 ***
287 - 290	IN9 - IN12	INDEX
291	CWM1	CONTAMINATED WATER MANAGEMENT
292 - 300	VA1 - VA9	VAULT REMOVAL PLAN
301 - 310	SC1 - SC10	STAGED CONVEYANCE
311	QTEC1	QUANTITY TABULATION - TESC GENERAL NOTES
312 - 347	QTEC2 - QTEC37	QUANTITY TABULATION - TESC
348 - 359	EC1 - EC10	TESC PLAN - STAGE 1
360 - 371	EC11 - EC20	TESC PLAN - STAGE 1A
372 - 383	EC21 - EC30	TESC PLAN - STAGE 1B
384 - 395	EC31 - EC40	TESC PLAN - STAGE 1C
396 - 407	EC41 - EC50	TESC PLAN - STAGE 1D

PLAN REFERENCE NO.

SHEET OF SHEETS

NOTE: ALL SHEET REFERENCES, FIRST NOS. OF STRUCTURE CODE DESIGNATIONS AND MATCH LINE SHEET REFERENCES, ETC., THROUGHOUT THE PLANS, REFER TO THE ENTRY IN THE PLAN REFERENCE NUMBER BOX.

FILE NAME	PW:_XL3497\PS&E Sheets\Index\P3497_SH_IN_601.dgn
TIME	11:02:56 AM
DATE	3/14/2014
PLOTTED BY	SancheA
DESIGNED BY	S. SHYU
ENTERED BY	A. SANCHEZ
CHECKED BY	B. REGISTER
PROJ. ENGR.	J. PEREZ
REGIONAL ADM.	K. DAYTON

REVISION | DATE | BY

REGION NO.	STATE	FED.AID PROJ.NO.
10	WASH	
JOB NUMBER 12C501		
CONTRACT NO.		LOCATION NO. XL3497

P.E. STAMP BOX DATE

P.E. STAMP BOX DATE

Washington State Department of Transportation

I-5
M ST TO PORTLAND AVE - HOV

INDEX

PLAN REF NO IN21

SHEET 820 OF 1763 SHEETS

INDEX

SHEET NO.	PLAN REFERENCE NO.	TITLE
408 - 419	EC51 - EC60	TESC PLAN - STAGE 2
420 - 431	EC61 - EC70	TESC PLAN - STAGE 3A
432 - 443	EC71 - EC80	TESC PLAN - STAGE 3B
444 - 455	EC81 - EC90	TESC PLAN - STAGE 4
456 - 467	EC91 - EC100	TESC PLAN - STAGE 5
468 - 469	ECP1 - ECP2	TESC PROFILE
470 - 473	ECD1 - ECD4	TESC DETAILS
		*** VOLUME 4 ***
474 - 477	IN13 - IN16	INDEX
478	NTDR1	STRUCTURE NOTES - DRAINAGE GENERAL NOTES
479 - 558	NTDR2 - NTDR81	STRUCTURE NOTES - DRAINAGE
559 - 561	DRST1 - DRST3	STAGED DRAINAGE TABLE
562 - 571	DR1A - DR9	DRAINAGE PLAN
572 - 596	DP1 - DP25	DRAINAGE PROFILE
597 - 601	DD1 - DD5	DRAINAGE DETAIL
602 - 612	PD1 - PD11	POND DETAILS
613	TNTDR1	STRUCTURE NOTES - TEMPORARY DRAINAGE GENERAL NOTES
614 - 629	TNTDR2 - TNTDR17	STRUCTURE NOTES - TEMPORARY DRAINAGE
630 - 631	TDRST1 - TDRST2	TEMPORARY STAGED DRAINAGE TABLE
632 - 641	TDR1A - TDR9	TEMPORARY DRAINAGE PLAN
642 - 646	TDP1 - TDP5	TEMPORARY DRAINAGE PROFILE
647 - 650	TDD1 - TDD4	TEMPORARY DRAINAGE DETAIL
651 - 662	LS1 - LS12	LANDSCAPING

INDEX (CONTINUED)

SHEET NO.	PLAN REFERENCE NO.	TITLE
		*** VOLUME 5 ***
663 - 666	IN17 - IN20	INDEX
667 - 677	QTPV1 - QTPV11	QUANTITY TABULATION - PAVING
678 - 687	PV1A - PV9	PAVING PLAN
688 - 712	PVD1 - PVD24	PAVING DETAILS
713 - 717	PRD1 - PRD5	ADA RAMP DETAILS
718 - 724	PJ1 - PJ8	PAVING JOINT PLAN
725 - 729	PVS1-1A - PVS1-9	PAVING PLAN - STAGE 1
730A - 737	PVS1A-1 - PVS1A-9	PAVING PLAN - STAGE 1A
738 - 745	PVS1B-1 - PVS1B-9	PAVING PLAN - STAGE 1B
746 - 753	PVS1C-1 - PVS1C-9	PAVING PLAN - STAGE 1C
753A - 761	PVS1D-1A - PVS1D-9	PAVING PLAN - STAGE 1D
762 - 768	PVS2-2 - PVS2-9	PAVING PLAN - STAGE 2
769 - 774	PVS3A-3 - PVS3A-8	PAVING PLAN - STAGE 3A
775 - 779	PVS3B-3 - PVS3B-8	PAVING PLAN - STAGE 3B
780 - 785	PVS4-2 - PVS4-8	PAVING PLAN - STAGE 4
786 - 794	PVS5-1A - PVS5-9	PAVING PLAN - STAGE 5
795 - 798	QTMK1 - QTMK4	QUANTITY TABULATION - PAVEMENT MARKINGS
799 - 812	MK1A - MK11	PAVEMENT MARKING PLAN
813 - 819	MKD1 - MKD7	PAVEMENT MARKING DETAILS

PLAN REFERENCE NO.

SHEET OF SHEETS

NOTE: ALL SHEET REFERENCES, FIRST NOS. OF STRUCTURE CODE DESIGNATIONS AND MATCH LINE SHEET REFERENCES, ETC., THROUGHOUT THE PLANS, REFER TO THE ENTRY IN THE PLAN REFERENCE NUMBER BOX.

FILE NAME	PW:_XL3497\PS&E Sheets\Index\ADD1_P3497_SH_IN_602.dgn
TIME	3:31:15 PM
DATE	4/23/2014
PLOTTED BY	SancheA
DESIGNED BY	S. SHYU
ENTERED BY	A. SANCHEZ
CHECKED BY	B. REGISTER
PROJ. ENGR.	J. PEREZ
REGIONAL ADM.	K. DAYTON

REVISION	DATE	BY
AD1 - REVISED INDEX	05/02/2014	BR

REGION NO. 10 | STATE WASH | FED.AID PROJ.NO.

JOB NUMBER 12C501

CONTRACT NO.

LOCATION NO. XL3497

P.E. STAMP BOX DATE

P.E. STAMP BOX DATE

Washington State Department of Transportation

I-5
M ST TO PORTLAND AVE - HOV

INDEX

PLAN REF NO IN22

SHEET 821 OF 1763 SHEETS

INDEX

SHEET NO.	PLAN REFERENCE NO.	TITLE
		*** VOLUME 6 ***
820 - 823	IN21 - IN24	INDEX
824 - 825	WR1 - WR2	WALL VICINITY MAP
826 - 837	WR3 - WR14	I5NB WALL-A
838 - 839	WR15 - WR16	I5SB WALL-A
840 - 848	WR17 - WR25	I5SB WALL-E
849 - 886	WR26 - WR63	NBN WALL-A & SNB WALL-A
887 - 889	WR64 - WR66	SSB WALL-A
890 - 894	WR67 - WR71	SSB WALL-B1 & SSB WALL-B2
895 - 896	WR72 - WR73	ARCHITECTURAL DETAILS MISCELLANEOUS
897 - 902	BM1 - BM6	I-5 OVER M STREET BRIDGE NO. 5/437
903 - 909	BE1 - BE7	I-5 OVER I-705 AND TACOMA RAIL BRIDGE NO. 5/445HOV
910 - 925	BW1 - BW16	I-5 OVER I-705 AND TACOMA RAIL BRIDGE NO. 5/445W
926 - 994	MC0 - MC68	MCKINLEY WAY OVER I-5 BRIDGE NO. 5/448
		*** VOLUME 7 ***
995 - 998	IN25 - IN28	INDEX
999 - 1103	PA0 - PA104	PACIFIC AVE OVER I-5 BRIDGE NO. 5/444
1104 - 1194	SR0 - SR90	I-5 OVER I-705 AND TACOMA RAIL BRIDGE NO. 5/445E

INDEX (CONTINUED)

SHEET NO.	PLAN REFERENCE NO.	TITLE
		*** VOLUME 8 ***
1195 - 1198	IN29 - IN32	INDEX
1199 - 1205	SS1 - SS7	SIGN SPECIFICATIONS
1206 - 1212	SE1 - SE8	SIGN REMOVAL PLAN
1213 - 1219	SN1 - SN8	SIGN PLAN
1220	SND1	SIGN DETAIL PLAN
1221 - 1222	SNSD1 - SNSD2	SIGN STAGING TABLE
1223 - 1225	SNSD3 - SNSD5	SIGN STAGING SPECIFICATIONS
1226 - 1267	SNS3 - SNS110	SIGN STAGING PLAN
1268 - 1291	TSB1 - TSB24	TEMPORARY SIGN STRUCTURE
1292 - 1320	SB1 - SB29	SIGN STRUCTURES
1321 - 1322	TILN1 - TILN2	TEMPORARY ILLUMINATION NOTES
1323 - 1335	TIL0 - TIL9	TEMPORARY ILLUMINATION PLAN
1336 - 1343	ILN1 - ILN8	ILLUMINATION NOTES AND SCHEDULES
1344 - 1353	IL1 - IL8	ILLUMINATION PLAN
1354	ILD1	ILLUMINATION AREA DETAIL
1355	ILD2	UNDERDECK HANGER DETAILS
1356 - 1359	ILC1 - ILC4	ILLUMINATION PLAN - CITY

PLAN REFERENCE NO.

SHEET OF SHEETS

NOTE: ALL SHEET REFERENCES, FIRST NOS. OF STRUCTURE CODE DESIGNATIONS AND MATCH LINE SHEET REFERENCES, ETC., THROUGHOUT THE PLANS, REFER TO THE ENTRY IN THE PLAN REFERENCE NUMBER BOX.

FILE NAME	PW:_XL3497\PS&E Sheets\Index\P3497_SH_IN_603.dgn
TIME	11:03:06 AM
DATE	3/14/2014
PLOTTED BY	SancheA
DESIGNED BY	S. SHYU
ENTERED BY	A. SANCHEZ
CHECKED BY	B. REGISTER
PROJ. ENGR.	J. PEREZ
REGIONAL ADM.	K. DAYTON

REVISION | DATE | BY

REGION NO. 10 | STATE WASH | FED.AID PROJ.NO.

JOB NUMBER 12C501

CONTRACT NO.

LOCATION NO. XL3497

DATE P.E. STAMP BOX

DATE P.E. STAMP BOX

Washington State Department of Transportation

I-5
M ST TO PORTLAND AVE - HOV

INDEX

PLAN REF NO IN23

SHEET 822 OF 1763 SHEETS

INDEX

SHEET NO.	PLAN REFERENCE NO.	TITLE
1360	ITN1	ITS LEGEND AND GENERAL NOTES
1361 - 1366	ITTP1 - ITTP5	ITS TEMPORARY PLAN
1367 - 1385	ITAA - IT12	ITS PLAN
1386 - 1387	ITBX1 - ITBX2	BOX DETAIL
1388	ITCB1	CABINET EQUIPMENT DETAIL
1389 - 1393	ITCB2 - ITCB6	CABINET DETAIL
1394 - 1396	ITCD1 - ITCD3	CONDUIT DETAIL
1397	ITCF1	CABINET FOUNDATION
1398 - 1399	ITDS1 - ITDS2	DATA STATION DETAIL
1400	ITFD1	FENCING DETAIL
1401 - 1414	ITFO1 - ITFO14	FIBER OPTIC DETAIL
1415	ITND1	NETWORK DIAGRAM
1416 - 1417	ITRM1 - ITRM2	RAMP METER DETAIL
1418	ITTD1	TRANSFORMER DETAIL
1419	ITVC1	VIDEO CAMERA DETAIL
		*** VOLUME 9 ***
1420 - 1423	IN33 - IN36	INDEX
1424 - 1425	TCIN1 - TCIN2	TRAFFIC CONTROL INDEX
1426 - 1434	QTTC1 - QTTC9	QUANTITY TABULATION - TRAFFIC CONTROL
1435	TCS1	ADVANCE SIGN PLAN
1436 - 1444	TCS2 - TCS10	TRAFFIC CONTROL STAGING (STAGE 1)
1445 - 1454	TCS11 - TCS20	TRAFFIC CONTROL STAGING (STAGE 1A)
1455 - 1461	TCS21 - TCS27	TRAFFIC CONTROL STAGING (STAGE 1B)
1462 - 1468	TCS28 - TCS34	TRAFFIC CONTROL STAGING (STAGE 1C)
1469 - 1485	TCS35 - TCS51	TRAFFIC CONTROL STAGING (STAGE 1D)
1486 - 1504	TCS52 - TCS70	TRAFFIC CONTROL STAGING (STAGE 2)
1505 - 1529	TCS71 - TCS96	TRAFFIC CONTROL STAGING (STAGE 3A)
1530 - 1539	TCS97 - TCS106	TRAFFIC CONTROL STAGING (STAGE 3B)

INDEX (CONTINUED)

SHEET NO.	PLAN REFERENCE NO.	TITLE
1540 - 1549	TCS107 - TCS116	TRAFFIC CONTROL STAGING (STAGE 4)
1550 - 1558	TCS118 - TCS126	TRAFFIC CONTROL STAGING (STAGE 5)
		*** VOLUME 10 ***
1559 - 1562	IN37 - IN40	INDEX
1563 - 1564	TCIN3 - TCIN4	TRAFFIC CONTROL INDEX
1565 - 1580	TC1 - TC16	TRAFFIC CONTROL PLAN (STAGE 1A)
1581 - 1589	TC17 - TC25	TRAFFIC CONTROL PLAN (STAGE 1B)
1590 - 1596	TC26 - TC32	TRAFFIC CONTROL PLAN (STAGE 1C)
1597 - 1607	TC33 - TC43	TRAFFIC CONTROL PLAN (STAGE 1D)
1608 - 1623	TC44 - TC59	TRAFFIC CONTROL PLAN (STAGE 2)
1624 - 1638	TC60 - TC74	TRAFFIC CONTROL PLAN (STAGE 3A)
1639 - 1645	TC75 - TC81	TRAFFIC CONTROL PLAN (STAGE 3B)
1646 - 1655	TC82 - TC91	TRAFFIC CONTROL PLAN (STAGE 4)
1656 - 1663	TC92 - TC99	TRAFFIC CONTROL PLAN (STAGE 5)
1664 - 1712	TC100 - TC148	MISCELLANEOUS SITE SPECIFIC TRAFFIC CONTROL PLANS
1713 - 1724	TCD1 - TCD12	TRAFFIC CONTROL DETAIL
1725 - 1761	DU1 - DU37	DETOUR PLAN
1762 - 1763	DU38 - DU39	PEDESTRIAN DETOUR

PLAN REFERENCE NO.

SHEET OF SHEETS

NOTE: ALL SHEET REFERENCES, FIRST NOS. OF STRUCTURE CODE DESIGNATIONS AND MATCH LINE SHEET REFERENCES, ETC., THROUGHOUT THE PLANS, REFER TO THE ENTRY IN THE PLAN REFERENCE NUMBER BOX.

FILE NAME	PW:_XL3497\PS&E Sheets\Index\P3497_SH_IN_604.dgn
TIME	11:03:10 AM
DATE	3/14/2014
PLOTTED BY	SancheA
DESIGNED BY	S. SHYU
ENTERED BY	A. SANCHEZ
CHECKED BY	B. REGISTER
PROJ. ENGR.	J. PEREZ
REGIONAL ADM.	K. DAYTON

REVISION | DATE | BY

REGION NO.	STATE	FED.AID PROJ.NO.
10	WASH	
JOB NUMBER 12C501		
CONTRACT NO.		LOCATION NO. XL3497

P.E. STAMP BOX DATE

P.E. STAMP BOX DATE

Washington State Department of Transportation

I-5
M ST TO PORTLAND AVE - HOV

INDEX

PLAN REF NO IN24

SHEET 823 OF 1763 SHEETS

WALL SCHEDULE

WALL NAME	WALL TYPE	SHEET NO.
MP WALL VICINITY MAP	-- -- --	WR1 - WR2
I5NB WALL-A	GRADE SEPARATION BARRIER WALL	WR3 - WR14
I5NB WALL-B	REINFORCED CONCRETE RETAINING WALL	SR25 - SR26
I5NB WALL-C	REINFORCED CONCRETE RETAINING WALL	SR26
I5NB WALL-D	REINFORCED CONCRETE RETAINING WALL	SR36
I5NB WALL-E	REINFORCED CONCRETE RETAINING WALL	SR37 - SR38
I5SB WALL-A	REINFORCED CONCRETE RETAINING WALL	WR15 - WR16
I5SB WALL-E	NON-STD REINFORCED CONCRETE RETAINING WALL	WR17 - WR25
MCK WALL-A	REINFORCED CONCRETE RETAINING WALL	MC36
MCK WALL-B	REINFORCED CONCRETE RETAINING WALL	MC36
MCK WALL-C	REINFORCED CONCRETE RETAINING WALL	MC22
NBN WALL-A & SNB WALL-A	REINFORCED CONCRETE RETAINING WALL SOIL NAIL WALL	WR26 - WR63
SSB WALL-A	REINFORCED CONCRETE RETAINING WALL	WR64 - WR66
SSB WALL-B1 & SSB WALL-B2	REINFORCED CONCRETE RETAINING WALL	WR67 - WR71
ARCHITECTURAL DETAILS FOR ALL WALLS	-- -- --	WR72 - WR73

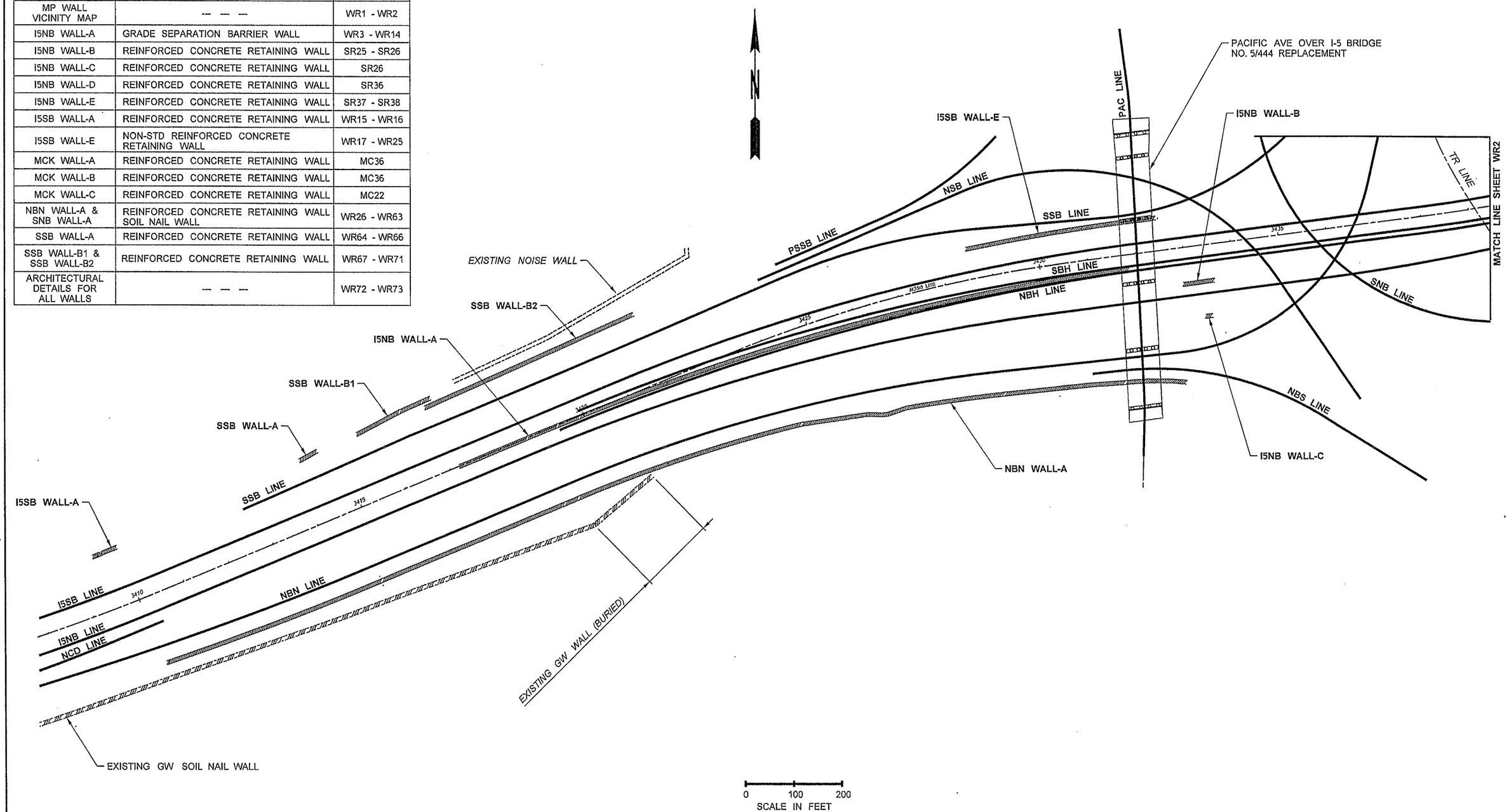

FILE NAME	PW:_XL3497\PS&E Sheets\Wall Vicinity Map\P3497_SH_WR_VM_001.dgn						
TIME	2:06:21 PM				REGION NO. 10	STATE WASH	FED.AID PROJ.NO.
DATE	2/20/2014						
PLOTTED BY	ShannoC				JOB NUMBER 12C501		
DESIGNED BY	F. COLLS						
ENTERED BY	C. SHANNON						
CHECKED BY	B. REGISTER				CONTRACT NO.		LOCATION NO.
PROJ. ENGR.	J. PEREZ						XL3497
REGIONAL ADM.	K. DAYTON	REVISION	DATE	BY			

P.E. STAMP BOX DATE

P.E. STAMP BOX DATE

Washington State Department of Transportation

I-5
M ST TO PORTLAND AVE - HOV

WALL VICINITY MAP

PLAN REF NO WR1

SHEET 824 OF 1763 SHEETS

WALL SCHEDULE

WALL NAME	WALL TYPE	SHEET NO.
MP WALL VICINITY MAP	--- --- ---	WR1 - WR2
I5NB WALL-A	GRADE SEPARATION BARRIER WALL	WR3 - WR14
I5NB WALL-B	REINFORCED CONCRETE RETAINING WALL	SR25 - SR26
I5NB WALL-C	REINFORCED CONCRETE RETAINING WALL	SR26
I5NB WALL-D	REINFORCED CONCRETE RETAINING WALL	SR36
I5NB WALL-E	REINFORCED CONCRETE RETAINING WALL	SR37 - SR38
I5SB WALL-A	REINFORCED CONCRETE RETAINING WALL	WR15 - WR16
I5SB WALL-E	NON-STD REINFORCED CONCRETE RETAINING WALL	WR17 - WR25
MCK WALL-A	REINFORCED CONCRETE RETAINING WALL	MC36
MCK WALL-B	REINFORCED CONCRETE RETAINING WALL	MC36
MCK WALL-C	REINFORCED CONCRETE RETAINING WALL	MC22
NBN WALL-A & SNB WALL-A	REINFORCED CONCRETE RETAINING WALL SOIL NAIL WALL	WR26 - WR63
SSB WALL-A	REINFORCED CONCRETE RETAINING WALL	WR64 - WR66
SSB WALL-B1 & SSB WALL-B2	REINFORCED CONCRETE RETAINING WALL	WR67 - WR71
ARCHITECTURAL DETAILS FOR ALL WALLS	--- --- ---	WR72 - WR73

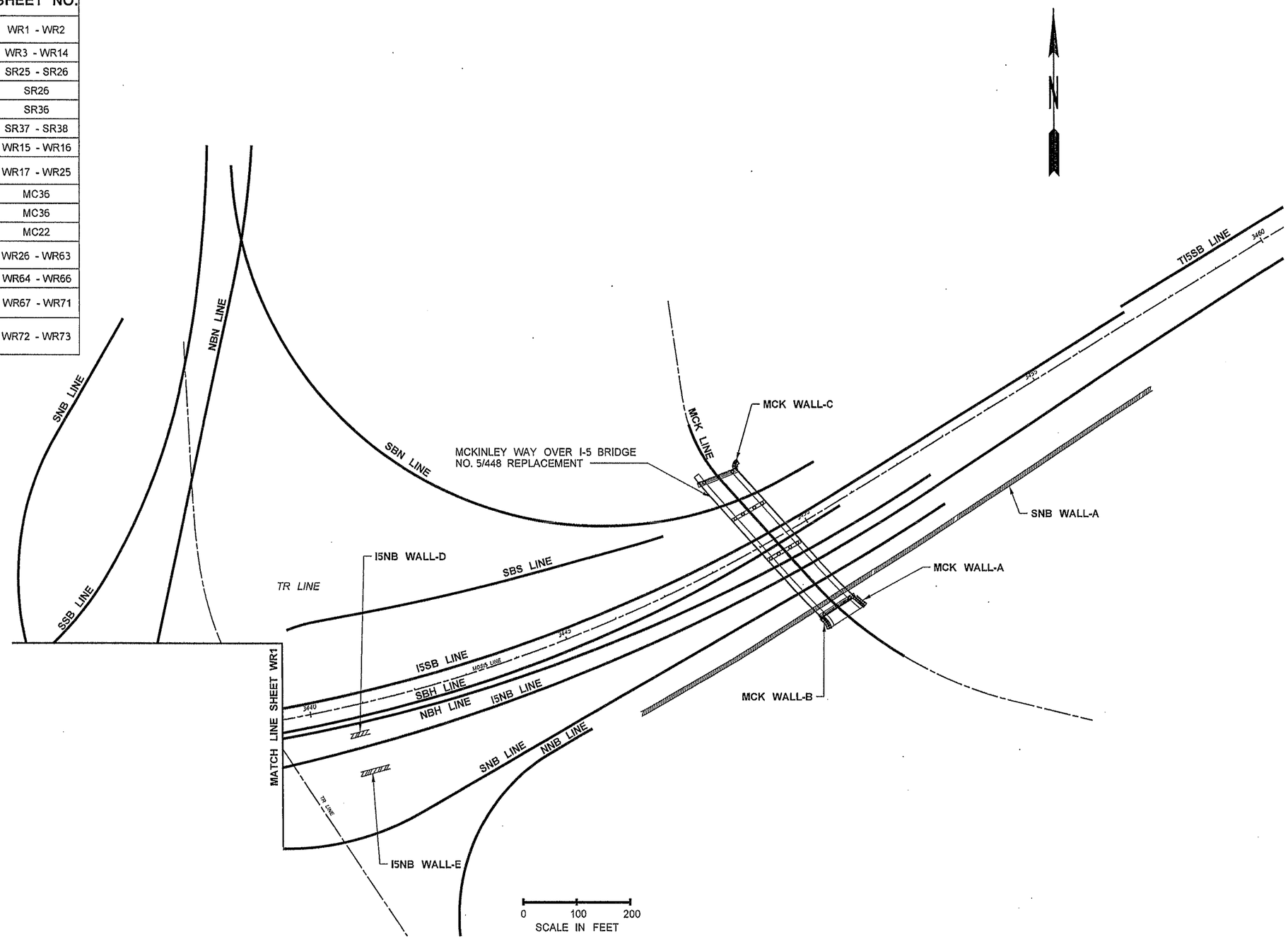

FILE NAME	PW:_XL3497\PS&E Sheets\Wall Vicinity Map\P3497_SH_WR_VM_002.dgn						
TIME	2:06:38 PM				REGION NO. 10	STATE WASH	FED.AID PROJ.NO.
DATE	2/20/2014						
PLOTTED BY	ShannoC						
DESIGNED BY	F. COLLS				JOB NUMBER 12C501		
ENTERED BY	C. SHANNON						
CHECKED BY	B. REGISTER				CONTRACT NO.		LOCATION NO.
PROJ. ENGR.	J. PEREZ						XL3497
REGIONAL ADM.	K. DAYTON	REVISION	DATE	BY			

P.E. STAMP BOX DATE

P.E. STAMP BOX DATE

Washington State Department of Transportation

I-5
M ST TO PORTLAND AVE - HOV

WALL VICINITY MAP

PLAN REF NO WR2

SHEET 825 OF 1763 SHEETS

CURVE DATA					
P.I. STATION	DELTA	RADIUS	TANGENT	LENGTH	BK. TANGENT BRG.
15NB WALL-A 11+88.04	0°54'09" RT	4234.00'	33.35'	66.69'	N 67°21'36" E

SEC. 9 T. 20N. R. 3E. W.M.
CITY OF TACOMA

I-5

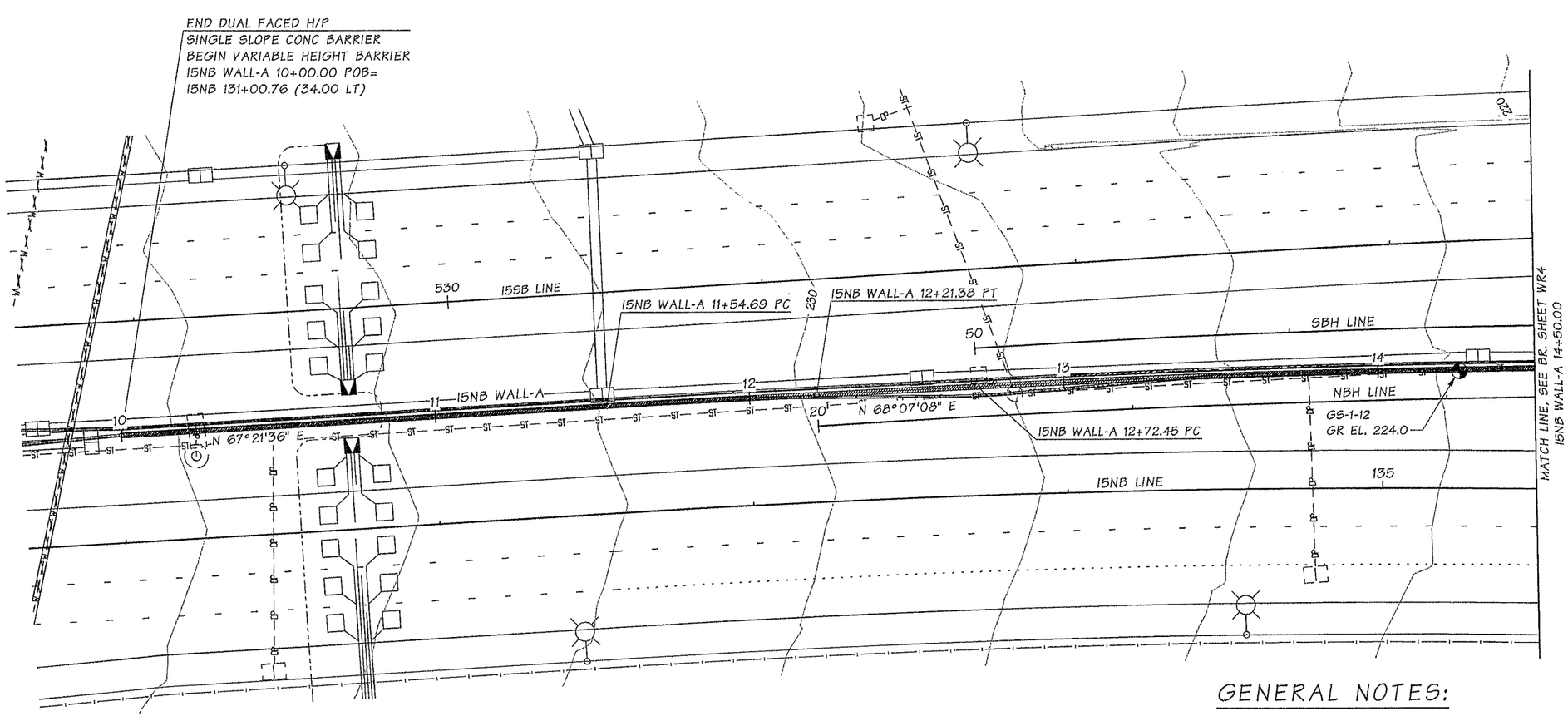

DATUM

N.A.V.D. OF 1988

PLAN

LEGEND

B/5 - IDENTIFIES SECTION, VIEW OR DETAIL
TAKEN OR SHOWN ON BRIDGE SHEET 5

B/— - TAKEN OR SHOWN ON THE SAME SHEET

- TEST HOLE

GENERAL NOTES:

1. ALL MATERIAL AND WORKMANSHIP SHALL BE IN ACCORDANCE WITH THE REQUIREMENTS OF THE WASHINGTON STATE DEPARTMENT OF TRANSPORTATION STANDARD SPECIFICATIONS FOR ROAD, BRIDGE AND MUNICIPAL CONSTRUCTION DATED 2014, AND AMENDMENTS.
2. ALL CAST-IN-PLACE CONCRETE SHALL BE CLASS 4000.
3. EXISTING GROUNDLINE IS APPROXIMATE AND SHALL BE VERIFIED BY THE CONTRACTOR IN THE FIELD.
4. FOR EXISTING UTILITIES LEGEND SEE EXISTING UTILITY PLANS.
5. CONDUITS, JUNCTION BOXES, AND UTILITIES ARE SHOWN FOR REFERENCE ONLY. THE CONTRACTOR SHALL COORDINATE THESE PLANS WITH ELECTRICAL, I.T.S. AND OTHER CIVIL PLANS.
6. FOR BACKFILL AND DRAINAGE REQUIREMENTS SEE STANDARD PLAN D-4.

SUMMARY OF QUANTITIES
15NB WALL-A

STD. ITEM NO.	ITEM	UNIT	QUANTITY
1160	UNDERDRAIN PIPE 6 IN. DIAM.	L.F.	1,460
4006	STRUCTURE EXC CLASS A INCL. HAUL	C.Y.	3,620
4013	SHORING OR EXTRA EXC. CLASS A	S.F.	21,605
4025	GRAVEL BACKFILL FOR WALL	C.Y.	2,165
4150	ST. REINF. BAR FOR RETAINING WALL	LB	188,800
4139	CONC. CLASS 4000 FOR RETAINING WALL	C.Y.	1,866
7014	GRAVEL BACKFILL FOR DRAIN	C.Y.	70
7550	CONSTRUCTION GEOTEXTILE FOR UNDERGROUND DRAINAGE	S.Y.	90

NOTE:
THE QUANTITIES AS LISTED ON THIS SHEET ARE FOR THE CONVENIENCE OF THE CONTRACTOR AND ARE NOT GUARANTEED TO BE ACCURATE. THE QUANTITIES AS LISTED ON THE SUMMARY OF QUANTITIES SHEETS SHALL TAKE PRECEDENCE OVER ANY QUANTITY LISTED ON THIS SHEET.

VARIABLE HEIGHT CONCRETE BARRIER WALL

SR 5 FILE NO. ____ SHEET WR3

Bridge Design Engr.	Khaleghi, B	
Supervisor	Stoddard, RB	
Designed By	Burnham, B	05/13
Checked By	Pawelka, M	02/14
Detailed By	Davis, E	05/13
Bridge Projects Engr.		
Prelim. Plan By		
Architect/Specialist		

M:\Y-Team\M ST. TO PORTLAND BARRIER WALLS\I5NB WALL - A\window files\WR03-LAYOUT 1_AD1.wnd

DATE	REVISION	BY	APP'D
05/02/14	AD1 - UPDATE BID ITEM NAME	MEP	BK
05/02/14	AD1 - REMOVED BORING HOLE	MEP	BK

REGION NO.	STATE	FED. AID PROJ. NO.	SHEET NO.	TOTAL SHEETS
10	WASH.			

JOB NUMBER 12C501

BRIDGE AND STRUCTURES OFFICE

BIJAN KHALEGHI — STATE OF WASHINGTON — 27966 — STRUCTURAL ENGINEER — PROFESSIONAL ENGINEER — 5/2/14

Washington State Department of Transportation

I-5
M ST TO PORTLAND AVE - HOV
I5NB WALL - A
LAYOUT 1 OF 3

BRIDGE SHEET NO. WR3

SHEET 826 OF 1763 SHEETS

Fri May 02 13:05:10 2014

CURVE DATA					
P.I. STATION	DELTA	RADIUS	TANGENT	LENGTH	BK. TANGENT BRG.
I5NB WALL-A 18+69.14	14°14'36" RT	4775.80'	596.69'	1187.22'	N 67°53'58" E

SEC. 9 T. 20N. R. 3E. W.M.
CITY OF TACOMA

I-5

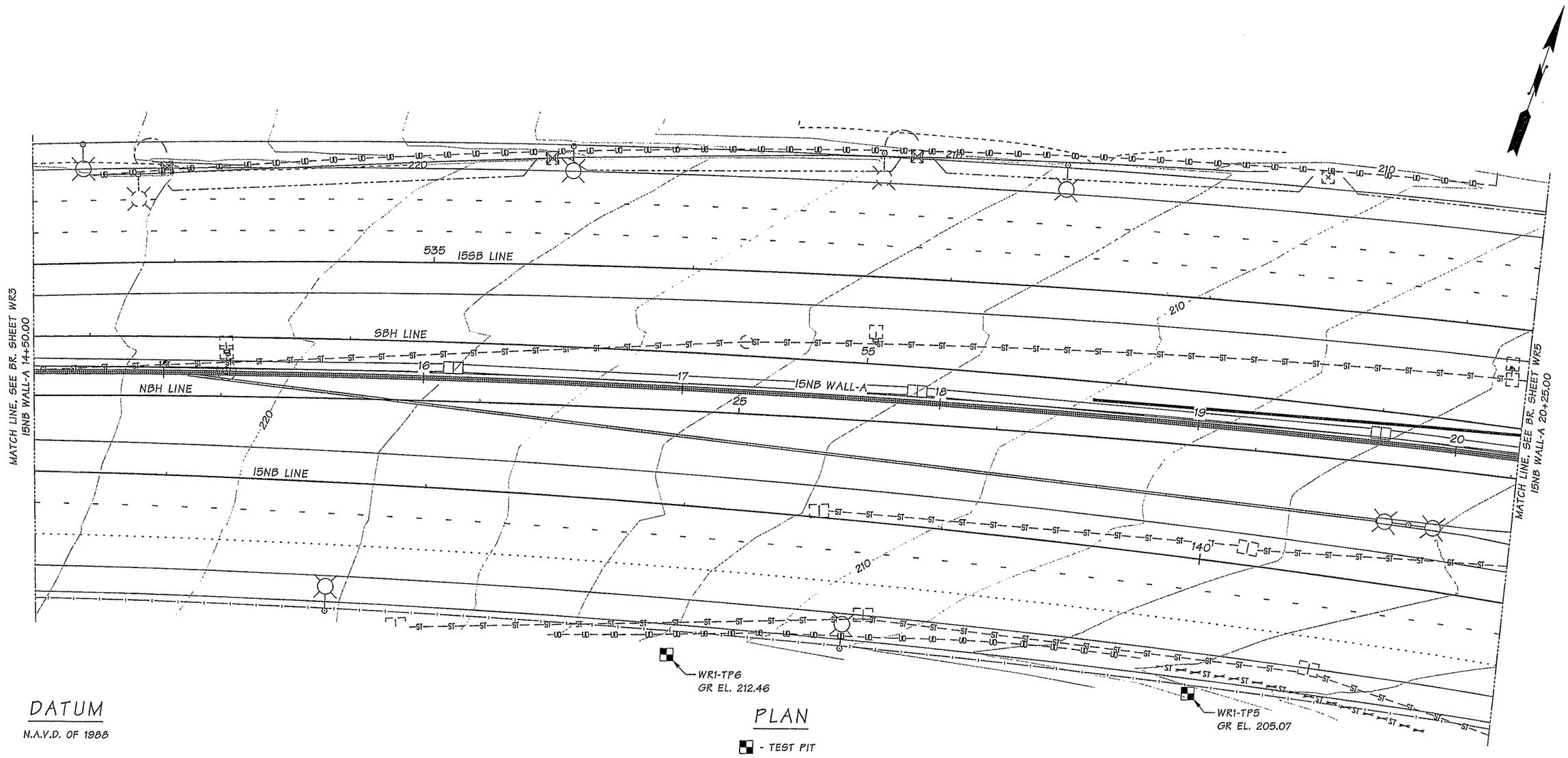

DATUM

N.A.V.D. OF 1988

PLAN

- TEST PIT

VARIABLE HEIGHT
CONCRETE BARRIER WALL

SR 5 FILE NO. ____ SHEET WR4

Bridge Design Engr.	Khaleghi, B		M:\Y-Team\M ST. TO PORTLAND BARRIER WALLS\I5NB WALL - A\window files\WR04-LAYOUT 2.wnd
Supervisor	Stoddard, RB		
Designed By	Burnham, B	05/13	
Checked By	Pawelka, M	02/14	
Detailed By	Davis, E	05/13	
Bridge Projects Engr.			
Prelim. Plan By			
Architect/Specialist			

DATE	REVISION	BY	APP'D

REGION NO.	STATE	FED. AID PROJ. NO.	SHEET NO.	TOTAL SHEETS
10	WASH.			
JOB NUMBER 12C501				

Wed Feb 12 09:10:46 2014

BRIDGE AND STRUCTURES OFFICE

BIJAN KHALEGHI, STATE OF WASHINGTON, 27995, PROFESSIONAL ENGINEER
2/12/14

Washington State Department of Transportation

I-5
M ST TO PORTLAND AVE - HOV

I5NB WALL - A

LAYOUT
2 OF 3

BRIDGE SHEET NO. WR4

SHEET 827 OF 1763 SHEETS

SEC. 9 T. 20N. R. 3E. W.M.

CITY OF TACOMA

I-5

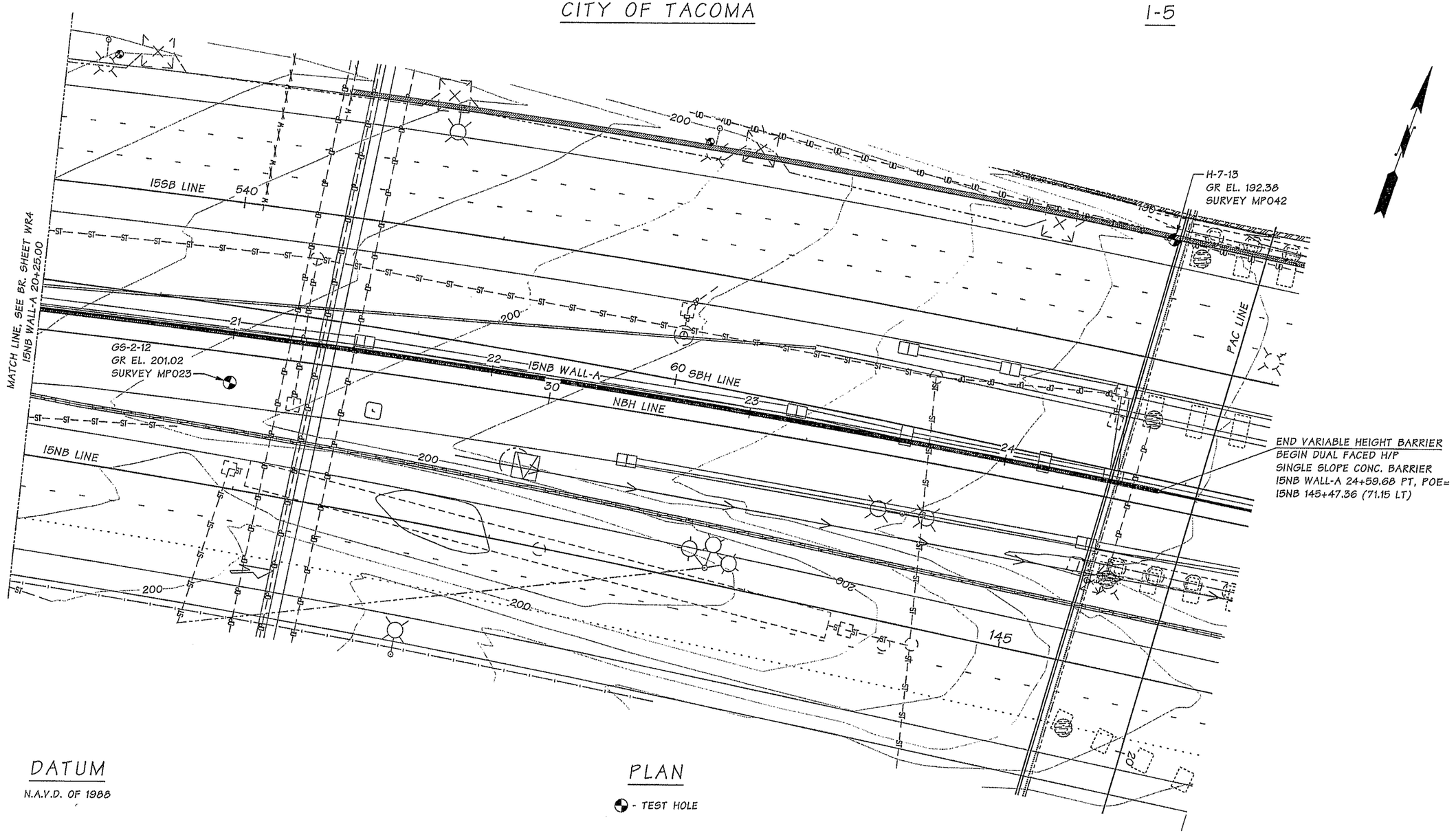

DATUM

N.A.V.D. OF 1988

PLAN

- TEST HOLE

VARIABLE HEIGHT
CONCRETE BARRIER WALL

SR 5 FILE NO. ____ SHEET WR5

Bridge Design Engr.	Khaleghi, B	
Supervisor	Stoddard, RB	
Designed By	Burnham, B	05/13
Checked By	Pawelka, M	02/14
Detailed By	Davis, E	05/13
Bridge Projects Engr.		
Prelim. Plan By		
Architect/Specialist		

M:\Y-Team\M ST. TO PORTLAND BARRIER WALLS\I5NB WALL - A\window files\WR05-LAYOUT 3.wnd

DATE	REVISION	BY	APP'D

REGION NO.	STATE	FED. AID PROJ. NO.	SHEET NO.	TOTAL SHEETS
10	WASH.			
JOB NUMBER 12C501				

Wed Feb 12 09:10:52 2014

BRIDGE AND STRUCTURES OFFICE

BIJAN KHALEGHI STATE OF WASHINGTON PROFESSIONAL ENGINEER

2/12/14

Washington State Department of Transportation

I-5
M ST TO PORTLAND AVE - HOV

I5NB WALL - A

LAYOUT 3 OF 3

BRIDGE SHEET NO. WR5

SHEET 828 OF 1763 SHEETS

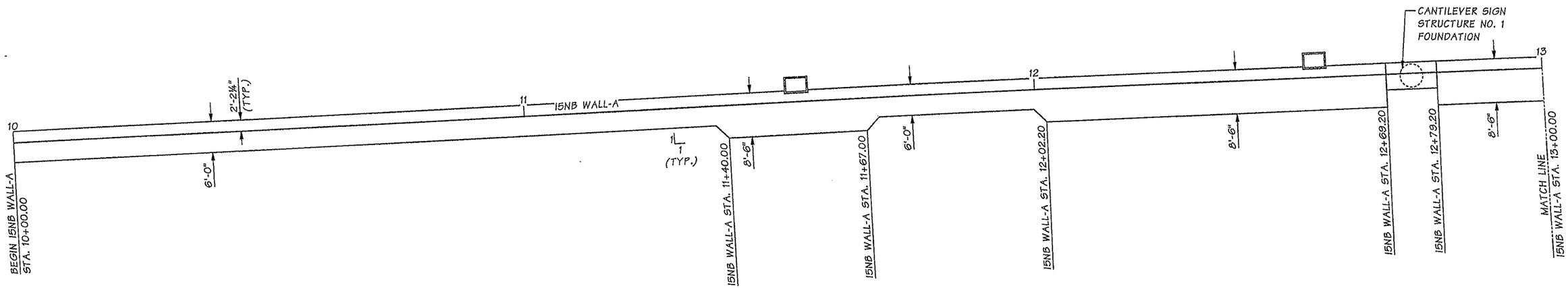

FOOTING PLAN

CONSTRUCTION JOINTS IN FOOTING SHOULD OCCUR AT 120'-0" SPA. MAX.

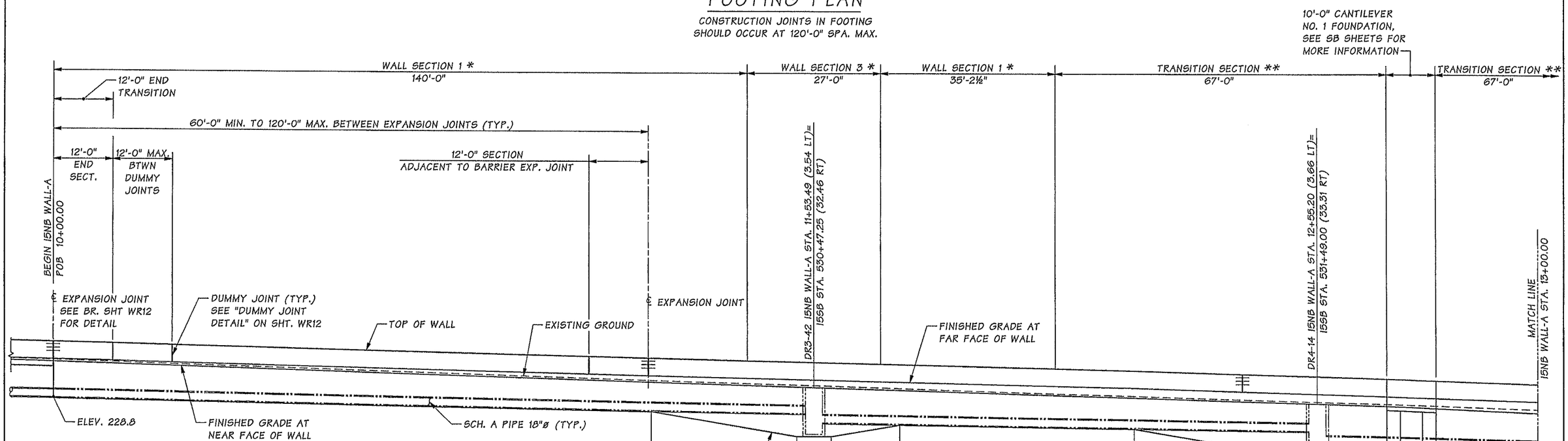

NOTES:

1. SEE TABLE ON WR13 FOR SUMMARY OF WALL ELEVATIONS.

* SEE SHEET WR11 FOR STEEL REINF. REQUIREMENTS.

** SEE SHEET WR13 FOR STEEL REINF. REQUIREMENTS.

DEVELOPED ELEVATION

15NB WALL-A

SR 5 FILE NO. ____ SHEET WR6

Bridge Design Engr.	Khaleghi, B		
Supervisor	Stoddard, RB		
Designed By	Burnham, B	05/13	
Checked By	Pawelka, M	02/14	
Detailed By	Davis, E	05/13	
Bridge Projects Engr.			
Prelim. Plan By			
Architect/Specialist			

M:\Y-Team\M ST. TO PORTLAND BARRIER WALLS\I5NB WALL - A\window files\WR06-ELEV 1.WND

DATE	REVISION	BY	APP'D

REGION NO.	STATE	FED. AID PROJ. NO.	SHEET NO.	TOTAL SHEETS
10	WASH.			
JOB NUMBER 12C501				

BRIAN DAVID BURNHAM, STATE OF WASHINGTON, 40135, REGISTERED PROFESSIONAL ENGINEER — 3-11-14

BRIDGE AND STRUCTURES OFFICE

BIJAN KHALEGHI, STATE OF WASHINGTON, 27604, PROFESSIONAL ENGINEER — 3/11/14

Washington State Department of Transportation

I-5
M ST TO PORTLAND AVE - HOV
I5NB WALL - A

WALL FOOTING AND ELEVATION
1 OF 5

BRIDGE SHEET NO. WR6

SHEET 829 OF 1763 SHEETS

Tue Mar 11 09:38:05 2014

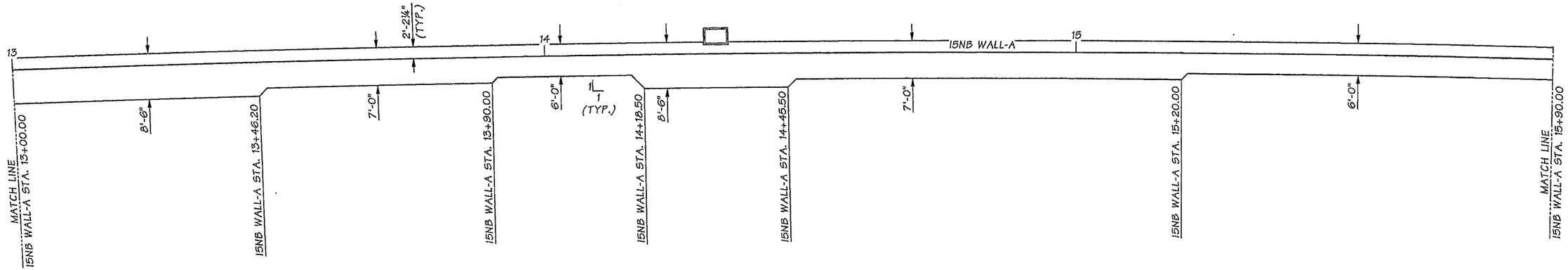

FOOTING PLAN

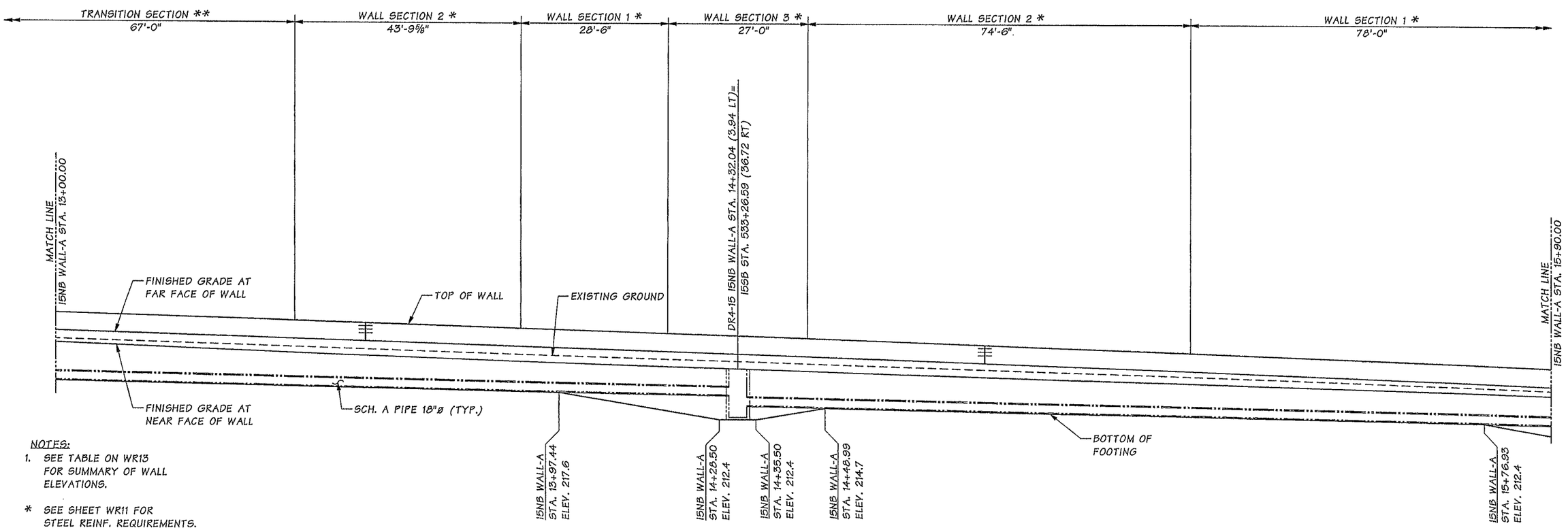

NOTES:

1. SEE TABLE ON WR13 FOR SUMMARY OF WALL ELEVATIONS.

* SEE SHEET WR11 FOR STEEL REINF. REQUIREMENTS.

** SEE SHEET WR13 FOR STEEL REINF. REQUIREMENTS.

DEVELOPED ELEVATION

15NB WALL-A

Bridge Design Engr.	Khaleghi, B		M:\Y-Team\M ST. TO PORTLAND BARRIER WALLS\I5NB WALL - A\window files\WR07-ELEV 2.wnd							
Supervisor	Stoddard, RB									
Designed By	Burnham, B	10/13								
Checked By	Pawelka, M	02/14								
Detailed By	Davis, E	10/13								
Bridge Projects Engr.										
Prelim. Plan By										
Architect/Specialist			DATE	REVISION	BY	APP'D				

Wed Feb 12 09:10:58 2014

REGION NO.	STATE	FED. AID PROJ. NO.	SHEET NO.	TOTAL SHEETS
10	WASH.			
JOB NUMBER 12C501				

BRIAN DAVIS BURNHAM STATE OF WASHINGTON 40186 REGISTERED PROFESSIONAL ENGINEER 2/12/14

BRIDGE AND STRUCTURES OFFICE

BRIAN KHALEGHI STATE OF WASHINGTON 37965 REGISTERED PROFESSIONAL ENGINEER 2/12/14

Washington State Department of Transportation

I-5
M ST TO PORTLAND AVE - HOV

I5NB WALL - A

WALL FOOTING AND ELEVATION
2 OF 5

BRIDGE SHEET NO. WR7

SHEET 830 OF 1763 SHEETS

SR 5 FILE NO. ____ SHEET WR7

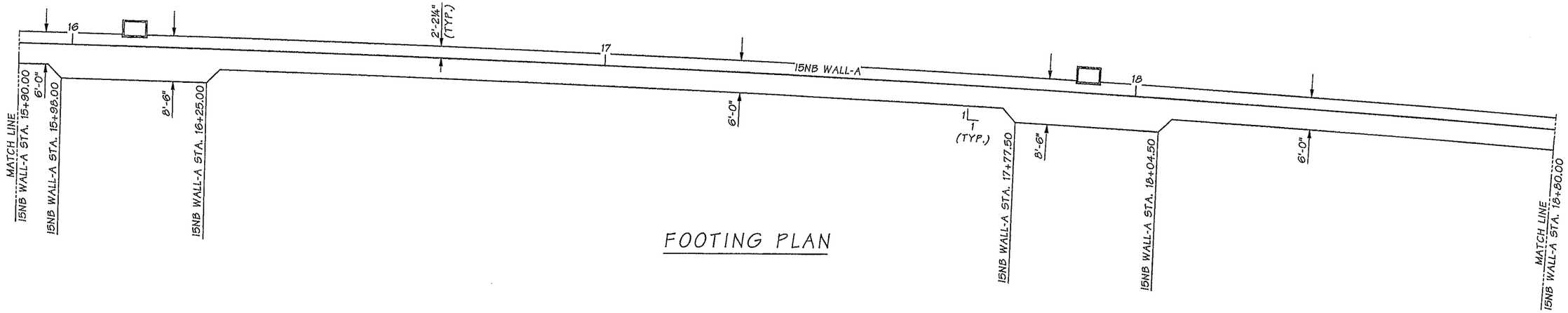

FOOTING PLAN

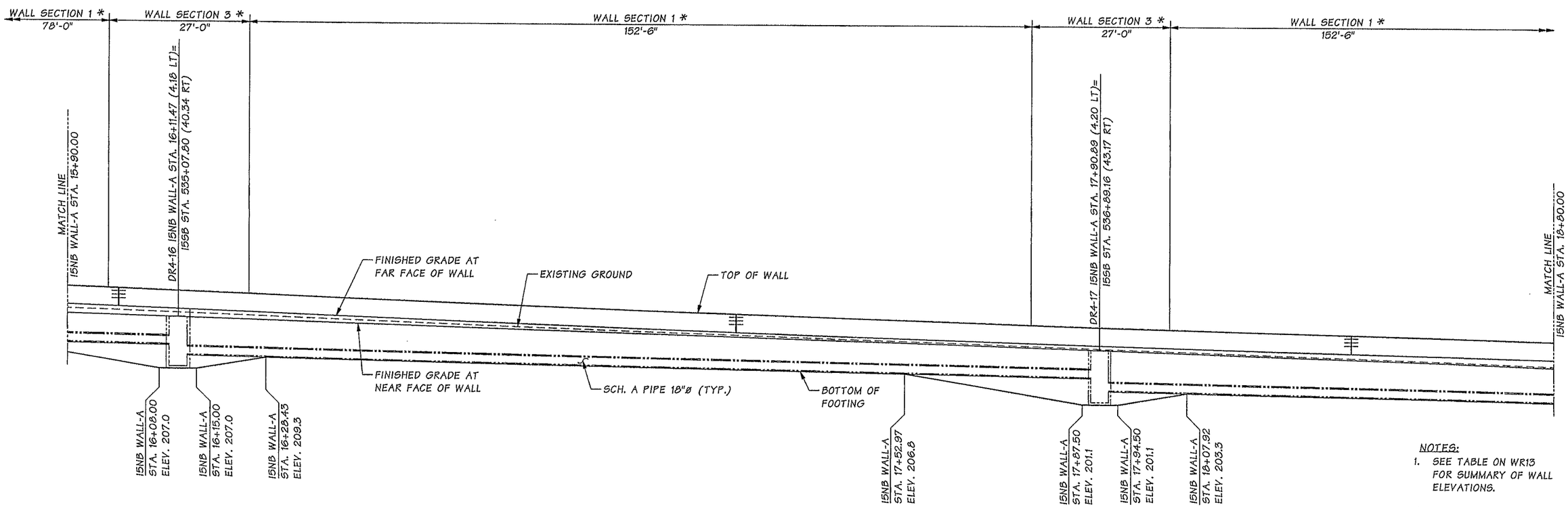

NOTES:

1. SEE TABLE ON WR13 FOR SUMMARY OF WALL ELEVATIONS.

* SEE SHEET WR11 FOR STEEL REINF. REQUIREMENTS.

DEVELOPED ELEVATION

15NB WALL-A

SR 5 FILE NO. ____ SHEET WR8

Bridge Design Engr.	Khaleghi, B	
Supervisor	Stoddard, RB	
Designed By	Burnham, B	10/13
Checked By	Pawelka, M	02/14
Detailed By	Davis, E	10/13
Bridge Projects Engr.		
Prelim. Plan By		
Architect/Specialist		

M:\Y-Team\M ST. TO PORTLAND BARRIER WALLS\I5NB WALL - A\window files\WR08-ELEV 3.wnd

DATE	REVISION	BY	APP'D

REGION NO.	STATE	FED. AID PROJ. NO.	SHEET NO.	TOTAL SHEETS
10	WASH.			

JOB NUMBER 12C501

BRIAN DAVID BURNHAM — STATE OF WASHINGTON — 46158 — REGISTERED PROFESSIONAL ENGINEER — 2/12/14

BRIDGE AND STRUCTURES OFFICE

BIJAN KHALEGHI — STATE OF WASHINGTON — 27685 — REGISTERED PROFESSIONAL ENGINEER — 2/12/14

Washington State Department of Transportation

I-5
M ST TO PORTLAND AVE - HOV

I5NB WALL - A

WALL FOOTING AND ELEVATION
3 OF 5

BRIDGE SHEET NO. WR8

SHEET 831 OF 1763 SHEETS

Wed Feb 12 09:11:00 2014

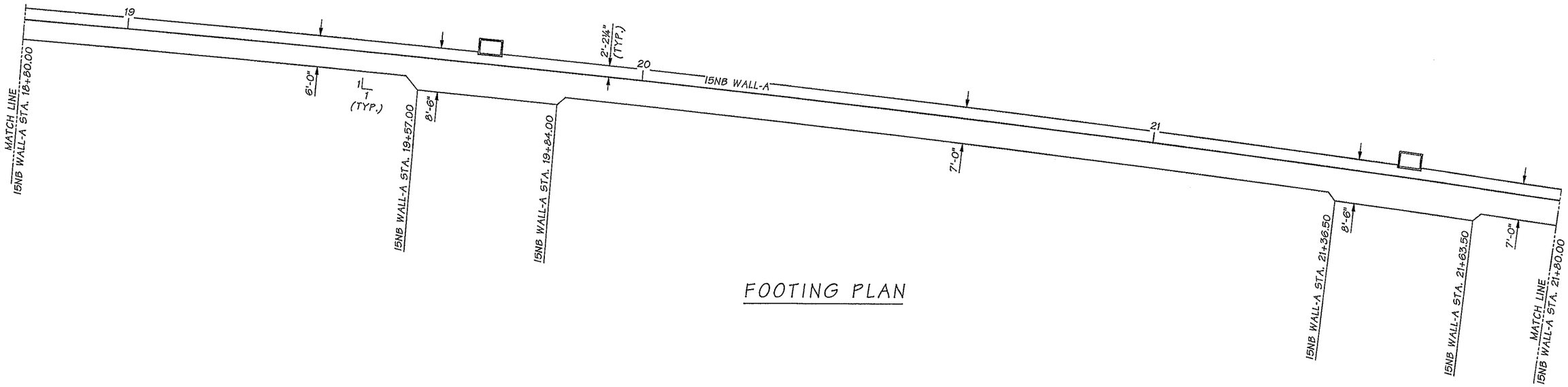

FOOTING PLAN

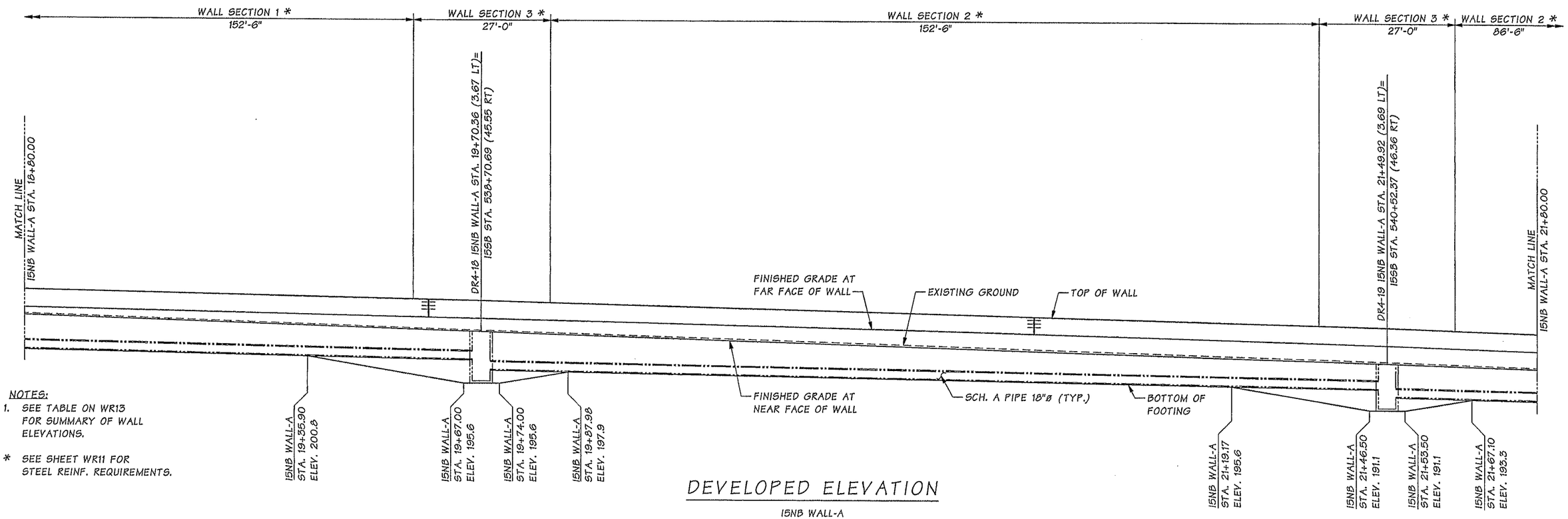

NOTES:
1. SEE TABLE ON WR13 FOR SUMMARY OF WALL ELEVATIONS.

* SEE SHEET WR11 FOR STEEL REINF. REQUIREMENTS.

DEVELOPED ELEVATION

15NB WALL-A

SR 5 FILE NO. SHEET WR9

Bridge Design Engr.	Khaleghi, B		M:\Y-Team\M ST. TO PORTLAND BARRIER WALLS\I5NB WALL - A\window files\WR09-ELEV 4.wnd								
Supervisor	Stoddard, RB										
Designed By	Burnham, B	10/13									
Checked By	Pawelka, M	02/14									
Detailed By	Davis, E	10/13									
Bridge Projects Engr.											
Prelim. Plan By											
Architect/Specialist			DATE	REVISION	BY	APP'D					

REGION NO.	STATE	FED. AID PROJ. NO.	SHEET NO.	TOTAL SHEETS
10	WASH.			
JOB NUMBER 12C501				

BRIDGE AND STRUCTURES OFFICE

2/12/14

2/12/14

Washington State Department of Transportation

I-5
M ST TO PORTLAND AVE - HOV

I5NB WALL - A

WALL FOOTING AND ELEVATION
4 OF 5

BRIDGE SHEET NO. WR9

SHEET 832 OF 1763 SHEETS

Wed Feb 12 09:11:01 2014

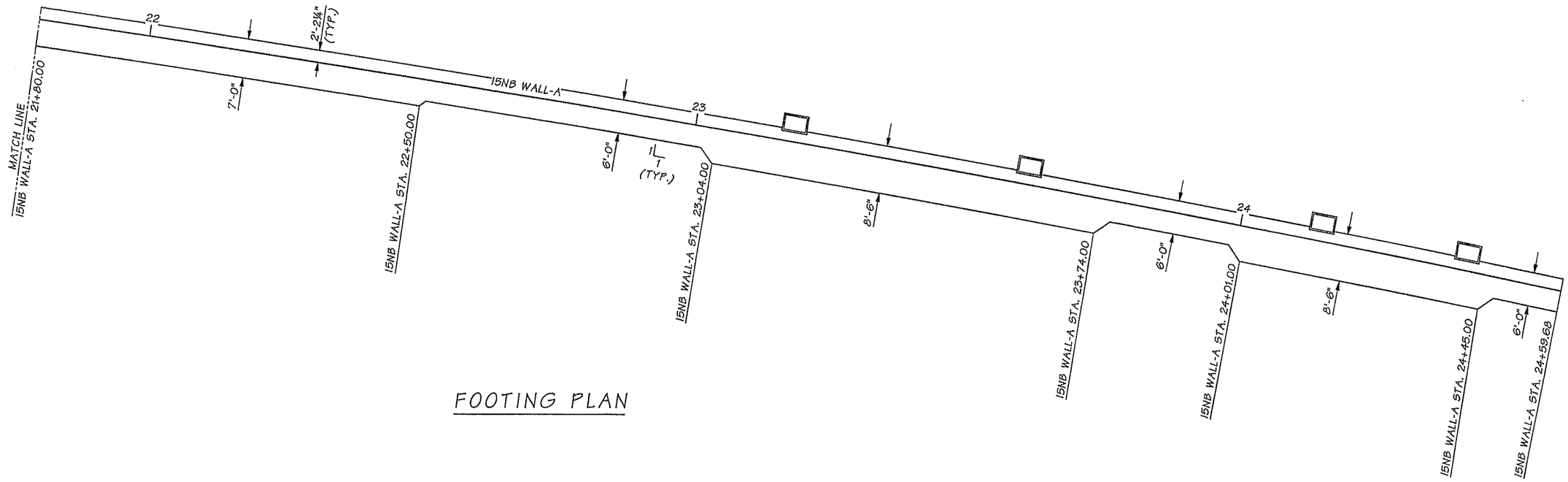

FOOTING PLAN

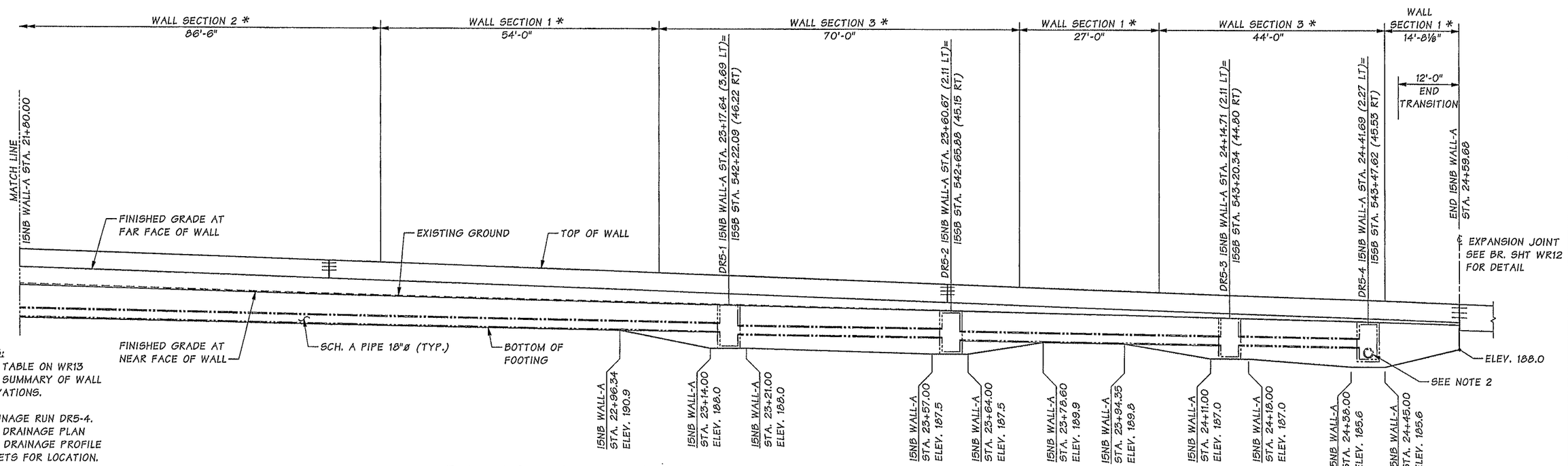

NOTES:

1. SEE TABLE ON WR13 FOR SUMMARY OF WALL ELEVATIONS.
2. DRAINAGE RUN DR5-4. SEE DRAINAGE PLAN AND DRAINAGE PROFILE SHEETS FOR LOCATION.

* SEE SHEET WR11 FOR STEEL REINF. REQUIREMENTS.

DEVELOPED ELEVATION

15NB WALL-A

Bridge Design Engr.	Khaleghi, B		
Supervisor	Stoddard, RB		
Designed By	Burnham, B	10/13	
Checked By	Pawelka, M	02/14	
Detailed By	Davis, E	10/13	
Bridge Projects Engr.			
Prelim. Plan By			
Architect/Specialist			

M:\Y-Team\M ST. TO PORTLAND BARRIER WALLS\I5NB WALL - A\window files\WR10-ELEV 5.wnd

DATE	REVISION	BY	APP'D

REGION NO.	STATE	FED. AID PROJ. NO.	SHEET NO.	TOTAL SHEETS
10	WASH.			
JOB NUMBER 12C501				

BRIAN DAVID BURNHAM, STATE OF WASHINGTON, 46136, REGISTERED PROFESSIONAL ENGINEER — 2/12/14

BRIDGE AND STRUCTURES OFFICE

BRIAN KHALEGHI, STATE OF WASHINGTON, PROFESSIONAL ENGINEER — 2/12/14

Washington State Department of Transportation

I-5
M ST TO PORTLAND AVE - HOV

I5NB WALL - A

WALL FOOTING AND ELEVATION
5 OF 5

BRIDGE SHEET NO. WR10

SHEET 833 OF 1763 SHEETS

SR 5 FILE NO. ____ SHEET WR10

Wed Feb 12 09:11:03 2014

FOOTING REINFORCEMENT										STEM REINFORCEMENT							
WALL SECTION	'B'	BAR A		BAR C		BAR D		BAR E		BAR F		BAR G		BAR K		BAR L	
		SIZE	SPA.	SIZE	SPA.	SIZE	SPA.	SIZE	SPA.	SIZE	SPA.	SIZE	SPA.	SIZE	SPA.	SIZE	SPA.
1	6'-0"	#6	1'-0"	#6	1'-0"	#5	9"	#5	1'-0"	#5	9"	#5	9"	—	—	—	—
2	7'-0"	#6	10"	#6	10"	#5	9"	#5	10"	#5	9"	#5	9"	—	—	—	—
3	8'-6"	#6	1'-0"	#6	6"	#5	6"	#5	6"	#5	6"	#5	6"	#6	6"	#6	6"

NOTE:

1. MIN. LAP SPLICE:
   #4 = 2'-0"
   #5 = 2'-4"
   #6 = 2'-9"
2. DO NOT SPLICE MORE THEN 50% BARS AT ANY ONE LOCATION UNLESS NOTED OTHERWISE. STAGGER SPLICES A MINIMUM OF 2'-9".
3. SEE TABLE ON WR13 FOR SUMMARY OF WALL ELEVATIONS SB AND NB.
4. AN ADDITIONAL STRAIGHT BAR MAY BE LAP SPLICED BETWEEN BAR E AND BAR G AND BETWEEN BAR D AND BAR F IN THE CONTACTOR CHOOSES. ADDITIONAL BAR SHOULD MATCH SIZE AND SPACING OF THE BARS BEING SPLICED TO.

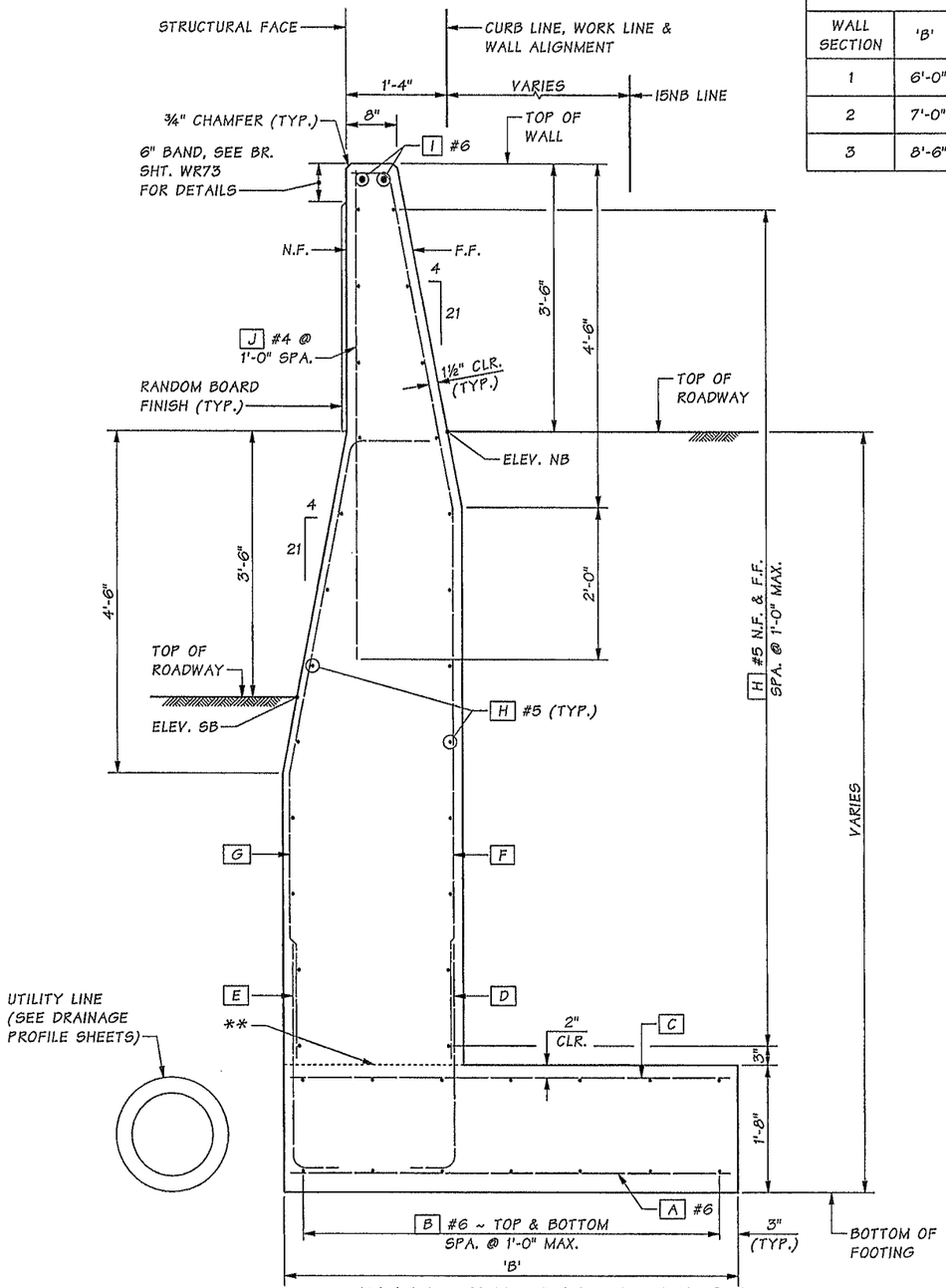

WALL TYPICAL SECTION

** - CONSTRUCTION JOINT WITH ROUGHENED SURFACE

N.F. - NEAR FACE
F.F. - FAR FACE

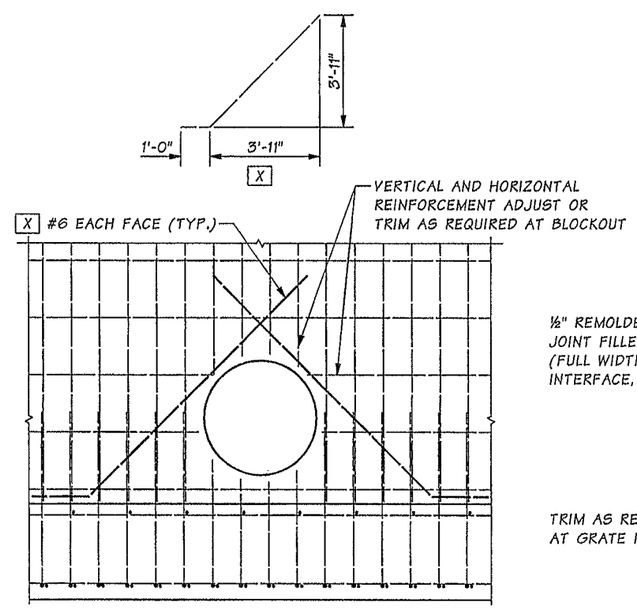

BLOCKOUT ELEVATION

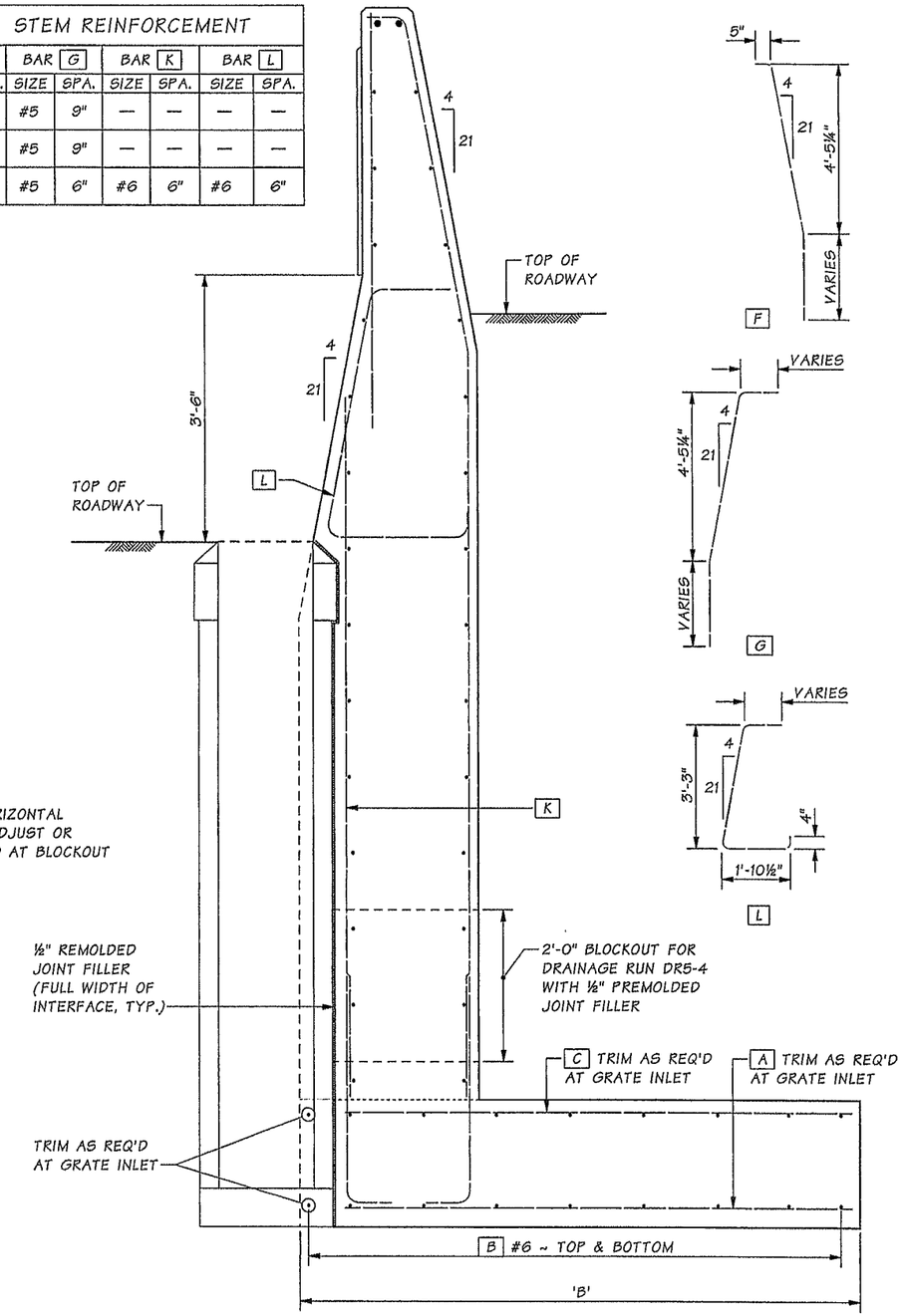

SECTION AT GRATE INLET TYPE 2

FOR DETAILS NOT SHOWN SEE WALL TYPICAL SECTION THIS SHEET

Bridge Design Engr.	Khaleghi, B		
Supervisor	Stoddard, RB		
Designed By	Burnham, B	10/13	
Checked By	Pawelka, M	02/14	
Detailed By	Davis, E	10/13	
Bridge Projects Engr.			
Prelim. Plan By			
Architect/Specialist			

M:\Y-Team\M ST. TO PORTLAND BARRIER WALLS\I5NB WALL - A\window files\WR11-WALL DET 1.wnd

DATE	REVISION	BY	APP'D

REGION NO.	STATE	FED. AID PROJ. NO.	SHEET NO.	TOTAL SHEETS
10	WASH.			
JOB NUMBER 12C501				

BRIAN DAVID BURNHAM, STATE OF WASHINGTON, 49136, REGISTERED PROFESSIONAL ENGINEER 2/12/14

BRIDGE AND STRUCTURES OFFICE

BIJAN KHALEGHI, STATE OF WASHINGTON, 24246, REGISTERED PROFESSIONAL ENGINEER 2/12/14

Washington State Department of Transportation

I-5
M ST TO PORTLAND AVE - HOV

I5NB WALL - A

WALL DETAILS
1 OF 4

BRIDGE SHEET NO. WR11

SHEET 834 OF 1763 SHEETS

SR 5 FILE NO. ____ SHEET WR11

Wed Feb 12 09:11:04 2014

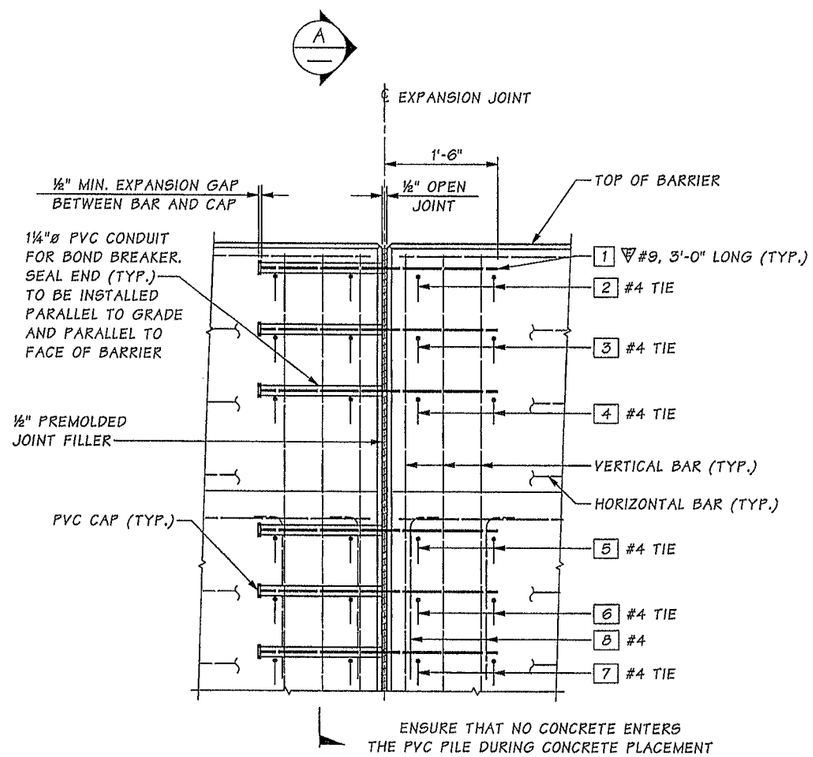

EXPANSION JOINT DETAIL

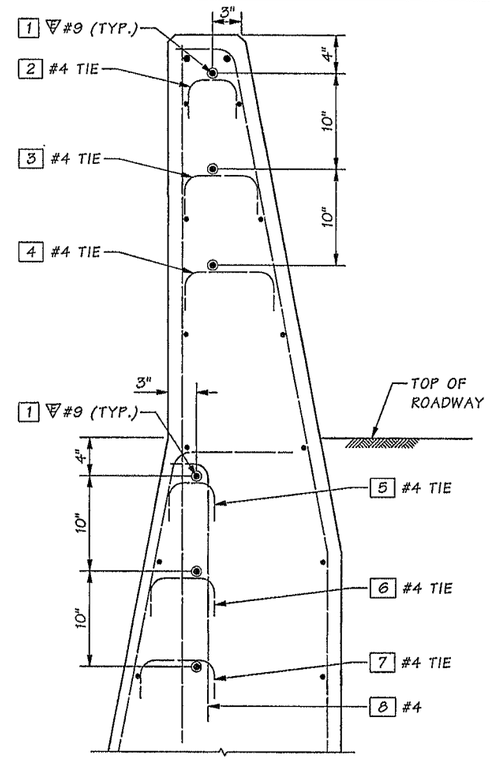

SECTION A

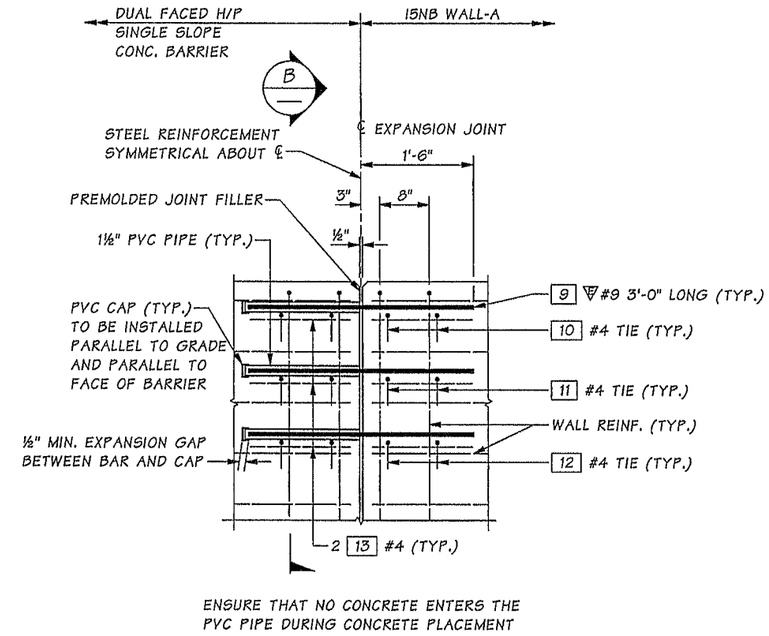

EXPANSION JOINT DETAIL AT ENDS

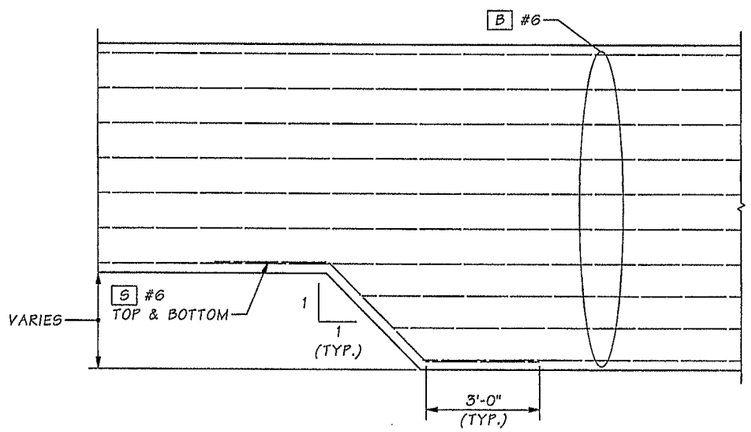

FOOTING STEP PLAN DETAIL

TRANSVERSE FOOTING REINFORCEMENT NOT SHOWN FOR CLARITY

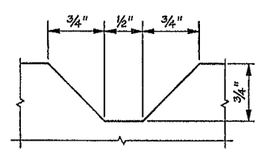

DUMMY JOINT DETAIL

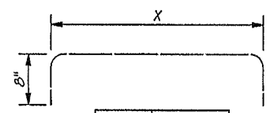

BAR	X
2	5¾"
3	7¾"
4	9¾"
5	3½"
6	5½"
7	7¼"
10	5¾"
11	9½"
12	1'-1¼"

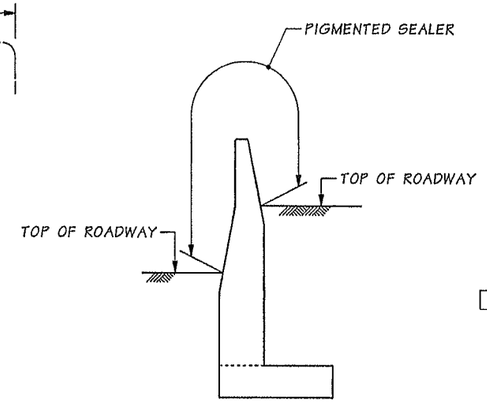

PIGMENTED SEALER LIMITS

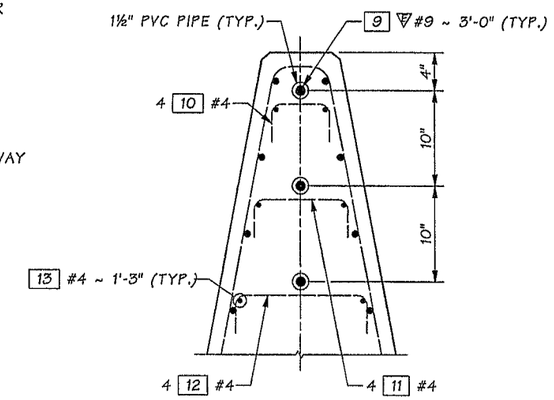

SECTION B

Bridge Design Engr.	Khaleghi, B		M:\Y-Team\M ST. TO PORTLAND BARRIER WALLS\I5NB WALL - A\window files\WR12-WALL DET 2.wnd				REGION NO.	STATE	FED. AID PROJ. NO.	SHEET NO.	TOTAL SHEETS
Supervisor	Stoddard, RB						10	WASH.			
Designed By	Burnham, B	10/13					JOB NUMBER 12C501				
Checked By	Pawelka, M	02/14									
Detailed By	Davis, E	10/13									
Bridge Projects Engr.											
Prelim. Plan By											
Architect/Specialist			DATE	REVISION	BY	APP'D					

Wed Feb 12 09:11:07 2014

SR 5 FILE NO. ____ SHEET WR12

BRIDGE AND STRUCTURES OFFICE

2/12/14

Washington State Department of Transportation

I-5
M ST TO PORTLAND AVE - HOV

I5NB WALL - A

WALL DETAILS
2 OF 4

BRIDGE SHEET NO. WR12

SHEET 835 OF 1763 SHEETS

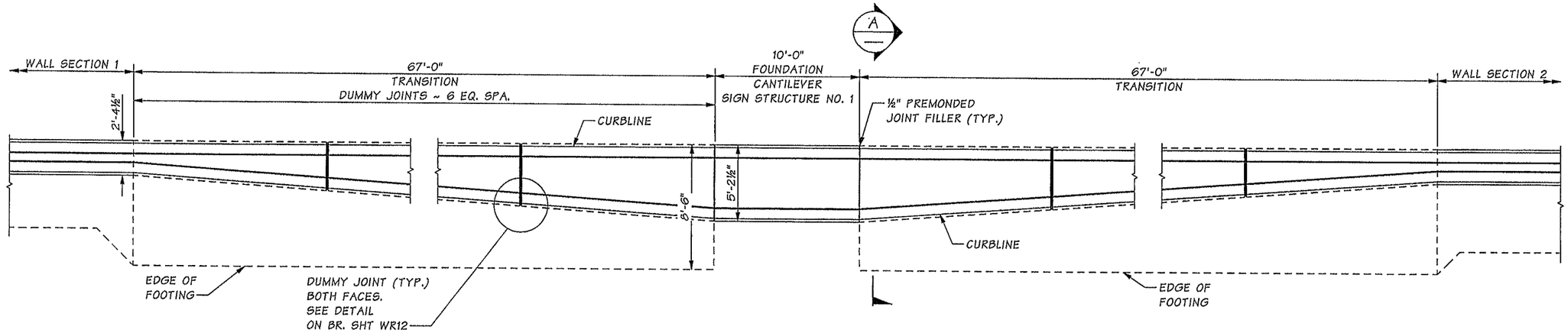

PLAN
BARRIER TRANSITION

SUMMARY OF WALL ELEVATIONS 15NB WALL-A		
15NB WALL-A STATION	ELEVATION "NB"	ELEVATION "SB"
10+00.00	236.69	236.19
12+00.00	231.98	230.16
12+20.28	231.49	229.54
12+50.00	230.61	228.64
12+61.44	230.24	228.30
12+72.51	229.91	227.96
12+78.00	229.74	227.74
13+00.00	229.14	226.88
13+01.73	229.09	226.76
13+02.44	229.07	226.76
13+50.00	227.66	224.91
13+60.00	227.35	224.56
13+80.00	226.72	223.87
14+00.00	226.09	223.22
14+10.00	225.76	222.88
14+44.04	224.63	221.82
14+50.00	224.43	221.64
14+60.00	224.08	221.33
15+01.82	222.61	220.12
16+00.00	219.02	217.35
17+00.00	215.35	214.41

SUMMARY OF WALL ELEVATIONS 15NB WALL-A CONTINUED		
15NB WALL-A STATION	ELEVATION "NB"	ELEVATION "SB"
17+50.00	213.65	212.84
17+70.00	213.03	212.21
18+00.00	212.17	211.27
18+10.00	211.89	210.95
18+30.00	211.36	210.30
18+50.00	210.85	209.66
18+70.00	210.4	209.02
19+00.00	209.75	208.05
19+50.00	208.77	206.45
20+00.00	207.68	204.84
20+50.00	206.48	203.23
21+00.00	205.16	201.67
21+20.00	204.58	201.09
21+50.00	203.72	200.20
22+00.00	202.16	198.80
22+50.00	200.48	197.49
23+00.00	198.67	196.24
23+50.00	196.81	195.08
24+00.00	195.00	193.96
24+59.68	192.96	192.47

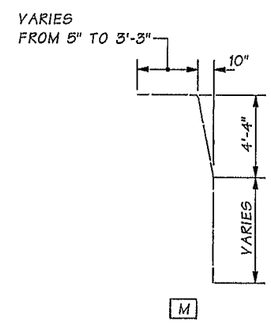

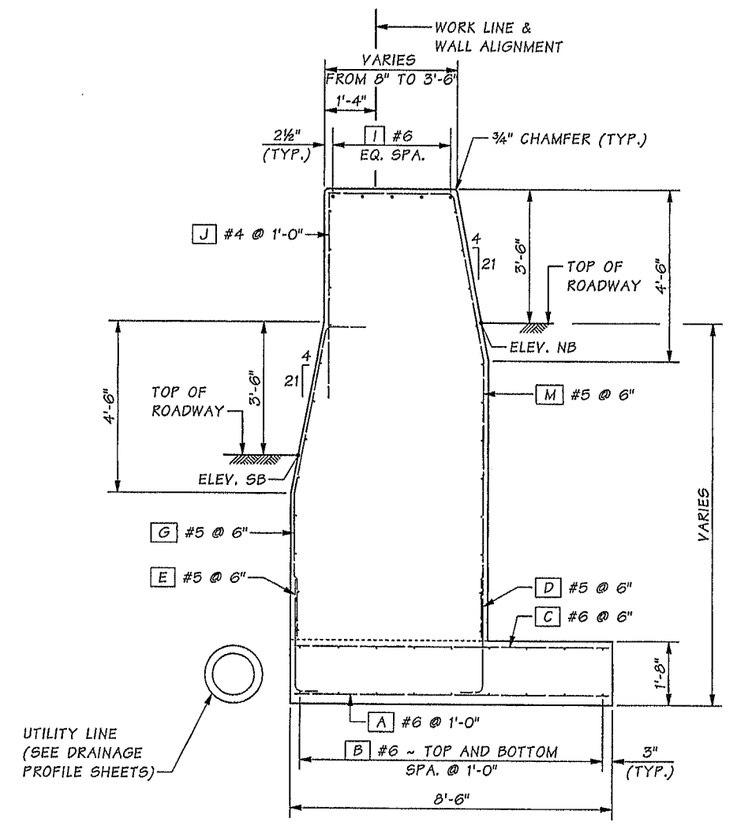

SECTION A

Bridge Design Engr.	Khaleghi, B		M:\Y-Team\M ST. TO PORTLAND BARRIER WALLS\I5NB WALL - A\window files\WR13-WALL DET 3.wnd						
Supervisor	Stoddard, RB								
Designed By	Burnham, B	10/13							
Checked By	Pawelka, M	02/14							
Detailed By	Davis, E	10/13							
Bridge Projects Engr.									
Prelim. Plan By									
Architect/Specialist			DATE	REVISION	BY	APP'D			

Wed Feb 12 09:11:09 2014

REGION NO.	STATE	FED. AID PROJ. NO.	SHEET NO.	TOTAL SHEETS
10	WASH.			
JOB NUMBER 12C501				

BRIAN DAVID BURNHAM STATE OF WASHINGTON 48136 REGISTERED PROFESSIONAL ENGINEER 2/12/14

BRIDGE AND STRUCTURES OFFICE

BALIAN KHALEGHI STATE OF WASHINGTON 37065 PROFESSIONAL ENGINEER 2/12/14

Washington State Department of Transportation

I-5
M ST TO PORTLAND AVE - HOV

I5NB WALL - A

WALL DETAILS
3 OF 4

BRIDGE SHEET NO. WR13

SHEET 836 OF 1763 SHEETS

SR 5 FILE NO. ____ SHEET WR13

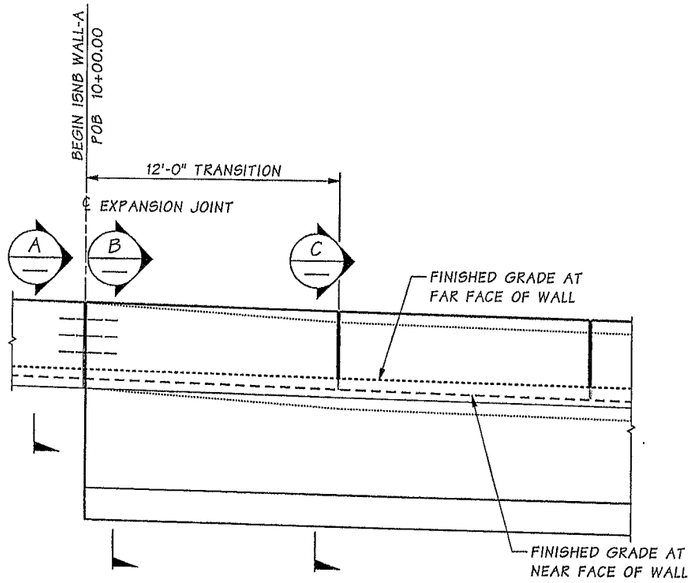

ELEVATION
BARRIER TRANSITION ENDS

BEGINNING OF 15NB WALL-A TRANSITION SHOWN,
END OF 15NB WALL-A TRANSITION SIMILAR

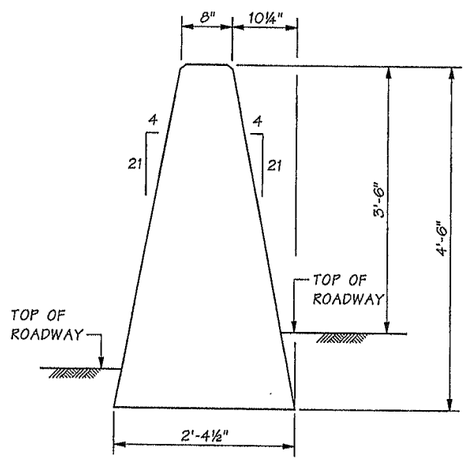

SECTION A

HIGH PERFORMANCE SINGLE-SLOPE
CONCRETE BARRIER DUAL FACED
SEE STD. PLAN C-80.10-00

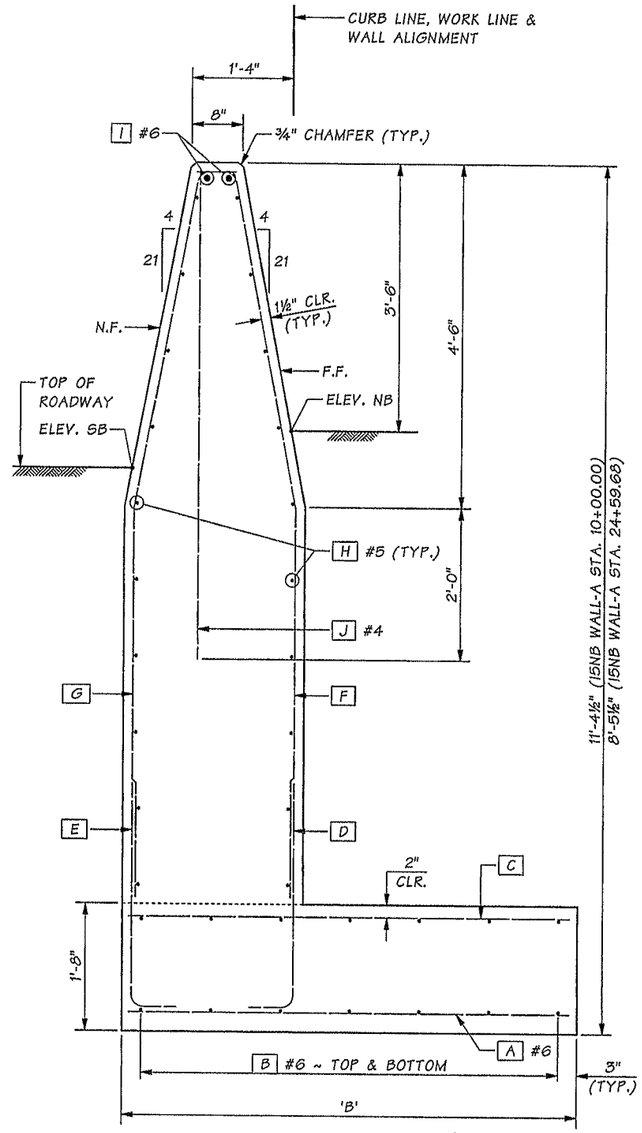

SECTION B

BEGINNING OF 15NB WALL-A TRANSITION SHOWN,
END OF 15NB WALL-A TRANSITION SIMILAR.
REINFORCEMENT PER SECTION
SPECIFIED IN WALL ELEVATIONS.
SEE WR11 & WR12 FOR DETAILS.

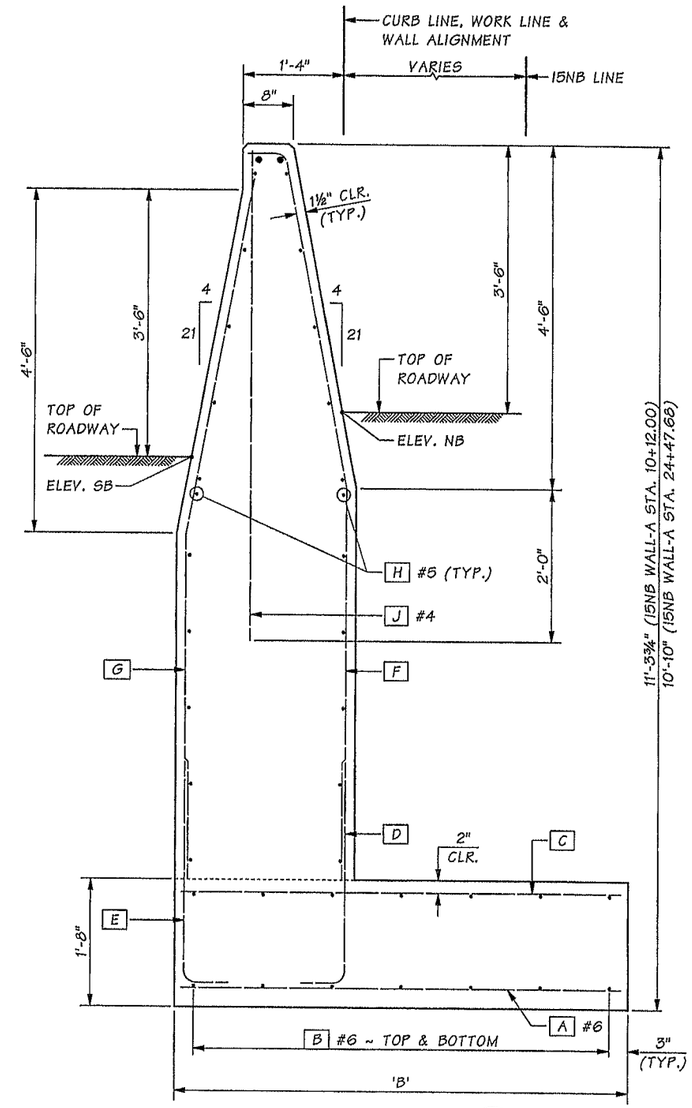

SECTION C

BEGINNING OF 15NB WALL-A TRANSITION SHOWN,
END OF 15NB WALL-A TRANSITION SIMILAR.
REINFORCEMENT PER SECTION
SPECIFIED IN WALL ELEVATIONS.
SEE WR11 & WR12 FOR DETAILS.

Bridge Design Engr.	Khaleghi, B	
Supervisor	Stoddard, RB	
Designed By	Burnham, B	01/14
Checked By	Pawelka, M	02/14
Detailed By	Davis, E	01/14
Bridge Projects Engr.		
Prelim. Plan By		
Architect/Specialist		

M:\Y-Team\M ST. TO PORTLAND BARRIER WALLS\I5NB WALL - A\window files\WR14-WALL DET 4.wnd

DATE	REVISION	BY	APP'D

REGION NO.	STATE	FED. AID PROJ. NO.	SHEET NO.	TOTAL SHEETS
10	WASH.			
JOB NUMBER 12C501				

BRIAN DAVID BURNHAM — STATE OF WASHINGTON — 48126 — REGISTERED PROFESSIONAL ENGINEER — 2/12/14

BRIDGE AND STRUCTURES OFFICE

BRIAN KHALEGHI — STATE OF WASHINGTON — 37826 — PROFESSIONAL ENGINEER — 2/12/14

Washington State Department of Transportation

I-5
M ST TO PORTLAND AVE - HOV

15NB WALL - A

WALL DETAILS
4 OF 4

BRIDGE SHEET NO. WR14

SHEET 837 OF 1763 SHEETS

SR 5 FILE NO. ____ SHEET WR14

Wed Feb 12 09:11:11 2014

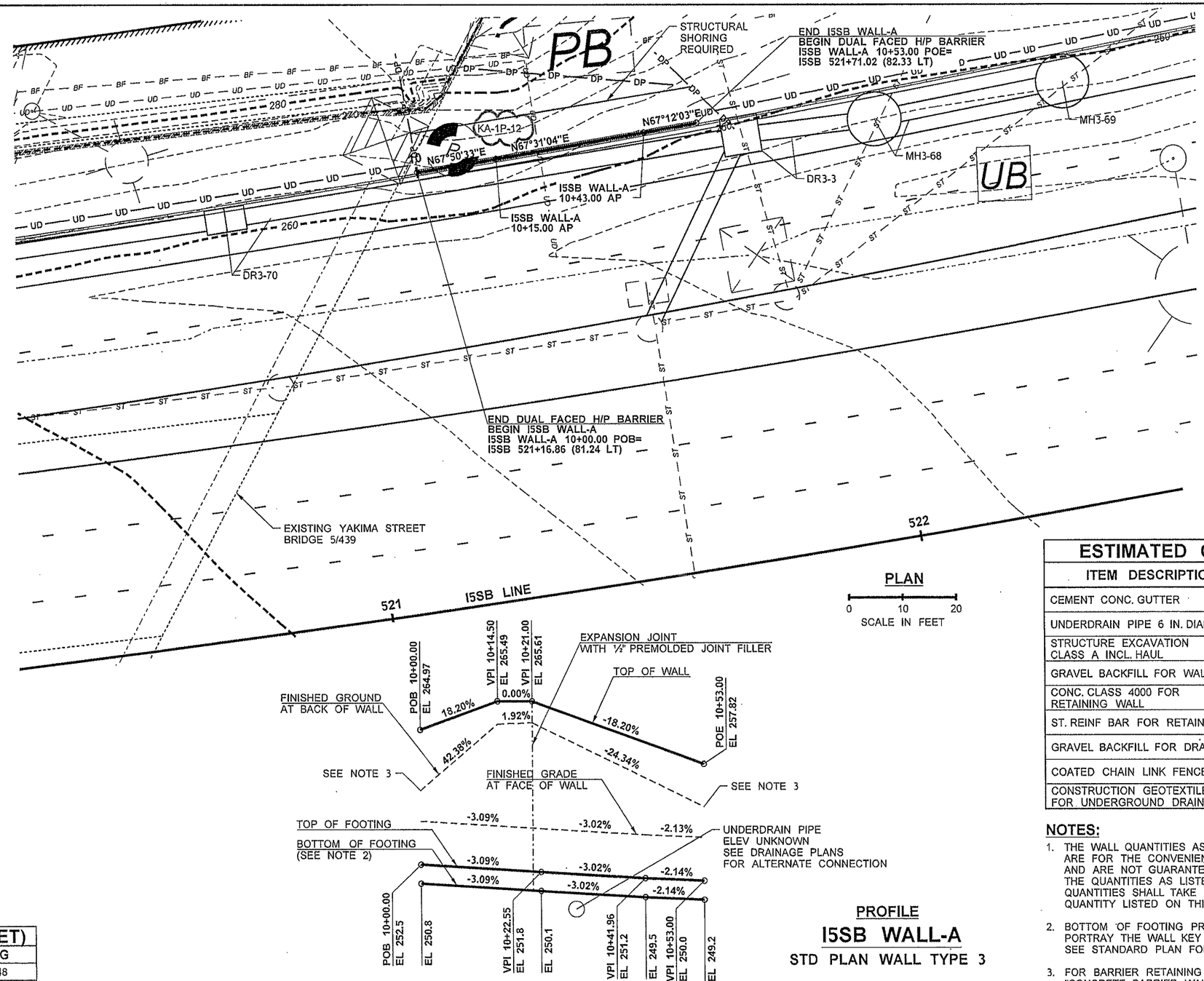

PROFILE

I5SB WALL-A

STD PLAN WALL TYPE 3

ESTIMATED QUANTITIES

ITEM DESCRIPTION	QUANTITY
CEMENT CONC. GUTTER	53 L.F.
UNDERDRAIN PIPE 6 IN. DIAM.	53 L.F.
STRUCTURE EXCAVATION CLASS A INCL. HAUL	196 C.Y.
GRAVEL BACKFILL FOR WALL	75 C.Y.
CONC. CLASS 4000 FOR RETAINING WALL	71 C.Y.
ST. REINF BAR FOR RETAINING WALL	4570 L.B.
GRAVEL BACKFILL FOR DRAIN	3 C.Y.
COATED CHAIN LINK FENCE TYPE 4	19 L.F.
CONSTRUCTION GEOTEXTILE FOR UNDERGROUND DRAINAGE	35 S.Y.

NOTES:

1. THE WALL QUANTITIES AS LISTED ON THIS SHEET ARE FOR THE CONVENIENCE OF THE CONTRACTOR AND ARE NOT GUARANTEED TO BE ACCURATE. THE QUANTITIES AS LISTED ON THE SUMMARY OF QUANTITIES SHALL TAKE PRECEDENCE OVER ANY QUANTITY LISTED ON THIS SHEET.
2. BOTTOM OF FOOTING PROFILE DOES NOT PORTRAY THE WALL KEY ELEVATION. SEE STANDARD PLAN FOR DETAILS.
3. FOR BARRIER RETAINING SOIL, SEE "CONCRETE BARRIER WALL UNDERDRAIN" DETAIL IN DRAINAGE DETAILS.

ALIGNMENT COORDINATES (FEET)

STATION	NORTHING	EASTING
I5SB WALL-A 10+00.00	698084.86	1157789.48
I5SB WALL-A 10+53.00	698105.10	1157838.46

FILE NAME	PW:_XL3497\PS&E Sheets\Wall\ADD1_P3497_SH_WR_015.dgn
TIME	1:47:14 PM
DATE	5/1/2014
PLOTTED BY	SancheA
DESIGNED BY	F. COLLS
ENTERED BY	S. SHYU
CHECKED BY	B. REGISTER
PROJ. ENGR.	J. PEREZ
REGIONAL ADM.	K. DAYTON

REVISION	DATE	BY
AD1 - ADDED BOREHOLE TEXT	4/25/2014	TH

REGION NO. 10 | STATE WASH | FED.AID PROJ.NO.

JOB NUMBER 12C501

CONTRACT NO.

LOCATION NO. XL3497

JOSEPH J. PEREZ, STATE OF WASHINGTON, 35392, REGISTERED PROFESSIONAL ENGINEER

5-1-14 DATE

P.E. STAMP BOX

DATE

P.E. STAMP BOX

Washington State Department of Transportation

I-5

M ST TO PORTLAND AVE - HOV

I5SB WALL-A PLAN AND PROFILE

PLAN REF NO WR15

SHEET 838 OF 1763 SHEETS

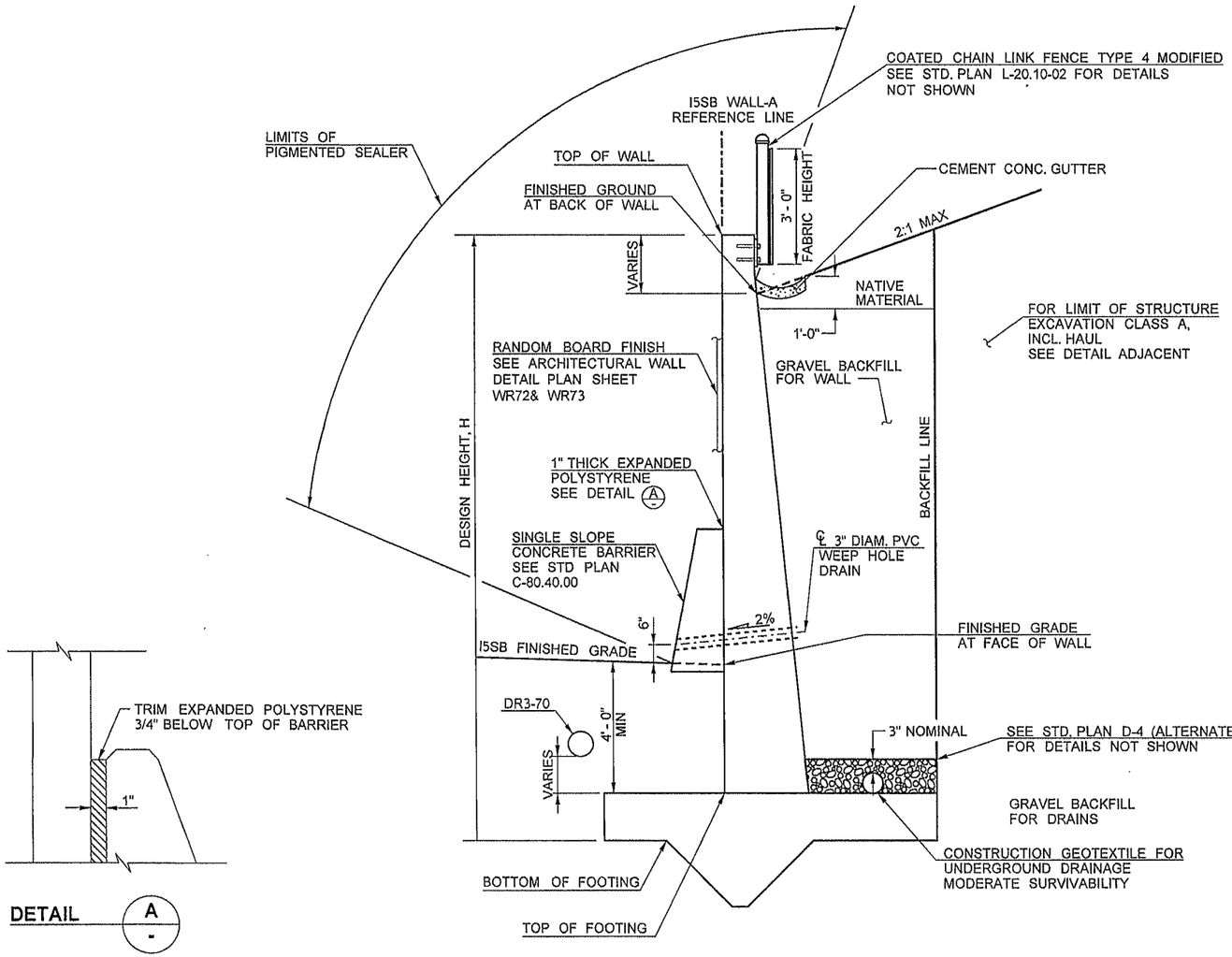

DETAIL A

TYPICAL CROSS SECTION
NOT TO SCALE
NOTE: LOOKING BACK ON STATION

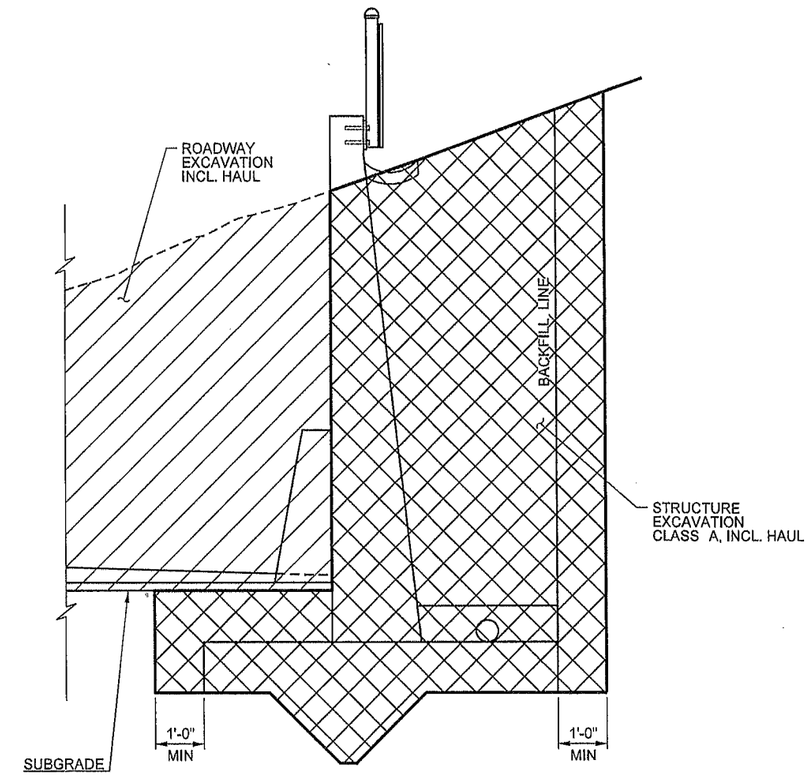

STRUCTURE EXCAVATION CLASS A, INCL. HAUL DETAIL
NOT TO SCALE

NOTES:

1. SEE STD. PLAN D-10.20-00 REINFORCED CONCRETE RETAINING WALL TYPE 3 FOR ADDITIONAL WALL DETAILS AND DIMENSIONS.
2. FOR UNDERDRAIN OUTLETS, SEE DRAINAGE PLANS.
3. BACKFILL AND DRAINAGE FOR RETAINING WALLS SEE STD. PLAN D-4.

FILE NAME	PW:_XL3497\PS&E Sheets\Wall\P3497_SH_WR_016.dgn				REGION NO. 10	STATE WASH	FED.AID PROJ.NO.
TIME	2:32:53 PM						
DATE	2/10/2014						
PLOTTED BY	ShannoC				JOB NUMBER 12C501		
DESIGNED BY	F. COLLS						
ENTERED BY	C. SHANNON				CONTRACT NO.		LOCATION NO. XL3497
CHECKED BY	B. REGISTER						
PROJ. ENGR.	J. PEREZ						
REGIONAL ADM.	K. DAYTON	REVISION	DATE	BY			

JOSEPH J. PEREZ — STATE OF WASHINGTON — REGISTERED PROFESSIONAL ENGINEER
3-12-14
DATE
P.E. STAMP BOX

DATE
P.E. STAMP BOX

Washington State
Department of Transportation

I-5
M ST TO PORTLAND AVE - HOV

I5SB WALL-A DETAIL

PLAN REF NO
WR16

SHEET 839 OF 1763 SHEETS

CURVE DATA					
P.I. STATION	DELTA	RADIUS	TANGENT	LENGTH	BK. TANGENT BRG.
15SB WALL-E 11+68.89	4°33'16" RT.	4247.08'	168.89'	337.61'	N 78°05'13" E

SEC. 9 T. 20N. R. 3E. W.M.
CITY OF TACOMA

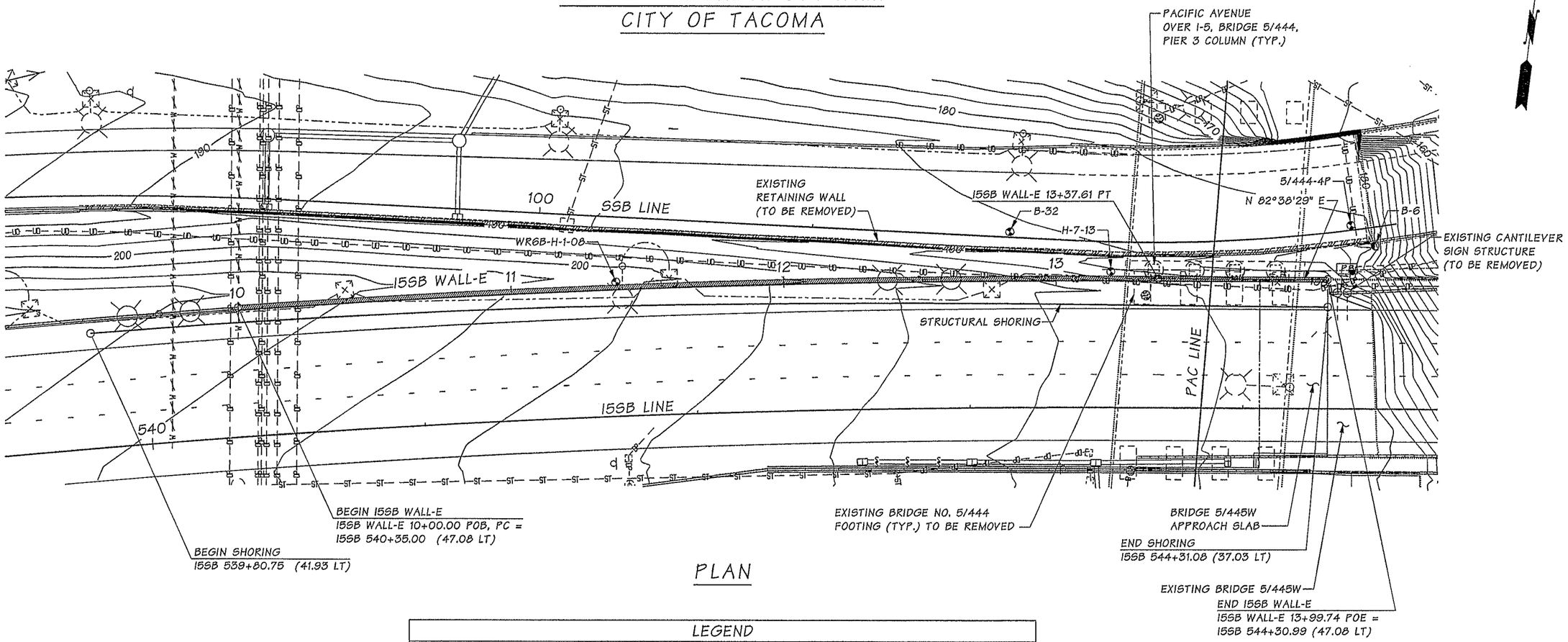

PLAN

STRUCTURAL SHORING	
SHORING LIMITS	15SB STATION (OFFSET)
BEGIN SHORING	539+80.75 (41.93 LT)
	539+81.16 (41.93 LT)
	540+23.84 (41.77 LT)
	540+66.53 (41.45 LT)
	541+09.21 (41.07 LT)
	541+51.90 (40.59 LT)
	541+94.58 (39.81 LT)
	542+37.26 (39.04 LT)
	542+79.95 (38.37 LT)
	543+22.65 (37.76 LT)
	543+65.35 (37.31 LT)
	543+69.53 (37.28 LT)
	543+94.52 (37.15 LT)
END SHORING	544+31.08 (37.03 LT)

LEGEND

—W—	DEACTIVATED WATER LINE		EXISTING MAN HOLE
—DP—	EXISTING DRAIN PIPE		EXISTING BRIDGE DRAIN
—ST—	EXISTING STORM SEWER LINE		EXISTING JUNCTION BOX
—UG—	EXISTING UNDERGROUND DRAIN LINE		EXISTING LUMINAIRE
—OP—	EXISTING ABOVE GROUND POWER		EXISTING SIGN
	EXISTING CONDUIT AND WIRING		SIGNS
	EXISTING RETAINING WALL	PB	PULL BOX
	EXISTING CONC. BARRIER	—S—	STORM SEWER PIPE
	CONC. BARRIER	—DP—	DRAIN PIPE
	BORE HOLE		GRATE INLET
	EXISTING CATCH BASIN		MANHOLE
	EXISTING GRATE INLET		LUMINAIRE
	EXISTING CANTILEVER SIGN		

DATUM
N.A.V.D. OF 1988

REINFORCED CONCRETE RETAINING WALL

SR 5 FILE NO. SHEET WR17

Bridge Design Engr.	Khaleghi, B	
Supervisor	Stoddard, RB	
Designed By	Hsieh, JC	09/13
Checked By	Dobrev, B	10/13
Detailed By	Williams, S/L.A.	05/13
Bridge Projects Engr.		
Prelim. Plan By		
Architect/Specialist		

M:\Y-Team\M ST TO PORTLAND - WALLS\I5SB WALL - E\I5SB WALL - E\window files\WR17-LAYOUT.wnd

DATE	REVISION	BY	APP'D

REGION NO.	STATE	FED. AID PROJ. NO.	SHEET NO.	TOTAL SHEETS
10	WASH.			
JOB NUMBER 12C501				

BRIDGE AND STRUCTURES OFFICE

SALAM KHALEGHI, STATE OF WASHINGTON, 27695, PROFESSIONAL ENGINEER
2/12/14

Washington State Department of Transportation

I-5
M ST TO PORTLAND AVE - HOV
15SB WALL - E

15SB WALL-E
LAYOUT

BRIDGE SHEET NO. WR17

SHEET 840 OF 1763 SHEETS

Wed Feb 12 09:22:54 2014

15SB WALL-E STATION	FOOTING REINFORCEMENT BAR (F) SIZE
13+23.08 TO 13+94.74	#6

SEE STD. PLAN D-10.10 FOR DETAILS NOT SHOWN.

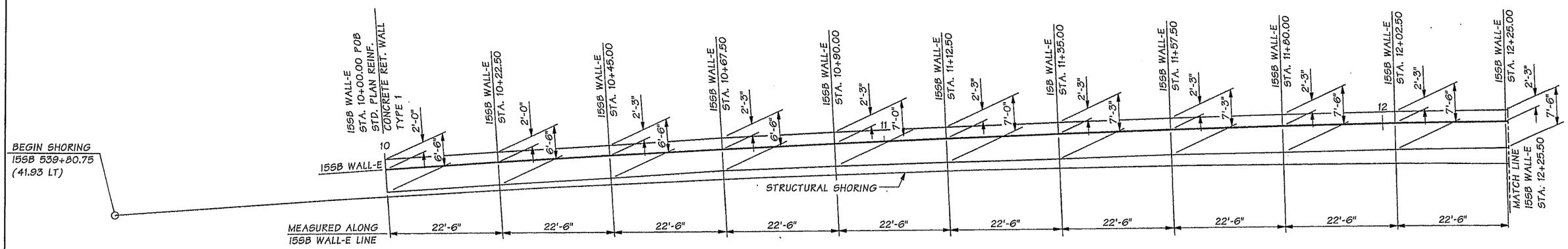

FOOTING PLAN

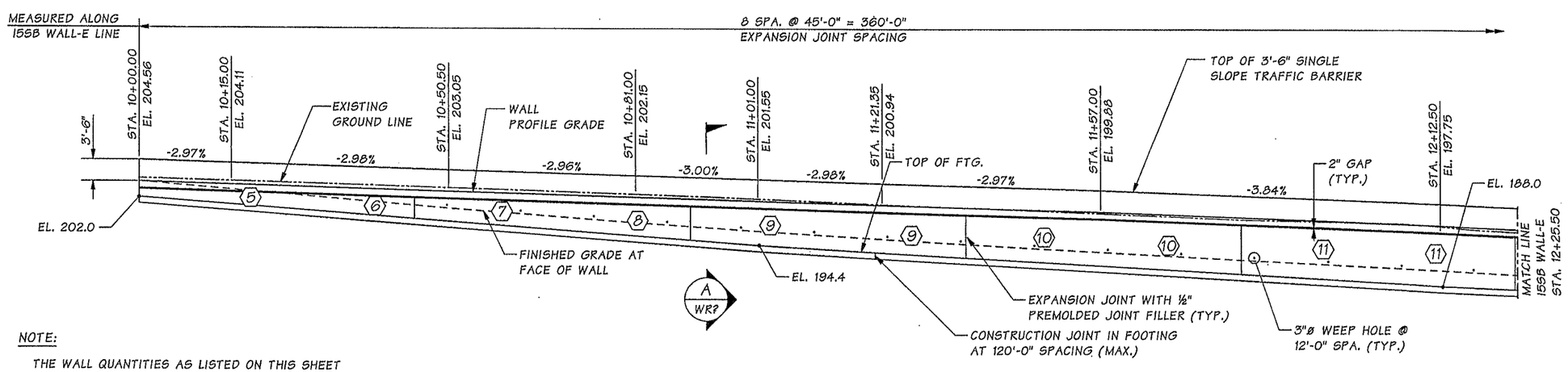

REFLECTED ELEVATION

STD. PLAN WALL TYPE 1
UNLESS NOTED OTHERWISE.

NOTE:

(#) INDICATES DESIGN WALL HEIGHT "H" FOR SELECTING REINFORCEMENT.

ESTIMATED QUANTITIES	
ITEM DESCRIPTION	QUANTITY
UNDERDRAIN PIPE 6 IN. DIAM.	403 L.F.
STRUCTURE EXCAVATION CLASS A INCL. HAUL	1,541 C.Y.
GRAVEL BACKFILL FOR WALL	520 C.Y.
CONC. CLASS 4000 FOR RETAINING WALL	255 C.Y.
ST. REINF. BAR FOR RETAINING WALL	15,700 LB.
GRAVEL BACKFILL FOR DRAIN	19 C.Y.
CONSTRUCTION GEOTEXTILE FOR UNDERGROUND DRAINAGE	270 S.Y.

NOTE:

THE WALL QUANTITIES AS LISTED ON THIS SHEET ARE FOR THE CONVENIENCE OF THE CONTRACTOR AND ARE NOT GUARANTEED TO BE ACCURATE. THE QUANTITIES AS LISTED ON THE SUMMARY OF QUANTITIES SHALL TAKE PRECEDENCE OVER ANY QUANTITY LISTED ON THIS SHEET.

SR 5 FILE NO. SHEET WR18

Bridge Design Engr.	Khaleghi, B	
Supervisor	Stoddard, RB	
Designed By	Hsieh, JC	09/13
Checked By	Dobrev, B	10/13
Detailed By	Williams, S/L.A.	09/13
Bridge Projects Engr.		
Prelim. Plan By		
Architect/Specialist		

M:\Y-Team\M ST TO PORTLAND - WALLS\I5SB WALL - E\I5SB WALL - E\window files\WR18-ELEV1.WND

DATE	REVISION	BY	APP'D
06/14	REVISED QUANTITY	JCH	DS

REGION NO.	STATE	FED. AID PROJ. NO.	SHEET NO.	TOTAL SHEETS
10	WASH.			

JOB NUMBER 12C501

JEN-CHI HSIEH STATE OF WASHINGTON 22272 PROFESSIONAL ENGINEER 6/10/14

BRIDGE AND STRUCTURES OFFICE

BERNARD B. STODDARD STATE OF WASHINGTON 16127 PROFESSIONAL ENGINEER 6/10/14

Washington State Department of Transportation

I-5
M ST TO PORTLAND AVE - HOV

I5SB WALL - E

I5SB WALL-E
ELEVATION 1 OF 2

BRIDGE SHEET NO. WR18

SHEET 841 OF 1763 SHEETS

Tue Jun 10 14:45:34 2014

15SB WALL-E STATION	FOOTING REINFORCEMENT
	BAR (F)
	SIZE
13+23.08 TO 13+94.74	#6

SEE STD. PLAN D-10.10 FOR DETAILS NOT SHOWN.

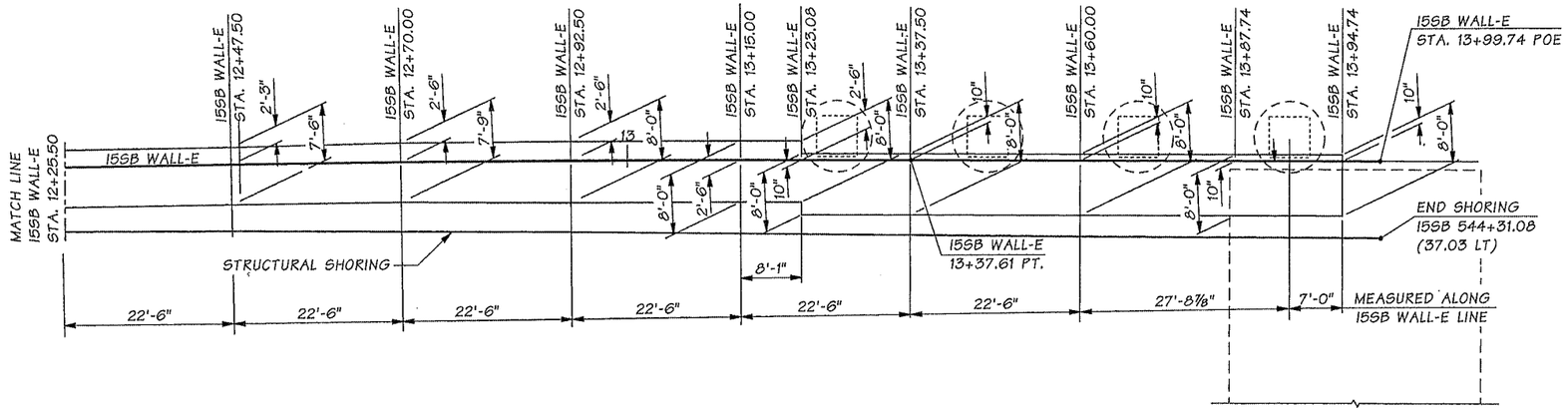

FOOTING PLAN

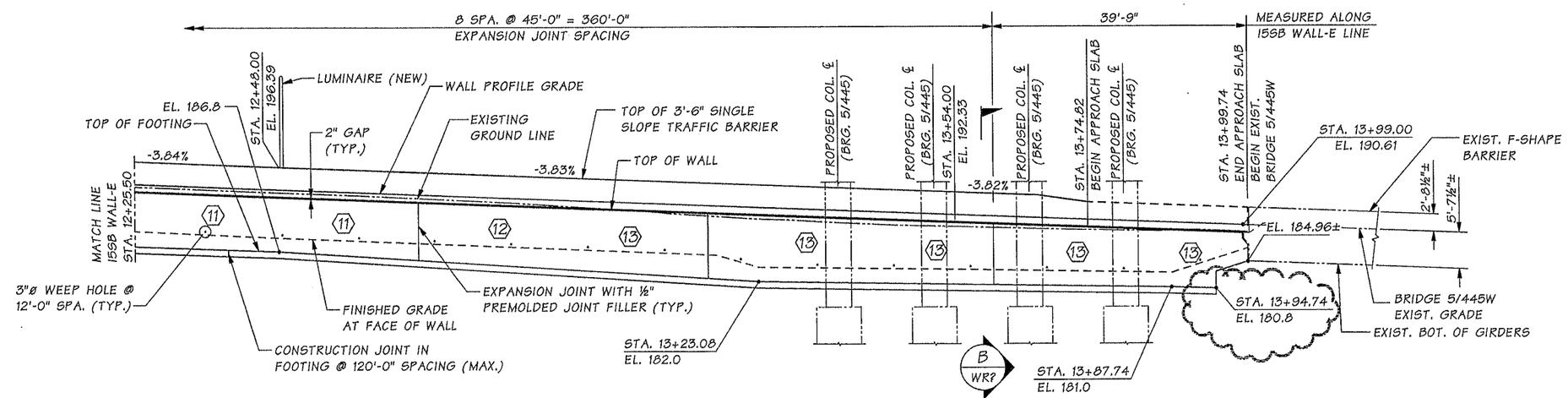

NOTE:

(#) INDICATES DESIGN WALL HEIGHT "H" FOR SELECTING REINFORCEMENT.

REFLECTED ELEVATION

STD. PLAN WALL TYPE 1
UNLESS NOTED OTHERWISE.

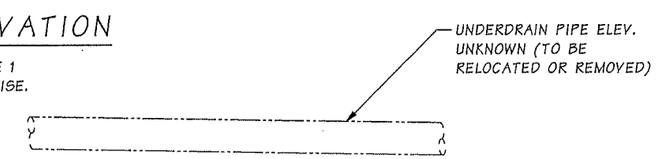

SR 5 FILE NO. SHEET WR19

Bridge Design Engr.	Khaleghi, B	M:\Y-Team\M ST TO PORTLAND - WALLS\I5SB WALL - E\I5SB WALL - E\window files\WR19-ELEV2.WND								
Supervisor	Stoddard, RB									
Designed By	Hsieh, JC 09/14									
Checked By	Dobrev, B 10/13									
Detailed By	Williams, S / L.A. 09/13									
Bridge Projects Engr.										
Prelim. Plan By		5/21	AD3-REVISED FOOTING ELEVATION	JCH	RBS					
Architect/Specialist		DATE	REVISION	BY	APP'D					

REGION NO.	STATE	FED. AID PROJ. NO.	SHEET NO.	TOTAL SHEETS
10	WASH.			
JOB NUMBER 12C501				

JEN-CHI HSIEH STATE OF WASHINGTON 28272 PROFESSIONAL ENGINEER 5/21/2014

BRIDGE AND STRUCTURES OFFICE

Washington State Department of Transportation

I-5
M ST TO PORTLAND AVE - HOV

I5SB WALL - E

I5SB WALL-E
ELEVATION 2 OF 2

BRIDGE SHEET NO. WR19

SHEET 842 OF 1763 SHEETS

Wed May 21 14:00:24 2014

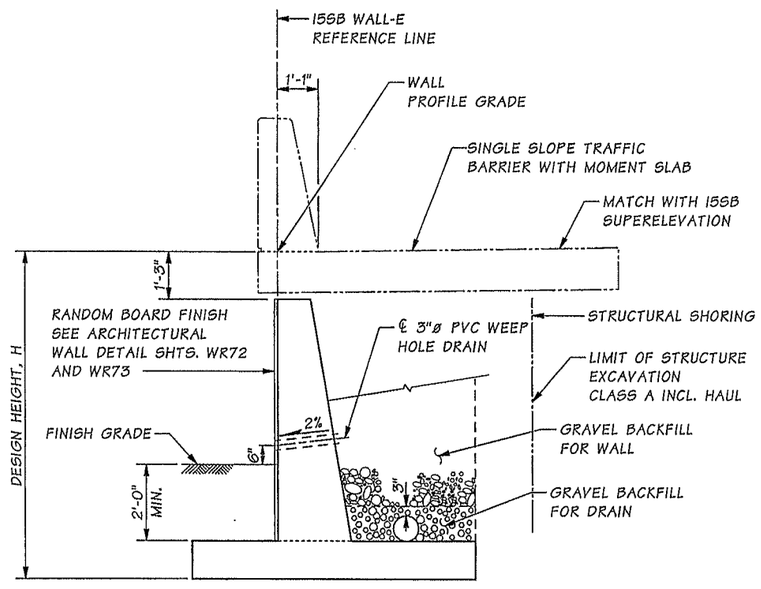

SECTION A
WR18

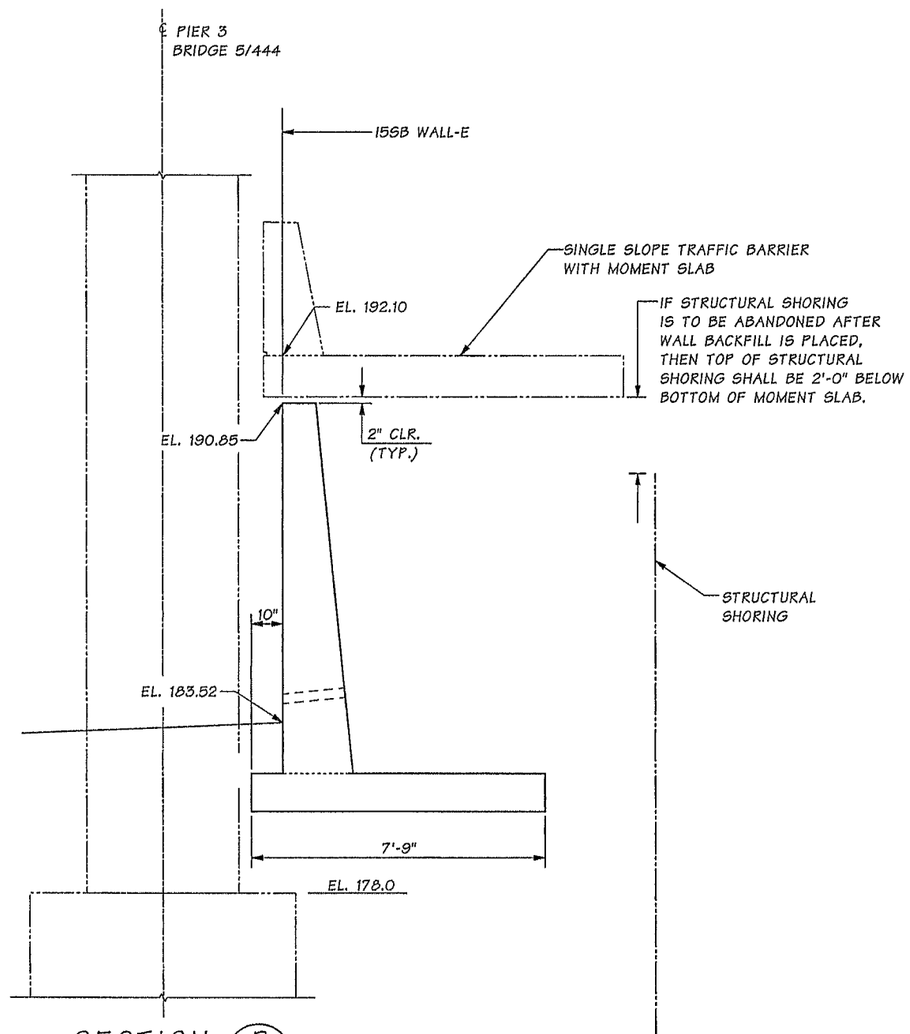

SECTION B
WR19

ELEVATIONS SHOWN AT 15SB WALL-E 13+60.00
OTHER LOCATIONS AT NEAR BRIDGE 5/444 PIER 3
SIMILAR. SEE SECTION A FOR DETAILS NOT SHOWN.

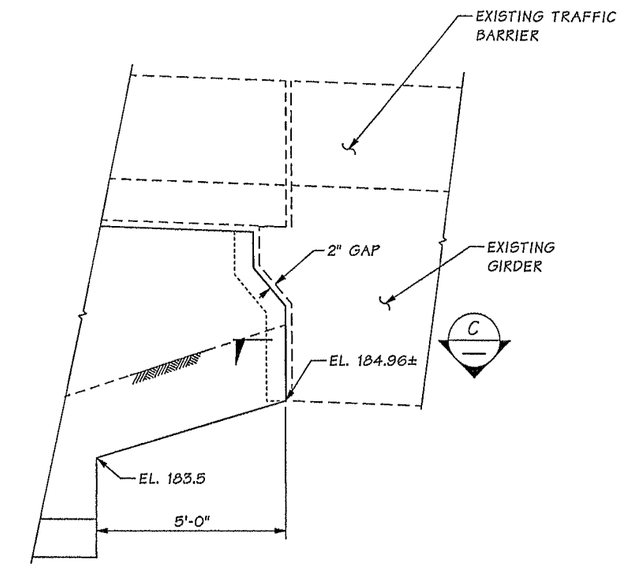

REFLECTED END WALL ELEVATION
ADJUST/CUT WALL REINFORCEMENT AS NECESSARY.

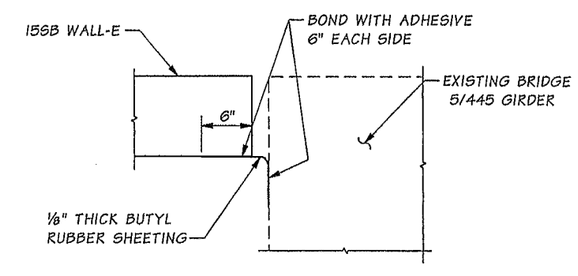

SECTION C

NOTES:

1. SEE STD. PLAN D-10.10 REINFORCED CONCRETE RETAINING WALL TYPE 1 FOR ADDITIONAL WALL DETAILS AND DIMENSIONS.
2. FOR UNDERDRAIN OUTLETS SEE DRAINAGE PLAN.

SR 5 FILE NO. SHEET WR20

Bridge Design Engr.	Khaleghi, B	
Supervisor	Stoddard, RB	
Designed By	Hsieh, JC	10/13
Checked By	Dobrev, B	10/13
Detailed By	Williams, S/L.A.	10/13
Bridge Projects Engr.		
Prelim. Plan By		
Architect/Specialist		

M:\Y-Team\M ST TO PORTLAND - WALLS\I5SB WALL - E\I5SB WALL - E\window files\WR20-WALL DET.wnd

DATE	REVISION	BY	APP'D

REGION NO.	STATE	FED. AID PROJ. NO.	SHEET NO.	TOTAL SHEETS
10	WASH.			

JOB NUMBER 12C501

JEN-CHI HSIEH STATE OF WASHINGTON 28272 STRUCTURAL ENGINEER PROFESSIONAL ENGINEER 5/12/14

BRIDGE AND STRUCTURES OFFICE

RICHARD B. STODDARD STATE OF WASHINGTON 28272 STRUCTURAL ENGINEER PROFESSIONAL ENGINEER 2/12/14

Washington State Department of Transportation

I-5
M ST TO PORTLAND AVE - HOV

15SB WALL - E

15SB WALL-E
WALL DETAILS

BRIDGE SHEET NO. WR20

SHEET 843 OF 1763 SHEETS

Wed Feb 12 09:23:04 2014

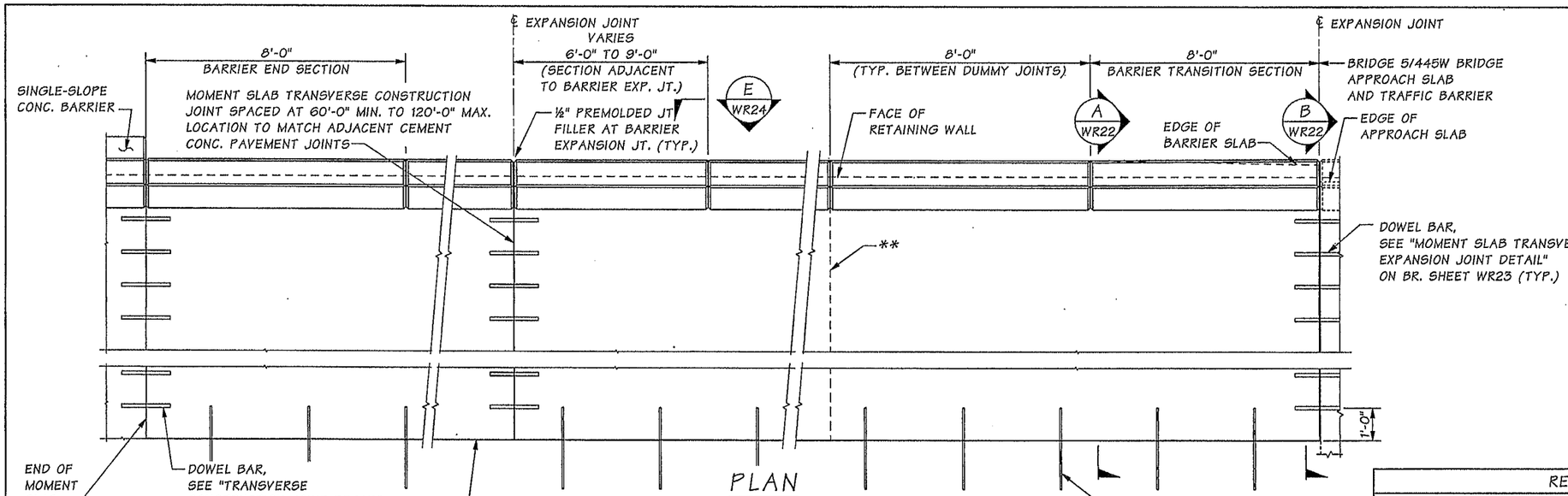

** MOMENT SLAB TRANSVERSE CONTRACTION JOINT LOCATE BETWEEN MOMENT SLAB TRANSVERSE CONSTRUCTION JOINTS.
SEE DETAIL ON BR. SHT. WR23.
SEE STD. PLAN A-40.10 FOR SPACING.
MATCH ADJACENT CEMENT CONC. PAVEMENT JOINTS.

PLAN
SINGLE SLOPE TRAFFIC BARRIER WITH MOMENT SLAB

BARRIER EXPANSION JOINT SPACING @ 60'-0" MIN. TO 120'-0" MAX.
BARRIER CONSTRUCTION JOINTS WITH SHEAR KEYS ARE PERMISSIBLE AT DUMMY JOINT LOCATIONS. FORM JOINTS BETWEEN DUMMY JOINTS SHALL NOT BE PERMITTED.

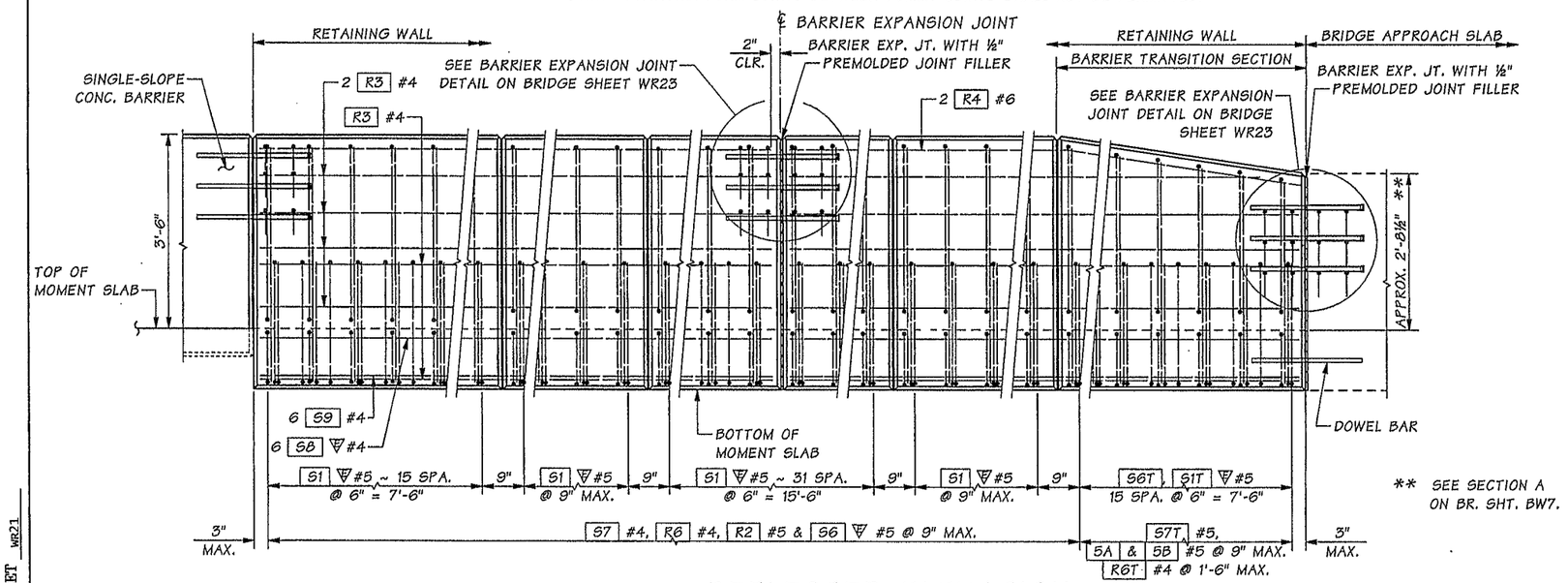

** SEE SECTION A ON BR. SHT. BW7.

REFLECTED ELEVATION
SINGLE SLOPE TRAFFIC BARRIER WITH MOMENT SLAB

REINFORCING STEEL BENDING DIAGRAM

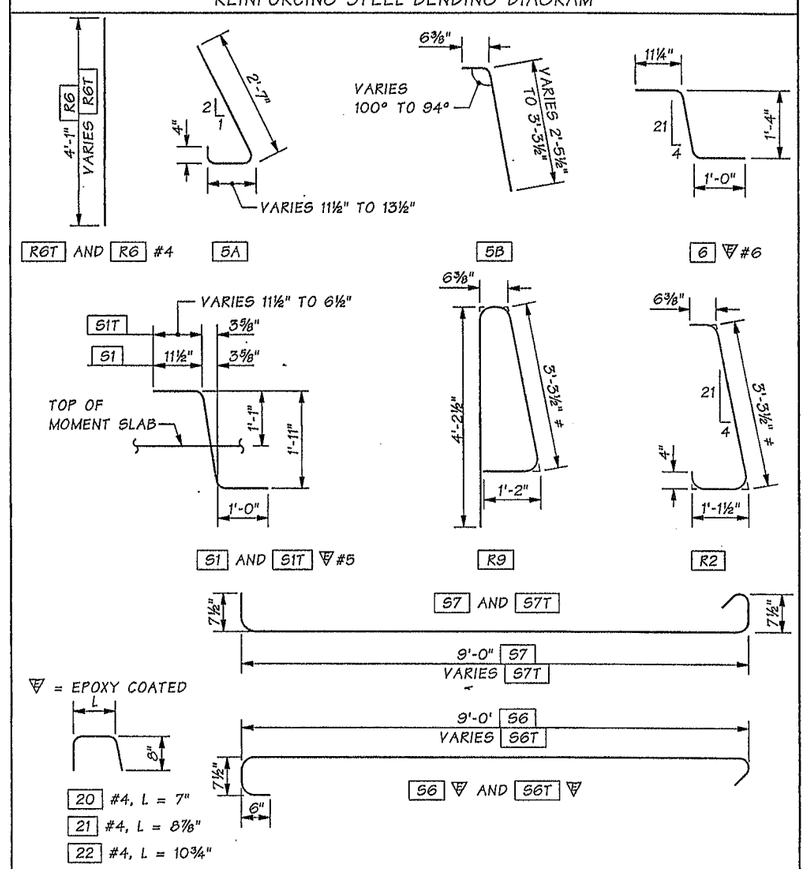

Bridge Design Engr.	Khaleghi, B	M:\Y-Team\M ST TO PORTLAND - WALLS\I5SB WALL - E\I5SB WALL - E\window files\WR21-TR BAR DET1.wnd	
Supervisor	Zeldenrust, RP		
Designed By	Pawelka, M 05/13		
Checked By	Dobrev, B 12/13		
Detailed By	Williams, S / Davis, E 05/13		
Bridge Projects Engr.			
Prelim. Plan By			
Architect/Specialist		DATE / REVISION / BY / APP'D	

REGION NO.	STATE	FED. AID PROJ. NO.	SHEET NO.	TOTAL SHEETS
10	WASH.			
JOB NUMBER 12C501				

BRIDGE AND STRUCTURES OFFICE

Washington State Department of Transportation

I-5
M ST TO PORTLAND AVE - HOV
I5SB WALL - E

SINGLE SLOPE TRAFFIC BARRIER WITH MOMENT SLAB - DETAILS 1 OF 4

BRIDGE SHEET NO. WR21

SHEET 844 OF 1763 SHEETS

SR 5 FILE NO. ____ SHEET WR21

Tue Feb 11 15:25:36 2014

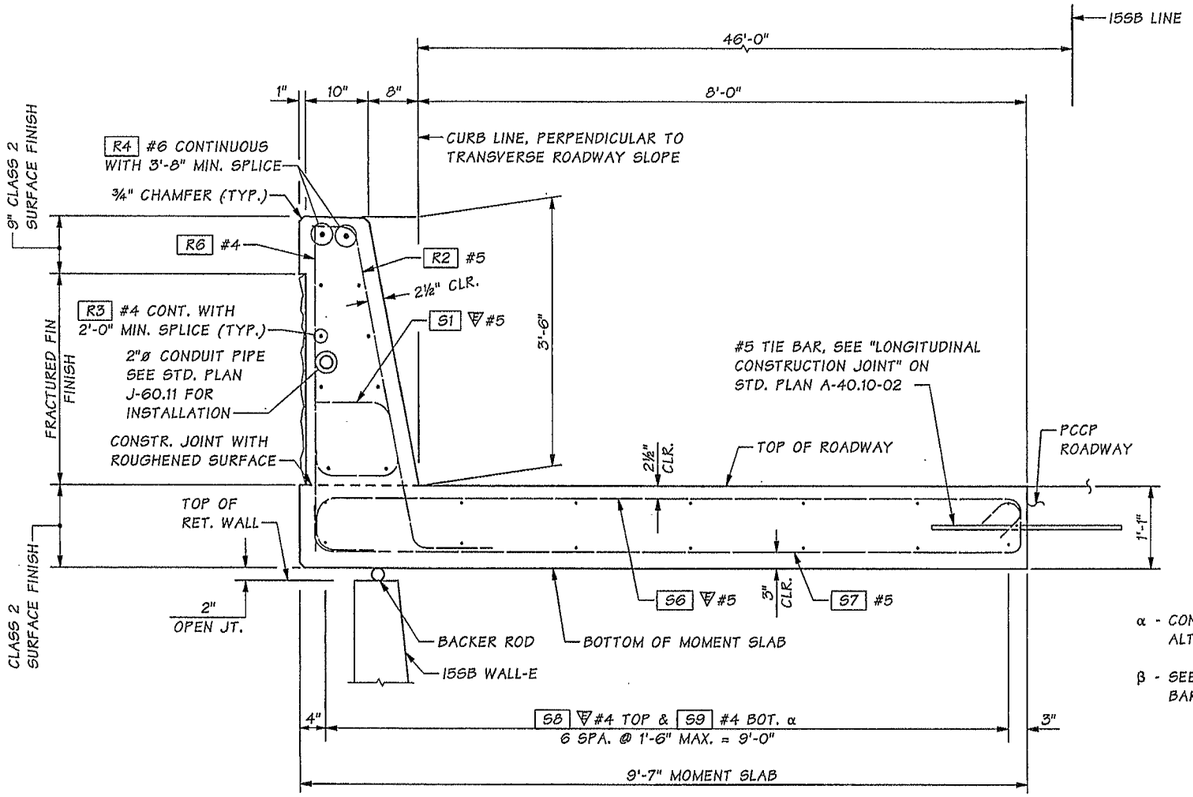

TYPICAL SECTION
SINGLE SLOPE TRAFFIC BARRIER WITH MOMENT SLAB

α - CONTINUOUS W/ 2'-0" MIN. SPLICE. ALTERNATE LOCATION OF SPLICE.

β - SEE BR. SHT. BW7 FOR BARRIER DIMENSIONS NOT SHOWN.

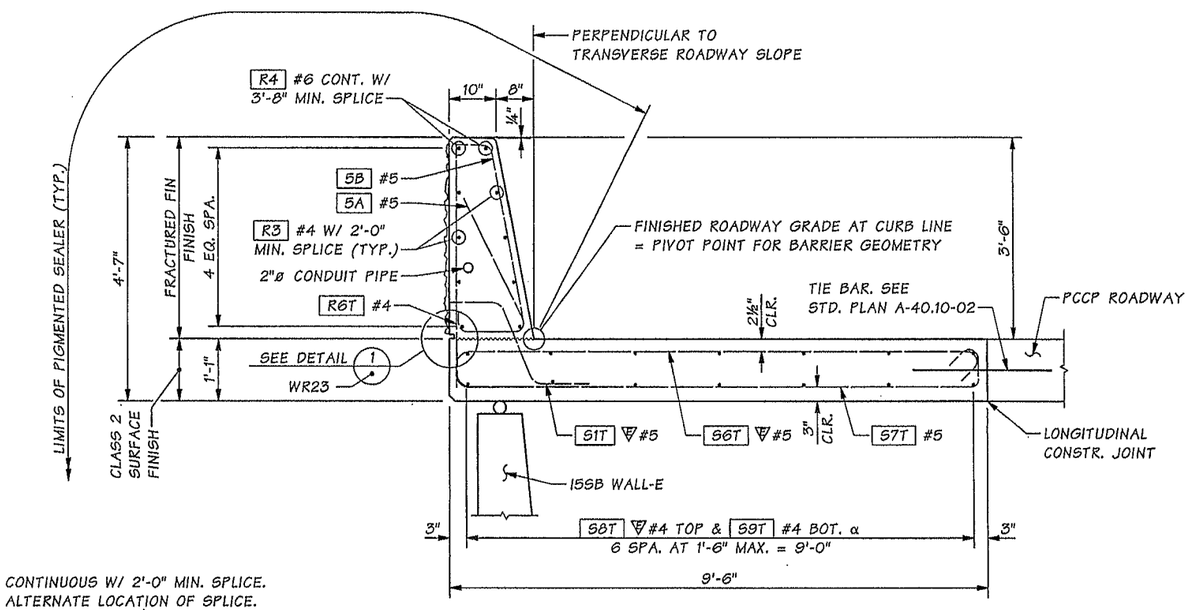

SECTION A
BARRIER TRANSITION
WR21

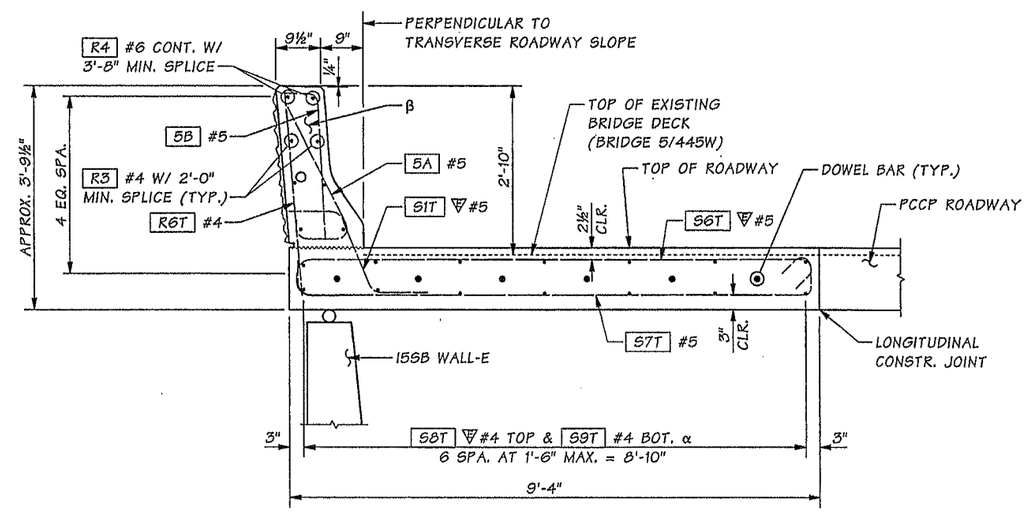

SECTION B
BARRIER TRANSITION
FOR DETAILS NOT SHOWN
SEE SECTION A THIS SHEET
WR21

Bridge Design Engr.	Khaleghi, B	M:\Y-Team\M ST TO PORTLAND - WALLS\I5SB WALL - E\I5SB WALL - E\window files\WR22-TR BAR DET2.wnd			REGION NO.	STATE	FED. AID PROJ. NO.	SHEET NO.	TOTAL SHEETS
Supervisor	Zeldenrust, RP				10	WASH.			
Designed By	Pawelka, M 05/13				JOB NUMBER 12C501				
Checked By	Dobrev, B 12/13								
Detailed By	Williams, S / Davis, E 05/13								
Bridge Projects Engr.									
Prelim. Plan By									
Architect/Specialist		DATE	REVISION	BY	APP'D				

Tue Feb 11 15:25:38 2014

MONIQUE E. PAWELKA STATE OF WASHINGTON 35812 REGISTERED PROFESSIONAL ENGINEER 2/11/14

BRIDGE AND STRUCTURES OFFICE

BIJAN KHALEGHI STATE OF WASHINGTON 27695 REGISTERED PROFESSIONAL ENGINEER 2/12/14

Washington State Department of Transportation

I-5
M ST TO PORTLAND AVE - HOV

I5SB WALL - E

SINGLE SLOPE TRAFFIC BARRIER WITH MOMENT SLAB - DETAILS 2 OF 4

BRIDGE SHEET NO. WR22

SHEET 845 OF 1763 SHEETS

SR 5 FILE NO. ____ SHEET WR22

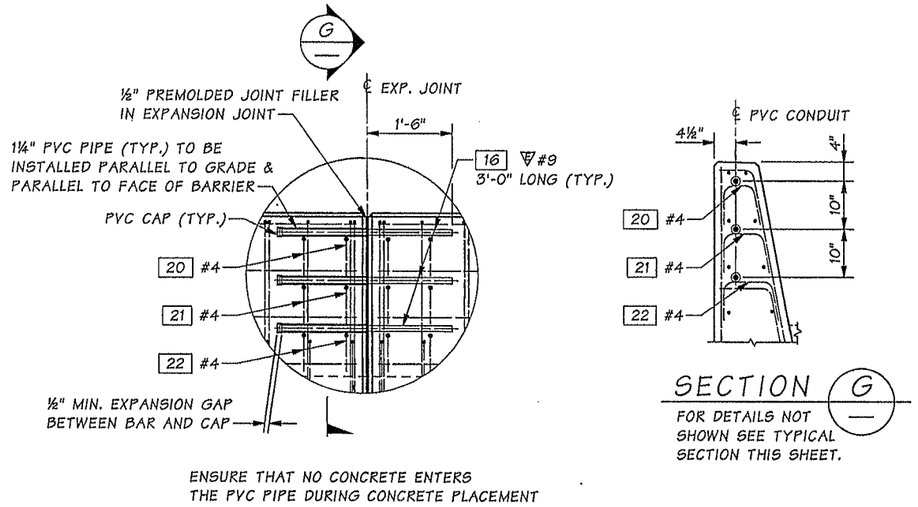

SECTION G

FOR DETAILS NOT SHOWN SEE TYPICAL SECTION THIS SHEET.

BARRIER EXPANSION JOINT DETAIL

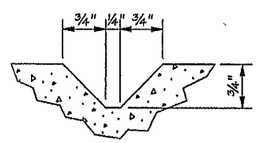

DUMMY JOINT DETAIL

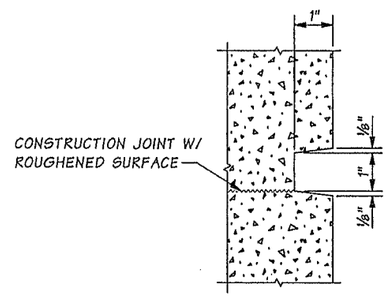

SECTION 1

RUSTICATION DETAIL

WR22

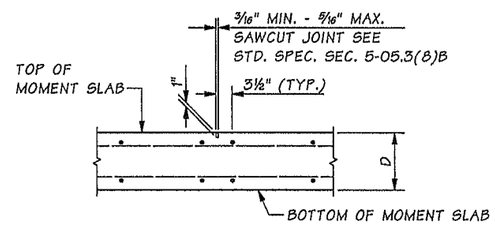

MOMENT SLAB TRANSVERSE CONTRACTION JOINT DETAIL

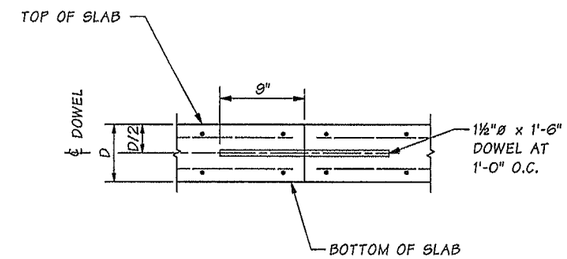

MOMENT SLAB TRANVERSE CONSTRUCTION JOINT DETAIL

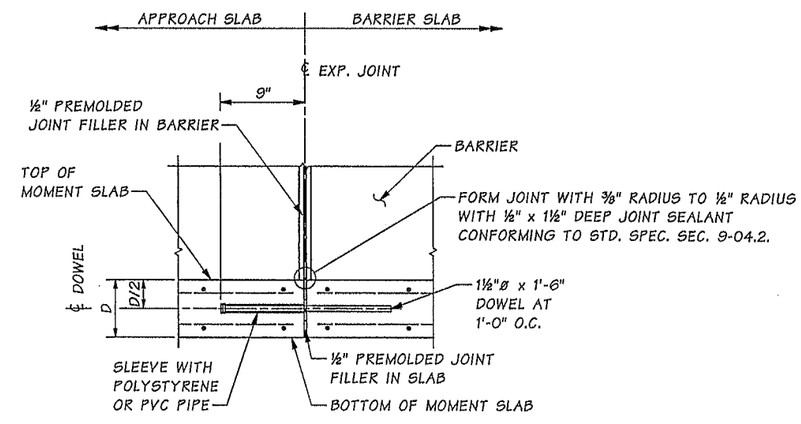

MOMENT SLAB TRANVERSE EXPANSION JOINT DETAIL

REINFORCING STEEL NOT SHOWN FOR CLARITY.

SR 5 FILE NO. SHEET WR23

Bridge Design Engr.	Khaleghi, B	M:\Y-Team\M ST TO PORTLAND - WALLS\I5SB WALL - E\I5SB WALL - E\window files\WR23-TR BAR DET3.wnd								
Supervisor	Zeldenrust, RP									
Designed By	Pawelka, M 05/13									
Checked By	Dobrev, B 12/13									
Detailed By	Williams, S / Davis, E 05/13									
Bridge Projects Engr.										
Prelim. Plan By										
Architect/Specialist		DATE	REVISION	BY	APP'D					

REGION NO.	STATE	FED. AID PROJ. NO.	SHEET NO.	TOTAL SHEETS
10	WASH.			
JOB NUMBER 12C501				

MONIQUE E. PAWELKA, STATE OF WASHINGTON, 35812, REGISTERED PROFESSIONAL ENGINEER — 2/11/14

BRIDGE AND STRUCTURES OFFICE

BIJAN KHALEGHI, STATE OF WASHINGTON, 27695, STRUCTURAL ENGINEER, PROFESSIONAL ENGINEER — 2/12/14

Washington State Department of Transportation

I-5
M ST TO PORTLAND AVE - HOV

I5SB WALL - E

SINGLE SLOPE TRAFFIC BARRIER WITH MOMENT SLAB - DETAILS 3 OF 4

BRIDGE SHEET NO. WR23

SHEET 846 OF 1763 SHEETS

Tue Feb 11 15:25:40 2014

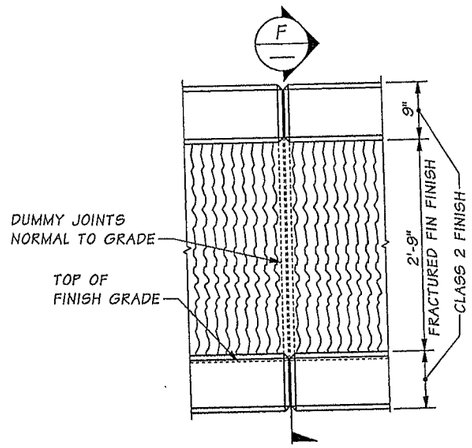

VIEW E

ALL CHAMFERS ¾" — WR21

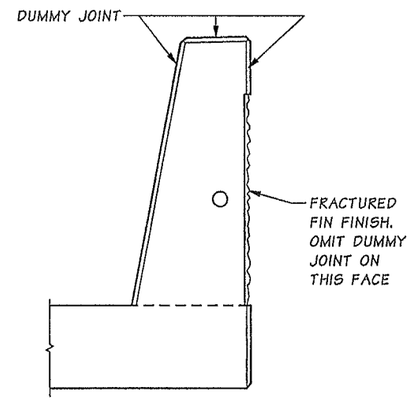

SECTION F

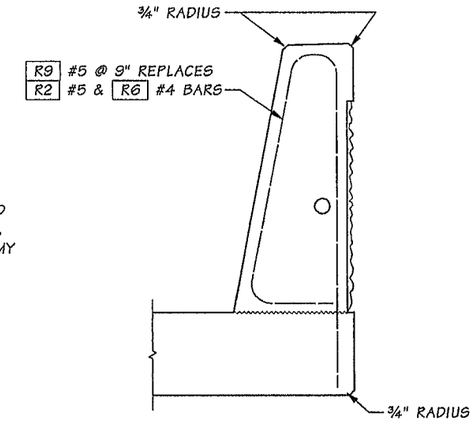

SLIPFORM ALTERNATE

SEE "TYPICAL SECTION SINGLE SLOPE TRAFFIC BARRIER WITH MOMENT SLAB" FOR ADDITIONAL DETAILS.

THE CONTRACTOR IS ADVISED THAT THE SLIPFORM CONSTRUCTION METHOD IS A PATENTED PROPRIETARY PROCESS FOR BARRIERS WITH A FRACTURED FIN FINISH.

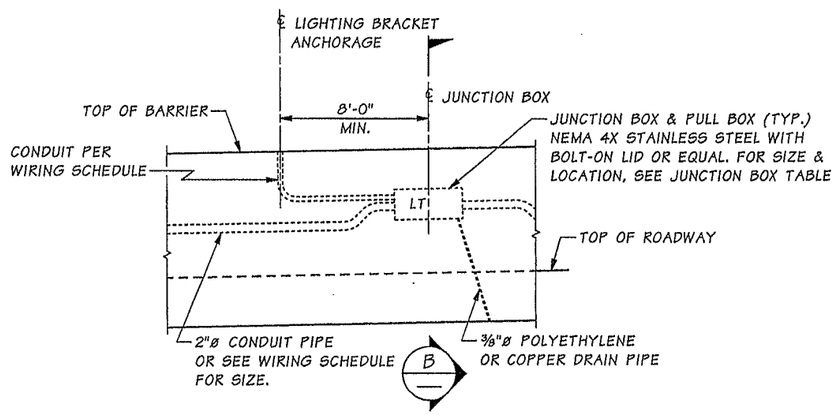

ELEVATION

CONDUITS & J-BOX IN TRAFFIC BARRIER

FRACTURED FIN FINISH OMITTED FOR CLARITY

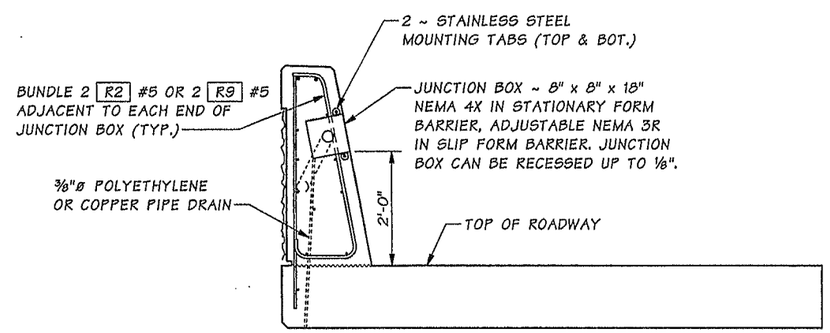

SECTION B

SR 5 FILE NO. ____ SHEET WR24

Bridge Design Engr.	Khaleghi, B		M:\Y-Team\M ST TO PORTLAND - WALLS\I5SB WALL - E\I5SB WALL - E\window files\WR24-TR BAR DET4.wnd				REGION NO.	STATE	FED. AID PROJ. NO.	SHEET NO.	TOTAL SHEETS
Supervisor	Zeldenrust, RP						10	WASH.			
Designed By	Pawelka, M	06/13									
Checked By	Dobrev, B	12/13					JOB NUMBER 12C501				
Detailed By	Davis, E	06/13									
Bridge Projects Engr.											
Prelim. Plan By											
Architect/Specialist			DATE	REVISION	BY	APP'D					

Tue Feb 11 15:25:42 2014

MONIQUE E. PAWELKA — STATE OF WASHINGTON — 30018 — REGISTERED PROFESSIONAL ENGINEER — 2/11/14

BRIDGE AND STRUCTURES OFFICE

BRIAN KHALEGHI — STATE OF WASHINGTON — 37405 — PROFESSIONAL ENGINEER — 2/12/14

Washington State Department of Transportation

I-5
M ST TO PORTLAND AVE - HOV

I5SB WALL - E

SINGLE SLOPE TRAFFIC BARRIER WITH MOMENT SLAB - DETAILS 4 OF 4

BRIDGE SHEET NO. WR24

SHEET 847 OF 1763 SHEETS

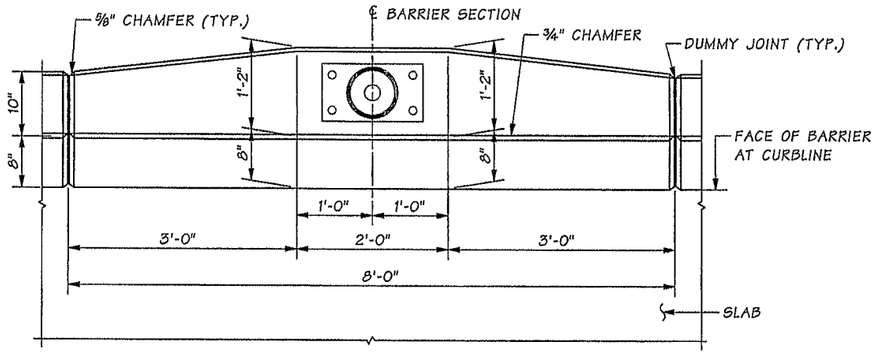

PLAN

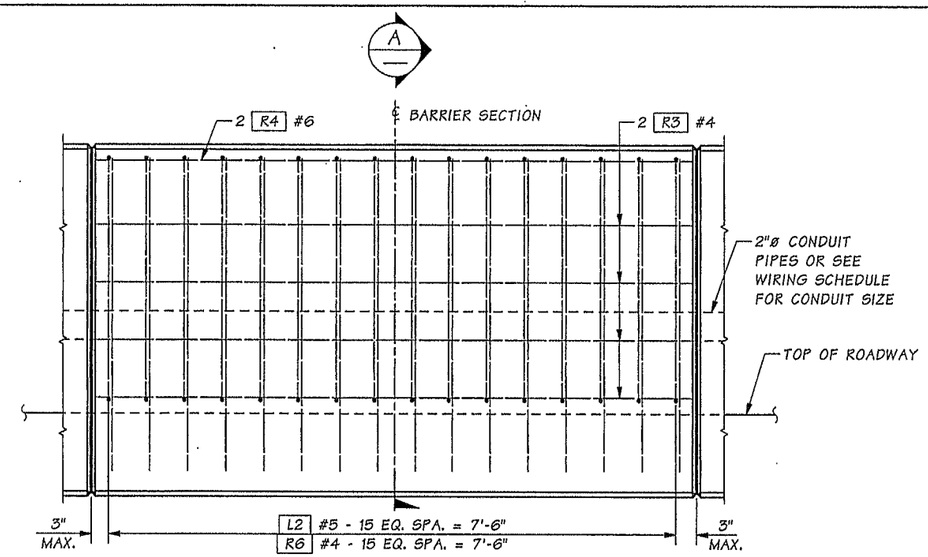

ELEVATION

SLAB REINF. NOT SHOWN

LUMINAIRE POLE LOCATIONS ON I5SB WALL-E	
I5SB STATION	OFFSET
542+82.00	LEFT

JUNCTION BOX LOCATIONS ON I5SB WALL-E	
I5SB STATION	OFFSET
541+30	LEFT
542+74	LEFT
543+92	LEFT

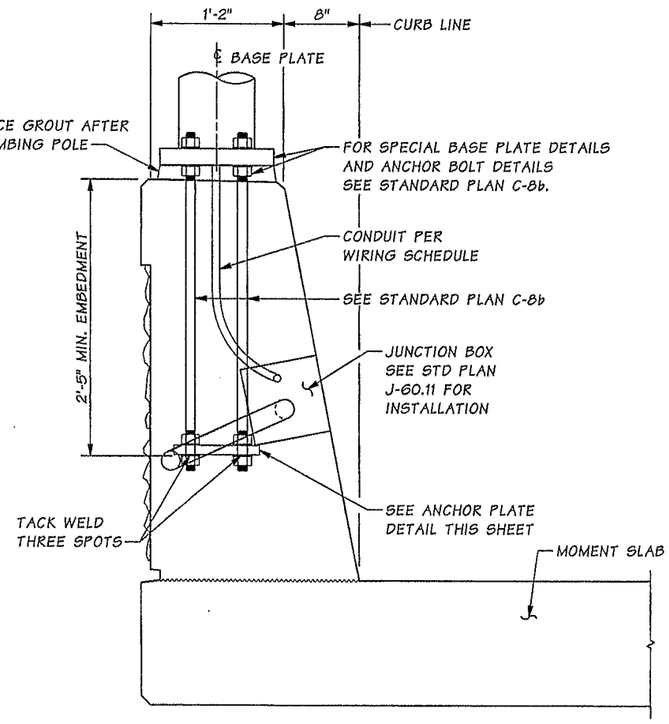

ELEVATION PROFILE
LUMINAIRE SUPPORT

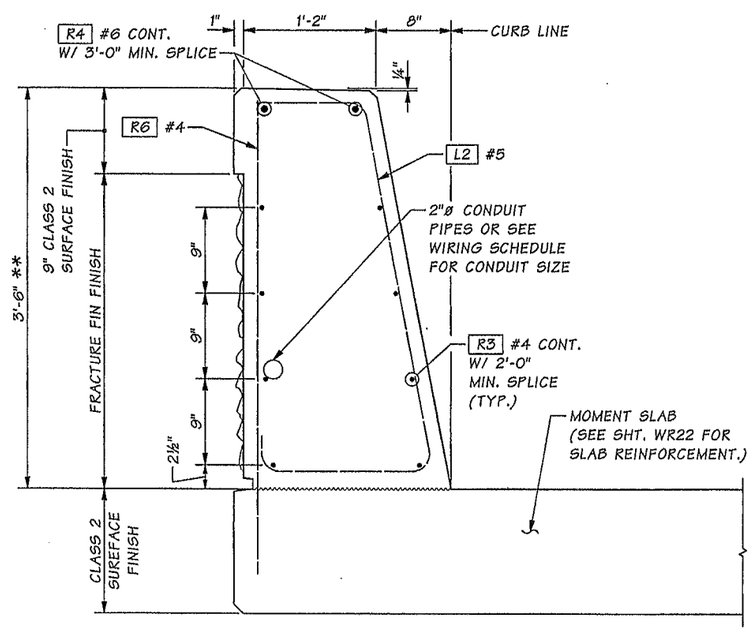

SECTION A

** HEIGHT MAY VARY IF REQUIRED TO PROVIDE A PROFILE PLEASING TO THE EYE

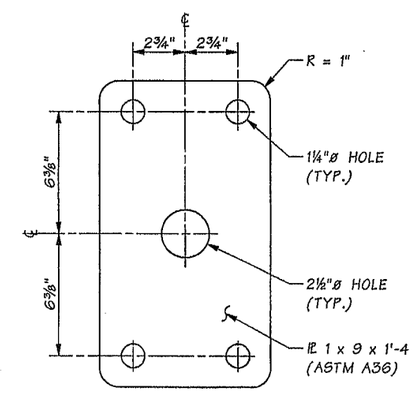

ANCHOR PLATE

Bridge Design Engr.	Khaleghi, B		
Supervisor	Zeldenrust, RP		
Designed By	Pawelka, M	05/13	
Checked By	Dobrev, B	12/13	
Detailed By	Williams, S / Davis, E	05/13	
Bridge Projects Engr.			
Prelim. Plan By			
Architect/Specialist			

M:\Y-Team\M ST TO PORTLAND - WALLS\I5SB WALL - E\I5SB WALL - E\window files\WR25-LUMIN DET.wnd

DATE	REVISION	BY	APP'D

REGION NO.	STATE	FED. AID PROJ. NO.	SHEET NO.	TOTAL SHEETS
10	WASH.			
JOB NUMBER 12C501				

MONIQUE E. PAWELKA — STATE OF WASHINGTON — 50312 — REGISTERED PROFESSIONAL ENGINEER — 2/12/14

BRIDGE AND STRUCTURES OFFICE

BRIAN KHALEGHI — STATE OF WASHINGTON — 27402 — PROFESSIONAL ENGINEER — 2/12/14

Washington State Department of Transportation

I-5
M ST TO PORTLAND AVE - HOV

I5SB WALL - E

BARRIER MOUNTED LUMINAIRE DETAILS

BRIDGE SHEET NO. WR25

SHEET 848 OF 1763 SHEETS

SR 5 FILE NO. ____ SHEET WR25

Tue Feb 11 15:25:43 2014

GENERAL NOTES

1. ALL MATERIAL AND WORKMANSHIP SHALL BE IN ACCORDANCE WITH THE REQUIREMENTS OF THE WASHINGTON STATE DEPARTMENT OF TRANSPORTATION STANDARD SPECIFICATIONS FOR ROAD, BRIDGE AND MUNICIPAL CONSTRUCTION DATED 2014, AND AMENDMENTS.

2. THE SOIL NAIL WALLS HAVE BEEN DESIGNED IN ACCORDANCE WITH THE REQUIREMENTS OF THE FHWA-IF-03-017 GEOTECHNICAL ENGINEERING CIRCULAR NO. 7 SOIL NAIL WALLS AND THE AASHTO STANDARD SPECIFICATIONS FOR HIGHWAY BRIDGES SEVENTEENTH EDITION - 2002 AND INTERIMS. ALL STRUCTURAL ELEMENTS HAVE BEEN DESIGNED IN ACCORDANCE WITH THE REQUIREMENTS FOR SERVICE LOAD DESIGN.

3. THE SEISMIC DESIGN PARAMETERS HAVE BEEN DETERMINED IN ACCORDANCE WITH THE AASHTO GUIDE SPECIFICATIONS FOR LRFD, 2ND EDITION 2011, USING SITE CLASS C, A 0.2 SECOND PERIOD SPECTRAL ACCELERATION COEFFICIENT OF 0.89 ON SITE CLASS B, AN EFFECTIVE PEAK GROUND ACCELERATION COEFFICIENT (As) OF 0.41g, AND A SEISMIC HORIZONTAL ACCELERATION COEFFICIENT (k_h) OF 0.205.

4. UNLESS OTHERWISE SHOWN IN THE PLANS, THE CONCRETE COVER MEASURED FROM THE FACE OF THE CONCRETE TO THE FACE OF ANY REINFORCING STEEL SHALL BE 1½".

5. CONCRETE SHALL BE CLASS 4000. ALL SHOTCRETE SHALL ATTAIN A MINIMUM COMPRESSIVE STRENGTH OF 4000 PSI AT 28 DAYS.

6. THE SHOTCRETE FACING SHALL HAVE A MINIMUM COMPRESSIVE STRENGTH OF 2600 PSI BEFORE EXCAVATION FOR THE NEXT LOWER ROW OF NAILS.

7. THE REINFORCING BAR FOR THE SOIL NAILS SHALL BE GRADE 75.

8. SHOTCRETE SHALL NOT BE USED AS A REPLACEMENT FOR CAST-IN-PLACE CONCRETE.

9. EXISTING FEATURES AND DIMENSIONS ARE BASED ON INSPECTION REPORTS AND AS-BUILT PLANS. ALL DIMENSIONS AND ELEVATIONS NOTED WITH AN ASTERISK (*) SHALL BE FIELD MEASURED BY THE CONTRACTOR PRIOR TO ORDERING MATERIALS AND PROCEEDING WITH CONSTRUCTION.

10. FOR EXISTING UTILITIES LEGEND SEE SHEET EU1.

11. CONDUITS, JUNCTION BOXES, AND UTILITIES ARE SHOWN FOR REFERENCE ONLY. THE CONTRACTOR SHALL COORDINATE THESE PLANS WITH ELECTRICAL, I.T.S., AND OTHER CIVIL PLANS.

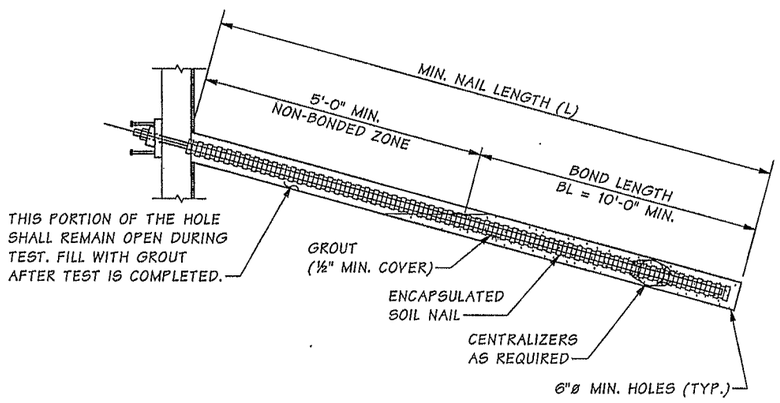

ENCAPSULATED TEST NAIL DETAIL

TL = TEST LOAD = (BOND LENGTH) x (DESIGN LOAD TRANSFER (DLT))

ENCAPSULATED NAIL SHOWN, EPOXY COATED NAIL SIMILAR.

LEGEND

B/15 — IDENTIFIES SECTION OR VIEW
TAKEN OR SHOWN ON BRIDGE SHEET 15

1/— IDENTIFIES DETAIL
TAKEN OR SHOWN ON THE SAME SHEET

LEGEND
L = MINIMUM NAIL LENGTH (FT.)
α = NAIL DECLINATION (DEG.)
S_H = MAXIMUM HORIZONTAL SPACING OF NAILS
S_V = MAXIMUM VERTICAL SPACING OF NAILS
BAR # = MIN. STEEL BAR SIZE
DLT = DESIGN LOAD TRANSFER
⊙ = PROOF TEST NAILS
= EPOXY COATED PRODUCTION NAILS
= ENCAPSULATED PRODUCTION NAILS

SNB WALL-A SOIL NAIL SCHEDULE

NOTES	SNB WALL-A STATION	ROW	S_V MAX. (FT.)	S_H MAX. (FT.)	L (FT.)	α	BAR #	ALLOWABLE DLT (LB./FT.)
	8+97.45 TO 10+00.00	ALL	5	5	16	15	8	2000
	10+00.01 TO 11+22.00	ALL	5	5	22	15	8	2000
LUMINAIRE AT TOP OF WALL	11+22.01 TO 11+42.00	1	5	5	35	15	8	2000
LUMINAIRE AT TOP OF WALL	11+22.01 TO 11+42.00	2	5	5	31	15	8	2000
LUMINAIRE AT TOP OF WALL	11+22.01 TO 11+42.00	3	5	5	25	15	8	2000
LUMINAIRE AT TOP OF WALL	11+22.01 TO 11+42.00	4	5	5	23	15	8	2000
LUMINAIRE AT TOP OF WALL	11+22.01 TO 11+42.00	5	5	5	23	15	8	2000
	11+42.01 TO 11+50.00	ALL	5	5	22	15	8	2000
	11+50.01 TO 12+80.65	ALL	4	4	27	15	8	2000
BRIDGE 5/448 PIER 4 SHAFT	12+80.66 TO 12+88.66	ALL	4	4	27	23	8	2000
	12+88.67 TO 13+08.65	ALL	4	4	27	15	8	2000
BRIDGE 5/448 PIER 4 SHAFT	13+08.66 TO 13+16.66	ALL	4	4	27	23	8	2000
	13+16.67 TO 13+36.65	ALL	4	4	27	15	8	2000
BRIDGE 5/448 PIER 4 SHAFT	13+36.66 TO 13+43.66	ALL	4	4	27	23	8	2000
	13+43.67 TO 14+15.00	ALL	4	4	27	15	8	2000
LUMINAIRE AT TOP OF WALL	14+15.01 TO 14+35.00	1	4	4	40	15	8	2000
LUMINAIRE AT TOP OF WALL	14+15.01 TO 14+35.00	2	4	4	36	15	8	2000
LUMINAIRE AT TOP OF WALL	14+15.01 TO 14+35.00	3	4	4	30	15	8	2000
LUMINAIRE AT TOP OF WALL	14+15.01 TO 14+35.00	4	4	4	28	15	8	2000
LUMINAIRE AT TOP OF WALL	14+15.01 TO 14+35.00	5	4	4	28	15	8	2000
	14+35.01 TO 14+50.00	ALL	4	4	27	15	8	2000
	14+50.01 TO 16+94.00	ALL	5	5	22	15	8	2000
LUMINAIRE AT TOP OF WALL	16+94.01 TO 17+14.00	1	5	5	35	15	8	2000
LUMINAIRE AT TOP OF WALL	16+94.01 TO 17+14.00	2	5	5	31	15	8	2000
LUMINAIRE AT TOP OF WALL	16+94.01 TO 17+14.00	3	5	5	25	15	8	2000
LUMINAIRE AT TOP OF WALL	16+94.01 TO 17+14.00	4	5	5	23	15	8	2000
LUMINAIRE AT TOP OF WALL	16+94.01 TO 17+14.00	5	5	5	23	15	8	2000
	17+14.01 TO 18+00.00	ALL	5	5	22	15	8	2000
	18+00.01 TO 19+23.00	ALL	5	5	16	15	8	2000
LUMINAIRE AT TOP OF WALL	19+23.01 TO 19+43.00	1	5	5	29	15	8	2000
LUMINAIRE AT TOP OF WALL	19+23.01 TO 19+43.00	2	5	5	25	15	8	2000
	19+43.01 TO 20+16.35	ALL	5	5	16	15	8	2000

NBN WALL-A SOIL NAIL SCHEDULE

NOTES	NBN WALL-A STATION	ROW	S_V MAX. (FT.)	S_H MAX. (FT.)	L (FT.)	α	BAR #	ALLOWABLE DLT (LB./FT.)
	9+90.43 TO 13+00.00	ALL	4	4	28	15	9	2000
	13+00.01 TO 14+58.37	ALL	4	4	48	15	9	2000
	14+58.38 TO 14+62.53	ALL	4	4	48	23	9	2000
	14+62.54 TO 19+50.00	ALL	4	4	48	15	9	2000
	19+50.01 TO 22+36.00	ALL	4	4	28	15	9	2000
LUMINAIRE AT TOP OF WALL	22+36.01 TO 22+50.00	1	4	4	41	15	9	2000
LUMINAIRE AT TOP OF WALL	22+36.01 TO 22+50.00	2	4	4	37	15	9	2000
LUMINAIRE AT TOP OF WALL	22+36.01 TO 22+50.00	3	4	4	31	15	9	2000
LUMINAIRE AT TOP OF WALL	22+36.01 TO 22+50.00	4	4	4	29	15	9	2000
LUMINAIRE AT TOP OF WALL	22+50.01 TO 22+56.00	1	4	4	33	15	9	2000
LUMINAIRE AT TOP OF WALL	22+50.01 TO 22+56.00	2	4	4	29	15	9	2000
LUMINAIRE AT TOP OF WALL	22+50.01 TO 22+56.00	3	4	4	23	15	9	2000
	22+56.01 TO 22+70.88	ALL	4	4	20	15	9	2000

SR 5 FILE NO. ____ SHEET WR26

Bridge Design Engr.	Khaleghi, B	
Supervisor	Zeldenrust, RP	
Designed By	Pawelka, M	07/13
Checked By	Chu, A	10/13
Detailed By	Davis, EA	07/13
Bridge Projects Engr.		
Prelim. Plan By		
Architect/Specialist		

M:\Y-Team\M ST TO PORTLAND - WALLS\window files\WR26-GEN NOTES & NAIL SCHDL.wnd

DATE	REVISION	BY	APP'D

REGION NO.	STATE	FED. AID PROJ. NO.	SHEET NO.	TOTAL SHEETS
10	WASH.			
JOB NUMBER 12C501				

Tue Feb 11 15:25:45 2014

MONIQUE E. PAWELKA — STATE OF WASHINGTON — 35818 — REGISTERED PROFESSIONAL ENGINEER — 2/11/14

BRIDGE AND STRUCTURES OFFICE

BRIAN KHALEGHI — STATE OF WASHINGTON — 27095 — REGISTERED PROFESSIONAL ENGINEER — 2/11/14

Washington State Department of Transportation

I-5
M ST TO PORTLAND AVE - HOV

NBN WALL - A & SNB WALL - A

GENERAL NOTES & NAIL SCHEDULE

BRIDGE SHEET NO. WR26

SHEET 849 OF 1763 SHEETS

CURVE DATA

PI STATION	DELTA	RADIUS	TANGENT	LENGTH	BK TAN. BRG.
NBN WALL-A 2+92.14	3°40'07" LT	7435.33'	238.13'	476.09'	N 71°00'29" E

SUMMARY OF QUANTITIES
NBN WALL-A

STD. ITEM NO.	ITEM	UNIT	QUANTITY
4474	CONCRETE FASCIA PANEL	S.F.	44,200
4478	SOIL NAIL- EPOXY COATED	EACH	2,395
4479	SOIL NAIL- ENCAPSULATED	EACH	116
4482	PREFABRICATED DRAINAGE MAT	S.Y.	2,220
4486	SOIL NAIL VERIFICATION AND PROOF TEST	EACH	78
7561	SHOTCRETE FACING	S.F.	39,900
7088	COATED CHAIN LINK FENCE TYPE 4 MODIFIED	L.F.	1,790
---	VERTICAL SHORING PILE	L.F.	31,062

SUMMARY OF QUANTITIES CONT...
NBN WALL-A

STD. ITEM NO.	ITEM	UNIT	QUANTITY
1065	CEMENT CONC. GUTTER	L.F.	2,226
1160	UNDERDRAIN PIPE 6 IN. DIAM.	L.F.	2,217
4006	STRUCTURE EXC CLASS A INCL. HAUL	C.Y.	8,980
4025	GRAVEL BACKFILL FOR WALL	C.Y.	4,221
4139	CONC. CLASS 4000	C.Y.	3,347
4150	ST. REINF. BAR	LB	298,340
7014	GRAVEL BACKFILL FOR DRAIN	C.Y.	312
7550	CONSTRUCTION GEOTEXTILE FOR UNDERGROUND DRAINAGE	S.Y.	3,210

NOTE:
THE QUANTITIES AS LISTED ON THIS SHEET ARE FOR THE CONVENIENCE OF THE CONTRACTOR AND ARE NOT GUARANTEED TO BE ACCURATE. THE QUANTITIES AS LISTED ON THE SUMMARY OF QUANTITIES SHEETS SHALL TAKE PRECEDENCE OVER ANY QUANTITY LISTED ON THIS SHEET.

SEC. 9., T. 20N., R. 3E., W.M.
CITY OF TACOMA

N

I-5

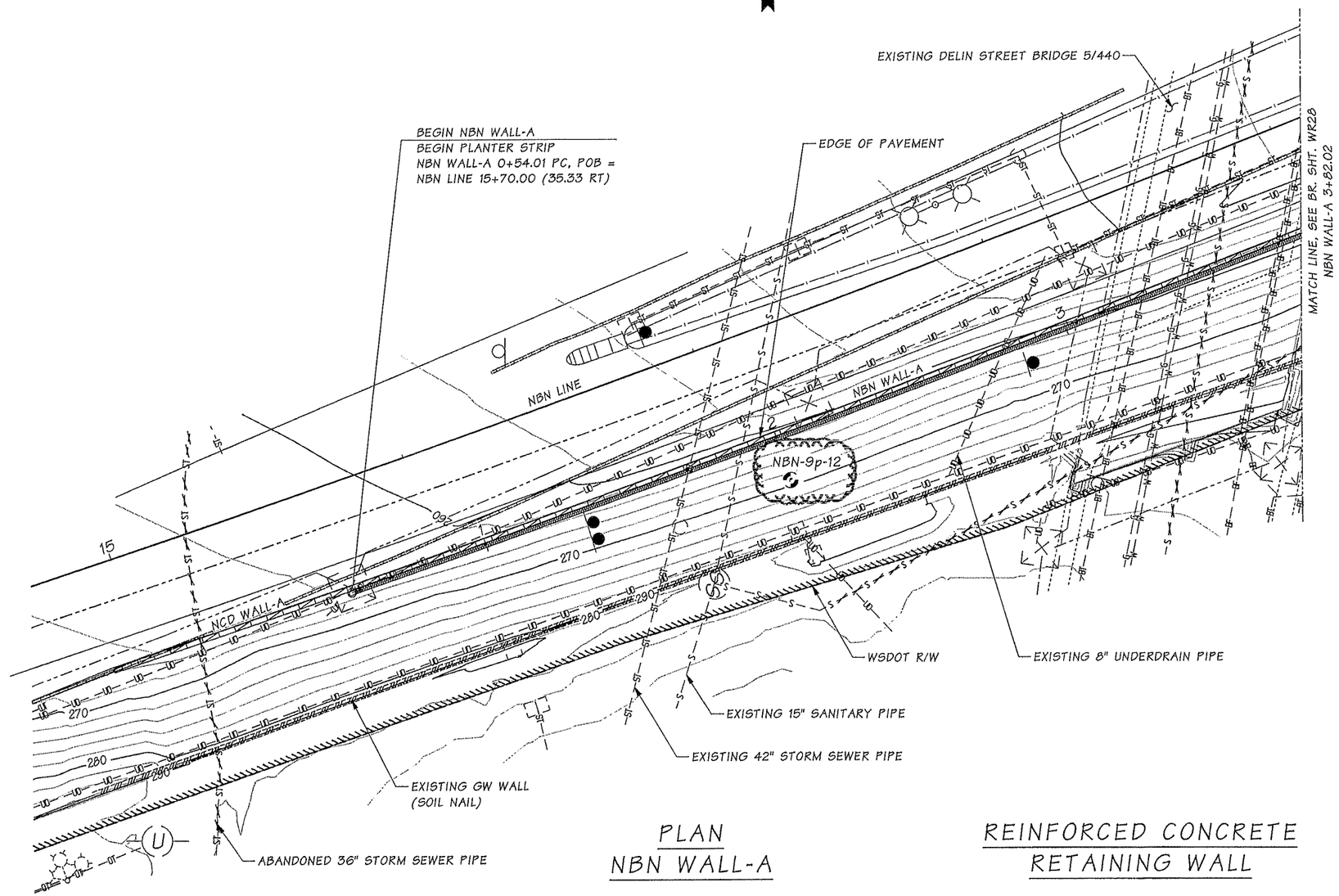

PLAN
NBN WALL-A

REINFORCED CONCRETE
RETAINING WALL

DATUM
N.A.V.D. OF 1988

Bridge Design Engr.	Khaleghi, B		M:\Y-Team\M ST TO PORTLAND - WALLS\window files\WR27-PLAN1_AD1.wnd						
Supervisor	Zeldenrust, RP								
Designed By	Pawelka, M	03/13							
Checked By	Chu, A	10/13							
Detailed By	Davis, EA	05/13							
Bridge Projects Engr.			05/02/14	AD1 - UPDATE BID ITEM NAME	MEP	BK			
Prelim. Plan By			05/02/14	AD1 - UPDATE BORING HOLES	MEP	BK			
Architect/Specialist			DATE	REVISION	BY	APP'D			

REGION NO.	STATE	FED. AID PROJ. NO.	SHEET NO.	TOTAL SHEETS
10	WASH.			
JOB NUMBER 12C501				

Fri May 02 13:05:16 2014

BRIDGE AND STRUCTURES OFFICE

BRIAN KHALEGHI — STATE OF WASHINGTON — STRUCTURAL ENGINEER — PROFESSIONAL ENGINEER
5/2/14

Washington State Department of Transportation

I-5
M ST TO PORTLAND AVE - HOV
NBN WALL - A
NBN WALL-A
PLAN 1 OF 5

BRIDGE SHEET NO. WR27
SHEET 850 OF 1763 SHEETS

SR 5 FILE NO. ____ SHEET WR27

SEC. 9., T. 20N., R. 3E., W.M.
CITY OF TACOMA

I-5

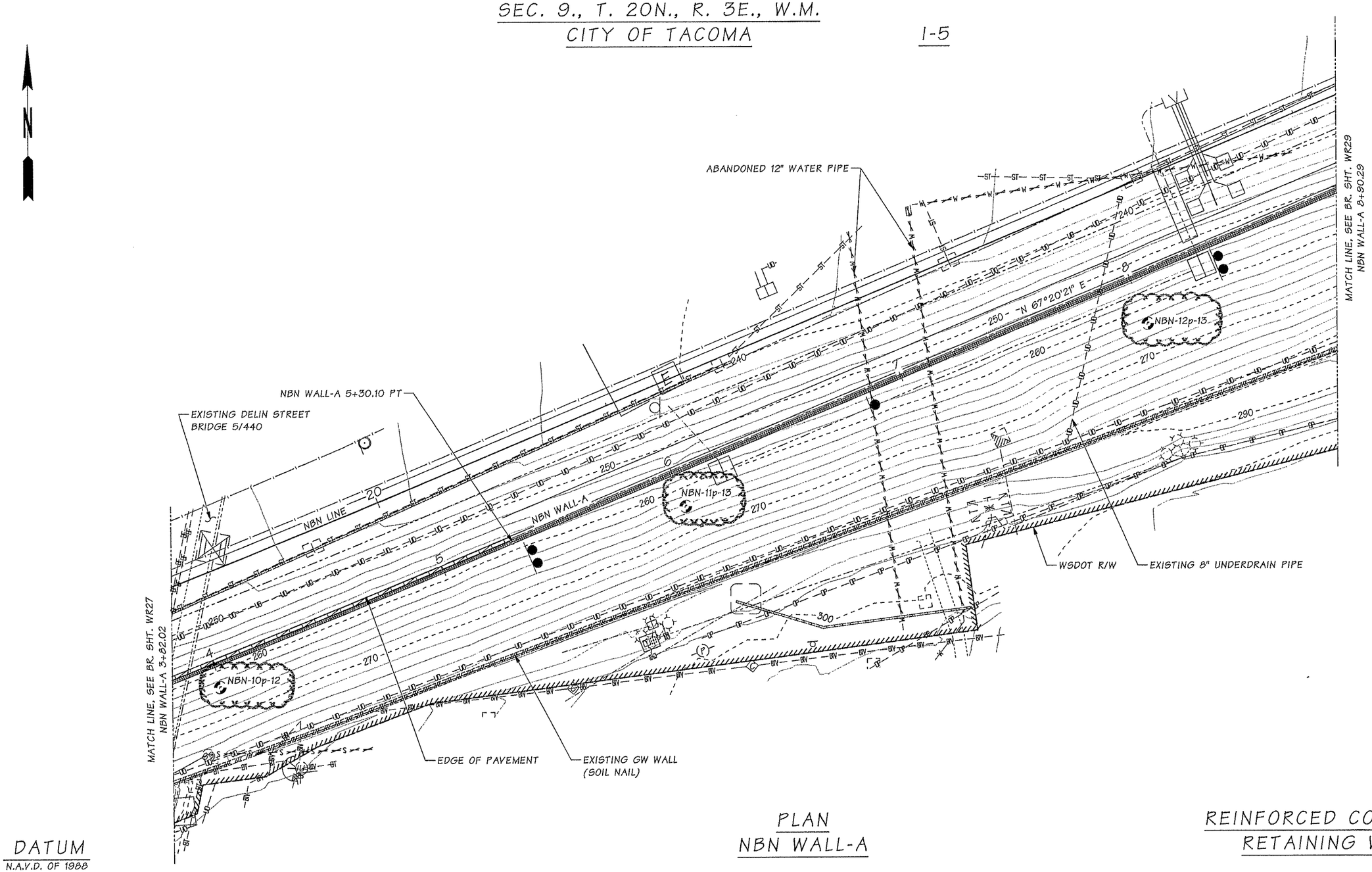

DATUM
N.A.V.D. OF 1988

PLAN
NBN WALL-A

REINFORCED CONCRETE RETAINING WALL

SR 5 FILE NO. ____ SHEET WR28

Bridge Design Engr.	Khaleghi, B		M:\Y-Team\M ST TO PORTLAND - WALLS\window files\WR28-PLAN 2_AD1.wnd								
Supervisor	Zeldenrust, RP						REGION NO.	STATE	FED. AID PROJ. NO.	SHEET NO.	TOTAL SHEETS
Designed By	Pawelka, M	02/13					10	WASH.			
Checked By	Chu, A	10/13									
Detailed By	Davis, EA	05/13					JOB NUMBER 12C501				
Bridge Projects Engr.											
Prelim. Plan By			05/02/14	AD1 - UPDATE BORING HOLES	MEP	BK					
Architect/Specialist			DATE	REVISION	BY	APP'D					

Fri May 02 13:05:22 2014

BRIDGE AND STRUCTURES OFFICE

BIJAN KHALEGHI STATE OF WASHINGTON STRUCTURAL ENGINEER PROFESSIONAL ENGINEER 5/4/14

Washington State Department of Transportation

I-5
M ST TO PORTLAND AVE - HOV

NBN WALL - A

NBN WALL-A
PLAN 2 OF 5

BRIDGE SHEET NO. WR28

SHEET 851 OF 1763 SHEETS

CURVE DATA					
PI STATION	DELTA	RADIUS	TANGENT	LENGTH	BK TAN. BRG.
NBN WALL-A 12+20.39	8°47'06" RT	3164.67'	243.09'	485.23'	N 67°20'21" E

SEC. 9., T. 20N., R. 3E., W.M.
CITY OF TACOMA

I-5

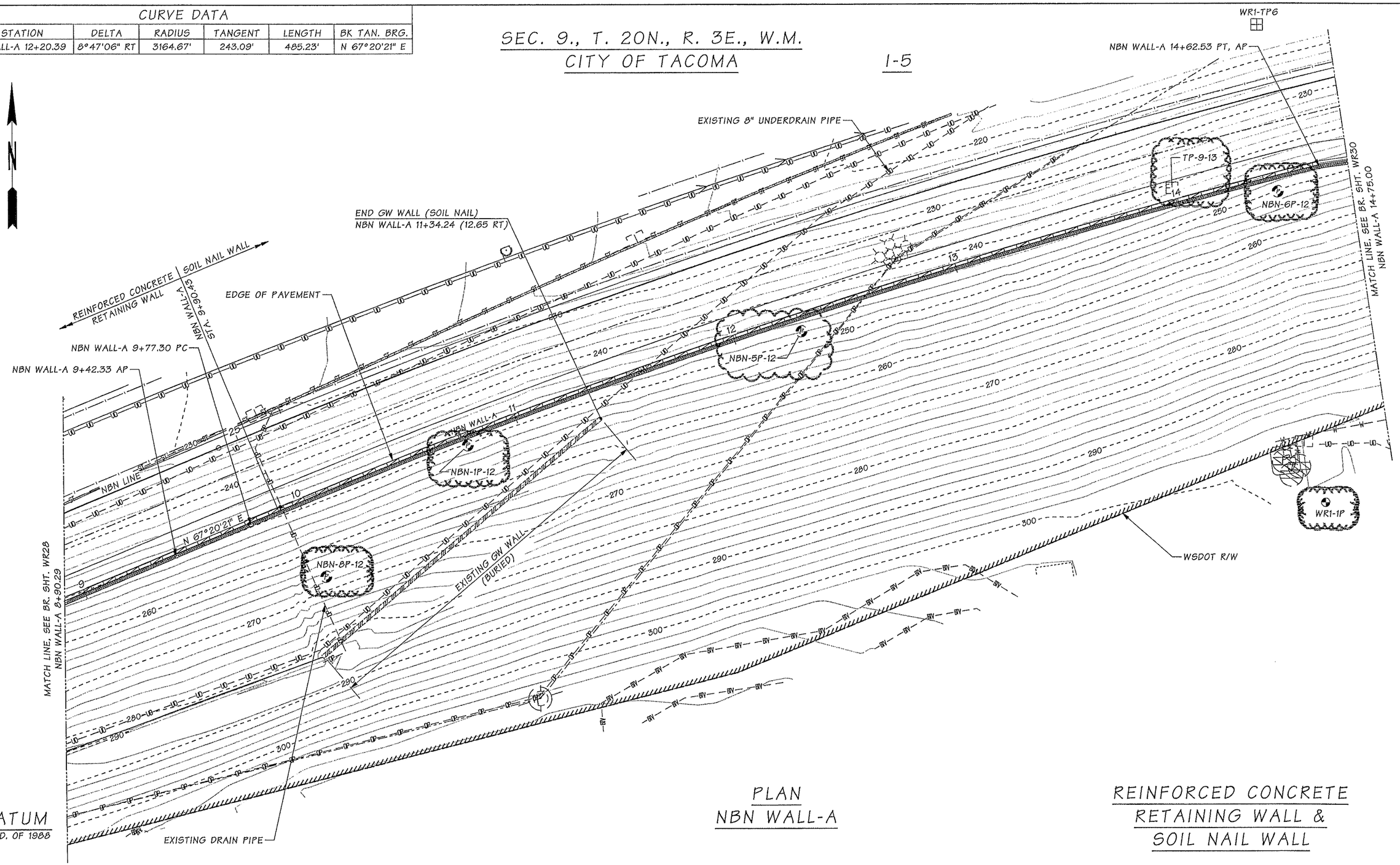

DATUM
N.A.V.D. OF 1988

PLAN
NBN WALL-A

REINFORCED CONCRETE
RETAINING WALL &
SOIL NAIL WALL

Bridge Design Engr.	Khaleghi, B		M:\Y-Team\M ST TO PORTLAND - WALLS\window files\WR29-PLAN 3_AD1.wnd								
Supervisor	Zeldenrust, RP										
Designed By	Pawelka, M	02/13									
Checked By	Chu, A	10/13									
Detailed By	Davis, EA	05/13									
Bridge Projects Engr.											
Prelim. Plan By			05/02/14	AD1 - UPDATE BORING HOLES	MEP	BK					
Architect/Specialist			DATE	REVISION	BY	APP'D					

REGION NO.	STATE	FED. AID PROJ. NO.	SHEET NO.	TOTAL SHEETS
10	WASH.			
JOB NUMBER 12C501				

BRIDGE AND STRUCTURES OFFICE

BIJAN KHALEGHI, STATE OF WASHINGTON, REGISTERED PROFESSIONAL ENGINEER
5/2/14

Washington State Department of Transportation

I-5
M ST TO PORTLAND AVE - HOV
NBN WALL - A
NBN WALL-A
PLAN 3 OF 5

BRIDGE SHEET NO. WR29
SHEET 852 OF 1763 SHEETS

SR 5 FILE NO. SHEET WR29

Fri May 02 13:05:28 2014

CURVE DATA					
PI STATION	DELTA	RADIUS	TANGENT	LENGTH	BK TAN. BRG.
NBN WALL-A 17+92.06	3°41'33" RT	3152.67'	101.63'	203.18'	N 80°14'01" E

SEC. 9., T. 20N., R. 3E., W.M.
CITY OF TACOMA

1-5

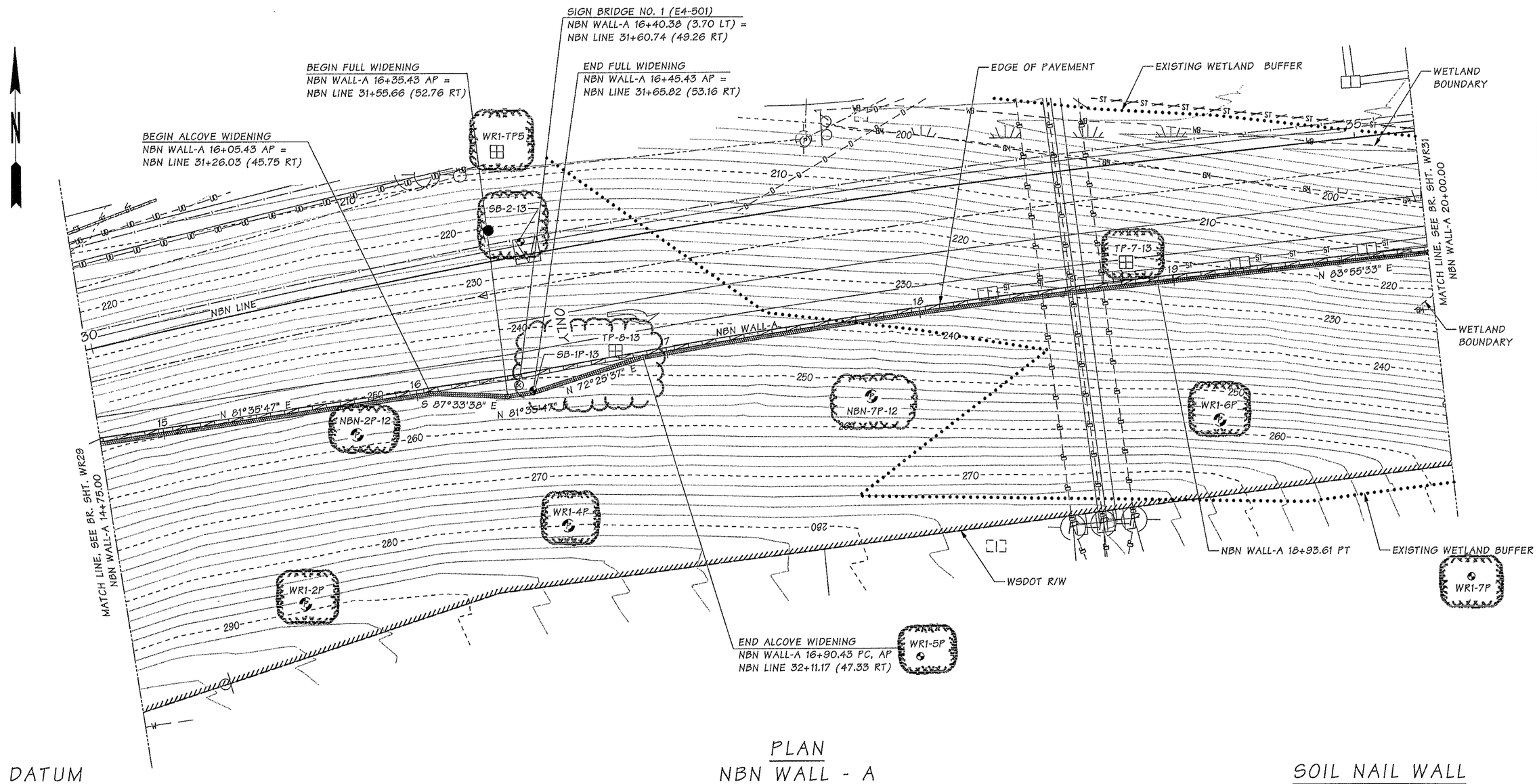

DATUM
N.A.V.D. OF 1988

PLAN
NBN WALL - A

SOIL NAIL WALL

SR 5 FILE NO. ____ SHEET WR30

Bridge Design Engr.	Khaleghi, B		M:\Y-Team\M ST TO PORTLAND - WALLS\window files\WR30-PLAN 4_AD1.wnd
Supervisor	Zeldenrust, RP		
Designed By	Pawelka, M	06/13	
Checked By	Chu, A	10/13	
Detailed By	Davis, EA	06/13	
Bridge Projects Engr.			
Prelim. Plan By			05/02/14 AD1 - UPDATE BORING HOLES
Architect/Specialist			DATE REVISION

BY	APP'D
MEP	BK

REGION NO.	STATE	FED. AID PROJ. NO.	SHEET NO.	TOTAL SHEETS
10	WASH.			
JOB NUMBER 12C501				

Fri May 02 13:05:32 2014

BRIDGE AND STRUCTURES OFFICE

BILAN KHALEGHI STATE OF WASHINGTON STRUCTURAL ENGINEER PROFESSIONAL ENGINEER 5/2/14

Washington State Department of Transportation

I-5
M ST TO PORTLAND AVE - HOV

NBN WALL - A

NBN WALL-A
PLAN 4 OF 5

BRIDGE SHEET NO. WR30

SHEET 853 OF 1763 SHEETS

CURVE DATA					
PI STATION	DELTA	RADIUS	TANGENT	LENGTH	BK TAN. BRG.
NBN WALL-A 22+08.21	11°32'09" RT	624.67'	63.10'	125.77'	N 83°54'25" E

SEC. 9., T. 20N., R. 3E., W.M.

CITY OF TACOMA

I-5

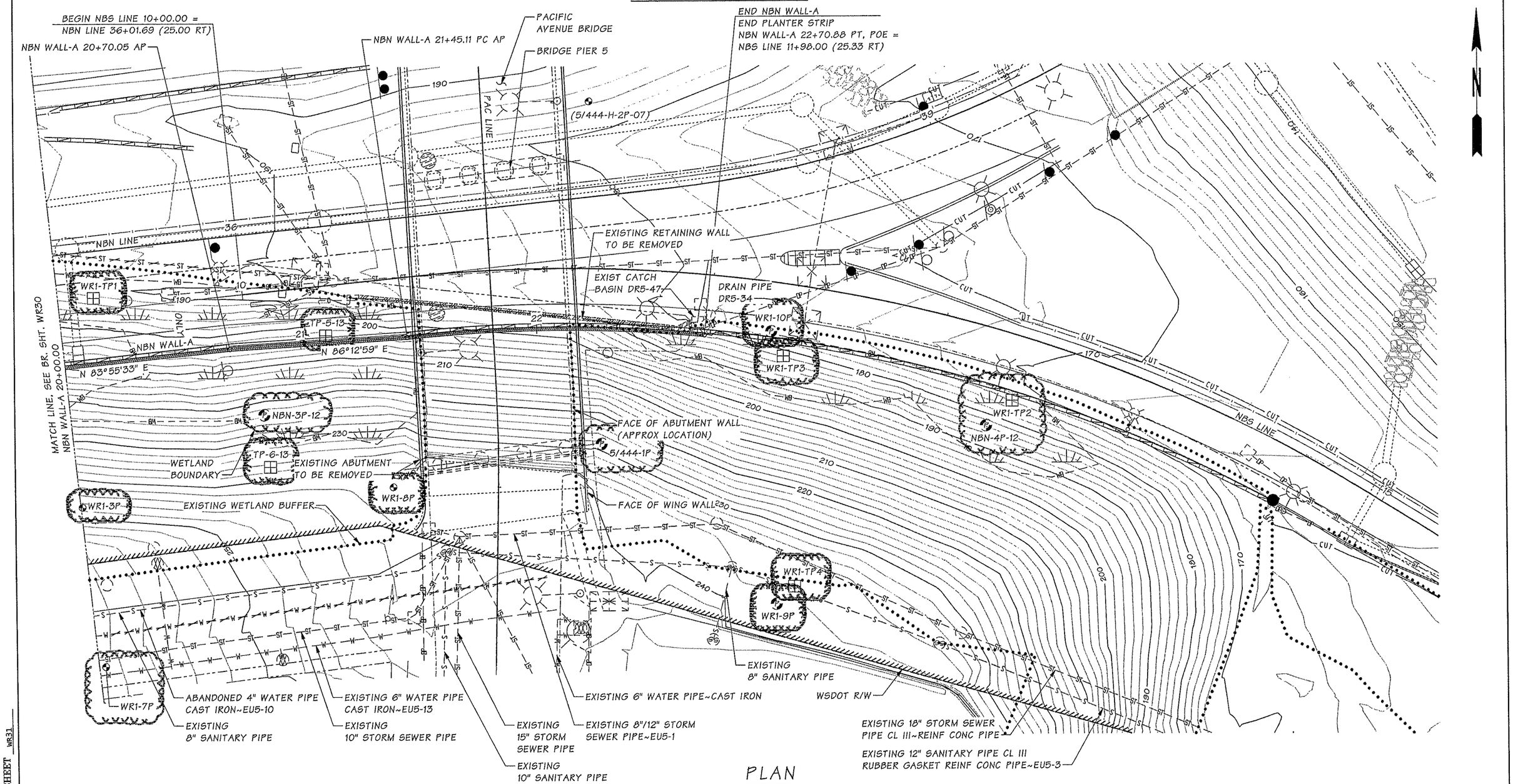

PLAN

NBN WALL-A

SOIL NAIL WALL

DATUM

N.A.V.D. OF 1988

- TEST HOLE

Bridge Design Engr.	Khaleghi, B		
Supervisor	Zeldenrust, RP		
Designed By	Pawelka, M	05/13	
Checked By	Chu, A	10/13	
Detailed By	Davis, EA	05/13	
Bridge Projects Engr.			
Prelim. Plan By			
Architect/Specialist			

M:\Y-Team\M ST TO PORTLAND - WALLS\window files\WR31-PLAN 5_AD1.wnd

DATE	REVISION	BY	APP'D
05/02/14	AD1 - UPDATE BORING HOLES	MEP	BK

REGION NO.	STATE	FED. AID PROJ. NO.	SHEET NO.	TOTAL SHEETS
10	WASH.			

JOB NUMBER 12C501

BRIDGE AND STRUCTURES OFFICE

BRIAN KHALEGHI, STATE OF WASHINGTON, 27695, PROFESSIONAL ENGINEER

5/2/14

Washington State Department of Transportation

I-5

M ST TO PORTLAND AVE - HOV

NBN WALL - A

NBN WALL-A
PLAN 5 OF 5

BRIDGE SHEET NO. WR31

SHEET 854 OF 1763 SHEETS

SR 5 FILE NO. SHEET WR31

Fri May 02 13:05:41 2014

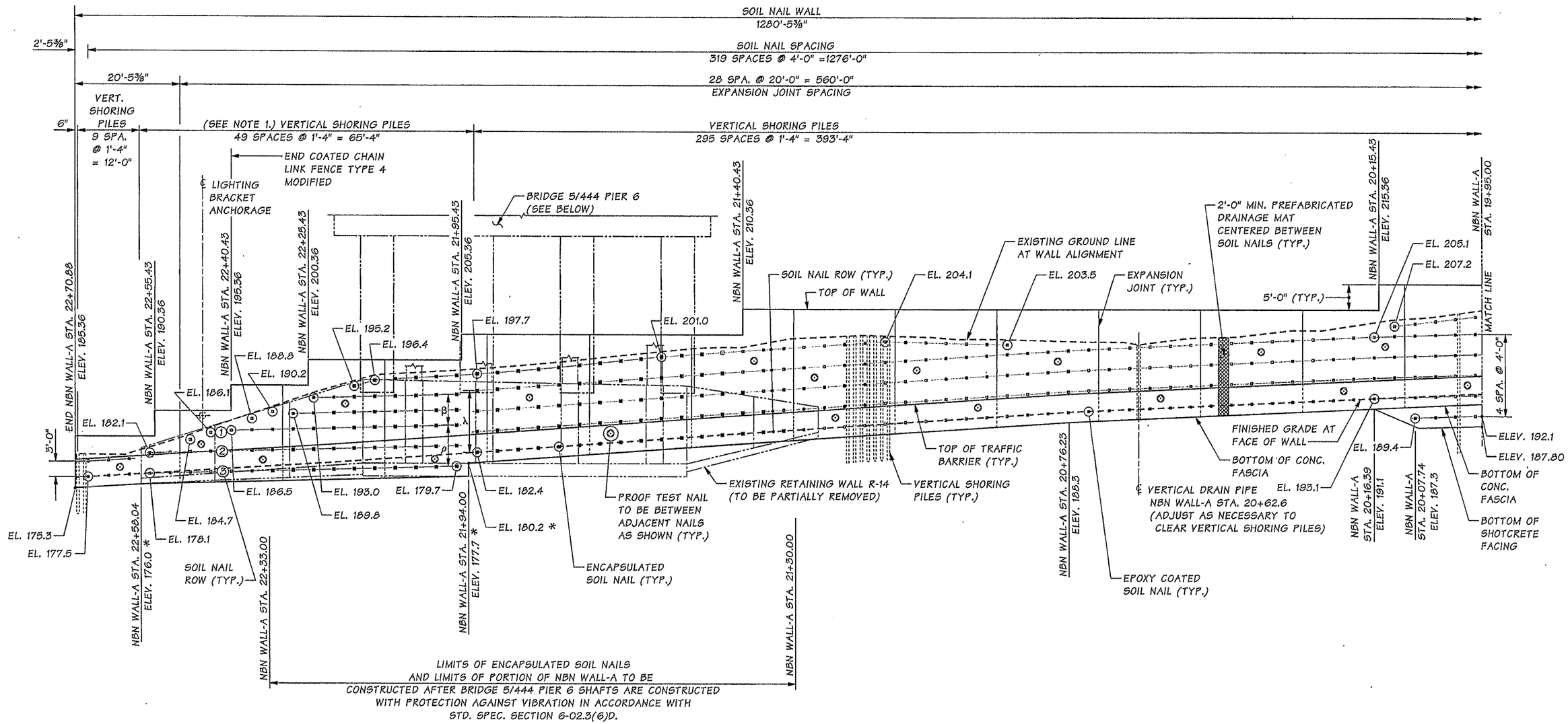

NOTE:

1. VERTICAL SHORING PILES TO BE INSTALLED TO TOP OF EXISTING RETAINING WALL R-14 FOOTING BETWEEN NBN WALL-A STA. 22+58.04 AND NBN WALL-A STA. 21+94.00.

DEVELOPED ELEVATION

NBN WALL-A

* SEE GENERAL NOTE 9

ρ - 2 SPACES @ 4'-0"

β - 2 SPACES @ 3'-0"

λ - 3 SPACES @ 4'-0"

SR 5 FILE NO. ____ SHEET WR32

Bridge Design Engr.	Khaleghi, B		
Supervisor	Zeldenrust, RP		
Designed By	Pawelka, M	07/13	
Checked By	Chu, A	10/13	
Detailed By	Davis, EA	07/13	
Bridge Projects Engr.			
Prelim. Plan By			
Architect/Specialist			

M:\Y-Team\M ST TO PORTLAND - WALLS\window files\WR32-NBN ELEV 1.wnd

DATE	REVISION	BY	APP'D

REGION NO.	STATE	FED. AID PROJ. NO.	SHEET NO.	TOTAL SHEETS
10	WASH.			
JOB NUMBER 12C501				

MONIQUE E. PAWELKA STATE OF WASHINGTON 40 SCALE REGISTERED PROFESSIONAL ENGINEER 2/11/14

BRIDGE AND STRUCTURES OFFICE

BRIAN KHALEGHI STATE OF WASHINGTON 37 SCALE REGISTERED PROFESSIONAL ENGINEER 2/11/14

Washington State Department of Transportation

I-5
M ST TO PORTLAND AVE - HOV

NBN WALL - A

NBN WALL-A
ELEVATION 1 OF 8

BRIDGE SHEET NO. WR32

SHEET 855 OF 1763 SHEETS

Tue Feb 11 15:26:18 2014

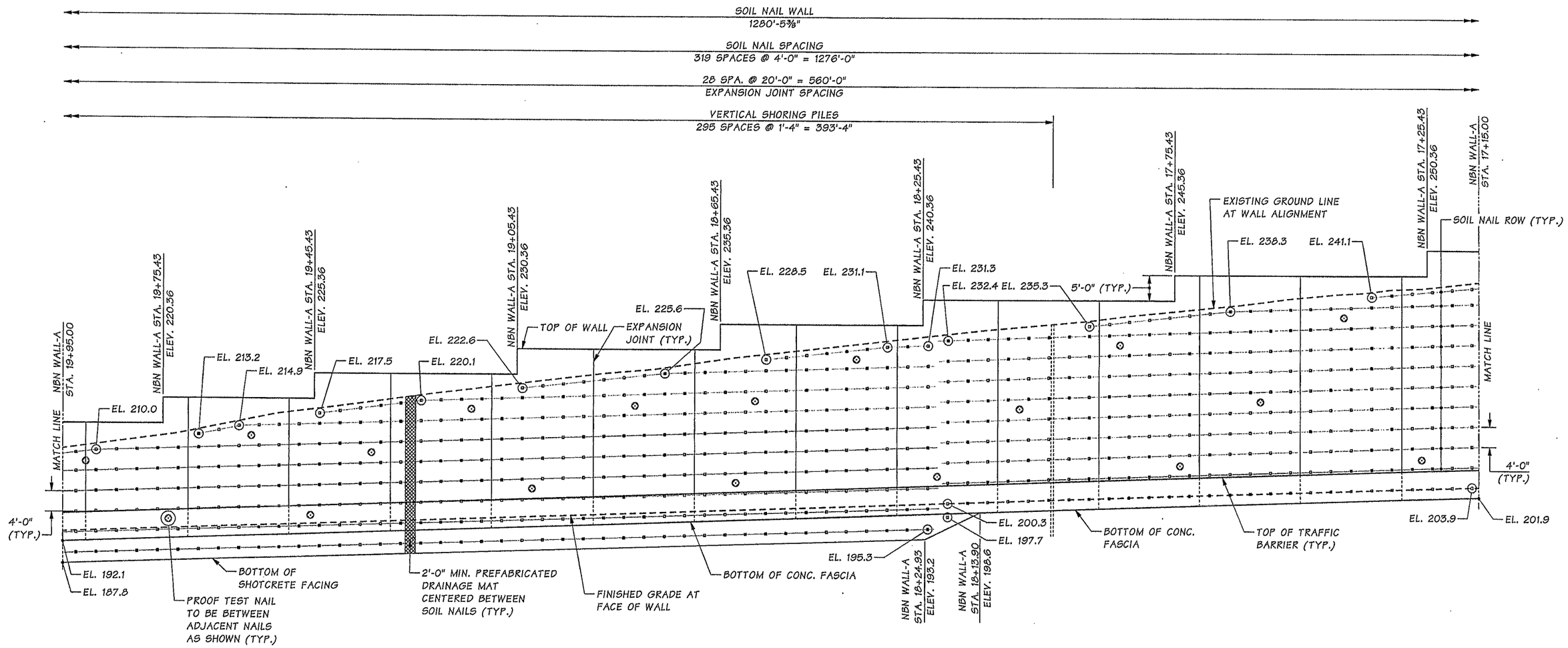

DEVELOPED ELEVATION
NBN WALL-A

SR 5 FILE NO. ____ SHEET WR33

Bridge Design Engr.	Khaleghi, B	M:\Y-Team\M ST TO PORTLAND - WALLS\window files\WR33-NBN ELEV 2.wnd								
Supervisor	Zeldenrust, RP									
Designed By	Pawelka, M	06/13								
Checked By	Chu, A	10/13								
Detailed By	Davis, EA	06/13								
Bridge Projects Engr.										
Prelim. Plan By										
Architect/Specialist		DATE	REVISION	BY	APP'D					

REGION NO.	STATE	FED. AID PROJ. NO.	SHEET NO.	TOTAL SHEETS
10	WASH.			
JOB NUMBER 12C501				

MONIQUE E. PAWELKA, STATE OF WASHINGTON, 35012, REGISTERED PROFESSIONAL ENGINEER — 2/11/14

BRIDGE AND STRUCTURES OFFICE

BRIAN KHALEGHI, STATE OF WASHINGTON, 37605, REGISTERED PROFESSIONAL ENGINEER — 2/12/14

Washington State Department of Transportation

I-5
M ST TO PORTLAND AVE - HOV
NBN WALL - A
NBN WALL-A
ELEVATION 2 OF 8

BRIDGE SHEET NO. WR33
SHEET 856 OF 1763 SHEETS

Tue Feb 11 15:26:19 2014

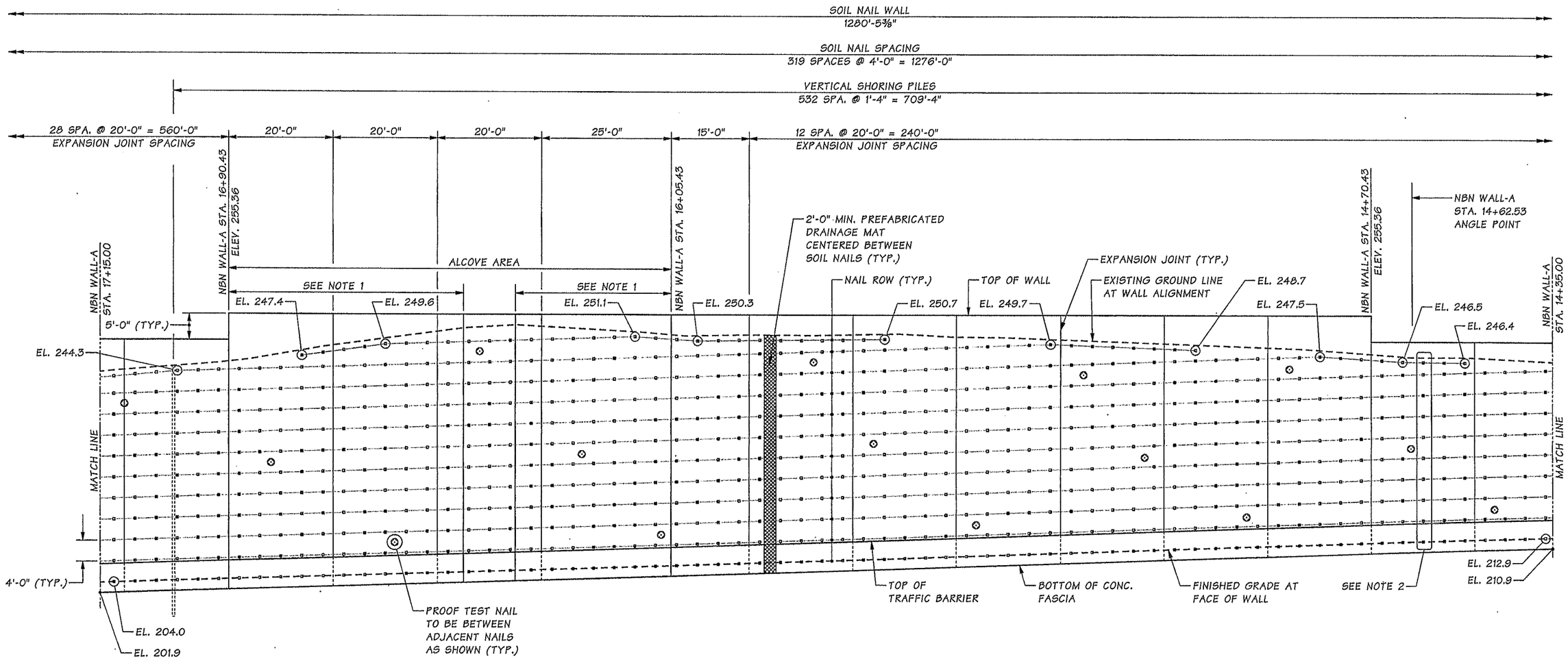

DEVELOPED ELEVATION
NBN WALL-A

NOTES:

1. SOIL NAILS SHALL BE SPLAYED HORIZONTALLY, SEE DETAIL WR47.
2. SOIL NAIL COLUMN LOCATED ADJACENT TO WALL ALIGNMENT ANGLE POINT SHALL HAVE A 23 DEGREE DECLINATION ANGLE.

SR 5 FILE NO. SHEET WR34

Bridge Design Engr.	Khaleghi, B	
Supervisor	Zeldenrust, RP	
Designed By	Pawelka, M	06/13
Checked By	Chu, A	10/13
Detailed By	Davis, EA	06/13
Bridge Projects Engr.		
Prelim. Plan By		
Architect/Specialist		

M:\Y-Team\M ST TO PORTLAND - WALLS\window files\WR34-NBN ELEV 3.WND

DATE	REVISION	BY	APP'D

REGION NO.	STATE	FED. AID PROJ. NO.	SHEET NO.	TOTAL SHEETS
10	WASH.			

JOB NUMBER 12C501

MONIQUE E. PAWELKA, STATE OF WASHINGTON, REGISTERED PROFESSIONAL ENGINEER, 36512, 2/11/14

BRIDGE AND STRUCTURES OFFICE

BIJAN KHALEGHI, STATE OF WASHINGTON, REGISTERED PROFESSIONAL ENGINEER, 27695, 2/12/14

Washington State Department of Transportation

I-5
M ST TO PORTLAND AVE - HOV
NBN WALL - A
NBN WALL-A
ELEVATION 3 OF 8

BRIDGE SHEET NO. WR34
SHEET 857 OF 1763 SHEETS

Tue Feb 11 15:26:21 2014

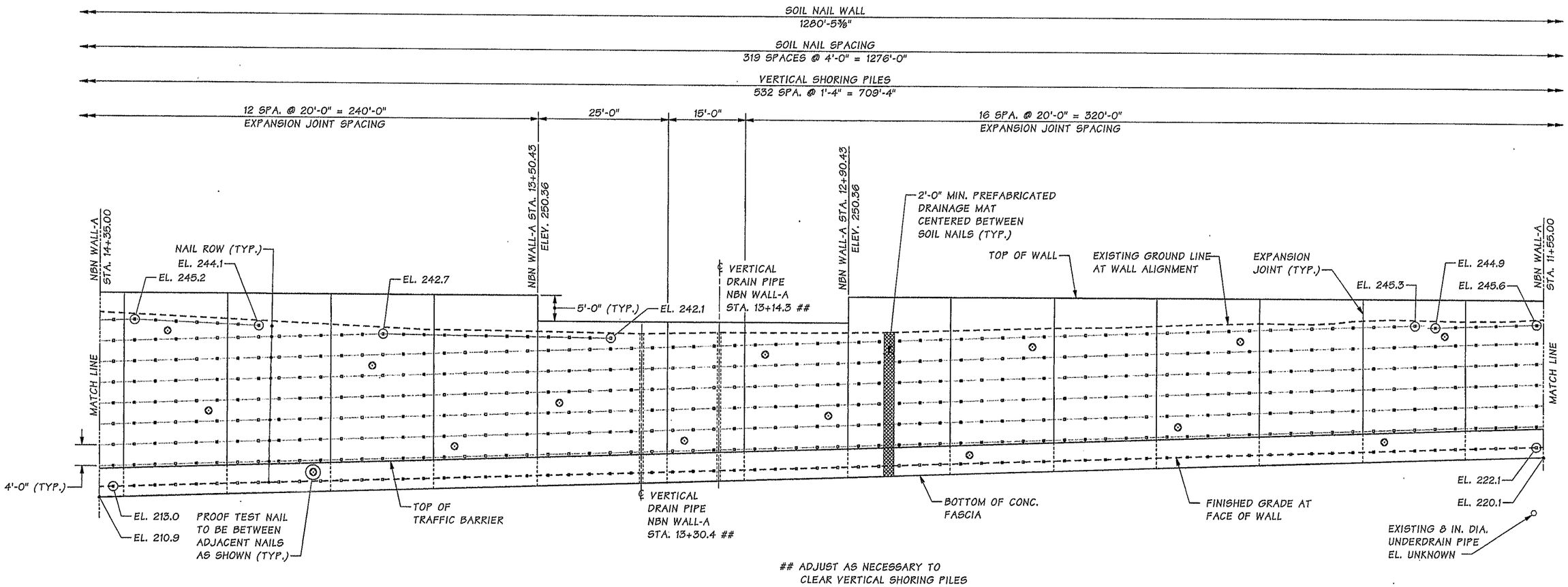

DEVELOPED ELEVATION
NBN WALL-A

SR 5 FILE NO. SHEET WR35

Bridge Design Engr.	Khaleghi, B	
Supervisor	Zeldenrust, RP	
Designed By	Pawelka, M	06/13
Checked By	Chu, A	10/13
Detailed By	Davis, EA	06/13
Bridge Projects Engr.		
Prelim. Plan By		
Architect/Specialist		

M:\Y-Team\M ST TO PORTLAND - WALLS\window files\WR35-NBN ELEV 4.wnd

DATE	REVISION	BY	APP'D

REGION NO.	STATE	FED. AID PROJ. NO.	SHEET NO.	TOTAL SHEETS
10	WASH.			

JOB NUMBER 12C501

MONIQUE E. PAWELKA STATE OF WASHINGTON 38612 REGISTERED PROFESSIONAL ENGINEER 2/11/14

BRIDGE AND STRUCTURES OFFICE

BIJAN KHALEGHI STATE OF WASHINGTON 27595 REGISTERED PROFESSIONAL ENGINEER 2/11/14

Washington State Department of Transportation

I-5
M ST TO PORTLAND AVE - HOV
NBN WALL - A
NBN WALL-A
ELEVATION 4 OF 8

BRIDGE SHEET NO. WR35
SHEET 858 OF 1763 SHEETS

Tue Feb 11 15:26:23 2014

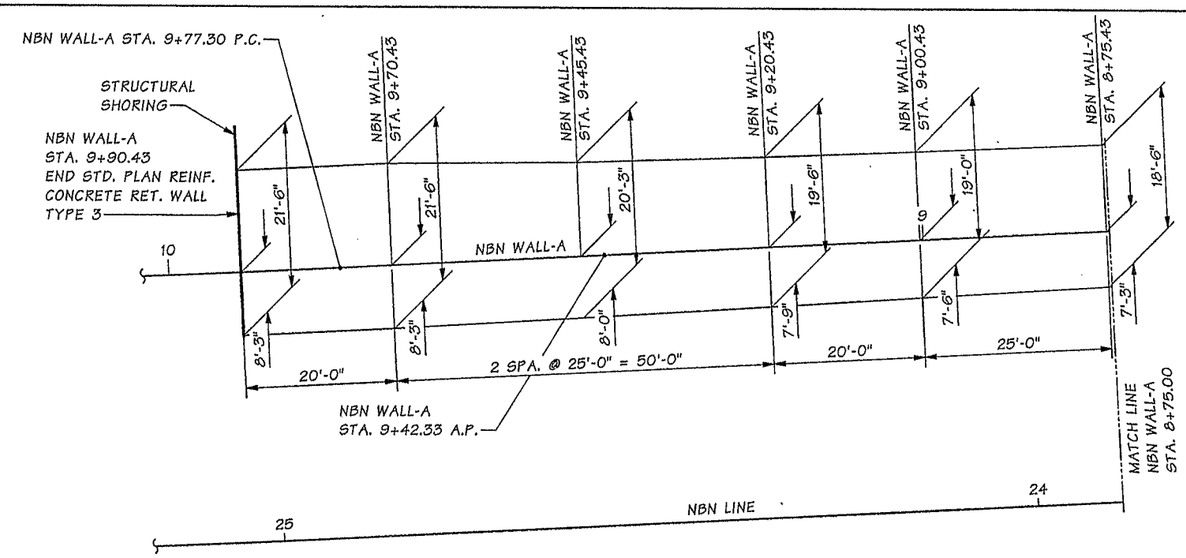

FOOTING PLAN

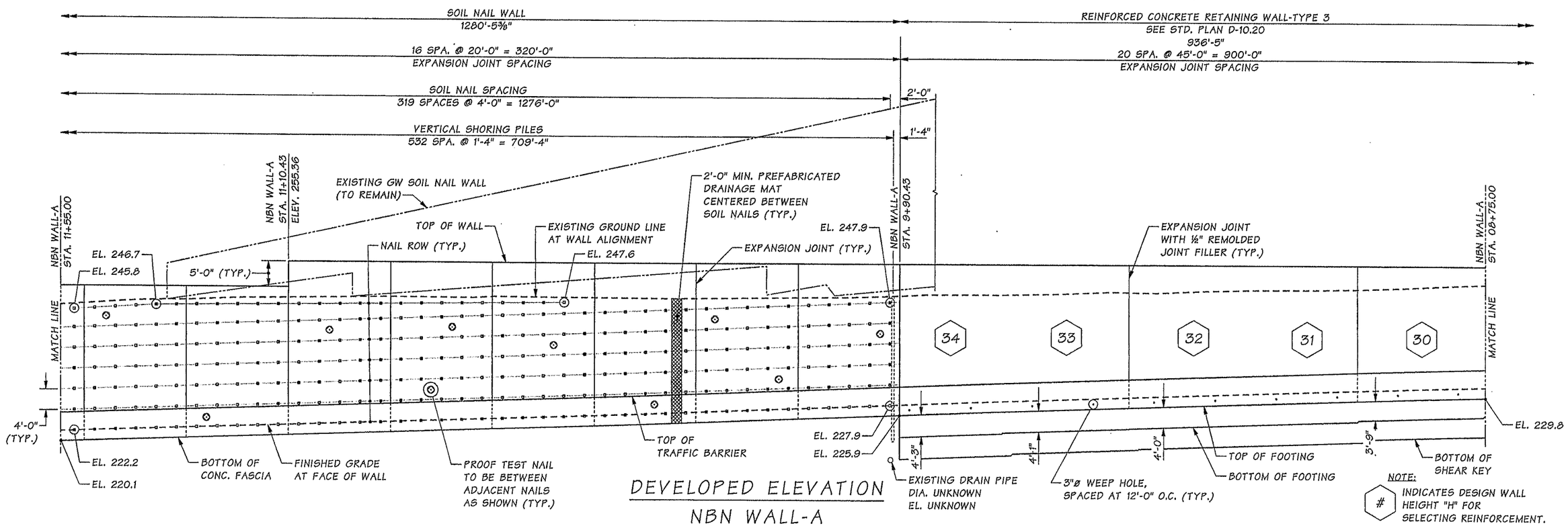

DEVELOPED ELEVATION
NBN WALL-A

Bridge Design Engr.	Khaleghi, B	
Supervisor	Zeldenrust, RP	
Designed By	Pawelka, M	06/13
Checked By	Chu, A	10/13
Detailed By	Davis, E	06/13
Bridge Projects Engr.		
Prelim. Plan By		
Architect/Specialist		

M:\Y-Team\M ST TO PORTLAND - WALLS\window files\WR36-NBN ELEV 5.wnd

DATE	REVISION	BY	APP'D

REGION NO.	STATE	FED. AID PROJ. NO.	SHEET NO.	TOTAL SHEETS
10	WASH.			

JOB NUMBER 12C501

MONIQUE E. PAWELKA, STATE OF WASHINGTON, 33812, REGISTERED PROFESSIONAL ENGINEER — 2/11/14

BRIDGE AND STRUCTURES OFFICE

BIJAN KHALEGHI, STATE OF WASHINGTON, 27683, REGISTERED PROFESSIONAL ENGINEER — 2/12/14

Washington State Department of Transportation

I-5
M ST TO PORTLAND AVE - HOV
NBN WALL - A
NBN WALL-A
ELEVATION 5 OF 8

BRIDGE SHEET NO. WR36
SHEET 859 OF 1763 SHEETS

SR 5 FILE NO. SHEET WR36

Tue Feb 11 15:26:25 2014

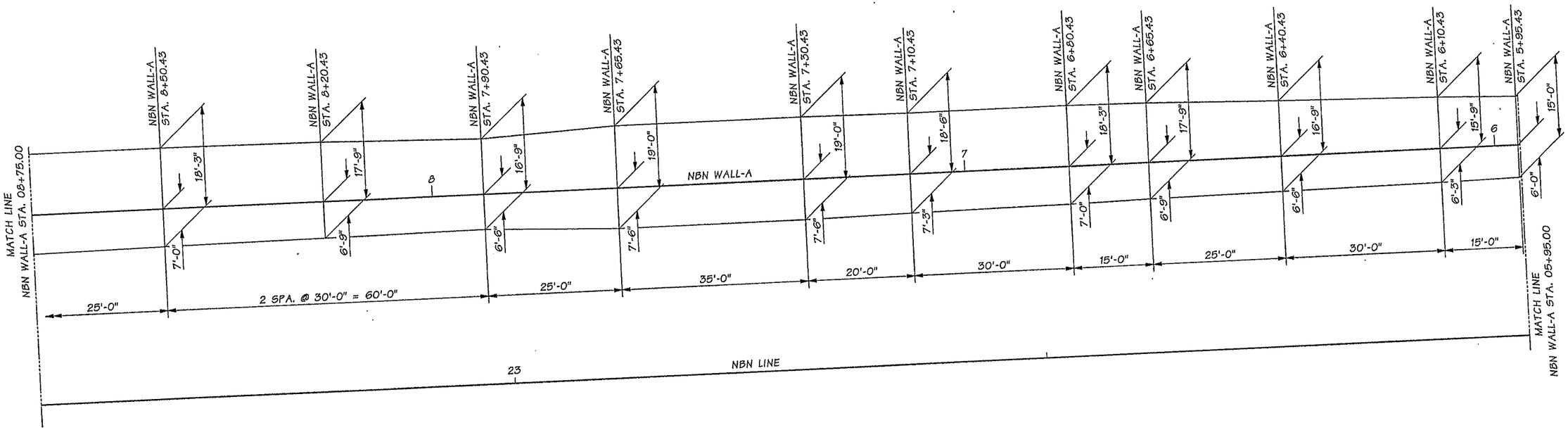

FOOTING PLAN

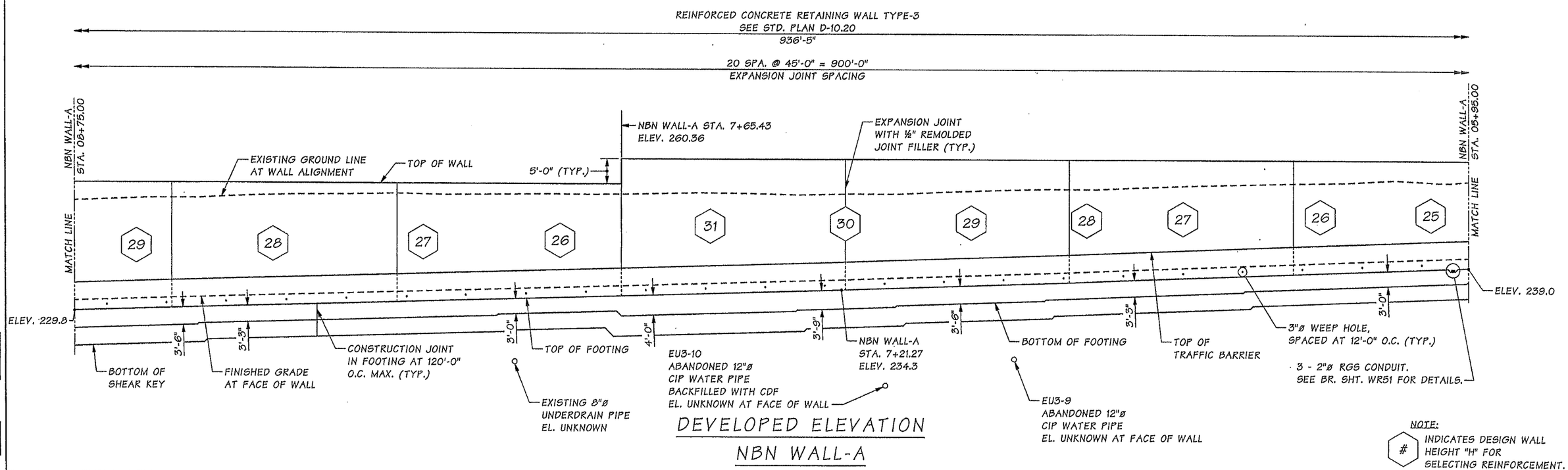

DEVELOPED ELEVATION

NBN WALL-A

NOTE:
# INDICATES DESIGN WALL HEIGHT "H" FOR SELECTING REINFORCEMENT.

Bridge Design Engr.	Khaleghi, B		M:\Y-Team\M ST TO PORTLAND - WALLS\window files\WR37-NBN ELEV 6.wnd
Supervisor	Zeldenrust, RP		
Designed By	Pawelka, M	06/13	
Checked By	Chu, A	10/13	
Detailed By	Davis, E	06/13	
Bridge Projects Engr.			
Prelim. Plan By			
Architect/Specialist			

DATE	REVISION	BY	APP'D

REGION NO.	STATE	FED. AID PROJ. NO.	SHEET NO.	TOTAL SHEETS
10	WASH.			

JOB NUMBER 12C501

MONIQUE E. PAWELKA, STATE OF WASHINGTON, 35812, REGISTERED PROFESSIONAL ENGINEER — 2/11/14

BRIDGE AND STRUCTURES OFFICE

BIJAN KHALEGHI, STATE OF WASHINGTON, REGISTERED PROFESSIONAL ENGINEER — 2/12/14

Washington State Department of Transportation

I-5
M ST TO PORTLAND AVE - HOV

NBN WALL - A

NBN WALL-A
ELEVATION 6 OF 8

BRIDGE SHEET NO. WR37

SHEET 860 OF 1763 SHEETS

SR 5 FILE NO. SHEET WR37

Tue Feb 11 15:26:27 2014

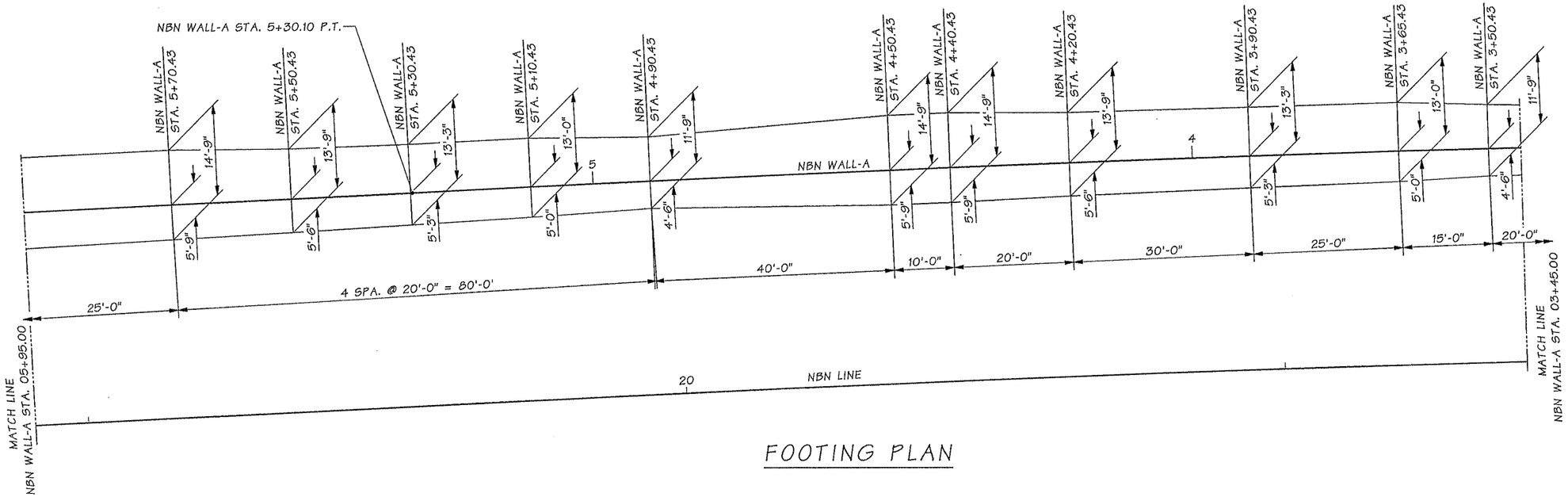

FOOTING PLAN

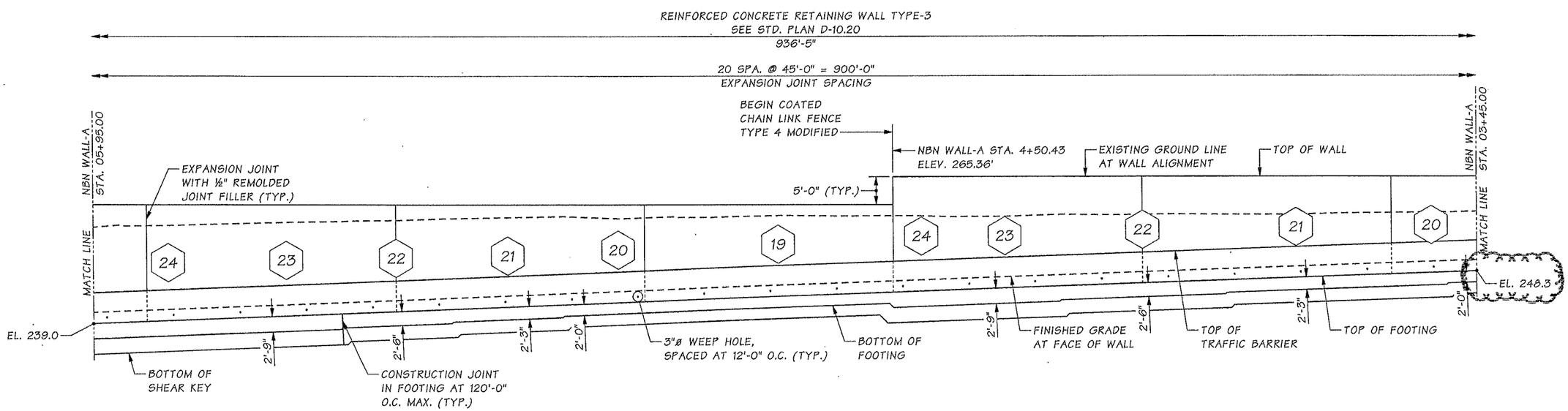

DEVELOPED ELEVATION
NBN WALL-A

NOTE:
# INDICATES DESIGN WALL HEIGHT "H" FOR SELECTING REINFORCEMENT.

Bridge Design Engr.	Khaleghi, B	M:\Y-Team\M ST TO PORTLAND - WALLS\window files\WR38-NBN ELEV 7_AD3.WND									
Supervisor	Zeldenrust, RP										
Designed By	Pawelka, M	07/13									
Checked By	Chu, A	10/13									
Detailed By	Davis, E	07/13									
Bridge Projects Engr.											
Prelim. Plan By			05/21/14	AD3 - CORRECTED ELEV. LOCATION	MEP	BK					
Architect/Specialist			DATE	REVISION	BY	APP'D					

REGION NO.	STATE	FED. AID PROJ. NO.	SHEET NO.	TOTAL SHEETS
10	WASH.			
JOB NUMBER 12C501				

MONIQUE E. PAWELKA, STATE OF WASHINGTON, 36612, REGISTERED PROFESSIONAL ENGINEER — 5/20/14

BRIDGE AND STRUCTURES OFFICE

BIJAN KHALEGHI, STATE OF WASHINGTON, 27695, REGISTERED PROFESSIONAL ENGINEER — 5/20/14

Washington State Department of Transportation

I-5
M ST TO PORTLAND AVE - HOV
NBN WALL - A
NBN WALL-A
ELEVATION 7 OF 8

BRIDGE SHEET NO. WR38
SHEET 861 OF 1763 SHEETS

SR 5 FILE NO. ____ SHEET WR38

Tue May 20 14:08:06 2014

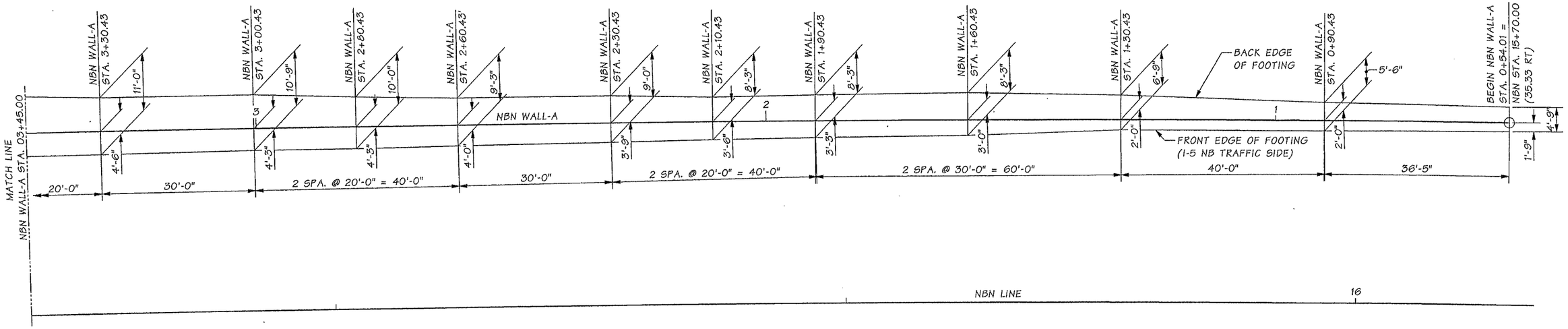

FOOTING PLAN

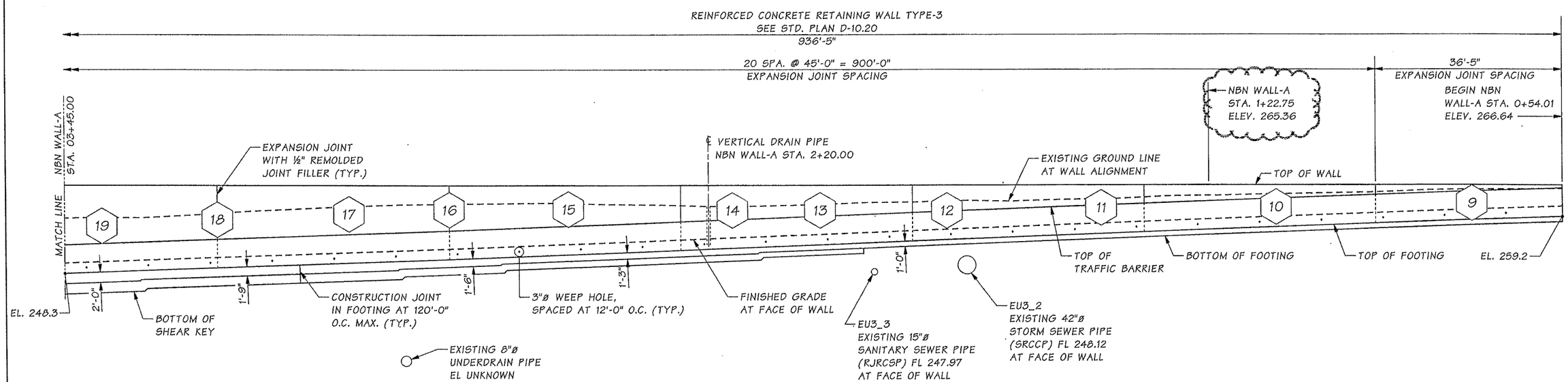

DEVELOPED ELEVATION
NBN WALL-A

NOTE:
(#) INDICATES DESIGN WALL HEIGHT "H" FOR SELECTING REINFORCEMENT.

Bridge Design Engr.	Khaleghi, B		
Supervisor	Zeldenrust, RP		
Designed By	Pawelka, M	07/13	
Checked By	Chu, A	10/13	
Detailed By	Davis, E	07/13	
Bridge Projects Engr.			
Prelim. Plan By			
Architect/Specialist			

M:\Y-Team\M ST TO PORTLAND - WALLS\window files\WR39-NBN ELEV 8_AD3.WND

DATE	REVISION	BY	APP'D
05/21/14	AD3 - ADDED STATION CALLOUT	MEP	BK

REGION NO.	STATE	FED. AID PROJ. NO.	SHEET NO.	TOTAL SHEETS
10	WASH.			
JOB NUMBER 12C501				

MONIQUE E. PAWELKA — STATE OF WASHINGTON — 24012 — REGISTERED PROFESSIONAL ENGINEER — 5/20/14

BRIDGE AND STRUCTURES OFFICE

BIJAN KHALEGHI — STATE OF WASHINGTON — 27695 — PROFESSIONAL ENGINEER — 5/20/14

Washington State Department of Transportation

I-5
M ST TO PORTLAND AVE - HOV

NBN WALL - A

NBN WALL-A
ELEVATION 8 OF 8

BRIDGE SHEET NO. WR39

SHEET 862 OF 1763 SHEETS

SR 5 FILE NO. ____ SHEET WR39

Tue May 20 14:00:26 2014

CURVE DATA					
PI STATION	DELTA	RADIUS	TANGENT	LENGTH	BK. TANGENT BRG.
SNB WALL-A 14+95.61	2°27'05" LT.	4257.87'	91.10'	182.17'	N 58°41'25" E

SEC. 9 T. 20N. R. 3E. W.M.
CITY OF TACOMA

I-5

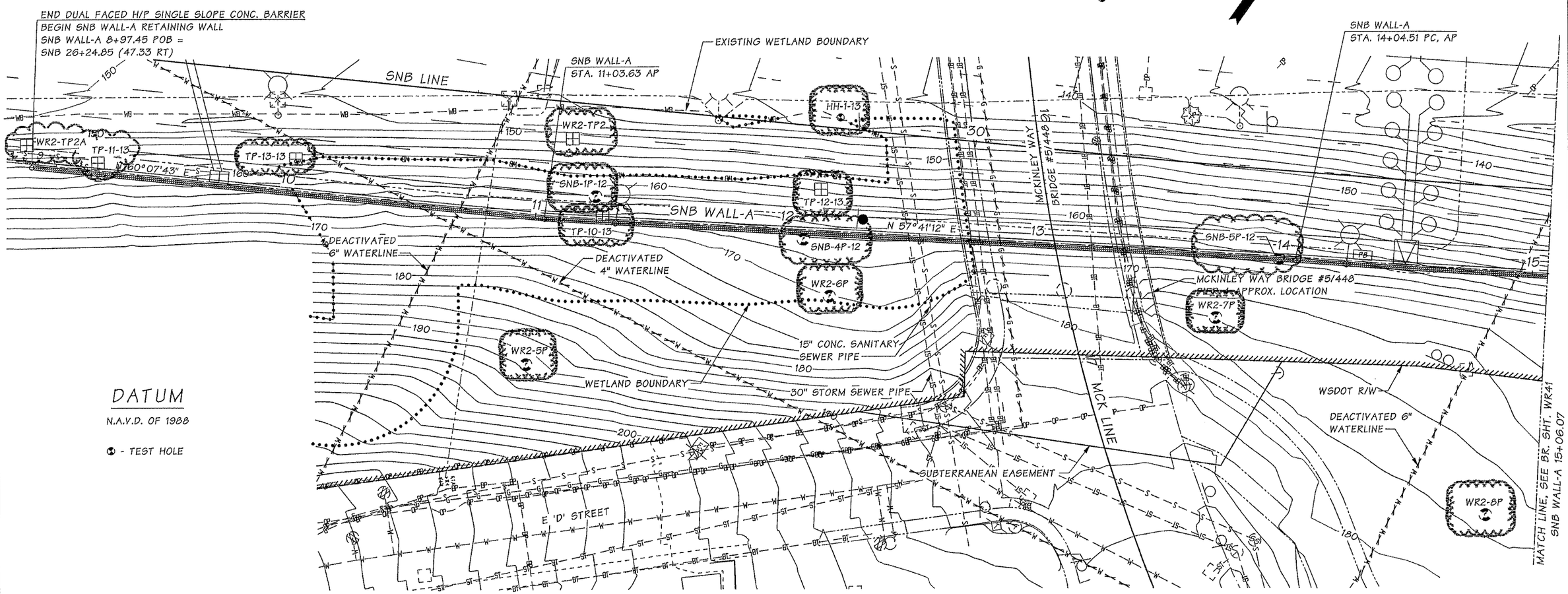

DATUM

N.A.V.D. OF 1988

⊗ - TEST HOLE

PLAN
SNB WALL-A

SOIL NAIL WALL

SUMMARY OF QUANTITIES SNB WALL-A			
STD. ITEM NO.	ITEM	UNIT	QUANTITY
4474	CONCRETE FASCIA PANEL	S.F.	21,700
4478	SOIL NAIL- EPOXY COATED	EACH	885
4479	SOIL NAIL- ENCAPSULATED	EACH	141
4482	PREFABRICATED DRAINAGE MAT	S.Y.	860
4486	SOIL NAIL VERIFICATION AND PROOF TEST	EACH	33
7561	SHOTCRETE FACING	S.F.	17,900
7088	COATED CHAIN LINK FENCE TYPE 4 MODIFIED	L.F.	910
---	VERTICAL SHORING PILE	L.F.	6,870

SUMMARY OF QUANTITIES CONT... SNB WALL-A			
STD. ITEM NO.	ITEM	UNIT	QUANTITY
1065	CEMENT CONC. GUTTER	L.F.	1,133
1160	UNDERDRAIN PIPE 6 IN. DIAM.	L.F.	1,129
4006	STRUCTURE EXC CLASS A INCL. HAUL	C.Y.	60
4025	GRAVEL BACKFILL FOR WALL	C.Y.	21
7014	GRAVEL BACKFILL FOR DRAIN	C.Y.	158
7550	CONSTRUCTION GEOTEXTILE FOR UNDERGROUND DRAINAGE	S.Y.	1,640

NOTE:
THE QUANTITIES AS LISTED ON THIS SHEET ARE FOR THE CONVENIENCE OF THE CONTRACTOR AND ARE NOT GUARANTEED TO BE ACCURATE. THE QUANTITIES AS LISTED ON THE SUMMARY OF QUANTITIES SHEETS SHALL TAKE PRECEDENCE OVER ANY QUANTITY LISTED ON THIS SHEET.

SR 5 FILE NO. SHEET WR40

Bridge Design Engr.	Khaleghi, B	M:\Y-Team\M ST TO PORTLAND - WALLS\SNB WALL - A\window files\WR40-LAYOUT 1_AD1.wnd			
Supervisor	Zeldenrust, RP				
Designed By	Pawelka, M 01/13				
Checked By	Chu, A 10/13				
Detailed By	Andreotti, L / Davis, E. 01/13				
Bridge Projects Engr.		05/02/14	AD1 - UPDATE BID ITEM NAME	MEP	BK
Prelim. Plan By		05/02/14	AD1 - UPDATE BORING HOLES	MEP	BK
Architect/Specialist		DATE	REVISION	BY	APP'D

REGION NO.	STATE	FED. AID PROJ. NO.	SHEET NO.	TOTAL SHEETS
10	WASH.			
JOB NUMBER 12C501				

BRIDGE AND STRUCTURES OFFICE

BIJAN KHALEGHI, STATE OF WASHINGTON, 27695, PROFESSIONAL ENGINEER
5/2/14

Washington State Department of Transportation

I-5
M ST TO PORTLAND AVE - HOV
SNB WALL - A

SNB WALL - A
PLAN 1 OF 2

BRIDGE SHEET NO. WR40
SHEET 863 OF 1763 SHEETS

Fri May 02 13:05:54 2014

CURVE DATA					
PI STATION	DELTA	RADIUS	TANGENT	LENGTH	BK. TANGENT BRG.
SNB WALL-A 20+15.63	0°05'10" RT.	14604.67'	10.97'	21.93'	N 56°34'07" E

SEC. 9 T. 20N.R. 3E. W.M.
CITY OF TACOMA

I-5

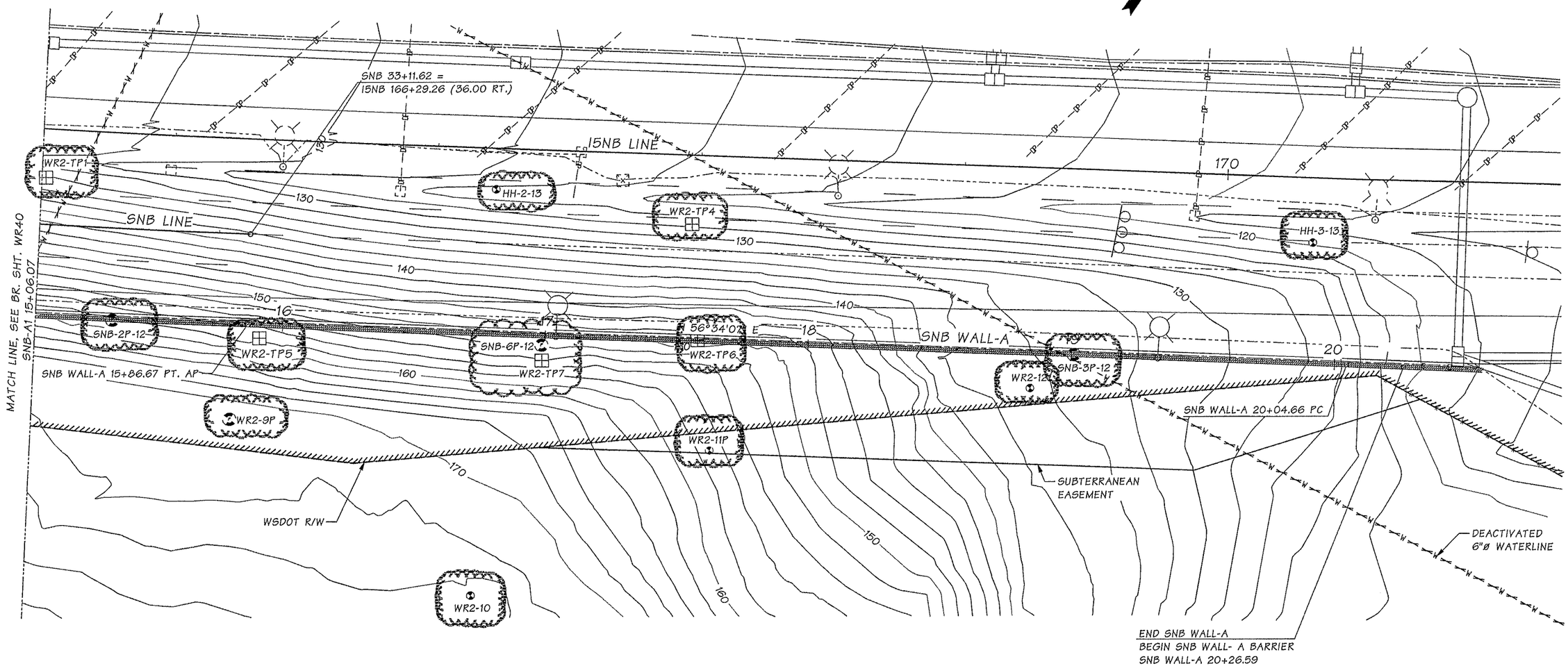

PLAN
SNB WALL-A

SOIL NAIL WALL

DATUM
N.A.V.D. OF 1988

⊗ - TEST HOLE

SR 5 FILE NO. SHEET WR41

Bridge Design Engr.	Khaleghi, B	M:\Y-Team\M ST TO PORTLAND - WALLS\SNB WALL - A\window files\WR41-LAYOUT 2_AD1.wnd				REGION NO.	STATE	FED. AID PROJ. NO.	SHEET NO.	TOTAL SHEETS
Supervisor	Zeldenrust, RP					10	WASH.			
Designed By	Pawelka, M 01/13									
Checked By	Chu, A 10/13					JOB NUMBER 12C501				
Detailed By	Andreotti, L / Davis, E 01/13									
Bridge Projects Engr.										
Prelim. Plan By		05/02/14	AD1 - UPDATE BORING HOLES	MEP	BK					
Architect/Specialist		DATE	REVISION	BY	APP'D					

Fri May 02 13:06:01 2014

BRIDGE AND STRUCTURES OFFICE

BIJAN KHALEGHI
STATE OF WASHINGTON
27695
STRUCTURAL ENGINEER
PROFESSIONAL ENGINEER
5/2/14

Washington State Department of Transportation

I-5
M ST TO PORTLAND AVE - HOV
SNB WALL - A
SNB WALL - A
PLAN 2 OF 2

BRIDGE SHEET NO. WR41
SHEET 864 OF 1763 SHEETS

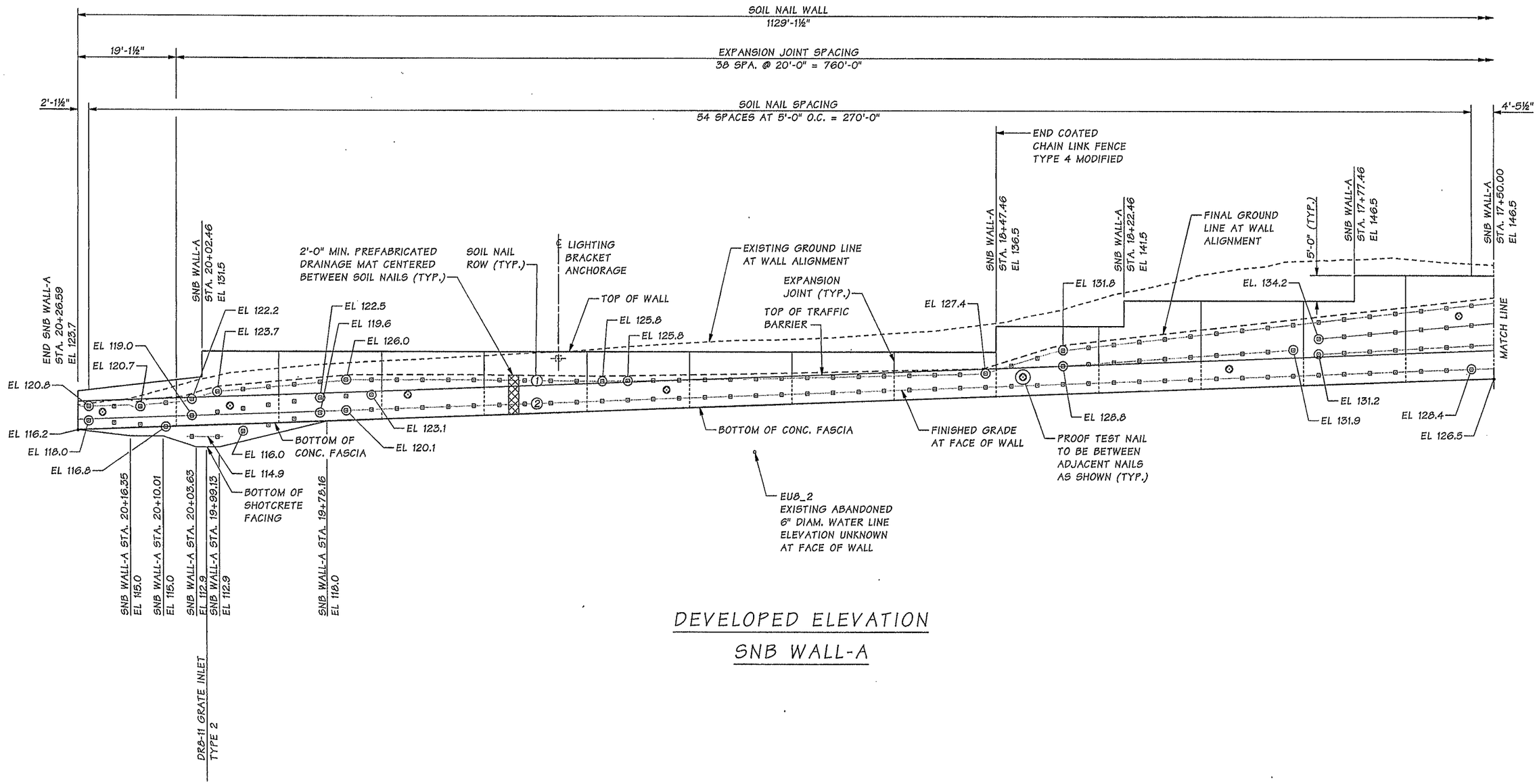

DEVELOPED ELEVATION

SNB WALL-A

SR 5 FILE NO. SHEET WR42

Bridge Design Engr.	Khaleghi, B	M:\Y-Team\M ST TO PORTLAND - WALLS\SNB WALL - A\window files\WR42-ELEV 1.wnd								
Supervisor	Zeldenrust, RP									
Designed By	Pawelka, M 01/13									
Checked By	Chu, A 10/13									
Detailed By	Williams, S / Davis, E 05/13									
Bridge Projects Engr.										
Prelim. Plan By										
Architect/Specialist		DATE	REVISION	BY	APP'D					

REGION NO.	STATE	FED. AID PROJ. NO.	SHEET NO.	TOTAL SHEETS
10	WASH.			
JOB NUMBER 12C501				

MONIQUE E. PAWELKA STATE OF WASHINGTON 36518 REGISTERED PROFESSIONAL ENGINEER 2/11/14

BRIDGE AND STRUCTURES OFFICE

BIJAN KHALEGHI STATE OF WASHINGTON 27605 REGISTERED PROFESSIONAL ENGINEER 2/12/14

Washington State Department of Transportation

I-5
M ST TO PORTLAND AVE - HOV

SNB WALL - A

SNB WALL-A
ELEVATION 1 OF 4

BRIDGE SHEET NO. WR42

SHEET 865 OF 1763 SHEETS

Tue Feb 11 15:26:45 2014

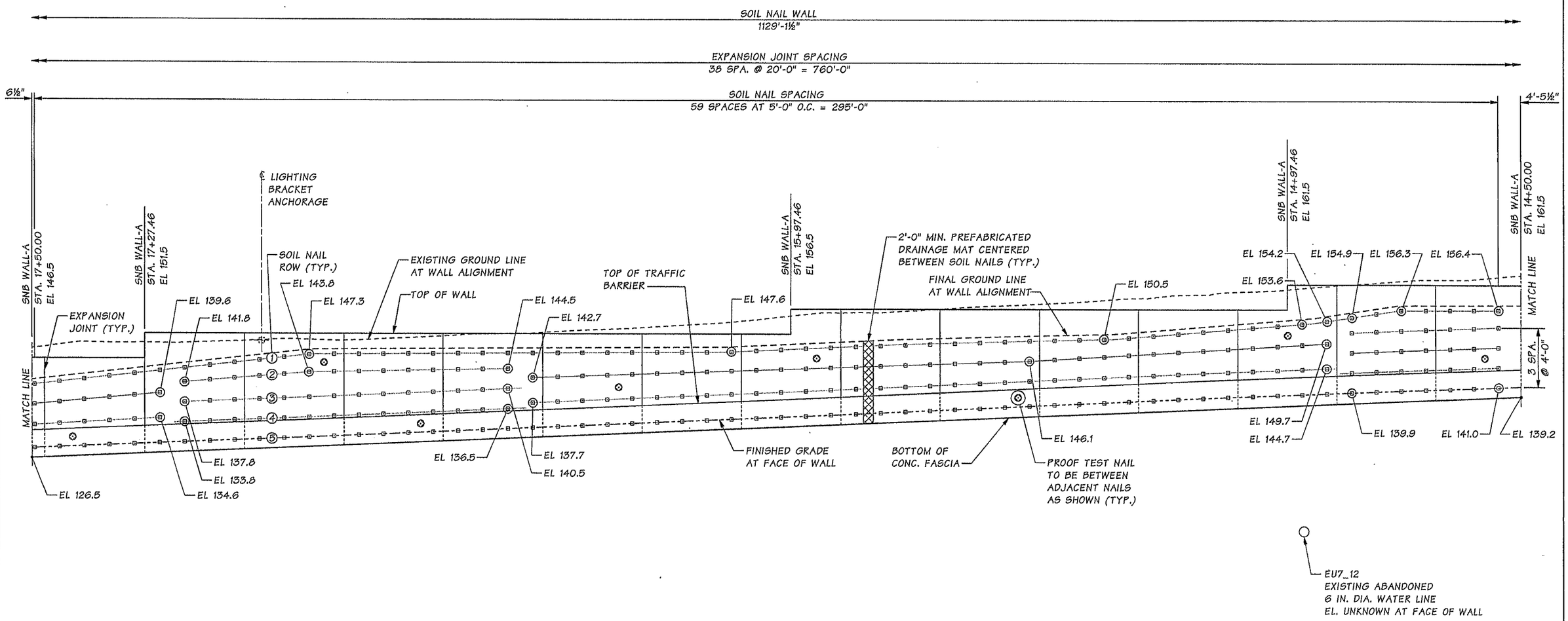

DEVELOPED ELEVATION

SNB WALL-A

SR 5 FILE NO. SHEET WR43

Bridge Design Engr.	Khaleghi, B	M:\Y-Team\M ST TO PORTLAND - WALLS\SNB WALL - A\window files\WR43-ELEV 2.wnd								
Supervisor	Zeldenrust, RP									
Designed By	Pawelka, M 01/13									
Checked By	Chu, A 10/13									
Detailed By	Williams, S / Davis, E 05/13									
Bridge Projects Engr.										
Prelim. Plan By										
Architect/Specialist		DATE	REVISION	BY	APP'D					

REGION NO.	STATE	FED. AID PROJ. NO.	SHEET NO.	TOTAL SHEETS
10	WASH.			
JOB NUMBER 12C501				

MONIQUE E. PAWELKA — STATE OF WASHINGTON — REGISTERED PROFESSIONAL ENGINEER — 2/11/14

BRIDGE AND STRUCTURES OFFICE

BIJAN KHALEGHI — STATE OF WASHINGTON — REGISTERED PROFESSIONAL ENGINEER — 2/12/14

Washington State Department of Transportation

I-5
M ST TO PORTLAND AVE - HOV

SNB WALL - A

SNB WALL-A
ELEVATION 2 OF 4

BRIDGE SHEET NO. WR43

SHEET 866 OF 1763 SHEETS

Tue Feb 11 15:26:46 2014

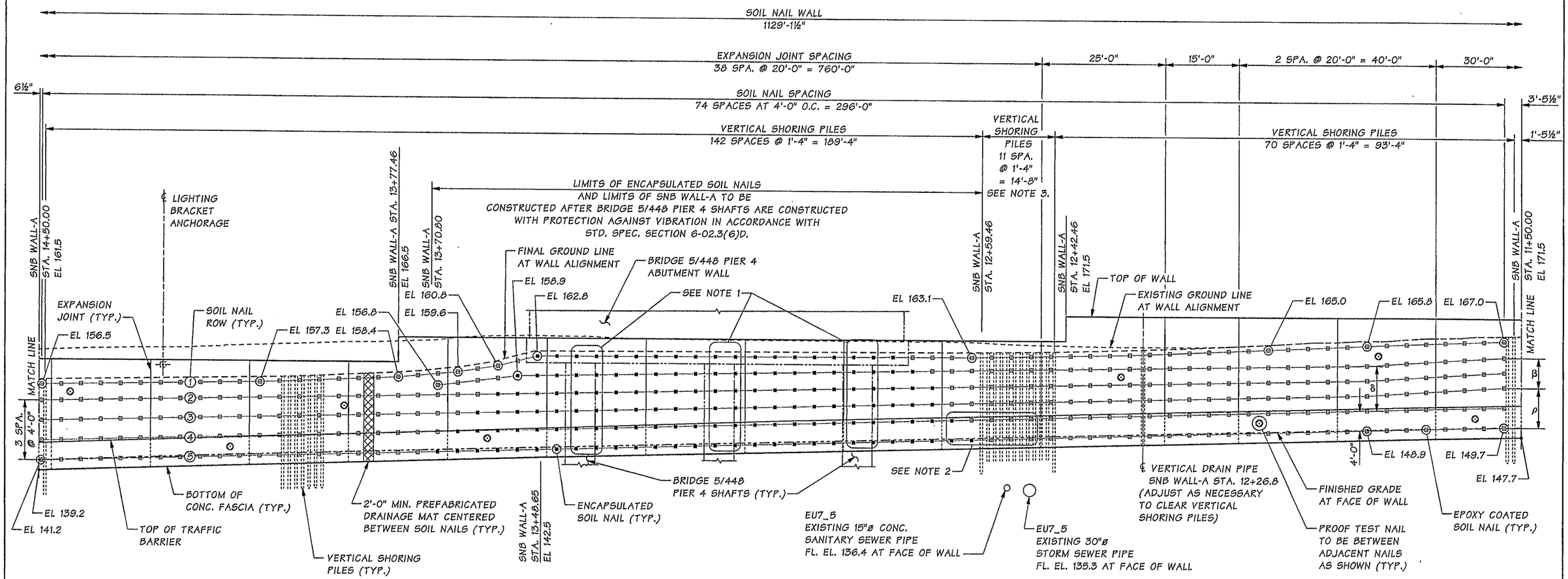

NOTES:

1. NAILS LOCATED WITHIN 1 FOOT OF THE EDGE OF BRIDGE 5/448 PIER 4 SHAFTS SHALL HAVE A 23 DEGREE NAIL DECLINATION ANGLE AND SHALL BE SPLAYED HORIZONTALLY TO CLEAR THE SHAFTS, SEE DETAIL ON BR. SHT. WR47.
2. NAILS SHALL BE SPLAYED HORIZONTALLY TO CLEAR EXISTING PIPES, SEE DETAIL ON BR. SHT. WR47.
3. IN THE VICINITY OF EXISTING UTILITIES EU7_5, VERTICAL SHORING PILE EMBEDMENT DEPTH = 2'-6"

DEVELOPED ELEVATION

SNB WALL-A

ρ - 2 SPA. @ 4'-0"

β - 2 SPA. @ 3'-0"

δ - 3 SPA. @ 3'-0"

SR 5 FILE NO. SHEET WR44

Bridge Design Engr.	Khaleghi, B	
Supervisor	Zeldenrust, RP	
Designed By	Pawelka, M	01/13
Checked By	Chu, A	10/13
Detailed By	Williams, S / Davis, E	05/13
Bridge Projects Engr.		
Prelim. Plan By		
Architect/Specialist		

M:\Y-Team\M ST TO PORTLAND - WALLS\SNB WALL - A\window files\WR44-ELEV 3.wnd

DATE	REVISION	BY	APP'D

REGION NO.	STATE	FED. AID PROJ. NO.	SHEET NO.	TOTAL SHEETS
10	WASH.			

JOB NUMBER 12C501

MONIQUE E. PAWELKA STATE OF WASHINGTON 38812 REGISTERED PROFESSIONAL ENGINEER 2/11/14

BRIDGE AND STRUCTURES OFFICE

BIJAN KHALEGHI STATE OF WASHINGTON 27690 REGISTERED PROFESSIONAL ENGINEER 2/12/14

Washington State Department of Transportation

I-5
M ST TO PORTLAND AVE - HOV

SNB WALL - A

SNB WALL-A
ELELVATION 3 OF 4

BRIDGE SHEET NO. WR44

SHEET 867 OF 1763 SHEETS

Tue Feb 11 15:26:48 2014

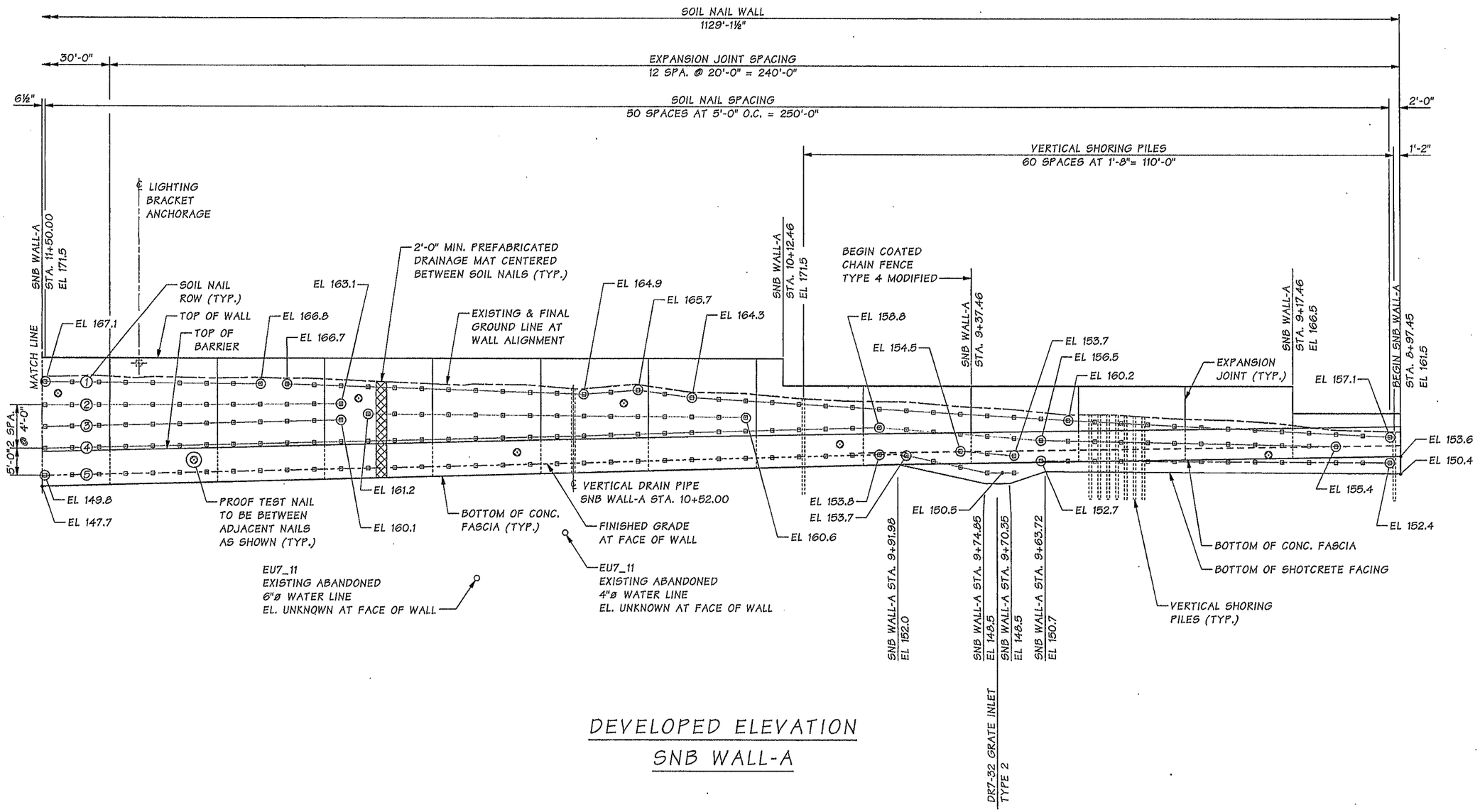

DEVELOPED ELEVATION

SNB WALL-A

SR 5 FILE NO. SHEET WR45

Bridge Design Engr.	Khaleghi, B	M:\Y-Team\M ST TO PORTLAND - WALLS\SNB WALL - A\window files\WR45-ELEV 4.wnd							
Supervisor	Zeldenrust, RP				REGION NO.	STATE	FED. AID PROJ. NO.	SHEET NO.	TOTAL SHEETS
Designed By	Pawelka, M 01/13				10	WASH.			
Checked By	Chu, A 10/13								
Detailed By	Williams, S / Davis, E 05/13				JOB NUMBER 12C501				
Bridge Projects Engr.									
Prelim. Plan By									
Architect/Specialist		DATE	REVISION	BY	APP'D				

Tue Feb 11 15:26:51 2014

MONIQUE E. PAWELKA STATE OF WASHINGTON 25612 REGISTERED PROFESSIONAL ENGINEER 2/11/14

BRIDGE AND STRUCTURES OFFICE

BIJAN KHALEGHI STATE OF WASHINGTON 27495 REGISTERED PROFESSIONAL ENGINEER 2/12/14

Washington State Department of Transportation

I-5
M ST TO PORTLAND AVE - HOV

SNB WALL - A

SNB WALL-A
ELEVATION 4 OF 4

BRIDGE SHEET NO. WR45

SHEET 868 OF 1763 SHEETS

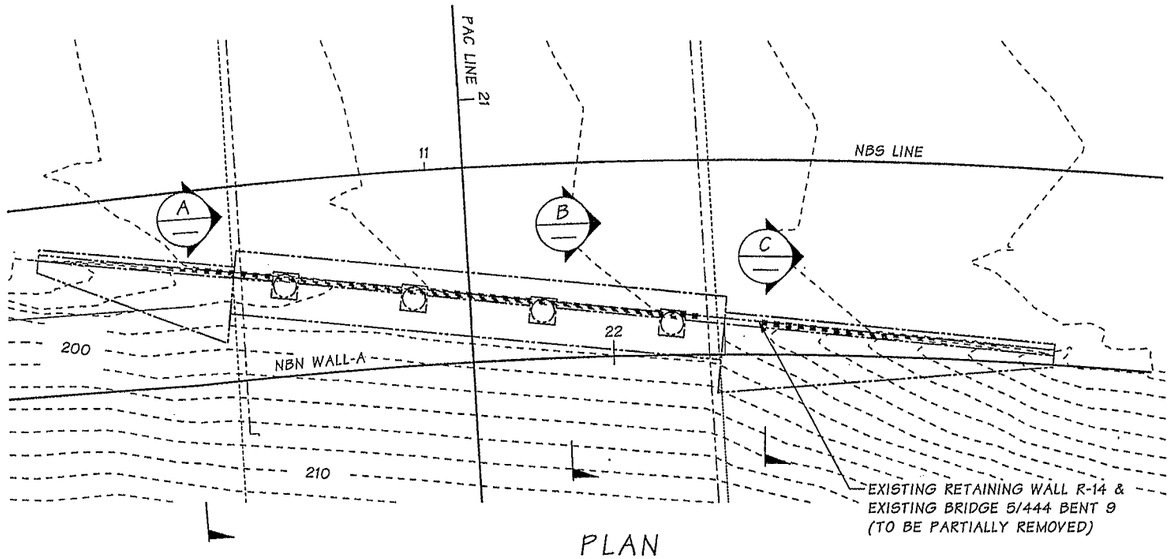

PLAN

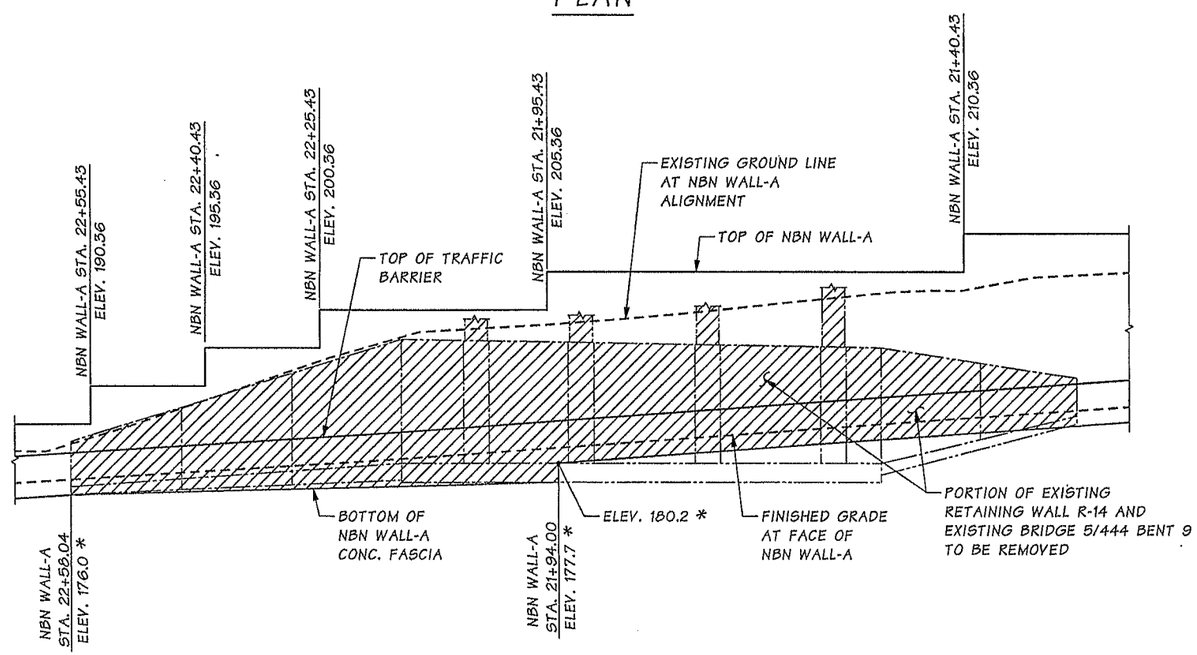

DEVELOPED ELEVATION

SOIL NAILS NOT SHOWN
FOR CLARITY

* SEE GENERAL NOTE 9.

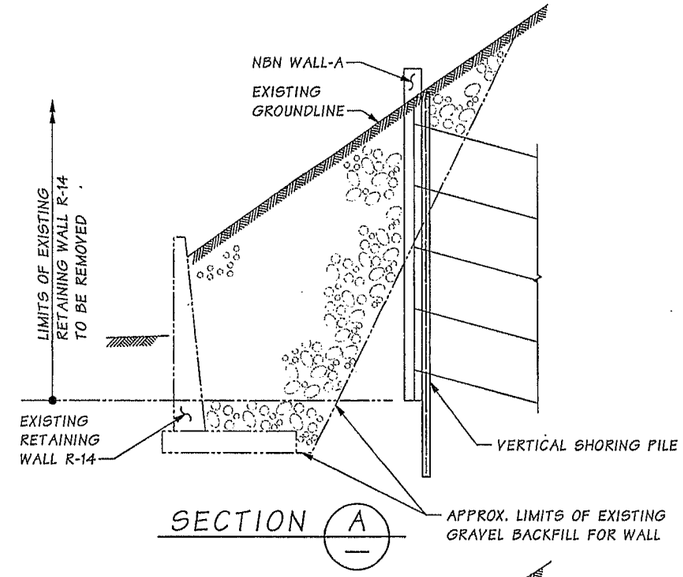

SECTION A

NOTES:

1. EXISTING RETAINING WALL R-14 AND EXISTING BRIDE 5/444 BENT 9 TO BE INCREMENTALLY REMOVED IN 4'-0" MAX. VERTICAL SECTIONS AS NBN WALL-A IS CONSTRUCTED.

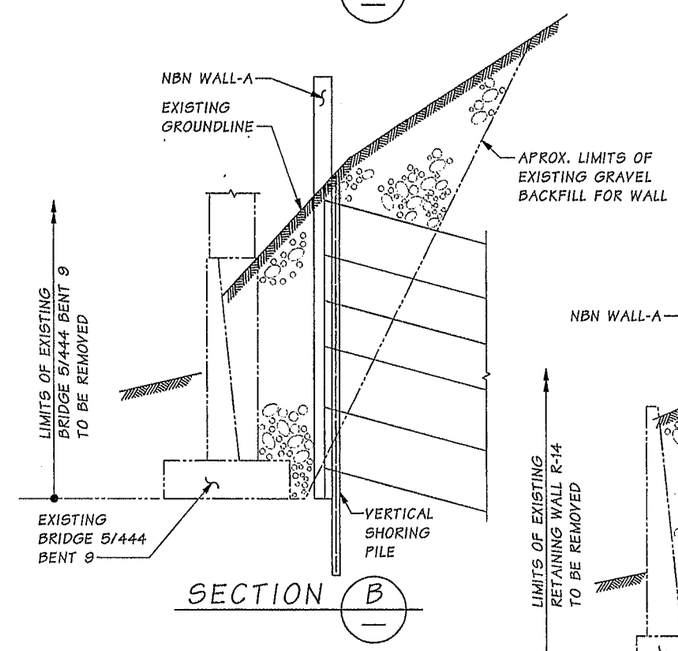

SECTION B

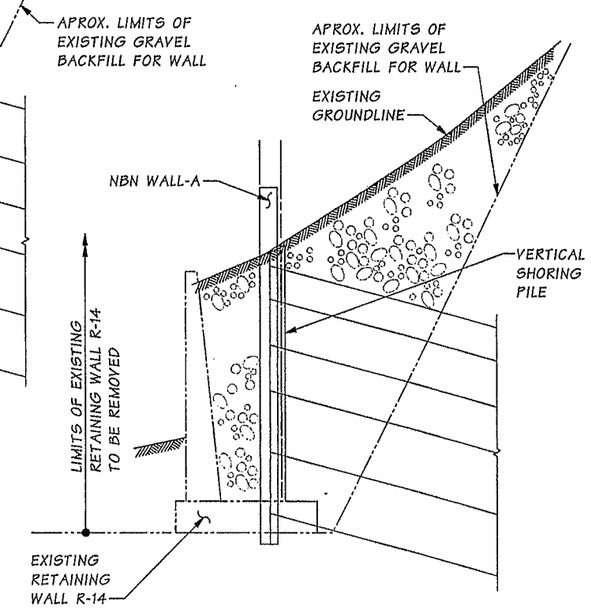

SECTION C

Bridge Design Engr.	Khaleghi, B		M:\Y-Team\M ST TO PORTLAND - WALLS\window files\WR46-EXST WALL REMOVAL.wnd							
Supervisor	Zeldenrust, RP					REGION NO.	STATE	FED. AID PROJ. NO.	SHEET NO.	TOTAL SHEETS
Designed By	Pawelka, M	08/13				10	WASH.			
Checked By	Chu, A	10/13								
Detailed By	Davis, E	08/13				JOB NUMBER 12C501				
Bridge Projects Engr.										
Prelim. Plan By										
Architect/Specialist			DATE	REVISION	BY	APP'D				

Tue Feb 11 15:26:52 2014

SR 5 FILE NO. ____ SHEET WR46

MONIQUE E. PANCHI — STATE OF WASHINGTON — 38015 — REGISTERED PROFESSIONAL ENGINEER — 2/11/14

BRIDGE AND STRUCTURES OFFICE

SUAN KHALEGHI — STATE OF WASHINGTON — 27096 — REGISTERED PROFESSIONAL ENGINEER — 2/12/14

Washington State Department of Transportation

I-5
M ST TO PORTLAND AVE - HOV

NBN WALL - A

EXISTING RETAINING WALL R-14
REMOVAL DETAILS

BRIDGE SHEET NO. WR46

SHEET 869 OF 1763 SHEETS

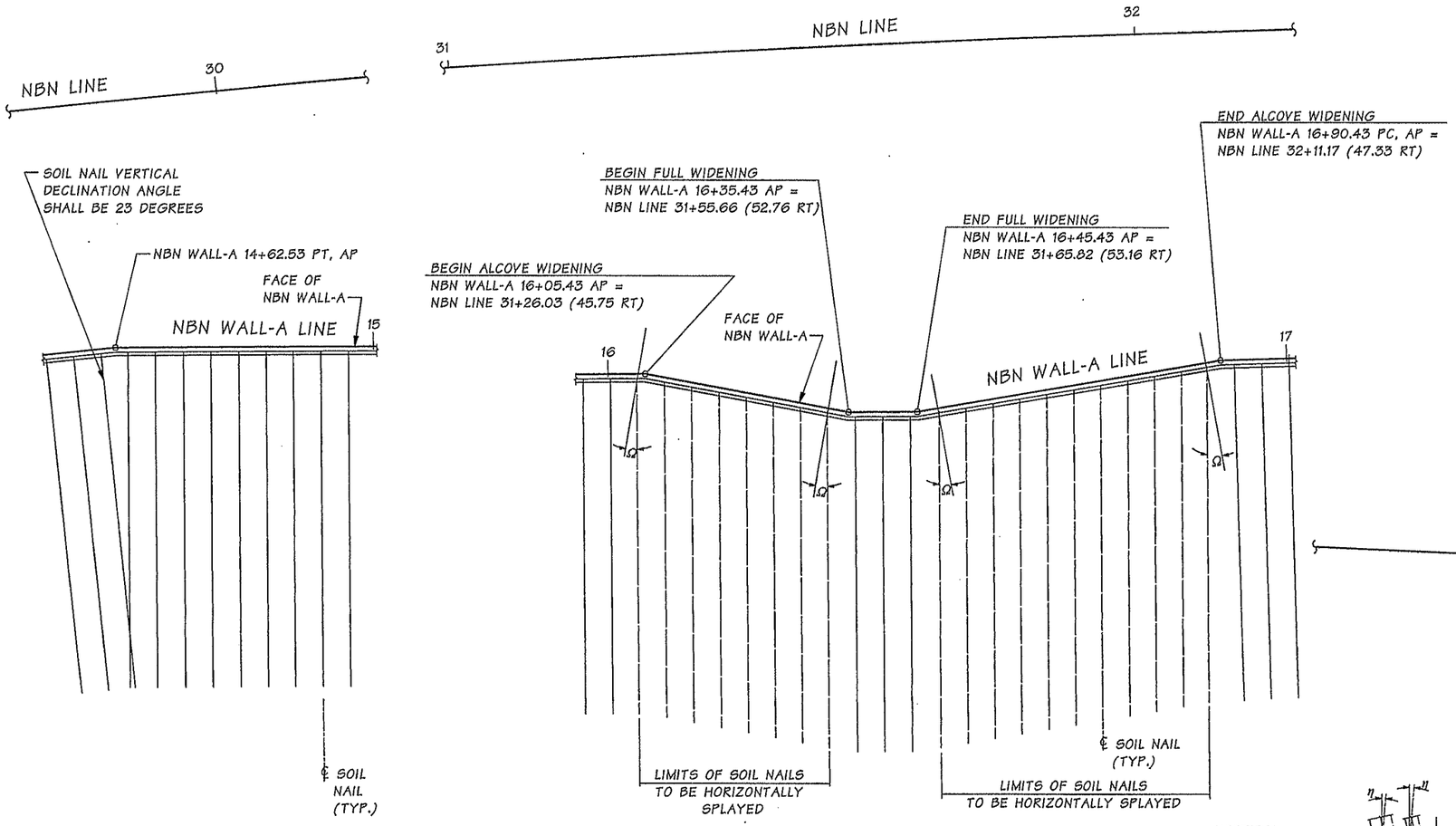

PLAN
NBN WALL-A

AT ANGLE POINT AND ALCOVE

$\sigma = 15°$

$\Omega = 10°$

$\eta = 5°$

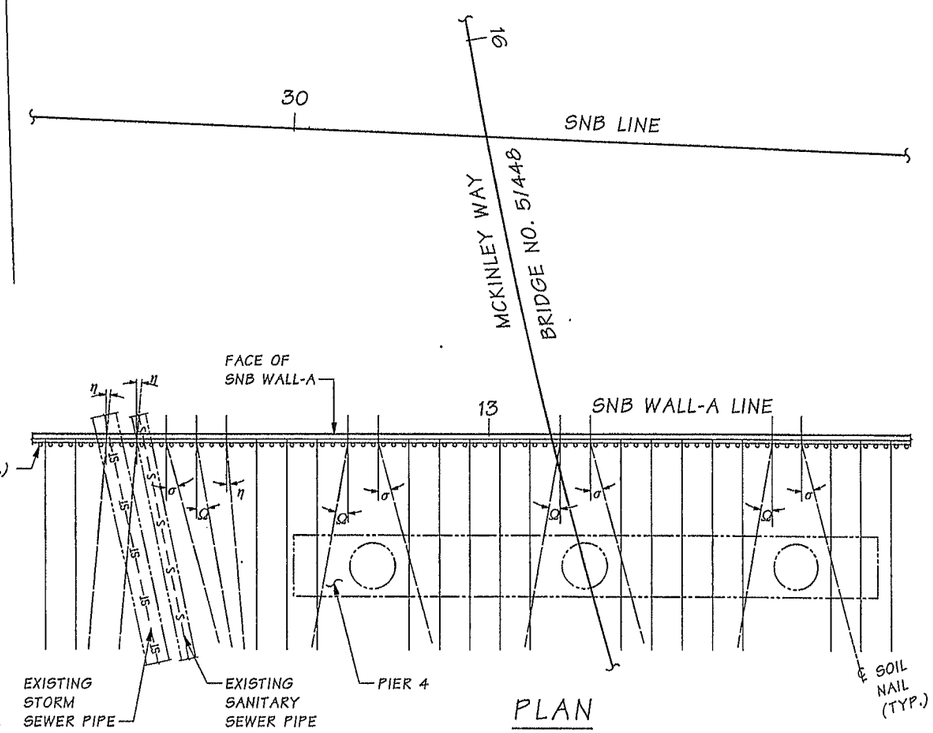

PLAN
SNB WALL-A

AT BRIDGE 5/448
PIER 4 SHAFTS

Bridge Design Engr.	Khaleghi, B		
Supervisor	Zeldenrust, RP		
Designed By	Pawelka, M	07/13	
Checked By	Chu, A	10/13	
Detailed By	Davis, E	07/13	
Bridge Projects Engr.			
Prelim. Plan By			
Architect/Specialist			

M:\Y-Team\M ST TO PORTLAND - WALLS\window files\WR47-HORIZ SPLYED NAIL DET.wnd

DATE	REVISION	BY	APP'D

REGION NO.	STATE	FED. AID PROJ. NO.	SHEET NO.	TOTAL SHEETS
10	WASH.			
JOB NUMBER 12C501				

Tue Feb 11 15:26:55 2014

MONIQUE E. PAWELKA, STATE OF WASHINGTON, 38012, REGISTERED PROFESSIONAL ENGINEER — 2/11/14

BRIDGE AND STRUCTURES OFFICE

BIJAN KHALEGHI, STATE OF WASHINGTON, 27046, STRUCTURAL ENGINEER, PROFESSIONAL ENGINEER — 2/12/14

Washington State Department of Transportation

I-5
M ST TO PORTLAND AVE - HOV

NBN WALL - A & SNB WALL - A

HORIZONTALLY SPLAYED NAILS

BRIDGE SHEET NO. WR47

SHEET 870 OF 1763 SHEETS

SR 5 FILE NO. ____ SHEET WR47

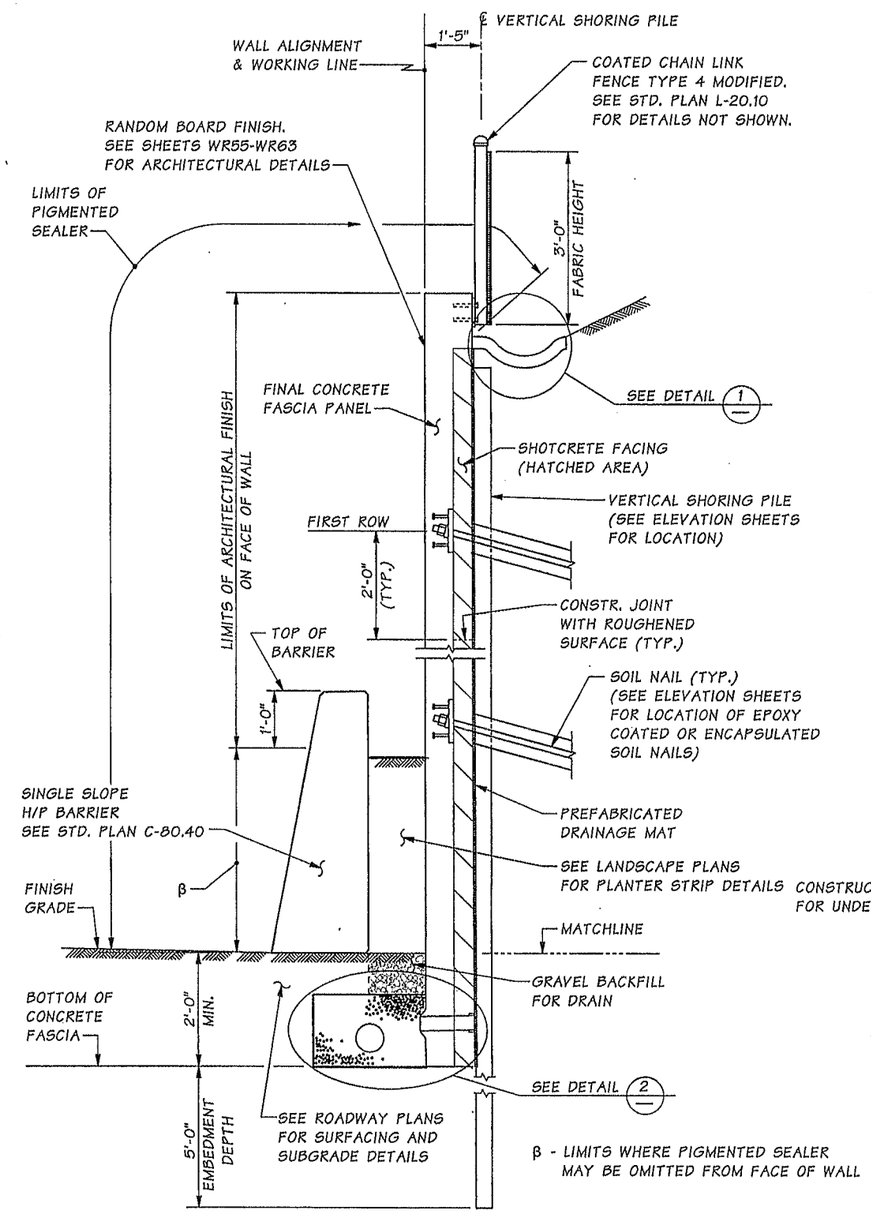

SOIL NAIL WALL TYPICAL SECTION

NBN WALL-A AND SNB WALL-A

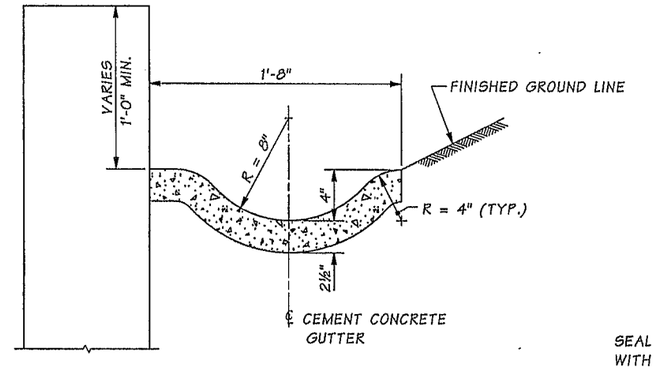

DETAIL 1

CEMENT CONCRETE GUTTER

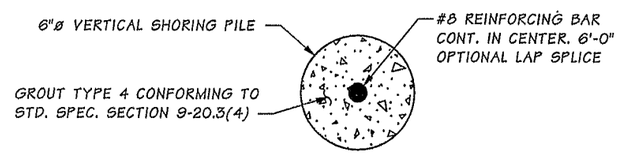

VERTICAL SHORING PILE

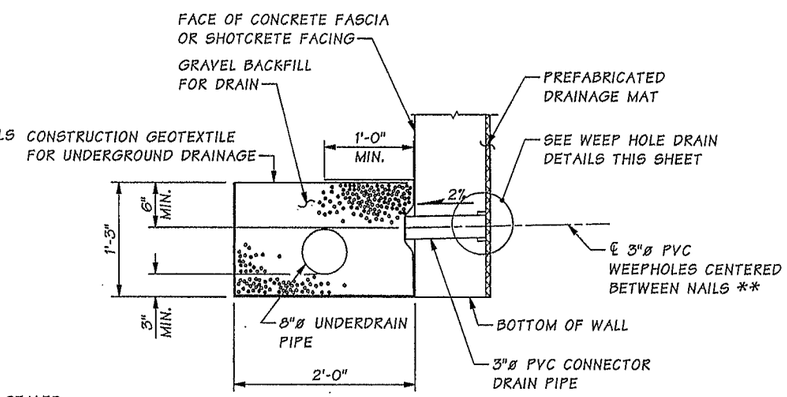

DETAIL 2

TYPICAL FABRIC DRAIN CONNECTION TO UNDERDRAIN PIPE

WR50

** ADJUST WEEP HOLE LOCATION AS NECESSARY TO BE CENTERED BETWEEN VERTICAL SHORING PILES.

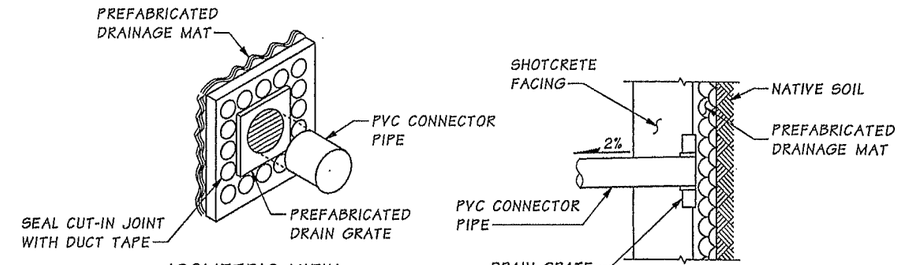

WEEP HOLE DRAIN DETAILS

DRAIN GRATE INSTALLATION SHALL NOT DISRUPT PREFABRICATED DRAINAGE MAT

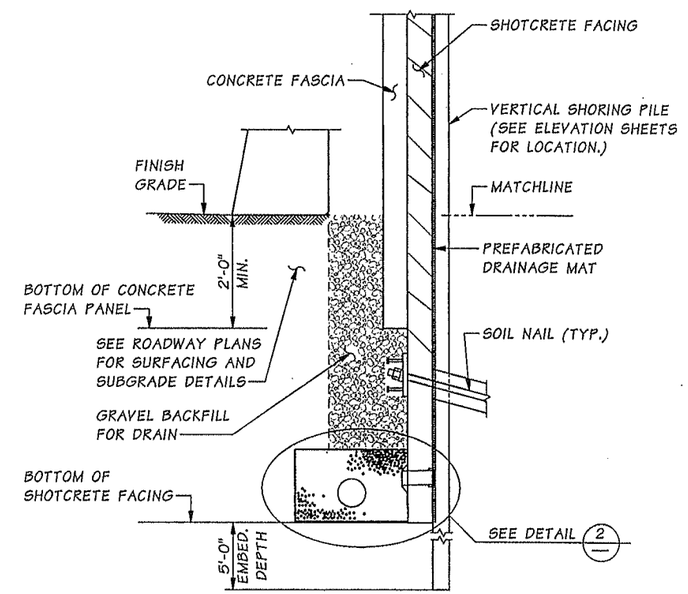

SOIL NAIL WALL TYPICAL SECTION AT DRAINAGE STRUCTURES

NBN WALL-A AND SNB WALL-A
FOR DETAILS ABOVE THE MATCHLINE
SEE "SOIL NAIL WALL TYPICAL SECTION"

Bridge Design Engr.	Khaleghi, B		M:\Y-Team\M ST TO PORTLAND - WALLS\window files\WR48-SOIL NAIL WALL SEC.WND							
Supervisor	Zeldenrust, RP					REGION NO.	STATE	FED. AID PROJ. NO.	SHEET NO.	TOTAL SHEETS
Designed By	Pawelka, M	07/13				10	WASH.			
Checked By	Chu, A	10/13								
Detailed By	Davis, E	07/13				JOB NUMBER 12C501				
Bridge Projects Engr.										
Prelim. Plan By										
Architect/Specialist			DATE	REVISION	BY	APP'D				

Tue Mar 11 11:40:45 2014

BRIDGE AND STRUCTURES OFFICE 3/11/14

Washington State Department of Transportation

I-5
M ST TO PORTLAND AVE - HOV

NBN WALL-A & SNB WALL-A

SOIL NAIL WALL SECTION

BRIDGE SHEET NO. WR48

SHEET 871 OF 1763 SHEETS

SR 5 FILE NO. ____ SHEET WR48

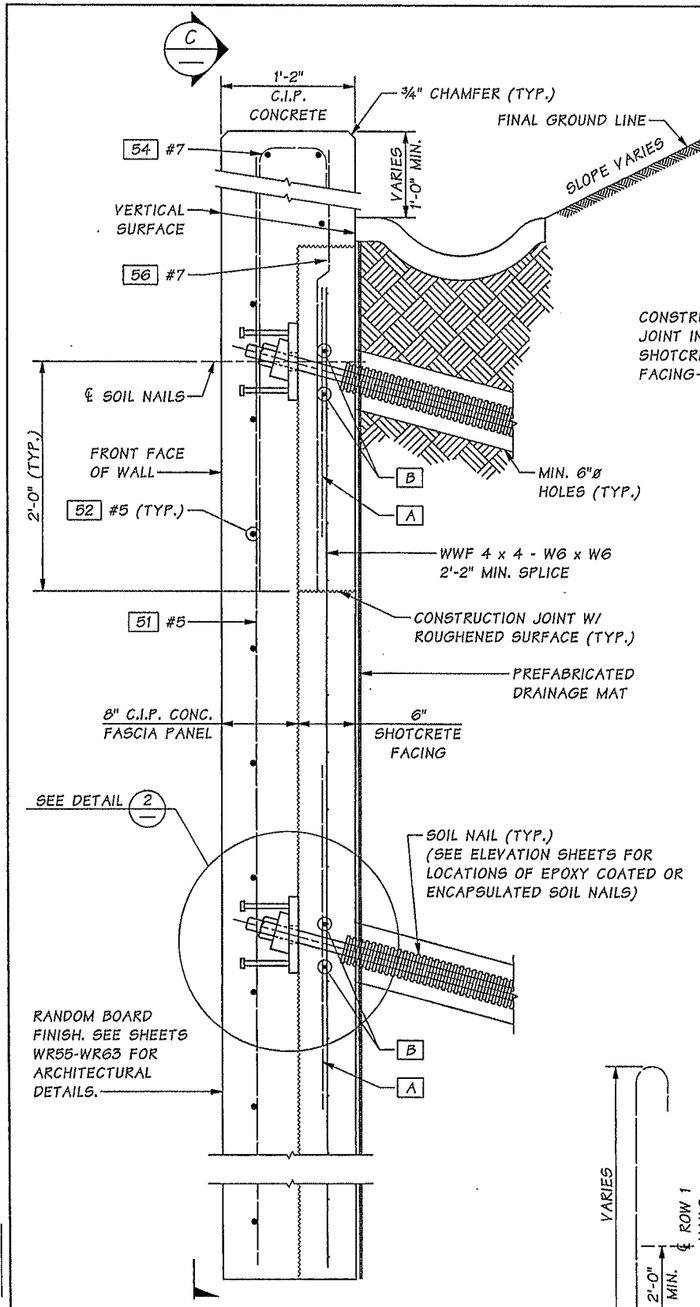

TYPICAL SECTION

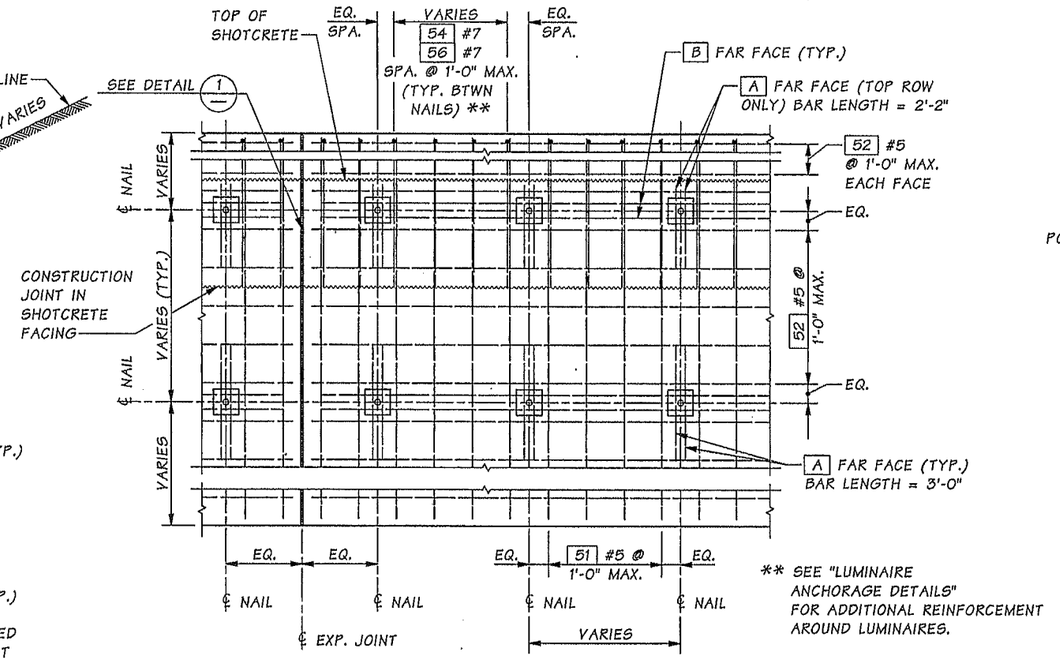

** SEE "LUMINAIRE ANCHORAGE DETAILS" FOR ADDITIONAL REINFORCEMENT AROUND LUMINAIRES.

VIEW C

WWF NOT SHOWN FOR CLARITY.

WR52

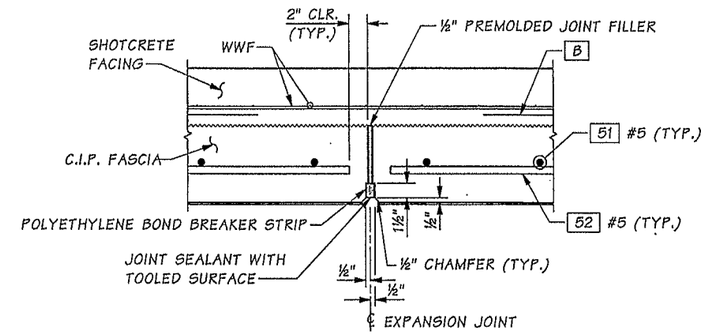

DETAIL 1

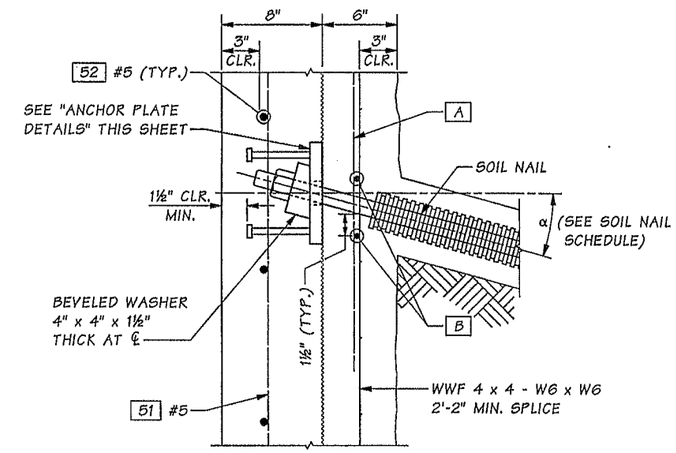

DETAIL 2

SOIL NAIL SIZE	ANCHOR PLATE TYPE	PLATE WIDTH, "L"	PLATE THICKNESS, "T"	HOLE ø, "D"	HEADED STUD SPACING "S"	VERT. WALER BAR A	HORZ. WALER BAR B
#8	1	0'-9"	1"	1¾"	5½"	#4	#4
#9	1	0'-9"	1"	1⅞"	5½"	#4	#4

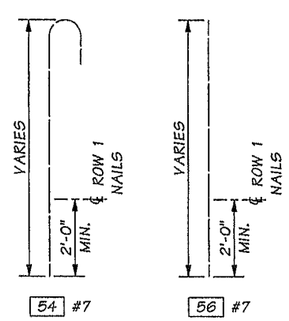

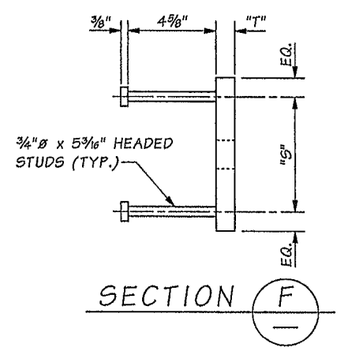

SECTION F

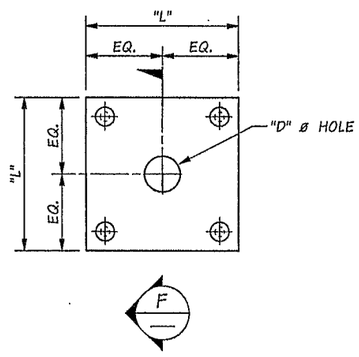

ANCHOR PLATE TYPE 1 DETAILS

ASTM A 36

Bridge Design Engr.	Khaleghi, B		
Supervisor	Zeldenrust, RP		
Designed By	Pawelka, M	07/13	
Checked By	Chu, A	10/13	
Detailed By	Davis, EA	07/13	
Bridge Projects Engr.			
Prelim. Plan By			
Architect/Specialist			

M:\Y-Team\M ST TO PORTLAND - WALLS\window files\WR49-SOIL NAIL WALL DET.wnd

DATE	REVISION	BY	APP'D

REGION NO.	STATE	FED. AID PROJ. NO.	SHEET NO.	TOTAL SHEETS
10	WASH.			
JOB NUMBER 12C501				

Tue Feb 11 15:26:59 2014

BRIDGE AND STRUCTURES OFFICE

2/11/14 2/12/14

Washington State Department of Transportation

I-5
M ST TO PORTLAND AVE - HOV

NBN WALL - A & SNB WALL - A

SOIL NAIL WALL DETAILS

BRIDGE SHEET NO. WR49

SHEET 872 OF 1763 SHEETS

SR 5 FILE NO. ____ SHEET WR49

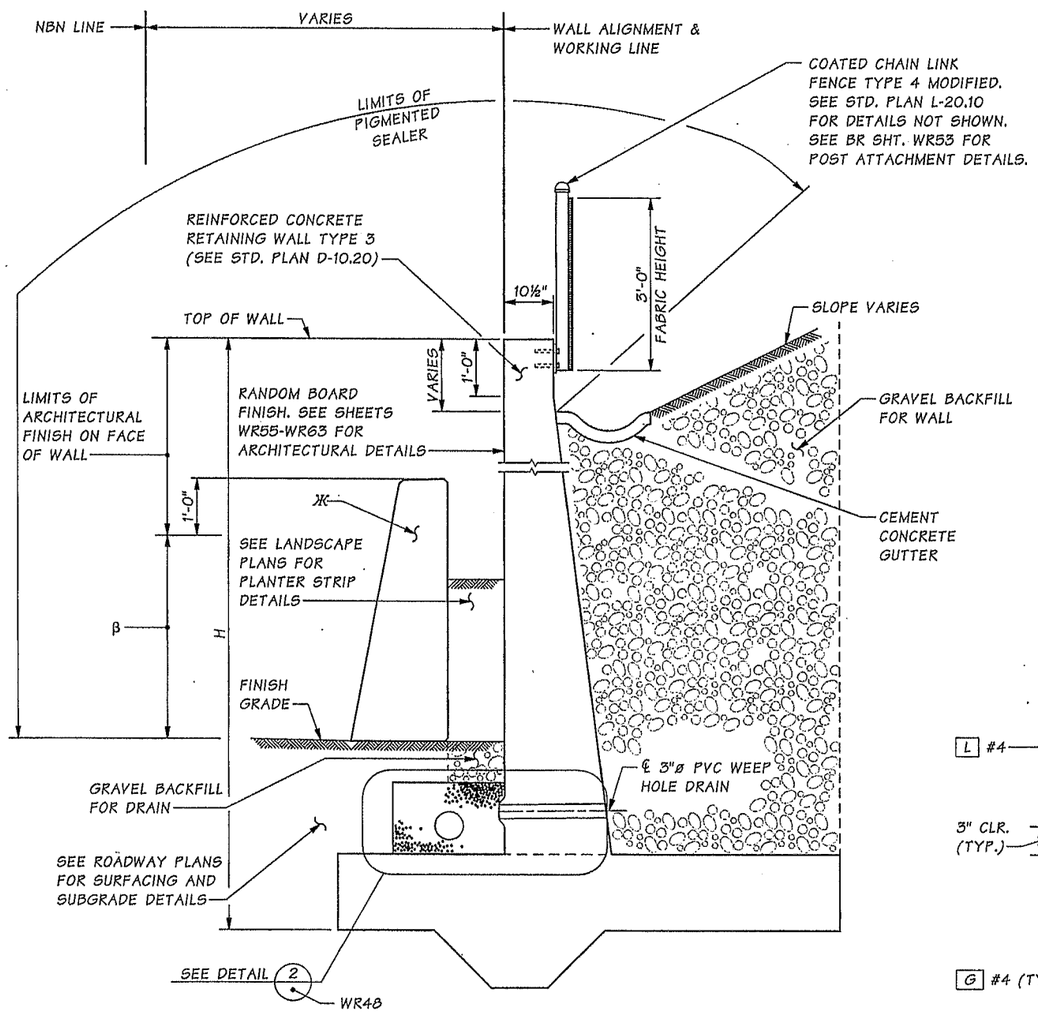

REINFORCED CONCRETE RETAINING WALL TYPICAL SECTION

NBN WALL-A STA. 0+54.01
TO NBN WALL-A STA. 9+90.43
FOR DETAILS NOT SHOWN SEE
STD. PLAN D-10.20.

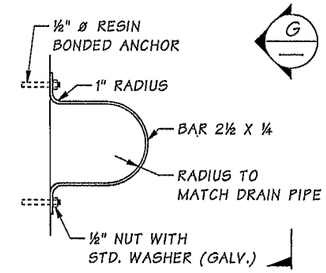

DETAIL 1
PIPE BRACING

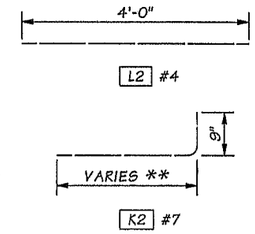

** DETERMINE FROM PLANS

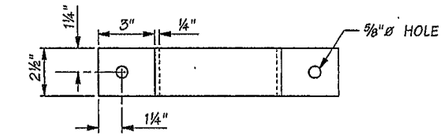

VIEW G

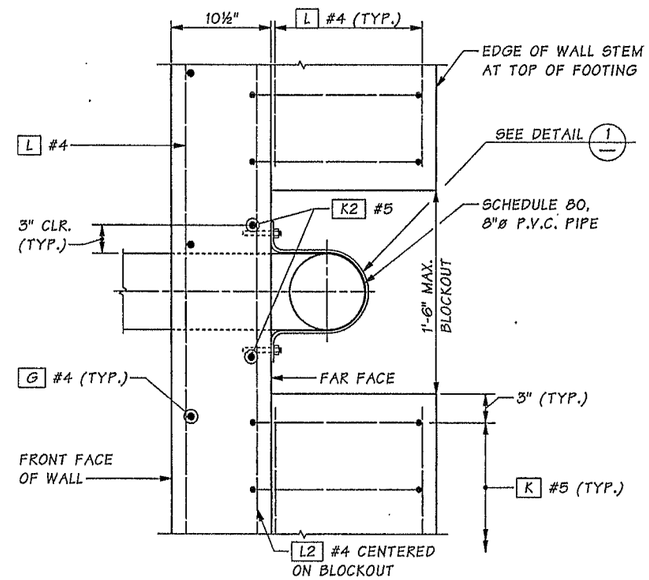

SECTION A
FOOTING NOT SHOWN

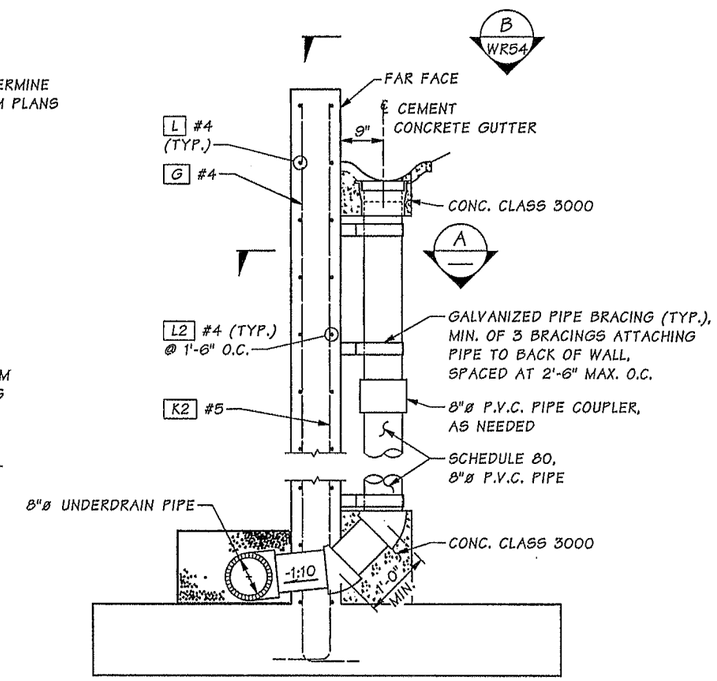

REINFORCED CONCRETE RETAINING WALL SECTION AT VERTICAL DRAIN PIPE

FOOTING REINFORCEMENT NOT SHOWN

ж - SINGLE SLOPE H/P CONCRETE BARRIER. SEE STD. PLAN C-80.40

β - LIMITS WHERE PIGMENTED SEALER MAY BE OMITTED FROM FACE OF WALL

Bridge Design Engr.	Khaleghi, B		M:\Y-Team\M ST TO PORTLAND - WALLS\window files\WR50-RET WALL SEC.WND								
Supervisor	Zeldenrust, RP						REGION NO.	STATE	FED. AID PROJ. NO.	SHEET NO.	TOTAL SHEETS
Designed By	Pawelka, M	08/13					10	WASH.			
Checked By	Chu, A	10/13					JOB NUMBER 12C501				
Detailed By	Davis, E	08/13									
Bridge Projects Engr.											
Prelim. Plan By											
Architect/Specialist			DATE	REVISION	BY	APP'D					

Tue Mar 11 11:40:30 2014

BRIDGE AND STRUCTURES OFFICE

Washington State Department of Transportation

I-5
M ST TO PORTLAND AVE - HOV

NBN WALL - A

REINFORCED CONCRETE RETAINING WALL SECTION

BRIDGE SHEET NO. WR50

SHEET 873 OF 1763 SHEETS

SR 5 FILE NO. ____ SHEET WR50

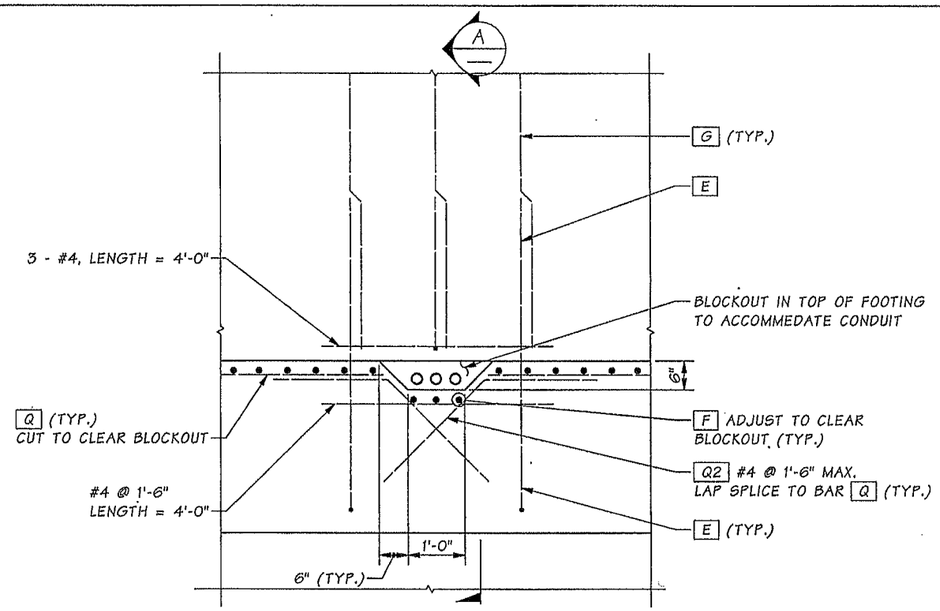

FRONT ELEVATION

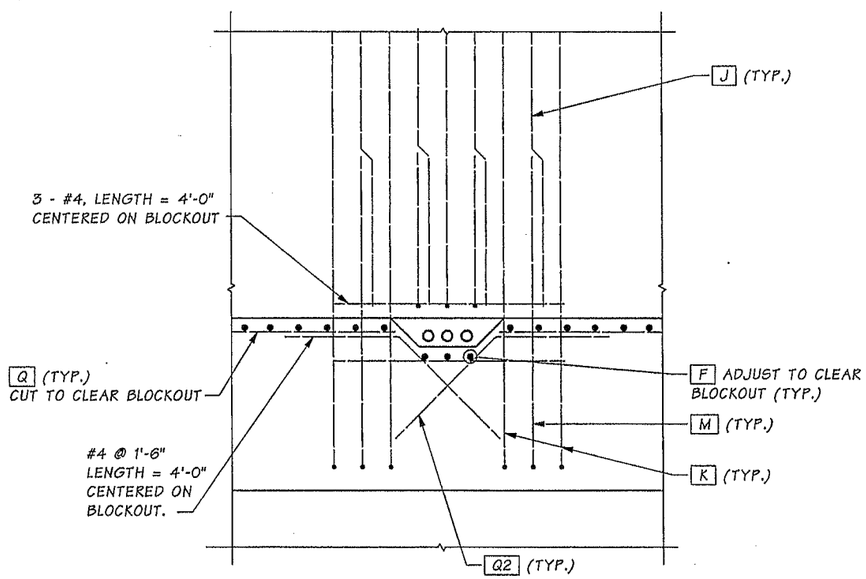

BACK ELEVATION

FOR DETAILS NOT SHOWN SEE "FRONT ELEVATION",
BR. SHT. WR46-RET WALL SEC AND STD. PLAN D-10.20.

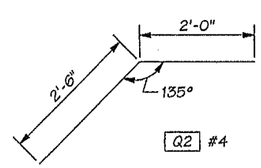

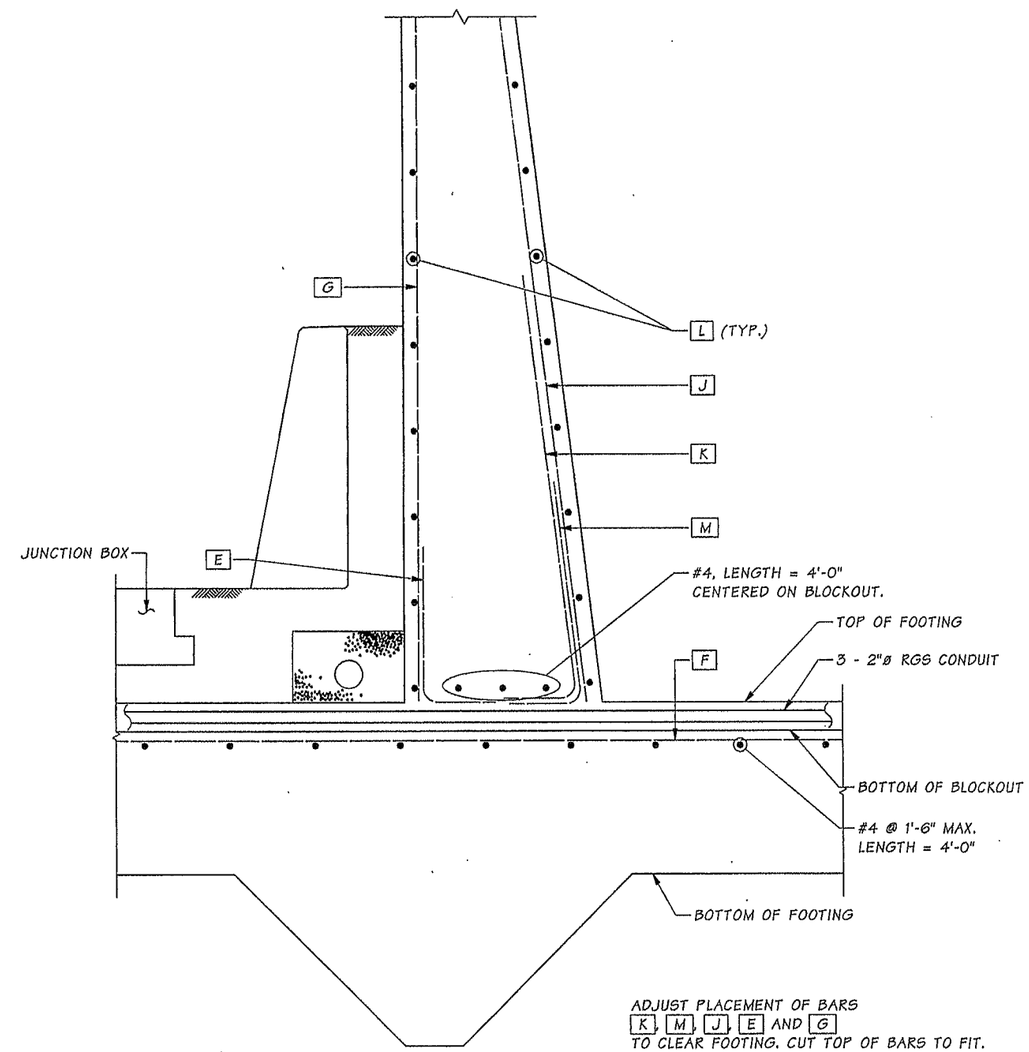

ADJUST PLACEMENT OF BARS
K, M, J, E AND G
TO CLEAR FOOTING. CUT TOP OF BARS TO FIT.
JUNCTION BOX LOCATED AT
NBN STA. 21+12.00 = NBN WALL-A STA. 5+98.25.

SECTION A

Bridge Design Engr.	Khaleghi, B		
Supervisor	Zeldenrust, RP		
Designed By	Pawelka, M	01/14	
Checked By	Chu, A	01/14	
Detailed By	Andreotti, L	01/14	
Bridge Projects Engr.			
Prelim. Plan By			
Architect/Specialist			

M:\Y-Team\M ST TO PORTLAND - WALLS\window files\WR51-RET WALL SEC 2.WND

DATE	REVISION	BY	APP'D

REGION NO.	STATE	FED. AID PROJ. NO.	SHEET NO.	TOTAL SHEETS
10	WASH.			
JOB NUMBER 12C501				

MONIQUE E. PAWELKA, STATE OF WASHINGTON, 22012, REGISTERED PROFESSIONAL ENGINEER — 2/13/14

BRIDGE AND STRUCTURES OFFICE

ALAN KHALEGHI, STATE OF WASHINGTON, 27690, STRUCTURAL ENGINEER, PROFESSIONAL ENGINEER — 2/13/14

Washington State Department of Transportation

I-5
M ST TO PORTLAND AVE - HOV

NBN WALL - A

REINFORCED CONCRETE RETAINING WALL BLOCKOUT DETAILS

BRIDGE SHEET NO. WR51

SHEET 874 OF 1763 SHEETS

SR 5 FILE NO. ____ SHEET WR51

Thu Feb 13 09:50:40 2014

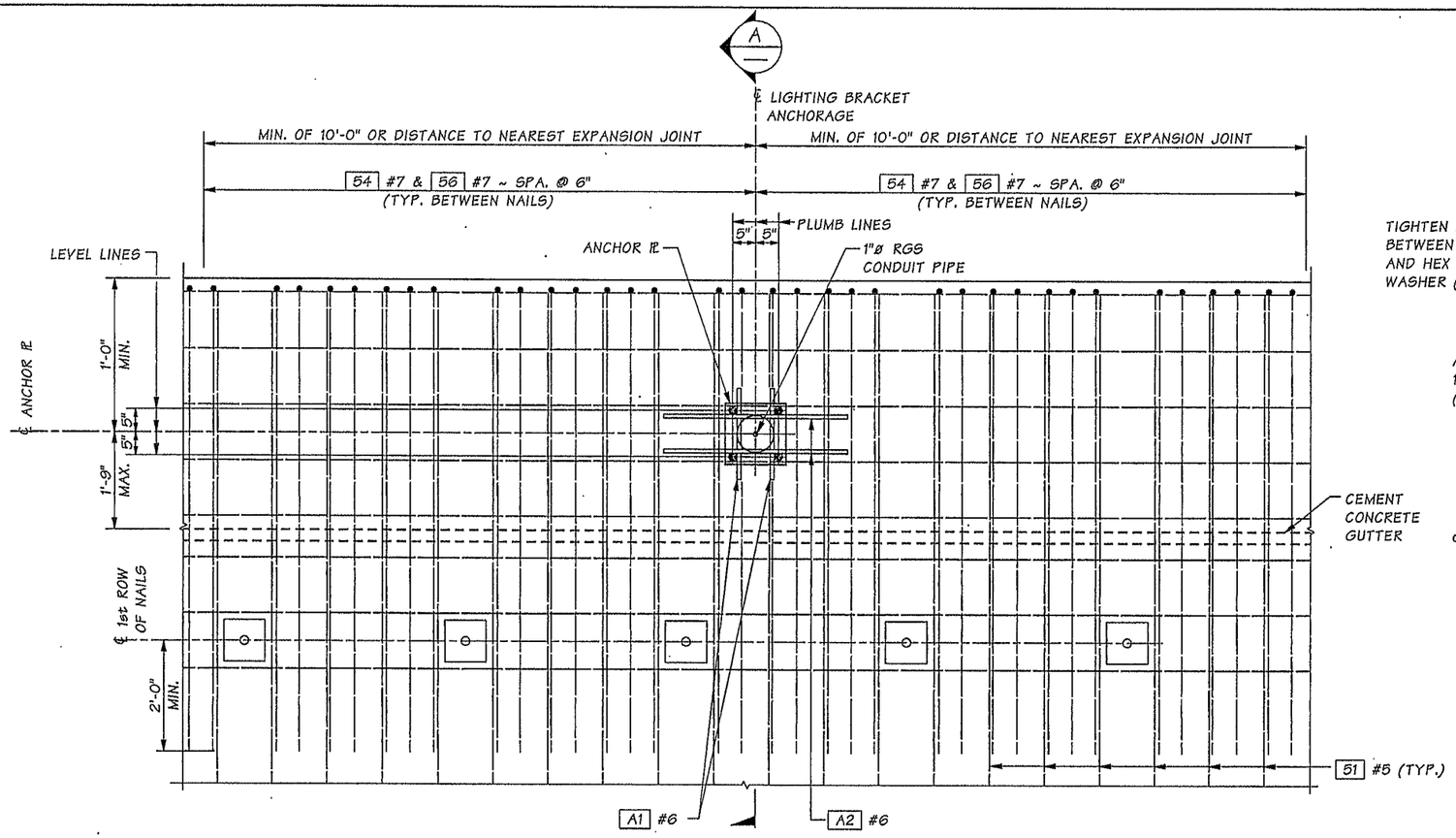

ELEVATION AT LUMINAIRE ANCHORAGE

RGS CONDUIT NOT SHOWN FOR CLARITY
FOR DETAILS NOT SHOWN SEE VIEW C WR49

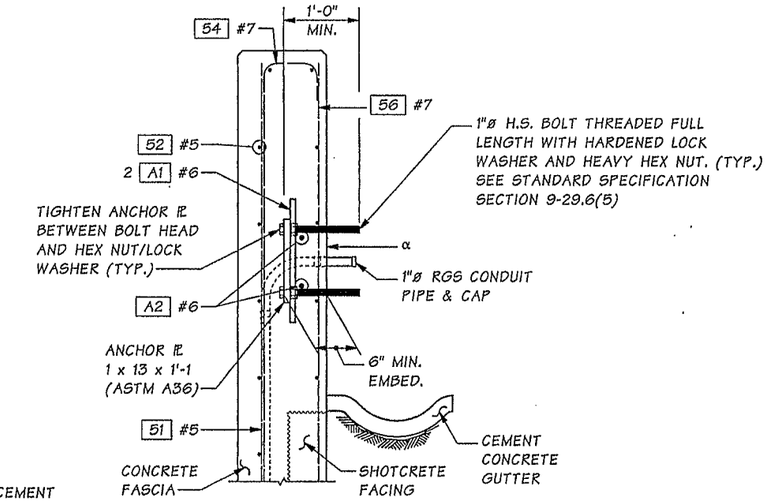

α CHIP OR FORM FACE OF WALL FLUSH UNDER SUPPORT ELBOW BASE PLATE. APPLY EPOXY BONDING AGENT TO SURFACE TO ASSURE UNIFORM BEARING SURFACE. SEE STANDARD SPECIFICATION SECTION 9-26.1

SECTION A

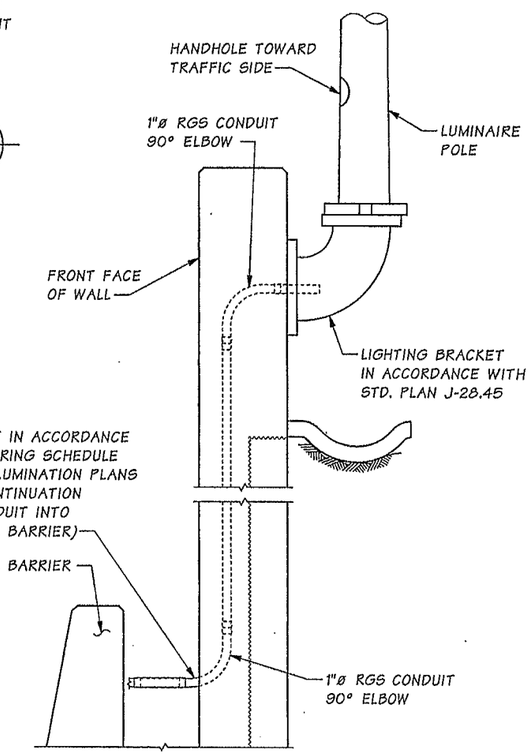

ELEVATION PROFILE
LUMINAIRE SUPPORT

ANCHORAGE BARLIST			
MARK #	SIZE	LENGTH	BEND TYPE
A1	6	1'-9"	STRAIGHT
A2	6	5'-0"	STRAIGHT

LUMINAIRE POLE LOCATIONS ON WALL	
STATION	OFFSET
SNB WALL-A STA. 11+32.00	RT
SNB WALL-A STA. 14+25.00	RT
SNB WALL-A STA. 17+04.00	RT
SNB WALL-A STA. 19+33.00	RT
NBN WALL-A STA. 22+46.00	RT

NOTE:
ALL CONDUIT SHALL BE RIGID GALVANIZED STEEL (RGS).
INSTALL ALL CONDUIT RUNS TO DRAIN TO AN END OR PROVIDE DRAIN AT ALL LOW POINTS WITHIN CONDUIT RUN.

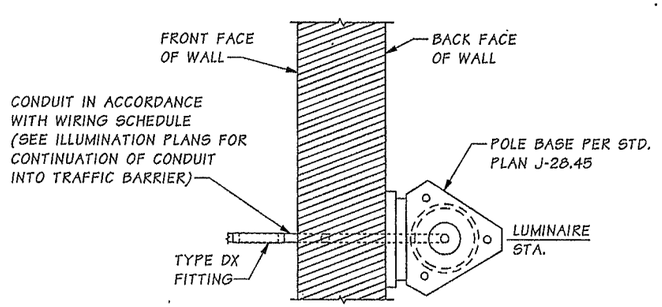

PLAN
LUMINAIRE SUPPORT

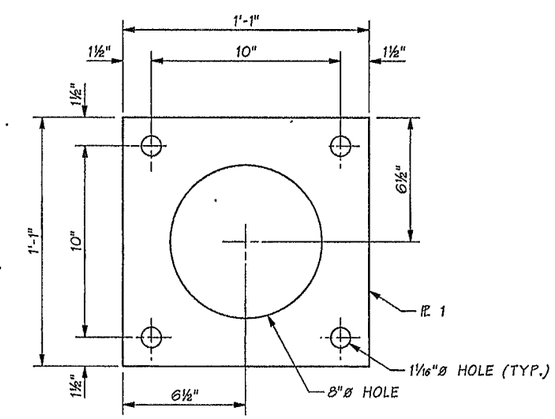

ANCHOR PLATE
GALVANIZE IN ACCORDANCE WITH AASHTO M 111

SR 5 FILE NO. ____ SHEET WR52

Bridge Design Engr.	Khaleghi, B		M:\Y-Team\M ST TO PORTLAND - WALLS\window files\WR52-LUM DET 1.wnd							
Supervisor	Zeldenrust, RP					REGION NO.	STATE	FED. AID PROJ. NO.	SHEET NO.	TOTAL SHEETS
Designed By	Pawelka, M	06/13				10	WASH.			
Checked By	Chu, A	10/13				JOB NUMBER 12C501				
Detailed By	Davis, EA	06/13								
Bridge Projects Engr.										
Prelim. Plan By										
Architect/Specialist			DATE	REVISION	BY	APP'D				

Tue Feb 11 15:27:04 2014

MONIQUE E. PAWELKA STATE OF WASHINGTON 36512 REGISTERED PROFESSIONAL ENGINEER 2/11/14

BRIDGE AND STRUCTURES OFFICE

ALAN KHALEGHI STATE OF WASHINGTON 27605 REGISTERED PROFESSIONAL ENGINEER 2/12/14

Washington State Department of Transportation

I-5
M ST TO PORTLAND AVE - HOV
NBN WALL - A & SNB WALL - A
LUMINAIRE ANCHORAGE DETAILS

BRIDGE SHEET NO. WR52

SHEET 875 OF 1763 SHEETS

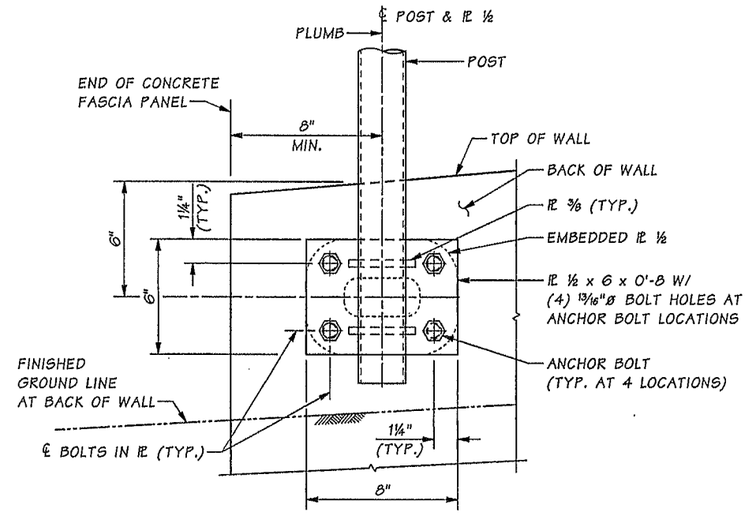

VIEW B

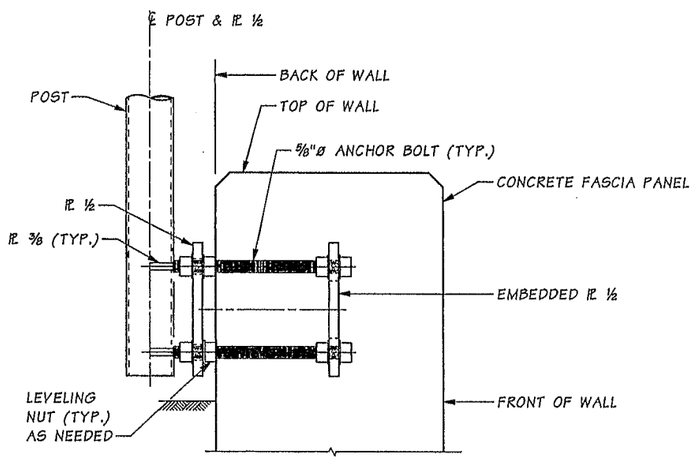

SECTION C

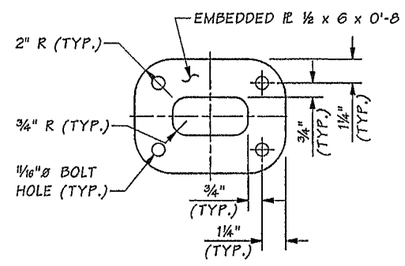

EMBEDDED PLATE DETAILS

POST ATTACHMENT DETAILS

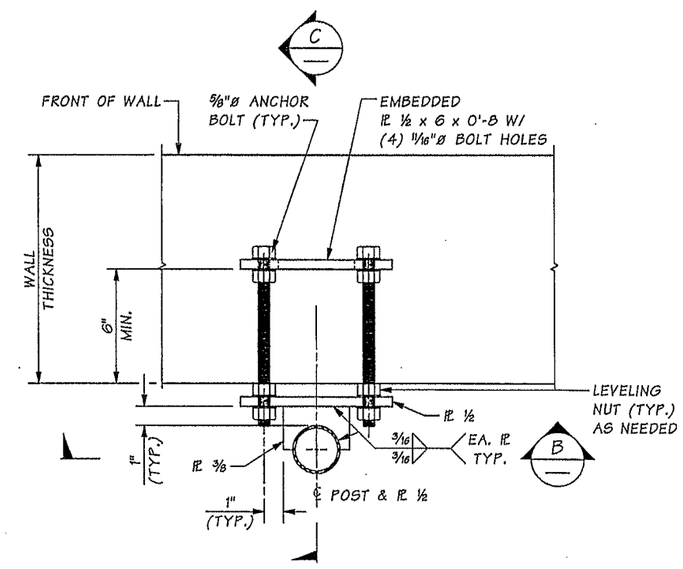

PLAN

NOTES

1. ALL STRUCTURAL STEEL SHALL CONFORM TO ASTM A36 AND SHALL BE GALVANIZED IN ACCORDANCE WITH AASHTO M 111.
2. ALL POSTS TO BE INSTALLED PLUMB.

SR 5 FILE NO. ____ SHEET WR53

Bridge Design Engr.	Khaleghi, B		M:\Y-Team\M ST TO PORTLAND - WALLS\window files\WR53-CHAIN LINK FENCE DET.wnd								
Supervisor	Zeldenrust, RP										
Designed By	Pawelka, M	07/13									
Checked By	Chu, A	10/13									
Detailed By	Davis, EA	07/13									
Bridge Projects Engr.											
Prelim. Plan By											
Architect/Specialist			DATE	REVISION	BY	APP'D					

REGION NO.	STATE	FED. AID PROJ. NO.	SHEET NO.	TOTAL SHEETS
10	WASH.			
JOB NUMBER 12C501				

MONIQUE E. PAWELKA, STATE OF WASHINGTON, 38812, REGISTERED PROFESSIONAL ENGINEER — 2/11/14

BRIDGE AND STRUCTURES OFFICE

BIJAN KHALEGHI, STATE OF WASHINGTON, 27695, REGISTERED PROFESSIONAL ENGINEER — 2/12/14

Washington State Department of Transportation

I-5
M ST TO PORTLAND AVE - HOV
NBN WALL - A & SNB WALL - A
COATED CHAIN LINK FENCE TYPE 4
POST ATTACHMENT DETAILS

BRIDGE SHEET NO. WR53
SHEET 876 OF 1763 SHEETS

Tue Feb 11 15:27:06 2014

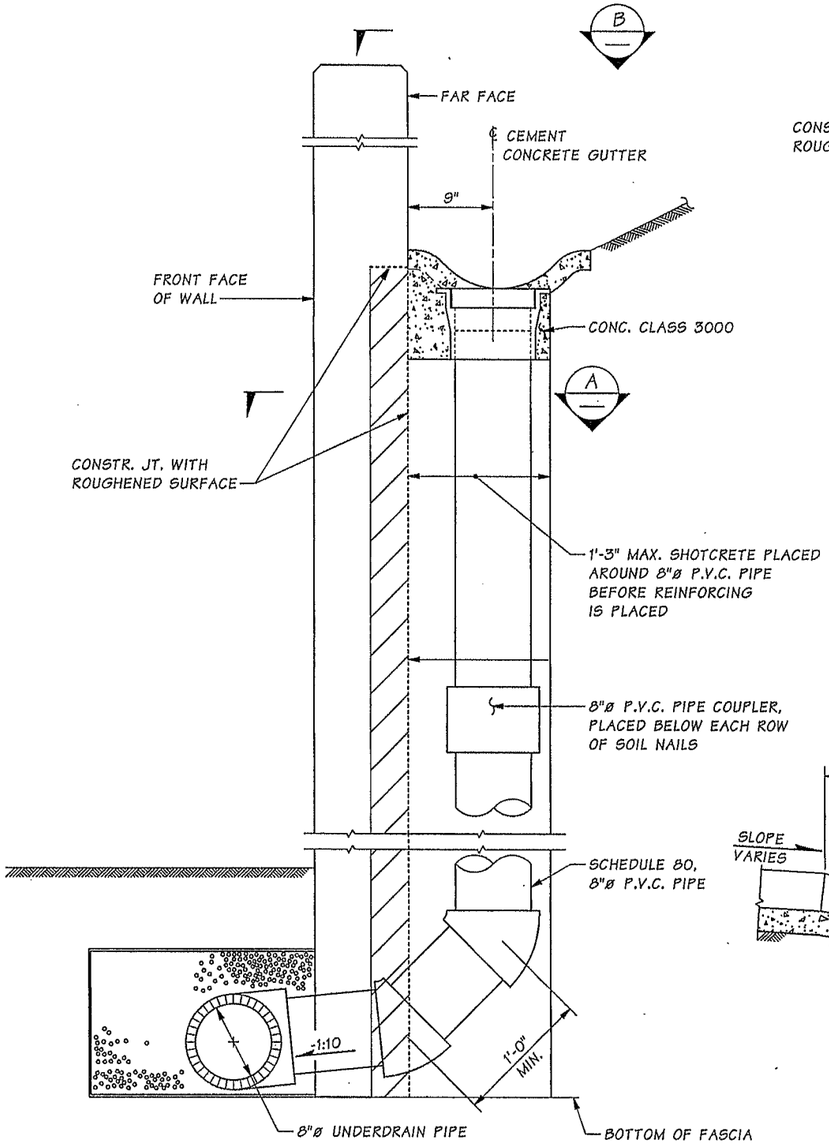

DRAIN PIPE BEHIND SOIL NAIL WALL

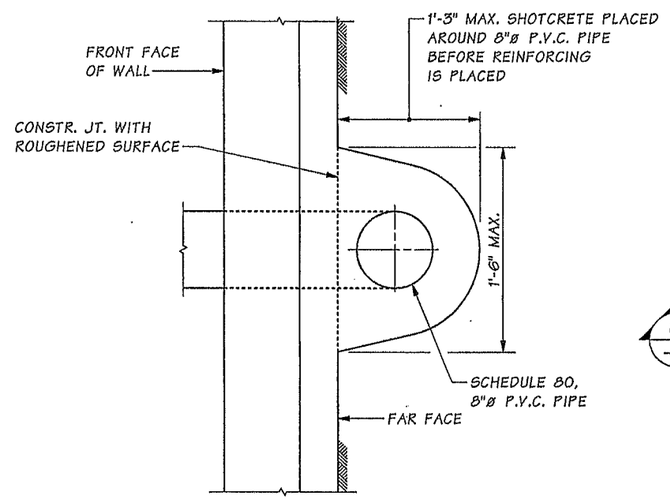

SECTION A

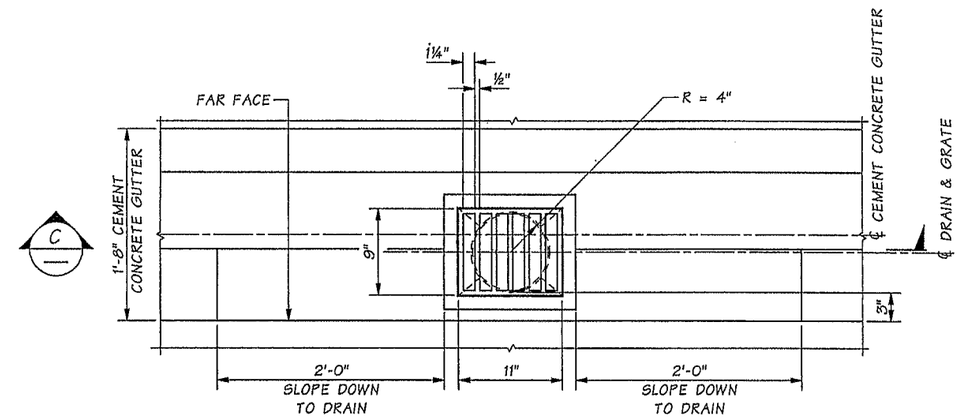

VIEW B

WR50

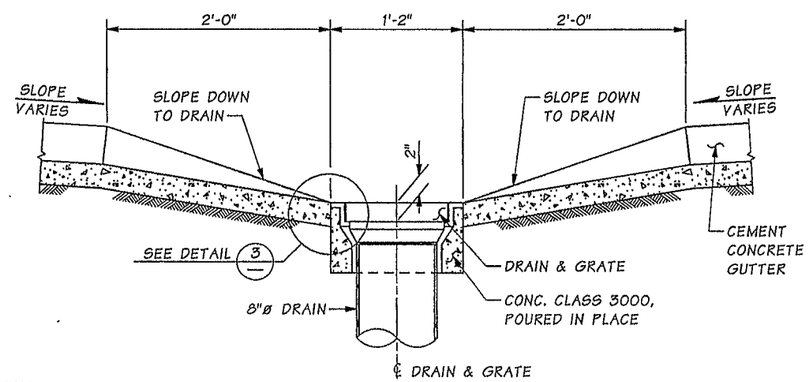

SECTION C

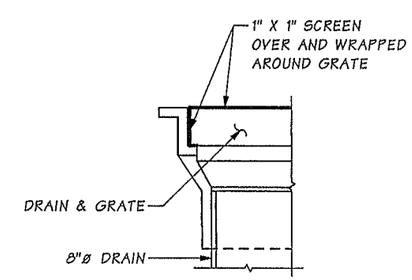

DETAIL 3

Bridge Design Engr.	Khaleghi, B		M:\Y-Team\M ST TO PORTLAND - WALLS\window files\WR54-DRAIN PIPE DET.wnd								
Supervisor	Zeldenrust, RP										
Designed By	Pawelka, M	08/13									
Checked By	Chu, A	10/13									
Detailed By	Davis, EA	08/13									
Bridge Projects Engr.											
Prelim. Plan By											
Architect/Specialist			DATE	REVISION	BY	APP'D					

Tue Feb 11 15:27:07 2014

REGION NO.	STATE	FED. AID PROJ. NO.	SHEET NO.	TOTAL SHEETS
10	WASH.			
JOB NUMBER 12C501				

MONIQUE E. PAWELKA, STATE OF WASHINGTON, 34812, REGISTERED PROFESSIONAL ENGINEER — 2/11/14

BRIDGE AND STRUCTURES OFFICE

BRIAN KHALEGHI, STATE OF WASHINGTON, 27685, PROFESSIONAL ENGINEER — 2/11/14

Washington State Department of Transportation

I-5
M ST TO PORTLAND AVE - HOV

NBN WALL - A & SNB WALL-A

DRAIN PIPE DETAILS

BRIDGE SHEET NO. WR54

SHEET 877 OF 1763 SHEETS

SR 5 FILE NO. ____ SHEET WR54

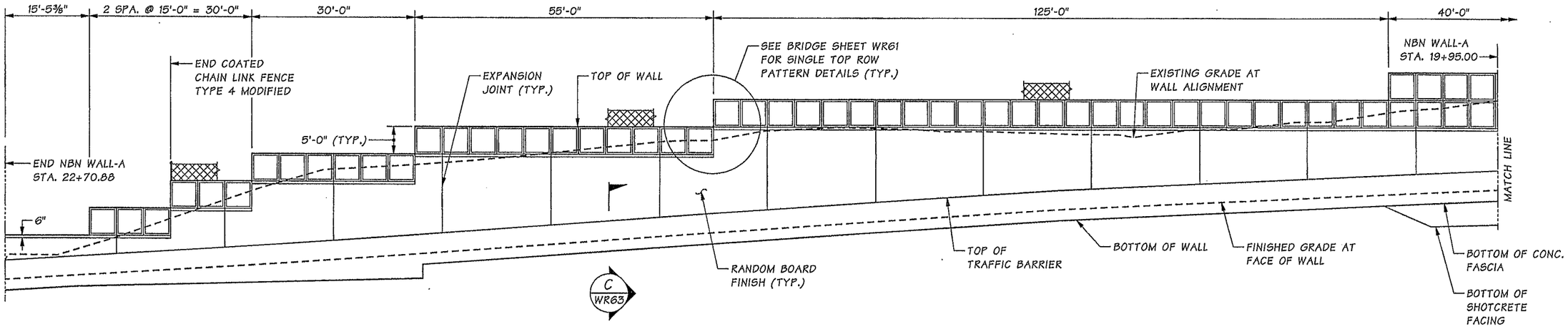

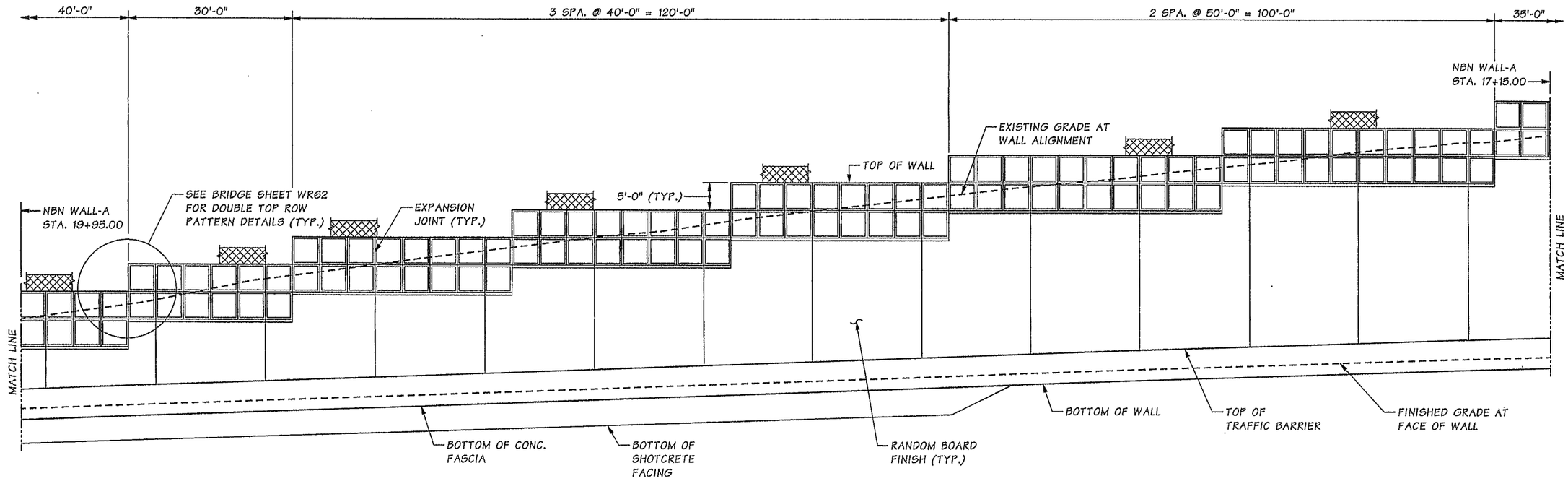

DEVELOPED ELEVATION

NBN WALL-A

Bridge Design Engr.	Khaleghi, B		M:\Y-Team\M ST TO PORTLAND - WALLS\window files\WR55-ARCH ELEV 1.wnd								
Supervisor	Khaleghi, B										
Designed By	Kinderman, PD	06/13									
Checked By	Glassford, P	09/13									
Detailed By	Davis, EA	06/13									
Bridge Projects Engr.											
Prelim. Plan By											
Architect/Specialist			DATE	REVISION	BY	APP'D					

REGION NO.	STATE	FED. AID PROJ. NO.	SHEET NO.	TOTAL SHEETS
10	WASH.			

JOB NUMBER 12C501

8802 REGISTERED ARCHITECT PAUL D. KINDERMAN STATE OF WASHINGTON 2.11.14

BRIDGE AND STRUCTURES OFFICE

Washington State Department of Transportation

I-5
M ST TO PORTLAND AVE - HOV

NBN WALL - A

ARCHITECTURAL ELEVATION
1 OF 4

BRIDGE SHEET NO. WR55

SHEET 878 OF 1763 SHEETS

SR 5 FILE NO. SHEET WR55

Tue Feb 11 15:27:09 2014

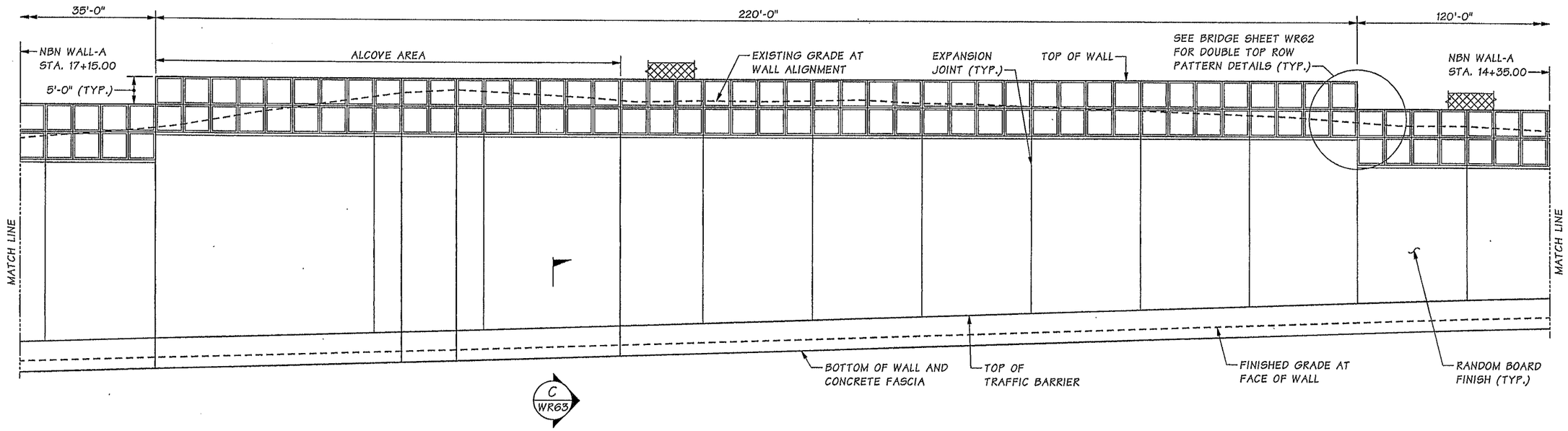

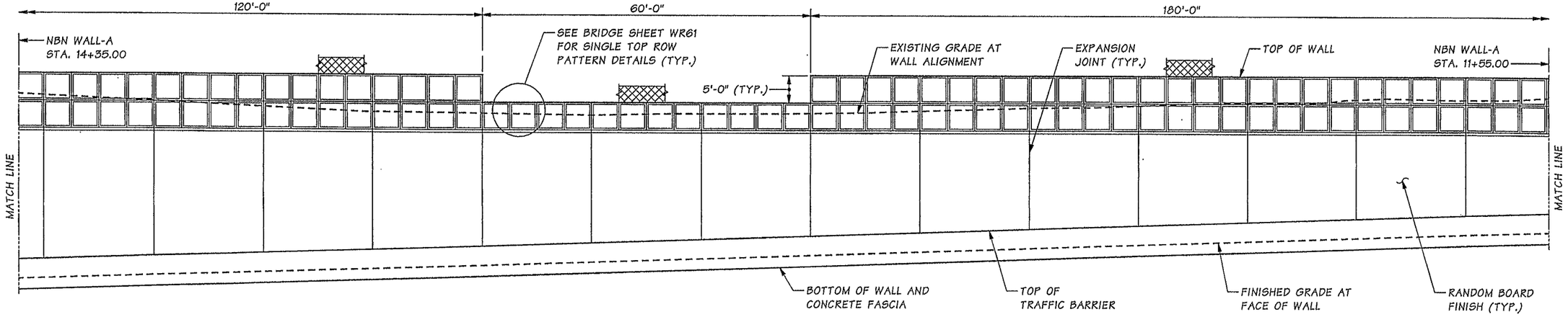

DEVELOPED ELEVATION

NBN WALL-A

Bridge Design Engr.	Khaleghi, B		
Supervisor	Khaleghi, B		
Designed By	Kinderman, PD	07/13	
Checked By	Glassford, P	09/13	
Detailed By	Davis, EA	07/13	
Bridge Projects Engr.			
Prelim. Plan By			
Architect/Specialist			

M:\Y-Team\M ST TO PORTLAND - WALLS\window files\WR56-ARCH ELEV 2.wnd

DATE	REVISION	BY	APP'D

REGION NO.	STATE	FED. AID PROJ. NO.	SHEET NO.	TOTAL SHEETS
10	WASH.			
JOB NUMBER 12C501				

8802 REGISTERED ARCHITECT PAUL D. KINDERMAN STATE OF WASHINGTON
2-11-14

BRIDGE AND STRUCTURES OFFICE

Washington State Department of Transportation

I-5
M ST TO PORTLAND AVE - HOV

NBN WALL - A

ARCHITECTURAL ELEVATION
2 OF 4

BRIDGE SHEET NO. WR56

SHEET 879 OF 1763 SHEETS

SR 5 FILE NO. ____ SHEET WR56

Tue Feb 11 15:27:10 2014

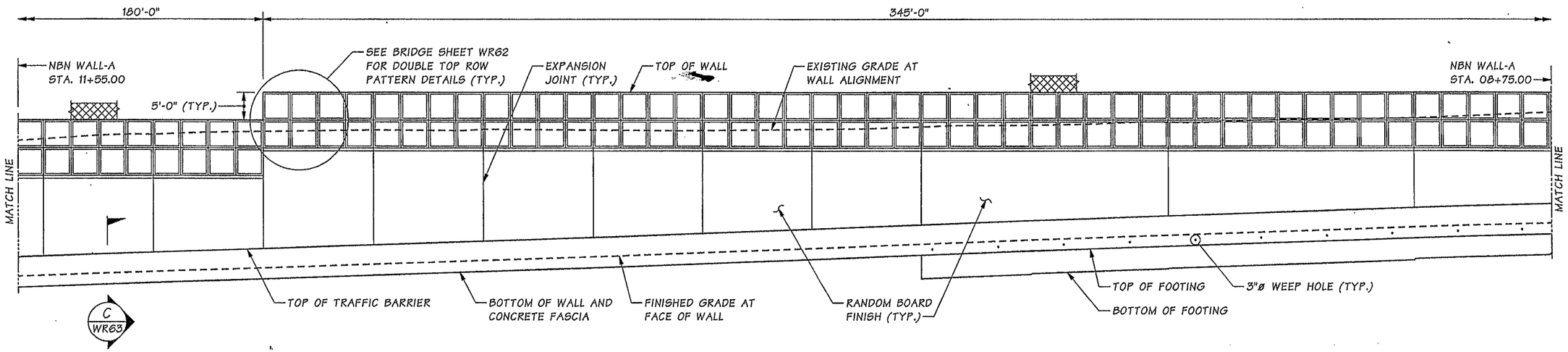

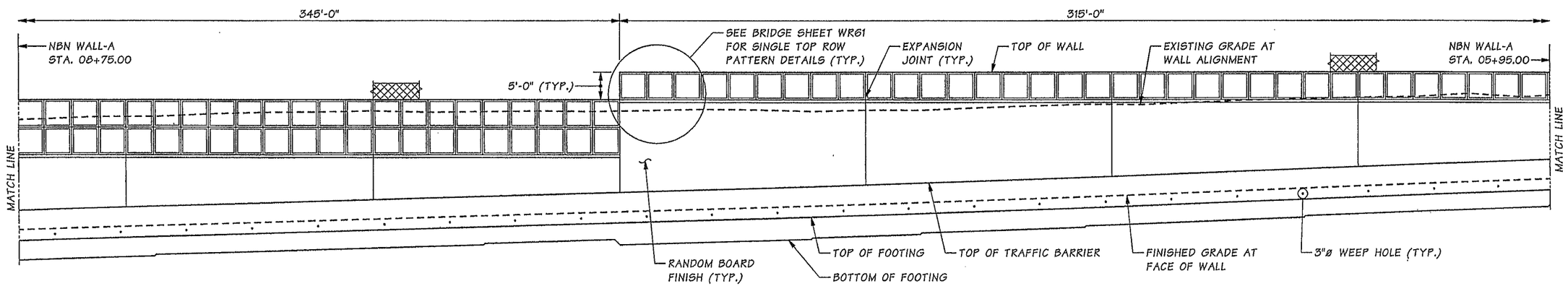

DEVELOPED ELEVATION

NBN WALL-A

Bridge Design Engr.	Khaleghi, B		M:\Y-Team\M ST TO PORTLAND - WALLS\window files\WR57-ARCH ELEV 3.wnd								
Supervisor	Khaleghi, B						REGION NO.	STATE	FED. AID PROJ. NO.	SHEET NO.	TOTAL SHEETS
Designed By	Kinderman, PD	06/13					10	WASH.			
Checked By	Glassford, P	09/13									
Detailed By	Davis, EA	06/13					JOB NUMBER 12C501				
Bridge Projects Engr.											
Prelim. Plan By											
Architect/Specialist			DATE	REVISION	BY	APP'D					

8802 REGISTERED ARCHITECT PAUL D. KINDERMAN STATE OF WASHINGTON

Paul D. Kinderman 2.11.14

BRIDGE AND STRUCTURES OFFICE

Washington State Department of Transportation

I-5
M ST TO PORTLAND AVE - HOV

NBN WALL - A

ARCHITECTURAL ELEVATION
3 OF 4

BRIDGE SHEET NO. WR57

SHEET 880 OF 1763 SHEETS

SR 5 FILE NO. SHEET WR57

Tue Feb 11 15:27:12 2014

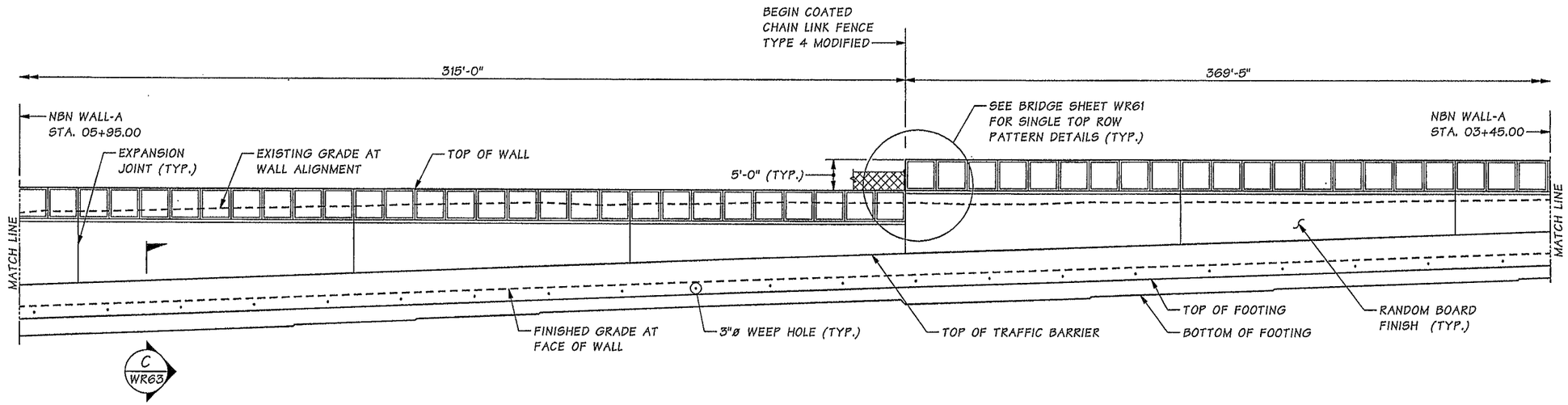

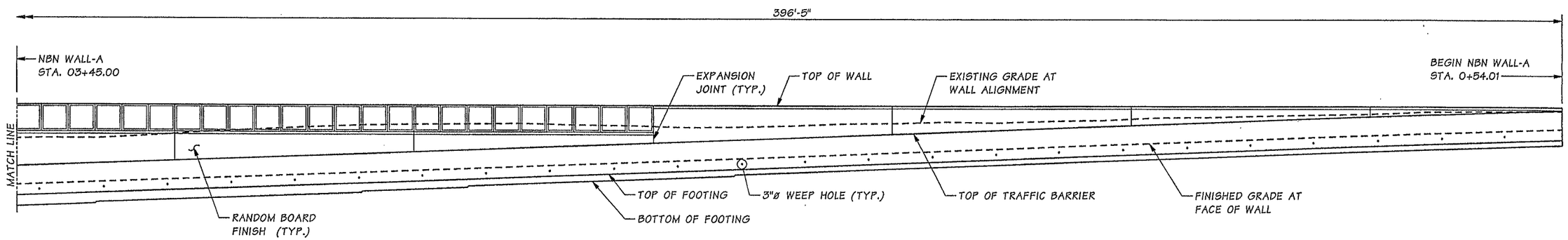

DEVELOPED ELEVATION

NBN WALL-A

SR 5 FILE NO. ____ SHEET WR58

Bridge Design Engr.	Khaleghi, B		M:\Y-Team\M ST TO PORTLAND - WALLS\window files\WR58-ARCH ELEV 4.wnd
Supervisor	Khaleghi, B		
Designed By	Kinderman, PD	06/13	
Checked By	Glassford, P	09/13	
Detailed By	Davis, EA	06/13	
Bridge Projects Engr.			
Prelim. Plan By			
Architect/Specialist			

DATE	REVISION	BY	APP'D

REGION NO.	STATE	FED. AID PROJ. NO.	SHEET NO.	TOTAL SHEETS
10	WASH.			

JOB NUMBER 12C501

8802 REGISTERED ARCHITECT PAUL D. KINDERMAN STATE OF WASHINGTON 2-11-14

BRIDGE AND STRUCTURES OFFICE

Washington State Department of Transportation

I-5
M ST TO PORTLAND AVE - HOV

NBN WALL - A

ARCHITECTURAL ELEVATION
4 OF 4

BRIDGE SHEET NO. WR58

SHEET 881 OF 1763 SHEETS

Tue Feb 11 15:27:13 2014

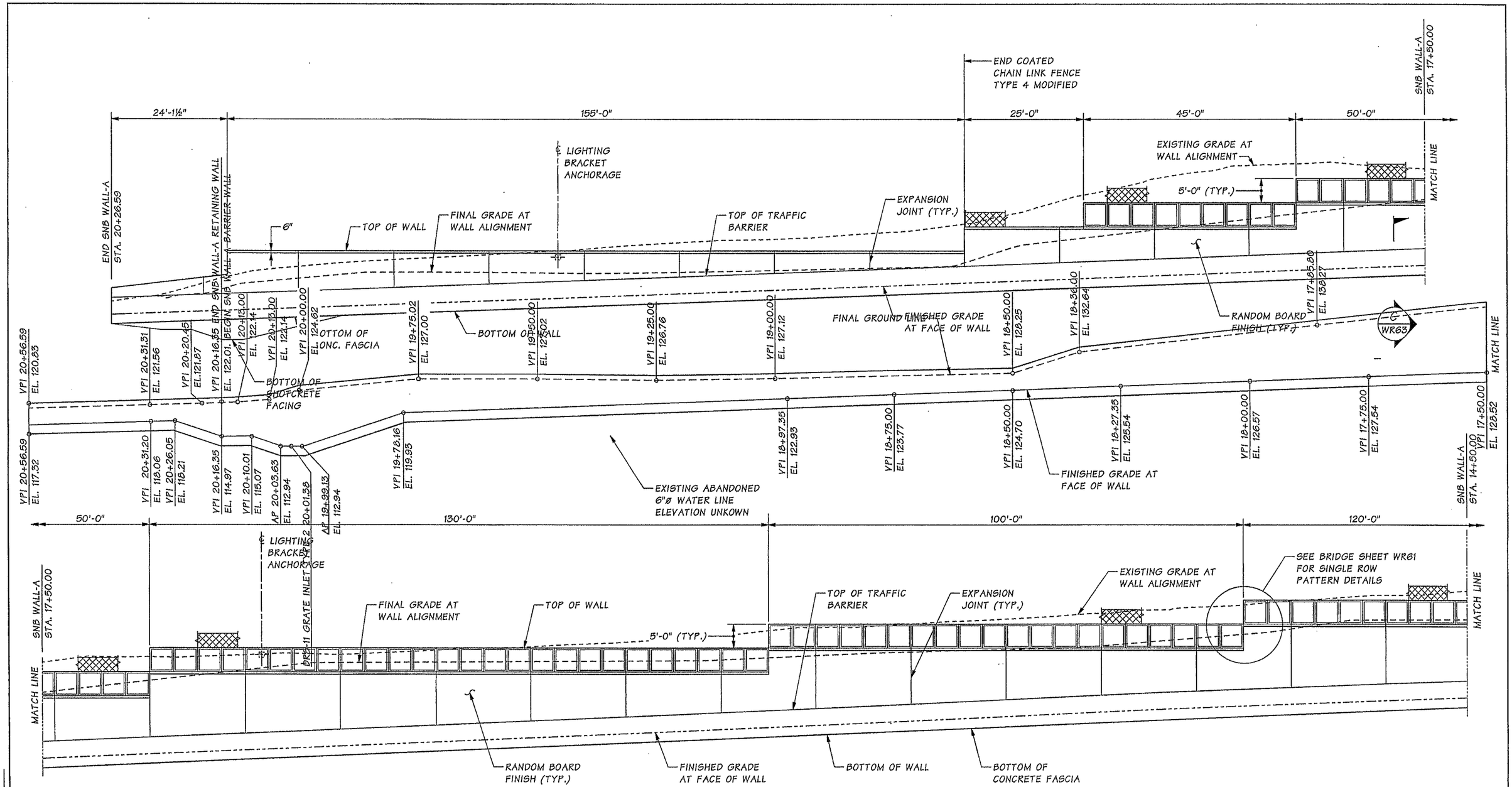

DEVELOPED ELEVATION

SNB WALL-A

SR 5 FILE NO. ____ SHEET WR59

Bridge Design Engr.	Khaleghi, B		
Supervisor	Khaleghi, B		
Designed By	Kinderman, PD	03/13	
Checked By	Glassford, P	09/13	
Detailed By	Davis, E	05/13	
Bridge Projects Engr.			
Prelim. Plan By			
Architect/Specialist			

M:\Y-Team\M ST TO PORTLAND - WALLS\SNB WALL - A\window files\WR59-ARCH ELEV 1.wnd

DATE	REVISION	BY	APP'D

REGION NO.	STATE	FED. AID PROJ. NO.	SHEET NO.	TOTAL SHEETS
10	WASH.			
JOB NUMBER 12C501				

8802 REGISTERED ARCHITECT PAUL D. KINDERMAN STATE OF WASHINGTON
Paul D. Kinderman
2-11-14

BRIDGE AND STRUCTURES OFFICE

Washington State Department of Transportation

I-5
M ST TO PORTLAND AVE - HOV

SNB WALL - A

ARCHITECTURAL ELEVATION
1 OF 2

BRIDGE SHEET NO. WR59

SHEET 882 OF 1763 SHEETS

Tue Feb 11 15:27:15 2014

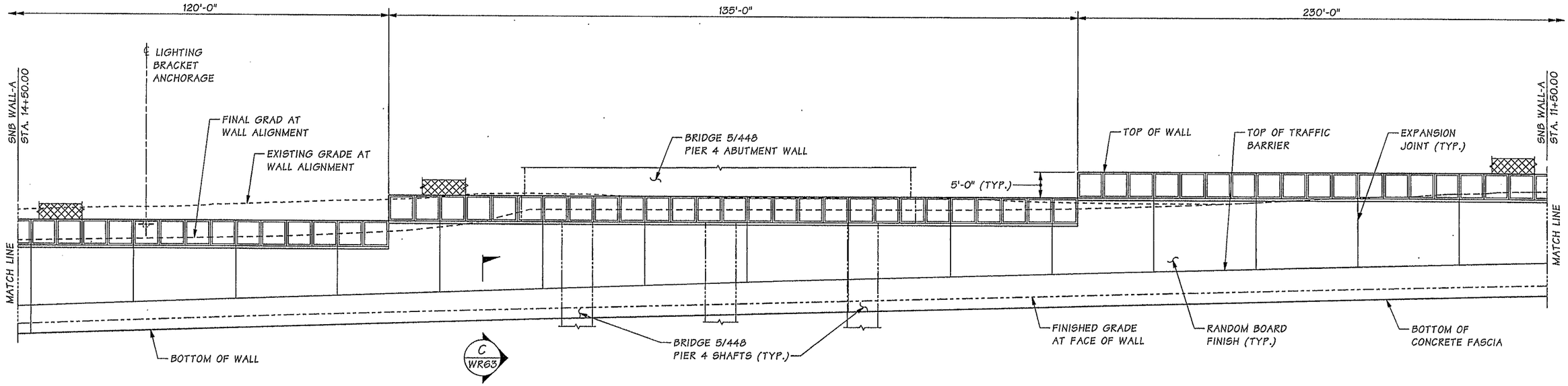

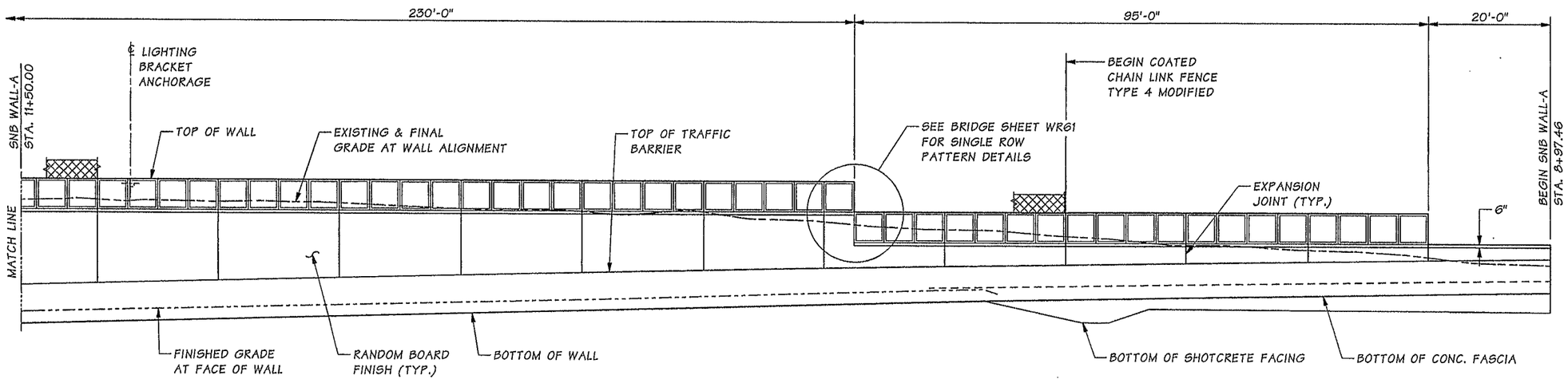

DEVELOPED ELEVATION

SNB WALL-A

Bridge Design Engr.	Khaleghi, B		M:\Y-Team\M ST TO PORTLAND - WALLS\SNB WALL - A\window files\WR60-ARCH ELEV 2.wnd								
Supervisor	Khaleghi, B					REGION NO.	STATE	FED. AID PROJ. NO.	SHEET NO.	TOTAL SHEETS	
Designed By	Kinderman, PD	03/13				10	WASH.				
Checked By	Glassford, P	09/13									
Detailed By	Davis, E	05/13				JOB NUMBER 12C501					
Bridge Projects Engr.											
Prelim. Plan By											
Architect/Specialist			DATE	REVISION	BY	APP'D					

Tue Feb 11 15:27:17 2014

8802 REGISTERED ARCHITECT PAUL D. KINDERMAN STATE OF WASHINGTON 2-11-14

BRIDGE AND STRUCTURES OFFICE

Washington State Department of Transportation

I-5
M ST TO PORTLAND AVE - HOV

SNB WALL - A

ARCHITECTURAL ELEVATION 2 OF 2

BRIDGE SHEET NO. WR60

SHEET 883 OF 1763 SHEETS

SR 5 FILE NO. ____ SHEET WR60

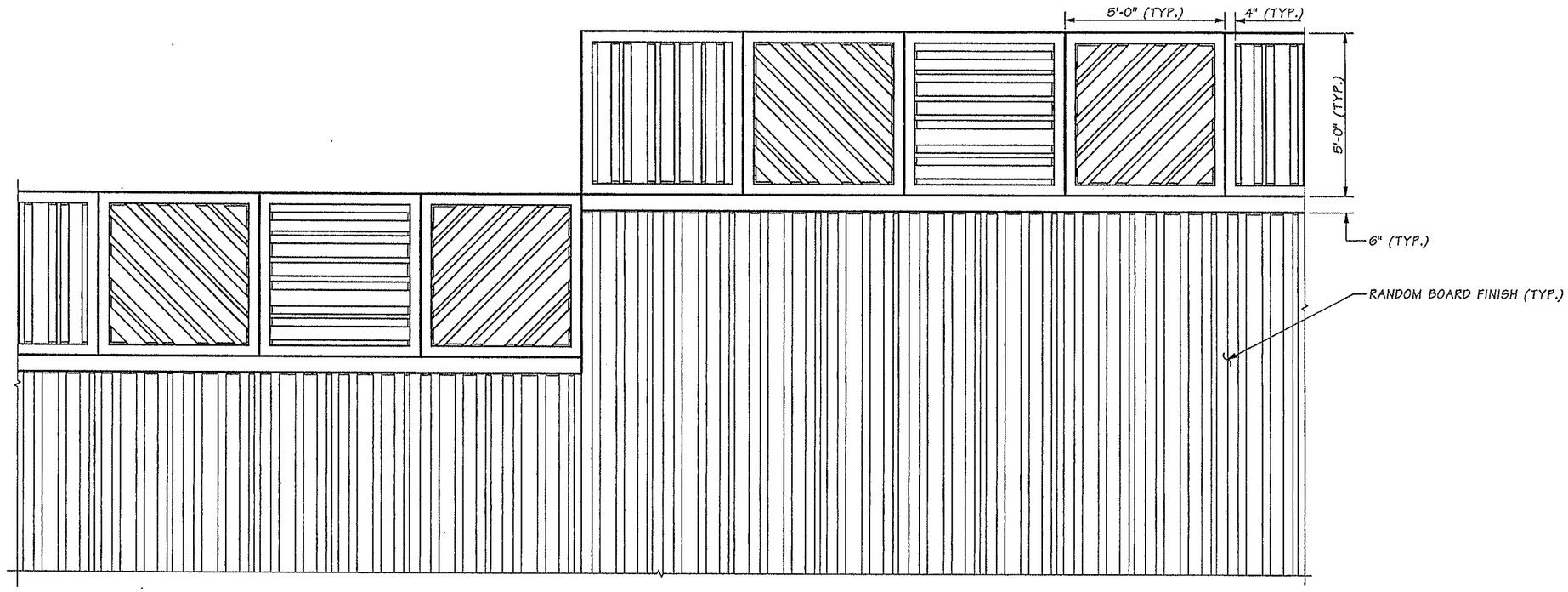

ELEVATION

SHOWING SINGLE TOP ROW PATTERN

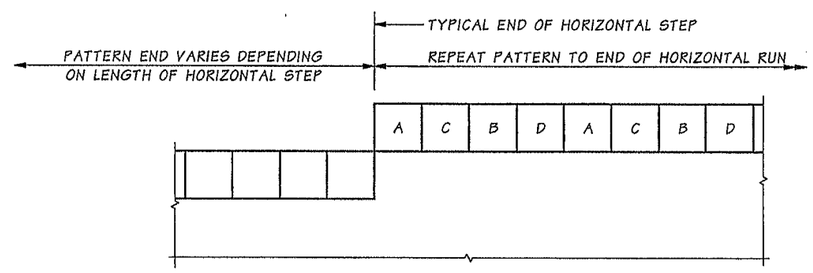

PATTERN LAYOUT

SR 5 FILE NO. ____ SHEET WR61

Bridge Design Engr.	Khaleghi, B		
Supervisor	Khaleghi, B		
Designed By	Kinderman, PD	07/13	
Checked By	Glassford, P	09/13	
Detailed By	Davis, EA	07/13	
Bridge Projects Engr.			
Prelim. Plan By			
Architect/Specialist			

M:\Y-Team\M ST TO PORTLAND - WALLS\window files\WR61-ARCH DET 1.wnd

DATE	REVISION	BY	APP'D

REGION NO.	STATE	FED. AID PROJ. NO.	SHEET NO.	TOTAL SHEETS
10	WASH.			
JOB NUMBER 12C501				

8802 REGISTERED ARCHITECT PAUL D. KINDERMAN STATE OF WASHINGTON
Paul D. Kinderman
2-11-14

BRIDGE AND STRUCTURES OFFICE

Washington State Department of Transportation

I-5
M ST TO PORTLAND AVE - HOV

NBN WALL - A & SNB WALL - A

ARCHITECTURAL DETAILS
PATTERN LAYOUT 1 OF 2

BRIDGE SHEET NO. WR61

SHEET 884 OF 1763 SHEETS

Tue Feb 11 15:27:18 2014

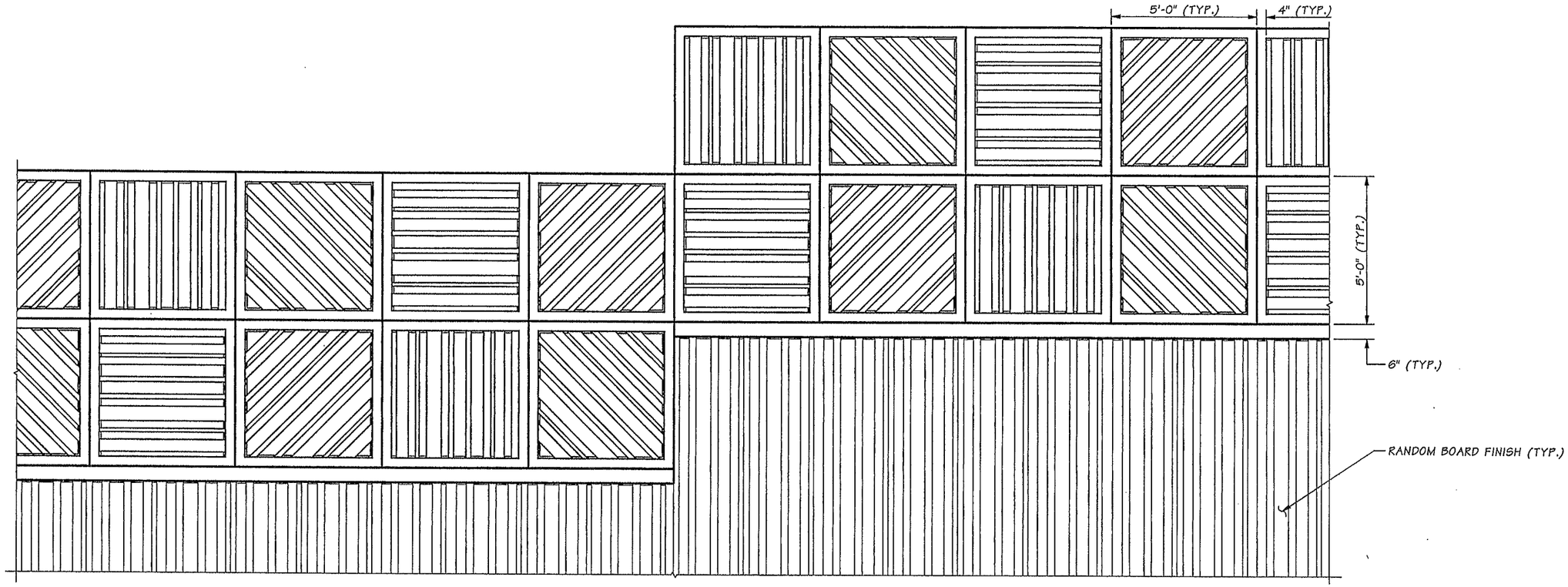

ELEVATION

SHOWING DOUBLE TOP ROW PATTERN

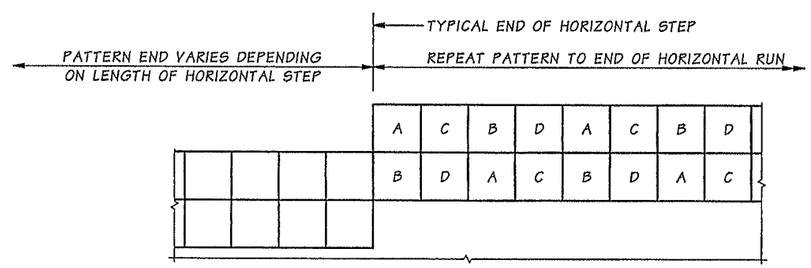

PATTERN LAYOUT

SR 5 FILE NO. SHEET WR62

Bridge Design Engr.	Khaleghi, B		M:\Y-Team\M ST TO PORTLAND - WALLS\window files\WR62-ARCH DET 2.wnd								
Supervisor	Khaleghi, B										
Designed By	Kinderman, PD	07/13									
Checked By	Glassford, P	09/13									
Detailed By	Davis, EA	07/13									
Bridge Projects Engr.											
Prelim. Plan By											
Architect/Specialist			DATE	REVISION	BY	APP'D					

REGION NO.	STATE	FED. AID PROJ. NO.	SHEET NO.	TOTAL SHEETS
10	WASH.			
JOB NUMBER 12C501				

8802 REGISTERED ARCHITECT PAUL D. KINDERMAN STATE OF WASHINGTON

PAUL D. KINDERMAN 2-11-14

BRIDGE AND STRUCTURES OFFICE

Washington State Department of Transportation

I-5
M ST TO PORTLAND AVE - HOV

NBN WALL - A & SNB WALL - A

ARCHITECTURAL DETAILS
PATTERN LAYOUT 2 OF 2

BRIDGE SHEET NO. WR62

SHEET 885 OF 1763 SHEETS

Tue Feb 11 15:27:19 2014

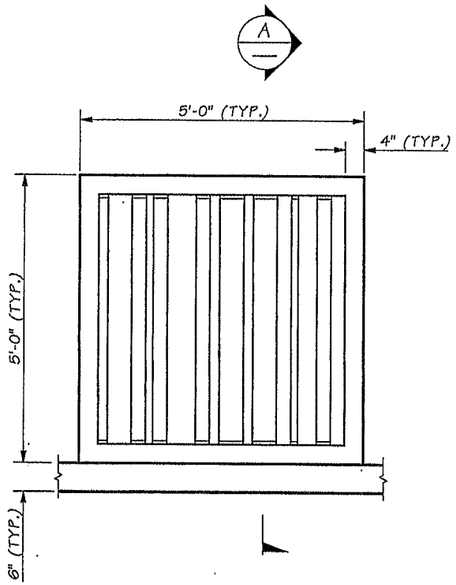

PATTERN 'A'

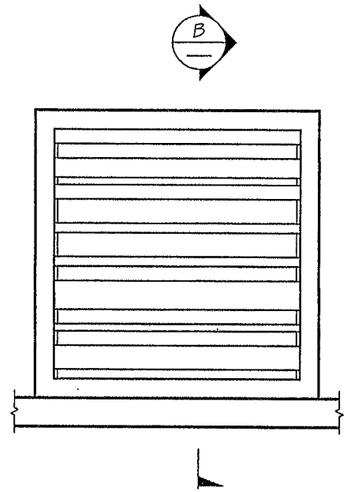

PATTERN 'B'

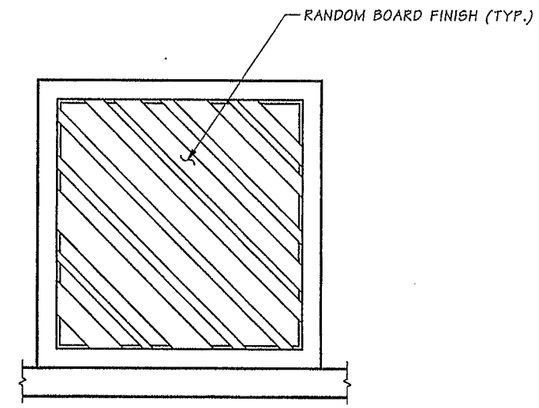

PATTERN 'C'

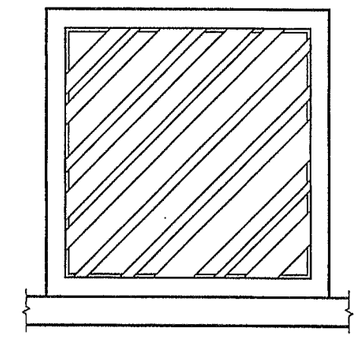

PATTERN 'D'

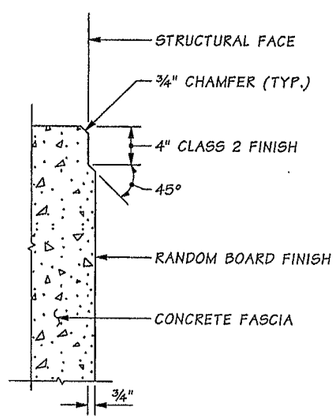

SECTION A

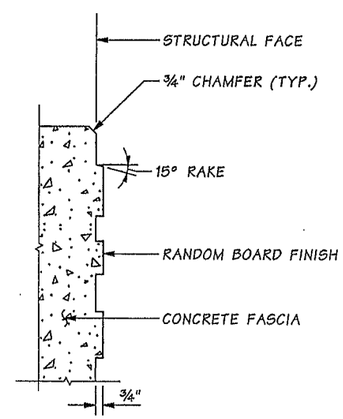

SECTION B

MISCELLANEOUS

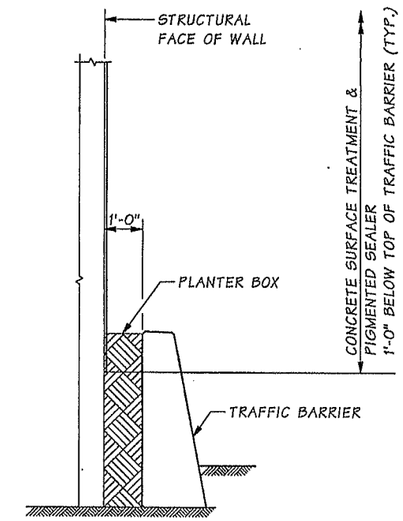

SECTION C

WR55, WR56, WR57, WR58, WR59, & WR60

SR 5 FILE NO. ____ SHEET WR63

Bridge Design Engr.	Khaleghi, B	
Supervisor	Khaleghi, B	
Designed By	Kinderman, PD	07/13
Checked By	Glassford, P	09/13
Detailed By	Davis, EA	07/13
Bridge Projects Engr.		
Prelim. Plan By		
Architect/Specialist		

M:\Y-Team\M ST TO PORTLAND - WALLS\window files\WR63-ARCH DET 3.wnd

DATE	REVISION	BY	APP'D

REGION NO.	STATE	FED. AID PROJ. NO.	SHEET NO.	TOTAL SHEETS
10	WASH.			
JOB NUMBER 12C501				

8802 REGISTERED ARCHITECT PAUL D. KINDERMAN STATE OF WASHINGTON
Paul D. Kinderman
2.11.14

BRIDGE AND STRUCTURES OFFICE

Washington State Department of Transportation

I-5
M ST TO PORTLAND AVE - HOV

NBN WALL - A & SNB WALL - A

ARCHITECTURAL DETAILS
MISCELLANEOUS

BRIDGE SHEET NO. WR63

SHEET 886 OF 1763 SHEETS

Tue Feb 11 15:27:20 2014

ALIGNMENT COORDINATES (FEET)		
STATION	NORTHING	EASTING
SSB WALL-A 10+08.76	698284.33	1158217.53
SSB WALL-A 10+50.34	698304.53	1158253.86

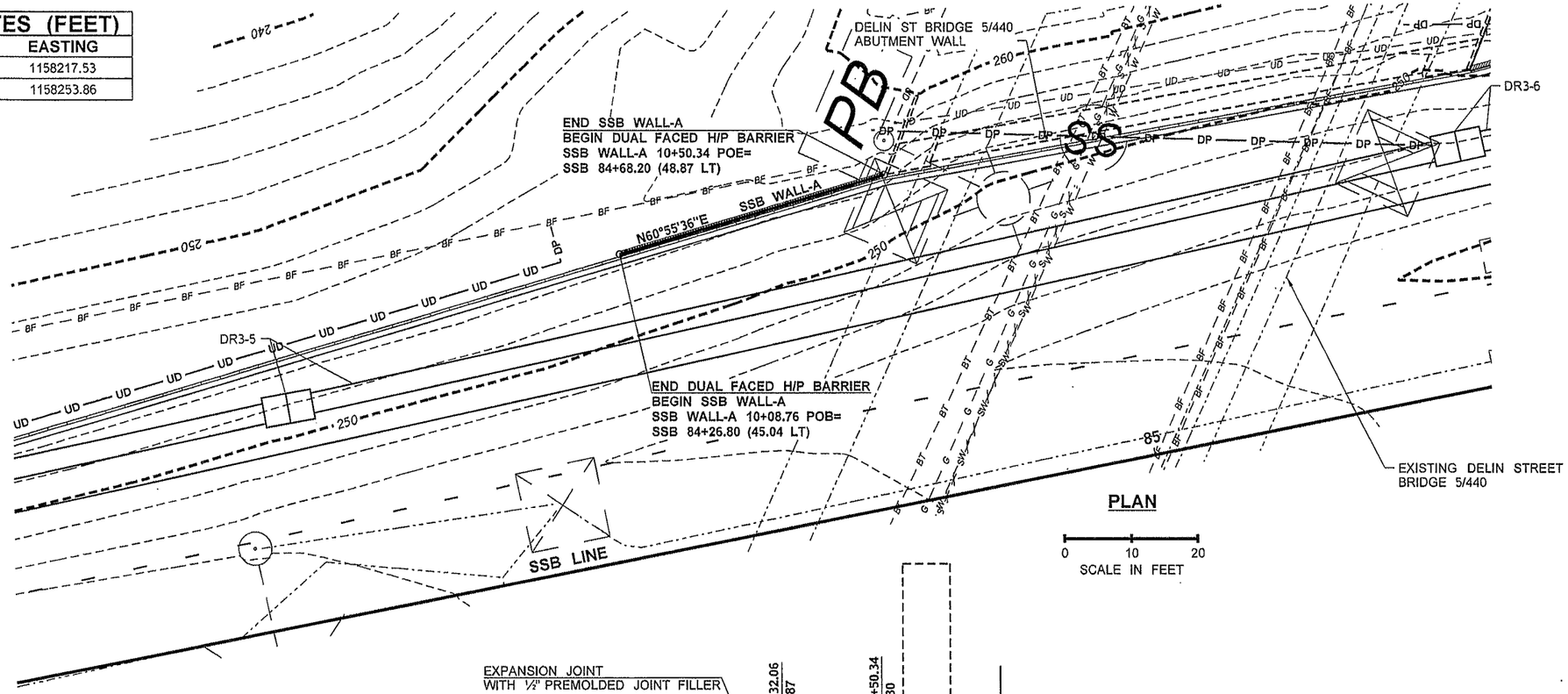

PLAN

0 10 20
SCALE IN FEET

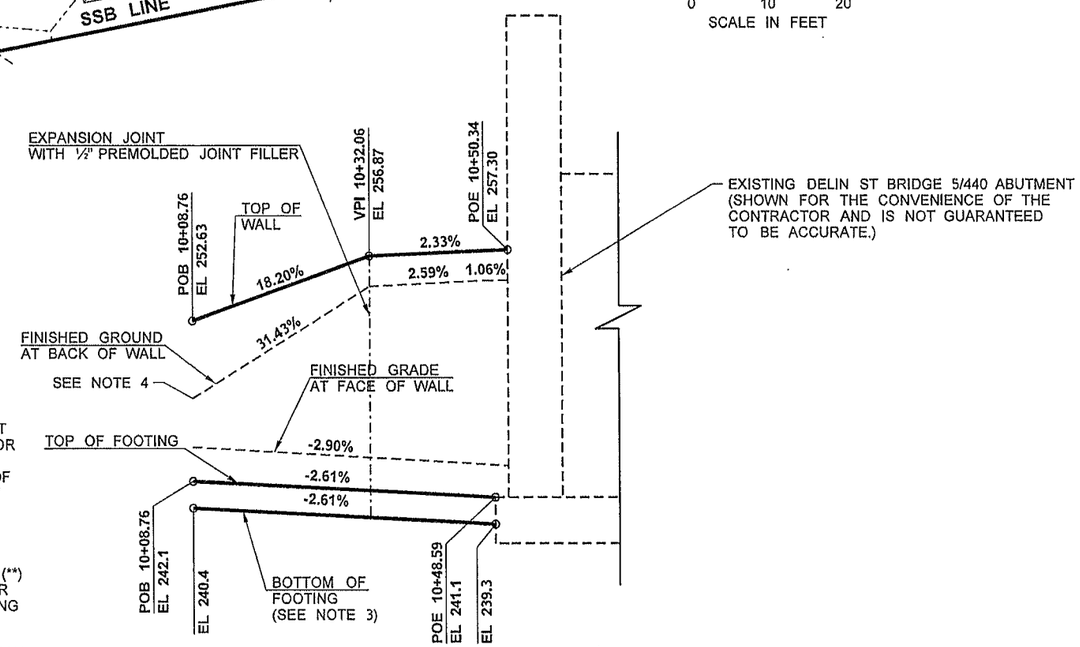

PROFILE

SSB WALL-A

STD PLAN WALL TYPE 3

ESTIMATED QUANTITIES	
ITEM DESCRIPTION	QUANTITY
CEMENT CONC. GUTTER	43 L.F.
UNDERDRAIN PIPE 6 IN. DIAM.	42 L.F.
STRUCTURE EXCAVATION CLASS A INCL. HAUL	180 C.Y.
GRAVEL BACKFILL FOR WALL	82 C.Y.
CONC. CLASS 4000 FOR RETAINING WALL	62 C.Y.
ST. REINF BAR FOR RETAINING WALL	4120 L.B.
GRAVEL BACKFILL FOR DRAIN	2 C.Y.
COATED CHAIN LINK FENCE TYPE 4	28 L.F.
CONSTRUCTION GEOTEXTILE FOR UNDERGROUND DRAINAGE	28 S.Y.

NOTES:

1. THE WALL QUANTITIES AS LISTED ON THIS SHEET ARE FOR THE CONVENIENCE OF THE CONTRACTOR AND ARE NOT GUARANTEED TO BE ACCURATE. THE QUANTITIES AS LISTED ON THE SUMMARY OF QUANTITIES SHALL TAKE PRECEDENCE OVER ANY QUANTITY LISTED ON THIS SHEET.
2. STATIONING WHERE WALLS TIE INTO EXISTING ABUTMENTS IS BASED ON FIELD SURVEY DATA. ALL INFORMATION NOTED WITH TWO ASTERISKS (**) SHALL BE FIELD MEASURED BY THE CONTRACTOR PRIOR TO ORDERING MATERIALS AND PROCEEDING WITH CONSTRUCTION.
3. BOTTOM OF FOOTING PROFILE DOES NOT PORTRAY THE WALL KEY ELEVATION. SEE STANDARD PLANS FOR DETAILS.
4. FOR BARRIER RETAINING SOIL, SEE "CONCRETE BARRIER WALL UNDERDRAIN" DETAIL IN DRAINAGE DETAILS.

FILE NAME	PW:_XL3497\PS&E Sheets\Wall\P3497_SH_WR_064.dgn				REGION NO. 10	STATE WASH	FED.AID PROJ.NO.
TIME	2:37:36 PM				JOB NUMBER 12C501		
DATE	3/11/2014				CONTRACT NO.		LOCATION NO. XL3497
PLOTTED BY	ShannoC						
DESIGNED BY	F. COLLS						
ENTERED BY	S. SHYU						
CHECKED BY	B. REGISTER						
PROJ. ENGR.	J. PEREZ						
REGIONAL ADM.	K. DAYTON	REVISION	DATE	BY			

JOSEPH J. PEREZ STATE OF WASHINGTON 39392 REGISTERED PROFESSIONAL ENGINEER
3-12-14
DATE
P.E. STAMP BOX

DATE
P.E. STAMP BOX

Washington State Department of Transportation

I-5
M ST TO PORTLAND AVE - HOV

SSB WALL-A PLAN AND PROFILE

PLAN REF NO WR64

SHEET 887 OF 1763 SHEETS

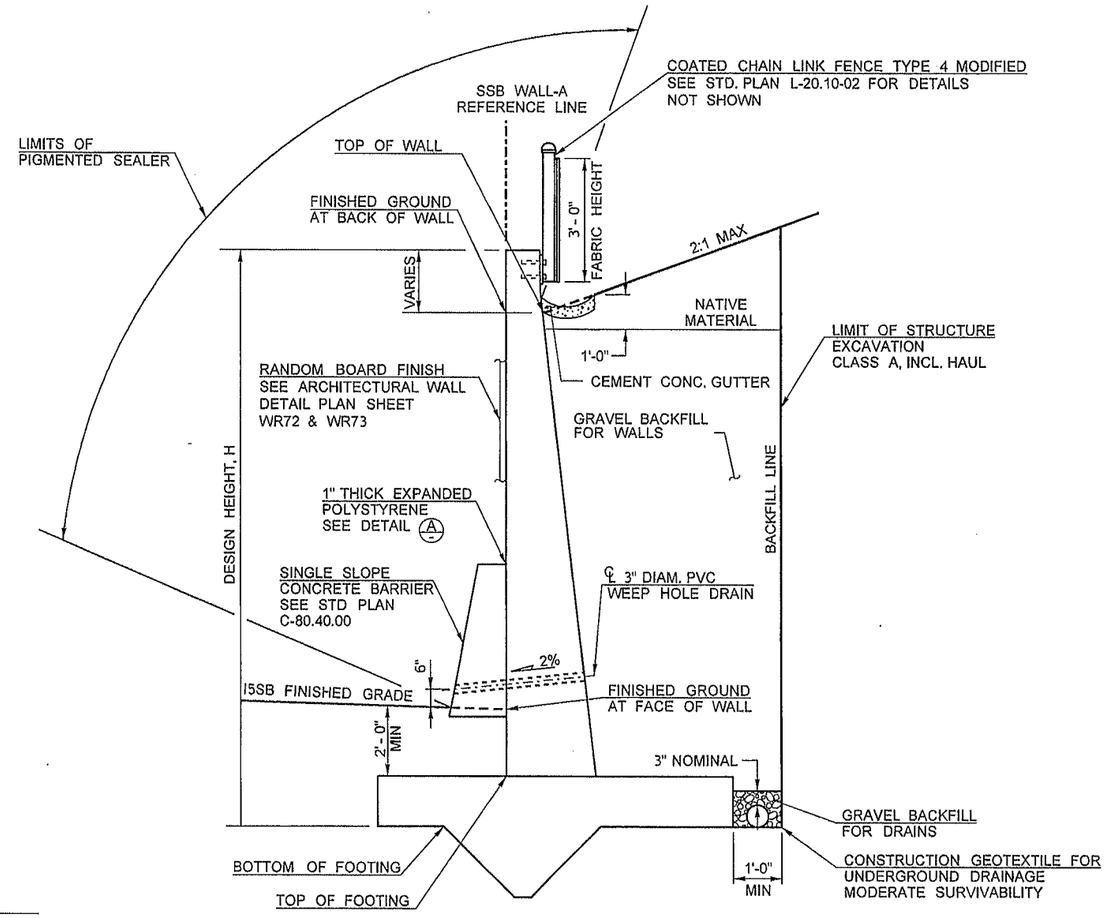

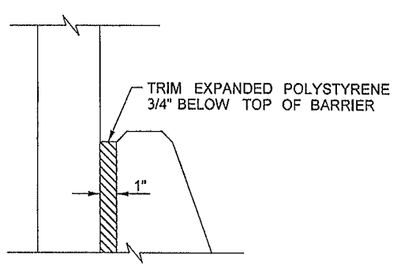

DETAIL A

TYPICAL CROSS SECTION
NOT TO SCALE
NOTE: SHOWN LOOKING BACK ON STATION

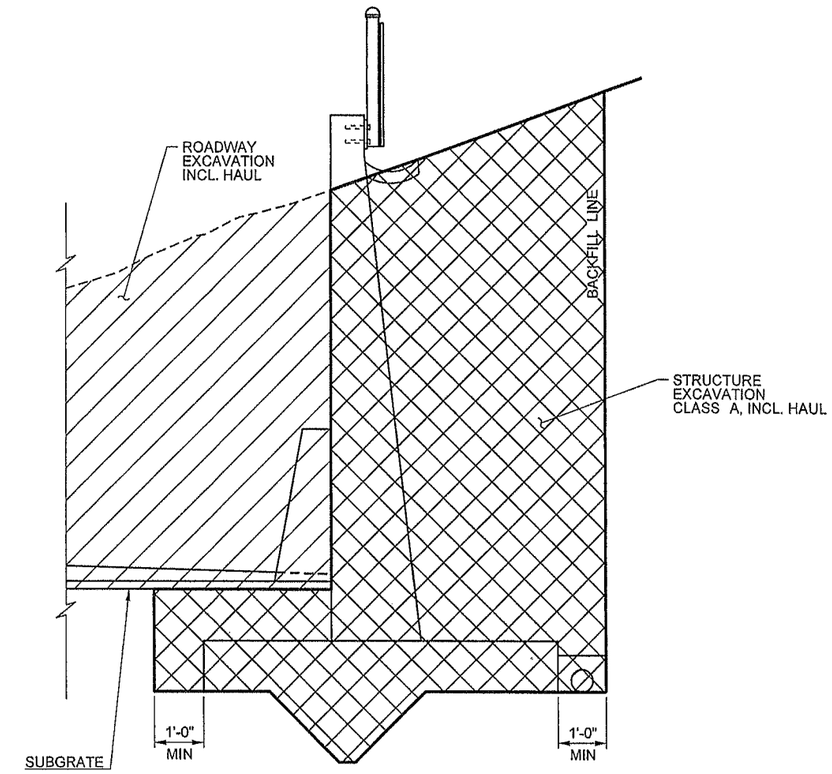

STRUCTURE EXCAVATION CLASS A, INCL. HAUL DETAIL
NOT TO SCALE

NOTES:
1. SEE STD. PLAN D-10.20-00 REINFORCED CONCRETE RETAINING WALL TYPE 3 FOR ADDITIONAL WALL DETAILS AND DIMENSIONS.
2. FOR UNDERDRAIN OUTLETS, SEE DRAINAGE PLANS.
3. BACKFILL AND DRAINAGE FOR RETAINING WALLS SEE STD. PLAN D-4.

FILE NAME	PW:_XL3497\PS&E Sheets\Wall\P3497_SH_WR_065.dgn				REGION NO.	STATE	FED.AID PROJ.NO.		
TIME	2:39:53 PM				10	WASH			
DATE	2/10/2014				JOB NUMBER				
PLOTTED BY	ShannoC				12C501				
DESIGNED BY	F. COLLS				CONTRACT NO.		LOCATION NO.		
ENTERED BY	C. SHANNON						XL3497		
CHECKED BY	B. REGISTER								
PROJ. ENGR.	J. PEREZ								
REGIONAL ADM.	K. DAYTON	REVISION	DATE	BY					

JOSEPH J. PEREZ, STATE OF WASHINGTON, 39392, REGISTERED PROFESSIONAL ENGINEER
3-12-14
DATE
P.E. STAMP BOX

DATE
P.E. STAMP BOX

Washington State
Department of Transportation

I-5
M ST TO PORTLAND AVE - HOV

SSB WALL-A DETAIL

PLAN REF NO
WR65

SHEET
888
OF
1763
SHEETS

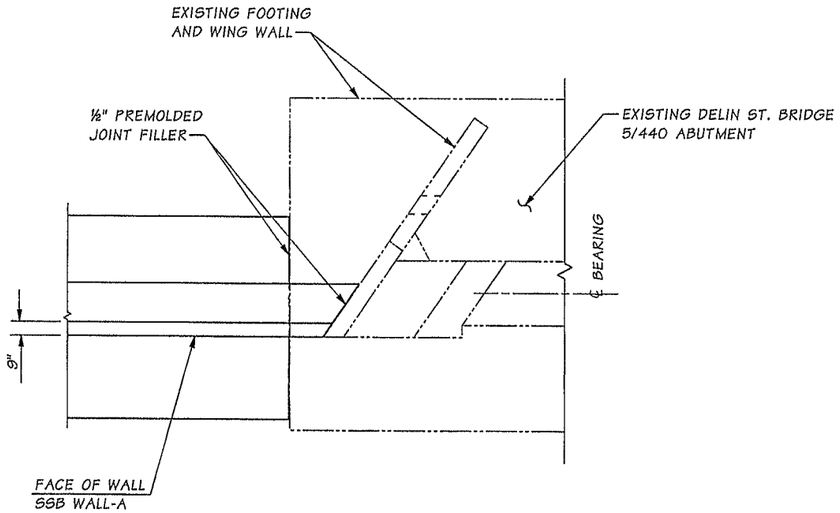

PLAN

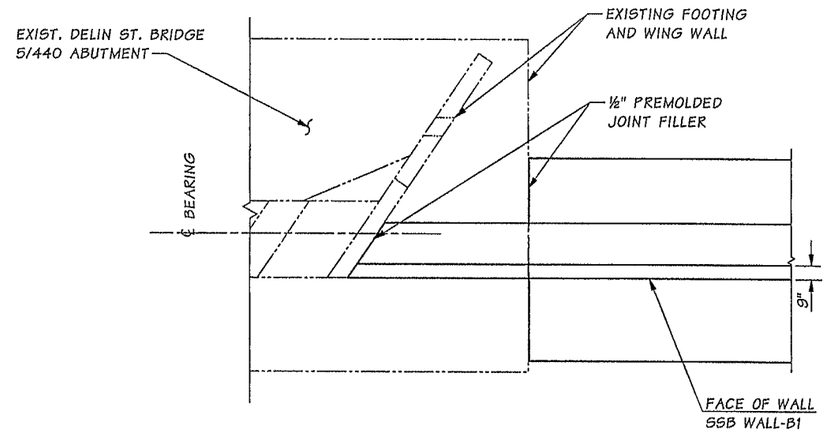

PLAN

NOTE: DOWEL BAR [E] 7" INTO EXISITNG FOOTING WITH EPOXY RESIN. ⅝"ø DRILL HOLE.
DOWEL BAR [K] 11" INTO EXISTING FOOTING WITH EXPOXY RESIN. 1⅛"ø DRILL HOLE.
ADJUST BARS [E] AND [K] LENGTHS OF STD. PLAN WALL TYPE 3 ACCORDINGLY.

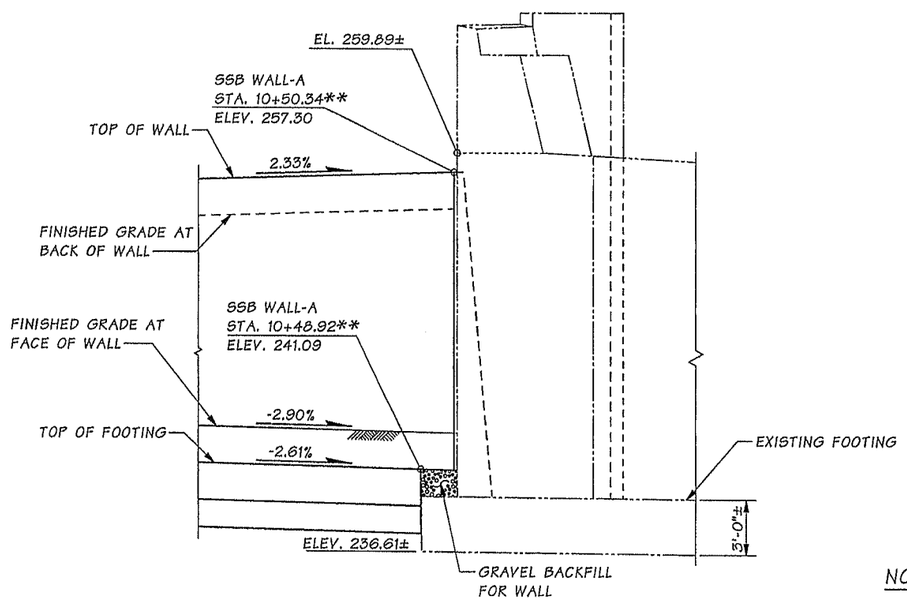

ELEVATION

NOTE:

ADJUST AND CUT WALL REINF. AS NECESSARY AT CONNECTION TO EXISTING FOOTING.

** SEE NOTE 2 ON SHEET WR64 FOR INFORMATION ON STATIONING.

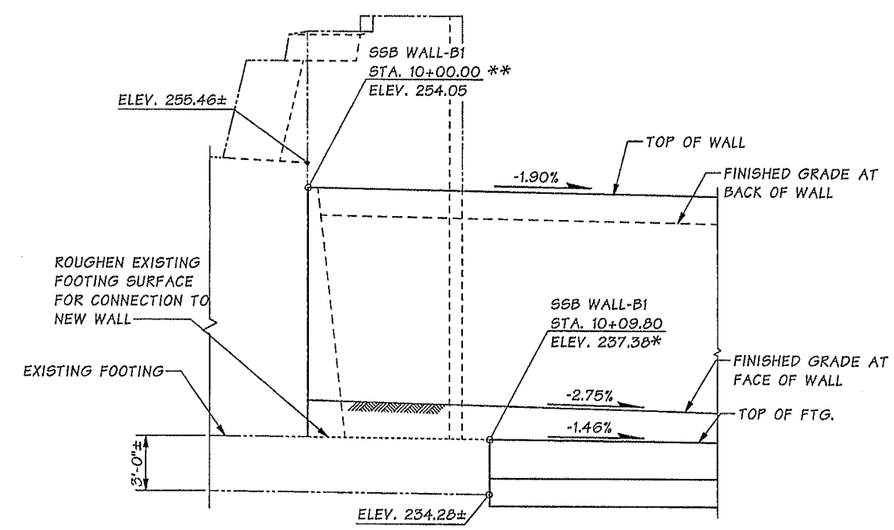

ELEVATION

* MATCH TOP OF WALL FOOTING TO EXISTING TOP OF ABUTMENT FOOTING.

SR 5 FILE NO. SHEET WR66

Bridge Design Engr.	Khaleghi, B		M:\Y-Team\M ST TO PORTLAND - WALLS\SSB WALLS\window files\SSB WALL.wnd								
Supervisor	Stoddard, RB										
Designed By	Hsieh, JC	08/13									
Checked By	Dobrev, B	01/14									
Detailed By	Andreotti, L	08/13									
Bridge Projects Engr.											
Prelim. Plan By											
Architect/Specialist			DATE	REVISION	BY	APP'D					

REGION NO.	STATE	FED. AID PROJ. NO.	SHEET NO.	TOTAL SHEETS
10	WASH.			
JOB NUMBER 12C501				

JEN-CHI HSIEH STATE OF WASHINGTON 28272 STRUCTURAL ENGINEER PROFESSIONAL ENGINEER 5/2/14

BRIDGE AND STRUCTURES OFFICE

RICHARD B. STODDARD STATE OF WASHINGTON 28277 STRUCTURAL ENGINEER PROFESSIONAL ENGINEER 2/12/14

Washington State Department of Transportation

I-5
M ST TO PORTLAND AVE - HOV

SSB WALL-A AND SSB WALL-B1
ABUTMENT CONNECTION DETAILS

BRIDGE SHEET NO. WR66

SHEET 889 OF 1763 SHEETS

Wed Feb 12 09:23:06 2014

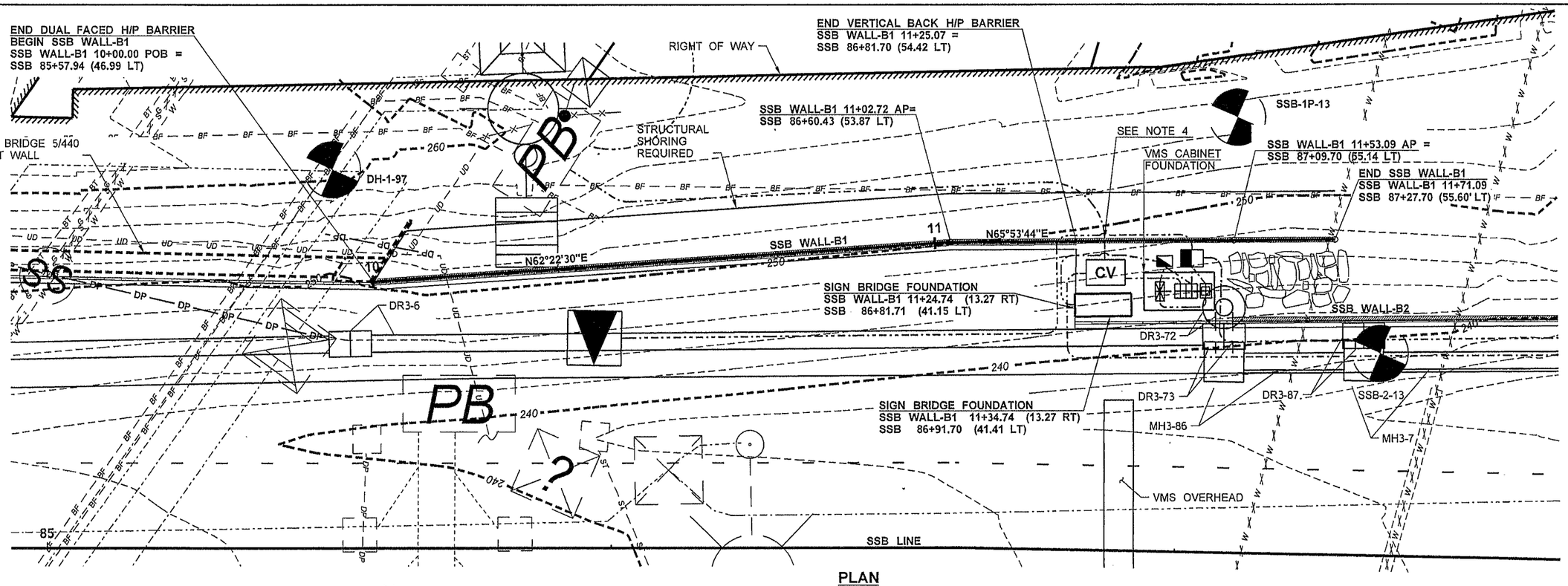

PLAN

0 10 20
SCALE IN FEET

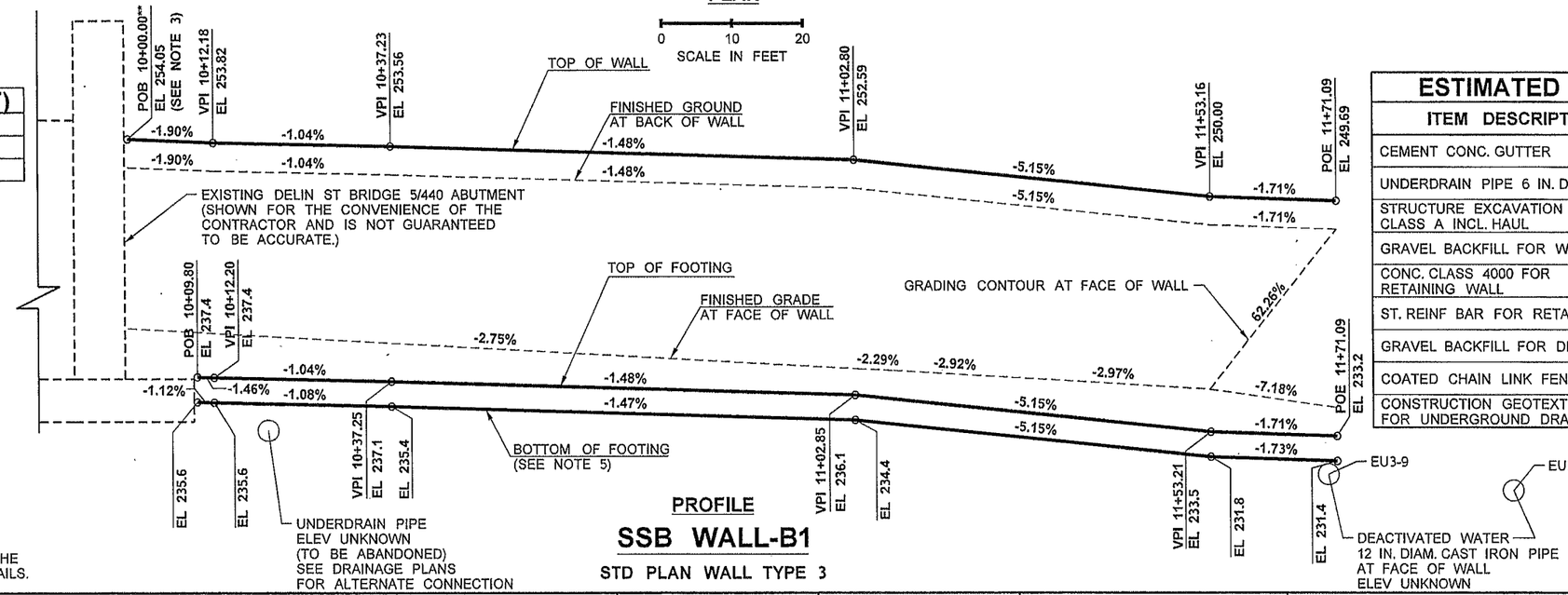

PROFILE

SSB WALL-B1

STD PLAN WALL TYPE 3

ALIGNMENT COORDINATES (FEET)

STATION	NORTHING	EASTING
SSB WALL-B1 10+00.00	698339.01	1158336.74
SSB WALL-B1 11+71.09	698414.56	1158490.16

NOTES:

1. THE WALL QUANTITIES AS LISTED ON THIS SHEET ARE FOR THE CONVENIENCE OF THE CONTRACTOR AND ARE NOT GUARANTEED TO BE ACCURATE. THE QUANTITIES AS LISTED ON THE SUMMARY OF QUANTITIES SHALL TAKE PRECEDENCE OVER ANY QUANTITY LISTED ON THIS SHEET.
2. STATIONING WHERE WALLS TIE INTO EXISTING ABUTMENTS IS BASED ON FIELD SURVEY DATA. ALL INFORMATION NOTED WITH TWO ASTERISKS (**) SHALL BE FIELD MEASURED BY THE CONTRACTOR PRIOR TO ORDERING MATERIALS AND PROCEEDING WITH CONSTRUCTION.
3. BOTTOM OF DELIN ST. BRIDGE 5/440 GIRDERS AT VICINITY OF WALL ARE SET AT ELEVATION 256.93.
4. FOR CABLE VAULT BLOCKOUT DETAILS, SEE WR71.
5. BOTTOM OF FOOTING PROFILE DOES NOT PORTRAY THE WALL KEY ELEVATION. SEE STANDARD PLAN FOR DETAILS.

ESTIMATED QUANTITIES

ITEM DESCRIPTION	QUANTITY
CEMENT CONC. GUTTER	172 L.F.
UNDERDRAIN PIPE 6 IN. DIAM.	172 L.F.
STRUCTURE EXCAVATION CLASS A INCL. HAUL	1008 C.Y.
GRAVEL BACKFILL FOR WALL	519 C.Y.
CONC. CLASS 4000 FOR RETAINING WALL	332 C.Y.
ST. REINF BAR FOR RETAINING WALL	23,901 L.B.
GRAVEL BACKFILL FOR DRAIN	8 C.Y.
COATED CHAIN LINK FENCE TYPE 4	159 L.F.
CONSTRUCTION GEOTEXTILE FOR UNDERGROUND DRAINAGE	114 S.Y.

FILE NAME	PW:_XL3497\PS&E Sheets\Wall\P3497_SH_WR_067.dgn
TIME	7:10:04 AM
DATE	3/12/2014
PLOTTED BY	ShannoC
DESIGNED BY	F. COLLS
ENTERED BY	C. SHANNON
CHECKED BY	B. REGISTER
PROJ. ENGR.	J. PEREZ
REGIONAL ADM.	K. DAYTON

REVISION | DATE | BY

REGION NO. 10 | STATE WASH | FED.AID PROJ.NO.

JOB NUMBER 12C501

CONTRACT NO.

LOCATION NO. XL3497

JOSEPH J. PEREZ — STATE OF WASHINGTON — 33332 — REGISTERED PROFESSIONAL ENGINEER
3-12-14
DATE
P.E. STAMP BOX

DATE
P.E. STAMP BOX

Washington State Department of Transportation

I-5
M ST TO PORTLAND AVE - HOV

SSB WALL-B1 PLAN AND PROFILE

PLAN REF NO WR67

SHEET 890 OF 1763 SHEETS

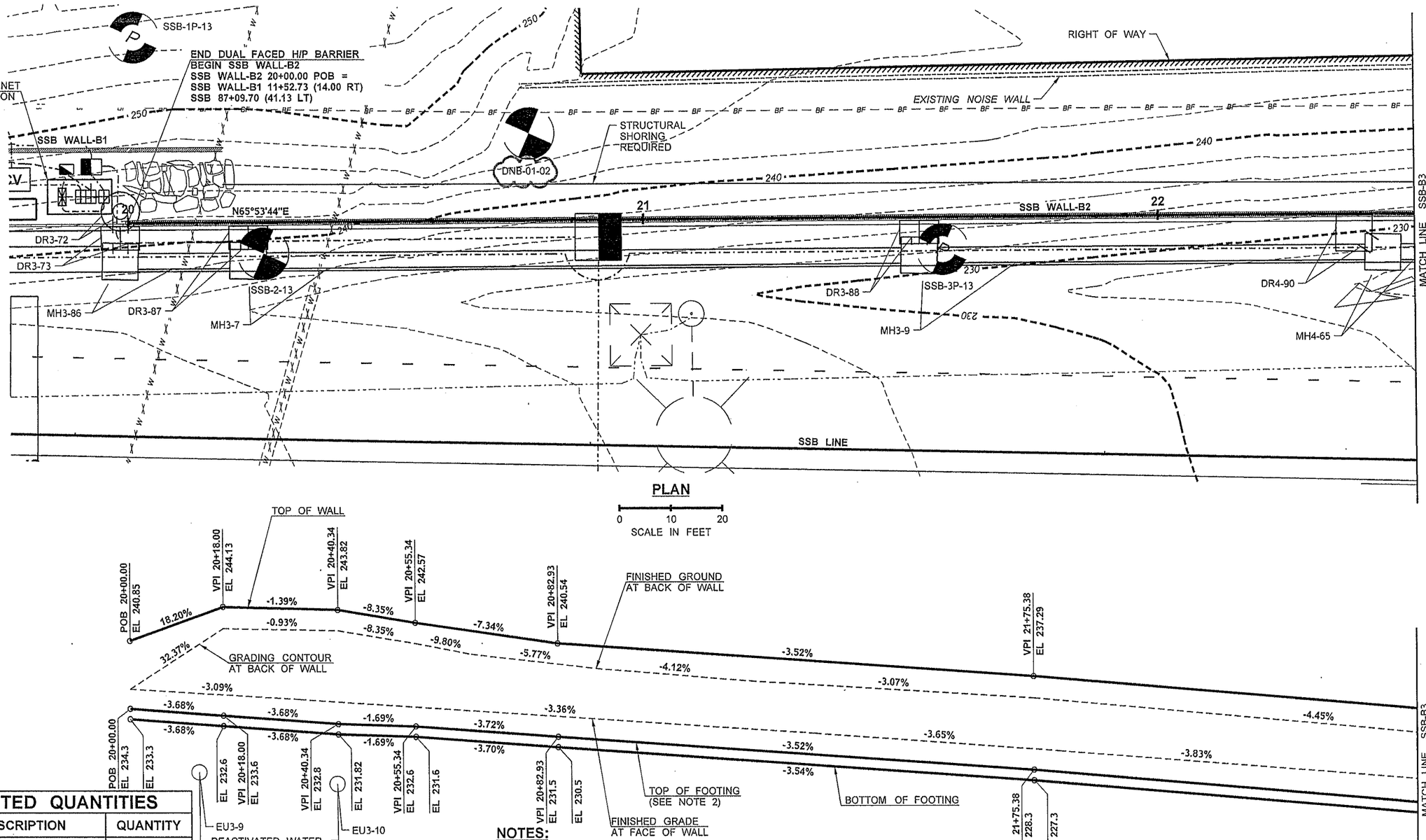

ESTIMATED QUANTITIES

ITEM DESCRIPTION	QUANTITY		
CEMENT CONC. GUTTER	477 L.F.		
STRUCTURE EXCAVATION CLASS A INCL. HAUL	475 L.F.		
CONSTRUCTION GEOTEXTILE FOR UNDERGROUND DRAINAGE	853 C.Y.	ST. REINF BAR FOR RETAINING WALL	16,370 L.B.
GRAVEL BACKFILL FOR WALL	381 C.Y.	GRAVEL BACKFILL FOR DRAIN	23 C.Y.
CONC. CLASS 4000 FOR RETAINING WALL	290 C.Y.	CONSTRUCTION GEOTEXTILE FOR UNDERGROUND DRAINAGE	317 C.Y.

NOTES:

1. THE WALL QUANTITIES AS LISTED ON THIS SHEET ARE FOR THE CONVENIENCE OF THE CONTRACTOR AND ARE NOT GUARANTEED TO BE ACCURATE. THE QUANTITIES AS LISTED ON THE SUMMARY OF QUANTITIES SHALL TAKE PRECEDENCE OVER ANY QUANTITY LISTED ON THIS SHEET.
2. BOTTOM OF FOOTING PROFILE DOES NOT PORTRAY THE WALL KEY ELEVATION. SEE STANDARD PLAN FOR DETAILS.

PROFILE

SSB WALL-B2

STD PLAN WALL TYPE 3

ALIGNMENT COORDINATES (FEET)

STATION	NORTHING	EASTING
SSB WALL-B2 20+00.00	698394.29	1158479.11

FILE NAME	PW:_XL3497\PS&E Sheets\Wall\ADD1_P3497_SH_WR_068.dgn			
TIME	1:50:07 PM			
DATE	5/1/2014			
PLOTTED BY	SancheA			
DESIGNED BY	F. COLLS			
ENTERED BY	C. SHANNON			
CHECKED BY	B. REGISTER			
PROJ. ENGR.	J. PEREZ	AD1 - EDITED BOREHOLE TEXT	04/25/2014	TH
REGIONAL ADM.	K. DAYTON	REVISION	DATE	BY

REGION NO.	STATE	FED.AID PROJ.NO.
10	WASH	
JOB NUMBER 12C501		
CONTRACT NO.		LOCATION NO. XL3497

P.E. STAMP BOX — DATE 5-1-14

P.E. STAMP BOX — DATE

Washington State Department of Transportation

I-5
M ST TO PORTLAND AVE - HOV

SSB WALL-B2 PLAN AND PROFILE

PLAN REF NO WR68

SHEET 891 OF 1763 SHEETS

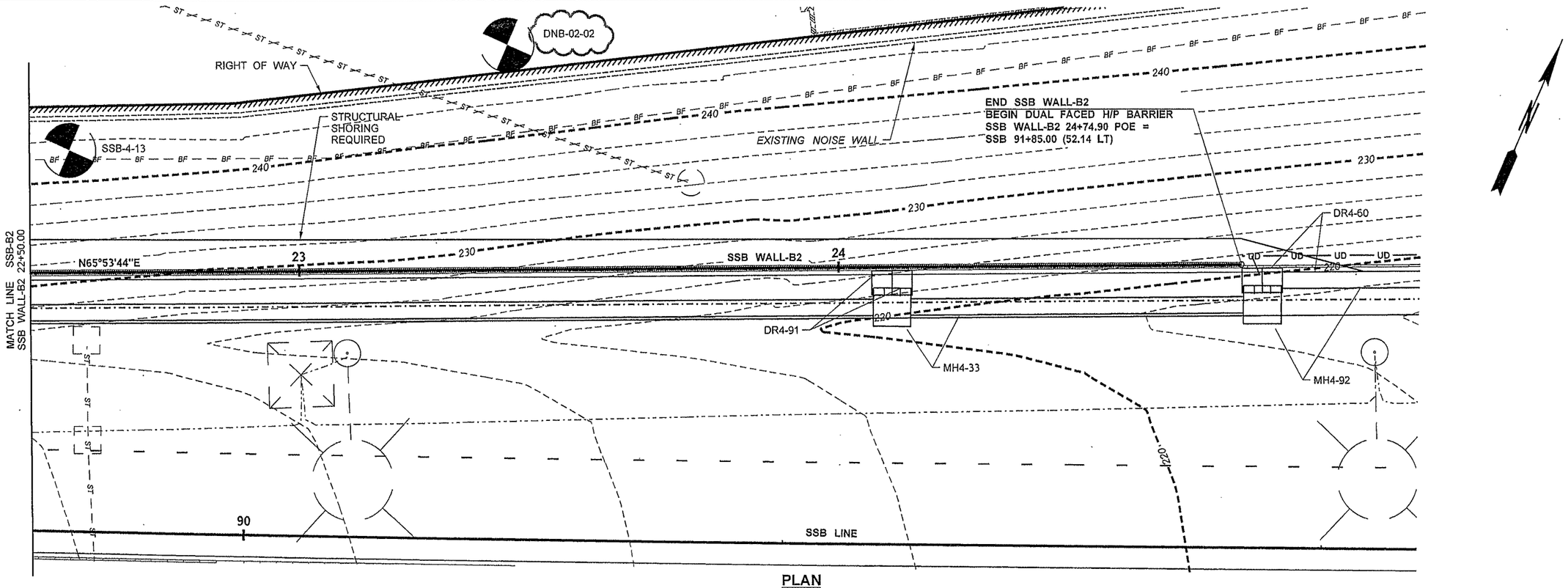

PLAN

0 10 20
SCALE IN FEET

ALIGNMENT COORDINATES (FEET)		
STATION	NORTHING	EASTING
SSB WALL-B2 24+74.90	698588.24	1158912.60

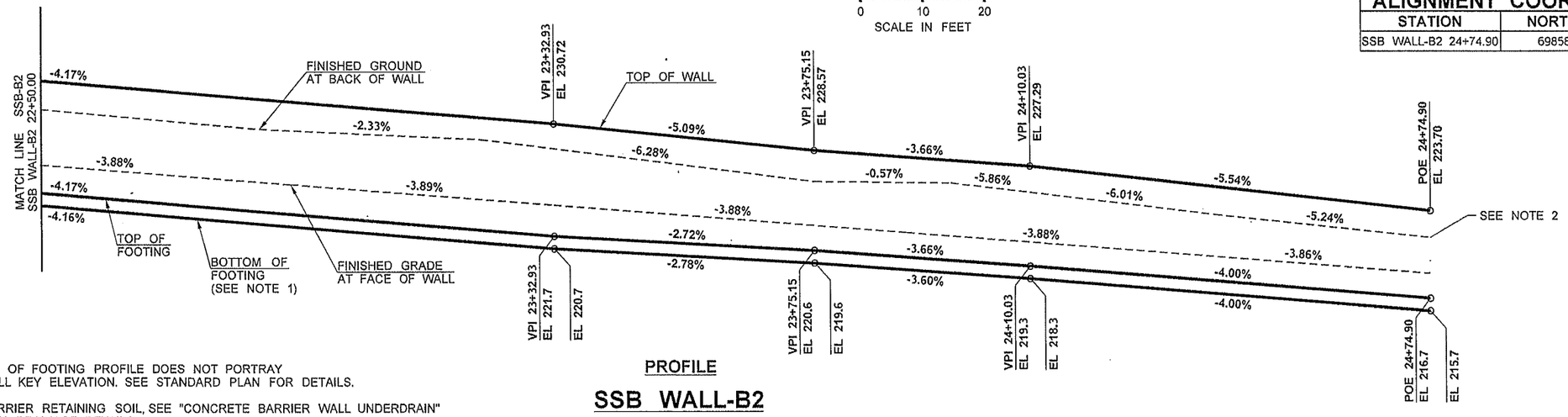

PROFILE

SSB WALL-B2

STD PLAN WALL TYPE 3

NOTES:

1. BOTTOM OF FOOTING PROFILE DOES NOT PORTRAY THE WALL KEY ELEVATION. SEE STANDARD PLAN FOR DETAILS.
2. FOR BARRIER RETAINING SOIL, SEE "CONCRETE BARRIER WALL UNDERDRAIN" DETAIL IN DRAINAGE DETAILS.

FILE NAME	PW:_XL3497\PS&E Sheets\Wall\ADD1_P3497_SH_WR_069dgn.dgn				REGION NO. 10	STATE WASH	FED.AID PROJ.NO.
TIME	1:52:25 PM						
DATE	5/1/2014				JOB NUMBER 12C501		
PLOTTED BY	SancheA						
DESIGNED BY	F. COLLS				CONTRACT NO.		LOCATION NO. XL3497
ENTERED BY	C. SHANNON						
CHECKED BY	B. REGISTER						
PROJ. ENGR.	J. PEREZ	AD1 - EDITED BOREHOLE TEXT	04/25/2014	TH			
REGIONAL ADM.	K. DAYTON	REVISION	DATE	BY			

JOSEPH J. PEREZ — STATE OF WASHINGTON — REGISTERED PROFESSIONAL ENGINEER
5-1-14
DATE
P.E. STAMP BOX

DATE
P.E. STAMP BOX

Washington State Department of Transportation

I-5
M ST TO PORTLAND AVE - HOV

SSB WALL-B2 PLAN AND PROFILE

PLAN REF NO WR69

SHEET 892 OF 1763 SHEETS

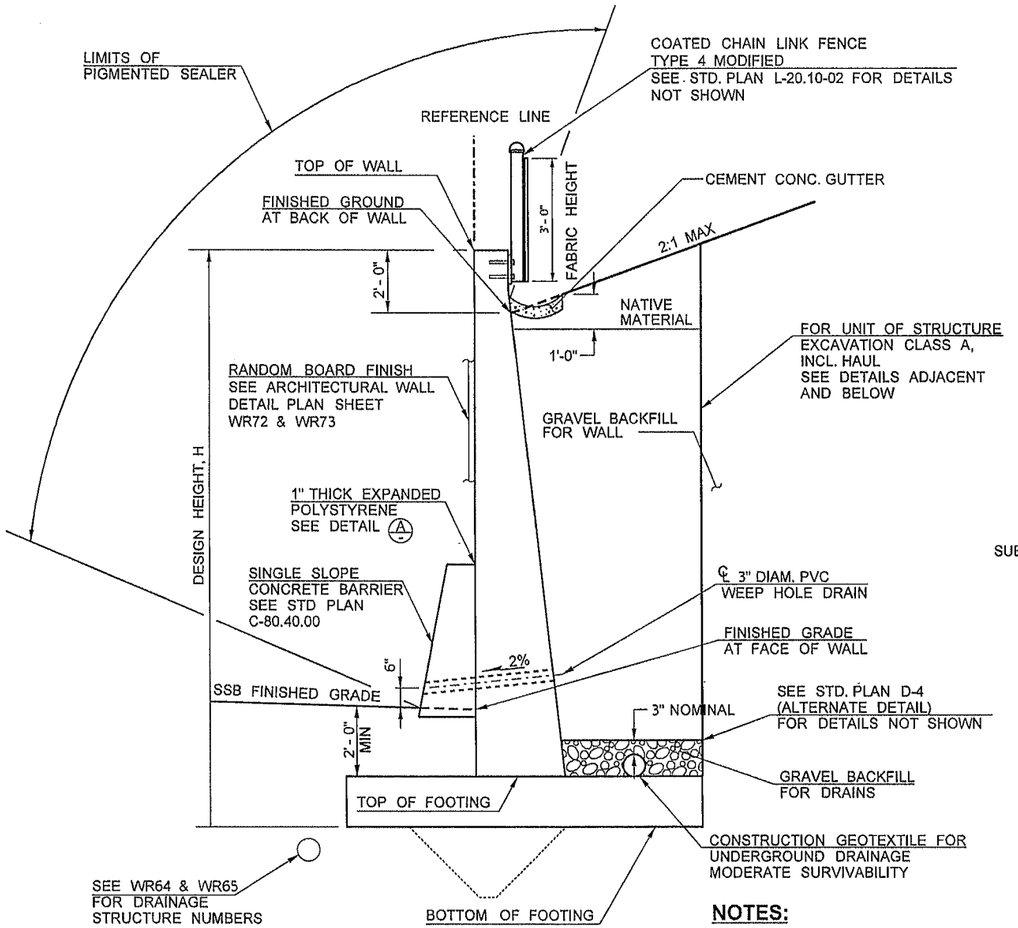

TYPICAL CROSS SECTION
NOT TO SCALE

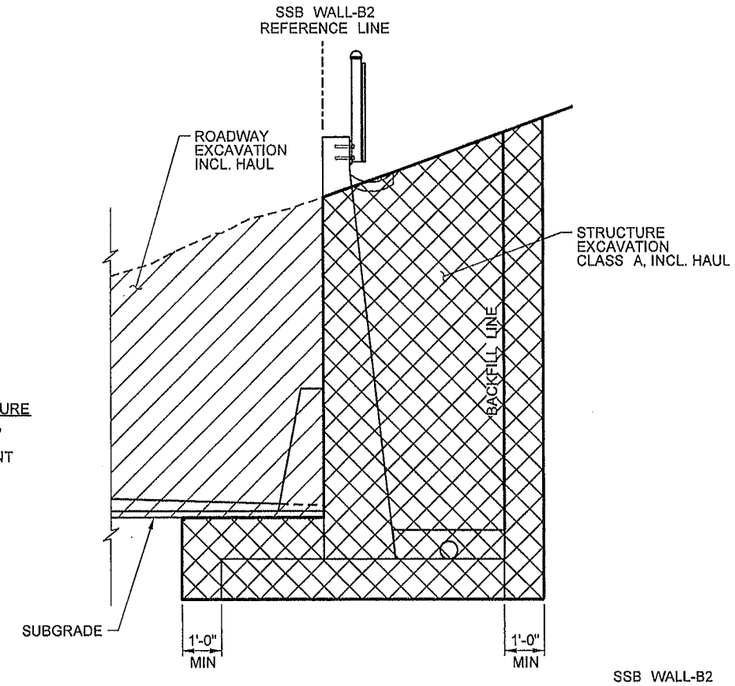

STRUCTURE EXCAVATION CLASS A, INCL. HAUL DETAIL 1
NOT TO SCALE

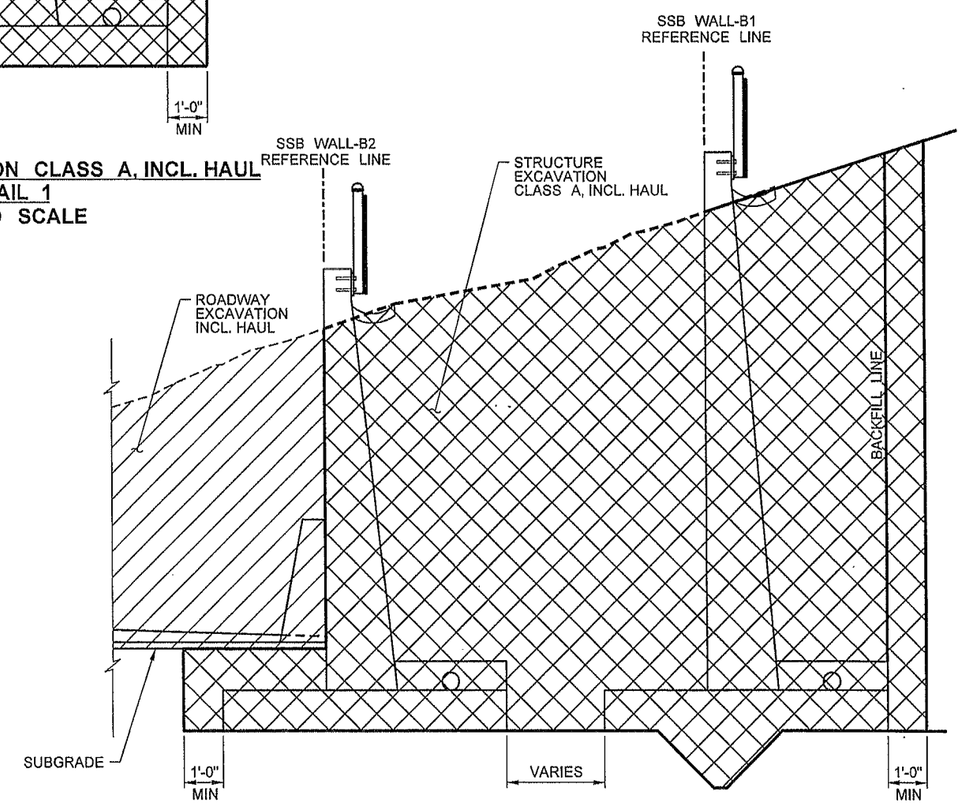

STRUCTURE EXCAVATION CLASS A, INCL. HAUL DETAIL 2
NOT TO SCALE

NOTES:

1. SEE STD. PLAN D-10.20-00 REINFORCED CONCRETE RETAINING WALL TYPE 3 FOR ADDITIONAL WALL DETAILS AND DIMENSIONS.
2. FOR UNDERDRAIN OUTLETS, SEE DRAINAGE PLANS.
3. BACKFILL AND DRAINAGE FOR RETAINING WALLS SEE STD. PLAN D-4.
4. FOR GRATE INLET BLOCKOUTS INFORMATION SEE SHEET WR66.
5. FOR ITS INNER DUCT CROSSING INFORMATION SEE SHEET WR66.
6. FOR SPECIAL DRAINAGE BACKFILL REQUIREMENTS ON DRAINAGE STRUCTURES DR3-7, DR3-9, DR3-72, DR3-73, DR4-33, DR4-60, DR4-65 SEE DRAINAGE PROFILES.

NOTE: SHOWN LOOKING BACK ON STATION

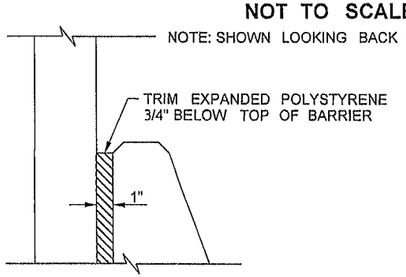

DETAIL A

FILE NAME	PW:_XL3497\PS&E Sheets\Wall\P3497_SH_WR_070.dgn				REGION NO. 10	STATE WASH	FED.AID PROJ.NO.
TIME	2:43:13 PM						
DATE	2/10/2014						
PLOTTED BY	ShannoC				JOB NUMBER 12C501		
DESIGNED BY	F. COLLS						
ENTERED BY	C. SHANNON				CONTRACT NO.		LOCATION NO.
CHECKED BY	B. REGISTER						XL3497
PROJ. ENGR.	J. PEREZ						
REGIONAL ADM.	K. DAYTON	REVISION	DATE	BY			

JOSEPH J. PEREZ — STATE OF WASHINGTON — 19392 — REGISTERED PROFESSIONAL ENGINEER
3-12-14
DATE
P.E. STAMP BOX

DATE
P.E. STAMP BOX

Washington State
Department of Transportation

I-5
M ST TO PORTLAND AVE - HOV

SSB WALL-B1 & B2 DETAIL

PLAN REF NO
WR70

SHEET 893 OF 1763 SHEETS

CATCH BASIN LOCATIONS

SSB STATION	OFFSET
87+33.04	38.86' LT.
88+63.31	42.02' LT.
89+47.97	44.18' LT.
91+20.00	48.68' LT

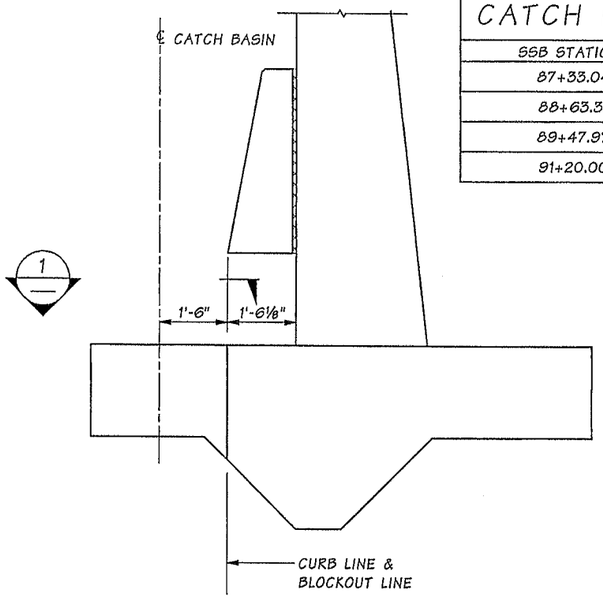

CATCH BASIN BLOCKOUT SECTION

SEE STD. PLAN D-10.20 AND WALL PLANS FOR DETAILS NOT SHOWN.

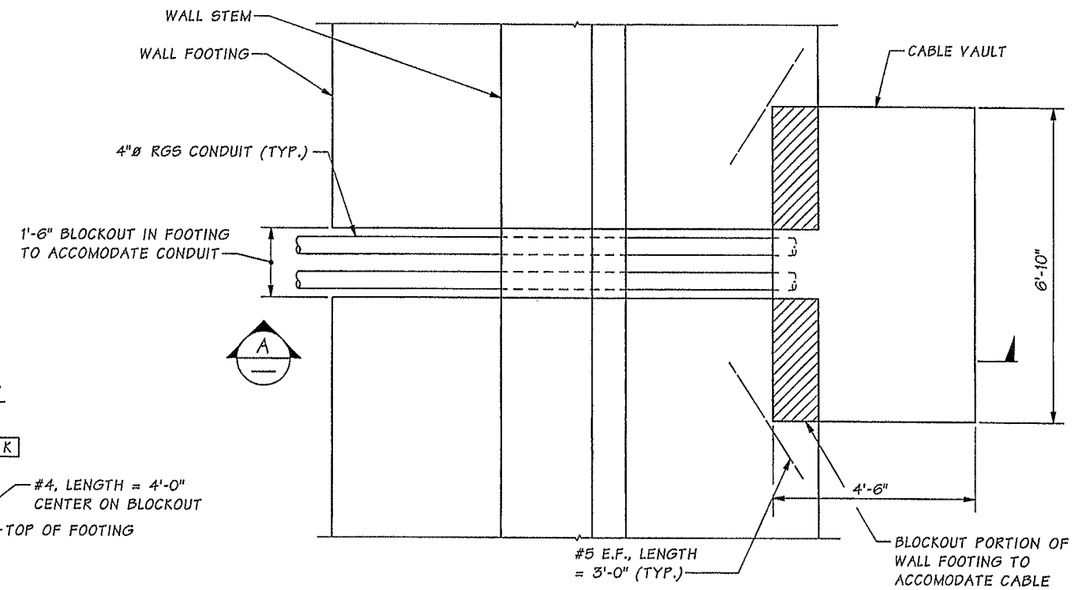

CABLE VAULT BLOCKOUT PLAN

SSB WALL - B1
CABLE VAULT AT SSB STA. 86+87.00.
ADJUST AND CUT FOOTING REINF. TO CLEAR BLOCKOUT.
SEE STD. PLAN D-10.20 AND WALL PLANS FOR DETAILS NOT SHOWN.

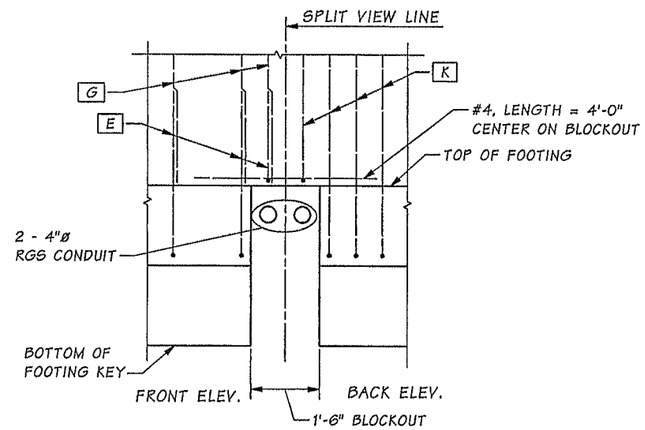

CABLE VAULT BLOCKOUT ELEVATION

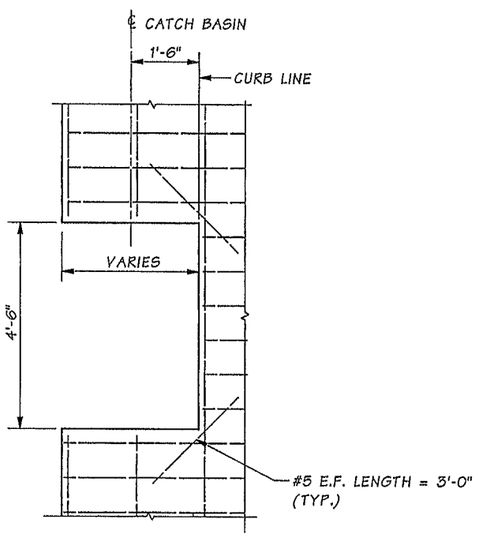

VIEW 1

ADJUST AND CUT FOOTING
REINF. TO CLEAR BLOCKOUT.

NOTE:

SEE SHEET WR66 FOR SSB WALL-B1 ABUTMENT
CONNECTION DETAILS.

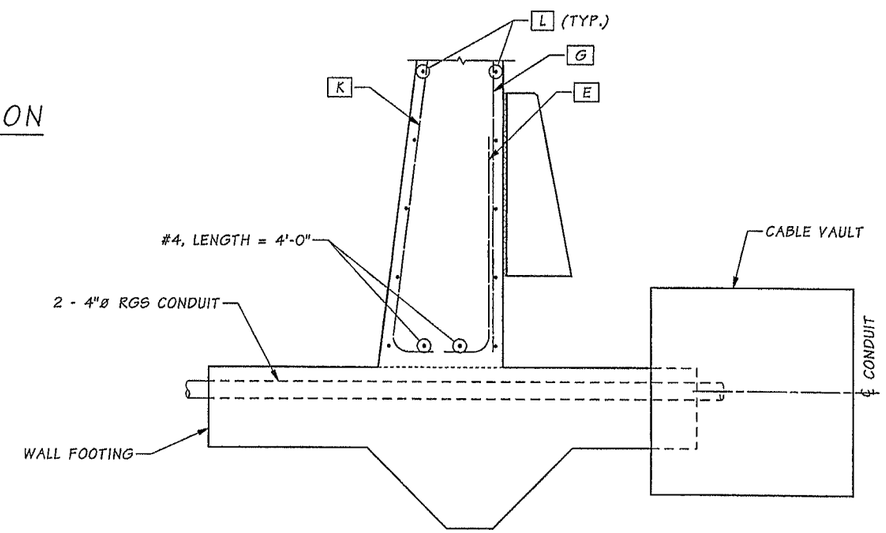

SECTION A

ADJUST PLACEMENT OF BARS K & E TO CLEAR
FOOTING. CUT TOP OF BARS K & E TO FIT.

SR 5 FILE NO. ____ SHEET WR71

Bridge Design Engr.	Khaleghi, B	M:\Y-Team\M ST TO PORTLAND - WALLS\SSB WALLS\window files\SSB WALL DRAINAGE.wnd							
Supervisor	Stoddard, RB								
Designed By	Hsieh, JC / Pawelka, M 08/13								
Checked By	Dobrev, B 01/14								
Detailed By	Andreotti, L 08/13								
Bridge Projects Engr.									
Prelim. Plan By									
Architect/Specialist		DATE	REVISION	BY	APP'D				

REGION NO.	STATE	FED. AID PROJ. NO.	SHEET NO.	TOTAL SHEETS
10	WASH.			
JOB NUMBER 12C501				

BRIDGE AND STRUCTURES OFFICE

2/12/14 2/12/14

Washington State Department of Transportation

I-5
M ST TO PORTLAND AVE - HOV

SSB WALL-B1 & SSB WALL-B2
BLOCKOUT DETAILS

BRIDGE SHEET NO. WR71
SHEET 894 OF 1763 SHEETS

Wed Feb 12 09:23:08 2014

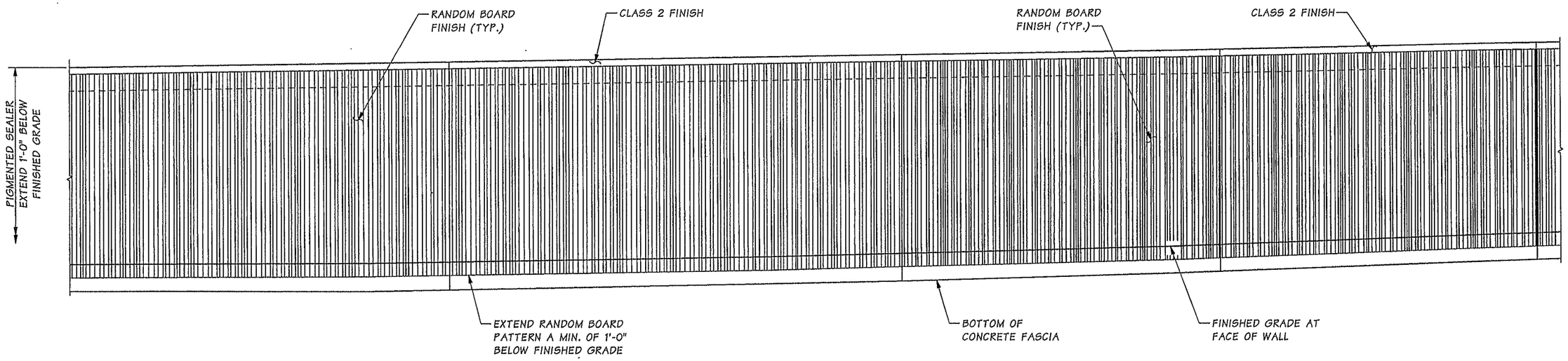

ELEVATION

WALL CONCRETE SURFACE FINISH SCHEDULE			
WALL NAME	WALL TYPE	FINISH	TOP TRIM
I5NB WALL-A	GRADE SEPARATION BARRIER WALL	RANDOM BOARD	6" BAND
I5NB WALL-B	REINFORCED CONCRETE RETAINING WALL	RANDOM BOARD	6" BAND
I5NB WALL-C	REINFORCED CONCRETE RETAINING WALL	RANDOM BOARD	6" BAND
I5NB WALL-D	REINFORCED CONCRETE RETAINING WALL	RANDOM BOARD	6" BAND
I5NB WALL-E	REINFORCED CONCRETE RETAINING WALL	RANDOM BOARD	6" BAND
I5SB WALL-A	REINFORCED CONCRETE RETAINING WALL	RANDOM BOARD	6" BAND
I5SB WALL-E	NON-STD REINFORCED CONCRETE RETAINING WALL	RANDOM BOARD	6" BAND
MCK WALL-A	REINFORCED CONCRETE RETAINING WALL	RANDOM BOARD	NONE
MCK WALL-B	REINFORCED CONCRETE RETAINING WALL	RANDOM BOARD	NONE
MCK WALL-C	REINFORCED CONCRETE RETAINING WALL	RANDOM BOARD	NONE
NBN WALL-A	SOIL NAIL WALL & REINF. CONC. RETAINING WALL	RANDOM BOARD	TOP PATTERN
SNB WALL-A	SOIL NAIL WALL	RANDOM BOARD	TOP PATTERN
SSB WALL-A	REINFORCED CONCRETE RETAINING WALL	RANDOM BOARD	6" BAND
SSB WALL-B1	REINFORCED CONCRETE RETAINING WALL	RANDOM BOARD	6" BAND
SSB WALL-B2	REINFORCED CONCRETE RETAINING WALL	RANDOM BOARD	6" BAND

SR 5 FILE NO. ____ SHEET WR72

Bridge Design Engr.	Khaleghi, B	M:\Y-Team\M ST TO PORTLAND - WALLS\window files\WR72-ARCH DET MISC.wnd							
Supervisor	Khaleghi, B				REGION NO.	STATE	FED. AID PROJ. NO.	SHEET NO.	TOTAL SHEETS
Designed By	Kinderman, PD 02/13				10	WASH.			
Checked By	Glassford, P 09/13								
Detailed By	Andreotti, L / Davis, E 02/13				JOB NUMBER 12C501				
Bridge Projects Engr.									
Prelim. Plan By									
Architect/Specialist		DATE	REVISION	BY	APP'D				

Tue Feb 11 15:27:24 2014

8802 REGISTERED ARCHITECT PAUL D. KINDERMAN STATE OF WASHINGTON
Paul D. Kinderman
2.11.14

BRIDGE AND STRUCTURES OFFICE

Washington State Department of Transportation

I-5
M ST TO PORTLAND AVE - HOV
ALL WALLS
ARCHITECTURAL DETAILS MISCELLANEOUS

BRIDGE SHEET NO. WR72
SHEET 895 OF 1763 SHEETS

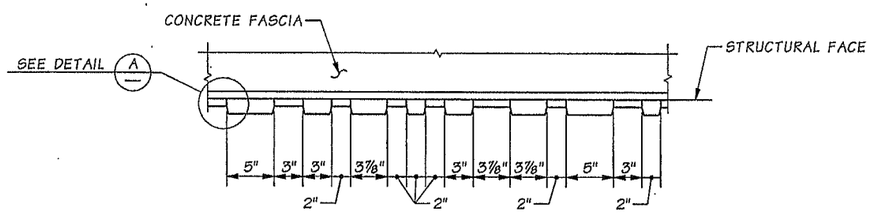

PLAN
OPTION A

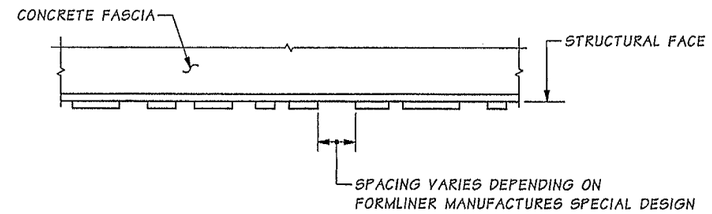

PLAN
OPTION B

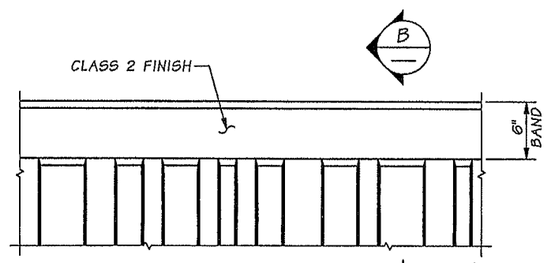

ELEVATION
RANDOM BOARD FINISH OPTION A

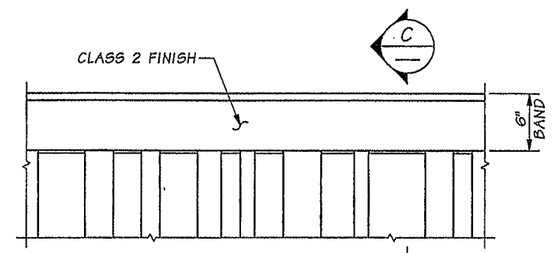

ELEVATION
RANDOM BOARD FINISH OPTION B

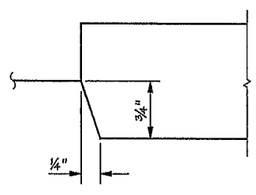

DETAIL A

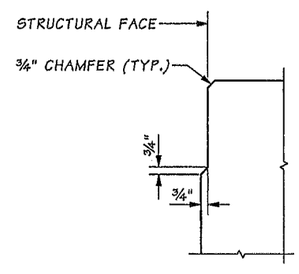

SECTION B

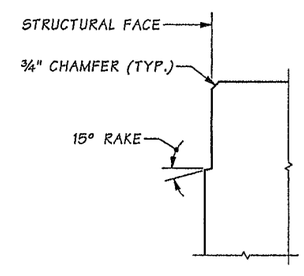

SECTION C

NOTES:

1. BOARD PATTERN SHALL ALIGN WITH ADJACENT VERTICAL PANELS.
2. THE RANDOM BOARD FINISH MAY BE ACCOMPLISHED WITH EITHER OPTION A OR OPTION B. OPTION A IS FORMED WITH BOARDS. OPTION B IS FORMED WITH FORMLINERS.
3. ONLY ONE OPTION MAY BE USED WITHIN THE CONTRACT FOR ALL THE WALLS.

SR 5 FILE NO. ____ SHEET WR73

Bridge Design Engr.	Khaleghi, B		
Supervisor	Khaleghi, B		
Designed By	Kinderman, PD	02/13	
Checked By	Glassford, P	09/13	
Detailed By	Andreotti, L / Davis, E	02/13	
Bridge Projects Engr.			
Prelim. Plan By			
Architect/Specialist			

M:\Y~Team\M ST TO PORTLAND - WALLS\window files\WR73-ARCH DET MISC.wnd

DATE	REVISION	BY	APP'D

REGION NO.	STATE	FED. AID PROJ. NO.	SHEET NO.	TOTAL SHEETS
10	WASH.			
JOB NUMBER 12C501				

8802 REGISTERED ARCHITECT PAUL D. KINDERMAN STATE OF WASHINGTON
Paul D. Kinderman
2-11-14

BRIDGE AND STRUCTURES OFFICE

Washington State Department of Transportation

I-5
M ST TO PORTLAND AVE - HOV

ALL WALLS

ARCHITECTURAL DETAILS
MISCELLANEOUS

BRIDGE SHEET NO. WR73

SHEET 896 OF 1763 SHEETS

Tue Feb 11 15:27:25 2014

CURVE DATA					
P.I. STATION	Δ	RADIUS	TANGENT	LENGTH	BK. TANGENT BRG.
15NB STA. 113+11.23	33°59'24" LT.	3800.00'	1161.41'	2254.30'	S 78°39'00" E

SEC. 8, T. 20N., R. 3E., W.M.
CITY OF TACOMA

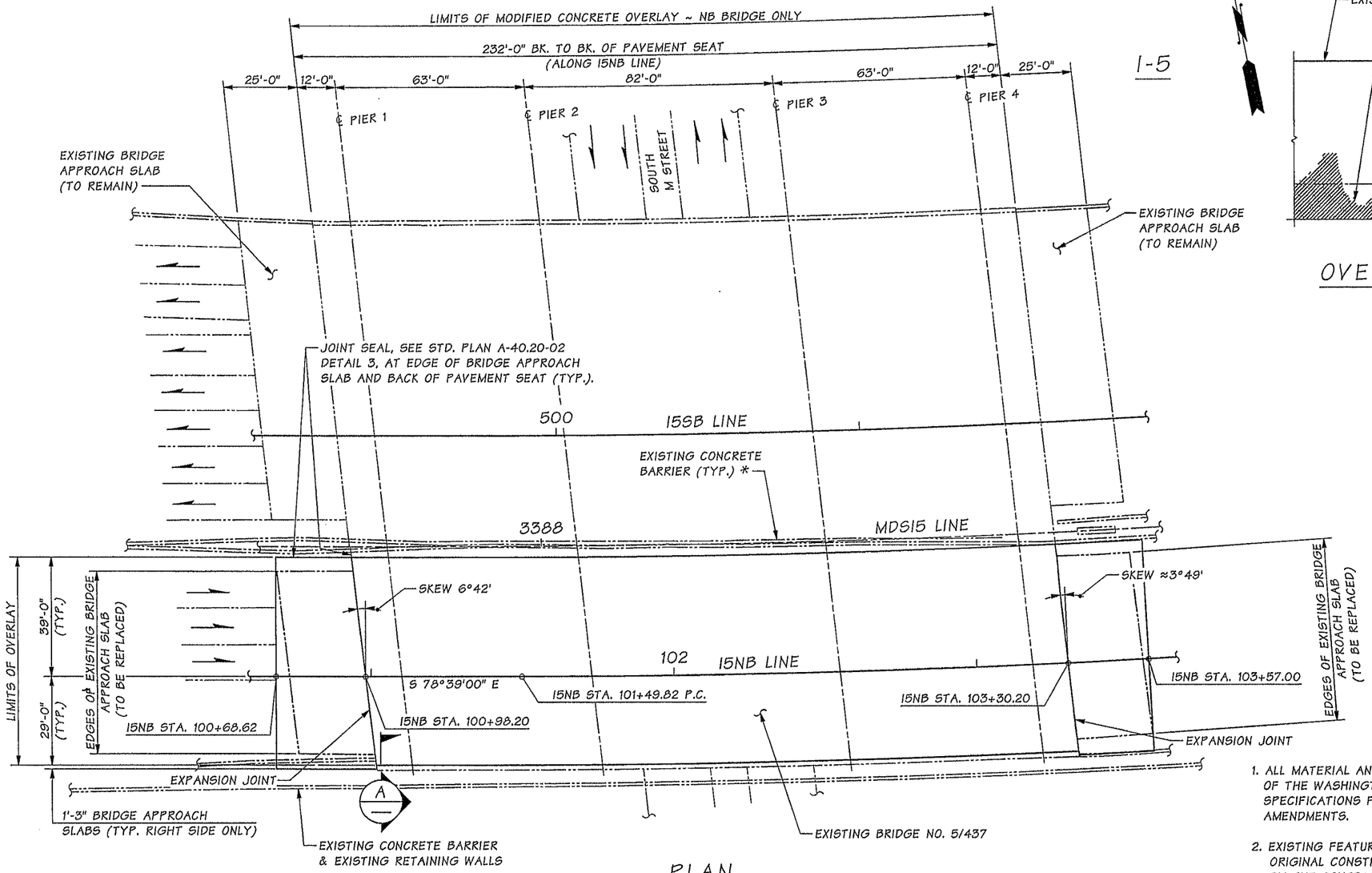

PLAN

* SEE PAVING PLANS FOR FINAL BARRIER CONFIGURATION.

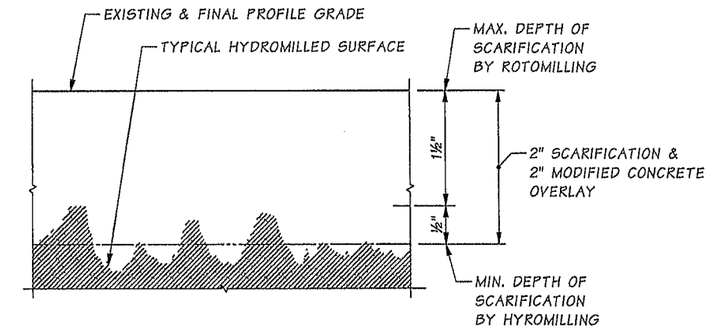

OVERLAY REQUIREMENTS

MODIFIED CONCRETE OVERLAY

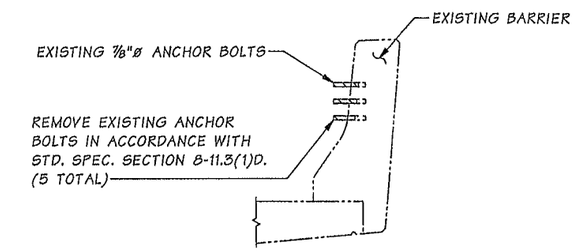

SECTION A

GENERAL NOTES:

1. ALL MATERIAL AND WORKMANSHIP SHALL BE IN ACCORDANCE WITH THE REQUIREMENTS OF THE WASHINGTON STATE DEPARTMENT OF TRANSPORTATION STANDARD SPECIFICATIONS FOR ROAD, BRIDGE AND MUNICIPAL CONSTRUCTION DATED 2014 AND AMENDMENTS.
2. EXISTING FEATURES, DIMENSIONS AND ELEVATIONS SHOWN IN THE PLANS ARE BASED ON ORIGINAL CONSTRUCTION RECORDS. THESE DIMENSIONS SHALL BE MEASURED AND VERIFIED BY THE CONTRACTOR IN THE FIELD PRIOR TO ORDERING MATERIAL AND PROCEEDING WITH CONSTRUCTION.
3. BRIDGE APPROACH SLAB SHALL BE CONCRETE CLASS 4000A. ALL OTHER CONCRETE SHALL BE CLASS 4000 UNLESS NOTED OTHERWISE. REINFORCING STEEL SHALL CONFORM TO THE REQUIREMENTS OF ASTM A 706 GRADE 60.
4. THE MINIMUM CONCRETE COVER MEASURED FROM THE FACE OF THE CONCRETE TO THE FACE OF ANY REINFORCING STEEL SHALL BE 1½" UNLESS OTHERWISE NOTED.

LEGEND

B / BM15 — IDENTIFIES SECTION OR VIEW; TAKEN OR SHOWN ON BR. SHT. BM15

1 / — IDENTIFIES DETAIL; TAKEN OR SHOWN ON THE SAME SHEET

DATUM

NAVD 1988

MODIFIED CONCRETE OVERLAY & BRIDGE APPROACH SLAB REPLACEMENT

Bridge Design Engr.	Khaleghi, B	
Supervisor	Khaleghi, B	
Designed By	Mizumori, A	12/12
Checked By	Thill, B	01/14
Detailed By	Bontemps, W	12/12
Bridge Projects Engr.		
Prelim. Plan By		
Architect/Specialist		

M:\Y-Team\M ST TO PORTLAND\M ST BRIDGE DECK AND APPROACH SLAB\window files\LAYOUT.wnd

DATE	REVISION	BY	APP'D

REGION NO.	STATE	FED. AID PROJ. NO.	SHEET NO.	TOTAL SHEETS
10	WASH.			
JOB NUMBER 12C501				

BRIDGE AND STRUCTURES OFFICE

BLAIN KHALEGHI — STATE OF WASHINGTON — 27495 — STRUCTURAL ENGINEER — PROFESSIONAL ENGINEER — 2/12/14

Washington State Department of Transportation

I-5
M ST TO PORTLAND AVE - HOV

I-5 OVER M STREET BRIDGE NO. 5/437

LAYOUT

BRIDGE SHEET NO. BM1

SHEET 897 OF 1763 SHEETS

SR 5 FILE NO. SHEET BM1

Tue Feb 11 07:42:12 2014

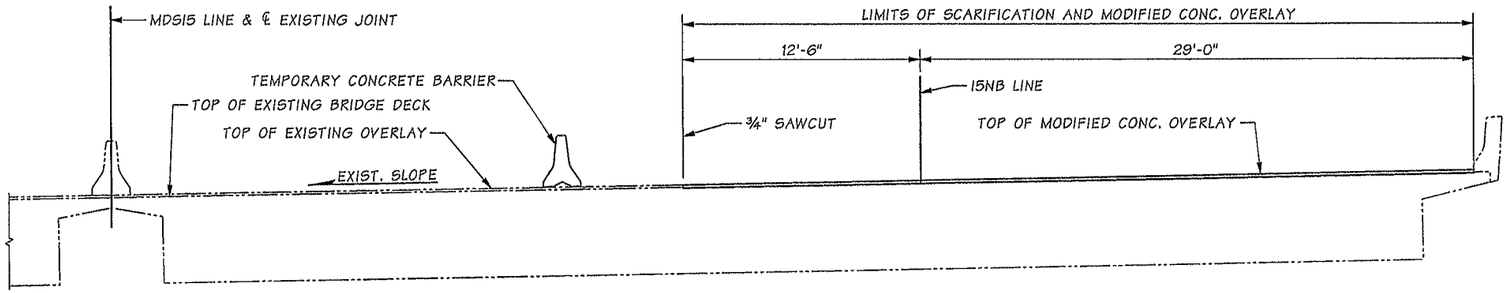

HALF-SECTION
NORTHBOUND
STEP 1

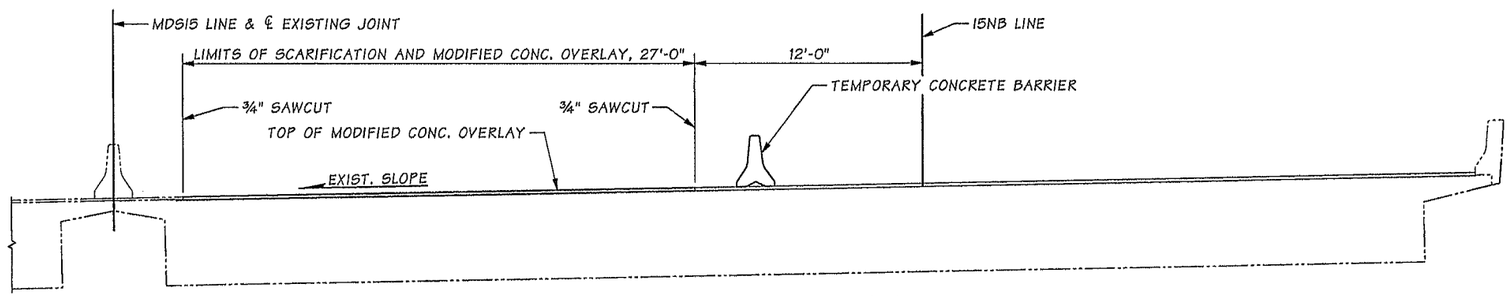

HALF-SECTION
NORTHBOUND
STEP 2

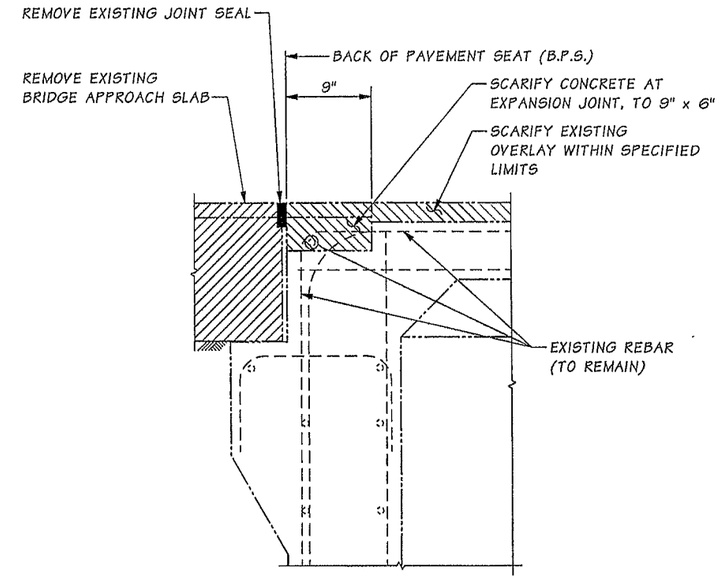

CONCRETE REMOVAL
AT EXPANSION JOINT

SCARIFICATION NOTES:

1. IF THE LIMITS SHOWN IN TABLE 1 ARE REACHED DURING THE SCARIFICATION PROCESS, THE CONTRACTOR SHALL DISCONTINUE SCARIFICATION IN THIS AREA, UNTIL TYPE 2 DECK REPAIRS HAVE BEEN COMPLETED IN ACCORDANCE WITH STD. SPEC. SECTION 6-09.3(6)C. SCARIFICATION MAY RESUME PRIOR TO COMPLETING THE TYPE 2 DECK REPAIRS AT A DISTANCE OF NO LESS THAN 20 FEET FROM THE EDGE OF THE AREA REQUIRING TYPE 2 DECK REPAIRS.
2. IN NO CASE SHALL "d" EXCEED 3".

TABLE 1

DEPTH OF REMOVED CONC. BELOW TOP MAT TOP BAR	MAX. PLAN DIMENSION "W" LIMIT
d ≤ ¾"	10'-0"
¾" < d ≤ 1½"	5'-0"
1½" < d ≤ 3"	2'-6"

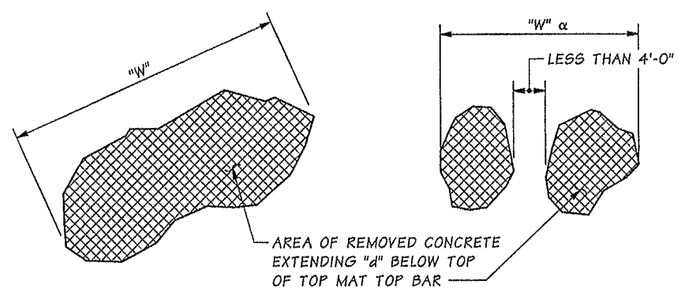

PLAN

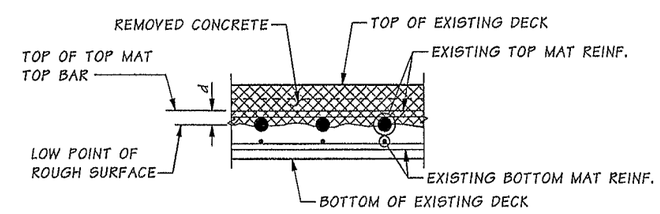

SECTION

α FOR CASES WHERE TWO ADJACENT AREAS ARE SPACED LESS THAN 4'-0" APART, THE TWO AREAS SHALL BE CONSIDERED A SINGLE AREA.

SCARIFICATION LIMITATIONS

Bridge Design Engr.	Khaleghi, B		M:\Y-Team\M ST TO PORTLAND\M ST BRIDGE DECK AND APPROACH SLAB\window files\OVERLAYDTLS.wnd				REGION NO.	STATE	FED. AID PROJ. NO.	SHEET NO.	TOTAL SHEETS
Supervisor	Khaleghi, B						10	WASH.			
Designed By	Mizumori, A	12/12					JOB NUMBER 12C501				
Checked By	Thill, B	01/14									
Detailed By	Bontemps, W	12/12									
Bridge Projects Engr.											
Prelim. Plan By											
Architect/Specialist			DATE	REVISION	BY	APP'D					

ANTHONY J. I. MIZUMORI, STATE OF WASHINGTON, 27695, PROFESSIONAL ENGINEER 2/11/14

BRIDGE AND STRUCTURES OFFICE

BIJAN KHALEGHI, STATE OF WASHINGTON, 27695, PROFESSIONAL ENGINEER 2/12/14

Washington State Department of Transportation

I-5
M ST TO PORTLAND AVE - HOV
I-5 OVER M STREET BRIDGE NO. 5/437
OVERLAY DETAILS

BRIDGE SHEET NO. BM2
SHEET 898 OF 1763 SHEETS

SR 5 FILE NO. SHEET BM2

Tue Feb 11 07:29:51 2014

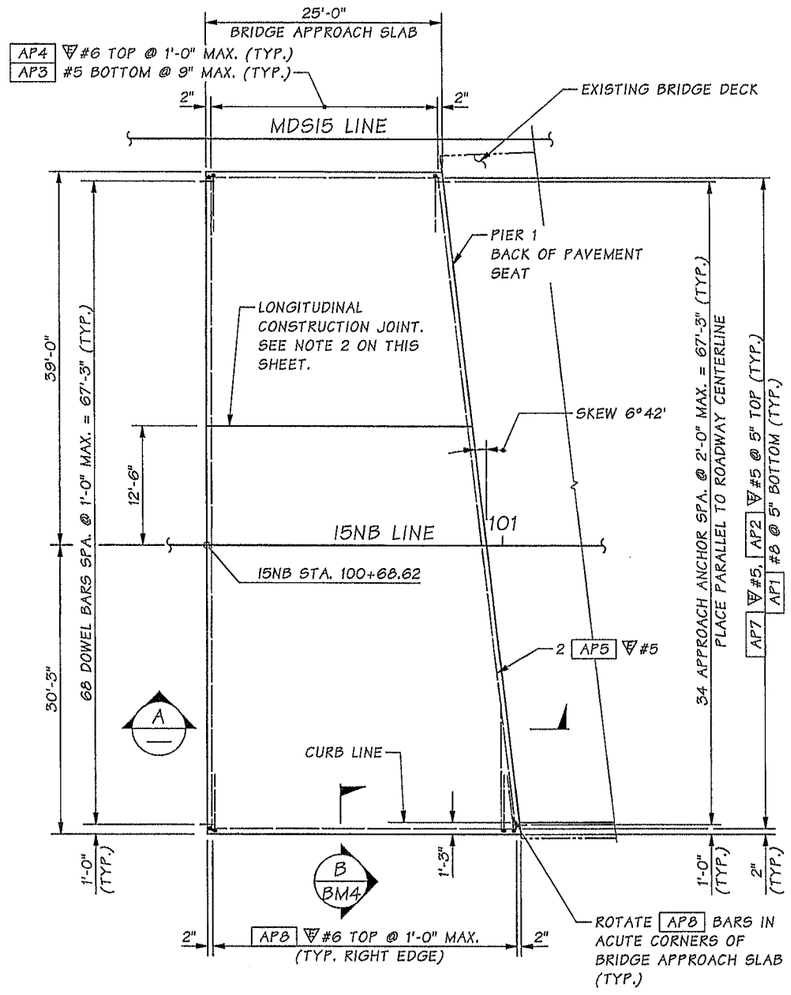

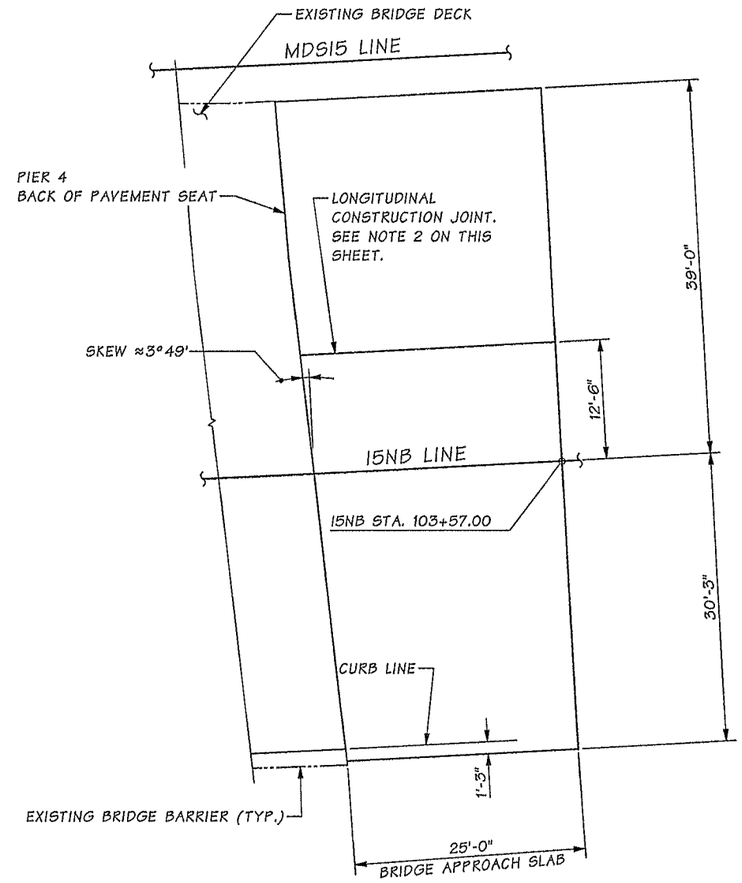

PLAN

NOTES:

1. ALL EDGES OF BRIDGE APPROACH SLAB SHALL HAVE ½" RADIUS EXCEPT AT LONGITUDINAL CONSTRUCTION JOINTS.
2. SEE "LONGITUDINAL CONSTRUCTION JOINT DETAIL" ON BRIDGE APPROACH SLAB DETAILS 2 OF 3.
3. THE MINIMUM LAP SPLICE OF #5 IS 2'-0", #5 IS 2'-6", #6 IS 3'-0", AND #8 IS 3'-3". ALL LAP SPLICES SHALL BE STAGGERED SO THAT NO MORE THAN 50% OF REBAR IS SPLICED AT THE SAME LOCATION. LAP SPLICES SHALL BE LOCATED WITHIN THE MIDDLE HALF OF THE BRIDGE APPROACH SLAB. OPTIONAL SPLICES ARE ALLOWED FOR AP4 #6.

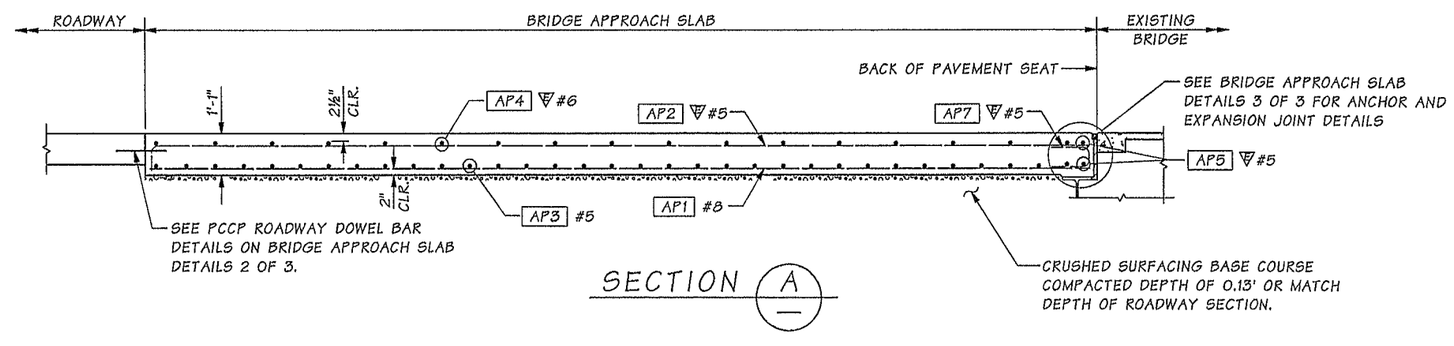

SECTION A

BENDING DIAGRAM

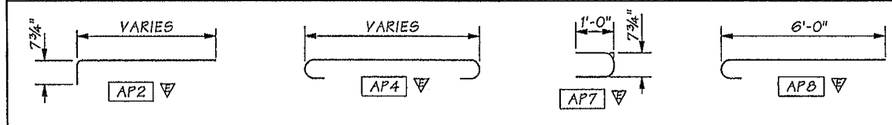

= EPOXY COATED REINFORCING STEEL NOTE: ALL DIMENSIONS ARE OUT TO OUT

Bridge Design Engr.	Khaleghi, B		M:\Y-Team\M ST TO PORTLAND\M ST BRIDGE DECK AND APPROACH SLAB\window files\BRAPPSLAB1.wnd								
Supervisor	Khaleghi, B						REGION NO.	STATE	FED. AID PROJ. NO.	SHEET NO.	TOTAL SHEETS
Designed By	Mizumori, A	12/12					10	WASH.			
Checked By	Thill, B	01/14									
Detailed By	Bontemps, W	12/12					JOB NUMBER 12C501				
Bridge Projects Engr.											
Prelim. Plan By											
Architect/Specialist			DATE	REVISION	BY	APP'D					

Tue Feb 11 07:29:54 2014

SR 5 FILE NO. ____ SHEET BM3

ANTHONY J. I. MIZUMORI — STATE OF WASHINGTON — 44257 — PROFESSIONAL ENGINEER — 2/11/14

BRIDGE AND STRUCTURES OFFICE

BLAIN KHALEGHI — STATE OF WASHINGTON — 27605 — PROFESSIONAL ENGINEER — 2/12/14

Washington State Department of Transportation

I-5
M ST TO PORTLAND AVE - HOV

I-5 OVER M STREET BRIDGE NO. 5/437

BRIDGE APPROACH SLAB
DETAILS 1 OF 3

BRIDGE SHEET NO. BM3

SHEET 899 OF 1763 SHEETS

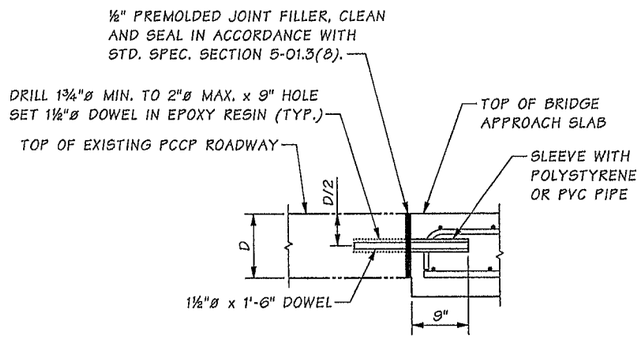

EXISTING PCCP ROADWAY DOWEL BAR DETAIL

INSERT DOWELS PARALLEL TO ROADWAY CENTER LINE ALONG TRANSVERSE CONSTRUCTION JOINT.

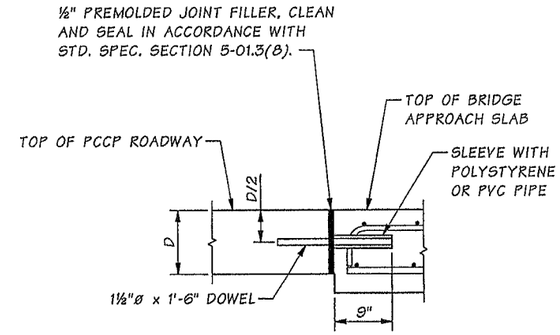

PCCP ROADWAY DOWEL BAR DETAIL

INSERT DOWELS PARALLEL TO ROADWAY CENTER LINE ALONG TRANSVERSE CONSTRUCTION JOINT.

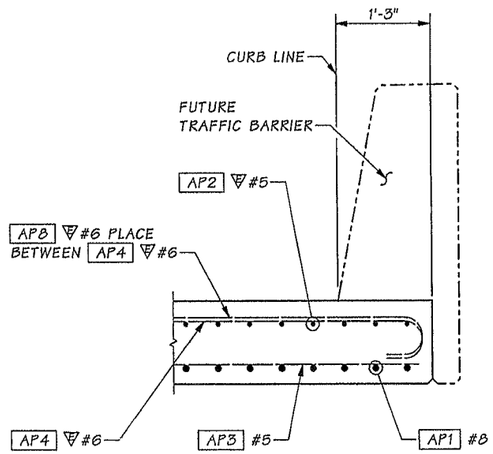

SECTION B / BM3

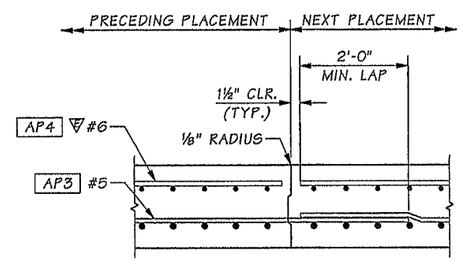

LONGITUDINAL CONSTRUCTION JOINT DETAIL

EDGE PRECEDING PLACEMENT ONLY WITH ⅛" RADIUS.

SR 5 FILE NO. ____ SHEET BM4

Bridge Design Engr.	Khaleghi, B		
Supervisor	Khaleghi, B		
Designed By	Mizumori, A	12/12	
Checked By	Thill, B	01/14	
Detailed By	Bontemps, W	12/12	
Bridge Projects Engr.			
Prelim. Plan By			
Architect/Specialist			

M:\Y-Team\M ST TO PORTLAND\M ST BRIDGE DECK AND APPROACH SLAB\window files\BRAPPSLAB2.wnd

DATE	REVISION	BY	APP'D

REGION NO.	STATE	FED. AID PROJ. NO.	SHEET NO.	TOTAL SHEETS
10	WASH.			

JOB NUMBER 12C501

ANTHONY J. I. MIZUMORI, STATE OF WASHINGTON, PROFESSIONAL ENGINEER 2/11/14

BRIDGE AND STRUCTURES OFFICE

BIJAN KHALEGHI, STATE OF WASHINGTON, 27695, PROFESSIONAL ENGINEER 2/12/14

Washington State Department of Transportation

I-5
M ST TO PORTLAND AVE - HOV

I-5 OVER M STREET BRIDGE NO. 5/437

BRIDGE APPROACH SLAB DETAILS 2 OF 3

BRIDGE SHEET NO. BM4

SHEET 900 OF 1763 SHEETS

Tue Feb 11 07:29:55 2014

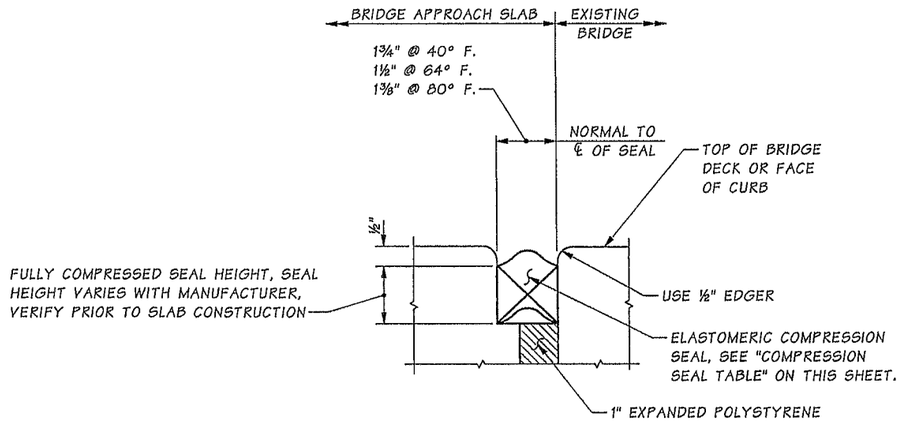

COMPRESSION SEAL DETAIL

EXPANSION JOINT AT BACK OF PAV'T. SEAT.
PROVIDE FULL WIDTH OF BRIDGE APPROACH SLAB.

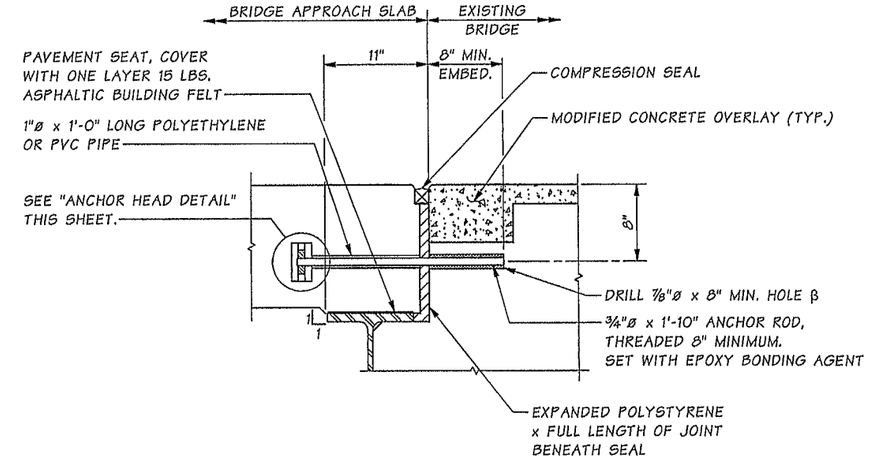

APPROACH ANCHOR

β DRILL AND INSTALL ANCHOR ROD PRIOR TO SCARIFICATION, OR AFTER THE OVERLAY HAS CURED 42 HOURS.

COMPRESSION SEAL TABLE

D.S. BROWN		WATSON BOWMAN ACME	
SEAL	WIDTH	SEAL	WIDTH
CV-2502	2½	WA-250	2½

TESTING SHALL BE PER AASHTO M 220 PRIOR TO USE.

NOTE:

ALL METAL PARTS OF THE APPROACH EXPANSION ANCHOR SHALL RECEIVE ONE COAT OF PAINT CONFORMING TO STANDARD SPECIFICATION SECTION 9-08.1(2)F OR BE GALVANIZED IN ACCORDANCE WITH AASHTO M 232.

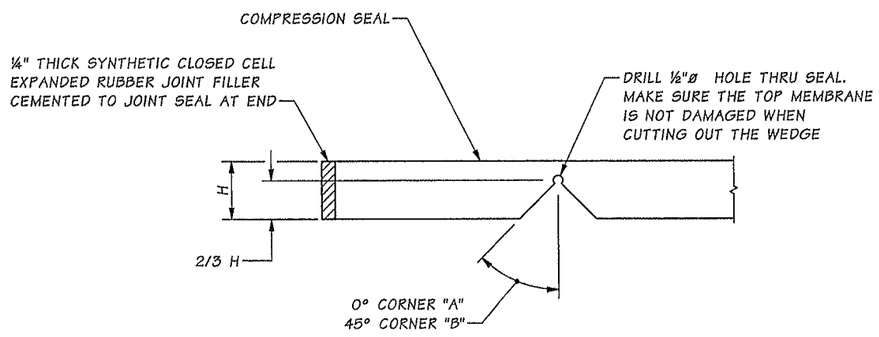

SEAL CUTTING DETAIL

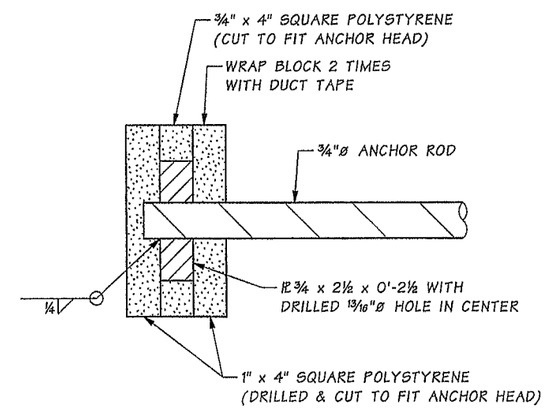

ANCHOR HEAD DETAIL

Bridge Design Engr.	Khaleghi, B		
Supervisor	Khaleghi, B		
Designed By	Mizumori, A	12/12	
Checked By	Thill, B	01/14	
Detailed By	Bontemps, W	12/12	
Bridge Projects Engr.			
Prelim. Plan By			
Architect/Specialist			

M:\Y-Team\M ST TO PORTLAND\M ST BRIDGE DECK AND APPROACH SLAB\window files\BRAPPSLAB3.wnd

DATE	REVISION	BY	APP'D

REGION NO.	STATE	FED. AID PROJ. NO.	SHEET NO.	TOTAL SHEETS
10	WASH.			
JOB NUMBER 12C501				

ANTHONY J. I. MIZUMORI, STATE OF WASHINGTON, 38386, REGISTERED PROFESSIONAL ENGINEER — 2/11/14

BRIDGE AND STRUCTURES OFFICE

BILLAN KHALEGHI, STATE OF WASHINGTON, 27096, PROFESSIONAL ENGINEER — 2/12/14

Washington State Department of Transportation

I-5
M ST TO PORTLAND AVE - HOV

I-5 OVER M STREET BRIDGE NO. 5/437

BRIDGE APPROACH SLAB DETAILS 3 OF 3

BRIDGE SHEET NO. BM5

SHEET 901 OF 1763 SHEETS

SR 5 FILE NO. ____ SHEET BM5

Tue Feb 11 07:29:56 2014

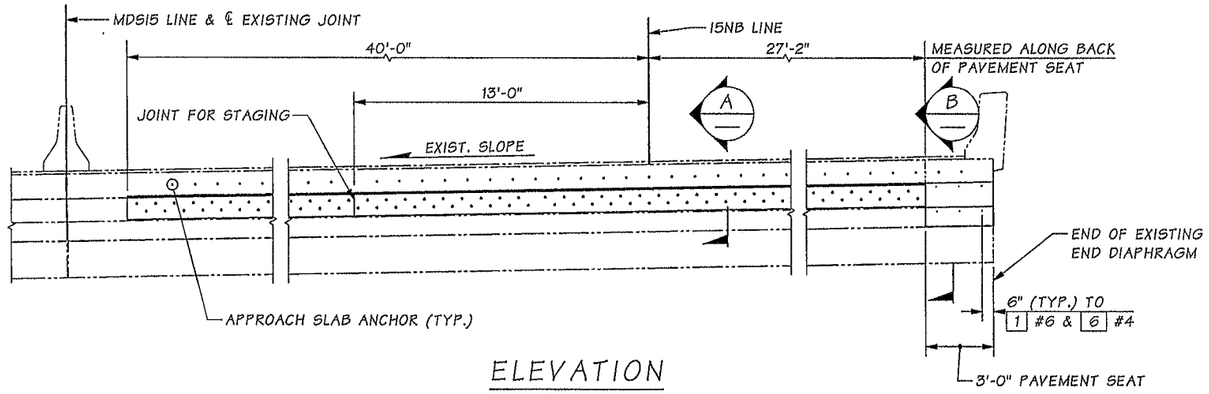

ELEVATION PAVEMENT SEAT

NEAR PIER 1 BACK OF PAVEMENT SEAT SHOWN, NEAR PIER 4 BACK OF PAVEMENT SEAT SIMILAR

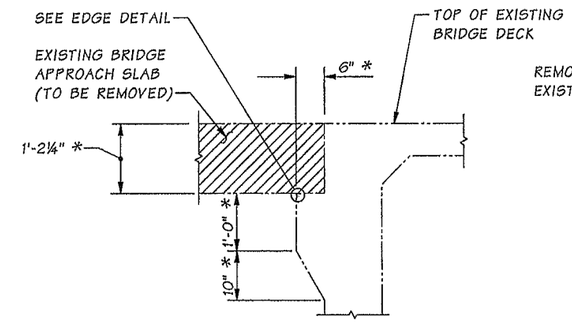

REMOVAL DETAIL

* SEE GENERAL NOTE 2 ON BR. SHT. BM1.

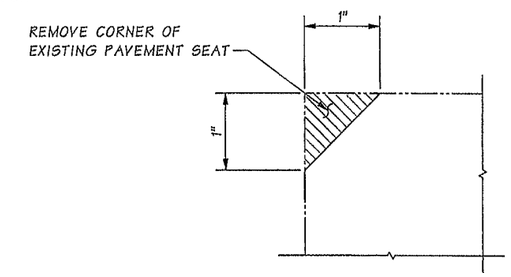

EDGE DETAIL

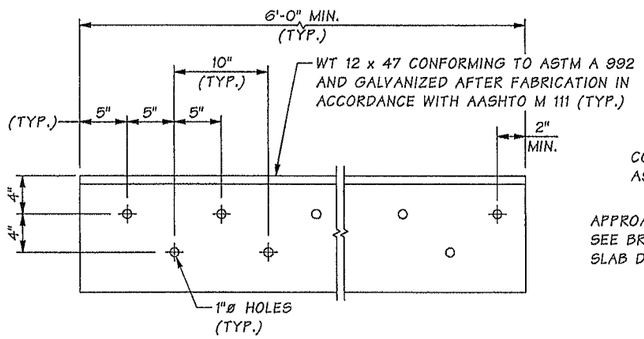

TYPICAL WT 12 SECTION DETAIL

BAR LIST

MARK	SIZE	LENGTH	BENDING DIAGRAM (ALL DIMENSIONS ARE OUT TO OUT TO POINTS OF INTERSECTION)
1	6	2'-4"	
2	4	2'-4'	
3	4	(A)	STR.
6	4	1'-3"	

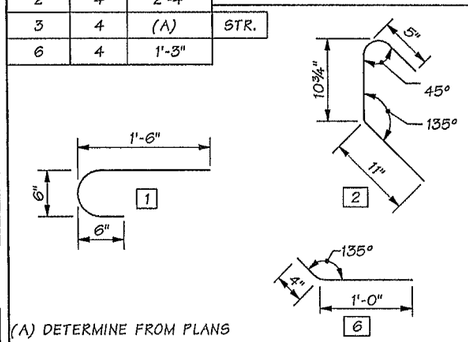

(A) DETERMINE FROM PLANS

BEND BARS AS REQ'D. TO CONFORM TO THE CONFIGURATION OF THE ROADWAY CROWN.

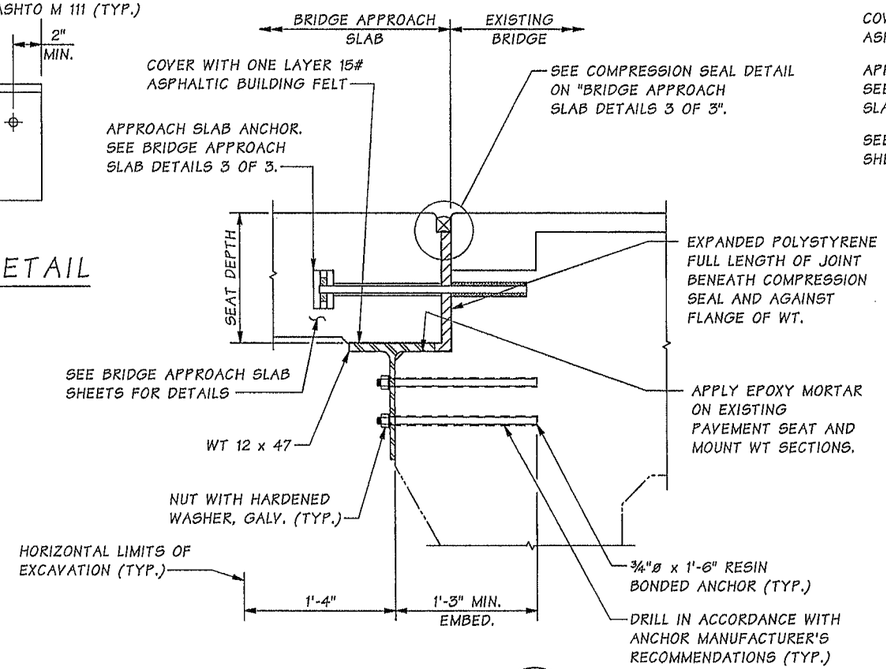

SECTION A

NOTE:

REPAIR EXISTING PAVEMENT SEAT CONCRETE PRIOR TO INSTALLING WT SECTIONS.

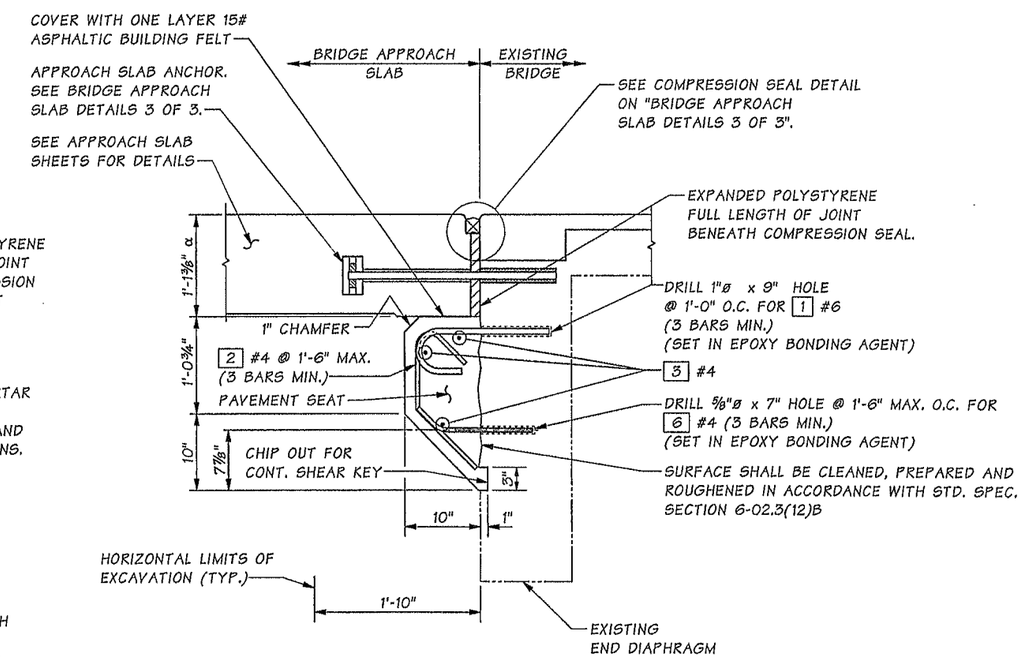

SECTION B

RETROFIT CONDITION

α MATCH SEAT DEPTH FROM SECTION A

Bridge Design Engr.	Khaleghi, B		M:\Y-Team\M ST TO PORTLAND\M ST BRIDGE DECK AND APPROACH SLAB\window files\PAVEMENTSEATDTL.wnd							
Supervisor	Khaleghi, B									
Designed By	Mizumori, A	01/13								
Checked By	Thill, B	01/14								
Detailed By	Bontemps, W	01/13								
Bridge Projects Engr.										
Prelim. Plan By										
Architect/Specialist			DATE	REVISION	BY	APP'D				

REGION NO.	STATE	FED. AID PROJ. NO.	SHEET NO.	TOTAL SHEETS
10	WASH.			
JOB NUMBER 12C501				

Tue Feb 11 07:29:58 2014

ANTHONY J. I. MIZUMORI, STATE OF WASHINGTON, 38192, PROFESSIONAL ENGINEER — 2/11/14

BRIDGE AND STRUCTURES OFFICE

RIJAN KHALEGHI, STATE OF WASHINGTON, 21895, PROFESSIONAL ENGINEER — 2/12/14

Washington State Department of Transportation

I-5
M ST TO PORTLAND AVE - HOV

I-5 OVER M STREET BRIDGE NO. 5/437

PAVEMENT SEAT REPAIR DETAILS

BRIDGE SHEET NO. BM6

SHEET 902 OF 1763 SHEETS

SR 5 FILE NO. ____ SHEET BM6

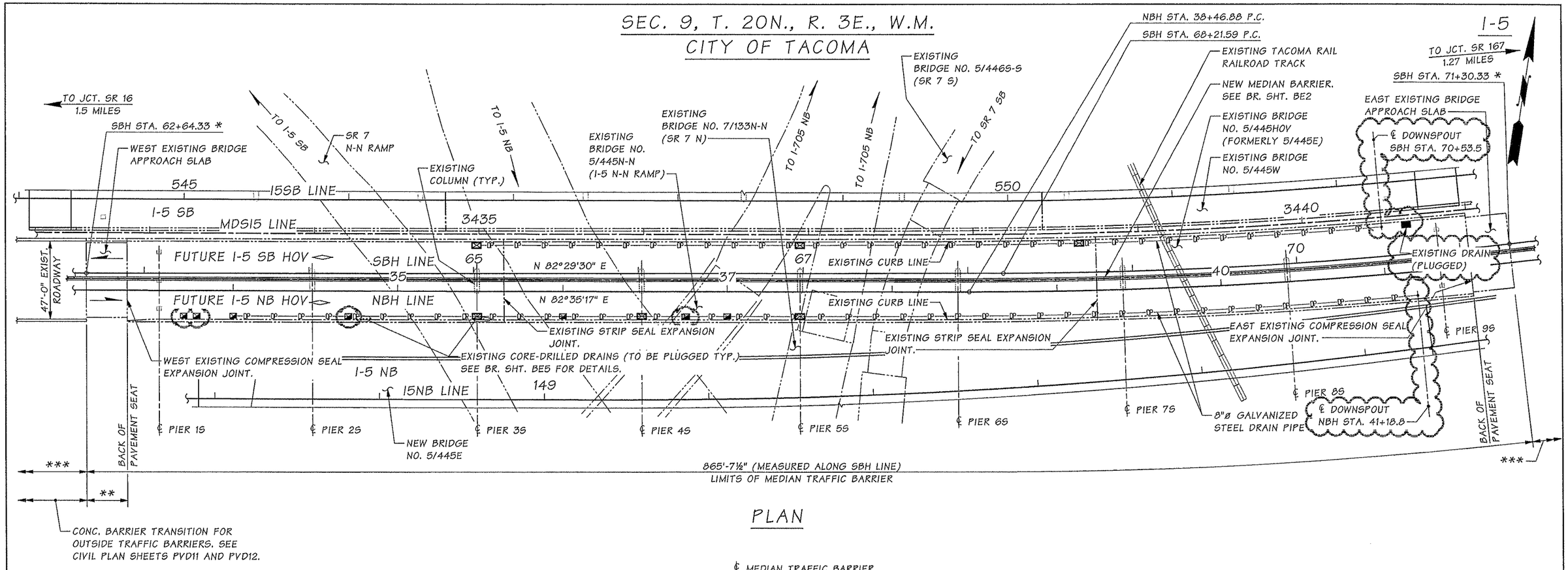

PLAN

CONC. BARRIER TRANSITION FOR OUTSIDE TRAFFIC BARRIERS. SEE CIVIL PLAN SHEETS PVD11 AND PVD12.

* MATCH BEGIN/END OF EXISTING BRIDGE APPROACH SLAB.

** SEE "PAVING PLAN" FOR OUTSIDE TRAFFIC BARRIERS ON EXISTING BRIDGE APPROACH SLAB.

*** SINGLE-SLOPE CONCRETE BARRIER. SEE STD. PLAN C-80.10-00.

BRIDGE DRAIN LOCATIONS

STATION	OFFSET	TYPE MODIFICATION
SBH STA. 65+02.00	LEFT	EXISTING
SBH STA. 66+96.00	LEFT	EXISTING
SBH STA. 68+84.00	LEFT	EXISTING
NBH STA. 33+70.00	RIGHT	NEW
NBH STA. 33+78.00	RIGHT	NEW
NBH STA. 34+00.00	RIGHT	NEW
NBH STA. 34+70.00	RIGHT	NEW
NBH STA. 35+48.00	RIGHT	EXISTING
NBH STA. 36+00.00	RIGHT	NEW
NBH STA. 36+48.00	RIGHT	EXISTING
NBH STA. 36+75.00	RIGHT	NEW
NBH STA. 37+00.00	RIGHT	NEW
NBH STA. 37+44.00	RIGHT	EXISTING

EXISTING BRIDGE DRAIN LOCATIONS ARE APPROXIMATE. THE CONTRACTOR SHALL LOCATE AND EXPOSE THE EXISTING DRAINS COVERED BY THE EXISTING OVERLAY.

DATUM

NAVD 1988

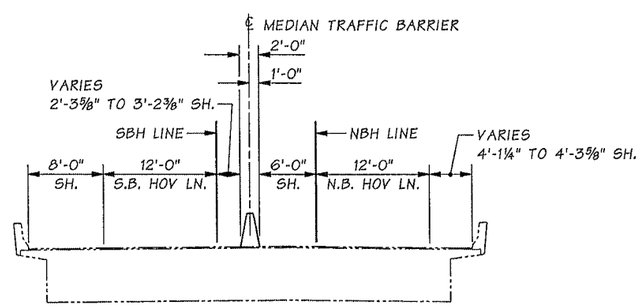

TYPICAL SECTION

LEGEND

EXISTING DRAIN TO BE MODIFIED.

NEW DRAIN

EXISTING DRAIN (PLUGGED)

B / BE15 — IDENTIFIES SECTION OR VIEW; TAKEN OR SHOWN ON BR. SHT. BE15

1 / — IDENTIFIES DETAIL; TAKEN OR SHOWN ON THE SAME SHEET

GENERAL NOTES:

1. ALL MATERIAL AND WORKMANSHIP SHALL BE IN ACCORDANCE WITH THE REQUIREMENTS OF THE WASHINGTON STATE DEPARTMENT OF TRANSPORTATION STANDARD SPECIFICATIONS FOR ROAD, BRIDGE AND MUNICIPAL CONSTRUCTION DATED 2014 AND AMENDMENTS.
2. NEW CONSTRUCTION HAS BEEN DESIGNED IN ACCORDANCE WITH THE REQUIREMENTS OF THE AASHTO LRFD BRIDGE DESIGN SPECIFICATIONS 6TH EDITION 2012.
3. EXISTING FEATURES, DIMENSIONS AND ELEVATIONS SHOWN IN THE PLANS ARE BASED ON ORIGINAL CONSTRUCTION RECORDS. THESE DIMENSIONS SHALL BE MEASURED AND VERIFIED BY THE CONTRACTOR IN THE FIELD PRIOR TO ORDERING MATERIAL AND PROCEEDING WITH CONSTRUCTION.
4. ALL CAST-IN-PLACE CONCRETE SHALL BE CLASS 4000.
5. UNLESS OTHERWISE SHOWN IN THE PLANS, CONCRETE COVER MEASURED FROM THE FACE OF CONCRETE TO THE FACE OF ANY REINFORCING STEEL SHALL BE 1½".
6. CONDUITS, JUNCTION BOXES AND UTILITIES ARE SHOWN FOR REFERENCE ONLY. THE CONTRACTOR SHALL COORDINATE THESE PLANS WITH ELECTRICAL, I.T.S. AND OTHER CIVIL PLANS.
7. DECK DRAIN SHALL BE NEENAH BRAND DRAIN, MODEL #R-4016-B TYPE A WITH GRATE TYPE C.
8. SEE "ALIGNMENT AND RIGHT OF WAY PLAN" FOR CURVE DATA.

DRAINS & MEDIAN BARRIER RETROFIT

Bridge Design Engr.	Khaleghi, B	
Supervisor	Khaleghi, B	
Designed By	Lee, CS	07/13
Checked By	Chu, A	10/13
Detailed By	Bontemps, W	06/13
Bridge Projects Engr.		
Prelim. Plan By		
Architect/Specialist		

M:\Y-Team\M ST TO PORTLAND\BRIDGE5-445E HOV\window files\ADD 04-21 LAYOUT.wnd

DATE	REVISION	BY	APP'D
04/25/14	ADD-1 ADDED & CHANGED DRAINS LOCATIONS	CSL	RBS

REGION NO.	STATE	FED. AID PROJ. NO.	SHEET NO.	TOTAL SHEETS
10	WASH.			

JOB NUMBER 12C501

BRIDGE AND STRUCTURES OFFICE

RICHARD B. SONNEMANN, STATE OF WASHINGTON, 18207, PROFESSIONAL ENGINEER — 4/24/14

Washington State Department of Transportation

I-5
M ST TO PORTLAND AVE-HOV

I-5 OVER I-705 AND TACOMA RAIL BRIDGE No.5/445HOV

LAYOUT

BRIDGE SHEET NO. BE1

SHEET 903 OF 1763 SHEETS

SR 5 FILE NO. ____ SHEET BE1

Tue Apr 22 08:27:36 2014

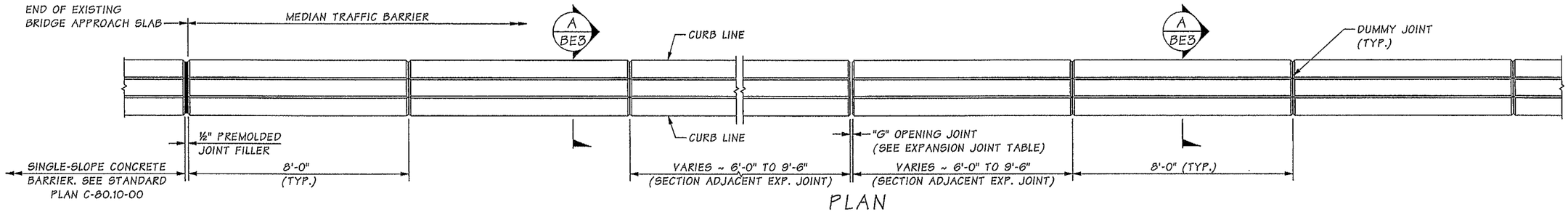

PLAN
MEDIAN TRAFFIC BARRIER

BARRIER CONTINUOUS BETWEEN BRIDGE EXPANSION JOINTS.
CONSTRUCTION JOINTS WITH SHEAR KEYS ARE PERMISSIBLE AT DUMMY JOINT LOCATIONS.
FORM JOINTS BETWEEN DUMMY JOINTS SHALL NOT BE PERMITTED.

EXPANSION JOINT TABLE

LOCATION	OPENING "G"		
	@40°F	@64°F	@80°F
NEAR PIER 1S	1¾"	1½"	1⅜"
NEAR PIER 3S	3¼"	2¾"	2½"
NEAR PIER 7S	2½"	2¼"	2⅛"
NEAR PIER 9S	1¾"	1½"	1⅜"

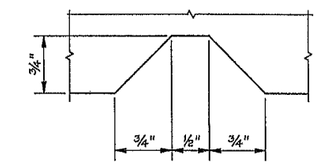

DUMMY JOINT DETAIL

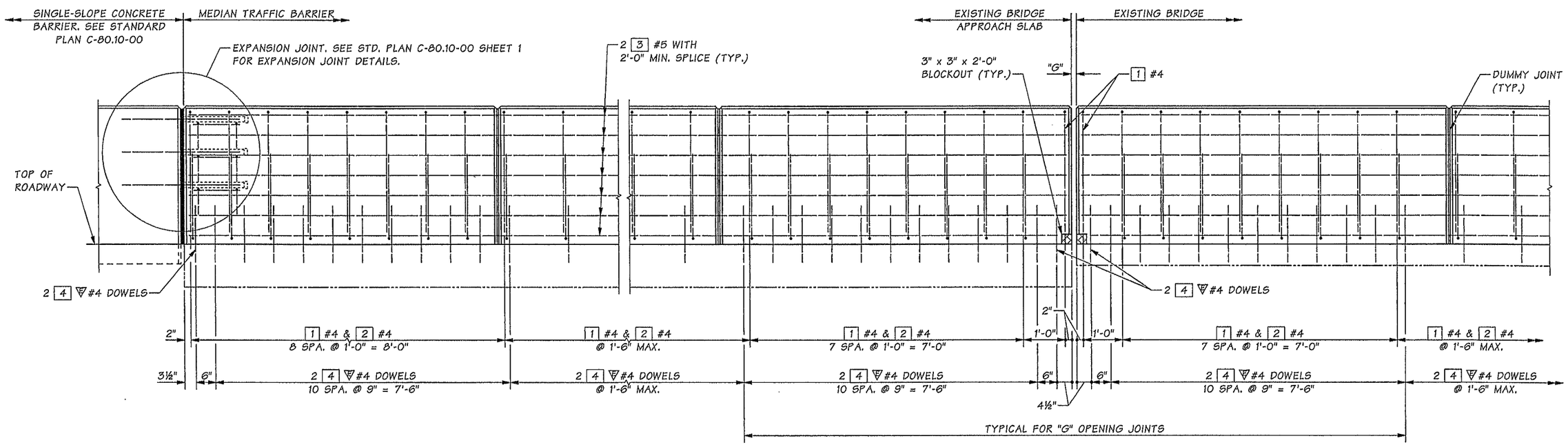

ELEVATION

SHOWN WITH BRIDGE APPROACH SLAB

Bridge Design Engr.	Khaleghi, B		M:\Y-Team\M ST TO PORTLAND\BRIDGE5-445E HOV\window files\MEDIAN BARRIER.wnd							
Supervisor	Khaleghi, B									
Designed By	Lee, CS	07/13								
Checked By	Chu, A	10/13								
Detailed By	Bontemps, W	07/13								
Bridge Projects Engr.										
Prelim. Plan By										
Architect/Specialist			DATE	REVISION	BY	APP'D				

REGION NO.	STATE	FED. AID PROJ. NO.	SHEET NO.	TOTAL SHEETS
10	WASH.			
JOB NUMBER 12C501				

Tue Feb 11 07:29:13 2014

SR 5 FILE NO. ____ SHEET BE2

CHUAN-SHENG LEE, STATE OF WASHINGTON, 30474, PROFESSIONAL ENGINEER 2/11/2014

BRIDGE AND STRUCTURES OFFICE

BRIAN KHALEGHI, STATE OF WASHINGTON, 27695, PROFESSIONAL ENGINEER 2/12/14

Washington State Department of Transportation

I-5
M ST TO PORTLAND AVE-HOV

I-5 OVER I-705 AND TACOMA RAIL BRIDGE No.5/445HOV

MEDIAN TRAFFIC BARRIER DETAILS 1 OF 2

BRIDGE SHEET NO. BE2

SHEET 904 OF 1763 SHEETS

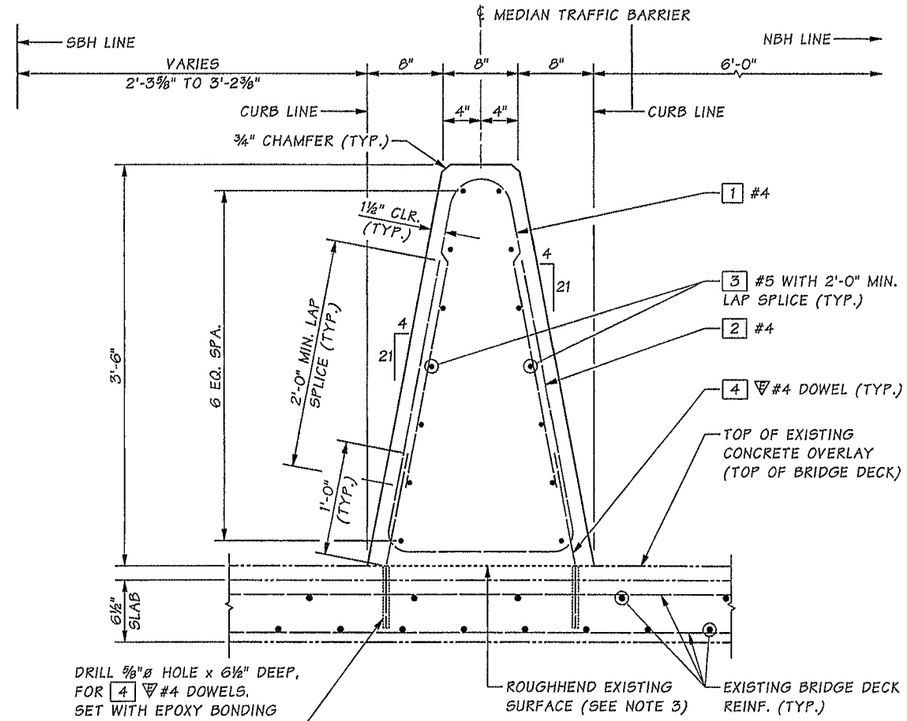

SECTION A / BE2

DETAIL FOR EXISTING BRIDGE AS SHOWN. DETAIL FOR EXISTING BRIDGE APPROACH SLAB SIMILAR.

BENDING DIAGRAM

▽ = EPOXY COATED REINFORCING STEEL

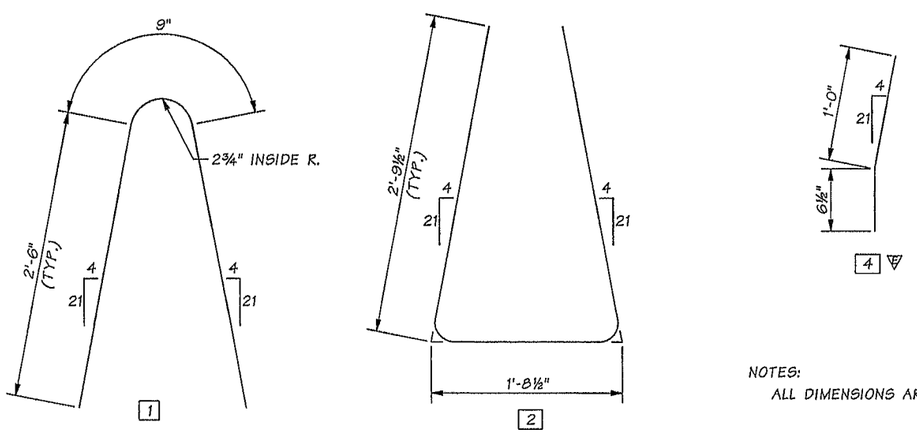

NOTES:
ALL DIMENSIONS ARE OUT TO OUT.

NOTES:

1. DO NOT SPLICE MORE THAN 50% OF BARS AT ONE LOCATION UNLESS AS NOTED. STAGGER SPLICE A MINIMUM OF 2'-0".
2. HOLES SHALL BE DRILLED WITH A ROTARY HAMMER DRILL. CORE DRILLED HOLES ARE NOT ALLOWED. ADJUST DOWEL SPACING AS REQUIRED TO AVOID EXISTING BRIDGE DECK REINFORCEMENTS.
3. SURFACE SHALL BE ROUGHENED AND CLEAN IN ACCORDANCE WITH STANDARD SPECIFICATION SECTION 6-02.3(12)B.

Bridge Design Engr.	Khaleghi, B	
Supervisor	Khaleghi, B	
Designed By	Lee, CS	07/13
Checked By	Chu, A	10/13
Detailed By	Bontemps, W	07/13
Bridge Projects Engr.		
Prelim. Plan By		
Architect/Specialist		

M:\Y-Team\M ST TO PORTLAND\BRIDGE5-445E HOV\window files\MEDIAN BARRIER 2.wnd

DATE	REVISION	BY	APP'D

REGION NO.	STATE	FED. AID PROJ. NO.	SHEET NO.	TOTAL SHEETS
10	WASH.			

JOB NUMBER 12C501

CHYUAN-SHEN LEE, STATE OF WASHINGTON, 30474, STRUCTURAL ENGINEER, PROFESSIONAL ENGINEER — 2/11/2014

BRIDGE AND STRUCTURES OFFICE

BIJAN KHALEGHI, STATE OF WASHINGTON, 27695, STRUCTURAL ENGINEER, PROFESSIONAL ENGINEER — 2/12/14

Washington State Department of Transportation

I-5
M ST TO PORTLAND AVE-HOV

I-5 OVER I-705 AND TACOMA RAIL BRIDGE No.5/445HOV

MEDIAN TRAFFIC BARRIER
DETAILS 2 OF 2

BRIDGE SHEET NO. BE3

SHEET 905 OF 1763 SHEETS

SR 5 FILE NO. SHEET BE3

Tue Feb 11 07:29:15 2014

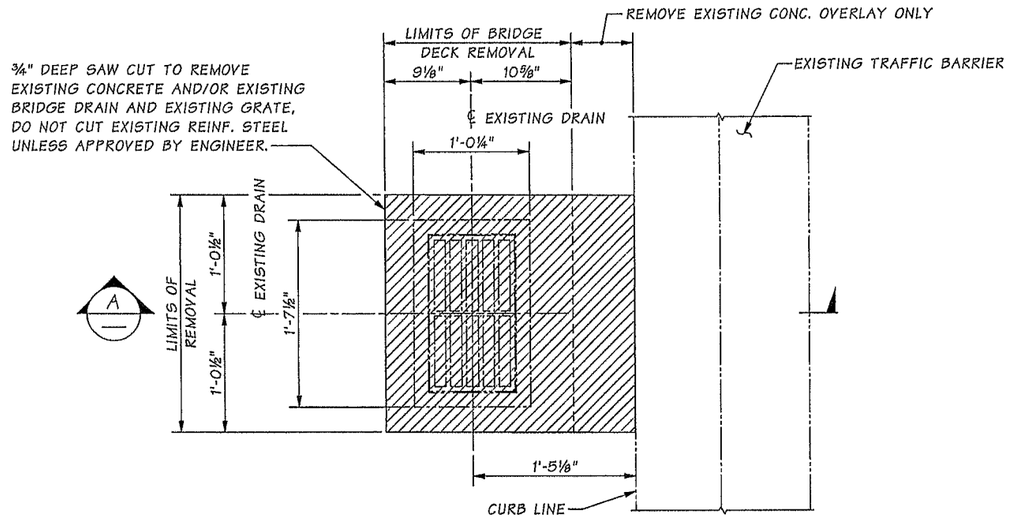

PLAN
EXISTNG DRAIN

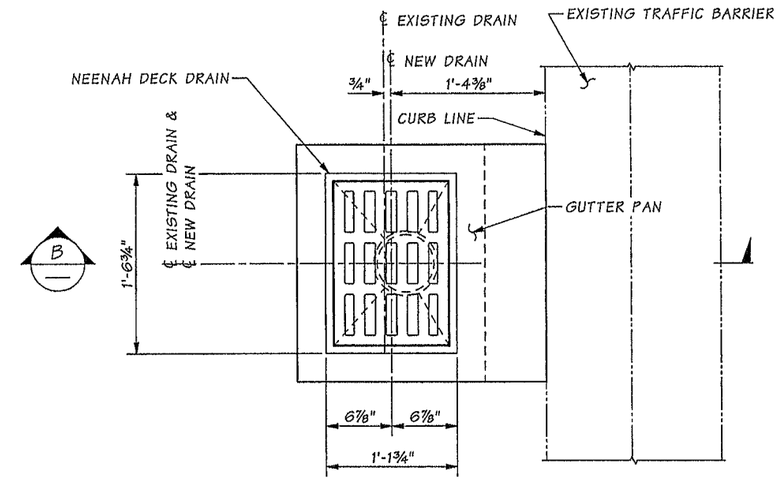

PLAN
AFTER MODIFICATION

BRIDGE DRAIN MODIFICATION DETAIL

7 LOCATIONS

(TO BE REMOVED)

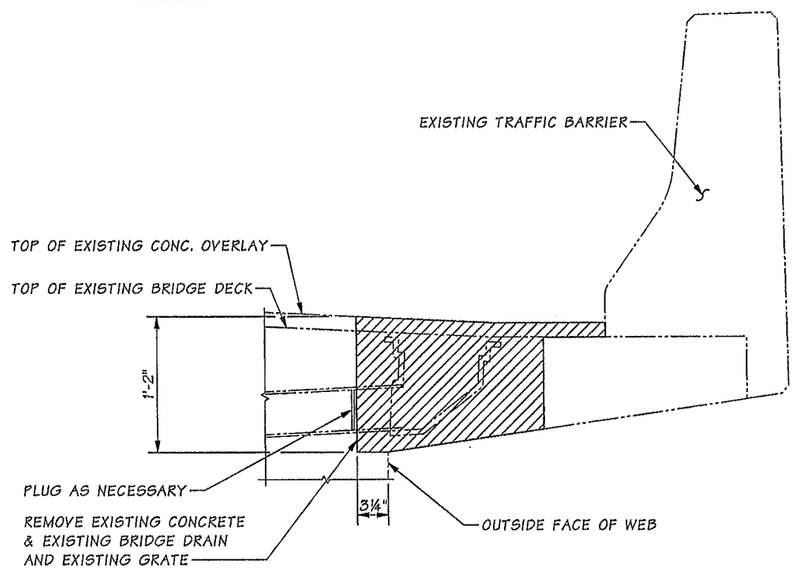

SECTION A

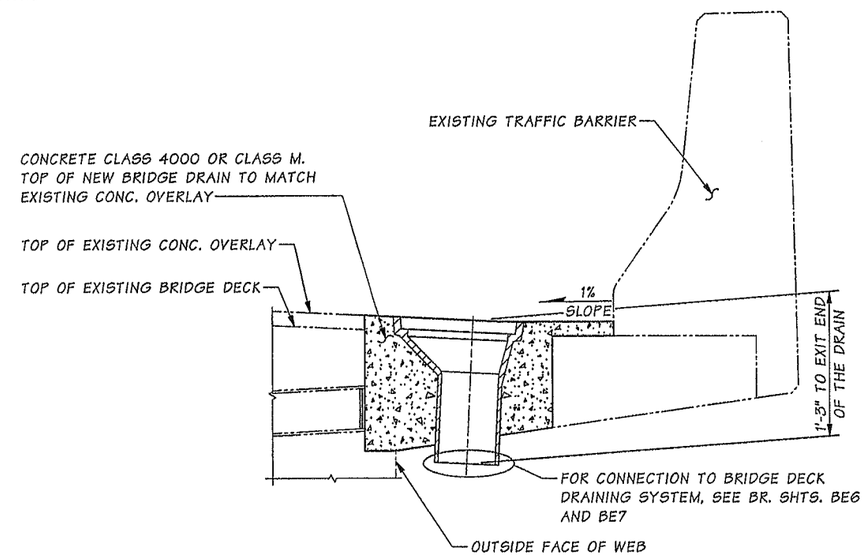

SECTION B

SEE BR. SHTS. BE6 AND BE7 FOR CONNECTION FROM NEENAH DECK DRAIN TO DRAIN PIPES.

SR 5 FILE NO. ____ SHEET BE4

Bridge Design Engr.	Khaleghi, B		M:\Y-Team\M ST TO PORTLAND\BRIDGE5-445E HOV\window files\BRIDGEDRAINDTLS1.wnd
Supervisor	Khaleghi, B		
Designed By	Lee, CS	07/13	
Checked By	Chu, A	10/13	
Detailed By	Bontemps, W	07/13	
Bridge Projects Engr.			
Prelim. Plan By			
Architect/Specialist			

DATE	REVISION	BY	APP'D

REGION NO.	STATE	FED. AID PROJ. NO.	SHEET NO.	TOTAL SHEETS
10	WASH.			
JOB NUMBER 12C501				

Tue Feb 11 07:29:16 2014

BRIDGE AND STRUCTURES OFFICE

2/11/2014 2/12/14

Washington State Department of Transportation

I-5
M ST TO PORTLAND AVE-HOV

I-5 OVER I-705 AND TACOMA RAIL BRIDGE No.5/445HOV

BRIDGE DRAIN DETAILS 1 OF 4

BRIDGE SHEET NO. BE4

SHEET 906 OF 1763 SHEETS

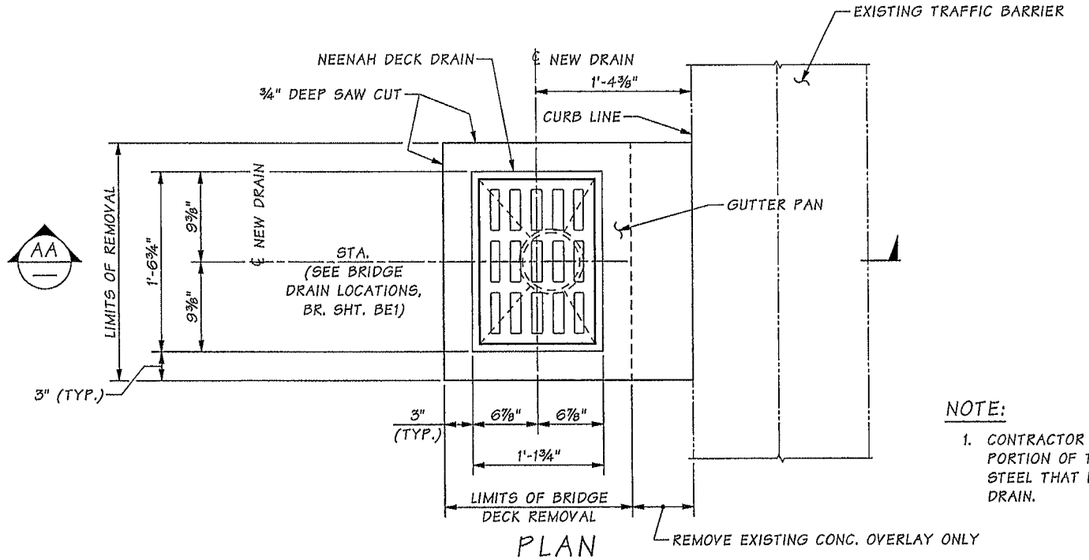

PLAN
RIGHT HAND

NOTE:

1. CONTRACTOR SHALL REMOVE ONLY THAT PORTION OF THE EXISTING REINFORCING STEEL THAT INTERFERE WITH NEW BRIDGE DRAIN.

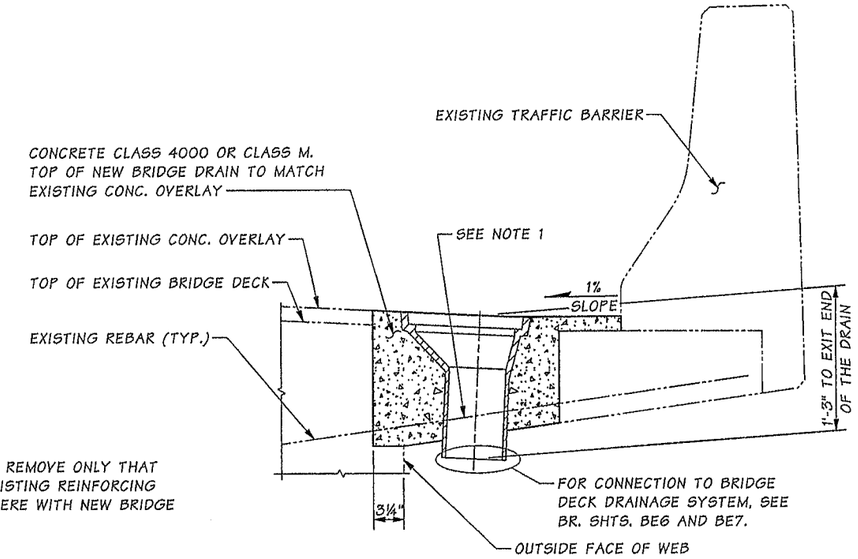

SECTION AA

SEE BR. SHTS. BE6 AND BE7 FOR CONNECTION FROM NEENAH DECK DRAIN TO DRAIN PIPES.

NEW BRIDGE DRAIN DETAILS

3 LOCATIONS

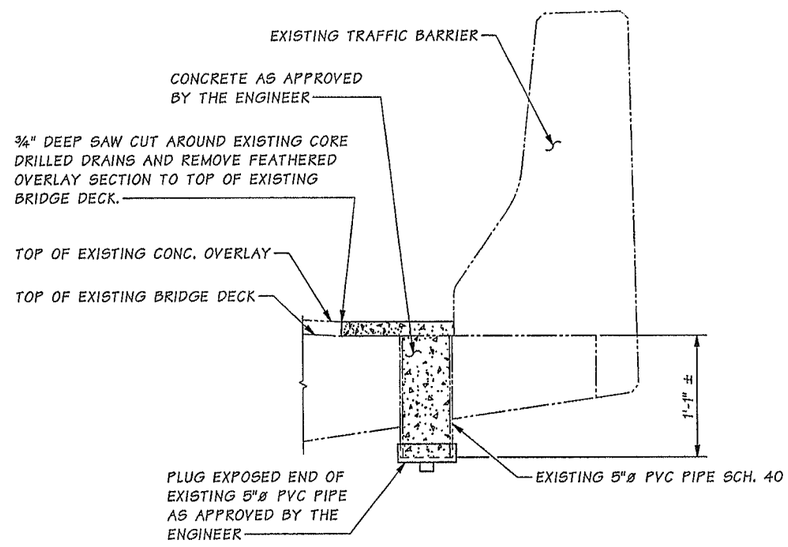

BRIDGE DRAIN PLUG DETAIL AT EXISTING CORE-DRILLED DRAINS

7 LOCATIONS

Bridge Design Engr.	Khaleghi, B		M:\Y-Team\M ST TO PORTLAND\BRIDGE5-445E HOV\window files\BRIDGEDRAINDTLS1A.wnd								
Supervisor	Khaleghi, B										
Designed By	Lee, CS	07/13									
Checked By	Chu, A	10/13									
Detailed By	Bontemps, W	07/13									
Bridge Projects Engr.											
Prelim. Plan By											
Architect/Specialist			DATE	REVISION	BY	APP'D					

REGION NO.	STATE	FED. AID PROJ. NO.	SHEET NO.	TOTAL SHEETS
10	WASH.			
JOB NUMBER 12C501				

Tue Feb 11 07:29:17 2014

BRIDGE AND STRUCTURES OFFICE

2/11/2014 2/12/14

Washington State Department of Transportation

I-5
M ST TO PORTLAND AVE-HOV

I-5 OVER I-705 AND TACOMA RAIL BRIDGE No.5/445HOV

BRIDGE DRAIN DETAILS 2 OF 4

BRIDGE SHEET NO. BE5

SHEET 907 OF 1763 SHEETS

SR 5 FILE NO. ____ SHEET BE5

DRAINAGE PIPE GENERAL NOTES:

1. DECK DRAIN SHALL BE NEENAH DECK DRAIN, MODEL R-4016-B, TYPE A WITH GRATE TYPE C (SEE SPECIAL PROVISIONS).

2. MATERIAL SPECIFICATION:

PLATE, BARS & SHAPES	ASTM A 36
HSS	ASTM A 500
PIPES & FITTINGS	ASTM A 53
THREADED RODS	ASTM A 307
BOLTS, NUTS & WASHERS	STD. SPEC. 9-06.5(1)
BRAND NAME HARDWARE	BY SUPPLIER
UNDERCUT ANCHORS	ASTM A 193 GR. B7

3. PIPES AND FITTING JOINTS SHALL BE JOINED WITH FLEXIBLE GROOVED END TYPE JOINT CONNECTIONS (SEE SPECIAL PROVISIONS).

4. ALL STEEL PARTS IN DRAINAGE ASSEMBLY SHALL BE GALVANIZED IN ACCORDANCE WITH AASHTO M 111 AFTER FABRICATION EXCEPT RODS, BOLTS, NUTS AND WASHERS SHALL BE GALVANIZED IN ACCORDANCE WITH AASHTO M 232. 8"ø EXPANSION JOINT, PIPE ROLLER AND VICTAULIC COUPLING ARE NOT TO BE GALVANIZED.

5. ALL EXPOSED DRAINAGE TO BE PAINTED IN ACCORDANCE WITH STD. SPEC. SECTION 6-07.3(11)A. THE COLOR OF THE TOP COAT OF PAINT SHALL BE WASHINGTON GRAY.

6. THE CONTRACTOR SHALL SUBMIT SHOP DRAWINGS TO THE ENGINEER FOR APPROVAL IN ACCORDANCE WITH SECTION 6-03.3(7).

7. PROVIDE A WYE CLEANOUT IMMEDIATELY UPSTREAM OF EACH DRAIN AND BOTH SIDES OF EXPANSION JOINTS.

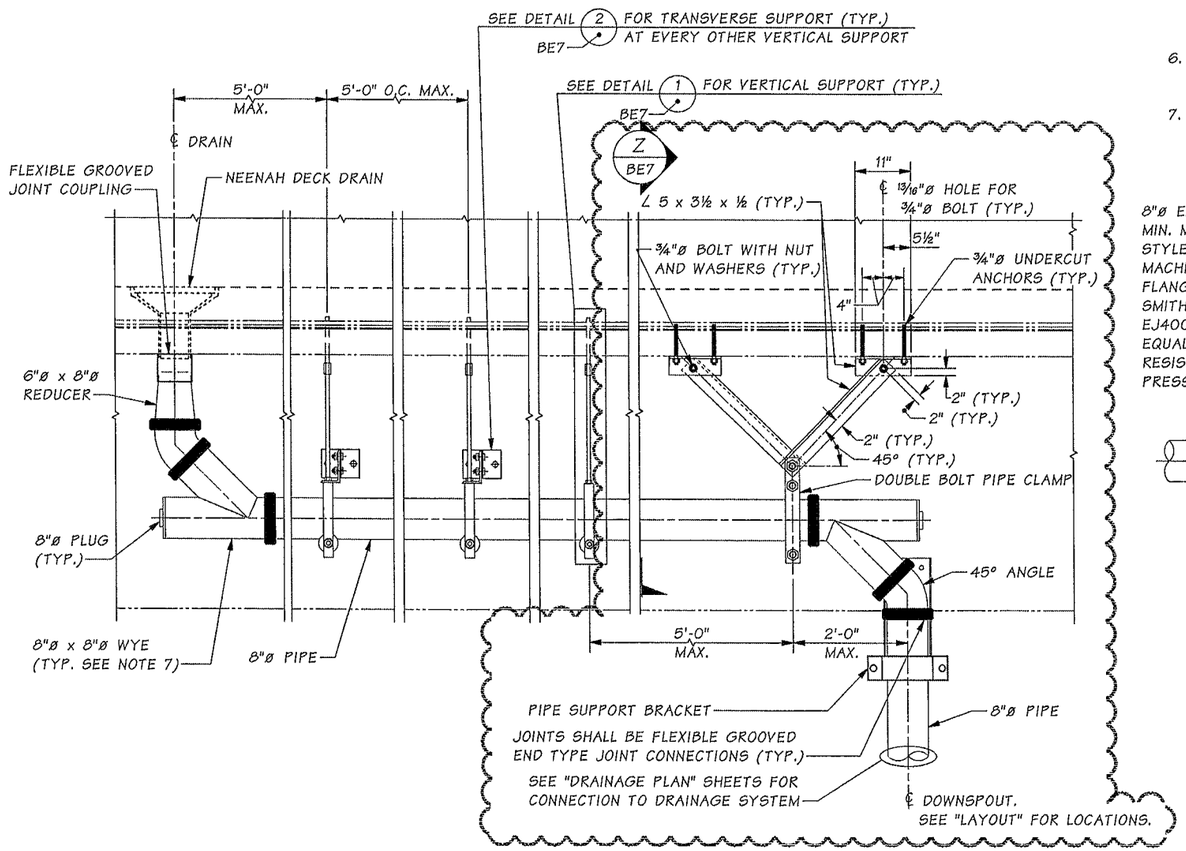

ELEVATION

RIGHT SIDE SHOWN, LEFT SIDE SIMILAR

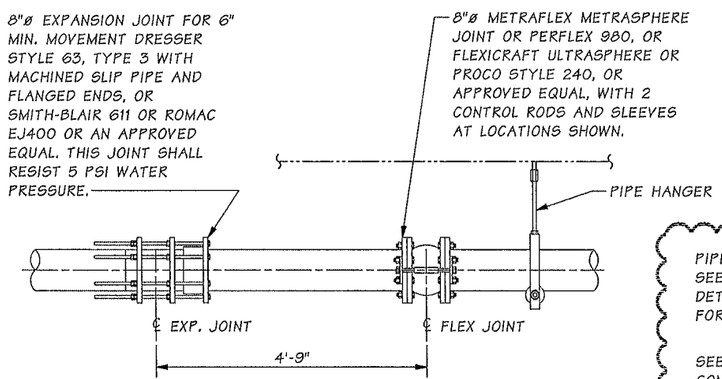

DRAIN LINE EXPANSION DETAILS

AT BRIDGE EXPANSION JOINTS NEAR PIERS 3S AND 7S (2 LOCATIONS)

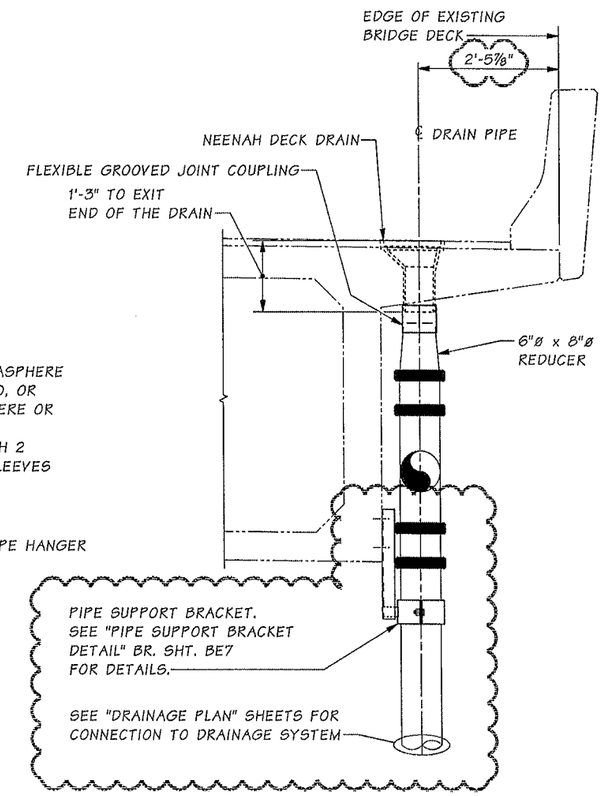

SIDE ELEVATION

SR 5 FILE NO. ____ SHEET BE6

Bridge Design Engr.	Khaleghi, B		
Supervisor	Khaleghi, B		
Designed By	Lee, CS	07/13	
Checked By	Chu, A	10/13	
Detailed By	Bontemps, W	07/13	
Bridge Projects Engr.			
Prelim. Plan By			
Architect/Specialist			

M:\Y-Team\M ST TO PORTLAND\BRIDGE5-445E HOV\window files\ADD 04-21 BRIDGEDRAINDTLS2.WND

DATE	REVISION	BY	APP'D
04/25/14	ADD-1 ADDED & CHANGED DRAINS	CSL	RBS

REGION NO.	STATE	FED. AID PROJ. NO.	SHEET NO.	TOTAL SHEETS
10	WASH.			

JOB NUMBER 12C501

Tue Apr 22 09:38:43 2014

BRIDGE AND STRUCTURES OFFICE

4/22/2014 4/22/14

Washington State Department of Transportation

I-5
M ST TO PORTLAND AVE-HOV

I-5 OVER I-705 AND TACOMA RAIL BRIDGE No.5/445HOV

BRIDGE DRAIN DETAILS 3 OF 4

BRIDGE SHEET NO. BE6

SHEET 908 OF 1763 SHEETS

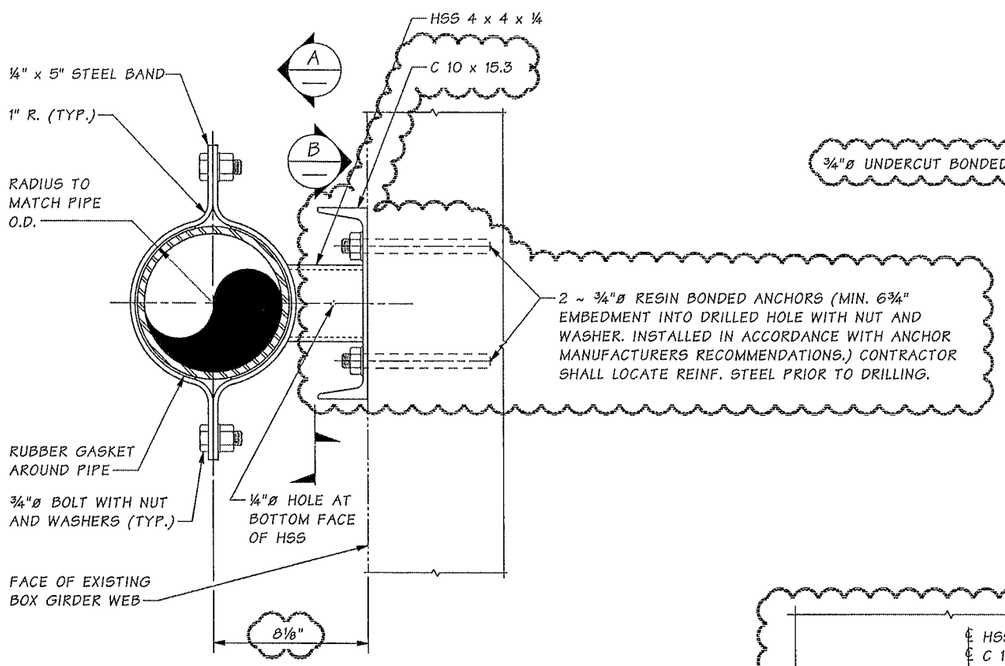

PIPE SUPPORT BRACKET DETAIL

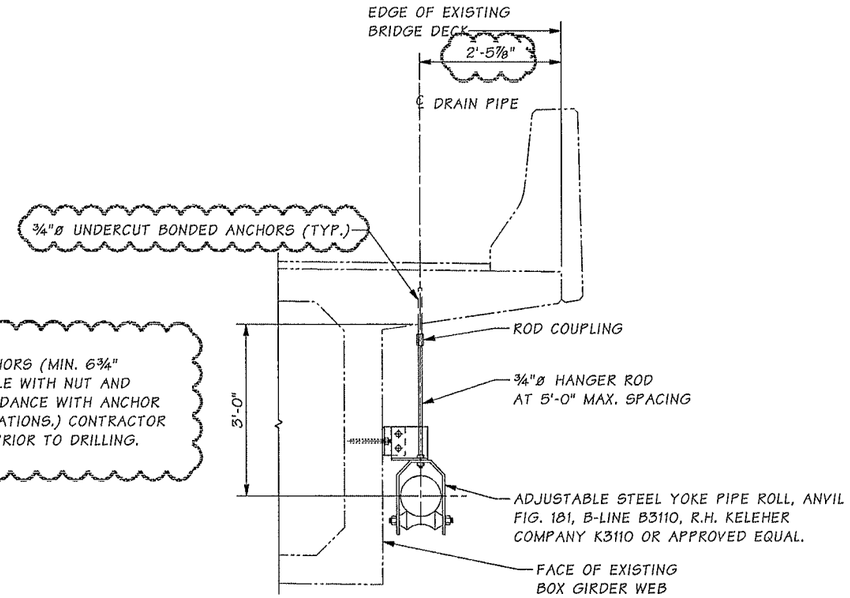

DETAIL 1 — BE6

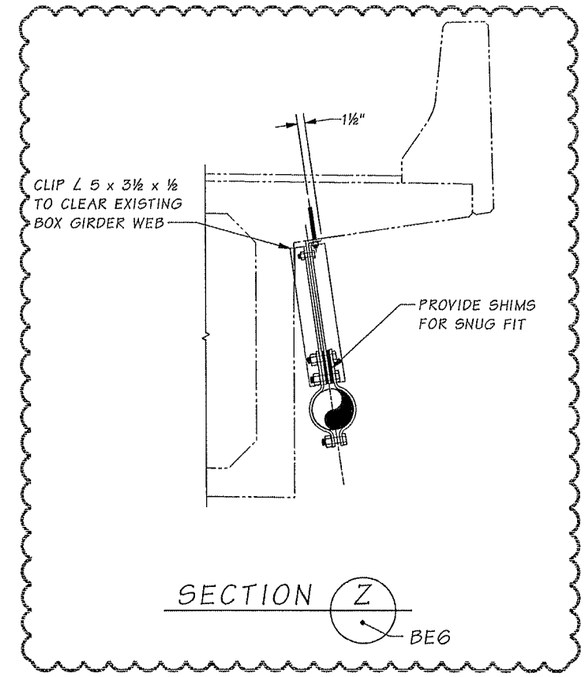

SECTION Z — BE6

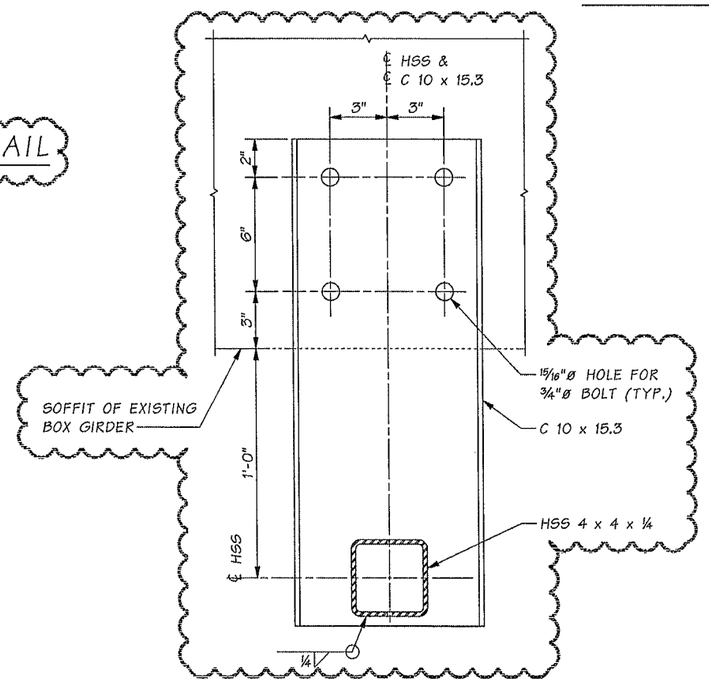

SECTION B

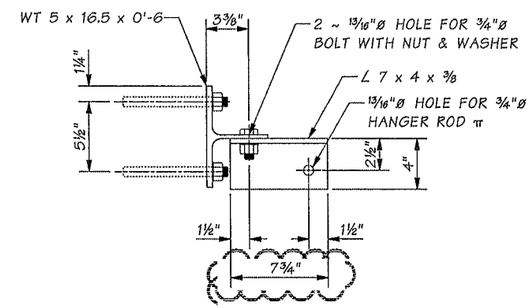

PLAN

π HOLE FOR HANGER ROD MAY BE FIELD DRILLED.

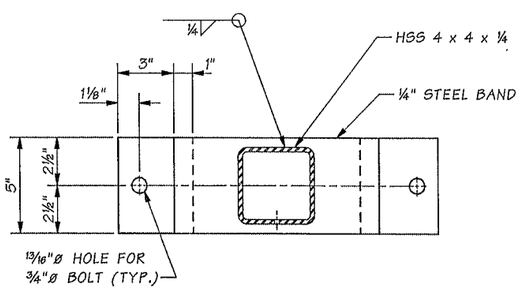

SECTION A

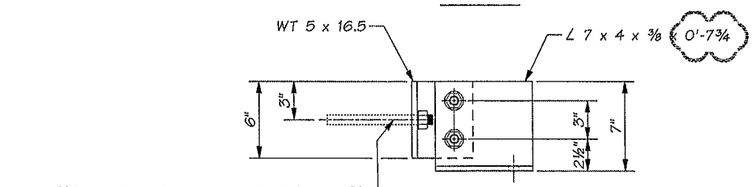

ELEVATION

DETAIL 2 — BE6

SR 5 FILE NO. ____ SHEET BE7

Bridge Design Engr.	Khaleghi, B		
Supervisor	Khaleghi, B		
Designed By	Lee, CS	07/13	
Checked By	Chu, A	10/13	
Detailed By	Bontemps, W	07/13	
Bridge Projects Engr.			
Prelim. Plan By		04/25/14	ADD-1 CHANGED PIPE SUPPORT BRACKET
Architect/Specialist		DATE	REVISION

M:\Y-Team\M ST TO PORTLAND\BRIDGE5-445E HOV\window files\ADD-04-21 BRIDGEDRAINDTLS3.wnd

CSL	RBS
BY	APP'D

REGION NO.	STATE	FED. AID PROJ. NO.	SHEET NO.	TOTAL SHEETS
10	WASH.			
JOB NUMBER 12C501				

Tue Apr 22 08:27:44 2014

CHYUAN-SHENG LEE — STATE OF WASHINGTON — 50474 — PROFESSIONAL ENGINEER — 4/22/2014

BRIDGE AND STRUCTURES OFFICE

RICHARD B. WOODWARD — STATE OF WASHINGTON — 18207 — PROFESSIONAL ENGINEER — 4/22/14

Washington State Department of Transportation

I-5
M ST TO PORTLAND AVE-HOV

I-5 OVER I-705 AND TACOMA RAIL BRIDGE No.5/445HOV

BRIDGE DRAIN DETAILS 4 OF 4

BRIDGE SHEET NO. BE7

SHEET 909 OF 1763 SHEETS

SEC. 9, T. 20N., R. 3E., W.M.

CITY OF TACOMA

I-5

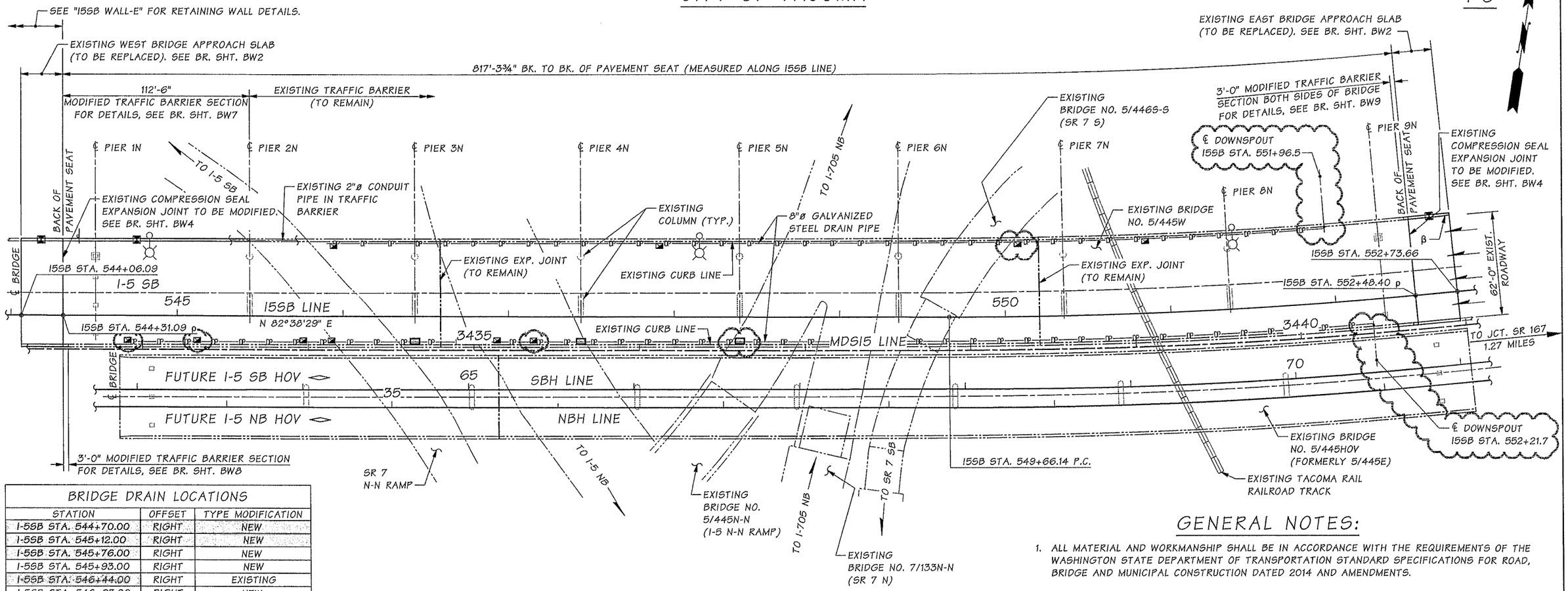

PLAN

BRIDGE DRAIN LOCATIONS		
STATION	OFFSET	TYPE MODIFICATION
I-5SB STA. 544+70.00	RIGHT	NEW
I-5SB STA. 545+12.00	RIGHT	NEW
I-5SB STA. 545+76.00	RIGHT	NEW
I-5SB STA. 545+93.00	RIGHT	NEW
I-5SB STA. 546+44.00	RIGHT	EXISTING
I-5SB STA. 546+93.00	RIGHT	NEW
I-5SB STA. 547+15.00	RIGHT	NEW
I-5SB STA. 547+44.00	RIGHT	EXISTING
I-5SB STA. 548+40.00	RIGHT	EXISTING
I-5SB STA. 545+94.00	LEFT	NEW
I-5SB STA. 547+91.00	LEFT	NEW
I-5SB STA. 550+08.00	LEFT	NEW
I-5SB STA. 550+86.00	LEFT	NEW

EXISTING BRIDGE DRAIN LOCATIONS ARE APPROXIMATE. THE CONTRACTOR SHALL LOCATE AND EXPOSE THE EXISTING DRAINS COVERED BY THE EXISTING OVERLAY.

LEGEND

- BARRIER MOUNTED SIGN
- JUNCTION BOX NEMA 4X S.S. (TYP.)
- EXISTING DRAIN TO BE MODIFIED.
- NEW DRAIN
- NEW LUMINARE POLE

B / BW15 — IDENTIFIES SECTION OR VIEW; TAKEN OR SHOWN ON BR. SHT. BW15

1 / — IDENTIFIES DETAIL; TAKEN OR SHOWN ON THE SAME SHEET

β THRIE BEAM GUARDRAIL CONNECTION TYPE "D" (STD. PLAN C-24.10-00)

ρ MATCH BACK OF PAVEMENT SEAT OF EXISTING BRIDGE.

DATUM

NAVD 1988

GENERAL NOTES:

1. ALL MATERIAL AND WORKMANSHIP SHALL BE IN ACCORDANCE WITH THE REQUIREMENTS OF THE WASHINGTON STATE DEPARTMENT OF TRANSPORTATION STANDARD SPECIFICATIONS FOR ROAD, BRIDGE AND MUNICIPAL CONSTRUCTION DATED 2014 AND AMENDMENTS.
2. NEW CONSTRUCTION HAS BEEN DESIGNED IN ACCORDANCE WITH THE REQUIREMENTS OF THE AASHTO LRFD BRIDGE DESIGN SPECIFICATIONS 6TH EDITION 2012.
3. EXISTING FEATURES, DIMENSIONS AND ELEVATIONS SHOWN IN THE PLANS ARE BASED ON ORIGINAL CONSTRUCTION RECORDS. THESE DIMENSIONS SHALL BE MEASURED AND VERIFIED BY THE CONTRACTOR IN THE FIELD PRIOR TO ORDERING MATERIAL AND PROCEEDING WITH CONSTRUCTION.
4. THE CONCRETE IN BRIDGE APPROACH SLABS SHALL BE CLASS 4000A. ALL OTHER CAST-IN-PLACE CONCRETE SHALL BE CLASS 4000. UNLESS OTHERWISE SHOWN IN THE PLANS.
5. UNLESS OTHERWISE SHOWN IN THE PLANS, CONCRETE COVER MEASURED FROM THE FACE OF CONCRETE TO THE FACE OF ANY REINFORCING STEEL SHALL BE 1½".
6. CONDUITS, JUNCTION BOXES AND UTILITIES ARE SHOWN FOR REFERENCE ONLY. THE CONTRACTOR SHALL COORDINATE THESE PLANS WITH ELECTRICAL, I.T.S. AND OTHER CIVIL PLANS.
7. DECK DRAIN SHALL BE NEENAH BRAND DRAIN, MODEL #R-4016-B TYPE A WITH GRATE TYPE C.
8. SEE "ALIGNMENT AND RIGHT OF WAY PLAN" FOR CURVE DATA.

APPROACH SLABS, DRAINS AND TRAFFIC BARRIER RETROFIT

Bridge Design Engr.	Khaleghi, B		M:\Y-Team\M ST TO PORTLAND\BRIDGE5-445W SB\window files\ADD-04-21 LAYOUT.wnd			REGION NO.	STATE	FED. AID PROJ. NO.	SHEET NO.	TOTAL SHEETS
Supervisor	Khaleghi, B					10	WASH.			
Designed By	Lee, CS	07/13								
Checked By	Chu, A	10/13								
Detailed By	Bontemps, W	06/13				JOB NUMBER 12C501				
Bridge Projects Engr.										
Prelim. Plan By			04/25/14	ADD-1 ADDED & CHANGED DRAINS LOCATIONS	CSL	RBS				
Architect/Specialist			DATE	REVISION	BY	APP'D				

Tue Apr 22 08:27:25 2014

BRIDGE AND STRUCTURES OFFICE

RICHARD B. SHOWALTER — STATE OF WASHINGTON — 18207 — GENERAL ENGINEER — PROFESSIONAL ENGINEER — 4/22/14

Washington State Department of Transportation

I-5
M ST TO PORTLAND AVE-HOV

I-5 OVER I-705 AND TACOMA RAIL BRIDGE NO. 5/445W

LAYOUT

BRIDGE SHEET NO. BW1

SHEET 910 OF 1763 SHEETS

SR 5 FILE NO. ____ SHEET BW1

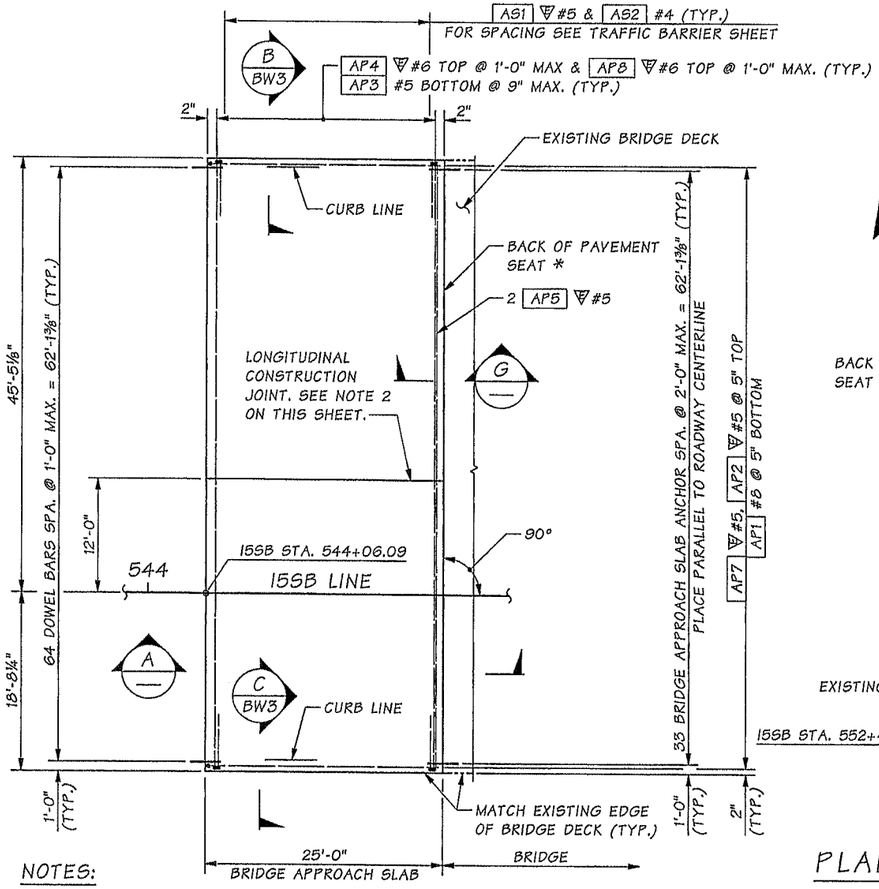

PLAN

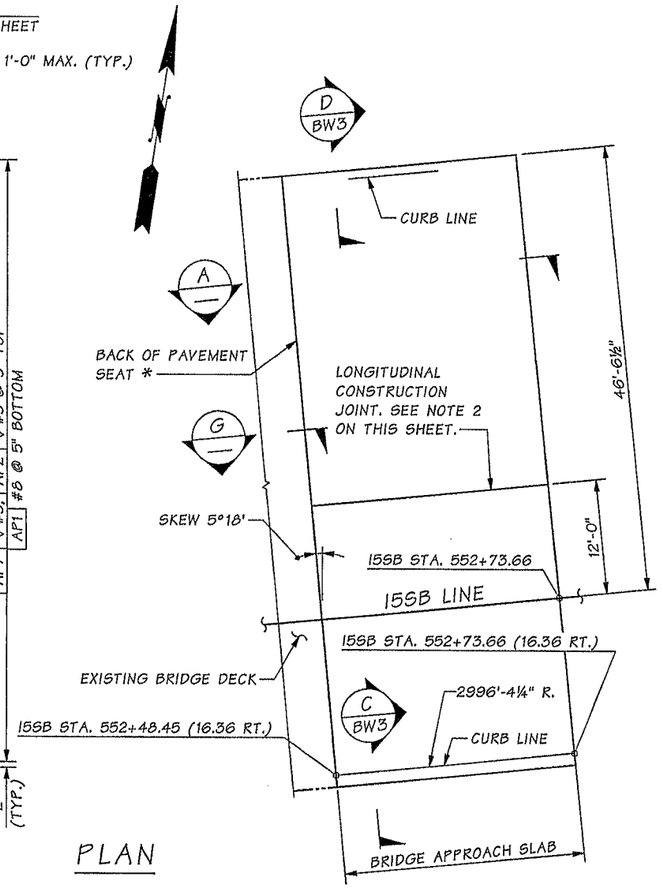

* MATCH EXISTING BRIDGE BACK OF PAVEMENT SEAT

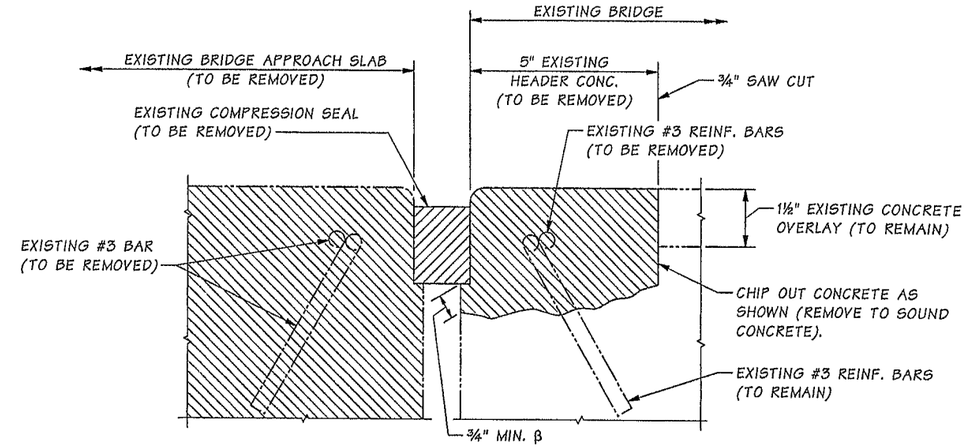

β DEPTH BELOW FULLY COMPRESSED SEAL HEIGHT OF NEW COMPRESSION SEAL

EXISTING

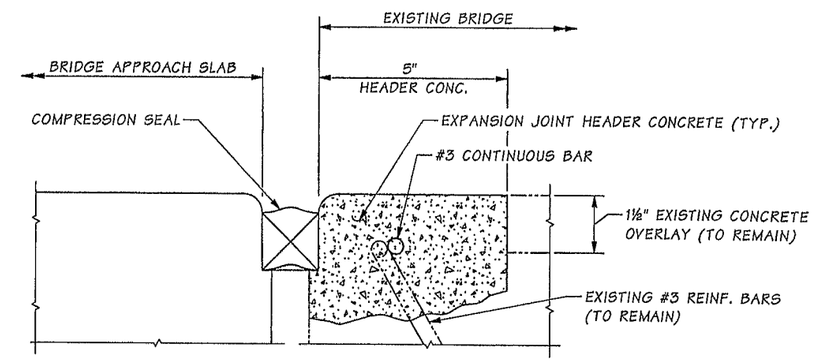

MODIFIED

SECTION G

EXISTING AND MODIFIED CONDITION AT BACK OF PAVEMENT SEATS NEAR PIERS 1N & 9N

NOTES:

1. ALL EDGES OF BRIDGE APPROACH SLAB SHALL HAVE ½" RADIUS EXCEPT AT LONGITUDINAL JOINTS.
2. SEE "LONGITUDINAL CONSTRUCTION JOINT DETAIL" ON BRIDGE APPROACH SLAB DETAILS 2 OF 3.
3. THE MINIMUM LAP SPLICE OF #5 IS 2'-0", #5 IS 2'-6", #6 IS 3'-0", AND #8 IS 3'-3". ALL LAP SPLICES SHALL BE STAGGERED SO THAT NO MORE THAN 50% OF REBAR IS SPLICED AT THE SAME LOCATION EXCEPT AT LONGITUDINAL CONSTRUCTION JOINTS. LAP SPLICES SHALL BE LOCATED WITHIN THE MIDDLE HALF OF THE BRIDGE APPROACH SLAB. OPTIONAL SPLICES ARE ALLOWED FOR AP4 #6.

BENDING DIAGRAM

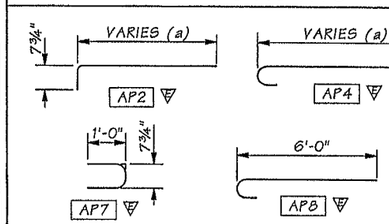

NOTES:
ALL DIMENSIONS ARE OUT TO OUT.

= EPOXY COATED REINFORCING STEEL

(a) DETERMINE FROM PLANS.

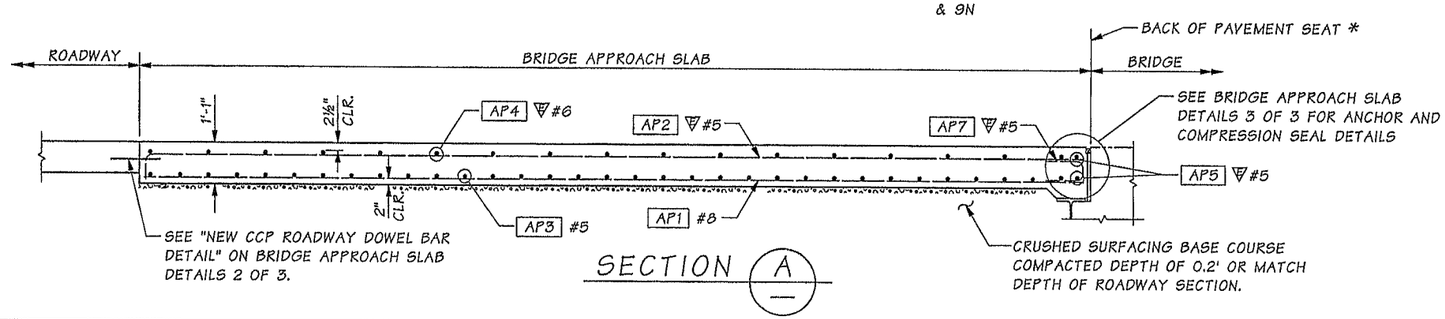

SECTION A

Bridge Design Engr.	Khaleghi, B		
Supervisor	Khaleghi, B		
Designed By	Lee, CS	07/13	
Checked By	Chu, A	10/13	
Detailed By	Bontemps, W	06/13	
Bridge Projects Engr.			
Prelim. Plan By			
Architect/Specialist			

M:\Y-Team\M ST TO PORTLAND\BRIDGE5-445W SB\window files\BRAPPSLAB1.wnd

DATE	REVISION	BY	APP'D

REGION NO.	STATE	FED. AID PROJ. NO.	SHEET NO.	TOTAL SHEETS
10	WASH.			
JOB NUMBER 12C501				

CHYUAN-SHEN LEE — STATE OF WASHINGTON — 30474 — PROFESSIONAL ENGINEER — 2/11/2014

BRIDGE AND STRUCTURES OFFICE

BEHAN KHALEGHI — STATE OF WASHINGTON — 27605 — PROFESSIONAL ENGINEER — 2/12/14

Washington State Department of Transportation

I-5
M ST TO PORTLAND AVE-HOV

I-5 OVER I-705 AND TACOMA RAIL BRIDGE NO. 5/445W

BRIDGE APPROACH SLAB DETAILS 1 OF 3

BRIDGE SHEET NO. BW2

SHEET 911 OF 1763 SHEETS

SR 5 FILE NO. ____ SHEET BW2

Tue Feb 11 07:29:24 2014

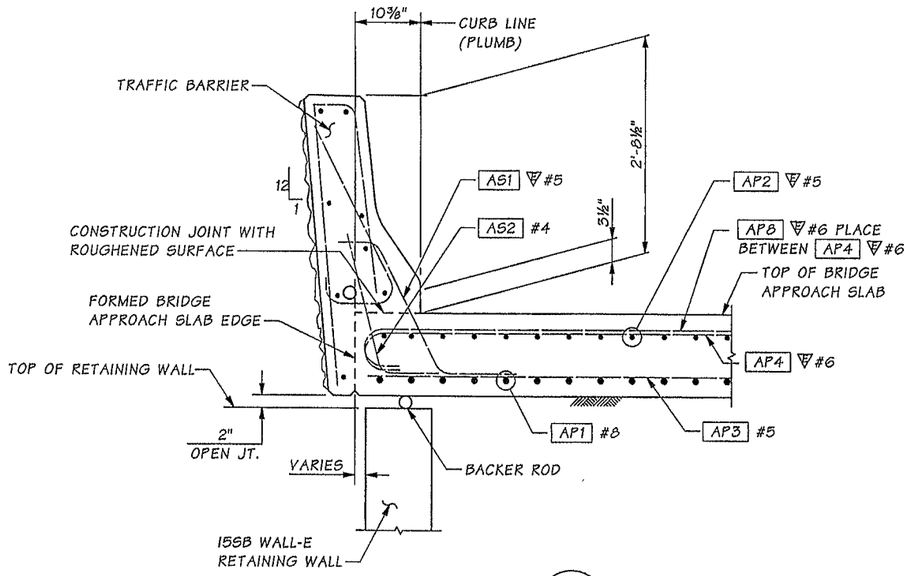

SECTION B

FOR DIMENSIONS NOT SHOWN SEE SECTION A BW7

BW2 & BW7

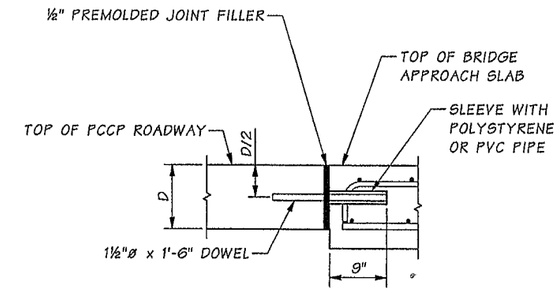

PCCP ROADWAY DOWEL BAR DETAIL

INSERT DOWELS PARALLEL TO ROADWAY CENTER LINE ALONG TRANSVERSE CONSTRUCTION JOINT.

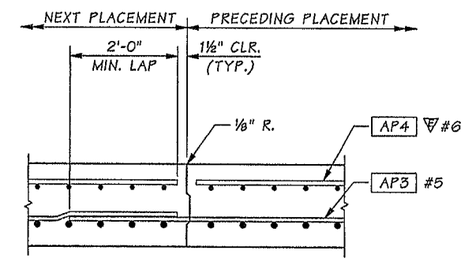

LONGITUDINAL CONSTRUCTION JOINT DETAIL

EDGE PRECEDING PLACEMENT ONLY WITH ⅛" RADIUS.

NOTES:

1. ADJUST HEIGHT TO MATCH EXISTING BARRIER HEIGHT ON BRIDGE AND TO PROVIDE A PROFILE PLEASING TO THE EYE.

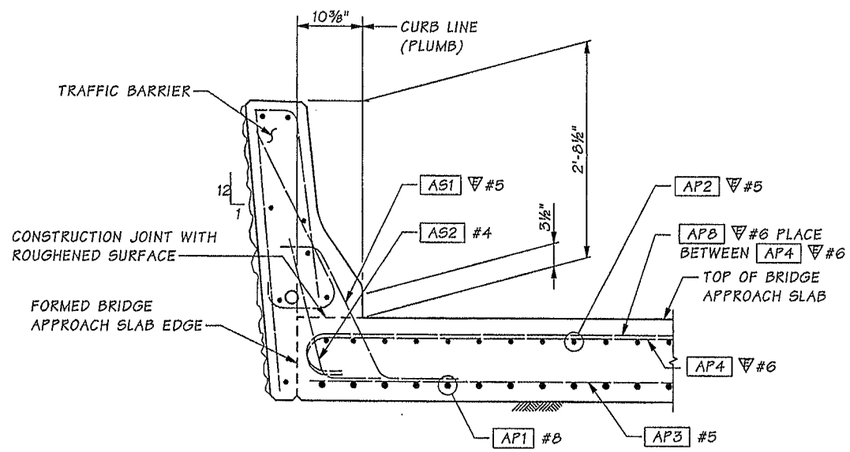

SECTION D

FOR DIMENSIONS NOT SHOWN SEE SECTION B BW9

BW2 & BW9

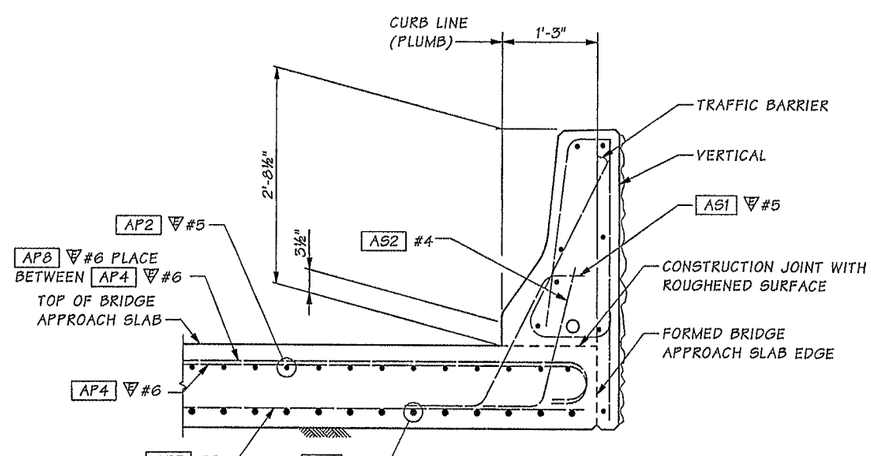

SECTION C

FOR DIMENSIONS NOT SHOWN SEE SECTION K BW8

BW2, BW8 & BW9

Bridge Design Engr.	Khaleghi, B		M:\Y-Team\M ST TO PORTLAND\BRIDGES-445W SB\window files\BRAPPSLAB2.wnd								
Supervisor	Khaleghi, B										
Designed By	Lee, CS	07/13									
Checked By	Chu, A	10/13									
Detailed By	Bontemps, W	06/13									
Bridge Projects Engr.											
Prelim. Plan By											
Architect/Specialist			DATE	REVISION	BY	APP'D					

Tue Feb 11 07:29:26 2014

REGION NO.	STATE	FED. AID PROJ. NO.	SHEET NO.	TOTAL SHEETS
10	WASH.			
JOB NUMBER 12C501				

BRIDGE AND STRUCTURES OFFICE

2/11/2014 2/12/14

Washington State Department of Transportation

I-5
M ST TO PORTLAND AVE-HOV

I-5 OVER I-705 AND TACOMA RAIL BRIDGE NO. 5/445W

BRIDGE APPROACH SLAB DETAILS 2 OF 3

BRIDGE SHEET NO. BW3

SHEET 912 OF 1763 SHEETS

SR 5 FILE NO. SHEET BW3

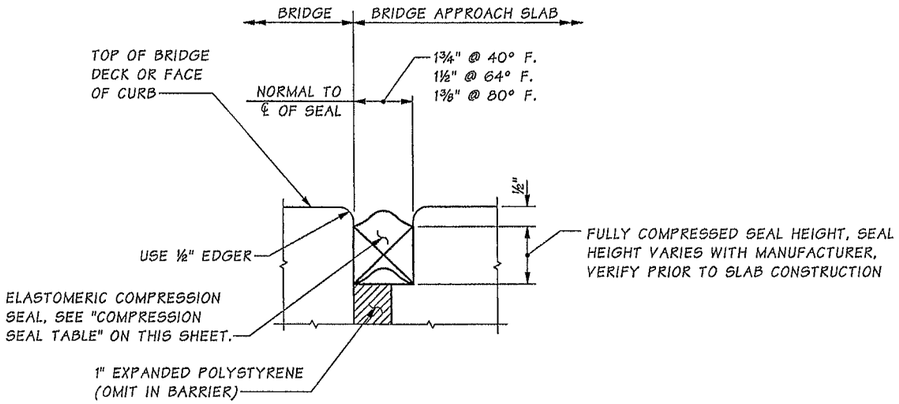

COMPRESSION SEAL DETAIL

EXPANSION JOINT AT BACK OF PAV'T. SEAT

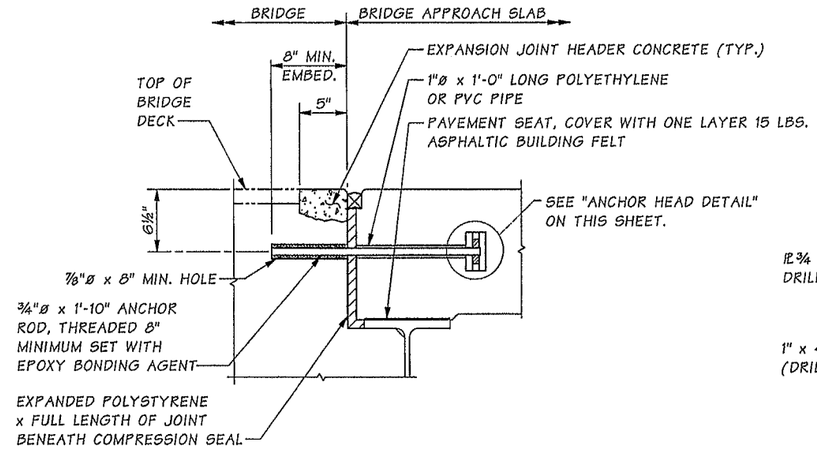

APPROACH SLAB ANCHOR

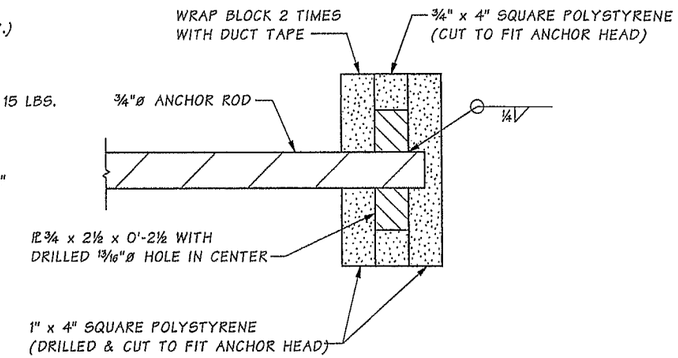

ANCHOR HEAD DETAIL

COMPRESSION SEAL TABLE

D.S. BROWN		WATSON BOWMAN ACME	
SEAL	WIDTH	SEAL	WIDTH
CV-2502	2½	WA-250	2½

TESTING SHALL BE PER AASHTO M 220 PRIOR TO USE.

NOTE:

ALL METAL PARTS OF THE APPROACH EXPANSION ANCHOR SHALL RECEIVE ONE COAT OF PAINT CONFORMING TO STANDARD SPECIFICATION SECTION 9-08.1(2)F OR BE GALVANIZED IN ACCORDANCE WITH AASHTO M 232.

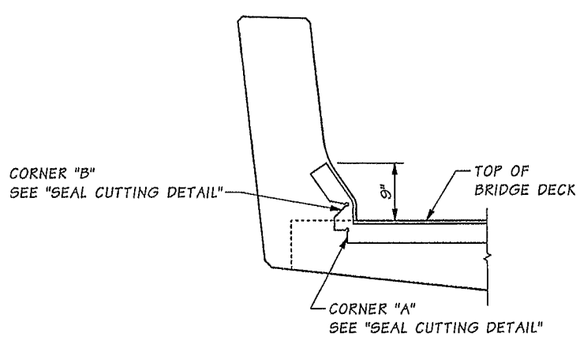

SECTION Z

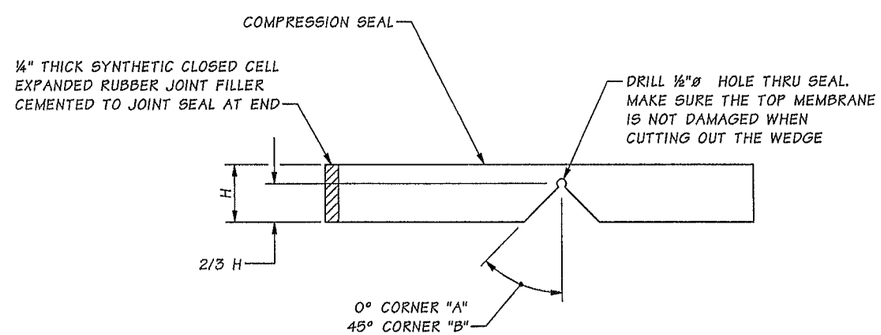

SEAL CUTTING DETAIL

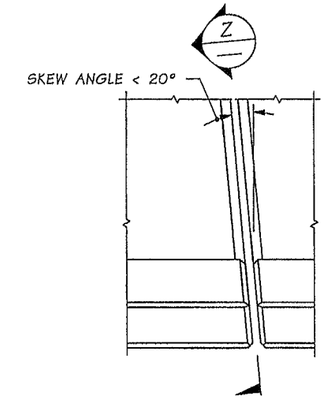

PLAN
EXPANSION JOINT

Bridge Design Engr.	Khaleghi, B		
Supervisor	Khaleghi, B		
Designed By	Lee, CS	07/13	
Checked By	Chu, A	10/13	
Detailed By	Bontemps, W	06/13	
Bridge Projects Engr.			
Prelim. Plan By			
Architect/Specialist			

M:\Y-Team\M ST TO PORTLAND\BRIDGE5-445W SB\window files\BRAPPSLAB3.wnd

DATE	REVISION	BY	APP'D

REGION NO.	STATE	FED. AID PROJ. NO.	SHEET NO.	TOTAL SHEETS
10	WASH.			
JOB NUMBER 12C501				

Tue Feb 11 07:29:27 2014

BRIDGE AND STRUCTURES OFFICE

2/11/2014 2/12/14

Washington State Department of Transportation

I-5
M ST TO PORTLAND AVE-HOV

I-5 OVER I-705 AND TACOMA RAIL BRIDGE NO. 5/445W

BRIDGE APPROACH SLAB DETAILS 3 OF 3

BRIDGE SHEET NO. BW4

SHEET 913 OF 1763 SHEETS

SR 5 FILE NO. SHEET BW4

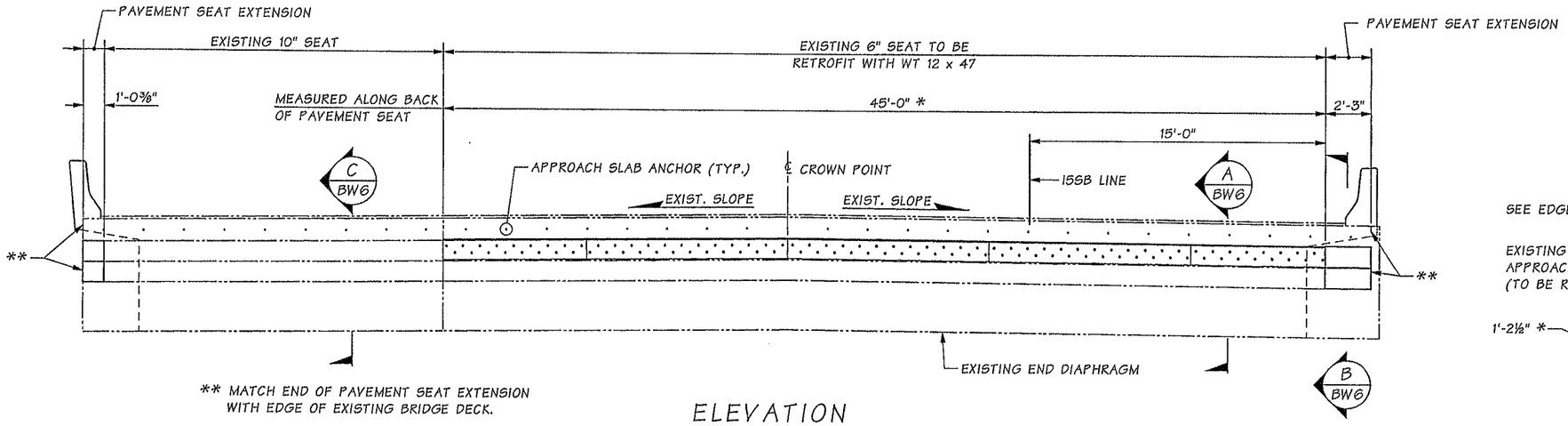

** MATCH END OF PAVEMENT SEAT EXTENSION WITH EDGE OF EXISTING BRIDGE DECK.

ELEVATION PAVEMENT SEAT

BACK OF PAVEMENT SEAT NEAR PIER 1N SHOWN.

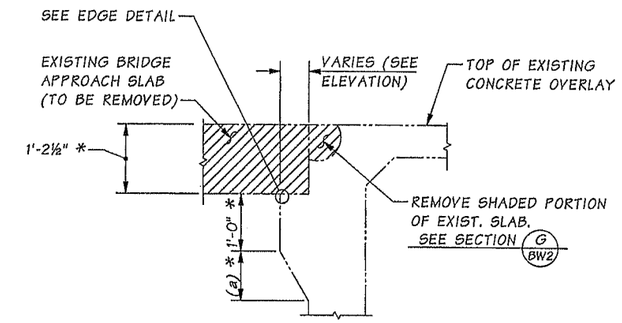

REMOVAL DETAIL

* SEE GENERAL NOTE 3 ON BR. SHT. BW1.
(a) 10" FOR 6" SEAT AND 1'-0" FOR 10" SEAT.

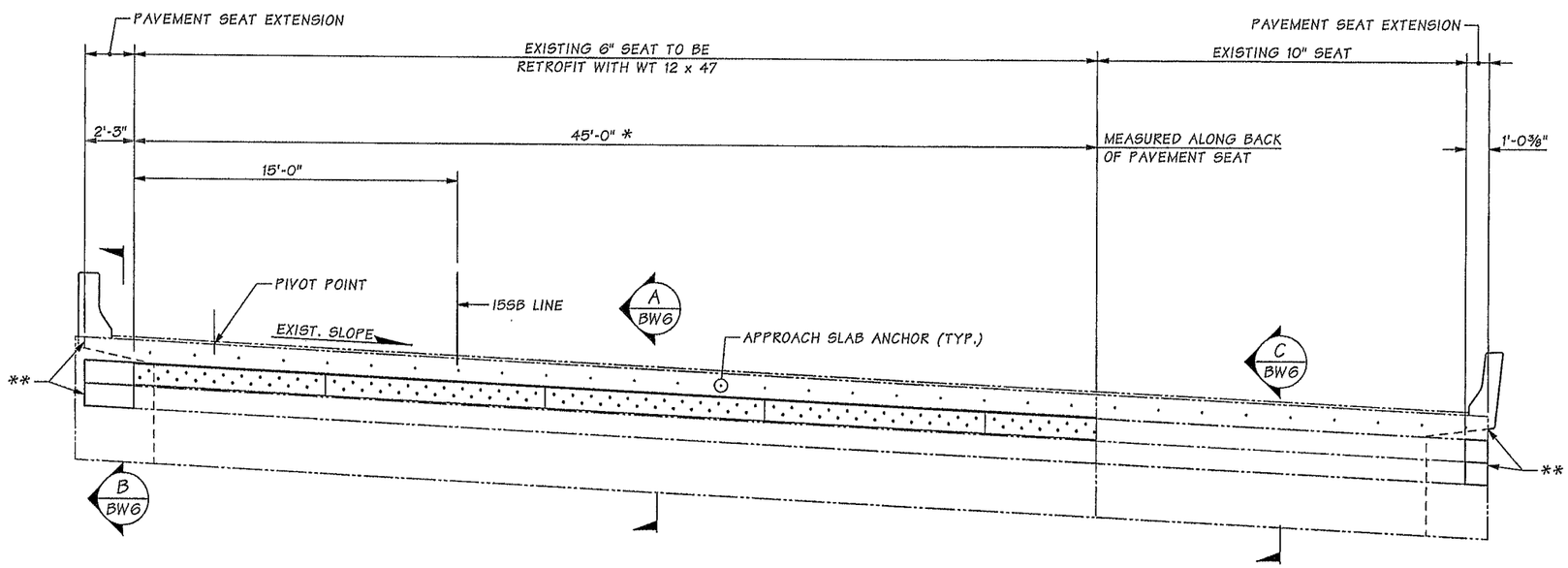

ELEVATION PAVEMENT SEAT

BACK OF PAVEMENT SEAT NEAR PIER 9N SHOWN.
LOOKING BACK ON STATIONING

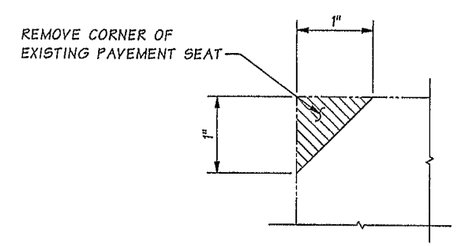

EDGE DETAIL

Bridge Design Engr.	Khaleghi, B	
Supervisor	Khaleghi, B	
Designed By	Lee, CS	07/13
Checked By	Chu, A	10/13
Detailed By	Bontemps, W	06/13
Bridge Projects Engr.		
Prelim. Plan By		
Architect/Specialist		

M:\Y-Team\M ST TO PORTLAND\BRIDGE5-445W SB\window files\PAVEMEANTSEATDTLS.wnd

DATE	REVISION	BY	APP'D

REGION NO.	STATE	FED. AID PROJ. NO.	SHEET NO.	TOTAL SHEETS
10	WASH.			

JOB NUMBER 12C501

CHYUAN-SHEN LEE, STATE OF WASHINGTON, 30474, PROFESSIONAL ENGINEER 2/11/2014

BRIDGE AND STRUCTURES OFFICE

BIJAN KHALEGHI, STATE OF WASHINGTON, 27695, PROFESSIONAL ENGINEER 2/12/14

Washington State Department of Transportation

I-5
M ST TO PORTLAND AVE-HOV

I-5 OVER I-705 AND TACOMA RAIL BRIDGE NO. 5/445W

PAVEMENT SEAT REPAIR
DETAILS 1 OF 2

BRIDGE SHEET NO. BW5

SHEET 914 OF 1763 SHEETS

SR 5 FILE NO. SHEET BW5

Tue Feb 11 07:29:29 2014

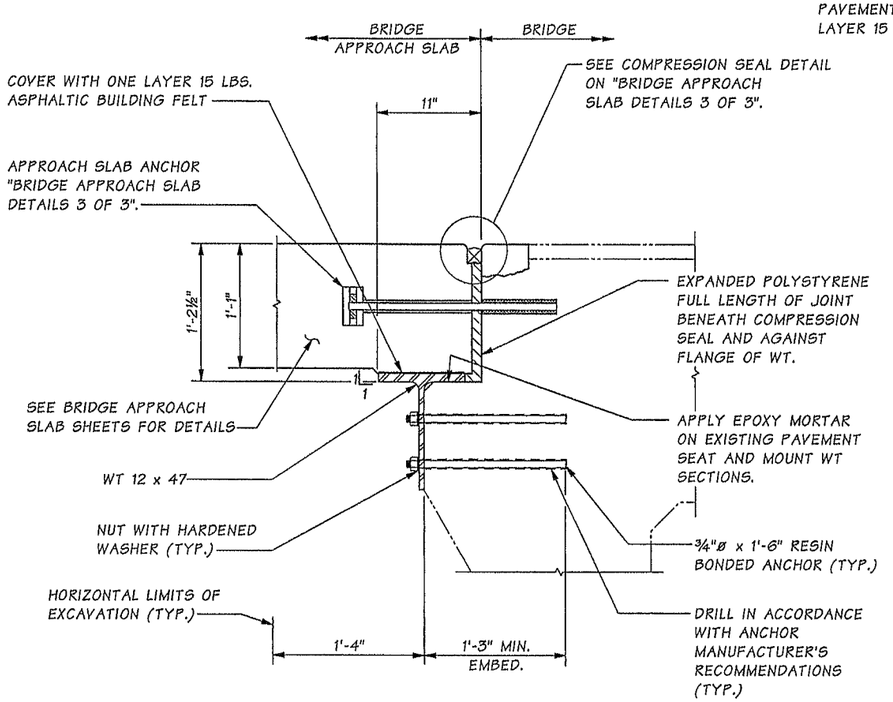

SECTION A BW5

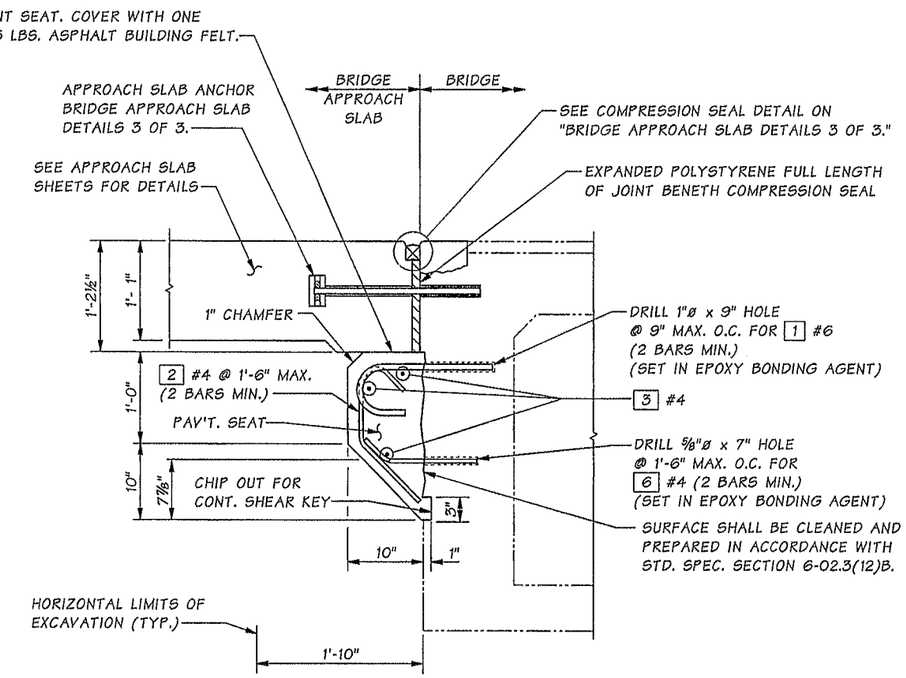

SECTION B BW5

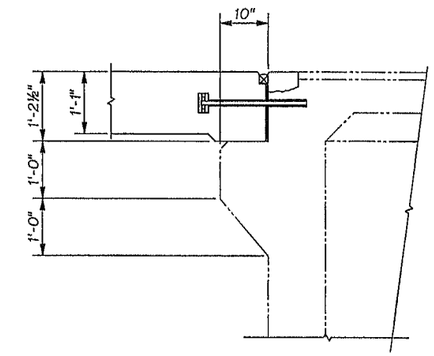

SECTION C BW5

FOR DETAILS NOT SHOWN SEE SECTION A —

NOTE:

1. REPAIR EXISTING PAVEMENT SEAT CONCRETE PRIOR TO INSTALLING WT SECTIONS.

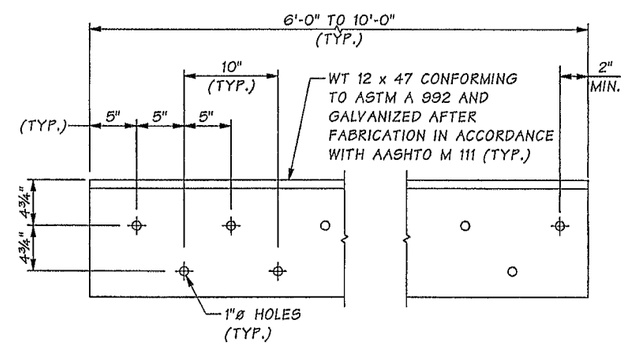

TYPICAL WT 12 SECTION DETAIL

BAR LIST

MARK	SIZE	LENGTH	BENDING DIAGRAM (ALL DIMENSIONS ARE OUT TO OUT TO POINTS OF INTERSECTION)
1	6	2'-4"	
2	4	2'-4'	
3	4	(A)	STR.
6	4	1'-3"	

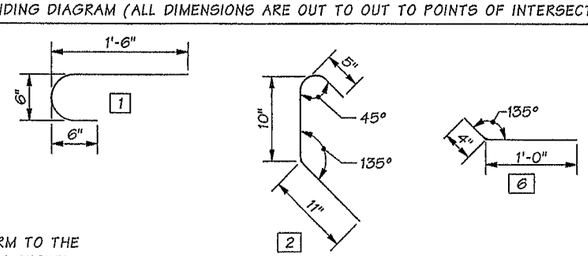

(A) DETERMINE FROM PLANS
BEND BARS AS REQ'D TO CONFORM TO THE CONFIGURATION OF THE ROADWAY CROWN.

Bridge Design Engr.	Khaleghi, B		M:\Y-Team\M ST TO PORTLAND\BRIDGE5-445W SB\window files\PAVEMENTSEATDTLS 2.wnd							
Supervisor	Khaleghi, B									
Designed By	Lee, CS	08/13								
Checked By	Chu, A	10/13								
Detailed By	WB/LA	08/13								
Bridge Projects Engr.										
Prelim. Plan By										
Architect/Specialist			DATE	REVISION	BY	APP'D				

REGION NO.	STATE	FED. AID PROJ. NO.	SHEET NO.	TOTAL SHEETS
10	WASH.			
JOB NUMBER 12C501				

Tue Feb 11 07:29:30 2014

BRIDGE AND STRUCTURES OFFICE

Washington State Department of Transportation

I-5
M ST TO PORTLAND AVE-HOV

I-5 OVER I-705 AND TACOMA RAIL BRIDGE NO. 5/445W

PAVEMENT SEAT REPAIR DETAILS 2 OF 2

BRIDGE SHEET NO. BW6

SHEET 915 OF 1763 SHEETS

SR 5 FILE NO. ____ SHEET BW6

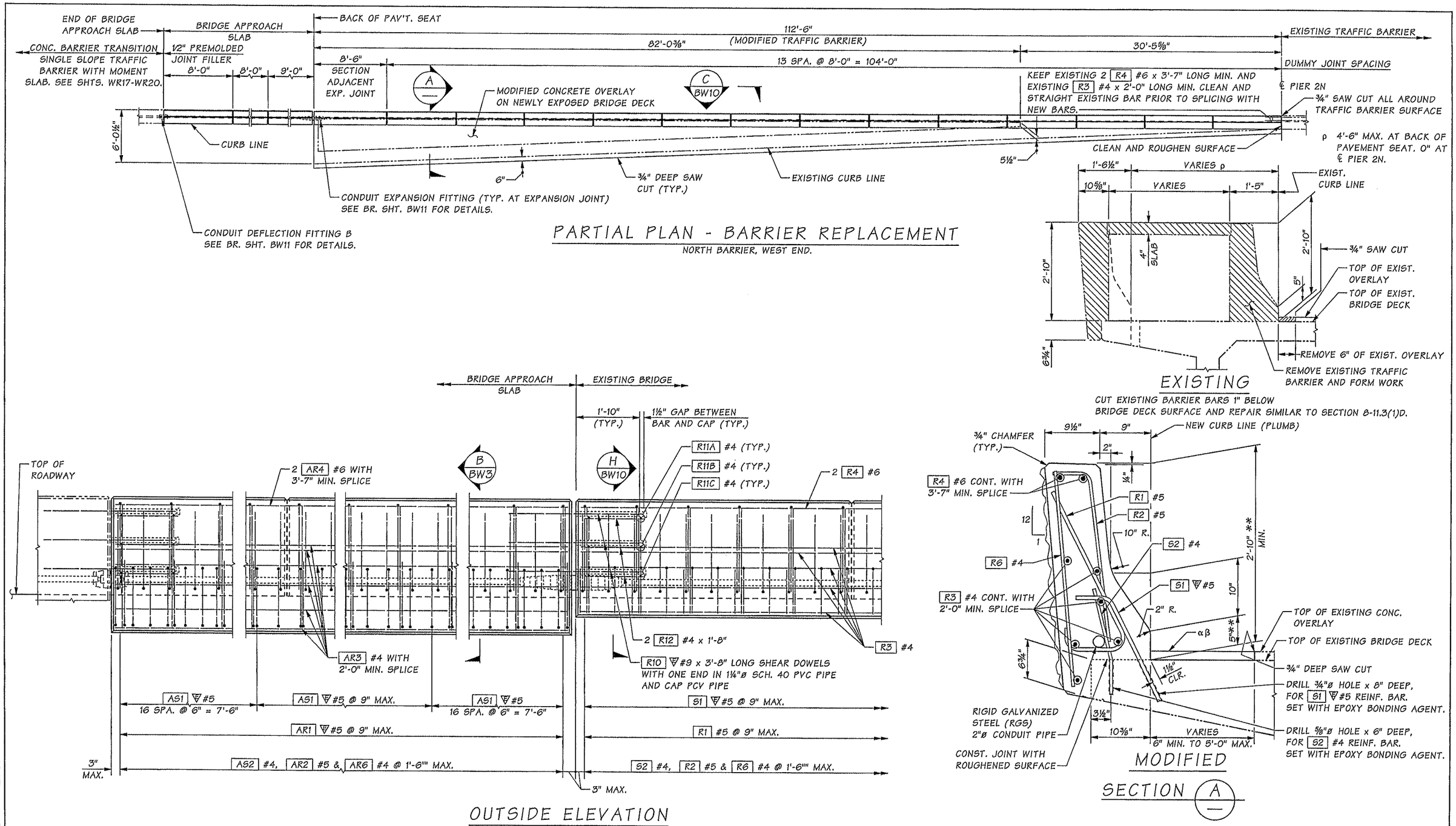

** HEIGHT MAY VARY IF REQUIRED TO MATCH EXIST. BARRIER HEIGHT AND TO PROVIDE A PROFILE PLEASING TO THE EYE.

αβ MODIFIED CONCRETE OVERLAY(THICKNESS TO MATCH EXIST. OVERLAY).

Bridge Design Engr.	Khaleghi, B		
Supervisor	Khaleghi, B		
Designed By	Lee, CS	07/13	
Checked By	Chu, A	10/13	
Detailed By	LA/WB	12/12	
Bridge Projects Engr.			
Prelim. Plan By			
Architect/Specialist			

M:\Y-Team\M ST TO PORTLAND\BRIDGE5-445W SB\window files\T81 MODIFIEDBARRIER.wnd

DATE	REVISION	BY	APP'D

REGION NO.	STATE	FED. AID PROJ. NO.	SHEET NO.	TOTAL SHEETS
10	WASH.			
JOB NUMBER 12C501				

CHYLAN-SHEAN LEE, STATE OF WASHINGTON, 20174, PROFESSIONAL ENGINEER — 2/11/2014

BRIDGE AND STRUCTURES OFFICE

BRIAN KHALEGHI, STATE OF WASHINGTON, 37906, PROFESSIONAL ENGINEER — 2/12/14

Washington State Department of Transportation

I-5
M ST TO PORTLAND AVE-HOV

I-5 OVER I-705 AND TACOMA RAIL BRIDGE NO. 5/445W

TRAFFIC BARRIER DETAILS 1 OF 6

BRIDGE SHEET NO. BW7

SHEET 916 OF 1763 SHEETS

SR 5 FILE NO. ____ SHEET BW7

Tue Feb 11 07:29:32 2014

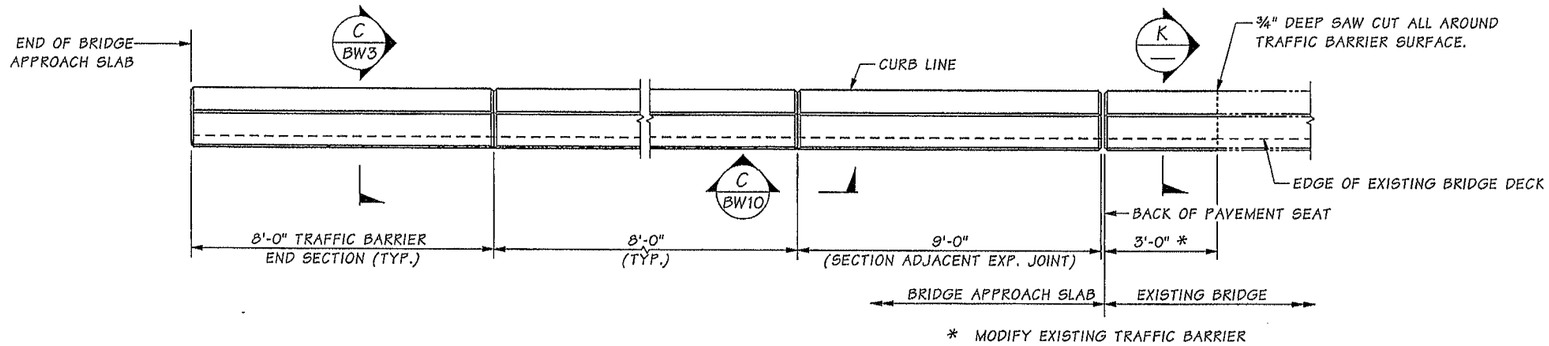

PARTIAL PLAN ~ BARRIER REPLACEMENT

SOUTH BARRIER, WEST END

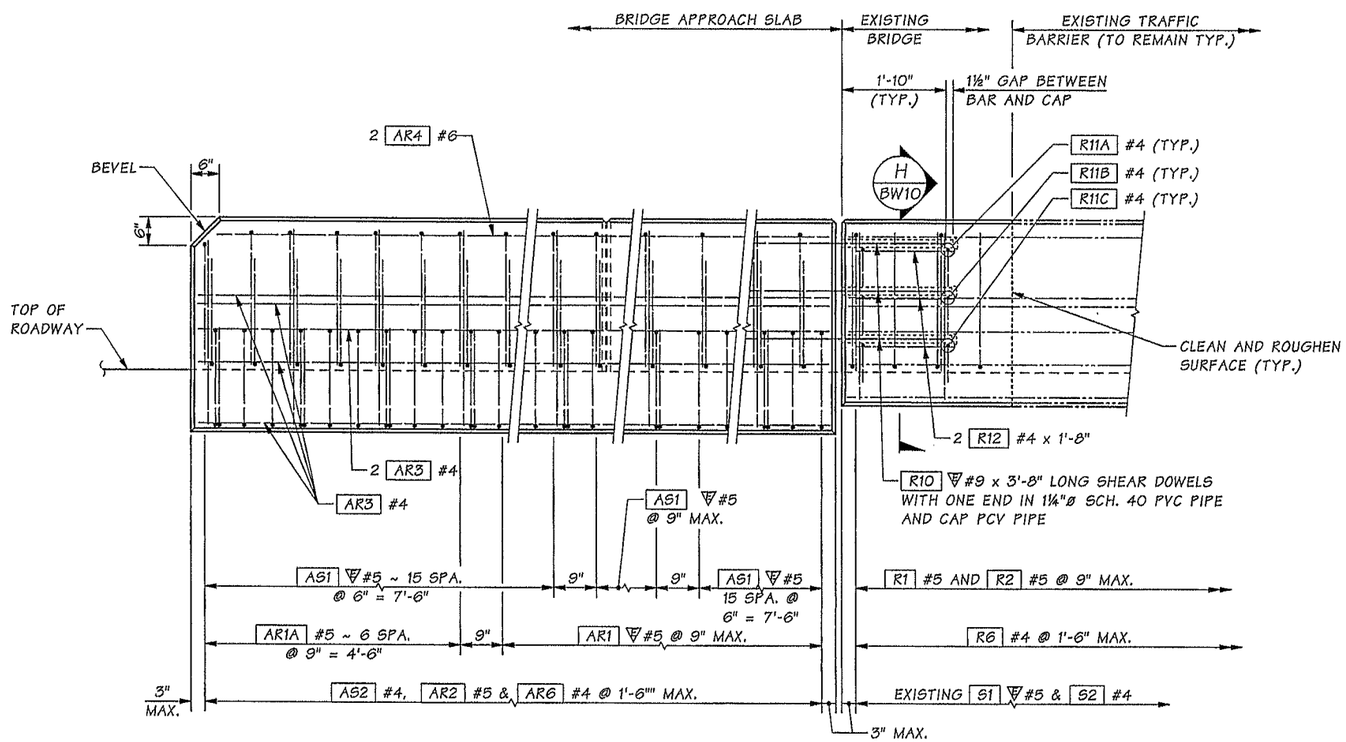

OUTSIDE ELEVATION
END OF TRAFFIC BARRIER

SHOWN WITH BRIDGE APPROACH SLAB.

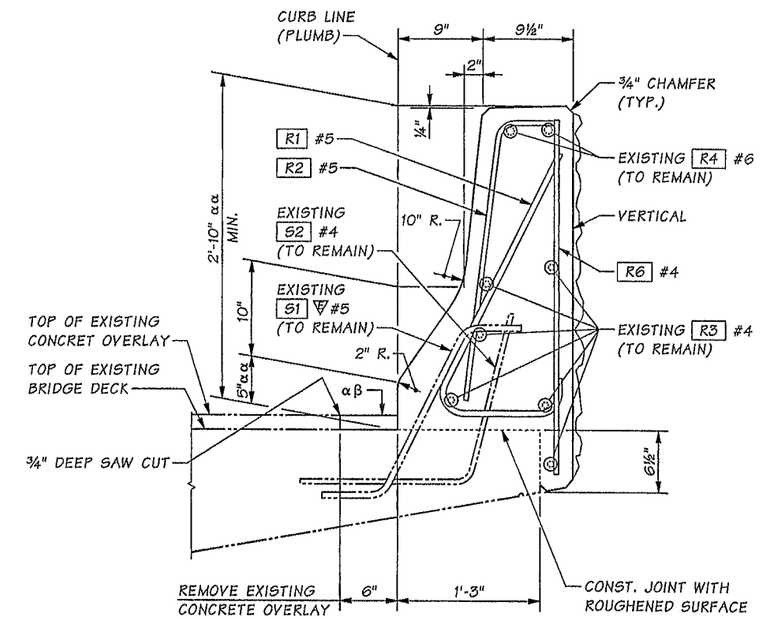

αα HEIGHT MAY VARY IF REQUIRED TO MATCH EXISTING BARRIER HEIGHT AND TO PROVIDE A PROFILE PLEASING TO THE EYE.

αβ MODIFIED CONCRETE OVERLAY (THICKNESS TO MATCH EXISTING OVERLAY).

SECTION K

NOTES:

1. REMOVE PORTION OF EXISTING TRAFFIC BARRIER TO THE LIMIT AS SHOWN.
2. SAVE AND CLEAN EXISTING S1 AND S2 BARS. CLEAN AND STRAIGHTEN EXISTING R3 AND R4 LONGITUDINAL BARS.

SR 5 FILE NO. ____ SHEET BW8

Bridge Design Engr.	Khaleghi, B		
Supervisor	Khaleghi, B		
Designed By	Lee, CS	07/13	
Checked By	Chu, A	10/13	
Detailed By	Bontemps, W	07/13	
Bridge Projects Engr.			
Prelim. Plan By			
Architect/Specialist			

M:\Y-Team\M ST TO PORTLAND\BRIDGE5-445W SB\window files\TB1A MOD.wnd

DATE	REVISION	BY	APP'D

REGION NO.	STATE	FED. AID PROJ. NO.	SHEET NO.	TOTAL SHEETS
10	WASH.			
JOB NUMBER 12C501				

Tue Feb 11 07:29:34 2014

CHYUAN-SHEN LEE — STATE OF WASHINGTON — 50474 — PROFESSIONAL ENGINEER — 2/11/2014

BRIDGE AND STRUCTURES OFFICE

ALLAN KHALEGHI — STATE OF WASHINGTON — 37545 — PROFESSIONAL ENGINEER — 2/12/14

Washington State Department of Transportation

I-5
M ST TO PORTLAND AVE-HOV

I-5 OVER I-705 AND TACOMA RAIL BRIDGE NO. 5/445W

TRAFFIC BARRIER DETAILS 2 OF 6

BRIDGE SHEET NO. BW8

SHEET 917 OF 1763 SHEETS

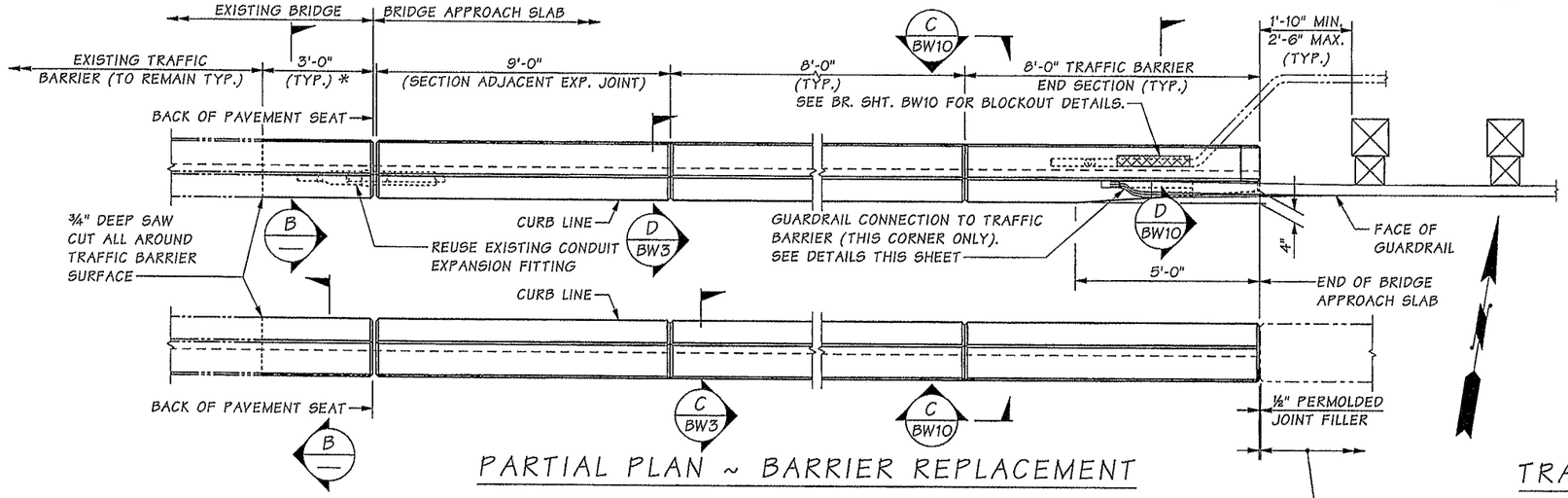

PARTIAL PLAN ~ BARRIER REPLACEMENT

EAST BRIDGE APPROACH SLAB TRAFFIC BARRIER.

* MODIFY EXISTING TRAFFIC BARRIER

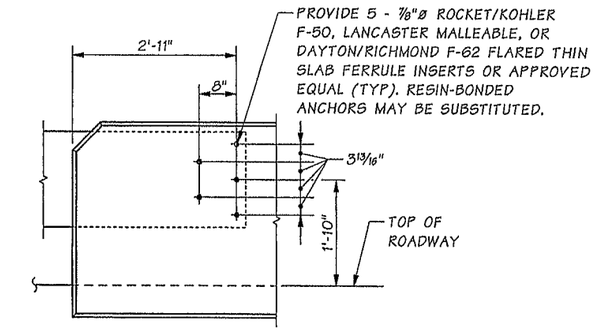

THRIE BEAM END SECTION DESIGN "F"
(SEE STD. PLAN C-7a)

OUTSIDE ELEVATION
TRAFFIC BARRIER - GUARDRAIL CONNECTION

(WHERE SHOWN ON LAYOUT)

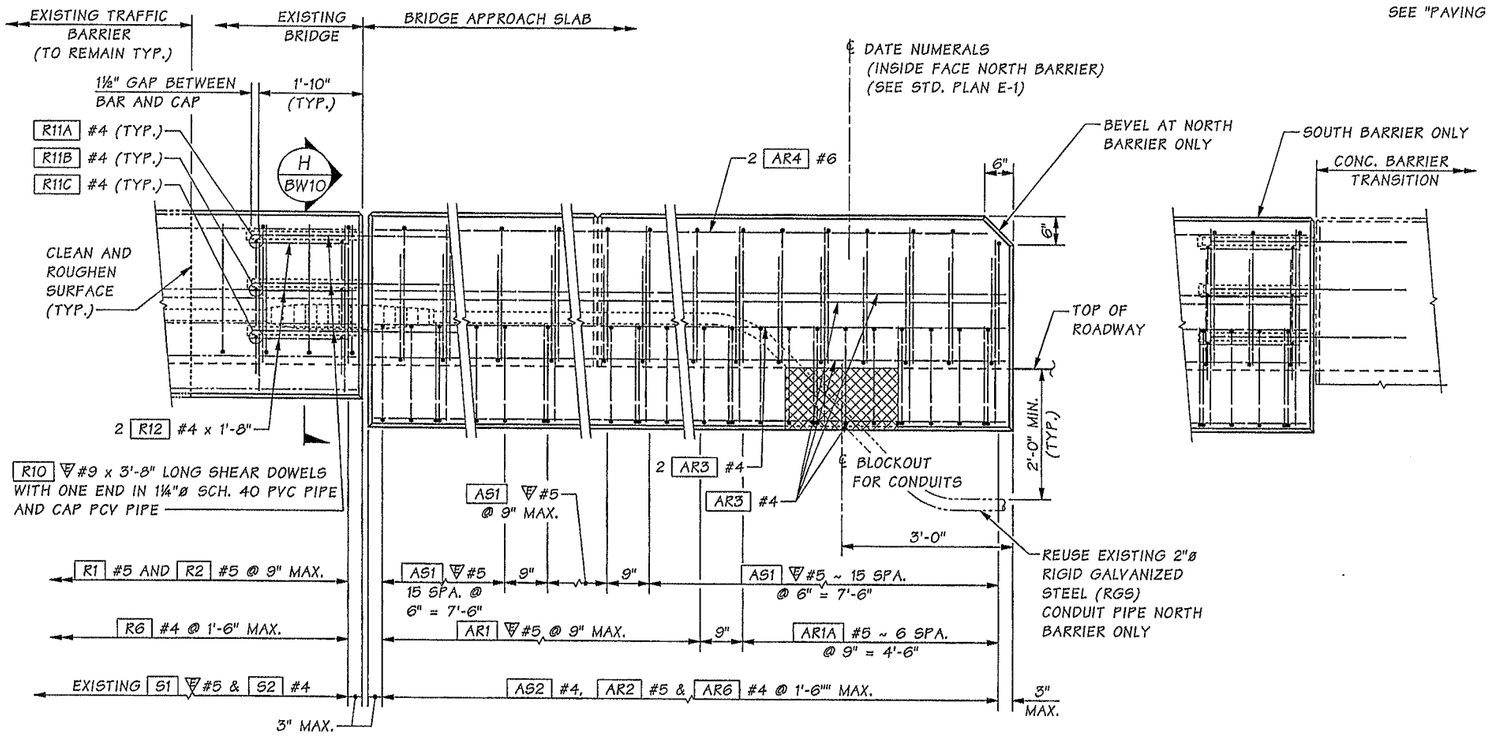

OUTSIDE ELEVATION
END OF TRAFFIC BARRIER

SHOWN WITH BRIDGE APPROACH SLAB.

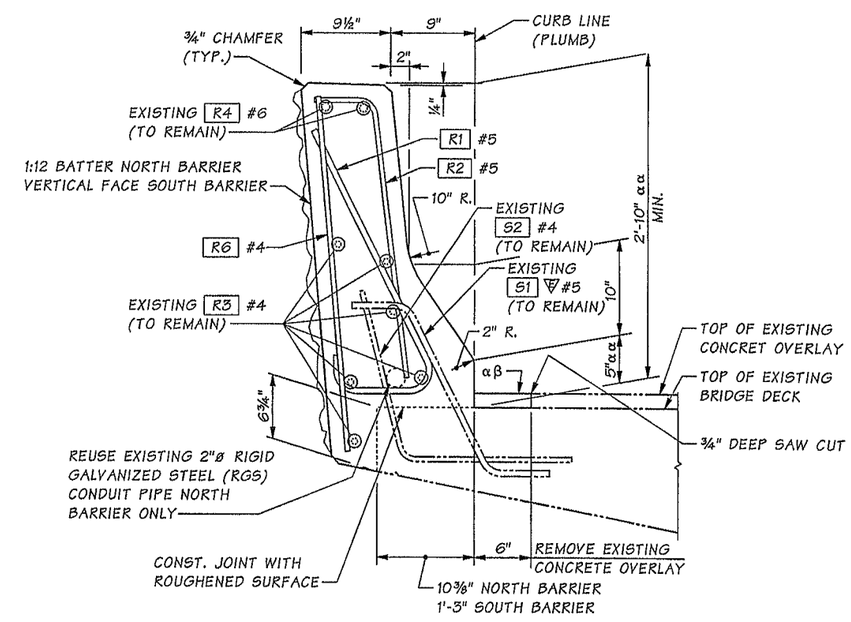

αα HEIGHT MAY VARY IF REQUIRED TO MATCH EXISTING BARRIER HEIGHT AND TO PROVIDE A PROFILE PLEASING TO THE EYE.

αβ MODIFIED CONCRETE OVERLAY (THICKNESS TO MATCH EXISTING OVERLAY).

SECTION B

NORTH BARRIER AS SHOWN, SOUTH BARRIER SIMILAR.

NOTES:

1. REMOVE PORTION OF EXISTING TRAFFIC BARRIER TO THE LIMIT AS SHOWN.
2. SAVE AND CLEAN EXISTING S1 AND S2 BARS. CLEAN AND STRAIGHTEN EXISTING R3 AND R4 LONGITUDINAL BARS.

Bridge Design Engr.	Khaleghi, B	
Supervisor	Khaleghi, B	
Designed By	Lee, CS	07/13
Checked By	Chu, A	10/13
Detailed By	Bontemps, W	06/13
Bridge Projects Engr.		
Prelim. Plan By		
Architect/Specialist		

M:\Y-Team\M ST TO PORTLAND\BRIDGE5-445W SB\window files\TB1A.wnd

DATE	REVISION	BY	APP'D

REGION NO.	STATE	FED. AID PROJ. NO.	SHEET NO.	TOTAL SHEETS
10	WASH.			
JOB NUMBER 12C501				

BRIDGE AND STRUCTURES OFFICE

Washington State Department of Transportation

I-5
M ST TO PORTLAND AVE-HOV

I-5 OVER I-705 AND TACOMA RAIL BRIDGE NO. 5/445W

TRAFFIC BARRIER DETAIL 3 OF 6

BRIDGE SHEET NO. BW9

SHEET 918 OF 1763 SHEETS

SR 5 FILE NO. ____ SHEET BW9

Tue Feb 11 07:29:36 2014

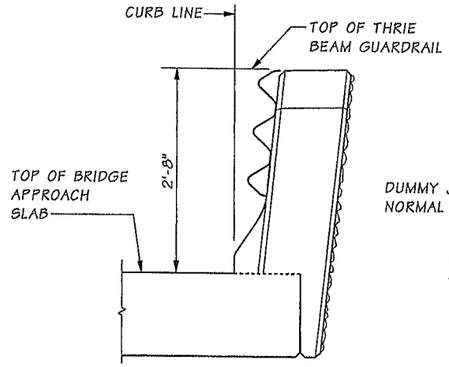

END VIEW

THRIE BEAM SHOWN WITH "D" CONNECTION (SEE STD. PLAN C-24.10-00).

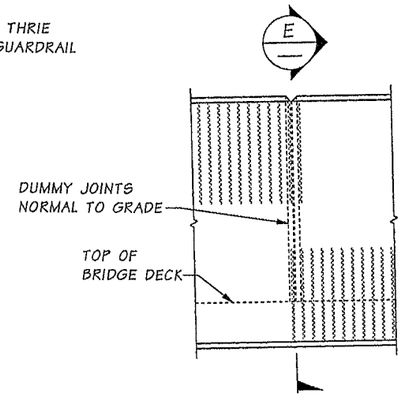

VIEW C

BW7, BW8 & BW9

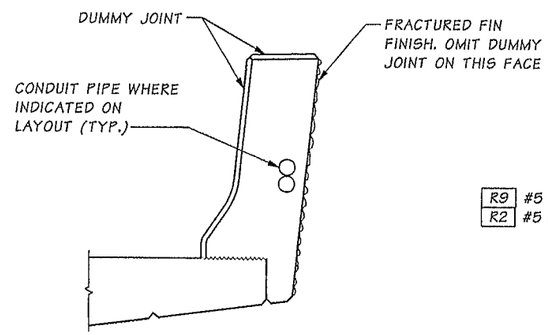

SECTION E

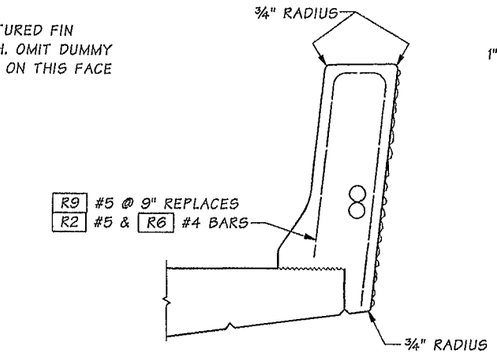

SLIPFORM ALTERNATE

SEE "TRAFFIC BARRIER DETAILS SHEETS" FOR ADDITIONAL DETAILS

THE CONTRACTOR IS ADVISED THAT THE SLIPFORM CONSTRUCTION METHOD IS A PATENTED PROPRIETARY PROCESS FOR BARRIERS WITH A FRACTURED FIN FINISH.

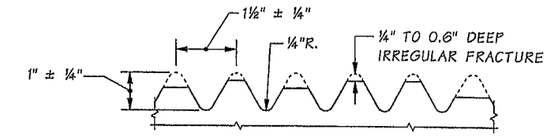

FRACTURED FIN FINISH

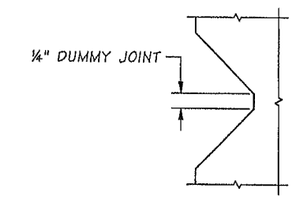

DUMMY JOINT DETAIL

BENDING DIAGRAM

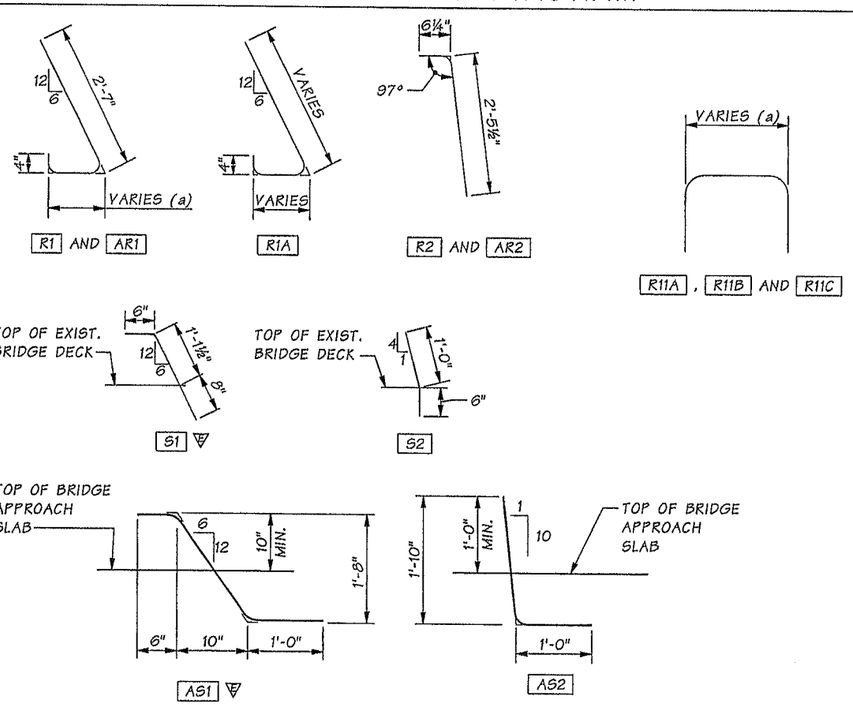

▽ = EPOXY COATED REINFORCING STEEL

NOTES:

ALL DIMENSIONS ARE OUT TO OUT.

(a) DETERMINE FROM PLANS.

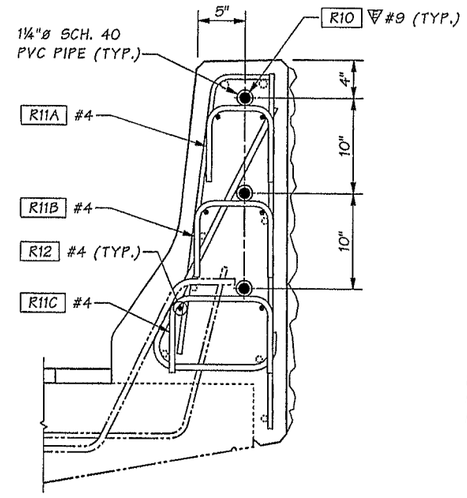

SECTION H

SOUTH SIDE WITH 1'-3" TRAFFIC BARRIER SHOWN, NORTH SIDE WITH 10⅜" TRAFFIC BARRIER SIMILAR.

BW7, BW8 & BW9

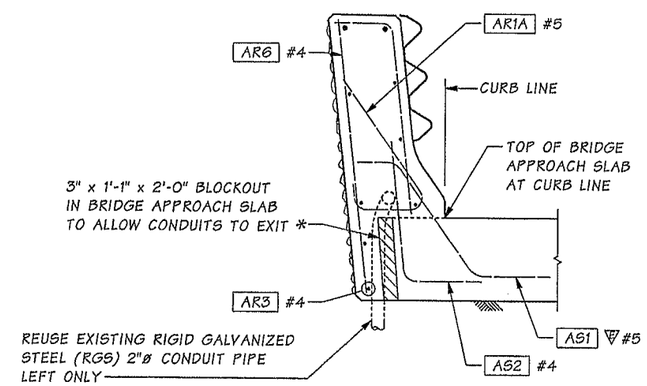

SECTION D APPROACH SLAB

BW9

FOR DETAILS NOT SHOWN SEE BR. SHT. BW9 "OUTSIDE ELEVATION" AND SEE SECTION B BW9

* BLOCKOUT WIDTH MAY BE INCREASED TO 6" TO ALLOW CONDUITS OF A LARGER DIAMETER THAN 2" TO EXIT BARRIER OR WALL WITHOUT REBAR STEEL CONFLICT

Bridge Design Engr.	Khaleghi, B	M:\Y-Team\M ST TO PORTLAND\BRIDGE5-445W SB\window files\TB2.wnd	
Supervisor	Khaleghi, B		
Designed By	Lee, CS	07/13	
Checked By	Chu, A	10/13	
Detailed By	Bontemps, W	06/13	
Bridge Projects Engr.			
Prelim. Plan By			
Architect/Specialist			

DATE	REVISION	BY	APP'D

REGION NO.	STATE	FED. AID PROJ. NO.	SHEET NO.	TOTAL SHEETS
10	WASH.			
JOB NUMBER 12C501				

Tue Feb 11 07:29:38 2014

SR 5 FILE NO. ____ SHEET BW10

CHYLAN-SHEN LEE, STATE OF WASHINGTON, 30474, PROFESSIONAL ENGINEER 2/11/2014

BRIDGE AND STRUCTURES OFFICE

BRIAN KHALEGHI, STATE OF WASHINGTON, 27895, PROFESSIONAL ENGINEER 2/12/14

Washington State Department of Transportation

I-5
M ST TO PORTLAND AVE-HOV

I-5 OVER I-705 AND TACOMA RAIL BRIDGE NO. 5/445W

TRAFFIC BARRIER DETAILS 4 OF 6

BRIDGE SHEET NO. BW10

SHEET 919 OF 1763 SHEETS

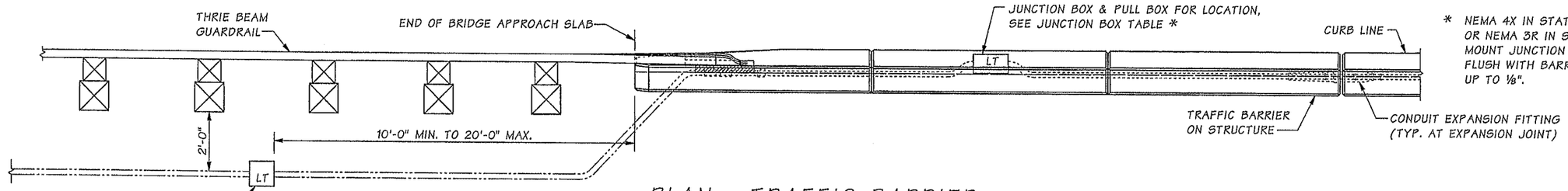

* NEMA 4X IN STATIONARY FORM BARRIER, OR NEMA 3R IN SLIP FORM BARRIER. MOUNT JUNCTION BOX SO COVER IS FLUSH WITH BARRIER, CAN BE RECESSED UP TO ⅛".

PLAN - TRAFFIC BARRIER

TYPICAL AT END OF MODIFIED TRAFFIC BARRIER END SECTION WHERE THRIE BEAM END SECTION "DESIGN F" STD. PLAN C-7a OR GUARDRAIL END SECTION "DESIGN F" STD. PLAN C-24.10-00 IS USED

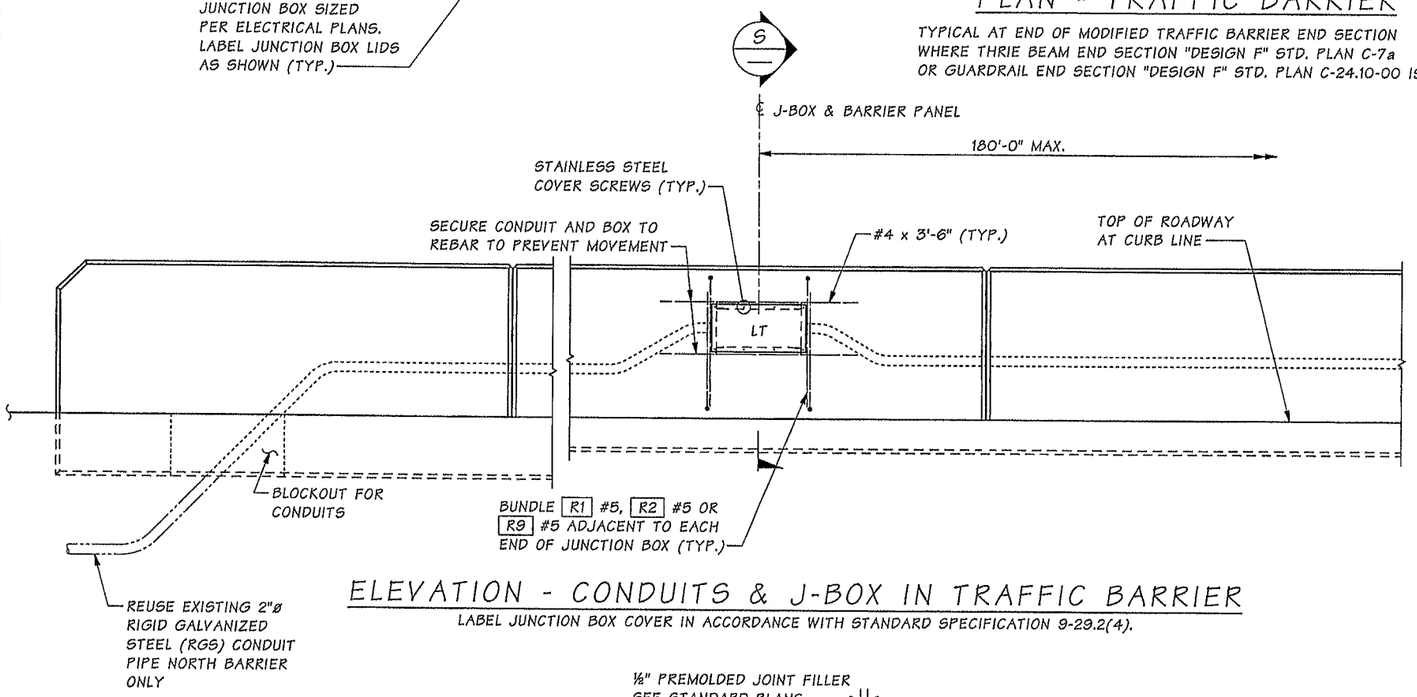

ELEVATION - CONDUITS & J-BOX IN TRAFFIC BARRIER

LABEL JUNCTION BOX COVER IN ACCORDANCE WITH STANDARD SPECIFICATION 9-29.2(4).

JUNCTION BOX LOCATIONS

15SB STA.	OFFSET	"LT" OR "TS"
544+18.09	LEFT	"LT"
544+80.08	LEFT	"LT"
552+61.40	LEFT	"LT"

"LT" = LIGHTING SYSTEM
"TS" TRAFFIC SYSTEM

JUNCTION BOX LOCATIONS SHOWN ARE APPROXIMATE. CENTER JUNCTION BOX INSTALLATION BETWEEN BARRIER DUMMY JOINTS.

INSTALL ALL CONDUIT RUNS TO DRAIN TO A BRIDGE END OR PROVIDE DRAIN AT ALL LOW POINTS IN CONDUIT RUN ON BRIDGE.

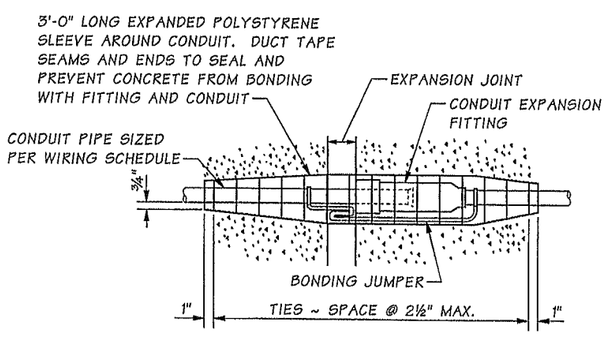

CONDUIT EXPANSION FITTING

CONDUIT FITTING - (TYPE AX FOR MOVEMENT OF ± 2") AT BRIDGE EXPANSION JOINTS

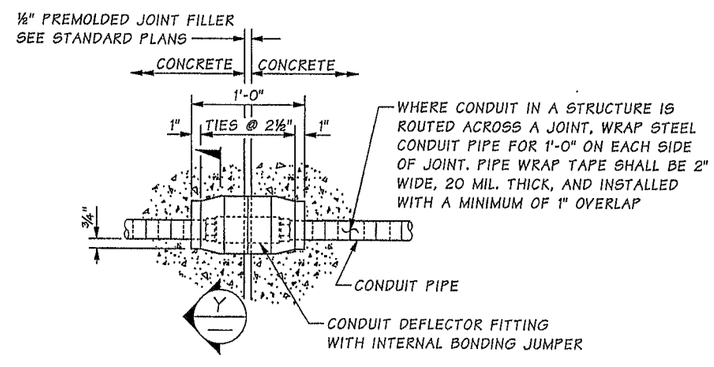

CONDUIT DEFLECTION FITTING B

CONDUIT FITTING - TYPE DX FOR DEFLECTION OF 30° AND ¾" MOVEMENT.

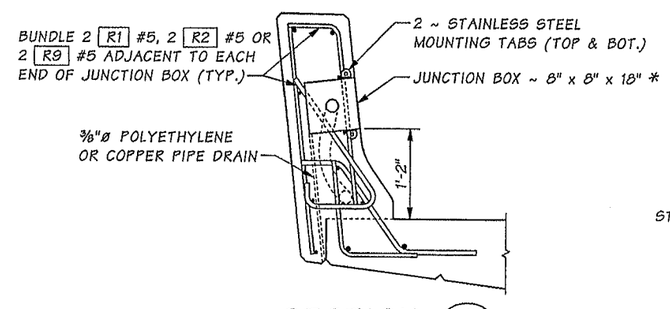

SECTION S

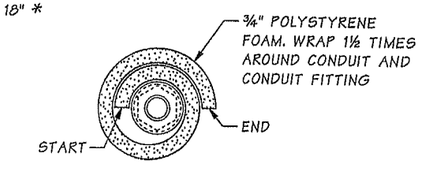

SECTION Y

Bridge Design Engr.	Khaleghi, B	M:\Y-Team\M ST TO PORTLAND\BRIDGES-445W SB\window files\TB3.wnd								
Supervisor	Khaleghi, B									
Designed By	Lee, CS	07/13								
Checked By	Chu, A	10/13								
Detailed By	Bontemps, W	06/13								
Bridge Projects Engr.										
Prelim. Plan By										
Architect/Specialist		DATE	REVISION	BY	APP'D					

Tue Feb 11 07:29:40 2014

REGION NO.	STATE	FED. AID PROJ. NO.	SHEET NO.	TOTAL SHEETS
10	WASH.			
JOB NUMBER 12C501				

CHYUAN-SHENG LEE, STATE OF WASHINGTON, 30474, PROFESSIONAL ENGINEER, 2/11/2014

BRIDGE AND STRUCTURES OFFICE

JALIAN KHALEGHI, STATE OF WASHINGTON, 27995, PROFESSIONAL ENGINEER, 2/12/14

Washington State Department of Transportation

I-5
M ST TO PORTLAND AVE-HOV

I-5 OVER I-705 AND TACOMA RAIL BRIDGE NO. 5/445W

TRAFFIC BARRIER DETAILS 5 OF 6

BRIDGE SHEET NO. BW11

SHEET 920 OF 1763 SHEETS

SR 5 FILE NO. ____ SHEET BW11

LUMINAIRE POLE LOCATIONS ON BRIDGE

STATION	OFFSET	LIGHTING BRACKET	LUMINAIRE POLE	JCT. BOX & PULL BOX
15SB 544+83.33	44.71 LT.	NEW	NEW	NEW
15SB 548+15.59	44.71 LT.	EXISTING TO REMAIN	NEW	EXISTING TO REMAIN
15SB 551+39.64	44.71 LT.	EXISTING TO REMAIN	NEW	EXISTING TO REMAIN

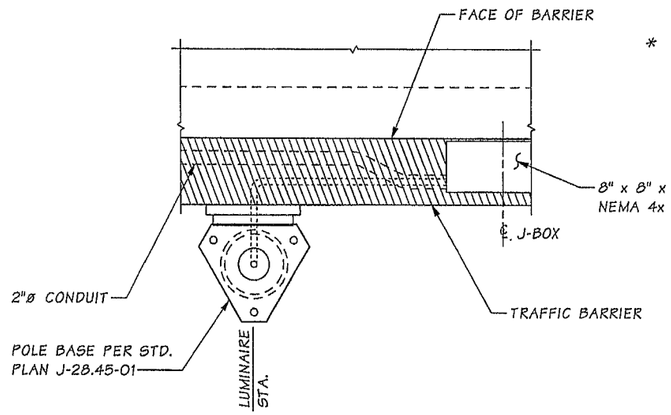

* NEMA 4X IN STATIONARY FORM BARRIER, OR NEMA 3R IN SLIP FORM BARRIER. MOUNT JUNCTION BOX SO COVER IS FLUSH WITH BARRIER, CAN BE RECESSED UP TO ⅛".

PLAN

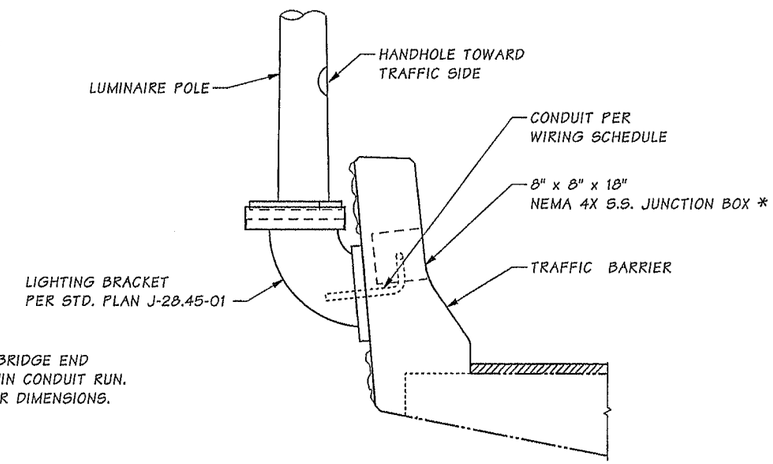

ELEVATION PROFILE LUMINAIRE SUPPORT

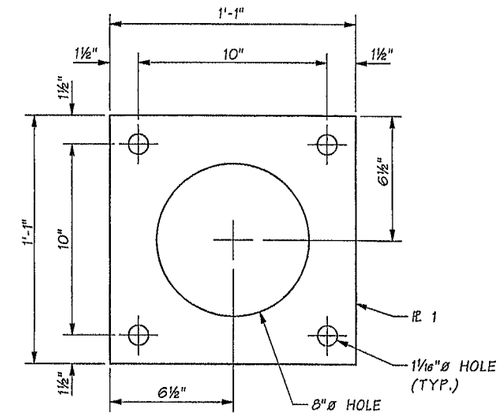

ANCHOR PLATE

GALVANIZE IN ACCORDANCE WITH AASHTO M 111

NOTES:

INSTALL ALL CONDUIT RUNS TO DRAIN TO A BRIDGE END OR PROVIDE DRAIN AT ALL LOW POINTS WITHIN CONDUIT RUN. SEE "TRAFFIC BARRIER SHEETS" FOR BARRIER DIMENSIONS.

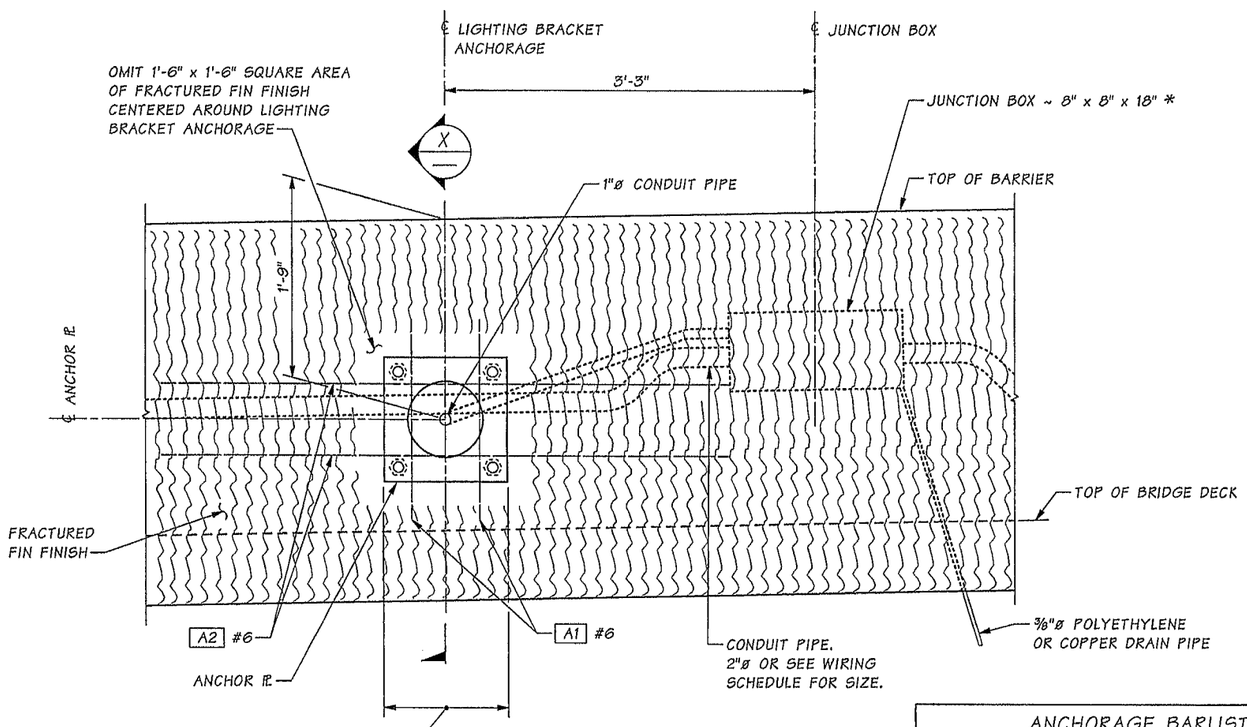

S1, S2 AND R1 BARS THAT OCCUR IN THIS AREA ARE TO BE MOVED TO THE NEAREST EDGE OF THE ANCHOR PLATE.

ELEVATION

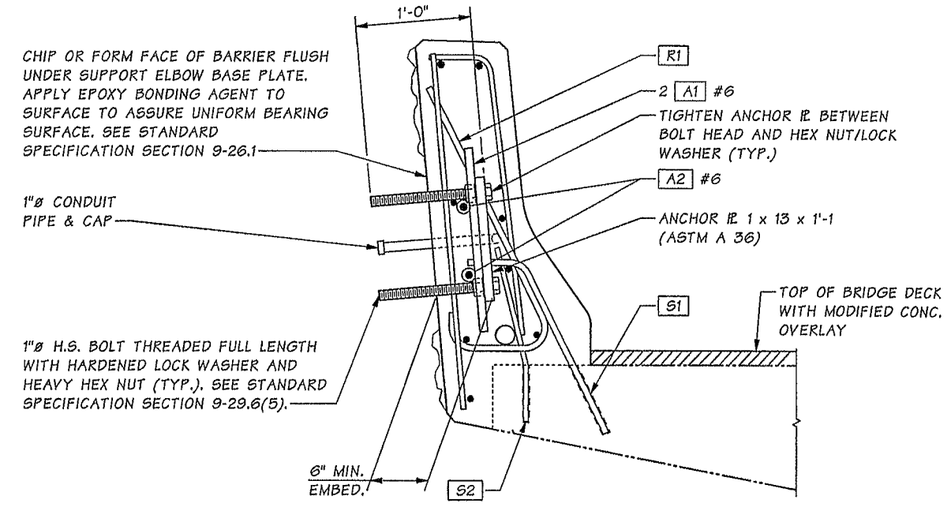

SECTION X

SEE TRAFFIC BARRIER SHEETS FOR INFORMATION NOT SHOWN.

ANCHORAGE BARLIST

MARK #	SIZE	LENGTH	BEND TYPE
A1	6	1'-9"	STRAIGHT
A2	6	5'-0"	STRAIGHT

Bridge Design Engr.	Khaleghi, B	
Supervisor	Khaleghi, B	
Designed By	Lee, CS	07/13
Checked By	Chu, A	10/13
Detailed By	Bontemps, W	06/13
Bridge Projects Engr.		
Prelim. Plan By		
Architect/Specialist		

M:\Y-Team\M ST TO PORTLAND\BRIDGE5-445W SB\window files\TB4 LUMINAIRE.wnd

DATE	REVISION	BY	APP'D

REGION NO.	STATE	FED. AID PROJ. NO.	SHEET NO.	TOTAL SHEETS
10	WASH.			
JOB NUMBER 12C501				

CHYUAN-SHENG LEE, STATE OF WASHINGTON, 30474, PROFESSIONAL ENGINEER, 2/12/2014

BRIDGE AND STRUCTURES OFFICE

BIJAN KHALEGHI, STATE OF WASHINGTON, PROFESSIONAL ENGINEER, 2/12/14

Washington State Department of Transportation

I-5
M ST TO PORTLAND AVE-HOV

I-5 OVER I-705 AND TACOMA RAIL BRIDGE NO. 5/445W

TRAFFIC BARRIER DETAILS 6 OF 6

BRIDGE SHEET NO. BW12

SHEET 921 OF 1763 SHEETS

SR 5 FILE NO. SHEET Bw12

Tue Feb 11 07:29:41 2014

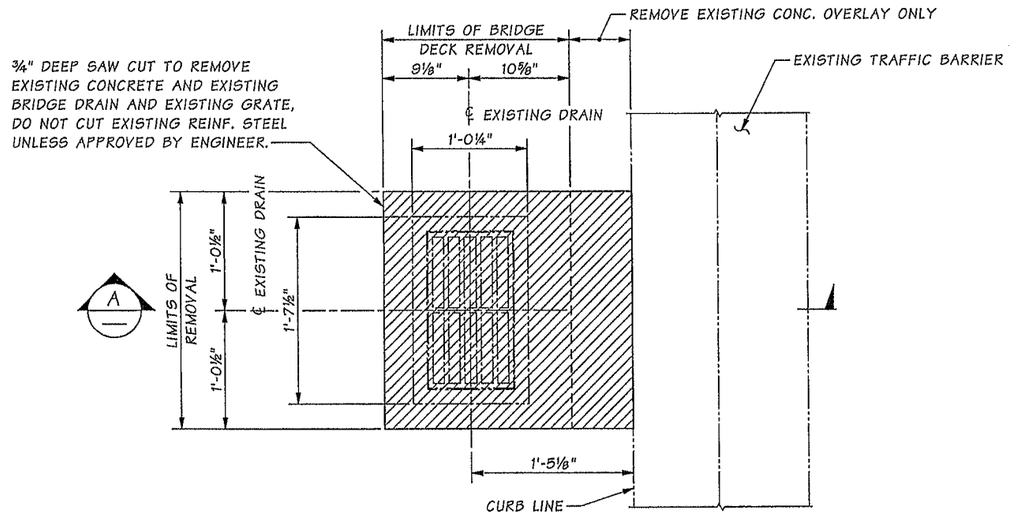

PLAN
EXISTNG DRAIN

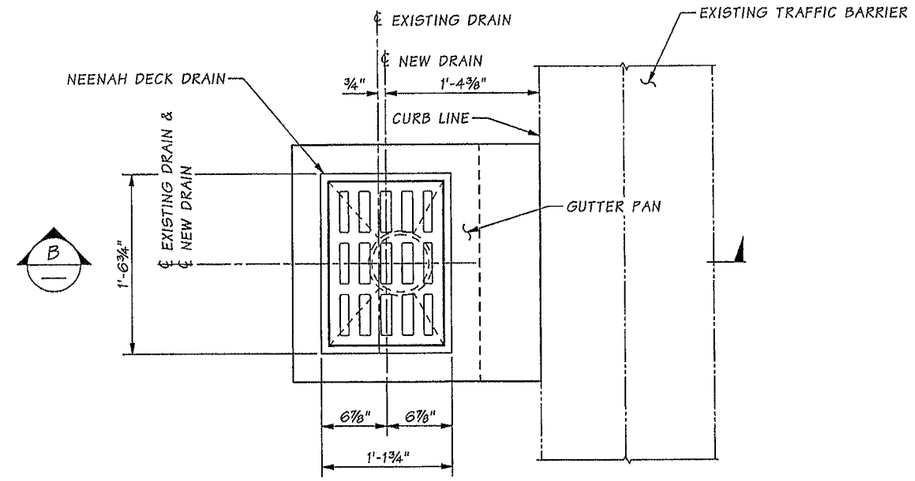

PLAN
AFTER MODIFICATION

BRIDGE DRAIN MODIFICATION DETAIL

2 LOCATIONS

(TO BE REMOVED)

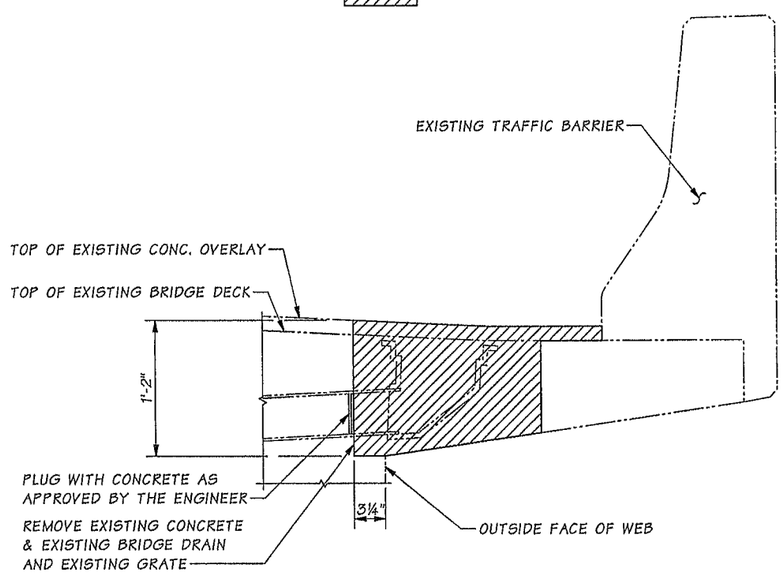

SECTION A

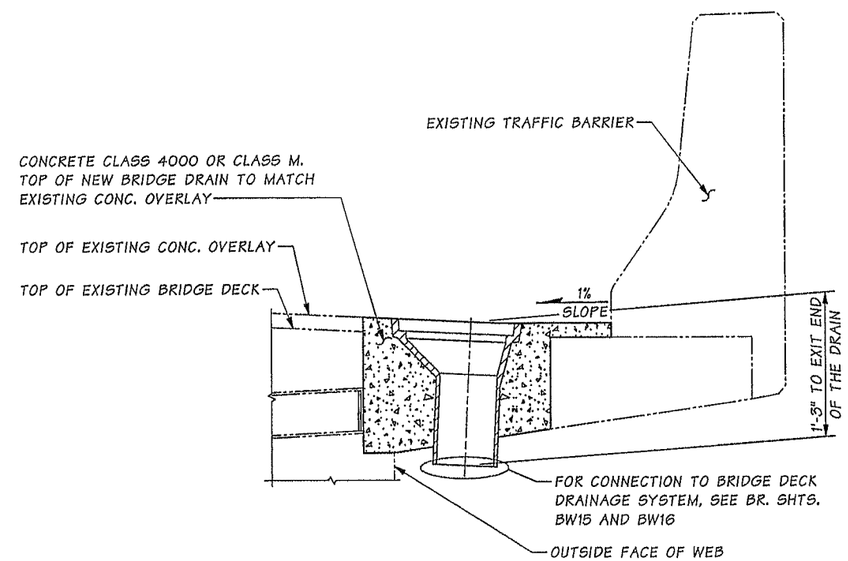

SECTION B

SEE BR. SHTS. BW15 AND BW16 FOR CONNECTION FROM NEENAH DECK DRAIN TO DRAIN PIPES.

Bridge Design Engr.	Khaleghi, B		M:\Y-Team\M ST TO PORTLAND\BRIDGE5-445W SB\window files\DRAINDLTS1.wnd
Supervisor	Khaleghi, B		
Designed By	Lee, CS	07/13	
Checked By	Chu, A	10/13	
Detailed By	Bontemps, W	06/13	
Bridge Projects Engr.			
Prelim. Plan By			
Architect/Specialist			

DATE	REVISION	BY	APP'D

REGION NO.	STATE	FED. AID PROJ. NO.	SHEET NO.	TOTAL SHEETS
10	WASH.			
JOB NUMBER 12C501				

CHYLIAN-SHENG LEE, STATE OF WASHINGTON, 50474, PROFESSIONAL ENGINEER, 2/11/2014

BRIDGE AND STRUCTURES OFFICE

ALIAN KHALEGHI, STATE OF WASHINGTON, 27695, PROFESSIONAL ENGINEER, 2/12/14

Washington State Department of Transportation

I-5
M ST TO PORTLAND AVE-HOV

I-5 OVER I-705 AND TACOMA RAIL BRIDGE NO. 5/445W

BRIDGE DRAIN DETAILS 1 OF 4

BRIDGE SHEET NO. BW13

SHEET 922 OF 1763 SHEETS

SR 5 FILE NO. ____ SHEET BW13

Tue Feb 11 07:28:43 2014

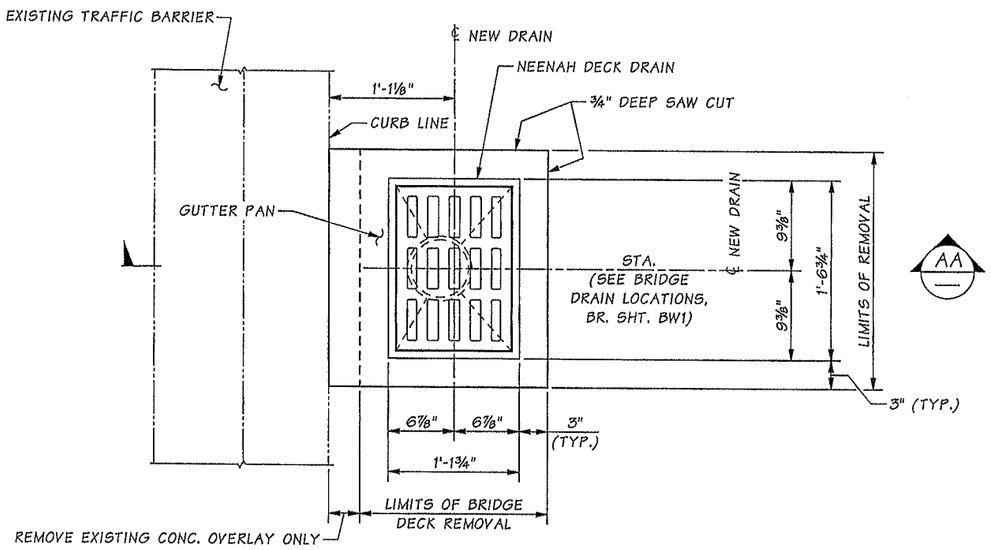

PLAN
LEFT HAND
3 LOCATIONS

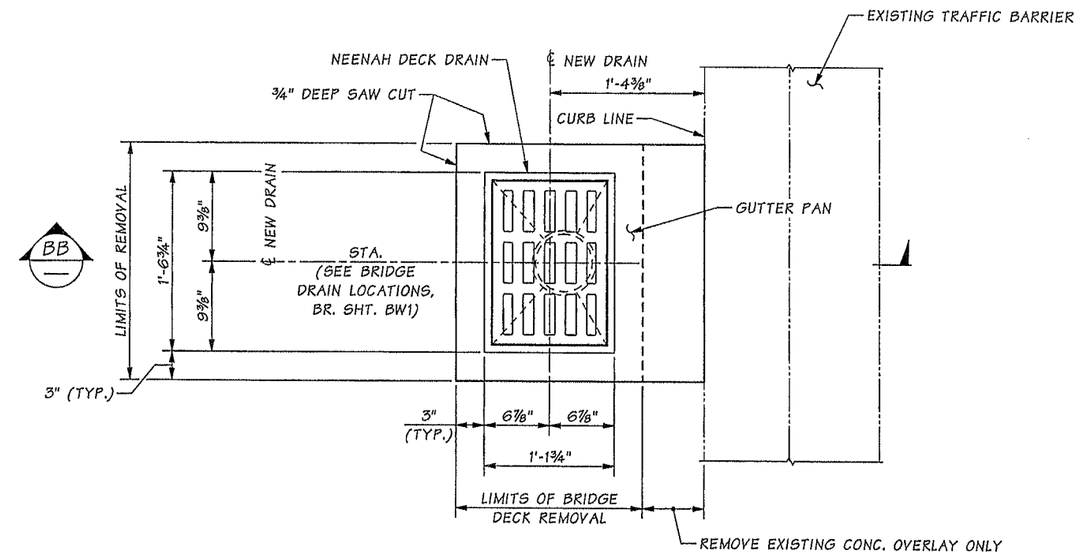

PLAN
RIGHT HAND
3 LOCATIONS

NEW BRIDGE DRAIN DETAILS

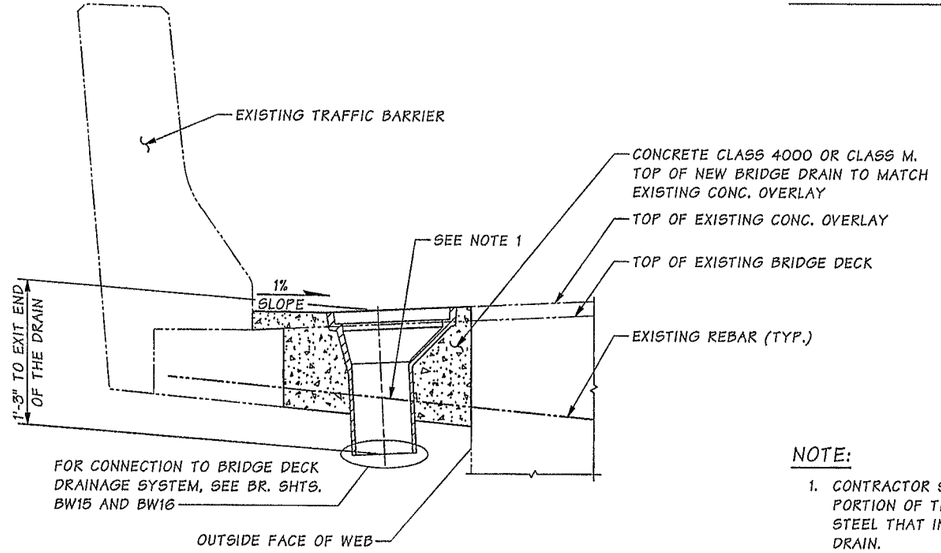

SECTION AA

SEE BR. SHTS. BW15 AND BW16
FOR CONNECTION FROM NEENAH
DECK DRAIN TO DRAIN PIPES.

NOTE:

1. CONTRACTOR SHALL REMOVE ONLY THAT PORTION OF THE EXISTING REINFORCING STEEL THAT INTERFERE WITH NEW BRIDGE DRAIN.

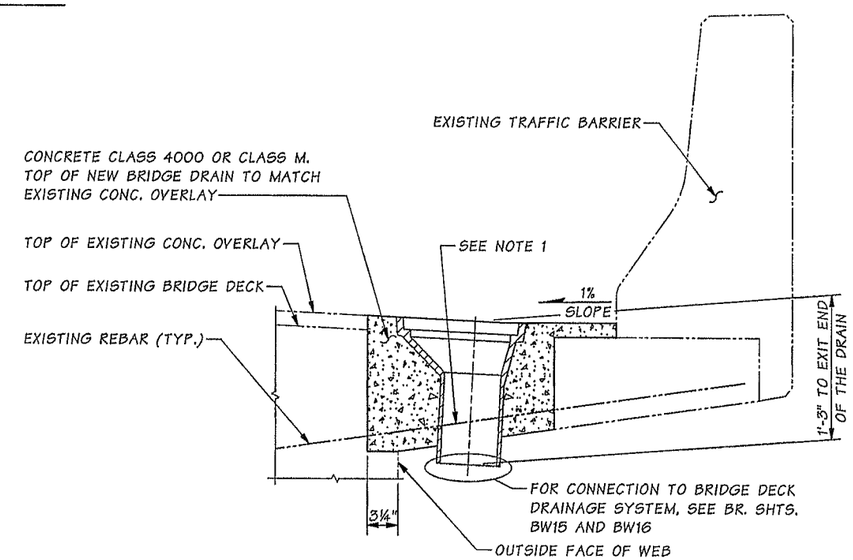

SECTION BB

SEE BR. SHTS. BW15 AND BW16
FOR CONNECTION FROM NEENAH
DECK DRAIN TO DRAIN PIPES.

Bridge Design Engr.	Khaleghi, B		M:\Y-Team\M ST TO PORTLAND\BRIDGES-445W SB\window files\DRAINDTLS1A.wnd								
Supervisor	Khaleghi, B										
Designed By	Lee, CS	07/13									
Checked By	Chu, A	10/13									
Detailed By	Bontemps, W	07/13									
Bridge Projects Engr.											
Prelim. Plan By											
Architect/Specialist			DATE	REVISION	BY	APP'D					

Tue Feb 11 07:29:44 2014

REGION NO.	STATE	FED. AID PROJ. NO.	SHEET NO.	TOTAL SHEETS
10	WASH.			
JOB NUMBER 12C501				

CHYUAN-SHEN LEE, STATE OF WASHINGTON, 30474, PROFESSIONAL ENGINEER — 2/11/2014

BRIDGE AND STRUCTURES OFFICE

ALLAN KHALEGHI, STATE OF WASHINGTON, 27655, PROFESSIONAL ENGINEER — 2/12/14

Washington State Department of Transportation

I-5
M ST TO PORTLAND AVE-HOV

I-5 OVER I-705 AND TACOMA RAIL BRIDGE NO. 5/445W

BRIDGE DRAIN
DETAILS 2 OF 4

BRIDGE SHEET NO. BW14

SHEET 923 OF 1763 SHEETS

SR 5 FILE NO. ____ SHEET BW14

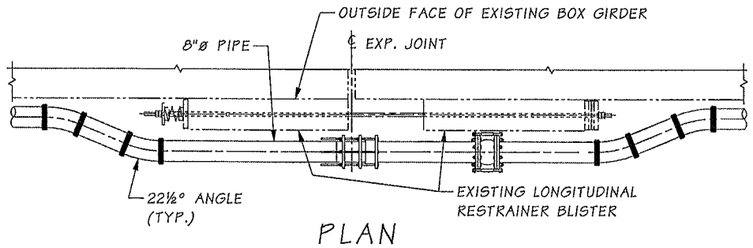

PLAN

EXISTING LONGITUDINAL RESTRAINER

AT BRIDGE EXPANSION JOINTS NEAR PIERS 3N AND 7N RIGHT SIDE ONLY (2 LOCATIONS)

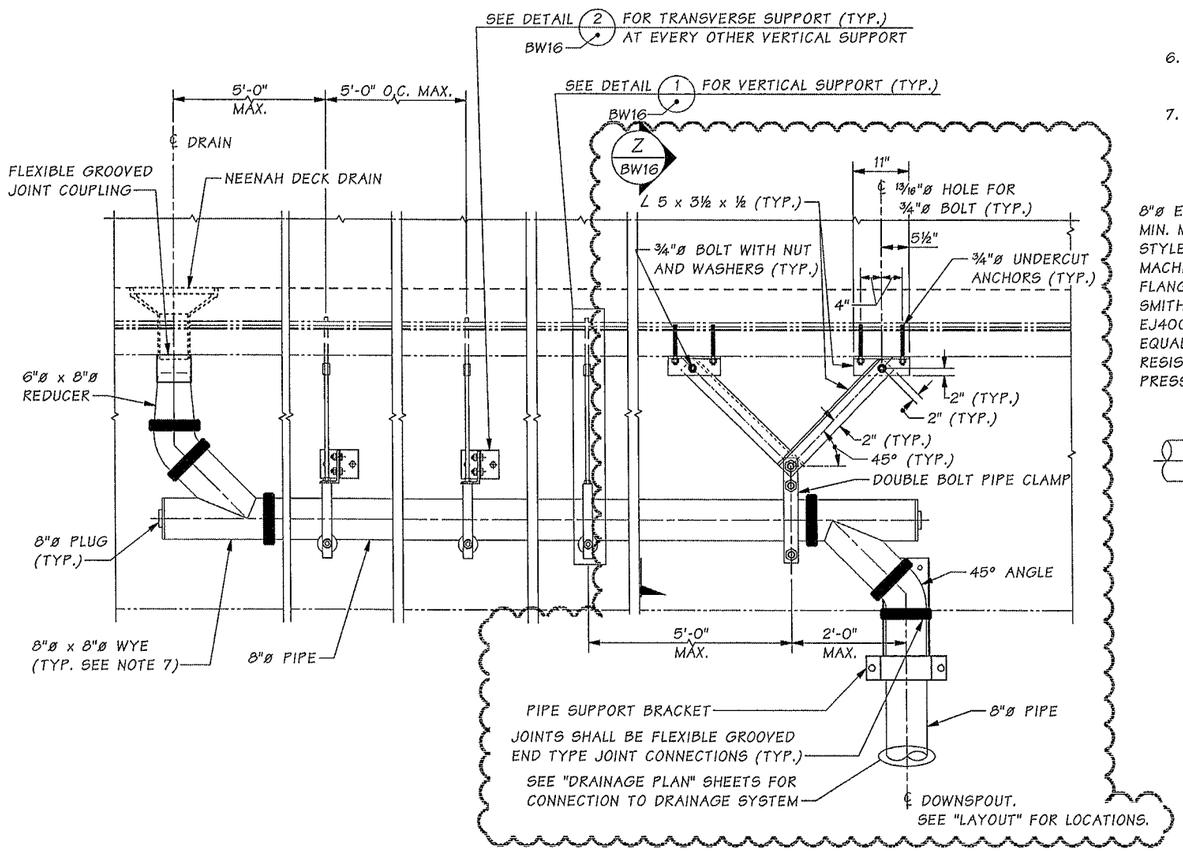

ELEVATION

RIGHT SIDE SHOWN, LEFT SIDE SIMILAR

DRAINAGE PIPE GENERAL NOTES:

1. DECK DRAIN SHALL BE NEENAH DECK DRAIN, MODEL R-4016-B, TYPE A WITH GRATE TYPE C (SEE SPECIAL PROVISIONS).

2. MATERIAL SPECIFICATION:

PLATE, BARS & SHAPES	ASTM A 36
HSS	ASTM A 500
PIPES & FITTINGS	ASTM A 53
THREADED RODS	ASTM A 307
BOLTS, NUTS & WASHERS	STD. SPEC. 9-06.5(1)
BRAND NAME HARDWARE	BY SUPPLIER
UNDERCUT ANCHORS	ASTM A 193 GR. B7

3. PIPES AND FITTING JOINTS SHALL BE JOINED WITH FLEXIBLE GROOVED END TYPE JOINT CONNECTIONS (SEE SPECIAL PROVISIONS).

4. ALL STEEL PARTS IN DRAINAGE ASSEMBLY SHALL BE GALVANIZED IN ACCORDANCE WITH AASHTO M 111 AFTER FABRICATION EXCEPT RODS, BOLTS, NUTS AND WASHERS SHALL BE GALVANIZED IN ACCORDANCE WITH AASHTO M 232. 8"ø EXPANSION JOINT, PIPE ROLLER AND VICTAULIC COUPLING ARE NOT TO BE GALVANIZED.

5. ALL EXPOSED DRAINAGE TO BE PAINTED IN ACCORDANCE WITH STD. SPEC. SECTION 6-07.3(11)A. THE COLOR OF THE TOP COAT OF PAINT SHALL BE WASHINGTON GRAY.

6. THE CONTRACTOR SHALL SUBMIT SHOP DRAWINGS TO THE ENGINEER FOR APPROVAL IN ACCORDANCE WITH SECTION 6-03.3(7).

7. PROVIDE A WYE CLEANOUT IMMEDIATELY UPSTREAM OF EACH DRAIN AND BOTH SIDES OF EXPANSION JOINTS.

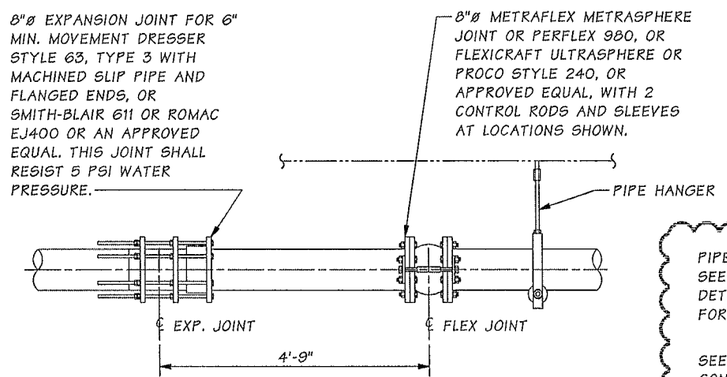

DRAIN LINE EXPANSION DETAILS

AT BRIDGE EXPANSION JOINTS NEAR PIERS 3N AND 7N (2 LOCATIONS)

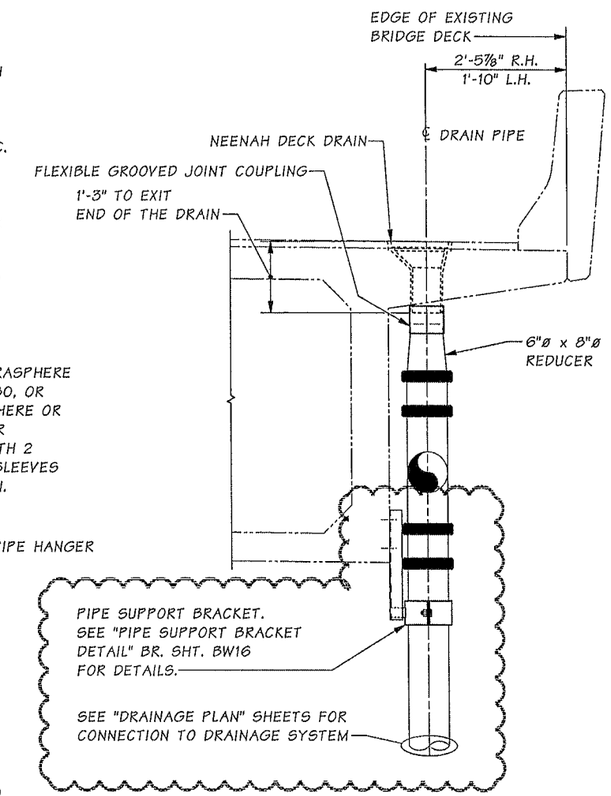

SIDE ELEVATION

Bridge Design Engr.	Khaleghi, B		M:\Y-Team\M ST TO PORTLAND\BRIDGES-445W SB\window files\ADD-04-21 DRAINDTLS2.wnd							
Supervisor	Khaleghi, B					REGION NO.	STATE	FED. AID PROJ. NO.	SHEET NO.	TOTAL SHEETS
Designed By	Lee, CS	07/13				10	WASH.			
Checked By	Chu, A	10/13								
Detailed By	Bontemps, W	07/13				JOB NUMBER 12C501				
Bridge Projects Engr.										
Prelim. Plan By			04/25/14	ADD-1 ADDED & CHANGED DRAINS	CSL	RBS				
Architect/Specialist			DATE	REVISION	BY	APP'D				

Tue Apr 22 08:27:28 2014

BRIDGE AND STRUCTURES OFFICE

4/22/2014 4/22/14

Washington State Department of Transportation

I-5
M ST TO PORTLAND AVE-HOV

I-5 OVER I-705 AND TACOMA RAIL BRIDGE NO. 5/445W

BRIDGE DRAIN DETAILS 3 OF 4

BRIDGE SHEET NO. BW15

SHEET 924 OF 1763 SHEETS

SR 5 FILE NO. ____ SHEET BW15

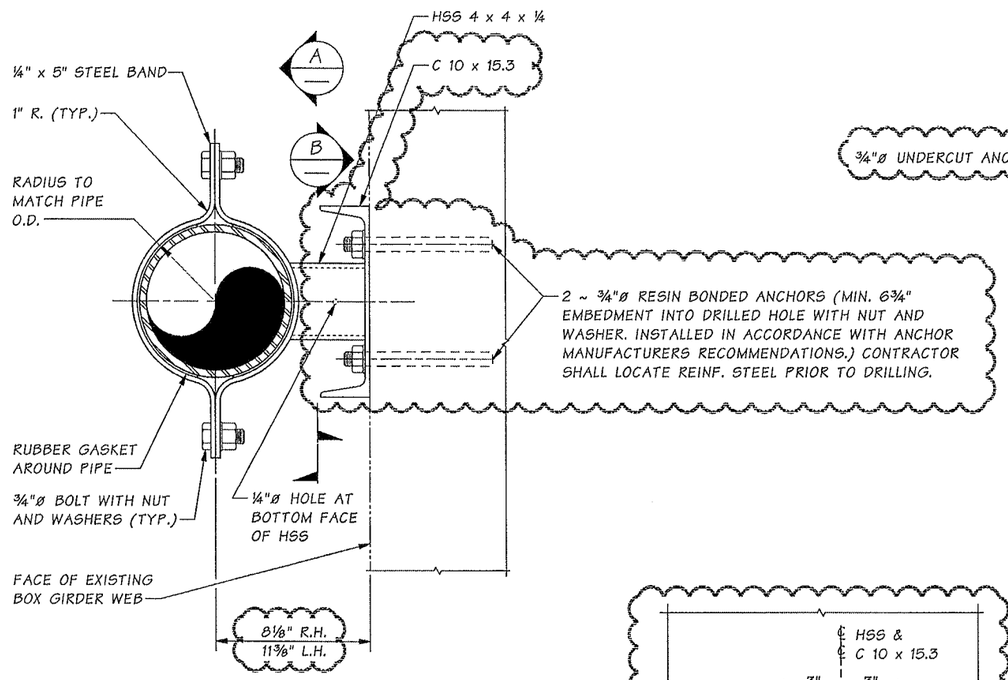

PIPE SUPPORT BRACKET DETAIL

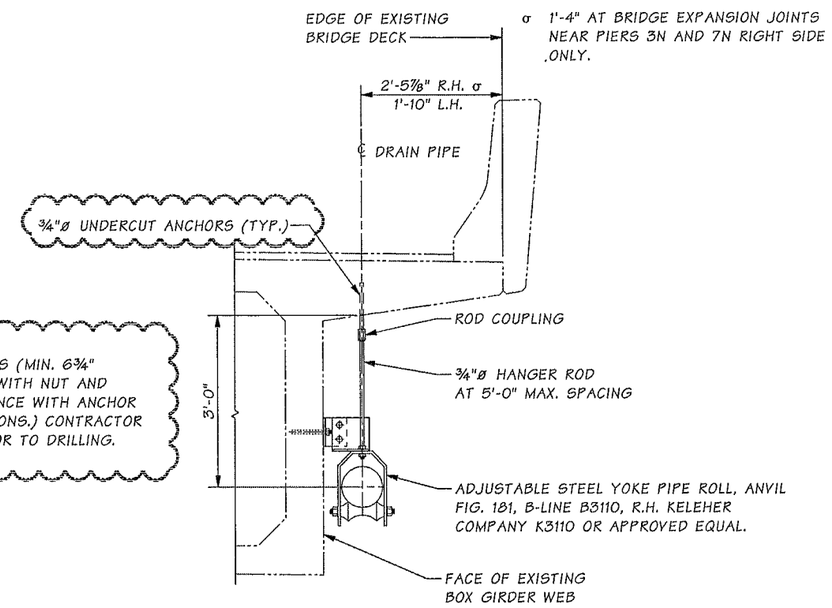

DETAIL 1 — BW15

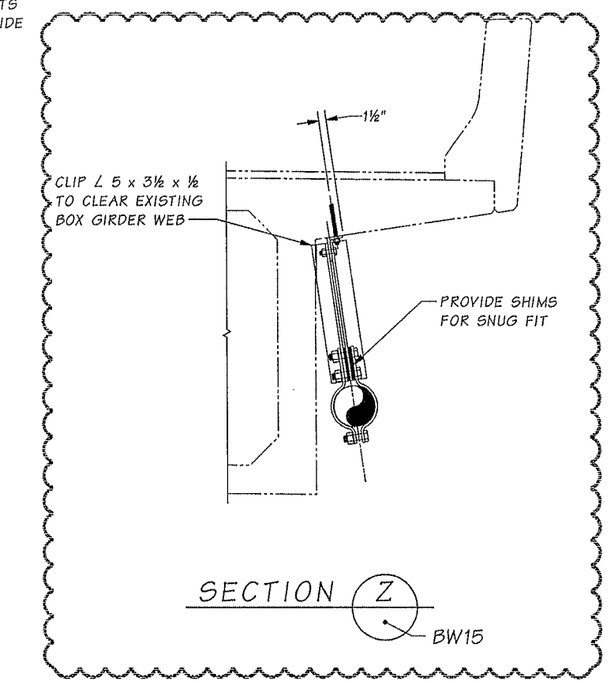

SECTION Z — BW15

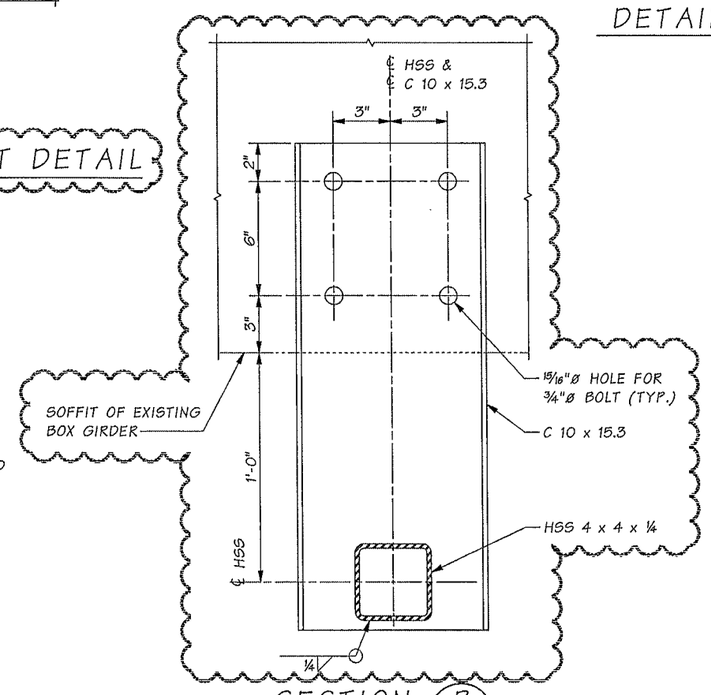

SECTION B

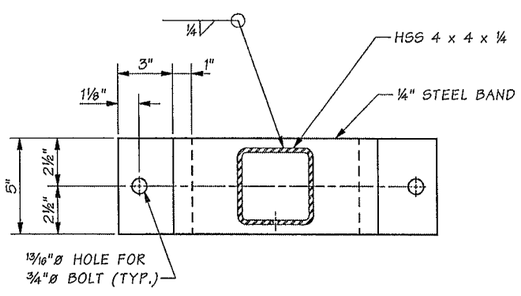

SECTION A

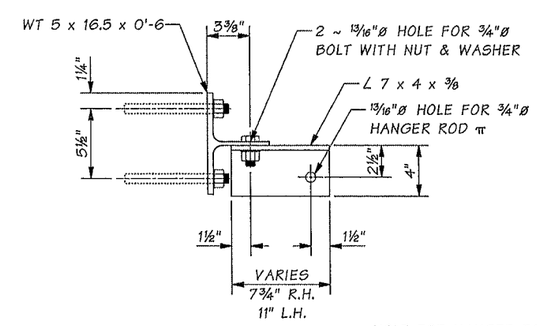

PLAN

π HOLE FOR HANGER ROD MAY BE FIELD DRILLED.

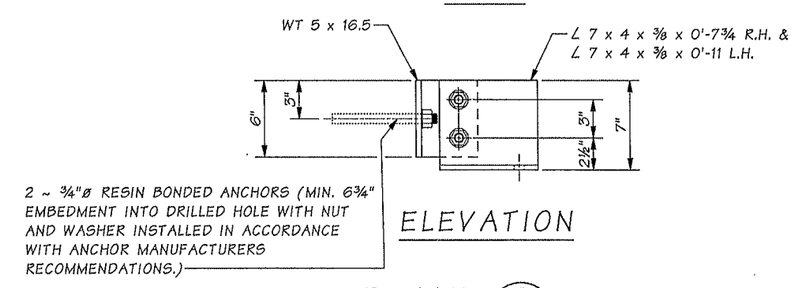

ELEVATION

DETAIL 2 — BW15

Bridge Design Engr.	Khaleghi, B		M:\Y-Team\M ST TO PORTLAND\BRIDGES-445W SB\window files\ADD-04-21 DRAINDTLS3.wnd			REGION NO.	STATE	FED. AID PROJ. NO.	SHEET NO.	TOTAL SHEETS
Supervisor	Khaleghi, B					10	WASH.			
Designed By	Lee, CS	07/13				JOB NUMBER 12C501				
Checked By	Chu, A	10/13								
Detailed By	Bontemps, W	07/13								
Bridge Projects Engr.										
Prelim. Plan By			04/25/14 ADD-1 CHANGED PIPE SUPPORT BRACKET	CSL	RBS					
Architect/Specialist			DATE REVISION	BY	APP'D					

Tue Apr 22 08:27:33 2014

BRIDGE AND STRUCTURES OFFICE

Washington State Department of Transportation

I-5
M ST TO PORTLAND AVE-HOV

I-5 OVER I-705 AND TACOMA RAIL BRIDGE NO. 5/445W

BRIDGE DRAIN DETAILS 4 OF 4

BRIDGE SHEET NO. BW16

SHEET 925 OF 1763 SHEETS

SR 5 FILE NO. ____ SHEET BW16

SHEET INDEX

BRIDGE SHEET NO.	SHEET TITLE
MC0	INDEX
MC1	LAYOUT
MC2	GENERAL NOTES & GEOMETRY DATA
MC3	GEOMETRIC DATA
MC4	CONSTRUCTION OPENING DIAGRAMS
MC5	SUGGESTED REMOVAL SEQUENCE
MC6	GIRDER CONSTRUCTION SEQUENCE
MC7	SUGGESTED GIRDER ERECTION PLAN
MC8	FOUNDATION LAYOUT
MC9	PIER 1 SHAFT
MC10	PIER 2 SHAFT
MC11	PIER 3 SHAFT
MC12	PIER 4 SHAFT
MC13	PIER 2 COLUMN ELEVATION
MC14	PIER 2 COLUMN DETAILS
MC15	PIER 3 COLUMN ELEVATION
MC16	PIER 3 COLUMN DETAILS
MC17	PIER 1 PLAN
MC18	PIER 1 ELEVATION
MC19	PIER 1 DETAILS
MC20	PIER 1 CURTAIN WALL DETAILS
MC21	PIER 1 WINGWALL DETAILS
MC22	PIER 1 RETAINING WALL
MC22A	COATED CHAIN LINK FENCE TYPE 4 MODICATIONS C - DETAILS
MC23	PEDESTRIAN BARRIER WITH MOMENT SLAB AT PIER 1
MC24	PIER 2 PLAN
MC25	PIER 2 ELEVATION
MC26	PIER 2 CROSSBEAM DETAILS 1 OF 2
MC27	PIER 2 CROSSBEAM DETAILS 2 OF 2
MC28	PIER 3 PLAN
MC29	PIER 3 ELEVATION
MC30	PIER 3 CROSSBEAM DETAILS 1 OF 2
MC31	PIER 3 CROSSBEAM DETAILS 2 OF 2
MC32	PIER 4 PLAN
MC33	PIER 4 ELEVATION
MC34	PIER 4 DETAILS
MC35	PIER 4 CURTAIN WALL
MC36	PIER 4 RETAINING WALL
MC37	BEARING DETAIL
MC38	FRAMING PLAN
MC39	TYPICAL SECTION
MC40	WF74G GIRDER DETAILS 1 OF 4
MC41	WF74G GIRDER DETAILS 2 OF 4
MC42	WF74G GIRDER DETAILS 3 OF 4
MC43	WF74G GIRDER DETAILS 4 OF 4
MC44	INTERMEDIATE DIAPHRAGM DETAILS
MC45	PIER 1 END DIAPHRAGM DETAILS
MC46	PIER 4 END DIAPHRAGM DETAILS
MC47	BRIDGE DECK REINFORCEMENT PLAN 1
MC48	BRIDGE DECK REINFORCEMENT PLAN 2
MC49	BRIDGE DECK REINFORCEMENT PLAN 3
MC50	BRIDGE DECK REINFORCEMENT PLAN 4
MC51	BRIDGE DECK REINFORCEMENT DETAIL
MC52	BRIDGE DECK SECTION MID-SPAN FOR SPAN 1
MC53	BRIDGE DECK SECTION NEAR PIER 2
MC54	BRIDGE DECK SECTION NEAR PIER 3
MC55	BRIDGE DECK SECTION MID-SPAN FOR SPAN 3
MC56	UTILITY SUPPORT DETAILS 1 OF 2
MC57	UTILITY SUPPORT DETAILS 2 OF 2
MC58	PEDESTRIAN BARRIER 1 OF 3
MC59	PEDESTRIAN BARRIER 2 OF 3
MC60	PEDESTRIAN BARRIER 3 OF 3
MC61	BRIDGE RAILING TYPE BP 1 OF 2
MC62	BRIDGE RAILING TYPE BP 2 OF 2
MC63	LUMINARE ANCHORAGE DETAILS
MC64	BRIDGE APPROACH SLAB DETAILS 1 OF 3
MC65	BRIDGE APPROACH SLAB DETAILS 2 OF 3
MC66	BRIDGE APPROACH SLAB DETAILS 3 OF 3
MC67	BARLIST 1 OF 2
MC68	BARLIST 2 OF 2

SR 5 FILE NO. 7452 SHEET MC0

Bridge Design Engr. Khaleghi, B	M:\Y-Team\M ST TO PORTLAND\MCKINLEY AVE BRG\window files\INDEX.wnd							
Supervisor Khaleghi, B								
Designed By								
Checked By								
Detailed By								
Bridge Projects Engr.								
Prelim. Plan By								
Architect/Specialist	DATE	REVISION	BY	APP'D				

REGION NO.	STATE	FED. AID PROJ. NO.	SHEET NO.	TOTAL SHEETS
10	WASH.			
JOB NUMBER 12C501				

Fri Mar 14 08:39:22 2014

BRIDGE AND STRUCTURES OFFICE

Washington State Department of Transportation

I-5
M ST TO PORTLAND AVE - HOV

MCKINLEY WAY OVER I-5 BRIDGE NO. 5/448

INDEX

BRIDGE SHEET NO. MC0

SHEET 926 OF 1763 SHEETS

SEC. 9 T. 20N. R. 3E. W.M.

CITY OF TACOMA

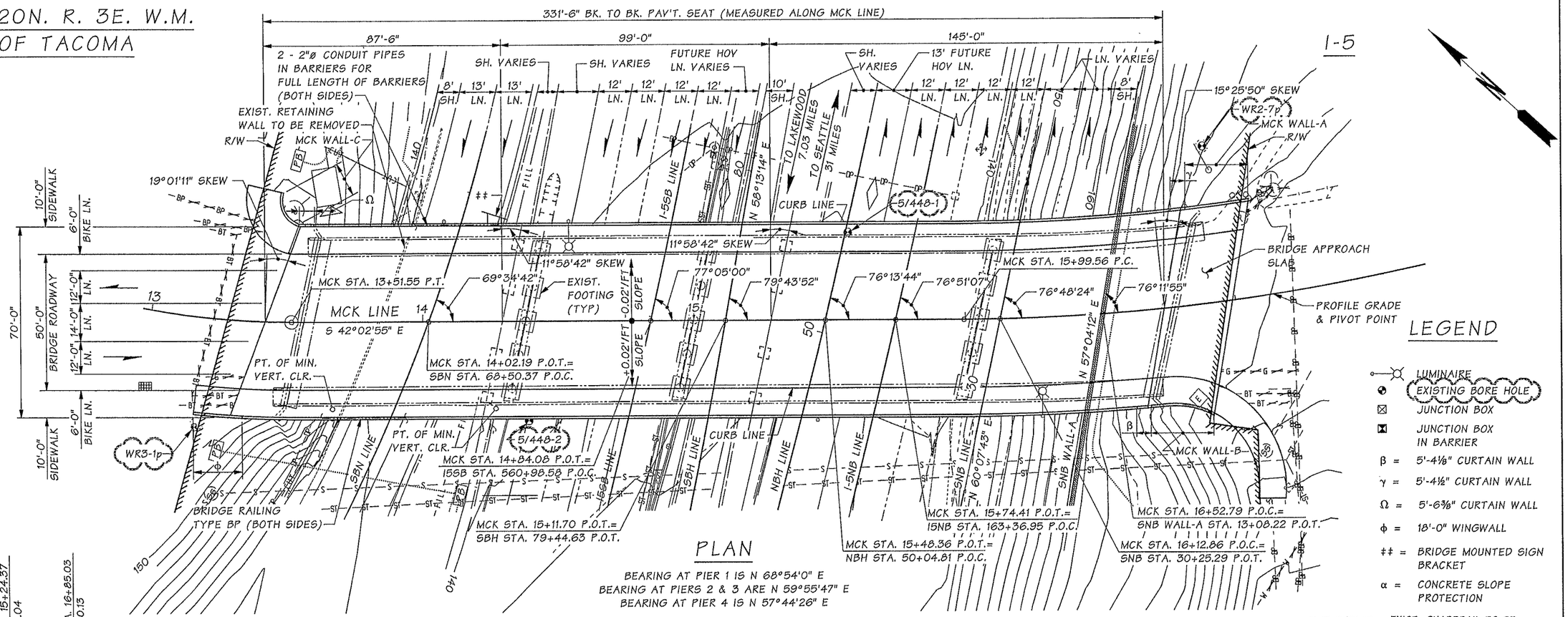

PLAN

BEARING AT PIER 1 IS N 68°54'0" E
BEARING AT PIERS 2 & 3 ARE N 59°55'47" E
BEARING AT PIER 4 IS N 57°44'26" E

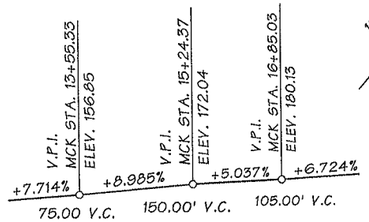

MCK LINE PROFILE

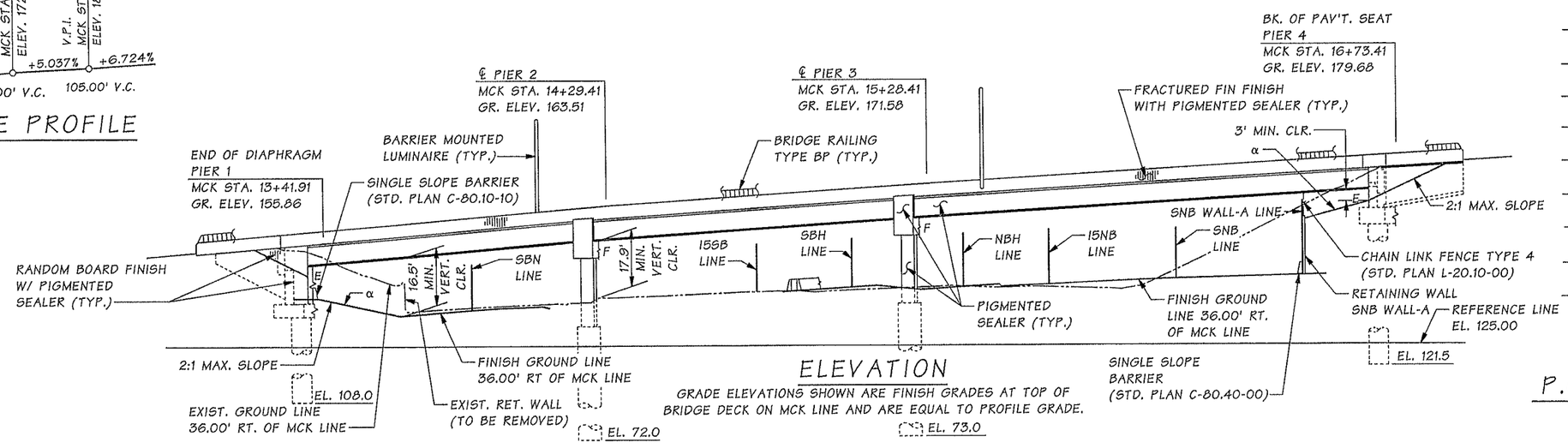

ELEVATION

GRADE ELEVATIONS SHOWN ARE FINISH GRADES AT TOP OF BRIDGE DECK ON MCK LINE AND ARE EQUAL TO PROFILE GRADE.

DATUM

NAVD 1988

LEGEND

- LUMINAIRE
- EXISTING BORE HOLE
- JUNCTION BOX
- JUNCTION BOX IN BARRIER
- β = 5'-4⅛" CURTAIN WALL
- γ = 5'-4½" CURTAIN WALL
- Ω = 5'-6⅜" CURTAIN WALL
- ϕ = 18'-0" WINGWALL
- ‡‡ = BRIDGE MOUNTED SIGN BRACKET
- α = CONCRETE SLOPE PROTECTION
- EXIST. GUARDRAIL TO BE REMOVED AND REPLACED.
- EXIST. FENCE TO BE REMOVED AND REPLACED.
- EXIST. WATERLINE TO BE RELOCATED
- EXIST. 15" DIA. SANITARY SEWER
- EXIST. 30" DIA. STORM SEWER
- EXIST. OVERHEAD POWER TO BE TEMP. RELOCATED
- EXIST. BURIED TELEPHONE TO BE RELOCATED
- EXIST. BURIED OPTIC FIBER TO BE RELOCATED
- EXIST. GAS TO BE REMOVED
- EXIST. BURIED POWER TO BE RELOCATED

P.C. GIRDERS (WF74G)

LOADING: HL-93

Bridge Design Engr.	Khaleghi, B		M:\Y-Team\M ST TO PORTLAND\MCKINLEY AVE BRG\window files\ADD-2 LAYOUT.WND						
Supervisor	Khaleghi, B								
Designed By	Burnham, B	12/13							
Checked By	Glassford, P	12/13							
Detailed By	Andreotti, L	12/13							
Bridge Projects Engr.	Lewis, RA	01/08							
Prelim. Plan By	CH2MHILL	01/08	05/02/14	CHANGED BORE HOLE CALLOUTS	PG	BK			
Architect/Specialist	Kinderman, P	01/08	DATE	REVISION	BY	APP'D			

REGION NO.	STATE	FED. AID PROJ. NO.	SHEET NO.	TOTAL SHEETS
10	WASH.			
JOB NUMBER 12C501				

BRIDGE AND STRUCTURES OFFICE

BRIAN KHALEGHI — STATE OF WASHINGTON — 27768 — PROFESSIONAL ENGINEER — 5/1/14

Washington State Department of Transportation

I-5
M ST TO PORTLAND AVE - HOV

MCKINLEY WAY OVER I-5 BRIDGE NO. 5/448

LAYOUT

BRIDGE SHEET NO. MC1

SHEET 927 OF 1763 SHEETS

SR 5 FILE NO. 7452 SHEET MC1

Thu May 01 08:03:45 2014

CURVE DATA

P.I. STATIONS	DELTA	RADIUS	TANGENT	LENGTH	BK. TAN. BEARING
SBN 66+53.61	116°11'14" LT.	692.00'	1111.47'	1403.27'	S 3°18'32" E
NBH 47+99.72	17°34'47" LT.	3295.00'	509.49'	1010.98'	N 74°08'54" E
I-5 SB 556+11.01	24°25'16" LT.	2980.00'	644.87'	1270.16'	N 82°38'29" E
I-5 NB 158+03.02	26°03'23" LT.	3700.00'	856.13'	1682.65'	N 82°37'30" E
MCK 12+69.72	33°44'23" LT.	286.50'	86.88'	168.71'	S 8°18'32" E
MCK 18+32.95	34°34'14" LT.	750.00'	233.39'	452.53'	S 42°02'55" E
SBH 75+91.75	15°55'40" LT.	2500.00	349.75	694.98	N 74°08'54" E

LEGEND

B/15 — IDENTIFIES SECTION OR VIEW
TAKEN OR SHOWN ON BRIDGE SHEET 15

1/— IDENTIFIES DETAIL
TAKEN OR SHOWN ON THE SAME SHEET

GENERAL NOTES:

1. ALL MATERIAL AND WORKMANSHIP SHALL BE IN ACCORDANCE WITH THE REQUIREMENTS OF THE WASHINGTON STATE DEPARTMENT OF TRANSPORTATION STANDARD SPECIFICATIONS FOR ROAD, BRIDGE, AND MUNICIPAL CONSTRUCTION DATED 2014, AND AMENDMENTS.

2. THIS STRUCTURE HAS BEEN DESIGNED IN ACCORDANCE WITH THE REQUIREMENTS OF THE AASHTO LRFD BRIDGE DESIGN SPECIFICATIONS 6TH EDITION 2012 AND 2013 INTERIMS. DEAD LOAD INCLUDES ADDITIONAL FUTURE WEARING SURFACE OF 25 POUNDS PER SQUARE FOOT.

3. THE SEISMIC DESIGN OF THIS STRUCTURE HAS BEEN COMPLETED IN ACCORDANCE WITH THE REQUIREMENTS OF THE AASHTO GUIDE SPECIFICATIONS FOR LRFD SEISMIC BRIDGE DESIGN 2ND EDITION 2011, USING SEISMIC DESIGN CATEGORY C, SITE CLASS C, A PEAK GROUND ACCELERATION OF 0.41g, AND 0.2 SECOND AND 1.0 SECOND SPECTRAL ACCELERATION OF 0.89g AND 0.30g, RESPECTIVELY, ON SITE CLASS B.

4. THE CONCRETE IN BRIDGE DECKS SHALL BE CLASS 4000D. THE CONCRETE IN BRIDGE APPROACH SLABS SHALL BE CLASS 4000A. THE CONCRETE IN SHAFTS SHALL BE CLASS 4000P. ALL OTHER CAST-IN-PLACE CONCRETE SHALL BE CLASS 4000.

5. THE BACKFILL BEHIND THE ABUTMENTS MAY BE PLACED PRIOR TO PLACEMENT OF THE SUPERSTRUCTURE, IN ACCORDANCE WITH STANDARD SPECIFICATIONS SECTION 2-09.3(1)E.

6. UNLESS OTHERWISE SHOWN IN THE PLANS, CONCRETE COVER MEASURED FROM THE FACE OF CONCRETE TO THE FACE OF ANY REINFORCING STEEL SHALL BE 2½" AT THE TOP OF THE BRIDGE DECK, 1" AT THE BOTTOM OF THE BRIDGE DECK, 3" AT THE BOTTOM OF SHAFT CAP, 2" AT THE TOP OF SHAFT CAP AND 1½" AT ALL OTHER LOCATIONS.

7. FALSEWORK SHALL BE CAREFULLY RELEASED TO PREVENT IMPACT OR UNDUE STRESS IN THE STRUCTURE.

8. CONDUITS, JUNCTION BOXES, AND UTILITIES ARE SHOWN FOR REFERENCE ONLY. THE CONTRACTOR SHALL COORDINATE THESE PLANS WITH THE ELECTRICAL, I.T.S. AND OTHER CIVIL PLANS.

9. NOMINAL SHAFT RESISTANCE SHALL BE TAKEN AS FOLLOWS, IN KIPS:

SERVICE LIMIT STATE

PIER NO.	SKIN FRICTION CAPACITY	END BEARING CAPACITY
1	1550	680
2	2300	820
3	2900	820
4	2100	680

STRENGTH LIMIT STATE

PIER NO.	SKIN FRICTION CAPACITY	END BEARING CAPACITY
1	2100	1700
2	3000	2300
3	4000	2300
4	2500	1700

EXTREME EVENT LIMIT STATE

PIER NO.	SKIN FRICTION CAPACITY	END BEARING CAPACITY
1	2100	1660
2	3000	2260
3	4000	2260
4	2500	1660

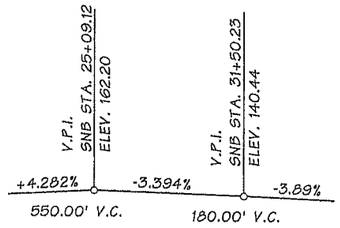

SNB LINE PROFILE

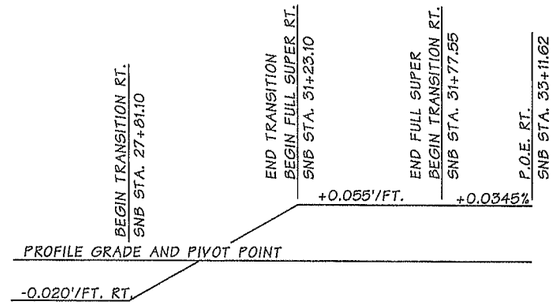

SNB SUPERELEVATION DIAGRAM

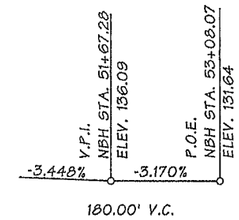

NBH LINE PROFILE

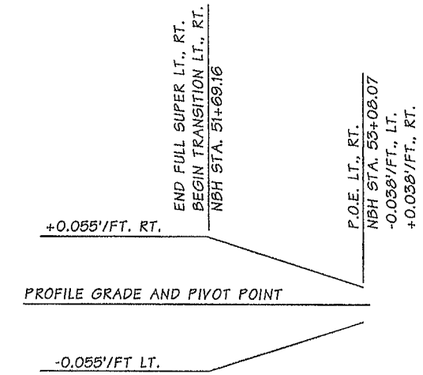

NBH LINE SUPERELEVATION DIAGRAM

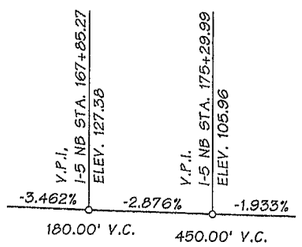

I-5 NB LINE PROFILE

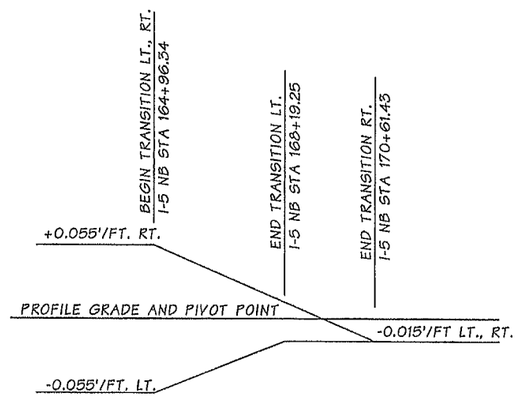

I-5 NB LINE SUPERELEVATION DIAGRAM

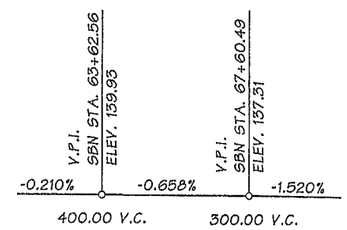

SBN LINE PROFILE

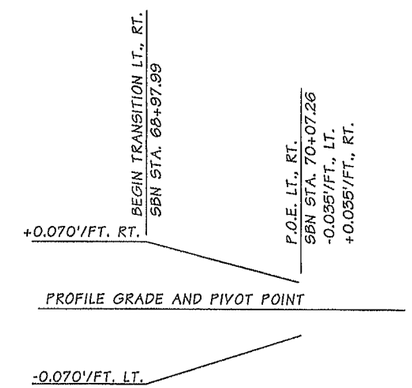

SBN SUPERELEVTION DIAGRAM

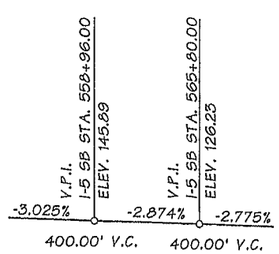

I-5 SB LINE PROFILE

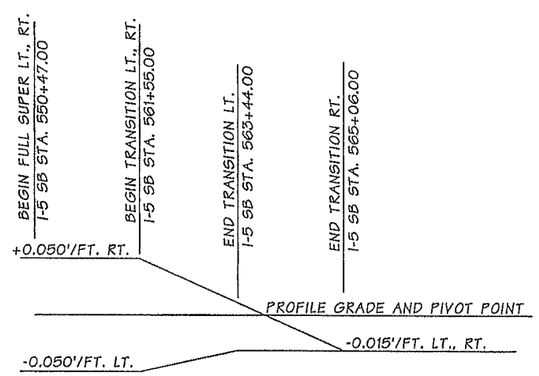

I-5 SB LINE SUPERELEVATION DIAGRAM

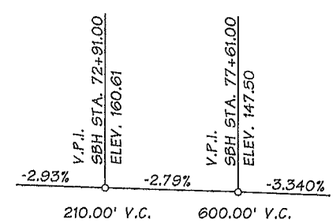

SBH LINE PROFILE

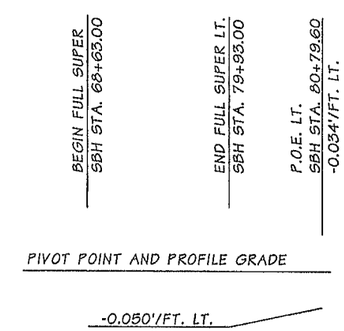

SBH SUPER ELEVATION DIAGRAM

Bridge Design Engr.	Khaleghi, B		M:\Y-Team\M ST TO PORTLAND\MCKINLEY AVE BRG\window files\GEO DATA.wnd								
Supervisor	Khaleghi, B										
Designed By	Burnham, B	05/13				REGION NO.	STATE	FED. AID PROJ. NO.	SHEET NO.	TOTAL SHEETS	
Checked By	Glassford, P	05/13				10	WASH.				
Detailed By	Andreotti, L	05/13				JOB NUMBER 12C501					
Bridge Projects Engr.											
Prelim. Plan By											
Architect/Specialist			DATE	REVISION	BY	APP'D					

Tue Feb 11 07:02:02 2014

BRIAN DAVID BURNHAM — STATE OF WASHINGTON — 40130 — REGISTERED PROFESSIONAL ENGINEER — 2/11/14

BRIDGE AND STRUCTURES OFFICE

BRIAN KHALEGHI — STATE OF WASHINGTON — PROFESSIONAL ENGINEER — 2/12/14

Washington State Department of Transportation

I-5
M ST TO PORTLAND AVE - HOV

MCKINLEY WAY OVER I-5 BRIDGE NO. 5/448

GEOMETRIC DATA

BRIDGE SHEET NO. MC3

SHEET 929 OF 1763 SHEETS

SR 5 FILE NO. 7452 SHEET MC3

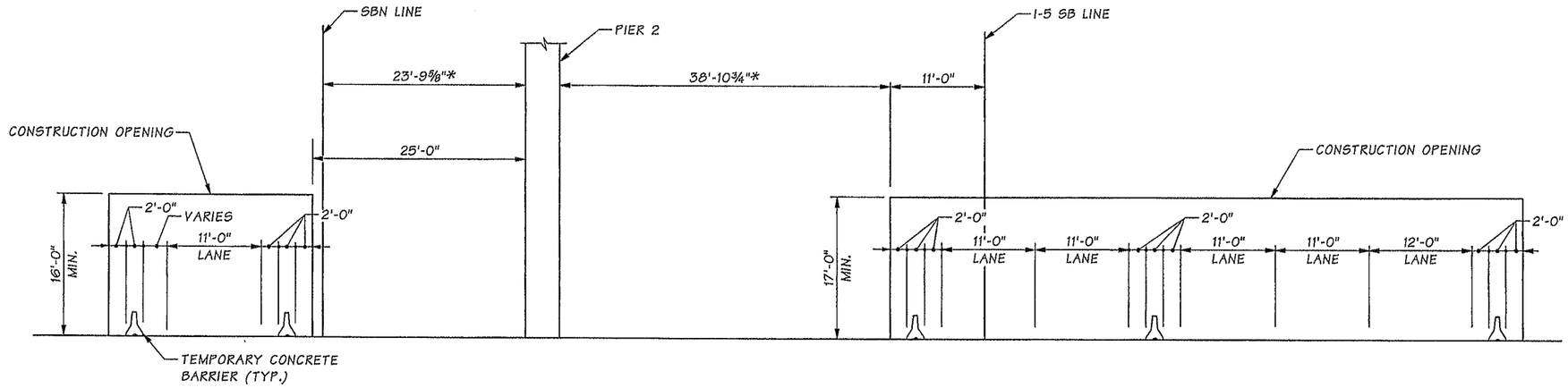

CONSTRUCTION OPENING DIAGRAM
STAGE 3A SBN-SBS STEP 3

FOR CONSTRUCTION OF PIER 2
* DIMENSION IS APPROXIMATE.

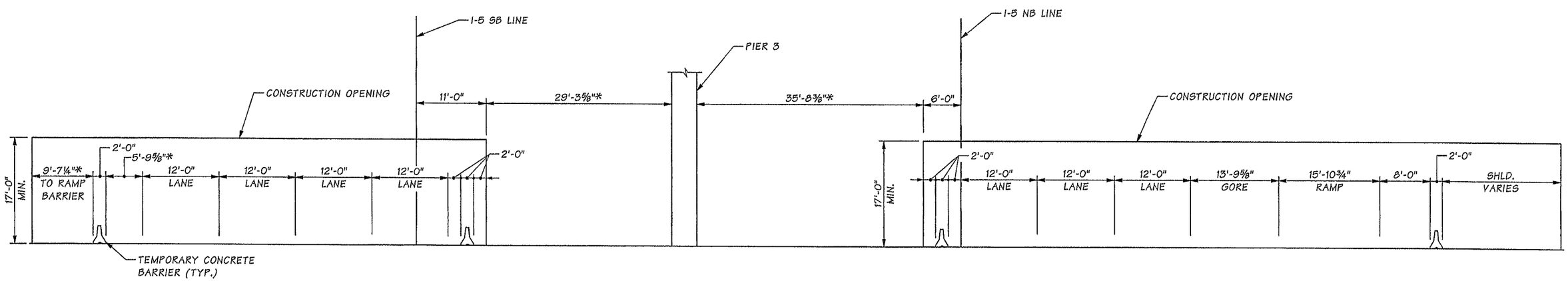

CONSTRUCTION OPENING DIAGRAM
STAGE 4

FOR CONSTRUCTION OF PIER 3
* DIMENSION IS APPROXIMATE.

SR 5 FILE NO. 7452 SHEET MC4

Bridge Design Engr.	Khaleghi, B	
Supervisor	Khaleghi, B	
Designed By	Glassford, P	05/13
Checked By	Burnham, B	05/13
Detailed By	Andreotti, L	05/13
Bridge Projects Engr.		
Prelim. Plan By		
Architect/Specialist		

M:\Y-Team\M ST TO PORTLAND\MCKINLEY AVE BRG\window files\CONSTRUCTION OPN DIAGRAM.WND

DATE	REVISION	BY	APP'D

REGION NO.	STATE	FED. AID PROJ. NO.	SHEET NO.	TOTAL SHEETS
10	WASH.			

JOB NUMBER 12C501

BRIDGE AND STRUCTURES OFFICE

2/11/14 2/12/14

Washington State Department of Transportation

I-5
M ST TO PORTLAND AVE - HOV

MCKINLEY WAY OVER I-5 BRIDGE NO. 5/448

CONSTRUCTION OPENING DIAGRAMS

BRIDGE SHEET NO. MC4

SHEET 930 OF 1763 SHEETS

Tue Feb 11 14:46:51 2014

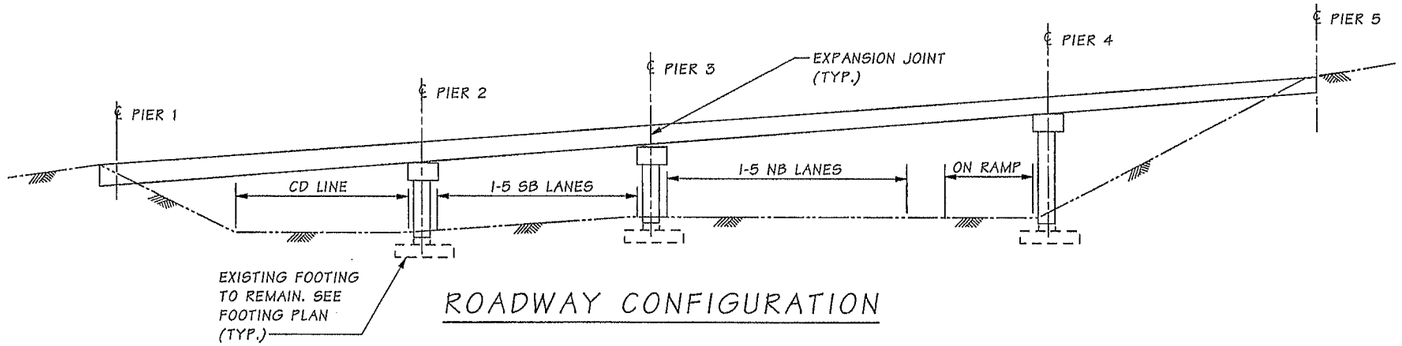

ROADWAY CONFIGURATION

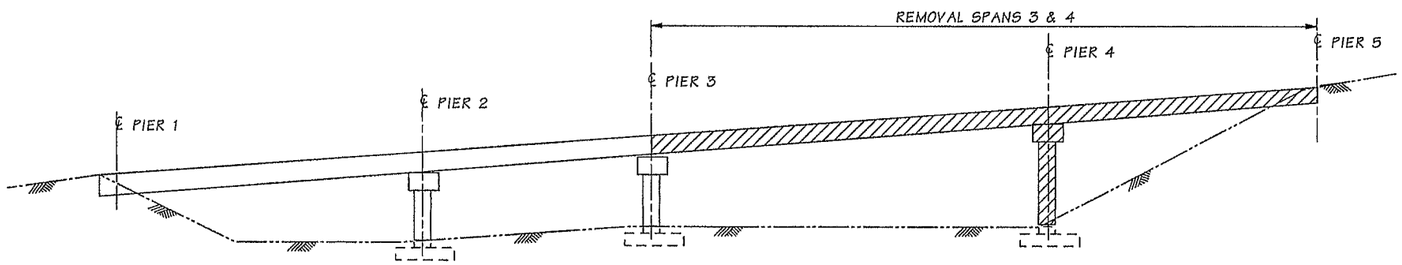

STEP 1

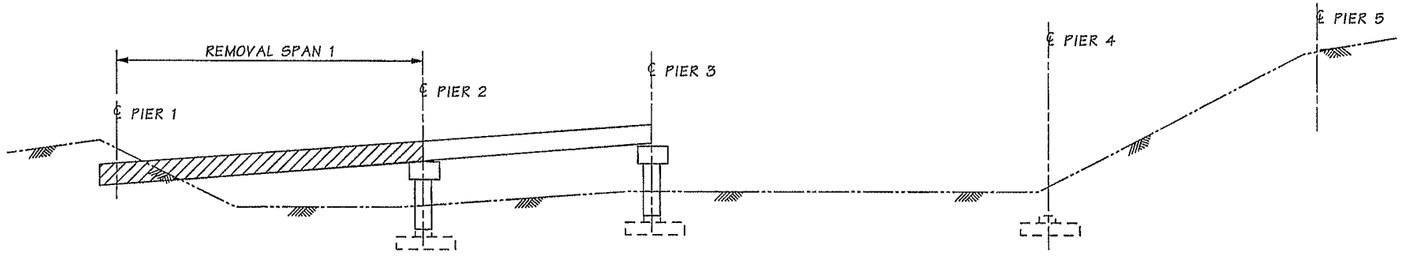

STEP 2

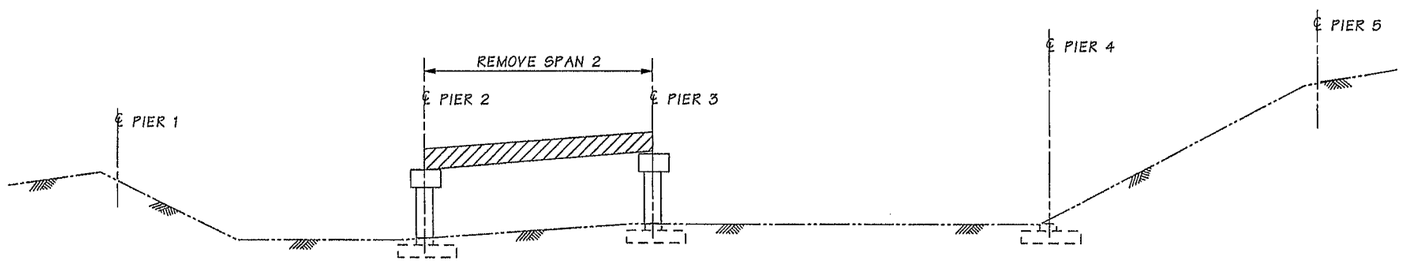

STEP 3

DEMOLITION NOTES:

1. THE DEMOLITION PLANS SHOWN ARE ONLY SUGGESTED SCHEMATIC CONCEPT. THE CONTRACTOR SHALL DESIGN AND DETAIL ALL ELEMENTS OF THE FALSEWORK AND DECK REMOVAL SYSTEM TO MEET THE MINIMUM CONSTRUCTION OPENING SHOWN IN THE PLANS AND THE TRAFFIC CONTROL RESTRICTIONS IN THE SPECIAL PROVISIONS.
2. THE FALSE WORK SHALL BE DESIGNED IN ACCORDANCE WITH THE REQUIREMENTS OF THE WASHINGTON STATE DEPARTMENT OF TRANSPORTATION STANDARD SPECIFICATIONS ROAD, BRIDGE, AND MUNICIPAL CONSTRUCTION - ENGLISH DATED 2014 AND AMENDMENTS. THE FALSEWORK AND DEMOLITION PLANS SHALL ALSO MEET THE ADDITIONAL REQUIREMENTS IN THE SPECIAL PROVISIONS.
3. IN PREPARATION OF THE FALSEWORK AND DEMOLITION PLANS, THE CONTRACTOR SHALL REFERENCE THE AS-BUILT PLANS AND SHALL MAKE ANY NECESSARY FIELD MEASUREMENTS FOR VERIFICATION. COPIES OF THE AS-BUILT PLANS WILL BE AVAILABLE AT THE PROJECT ENGINEER'S OFFICE.
4. THE EXISTING ABUTMENTS SHALL BE COMPLETELY REMOVED. THE EXISTING FOOTINGS MAY REMAINED IN PLACE, EXCEPT WHERE THERE IS A CONFLICT WITH THE SHAFT LOCATIONS AS INDICATED ON THE FOUNDATION PLAN. THE COLUMNS SHALL BE REMOVED AT LEAST 2'-0" BELOW THE FINAL GRADE OR AS INDICATED BY THE ENGINEER.
5. IF THE REMOVAL OF THE EXISTING ABUTMENTS OR PIER FOUNDATIONS REQUIRES SHORING, THE CONTRACTOR SHALL PROVIDE SHORING PLANS TO THE ENGINEER FOR APPROVAL.
6. SEE TRAFFIC CONTROL PLANS FOR ADDITION STAGING REQUIREMENTS THAT MAY AFFECT THE DEMOLITIONS.
7. THE CONTRACTOR SHALL FOLLOW THE SPECIAL PROVISION FOR REMOVAL OF ASBESTOS CONDUITS IN THE EXISTING STRUCTURE.

SR 5 FILE NO. 7452 SHEET MC5

Bridge Design Engr.	Khaleghi, B		
Supervisor	Khaleghi, B		
Designed By	Tran, LH	01/13	
Checked By	Burnham, B	05/13	
Detailed By	Andreotti, L	05/13	
Bridge Projects Engr.			
Prelim. Plan By			
Architect/Specialist			

M:\Y-Team\M ST TO PORTLAND\MCKINLEY AVE BRG\window files\REMOVAL PLAN.wnd

DATE	REVISION	BY	APP'D

REGION NO.	STATE	FED. AID PROJ. NO.	SHEET NO.	TOTAL SHEETS
10	WASH.			
JOB NUMBER 12C501				

HUONG HUU TRAN — STATE OF WASHINGTON — REGISTERED PROFESSIONAL ENGINEER — 2/12/14

BRIDGE AND STRUCTURES OFFICE

BIJAN KHALEGHI — STATE OF WASHINGTON — REGISTERED PROFESSIONAL ENGINEER — 2/12/14

Washington State Department of Transportation

I-5
M ST TO PORTLAND AVE - HOV

MCKINLEY WAY OVER I-5 BRIDGE NO. 5/448

SUGGESTED REMOVAL SEQUENCE

BRIDGE SHEET NO. MC5

SHEET 931 OF 1763 SHEETS

Tue Feb 11 07:02:05 2014

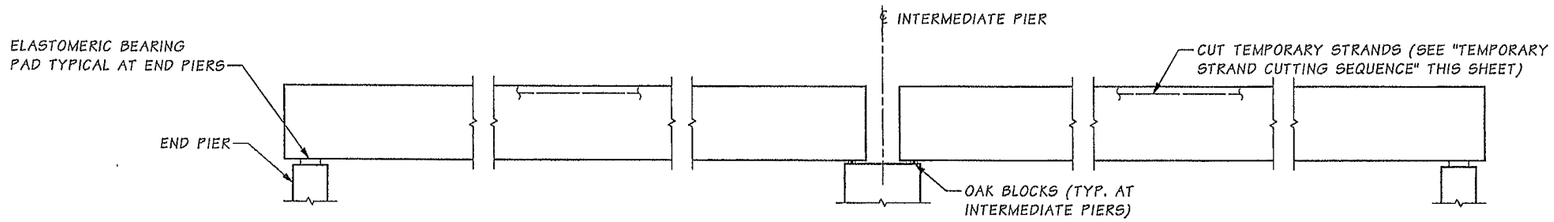

STAGE 1
SET GIRDERS IN PLACE

INSTALL TEMPORARY BRACING FOR ERECTION IN ACCORDANCE WITH STD. SPEC. SECTION 6-02.3(17)F.

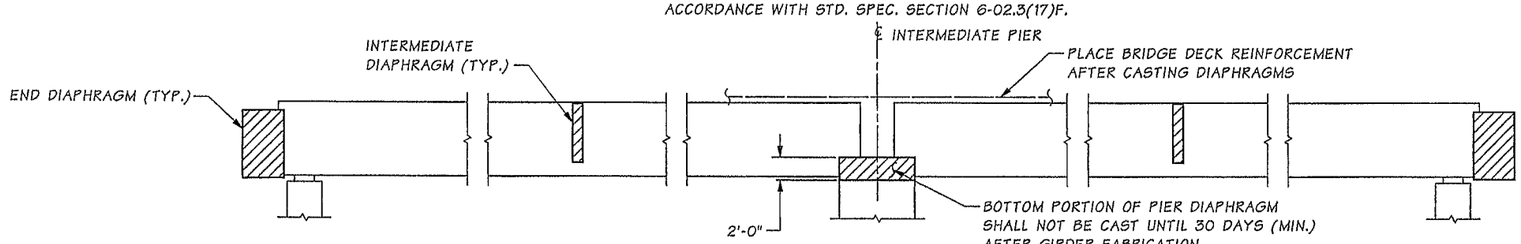

STAGE 2
CAST DIAPHRAGMS AND PLACE BRIDGE DECK REINFORCEMENT

INSTALL TEMPORARY BRACING FOR DIAPHRAGM AND DECK PLACEMENT IN ACCORDANCE WITH STD. SPEC. SECTION 6-02.3(17)F.

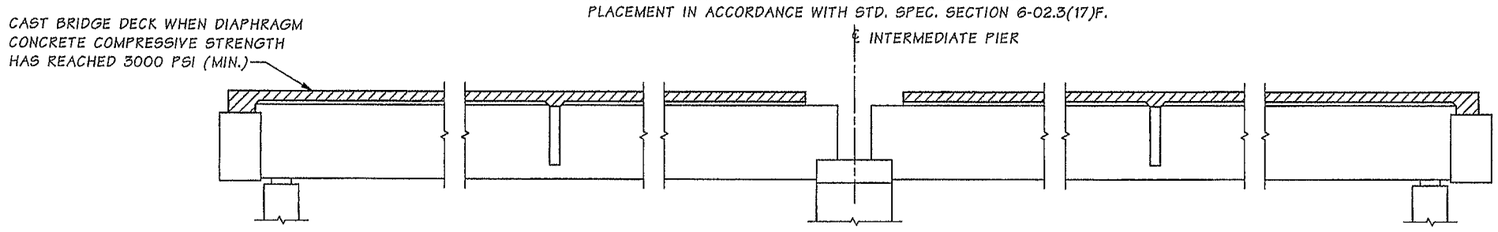

STAGE 3
CAST BRIDGE DECK

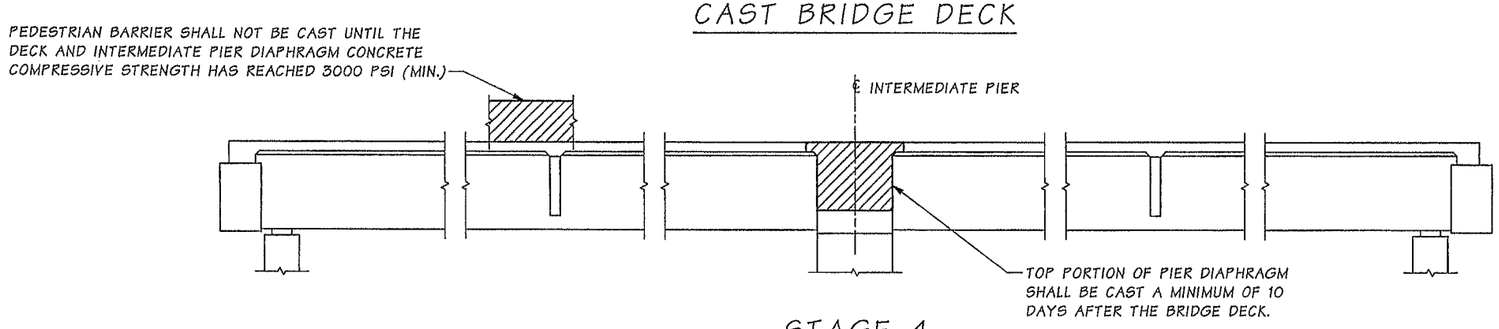

NOTE:
NO LIVE LOAD SHALL BE ALLOWED ON THE SPANS UNTIL THE COMPRESSIVE STRENGTH OF THE TOP PORTION OF THE PIER DIAPHRAGM HAS REACHED 3000 PSI (MIN.).

STAGE 4
COMPLETE DIAPHRAGMS

TEMPORARY STRAND CUTTING SEQUENCE

1. ERECT AND BRACE GIRDERS.
2. REMOVE EXPANDED POLYSTYRENE IN 2" x 6" RECESSES IN TOP FLANGE OF GIRDERS.
3. CUT STRANDS IN 2" x 6" RECESSES. STRANDS MAY BE CUT BY USING A CUTTING TORCH AND MOVING THE FLAME BACK AND FORTH OVER THE LENGTH OF EXPOSED STRAND TO LET INDIVIDUAL WIRES BREAK ONE AT A TIME TO LESSEN THE SHOCK TO THE GIRDER. STRANDS SHALL BE RELEASED IN A SYMMETRICAL MANNER AROUND THE GIRDER CENTERLINE STARTING WITH THOSE NEAREST THE CENTERLINE AND WORKING OUTWARDS.
4. REMOVE ALL MOISTURE IN RECESS PRIOR TO FILLING RECESS WITH GROUT.

CONSTRUCTION SEQUENCE ~ SUPERSTRUCTURE

SR 5 FILE NO. 7452 SHEET MC6

Bridge Design Engr.	Khaleghi, B		
Supervisor	Khaleghi, B		
Designed By	Burnham, B	05/13	
Checked By	Glassford, P	05/13	
Detailed By	Andreotti, L	05/13	
Bridge Projects Engr.			
Prelim. Plan By			
Architect/Specialist			

M:\Y-Team\M ST TO PORTLAND\MCKINLEY AVE BRG\window files\GIRDER CONSTR. SEQ.wnd

DATE	REVISION	BY	APP'D

REGION NO.	STATE	FED. AID PROJ. NO.	SHEET NO.	TOTAL SHEETS
10	WASH.			
JOB NUMBER 12C501				

BRIDGE AND STRUCTURES OFFICE 2/11/14 2/12/14

Washington State Department of Transportation

I-5
M ST TO PORTLAND AVE - HOV
MCKINLEY WAY OVER I-5 BRIDGE NO. 5/448

GIRDER CONSTRUCTION SEQUENCE

BRIDGE SHEET NO. MC6

SHEET 932 OF 1763 SHEETS

Tue Feb 11 07:02:06 2014

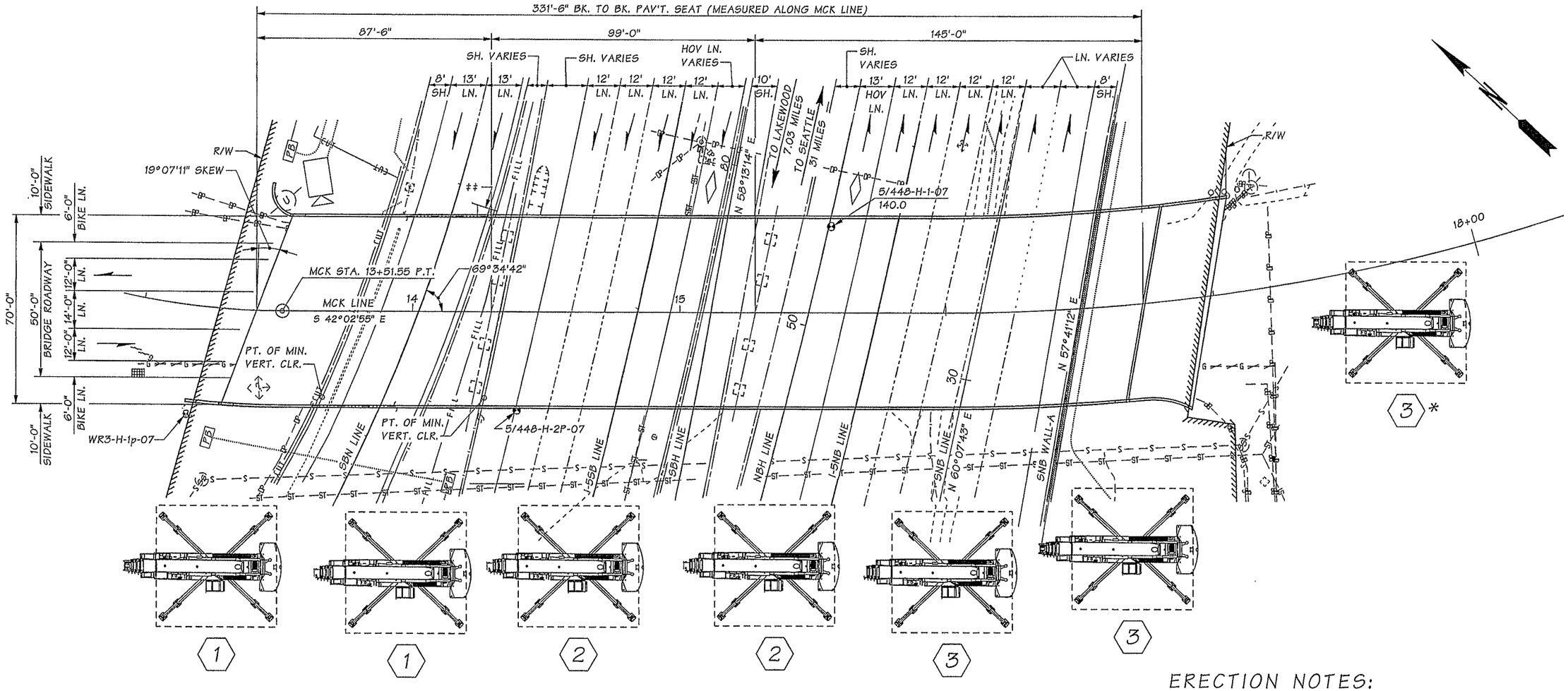

PLAN

ERECTION NOTES:

1. THE GIRDER ERECTION PLANS SHOWN ARE ONLY A SUGGESTED SCHEMATIC CONCEPT. THE CONTRACTOR IS REQUIRED TO SUBMIT THE GIRDER ERECTION PLANS TO THE ENGINEER FOR APPROVAL. THESE PLANS SHOULD INCLUDE ANY BUILDING UP OR LEVELING EXISTING GROUND AREAS.
2. THE CONTRACTOR SHALL VERIFY ALL EXISTING UTILITIES BEFORE PLACING THE CRANES AND TAKE APPROPRIATE MEASURES TO PROTECT THEM.
3. CRANES USED FOR THE GIRDER ERECTION SHALL NOT BE PLACED ON THE EXISTING STRUCTURES.
4. SEE TRAFFIC CONTROL PLANS FOR ADDITIONAL STAGING REQUIREMENTS THAT MAY AFFECT THE DEMOLITIONS.

LEGEND

⬡ CRANE LOCATION FOR GIRDER ERECTION AT DESIGNATED SPAN.

▭ CRANE LEVELING PAD, ASSUME 45' X 45'

NOTES:

1. THE CRANE SIZE DEMAG AC 1600 IS USED FOR THIS SUGGESTED GIRDER ERECTION PLAN.
2. FOR OTHER INFORMATION NOT SHOWN, SEE LAYOUT SHEET.

* POSSIBLE CRANE LOCATION.

SR 5 FILE NO. 7452 SHEET MC7

Bridge Design Engr.	Khaleghi, B		
Supervisor	Khaleghi, B		
Designed By	Burnham, B	09/13	
Checked By	Glassford, P	10/13	
Detailed By	Andreotti, L	09/13	
Bridge Projects Engr.			
Prelim. Plan By			
Architect/Specialist			

M:\Y-Team\M ST TO PORTLAND\MCKINLEY AVE BRG\window files\GIRDER ERECT PLAN.wnd

DATE	REVISION	BY	APP'D

REGION NO.	STATE	FED. AID PROJ. NO.	SHEET NO.	TOTAL SHEETS
10	WASH.			
JOB NUMBER 12C501				

Tue Feb 11 07:02:12 2014

BRIAN DAVID BURNHAM STATE OF WASHINGTON 48134 REGISTERED PROFESSIONAL ENGINEER 2/11/14

BRIDGE AND STRUCTURES OFFICE

BRIAN KHALEGHI STATE OF WASHINGTON 27966 REGISTERED PROFESSIONAL ENGINEER 2/12/14

Washington State Department of Transportation

I-5
M ST TO PORTLAND AVE - HOV

MCKINLEY WAY OVER I-5 BRIDGE NO. 5/448

SUGGESTED GIRDER ERECTION PLAN

BRIDGE SHEET NO. MC7

SHEET 933 OF 1763 SHEETS

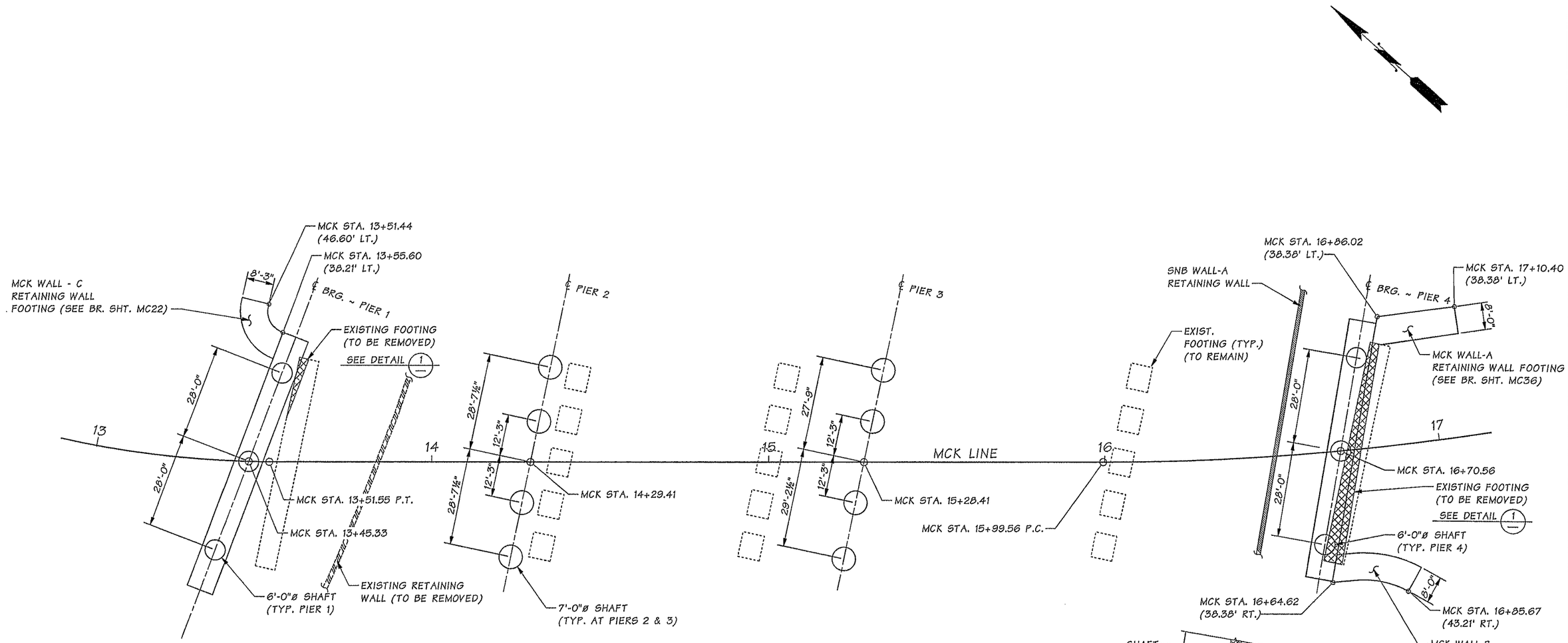

FOUNDATION LAYOUT

BEARING OF PIER 1 IS N 68°54'0" E
BEARING OF PIERS 2 & 3 ARE N 59°55'47" E
BEARING OF PIER 4 IS N 57°44'26" E

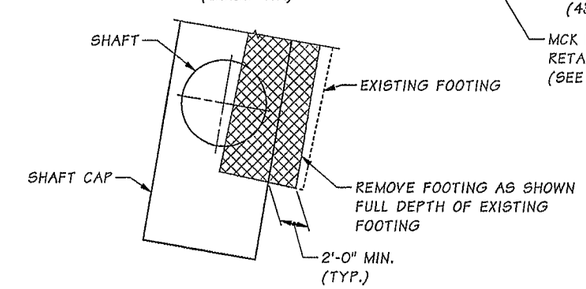

DETAIL 1

Bridge Design Engr.	Khaleghi, B		M:\Y-Team\M ST TO PORTLAND\MCKINLEY AVE BRG\window files\FND.wnd								
Supervisor	Khaleghi, B										
Designed By	Glassford, P	01/13									
Checked By	Burnham, B	05/13									
Detailed By	Andreotti, L	01/13									
Bridge Projects Engr.											
Prelim. Plan By											
Architect/Specialist			DATE	REVISION	BY	APP'D					

REGION NO.	STATE	FED. AID PROJ. NO.	SHEET NO.	TOTAL SHEETS
10	WASH.			
JOB NUMBER 12C501				

BRIDGE AND STRUCTURES OFFICE

2/11/14 2/12/14

Washington State Department of Transportation

I-5
M ST TO PORTLAND AVE - HOV

MCKINLEY WAY OVER I-5 BRIDGE NO. 5/448

FOUNDATION LAYOUT

BRIDGE SHEET NO. MC8

SHEET 934 OF 1763 SHEETS

SR 5 FILE NO. 7452 SHEET MC8

Tue Feb 11 07:02:13 2014

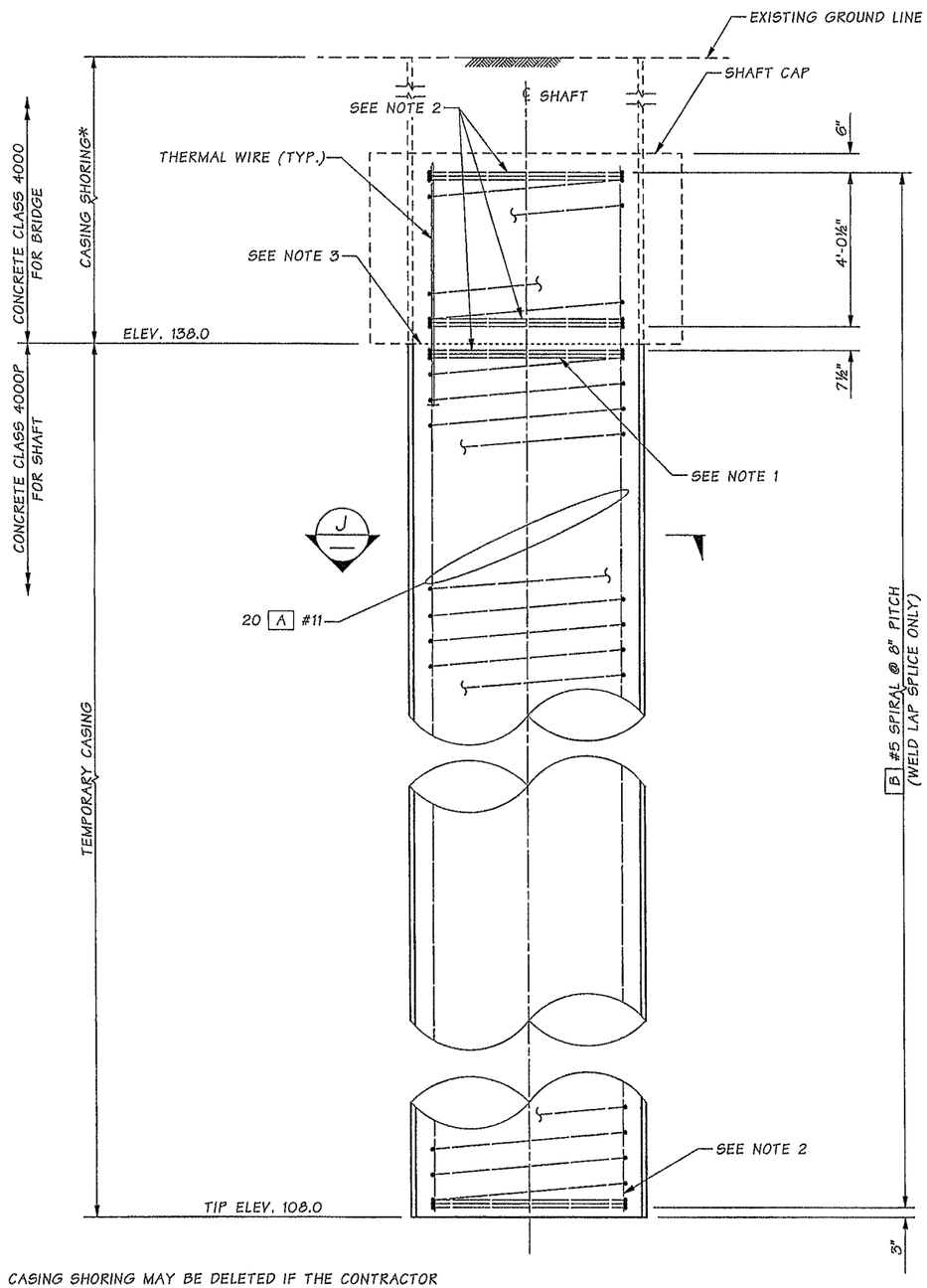

* CASING SHORING MAY BE DELETED IF THE CONTRACTOR SHORES AND EXCAVATES FOR THE SHAFT CAP PRIOR TO SHAFT CONSTRUCTION.

ELEVATION

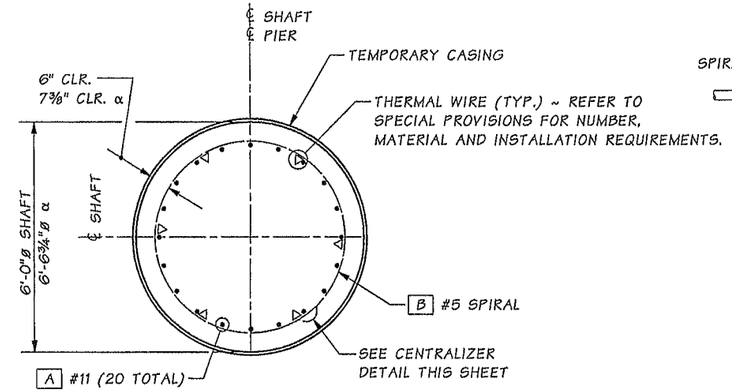

α OSCILLATOR METHOD (SEE NOTE 4)

SECTION J

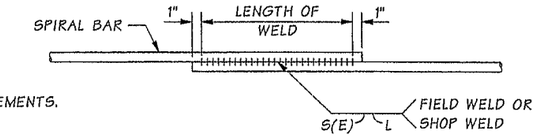

WELDED LAP SPLICE DETAIL

WELDING SHALL MEET THE REQUIREMENTS OF STD. SPEC. 6-02.3(24)E

SHAFT SPIRAL

DEFORMED BAR	WELD DIMENSIONS		
	S	E	LENGTH (L)
#5	5/16	3/16	6

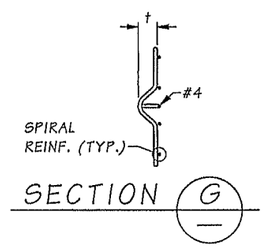

SECTION G

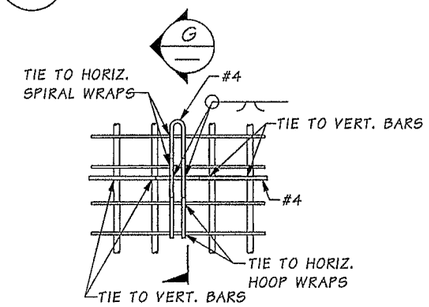

CENTRALIZER DETAIL

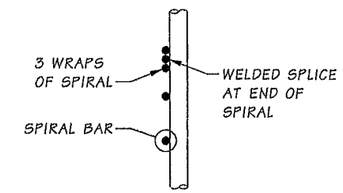

SPIRAL TERMINATION DETAIL

CENTRALIZER DETAIL NOTES:

1. EPOXY COAT CENTRALIZER OR PAINT WITH INORGANIC ZINC AFTER FABRICATION.
2. EACH LEG SHOULD BE TIED TO TWO VERTICAL BAR BUNDLES OR TWO SPIRAL.
3. SEE STD. SPEC. SECTION 6-19.3(5)B FOR SPACING REQUIREMENTS.
4. t CONCRETE COVER MINUS ½".

NOTES:

1. REMOVE LAITANCE AND WEAK CONCRETE TO SOUND CONCRETE PRIOR TO SETTING SHAFT CAP REINFORCEMENT.
2. SEE "SPIRAL TERMINATION DETAIL" THIS SHEET.
3. CONSTRUCTION JOINT WITH ROUGHENED SURFACE.
4. THE SHAFT BAR LIST WEIGHTS DO NOT REFLECT THE OSCILLATOR METHOD.

SHAFT BAR LIST

MARK	SIZE	NO.	LENGTH	BEND TYPE	WT. (lbs.)
A	#11	20	34'-5"	STRAIGHT	3,657
B	#5	1	(a)	SPIRAL	1013
				TOTAL PER SHAFT	4,670

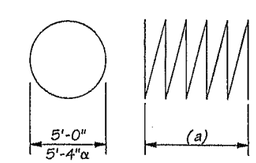

SPIRAL

(a) - DETERMINED FROM PLANS. WEIGHT DOES NOT INCLUDE SPLICES. (BEND TYPE 67)

Bridge Design Engr.	Khaleghi, B		
Supervisor	Khaleghi, B		
Designed By	Burnham, B	01/13	
Checked By	Glassford, P	05/13	
Detailed By	Andreotti, L	01/13	
Bridge Projects Engr.			
Preliim. Plan By			
Architect/Specialist			

M:\Y-Team\M ST TO PORTLAND\MCKINLEY AVE BRG\window files\SHAFT 1.wnd

DATE	REVISION	BY	APP'D

REGION NO.	STATE	FED. AID PROJ. NO.	SHEET NO.	TOTAL SHEETS
10	WASH.			
JOB NUMBER 12C501				

BRIDGE AND STRUCTURES OFFICE 2/11/14

2/12/14

Washington State Department of Transportation

I-5
M ST TO PORTLAND AVE - HOV

MCKINLEY WAY OVER I-5 BRIDGE NO. 5/448

PIER 1 SHAFT

BRIDGE SHEET NO. MC9

SHEET 935 OF 1763 SHEETS

SR 5 FILE NO. 7452 SHEET MC9

Tue Feb 11 07:02:15 2014

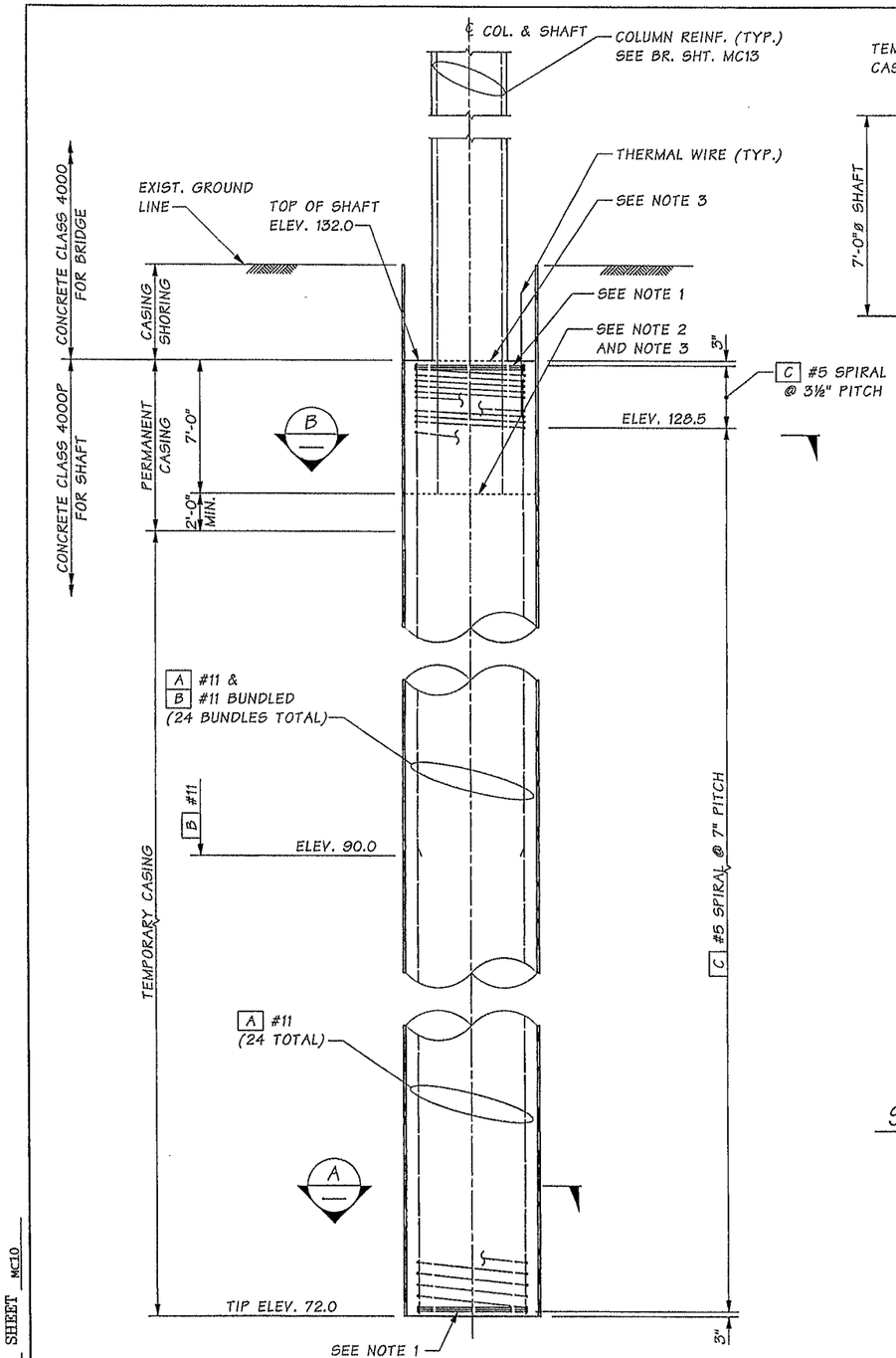

ELEVATION

COLUMN TRANSVERSE REINFORCEMENT NOT SHOWN FOR CLARITY.

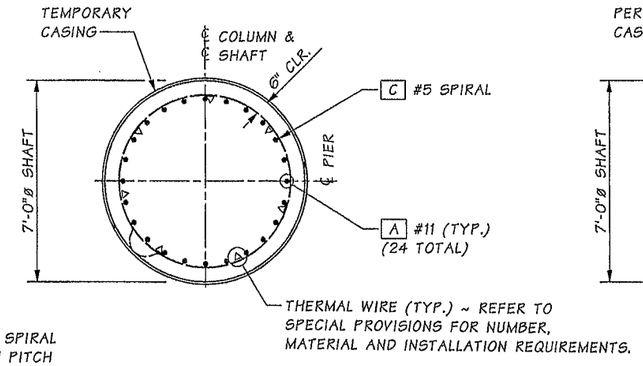

SECTION A

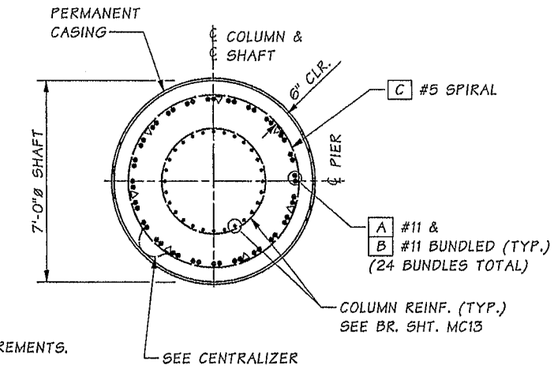

SECTION B

SHAFT BAR LIST

MARK	SIZE	NO.	LENGTH	BEND TYPE	WT. (lbs.)
A	#11	24	59'-8"	STR.	7,608
B	#11	24	41'-10"	STR.	5,334
C	#5	1	(a)	67	2,197
				TOTAL PER SHAFT	15,139

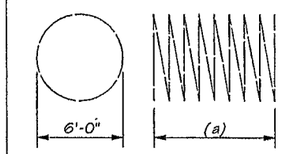

(a) ~ DETERMINED FROM PLANS
WEIGHT DOES NOT INCLUDE SPLICES

SPIRAL (BEND TYPE 67)

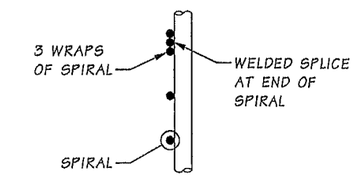

SPIRAL TERMINATION DETAIL

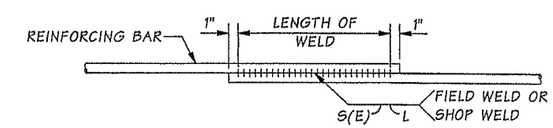

WELDED LAP SPLICE DETAIL

WELDING SHALL MEET THE REQUIREMENTS OF STD. SPEC. 6-02.3(24)E. FOR WELD DIMENSIONS, SEE TABLE BELOW.

	WELD DIMENSIONS (IN)		
BAR SIZE	S	E	L (LENGTH)
#5	5/16	3/16	6

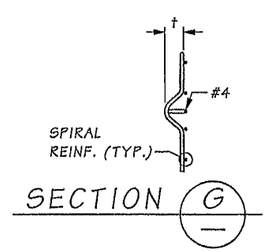

SECTION G

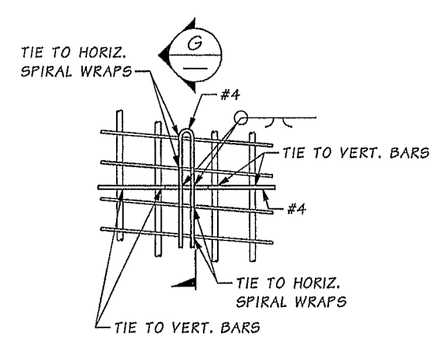

CENTRALIZER DETAIL

CENTRALIZER DETAIL NOTES:

1. EPOXY COAT CENTRALIZER OR PAINT WITH INORGANIC ZINC AFTER FABRICATION.
2. EACH LEG SHOULD BE TIED TO TWO VERTICAL BAR BUNDLES OR TWO SPIRALS.
3. SEE STD. SPEC. SECTION 6-19.3(5)B FOR SPACING REQUIREMENTS.
4. † CONCRETE COVER MINUS ½"

NOTES:

1. SEE SPIRAL TERMINATION DETAIL THIS SHEET.
2. REMOVE SEDIMENT LAITENCE & WEAK CONCRETE TO SOUND CONCRETE PRIOR TO CASTING CONCRETE CLASS 4000 FOR BRIDGE.
3. CONSTRUCTION JOINT WITH ROUGHENED SURFACE.

SR 5 FILE NO. 7452 SHEET MC10

Bridge Design Engr.	Khaleghi, B	
Supervisor	Khaleghi, B	
Designed By	Glassford, P	05/13
Checked By	Burnham, B	05/13
Detailed By	Andreotti, L	05/13
Bridge Projects Engr.		
Prelim. Plan By		
Architect/Specialist		

M:\Y-Team\M ST TO PORTLAND\MCKINLEY AVE BRG\window files\SHAFT 2.wnd

DATE	REVISION	BY	APP'D

REGION NO.	STATE	FED. AID PROJ. NO.	SHEET NO.	TOTAL SHEETS
10	WASH.			
JOB NUMBER 120501				

Tue Feb 11 07:02:16 2014

BRIDGE AND STRUCTURES OFFICE

PATRICK MICHAEL GLASSFORD, STATE OF WASHINGTON, REGISTERED PROFESSIONAL ENGINEER, 40072 — 2/11/14

BRIAN KHALEGHI, STATE OF WASHINGTON, REGISTERED PROFESSIONAL ENGINEER, 21664 — 2/12/14

Washington State Department of Transportation

I-5
M ST TO PORTLAND AVE - HOV

MCKINLEY WAY OVER I-5 BRIDGE NO. 5/448

PIER 2 SHAFT

BRIDGE SHEET NO. MC10

SHEET 936 OF 1763 SHEETS

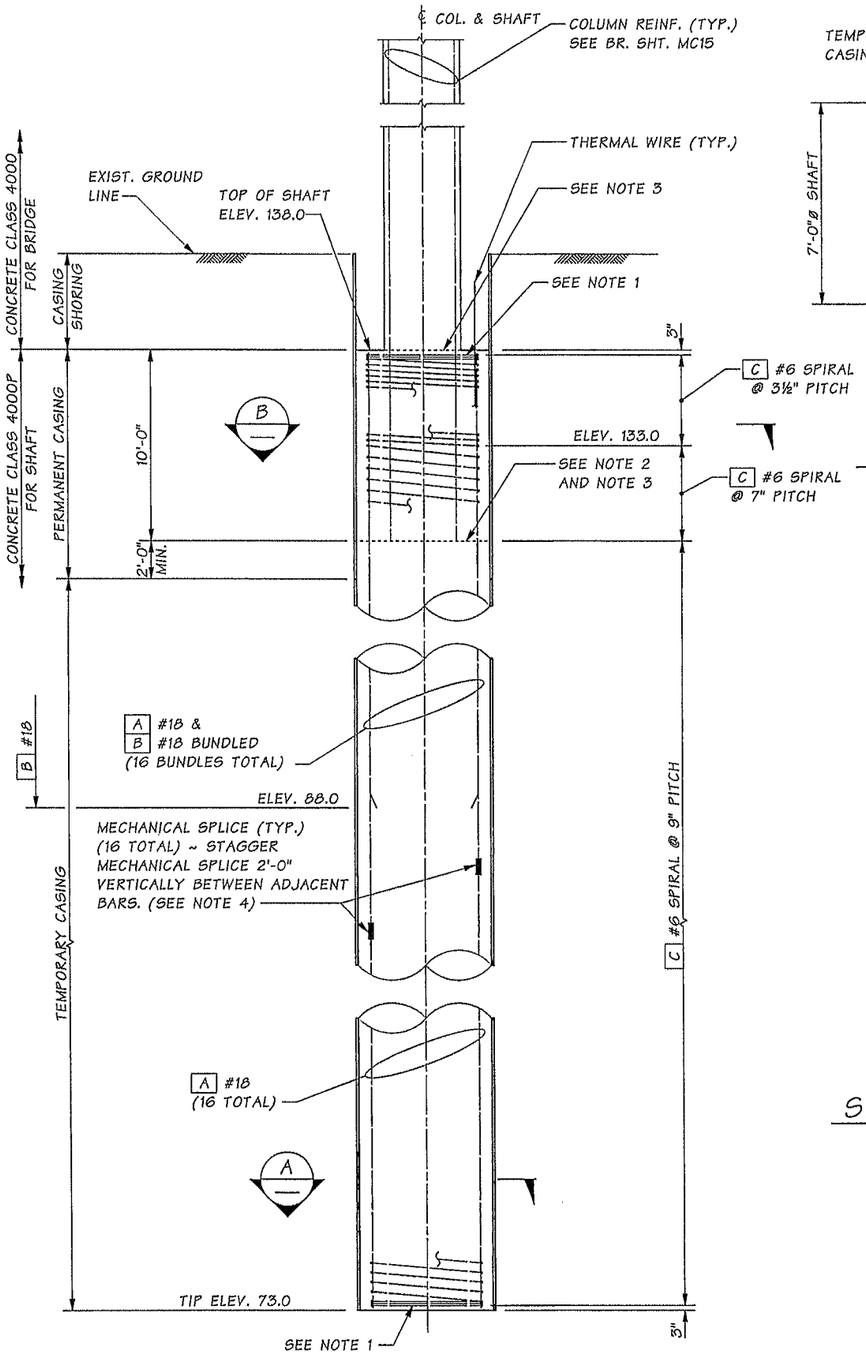

ELEVATION

COLUMN TRANSVERSE REINFORCEMENT NOT SHOWN FOR CLARITY.

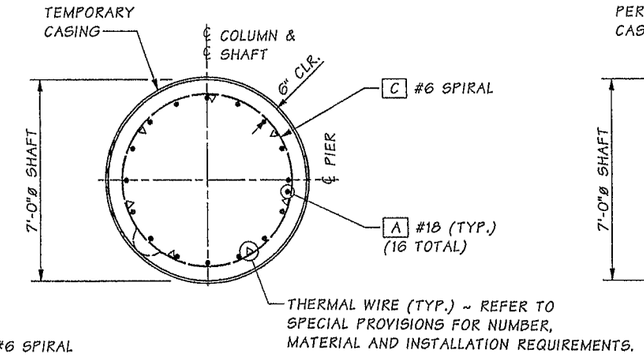

SECTION A

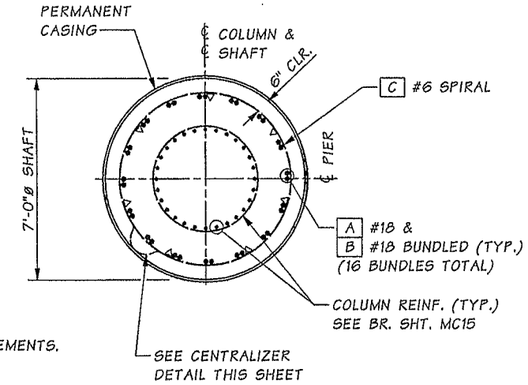

SECTION B

SHAFT BAR LIST

MARK	SIZE	NO.	LENGTH	BEND TYPE	WT. (lbs.)
A	#18	16	64'-8"	STR.	14,071
B	#18	16	49'-10"	STR.	10,844
C	#6	1	(a)	67	2,883
				TOTAL PER SHAFT	27,798

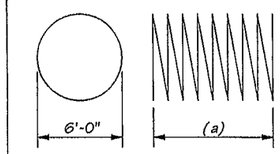

(a) ~ DETERMINED FROM PLANS
WEIGHT DOES NOT INCLUDE SPLICES

SPIRAL (BEND TYPE 67)

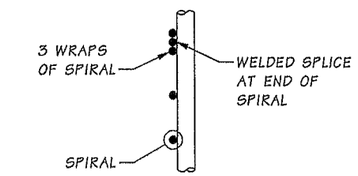

SPIRAL TERMINATION DETAIL

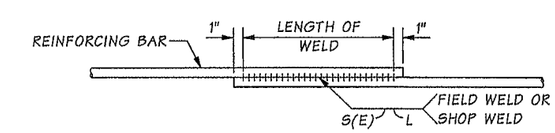

WELDED LAP SPLICE DETAIL

WELDING SHALL MEET THE REQUIREMENTS OF STD. SPEC. 6-02.3(24)E. FOR WELD DIMENSIONS, SEE TABLE BELOW.

	WELD DIMENSIONS (IN)		
BAR SIZE	S	E	L (LENGTH)
#6	⅜	3/16	6

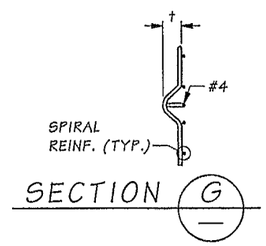

SECTION G

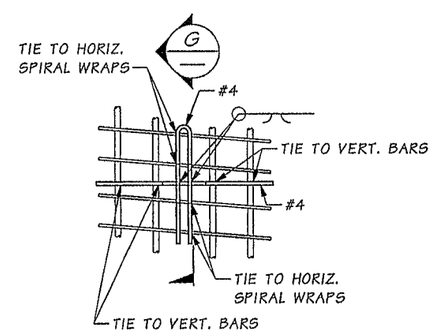

CENTRALIZER DETAIL

CENTRALIZER DETAIL NOTES:

1. EPOXY COAT CENTRALIZER OR PAINT WITH INORGANIC ZINC AFTER FABRICATION.
2. EACH LEG SHOULD BE TIED TO TWO VERTICAL BAR BUNDLES OR TWO SPIRALS.
3. SEE STD. SPEC. SECTION 6-19.3(5)B FOR SPACING REQUIREMENTS.
4. t CONCRETE COVER MINUS ½"

NOTES:

1. SEE SPIRAL TERMINATION DETAIL THIS SHEET.
2. REMOVE SEDIMENT LAITENCE & WEAK CONCRETE TO SOUND CONCRETE PRIOR TO CASTING CONCRETE CLASS 4000 FOR BRIDGE.
3. CONSTRUCTION JOINT WITH ROUGHENED SURFACE.
4. MECHANICAL SPLICES SHALL MEET THE REQUIREMENTS OF STD. SPEC. SECTION 6-02.3(24)F AND BE PLACED WITHIN THE LOWER HALF OF SHAFT.

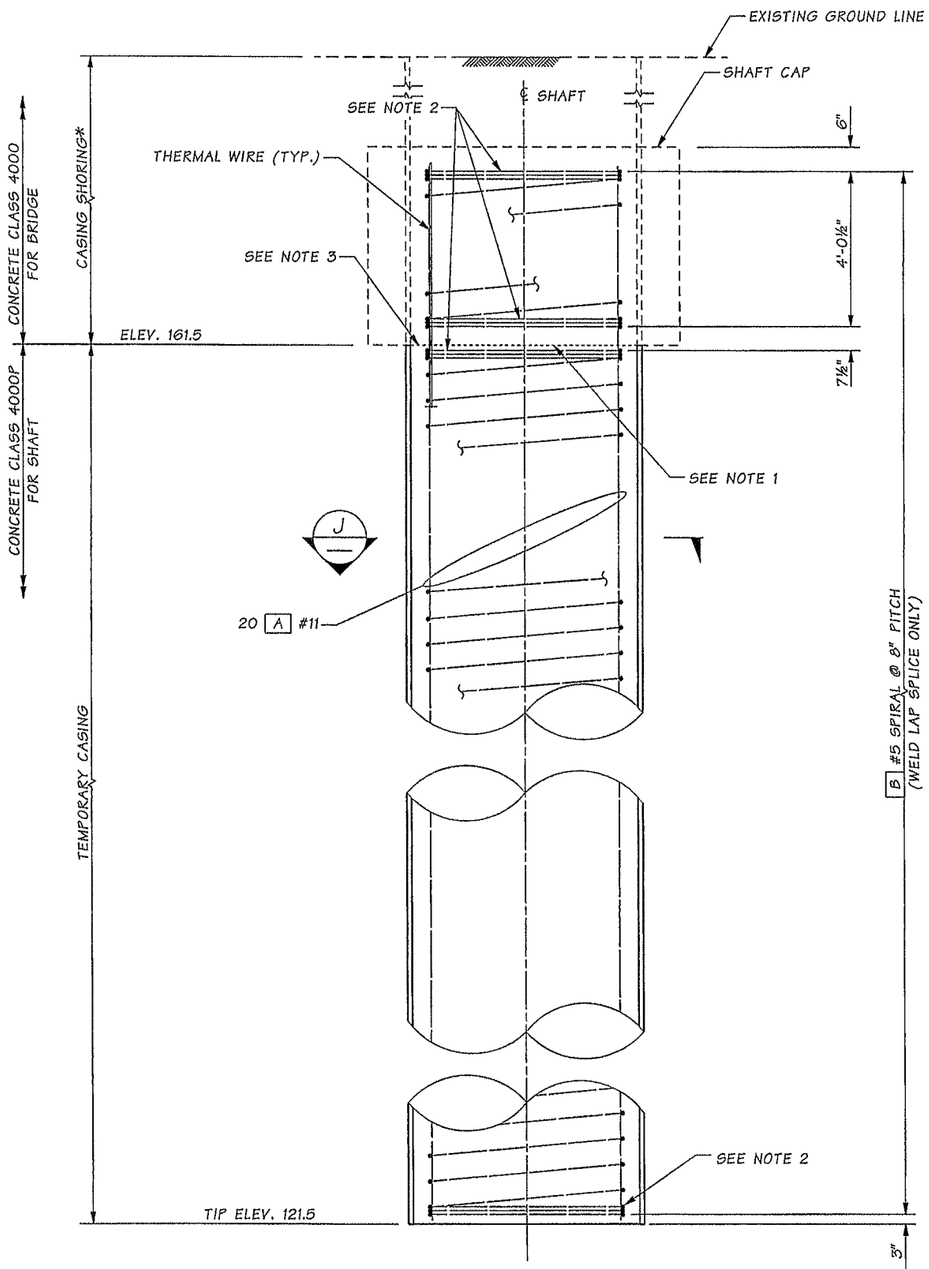

ELEVATION

* CASING SHORING MAY BE DELETED IF THE CONTRACTOR SHORES AND EXCAVATES FOR THE SHAFT CAP PRIOR TO SHAFT CONSTRUCTION.

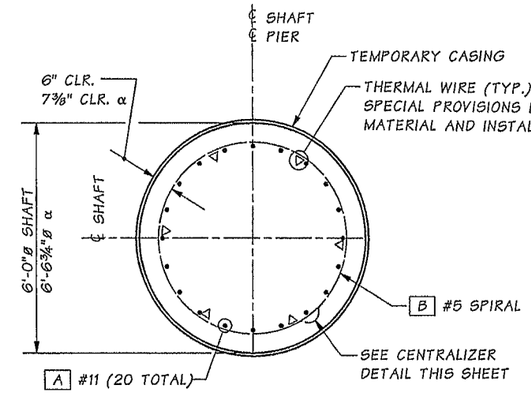

α OSCILLATOR METHOD (SEE NOTE 4)

SECTION J

α OSCILLATOR METHOD (SEE NOTE 4)

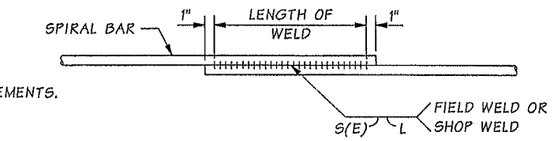

WELDED LAP SPLICE DETAIL

WELDING SHALL MEET THE REQUIREMENTS OF STD. SPEC. 6-02.3(24)E

SHAFT SPIRAL

DEFORMED BAR	WELD DIMENSIONS		
	S	E	LENGTH (L)
#5	5/16	3/16	6

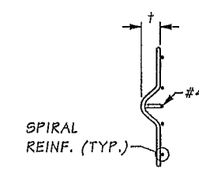

SECTION G

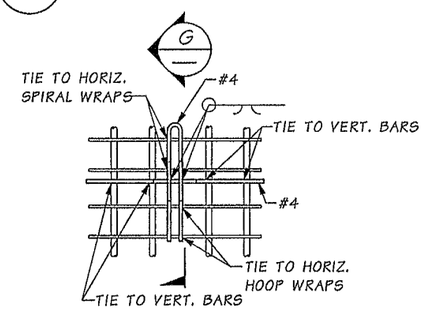

CENTRALIZER DETAIL

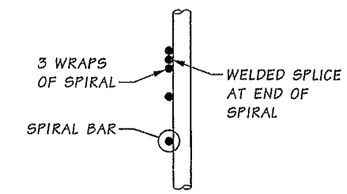

SPIRAL TERMINATION DETAIL

CENTRALIZER DETAIL NOTES:

1. EPOXY COAT CENTRALIZER OR PAINT WITH INORGANIC ZINC AFTER FABRICATION.
2. EACH LEG SHOULD BE TIED TO TWO VERTICAL BAR BUNDLES OR TWO SPIRALS.
3. SEE STD. SPEC. SECTION 6-19.3(5)B FOR SPACING REQUIREMENTS.
4. † CONCRETE COVER MINUS ½"

NOTES:

1. REMOVE LAITANCE AND WEAK CONCRETE TO SOUND CONCRETE PRIOR TO SETTING SHAFT CAP REINFORCEMENT.
2. SEE "SPIRAL TERMINATION DETAIL" THIS SHEET.
3. CONSTRUCTION JOINT WITH ROUGHENED SURFACE.
4. THE SHAFT BAR LIST WEIGHTS DO NOT REFLECT THE OSCILLATOR METHOD.

SHAFT BAR LIST

MARK	SIZE	NO.	LENGTH	BEND TYPE	WT. (lbs.)
A	#11	20	44'-5"	STRAIGHT	4,720
B	#5	1	(a)	SPIRAL	1,239
				TOTAL PER SHAFT	5,959

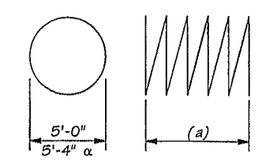

(a) ~ DETERMINED FROM PLANS. WEIGHT DOES NOT INCLUDE SPLICES.

SPIRAL (BEND TYPE 67)

Bridge Design Engr.	Khaleghi, B		
Supervisor	Khaleghi, B		
Designed By	Glassford, P	12/12	
Checked By	Burnham, B	05/13	
Detailed By	Andreotti, L	12/12	
Bridge Projects Engr.			
Prelim. Plan By			
Architect/Specialist			

M:\Y-Team\M ST TO PORTLAND\MCKINLEY AVE BRG\window files\SHAFT 4.wnd

DATE	REVISION	BY	APP'D

REGION NO.	STATE	FED. AID PROJ. NO.	SHEET NO.	TOTAL SHEETS
10	WASH.			
JOB NUMBER 12C501				

BRIDGE AND STRUCTURES OFFICE

2/11/14 2/12/14

Washington State Department of Transportation

I-5
M ST TO PORTLAND AVE - HOV

MCKINLEY WAY OVER I-5 BRIDGE NO. 5/448

PIER 4 SHAFT

BRIDGE SHEET NO. MC12

SHEET 938 OF 1763 SHEETS

SR 5 FILE NO. 7452 SHEET MC12

Tue Feb 11 07:02:20 2014

TABLE OF ELEVATIONS AT TOP OF COLUMN	
ELEV. A	150.73
ELEV. B	150.74
ELEV. C	150.77
ELEV. D	150.78

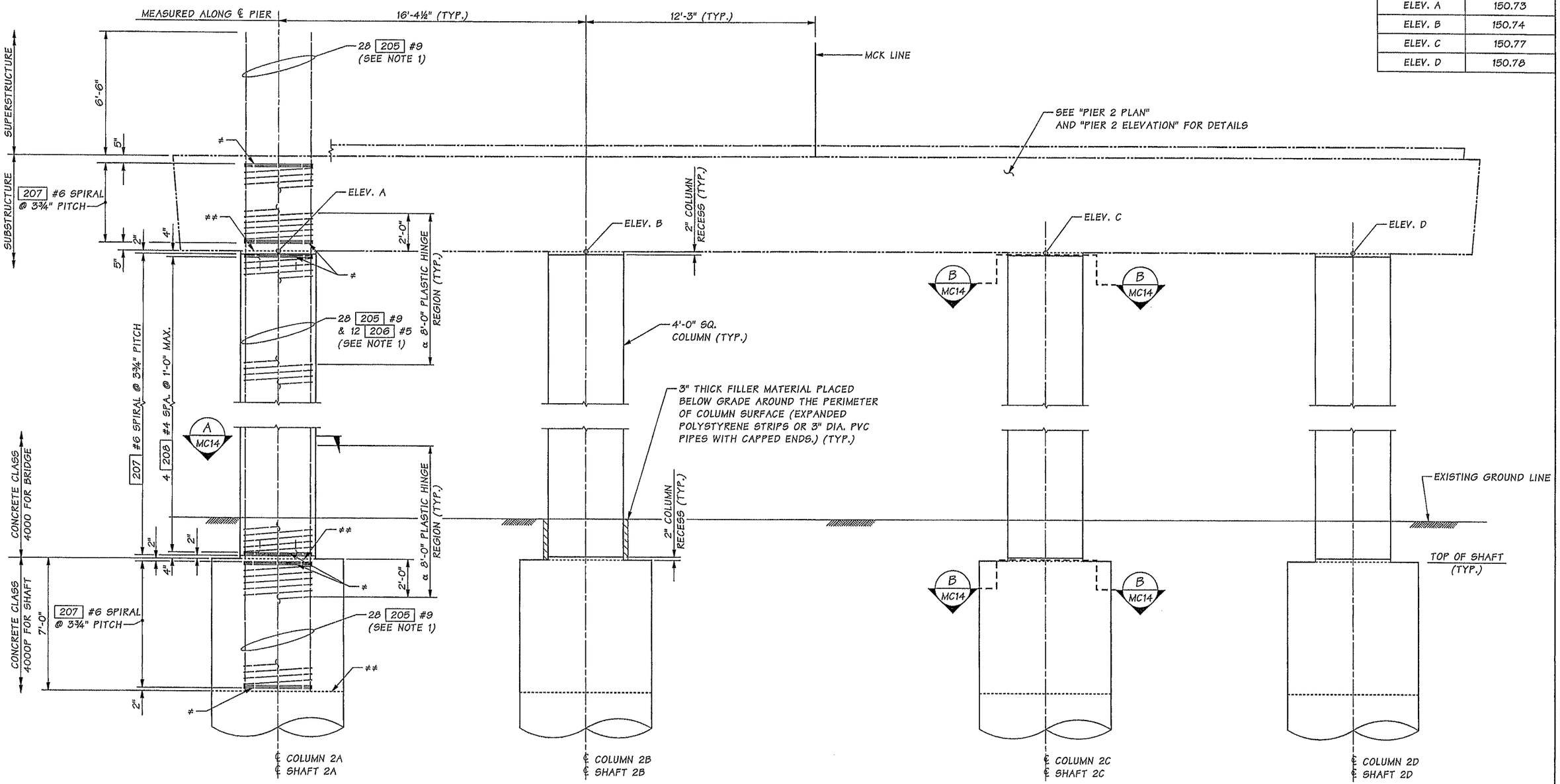

≠ SEE SPIRAL TERMINATION DETAIL, BRG. SHT. MC14.

≠≠ CONSTRUCTION JOINT WITH ROUGHENED SURFACE.

α NO WELDING OF SPIRALS IS PERMITTED IN THE PLASTIC HINGE REGION AFTER THE COLUMN CAGE IS ASSEMBLED. SPIRALS SHALL BE FIELD OR SHOP WELDED INDEPENDENTLY AND THEN ASSEMBLED AROUND THE COLUMN LONGITUDINAL STEEL AFTER WELDING.

ELEVATION

NOTES:

1. NO SPLICES ALLOWED ON COLUMN LONGITUDINAL REINFORCEMENT.
2. VERTICAL DIMENSIONS ARE MEASURED FROM CENTERLINE OF COLUMN OR SHAFT.

SR 5 FILE NO. 7452 SHEET MC13

Bridge Design Engr.	Khaleghi, B		
Supervisor	Khaleghi, B		
Designed By	Glassford, P	01/13	
Checked By	Burnham, B	05/13	
Detailed By	Andreotti, L	01/13	
Bridge Projects Engr.			
Prelim. Plan By			
Architect/Specialist			

M:\Y-Team\M ST TO PORTLAND\MCKINLEY AVE BRG\Window files\COLUMNS PIER 2-1.WND

DATE	REVISION	BY	APP'D

REGION NO.	STATE	FED. AID PROJ. NO.	SHEET NO.	TOTAL SHEETS
10	WASH.			
JOB NUMBER 12C501				

PATRICK MICHAEL GLASSFORD, STATE OF WASHINGTON, 49072, REGISTERED PROFESSIONAL ENGINEER 3/12/14

BRIDGE AND STRUCTURES OFFICE

ALAN KHALEGHI, STATE OF WASHINGTON, 38341, REGISTERED PROFESSIONAL ENGINEER 3/12/14

Washington State Department of Transportation

I-5
M ST TO PORTLAND AVE - HOV

MCKINLEY WAY OVER I-5 BRIDGE NO. 5/448

PIER 2 COLUMN ELEVATION

BRIDGE SHEET NO. MC13

SHEET 939 OF 1763 SHEETS

Wed Mar 12 14:29:57 2014

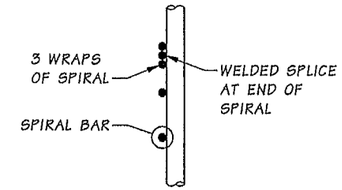

SPIRAL TERMINATION DETAIL

		WELD DIMENSIONS (IN)		
	BAR SIZE	S	E	L (LENGTH)
SPIRALS	#4	1/4	1/8	4
	#5	5/16	3/16	6
	#6	3/8	3/16	6

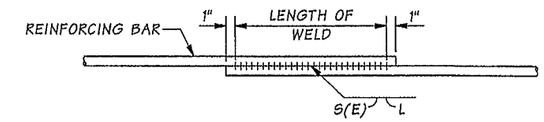

WELDED LAP SPLICE DETAIL

WELDING SHALL MEET THE REQUIREMENTS OF STD. SPEC. SECTION 6-02.3(24)E. FOR WELD DIMENSIONS SEE TABLE.

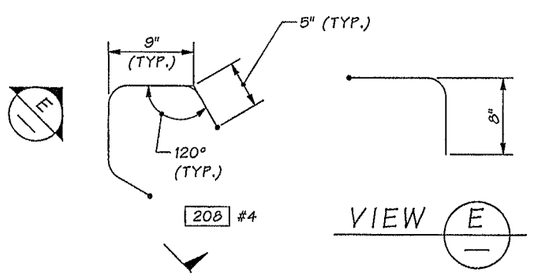

VIEW E

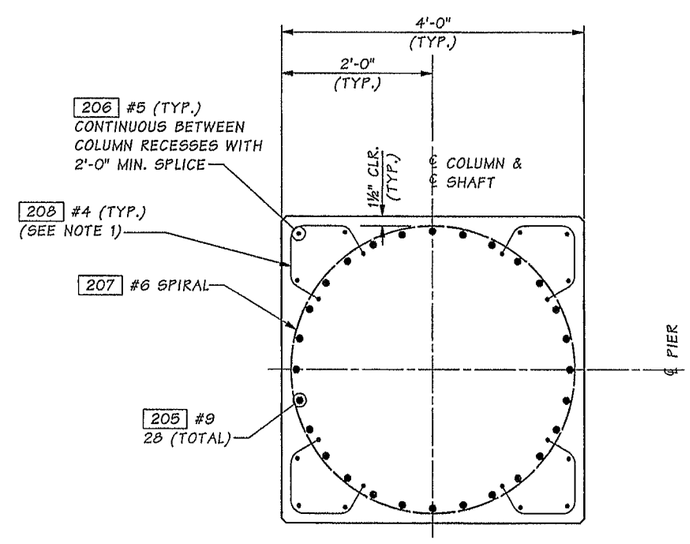

SECTION A — MC13

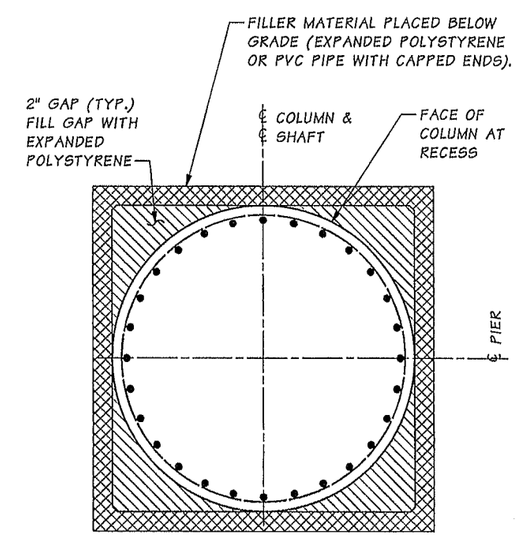

SECTION B — MC13

FOR INFORMATION NOT SHOWN, SEE SECTION A.

NOTE:

1. EACH LEG SHOULD BE TIED TO TWO SPIRAL WRAPS.

SR 5 FILE NO. 7452 SHEET MC14

Bridge Design Engr.	Khaleghi, B	
Supervisor	Khaleghi, B	
Designed By	Glassford, P	01/13
Checked By	Burnham, B	05/13
Detailed By	Andreotti, L	01/13
Bridge Projects Engr.		
Prelim. Plan By		
Architect/Specialist		

M:\Y-Team\M ST TO PORTLAND\MCKINLEY AVE BRG\Window files\COLUMNS PIER 2-2.WND

DATE	REVISION	BY	APP'D

REGION NO.	STATE	FED. AID PROJ. NO.	SHEET NO.	TOTAL SHEETS
10	WASH.			
JOB NUMBER 12C501				

PATRICK MICHAEL GLASSFORD — STATE OF WASHINGTON — 49572 — REGISTERED PROFESSIONAL ENGINEER — 3/12/14

BRIDGE AND STRUCTURES OFFICE

BILLAN KHALEGHI — STATE OF WASHINGTON — GENERAL ENGINEER — PROFESSIONAL ENGINEER — 3/12/14

Washington State Department of Transportation

I-5
M ST TO PORTLAND AVE - HOV

MCKINLEY WAY OVER I-5 BRIDGE NO. 5/448

PIER 2 COLUMN DETAILS

BRIDGE SHEET NO. MC14

SHEET 940 OF 1763 SHEETS

Wed Mar 12 14:29:59 2014

TABLE OF ELEVATIONS AT TOP OF COLUMN	
ELEV. A	158.93
ELEV. B	159.01
ELEV. C	159.14
ELEV. D	159.22

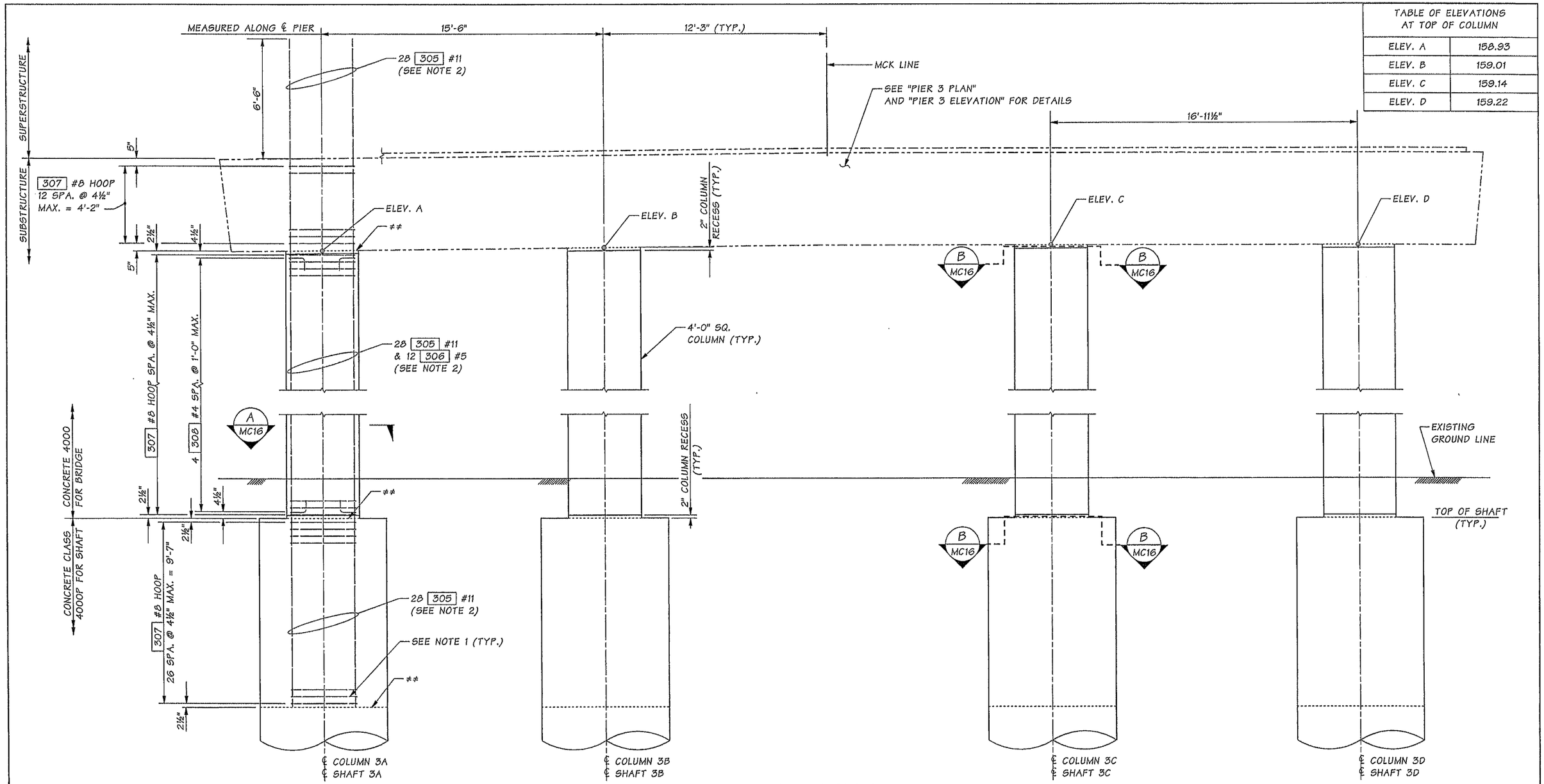

ELEVATION

** CONSTRUCTION JOINT WITH ROUGHENED SURFACE.

NOTES:

1. COLUMN HOOPS SHALL BE BUTT WELDED ONLY. THE LOCATION OF THE BUTT WELD FOR ADJACENT HOOPS SHALL BE STAGGERED SO THAT NO TWO BUTT WELDS ARE LOCATED AT THE SAME LOCATION. SEE "COLUMN DETAILS" SHEET FOR "RESISTANCE BUTT JOINT DETAILS" OR "MANUAL DIRECT BUTT JOINT DETAIL."
2. NO SPLICES ALLOWED ON COLUMN LONGITUDINAL REINFORCEMENT.
3. VERTICAL DIMENSIONS ARE MEASURED FROM CENTERLINE OF COLUMN OR SHAFT.

Bridge Design Engr.	Khaleghi, B	M:\Y-Team\M ST TO PORTLAND\MCKINLEY AVE BRG\window files\COLUMNS PIER 3-1.wnd			
Supervisor	Khaleghi, B				
Designed By	Glassford, P	01/13			
Checked By	Burnham, B	05/13			
Detailed By	Andreotti, L	01/13			
Bridge Projects Engr.					
Prelim. Plan By					
Architect/Specialist		DATE	REVISION	BY	APP'D

REGION NO.	STATE	FED. AID PROJ. NO.	SHEET NO.	TOTAL SHEETS
10	WASH.			
JOB NUMBER 12C501				

PATRICK MICHAEL GLASSFORD, STATE OF WASHINGTON, 40072, REGISTERED PROFESSIONAL ENGINEER — 2/11/14

BRIDGE AND STRUCTURES OFFICE

BRIAN KHALEGHI, STATE OF WASHINGTON, 21695, PROFESSIONAL ENGINEER — 2/12/14

Washington State Department of Transportation

I-5
M ST TO PORTLAND AVE - HOV

MCKINLEY WAY OVER I-5 BRIDGE NO. 5/448

PIER 3 COLUMN ELEVATION

BRIDGE SHEET NO. MC15

SHEET 941 OF 1763 SHEETS

SR 5 FILE NO. 7452 SHEET MC15

Tue Feb 11 07:02:23 2014

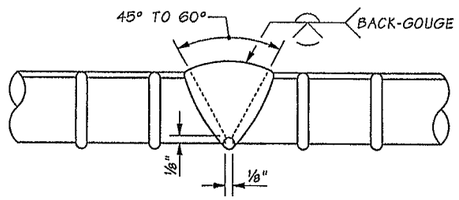

SINGLE V-GROOVE WELD
AWS D1.4 FIGURE 3.2(A)

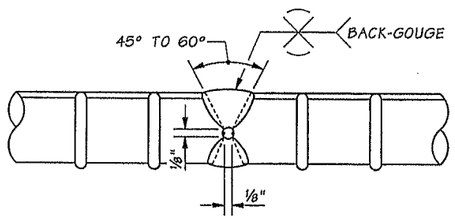

DOUBLE V-GROOVE WELD
AWS D1.4 FIGURE 3.2(B)

HOOP WELD DETAILS

ALL BACKING SHALL BE REMOVED.

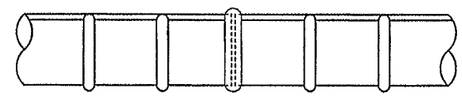

RESISTANCE BUTT JOINT DETAIL

SEE SPECIAL PROVISIONS FOR APPROVAL AND TESTING REQUIRMENTS

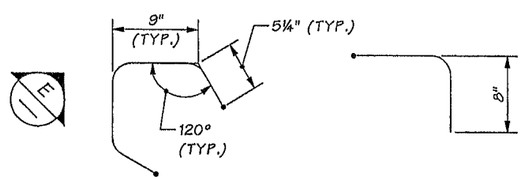

VIEW E

NOTE:

1. EACH LEG SHOULD BE TIED TO TWO HOOPS.

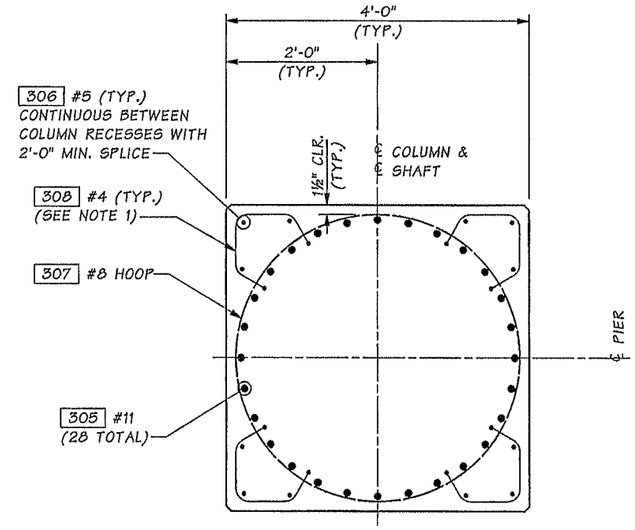

SECTION A
MC15

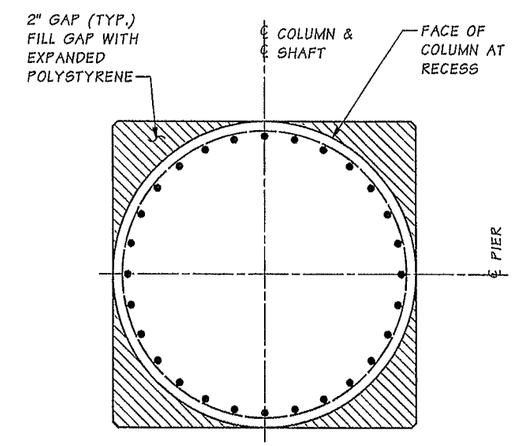

SECTION B
MC15

FOR INFORMATION NOT SHOWN, SEE SECTION A.

SR 5 FILE NO. 7452 SHEET MC16

Bridge Design Engr.	Khaleghi, B		
Supervisor	Khaleghi, B		
Designed By	Glassford, P	01/13	
Checked By	Burnham, B	05/13	
Detailed By	Andreotti, L	01/13	
Bridge Projects Engr.			
Prelim. Plan By			
Architect/Specialist			

M:\Y-Team\M ST TO PORTLAND\MCKINLEY AVE BRG\Window files\COLUMNS PIER 3-2.WND

DATE	REVISION	BY	APP'D

REGION NO.	STATE	FED. AID PROJ. NO.	SHEET NO.	TOTAL SHEETS
10	WASH.			
JOB NUMBER 12C501				

PATRICK MICHAEL GLASSFORD, STATE OF WASHINGTON, 49572, REGISTERED PROFESSIONAL ENGINEER 3/12/14

BRIDGE AND STRUCTURES OFFICE

BILAN KHALEGHI, STATE OF WASHINGTON, 36000, REGISTERED PROFESSIONAL ENGINEER 3/12/14

Washington State Department of Transportation

I-5
M ST TO PORTLAND AVE - HOV

MCKINLEY WAY OVER I-5 BRIDGE NO. 5/448

PIER 3 COLUMN DETAILS

BRIDGE SHEET NO. MC16

SHEET 942 OF 1763 SHEETS

Wed Mar 12 14:30:01 2014

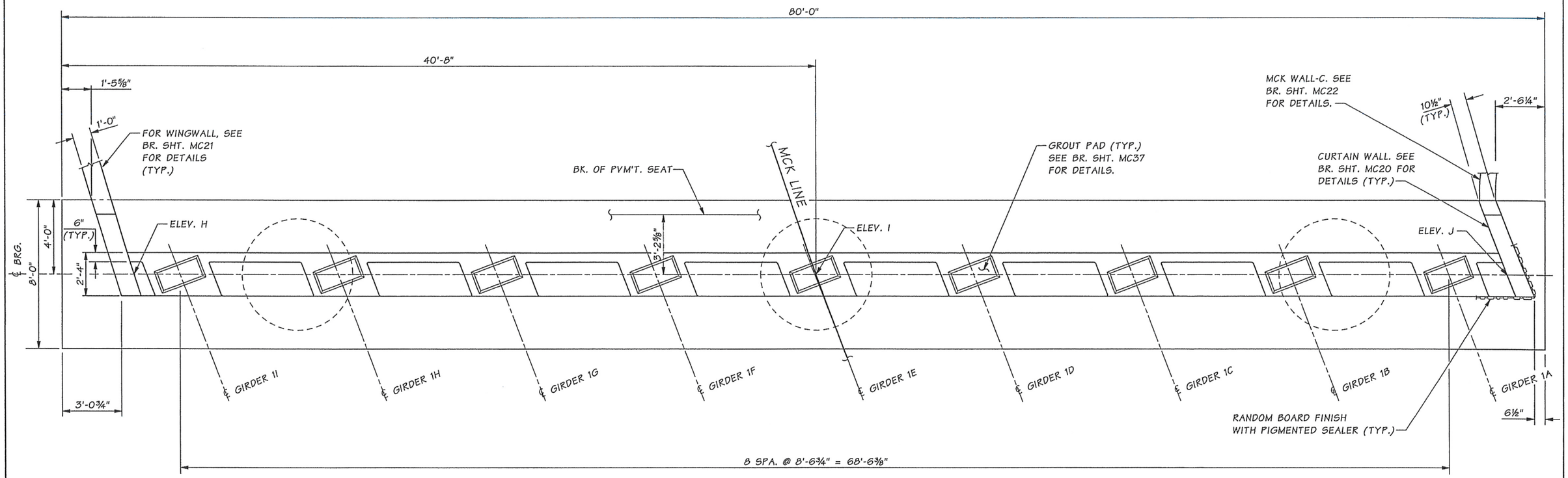

PIER 1 - PLAN

SEE BR. SHT. MC18 FOR ELEVATIONS.

SR 5 FILE NO. 7452 SHEET MC17

Bridge Design Engr.	Khaleghi, B		
Supervisor	Khaleghi, B		
Designed By	Burnham, B	05/13	
Checked By	Glassford, P	05/13	
Detailed By	Andreotti, L	05/13	
Bridge Projects Engr.			
Prelim. Plan By			
Architect/Specialist			

M:\Y-Team\M ST TO PORTLAND\MCKINLEY AVE BRG\window files\PIER 1 PLAN.wnd

DATE	REVISION	BY	APP'D

REGION NO.	STATE	FED. AID PROJ. NO.	SHEET NO.	TOTAL SHEETS
10	WASH.			
JOB NUMBER 12C501				

BRIAN DAVID BURNHAM — STATE OF WASHINGTON — 48158 — REGISTERED PROFESSIONAL ENGINEER — 2/11/14

BRIDGE AND STRUCTURES OFFICE

BRIAN KHALEGHI — STATE OF WASHINGTON — 21646 — PROFESSIONAL ENGINEER — 2/12/14

Washington State Department of Transportation

I-5
M ST TO PORTLAND AVE - HOV

MCKINLEY WAY OVER I-5 BRIDGE NO. 5/448

PIER 1 PLAN

BRIDGE SHEET NO. MC17

SHEET 943 OF 1763 SHEETS

Tue Feb 11 07:02:26 2014

TABLE OF ELEVATIONS	
ELEV. H	148.33
ELEV. I	148.52
ELEV. J	148.93

TABLE OF ELEVATIONS AT TOP OF GROUT PAD									
GIRDER	1A	1B	1C	1D	1E	1F	1G	1H	1I
GROUT PAD ELEV.	149.02	148.92	148.83	148.73	148.65	148.58	148.53	148.49	148.46

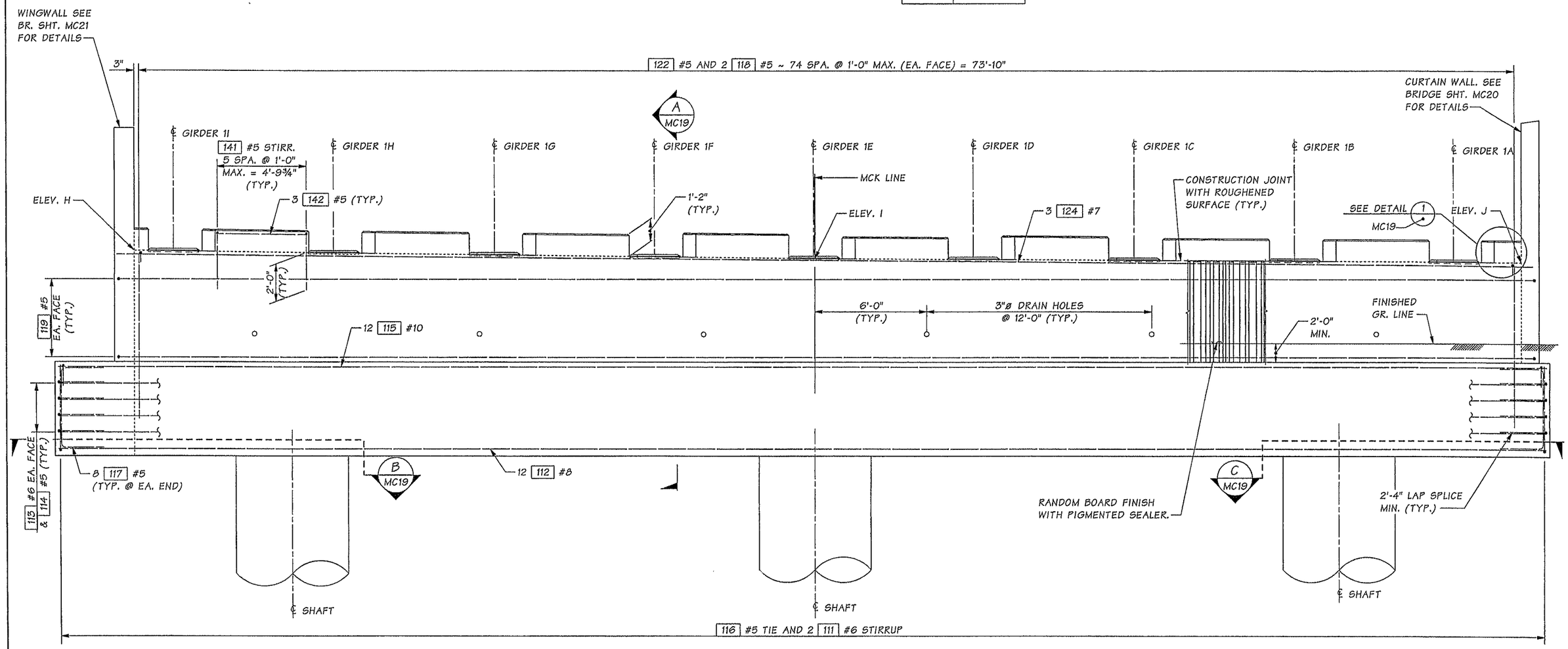

NOTES:

1. MINIMUM REINF. SPLICE LENGTH:
   #5 ~ 2'-4"
   #6 ~ 2'-9"
   #7 ~ 3'-6"
   #8 ~ 3'-3"
   #10 ~ 7'-4"

2. DO NOT SPLICE MORE THAN 50% OF REINF. AT ANY ONE LOCATION. STAGGER SPLICES AT A MINIMUM OF 2'-6".

PIER 1 - ELEVATION

LOOKING BACK ON STATION.
WING WALL AND CURTAIN WALL
REINFORCEMENT NOT SHOWN FOR CLARITY.

SR 5 FILE NO. 7452 SHEET MC18

Bridge Design Engr.	Khaleghi, B		
Supervisor	Khaleghi, B		
Designed By	Burnham, B	01/13	
Checked By	Glassford, P	05/13	
Detailed By	Andreotti, L	08/12	
Bridge Projects Engr.			
Prelim. Plan By			
Architect/Specialist			

M:\Y-Team\M ST TO PORTLAND\MCKINLEY AVE BRG\window files\PIER 1 ELEV.wnd

DATE	REVISION	BY	APP'D

REGION NO.	STATE	FED. AID PROJ. NO.	SHEET NO.	TOTAL SHEETS
10	WASH.			
JOB NUMBER 12C501				

BRIDGE AND STRUCTURES OFFICE

2/11/14 2/12/14

Washington State Department of Transportation

I-5
M ST TO PORTLAND AVE - HOV

MCKINLEY WAY OVER I-5 BRIDGE NO. 5/448

PIER 1 ELEVATION

BRIDGE SHEET NO. MC18

SHEET 944 OF 1763 SHEETS

Tue Feb 11 07:02:27 2014

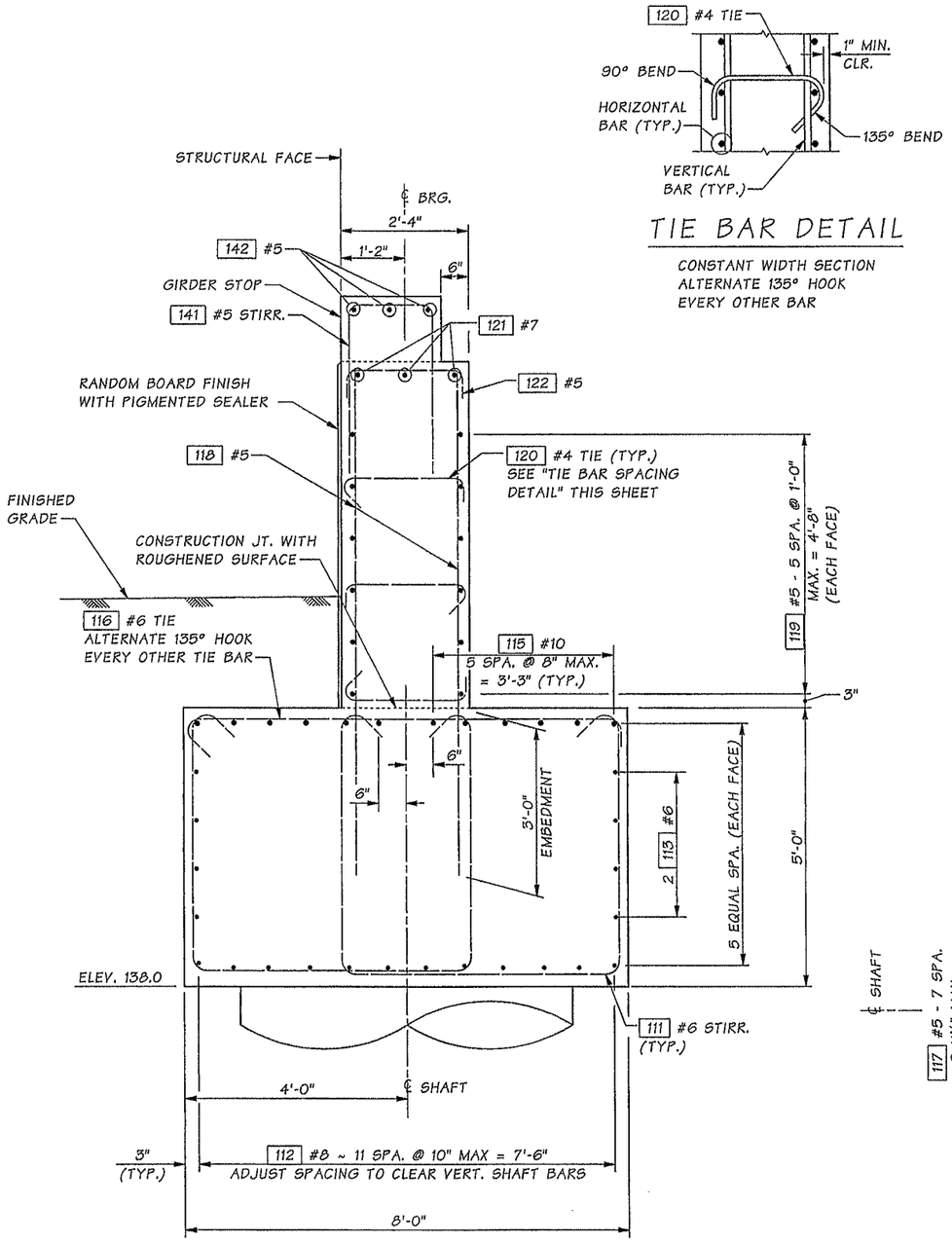

SECTION A MC18

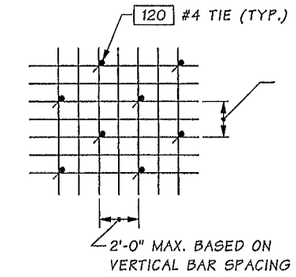

TIE BAR SPACING DETAIL

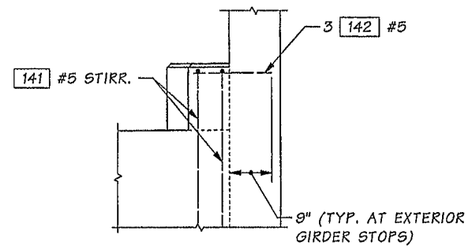

DETAIL 1 MC18

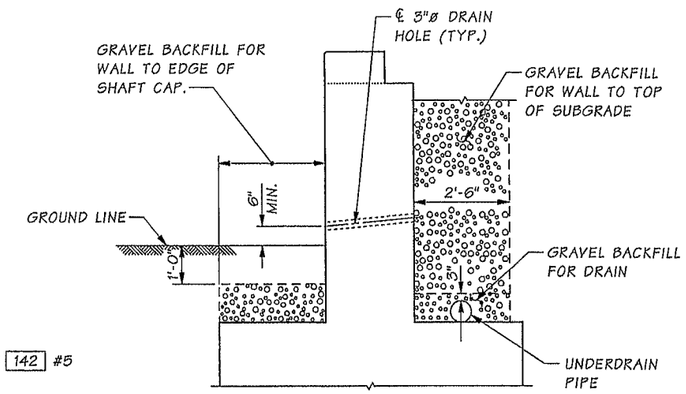

DRAINAGE DETAIL

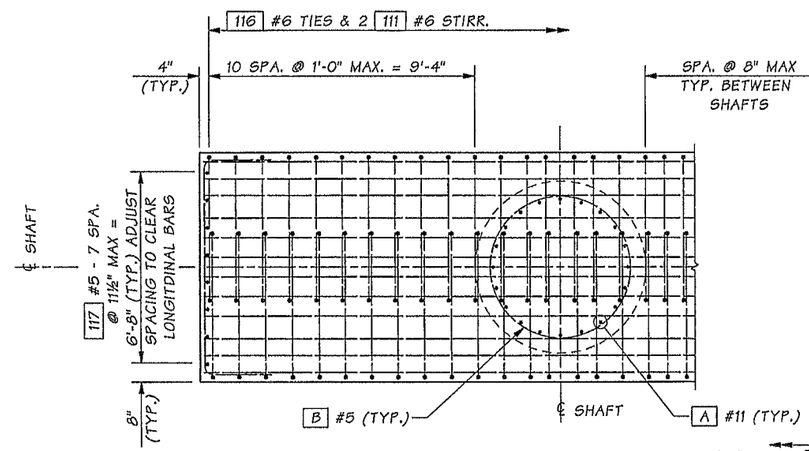

SECTION B MC18

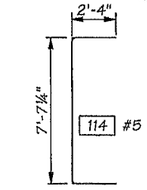

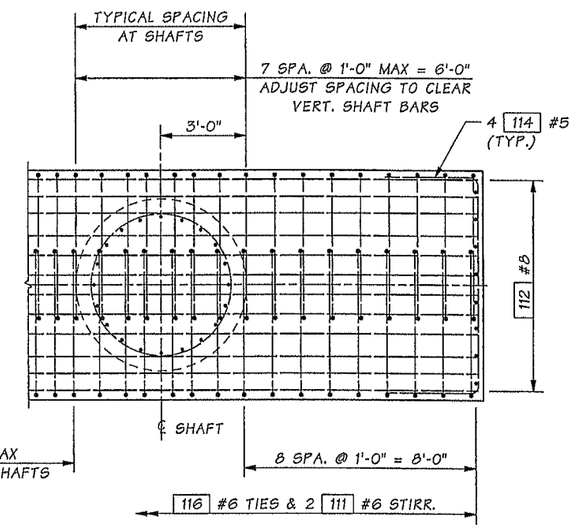

SECTION C MC18

Bridge Design Engr.	Khaleghi, B		M:\Y-Team\M ST TO PORTLAND\MCKINLEY AVE BRG\window files\PIER 1 DETAILS.wnd							
Supervisor	Khaleghi, B					REGION NO.	STATE	FED. AID PROJ. NO.	SHEET NO.	TOTAL SHEETS
Designed By	Burnham, B	12/12				10	WASH.			
Checked By	Glassford, P	05/13				JOB NUMBER 12C501				
Detailed By	Andreotti, L	12/12								
Bridge Projects Engr.										
Prelim. Plan By										
Architect/Specialist			DATE	REVISION	BY	APP'D				

Tue Feb 11 07:02:20 2014

BRIAN DAVID CURTIS — STATE OF WASHINGTON — 40836 — REGISTERED PROFESSIONAL ENGINEER — 2/11/14

BRIDGE AND STRUCTURES OFFICE

BRIAN KHALEGHI — STATE OF WASHINGTON — 27645 — PROFESSIONAL ENGINEER — 2/11/14

Washington State Department of Transportation

I-5
M ST TO PORTLAND AVE - HOV

MCKINLEY WAY OVER I-5 BRIDGE NO. 5/448

PIER 1 DETAILS

BRIDGE SHEET NO. MC19

SHEET 945 OF 1763 SHEETS

SR 5 FILE NO. 7452 SHEET MC19

CURTAIN WALL ELEVATIONS

WALL	"W"	"X"	"Y"	"Z"
LEFT	157.60	157.67	155.44	155.83

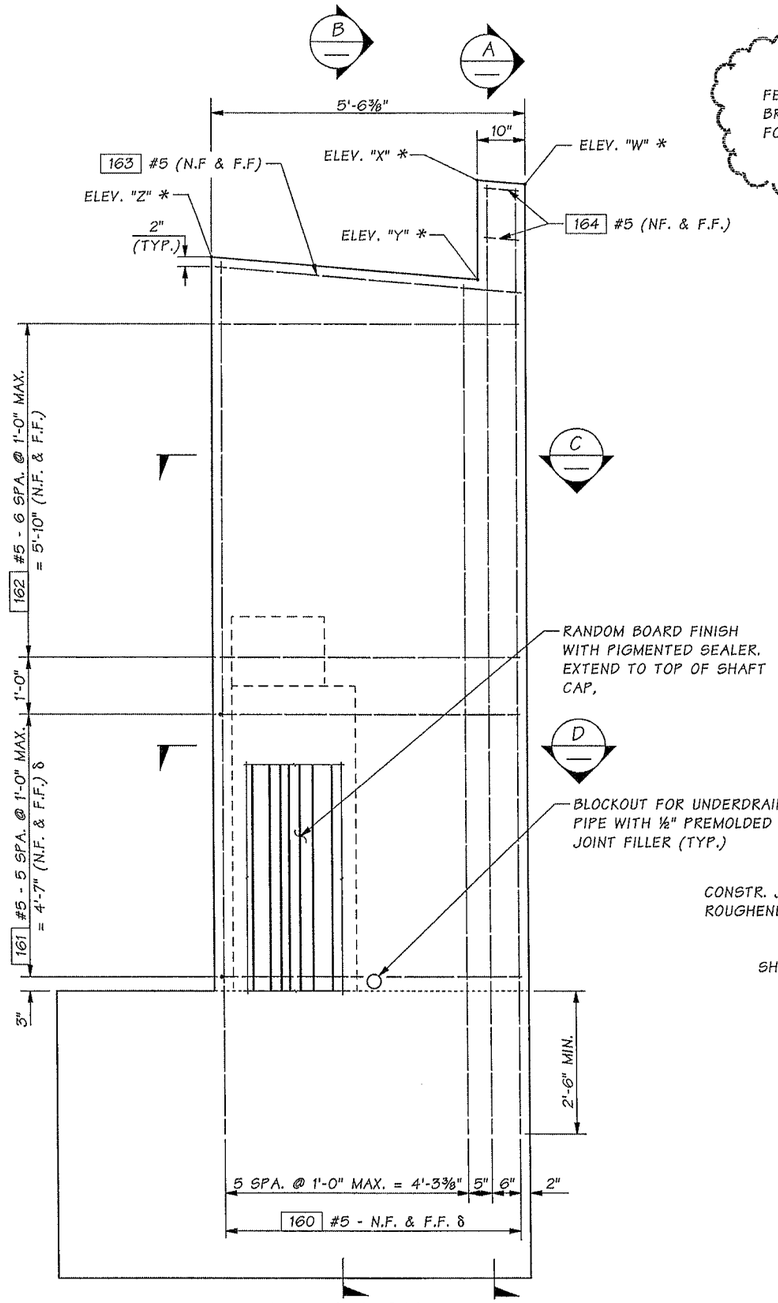

ELEVATION

SHAFT CAP REINFORCEMENT NOT SHOWN FOR CLARITY.
RIGHT CURTAIN WALL SHOWN, LEFT CURTAIN WALL SIMILAR.
CUT OR ADJUST REINF. AS NEEDED AROUND BLOCKOUT FOR UNDERDRAIN PIPE.

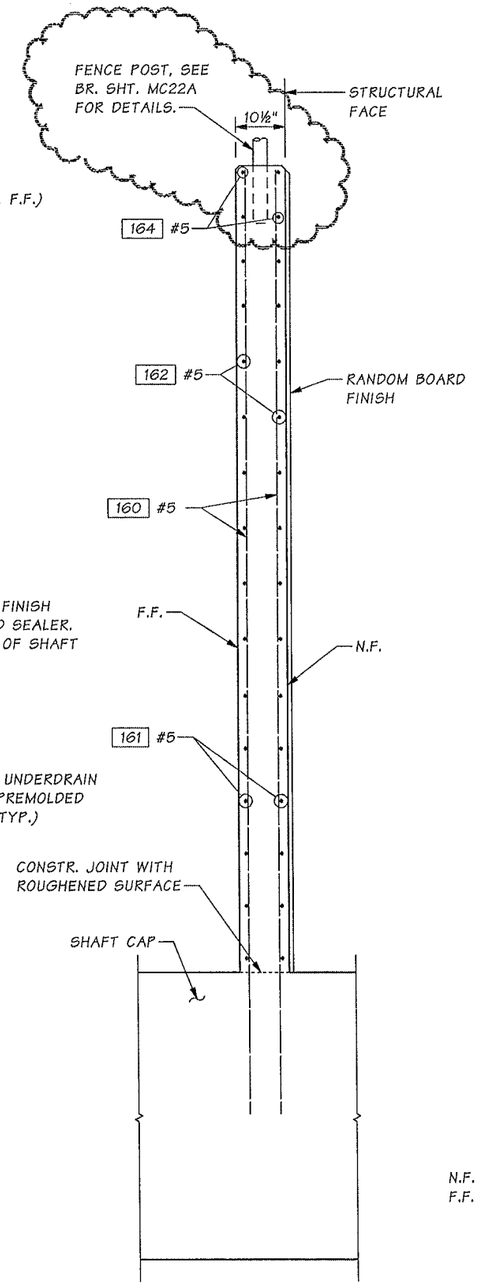

SECTION A

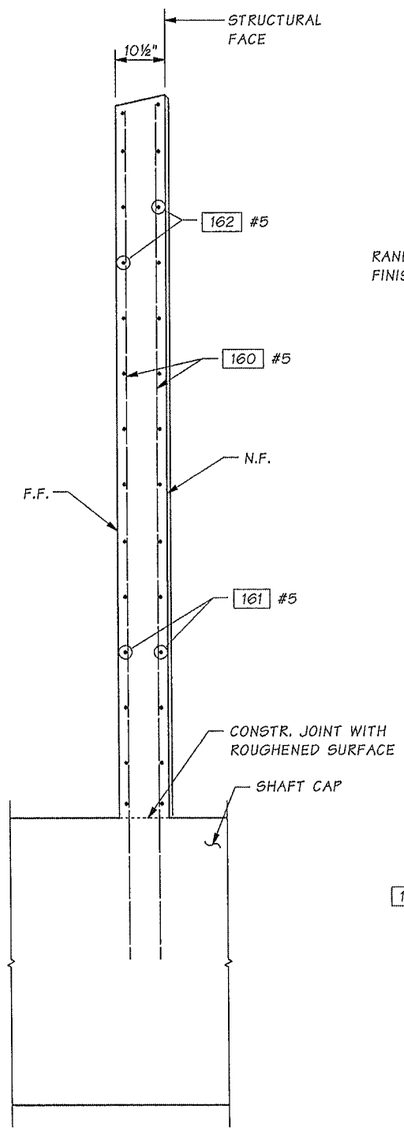

SECTION B

N.F. = NEAR FACE
F.F. = FAR FACE

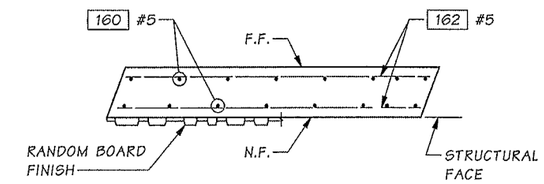

SECTION C

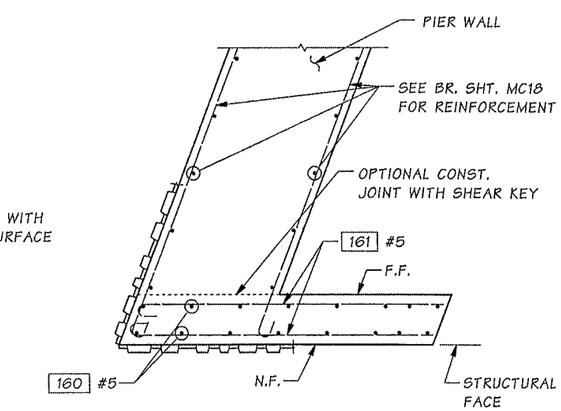

SECTION D

* ELEVATIONS SHOWN AT N.F. OF CURTAIN WALL.

Bridge Design Engr.	Khaleghi, B		
Supervisor	Khaleghi, B		
Designed By	Burnham, B	01/13	
Checked By	Glassford, P	05/13	
Detailed By	Andreotti, L	01/13	
Bridge Projects Engr.			
Prelim. Plan By			
Architect/Specialist			

M:\Y-Team\M ST TO PORTLAND\MCKINLEY ADDENDUMS\window files\PIER 1 CURTAIN WALL.WND

DATE	REVISION	BY	APP'D
04/25/14	AD1-CHANGED WALL ELEV., ADDED FENCE POST.	BB	RBS

REGION NO.	STATE	FED. AID PROJ. NO.	SHEET NO.	TOTAL SHEETS
10	WASH.			

JOB NUMBER 12C501

CONTRACT NO.

BRIDGE AND STRUCTURES OFFICE

4-22-14 4/22/14

Washington State Department of Transportation

I-5
M ST TO PORTLAND AVE - HOV

MCKINLEY WAY OVER I-5 BRIDGE NO. 5/448

PIER 1 CURTAIN WALL

BRIDGE SHEET NO. MC20

SHEET 946 OF 1763 SHEETS

SR 5 FILE NO. ____ SHEET MC20

Tue Apr 22 13:27:27 2014

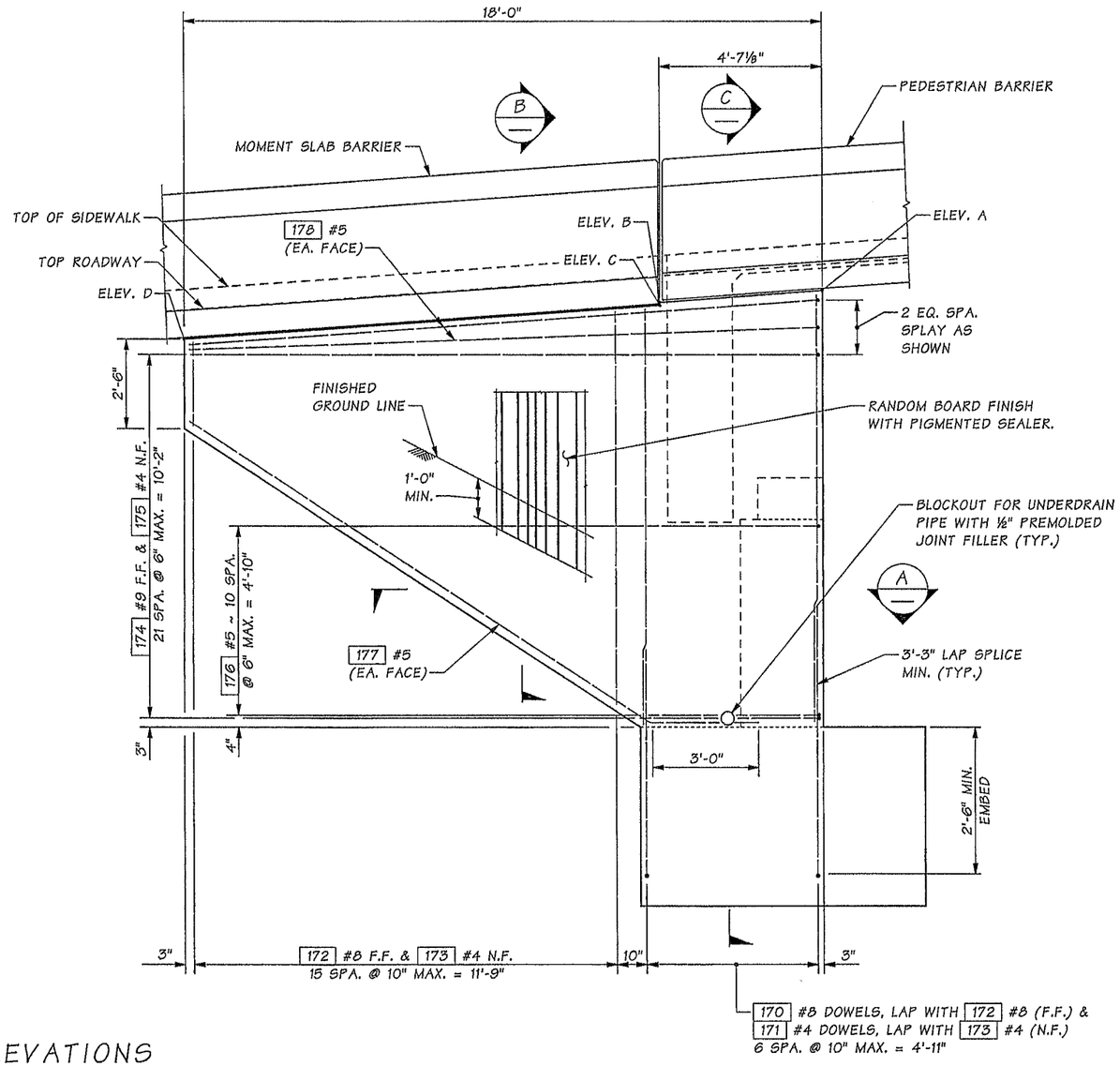

ELEVATIONS

A	B	C	D
155.20	154.87	154.79	153.85

WINGWALL DEVELOPED ELEVATION

SHAFT CAP REINFORCEMENT NOT SHOWN FOR CLARITY.
CUT OR ADJUST REINF. AS NEEDED AROUND BLOCKOUT FOR UNDERDRAIN PIPE.

NOTE:

1. WINGWALL IS PARALELL TO EDGE OF BRIDGE DECK.

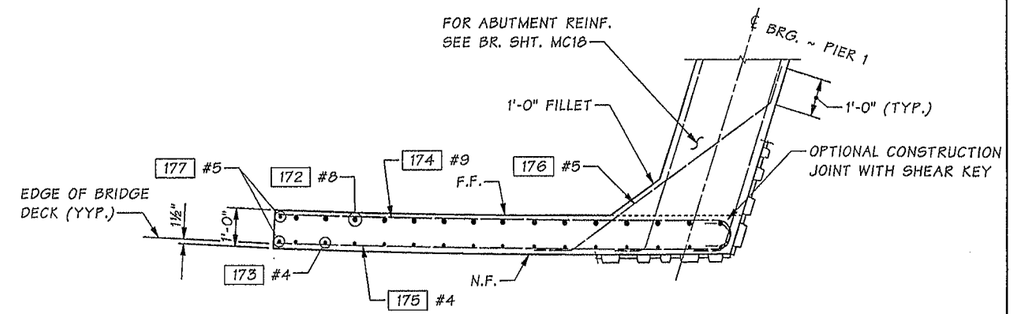

SECTION A

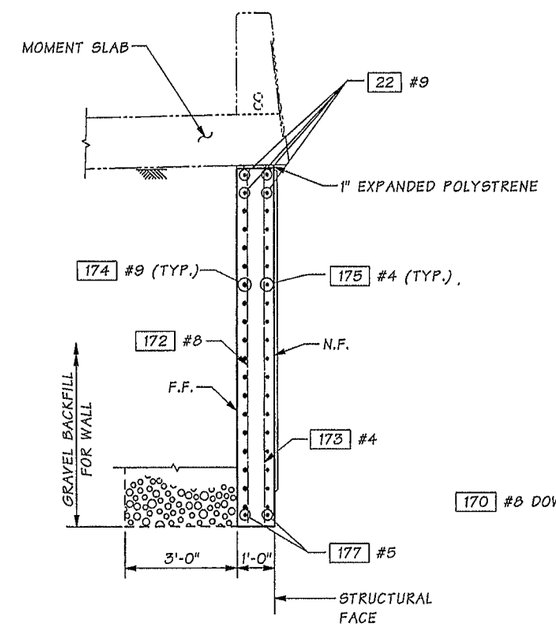

SECTION B

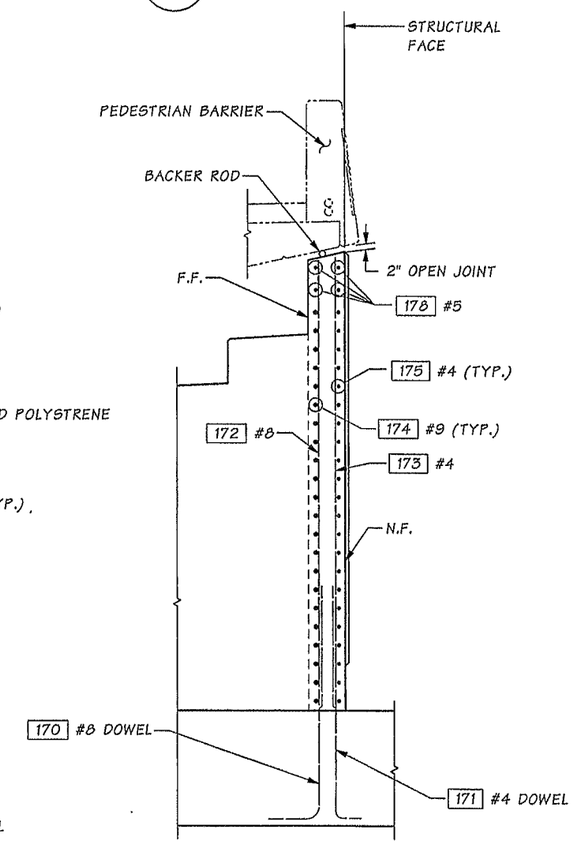

SECTION C

FOR REINFORCEMENT NOT SHOWN
SEE PIERS 1 ABUTMENT PLANS.

N.F. = NEAR FACE
F.F. = FAR FACE

Bridge Design Engr.	Khaleghi, B		M:\Y-Team\M ST TO PORTLAND\MCKINLEY AVE BRG\window files\PIER 1 WING WALL.WND							
Supervisor	Khaleghi, B									
Designed By	Burnham, B	01/13								
Checked By	Glassford, P	05/13								
Detailed By	Burnham, B	01/13								
Bridge Projects Engr.										
Prelim. Plan By										
Architect/Specialist			DATE	REVISION	BY	APP'D				

Tue Feb 11 10:31:29 2014

REGION NO.	STATE	FED. AID PROJ. NO.	SHEET NO.	TOTAL SHEETS
10	WASH.			
JOB NUMBER 12C501				

BRIAN DAVID BURNHAM, STATE OF WASHINGTON, 46130, REGISTERED PROFESSIONAL ENGINEER — 2/11/14

BRIDGE AND STRUCTURES OFFICE

BIJAN KHALEGHI, STATE OF WASHINGTON, 27646, PROFESSIONAL ENGINEER — 2/12/14

Washington State Department of Transportation

I-5
M ST TO PORTLAND AVE - HOV

MCKINLEY WAY OVER I-5 BRIDGE NO. 5/448

PIER 1
WINGWALL DETAILS

BRIDGE SHEET NO. MC21

SHEET 947 OF 1763 SHEETS

SR 5 FILE NO. 7452 SHEET MC21

CURVE DATA					
P.I. STATION	DELTA	RADIUS	TANGENT	LENGTH	BK. TAN. BEARING
WALL-C 10+08.19	84°25'31"	9.03'	8.19'	13.31'	N 23°03'22" W

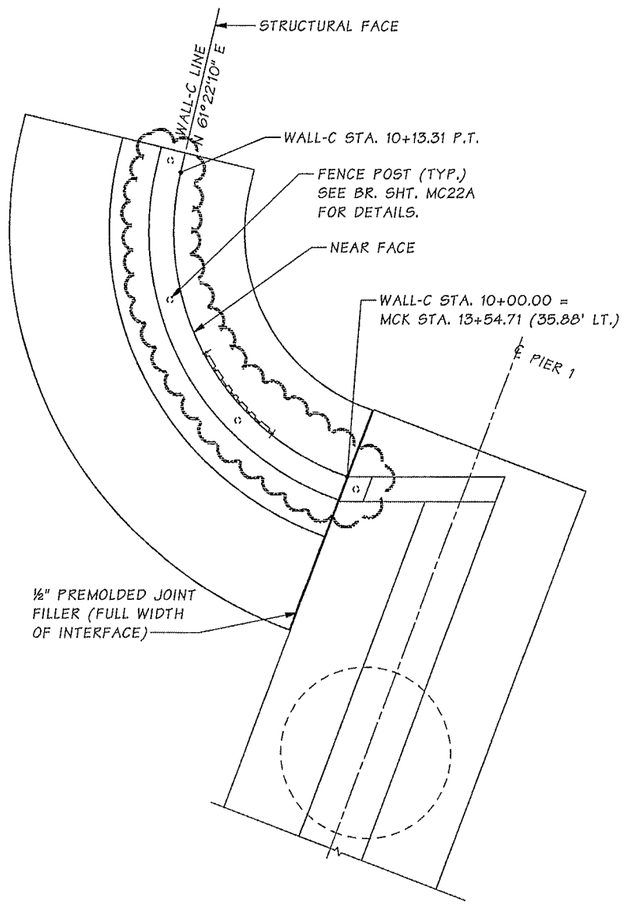

MCK WALL-C PLAN

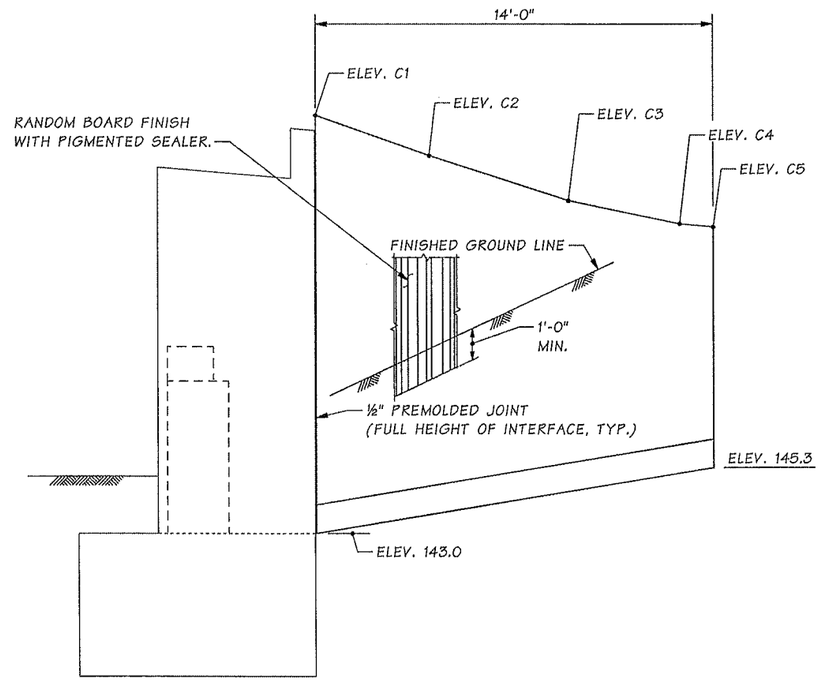

DEVELOPED MCK WALL-C ELEVATION

ELEVATIONS AND STATIONING MEASURED
AT TOP OF WALL, NEAR FACE.

WALL ELEVATIONS MEASURED AT NEAR FACE OF WALL.		
LOCATION	WALL-C STATION	ELEVATION
C1	10+00.00	157.62
C2	10+03.83	156.27
C3	10+08.79	154.69
C4	10+12.78	153.86
C5	10+14.00	153.75

SUMMARY OF QUANTITIES MCK WALL-C			
STD. ITEM NO.	STANDARD ITEM	UNIT	QUANTITY
1160	UNDERDRAIN PIPE 6 IN. DIAM.	LF	14
4006	STRUCTURE EXC, CLASS A	CY	60
4013	SHORING OR EXTRA EXC. CLASS A	SF	622
4025	GRAVEL BACKFILL WALLS	CY	27
7014	GRAVEL BACKFILL DRAIN	CY	1
7550	CONSTRUCTION GEOTEXTILE	SY	10
4139	CONC. CLASS 4000 FOR RETAINING WALL	CY	14
4150	STD. REINF. BAR FOR RETAINING WALL	LBS	951

NOTES:

1. SEE STD. PLAN D-10.10-01 FOR TYPE 1 RETAINING WALL DETAILS EXCEPT WALL HEIGHT SHALL BE AS SHOWN ON THIS SHEET.
2. USE THE "H" DIMENSION 14' IN STD. PLAN D-10.10-01 FOR WALL DIMENSIONS AND REINFORCING DETAILS.

SR 5 FILE NO. ____ SHEET MC22

Bridge Design Engr.	Khaleghi, B	
Supervisor	Khaleghi, B	
Designed By	Burnham, B	09/13
Checked By	Glassford, P	01/14
Detailed By	Andreotti, L	09/13
Bridge Projects Engr.		
Prelim. Plan By		
Architect/Specialist		

M:\Y-Team\M ST TO PORTLAND\MCKINLEY ADDENDUMS\Window files\RETAINING WALL PIER 1.WND

DATE	REVISION	BY	APPD
04/25/14	AD1-ADJUSTED POST SPA. ON WALL-C PLAN	BB	RBS

REGION NO.	STATE	FED. AID PROJ. NO.	SHEET NO.	TOTAL SHEETS
10	WASH.			

JOB NUMBER 12C501
CONTRACT NO.

BRIAN DAVID BURNHAM — STATE OF WASHINGTON — 48138 — REGISTERED PROFESSIONAL ENGINEER — 4-22-14
BRIDGE AND STRUCTURES OFFICE
RICHARD B. GLASSFORD — STATE OF WASHINGTON — 19207 — REGISTERED PROFESSIONAL ENGINEER — 4/22/14

Washington State Department of Transportation

I-5
M ST TO PORTLAND AVE - HOV
MCKINLEY WAY OVER I-5 BRIDGE NO. 5/448
PIER 1
RETAINING WALL

BRIDGE SHEET NO. MC22
SHEET 948 OF 1763 SHEETS

Tue Apr 22 07:27:44 2014

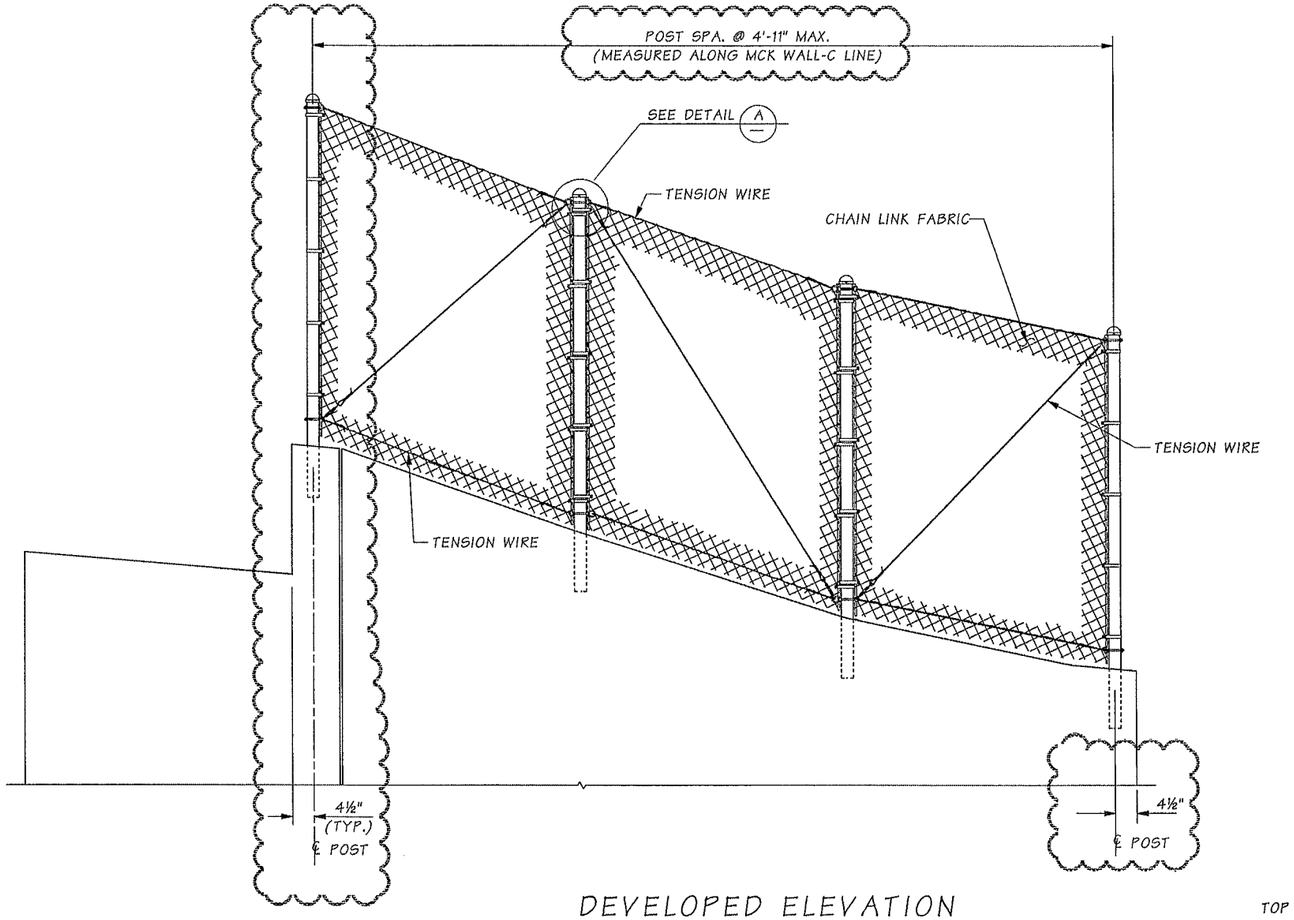

DEVELOPED ELEVATION

FENCE SECTIONS ARE STRAIGHT BETWEEN POSTS.

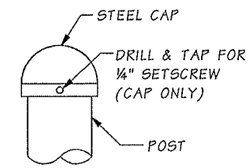

DETAIL A

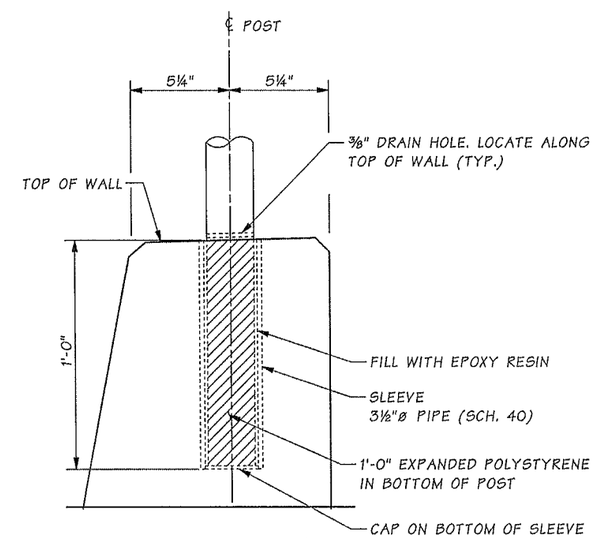

DETAIL B

NOTE: PLUG SLEEVE TO PREVENT INFILTRATION DURING CASTING OF CONRETE.

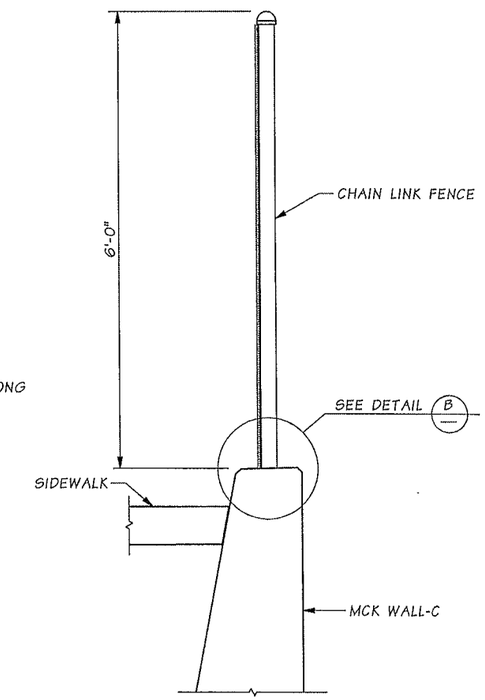

TYPICAL SECTION

MCK WALL-C SHOWN.
CURTAIN WALL SIMILAR.

NOTES

1. ALL STEEL POSTS SHALL BE GALVAIZED IN ACCORDANCE WITH AASHTO M 111 AFTER FABRICATION. BOLTS AND HARDWARE SHALL BE GALVIZED IN ACCORDANCE WITH AASHTO M 232.
2. FABRIC TIES SHALL BE INSTALLED TO ALL VERTICAL AND HORIZONTAL ELEMENTS IN ACCORDANCE WITH GOOD TRADE PRACTICES AT 1'-2" MAXIMUM SPACING.
3. THE SLEEVE SHALL BE CAPPED AND SEALED TO PREVENT WATER INFILTRATION UNTIL THE FENCE IS INSTALLED.
4. FOR DETAILS NOT SHOWN SEE STANDARD PLAN L-20-10.

SR 5 FILE NO. ____ SHEET MC22

Bridge Design Engr.	Khaleghi, B	
Supervisor	Khaleghi, B	
Designed By	Burnham, B	02/14
Checked By	Glassford, P	02/14
Detailed By	Andreotti, L	02/14
Bridge Projects Engr.		
Prelim. Plan By		
Architect/Specialist		

M:\Y-Team\M ST TO PORTLAND\MCKINLEY ADDENDUMS\window files\RETAINING WALL FENCE.WND

DATE	REVISION	BY	APP'D
04/25/14	AD1- CHANGED FENCE POST SPA. & ADDED NOTE	BB	RBS

REGION NO.	STATE	FED. AID PROJ. NO.	SHEET NO.	TOTAL SHEETS
10	WASH.			

JOB NUMBER 12C501

CONTRACT NO.

BRIAN DAVID BURNHAM — STATE OF WASHINGTON — 48136 — REGISTERED PROFESSIONAL ENGINEER
4-22-14

BRIDGE AND STRUCTURES OFFICE

RICHARD BASTODARD — STATE OF WASHINGTON — 19207 — REGISTERED PROFESSIONAL ENGINEER
4/22/14

Washington State Department of Transportation

I-5
M ST TO PORTLAND AVE - HOV

MCKINLEY WAY OVER I-5 BRIDGE NO. 5/448

COATED CHAIN LINK FENCE
TYOE 4 MODICICATIONS C - DETAILS

BRIDGE SHEET NO. MC22A

SHEET 948A OF 1763 SHEETS

Tue Apr 22 07:59:20 2014

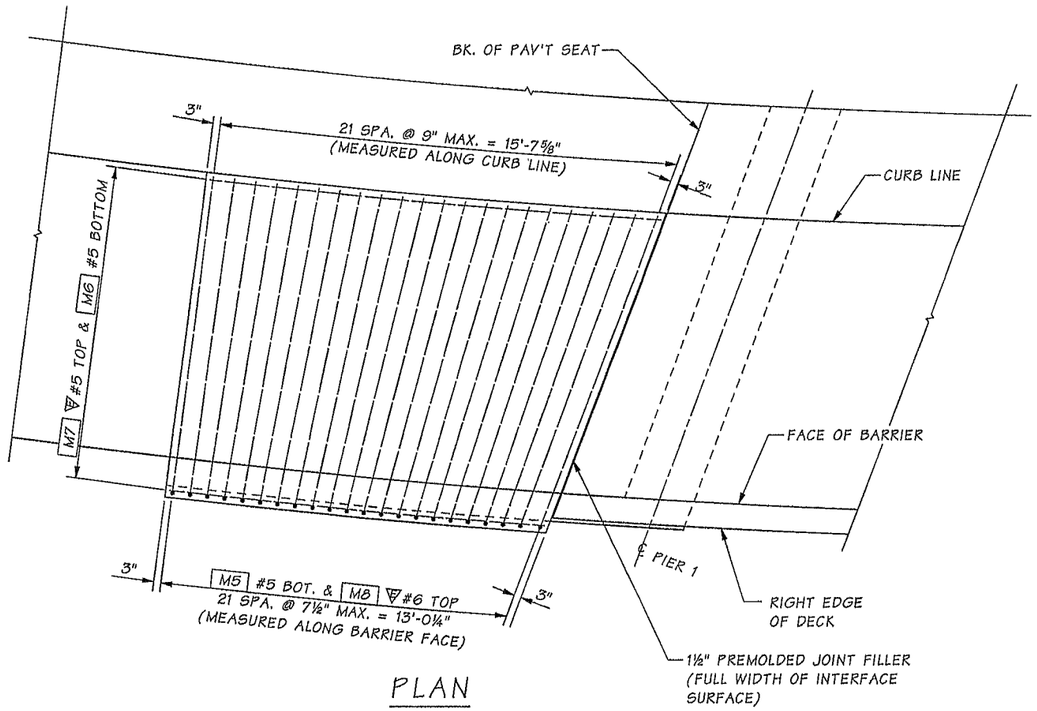

PLAN

BARRIER REINFORCEMENT NOT SHOWN FOR CLARITY.

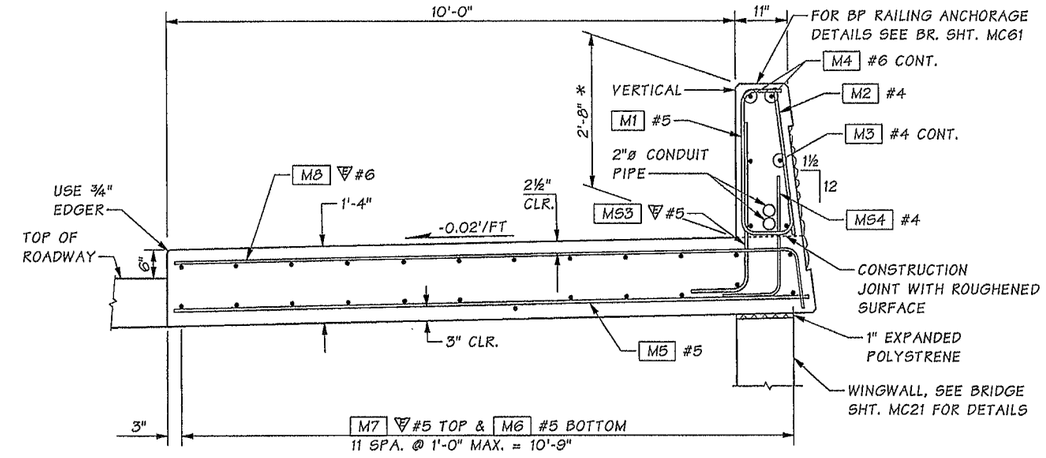

SECTION A

* MIN. HEIGHT, MOMENT SLAB BARRIER HEIGHT MAY VARY IF REQUIRED TO PROVIDE A SMOOTH PROFILE.

BENDING DIAGRAM

ALL DIMENSIONS ARE OUT TO OUT
= EPOXY COATED REINFORCING STEEL

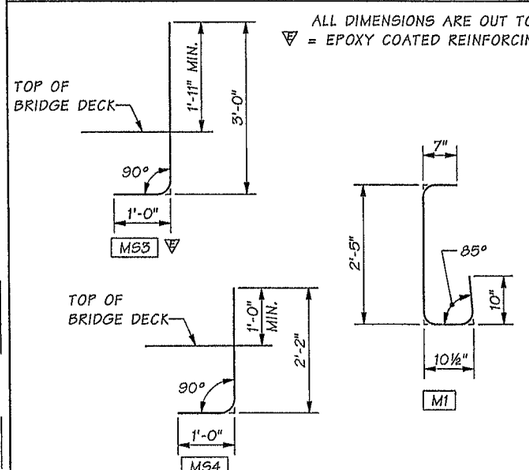

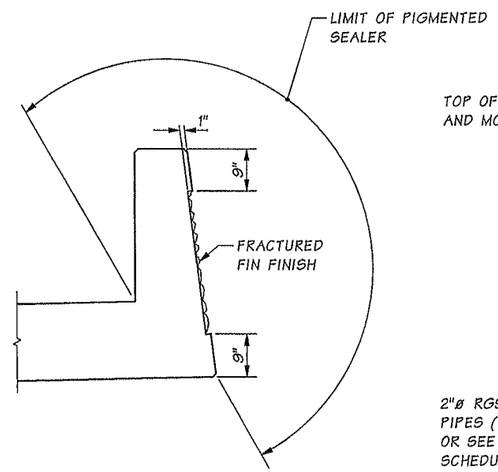

ARCHITECTURAL FINISH DETAIL

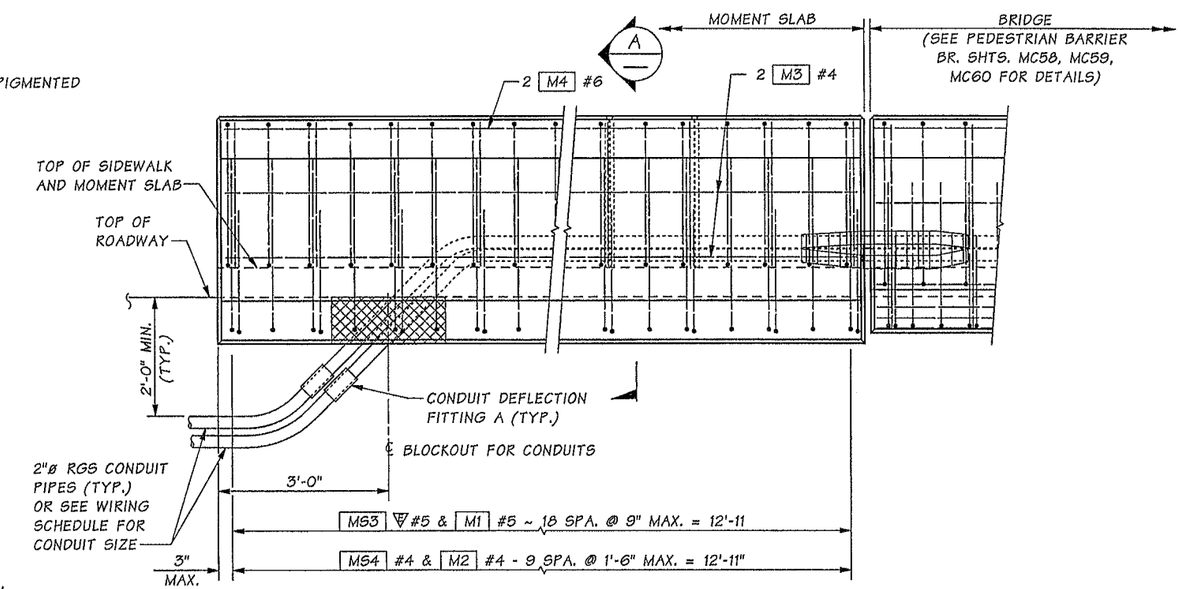

OUTSIDE ELEVATION

MOMENT SLAB REINFORCEMENT NOT SHOWN FOR CLARITY.

Bridge Design Engr.	Khaleghi, B		
Supervisor	Khaleghi, B		
Designed By	Burnham, B	09/13	
Checked By	Glassford, P	11/13	
Detailed By	Andreotti, L	09/13	
Bridge Projects Engr.			
Prelim. Plan By			
Architect/Specialist			

M:\Y-Team\M ST TO PORTLAND\MCKINLEY AVE BRG\window files\PIER 1 MOMENT SLAB.wnd

DATE	REVISION	BY	APP'D

REGION NO.	STATE	FED. AID PROJ. NO.	SHEET NO.	TOTAL SHEETS
10	WASH.			
JOB NUMBER 12C501				

BRIDGE AND STRUCTURES OFFICE

2/11/14 2/12/14

Washington State Department of Transportation

I-5
M ST TO PORTLAND AVE - HOV

MCKINLEY WAY OVER I-5 BRIDGE NO. 5/448

PEDESTRIAN BARRIER WITH MOMENT SLAB AT PIER 1

BRIDGE SHEET NO. MC23

SHEET 949 OF 1763 SHEETS

SR 5 FILE NO. 7452 SHEET MC23

Tue Feb 11 07:02:36 2014

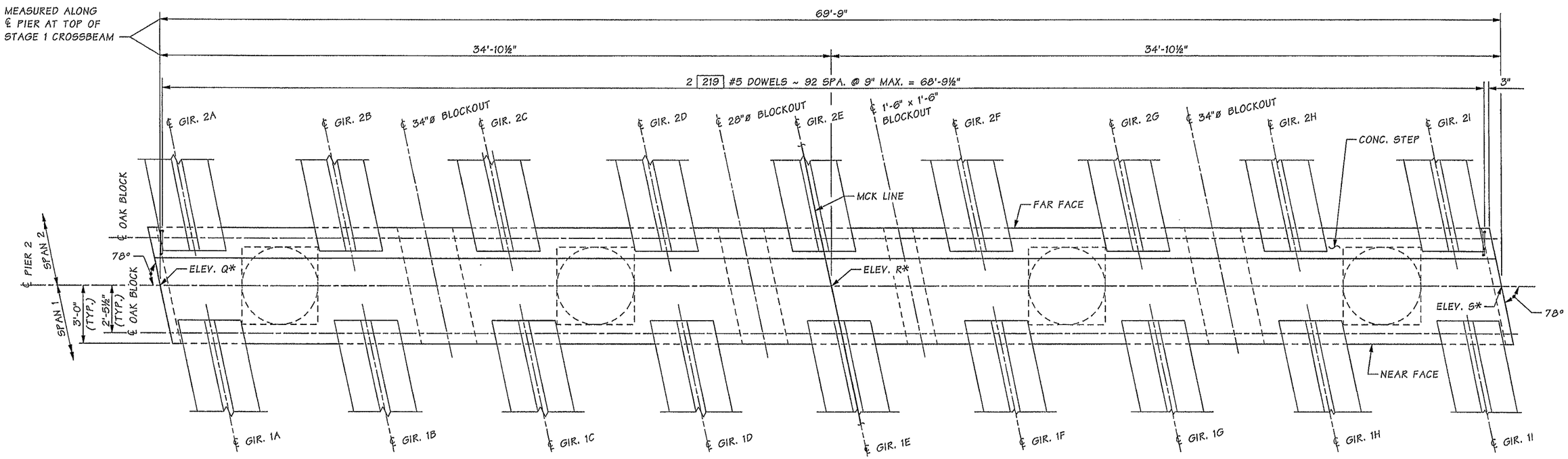

PLAN

NOTES:

1. SEE FRAMING PLAN FOR GIRDER SPACING.
2. FOR ELEVATIONS Q, R AND S, SEE BR. SHT. MC25. ELEVATIONS ARE AT TOP OF CROSSBEAM.

α ELEVATIONS ARE TAKEN AT TOP OF OAK BLOCK AT INTERSECTION OF ℄ OAK BLOCK AND ℄ GIRDER.

α TABLE OF ELEVATIONS AT TOP OF OAK BLOCK

GIRDER	2A	2B	2C	2D	2E	2F	2G	2H	2I
ELEVATION	156.61	156.62	156.63	156.64	156.64	156.65	156.66	156.67	156.67

GIRDER	1A	1B	1C	1D	1E	1F	1G	1H	1I
ELEVATION	155.97	155.98	155.99	156.00	156.00	156.01	156.02	156.03	156.03

Bridge Design Engr.	Khaleghi, B	
Supervisor	Khaleghi, B	
Designed By	Glassford, P	05/13
Checked By	Burnham, B	05/13
Detailed By	Andreotti, L	05/13
Bridge Projects Engr.		
Prelim. Plan By		
Architect/Specialist		

M:\Y-Team\M ST TO PORTLAND\MCKINLEY AVE BRG\window files\CROSSBM PLAN PIER 2.wnd

DATE	REVISION	BY	APP'D

REGION NO.	STATE	FED. AID PROJ. NO.	SHEET NO.	TOTAL SHEETS
10	WASH.			
JOB NUMBER 12C501				

Tue Feb 11 07:02:38 2014

BRIDGE AND STRUCTURES OFFICE

PATRICK MICHAEL GLASSFORD, STATE OF WASHINGTON, 40072, REGISTERED PROFESSIONAL ENGINEER — 2/11/14

BIJAN KHALEGHI, STATE OF WASHINGTON, 27695, REGISTERED PROFESSIONAL ENGINEER — 2/12/14

Washington State Department of Transportation

I-5
M ST TO PORTLAND AVE - HOV

MCKINLEY WAY OVER I-5 BRIDGE NO. 5/448

PIER 2 PLAN

BRIDGE SHEET NO. MC24

SHEET 950 OF 1763 SHEETS

SR 5 FILE NO. 7452 SHEET MC24

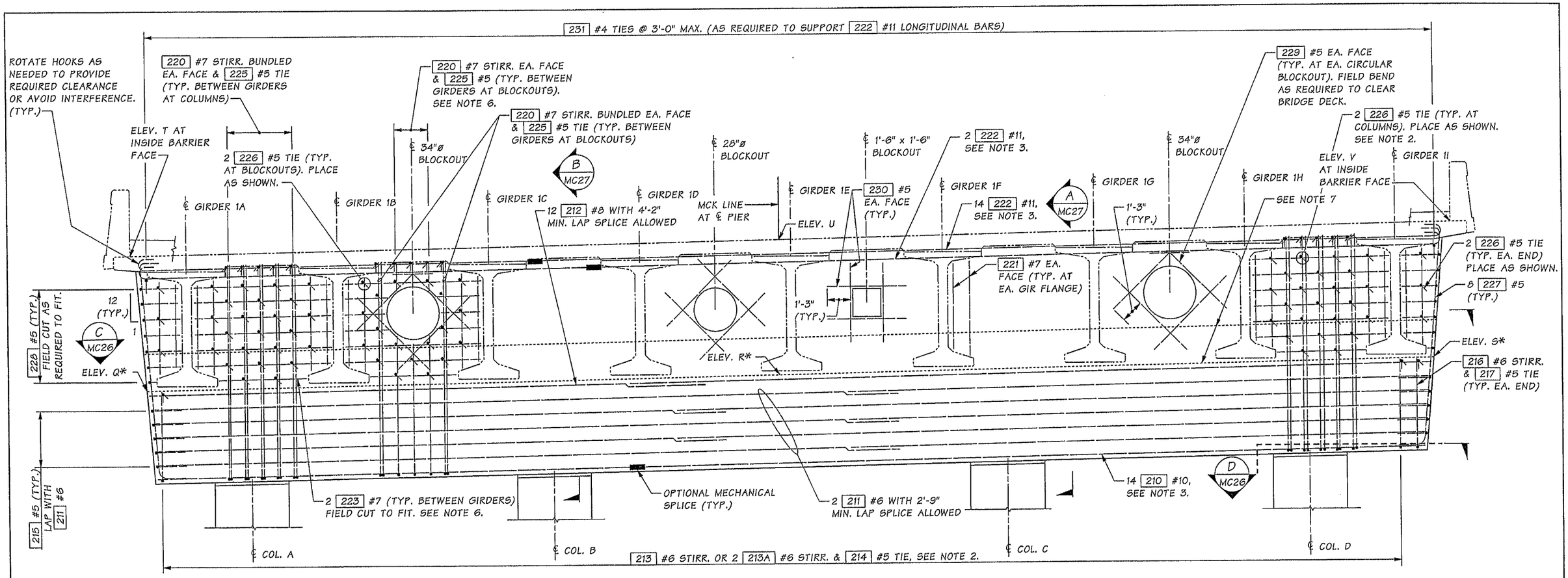

NOTES:

1. BRIDGE DECK AND COLUMN REINFORCING NOT SHOWN FOR CLARITY.
2. ADJUST CROSSBEAM LONGITUDINAL BAR, TRANSVERSE STIRRUP, AND TIE SPACING AS REQUIRED TO CLEAR COLUMN VERTICAL BARS. DO NOT EXCEED MAX SPACING.
3. NO LAP SPLICE ALLOWED UNLESS SHOWN OTHERWISE. ALL MECHANCAL SPLICES SHALL MEET THE REQUIREMENTS OF STD. SPEC. SECTION 6-02.3(24)F. DO NOT SPLICE MORE THAN 50% OF BARS AT ANY ONE LOCATION. STAGGER SPLICES A MINIMUM OF 2'-0".
4. ALL ELEVATIONS ARE AT TOP OF BRIDGE DECK AT CENTER LINE OF PIER EXCEPT THOSE MARKED WITH AN ASTERISK (*) WHICH ARE TOP OF CROSSBEAM ELEVATIONS AT CENTER LINE OF PIER.
5. DIAPHRAGM REINFORCING SHOWN FOR NEAR FACE ONLY. SEE SECTION A MC27 FOR DETAILS.
6. TRIM REINFORCEMENT AS REQUIRED TO CLEAR BLOCKOUTS.
7. CONSTRUCTION JOINT WITH ROUGHENED SURFACE.
8. SEE BRIDGE SHEET MC39 FOR UTILITY BLOCKOUT LOCATIONS.

ELEVATION

ELEVATION SHOWN NEAR FACE OF CROSSBEAM.

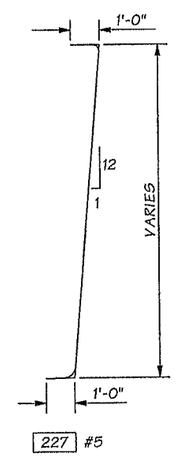

TABLE OF ELEVATIONS	
ELEV. Q*	155.72
ELEV. R*	155.75
ELEV. S*	155.79
ELEV. T	163.47
ELEV. U	163.51
ELEV. V	163.54

SR 5 FILE NO. 7452 SHEET MC25

Bridge Design Engr.	Khaleghi, B	M:\Y-Team\M ST TO PORTLAND\MCKINLEY AVE BRG\window files\CROSSBM ELEV PIER 2.wnd								
Supervisor	Khaleghi, B									
Designed By	Glassford, P	01/13								
Checked By	Burnham, B	05/13								
Detailed By	Andreotti, L	01/13								
Bridge Projects Engr.										
Prelim. Plan By										
Architect/Specialist		DATE	REVISION	BY	APP'D					

REGION NO.	STATE	FED. AID PROJ. NO.	SHEET NO.	TOTAL SHEETS
10	WASH.			
JOB NUMBER 12C501				

Tue Feb 11 07:02:39 2014

PATRICK MICHAEL GLASSFORD, STATE OF WASHINGTON, 18878, REGISTERED PROFESSIONAL ENGINEER 2/11/14

BRIDGE AND STRUCTURES OFFICE

BRIAN KHALEGHI, STATE OF WASHINGTON, 27606, STRUCTURAL ENGINEER, PROFESSIONAL ENGINEER 2/11/14

Washington State Department of Transportation

I-5
M ST TO PORTLAND AVE - HOV

MCKINLEY WAY OVER I-5 BRIDGE NO. 5/448

PIER 2 ELEVATION

BRIDGE SHEET NO. MC25

SHEET 951 OF 1763 SHEETS

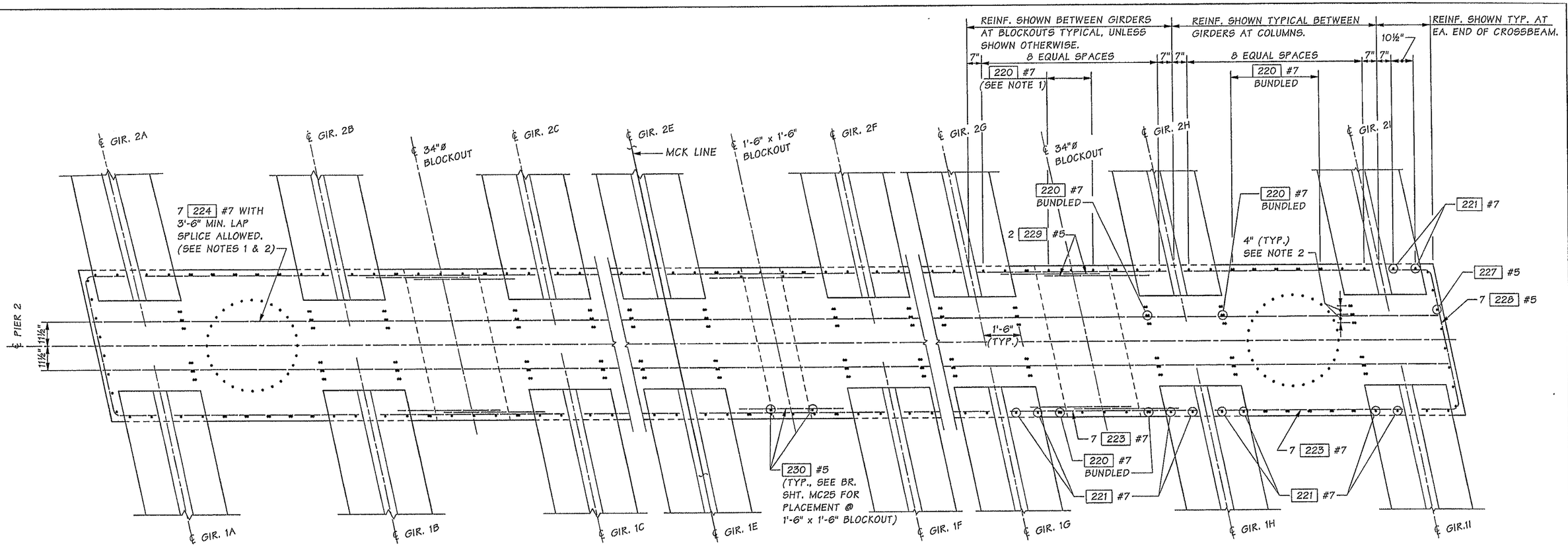

NOTES:

1. TRIM REINFORCING AS REQUIRED TO CLEAR BLOCKOUTS.
2. ADJUST CROSSBEAM LONGITIDINAL BAR, TRANSVERSE STIRRUP, AND TIE SPACING AS REQUIRED TO CLEAR COLUMN VERTICAL BARS. DO NOT EXCEED MAX. SPACING. ADJUST INTERIOR TRANSVERSE STIRRUP SPACING AS REQUIRED TO CLEAR CROSSBEAM LONGITUDINAL BARS.

Bridge Design Engr.	Khaleghi, B	
Supervisor	Khaleghi, B	
Designed By	Glassford, P	01/13
Checked By	Burnham, B	05/13
Detailed By	Andreotti, L	01/13
Bridge Projects Engr.		
Prelim. Plan By		
Architect/Specialist		

M:\Y-Team\M ST TO PORTLAND\MCKINLEY AVE BRG\window files\CROSSBM DETAILS PIER 2.wnd

DATE	REVISION	BY	APP'D

REGION NO.	STATE	FED. AID PROJ. NO.	SHEET NO.	TOTAL SHEETS
10	WASH.			

JOB NUMBER 12C501

BRIDGE AND STRUCTURES OFFICE

2/11/14 2/12/14

Washington State Department of Transportation

I-5
M ST TO PORTLAND AVE - HOV

MCKINLEY WAY OVER I-5 BRIDGE NO. 5/448

PIER 2
CROSSBEAM DETAILS 1 OF 2

BRIDGE SHEET NO. MC26

SHEET 952 OF 1763 SHEETS

SR 5 FILE NO. 7452 SHEET MC26

Tue Feb 11 07:02:40 2014

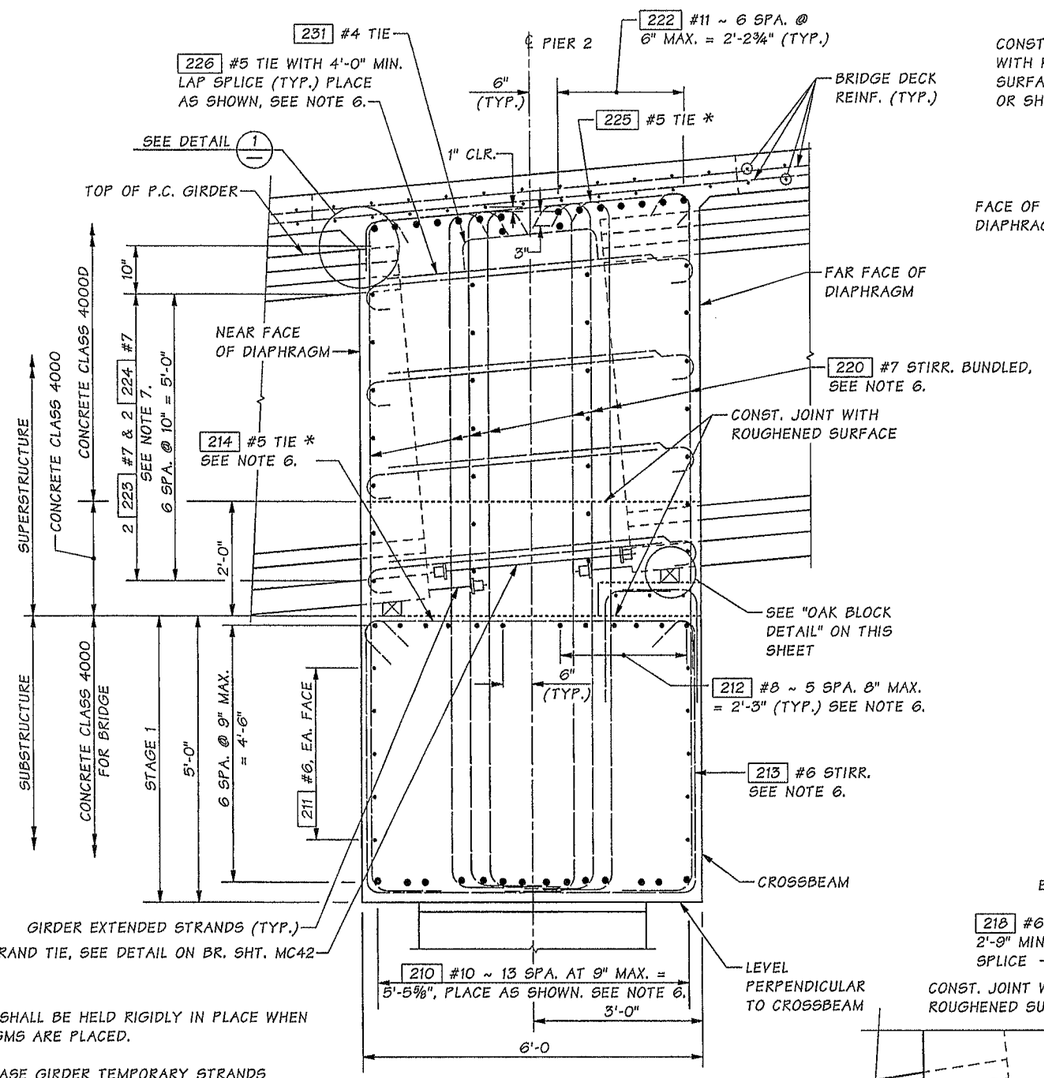

SECTION A — MC25

* ALTERNATE 135° HOOK EVERY OTHER BAR.

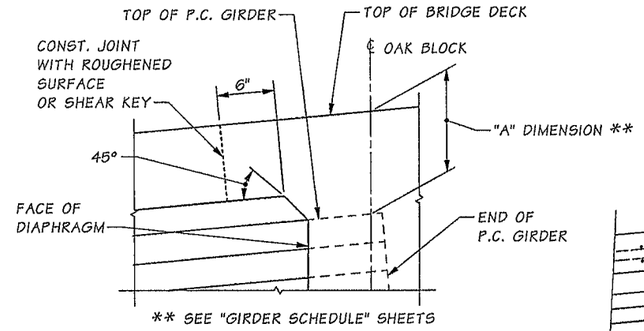

DETAIL 1

REINFORCING NOT SHOWN FOR CLARITY

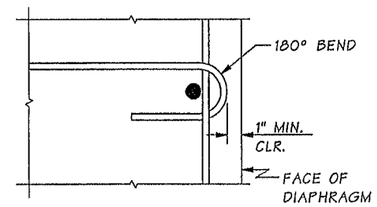

TIE BAR DETAIL

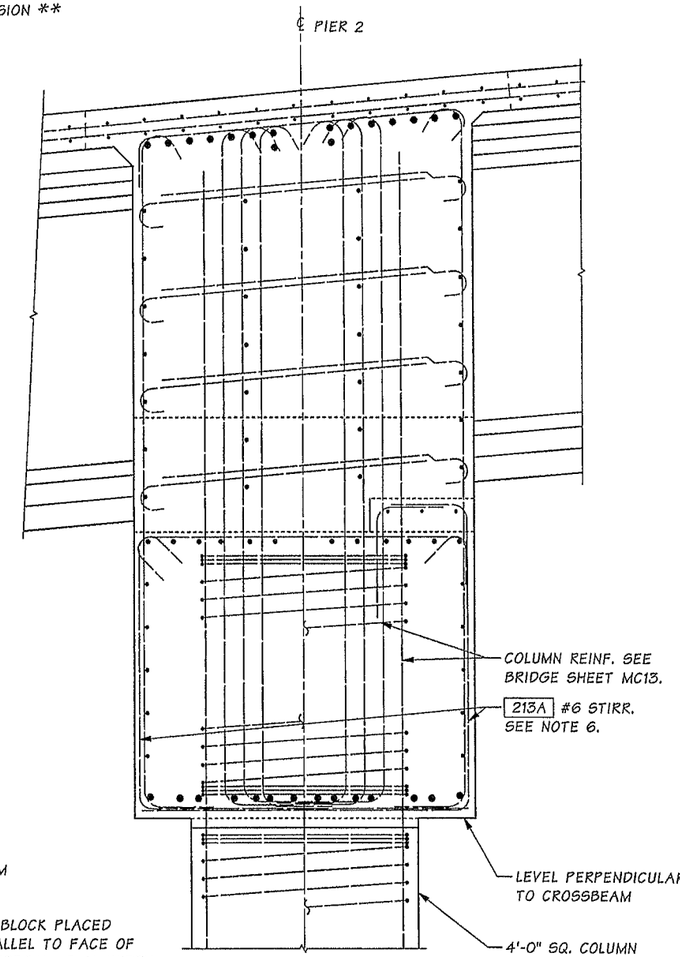

SECTION B — MC25

FOR CALLOUTS NOT SHOWN SEE SECTION A THIS SHEET.

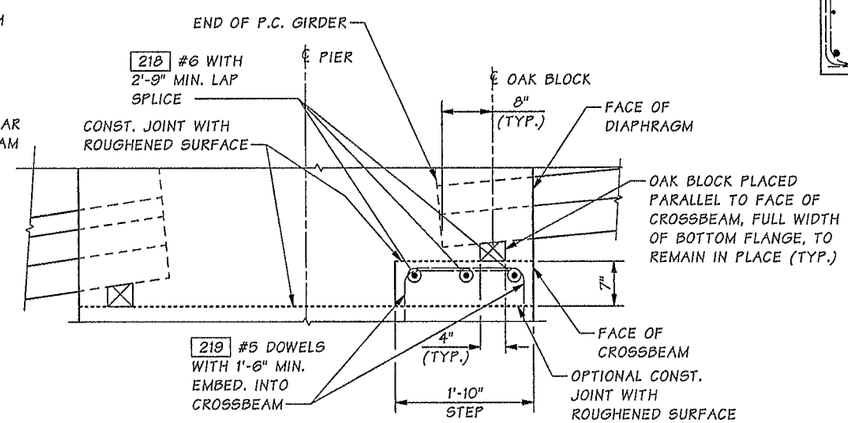

OAK BLOCK DETAIL

LONGITUDINAL DIMENSIONS ARE NORMAL TO SKEW

NOTES:

1. GIRDERS SHALL BE HELD RIGIDLY IN PLACE WHEN DIAPHRAGMS ARE PLACED.
2. CUT/RELEASE GIRDER TEMPORARY STRANDS BEFORE CASTING DIAPHRAGM. SEE TEMPORARY STRAND CUTTING SEQUENCE.
3. EXTENDED STRANDS AND GIRDER REINFORCING NOT SHOWN FOR CLARITY.
4. LONGITUDINAL DIMENSIONS ARE NORMAL TO SKEW.
5. FOR CONCRETE PLACEMENT PROCEDURE SEE "SUPERSTRUCTURE CONSTRUCTION SEQUENCE" SHEET.
6. ADJUST CROSSBEAM LONGITUDINAL BAR, TRANSVERSE STIRRUP, AND TIE SPACING AS REQUIRED TO CLEAR COLUMN VERTICAL BARS. DO NOT EXCEED MAX. SPACING.
7. TRIM REINFORCING AS REQUIRED TO CLEAR BLOCKOUTS.

Bridge Design Engr.	Khaleghi, B		M:\Y-Team\M ST TO PORTLAND\MCKINLEY AVE BRG\window files\CROSSBM DET2 PIER 2.wnd
Supervisor	Khaleghi, B		
Designed By	Glassford, P	01/13	
Checked By	Burnham, B	05/13	
Detailed By	Andreotti, L	01/13	
Bridge Projects Engr.			
Prelim. Plan By			
Architect/Specialist			

DATE	REVISION	BY	APP'D

REGION NO.	STATE	FED. AID PROJ. NO.	SHEET NO.	TOTAL SHEETS
10	WASH.			
JOB NUMBER 12C501				

BRIDGE AND STRUCTURES OFFICE

2/11/14 — 2/12/14

Washington State Department of Transportation

I-5
M ST TO PORTLAND AVE - HOV

MCKINLEY WAY OVER I-5 BRIDGE NO. 5/448

PIER 2
CROSSBEAM DETAILS 2 OF 2

BRIDGE SHEET NO. MC27

SHEET 953 OF 1763 SHEETS

SR 5 FILE NO. 7452 SHEET MC27

Tue Feb 11 07:02:42 2014

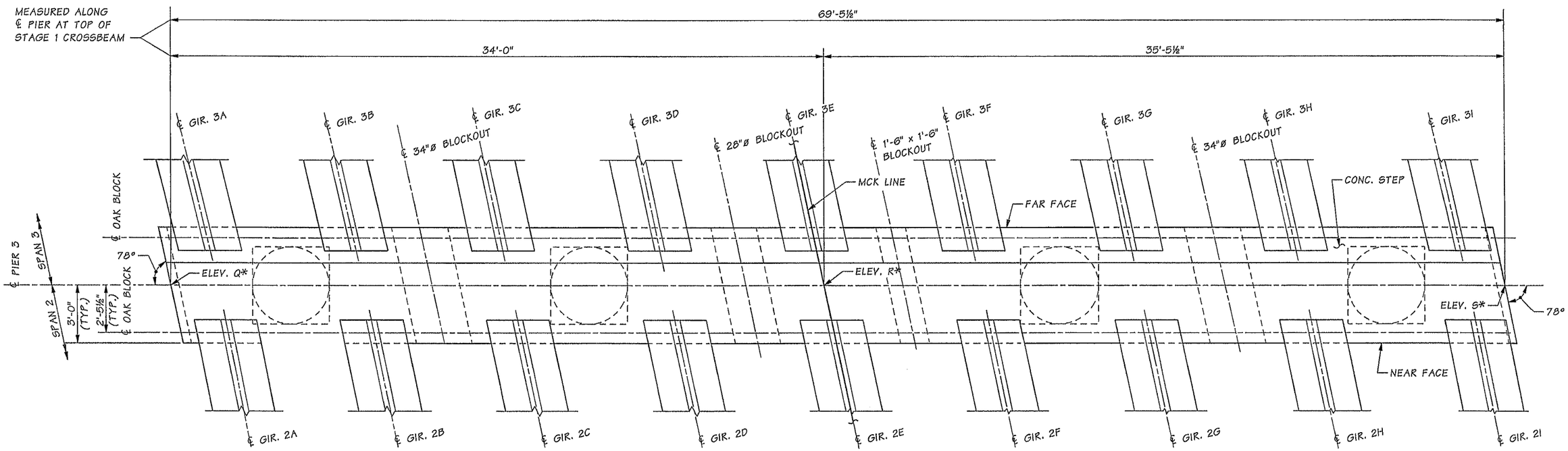

PLAN

NOTES:

1. SEE FRAMING PLAN FOR GIRDER SPACING.
2. FOR ELEVATIONS Q, R AND S, SEE BR. SHT. MC29. ELEVATIONS ARE AT TOP OF CROSSBEAM.

α ELEVATIONS ARE TAKEN AT TOP OF OAK BLOCK AT INTERSECTION OF ℄ OAK BLOCK AND ℄ GIRDER.

α TABLE OF ELEVATIONS AT TOP OF OAK BLOCK

GIRDER	3A	3B	3C	3D	3E	3F	3G	3H	3I
ELEVATION	164.42	164.46	164.50	164.55	164.59	164.63	164.68	164.72	164.76

GIRDER	2A	2B	2C	2D	2E	2F	2G	2H	2I
ELEVATION	164.16	164.20	164.24	164.28	164.33	164.37	164.41	164.45	164.49

SR 5 FILE NO. 7452 SHEET MC28

Bridge Design Engr.	Khaleghi, B	
Supervisor	Khaleghi, B	
Designed By	Glassford, P	01/13
Checked By	Burnham, B	05/13
Detailed By	Andreotti, L	01/13
Bridge Projects Engr.		
Prelim. Plan By		
Architect/Specialist		

M:\Y-Team\M ST TO PORTLAND\MCKINLEY AVE BRG\window files\CROSSBM PLAN PIER 3.wnd

DATE	REVISION	BY	APP'D

REGION NO.	STATE	FED. AID PROJ. NO.	SHEET NO.	TOTAL SHEETS
10	WASH.			

JOB NUMBER 12C501

BRIDGE AND STRUCTURES OFFICE

2/11/14 2/12/14

Washington State Department of Transportation

I-5
M ST TO PORTLAND AVE - HOV

MCKINLEY WAY OVER I-5 BRIDGE NO. 5/448

PIER 3 PLAN

BRIDGE SHEET NO. MC28

SHEET 954 OF 1763 SHEETS

Tue Feb 11 07:02:43 2014

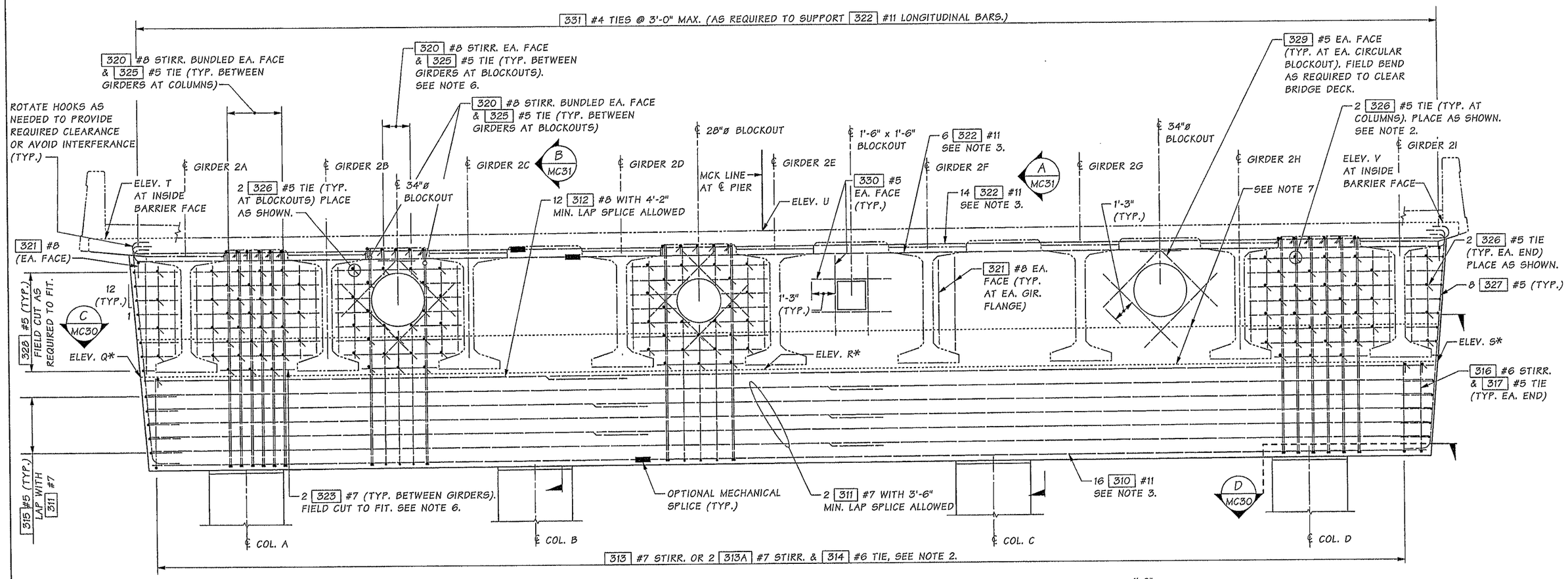

NOTES:

1. BRIDGE DECK AND COLUMN REINFORCING NOT SHOWN FOR CLARITY.
2. ADJUST CROSSBEAM LONGITUDINAL BAR, TRANSVERSE STIRRUP, AND TIE SPACING AS REQUIRED TO CLEAR COLUMN VERTICAL BARS. DO NOT EXCEED MAX. SPACING.
3. NO LAP SPLICE ALLOWED UNLESS SHOWN OTHERWISE. ALL MECHANICAL SPLICES SHALL MEET THE REQUIREMENTS OF STD. SPEC. SECTION 6-02.3(24)F. DO NOT SPLICE MORE THAN 50% OF BARS AT ANY ONE LOCATION. STAGGER SPLICES A MINIMUM OF 2'-0".
4. ALL ELEVATIONS ARE AT TOP OF BRIDGE DECK AT CENTER LINE OF PIER EXCEPT THOSE MARKED WITH AN ASTERISK (*) WHICH ARE TOP OF CROSSBEAM ELEVATIONS AT CENTER LINE OF PIER.
5. DIAPHRAGM REINFORCING SHOWN FOR NEAR FACE ONLY. SEE SECTION A MC31 FOR DETAILS.
6. TRIM REINFORCEMENT AS REQUIRED TO CLEAR BLOCKOUTS.
7. CONSTRUCTION JOINT WITH ROUGHENED SURFACE.
8. SEE BRIDGE SHEET MC39 FOR UTILITY BLOCKOUT LOCATIONS.

ELEVATION

ELEVATION SHOWN NEAR FACE OF CROSSBEAM.

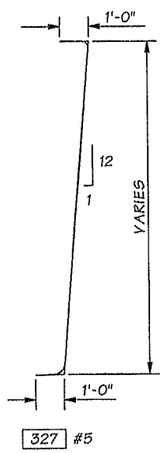

TABLE OF ELEVATIONS	
ELEV. Q*	163.90
ELEV. R*	164.08
ELEV. S*	164.25
ELEV. T	171.38
ELEV. U	171.58
ELEV. V	171.76

SR 5 FILE NO. 7452 SHEET MC29

Bridge Design Engr.	Khaleghi, B		M:\Y-Team\M ST TO PORTLAND\MCKINLEY AVE BRG\window files\CROSSBM ELEV PIER 3.wnd							
Supervisor	Khaleghi, B									
Designed By	Glassford, P	01/13								
Checked By	Burnham, B	05/13								
Detailed By	Andreotti, L	01/13								
Bridge Projects Engr.										
Prelim. Plan By										
Architect/Specialist			DATE	REVISION	BY	APP'D				

REGION NO.	STATE	FED. AID PROJ. NO.	SHEET NO.	TOTAL SHEETS
10	WASH.			
JOB NUMBER 12C501				

Tue Feb 11 07:02:45 2014

BRIDGE AND STRUCTURES OFFICE

2/11/14 2/12/14

Washington State Department of Transportation

I-5
M ST TO PORTLAND AVE - HOV

MCKINLEY WAY OVER I-5 BRIDGE NO. 5/448

PIER 3 ELEVATION

BRIDGE SHEET NO. MC29

SHEET 955 OF 1763 SHEETS

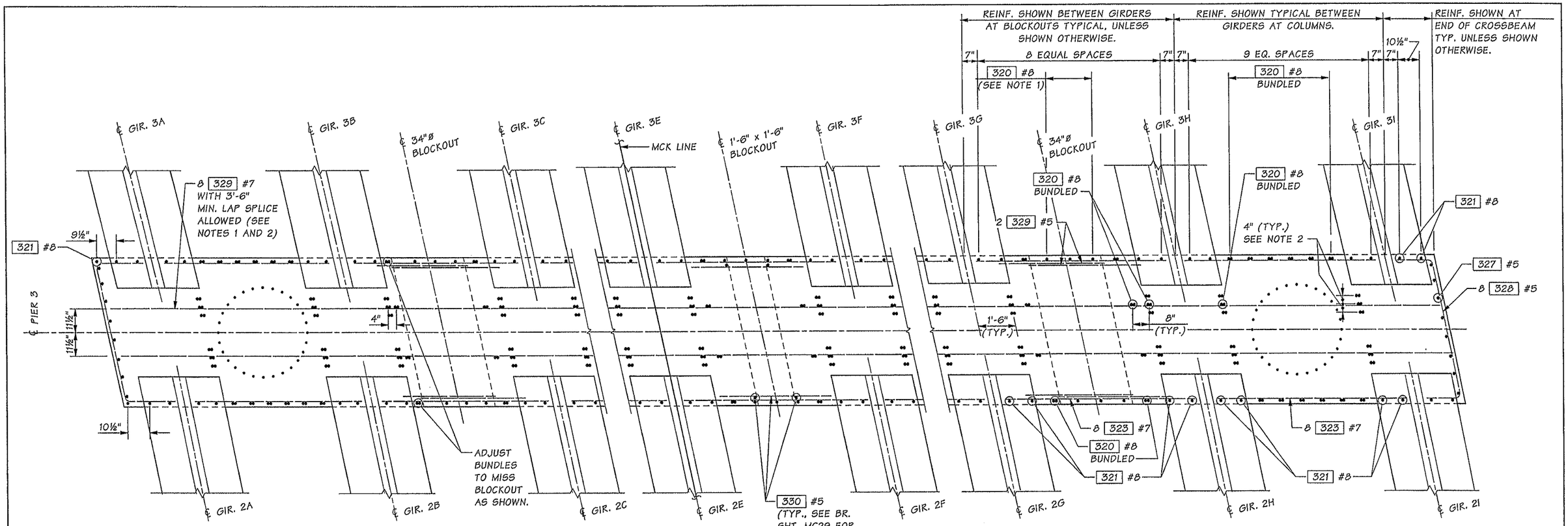

SECTION C MC29

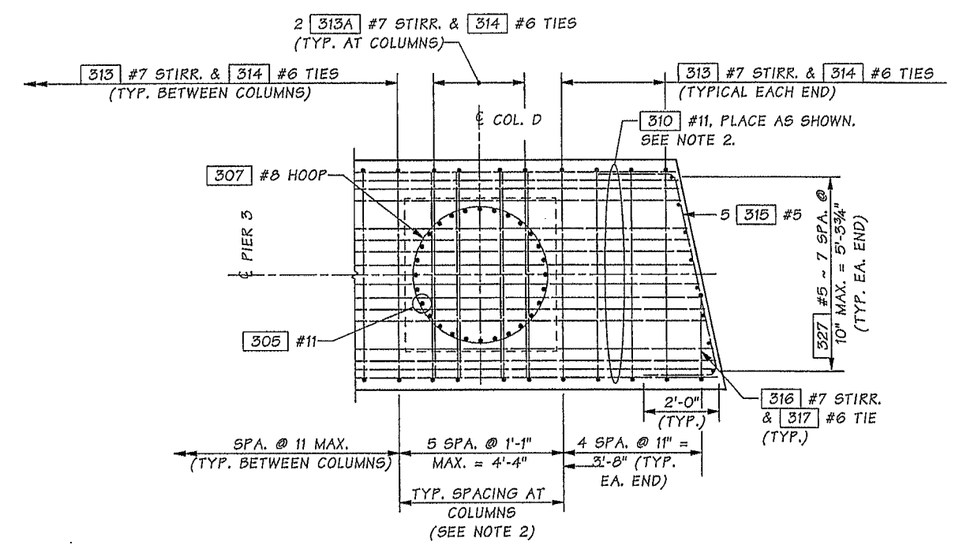

SECTION D MC29

NOTES:

1. TRIM REINFORCING AS REQUIRED TO CLEAR BLOCKOUTS.
2. ADJUST CROSSBEAM LONGITUDINAL BAR, TRANSVERSE STIRRUP, AND TIE SPACING AS REQUIRED TO CLEAR COLUMN VERTICAL BARS. DO NOT EXCEED MAX. SPACING. ADJUST INTERIOR TRANSVERSE STIRRUP SPACING AS REQUIRED TO CLEAR CROSSBEAM LONGITUDINAL BARS.

SR 5 FILE NO. 7452 SHEET

Bridge Design Engr.	Khaleghi, B	M:\Y-Team\M ST TO PORTLAND\MCKINLEY AVE BRG\window files\CROSSBM DETAILS PIER 3.wnd	
Supervisor	Khaleghi, B		
Designed By	Glassford, P	01/13	
Checked By	Burnham, B	05/13	
Detailed By	Andreotti, L	01/13	
Bridge Projects Engr.			
Prelim. Plan By			
Architect/Specialist			

DATE	REVISION	BY	APP'D

REGION NO.	STATE	FED. AID PROJ. NO.	SHEET NO.	TOTAL SHEETS
10	WASH.			
JOB NUMBER 12C501				

Tue Feb 11 07:02:46 2014

BRIDGE AND STRUCTURES OFFICE

2/11/14 2/12/14

Washington State Department of Transportation

I-5
M ST TO PORTLAND AVE - HOV

MCKINLEY WAY OVER I-5 BRIDGE NO. 5/448

PIER 3
CROSSBEAM DETAILS 1 OF 2

BRIDGE SHEET NO. MC30

SHEET 956 OF 1763 SHEETS

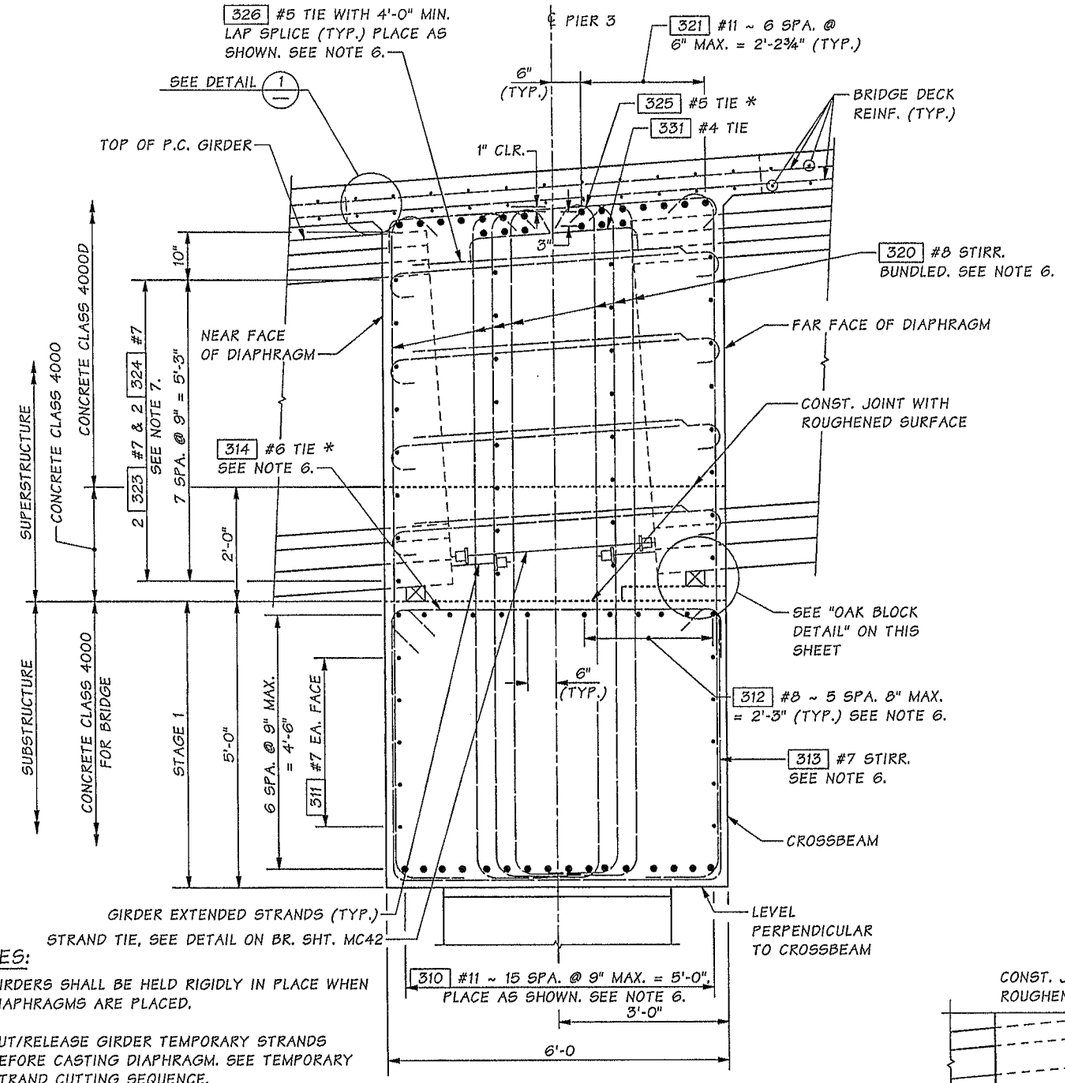

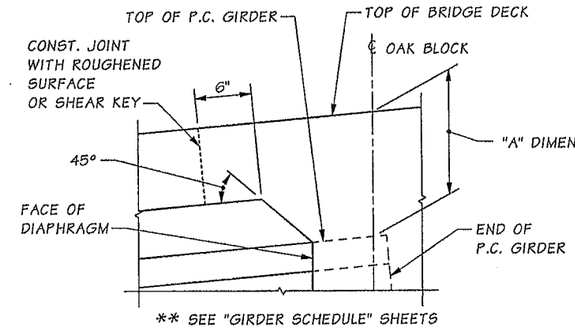

DETAIL 1

REINFORCING NOT SHOWN FOR CLARITY

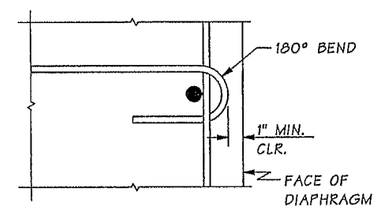

TIE BAR DETAIL

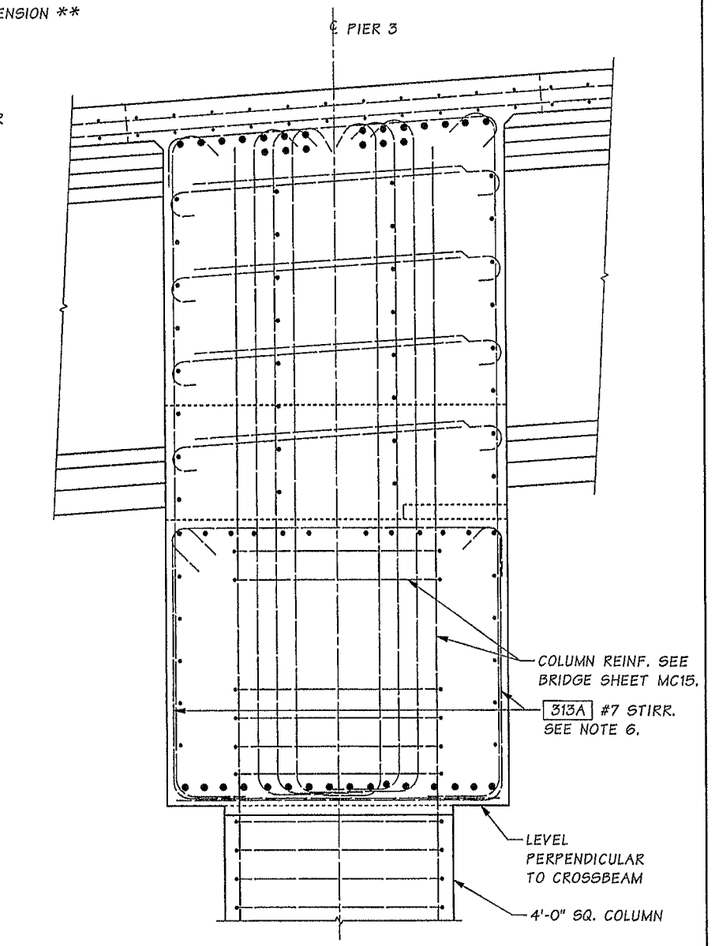

SECTION B — MC29

FOR CALLOUTS NOT SHOWN SEE SECTION A THIS SHEET.

NOTES:

1. GIRDERS SHALL BE HELD RIGIDLY IN PLACE WHEN DIAPHRAGMS ARE PLACED.
2. CUT/RELEASE GIRDER TEMPORARY STRANDS BEFORE CASTING DIAPHRAGM. SEE TEMPORARY STRAND CUTTING SEQUENCE.
3. EXTENDED STRANDS AND GIRDER REINFORCING NOT SHOWN FOR CLARITY.
4. LONGITUDINAL DIMENSIONS ARE NORMAL TO SKEW.
5. FOR CONCRETE PLACEMENT PROCEDURE SEE "SUPERSTRUCTURE CONSTRUCTION SEQUENCE" SHEET.
6. ADJUST CROSSBEAM LONGITUDINAL BAR, TRANSVERSE STIRRUP, AND TIE SPACING AS REQUIRED TO CLEAR COLUMN VERTICAL BARS. DO NOT EXCEED MAX. SPACING.
7. TRIM REINFORCING AS REQUIRED TO CLEAR BLOCKOUT.

SECTION A — MC29

* ALTERNATE 135° HOOK EVERY OTHER BAR.

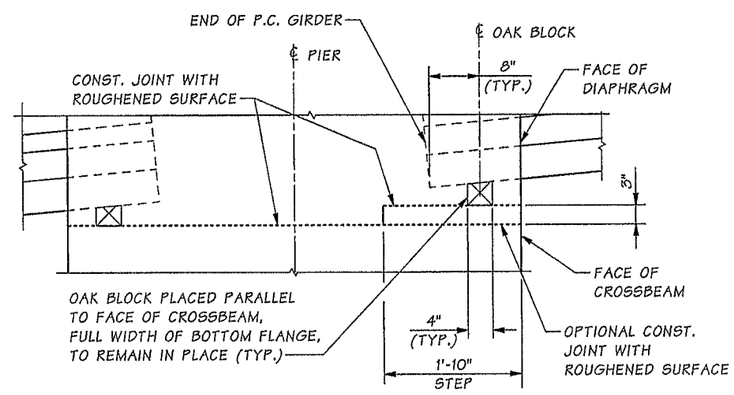

OAK BLOCK DETAIL

LONGITUDINAL DIMENSIONS ARE NORMAL TO SKEW.

Bridge Design Engr.	Khaleghi, B		M:\Y-Team\M ST TO PORTLAND\MCKINLEY AVE BRG\window files\CROSSBM DET2 PIER 3.wnd							
Supervisor	Khaleghi, B									
Designed By	Glassford, P	01/13								
Checked By	Burnham, B	05/13								
Detailed By	Andreotti, L	01/13								
Bridge Projects Engr.										
Prelim. Plan By										
Architect/Specialist			DATE	REVISION	BY	APP'D				

Tue Feb 11 07:02:48 2014

REGION NO.	STATE	FED. AID PROJ. NO.	SHEET NO.	TOTAL SHEETS
10	WASH.			
JOB NUMBER 12C501				

PATRICK MICHAEL GLASSFORD — STATE OF WASHINGTON — 45672 — REGISTERED PROFESSIONAL ENGINEER — 2/11/14

BRIDGE AND STRUCTURES OFFICE

BIJAN KHALEGHI — STATE OF WASHINGTON — 19866 — REGISTERED PROFESSIONAL ENGINEER — 2/11/14

Washington State Department of Transportation

I-5
M ST TO PORTLAND AVE - HOV

MCKINLEY WAY OVER I-5 BRIDGE NO. 5/448

PIER 3
CROSSBEAM DETAIL 2 OF 2

BRIDGE SHEET NO. MC31

SHEET 957 OF 1763 SHEETS

SR 5 FILE NO. 7452 SHEET MC31

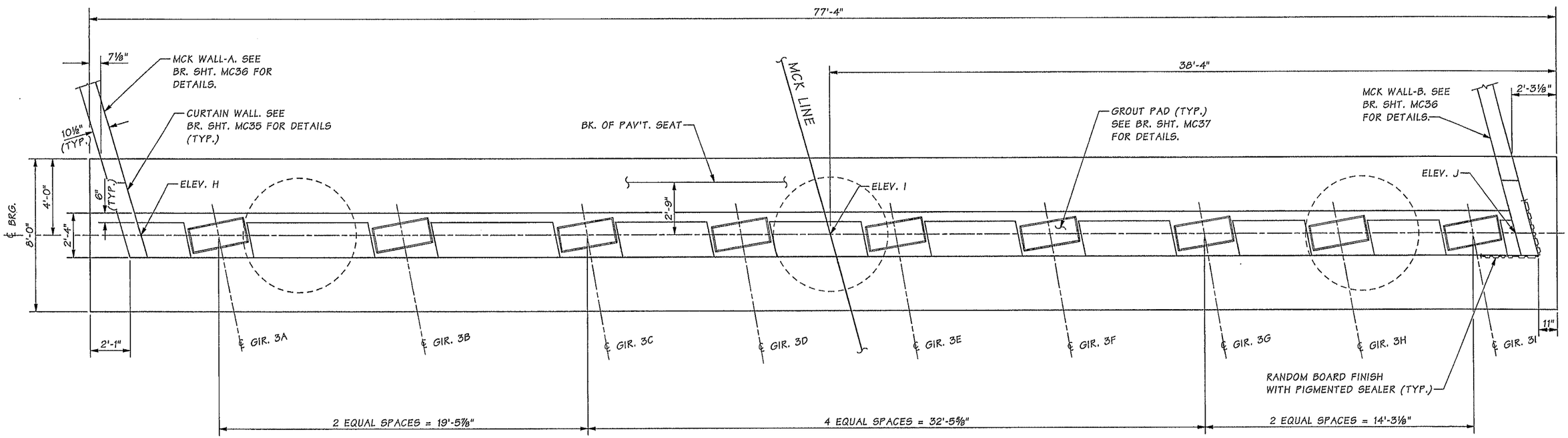

PIER 4 - PLAN

SEE BR. SHT. MC33 FOR ELEVATIONS.

SR 5 FILE NO. 7452 SHEET MC32

Bridge Design Engr.	Khaleghi, B		M:\Y-Team\M ST TO PORTLAND\MCKINLEY AVE BRG\window files\PIER 4 PLAN.wnd								
Supervisor	Khaleghi, B						REGION NO.	STATE	FED. AID PROJ. NO.	SHEET NO.	TOTAL SHEETS
Designed By	Glassford, P	05/13					10	WASH.			
Checked By	Burnham, B	05/13									
Detailed By	Andreotti, L	05/13					JOB NUMBER 12C501				
Bridge Projects Engr.											
Prelim. Plan By											
Architect/Specialist			DATE	REVISION	BY	APP'D					

Tue Feb 11 07:02:49 2014

BRIDGE AND STRUCTURES OFFICE

2/11/14 2/12/14

Washington State Department of Transportation

I-5
M ST TO PORTLAND AVE - HOV

MCKINLEY WAY OVER I-5 BRIDGE NO. 5/448

PIER 4 PLAN

BRIDGE SHEET NO. MC32

SHEET 958 OF 1763 SHEETS

TABLE OF ELEVATIONS	
ELEV. H	171.88
ELEV. I	172.00
ELEV. J	172.20

TABLE OF ELEVATIONS AT TOP OF GROUT PAD									
GIRDER	3A	3B	3C	3D	3E	3F	3G	3H	3I
GROUT PAD ELEV.	172.01	172.04	172.07	172.11	172.14	172.18	172.22	172.26	172.31

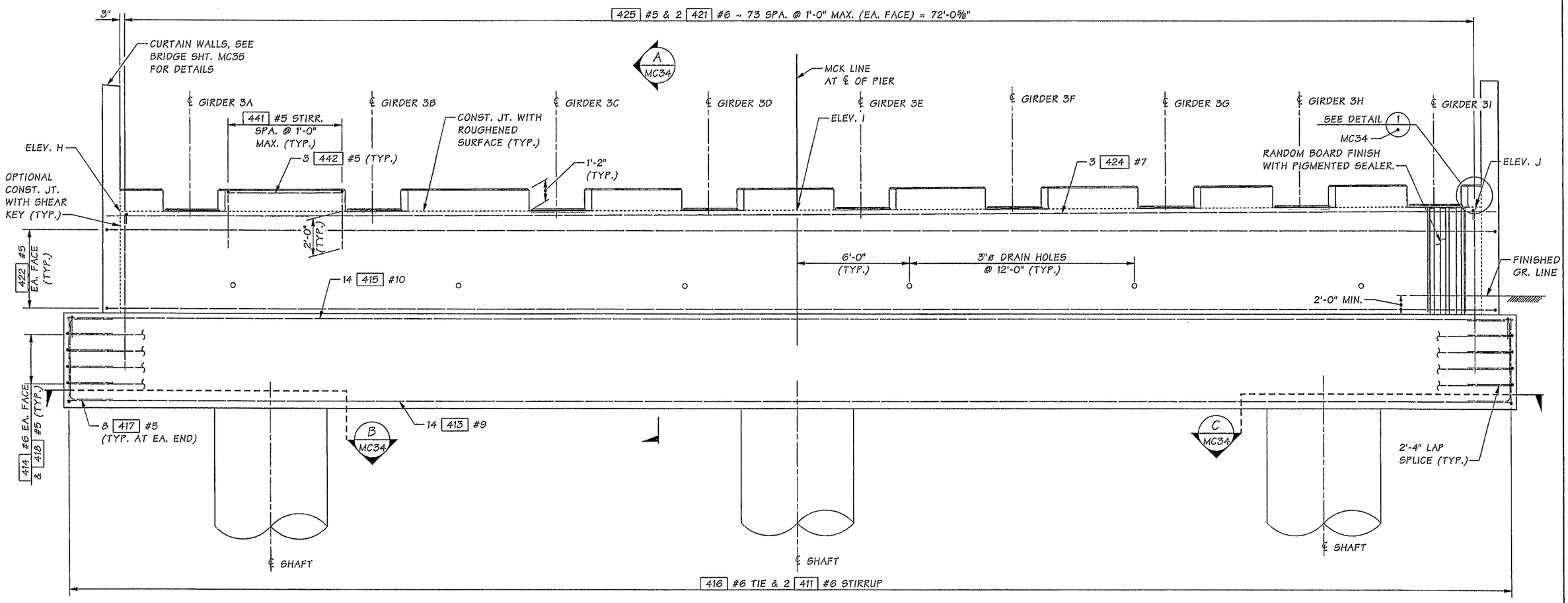

NOTES:

1. MINIMUM REINF. SPLICE LENGTH:
   #5 ~ 2'-4"
   #6 ~ 2'-9"
   #7 ~ 3'-6"
   #9 ~ 3'-3"
   #10 ~ 7'-4"

2. DO NOT SPLICE MORE THAN 50% OF REINF. AT ANY ONE LOCATION. STAGGER SPLICES AT A MINIMUM OF 2'-6".

PIER 4 - ELEVATION

CURTAIN WALL REINFOREMENT NOT SHOWN FOR CLARITY.

SR 5 FILE NO. 7452 SHEET MC33

Bridge Design Engr.	Khaleghi, B	M:\Y-Team\M ST TO PORTLAND\MCKINLEY AVE BRG\window files\PIER 4 ELEV.wnd							
Supervisor	Khaleghi, B				REGION NO.	STATE	FED. AID PROJ. NO.	SHEET NO.	TOTAL SHEETS
Designed By	Glassford, P 05/13				10	WASH.			
Checked By	Burnham, B 05/13				JOB NUMBER 12C501				
Detailed By	Andreotti, L 05/13								
Bridge Projects Engr.									
Prelim. Plan By									
Architect/Specialist		DATE	REVISION	BY	APP'D				

Tue Feb 11 07:02:50 2014

BRIDGE AND STRUCTURES OFFICE

2/11/14 2/12/14

Washington State Department of Transportation

I-5
M ST TO PORTLAND AVE - HOV

MCKINLEY WAY OVER I-5 BRIDGE NO. 5/448

PIER 4 ELEVATION

BRIDGE SHEET NO. MC33

SHEET 959 OF 1763 SHEETS

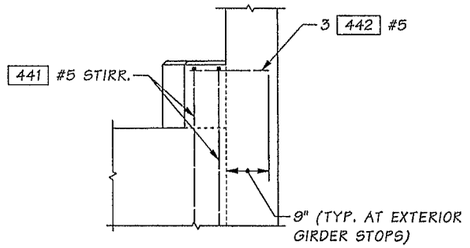

DETAIL 1 MC33

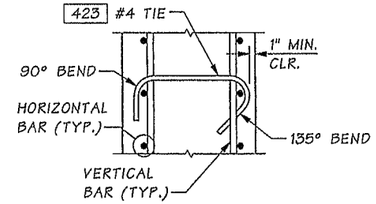

TIE BAR DETAIL

CONSTANT WIDTH SECTION
ALTERNATE 135° HOOK
EVERY OTHER BAR

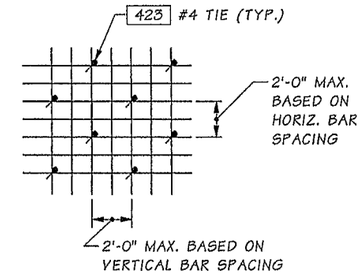

TIE BAR SPACING DETAIL

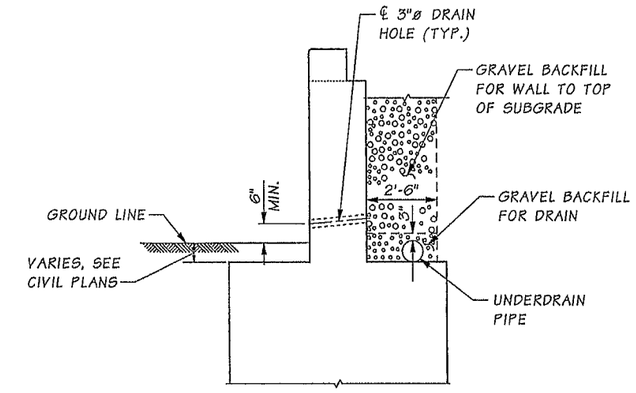

DRAINAGE DETAIL

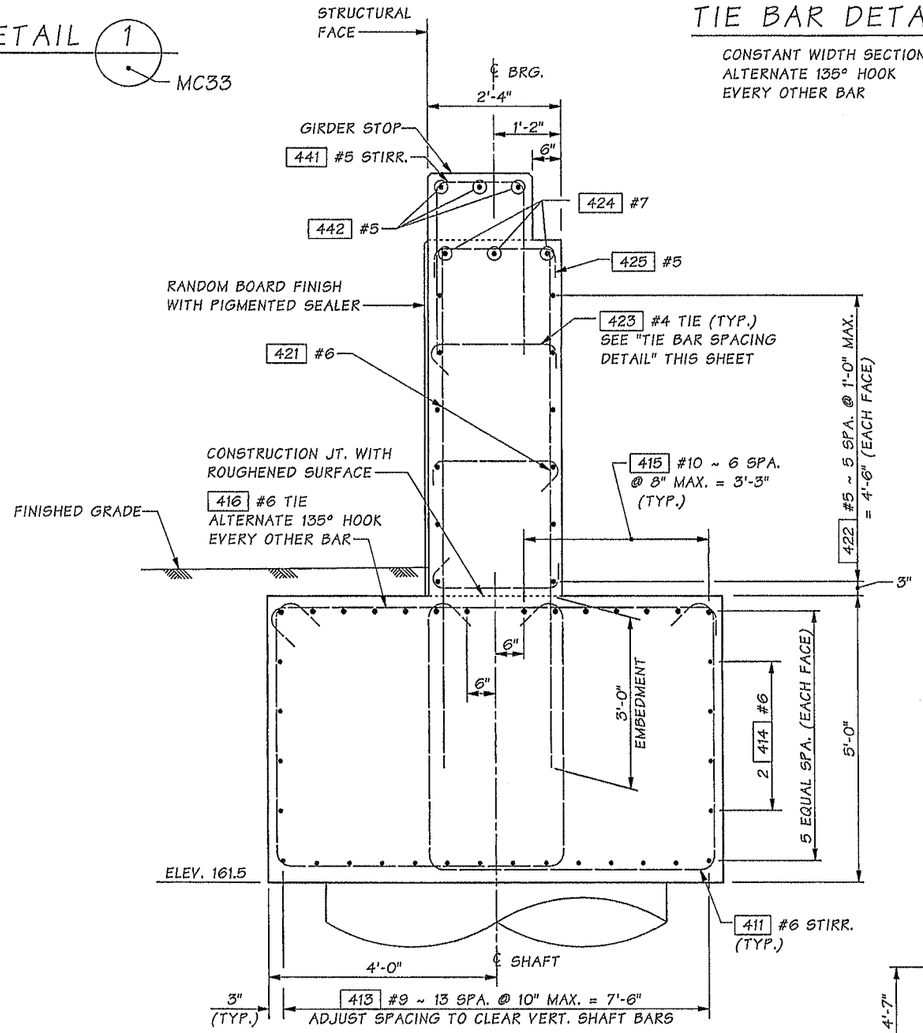

SECTION A MC33

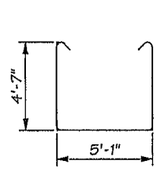

411 #6

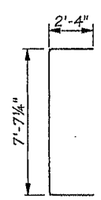

418 #5

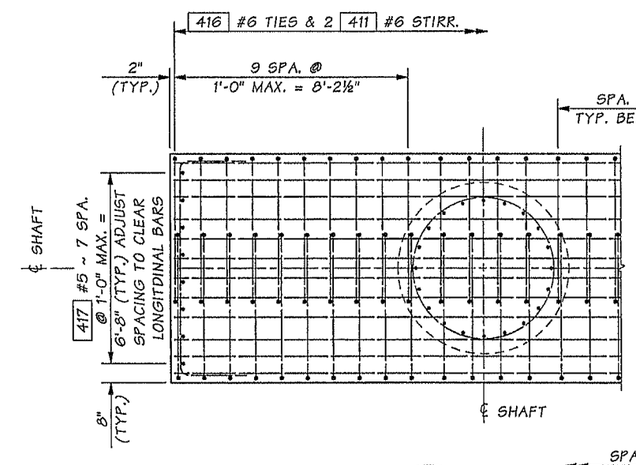

SECTION B MC33

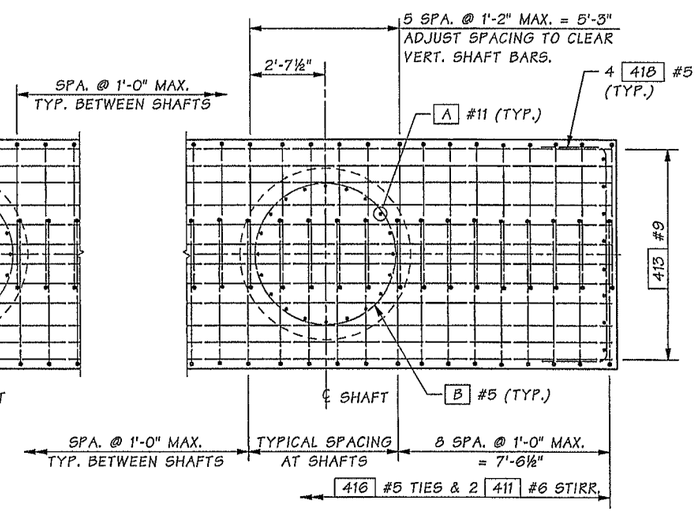

SECTION C MC33

SR 5 FILE NO. 7452 SHEET MC34

Bridge Design Engr.	Khaleghi, B	M:\Y-Team\M ST TO PORTLAND\MCKINLEY AVE BRG\window files\PIER 4 DETAILS.wnd	
Supervisor	Khaleghi, B		
Designed By	Glassford, P	05/13	
Checked By	Burnham, B	06/13	
Detailed By	Andreotti, L	06/13	
Bridge Projects Engr.			
Prelim. Plan By			
Architect/Specialist			

DATE	REVISION	BY	APP'D

REGION NO.	STATE	FED. AID PROJ. NO.	SHEET NO.	TOTAL SHEETS
10	WASH.			
JOB NUMBER 12C501				

Tue Feb 11 07:02:52 2014

PATRICK MICHAEL GLASSFORD — STATE OF WASHINGTON — 49572 — REGISTERED PROFESSIONAL ENGINEER — 2/11/14

BRIDGE AND STRUCTURES OFFICE

BIJAN KHALEGHI — STATE OF WASHINGTON — 27695 — PROFESSIONAL ENGINEER — 2/12/14

Washington State Department of Transportation

I-5
M ST TO PORTLAND AVE - HOV

MCKINLEY WAY OVER I-5 BRIDGE NO. 5/448

PIER 4 DETAILS

BRIDGE SHEET NO. MC34

SHEET 960 OF 1763 SHEETS

CURTAIN WALL ELEVATIONS				
WALL	"W"	"X"	"Y"	"Z"
RIGHT	178.68	178.62	179.03	178.82
LEFT	178.39	178.31	178.73	178.48

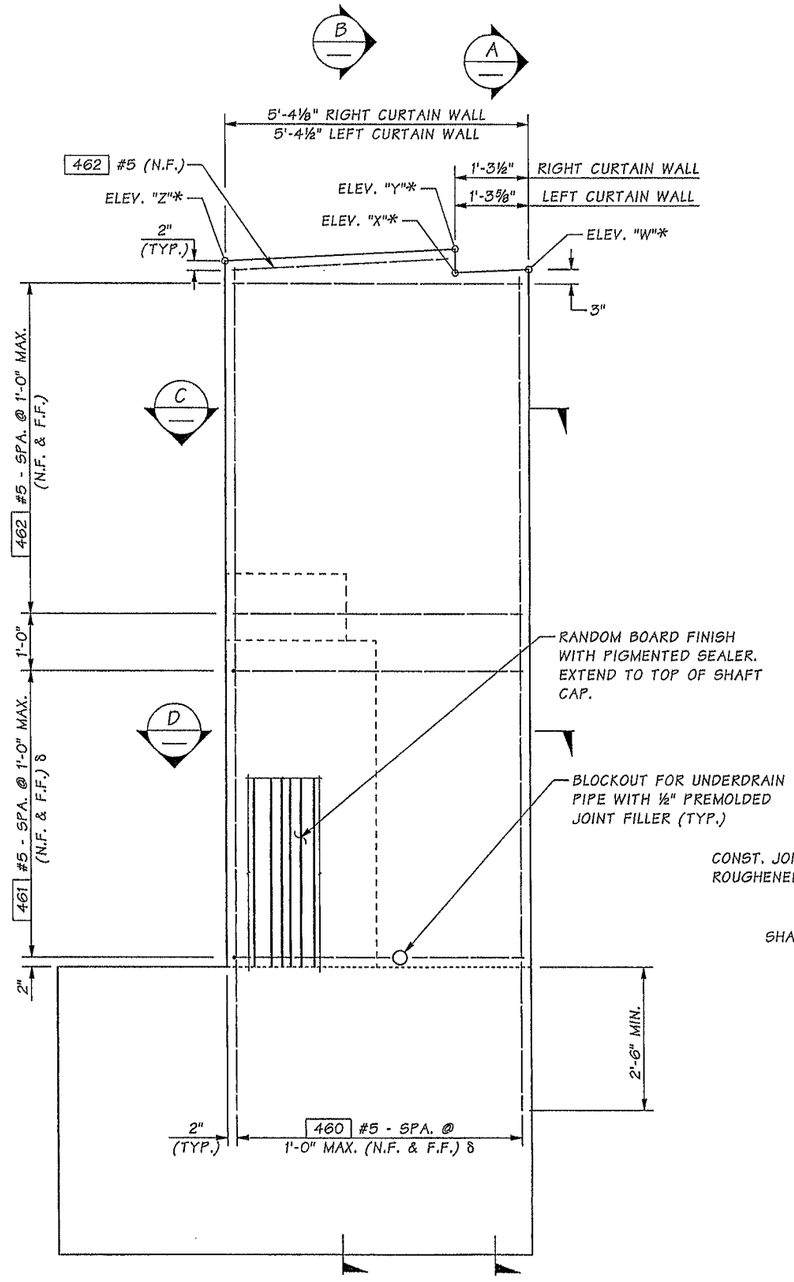

ELEVATION

SHAFT CAP REINFORCEMENT NOT SHOWN FOR CLARITY.
RIGHT CURTAIN WALL SHOWN, LEFT CURTAIN WALL SIMILAR.
CUT OR ADJUST REINF. AS NEEDED AROUND BLOCKOUT FOR UNDERDRAIN PIPE.

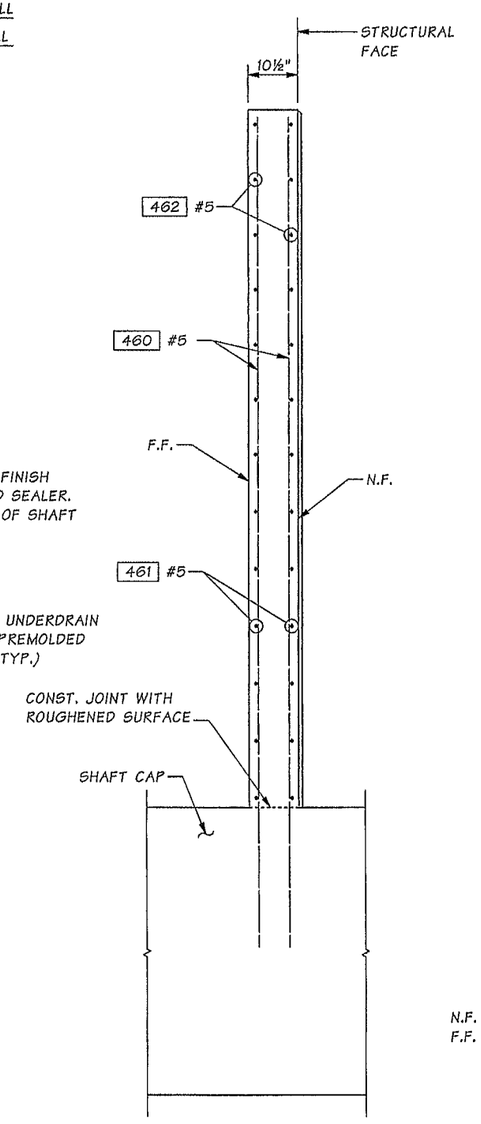

SECTION A

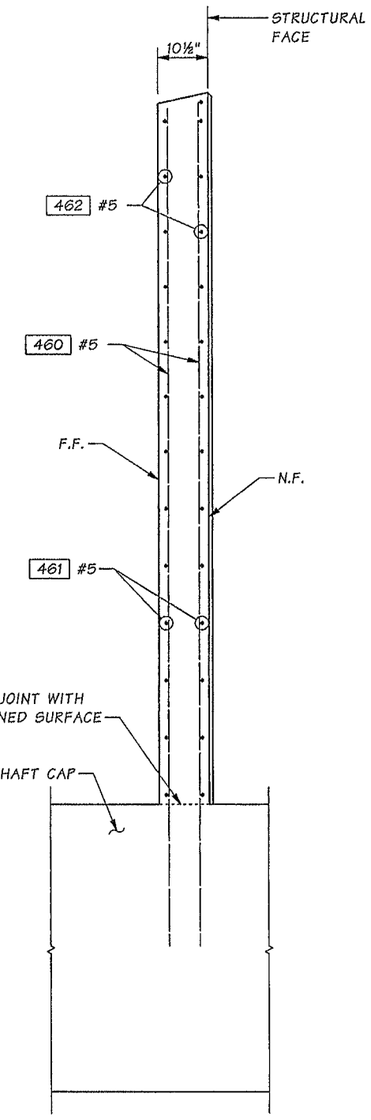

SECTION B

N.F. = NEAR FACE
F.F. = FAR FACE

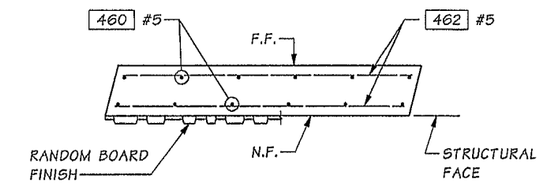

SECTION C

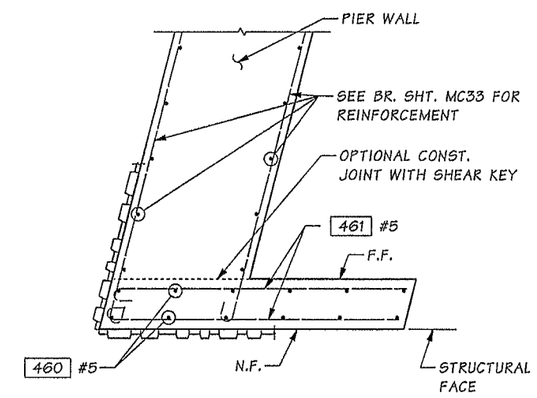

SECTION D

* ELEVATIONS SHOWN AT N.F. OF CURTAIN WALL.

δ CUT OR ADJUST REINFORCEMENT AS NEEDED AROUND BLOCKOUT FOR UNDERDRAIN PIPE.

Bridge Design Engr.	Khaleghi, B		
Supervisor	Khaleghi, B		
Designed By	Glassford, P	01/13	
Checked By	Burnham, B	05/13	
Detailed By	Andreotti, L	01/13	
Bridge Projects Engr.			
Prelim. Plan By			
Architect/Specialist			

M:\Y-Team\M ST TO PORTLAND\MCKINLEY AVE BRG\window files\PIER 4 CURTAIN WALL.wnd

DATE	REVISION	BY	APP'D

REGION NO.	STATE	FED. AID PROJ. NO.	SHEET NO.	TOTAL SHEETS
10	WASH.			
JOB NUMBER 12C501				

PATRICK MICHAEL GLASSFORD — STATE OF WASHINGTON — 19572 — REGISTERED PROFESSIONAL ENGINEER — 2/11/14

BRIDGE AND STRUCTURES OFFICE

BILLAN KHALEGHI — STATE OF WASHINGTON — REGISTERED PROFESSIONAL ENGINEER — 2/12/14

Washington State Department of Transportation

I-5
M ST TO PORTLAND AVE - HOV

MCKINLEY WAY OVER I-5 BRIDGE NO. 5/448

PIER 4 CURTAIN WALL

BRIDGE SHEET NO. MC35

SHEET 961 OF 1763 SHEETS

SR 5 FILE NO. 7452 SHEET MC35

Tue Feb 11 07:02:53 2014

CURVE DATA					
P.I. STATIONS	DELTA	RADIUS	TANGENT	LENGTH	BK. TAN. BEARING
WALL-A 10+11.98	1°55'21" LT.	714.12'	11.98'	23.96'	S 48°35'38" E
WALL-B 20+15.28	34°14'27" RT.	29.97'	9.23'	17.91'	S 47°48'39" E

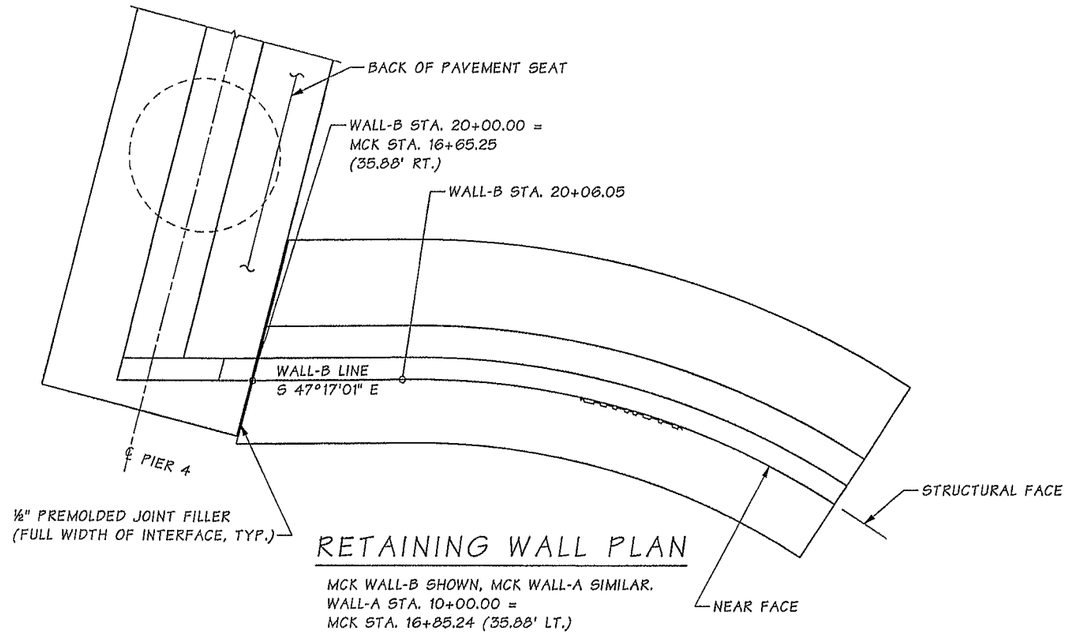

RETAINING WALL PLAN

MCK WALL-B SHOWN, MCK WALL-A SIMILAR.
WALL-A STA. 10+00.00 =
MCK STA. 16+85.24 (35.88' LT.)

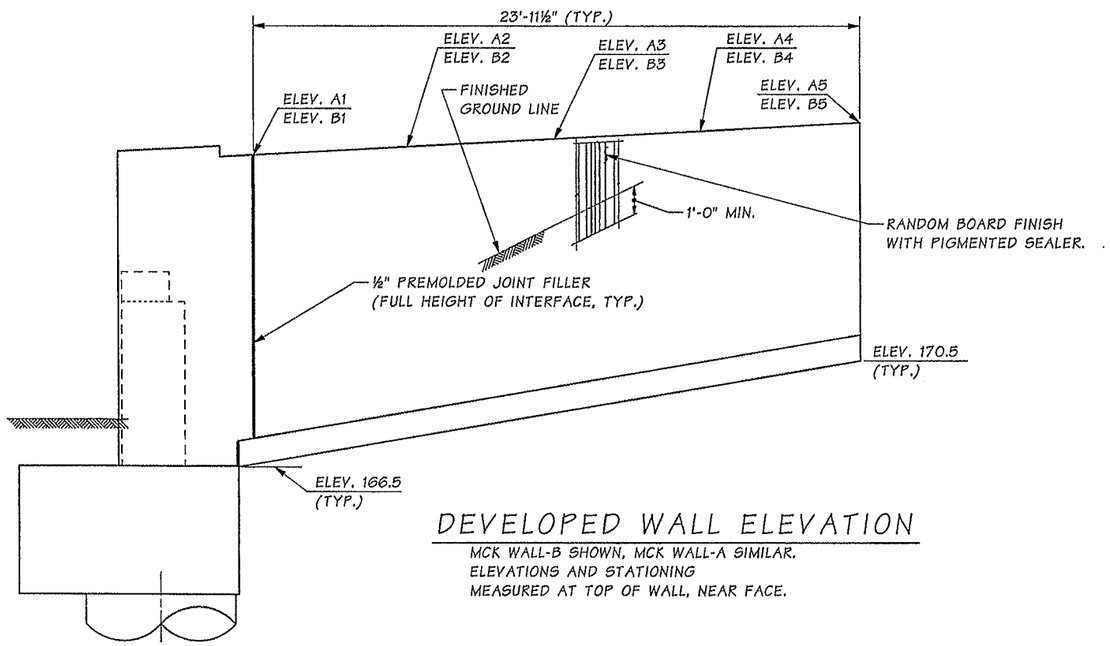

DEVELOPED WALL ELEVATION

MCK WALL-B SHOWN, MCK WALL-A SIMILAR.
ELEVATIONS AND STATIONING
MEASURED AT TOP OF WALL, NEAR FACE.

WALL ELEVATIONS MEASURED AT NEAR FACE OF WALL.			
LOCATION	WALL	WALL STATION	ELEVATION
A1	MCK WALL-A	10+00.00	178.40
A2		10+05.99	178.77
A3		10+11.98	179.15
A4		10+17.97	179.54
A5		10+23.96	179.93
B1	MCK WALL-B	20+00.00	178.69
B2		20+05.99	179.01
B3		20+11.98	179.34
B4		20+17.97	179.69
B5		20+23.96	180.04

SUMMARY OF QUANTITIES MCK WALL-A			
STD. ITEM NO.	STANDARD ITEM	UNIT	QUANTITY
1160	UNDERDRAIN PIPE 6 IN. DIAM.	LF	24
4006	STRUCTURE EXC. CLASS A	CY	90
4013	SHORING OR EXTRA EXC. CLASS A	SF	739
4025	GRAVEL BACKFILL WALLS	CY	42
7014	GRAVEL BACKFILL DRAIN	CY	1
7550	CONSTRUCTION GEOTEXTILE	SY	20
4139	CONC. CLASS 4000 FOR RETAINING WALL	CY	20
4150	STD. REINF. BAR FOR RETAINING WALL	LBS	1246

SUMMARY OF QUANTITIES MCK WALL-B			
STD. ITEM NO.	STANDARD ITEM	UNIT	QUANTITY
1160	UNDERDRAIN PIPE 6 IN. DIAM.	LF	24
4006	STRUCTURE EXC. CLASS A	CY	90
4013	SHORING OR EXTRA EXC. CLASS A	SF	836
4025	GRAVEL BACKFILL WALLS	CY	41
7014	GRAVEL BACKFILL DRAIN	CY	1
7550	CONSTRUCTION GEOTEXTILE	SY	20
4139	CONC. CLASS 4000 FOR RETAINING WALL	CY	20
4150	STD. REINF. BAR FOR RETAINING WALL	LBS	1263

NOTES:

1. SEE STD. PLAN D-10.10-01 FOR TYPE 1 RETAINING WALL DETAILS EXCEPT WALL HEIGHT SHALL BE AS SHOWN ON THIS SHEET.
2. USE THE "H" DIMENSION 13' IN STD. PLAN D-10.10-01 FOR WALL DIMENSIONS AND REINFORCING DETAILS.

SR 5 FILE NO. 7452 SHEET MC36

Bridge Design Engr.	Khaleghi, B		
Supervisor	Khaleghi, B		
Designed By	Glassford, P	05/13	
Checked By	Burnham, B	05/13	
Detailed By	Andreotti, L	05/13	
Bridge Projects Engr.			
Prelim. Plan By			
Architect/Specialist			

M:\Y-Team\M ST TO PORTLAND\MCKINLEY AVE BRG\window files\RETAINING WALL PIER 4.wnd

DATE	REVISION	BY	APP'D

REGION NO.	STATE	FED. AID PROJ. NO.	SHEET NO.	TOTAL SHEETS
10	WASH.			
JOB NUMBER 12C501				

PATRICK MICHAEL GLASSFORD, STATE OF WASHINGTON, 49572, REGISTERED PROFESSIONAL ENGINEER 2/11/14

BRIDGE AND STRUCTURES OFFICE

BIJAN KHALEGHI, STATE OF WASHINGTON, 27094, REGISTERED PROFESSIONAL ENGINEER 2/12/14

Washington State Department of Transportation

I-5
M ST TO PORTLAND AVE - HOV
MCKINLEY WAY OVER I-5 BRIDGE NO. 5/448
PIER 4
RETAINING WALL

BRIDGE SHEET NO. MC36

SHEET 962 OF 1763 SHEETS

Tue Feb 11 07:02:54 2014

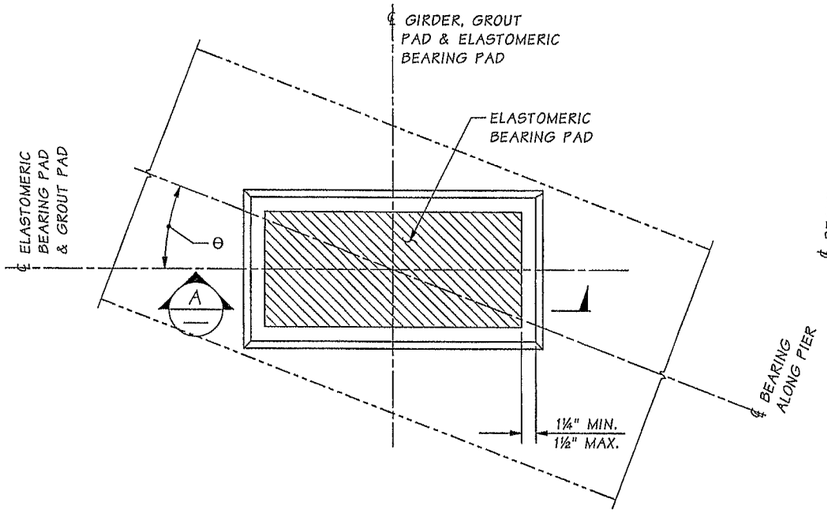

GROUT PAD DETAIL

PIER 1 SHOWN, PIER 4 SIMILAR.
GIRDER NOT SHOWN FOR CLARITY

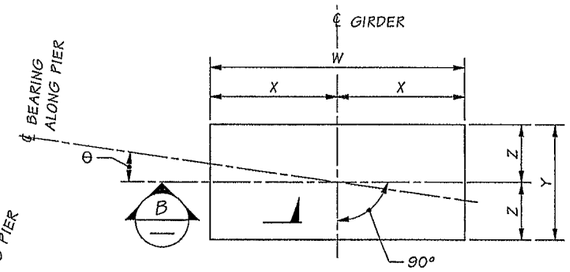

ELASTOMERIC BEARING PAD

LAMINATED ELASTOMERIC BEARING PAD
(6 SHIMS - PIER 1 AND PIER 4).

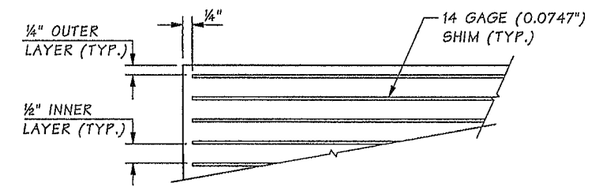

SECTION B

BEARING PAD GEOMETRY		
	PIER 1	PIER 4
W	2'-3"	2'-8"
X	1'-1½"	1'-4"
Y	1'-0"	1'-0"
Z	6"	6"
θ	21°	VARIES

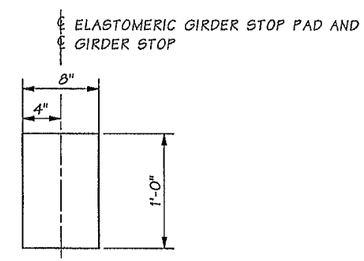

ELASTOMERIC GIRDER STOP PAD

SHEAR MODULUS = 165 PSI AT 73°

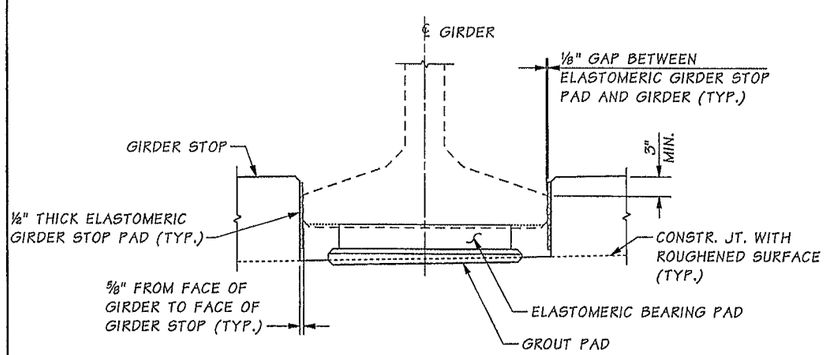

SECTION A

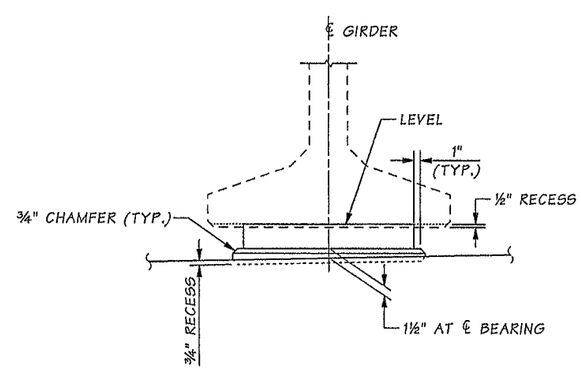

GROUT PAD ELEVATION

BEARING DESIGN TABLE AASHTO METHOD B DESIGN		
SERVICE - I LIMIT STATE		
	PIER 1	PIER 4
DEAD LOAD (DL) REACTION	156 KIPS	257 KIPS
LIVE LOAD REACTION (W/O IMPACT)	69 KIPS	102 KIPS
UNLOADED HEIGHT	3.45 IN	3.45 IN
LOADED HEIGHT (DL)	3.43 IN	3.42 IN
SHEAR MODULUS AT 73°F	165 PSI	165 PSI

NOTES:

1. GIRDER STOPS SHALL BE CONSTRUCTED AFTER GIRDER PLACEMENT.
2. THE ELASTOMERIC GIRDER STOP PADS SHALL BE BONDED TO THE GIRDER STOPS WITH AN APPROVED ADHESIVE.

SR 5 FILE NO. 7452 SHEET MC37

Bridge Design Engr.	Khaleghi, B	
Supervisor	Khaleghi, B	
Designed By	Burnham, B	05/13
Checked By	Glassford, P	05/14
Detailed By	Andreotti, L	05/13
Bridge Projects Engr.		
Prelim. Plan By		
Architect/Specialist		

M:\Y-Team\M ST TO PORTLAND\MCKINLEY AVE BRG\window files\BEARING DETAIL.wnd

DATE	REVISION	BY	APP'D

REGION NO.	STATE	FED. AID PROJ. NO.	SHEET NO.	TOTAL SHEETS
10	WASH.			

JOB NUMBER 12C501

Tue Feb 11 07:02:56 2014

BRIAN DAVID BURNHAM — STATE OF WASHINGTON — 48136 — REGISTERED PROFESSIONAL ENGINEER — 2/11/14

BRIDGE AND STRUCTURES OFFICE

BIJAN KHALEGHI — STATE OF WASHINGTON — 27595 — REGISTERED PROFESSIONAL ENGINEER — 2/12/14

Washington State Department of Transportation

I-5
M ST TO PORTLAND AVE - HOV

MCKINLEY WAY OVER I-5 BRIDGE NO. 5/448

BEARING DETAIL

BRIDGE SHEET NO. MC37

SHEET 963 OF 1763 SHEETS

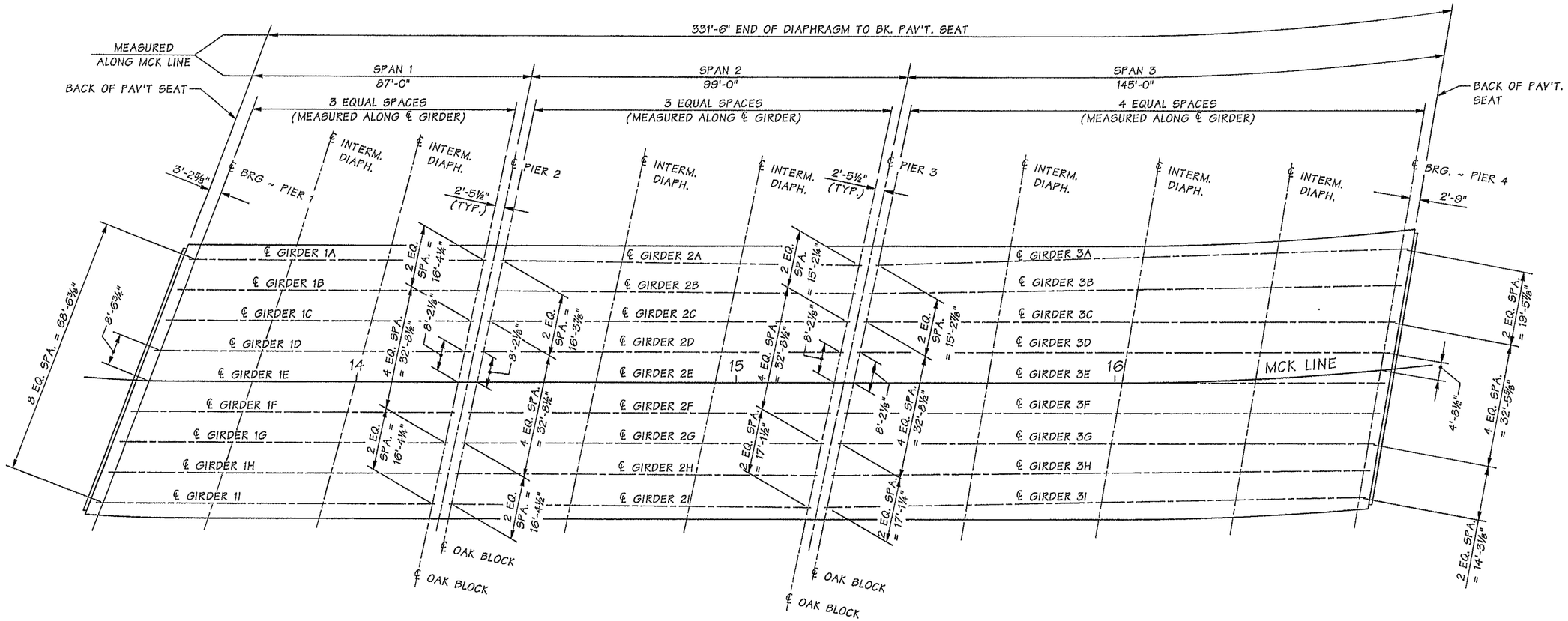

FRAMING PLAN

BEARING AT PIER 1 IS N 68°54'0" E
BEARING AT PIERS 2 & 3 ARE N 59°55'47" E
BEARING AT PIER 4 IS N 57°44'26" E

NOTE:

1. ALL DIMENSIONS ARE MEASURED ALONG OR NORMAL TO THE ℄ OF BEARING OR ℄ OAK BLOCK, UNLESS OTHERWISE NOTED.

SR 5 FILE NO. 7452 SHEET MC38

Bridge Design Engr.	Khaleghi, B		M:\Y-Team\M ST TO PORTLAND\MCKINLEY AVE BRG\window files\FRAMING PLAN.wnd
Supervisor	Khaleghi, B		
Designed By	Burnham, B	01/13	
Checked By	Glassford, P	05/13	
Detailed By	Andreotti, L	01/13	
Bridge Projects Engr.			
Prelim. Plan By			
Architect/Specialist			

DATE	REVISION	BY	APP'D

REGION NO.	STATE	FED. AID PROJ. NO.	SHEET NO.	TOTAL SHEETS
10	WASH.			
JOB NUMBER 12C501				

BRIAN DAVID BURNHAM STATE OF WASHINGTON 48130 REGISTERED PROFESSIONAL ENGINEER 2/11/14

BRIDGE AND STRUCTURES OFFICE

BRIAN KHALEGHI STATE OF WASHINGTON 27062 REGISTERED PROFESSIONAL ENGINEER 2/12/14

Washington State Department of Transportation

I-5
M ST TO PORTLAND AVE - HOV
MCKINLEY WAY OVER I-5 BRIDGE NO. 5/448

FRAMING PLAN

BRIDGE SHEET NO. MC38

SHEET 964 OF 1763 SHEETS

Tue Feb 11 07:02:57 2014

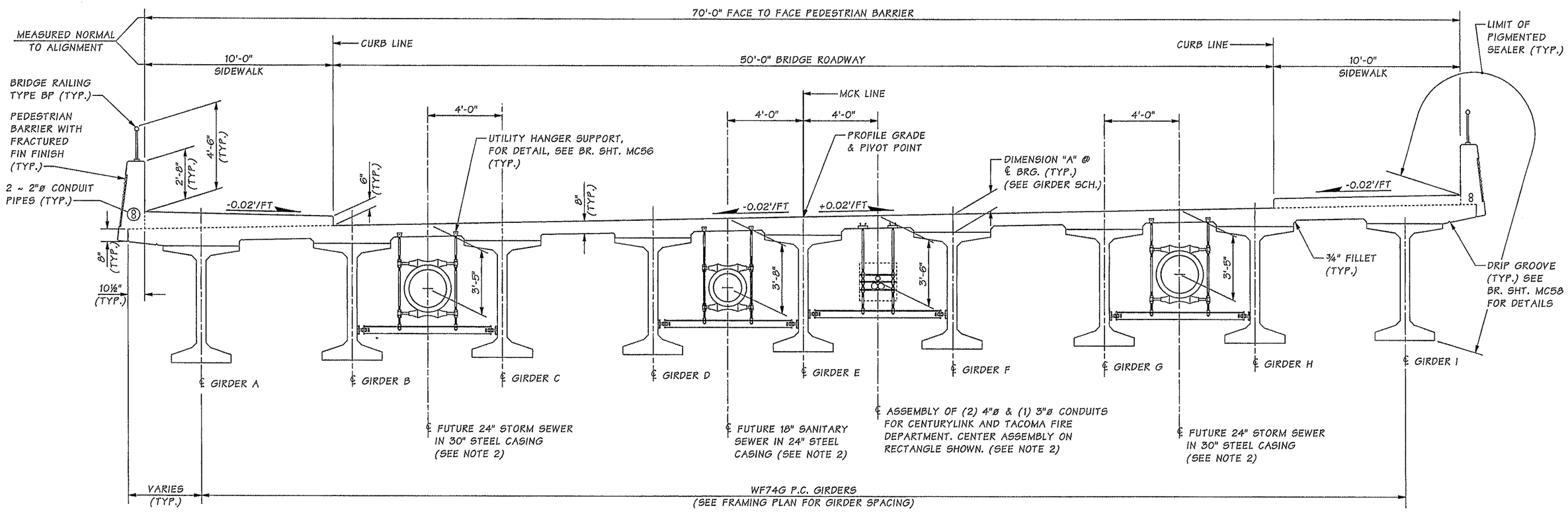

TYPICAL SECTION

SHOWN NEAR MIDSPAN OF SPAN 1.

NOTES:

1. TRANSVERSE DIMENSIONS ARE MEASURED NORMAL TO GIRDER ℄ U.N.O.
2. COORDINATE POSTION OF BLOCKOUTS IN THE END AND INTERMEDIATE DIAPHRAGMS WITH THE UTILITY LINES.

SR 5 FILE NO. 7452 SHEET MC39

Bridge Design Engr.	Khaleghi, B		M:\Y-Team\M ST TO PORTLAND\MCKINLEY AVE BRG\window files\TYPICAL SECTION.wnd
Supervisor	Khaleghi, B		
Designed By	Burnham, B	05/13	
Checked By	Glassford, P	05/13	
Detailed By	Andreotti, L	05/13	
Bridge Projects Engr.			
Prelim. Plan By			
Architect/Specialist			

DATE	REVISION	BY	APP'D

REGION NO.	STATE	FED. AID PROJ. NO.	SHEET NO.	TOTAL SHEETS
10	WASH.			
JOB NUMBER 12C501				

BRIAN DAVID BURNHAM STATE OF WASHINGTON 48186 REGISTERED PROFESSIONAL ENGINEER 2/11/14

BRIDGE AND STRUCTURES OFFICE

ALLAN KHALEGHI STATE OF WASHINGTON 27694 REGISTERED PROFESSIONAL ENGINEER 2/12/14

Washington State Department of Transportation

I-5
M ST TO PORTLAND AVE - HOV

MCKINLEY WAY OVER I-5 BRIDGE NO. 5/448

TYPICAL SECTION

BRIDGE SHEET NO. MC39

SHEET 965 OF 1763 SHEETS

Tue Feb 11 07:02:58 2014

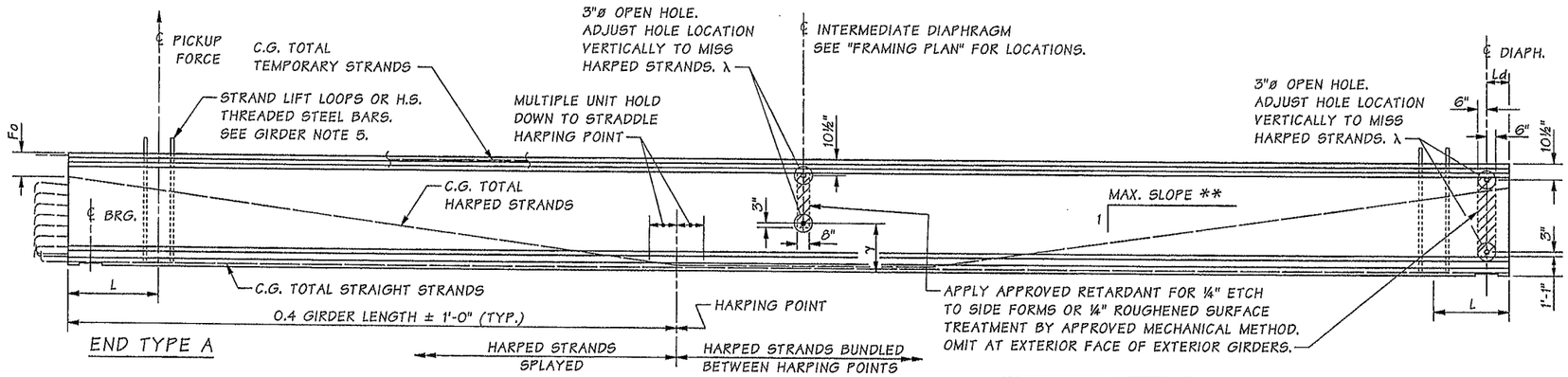

GIRDER ELEVATION

γ PARTIAL DEPTH INT. DIAPHRAGM	γ FULL DEPTH INT. DIAPHRAGM
2'-8"	1'-2⅛"

** 8 : 1 MAXIMUM SLOPE FOR EACH HARPED STRAND

λ SEE GIRDER NOTE 9.

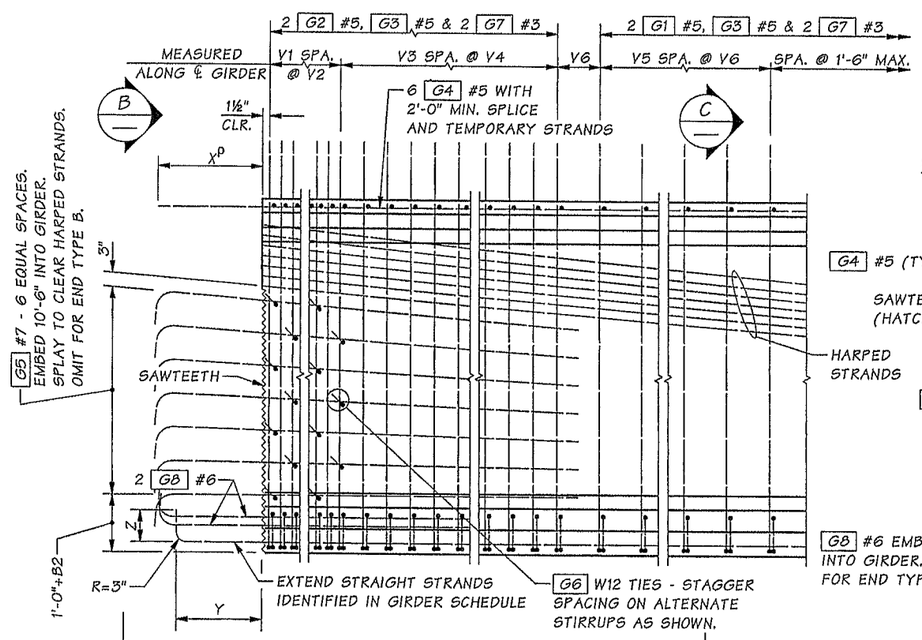

TYPICAL END ELEVATION

END TYPE C SHOWN, OTHER END TYPES SIMILAR.

ρ - X DIMENSION SHALL BE 1'-4" FOR G4 AT END TYPE A ONLY.

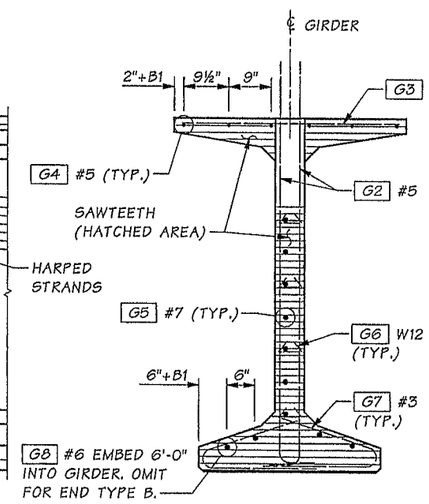

VIEW B

STRANDS NOT SHOWN

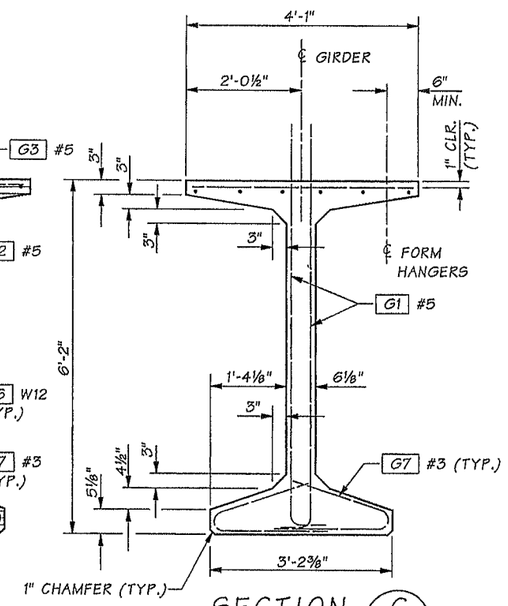

SECTION C

STRANDS NOT SHOWN

END TYPE PROPERTIES

END TYPE	BEARING RECESS	X	Y	Z	SAWTEETH
A	YES	1'-3"ρ	1'-6"	9"	YES
B	YES	0"	0"	0"	NO
C	NO	1'-10"	1'-6"	9"	YES
D	NO	1'-10"	SEE "STRAND EXTENSION DETAIL"		YES

BAR END PLACEMENT FOR END TYPE C

ENDS AHEAD ON STATION	ENDS BACK ON STATION
G5 BARS LEFT OF ℄	G5 BARS RIGHT OF ℄
B1 = 0" (G4 , G8)	B1 = 1½" (G4 , G8)
B2 = 0" (G5)	B2 = 3" (G5)

BENDING DIAGRAM (ALL DIMENSIONS ARE OUT TO OUT)

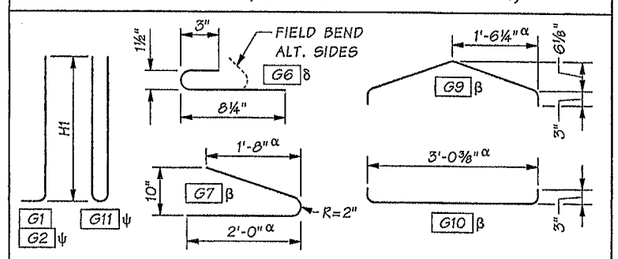

α - VARIES FOR SKEWED ENDS.
δ - #3 OR #4 MAY BE SUBSTITUTED. FIELD BENDING IS OPTIONAL.
β - PAIRS OF G7 BARS, OR G9 AND G10 BARS, MAY BE USED INTERCHANGEABLY AS BOTTOM FLANGE TIES.
ψ - 1 G11 MAY BE SUBSTITUTED FOR 2 G2 WITHIN THE V1 SPA. @ V2.

Bridge Design Engr.	Khaleghi, B	M:\Y-Team\M ST TO PORTLAND\MCKINLEY AVE BRG\window files\WF74G GIR SHT 1.wnd	
Supervisor	Khaleghi, B		
Designed By	Burnham, B	05/13	
Checked By	Glassford, P	05/13	
Detailed By	Andreotti, L	05/13	
Bridge Projects Engr.			
Prelim. Plan By			
Architect/Specialist			

DATE	REVISION	BY	APP'D

REGION NO.	STATE	FED. AID PROJ. NO.	SHEET NO.	TOTAL SHEETS
10	WASH.			
JOB NUMBER 12C501				

BRIAN DAVID BURNHAM, STATE OF WASHINGTON, 45156, REGISTERED PROFESSIONAL ENGINEER 2/11/14

BRIDGE AND STRUCTURES OFFICE

BRIAN KHALEGHI, STATE OF WASHINGTON, 37805, PROFESSIONAL ENGINEER 2/12/14

Washington State Department of Transportation

I-5
M ST TO PORTLAND AVE - HOV
MCKINLEY WAY OVER I-5 BRIDGE NO. 5/448
WF74G GIRDER DETAILS 1 OF 4

BRIDGE SHEET NO. MC40

SHEET 966 OF 1763 SHEETS

SR 5 FILE NO. 7452 SHEET MC40

Tue Feb 11 07:02:59 2014

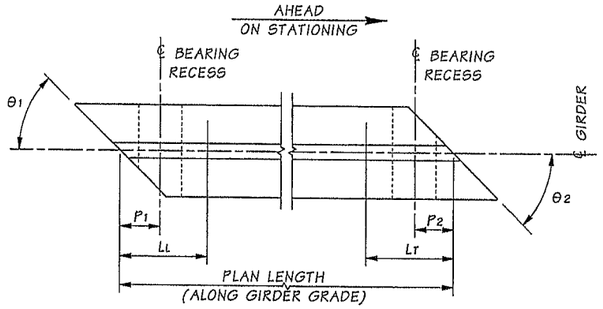

END 1 END 2

GIRDER SCHEDULE LEGEND

LL AND LT ARE SHIPPING SUPPORT LOCATIONS AT LEADING AND TRAILING ENDS, RESPECTIVELY.

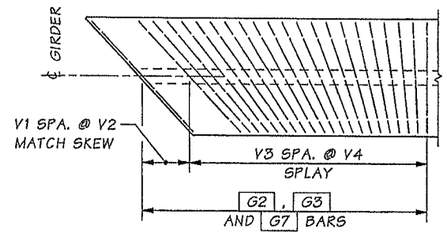

TRANSVERSE REINFORCING SKEWED ENDS

LENGTH OF G3 AND G7 VARY WITH SKEW.
ONLY TRANSVERSE REINFORCEMENT SHOWN.

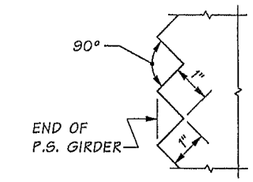

SAWTOOTH DETAILS

SAWTEETH ARE FULL WIDTH - USE SAWTOOTH KEYS FROM BOTTOM OF BOTTOM FLANGE TO BOTTOM OF LOWEST HARPED STRAND AS WELL AS TOP FLANGE ADJACENT TO HARPED STRANDS.

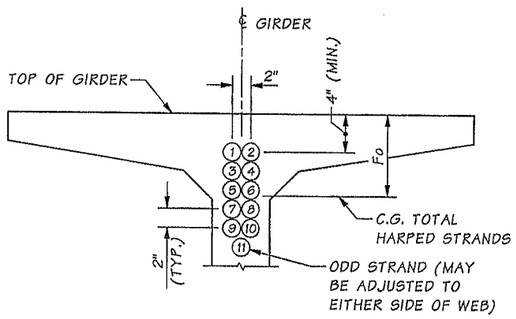

STRAND PATTERN AT GIRDER END

HARPED STRAND LOCATION SEQUENCE SHALL BE AS SHOWN (1), (2) ETC.

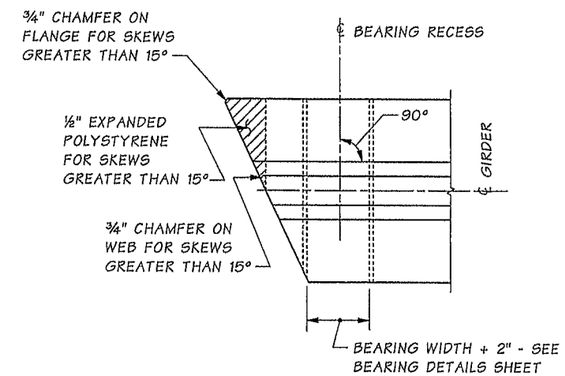

PLAN

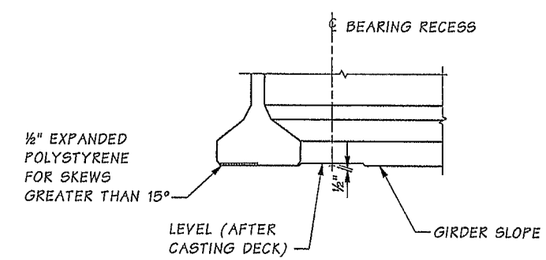

ELEVATION

BEARING RECESS AND BOTTOM FLANGE SPALL PROTECTION DETAIL

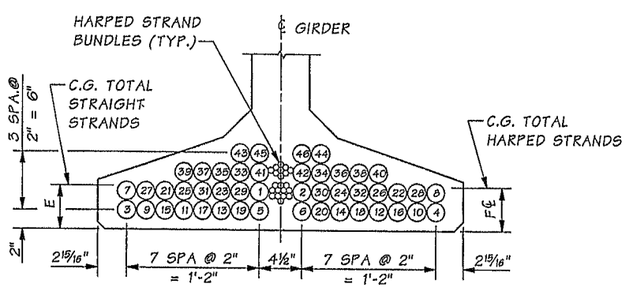

STRAND PATTERN AT ℄ SPAN

STRAIGHT STRAND LOCATION SEQUENCE SHALL BE AS SHOWN (1), (2) ETC.

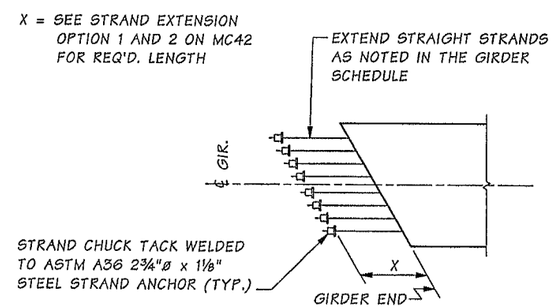

STRAND EXTENSION DETAIL

ANCHOR STRAND WITH TWO PIECE WEDGES BEFORE GIRDER ERECTION. VERIFY WEDGES ARE SEATED TIGHTLY IMMEDIATELY BEFORE PLACING DIAPHRAGM CONCRETE.

SR 5 FILE NO. 7452 SHEET MC41

Bridge Design Engr.	Khaleghi, B		
Supervisor	Khaleghi, B		
Designed By	Burnham, B	05/13	
Checked By	Glassford, P	05/13	
Detailed By	Andreotti, L	05/13	
Bridge Projects Engr.			
Prelim. Plan By			
Architect/Specialist			

M:\Y-Team\M ST TO PORTLAND\MCKINLEY AVE BRG\window files\WF74G GIR SHT 2.wnd

DATE	REVISION	BY	APP'D

REGION NO.	STATE	FED. AID PROJ. NO.	SHEET NO.	TOTAL SHEETS
10	WASH.			
JOB NUMBER 12C501				

Tue Feb 11 07:03:01 2014

BRIAN DAVID BURNHAM STATE OF WASHINGTON 46130 REGISTERED PROFESSIONAL ENGINEER 2/11/14

BRIDGE AND STRUCTURES OFFICE

BIJAN KHALEGHI STATE OF WASHINGTON 27695 REGISTERED PROFESSIONAL ENGINEER 2/12/14

Washington State Department of Transportation

I-5
M ST TO PORTLAND AVE - HOV

MCKINLEY WAY OVER I-5 BRIDGE NO. 5/448

WF74G GIRDER DETAILS
2 OF 4

BRIDGE SHEET NO. MC41

SHEET 967 OF 1763 SHEETS

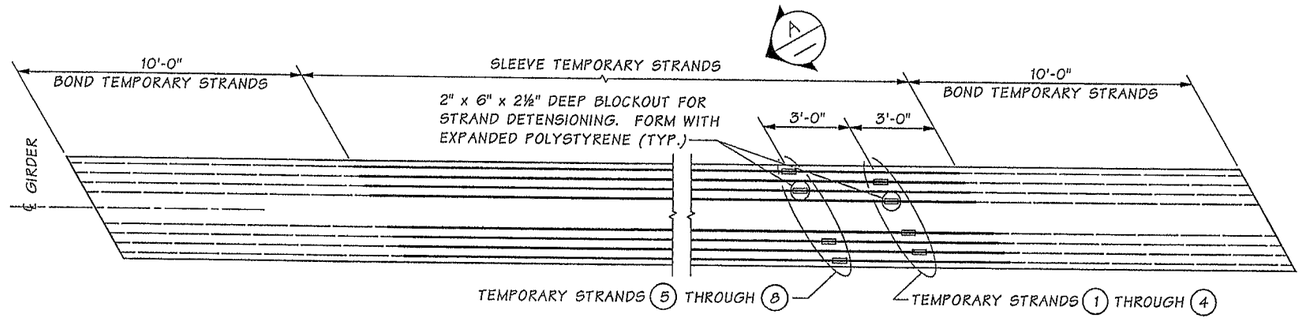

PLAN
PRETENSIONED TEMPORARY TOP STRANDS ALTERNATE

SEE "GIRDER SCHEDULE" FOR NUMBER OF TEMPORARY STRANDS REQUIRED.

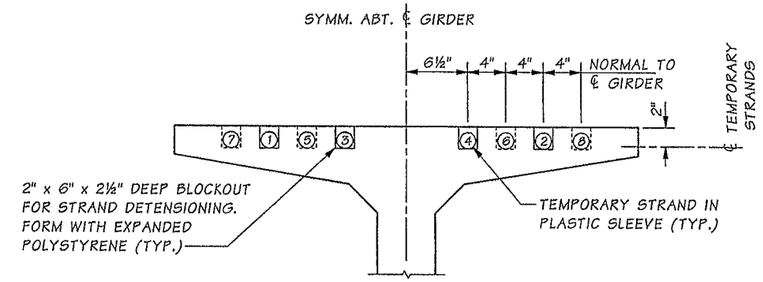

SECTION A

NOTES:

1. TEMPORARY STRAND LOCATION SEQUENCE SHALL BE AS SHOWN 1, 2 ETC.
2. STRANDS 7 AND 8 ARE NOT AVAILABLE FOR POST-TENSIONED ALTERNATE.

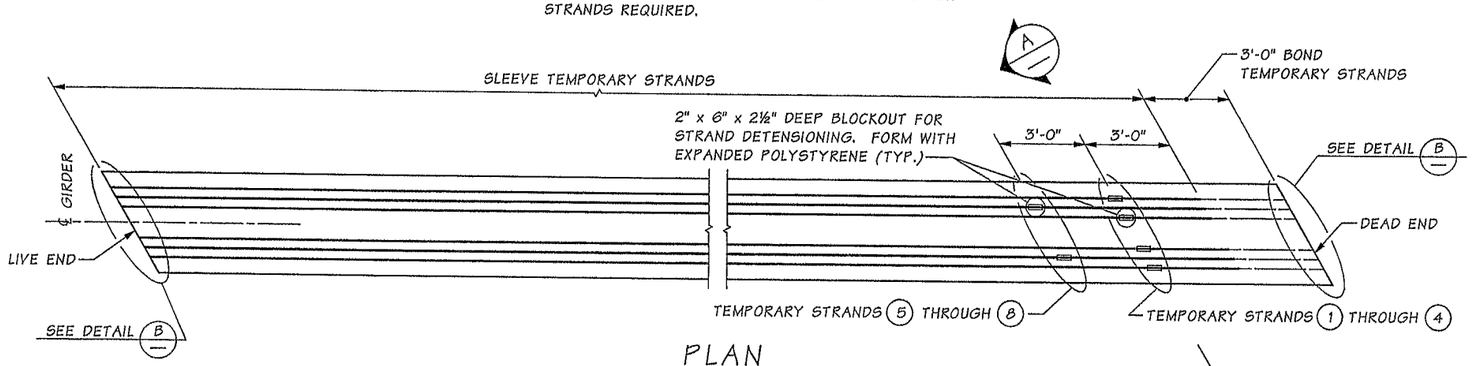

PLAN
POST-TENSIONED TEMPORARY TOP STRAND ALTERNATE

SEE "GIRDER SCHEDULE" FOR NUMBER OF TEMPORARY STRANDS REQUIRED. POST-TENSIONED ALTERNATE ONLY AVAILABLE FOR 6 OR FEWER TEMPORARY STRANDS.

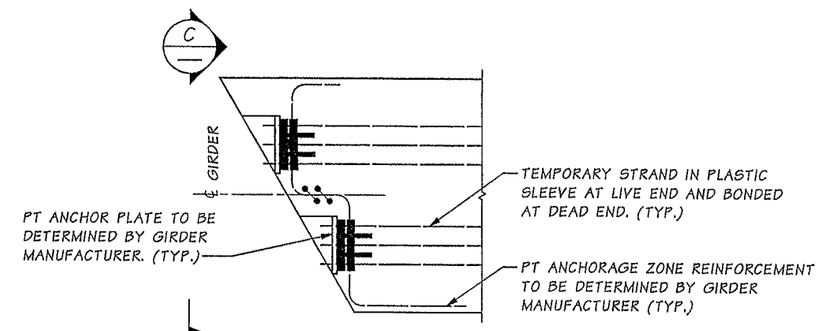

DETAIL B

LIVE END SHOWN
DEAD END SIMILAR.

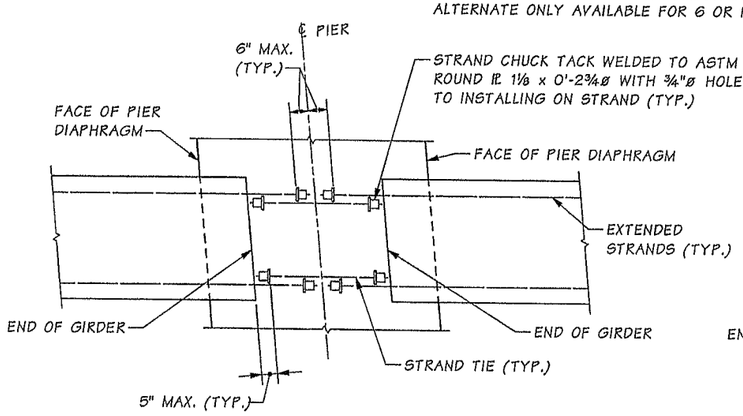

STRAND EXTENSION OPTION 1

GIRDERS A, B, H AND I MUST USE THIS OPTION

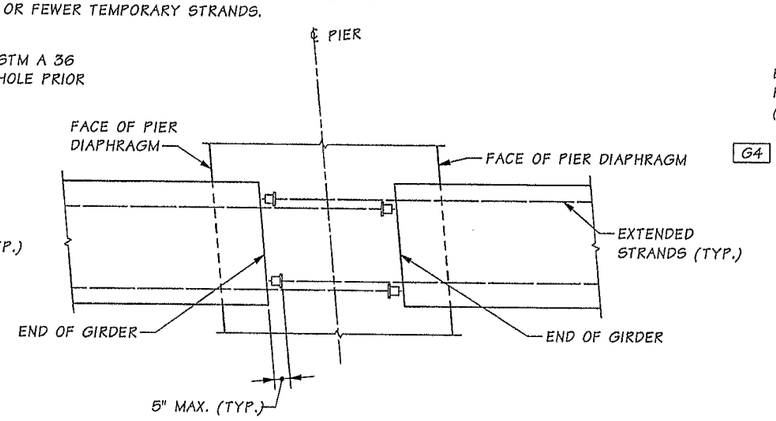

STRAND EXTENSION OPTION 2

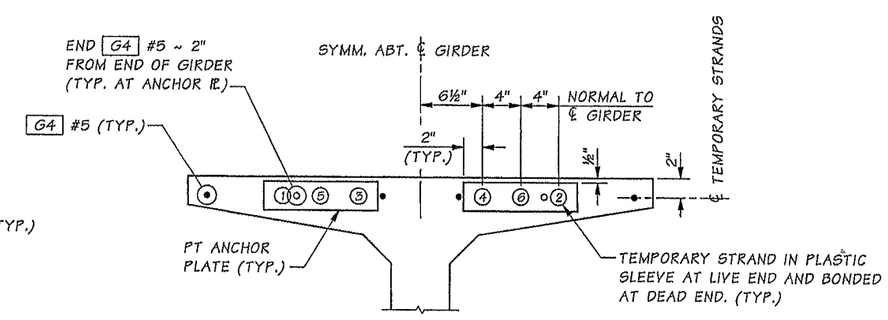

VIEW C

TEMPORARY STRAND LOCATION SEQUENCE SHALL BE AS SHOWN 1, 2 ETC.

SR 5 FILE NO. 7452 SHEET MC42

Bridge Design Engr.	Khaleghi, B		M:\Y-Team\M ST TO PORTLAND\MCKINLEY AVE BRG\window files\WF74G GIR SHT 3.wnd
Supervisor	Khaleghi, B		
Designed By	Burnham, B	05/13	
Checked By	Glassford, P	05/13	
Detailed By	Andreotti, L	05/13	
Bridge Projects Engr.			
Prelim. Plan By			
Architect/Specialist			

Tue Feb 11 07:03:03 2014

DATE	REVISION	BY	APP'D

REGION NO.	STATE	FED. AID PROJ. NO.	SHEET NO.	TOTAL SHEETS
10	WASH.			
JOB NUMBER 12C501				

BRIAN DAVID BURNHAM, STATE OF WASHINGTON, 48198, REGISTERED PROFESSIONAL ENGINEER 2/11/14

BRIDGE AND STRUCTURES OFFICE

BIJAN KHALEGHI, STATE OF WASHINGTON, 27695, REGISTERED PROFESSIONAL ENGINEER 2/12/14

Washington State Department of Transportation

I-5
M ST TO PORTLAND AVE - HOV

MCKINLEY WAY OVER I-5 BRIDGE NO. 5/448

WF74G GIRDER DETAILS
3 OF 4

BRIDGE SHEET NO. MC42

SHEET 968 OF 1763 SHEETS

GIRDER SCHEDULE

SPAN	GIRDER	END 1 TYPE	END 2 TYPE	"A" DIMENSION AT ℄ BEARINGS	L	Ld	LL	LT	θ1	θ2	P1	P2	PLAN LENGTH (ALONG GIRDER GRADE)	MIN. CONC. COMP. STRENGTH @ RELEASE F'CI (KSI)	MIN. CONC. COMP. STRENGTH @ 28-DAYS F'C (KSI)	NUMBER OF STRAIGHT STRANDS	NUMBER OF HARPED STRANDS	NUMBER OF TEMP. STRANDS	LOCATION OF C.G. STRANDS E	LOCATION OF C.G. STRANDS F℄	LOCATION OF C.G. STRANDS Fo	STRAIGHT STR. TO EXTEND END 1	STRAIGHT STR. TO EXTEND END 2	DECK SCREED CAMBER C	D LOWER BOUND @ 40 DAYS	D UPPER BOUND @ 120 DAYS	INT. DIAPHRAGM TYPE (FULL OR PARTIAL)	REINFORCEMENT DETAILS V1	V2	V3	V4	V5	V6	H1
1	A	A	D	13"	3'-0"	—	6'-2"	6'-2"	111°	102°	1'-8⅞"	—	78'-10¼"	4.0	5.0	14	5	0	2⅝"	4"	2'-0⅝"	-	PATTERN 1	⅜"	½"	1⅛"	FULL	8	2½"	20	5"	6	1'-0"	7'-5"
	B	A	D			—						—	80'-2¾"			14	5		2⅝"	4"	2'-0⅝"	-			½"	1¼"								
	C	A	D			—						—	81'-7¼"			14	6		2⅝"	4"	2'-0"	-			½"	1¼"								
	D	A	D			—						—	82'-11¾"			14	5		2⅝"	4"	1'-10⅝"	-			½"	1¼"								
	E	A	D			—						—	84'-4"			14	5		2⅝"	4"	1'-9⅝"	-			½"	1¼"								
	F	A	D			—						—	85'-8½"			14	5		2⅝"	4"	1'-8⅝"	-			½"	1¼"								
	G	A	D			—						—	87'-0¾"			16	6		2½"	4"	1'-8"	-			⅝"	1⅝"								
	H	A	D			—						—	88'-5¼"			16	6		2½"	4"	1'-8"	-			⅝"	1⅝"								
	I	A	D			—						—	89'-9½"			14	7		2⅝"	4"	1'-7⅝"	-			⅝"	1½"								
2	A	D	D	10¾"	3'-0"	—	6'-2"	6'-2"	101.5°	101.5°	—	—	95'-5"	4.0	5.0	20	7	0	2⅜"	4"	1'-5⅝"	PATTERN 2	PATTERN 2	¾"	1"	2⅜"									7'-4¾"
	B	D	D			—			101.5°	101.5°	—	—	95'-6½"			20	7		2⅜"	4"	1'-5⅝"				1"	2⅜"								
	C	D	D			—			102°	102°	—	—	95'-7¾"			20	7		2⅜"	4"	1'-5⅝"				1"	2⅜"								
	D	D	D			—			102°	102°	—	—	95'-7¾"			18	6		2½"	4"	1'-5"				¾"	2"								
	E	D	D			—			102°	102°	—	—	95'-7¾"			18	6		2½"	4"	1'-3"				¾"	2"								
	F	D	D			—			102°	102°	—	—	95'-8"			16	7		2½"	4"	1'-3⅝"				¾"	1¾"								
	G	D	D			—			102°	102°	—	—	95'-8"			20	7		2⅜"	4"	1'-5⅝"				1"	2⅜"								
	H	D	D			—			102°	102°	—	—	95'-7"			20	7		2⅜"	4"	1'-5⅝"				1"	2⅜"								
	I	D	D			—			101.5°	101.5°	—	—	95'-6¼"			18	7		2½"	4"	1'-5⅝"				⅞"	2⅛"								
3	A	D	A	11¾"	3'-0"	—	6'-2"	6'-2"	104°	101.5°	—	1'-7⅞"	141'-1"	6.1	8.5	34	17	2	3⅛"	4⅝"	11⅛"	PATTERN 3	-	2⅞"	2⅛"	4⅞"									7'-6"
	B	D	A			—			103°	100.5°	—	1'-7⅞"	140'-11½"	6.6	9.5	38	18	4	3½"	4⅝"	1'-0"		-		2¼"	5⅛"								
	C	D	A			—			102°	100°	—	1'-7¾"	140'-10½"	6.6	9.5	38	17	4	3½"	4⅝"	11½"		-		2¼"	5"								
	D	D	A			—			102°	100°	—	1'-7¾"	141'-2¼"	5.5	7.0	32	15	2	3"	4⅝"	10½"		-		2"	4⅝"								
	E	D	A			—			102°	100°	—	1'-7¾"	141'-6"	5.5	7.5	32	16	2	3"	4⅝"	11"		-		2"	4⅝"								
	F	D	A			—			102°	100°	—	1'-7¾"	141'-9¾"	5.4	7.0	32	14	2	3"	4⅝"	10"		-		1⅞"	4½"								
	G	D	A			—			102°	100°	—	1'-7¾"	142'-1½"	6.4	9.0	36	18	4	3⅜"	4⅝"	1'-0"		-		2⅛"	4⅞"								
	H	D	A			—			102.5°	100.5°	—	1'-7⅞"	142'-8½"	6.4	9.0	36	18	4	3⅜"	4⅝"	1'-0"		-		2⅛"	4⅞"								
	I	D	A			—			103°	101°	—	1'-7⅞"	143'-3¼"	6.7	9.0	38	18	4	3½"	4⅝"	1'-0"		-		2⅜"	5¼"								

STRAIGHT STRAND EXTENSION PATTERN	STRANDS
1	1 TO 4 & 7 TO 12
2	3 TO 6 & 9 TO 14
3	1 TO 8 & 11 TO 16
4	7 TO 10, 17 TO 22 & 29 TO 32

GIRDER NOTES:

1. PLAN LENGTH SHALL BE INCREASED AS NECESSARY TO COMPENSATE FOR SHORTENING DUE TO PRESTRESS AND SHRINKAGE.
2. ALL PRETENSION AND TEMPORARY STRANDS SHALL BE 0.6"ø AASHTO M203 GRADE 270 LOW RELAXATION STRANDS, JACKED TO 202.5 KSI.
3. FOR END TYPES A, C AND D CUT ALL STRANDS FLUSH WITH THE GIRDER ENDS AND PAINT WITH AN APPROVED EPOXY RESIN, EXCEPT FOR EXTENDED STRANDS AS SHOWN. FOR END TYPE B CUT ALL STRANDS 1" BELOW CONCRETE SURFACE AND GROUT WITH AN APPROVED EPOXY GROUT.
4. THE TOP SURFACE OF THE GIRDER FLANGE SHALL BE ROUGHENED IN ACCORDANCE WITH SECTION 6-02.3(25)H OF THE STANDARD SPECIFICATIONS.
5. LIFTING EMBEDMENT'S SHALL BE INSTALLED IN ACCORDANCE WITH SECTION 6-02.3(25)L OF THE STANDARD SPECIFICATIONS.
6. CAUTION SHALL BE EXERCISED IN HANDLING AND PLACING GIRDERS. ALL GIRDERS SHALL BE CHECKED BY THE CONTRACTOR TO ENSURE THAT THEY ARE BRACED ADEQUATELY TO PREVENT TIPPING AND TO CONTROL LATERAL BENDING DURING SHIPPING. ONCE ERECTED, ALL GIRDERS SHALL BE BRACED LATERALLY TO PREVENT TIPPING UNTIL DIAPHRAGMS ARE CAST AND CURED.
7. FORMS FOR BEARING PAD RECESSES SHALL BE CONSTRUCTED AND FASTENED IN SUCH A MANNER AS TO CAUSE DAMAGE TO THE GIRDER DURING THE STRAND RELEASE OPERATION.
8. TEMPORARY TOP STRANDS SHALL BE EITHER PRETENSION OR POST-TENSIONED IN ACCORDANCE WITH SECTION 6-02.3(25)L OF THE STANDARD SPECIFICATIONS AND THE GIRDER DETAILS SHEETS. THE LIFTING LOCATION "L" AND CONCRETE RELEASE STRENGTH "PCI" SHOWN IN THE GIRDER SCHEDULE ASSUME THAT THE TEMPORARY TOP STRANDS ARE PRETENSION. ALTERNATIVELY, POST-TENSIONED TEMPORARY TOP STRANDS MAY BE USED IF THE LIFTING POINTS IN THE GIRDER SCHEDULE ARE MAINTAINED AND THE STRANDS ARE STRESSED PRIOR TO LIFTING THE GIRDER FROM THE FORM.
9. FOR DIAPHRAGMS, OMIT HOLES AND PLACE INSERTS ON THE INTERIOR FACE OF EXTERIOR GIRDERS. PLACE HOLES AND INSERTS PARALLEL TO SKEW. INSERTS SHALL BE 1"ø MEADOWBURKE MX-3 HI-TENSILE, 1"ø x 5½" WILLIAMS F22 OPEN FERRULE INSERT, 1"ø x 4⅝" DAYTON-SUPERIOR F-62 FLARED THIN SLAB FERRULE INSERT OR APPROVED EQUAL.
10. DEFORMED WELDED WIRE REINFORCEMENT CONFORMING TO SECTION 9-07.7 WITH DEFORMED WIRE CONFORMING TO SECTION 9-07.8 MAY BE SUBSTITUTED FOR MILD STEEL REINFORCEMENT IF AASHTO LRFD BRIDGE DESIGN SPECIFICATION REQUIREMENTS (INCLUDING DEVELOPMENT AND ANCHORAGE) ARE MET. WELDED WIRE REINFORCEMENT SHALL HAVE THE SAME AREA AND SPACING AS THE MILD STEEL REINFORCEMENT THAT IT REPLACES AND THE YIELD STRENGTH SHALL BE GREATER THAN OR EQUAL TO 60 KSI. SHEAR STIRRUP LONGITUDINAL WIRES AND TACK WELDS SHALL BE EXCLUDED FROM GIRDER WEBS. LONGITUDINAL WIRES FOR ANCHORAGE OF WELDED WIRE REINFORCEMENT SHALL HAVE AN AREA OF 40% OR MORE OF THE AREA OF THE WIRE BEING ANCHORED BUT SHALL NOT BE LESS THAN D4.

SR 5 FILE NO. 7452 SHEET MC43

Bridge Design Engr.	Khaleghi, B	
Supervisor	Khaleghi, B	
Designed By	Burnham, B	05/13
Checked By	Glassford, P	05/13
Detailed By	Andreotti, L	05/13
Bridge Projects Engr.		
Prelim. Plan By		
Architect/Specialist		

M:\Y-Team\M ST TO PORTLAND\MCKINLEY AVE BRG\window files\WF74G GIR SHT 4.wnd

DATE	REVISION	BY	APP'D

REGION NO.	STATE	FED. AID PROJ. NO.	SHEET NO.	TOTAL SHEETS
10	WASH.			
JOB NUMBER 12C501				

BRIAN DAVID BURNHAM, STATE OF WASHINGTON, 48130, REGISTERED PROFESSIONAL ENGINEER 2/11/14

BRIDGE AND STRUCTURES OFFICE

BRIAN KHALEGHI, STATE OF WASHINGTON, 27036, REGISTERED PROFESSIONAL ENGINEER 2/12/14

Washington State Department of Transportation

I-5
M ST TO PORTLAND AVE - HOV

MCKINLEY WAY OVER I-5 BRIDGE NO. 5/448

WF74G GIRDER DETAILS
4 OF 4

BRIDGE SHEET NO. MC43

SHEET 969 OF 1763 SHEETS

Tue Feb 11 07:03:04 2014

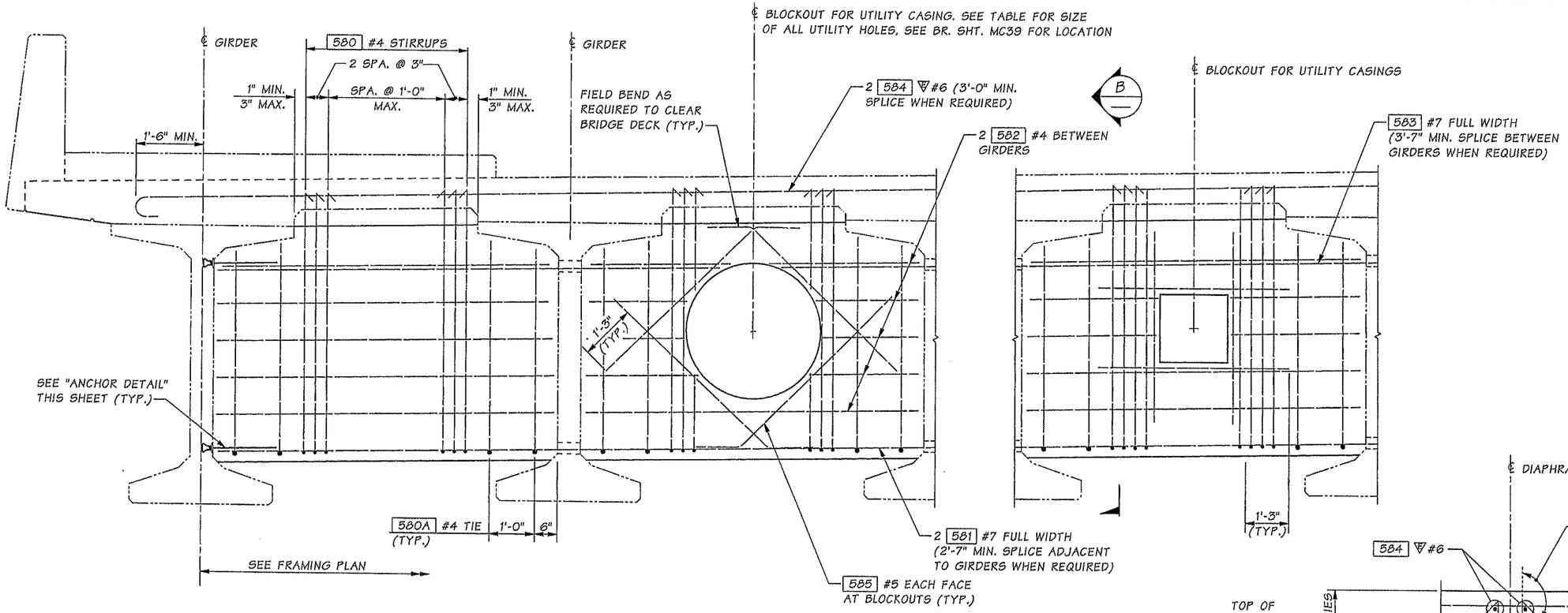

BLOCKOUT SIZES	
UTILITY	OPENING
24" STORM SEWER	34"ø
18" SANITARY SEWER	28"ø
ELECTRICAL CONDUIT	1'-6" X 1'-6"

ELEVATION
INTERMEDIATE DIAPHRAGM

DIMENSIONS ARE ALONG DIAPHRAGM

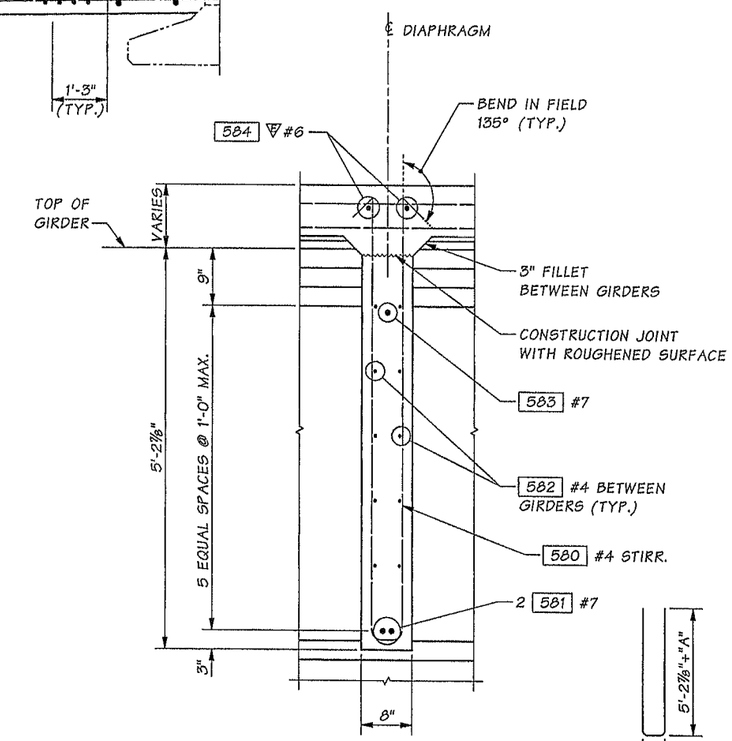

SECTION B

SEE "GIRDER DETAILS" SHEET FOR DIMENSION "A".

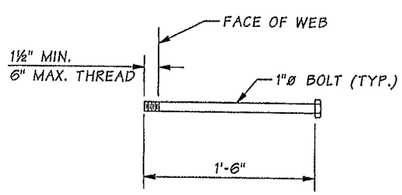

ANCHOR DETAIL

ASTM A-307

NOTES:

1. GIRDERS SHALL BE HELD RIGIDLY IN PLACE WHEN DIAPHRAGMS ARE PLACED.
2. IT MAY BE NECESSARY TO THREAD #7 REINFORCING BARS THROUGH HOLES IN GIRDERS PRIOR TO PLACING EXTERIOR GIRDERS.
3. CUT/RELEASE GIRDER TEMPORARY STRANDS BEFORE CASTING DIAPHRAGM. SEE TEMPORARY STRAND CUTTING SEQUENCE.
4. LONGITUDINAL DIMENSIONS ARE NORMAL TO SKEW.
5. FOR CONCRETE PLACEMENT PROCEDURE SEE "SUPERSTRUCTURE CONSTRUCTION SEQUENCE" SHEET.
6. CUT ANY STIRRUPS OR HORZ. REINF. AS REQ'D AT UTILITY BLOCKOUT LOCATIONS.

SR 5 FILE NO. 7452 SHEET MC44

Bridge Design Engr.	Khaleghi, B	
Supervisor	Khaleghi, B	
Designed By	Burnham, B	01/13
Checked By	Glassford, P	05/13
Detailed By	Andreotti, L	01/13
Bridge Projects Engr.		
Prelim. Plan By		
Architect/Specialist		

M:\Y-Team\M ST TO PORTLAND\MCKINLEY AVE BRG\window files\INTERMEDIATE DIAPH.wnd

DATE	REVISION	BY	APP'D

REGION NO.	STATE	FED. AID PROJ. NO.	SHEET NO.	TOTAL SHEETS
10	WASH.			

JOB NUMBER 12C501

BRIAN DAVID BURNHAM, STATE OF WASHINGTON, 48130, REGISTERED PROFESSIONAL ENGINEER — 2/11/14

BRIDGE AND STRUCTURES OFFICE

BIJAN KHALEGHI, STATE OF WASHINGTON, 27695, REGISTERED PROFESSIONAL ENGINEER — 2/12/14

Washington State Department of Transportation

I-5
M ST TO PORTLAND AVE - HOV

MCKINLEY WAY OVER I-5 BRIDGE NO. 5/448

INTERMEDIATE DIAPHRAGM DETAILS

BRIDGE SHEET NO. MC44

SHEET 970 OF 1763 SHEETS

Tue Feb 11 07:03:08 2014

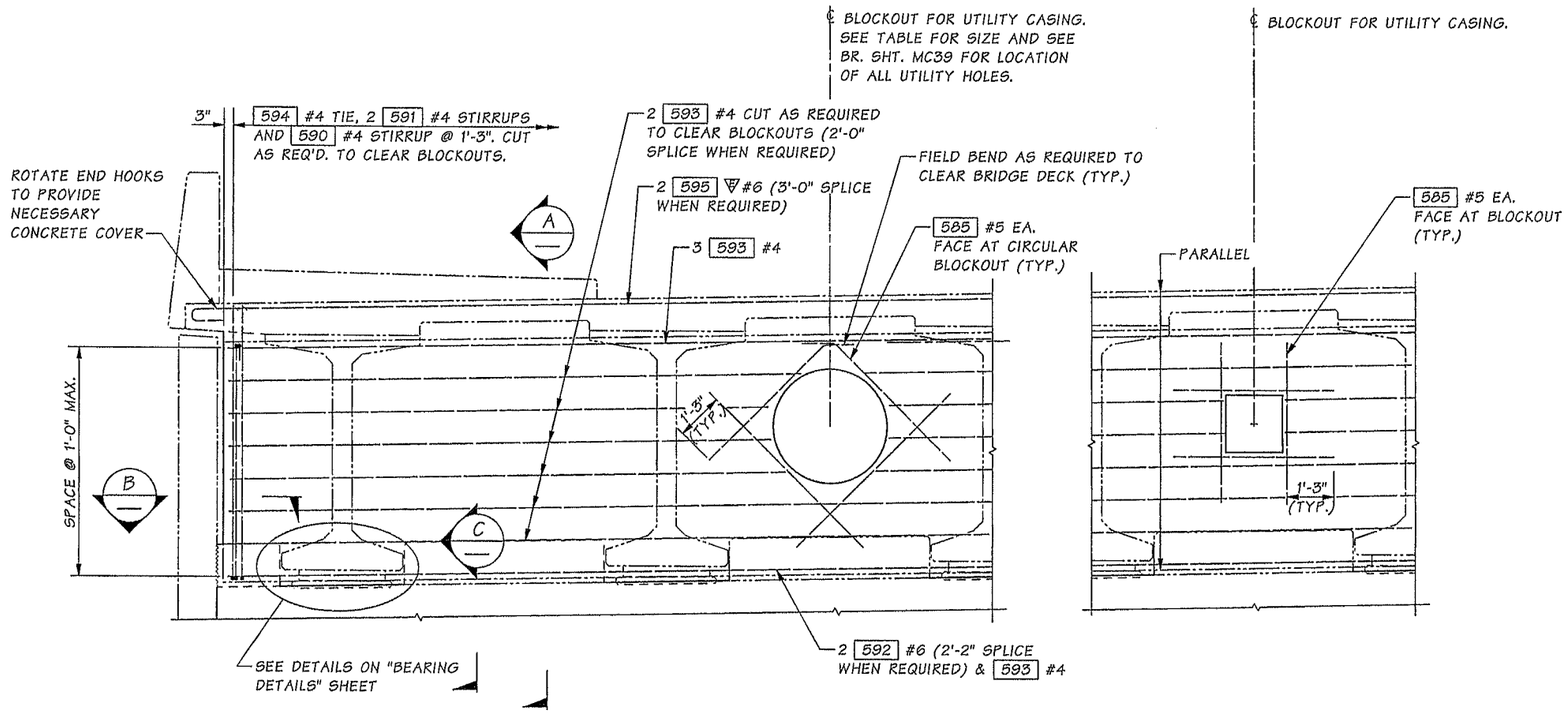

ELEVATION
END DIAPHRAGM

DIMENSIONS ARE ALONG ℄ DIAPHRAGM

BLOCKOUT SIZES	
UTILITY	OPENING
24" STORM SEWER	34"ø
18" SANITARY SEWER	28"ø
ELECTRICAL CONDUIT	1'-6" X 1'-6"

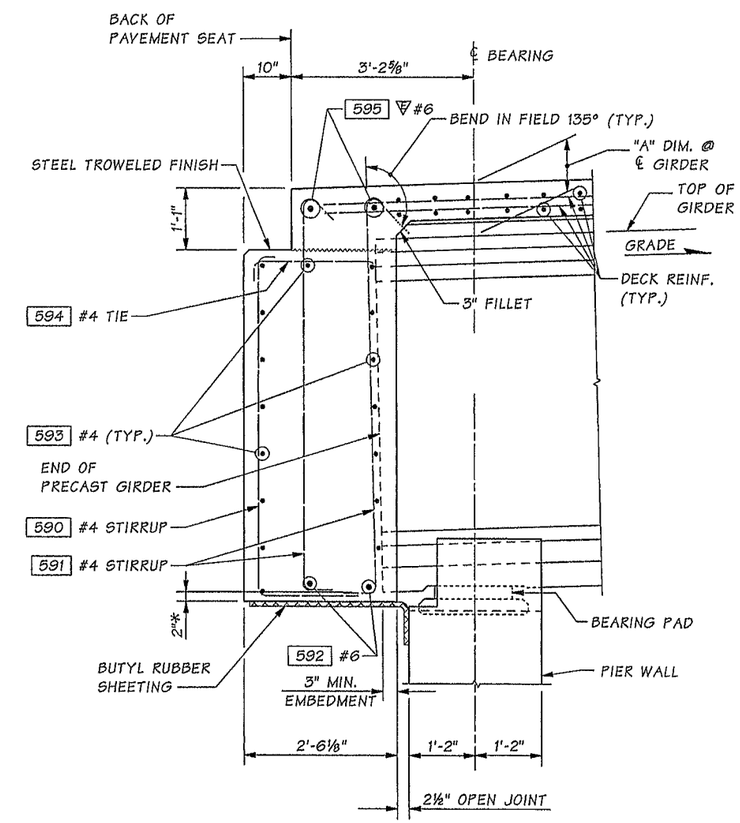

SECTION A

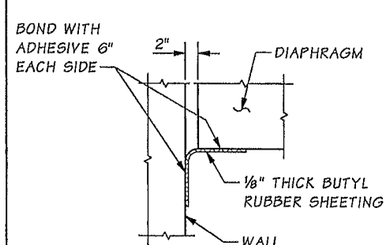

SECTION B

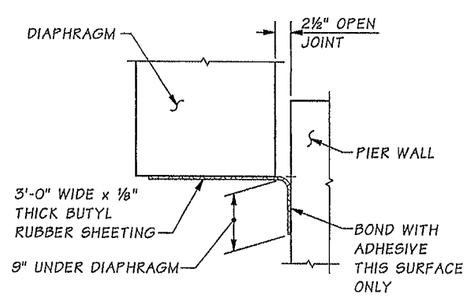

SECTION C

NOTES:

1. GIRDERS SHALL BE HELD RIGIDLY IN PLACE WHEN DIAPHRAGMS ARE PLACED.
2. CUT/RELEASE GIRDER TEMPORARY STRANDS BEFORE CASTING DIAPHRAGM. SEE TEMPORARY STRAND CUTTING SEQUENCE.
3. EXTENDED STRANDS AND GIRDER REINFORCING NOT SHOWN FOR CLARITY.
4. TRIM STIRR. AND HORZ. REINF. AS REQ'D AT UTILITY BLOCKOUT LOCATIONS

SEE GIRDER SHEETS FOR DIMENSION "A".
ALL LONGITUDINAL DIMENSIONS ARE NORMAL TO PIER WALL.
+ GRADE SHOWN, - GRADE SIMILAR.
* MEASURED AT THE CENTERLINE OF GIRDER

SR 5 FILE NO. 7452 SHEET MC45

Bridge Design Engr.	Khaleghi, B	
Supervisor	Khaleghi, B	
Designed By	Burnham, B	09/13
Checked By	Glassford, P	11/13
Detailed By	Andreotti, L	09/13
Bridge Projects Engr.		
Prelim. Plan By		
Architect/Specialist		

M:\Y-Team\M ST TO PORTLAND\MCKINLEY AVE BRG\window files\PIER 1 END DIAPHRAGM.wnd

DATE	REVISION	BY	APP'D

REGION NO.	STATE	FED. AID PROJ. NO.	SHEET NO.	TOTAL SHEETS
10	WASH.			
JOB NUMBER 12C501				

BRIAN DAVID BURNHAM — STATE OF WASHINGTON — 46156 — REGISTERED PROFESSIONAL ENGINEER — 2/11/14

BRIDGE AND STRUCTURES OFFICE

SILAN KHALEGHI — STATE OF WASHINGTON — 27695 — REGISTERED PROFESSIONAL ENGINEER — 2/11/14

Washington State Department of Transportation

I-5
M ST TO PORTLAND AVE - HOV

MCKINLEY WAY OVER I-5 BRIDGE NO. 5/448

PIER 1
END DIAPHRAGM DETAILS

BRIDGE SHEET NO. MC45

SHEET 971 OF 1763 SHEETS

Tue Feb 11 07:03:09 2014

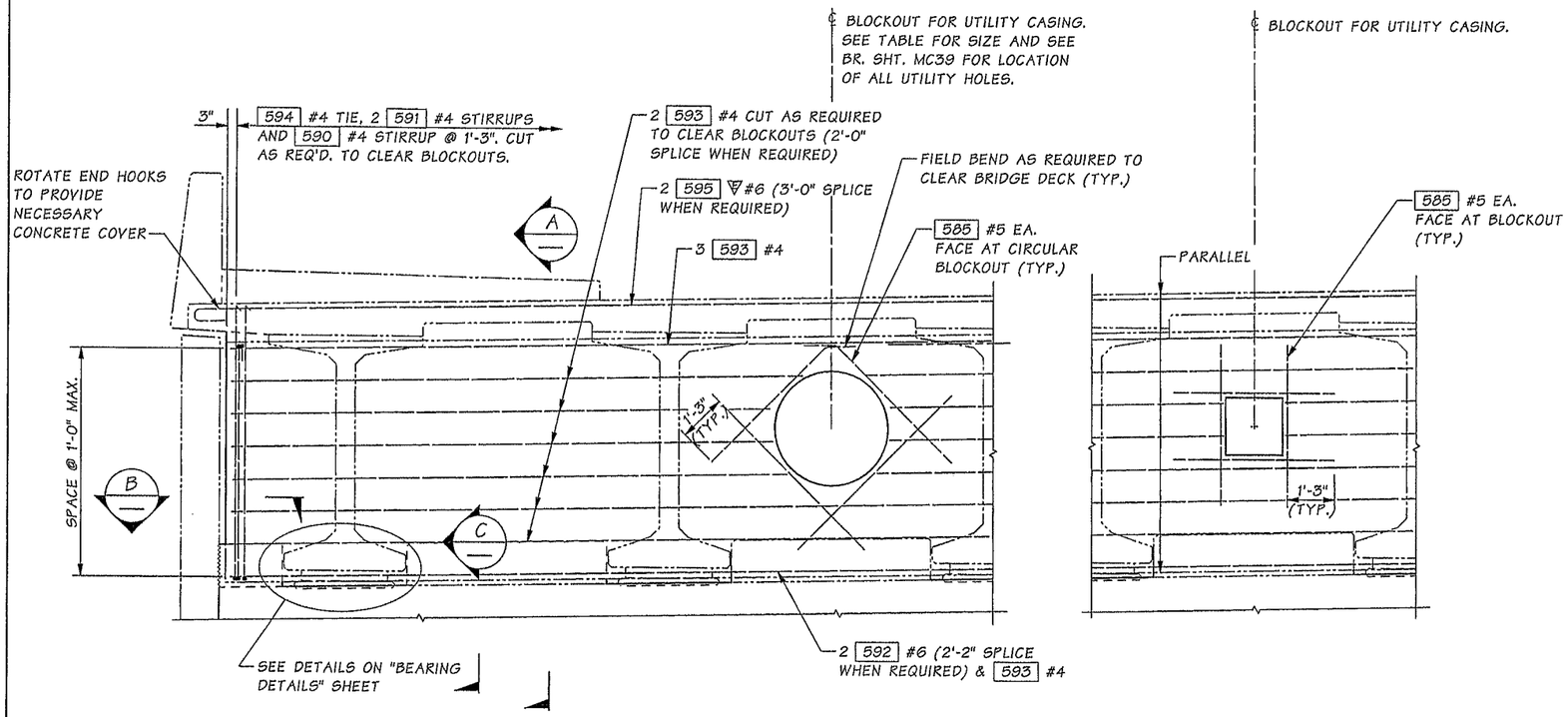

ELEVATION
END DIAPHRAGM

DIMENSIONS ARE ALONG ℄ DIAPHRAGM

BLOCKOUT SIZES	
UTILITY	OPENING
24" STORM SEWER	34"ø
18" SANITARY SEWER	28"ø
ELECTRICAL CONDUIT	1'-6" X 1'-6"

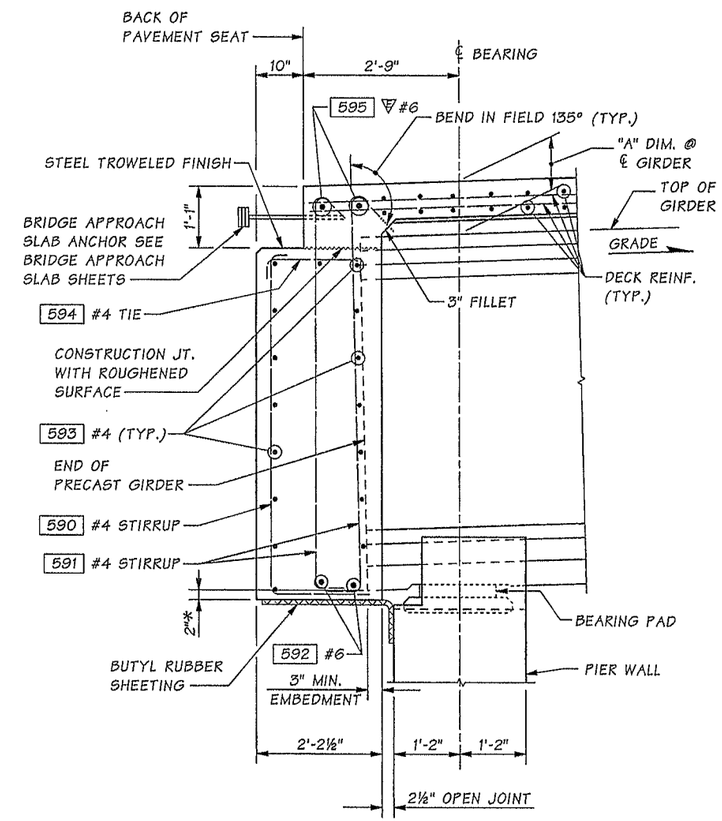

SECTION A

SEE GIRDER SHEETS FOR DIMENSION "A".
ALL LONGITUDINAL DIMENSIONS ARE NORMAL TO PIER WALL.
+ GRADE SHOWN, - GRADE SIMILAR.
* MEASURED AT THE CENTERLINE OF GIRDER

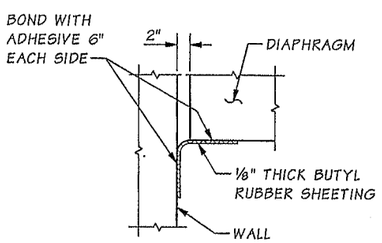

SECTION B

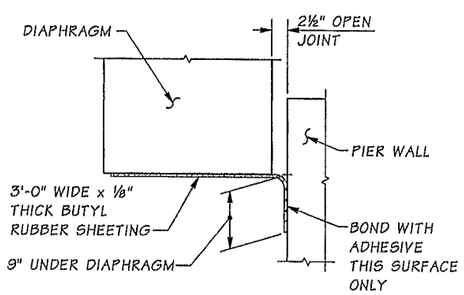

SECTION C

NOTES:

1. GIRDERS SHALL BE HELD RIGIDLY IN PLACE WHEN DIAPHRAGMS ARE PLACED.
2. CUT/RELEASE GIRDER TEMPORARY STRANDS BEFORE CASTING DIAPHRAGM. SEE TEMPORARY STRAND CUTTING SEQUENCE.
3. EXTENDED STRANDS AND GIRDER REINFORCING NOT SHOWN FOR CLARITY.
4. TRIM STIRR. AND HORZ. REINF. AS REQ'D AT UTILITY BLOCKOUT LOCATIONS

SR 5 FILE NO. 7452 SHEET MC46

Bridge Design Engr.	Khaleghi, B		
Supervisor	Stoddard, RB		
Designed By	Burnham, B	02/13	
Checked By	Glassford, P	05/13	
Detailed By	Andreotti, L	02/13	
Bridge Projects Engr.			
Prelim. Plan By			
Architect/Specialist			

M:\Y-Team\M ST TO PORTLAND\MCKINLEY AVE BRG\window files\PIER 4 END DIAPHRAGM.wnd

DATE	REVISION	BY	APP'D

REGION NO.	STATE	FED. AID PROJ. NO.	SHEET NO.	TOTAL SHEETS
10	WASH.			
JOB NUMBER 12C501				

BRIAN DAVID BURNHAM, STATE OF WASHINGTON, 49136, REGISTERED PROFESSIONAL ENGINEER 2/11/14

BRIDGE AND STRUCTURES OFFICE

BRIAN KHALEGHI, STATE OF WASHINGTON, 27506, PROFESSIONAL ENGINEER 2/12/14

Washington State Department of Transportation

I-5
M ST TO PORTLAND AVE - HOV
MCKINLEY WAY OVER I-5 BRIDGE NO. 5/448

PIER 4
END DIAPHRAGM DETAILS

BRIDGE SHEET NO. MC46

SHEET 972 OF 1763 SHEETS

Tue Feb 11 07:03:11 2014

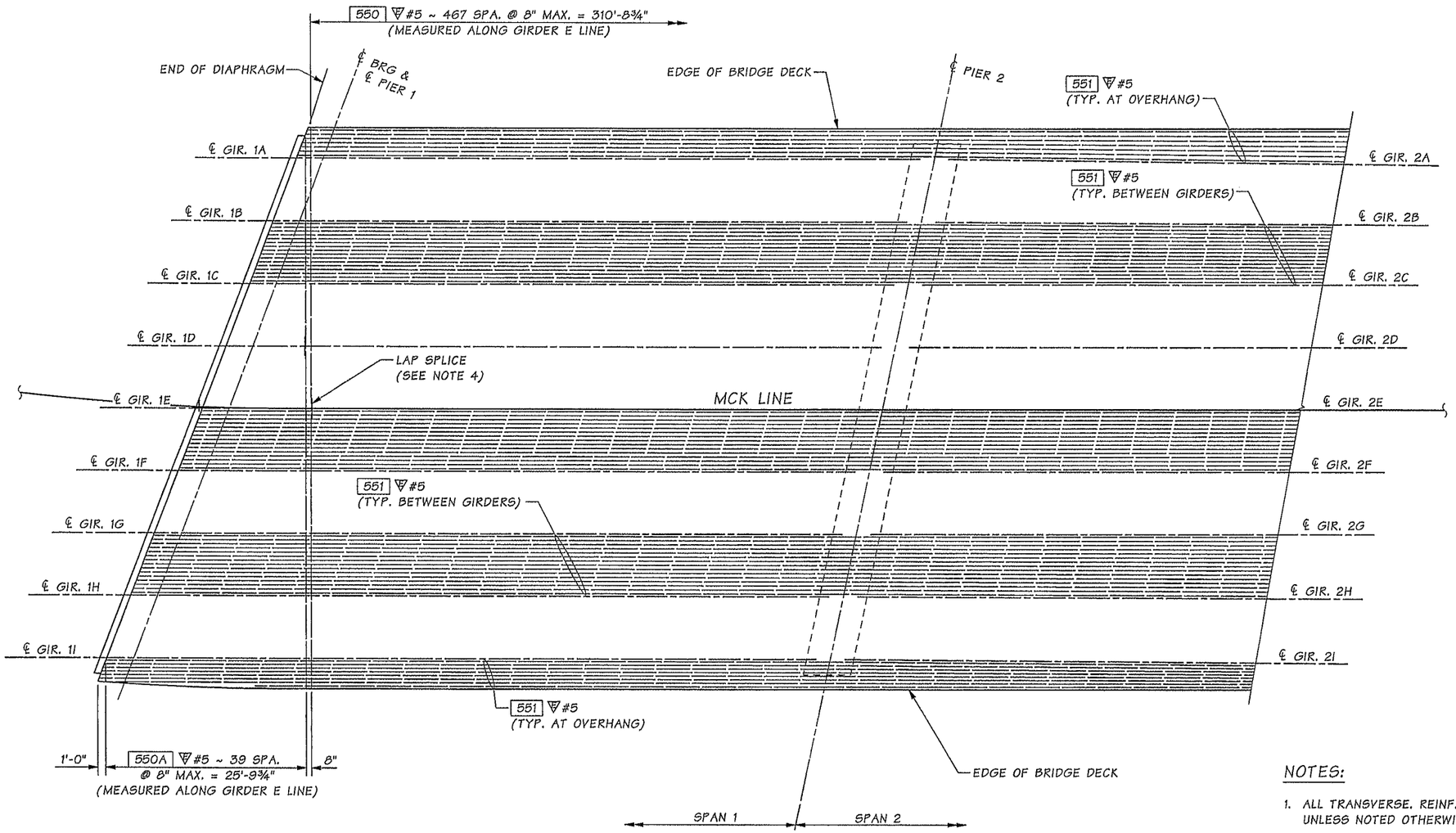

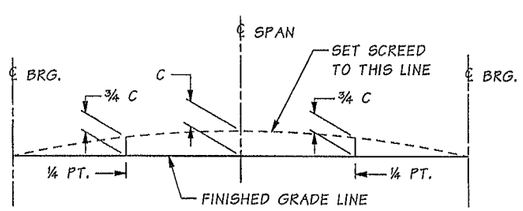

SCREED SETTING DIMENSIONS

FOR DIMENSION "C" SEE GIRDER SCHEDULE

BRIDGE DECK REINFORCEMENT PLAN
SPAN 1 AND PARTIAL SPAN 2 ~ BOTTOM MAT

NOTES:

1. ALL TRANSVERSE. REINF. IS PLACED NORMAL TO THE ℄ OF GIRDER E, UNLESS NOTED OTHERWISE. 53 & 54 BARS PLACED NORMAL TO CURBLINE.
2. MIN. REINF. SPLICE LENGTH UNLESS NOTED OTHERWISE:
   #5 ~ 2'-6"
   #6 ~ 3'-0"
   #7 ~ 3'-9"
   WHEN SPLICING DIFFERENT SIZED REINF., THE MIN. SPICE LENGTH OF THE SMALLER BAR MAY BE USED.
3. DO NOT SPLICE MORE THAN 50% OF REINF AT ANY ONE LOCATION UNLESS NOTED OTHERWISE. STAGGER SPLICES AT MINIMUM OF 2'-6".
4. TRANSVERSE LAP SPLICE FOR BOTTOM MAT SHALL BE CENTERED ON GIRDERS UNLESS SHOWN OTHERWISE (ALTERNATE LOCATION EVERY OTHER BAR).
5. CUT EPOXY COATED REBAR SHALL BE REPAIRED PER STD. SPEC. 6-02.3(24)H.
6. FIELD BEND THE REINFORCEMENT TO ACCOUNT FOR THE CURVE RADIUS AS NEEDED.

SR 5 FILE NO. 7452 SHEET MC47

Bridge Design Engr.	Khaleghi, B		M:\Y-Team\M ST TO PORTLAND\MCKINLEY AVE BRG\window files\DECK REINFORCEMENT PLN B1.wnd
Supervisor	Khaleghi, B		
Designed By	Burnham, B	12/12	
Checked By	Glassford, P	05/13	
Detailed By	Andreotti, L	12/12	
Bridge Projects Engr.			
Prelim. Plan By			
Architect/Specialist			

Tue Feb 11 07:03:12 2014

DATE	REVISION	BY	APP'D

REGION NO.	STATE	FED. AID PROJ. NO.	SHEET NO.	TOTAL SHEETS
10	WASH.			
JOB NUMBER 12C501				

BRIAN DAVID BURNHAM STATE OF WASHINGTON 38156 REGISTERED PROFESSIONAL ENGINEER 2/11/14

BRIDGE AND STRUCTURES OFFICE

BILLAN KHALEGHI STATE OF WASHINGTON 27995 REGISTERED PROFESSIONAL ENGINEER 2/12/14

Washington State Department of Transportation

I-5
M ST TO PORTLAND AVE - HOV

MCKINLEY WAY OVER I-5 BRIDGE NO. 5/448

BRIDGE DECK REINFORCEMENT PLAN 1

BRIDGE SHEET NO. MC47

SHEET 973 OF 1763 SHEETS

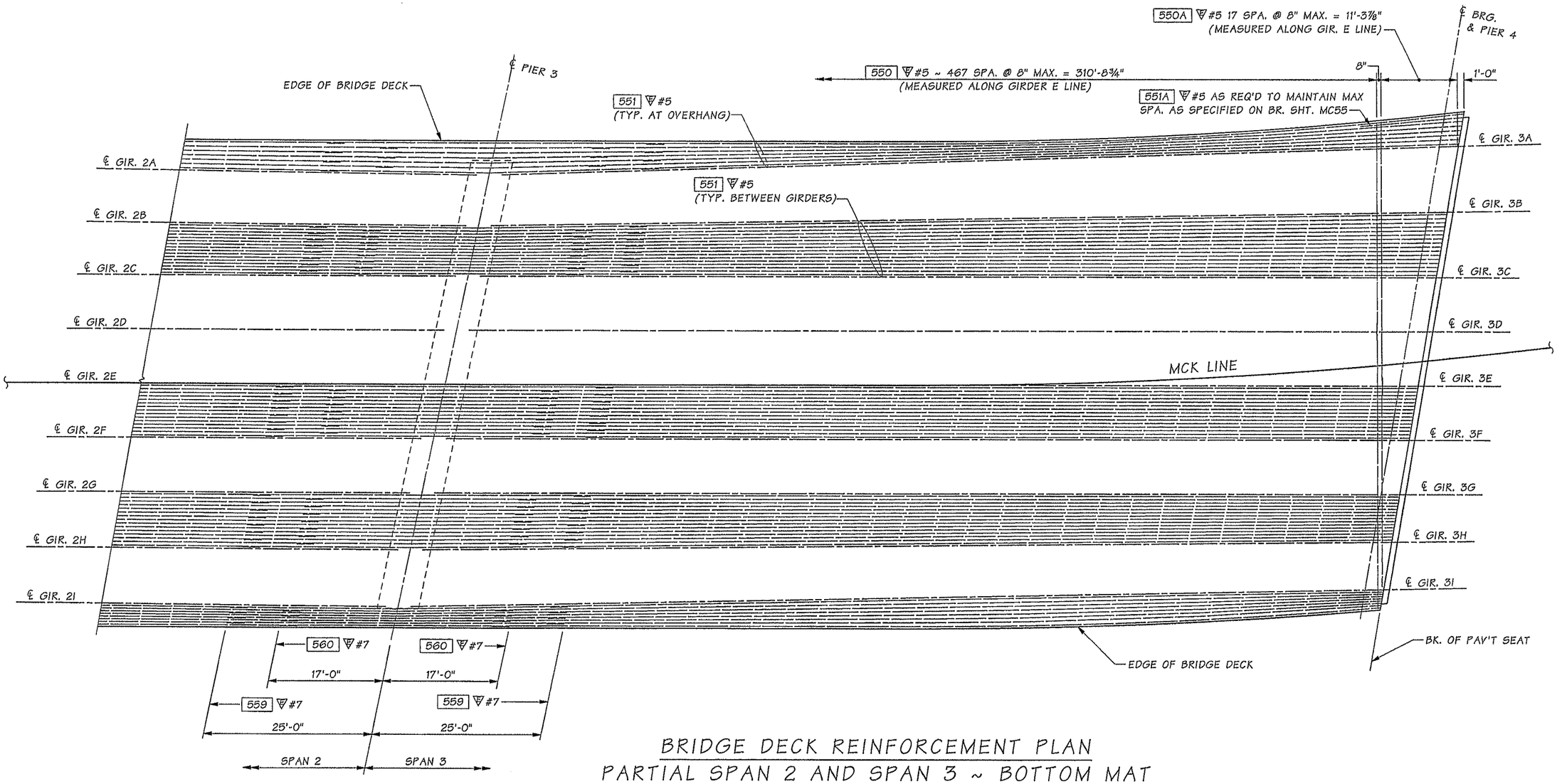

BRIDGE DECK REINFORCEMENT PLAN
PARTIAL SPAN 2 AND SPAN 3 ~ BOTTOM MAT

SR 5 FILE NO. 7452 SHEET MC48

Bridge Design Engr.	Khaleghi, B		
Supervisor	Khaleghi, B		
Designed By	Burnham, B	12/12	
Checked By	Glassford, P	05/13	
Detailed By	Andreotti, L	12/12	
Bridge Projects Engr.			
Prelim. Plan By			
Architect/Specialist			

M:\Y-Team\M ST TO PORTLAND\MCKINLEY AVE BRG\window files\DECK REINFORCEMENT PLN B2.wnd

DATE	REVISION	BY	APP'D

REGION NO.	STATE	FED. AID PROJ. NO.	SHEET NO.	TOTAL SHEETS
10	WASH.			
JOB NUMBER 12C501				

Tue Feb 11 07:03:13 2014

BRIAN DAVID BURNHAM STATE OF WASHINGTON 18136 REGISTERED PROFESSIONAL ENGINEER 2/11/14

BRIDGE AND STRUCTURES OFFICE

BIJAN KHALEGHI STATE OF WASHINGTON 27696 REGISTERED PROFESSIONAL ENGINEER 2/12/14

Washington State Department of Transportation

I-5
M ST TO PORTLAND AVE - HOV

MCKINLEY WAY OVER I-5 BRIDGE NO. 5/448

BRIDGE DECK REINFORCEMENT PLAN 2

BRIDGE SHEET NO. MC48

SHEET 974 OF 1763 SHEETS

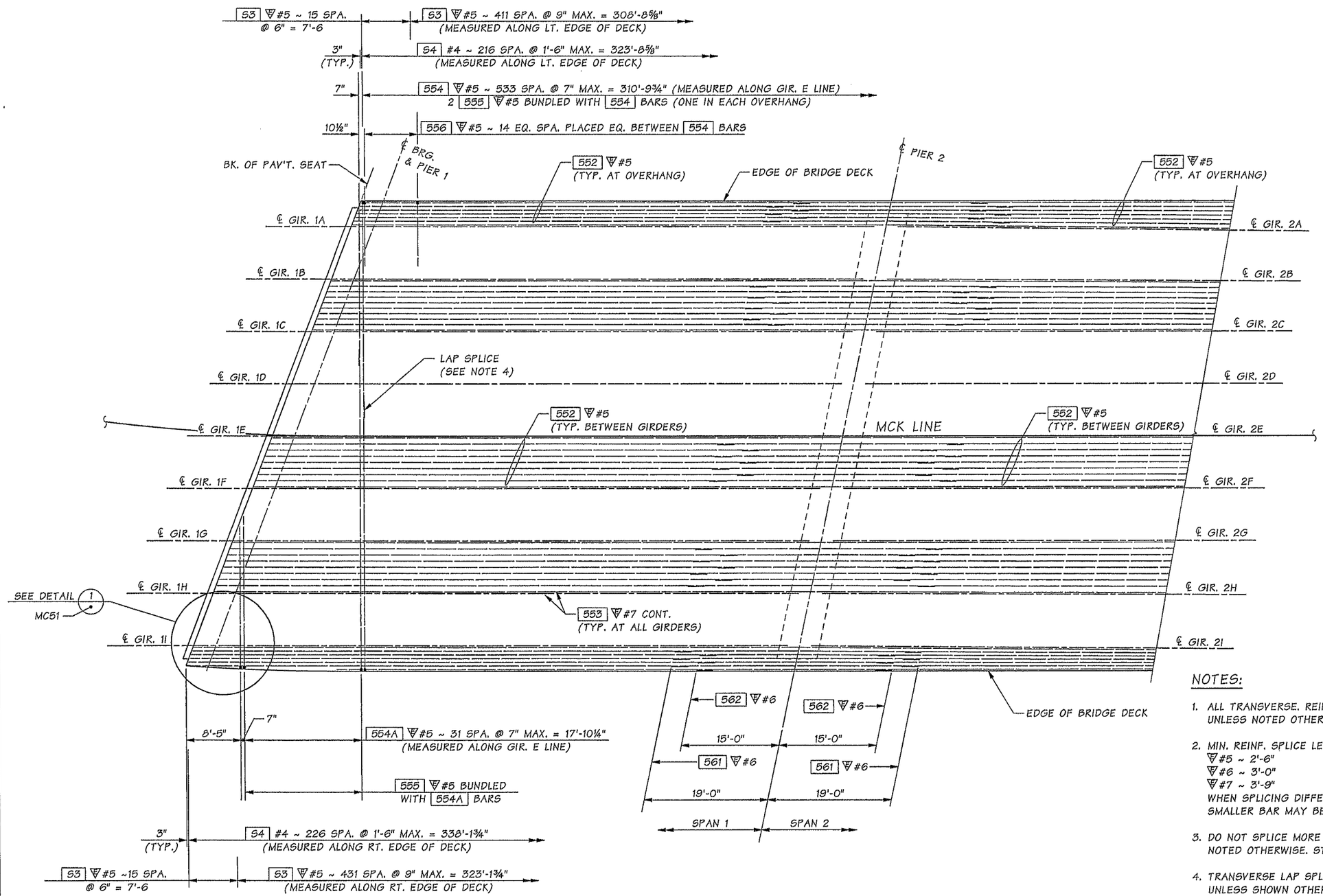

BRIDGE DECK REINFORCEMENT PLAN
SPAN 1 AND PARTIAL SPAN 2 - TOP MAT

NOTES:

1. ALL TRANSVERSE. REINF. IS PLACED NORMAL TO THE ℄ OF GIRDER E, UNLESS NOTED OTHERWISE. S3 & S4 BARS PLACED NORMAL TO CURBLINE.
2. MIN. REINF. SPLICE LENGTH UNLESS NOTED OTHERWISE:
   ▽#5 ~ 2'-6"
   ▽#6 ~ 3'-0"
   ▽#7 ~ 3'-9"
   WHEN SPLICING DIFFERENT SIZED REINF., THE MIN. SPICE LENGTH OF THE SMALLER BAR MAY BE USED.
3. DO NOT SPLICE MORE THAN 50% OF REINF AT ANY ONE LOCATION UNLESS NOTED OTHERWISE. STAGGER SPLICES AT MINIMUM OF 2'-6".
4. TRANSVERSE LAP SPLICE FOR TOP MAT SHALL BE CENTERED BETWEEN GIRDERS UNLESS SHOWN OTHERWISE (ALTERNATE LOCATION EVERY OTHER BAR).
5. CUT EPOXY COATED REBAR SHALL BE REPAIRED PER STD. SPEC. 6-02.3(24)H.
6. FIELD BEND THE REINFORCEMENT TO ACCOUNT FOR THE CURVE RADIUS AS NEEDED.

SR 5 FILE NO. 7452 SHEET MC49

Bridge Design Engr.	Khaleghi, B	
Supervisor	Khaleghi, B	
Designed By	Burnham, B	12/12
Checked By	Glassford, P	05/13
Detailed By	Andreotti, L	12/12
Bridge Projects Engr.		
Prelim. Plan By		
Architect/Specialist		

M:\Y-Team\M ST TO PORTLAND\MCKINLEY AVE BRG\window files\DECK REINFORCEMENT PLAN T1.wnd

DATE	REVISION	BY	APP'D

REGION NO.	STATE	FED. AID PROJ. NO.	SHEET NO.	TOTAL SHEETS
10	WASH.			

JOB NUMBER 12C501

BRIDGE AND STRUCTURES OFFICE

2/11/14 2/12/14

Washington State Department of Transportation

I-5
M ST TO PORTLAND AVE - HOV
MCKINLEY WAY OVER I-5 BRIDGE NO. 5/448

BRIDGE DECK REINFORCEMENT PLAN 3

BRIDGE SHEET NO. MC49
SHEET 975 OF 1763 SHEETS

Tue Feb 11 07:03:14 2014

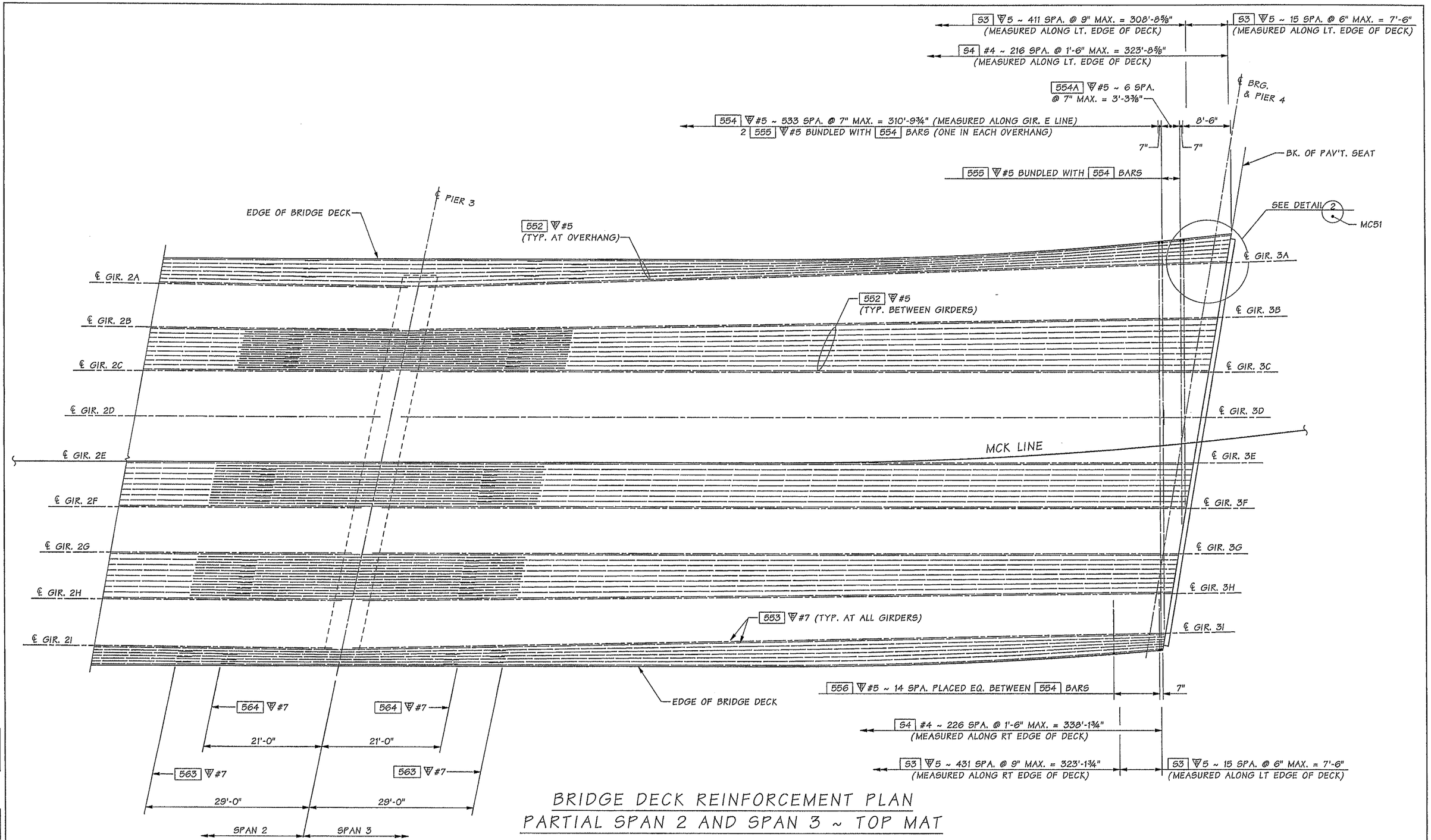

BRIDGE DECK REINFORCEMENT PLAN
PARTIAL SPAN 2 AND SPAN 3 ~ TOP MAT

SR 5 FILE NO. 7452 SHEET MC50

Bridge Design Engr.	Khaleghi, B		
Supervisor	Khaleghi, B		
Designed By	Burnham, B	12/12	
Checked By	Glassford, P	05/13	
Detailed By	Andreotti, L	12/12	
Bridge Projects Engr.			
Prelim. Plan By			
Architect/Specialist			

M:\Y-Team\M ST TO PORTLAND\MCKINLEY AVE BRG\window files\DECK REINFORCEMENT PLAN T2.wnd

DATE	REVISION	BY	APP'D

REGION NO.	STATE	FED. AID PROJ. NO.	SHEET NO.	TOTAL SHEETS
10	WASH.			
JOB NUMBER 122501				

BRIAN DAVID BURNHAM, STATE OF WASHINGTON, 48186, REGISTERED PROFESSIONAL ENGINEER 2/11/14

BRIDGE AND STRUCTURES OFFICE

BRIAN KHALEGHI, STATE OF WASHINGTON, 27695, PROFESSIONAL ENGINEER 2/12/14

Washington State Department of Transportation

I-5
M ST TO PORTLAND AVE - HOV
MCKINLEY WAY OVER I-5 BRIDGE NO. 5/448

BRIDGE DECK REINFORCEMENT PLAN 4

BRIDGE SHEET NO. MC50

SHEET 976 OF 1763 SHEETS

Tue Feb 11 07:03:16 2014

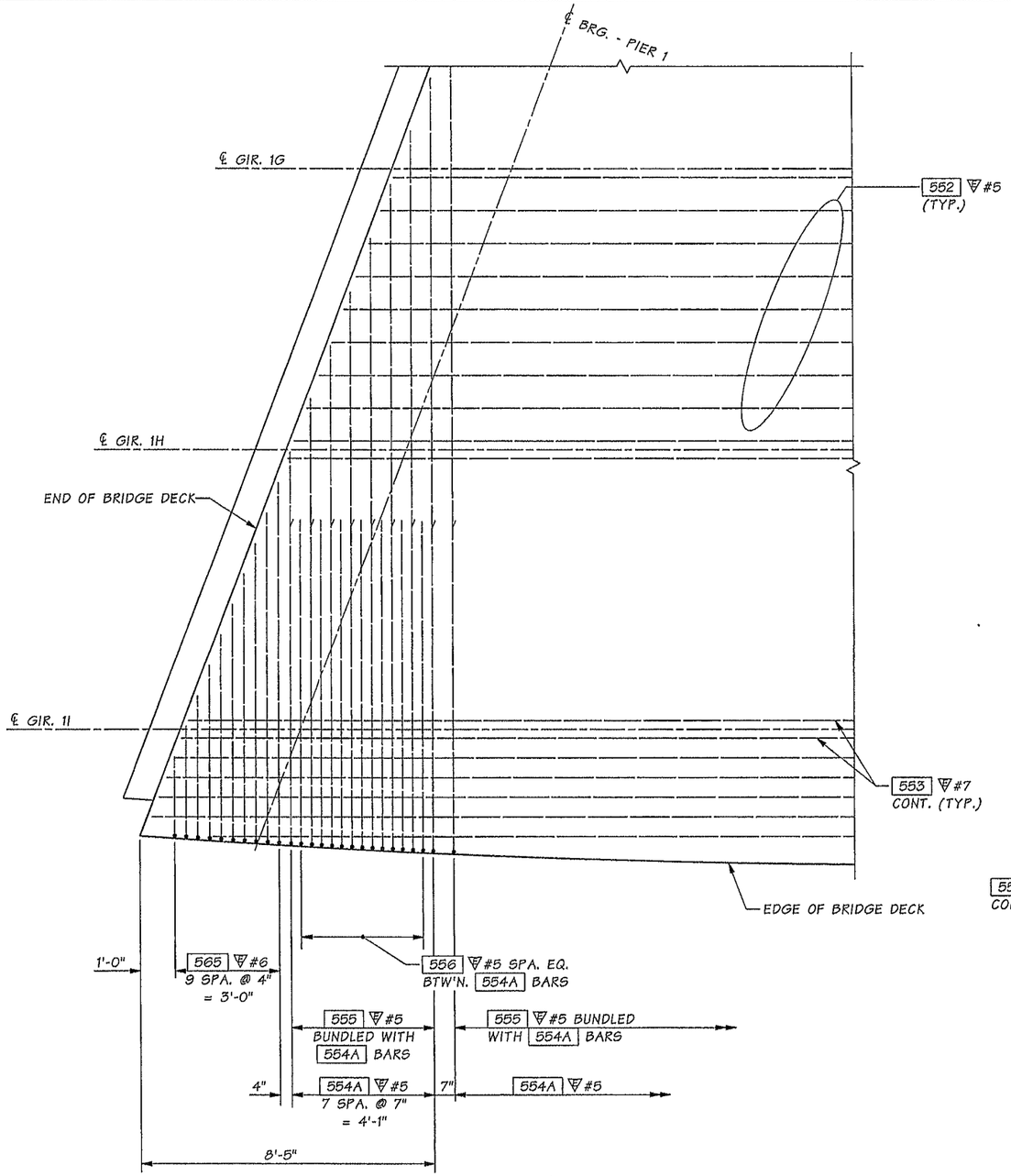

DETAIL 1 MC49

53 AND 54 BARS NOT SHOWN FOR CLARITY

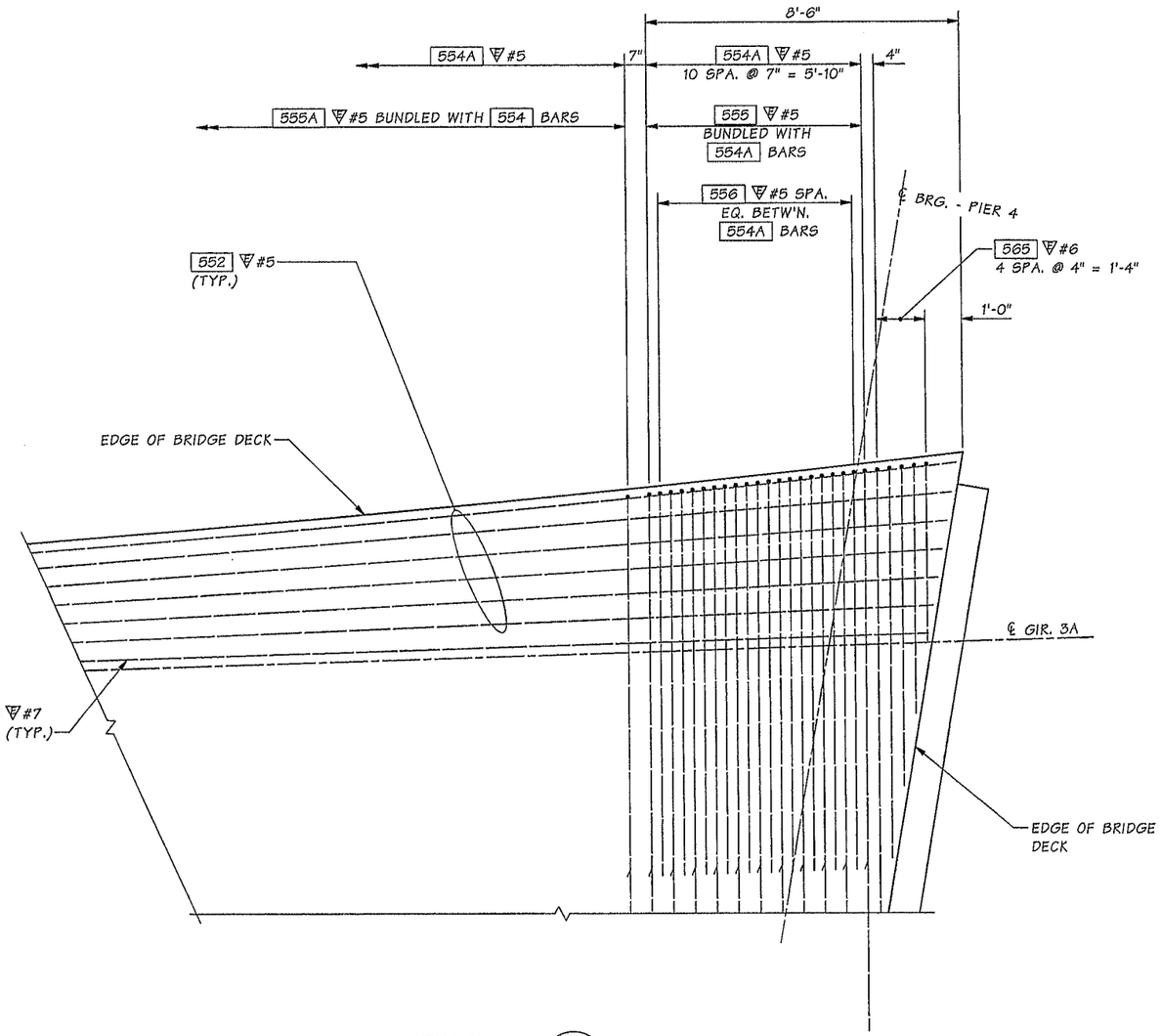

DETAIL 2 MC50

53 AND 54 BARS NOT SHOWN FOR CLARITY

NOTES:

1. FOR DETAILS NOT SHOWN SEE BR. SHT. MC49 AND MC50

Bridge Design Engr.	Khaleghi, B		M:\Y-Team\M ST TO PORTLAND\MCKINLEY AVE BRG\window files\DECK REINF DETAIL.wnd
Supervisor	Khaleghi, B		
Designed By	Burnham, B	12/12	
Checked By	Glassford, P	05/13	
Detailed By	Andreotti, L	12/12	
Bridge Projects Engr.			
Prelim. Plan By			
Architect/Specialist			

DATE	REVISION	BY	APP'D

REGION NO.	STATE	FED. AID PROJ. NO.	SHEET NO.	TOTAL SHEETS
10	WASH.			
JOB NUMBER 12C501				

BRIDGE AND STRUCTURES OFFICE

2/11/14 2/12/14

Washington State Department of Transportation

I-5
M ST TO PORTLAND AVE - HOV

MCKINLEY WAY OVER I-5 BRIDGE NO. 5/448

BRIDGE DECK REINFORCEMENT DETAIL

BRIDGE SHEET NO. MC51

SHEET 977 OF 1763 SHEETS

SR 5 FILE NO. 7452 SHEET MC51

Tue Feb 11 07:03:17 2014

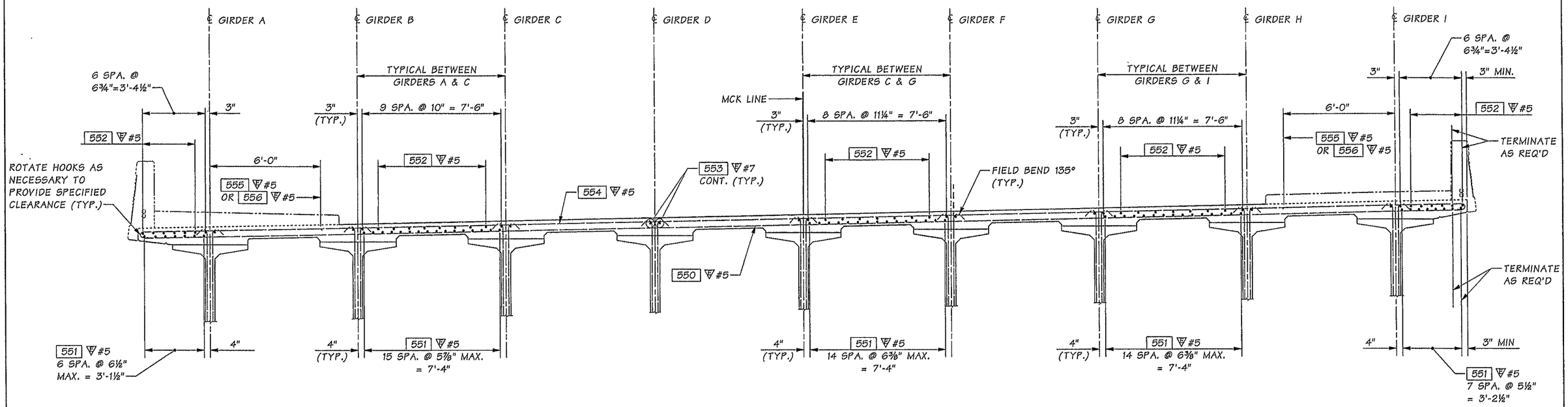

BRIDGE DECK REINFORCEMENT SECTION
MID-SPAN FOR SPAN 1

SR 5 FILE NO. 7452 SHEET MC52

Bridge Design Engr.	Khaleghi, B		
Supervisor	Khaleghi, B		
Designed By	Burnham, B	12/12	
Checked By	Glassford, P	05/13	
Detailed By	Andreotti, L	12/12	
Bridge Projects Engr.			
Prelim. Plan By			
Architect/Specialist			

M:\Y-Team\M ST TO PORTLAND\MCKINLEY AVE BRG\window files\SECTION SPAN 1.wnd

DATE	REVISION	BY	APP'D

REGION NO.	STATE	FED. AID PROJ. NO.	SHEET NO.	TOTAL SHEETS
10	WASH.			
JOB NUMBER 12C501				

BRIAN DAVID BURNHAM — STATE OF WASHINGTON — 48156 — REGISTERED PROFESSIONAL ENGINEER — 2/11/14

BRIDGE AND STRUCTURES OFFICE

BILLAN KHALEGHI — STATE OF WASHINGTON — PROFESSIONAL ENGINEER — 2/11/14

Washington State Department of Transportation

I-5
M ST TO PORTLAND AVE - HOV

MCKINLEY WAY OVER I-5 BRIDGE NO. 5/448

BRIDGE DECK SECTION
MID-SPAN FOR SPAN 1

BRIDGE SHEET NO. MC52

SHEET 978 OF 1763 SHEETS

Tue Feb 11 07:03:18 2014

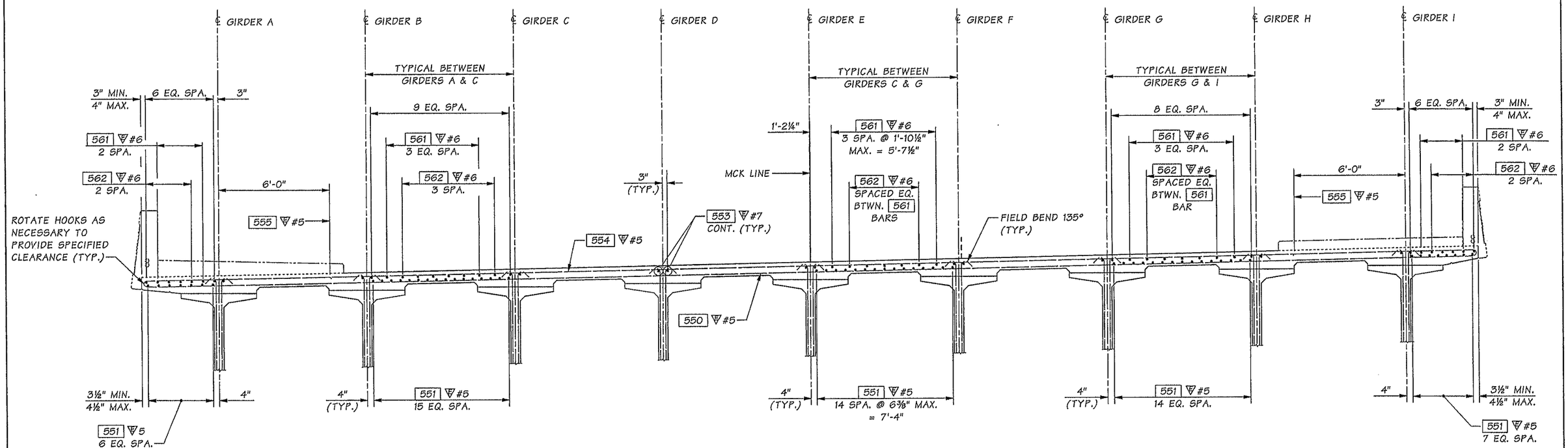

BRIDGE DECK REINFORCEMENT SECTION NEAR PIER 2

SR 5 FILE NO. 7452 SHEET MC53

Bridge Design Engr.	Khaleghi, B	
Supervisor	Khaleghi, B	
Designed By	Burnham, B	12/12
Checked By	Glassford, P	05/13
Detailed By	Andreotti, L	12/12
Bridge Projects Engr.		
Prelim. Plan By		
Architect/Specialist		

M:\Y-Team\M ST TO PORTLAND\MCKINLEY AVE BRG\window files\SECTION SPAN 2.wnd

DATE	REVISION	BY	APP'D

REGION NO.	STATE	FED. AID PROJ. NO.	SHEET NO.	TOTAL SHEETS
10	WASH.			

JOB NUMBER 12C501

BRIDGE AND STRUCTURES OFFICE

2/11/14 2/12/14

Washington State Department of Transportation

I-5
M ST TO PORTLAND AVE - HOV

MCKINLEY WAY OVER I-5 BRIDGE NO. 5/448

BRIDGE DECK SECTION NEAR PIER 2

BRIDGE SHEET NO. MC53

SHEET 979 OF 1763 SHEETS

Tue Feb 11 07:03:19 2014

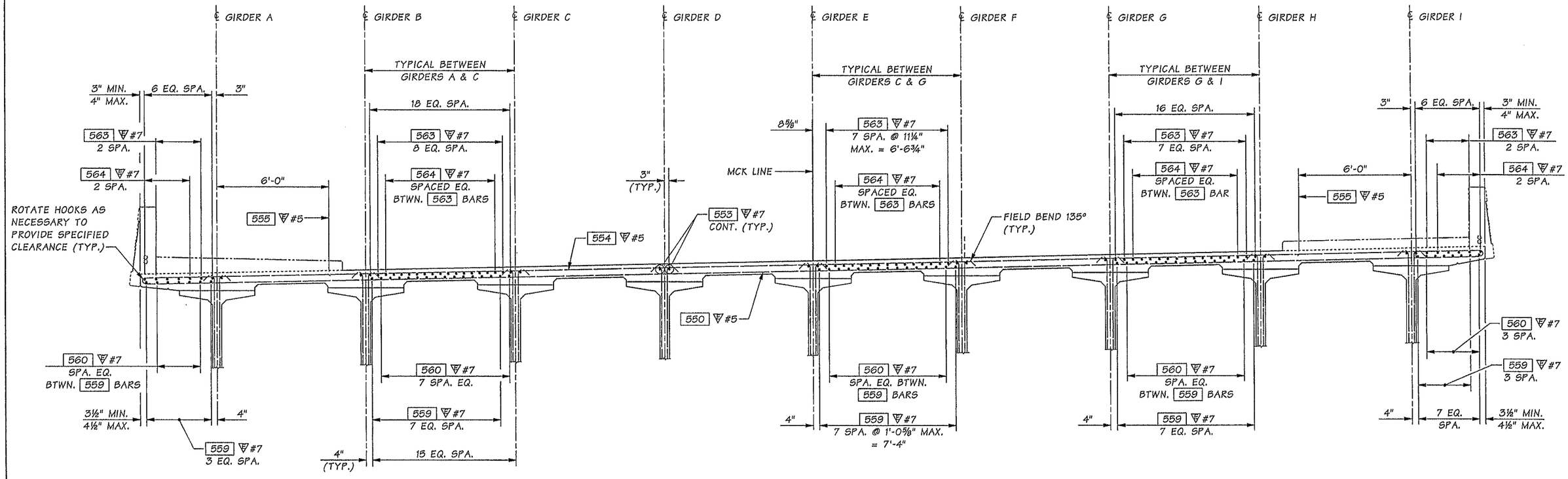

BRIDGE DECK REINFORCEMENT SECTION
NEAR PIER 3

SR 5 FILE NO. 7452 SHEET MC54

Bridge Design Engr.	Khaleghi, B		M:\Y-Team\M ST TO PORTLAND\MCKINLEY AVE BRG\window files\SECTION SPAN N3.wnd								
Supervisor	Khaleghi, B										
Designed By	Burnham, B	12/12									
Checked By	Glassford, P	05/13									
Detailed By	Andreotti, L	12/12									
Bridge Projects Engr.											
Prelim. Plan By											
Architect/Specialist			DATE	REVISION	BY	APP'D					

REGION NO.	STATE	FED. AID PROJ. NO.	SHEET NO.	TOTAL SHEETS
10	WASH.			
JOB NUMBER 12C501				

BRIDGE AND STRUCTURES OFFICE

2/11/14 2/12/14

Washington State Department of Transportation

I-5
M ST TO PORTLAND AVE - HOV

MCKINLEY WAY OVER I-5 BRIDGE NO. 5/448

BRIDGE DECK SECTION
NEAR PIER 3

BRIDGE SHEET NO. MC54

SHEET 980 OF 1763 SHEETS

Tue Feb 11 07:03:20 2014

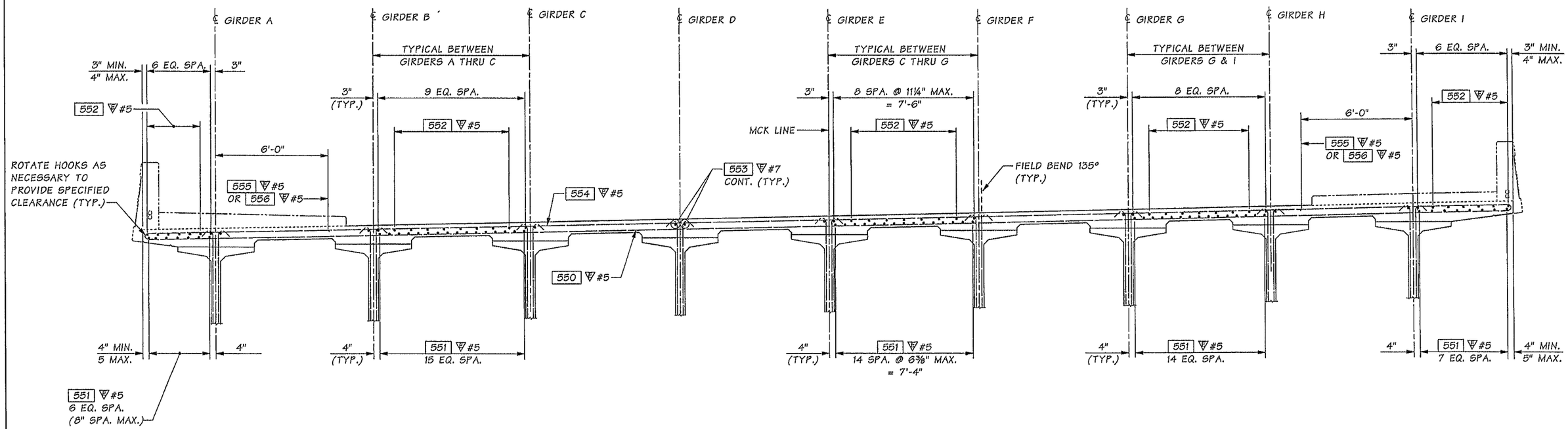

BRIDGE DECK REINFORCEMENT SECTION
MID-SPAN FOR SPAN 3

SR 5 FILE NO. 7452 SHEET MC55

Bridge Design Engr.	Khaleghi, B	
Supervisor	Khaleghi, B	
Designed By	Burnham, B	12/12
Checked By	Glassford, P	05/13
Detailed By	Andreotti, L	12/12
Bridge Projects Engr.		
Prelim. Plan By		
Architect/Specialist		

M:\Y-Team\M ST TO PORTLAND\MCKINLEY AVE BRG\window files\SECTION MID SPAN 3.wnd

DATE	REVISION	BY	APP'D

REGION NO.	STATE	FED. AID PROJ. NO.	SHEET NO.	TOTAL SHEETS
10	WASH.			

JOB NUMBER 12C501

BRIDGE AND STRUCTURES OFFICE

2/11/14 2/12/14

Washington State Department of Transportation

I-5
M ST TO PORTLAND AVE - HOV

MCKINLEY WAY OVER I-5 BRIDGE NO. 5/448

BRIDGE DECK SECTION
MID-SPAN FOR SPAN 3

BRIDGE SHEET NO. MC55

SHEET 981 OF 1763 SHEETS

Tue Feb 11 07:03:21 2014

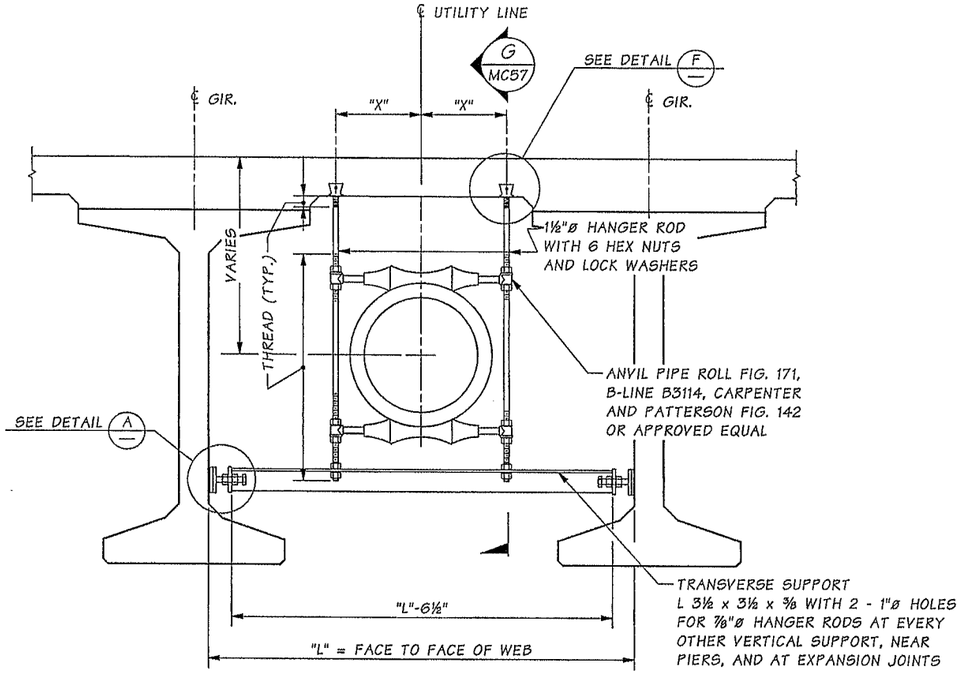

HANGER UTILITY SUPPORT

"X" DETERMINED FROM MANUFACTURER

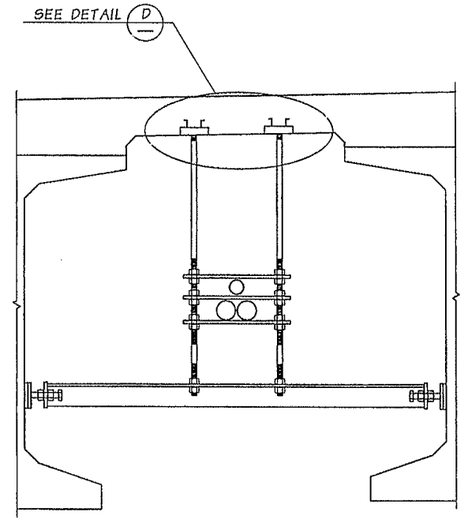

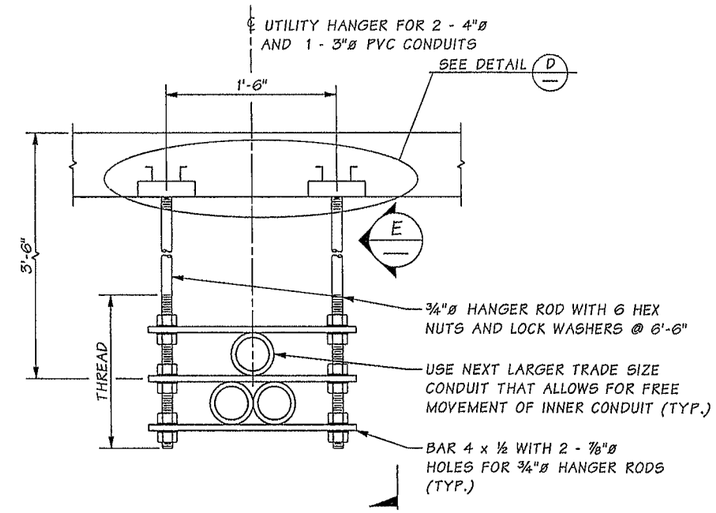

PVC CONDUIT SUPPORT DETAIL

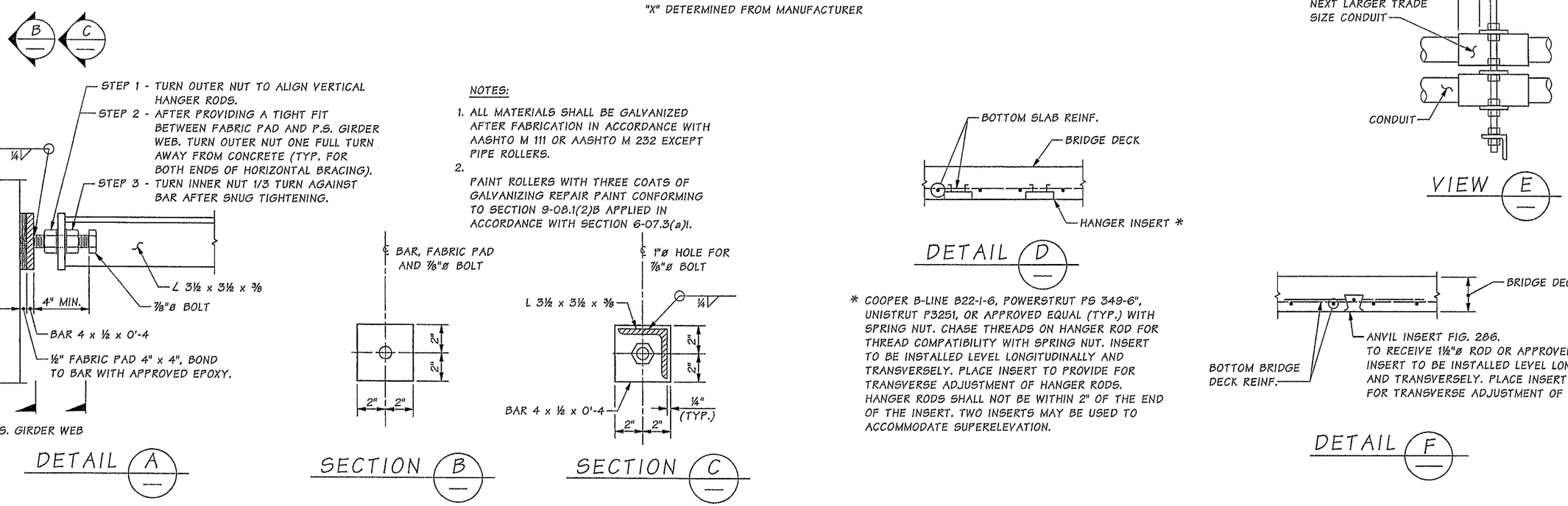

NOTES:

1. ALL MATERIALS SHALL BE GALVANIZED AFTER FABRICATION IN ACCORDANCE WITH AASHTO M 111 OR AASHTO M 232 EXCEPT PIPE ROLLERS.
2. PAINT ROLLERS WITH THREE COATS OF GALVANIZING REPAIR PAINT CONFORMING TO SECTION 9-08.1(2)B APPLIED IN ACCORDANCE WITH SECTION 6-07.3(a)I.

* COOPER B-LINE B22-1-6, POWERSTRUT PS 349-6", UNISTRUT P3251, OR APPROVED EQUAL (TYP.) WITH SPRING NUT. CHASE THREADS ON HANGER ROD FOR THREAD COMPATIBILITY WITH SPRING NUT. INSERT TO BE INSTALLED LEVEL LONGITUDINALLY AND TRANSVERSELY. PLACE INSERT TO PROVIDE FOR TRANSVERSE ADJUSTMENT OF HANGER RODS. HANGER RODS SHALL NOT BE WITHIN 2" OF THE END OF THE INSERT. TWO INSERTS MAY BE USED TO ACCOMMODATE SUPERELEVATION.

Bridge Design Engr.	Khaleghi, B		M:\Y-Team\M ST TO PORTLAND\MCKINLEY AVE BRG\window files\UTILITY SUPPORT 1.wnd
Supervisor	Khaleghi, B		
Designed By	Burnham, B	05/13	
Checked By	Glassford, P	05/13	
Detailed By	Andreotti, L	05/13	
Bridge Projects Engr.			
Prelim. Plan By			
Architect/Specialist			

DATE	REVISION	BY	APP'D

REGION NO.	STATE	FED. AID PROJ. NO.	SHEET NO.	TOTAL SHEETS
10	WASH.			
JOB NUMBER 12C501				

BRIDGE AND STRUCTURES OFFICE

Washington State Department of Transportation

I-5
M ST TO PORTLAND AVE - HOV

MCKINLEY WAY OVER I-5 BRIDGE NO. 5/448

UTILITY SUPPORT DETAILS 1 OF 2

BRIDGE SHEET NO. MC56

SHEET 982 OF 1763 SHEETS

SR 5 FILE NO. 7452 SHEET MC56

Tue Feb 11 07:03:22 2014

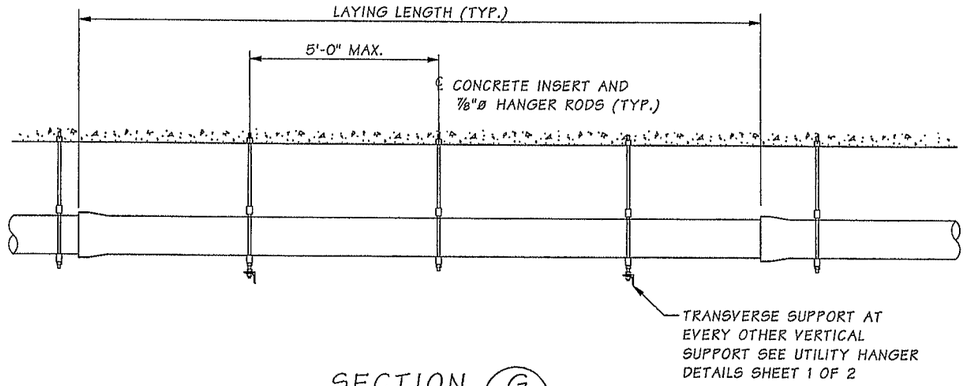

SECTION G MC56

RGS OR PVC CONDUIT

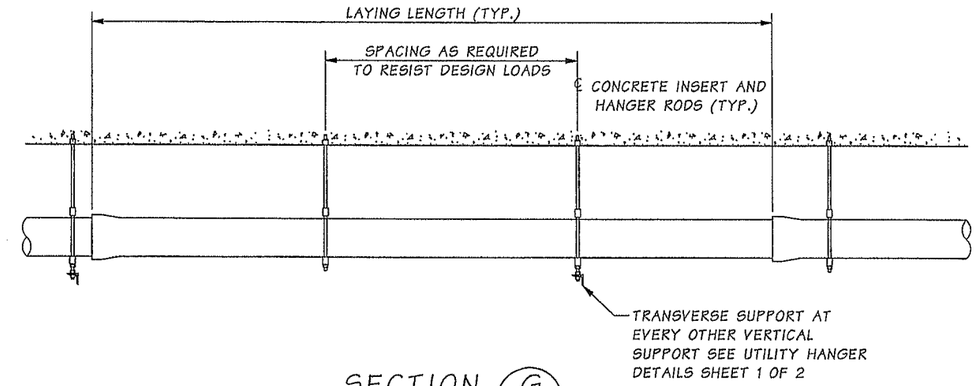

SECTION G MC56

UTILITIES OTHER THAN RGS OR PVC CONDUITS

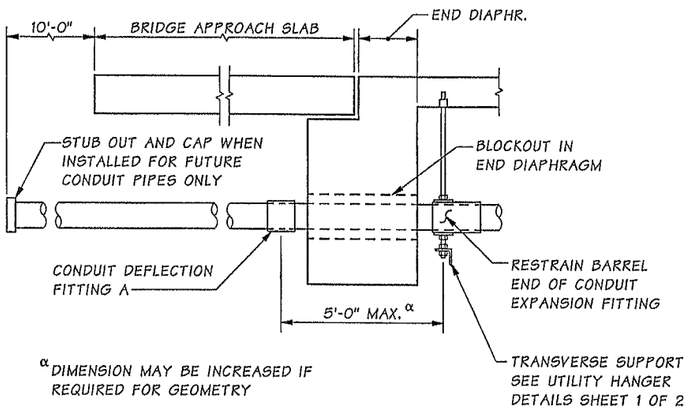

UTILITY CONDUIT PLACEMENT DETAIL ~ RGS

SEE BARRIER SHEETS FOR CONDUIT DEFLECTION FITTING A DETAIL.

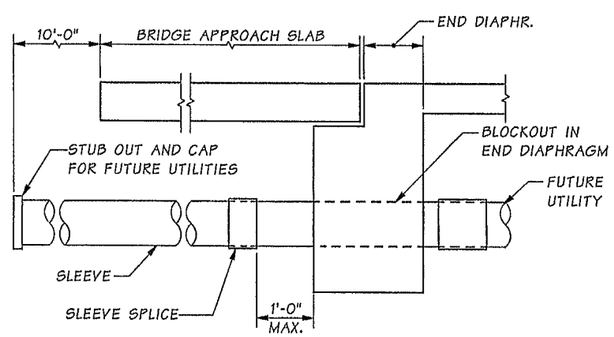

FUTURE UTILITIES SLEEVE PLACEMENT DETAIL

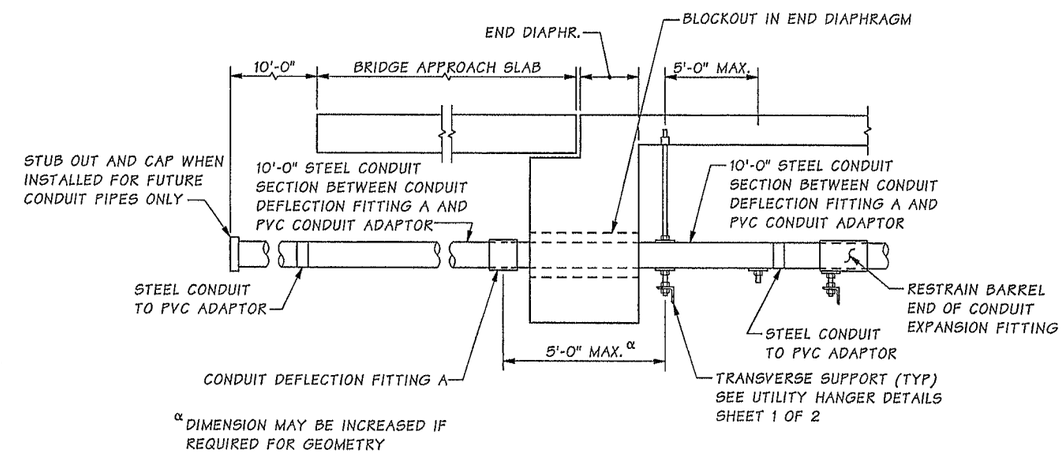

UTILITY CONDUIT PLACEMENT DETAIL ~ PVC

NOTES:

1. SET POSITION OF EXPANSION FITTING BASED ON MANUFACTURER RECOMMENDATIONS AND TEMPERATURE AT TIME OF INSTALLATION.
2. EXPANSION FITTINGS SHALL BE INSTALLED EVERY 100'-0" MAX, AND SHALL ACCOMMODATE 5.1 INCHES OF MOVEMENT. THE DESIGN TEMPERATURE RANGE IS 125 DEGREES (-15° TO 110°).
3. SEE BARRIER SHEETS FOR CONDUIT DEFLECTION FITTING A DETAIL.

SR 5 FILE NO. 7452 SHEET MC57

Bridge Design Engr.	Khaleghi, B		
Supervisor	Khaleghi, B		
Designed By	Burnham, B	05/13	
Checked By	Glassford, P	05/13	
Detailed By	Andreotti, L	05/13	
Bridge Projects Engr.			
Prelim. Plan By			
Architect/Specialist			

M:\Y-Team\M ST TO PORTLAND\MCKINLEY AVE BRG\window files\UTILITY SUPPORT 2.wnd

DATE	REVISION	BY	APP'D

REGION NO.	STATE	FED. AID PROJ. NO.	SHEET NO.	TOTAL SHEETS
10	WASH.			
JOB NUMBER 12C501				

BRIAN DAVID BURNHAM, STATE OF WASHINGTON, 48136, REGISTERED PROFESSIONAL ENGINEER 2/11/14

BRIDGE AND STRUCTURES OFFICE

ELIAN KHALEGHI, STATE OF WASHINGTON, 21695, PROFESSIONAL ENGINEER 2/12/14

Washington State Department of Transportation

I-5
M ST TO PORTLAND AVE - HOV

MCKINLEY WAY OVER I-5 BRIDGE NO. 5/448

UTILITY SUPPORT DETAILS 2 OF 2

BRIDGE SHEET NO. MC57

SHEET 983 OF 1763 SHEETS

Tue Feb 11 07:03:24 2014

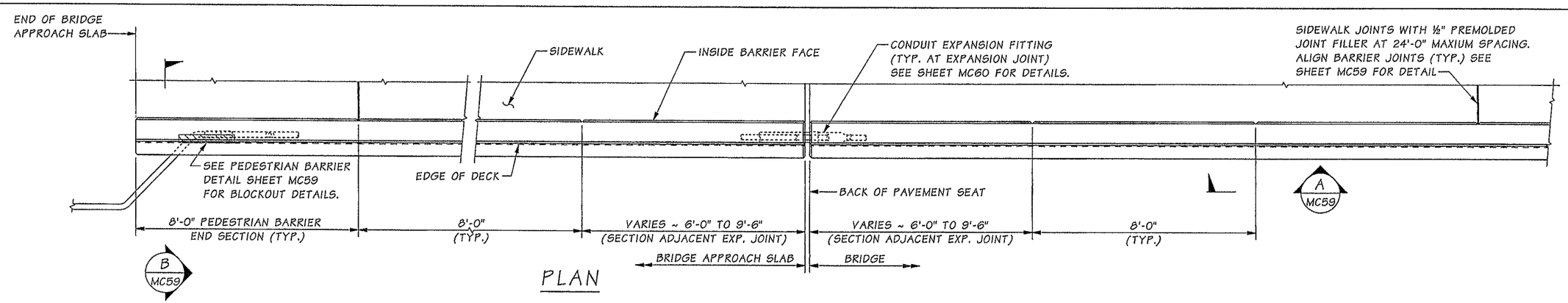

PLAN

PEDESTRIAN BARRIER

BARRIER CONTINUOUS BETWEEN BRIDGE DECK EXPANSION JOINTS.
CONSTRUCTION JOINTS WITH SHEAR KEYS ARE PERMISSIBLE AT DUMMY JOINT LOCATIONS.
FORM JOINTS BETWEEN DUMMY JOINTS SHALL NOT BE PERMITTED.

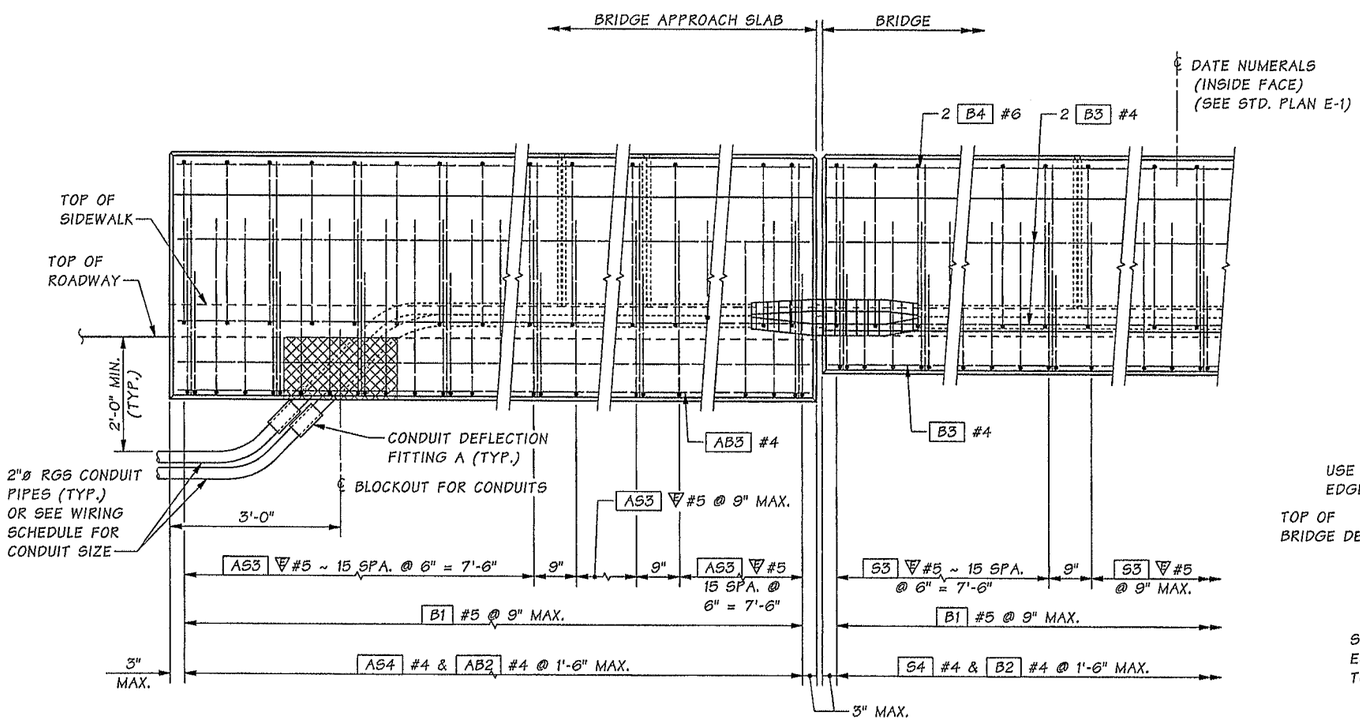

OUTSIDE ELEVATION
END OF PEDESTRIAN BARRIER

SHOWN WITH APPROACH SLAB

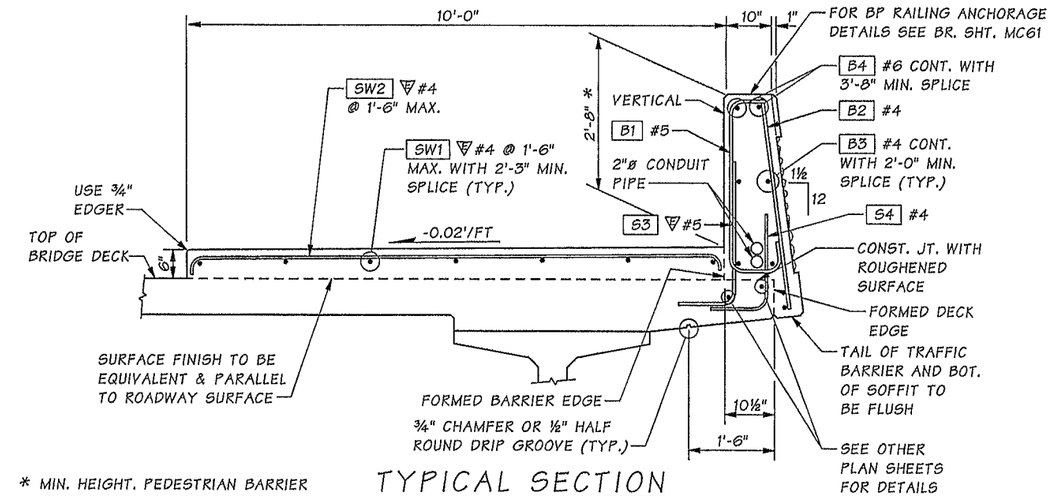

* MIN. HEIGHT. PEDESTRIAN BARRIER HEIGHT MAY VARY IF REQUIRED TO PROVIDE A SMOOTH PROFILE.

TYPICAL SECTION
PEDESTRIAN BARRIER

SHOWN ON BRIDGE

Bridge Design Engr.	Khaleghi, B		M:\Y-Team\M ST TO PORTLAND\MCKINLEY AVE BRG\window files\PED BARRIER 1.wnd
Supervisor	Khaleghi, B		
Designed By	Burnham, B	05/13	
Checked By	Glassford, P	05/13	
Detailed By	Andreotti, L	05/13	
Bridge Projects Engr.			
Prelim. Plan By			
Architect/Specialist			

DATE	REVISION	BY	APP'D

REGION NO.	STATE	FED. AID PROJ. NO.	SHEET NO.	TOTAL SHEETS
10	WASH.			
JOB NUMBER 12C501				

BRIAN DAVID BURNHAM — STATE OF WASHINGTON — 48136 — REGISTERED PROFESSIONAL ENGINEER — 2/11/14

BRIDGE AND STRUCTURES OFFICE

BRIAN KHALEGHI — STATE OF WASHINGTON — 37024 — PROFESSIONAL ENGINEER — 2/12/14

Washington State Department of Transportation

I-5
M ST TO PORTLAND AVE - HOV

MCKINLEY WAY OVER I-5 BRIDGE NO. 5/448

PEDESTRIAN BARRIER
1 OF 3

BRIDGE SHEET NO. MC58

SHEET 984 OF 1763 SHEETS

SR 5 FILE NO. 7452 SHEET MC58

Tue Feb 11 07:03:25 2014

JUNCTION BOX LOCATIONS

STATION	OFFSET	"TS" OR "LT"	STATION	OFFSET	"TS" OR "LT"
13+60	LT	LT	16+77	LT	TS
13+68	LT	TS	13+35	RT	LT
14+62	LT	LT	13+43	RT	TS
14+70	LT	TS	14+85	RT	LT
15+66	LT	LT	14+93	RT	TS
15+74	LT	TS	16+35	RT	LT
16+69	LT	LT	16+43	RT	TS

TS = TRAFFIC SYSTEM
LT = LIGHTING SYSTEM

JUNCTION BOX LOCATIONS SHOWN ARE APPROXIMATE. CENTER JUNCTION BOX INSTALLATION BETWEEN BARRIER DUMMY JOINTS.

INSTALL ALL CONDUIT RUNS TO DRAIN TO A BRIDGE END OR PROVIDE DRAIN AT ALL LOW POINTS IN CONDUIT RUN ON BRIDGE.

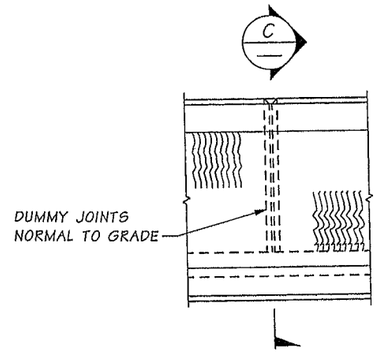

VIEW A MC58

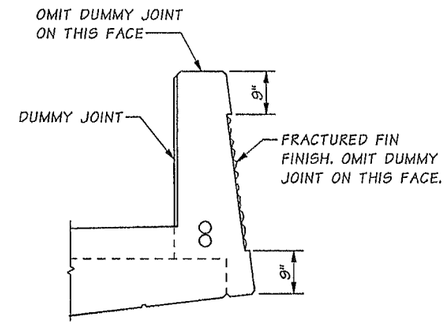

SECTION C

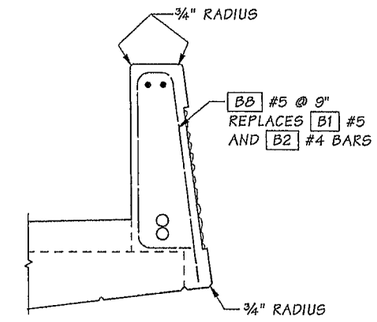

SLIPFORM ALTERNATE

SEE TYPICAL SECTION - PEDESTRIAN BARRIER FOR ADDITIONAL DETAILS

THE CONTRACTOR IS ADVISED THAT THE SLIPFORM CONSTRUCTION METHOD IS A PATENTED PROPRIETARY PROCESS FOR BARRIERS WITH A FRACTURED FIN FINISH.

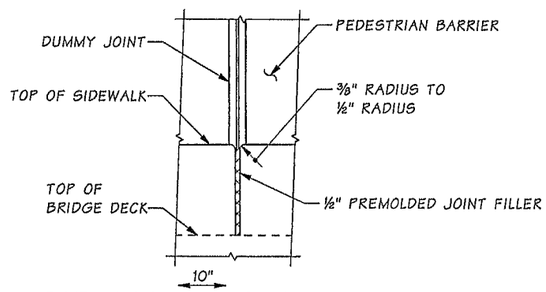

SIDEWALK JOINT DETAIL

SIDEWALK REINFORCING STEEL NOT SHOWN FOR CLARITY.

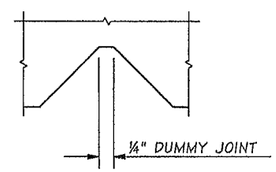

DUMMY JOINT DETAIL

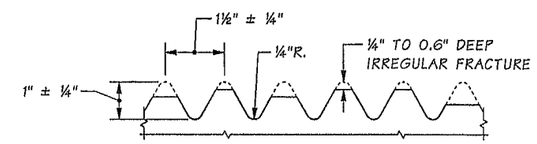

FRACTURED FIN FINISH

BENDING DIAGRAM

ALL DIMENSIONS ARE OUT TO OUT
▽ = EPOXY COATED REINFORCING STEEL

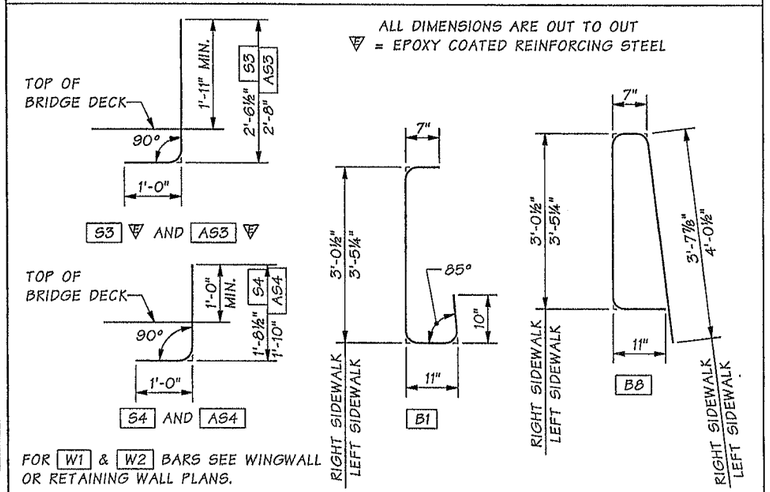

FOR W1 & W2 BARS SEE WINGWALL OR RETAINING WALL PLANS.

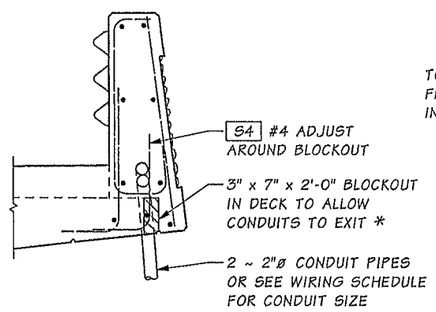

SECTION B BRIDGE MC58

FOR DETAILS NOT SHOWN SEE "OUTSIDE ELEVATION" AND "TYPICAL SECTION ~ PEDESTRIAN BARRIER"

* BLOCKOUT WIDTH MAY BE INCREASED TO 6" TO ALLOW CONDUITS OF A LARGER DIAMETER THAN 2" TO EXIT BARRIER OR WALL WITHOUT REBAR STEEL CONFLICT

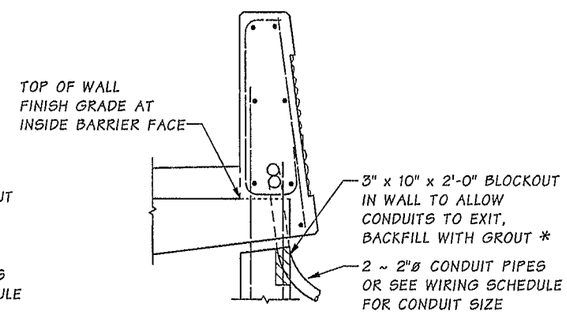

SECTION B WALL MC58

DETAIL FOR RETAINING WALL OR WINGWALL. FOR REINFORCING NOT SHOWN SEE STD. PLAN D-15 OR WINGWALL PLANS.

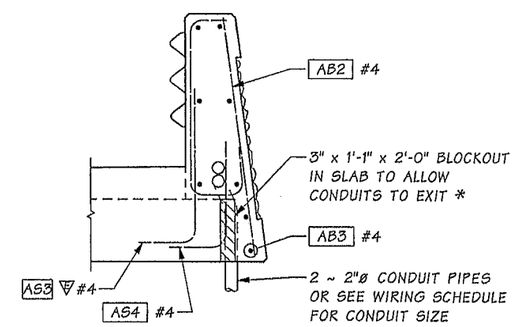

SECTION B BRIDGE APPR. SLAB MC58

FOR DETAILS NOT SHOWN SEE "OUTSIDE ELEVATION" AND "TYPICAL SECTION ~ PEDESTRIAN BARRIER" SECTION ALSO APPLIES TO THE MOMENT SLAB

SR 5 FILE NO. 7452 SHEET MC59

Bridge Design Engr.	Khaleghi, B	
Supervisor	Khaleghi, B	
Designed By	Burnham, B	05/13
Checked By	Glassford, P	05/13
Detailed By	Andreotti, L	05/13
Bridge Projects Engr.		
Prelim. Plan By		
Architect/Specialist		

M:\Y-Team\M ST TO PORTLAND\MCKINLEY AVE BRG\window files\PED BARRIER 2.wnd

DATE	REVISION	BY	APP'D

REGION NO.	STATE	FED. AID PROJ. NO.	SHEET NO.	TOTAL SHEETS
10	WASH.			
JOB NUMBER 12C501				

BRIAN DAVID BURNHAM STATE OF WASHINGTON 48136 REGISTERED PROFESSIONAL ENGINEER 2/11/14

BRIDGE AND STRUCTURES OFFICE

BRIAN KHALEGHI STATE OF WASHINGTON 18966 STRUCTURAL ENGINEER PROFESSIONAL ENGINEER 2/12/14

Washington State Department of Transportation

I-5
M ST TO PORTLAND AVE - HOV

MCKINLEY WAY OVER I-5 BRIDGE NO. 5/448

PEDSTRIAN BARRIER
2 OF 3

BRIDGE SHEET NO. MC59

SHEET 985 OF 1763 SHEETS

Tue Feb 11 07:03:26 2014

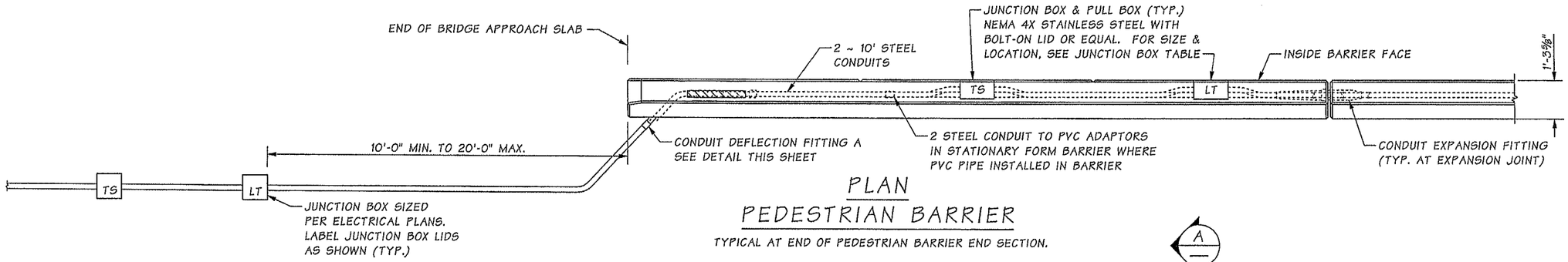

PLAN
PEDESTRIAN BARRIER

TYPICAL AT END OF PEDESTRIAN BARRIER END SECTION.

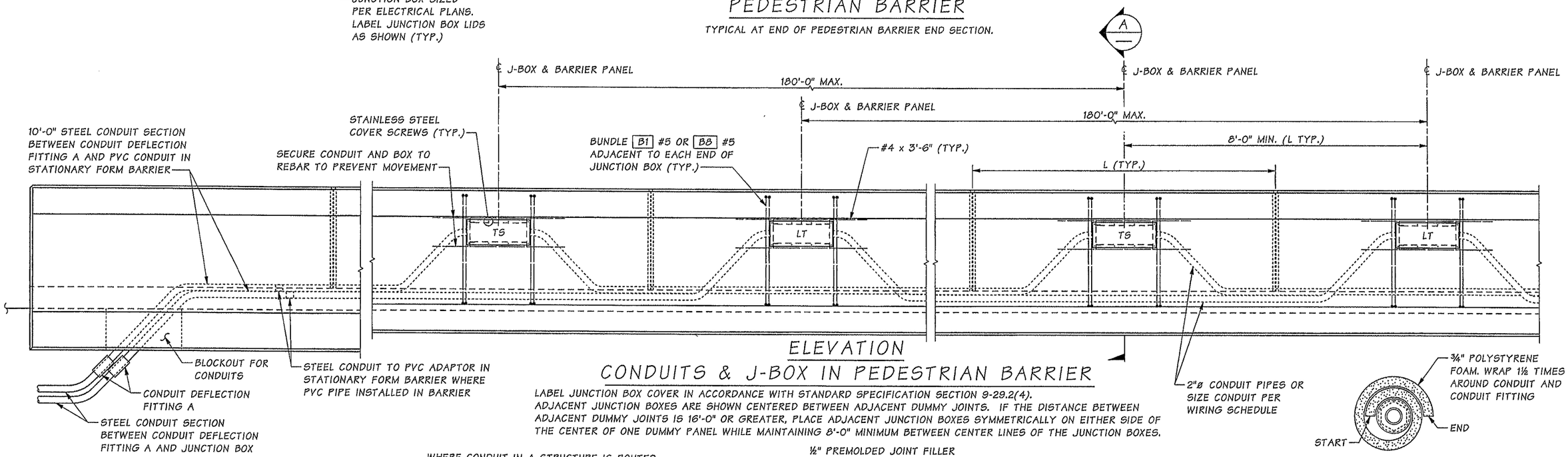

ELEVATION
CONDUITS & J-BOX IN PEDESTRIAN BARRIER

LABEL JUNCTION BOX COVER IN ACCORDANCE WITH STANDARD SPECIFICATION SECTION 9-29.2(4). ADJACENT JUNCTION BOXES ARE SHOWN CENTERED BETWEEN ADJACENT DUMMY JOINTS. IF THE DISTANCE BETWEEN ADJACENT DUMMY JOINTS IS 16'-0" OR GREATER, PLACE ADJACENT JUNCTION BOXES SYMMETRICALLY ON EITHER SIDE OF THE CENTER OF ONE DUMMY PANEL WHILE MAINTAINING 8'-0" MINIMUM BETWEEN CENTER LINES OF THE JUNCTION BOXES.

SECTION B

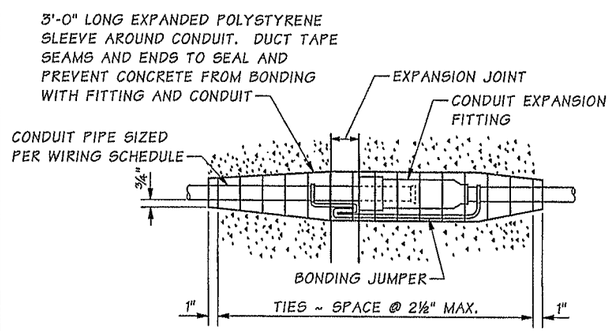

CONDUIT EXPANSION FITTING

CONDUIT FITTING - (TYPE AX FOR MOVEMENT OF ± 2") AT BRIDGE EXPANSION JOINTS

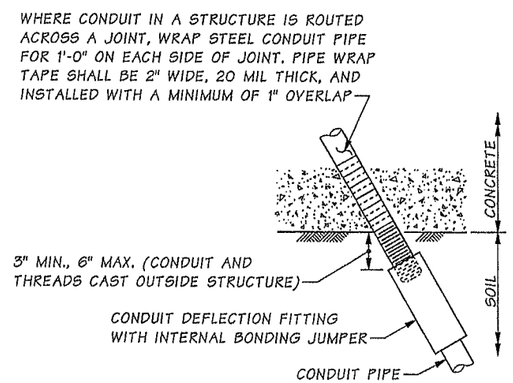

CONDUIT DEFLECTION FITTING A

CONDUIT FITTING - TYPE DX FOR DEFLECTION OF 30° AND ¾" MOVEMENT. PLACE AT CONDUIT PIPE EXIT FROM STRUCTURE

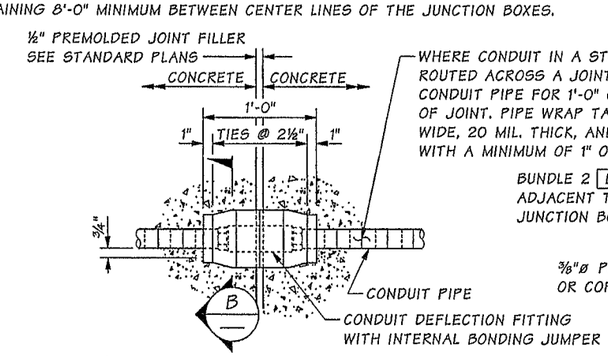

CONDUIT DEFLECTION FITTING B

CONDUIT FITTING - TYPE DX FOR DEFLECTION OF 30° AND ¾" MOVEMENT. CONDUIT PIPES PLACED THROUGH RETAINING WALL PEDESTRIAN BARRIER SHALL BE FITTED WITH DEFLECTION FITTINGS AT A MAXIMUM SPACING OF 120'. THE DEFLECTION FITTINGS SHALL BE PLACED AT THE PEDESTRIAN BARRIER OPEN JOINT THAT COINCIDES WITH THE RETAINING WALL STEM EXPANSION JOINT NEAREST TO THE TRANSVERSE CONSTRUCTION JOINT IN THE WALL FOOTING.

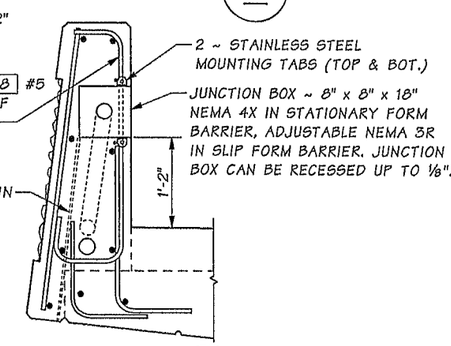

SECTION A

Bridge Design Engr.	Khaleghi, B		M:\Y-Team\M ST TO PORTLAND\MCKINLEY AVE BRG\window files\PED BARRIER 3.wnd							
Supervisor	Khaleghi, B									
Designed By	Burnham, B	05/13								
Checked By	Glassford, P	05/13								
Detailed By	Andreotti, L	05/13								
Bridge Projects Engr.										
Prelim. Plan By										
Architect/Specialist			DATE	REVISION	BY	APP'D				

Tue Feb 11 07:03:28 2014

REGION NO.	STATE	FED. AID PROJ. NO.	SHEET NO.	TOTAL SHEETS
10	WASH.			
JOB NUMBER 12C501				

BRIAN DAVID BURNHAM — STATE OF WASHINGTON — 48106 — REGISTERED PROFESSIONAL ENGINEER — 2/11/14

BRIDGE AND STRUCTURES OFFICE

BIJAN KHALEGHI — STATE OF WASHINGTON — 27196 — REGISTERED PROFESSIONAL ENGINEER — 2/12/14

Washington State Department of Transportation

I-5
M ST TO PORTLAND AVE - HOV

MCKINLEY WAY OVER I-5 BRIDGE NO. 5/448

PEDSTRIAN BARRIER
3 OF 3

BRIDGE SHEET NO. MC60

SHEET 986 OF 1763 SHEETS

SR 5 FILE NO. 7452 SHEET MC60

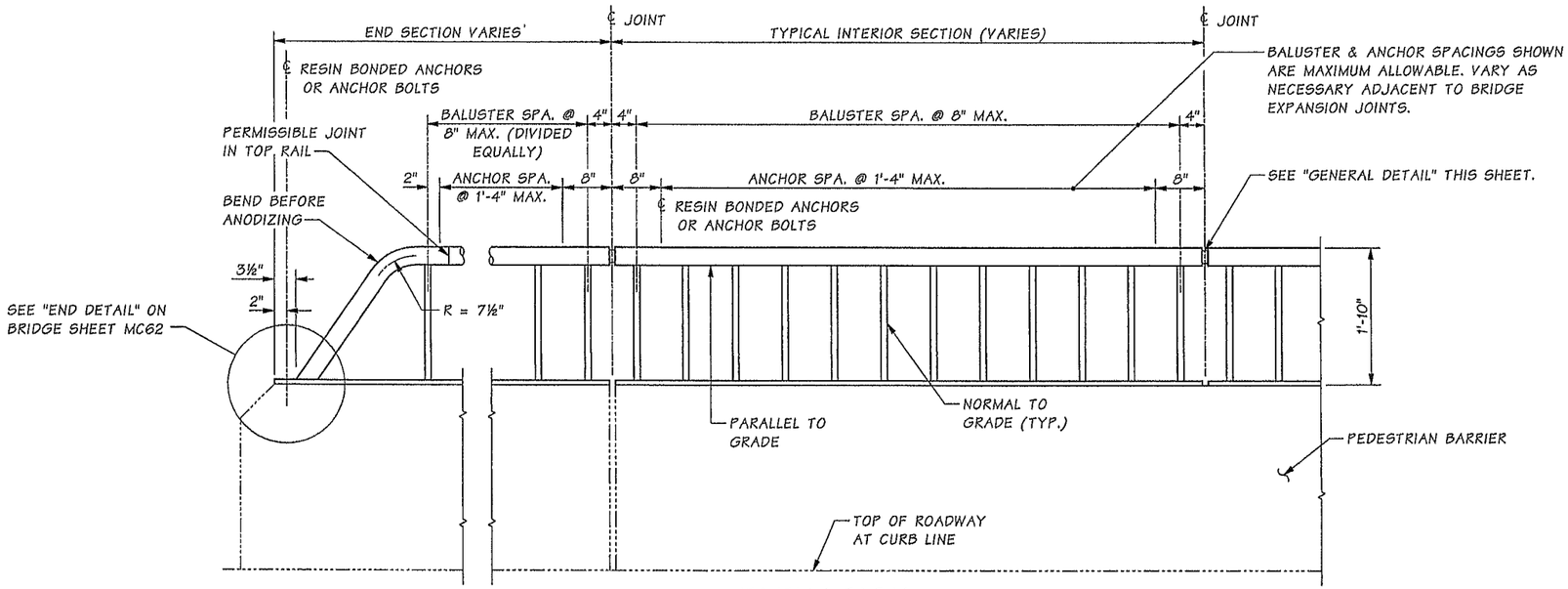

ELEVATION

BALUSTER AND GUARDRAIL SECTION
ATTACHMENT DETAILS NOT SHOWN.

NOTES

1. PIPE RAILING, PIPE RAILING SPLICES, COVER PLATES AND BOTTOM EXTRUDED CHANNELS SHALL BE BENT TO THE HORIZONTAL CURVE WHERE THE RADIUS OF CURVATURE IS LESS THAN 200'. THESE ITEMS MAY BE HEATED TO NOT MORE THAN 400°F FOR A PERIOD NOT TO EXCEED 30 MINUTES TO FACILITATE FORMING OR BENDING TO HORIZONTAL CURVATURE.
2. SHOP DRAWINGS OF RAILING SHALL BE SUBMITTED FOR APPROVAL SHOWING COMPLETE DIMENSIONS AND DETAILS OF FABRICATION AND INCLUDING AN ERECTION DIAGRAM. MATERIAL BEING USED SHALL BE SPECIFIED IN THE SHOP DRAWINGS.
3. CUTTING SHALL BE DONE BY SAWING OR MILLING AND ALL CUTS SHALL BE TRUE AND SMOOTH. FLAME CUTTING WILL NOT BE PERMITTED.
4. WELDING OF ALUMINUM SHALL CONFORM TO STD. SPEC. SECTION 9-28.14(3).
5. ALL ALUMINUM PARTS SHALL BE GIVEN A BRONZE ANODIC COATING OF AT LEAST 0.0006" THICK AND SEALED TO MEET THE REQUIREMENTS OF ASTM B 580 WITH A UNIFORM FINISH.
6. PIPE RAILING, PIPE BALUSTERS AND PIPE RAILING SPLICES SHALL BE ADEQUATELY WRAPPED TO INSURE SURFACE PROTECTION DURING HANDLING AND TRANSPORTATION TO THE JOB SITE.

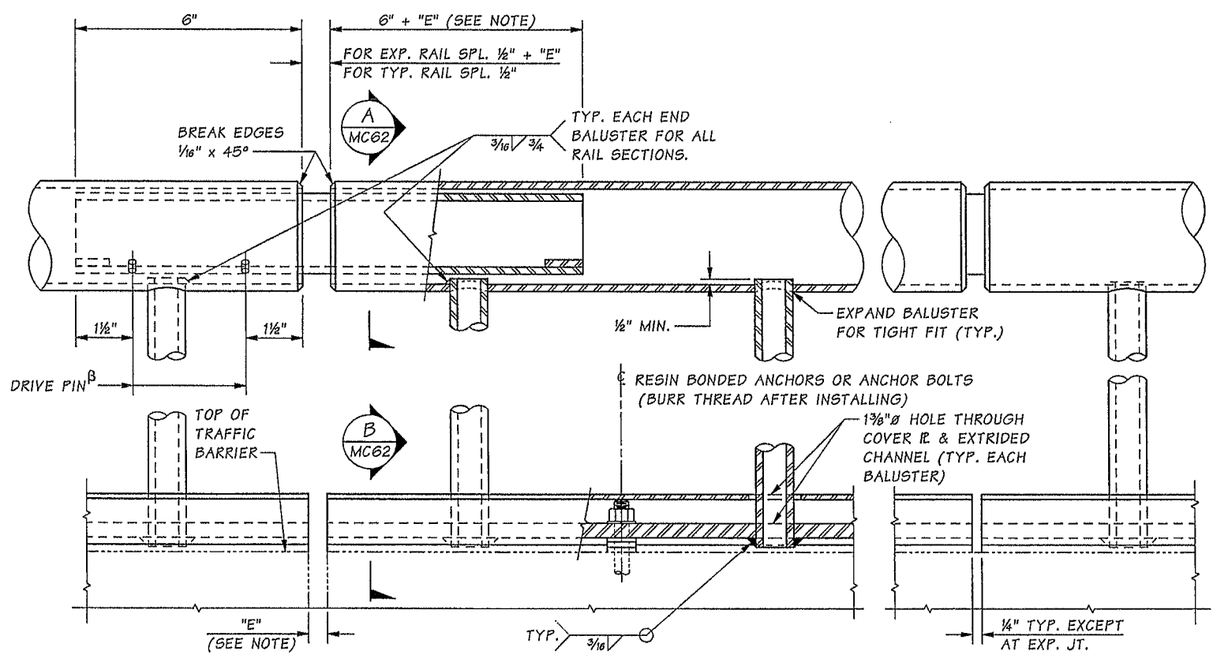

GENERAL DETAIL

β LOCATE ON OPPOSITE SIDE OF TRAFFIC. DRIVE PINS SHALL BE DRIVEN FLUSH WITH THE OUTSIDE FACE OF THE RAILING.

NOTE:

"E" DIMENSION TO MATCH OPENING OF ROADWAY EXPANSION JOINTS.

Bridge Design Engr.	Khaleghi, B		M:\Y-Team\M ST TO PORTLAND\MCKINLEY AVE BRG\window files\BP 1.wnd
Supervisor	Khaleghi, B		
Designed By	Burnham, B	05/13	
Checked By	Glassford, P	05/13	
Detailed By	Andreotti, L	01/13	
Bridge Projects Engr.			
Prelim. Plan By			
Architect/Specialist			

DATE	REVISION	BY	APP'D

REGION NO.	STATE	FED. AID PROJ. NO.	SHEET NO.	TOTAL SHEETS
10	WASH.			
JOB NUMBER 12C501				

BRIAN DAVID BURNHAM — STATE OF WASHINGTON — 48155 — REGISTERED PROFESSIONAL ENGINEER — 2/11/14

BRIDGE AND STRUCTURES OFFICE

BILLAN KHALEGHI — STATE OF WASHINGTON — 37696 — PROFESSIONAL ENGINEER — 2/12/14

Washington State Department of Transportation

I-5
M ST TO PORTLAND AVE - HOV

MCKINLEY WAY OVER I-5 BRIDGE NO. 5/448

BRIDGE RAILING TYPE BP
1 OF 2

BRIDGE SHEET NO. MC61

SHEET 987 OF 1763 SHEETS

SR 5 FILE NO. 7452 SHEET MC61

Tue Feb 11 07:03:30 2014

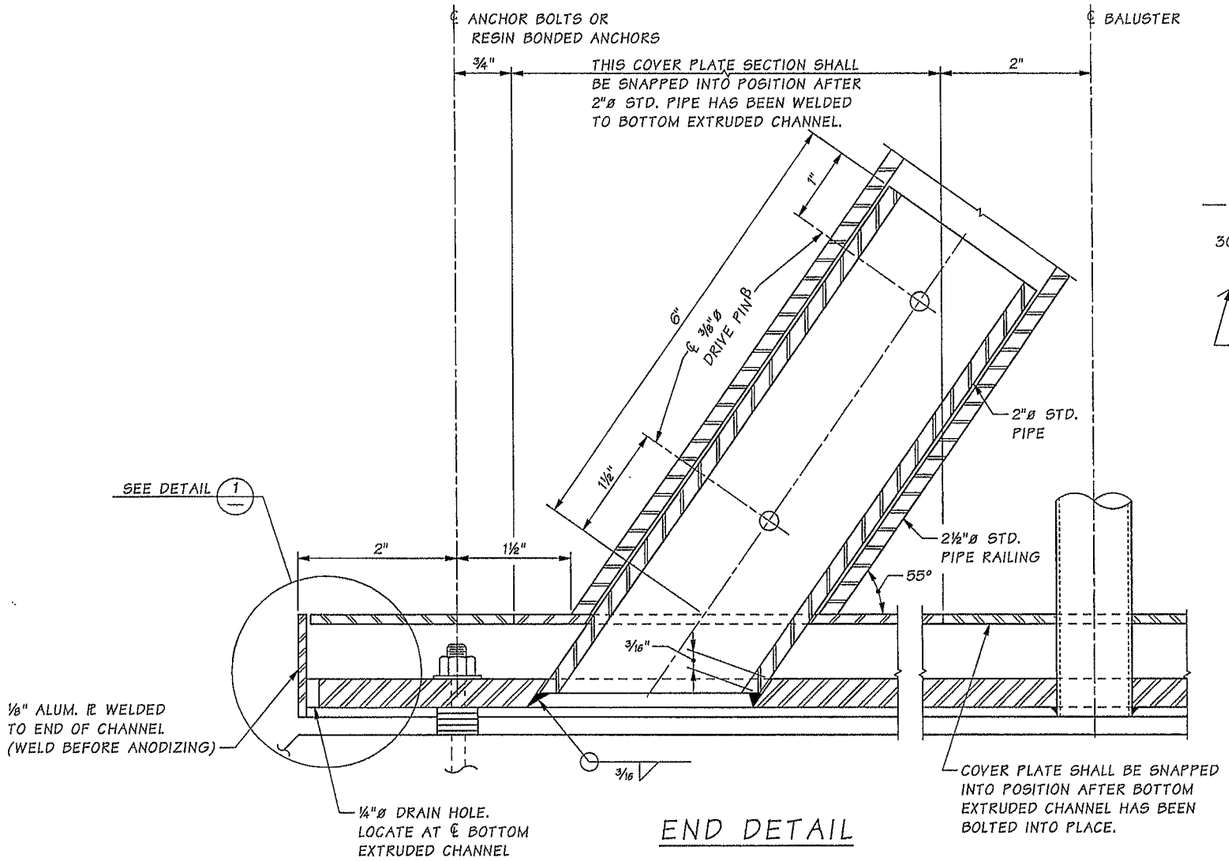

END DETAIL

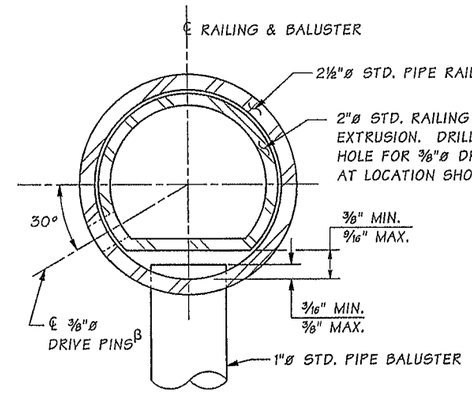

SECTION A MC61

OPTION #1

β LOCATE ON OPPOSITE SIDE OF TRAFFIC. DRIVE PINS SHALL BE DRIVEN FLUSH WITH THE OUTSIDE FACE OF THE RAILING.

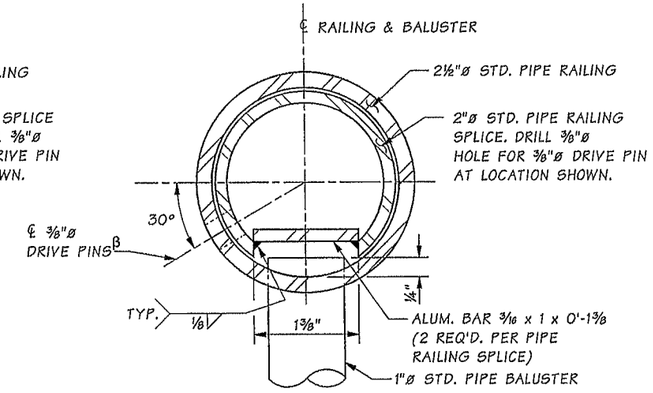

SECTION A MC61

OPTION #2

β LOCATE ON OPPOSITE SIDE OF TRAFFIC. DRIVE PINS SHALL BE DRIVEN FLUSH WITH THE OUTSIDE FACE OF THE RAILING.

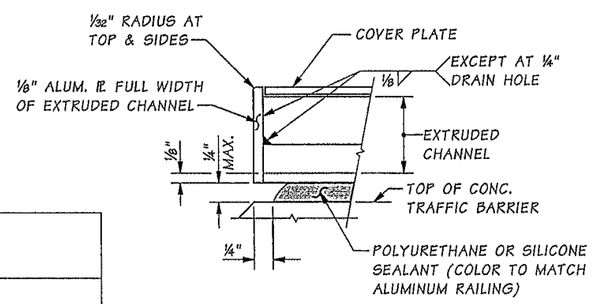

DETAIL 1

DRAIN HOLES NOT SHOWN

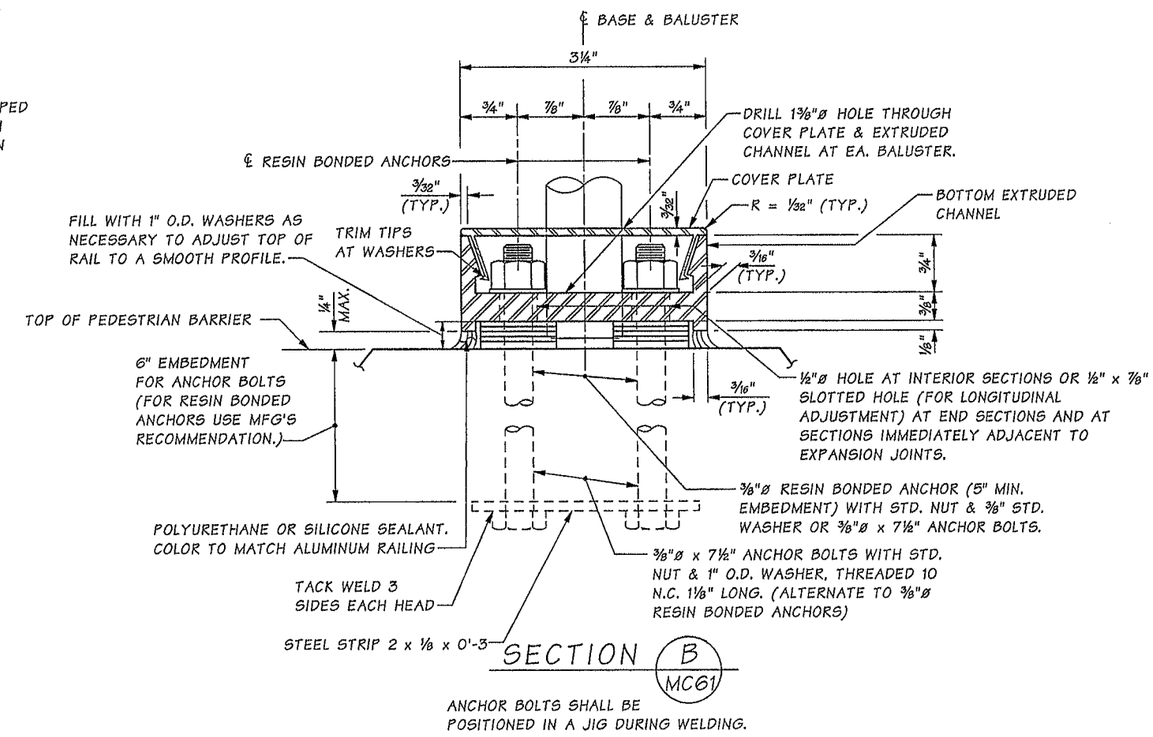

SECTION B MC61

ANCHOR BOLTS SHALL BE POSITIONED IN A JIG DURING WELDING.

MAT'L	PART	MATERIAL SPECIFICATION
ALUMINUM	PIPES	ASTM B 221- 6005-T5 OR 6005A-T5 ASTM B 241 OR B 429 6061-T6
ALUMINUM	EXTRUDED CHANNELS, COVER PLATES & BAR	ASTM B 221- 6005-T5
STEEL	ANCHOR BOLTS, NUTS & WASHERS	STANDARD SPECIFICATION SECTION 9-06.5(4) (GALVANIZE IN ACCORDANCE WITH AASHTO SPECIFICATION M 232)
STEEL	STRIP	ASTM A 36
STEEL	DRIVE PINS	ASTM A 276 TYPE 302 STAINLESS STEEL

SR 5 FILE NO. 7452 SHEET MC62

Bridge Design Engr.	Khaleghi, B	M:\Y-Team\M ST TO PORTLAND\MCKINLEY AVE BRG\window files\BP 2.wnd								
Supervisor	Khaleghi, B									
Designed By	Burnham, B	05/13								
Checked By	Glassford, P	05/13								
Detailed By	Andreotti, L	01/13								
Bridge Projects Engr.										
Prelim. Plan By										
Architect/Specialist		DATE	REVISION	BY	APP'D					

REGION NO.	STATE	FED. AID PROJ. NO.	SHEET NO.	TOTAL SHEETS
10	WASH.			
JOB NUMBER 12C501				

Tue Feb 11 07:03:31 2014

BRIAN DAVID BURNHAM — STATE OF WASHINGTON — 49186 — REGISTERED PROFESSIONAL ENGINEER — 2-11-14

BRIDGE AND STRUCTURES OFFICE

BRIAN KHALEGHI — STATE OF WASHINGTON — 27255 — PROFESSIONAL ENGINEER — 2/12/14

Washington State Department of Transportation

I-5
M ST TO PORTLAND AVE - HOV

MCKINLEY WAY OVER I-5 BRIDGE NO. 5/448

BRIDGE RAILING TYPE BP
2 OF 2

BRIDGE SHEET NO. MC62

SHEET 988 OF 1763 SHEETS

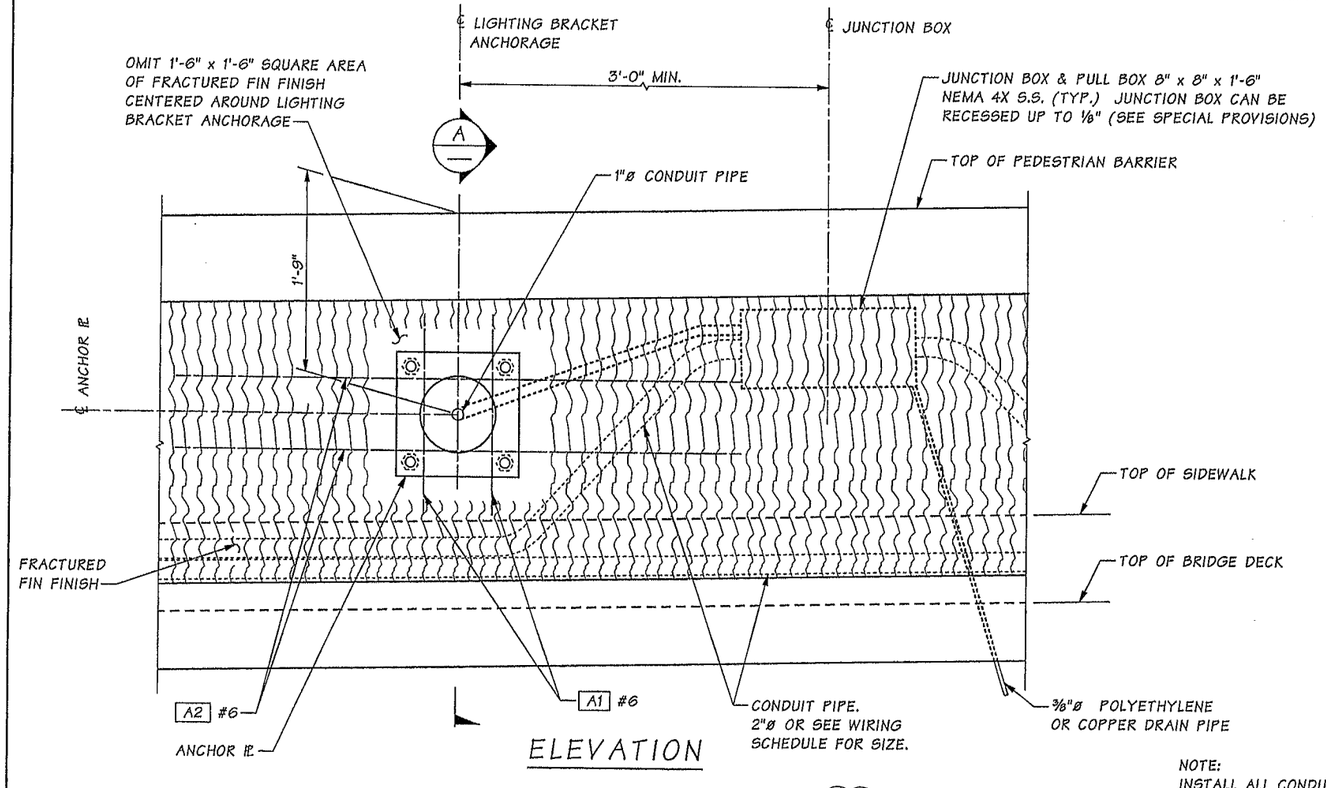

ELEVATION

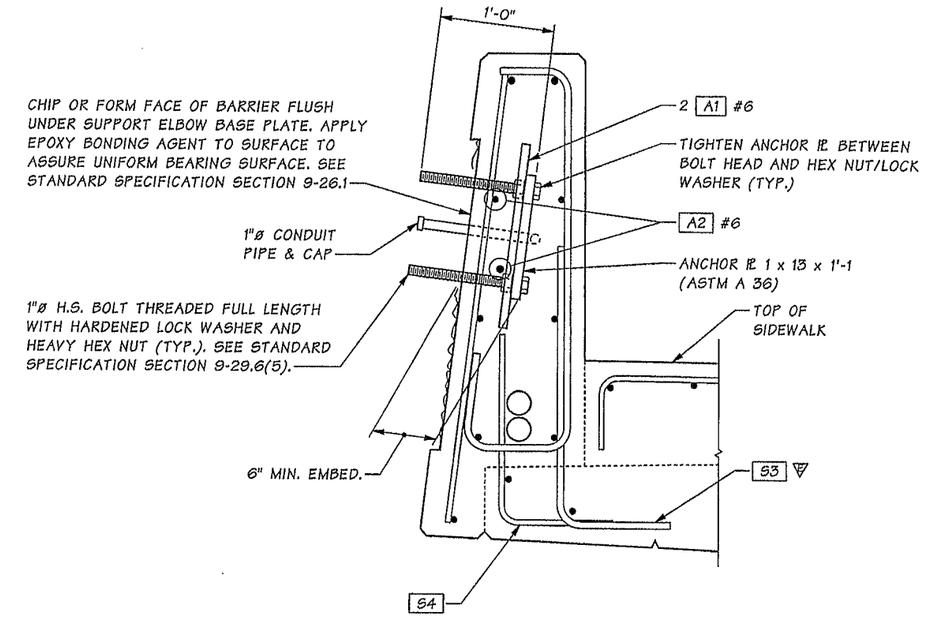

SECTION A

SEE PEDESTRIAN BARRIER SHEETS FOR INFORMATION NOT SHOWN.

NOTE:
INSTALL ALL CONDUIT RUNS TO DRAIN TO A BRIDGE END OR PROVIDE DRAIN AT ALL LOW POINTS WITHIN CONDUIT RUN. SEE "PEDESTRIAN BARRIER SHEETS" FOR BARRIER DIMENSIONS.

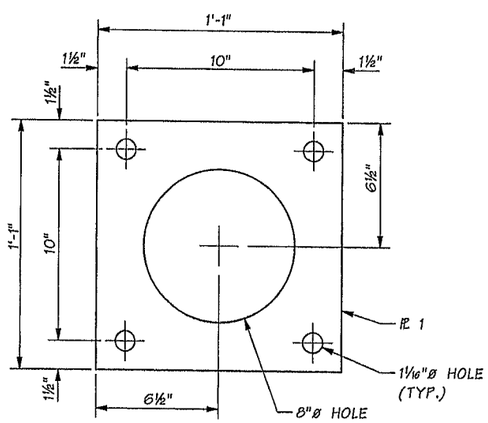

ANCHOR PLATE

GALVANIZE IN ACCORDANCE WITH AASHTO M 111

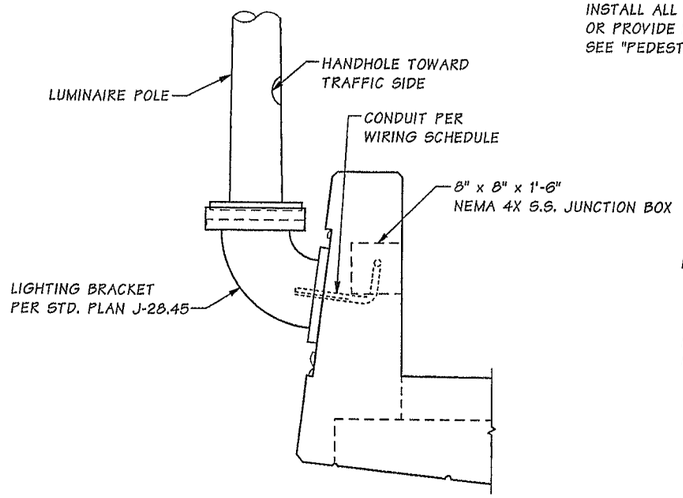

ELEVATION PROFILE
LUMINAIRE SUPPORT

SHOWN FOR BRIDGE, WALLS ARE SIMILAR

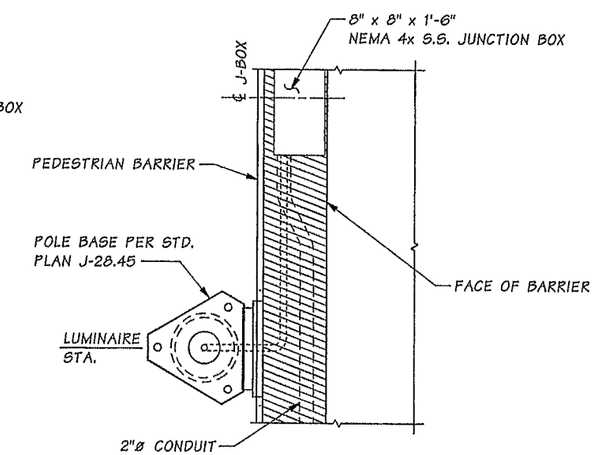

PLAN

LUMINAIRE POLE LOCATIONS ON BRIDGE & WALLS	
STATION	OFFSET
MCK 14+54.00	35.875 LT.
MCK 16+27.00	35.875 RT.

ANCHORAGE BARLIST			
MARK #	SIZE	LENGTH	BEND TYPE
A1	6	1'-9"	STRAIGHT
A2	6	5'-0"	STRAIGHT

Bridge Design Engr.	Khaleghi, B	
Supervisor	Khaleghi, B	
Designed By	Burnham, B	05/13
Checked By	Glassford, P	05/13
Detailed By	Andreotti, L	01/13
Bridge Projects Engr.		
Prelim. Plan By		
Architect/Specialist		

M:\Y-Team\M ST TO PORTLAND\MCKINLEY AVE BRG\Window files\LUMINAIRE ANCHOR.WND

DATE	REVISION	BY	APP'D

REGION NO.	STATE	FED. AID PROJ. NO.	SHEET NO.	TOTAL SHEETS
10	WASH.			
JOB NUMBER 12C501				

PATRICK MICHAEL GLASSFORD — STATE OF WASHINGTON — 40678 — REGISTERED PROFESSIONAL ENGINEER — 3/12/14

BRIDGE AND STRUCTURES OFFICE

BRIAN KHALEGHI — STATE OF WASHINGTON — 37066 — PROFESSIONAL ENGINEER — 3/12/14

Washington State Department of Transportation

I-5
M ST TO PORTLAND AVE - HOV

MCKINLEY WAY OVER I-5 BRIDGE NO. 5/448

LUMINAIRE ANCHORAGE DETAILS

BRIDGE SHEET NO. MC63

SHEET 989 OF 1763 SHEETS

SR 5 FILE NO. 7452 SHEET MC63

Wed Mar 12 14:30:03 2014

NOTES:

1. ALL EDGES OF BRIDGE APPROACH SLAB SHALL HAVE ½" RADIUS EXCEPT AT LONGITUDINAL JOINTS AND ADJACENT TO L-TYPE ABUTMENTS.

2. LONGITUDINAL JOINTS SHALL BE PLACED ON LANE LINES AND SHALL BE CONSTRUCTED AND SEALED IN ACCORDANCE WITH STD. SPEC. SECTION 5-05.3(8). JOINTS MAY BE EITHER A SAWCUT CRACK CONTROL JOINT OR A CONSTRUCTION JOINT. SAWCUT JOINTS SHALL TERMINATE 1'-0" BEFORE REACHING EDGE OF SLAB AND MUST BE SAW CUT AS SOON AS POSSIBLE AFTER PLACEMENT OF CONCRETE. SEE "LONGITUDINAL JOINT DETAIL" ON BRIDGE APPROACH SLAB DETAILS 2 OF 3.

3. THE MINIMUM LAP SPLICE OF #5 IS 2'-0", ∇#5 IS 2'-6", ∇#6 IS 3'-0", AND #8 IS 3'-3". ALL LAP SPLICES SHALL BE STAGGERED SO THAT NO MORE THAN 50% OF REBAR IS SPLICED AT THE SAME LOCATION. LAP SPLICES SHALL BE LOCATED WITHIN THE MIDDLE HALF OF THE BRIDGE APPROACH SLAB. OPTIONAL SPLICES ARE ALLOWED FOR AP4 ∇#6.

4. PER PEDESTRIAN BARRIER DETAILS, INCLUDING ANY BRIDGE APPROACH SLAB BLOCKOUT INFORMATION. SEE PEDSTRIAN BARRIER SHEETS.

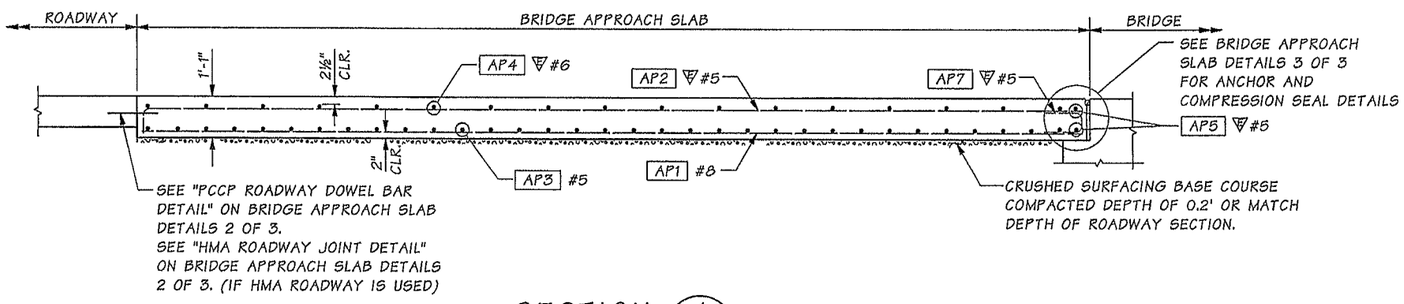

SECTION A

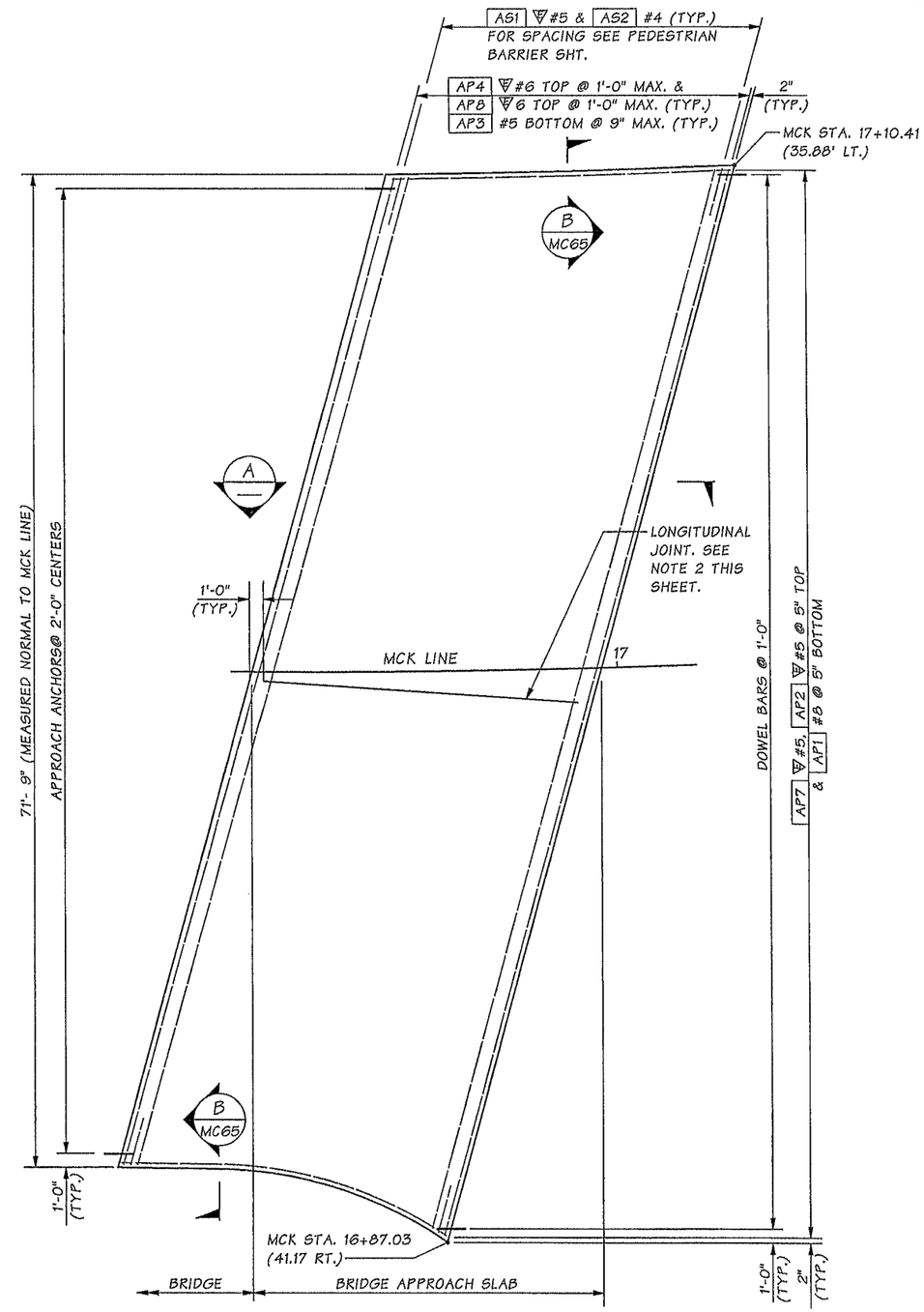

PLAN

BENDING DIAGRAM

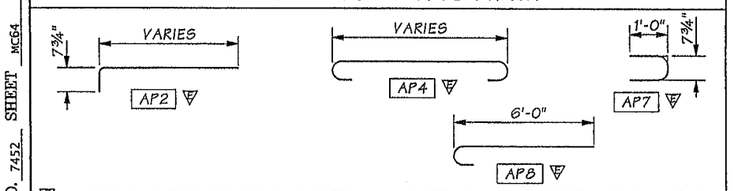

∇ = EPOXY COATED REINFORCING STEEL NOTE: ALL DIMENSIONS ARE OUT TO OUT

Bridge Design Engr.	Khaleghi, B		
Supervisor	Khaleghi, B		
Designed By	Burnham, B	01/13	
Checked By	Glassford, P	05/13	
Detailed By	Burnham, B	01/13	
Bridge Projects Engr.			
Prelim. Plan By			
Architect/Specialist			

M:\Y-Team\M ST TO PORTLAND\MCKINLEY AVE BRG\window files\APPROACH SLAB 1.wnd

DATE	REVISION	BY	APP'D

REGION NO.	STATE	FED. AID PROJ. NO.	SHEET NO.	TOTAL SHEETS
10	WASH.			
JOB NUMBER 12C501				

BRIAN DAVID BURNHAM, STATE OF WASHINGTON, 48136, REGISTERED PROFESSIONAL ENGINEER 2/11/14

BRIDGE AND STRUCTURES OFFICE

BRIAN KHALEGHI, STATE OF WASHINGTON, 20404, REGISTERED PROFESSIONAL ENGINEER 2/12/14

Washington State Department of Transportation

I-5
M ST TO PORTLAND AVE - HOV

MCKINLEY WAY OVER I-5 BRIDGE NO. 5/448

BRIDGE APPROACH SLAB DETAILS 1 OF 3

BRIDGE SHEET NO. MC64

SHEET 990 OF 1763 SHEETS

SR 5 FILE NO. 7452 SHEET MC64

Tue Feb 11 07:03:34 2014

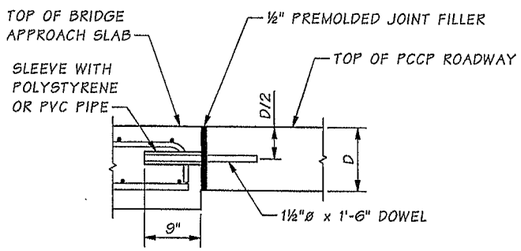

PCCP ROADWAY DOWEL BAR DETAIL

INSERT DOWELS PARALLEL TO CENTER LINE ALONG TRANSVERSE CONSTRUCTION JOINT.

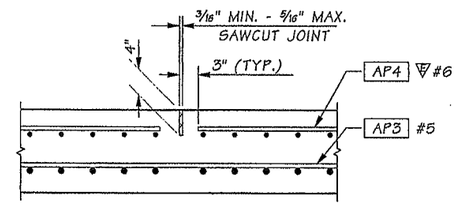

LONGITUDINAL JOINT DETAIL

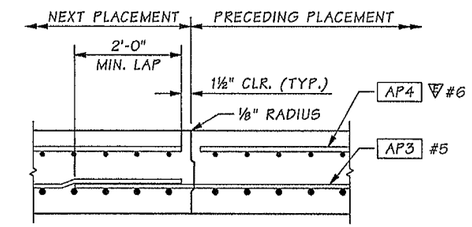

ALTERNATE LONGITUDINAL JOINT DETAIL

EDGE PRECEDING PLACEMENT ONLY WITH ⅛" RADIUS.

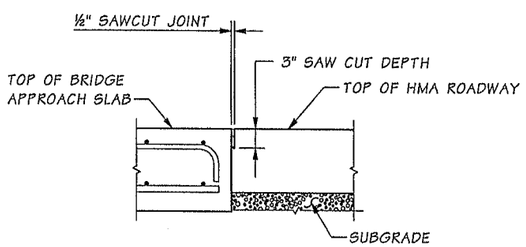

HMA ROADWAY JOINT DETAIL

SAWCUT SHALL BE FILLED WITH HOT-POURED COMPONENT IN ACCORDANCE WITH STANDARD SPECIFICATION SECTION 9-04.2(1) AND SEALED IN ACCORDANCE WITH STANDARD SPECIFICATION SECTION 5-05.3(8)B.

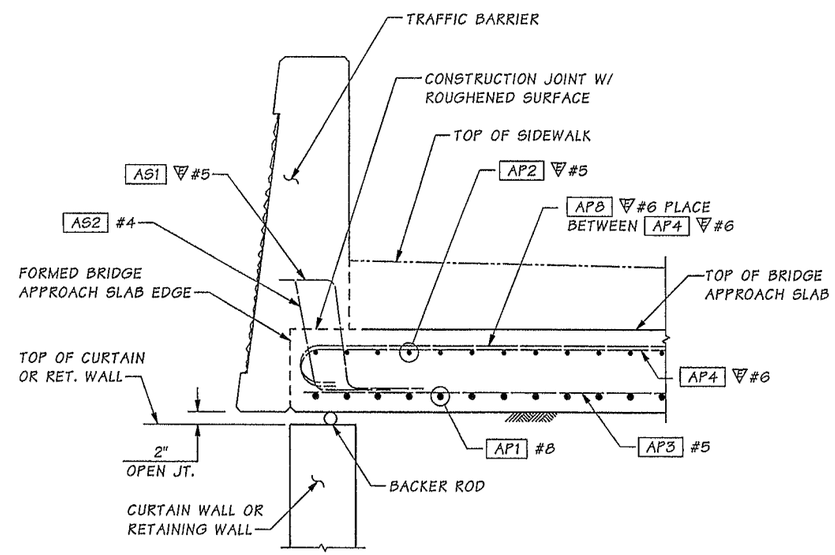

SECTION B MC64

SR 5 FILE NO. 7452 SHEET MC65

Bridge Design Engr.	Khaleghi, B		M:\Y-Team\M ST TO PORTLAND\MCKINLEY AVE BRG\window files\APPROACH SLAB 2.wnd								
Supervisor	Khaleghi, B										
Designed By	Burnham, B	01/13									
Checked By	Glassford, P	05/13									
Detailed By	Burnham, B	01/13									
Bridge Projects Engr.											
Prelim. Plan By											
Architect/Specialist			DATE	REVISION	BY	APP'D					

REGION NO.	STATE	FED. AID PROJ. NO.	SHEET NO.	TOTAL SHEETS
10	WASH.			
JOB NUMBER 12C501				

BRIDGE AND STRUCTURES OFFICE

2/11/14 2/12/14

Washington State Department of Transportation

I-5
M ST TO PORTLAND AVE - HOV

MCKINLEY WAY OVER I-5 BRIDGE NO. 5/448

BRIDGE APPROACH SLAB DETAILS
2 OF 3

BRIDGE SHEET NO. MC65

SHEET 991 OF 1763 SHEETS

Tue Feb 11 07:03:35 2014

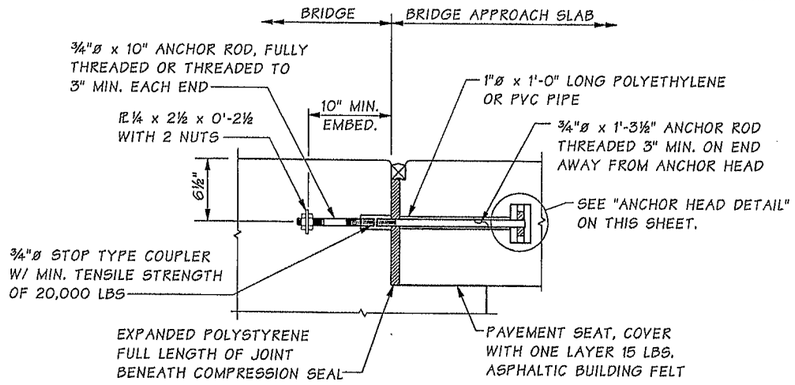

APPROACH ANCHOR - METHOD A

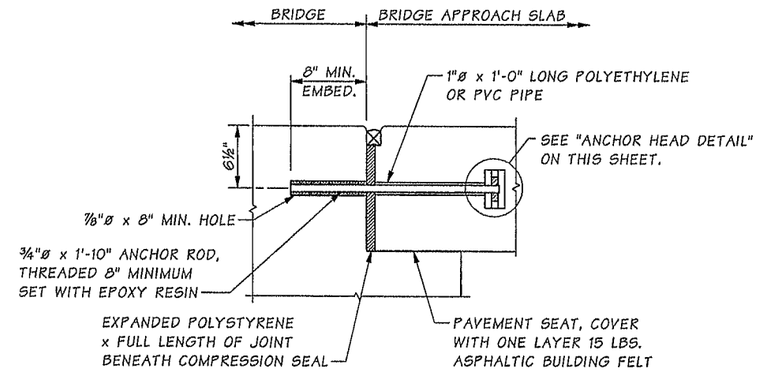

APPROACH ANCHOR - METHOD B

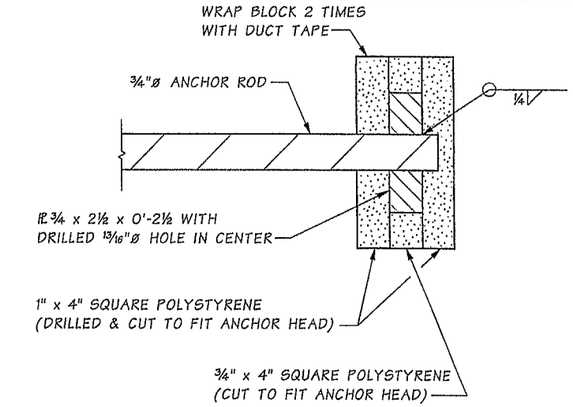

ANCHOR HEAD DETAIL

NOTE:

ALL METAL PARTS OF THE APPROACH EXPANSION ANCHOR SHALL RECEIVE ONE COAT OF PAINT CONFORMING TO STANDARD SPECIFICATION SECTION 9-08.1(2)F OR BE GALVANIZED IN ACCORDANCE WITH AASHTO M 232.

COMPRESSION SEAL TABLE

D.S. BROWN		WATSON BOWMAN ACME	
CV-2502	2½	WA-250	2½

TESTING SHALL BE PER AASHTO M-220 PRIOR TO USE.

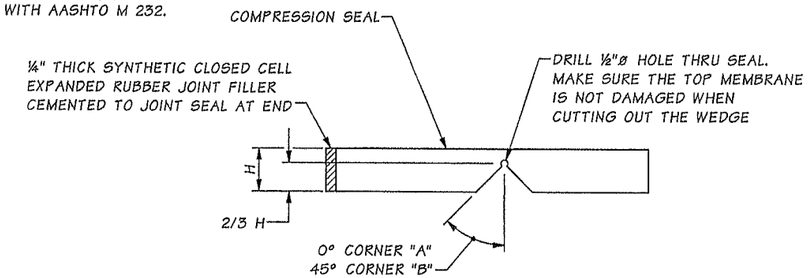

SEAL CUTTING DETAIL

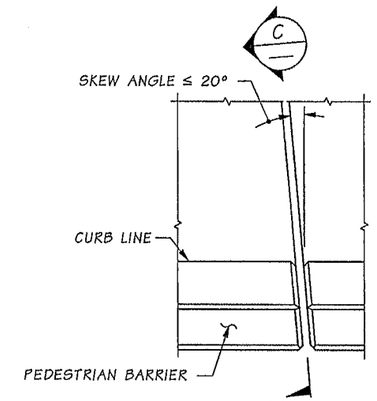

PLAN
EXPANSION JOINT

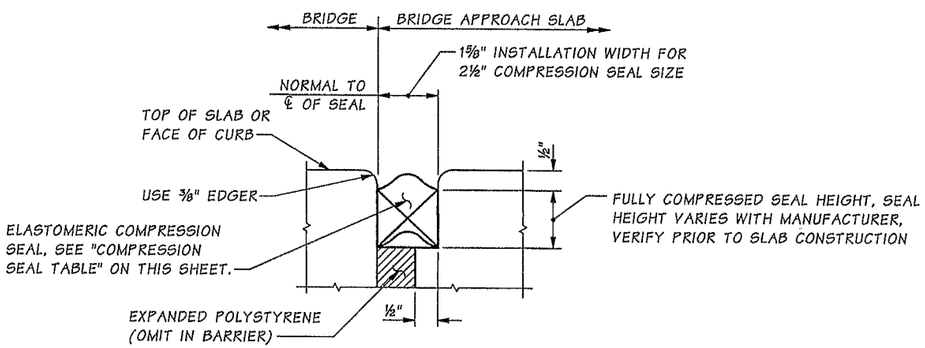

COMPRESSION SEAL DETAIL

EXPANSION JOINT AT BACK OF PAV'T SEAT

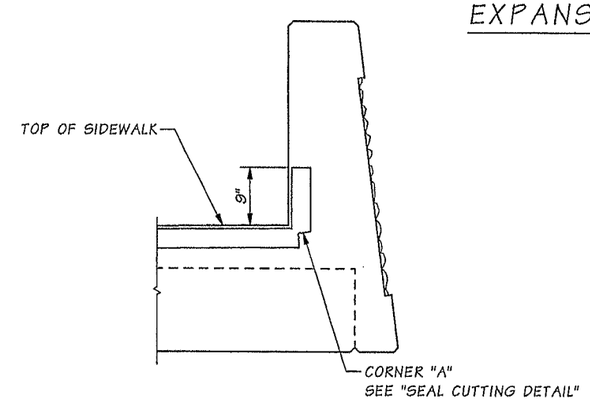

SECTION C

SR 5 FILE NO. 7452 SHEET MC66

Bridge Design Engr.	Khaleghi, B		
Supervisor	Khaleghi, B		
Designed By	Burnham, B	11/12	
Checked By	Glassford, P	05/13	
Detailed By	Burnham, B	11/12	
Bridge Projects Engr.			
Prelim. Plan By			
Architect/Specialist			

M:\Y-Team\M ST TO PORTLAND\MCKINLEY AVE BRG\window files\APPROACH SLAB 3.wnd

DATE	REVISION	BY	APP'D

REGION NO.	STATE	FED. AID PROJ. NO.	SHEET NO.	TOTAL SHEETS
10	WASH.			
JOB NUMBER 12C501				

Tue Feb 11 07:03:36 2014

BRIAN DAVID BURNHAM, STATE OF WASHINGTON, 48136, REGISTERED PROFESSIONAL ENGINEER 2/11/14

BRIDGE AND STRUCTURES OFFICE

BRIAN KHALEGHI, STATE OF WASHINGTON, 37693, PROFESSIONAL ENGINEER 2/12/14

Washington State Department of Transportation

I-5
M ST TO PORTLAND AVE - HOV

MCKINLEY WAY OVER I-5 BRIDGE NO. 5/448

BRIDGE APPROACH SLAB DETAILS 3 OF 3

BRIDGE SHEET NO. MC66

SHEET 992 OF 1763 SHEETS

S = Bar is included in substructure quantities.
L = Lump sum quantity.
T = Transverse or S = Seismic
E = Bar is to be epoxy coated.
V = Bar dimensions vary between dimensions shown on this line and the following line.

MARK NO.	LOCATION	SIZE	NO REQ'D	BEND TYPE	TIE OR STIR.	LUMP SUM	SUBSTR.	EPOXY COAT	VARIES	NO. EACH	U Ft.	U In.	W Ft.	W In.	X Ft.	X In.	Y Ft.	Y In.	Z Ft.	Z In.	θ_1 Deg.	θ_2 Deg.	LENGTH Ft.	LENGTH In.	WEIGHT Lbs.
	PIER 1 ABUTMENT																								
111	CAP STIRR.	6	212	72	T		S				5	1.0	4	7.0	4	7.0							15	3	4846
112	CAP LONG. BOT.	8	12	89			S				79	9.0	3	3.0									83	0	2659
113	CAP LONG. SIDE	6	8	89			S				79	9.0	2	9.0									82	6	991
114	CAP END HORZ.	5	8	74			S				7	7.3	2	4.0	2	4.0							12	0	100
115	CAP LONG. TOP	10	12	89			S				79	9.0	7	4.0									87	1	4497
116	CAP TIE	6	106	58	T		S				7	9.0											9	3	1471
117	CAP END VERT.	5	16	74			S				4	9.0	2	4.0	2	4.0							9	2	153
118	STEM VERT.	5	150	50			S	V	2		8	2.5											8	2	
											8	9.5											8	10	1330
119	STEM HORZ.	5	24	54			S	V	12		40	0.0											40	8	
											38	5.0											39	2	999
120	STEM TIE	4	57	58	T		S				2	2.0											2	10	108
121	STEM LONG. TOP	7	3	89			S				74	11.0	3	6.0									78	5	481
122	STEM TIE TOP	5	75	58	T		S				2	2.0											2	12	234
141	GIRDER STOP STIRR.	5	52	74	T		S				1	6.0	3	0.0	3	0.0							7	3	395
142	GIRDER STOP LONG.	5	24	50	T		S				4	10.5											4	10	122
142	GIRDER STOP LONG. END	5	6	54	T		S	V	3		2	2.0											2	6	
											1	7.0											1	11	14
	PIER 1 CURTAIN WALL																								
160	VERT.	5	12	50			S	V	2		15	2.5											15	2	
											14	9.5											14	10	188
160	VERT.	5	4	50			S	V	2		16	5.5											16	6	
											16	6.5											16	6	69
161	HORZ. LOWER	5	12	51			S				5	4.5											5	11	74
162	HORZ. UPPER	5	14	50			S				5	4.5											5	4	78
163	HORZ. TOP	5	2	50			S				5	5.0											5	5	11
164	HORZ. TOP STUB	5	4	50			S				0	7.0											0	7	2
	PIER 1 WING WALL																								
170	DOWEL F.F.	8	7	54			S				5	9.0											6	10	128
171	DOWEL N.F.	4	7	54			S				5	9.0											6	4	30
172	VERT. F.F.	8	7	50			S	V	1		12	1.0											12	1	
											11	9.0											11	9	223
172	VERT. F.F.	8	16	50			S	V	1		2	3.0											2	3	
											11	6.0											11	6	294
173	VERT. N.F.	4	7	50			S	V	1		12	1.0											12	1	
											11	9.0											11	9	56
173	VERT. N.F.	4	16	50			S	V	1		2	3.0											2	3	
											11	6.0											11	6	73
174	HORZ. F.F.	9	5	51			S				17	9.0											18	12	323
174	HORZ. F.F.	9	17	51			S	V	1		17	9.0											18	12	
											5	6.0											6	9	743
175	HORZ. N.F.	4	5	51			S				17	9.0											18	3	61
175	HORZ. N.F.	4	17	51			S	V	1		17	9.0											18	3	
											5	6.0											5	12	138
176	CORNER	5	11	80			S				5	10.0	1	0.0	1	0.0	0	2.5	0	2.5	135	135	7	9	89
177	HORZ. BOT.	5	2	69			S				2	6.0	12	7.0	8	4.0							17	7	37
178	HORZ. TOP	5	4	50			S				17	9.0											17	9	74
	PIER 2 COLUMNS																								
205	LONGITUDINAL BAR	9	112	50			S				37	3.1											37	3	14189
206	LONG. CORNER BAR	5	48	50			S				18	2.2											18	2	910
207	SPIRAL	6	4	67			S				3	9.0	32	2.2	0	3.8							117	8	7074
208	TRANS. CORNER BAR	4	320	60			S				0	8.5	0	4.0	0	8.0							3	1	654
	PIER 2 CROSSBEAM																								
210	CROSSBEAM BOTT. LONG.	10	14	89			S				68	8.5											68	8	4140
211	CROSSBEAM SIDE LONG.	6	10	89			S	V	2		68	10.0	2	9.0									71	7	
											69	4.0	2	9.0									72	1	1079
212	CROSSBEAM TOP LONG.	8	12	89			S				69	5.5	4	2.0									73	8	2359
213	CROSSBEAM STIRRUP	6	61	72	T		S				5	9.0	4	9.0	4	9.0							16	3	1486
213A	CROSSBEAM STIRRUP	6	32	72	T		S				5	9.0	4	9.0									16	12	528
214	CROSSBEAM TIE	5	77	58	T		S				5	9.0											6	7	528
215	CROSSBEAM HORIZ. END	5	10	80	T		S				5	8.0	2	0.0	2	0.0	0	2.0	0	2.0	102	78	9	5	98
216	CROSSBEAM END STIRR.	6	2	72	T		S				2	0.9	4	9.0	4	9.0							12	6	38
217	CROSSBEAM END TIE	5	2	58	T		S				2	0.9											2	11	6
218	DIAPH. STEP LONG. BAR	6	3	89							69	6.0	2	9.0									72	3	326
219	DIAPH. STEP TRANS. BAR	5	186	74	T						1	7.0	1	11.5									3	5	666
220	FULL DEPTH STIRRUPS	7	136	58	T		S	V	68		11	8.4											13	5	
											12	2.5											13	11	3804
220	FULL DEPTH STIRRUPS	7	144	58	T		S	V	72		11	10.3											13	7	
											12	0.6											13	9	4028
220	FULL DEPTH STIRRUPS	7	144	58	T		S	V	72		11	10.3											13	7	
											12	0.6											13	9	4028
221	DIAPH. VERTICAL BAR	7	72	50				V	36		4	7.7											4	8	
											5	0.8											5	1	715
222	DIAPH. TOP LONG BAR	11	32	51				V	16		32	0.0											33	6	
											38	7.1											40	2	6264
223	DIAPH. SIDE HORIZ. BAR	7	112	50							7	4.9											7	5	1696
224	DIAPH. MID. HORIZ. BAR	7	14	89				V	2		70	5.3	3	6.0									73	11	
											69	10.3	3	6.0									73	4	2108
225	DIAPH. TOP TIE	5	40	58	T						5	8.3											6	6	272

S = Bar is included in substructure quantities.
L = Lump sum quantity.
T = Transverse or S = Seismic
E = Bar is to be epoxy coated.
V = Bar dimensions vary between dimensions shown on this line and the following line.

MARK NO.	LOCATION	SIZE	NO REQ'D	BEND TYPE	TIE OR STIR.	LUMP SUM	SUBSTR.	EPOXY COAT	VARIES	NO. EACH	U Ft.	U In.	W Ft.	W In.	X Ft.	X In.	Y Ft.	Y In.	Z Ft.	Z In.	θ_1 Deg.	θ_2 Deg.	LENGTH Ft.	LENGTH In.	WEIGHT Lbs.
226	DIAPH. TIE	5	348	51							5	8.3											6	3	2274
227	VERTICAL END BAR	5	16	80			S		V	2	11	4.6	2	0.0	2	0.0	0	3.0	0	3.0	95	85	15	1	
											11	9.6	2	0.0	2	0.0	0	3.0	0	3.0	95	85	15	6	255
228	DIAPH. HORIZ. END BAR	5	14	80					V	2	5	9.8	2	1.4	2	1.4	0	3.0	0	3.0	78	102	9	9	
											5	9.8	1	9.4	1	9.4	0	3.0	0	3.0	78	102	9	1	137
229	CIRCULAR BLOCKOUT BAR	5	16	50							5	7.7											5	8	94
229	CIRCULAR BLOCKOUT BAR	5	8	50							5	1.7											5	2	43
230	SQUARE BLOCKOUT BAR	5	8	50							4	3.7											4	4	36
231	SUPPORT TIE	4	24	56							2	0.0											3	2	50
	PIER 3 COLUMNS																								
305	LONGITUDINAL BAR	11	112	50			S				42	7.0											42	7	25339
306	LONG. CORNER BAR	5	48	50			S				20	6.0											20	6	1026
307	HOOPS	8	386	66			S				3	9.0											11	6	11871
308	TRANS. CORNER BAR	4	352	60			S				0	8.5	0	4.0	0	8.0							3	1	719
	PIER 3 CROSSBEAM																								
310	CROSSBEAM BOTTOM LONG.	11	16	89			S				68	5.0											68	5	5816
311	CROSSBEAM SIDE BAR	7	10	89			S	V	2		68	6.5	3	6.0									72	0	
											69	0.5	3	6.0									72	6	1478
312	CROSSBEAM UPPER BAR	8	12	89			S				69	2.1	4	2.0									73	4	2350
313	CROSSBEAM STIRRUP	7	60	72	T		S				5	9.0	4	9.0	4	9.0							16	4	2009
313A	CROSSBEAM STIRRUP	7	32	72	T		S				5	9.0	4	9.0									11	1	724
314	CROSSBEAM TIE	6	76	58	T		S				5	9.0											7	3	826
315	CROSSBEAM HORIZ. END	5	10	80	T		S				5	8.1	2	0.0	2	0.0	0	2.0	0	2.0	102	78	9	5	98
316	CROSSBEAM END STIRR.	6	2	72	T		S				2	3.3	4	9.0	4	9.0							12	9	38
317	CROSSBEAM END TIE	5	2	58	T		S				2	3.3											3	1	6
320	FULL DEPTH STIRR.	8	152	58	T		S	V	76		11	6.1											13	6	
											11	10.8											13	10	5553
320	FULL DEPTH STIRR.	8	146	58	T		S	V	73		11	7.6											13	7	
											11	9.3											13	9	5333
320	FULL DEPTH STIRR.	8	146	58	T		S	V	73		11	7.6											13	7	
											11	9.3											13	9	5333
321	DIAPH. VERTICAL BAR	8	74	50				V	37		4	7.7											4	8	
											5	0.8											5	1	959
322	DIAPH. LONG. BAR	11	40	51				V	20		30	3.6											31	10	
											40	0.0											41	6	7798
323	DIAPH. SIDE HORIZ. BAR	7	64	50				V	32		6	9.8											6	10	
											7	9.5											7	10	956
323	DIAPH. SIDE HORIZ. BAR	7	64	50							7	4.9											7	5	969
324	DIAPH. MID. HORIZ. BAR	7	16	89				V	2		70	1.9	3	6.0									73	8	
											69	3.4	3	6.0									72	9	2395
325	DIAPH. TOP TIE	5	44	58	T		S				5	10.8											6	9	309
326	DIAPH. TIE	5	456	51							5	8.3											6	3	2980
327	VERTICAL END BAR	5	16	80			S	V	2		11	5.3	2	0.0	2	0.0	0	3.0	0	3.0	95	85	15	2	
											11	9.7	2	0.0	2	0.0	0	3.0	0	3.0	95	85	15	6	256
328	DIAPH. HORIZ. END BAR	5	16	80				V	2		5	7.6	2	4.7	2	4.7	0	3.0	0	3.0	78	102	10	1	
											5	7.6	2	0.4	2	0.4	0	3.0	0	3.0	78	102	9	4	162
329	CIRCULAR BLOCKOUT BAR	5	16	50							5	7.7											5	8	94
329	CIRCULAR BLOCKOUT BAR	5	8	50							5	1.7											5	2	43
330	SQUARE BLOCKOUT BAR	5	8	50							4	3.7											4	4	36
331	SUPPORT TIE	4	24	56			S				2	9.0											3	10	62
	PIER 4 ABUTMENT																								
411	SHAFT CAP STIRRUP	6	158	72	T		S				5	1.0	4	7.0	4	7.0							15	3	3612
414	SHAFT CAP SIDE LONG.	6	8	89			S				77	1.0	2	9.0									79	10	959
413	SHAFT CAP BOTT. LONG.	9	14	89			S				77	1.0	4	2.0									81	3	3868
415	SHAFT CAP TOP. LONG.	10	14	89							77	1.0	7	4.0									84	5	5086
416	SHAFT CAP TIE	6	79	58	T		S				7	9.0											9	3	1096
417	SHAFT CAP VERTICAL END	5	16	74			S				3	11.0	2	4.0	2	4.0							8	4	139
418	SHAFT CAP HORIZ. END	5	8	74			S				6	1.1	2	4.0	2	4.0							10	6	88
421	ABUT. WALL VERT. BAR	6	148	50			S	V	2		8	3.1											8	3	
											8	6.9											8	7	1871
422	ABUT. WALL HORIZ. BAR	5	24	52			S	V	12		37	2.3											38	4	
											39	6.0											40	8	988
423	ABUT. WALL TIE	4	56	58	T		S				2	2.0											2	10	106
424	ABUT. WALL TOP LONG.	7	3	89			S				74	1.4	3	6.0									77	7	476
425	ABUT. WALL TOP TIE	5	74	56	T		S				2	2.0											2	11	223
441	GIRDER STOP STIRR.	5	54	74	T		S				1	7.0	3	0.5	3	0.5							7	5	420
442	GIRDER STOP LONG.	5	6	50			S	V	3		1	4.0											1	4	
											2	10.4											2	10	13
442	GIRDER STOP LONG.	5	6	50			S				6	1.4											6	1	38
442	GIRDER STOP LONG.	5	6	50			S				3	6.5											3	6	22
442	GIRDER STOP LONG.	5	12	50			S				4	6.2											4	6	57
	PIER 4 CURTAIN WALL																								
460	CURTAIN WALL VERTICAL	5	28	50			S				14	7.8											14	8	428
461	CURTAIN WALL LOWER HORIZ.	5	24	51			S				5	1.5											5	8	143
462	CURTAIN WALL UPPER HORIZ.	5	28	50			S				5	1.5											5	2	150
	DECK																								
550	TRANS. BOT.	5	468	89				E			71	6.0	2	6.0									74	0	36118
550A	TRANS. BOT. ENDS	5	58	89				E	V	1	71	6.0	2	6.0									74	0	
											2	0.0	2	6.0									2	0	2299

BENDING DIAGRAMS

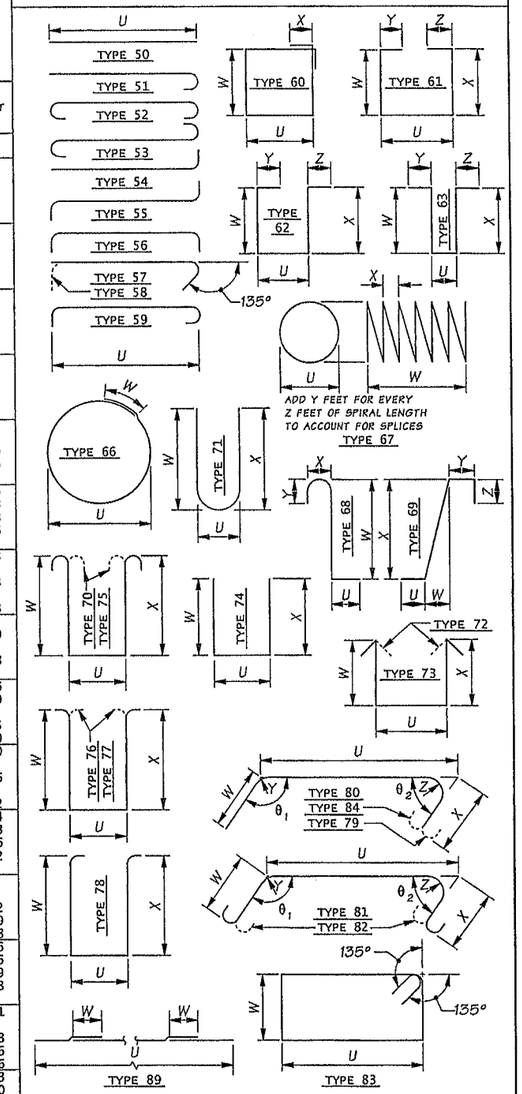

NOTES:

1. SEE PLANS FOR REINFORCEMENT NOT SHOWN.
2. BEND FOR TRANSVERSE BARS DUE TO ROADWAY CROWN CONDITIONS HAS NOT BEEN SHOWN. THESE BARS SHALL BE BENT AS REQUIRED TO CONFORM TO THE CONFIGURATION OF THE STRUCTURE.
3. BARLIST IS FOR QUANTITY ESTIMATION ONLY. REINFORCEMENT FABRICATION DETAILS SHALL BE DETERMINED FROM THE PLANS.

SR 5 FILE NO. 7452 SHEET MC67

Bridge Design Engr. Khaleghi, B	M:\Y-Team\M ST TO PORTLAND\MCKINLEY AVE BRG\window files\Barlist1.wnd						
Supervisor Khaleghi, B				REGION NO.	STATE	FED. AID PROJ. NO.	SHEET NO. / TOTAL SHEETS
Designed By				10	WASH.		
Checked By							
Detailed By				JOB NUMBER 12C501			
Bridge Projects Engr.							
Prelim. Plan By							
Architect/Specialist	DATE	REVISION	BY	APP'D			

Tue Feb 11 07:03:37 2014

BRIDGE AND STRUCTURES OFFICE

Washington State Department of Transportation

I-5
M ST TO PORTLAND AVE - HOV

MCKINLEY WAY OVER I-5 BRIDGE NO. 5/448

BARLIST 1 OF 2

BRIDGE SHEET NO. MC67

SHEET 993 OF 1763 SHEETS

S = Bar is included in substructure quantities.
L = Lump sum quantity.
T = Transverse or S = Seismic
E = Bar is to be epoxy coated.
V = Bar dimensions vary between dimensions shown on this line and the following line.

MARK NO.	LOCATION	SIZE	NO REQ'D	BEND TYPE	TIE OR STIR.	LUMP SUM	SUBSTR.	EPOXY COAT	VARIES	NO. EACH	U Ft.	U In.	W Ft.	W In.	X Ft.	X In.	Y Ft.	Y In.	Z Ft.	Z In.	θ_1 Deg.	θ_2 Deg.	LENGTH Ft.	LENGTH In.	WEIGHT Lbs.
551	LONG. BOT. SPAN 1 & 2	5	137	89				E	V	1	161	10.0	2	6.0									166	10	
											174	1.0	2	6.0									179	1	24712
551	LONG. BOT. SPAN 3	5	137	89				E	V	1	124	2.5	2	6.0									129	2	
											127	1.0	2	6.0									132	1	18666
551A	ADD'L LONG. BOT. SPAN 3	5	1	50				E			15	3.0											15	3	16
552	LONG. TOP SPAN 1	5	70	89				E	V	1	66	10.0	2	6.0									69	4	
											79	1.0	2	6.0									81	7	5509
552	LONG. TOP SPAN 2	5	70	89				E			66	0.0	2	6.0									68	6	5001
552	LONG. TOP SPAN 3	5	70	89				E	V	1	124	2.5	2	6.0									129	2	
											127	1.0	2	6.0									132	1	9537
553	LONG. TOP GIR.	7	18	89				E			330	9.0	3	9.0									349	6	12860
554	TRANS. TOP	5	1070	51				E			37	0.0											37	7	41928
554A	TRANS. TOP PIER 1 END	5	32	51				E	V	1	58	5.5											59	0	
											11	1.5											11	8	1180
554A	TRANS. TOP PIER 1 END	5	8	51				E			50	0.0											50	7	422
554A	TRANS. TOP PIER 1 END LAP	5	8	50				E	V	1	12	5.5											12	6	
											23	0.0											23	0	148
554A	TRANS. TOP PIER 4 END	5	14	51				E	V	1	57	0.5											57	7	
											14	3.5											14	10	529
554A	TRANS. TOP PIER 4 END	5	4	51				E			50	0.0											50	7	211
554A	TRANS. TOP PIER 4 END LAP	5	4	50				E	V	1	12	8.0											12	8	
											22	0.0											22	0	72
555	TRANS. OVERHANG	5	1126	51				E			9	9.0											10	4	12123
556	TRANS. OVERHANG END	5	47	51				E			9	9.0											10	4	506
559	LONG. BOT. PIER 3	7	72	50				E			50	0.0											50	0	7359
560	LONG. BOT. PIER 3	7	65	50				E			34	0.0											34	0	4518
561	LONG.TOP PIER 2	6	38	50				E			38	0.0											38	0	2169
562	LONG.TOP PIER 2	6	32	50				E			30	0.0											30	0	1442
563	LONG. TOP PIER 3	7	72	50				E			58	0.0											58	0	8536
564	LONG. TOP PIER 3	7	64	50				E			42	0.0											42	0	5495
565	TRAN. OVERHANG CORNER	6	15	51				E	V	1	9	9.0											10	5	
											3	0.0											3	8	159
S3	BARRIER	5	904	74				E			1	0.0	2	6.0									3	4	3177
S4	BARRIER	4	444	74							1	0.0	1	8.0									2	7	760
SW1	SIDEWALK LONG.	4	16	89				E	V	8	325	0.0	2	3.0									343	0	
											337	9.0	2	3.0									355	9	3734
SW2	SIDEWALK TRANS.	4	446	74	T			E			9	9.0	0	4.5	0	7.0							10	6	3139
SW1	SIDEWALK LONG. APPROACH	4	16	50				E			24	9.0											24	9	265
SW2	SIDEWALK TRANS. APPROACH	4	35	74	T			E			9	9.0	0	4.5	0	7.0							10	6	246
	INTERMEDIATE DIAPHRAGM																								
580	STIRR.	4	452	73	T						0	5.0	6	4.0	6	4.0							13	8	4121
580A	TIE	4	224	74	T						0	5.0	5	2.0	5	2.0							10	7	1583
581	HORZ. BOT.	7	14	89							65	2.0	2	7.0									67	9	1939
582	HORZ.	4	560	50							7	6.0											7	6	2805
583	HORZ. MID.	7	7	89							65	2.0	2	7.0									67	9	969
584	HORZ. TOP	6	28	51				E			34	8.5											35	5	1489
585	BLOCKOUT	5	224	69							0	11.8	3	4.5	3	4.5							5	9	1338
	END DIAPHRAGM PIER 1																								
590	STIRR.	4	60	62	T						2	5.0	6	2.0			0	3.0					8	8	347
591	STIRR.	4	120	58	T						7	2.0											7	10	627
592	HORZ. BOT.	6	2	89							73	8.0	2	2.0									75	10	228
593	HORZ.	4	16	89							73	8.0	2	0.0									75	8	809
594	TIE	4	59	56	T						2	0.0											2	7	102
595	HORZ. TOP	6	4	51				E			38	4.0											39	0	234
585	BLOCKOUT	5	32	69							0	11.8	3	4.5	3	4.5							5	9	191
	END DIAPHRAGM PIER 4																								
590	STIRR.	4	59	62	T						1	11.0	6	1.0			0	3.0					8	1	318
591	STIRR.	4	118	58	T						7	1.0											7	9	610
592	HORZ. BOT.	6	2	89							72	0.5	2	2.0									74	2	223
593	HORZ.	4	16	89					V	8	73	11.0	2	0.0									75	11	
											71	10.0	2	0.0									73	10	800
594	TIE	4	59	56	T						1	6.0											2	1	82
595	HORZ. TOP	6	4	51				E			37	6.5											38	3	230
585	BLOCKOUT	5	32	69							0	11.8	3	4.5	3	4.5							5	9	191

S = Bar is included in substructure quantities.
L = Lump sum quantity.
T = Transverse or S = Seismic
E = Bar is to be epoxy coated.
V = Bar dimensions vary between dimensions shown on this line and the following line.

MARK NO.	LOCATION	SIZE	NO REQ'D	BEND TYPE	TIE OR STIR.	LUMP SUM	SUBSTR.	EPOXY COAT	VARIES	NO. EACH	U Ft.	U In.	W Ft.	W In.	X Ft.	X In.	Y Ft.	Y In.	Z Ft.	Z In.	θ_1 Deg.	θ_2 Deg.	LENGTH Ft.	LENGTH In.	WEIGHT Lbs.

BENDING DIAGRAMS

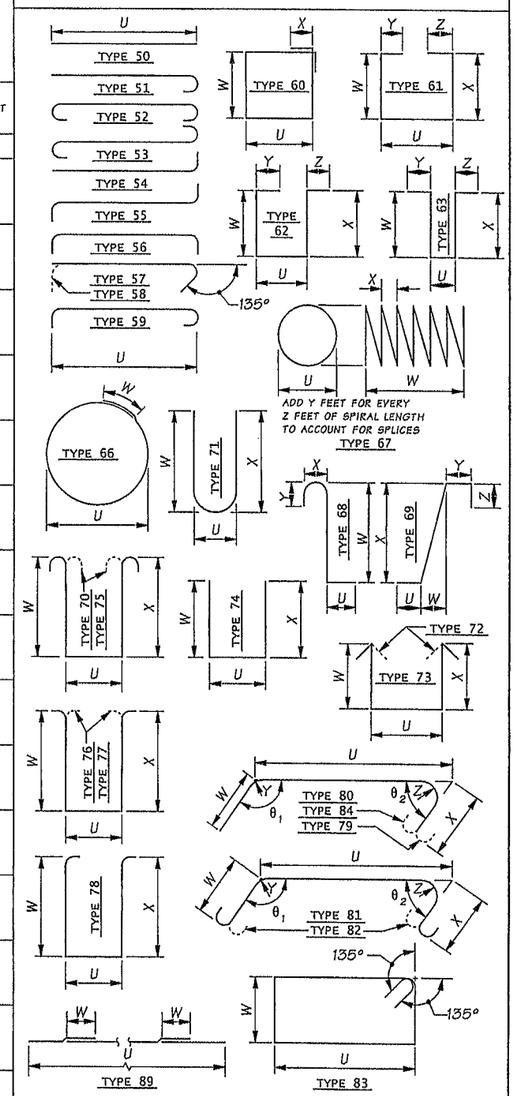

NOTES:

1. SEE PLANS FOR REINFORCEMENT NOT SHOWN.
2. BEND FOR TRANSVERSE BARS DUE TO ROADWAY CROWN CONDITIONS HAS NOT BEEN SHOWN. THESE BARS SHALL BE BENT AS REQUIRED TO CONFORM TO THE CONFIGURATION OF THE STRUCTURE.
3. BARLIST IS FOR QUANTITY ESTIMATION ONLY. REINFORCEMENT FABRICATION DETAILS SHALL BE DETERMINED FROM THE PLANS.

SR 5 FILE NO. 7452 SHEET MC68

Bridge Design Engr.	Khaleghi, B	M:\Y-Team\M ST TO PORTLAND\MCKINLEY AVE BRG\window files\Barlist2.wnd
Supervisor	Khaleghi, B	
Designed By		
Checked By		
Detailed By		
Bridge Projects Engr.		
Prelim. Plan By		
Architect/Specialist		DATE / REVISION / BY / APP'D

Tue Feb 11 07:03:40 2014

REGION NO.	STATE	FED. AID PROJ. NO.	SHEET NO.	TOTAL SHEETS
10	WASH.			
JOB NUMBER 12C501				

BRIDGE AND STRUCTURES OFFICE

Washington State Department of Transportation

I-5
M ST TO PORTLAND AVE - HOV

MCKINLEY WAY OVER I-5 BRIDGE NO. 5/448

BARLIST 2 OF 2

BRIDGE SHEET NO. MC68

SHEET 994 OF 1763 SHEETS