8607

Contract Plans

For Construction of:

I-5 MP 132.84 TO MP 134.41

I-5
M ST TO PORTLAND AVE - HOV

PIERCE COUNTY

A STATE PROJECT

VOLUME 4 OF 10

Washington State Department of Transportation

INDEX

SHEET NO.	PLAN REFERENCE NO.	TITLE
		*** VOLUME 1 ***
1 - 4	IN1 - IN4	INDEX
5	VM1	VICINITY MAP
6	KM1	KEY MAP
7 - 38	SQ1 - SQ32	SUMMARY OF QUANTITIES
39	SI1	SHARED ITEM TABLE
40 - 86	RS1 - RS47	ROADWAY SECTIONS
87	RS48	ROADWAY SECTIONS - DETAILS
88 - 93	GD1 - GD6	GORE DETAILS
94 - 99	TRS1 - TRS6	TEMPORARY ROADWAY SECTIONS
100 - 109	CN1A - CN9	CONTOUR PLAN
		*** VOLUME 2 ***
110 - 113	IN5 - IN8	INDEX
114 - 123	SU1 - SU10	STAGED CONSTRUCTION
124 - 141	AL1A - AL14	ALIGNMENT AND RIGHT OF WAY
142 - 147	SA1-1 - SA1-6	STAGED ALIGNMENT - STAGE 1
148 - 157	SA1A-1 - SA1A-10	STAGED ALIGNMENT - STAGE 1A
158 - 163	SA1B-1 - SA1B-6	STAGED ALIGNMENT - STAGE 1B
164 - 167	SA1C-1 - SA1C-4	STAGED ALIGNMENT - STAGE 1C
168 - 174	SA1D-1 - SA1D-7	STAGED ALIGNMENT - STAGE 1D
175 - 181	SA2-1 - SA2-7	STAGED ALIGNMENT - STAGE 2
182 - 192	SA3A-1 - SA3A-11	STAGED ALIGNMENT - STAGE 3A
193 - 198	SA3B-1 - SA3B-6	STAGED ALIGNMENT - STAGE 3B

INDEX (CONTINUED)

SHEET NO.	PLAN REFERENCE NO.	TITLE
199 - 205	SA4-1 - SA4-7	STAGED ALIGNMENT - STAGE 4
206 - 210	SA5-1 - SA5-5	STAGED ALIGNMENT - STAGE 5
211 - 221	QTSP1 - QTSP11	QUANTITY TABULATION - SITE PREPARATION
222 - 235	SP1A - SP11	SITE PREPARATION
236 - 237	SPD1 - SPD2	SITE PREPARATION DETAILS
238 - 247	EU1A - EU9	EXISTING UTILITY PLAN
248 - 249	EUS1 - EUS2	EXISTING UTILITY SCHEDULE
250 - 286	RP1 - RP37	ROADWAY PROFILE
		*** VOLUME 3 ***
287 - 290	IN9 - IN12	INDEX
291	CWM1	CONTAMINATED WATER MANAGEMENT
292 - 300	VA1 - VA9	VAULT REMOVAL PLAN
301 - 310	SC1 - SC10	STAGED CONVEYANCE
311	QTEC1	QUANTITY TABULATION - TESC GENERAL NOTES
312 - 347	QTEC2 - QTEC37	QUANTITY TABULATION - TESC
348 - 359	EC1 - EC10	TESC PLAN - STAGE 1
360 - 371	EC11 - EC20	TESC PLAN - STAGE 1A
372 - 383	EC21 - EC30	TESC PLAN - STAGE 1B
384 - 395	EC31 - EC40	TESC PLAN - STAGE 1C
396 - 407	EC41 - EC50	TESC PLAN - STAGE 1D

PLAN REFERENCE NO.

SHEET OF SHEETS

NOTE: ALL SHEET REFERENCES, FIRST NOS. OF STRUCTURE CODE DESIGNATIONS AND MATCH LINE SHEET REFERENCES, ETC., THROUGHOUT THE PLANS, REFER TO THE ENTRY IN THE PLAN REFERENCE NUMBER BOX.

FILE NAME	PW:_XL3497\PS&E Sheets\Index\P3497_SH_IN_401.dgn
TIME	11:02:18 AM
DATE	3/14/2014
PLOTTED BY	SancheA
DESIGNED BY	S. SHYU
ENTERED BY	A. SANCHEZ
CHECKED BY	B. REGISTER
PROJ. ENGR.	J. PEREZ
REGIONAL ADM.	K. DAYTON

REVISION | DATE | BY

REGION NO.	STATE	FED.AID PROJ.NO.
10	WASH	
JOB NUMBER 12C501		
CONTRACT NO.		LOCATION NO. XL3497

P.E. STAMP BOX DATE

P.E. STAMP BOX DATE

Washington State Department of Transportation

I-5
M ST TO PORTLAND AVE - HOV

INDEX

PLAN REF NO IN13

SHEET 474 OF 1763 SHEETS

INDEX

SHEET NO.	PLAN REFERENCE NO.	TITLE
408 - 419	EC51 - EC60	TESC PLAN - STAGE 2
420 - 431	EC61 - EC70	TESC PLAN - STAGE 3A
432 - 443	EC71 - EC80	TESC PLAN - STAGE 3B
444 - 455	EC81 - EC90	TESC PLAN - STAGE 4
456 - 467	EC91 - EC100	TESC PLAN - STAGE 5
468 - 469	ECP1 - ECP2	TESC PROFILE
470 - 473	ECD1 - ECD4	TESC DETAILS
		*** VOLUME 4 ***
474 - 477	IN13 - IN16	INDEX
478	NTDR1	STRUCTURE NOTES - DRAINAGE GENERAL NOTES
479 - 558	NTDR2 - NTDR81	STRUCTURE NOTES - DRAINAGE
559 - 561	DRST1 - DRST3	STAGED DRAINAGE TABLE
562 - 571	DR1A - DR9	DRAINAGE PLAN
572 - 596	DP1 - DP25	DRAINAGE PROFILE
597 - 601	DD1 - DD5	DRAINAGE DETAIL
602 - 612	PD1 - PD11	POND DETAILS
613	TNTDR1	STRUCTURE NOTES - TEMPORARY DRAINAGE GENERAL NOTES
614 - 629	TNTDR2 - TNTDR17	STRUCTURE NOTES - TEMPORARY DRAINAGE
630 - 631	TDRST1 - TDRST2	TEMPORARY STAGED DRAINAGE TABLE
632 - 641	TDR1A - TDR9	TEMPORARY DRAINAGE PLAN
642 - 646	TDP1 - TDP5	TEMPORARY DRAINAGE PROFILE
647 - 650	TDD1 - TDD4	TEMPORARY DRAINAGE DETAIL
651 - 662	LS1 - LS12	LANDSCAPING

INDEX (CONTINUED)

SHEET NO.	PLAN REFERENCE NO.	TITLE
		*** VOLUME 5 ***
663 - 666	IN17 - IN20	INDEX
667 - 677	QTPV1 - QTPV11	QUANTITY TABULATION - PAVING
678 - 687	PV1A - PV9	PAVING PLAN
688 - 712	PVD1 - PVD24	PAVING DETAILS
713 - 717	PRD1 - PRD5	ADA RAMP DETAILS
718 - 724	PJ1 - PJ8	PAVING JOINT PLAN
725 - 729	PVS1-1A - PVS1-9	PAVING PLAN - STAGE 1
730A - 737	PVS1A-1 - PVS1A-9	PAVING PLAN - STAGE 1A
738 - 745	PVS1B-1 - PVS1B-9	PAVING PLAN - STAGE 1B
746 - 753	PVS1C-1 - PVS1C-9	PAVING PLAN - STAGE 1C
753A - 761	PVS1D-1A - PVS1D-9	PAVING PLAN - STAGE 1D
762 - 768	PVS2-2 - PVS2-9	PAVING PLAN - STAGE 2
769 - 774	PVS3A-3 - PVS3A-8	PAVING PLAN - STAGE 3A
775 - 779	PVS3B-3 - PVS3B-8	PAVING PLAN - STAGE 3B
780 - 785	PVS4-2 - PVS4-8	PAVING PLAN - STAGE 4
786 - 794	PVS5-1A - PVS5-9	PAVING PLAN - STAGE 5
795 - 798	QTMK1 - QTMK4	QUANTITY TABULATION - PAVEMENT MARKINGS
799 - 812	MK1A - MK11	PAVEMENT MARKING PLAN
813 - 819	MKD1 - MKD7	PAVEMENT MARKING DETAILS

PLAN REFERENCE NO.

SHEET OF SHEETS

NOTE: ALL SHEET REFERENCES, FIRST NOS. OF STRUCTURE CODE DESIGNATIONS AND MATCH LINE SHEET REFERENCES, ETC., THROUGHOUT THE PLANS, REFER TO THE ENTRY IN THE PLAN REFERENCE NUMBER BOX.

FILE NAME	PW:_XL3497\PS&E Sheets\Index\ADD1_P3497_SH_IN_402.dgn
TIME	3:31:00 PM
DATE	4/23/2014
PLOTTED BY	SancheA
DESIGNED BY	S. SHYU
ENTERED BY	A. SANCHEZ
CHECKED BY	B. REGISTER
PROJ. ENGR.	J. PEREZ
REGIONAL ADM.	K. DAYTON

REVISION	DATE	BY
AD1 - REVISED INDEX	05/02/2014	BR

REGION NO.	STATE	FED.AID PROJ.NO.
10	WASH	
JOB NUMBER 12C501		
CONTRACT NO.		LOCATION NO. XL3497

P.E. STAMP BOX DATE

P.E. STAMP BOX DATE

Washington State Department of Transportation

I-5
M ST TO PORTLAND AVE - HOV

INDEX

PLAN REF NO IN14

SHEET 475 OF 1763 SHEETS

INDEX

SHEET NO.	PLAN REFERENCE NO.	TITLE
		*** VOLUME 6 ***
820 - 823	IN21 - IN24	INDEX
824 - 825	WR1 - WR2	WALL VICINITY MAP
826 - 837	WR3 - WR14	I5NB WALL-A
838 - 839	WR15 - WR16	I5SB WALL-A
840 - 848	WR17 - WR25	I5SB WALL-E
849 - 886	WR26 - WR63	NBN WALL-A & SNB WALL-A
887 - 889	WR64 - WR66	SSB WALL-A
890 - 894	WR67 - WR71	SSB WALL-B1 & SSB WALL-B2
895 - 896	WR72 - WR73	ARCHITECTURAL DETAILS MISCELLANEOUS
897 - 902	BM1 - BM6	I-5 OVER M STREET BRIDGE NO. 5/437
903 - 909	BE1 - BE7	I-5 OVER I-705 AND TACOMA RAIL BRIDGE NO. 5/445HOV
910 - 925	BW1 - BW16	I-5 OVER I-705 AND TACOMA RAIL BRIDGE NO. 5/445W
926 - 994	MC0 - MC68	MCKINLEY WAY OVER I-5 BRIDGE NO. 5/448
		*** VOLUME 7 ***
995 - 998	IN25 - IN28	INDEX
999 - 1103	PA0 - PA104	PACIFIC AVE OVER I-5 BRIDGE NO. 5/444
1104 - 1194	SR0 - SR90	I-5 OVER I-705 AND TACOMA RAIL BRIDGE NO. 5/445E

INDEX (CONTINUED)

SHEET NO.	PLAN REFERENCE NO.	TITLE
		*** VOLUME 8 ***
1195 - 1198	IN29 - IN32	INDEX
1199 - 1205	SS1 - SS7	SIGN SPECIFICATIONS
1206 - 1212	SE1 - SE8	SIGN REMOVAL PLAN
1213 - 1219	SN1 - SN8	SIGN PLAN
1220	SND1	SIGN DETAIL PLAN
1221 - 1222	SNSD1 - SNSD2	SIGN STAGING TABLE
1223 - 1225	SNSD3 - SNSD5	SIGN STAGING SPECIFICATIONS
1226 - 1267	SNS3 - SNS110	SIGN STAGING PLAN
1268 - 1291	TSB1 - TSB24	TEMPORARY SIGN STRUCTURE
1292 - 1320	SB1 - SB29	SIGN STRUCTURES
1321 - 1322	TILN1 - TILN2	TEMPORARY ILLUMINATION NOTES
1323 - 1335	TIL0 - TIL9	TEMPORARY ILLUMINATION PLAN
1336 - 1343	ILN1 - ILN8	ILLUMINATION NOTES AND SCHEDULES
1344 - 1353	IL1 - IL8	ILLUMINATION PLAN
1354	ILD1	ILLUMINATION AREA DETAIL
1355	ILD2	UNDERDECK HANGER DETAILS
1356 - 1359	ILC1 - ILC4	ILLUMINATION PLAN - CITY

PLAN REFERENCE NO.

SHEET OF SHEETS

NOTE: ALL SHEET REFERENCES, FIRST NOS. OF STRUCTURE CODE DESIGNATIONS AND MATCH LINE SHEET REFERENCES, ETC., THROUGHOUT THE PLANS, REFER TO THE ENTRY IN THE PLAN REFERENCE NUMBER BOX.

FILE NAME	PW:_XL3497\PS&E Sheets\Index\P3497_SH_IN_403.dgn
TIME	11:02:28 AM
DATE	3/14/2014
PLOTTED BY	SancheA
DESIGNED BY	S. SHYU
ENTERED BY	A. SANCHEZ
CHECKED BY	B. REGISTER
PROJ. ENGR.	J. PEREZ
REGIONAL ADM.	K. DAYTON

REVISION | DATE | BY

REGION NO. 10 | STATE WASH | FED.AID PROJ.NO.

JOB NUMBER 12C501

CONTRACT NO.

LOCATION NO. XL3497

P.E. STAMP BOX DATE

P.E. STAMP BOX DATE

Washington State Department of Transportation

I-5
M ST TO PORTLAND AVE - HOV

INDEX

PLAN REF NO IN15

SHEET 476 OF 1763 SHEETS

INDEX

SHEET NO.	PLAN REFERENCE NO.	TITLE
1360	ITN1	ITS LEGEND AND GENERAL NOTES
1361 - 1366	ITTP1 - ITTP5	ITS TEMPORARY PLAN
1367 - 1385	ITAA - IT12	ITS PLAN
1386 - 1387	ITBX1 - ITBX2	BOX DETAIL
1388	ITCB1	CABINET EQUIPMENT DETAIL
1389 - 1393	ITCB2 - ITCB6	CABINET DETAIL
1394 - 1396	ITCD1 - ITCD3	CONDUIT DETAIL
1397	ITCF1	CABINET FOUNDATION
1398 - 1399	ITDS1 - ITDS2	DATA STATION DETAIL
1400	ITFD1	FENCING DETAIL
1401 - 1414	ITFO1 - ITFO14	FIBER OPTIC DETAIL
1415	ITND1	NETWORK DIAGRAM
1416 - 1417	ITRM1 - ITRM2	RAMP METER DETAIL
1418	ITTD1	TRANSFORMER DETAIL
1419	ITVC1	VIDEO CAMERA DETAIL
		*** VOLUME 9 ***
1420 - 1423	IN33 - IN36	INDEX
1424 - 1425	TCIN1 - TCIN2	TRAFFIC CONTROL INDEX
1426 - 1434	QTTC1 - QTTC9	QUANTITY TABULATION - TRAFFIC CONTROL
1435	TCS1	ADVANCE SIGN PLAN
1436 - 1444	TCS2 - TCS10	TRAFFIC CONTROL STAGING (STAGE 1)
1445 - 1454	TCS11 - TCS20	TRAFFIC CONTROL STAGING (STAGE 1A)
1455 - 1461	TCS21 - TCS27	TRAFFIC CONTROL STAGING (STAGE 1B)
1462 - 1468	TCS28 - TCS34	TRAFFIC CONTROL STAGING (STAGE 1C)
1469 - 1485	TCS35 - TCS51	TRAFFIC CONTROL STAGING (STAGE 1D)
1486 - 1504	TCS52 - TCS70	TRAFFIC CONTROL STAGING (STAGE 2)
1505 - 1529	TCS71 - TCS96	TRAFFIC CONTROL STAGING (STAGE 3A)
1530 - 1539	TCS97 - TCS106	TRAFFIC CONTROL STAGING (STAGE 3B)

INDEX (CONTINUED)

SHEET NO.	PLAN REFERENCE NO.	TITLE
1540 - 1549	TCS107 - TCS116	TRAFFIC CONTROL STAGING (STAGE 4)
1550 - 1558	TCS118 - TCS126	TRAFFIC CONTROL STAGING (STAGE 5)
		*** VOLUME 10 ***
1559 - 1562	IN37 - IN40	INDEX
1563 - 1564	TCIN3 - TCIN4	TRAFFIC CONTROL INDEX
1565 - 1580	TC1 - TC16	TRAFFIC CONTROL PLAN (STAGE 1A)
1581 - 1589	TC17 - TC25	TRAFFIC CONTROL PLAN (STAGE 1B)
1590 - 1596	TC26 - TC32	TRAFFIC CONTROL PLAN (STAGE 1C)
1597 - 1607	TC33 - TC43	TRAFFIC CONTROL PLAN (STAGE 1D)
1608 - 1623	TC44 - TC59	TRAFFIC CONTROL PLAN (STAGE 2)
1624 - 1638	TC60 - TC74	TRAFFIC CONTROL PLAN (STAGE 3A)
1639 - 1645	TC75 - TC81	TRAFFIC CONTROL PLAN (STAGE 3B)
1646 - 1655	TC82 - TC91	TRAFFIC CONTROL PLAN (STAGE 4)
1656 - 1663	TC92 - TC99	TRAFFIC CONTROL PLAN (STAGE 5)
1664 - 1712	TC100 - TC148	MISCELLANEOUS SITE SPECIFIC TRAFFIC CONTROL PLANS
1713 - 1724	TCD1 - TCD12	TRAFFIC CONTROL DETAIL
1725 - 1761	DU1 - DU37	DETOUR PLAN
1762 - 1763	DU38 - DU39	PEDESTRIAN DETOUR

PLAN REFERENCE NO.

SHEET OF SHEETS

NOTE: ALL SHEET REFERENCES, FIRST NOS. OF STRUCTURE CODE DESIGNATIONS AND MATCH LINE SHEET REFERENCES, ETC., THROUGHOUT THE PLANS, REFER TO THE ENTRY IN THE PLAN REFERENCE NUMBER BOX.

FILE NAME	PW:_XL3497\PS&E Sheets\Index\P3497_SH_IN_404.dgn
TIME	11:02:32 AM
DATE	3/14/2014
PLOTTED BY	SancheA
DESIGNED BY	S. SHYU
ENTERED BY	A. SANCHEZ
CHECKED BY	B. REGISTER
PROJ. ENGR.	J. PEREZ
REGIONAL ADM.	K. DAYTON

REVISION | DATE | BY

REGION NO.	STATE	FED.AID PROJ.NO.
10	WASH	
JOB NUMBER 12C501		
CONTRACT NO.		LOCATION NO. XL3497

P.E. STAMP BOX DATE

P.E. STAMP BOX DATE

Washington State Department of Transportation

I-5
M ST TO PORTLAND AVE - HOV

INDEX

PLAN REF NO IN16

SHEET 477 OF 1763 SHEETS

STRUCTURE NOTES - DRAINAGE GENERAL NOTES

1. SEE STD. PLAN B-5.20.
2. SEE STD. PLAN B-10.20.
3. SEE STD. PLAN B-15.60.
4. SEE STD. PLAN B-25.60.
5. SEE STD. PLAN B-30.10.
6. SEE STD. PLAN B-30.20.
7. SEE STD. PLAN B-30.30.
8. SEE STD. PLAN B-30.70.
9. SEE STD. PLAN B-35.20.
10. SEE STD. PLAN B-35.40.
11. SEE STD. PLAN B-40.20, USE GRATE A.
12. SEE STD. PLAN B-40.20, USE GRATE B.
13. SEE STD. PLAN B-40.40.
14. SEE STD. PLAN B-45.20.
15. SEE STD. PLAN B-50.20.
16. SEE STD. PLAN B-70.20.
17. SEE STD. PLAN B-95.20.
18. ROTATED INSTALLATION.
19. DEPRESS RIM ELEVATION 0.5" BELOW GRADE.
20. CONNECT TO EXISTING PIPE.
21. CONNECT TO EXISTING STRUCTURE.
22. SEE SPECIAL PROVISIONS SECTION 2-02, REMOVING DRAINAGE STRUCTURE.
23. NOT USED.
24. SEE SPECIAL PROVISIONS SECTION 2-09.3(1)D - STRUCTURE EXCAV. CL.B INCL. HAUL-CONTAMINATED MATERIAL.
25. SEE SPECIAL PROVISIONS DIVISION 7, TRENCHLESS CONSTRUCTION.
26. SEE SPECIAL PROVISIONS SECTION 7-05, ABANDON DRAINAGE STRUCTURE.
27. SEE SPECIAL PROVISION 7-04.3 AND 7-05.3.
28. SEE SPECIAL PROVISION 7-08.3(3).
29. SEE SPECIAL PROVISIONS SECTION 7-08.3(4), FLOW FILL PIPE.
30. SEE STANDARD SPECIFICATIONS, SECTION 2-03.3(14)C, METHOD C COMPACTION.
31. SEE STANDARD SPECIFICATIONS, SECTION 9-13.6, QUARRY SPALLS. THE USE OF RECYCLED MATERIALS AND CONCRETE RUBBLE IS NOT PERMITTED FOR THIS APPLICATION.
32. SEE SPECIAL PROVISION 7-01.
33. "TEE" AND "WYE" CONNECTIONS TO BE INCLUDED IN COST OF DRAIN PIPE 6 IN. DIAM. CONNECTIONS TO WALL DRAINS AND DRAIN PIPE 6 IN. DIAM..
34. FOR ADDITIONAL QUANTITIES OF SHARED BID ITEMS FOUND IN MULTIPLE LOCATIONS THROUGHOUT THE PLANS - SEE SHARED ITEM TABLE.
35. CONNECT DR3-22 - MEDIA FILTER DRAIN UNDERDRAIN PIPE 18 IN. DIAM. - TO STRUCTURE DR4-40.
36. SEE MEDIA FILTER DRAIN DETAIL.
37. SEE POND MARKER DETAIL.
38. SEE GUIDEPOST / BMP MARKER DETAILS.
39. SEE BIOFILTRATION SWALE DETAIL.
40. SEE EMERGENCY OVERFLOW STRUCTURE DETAIL.
41. SEE OVERFLOW SPILLWAY DETAIL.
42. SEE FLOW SPLITTER DETAIL.
43. SEE OPEN FLOW RESTRICTOR DETAIL.
44. SEE POND PIPE PENETRATION DETAIL.
45. SEE LLDPE GEOMEMBRANE LINING SYSTEM DETAIL.
46. SEE QUARRY SPALL ENERGY DISSIPATOR DETAIL.
47. SEE ROCK BERM IN DITCH DETAIL.
48. SEE CONCRETE BARRIER UNDERDRAIN DETAIL.
49. SEE PAVING DETAIL FOR TRENCH RESTORATION.
50. SEE CONTROLLED DENSITY FILL FOR PIPE TRENCH DETAIL.
51. SEE CONCRETE CHANNEL DETAIL.
52. SEE CONCRETE SURROUNDING PAD DETAIL.
53. SEE STRUCTURE ADJUSTMENT COLLAR DETAIL - TEMPORARY DRAINAGE DETAILS.
54. SEE TEMPORARY ROADWAY SECTION MDSI5-T1 FOR INSTALLATION DETAIL.
55. SEE STANDARD SPECIFICATIONS, SECTION 2-03.3(14)C, METHOD B COMPACTION. BACKFILL MATERIAL SHALL MEET REQUIREMENTS OF STANDARD SPECIFICATIONS, SECTION 9-03.14 (3).

*** GENERAL DRAINAGE NOTES ***

A - WHERE NEEDED TO CONNECT DISSIMILAR PIPES, SEE STD. PLAN B-60.20.

B - DRAINAGE STRUCTURE STATIONING IS TO THE CENTER OF THE STRUCTURE REGARDLESS OF STRUCTURE TYPE AND SIZE.

C - ORIENT DRAINAGE STRUCTURES WITH SOLID LOCKING LIDS SO THE LID IS OPPOSITE FROM TRAFFIC LANES.

ADD1_XL3497_SN_DR.xlsm					
4/30/2014 19:02					
DESIGNED BY	S. MERRYMAN	03/25/14			
ENTERED BY	S. MERRYMAN	03/25/14			
CHECKED BY	E. QUINN	03/25/14			
PROJ. ENGR.	J. PEREZ	03/25/14			
REGION ADM.	K. DAYTON	03/25/14	05/02/14	AD1 - REVISED / ADDED NOTES	SM
		DATE	DATE	REVISION	BY

REGION NO.	STATE	FED. AID PROJ. NO.
10	WASH	
JOB NUMBER 12C501		
CONTRACT NO.		

Washington State Department of Transportation

I-5
M ST TO PORTLAND AVE - HOV

STRUCTURE NOTES - DRAINAGE GENERAL NOTES

NTDR 1

SHEET 478 OF 1763 SHEETS

STRUCTURE NOTES - DRAINAGE

NOTE:
THE FIRST NUMBER OF THE "CODE DESIGNATION" BELOW REFERS TO THE SHEET NO. OR THE SHEET REFERENCE NO. SHOWING THE DRAINAGE FEATURE.

THE SECOND NUMBER REFERS TO THE DRAINAGE FEATURE FOUND ON THAT SHEET.

CODE	LOCATION ⊽ \ UNIT OF MEASURE ➢	REMOVING DRAINAGE STRUCTURE		ROADWAY EXCAVATION INCL. HAUL - AREA NW POND		ROADWAY EXCAVATION INCL. HAUL - AREA NE POND	CONCRETE INLET	GRATE INLET TYPE 2		DROP INTLET TYPE 1	QUARRY SPALLS	UNDERDRAIN PIPE 6 IN. DIAM.		UNDERDRAIN PIPE 18 IN. DIAM.	DRAIN PIPE 6 IN. DIAM.	DRAIN PIPE 8 IN. DIAM.		HIGH DENSITY POLYETHYLENE (HDPE) UNDERDRAIN PIPE 6 IN.D	HIGH-DENSITY POLYETHYLENE (HDPE) PIPE 18 IN. DIAM.	HIGH-DENSITY POLYETHYLENE (HDPE) PIPE 24 IN. DIAM.		SEE GENERAL NOTES
		EACH		C.Y.		C.Y.	EACH	EACH		EACH	TON	L.F.		L.F.	L.F.	L.F.		L.F.	L.F.	L.F.		
DR1A-1	MDSI5 3378+96.31 (4.90' RT)																					5,6
DR1A-2	MDSI5 3376+77.93 (2.81' LT) TO 3377+45.48 (2.42' LT)																	68				32,54
DR1A-3	MDSI5 3377+45.49 (2.27' LT)																					5,6,21,54
DR1A-4	MDSI5 3377+79.20 (2.54' LT) TO 3379+95.48 (2.64' LT)																	216				32,54
DR1A-5	MDSI5 3377+71.91 (1.81' LT) TO 3377+71.92 (0.20' RT)							1														18
DR1A-6	MDSI5 3377+71.92 (0.20' RT) TO 3378+96.31 (4.90' RT)							1														18
DR1-1	I5SB 501+93.49 (67.70' LT)																					34
DR1-2	I5SB 503+73.13 (66.56' LT)																					34
DR1-3	I5NB 104+02.20 (40.23' LT)																					5,6,34
DR1-4	I5NB 105+84.55 (40.12' LT)																					5,6,34
DR1-5	MDSI5 3379+95.48 (2.64' LT)																					5,6,54
DR1-6	MDSI5 3379+95.77 (2.97' RT)																					5,6
DR1-7	MDSI5 3382+45.46 (3.42' LT)																					5,6,54
DR1-8	MDSI5 3382+45.88 (2.97' RT)																					5,6
DR1-9	MDSI5 3382+95.33 (4.70' RT)																					5,6
DR1-10	MDSI5 3384+96.29 (3.32' LT)																					5,6,54
DR1-11	I5NB 98+52.69 (38.33' LT)																					5,6
DR1-12	I5NB 100+52.05 (37.27' LT)																					5,6,34
DR1-13	MDSI5 3387+02.10 (3.53' LT)							1														10,18,54
DR1-14	I5NB 100+58.34 (38.91' LT)																					5,6
DR1-15	I5NB 100+10.44 (40.07' LT)																					5,6
DR1-16	MDSI5 3380+01.96 (2.71' LT) TO 3382+45.52 (2.42' LT)																	244				32,54
DR1-17	MDSI5 3382+52.19 (2.40' LT) TO 3384+96.29 (3.32' LT)																	244				32,54
DR1-18	MDSI5 3385+02.49 (2.01' LT) TO 3387+02.10 (3.53' LT)																	200				32,54
	SHEET TOTAL							3										972				

ADD1_XL3497_SN_DR.xlsm						
4/30/2014 19:02						
DESIGNED BY	S. MERRYMAN	03/25/14				
ENTERED BY	S. MERRYMAN	03/25/14				
CHECKED BY	E. QUINN	03/25/14				
PROJ. ENGR.	J. PEREZ	03/25/14				
REGION ADM.	K. DAYTON	03/25/14	05/02/14	AD1 - REVISED QTY	SM	
		DATE	DATE	REVISION	BY	

REGION NO.	STATE	FED. AID PROJ. NO.
10	WASH	
JOB NUMBER 12C501		
CONTRACT NO.		

Washington State Department of Transportation

I-5
M ST TO PORTLAND AVE - HOV

STRUCTURE NOTES - DRAINAGE

NTDR 2

SHEET 479 OF 1763 SHEETS

STRUCTURE NOTES - DRAINAGE

NOTE:
THE FIRST NUMBER OF THE "CODE DESIGNATION" BELOW REFERS TO THE SHEET NO. OR THE SHEET REFERENCE NO. SHOWING THE DRAINAGE FEATURE.

THE SECOND NUMBER REFERS TO THE DRAINAGE FEATURE FOUND ON THAT SHEET.

CODE	LOCATION ⊽ \ UNIT OF MEASURE ➢	CL. V REINF. CONC. CULV. PIPE 12 IN. DIAM.	CATCH BASIN TYPE 1	CATCH BASIN TYPE 2 48 IN. DIAM.		CATCH BASIN TYPE 2 60 IN. DIAM.	CATCH BASIN TYPE 2 72 IN. DIAM.	TESTING STORM SEWER PIPE		CL. IV REINF. CONC. STORM SEWER PIPE 15 IN. DIAM.	CL. V REINF. CONC. STORM SEWER PIPE 12 IN. DIAM.	CL. V REINF. CONC. STORM SEWER PIPE 18 IN. DIAM.		CL. V REINF. CONC. STORM SEWER PIPE 24 IN. DIAM.	SCHEDULE A STORM SEWER PIPE 12 IN. DIAM.	SCHEDULE A STORM SEWER PIPE 18 IN. DIAM.		SCHEDULE A STORM SEWER PIPE 24 IN. DIAM.	SCHEDULE B STORM SEWER PIPE 18 IN. DIAM.	SCHEDULE B STORM SEWER PIPE 24 IN. DIAM.		SEE GENERAL NOTES
		L.F.	EACH	EACH		EACH	EACH	L.F.		L.F.	L.F.	L.F.		L.F.	L.F.	L.F.		L.F.	L.F.	L.F.		
DR1A-1	MDSI5 3378+96.31 (4.90' RT)																					5,6
DR1A-2	MDSI5 3376+77.93 (2.81' LT) TO 3377+45.48 (2.42' LT)																					32,54
DR1A-3	MDSI5 3377+45.49 (2.27' LT)																					5,6,21,54
DR1A-4	MDSI5 3377+79.20 (2.54' LT) TO 3379+95.48 (2.64' LT)																					32,54
DR1A-5	MDSI5 3377+71.91 (1.81' LT) TO 3377+71.92 (0.20' RT)														2							18
DR1A-6	MDSI5 3377+71.92 (0.20' RT) TO 3378+96.31 (4.90' RT)							123							123							18
DR1-1	I5SB 501+93.49 (67.70' LT)																					34
DR1-2	I5SB 503+73.13 (66.56' LT)																					34
DR1-3	I5NB 104+02.20 (40.23' LT)																					5,6,34
DR1-4	I5NB 105+84.55 (40.12' LT)																					5,6,34
DR1-5	MDSI5 3379+95.48 (2.64' LT)																					5,6,54
DR1-6	MDSI5 3379+95.77 (2.97' RT)																					5,6
DR1-7	MDSI5 3382+45.46 (3.42' LT)																					5,6,54
DR1-8	MDSI5 3382+45.88 (2.97' RT)																					5,6
DR1-9	MDSI5 3382+95.33 (4.70' RT)																					5,6
DR1-10	MDSI5 3384+96.29 (3.32' LT)																					5,6,54
DR1-11	I5NB 98+52.69 (38.33' LT)																					5,6
DR1-12	I5NB 100+52.05 (37.27' LT)																					5,6,34
DR1-13	MDSI5 3387+02.10 (3.53' LT)														6							10,18,54
DR1-14	I5NB 100+58.34 (38.91' LT)																					5,6
DR1-15	I5NB 100+10.44 (40.07' LT)																					5,6
DR1-16	MDSI5 3380+01.96 (2.71' LT) TO 3382+45.52 (2.42' LT)																					32,54
DR1-17	MDSI5 3382+52.19 (2.40' LT) TO 3384+96.29 (3.32' LT)																					32,54
DR1-18	MDSI5 3385+02.49 (2.01' LT) TO 3387+02.10 (3.53' LT)																					32,54
	SHEET TOTAL							123							131							

ADD1_XL3497_SN_DR.xlsm					
4/30/2014 19:02					
DESIGNED BY	S. MERRYMAN	03/25/14			
ENTERED BY	S. MERRYMAN	03/25/14			
CHECKED BY	E. QUINN	03/25/14			
PROJ. ENGR.	J. PEREZ	03/25/14			
REGION ADM.	K. DAYTON	03/25/14	05/02/14	AD1 - REVISED QTY	SM
		DATE	DATE	REVISION	BY

REGION NO.	STATE	FED. AID PROJ. NO.
10	WASH	
JOB NUMBER 12C501		
CONTRACT NO.		

Washington State Department of Transportation

I-5
M ST TO PORTLAND AVE - HOV

STRUCTURE NOTES - DRAINAGE

NTDR 3

SHEET 480 OF 1763 SHEETS

STRUCTURE NOTES - DRAINAGE

NOTE:
THE FIRST NUMBER OF THE "CODE DESIGNATION" BELOW REFERS TO THE SHEET NO. OR THE SHEET REFERENCE NO. SHOWING THE DRAINAGE FEATURE.

THE SECOND NUMBER REFERS TO THE DRAINAGE FEATURE FOUND ON THAT SHEET.

CODE	LOCATION ⤵ \ UNIT OF MEASURE ➢	TRENCHLESS PIPE 24 IN. DIAM.	DUCTILE IRON STORM SEWER PIPE 12 IN. DIAM.				MEDIA FILTER DRAIN	POND MARKER		BMP MARKER	STRUCTURE EXCAVATION CLASS B INCL. HAUL	STRUCTURE EXCAV. CL.B INCL. HAUL-CONTAMINATED MATERIAL		SHORING OR EXTRA EXCAVATION CLASS B	GRAVEL BACKFILL FOR DRAIN	LLDPE GEOMEMBRANE LINING SYSTEM		CONTROLLED DENSITY FILL	FLOW FILL PIPE	COMMERCIAL CONCRETE		SEE GENERAL NOTES
		L.F.	L.F.				L.F.	EACH		EACH	C.Y.	C.Y.		S.F.	C.Y.	S.Y.		C.Y.	C.Y.	C.Y.		
DR1A-1	MDSI5 3378+96.31 (4.90' RT)																					5,6
DR1A-2	MDSI5 3376+77.93 (2.81' LT) TO 3377+45.48 (2.42' LT)																					32,54
DR1A-3	MDSI5 3377+45.49 (2.27' LT)																					5,6,21,54
DR1A-4	MDSI5 3377+79.20 (2.54' LT) TO 3379+95.48 (2.64' LT)																					32,54
DR1A-5	MDSI5 3377+71.91 (1.81' LT) TO 3377+71.92 (0.20' RT)										10			10								18
DR1A-6	MDSI5 3377+71.92 (0.20' RT) TO 3378+96.31 (4.90' RT)										80			540								18
DR1-1	I5SB 501+93.49 (67.70' LT)																					34
DR1-2	I5SB 503+73.13 (66.56' LT)																					34
DR1-3	I5NB 104+02.20 (40.23' LT)																					5,6,34
DR1-4	I5NB 105+84.55 (40.12' LT)																					5,6,34
DR1-5	MDSI5 3379+95.48 (2.64' LT)																					5,6,54
DR1-6	MDSI5 3379+95.77 (2.97' RT)																					5,6
DR1-7	MDSI5 3382+45.46 (3.42' LT)																					5,6,54
DR1-8	MDSI5 3382+45.88 (2.97' RT)																					5,6
DR1-9	MDSI5 3382+95.33 (4.70' RT)																					5,6
DR1-10	MDSI5 3384+96.29 (3.32' LT)																					5,6,54
DR1-11	I5NB 98+52.69 (38.33' LT)																					5,6
DR1-12	I5NB 100+52.05 (37.27' LT)																					5,6,34
DR1-13	MDSI5 3387+02.10 (3.53' LT)																					10,18,54
DR1-14	I5NB 100+58.34 (38.91' LT)																					5,6
DR1-15	I5NB 100+10.44 (40.07' LT)																					5,6
DR1-16	MDSI5 3380+01.96 (2.71' LT) TO 3382+45.52 (2.42' LT)																					32,54
DR1-17	MDSI5 3382+52.19 (2.40' LT) TO 3384+96.29 (3.32' LT)																					32,54
DR1-18	MDSI5 3385+02.49 (2.01' LT) TO 3387+02.10 (3.53' LT)																					32,54
	SHEET TOTAL										90			550								

ADD1_XL3497_SN_DR.xlsm					
4/30/2014 19:02					
DESIGNED BY	S. MERRYMAN	03/25/14			
ENTERED BY	S. MERRYMAN	03/25/14			
CHECKED BY	E. QUINN	03/25/14			
PROJ. ENGR.	J. PEREZ	03/25/14			
REGION ADM.	K. DAYTON	03/25/14	05/02/14	AD1 REVISED QTY	SM
		DATE	DATE	REVISION	BY

REGION NO.	STATE	FED. AID PROJ. NO.
10	WASH	
JOB NUMBER 12C501		
CONTRACT NO.		

Washington State Department of Transportation

I-5
M ST TO PORTLAND AVE - HOV

STRUCTURE NOTES - DRAINAGE

NTDR 4

SHEET 481 OF 1763 SHEETS

STRUCTURE NOTES - DRAINAGE

NOTE:
THE FIRST NUMBER OF THE "CODE DESIGNATION" BELOW REFERS TO THE SHEET NO. OR THE SHEET REFERENCE NO. SHOWING THE DRAINAGE FEATURE.

THE SECOND NUMBER REFERS TO THE DRAINAGE FEATURE FOUND ON THAT SHEET.

CODE	LOCATION ⤵ \ UNIT OF MEASURE ➢	PLUGGING EXISTING PIPE	ADJUST INLET	CONNECTION TO DRAINAGE STRUCTURE		ABANDON DRAINAGE STRUCTURE	ADJUST MANHOLE	MANHOLE 48 IN. DIAM. TYPE 3		MANHOLE 60 IN. DIAM. TYPE 3	MANHOLE 72 IN. DIAM. TYPE 3	MANHOLE ADDITIONAL HEIGHT 48 IN. DIAM. TYPE 3		MANHOLE ADDITIONAL HEIGHT 72 IN. DIAM. TYPE 3	ADJUST CATCH BASIN	LOCKING SOLID METAL COVER AND FRAME FOR CATCH BASIN		MANHOLE RING AND SOLID COVER	OPEN FLOW RESTRICTOR	CONSTRUCTION GEOTEXTILE FOR UNDERGROUND DRAINAGE		SEE GENERAL NOTES
		EACH	EACH	EACH		EACH	EACH	EACH		EACH	EACH	L.F.		L.F.	EACH	EACH		EACH	EACH	S.Y.		
DR1A-1	MDSI5 3378+96.31 (4.90' RT)						1															5,6
DR1A-2	MDSI5 3376+77.93 (2.81' LT) TO 3377+45.48 (2.42' LT)			1																		32,54
DR1A-3	MDSI5 3377+45.49 (2.27' LT)														1	1						5,6,21,54
DR1A-4	MDSI5 3377+79.20 (2.54' LT) TO 3379+95.48 (2.64' LT)			1																		32,54
DR1A-5	MDSI5 3377+71.91 (1.81' LT) TO 3377+71.92 (0.20' RT)																					18
DR1A-6	MDSI5 3377+71.92 (0.20' RT) TO 3378+96.31 (4.90' RT)			1																		18
DR1-1	I5SB 501+93.49 (67.70' LT)		1																			34
DR1-2	I5SB 503+73.13 (66.56' LT)		1																			34
DR1-3	I5NB 104+02.20 (40.23' LT)		1													1						5,6,34
DR1-4	I5NB 105+84.55 (40.12' LT)		1													1						5,6,34
DR1-5	MDSI5 3379+95.48 (2.64' LT)														1	1						5,6,54
DR1-6	MDSI5 3379+95.77 (2.97' RT)														1	1						5,6
DR1-7	MDSI5 3382+45.46 (3.42' LT)														1	1						5,6,54
DR1-8	MDSI5 3382+45.88 (2.97' RT)														1	1						5,6
DR1-9	MDSI5 3382+95.33 (4.70' RT)						1									1						5,6
DR1-10	MDSI5 3384+96.29 (3.32' LT)														1	1						5,6,54
DR1-11	I5NB 98+52.69 (38.33' LT)														1	1						5,6
DR1-12	I5NB 100+52.05 (37.27' LT)			2		1	1									1						5,6,34
DR1-13	MDSI5 3387+02.10 (3.53' LT)					1									1	1						10,18,54
DR1-14	I5NB 100+58.34 (38.91' LT)					1									1	1						5,6
DR1-15	I5NB 100+10.44 (40.07' LT)														1	1						5,6
DR1-16	MDSI5 3380+01.96 (2.71' LT) TO 3382+45.52 (2.42' LT)			1																		32,54
DR1-17	MDSI5 3382+52.19 (2.40' LT) TO 3384+96.29 (3.32' LT)			1																		32,54
DR1-18	MDSI5 3385+02.49 (2.01' LT) TO 3387+02.10 (3.53' LT)			1																		32,54
	SHEET TOTAL		4	8		3	3								10	14						

ADD1_XL3497_SN_DR.xlsm					
4/30/2014 19:02					
DESIGNED BY	S. MERRYMAN	03/25/14			
ENTERED BY	S. MERRYMAN	03/25/14			
CHECKED BY	E. QUINN	03/25/14			
PROJ. ENGR.	J. PEREZ	03/25/14			
REGION ADM.	K. DAYTON	03/25/14	05/02/14	AD1 - REVISED QTY	SM
		DATE	DATE	REVISION	BY

REGION NO.	STATE	FED. AID PROJ. NO.
10	WASH	
JOB NUMBER 12C501		
CONTRACT NO.		

Washington State Department of Transportation

I-5
M ST TO PORTLAND AVE - HOV

STRUCTURE NOTES - DRAINAGE

NTDR 5

STRUCTURE NOTES - DRAINAGE

NOTE:
THE FIRST NUMBER OF THE "CODE DESIGNATION" BELOW REFERS TO THE SHEET NO. OR THE SHEET REFERENCE NO. SHOWING THE DRAINAGE FEATURE.

THE SECOND NUMBER REFERS TO THE DRAINAGE FEATURE FOUND ON THAT SHEET.

CODE	LOCATION ∨ \ UNIT OF MEASURE >	REMOVING DRAINAGE STRUCTURE		ROADWAY EXCAVATION INCL. HAUL - AREA NW POND		ROADWAY EXCAVATION INCL. HAUL - AREA NE POND	CONCRETE INLET	GRATE INLET TYPE 2		DROP INTLET TYPE 1	QUARRY SPALLS	UNDERDRAIN PIPE 6 IN. DIAM.		UNDERDRAIN PIPE 18 IN. DIAM.	DRAIN PIPE 6 IN. DIAM.	DRAIN PIPE 8 IN. DIAM.		HIGH DENSITY POLYETHYLENE (HDPE) UNDERDRAIN PIPE 6 IN.D	HIGH-DENSITY POLYETHYLENE (HDPE) PIPE 18 IN. DIAM.	HIGH-DENSITY POLYETHYLENE (HDPE) PIPE 24 IN. DIAM.		SEE GENERAL NOTES
		EACH		C.Y.		C.Y.	EACH	EACH		EACH	TON	L.F.		L.F.	L.F.	L.F.		L.F.	L.F.	L.F.		
DR2-1	I5SB 505+52.68 (66.25' LT)																					34
DR2-2	I5SB 507+31.88 (67.01' LT)																					34
DR2-3	I5SB 509+06.15 (66.71' LT)																					34
DR2-4	I5SB 510+15.23 (67.39' LT)																					
DR2-5	I5SB 510+86.69 (67.58' LT)																					34
DR2-6	I5SB 510+86.90 (59.69' LT)																					
DR2-7	I5SB 512+64.76 (67.70' LT)																					
DR2-8	I5SB 512+65.76 (61.30' LT) TO 514+47.84 (67.46' LT)																					34
DR2-9	I5SB 514+47.84 (67.46' LT) TO 516+29.82 (68.53' LT)							1														21,34
DR2-10	I5SB 516+29.82 (68.53' LT) TO 518+01.55 (71.96' LT)							1														10,13,34
																						10,13,34
DR2-11	I5SB 512+65.76 (61.30' LT) TO 514+43.55 (55.90' LT)																					
DR2-12	I5SB 514+44.01 (63.18' LT) TO 514+43.55 (55.90' LT)																					34
DR2-13	I5SB 514+43.55 (55.90' LT) TO 515+64.88 (52.05' LT)																					34
DR2-14	I5SB 515+65.39 (67.71' LT) TO 515+64.88 (52.05' LT)																					34
DR2-15	I5SB 515+64.88 (52.05' LT) TO 518+01.63 (48.96' LT)	1																				34
																						22,34
DR2-16	I5NB 107+66.26 (40.02' LT)																					
DR2-17	I5NB 109+48.27 (39.71' LT)																					5,6,34
DR2-18	I5NB 111+30.00 (39.25' LT)																					5,6,34
DR2-19	I5NB 112+00.78 (36.08' LT)																					5,6,34
DR2-20	I5NB 116+75.98 (36.99' LT)																					5,6
																						5,6,34
DR2-21	I5NB 118+58.03 (36.70' LT)																					
DR2-22	I5NB 114+29.08 (39.51' LT) TO 115+55.39 (38.88' LT)							1														5,6,34
DR2-23	I5NB 115+55.35 (39.30' LT) TO 116+76.08 (36.86' LT)							1														10,13,34
DR2-24	I5NB 115+36.18 (37.10' RT) TO 116+27.48 (35.12' RT)																					10,13,21,34
DR2-25	I5NB 116+27.48 (35.12' RT) TO 118+01.78 (29.26' RT)																					29,34
																						29,34
DR2-26	I5NB 118+01.78 (29.26' RT) TO 118+85.57 (25.48' RT)																					
DR2-27	I5NB 118+85.57 (25.48' RT) TO 119+71.39 (20.97' RT)																					29,34
DR2-28	NCD 46+03.23 (4.85' LT) TO 47+74.29 (4.26' LT)							1														29,34
DR2-29	NCD 47+74.29 (4.26' LT) TO I5NB 115+55.39 (38.88' LT)							1														10,13,34
DR2-30	I5SB 510+18.61 (71.94' LT) TO 521+16.92 (82.77' LT)											1077										10,13,34
																						34,48
	SHEET TOTAL	1						6				1077										

ADD1_XL3497_SN_DR.xlsm						
4/30/2014 19:02						
DESIGNED BY	S. MERRYMAN	03/25/14				
ENTERED BY	S. MERRYMAN	03/25/14				
CHECKED BY	E. QUINN	03/25/14				
PROJ. ENGR.	J. PEREZ	03/25/14				
REGION ADM.	K. DAYTON	03/25/14	05/02/14	AD1 - REVISED NOTES	SM	
		DATE	DATE	REVISION	BY	

REGION NO.	STATE	FED. AID PROJ. NO.
10	WASH	
JOB NUMBER 12C501		
CONTRACT NO.		

Washington State Department of Transportation

I-5
M ST TO PORTLAND AVE - HOV

STRUCTURE NOTES - DRAINAGE

NTDR 6

SHEET 483 OF 1763 SHEETS

STRUCTURE NOTES - DRAINAGE

NOTE:
THE FIRST NUMBER OF THE "CODE DESIGNATION" BELOW REFERS TO THE SHEET NO. OR THE SHEET REFERENCE NO. SHOWING THE DRAINAGE FEATURE.

THE SECOND NUMBER REFERS TO THE DRAINAGE FEATURE FOUND ON THAT SHEET.

CODE	LOCATION ↓ \ UNIT OF MEASURE →	CL. V REINF. CONC. CULV. PIPE 12 IN. DIAM.	CATCH BASIN TYPE 1	CATCH BASIN TYPE 2 48 IN. DIAM.		CATCH BASIN TYPE 2 60 IN. DIAM.	CATCH BASIN TYPE 2 72 IN. DIAM.	TESTING STORM SEWER PIPE		CL. IV REINF. CONC. STORM SEWER PIPE 15 IN. DIAM.	CL. V REINF. CONC. STORM SEWER PIPE 12 IN. DIAM.	CL. V REINF. CONC. STORM SEWER PIPE 18 IN. DIAM.		CL. V REINF. CONC. STORM SEWER PIPE 24 IN. DIAM.	SCHEDULE A STORM SEWER PIPE 12 IN. DIAM.	SCHEDULE A STORM SEWER PIPE 18 IN. DIAM.		SCHEDULE A STORM SEWER PIPE 24 IN. DIAM.	SCHEDULE B STORM SEWER PIPE 18 IN. DIAM.	SCHEDULE B STORM SEWER PIPE 24 IN. DIAM.		SEE GENERAL NOTES
		L.F.	EACH	EACH		EACH	EACH	L.F.		L.F.	L.F.	L.F.		L.F.	L.F.	L.F.		L.F.	L.F.	L.F.		
DR2-1	I5SB 505+52.68 (66.25' LT)																					34
DR2-2	I5SB 507+31.88 (67.01' LT)																					34
DR2-3	I5SB 509+06.15 (66.71' LT)																					34
DR2-4	I5SB 510+15.23 (67.39' LT)																					
DR2-5	I5SB 510+86.69 (67.58' LT)																					34
DR2-6	I5SB 510+86.90 (59.69' LT)																					
DR2-7	I5SB 512+64.76 (67.70' LT)																					34
DR2-8	I5SB 512+65.76 (61.30' LT) TO 514+47.84 (67.46' LT)							179								179						21,34
DR2-9	I5SB 514+47.84 (67.46' LT) TO 516+29.82 (68.53' LT)							179								179						10,13,34
DR2-10	I5SB 516+29.82 (68.53' LT) TO 518+01.55 (71.96' LT)							169								169						10,13,34
DR2-11	I5SB 512+65.76 (61.30' LT) TO 514+43.55 (55.90' LT)																					34
DR2-12	I5SB 514+44.01 (63.18' LT) TO 514+43.55 (55.90' LT)																					34
DR2-13	I5SB 514+43.55 (55.90' LT) TO 515+64.88 (52.05' LT)																					34
DR2-14	I5SB 515+65.39 (67.71' LT) TO 515+64.88 (52.05' LT)																					34
DR2-15	I5SB 515+64.88 (52.05' LT) TO 518+01.63 (48.96' LT)																					22,34
DR2-16	I5NB 107+66.26 (40.02' LT)																					5,6,34
DR2-17	I5NB 109+48.27 (39.71' LT)																					5,6,34
DR2-18	I5NB 111+30.00 (39.25' LT)																					5,6,34
DR2-19	I5NB 112+00.78 (36.08' LT)																					5,6
DR2-20	I5NB 116+75.98 (36.99' LT)																					5,6,34
DR2-21	I5NB 118+58.03 (36.70' LT)																					5,6,34
DR2-22	I5NB 114+29.08 (39.51' LT) TO 115+55.39 (38.88' LT)							125				125										10,13,34
DR2-23	I5NB 115+55.35 (39.30' LT) TO 116+76.08 (36.86' LT)							119				119										10,13,21,34
DR2-24	I5NB 115+36.18 (37.10' RT) TO 116+27.48 (35.12' RT)																					29,34
DR2-25	I5NB 116+27.48 (35.12' RT) TO 118+01.78 (29.26' RT)																					29,34
DR2-26	I5NB 118+01.78 (29.26' RT) TO 118+85.57 (25.48' RT)																					29,34
DR2-27	I5NB 118+85.57 (25.48' RT) TO 119+71.39 (20.97' RT)																					29,34
DR2-28	NCD 46+03.23 (4.85' LT) TO 47+74.29 (4.26' LT)							171			171											10,13,34
DR2-29	NCD 47+74.29 (4.26' LT) TO I5NB 115+55.39 (38.88' LT)							103				103										10,13,34
DR2-30	I5SB 510+18.61 (71.94' LT) TO 521+16.92 (82.77' LT)																					34,48
	SHEET TOTAL							1045			171	347				527						

ADD1_XL3497_SN_DR.xlsm					REGION NO.	STATE	FED. AID PROJ. NO.
4/30/2014 19:02					10	WASH	
DESIGNED BY	S. MERRYMAN	03/25/14					
ENTERED BY	S. MERRYMAN	03/25/14			JOB NUMBER		
CHECKED BY	E. QUINN	03/25/14			12C501		
PROJ. ENGR.	J. PEREZ	03/25/14					
REGION ADM.	K. DAYTON	03/25/14	05/02/14	AD1 REVISED NOTES	CONTRACT NO.		
		DATE	DATE	REVISION	BY		

Washington State Department of Transportation

I-5
M ST TO PORTLAND AVE - HOV

STRUCTURE NOTES - DRAINAGE

NTDR 7

SHEET 484 OF 1763 SHEETS

STRUCTURE NOTES - DRAINAGE

NOTE:
THE FIRST NUMBER OF THE "CODE DESIGNATION" BELOW REFERS TO THE SHEET NO. OR THE SHEET REFERENCE NO. SHOWING THE DRAINAGE FEATURE.

THE SECOND NUMBER REFERS TO THE DRAINAGE FEATURE FOUND ON THAT SHEET.

CODE	LOCATION ∀ \ UNIT OF MEASURE >	TRENCHLESS PIPE 24 IN. DIAM.	DUCTILE IRON STORM SEWER PIPE 12 IN. DIAM.				MEDIA FILTER DRAIN	POND MARKER		BMP MARKER	STRUCTURE EXCAVATION CLASS B INCL. HAUL	STRUCTURE EXCAV. CL.B INCL. HAUL-CONTAMINATED MATERIAL		SHORING OR EXTRA EXCAVATION CLASS B	GRAVEL BACKFILL FOR DRAIN	LLDPE GEOMEMBRANE LINING SYSTEM		CONTROLLED DENSITY FILL	FLOW FILL PIPE	COMMERCIAL CONCRETE		SEE GENERAL NOTES
		L.F.	L.F.				L.F.	EACH		EACH	C.Y.	C.Y.		S.F.	C.Y.	S.Y.		C.Y.	C.Y.	C.Y.		
DR2-1	I5SB 505+52.68 (66.25' LT)																					34
DR2-2	I5SB 507+31.88 (67.01' LT)																					34
DR2-3	I5SB 509+06.15 (66.71' LT)																					34
DR2-4	I5SB 510+15.23 (67.39' LT)																					
DR2-5	I5SB 510+86.69 (67.58' LT)																					34
DR2-6	I5SB 510+86.90 (59.69' LT)																					
DR2-7	I5SB 512+64.76 (67.70' LT)																					34
DR2-8	I5SB 512+65.76 (61.30' LT) TO 514+47.84 (67.46' LT)										190			1380								21,34
DR2-9	I5SB 514+47.84 (67.46' LT) TO 516+29.82 (68.53' LT)										200			1360								10,13,34
DR2-10	I5SB 516+29.82 (68.53' LT) TO 518+01.55 (71.96' LT)										150			1030								10,13,34
DR2-11	I5SB 512+65.76 (61.30' LT) TO 514+43.55 (55.90' LT)																		11			34
DR2-12	I5SB 514+44.01 (63.18' LT) TO 514+43.55 (55.90' LT)																		1			34
DR2-13	I5SB 514+43.55 (55.90' LT) TO 515+64.88 (52.05' LT)																		14			34
DR2-14	I5SB 515+65.39 (67.71' LT) TO 515+64.88 (52.05' LT)																		1			34
DR2-15	I5SB 515+64.88 (52.05' LT) TO 518+01.63 (48.96' LT)																					22,34
DR2-16	I5NB 107+66.26 (40.02' LT)																					5,6,34
DR2-17	I5NB 109+48.27 (39.71' LT)																					5,6,34
DR2-18	I5NB 111+30.00 (39.25' LT)																					5,6,34
DR2-19	I5NB 112+00.78 (36.08' LT)																					5,6
DR2-20	I5NB 116+75.98 (36.99' LT)																					5,6,34
DR2-21	I5NB 118+58.03 (36.70' LT)																					5,6,34
DR2-22	I5NB 114+29.08 (39.51' LT) TO 115+55.39 (38.88' LT)										100			630								10,13,34
DR2-23	I5NB 115+55.35 (39.30' LT) TO 116+76.08 (36.86' LT)										90			600								10,13,21,34
DR2-24	I5NB 115+36.18 (37.10' RT) TO 116+27.48 (35.12' RT)																		6			29,34
DR2-25	I5NB 116+27.48 (35.12' RT) TO 118+01.78 (29.26' RT)																		11			29,34
DR2-26	I5NB 118+01.78 (29.26' RT) TO 118+85.57 (25.48' RT)																		5			29,34
DR2-27	I5NB 118+85.57 (25.48' RT) TO 119+71.39 (20.97' RT)																		5			29,34
DR2-28	NCD 46+03.23 (4.85' LT) TO 47+74.29 (4.26' LT)										110			820								10,13,34
DR2-29	NCD 47+74.29 (4.26' LT) TO I5NB 115+55.39 (38.88' LT)										80			530								10,13,34
DR2-30	I5SB 510+18.61 (71.94' LT) TO 521+16.92 (82.77' LT)										690			6250	320							34,48
	SHEET TOTAL										1610			12600	320				54			

ADD1_XL3497_SN_DR.xlsm					REGION NO.	STATE	FED. AID PROJ. NO.	
4/30/2014 19:02					10	WASH		
DESIGNED BY	S. MERRYMAN	03/25/14						
ENTERED BY	S. MERRYMAN	03/25/14						
CHECKED BY	E. QUINN	03/25/14			JOB NUMBER 12C501			
PROJ. ENGR.	J. PEREZ	03/25/14						
REGION ADM.	K. DAYTON	03/25/14	05/02/14	AD1 - REVISED QTY	SM	CONTRACT NO.		
		DATE	DATE	REVISION	BY			

Washington State Department of Transportation

I-5
M ST TO PORTLAND AVE - HOV

STRUCTURE NOTES - DRAINAGE

NTDR 8

STRUCTURE NOTES - DRAINAGE

NOTE:
THE FIRST NUMBER OF THE "CODE DESIGNATION" BELOW REFERS TO THE SHEET NO. OR THE SHEET REFERENCE NO. SHOWING THE DRAINAGE FEATURE.

THE SECOND NUMBER REFERS TO THE DRAINAGE FEATURE FOUND ON THAT SHEET.

CODE	LOCATION ∨ \ UNIT OF MEASURE >	PLUGGING EXISTING PIPE	ADJUST INLET	CONNECTION TO DRAINAGE STRUCTURE		ABANDON DRAINAGE STRUCTURE	ADJUST MANHOLE	MANHOLE 48 IN. DIAM. TYPE 3		MANHOLE 60 IN. DIAM. TYPE 3	MANHOLE 72 IN. DIAM. TYPE 3	MANHOLE ADDITIONAL HEIGHT 48 IN. DIAM. TYPE 3		MANHOLE ADDITIONAL HEIGHT 72 IN. DIAM. TYPE 3	ADJUST CATCH BASIN	LOCKING SOLID METAL COVER AND FRAME FOR CATCH BASIN		MANHOLE RING AND SOLID COVER	OPEN FLOW RESTRICTOR	CONSTRUCTION GEOTEXTILE FOR UNDERGROUND DRAINAGE		SEE GENERAL NOTES
		EACH	EACH	EACH		EACH	EACH	EACH		EACH	EACH	L.F.		L.F.	EACH	EACH		EACH	EACH	S.Y.		
DR2-1	I5SB 505+52.68 (66.25' LT)		1																			34
DR2-2	I5SB 507+31.88 (67.01' LT)		1																			34
DR2-3	I5SB 509+06.15 (66.71' LT)		1																			34
DR2-4	I5SB 510+15.23 (67.39' LT)														1							
DR2-5	I5SB 510+86.69 (67.58' LT)		1																			34
DR2-6	I5SB 510+86.90 (59.69' LT)						1															
DR2-7	I5SB 512+64.76 (67.70' LT)		1																			34
DR2-8	I5SB 512+65.76 (61.30' LT) TO 514+47.84 (67.46' LT)			1			1															21,34
DR2-9	I5SB 514+47.84 (67.46' LT) TO 516+29.82 (68.53' LT)																					10,13,34
DR2-10	I5SB 516+29.82 (68.53' LT) TO 518+01.55 (71.96' LT)																					10,13,34
DR2-11	I5SB 512+65.76 (61.30' LT) TO 514+43.55 (55.90' LT)																					34
DR2-12	I5SB 514+44.01 (63.18' LT) TO 514+43.55 (55.90' LT)					1																34
DR2-13	I5SB 514+43.55 (55.90' LT) TO 515+64.88 (52.05' LT)					1																34
DR2-14	I5SB 515+65.39 (67.71' LT) TO 515+64.88 (52.05' LT)					1																34
DR2-15	I5SB 515+64.88 (52.05' LT) TO 518+01.63 (48.96' LT)																					22,34
DR2-16	I5NB 107+66.26 (40.02' LT)		1													1						5,6,34
DR2-17	I5NB 109+48.27 (39.71' LT)		1													1						5,6,34
DR2-18	I5NB 111+30.00 (39.25' LT)		1													1						5,6,34
DR2-19	I5NB 112+00.78 (36.08' LT)														1	1						5,6
DR2-20	I5NB 116+75.98 (36.99' LT)		1													1						5,6,34
DR2-21	I5NB 118+58.03 (36.70' LT)		1													1						5,6,34
DR2-22	I5NB 114+29.08 (39.51' LT) TO 115+55.39 (38.88' LT)		1																			10,13,34
DR2-23	I5NB 115+55.35 (39.30' LT) TO 116+76.08 (36.86' LT)		1	1																		10,13,21,34
DR2-24	I5NB 115+36.18 (37.10' RT) TO 116+27.48 (35.12' RT)	1	1			1																29,34
DR2-25	I5NB 116+27.48 (35.12' RT) TO 118+01.78 (29.26' RT)	2	1			1																29,34
DR2-26	I5NB 118+01.78 (29.26' RT) TO 118+85.57 (25.48' RT)	2	1			1																29,34
DR2-27	I5NB 118+85.57 (25.48' RT) TO 119+71.39 (20.97' RT)	2	1			1																29,34
DR2-28	NCD 46+03.23 (4.85' LT) TO 47+74.29 (4.26' LT)																					10,13,34
DR2-29	NCD 47+74.29 (4.26' LT) TO I5NB 115+55.39 (38.88' LT)																					10,13,34
DR2-30	I5SB 510+18.61 (71.94' LT) TO 521+16.92 (82.77' LT)																			960		34,48
	SHEET TOTAL	7	16	2		7	2								2	6				960		

ADD1_XL3497_SN_DR.xlsm					REGION NO.	STATE	FED. AID PROJ. NO.
4/30/2014 19:02					10	WASH	
DESIGNED BY	S. MERRYMAN	03/25/14			JOB NUMBER		
ENTERED BY	S. MERRYMAN	03/25/14			12C501		
CHECKED BY	E. QUINN	03/25/14					
PROJ. ENGR.	J. PEREZ	03/25/14					
REGION ADM.	K. DAYTON	03/25/14	05/02/14	AD1 - REVISED QTY	SM	CONTRACT NO.	
		DATE	DATE	REVISION	BY		

Washington State Department of Transportation

I-5
M ST TO PORTLAND AVE - HOV

STRUCTURE NOTES - DRAINAGE

NTDR 9

STRUCTURE NOTES - DRAINAGE

NOTE:
THE FIRST NUMBER OF THE "CODE DESIGNATION" BELOW REFERS TO THE SHEET NO. OR THE SHEET REFERENCE NO. SHOWING THE DRAINAGE FEATURE.

THE SECOND NUMBER REFERS TO THE DRAINAGE FEATURE FOUND ON THAT SHEET.

CODE	LOCATION ⤵ \ UNIT OF MEASURE ➤	REMOVING DRAINAGE STRUCTURE		ROADWAY EXCAVATION INCL. HAUL - AREA NW POND		ROADWAY EXCAVATION INCL. HAUL - AREA NE POND	CONCRETE INLET	GRATE INLET TYPE 2		DROP INTLET TYPE 1	QUARRY SPALLS	UNDERDRAIN PIPE 6 IN. DIAM.		UNDERDRAIN PIPE 18 IN. DIAM.	DRAIN PIPE 6 IN. DIAM.	DRAIN PIPE 8 IN. DIAM.		HIGH DENSITY POLYETHYLENE (HDPE) UNDERDRAIN PIPE 6 IN.D	HIGH-DENSITY POLYETHYLENE (HDPE) PIPE 18 IN. DIAM.	HIGH-DENSITY POLYETHYLENE (HDPE) PIPE 24 IN. DIAM.		SEE GENERAL NOTES
		EACH		C.Y.		C.Y.	EACH	EACH		EACH	TON	L.F.		L.F.	L.F.	L.F.		L.F.	L.F.	L.F.		
DR2-31	I5NB 115+50.97 (103.63' RT) TO 123+84.06 (106.88' RT)											856										34,48
DR3-1	I5SB 518+01.55 (71.96' LT) TO 519+80.23 (75.54' LT)							1														10,13,34
DR3-2	I5SB 519+80.23 (75.54' LT) TO 520+79.50 (77.53' LT)							1														10,13,34
DR3-3	I5SB 521+79.00 (78.72' LT) TO 522+04.60 (77.57' LT)																					2,5,7,20,34
DR3-4	I5SB 523+57.67 (83.10' LT) TO 524+64.71 (86.35' LT)							1														10,13,34
DR3-5	SSB 83+73.36 (32.28' LT) TO 85+53.85 (36.04' LT)							1														10,13,34
DR3-6	SSB 85+53.85 (36.04' LT) TO 87+08.21 (38.13' LT)							1														10,13,30,34
DR3-7	SSB 87+33.16 (34.31' LT) TO 88+63.44 (37.64' LT)																					2,5,6,28,34,50
DR3-8	I5SB 528+19.76 (43.75' LT) TO 529+24.19 (43.75' LT)							1														10,13,18,34
DR3-9	SSB 88+63.44 (37.64' LT) TO 89+53.62 (39.95' LT)																					2,5,6,28,34,50
DR3-10	I5SB 530+48.69 (43.75' LT) TO 530+47.25 (32.36' RT)							1														10,13,18,34
DR3-11	I5SB 518+02.78 (71.54' LT)	1																				22,34
DR3-12	I5SB 518+01.63 (48.96' LT) TO 518+01.55 (71.96' LT)																					21,34
DR3-13	I5SB 519+80.81 (67.21' LT) TO 519+78.66 (45.86' LT)																					34
DR3-14	I5SB 519+78.66 (45.86' LT) TO 518+01.63 (48.96' LT)																					34
DR3-15	I5SB 520+85.43 (45.48' LT) TO 519+78.66 (45.86' LT)																					34
DR3-16	I5SB 521+56.65 (52.65' LT) TO 521+55.96 (46.23' LT)																					34
DR3-17	I5SB 521+55.96 (46.23' LT) TO 520+85.43 (45.48' LT)																					34
DR3-18	I5SB 521+82.53 (47.96' LT)																					26,34
DR3-19	I5SB 523+18.76 (64.14' LT) TO 523+18.44 (30.28' RT)																					34
DR3-20	I5SB 527+21.64 (79.15' LT) TO 527+17.99 (40.75' RT)																					34
DR3-21	I5SB 527+62.08 (80.45' LT) TO 528+16.57 (39.66' RT)																					34
DR3-22	I5NB 129+94.55 (58.61' RT) TO 143+40.30 (57.50' RT)													1330								35,36,38
DR3-23	I5NB 120+01.58 (35.01' LT)																					5,6
DR3-24	I5NB 120+39.46 (34.68' LT)																					34
DR3-25	I5NB 120+73.31 (35.47' LT)																					34
	SHEET TOTAL	1						7				856		1330								

ADD1_XL3497_SN_DR.xlsm					REGION NO.	STATE	FED. AID PROJ. NO.	
4/30/2014 19:02					10	WASH		
DESIGNED BY	S. MERRYMAN	03/25/14			JOB NUMBER			
ENTERED BY	S. MERRYMAN	03/25/14			12C501			
CHECKED BY	E. QUINN	03/25/14			CONTRACT NO.			
PROJ. ENGR.	J. PEREZ	03/25/14						
REGION ADM.	K. DAYTON	03/25/14	05/02/14	AD1 - REVISED QTY	SM			
		DATE	DATE	REVISION	BY			

Washington State Department of Transportation

I-5
M ST TO PORTLAND AVE - HOV

STRUCTURE NOTES - DRAINAGE

NTDR 10

STRUCTURE NOTES - DRAINAGE

NOTE:
THE FIRST NUMBER OF THE "CODE DESIGNATION" BELOW REFERS TO THE SHEET NO. OR THE SHEET REFERENCE NO. SHOWING THE DRAINAGE FEATURE.

THE SECOND NUMBER REFERS TO THE DRAINAGE FEATURE FOUND ON THAT SHEET.

CODE	LOCATION ⊽ \ UNIT OF MEASURE ➢	CL. V REINF. CONC. CULV. PIPE 12 IN. DIAM.	CATCH BASIN TYPE 1	CATCH BASIN TYPE 2 48 IN. DIAM.		CATCH BASIN TYPE 2 60 IN. DIAM.	CATCH BASIN TYPE 2 72 IN. DIAM.	TESTING STORM SEWER PIPE		CL. IV REINF. CONC. STORM SEWER PIPE 15 IN. DIAM.	CL. V REINF. CONC. STORM SEWER PIPE 12 IN. DIAM.	CL. V REINF. CONC. STORM SEWER PIPE 18 IN. DIAM.		CL. V REINF. CONC. STORM SEWER PIPE 24 IN. DIAM.	SCHEDULE A STORM SEWER PIPE 12 IN. DIAM.	SCHEDULE A STORM SEWER PIPE 18 IN. DIAM.		SCHEDULE A STORM SEWER PIPE 24 IN. DIAM.	SCHEDULE B STORM SEWER PIPE 18 IN. DIAM.	SCHEDULE B STORM SEWER PIPE 24 IN. DIAM.		SEE GENERAL NOTES
		L.F.	EACH	EACH		EACH	EACH	L.F.		L.F.	L.F.	L.F.		L.F.	L.F.	L.F.		L.F.	L.F.	L.F.		
DR2-31	I5NB 115+50.97 (103.63' RT) TO 123+84.06 (106.88' RT)																					34,48
DR3-1	I5SB 518+01.55 (71.96' LT) TO 519+80.23 (75.54' LT)							175								175						10,13,34
DR3-2	I5SB 519+80.23 (75.54' LT) TO 520+79.50 (77.53' LT)							97								97						10,13,34
DR3-3	I5SB 521+79.00 (78.72' LT) TO 522+04.60 (77.57' LT)			1				25								25						2,5,7,20,34
DR3-4	I5SB 523+57.67 (83.10' LT) TO 524+64.71 (86.35' LT)							107			107											10,13,34
DR3-5	SSB 83+73.36 (32.28' LT) TO 85+53.85 (36.04' LT)							181			181											10,13,34
DR3-6	SSB 85+53.85 (36.04' LT) TO 87+08.21 (38.13' LT)							155			155											10,13,30,34
DR3-7	SSB 87+33.16 (34.31' LT) TO 88+63.44 (37.64' LT)			1				130			130											2,5,6,28,34,50
DR3-8	I5SB 528+19.76 (43.75' LT) TO 529+24.19 (43.75' LT)							104							104							10,13,18,34
DR3-9	SSB 88+63.44 (37.64' LT) TO 89+53.62 (39.95' LT)			1				90				90										2,5,6,28,34,50
DR3-10	I5SB 530+48.69 (43.75' LT) TO 530+47.25 (32.36' RT)							76								76						10,13,18,34
DR3-11	I5SB 518+02.78 (71.54' LT)																					22,34
DR3-12	I5SB 518+01.63 (48.96' LT) TO 518+01.55 (71.96' LT)							23								23						21,34
DR3-13	I5SB 519+80.81 (67.21' LT) TO 519+78.66 (45.86' LT)																					34
DR3-14	I5SB 519+78.66 (45.86' LT) TO 518+01.63 (48.96' LT)																					34
DR3-15	I5SB 520+85.43 (45.48' LT) TO 519+78.66 (45.86' LT)																					34
DR3-16	I5SB 521+56.65 (52.65' LT) TO 521+55.96 (46.23' LT)																					34
DR3-17	I5SB 521+55.96 (46.23' LT) TO 520+85.43 (45.48' LT)																					34
DR3-18	I5SB 521+82.53 (47.96' LT)																					26,34
DR3-19	I5SB 523+18.76 (64.14' LT) TO 523+18.44 (30.28' RT)																					34
DR3-20	I5SB 527+21.64 (79.15' LT) TO 527+17.99 (40.75' RT)																					34
DR3-21	I5SB 527+62.08 (80.45' LT) TO 528+16.57 (39.66' RT)																					35,36,38
DR3-22	I5NB 129+94.55 (58.61' RT) TO 143+40.30 (57.50' RT)																					5,6
DR3-23	I5NB 120+01.58 (35.01' LT)																					34
DR3-24	I5NB 120+39.46 (34.68' LT)																					34
DR3-25	I5NB 120+73.31 (35.47' LT)																					
	SHEET TOTAL			3				1163			573	90			104	396						

ADD1_XL3497_SN_DR.xlsm					REGION NO.	STATE	FED. AID PROJ. NO.
4/30/2014 19:02					10	WASH	
DESIGNED BY	S. MERRYMAN	03/25/14			JOB NUMBER 12C501		
ENTERED BY	S. MERRYMAN	03/25/14					
CHECKED BY	E. QUINN	03/25/14					
PROJ. ENGR.	J. PEREZ	03/25/14					
REGION ADM.	K. DAYTON	03/25/14	05/02/14	AD1 - REVISED QTY	SM	CONTRACT NO.	
		DATE	DATE	REVISION	BY		

Washington State Department of Transportation

I-5
M ST TO PORTLAND AVE - HOV

STRUCTURE NOTES - DRAINAGE

NTDR 11

SHEET 488 OF 1763 SHEETS

STRUCTURE NOTES - DRAINAGE

NOTE:
THE FIRST NUMBER OF THE "CODE DESIGNATION" BELOW REFERS TO THE SHEET NO. OR THE SHEET REFERENCE NO. SHOWING THE DRAINAGE FEATURE.

THE SECOND NUMBER REFERS TO THE DRAINAGE FEATURE FOUND ON THAT SHEET.

CODE	LOCATION ∨ \ UNIT OF MEASURE >	TRENCHLESS PIPE 24 IN. DIAM.	DUCTILE IRON STORM SEWER PIPE 12 IN. DIAM.				MEDIA FILTER DRAIN	POND MARKER		BMP MARKER	STRUCTURE EXCAVATION CLASS B INCL. HAUL	STRUCTURE EXCAV. CL.B INCL. HAUL-CONTAMINATED MATERIAL		SHORING OR EXTRA EXCAVATION CLASS B	GRAVEL BACKFILL FOR DRAIN	LLDPE GEOMEMBRANE LINING SYSTEM		CONTROLLED DENSITY FILL	FLOW FILL PIPE	COMMERCIAL CONCRETE		SEE GENERAL NOTES
		L.F.	L.F.				L.F.	EACH		EACH	C.Y.	C.Y.		S.F.	C.Y.	S.Y.		C.Y.	C.Y.	C.Y.		
DR2-31	I5NB 115+50.97 (103.63' RT) TO 123+84.06 (106.88' RT)										510			4590	250							34,48
DR3-1	I5SB 518+01.55 (71.96' LT) TO 519+80.23 (75.54' LT)										210			1470								10,13,34
DR3-2	I5SB 519+80.23 (75.54' LT) TO 520+79.50 (77.53' LT)										120			810								10,13,34
DR3-3	I5SB 521+79.00 (78.72' LT) TO 522+04.60 (77.57' LT)										60			340								2,5,7,20,34
DR3-4	I5SB 523+57.67 (83.10' LT) TO 524+64.71 (86.35' LT)										160			1160								10,13,34
DR3-5	SSB 83+73.36 (32.28' LT) TO 85+53.85 (36.04' LT)										240			1810								10,13,34
DR3-6	SSB 85+53.85 (36.04' LT) TO 87+08.21 (38.13' LT)										220			1610								10,13,30,34
DR3-7	SSB 87+33.16 (34.31' LT) TO 88+63.44 (37.64' LT)										120			830				58				2,5,6,28,34,50
DR3-8	I5SB 528+19.76 (43.75' LT) TO 529+24.19 (43.75' LT)										80			570								10,13,18,34
DR3-9	SSB 88+63.44 (37.64' LT) TO 89+53.62 (39.95' LT)										90			560				46				2,5,6,28,34,50
DR3-10	I5SB 530+48.69 (43.75' LT) TO 530+47.25 (32.36' RT)										80			490								10,13,18,34
DR3-11	I5SB 518+02.78 (71.54' LT)																					22,34
DR3-12	I5SB 518+01.63 (48.96' LT) TO 518+01.55 (71.96' LT)										20			130								21,34
DR3-13	I5SB 519+80.81 (67.21' LT) TO 519+78.66 (45.86' LT)																		1			34
DR3-14	I5SB 519+78.66 (45.86' LT) TO 518+01.63 (48.96' LT)																		11			34
DR3-15	I5SB 520+85.43 (45.48' LT) TO 519+78.66 (45.86' LT)																		7			34
DR3-16	I5SB 521+56.65 (52.65' LT) TO 521+55.96 (46.23' LT)																		1			34
DR3-17	I5SB 521+55.96 (46.23' LT) TO 520+85.43 (45.48' LT)																					34
DR3-18	I5SB 521+82.53 (47.96' LT)																					26,34
DR3-19	I5SB 523+18.76 (64.14' LT) TO 523+18.44 (30.28' RT)																					34
DR3-20	I5SB 527+21.64 (79.15' LT) TO 527+17.99 (40.75' RT)																		7			34
DR3-21	I5SB 527+62.08 (80.45' LT) TO 528+16.57 (39.66' RT)																		8			34
DR3-22	I5NB 129+94.55 (58.61' RT) TO 143+40.30 (57.50' RT)						1330			15												35,36,38
DR3-23	I5NB 120+01.58 (35.01' LT)																					5,6
DR3-24	I5NB 120+39.46 (34.68' LT)																					34
DR3-25	I5NB 120+73.31 (35.47' LT)																		1			34
	SHEET TOTAL						1330			15	1910			14370	250			104	36			

ADD1_XL3497_SN_DR.xlsm						
4/30/2014 19:02						
DESIGNED BY	S. MERRYMAN	03/25/14				
ENTERED BY	S. MERRYMAN	03/25/14				
CHECKED BY	E. QUINN	03/25/14				
PROJ. ENGR.	J. PEREZ	03/25/14				
REGION ADM.	K. DAYTON	03/25/14	05/02/14	AD1 - REVISED QTY	SM	
		DATE	DATE	REVISION	BY	

REGION NO.	STATE	FED. AID PROJ. NO.
10	WASH	
JOB NUMBER 12C501		
CONTRACT NO.		

Washington State Department of Transportation

I-5
M ST TO PORTLAND AVE - HOV

STRUCTURE NOTES - DRAINAGE

NTDR 12

STRUCTURE NOTES - DRAINAGE

NOTE:
THE FIRST NUMBER OF THE "CODE DESIGNATION" BELOW REFERS TO THE SHEET NO. OR THE SHEET REFERENCE NO. SHOWING THE DRAINAGE FEATURE.

THE SECOND NUMBER REFERS TO THE DRAINAGE FEATURE FOUND ON THAT SHEET.

CODE	LOCATION ⤵ \ UNIT OF MEASURE ➢	PLUGGING EXISTING PIPE	ADJUST INLET	CONNECTION TO DRAINAGE STRUCTURE		ABANDON DRAINAGE STRUCTURE	ADJUST MANHOLE	MANHOLE 48 IN. DIAM. TYPE 3		MANHOLE 60 IN. DIAM. TYPE 3	MANHOLE 72 IN. DIAM. TYPE 3	MANHOLE ADDITIONAL HEIGHT 48 IN. DIAM. TYPE 3		MANHOLE ADDITIONAL HEIGHT 72 IN. DIAM. TYPE 3	ADJUST CATCH BASIN	LOCKING SOLID METAL COVER AND FRAME FOR CATCH BASIN		MANHOLE RING AND SOLID COVER	OPEN FLOW RESTRICTOR	CONSTRUCTION GEOTEXTILE FOR UNDERGROUND DRAINAGE		SEE GENERAL NOTES
		EACH	EACH	EACH		EACH	EACH	EACH		EACH	EACH	L.F.		L.F.	EACH	EACH		EACH	EACH	S.Y.		
DR2-31	I5NB 115+50.97 (103.63' RT) TO 123+84.06 (106.88' RT)																			760		34,48
DR3-1	I5SB 518+01.55 (71.96' LT) TO 519+80.23 (75.54' LT)																					10,13,34
DR3-2	I5SB 519+80.23 (75.54' LT) TO 520+79.50 (77.53' LT)																					10,13,34
DR3-3	I5SB 521+79.00 (78.72' LT) TO 522+04.60 (77.57' LT)			1																		2,5,7,20,34
DR3-4	I5SB 523+57.67 (83.10' LT) TO 524+64.71 (86.35' LT)																					10,13,34
DR3-5	SSB 83+73.36 (32.28' LT) TO 85+53.85 (36.04' LT)																					10,13,34
DR3-6	SSB 85+53.85 (36.04' LT) TO 87+08.21 (38.13' LT)																					10,13,30,34
DR3-7	SSB 87+33.16 (34.31' LT) TO 88+63.44 (37.64' LT)															1						2,5,6,28,34,50
DR3-8	I5SB 528+19.76 (43.75' LT) TO 529+24.19 (43.75' LT)																					10,13,18,34
DR3-9	SSB 88+63.44 (37.64' LT) TO 89+53.62 (39.95' LT)															1						2,5,6,28,34,50
DR3-10	I5SB 530+48.69 (43.75' LT) TO 530+47.25 (32.36' RT)																					10,13,18,34
DR3-11	I5SB 518+02.78 (71.54' LT)																					22,34
DR3-12	I5SB 518+01.63 (48.96' LT) TO 518+01.55 (71.96' LT)			1			1															21,34
DR3-13	I5SB 519+80.81 (67.21' LT) TO 519+78.66 (45.86' LT)					1																34
DR3-14	I5SB 519+78.66 (45.86' LT) TO 518+01.63 (48.96' LT)					1																34
DR3-15	I5SB 520+85.43 (45.48' LT) TO 519+78.66 (45.86' LT)					1																34
DR3-16	I5SB 521+56.65 (52.65' LT) TO 521+55.96 (46.23' LT)					1																34
DR3-17	I5SB 521+55.96 (46.23' LT) TO 520+85.43 (45.48' LT)			1			1															34
DR3-18	I5SB 521+82.53 (47.96' LT)						1															
DR3-19	I5SB 523+18.76 (64.14' LT) TO 523+18.44 (30.28' RT)					1									1							26,34
DR3-20	I5SB 527+21.64 (79.15' LT) TO 527+17.99 (40.75' RT)					1																34
DR3-21	I5SB 527+62.08 (80.45' LT) TO 528+16.57 (39.66' RT)					1																34
DR3-22	I5NB 129+94.55 (58.61' RT) TO 143+40.30 (57.50' RT)																					35,36,38
DR3-23	I5NB 120+01.58 (35.01' LT)						1									1						5,6
DR3-24	I5NB 120+39.46 (34.68' LT)		1																			34
DR3-25	I5NB 120+73.31 (35.47' LT)					1																34
	SHEET TOTAL		1	3		8	4								1	3				760		

ADD1_XL3497_SN_DR.xlsm
4/30/2014 19:02

DESIGNED BY	S. MERRYMAN	03/25/14			
ENTERED BY	S. MERRYMAN	03/25/14			
CHECKED BY	E. QUINN	03/25/14			
PROJ. ENGR.	J. PEREZ	03/25/14			
REGION ADM.	K. DAYTON	03/25/14	05/02/14	AD1 - REVISED QTY	SM
		DATE	DATE	REVISION	BY

REGION NO.	STATE	FED. AID PROJ. NO.
10	WASH	

JOB NUMBER 12C501

CONTRACT NO.

Washington State Department of Transportation

I-5
M ST TO PORTLAND AVE - HOV

STRUCTURE NOTES - DRAINAGE

NTDR 13

SHEET 490 OF 1763 SHEETS

STRUCTURE NOTES - DRAINAGE

NOTE:
THE FIRST NUMBER OF THE "CODE DESIGNATION" BELOW REFERS TO THE SHEET NO. OR THE SHEET REFERENCE NO. SHOWING THE DRAINAGE FEATURE.

THE SECOND NUMBER REFERS TO THE DRAINAGE FEATURE FOUND ON THAT SHEET.

CODE	LOCATION ⤵ \ UNIT OF MEASURE ➢	REMOVING DRAINAGE STRUCTURE		ROADWAY EXCAVATION INCL. HAUL - AREA NW POND		ROADWAY EXCAVATION INCL. HAUL - AREA NE POND	CONCRETE INLET	GRATE INLET TYPE 2		DROP INTLET TYPE 1	QUARRY SPALLS	UNDERDRAIN PIPE 6 IN. DIAM.		UNDERDRAIN PIPE 18 IN. DIAM.	DRAIN PIPE 6 IN. DIAM.	DRAIN PIPE 8 IN. DIAM.		HIGH DENSITY POLYETHYLENE (HDPE) UNDERDRAIN PIPE 6 IN.D	HIGH-DENSITY POLYETHYLENE (HDPE) PIPE 18 IN. DIAM.	HIGH-DENSITY POLYETHYLENE (HDPE) PIPE 24 IN. DIAM.		SEE GENERAL NOTES
		EACH		C.Y.		C.Y.	EACH	EACH		EACH	TON	L.F.		L.F.	L.F.	L.F.		L.F.	L.F.	L.F.		
DR3-26	I5NB 120+75.99 (41.03' LT)																					34
DR3-27	I5NB 122+67.05 (33.11' LT)																					34
DR3-28	I5NB 123+62.94 (32.51' LT)	1																				22,34
DR3-29	I5SB 523+18.44 (30.28' RT)																					34
DR3-30	I5SB 524+08.60 (29.89' RT)																					29,34
DR3-31	I5SB 526+69.18 (33.95' RT)																					
DR3-32	I5NB 128+76.09 (30.83' LT)	1																				22,29,34
DR3-33	I5NB 129+24.99 (29.25' LT)																					29,34
DR3-34	I5NB 128+28.20 (29.51' LT) TO 129+30.00 (32.46' LT)							1														10,13,34
DR3-35	I5NB 129+30.00 (32.46' LT) TO 129+95.99 (32.46' LT)							1														10,13,29,34
DR3-36	I5NB 129+95.99 (32.46' LT) TO I5SB 527+88.91 (32.36' RT)							1														10,13,17,34
DR3-37	I5NB 130+91.02 (31.38' LT) TO 130+66.67 (30.34' LT)							1														10,13,18,34
DR3-38	I5SB 527+88.91 (32.36' RT) TO 528+59.67 (30.34' RT)							1														10,13,17,34
DR3-39	I5SB 528+67.36 (31.36' RT) TO 530+47.25 (32.36' RT)							1														10,13,34
DR3-40	I5SB 529+17.69 (33.18' RT)																					34
DR3-41	I5NB 131+25.04 (31.02' LT)																					34
DR3-42	I5SB 530+47.25 (32.36' RT) TO 531+49.04 (32.97' RT)							1														10,13,34
DR3-43	I5NB 120+65.91 (50.10' RT) TO 120+75.99 (41.03' LT)																					34
DR3-44	I5NB 125+00.47 (61.96' RT) TO 125+59.19 (60.87' RT)																					34
DR3-45	I5NB 125+59.19 (60.87' RT) TO 126+36.70 (61.00' RT)																					34
DR3-46	I5NB 126+36.70 (61.00' RT) TO 126+38.24 (95.28' RT)																					34
DR3-47	I5NB 128+94.83 (49.09' RT) TO 129+24.99 (29.25' LT)																					34
DR3-48	NBN 21+77.30 (17.21' LT) TO I5NB 129+95.99 (32.46' LT)									1												14,15,34,47
DR3-49	I5NB 126+38.24 (95.28' RT) TO 127+84.53 (92.53' RT)																					26,29,34
DR3-50	I5NB 127+84.53 (92.53' RT) TO 129+64.95 (88.70' RT)																					26
DR3-51	I5NB 129+64.95 (88.70' RT) TO 130+64.85 (49.34' RT)																					26,34
DR3-52	I5NB 130+64.85 (49.34' RT) TO 131+45.48 (84.74' RT)																					26,34
DR3-53	I5NB 131+44.19 (43.18' RT) TO 131+48.86 (29.63' LT)																					34
DR3-54	I5NB 130+64.87 (86.60' RT) TO 131+45.48 (84.74' RT)																					26,34
DR3-55	I5NB 131+45.48 (84.74' RT) TO 133+28.34 (77.97' RT)																					26,34
	SHEET TOTAL	2						7		1												

ADD1_XL3497_SN_DR.xlsm						
4/30/2014 19:02						
DESIGNED BY	S. MERRYMAN	03/25/14				
ENTERED BY	S. MERRYMAN	03/25/14				
CHECKED BY	E. QUINN	03/25/14				
PROJ. ENGR.	J. PEREZ	03/25/14				
REGION ADM.	K. DAYTON	03/25/14	05/02/14	AD1 - REVISED QTY	SM	
		DATE	DATE	REVISION	BY	

REGION NO.	STATE	FED. AID PROJ. NO.
10	WASH	
JOB NUMBER 12C501		
CONTRACT NO.		

Washington State Department of Transportation

I-5
M ST TO PORTLAND AVE - HOV

STRUCTURE NOTES - DRAINAGE

NTDR 14

STRUCTURE NOTES - DRAINAGE

NOTE:
THE FIRST NUMBER OF THE "CODE DESIGNATION" BELOW REFERS TO THE SHEET NO. OR THE SHEET REFERENCE NO. SHOWING THE DRAINAGE FEATURE.

THE SECOND NUMBER REFERS TO THE DRAINAGE FEATURE FOUND ON THAT SHEET.

CODE	LOCATION ⊽ \ UNIT OF MEASURE ⊳	CL. V REINF. CONC. CULV. PIPE 12 IN. DIAM.	CATCH BASIN TYPE 1	CATCH BASIN TYPE 2 48 IN. DIAM.		CATCH BASIN TYPE 2 60 IN. DIAM.	CATCH BASIN TYPE 2 72 IN. DIAM.	TESTING STORM SEWER PIPE		CL. IV REINF. CONC. STORM SEWER PIPE 15 IN. DIAM.	CL. V REINF. CONC. STORM SEWER PIPE 12 IN. DIAM.	CL. V REINF. CONC. STORM SEWER PIPE 18 IN. DIAM.		CL. V REINF. CONC. STORM SEWER PIPE 24 IN. DIAM.	SCHEDULE A STORM SEWER PIPE 12 IN. DIAM.	SCHEDULE A STORM SEWER PIPE 18 IN. DIAM.		SCHEDULE A STORM SEWER PIPE 24 IN. DIAM.	SCHEDULE B STORM SEWER PIPE 18 IN. DIAM.	SCHEDULE B STORM SEWER PIPE 24 IN. DIAM.		SEE GENERAL NOTES
		L.F.	EACH	EACH		EACH	EACH	L.F.		L.F.	L.F.	L.F.		L.F.	L.F.	L.F.		L.F.	L.F.	L.F.		
DR3-26	I5NB 120+75.99 (41.03' LT)																					34
DR3-27	I5NB 122+67.05 (33.11' LT)																					34
DR3-28	I5NB 123+62.94 (32.51' LT)																					22,34
DR3-29	I5SB 523+18.44 (30.28' RT)																					34
DR3-30	I5SB 524+08.60 (29.89' RT)																					29,34
DR3-31	I5SB 526+69.18 (33.95' RT)																					
DR3-32	I5NB 128+76.09 (30.83' LT)																					22,29,34
DR3-33	I5NB 129+24.99 (29.25' LT)																					29,34
DR3-34	I5NB 128+28.20 (29.51' LT) TO 129+30.00 (32.46' LT)							102			102											10,13,34
DR3-35	I5NB 129+30.00 (32.46' LT) TO 129+95.99 (32.46' LT)							66							66							10,13,29,34
DR3-36	I5NB 129+95.99 (32.46' LT) TO I5SB 527+88.91 (32.36' RT)															5						10,13,17,34
DR3-37	I5NB 130+91.02 (31.38' LT) TO 130+66.67 (30.34' LT)							25			25											10,13,18,34
DR3-38	I5SB 527+88.91 (32.36' RT) TO 528+59.67 (30.34' RT)							71				71										10,13,17,34
DR3-39	I5SB 528+67.36 (31.36' RT) TO 530+47.25 (32.36' RT)							180								180						10,13,34
DR3-40	I5SB 529+17.69 (33.18' RT)																					34
DR3-41	I5NB 131+25.04 (31.02' LT)																					34
DR3-42	I5SB 530+47.25 (32.36' RT) TO 531+49.04 (32.97' RT)							102								102						10,13,34
DR3-43	I5NB 120+65.91 (50.10' RT) TO 120+75.99 (41.03' LT)																					34
DR3-44	I5NB 125+00.47 (61.96' RT) TO 125+59.19 (60.87' RT)																					34
DR3-45	I5NB 125+59.19 (60.87' RT) TO 126+36.70 (61.00' RT)																					34
DR3-46	I5NB 126+36.70 (61.00' RT) TO 126+38.24 (95.28' RT)																					34
DR3-47	I5NB 128+94.83 (49.09' RT) TO 129+24.99 (29.25' LT)																					34
DR3-48	NBN 21+77.30 (17.21' LT) TO I5NB 129+95.99 (32.46' LT)							101			101											14,15,34,47
DR3-49	I5NB 126+38.24 (95.28' RT) TO 127+84.53 (92.53' RT)																					26,29,34
DR3-50	I5NB 127+84.53 (92.53' RT) TO 129+64.95 (88.70' RT)																					26
DR3-51	I5NB 129+64.95 (88.70' RT) TO 130+64.85 (49.34' RT)																					26,34
DR3-52	I5NB 130+64.85 (49.34' RT) TO 131+45.48 (84.74' RT)																					26,34
DR3-53	I5NB 131+44.19 (43.18' RT) TO 131+48.86 (29.63' LT)																					34
DR3-54	I5NB 130+64.87 (86.60' RT) TO 131+45.48 (84.74' RT)																					26,34
DR3-55	I5NB 131+45.48 (84.74' RT) TO 133+28.34 (77.97' RT)																					26,34
	SHEET TOTAL							647			228	71			66	287						

ADD1_XL3497_SN_DR.xlsm						
4/30/2014 19:02						
DESIGNED BY	S. MERRYMAN	03/25/14				
ENTERED BY	S. MERRYMAN	03/25/14				
CHECKED BY	E. QUINN	03/25/14				
PROJ. ENGR.	J. PEREZ	03/25/14				
REGION ADM.	K. DAYTON	03/25/14	05/02/14	AD1 - REVISED QTY	SM	
		DATE	DATE	REVISION	BY	

REGION NO.	STATE	FED. AID PROJ. NO.
10	WASH	
JOB NUMBER 12C501		
CONTRACT NO.		

Washington State Department of Transportation

I-5
M ST TO PORTLAND AVE - HOV

STRUCTURE NOTES - DRAINAGE

NTDR 15

STRUCTURE NOTES - DRAINAGE

NOTE:
THE FIRST NUMBER OF THE "CODE DESIGNATION" BELOW REFERS TO THE SHEET NO. OR THE SHEET REFERENCE NO. SHOWING THE DRAINAGE FEATURE.

THE SECOND NUMBER REFERS TO THE DRAINAGE FEATURE FOUND ON THAT SHEET.

CODE	LOCATION ⤵ \ UNIT OF MEASURE ➢	TRENCHLESS PIPE 24 IN. DIAM.	DUCTILE IRON STORM SEWER PIPE 12 IN. DIAM.				MEDIA FILTER DRAIN	POND MARKER		BMP MARKER	STRUCTURE EXCAVATION CLASS B INCL. HAUL	STRUCTURE EXCAV. CL. B INCL. HAUL-CONTAMINATED MATERIAL		SHORING OR EXTRA EXCAVATION CLASS B	GRAVEL BACKFILL FOR DRAIN	LLDPE GEOMEMBRANE LINING SYSTEM		CONTROLLED DENSITY FILL	FLOW FILL PIPE	COMMERCIAL CONCRETE		SEE GENERAL NOTES
		L.F.	L.F.				L.F.	EACH		EACH	C.Y.	C.Y.		S.F.	C.Y.	S.Y.		C.Y.	C.Y.	C.Y.		
DR3-26	I5NB 120+75.99 (41.03' LT)																		52			34
DR3-27	I5NB 122+67.05 (33.11' LT)																					34
DR3-28	I5NB 123+62.94 (32.51' LT)																					22,34
DR3-29	I5SB 523+18.44 (30.28' RT)																		1			34
DR3-30	I5SB 524+08.60 (29.89' RT)																		16			29,34
DR3-31	I5SB 526+69.18 (33.95' RT)																					
DR3-32	I5NB 128+76.09 (30.83' LT)																					22,29,34
DR3-33	I5NB 129+24.99 (29.25' LT)																		13			29,34
DR3-34	I5NB 128+28.20 (29.51' LT) TO 129+30.00 (32.46' LT)										80			550								10,13,34
DR3-35	I5NB 129+30.00 (32.46' LT) TO 129+95.99 (32.46' LT)										50			350								10,13,29,34
DR3-36	I5NB 129+95.99 (32.46' LT) TO I5SB 527+88.91 (32.36' RT)										10			20								10,13,17,34
DR3-37	I5NB 130+91.02 (31.38' LT) TO 130+66.67 (30.34' LT)										20			110								10,13,18,34
DR3-38	I5SB 527+88.91 (32.36' RT) TO 528+59.67 (30.34' RT)										80			470								10,13,17,34
DR3-39	I5SB 528+67.36 (31.36' RT) TO 530+47.25 (32.36' RT)										190			1260								10,13,34
DR3-40	I5SB 529+17.69 (33.18' RT)																		1			34
DR3-41	I5NB 131+25.04 (31.02' LT)																		1			34
DR3-42	I5SB 530+47.25 (32.36' RT) TO 531+49.04 (32.97' RT)										110			690								10,13,34
DR3-43	I5NB 120+65.91 (50.10' RT) TO 120+75.99 (41.03' LT)																		6			34
DR3-44	I5NB 125+00.47 (61.96' RT) TO 125+59.19 (60.87' RT)																		4			34
DR3-45	I5NB 125+59.19 (60.87' RT) TO 126+36.70 (61.00' LT)																		5			34
DR3-46	I5NB 126+36.70 (61.00' RT) TO 126+38.24 (95.28' RT)																		2			34
DR3-47	I5NB 128+94.83 (49.09' RT) TO 129+24.99 (29.25' LT)																		2			34
DR3-48	NBN 21+77.30 (17.21' LT) TO I5NB 129+95.99 (32.46' LT)										100			680								14,15,34,47
DR3-49	I5NB 126+38.24 (95.28' RT) TO 127+84.53 (92.53' RT)																					26,29,34
DR3-50	I5NB 127+84.53 (92.53' RT) TO 129+64.95 (88.70' RT)																					26
DR3-51	I5NB 129+64.95 (88.70' RT) TO 130+64.85 (49.34' RT)																					26,34
DR3-52	I5NB 130+64.85 (49.34' RT) TO 131+45.48 (84.74' RT)																					26,34
DR3-53	I5NB 131+44.19 (43.18' RT) TO 131+48.86 (29.63' LT)																		5			34
DR3-54	I5NB 130+64.87 (86.60' RT) TO 131+45.48 (84.74' RT)																					26,34
DR3-55	I5NB 131+45.48 (84.74' RT) TO 133+28.34 (77.97' RT)																					26,34
	SHEET TOTAL										640			4130					108			

ADD1_XL3497_SN_DR.xlsm					
4/30/2014 19:02					
DESIGNED BY	S. MERRYMAN	03/25/14			
ENTERED BY	S. MERRYMAN	03/25/14			
CHECKED BY	E. QUINN	03/25/14			
PROJ. ENGR.	J. PEREZ	03/25/14			
REGION ADM.	K. DAYTON	03/25/14	05/02/14	AD1 REVISED QTY	SM
		DATE	DATE	REVISION	BY

REGION NO.	STATE	FED. AID PROJ. NO.
10	WASH	

JOB NUMBER 12C501

CONTRACT NO.

Washington State Department of Transportation

I-5
M ST TO PORTLAND AVE - HOV

STRUCTURE NOTES - DRAINAGE

NTDR 16

SHEET 493 OF 1763 SHEETS

STRUCTURE NOTES - DRAINAGE

NOTE:
THE FIRST NUMBER OF THE "CODE DESIGNATION" BELOW REFERS TO THE SHEET NO. OR THE SHEET REFERENCE NO. SHOWING THE DRAINAGE FEATURE.

THE SECOND NUMBER REFERS TO THE DRAINAGE FEATURE FOUND ON THAT SHEET.

CODE	LOCATION ⤵ \ UNIT OF MEASURE ⤵	PLUGGING EXISTING PIPE	ADJUST INLET	CONNECTION TO DRAINAGE STRUCTURE		ABANDON DRAINAGE STRUCTURE	ADJUST MANHOLE	MANHOLE 48 IN. DIAM. TYPE 3		MANHOLE 60 IN. DIAM. TYPE 3	MANHOLE 72 IN. DIAM. TYPE 3	MANHOLE ADDITIONAL HEIGHT 48 IN. DIAM. TYPE 3		MANHOLE ADDITIONAL HEIGHT 72 IN. DIAM. TYPE 3	ADJUST CATCH BASIN	LOCKING SOLID METAL COVER AND FRAME FOR CATCH BASIN		MANHOLE RING AND SOLID COVER	OPEN FLOW RESTRICTOR	CONSTRUCTION GEOTEXTILE FOR UNDERGROUND DRAINAGE		SEE GENERAL NOTES
		EACH	EACH	EACH		EACH	EACH	EACH		EACH	EACH	L.F.		L.F.	EACH	EACH		EACH	EACH	S.Y.		
DR3-26	I5NB 120+75.99 (41.03' LT)					1																34
DR3-27	I5NB 122+67.05 (33.11' LT)		1			1																34
DR3-28	I5NB 123+62.94 (32.51' LT)		1																			22,34
DR3-29	I5SB 523+18.44 (30.28' RT)					1																34
DR3-30	I5SB 524+08.60 (29.89' RT)	1				1																29,34
DR3-31	I5SB 526+69.18 (33.95' RT)														1							
DR3-32	I5NB 128+76.09 (30.83' LT)	2																				22,29,34
DR3-33	I5NB 129+24.99 (29.25' LT)	1				1																29,34
DR3-34	I5NB 128+28.20 (29.51' LT) TO 129+30.00 (32.46' LT)																					10,13,34
DR3-35	I5NB 129+30.00 (32.46' LT) TO 129+95.99 (32.46' LT)	1																				10,13,29,34
DR3-36	I5NB 129+95.99 (32.46' LT) TO I5SB 527+88.91 (32.36' RT)																					10,13,17,34
DR3-37	I5NB 130+91.02 (31.38' LT) TO 130+66.67 (30.34' LT)																					10,13,18,34
DR3-38	I5SB 527+88.91 (32.36' RT) TO 528+59.67 (30.34' RT)																					10,13,17,34
DR3-39	I5SB 528+67.36 (31.36' RT) TO 530+47.25 (32.36' RT)																					10,13,34
DR3-40	I5SB 529+17.69 (33.18' RT)					1																34
DR3-41	I5NB 131+25.04 (31.02' LT)					1																34
DR3-42	I5SB 530+47.25 (32.36' RT) TO 531+49.04 (32.97' RT)																					10,13,34
DR3-43	I5NB 120+65.91 (50.10' RT) TO 120+75.99 (41.03' LT)					1																34
DR3-44	I5NB 125+00.47 (61.96' RT) TO 125+59.19 (60.87' RT)					1																34
DR3-45	I5NB 125+59.19 (60.87' RT) TO 126+36.70 (61.00' RT)					1																34
DR3-46	I5NB 126+36.70 (61.00' RT) TO 126+38.24 (95.28' RT)					1																34
DR3-47	I5NB 128+94.83 (49.09' RT) TO 129+24.99 (29.25' LT)		1			1																34
DR3-48	NBN 21+77.30 (17.21' LT) TO I5NB 129+95.99 (32.46' LT)																					14,15,34,47
DR3-49	I5NB 126+38.24 (95.28' RT) TO 127+84.53 (92.53' RT)	1				1									1							26,29,34
DR3-50	I5NB 127+84.53 (92.53' RT) TO 129+64.95 (88.70' RT)		1			1																26
DR3-51	I5NB 129+64.95 (88.70' RT) TO 130+64.85 (49.34' RT)		1			1																26,34
DR3-52	I5NB 130+64.85 (49.34' RT) TO 131+45.48 (84.74' RT)					1									1							26,34
DR3-53	I5NB 131+44.19 (43.18' RT) TO 131+48.86 (29.63' LT)					1																34
DR3-54	I5NB 130+64.87 (86.60' RT) TO 131+45.48 (84.74' RT)		1			1																26,34
DR3-55	I5NB 131+45.48 (84.74' RT) TO 133+28.34 (77.97' RT)		1			1																26,34
	SHEET TOTAL	6	7			19									3							

ADD1_XL3497_SN_DR.xlsm					REGION NO.	STATE	FED. AID PROJ. NO.
4/30/2014 19:02					10	WASH	
DESIGNED BY	S. MERRYMAN	03/25/14					
ENTERED BY	S. MERRYMAN	03/25/14					
CHECKED BY	E. QUINN	03/25/14			JOB NUMBER		
PROJ. ENGR.	J. PEREZ	03/25/14			12C501		
REGION ADM.	K. DAYTON	03/25/14	05/02/14	AD1 - REVISED QTY	CONTRACT NO.		
		DATE	DATE	REVISION			

BY: SM

Washington State Department of Transportation

I-5
M ST TO PORTLAND AVE - HOV

STRUCTURE NOTES - DRAINAGE

NTDR 17

SHEET 494 OF 1763 SHEETS

STRUCTURE NOTES - DRAINAGE

NOTE:
THE FIRST NUMBER OF THE "CODE DESIGNATION" BELOW REFERS TO THE SHEET NO. OR THE SHEET REFERENCE NO. SHOWING THE DRAINAGE FEATURE.

THE SECOND NUMBER REFERS TO THE DRAINAGE FEATURE FOUND ON THAT SHEET.

CODE	LOCATION ⊽ \ UNIT OF MEASURE ⊳	REMOVING DRAINAGE STRUCTURE		ROADWAY EXCAVATION INCL. HAUL - AREA NW POND		ROADWAY EXCAVATION INCL. HAUL - AREA NE POND	CONCRETE INLET	GRATE INLET TYPE 2		DROP INTLET TYPE 1	QUARRY SPALLS	UNDERDRAIN PIPE 6 IN. DIAM.		UNDERDRAIN PIPE 18 IN. DIAM.	DRAIN PIPE 6 IN. DIAM.	DRAIN PIPE 8 IN. DIAM.		HIGH DENSITY POLYETHYLENE (HDPE) UNDERDRAIN PIPE 6 IN.D	HIGH-DENSITY POLYETHYLENE (HDPE) PIPE 18 IN. DIAM.	HIGH-DENSITY POLYETHYLENE (HDPE) PIPE 24 IN. DIAM.		SEE GENERAL NOTES
		EACH		C.Y.		C.Y.	EACH	EACH		EACH	TON	L.F.		L.F.	L.F.	L.F.		L.F.	L.F.	L.F.		
DR3-56	SSB 82+99.97 (30.88' LT) TO 83+73.36 (32.28' LT)							1														10,13,34
DR3-57	I5SB 529+24.19 (43.75' LT) TO 530+48.69 (43.75' LT)							1														10,13,34
DR3-58	I5NB 126+78.02 (32.14' LT) TO 126+78.03 (18.00' LT)							1														10,13,34
DR3-59	I5NB 119+71.39 (20.97' RT) TO 120+04.09 (19.07' RT)																					26,29,34
DR3-60	I5NB 125+25.84 (32.36' LT) TO 126+78.03 (18.00' LT)							1														10,13,34
DR3-61	I5NB 120+04.09 (19.07' RT) TO 120+01.58 (35.01' LT)																					26,29,34
DR3-62	I5SB 521+70.88 (89.20' LT) TO 521+79.00 (78.72' LT)														13							32,34
DR3-63	I5SB 521+70.97 (83.85' LT) TO 525+82.37 (102.77' LT)											411										34,48
DR3-64	I5SB 525+82.37 (102.77' LT) TO 525+81.76 (108.20' LT)														5							32,34
DR3-65	I5SB 526+31.78 (113.84' LT) TO 527+18.45 (95.89' LT)														89							32,34
DR3-66	I5NB 126+78.03 (18.00' LT) TO 128+28.00 (18.00' LT)																					3,8,34
DR3-67	I5SB 521+55.96 (46.22' LT) TO 521+79.00 (78.72' LT)																					34
DR3-68	I5SB 522+04.60 (77.57' LT) TO 522+41.17 (78.31' LT)																					3,8,20,34
DR3-69	I5SB 522+41.17 (78.31' LT)																					3,8,20,34
DR3-70	I5SB 520+79.50 (77.53' LT) TO 521+79.00 (78.72' LT)							1														10,13,34
DR3-71	SSB 87+09.53 (62.01' LT) TO 87+08.18 (43.28' LT)														19							32,34
DR3-72	SSB 87+08.15 (43.28' LT) TO 87+08.20 (38.24' LT)						1				12											4,28,31,34,50
DR3-73	SSB 87+08.21 (38.13' LT) TO 87+08.32 (33.68' LT)							1														10,13,28,34,50
DR3-74	I5SB 526+26.30 (48.84' LT) TO 530+85.00 (48.84' LT)											459										34,48
DR3-75	NBN 15+70.00 (35.84' RT) TO 15+70.00 (35.00' RT)														1							32
DR3-76	I5SB 521+16.92 (82.77' LT) TO 521+16.71 (88.12' LT)														5							32,34
DR3-77	SSB 85+69.95 (51.48' LT) TO 85+57.48 (53.85' LT)														13							20,32,34
DR3-78	NOT USED																					
DR3-79	I5SB 528+59.67 (30.34' RT) TO 528+67.36 (31.36' RT)							1														10,13,18,34
DR3-80	I5NB 130+66.67 (30.43' LT) TO 130+91.02 (31.38' LT)							1														10,13,18,34
DR3-81	I5NB 131+24.21 (26.09' LT)																					34
DR3-82	NBN 17+62.90 (66.05' RT) TO 17+93.12 (35.33' RT)														43							20,32,34
DR3-83	NBN 22+65.06 (85.33' RT) TO 23+00.49 (35.33' RT)														61							20,32,34
DR3-84	I5NB 128+28.00 (18.00' LT) TO 128+28.20 (29.51' LT)																					3,8,34
DR3-85	I5SB 521+27.38 (99.32' LT) TO 521+70.88 (89.20' LT)														44							32,34
	SHEET TOTAL						1	8			12	870			293							

ADD1_XL3497_SN_DR.xlsm				REGION NO.	STATE	FED. AID PROJ. NO.
4/30/2014 19:02				10	WASH	
DESIGNED BY	S. MERRYMAN	03/25/14				
ENTERED BY	S. MERRYMAN	03/25/14				
CHECKED BY	E. QUINN	03/25/14		JOB NUMBER		
PROJ. ENGR.	J. PEREZ	03/25/14		12C501		
REGION ADM.	K. DAYTON	03/25/14	05/02/14	AD1 REVISED NOTES	SM	CONTRACT NO.
		DATE	DATE	REVISION	BY	

Washington State Department of Transportation

I-5
M ST TO PORTLAND AVE - HOV

STRUCTURE NOTES - DRAINAGE

NTDR 18

SHEET 495 OF 1763 SHEETS

STRUCTURE NOTES - DRAINAGE

NOTE:
THE FIRST NUMBER OF THE "CODE DESIGNATION" BELOW REFERS TO THE SHEET NO. OR THE SHEET REFERENCE NO. SHOWING THE DRAINAGE FEATURE.

THE SECOND NUMBER REFERS TO THE DRAINAGE FEATURE FOUND ON THAT SHEET.

CODE	LOCATION ▽ \ UNIT OF MEASURE ➢	CL. V REINF. CONC. CULV. PIPE 12 IN. DIAM.	CATCH BASIN TYPE 1	CATCH BASIN TYPE 2 48 IN. DIAM.		CATCH BASIN TYPE 2 60 IN. DIAM.	CATCH BASIN TYPE 2 72 IN. DIAM.	TESTING STORM SEWER PIPE		CL. IV REINF. CONC. STORM SEWER PIPE 15 IN. DIAM.	CL. V REINF. CONC. STORM SEWER PIPE 12 IN. DIAM.	CL. V REINF. CONC. STORM SEWER PIPE 18 IN. DIAM.		CL. V REINF. CONC. STORM SEWER PIPE 24 IN. DIAM.	SCHEDULE A STORM SEWER PIPE 12 IN. DIAM.	SCHEDULE A STORM SEWER PIPE 18 IN. DIAM.		SCHEDULE A STORM SEWER PIPE 24 IN. DIAM.	SCHEDULE B STORM SEWER PIPE 18 IN. DIAM.	SCHEDULE B STORM SEWER PIPE 24 IN. DIAM.		SEE GENERAL NOTES
		L.F.	EACH	EACH		EACH	EACH	L.F.		L.F.	L.F.	L.F.		L.F.	L.F.	L.F.		L.F.	L.F.	L.F.		
DR3-56	SSB 82+99.97 (30.88' LT) TO 83+73.36 (32.28' LT)							73			73											10,13,34
DR3-57	I5SB 529+24.19 (43.75' LT) TO 530+48.69 (43.75' LT)							125							125							10,13,34
DR3-58	I5NB 126+78.02 (32.14' LT) TO 126+78.03 (18.00' LT)							14			14											10,13,34
DR3-59	I5NB 119+71.39 (20.97' RT) TO 120+04.09 (19.07' RT)																					26,29,34
DR3-60	I5NB 125+25.84 (32.36' LT) TO 126+78.03 (18.00' LT)							153							153							10,13,34
DR3-61	I5NB 120+04.09 (19.07' RT) TO 120+01.58 (35.01' LT)																					26,29,34
DR3-62	I5SB 521+70.88 (89.20' LT) TO 521+79.00 (78.72' LT)							13														32,34
DR3-63	I5SB 521+70.97 (83.85' LT) TO 525+82.37 (102.77' LT)																					34,48
DR3-64	I5SB 525+82.37 (102.77' LT) TO 525+81.76 (108.20' LT)																					32,34
DR3-65	I5SB 526+31.78 (113.84' LT) TO 527+18.45 (95.89' LT)							89														32,34
DR3-66	I5NB 126+78.03 (18.00' LT) TO 128+28.00 (18.00' LT)							150							150							3,8,34
DR3-67	I5SB 521+55.96 (46.22' LT) TO 521+79.00 (78.72' LT)							40								40						34
DR3-68	I5SB 522+04.60 (77.57' LT) TO 522+41.17 (78.31' LT)							36		36												3,8,20,34
DR3-69	I5SB 522+41.17 (78.31' LT)																					3,8,20,34
DR3-70	I5SB 520+79.50 (77.53' LT) TO 521+79.00 (78.72' LT)							97				97										10,13,34
DR3-71	SSB 87+09.53 (62.01' LT) TO 87+08.18 (43.28' LT)							19														32,34
DR3-72	SSB 87+08.15 (43.28' LT) TO 87+08.20 (38.24' LT)										5											4,28,31,34,50
DR3-73	SSB 87+08.21 (38.13' LT) TO 87+08.32 (33.68' LT)										4											10,13,28,34,50
DR3-74	I5SB 526+26.30 (48.84' LT) TO 530+85.00 (48.84' LT)																					34,48
DR3-75	NBN 15+70.00 (35.84' RT) TO 15+70.00 (35.00' RT)																					32
DR3-76	I5SB 521+16.92 (82.77' LT) TO 521+16.71 (88.12' LT)																					32,34
DR3-77	SSB 85+69.95 (51.48' LT) TO 85+57.48 (53.85' LT)							13														20,32,34
DR3-78	NOT USED																					
DR3-79	I5SB 528+59.67 (30.34' RT) TO 528+67.36 (31.36' RT)											8										10,13,18,34
DR3-80	I5NB 130+66.67 (30.43' LT) TO 130+91.02 (31.38' LT)							71			71											10,13,18,34
DR3-81	I5NB 131+24.21 (26.09' LT)																					34
DR3-82	NBN 17+62.90 (66.05' RT) TO 17+93.12 (35.33' RT)							43														20,32,34
DR3-83	NBN 22+65.06 (85.33' RT) TO 23+00.49 (35.33' RT)							61														20,32,34
DR3-84	I5NB 128+28.00 (18.00' LT) TO 128+28.20 (29.51' LT)										12											3,8,34
DR3-85	I5SB 521+27.38 (99.32' LT) TO 521+70.88 (89.20' LT)							44														32,34
	SHEET TOTAL							1041		36	179	105			428	40						

ADD1_XL3497_SN_DR.xlsm					REGION NO.	STATE	FED. AID PROJ. NO.
4/30/2014 19:02					10	WASH	
DESIGNED BY	S. MERRYMAN	03/25/14					
ENTERED BY	S. MERRYMAN	03/25/14					
CHECKED BY	E. QUINN	03/25/14			JOB NUMBER 12C501		
PROJ. ENGR.	J. PEREZ	03/25/14					
REGION ADM.	K. DAYTON	03/25/14	05/02/14	AD1 - REVISED QTY	SM	CONTRACT NO.	
		DATE	DATE	REVISION	BY		

Washington State Department of Transportation

I-5
M ST TO PORTLAND AVE - HOV

STRUCTURE NOTES - DRAINAGE

NTDR 19

SHEET 496 OF 1763 SHEETS

STRUCTURE NOTES - DRAINAGE

NOTE:
THE FIRST NUMBER OF THE "CODE DESIGNATION" BELOW REFERS TO THE SHEET NO. OR THE SHEET REFERENCE NO. SHOWING THE DRAINAGE FEATURE.

THE SECOND NUMBER REFERS TO THE DRAINAGE FEATURE FOUND ON THAT SHEET.

CODE	LOCATION ⊽ \ UNIT OF MEASURE ➢	TRENCHLESS PIPE 24 IN. DIAM.	DUCTILE IRON STORM SEWER PIPE 12 IN. DIAM.				MEDIA FILTER DRAIN	POND MARKER		BMP MARKER	STRUCTURE EXCAVATION CLASS B INCL. HAUL	STRUCTURE EXCAV. CL.B INCL. HAUL-CONTAMINATED MATERIAL		SHORING OR EXTRA EXCAVATION CLASS B	GRAVEL BACKFILL FOR DRAIN	LLDPE GEOMEMBRANE LINING SYSTEM		CONTROLLED DENSITY FILL	FLOW FILL PIPE	COMMERCIAL CONCRETE		SEE GENERAL NOTES
		L.F.	L.F.				L.F.	EACH		EACH	C.Y.	C.Y.		S.F.	C.Y.	S.Y.		C.Y.	C.Y.	C.Y.		
DR3-56	SSB 82+99.97 (30.88' LT) TO 83+73.36 (32.28' LT)										110			780								10,13,34
DR3-57	I5SB 529+24.19 (43.75' LT) TO 530+48.69 (43.75' LT)										100			730								10,13,34
DR3-58	I5NB 126+78.02 (32.14' LT) TO 126+78.03 (18.00' LT)										20			60								10,13,34
DR3-59	I5NB 119+71.39 (20.97' RT) TO 120+04.09 (19.07' RT)																		2			26,29,34
DR3-60	I5NB 125+25.84 (32.36' LT) TO 126+78.03 (18.00' LT)										110			790								10,13,34
DR3-61	I5NB 120+04.09 (19.07' RT) TO 120+01.58 (35.01' LT)																		6			26,29,34
DR3-62	I5SB 521+70.88 (89.20' LT) TO 521+79.00 (78.72' LT)										10			130								32,34
DR3-63	I5SB 521+70.97 (83.85' LT) TO 525+82.37 (102.77' LT)										460			4140	120							34,48
DR3-64	I5SB 525+82.37 (102.77' LT) TO 525+81.76 (108.20' LT)													80								32,34
DR3-65	I5SB 526+31.78 (113.84' LT) TO 527+18.45 (95.89' LT)										60			1100								32,34
DR3-66	I5NB 126+78.03 (18.00' LT) TO 128+28.00 (18.00' LT)										80			610								3,8,34
DR3-67	I5SB 521+55.96 (46.22' LT) TO 521+79.00 (78.72' LT)										40			310								34
DR3-68	I5SB 522+04.60 (77.57' LT) TO 522+41.17 (78.31' LT)										80			500								3,8,20,34
DR3-69	I5SB 522+41.17 (78.31' LT)										10			60								3,8,20,34
DR3-70	I5SB 520+79.50 (77.53' LT) TO 521+79.00 (78.72' LT)										150			990								10,13,34
DR3-71	SSB 87+09.53 (62.01' LT) TO 87+08.18 (43.28' LT)										20			270								32,34
DR3-72	SSB 87+08.15 (43.28' LT) TO 87+08.20 (38.24' LT)										10			50				2				4,28,31,34,50
DR3-73	SSB 87+08.21 (38.13' LT) TO 87+08.32 (33.68' LT)										10			30				1				10,13,28,34,50
DR3-74	I5SB 526+26.30 (48.84' LT) TO 530+85.00 (48.84' LT)										120			1080	140							34,48
DR3-75	NBN 15+70.00 (35.84' RT) TO 15+70.00 (35.00' RT)																					32
DR3-76	I5SB 521+16.92 (82.77' LT) TO 521+16.71 (88.12' LT)													60								32,34
DR3-77	SSB 85+69.95 (51.48' LT) TO 85+57.48 (53.85' LT)																					20,32,34
DR3-78	NOT USED																					
DR3-79	I5SB 528+59.67 (30.34' RT) TO 528+67.36 (31.36' RT)										10			30								10,13,18,34
DR3-80	I5NB 130+66.67 (30.43' LT) TO 130+91.02 (31.38' LT)										70			440								10,13,18,34
DR3-81	I5NB 131+24.21 (26.09' LT)																		1			34
DR3-82	NBN 17+62.90 (66.05' RT) TO 17+93.12 (35.33' RT)										20			360								20,32,34
DR3-83	NBN 22+65.06 (85.33' RT) TO 23+00.49 (35.33' RT)										50			860								20,32,34
DR3-84	I5NB 128+28.00 (18.00' LT) TO 128+28.20 (29.51' LT)										10			40								3,8,34
DR3-85	I5SB 521+27.38 (99.32' LT) TO 521+70.88 (89.20' LT)																					32,34
	SHEET TOTAL										1550			13500	260			3	9			

ADD1_XL3497_SN_DR.xlsm					REGION NO.	STATE	FED. AID PROJ. NO.
4/30/2014 19:02					10	WASH	
DESIGNED BY	S. MERRYMAN	03/25/14					
ENTERED BY	S. MERRYMAN	03/25/14					
CHECKED BY	E. QUINN	03/25/14			JOB NUMBER 12C501		
PROJ. ENGR.	J. PEREZ	03/25/14					
REGION ADM.	K. DAYTON	03/25/14	05/02/14	AD1 - REVISED QTY	SM	CONTRACT NO.	
		DATE	DATE	REVISION	BY		

Washington State Department of Transportation

I-5
M ST TO PORTLAND AVE - HOV

STRUCTURE NOTES - DRAINAGE

NTDR 20

SHEET 497 OF 1763 SHEETS

STRUCTURE NOTES - DRAINAGE

NOTE:
THE FIRST NUMBER OF THE "CODE DESIGNATION" BELOW REFERS TO THE SHEET NO. OR THE SHEET REFERENCE NO. SHOWING THE DRAINAGE FEATURE.

THE SECOND NUMBER REFERS TO THE DRAINAGE FEATURE FOUND ON THAT SHEET.

CODE	LOCATION ↓ \ UNIT OF MEASURE →	PLUGGING EXISTING PIPE	ADJUST INLET	CONNECTION TO DRAINAGE STRUCTURE		ABANDON DRAINAGE STRUCTURE	ADJUST MANHOLE	MANHOLE 48 IN. DIAM. TYPE 3		MANHOLE 60 IN. DIAM. TYPE 3	MANHOLE 72 IN. DIAM. TYPE 3	MANHOLE ADDITIONAL HEIGHT 48 IN. DIAM. TYPE 3		MANHOLE ADDITIONAL HEIGHT 72 IN. DIAM. TYPE 3	ADJUST CATCH BASIN	LOCKING SOLID METAL COVER AND FRAME FOR CATCH BASIN		MANHOLE RING AND SOLID COVER	OPEN FLOW RESTRICTOR	CONSTRUCTION GEOTEXTILE FOR UNDERGROUND DRAINAGE		SEE GENERAL NOTES
		EACH	EACH	EACH		EACH	EACH	EACH		EACH	EACH	L.F.		L.F.	EACH	EACH		EACH	EACH	S.Y.		
DR3-56	SSB 82+99.97 (30.88' LT) TO 83+73.36 (32.28' LT)																					10,13,34
DR3-57	I5SB 529+24.19 (43.75' LT) TO 530+48.69 (43.75' LT)																					10,13,34
DR3-58	I5NB 126+78.02 (32.14' LT) TO 126+78.03 (18.00' LT)																					10,13,34
DR3-59	I5NB 119+71.39 (20.97' RT) TO 120+04.09 (19.07' RT)	2	1			1																26,29,34
DR3-60	I5NB 125+25.84 (32.36' LT) TO 126+78.03 (18.00' LT)																					10,13,34
DR3-61	I5NB 120+04.09 (19.07' RT) TO 120+01.58 (35.01' LT)	2	1			1																26,29,34
DR3-62	I5SB 521+70.88 (89.20' LT) TO 521+79.00 (78.72' LT)																					32,34
DR3-63	I5SB 521+70.97 (83.85' LT) TO 525+82.37 (102.77' LT)																			370		34,48
DR3-64	I5SB 525+82.37 (102.77' LT) TO 525+81.76 (108.20' LT)																					32,34
DR3-65	I5SB 526+31.78 (113.84' LT) TO 527+18.45 (95.89' LT)																					32,34
DR3-66	I5NB 126+78.03 (18.00' LT) TO 128+28.00 (18.00' LT)							1														3,8,34
DR3-67	I5SB 521+55.96 (46.22' LT) TO 521+79.00 (78.72' LT)																					34
DR3-68	I5SB 522+04.60 (77.57' LT) TO 522+41.17 (78.31' LT)			1						1												3,8,20,34
DR3-69	I5SB 522+41.17 (78.31' LT)			1				1														3,8,20,34
DR3-70	I5SB 520+79.50 (77.53' LT) TO 521+79.00 (78.72' LT)																					10,13,34
DR3-71	SSB 87+09.53 (62.01' LT) TO 87+08.18 (43.28' LT)																					32,34
DR3-72	SSB 87+08.15 (43.28' LT) TO 87+08.20 (38.24' LT)																					4,28,31,34,50
DR3-73	SSB 87+08.21 (38.13' LT) TO 87+08.32 (33.68' LT)																					10,13,28,34,50
DR3-74	I5SB 526+26.30 (48.84' LT) TO 530+85.00 (48.84' LT)																			410		34,48
DR3-75	NBN 15+70.00 (35.84' RT) TO 15+70.00 (35.00' RT)																					32
DR3-76	I5SB 521+16.92 (82.77' LT) TO 521+16.71 (88.12' LT)																					32,34
DR3-77	SSB 85+69.95 (51.48' LT) TO 85+57.48 (53.85' LT)			1																		20,32,34
DR3-78	NOT USED																					
DR3-79	I5SB 528+59.67 (30.34' RT) TO 528+67.36 (31.36' RT)																					10,13,18,34
DR3-80	I5NB 130+66.67 (30.43' LT) TO 130+91.02 (31.38' LT)																					10,13,18,34
DR3-81	I5NB 131+24.21 (26.09' LT)					1																34
DR3-82	NBN 17+62.90 (66.05' RT) TO 17+93.12 (35.33' RT)			1																		20,32,34
DR3-83	NBN 22+65.06 (85.33' RT) TO 23+00.49 (35.33' RT)			1																		20,32,34
DR3-84	I5NB 128+28.00 (18.00' LT) TO 128+28.20 (29.51' LT)							1														3,8,34
DR3-85	I5SB 521+27.38 (99.32' LT) TO 521+70.88 (89.20' LT)																					32,34
	SHEET TOTAL	4	2	5		3		3		1										780		

ADD1_XL3497_SN_DR.xlsm					REGION NO.	STATE	FED. AID PROJ. NO.	
4/30/2014 19:02					10	WASH		
DESIGNED BY	S. MERRYMAN	03/25/14						
ENTERED BY	S. MERRYMAN	03/25/14			JOB NUMBER			
CHECKED BY	E. QUINN	03/25/14			12C501			
PROJ. ENGR.	J. PEREZ	03/25/14						
REGION ADM.	K. DAYTON	03/25/14	05/02/14	AD1 REVISED QTY	SM	CONTRACT NO.		
		DATE	DATE	REVISION	BY			

Washington State Department of Transportation

I-5
M ST TO PORTLAND AVE - HOV

STRUCTURE NOTES - DRAINAGE

NTDR 21

SHEET 498 OF 1763 SHEETS

STRUCTURE NOTES - DRAINAGE

NOTE:
THE FIRST NUMBER OF THE "CODE DESIGNATION" BELOW REFERS TO THE SHEET NO. OR THE SHEET REFERENCE NO. SHOWING THE DRAINAGE FEATURE.

THE SECOND NUMBER REFERS TO THE DRAINAGE FEATURE FOUND ON THAT SHEET.

CODE	LOCATION ⤵ \ UNIT OF MEASURE ➢	REMOVING DRAINAGE STRUCTURE		ROADWAY EXCAVATION INCL. HAUL - AREA NW POND		ROADWAY EXCAVATION INCL. HAUL - AREA NE POND	CONCRETE INLET	GRATE INLET TYPE 2		DROP INTLET TYPE 1	QUARRY SPALLS	UNDERDRAIN PIPE 6 IN. DIAM.		UNDERDRAIN PIPE 18 IN. DIAM.	DRAIN PIPE 6 IN. DIAM.	DRAIN PIPE 8 IN. DIAM.		HIGH DENSITY POLYETHYLENE (HDPE) UNDERDRAIN PIPE 6 IN.D	HIGH-DENSITY POLYETHYLENE (HDPE) PIPE 18 IN. DIAM.	HIGH-DENSITY POLYETHYLENE (HDPE) PIPE 24 IN. DIAM.		SEE GENERAL NOTES
		EACH		C.Y.		C.Y.	EACH	EACH		EACH	TON	L.F.		L.F.	L.F.	L.F.		L.F.	L.F.	L.F.		
DR3-86	SSB 87+08.32 (33.68' LT) TO 87+33.16 (34.31' LT)																					2,5,6,28,34,50
DR3-87	SSB 87+33.05 (38.76' LT) TO 87+33.16 (34.31' LT)							1														10,13,28,34,50
DR3-88	SSB 88+63.33 (42.10' LT) TO 88+63.44 (37.64' LT)							1														10,13,28,34,50
DR4-1	I5SB 531+35.61 (97.27' LT) TO 531+36.11 (78.91' LT)																					34
DR4-2	I5SB 531+36.11 (78.91' LT) TO 531+38.87 (39.95' LT)																					34
DR4-3	I5SB 531+38.87 (39.95' LT) TO 531+77.94 (40.12' RT)																					26,34
DR4-4	I5SB 531+66.96 (33.53' RT) TO 5351+77.94 (40.12' RT)																					34
DR4-5	I5SB 531+77.94 (40.12' RT)																					34
DR4-6	I5SB 534+19.42 (31.00' RT) TO 534+20.31 (38.57' RT)																					34
DR4-7	I5SB 534+19.38 (41.74' RT) TO 534+20.31 (38.57' RT)																					34
DR4-8	I5SB 536+21.59 (27.29' RT)																					34
DR4-9	I5SB 536+72.00 (21.21' RT)																					34
DR4-10	I5SB 539+19.97 (13.66' RT)																					34
DR4-11	I5SB 539+20.40 (19.65' RT)																					34
DR4-12	I5SB 540+30.16 (17.43' RT)																					34
DR4-13	I5SB 541+74.00 (15.40' RT)																					29,34
DR4-14	I5SB 531+49.04 (32.97' RT) TO 533+26.58 (37.01' RT)							1														10,13,34
DR4-15	I5SB 533+26.58 (37.01' RT) TO 535+07.79 (40.87' RT)							1														10,13,34
DR4-16	I5SB 535+07.79 (40.87' RT) TO 536+89.16 (43.72' RT)							1														10,13,34
DR4-17	I5SB 536+89.16 (43.72' RT) TO 538+70.68 (45.58' RT)							1														10,13,34
DR4-18	I5SB 538+70.68 (45.58' RT) TO 540+52.36 (46.41' RT)							1														10,13,34
DR4-19	I5SB 540+52.36 (46.41' RT) TO 542+22.07 (46.26' RT)							1														10,13,34
DR4-20	I5NB 134+78.39 (27.13' RT) TO 134+76.87 (34.55' LT)																					34
DR4-21	NBN 25+11.48 (7.35' LT) TO 26+90.35 (19.11' LT)																					34
DR4-22	NBN 26+90.35 (19.11' LT) TO 28+66.40 (32.38' LT)																					34
DR4-23	NBN 28+66.40 (32.38' LT) TO I5NB 138+72.92 (35.78' RT)																					34
DR4-24	I5NB 138+52.25 (2.48' LT) TO 140+17.79 (6.66' LT)																					34
DR4-25	I5NB 140+17.79 (6.66' LT) TO 141+74.96 (20.02' LT)																					34
	SHEET TOTAL							8														

ADD1_XL3497_SN_DR.xlsm					REGION NO.	STATE	FED. AID PROJ. NO.
4/30/2014 19:02					10	WASH	
DESIGNED BY	S. MERRYMAN	03/25/14					
ENTERED BY	S. MERRYMAN	03/25/14			JOB NUMBER		
CHECKED BY	E. QUINN	03/25/14			12C501		
PROJ. ENGR.	J. PEREZ	03/25/14					
REGION ADM.	K. DAYTON	03/25/14	05/02/14	AD1 - REVISED NOTES	CONTRACT NO.		
		DATE	DATE	REVISION			

BY: SM

Washington State Department of Transportation

I-5
M ST TO PORTLAND AVE - HOV

STRUCTURE NOTES - DRAINAGE

NTDR 22

SHEET 499 OF 1763 SHEETS

STRUCTURE NOTES - DRAINAGE

NOTE:
THE FIRST NUMBER OF THE "CODE DESIGNATION" BELOW REFERS TO THE SHEET NO. OR THE SHEET REFERENCE NO. SHOWING THE DRAINAGE FEATURE.

THE SECOND NUMBER REFERS TO THE DRAINAGE FEATURE FOUND ON THAT SHEET.

CODE	LOCATION ⩔ \ UNIT OF MEASURE ⩥	CL. V REINF. CONC. CULV. PIPE 12 IN. DIAM.	CATCH BASIN TYPE 1	CATCH BASIN TYPE 2 48 IN. DIAM.		CATCH BASIN TYPE 2 60 IN. DIAM.	CATCH BASIN TYPE 2 72 IN. DIAM.	TESTING STORM SEWER PIPE		CL. IV REINF. CONC. STORM SEWER PIPE 15 IN. DIAM.	CL. V REINF. CONC. STORM SEWER PIPE 12 IN. DIAM.	CL. V REINF. CONC. STORM SEWER PIPE 18 IN. DIAM.		CL. V REINF. CONC. STORM SEWER PIPE 24 IN. DIAM.	SCHEDULE A STORM SEWER PIPE 12 IN. DIAM.	SCHEDULE A STORM SEWER PIPE 18 IN. DIAM.		SCHEDULE A STORM SEWER PIPE 24 IN. DIAM.	SCHEDULE B STORM SEWER PIPE 18 IN. DIAM.	SCHEDULE B STORM SEWER PIPE 24 IN. DIAM.		SEE GENERAL NOTES
		L.F.	EACH	EACH		EACH	EACH	L.F.		L.F.	L.F.	L.F.		L.F.	L.F.	L.F.		L.F.	L.F.	L.F.		
DR3-86	SSB 87+08.32 (33.68' LT) TO 87+33.16 (34.31' LT)			1				25			25											2,5,6,28,34,50
DR3-87	SSB 87+33.05 (38.76' LT) TO 87+33.16 (34.31' LT)										4											10,13,28,34,50
DR3-88	SSB 88+63.33 (42.10' LT) TO 88+63.44 (37.64' LT)										4											10,13,28,34,50
DR4-1	I5SB 531+35.61 (97.27' LT) TO 531+36.11 (78.91' LT)																					34
DR4-2	I5SB 531+36.11 (78.91' LT) TO 531+38.87 (39.95' LT)																					34
DR4-3	I5SB 531+38.87 (39.95' LT) TO 531+77.94 (40.12' RT)																					26,34
DR4-4	I5SB 531+66.96 (33.53' RT) TO 5351+77.94 (40.12' RT)																					34
DR4-5	I5SB 531+77.94 (40.12' RT)																					34
DR4-6	I5SB 534+19.42 (31.00' RT) TO 534+20.31 (38.57' RT)																					34
DR4-7	I5SB 534+19.38 (41.74' RT) TO 534+20.31 (38.57' RT)																					34
DR4-8	I5SB 536+21.59 (27.29' RT)																					34
DR4-9	I5SB 536+72.00 (21.21' RT)																					34
DR4-10	I5SB 539+19.97 (13.66' RT)																					34
DR4-11	I5SB 539+20.40 (19.65' RT)																					34
DR4-12	I5SB 540+30.16 (17.43' RT)																					34
DR4-13	I5SB 541+74.00 (15.40' RT)																					29,34
DR4-14	I5SB 531+49.04 (32.97' RT) TO 533+26.58 (37.01' RT)							177				177										10,13,34
DR4-15	I5SB 533+26.58 (37.01' RT) TO 535+07.79 (40.87' RT)							180								180						10,13,34
DR4-16	I5SB 535+07.79 (40.87' RT) TO 536+89.16 (43.72' RT)							180								180						10,13,34
DR4-17	I5SB 536+89.16 (43.72' RT) TO 538+70.68 (45.58' RT)							180								180						10,13,34
DR4-18	I5SB 538+70.68 (45.58' RT) TO 540+52.36 (46.41' RT)							180								180						10,13,34
DR4-19	I5SB 540+52.36 (46.41' RT) TO 542+22.07 (46.26' RT)							168								168						10,13,34
DR4-20	I5NB 134+78.39 (27.13' RT) TO 134+76.87 (34.55' LT)																					34
DR4-21	NBN 25+11.48 (7.35' LT) TO 26+90.35 (19.11' LT)																					34
DR4-22	NBN 26+90.35 (19.11' LT) TO 28+66.40 (32.38' LT)																					34
DR4-23	NBN 28+66.40 (32.38' LT) TO I5NB 138+72.92 (35.78' RT)																					34
DR4-24	I5NB 138+52.25 (2.48' LT) TO 140+17.79 (6.66' LT)																					34
DR4-25	I5NB 140+17.79 (6.66' LT) TO 141+74.96 (20.02' LT)																					34
	SHEET TOTAL			1				1090			33	177				888						

ADD1_XL3497_SN_DR.xlsm				REGION NO.	STATE	FED. AID PROJ. NO.
4/30/2014 19:02				10	WASH	
DESIGNED BY	S. MERRYMAN	03/25/14				
ENTERED BY	S. MERRYMAN	03/25/14				
CHECKED BY	E. QUINN	03/25/14		JOB NUMBER 12C501		
PROJ. ENGR.	J. PEREZ	03/25/14				
REGION ADM.	K. DAYTON	03/25/14	05/02/14	AD1 - REVISED QTY	SM	CONTRACT NO.
		DATE	DATE	REVISION	BY	

Washington State Department of Transportation

I-5
M ST TO PORTLAND AVE - HOV

STRUCTURE NOTES - DRAINAGE

NTDR 23

SHEET 500 OF 1763 SHEETS

STRUCTURE NOTES - DRAINAGE

NOTE:
THE FIRST NUMBER OF THE "CODE DESIGNATION" BELOW REFERS TO THE SHEET NO. OR THE SHEET REFERENCE NO. SHOWING THE DRAINAGE FEATURE.

THE SECOND NUMBER REFERS TO THE DRAINAGE FEATURE FOUND ON THAT SHEET.

CODE	LOCATION ⊽ \ UNIT OF MEASURE ⊳	TRENCHLESS PIPE 24 IN. DIAM.	DUCTILE IRON STORM SEWER PIPE 12 IN. DIAM.				MEDIA FILTER DRAIN	POND MARKER		BMP MARKER	STRUCTURE EXCAVATION CLASS B INCL. HAUL	STRUCTURE EXCAV. CL.B INCL. HAUL-CONTAMINATED MATERIAL		SHORING OR EXTRA EXCAVATION CLASS B	GRAVEL BACKFILL FOR DRAIN	LLDPE GEOMEMBRANE LINING SYSTEM		CONTROLLED DENSITY FILL	FLOW FILL PIPE	COMMERCIAL CONCRETE		SEE GENERAL NOTES
		L.F.	L.F.				L.F.	EACH		EACH	C.Y.	C.Y.		S.F.	C.Y.	S.Y.		C.Y.	C.Y.	C.Y.		
DR3-86	SSB 87+08.32 (33.68' LT) TO 87+33.16 (34.31' LT)										30			190				10				2,5,6,28,34,50
DR3-87	SSB 87+33.05 (38.76' LT) TO 87+33.16 (34.31' LT)										10			30				1				10,13,28,34,50
DR3-88	SSB 88+63.33 (42.10' LT) TO 88+63.44 (37.64' LT)										10			20				1				10,13,28,34,50
DR4-1	I5SB 531+35.61 (97.27' LT) TO 531+36.11 (78.91' LT)																		1			34
DR4-2	I5SB 531+36.11 (78.91' LT) TO 531+38.87 (39.95' LT)																		1			34
DR4-3	I5SB 531+38.87 (39.95' LT) TO 531+77.94 (40.12' RT)																					26,34
DR4-4	I5SB 531+66.96 (33.53' RT) TO 5351+77.94 (40.12' RT)																		1			34
DR4-5	I5SB 531+77.94 (40.12' RT)																		29			34
DR4-6	I5SB 534+19.42 (31.00' RT) TO 534+20.31 (38.57' RT)																		1			34
DR4-7	I5SB 534+19.38 (41.74' RT) TO 534+20.31 (38.57' RT)																		1			34
DR4-8	I5SB 536+21.59 (27.29' RT)																		19			34
DR4-9	I5SB 536+72.00 (21.21' RT)																		1			34
DR4-10	I5SB 539+19.97 (13.66' RT)																		1			34
DR4-11	I5SB 539+20.40 (19.65' RT)																		7			34
DR4-12	I5SB 540+30.16 (17.43' RT)																		16			34
DR4-13	I5SB 541+74.00 (15.40' RT)																		1			29,34
DR4-14	I5SB 531+49.04 (32.97' RT) TO 533+26.58 (37.01' RT)										210			1390								10,13,34
DR4-15	I5SB 533+26.58 (37.01' RT) TO 535+07.79 (40.87' RT)										200			1390								10,13,34
DR4-16	I5SB 535+07.79 (40.87' RT) TO 536+89.16 (43.72' RT)										190			1310								10,13,34
DR4-17	I5SB 536+89.16 (43.72' RT) TO 538+70.68 (45.58' RT)										200			1320								10,13,34
DR4-18	I5SB 538+70.68 (45.58' RT) TO 540+52.36 (46.41' RT)										190			1250								10,13,34
DR4-19	I5SB 540+52.36 (46.41' RT) TO 542+22.07 (46.26' RT)										160			1070								10,13,34
DR4-20	I5NB 134+78.39 (27.13' RT) TO 134+76.87 (34.55' LT)																		4			34
DR4-21	NBN 25+11.48 (7.35' LT) TO 26+90.35 (19.11' LT)																		12			34
DR4-22	NBN 26+90.35 (19.11' LT) TO 28+66.40 (32.38' LT)																		11			34
DR4-23	NBN 28+66.40 (32.38' LT) TO I5NB 138+72.92 (35.78' RT)																		12			34
DR4-24	I5NB 138+52.25 (2.48' LT) TO 140+17.79 (6.66' LT)																		10			34
DR4-25	I5NB 140+17.79 (6.66' LT) TO 141+74.96 (20.02' LT)																		10			34
	SHEET TOTAL										1200			7970				12	138			

ADD1_XL3497_SN_DR.xlsm					REGION NO.	STATE	FED. AID PROJ. NO.	
4/30/2014 19:02					10	WASH		
DESIGNED BY	S. MERRYMAN	03/25/14						
ENTERED BY	S. MERRYMAN	03/25/14						
CHECKED BY	E. QUINN	03/25/14			JOB NUMBER 12C501			
PROJ. ENGR.	J. PEREZ	03/25/14						
REGION ADM.	K. DAYTON	03/25/14	05/02/14	AD1 - REVISED QTY	SM	CONTRACT NO.		
		DATE	DATE	REVISION	BY			

Washington State Department of Transportation

I-5
M ST TO PORTLAND AVE - HOV

STRUCTURE NOTES - DRAINAGE

NTDR 24

SHEET 501 OF 1763 SHEETS

STRUCTURE NOTES - DRAINAGE

NOTE:
THE FIRST NUMBER OF THE "CODE DESIGNATION" BELOW REFERS TO THE SHEET NO. OR THE SHEET REFERENCE NO. SHOWING THE DRAINAGE FEATURE.

THE SECOND NUMBER REFERS TO THE DRAINAGE FEATURE FOUND ON THAT SHEET.

CODE	LOCATION ↓ \ UNIT OF MEASURE →	PLUGGING EXISTING PIPE	ADJUST INLET	CONNECTION TO DRAINAGE STRUCTURE		ABANDON DRAINAGE STRUCTURE	ADJUST MANHOLE	MANHOLE 48 IN. DIAM. TYPE 3		MANHOLE 60 IN. DIAM. TYPE 3	MANHOLE 72 IN. DIAM. TYPE 3	MANHOLE ADDITIONAL HEIGHT 48 IN. DIAM. TYPE 3		MANHOLE ADDITIONAL HEIGHT 72 IN. DIAM. TYPE 3	ADJUST CATCH BASIN	LOCKING SOLID METAL COVER AND FRAME FOR CATCH BASIN		MANHOLE RING AND SOLID COVER	OPEN FLOW RESTRICTOR	CONSTRUCTION GEOTEXTILE FOR UNDERGROUND DRAINAGE		SEE GENERAL NOTES
		EACH	EACH	EACH		EACH	EACH	EACH		EACH	EACH	L.F.		L.F.	EACH	EACH		EACH	EACH	S.Y.		
DR3-86	SSB 87+08.32 (33.68' LT) TO 87+33.16 (34.31' LT)															1						2,5,6,28,34,50
DR3-87	SSB 87+33.05 (38.76' LT) TO 87+33.16 (34.31' LT)																					10,13,28,34,50
DR3-88	SSB 88+63.33 (42.10' LT) TO 88+63.44 (37.64' LT)																					10;13,28,34,50
DR4-1	I5SB 531+35.61 (97.27' LT) TO 531+36.11 (78.91' LT)					1																34
DR4-2	I5SB 531+36.11 (78.91' LT) TO 531+38.87 (39.95' LT)					1																34
DR4-3	I5SB 531+38.87 (39.95' LT) TO 531+77.94 (40.12' RT)					1									1							26,34
DR4-4	I5SB 531+66.96 (33.53' RT) TO 5351+77.94 (40.12' RT)					1																34
DR4-5	I5SB 531+77.94 (40.12' RT)					1																34
DR4-6	I5SB 534+19.42 (31.00' RT) TO 534+20.31 (38.57' RT)					1																34
DR4-7	I5SB 534+19.38 (41.74' RT) TO 534+20.31 (38.57' RT)					1																34
DR4-8	I5SB 536+21.59 (27.29' RT)					1																34
DR4-9	I5SB 536+72.00 (21.21' RT)					1																34
DR4-10	I5SB 539+19.97 (13.66' RT)					1																34
DR4-11	I5SB 539+20.40 (19.65' RT)					1																34
DR4-12	I5SB 540+30.16 (17.43' RT)					1																34
DR4-13	I5SB 541+74.00 (15.40' RT)	1				1																29,34
DR4-14	I5SB 531+49.04 (32.97' RT) TO 533+26.58 (37.01' RT)																					10,13,34
DR4-15	I5SB 533+26.58 (37.01' RT) TO 535+07.79 (40.87' RT)																					10,13,34
DR4-16	I5SB 535+07.79 (40.87' RT) TO 536+89.16 (43.72' RT)																					10,13,34
DR4-17	I5SB 536+89.16 (43.72' RT) TO 538+70.68 (45.58' RT)																					10,13,34
DR4-18	I5SB 538+70.68 (45.58' RT) TO 540+52.36 (46.41' RT)																					10,13,34
DR4-19	I5SB 540+52.36 (46.41' RT) TO 542+22.07 (46.26' RT)																					10,13,34
DR4-20	I5NB 134+78.39 (27.13' RT) TO 134+76.87 (34.55' LT)					1																34
DR4-21	NBN 25+11.48 (7.35' LT) TO 26+90.35 (19.11' LT)		1			1																34
DR4-22	NBN 26+90.35 (19.11' LT) TO 28+66.40 (32.38' LT)					1																34
DR4-23	NBN 28+66.40 (32.38' LT) TO I5NB 138+72.92 (35.78' RT)					1																34
DR4-24	I5NB 138+52.25 (2.48' LT) TO 140+17.79 (6.66' LT)					1																34
DR4-25	I5NB 140+17.79 (6.66' LT) TO 141+74.96 (20.02' LT)					1																34
	SHEET TOTAL	1	1			19									1	1						

ADD1_XL3497_SN_DR.xlsm					
4/30/2014 19:02					
DESIGNED BY	S. MERRYMAN	03/25/14			
ENTERED BY	S. MERRYMAN	03/25/14			
CHECKED BY	E. QUINN	03/25/14			
PROJ. ENGR.	J. PEREZ	03/25/14			
REGION ADM.	K. DAYTON	03/25/14	05/02/14	AD1 - REVISED QTY	SM
		DATE	DATE	REVISION	BY

REGION NO.	STATE	FED. AID PROJ. NO.
10	WASH	
JOB NUMBER 12C501		
CONTRACT NO.		

Washington State Department of Transportation

I-5
M ST TO PORTLAND AVE - HOV

STRUCTURE NOTES - DRAINAGE

NTDR 25

SHEET 502 OF 1763 SHEETS

STRUCTURE NOTES - DRAINAGE

NOTE:
THE FIRST NUMBER OF THE "CODE DESIGNATION" BELOW REFERS TO THE SHEET NO. OR THE SHEET REFERENCE NO. SHOWING THE DRAINAGE FEATURE.

THE SECOND NUMBER REFERS TO THE DRAINAGE FEATURE FOUND ON THAT SHEET.

CODE	LOCATION ⩔ \ UNIT OF MEASURE ⩥	REMOVING DRAINAGE STRUCTURE		ROADWAY EXCAVATION INCL. HAUL - AREA NW POND		ROADWAY EXCAVATION INCL. HAUL - AREA NE POND	CONCRETE INLET	GRATE INLET TYPE 2		DROP INTLET TYPE 1	QUARRY SPALLS	UNDERDRAIN PIPE 6 IN. DIAM.		UNDERDRAIN PIPE 18 IN. DIAM.	DRAIN PIPE 6 IN. DIAM.	DRAIN PIPE 8 IN. DIAM.		HIGH DENSITY POLYETHYLENE (HDPE) UNDERDRAIN PIPE 6 IN.D	HIGH-DENSITY POLYETHYLENE (HDPE) PIPE 18 IN. DIAM.	HIGH-DENSITY POLYETHYLENE (HDPE) PIPE 24 IN. DIAM.		SEE GENERAL NOTES
		EACH		C.Y.		C.Y.	EACH	EACH		EACH	TON	L.F.		L.F.	L.F.	L.F.		L.F.	L.F.	L.F.		
DR4-26	I5NB 142+17.43 (35.94' LT) TO I5SB 540+30.16 (17.43' RT)	1																				22,34
DR4-27	I5NB 138+72.92 (35.78' RT) TO 140+47.13 (36.21' RT)																					34
DR4-28	I5NB 140+47.13 (36.21' RT) TO 141+79.44 (60.58' RT)																					34
DR4-29	I5NB 141+46.04 (66.51' RT) TO 141+79.44 (60.58' RT)																					34
DR4-30	I5NB 141+85.92 (62.87' RT) TO 141+79.44 (60.58' RT)																					34
DR4-31	I5NB 141+97.44 (7.65' LT) TO 141+85.92 (62.87' RT)																					
DR4-32	NBN 25+07.40 (93.02' RT) TO 25+04.31 (35.33' RT)										2				58							34
DR4-33	SSB 91+20.09 (43.71' LT) TO 91+88.91 (44.78' LT)																					20,28,31,32,34
DR4-34	NBN 33+50.00 (43.46' RT) TO 34+00.00 (43.45' RT)							1														2,5,6,28,34,50
DR4-35	NBN 34+00.00 (43.45' RT) TO 34+50.00 (43.46' RT)							1														10,13,34
DR4-36	NBN 34+50.00 (43.46' RT) TO 35+00.00 (43.45' RT)							1														10,13,34
DR4-37	SSB 91+85.10 (57.77' LT) TO 91+88.84 (49.63' LT)														9							32,34
DR4-38	SSB 91+85.06 (53.67' LT) TO 94+50.31 (55.94' LT)											265										34,48
DR4-39	SSB 94+50.31 (55.94' LT) TO 94+55.31 (51.98' LT)														6							32,34
DR4-40	NBN 35+00.30 (49.48' LT) TO 35+00.98 (21.47' LT)																					3,8,34
DR4-41	NBN 35+00.00 (43.45' RT) TO 35+30.00 (42.75' RT)							1														10,13,34
DR4-42	NBN 35+30.22 (2.00' LT) TO 36+37.49 (2.00' LT)																					3,8,34
DR4-43	NBN 35+00.98 (21.47' LT) TO 36+32.64 (39.10' LT)							1														10,12,34,47
DR4-44	SSB 92+70.00 (50.47' LT) TO 93+30.01 (51.37' LT)							1														10,13,34
DR4-45	SSB 93+30.01 (51.37' LT) TO 93+50.00 (51.46' LT)							1														10,13,34
DR4-46	SSB 93+50.00 (51.46' LT) TO 93+70.00 (51.46' LT)							1														10,13,34
DR4-47	SSB 93+70.00 (51.46' LT) TO 94+55.31 (51.98' LT)							1														10,13,34
DR4-48	SSB 94+55.31 (51.98' LT) TO 96+26.43 (57.48' LT)																					3,8,34
DR4-49	SSB 95+00.00 (2.98' RT) TO 96+00.00 (2.98' RT)							1														10,13,34
DR4-50	SSB 96+00.00 (2.98' RT) TO 97+00.00 (2.98' RT)							1														10,13,34
DR4-51	SSB 97+00.00 (2.98' RT) TO 97+54.76 (2.00' RT)							1														10,13,34
DR4-52	SSB 97+54.76 (2.00' RT) TO 98+00.00 (2.98' RT)																					3,8,34
DR4-53	SSB 98+00.00 (2.98' RT) TO PSSB 54+68.82 (21.49' RT)							1														10,13,34
DR4-54	PSSB 54+68.72 (21.54' RT) TO 55+41.14 (32.79' RT)																					3,8,34
DR4-55	PSSB 55+41.19 (32.61' RT) TO 55+76.45 (10.39' RT)							1														10,13,34
	SHEET TOTAL	1						14			2	265			73							

ADD1_XL3497_SN_DR.xlsm						
4/30/2014 19:02						
DESIGNED BY	S. MERRYMAN	03/25/14				
ENTERED BY	S. MERRYMAN	03/25/14				
CHECKED BY	E. QUINN	03/25/14				
PROJ. ENGR.	J. PEREZ	03/25/14				
REGION ADM.	K. DAYTON	03/25/14	05/02/14	AD1 - REVISED QTY	SM	
		DATE	DATE	REVISION	BY	

REGION NO.	STATE	FED. AID PROJ. NO.
10	WASH	

JOB NUMBER
12C501
CONTRACT NO.

Washington State Department of Transportation

I-5
M ST TO PORTLAND AVE - HOV

STRUCTURE NOTES - DRAINAGE

NTDR 26

SHEET 503 OF 1763 SHEETS

STRUCTURE NOTES - DRAINAGE

NOTE:
THE FIRST NUMBER OF THE "CODE DESIGNATION" BELOW REFERS TO THE SHEET NO. OR THE SHEET REFERENCE NO. SHOWING THE DRAINAGE FEATURE.

THE SECOND NUMBER REFERS TO THE DRAINAGE FEATURE FOUND ON THAT SHEET.

CODE	LOCATION ⊽ \ UNIT OF MEASURE ➢	CL. V REINF. CONC. CULV. PIPE 12 IN. DIAM.	CATCH BASIN TYPE 1	CATCH BASIN TYPE 2 48 IN. DIAM.		CATCH BASIN TYPE 2 60 IN. DIAM.	CATCH BASIN TYPE 2 72 IN. DIAM.	TESTING STORM SEWER PIPE		CL. IV REINF. CONC. STORM SEWER PIPE 15 IN. DIAM.	CL. V REINF. CONC. STORM SEWER PIPE 12 IN. DIAM.	CL. V REINF. CONC. STORM SEWER PIPE 18 IN. DIAM.		CL. V REINF. CONC. STORM SEWER PIPE 24 IN. DIAM.	SCHEDULE A STORM SEWER PIPE 12 IN. DIAM.	SCHEDULE A STORM SEWER PIPE 18 IN. DIAM.		SCHEDULE A STORM SEWER PIPE 24 IN. DIAM.	SCHEDULE B STORM SEWER PIPE 18 IN. DIAM.	SCHEDULE B STORM SEWER PIPE 24 IN. DIAM.		SEE GENERAL NOTES
		L.F.	EACH	EACH		EACH	EACH	L.F.		L.F.	L.F.	L.F.		L.F.	L.F.	L.F.		L.F.	L.F.	L.F.		
DR4-26	I5NB 142+17.43 (35.94' LT) TO I5SB 540+30.16 (17.43' RT)																					22,34
DR4-27	I5NB 138+72.92 (35.78' RT) TO 140+47.13 (36.21' RT)																					34
DR4-28	I5NB 140+47.13 (36.21' RT) TO 141+79.44 (60.58' RT)																					34
DR4-29	I5NB 141+46.04 (66.51' RT) TO 141+79.44 (60.58' RT)																					34
DR4-30	I5NB 141+85.92 (62.87' RT) TO 141+79.44 (60.58' RT)																					34
DR4-31	I5NB 141+97.44 (7.65' LT) TO 141+85.92 (62.87' RT)																					
DR4-32	NBN 25+07.40 (93.02' RT) TO 25+04.31 (35.33' RT)							58														34
DR4-33	SSB 91+20.09 (43.71' LT) TO 91+88.91 (44.78' LT)			1				69								69						20,28,31,32,34
DR4-34	NBN 33+50.00 (43.46' RT) TO 34+00.00 (43.45' RT)							49			49											2,5,6,28,34,50
DR4-35	NBN 34+00.00 (43.45' RT) TO 34+50.00 (43.46' RT)							50			50											10,13,34
DR4-36	NBN 34+50.00 (43.46' RT) TO 35+00.00 (43.45' RT)							50			50											10,13,34
DR4-37	SSB 91+85.10 (57.77' LT) TO 91+88.84 (49.63' LT)																					32,34
DR4-38	SSB 91+85.06 (53.67' LT) TO 94+50.31 (55.94' LT)																					34,48
DR4-39	SSB 94+50.31 (55.94' LT) TO 94+55.31 (51.98' LT)																					32,34
DR4-40	NBN 35+00.30 (49.48' LT) TO 35+00.98 (21.47' LT)							28							28							3,8,34
DR4-41	NBN 35+00.00 (43.45' RT) TO 35+30.00 (42.75' RT)							30			30											10,13,34
DR4-42	NBN 35+30.22 (2.00' LT) TO 36+37.49 (2.00' LT)							107								107						3,8,34
DR4-43	NBN 35+00.98 (21.47' LT) TO 36+32.64 (39.10' LT)							133								133						10,12,34,47
DR4-44	SSB 92+70.00 (50.47' LT) TO 93+30.01 (51.37' LT)							60								60						10,13,34
DR4-45	SSB 93+30.01 (51.37' LT) TO 93+50.00 (51.46' LT)							20								20						10,13,34
DR4-46	SSB 93+50.00 (51.46' LT) TO 93+70.00 (51.46' LT)							20								20						10,13,34
DR4-47	SSB 93+70.00 (51.46' LT) TO 94+55.31 (51.98' LT)							85								85						10,13,34
DR4-48	SSB 94+55.31 (51.98' LT) TO 96+26.43 (57.48' LT)							177								177						3,8,34
DR4-49	SSB 95+00.00 (2.98' RT) TO 96+00.00 (2.98' RT)							100							100							10,13,34
DR4-50	SSB 96+00.00 (2.98' RT) TO 97+00.00 (2.98' RT)							100							100							10,13,34
DR4-51	SSB 97+00.00 (2.98' RT) TO 97+54.76 (2.00' RT)							55							55							10,13,34
DR4-52	SSB 97+54.76 (2.00' RT) TO 98+00.00 (2.98' RT)							45							45							3,8,34
DR4-53	SSB 98+00.00 (2.98' RT) TO PSSB 54+68.82 (21.49' RT)							51							51							10,13,34
DR4-54	PSSB 54+68.72 (21.54' RT) TO 55+41.14 (32.79' RT)							76							76							3,8,34
DR4-55	PSSB 55+41.19 (32.61' RT) TO 55+76.45 (10.39' RT)							43			43											10,13,34
	SHEET TOTAL			1				1406			222				455	671						

ADD1_XL3497_SN_DR.xlsm					
4/30/2014 19:02					
DESIGNED BY	S. MERRYMAN	03/25/14			
ENTERED BY	S. MERRYMAN	03/25/14			
CHECKED BY	E. QUINN	03/25/14			
PROJ. ENGR.	J. PEREZ	03/25/14			
REGION ADM.	K. DAYTON	03/25/14	05/02/14	AD1 - REVISED NOTES	SM
		DATE	DATE	REVISION	BY

REGION NO.	STATE	FED. AID PROJ. NO.
10	WASH	

JOB NUMBER 12C501

CONTRACT NO.

Washington State Department of Transportation

I-5
M ST TO PORTLAND AVE - HOV

STRUCTURE NOTES - DRAINAGE

NTDR 27

SHEET 504 OF 1763 SHEETS

STRUCTURE NOTES - DRAINAGE

NOTE:
THE FIRST NUMBER OF THE "CODE DESIGNATION" BELOW REFERS TO THE SHEET NO. OR THE SHEET REFERENCE NO. SHOWING THE DRAINAGE FEATURE.

THE SECOND NUMBER REFERS TO THE DRAINAGE FEATURE FOUND ON THAT SHEET.

CODE	LOCATION ⊽ \ UNIT OF MEASURE ⊳	TRENCHLESS PIPE 24 IN. DIAM.	DUCTILE IRON STORM SEWER PIPE 12 IN. DIAM.				MEDIA FILTER DRAIN	POND MARKER		BMP MARKER	STRUCTURE EXCAVATION CLASS B INCL. HAUL	STRUCTURE EXCAV. CL.B INCL. HAUL-CONTAMINATED MATERIAL		SHORING OR EXTRA EXCAVATION CLASS B	GRAVEL BACKFILL FOR DRAIN	LLDPE GEOMEMBRANE LINING SYSTEM		CONTROLLED DENSITY FILL	FLOW FILL PIPE	COMMERCIAL CONCRETE		SEE GENERAL NOTES
		L.F.	L.F.				L.F.	EACH		EACH	C.Y.	C.Y.		S.F.	C.Y.	S.Y.		C.Y.	C.Y.	C.Y.		
DR4-26	I5NB 142+17.43 (35.94' LT) TO I5SB 540+30.16 (17.43' RT)																					22,34
DR4-27	I5NB 138+72.92 (35.78' RT) TO 140+47.13 (36.21' RT)																		11			34
DR4-28	I5NB 140+47.13 (36.21' RT) TO 141+79.44 (60.58' RT)																		8			34
DR4-29	I5NB 141+46.04 (66.51' RT) TO 141+79.44 (60.58' RT)																		1			34
DR4-30	I5NB 141+85.92 (62.87' RT) TO 141+79.44 (60.58' RT)																		9			34
DR4-31	I5NB 141+97.44 (7.65' LT) TO 141+85.92 (62.87' RT)																		8			34
DR4-32	NBN 25+07.40 (93.02' RT) TO 25+04.31 (35.33' RT)										40			750				1				20,28,31,32,34
DR4-33	SSB 91+20.09 (43.71' LT) TO 91+88.91 (44.78' LT)										60			360				39				2,5,6,28,34,50
DR4-34	NBN 33+50.00 (43.46' RT) TO 34+00.00 (43.45' RT)										220			1610								10,13,34
DR4-35	NBN 34+00.00 (43.45' RT) TO 34+50.00 (43.46' RT)										190			1410								10,13,34
DR4-36	NBN 34+50.00 (43.46' RT) TO 35+00.00 (43.45' RT)										160			1140								10,13,34
DR4-37	SSB 91+85.10 (57.77' LT) TO 91+88.84 (49.63' LT)													60								32,34
DR4-38	SSB 91+85.06 (53.67' LT) TO 94+50.31 (55.94' LT)										100			910	80							34,48
DR4-39	SSB 94+50.31 (55.94' LT) TO 94+55.31 (51.98' LT)													10								32,34
DR4-40	NBN 35+00.30 (49.48' LT) TO 35+00.98 (21.47' LT)										50			270								3,8,34
DR4-41	NBN 35+00.00 (43.45' RT) TO 35+30.00 (42.75' RT)										80			530								10,13,34
DR4-42	NBN 35+30.22 (2.00' LT) TO 36+37.49 (2.00' LT)										170			1110								3,8,34
DR4-43	NBN 35+00.98 (21.47' LT) TO 36+32.64 (39.10' LT)										210			1450								10,12,34,47
DR4-44	SSB 92+70.00 (50.47' LT) TO 93+30.01 (51.37' LT)										70			390								10,13,34
DR4-45	SSB 93+30.01 (51.37' LT) TO 93+50.00 (51.46' LT)										30			110								10,13,34
DR4-46	SSB 93+50.00 (51.46' LT) TO 93+70.00 (51.46' LT)										20			100								10,13,34
DR4-47	SSB 93+70.00 (51.46' LT) TO 94+55.31 (51.98' LT)										60			360								10,13,34
DR4-48	SSB 94+55.31 (51.98' LT) TO 96+26.43 (57.48' LT)										130			900								3,8,34
DR4-49	SSB 95+00.00 (2.98' RT) TO 96+00.00 (2.98' RT)										110			730								10,13,34
DR4-50	SSB 96+00.00 (2.98' RT) TO 97+00.00 (2.98' RT)										110			780								10,13,34
DR4-51	SSB 97+00.00 (2.98' RT) TO 97+54.76 (2.00' RT)										60			350								10,13,34
DR4-52	SSB 97+54.76 (2.00' RT) TO 98+00.00 (2.98' RT)										40			260								3,8,34
DR4-53	SSB 98+00.00 (2.98' RT) TO PSSB 54+68.82 (21.49' RT)										60			370								10,13,34
DR4-54	PSSB 54+68.72 (21.54' RT) TO 55+41.14 (32.79' RT)										70			520								3,8,34
DR4-55	PSSB 55+41.19 (32.61' RT) TO 55+76.45 (10.39' RT)										40			220								10,13,34
	SHEET TOTAL										2080			14700	80			40	37			

ADD1_XL3497_SN_DR.xlsm					REGION NO.	STATE	FED. AID PROJ. NO.	
4/30/2014 19:02					10	WASH		
DESIGNED BY	S. MERRYMAN	03/25/14						
ENTERED BY	S. MERRYMAN	03/25/14			JOB NUMBER			
CHECKED BY	E. QUINN	03/25/14			12C501			
PROJ. ENGR.	J. PEREZ	03/25/14						
REGION ADM.	K. DAYTON	03/25/14	05/02/14	AD1 - REVISED QTY	CONTRACT NO.			
		DATE	DATE	REVISION				
					BY			

Washington State Department of Transportation

I-5
M ST TO PORTLAND AVE - HOV

STRUCTURE NOTES - DRAINAGE

NTDR 28

SHEET 505 OF 1763 SHEETS

STRUCTURE NOTES - DRAINAGE

NOTE:
THE FIRST NUMBER OF THE "CODE DESIGNATION" BELOW REFERS TO THE SHEET NO. OR THE SHEET REFERENCE NO. SHOWING THE DRAINAGE FEATURE.

THE SECOND NUMBER REFERS TO THE DRAINAGE FEATURE FOUND ON THAT SHEET.

CODE	LOCATION ⊽ \ UNIT OF MEASURE ➢	PLUGGING EXISTING PIPE	ADJUST INLET	CONNECTION TO DRAINAGE STRUCTURE		ABANDON DRAINAGE STRUCTURE	ADJUST MANHOLE	MANHOLE 48 IN. DIAM. TYPE 3		MANHOLE 60 IN. DIAM. TYPE 3	MANHOLE 72 IN. DIAM. TYPE 3	MANHOLE ADDITIONAL HEIGHT 48 IN. DIAM. TYPE 3		MANHOLE ADDITIONAL HEIGHT 72 IN. DIAM. TYPE 3	ADJUST CATCH BASIN	LOCKING SOLID METAL COVER AND FRAME FOR CATCH BASIN		MANHOLE RING AND SOLID COVER	OPEN FLOW RESTRICTOR	CONSTRUCTION GEOTEXTILE FOR UNDERGROUND DRAINAGE		SEE GENERAL NOTES
		EACH	EACH	EACH		EACH	EACH	EACH		EACH	EACH	L.F.		L.F.	EACH	EACH		EACH	EACH	S.Y.		
DR4-26	I5NB 142+17.43 (35.94' LT) TO I5SB 540+30.16 (17.43' RT)																					22,34
DR4-27	I5NB 138+72.92 (35.78' RT) TO 140+47.13 (36.21' RT)					1																34
DR4-28	I5NB 140+47.13 (36.21' RT) TO 141+79.44 (60.58' RT)					1																34
DR4-29	I5NB 141+46.04 (66.51' RT) TO 141+79.44 (60.58' RT)					1																34
DR4-30	I5NB 141+85.92 (62.87' RT) TO 141+79.44 (60.58' RT)					1																34
DR4-31	I5NB 141+97.44 (7.65' LT) TO 141+85.92 (62.87' RT)					1																34
DR4-32	NBN 25+07.40 (93.02' RT) TO 25+04.31 (35.33' RT)			1																		20,28,31,32,34
DR4-33	SSB 91+20.09 (43.71' LT) TO 91+88.91 (44.78' LT)															1						2,5,6,28,34,50
DR4-34	NBN 33+50.00 (43.46' RT) TO 34+00.00 (43.45' RT)																					10,13,34
DR4-35	NBN 34+00.00 (43.45' RT) TO 34+50.00 (43.46' RT)																					10,13,34
DR4-36	NBN 34+50.00 (43.46' RT) TO 35+00.00 (43.45' RT)																					10,13,34
DR4-37	SSB 91+85.10 (57.77' LT) TO 91+88.84 (49.63' LT)																					32,34
DR4-38	SSB 91+85.06 (53.67' LT) TO 94+50.31 (55.94' LT)																			240		34,48
DR4-39	SSB 94+50.31 (55.94' LT) TO 94+55.31 (51.98' LT)																					32,34
DR4-40	NBN 35+00.30 (49.48' LT) TO 35+00.98 (21.47' LT)							1				2										3,8,34
DR4-41	NBN 35+00.00 (43.45' RT) TO 35+30.00 (42.75' RT)																					10,13,34
DR4-42	NBN 35+30.22 (2.00' LT) TO 36+37.49 (2.00' LT)							1				2										3,8,34
DR4-43	NBN 35+00.98 (21.47' LT) TO 36+32.64 (39.10' LT)																					10,12,34,47
DR4-44	SSB 92+70.00 (50.47' LT) TO 93+30.01 (51.37' LT)																					10,13,34
DR4-45	SSB 93+30.01 (51.37' LT) TO 93+50.00 (51.46' LT)																					10,13,34
DR4-46	SSB 93+50.00 (51.46' LT) TO 93+70.00 (51.46' LT)																					10,13,34
DR4-47	SSB 93+70.00 (51.46' LT) TO 94+55.31 (51.98' LT)																					10,13,34
DR4-48	SSB 94+55.31 (51.98' LT) TO 96+26.43 (57.48' LT)							1														3,8,34
DR4-49	SSB 95+00.00 (2.98' RT) TO 96+00.00 (2.98' RT)																					10,13,34
DR4-50	SSB 96+00.00 (2.98' RT) TO 97+00.00 (2.98' RT)																					10,13,34
DR4-51	SSB 97+00.00 (2.98' RT) TO 97+54.76 (2.00' RT)																					10,13,34
DR4-52	SSB 97+54.76 (2.00' RT) TO 98+00.00 (2.98' RT)							1														3,8,34
DR4-53	SSB 98+00.00 (2.98' RT) TO PSSB 54+68.82 (21.49' RT)																					10,13,34
DR4-54	PSSB 54+68.72 (21.54' RT) TO 55+41.14 (32.79' RT)							1														3,8,34
DR4-55	PSSB 55+41.19 (32.61' RT) TO 55+76.45 (10.39' RT)																					10,13,34
	SHEET TOTAL			1		5		5				4				1				240		

ADD1_XL3497_SN_DR.xlsm						
4/30/2014 19:02						
DESIGNED BY	S. MERRYMAN	03/25/14				
ENTERED BY	S. MERRYMAN	03/25/14				
CHECKED BY	E. QUINN	03/25/14				
PROJ. ENGR.	J. PEREZ	03/25/14				
REGION ADM.	K. DAYTON	03/25/14	05/02/14	AD1 - REVISED QTY	SM	
		DATE	DATE	REVISION	BY	

REGION NO.	STATE	FED. AID PROJ. NO.
10	WASH	
JOB NUMBER 12C501		
CONTRACT NO.		

Washington State Department of Transportation

I-5
M ST TO PORTLAND AVE - HOV

STRUCTURE NOTES - DRAINAGE

NTDR 29

STRUCTURE NOTES - DRAINAGE

NOTE:
THE FIRST NUMBER OF THE "CODE DESIGNATION" BELOW REFERS TO THE SHEET NO. OR THE SHEET REFERENCE NO. SHOWING THE DRAINAGE FEATURE.

THE SECOND NUMBER REFERS TO THE DRAINAGE FEATURE FOUND ON THAT SHEET.

CODE	LOCATION ⊽ \ UNIT OF MEASURE ⊳	REMOVING DRAINAGE STRUCTURE		ROADWAY EXCAVATION INCL. HAUL - AREA NW POND		ROADWAY EXCAVATION INCL. HAUL - AREA NE POND	CONCRETE INLET	GRATE INLET TYPE 2		DROP INTLET TYPE 1	QUARRY SPALLS	UNDERDRAIN PIPE 6 IN. DIAM.		UNDERDRAIN PIPE 18 IN. DIAM.	DRAIN PIPE 6 IN. DIAM.	DRAIN PIPE 8 IN. DIAM.		HIGH DENSITY POLYETHYLENE (HDPE) UNDERDRAIN PIPE 6 IN.D	HIGH-DENSITY POLYETHYLENE (HDPE) PIPE 18 IN. DIAM.	HIGH-DENSITY POLYETHYLENE (HDPE) PIPE 24 IN. DIAM.		SEE GENERAL NOTES
		EACH		C.Y.		C.Y.	EACH	EACH		EACH	TON	L.F.		L.F.	L.F.	L.F.		L.F.	L.F.	L.F.		
DR4-56	PSSB 55+69.75 (19.71' LT) TO 55+76.45 (10.39' RT)							1														10,13,34
DR4-57	PSSB 55+76.45 (10.39' RT) TO 57+28.08 (19.02' RT)																					3,8,34
DR4-58	PSSB 57+28.08 (19.02' RT) TO 57+98.66 (20.13' RT)																					3,8,34
DR4-59	NBN 35+30.00 (42.75' RT) TO 35+30.22 (2.00' LT)							1														10,13,18,34
DR4-60	SSB 91+88.86 (49.24' LT) TO 92+70.00 (50.99' LT)							1														10,13,34
DR4-61	SSB 99+00.00 (2.98' RT) TO 98+99.42 (23.08' LT)							1														10,13,34
DR4-62	SSB 98+99.42 (23.08' LT) TO 99+69.38 (24.65' LT)																					3,8,34
DR4-63	SSB 99+70.00 (2.98' LT) TO 99+69.38 (24.65' LT)							1														10,13,34
DR4-64	SSB 99+69.38 (24.65' LT) TO 100+00.35 (84.17' LT)										3											3,8,31,34,46
DR4-65	SSB 89+53.62 (39.95' LT) TO 91+20.09 (43.71' LT)																					2,5,6,28,34,50
DR4-66	PSSB 54+27.75 (29.86' LT) TO 54+28.00 (20.85' LT)							1														10,11,34,47
DR4-67	I5NB 143+45.60 (39.89' LT) TO 145+24.51 (45.07' LT)							1														10,13,34
DR4-68	PSSB 57+98.66 (20.13' RT) TO 59+14.25 (30.13' RT)																					3,8,34
DR4-69	PSSB 52+96.00 (20.69' LT) TO 54+28.00 (20.85' LT)																					3,8,34
DR4-70	PSSB 54+28.00 (20.85' LT) TO 55+69.75 (19.71' LT)																					3,8,34
DR4-71	I5SB 530+85.00 (48.84' LT) TO SSB 89+50.00 (6.84' RT)											31										34
DR4-72	SSB 89+50.00 (6.84' RT) TO 92+80.00 (6.84' RT)											330										34,48
DR4-73	SSB 92+80.00 (6.84' RT) TO 92+80.00 (8.75' RT)														2							32
DR4-74	SSB 92+80.00 (8.75' RT) TO 99+00.00 (8.75' RT)											617										34,48
DR4-75	SSB 99+00.00 (8.75' RT) TO 99+00.00 (2.98' RT)														6							32,34
DR4-76	SSB 94+48.84 (49.59' LT) TO 94+50.95 (11.30' RT)																					34
DR4-77	I5SB 530+75.01 (43.75' LT) TO 530+48.69 (43.75' LT)							1														10,13,18,34
DR4-78	NBN 25+04.31 (34.97' RT) TO 25+04.31 (20.19' LT)										3				55							31,32,34,46
DR4-79	NBN 35+31.52 (46.33' RT) TO 35+30.00 (42.75' RT)														4							32,34
DR4-80	NBN 26+48.37 (44.45' RT) TO 26+72.58 (35.33' RT)														26							20,32,34
DR4-81	PSSB 54+03.50 (27.63' LT) TO 54+07.45 (10.65' LT)																					34
DR4-82	PSSB 54+07.45 (10.65' LT) TO 54+17.38 (32.22' RT)																					34
DR4-83	PSSB 55+54.28 (31.42' LT) TO 55+57.70 (10.01' LT)																					34
DR4-84	PSSB 58+82.62 (21.64' RT)	1																				22,34
DR4-85	NBN 33+42.97 (39.35' LT) TO 33+49.38 (37.36' LT)																					34
	SHEET TOTAL	1						8			6	978			93							

ADD1_XL3497_SN_DR.xlsm					REGION NO.	STATE	FED. AID PROJ. NO.	
4/30/2014 19:02					10	WASH		
DESIGNED BY	S. MERRYMAN	03/25/14						
ENTERED BY	S. MERRYMAN	03/25/14			JOB NUMBER			
CHECKED BY	E. QUINN	03/25/14			12C501			
PROJ. ENGR.	J. PEREZ	03/25/14			CONTRACT NO.			
REGION ADM.	K. DAYTON	03/25/14	05/02/14	AD1 - REVISED QTY				
		DATE	DATE	REVISION		BY		

Washington State Department of Transportation

I-5
M ST TO PORTLAND AVE - HOV

STRUCTURE NOTES - DRAINAGE

NTDR 30

SHEET 507 OF 1763 SHEETS

STRUCTURE NOTES - DRAINAGE

NOTE:
THE FIRST NUMBER OF THE "CODE DESIGNATION" BELOW REFERS TO THE SHEET NO. OR THE SHEET REFERENCE NO. SHOWING THE DRAINAGE FEATURE.

THE SECOND NUMBER REFERS TO THE DRAINAGE FEATURE FOUND ON THAT SHEET.

CODE	LOCATION ⊽ \ UNIT OF MEASURE ⊳	CL. V REINF. CONC. CULV. PIPE 12 IN. DIAM.	CATCH BASIN TYPE 1	CATCH BASIN TYPE 2 48 IN. DIAM.		CATCH BASIN TYPE 2 60 IN. DIAM.	CATCH BASIN TYPE 2 72 IN. DIAM.	TESTING STORM SEWER PIPE		CL. IV REINF. CONC. STORM SEWER PIPE 15 IN. DIAM.	CL. V REINF. CONC. STORM SEWER PIPE 12 IN. DIAM.	CL. V REINF. CONC. STORM SEWER PIPE 18 IN. DIAM.		CL. V REINF. CONC. STORM SEWER PIPE 24 IN. DIAM.	SCHEDULE A STORM SEWER PIPE 12 IN. DIAM.	SCHEDULE A STORM SEWER PIPE 18 IN. DIAM.		SCHEDULE A STORM SEWER PIPE 24 IN. DIAM.	SCHEDULE B STORM SEWER PIPE 18 IN. DIAM.	SCHEDULE B STORM SEWER PIPE 24 IN. DIAM.		SEE GENERAL NOTES
		L.F.	EACH	EACH		EACH	EACH	L.F.		L.F.	L.F.	L.F.		L.F.	L.F.	L.F.		L.F.	L.F.	L.F.		
DR4-56	PSSB 55+69.75 (19.71' LT) TO 55+76.45 (10.39' RT)							31				31										10,13,34
DR4-57	PSSB 55+76.45 (10.39' RT) TO 57+28.08 (19.02' RT)							155								155						3,8,34
DR4-58	PSSB 57+28.08 (19.02' RT) TO 57+98.66 (20.13' RT)							73								73						3,8,34
DR4-59	NBN 35+30.00 (42.75' RT) TO 35+30.22 (2.00' LT)							45				45										10,13,18,34
DR4-60	SSB 91+88.86 (49.24' LT) TO 92+70.00 (50.99' LT)							81								81						10,13,34
DR4-61	SSB 99+00.00 (2.98' RT) TO 98+99.42 (23.08' LT)							26			26											10,13,34
DR4-62	SSB 98+99.42 (23.08' LT) TO 99+69.38 (24.65' LT)							70							70							3,8,34
DR4-63	SSB 99+70.00 (2.98' LT) TO 99+69.38 (24.65' LT)							28			28											10,13,34
DR4-64	SSB 99+69.38 (24.65' LT) TO 100+00.35 (84.17' LT)							67							67							3,8,31,34,46
DR4-65	SSB 89+53.62 (39.95' LT) TO 91+20.09 (43.71' LT)			1				166				166										2,5,6,28,34,50
DR4-66	PSSB 54+27.75 (29.86' LT) TO 54+28.00 (20.85' LT)										9											10,11,34,47
DR4-67	I5NB 143+45.60 (39.89' LT) TO 145+24.51 (45.07' LT)							179														10,13,34
DR4-68	PSSB 57+98.66 (20.13' RT) TO 59+14.25 (30.13' RT)							120								120						3,8,34
DR4-69	PSSB 52+96.00 (20.69' LT) TO 54+28.00 (20.85' LT)							131								131						3,8,34
DR4-70	PSSB 54+28.00 (20.85' LT) TO 55+69.75 (19.71' LT)							137								137						3,8,34
DR4-71	I5SB 530+85.00 (48.84' LT) TO SSB 89+50.00 (6.84' RT)																					34
DR4-72	SSB 89+50.00 (6.84' RT) TO 92+80.00 (6.84' RT)																					34,48
DR4-73	SSB 92+80.00 (6.84' RT) TO 92+80.00 (8.75' RT)																					32
DR4-74	SSB 92+80.00 (8.75' RT) TO 99+00.00 (8.75' RT)																					34,48
DR4-75	SSB 99+00.00 (8.75' RT) TO 99+00.00 (2.98' RT)																					32,34
DR4-76	SSB 94+48.84 (49.59' LT) TO 94+50.95 (11.30' RT)																					34
DR4-77	I5SB 530+75.01 (43.75' LT) TO 530+48.69 (43.75' LT)							26			26											10,13,18,34
DR4-78	NBN 25+04.31 (34.97' RT) TO 25+04.31 (20.19' LT)							55														31,32,34,46
DR4-79	NBN 35+31.52 (46.33' RT) TO 35+30.00 (42.75' RT)																					32,34
DR4-80	NBN 26+48.37 (44.45' RT) TO 26+72.58 (35.33' RT)							26														20,32,34
DR4-81	PSSB 54+03.50 (27.63' LT) TO 54+07.45 (10.65' LT)																					34
DR4-82	PSSB 54+07.45 (10.65' LT) TO 54+17.38 (32.22' RT)																					34
DR4-83	PSSB 55+54.28 (31.42' LT) TO 55+57.70 (10.01' LT)																					34
DR4-84	PSSB 58+82.62 (21.64' RT)																					22,34
DR4-85	NBN 33+42.97 (39.35' LT) TO 33+49.38 (37.36' LT)																					34
	SHEET TOTAL			1				1416			89	242			137	697						

ADD1_XL3497_SN_DR.xlsm					REGION NO.	STATE	FED. AID PROJ. NO.	
4/30/2014 19:02					10	WASH		
DESIGNED BY	S. MERRYMAN	03/25/14						
ENTERED BY	S. MERRYMAN	03/25/14			JOB NUMBER			
CHECKED BY	E. QUINN	03/25/14			12C501			
PROJ. ENGR.	J. PEREZ	03/25/14						
REGION ADM.	K. DAYTON	03/25/14	05/02/14	AD1 - REVISED QTY	CONTRACT NO.			
		DATE	DATE	REVISION				
					BY			

Washington State Department of Transportation

I-5
M ST TO PORTLAND AVE - HOV

STRUCTURE NOTES - DRAINAGE

NTDR 31

SHEET 508 OF 1763 SHEETS

STRUCTURE NOTES - DRAINAGE

NOTE:
THE FIRST NUMBER OF THE "CODE DESIGNATION" BELOW REFERS TO THE SHEET NO. OR THE SHEET REFERENCE NO. SHOWING THE DRAINAGE FEATURE.

THE SECOND NUMBER REFERS TO THE DRAINAGE FEATURE FOUND ON THAT SHEET.

CODE	LOCATION ⤵ \ UNIT OF MEASURE ➢	TRENCHLESS PIPE 24 IN. DIAM.	DUCTILE IRON STORM SEWER PIPE 12 IN. DIAM.				MEDIA FILTER DRAIN	POND MARKER		BMP MARKER	STRUCTURE EXCAVATION CLASS B INCL. HAUL	STRUCTURE EXCAV. CL.B INCL. HAUL-CONTAMINATED MATERIAL		SHORING OR EXTRA EXCAVATION CLASS B	GRAVEL BACKFILL FOR DRAIN	LLDPE GEOMEMBRANE LINING SYSTEM		CONTROLLED DENSITY FILL	FLOW FILL PIPE	COMMERCIAL CONCRETE		SEE GENERAL NOTES
		L.F.	L.F.				L.F.	EACH		EACH	C.Y.	C.Y.		S.F.	C.Y.	S.Y.		C.Y.	C.Y.	C.Y.		
DR4-56	PSSB 55+69.75 (19.71' LT) TO 55+76.45 (10.39' RT)										20			110								10,13,34
DR4-57	PSSB 55+76.45 (10.39' RT) TO 57+28.08 (19.02' RT)										170			1150								3,8,34
DR4-58	PSSB 57+28.08 (19.02' RT) TO 57+98.66 (20.13' RT)										130			820								3,8,34
DR4-59	NBN 35+30.00 (42.75' RT) TO 35+30.22 (2.00' LT)										50			290								10,13,18,34
DR4-60	SSB 91+88.86 (49.24' LT) TO 92+70.00 (50.99' LT)										80			500								10,13,34
DR4-61	SSB 99+00.00 (2.98' RT) TO 98+99.42 (23.08' LT)										30			130								10,13,34
DR4-62	SSB 98+99.42 (23.08' LT) TO 99+69.38 (24.65' LT)										60			400								3,8,34
DR4-63	SSB 99+70.00 (2.98' LT) TO 99+69.38 (24.65' LT)										30			130								10,13,34
DR4-64	SSB 99+69.38 (24.65' LT) TO 100+00.35 (84.17' LT)										40			240								3,8,31,34,46
DR4-65	SSB 89+53.62 (39.95' LT) TO 91+20.09 (43.71' LT)										150			1020				92				2,5,6,28,34,50
DR4-66	PSSB 54+27.75 (29.86' LT) TO 54+28.00 (20.85' LT)										10			10								10,11,34,47
DR4-67	I5NB 143+45.60 (39.89' LT) TO 145+24.51 (45.07' LT)		179								50			330								10,13,34
DR4-68	PSSB 57+98.66 (20.13' RT) TO 59+14.25 (30.13' RT)										190			1290								3,8,34
DR4-69	PSSB 52+96.00 (20.69' LT) TO 54+28.00 (20.85' LT)										140			930								3,8,34
DR4-70	PSSB 54+28.00 (20.85' LT) TO 55+69.75 (19.71' LT)										150			960								3,8,34
DR4-71	I5SB 530+85.00 (48.84' LT) TO SSB 89+50.00 (6.84' RT)										10			50	10							34
DR4-72	SSB 89+50.00 (6.84' RT) TO 92+80.00 (6.84' RT)										60			540	100							34,48
DR4-73	SSB 92+80.00 (6.84' RT) TO 92+80.00 (8.75' RT)																					32
DR4-74	SSB 92+80.00 (8.75' RT) TO 99+00.00 (8.75' RT)										190			1710	180							34,48
DR4-75	SSB 99+00.00 (8.75' RT) TO 99+00.00 (2.98' RT)													-40								32,34
DR4-76	SSB 94+48.84 (49.59' LT) TO 94+50.95 (11.30' RT)																		2			34
DR4-77	I5SB 530+75.01 (43.75' LT) TO 530+48.69 (43.75' LT)										20			120								10,13,18,34
DR4-78	NBN 25+04.31 (34.97' RT) TO 25+04.31 (20.19' LT)										30			620								31,32,34,46
DR4-79	NBN 35+31.52 (46.33' RT) TO 35+30.00 (42.75' RT)													70								32,34
DR4-80	NBN 26+48.37 (44.45' RT) TO 26+72.58 (35.33' RT)										20			390								20,32,34
DR4-81	PSSB 54+03.50 (27.63' LT) TO 54+07.45 (10.65' LT)																		1			34
DR4-82	PSSB 54+07.45 (10.65' LT) TO 54+17.38 (32.22' RT)																		1			34
DR4-83	PSSB 55+54.28 (31.42' LT) TO 55+57.70 (10.01' LT)																		1			34
DR4-84	PSSB 58+82.62 (21.64' RT)																					22,34
DR4-85	NBN 33+42.97 (39.35' LT) TO 33+49.38 (37.36' LT)																		1			34
	SHEET TOTAL		179								1630			11850	290			92	6			

ADD1_XL3497_SN_DR.xlsm						
4/30/2014 19:02						
DESIGNED BY	S. MERRYMAN	03/25/14				
ENTERED BY	S. MERRYMAN	03/25/14				
CHECKED BY	E. QUINN	03/25/14				
PROJ. ENGR.	J. PEREZ	03/25/14				
REGION ADM.	K. DAYTON	03/25/14	05/02/14	AD1 - REVISED QTY	SM	
		DATE	DATE	REVISION	BY	

REGION NO.	STATE	FED. AID PROJ. NO.
10	WASH	

JOB NUMBER
12C501

CONTRACT NO.

Washington State Department of Transportation

I-5
M ST TO PORTLAND AVE - HOV

STRUCTURE NOTES - DRAINAGE

NTDR 32

SHEET 509 OF 1763 SHEETS

STRUCTURE NOTES - DRAINAGE

NOTE:
THE FIRST NUMBER OF THE "CODE DESIGNATION" BELOW REFERS TO THE SHEET NO. OR THE SHEET REFERENCE NO. SHOWING THE DRAINAGE FEATURE.

THE SECOND NUMBER REFERS TO THE DRAINAGE FEATURE FOUND ON THAT SHEET.

CODE	LOCATION ↓ \ UNIT OF MEASURE →	PLUGGING EXISTING PIPE	ADJUST INLET	CONNECTION TO DRAINAGE STRUCTURE		ABANDON DRAINAGE STRUCTURE	ADJUST MANHOLE	MANHOLE 48 IN. DIAM. TYPE 3		MANHOLE 60 IN. DIAM. TYPE 3	MANHOLE 72 IN. DIAM. TYPE 3	MANHOLE ADDITIONAL HEIGHT 48 IN. DIAM. TYPE 3		MANHOLE ADDITIONAL HEIGHT 72 IN. DIAM. TYPE 3	ADJUST CATCH BASIN	LOCKING SOLID METAL COVER AND FRAME FOR CATCH BASIN		MANHOLE RING AND SOLID COVER	OPEN FLOW RESTRICTOR	CONSTRUCTION GEOTEXTILE FOR UNDERGROUND DRAINAGE		SEE GENERAL NOTES
		EACH	EACH	EACH		EACH	EACH	EACH		EACH	EACH	L.F.		L.F.	EACH	EACH		EACH	EACH	S.Y.		
DR4-56	PSSB 55+69.75 (19.71' LT) TO 55+76.45 (10.39' RT)																					10,13,34
DR4-57	PSSB 55+76.45 (10.39' RT) TO 57+28.08 (19.02' RT)							1														3,8,34
DR4-58	PSSB 57+28.08 (19.02' RT) TO 57+98.66 (20.13' RT)							1				4										3,8,34
DR4-59	NBN 35+30.00 (42.75' RT) TO 35+30.22 (2.00' LT)																					10,13,18,34
DR4-60	SSB 91+88.86 (49.24' LT) TO 92+70.00 (50.99' LT)																					10,13,34
DR4-61	SSB 99+00.00 (2.98' RT) TO 98+99.42 (23.08' LT)																					10,13,34
DR4-62	SSB 98+99.42 (23.08' LT) TO 99+69.38 (24.65' LT)							1														3,8,34
DR4-63	SSB 99+70.00 (2.98' LT) TO 99+69.38 (24.65' LT)																					10,13,34
DR4-64	SSB 99+69.38 (24.65' LT) TO 100+00.35 (84.17' LT)							1														3,8,31,34,46
DR4-65	SSB 89+53.62 (39.95' LT) TO 91+20.09 (43.71' LT)															1						2,5,6,28,34,50
DR4-66	PSSB 54+27.75 (29.86' LT) TO 54+28.00 (20.85' LT)																					10,11,34,47
DR4-67	I5NB 143+45.60 (39.89' LT) TO 145+24.51 (45.07' LT)																					10,13,34
DR4-68	PSSB 57+98.66 (20.13' RT) TO 59+14.25 (30.13' RT)							1				4										3,8,34
DR4-69	PSSB 52+96.00 (20.69' LT) TO 54+28.00 (20.85' LT)							1				2										3,8,34
DR4-70	PSSB 54+28.00 (20.85' LT) TO 55+69.75 (19.71' LT)							1				1										3,8,34
DR4-71	I5SB 530+85.00 (48.84' LT) TO SSB 89+50.00 (6.84' RT)																			30		34
DR4-72	SSB 89+50.00 (6.84' RT) TO 92+80.00 (6.84' RT)																			290		34,48
DR4-73	SSB 92+80.00 (6.84' RT) TO 92+80.00 (8.75' RT)																					32
DR4-74	SSB 92+80.00 (8.75' RT) TO 99+00.00 (8.75' RT)																			550		34,48
DR4-75	SSB 99+00.00 (8.75' RT) TO 99+00.00 (2.98' RT)																					32,34
DR4-76	SSB 94+48.84 (49.59' LT) TO 94+50.95 (11.30' RT)																					34
DR4-77	I5SB 530+75.01 (43.75' LT) TO 530+48.69 (43.75' LT)																					10,13,18,34
DR4-78	NBN 25+04.31 (34.97' RT) TO 25+04.31 (20.19' LT)																					31,32,34,46
DR4-79	NBN 35+31.52 (46.33' RT) TO 35+30.00 (42.75' RT)																					32,34
DR4-80	NBN 26+48.37 (44.45' RT) TO 26+72.58 (35.33' RT)			1																		20,32,34
DR4-81	PSSB 54+03.50 (27.63' LT) TO 54+07.45 (10.65' LT)					1																34
DR4-82	PSSB 54+07.45 (10.65' LT) TO 54+17.38 (32.22' RT)					1																34
DR4-83	PSSB 55+54.28 (31.42' LT) TO 55+57.70 (10.01' LT)					1																34
DR4-84	PSSB 58+82.62 (21.64' RT)																					22,34
DR4-85	NBN 33+42.97 (39.35' LT) TO 33+49.38 (37.36' LT)					1																34
	SHEET TOTAL			1		4		7				11				1				870		

ADD1_XL3497_SN_DR.xlsm						
4/30/2014 19:02						
DESIGNED BY	S. MERRYMAN	03/25/14				
ENTERED BY	S. MERRYMAN	03/25/14				
CHECKED BY	E. QUINN	03/25/14				
PROJ. ENGR.	J. PEREZ	03/25/14				
REGION ADM.	K. DAYTON	03/25/14	05/02/14	AD1 REVISED QTY	SM	
		DATE	DATE	REVISION	BY	

REGION NO.	STATE	FED. AID PROJ. NO.
10	WASH	
JOB NUMBER 12C501		
CONTRACT NO.		

Washington State Department of Transportation

I-5
M ST TO PORTLAND AVE - HOV

STRUCTURE NOTES - DRAINAGE

NTDR 33

STRUCTURE NOTES - DRAINAGE

NOTE:
THE FIRST NUMBER OF THE "CODE DESIGNATION" BELOW REFERS TO THE SHEET NO. OR THE SHEET REFERENCE NO. SHOWING THE DRAINAGE FEATURE.

THE SECOND NUMBER REFERS TO THE DRAINAGE FEATURE FOUND ON THAT SHEET.

CODE	LOCATION ⤓ \ UNIT OF MEASURE ⤔	REMOVING DRAINAGE STRUCTURE		ROADWAY EXCAVATION INCL. HAUL - AREA NW POND		ROADWAY EXCAVATION INCL. HAUL - AREA NE POND	CONCRETE INLET	GRATE INLET TYPE 2		DROP INTLET TYPE 1	QUARRY SPALLS	UNDERDRAIN PIPE 6 IN. DIAM.		UNDERDRAIN PIPE 18 IN. DIAM.	DRAIN PIPE 6 IN. DIAM.	DRAIN PIPE 8 IN. DIAM.		HIGH DENSITY POLYETHYLENE (HDPE) UNDERDRAIN PIPE 6 IN.D	HIGH-DENSITY POLYETHYLENE (HDPE) PIPE 18 IN. DIAM.	HIGH-DENSITY POLYETHYLENE (HDPE) PIPE 24 IN. DIAM.		SEE GENERAL NOTES
		EACH		C.Y.		C.Y.	EACH	EACH		EACH	TON	L.F.		L.F.	L.F.	L.F.		L.F.	L.F.	L.F.		
DR4-86	I5SB 541+73.95 (25.19' RT) TO 541+74.00 (15.40' RT)																					28,34
DR4-87	NBN 32+57.64 (2.38' LT) TO 33+42.97 (39.35' LT)																					34
DR4-88	I5SB 534+19.52 (34.76' RT)																					34
DR4-89	NBH 28+21.20 (22.94' RT) TO 32+24.04 (27.12' RT)											402										34,48
DR4-90	SSB 89+47.87 (44.35' LT) TO 89+53.62 (39.95' LT)																					2,28,34,50
DR4-91	SSB 91+20.01 (48.17' LT) TO 91+20.09 (43.71' LT)							1														10,13,28,34,50
DR4-92	SSB 91+88.91 (44.78' LT) TO 91+88.86 (49.24' LT)																					2,5,6,30,34,50
DR5-1	I5SB 542+22.07 (46.26' RT) TO 542+65.64 (46.26' RT)							1														10,13,34
DR5-2	I5SB 542+65.64 (46.26' RT) TO 543+20.31 (45.07' RT)							1														10,13,18,34
DR5-3	I5SB 543+20.31 (45.07' RT) TO 543+47.61 (45.59' RT)							1														10,13,18,34
DR5-4	I5SB 543+47.61 (45.59' RT) TO I5NB 145+24.51 (45.07' LT)							1														10,13,34
DR5-5	I5SB 543+46.00 (20.15' RT) TO 543+47.62 (45.53' RT)							1														10,13,34
DR5-6	SNB 15+82.26 (63.08' RT) TO 15+83.11 (45.53' RT)																					34
DR5-7	NSB 82+46.79 (8.94' RT) TO SNB 13+23.47 (55.18' RT)																					3,8,34
DR5-8	SNB 13+23.47 (55.18' RT) TO 12+19.24 (60.34' RT)																					3,8,34
DR5-9	I5SB 542+72.91 (23.45' RT)																					34
DR5-10	NOT USED																					
DR5-11	NOT USED																					
DR5-12	I5NB 145+23.21 (36.59' LT)																					22,34
DR5-13	I5NB 146+10.31 (37.26' LT) TO 146+03.13 (43.90' RT)																					2,34,47
DR5-14	NSB 84+27.25 (19.16' RT) TO 83+82.01 (27.75' LT)																					2,6,34,49
DR5-15	I5NB 148+07.21 (40.59' LT) TO NSB 82+46.79 (8.94' RT)																					2,6,34
DR5-16	I5NB 144+41.07 (6.11' RT) TO 144+56.44 (8.43' RT)																					34
DR5-17	I5NB 144+56.44 (8.43' RT) TO 144+66.90 (6.11' RT)																					34
DR5-18	I5NB 144+66.90 (6.11' RT)																					34
DR5-19	I5NB 144+42.84 (61.64' RT) TO 144+78.97 (133.58' RT)																					34
DR5-20	SBS 110+18.27 (18.56' LT) TO 111+17.66 (19.85' LT)																					3,8,34
	SHEET TOTAL							6				402										

ADD1_XL3497_SN_DR.xlsm					REGION NO.	STATE	FED. AID PROJ. NO.	
4/30/2014 19:02					10	WASH		
DESIGNED BY	S. MERRYMAN	03/25/14						
ENTERED BY	S. MERRYMAN	03/25/14			JOB NUMBER			
CHECKED BY	E. QUINN	03/25/14			12C501			
PROJ. ENGR.	J. PEREZ	03/25/14						
REGION ADM.	K. DAYTON	03/25/14	05/02/14	AD1 - DELETED CODE	CONTRACT NO.			
		DATE	DATE	REVISION				
					BY			

Washington State Department of Transportation

I-5
M ST TO PORTLAND AVE - HOV

STRUCTURE NOTES - DRAINAGE

NTDR 34

SHEET 511 OF 1763 SHEETS

STRUCTURE NOTES - DRAINAGE

NOTE:
THE FIRST NUMBER OF THE "CODE DESIGNATION" BELOW REFERS TO THE SHEET NO. OR THE SHEET REFERENCE NO. SHOWING THE DRAINAGE FEATURE.

THE SECOND NUMBER REFERS TO THE DRAINAGE FEATURE FOUND ON THAT SHEET.

CODE	LOCATION ⤵ \ UNIT OF MEASURE ➢	CL. V REINF. CONC. CULV. PIPE 12 IN. DIAM.	CATCH BASIN TYPE 1	CATCH BASIN TYPE 2 48 IN. DIAM.		CATCH BASIN TYPE 2 60 IN. DIAM.	CATCH BASIN TYPE 2 72 IN. DIAM.	TESTING STORM SEWER PIPE		CL. IV REINF. CONC. STORM SEWER PIPE 15 IN. DIAM.	CL. V REINF. CONC. STORM SEWER PIPE 12 IN. DIAM.	CL. V REINF. CONC. STORM SEWER PIPE 18 IN. DIAM.		CL. V REINF. CONC. STORM SEWER PIPE 24 IN. DIAM.	SCHEDULE A STORM SEWER PIPE 12 IN. DIAM.	SCHEDULE A STORM SEWER PIPE 18 IN. DIAM.		SCHEDULE A STORM SEWER PIPE 24 IN. DIAM.	SCHEDULE B STORM SEWER PIPE 18 IN. DIAM.	SCHEDULE B STORM SEWER PIPE 24 IN. DIAM.		SEE GENERAL NOTES
		L.F.	EACH	EACH		EACH	EACH	L.F.		L.F.	L.F.	L.F.		L.F.	L.F.	L.F.		L.F.	L.F.	L.F.		
DR4-86	I5SB 541+73.95 (25.19' RT) TO 541+74.00 (15.40' RT)																					28,34
DR4-87	NBN 32+57.64 (2.38' LT) TO 33+42.97 (39.35' LT)																					34
DR4-88	I5SB 534+19.52 (34.76' RT)																					34
DR4-89	NBH 28+21.20 (22.94' RT) TO 32+24.04 (27.12' RT)																					34,48
DR4-90	SSB 89+47.87 (44.35' LT) TO 89+53.62 (39.95' LT)			1							7											2,28,34,50
DR4-91	SSB 91+20.01 (48.17' LT) TO 91+20.09 (43.71' LT)										4											10,13,28,34,50
DR4-92	SSB 91+88.91 (44.78' LT) TO 91+88.86 (49.24' LT)			1												4						2,5,6,30,34,50
DR5-1	I5SB 542+22.07 (46.26' RT) TO 542+65.64 (46.26' RT)							43								43						10,13,34
DR5-2	I5SB 542+65.64 (46.26' RT) TO 543+20.31 (45.07' RT)							54				54										10,13,18,34
DR5-3	I5SB 543+20.31 (45.07' RT) TO 543+47.61 (45.59' RT)							27				27										10,13,18,34
DR5-4	I5SB 543+47.61 (45.59' RT) TO I5NB 145+24.51 (45.07' LT)							29				29										10,13,34
DR5-5	I5SB 543+46.00 (20.15' RT) TO 543+47.62 (45.53' RT)							25								25						10,13,34
DR5-6	SNB 15+82.26 (63.08' RT) TO 15+83.11 (45.53' RT)							17							17							34
DR5-7	NSB 82+46.79 (8.94' RT) TO SNB 13+23.47 (55.18' RT)							116										116				3,8,34
DR5-8	SNB 13+23.47 (55.18' RT) TO 12+19.24 (60.34' RT)							116										116				3,8,34
DR5-9	I5SB 542+72.91 (23.45' RT)																					34
DR5-10	NOT USED																					
DR5-11	NOT USED																					
DR5-12	I5NB 145+23.21 (36.59' LT)																					22,34
DR5-13	I5NB 146+10.31 (37.26' LT) TO 146+03.13 (43.90' RT)			1				81				81										2,34,47
DR5-14	NSB 84+27.25 (19.16' RT) TO 83+82.01 (27.75' LT)						1	66						66								2,6,34,49
DR5-15	I5NB 148+07.21 (40.59' LT) TO NSB 82+46.79 (8.94' RT)						1	79										79				2,6,34
DR5-16	I5NB 144+41.07 (6.11' RT) TO 144+56.44 (8.43' RT)																					34
DR5-17	I5NB 144+56.44 (8.43' RT) TO 144+66.90 (6.11' RT)																					34
DR5-18	I5NB 144+66.90 (6.11' RT)																					34
DR5-19	I5NB 144+42.84 (61.64' RT) TO 144+78.97 (133.58' RT)																					34
DR5-20	SBS 110+18.27 (18.56' LT) TO 111+17.66 (19.85' LT)							99								99						3,8,34
	SHEET TOTAL			3			2	752			11	191		66	17	171		311				

ADD1_XL3497_SN_DR.xlsm						
4/30/2014 19:02						
DESIGNED BY	S. MERRYMAN	03/25/14				
ENTERED BY	S. MERRYMAN	03/25/14				
CHECKED BY	E. QUINN	03/25/14				
PROJ. ENGR.	J. PEREZ	03/25/14				
REGION ADM.	K. DAYTON	03/25/14	05/02/14	AD1 - REVISED QTY	SM	
		DATE	DATE	REVISION	BY	

REGION NO.	STATE	FED. AID PROJ. NO.
10	WASH	
JOB NUMBER 12C501		
CONTRACT NO.		

Washington State Department of Transportation

I-5
M ST TO PORTLAND AVE - HOV

STRUCTURE NOTES - DRAINAGE

NTDR 35

STRUCTURE NOTES - DRAINAGE

NOTE:
THE FIRST NUMBER OF THE "CODE DESIGNATION" BELOW REFERS TO THE SHEET NO. OR THE SHEET REFERENCE NO. SHOWING THE DRAINAGE FEATURE.

THE SECOND NUMBER REFERS TO THE DRAINAGE FEATURE FOUND ON THAT SHEET.

CODE	LOCATION ⤵ \ UNIT OF MEASURE ➢	TRENCHLESS PIPE 24 IN. DIAM.	DUCTILE IRON STORM SEWER PIPE 12 IN. DIAM.				MEDIA FILTER DRAIN	POND MARKER		BMP MARKER	STRUCTURE EXCAVATION CLASS B INCL. HAUL	STRUCTURE EXCAV. CL.B INCL. HAUL-CONTAMINATED MATERIAL		SHORING OR EXTRA EXCAVATION CLASS B	GRAVEL BACKFILL FOR DRAIN	LLDPE GEOMEMBRANE LINING SYSTEM		CONTROLLED DENSITY FILL	FLOW FILL PIPE	COMMERCIAL CONCRETE		SEE GENERAL NOTES
		L.F.	L.F.				L.F.	EACH		EACH	C.Y.	C.Y.		S.F.	C.Y.	S.Y.		C.Y.	C.Y.	C.Y.		
DR4-86	I5SB 541+73.95 (25.19' RT) TO 541+74.00 (15.40' RT)																	1	1			28,34
DR4-87	NBN 32+57.64 (2.38' LT) TO 33+42.97 (39.35' LT)																		6			34
DR4-88	I5SB 534+19.52 (34.76' RT)																		1			34
DR4-89	NBH 28+21.20 (22.94' RT) TO 32+24.04 (27.12' RT)										20			210	120							34,48
DR4-90	SSB 89+47.87 (44.35' LT) TO 89+53.62 (39.95' LT)										10			20				1				2,28,34,50
DR4-91	SSB 91+20.01 (48.17' LT) TO 91+20.09 (43.71' LT)										10			20				1				10,13,28,34,50
DR4-92	SSB 91+88.91 (44.78' LT) TO 91+88.86 (49.24' LT)										10			10								2,5,6,30,34,50
DR5-1	I5SB 542+22.07 (46.26' RT) TO 542+65.64 (46.26' RT)										40			240								10,13,34
DR5-2	I5SB 542+65.64 (46.26' RT) TO 543+20.31 (45.07' RT)										50			300								10,13,18,34
DR5-3	I5SB 543+20.31 (45.07' RT) TO 543+47.61 (45.59' RT)										30			130								10,13,18,34
DR5-4	I5SB 543+47.61 (45.59' RT) TO I5NB 145+24.51 (45.07' LT)										40			220								10,13,34
DR5-5	I5SB 543+46.00 (20.15' RT) TO 543+47.62 (45.53' RT)										40			180								10,13,34
DR5-6	SNB 15+82.26 (63.08' RT) TO 15+83.11 (45.53' RT)										10			90					2			34
DR5-7	NSB 82+46.79 (8.94' RT) TO SNB 13+23.47 (55.18' RT)										270			1520								3,8,34
DR5-8	SNB 13+23.47 (55.18' RT) TO 12+19.24 (60.34' RT)										150			870								3,8,34
DR5-9	I5SB 542+72.91 (23.45' RT)																		7			34
DR5-10	NOT USED																					
DR5-11	NOT USED																					
DR5-12	I5NB 145+23.21 (36.59' LT)																					22,34
DR5-13	I5NB 146+10.31 (37.26' LT) TO 146+03.13 (43.90' RT)										80			460								2,34,47
DR5-14	NSB 84+27.25 (19.16' RT) TO 83+82.01 (27.75' LT)										90			420								2,6,34,49
DR5-15	I5NB 148+07.21 (40.59' LT) TO NSB 82+46.79 (8.94' RT)										140			710								2,6,34
DR5-16	I5NB 144+41.07 (6.11' RT) TO 144+56.44 (8.43' RT)																		1			34
DR5-17	I5NB 144+56.44 (8.43' RT) TO 144+66.90 (6.11' RT)																		2			34
DR5-18	I5NB 144+66.90 (6.11' RT)																		8			34
DR5-19	I5NB 144+42.84 (61.64' RT) TO 144+78.97 (133.58' RT)																		2			34
DR5-20	SBS 110+18.27 (18.56' LT) TO 111+17.66 (19.85' LT)										60			360								3,8,34
	SHEET TOTAL										1050			5760	120			3	30			

ADD1_XL3497_SN_DR.xlsm						
4/30/2014 19:02						
DESIGNED BY	S. MERRYMAN	03/25/14				
ENTERED BY	S. MERRYMAN	03/25/14				
CHECKED BY	E. QUINN	03/25/14				
PROJ. ENGR.	J. PEREZ	03/25/14				
REGION ADM.	K. DAYTON	03/25/14	05/02/14	AD1 - REVISED QTY	SM	
		DATE	DATE	REVISION	BY	

REGION NO.	STATE	FED. AID PROJ. NO.
10	WASH	

JOB NUMBER
12C501

CONTRACT NO.

Washington State Department of Transportation

I-5
M ST TO PORTLAND AVE - HOV

STRUCTURE NOTES - DRAINAGE

NTDR 36

STRUCTURE NOTES - DRAINAGE

NOTE:
THE FIRST NUMBER OF THE "CODE DESIGNATION" BELOW REFERS TO THE SHEET NO. OR THE SHEET REFERENCE NO. SHOWING THE DRAINAGE FEATURE.

THE SECOND NUMBER REFERS TO THE DRAINAGE FEATURE FOUND ON THAT SHEET.

CODE	LOCATION ∀ \ UNIT OF MEASURE ≻	PLUGGING EXISTING PIPE	ADJUST INLET	CONNECTION TO DRAINAGE STRUCTURE		ABANDON DRAINAGE STRUCTURE	ADJUST MANHOLE	MANHOLE 48 IN. DIAM. TYPE 3		MANHOLE 60 IN. DIAM. TYPE 3	MANHOLE 72 IN. DIAM. TYPE 3	MANHOLE ADDITIONAL HEIGHT 48 IN. DIAM. TYPE 3		MANHOLE ADDITIONAL HEIGHT 72 IN. DIAM. TYPE 3	ADJUST CATCH BASIN	LOCKING SOLID METAL COVER AND FRAME FOR CATCH BASIN		MANHOLE RING AND SOLID COVER	OPEN FLOW RESTRICTOR	CONSTRUCTION GEOTEXTILE FOR UNDERGROUND DRAINAGE		SEE GENERAL NOTES
		EACH	EACH	EACH		EACH	EACH	EACH		EACH	EACH	L.F.		L.F.	EACH	EACH		EACH	EACH	S.Y.		
DR4-86	I5SB 541+73.95 (25.19' RT) TO 541+74.00 (15.40' RT)					1																28,34
DR4-87	NBN 32+57.64 (2.38' LT) TO 33+42.97 (39.35' LT)																					34
DR4-88	I5SB 534+19.52 (34.76' RT)					1																34
DR4-89	NBH 28+21.20 (22.94' RT) TO 32+24.04 (27.12' RT)																			360		34,48
DR4-90	SSB 89+47.87 (44.35' LT) TO 89+53.62 (39.95' LT)																					2,28,34,50
DR4-91	SSB 91+20.01 (48.17' LT) TO 91+20.09 (43.71' LT)																					10,13,28,34,50
DR4-92	SSB 91+88.91 (44.78' LT) TO 91+88.86 (49.24' LT)															1						2,5,6,30,34,50
DR5-1	I5SB 542+22.07 (46.26' RT) TO 542+65.64 (46.26' RT)																					10,13,34
DR5-2	I5SB 542+65.64 (46.26' RT) TO 543+20.31 (45.07' RT)																					10,13,18,34
DR5-3	I5SB 543+20.31 (45.07' RT) TO 543+47.61 (45.59' RT)																					10,13,18,34
DR5-4	I5SB 543+47.61 (45.59' RT) TO I5NB 145+24.51 (45.07' LT)																					10,13,34
DR5-5	I5SB 543+46.00 (20.15' RT) TO 543+47.62 (45.53' RT)																					10,13,34
DR5-6	SNB 15+82.26 (63.08' RT) TO 15+83.11 (45.53' RT)			1																		34
DR5-7	NSB 82+46.79 (8.94' RT) TO SNB 13+23.47 (55.18' RT)										1			1								3,8,34
DR5-8	SNB 13+23.47 (55.18' RT) TO 12+19.24 (60.34' RT)							1														3,8,34
DR5-9	I5SB 542+72.91 (23.45' RT)					1																34
DR5-10	NOT USED																					
DR5-11	NOT USED																					
DR5-12	I5NB 145+23.21 (36.59' LT)					1																22,34
DR5-13	I5NB 146+10.31 (37.26' LT) TO 146+03.13 (43.90' RT)																					2,34,47
DR5-14	NSB 84+27.25 (19.16' RT) TO 83+82.01 (27.75' LT)																					2,6,34,49
DR5-15	I5NB 148+07.21 (40.59' LT) TO NSB 82+46.79 (8.94' RT)																					2,6,34
DR5-16	I5NB 144+41.07 (6.11' RT) TO 144+56.44 (8.43' RT)					1																34
DR5-17	I5NB 144+56.44 (8.43' RT) TO 144+66.90 (6.11' RT)					1																34
DR5-18	I5NB 144+66.90 (6.11' RT)					1																34
DR5-19	I5NB 144+42.84 (61.64' RT) TO 144+78.97 (133.58' RT)					1																34
DR5-20	SBS 110+18.27 (18.56' LT) TO 111+17.66 (19.85' LT)							1														3,8,34
	SHEET TOTAL			1		8		2			1			1		1				360		

ADD1_XL3497_SN_DR.xlsm					
4/30/2014 19:02					
DESIGNED BY	S. MERRYMAN	03/25/14			
ENTERED BY	S. MERRYMAN	03/25/14			
CHECKED BY	E. QUINN	03/25/14			
PROJ. ENGR.	J. PEREZ	03/25/14			
REGION ADM.	K. DAYTON	03/25/14	05/02/14	AD1 - REVISED QTY	SM
		DATE	DATE	REVISION	BY

REGION NO.	STATE	FED. AID PROJ. NO.
10	WASH	
JOB NUMBER 12C501		
CONTRACT NO.		

Washington State Department of Transportation

I-5
M ST TO PORTLAND AVE - HOV

STRUCTURE NOTES - DRAINAGE

NTDR 37

STRUCTURE NOTES - DRAINAGE

NOTE:
THE FIRST NUMBER OF THE "CODE DESIGNATION" BELOW REFERS TO THE SHEET NO. OR THE SHEET REFERENCE NO. SHOWING THE DRAINAGE FEATURE.

THE SECOND NUMBER REFERS TO THE DRAINAGE FEATURE FOUND ON THAT SHEET.

CODE	LOCATION ⊽ \ UNIT OF MEASURE ⊳	REMOVING DRAINAGE STRUCTURE		ROADWAY EXCAVATION INCL. HAUL - AREA NW POND		ROADWAY EXCAVATION INCL. HAUL - AREA NE POND	CONCRETE INLET	GRATE INLET TYPE 2		DROP INTLET TYPE 1	QUARRY SPALLS	UNDERDRAIN PIPE 6 IN. DIAM.		UNDERDRAIN PIPE 18 IN. DIAM.	DRAIN PIPE 6 IN. DIAM.	DRAIN PIPE 8 IN. DIAM.		HIGH DENSITY POLYETHYLENE (HDPE) UNDERDRAIN PIPE 6 IN.D	HIGH-DENSITY POLYETHYLENE (HDPE) PIPE 18 IN. DIAM.	HIGH-DENSITY POLYETHYLENE (HDPE) PIPE 24 IN. DIAM.		SEE GENERAL NOTES
		EACH		C.Y.		C.Y.	EACH	EACH		EACH	TON	L.F.		L.F.	L.F.	L.F.		L.F.	L.F.	L.F.		
DR5-21	SNB 16+10.74 (34.49' LT) TO 16+09.93 (10.44' LT)														24							1,20,32,34
DR5-22	I5SB 552+95.37 (44.88' LT) TO 552+86.12 (44.07' LT)							1														10,13,34
DR5-23	I5SB 552+86.12 (44.07' LT) TO SSB 110+19.45 (10.14' RT)																		104			2,5,7,19,34
DR5-24	I5NB 146+53.77 (43.74' RT) TO 147+46.19 (79.68' RT)																			99		3,8,34
DR5-25	SNB 14+38.59 (2.20' LT) TO 14+38.76 (46.92' RT)																					34
DR5-26	I5SB 553+16.94 (24.93' RT) TO 552+95.37 (44.88' LT)							1														10,13,34
DR5-27	I5NB 155+10.93 (47.74' LT) TO I5SB 553+16.94 (24.93' RT)							1														10,13,34
DR5-28	I5NB 154+93.00 (22.46' LT) TO 155+01.36 (22.46' LT)							1														10,13,34
DR5-29	I5NB 155+01.36 (22.46' LT) TO 155+10.93 (47.74' LT)							1														10,13,34
DR5-30	NBN 39+27.35 (10.49' LT) TO 39+13.24 (19.77' LT)							1														10,11,34,47
DR5-31	NSB 84+90.78 (23.47' RT) TO 84+27.25 (19.16' RT)																					3,8,34
DR5-32	I5NB 146+78.77 (43.66' RT) TO 146+53.77 (43.74' RT)							1														10,13,18,34
DR5-33	SNB 16+08.29 (47.72' RT)																					3,8,20,34
DR5-34	I5NB 147+16.66 (22.87' LT) TO 147+46.16 (39.92' LT)														34							32,34
DR5-35	NBS 15+45.96 (14.88' RT) TO 14+95.72 (21.89' RT)							1														10,13,34
DR5-36	NBN 39+04.94 (2.29' LT) TO 39+13.24 (19.77' LT)																					2,6,34
DR5-37	NBN 36+37.49 (2.00' LT) TO 37+95.16 (2.02' LT)																					3,8,34
DR5-38	NBN 38+45.59 (2.18' LT) TO 39+04.99 (2.29' LT)																					3,8,34
DR5-39	NBN 39+13.24 (19.77' LT) TO I5NB 148+07.21 (40.59' LT)																			135		2,34,55
DR5-40	SNB 11+18.38 (84.22' RT) TO PSSB 60+44.56 (224.41' RT)																					3,8,34
DR5-41	NBS 14+95.15 (10.14' LT) TO 15+09.80 (76.92' LT)																			67		3,8,34
DR5-42	NBS 14+95.72 (21.89' RT) TO 14+95.15 (10.14' LT)							1														10,13,34
DR5-43	I5SB 551+91.14 (58.32' LT) TO SBS 110+00.52 (25.44' RT)							1											66			9,13,34,51
DR5-44	NSB 83+82.01 (27.75' LT) TO 83+26.94 (21.49' RT)																					3,8,34,49
DR5-45	I5NB 144+75.34 (128.18' RT) TO 144+78.97 (133.58' RT)	1																				22,34
DR5-46	I5NB 144+78.97 (133.58' RT)	1																				22,34
DR5-47	NOT USED																					
DR5-48	NBN 38+87.58 (49.54' RT)																					21,34
DR5-49	NBN 39+37.36 (10.73' LT) TO 39+41.00 (37.92' RT)	1																				22,34
DR5-50	NBS 14+40.31 (10.06' RT) TO 14+69.87 (15.22' RT)																					34
	SHEET TOTAL	3						10							58				170	301		

ADD1_XL3497_SN_DR.xlsm					REGION NO.	STATE	FED. AID PROJ. NO.	
4/30/2014 19:02					10	WASH		
DESIGNED BY	S. MERRYMAN	03/25/14						
ENTERED BY	S. MERRYMAN	03/25/14			JOB NUMBER			
CHECKED BY	E. QUINN	03/25/14			12C501			
PROJ. ENGR.	J. PEREZ	03/25/14						
REGION ADM.	K. DAYTON	03/25/14	05/02/14	AD1 - REVISED QTY	CONTRACT NO.			
		DATE	DATE	REVISION	BY			

Washington State Department of Transportation

I-5
M ST TO PORTLAND AVE - HOV

STRUCTURE NOTES - DRAINAGE

NTDR 38

SHEET 515 OF 1763 SHEETS

STRUCTURE NOTES - DRAINAGE

NOTE:
THE FIRST NUMBER OF THE "CODE DESIGNATION" BELOW REFERS TO THE SHEET NO. OR THE SHEET REFERENCE NO. SHOWING THE DRAINAGE FEATURE.

THE SECOND NUMBER REFERS TO THE DRAINAGE FEATURE FOUND ON THAT SHEET.

CODE	LOCATION ⊽ \ UNIT OF MEASURE ⊳	CL. V REINF. CONC. CULV. PIPE 12 IN. DIAM.	CATCH BASIN TYPE 1	CATCH BASIN TYPE 2 48 IN. DIAM.		CATCH BASIN TYPE 2 60 IN. DIAM.	CATCH BASIN TYPE 2 72 IN. DIAM.	TESTING STORM SEWER PIPE		CL. IV REINF. CONC. STORM SEWER PIPE 15 IN. DIAM.	CL. V REINF. CONC. STORM SEWER PIPE 12 IN. DIAM.	CL. V REINF. CONC. STORM SEWER PIPE 18 IN. DIAM.		CL. V REINF. CONC. STORM SEWER PIPE 24 IN. DIAM.	SCHEDULE A STORM SEWER PIPE 12 IN. DIAM.	SCHEDULE A STORM SEWER PIPE 18 IN. DIAM.		SCHEDULE A STORM SEWER PIPE 24 IN. DIAM.	SCHEDULE B STORM SEWER PIPE 18 IN. DIAM.	SCHEDULE B STORM SEWER PIPE 24 IN. DIAM.		SEE GENERAL NOTES
		L.F.	EACH	EACH		EACH	EACH	L.F.		L.F.	L.F.	L.F.		L.F.	L.F.	L.F.		L.F.	L.F.	L.F.		
DR5-21	SNB 16+10.74 (34.49' LT) TO 16+09.93 (10.44' LT)		1					24														1,20,32,34
DR5-22	I5SB 552+95.37 (44.88' LT) TO 552+86.12 (44.07' LT)															9						10,13,34
DR5-23	I5SB 552+86.12 (44.07' LT) TO SSB 110+19.45 (10.14' RT)			1				104														2,5,7,19,34
DR5-24	I5NB 146+53.77 (43.74' RT) TO 147+46.19 (79.68' RT)							99														3,8,34
DR5-25	SNB 14+38.59 (2.20' LT) TO 14+38.76 (46.92' RT)																					34
DR5-26	I5SB 553+16.94 (24.93' RT) TO 552+95.37 (44.88' LT)							73				73										10,13,34
DR5-27	I5NB 155+10.93 (47.74' LT) TO I5SB 553+16.94 (24.93' RT)							26								26						10,13,34
DR5-28	I5NB 154+93.00 (22.46' LT) TO 155+01.36 (22.46' LT)														8							10,13,34
DR5-29	I5NB 155+01.36 (22.46' LT) TO 155+10.93 (47.74' LT)							27								27						10,13,34
DR5-30	NBN 39+27.35 (10.49' LT) TO 39+13.24 (19.77' LT)							16			16											10,11,34,47
DR5-31	NSB 84+90.78 (23.47' RT) TO 84+27.25 (19.16' RT)							64							64							3,8,34
DR5-32	I5NB 146+78.77 (43.66' RT) TO 146+53.77 (43.74' RT)							25			25											10,13,18,34
DR5-33	SNB 16+08.29 (47.72' RT)																					3,8,20,34
DR5-34	I5NB 147+16.66 (22.87' LT) TO 147+46.16 (39.92' LT)							34														32,34
DR5-35	NBS 15+45.96 (14.88' RT) TO 14+95.72 (21.89' RT)							51			51											10,13,34
DR5-36	NBN 39+04.94 (2.29' LT) TO 39+13.24 (19.77' LT)						1	19										19				2,6,34
DR5-37	NBN 36+37.49 (2.00' LT) TO 37+95.16 (2.02' LT)							158				158										3,8,34
DR5-38	NBN 38+45.59 (2.18' LT) TO 39+04.99 (2.29' LT)							59								59						3,8,34
DR5-39	NBN 39+13.24 (19.77' LT) TO I5NB 148+07.21 (40.59' LT)						1	135														2,34,55
DR5-40	SNB 11+18.38 (84.22' RT) TO PSSB 60+44.56 (224.41' RT)							137										137				3,8,34
DR5-41	NBS 14+95.15 (10.14' LT) TO 15+09.80 (76.92' LT)							67														3,8,34
DR5-42	NBS 14+95.72 (21.89' RT) TO 14+95.15 (10.14' LT)							32			32											10,13,34
DR5-43	I5SB 551+91.14 (58.32' LT) TO SBS 110+00.52 (25.44' RT)							66														9,13,34,51
DR5-44	NSB 83+82.01 (27.75' LT) TO 83+26.94 (21.49' RT)							74						74								3,8,34,49
DR5-45	I5NB 144+75.34 (128.18' RT) TO 144+78.97 (133.58' RT)																					22,34
DR5-46	I5NB 144+78.97 (133.58' RT)																					22,34
DR5-47	NOT USED																					
DR5-48	NBN 38+87.58 (49.54' RT)																					21,34
DR5-49	NBN 39+37.36 (10.73' LT) TO 39+41.00 (37.92' RT)																					22,34
DR5-50	NBS 14+40.31 (10.06' RT) TO 14+69.87 (15.22' RT)																					34
	SHEET TOTAL		1	1			2	1290			124	231		74	72	121		156				

ADD1_XL3497_SN_DR.xlsm					REGION NO.	STATE	FED. AID PROJ. NO.
4/30/2014 19:02					10	WASH	
DESIGNED BY	S. MERRYMAN	03/25/14					
ENTERED BY	S. MERRYMAN	03/25/14			JOB NUMBER		
CHECKED BY	E. QUINN	03/25/14			12C501		
PROJ. ENGR.	J. PEREZ	03/25/14					
REGION ADM.	K. DAYTON	03/25/14	05/02/14	AD1 - REVISED QTY	CONTRACT NO.		
		DATE	DATE	REVISION			

SM
BY

Washington State Department of Transportation

I-5
M ST TO PORTLAND AVE - HOV

STRUCTURE NOTES - DRAINAGE

NTDR 39

SHEET 516 OF 1763 SHEETS

STRUCTURE NOTES - DRAINAGE

NOTE:
THE FIRST NUMBER OF THE "CODE DESIGNATION" BELOW REFERS TO THE SHEET NO. OR THE SHEET REFERENCE NO. SHOWING THE DRAINAGE FEATURE.

THE SECOND NUMBER REFERS TO THE DRAINAGE FEATURE FOUND ON THAT SHEET.

CODE	LOCATION ⊽ \ UNIT OF MEASURE ➢	TRENCHLESS PIPE 24 IN. DIAM.	DUCTILE IRON STORM SEWER PIPE 12 IN. DIAM.				MEDIA FILTER DRAIN	POND MARKER		BMP MARKER	STRUCTURE EXCAVATION CLASS B INCL. HAUL	STRUCTURE EXCAV. CL.B INCL. HAUL-CONTAMINATED MATERIAL		SHORING OR EXTRA EXCAVATION CLASS B	GRAVEL BACKFILL FOR DRAIN	LLDPE GEOMEMBRANE LINING SYSTEM		CONTROLLED DENSITY FILL	FLOW FILL PIPE	COMMERCIAL CONCRETE		SEE GENERAL NOTES
		L.F.	L.F.				L.F.	EACH		EACH	C.Y.	C.Y.		S.F.	C.Y.	S.Y.		C.Y.	C.Y.	C.Y.		
DR5-21	SNB 16+10.74 (34.49' LT) TO 16+09.93 (10.44' LT)										10			80								1,20,32,34
DR5-22	I5SB 552+95.37 (44.88' LT) TO 552+86.12 (44.07' LT)										10			30								10,13,34
DR5-23	I5SB 552+86.12 (44.07' LT) TO SSB 110+19.45 (10.14' RT)										90			560								2,5,7,19,34
DR5-24	I5NB 146+53.77 (43.74' RT) TO 147+46.19 (79.68' RT)										90			470								3,8,34
DR5-25	SNB 14+38.59 (2.20' LT) TO 14+38.76 (46.92' RT)																		1			34
DR5-26	I5SB 553+16.94 (24.93' RT) TO 552+95.37 (44.88' LT)										60			370								10,13,34
DR5-27	I5NB 155+10.93 (47.74' LT) TO I5SB 553+16.94 (24.93' RT)										30			130								10,13,34
DR5-28	I5NB 154+93.00 (22.46' LT) TO 155+01.36 (22.46' LT)										10			20								10,13,34
DR5-29	I5NB 155+01.36 (22.46' LT) TO 155+10.93 (47.74' LT)										30			150								10,13,34
DR5-30	NBN 39+27.35 (10.49' LT) TO 39+13.24 (19.77' LT)										10			10								10,11,34,47
DR5-31	NSB 84+90.78 (23.47' RT) TO 84+27.25 (19.16' RT)										60			420								3,8,34
DR5-32	I5NB 146+78.77 (43.66' RT) TO 146+53.77 (43.74' RT)										10			20								10,13,18,34
DR5-33	SNB 16+08.29 (47.72' RT)										20			70								3,8,20,34
DR5-34	I5NB 147+16.66 (22.87' LT) TO 147+46.16 (39.92' LT)										10			170								32,34
DR5-35	NBS 15+45.96 (14.88' RT) TO 14+95.72 (21.89' RT)										30			210								10,13,34
DR5-36	NBN 39+04.94 (2.29' LT) TO 39+13.24 (19.77' LT)										80			400								2,6,34
DR5-37	NBN 36+37.49 (2.00' LT) TO 37+95.16 (2.02' LT)										220			1500								3,8,34
DR5-38	NBN 38+45.59 (2.18' LT) TO 39+04.99 (2.29' LT)										70			420								3,8,34
DR5-39	NBN 39+13.24 (19.77' LT) TO I5NB 148+07.21 (40.59' LT)										20			60								2,34,55
DR5-40	SNB 11+18.38 (84.22' RT) TO PSSB 60+44.56 (224.41' RT)										530			3090								3,8,34
DR5-41	NBS 14+95.15 (10.14' LT) TO 15+09.80 (76.92' LT)										30			150								3,8,34
DR5-42	NBS 14+95.72 (21.89' RT) TO 14+95.15 (10.14' LT)										30			180								10,13,34
DR5-43	I5SB 551+91.14 (58.32' LT) TO SBS 110+00.52 (25.44' RT)										60			390								9,13,34,51
DR5-44	NSB 83+82.01 (27.75' LT) TO 83+26.94 (21.49' RT)										90			510								3,8,34,49
DR5-45	I5NB 144+75.34 (128.18' RT) TO 144+78.97 (133.58' RT)																					22,34
DR5-46	I5NB 144+78.97 (133.58' RT)																					22,34
DR5-47	NOT USED																					
DR5-48	NBN 38+87.58 (49.54' RT)																					21,34
DR5-49	NBN 39+37.36 (10.73' LT) TO 39+41.00 (37.92' RT)																					22,34
DR5-50	NBS 14+40.31 (10.06' RT) TO 14+69.87 (15.22' RT)																		1			34
	SHEET TOTAL										1600			9410					2			

ADD1_XL3497_SN_DR.xlsm					REGION NO.	STATE	FED. AID PROJ. NO.	
4/30/2014 19:02					10	WASH		
DESIGNED BY	S. MERRYMAN	03/25/14						
ENTERED BY	S. MERRYMAN	03/25/14			JOB NUMBER			
CHECKED BY	E. QUINN	03/25/14			12C501			
PROJ. ENGR.	J. PEREZ	03/25/14						
REGION ADM.	K. DAYTON	03/25/14	05/02/14	AD1 - REVISED QTY	SM	CONTRACT NO.		
		DATE	DATE	REVISION	BY			

Washington State Department of Transportation

I-5
M ST TO PORTLAND AVE - HOV

STRUCTURE NOTES - DRAINAGE

NTDR 40

STRUCTURE NOTES - DRAINAGE

NOTE:
THE FIRST NUMBER OF THE "CODE DESIGNATION" BELOW REFERS TO THE SHEET NO. OR THE SHEET REFERENCE NO. SHOWING THE DRAINAGE FEATURE.

THE SECOND NUMBER REFERS TO THE DRAINAGE FEATURE FOUND ON THAT SHEET.

CODE	LOCATION ⤵ \ UNIT OF MEASURE ➢	PLUGGING EXISTING PIPE	ADJUST INLET	CONNECTION TO DRAINAGE STRUCTURE		ABANDON DRAINAGE STRUCTURE	ADJUST MANHOLE	MANHOLE 48 IN. DIAM. TYPE 3		MANHOLE 60 IN. DIAM. TYPE 3	MANHOLE 72 IN. DIAM. TYPE 3	MANHOLE ADDITIONAL HEIGHT 48 IN. DIAM. TYPE 3		MANHOLE ADDITIONAL HEIGHT 72 IN. DIAM. TYPE 3	ADJUST CATCH BASIN	LOCKING SOLID METAL COVER AND FRAME FOR CATCH BASIN		MANHOLE RING AND SOLID COVER	OPEN FLOW RESTRICTOR	CONSTRUCTION GEOTEXTILE FOR UNDERGROUND DRAINAGE		SEE GENERAL NOTES
		EACH	EACH	EACH		EACH	EACH	EACH		EACH	EACH	L.F.		L.F.	EACH	EACH		EACH	EACH	S.Y.		
DR5-21	SNB 16+10.74 (34.49' LT) TO 16+09.93 (10.44' LT)			1																		1,20,32,34
DR5-22	I5SB 552+95.37 (44.88' LT) TO 552+86.12 (44.07' LT)																					10,13,34
DR5-23	I5SB 552+86.12 (44.07' LT) TO SSB 110+19.45 (10.14' RT)																					2,5,7,19,34
DR5-24	I5NB 146+53.77 (43.74' RT) TO 147+46.19 (79.68' RT)							1														3,8,34
DR5-25	SNB 14+38.59 (2.20' LT) TO 14+38.76 (46.92' RT)					1																34
DR5-26	I5SB 553+16.94 (24.93' RT) TO 552+95.37 (44.88' LT)																					10,13,34
DR5-27	I5NB 155+10.93 (47.74' LT) TO I5SB 553+16.94 (24.93' RT)																					10,13,34
DR5-28	I5NB 154+93.00 (22.46' LT) TO 155+01.36 (22.46' LT)																					10,13,34
DR5-29	I5NB 155+01.36 (22.46' LT) TO 155+10.93 (47.74' LT)																					10,13,34
DR5-30	NBN 39+27.35 (10.49' LT) TO 39+13.24 (19.77' LT)																					10,11,34,47
DR5-31	NSB 84+90.78 (23.47' RT) TO 84+27.25 (19.16' RT)							1														3,8,34
DR5-32	I5NB 146+78.77 (43.66' RT) TO 146+53.77 (43.74' RT)																					10,13,18,34
DR5-33	SNB 16+08.29 (47.72' RT)										1											3,8,20,34
DR5-34	I5NB 147+16.66 (22.87' LT) TO 147+46.16 (39.92' LT)																					32,34
DR5-35	NBS 15+45.96 (14.88' RT) TO 14+95.72 (21.89' RT)																					10,13,34
DR5-36	NBN 39+04.94 (2.29' LT) TO 39+13.24 (19.77' LT)																					2,6,34
DR5-37	NBN 36+37.49 (2.00' LT) TO 37+95.16 (2.02' LT)							1				4										3,8,34
DR5-38	NBN 38+45.59 (2.18' LT) TO 39+04.99 (2.29' LT)							1														3,8,34
DR5-39	NBN 39+13.24 (19.77' LT) TO I5NB 148+07.21 (40.59' LT)																					2,34,55
DR5-40	SNB 11+18.38 (84.22' RT) TO PSSB 60+44.56 (224.41' RT)							1				3										3,8,34
DR5-41	NBS 14+95.15 (10.14' LT) TO 15+09.80 (76.92' LT)							1														3,8,34
DR5-42	NBS 14+95.72 (21.89' RT) TO 14+95.15 (10.14' LT)																					10,13,34
DR5-43	I5SB 551+91.14 (58.32' LT) TO SBS 110+00.52 (25.44' RT)																					9,13,34,51
DR5-44	NSB 83+82.01 (27.75' LT) TO 83+26.94 (21.49' RT)							1														3,8,34,49
DR5-45	I5NB 144+75.34 (128.18' RT) TO 144+78.97 (133.58' RT)																					22,34
DR5-46	I5NB 144+78.97 (133.58' RT)																					22,34
DR5-47	NOT USED																					
DR5-48	NBN 38+87.58 (49.54' RT)			1			1					4										21,34
DR5-49	NBN 39+37.36 (10.73' LT) TO 39+41.00 (37.92' RT)																					22,34
DR5-50	NBS 14+40.31 (10.06' RT) TO 14+69.87 (15.22' RT)					1																34
	SHEET TOTAL			2		2	1	7			1	11										

ADD1_XL3497_SN_DR.xlsm				REGION NO.	STATE	FED. AID PROJ. NO.
4/30/2014 19:02				10	WASH	
DESIGNED BY	S. MERRYMAN	03/25/14				
ENTERED BY	S. MERRYMAN	03/25/14				
CHECKED BY	E. QUINN	03/25/14		JOB NUMBER 12C501		
PROJ. ENGR.	J. PEREZ	03/25/14				
REGION ADM.	K. DAYTON	03/25/14	05/02/14 AD1 REVISED QTY	CONTRACT NO.		
		DATE	DATE REVISION	BY		

Washington State Department of Transportation

I-5
M ST TO PORTLAND AVE - HOV

STRUCTURE NOTES - DRAINAGE

NTDR 41

SHEET 518 OF 1763 SHEETS

STRUCTURE NOTES - DRAINAGE

NOTE:
THE FIRST NUMBER OF THE "CODE DESIGNATION" BELOW REFERS TO THE SHEET NO. OR THE SHEET REFERENCE NO. SHOWING THE DRAINAGE FEATURE.

THE SECOND NUMBER REFERS TO THE DRAINAGE FEATURE FOUND ON THAT SHEET.

CODE	LOCATION ⤓ \ UNIT OF MEASURE ⤚	REMOVING DRAINAGE STRUCTURE		ROADWAY EXCAVATION INCL. HAUL - AREA NW POND		ROADWAY EXCAVATION INCL. HAUL - AREA NE POND	CONCRETE INLET	GRATE INLET TYPE 2		DROP INTLET TYPE 1	QUARRY SPALLS	UNDERDRAIN PIPE 6 IN. DIAM.		UNDERDRAIN PIPE 18 IN. DIAM.	DRAIN PIPE 6 IN. DIAM.	DRAIN PIPE 8 IN. DIAM.		HIGH DENSITY POLYETHYLENE (HDPE) UNDERDRAIN PIPE 6 IN.D	HIGH-DENSITY POLYETHYLENE (HDPE) PIPE 18 IN. DIAM.	HIGH-DENSITY POLYETHYLENE (HDPE) PIPE 24 IN. DIAM		SEE GENERAL NOTES
		EACH		C.Y.		C.Y.	EACH	EACH		EACH	TON	L.F.		L.F.	L.F.	L.F.		L.F.	L.F.	L.F.		
DR5-51	NSB 83+20.53 (9.60' RT) TO 84+76.86 (2.35' LT)																					34
DR5-52	I5SB 551+41.08 (108.80' LT)																					
DR5-53	I5SB 552+75.86 (44.13' LT) TO 552+84.03 (44.77' LT)																					34
DR5-54	I5SB 552+84.03 (44.77' LT) TO 554+32.19 (120.33' LT)																					34
DR5-55	I5SB 552+81.57 (25.56' RT) TO 552+90.55 (25.57' RT)																					34
DR5-56	I5SB 552+90.55 (25.57' RT)																					34
DR5-57	SNB 20+44.52 (5.56' LT)																					
DR5-58	SNB 21+14.90 (16.16' LT) TO 20+44.52 (5.56' LT)																					
DR5-59	SNB 20+49.42 (26.88' RT) TO 20+42.40 (2.11' LT)																					
DR5-60	NNB 12+49.24 (17.96' RT) TO 13+25.55 (17.96' RT)																					2,5,7,34
DR5-61	NNB 10+92.66 (20.07' RT) TO 12+49.24 (17.96' RT)																					2,5,7,20,34
DR5-62	NBN 36+32.64 (39.10' LT) TO 37+62.64 (39.21' LT)																					3,8,34
DR5-63	NBN 38+49.04 (24.17' LT) TO 38+87.58 (49.54' RT)																					3,8,34
DR5-64	SNB 21+35.96 (14.49' LT) TO 23+27.70 (14.50' LT)																					36,38
DR5-65	I5SB 552+72.04 (56.15' LT) TO 559+38.89 (56.50' LT)																					36,38
DR5-66	SBS 111+39.73 (0.98' RT) TO 111+17.66 (19.85' LT)							1														10,13,34
DR5-67	NSB 84+76.86 (2.35' LT)																					3,20,34
DR5-68	NSB 82+68.49 (6.93' RT) TO 83+82.54 (37.97' LT)																					3,8,20,34,49
DR5-69	NSB 83+82.54 (37.97' LT) TO 84+76.86 (2.35' LT)																					3,8,34,49
DR5-70	I5NB 147+05.14 (44.96' RT) TO NBN 39+04.79 (12.25' LT)														54							32,34
DR5-71	SNB 12+19.24 (60.34' RT) TO 11+18.38 (84.22' RT)																					3,8,34
DR5-72	I5NB 146+03.13 (43.90' RT) TO 146+53.77 (43.74' RT)																					2,5,7,34
DR5-73	I5NB 145+24.51 (45.07' LT) TO 146+09.10 (50.26' LT)							1														10,13,34
DR5-74	I5NB 146+09.10 (50.26' LT) TO 146+10.31 (37.26' LT)							1														10,13,34
DR5-75	I5SB 542+60.01 (19.12' RT) TO 543+00.52 (19.79' RT)							1														10,13,34
DR5-76	I5SB 543+00.52 (19.79' RT) TO 543+46.00 (20.15' RT)							1														10,13,34
DR5-77	I5SB 543+94.54 (19.37' RT) TO 543+46.00 (20.15' RT)							1														10,13,34
DR5-78	NSB 86+39.98 (11.40' RT) TO 84+90.78 (23.47' RT)																					2,5,7,34
DR5-79	SSB 105+40.81 (108.49' LT) TO 104+92.89 (37.18' RT)																					3,8,34
DR5-80	SSB 104+92.89 (37.18' RT) TO NSB 83+36.87 (55.75' RT)																					3,8,34
	SHEET TOTAL							6							54							

ADD1_XL3497_SN_DR.xlsm					
4/30/2014 19:02					
DESIGNED BY	S. MERRYMAN	03/25/14			
ENTERED BY	S. MERRYMAN	03/25/14			
CHECKED BY	E. QUINN	03/25/14			
PROJ. ENGR.	J. PEREZ	03/25/14			
REGION ADM.	K. DAYTON	03/25/14	05/02/14	AD1 - REVISED QTY	SM
		DATE	DATE	REVISION	BY

REGION NO.	STATE	FED. AID PROJ. NO.
10	WASH	
JOB NUMBER 12C501		
CONTRACT NO.		

Washington State Department of Transportation

I-5
M ST TO PORTLAND AVE - HOV

STRUCTURE NOTES - DRAINAGE

NTDR 42

SHEET 519 OF 1763 SHEETS

STRUCTURE NOTES - DRAINAGE

NOTE:
THE FIRST NUMBER OF THE "CODE DESIGNATION" BELOW REFERS TO THE SHEET NO. OR THE SHEET REFERENCE NO. SHOWING THE DRAINAGE FEATURE.

THE SECOND NUMBER REFERS TO THE DRAINAGE FEATURE FOUND ON THAT SHEET.

CODE	LOCATION ▼ \ UNIT OF MEASURE ▶	CL. V REINF. CONC. CULV. PIPE 12 IN. DIAM.	CATCH BASIN TYPE 1	CATCH BASIN TYPE 2 48 IN. DIAM.		CATCH BASIN TYPE 2 60 IN. DIAM.	CATCH BASIN TYPE 2 72 IN. DIAM.	TESTING STORM SEWER PIPE		CL. IV REINF. CONC. STORM SEWER PIPE 15 IN. DIAM.	CL. V REINF. CONC. STORM SEWER PIPE 12 IN. DIAM.	CL. V REINF. CONC. STORM SEWER PIPE 18 IN. DIAM.		CL. V REINF. CONC. STORM SEWER PIPE 24 IN. DIAM.	SCHEDULE A STORM SEWER PIPE 12 IN. DIAM.	SCHEDULE A STORM SEWER PIPE 18 IN. DIAM.		SCHEDULE A STORM SEWER PIPE 24 IN. DIAM.	SCHEDULE B STORM SEWER PIPE 18 IN. DIAM.	SCHEDULE B STORM SEWER PIPE 24 IN. DIAM.		SEE GENERAL NOTES
		L.F.	EACH	EACH		EACH	EACH	L.F.		L.F.	L.F.	L.F.		L.F.	L.F.	L.F.		L.F.	L.F.	L.F.		
DR5-51	NSB 83+20.53 (9.60' RT) TO 84+76.86 (2.35' LT)																					34
DR5-52	I5SB 551+41.08 (108.80' LT)																					
DR5-53	I5SB 552+75.86 (44.13' LT) TO 552+84.03 (44.77' LT)																					34
DR5-54	I5SB 552+84.03 (44.77' LT) TO 554+32.19 (120.33' LT)																					34
DR5-55	I5SB 552+81.57 (25.56' RT) TO 552+90.55 (25.57' RT)																					34
DR5-56	I5SB 552+90.55 (25.57' RT)																					34
DR5-57	SNB 20+44.52 (5.56' LT)																					
DR5-58	SNB 21+14.90 (16.16' LT) TO 20+44.52 (5.56' LT)																					
DR5-59	SNB 20+49.42 (26.88' RT) TO 20+42.40 (2.11' LT)																					
DR5-60	NNB 12+49.24 (17.96' RT) TO 13+25.55 (17.96' RT)					1		72							72							2,5,7,34
DR5-61	NNB 10+92.66 (20.07' RT) TO 12+49.24 (17.96' RT)					1		147							147							2,5,7,20,34
DR5-62	NBN 36+32.64 (39.10' LT) TO 37+62.64 (39.21' LT)							130				130										3,8,34
DR5-63	NBN 38+49.04 (24.17' LT) TO 38+87.58 (49.54' RT)							84								84						3,8,34
DR5-64	SNB 21+35.96 (14.49' LT) TO 23+27.70 (14.50' LT)																					36,38
DR5-65	I5SB 552+72.04 (56.15' LT) TO 559+38.89 (56.50' LT)																					36,38
DR5-66	SBS 111+39.73 (0.98' RT) TO 111+17.66 (19.85' LT)							30						30								10,13,34
DR5-67	NSB 84+76.86 (2.35' LT)																					3,20,34
DR5-68	NSB 82+68.49 (6.93' RT) TO 83+82.54 (37.97' LT)							125							125							3,8,20,34,49
DR5-69	NSB 83+82.54 (37.97' LT) TO 84+76.86 (2.35' LT)							101			101											3,8,34,49
DR5-70	I5NB 147+05.14 (44.96' RT) TO NBN 39+04.79 (12.25' LT)							54														32,34
DR5-71	SNB 12+19.24 (60.34' RT) TO 11+18.38 (84.22' RT)							117										117				3,8,34
DR5-72	I5NB 146+03.13 (43.90' RT) TO 146+53.77 (43.74' RT)			1				51				51										2,5,7,34
DR5-73	I5NB 145+24.51 (45.07' LT) TO 146+09.10 (50.26' LT)							85				85										10,13,34
DR5-74	I5NB 146+09.10 (50.26' LT) TO 146+10.31 (37.26' LT)							13								13						10,13,34
DR5-75	I5SB 542+60.01 (19.12' RT) TO 543+00.52 (19.79' RT)							40														10,13,34
DR5-76	I5SB 543+00.52 (19.79' RT) TO 543+46.00 (20.15' RT)							45			45											10,13,34
DR5-77	I5SB 543+94.54 (19.37' RT) TO 543+46.00 (20.15' RT)							48			48											10,13,34
DR5-78	NSB 86+39.98 (11.40' RT) TO 84+90.78 (23.47' RT)						1	150			150											2,5,7,34
DR5-79	SSB 105+40.81 (108.49' LT) TO 104+92.89 (37.18' RT)							152								152						3,8,34
DR5-80	SSB 104+92.89 (37.18' RT) TO NSB 83+36.87 (55.75' RT)							146								146						3,8,34
	SHEET TOTAL			1		2	1	1590			344	266		30	344	395		117				

ADD1_XL3497_SN_DR.xlsm					REGION NO.	STATE	FED. AID PROJ. NO.
4/30/2014 19:02					10	WASH	
DESIGNED BY	S. MERRYMAN	03/25/14					
ENTERED BY	S. MERRYMAN	03/25/14					
CHECKED BY	E. QUINN	03/25/14			JOB NUMBER		
PROJ. ENGR.	J. PEREZ	03/25/14			12C501		
REGION ADM.	K. DAYTON	03/25/14	05/02/14	AD1 REVISED QTY	CONTRACT NO.		
		DATE	DATE	REVISION	BY		

Washington State Department of Transportation

I-5
M ST TO PORTLAND AVE - HOV

STRUCTURE NOTES - DRAINAGE

NTDR 43

SHEET 520 OF 1763 SHEETS

STRUCTURE NOTES - DRAINAGE

NOTE:
THE FIRST NUMBER OF THE "CODE DESIGNATION" BELOW REFERS TO THE SHEET NO. OR THE SHEET REFERENCE NO. SHOWING THE DRAINAGE FEATURE.

THE SECOND NUMBER REFERS TO THE DRAINAGE FEATURE FOUND ON THAT SHEET.

CODE	LOCATION ⤵ \ UNIT OF MEASURE ➢	TRENCHLESS PIPE 24 IN. DIAM.	DUCTILE IRON STORM SEWER PIPE 12 IN. DIAM.				MEDIA FILTER DRAIN	POND MARKER		BMP MARKER	STRUCTURE EXCAVATION CLASS B INCL. HAUL	STRUCTURE EXCAV. CL.B INCL. HAUL-CONTAMINATED MATERIAL		SHORING OR EXTRA EXCAVATION CLASS B	GRAVEL BACKFILL FOR DRAIN	LLDPE GEOMEMBRANE LINING SYSTEM		CONTROLLED DENSITY FILL	FLOW FILL PIPE	COMMERCIAL CONCRETE		SEE GENERAL NOTES
		L.F.	L.F.				L.F.	EACH		EACH	C.Y.	C.Y.		S.F.	C.Y.	S.Y.		C.Y.	C.Y.	C.Y.		
DR5-51	NSB 83+20.53 (9.60' RT) TO 84+76.86 (2.35' LT)																		8			34
DR5-52	I5SB 551+41.08 (108.80' LT)																					
DR5-53	I5SB 552+75.86 (44.13' LT) TO 552+84.03 (44.77' LT)																		1			34
DR5-54	I5SB 552+84.03 (44.77' LT) TO 554+32.19 (120.33' LT)																		2			34
DR5-55	I5SB 552+81.57 (25.56' RT) TO 552+90.55 (25.57' RT)																		1			34
DR5-56	I5SB 552+90.55 (25.57' RT)																		1			34
DR5-57	SNB 20+44.52 (5.56' LT)																					
DR5-58	SNB 21+14.90 (16.16' LT) TO 20+44.52 (5.56' LT)																					
DR5-59	SNB 20+49.42 (26.88' RT) TO 20+42.40 (2.11' LT)																					
DR5-60	NNB 12+49.24 (17.96' RT) TO 13+25.55 (17.96' RT)										110			760								2,5,7,34
DR5-61	NNB 10+92.66 (20.07' RT) TO 12+49.24 (17.96' RT)										210			1490								2,5,7,20,34
DR5-62	NBN 36+32.64 (39.10' LT) TO 37+62.64 (39.21' LT)										110			710								3,8,34
DR5-63	NBN 38+49.04 (24.17' LT) TO 38+87.58 (49.54' RT)										150			980								3,8,34
DR5-64	SNB 21+35.96 (14.49' LT) TO 23+27.70 (14.50' LT)						190			3												36,38
DR5-65	I5SB 552+72.04 (56.15' LT) TO 559+38.89 (56.50' LT)						655			9												36,38
DR5-66	SBS 111+39.73 (0.98' RT) TO 111+17.66 (19.85' LT)										20			60								10,13,34
DR5-67	NSB 84+76.86 (2.35' LT)										120			700								3,20,34
DR5-68	NSB 82+68.49 (6.93' RT) TO 83+82.54 (37.97' LT)										110			780								3,8,20,34,49
DR5-69	NSB 83+82.54 (37.97' LT) TO 84+76.86 (2.35' LT)										80			580								3,8,34,49
DR5-70	I5NB 147+05.14 (44.96' RT) TO NBN 39+04.79 (12.25' LT)													20								32,34
DR5-71	SNB 12+19.24 (60.34' RT) TO 11+18.38 (84.22' RT)										170			950								3,8,34
DR5-72	I5NB 146+03.13 (43.90' RT) TO 146+53.77 (43.74' RT)										30			160								2,5,7,34
DR5-73	I5NB 145+24.51 (45.07' LT) TO 146+09.10 (50.26' LT)										90			630								10,13,34
DR5-74	I5NB 146+09.10 (50.26' LT) TO 146+10.31 (37.26' LT)										20			90								10,13,34
DR5-75	I5SB 542+60.01 (19.12' RT) TO 543+00.52 (19.79' RT)		40								40			230								10,13,34
DR5-76	I5SB 543+00.52 (19.79' RT) TO 543+46.00 (20.15' RT)										40			250								10,13,34
DR5-77	I5SB 543+94.54 (19.37' RT) TO 543+46.00 (20.15' RT)										50			320								10,13,34
DR5-78	NSB 86+39.98 (11.40' RT) TO 84+90.78 (23.47' RT)										80			560								2,5,7,34
DR5-79	SSB 105+40.81 (108.49' LT) TO 104+92.89 (37.18' RT)										180			1250								3,8,34
DR5-80	SSB 104+92.89 (37.18' RT) TO NSB 83+36.87 (55.75' RT)										150			1020								3,8,34
	SHEET TOTAL		40				845			12	1760			11540					13			

ADD1_XL3497_SN_DR.xlsm							
4/30/2014 19:02							
DESIGNED BY	S. MERRYMAN	03/25/14					
ENTERED BY	S. MERRYMAN	03/25/14					
CHECKED BY	E. QUINN	03/25/14					
PROJ. ENGR.	J. PEREZ	03/25/14					
REGION ADM.	K. DAYTON	03/25/14	05/02/14	AD1 - REVISED QTY	SM		
		DATE	DATE	REVISION	BY		

REGION NO.	STATE	FED. AID PROJ. NO.
10	WASH	
JOB NUMBER 12C501		
CONTRACT NO.		

Washington State Department of Transportation

I-5
M ST TO PORTLAND AVE - HOV

STRUCTURE NOTES - DRAINAGE

NTDR 44

STRUCTURE NOTES - DRAINAGE

NOTE:
THE FIRST NUMBER OF THE "CODE DESIGNATION" BELOW REFERS TO THE SHEET NO. OR THE SHEET REFERENCE NO. SHOWING THE DRAINAGE FEATURE.

THE SECOND NUMBER REFERS TO THE DRAINAGE FEATURE FOUND ON THAT SHEET.

CODE	LOCATION ⤵ \ UNIT OF MEASURE ➤	PLUGGING EXISTING PIPE	ADJUST INLET	CONNECTION TO DRAINAGE STRUCTURE		ABANDON DRAINAGE STRUCTURE	ADJUST MANHOLE	MANHOLE 48 IN. DIAM. TYPE 3		MANHOLE 60 IN. DIAM. TYPE 3	MANHOLE 72 IN. DIAM. TYPE 3	MANHOLE ADDITIONAL HEIGHT 48 IN. DIAM. TYPE 3		MANHOLE ADDITIONAL HEIGHT 72 IN. DIAM. TYPE 3	ADJUST CATCH BASIN	LOCKING SOLID METAL COVER AND FRAME FOR CATCH BASIN		MANHOLE RING AND SOLID COVER	OPEN FLOW RESTRICTOR	CONSTRUCTION GEOTEXTILE FOR UNDERGROUND DRAINAGE		SEE GENERAL NOTES
		EACH	EACH	EACH		EACH	EACH	EACH		EACH	EACH	L.F.		L.F.	EACH	EACH		EACH	EACH	S.Y.		
DR5-51	NSB 83+20.53 (9.60' RT) TO 84+76.86 (2.35' LT)																					34
DR5-52	I5SB 551+41.08 (108.80' LT)						1															
DR5-53	I5SB 552+75.86 (44.13' LT) TO 552+84.03 (44.77' LT)					1																34
DR5-54	I5SB 552+84.03 (44.77' LT) TO 554+32.19 (120.33' LT)					1																34
DR5-55	I5SB 552+81.57 (25.56' RT) TO 552+90.55 (25.57' RT)					1																34
DR5-56	I5SB 552+90.55 (25.57' RT)					1																34
DR5-57	SNB 20+44.52 (5.56' LT)														1							
DR5-58	SNB 21+14.90 (16.16' LT) TO 20+44.52 (5.56' LT)														1							
DR5-59	SNB 20+49.42 (26.88' RT) TO 20+42.40 (2.11' LT)														1							
DR5-60	NNB 12+49.24 (17.96' RT) TO 13+25.55 (17.96' RT)																					2,5,7,34
DR5-61	NNB 10+92.66 (20.07' RT) TO 12+49.24 (17.96' RT)			1																		2,5,7,20,34
DR5-62	NBN 36+32.64 (39.10' LT) TO 37+62.64 (39.21' LT)	1						1				2										3,8,34
DR5-63	NBN 38+49.04 (24.17' LT) TO 38+87.58 (49.54' RT)							1				3										3,8,34
DR5-64	SNB 21+35.96 (14.49' LT) TO 23+27.70 (14.50' LT)																					36,38
DR5-65	I5SB 552+72.04 (56.15' LT) TO 559+38.89 (56.50' LT)																					36,38
DR5-66	SBS 111+39.73 (0.98' RT) TO 111+17.66 (19.85' LT)																					10,13,34
DR5-67	NSB 84+76.86 (2.35' LT)			1			1															3,20,34
DR5-68	NSB 82+68.49 (6.93' RT) TO 83+82.54 (37.97' LT)			1				1														3,8,20,34,49
DR5-69	NSB 83+82.54 (37.97' LT) TO 84+76.86 (2.35' LT)							1														3,8,34,49
DR5-70	I5NB 147+05.14 (44.96' RT) TO NBN 39+04.79 (12.25' LT)																					32,34
DR5-71	SNB 12+19.24 (60.34' RT) TO 11+18.38 (84.22' RT)							1														3,8,34
DR5-72	I5NB 146+03.13 (43.90' RT) TO 146+53.77 (43.74' RT)																					2,5,7,34
DR5-73	I5NB 145+24.51 (45.07' LT) TO 146+09.10 (50.26' LT)																					10,13,34
DR5-74	I5NB 146+09.10 (50.26' LT) TO 146+10.31 (37.26' LT)																					10,13,34
DR5-75	I5SB 542+60.01 (19.12' RT) TO 543+00.52 (19.79' RT)																					10,13,34
DR5-76	I5SB 543+00.52 (19.79' RT) TO 543+46.00 (20.15' RT)																					10,13,34
DR5-77	I5SB 543+94.54 (19.37' RT) TO 543+46.00 (20.15' RT)																					10,13,34
DR5-78	NSB 86+39.98 (11.40' RT) TO 84+90.78 (23.47' RT)																					2,5,7,34
DR5-79	SSB 105+40.81 (108.49' LT) TO 104+92.89 (37.18' RT)							1														3,8,34
DR5-80	SSB 104+92.89 (37.18' RT) TO NSB 83+36.87 (55.75' RT)							1														3,8,34
	SHEET TOTAL	1		3		4	2	7				5			3							

ADD1_XL3497_SN_DR.xlsm
4/30/2014 19:02

DESIGNED BY	S. MERRYMAN	03/25/14			
ENTERED BY	S. MERRYMAN	03/25/14			
CHECKED BY	E. QUINN	03/25/14			
PROJ. ENGR.	J. PEREZ	03/25/14			
REGION ADM.	K. DAYTON	03/25/14	05/02/14	AD1 - REVISED QTY	SM
		DATE	DATE	REVISION	BY

REGION NO.	STATE	FED. AID PROJ. NO.
10	WASH	

JOB NUMBER
12C501
CONTRACT NO.

Washington State Department of Transportation

I-5
M ST TO PORTLAND AVE - HOV

STRUCTURE NOTES - DRAINAGE

NTDR 45

STRUCTURE NOTES - DRAINAGE

NOTE:
THE FIRST NUMBER OF THE "CODE DESIGNATION" BELOW REFERS TO THE SHEET NO. OR THE SHEET REFERENCE NO. SHOWING THE DRAINAGE FEATURE.

THE SECOND NUMBER REFERS TO THE DRAINAGE FEATURE FOUND ON THAT SHEET.

CODE	LOCATION ↓ \ UNIT OF MEASURE →	REMOVING DRAINAGE STRUCTURE		ROADWAY EXCAVATION INCL. HAUL - AREA NW POND		ROADWAY EXCAVATION INCL. HAUL - AREA NE POND	CONCRETE INLET	GRATE INLET TYPE 2		DROP INTLET TYPE 1	QUARRY SPALLS	UNDERDRAIN PIPE 6 IN. DIAM.		UNDERDRAIN PIPE 18 IN. DIAM.	DRAIN PIPE 6 IN. DIAM.	DRAIN PIPE 8 IN. DIAM.		HIGH DENSITY POLYETHYLENE (HDPE) UNDERDRAIN PIPE 6 IN.D	HIGH-DENSITY POLYETHYLENE (HDPE) PIPE 18 IN. DIAM.	HIGH-DENSITY POLYETHYLENE (HDPE) PIPE 24 IN. DIAM.		SEE GENERAL NOTES
		EACH		C.Y.		C.Y.	EACH	EACH		EACH	TON	L.F.		L.F.	L.F.	L.F.		L.F.	L.F.	L.F.		
DR5-81	NSB 83+36.87 (55.75' RT) TO 84+54.45 (85.74' LT)																					3,8,29,34
DR5-82	SNB 11+72.89 (84.84' RT) TO 14+69.57 (52.94' RT)																					34
DR5-83	NNB 14+01.95 (18.37' RT) TO 14+79.10 (18.38' RT)																					2,5,7,34
DR5-84	PAC 15+22.21 (50.77' RT) TO 15+19.91 (43.11' RT)							1														10,13,18,34
DR5-85	PAC 15+27.54 (36.54' RT) TO 15+19.91 (43.11' RT)							1														10,13,18,34
DR5-86	PAC 15+58.00 (27.75' LT) TO 15+38.88 (27.75' LT)																					1,34
DR5-87	PAC 15+61.64 (27.75' RT) TO 15+38.45 (29.36' RT)																					1,34
DR5-88	PAC 15+81.82 (27.75' LT) TO 15+58.00 (27.75' LT)																					1,34
DR5-89	PAC 15+81.81 (27.75' RT) TO 15+61.64 (27.75' RT)																					1,34
DR5-90	PAC 22+18.43 (29.03' RT) TO 22+21.36 (16.29' RT)																					1,21,34
DR5-91	PAC 22+18.11 (24.65' LT)							1														10,13,20,34
DR5-92	PAC 15+19.91 (43.11' RT)																					3,8,20,27,34
DR5-93	NBN 35+70.28 (21.70' RT) TO 36+40.19 (23.31' RT)																					34
DR5-94	NBS 11+95.27 (12.82' RT) TO 11+97.06 (6.04' LT)																					34
DR5-95	NBS 14+69.87 (15.22' RT) TO 15+54.69 (15.41' RT)																					29,34
DR5-96	NSB 84+71.33 (11.45' RT) TO 84+76.86 (2.35' LT)																					34
DR5-97	NBS 10+45.97 (7.63' RT) TO 10+32.09 (5.85' RT)																					29,34
DR5-98	SNB 14+03.36 (52.94' RT)																					34
DR5-99	SNB 15+20.22 (26.81' LT)	1																				22,29,34
DR5-100	SNB 15+98.29 (13.12' LT)	1																				22,29,34
DR5-101	NNB 11+69.31 (6.78' RT) TO 10+92.60 (20.83' RT)																					34
DR5-102	NOT USED																					
DR5-103	PAC 15+38.88 (27.75' LT) TO 15+38.45 (29.36' RT)																					1,34
DR5-104	PAC 15+38.45 (29.36' RT) TO 15+27.54 (36.54' RT)																					2,5,7,34
DR5-105	SNB 21+37.35 (36.43' LT) TO 20+33.65 (27.44' LT)							1								97						9,11,34
DR5-106	SNB 20+33.65 (27.44' LT)																					2,5,7,20,34
DR5-107	PAC 15+23.55 (43.17' RT)																					34
DR5-108	NOT USED																					
DR5-109	NBN 37+62.64 (39.21' LT) TO 38+49.04 (24.17' LT)																					3,8,34
DR5-110	NOT USED																					
	SHEET TOTAL	2						4								97						

ADD1_XL3497_SN_DR.xlsm						
4/30/2014 19:02						
DESIGNED BY	S. MERRYMAN	03/25/14				
ENTERED BY	S. MERRYMAN	03/25/14				
CHECKED BY	E. QUINN	03/25/14				
PROJ. ENGR.	J. PEREZ	03/25/14				
REGION ADM.	K. DAYTON	03/25/14	05/02/14	AD1 - REVISED QTY	SM	
		DATE	DATE	REVISION	BY	

REGION NO.	STATE	FED. AID PROJ. NO.
10	WASH	
JOB NUMBER 12C501		
CONTRACT NO.		

Washington State Department of Transportation

I-5
M ST TO PORTLAND AVE - HOV

STRUCTURE NOTES - DRAINAGE

NTDR 46

SHEET 523 OF 1763 SHEETS

STRUCTURE NOTES - DRAINAGE

NOTE:
THE FIRST NUMBER OF THE "CODE DESIGNATION" BELOW REFERS TO THE SHEET NO. OR THE SHEET REFERENCE NO. SHOWING THE DRAINAGE FEATURE.

THE SECOND NUMBER REFERS TO THE DRAINAGE FEATURE FOUND ON THAT SHEET.

CODE	LOCATION ⮟ \ UNIT OF MEASURE ⮞	CL. V REINF. CONC. CULV. PIPE 12 IN. DIAM.	CATCH BASIN TYPE 1	CATCH BASIN TYPE 2 48 IN. DIAM.		CATCH BASIN TYPE 2 60 IN. DIAM.	CATCH BASIN TYPE 2 72 IN. DIAM.	TESTING STORM SEWER PIPE		CL. IV REINF. CONC. STORM SEWER PIPE 15 IN. DIAM.	CL. V REINF. CONC. STORM SEWER PIPE 12 IN. DIAM.	CL. V REINF. CONC. STORM SEWER PIPE 18 IN. DIAM.		CL. V REINF. CONC. STORM SEWER PIPE 24 IN. DIAM.	SCHEDULE A STORM SEWER PIPE 12 IN. DIAM.	SCHEDULE A STORM SEWER PIPE 18 IN. DIAM.		SCHEDULE A STORM SEWER PIPE 24 IN. DIAM.	SCHEDULE B STORM SEWER PIPE 18 IN. DIAM.	SCHEDULE B STORM SEWER PIPE 24 IN. DIAM.		SEE GENERAL NOTES
		L.F.	EACH	EACH		EACH	EACH	L.F.		L.F.	L.F.	L.F.		L.F.	L.F.	L.F.		L.F.	L.F.	L.F.		
DR5-81	NSB 83+36.87 (55.75' RT) TO 84+54.45 (85.74' LT)							125				125										3,8,29,34
DR5-82	SNB 11+72.89 (84.84' RT) TO 14+69.57 (52.94' RT)																					34
DR5-83	NNB 14+01.95 (18.37' RT) TO 14+79.10 (18.38' RT)			1				73							73							2,5,7,34
DR5-84	PAC 15+22.21 (50.77' RT) TO 15+19.91 (43.11' RT)										8											10,13,18,34
DR5-85	PAC 15+27.54 (36.54' RT) TO 15+19.91 (43.11' RT)										10											10,13,18,34
DR5-86	PAC 15+58.00 (27.75' LT) TO 15+38.88 (27.75' LT)		1					20			20											1,34
DR5-87	PAC 15+61.64 (27.75' RT) TO 15+38.45 (29.36' RT)		1					22							22							1,34
DR5-88	PAC 15+81.82 (27.75' LT) TO 15+58.00 (27.75' LT)		1					25							25							1,34
DR5-89	PAC 15+81.81 (27.75' RT) TO 15+61.64 (27.75' RT)		1					19							19							1,34
DR5-90	PAC 22+18.43 (29.03' RT) TO 22+21.36 (16.29' RT)		1					20							20							1,21,34
DR5-91	PAC 22+18.11 (24.65' LT)																					10,13,20,34
DR5-92	PAC 15+19.91 (43.11' RT)																					3,8,20,27,34
DR5-93	NBN 35+70.28 (21.70' RT) TO 36+40.19 (23.31' RT)																					34
DR5-94	NBS 11+95.27 (12.82' RT) TO 11+97.06 (6.04' LT)																					34
DR5-95	NBS 14+69.87 (15.22' RT) TO 15+54.69 (15.41' RT)																					29,34
DR5-96	NSB 84+71.33 (11.45' RT) TO 84+76.86 (2.35' LT)																					34
DR5-97	NBS 10+45.97 (7.63' RT) TO 10+32.09 (5.85' RT)																					29,34
DR5-98	SNB 14+03.36 (52.94' RT)																					34
DR5-99	SNB 15+20.22 (26.81' LT)																					22,29,34
DR5-100	SNB 15+98.29 (13.12' LT)																					22,29,34
DR5-101	NNB 11+69.31 (6.78' RT) TO 10+92.60 (20.83' RT)																					34
DR5-102	NOT USED																					
DR5-103	PAC 15+38.88 (27.75' LT) TO 15+38.45 (29.36' RT)		1					56			56											1,34
DR5-104	PAC 15+38.45 (29.36' RT) TO 15+27.54 (36.54' RT)			1				13			13											2,5,7,34
DR5-105	SNB 21+37.35 (36.43' LT) TO 20+33.65 (27.44' LT)							97														9,11,34
DR5-106	SNB 20+33.65 (27.44' LT)					1																2,5,7,20,34
DR5-107	PAC 15+23.55 (43.17' RT)																					34
DR5-108	NOT USED																					
DR5-109	NBN 37+62.64 (39.21' LT) TO 38+49.04 (24.17' LT)							84								84						3,8,34
DR5-110	NOT USED																					
	SHEET TOTAL		6	2		1		554			107	125			159	84						

ADD1_XL3497_SN_DR.xlsm						
4/30/2014 19:02						
DESIGNED BY	S. MERRYMAN	03/25/14				
ENTERED BY	S. MERRYMAN	03/25/14				
CHECKED BY	E. QUINN	03/25/14				
PROJ. ENGR.	J. PEREZ	03/25/14				
REGION ADM.	K. DAYTON	03/25/14	05/02/14	AD1 REVISED QTY	SM	
		DATE	DATE	REVISION	BY	

REGION NO.	STATE	FED. AID PROJ. NO.
10	WASH	
JOB NUMBER 12C501		
CONTRACT NO.		

Washington State Department of Transportation

I-5
M ST TO PORTLAND AVE - HOV

STRUCTURE NOTES - DRAINAGE

NTDR 47

SHEET 524 OF 1763 SHEETS

STRUCTURE NOTES - DRAINAGE

NOTE:
THE FIRST NUMBER OF THE "CODE DESIGNATION" BELOW REFERS TO THE SHEET NO. OR THE SHEET REFERENCE NO. SHOWING THE DRAINAGE FEATURE.

THE SECOND NUMBER REFERS TO THE DRAINAGE FEATURE FOUND ON THAT SHEET.

CODE	LOCATION ⤵ \ UNIT OF MEASURE ➢	TRENCHLESS PIPE 24 IN. DIAM.	DUCTILE IRON STORM SEWER PIPE 12 IN. DIAM.				MEDIA FILTER DRAIN	POND MARKER		BMP MARKER	STRUCTURE EXCAVATION CLASS B INCL. HAUL	STRUCTURE EXCAV. CL.B INCL. HAUL-CONTAMINATED MATERIAL		SHORING OR EXTRA EXCAVATION CLASS B	GRAVEL BACKFILL FOR DRAIN	LLDPE GEOMEMBRANE LINING SYSTEM		CONTROLLED DENSITY FILL	FLOW FILL PIPE	COMMERCIAL CONCRETE		SEE GENERAL NOTES
		L.F.	L.F.				L.F.	EACH		EACH	C.Y.	C.Y.		S.F.	C.Y.	S.Y.		C.Y.	C.Y.	C.Y.		
DR5-81	NSB 83+36.87 (55.75' RT) TO 84+54.45 (85.74' LT)										110			720								3,8,29,34
DR5-82	SNB 11+72.89 (84.84' RT) TO 14+69.57 (52.94' RT)																		3			34
DR5-83	NNB 14+01.95 (18.37' RT) TO 14+79.10 (18.38' RT)										100			690								2,5,7,34
DR5-84	PAC 15+22.21 (50.77' RT) TO 15+19.91 (43.11' RT)										10			20								10,13,18,34
DR5-85	PAC 15+27.54 (36.54' RT) TO 15+19.91 (43.11' RT)										10			30								10,13,18,34
DR5-86	PAC 15+58.00 (27.75' LT) TO 15+38.88 (27.75' LT)										20			80								1,34
DR5-87	PAC 15+61.64 (27.75' RT) TO 15+38.45 (29.36' RT)										20			90								1,34
DR5-88	PAC 15+81.82 (27.75' LT) TO 15+58.00 (27.75' LT)										20			110								1,34
DR5-89	PAC 15+81.81 (27.75' RT) TO 15+61.64 (27.75' RT)										10			70								1,34
DR5-90	PAC 22+18.43 (29.03' RT) TO 22+21.36 (16.29' RT)										20			90								1,21,34
DR5-91	PAC 22+18.11 (24.65' LT)										10			50								10,13,20,34
DR5-92	PAC 15+19.91 (43.11' RT)										10			20								3,8,20,27,34
DR5-93	NBN 35+70.28 (21.70' RT) TO 36+40.19 (23.31' RT)																		2			34
DR5-94	NBS 11+95.27 (12.82' RT) TO 11+97.06 (6.04' LT)																		1			34
DR5-95	NBS 14+69.87 (15.22' RT) TO 15+54.69 (15.41' RT)																		3			29,34
DR5-96	NSB 84+71.33 (11.45' RT) TO 84+76.86 (2.35' LT)																		1			34
DR5-97	NBS 10+45.97 (7.63' RT) TO 10+32.09 (5.85' RT)																					29,34
DR5-98	SNB 14+03.36 (52.94' RT)																					34
DR5-99	SNB 15+20.22 (26.81' LT)																					22,29,34
DR5-100	SNB 15+98.29 (13.12' LT)																		2			22,29,34
DR5-101	NNB 11+69.31 (6.78' RT) TO 10+92.60 (20.83' RT)																		26			34
DR5-102	NOT USED																					
DR5-103	PAC 15+38.88 (27.75' LT) TO 15+38.45 (29.36' RT)										30			220								1,34
DR5-104	PAC 15+38.45 (29.36' RT) TO 15+27.54 (36.54' RT)										10			50								2,5,7,34
DR5-105	SNB 21+37.35 (36.43' LT) TO 20+33.65 (27.44' LT)										60			820								9,11,34
DR5-106	SNB 20+33.65 (27.44' LT)										10			20								2,5,7,20,34
DR5-107	PAC 15+23.55 (43.17' RT)																		3			34
DR5-108	NOT USED																					
DR5-109	NBN 37+62.64 (39.21' LT) TO 38+49.04 (24.17' LT)										120			770								3,8,34
DR5-110	NOT USED																					
	SHEET TOTAL										570			3850					41			

ADD1_XL3497_SN_DR.xlsm					REGION NO.	STATE	FED. AID PROJ. NO.
4/30/2014 19:02					10	WASH	
DESIGNED BY	S. MERRYMAN	03/25/14					
ENTERED BY	S. MERRYMAN	03/25/14					
CHECKED BY	E. QUINN	03/25/14			JOB NUMBER 12C501		
PROJ. ENGR.	J. PEREZ	03/25/14					
REGION ADM.	K. DAYTON	03/25/14	05/02/14	AD1 - REVISED QTY	SM	CONTRACT NO.	
		DATE	DATE	REVISION	BY		

Washington State Department of Transportation

I-5
M ST TO PORTLAND AVE - HOV

STRUCTURE NOTES - DRAINAGE

NTDR 48

SHEET 525 OF 1763 SHEETS

STRUCTURE NOTES - DRAINAGE

NOTE:
THE FIRST NUMBER OF THE "CODE DESIGNATION" BELOW REFERS TO THE SHEET NO. OR THE SHEET REFERENCE NO. SHOWING THE DRAINAGE FEATURE.

THE SECOND NUMBER REFERS TO THE DRAINAGE FEATURE FOUND ON THAT SHEET.

CODE	LOCATION ∨ \ UNIT OF MEASURE >	PLUGGING EXISTING PIPE	ADJUST INLET	CONNECTION TO DRAINAGE STRUCTURE		ABANDON DRAINAGE STRUCTURE	ADJUST MANHOLE	MANHOLE 48 IN. DIAM. TYPE 3		MANHOLE 60 IN. DIAM. TYPE 3	MANHOLE 72 IN. DIAM. TYPE 3	MANHOLE ADDITIONAL HEIGHT 48 IN. DIAM. TYPE 3		MANHOLE ADDITIONAL HEIGHT 72 IN. DIAM. TYPE 3	ADJUST CATCH BASIN	LOCKING SOLID METAL COVER AND FRAME FOR CATCH BASIN		MANHOLE RING AND SOLID COVER	OPEN FLOW RESTRICTOR	CONSTRUCTION GEOTEXTILE FOR UNDERGROUND DRAINAGE		SEE GENERAL NOTES
		EACH	EACH	EACH		EACH	EACH	EACH		EACH	EACH	L.F.		L.F.	EACH	EACH		EACH	EACH	S.Y.		
DR5-81	NSB 83+36.87 (55.75' RT) TO 84+54.45 (85.74' LT)	1						1														3,8,29,34
DR5-82	SNB 11+72.89 (84.84' RT) TO 14+69.57 (52.94' RT)					2																34
DR5-83	NNB 14+01.95 (18.37' RT) TO 14+79.10 (18.38' RT)																					2,5,7,34
DR5-84	PAC 15+22.21 (50.77' RT) TO 15+19.91 (43.11' RT)																					10,13,18,34
DR5-85	PAC 15+27.54 (36.54' RT) TO 15+19.91 (43.11' RT)																					10,13,18,34
DR5-86	PAC 15+58.00 (27.75' LT) TO 15+38.88 (27.75' LT)																					1,34
DR5-87	PAC 15+61.64 (27.75' RT) TO 15+38.45 (29.36' RT)																					1,34
DR5-88	PAC 15+81.82 (27.75' LT) TO 15+58.00 (27.75' LT)																					1,34
DR5-89	PAC 15+81.81 (27.75' RT) TO 15+61.64 (27.75' RT)																					1,34
DR5-90	PAC 22+18.43 (29.03' RT) TO 22+21.36 (16.29' RT)			1																		1,21,34
DR5-91	PAC 22+18.11 (24.65' LT)			1																		10,13,20,34
DR5-92	PAC 15+19.91 (43.11' RT)			1				1														3,8,20,27,34
DR5-93	NBN 35+70.28 (21.70' RT) TO 36+40.19 (23.31' RT)					1																34
DR5-94	NBS 11+95.27 (12.82' RT) TO 11+97.06 (6.04' LT)					1																34
DR5-95	NBS 14+69.87 (15.22' RT) TO 15+54.69 (15.41' RT)	1				1																29,34
DR5-96	NSB 84+71.33 (11.45' RT) TO 84+76.86 (2.35' LT)					1																34
DR5-97	NBS 10+45.97 (7.63' RT) TO 10+32.09 (5.85' RT)	1																				29,34
DR5-98	SNB 14+03.36 (52.94' RT)																					34
DR5-99	SNB 15+20.22 (26.81' LT)	4																				22,29,34
DR5-100	SNB 15+98.29 (13.12' LT)	4																				22,29,34
DR5-101	NNB 11+69.31 (6.78' RT) TO 10+92.60 (20.83' RT)					1																34
DR5-102	NOT USED																					
DR5-103	PAC 15+38.88 (27.75' LT) TO 15+38.45 (29.36' RT)																					1,34
DR5-104	PAC 15+38.45 (29.36' RT) TO 15+27.54 (36.54' RT)																					2,5,7,34
DR5-105	SNB 21+37.35 (36.43' LT) TO 20+33.65 (27.44' LT)																					9,11,34
DR5-106	SNB 20+33.65 (27.44' LT)			1																		2,5,7,20,34
DR5-107	PAC 15+23.55 (43.17' RT)					1																34
DR5-108	NOT USED																					
DR5-109	NBN 37+62.64 (39.21' LT) TO 38+49.04 (24.17' LT)							1				4										3,8,34
DR5-110	NOT USED																					
	SHEET TOTAL	11		4		8		3				4										

ADD1_XL3497_SN_DR.xlsm					
4/30/2014 19:02					
DESIGNED BY	S. MERRYMAN	03/25/14			
ENTERED BY	S. MERRYMAN	03/25/14			
CHECKED BY	E. QUINN	03/25/14			
PROJ. ENGR.	J. PEREZ	03/25/14			
REGION ADM.	K. DAYTON	03/25/14	05/02/14	AD1 - REVISED QTY	SM
		DATE	DATE	REVISION	BY

REGION NO.	STATE	FED. AID PROJ. NO.
10	WASH	
JOB NUMBER 12C501		
CONTRACT NO.		

Washington State Department of Transportation

I-5
M ST TO PORTLAND AVE - HOV

STRUCTURE NOTES - DRAINAGE

NTDR 49

SHEET 526 OF 1763 SHEETS

STRUCTURE NOTES - DRAINAGE

NOTE:
THE FIRST NUMBER OF THE "CODE DESIGNATION" BELOW REFERS TO THE SHEET NO. OR THE SHEET REFERENCE NO. SHOWING THE DRAINAGE FEATURE.

THE SECOND NUMBER REFERS TO THE DRAINAGE FEATURE FOUND ON THAT SHEET.

CODE	LOCATION ⊽ \ UNIT OF MEASURE ⊳	REMOVING DRAINAGE STRUCTURE		ROADWAY EXCAVATION INCL. HAUL - AREA NW POND		ROADWAY EXCAVATION INCL. HAUL - AREA NE POND	CONCRETE INLET	GRATE INLET TYPE 2		DROP INTLET TYPE 1	QUARRY SPALLS	UNDERDRAIN PIPE 6 IN. DIAM.		UNDERDRAIN PIPE 18 IN. DIAM.	DRAIN PIPE 6 IN. DIAM.	DRAIN PIPE 8 IN. DIAM.		HIGH DENSITY POLYETHYLENE (HDPE) UNDERDRAIN PIPE 6 IN.D	HIGH-DENSITY POLYETHYLENE (HDPE) PIPE 18 IN. DIAM.	HIGH-DENSITY POLYETHYLENE (HDPE) PIPE 24 IN. DIAM.		SEE GENERAL NOTES
		EACH		C.Y.		C.Y.	EACH	EACH		EACH	TON	L.F.		L.F.	L.F.	L.F.		L.F.	L.F.	L.F.		
DR5-111	SNB 13+70.79 (60.06' RT) TO 14+69.57 (52.94' RT)																					29,34
DR5-112	I5SB 544+31.08 (44.08' LT) TO 545+36.93 (43.28' LT)														106							32,34
DR5-113	I5SB 545+36.93 (43.28' LT) TO 545+89.72 (9.72' RT)														75							32,34
DR5-114	NBN 37+92.85 (62.96' RT) TO 38+45.59 (0.72' LT)														85							32,34
DR5-115	SNB 14+74.73 (41.16' RT) TO 14+69.57 (52.94' RT)																					34
DR5-116	NBS 11+98.00 (25.84' RT) TO 14+59.00 (25.84' RT)											251										34,48
DR5-117	NBS 14+59.00 (25.84' RT) TO 14+95.73 (21.97' RT)														36							32,34
DR5-118	I5NB 154+34.32 (23.08' LT) TO 154+35.42 (45.08' RT)														68							32,34
DR5-119	I5NB 154+35.42 (45.08' RT) TO 153+87.17 (133.94' RT)														85							32,34
DR5-120	NSB 78+81.41 (71.39' RT) TO 79+82.82 (51.37' RT)																					34
DR5-121	SNB 16+09.93 (10.44' LT) TO 16+08.29 (47.72' RT)							1														10,13,34
DR5-122	NNB 11+96.86 (42.56' RT) TO 11+98.38 (15.62' RT)																					34
DR5-123	NOT USED																					
DR5-124	NBN 41+28.90 (39.44' RT) TO 41+29.10 (60.48' RT)	1																				22,34
DR5-125	SNB 17+61.65 (16.25' RT)																					8
DR5-126	SBS 110+19.45 (10.14' RT) TO 110+18.27 (18.56' LT)																					2,5,7,34
DR5-127	SBS 110+00.52 (25.44' RT) TO 110+19.45 (10.14' RT)																					2,5,7,34
DR5-128	SNB 11+55.20 (54.05' RT)	1																				22,34
DR5-129	NSB 84+54.45 (85.74' LT) TO SNB 16+08.29 (47.72' RT)																					3,8,34
DR5-130	NBN 37+95.16 (2.02' LT) TO 38+45.59 (2.18' LT)																					3,8,34
DR5-131	NNB 13+25.55 (17.96' RT) TO 14+01.95 (18.37' RT)																					2,5,6,34
DR6-1	PAC 12+54.74 (66.58' LT) TO 12+54.64 (121.58' LT)										3											3,8,31,34,44
DR6-2	I5SB 546+76.55 (654.51' LT) TO 547+29.13 (680.58' LT)																					2,5,7,34,44
DR6-3	PSSB 61+64.62 (291.27' RT) TO 61+09.34 (311.16' RT)																					34,42,43,44
DR6-4	SBN 63+83.93 (52.24' LT) TO 66+55.95 (38.28' LT)																					36,38
DR6-5	PSSB 60+05.08 (308.01' RT) TO SSB 105+40.81 (108.49' LT)																					3,8,34
	SHEET TOTAL	2						1			3	251			455							

ADD1_XL3497_SN_DR.xlsm						
4/30/2014 19:02						
DESIGNED BY	S. MERRYMAN	03/25/14				
ENTERED BY	S. MERRYMAN	03/25/14				
CHECKED BY	E. QUINN	03/25/14				
PROJ. ENGR.	J. PEREZ	03/25/14				
REGION ADM.	K. DAYTON	03/25/14	05/02/14	AD1 - REVISED QTY	SM	
		DATE	DATE	REVISION	BY	

REGION NO.	STATE	FED. AID PROJ. NO.
10	WASH	
JOB NUMBER 12C501		
CONTRACT NO.		

Washington State Department of Transportation

I-5
M ST TO PORTLAND AVE - HOV

STRUCTURE NOTES - DRAINAGE

NTDR 50

SHEET 527 OF 1763 SHEETS

STRUCTURE NOTES - DRAINAGE

NOTE:
THE FIRST NUMBER OF THE "CODE DESIGNATION" BELOW REFERS TO THE SHEET NO. OR THE SHEET REFERENCE NO. SHOWING THE DRAINAGE FEATURE.

THE SECOND NUMBER REFERS TO THE DRAINAGE FEATURE FOUND ON THAT SHEET.

CODE	LOCATION ▽ \ UNIT OF MEASURE ▷	CL. V REINF. CONC. CULV. PIPE 12 IN. DIAM.	CATCH BASIN TYPE 1	CATCH BASIN TYPE 2 48 IN. DIAM.		CATCH BASIN TYPE 2 60 IN. DIAM.	CATCH BASIN TYPE 2 72 IN. DIAM.	TESTING STORM SEWER PIPE		CL. IV REINF. CONC. STORM SEWER PIPE 15 IN. DIAM.	CL. V REINF. CONC. STORM SEWER PIPE 12 IN. DIAM.	CL. V REINF. CONC. STORM SEWER PIPE 18 IN. DIAM.		CL. V REINF. CONC. STORM SEWER PIPE 24 IN. DIAM.	SCHEDULE A STORM SEWER PIPE 12 IN. DIAM.	SCHEDULE A STORM SEWER PIPE 18 IN. DIAM.		SCHEDULE A STORM SEWER PIPE 24 IN. DIAM.	SCHEDULE B STORM SEWER PIPE 18 IN. DIAM.	SCHEDULE B STORM SEWER PIPE 24 IN. DIAM.		SEE GENERAL NOTES
		L.F.	EACH	EACH		EACH	EACH	L.F.		L.F.	L.F.	L.F.		L.F.	L.F.	L.F.		L.F.	L.F.	L.F.		
DR5-111	SNB 13+70.79 (60.06' RT) TO 14+69.57 (52.94' RT)																					29,34
DR5-112	I5SB 544+31.08 (44.08' LT) TO 545+36.93 (43.28' LT)							106														32,34
DR5-113	I5SB 545+36.93 (43.28' LT) TO 545+89.72 (9.72' RT)							75														32,34
DR5-114	NBN 37+92.85 (62.96' RT) TO 38+45.59 (0.72' LT)							85														32,34
DR5-115	SNB 14+74.73 (41.16' RT) TO 14+69.57 (52.94' RT)																					34
DR5-116	NBS 11+98.00 (25.84' RT) TO 14+59.00 (25.84' RT)																					
DR5-117	NBS 14+59.00 (25.84' RT) TO 14+95.73 (21.97' RT)							36														34,48
DR5-118	I5NB 154+34.32 (23.08' LT) TO 154+35.42 (45.08' RT)							68														32,34
DR5-119	I5NB 154+35.42 (45.08' RT) TO 153+87.17 (133.94' RT)							85														32,34
DR5-120	NSB 78+81.41 (71.39' RT) TO 79+82.82 (51.37' RT)																					32,34
DR5-121	SNB 16+09.93 (10.44' LT) TO 16+08.29 (47.72' RT)							58			58											34
DR5-122	NNB 11+96.86 (42.56' RT) TO 11+98.38 (15.62' RT)																					10,13,34
DR5-123	NOT USED																					34
DR5-124	NBN 41+28.90 (39.44' RT) TO 41+29.10 (60.48' RT)																					
DR5-125	SNB 17+61.65 (16.25' RT)																					22,34
DR5-126	SBS 110+19.45 (10.14' RT) TO 110+18.27 (18.56' LT)					1		29								29						8
DR5-127	SBS 110+00.52 (25.44' RT) TO 110+19.45 (10.14' RT)			1				24								24						2,5,7,34
DR5-128	SNB 11+55.20 (54.05' RT)																					2,5,7,34
DR5-129	NSB 84+54.45 (85.74' LT) TO SNB 16+08.29 (47.72' RT)							28								28						22,34
DR5-130	NBN 37+95.16 (2.02' LT) TO 38+45.59 (2.18' LT)							50				50										3,8,34
DR5-131	NNB 13+25.55 (17.96' RT) TO 14+01.95 (18.37' RT)					1		72							72							3,8,34
DR6-1	PAC 12+54.74 (66.58' LT) TO 12+54.64 (121.58' LT)							55										55				2,5,6,34
DR6-2	I5SB 546+76.55 (654.51' LT) TO 547+29.13 (680.58' LT)			1				59							59							3,8,31,34,44
DR6-3	PSSB 61+64.62 (291.27' RT) TO 61+09.34 (311.16' RT)							81								81						2,5,7,34,44
DR6-4	SBN 63+83.93 (52.24' LT) TO 66+55.95 (38.28' LT)																					34,42,43,44
DR6-5	PSSB 60+05.08 (308.01' RT) TO SSB 105+40.81 (108.49' LT)							136								136						36,38
	SHEET TOTAL			2		2		1047			58	50			131	298		55				3,8,34

ADD1_XL3497_SN_DR.xlsm						
4/30/2014 19:02						
DESIGNED BY	S. MERRYMAN	03/25/14				
ENTERED BY	S. MERRYMAN	03/25/14				
CHECKED BY	E. QUINN	03/25/14				
PROJ. ENGR.	J. PEREZ	03/25/14				
REGION ADM.	K. DAYTON	03/25/14	05/02/14	AD1 - REVISED QTY	SM	
		DATE	DATE	REVISION	BY	

REGION NO.	STATE	FED. AID PROJ. NO.
10	WASH	
JOB NUMBER 12C501		
CONTRACT NO.		

Washington State Department of Transportation

I-5
M ST TO PORTLAND AVE - HOV

STRUCTURE NOTES - DRAINAGE

NTDR 51

SHEET 528 OF 1763 SHEETS

STRUCTURE NOTES - DRAINAGE

NOTE:
THE FIRST NUMBER OF THE "CODE DESIGNATION" BELOW REFERS TO THE SHEET NO. OR THE SHEET REFERENCE NO. SHOWING THE DRAINAGE FEATURE.

THE SECOND NUMBER REFERS TO THE DRAINAGE FEATURE FOUND ON THAT SHEET.

CODE	LOCATION ⤵ \ UNIT OF MEASURE ➢	TRENCHLESS PIPE 24 IN. DIAM.	DUCTILE IRON STORM SEWER PIPE 12 IN. DIAM.				MEDIA FILTER DRAIN	POND MARKER		BMP MARKER	STRUCTURE EXCAVATION CLASS B INCL. HAUL	STRUCTURE EXCAV. CL.B INCL. HAUL-CONTAMINATED MATERIAL		SHORING OR EXTRA EXCAVATION CLASS B	GRAVEL BACKFILL FOR DRAIN	LLDPE GEOMEMBRANE LINING SYSTEM		CONTROLLED DENSITY FILL	FLOW FILL PIPE	COMMERCIAL CONCRETE		SEE GENERAL NOTES
		L.F.	L.F.				L.F.	EACH		EACH	C.Y.	C.Y.		S.F.	C.Y.	S.Y.		C.Y.	C.Y.	C.Y.		
DR5-111	SNB 13+70.79 (60.06' RT) TO 14+69.57 (52.94' RT)																		7			29,34
DR5-112	I5SB 544+31.08 (44.08' LT) TO 545+36.93 (43.28' LT)										40			700								32,34
DR5-113	I5SB 545+36.93 (43.28' LT) TO 545+89.72 (9.72' RT)										50			970								32,34
DR5-114	NBN 37+92.85 (62.96' RT) TO 38+45.59 (0.72' LT)										20			370								32,34
DR5-115	SNB 14+74.73 (41.16' RT) TO 14+69.57 (52.94' RT)																		1			34
DR5-116	NBS 11+98.00 (25.84' RT) TO 14+59.00 (25.84' RT)										100			910	70							34,48
DR5-117	NBS 14+59.00 (25.84' RT) TO 14+95.73 (21.97' RT)										10			100								32,34
DR5-118	I5NB 154+34.32 (23.08' LT) TO 154+35.42 (45.08' RT)										10			160								32,34
DR5-119	I5NB 154+35.42 (45.08' RT) TO 153+87.17 (133.94' RT)										60			1030								32,34
DR5-120	NSB 78+81.41 (71.39' RT) TO 79+82.82 (51.37' RT)																		6			34
DR5-121	SNB 16+09.93 (10.44' LT) TO 16+08.29 (47.72' RT)										30			190								10,13,34
DR5-122	NNB 11+96.86 (42.56' RT) TO 11+98.38 (15.62' RT)																		2			34
DR5-123	NOT USED																					
DR5-124	NBN 41+28.90 (39.44' RT) TO 41+29.10 (60.48' RT)																					22,34
DR5-125	SNB 17+61.65 (16.25' RT)																					8
DR5-126	SBS 110+19.45 (10.14' RT) TO 110+18.27 (18.56' LT)										20			100								2,5,7,34
DR5-127	SBS 110+00.52 (25.44' RT) TO 110+19.45 (10.14' RT)										20			80								2,5,7,34
DR5-128	SNB 11+55.20 (54.05' RT)																					22,34
DR5-129	NSB 84+54.45 (85.74' LT) TO SNB 16+08.29 (47.72' RT)										20			160								3,8,34
DR5-130	NBN 37+95.16 (2.02' LT) TO 38+45.59 (2.18' LT)										70			470								3,8,34
DR5-131	NNB 13+25.55 (17.96' RT) TO 14+01.95 (18.37' RT)										110			740								2,5,6,34
DR6-1	PAC 12+54.74 (66.58' LT) TO 12+54.64 (121.58' LT)										170			900								3,8,31,34,44
DR6-2	I5SB 546+76.55 (654.51' LT) TO 547+29.13 (680.58' LT)										30			220								2,5,7,34,44
DR6-3	PSSB 61+64.62 (291.27' RT) TO 61+09.34 (311.16' RT)										90			630								34,42,43,44
DR6-4	SBN 63+83.93 (52.24' LT) TO 66+55.95 (38.28' LT)						250			4												36,38
DR6-5	PSSB 60+05.08 (308.01' RT) TO SSB 105+40.81 (108.49' LT)										190			1230								3,8,34
	SHEET TOTAL						250			4	1040			8960	70				16			

ADD1_XL3497_SN_DR.xlsm				REGION NO.	STATE	FED. AID PROJ. NO.
4/30/2014 19:02				10	WASH	
DESIGNED BY	S. MERRYMAN	03/25/14				
ENTERED BY	S. MERRYMAN	03/25/14		JOB NUMBER		
CHECKED BY	E. QUINN	03/25/14		12C501		
PROJ. ENGR.	J. PEREZ	03/25/14		CONTRACT NO.		
REGION ADM.	K. DAYTON	03/25/14	05/02/14	AD1, REVISED QTY	SM	
		DATE	DATE	REVISION	BY	

Washington State Department of Transportation

I-5
M ST TO PORTLAND AVE - HOV

STRUCTURE NOTES - DRAINAGE

NTDR 52

STRUCTURE NOTES - DRAINAGE

NOTE:
THE FIRST NUMBER OF THE "CODE DESIGNATION" BELOW REFERS TO THE SHEET NO. OR THE SHEET REFERENCE NO. SHOWING THE DRAINAGE FEATURE.

THE SECOND NUMBER REFERS TO THE DRAINAGE FEATURE FOUND ON THAT SHEET.

CODE	LOCATION ↓ \ UNIT OF MEASURE →	PLUGGING EXISTING PIPE	ADJUST INLET	CONNECTION TO DRAINAGE STRUCTURE		ABANDON DRAINAGE STRUCTURE	ADJUST MANHOLE	MANHOLE 48 IN. DIAM. TYPE 3		MANHOLE 60 IN. DIAM. TYPE 3	MANHOLE 72 IN. DIAM. TYPE 3	MANHOLE ADDITIONAL HEIGHT 48 IN. DIAM. TYPE 3		MANHOLE ADDITIONAL HEIGHT 72 IN. DIAM. TYPE 3	ADJUST CATCH BASIN	LOCKING SOLID METAL COVER AND FRAME FOR CATCH BASIN		MANHOLE RING AND SOLID COVER	OPEN FLOW RESTRICTOR	CONSTRUCTION GEOTEXTILE FOR UNDERGROUND DRAINAGE		SEE GENERAL NOTES
		EACH	EACH	EACH		EACH	EACH	EACH		EACH	EACH	L.F.		L.F.	EACH	EACH		EACH	EACH	S.Y.		
DR5-111	SNB 13+70.79 (60.06' RT) TO 14+69.57 (52.94' RT)	1				1																29,34
DR5-112	I5SB 544+31.08 (44.08' LT) TO 545+36.93 (43.28' LT)																					32,34
DR5-113	I5SB 545+36.93 (43.28' LT) TO 545+89.72 (9.72' RT)																					32,34
DR5-114	NBN 37+92.85 (62.96' RT) TO 38+45.59 (0.72' LT)																					32,34
DR5-115	SNB 14+74.73 (41.16' RT) TO 14+69.57 (52.94' RT)					1																34
DR5-116	NBS 11+98.00 (25.84' RT) TO 14+59.00 (25.84' RT)																			220		34,48
DR5-117	NBS 14+59.00 (25.84' RT) TO 14+95.73 (21.97' RT)																					32,34
DR5-118	I5NB 154+34.32 (23.08' LT) TO 154+35.42 (45.08' RT)																					32,34
DR5-119	I5NB 154+35.42 (45.08' RT) TO 153+87.17 (133.94' RT)																					32,34
DR5-120	NSB 78+81.41 (71.39' RT) TO 79+82.82 (51.37' RT)																					34
DR5-121	SNB 16+09.93 (10.44' LT) TO 16+08.29 (47.72' RT)																					10,13,34
DR5-122	NNB 11+96.86 (42.56' RT) TO 11+98.38 (15.62' RT)					1																34
DR5-123	NOT USED																					
DR5-124	NBN 41+28.90 (39.44' RT) TO 41+29.10 (60.48' RT)																					22,34
DR5-125	SNB 17+61.65 (16.25' RT)																	1				8
DR5-126	SBS 110+19.45 (10.14' RT) TO 110+18.27 (18.56' LT)																					2,5,7,34
DR5-127	SBS 110+00.52 (25.44' RT) TO 110+19.45 (10.14' RT)																					2,5,7,34
DR5-128	SNB 11+55.20 (54.05' RT)																					22,34
DR5-129	NSB 84+54.45 (85.74' LT) TO SNB 16+08.29 (47.72' RT)							1														3,8,34
DR5-130	NBN 37+95.16 (2.02' LT) TO 38+45.59 (2.18' LT)							1														3,8,34
DR5-131	NNB 13+25.55 (17.96' RT) TO 14+01.95 (18.37' RT)															1						2,5,6,34
DR6-1	PAC 12+54.74 (66.58' LT) TO 12+54.64 (121.58' LT)										1			1								3,8,31,34,44
DR6-2	I5SB 546+76.55 (654.51' LT) TO 547+29.13 (680.58' LT)																					2,5,7,34,44
DR6-3	PSSB 61+64.62 (291.27' RT) TO 61+09.34 (311.16' RT)																		1			34,42,43,44
DR6-4	SBN 63+83.93 (52.24' LT) TO 66+55.95 (38.28' LT)																					36,38
DR6-5	PSSB 60+05.08 (308.01' RT) TO SSB 105+40.81 (108.49' LT)							1				6										3,8,34
	SHEET TOTAL	1				3		3			1	6		1		1		1	1	220		

ADD1_XL3497_SN_DR.xlsm						
4/30/2014 19:02						
DESIGNED BY	S. MERRYMAN	03/25/14				
ENTERED BY	S. MERRYMAN	03/25/14				
CHECKED BY	E. QUINN	03/25/14				
PROJ. ENGR.	J. PEREZ	03/25/14				
REGION ADM.	K. DAYTON	03/25/14	05/02/14	AD1 REVISED QTY	SM	
		DATE	DATE	REVISION	BY	

REGION NO.	STATE	FED. AID PROJ. NO.
10	WASH	

JOB NUMBER
12C501
CONTRACT NO.

Washington State Department of Transportation

I-5
M ST TO PORTLAND AVE - HOV

STRUCTURE NOTES - DRAINAGE

NTDR 53

SHEET 530 OF 1763 SHEETS

STRUCTURE NOTES - DRAINAGE

NOTE:
THE FIRST NUMBER OF THE "CODE DESIGNATION" BELOW REFERS TO THE SHEET NO. OR THE SHEET REFERENCE NO. SHOWING THE DRAINAGE FEATURE.

THE SECOND NUMBER REFERS TO THE DRAINAGE FEATURE FOUND ON THAT SHEET.

CODE	LOCATION ⊽ \ UNIT OF MEASURE ⊳	REMOVING DRAINAGE STRUCTURE		ROADWAY EXCAVATION INCL. HAUL - AREA NW POND		ROADWAY EXCAVATION INCL. HAUL - AREA NE POND	CONCRETE INLET	GRATE INLET TYPE 2		DROP INTLET TYPE 1	QUARRY SPALLS	UNDERDRAIN PIPE 6 IN. DIAM.		UNDERDRAIN PIPE 18 IN. DIAM.	DRAIN PIPE 6 IN. DIAM.	DRAIN PIPE 8 IN. DIAM.		HIGH DENSITY POLYETHYLENE (HDPE) UNDERDRAIN PIPE 6 IN.D	HIGH-DENSITY POLYETHYLENE (HDPE) PIPE 18 IN. DIAM.	HIGH-DENSITY POLYETHYLENE (HDPE) PIPE 24 IN. DIAM.		SEE GENERAL NOTES
		EACH		C.Y.		C.Y.	EACH	EACH		EACH	TON	L.F.		L.F.	L.F.	L.F.		L.F.	L.F.	L.F.		
DR6-6	SBN 63+81.42 (40.82' LT) TO 62+19.97 (48.85' LT)							1														10,13,34
DR6-7	SBN 62+19.97 (48.85' LT) TO 62+17.99 (20.43' RT)							1														10,13,34
DR6-8	SBN 62+17.99 (20.43' RT) TO 61+61.64 (88.56' RT)																					3,8,34
DR6-9	SBN 59+86.22 (94.04' RT) TO 59+28.07 (106.77' RT)																					3,8,21,34
DR6-10	SBN 61+29.92 (166.76' RT) TO 59+86.22 (94.04' RT)																					3,8,34
DR6-11	SBN 61+29.92 (187.01' RT) TO 61+29.92 (166.76' RT)																					2,5,7,34,44
DR6-12	SBN 61+46.04 (186.18' RT) TO 61+29.92 (166.76' RT)																					34,42,43,44
DR6-13	NOT USED																					
DR6-14	NOT USED																					
DR6-15	SBS 111+17.66 (19.85' LT) TO SBN 61+80.96 (126.05' RT)																					3,8,34
DR6-16	SBN 61+80.96 (126.05' RT) TO 61+95.88 (110.24' RT)										3											3,8,31,34,44
DR6-17	NOT USED																					
DR6-18	I5SB 547+29.13 (680.58' LT)																					21,34
DR6-19	PAC 12+94.34 (47.06' RT) TO 12+54.74 (66.58' LT)																					3,8,34,49
DR6-20	PSSB 60+44.56 (224.41' RT) TO 61+37.09 (123.14' RT)																					3,8,34
DR6-21	SBN 61+61.64 (88.56' RT) TO 61+80.96 (126.05' RT)																					3,8,34
DR6-22	SBN 61+95.93 (192.44' RT) TO 62+11.12 (175.78' RT)										3											3,8,31,34,44
DR6-23	I5SB 545+75.67 (603.87' LT)			17720							470											31,34,37,38,40,45
DR6-24	SBN 62+54.14 (102.83' RT)					7173					32											31,34,37,38,41,45
DR6-25	SBN 61+46.75 (236.57' RT)					4782					1060											31,34,37,40,41,45
DR6-26	SBN 61+19.90 (58.30' LT) TO 62+19.97 (48.85' LT)							1														10,13,34
DR6-27	PSSB 61+09.34 (311.16' RT) TO 60+05.08 (308.01' RT)																					3,8,34
DR6-28	PSSB 59+14.25 (30.13' RT) TO 60+73.26 (25.54' RT)																					3,8,34
DR6-29	SBS 111+17.59 (110.70' LT) TO 111+39.69 (109.92' LT)																					34,44
DR6-30	PSSB 61+16.28 (331.56' RT) TO 61+58.74 (340.87' RT)																					16,34
DR7-1	SBS 112+07.99 (42.49' LT) TO 111+78.84 (11.27' RT)							1														10,11,34
DR7-2	SBS 111+78.84 (11.27' RT) TO 111+79.43 (15.65' RT)							1														10,12,34
DR7-3	SBS 111+79.43 (15.65' RT)																					3,8,34
DR7-4	SBN 66+55.39 (48.55' LT)							1														10,13,20,34
DR7-5	SBN 65+88.46 (35.25' LT) TO 65+83.92 (11.61' RT)	1																				22,34
	SHEET TOTAL	1		17720		11955		6			1568											

ADD1_XL3497_SN_DR.xlsm					
4/30/2014 19:02					
DESIGNED BY	S. MERRYMAN	03/25/14			
ENTERED BY	S. MERRYMAN	03/25/14			
CHECKED BY	E. QUINN	03/25/14			
PROJ. ENGR.	J. PEREZ	03/25/14			
REGION ADM.	K. DAYTON	03/25/14	05/02/14	AD1 REVISED QTY	SM
		DATE	DATE	REVISION	BY

REGION NO.	STATE	FED. AID PROJ. NO.
10	WASH	
JOB NUMBER 12C501		
CONTRACT NO.		

Washington State Department of Transportation

I-5
M ST TO PORTLAND AVE - HOV

STRUCTURE NOTES - DRAINAGE

NTDR 54

SHEET 531 OF 1763 SHEETS

STRUCTURE NOTES - DRAINAGE

NOTE:
THE FIRST NUMBER OF THE "CODE DESIGNATION" BELOW REFERS TO THE SHEET NO. OR THE SHEET REFERENCE NO. SHOWING THE DRAINAGE FEATURE.

THE SECOND NUMBER REFERS TO THE DRAINAGE FEATURE FOUND ON THAT SHEET.

CODE	LOCATION ⤵ \ UNIT OF MEASURE ➢	CL. V REINF. CONC. CULV. PIPE 12 IN. DIAM.	CATCH BASIN TYPE 1	CATCH BASIN TYPE 2 48 IN. DIAM.		CATCH BASIN TYPE 2 60 IN. DIAM.	CATCH BASIN TYPE 2 72 IN. DIAM.	TESTING STORM SEWER PIPE		CL. IV REINF. CONC. STORM SEWER PIPE 15 IN. DIAM.	CL. V REINF. CONC. STORM SEWER PIPE 12 IN. DIAM.	CL. V REINF. CONC. STORM SEWER PIPE 18 IN. DIAM.		CL. V REINF. CONC. STORM SEWER PIPE 24 IN. DIAM.	SCHEDULE A STORM SEWER PIPE 12 IN. DIAM.	SCHEDULE A STORM SEWER PIPE 18 IN. DIAM.		SCHEDULE A STORM SEWER PIPE 24 IN. DIAM.	SCHEDULE B STORM SEWER PIPE 18 IN. DIAM.	SCHEDULE B STORM SEWER PIPE 24 IN. DIAM.		SEE GENERAL NOTES
		L.F.	EACH	EACH		EACH	EACH	L.F.		L.F.	L.F.	L.F.		L.F.	L.F.	L.F.		L.F.	L.F.	L.F.		
DR6-6	SBN 63+81.42 (40.82' LT) TO 62+19.97 (48.85' LT)							155			155											10,13,34
DR6-7	SBN 62+19.97 (48.85' LT) TO 62+17.99 (20.43' RT)							69								69						10,13,34
DR6-8	SBN 62+17.99 (20.43' RT) TO 61+61.64 (88.56' RT)							91								91						3,8,34
DR6-9	SBN 59+86.22 (94.04' RT) TO 59+28.07 (106.77' RT)							68											68			3,8,21,34
DR6-10	SBN 61+29.92 (166.76' RT) TO 59+86.22 (94.04' RT)							185								185						3,8,34
DR6-11	SBN 61+29.92 (187.01' RT) TO 61+29.92 (166.76' RT)			1				20								20						2,5,7,34,44
DR6-12	SBN 61+46.04 (186.18' RT) TO 61+29.92 (166.76' RT)							28								28						34,42,43,44
DR6-13	NOT USED																					
DR6-14	NOT USED																					
DR6-15	SBS 111+17.66 (19.85' LT) TO SBN 61+80.96 (126.05' RT)							152						152								3,8,34
DR6-16	SBN 61+80.96 (126.05' RT) TO 61+95.88 (110.24' RT)							14						14								3,8,31,34,44
DR6-17	NOT USED																					
DR6-18	I5SB 547+29.13 (680.58' LT)																					21,34
DR6-19	PAC 12+94.34 (47.06' RT) TO 12+54.74 (66.58' LT)							120								120						3,8,34,49
DR6-20	PSSB 60+44.56 (224.41' RT) TO 61+37.09 (123.14' RT)							154												154		3,8,34
DR6-21	SBN 61+61.64 (88.56' RT) TO 61+80.96 (126.05' RT)							44				44										3,8,34
DR6-22	SBN 61+95.93 (192.44' RT) TO 62+11.12 (175.78' RT)							25								25						3,8,31,34,44
DR6-23	I5SB 545+75.67 (603.87' LT)																					31,34,37,38,40,45
DR6-24	SBN 62+54.14 (102.83' RT)																					31,34,37,38,41,45
DR6-25	SBN 61+46.75 (236.57' RT)																					31,34,37,40,41,45
DR6-26	SBN 61+19.90 (58.30' LT) TO 62+19.97 (48.85' LT)							93			93											10,13,34
DR6-27	PSSB 61+09.34 (311.16' RT) TO 60+05.08 (308.01' RT)							150								150						3,8,34
DR6-28	PSSB 59+14.25 (30.13' RT) TO 60+73.26 (25.54' RT)							165								165						3,8,34
DR6-29	SBS 111+17.59 (110.70' LT) TO 111+39.69 (109.92' LT)							18								18						34,44
DR6-30	PSSB 61+16.28 (331.56' RT) TO 61+58.74 (340.87' RT)	63																				16,34
DR7-1	SBS 112+07.99 (42.49' LT) TO 111+78.84 (11.27' RT)							59			59											10,11,34
DR7-2	SBS 111+78.84 (11.27' RT) TO 111+79.43 (15.65' RT)														9							10,12,34
DR7-3	SBS 111+79.43 (15.65' RT)																					3,8,34
DR7-4	SBN 66+55.39 (48.55' LT)																					10,13,20,34
DR7-5	SBN 65+88.46 (35.25' LT) TO 65+83.92 (11.61' RT)																					22,34
	SHEET TOTAL	63		1				1610			307	44		166	9	871			68	154		

ADD1_XL3497_SN_DR.xlsm					REGION NO.	STATE	FED. AID PROJ. NO.
4/30/2014 19:02					10	WASH	
DESIGNED BY	S. MERRYMAN	03/25/14					
ENTERED BY	S. MERRYMAN	03/25/14			JOB NUMBER		
CHECKED BY	E. QUINN	03/25/14			12C501		
PROJ. ENGR.	J. PEREZ	03/25/14					
REGION ADM.	K. DAYTON	03/25/14	05/02/14	AD1 REVISED QTY	SM	CONTRACT NO.	
		DATE	DATE	REVISION	BY		

Washington State Department of Transportation

I-5
M ST TO PORTLAND AVE - HOV

STRUCTURE NOTES - DRAINAGE

NTDR 55

SHEET 532 OF 1763 SHEETS

STRUCTURE NOTES - DRAINAGE

NOTE:
THE FIRST NUMBER OF THE "CODE DESIGNATION" BELOW REFERS TO THE SHEET NO. OR THE SHEET REFERENCE NO. SHOWING THE DRAINAGE FEATURE.

THE SECOND NUMBER REFERS TO THE DRAINAGE FEATURE FOUND ON THAT SHEET.

CODE	LOCATION ∀ \ UNIT OF MEASURE ≻	TRENCHLESS PIPE 24 IN. DIAM.	DUCTILE IRON STORM SEWER PIPE 12 IN. DIAM.				MEDIA FILTER DRAIN	POND MARKER		BMP MARKER	STRUCTURE EXCAVATION CLASS B INCL. HAUL	STRUCTURE EXCAV. CL.B INCL. HAUL-CONTAMINATED MATERIAL		SHORING OR EXTRA EXCAVATION CLASS B	GRAVEL BACKFILL FOR DRAIN	LLDPE GEOMEMBRANE LINING SYSTEM		CONTROLLED DENSITY FILL	FLOW FILL PIPE	COMMERCIAL CONCRETE		SEE GENERAL NOTES
		L.F.	L.F.				L.F.	EACH		EACH	C.Y.	C.Y.		S.F.	C.Y.	S.Y.		C.Y.	C.Y.	C.Y.		
DR6-6	SBN 63+81.42 (40.82' LT) TO 62+19.97 (48.85' LT)										90			630								10,13,34
DR6-7	SBN 62+19.97 (48.85' LT) TO 62+17.99 (20.43' RT)										100			610								10,13,34
DR6-8	SBN 62+17.99 (20.43' RT) TO 61+61.64 (88.56' RT)										150			1010								3,8,34
DR6-9	SBN 59+86.22 (94.04' RT) TO 59+28.07 (106.77' RT)										150			970								3,8,21,34
DR6-10	SBN 61+29.92 (166.76' RT) TO 59+86.22 (94.04' RT)										320			2200								3,8,34
DR6-11	SBN 61+29.92 (187.01' RT) TO 61+29.92 (166.76' RT)										60			400								2,5,7,34,44
DR6-12	SBN 61+46.04 (186.18' RT) TO 61+29.92 (166.76' RT)										70			470								34,42,43,44
DR6-13	NOT USED																					
DR6-14	NOT USED																					
DR6-15	SBS 111+17.66 (19.85' LT) TO SBN 61+80.96 (126.05' RT)										170			1010								3,8,34
DR6-16	SBN 61+80.96 (126.05' RT) TO 61+95.88 (110.24' RT)										40			160								3,8,31,34,44
DR6-17	NOT USED																					
DR6-18	I5SB 547+29.13 (680.58' LT)																					21,34
DR6-19	PAC 12+94.34 (47.06' RT) TO 12+54.74 (66.58' LT)										280			1870								3,8,34,49
DR6-20	PSSB 60+44.56 (224.41' RT) TO 61+37.09 (123.14' RT)										580			3350								3,8,34
DR6-21	SBN 61+61.64 (88.56' RT) TO 61+80.96 (126.05' RT)										80			530								3,8,34
DR6-22	SBN 61+95.93 (192.44' RT) TO 62+11.12 (175.78' RT)										30			160								3,8,31,34,44
DR6-23	I5SB 545+75.67 (603.87' LT)							1		1						7000						31,34,37,38,40,45
DR6-24	SBN 62+54.14 (102.83' RT)							1		1						3250						31,34,37,38,41,45
DR6-25	SBN 61+46.75 (236.57' RT)							1								2160						31,34,37,40,41,45
DR6-26	SBN 61+19.90 (58.30' LT) TO 62+19.97 (48.85' LT)										60			440								10,13,34
DR6-27	PSSB 61+09.34 (311.16' RT) TO 60+05.08 (308.01' RT)										250			1730								3,8,34
DR6-28	PSSB 59+14.25 (30.13' RT) TO 60+73.26 (25.54' RT)										290			1950								3,8,34
DR6-29	SBS 111+17.59 (110.70' LT) TO 111+39.69 (109.92' LT)										20			170								34,44
DR6-30	PSSB 61+16.28 (331.56' RT) TO 61+58.74 (340.87' RT)																					16,34
DR7-1	SBS 112+07.99 (42.49' LT) TO 111+78.84 (11.27' RT)										40			270								10,11,34
DR7-2	SBS 111+78.84 (11.27' RT) TO 111+79.43 (15.65' RT)										10			20								10,12,34
DR7-3	SBS 111+79.43 (15.65' RT)										10			70								3,8,34
DR7-4	SBN 66+55.39 (48.55' LT)										10			70								10,13,20,34
DR7-5	SBN 65+88.46 (35.25' LT) TO 65+83.92 (11.61' RT)																					22,34
	SHEET TOTAL							3		2	2810			18090		12410						

ADD1_XL3497_SN_DR.xlsm						
4/30/2014 19:02						
DESIGNED BY	S. MERRYMAN	03/25/14				
ENTERED BY	S. MERRYMAN	03/25/14				
CHECKED BY	E. QUINN	03/25/14				
PROJ. ENGR.	J. PEREZ	03/25/14				
REGION ADM.	K. DAYTON	03/25/14	05/02/14	AD1 - REVISED STATIONS	SM	
		DATE	DATE	REVISION	BY	

REGION NO.	STATE	FED. AID PROJ. NO.
10	WASH	
JOB NUMBER 12C501		
CONTRACT NO.		

Washington State Department of Transportation

I-5
M ST TO PORTLAND AVE - HOV

STRUCTURE NOTES - DRAINAGE

NTDR 56

SHEET 533 OF 1763 SHEETS

STRUCTURE NOTES - DRAINAGE

NOTE:
THE FIRST NUMBER OF THE "CODE DESIGNATION" BELOW REFERS TO THE SHEET NO. OR THE SHEET REFERENCE NO. SHOWING THE DRAINAGE FEATURE.

THE SECOND NUMBER REFERS TO THE DRAINAGE FEATURE FOUND ON THAT SHEET.

CODE	LOCATION ∨ \ UNIT OF MEASURE >	PLUGGING EXISTING PIPE	ADJUST INLET	CONNECTION TO DRAINAGE STRUCTURE		ABANDON DRAINAGE STRUCTURE	ADJUST MANHOLE	MANHOLE 48 IN. DIAM. TYPE 3		MANHOLE 60 IN. DIAM. TYPE 3	MANHOLE 72 IN. DIAM. TYPE 3	MANHOLE ADDITIONAL HEIGHT 48 IN. DIAM. TYPE 3		MANHOLE ADDITIONAL HEIGHT 72 IN. DIAM. TYPE 3	ADJUST CATCH BASIN	LOCKING SOLID METAL COVER AND FRAME FOR CATCH BASIN		MANHOLE RING AND SOLID COVER	OPEN FLOW RESTRICTOR	CONSTRUCTION GEOTEXTILE FOR UNDERGROUND DRAINAGE		SEE GENERAL NOTES
		EACH	EACH	EACH		EACH	EACH	EACH		EACH	EACH	L.F.		L.F.	EACH	EACH		EACH	EACH	S.Y.		
DR6-6	SBN 63+81.42 (40.82' LT) TO 62+19.97 (48.85' LT)																					10,13,34
DR6-7	SBN 62+19.97 (48.85' LT) TO 62+17.99 (20.43' RT)																					10,13,34
DR6-8	SBN 62+17.99 (20.43' RT) TO 61+61.64 (88.56' RT)							1				2										3,8,34
DR6-9	SBN 59+86.22 (94.04' RT) TO 59+28.07 (106.77' RT)			1				1				8										3,8,21,34
DR6-10	SBN 61+29.92 (166.76' RT) TO 59+86.22 (94.04' RT)							1				1										3,8,34
DR6-11	SBN 61+29.92 (187.01' RT) TO 61+29.92 (166.76' RT)																					2,5,7,34,44
DR6-12	SBN 61+46.04 (186.18' RT) TO 61+29.92 (166.76' RT)																		1			34,42,43,44
DR6-13	NOT USED																					
DR6-14	NOT USED																					
DR6-15	SBS 111+17.66 (19.85' LT) TO SBN 61+80.96 (126.05' RT)							1														3,8,34
DR6-16	SBN 61+80.96 (126.05' RT) TO 61+95.88 (110.24' RT)										1											3,8,31,34,44
DR6-17	NOT USED																					
DR6-18	I5SB 547+29.13 (680.58' LT)			1																		21,34
DR6-19	PAC 12+94.34 (47.06' RT) TO 12+54.74 (66.58' LT)							1				7										3,8,34,49
DR6-20	PSSB 60+44.56 (224.41' RT) TO 61+37.09 (123.14' RT)							1				15										3,8,34
DR6-21	SBN 61+61.64 (88.56' RT) TO 61+80.96 (126.05' RT)							1														3,8,34
DR6-22	SBN 61+95.93 (192.44' RT) TO 62+11.12 (175.78' RT)							1														3,8,31,34,44
DR6-23	I5SB 545+75.67 (603.87' LT)																					31,34,37,38,40,45
DR6-24	SBN 62+54.14 (102.83' RT)																					31,34,37,38,41,45
DR6-25	SBN 61+46.75 (236.57' RT)																					31,34,37,40,41,45
DR6-26	SBN 61+19.90 (58.30' LT) TO 62+19.97 (48.85' LT)																					10,13,34
DR6-27	PSSB 61+09.34 (311.16' RT) TO 60+05.08 (308.01' RT)							1														3,8,34
DR6-28	PSSB 59+14.25 (30.13' RT) TO 60+73.26 (25.54' RT)							1				8										3,8,34
DR6-29	SBS 111+17.59 (110.70' LT) TO 111+39.69 (109.92' LT)																					34,44
DR6-30	PSSB 61+16.28 (331.56' RT) TO 61+58.74 (340.87' RT)																					16,34
DR7-1	SBS 112+07.99 (42.49' LT) TO 111+78.84 (11.27' RT)																					10,11,34
DR7-2	SBS 111+78.84 (11.27' RT) TO 111+79.43 (15.65' RT)																					10,12,34
DR7-3	SBS 111+79.43 (15.65' RT)							1														3,8,34
DR7-4	SBN 66+55.39 (48.55' LT)			1																		10,13,20,34
DR7-5	SBN 65+88.46 (35.25' LT) TO 65+83.92 (11.61' RT)																					22,34
	SHEET TOTAL			3				11			1	41							1			

ADD1_XL3497_SN_DR.xlsm						
4/30/2014 19:02						
DESIGNED BY	S. MERRYMAN	03/25/14				
ENTERED BY	S. MERRYMAN	03/25/14				
CHECKED BY	E. QUINN	03/25/14				
PROJ. ENGR.	J. PEREZ	03/25/14				
REGION ADM.	K. DAYTON	03/25/14	05/02/14	AD1 REVISED STATIONS	SM	
		DATE	DATE	REVISION	BY	

REGION NO.	STATE	FED. AID PROJ. NO.
10	WASH	
JOB NUMBER 12C501		
CONTRACT NO.		

Washington State Department of Transportation

I-5
M ST TO PORTLAND AVE - HOV

STRUCTURE NOTES - DRAINAGE

NTDR 57

SHEET 534 OF 1763 SHEETS

STRUCTURE NOTES - DRAINAGE

NOTE:
THE FIRST NUMBER OF THE "CODE DESIGNATION" BELOW REFERS TO THE SHEET NO. OR THE SHEET REFERENCE NO. SHOWING THE DRAINAGE FEATURE.

THE SECOND NUMBER REFERS TO THE DRAINAGE FEATURE FOUND ON THAT SHEET.

CODE	LOCATION ⤵ \ UNIT OF MEASURE ➢	REMOVING DRAINAGE STRUCTURE		ROADWAY EXCAVATION INCL. HAUL - AREA NW POND		ROADWAY EXCAVATION INCL. HAUL - AREA NE POND	CONCRETE INLET	GRATE INLET TYPE 2		DROP INTLET TYPE 1	QUARRY SPALLS	UNDERDRAIN PIPE 6 IN. DIAM.		UNDERDRAIN PIPE 18 IN. DIAM.	DRAIN PIPE 6 IN. DIAM.	DRAIN PIPE 8 IN. DIAM.		HIGH DENSITY POLYETHYLENE (HDPE) UNDERDRAIN PIPE 6 IN.D	HIGH-DENSITY POLYETHYLENE (HDPE) PIPE 18 IN. DIAM.	HIGH-DENSITY POLYETHYLENE (HDPE) PIPE 24 IN. DIAM.		SEE GENERAL NOTES
		EACH		C.Y.		C.Y.	EACH	EACH		EACH	TON	L.F.		L.F.	L.F.	L.F.		L.F.	L.F.	L.F.		
DR7-6	SBS 114+64.62 (25.72' LT) TO 114+64.49 (4.34' RT)							1														10,13,34
DR7-7	SBS 112+08.77 (14.31' RT) TO 112+07.85 (2.18' LT)																					34
DR7-8	NOT USED																					
DR7-9	SBS 112+92.49 (4.00' RT) TO 111+39.73 (0.98' RT)																					3,8,34
DR7-10	NBH 43+51.96 (4.46' LT) TO 45+30.32 (4.46' LT)							1														10,13,34
DR7-11	I5SB 556+46.40 (22.32' RT) TO NBH 45+30.32 (4.46' LT)							1														10,13,34
DR7-12	I5SB 557+05.47 (24.60' RT) TO 556+46.40 (22.32' RT)							1														10,13,34
DR7-13	NBH 45+30.32 (4.46' LT) TO 47+08.83 (5.58' LT)							1														10,13,34
DR7-14	SNB 26+81.14 (6.25' LT) TO NBH 47+08.83 (5.58' LT)																					2,5,7,34
DR7-15	NBH 47+08.83 (5.58' LT) TO 48+87.48 (8.61' LT)							1														10,13,34
DR7-16	NBH 48+87.48 (8.61' LT) TO I5SB 559+98.45 (45.68' LT)																					2,5,7,34
DR7-17	I5NB 163+92.86 (37.26' LT) TO 165+49.93 (36.61' LT)							1														10,13,34
DR7-18	I5NB 165+49.93 (36.61' LT) TO 167+30.12 (36.46' LT)							1														10,13,34
DR7-19	I5NB 167+30.12 (36.46' LT) TO 169+10.32 (36.46' LT)							1														10,13,34
DR7-20	NNB 14+49.97 (34.54' RT) TO 15+63.90 (47.27' RT)						1															4,34
DR7-21	SBN 65+83.92 (11.61' RT) TO 65+88.46 (35.25' RT)																					34
DR7-22	NNB 15+63.23 (18.38' RT) TO 17+12.98 (17.72' RT)																					2,5,7,34
DR7-23	NNB 17+12.98 (17.72' RT) TO SNB 25+32.14 (31.43' RT)																					2,5,7,34
DR7-24	SBS 114+64.49 (4.34' RT) TO 112+92.49 (4.00' RT)																					3,8,34
DR7-25	SBS 115+86.58 (4.35' RT) TO 114+64.49 (4.34' RT)																					3,8,34
DR7-26	SBN 67+75.01 (22.14' RT) TO SBS 115+86.58 (4.35' RT)																					3,8,34
DR7-27	NNB 15+63.90 (47.27' RT) TO 16+71.67 (37.33' RT)																					3,8,34
DR7-28	I5SB 562+58.51 (89.72' LT) TO 564+08.95 (83.53' LT)							1														10,13,34
DR7-29	I5SB 564+08.95 (83.53' LT) TO 565+08.93 (79.42' LT)							1														10,13,34
DR7-30	SBS 111+53.35 (33.50' LT) TO 114+62.24 (37.65' LT)																					36,38
DR7-31	SNB 26+15.00 (42.67' RT) TO 26+14.34 (4.00' LT)																					2,5,7,34
DR7-32	SNB 27+00.00 (43.51' RT) TO 26+15.00 (42.67' RT)							1														10,13,34
DR7-33	NNB 16+71.67 (37.33' RT) TO SNB 26+15.00 (42.67' RT)																					3,8,34
DR7-34	I5SB 561+24.17 (48.22' LT) TO 562+23.79 (50.11' LT)							1														10,13,34
DR7-35	I5SB 562+23.79 (50.11 LT) TO 562+58.51 (89.72' LT)							1														10,13,34
	SHEET TOTAL						1	14														

ADD1_XL3497_SN_DR.xlsm				REGION NO.	STATE	FED. AID PROJ. NO.
4/30/2014 19:02				10	WASH	
DESIGNED BY	S. MERRYMAN	03/25/14				
ENTERED BY	S. MERRYMAN	03/25/14				
CHECKED BY	E. QUINN	03/25/14		JOB NUMBER 12C501		
PROJ. ENGR.	J. PEREZ	03/25/14				
REGION ADM.	K. DAYTON	03/25/14	05/02/14	AD1 - DELETED CODE	SM	CONTRACT NO.
		DATE	DATE	REVISION	BY	

Washington State Department of Transportation

I-5
M ST TO PORTLAND AVE - HOV

STRUCTURE NOTES - DRAINAGE

NTDR 58

STRUCTURE NOTES - DRAINAGE

NOTE:
THE FIRST NUMBER OF THE "CODE DESIGNATION" BELOW REFERS TO THE SHEET NO. OR THE SHEET REFERENCE NO. SHOWING THE DRAINAGE FEATURE.

THE SECOND NUMBER REFERS TO THE DRAINAGE FEATURE FOUND ON THAT SHEET.

CODE	LOCATION ⤵ \ UNIT OF MEASURE ➢	CL. V REINF. CONC. CULV. PIPE 12 IN. DIAM.	CATCH BASIN TYPE 1	CATCH BASIN TYPE 2 48 IN. DIAM.		CATCH BASIN TYPE 2 60 IN. DIAM.	CATCH BASIN TYPE 2 72 IN. DIAM.	TESTING STORM SEWER PIPE		CL. IV REINF. CONC. STORM SEWER PIPE 15 IN. DIAM.	CL. V REINF. CONC. STORM SEWER PIPE 12 IN. DIAM.	CL. V REINF. CONC. STORM SEWER PIPE 18 IN. DIAM.		CL. V REINF. CONC. STORM SEWER PIPE 24 IN. DIAM.	SCHEDULE A STORM SEWER PIPE 12 IN. DIAM.	SCHEDULE A STORM SEWER PIPE 18 IN. DIAM.		SCHEDULE A STORM SEWER PIPE 24 IN. DIAM.	SCHEDULE B STORM SEWER PIPE 18 IN. DIAM.	SCHEDULE B STORM SEWER PIPE 24 IN. DIAM.		SEE GENERAL NOTES
		L.F.	EACH	EACH		EACH	EACH	L.F.		L.F.	L.F.	L.F.		L.F.	L.F.	L.F.		L.F.	L.F.	L.F.		
DR7-6	SBS 114+64.62 (25.72' LT) TO 114+64.49 (4.34' RT)							30				30										10,13,34
DR7-7	SBS 112+08.77 (14.31' RT) TO 112+07.85 (2.18' LT)																					34
DR7-8	NOT USED																					
DR7-9	SBS 112+92.49 (4.00' RT) TO 111+39.73 (0.98' RT)							153				153										3,8,34
DR7-10	NBH 43+51.96 (4.46' LT) TO 45+30.32 (4.46' LT)							178							178							10,13,34
DR7-11	I5SB 556+46.40 (22.32' RT) TO NBH 45+30.32 (4.46' LT)							28								28						10,13,34
DR7-12	I5SB 557+05.47 (24.60' RT) TO 556+46.40 (22.32' RT)							60			60											10,13,34
DR7-13	NBH 45+30.32 (4.46' LT) TO 47+08.83 (5.58' LT)							178								178						10,13,34
DR7-14	SNB 26+81.14 (6.25' LT) TO NBH 47+08.83 (5.58' LT)			1				92								92						2,5,7,34
DR7-15	NBH 47+08.83 (5.58' LT) TO 48+87.48 (8.61' LT)							178								178						10,13,34
DR7-16	NBH 48+87.48 (8.61' LT) TO I5SB 559+98.45 (45.68' LT)			1				98								98						2,5,7,34
DR7-17	I5NB 163+92.86 (37.26' LT) TO 165+49.93 (36.61' LT)							156			156											10,13,34
DR7-18	I5NB 165+49.93 (36.61' LT) TO 167+30.12 (36.46' LT)							179							179							10,13,34
DR7-19	I5NB 167+30.12 (36.46' LT) TO 169+10.32 (36.46' LT)							180							180							10,13,34
DR7-20	NNB 14+49.97 (34.54' RT) TO 15+63.90 (47.27' RT)							101							101							4,34
DR7-21	SBN 65+83.92 (11.61' RT) TO 65+88.46 (35.25' RT)																					34
DR7-22	NNB 15+63.23 (18.38' RT) TO 17+12.98 (17.72' RT)			1				146							146							2,5,7,34
DR7-23	NNB 17+12.98 (17.72' RT) TO SNB 25+32.14 (31.43' RT)			1												12						2,5,7,34
DR7-24	SBS 114+64.49 (4.34' RT) TO 112+92.49 (4.00' RT)							172								172						3,8,34
DR7-25	SBS 115+86.58 (4.35' RT) TO 114+64.49 (4.34' RT)							122								122						3,8,34
DR7-26	SBN 67+75.01 (22.14' RT) TO SBS 115+86.58 (4.35' RT)							171								171						3,8,34
DR7-27	NNB 15+63.90 (47.27' RT) TO 16+71.67 (37.33' RT)							100							100							3,8,34
DR7-28	I5SB 562+58.51 (89.72' LT) TO 564+08.95 (83.53' LT)							151								151						10,13,34
DR7-29	I5SB 564+08.95 (83.53' LT) TO 565+08.93 (79.42' LT)							100								100						10,13,34
DR7-30	SBS 111+53.35 (33.50' LT) TO 114+62.24 (37.65' LT)	100																				36,38
DR7-31	SNB 26+15.00 (42.67' RT) TO 26+14.34 (4.00' LT)			1				47								47						2,5,7,34
DR7-32	SNB 27+00.00 (43.51' RT) TO 26+15.00 (42.67' RT)							85			85											10,13,34
DR7-33	NNB 16+71.67 (37.33' RT) TO SNB 26+15.00 (42.67' RT)							129							129							3,8,34
DR7-34	I5SB 561+24.17 (48.22' LT) TO 562+23.79 (50.11' LT)							98			98											10,13,34
DR7-35	I5SB 562+23.79 (50.11 LT) TO 562+58.51 (89.72' LT)							53								53						10,13,34
	SHEET TOTAL	100		5				2985			399	183			1013	1402						

ADD1_XL3497_SN_DR.xlsm						
4/30/2014 19:02						
DESIGNED BY	S. MERRYMAN	03/25/14				
ENTERED BY	S. MERRYMAN	03/25/14				
CHECKED BY	E. QUINN	03/25/14				
PROJ. ENGR.	J. PEREZ	03/25/14				
REGION ADM.	K. DAYTON	03/25/14	05/02/14	AD1 - REVISED QTY	SM	
		DATE	DATE	REVISION	BY	

REGION NO.	STATE	FED. AID PROJ. NO.
10	WASH	

JOB NUMBER
12C501

CONTRACT NO.

Washington State Department of Transportation

I-5
M ST TO PORTLAND AVE - HOV

STRUCTURE NOTES - DRAINAGE

NTDR 59

STRUCTURE NOTES - DRAINAGE

NOTE:
THE FIRST NUMBER OF THE "CODE DESIGNATION" BELOW REFERS TO THE SHEET NO. OR THE SHEET REFERENCE NO. SHOWING THE DRAINAGE FEATURE.

THE SECOND NUMBER REFERS TO THE DRAINAGE FEATURE FOUND ON THAT SHEET.

CODE	LOCATION > \ UNIT OF MEASURE >	TRENCHLESS PIPE 24 IN. DIAM.	DUCTILE IRON STORM SEWER PIPE 12 IN. DIAM.				MEDIA FILTER DRAIN	POND MARKER		BMP MARKER	STRUCTURE EXCAVATION CLASS B INCL. HAUL	STRUCTURE EXCAV. CL.B INCL. HAUL-CONTAMINATED MATERIAL		SHORING OR EXTRA EXCAVATION CLASS B	GRAVEL BACKFILL FOR DRAIN	LLDPE GEOMEMBRANE LINING SYSTEM		CONTROLLED DENSITY FILL	FLOW FILL PIPE	COMMERCIAL CONCRETE		SEE GENERAL NOTES
		L.F.	L.F.				L.F.	EACH		EACH	C.Y.	C.Y.		S.F.	C.Y.	S.Y.		C.Y.	C.Y.	C.Y.		
DR7-6	SBS 114+64.62 (25.72' LT) TO 114+64.49 (4.34' RT)										10			20								10,13,34
DR7-7	SBS 112+08.77 (14.31' RT) TO 112+07.85 (2.18' LT)																		1			34
DR7-8	NOT USED																					
DR7-9	SBS 112+92.49 (4.00' RT) TO 111+39.73 (0.98' RT)										20			90								3,8,34
DR7-10	NBH 43+51.96 (4.46' LT) TO 45+30.32 (4.46' LT)										180			1290								10,13,34
DR7-11	I5SB 556+46.40 (22.32' RT) TO NBH 45+30.32 (4.46' LT)										40			180								10,13,34
DR7-12	I5SB 557+05.47 (24.60' RT) TO 556+46.40 (22.32' RT)										40			250								10,13,34
DR7-13	NBH 45+30.32 (4.46' LT) TO 47+08.83 (5.58' LT)										190			1300								10,13,34
DR7-14	SNB 26+81.14 (6.25' LT) TO NBH 47+08.83 (5.58' LT)										80			490								2,5,7,34
DR7-15	NBH 47+08.83 (5.58' LT) TO 48+87.48 (8.61' LT)										180			1190								10,13,34
DR7-16	NBH 48+87.48 (8.61' LT) TO I5SB 559+98.45 (45.68' LT)										130			820								2,5,7,34
DR7-17	I5NB 163+92.86 (37.26' LT) TO 165+49.93 (36.61' LT)										120			850								10,13,34
DR7-18	I5NB 165+49.93 (36.61' LT) TO 167+30.12 (36.46' LT)										130			940								10,13,34
DR7-19	I5NB 167+30.12 (36.46' LT) TO 169+10.32 (36.46' LT)										140			980								10,13,34
DR7-20	NNB 14+49.97 (34.54' RT) TO 15+63.90 (47.27' RT)										110			800								4,34
DR7-21	SBN 65+83.92 (11.61' RT) TO 65+88.46 (35.25' RT)																		1			34
DR7-22	NNB 15+63.23 (18.38' RT) TO 17+12.98 (17.72' RT)										120			830								2,5,7,34
DR7-23	NNB 17+12.98 (17.72' RT) TO SNB 25+32.14 (31.43' RT)										20			60								2,5,7,34
DR7-24	SBS 114+64.49 (4.34' RT) TO 112+92.49 (4.00' RT)										40			210								3,8,34
DR7-25	SBS 115+86.58 (4.35' RT) TO 114+64.49 (4.34' RT)										60			400								3,8,34
DR7-26	SBN 67+75.01 (22.14' RT) TO SBS 115+86.58 (4.35' RT)										110			730								3,8,34
DR7-27	NNB 15+63.90 (47.27' RT) TO 16+71.67 (37.33' RT)										150			1090								3,8,34
DR7-28	I5SB 562+58.51 (89.72' LT) TO 564+08.95 (83.53' LT)										180			1260								10,13,34
DR7-29	I5SB 564+08.95 (83.53' LT) TO 565+08.93 (79.42' LT)										90			610								10,13,34
DR7-30	SBS 111+53.35 (33.50' LT) TO 114+62.24 (37.65' LT)						245			5												36,38
DR7-31	SNB 26+15.00 (42.67' RT) TO 26+14.34 (4.00' LT)										40			230								2,5,7,34
DR7-32	SNB 27+00.00 (43.51' RT) TO 26+15.00 (42.67' RT)										90			620								10,13,34
DR7-33	NNB 16+71.67 (37.33' RT) TO SNB 26+15.00 (42.67' RT)										170			1200								3,8,34
DR7-34	I5SB 561+24.17 (48.22' LT) TO 562+23.79 (50.11' LT)										80			560								10,13,34
DR7-35	I5SB 562+23.79 (50.11 LT) TO 562+58.51 (89.72' LT)										60			350								10,13,34
	SHEET TOTAL						245			5	2580			17350					2			

ADD1_XL3497_SN_DR.xlsm					REGION NO.	STATE	FED. AID PROJ. NO.	
4/30/2014 19:02					10	WASH		
DESIGNED BY	S. MERRYMAN	03/25/14						
ENTERED BY	S. MERRYMAN	03/25/14			JOB NUMBER			
CHECKED BY	E. QUINN	03/25/14			12C501			
PROJ. ENGR.	J. PEREZ	03/25/14						
REGION ADM.	K. DAYTON	03/25/14	05/02/14	AD1 - REVISED QTY	SM	CONTRACT NO.		
		DATE	DATE	REVISION	BY			

Washington State Department of Transportation

I-5
M ST TO PORTLAND AVE - HOV

STRUCTURE NOTES - DRAINAGE

NTDR 60

SHEET 537 OF 1763 SHEETS

STRUCTURE NOTES - DRAINAGE

NOTE:
THE FIRST NUMBER OF THE "CODE DESIGNATION" BELOW REFERS TO THE SHEET NO. OR THE SHEET REFERENCE NO. SHOWING THE DRAINAGE FEATURE.

THE SECOND NUMBER REFERS TO THE DRAINAGE FEATURE FOUND ON THAT SHEET.

CODE	LOCATION ↓ \ UNIT OF MEASURE →	PLUGGING EXISTING PIPE	ADJUST INLET	CONNECTION TO DRAINAGE STRUCTURE		ABANDON DRAINAGE STRUCTURE	ADJUST MANHOLE	MANHOLE 48 IN. DIAM. TYPE 3		MANHOLE 60 IN. DIAM. TYPE 3	MANHOLE 72 IN. DIAM. TYPE 3	MANHOLE ADDITIONAL HEIGHT 48 IN. DIAM. TYPE 3		MANHOLE ADDITIONAL HEIGHT 72 IN. DIAM. TYPE 3	ADJUST CATCH BASIN	LOCKING SOLID METAL COVER AND FRAME FOR CATCH BASIN		MANHOLE RING AND SOLID COVER	OPEN FLOW RESTRICTOR	CONSTRUCTION GEOTEXTILE FOR UNDERGROUND DRAINAGE		SEE GENERAL NOTES
		EACH	EACH	EACH		EACH	EACH	EACH		EACH	EACH	L.F.		L.F.	EACH	EACH		EACH	EACH	S.Y.		
DR7-6	SBS 114+64.62 (25.72' LT) TO 114+64.49 (4.34' RT)																					10,13,34
DR7-7	SBS 112+08.77 (14.31' RT) TO 112+07.85 (2.18' LT)					1																34
DR7-8	NOT USED																					
DR7-9	SBS 112+92.49 (4.00' RT) TO 111+39.73 (0.98' RT)							1														3,8,34
DR7-10	NBH 43+51.96 (4.46' LT) TO 45+30.32 (4.46' LT)																					10,13,34
DR7-11	I5SB 556+46.40 (22.32' RT) TO NBH 45+30.32 (4.46' LT)																					10,13,34
DR7-12	I5SB 557+05.47 (24.60' RT) TO 556+46.40 (22.32' RT)																					10,13,34
DR7-13	NBH 45+30.32 (4.46' LT) TO 47+08.83 (5.58' LT)																					10,13,34
DR7-14	SNB 26+81.14 (6.25' LT) TO NBH 47+08.83 (5.58' LT)																					2,5,7,34
DR7-15	NBH 47+08.83 (5.58' LT) TO 48+87.48 (8.61' LT)																					10,13,34
DR7-16	NBH 48+87.48 (8.61' LT) TO I5SB 559+98.45 (45.68' LT)																					2,5,7,34
DR7-17	I5NB 163+92.86 (37.26' LT) TO 165+49.93 (36.61' LT)																					10,13,34
DR7-18	I5NB 165+49.93 (36.61' LT) TO 167+30.12 (36.46' LT)																					10,13,34
DR7-19	I5NB 167+30.12 (36.46' LT) TO 169+10.32 (36.46' LT)																					10,13,34
DR7-20	NNB 14+49.97 (34.54' RT) TO 15+63.90 (47.27' RT)																					4,34
DR7-21	SBN 65+83.92 (11.61' RT) TO 65+88.46 (35.25' RT)					1																34
DR7-22	NNB 15+63.23 (18.38' RT) TO 17+12.98 (17.72' RT)																					2,5,7,34
DR7-23	NNB 17+12.98 (17.72' RT) TO SNB 25+32.14 (31.43' RT)																					2,5,7,34
DR7-24	SBS 114+64.49 (4.34' RT) TO 112+92.49 (4.00' RT)							1														3,8,34
DR7-25	SBS 115+86.58 (4.35' RT) TO 114+64.49 (4.34' RT)							1														3,8,34
DR7-26	SBN 67+75.01 (22.14' RT) TO SBS 115+86.58 (4.35' RT)							1														3,8,34
DR7-27	NNB 15+63.90 (47.27' RT) TO 16+71.67 (37.33' RT)							1														3,8,34
DR7-28	I5SB 562+58.51 (89.72' LT) TO 564+08.95 (83.53' LT)																					10,13,34
DR7-29	I5SB 564+08.95 (83.53' LT) TO 565+08.93 (79.42' LT)																					10,13,34
DR7-30	SBS 111+53.35 (33.50' LT) TO 114+62.24 (37.65' LT)																					36,38
DR7-31	SNB 26+15.00 (42.67' RT) TO 26+14.34 (4.00' LT)																					2,5,7,34
DR7-32	SNB 27+00.00 (43.51' RT) TO 26+15.00 (42.67' RT)																					10,13,34
DR7-33	NNB 16+71.67 (37.33' RT) TO SNB 26+15.00 (42.67' RT)							1				1										3,8,34
DR7-34	I5SB 561+24.17 (48.22' LT) TO 562+23.79 (50.11' LT)																					10,13,34
DR7-35	I5SB 562+23.79 (50.11 LT) TO 562+58.51 (89.72' LT)																					10,13,34
	SHEET TOTAL					2		6				1										

ADD1_XL3497_SN_DR.xlsm					
4/30/2014 19:02					
DESIGNED BY	S. MERRYMAN	03/25/14			
ENTERED BY	S. MERRYMAN	03/25/14			
CHECKED BY	E. QUINN	03/25/14			
PROJ. ENGR.	J. PEREZ	03/25/14			
REGION ADM.	K. DAYTON	03/25/14	05/02/14	AD1 - REVISED QTY	SM
		DATE	DATE	REVISION	BY

REGION NO.	STATE	FED. AID PROJ. NO.
10	WASH	

JOB NUMBER
12C501
CONTRACT NO.

Washington State Department of Transportation

I-5
M ST TO PORTLAND AVE - HOV

STRUCTURE NOTES - DRAINAGE

NTDR 61

SHEET 538 OF 1763 SHEETS

STRUCTURE NOTES - DRAINAGE

NOTE:
THE FIRST NUMBER OF THE "CODE DESIGNATION" BELOW REFERS TO THE SHEET NO. OR THE SHEET REFERENCE NO. SHOWING THE DRAINAGE FEATURE.

THE SECOND NUMBER REFERS TO THE DRAINAGE FEATURE FOUND ON THAT SHEET.

CODE	LOCATION ⩔ \ UNIT OF MEASURE ⩥	REMOVING DRAINAGE STRUCTURE		ROADWAY EXCAVATION INCL. HAUL - AREA NW POND		ROADWAY EXCAVATION INCL. HAUL - AREA NE POND	CONCRETE INLET	GRATE INLET TYPE 2		DROP INTLET TYPE 1	QUARRY SPALLS	UNDERDRAIN PIPE 6 IN. DIAM.		UNDERDRAIN PIPE 18 IN. DIAM.	DRAIN PIPE 6 IN. DIAM.	DRAIN PIPE 8 IN. DIAM.		HIGH DENSITY POLYETHYLENE (HDPE) UNDERDRAIN PIPE 6 IN.D	HIGH-DENSITY POLYETHYLENE (HDPE) PIPE 18 IN. DIAM.	HIGH-DENSITY POLYETHYLENE (HDPE) PIPE 24 IN. DIAM.		SEE GENERAL NOTES
		EACH		C.Y.		C.Y.	EACH	EACH		EACH	TON	L.F.		L.F.	L.F.	L.F.		L.F.	L.F.	L.F.		
DR7-36	I5SB 565+08.93 (79.42' LT) TO 566+08.94 (75.30' LT)							1														10,13,34
DR7-37	MCK 13+54.04 (33.99 LT) TO 13+85.10 (23.26' LT)														33							32,34
DR7-38	MCK 16+85.46 (33.88' LT) TO 16+65.24 (33.88' RT)														71							32,34
DR7-39	SNB 26+14.34 (4.00' LT) TO 26+81.14 (6.25' LT)																					3,8,34
DR7-40	I5SB 559+32.97 (139.31' LT) TO 568+22.00 (71.02' LT)											884										34,48
DR7-41	SBH 75+04.61 (2.86' RT) TO 76+53.74 (6.96' RT)																					3,8,20,34
DR7-42	SBH 76+53.74 (6.96' RT) TO 78+03.58 (7.65' RT)																					3,8,34
DR7-43	SBH 78+03.58 (7.65' RT) TO 79+53.55 (7.98' RT)																					3,8,34
DR7-44	SBH 79+53.55 (7.98' RT) TO I5SB 562+62.37 (31.91' RT)																					3,8,34
DR7-45	I5SB 562+62.37 (31.91' RT) TO 564+12.41 (31.97' RT)																					3,8,34
DR7-46	I5SB 564+12.41 (31.97' RT) TO 565+62.57 (31.89' RT)																					3,8,34
DR7-47	I5SB 565+62.57 (31.89' RT) TO 567+13.15 (27.73' RT)																					3,8,34
DR7-48	I5SB 556+61.75 (16.34' RT) TO 556+71.77 (14.28' RT)																					34
DR7-49	I5SB 556+71.77 (14.28' RT) TO 559+07.80 (15.25' RT)																					34
DR7-50	I5SB 559+07.80 (15.25' RT) TO 561+58.98 (11.67' RT)																					34
DR7-51	I5SB 561+58.98 (11.67' RT) TO 561+65.32 (9.98' RT)																					34
DR7-52	I5SB 561+65.32 (9.98' RT) TO 564+06.44 (13.44' RT)																					34
DR7-53	I5SB 564+06.44 (13.44' RT) TO 564+25.10 (12.81' RT)																					34
DR7-54	I5SB 564+25.10 (12.81' RT) TO 566+55.99 (14.75' RT)																					34
DR7-55	MCK 12+38.68 (24.47' LT) TO 12+69.07 (34.75' RT)																					1,5,7,34
DR7-56	MCK 13+34.76 (52.45' LT) TO 13+31.62 (34.93 LT)																					1,5,7,34
DR7-57	MCK 13+47.73 (23.93' LT) TO 13+31.62 (34.93' RT)							1														10,13,34
DR7-58	MCK 17+17.49 (23.07' LT) TO 17+92.90 (36.67' LT)																					1,5,7,34
DR7-59	MCK 12+37.08 (29.73' RT)																					3,8,20,27,34
DR7-60	SBN 65+85.31 (28.48' LT) TO 65+86.17 (45.64' LT)																					34
DR7-61	NOT USED																					
DR7-62	SNB 25+51.91 (1.61' RT) TO 25+32.14 (31.43' RT)																					34
DR7-63	NOT USED																					
DR7-64	NOT USED																					
DR7-65	I5SB 556+58.72 (21.36' RT) TO 556+61.75 (16.34' RT)																					34
	SHEET TOTAL							2				884			104							

ADD1_XL3497_SN_DR.xlsm					REGION NO.	STATE	FED. AID PROJ. NO.
4/30/2014 19:02					10	WASH	
DESIGNED BY	S. MERRYMAN	03/25/14					
ENTERED BY	S. MERRYMAN	03/25/14			JOB NUMBER		
CHECKED BY	E. QUINN	03/25/14			12C501		
PROJ. ENGR.	J. PEREZ	03/25/14			CONTRACT NO.		
REGION ADM.	K. DAYTON	03/25/14	05/02/14	AD1 - DELETED CODES	SM		
		DATE	DATE	REVISION	BY		

Washington State Department of Transportation

I-5
M ST TO PORTLAND AVE - HOV

STRUCTURE NOTES - DRAINAGE

NTDR 62

SHEET 539 OF 1763 SHEETS

STRUCTURE NOTES - DRAINAGE

NOTE:
THE FIRST NUMBER OF THE "CODE DESIGNATION" BELOW REFERS TO THE SHEET NO. OR THE SHEET REFERENCE NO. SHOWING THE DRAINAGE FEATURE.

THE SECOND NUMBER REFERS TO THE DRAINAGE FEATURE FOUND ON THAT SHEET.

CODE	LOCATION ↓ \ UNIT OF MEASURE →	CL. V REINF. CONC. CULV. PIPE 12 IN. DIAM.	CATCH BASIN TYPE 1	CATCH BASIN TYPE 2 48 IN. DIAM.		CATCH BASIN TYPE 2 60 IN. DIAM.	CATCH BASIN TYPE 2 72 IN. DIAM.	TESTING STORM SEWER PIPE		CL. IV REINF. CONC. STORM SEWER PIPE 15 IN. DIAM.	CL. V REINF. CONC. STORM SEWER PIPE 12 IN. DIAM.	CL. V REINF. CONC. STORM SEWER PIPE 18 IN. DIAM.		CL. V REINF. CONC. STORM SEWER PIPE 24 IN. DIAM.	SCHEDULE A STORM SEWER PIPE 12 IN. DIAM.	SCHEDULE A STORM SEWER PIPE 18 IN. DIAM.		SCHEDULE A STORM SEWER PIPE 24 IN. DIAM.	SCHEDULE B STORM SEWER PIPE 18 IN. DIAM.	SCHEDULE B STORM SEWER PIPE 24 IN. DIAM.		SEE GENERAL NOTES
		L.F.	EACH	EACH		EACH	EACH	L.F.		L.F.	L.F.	L.F.		L.F.	L.F.	L.F.		L.F.	L.F.	L.F.		
DR7-36	I5SB 565+08.93 (79.42' LT) TO 566+08.94 (75.30' LT)							100				100										10,13,34
DR7-37	MCK 13+54.04 (33.99 LT) TO 13+85.10 (23.26' LT)							33														32,34
DR7-38	MCK 16+85.46 (33.88' LT) TO 16+65.24 (33.88' RT)							71														32,34
DR7-39	SNB 26+14.34 (4.00' LT) TO 26+81.14 (6.25' LT)							68								68						3,8,34
DR7-40	I5SB 559+32.97 (139.31' LT) TO 568+22.00 (71.02' LT)																					34,48
DR7-41	SBH 75+04.61 (2.86' RT) TO 76+53.74 (6.96' RT)							149								149						3,8,20,34
DR7-42	SBH 76+53.74 (6.96' RT) TO 78+03.58 (7.65' RT)							150								150						3,8,34
DR7-43	SBH 78+03.58 (7.65' RT) TO 79+53.55 (7.98' RT)							150				150										3,8,34
DR7-44	SBH 79+53.55 (7.98' RT) TO I5SB 562+62.37 (31.91' RT)							150				150										3,8,34
DR7-45	I5SB 562+62.37 (31.91' RT) TO 564+12.41 (31.97' RT)							150				150										3,8,34
DR7-46	I5SB 564+12.41 (31.97' RT) TO 565+62.57 (31.89' RT)							150								150						3,8,34
DR7-47	I5SB 565+62.57 (31.89' RT) TO 567+13.15 (27.73' RT)							151								151						3,8,34
DR7-48	I5SB 556+61.75 (16.34' RT) TO 556+71.77 (14.28' RT)																					34
DR7-49	I5SB 556+71.77 (14.28' RT) TO 559+07.80 (15.25' RT)																					34
DR7-50	I5SB 559+07.80 (15.25' RT) TO 561+58.98 (11.67' RT)																					34
DR7-51	I5SB 561+58.98 (11.67' RT) TO 561+65.32 (9.98' RT)																					34
DR7-52	I5SB 561+65.32 (9.98' RT) TO 564+06.44 (13.44' RT)																					34
DR7-53	I5SB 564+06.44 (13.44' RT) TO 564+25.10 (12.81' RT)																					34
DR7-54	I5SB 564+25.10 (12.81' RT) TO 566+55.99 (14.75' RT)																					34
DR7-55	MCK 12+38.68 (24.47' LT) TO 12+69.07 (34.75' RT)		1					29			29											1,5,7,34
DR7-56	MCK 13+34.76 (52.45' LT) TO 13+31.62 (34.93 LT)		1					18			18											1,5,7,34
DR7-57	MCK 13+47.73 (23.93' LT) TO 13+31.62 (34.93' RT)							18			18											10,13,34
DR7-58	MCK 17+17.49 (23.07' LT) TO 17+92.90 (36.67' LT)		1					74							74							1,5,7,34
DR7-59	MCK 12+37.08 (29.73' RT)																					3,8,20,27,34
DR7-60	SBN 65+85.31 (28.48' LT) TO 65+86.17 (45.64' LT)																					34
DR7-61	NOT USED																					
DR7-62	SNB 25+51.91 (1.61' RT) TO 25+32.14 (31.43' RT)																					34
DR7-63	NOT USED																					
DR7-64	NOT USED																					
DR7-65	I5SB 556+58.72 (21.36' RT) TO 556+61.75 (16.34' RT)																					34
	SHEET TOTAL		3					1461			65	550			74	668						

ADD1_XL3497_SN_DR.xlsm						
4/30/2014 19:02						
DESIGNED BY	S. MERRYMAN	03/25/14				
ENTERED BY	S. MERRYMAN	03/25/14				
CHECKED BY	E. QUINN	03/25/14				
PROJ. ENGR.	J. PEREZ	03/25/14				
REGION ADM.	K. DAYTON	03/25/14	05/02/14	AD1 - REVISED QTY	SM	
		DATE	DATE	REVISION	BY	

REGION NO.	STATE	FED. AID PROJ. NO.
10	WASH	
JOB NUMBER 12C501		
CONTRACT NO.		

Washington State Department of Transportation

I-5
M ST TO PORTLAND AVE - HOV

STRUCTURE NOTES - DRAINAGE

NTDR 63

STRUCTURE NOTES - DRAINAGE

NOTE:
THE FIRST NUMBER OF THE "CODE DESIGNATION" BELOW REFERS TO THE SHEET NO. OR THE SHEET REFERENCE NO. SHOWING THE DRAINAGE FEATURE.

THE SECOND NUMBER REFERS TO THE DRAINAGE FEATURE FOUND ON THAT SHEET.

CODE	LOCATION ⩤ \ UNIT OF MEASURE ⩥	TRENCHLESS PIPE 24 IN. DIAM.	DUCTILE IRON STORM SEWER PIPE 12 IN. DIAM.				MEDIA FILTER DRAIN	POND MARKER		BMP MARKER	STRUCTURE EXCAVATION CLASS B INCL. HAUL	STRUCTURE EXCAV. CL.B INCL. HAUL-CONTAMINATED MATERIAL		SHORING OR EXTRA EXCAVATION CLASS B	GRAVEL BACKFILL FOR DRAIN	LLDPE GEOMEMBRANE LINING SYSTEM		CONTROLLED DENSITY FILL	FLOW FILL PIPE	COMMERCIAL CONCRETE		SEE GENERAL NOTES
		L.F.	L.F.				L.F.	EACH		EACH	C.Y.	C.Y.		S.F.	C.Y.	S.Y.		C.Y.	C.Y.	C.Y.		
DR7-36	I5SB 565+08.93 (79.42' LT) TO 566+08.94 (75.30' LT)										80			540								10,13,34
DR7-37	MCK 13+54.04 (33.99 LT) TO 13+85.10 (23.26' LT)										30			480								32,34
DR7-38	MCK 16+85.46 (33.88' LT) TO 16+65.24 (33.88' RT)										40			640								32,34
DR7-39	SNB 26+14.34 (4.00' LT) TO 26+81.14 (6.25' LT)										60			340								3,8,34
DR7-40	I5SB 559+32.97 (139.31' LT) TO 568+22.00 (71.02' LT)										700			6290	260							34,48
DR7-41	SBH 75+04.61 (2.86' RT) TO 76+53.74 (6.96' RT)										190			1260								3,8,20,34
DR7-42	SBH 76+53.74 (6.96' RT) TO 78+03.58 (7.65' RT)										130			900								3,8,34
DR7-43	SBH 78+03.58 (7.65' RT) TO 79+53.55 (7.98' RT)										50			300								3,8,34
DR7-44	SBH 79+53.55 (7.98' RT) TO I5SB 562+62.37 (31.91' RT)										70			480								3,8,34
DR7-45	I5SB 562+62.37 (31.91' RT) TO 564+12.41 (31.97' RT)										80			550								3,8,34
DR7-46	I5SB 564+12.41 (31.97' RT) TO 565+62.57 (31.89' RT)										130			880								3,8,34
DR7-47	I5SB 565+62.57 (31.89' RT) TO 567+13.15 (27.73' RT)										130			910								3,8,34
DR7-48	I5SB 556+61.75 (16.34' RT) TO 556+71.77 (14.28' RT)																		1			34
DR7-49	I5SB 556+71.77 (14.28' RT) TO 559+07.80 (15.25' RT)																		28			34
DR7-50	I5SB 559+07.80 (15.25' RT) TO 561+58.98 (11.67' RT)																		30			34
DR7-51	I5SB 561+58.98 (11.67' RT) TO 561+65.32 (9.98' RT)																		1			34
DR7-52	I5SB 561+65.32 (9.98' RT) TO 564+06.44 (13.44' RT)																		28			34
DR7-53	I5SB 564+06.44 (13.44' RT) TO 564+25.10 (12.81' RT)																		2			34
DR7-54	I5SB 564+25.10 (12.81' RT) TO 566+55.99 (14.75' RT)																		27			34
DR7-55	MCK 12+38.68 (24.47' LT) TO 12+69.07 (34.75' RT)										50			110								1,5,7,34
DR7-56	MCK 13+34.76 (52.45' LT) TO 13+31.62 (34.93 LT)										20			80								1,5,7,34
DR7-57	MCK 13+47.73 (23.93' LT) TO 13+31.62 (34.93' RT)										20			70								10,13,34
DR7-58	MCK 17+17.49 (23.07' LT) TO 17+92.90 (36.67' LT)										70			510								1,5,7,34
DR7-59	MCK 12+37.08 (29.73' RT)										10			30								3,8,20,27,34
DR7-60	SBN 65+85.31 (28.48' LT) TO 65+86.17 (45.64' LT)																		1			34
DR7-61	NOT USED																					
DR7-62	SNB 25+51.91 (1.61' RT) TO 25+32.14 (31.43' RT)																		2			34
DR7-63	NOT USED																					
DR7-64	NOT USED																					
DR7-65	I5SB 556+58.72 (21.36' RT) TO 556+61.75 (16.34' RT)																		1			34
	SHEET TOTAL										1860			14370	260				121			

ADD1_XL3497_SN_DR.xlsm					REGION NO.	STATE	FED. AID PROJ. NO.	
4/30/2014 19:02					10	WASH		
DESIGNED BY	S. MERRYMAN	03/25/14			JOB NUMBER 12C501			
ENTERED BY	S. MERRYMAN	03/25/14						
CHECKED BY	E. QUINN	03/25/14						
PROJ. ENGR.	J. PEREZ	03/25/14						
REGION ADM.	K. DAYTON	03/25/14	05/02/14	AD1 - REVISED QTY	SM	CONTRACT NO.		
		DATE	DATE	REVISION	BY			

Washington State Department of Transportation

I-5
M ST TO PORTLAND AVE - HOV

STRUCTURE NOTES - DRAINAGE

NTDR 64

STRUCTURE NOTES - DRAINAGE

NOTE:
THE FIRST NUMBER OF THE "CODE DESIGNATION" BELOW REFERS TO THE SHEET NO. OR THE SHEET REFERENCE NO. SHOWING THE DRAINAGE FEATURE.

THE SECOND NUMBER REFERS TO THE DRAINAGE FEATURE FOUND ON THAT SHEET.

CODE	LOCATION ∨ \ UNIT OF MEASURE >	PLUGGING EXISTING PIPE	ADJUST INLET	CONNECTION TO DRAINAGE STRUCTURE		ABANDON DRAINAGE STRUCTURE	ADJUST MANHOLE	MANHOLE 48 IN. DIAM. TYPE 3		MANHOLE 60 IN. DIAM. TYPE 3	MANHOLE 72 IN. DIAM. TYPE 3	MANHOLE ADDITIONAL HEIGHT 48 IN. DIAM. TYPE 3		MANHOLE ADDITIONAL HEIGHT 72 IN. DIAM. TYPE 3	ADJUST CATCH BASIN	LOCKING SOLID METAL COVER AND FRAME FOR CATCH BASIN		MANHOLE RING AND SOLID COVER	OPEN FLOW RESTRICTOR	CONSTRUCTION GEOTEXTILE FOR UNDERGROUND DRAINAGE		SEE GENERAL NOTES
		EACH	EACH	EACH		EACH	EACH	EACH		EACH	EACH	L.F.		L.F.	EACH	EACH		EACH	EACH	S.Y.		
DR7-36	I5SB 565+08.93 (79.42' LT) TO 566+08.94 (75.30' LT)																					10,13,34
DR7-37	MCK 13+54.04 (33.99 LT) TO 13+85.10 (23.26' LT)																					32,34
DR7-38	MCK 16+85.46 (33.88' LT) TO 16+65.24 (33.88' RT)																					32,34
DR7-39	SNB 26+14.34 (4.00' LT) TO 26+81.14 (6.25' LT)							1				1										3,8,34
DR7-40	I5SB 559+32.97 (139.31' LT) TO 568+22.00 (71.02' LT)																			790		34,48
DR7-41	SBH 75+04.61 (2.86' RT) TO 76+53.74 (6.96' RT)			1				1														3,8,20,34
DR7-42	SBH 76+53.74 (6.96' RT) TO 78+03.58 (7.65' RT)							1														3,8,34
DR7-43	SBH 78+03.58 (7.65' RT) TO 79+53.55 (7.98' RT)							1														3,8,34
DR7-44	SBH 79+53.55 (7.98' RT) TO I5SB 562+62.37 (31.91' RT)							1														3,8,34
DR7-45	I5SB 562+62.37 (31.91' RT) TO 564+12.41 (31.97' RT)							1														3,8,34
DR7-46	I5SB 564+12.41 (31.97' RT) TO 565+62.57 (31.89' RT)							1														3,8,34
DR7-47	I5SB 565+62.57 (31.89' RT) TO 567+13.15 (27.73' RT)							1														3,8,34
DR7-48	I5SB 556+61.75 (16.34' RT) TO 556+71.77 (14.28' RT)					1																34
DR7-49	I5SB 556+71.77 (14.28' RT) TO 559+07.80 (15.25' RT)					1																34
DR7-50	I5SB 559+07.80 (15.25' RT) TO 561+58.98 (11.67' RT)					1																34
DR7-51	I5SB 561+58.98 (11.67' RT) TO 561+65.32 (9.98' RT)					1																34
DR7-52	I5SB 561+65.32 (9.98' RT) TO 564+06.44 (13.44' RT)					1																34
DR7-53	I5SB 564+06.44 (13.44' RT) TO 564+25.10 (12.81' RT)					1																34
DR7-54	I5SB 564+25.10 (12.81' RT) TO 566+55.99 (14.75' RT)					1																34
DR7-55	MCK 12+38.68 (24.47' LT) TO 12+69.07 (34.75' RT)																					1,5,7,34
DR7-56	MCK 13+34.76 (52.45' LT) TO 13+31.62 (34.93 LT)																					1,5,7,34
DR7-57	MCK 13+47.73 (23.93' LT) TO 13+31.62 (34.93' RT)																					10,13,34
DR7-58	MCK 17+17.49 (23.07' LT) TO 17+92.90 (36.67' LT)																					1,5,7,34
DR7-59	MCK 12+37.08 (29.73' RT)			1				1														3,8,20,27,34
DR7-60	SBN 65+85.31 (28.48' LT) TO 65+86.17 (45.64' LT)					1																34
DR7-61	NOT USED																					
DR7-62	SNB 25+51.91 (1.61' RT) TO 25+32.14 (31.43' RT)					1																34
DR7-63	NOT USED																					
DR7-64	NOT USED																					
DR7-65	I5SB 556+58.72 (21.36' RT) TO 556+61.75 (16.34' RT)					1																34
	SHEET TOTAL			2		10		9				1								790		

ADD1_XL3497_SN_DR.xlsm				REGION NO.	STATE	FED. AID PROJ. NO.
4/30/2014 19:02				10	WASH	
DESIGNED BY	S. MERRYMAN	03/25/14				
ENTERED BY	S. MERRYMAN	03/25/14		JOB NUMBER		
CHECKED BY	E. QUINN	03/25/14		12C501		
PROJ. ENGR.	J. PEREZ	03/25/14				
REGION ADM.	K. DAYTON	03/25/14	05/02/14	AD1 - REVISED QTY	SM	CONTRACT NO.
		DATE	DATE	REVISION	BY	

Washington State Department of Transportation

I-5
M ST TO PORTLAND AVE - HOV

STRUCTURE NOTES - DRAINAGE

NTDR 65

STRUCTURE NOTES - DRAINAGE

NOTE:
THE FIRST NUMBER OF THE "CODE DESIGNATION" BELOW REFERS TO THE SHEET NO. OR THE SHEET REFERENCE NO. SHOWING THE DRAINAGE FEATURE.

THE SECOND NUMBER REFERS TO THE DRAINAGE FEATURE FOUND ON THAT SHEET.

CODE	LOCATION ⤵ \ UNIT OF MEASURE ➢	REMOVING DRAINAGE STRUCTURE		ROADWAY EXCAVATION INCL. HAUL - AREA NW POND		ROADWAY EXCAVATION INCL. HAUL - AREA NE POND	CONCRETE INLET	GRATE INLET TYPE 2		DROP INTLET TYPE 1	QUARRY SPALLS	UNDERDRAIN PIPE 6 IN. DIAM.		UNDERDRAIN PIPE 18 IN. DIAM.	DRAIN PIPE 6 IN. DIAM.	DRAIN PIPE 8 IN. DIAM.		HIGH DENSITY POLYETHYLENE (HDPE) UNDERDRAIN PIPE 6 IN.D	HIGH-DENSITY POLYETHYLENE (HDPE) PIPE 18 IN. DIAM.	HIGH-DENSITY POLYETHYLENE (HDPE) PIPE 24 IN. DIAM.		SEE GENERAL NOTES
		EACH		C.Y.		C.Y.	EACH	EACH		EACH	TON	L.F.		L.F.	L.F.	L.F.		L.F.	L.F.	L.F.		
DR7-66	I5SB 559+07.77 (19.43' RT) TO 559+07.80 (15.25' RT)																					34
DR7-67	I5SB 561+58.78 (17.67' RT) TO 561+58.98 (11.67' RT)																					34
DR7-68	I5SB 564+06.34 (18.06' RT) TO 564+06.44 (13.44' RT)																					29,34
DR7-69	I5SB 564+24.70 (17.16' RT) TO 564+25.10 (12.81' RT)																					34
DR7-70	I5NB 160+28.29 (48.74' RT) TO 160+25.89 (20.21' RT)																					34
DR7-71	I5NB 160+25.89 (20.21' RT) TO 160+23.88 (5.95' RT)																					34
DR7-72	I5NB 160+23.88 (5.95' RT) TO 160+23.61 (73.81' LT)																					34
DR7-73	I5NB 161+48.81 (42.56' RT) TO 161+47.25 (74.29' LT)																					34
DR7-74	I5NB 161+95.40 (4.37' LT) TO 161+91.73 (74.77' LT)																					34
DR7-75	I5SB 559+78.07 (41.06' LT) TO 559+77.31 (12.40' RT)																					34
DR7-76	I5NB 163+85.65 (11.51' RT) TO 163+84.40 (78.71' LT)																					34
DR7-77	I5SB 562+17.12 (85.74' LT) TO 562+13.73 (44.85' LT)																					34
DR7-78	I5SB 562+13.73 (44.85' LT) TO 562+13.93 (9.71' RT)																					34
DR7-79	I5NB 165+98.58 (12.61' RT) TO 166+89.17 (75.82' LT)	1																				22,34
DR7-80	I5NB 166+85.81 (17.55' RT) TO 166+89.17 (75.82' LT)																					29,34
DR7-81	I5NB 167+54.24 (0.39' RT) TO 167+51.68 (17.60' RT)																					34
DR7-82	I5SB 565+54.85 (79.54' LT) TO 565+55.32 (41.64' LT)																					34
DR7-83	I5SB 565+55.32 (41.64' LT) TO 565+54.94 (11.95' RT)																					29,34
DR7-84	MCK 17+92.97 (36.40' LT)																					27,34
DR7-85	I5SB 556+73.64 (63.52' LT) TO 556+71.77 (14.28' RT)																					34
DR7-86	MCK 13+31.62 (34.93' LT) TO 12+69.07 (34.75' LT)																					3,8,27,34
DR7-87	NNB 14+67.19 (43.20' RT) TO 14+70.96 (28.68' RT)																					34
DR7-88	I5SB 559+98.45 (45.68' LT) TO SBN 67+75.01 (22.14' RT)							1														10,13,34
DR7-89	SNB 25+95.25 (47.84' RT) TO 26+24.85 (47.84' RT)											30										34,48
DR7-90	SNB 26+24.85 (47.84' RT) TO 26+15.00 (43.27' RT)														11							32,34,48
DR7-91	I5NB 163+07.13 (22.89' LT)	1																				22,34
DR7-92	I5NB 164+45.91 (27.96' LT)	1																				22,34
DR7-93	I5NB 164+90.06 (32.91' LT) TO 164+89.98 (80.24' LT)																					29,34
DR7-94	MCK 16+65.24 (33.88' RT) TO 17+09.53 (60.97 RT)														56							32,34
DR7-95	SBS 114+91.13 (2.00' RT)	1																				22,34
	SHEET TOTAL	4						1				30			67							

ADD1_XL3497_SN_DR.xlsm						
4/30/2014 19:02						
DESIGNED BY	S. MERRYMAN	03/25/14				
ENTERED BY	S. MERRYMAN	03/25/14				
CHECKED BY	E. QUINN	03/25/14				
PROJ. ENGR.	J. PEREZ	03/25/14				
REGION ADM.	K. DAYTON	03/25/14	05/02/14	AD1 - REVISED QTY	SM	
		DATE	DATE	REVISION	BY	

REGION NO.	STATE	FED. AID PROJ. NO.
10	WASH	
JOB NUMBER 12C501		
CONTRACT NO.		

Washington State Department of Transportation

I-5
M ST TO PORTLAND AVE - HOV

STRUCTURE NOTES - DRAINAGE

NTDR 66

STRUCTURE NOTES - DRAINAGE

NOTE:
THE FIRST NUMBER OF THE "CODE DESIGNATION" BELOW REFERS TO THE SHEET NO. OR THE SHEET REFERENCE NO. SHOWING THE DRAINAGE FEATURE.

THE SECOND NUMBER REFERS TO THE DRAINAGE FEATURE FOUND ON THAT SHEET.

CODE	LOCATION ↓ \ UNIT OF MEASURE →	CL. V REINF. CONC. CULV. PIPE 12 IN. DIAM.	CATCH BASIN TYPE 1	CATCH BASIN TYPE 2 48 IN. DIAM.		CATCH BASIN TYPE 2 60 IN. DIAM.	CATCH BASIN TYPE 2 72 IN. DIAM.	TESTING STORM SEWER PIPE		CL. IV REINF. CONC. STORM SEWER PIPE 15 IN. DIAM.	CL. V REINF. CONC. STORM SEWER PIPE 12 IN. DIAM.	CL. V REINF. CONC. STORM SEWER PIPE 18 IN. DIAM.		CL. V REINF. CONC. STORM SEWER PIPE 24 IN. DIAM.	SCHEDULE A STORM SEWER PIPE 12 IN. DIAM.	SCHEDULE A STORM SEWER PIPE 18 IN. DIAM.		SCHEDULE A STORM SEWER PIPE 24 IN. DIAM.	SCHEDULE B STORM SEWER PIPE 18 IN. DIAM.	SCHEDULE B STORM SEWER PIPE 24 IN. DIAM.		SEE GENERAL NOTES
		L.F.	EACH	EACH		EACH	EACH	L.F.		L.F.	L.F.	L.F.		L.F.	L.F.	L.F.		L.F.	L.F.	L.F.		
DR7-66	I5SB 559+07.77 (19.43' RT) TO 559+07.80 (15.25' RT)																					34
DR7-67	I5SB 561+58.78 (17.67' RT) TO 561+58.98 (11.67' RT)																					34
DR7-68	I5SB 564+06.34 (18.06' RT) TO 564+06.44 (13.44' RT)																					29,34
DR7-69	I5SB 564+24.70 (17.16' RT) TO 564+25.10 (12.81' RT)																					34
DR7-70	I5NB 160+28.29 (48.74' RT) TO 160+25.89 (20.21' RT)																					34
DR7-71	I5NB 160+25.89 (20.21' RT) TO 160+23.88 (5.95' RT)																					
DR7-72	I5NB 160+23.88 (5.95' RT) TO 160+23.61 (73.81' LT)																					34
DR7-73	I5NB 161+48.81 (42.56' RT) TO 161+47.25 (74.29' LT)																					34
DR7-74	I5NB 161+95.40 (4.37' LT) TO 161+91.73 (74.77' LT)																					34
DR7-75	I5SB 559+78.07 (41.06' LT) TO 559+77.31 (12.40' RT)																					34
DR7-76	I5NB 163+85.65 (11.51' RT) TO 163+84.40 (78.71' LT)																					
DR7-77	I5SB 562+17.12 (85.74' LT) TO 562+13.73 (44.85' LT)																					34
DR7-78	I5SB 562+13.73 (44.85' LT) TO 562+13.93 (9.71' RT)																					34
DR7-79	I5NB 165+98.58 (12.61' RT) TO 166+89.17 (75.82' LT)																					34
DR7-80	I5NB 166+85.81 (17.55' RT) TO 166+89.17 (75.82' LT)																					22,34
DR7-81	I5NB 167+54.24 (0.39' RT) TO 167+51.68 (17.60' RT)																					29,34
DR7-82	I5SB 565+54.85 (79.54' LT) TO 565+55.32 (41.64' LT)																					
DR7-83	I5SB 565+55.32 (41.64' LT) TO 565+54.94 (11.95' RT)																					34
DR7-84	MCK 17+92.97 (36.40' LT)																					34
DR7-85	I5SB 556+73.64 (63.52' LT) TO 556+71.77 (14.28' RT)																					29,34
DR7-86	MCK 13+31.62 (34.93' LT) TO 12+69.07 (34.75' LT)							55			55											27,34
DR7-87	NNB 14+67.19 (43.20' RT) TO 14+70.96 (28.68' RT)																					34
DR7-88	I5SB 559+98.45 (45.68' LT) TO SBN 67+75.01 (22.14' RT)							25								25						10,13,34
DR7-89	SNB 25+95.25 (47.84' RT) TO 26+24.85 (47.84' RT)																					34,48
DR7-90	SNB 26+24.85 (47.84' RT) TO 26+15.00 (43.27' RT)																					32,34,48
DR7-91	I5NB 163+07.13 (22.89' LT)																					
DR7-92	I5NB 164+45.91 (27.96' LT)																					22,34
DR7-93	I5NB 164+90.06 (32.91' LT) TO 164+89.98 (80.24' LT)																					22,34
DR7-94	MCK 16+65.24 (33.88' RT) TO 17+09.53 (60.97 RT)							56														29,34
DR7-95	SBS 114+91.13 (2.00' RT)																					32,34
																						22,34
	SHEET TOTAL							136			55					25						

ADD1_XL3497_SN_DR.xlsm						
4/30/2014 19:02						
DESIGNED BY	S. MERRYMAN	03/25/14				
ENTERED BY	S. MERRYMAN	03/25/14				
CHECKED BY	E. QUINN	03/25/14				
PROJ. ENGR.	J. PEREZ	03/25/14				
REGION ADM.	K. DAYTON	03/25/14	05/02/14	AD1 - REVISED QTY	SM	
		DATE	DATE	REVISION	BY	

REGION NO.	STATE	FED. AID PROJ. NO.
10	WASH	

JOB NUMBER
12C501

CONTRACT NO.

Washington State Department of Transportation

I-5
M ST TO PORTLAND AVE - HOV

STRUCTURE NOTES - DRAINAGE

NTDR 67

SHEET 544 OF 1763 SHEETS

STRUCTURE NOTES - DRAINAGE

NOTE:
THE FIRST NUMBER OF THE "CODE DESIGNATION" BELOW REFERS TO THE SHEET NO. OR THE SHEET REFERENCE NO. SHOWING THE DRAINAGE FEATURE.

THE SECOND NUMBER REFERS TO THE DRAINAGE FEATURE FOUND ON THAT SHEET.

CODE	LOCATION ⤵ \ UNIT OF MEASURE ➢	TRENCHLESS PIPE 24 IN. DIAM.	DUCTILE IRON STORM SEWER PIPE 12 IN. DIAM.				MEDIA FILTER DRAIN	POND MARKER		BMP MARKER	STRUCTURE EXCAVATION CLASS B INCL. HAUL	STRUCTURE EXCAV. CL.B INCL. HAUL-CONTAMINATED MATERIAL		SHORING OR EXTRA EXCAVATION CLASS B	GRAVEL BACKFILL FOR DRAIN	LLDPE GEOMEMBRANE LINING SYSTEM		CONTROLLED DENSITY FILL	FLOW FILL PIPE	COMMERCIAL CONCRETE		SEE GENERAL NOTES
		L.F.	L.F.				L.F.	EACH		EACH	C.Y.	C.Y.		S.F.	C.Y.	S.Y.		C.Y.	C.Y.	C.Y.		
DR7-66	I5SB 559+07.77 (19.43' RT) TO 559+07.80 (15.25' RT)																		1			34
DR7-67	I5SB 561+58.78 (17.67' RT) TO 561+58.98 (11.67' RT)																		1			34
DR7-68	I5SB 564+06.34 (18.06' RT) TO 564+06.44 (13.44' RT)																		1			29,34
DR7-69	I5SB 564+24.70 (17.16' RT) TO 564+25.10 (12.81' RT)																		1			34
DR7-70	I5NB 160+28.29 (48.74' RT) TO 160+25.89 (20.21' RT)																		1			34
DR7-71	I5NB 160+25.89 (20.21' RT) TO 160+23.88 (5.95' RT)																		1			34
DR7-72	I5NB 160+23.88 (5.95' RT) TO 160+23.61 (73.81' LT)																		2			34
DR7-73	I5NB 161+48.81 (42.56' RT) TO 161+47.25 (74.29' LT)																		2			34
DR7-74	I5NB 161+95.40 (4.37' LT) TO 161+91.73 (74.77' LT)																		1			34
DR7-75	I5SB 559+78.07 (41.06' LT) TO 559+77.31 (12.40' RT)																		3			34
DR7-76	I5NB 163+85.65 (11.51' RT) TO 163+84.40 (78.71' LT)																		1			34
DR7-77	I5SB 562+17.12 (85.74' LT) TO 562+13.73 (44.85' LT)																		1			34
DR7-78	I5SB 562+13.73 (44.85' LT) TO 562+13.93 (9.71' RT)																		1			34
DR7-79	I5NB 165+98.58 (12.61' RT) TO 166+89.17 (75.82' LT)																					22,34
DR7-80	I5NB 166+85.81 (17.55' RT) TO 166+89.17 (75.82' LT)																		6			29,34
DR7-81	I5NB 167+54.24 (0.39' RT) TO 167+51.68 (17.60' RT)																		1			34
DR7-82	I5SB 565+54.85 (79.54' LT) TO 565+55.32 (41.64' LT)																		2			34
DR7-83	I5SB 565+55.32 (41.64' LT) TO 565+54.94 (11.95' RT)																		1			29,34
DR7-84	MCK 17+92.97 (36.40' LT)																					27,34
DR7-85	I5SB 556+73.64 (63.52' LT) TO 556+71.77 (14.28' RT)																		4			34
DR7-86	MCK 13+31.62 (34.93' LT) TO 12+69.07 (34.75' LT)										80			260								3,8,27,34
DR7-87	NNB 14+67.19 (43.20' RT) TO 14+70.96 (28.68' RT)																		9			34
DR7-88	I5SB 559+98.45 (45.68' LT) TO SBN 67+75.01 (22.14' RT)										30			220								10,13,34
DR7-89	SNB 25+95.25 (47.84' RT) TO 26+24.85 (47.84' RT)										10			100	10							34,48
DR7-90	SNB 26+24.85 (47.84' RT) TO 26+15.00 (43.27' RT)													60								32,34,48
DR7-91	I5NB 163+07.13 (22.89' LT)																					22,34
DR7-92	I5NB 164+45.91 (27.96' LT)																					22,34
DR7-93	I5NB 164+90.06 (32.91' LT) TO 164+89.98 (80.24' LT)																		3			29,34
DR7-94	MCK 16+65.24 (33.88' RT) TO 17+09.53 (60.97 RT)										50			950								32,34
DR7-95	SBS 114+91.13 (2.00' RT)																					22,34
	SHEET TOTAL										170			1590	10				43			

ADD1_XL3497_SN_DR.xlsm						
4/30/2014 19:02						
DESIGNED BY	S. MERRYMAN	03/25/14				
ENTERED BY	S. MERRYMAN	03/25/14				
CHECKED BY	E. QUINN	03/25/14				
PROJ. ENGR.	J. PEREZ	03/25/14				
REGION ADM.	K. DAYTON	03/25/14	05/02/14	AD1 - REVISED QTY	SM	
		DATE	DATE	REVISION	BY	

REGION NO.	STATE	FED. AID PROJ. NO.
10	WASH	
JOB NUMBER 12C501		
CONTRACT NO.		

Washington State Department of Transportation

I-5
M ST TO PORTLAND AVE - HOV

STRUCTURE NOTES - DRAINAGE

NTDR 68

STRUCTURE NOTES - DRAINAGE

NOTE:
THE FIRST NUMBER OF THE "CODE DESIGNATION" BELOW REFERS TO THE SHEET NO. OR THE SHEET REFERENCE NO. SHOWING THE DRAINAGE FEATURE.

THE SECOND NUMBER REFERS TO THE DRAINAGE FEATURE FOUND ON THAT SHEET.

CODE	LOCATION ⤵ \ UNIT OF MEASURE ➢	PLUGGING EXISTING PIPE	ADJUST INLET	CONNECTION TO DRAINAGE STRUCTURE		ABANDON DRAINAGE STRUCTURE	ADJUST MANHOLE	MANHOLE 48 IN. DIAM. TYPE 3		MANHOLE 60 IN. DIAM. TYPE 3	MANHOLE 72 IN. DIAM. TYPE 3	MANHOLE ADDITIONAL HEIGHT 48 IN. DIAM. TYPE 3		MANHOLE ADDITIONAL HEIGHT 72 IN. DIAM. TYPE 3	ADJUST CATCH BASIN	LOCKING SOLID METAL COVER AND FRAME FOR CATCH BASIN		MANHOLE RING AND SOLID COVER	OPEN FLOW RESTRICTOR	CONSTRUCTION GEOTEXTILE FOR UNDERGROUND DRAINAGE		SEE GENERAL NOTES
		EACH	EACH	EACH		EACH	EACH	EACH		EACH	EACH	L.F.		L.F.	EACH	EACH		EACH	EACH	S.Y.		
DR7-66	I5SB 559+07.77 (19.43' RT) TO 559+07.80 (15.25' RT)					1																34
DR7-67	I5SB 561+58.78 (17.67' RT) TO 561+58.98 (11.67' RT)					1																34
DR7-68	I5SB 564+06.34 (18.06' RT) TO 564+06.44 (13.44' RT)	1				1																29,34
DR7-69	I5SB 564+24.70 (17.16' RT) TO 564+25.10 (12.81' RT)					1																34
DR7-70	I5NB 160+28.29 (48.74' RT) TO 160+25.89 (20.21' RT)					1																34
DR7-71	I5NB 160+25.89 (20.21' RT) TO 160+23.88 (5.95' RT)					1																34
DR7-72	I5NB 160+23.88 (5.95' RT) TO 160+23.61 (73.81' LT)					1																34
DR7-73	I5NB 161+48.81 (42.56' RT) TO 161+47.25 (74.29' LT)					1																34
DR7-74	I5NB 161+95.40 (4.37' LT) TO 161+91.73 (74.77' LT)					1																34
DR7-75	I5SB 559+78.07 (41.06' LT) TO 559+77.31 (12.40' RT)					1																34
DR7-76	I5NB 163+85.65 (11.51' RT) TO 163+84.40 (78.71' LT)					1																34
DR7-77	I5SB 562+17.12 (85.74' LT) TO 562+13.73 (44.85' LT)					1																34
DR7-78	I5SB 562+13.73 (44.85' LT) TO 562+13.93 (9.71' RT)					1																34
DR7-79	I5NB 165+98.58 (12.61' RT) TO 166+89.17 (75.82' LT)																					22,34
DR7-80	I5NB 166+85.81 (17.55' RT) TO 166+89.17 (75.82' LT)	1				1																29,34
DR7-81	I5NB 167+54.24 (0.39' RT) TO 167+51.68 (17.60' RT)					1																34
DR7-82	I5SB 565+54.85 (79.54' LT) TO 565+55.32 (41.64' LT)					1																34
DR7-83	I5SB 565+55.32 (41.64' LT) TO 565+54.94 (11.95' RT)	1				1																29,34
DR7-84	MCK 17+92.97 (36.40' LT)			1								4										27,34
DR7-85	I5SB 556+73.64 (63.52' LT) TO 556+71.77 (14.28' RT)					1																34
DR7-86	MCK 13+31.62 (34.93' LT) TO 12+69.07 (34.75' LT)							1														3,8,27,34
DR7-87	NNB 14+67.19 (43.20' RT) TO 14+70.96 (28.68' RT)					1																34
DR7-88	I5SB 559+98.45 (45.68' LT) TO SBN 67+75.01 (22.14' RT)																					10,13,34
DR7-89	SNB 25+95.25 (47.84' RT) TO 26+24.85 (47.84' RT)																			30		34,48
DR7-90	SNB 26+24.85 (47.84' RT) TO 26+15.00 (43.27' RT)																					32,34,48
DR7-91	I5NB 163+07.13 (22.89' LT)																					22,34
DR7-92	I5NB 164+45.91 (27.96' LT)																					22,34
DR7-93	I5NB 164+90.06 (32.91' LT) TO 164+89.98 (80.24' LT)	1				1																29,34
DR7-94	MCK 16+65.24 (33.88' RT) TO 17+09.53 (60.97 RT)																					32,34
DR7-95	SBS 114+91.13 (2.00' RT)																					22,34
	SHEET TOTAL	4		1		20		1				4								30		

ADD1_XL3497_SN_DR.xlsm
4/30/2014 19:02

DESIGNED BY	S. MERRYMAN	03/25/14			
ENTERED BY	S. MERRYMAN	03/25/14			
CHECKED BY	E. QUINN	03/25/14			
PROJ. ENGR.	J. PEREZ	03/25/14			
REGION ADM.	K. DAYTON	03/25/14	05/02/14	AD1 - REVISED QTY	SM
		DATE	DATE	REVISION	BY

REGION NO.	STATE	FED. AID PROJ. NO.
10	WASH	

JOB NUMBER
12C501
CONTRACT NO.

Washington State Department of Transportation

I-5
M ST TO PORTLAND AVE - HOV

STRUCTURE NOTES - DRAINAGE

NTDR 69

SHEET 546 OF 1763 SHEETS

STRUCTURE NOTES - DRAINAGE

NOTE:
THE FIRST NUMBER OF THE "CODE DESIGNATION" BELOW REFERS TO THE SHEET NO. OR THE SHEET REFERENCE NO. SHOWING THE DRAINAGE FEATURE.

THE SECOND NUMBER REFERS TO THE DRAINAGE FEATURE FOUND ON THAT SHEET.

CODE	LOCATION ⤵ \ UNIT OF MEASURE ➢	REMOVING DRAINAGE STRUCTURE		ROADWAY EXCAVATION INCL. HAUL - AREA NW POND		ROADWAY EXCAVATION INCL. HAUL - AREA NE POND	CONCRETE INLET	GRATE INLET TYPE 2		DROP INTLET TYPE 1	QUARRY SPALLS	UNDERDRAIN PIPE 6 IN. DIAM.		UNDERDRAIN PIPE 18 IN. DIAM.	DRAIN PIPE 6 IN. DIAM.	DRAIN PIPE 8 IN. DIAM.		HIGH DENSITY POLYETHYLENE (HDPE) UNDERDRAIN PIPE 6 IN.D	HIGH-DENSITY POLYETHYLENE (HDPE) PIPE 18 IN. DIAM.	HIGH-DENSITY POLYETHYLENE (HDPE) PIPE 24 IN. DIAM.		SEE GENERAL NOTES
		EACH		C.Y.		C.Y.	EACH	EACH		EACH	TON	L.F.		L.F.	L.F.	L.F.		L.F.	L.F.	L.F.		
DR7-96	SNB 25+33.02 (42.37' RT) TO 25+32.14 (31.43' RT)																					21,34
DR7-97	MCK 17+09.53 (60.97' RT)																					21,34
DR7-98	NNB 14+79.10 (18.38' RT) TO 15+63.23 (18.38' RT)																					2,5,6,34
DR7-99	MCK 12+69.07 (34.75' LT) TO 12+37.08 (29.73' RT)																					3,8,27,34
DR8-1	I5SB 566+86.91 (36.92' RT) TO I5NB 169+10.32 (36.46' LT)							1														10,13,17,34
DR8-2	I5NB 169+10.32 (36.46' LT) TO 170+47.19 (36.46' LT)							1														10,13,17,34
DR8-3	I5NB 170+47.19 (36.46' LT) TO 170+90.63 (35.28' LT)							1														10,13,17,34
DR8-4	I5NB 171+75.49 (68.46' RT) TO 171+33.24 (67.83' RT)							1														10,13,24,34
DR8-5	I5SB 568+23.50 (32.04' RT) TO I5NB 170+47.19 (36.46' LT)							1														10,13,17,18,34
DR8-6	I5NB 170+90.63 (35.28' LT) TO 170+89.99 (66.48' RT)							1														10,13,18,24,34
DR8-7	I5NB 170+89.99 (66.48' RT) TO 171+33.24 (67.83' RT)							1														10,13,24,34
DR8-8	I5SB 566+08.94 (75.30' LT) TO 567+08.75 (71.19' LT)							1														10,13,34
DR8-9	I5SB 567+08.75 (71.19' LT) TO 568+21.91 (65.83' LT)							1														10,13,34
DR8-10	I5SB 568+21.91 (65.83' LT) TO 568+23.50 (32.04' RT)							1														10,13,18,34
DR8-11	I5NB 170+43.97 (66.46' RT) TO 170+89.99 (66.48' RT)							1														10,13,24,34
DR8-12	I5NB 174+62.84 (95.93' RT) TO 174+87.80 (92.49' RT)																					24,34
DR8-13	I5NB 175+66.32 (85.14' RT) TO TI5NB 101+99.65 (35.39' LT)																					3,8,24,25,34
DR8-14	I5SB 574+32.81 (16.96' RT)																					3,8,20,34
DR8-15	I5NB 173+17.89 (96.71' RT)										520											31,34,37,38,39,45
DR8-16	I5NB 171+33.24 (67.83' RT) TO 171+32.16 (88.41' RT)							1														10,13,24,34
DR8-17	I5NB 171+32.16 (88.41' RT) TO 171+72.94 (96.35' RT)																					3,8,24,34
DR8-18	I5NB 170+69.28 (70.33' RT) TO 174+74.00 (72.33' RT)											403										24,34,48
DR8-19	I5NB 174+74.00 (72.33' RT) TO 175+66.32 (85.14 RT)														93							24,32,34
DR8-20	I5NB 171+30.29 (102.02' RT) TO 172+33.67 (123.19' RT)									1												14,15,24,34
DR8-21	I5NB 172+33.67 (123.32' RT) TO 174+03.94 (123.09' RT)						1															4,24,34
DR8-22	I5SB 567+13.15 (27.73' RT) TO 568+62.15 (27.31' RT)																					3,8,34
DR8-23	I5SB 568+62.15 (27.31' RT) TO 570+12.41 (27.08' RT)																					3,8,34
DR8-24	TI5SB 11+31.69 (38.47' RT) TO 12+81.49 (37.17' RT)																					3,8,34
DR8-25	TI5SB 12+81.49 (37.17' RT) TO 14+31.60 (37.65' RT)																					3,8,34
	SHEET TOTAL						1	12		1	520	403			93							

.ADD1_XL3497_SN_DR.xlsm					REGION NO.	STATE	FED. AID PROJ. NO.
4/30/2014 19:02					10	WASH	
DESIGNED BY	S. MERRYMAN	03/25/14			JOB NUMBER		
ENTERED BY	S. MERRYMAN	03/25/14			12C501		
CHECKED BY	E. QUINN	03/25/14			CONTRACT NO.		
PROJ. ENGR.	J. PEREZ	03/25/14					
REGION ADM.	K. DAYTON	03/25/14	05/02/14	AD1 - ADDED CODE	SM		
		DATE	DATE	REVISION	BY		

Washington State Department of Transportation

I-5
M ST TO PORTLAND AVE - HOV

STRUCTURE NOTES - DRAINAGE

NTDR 70

SHEET 547 OF 1763 SHEETS

STRUCTURE NOTES - DRAINAGE

NOTE:
THE FIRST NUMBER OF THE "CODE DESIGNATION" BELOW REFERS TO THE SHEET NO. OR THE SHEET REFERENCE NO. SHOWING THE DRAINAGE FEATURE.

THE SECOND NUMBER REFERS TO THE DRAINAGE FEATURE FOUND ON THAT SHEET.

CODE	LOCATION ⊽ \ UNIT OF MEASURE ⊳	CL. V REINF. CONC. CULV. PIPE 12 IN. DIAM.	CATCH BASIN TYPE 1	CATCH BASIN TYPE 2 48 IN. DIAM.		CATCH BASIN TYPE 2 60 IN. DIAM.	CATCH BASIN TYPE 2 72 IN. DIAM.	TESTING STORM SEWER PIPE		CL. IV REINF. CONC. STORM SEWER PIPE 15 IN. DIAM.	CL. V REINF. CONC. STORM SEWER PIPE 12 IN. DIAM.	CL. V REINF. CONC. STORM SEWER PIPE 18 IN. DIAM.		CL. V REINF. CONC. STORM SEWER PIPE 24 IN. DIAM.	SCHEDULE A STORM SEWER PIPE 12 IN. DIAM.	SCHEDULE A STORM SEWER PIPE 18 IN. DIAM.		SCHEDULE A STORM SEWER PIPE 24 IN. DIAM.	SCHEDULE B STORM SEWER PIPE 18 IN. DIAM.	SCHEDULE B STORM SEWER PIPE 24 IN. DIAM.		SEE GENERAL NOTES
		L.F.	EACH	EACH		EACH	EACH	L.F.		L.F.	L.F.	L.F.		L.F.	L.F.	L.F.		L.F.	L.F.	L.F.		
DR7-96	SNB 25+33.02 (42.37' RT) TO 25+32.14 (31.43' RT)																					21,34
DR7-97	MCK 17+09.53 (60.97' RT)																					21,34
DR7-98	NNB 14+79.10 (18.38' RT) TO 15+63.23 (18.38' RT)					1		80							80							2,5,6,34
DR7-99	MCK 12+69.07 (34.75' LT) TO 12+37.08 (29.73' RT)							72			72											3,8,27,34
DR8-1	I5SB 566+86.91 (36.92' RT) TO I5NB 169+10.32 (36.46' LT)										7											10,13,17,34
DR8-2	I5NB 169+10.32 (36.46' LT) TO 170+47.19 (36.46' LT)							137				137										10,13,17,34
DR8-3	I5NB 170+47.19 (36.46' LT) TO 170+90.63 (35.28' LT)							43				43										10,13,17,34
DR8-4	I5NB 171+75.49 (68.46' RT) TO 171+33.24 (67.83' RT)							42			42											10,13,24,34
DR8-5	I5SB 568+23.50 (32.04' RT) TO I5NB 170+47.19 (36.46' LT)											8										10,13,17,18,34
DR8-6	I5NB 170+90.63 (35.28' LT) TO 170+89.99 (66.48' RT)							101				101										10,13,18,24,34
DR8-7	I5NB 170+89.99 (66.48' RT) TO 171+33.24 (67.83' RT)							43								43						10,13,24,34
DR8-8	I5SB 566+08.94 (75.30' LT) TO 567+08.75 (71.19' LT)							100				100										10,13,34
DR8-9	I5SB 567+08.75 (71.19' LT) TO 568+21.91 (65.83' LT)							113				113										10,13,34
DR8-10	I5SB 568+21.91 (65.83' LT) TO 568+23.50 (32.04' RT)							98				98										10,13,18,34
DR8-11	I5NB 170+43.97 (66.46' RT) TO 170+89.99 (66.48' RT)							46			46											10,13,24,34
DR8-12	I5NB 174+62.84 (95.93' RT) TO 174+87.80 (92.49' RT)							25								25						24,34
DR8-13	I5NB 175+66.32 (85.14' RT) TO TI5NB 101+99.65 (35.39' LT)							157														3,8,24,25,34
DR8-14	I5SB 574+32.81 (16.96' RT)																					3,8,20,34
DR8-15	I5NB 173+17.89 (96.71' RT)																					31,34,37,38,39,45
DR8-16	I5NB 171+33.24 (67.83' RT) TO 171+32.16 (88.41' RT)							20								20						10,13,24,34
DR8-17	I5NB 171+32.16 (88.41' RT) TO 171+72.94 (96.35' RT)							105				105										3,8,24,34
DR8-18	I5NB 170+69.28 (70.33' RT) TO 174+74.00 (72.33' RT)																					24,34,48
DR8-19	I5NB 174+74.00 (72.33' RT) TO 175+66.32 (85.14 RT)							93														24,32,34
DR8-20	I5NB 171+30.29 (102.02' RT) TO 172+33.67 (123.19' RT)							90							90							14,15,24,34
DR8-21	I5NB 172+33.67 (123.32' RT) TO 174+03.94 (123.09' RT)							121							121							4,24,34
DR8-22	I5SB 567+13.15 (27.73' RT) TO 568+62.15 (27.31' RT)							149				149										3,8,34
DR8-23	I5SB 568+62.15 (27.31' RT) TO 570+12.41 (27.08' RT)							150								150						3,8,34
DR8-24	TI5SB 11+31.69 (38.47' RT) TO 12+81.49 (37.17' RT)							154								154						3,8,34
DR8-25	TI5SB 12+81.49 (37.17' RT) TO 14+31.60 (37.65' RT)															10						3,8,34
	SHEET TOTAL					1		1939			167	854			291	402						

ADD1_XL3497_SN_DR.xlsm					REGION NO.	STATE	FED. AID PROJ. NO.
4/30/2014 19:02					10	WASH	
DESIGNED BY	S. MERRYMAN	03/25/14					
ENTERED BY	S. MERRYMAN	03/25/14			JOB NUMBER		
CHECKED BY	E. QUINN	03/25/14			12C501		
PROJ. ENGR.	J. PEREZ	03/25/14			CONTRACT NO.		
REGION ADM.	K. DAYTON	03/25/14	05/02/14	AD1 - REVISED QTY	SM		
		DATE	DATE	REVISION	BY		

Washington State Department of Transportation

I-5
M ST TO PORTLAND AVE - HOV

STRUCTURE NOTES - DRAINAGE

NTDR 71

SHEET 548 OF 1763 SHEETS

STRUCTURE NOTES - DRAINAGE

NOTE:
THE FIRST NUMBER OF THE "CODE DESIGNATION" BELOW REFERS TO THE SHEET NO. OR THE SHEET REFERENCE NO. SHOWING THE DRAINAGE FEATURE.

THE SECOND NUMBER REFERS TO THE DRAINAGE FEATURE FOUND ON THAT SHEET.

CODE	LOCATION ⤵ \ UNIT OF MEASURE ➢	TRENCHLESS PIPE 24 IN. DIAM.	DUCTILE IRON STORM SEWER PIPE 12 IN. DIAM.				MEDIA FILTER DRAIN	POND MARKER		BMP MARKER	STRUCTURE EXCAVATION CLASS B INCL. HAUL	STRUCTURE EXCAV. CL.B INCL. HAUL-CONTAMINATED MATERIAL		SHORING OR EXTRA EXCAVATION CLASS B	GRAVEL BACKFILL FOR DRAIN	LLDPE GEOMEMBRANE LINING SYSTEM		CONTROLLED DENSITY FILL	FLOW FILL PIPE	COMMERCIAL CONCRETE		SEE GENERAL NOTES
		L.F.	L.F.				L.F.	EACH		EACH	C.Y.	C.Y.		S.F.	C.Y.	S.Y.		C.Y.	C.Y.	C.Y.		
DR7-96	SNB 25+33.02 (42.37' RT) TO 25+32.14 (31.43' RT)																		1			21,34
DR7-97	MCK 17+09.53 (60.97' RT)																					21,34
DR7-98	NNB 14+79.10 (18.38' RT) TO 15+63.23 (18.38' RT)										100			660								2,5,6,34
DR7-99	MCK 12+69.07 (34.75' LT) TO 12+37.08 (29.73' RT)										90			300								3,8,27,34
DR8-1	I5SB 566+86.91 (36.92' RT) TO I5NB 169+10.32 (36.46' LT)										10			30								10,13,17,34
DR8-2	I5NB 169+10.32 (36.46' LT) TO 170+47.19 (36.46' LT)										120			790								10,13,17,34
DR8-3	I5NB 170+47.19 (36.46' LT) TO 170+90.63 (35.28' LT)										40			220								10,13,17,34
DR8-4	I5NB 171+75.49 (68.46' RT) TO 171+33.24 (67.83' RT)											20		120								10,13,24,34
DR8-5	I5SB 568+23.50 (32.04' RT) TO I5NB 170+47.19 (36.46' LT)										10			30								10,13,17,18,34
DR8-6	I5NB 170+90.63 (35.28' LT) TO 170+89.99 (66.48' RT)											90		560								10,13,18,24,34
DR8-7	I5NB 170+89.99 (66.48' RT) TO 171+33.24 (67.83' RT)											40		240								10,13,24,34
DR8-8	I5SB 566+08.94 (75.30' LT) TO 567+08.75 (71.19' LT)										70			470								10,13,34
DR8-9	I5SB 567+08.75 (71.19' LT) TO 568+21.91 (65.83' LT)										70			420								10,13,34
DR8-10	I5SB 568+21.91 (65.83' LT) TO 568+23.50 (32.04' RT)										60			420								10,13,18,34
DR8-11	I5NB 170+43.97 (66.46' RT) TO 170+89.99 (66.48' RT)											50		310								10,13,24,34
DR8-12	I5NB 174+62.84 (95.93' RT) TO 174+87.80 (92.49' RT)											10		70								24,34
DR8-13	I5NB 175+66.32 (85.14' RT) TO TI5NB 101+99.65 (35.39' LT)	157										10										3,8,24,25,34
DR8-14	I5SB 574+32.81 (16.96' RT)										10			50								3,8,20,34
DR8-15	I5NB 173+17.89 (96.71' RT)							1		4												31,34,37,38,39,45
DR8-16	I5NB 171+33.24 (67.83' RT) TO 171+32.16 (88.41' RT)											20		90								10,13,24,34
DR8-17	I5NB 171+32.16 (88.41' RT) TO 171+72.94 (96.35' RT)											60		370								3,8,24,34
DR8-18	I5NB 170+69.28 (70.33' RT) TO 174+74.00 (72.33' RT)											20		190	120							24,34,48
DR8-19	I5NB 174+74.00 (72.33' RT) TO 175+66.32 (85.14 RT)											90		1550	30							24,32,34
DR8-20	I5NB 171+30.29 (102.02' RT) TO 172+33.67 (123.19' RT)											120		890								14,15,24,34
DR8-21	I5NB 172+33.67 (123.32' RT) TO 174+03.94 (123.09' RT)											210		1570								4,24,34
DR8-22	I5SB 567+13.15 (27.73' RT) TO 568+62.15 (27.31' RT)										160			1110								3,8,34
DR8-23	I5SB 568+62.15 (27.31' RT) TO 570+12.41 (27.08' RT)										160			1090								3,8,34
DR8-24	TI5SB 11+31.69 (38.47' RT) TO 12+81.49 (37.17' RT)										150			1050								3,8,34
DR8-25	TI5SB 12+81.49 (37.17' RT) TO 14+31.60 (37.65' RT)										150			1060								3,8,34
	SHEET TOTAL	157						1		4	1200	740		13660	150				1			

ADD1_XL3497_SN_DR.xlsm					REGION NO.	STATE	FED. AID PROJ. NO.
4/30/2014 19:02					10	WASH	
DESIGNED BY	S. MERRYMAN	03/25/14					
ENTERED BY	S. MERRYMAN	03/25/14			JOB NUMBER		
CHECKED BY	E. QUINN	03/25/14			12C501		
PROJ. ENGR.	J. PEREZ	03/25/14			CONTRACT NO.		
REGION ADM.	K. DAYTON	03/25/14	05/02/14	AD1 REVISED QTY	SM		
		DATE	DATE	REVISION	BY		

Washington State Department of Transportation

I-5
M ST TO PORTLAND AVE - HOV

STRUCTURE NOTES - DRAINAGE

NTDR 72

STRUCTURE NOTES - DRAINAGE

NOTE:
THE FIRST NUMBER OF THE "CODE DESIGNATION" BELOW REFERS TO THE SHEET NO. OR THE SHEET REFERENCE NO. SHOWING THE DRAINAGE FEATURE.

THE SECOND NUMBER REFERS TO THE DRAINAGE FEATURE FOUND ON THAT SHEET.

CODE	LOCATION ⤵ \ UNIT OF MEASURE ➢	PLUGGING EXISTING PIPE	ADJUST INLET	CONNECTION TO DRAINAGE STRUCTURE		ABANDON DRAINAGE STRUCTURE	ADJUST MANHOLE	MANHOLE 48 IN. DIAM. TYPE 3		MANHOLE 60 IN. DIAM. TYPE 3	MANHOLE 72 IN. DIAM. TYPE 3	MANHOLE ADDITIONAL HEIGHT 48 IN. DIAM. TYPE 3		MANHOLE ADDITIONAL HEIGHT 72 IN. DIAM. TYPE 3	ADJUST CATCH BASIN	LOCKING SOLID METAL COVER AND FRAME FOR CATCH BASIN		MANHOLE RING AND SOLID COVER	OPEN FLOW RESTRICTOR	CONSTRUCTION GEOTEXTILE FOR UNDERGROUND DRAINAGE		SEE GENERAL NOTES
		EACH	EACH	EACH		EACH	EACH	EACH		EACH	EACH	L.F.		L.F.	EACH	EACH		EACH	EACH	S.Y.		
DR7-96	SNB 25+33.02 (42.37' RT) TO 25+32.14 (31.43' RT)			1		1																21,34
DR7-97	MCK 17+09.53 (60.97' RT)			2			1															21,34
DR7-98	NNB 14+79.10 (18.38' RT) TO 15+63.23 (18.38' RT)															1						2,5,6,34
DR7-99	MCK 12+69.07 (34.75' LT) TO 12+37.08 (29.73' RT)							1														3,8,27,34
DR8-1	I5SB 566+86.91 (36.92' RT) TO I5NB 169+10.32 (36.46' LT)																					10,13,17,34
DR8-2	I5NB 169+10.32 (36.46' LT) TO 170+47.19 (36.46' LT)																					10,13,17,34
DR8-3	I5NB 170+47.19 (36.46' LT) TO 170+90.63 (35.28' LT)																					10,13,17,34
DR8-4	I5NB 171+75.49 (68.46' RT) TO 171+33.24 (67.83' RT)																					10,13,24,34
DR8-5	I5SB 568+23.50 (32.04' RT) TO I5NB 170+47.19 (36.46' LT)																					10,13,17,18,34
DR8-6	I5NB 170+90.63 (35.28' LT) TO 170+89.99 (66.48' RT)																					10,13,18,24,34
DR8-7	I5NB 170+89.99 (66.48' RT) TO 171+33.24 (67.83' RT)																					10,13,24,34
DR8-8	I5SB 566+08.94 (75.30' LT) TO 567+08.75 (71.19' LT)																					10,13,34
DR8-9	I5SB 567+08.75 (71.19' LT) TO 568+21.91 (65.83' LT)																					10,13,34
DR8-10	I5SB 568+21.91 (65.83' LT) TO 568+23.50 (32.04' RT)																					10,13,18,34
DR8-11	I5NB 170+43.97 (66.46' RT) TO 170+89.99 (66.48' RT)																					10,13,24,34
DR8-12	I5NB 174+62.84 (95.93' RT) TO 174+87.80 (92.49' RT)																					24,34
DR8-13	I5NB 175+66.32 (85.14' RT) TO TI5NB 101+99.65 (35.39' LT)							1														3,8,24,25,34
DR8-14	I5SB 574+32.81 (16.96' RT)			2				1														3,8,20,34
DR8-15	I5NB 173+17.89 (96.71' RT)																					31,34,37,38,39,45
DR8-16	I5NB 171+33.24 (67.83' RT) TO 171+32.16 (88.41' RT)																					10,13,24,34
DR8-17	I5NB 171+32.16 (88.41' RT) TO 171+72.94 (96.35' RT)							1														3,8,24,34
DR8-18	I5NB 170+69.28 (70.33' RT) TO 174+74.00 (72.33' RT)																			360		24,34,48
DR8-19	I5NB 174+74.00 (72.33' RT) TO 175+66.32 (85.14 RT)																			80		24,32,34
DR8-20	I5NB 171+30.29 (102.02' RT) TO 172+33.67 (123.19' RT)																					14,15,24,34
DR8-21	I5NB 172+33.67 (123.32' RT) TO 174+03.94 (123.09' RT)																					4,24,34
DR8-22	I5SB 567+13.15 (27.73' RT) TO 568+62.15 (27.31' RT)							1														3,8,34
DR8-23	I5SB 568+62.15 (27.31' RT) TO 570+12.41 (27.08' RT)							1														3,8,34
DR8-24	TI5SB 11+31.69 (38.47' RT) TO 12+81.49 (37.17' RT)							1														3,8,34
DR8-25	TI5SB 12+81.49 (37.17' RT) TO 14+31.60 (37.65' RT)							1														3,8,34
	SHEET TOTAL			5		1	1	8								1				440		

ADD1_XL3497_SN_DR.xlsm				REGION NO.	STATE	FED. AID PROJ. NO.
4/30/2014 19:02				10	WASH	
DESIGNED BY	S. MERRYMAN	03/25/14				
ENTERED BY	S. MERRYMAN	03/25/14		JOB NUMBER		
CHECKED BY	E. QUINN	03/25/14		12C501		
PROJ. ENGR.	J. PEREZ	03/25/14				
REGION ADM.	K. DAYTON	03/25/14	05/02/14 AD1 - REVISED QTY	SM	CONTRACT NO.	
		DATE	DATE REVISION	BY		

Washington State Department of Transportation

I-5
M ST TO PORTLAND AVE - HOV

STRUCTURE NOTES - DRAINAGE

NTDR 73

STRUCTURE NOTES - DRAINAGE

NOTE:
THE FIRST NUMBER OF THE "CODE DESIGNATION" BELOW REFERS TO THE SHEET NO. OR THE SHEET REFERENCE NO. SHOWING THE DRAINAGE FEATURE.

THE SECOND NUMBER REFERS TO THE DRAINAGE FEATURE FOUND ON THAT SHEET.

CODE	LOCATION ▼ \ UNIT OF MEASURE ➢	REMOVING DRAINAGE STRUCTURE		ROADWAY EXCAVATION INCL. HAUL - AREA NW POND		ROADWAY EXCAVATION INCL. HAUL - AREA NE POND	CONCRETE INLET	GRATE INLET TYPE 2		DROP INTLET TYPE 1	QUARRY SPALLS	UNDERDRAIN PIPE 6 IN. DIAM.		UNDERDRAIN PIPE 18 IN. DIAM.	DRAIN PIPE 6 IN. DIAM.	DRAIN PIPE 8 IN. DIAM.		HIGH DENSITY POLYETHYLENE (HDPE) UNDERDRAIN PIPE 6 IN.D	HIGH-DENSITY POLYETHYLENE (HDPE) PIPE 18 IN. DIAM.	HIGH-DENSITY POLYETHYLENE (HDPE) PIPE 24 IN. DIAM.		SEE GENERAL NOTES
		EACH		C.Y.		C.Y.	EACH	EACH		EACH	TON	L.F.		L.F.	L.F.	L.F.		L.F.	L.F.	L.F.		
DR8-26	NOT USED																					
DR8-27	TI5NB 101+99.65 (35.39' LT) TO I5SB 574+32.81 (16.96' RT)																					3,8,34
DR8-28	I5SB 566+55.99 (14.75' RT) TO 566+70.30 (12.74' RT)																					34
DR8-29	I5SB 566+70.30 (12.74' RT) TO 569+04.35 (17.44 RT)																					34
DR8-30	I5SB 566+56.42 (19.67' RT) TO 566+55.99 (14.75' RT)																					29,34
DR8-31	I5NB 169+88.12 (16.36' RT) TO 169+92.62 (64.98' LT)																					29,34
DR8-32	I5NB 172+89.17 (15.83' RT) TO 172+90.60 (56.11' LT)																					29,34
DR8-33	TI5NB 101+17.96 (26.53' RT) TO 101+19.40 (52.17' LT)																					34
DR8-34	TI5NB 100+03.99 (118.85' RT)																					52
DR8-35	I5SB 568+22.00 (71.02' LT) TO 568+22.00 (66.11' LT)														5							32,34,48
DR8-36	I5SB 567+68.92 (70.19' LT) TO 567+68.29 (13.49' RT)	1																				22,34
DR8-37	TI5SB 11+86.61 (45.17' LT) TO 11+86.53 (19.66' LT)	1																				22,34
DR8-38	TI5SB 14+71.44 (23.98' LT) TO 14+71.44 (26.81' RT)	1																				22,34
DR8-39	TI5SB 17+86.37 TO 17+86.08 (26.81' RT)	1																				22,34
DR8-40	MDSI5 3467+94.15 (58.36' LT)	1																				22,34
DR8-41	I5NB 174+87.80 (92.49' RT) TO I5NB 175+66.32 (85.14' RT)																					2,5,7,24,34
DR8-42	I5NB 174+52.47 (65.36' RT) TO 174+87.90 (93.38' RT)											8			37							24,32,34
DR8-43	MDSI5 3464+95.50 (75.52' RT)	1																				22,34
DR8-44	I5NB 174+03.94 (123.09' RT) TO 175+19.65 (128.08' RT)						1															4,24,34
DR8-45	I5NB 175+19.65 (128.08' RT) TO TI5NB 101+99.22 (106.06' RT)						1				3											4,24,34,46
DR8-46	MDSI5 3467+93.45 (73.44' RT)	1																				22,34
DR8-47	MDSI5 3457+32.98 (1.70' RT)																					34,53
DR8-48	MDSI5 3459+86.32 (1.64' RT)																					34,53
DR8-49	MDSI5 3462+35.46 (1.87' RT)																					34,53
DR8-50	MDSI5 3464+85.24 (1.88' RT)																					34,53
DR8-51	MDSI5 3467+35.55 (1.85' RT)																					34,53
DR8-52	MDSI5 3457+33.43 (3.06' LT) TO 3457+32.98 (1.70' RT)																					53
DR8-53	MDSI5 3459+86.06 (3.05' LT) TO 3459+86.32 (1.64' RT)																					53
DR8-54	MDSI5 3462+36.12 (3.00' LT) TO 3462+35.46 (1.87' RT)																					53
DR8-55	MDSI5 3464+85.80 (2.87' LT) TO 3464+85.24 (1.88' RT)																					53
	SHEET TOTAL	7					2				3	8			42							

ADD1_XL3497_SN_DR.xlsm						
4/30/2014 19:02						
DESIGNED BY	S. MERRYMAN	03/25/14				
ENTERED BY	S. MERRYMAN	03/25/14				
CHECKED BY	E. QUINN	03/25/14				
PROJ. ENGR.	J. PEREZ	03/25/14				
REGION ADM.	K. DAYTON	03/25/14	05/02/14	AD1 - REVISED QTY	SM	
		DATE	DATE	REVISION	BY	

REGION NO.	STATE	FED. AID PROJ. NO.
10	WASH	
JOB NUMBER 12C501		
CONTRACT NO.		

Washington State Department of Transportation

I-5
M ST TO PORTLAND AVE - HOV

STRUCTURE NOTES - DRAINAGE

NTDR 74

SHEET 551 OF 1763 SHEETS

STRUCTURE NOTES - DRAINAGE

NOTE:
THE FIRST NUMBER OF THE "CODE DESIGNATION" BELOW REFERS TO THE SHEET NO. OR THE SHEET REFERENCE NO. SHOWING THE DRAINAGE FEATURE.

THE SECOND NUMBER REFERS TO THE DRAINAGE FEATURE FOUND ON THAT SHEET.

CODE	LOCATION ⤵ \ UNIT OF MEASURE ➢	CL. V REINF. CONC. CULV. PIPE 12 IN. DIAM.	CATCH BASIN TYPE 1	CATCH BASIN TYPE 2 48 IN. DIAM.		CATCH BASIN TYPE 2 60 IN. DIAM.	CATCH BASIN TYPE 2 72 IN. DIAM.	TESTING STORM SEWER PIPE		CL. IV REINF. CONC. STORM SEWER PIPE 15 IN. DIAM.	CL. V REINF. CONC. STORM SEWER PIPE 12 IN. DIAM.	CL. V REINF. CONC. STORM SEWER PIPE 18 IN. DIAM.		CL. V REINF. CONC. STORM SEWER PIPE 24 IN. DIAM.	SCHEDULE A STORM SEWER PIPE 12 IN. DIAM.	SCHEDULE A STORM SEWER PIPE 18 IN. DIAM.		SCHEDULE A STORM SEWER PIPE 24 IN. DIAM.	SCHEDULE B STORM SEWER PIPE 18 IN. DIAM.	SCHEDULE B STORM SEWER PIPE 24 IN. DIAM.		SEE GENERAL NOTES
		L.F.	EACH	EACH		EACH	EACH	L.F.		L.F.	L.F.	L.F.		L.F.	L.F.	L.F.		L.F.	L.F.	L.F.		
DR8-26	NOT USED																					
DR8-27	TI5NB 101+99.65 (35.39' LT) TO I5SB 574+32.81 (16.96' RT)																	9				3,8,34
DR8-28	I5SB 566+55.99 (14.75' RT) TO 566+70.30 (12.74' RT)																					34
DR8-29	I5SB 566+70.30 (12.74' RT) TO 569+04.35 (17.44 RT)																					34
DR8-30	I5SB 566+56.42 (19.67' RT) TO 566+55.99 (14.75' RT)																					29,34
DR8-31	I5NB 169+88.12 (16.36' RT) TO 169+92.62 (64.98' LT)																					29,34
DR8-32	I5NB 172+89.17 (15.83' RT) TO 172+90.60 (56.11' LT)																					29,34
DR8-33	TI5NB 101+17.96 (26.53' RT) TO 101+19.40 (52.17' LT)																					34
DR8-34	TI5NB 100+03.99 (118.85' RT)																					52
DR8-35	I5SB 568+22.00 (71.02' LT) TO 568+22.00 (66.11' LT)																					32,34,48
DR8-36	I5SB 567+68.92 (70.19' LT) TO 567+68.29 (13.49' RT)																					22,34
DR8-37	TI5SB 11+86.61 (45.17' LT) TO 11+86.53 (19.66' LT)																					22,34
DR8-38	TI5SB 14+71.44 (23.98' LT) TO 14+71.44 (26.81' RT)																					22,34
DR8-39	TI5SB 17+86.37 TO 17+86.08 (26.81' RT)																					22,34
DR8-40	MDSI5 3467+94.15 (58.36' LT)																					22,34
DR8-41	I5NB 174+87.80 (92.49' RT) TO I5NB 175+66.32 (85.14' RT)			1				78								78						2,5,7,24,34
DR8-42	I5NB 174+52.47 (65.36' RT) TO 174+87.90 (93.38' RT)							37														24,32,34
DR8-43	MDSI5 3464+95.50 (75.52' RT)																					22,34
DR8-44	I5NB 174+03.94 (123.09' RT) TO 175+19.65 (128.08' RT)							121							121							4,24,34
DR8-45	I5NB 175+19.65 (128.08' RT) TO TI5NB 101+99.22 (106.06' RT)							100							100							4,24,34,46
DR8-46	MDSI5 3467+93.45 (73.44' RT)																					22,34
DR8-47	MDSI5 3457+32.98 (1.70' RT)																					34,53
DR8-48	MDSI5 3459+86.32 (1.64' RT)																					34,53
DR8-49	MDSI5 3462+35.46 (1.87' RT)																					34,53
DR8-50	MDSI5 3464+85.24 (1.88' RT)																					34,53
DR8-51	MDSI5 3467+35.55 (1.85' RT)																					34,53
DR8-52	MDSI5 3457+33.43 (3.06' LT) TO 3457+32.98 (1.70' RT)																					53
DR8-53	MDSI5 3459+86.06 (3.05' LT) TO 3459+86.32 (1.64' RT)																					53
DR8-54	MDSI5 3462+36.12 (3.00' LT) TO 3462+35.46 (1.87' RT)										5											53
DR8-55	MDSI5 3464+85.80 (2.87' LT) TO 3464+85.24 (1.88' RT)																					53
	SHEET TOTAL			1				336			5				221	78		9				

ADD1_XL3497_SN_DR.xlsm					REGION NO.	STATE	FED. AID PROJ. NO.	
4/30/2014 19:02					10	WASH		
DESIGNED BY	S. MERRYMAN	03/25/14						
ENTERED BY	S. MERRYMAN	03/25/14			JOB NUMBER			
CHECKED BY	E. QUINN	03/25/14			12C501			
PROJ. ENGR.	J. PEREZ	03/25/14			CONTRACT NO.			
REGION ADM.	K. DAYTON	03/25/14	05/02/14	AD1 - REVISED QTY	SM			
		DATE	DATE	REVISION	BY			

Washington State Department of Transportation

I-5
M ST TO PORTLAND AVE - HOV

STRUCTURE NOTES - DRAINAGE

NTDR 75

SHEET 552 OF 1763 SHEETS

STRUCTURE NOTES - DRAINAGE

NOTE:
THE FIRST NUMBER OF THE "CODE DESIGNATION" BELOW REFERS TO THE SHEET NO. OR THE SHEET REFERENCE NO. SHOWING THE DRAINAGE FEATURE.

THE SECOND NUMBER REFERS TO THE DRAINAGE FEATURE FOUND ON THAT SHEET.

CODE	LOCATION ⤵ \ UNIT OF MEASURE ➢	TRENCHLESS PIPE 24 IN. DIAM.	DUCTILE IRON STORM SEWER PIPE 12 IN. DIAM.				MEDIA FILTER DRAIN	POND MARKER		BMP MARKER	STRUCTURE EXCAVATION CLASS B INCL. HAUL	STRUCTURE EXCAV. CL.B INCL. HAUL-CONTAMINATED MATERIAL		SHORING OR EXTRA EXCAVATION CLASS B	GRAVEL BACKFILL FOR DRAIN	LLDPE GEOMEMBRANE LINING SYSTEM		CONTROLLED DENSITY FILL	FLOW FILL PIPE	COMMERCIAL CONCRETE		SEE GENERAL NOTES
		L.F.	L.F.				L.F.	EACH		EACH	C.Y.	C.Y.		S.F.	C.Y.	S.Y.		C.Y.	C.Y.	C.Y.		
DR8-26	NOT USED																					
DR8-27	TI5NB 101+99.65 (35.39' LT) TO I5SB 574+32.81 (16.96' RT)										30			100								3,8,34
DR8-28	I5SB 566+55.99 (14.75' RT) TO 566+70.30 (12.74' RT)																		2			34
DR8-29	I5SB 566+70.30 (12.74' RT) TO 569+04.35 (17.44 RT)																		27			34
DR8-30	I5SB 566+56.42 (19.67' RT) TO 566+55.99 (14.75' RT)																		1			29,34
DR8-31	I5NB 169+88.12 (16.36' RT) TO 169+92.62 (64.98' LT)																		1			29,34
DR8-32	I5NB 172+89.17 (15.83' RT) TO 172+90.60 (56.11' LT)																		5			29,34
DR8-33	TI5NB 101+17.96 (26.53' RT) TO 101+19.40 (52.17' LT)																		5			34
DR8-34	TI5NB 100+03.99 (118.85' RT)																			3		52
DR8-35	I5SB 568+22.00 (71.02' LT) TO 568+22.00 (66.11' LT)													10								32,34,48
DR8-36	I5SB 567+68.92 (70.19' LT) TO 567+68.29 (13.49' RT)																					22,34
DR8-37	TI5SB 11+86.61 (45.17' LT) TO 11+86.53 (19.66' LT)																					22,34
DR8-38	TI5SB 14+71.44 (23.98' LT) TO 14+71.44 (26.81' RT)																					22,34
DR8-39	TI5SB 17+86.37 TO 17+86.08 (26.81' RT)																					22,34
DR8-40	MDSI5 3467+94.15 (58.36' LT)																					22,34
DR8-41	I5NB 174+87.80 (92.49' RT) TO I5NB 175+66.32 (85.14' RT)											40		210								2,5,7,24,34
DR8-42	I5NB 174+52.47 (65.36' RT) TO 174+87.90 (93.38' RT)											10		100	1							24,32,34
DR8-43	MDSI5 3464+95.50 (75.52' RT)																					22,34
DR8-44	I5NB 174+03.94 (123.09' RT) TO 175+19.65 (128.08' RT)											110		870								4,24,34
DR8-45	I5NB 175+19.65 (128.08' RT) TO TI5NB 101+99.22 (106.06' RT)											70		510								4,24,34,46
DR8-46	MDSI5 3467+93.45 (73.44' RT)																					22,34
DR8-47	MDSI5 3457+32.98 (1.70' RT)																					34,53
DR8-48	MDSI5 3459+86.32 (1.64' RT)																					34,53
DR8-49	MDSI5 3462+35.46 (1.87' RT)																					34,53
DR8-50	MDSI5 3464+85.24 (1.88' RT)																					34,53
DR8-51	MDSI5 3467+35.55 (1.85' RT)																					34,53
DR8-52	MDSI5 3457+33.43 (3.06' LT) TO 3457+32.98 (1.70' RT)		5								10			20					1			53
DR8-53	MDSI5 3459+86.06 (3.05' LT) TO 3459+86.32 (1.64' RT)		5								10			20					1			53
DR8-54	MDSI5 3462+36.12 (3.00' LT) TO 3462+35.46 (1.87' RT)										10			20					1			53
DR8-55	MDSI5 3464+85.80 (2.87' LT) TO 3464+85.24 (1.88' RT)		5								10			20					1			53
	SHEET TOTAL		15								70	230		1880	1				45	3		

ADD1_XL3497_SN_DR.xlsm					REGION NO.	STATE	FED. AID PROJ. NO.	
4/30/2014 19:02					10	WASH		
DESIGNED BY	S. MERRYMAN	03/25/14						
ENTERED BY	S. MERRYMAN	03/25/14						
CHECKED BY	E. QUINN	03/25/14			JOB NUMBER 12C501			
PROJ. ENGR.	J. PEREZ	03/25/14						
REGION ADM.	K. DAYTON	03/25/14	05/02/14	AD1 - REVISED QTY	SM	CONTRACT NO.		
		DATE	DATE	REVISION	BY			

Washington State Department of Transportation

I-5
M ST TO PORTLAND AVE - HOV

STRUCTURE NOTES - DRAINAGE

NTDR 76

SHEET 553 OF 1763 SHEETS

STRUCTURE NOTES - DRAINAGE

NOTE:
THE FIRST NUMBER OF THE "CODE DESIGNATION" BELOW REFERS TO THE SHEET NO. OR THE SHEET REFERENCE NO. SHOWING THE DRAINAGE FEATURE.

THE SECOND NUMBER REFERS TO THE DRAINAGE FEATURE FOUND ON THAT SHEET.

CODE	LOCATION ⤵ \ UNIT OF MEASURE ➢	PLUGGING EXISTING PIPE	ADJUST INLET	CONNECTION TO DRAINAGE STRUCTURE		ABANDON DRAINAGE STRUCTURE	ADJUST MANHOLE	MANHOLE 48 IN. DIAM. TYPE 3		MANHOLE 60 IN. DIAM. TYPE 3	MANHOLE 72 IN. DIAM. TYPE 3	MANHOLE ADDITIONAL HEIGHT 48 IN. DIAM. TYPE 3		MANHOLE ADDITIONAL HEIGHT 72 IN. DIAM. TYPE 3	ADJUST CATCH BASIN	LOCKING SOLID METAL COVER AND FRAME FOR CATCH BASIN		MANHOLE RING AND SOLID COVER	OPEN FLOW RESTRICTOR	CONSTRUCTION GEOTEXTILE FOR UNDERGROUND DRAINAGE		SEE GENERAL NOTES
		EACH	EACH	EACH		EACH	EACH	EACH		EACH	EACH	L.F.		L.F.	EACH	EACH		EACH	EACH	S.Y.		
DR8-26	NOT USED																					
DR8-27	TI5NB 101+99.65 (35.39' LT) TO I5SB 574+32.81 (16.96' RT)							1														3,8,34
DR8-28	I5SB 566+55.99 (14.75' RT) TO 566+70.30 (12.74' RT)					1																34
DR8-29	I5SB 566+70.30 (12.74' RT) TO 569+04.35 (17.44 RT)					1																34
DR8-30	I5SB 566+56.42 (19.67' RT) TO 566+55.99 (14.75' RT)	1				1																29,34
DR8-31	I5NB 169+88.12 (16.36' RT) TO 169+92.62 (64.98' LT)	1				1																29,34
DR8-32	I5NB 172+89.17 (15.83' RT) TO 172+90.60 (56.11' LT)	3				1																29,34
DR8-33	TI5NB 101+17.96 (26.53' RT) TO 101+19.40 (52.17' LT)					1																34
DR8-34	TI5NB 100+03.99 (118.85' RT)						1															52
DR8-35	I5SB 568+22.00 (71.02' LT) TO 568+22.00 (66.11' LT)																					32,34,48
DR8-36	I5SB 567+68.92 (70.19' LT) TO 567+68.29 (13.49' RT)																					22,34
DR8-37	TI5SB 11+86.61 (45.17' LT) TO 11+86.53 (19.66' LT)																					22,34
DR8-38	TI5SB 14+71.44 (23.98' LT) TO 14+71.44 (26.81' RT)																					22,34
DR8-39	TI5SB 17+86.37 TO 17+86.08 (26.81' RT)																					22,34
DR8-40	MDSI5 3467+94.15 (58.36' LT)																					22,34
DR8-41	I5NB 174+87.80 (92.49' RT) TO I5NB 175+66.32 (85.14' RT)																					2,5,7,24,34
DR8-42	I5NB 174+52.47 (65.36' RT) TO 174+87.90 (93.38' RT)																			3		24,32,34
DR8-43	MDSI5 3464+95.50 (75.52' RT)																					22,34
DR8-44	I5NB 174+03.94 (123.09' RT) TO 175+19.65 (128.08' RT)																					4,24,34
DR8-45	I5NB 175+19.65 (128.08' RT) TO TI5NB 101+99.22 (106.06' RT)																					4,24,34,46
DR8-46	MDSI5 3467+93.45 (73.44' RT)																					22,34
DR8-47	MDSI5 3457+32.98 (1.70' RT)														1							34,53
DR8-48	MDSI5 3459+86.32 (1.64' RT)														1							34,53
DR8-49	MDSI5 3462+35.46 (1.87' RT)														1							34,53
DR8-50	MDSI5 3464+85.24 (1.88' RT)														1							34,53
DR8-51	MDSI5 3467+35.55 (1.85' RT)														1							34,53
DR8-52	MDSI5 3457+33.43 (3.06' LT) TO 3457+32.98 (1.70' RT)														1							53
DR8-53	MDSI5 3459+86.06 (3.05' LT) TO 3459+86.32 (1.64' RT)														1							53
DR8-54	MDSI5 3462+36.12 (3.00' LT) TO 3462+35.46 (1.87' RT)														1							53
DR8-55	MDSI5 3464+85.80 (2.87' LT) TO 3464+85.24 (1.88' RT)														1							53
	SHEET TOTAL	5				6	1	1							9					3		

ADD1_XL3497_SN_DR.xlsm
4/30/2014 19:02

DESIGNED BY	S. MERRYMAN	03/25/14			
ENTERED BY	S. MERRYMAN	03/25/14			
CHECKED BY	E. QUINN	03/25/14			
PROJ. ENGR.	J. PEREZ	03/25/14			
REGION ADM.	K. DAYTON	03/25/14	05/02/14	AD1 - REVISED QTY	SM
		DATE	DATE	REVISION	BY

REGION NO.	STATE	FED. AID PROJ. NO.
10	WASH	

JOB NUMBER
12C501
CONTRACT NO.

Washington State Department of Transportation

I-5
M ST TO PORTLAND AVE - HOV

STRUCTURE NOTES - DRAINAGE

NTDR 77

SHEET 554 OF 1763 SHEETS

STRUCTURE NOTES - DRAINAGE

NOTE:
THE FIRST NUMBER OF THE "CODE DESIGNATION" BELOW REFERS TO THE SHEET NO. OR THE SHEET REFERENCE NO. SHOWING THE DRAINAGE FEATURE.

THE SECOND NUMBER REFERS TO THE DRAINAGE FEATURE FOUND ON THAT SHEET.

CODE	LOCATION ⩔ \ UNIT OF MEASURE ⩥	REMOVING DRAINAGE STRUCTURE		ROADWAY EXCAVATION INCL. HAUL - AREA NW POND		ROADWAY EXCAVATION INCL. HAUL - AREA NE POND	CONCRETE INLET	GRATE INLET TYPE 2		DROP INTLET TYPE 1	QUARRY SPALLS	UNDERDRAIN PIPE 6 IN. DIAM.		UNDERDRAIN PIPE 18 IN. DIAM.	DRAIN PIPE 6 IN. DIAM.	DRAIN PIPE 8 IN. DIAM.		HIGH DENSITY POLYETHYLENE (HDPE) UNDERDRAIN PIPE 6 IN.D	HIGH-DENSITY POLYETHYLENE (HDPE) PIPE 18 IN. DIAM.	HIGH-DENSITY POLYETHYLENE (HDPE) PIPE 24 IN. DIAM.		SEE GENERAL NOTES
		EACH		C.Y.		C.Y.	EACH	EACH		EACH	TON	L.F.		L.F.	L.F.	L.F.		L.F.	L.F.	L.F.		
DR8-56	MDSI5 3467+35.98 (2.94' LT) TO 3467+35.55 (1.85' RT)																					53
DR8-57	I5NB 175+75.26 (134.10') RT TO TI5NB 101+99.22 (106.06' RT)						1				3											
DR9-1	MDSI5 3470+91.68 (67.19' RT) TO 3470+95.42 (4.75' LT)																					34
	SHEET TOTAL						1				3											
	PROJECT TOTAL	25		17720		11955	6	123		2	2117	6024		1330	1332	97		972	170	301		

ADD1_XL3497_SN_DR.xlsm					
4/30/2014 19:02					
DESIGNED BY	S. MERRYMAN	03/25/14			
ENTERED BY	S. MERRYMAN	03/25/14			
CHECKED BY	E. QUINN	03/25/14			
PROJ. ENGR.	J. PEREZ	03/25/14			
REGION ADM.	K. DAYTON	03/25/14	05/02/14	AD1 - REVISED PROJECT TOTALS	SM
		DATE	DATE	REVISION	BY

REGION NO.	STATE	FED. AID PROJ. NO.
10	WASH	
JOB NUMBER 12C501		
CONTRACT NO.		

Washington State Department of Transportation

I-5
M ST TO PORTLAND AVE - HOV

STRUCTURE NOTES - DRAINAGE

NTDR 78

SHEET 555 OF 1763 SHEETS

STRUCTURE NOTES - DRAINAGE

NOTE:
THE FIRST NUMBER OF THE "CODE DESIGNATION" BELOW REFERS TO THE SHEET NO. OR THE SHEET REFERENCE NO. SHOWING THE DRAINAGE FEATURE.

THE SECOND NUMBER REFERS TO THE DRAINAGE FEATURE FOUND ON THAT SHEET.

CODE	LOCATION ∨ \ UNIT OF MEASURE >	CL. V REINF. CONC. CULV. PIPE 12 IN. DIAM.	CATCH BASIN TYPE 1	CATCH BASIN TYPE 2 48 IN. DIAM.		CATCH BASIN TYPE 2 60 IN. DIAM.	CATCH BASIN TYPE 2 72 IN. DIAM.	TESTING STORM SEWER PIPE		CL. IV REINF. CONC. STORM SEWER PIPE 15 IN. DIAM.	CL. V REINF. CONC. STORM SEWER PIPE 12 IN. DIAM.	CL. V REINF. CONC. STORM SEWER PIPE 18 IN. DIAM.		CL. V REINF. CONC. STORM SEWER PIPE 24 IN. DIAM.	SCHEDULE A STORM SEWER PIPE 12 IN. DIAM.	SCHEDULE A STORM SEWER PIPE 18 IN. DIAM.		SCHEDULE A STORM SEWER PIPE 24 IN. DIAM.	SCHEDULE B STORM SEWER PIPE 18 IN. DIAM.	SCHEDULE B STORM SEWER PIPE 24 IN. DIAM.		SEE GENERAL NOTES
		L.F.	EACH	EACH		EACH	EACH	L.F.		L.F.	L.F.	L.F.		L.F.	L.F.	L.F.		L.F.	L.F.	L.F.		
DR8-56	MDSI5 3467+35.98 (2.94' LT) TO 3467+35.55 (1.85' RT)																					53
DR8-57	I5NB 175+75.26 (134.10') RT TO T15NB 101+99.22 (106.06' RT)							88			88											
DR9-1	MDSI5 3470+91.68 (67.19' RT) TO 3470+95.42 (4.75' LT)																					34
	SHEET TOTAL							88			88											
	PROJECT TOTAL	163	10	22		6	5	217.19		36	3225	3526		336	3652	8021		648	68	154		

ADD1_XL3497_SN_DR.xlsm								
4/30/2014 19:02								
DESIGNED BY	S. MERRYMAN	03/25/14						
ENTERED BY	S. MERRYMAN	03/25/14						
CHECKED BY	E. QUINN	03/25/14						
PROJ. ENGR.	J. PEREZ	03/25/14						
REGION ADM.	K. DAYTON	03/25/14	05/02/14	AD1 - REVISED PROJECT TOTALS	SM			
		DATE	DATE	REVISION	BY			

REGION NO.	STATE	FED. AID PROJ. NO.
10	WASH	

JOB NUMBER
12C501

CONTRACT NO.

Washington State Department of Transportation

I-5
M ST TO PORTLAND AVE - HOV

STRUCTURE NOTES - DRAINAGE

NTDR 79

STRUCTURE NOTES - DRAINAGE

NOTE:
THE FIRST NUMBER OF THE "CODE DESIGNATION" BELOW REFERS TO THE SHEET NO. OR THE SHEET REFERENCE NO. SHOWING THE DRAINAGE FEATURE.

THE SECOND NUMBER REFERS TO THE DRAINAGE FEATURE FOUND ON THAT SHEET.

CODE	LOCATION > \ UNIT OF MEASURE >	TRENCHLESS PIPE 24 IN. DIAM.	DUCTILE IRON STORM SEWER PIPE 12 IN. DIAM.				MEDIA FILTER DRAIN	POND MARKER		BMP MARKER	STRUCTURE EXCAVATION CLASS B INCL. HAUL	STRUCTURE EXCAV. CL.B INCL. HAUL-CONTAMINATED MATERIAL		SHORING OR EXTRA EXCAVATION CLASS B	GRAVEL BACKFILL FOR DRAIN	LLDPE GEOMEMBRANE LINING SYSTEM		CONTROLLED DENSITY FILL	FLOW FILL PIPE	COMMERCIAL CONCRETE		SEE GENERAL NOTES
		L.F.	L.F.				L.F.	EACH		EACH	C.Y.	C.Y.		S.F.	C.Y.	S.Y.		C.Y.	C.Y.	C.Y.		
DR8-56	MDSI5 3467+35.98 (2.94' LT) TO 3467+35.55 (1.85' RT)		5								10			20					1			53
DR8-57	I5NB 175+75.26 (134.10') RT TO TI5NB 101+99.22 (106.06' RT)										10			200								
DR9-1	MDSI5 3470+91.68 (67.19' RT) TO 3470+95.42 (4.75' LT)																		5			34
	SHEET TOTAL		5								20			220					6			
	PROJECT TOTAL	157	239				2670	4		42	25440	970		186350	1811	12410		254	708	3		

ADD1_XL3497_SN_DR.xlsm
4/30/2014 19:02

DESIGNED BY	S. MERRYMAN	03/25/14			
ENTERED BY	S. MERRYMAN	03/25/14			
CHECKED BY	E. QUINN	03/25/14			
PROJ. ENGR.	J. PEREZ	03/25/14			
REGION ADM.	K. DAYTON	03/25/14	05/02/14	AD1 REVISED PROJECT TOTALS	SM
		DATE	DATE	REVISION	BY

REGION NO.	STATE	FED. AID PROJ. NO.
10	WASH	

JOB NUMBER 12C501

CONTRACT NO.

Washington State Department of Transportation

I-5
M ST TO PORTLAND AVE - HOV

STRUCTURE NOTES - DRAINAGE

NTDR 80

SHEET 557 OF 1763 SHEETS

STRUCTURE NOTES - DRAINAGE

NOTE:
THE FIRST NUMBER OF THE "CODE DESIGNATION" BELOW REFERS TO THE SHEET NO. OR THE SHEET REFERENCE NO. SHOWING THE DRAINAGE FEATURE.

THE SECOND NUMBER REFERS TO THE DRAINAGE FEATURE FOUND ON THAT SHEET.

CODE	LOCATION ⤵ \ UNIT OF MEASURE ➢	PLUGGING EXISTING PIPE	ADJUST INLET	CONNECTION TO DRAINAGE STRUCTURE		ABANDON DRAINAGE STRUCTURE	ADJUST MANHOLE	MANHOLE 48 IN. DIAM. TYPE 3		MANHOLE 60 IN. DIAM. TYPE 3	MANHOLE 72 IN. DIAM. TYPE 3	MANHOLE ADDITIONAL HEIGHT 48 IN. DIAM. TYPE 3		MANHOLE ADDITIONAL HEIGHT 72 IN. DIAM. TYPE 3	ADJUST CATCH BASIN	LOCKING SOLID METAL COVER AND FRAME FOR CATCH BASIN		MANHOLE RING AND SOLID COVER	OPEN FLOW RESTRICTOR	CONSTRUCTION GEOTEXTILE FOR UNDERGROUND DRAINAGE		SEE GENERAL NOTES
		EACH	EACH	EACH		EACH	EACH	EACH		EACH	EACH	L.F.		L.F.	EACH	EACH		EACH	EACH	S.Y.		
DR8-56	MDSI5 3467+35.98 (2.94' LT) TO 3467+35.55 (1.85' RT)														1							53
DR8-57	I5NB 175+75.26 (134.10') RT TO TI5NB 101+99.22 (108.06' RT)																					
DR9-1	MDSI5 3470+91.68 (67.19' RT) TO 3470+95.42 (4.75' LT)					1																34
	SHEET TOTAL					1									1							
	PROJECT TOTAL	40	31	41		133	14	73		1	4	88		2	30	29		1	2	5453		

ADD1_XL3497_SN_DR.xlsm					
4/30/2014 19:02					
DESIGNED BY	S. MERRYMAN	03/25/14			
ENTERED BY	S. MERRYMAN	03/25/14			
CHECKED BY	E. QUINN	03/25/14			
PROJ. ENGR.	J. PEREZ	03/25/14			
REGION ADM.	K. DAYTON	03/25/14	05/02/14	AD1 - REVISED PROJECT TOTALS	SM
		DATE	DATE	REVISION	BY

REGION NO.	STATE	FED. AID PROJ. NO.
10	WASH	

JOB NUMBER
12C501

CONTRACT NO.

Washington State Department of Transportation

I-5
M ST TO PORTLAND AVE - HOV

STRUCTURE NOTES - DRAINAGE

NTDR 81

SHEET 558 OF 1763 SHEETS

STAGED DRAINAGE TABLE

SHEET DR1A

DRAINAGE CODE	CONSTRUCTION STAGE									
	1	1A	1B	1C	1D	2	3A	3B	4	5
DR1A-1	N	AJ	-	-	-	-	-	-	-	-
DR1A-2	N	-	-	-	-	-	-	-	-	-
DR1A-3	N	-	-	-	-	-	-	-	-	-
DR1A-4	N	-	-	-	-	-	-	-	-	-
DR1A-5	N	-	-	-	-	-	-	-	-	-
DR1A-6	N	-	-	-	-	-	-	-	-	-

SHEET DR1

DRAINAGE CODE	CONSTRUCTION STAGE									
	1	1A	1B	1C	1D	2	3A	3B	4	5
DR1-1	-	-	AJ	-	-	-	-	-	-	-
DR1-2	-	-	AJ	-	-	-	-	-	-	-
DR1-3	-	-	-	-	AJ	-	-	-	-	-
DR1-4	-	-	-	-	AJ	-	-	-	-	-
DR1-5	N	-	AJ	-	-	-	-	-	-	-
DR1-6	N	-	AJ	-	-	-	-	-	-	-
DR1-7	N	-	AJ	-	-	-	-	-	-	-
DR1-8	N	-	AJ	-	-	-	-	-	-	-
DR1-9	N	-	AJ	-	-	-	-	-	-	-
DR1-10	N	-	AJ	-	-	-	-	-	-	-
DR1-11	N	-	AJ	-	-	-	-	-	-	-
DR1-12	N	-	AJ	-	-	-	-	-	-	-
DR1-13	N	-	AJ	-	-	-	-	-	-	-
DR1-14	N	-	AJ	-	-	-	-	-	-	-
DR1-15	N	-	AJ	-	-	-	-	-	-	-
DR1-16	N	-	-	-	-	-	-	-	-	-
DR1-17	N	-	-	-	-	-	-	-	-	-
DR1-18	N	-	-	-	-	-	-	-	-	-

SHEET DR2

DRAINAGE CODE	CONSTRUCTION STAGE									
	1	1A	1B	1C	1D	2	3A	3B	4	5
DR2-1	-	-	AJ	-	-	-	-	-	-	-
DR2-2	-	-	AJ	-	-	-	-	-	-	-
DR2-3	-	-	AJ	-	-	-	-	-	-	-
DR2-4	-	-	AJ	-	-	-	-	-	-	-
DR2-5	-	-	AJ	-	-	-	-	-	-	-
DR2-6	-	-	AJ	-	-	-	-	-	-	-
DR2-7	-	-	AJ	-	-	-	-	-	-	-
DR2-8	-	-	N/AJ	-	-	-	-	-	-	-
DR2-9	-	-	N	-	-	-	-	-	-	-
DR2-10	-	-	N	-	-	-	-	-	-	-
DR2-11	-	-	R	-	-	-	-	-	-	-
DR2-12	-	-	R	-	-	-	-	-	-	-
DR2-13	-	-	R	-	-	-	-	-	-	-
DR2-14	-	-	R	-	-	-	-	-	-	-
DR2-15	-	-	R	-	-	-	-	-	-	-
DR2-16	-	-	-	-	AJ	-	-	-	-	-
DR2-17	-	-	-	-	AJ	-	-	-	-	-
DR2-18	-	-	-	-	AJ	-	-	-	-	-
DR2-19	-	-	-	-	AJ	-	-	-	-	-
DR2-20	-	-	-	-	AJ	-	-	-	-	-
DR2-21	-	-	-	-	AJ	-	-	-	-	-
DR2-22	-	-	-	-	N	-	-	-	-	-

SHEET DR2

DRAINAGE CODE	CONSTRUCTION STAGE									
	1	1A	1B	1C	1D	2	3A	3B	4	5
DR2-23	-	-	-	-	N	-	-	-	-	-
DR2-24	-	AJ	-	-	-	-	-	-	-	AB
DR2-25	-	AJ	-	-	-	-	-	-	-	AB
DR2-26	-	AJ	-	-	-	-	-	-	-	AB
DR2-27	-	AJ	-	-	-	-	-	-	-	AB
DR2-28	-	N	-	-	-	-	-	-	-	-
DR2-29	-	N/S	-	-	S	-	-	-	S	-
DR2-30	-	-	N	-	-	-	-	-	-	-
DR2-31	-	N	-	-	-	-	-	-	-	-

SHEET DR3

DRAINAGE CODE	CONSTRUCTION STAGE									
	1	1A	1B	1C	1D	2	3A	3B	4	5
DR3-1	-	-	N	-	-	-	-	-	-	-
DR3-2	-	-	N	-	-	-	-	-	-	-
DR3-3	-	-	N	-	-	-	-	-	-	-
DR3-4	-	-	N	-	-	-	-	-	-	-
DR3-5	-	-	N	-	-	-	-	-	-	-
DR3-6	-	-	N	-	-	-	-	-	-	-
DR3-7	-	-	N	-	-	-	-	-	-	-
DR3-8	-	-	-	-	-	-	N	-	-	-
DR3-9	-	-	N	-	-	-	-	-	-	-
DR3-10	-	-	-	-	-	-	S	S	S	-
DR3-11	-	-	R	-	-	-	-	-	-	-
DR3-12	-	-	N/AJ	-	-	-	-	-	-	-
DR3-13	-	-	R	-	-	-	-	-	-	-
DR3-14	-	-	R	-	-	-	-	-	-	-
DR3-15	-	-	R	-	-	-	-	-	-	-
DR3-16	-	-	R	-	-	-	-	-	-	-
DR3-17	-	-	AJ	-	-	-	-	-	-	-
DR3-18	-	-	AJ	-	-	-	-	-	-	-
DR3-19	-	-	AJ	-	-	-	-	-	-	AB
DR3-20	-	-	R	-	-	-	-	-	-	-
DR3-21	-	-	R	-	-	-	-	-	-	-
DR3-22	-	-	-	-	-	-	-	-	-	N
DR3-23	-	-	-	-	AJ	-	-	-	-	-
DR3-24	-	-	-	-	AJ	-	-	-	-	-
DR3-25	-	-	-	-	-	-	-	-	R	-
DR3-26	-	-	-	-	-	-	-	-	R	-
DR3-27	-	-	-	-	-	-	-	-	AJ	-
DR3-28	-	-	-	-	-	-	-	-	AJ	-
DR3-29	-	-	-	-	-	-	-	-	-	R
DR3-30	-	-	N	-	-	-	-	-	-	-
DR3-31	-	-	-	-	-	-	-	-	AJ	-
DR3-32	-	-	-	-	-	-	-	-	R	-
DR3-33	-	-	-	-	-	-	-	-	R	-
DR3-34	-	-	-	-	-	-	-	-	N	-
DR3-35	-	-	-	-	-	-	-	-	N	-
DR3-36	-	-	-	-	-	-	-	-	N	-
DR3-37	-	-	-	-	-	-	-	-	N	-
DR3-38	-	-	-	-	-	-	-	-	N	-
DR3-39	-	-	-	-	-	-	-	-	N	-
DR3-40	-	-	-	-	-	-	-	-	R	-
DR3-41	-	-	-	-	-	-	-	-	R	-

SHEET DR3

DRAINAGE CODE	CONSTRUCTION STAGE									
	1	1A	1B	1C	1D	2	3A	3B	4	5
DR3-42	-	-	-	-	-	-	-	-	N	-
DR3-43	-	-	-	-	-	-	-	-	-	R
DR3-44	-	-	-	-	-	R	-	-	-	-
DR3-45	-	-	-	-	-	R	-	-	-	-
DR3-46	-	-	-	-	-	R	-	-	-	-
DR3-47	-	-	-	-	AJ	R	-	-	-	-
DR3-48	-	-	-	-	-	N/S	-	-	-	S
DR3-49	-	-	AJ	-	-	-	-	-	-	AB
DR3-50	-	-	AJ	-	-	-	-	-	-	AB
DR3-51	-	-	AJ	-	-	-	-	-	-	AB
DR3-52	-	-	-	-	-	AJ	-	-	-	AB
DR3-53	-	-	-	-	-	R	-	-	-	-
DR3-54	-	-	AJ	AB	-	-	-	-	-	-
DR3-55	-	-	AJ	-	-	-	-	-	-	AB
DR3-56	-	-	N	-	-	-	-	-	-	-
DR3-57	-	-	-	-	-	-	N	-	-	-
DR3-58	-	-	-	-	-	-	-	-	N	-
DR3-59	-	AJ	-	-	-	-	-	-	-	AB
DR3-60	-	-	-	-	-	-	-	-	N	-
DR3-61	-	AJ	-	-	-	-	-	-	-	AB
DR3-62	-	-	N	-	-	-	-	-	-	-
DR3-63	-	-	S	-	N	-	-	-	-	-
DR3-64	-	-	N	-	-	-	-	-	-	-
DR3-65	-	-	N	-	-	-	-	-	-	-
DR3-66	-	-	-	-	-	-	-	-	N	-
DR3-67	-	-	N	-	-	-	-	-	-	-
DR3-68	-	-	N	-	-	-	-	-	-	-
DR3-69	-	-	N	-	-	-	-	-	-	-
DR3-70	-	-	N	-	-	-	-	-	-	-
DR3-71	-	-	N	-	-	-	-	-	-	-
DR3-72	-	-	N	-	-	-	-	-	-	-
DR3-73	-	-	N	-	-	-	-	-	-	-
DR3-74	-	-	-	-	-	-	N	-	-	-
DR3-75	-	-	N	-	-	-	-	-	-	-
DR3-76	-	-	N	-	-	-	-	-	-	-
DR3-77	-	-	N	-	-	-	-	-	-	-
DR3-78	N O T U S E D									
DR3-79	-	-	-	-	-	-	-	-	N	-
DR3-80	-	-	-	-	-	-	-	-	N	-
DR3-81	-	-	-	-	-	-	-	-	R	-
DR3-82	-	-	N	-	-	-	-	-	-	-
DR3-83	-	-	N	-	-	-	-	-	-	-
DR3-84	-	-	-	-	-	-	-	-	N	-
DR3-85	-	-	N	-	-	-	-	-	-	-
DR3-86	-	-	N	-	-	-	-	-	-	-
DR3-87	-	-	N	-	-	-	-	-	-	-
DR3-88	-	-	N	-	-	-	-	-	-	-

SHEET DR4

DRAINAGE CODE	CONSTRUCTION STAGE									
	1	1A	1B	1C	1D	2	3A	3B	4	5
DR4-1	-	-	R	-	-	-	-	-	-	-
DR4-2	-	-	R	-	-	-	-	-	-	-
DR4-3	-	AJ	AB	-	-	-	-	-	R	-

SHEET DR4

DRAINAGE CODE	CONSTRUCTION STAGE									
	1	1A	1B	1C	1D	2	3A	3B	4	5
DR4-4	-	-	-	-	-	-	-	-	R	-
DR4-5	-	-	-	-	-	-	-	-	R	-
DR4-6	-	-	-	-	-	-	-	-	R	-
DR4-7	-	-	-	-	-	-	-	-	R	-
DR4-8	-	-	-	-	-	-	-	-	R	-
DR4-9	-	-	-	-	-	-	-	-	R	-
DR4-10	-	-	-	-	-	-	-	-	R	-
DR4-11	-	-	-	-	-	-	-	-	R	-
DR4-12	-	-	-	-	-	-	-	-	R	-
DR4-13	-	-	-	-	-	-	-	-	R	-
DR4-14	-	-	-	-	-	-	-	-	N	-
DR4-15	-	-	-	-	-	-	-	-	N	-
DR4-16	-	-	-	-	-	-	-	-	N	-
DR4-17	-	-	-	-	-	-	-	-	N	-
DR4-18	-	-	-	-	-	-	-	-	N	-
DR4-19	-	-	-	-	-	-	-	-	N	-
DR4-20	-	-	-	-	-	R	-	-	-	-
DR4-21	-	-	AJ	-	-	-	-	-	-	R
DR4-22	-	-	-	-	-	-	-	-	-	R
DR4-23	-	-	-	-	-	-	-	-	-	R
DR4-24	-	-	-	-	-	R	-	-	-	-
DR4-25	-	-	-	-	-	R	-	-	-	-
DR4-26	-	-	-	-	-	-	-	-	R	-
DR4-27	-	-	-	-	-	-	-	-	-	R
DR4-28	-	-	-	-	-	-	-	-	-	R
DR4-29	-	-	R	-	-	-	-	-	-	-
DR4-30	-	-	-	-	-	R	-	-	-	-
DR4-31	-	-	R	-	-	-	-	-	-	R
DR4-32	-	-	-	N	-	-	-	-	-	-
DR4-33	-	-	N	-	-	-	-	-	-	-
DR4-34	-	-	N	-	-	-	-	-	-	-
DR4-35	-	-	N	-	-	-	-	-	-	-
DR4-36	-	-	N	-	-	-	-	-	-	-
DR4-37	-	-	N	-	-	-	-	-	-	-
DR4-38	-	-	N	-	-	-	-	-	-	-
DR4-39	-	-	N	-	-	-	-	-	-	-
DR4-40	-	-	-	-	-	-	-	-	-	N
DR4-41	-	-	N	-	-	-	-	-	-	-
DR4-42	-	S	-	-	S/N	-	-	-	-	-
DR4-43	-	-	-	-	-	-	-	-	-	N
DR4-44	-	-	N	-	-	-	-	-	-	-
DR4-45	-	-	N	-	-	-	-	-	-	-
DR4-46	-	-	N	-	-	-	-	-	-	-
DR4-47	-	-	N	-	-	-	-	-	-	-
DR4-48	-	-	N	-	-	-	-	-	-	-
DR4-49	-	-	-	-	-	-	N	-	-	-
DR4-50	-	-	-	-	-	-	N	-	-	-
DR4-51	-	-	-	-	-	-	N	-	-	-
DR4-52	-	-	-	-	-	-	N	-	-	-
DR4-53	-	-	-	-	-	-	N	-	-	-
DR4-54	-	-	-	-	-	-	N	-	-	-
DR4-55	-	S	-	-	-	-	S/N	-	-	-
DR4-56	-	N	-	-	-	-	-	-	-	-
DR4-57	-	N	-	-	-	-	-	-	-	-

SHEET DR4

DRAINAGE CODE	CONSTRUCTION STAGE									
	1	1A	1B	1C	1D	2	3A	3B	4	5
DR4-58	-	N	-	-	-	-	-	-	-	
DR4-59	-	-	N/S	-	S	-	-	-	-	-
DR4-60	-	-	N	-	-	-	-	-	-	-
DR4-61	-	-	-	-	-	-	N	-	-	-
DR4-62	-	-	-	-	-	-	N	-	-	-
DR4-63	-	-	-	-	-	-	N	-	-	-
DR4-64	-	-	-	-	-	-	N	-	-	-
DR4-65	-	-	N	-	-	-	-	-	-	-
DR4-66	-	-	N	-	-	-	-	-	-	-
DR4-67	-	-	-	-	-	-	-	-	N	-
DR4-68	-	N	-	-	-	-		-	-	-
DR4-69	-	-	N	-	-	-	-	-	-	-
DR4-70	-	-	N	-	-	-	-	-	-	-
DR4-71	-	-	-	-	-	-	N	-	-	-
DR4-72	-	-	-	-	-	-	N	-	-	-
DR4-73	-	-	-	-	-	-	N	-	-	-
DR4-74	-	-	N	-	-	-	-	-	-	-
DR4-75	-	-	-	-	-	-	N	-	-	-
DR4-76	-	-	R	-	-	-	R	-	-	-
DR4-77	-	-	-	-	-	-	N	-	-	-
DR4-78	-	-	-	N	-	-	-	-	-	-
DR4-79	-	-	N	-	-	-	-	-	-	-
DR4-80	-	-	-	N	-	-	-	-	-	-
DR4-81	-	-	R	-	-	-	-	-	-	-
DR4-82	-	-	-	-	-	-	R	-	-	-
DR4-83	-	-	R	-	-	-	-	-	-	-
DR4-84	-	R	-	-	-	-	-	-	-	-
DR4-85	-	-	-	-	-	-	-	-	-	R
DR4-86	-	-	-	-	-	-	-	-	R	-
DR4-87	-	-	R	-	-	-	-	-	-	-
DR4-88	-	-	-	-	-	-	-	-	R	-
DR4-89	-	-	-	-	-	-	-	-	N	-
DR4-90	-	-	N	-	-	-	-	-	-	-
DR4-91	-	-	N	-	-	-	-	-	-	-
DR4-92	-	-	N	-	-	-	-	-	-	-

SHEET DR5 (CONT. ON NEXT SHEET)

DRAINAGE CODE	CONSTRUCTION STAGE									
	1	1A	1B	1C	1D	2	3A	3B	4	5
DR5-1	-	-	-	-	-	-	-	-	N	-
DR5-2	-	-	-	-	-	-	-	-	N	-
DR5-3	-	-	-	-	-	-	-	-	N	-
DR5-4	-	-	-	-	-	-	-	-	N	-
DR5-5	-	-	-	-	-	-	-	-	N	-
DR5-6	-	N	-	-	-	-	-	-	-	-
DR5-7	-	N	-	-	-	-	-	-	-	-
DR5-8	-	N	-	-	-	-	-	-	-	-
DR5-9	-	-	-	-	-	-	-	-	R	-

LEGEND

N - NEW INSTALLATION
R - REMOVE
AJ - ADJUST
AB - ABANDON
S - SEGMENTED INSTALL
\- - NO WORK TO BE PERFORMED

FILE NAME	PW:_XL3497\PS&E Sheets\Drainage Staging Table\ADD1_P3497_SH_01_StagedDrainTable.dgn
TIME	8:36:36 AM
DATE	4/23/2014
PLOTTED BY	ShannoC
DESIGNED BY	S. MERRYMAN
ENTERED BY	C. SHANNON
CHECKED BY	E. QUINN
PROJ. ENGR.	J. PEREZ
REGIONAL ADM.	K. DAYTON

REVISION	DATE	BY
AD1 - CODE CHANGE	04/25/2014	SM

REGION NO. 10 | STATE WASH | FED.AID PROJ.NO.

JOB NUMBER 12C501

CONTRACT NO.

LOCATION NO. XL3497

P.E. STAMP BOX DATE

P.E. STAMP BOX DATE

Washington State Department of Transportation

I-5
M ST TO PORTLAND AVE - HOV

STAGED DRAINAGE TABLE

PLAN REF NO DRST1

SHEET 559 OF 1763 SHEETS

STAGED DRAINAGE TABLE

SHEET DR5 (CONT. FROM PREVIOUS SHEET)

DRAINAGE CODE	CONSTRUCTION STAGE									
	1	1A	1B	1C	1D	2	3A	3B	4	5
DR5-10	-	-	-	-	-	-	-	-	R	-
DR5-11	-	-	-	-	-	-	-	-	R	-
DR5-12	-	R	-	-	-	-	-	-	-	-
DR5-13	-	N	-	-	-	-	-	-	-	-
DR5-14	-	N	-	-	-	-	-	-	-	-
DR5-15	-	N	-	-	-	-	-	-	-	-
DR5-16	-	-	-	-	-	R	-	-	-	-
DR5-17	-	-	-	-	-	R	-	-	-	-
DR5-18	-	-	-	-	-	R	-	-	-	-
DR5-19	-	-	-	-	-	-	-	-	-	R
DR5-20	-	-	-	-	-	-	N	-	-	-
DR5-21	-	N	-	-	-	-	-	-	-	-
DR5-22	-	-	-	-	-	-	N	-	-	-
DR5-23	-	-	-	-	-	-	N	-	-	-
DR5-24	-	N	-	-	-	-	-	-	-	-
DR5-25	-	R	-	-	-	-	-	-	-	-
DR5-26	-	-	-	-	-	-	S	S	S/N	-
DR5-27	-	-	-	-	-	-	-	-	N	-
DR5-28	-	-	-	-	-	-	-	-	N	-
DR5-29	-	-	-	-	-	-	-	-	N	-
DR5-30	-	-	-	-	-	N	-	-	-	-
DR5-31	-	N	-	-	-	-	-	-	-	-
DR5-32	-	N	-	-	-	-	-	-	-	-
DR5-33	-	AJ	-	-	-	-	-	-	-	-
DR5-34	-	-	-	-	N	-	-	-	-	-
DR5-35	-	-	-	-	N	-	-	-	-	-
DR5-36	-	-	-	-	N	-	-	-	-	-
DR5-37	-	N	-	-	-	-	-	-	-	-
DR5-38	-	-	-	-	N	-	-	-	-	-
DR5-39	-	N	-	-	-	-	-	-	-	-
DR5-40	-	N	-	-	-	-	-	-	-	-
DR5-41	N	-	-	-	-	-	-	-	-	-
DR5-42	N	-	-	-	-	-	-	-	-	-
DR5-43	-	-	-	-	-	-	N	-	-	-
DR5-44	-	N	-	-	-	-	-	-	-	-
DR5-45	-	-	-	-	R	-	-	-	-	-
DR5-46	-	-	-	-	R	-	-	-	-	-
DR5-47	-	-	-	-	R	-	-	-	-	-
DR5-48	-	AJ	-	-	-	-	-	-	-	-
DR5-49	-	-	-	-	R	-	-	-	-	-
DR5-50	-	-	-	-	R	-	-	-	-	-
DR5-51	-	R	-	-	-	-	-	-	-	-
DR5-52	-	-	-	-	-	-	AJ	-	-	-
DR5-53	-	-	-	-	-	-	R	-	-	-
DR5-54	-	-	-	-	-	-	R	-	-	-
DR5-55	-	-	-	-	-	-	-	-	R	-
DR5-56	-	-	-	-	-	-	-	-	R	-
DR5-57	-	-	-	-	-	AJ	-	-	-	-
DR5-58	-	-	-	-	-	AJ	-	-	-	-
DR5-59	-	-	-	-	-	AJ	-	-	-	-
DR5-60	-	-	-	-	-	N	-	-	-	-
DR5-61	-	-	-	-	-	N	-	-	-	-

SHEET DR5

DRAINAGE CODE	CONSTRUCTION STAGE									
	1	1A	1B	1C	1D	2	3A	3B	4	5
DR5-62	-	N	-	-	-	-	-	-	-	-
DR5-63	-	-	-	-	N	-	-	-	-	AJ
DR5-64	-	-	-	-	-	N	-	-	-	-
DR5-65	-	-	-	-	-	-	N	-	-	-
DR5-66	-	-	-	-	-	-	N	-	-	-
DR5-67	-	AJ	-	-	-	-	-	-	-	-
DR5-68	-	N	-	-	-	-	-	-	-	-
DR5-69	-	N	-	-	-	-	-	-	-	-
DR5-70	-	-	-	-	N	-	-	-	-	-
DR5-71	-	N	-	-	-	-	-	-	-	-
DR5-72	-	N	-	-	-	-	-	-	-	-
DR5-73	-	-	-	-	-	-	-	-	N	-
DR5-74	-	S	-	-	-	-	-	-	S/N	-
DR5-75	-	-	-	-	-	-	-	-	N	-
DR5-76	-	-	-	-	-	-	-	-	N	-
DR5-77	-	-	-	-	-	-	-	-	N	-
DR5-78	N	N	-	-	-	-	-	-	-	-
DR5-79	-	N	-	-	-	-	-	-	-	-
DR5-80	-	N	-	-	-	-	-	-	-	-
DR5-81	-	N	-	-	-	-	-	-	-	-
DR5-82	-	R	-	-	-	-	-	-	-	-
DR5-83	-	-	-	-	-	N	-	-	-	-
DR5-84	-	-	-	-	-	N	-	-	-	-
DR5-85	-	-	-	-	-	N	-	-	-	-
DR5-86	-	-	-	-	-	N	-	-	-	-
DR5-87	-	-	-	-	-	N	-	-	-	-
DR5-88	-	-	-	-	-	N	-	-	-	-
DR5-89	-	-	-	-	-	N	-	-	-	-
DR5-90	-	-	-	-	-	N	-	-	-	-
DR5-91	-	-	-	-	-	N	-	-	-	-
DR5-92	-	-	-	-	-	N	-	-	-	-
DR5-93	-	-	R	-	-	-	-	-	-	-
DR5-94	-	-	-	-	R	-	-	-	-	-
DR5-95	-	-	-	-	R	-	-	-	-	-
DR5-96	-	R	-	-	-	-	-	-	-	-
DR5-97	-	-	R	-	-	-	-	-	-	-
DR5-98	-	R	-	-	-	-	-	-	-	-
DR5-99	-	R	-	-	-	-	-	-	-	-
DR5-100	-	R	-	-	-	-	-	-	-	-
DR5-101	-	-	-	-	-	R	-	-	-	-
DR5-102	-	-	-	-	-	R	-	-	-	-
DR5-103	-	-	-	-	-	-	N	-	-	-
DR5-104	-	-	-	-	-	-	N	-	-	-
DR5-105	-	-	-	-	-	N	-	-	-	-
DR5-106	-	-	-	-	-	N	-	-	-	-
DR5-107	-	-	-	-	-	R	-	-	-	-
DR5-108	-	-	-	-	-	R	-	-	-	-
DR5-109	-	N	-	-	-	-	-	-	-	-
DR5-110	-	R	-	-	-	-	-	-	-	-
DR5-111	-	R	-	-	-	-	-	-	-	-
DR5-112	-	-	-	-	N	-	-	-	-	-
DR5-113	-	-	-	-	N	-	-	-	-	-

SHEET DR5 CONTINUED

DRAINAGE CODE	CONSTRUCTION STAGE									
	1	1A	1B	1C	1D	2	3A	3B	4	5
DR5-114	-	-	-	-	N	-	-	-	-	-
DR5-115	-	R	-	-	-	-	-	-	-	-
DR5-116	-	-	S	-	S	-	-	-	-	-
DR5-117	-	-	-	-	N	-	-	-	-	-
DR5-118	-	-	-	-	N	-	-	-	-	-
DR5-119	-	-	-	-	S	S	-	-	-	-
DR5-120	-	R	-	-	-	-	-	-	-	-
DR5-121	-	N	-	-	-	-	-	-	-	-
DR5-122	-	-	-	-	-	R	-	-	-	-
DR5-123	-	-	-	-	-	R	-	-	-	-
DR5-124	-	R	-	-	-	-	-	-	-	-
DR5-125		AJ								
DR5-126	-	-	-	-	-	-	N	-	-	-
DR5-127	-	-	-	-	-	-	N	-	-	
DR5-128	-	R	-	-	-	-	-	-	-	-
DR5-129	-	N	-	-	-	-	-	-	-	-
DR5-130	-	N	-	-	-	-	-	-	-	-
DR5-131	-	-	-	-	-	N	-	-	-	-

SHEET DR6

DRAINAGE CODE	CONSTRUCTION STAGE									
	1	1A	1B	1C	1D	2	3A	3B	4	5
DR6-1	-	N	-	-	-	-	-	-	-	-
DR6-2	-	N	-	-	-	-	-	-	-	-
DR6-3	-	N	-	-	-	-	-	-	-	-
DR6-4	-	-	-	-	-	-	N	-	-	-
DR6-5	-	N	-	-	-	-	-	-	-	-
DR6-6	-	-	-	-	-	-	N	-	-	-
DR6-7	-	-	-	-	-	-	N	-	-	-
DR6-8	-	S	-	-	-	-	S/N	-	-	-
DR6-9	-	-	N	-	-	-	-	-	-	-
DR6-10	-	-	N	-	-	-	-	-	-	-
DR6-11	-	-	N	-	-	-	-	-	-	-
DR6-12	-	-	N	-	-	-	-	-	-	-
DR6-13	NOT USED									
DR6-14	NOT USED									
DR6-15	-	-	S	-	-	-	S	-	-	-
DR6-16	-	N	-	-	-	-	-	-	-	-
DR6-17	NOT USED									
DR6-18	-	AJ	-	-	-	-	-	-	-	-
DR6-19	-	N	-	-	-	-	-	-	-	-
DR6-20	-	N	-	-	-	-	-	-	-	-
DR6-21	-	N	-	-	-	-	-	-	-	-
DR6-22	-	-	N	-	-	-	-	-	-	-
DR6-23	N/S	S	-	-	-	-	-	-	-	-
DR6-24	N/S	S	-	-	-	-	-	-	-	-
DR6-25	N/S	S	-	-	-	-	-	-	-	-
DR6-26	-	-	-	-	-	-	N	-	-	-
DR6-27	-	N	-	-	-	-	-	-	-	-
DR6-28	-	N	-	-	-	-	-	-	-	-
DR6-29	-	N	-	-	-	-	-	-	-	-
DR6-30	-	-	-	-	-	-	N	-	-	-

SHEET DR7

DRAINAGE CODE	CONSTRUCTION STAGE									
	1	1A	1B	1C	1D	2	3A	3B	4	5
DR7-1	-	-	-	-	-	-	N	-	-	-
DR7-2	-	-	-	-	-	-	N	-	-	-
DR7-3	-	-	-	-	-	-	N	-	-	-
DR7-4	-	-	-	-	-	-	N	-	-	-
DR7-5	-	-	-	-	-	-	R	-	-	-
DR7-6	-	-	-	-	-	-	N	-	-	-
DR7-7	-	-	-	-	-	-	R	-	-	-
DR7-8	-	-	-	-	-	-	R	-	-	-
DR7-9	-	-	-	-	-	-	N	-	-	-
DR7-10	-	-	-	-	-	-	-	-	N	-
DR7-11	-	-	-	-	-	-	-	-	N	-
DR7-12	-	-	-	-	-	-	-	-	N	-
DR7-13	-	-	-	-	-	-	-	-	N	-
DR7-14	-	-	-	-	-	N/S	-	-	S	-
DR7-15	-	-	-	-	-	-	-	-	N	-
DR7-16	-	-	-	-	-	-	S	S	S/N	-
DR7-17	-	-	-	-	-	-	-	-	N	-
DR7-18	-	-	-	-	-	-	-	-	N	-
DR7-19	-	-	-	-	-	-	-	-	N	-
DR7-20	-	-	-	-	-	N	-	-	-	-
DR7-21	-	-	-	-	-	-	R	-	-	-
DR7-22	-	-	-	-	-	N	-	-	-	-
DR7-23	-	-	-	-	-	N	-	-	-	-
DR7-24	-	-	-	-	-	-	N	-	-	-
DR7-25	-	-	-	-	-	-	N	-	-	-
DR7-26	-	-	-	-	-	-	N	-	-	-
DR7-27	-	-	-	-	-	N	-	-	-	-
DR7-28	-	-	-	-	-	-	N	-	-	-
DR7-29	-	-	-	-	-	-	N	-	-	-
DR7-30	-	-	-	-	-	-	N	-	-	-
DR7-31	-	-	-	-	-	N	-	-	-	-
DR7-32	-	-	-	-	-	N	-	-	-	-
DR7-33	-	-	-	-	-	N	-	-	-	-
DR7-34	-	-	-	-	-	-	N	-	-	-
DR7-35	-	-	-	-	-	-	N	-	-	-
DR7-36	-	-	-	-	-	-	N	-	-	-
DR7-37	-	-	-	-	-	-	N	-	-	-
DR7-38	-	-	-	-	-	N	-	-	-	-
DR7-39	-	-	-	-	-	N	-	-	-	-
DR7-40	-	-	-	-	-	-	N	-	-	-
DR7-41	-	-	-	-	-	-	-	-	N	-
DR7-42	-	-	-	-	-	-	-	-	N	-
DR7-43	-	-	-	-	-	-	-	-	N	-
DR7-44	-	-	-	-	-	-	-	-	N	-
DR7-45	-	-	-	-	-	-	-	-	N	-
DR7-46	-	-	-	-	-	-	-	-	N	-
DR7-47	-	-	-	-	-	-	-	-	N	-
DR7-48	-	-	-	-	-	-	-	-	R	-
DR7-49	-	-	-	-	-	-	-	-	R	-
DR7-50	-	-	-	-	-	-	-	-	R	-
DR7-51	-	-	-	-	-	-	-	-	AB	-
DR7-52	-	-	-	-	-	-	-	-	AB	-

SHEET DR7

DRAINAGE CODE	CONSTRUCTION STAGE									
	1	1A	1B	1C	1D	2	3A	3B	4	5
DR7-53	-	-	-	-	-	-	-	AB	-	-
DR7-54	-	-	-	-	-	-	-	AB	-	-
DR7-55	-	-	-	-	-	-	-	-	N	-
DR7-56	-	-	-	-	-	-	-	-	N	-
DR7-57	-	-	-	-	-	-	-	-	N	-
DR7-58	-	-	-	-	-	-	-	-	N	-
DR7-59	-	-	-	-	-	-	-	-	N	-
DR7-60	-	-	-	-	-	-	R	-	-	-
DR7-61	-	-	-	-	-	-	R	-	-	-
DR7-62	-	-	-	-	-	R	-	-	-	-
DR7-63	-	-	-	-	-	R	-	-	-	-
DR7-64	-	-	-	-	-	-	-	-	AB	-
DR7-65	-	-	-	-	-	-	-	-	AB	-
DR7-66	-	-	-	-	-	-	-	-	AB	-
DR7-67	-	-	-	-	-	-	-	-	AB	-
DR7-68	-	-	-	-	-	-	-	-	AB	-
DR7-69	-	-	-	-	-	-	-	-	AB	-
DR7-70	-	-	-	-	-	R	-	-	-	-
DR7-71	-	-	-	-	-	R	-	-	-	-
DR7-72	-	-	-	-	-	R	-	-	-	-
DR7-73	-	-	-	-	-	R	-	-	-	-
DR7-74	-	-	-	-	-	R	-	-	-	-
DR7-75	-	-	-	-	-	-	R	-	-	-
DR7-76	-	-	-	-	-	R	-	-	R	-
DR7-77	-	-	-	-	-	-	R	-	-	-
DR7-78	-	-	-	-	-	-	R	-	-	-
DR7-79	-	-	-	-	-	R	-	-	-	-
DR7-80	-	-	R	-	-	-	-	-	-	-
DR7-81	-	-	R	-	-	-	-	-	-	-
DR7-82	-	-	-	-	-	-	R	-	-	-
DR7-83	-	-	-	-	-	-	R	-	-	-
DR7-84	-	-	-	-	-	-	-	-	AJ	-
DR7-85	-	-	-	-	-	-	R	-	-	-
DR7-86	-	-	-	-	-	-	-	-	N	-
DR7-87	-	-	-	-	-	R	-	-	-	-
DR7-88	-	-	-	-	-	-	N	-	-	-
DR7-89	-	-	-	-	-	N	-	-	-	-
DR7-90	-	-	-	-	-	N	-	-	-	-
DR7-91	-	-	-	-	-	-	-	-	R	-
DR7-92	-	-	-	-	-	-	-	-	R	-
DR7-93	-	-	-	-	-	-	-	-	R	-
DR7-94	-	-	-	-	-	N	-	-	-	-
DR7-95	-	-	-	-	-	-	R	-	-	-
DR7-96	-	-	-	-	-	R	-	-	-	-
DR7-97	-	-	-	-	-	AJ	-	-	-	-
DR7-98	-	-	-	-	-	N	-	-	-	-
DR7-99									N	

LEGEND

N - NEW INSTALLATION
R - REMOVE
AJ - ADJUST
AB - ABANDON
S - SEGMENTED INSTALL
- - NO WORK TO BE PERFORMED

FILE NAME	PW:_XL3497\PS&E Sheets\Drainage Staging Table\ADD1_P3497_SH_02_StagedDrainTable.dgn
TIME	5:05:12 PM
DATE	4/30/2014
PLOTTED BY	SancheA
DESIGNED BY	S. MERRYMAN
ENTERED BY	C. SHANNON
CHECKED BY	E. QUINN
PROJ. ENGR.	J. PEREZ
REGIONAL ADM.	K. DAYTON

REVISION	DATE	BY
AD1 - CODE CHANGE	04/25/2014	SM

REGION NO. 10 | STATE WASH | FED.AID PROJ.NO.

JOB NUMBER 12C501

CONTRACT NO.

LOCATION NO. XL3497

P.E. STAMP BOX DATE

P.E. STAMP BOX DATE

Washington State Department of Transportation

I-5
M ST TO PORTLAND AVE - HOV

STAGED DRAINAGE TABLE

PLAN REF NO DRST2

SHEET 560 OF 1763 SHEETS

STAGED DRAINAGE TABLE

SHEET DR8										
DRAINAGE CODE	CONSTRUCTION STAGE									
	1	1A	1B	1C	1D	2	3A	3B	4	5
DR8-1	-	-	-	-	-	-	-	-	N	-
DR8-2	-	-	-	-	-	-	-	-	N	-
DR8-3	-	-	-	-	-	-	-	-	N	-
DR8-4	N	-	-	-	-	-	-	-	-	-
DR8-5	-	-	-	-	-	-	-	-	N	-
DR8-6	N	-	S	-	-	S	-	-	S/N	-
DR8-7	N	-	-	-	-	-	-	-	-	-
DR8-8	-	-	-	-	-	-	N	-	-	-
DR8-9	-	-	-	-	-	-	N	-	-	-
DR8-10	-	-	-	-	-	-	N/S	S	S	-
DR8-11	N	-	-	-	-	-	-	-	-	-
DR8-12	N	-	-	-	-	-	-	-	-	-
DR8-13	N	-	-	-	-	S	-	-	-	-
DR8-14	N	-	-	-	-	-	-	-	-	-
DR8-15	-	N	-	-	-	-	-	-	-	-
DR8-16	N	-	-	-	-	-	-	-	-	-
DR8-17	N	-	-	-	-	-	-	-	-	-
DR8-18	-	-	-	-	N	-	-	-	-	-
DR8-19	-	-	-	-	N	-	-	-	-	-
DR8-20	N	-	-	-	-	-	-	-	-	-
DR8-21	N	-	-	-	-	-	-	-	-	-
DR8-22	-	-	-	-	-	-	-	-	N	-
DR8-23	-	-	-	-	-	-	-	-	N	-
DR8-24	-	-	-	-	-	-	-	-	N	-
DR8-25	-	-	-	-	-	-	-	-	N	-
DR8-26	-	-	-	-	-	-	-	-	N	-
DR8-27	-	-	-	-	-	-	-	-	N	-
DR8-28	-	-	-	-	-	-	-	-	AB	-
DR8-29	-	-	-	-	-	-	-	-	AB	-
DR8-30	-	-	-	-	-	-	-	-	AB	-
DR8-31	-	-	R	-	-	-	-	-	-	-
DR8-32	-	-	R	-	-	-	-	-	-	-
DR8-33	-	-	R	-	-		-	-	-	-
DR8-34	-	-	-	-	-	AJ	-	-	-	-
DR8-35	-	-	-	-	-	-	N	-	-	-
DR8-36	-	-	-	-	-	-	R	-	-	-
DR8-37	-	-	-	-	-	-	R	-	-	-
DR8-38	-	-	-	-	-	-	R	-	-	-
DR8-39	-	-	-	-	-	-	R	-	-	-
DR8-40	-	-	-	-	-	-	R	-	-	-
DR8-41	-	N	-	-	-	-	-	-	-	-
DR8-42	-	N	-	-	-	-	-	-	-	-
DR8-43	-	-	R	-	-	-	-	-	-	-
DR8-44	N	-	-	-	-	-	-	-	-	-
DR8-45	N	-	-	-	-	-	-	-	-	-
DR8-46	-	-	R	-	-	-	-	-	-	-

SHEET DR8										
DRAINAGE CODE	CONSTRUCTION STAGE									
	1	1A	1B	1C	1D	2	3A	3B	4	5
DR8-47	AJ	-	-	-	-	-	-	-	-	-
DR8-48	AJ	-	-	-	-	-	-	-	-	-
DR8-49	AJ	-	-	-	-	-	-	-	-	-
DR8-50	AJ	-	-	-	-	-	-	-	-	-
DR8-51	AJ	-	-	-	-	-	-	-	-	-
DR8-52	AJ/N	-	-	-	-	-	-	-	-	-
DR8-53	AJ/N	-	-	-	-	-	-	-	-	-
DR8-54	AJ/N	-	-	-	-	-	-	-	-	-
DR8-55	AJ/N	-	-	-	-	-	-	-	-	-
DR8-56	AJ/N	-	-	-	-	-	-	-	-	-

SHEET DR9										
DRAINAGE CODE	CONSTRUCTION STAGE									
	1	1A	1B	1C	1D	2	3A	3B	4	5
DR9-1	-	R	-	-	-	-	-	-	-	-

LEGEND

N - NEW INSTALLATION
R - REMOVE
AJ - ADJUST
AB - ABANDON
S - SEGMENTED INSTALL
\- - NO WORK TO BE PERFORMED

FILE NAME	PW:_XL3497\PS&E Sheets\Drainage Staging Table\ADD1_P3497_SH_03_StagedDrainTable.dgn
TIME	8:38:21 AM
DATE	4/23/2014
PLOTTED BY	ShannoC
DESIGNED BY	S. MERRYMAN
ENTERED BY	C. SHANNON
CHECKED BY	E. QUINN
PROJ. ENGR.	J. PEREZ
REGIONAL ADM.	K. DAYTON

REVISION	DATE	BY
AD1 CODE CHANGE	04/25/2014	SM

REGION NO.	STATE	FED.AID PROJ.NO.
10	WASH	
JOB NUMBER 12C501		
CONTRACT NO.		LOCATION NO. XL3497

P.E. STAMP BOX DATE

P.E. STAMP BOX DATE

Washington State Department of Transportation

I-5
M ST TO PORTLAND AVE - HOV

STAGED DRAINAGE TABLE

PLAN REF NO DRST3

SHEET 561 OF 1763 SHEETS

PROFILE SHT NO.	STRUCTURE CODE
DP6	5, 6
DP19	2, 4

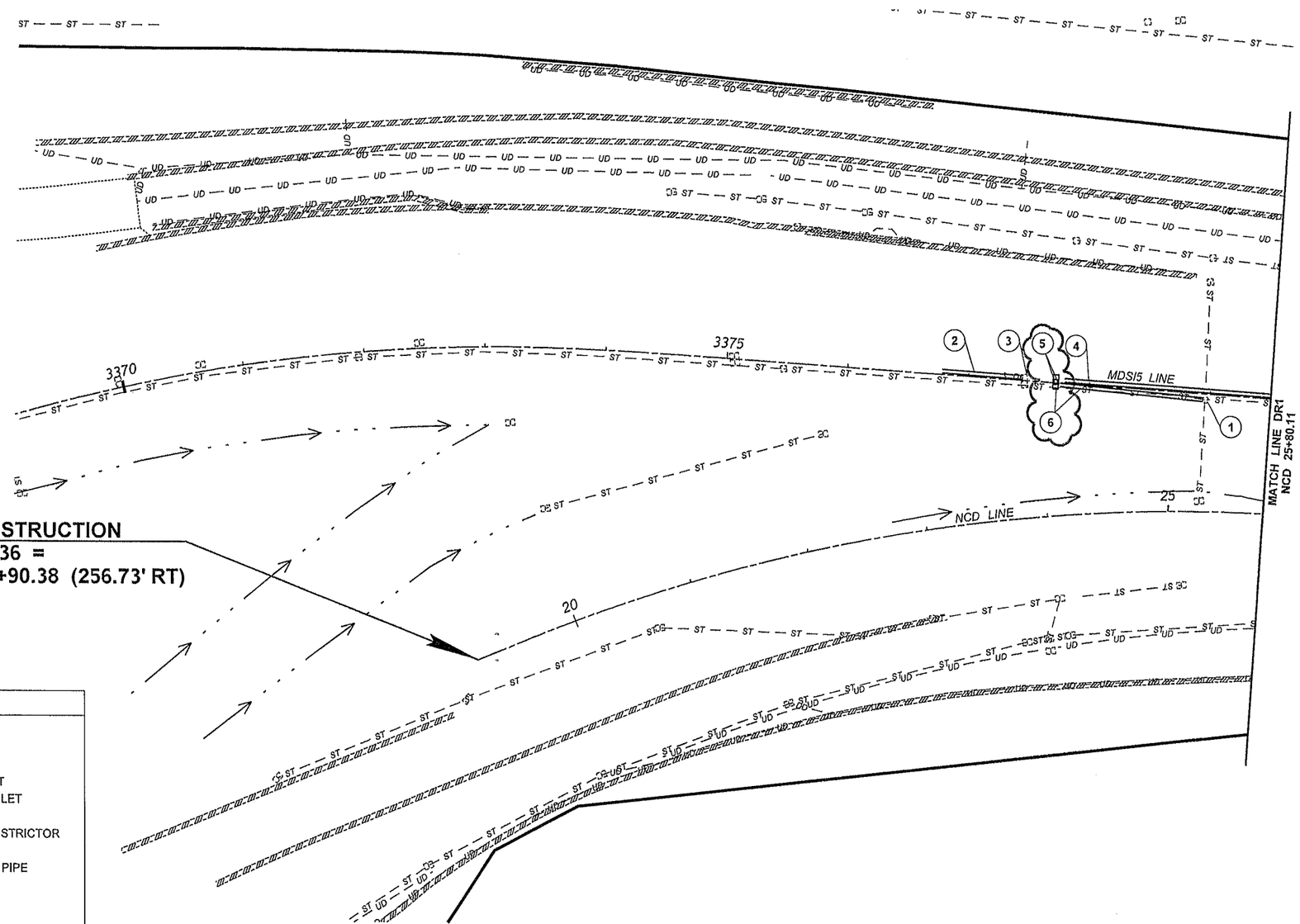

BEGIN CONSTRUCTION
NCD 19+13.36 =
MDSI5 3372+90.38 (256.73' RT)

NOTES:

1. SEE SHEET KM1 VOLUME 1 FOR KEY MAP.

LEGEND

EXISTING CATCH BASIN	CATCH BASIN
EXISTING GRATE INLET	GRATE INLET
EXISTING DROP INLET	DROP INLET
EXISTING CAST METAL INLET	CONCRETE INLET
EXISTING BRIDGE DRAIN	COMBINATION INLET
EXISTING MANHOLE	MANHOLE
EXISTING OPEN FLOW RESTRICTOR	OPEN FLOW RESTRICTOR
DEACTIVATED STORM SEWER	QUARRY SPALLS
EXISTING STORM SEWER	STORM SEWER PIPE
EXISTING DRAIN PIPE	DRAIN PIPE
EXISTING UNDERDRAIN	UNDERDRAIN
EXISTING CULVERT	DITCH
EXISTING DITCH	MEDIA FILTER DRAIN
EXISTING POND TOP/BOTTOM	POND TOP/BOTTOM
EXISTING RETAINING WALL	RETAINING WALL
RIGHT OF WAY	
CLEAN EXISTING DRAINAGE STRUCTURE	DRAINAGE STRUCTURE CODE
PLUG EXISTING PIPE	

0 50 100
SCALE IN FEET

FILE NAME	PW:_XL3497\PS&E Sheets\Drainage Plan\ADD1_P3497_SH_DR_0001A.dgn
TIME	1:48:42 PM
DATE	4/11/2014
PLOTTED BY	SancheA
DESIGNED BY	G. CARR
ENTERED BY	S. WILLIAMS
CHECKED BY	E. QUINN
PROJ. ENGR.	J. PEREZ
REGIONAL ADM.	K. DAYTON

REVISION	DATE	BY
AD1 - ROTATED STRUCTURES 5 & 6	4/21/2014	DD

REGION NO.	STATE	FED.AID PROJ.NO.
10	WASH	
JOB NUMBER 12C501		
CONTRACT NO.		LOCATION NO. XL3497

P.E. STAMP BOX — DATE 4/30/14

P.E. STAMP BOX — DATE

Washington State Department of Transportation

I-5
M ST TO PORTLAND AVE - HOV

DRAINAGE PLAN

PLAN REF NO DR1A

SHEET 562 OF 1763 SHEETS

PROFILE SHT NO.	STRUCTURE CODE
DP19	16~18

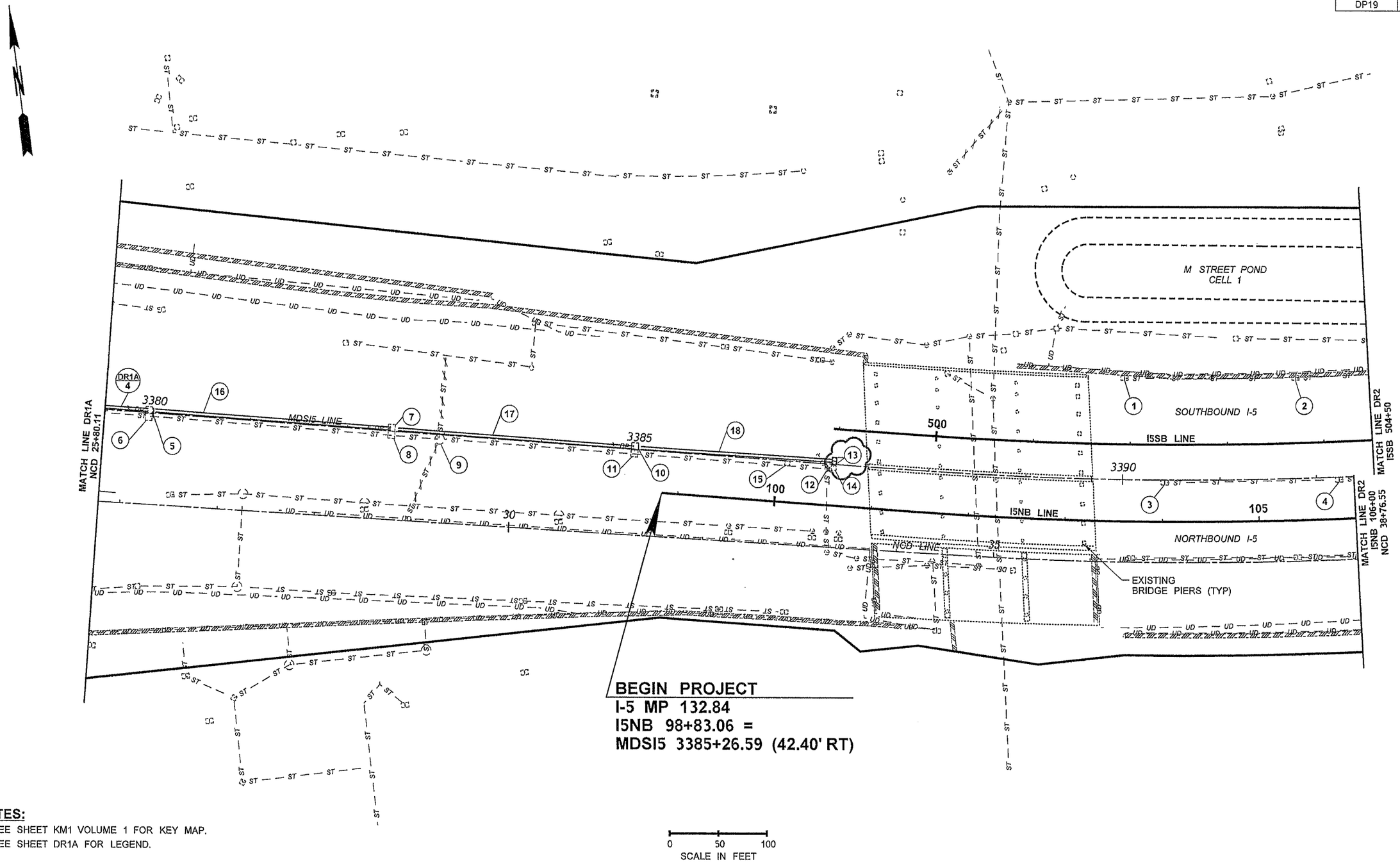

NOTES:

1. SEE SHEET KM1 VOLUME 1 FOR KEY MAP.
2. SEE SHEET DR1A FOR LEGEND.

FILE NAME	PW:_XL3497\PS&E Sheets\Drainage Plan\ADD1_P3497_SH_DR_001.dgn
TIME	1:33:17 PM
DATE	4/24/2014
PLOTTED BY	ShannoC
DESIGNED BY	G. CARR
ENTERED BY	S. WILLIAMS
CHECKED BY	E. QUINN
PROJ. ENGR.	J. PEREZ
REGIONAL ADM.	K. DAYTON

REVISION	DATE	BY
AD1 - CHANGED STRUCTURE 13	4/21/2014	DD

REGION NO.	STATE	FED.AID PROJ.NO.
10	WASH	
JOB NUMBER 12C501		
CONTRACT NO.		LOCATION NO. XL3497

CARLA A. MALONEY, STATE OF WASHINGTON, REGISTERED PROFESSIONAL ENGINEER

4/30/14
DATE
P.E. STAMP BOX

DATE
P.E. STAMP BOX

Washington State Department of Transportation

I-5
M ST TO PORTLAND AVE - HOV

DRAINAGE PLAN

PLAN REF NO DR1

SHEET 563 OF 1763 SHEETS

PROFILE SHT NO.	STRUCTURE CODE
DP1	8~10, 20, 22, 23 28, 29

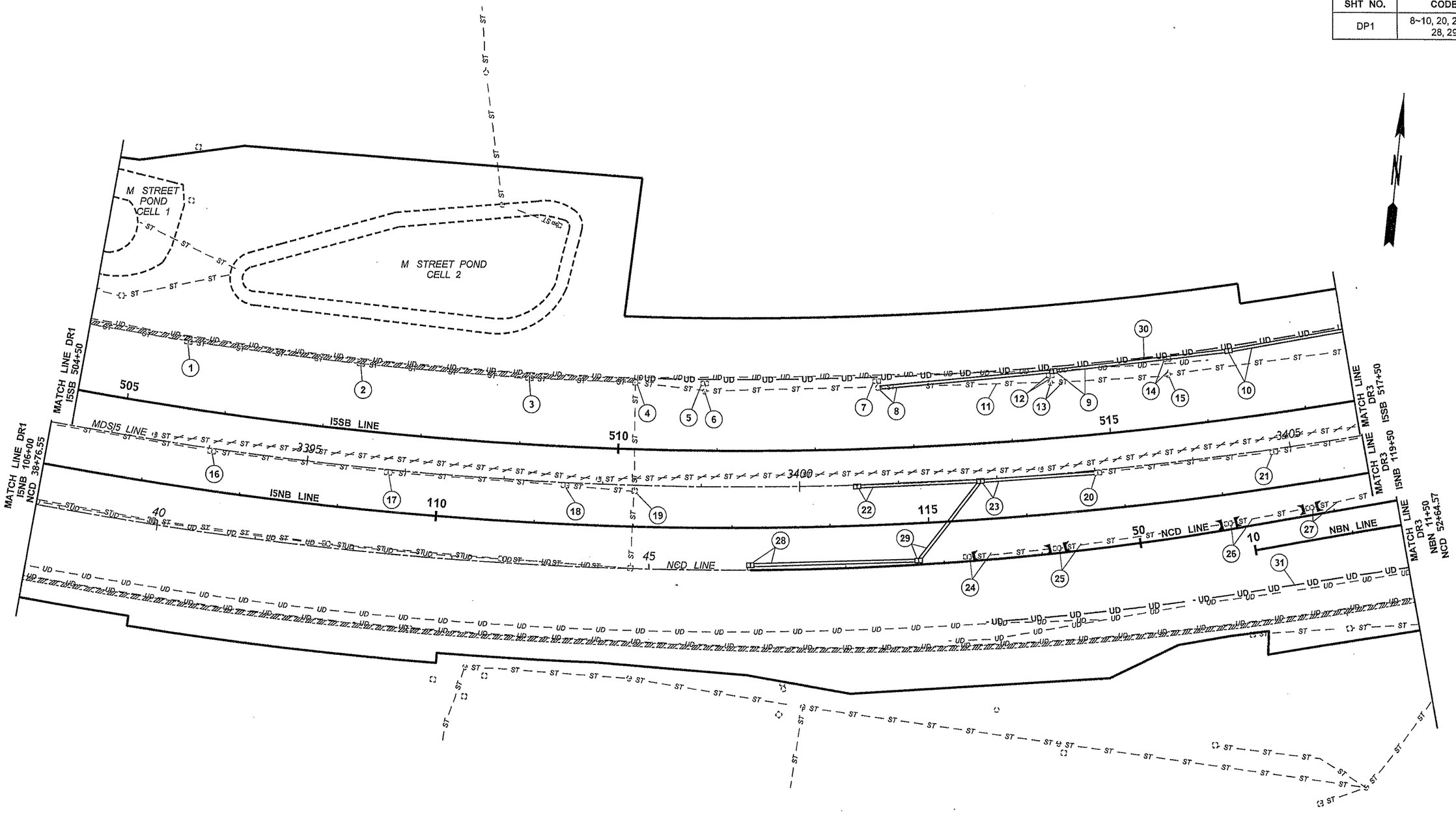

NOTES:

1. SEE SHEET KM1 VOLUME 1 FOR KEY MAP.
2. SEE SHEET DR1A FOR LEGEND.

0 50 100
SCALE IN FEET

FILE NAME	PW:_XL3497\PS&E Sheets\Drainage Plan\P3497_SH_DR_002.dgn				REGION NO. 10	STATE WASH	FED.AID PROJ.NO.
TIME	10:55:56 AM				JOB NUMBER 12C501		
DATE	3/23/2014				CONTRACT NO.		LOCATION NO. XL3497
PLOTTED BY	SancheA						
DESIGNED BY	G. CARR						
ENTERED BY	S. WILLIAMS						
CHECKED BY	E. QUINN						
PROJ. ENGR.	J. PEREZ						
REGIONAL ADM.	K. DAYTON	REVISION	DATE	BY			

CARLA A. MALONEY STATE OF WASHINGTON 18957 REGISTERED PROFESSIONAL ENGINEER
3/24/14
DATE
P.E. STAMP BOX

DATE
P.E. STAMP BOX

Washington State Department of Transportation

I-5
M ST TO PORTLAND AVE - HOV

DRAINAGE PLAN

PLAN REF NO DR2

SHEET 564 OF 1763 SHEETS

PROFILE SHT NO.	STRUCTURE CODE
DP1	1~3, 68~70
DP2	4~10, 42, 56, 57, 73 86
DP3	7, 9, 42, 87, 88
DP5	34~39, 42, 48, 50, 60, 66, 79, 80, 84
DP8	1, 3, 12, 67
DP22	3, 6, 62~65, 71~73, 75, 76
DP25	82, 83

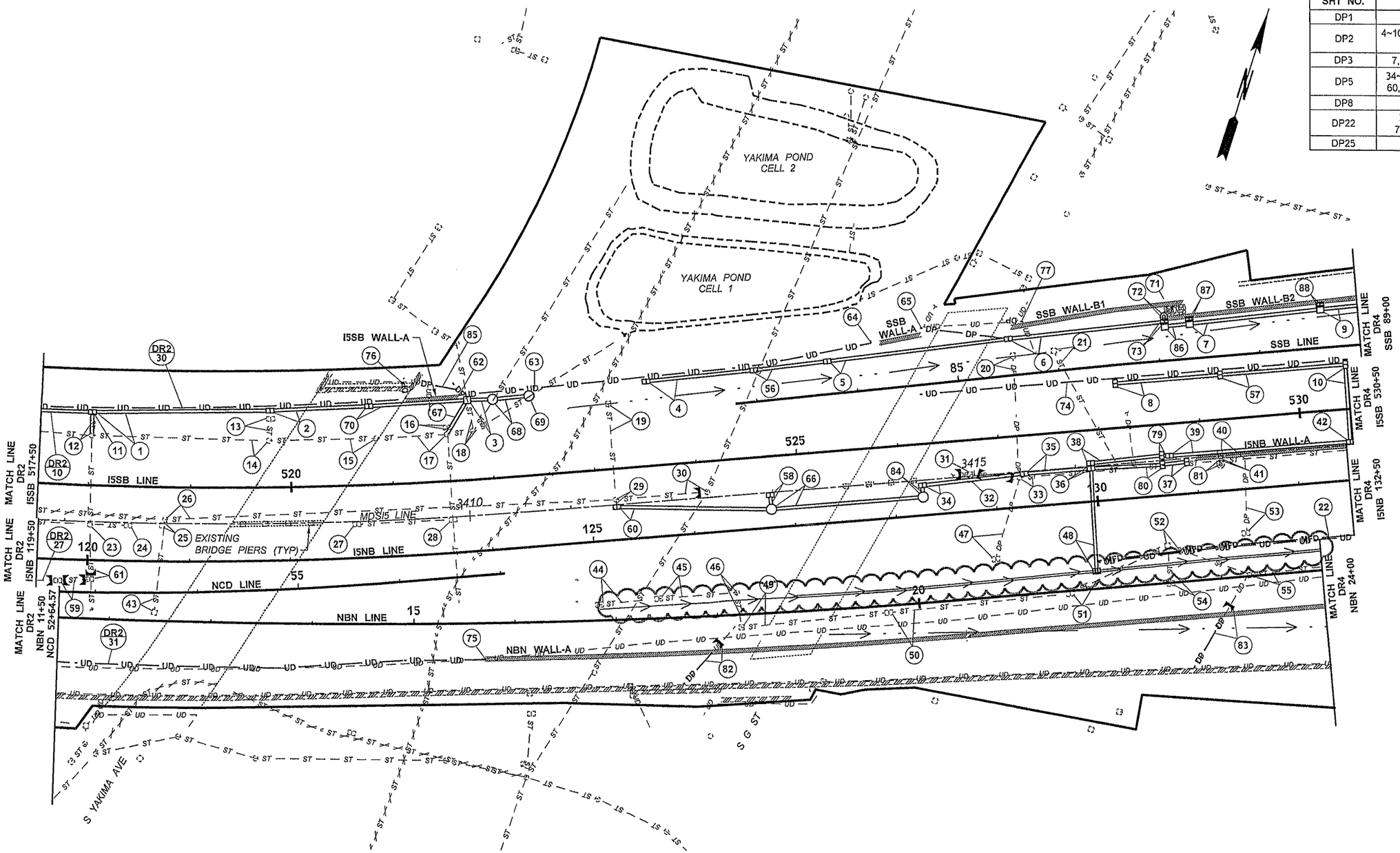

NOTES:

1. SEE SHEET KM1 VOLUME 1 FOR KEY MAP.
2. SEE SHEET DR1A FOR LEGEND.

0 50 100
SCALE IN FEET

FILE NAME	PW:_XL3497\PS&E Sheets\Drainage Plan\ADD1_P3497_SH_DR_003.dgn
TIME	3:27:22 PM
DATE	4/19/2014
PLOTTED BY	SancheA
DESIGNED BY	G. CARR
ENTERED BY	S. WILLIAMS
CHECKED BY	E. QUINN
PROJ. ENGR.	J. PEREZ
REGIONAL ADM.	K. DAYTON

REVISION	DATE	BY
AD1 - ADDED DITCH	04/25/2014	SM

REGION NO.	STATE	FED.AID PROJ.NO.
10	WASH	
JOB NUMBER 12C501		
CONTRACT NO.	LOCATION NO. XL3497	

CARLA A. MALONEY STATE OF WASHINGTON 11837 REGISTERED PROFESSIONAL ENGINEER
4/30/14
DATE
P.E. STAMP BOX

DATE
P.E. STAMP BOX

Washington State Department of Transportation

I-5
M ST TO PORTLAND AVE - HOV

DRAINAGE PLAN

PLAN REF NO DR3

SHEET 565 OF 1763 SHEETS

NOTES:

1. SEE SHEET KM1 VOLUME 1 FOR KEY MAP.
2. SEE SHEET DR1A FOR LEGEND.
3. SEE SITE PREPARATION SHEETS SP4 AND SP5 FOR DRAINAGE VAULT REMOVAL.

PROFILE SHT NO.	STRUCTURE CODE
DP2	33, 65, 77
DP3	14~19, 33, 65, 90, 91
DP4	67
DP6	42
DP7	34~36, 41, 42, 59
DP8	40, 43
DP10	33, 44~53, 56, 57, 60, 66, 69, 70, 91, 92
DP11	53~55, 57, 58, 61~64, 68
DP22	59, 73, 78, 79
DP23	37~39, 48, 60
DP24	61, 75
DP25	32, 80

FILE NAME	PW:_XL3497\PS&E Sheets\Drainage Plan\ADD1_P3497_SH_DR_004.dgn
TIME	3:28:10 PM
DATE	4/19/2014
PLOTTED BY	SanchoA
DESIGNED BY	G. CARR
ENTERED BY	S. WILLIAMS
CHECKED BY	E. QUINN
PROJ. ENGR.	J. PEREZ
REGIONAL ADM.	K. DAYTON

REVISION	DATE	BY
AD1 - ADDED DITCH	04/25/2014	SM

REGION NO.	STATE	FED.AID PROJ.NO.
10	WASH	
JOB NUMBER 12C501		
CONTRACT NO.		LOCATION NO. XL3497

CARLA A. MALONEY — STATE OF WASHINGTON — REGISTERED PROFESSIONAL ENGINEER
4/30/14
P.E. STAMP BOX — DATE

P.E. STAMP BOX — DATE

Washington State Department of Transportation

I-5
M ST TO PORTLAND AVE - HOV

DRAINAGE PLAN

PLAN REF NO DR4

SHEET 566 OF 1763 SHEETS

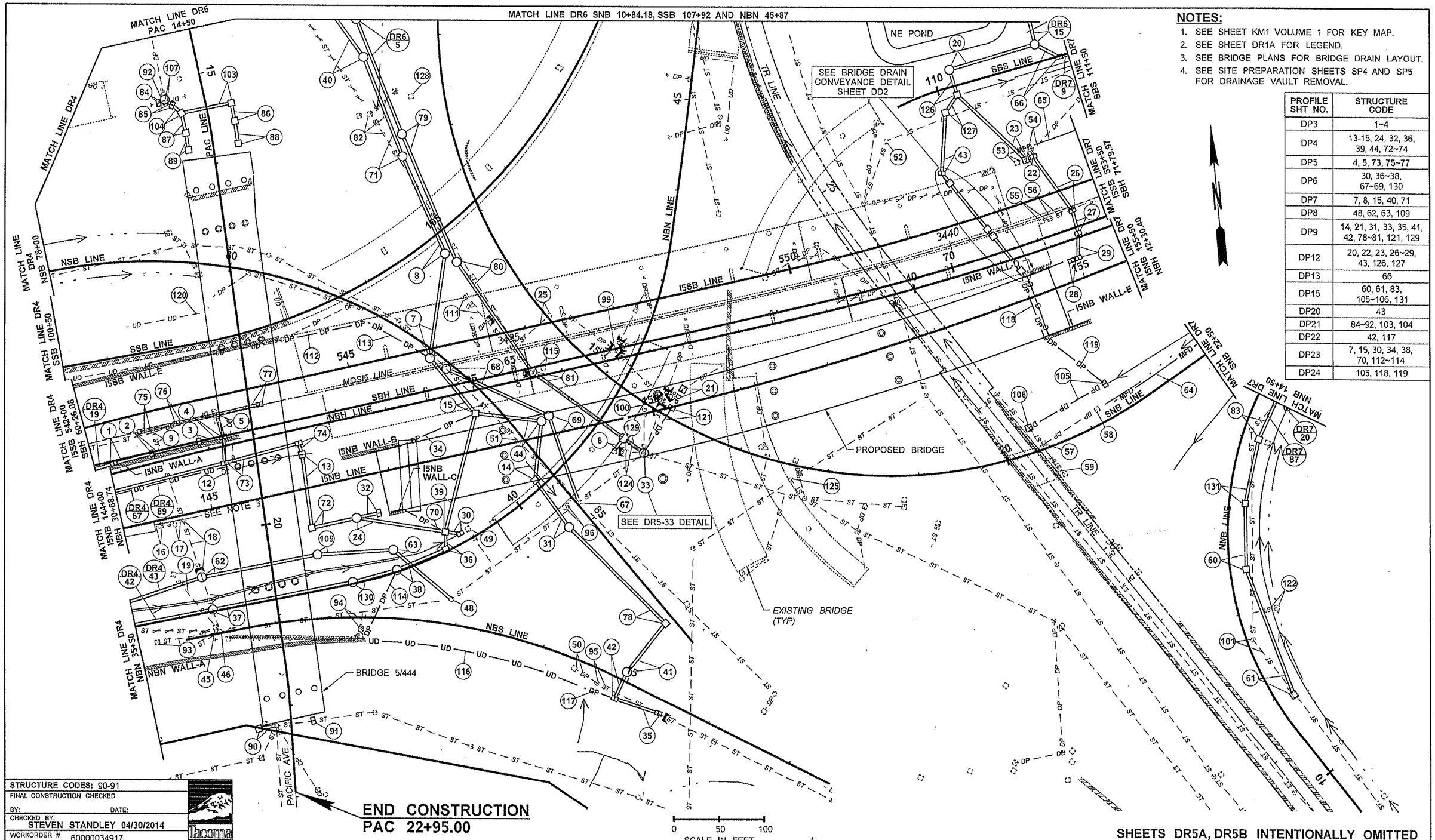

NOTES:

1. SEE SHEET KM1 VOLUME 1 FOR KEY MAP.
2. SEE SHEET DR1A FOR LEGEND.
3. SEE BRIDGE PLANS FOR BRIDGE DRAIN LAYOUT.
4. SEE SITE PREPARATION SHEETS SP4 AND SP5 FOR DRAINAGE VAULT REMOVAL.

PROFILE SHT NO.	STRUCTURE CODE
DP3	1~4
DP4	13-15, 24, 32, 36, 39, 44, 72~74
DP5	4, 5, 73, 75~77
DP6	30, 36~38, 67~69, 130
DP7	7, 8, 15, 40, 71
DP8	48, 62, 63, 109
DP9	14, 21, 31, 33, 35, 41, 42, 78~81, 121, 129
DP12	20, 22, 23, 26~29, 43, 126, 127
DP13	66
DP15	60, 61, 83, 105~106, 131
DP20	43
DP21	84~92, 103, 104
DP22	42, 117
DP23	7, 15, 30, 34, 38, 70, 112~114
DP24	105, 118, 119

SHEETS DR5A, DR5B INTENTIONALLY OMITTED

STRUCTURE CODES: 90-91
FINAL CONSTRUCTION CHECKED
BY: DATE:
CHECKED BY: STEVEN STANDLEY 04/30/2014
WORKORDER # 60000034917

Tacoma

FILE NAME	PW:_XL3497\PS&E Sheets\Drainage Plan\ADD1_P3497_SH_DR_005.dgn
TIME	5:59:22 PM
DATE	4/30/2014
PLOTTED BY	ShannoC
DESIGNED BY	G. CARR
ENTERED BY	S. WILLIAMS
CHECKED BY	E. QUINN
PROJ. ENGR.	J. PEREZ
REGIONAL ADM.	K. DAYTON

REVISION	DATE	BY
AD1 - REPLACED SHEET	05/02/2014	SM

REGION NO.	STATE	FED.AID PROJ.NO.
10	WASH	
JOB NUMBER 12C501		
CONTRACT NO.		LOCATION NO. XL3497

CARLA A. MALONEY, STATE OF WASHINGTON, REGISTERED PROFESSIONAL ENGINEER
4/30/14
P.E. STAMP BOX DATE

P.E. STAMP BOX DATE

Washington State Department of Transportation

I-5
M ST TO PORTLAND AVE - HOV

DRAINAGE PLAN

PLAN REF NO DR5

SHEET 567 OF 1763 SHEETS

PROFILE SHT NO.	STRUCTURE CODE
DP4	2, 18
DP7	1
DP9	3, 5, 27
DP11	1, 19, 28
DP12	6~8, 15, 16, 21
DP13	15
DP14	3, 9~12,
DP15	7, 26

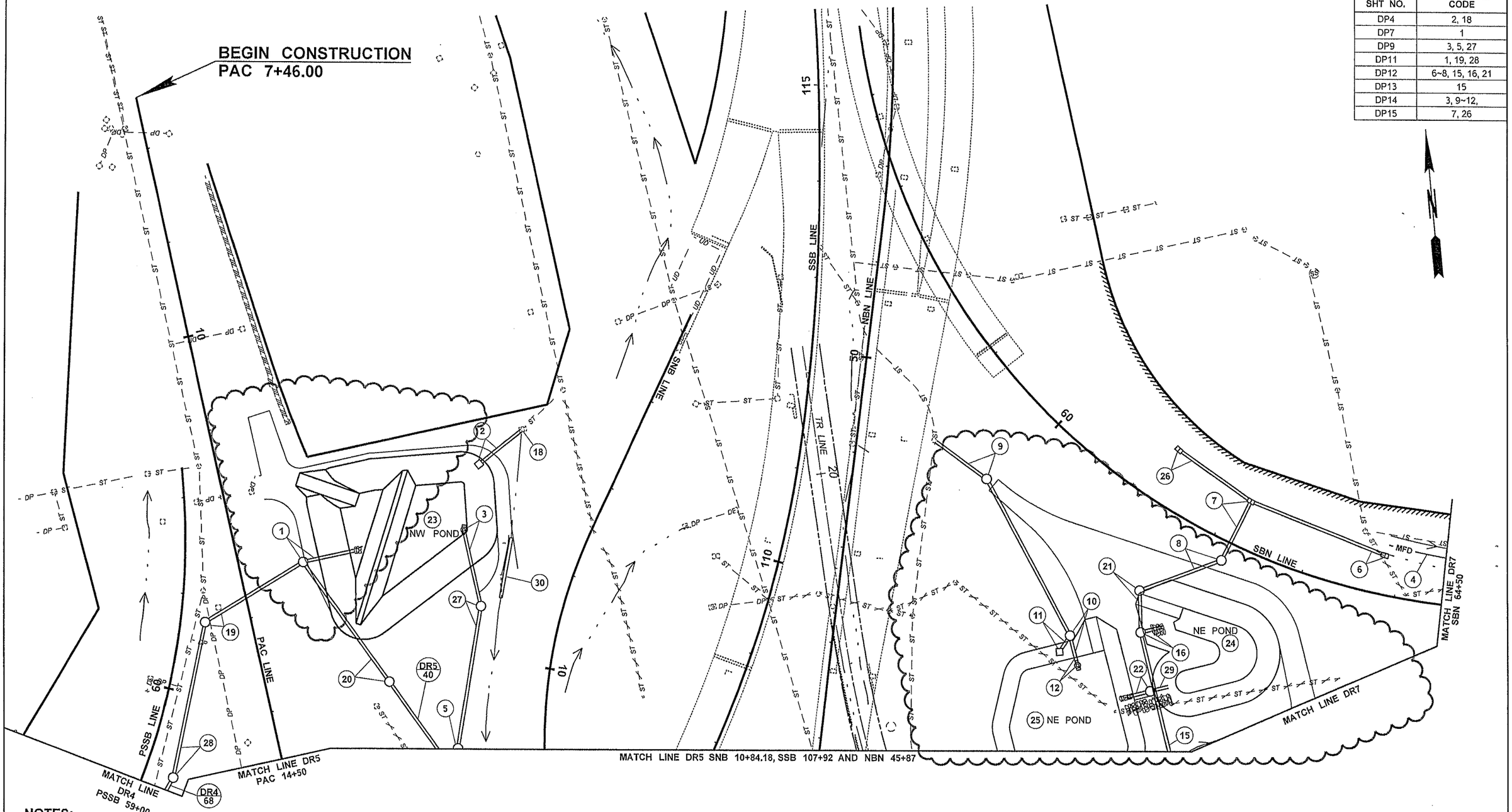

NOTES:

1. SEE SHEET KM1 VOLUME 1 FOR KEY MAP.
2. SEE SHEET DR1A FOR LEGEND.
3. STRUCTURE CODES 9,13,14,17 NOT USED

SHEETS DR5A, DR5B, AND DR6A INTENTIONALLY OMITTED

FILE NAME	PW:_XL3497\PS&E Sheets\Drainage Plan\ADD1_P3497_SH_DR_006.dgn
TIME	1:01:16 PM
DATE	4/22/2014
PLOTTED BY	ShannoC
DESIGNED BY	G. CARR
ENTERED BY	S. WILLIAMS
CHECKED BY	E. QUINN
PROJ. ENGR.	J. PEREZ
REGIONAL ADM.	K. DAYTON

REVISION	DATE	BY
AD1 POND ACCESS, PIPES, & STRUCTURES REVISED	04/25/2014	SM

REGION NO.	STATE	FED.AID PROJ.NO.
10	WASH	
JOB NUMBER 12C501		
CONTRACT NO.	LOCATION NO. XL3497	

P.E. STAMP BOX — DATE 4/30/14

P.E. STAMP BOX — DATE

Washington State Department of Transportation

I-5
M ST TO PORTLAND AVE - HOV

DRAINAGE PLAN

PLAN REF NO DR6

SHEET 568 OF 1763 SHEETS

NOTES:

1. SEE SHEET KM1 VOLUME 1 FOR KEY MAP.
2. SEE SHEET DR1A FOR LEGEND.
3. SEE BRIDGE PLANS FOR BRIDGE DRAIN LAYOUT.

PROFILE SHT NO.	STRUCTURE CODE
DP13	9~13, 15, 16, 24~26, 88
DP14	14, 15, 20, 27, 31~33, 39
DP15	1~3, 6, 9, 22~24
DP16	17~19
DP17	4, 28, 29, 34~36
DP18	41~47
DP20	55~59, 84, 86, 99
DP23	81, 90
DP24	37, 38, 94, 97

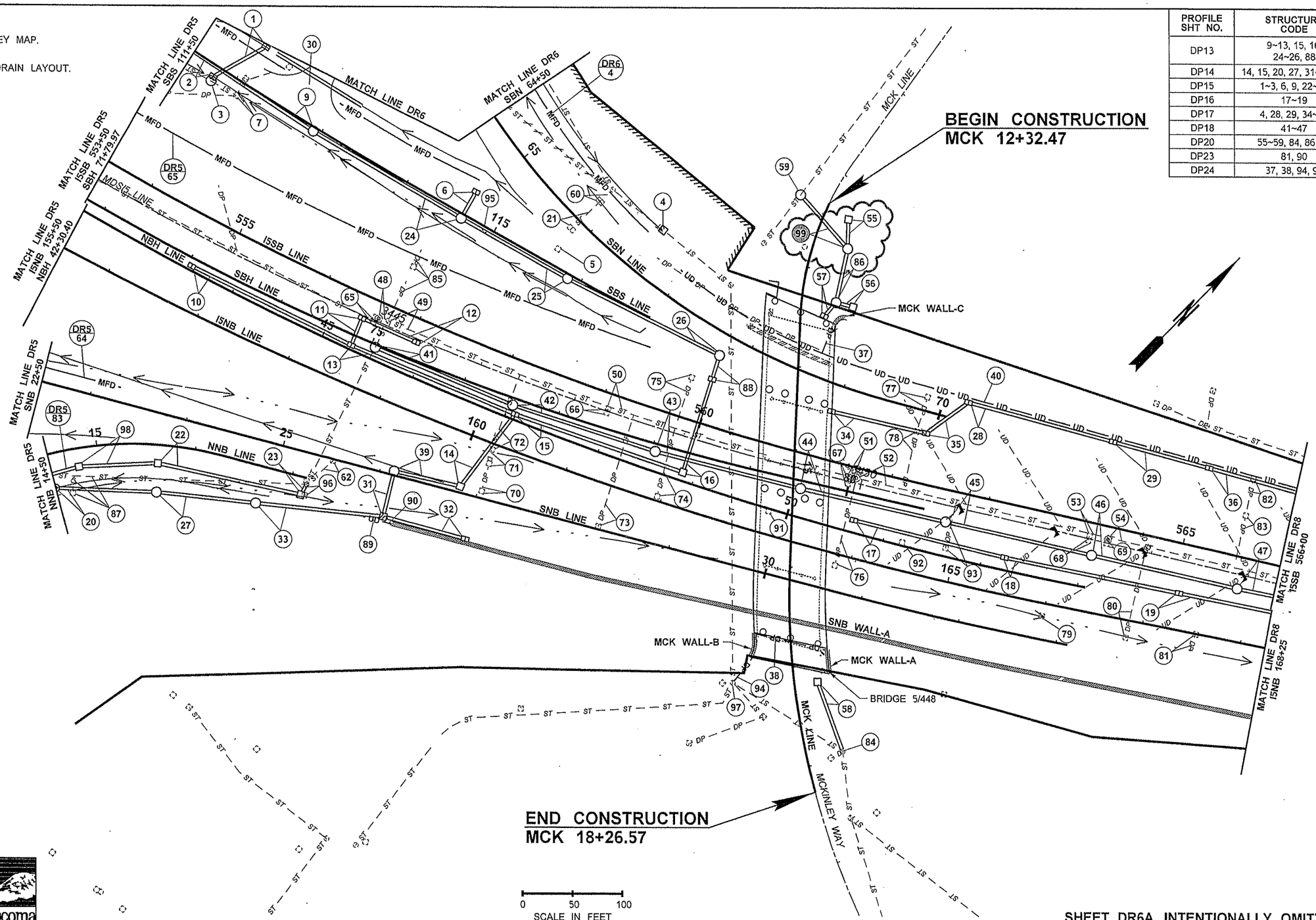

SHEET DR6A INTENTIONALLY OMITTED

STRUCTURE CODES: 55~59, 84, 86, 94, 97
FINAL CONSTRUCTION CHECKED
BY: DATE:
CHECKED BY: STEVEN STANDLEY 04/30/2014
WORKORDER # 60000034917

Tacoma

FILE NAME	PW:_XL3497\PS&E Sheets\Drainage Plan\ADD1_P3497_SH_DR_007.dgn
TIME	7:26:24 PM
DATE	4/30/2014
PLOTTED BY	ShannoC
DESIGNED BY	G. CARR
ENTERED BY	S. WILLIAMS
CHECKED BY	E. QUINN
PROJ. ENGR.	J. PEREZ
REGIONAL ADM.	K. DAYTON

REVISION	DATE	BY
AD1 - STRUCTURES ADDED, DELETED 8, 61, 63, 64	05/02/2014	SM

REGION NO.	STATE	FED.AID PROJ.NO.
10	WASH	
JOB NUMBER 12C501		
CONTRACT NO.		LOCATION NO. XL3497

CARLA A. MALONEY, STATE OF WASHINGTON, REGISTERED PROFESSIONAL ENGINEER
4/30/14
DATE
P.E. STAMP BOX

DATE
P.E. STAMP BOX

Washington State Department of Transportation

I-5
M ST TO PORTLAND AVE - HOV

DRAINAGE PLAN

PLAN REF NO DR7

SHEET 569 OF 1763 SHEETS

PROFILE SHT NO.	STRUCTURE CODE
DP15	20, 21, 44, 45, 57
DP16	1~4, 6, 7,11, 16,17
DP17	3, 5, 8~10, 12~14, 27, 41
DP18	22, 23
DP19	23~25, 27
DP23	10, 35
DP24	10, 41, 42
DP25	13, 19

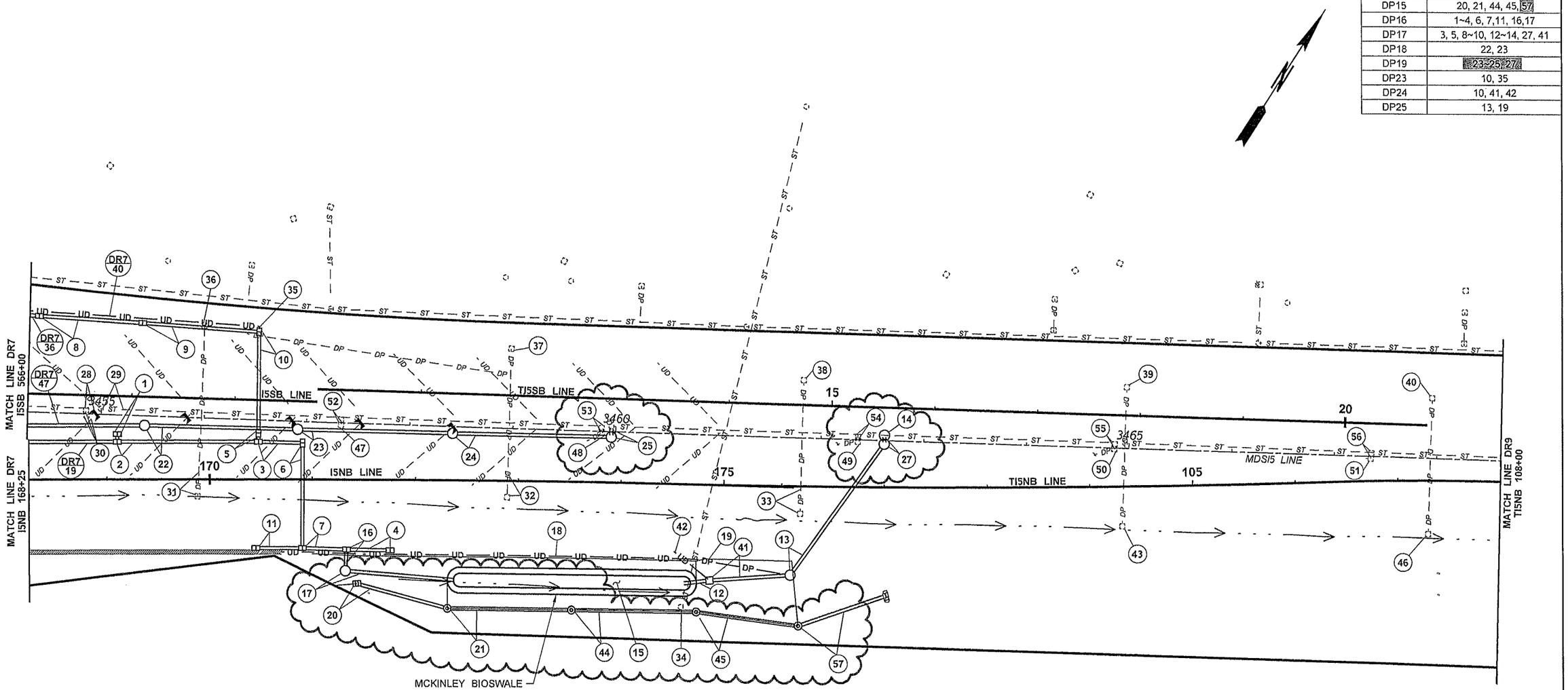

NOTES:

1. SEE SHEET KM1 VOLUME 1 FOR KEY MAP.
2. SEE SHEET DR1A FOR LEGEND.

0 50 100
SCALE IN FEET

FILE NAME	PW:_XL3497\PS&E Sheets\Drainage Plan\ADD1_P3497_SH_DR_008.dgn				REGION NO. 10	STATE WASH	FED.AID PROJ.NO.
TIME	2:58:14 PM				JOB NUMBER 12C501		
DATE	4/29/2014				CONTRACT NO.		LOCATION NO. XL3497
PLOTTED BY	ShannoC						
DESIGNED BY	G. CARR						
ENTERED BY	S. WILLIAMS						
CHECKED BY	E. QUINN						
PROJ. ENGR.	J. PEREZ	AD1 - STRUCTURES MODIFIED	04/25/2014	EQ			
REGIONAL ADM.	K. DAYTON	REVISION	DATE	BY			

CARLA A. MARQUARDT, STATE OF WASHINGTON, REGISTERED PROFESSIONAL ENGINEER
4/30/14
DATE
P.E. STAMP BOX

DATE
P.E. STAMP BOX

Washington State Department of Transportation

I-5
M ST TO PORTLAND AVE - HOV

DRAINAGE PLAN

PLAN REF NO DR8

SHEET 570 OF 1763 SHEETS

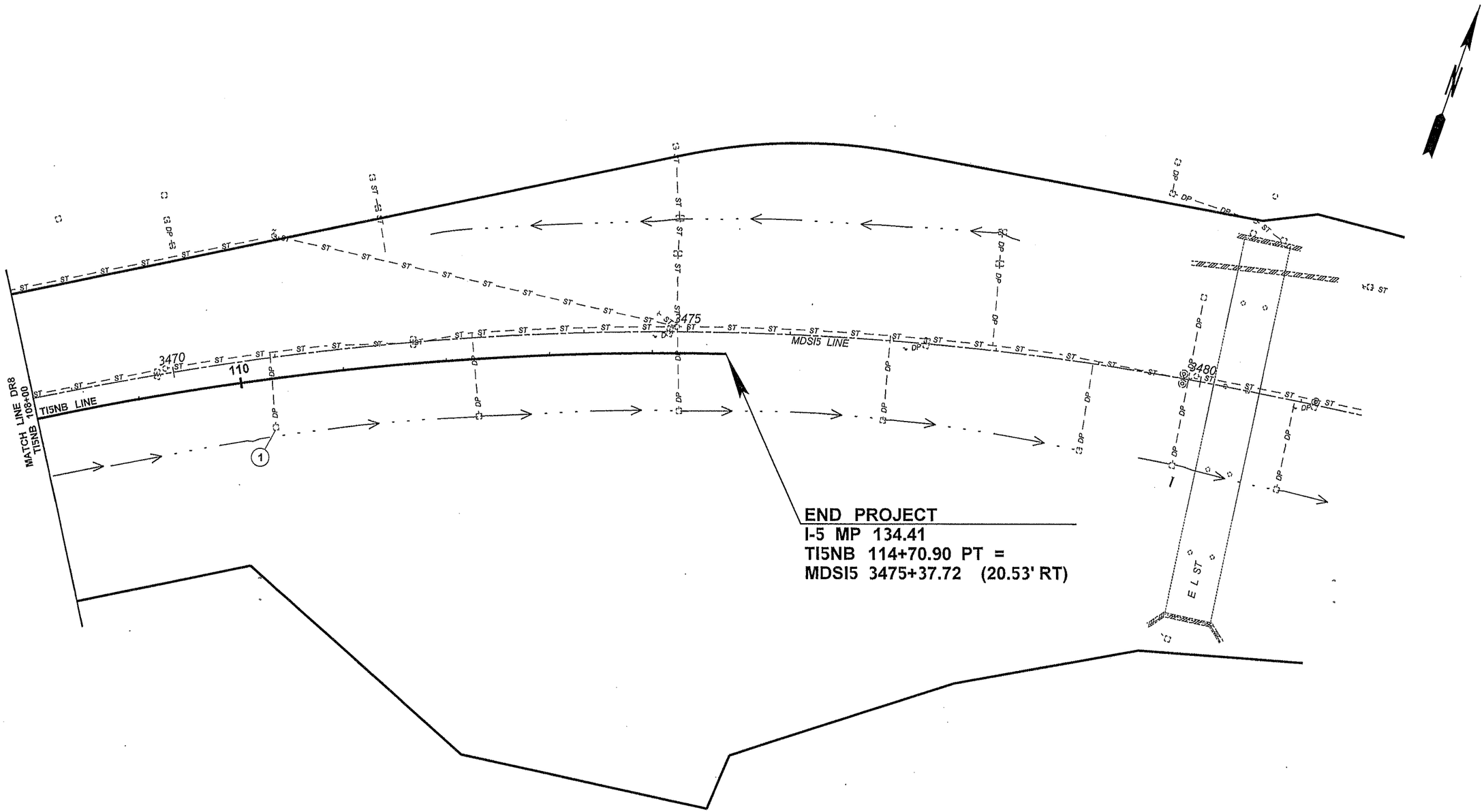

NOTES:

1. SEE SHEET KM1 VOLUME 1 FOR KEY MAP.
2. SEE SHEET DR1A FOR LEGEND.

SHEET DR10 & DR11 INTENTIONALLY OMITTED

FILE NAME	PW:_XL3497\PS&E Sheets\Drainage Plan\P3497_SH_DR_009.dgn			
TIME	10:56:52 AM			
DATE	3/23/2014			
PLOTTED BY	SancheA			
DESIGNED BY	G. CARR			
ENTERED BY	S. WILLIAMS			
CHECKED BY	E. QUINN			
PROJ. ENGR.	J. PEREZ			
REGIONAL ADM.	K. DAYTON	REVISION	DATE	BY

REGION NO.	STATE	FED.AID PROJ.NO.
10	WASH	
JOB NUMBER 12C501		
CONTRACT NO.		LOCATION NO. XL3497

CARLA A. MALONEY, STATE OF WASHINGTON, 37937, REGISTERED PROFESSIONAL ENGINEER

3/24/14
DATE
P.E. STAMP BOX

DATE
P.E. STAMP BOX

Washington State Department of Transportation

I-5
M ST TO PORTLAND AVE - HOV

DRAINAGE PLAN

PLAN REF NO DR9

SHEET 571 OF 1763 SHEETS

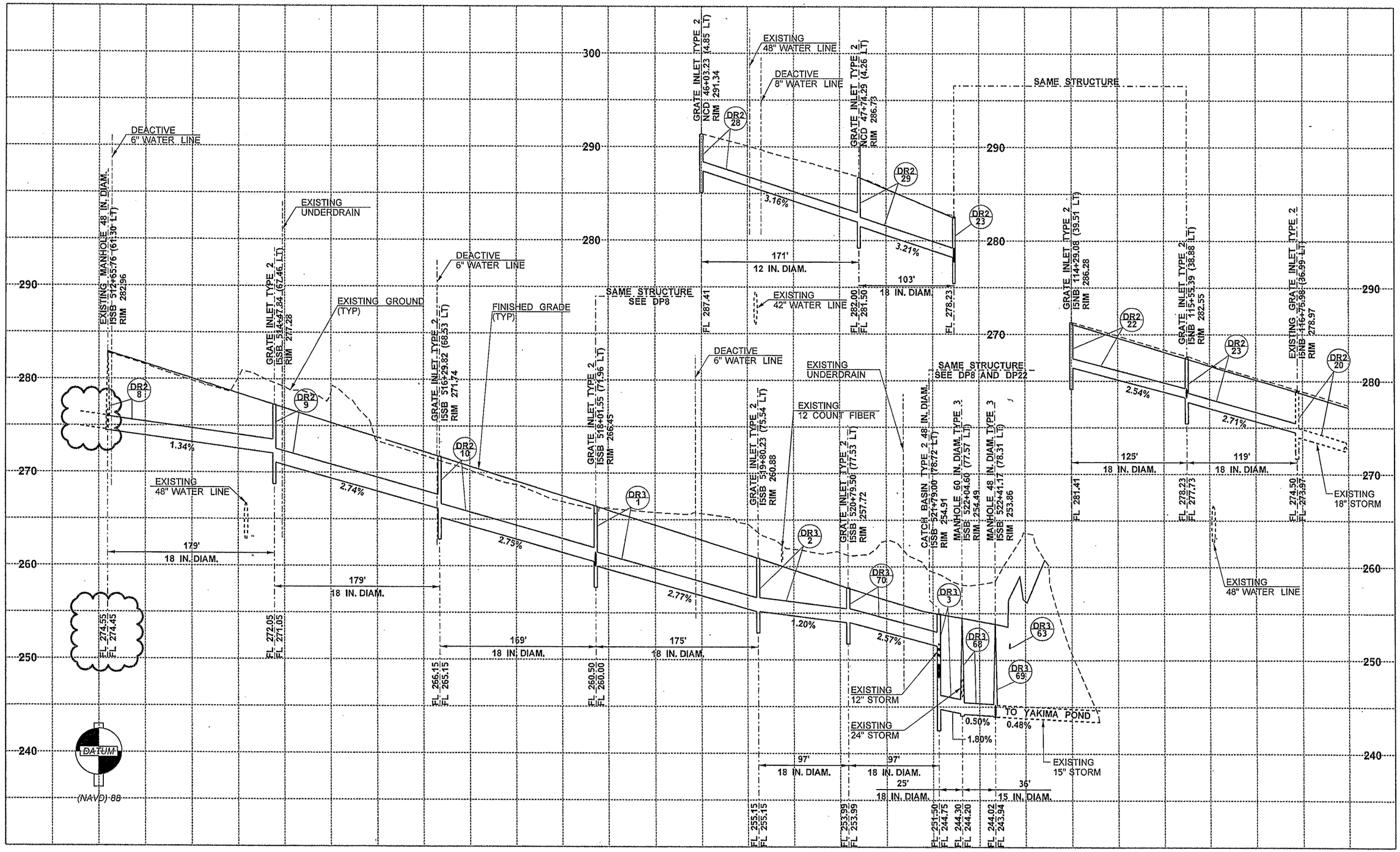

FILE NAME	PW:_XL3497\PS&E Sheets\Drainage Profile\ADD1_P3497_PR_DR_001.dgn						
TIME	5:48:41 PM						
DATE	4/30/2014						
PLOTTED BY	ShannoC						
DESIGNED BY	G. CARR						
ENTERED BY	S. SHYU						
CHECKED BY	E. QUINN						
PROJ. ENGR.	J. PEREZ	AD1 - DRAINAGE PROFILE UPDATED	05/02/2014	SM			
REGIONAL ADM.	K. DAYTON	REVISION	DATE	BY			

REGION NO.	STATE	FED.AID PROJ.NO.
10	WASH	
JOB NUMBER 12C501		
CONTRACT NO.		LOCATION NO. XL3497

P.E. STAMP BOX — DATE 4/30/14

P.E. STAMP BOX — DATE

Washington State Department of Transportation

I-5
M ST TO PORTLAND AVE - HOV

DRAINAGE PROFILE

PLAN REF NO DP1

SHEET 572 OF 1763 SHEETS

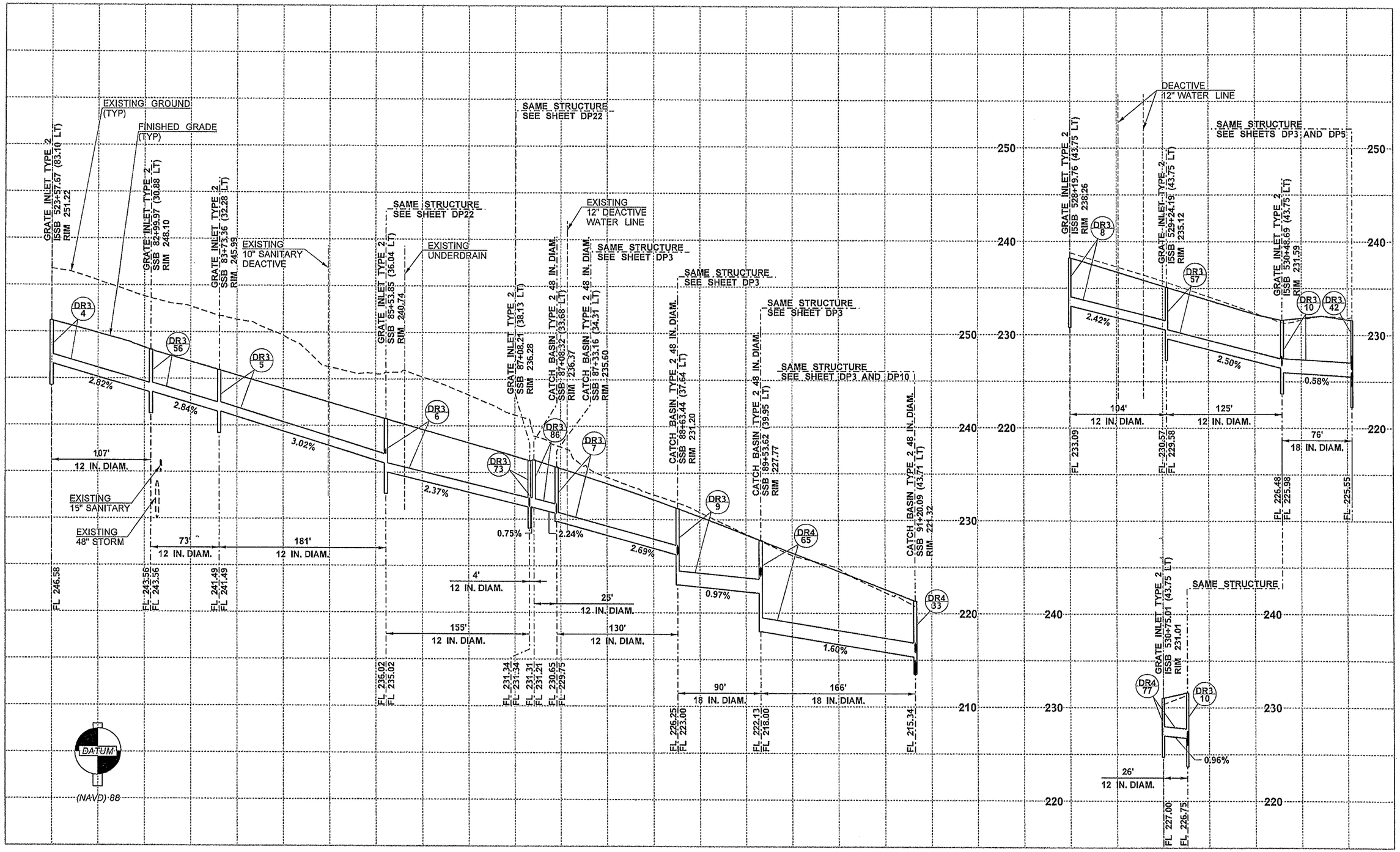

FILE NAME	PW:_XL3497\PS&E Sheets\Drainage Profile\P3497_PR_DR_002.dgn				REGION NO. 10	STATE WASH	FED.AID PROJ.NO.	
TIME	6:46:39 PM							
DATE	3/24/2014				JOB NUMBER 12C501			
PLOTTED BY	SancheA							
DESIGNED BY	G. CARR							
ENTERED BY	S. SHYU							
CHECKED BY	E. QUINN				CONTRACT NO.		LOCATION NO. XL3497	
PROJ. ENGR.	J. PEREZ							
REGIONAL ADM.	K. DAYTON	REVISION	DATE	BY				

CARLA A. MALONEY STATE OF WASHINGTON 41837 REGISTERED PROFESSIONAL ENGINEER
3/24/14
DATE
P.E. STAMP BOX

DATE
P.E. STAMP BOX

Washington State Department of Transportation

I-5
M ST TO PORTLAND AVE - HOV

DRAINAGE PROFILE

PLAN REF NO DP2

SHEET 573 OF 1763 SHEETS

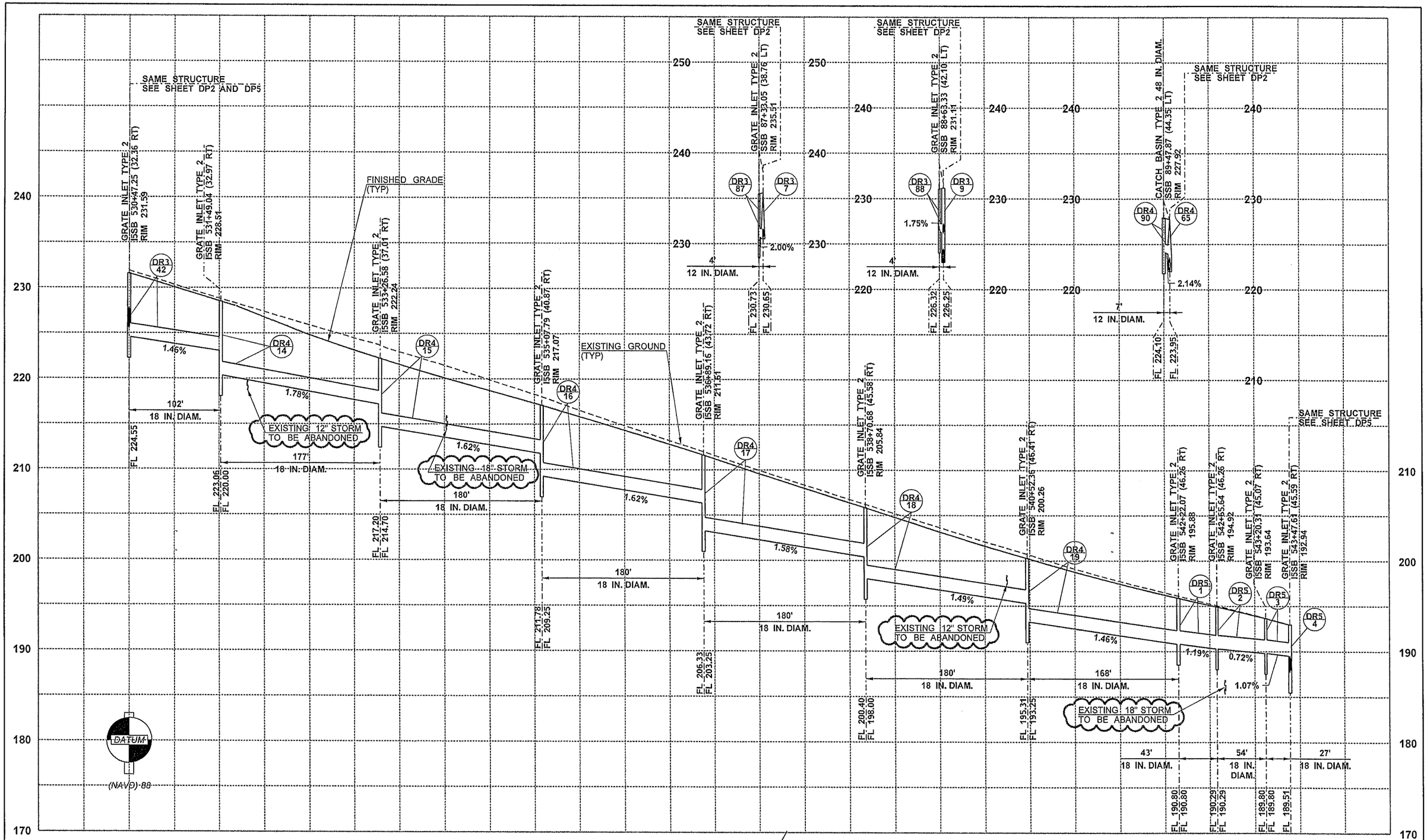

FILE NAME	PW:_XL3497\PS&E Sheets\Drainage Profile\ADD1_P3497_PR_DR_003.dgn
TIME	9:06:23 AM
DATE	4/24/2014
PLOTTED BY	ShannoC
DESIGNED BY	G. CARR
ENTERED BY	S. SHYU
CHECKED BY	E. QUINN
PROJ. ENGR.	J. PEREZ
REGIONAL ADM.	K. DAYTON

REVISION	DATE	BY
AD1 - UPDATED DRAINAGE PROFILES	04/25/2014	TH

REGION NO.	STATE	FED.AID PROJ.NO.
10	WASH	
JOB NUMBER 12C501		
CONTRACT NO.		LOCATION NO. XL3497

CARLA A. MALONEY, STATE OF WASHINGTON, REGISTERED PROFESSIONAL ENGINEER

4/30/14 DATE

P.E. STAMP BOX

DATE

P.E. STAMP BOX

Washington State Department of Transportation

I-5
M ST TO PORTLAND AVE - HOV

DRAINAGE PROFILE

PLAN REF NO DP3

SHEET 574 OF 1763 SHEETS

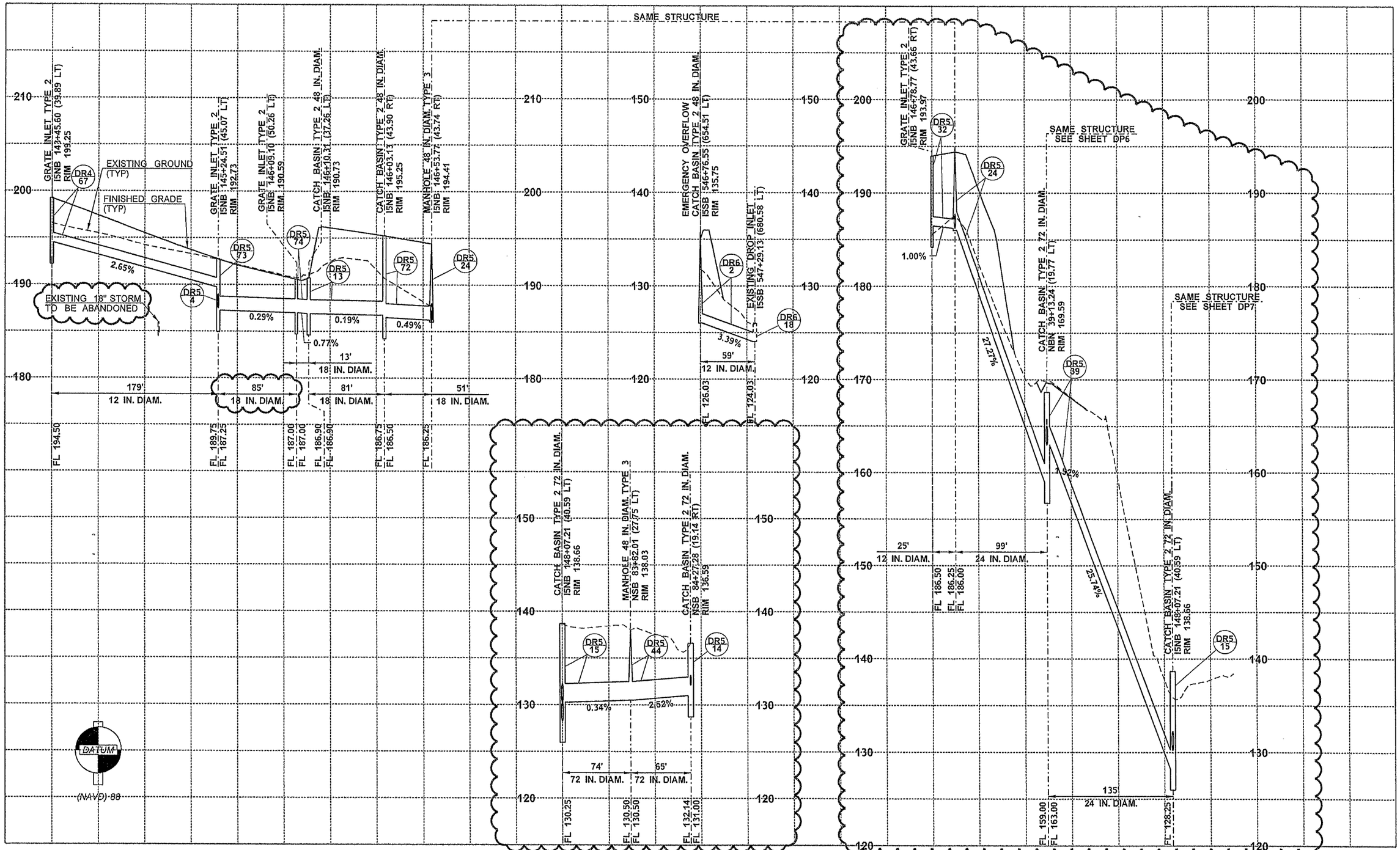

FILE NAME	PW:_XL3497\PS&E Sheets\Drainage Profile\ADD1_P3497_PR_DR_004.dgn
TIME	8:07:13 AM
DATE	4/24/2014
PLOTTED BY	ShannoC
DESIGNED BY	G. CARR
ENTERED BY	S. SHYU
CHECKED BY	E. QUINN
PROJ. ENGR.	J. PEREZ
REGIONAL ADM.	K. DAYTON

REVISION	DATE	BY
AD1 DRAINAGE PROFILES UPDATED	04/25/2014	SM

REGION NO.	STATE	FED.AID PROJ.NO.
10	WASH	
JOB NUMBER 12C501		
CONTRACT NO.	LOCATION NO. XL3497	

CARLA A. MALONEY STATE OF WASHINGTON REGISTERED PROFESSIONAL ENGINEER
4/30/14
DATE
P.E. STAMP BOX

DATE
P.E. STAMP BOX

Washington State Department of Transportation

I-5
M ST TO PORTLAND AVE - HOV

DRAINAGE PROFILE

PLAN REF NO DP4

SHEET 575 OF 1763 SHEETS

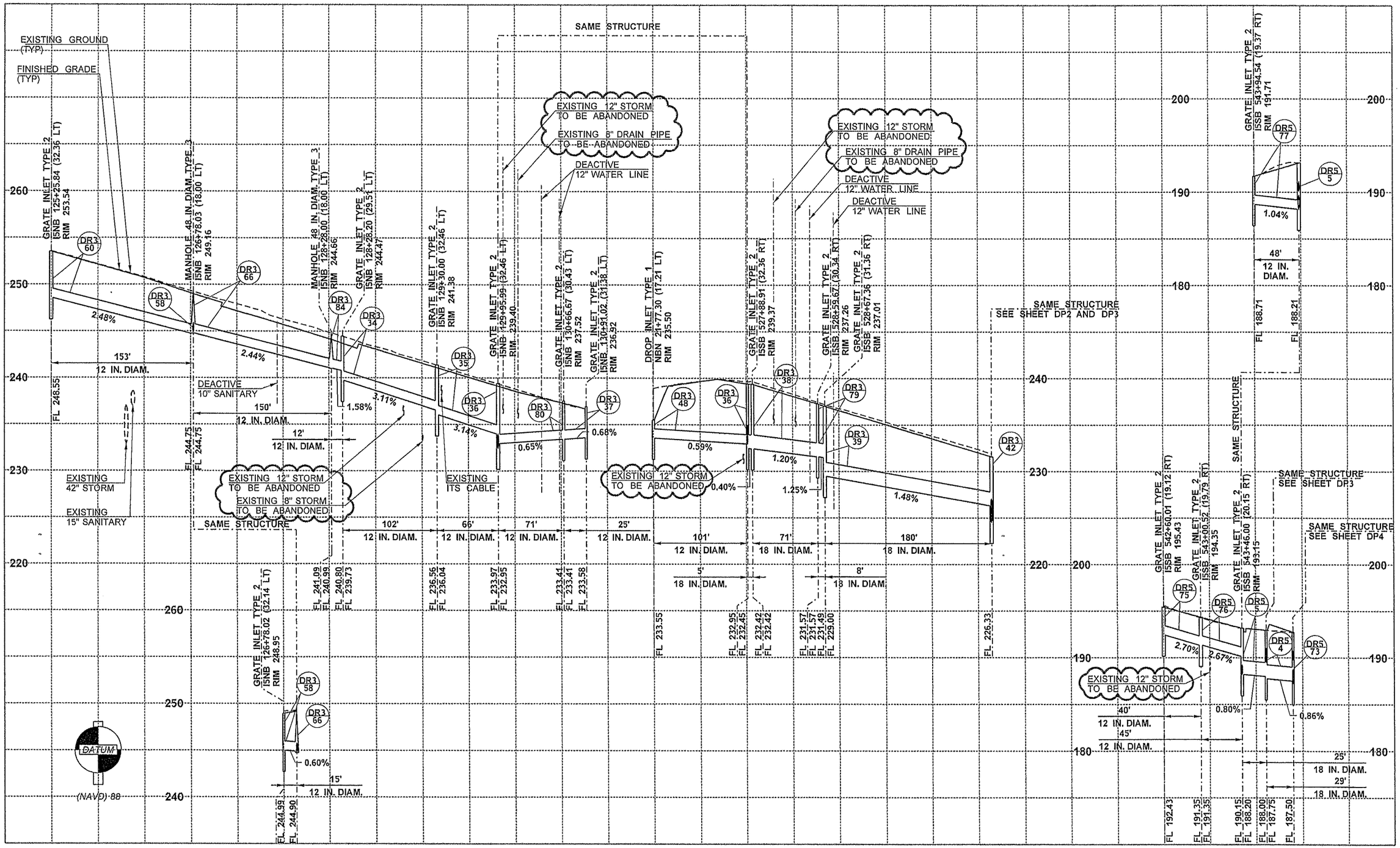

FILE NAME	PW:_XL3497\PS&E Sheets\Drainage Profile\ADD1_P3497_PR_DR_005.dgn				REGION NO. 10	STATE WASH	FED.AID PROJ.NO.
TIME	9:07:23 AM				JOB NUMBER 12C501		
DATE	4/24/2014				CONTRACT NO.		LOCATION NO. XL3497
PLOTTED BY	ShannoC						
DESIGNED BY	G. CARR						
ENTERED BY	S. SHYU						
CHECKED BY	E. QUINN						
PROJ. ENGR.	J. PEREZ	AD1 - UPDATED DRAINAGE PROFILES	04/25/2014	TH			
REGIONAL ADM.	K. DAYTON	REVISION	DATE	BY			

CARLA A. MALONEY — STATE OF WASHINGTON — REGISTERED PROFESSIONAL ENGINEER
4/30/14
DATE
P.E. STAMP BOX

DATE
P.E. STAMP BOX

Washington State Department of Transportation

I-5
M ST TO PORTLAND AVE - HOV

DRAINAGE PROFILE

PLAN REF NO DP5

SHEET 576 OF 1763 SHEETS

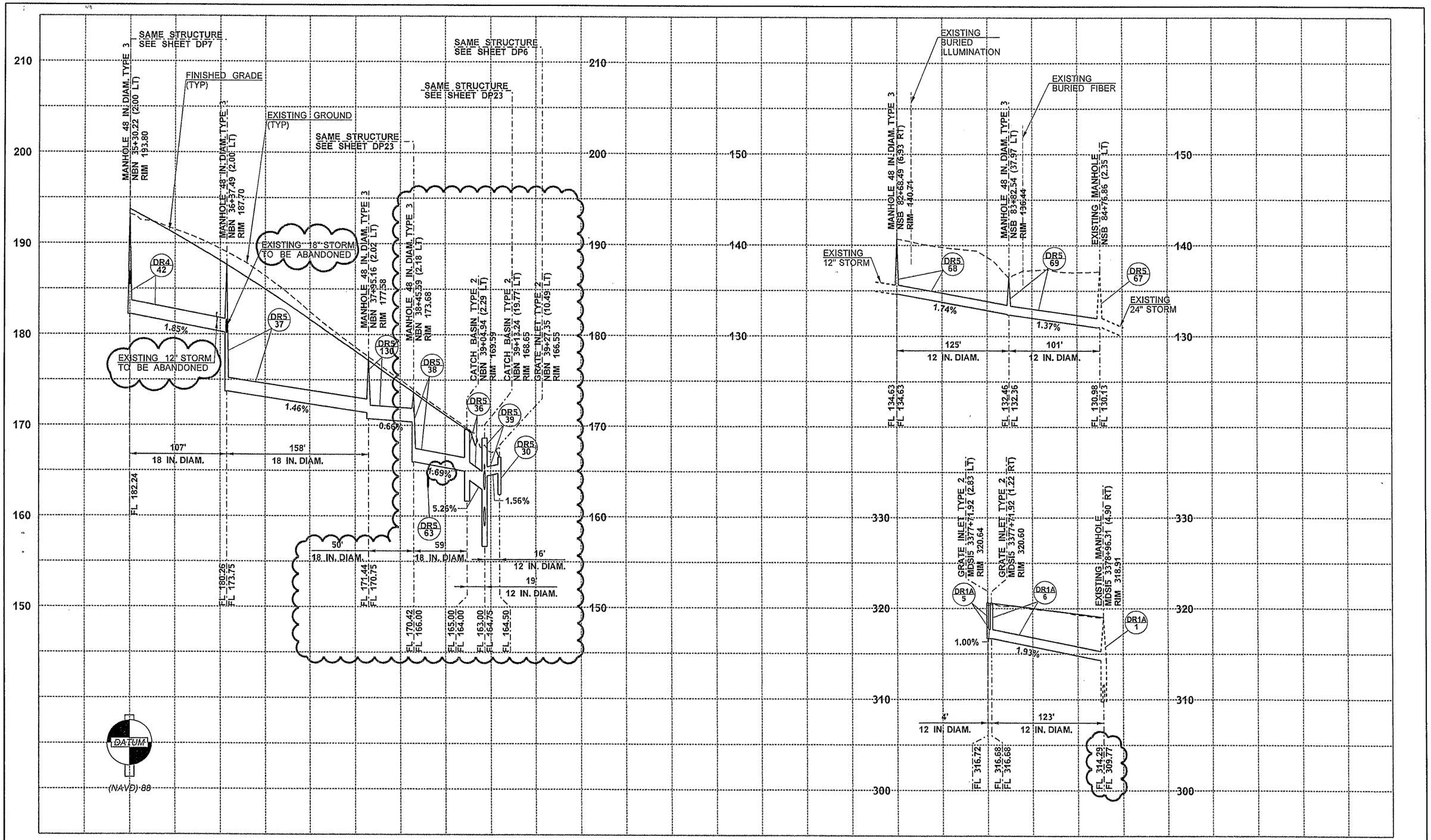

FILE NAME	PW:_XL3497\PS&E Sheets\Drainage Profile\ADD1_P3497_PR_DR_006.dgn
TIME	6:46:00 PM
DATE	4/21/2014
PLOTTED BY	ShannoC
DESIGNED BY	G. CARR
ENTERED BY	S. SHYU
CHECKED BY	E. QUINN
PROJ. ENGR.	J. PEREZ
REGIONAL ADM.	K. DAYTON

REVISION	DATE	BY
AD1 - DRAINAGE PROFILE UPDATED	04/25/2014	SM

REGION NO.	STATE	FED.AID PROJ.NO.
10	WASH	

JOB NUMBER 12C501

CONTRACT NO.

LOCATION NO. XL3497

CARLA A. MALANUM — STATE OF WASHINGTON — REGISTERED PROFESSIONAL ENGINEER

4/25/14 DATE

P.E. STAMP BOX

DATE

P.E. STAMP BOX

Washington State Department of Transportation

I-5
M ST TO PORTLAND AVE - HOV

DRAINAGE PROFILE

PLAN REF NO DP6

SHEET 577 OF 1763 SHEETS

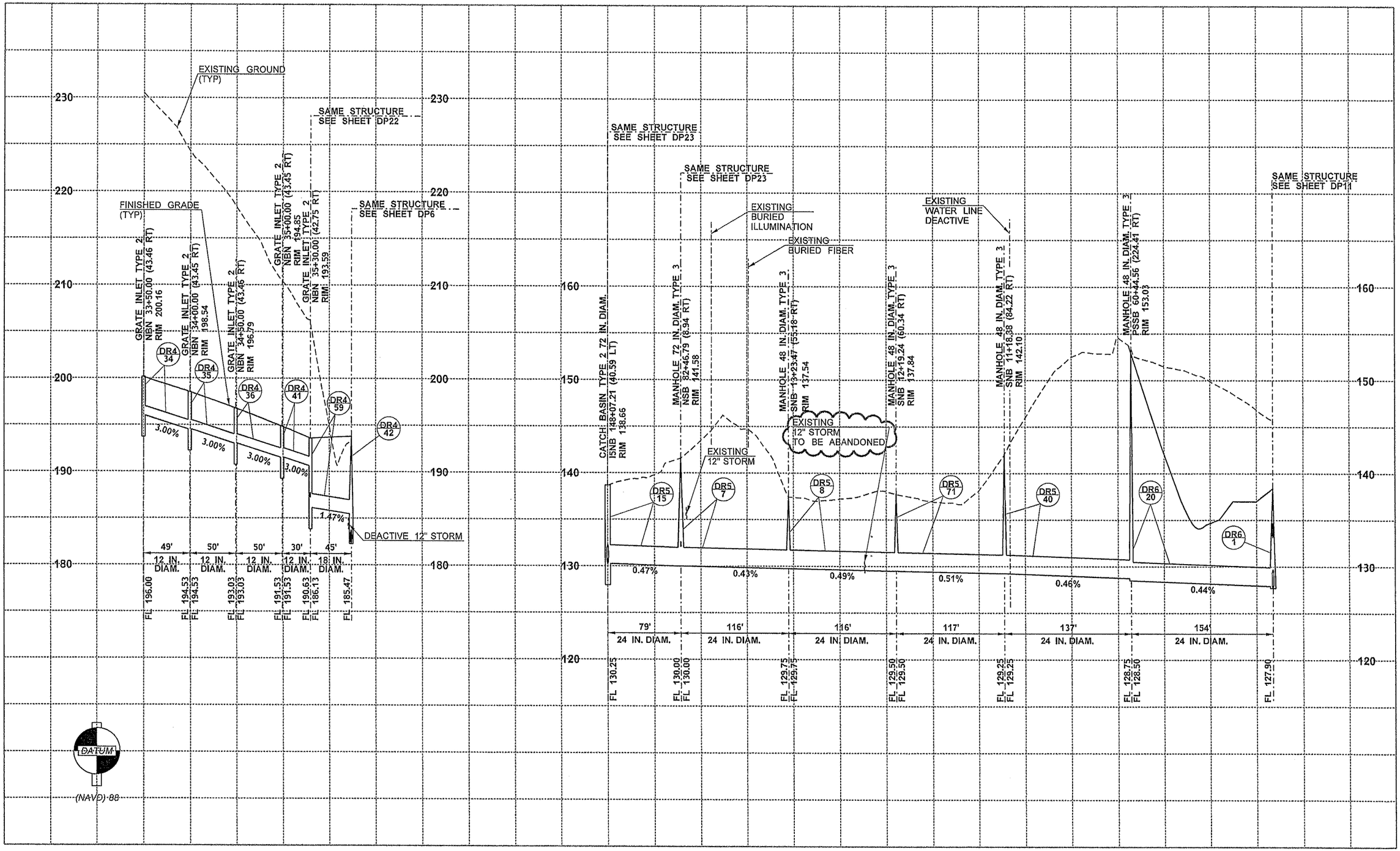

FILE NAME	PW:_XL3497\PS&E Sheets\Drainage Profile\ADD1_P3497_PR_DR_007.dgn
TIME	9:08:43 AM
DATE	4/24/2014
PLOTTED BY	ShannoC
DESIGNED BY	G. CARR
ENTERED BY	S. SHYU
CHECKED BY	E. QUINN
PROJ. ENGR.	J. PEREZ
REGIONAL ADM.	K. DAYTON

REVISION	DATE	BY
AD1 UPDATED DRAINAGE PROFILES	04/25/2014	TH

REGION NO.	STATE	FED.AID PROJ.NO.
10	WASH	

JOB NUMBER 12C501

CONTRACT NO.

LOCATION NO. XL3497

P.E. STAMP BOX — DATE 4/30/14

P.E. STAMP BOX — DATE

Washington State Department of Transportation

I-5
M ST TO PORTLAND AVE - HOV

DRAINAGE PROFILE

PLAN REF NO DP7

SHEET 578 OF 1763 SHEETS

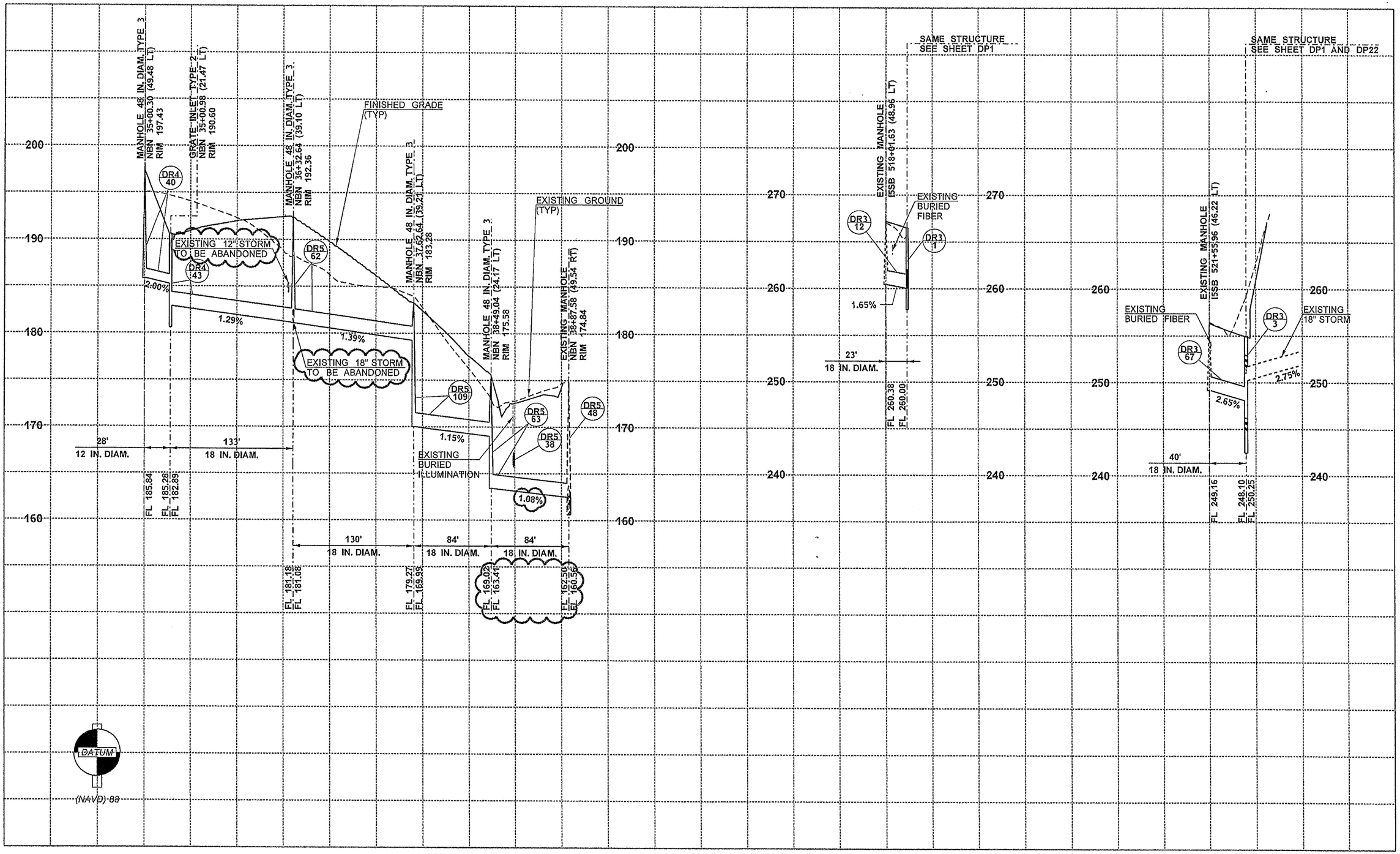

FILE NAME	PW:_XL3497\PS&E Sheets\Drainage Profile\ADD1_P3497_PR_DR_008.dgn
TIME	6:46:50 PM
DATE	4/21/2014
PLOTTED BY	ShannoC
DESIGNED BY	G. CARR
ENTERED BY	S. SHYU
CHECKED BY	E. QUINN
PROJ. ENGR.	J. PEREZ
REGIONAL ADM.	K. DAYTON

REVISION	DATE	BY
AD1 - DRAINAGE PROFILES UPDATED	04/25/2014	SM

REGION NO.	STATE	FED.AID PROJ.NO.
10	WASH	
JOB NUMBER 12C501		
CONTRACT NO.		LOCATION NO. XL3497

CARLA A. MALONEY — STATE OF WASHINGTON — REGISTERED PROFESSIONAL ENGINEER
4/30/14
DATE
P.E. STAMP BOX

DATE
P.E. STAMP BOX

Washington State Department of Transportation

I-5
M ST TO PORTLAND AVE - HOV

DRAINAGE PROFILE

PLAN REF NO DP8

SHEET 579 OF 1763 SHEETS

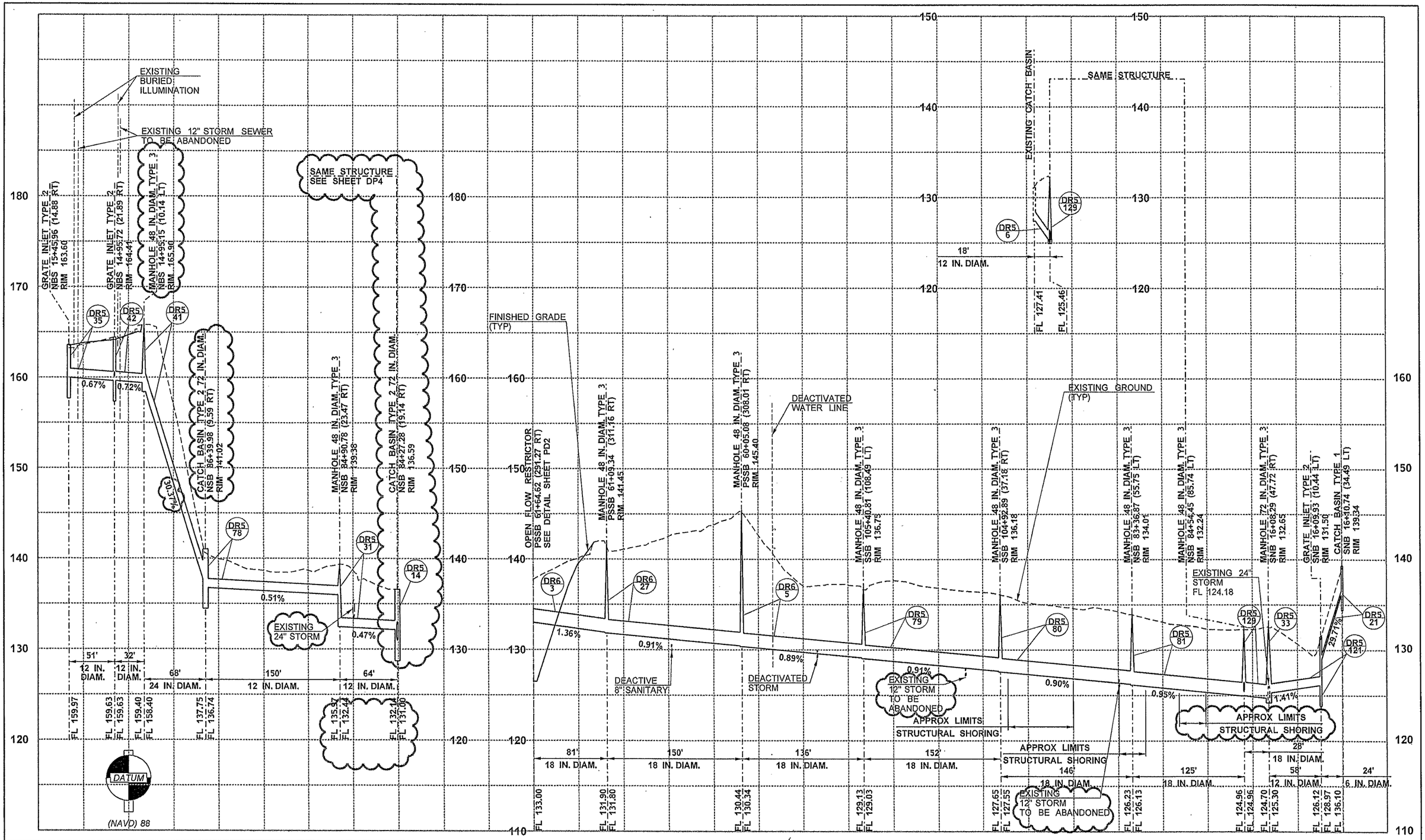

FILE NAME	PW:_XL3497\PS&E Sheets\Drainage Profile\ADD1_P3497_PR_DR_009.dgn
TIME	7:13:39 PM
DATE	4/30/2014
PLOTTED BY	ShannoC
DESIGNED BY	G. CARR
ENTERED BY	S. SHYU
CHECKED BY	E. QUINN
PROJ. ENGR.	J. PEREZ
REGIONAL ADM.	K. DAYTON

REVISION	DATE	BY
ADD1 - UPDATED DRAINAGE PROFILES	05/02/2014	SM

REGION NO.	STATE	FED.AID PROJ.NO.
10	WASH	
JOB NUMBER 12C501		
CONTRACT NO.		LOCATION NO. XL3497

CARLA A. MALONEY STATE OF WASHINGTON 38400 REGISTERED PROFESSIONAL ENGINEER
4/30/14
DATE
P.E. STAMP BOX

DATE
P.E. STAMP BOX

Washington State Department of Transportation

I-5
M ST TO PORTLAND AVE - HOV

DRAINAGE PROFILE

PLAN REF NO DP9

SHEET 580 OF 1763 SHEETS

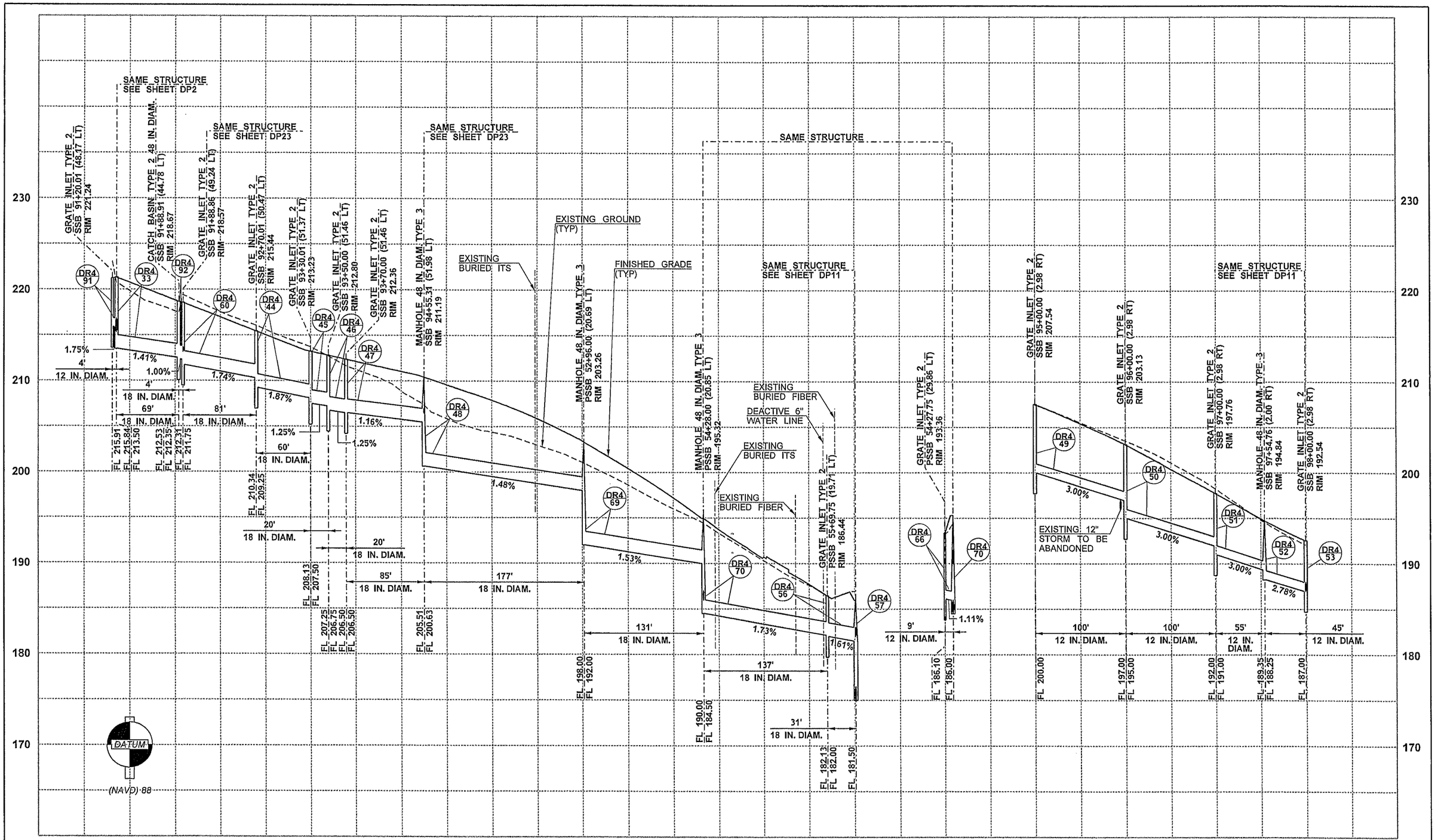

FILE NAME	PW:_XL3497\PS&E Sheets\Drainage Profile\P3497_PR_DR_010.dgn						
TIME	9:25:44 AM						
DATE	3/26/2014						
PLOTTED BY	SancheA						
DESIGNED BY	G. CARR						
ENTERED BY	S. SHYU						
CHECKED BY	E. QUINN						
PROJ. ENGR.	J. PEREZ						
REGIONAL ADM.	K. DAYTON	REVISION	DATE	BY			

REGION NO.	STATE	FED.AID PROJ.NO.
10	WASH	
JOB NUMBER 12C501		
CONTRACT NO.		LOCATION NO. XL3497

CARLA A. MALONEY — STATE OF WASHINGTON — REGISTERED PROFESSIONAL ENGINEER
3/26/14
DATE
P.E. STAMP BOX

DATE
P.E. STAMP BOX

Washington State Department of Transportation

I-5
M ST TO PORTLAND AVE - HOV

DRAINAGE PROFILE

PLAN REF NO DP10

SHEET 581 OF 1763 SHEETS

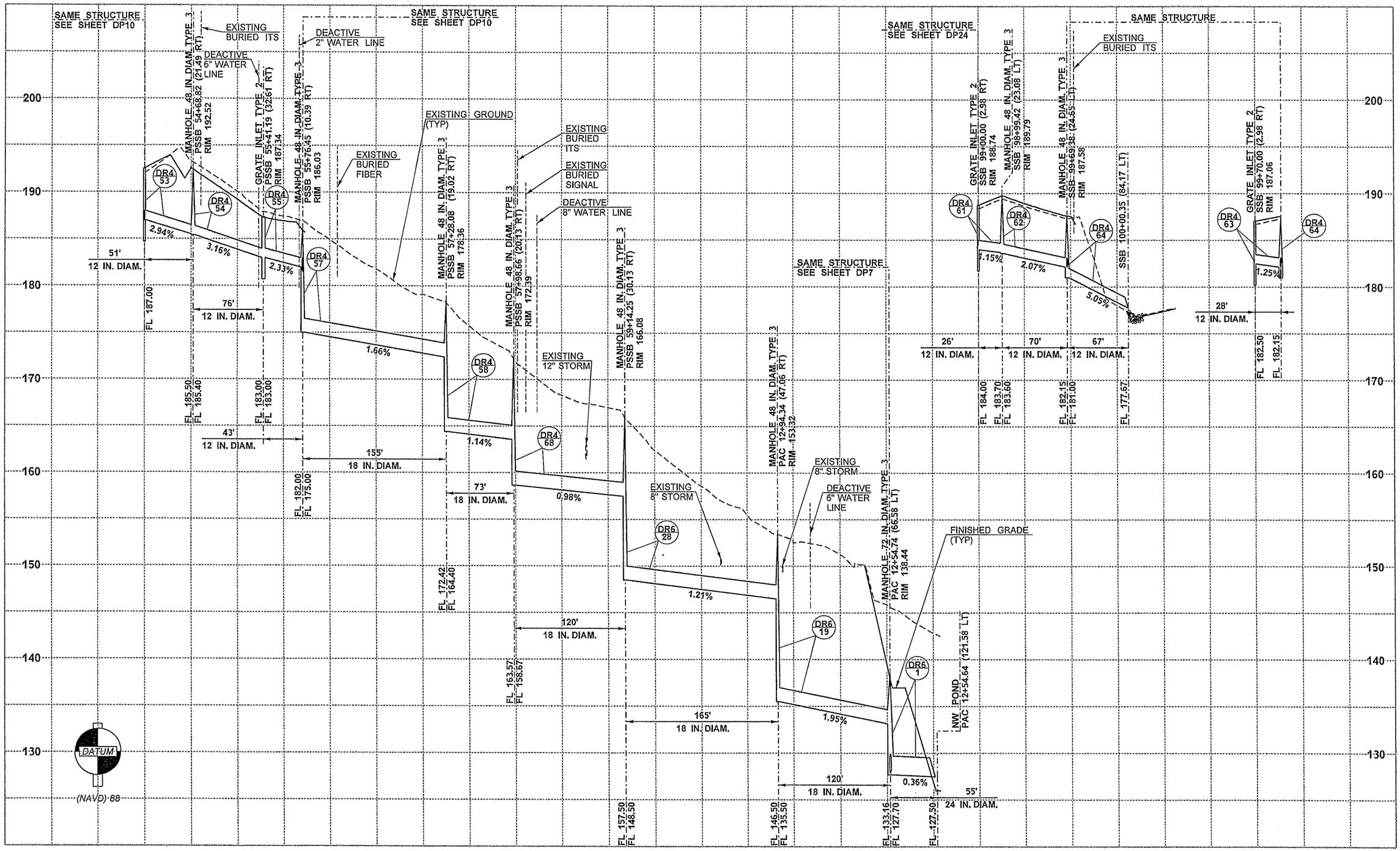

FILE NAME	PW:_XL3497\PS&E Sheets\Drainage Profile\P3497_PR_DR_011.dgn
TIME	6:30:27 PM
DATE	3/24/2014
PLOTTED BY	SancheA
DESIGNED BY	G. CARR
ENTERED BY	S. SHYU
CHECKED BY	E. QUINN
PROJ. ENGR.	J. PEREZ
REGIONAL ADM.	K. DAYTON

REVISION | DATE | BY

REGION NO.	STATE	FED.AID PROJ.NO.
10	WASH	
JOB NUMBER 12C501		
CONTRACT NO.		LOCATION NO. XL3497

CARLA A. MALONEY STATE OF WASHINGTON REGISTERED PROFESSIONAL ENGINEER
3/24/14 DATE
P.E. STAMP BOX

DATE
P.E. STAMP BOX

Washington State Department of Transportation

I-5
M ST TO PORTLAND AVE - HOV

DRAINAGE PROFILE

PLAN REF NO DP11

SHEET 582 OF 1763 SHEETS

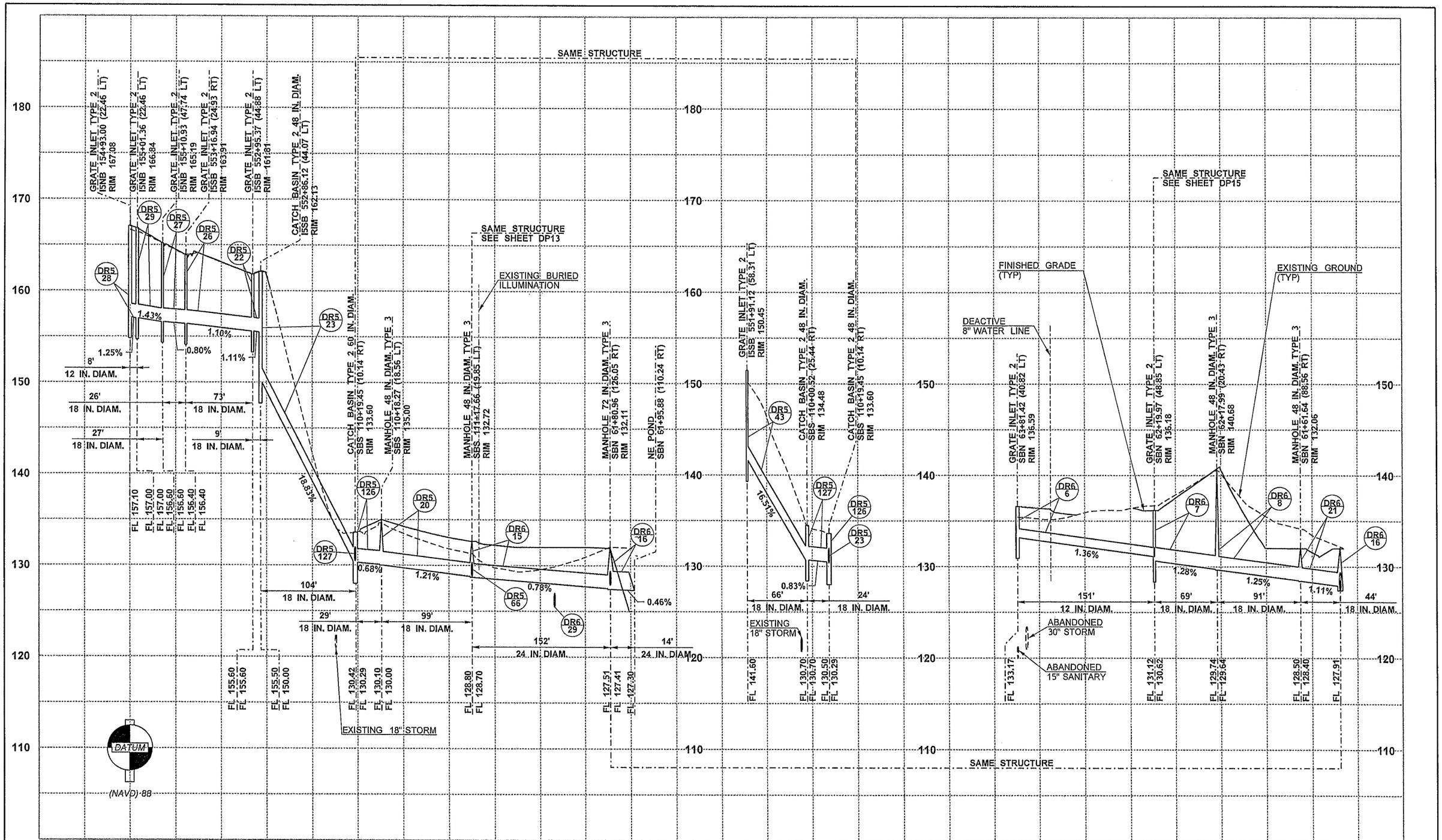

FILE NAME	PW:_XL3497\PS&E Sheets\Drainage Profile\P3497_PR_DR_012.dgn
TIME	9:26:18 AM
DATE	3/26/2014
PLOTTED BY	SancheA
DESIGNED BY	G. CARR
ENTERED BY	S. SHYU
CHECKED BY	E. QUINN
PROJ. ENGR.	J. PEREZ
REGIONAL ADM.	K. DAYTON

REVISION	DATE	BY

REGION NO.	STATE	FED.AID PROJ.NO.
10	WASH	
JOB NUMBER 12C501		
CONTRACT NO.		LOCATION NO. XL3497

P.E. STAMP BOX — DATE 3/26/14

P.E. STAMP BOX — DATE

Washington State Department of Transportation

I-5
M ST TO PORTLAND AVE - HOV

DRAINAGE PROFILE

PLAN REF NO DP12

SHEET 583 OF 1763 SHEETS

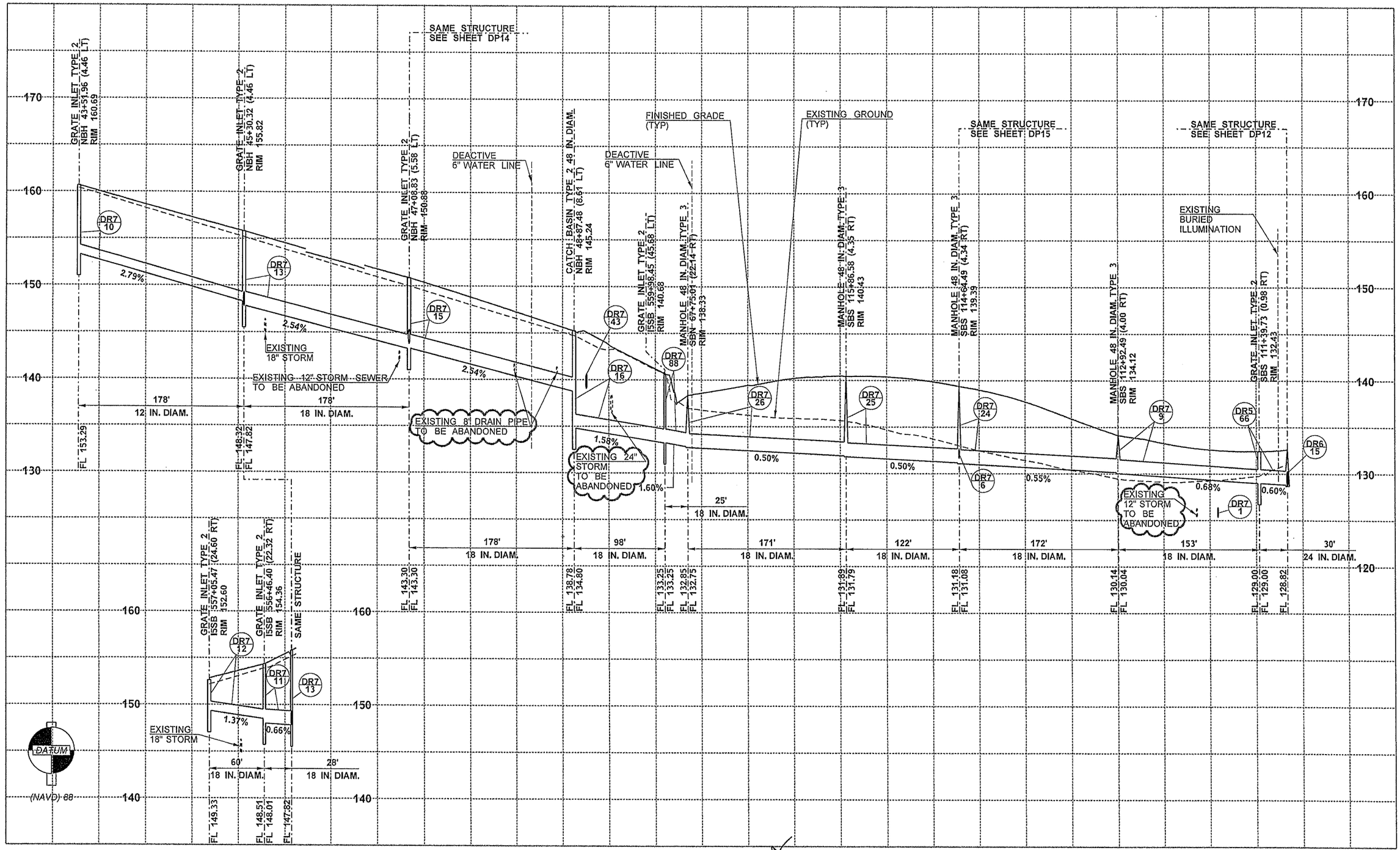

FILE NAME	PW:_XL3497\PS&E Sheets\Drainage Profile\ADD1_P3497_PR_DR_013.dgn						
TIME	9:10:06 AM						
DATE	4/24/2014						
PLOTTED BY	ShannoC						
DESIGNED BY	G. CARR						
ENTERED BY	S. SHYU						
CHECKED BY	E. QUINN						
PROJ. ENGR.	J. PEREZ	AD1 - UPDATED DRAINAGE PROFILES	04/25/2014	TH			
REGIONAL ADM.	K. DAYTON	REVISION	DATE	BY			

REGION NO.	STATE	FED.AID PROJ.NO.
10	WASH	
JOB NUMBER 12C501		
CONTRACT NO.	LOCATION NO. XL3497	

CARLA A. HANSON STATE OF WASHINGTON 41837 REGISTERED PROFESSIONAL ENGINEER

4/30/14 DATE

P.E. STAMP BOX

DATE

P.E. STAMP BOX

Washington State Department of Transportation

I-5
M ST TO PORTLAND AVE - HOV

DRAINAGE PROFILE

PLAN REF NO DP13

SHEET 584 OF 1763 SHEETS

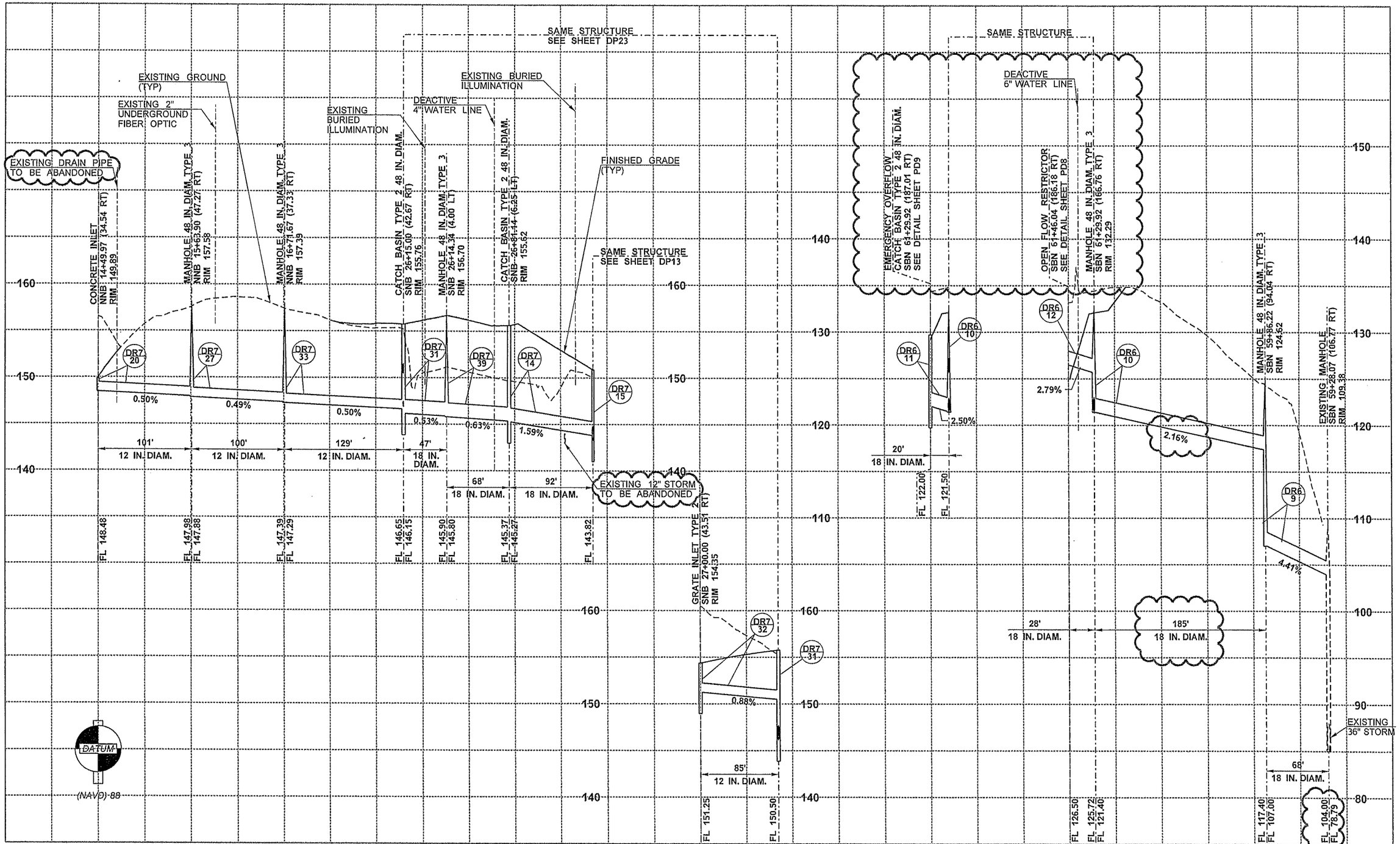

FILE NAME	PW:_XL3497\PS&E Sheets\Drainage Profile\ADD1_P3497_PR_DR_014.dgn
TIME	10:15:43 AM
DATE	4/22/2014
PLOTTED BY	ShannoC
DESIGNED BY	G. CARR
ENTERED BY	S. SHYU
CHECKED BY	E. QUINN
PROJ. ENGR.	J. PEREZ
REGIONAL ADM.	K. DAYTON

REVISION	DATE	BY
AD1 - DRAINAGE PROFILES UPDATED	04/25/2014	TH

REGION NO.	STATE	FED.AID PROJ.NO.
10	WASH	
JOB NUMBER 12C501		
CONTRACT NO.		LOCATION NO. XL3497

CARLA A. MALONE STATE OF WASHINGTON REGISTERED PROFESSIONAL ENGINEER
4/30/14
DATE
P.E. STAMP BOX

P.E. STAMP BOX
DATE

Washington State Department of Transportation

I-5
M ST TO PORTLAND AVE - HOV

DRAINAGE PROFILE

PLAN REF NO DP14

SHEET 585 OF 1763 SHEETS

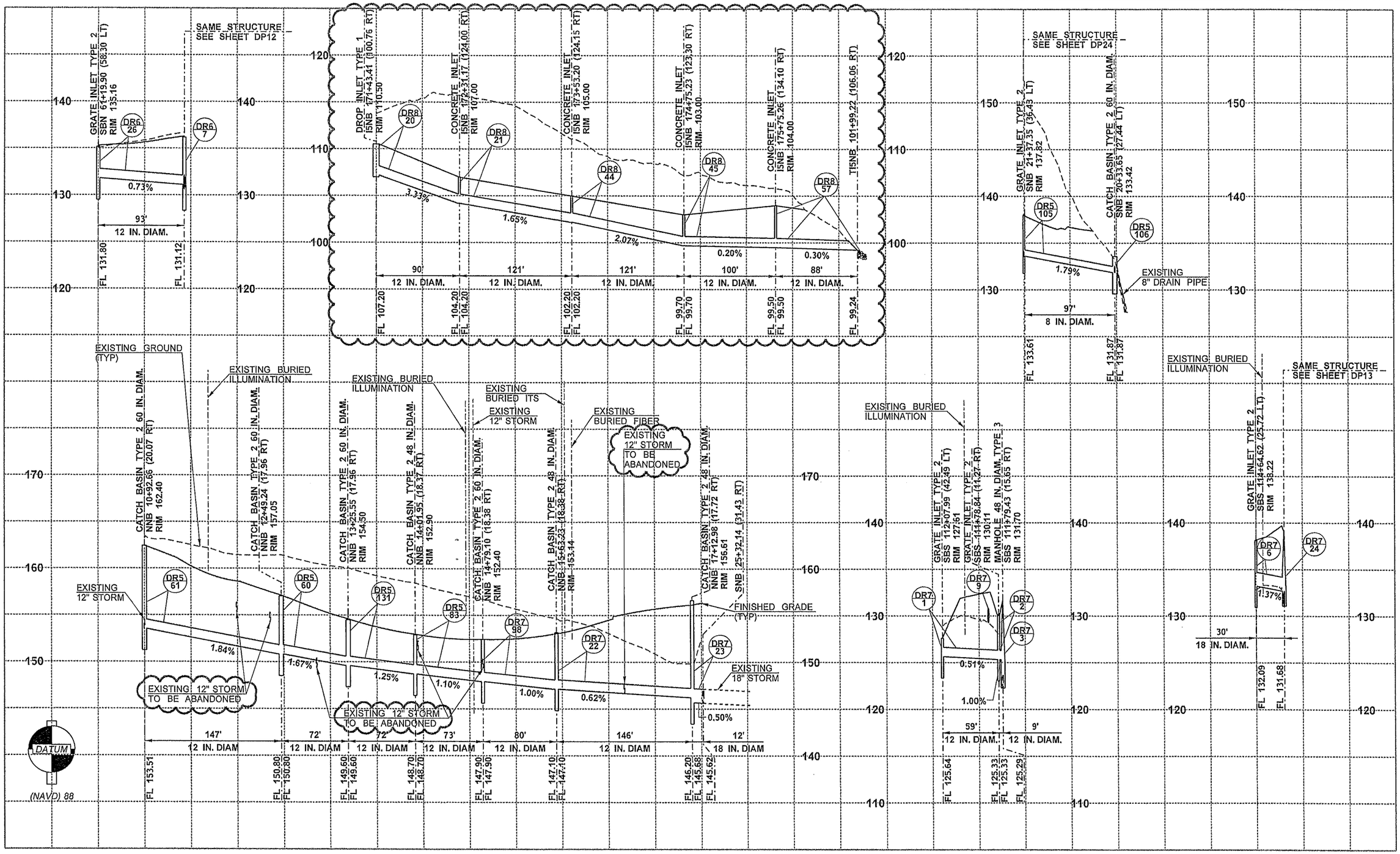

FILE NAME	PW:_XL3497\PS&E Sheets\Drainage Profile\ADD1_P3497_PR_DR_015.dgn
TIME	2:01:14 PM
DATE	4/29/2014
PLOTTED BY	ShannoC
DESIGNED BY	G. CARR
ENTERED BY	S. SHYU
CHECKED BY	E. QUINN
PROJ. ENGR.	J. PEREZ
REGIONAL ADM.	K. DAYTON

REVISION	DATE	BY
ADD1 UPDATED DRAINAGE PROFILES	04/25/2014	TH

REGION NO.	STATE	FED.AID PROJ.NO.
10	WASH	

JOB NUMBER 12C501

CONTRACT NO.

LOCATION NO. XL3497

CARLA A. MALONEY — STATE OF WASHINGTON — REGISTERED PROFESSIONAL ENGINEER

4/30/14 DATE

P.E. STAMP BOX

DATE

P.E. STAMP BOX

Washington State Department of Transportation

I-5
M ST TO PORTLAND AVE - HOV

DRAINAGE PROFILE

PLAN REF NO DP15

SHEET 586 OF 1763 SHEETS

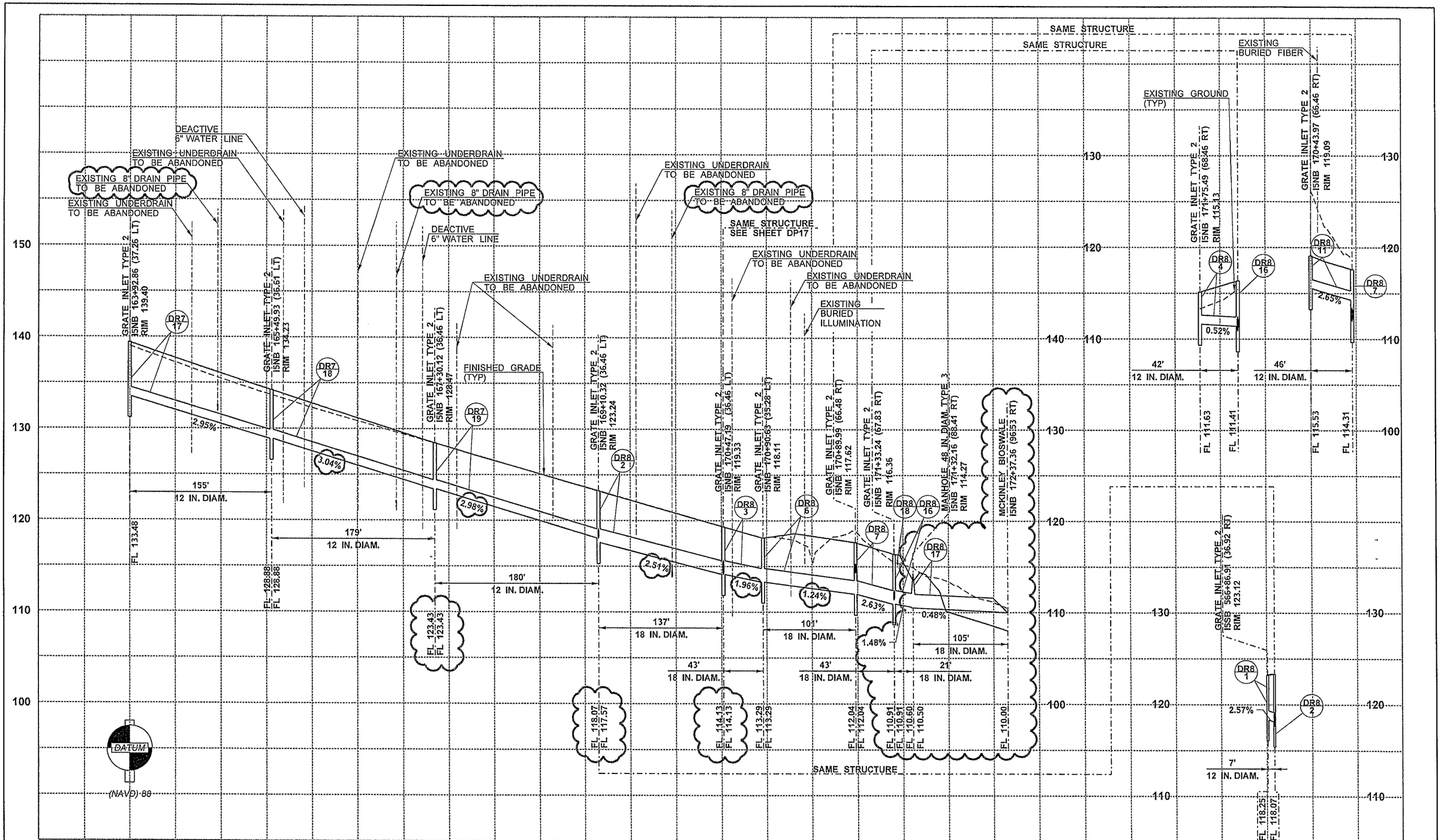

FILE NAME	PW:_XL3497\PS&E Sheets\Drainage Profile\ADD1_P3497_PR_DR_016.dgn
TIME	1:05:49 PM
DATE	4/28/2014
PLOTTED BY	ShannoC
DESIGNED BY	G. CARR
ENTERED BY	S. SHYU
CHECKED BY	E. QUINN
PROJ. ENGR.	J. PEREZ
REGIONAL ADM.	K. DAYTON

REVISION	DATE	BY
ADD1 UPDATED DRAINAGE PROFILES	04/25/2014	SM

REGION NO.	STATE	FED.AID PROJ.NO.
10	WASH	

JOB NUMBER 12C501

CONTRACT NO.

LOCATION NO. XL3497

CARLA A. MALONE, STATE OF WASHINGTON, REGISTERED PROFESSIONAL ENGINEER

4/30/14 DATE

P.E. STAMP BOX

DATE

P.E. STAMP BOX

Washington State Department of Transportation

I-5
M ST TO PORTLAND AVE - HOV

DRAINAGE PROFILE

PLAN REF NO DP16

SHEET 587 OF 1763 SHEETS

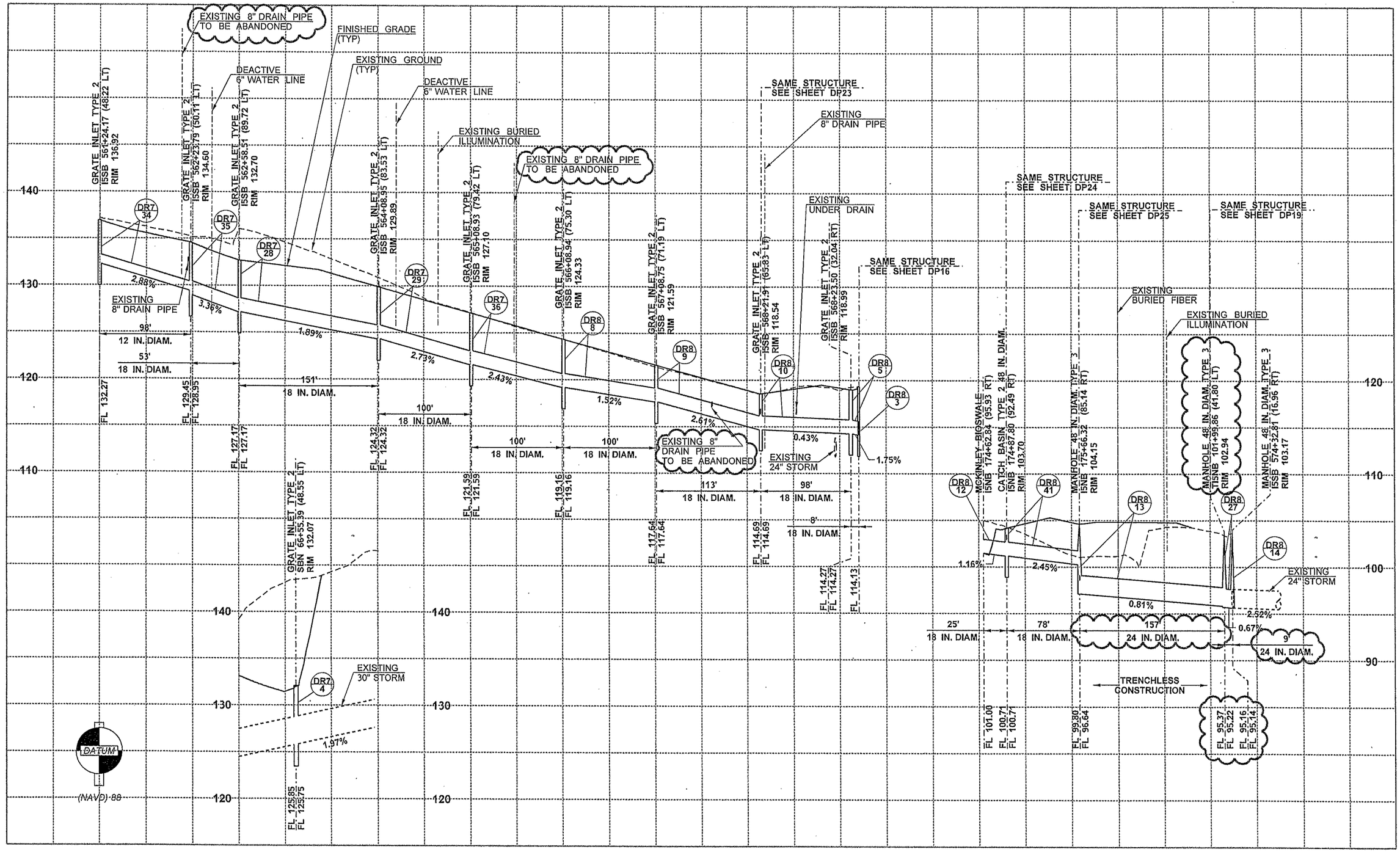

FILE NAME	PW:_XL3497\PS&E Sheets\Drainage Profile\ADD1_P3497_PR_DR_017.dgn
TIME	7:17:21 PM
DATE	4/30/2014
PLOTTED BY	ShannoC
DESIGNED BY	G. CARR
ENTERED BY	S. SHYU
CHECKED BY	E. QUINN
PROJ. ENGR.	J. PEREZ
REGIONAL ADM.	K. DAYTON

REVISION	DATE	BY
AD1 UPDATED DRAINAGE PROFILES	05/02/2014	TH

REGION NO.	STATE	FED.AID PROJ.NO.
10	WASH	

JOB NUMBER 12C501

CONTRACT NO.

LOCATION NO. XL3497

CARLA A. MALONEY STATE OF WASHINGTON REGISTERED PROFESSIONAL ENGINEER

4/30/14 DATE

P.E. STAMP BOX

DATE

P.E. STAMP BOX

Washington State Department of Transportation

I-5
M ST TO PORTLAND AVE - HOV

DRAINAGE PROFILE

PLAN REF NO DP17

SHEET 588 OF 1763 SHEETS

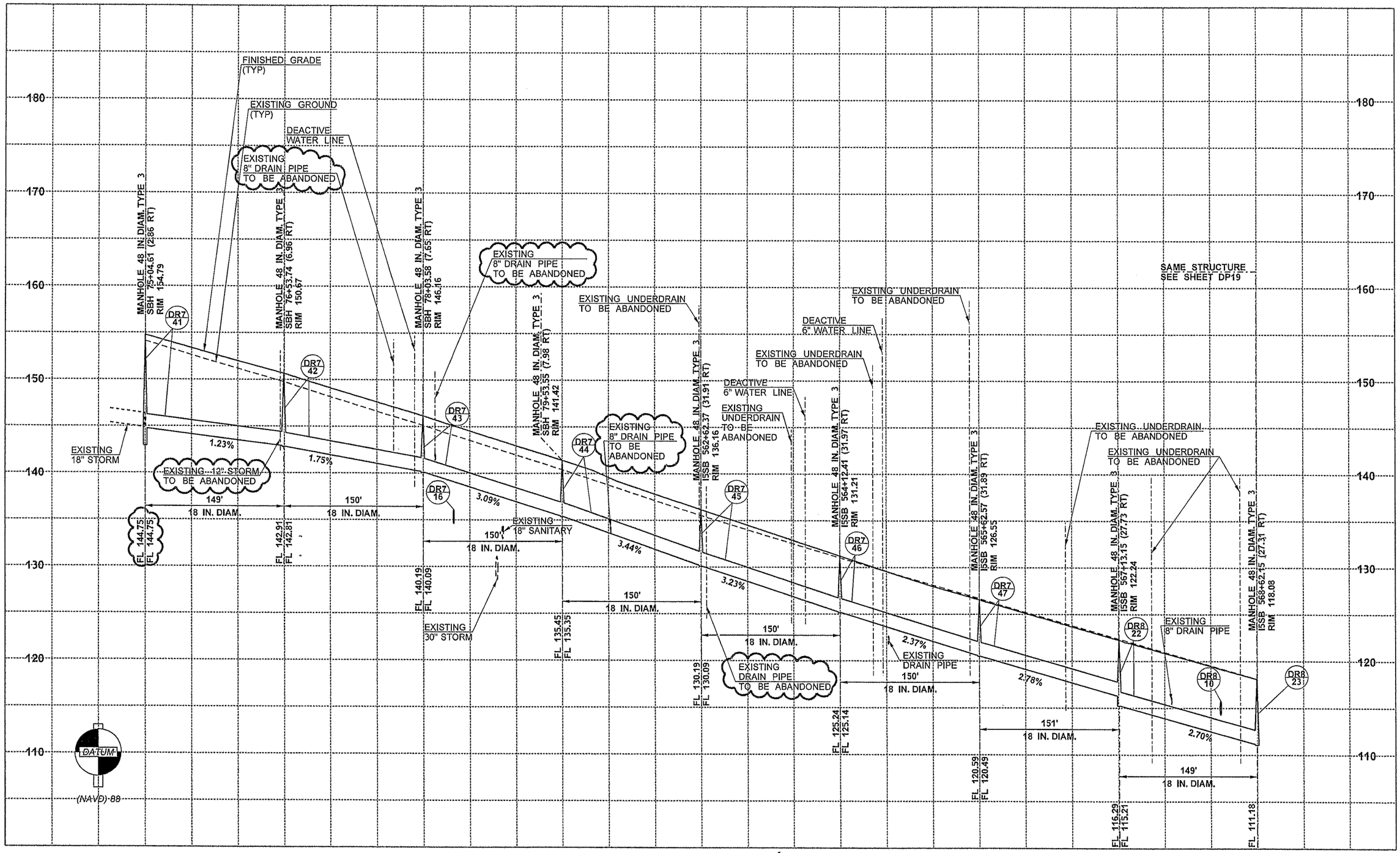

FILE NAME	PW:_XL3497\PS&E Sheets\Drainage Profile\ADD1_P3497_PR_DR_018.dgn				REGION NO. 10	STATE WASH	FED.AID PROJ.NO.
TIME	6:48:33 PM				JOB NUMBER 12C501		
DATE	4/21/2014				CONTRACT NO.		LOCATION NO. XL3497
PLOTTED BY	ShannoC						
DESIGNED BY	G. CARR						
ENTERED BY	S. SHYU						
CHECKED BY	E. QUINN						
PROJ. ENGR.	J. PEREZ	AD1 - DRAINAGE PROFILES UPDATED	04/25/2014	TH			
REGIONAL ADM.	K. DAYTON	REVISION	DATE	BY			

CARLA A. MALONE — STATE OF WASHINGTON — 36766 — REGISTERED PROFESSIONAL ENGINEER

4/21/14 DATE

P.E. STAMP BOX

DATE

P.E. STAMP BOX

Washington State Department of Transportation

I-5

M ST TO PORTLAND AVE - HOV

DRAINAGE PROFILE

PLAN REF NO DP18

SHEET 589 OF 1763 SHEETS

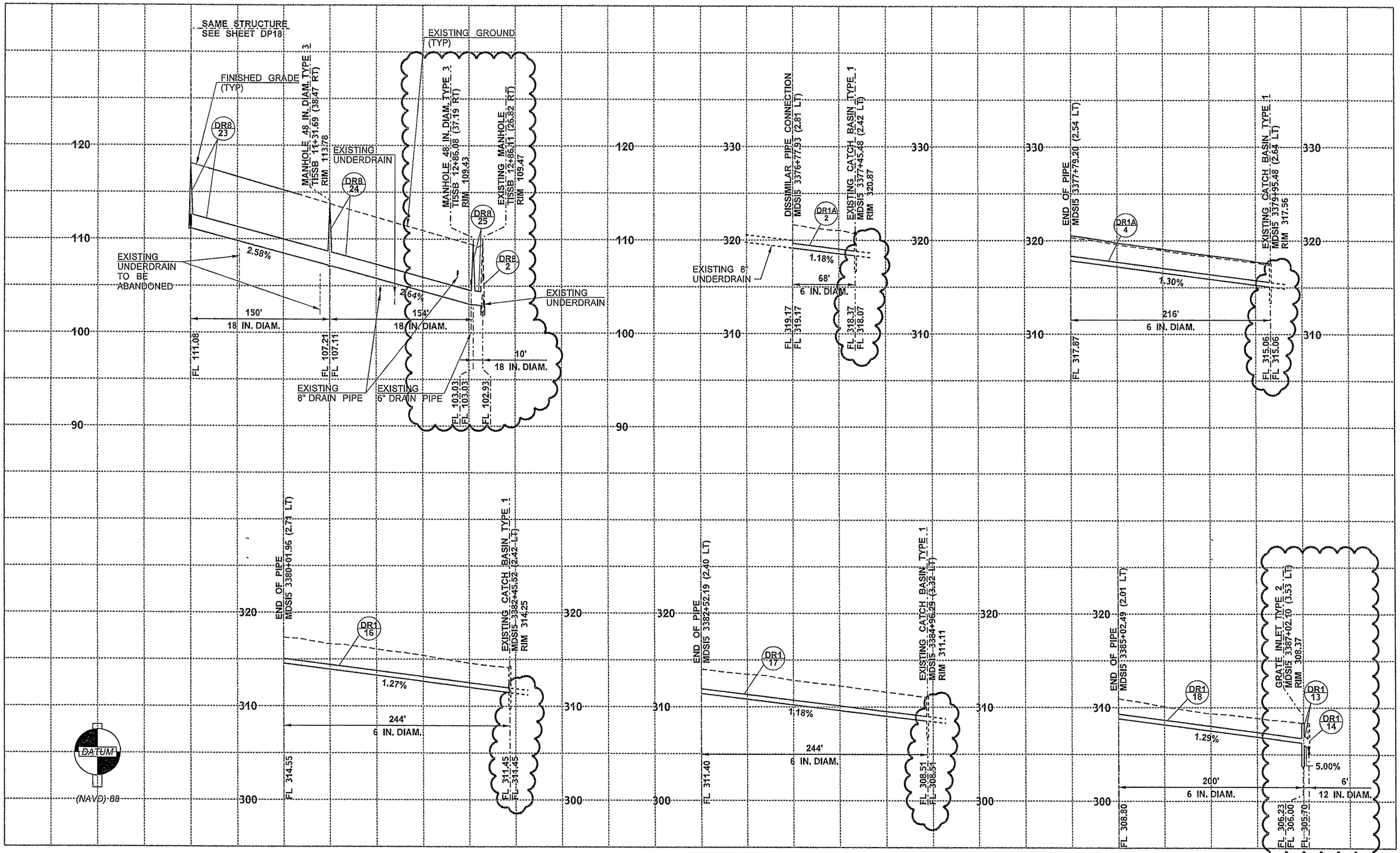

FILE NAME	PW:_XL3497\PS&E Sheets\Drainage Profile\ADD1_P3497_PR_DR_019.dgn						
TIME	4:15:30 PM						
DATE	4/29/2014						
PLOTTED BY	ShannoC						
DESIGNED BY	G. CARR						
ENTERED BY	S. SHYU						
CHECKED BY	E. QUINN						
PROJ. ENGR.	J. PEREZ	AD1 - DRAINAGE PROFILES UPDATED	04/25/2014	DD			
REGIONAL ADM.	K. DAYTON	REVISION	DATE	BY			

REGION NO.	STATE	FED.AID PROJ.NO.
10	WASH	
JOB NUMBER 12C501		
CONTRACT NO.		LOCATION NO. XL3497

CARLA A. MALONEY STATE OF WASHINGTON REGISTERED PROFESSIONAL ENGINEER

4/30/14
DATE
P.E. STAMP BOX

DATE
P.E. STAMP BOX

Washington State Department of Transportation

I-5
M ST TO PORTLAND AVE - HOV

DRAINAGE PROFILE

PLAN REF NO DP19

SHEET 590 OF 1763 SHEETS

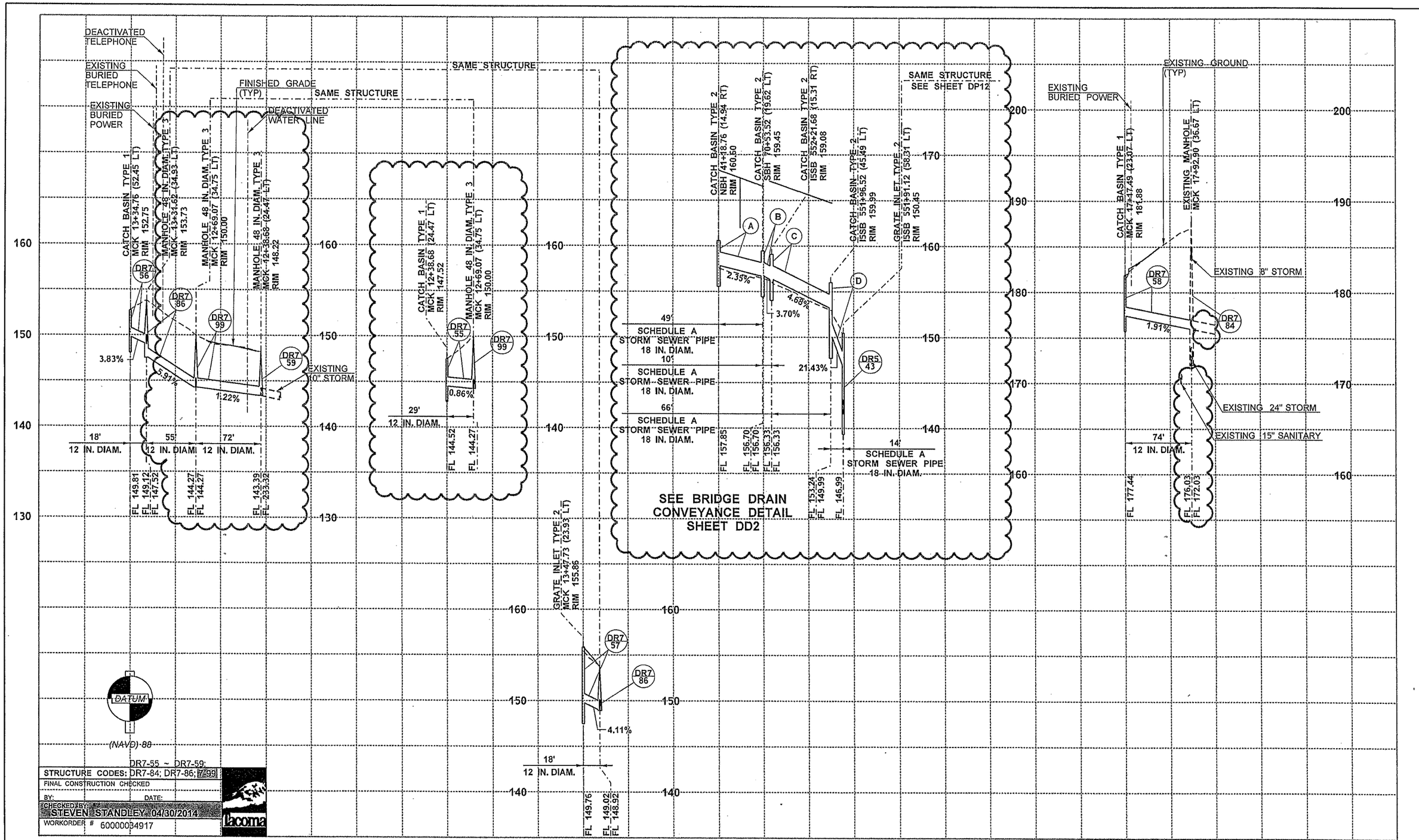

DR7-55 ~ DR7-59;
STRUCTURE CODES: DR7-84; DR7-86; 7-99
FINAL CONSTRUCTION CHECKED
BY: DATE:
CHECKED BY: STEVEN STANDLEY 04/30/2014
WORKORDER # 60000034917

Tacoma

FILE NAME	PW:_XL3497\PS&E Sheets\Drainage Profile\ADD1_P3497_PR_DR_020.dgn
TIME	7:27:18 AM
DATE	5/1/2014
PLOTTED BY	ShannoC
DESIGNED BY	M. KWIATKOWSKI
ENTERED BY	C. SHANNON
CHECKED BY	E. QUINN
PROJ. ENGR.	J. PEREZ
REGIONAL ADM.	K. DAYTON

REVISION	DATE	BY
AD1 - NEW DRAINAGE PROFILE ADDED, UPDATED	05/02/2014	SM

REGION NO.	STATE	FED.AID PROJ.NO.
10	WASH	
JOB NUMBER 12C501		
CONTRACT NO.		LOCATION NO. XL3497

CARLA A. MALONEY, STATE OF WASHINGTON, REGISTERED PROFESSIONAL ENGINEER
5/1/14
DATE
P.E. STAMP BOX

DATE
P.E. STAMP BOX

Washington State Department of Transportation

I-5
M ST TO PORTLAND AVE - HOV

DRAINAGE PROFILE

PLAN REF NO DP20

SHEET 591 OF 1763 SHEETS

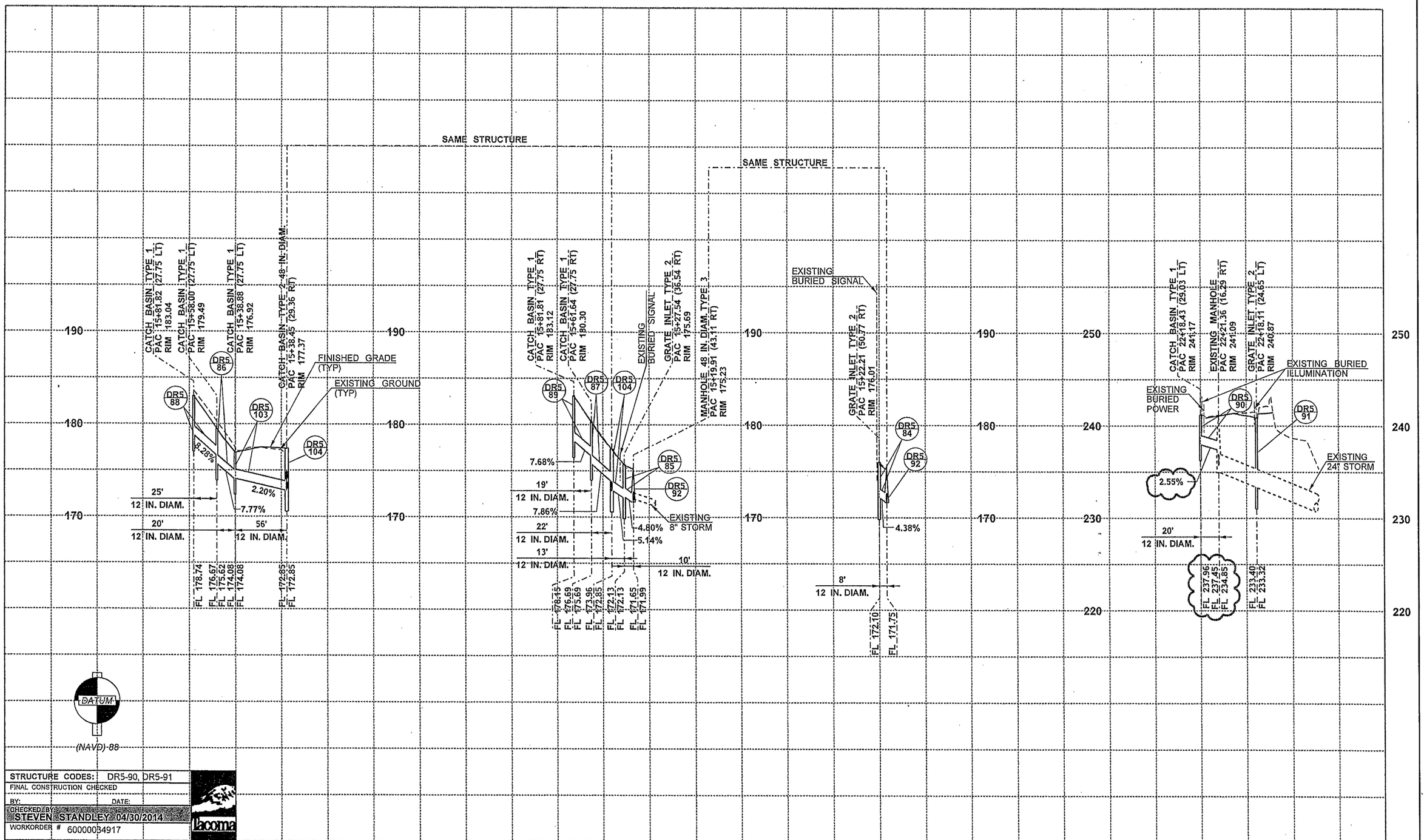

STRUCTURE CODES:	DR5-90, DR5-91
FINAL CONSTRUCTION CHECKED	
BY:	DATE:
CHECKED BY	STEVEN STANDLEY 04/30/2014
WORKORDER #	60000034917

Tacoma

FILE NAME	PW:_XL3497\PS&E Sheets\Drainage Profile\ADD1_P3497_PR_DR_021.dgn
TIME	7:28:42 PM
DATE	4/30/2014
PLOTTED BY	MerrymS
DESIGNED BY	M. KWIATKOWSKI
ENTERED BY	C. SHANNON
CHECKED BY	E. QUINN
PROJ. ENGR.	J. PEREZ
REGIONAL ADM.	K. DAYTON

REVISION	DATE	BY
AD1 - UPDATED DRAINAGE PROFILE	05/02/14	SM

REGION NO.	STATE	FED.AID PROJ.NO.
10	WASH	
JOB NUMBER 12C501		
CONTRACT NO.		LOCATION NO. XL3497

CARLA A. MALONEY STATE OF WASHINGTON 38809 REGISTERED PROFESSIONAL ENGINEER
4/30/14 DATE
P.E. STAMP BOX

DATE
P.E. STAMP BOX

Washington State Department of Transportation

I-5
M ST TO PORTLAND AVE - HOV

DRAINAGE PROFILE

PLAN REF NO DP21

SHEET 592 OF 1763 SHEETS

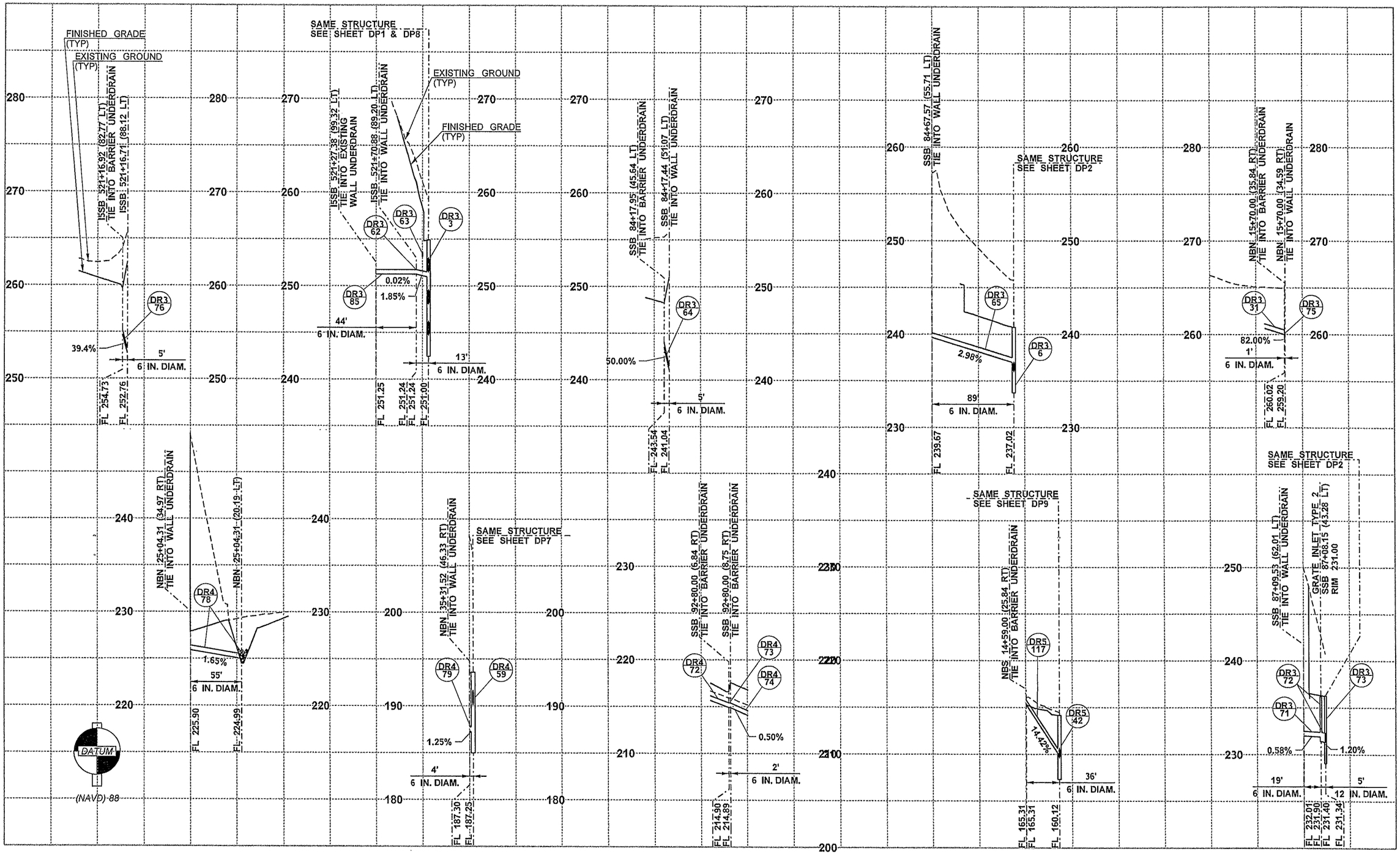

FILE NAME	PW:_XL3497\PS&E Sheets\Drainage Profile\P3497_PR_DR_022.dgn				REGION NO. 10	STATE WASH	FED.AID PROJ.NO.
TIME	7:00:23 PM				JOB NUMBER 12C501		
DATE	3/24/2014				CONTRACT NO.		LOCATION NO. XL3497
PLOTTED BY	SancheA						
DESIGNED BY	M. KWIATKOWSKI						
ENTERED BY	C. SHANNON						
CHECKED BY	E. QUINN						
PROJ. ENGR.	J. PEREZ						
REGIONAL ADM.	K. DAYTON	REVISION	DATE	BY			

CARLA A. MALONEY — STATE OF WASHINGTON — REGISTERED PROFESSIONAL ENGINEER
3/24/14
DATE
P.E. STAMP BOX

DATE
P.E. STAMP BOX

Washington State Department of Transportation

I-5
M ST TO PORTLAND AVE - HOV

DRAINAGE PROFILE

PLAN REF NO DP22

SHEET 593 OF 1763 SHEETS

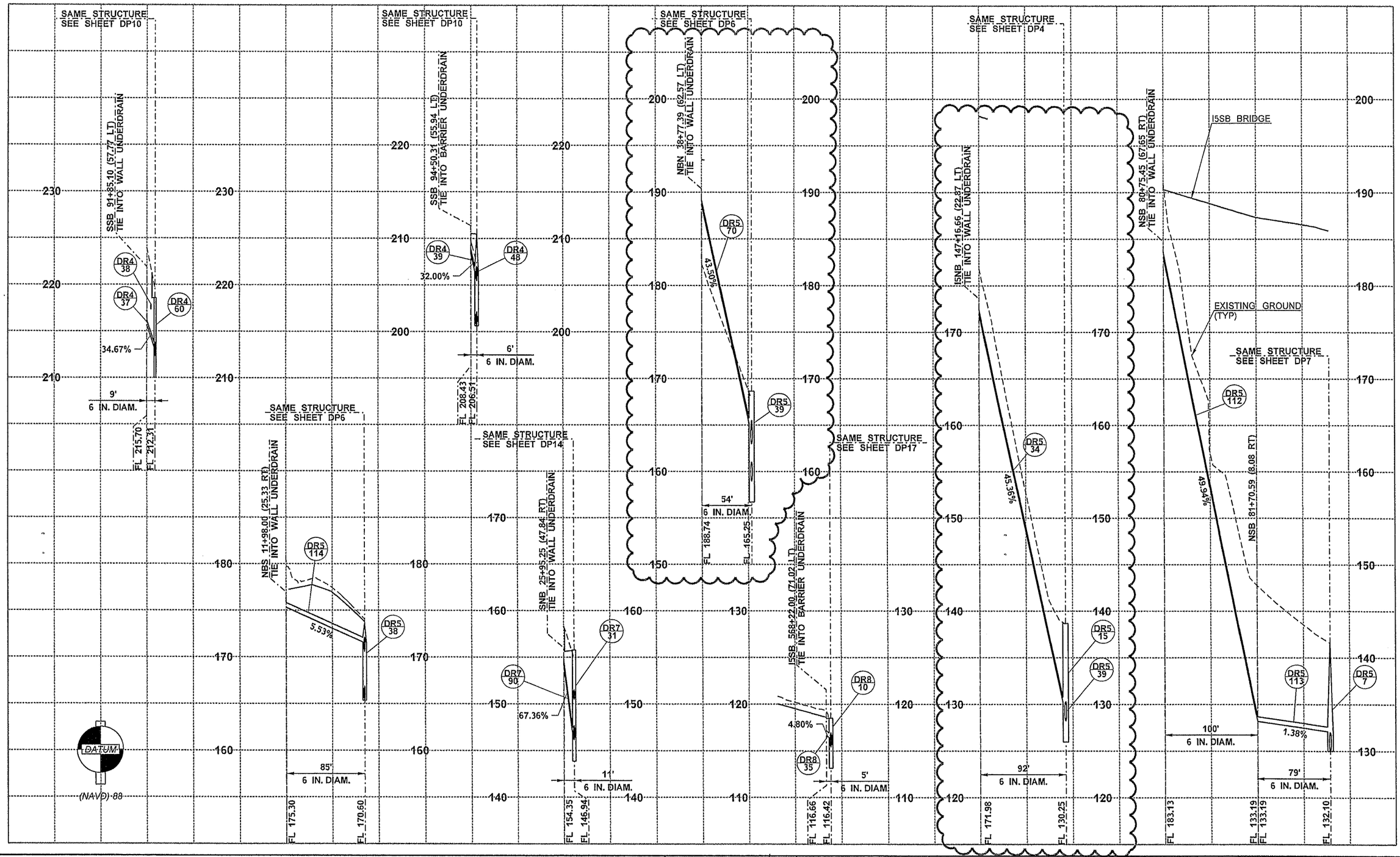

FILE NAME	PW:_XL3497\PS&E Sheets\Drainage Profile\ADD1_P3497_PR_DR_023.dgn				REGION NO. 10	STATE WASH	FED.AID PROJ.NO.
TIME	6:52:04 PM				JOB NUMBER 12C501		
DATE	4/21/2014				CONTRACT NO.		LOCATION NO. XL3497
PLOTTED BY	ShannoC						
DESIGNED BY	M. KWIATKOWSKI						
ENTERED BY	C. SHANNON						
CHECKED BY	E. QUINN						
PROJ. ENGR.	J. PEREZ	ADD1 - UPDATED DRAINAGE PROFILE	04/25/2014	SM			
REGIONAL ADM.	K. DAYTON	REVISION	DATE	BY			

CARLA A. MALAMUD — STATE OF WASHINGTON — 37782 — REGISTERED PROFESSIONAL ENGINEER

4/30/14
DATE
P.E. STAMP BOX

DATE
P.E. STAMP BOX

Washington State Department of Transportation

I-5
M ST TO PORTLAND AVE - HOV

DRAINAGE PROFILE

PLAN REF NO DP23

SHEET 594 OF 1763 SHEETS

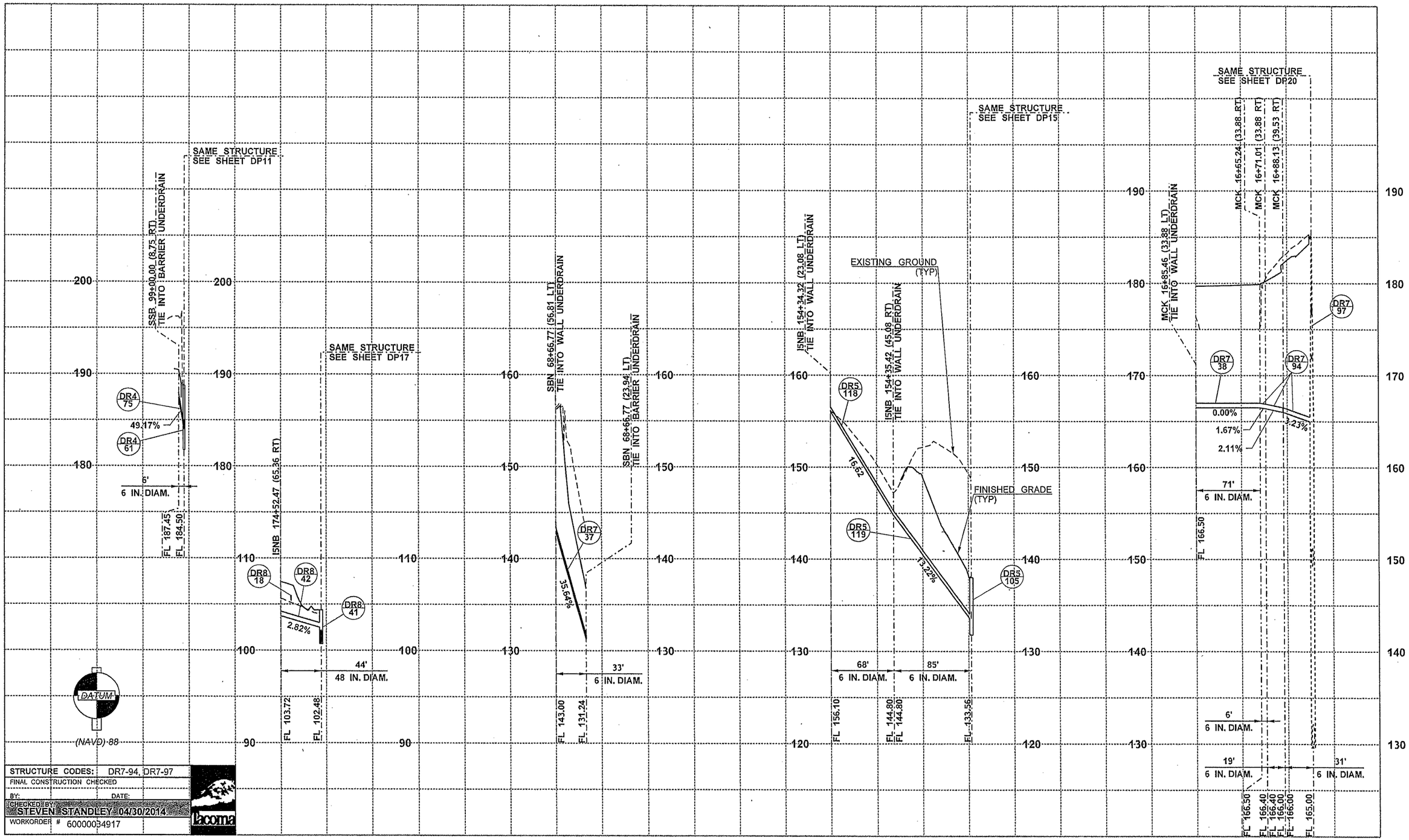

FILE NAME	PW:_XL3497\PS&E Sheets\Drainage Profile\ADD1_P3497_PR_DR_024.dgn			
TIME	10:41:02 AM			
DATE	5/1/2014			
PLOTTED BY	ShannoC			
DESIGNED BY	M. KWIATKOWSKI			
ENTERED BY	C. SHANNON			
CHECKED BY	E. QUINN			
PROJ. ENGR.	J. PEREZ	AD1 CITY OF TACOMA	05/02/2014	CM
REGIONAL ADM.	K. DAYTON	REVISION	DATE	BY

REGION NO.	STATE	FED.AID PROJ.NO.
10	WASH	
JOB NUMBER 12C501		
CONTRACT NO.		LOCATION NO. XL3497

CARLA A. MALONEY STATE OF WASHINGTON REGISTERED PROFESSIONAL ENGINEER
5/1/14
DATE
P.E. STAMP BOX

DATE
P.E. STAMP BOX

Washington State Department of Transportation

I-5
M ST TO PORTLAND AVE - HOV

DRAINAGE PROFILE

PLAN REF NO DP24

SHEET 595 OF 1763 SHEETS

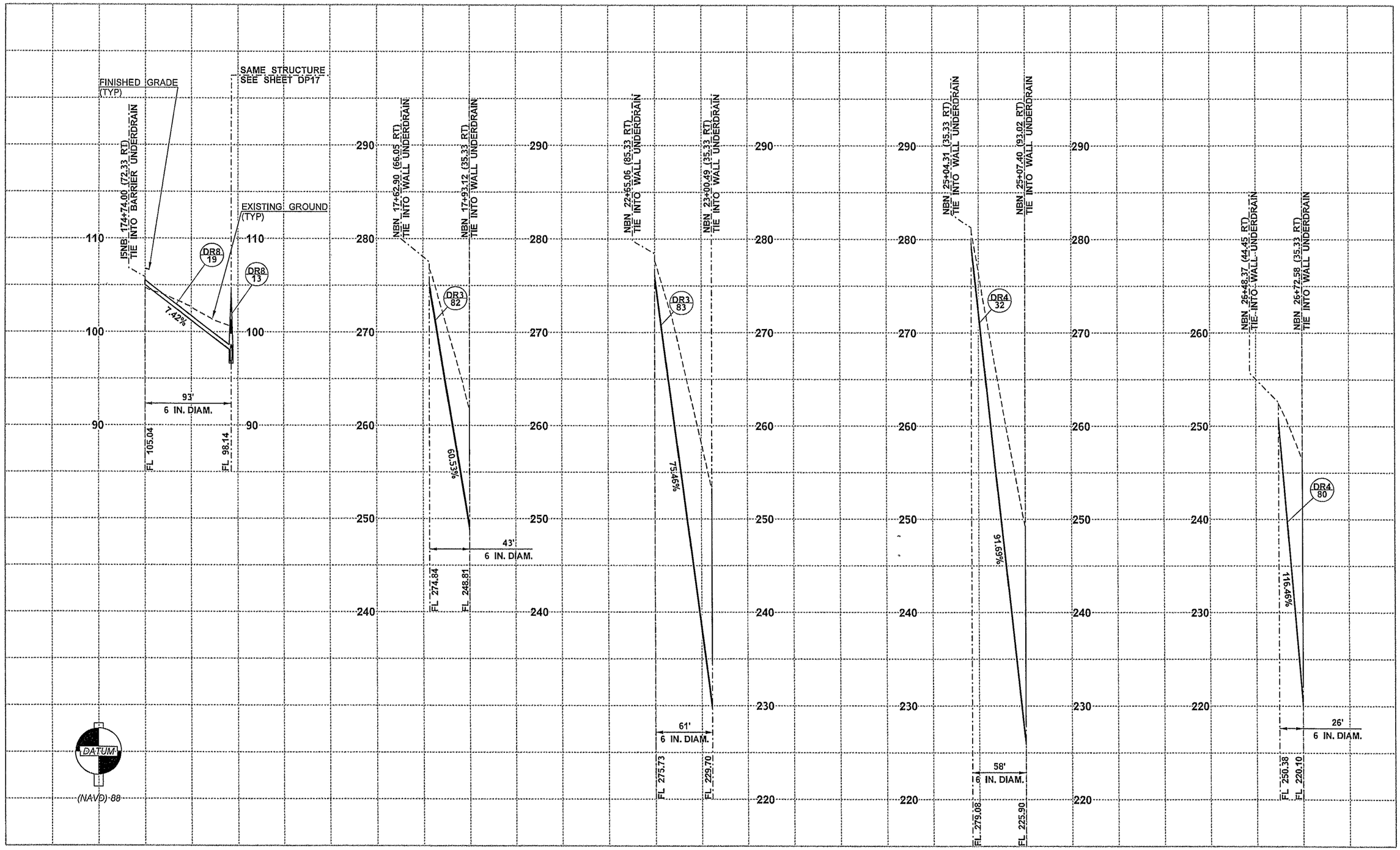

FILE NAME	PW:_XL3497\PS&E Sheets\Drainage Profile\P3497_PR_DR_025.dgn
TIME	7:00:45 PM
DATE	3/24/2014
PLOTTED BY	SancheA
DESIGNED BY	M. KWIATKOWSKI
ENTERED BY	C. SHANNON
CHECKED BY	E. QUINN
PROJ. ENGR.	J. PEREZ
REGIONAL ADM.	K. DAYTON

REVISION | DATE | BY

REGION NO. 10 | STATE WASH | FED.AID PROJ.NO.

JOB NUMBER 12C501

CONTRACT NO. | LOCATION NO. XL3497

CARLA A. MALONEY, STATE OF WASHINGTON, REGISTERED PROFESSIONAL ENGINEER

3/24/14 DATE

P.E. STAMP BOX

P.E. STAMP BOX DATE

Washington State Department of Transportation

I-5

M ST TO PORTLAND AVE - HOV

DRAINAGE PROFILE

PLAN REF NO DP25

SHEET 596 OF 1763 SHEETS

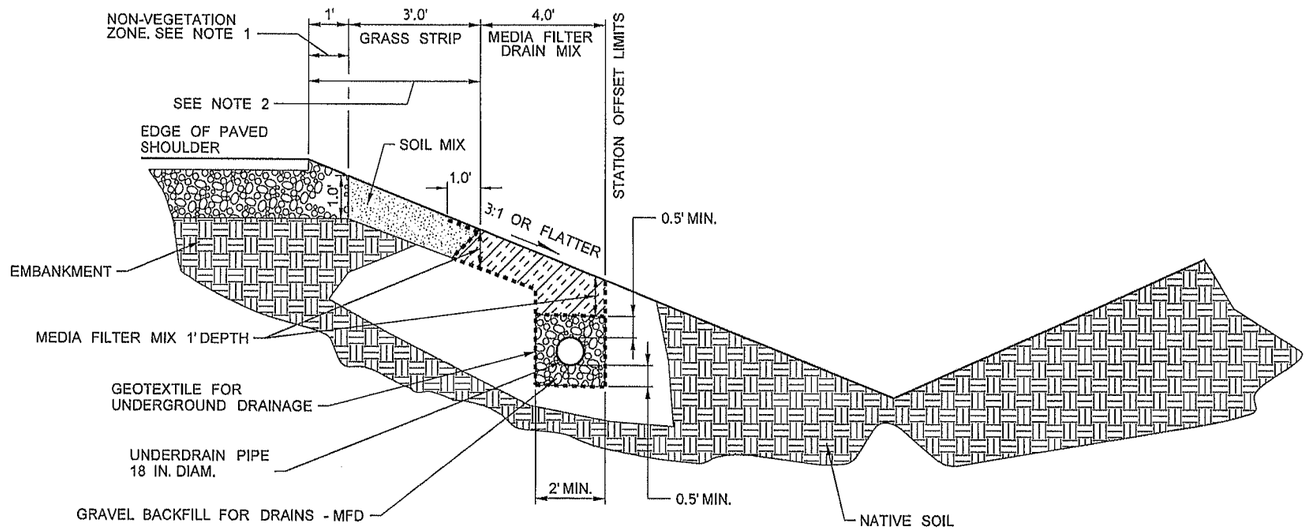

DR3 22 **SIDE SLOPE APPLICATION WITH UNDERDRAIN**

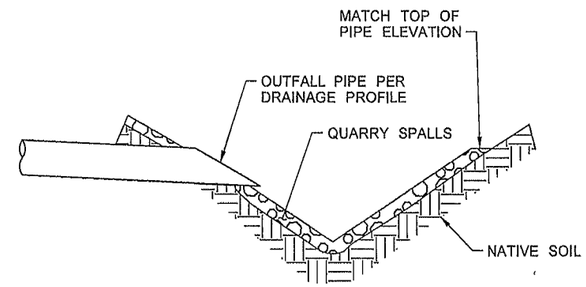

SECTION A-A

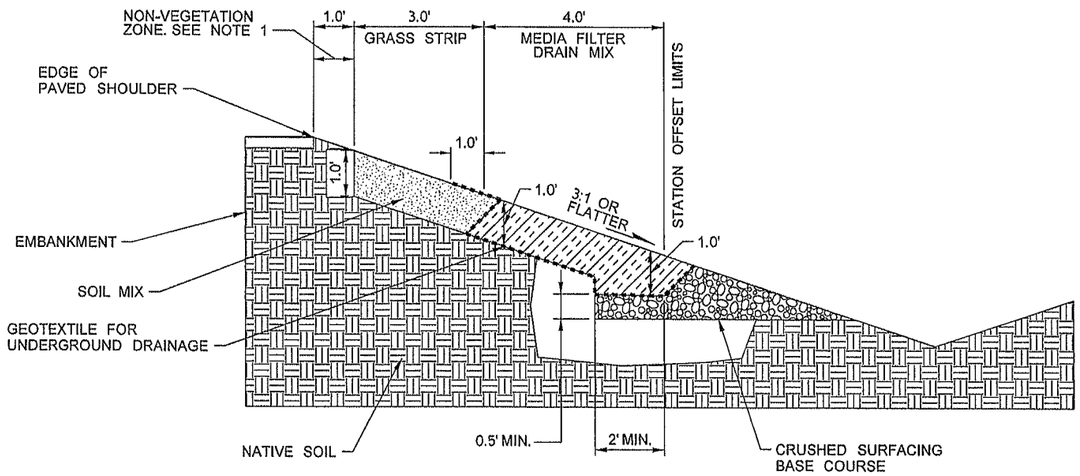

SIDE SLOPE APPLICATION WITHOUT UNDERDRAIN

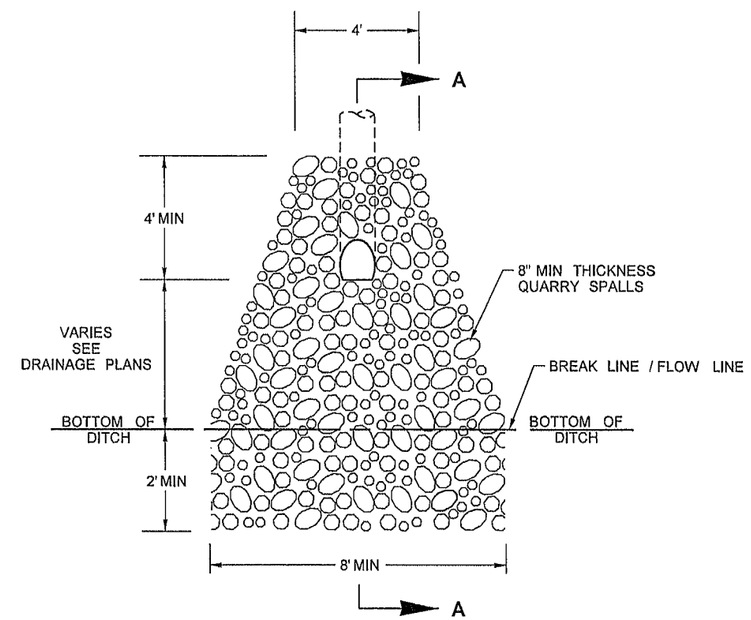

QUARRY SPALL ENERGY DISSIPATER DETAIL

NOTES:

1. FOR LOCATIONS TO RECEIVE GUARDRAIL, NON-VEGETATION ZONE BEGINS AT BACK OF GUARD RAIL POST.
2. FOR DR3-22, INCREASE NON-VEGETATION ZONE TO 3' WIDE AND GRASS STRIP TO 7' WIDE AT I5NB 142+55 (RT) TO I5NB 143+40 (RT).

MEDIA FILTER DRAIN

NOT TO SCALE

FILE NAME	PW:_XL3497\PS&E Sheets\Drainage Details\P3497_DE_DR_001.dgn
TIME	12:35:09 PM
DATE	3/18/2014
PLOTTED BY	WillisSt
DESIGNED BY	S. MERRYMAN
ENTERED BY	J.NEUGEBAUER-REX
CHECKED BY	E. QUINN
PROJ. ENGR.	J. PEREZ
REGIONAL ADM.	K. DAYTON

REVISION | DATE | BY

REGION NO. 10 | STATE WASH | FED.AID PROJ.NO.

JOB NUMBER 12C501

CONTRACT NO. | LOCATION NO. XL3497

CARLA A. MALONEY, STATE OF WASHINGTON, REGISTERED PROFESSIONAL ENGINEER — 3/24/14 DATE — P.E. STAMP BOX

DATE — P.E. STAMP BOX

Washington State Department of Transportation

I-5
M ST TO PORTLAND AVE - HOV

DRAINAGE DETAIL

PLAN REF NO DD1

SHEET 597 OF 1763 SHEETS

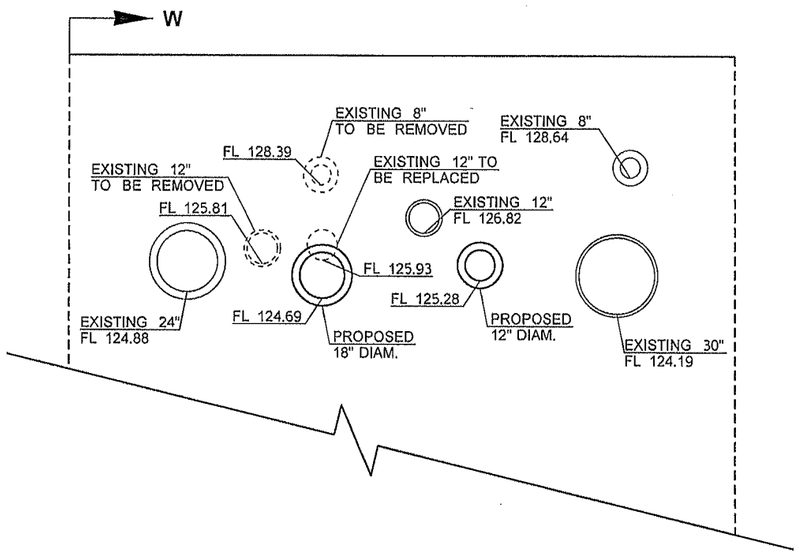

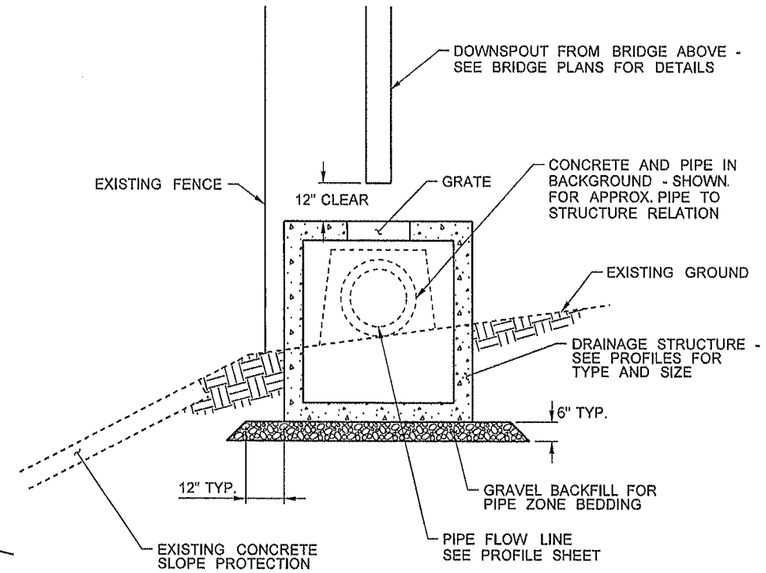

SECTION A-A

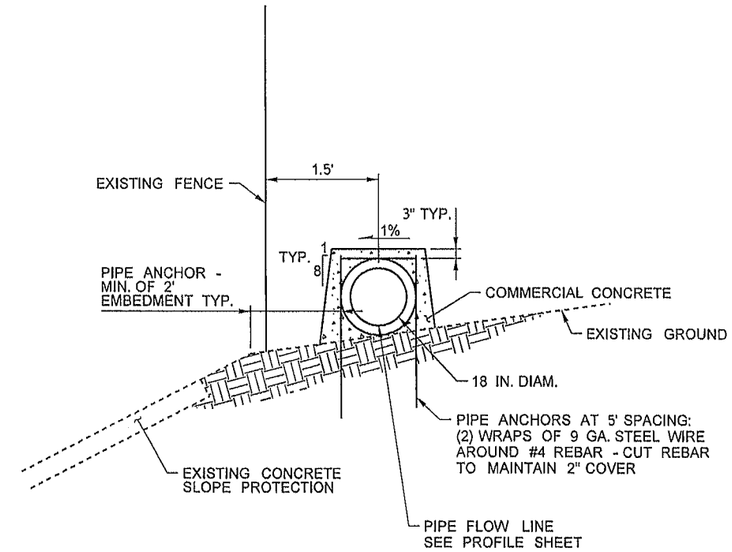

SECTION B-B

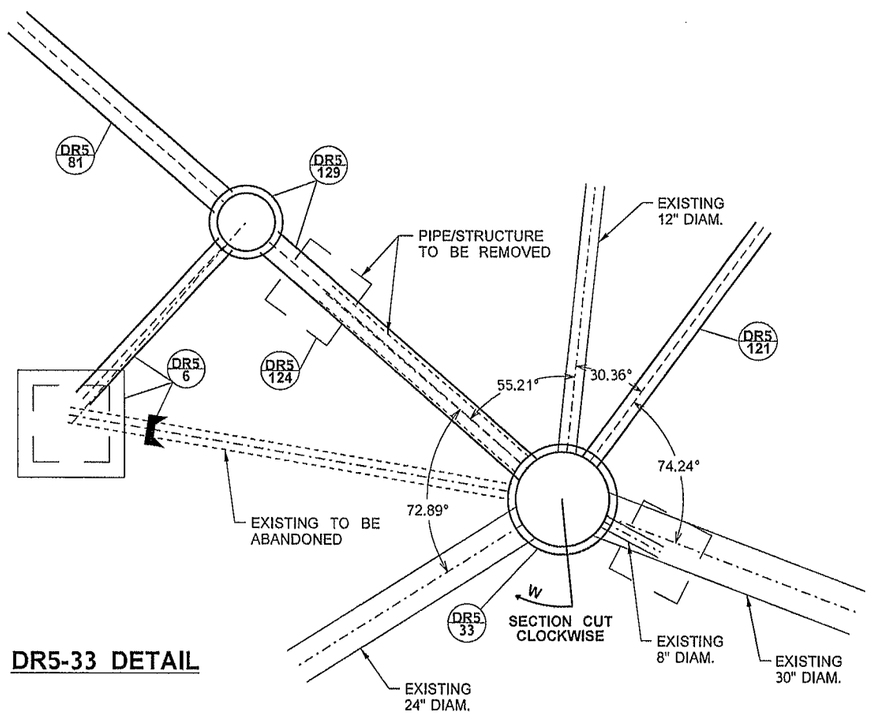

DR5-33 DETAIL

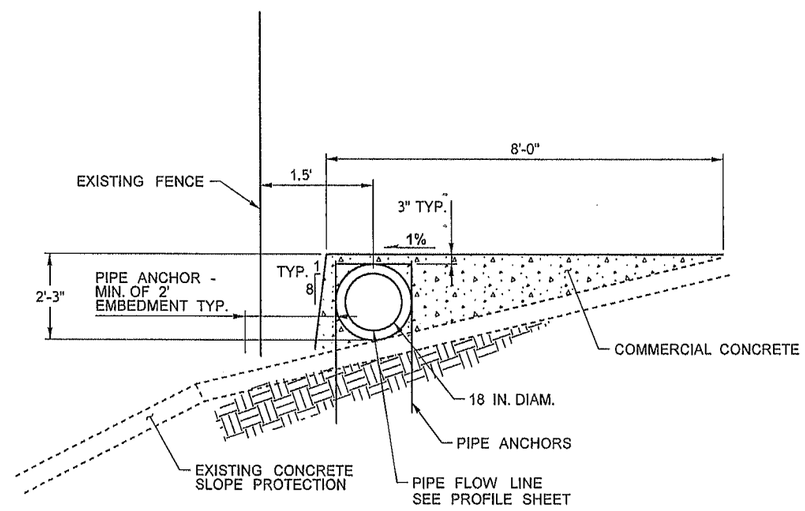

SECTION C-C

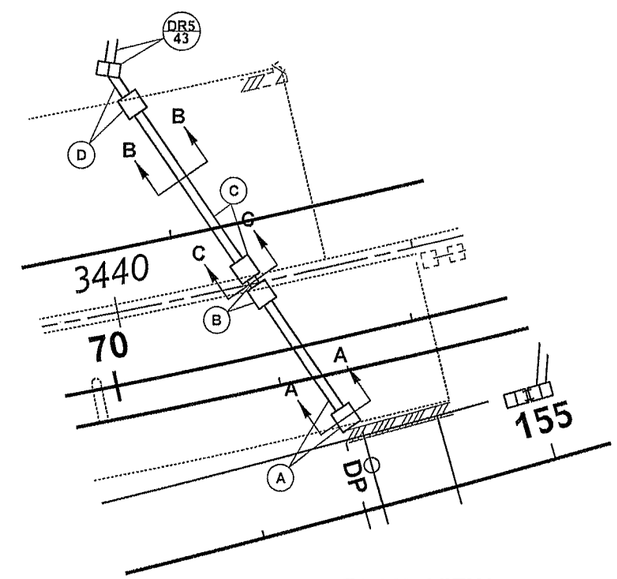

PLAN VIEW

BRIDGE DRAIN CONVEYANCE DETAIL
FOR PROFILES SEE DP20

NOT TO SCALE

NOTES:

1. SEE SPECIAL PROVISION BRIDGE DRAIN CONVEYANCE FOR FURTHER REQUIREMENTS.

FILE NAME	PW:_XL3497\PS&E Sheets\Drainage Details\ADD1_P3497_DE_DR_002.dgn			
TIME	3:30:52 PM			
DATE	4/29/2014			
PLOTTED BY	ShannoC			
DESIGNED BY	S. MERRYMAN			
ENTERED BY	C. SHANNON			
CHECKED BY	E. QUINN			
PROJ. ENGR.	J. PEREZ	AD1 - REPLACED SHEET	04/25/2014	SM
REGIONAL ADM.	K. DAYTON	REVISION	DATE	BY

REGION NO.	STATE	FED.AID PROJ.NO.
10	WASH	
JOB NUMBER 12C501		
CONTRACT NO.		LOCATION NO. XL3497

CARLA A. MALDONADO, STATE OF WASHINGTON, 37837, REGISTERED PROFESSIONAL ENGINEER
4/30/14
DATE
P.E. STAMP BOX

DATE
P.E. STAMP BOX

Washington State Department of Transportation

I-5
M ST TO PORTLAND AVE - HOV

DRAINAGE DETAIL

PLAN REF NO DD2

SHEET 598 OF 1763 SHEETS

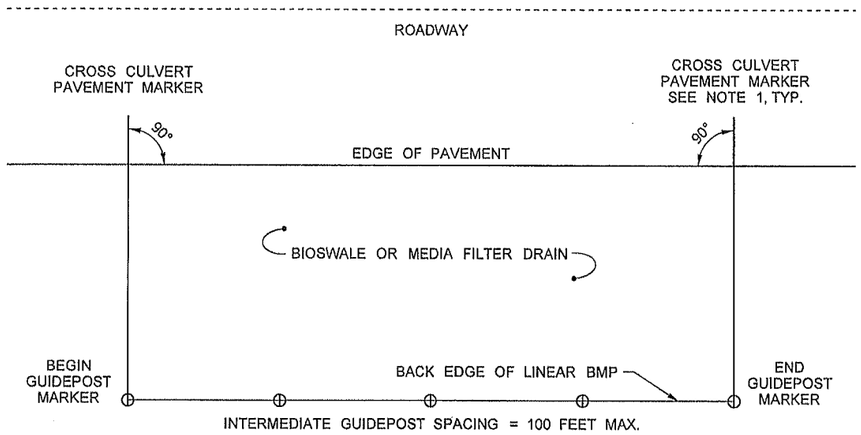

LINEAR BMP MARKER PLAN

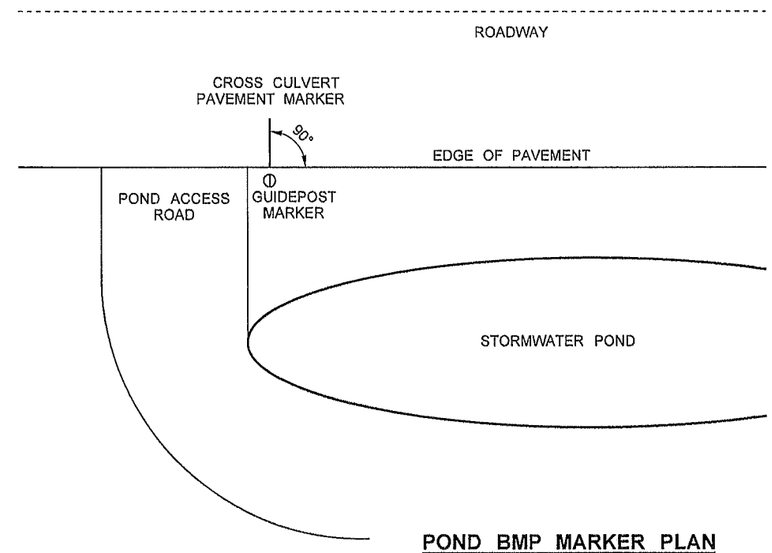

POND BMP MARKER PLAN

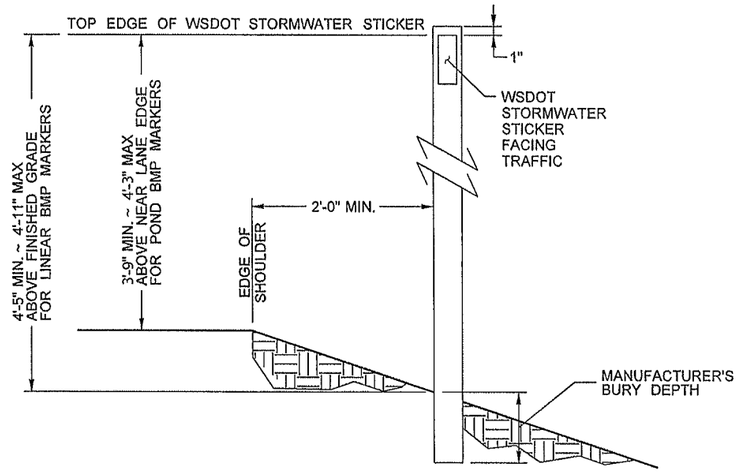

GUIDEPOST MARKER GROUND MOUNT

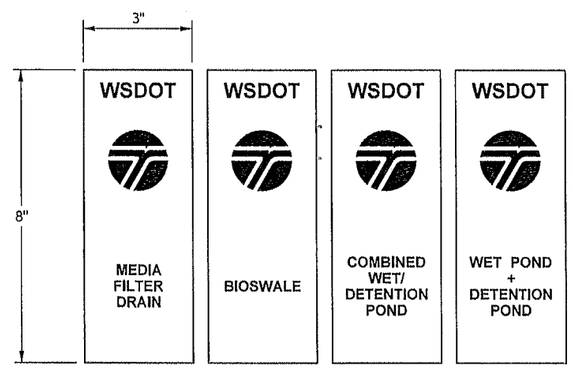

WHITE TEXT ON GREEN BACKGROUND

WSDOT STORMWATER BMP STICKERS

STRUCTURE CODE	BMP TYPE	STICKER TEXT	# OF MARKERS	STATIONS (APPROX.)
DR3-22	LINEAR	MEDIA FILTER DRAIN	15	SEE NOTE 4
DR5-64	LINEAR	MEDIA FILTER DRAIN	3	SEE NOTE 4
DR5-65	LINEAR	MEDIA FILTER DRAIN	9	SEE NOTE 4
DR6-4	LINEAR	MEDIA FILTER DRAIN	4	SEE NOTE 4
DR6-23	POND	COMBINED WET/DETENTION POND	1	I5SB 547+00 (567' LT)
DR6-24	POND	WET POND + DETENTION POND	1	SBN 61+50 (27' RT)
DR7-30	LINEAR	MEDIA FILTER DRAIN	5	SEE NOTE 4
DR8-15	LINEAR	BIOSWALE	4	SEE NOTE 4
		TOTAL	42	

NOTES:

1. CROSS CULVERT PAVEMENT MARKERS PER STD. PLAN M-24.60-03 SHALL BE PLASTIC.
2. GUIDEPOST MARKERS SHALL BE FLEXIBLE, NON-REFLECTIVE BROWN GUIDEPOST.
3. BEGIN/END AND POND GUIDEPOST MARKERS SHALL INCLUDE STICKER IDENTIFYING BMP TYPE. NO STICKERS ON INTERMEDIATE MARKERS.
4. SEE STRUCTURE NOTES FOR BEGIN AND END STATIONS. INTERMEDIATE STATIONS NOT TO EXCEED 100 FEET. PLACE LINEAR GUIDEPOST MARKERS AT BACK EDGE OF BMP, FARTHEST FROM ROADWAY.

NOT TO SCALE

FILE NAME	PW:_XL3497\PS&E Sheets\Drainage Details\P3497_DE_DR_003.dgn
TIME	12:35:27 PM
DATE	3/18/2014
PLOTTED BY	WilliSt
DESIGNED BY	G. CARR
ENTERED BY	C. SHANNON
CHECKED BY	E. QUINN
PROJ. ENGR.	J. PEREZ
REGIONAL ADM.	K. DAYTON

REVISION | DATE | BY

REGION NO. 10 | STATE WASH | FED.AID PROJ.NO.

JOB NUMBER 12C501

CONTRACT NO. | LOCATION NO. XL3497

CARLA A. MALDONADO, STATE OF WASHINGTON, 41837, REGISTERED PROFESSIONAL ENGINEER

3/24/14 DATE

P.E. STAMP BOX

P.E. STAMP BOX DATE

Washington State Department of Transportation

I-5
M ST TO PORTLAND AVE - HOV

DRAINAGE DETAIL

PLAN REF NO DD3

SHEET 599 OF 1763 SHEETS

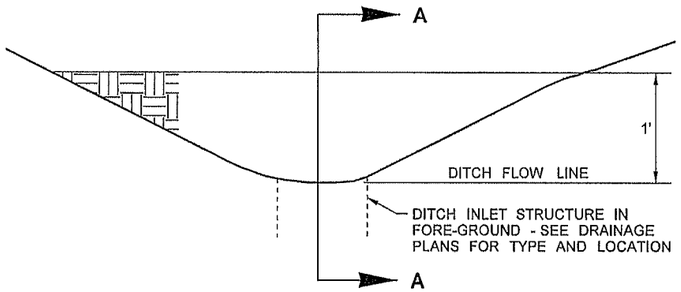

ELEVATION
SEE ROADWAY SECTIONS FOR DITCH SIDE SLOPES

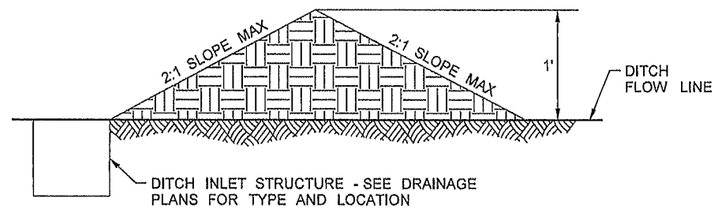

SECTION A

EARTH CHECK DAM
NOT TO SCALE

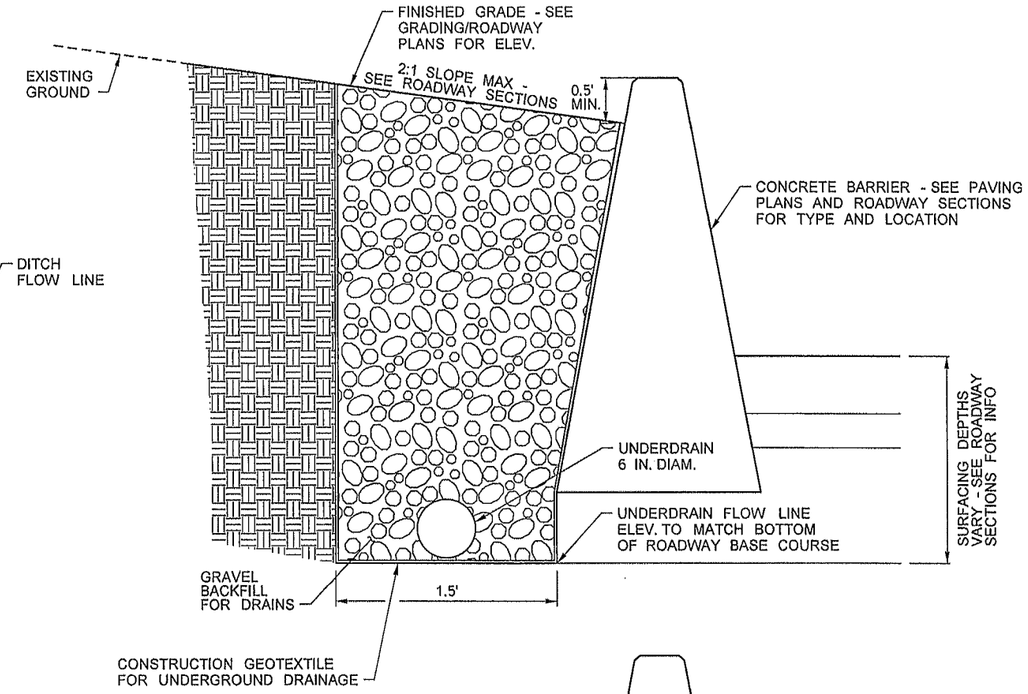

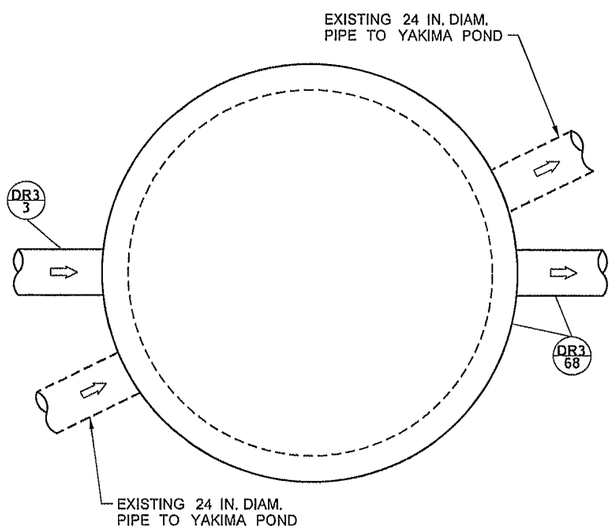

PLAN

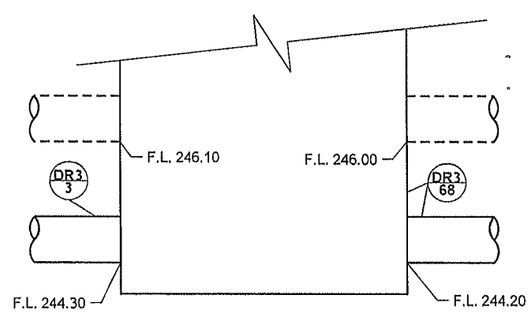

REPRESENTATIVE SECTION
EXISTING FLOW LINES ARE APPROXIMATE - FIELD VERIFY

YAKIMA POND FLOW SPLITTER
NOT TO SCALE

CONCRETE BARRIER UNDERDRAIN
NOT TO SCALE

FILE NAME	PW:_XL3497\PS&E Sheets\Drainage Details\P3497_DE_DR_004.dgn			
TIME	12:35:34 PM			
DATE	3/18/2014			
PLOTTED BY	WilliSt			
DESIGNED BY	S. MERRYMAN			
ENTERED BY	A. SANCHEZ			
CHECKED BY	E. QUINN			
PROJ. ENGR.	J. PEREZ			
REGIONAL ADM.	K. DAYTON	REVISION	DATE	BY

REGION NO.	STATE	FED.AID PROJ.NO.
10	WASH	
JOB NUMBER 12C501		
CONTRACT NO.		LOCATION NO. XL3497

CARLA A. MALONEY, STATE OF WASHINGTON, REGISTERED PROFESSIONAL ENGINEER
3/24/14
DATE
P.E. STAMP BOX

DATE
P.E. STAMP BOX

Washington State Department of Transportation

I-5
M ST TO PORTLAND AVE - HOV

DRAINAGE DETAIL

PLAN REF NO DD4
SHEET 600 OF 1763 SHEETS

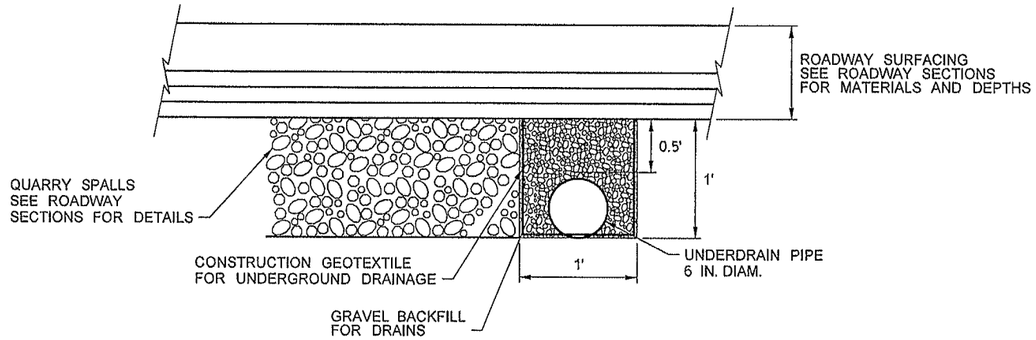

DR8/42 **UNDERDRAIN AT ADDITIONAL EXCAVATION**

SEE PROFILE SHEET DP24 FOR FLOW LINE AND SLOPE INFORMATION

CLEANING EXISTING DRAINAGE STRUCTURES			
ALIGNMENT	BEGIN STA.	END STA.	# OF STRUCTURES
I5 NB	128+76	144+67	15
I5 NB	160+23	175+75	12
I5 SB	510+86	524+09	28
I5 SB	549+70	574+07	41
NCD	48+23	53+58	7
NBN	10+80	49+22	48
NBS	10+35	16+15	15
SSB	84+06	100+10	17
SSB	109+34	112+98	9
SBH	0+02	11+68	15
PSSB	54+03	61+05	17
NSB	77+87	86+57	15
SNB	6+00	14+75	15
SNB	17+30	28+26	22
SBN	63+54	69+84	7
SBS	112+08	115+64	6
NNB	10+18	17+15	10
PAC	14+20	15+30	3
MCK	12+72	13+20	2
MCK	16+60	18+00	6
MDSI5	3375+00	3385+00	13

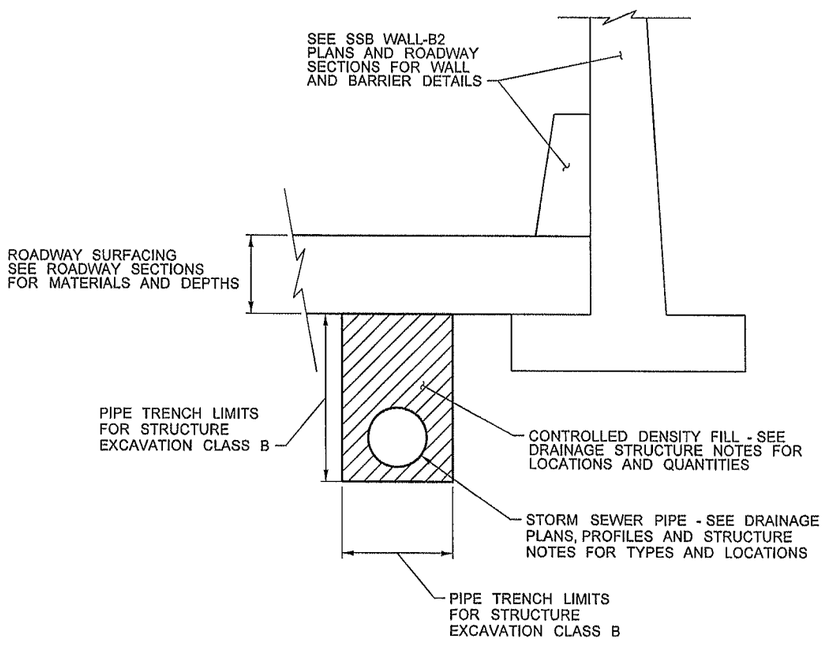

CONTROLLED DENSITY FILL FOR PIPE TRENCH AT SSB WALL-B2 DETAIL

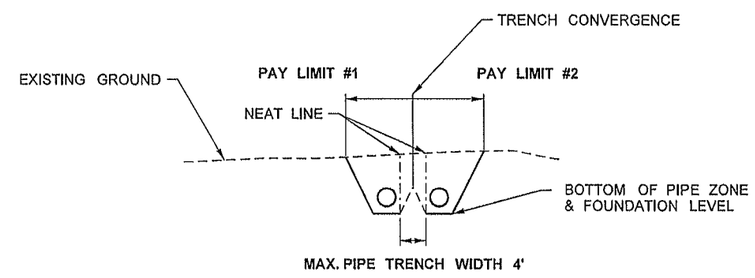

PAY LIMITS FOR COMMON TRENCH

DR3-35
DR3-37
DR3-38
DR3-39
DR3-79
DR5- 8
DR5-44
DR5-69
DR5-71
DR5-79
DR5-83
DR6- 5
DR7-13
DR7-15
DR7-20
DR7-41
DR7-42
DR7-43

NOT TO SCALE

FILE NAME	PW:_XL3497\PS&E Sheets\Drainage Details\P3497_DE_DR_005.dgn
TIME	1:06:19 PM
DATE	3/20/2014
PLOTTED BY	neugebj
DESIGNED BY	S. MERRYMAN
ENTERED BY	A. SANCHEZ
CHECKED BY	E. QUINN
PROJ. ENGR.	J. PEREZ
REGIONAL ADM.	K. DAYTON

REVISION | DATE | BY

REGION NO. 10 | STATE WASH | FED.AID PROJ.NO.

JOB NUMBER 12C501

CONTRACT NO. | LOCATION NO. XL3497

CARLA A. MAUDRY, STATE OF WASHINGTON, 41837, REGISTERED PROFESSIONAL ENGINEER

3/24/14 DATE

P.E. STAMP BOX

DATE

P.E. STAMP BOX

Washington State Department of Transportation

I-5

M ST TO PORTLAND AVE - HOV

DRAINAGE DETAIL

PLAN REF NO DD5

SHEET 601 OF 1763 SHEETS

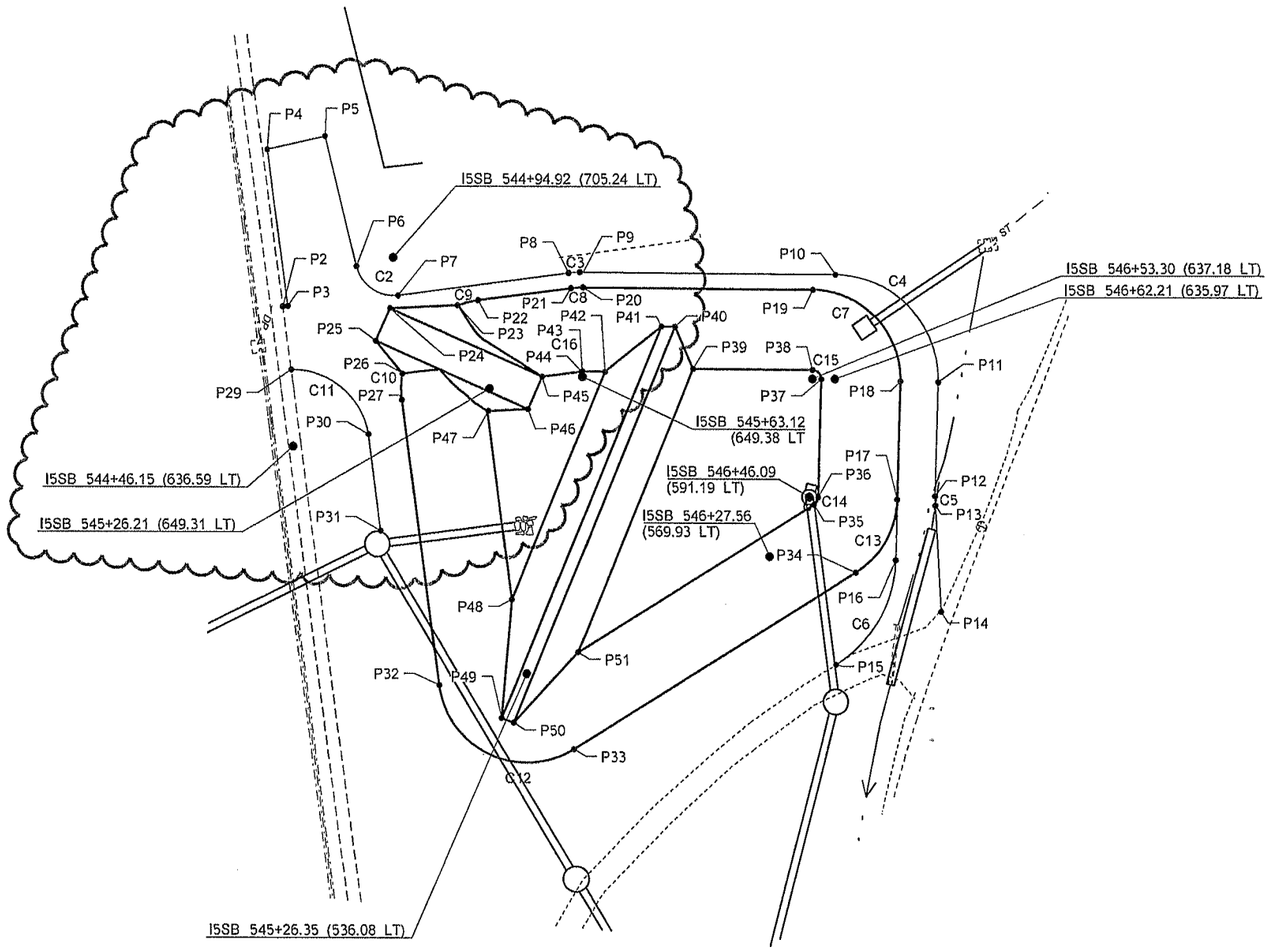

NW POND

0 30 60
SCALE IN FEET

POINT LAYOUT TABLE							
-----	RADIUS	----	STATION/OFFSET	ELEV	-----	STATION/OFFSET	ELEV
			I5SB			I5SB	
C1	15	P1	DELETED		P27	544+91.21 (649.26 LT)	137.00
C2	15	P2	544+49.07 (691.52 LT)	141.00	P28	DELETED	
C3	41	P3	544+51.07 (691.54 LT)	141.00	P29	544+49.21 (666.52 LT)	142.34
C4	41	P4	544+50.75 (753.44 LT)	137.00	P30	544+76.22 (637.53 LT)	137.00
C5	41	P5	544+74.21 (755.73 LT)	136.00	P31	544+76.28 (599.24 LT)	137.00
C6	50	P6	544+80.02 (703.56 LT)	137.00	P32	544+91.35 (536.04 LT)	137.00
C7	35	P7	544+94.95 (690.24 LT)	137.00	P33	545+40.99 (504.29 LT)	137.00
C8	35	P8	545+63.04 (690.38 LT)	137.00	P34	546+60.72 (559.39 LT)	137.00
C9	35	P9	545+68.62 (690.01 LT)	137.00	P35	546+47.55 (588.01 LT)	126.50
C10	35	P10	546+67.72 (676.61 LT)	137.00	P36	546+49.55 (590.65 LT)	126.50
C11	30	P11	547+02.72 (629.63 LT)	137.00	P37	546+56.76 (636.64 LT)	126.50
C12	35	P12	546+95.77 (585.23 LT)	137.00	P38	546+53.77 (640.65 LT)	126.50
C13	35	P13	546+95.37 (581.65 LT)	137.09	P39	546+07.14 (646.96 LT)	126.50
C14	3.5	P14	546+92.22 (539.80 LT)	139.23	P40	546+02.03 (664.30 LT)	132.00
C15	3.5	P15	546+48.14 (524.34 LT)	141.75	P41	545+96.69 (665.02 LT)	132.00
C16	2	P16	546+76.97 (562.17 LT)	137.68	P42	545+72.16 (650.18 LT)	126.00
		P17	546+80.67 (585.77 LT)	137.00	P43	545+63.39 (651.36 LT)	126.00
		P18	546+87.88 (631.77 LT)	137.00	P44	545+63.13 (651.36 LT)	126.00
		P19	546+57.99 (671.87 LT)	137.00	P45	545+47.52 (651.35 LT)	126.00
		P20	545+67.82 (684.07 LT)	137.00	P46	545+40.26 (639.38 LT)	126.00
		P21	545+63.05 (684.38 LT)	137.00	P47	545+24.66 (640.67 LT)	126.00
		P22	545+26.14 (684.31 LT)	137.00	P48	545+24.32 (565.91 LT)	126.00
		P23	545+17.85 (683.40 LT)	137.00	P49	545+14.38 (520.06 LT)	132.00
		P24	544+91.10 (685.60 LT)	137.00	P50	545+18.73 (517.59 LT)	132.00
		P25	544+83.84 (673.64 LT)	137.00	P51	545+47.52 (541.97 LT)	126.50
		P26	544+92.56 (659.77 LT)	137.00			

ALL ELEVATIONS ARE TO FINISHED GRADE

FILE NAME	PW:_XL3497\PS&E Sheets\Drainage Pond Details\ADD1_P3497_DE_POND_001.dgn						
TIME	5:48:05 PM				REGION NO. 10	STATE WASH	FED.AID PROJ.NO.
DATE	4/22/2014						
PLOTTED BY	ShannoC						
DESIGNED BY	S. MERRYMAN				JOB NUMBER 12C501		
ENTERED BY	S. MERRYMAN						
CHECKED BY	E. QUINN				CONTRACT NO.		LOCATION NO.
PROJ. ENGR.	J. PEREZ	AD1 - ACCESS ROAD AND TABLE CHANGE	04/25/2014	JMI			XL3497
REGIONAL ADM.	K. DAYTON	REVISION	DATE	BY			

CARLA A. MALONEY STATE OF WASHINGTON 37997 REGISTERED PROFESSIONAL ENGINEER
4/30/14 DATE
P.E. STAMP BOX

DATE
P.E. STAMP BOX

Washington State Department of Transportation

I-5
M ST TO PORTLAND AVENUE - HOV

POND DETAILS

PLAN REF NO PD1

SHEET 602 OF 1763 SHEETS

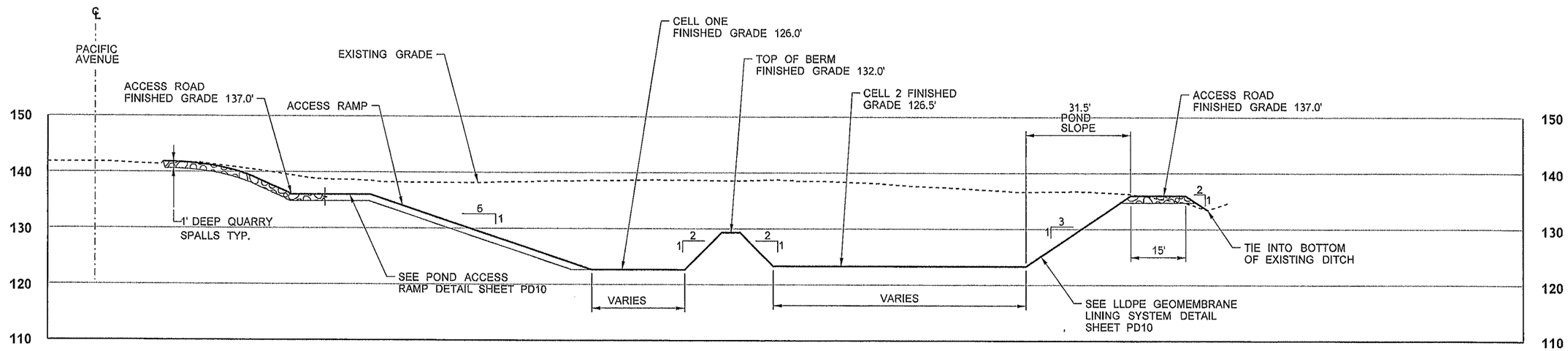

SECTION A-A
NOT TO SCALE

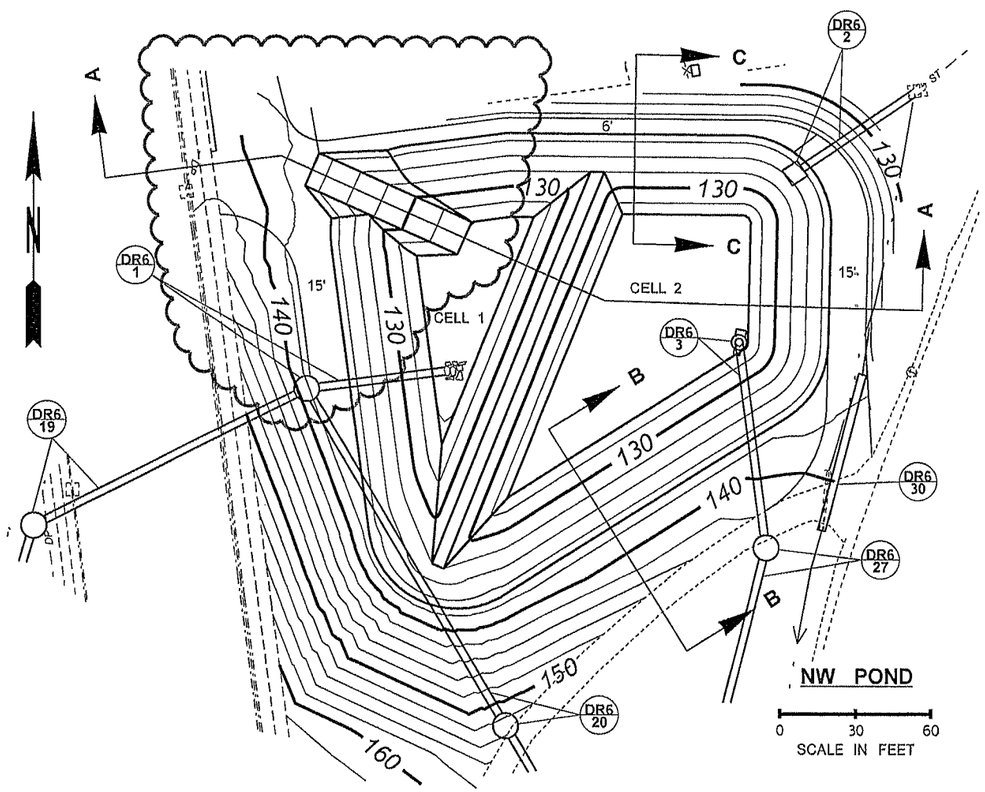

NW POND

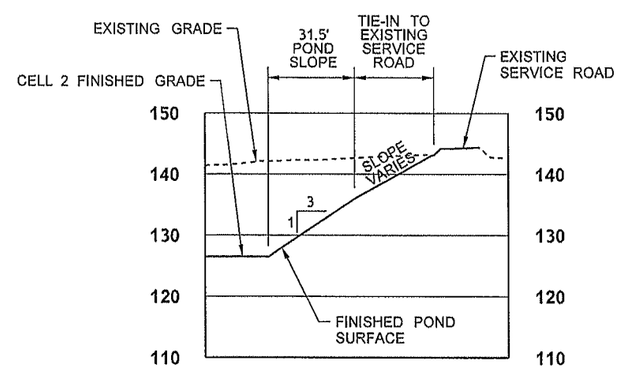

SECTION B-B
NOT TO SCALE

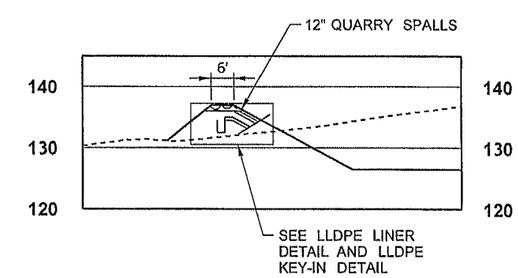

SECTION C-C
NOT TO SCALE

FILE NAME	PW:_XL3497\PS&E Sheets\Drainage Pond Details\ADD1_P3497_DE_POND_002.dgn				REGION NO. 10	STATE WASH	FED.AID PROJ.NO.	I-5 M ST TO PORTLAND AVENUE - HOV
TIME	5:49:01 PM							
DATE	4/22/2014							
PLOTTED BY	ShannoC				JOB NUMBER 12C501			
DESIGNED BY	S. MERRYMAN							
ENTERED BY	S. MERRYMAN							
CHECKED BY	E. QUINN				CONTRACT NO.		LOCATION NO.	
PROJ. ENGR.	J. PEREZ	AD1 - ACCESS ROAD CHANGE	04/25/2014	JM			XL3497	
REGIONAL ADM.	K. DAYTON	REVISION	DATE	BY				

P.E. STAMP BOX — DATE 4/30/14

P.E. STAMP BOX — DATE

Washington State Department of Transportation

POND DETAILS

PLAN REF NO PD2

SHEET 603 OF 1763 SHEETS

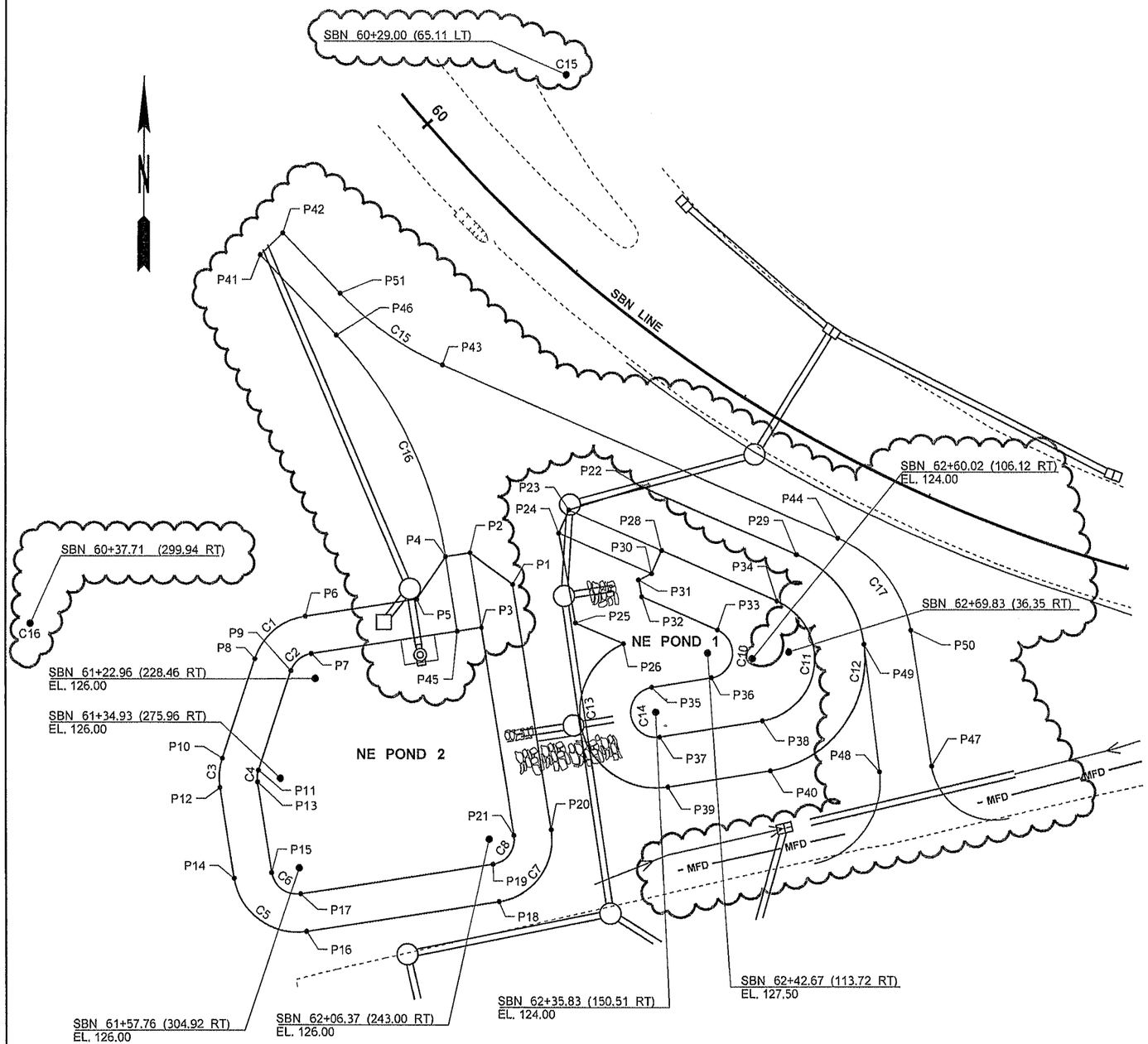

NE PONDS

POINT LAYOUT TABLE

NE POND 2				
-----	RADIUS	----	STATION/OFFSET	ELEV
			SBN	
C1	30	P1	61+61.35 (135.52 RT)	132.00
C2	12	P2	61+40.06 (135.57 RT)	132.00
C3	30	P3	61+61.07 (160.98 RT)	126.00
C4	12	P4	61+33.16 (144.24 RT)	132.00
C5	30	P5	61+34.46 (168.71 RT)	132.00
C6	12	P6	61+05.99 (208.42 RT)	132.00
C7	30	P7	61+16.26 (220.38 RT)	126.00
C8	12	P8	61+02.07 (239.36 RT)	132.00
		P9	61+14.55 (232.72 RT)	126.00
		P10	61+15.39 (285.71 RT)	132.00
		P11	61+27.36 (279.39 RT)	126.00
		P12	61+20.94 (297.26 RT)	132.00
		P13	61+29.55 (284.05 RT)	126.00
		P14	61+42.77 (327.16 RT)	132.00
		P15	61+51.40 (314.35 RT)	126.00
		P16	61+71.57 (327.49 RT)	132.00
		P17	61+63.07 (314.48 RT)	126.00
		P18	62+20.44 (266.01 RT)	132.00
		P19	62+12.08 (252.15 RT)	126.00
		P20	62+23.62 (223.80 RT)	132.00
		P21	62+13.18 (235.25 RT)	126.00

NE POND 1				
-----	RADIUS	----	STATION/OFFSET	ELEV
			SBN	
C9	NOT USED	P22	61+82.74 (62.28 RT)	132.00
C10	12	P23	61+62.56 (91.09 RT)	132.00
C11	30	P24	61+64.70 (102.83 RT)	132.00
C12	54	P25	61+90.66 (133.79 RT)	132.00
C13	36	P26	62+11.18 (130.08 RT)	132.00
C14	12	P27	NOT USED	-
		P28	62+04.55 (82.66 RT)	124.00
		P29	62+56.69 (52.24 RT)	132.00
		P30	62+06.09 (94.53 RT)	124.00
		P31	62+02.84 (100.46 RT)	124.00
		P32	62+07.58 (106.41 RT)	124.00
		P33	62+41.72 (101.77 RT)	124.00
		P34	62+58.23 (76.18 RT)	124.00
		P35	62+29.66 (141.12 RT)	124.00
		P36	62+48.89 (123.26 RT)	124.00
		P37	62+41.86 (159.97 RT)	124.00
		P38	62+74.93 (130.51 RT)	124.00
		P39	62+53.52 (179.08 RT)	132.00
		P40	62+86.24 (150.28 RT)	132.00

ACCESS ROAD				
-----	RADIUS	----	STATION/OFFSET	ELEV
			SBN	
C15	150	P41	59+95.01 (100.94 RT)	132.00
C16	200	P42	59+94.32 (85.96 RT)	132.00
C17	59	P43	60+81.75 (75.26 RT)	132.00
		P44	62+69.83 (36.35 RT)	132.00
		P45	61+54.15 (169.39 RT)	126.00
		P46	60+40.79 (99.97 RT)	132.00
		P47	63+45.09 (118.53 RT)	132.00
		P48	63+26.19 (130.01 RT)	132.00
		P49	63+00.09 (76.62 RT)	132.00
		P50	63+17.07 (63.29 RT)	132.00
		P51	60+29.93 (84.89 RT)	132.00

ALL ELEVATIONS ARE TO FINISHED GRADE

0 30 60
SCALE IN FEET

FILE NAME	PW:_XL3497\PS&E Sheets\Drainage Pond Details\ADD1_P3497_DE_POND_003.dgn
TIME	5:47:07 PM
DATE	4/22/2014
PLOTTED BY	ShannoC
DESIGNED BY	G. CARR
ENTERED BY	A. SANCHEZ
CHECKED BY	E. QUINN
PROJ. ENGR.	J. PEREZ
REGIONAL ADM.	K. DAYTON

REVISION	DATE	BY
AD1 - ACCESS ROAD CALL OUTS & DRAINAGE MODIFIED	04/25/2014	SM

REGION NO.	STATE	FED.AID PROJ.NO.
10	WASH	
JOB NUMBER 12C501		
CONTRACT NO.	LOCATION NO. XL3497	

CARLA A. MALONEY — STATE OF WASHINGTON — REGISTERED PROFESSIONAL ENGINEER
4/30/14
DATE
P.E. STAMP BOX

DATE
P.E. STAMP BOX

Washington State Department of Transportation

I-5
M ST TO PORTLAND AVENUE - HOV

POND DETAILS

PLAN REF NO PD3

SHEET 604 OF 1763 SHEETS

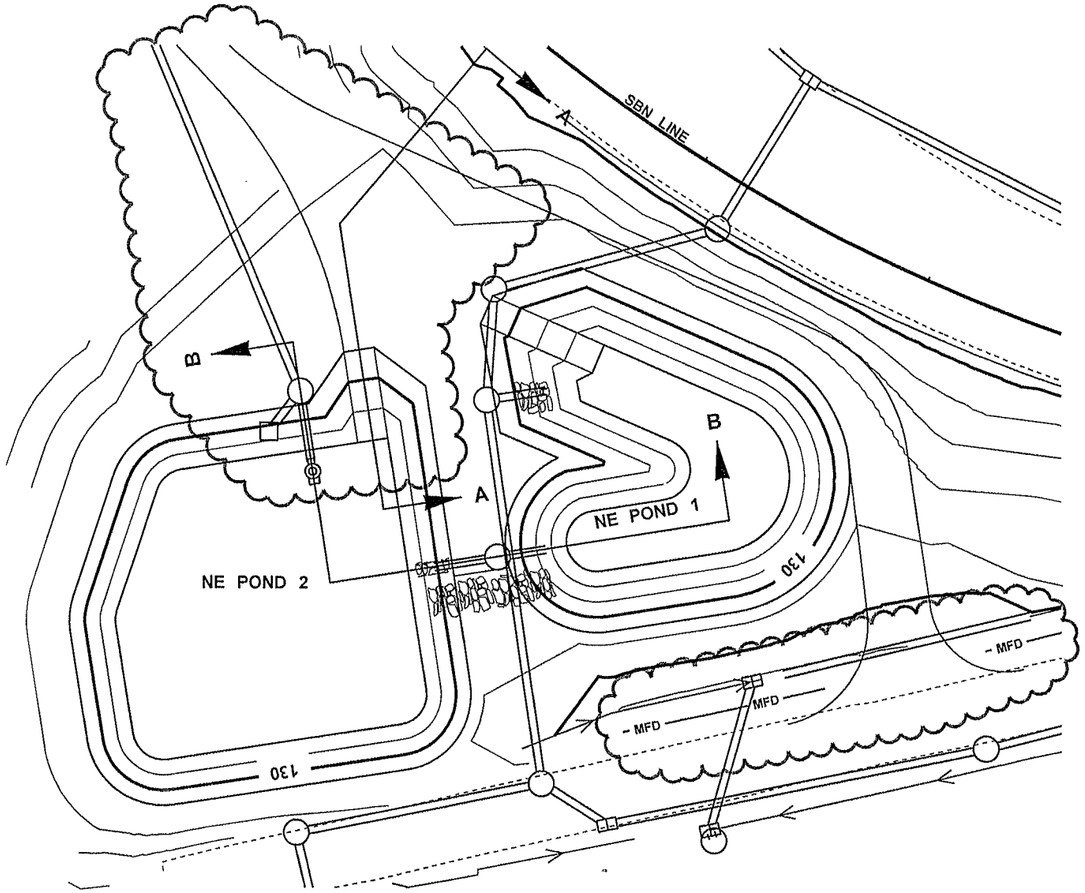

NE PONDS

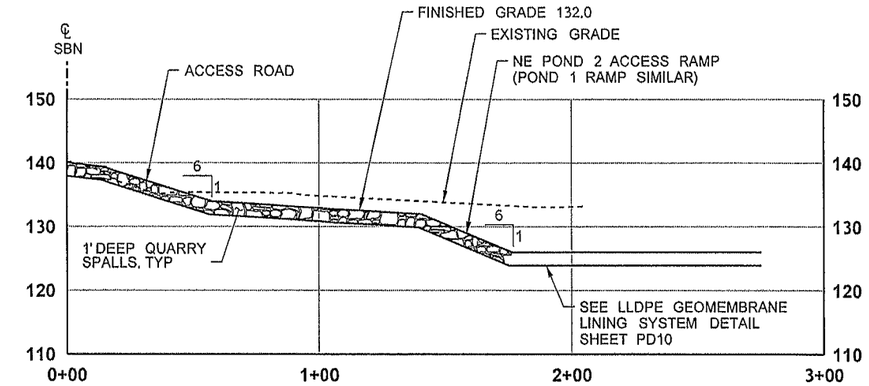

SECTION A-A
NOT TO SCALE

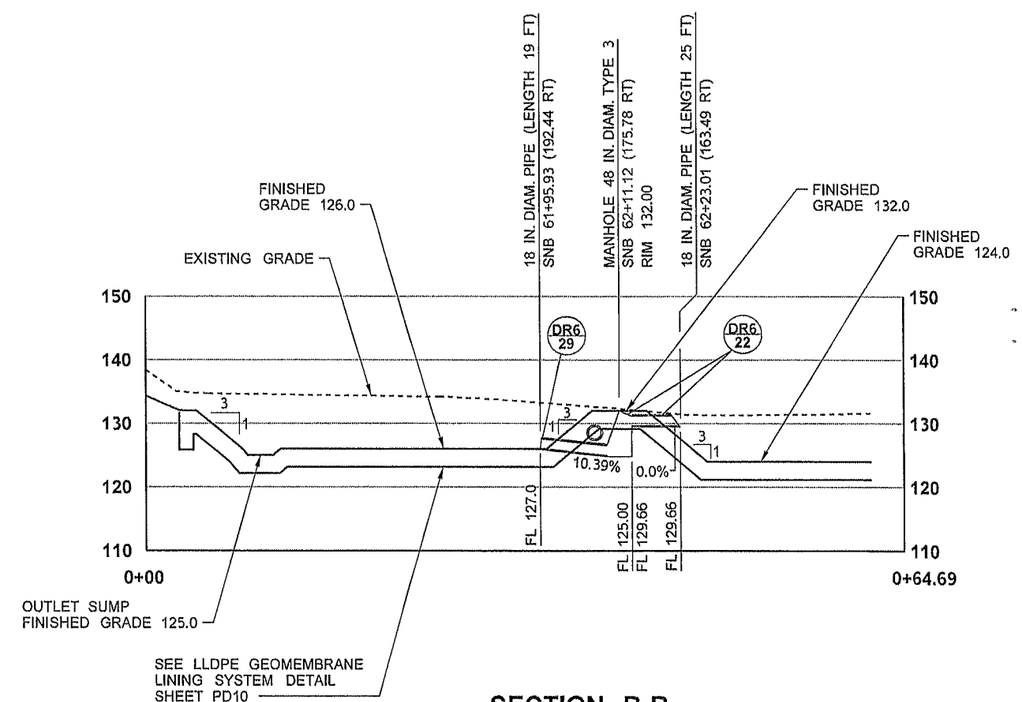

SECTION B-B
NOT TO SCALE

0 30 60
SCALE IN FEET

FILE NAME	PW:_XL3497\PS&E Sheets\Drainage Pond Details\ADD1_P3497_DE_POND_004.dgn			
TIME	11:27:10 AM			
DATE	4/25/2014			
PLOTTED BY	ShannoC			
DESIGNED BY	G. CARR			
ENTERED BY	A. SANCHEZ			
CHECKED BY	E. QUINN			
PROJ. ENGR.	J. PEREZ	AD1 - ACCESS ROAD & DRAINAGE MODIFIED	04/25/2014	SM
REGIONAL ADM.	K. DAYTON	REVISION	DATE	BY

REGION NO.	STATE	FED.AID PROJ.NO.
10	WASH	
JOB NUMBER 12C501		
CONTRACT NO.		LOCATION NO. XL3497

CARLA A. MALONEY, STATE OF WASHINGTON, REGISTERED PROFESSIONAL ENGINEER
4/30/14
DATE
P.E. STAMP BOX

DATE
P.E. STAMP BOX

Washington State Department of Transportation

I-5
M ST TO PORTLAND AVENUE - HOV

POND DETAILS

PLAN REF NO PD4

SHEET 605 OF 1763 SHEETS

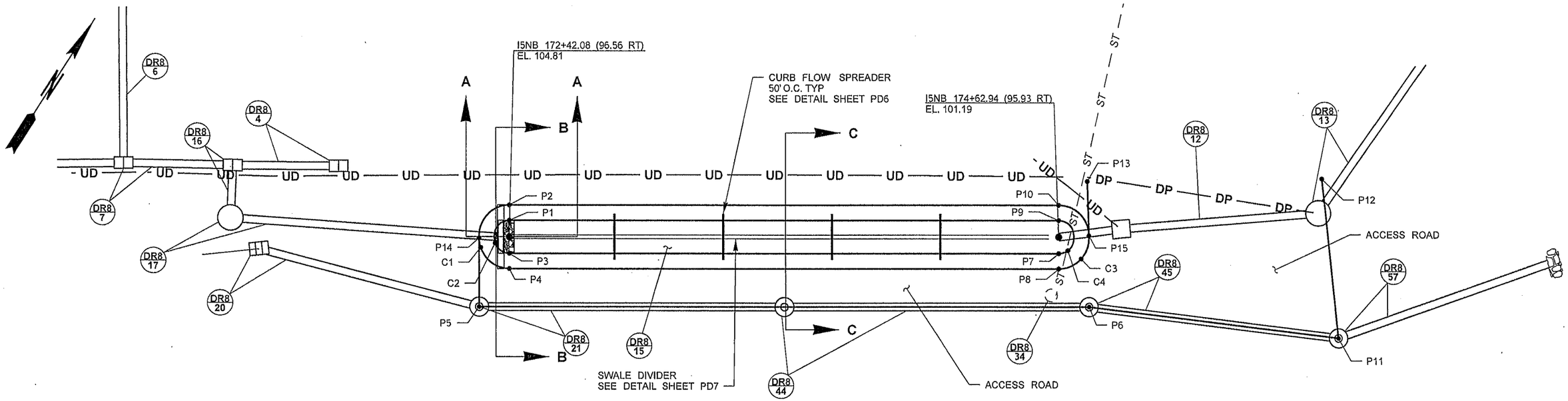

BIOFILTRATION SWALE

0 20 40
SCALE IN FEET

POINT LAYOUT TABLE				
-----	RADIUS	----	STATION/OFFSET	ELEV
			I5NB	
C1	12.5	P1	172+43.43 (90.06' RT)	104.81
C2	6.5	P2	172+43.45 (84.06' RT)	106.81
C3	12.5	P3	172+43.37 (103.06' RT)	104.81
C4	6.5	P4	172+43.34 (109.06' RT)	106.81
		P5	172+31.17 (0.0' RT)	107.00
		P6	174+75.23 (123.30' RT)	103.00
		P7	174+62.90 (102.43' RT)	101.19
		P8	174+62.97 (108.43' RT)	103.19
		P9	174+62.77 (89.43' RT)	101.19
		P10	174+62.71 (83.43' RT)	103.19
		P11	175+75.26 (134.10' RT)	104.00
		P12	175+67.60 (71.67' RT)	104.52
		P13	174+74.00 (74.00' RT)	106.74
		P14	172+31.31 (97.00' RT)	107.00
		P15	174+74.91 (95.30 RT)	103.00

ALL ELEVATIONS ARE TO FINISHED GRADE

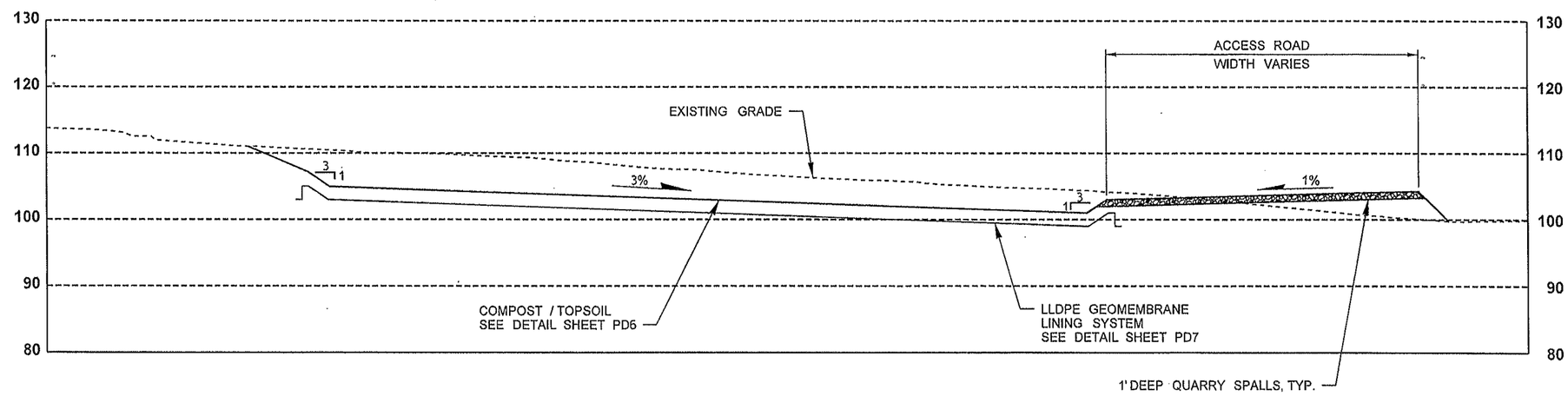

BIOFILTRATION SWALE PROFILE
NOT TO SCALE

NOTES:

1. BUILD EMBANKMENT PER STANDARD SPECIFICATION 2-03.3 (14) B.
2. COMPACT EMBANKMENT PER STANDARD SPECIFICATION 2-03.3 (14) C, METHOD C.

FILE NAME	PW:_XL3497\PS&E Sheets\Drainage Pond Details\ADD1_P3497_DE_POND_005.dgn				REGION NO. 10	STATE WASH	FED.AID PROJ.NO.
TIME	7:14:30 PM				JOB NUMBER 12C501		
DATE	4/30/2014						
PLOTTED BY	MerrymS						
DESIGNED BY	T. KELLY				CONTRACT NO.	LOCATION NO. XL3497	
ENTERED BY	C. SHANNON						
CHECKED BY	E. QUINN						
PROJ. ENGR.	J. PEREZ	ADD1 - REPLACED SHEET	05/02/14	DD			
REGIONAL ADM.	K. DAYTON	REVISION	DATE	BY			

CARLA A. MALONEY, STATE OF WASHINGTON, REGISTERED PROFESSIONAL ENGINEER
4/30/14
DATE
P.E. STAMP BOX

DATE
P.E. STAMP BOX

Washington State Department of Transportation

I-5
M ST TO PORTLAND AVENUE - HOV

POND DETAILS

PLAN REF NO PD5

SHEET 606 OF 1763 SHEETS

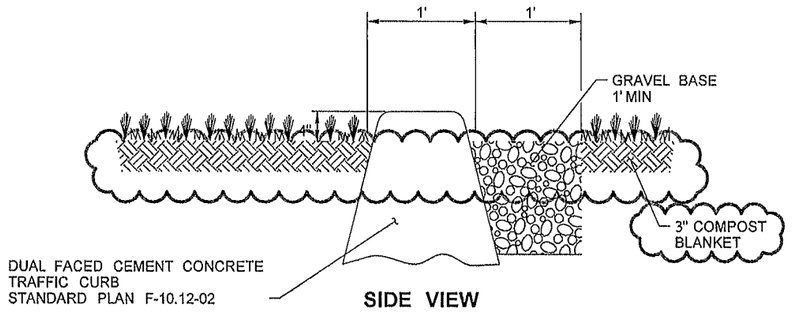

SIDE VIEW

CURB FLOW SPREADER

*SEE NOTE 2.

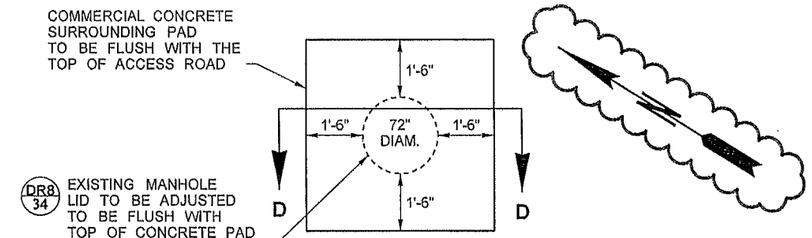

PLAN VIEW

NOT TO SCALE

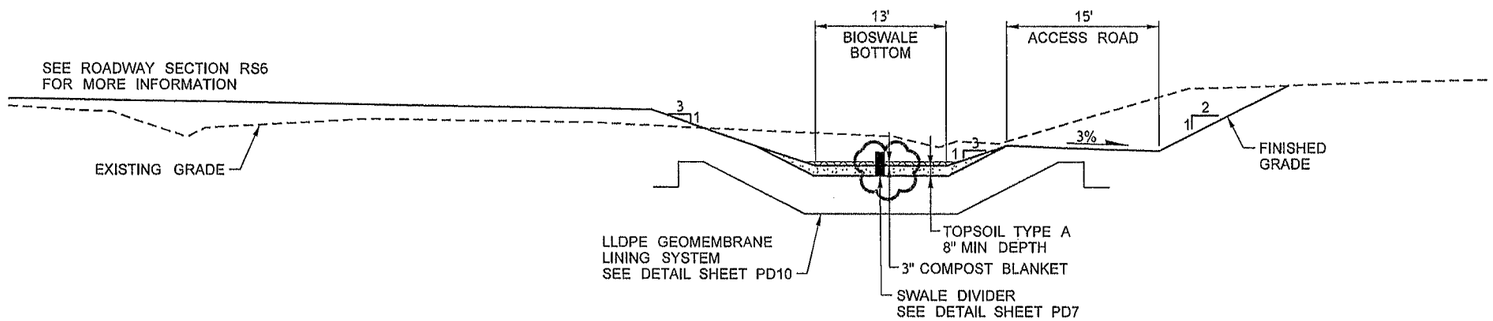

SECTION C-C

SHEET PD5

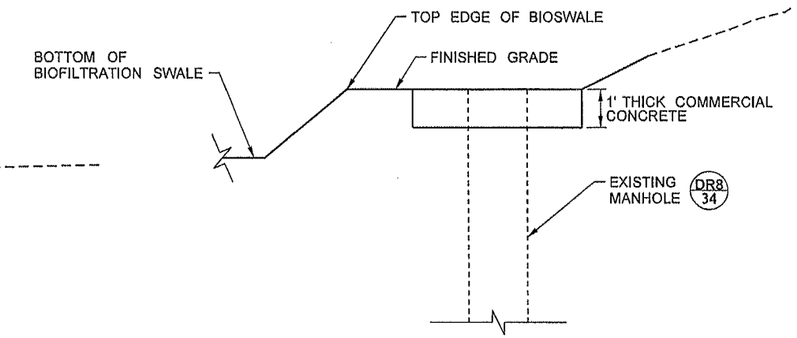

CROSS SECTION D-D

NOT TO SCALE

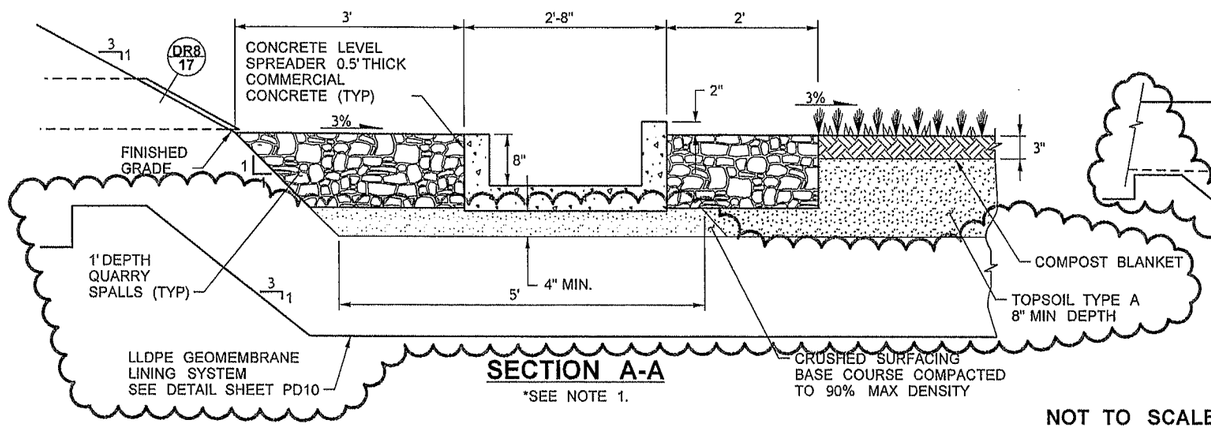

SECTION A-A

*SEE NOTE 1.

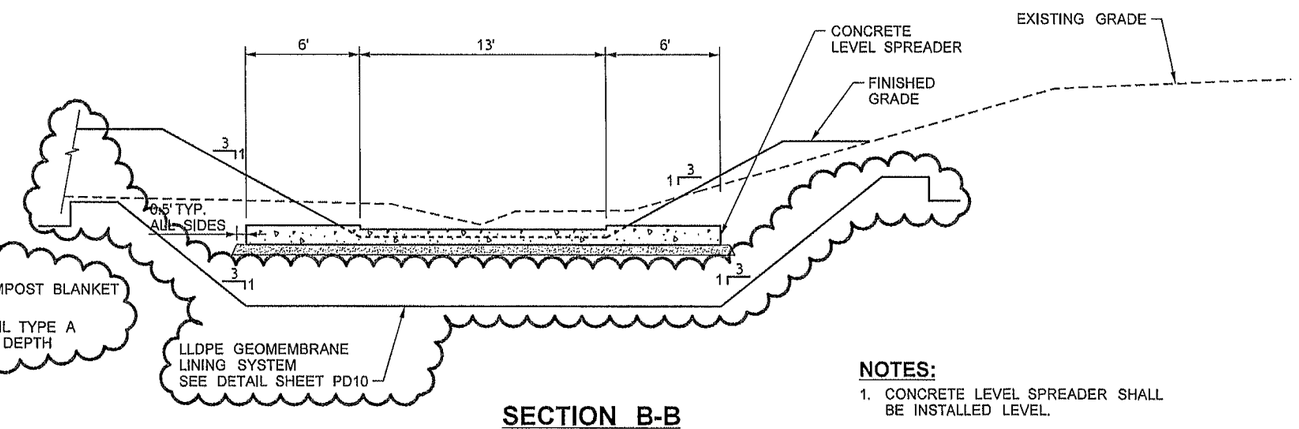

SECTION B-B

SHEET PD5

NOT TO SCALE

NOTES:

1. CONCRETE LEVEL SPREADER SHALL BE INSTALLED LEVEL.
2. CURB FLOW SPREADER SHALL BE INSTALLED LEVEL.

FILE NAME	PW:_XL3497\PS&E Sheets\Drainage Pond Details\ADD1_P3497_DE_POND_006.dgn				REGION NO. 10	STATE WASH	FED.AID PROJ.NO.	I-5 M ST TO PORTLAND AVENUE - HOV
TIME	3:22:01 PM							
DATE	4/29/2014				JOB NUMBER 12C501			
PLOTTED BY	ShannoC							
DESIGNED BY	T. KELLY							
ENTERED BY	S. WILLIAMS							
CHECKED BY	E. QUINN				CONTRACT NO.		LOCATION NO. XL3497	POND DETAILS
PROJ. ENGR.	J. PEREZ	ADD1 - DETAILS MODIFIED, NORTH ARROW ADDED	04/25/2014	DD				
REGIONAL ADM.	K. DAYTON	REVISION	DATE	BY				

P.E. STAMP BOX — DATE 4/30/14

P.E. STAMP BOX — DATE

Washington State Department of Transportation

PLAN REF NO PD6

SHEET 607 OF 1763 SHEETS

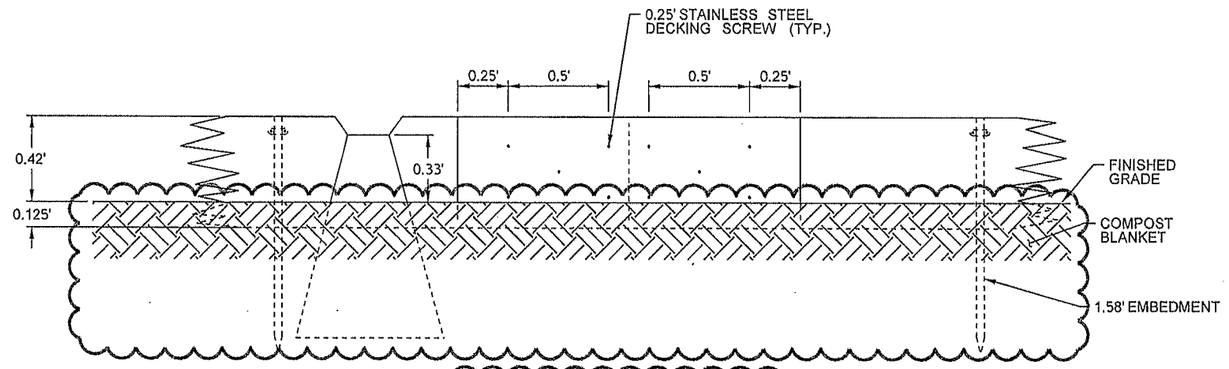

PROFILE - SECTION A-A

THIS SHEET

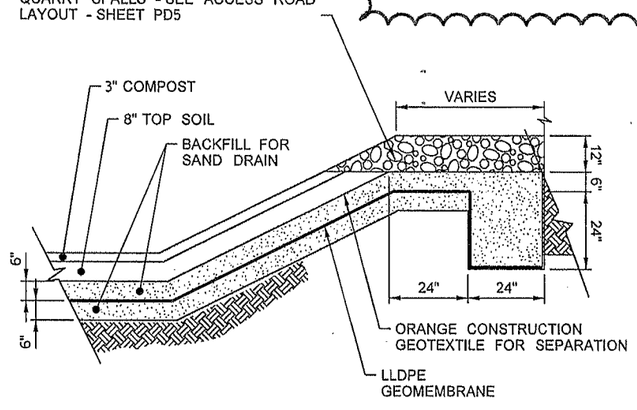

LLDPE GEOMEMBRANE LINING SYSTEM DETAIL AT BIOSWALE

NOT TO SCALE

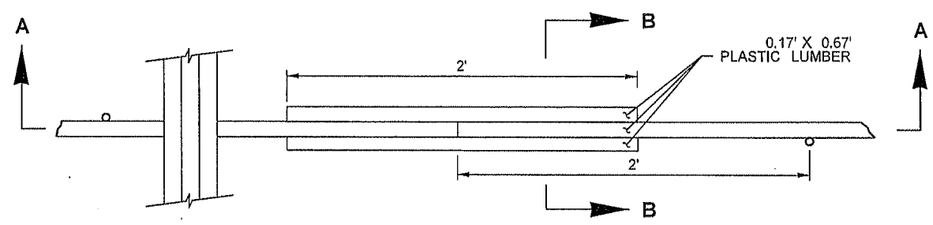

LAP SPLICE DETAIL (PLAN VIEW) SWALE DIVIDER

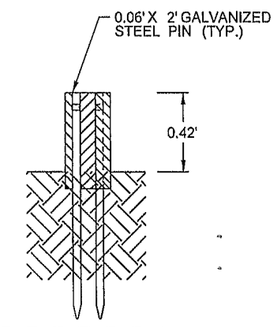

SECTION B-B

THIS SHEET

NOT TO SCALE

FILE NAME	PW:_XL3497\PS&E Sheets\Drainage Pond Details\ADD1_P3497_DE_POND_007.dgn				REGION NO. 10	STATE WASH	FED.AID PROJ.NO.
TIME	7:20:16 PM						
DATE	4/30/2014						
PLOTTED BY	MerrymS				JOB NUMBER 12C501		
DESIGNED BY	T. KELLY/D. DIZON						
ENTERED BY	C. SHANNON						
CHECKED BY	E. QUINN				CONTRACT NO.		LOCATION NO.
PROJ. ENGR.	J. PEREZ	AD1 DETAIL MODIFIED DETAIL ADDED	05/02/14	DD			XL3497
REGIONAL ADM.	K. DAYTON	REVISION	DATE	BY			

CARLA A. MALONEY, STATE OF WASHINGTON, REGISTERED PROFESSIONAL ENGINEER

4/30/14
DATE
P.E. STAMP BOX

DATE
P.E. STAMP BOX

Washington State Department of Transportation

I-5
M ST TO PORTLAND AVE - HOV

POND DETAILS

PLAN REF NO PD7

SHEET 608 OF 1763 SHEETS

OPEN FLOW RESTRICTOR DIMENSIONS				
POND NAME	A	B	C	D
NW	6"	24"	135.75'	133.00'
NE	4"	24"	129.50'	126.50'

POND MARKER LOCATIONS				
POND NAME	STATION	OFFSET	X (IN.)	Y (FT.)
NW	I5SB 546+10.43	600.74' LT	12	9
NW	I5SB 545+40.19	615.76' LT	6	9
NE	SBN 62+68.00	101.00' RT	12	8
NE	SBN 61+54.00	243.00' RT	6	6
BIOSWALE	TI5NB 103+37.22	119.07' RT	6	2

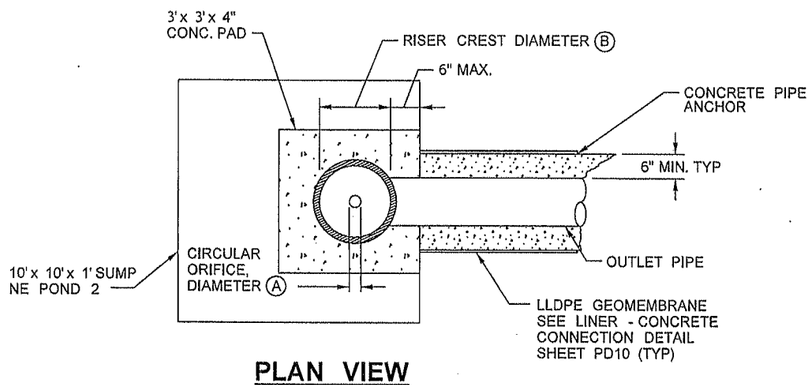

PLAN VIEW

NOTES:

1. FLOW RESTRICTOR, RESTRICTOR PLATE WITH ORIFICE, AND SHEAR GATE; SEE STD PLAN B-10.40-00
2. SEE SPECIAL PROVISIONS "OPEN FLOW RESTRICTOR".
3. SEE SPECIAL PROVISIONS "POND MARKERS".

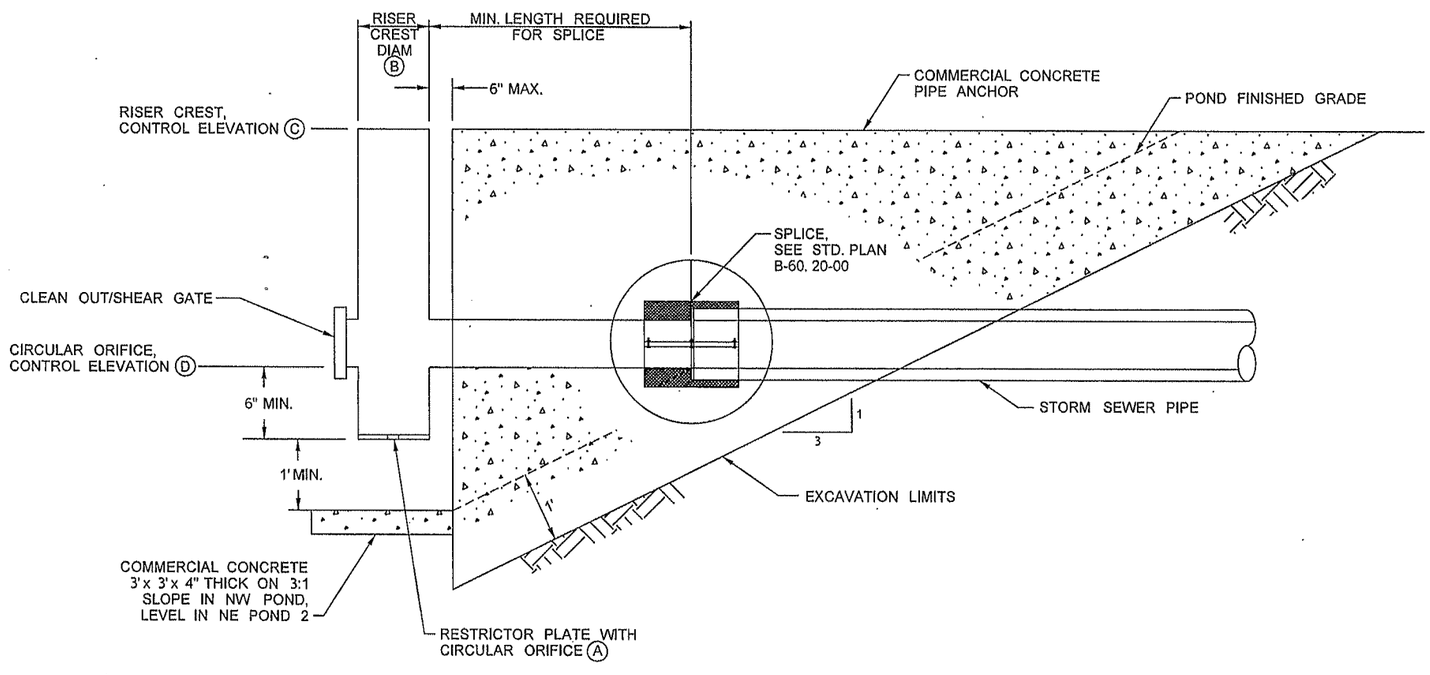

OPEN FLOW RESTRICTOR TYPICAL ELEVATION

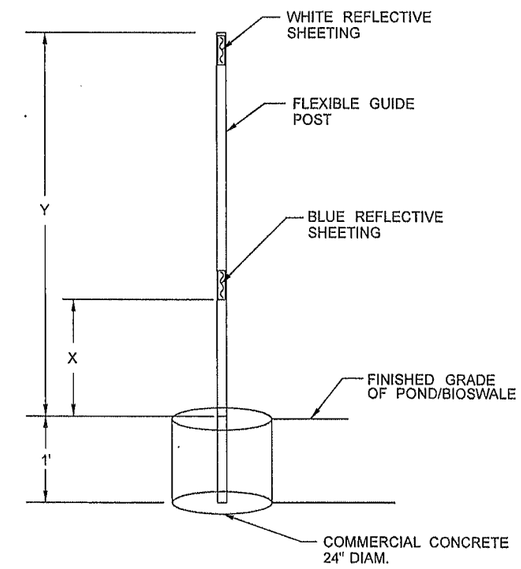

POND MARKER DETAIL

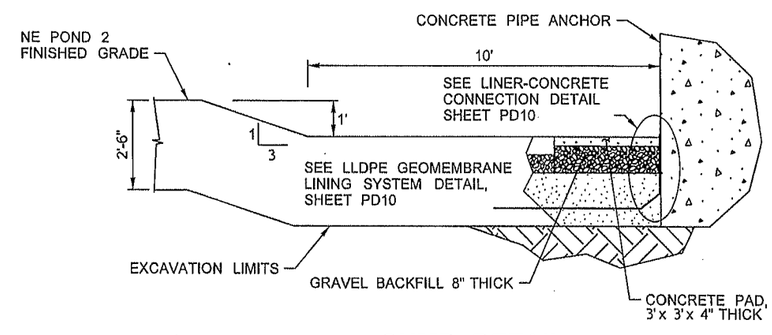

SUMP DETAIL

NOT TO SCALE

FILE NAME	PW:_XL3497\PS&E Sheets\Drainage Pond Details\ADD1_P3497_DE_POND_008.dgn
TIME	7:21:49 PM
DATE	4/30/2014
PLOTTED BY	MerrymS
DESIGNED BY	S. MERRYMAN
ENTERED BY	S. MERRYMAN
CHECKED BY	E. QUINN
PROJ. ENGR.	J. PEREZ
REGIONAL ADM.	K. DAYTON

REVISION	DATE	BY
AD1 RESTRICTOR DIMENSION MODIFIED	05/02/14	SM

REGION NO.	STATE	FED.AID PROJ.NO.
10	WASH	
JOB NUMBER 12C501		
CONTRACT NO.		LOCATION NO. XL3497

CARLA A. MALONEY, STATE OF WASHINGTON, REGISTERED PROFESSIONAL ENGINEER
4/30/14
DATE
P.E. STAMP BOX

DATE
P.E. STAMP BOX

Washington State Department of Transportation

I-5
M ST TO PORTLAND AVE - HOV

POND DETAILS

PLAN REF NO PD8

SHEET 609 OF 1763 SHEETS

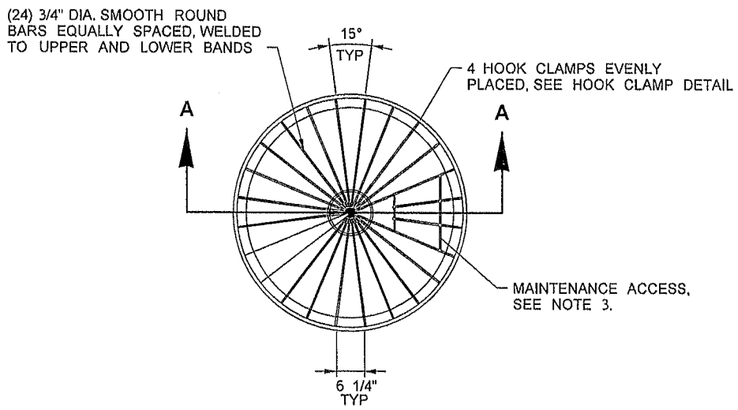

PLAN VIEW

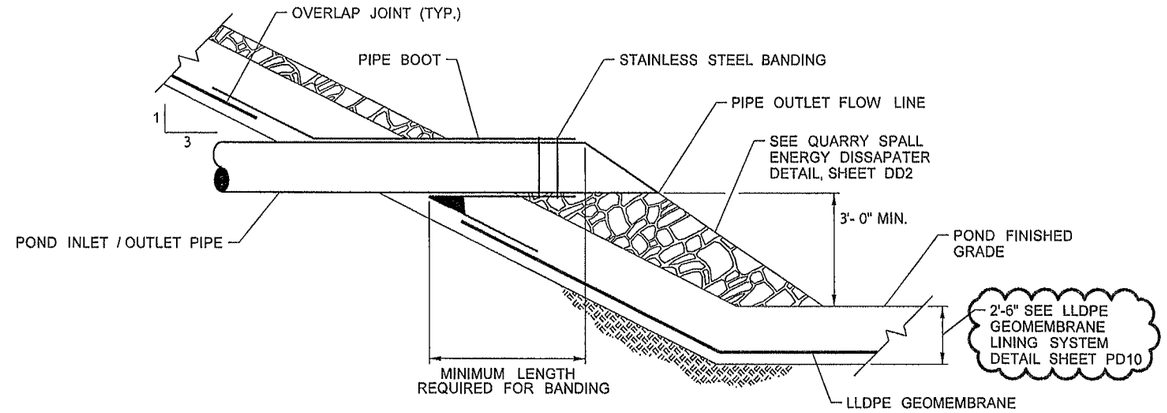

POND PIPE PENETRATION

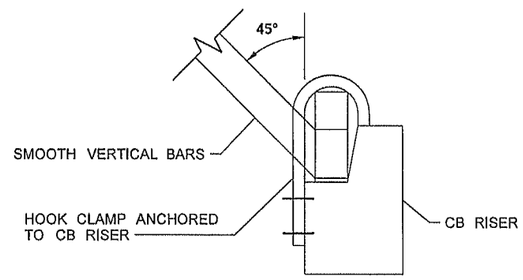

HOOK CLAMP

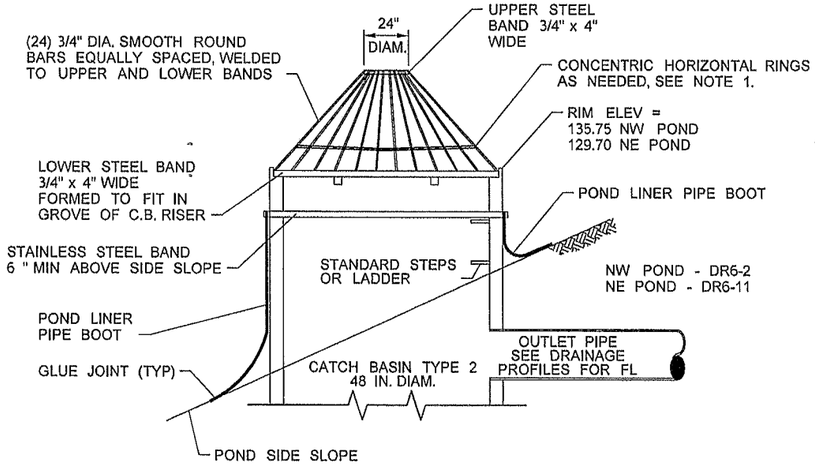

SECTION A - A
EMERGENCY OVERFLOW STRUCTURE

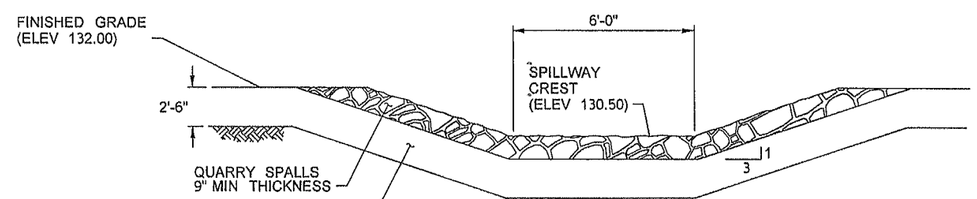

NE POND 1
OVERFLOW SPILLWAY DETAIL

NOTES:

1. WHERE THE MAXIMUM OPENING BETWEEN VERTICAL BARS EXCEED 4", ADD CONCENTRIC HORIZONTAL RINGS AS NEEDED SO THAT OPENINGS DO NOT EXCEED 4" IN ONE DIRECTION.
2. METAL PARTS MUST BE CORROSION RESISTANT; GALVANIZING NOT ALLOWED. USE ALUMINUM OR STAINLESS STEEL.
3. PROVIDE MAINTENANCE ACCESS BY WELDING 4 CROSSBARS TO 4 VERTICAL BARS AS SHOWN. HINGE UPPER ENDS WITH FLANGES/BOLTS AND PROVIDE LOCKING MECHANISM (PADLOCK) ON LOWER END. LOCATE STEPS DIRECTLY BELOW.

NOT TO SCALE

FILE NAME	PW:_XL3497\PS&E Sheets\Drainage Pond Details\ADD1_P3497_DE_POND_009.dgn			
TIME	6:24:32 PM			
DATE	4/22/2014			
PLOTTED BY	ShannoC			
DESIGNED BY	G. CARR			
ENTERED BY	C. SHANNON			
CHECKED BY	E. QUINN			
PROJ. ENGR.	J. PEREZ	AD1 - TEXT EDIT	04/25/2014	CM
REGIONAL ADM.	K. DAYTON	REVISION	DATE	BY

REGION NO.	STATE	FED.AID PROJ.NO.
10	WASH	
JOB NUMBER 12C501		
CONTRACT NO.		LOCATION NO. XL3497

P.E. STAMP BOX — DATE 4/30/14

P.E. STAMP BOX — DATE

Washington State Department of Transportation

I-5
M ST TO PORTLAND AVE - HOV

POND DETAILS

PLAN REF NO PD9

SHEET 610 OF 1763 SHEETS

NOTES:

1. SEE BIOFILTRATION SWALE DETAIL FOR LINER AND SURFACING INFORMATION

* NW POND SHALL HAVE PERMEABLE BALLAST FOR ENTIRE SURFACE.
NE POND 1 SHALL HAVE PERMEABLE BALLAST FROM FLOOR TO ELEV. 129.66, TOPSOIL ABOVE.
NE POND 2 SHALL HAVE TOPSOIL FOR ENTIRE SURFACE.

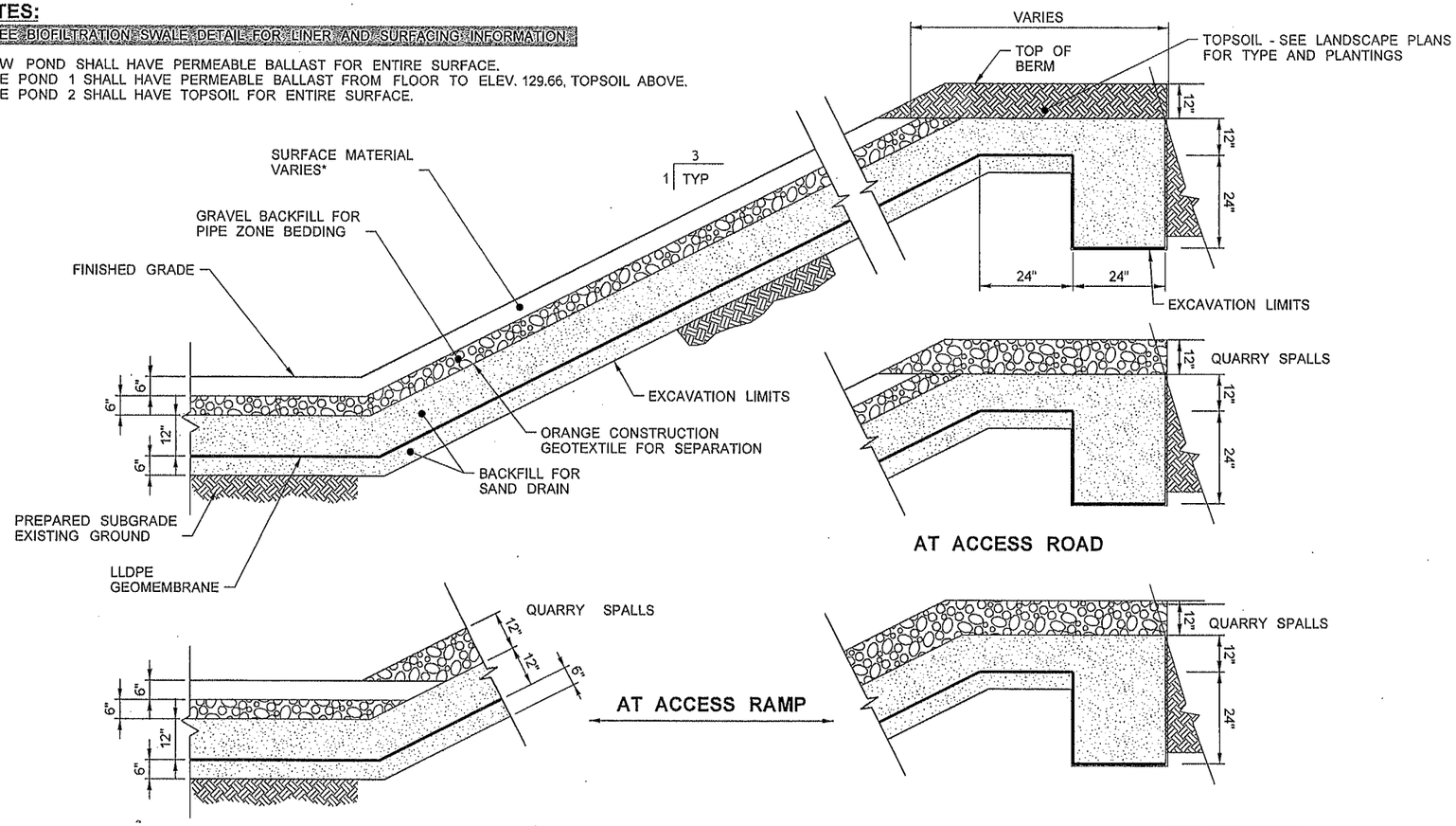

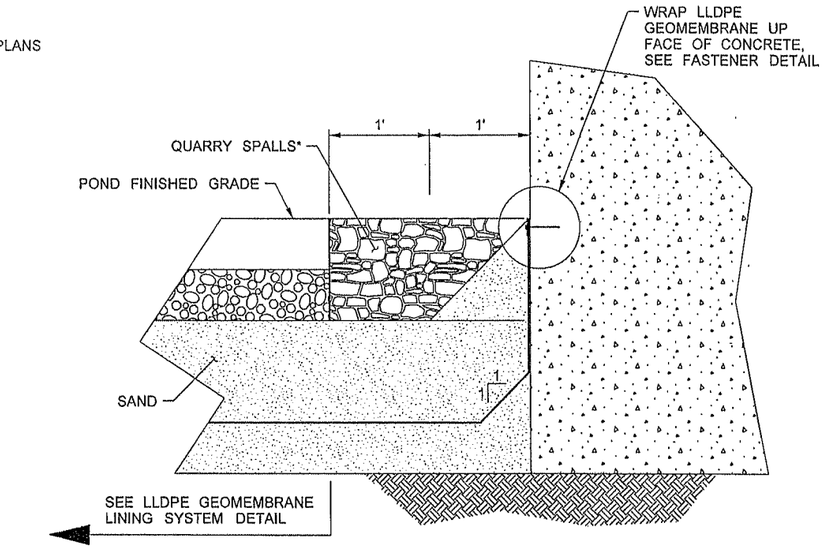

* TYP. ALONG BOTH SIDES OF CONC. PIPE ANHOR. AT END, EXTEND GRAVEL BACKFILL BENEATH 3'X3' CONC. PAD AND OMIT QUARRY SPALLS

LLDPE GEOMEMBRANE TO COMMERCIAL CONCRETE PIPE ANCHOR CONNECTION DETAIL

NOT TO SCALE

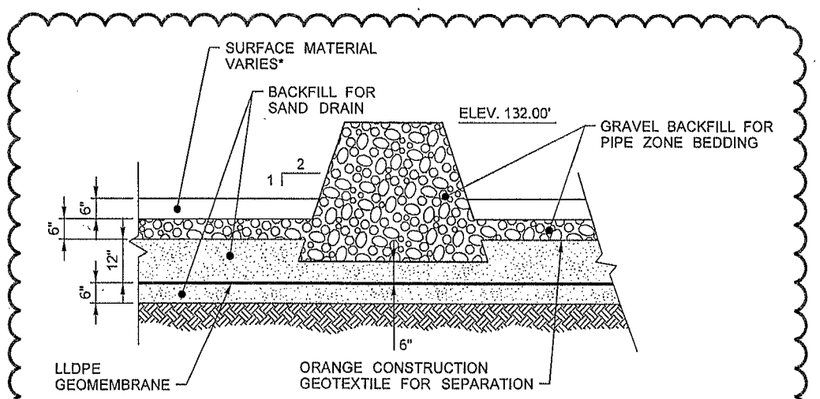

NW INTERIOR BERM DETAIL

NOT TO SCALE

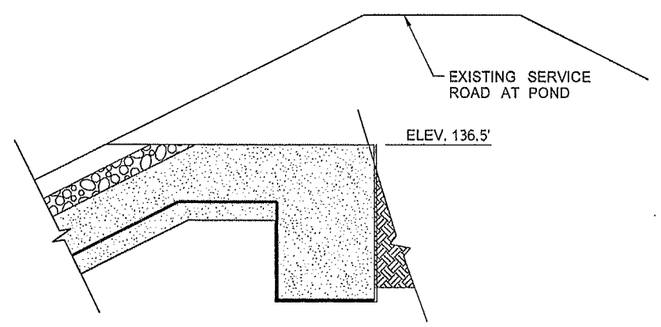

LINING SYSTEM AT NW POND AND EXISTING SERVICE ROAD

LLDPE GEOMEMBRANE LINING SYSTEM DETAIL

NOT TO SCALE

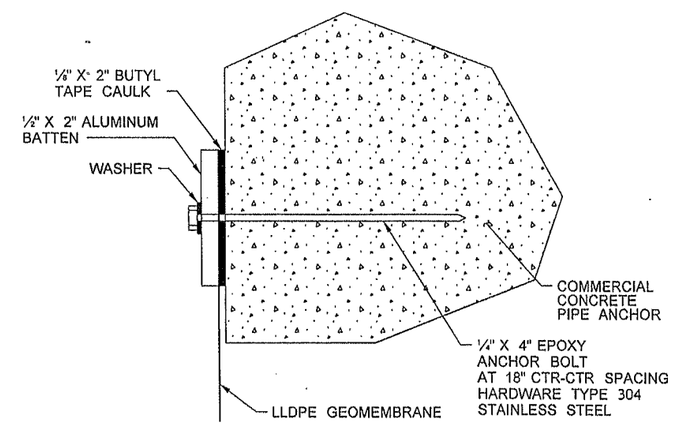

FASTENER DETAIL

NOT TO SCALE

FILE NAME	PW:_XL3497\PS&E Sheets\Drainage Pond Details\ADD1_P3497_DE_POND_010.dgn				REGION NO. 10	STATE WASH	FED.AID PROJ.NO.
TIME	10:57:49 AM						
DATE	5/1/2014						
PLOTTED BY	ShannoC				JOB NUMBER 12C501		
DESIGNED BY	S. MERRYMAN						
ENTERED BY	J. NEUGEBAUER-REX				CONTRACT NO.		LOCATION NO. XL3497
CHECKED BY	E. QUINN						
PROJ. ENGR.	J. PEREZ	AD1 DETAIL ADDED DETAIL MODIFIED	05/02/2014	CM			
REGIONAL ADM.	K. DAYTON	REVISION	DATE	BY			

CARLA A. MALONEY, STATE OF WASHINGTON, REGISTERED PROFESSIONAL ENGINEER
5/1/14
DATE
P.E. STAMP BOX

P.E. STAMP BOX DATE

Washington State Department of Transportation

I-5
M ST TO PORTLAND AVE - HOV

POND DETAILS

PLAN REF NO PD10

SHEET 611 OF 1763 SHEETS

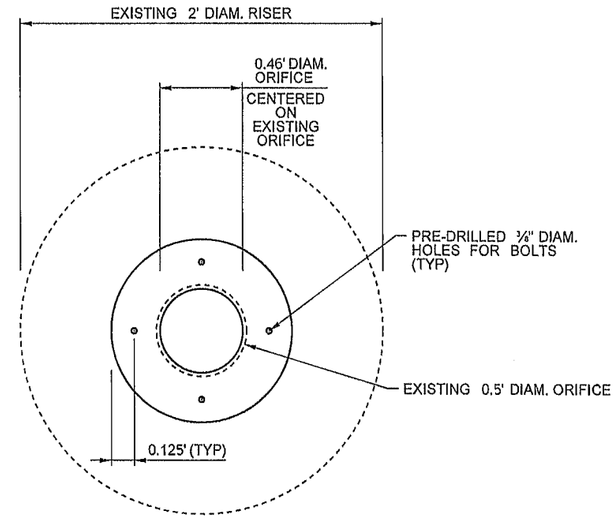

SECTION A-A

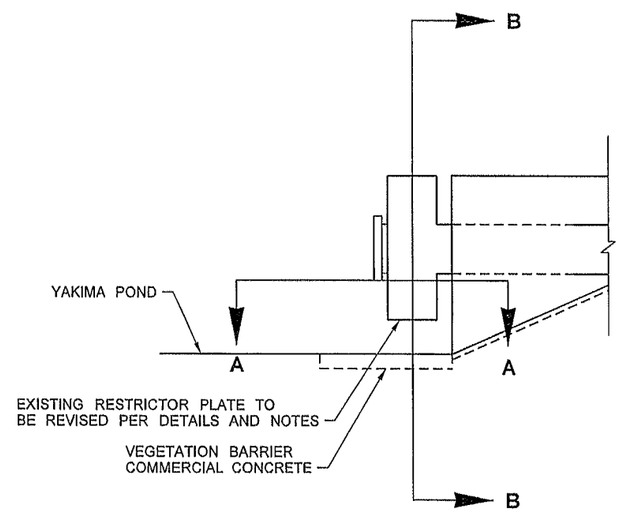

EXISTING OPEN FLOW RESTRICTOR

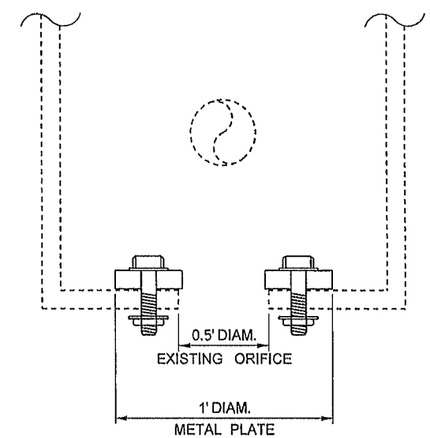

SECTION B-B

NOTES:

1. CLEAN EXISTING RESTRICTOR PLATE. DRILL HOLES MATCHING THE HOLE PATTERN ON NEW 12" DIAM. PLATE. SEE DETAIL THIS SHEET.
2. PLACE 12" DIAM. METAL PLATE INSIDE OPEN FLOW RESTRICTOR, CENTERED TO EXISTING 6" DIAM. ORIFICE.
3. SECURE THE 12" DIAM. PLATE TO THE EXISTING PLATE WITH MINIMUM 4 EQUALLY SPACED STAINLESS STEEL 316 BOLTS WITH NUTS AND SPLIT WASHERS.
4. THE 12" DIAM. PLATE SHALL BE OF THE SAME MATERIAL AND THICKNESS AS THE EXISTING PLATE.

NOT TO SCALE

RESTRICTOR PLATE REVISION

FILE NAME	PW:_XL3497\PS&E Sheets\Drainage Pond Details\P3497_DE_POND_011.dgn						
TIME	3:58:41 PM				REGION NO. 10	STATE WASH	FED.AID PROJ.NO.
DATE	3/24/2014						
PLOTTED BY	SancheA				JOB NUMBER 12C501		
DESIGNED BY	S. MERRYMAN						
ENTERED BY	J. NEUGEBAUER-REX				CONTRACT NO.		LOCATION NO. XL3497
CHECKED BY	E. QUINN						
PROJ. ENGR.	J. PEREZ						
REGIONAL ADM.	K. DAYTON	REVISION	DATE	BY			

CARLA A. MALONEY, STATE OF WASHINGTON, REGISTERED PROFESSIONAL ENGINEER — DATE 3/24/14 — P.E. STAMP BOX

DATE — P.E. STAMP BOX

Washington State Department of Transportation

I-5
M ST TO PORTLAND AVE - HOV

POND DETAILS

PLAN REF NO PD11

SHEET 612 OF 1763 SHEETS

STRUCTURE NOTES - TEMPORARY DRAINAGE GENERAL NOTES

1. SEE STD. PLAN B-10.20-01
2. SEE STD. PLAN B-25.60-00
3. SEE STD. PLAN B-35.40-00
4. SEE STD. PLAN B-60.20-00
5. ROTATED INSTALLATION
6. DEPRESS 0.5" BELOW GRADE
7. INLETS TO BE PLACED UNDER SCUPPER BARRIER OPENING
8. CONNECTION TO DRAINAGE STRUCTURE
9. SEE SPECIAL PROVISIONS SECTION 2-02, REMOVING DRAINAGE STRUCTURE
10. SEE SPECIAL PROVISIONS SECTION 2-02, REMOVING DRAINAGE PIPE
11. SEE SPECIAL PROVISIONS SECTION 7-05, PIPE CONNECTION TO NEW STRUCTURE
12. SEE SPECIAL PROVISIONS SECTION 7-05, ABANDON DRAINAGE STRUCTURE
13. SEE SPECIAL PROVISIONS SECTION 7-09, TRENCHLESS CONSTRUCTION
14. SEE SPECIAL PROVISIONS SECTION 7-09, PUMP - TEMPORARY DRAINAGE
15. FOR BARRIER PLACEMENT SEE WORK ZONE PLANS AND TEMPORARY CONC. BARRIER WITH SCUPPER TABLE
16. SEE TEMPORARY CONC. BARRIER TYPE 2 WITH SCUPPER DETAIL
17. SEE TEMPORARY UNDERDRAIN DETAIL
18. SEE STRUCTURE ADJUSTMENT COLLAR DETAIL
19. SEE TEMPORARY CURB OFFSET DETAIL
20. SEE TRENCH DRAIN SYSTEM DETAIL
21. THRESHOLD DISCHARGE AREA = 18.8 ACRES. PECENT IMPERVIOUS GOING TO PUMP = 35%
22. THRESHOLD DISCHARGE AREA = 21.7 ACRES. PECENT IMPERVIOUS GOING TO PUMP = 2%
23. THRESHOLD DISCHARGE AREA = 21.7 ACRES. PECENT IMPERVIOUS GOING TO PUMP = 10%
24. THRESHOLD DISCHARGE AREA = 2.9 ACRES. PECENT IMPERVIOUS GOING TO PUMP = 31%
25. THRESHOLD DISCHARGE AREA = 21.7 ACRES. PECENT IMPERVIOUS GOING TO PUMP = 28%

P3497_SN_TNTDR.xlsm					
3/24/2014 14:33					
DESIGNED BY	S. MERRYMAN	03/24/14			
ENTERED BY	C. MINTEN	03/24/14			
CHECKED BY	E. QUINN	03/24/14			
PROJ. ENGR.	J. PEREZ	03/24/14			
REGION ADM.	K. DAYTON	03/24/14			
		DATE	DATE	REVISION	BY

REGION NO.	STATE	FED. AID PROJ. NO.
10	WASH	
JOB NUMBER 12C501		
CONTRACT NO.		

Washington State Department of Transportation

I-5
M ST TO PORTLAND AVE - HOV

STRUCTURE NOTES - TEMPORARY DRAINAGE GENERAL NOTES

TNTDR 1

SHEET 613 OF 1763 SHEETS

STRUCTURE NOTES - TEMPORARY DRAINAGE

NOTE:
THE FIRST NUMBER OF THE "CODE DESIGNATION" BELOW REFERS TO THE SHEET NO. OR THE SHEET REFERENCE NO. SHOWING THE DRAINAGE FEATURE.

THE SECOND NUMBER REFERS TO THE DRAINAGE FEATURE FOUND ON THAT SHEET.

CODE	LOCATION ⊽ \ UNIT OF MEASURE ➢			REMOVING DRAINAGE STRUCTURE	REMOVING DRAINAGE PIPE		CONCRETE INLET	GRATE INLET TYPE 2		UNDERDRAIN PIPE 6 IN. DIAM.			TESTING STORM SEWER PIPE	SCHEDULE A STORM SEWER PIPE 12 IN. DIAM.	SCHEDULE A STORM SEWER PIPE 24 IN. DIAM.		TEMPORARY CURB	TEMPORARY CONC. BARRIER TYPE 2 WITH SCUPPER				SEE GENERAL NOTES
				EACH	L.F.		EACH	EACH		L.F.			L.F.	L.F.	L.F.		L.F.	L.F.				
TDR1A-301	TNB3 33+53 (12.5 LT) TO TNB3 43+28 (5.0 LT)																	975				15, 16
TDR1-302	TNW1 16+40 (3.0 LT) TO TNSB 11+24 (17.3 LT)																	3914				15, 16
TDR1-303	I5SB 501+36 (39.7 LT) TO I5SB 540+36 (184.4 LT)																3915					19
TDR1-304	TSB2 71+93 (27.0 LT) TO TSB1 86+35 (36.8 LT)																	2599				15, 16
TDR1-305	I5SB 501+29 (11.0 LT) TO I5SB 527+05 (21.3 LT)																2571					19
TDR1-306	TNB2 35+53 (25.1 LT) TO TNB2 46+64 (25.1 LT)																	1107				15, 16
TDR1-307	I5NB 100+70 (11.0 LT) TO I5NB 115+38 (14.0 LT)																1464					19
TDR1-308	TSB5 30+10 (17.0 RT) TO TSB5 52+42 (17.0 RT)																	2242				15, 16
TDR1-309	TNB4 11+53 (5.0 LT) TO TNB4 35+17 (0.7 LT)																	2363				15, 16
TDR1-310	TNB3 46+00 (5.0 LT)																	13				7, 15, 16
TDR1-311	TNB3 47+80 (5.0 LT)																	13				7, 15, 16
	SHEET TOTAL																7950	13226				

ADD1_P3497_SN_TNTDR.xlsm				REGION NO.	STATE	FED. AID PROJ. NO.	
4/30/2014 10:36				10	WASH		
DESIGNED BY	S. MERRYMAN	03/24/14					
ENTERED BY	C. MINTEN	03/24/14		JOB NUMBER			
CHECKED BY	E. QUINN	03/24/14		12C501			
PROJ. ENGR.	J. PEREZ	03/24/14					
REGION ADM.	K. DAYTON	03/24/14	04/25/14 AD1 REVISED BID ITEM NAME CAM	CONTRACT NO.			
		DATE	DATE REVISION BY				

Washington State Department of Transportation

I-5
M ST TO PORTLAND AVE - HOV

STRUCTURE NOTES - TEMPORARY DRAINAGE

TNTDR 2

SHEET 614 OF 1763 SHEETS

STRUCTURE NOTES - TEMPORARY DRAINAGE

NOTE:
THE FIRST NUMBER OF THE "CODE DESIGNATION" BELOW REFERS TO THE SHEET NO. OR THE SHEET REFERENCE NO. SHOWING THE DRAINAGE FEATURE.

THE SECOND NUMBER REFERS TO THE DRAINAGE FEATURE FOUND ON THAT SHEET.

CODE	LOCATION ∀ \ UNIT OF MEASURE ≻			STRUCTURE EXCAVATION CLASS B INCL. HAUL	SHORING OR EXTRA EXCAVATION CLASS B		TEMPORARY PLUGGING EXISTING PIPE	CONNECTION TO DRAINAGE STRUCTURE		TRENCH DRAIN SYSTEM		CATCH BASIN TYPE 2 48 IN. DIAM.										SEE GENERAL NOTES
				C.Y.	S.F.		EACH	EACH		L.F.		EACH										
TDR1A-301	TNB3 33+53 (12.5 LT) TO TNB3 43+28 (5.0 LT)																					15, 16
TDR1-302	TNW1 16+40 (3.0 LT) TO TNSB 11+24 (17.3 LT)																					15, 16
TDR1-303	I5SB 501+36 (39.7 LT) TO I5SB 540+36 (184.4 LT)																					19
TDR1-304	TSB2 71+93 (27.0 LT) TO TSB1 86+35 (36.8 LT)																					15, 16
TDR1-305	I5SB 501+29 (11.0 LT) TO I5SB 527+05 (21.3 LT)																					19
TDR1-306	TNB2 35+53 (25.1 LT) TO TNB2 46+64 (25.1 LT)																					15, 16
TDR1-307	I5NB 100+70 (11.0 LT) TO I5NB 115+38 (14.0 LT)																					19
TDR1-308	TSB5 30+10 (17.0 RT) TO TSB5 52+42 (17.0 RT)																					15, 16
TDR1-309	TNB4 11+53 (5.0 LT) TO TNB4 35+17 (0.7 LT)																					15, 16
TDR1-310	TNB3 46+00 (5.0 LT)																					7, 15, 16
TDR1-311	TNB3 47+80 (5.0 LT)																					7, 15, 16
	SHEET TOTAL																					

ADD1_P3497_SN_TNTDR.xlsm					REGION NO.	STATE	FED. AID PROJ. NO.	
4/30/2014 10:36					10	WASH		
DESIGNED BY	S. MERRYMAN	03/24/14			JOB NUMBER			
ENTERED BY	C. MINTEN	03/24/14			12C501			
CHECKED BY	E. QUINN	03/24/14						
PROJ. ENGR.	J. PEREZ	03/24/14						
REGION ADM.	K. DAYTON	03/24/14	04/25/14	AD1 - ADDED BID ITEM	SM	CONTRACT NO.		
		DATE	DATE	REVISION	BY			

Washington State Department of Transportation

I-5
M ST TO PORTLAND AVE - HOV

STRUCTURE NOTES - TEMPORARY DRAINAGE

TNTDR 3

SHEET 615 OF 1763 SHEETS

STRUCTURE NOTES - TEMPORARY DRAINAGE

NOTE:
THE FIRST NUMBER OF THE "CODE DESIGNATION" BELOW REFERS TO THE SHEET NO. OR THE SHEET REFERENCE NO. SHOWING THE DRAINAGE FEATURE.

THE SECOND NUMBER REFERS TO THE DRAINAGE FEATURE FOUND ON THAT SHEET.

CODE	LOCATION ⊽ \ UNIT OF MEASURE ⊳			REMOVING DRAINAGE STRUCTURE	REMOVING DRAINAGE PIPE		CONCRETE INLET	GRATE INLET TYPE 2		UNDERDRAIN PIPE 6 IN. DIAM.			TESTING STORM SEWER PIPE	SCHEDULE A STORM SEWER PIPE 12 IN. DIAM.	SCHEDULE A STORM SEWER PIPE 24 IN. DIAM.		TEMPORARY CURB	TEMPORARY CONC. BARRIER TYPE 2 WITH SCUPPER				SEE GENERAL NOTES
				EACH	L.F.		EACH	EACH		L.F.			L.F.	L.F.	L.F.		L.F.	L.F.				
TDR2-312	I5SB 510+16 (10.1 LT)			1				1														3, 9, 11
TDR2-313	TNBN 31+52 (2.0 RT) TO TNBN 39+27 (6.4 RT)																	776				15, 16
TDR2-314	TNB4 26+86 (51.0 RT) TO TNB4 57+07 (39.0 RT)																	3021				15, 16
TDR2-315	TNCD4 24+60 (5.8 LT) TO TNCD4 34+50 (3.0 LT)																	990				15, 16
TDR2-316	TNCD4 37+13 (17.0 RT) TO TNB5 85+47 (47.0 RT)																	2675				15, 16
TDR2-317	I5NB 118+48 (59.3 RT) TO I5NB 131+50 (37.0 RT)																1310					19
TDR2-318	TNB3 49+60 (5.0 LT)																	13				7, 15, 16
TDR2-319	TNB3 51+41 (5.0 LT)																	13				7, 15, 16
TDR2-320	TNB3 53+21 (5.0 LT)																	13				7, 15, 16
TDR2-321	TNB3 58+62 (5.0 LT)																	13				7, 15, 16
TDR2-399	I5NB 115+30 (17.0 LT)																					14, 21
TDR2-400	I5NB 112+68 (35.0 RT) TO I5NB 123+65 (24.2 RT)																1108					19
TDR2-424	TNCD1 90+15 (22.4 LT) TO TNCD1 101+89 (3.0 LT)																	1172				15, 16
	SHEET TOTAL			1				1									2418	8686				

ADD1_P3497_SN_TNTDR.xlsm						
4/30/2014 10:36						
DESIGNED BY	S. MERRYMAN	03/24/14				
ENTERED BY	C. MINTEN	03/24/14				
CHECKED BY	E. QUINN	03/24/14				
PROJ. ENGR.	J. PEREZ	03/24/14				
REGION ADM.	K. DAYTON	03/24/14	04/25/14	AD1 UPDATED CODE TDR2-399	SM	
		DATE	DATE	REVISION	BY	

REGION NO.	STATE	FED. AID PROJ. NO.
10	WASH	
JOB NUMBER 12C501		
CONTRACT NO.		

Washington State Department of Transportation

I-5
M ST TO PORTLAND AVE - HOV

STRUCTURE NOTES - TEMPORARY DRAINAGE

TNTDR 4

SHEET 616 OF 1763 SHEETS

STRUCTURE NOTES - TEMPORARY DRAINAGE

NOTE:
THE FIRST NUMBER OF THE "CODE DESIGNATION" BELOW REFERS TO THE SHEET NO. OR THE SHEET REFERENCE NO. SHOWING THE DRAINAGE FEATURE.

THE SECOND NUMBER REFERS TO THE DRAINAGE FEATURE FOUND ON THAT SHEET.

CODE	LOCATION ∨ \ UNIT OF MEASURE >			STRUCTURE EXCAVATION CLASS B INCL. HAUL	SHORING OR EXTRA EXCAVATION CLASS B		TEMPORARY PLUGGING EXISTING PIPE	CONNECTION TO DRAINAGE STRUCTURE		TRENCH DRAIN SYSTEM		CATCH BASIN TYPE 2 48 IN. DIAM.										SEE GENERAL NOTES
				C.Y.	S.F.		EACH	EACH		L.F.		EACH										
TDR2-312	I5SB 510+16 (10.1 LT)			10	50			1														3, 9, 11
TDR2-313	TNBN 31+52 (2.0 RT) TO TNBN 39+27 (6.4 RT)																					15, 16
TDR2-314	TNB4 26+86 (51.0 RT) TO TNB4 57+07 (39.0 RT)																					15, 16
TDR2-315	TNCD4 24+60 (5.8 LT) TO TNCD4 34+50 (3.0 LT)																					15, 16
TDR2-316	TNCD4 37+13 (17.0 RT) TO TNB5 85+47 (47.0 RT)																					15, 16
TDR2-317	I5NB 118+48 (59.3 RT) TO I5NB 131+50 (37.0 RT)																					19
TDR2-318	TNB3 49+60 (5.0 LT)																					7, 15, 16
TDR2-319	TNB3 51+41 (5.0 LT)																					7, 15, 16
TDR2-320	TNB3 53+21 (5.0 LT)																					7, 15, 16
TDR2-321	TNB3 58+62 (5.0 LT)																					7, 15, 16
TDR2-399	I5NB 115+30 (17.0 LT)																					14, 21
TDR2-400	I5NB 112+68 (35.0 RT) TO I5NB 123+65 (24.2 RT)																					19
TDR2-424	TNCD1 90+15 (22.4 LT) TO TNCD1 101+89 (3.0 LT)																					15, 16
	SHEET TOTAL			10	50			1														

ADD1_P3497_SN_TNTDR.xlsm						REGION NO.	STATE	FED. AID PROJ. NO.
4/30/2014 10:36						10	WASH	
DESIGNED BY	S. MERRYMAN	03/24/14						
ENTERED BY	C. MINTEN	03/24/14						
CHECKED BY	E. QUINN	03/24/14				JOB NUMBER		
PROJ. ENGR.	J. PEREZ	03/24/14				12C501		
REGION ADM.	K. DAYTON	03/24/14	04/25/14	AD1 - UPDATED CODE TDR2-399	SM	CONTRACT NO.		
		DATE	DATE	REVISION	BY			

Washington State Department of Transportation

I-5
M ST TO PORTLAND AVE - HOV

STRUCTURE NOTES - TEMPORARY DRAINAGE

TNTDR 5

SHEET 617 OF 1763 SHEETS

STRUCTURE NOTES - TEMPORARY DRAINAGE

NOTE:
THE FIRST NUMBER OF THE "CODE DESIGNATION" BELOW REFERS TO THE SHEET NO. OR THE SHEET REFERENCE NO. SHOWING THE DRAINAGE FEATURE.

THE SECOND NUMBER REFERS TO THE DRAINAGE FEATURE FOUND ON THAT SHEET.

CODE	LOCATION ∨ \ UNIT OF MEASURE >			REMOVING DRAINAGE STRUCTURE	REMOVING DRAINAGE PIPE		CONCRETE INLET	GRATE INLET TYPE 2		UNDERDRAIN PIPE 6 IN. DIAM.			TESTING STORM SEWER PIPE	SCHEDULE A STORM SEWER PIPE 12 IN. DIAM.	SCHEDULE A STORM SEWER PIPE 24 IN. DIAM.		TEMPORARY CURB	TEMPORARY CONC. BARRIER TYPE 2 WITH SCUPPER				SEE GENERAL NOTES
				EACH	L.F.		EACH	EACH		L.F.			L.F.	L.F.	L.F.		L.F.	L.F.				
TDR3-322	I5NB 126+16 (40.1 LT) TO I5NB 126+50 (31.0 LT)			1	36			1					36	36								3, 8, 9, 10
TDR3-323	I5NB 126+50 (31.0 LT) TO I5NB 127+00 (30.2 LT)			1	50			1					50	50								3, 9, 10
TDR3-324	I5SB 518+02 (10.4 LT)			1																		3, 9, 11
TDR3-325	NOT USED																					
TDR3-326	NOT USED																					
TDR3-327	TNB3 69+80 (40.9 RT) TO TNB1 67+95 (41.0 RT)																	1792				15, 16
TDR3-328	TCD1 28+68 (27.0 LT) TO TCD1 38+00 (26.9 LT)																	931				15, 16
TDR3-329	TNB3 67+56 (44.1 RT) TO TNB3 69+80 (40.9 RT)																	224				15, 16
TDR3-330	I5NB 125+79 (18.6 RT) TO I5NB 144+67 (50.2 LT)																1900					19
TDR3-331	TSB5 53+57 (17.2 RT) TO TSB5 56+01 (17.0 RT)																	244				15, 16
TDR3-332	I5NB 125+55 (21.4 RT) TO I5NB 143+13 (41.6 LT)																1762					19
TDR3-333	I5NB 125+29 (73.0 RT) TO I5NB 126+04 (78.0 RT)																75					19
TDR3-334	I5SB 529+12 (56.4 LT) TO I5SB 531+52 (56.0 LT)																240					19
TDR3-335	TSSB5 63+73 (3.0 LT) TO TSSB5 73+36 (3.0 LT)																	963				15, 16
TDR3-336	TSB6 36+31 (15.0 RT) TO TSB6 54+00 (15.0 RT)																	1766				15, 16
TDR3-337	I5SB 526+51 (11.0 RT) TO I5SB 544+18 (16.3 RT)																1766					19
TDR3-338	NBN 17+88 (7.7 LT) TO NBN 31+59 (21.6 LT)									1374												17
TDR3-401	NCD 56+57 (0.2 RT)			1				1														3, 9, 11
	SHEET TOTAL			4	86			3		1374			86	86			5743	5920				

ADD1_P3497_SN_TNTDR.xlsm							
4/30/2014 10:36							
DESIGNED BY	S. MERRYMAN	03/24/14					
ENTERED BY	C. MINTEN	03/24/14					
CHECKED BY	E. QUINN	03/24/14					
PROJ. ENGR.	J. PEREZ	03/24/14	04/25/14	AD1 - REVISED QTY	SM		
REGION ADM.	K. DAYTON	03/24/14	04/25/14	AD1 - REVISED BID ITEM NAME	CAM		
		DATE	DATE	REVISION	BY		

REGION NO.	STATE	FED. AID PROJ. NO.
10	WASH	

JOB NUMBER
12C501

CONTRACT NO.

Washington State Department of Transportation

I-5
M ST TO PORTLAND AVE - HOV

STRUCTURE NOTES - TEMPORARY DRAINAGE

TNTDR 6

SHEET 618 OF 1763 SHEETS

STRUCTURE NOTES - TEMPORARY DRAINAGE

NOTE:
THE FIRST NUMBER OF THE "CODE DESIGNATION" BELOW REFERS TO THE SHEET NO. OR THE SHEET REFERENCE NO. SHOWING THE DRAINAGE FEATURE.

THE SECOND NUMBER REFERS TO THE DRAINAGE FEATURE FOUND ON THAT SHEET.

CODE	LOCATION ⊽ \ UNIT OF MEASURE ⊳			STRUCTURE EXCAVATION CLASS B INCL. HAUL	SHORING OR EXTRA EXCAVATION CLASS B		TEMPORARY PLUGGING EXISTING PIPE	CONNECTION TO DRAINAGE STRUCTURE		TRENCH DRAIN SYSTEM		CATCH BASIN TYPE 2 48 IN. DIAM.										SEE GENERAL NOTES
				C.Y.	S.F.		EACH	EACH		L.F.		EACH										
TDR3-322	I5NB 126+16 (40.1 LT) TO I5NB 126+50 (31.0 LT)			60	360			1														3, 8, 9, 10
TDR3-323	I5NB 126+50 (31.0 LT) TO I5NB 127+00 (30.2 LT)			60	360																	3, 9, 10
TDR3-324	I5SB 518+02 (10.4 LT)			10	50			1				1										3, 9, 11
TDR3-325	NOT USED																					
TDR3-326	NOT USED																					
TDR3-327	TNB3 69+80 (40.9 RT) TO TNB1 67+95 (41.0 RT)																					15, 16
TDR3-328	TCD1 28+68 (27.0 LT) TO TCD1 38+00 (26.9 LT)																					15, 16
TDR3-329	TNB3 67+56 (44.1 RT) TO TNB3 69+80 (40.9 RT)																					15, 16
TDR3-330	I5NB 125+79 (18.6 RT) TO I5NB 144+67 (50.2 LT)																					19
TDR3-331	TSB5 53+57 (17.2 RT) TO TSB5 56+01 (17.0 RT)																					15, 16
TDR3-332	I5NB 125+55 (21.4 RT) TO I5NB 143+13 (41.6 LT)																					19
TDR3-333	I5NB 125+29 (73.0 RT) TO I5NB 126+04 (78.0 RT)																					19
TDR3-334	I5SB 529+12 (56.4 LT) TO I5SB 531+52 (56.0 LT)																					19
TDR3-335	TSSB5 63+73 (3.0 LT) TO TSSB5 73+36 (3.0 LT)																					15, 16
TDR3-336	TSB6 36+31 (15.0 RT) TO TSB6 54+00 (15.0 RT)																					15, 16
TDR3-337	I5SB 526+51 (11.0 RT) TO I5SB 544+18 (16.3 RT)																					19
TDR3-338	NBN 17+88 (7.7 LT) TO NBN 31+59 (21.6 LT)																					17
TDR3-401	NCD 56+57 (0.2 RT)			10	30			1														3, 9, 11
	SHEET TOTAL			140	800			3				1										

ADD1_P3497_SN_TNTDR.xlsm							
4/30/2014 10:36							
DESIGNED BY	S. MERRYMAN	03/24/14					
ENTERED BY	C. MINTEN	03/24/14					
CHECKED BY	E. QUINN	03/24/14					
PROJ. ENGR.	J. PEREZ	03/24/14					
REGION ADM.	K. DAYTON	03/24/14	04/25/14	AD1 - REVISED QTY	SM		
		DATE	DATE	REVISION	BY		

REGION NO.	STATE	FED. AID PROJ. NO.
10	WASH	
JOB NUMBER 12C501		
CONTRACT NO.		

Washington State Department of Transportation

I-5
M ST TO PORTLAND AVE - HOV

STRUCTURE NOTES - TEMPORARY DRAINAGE

TNTDR 7

SHEET 619 OF 1763 SHEETS

STRUCTURE NOTES - TEMPORARY DRAINAGE

NOTE:
THE FIRST NUMBER OF THE "CODE DESIGNATION" BELOW REFERS TO THE SHEET NO. OR THE SHEET REFERENCE NO. SHOWING THE DRAINAGE FEATURE.

THE SECOND NUMBER REFERS TO THE DRAINAGE FEATURE FOUND ON THAT SHEET.

CODE	LOCATION ⩔ \ UNIT OF MEASURE ⩥	REMOVING DRAINAGE STRUCTURE	REMOVING DRAINAGE PIPE	CONCRETE INLET	GRATE INLET TYPE 2	UNDERDRAIN PIPE 6 IN. DIAM.	TESTING STORM SEWER PIPE	SCHEDULE A STORM SEWER PIPE 12 IN. DIAM.	SCHEDULE A STORM SEWER PIPE 24 IN. DIAM.	TEMPORARY CURB	TEMPORARY CONC. BARRIER TYPE 2 WITH SCUPPER	SEE GENERAL NOTES
		EACH	L.F.	EACH	EACH	L.F.	L.F.	L.F.	L.F.	L.F.	L.F.	
TDR4-339	TSSB1 47+00 (3.0 LT) TO TSSB1 56+00 (4.5 LT)										897	15, 16
TDR4-340	I5SB 531+38 (56.4 LT)	1		1								2, 9, 11
TDR4-341	I5SB 530+75 (38.5 LT) TO I5SB 531+00 (39.4 LT)	1	25		1		25	25				3, 9, 10
TDR4-342	I5SB 531+00 (39.4 LT) TO I5SB 531+20 (40.0 LT)	1	20		1		20	20				3, 9, 10
TDR4-343	I5SB 531+20 (40.0 LT) TO I5SB 531+37 (37.9 LT)	1	17		1		17	17				3, 8, 9, 10
TDR4-344	NOT USED											
TDR4-345	NOT USED											
TDR4-346	NOT USED											
TDR4-347	I5NB 134+78 (12.4 RT)	1			1							3, 9, 11
TDR4-348	TCD2 36+35 (15.1 RT) TO TCD2 48+94 (15.0 RT)										1274	15, 16
TDR4-349	I5SB 531+00 (13.0 LT) TO I5SB 543+50 (8.0 LT)									1253		19
TDR4-350	TPSSB 68+35 (3.1 RT) TO TPSSB 71+55 (3.0 RT)										320	15, 16
TDR4-351	SSB 93+83 (25.6 LT) TO SSB 96+95 (50.8 LT)									320		19
TDR4-352	NSB 72+53 (5.0 RT) TO NSB 74+15 (5.0 RT)										163	15, 16
TDR4-353	NSB 72+53 (7.0 RT) TO NSB 74+15 (7.0 RT)									163		19
TDR4-354	NOT USED											
TDR4-355	NOT USED											
TDR4-425	I5NB 141+86 (62.9 RT) TO I5NB 143+69 (105.8 RT)		185						185			
	SHEET TOTAL	5	247	1	4		62	62	185	1736	2654	

ADD1_P3497_SN_TNTDR.xlsm					
4/30/2014 10:36					
DESIGNED BY	S. MERRYMAN	03/24/14			
ENTERED BY	C. MINTEN	03/24/14			
CHECKED BY	E. QUINN	03/24/14			
PROJ. ENGR.	J. PEREZ	03/24/14			
REGION ADM.	K. DAYTON	03/24/14	04/25/14	AD1 - REVISED QTY	SM
		DATE	DATE	REVISION	BY

REGION NO.	STATE	FED. AID PROJ. NO.
10	WASH	
JOB NUMBER 12C501		
CONTRACT NO.		

Washington State Department of Transportation

I-5
M ST TO PORTLAND AVE - HOV

STRUCTURE NOTES - TEMPORARY DRAINAGE

TNTDR 8

SHEET 620 OF 1763 SHEETS

STRUCTURE NOTES - TEMPORARY DRAINAGE

NOTE:
THE FIRST NUMBER OF THE "CODE DESIGNATION" BELOW REFERS TO THE SHEET NO. OR THE SHEET REFERENCE NO. SHOWING THE DRAINAGE FEATURE.

THE SECOND NUMBER REFERS TO THE DRAINAGE FEATURE FOUND ON THAT SHEET.

CODE	LOCATION ∀ \ UNIT OF MEASURE ➢	STRUCTURE EXCAVATION CLASS B INCL. HAUL	SHORING OR EXTRA EXCAVATION CLASS B	TEMPORARY PLUGGING EXISTING PIPE	CONNECTION TO DRAINAGE STRUCTURE	TRENCH DRAIN SYSTEM	CATCH BASIN TYPE 2 48 IN. DIAM.	SEE GENERAL NOTES
		C.Y.	S.F.	EACH	EACH	L.F.	EACH	
TDR4-339	TSSB1 47+00 (3.0 LT) TO TSSB1 56+00 (4.5 LT)							15, 16
TDR4-340	I5SB 531+38 (56.4 LT)	10	20		1			2, 9, 11
TDR4-341	I5SB 530+75 (38.5 LT) TO I5SB 531+00 (39.4 LT)	20	120					3, 9, 10
TDR4-342	I5SB 531+00 (39.4 LT) TO I5SB 531+20 (40.0 LT)	20	100					3, 9, 10
TDR4-343	I5SB 531+20 (40.0 LT) TO I5SB 531+37 (37.9 LT)	20	90		1			3, 8, 9, 10
TDR4-344	NOT USED							
TDR4-345	NOT USED							
TDR4-346	NOT USED							
TDR4-347	I5NB 134+78 (12.4 RT)	10	30		1			3, 9, 11
TDR4-348	TCD2 36+35 (15.1 RT) TO TCD2 48+94 (15.0 RT)							15, 16
TDR4-349	I5SB 531+00 (13.0 LT) TO I5SB 543+50 (8.0 LT)							19
TDR4-350	TPSSB 68+35 (3.1 RT) TO TPSSB 71+55 (3.0 RT)							15, 16
TDR4-351	SSB 93+83 (25.6 LT) TO SSB 96+95 (50.8 LT)							19
TDR4-352	NSB 72+53 (5.0 RT) TO NSB 74+15 (5.0 RT)							15, 16
TDR4-353	NSB 72+53 (7.0 RT) TO NSB 74+15 (7.0 RT)							19
TDR4-354	NOT USED							
TDR4-355	NOT USED							
TDR4-425	I5NB 141+86 (62.9 RT) TO I5NB 143+69 (105.8 RT)	120	740				1	
	SHEET TOTAL	200	1100		3		1	

ADD1_P3497_SN_TNTDR.xlsm					
4/30/2014 10:36					
DESIGNED BY	S. MERRYMAN	03/24/14			
ENTERED BY	C. MINTEN	03/24/14			
CHECKED BY	E. QUINN	03/24/14			
PROJ. ENGR.	J. PEREZ	03/24/14			
REGION ADM.	K. DAYTON	03/24/14	04/25/14	AD1 QUANTITY UPDATES	SM
		DATE	DATE	REVISION	BY

REGION NO.	STATE	FED. AID PROJ. NO.
10	WASH	
JOB NUMBER 12C501		
CONTRACT NO.		

Washington State Department of Transportation

I-5
M ST TO PORTLAND AVE - HOV

STRUCTURE NOTES - TEMPORARY DRAINAGE

TNTDR 9

SHEET 621 OF 1763 SHEETS

STRUCTURE NOTES - TEMPORARY DRAINAGE

NOTE:
THE FIRST NUMBER OF THE "CODE DESIGNATION" BELOW REFERS TO THE SHEET NO. OR THE SHEET REFERENCE NO. SHOWING THE DRAINAGE FEATURE.

THE SECOND NUMBER REFERS TO THE DRAINAGE FEATURE FOUND ON THAT SHEET.

CODE	LOCATION ⊽ \ UNIT OF MEASURE ⊳			REMOVING DRAINAGE STRUCTURE	REMOVING DRAINAGE PIPE		CONCRETE INLET	GRATE INLET TYPE 2		UNDERDRAIN PIPE 6 IN. DIAM.			TESTING STORM SEWER PIPE	SCHEDULE A STORM SEWER PIPE 12 IN. DIAM.	SCHEDULE A STORM SEWER PIPE 24 IN. DIAM.		TEMPORARY CURB	TEMPORARY CONC. BARRIER TYPE 2 WITH SCUPPER				SEE GENERAL NOTES
				EACH	L.F.		EACH	EACH		L.F.			L.F.	L.F.	L.F.		L.F.	L.F.				
TDR5-356	I5NB 147+52 (157.5 LT) TO I5NB 148+98 (78.8 RT)																					14, 23
TDR5-357	I5NB 148+78 (66.9 LT) TO I5NB 149+79 (42.2 RT)																					14, 24
TDR5-358	NBS 12+95 (30.7 LT) TO NBS 13+81 (155.4 LT)																					14, 25
TDR5-359	NBS 14+75 (13.4 RT) TO NBS 16+15 (15.3 RT)																					14, 22
TDR5-360	MDSI5 3432+78 (10.1 LT) TO MDSI5 3437+28 (9.0 LT)																	450				15, 16
TDR5-361	I5NB 144+63 (6.4 RT)																					
TDR5-362	TNB4 57+17 (3.0 LT) TO TNB4 79+17 (3.1 LT)																	2200				15, 16
TDR5-363	TCD1 53+49 (29.0 LT) TO TCD1 53+68 (29.0 LT)																	19				15, 16
TDR5-364	TCD1 55+68 (28.2 LT) TO TCD1 67+75 (24.7 LT)																	1200				15, 16
TDR5-365	I5NB 154+71 (13.0 LT) TO I5NB 170+00 (5.4 RT)																1569					19
TDR5-366	I5SB 542+73 (17.2 RT) TO I5SB 543+00 (16.9 RT)			1	6		1						6	6								2, 8, 9, 10
TDR5-367	I5SB 543+00 (16.9 RT) TO I5SB 543+44 (16.6 RT)			1	44		1						44	44								2, 9, 10, 11
TDR5-368	I5SB 543+44 (16.1 RT) TO I5SB 543+61 (24.8 RT)			1	19		1						19	19								2, 9, 10
TDR5-369	I5NB 154+78 (26.2 LT) TO I5NB 167+81 (10.9 LT)																1303					19
TDR5-370	I5SB 544+08 (36.8 LT) TO I5SB 544+77 (39.3 LT)																69					19
TDR5-422	TNBS2 21+38 (14.0 RT) TO TNBS2 26+00 (14.0 RT)																	455				15, 16
TDR5-423	NBS 11+39 (3.6 RT) TO NBS 16+12 (17.9 RT)																482					19
TDR5-431	I5SB 543+21 (74.2 RT) TO I5SB 542+83 (125.5 RT)			1	63		1						63	63								2, 8, 9, 10
TDR5-432	I5SB 544+29 (73.3 RT) TO I5SB 543+21 (74.2 RT)			1	107		1						107	107								2, 9, 10
TDR6-371	SBN 59+70 (11.0 LT) TO SBN 61+28 (15.2 LT)																156					19
TDR6-372	TSBN1 10+44 (14.0 LT) TO TSBN1 12+52 (14.0 LT)																	204				15, 16
TDR6-373	SBN 62+88 (2.2 LT) TO TI5SB 11+00 (11.0 LT)																1463					19
TDR6-374	TSBN2 22+33 (7.3 LT) TO TSBN2 28+42 (2.8 LT)																	606				15, 16
	SHEET TOTAL			5	239		5						239	239			5042	5134				

ADD1_P3497_SN_TNTDR.xlsm					REGION NO.	STATE	FED. AID PROJ. NO.
4/30/2014 10:36					10	WASH	
DESIGNED BY	S. MERRYMAN	03/24/14					
ENTERED BY	C. MINTEN	03/24/14			JOB NUMBER		
CHECKED BY	E. QUINN	03/24/14			12C501		
PROJ. ENGR.	J. PEREZ	03/24/14					
REGION ADM.	K. DAYTON	03/24/14	04/25/14	AD1 - QUANTITY UPDATES	SM	CONTRACT NO.	
		DATE	DATE	REVISION	BY		

Washington State Department of Transportation

I-5
M ST TO PORTLAND AVE - HOV

STRUCTURE NOTES - TEMPORARY DRAINAGE

TNTDR
10

SHEET 622 OF 1763 SHEETS

STRUCTURE NOTES - TEMPORARY DRAINAGE

NOTE:
THE FIRST NUMBER OF THE "CODE DESIGNATION" BELOW REFERS TO THE SHEET NO. OR THE SHEET REFERENCE NO. SHOWING THE DRAINAGE FEATURE.

THE SECOND NUMBER REFERS TO THE DRAINAGE FEATURE FOUND ON THAT SHEET.

CODE	LOCATION ⊽ \ UNIT OF MEASURE >			STRUCTURE EXCAVATION CLASS B INCL. HAUL	SHORING OR EXTRA EXCAVATION CLASS B		TEMPORARY PLUGGING EXISTING PIPE	CONNECTION TO DRAINAGE STRUCTURE		TRENCH DRAIN SYSTEM		CATCH BASIN TYPE 2 48 IN. DIAM.										SEE GENERAL NOTES
				C.Y.	S.F.		EACH	EACH		L.F.		EACH										
TDR5-356	I5NB 147+52 (157.5 LT) TO I5NB 148+98 (78.8 RT)																					14, 23
TDR5-357	I5NB 148+78 (66.9 LT) TO I5NB 149+79 (42.2 RT)																					14, 24
TDR5-358	NBS 12+95 (30.7 LT) TO NBS 13+81 (155.4 LT)																					14, 25
TDR5-359	NBS 14+75 (13.4 RT) TO NBS 16+15 (15.3 RT)																					14, 22
TDR5-360	MDSI5 3432+78 (10.1 LT) TO MDSI5 3437+28 (9.0 LT)																					15, 16
TDR5-361	I5NB 144+63 (6.4 RT)						1															
TDR5-362	TNB4 57+17 (3.0 LT) TO TNB4 79+17 (3.1 LT)																					15, 16
TDR5-363	TCD1 53+49 (29.0 LT) TO TCD1 53+68 (29.0 LT)																					15, 16
TDR5-364	TCD1 55+68 (28.2 LT) TO TCD1 67+75 (24.7 LT)																					15, 16
TDR5-365	I5NB 154+71 (13.0 LT) TO I5NB 170+00 (5.4 RT)																					19
TDR5-366	I5SB 542+73 (17.2 RT) TO I5SB 543+00 (16.9 RT)			10	50			1														2, 8, 9, 10
TDR5-367	I5SB 543+00 (16.9 RT) TO I5SB 543+44 (16.6 RT)			30	220			1														2, 9, 10, 11
TDR5-368	I5SB 543+44 (16.1 RT) TO I5SB 543+61 (24.8 RT)			60	450																	2, 9, 10
TDR5-369	I5NB 154+78 (26.2 LT) TO I5NB 167+81 (10.9 LT)																					19
TDR5-370	I5SB 544+08 (36.8 LT) TO I5SB 544+77 (39.3 LT)																					19
TDR5-422	TNBS2 21+38 (14.0 RT) TO TNBS2 26+00 (14.0 RT)																					15, 16
TDR5-423	NBS 11+39 (3.6 RT) TO NBS 16+12 (17.9 RT)																					19
TDR5-431	I5SB 543+21 (74.2 RT) TO I5SB 542+83 (125.5 RT)			40	250			1														2, 8, 9, 10
TDR5-432	I5SB 544+29 (73.3 RT) TO I5SB 543+21 (74.2 RT)			60	430																	2, 9, 10
TDR6-371	SBN 59+70 (11.0 LT) TO SBN 61+28 (15.2 LT)																					19
TDR6-372	TSBN1 10+44 (14.0 LT) TO TSBN1 12+52 (14.0 LT)																					15, 16
TDR6-373	SBN 62+88 (2.2 LT) TO TI5SB 11+00 (11.0 LT)																					19
TDR6-374	TSBN2 22+33 (7.3 LT) TO TSBN2 28+42 (2.8 LT)																					15, 16
	SHEET TOTAL			200	1400		1	3														

ADD1_P3497_SN_TNTDR.xlsm					REGION NO.	STATE	FED. AID PROJ. NO.
4/30/2014 10:36					10	WASH	
DESIGNED BY	S. MERRYMAN	03/24/14					
ENTERED BY	C. MINTEN	03/24/14					
CHECKED BY	E. QUINN	03/24/14			JOB NUMBER		
PROJ. ENGR.	J. PEREZ	03/24/14			12C501		
REGION ADM.	K. DAYTON	03/24/14	04/25/14	AD1 - QUANTITY UPDATES	CONTRACT NO.		
		DATE	DATE	REVISION	BY		

Washington State Department of Transportation

I-5
M ST TO PORTLAND AVE - HOV

STRUCTURE NOTES - TEMPORARY DRAINAGE

TNTDR
11

SHEET
623
OF
1763
SHEETS

STRUCTURE NOTES - TEMPORARY DRAINAGE

NOTE:
THE FIRST NUMBER OF THE "CODE DESIGNATION" BELOW REFERS TO THE SHEET NO. OR THE SHEET REFERENCE NO. SHOWING THE DRAINAGE FEATURE.

THE SECOND NUMBER REFERS TO THE DRAINAGE FEATURE FOUND ON THAT SHEET.

CODE	LOCATION ⊽ \ UNIT OF MEASURE ⊳			REMOVING DRAINAGE STRUCTURE	REMOVING DRAINAGE PIPE		CONCRETE INLET	GRATE INLET TYPE 2		UNDERDRAIN PIPE 6 IN. DIAM.			TESTING STORM SEWER PIPE	SCHEDULE A STORM SEWER PIPE 12 IN. DIAM.	SCHEDULE A STORM SEWER PIPE 24 IN. DIAM.		TEMPORARY CURB	TEMPORARY CONC. BARRIER TYPE 2 WITH SCUPPER				SEE GENERAL NOTES
				EACH	L.F.		EACH	EACH		L.F.			L.F.	L.F.	L.F.		L.F.	L.F.				
TDR7-375	TNB1 86+88 (68.5 RT) TO TNB1 107+51 (45.0 RT)																	2059				15, 16
TDR7-376	TCD1 60+40 (2.9 RT) TO TCD1 67+15 (3.0 RT)																	676				15, 16
TDR7-377	I5SB 560+99 (57.0 LT) TO I5SB 565+37 (35.5 LT)																437					19
TDR7-378	TNNB1 12+80 (14.0 RT) to TNNB1 14+88 (14.0 RT)																	208				15, 16
TDR7-379	SNB 25+23 (28.3 RT) TO SNB 27+20 (8.1 RT)																195					19
TDR7-380	NOT USED																					
TDR7-381	I5NB 165+73 (24.1 LT) TO I5NB 175+16 (13.6 LT)																944					19
TDR7-382	I5NB 167+65 (13.5 RT) TO I5NB 169+88 (13.5 RT)																223					19
TDR7-383	TNB4 77+43 (39.0 RT) TO TNB4 79+42 (34.7 RT)																	200				15, 16
TDR7-384	I5NB 158+74 (14.0 LT)			1				1														3, 9, 11
TDR7-385	I5NB 161+48 (16.5 LT)			1				1														3, 9, 11
TDR7-386	I5NB 161+95 (15.8 LT)			1				1														3, 9, 11
TDR7-387	I5NB 163+85 (13.8 LT)			1				1														3, 9, 11
TDR7-388	I5NB 166+86 (13.8 LT)			1				1														3, 9, 11
TDR7-389	TSBN2 28+41 (16.0 RT) TO TSBN2 29+59 (16.0 RT)																	118				15, 16
TDR7-390	SBN 68+84 (31.0 RT) TO SBN 70+05 (25.3 RT)																131					19
TDR7-391	TSBN2 30+54 (3.2 LT) TO TSBN2 35+21 (6.3 LT)																	467				15, 16
TDR7-392	I5NB 165+06 (5.7 RT) TO TI5NB 111+12 (36.9 RT)																2142					19
TDR7-412	NOT USED																					
TDR7-413	NOT USED																					
TDR7-414	SNB 25+40 (3.4 RT) TO SNB 26+23 (1.1 LT)																83					19
TDR7-416	NOT USED																					
TDR7-417	SNB 28+21 (0.5 LT) TO SNB 28+28 (5.8 LT)																14					19
TDR7-418	TNB1 83+39 (106.6 RT) TO TNB1 86+88 (68.5 RT)																	365				15, 16
TDR7-419	I5NB 161+53 (50.1 RT) TO I5NB 166+89 (15.1 RT)																549					19
TDR7-420	TSNB3 30+97 (3.0 RT) TO TSNB3 32+41 (3.0 RT)																	145				15, 16
TDR7-421	SNB 28+21 (23.7 LT) TO SNB 30+69 (28.2 LT)																253					19
	SHEET TOTAL			5				5									4971	4238				

ADD1_P3497_SN_TNTDR.xlsm					REGION NO.	STATE	FED. AID PROJ. NO.
4/30/2014 10:36					10	WASH	
DESIGNED BY	S. MERRYMAN	03/24/14			JOB NUMBER		
ENTERED BY	C. MINTEN	03/24/14			12C501		
CHECKED BY	E. QUINN	03/24/14			CONTRACT NO.		
PROJ. ENGR.	J. PEREZ	03/24/14					
REGION ADM.	K. DAYTON	03/24/14	04/25/14	AD1 - QTY UPDATES	SM		
		DATE	DATE	REVISION	BY		

Washington State Department of Transportation

I-5
M ST TO PORTLAND AVE - HOV

STRUCTURE NOTES - TEMPORARY DRAINAGE

TNTDR
12

SHEET 624 OF 1763 SHEETS

STRUCTURE NOTES - TEMPORARY DRAINAGE

NOTE:
THE FIRST NUMBER OF THE "CODE DESIGNATION" BELOW REFERS TO THE SHEET NO. OR THE SHEET REFERENCE NO. SHOWING THE DRAINAGE FEATURE.

THE SECOND NUMBER REFERS TO THE DRAINAGE FEATURE FOUND ON THAT SHEET.

CODE	LOCATION ⤵ \ UNIT OF MEASURE ➢			STRUCTURE EXCAVATION CLASS B INCL. HAUL	SHORING OR EXTRA EXCAVATION CLASS B		TEMPORARY PLUGGING EXISTING PIPE	CONNECTION TO DRAINAGE STRUCTURE		TRENCH DRAIN SYSTEM		CATCH BASIN TYPE 2 48 IN. DIAM.										SEE GENERAL NOTES
				C.Y.	S.F.		EACH	EACH		L.F.		EACH										
TDR7-375	TNB1 86+88 (68.5 RT) TO TNB1 107+51 (45.0 RT)																					15, 16
TDR7-376	TCD1 60+40 (2.9 RT) TO TCD1 67+15 (3.0 RT)																					15, 16
TDR7-377	I5SB 560+99 (57.0 LT) TO I5SB 565+37 (35.5 LT)																					19
TDR7-378	TNNB1 12+80 (14.0 RT) to TNNB1 14+88 (14.0 RT)																					15, 16
TDR7-379	SNB 25+23 (28.3 RT) TO SNB 27+20 (8.1 RT)																					19
TDR7-380	NOT USED																					
TDR7-381	I5NB 165+73 (24.1 LT) TO I5NB 175+16 (13.6 LT)																					19
TDR7-382	I5NB 167+65 (13.5 RT) TO I5NB 169+88 (13.5 RT)																					19
TDR7-383	TNB4 77+43 (39.0 RT) TO TNB4 79+42 (34.7 RT)																					15, 16
TDR7-384	I5NB 158+74 (14.0 LT)			10	30			1														3, 9, 11
TDR7-385	I5NB 161+48 (16.5 LT)			10	30			1														3, 9, 11
TDR7-386	I5NB 161+95 (15.8 LT)			10	30			1														3, 9, 11
TDR7-387	I5NB 163+85 (13.8 LT)			10	30			1														3, 9, 11
TDR7-388	I5NB 166+86 (13.8 LT)			10	30			1														3, 9, 11
TDR7-389	TSBN2 28+41 (16.0 RT) TO TSBN2 29+59 (16.0 RT)																					15, 16
TDR7-390	SBN 68+84 (31.0 RT) TO SBN 70+05 (25.3 RT)																					19
TDR7-391	TSBN2 30+54 (3.2 LT) TO TSBN2 35+21 (6.3 LT)																					15, 16
TDR7-392	I5NB 165+06 (5.7 RT) TO TI5NB 111+12 (36.9 RT)																					19
TDR7-412	NOT USED																					
TDR7-413	NOT USED																					
TDR7-414	SNB 25+40 (3.4 RT) TO SNB 26+23 (1.1 LT)																					19
TDR7-416	NOT USED																					
TDR7-417	SNB 28+21 (0.5 LT) TO SNB 28+28 (5.8 LT)																					19
TDR7-418	TNB1 83+39 (106.6 RT) TO TNB1 86+88 (68.5 RT)																					15, 16
TDR7-419	I5NB 161+53 (50.1 RT) TO I5NB 166+89 (15.1 RT)																					19
TDR7-420	TSNB3 30+97 (3.0 RT) TO TSNB3 32+41 (3.0 RT)																					15, 16
TDR7-421	SNB 28+21 (23.7 LT) TO SNB 30+69 (28.2 LT)																					19
	SHEET TOTAL			50	150			5														

ADD1_P3497_SN_TNTDR.xlsm					REGION NO.	STATE	FED. AID PROJ. NO.
4/30/2014 10:36					10	WASH	
DESIGNED BY	S. MERRYMAN	03/24/14					
ENTERED BY	C. MINTEN	03/24/14			JOB NUMBER		
CHECKED BY	E. QUINN	03/24/14			12C501		
PROJ. ENGR.	J. PEREZ	03/24/14					
REGION ADM.	K. DAYTON	03/24/14	04/25/14	AD1 - ADDED BID ITEM	SM	CONTRACT NO.	
		DATE	DATE	REVISION	BY		

Washington State Department of Transportation

I-5
M ST TO PORTLAND AVE - HOV

STRUCTURE NOTES - TEMPORARY DRAINAGE

TNTDR
13

SHEET 625 OF 1763 SHEETS

STRUCTURE NOTES - TEMPORARY DRAINAGE

NOTE:
THE FIRST NUMBER OF THE "CODE DESIGNATION" BELOW REFERS TO THE SHEET NO. OR THE SHEET REFERENCE NO. SHOWING THE DRAINAGE FEATURE.

THE SECOND NUMBER REFERS TO THE DRAINAGE FEATURE FOUND ON THAT SHEET.

CODE	LOCATION ⊽ \ UNIT OF MEASURE ⊳			REMOVING DRAINAGE STRUCTURE	REMOVING DRAINAGE PIPE		CONCRETE INLET	GRATE INLET TYPE 2		UNDERDRAIN PIPE 6 IN. DIAM.			TESTING STORM SEWER PIPE	SCHEDULE A STORM SEWER PIPE 12 IN. DIAM.	SCHEDULE A STORM SEWER PIPE 24 IN. DIAM.		TEMPORARY CURB	TEMPORARY CONC. BARRIER TYPE 2 WITH SCUPPER				SEE GENERAL NOTES
				EACH	L.F.		EACH	EACH		L.F.			L.F.	L.F.	L.F.		L.F.	L.F.				
TDR8-393	I5SB 567+69 (44.0 LT)			1				1														3, 9, 11
TDR8-394	I5SB 567+67 (65.7 RT)			1				1														3, 9, 11
TDR8-395	I5NB 169+89 (1.7 LT)			1				1														3, 9, 11
TDR8-396	I5SB 570+68 (30.5 LT)			1				1														3, 9, 11
TDR8-397	I5SB 567+69 (32.9 LT)			1				1														3, 9, 11
TDR8-398	TI5SB 11+00 (38.9 LT) TO TI5SB 20+80 (41.8 LT)																980					19
TDR8-402	MSDI5 3457+35 (0.6 RT) TO MSDI5 3459+86 (1.7 RT)																					20
TDR8-403	MSDI5 3459+89 (0.6 RT) TO MSDI5 3462+35 (1.9 RT)																					20
TDR8-404	MSDI5 3462+38 (0.7 RT) TO MSDI5 3464+85 (1.9 RT)																					20
TDR8-405	MSDI5 3464+88 (0.8 RT) TO MSDI5 3467+36 (1.9 RT)																					20
TDR8-406	NOT USED																					
TDR8-407	NOT USED																					
TDR8-408	NOT USED																					
TDR8-409	NOT USED																					
TDR8-410	NOT USED																					
TDR8-411	NOT USED																					
TDR8-415	TCD1 73+51 (80.8 LT) TO TCD1 84+10 (38.9 LT)																	1057				15, 16
TDR8-426	NOT USED																					
TDR8-427	NOT USED																					
TDR8-428	TCD1 81+75 (3.0 RT) TO TCD1 95+06 (3.0 RT)																	1330				15, 16
TDR8-433	NOT USED																					
TDR9-429	I5SB 584+65 (74.7 LT) TO I5SB 586+11 (76.8 LT)																148					19
TDR9-430	I5SB 586+16 (59.9 LT) TO I5SB 591+73 (50.2 LT)																570					19
	SHEET TOTAL			5				5									1698	2387				

ADD1_P3497_SN_TNTDR.xlsm					REGION NO.	STATE	FED. AID PROJ. NO.
4/30/2014 10:36					10	WASH	
DESIGNED BY	S. MERRYMAN	03/24/14			JOB NUMBER		
ENTERED BY	C. MINTEN	03/24/14			12C501		
CHECKED BY	E. QUINN	03/24/14					
PROJ. ENGR.	J. PEREZ	03/24/14					
REGION ADM.	K. DAYTON	03/24/14	04/25/14	AD1 REVISED BID ITEM NAME	CAM	CONTRACT NO.	
		DATE	DATE	REVISION	BY		

Washington State Department of Transportation

I-5
M ST TO PORTLAND AVE - HOV

STRUCTURE NOTES - TEMPORARY DRAINAGE

TNTDR 14

SHEET 626 OF 1763 SHEETS

STRUCTURE NOTES - TEMPORARY DRAINAGE

NOTE:
THE FIRST NUMBER OF THE "CODE DESIGNATION" BELOW REFERS TO THE SHEET NO. OR THE SHEET REFERENCE NO. SHOWING THE DRAINAGE FEATURE.

THE SECOND NUMBER REFERS TO THE DRAINAGE FEATURE FOUND ON THAT SHEET.

CODE	LOCATION ∨ \ UNIT OF MEASURE >			STRUCTURE EXCAVATION CLASS B INCL. HAUL	SHORING OR EXTRA EXCAVATION CLASS B		TEMPORARY PLUGGING EXISTING PIPE	CONNECTION TO DRAINAGE STRUCTURE		TRENCH DRAIN SYSTEM		CATCH BASIN TYPE 2 48 IN. DIAM.										SEE GENERAL NOTES
				C.Y.	S.F.		EACH	EACH		L.F.		EACH										
TDR8-393	I5SB 567+69 (44.0 LT)			10	30			1														3, 9, 11
TDR8-394	I5SB 567+67 (65.7 RT)			10	30			1														3, 9, 11
TDR8-395	I5NB 169+89 (1.7 LT)			10	30			1														3, 9, 11
TDR8-396	I5SB 570+68 (30.5 LT)			10	30			1														3, 9, 11
TDR8-397	I5SB 567+69 (32.9 LT)			10	30			1														3, 9, 11
TDR8-398	TI5SB 11+00 (38.9 LT) TO TI5SB 20+80 (41.8 LT)																					19
TDR8-402	MSDI5 3457+35 (0.6 RT) TO MSDI5 3459+86 (1.7 RT)									251												20
TDR8-403	MSDI5 3459+89 (0.6 RT) TO MSDI5 3462+35 (1.9 RT)									247												20
TDR8-404	MSDI5 3462+38 (0.7 RT) TO MSDI5 3464+85 (1.9 RT)									247												20
TDR8-405	MSDI5 3464+88 (0.8 RT) TO MSDI5 3467+36 (1.9 RT)									248												20
TDR8-406	NOT USED																					
TDR8-407	NOT USED																					
TDR8-408	NOT USED																					
TDR8-409	NOT USED																					
TDR8-410	NOT USED																					
TDR8-411	NOT USED																					
TDR8-415	TCD1 73+51 (80.8 LT) TO TCD1 84+10 (38.9 LT)																					15, 16
TDR8-426	NOT USED																					
TDR8-427	NOT USED																					
TDR8-428	TCD1 81+75 (3.0 RT) TO TCD1 95+06 (3.0 RT)																					15, 16
TDR8-433	NOT USED																					
TDR9-429	I5SB 584+65 (74.7 LT) TO I5SB 586+11 (76.8 LT)																					19
TDR9-430	I5SB 586+16 (59.9 LT) TO I5SB 591+73 (50.2 LT)																					19
	SHEET TOTAL			50	150			5		993												

ADD1_P3497_SN_TNTDR.xlsm							
4/30/2014 10:36							
DESIGNED BY	S. MERRYMAN	03/24/14					
ENTERED BY	C. MINTEN	03/24/14					
CHECKED BY	E. QUINN	03/24/14					
PROJ. ENGR.	J. PEREZ	03/24/14					
REGION ADM.	K. DAYTON	03/24/14	04/25/14	AD1 - ADDED BID ITEM	SM		
		DATE	DATE	REVISION	BY		

REGION NO.	STATE	FED. AID PROJ. NO.
10	WASH	

JOB NUMBER
12C501

CONTRACT NO.

Washington State Department of Transportation

I-5
M ST TO PORTLAND AVE - HOV

STRUCTURE NOTES - TEMPORARY DRAINAGE

TNTDR
15

SHEET
627
OF
1763
SHEETS

STRUCTURE NOTES - TEMPORARY DRAINAGE

NOTE:
THE FIRST NUMBER OF THE "CODE DESIGNATION" BELOW REFERS TO THE SHEET NO. OR THE SHEET REFERENCE NO. SHOWING THE DRAINAGE FEATURE.

THE SECOND NUMBER REFERS TO THE DRAINAGE FEATURE FOUND ON THAT SHEET.

CODE	LOCATION ∨ \ UNIT OF MEASURE >			REMOVING DRAINAGE STRUCTURE	REMOVING DRAINAGE PIPE		CONCRETE INLET	GRATE INLET TYPE 2		UNDERDRAIN PIPE 6 IN. DIAM.			TESTING STORM SEWER PIPE	SCHEDULE A STORM SEWER PIPE 12 IN. DIAM.	SCHEDULE A STORM SEWER PIPE 24 IN. DIAM.		TEMPORARY CURB	TEMPORARY CONC. BARRIER TYPE 2 WITH SCUPPER				SEE GENERAL NOTES
				EACH	L.F.		EACH	EACH		L.F.			L.F.	L.F.	L.F.		L.F.	L.F.				
	NO STRUCTURE CODES ON THIS SHEET																					
	THIS SHEET INCLUDES THE PROJECT TOTALS																					
	SHEET TOTAL																					
	PROJECT TOTAL			25	572		6	18		1374			387	387	185		29558	42245				

ADD1_P3497_SN_TNTDR.xlsm					REGION NO.	STATE	FED. AID PROJ. NO.	
4/30/2014 10:36					10	WASH		
DESIGNED BY	S. MERRYMAN	03/24/14						
ENTERED BY	C. MINTEN	03/24/14						
CHECKED BY	E. QUINN	03/24/14			JOB NUMBER			
PROJ. ENGR.	J. PEREZ	03/24/14			12C501			
REGION ADM.	K. DAYTON	03/24/14	04/25/14	AD1 - UPDATED PROJECT TOTALS	CONTRACT NO.			
		DATE	DATE	REVISION				
					BY			

Washington State Department of Transportation

I-5
M ST TO PORTLAND AVE - HOV

STRUCTURE NOTES - TEMPORARY DRAINAGE

TNTDR 16

SHEET 628 OF 1763 SHEETS

STRUCTURE NOTES - TEMPORARY DRAINAGE

NOTE:
THE FIRST NUMBER OF THE "CODE DESIGNATION" BELOW REFERS TO THE SHEET NO. OR THE SHEET REFERENCE NO. SHOWING THE DRAINAGE FEATURE.

THE SECOND NUMBER REFERS TO THE DRAINAGE FEATURE FOUND ON THAT SHEET.

CODE	LOCATION ⊽ \ UNIT OF MEASURE ⊳			STRUCTURE EXCAVATION CLASS B INCL. HAUL	SHORING OR EXTRA EXCAVATION CLASS B		TEMPORARY PLUGGING EXISTING PIPE	CONNECTION TO DRAINAGE STRUCTURE		TRENCH DRAIN SYSTEM		CATCH BASIN TYPE 2 48 IN DIAM.										SEE GENERAL NOTES
				C.Y.	S.F.		EACH	EACH		L.F.		EACH										
	NO STRUCTURE CODES ON THIS SHEET																					
	THIS SHEET INCLUDES THE PROJECT TOTALS																					
	SHEET TOTAL																					
	PROJECT TOTAL			650	3650		1	20		993		2										

ADD1_P3497_SN_TNTDR.xlsm					REGION NO.	STATE	FED. AID PROJ. NO.
4/30/2014 10:36					10	WASH	
DESIGNED BY	S. MERRYMAN	03/24/14					
ENTERED BY	C. MINTEN	03/24/14					
CHECKED BY	E. QUINN	03/24/14			JOB NUMBER 12C501		
PROJ. ENGR.	J. PEREZ	03/24/14					
REGION ADM.	K. DAYTON	03/24/14	04/25/14	AD1 - UPDATED PROJECT TOTALS	SM	CONTRACT NO.	
		DATE	DATE	REVISION	BY		

Washington State Department of Transportation

I-5
M ST TO PORTLAND AVE - HOV

STRUCTURE NOTES - TEMPORARY DRAINAGE

TNTDR 17

SHEET TDR1A

DRAINAGE CODE	CONSTRUCTION STAGE									
	1	1A	1B	1C	1D	2	3A	3B	4	5
	-	-	-	-	-	-	-	-	-	-

SHEET TDR1

DRAINAGE CODE	CONSTRUCTION STAGE									
	1	1A	1B	1C	1D	2	3A	3B	4	5
TDR1-303	-	-	F	-	-	-	-	-	-	-
TDR1-305	-	-	-	F	-	-	-	-	-	-
TDR1-307	-	-	F	-	-	-	-	-	-	-

SHEET TDR2

DRAINAGE CODE	CONSTRUCTION STAGE									
	1	1A	1B	1C	1D	2	3A	3B	4	5
TDR2-312	-	-	-	N	R	-	-	-	-	-
TDR2-317	-	-	-	-	-	-	-	-	-	F
TDR2-399	-	-	N	-	-	-	-	-	-	-
TDR2-400	-	N	-	-	-	-	-	-	-	-

SHEET TDR3

DRAINAGE CODE	CONSTRUCTION STAGE									
	1	1A	1B	1C	1D	2	3A	3B	4	5
TDR3-322	-	-	-	-	-	-	N	-	R	-
TDR3-323	-	-	-	-	-	-	N	-	R	-
TDR3-324	-	-	-	N/R	-	-	-	-	-	-
TDR3-330	-	-	-	-	-	F	-	-	-	-
TDR3-332	-	-	-	-	-	-	F	-	-	-
TDR3-333	-	-	-	-	-	-	F	-	-	-
TDR3-334	-	-	-	-	-	-	F	-	-	-
TDR3-337	-	-	-	-	-	-	-	-	F	-
TDR3-338	-	-	-	-	-	-	N	-	-	R
TDR3-401	-	N/R	-	-	-	-	-	-	-	-

SHEET TDR4

DRAINAGE CODE	CONSTRUCTION STAGE									
	1	1A	1B	1C	1D	2	3A	3B	4	5
TDR4-340	-	-	N/R	-	-	-	-	-	-	-
TDR4-341	-	-	-	-	-	-	-	N/R	-	-
TDR4-342	-	-	-	-	-	-	-	N/R	-	-
TDR4-343	-	-	-	-	-	-	-	N/R	-	-
TDR4-347	-	-	-	-	-	N	-	-	R	-
TDR4-349	-	-	-	-	-	-	-	F	-	-
TDR4-351	-	-	F	-	-	-	-	-	-	-
TDR4-353	-	-	-	-	-	-	F	-	-	-
TDR4-355	NOT USED									
TDR4-425	-	N	-	-	R	-	-	-	-	-

SHEET TDR5

DRAINAGE CODE	CONSTRUCTION STAGE									
	1	1A	1B	1C	1D	2	3A	3B	4	5
TDR5-356	-	N/R	-	-	-	-	-	-	-	-
TDR5-357	-	N/R	-	-	-	-	-	-	-	-
TDR5-358	-	N/R	-	-	-	-	-	-	-	-
TDR5-359	-	N	-	-	R	-	-	-	-	-
TDR5-361	-	-	-	-	-	N/R	-	-	-	-
TDR5-365	-	-	-	-	-	-	F	-	-	-
TDR5-366	-	-	-	-	-	-	N	-	R	-
TDR5-367	-	-	-	-	-	-	N	-	R	-
TDR5-368	-	-	-	-	-	-	N	-	R	-
TDR5-369	-	-	-	-	-	-	-	-	F	-
TDR5-370	-	-	-	-	F	-	-	-	-	-
TDR5-423	-	-	-	-	N/R	-	-	-	-	-
TDR5-431	-	-	-	-	-	-	N/R	-	-	-
TDR5-432	-	-	-	-	-	-	N/R	-	-	-

SHEET TDR6

DRAINAGE CODE	CONSTRUCTION STAGE									
	1	1A	1B	1C	1D	2	3A	3B	4	5
TDR6-371	-	-	-	-	-	-	F	-	-	-
TDR6-373	-	-	-	-	-	-	F	-	-	-

SHEET TDR7

DRAINAGE CODE	CONSTRUCTION STAGE									
	1	1A	1B	1C	1D	2	3A	3B	4	5
TDR7-377	-	-	-	-	-	-	F	-	-	-
TDR7-379	-	-	-	-	-	F	-	-	-	-
TDR7-381	-	-	-	-	-	-	F	-	-	-
TDR7-382	-	-	-	-	-	F	-	-	-	-
TDR7-384	-	-	-	-	-	-	N	-	R	-
TDR7-385	-	-	-	-	-	-	N	-	R	-
TDR7-386	-	-	-	-	-	-	N	-	R	-
TDR7-387	-	-	-	-	-	-	N	-	R	-
TDR7-388	-	-	-	-	-	-	N	-	R	-
TDR7-390	-	-	-	-	-	-	F	-	-	-
TDR7-392	-	F	-	-	-	-	-	-	-	-
TDR7-414	-	-	-	-	-	N/R	-	-	-	-
TDR7-417	-	-	-	-	-	N/R	-	-	-	-
TDR7-419	-	-	-	-	-	N/R	-	-	-	-
TDR7-421	-	-	-	-	-	N/R	-	-	-	-

SHEET TDR8

DRAINAGE CODE	CONSTRUCTION STAGE									
	1	1A	1B	1C	1D	2	3A	3B	4	5
TDR8-393	-	-	-	-	-	-	N/R	-	-	-
TDR8-394	-	-	-	-	-	-	N	-	R	-
TDR8-395	-	-	-	-	-	-	N	-	R	-
TDR8-396	-	-	-	-	-	-	N/R	-	-	-
TDR8-397	-	-	-	-	-	-	N/R	-	-	-
TDR8-398						F				
TDR8-402	N	-	-	-	-	-	-	-	R	-
TDR8-403	N	-	-	-	-	-	-	-	R	-
TDR8-404	N	-	-	-	-	-	-	-	R	-
TDR8-405	N	-	-	-	-	-	-	-	R	-

SHEET TDR9

DRAINAGE CODE	CONSTRUCTION STAGE									
	1	1A	1B	1C	1D	2	3A	3B	4	5
TDR9-429	-	-	-	-	-	-	F	-	-	-
TDR9-430	-	-	-	-	-	-	F	-	-	-

LEGEND

F - FUNCTIONAL
N - NEW INSTALLATION
R - REMOVE
AJ - ADJUST
AB - ABANDON
- NO WORK TO BE PERFORMED

FILE NAME	PW:_XL3497\PS&E Sheets\Drainage Staging Table Temporary\ADD1_P3497_SH_TDRST_001.dgn
TIME	7:48:10 PM
DATE	4/30/2014
PLOTTED BY	MerrymS
DESIGNED BY	C. MINTEN
ENTERED BY	A. SANCHEZ
CHECKED BY	E. QUINN
PROJ. ENGR.	C. MALONEY
REGIONAL ADM.	K. DAYTON

REVISION	DATE	BY
ADD1 - UPDTED DRAINAGE CODES	05/02/2014	SM

REGION NO.	STATE	FED.AID PROJ.NO.
10	WASH	
JOB NUMBER 12C501		
CONTRACT NO.		LOCATION NO. XL3497

P.E. STAMP BOX DATE

P.E. STAMP BOX DATE

Washington State Department of Transportation

I-5
M ST TO PORTLAND AVE - HOV

TEMPORARY STAGED DRAINAGE TABLE

PLAN REF NO TDRST1

SHEET 630 OF 1763 SHEETS

TEMPORARY CONC. BARRIER WITH SCUPPER

DRAINAGE CODE	CONSTRUCTION STAGE										PERMANENT ALIGNMENT BEGIN & END STATIONS	TEMPORARY ALIGNMENT BEGIN & END STATIONS
	1	1A	1B	1C	1D	2	3A	3B	4	5		
TDR1A-301	-	-	-	-	-	F	F	-	-	-	MDSI5 3377+97 (4.3' LT) TO MDSI5 3387+72 (3.1' RT)	TNB3 33+53 (12.5' LT) TO TNB3 43+28 (5.0' LT)
TDR1-302	-	-	F	-	-	-	-	-	-	-	I5SB 501+36 (36.7' LT) TO I5SB 540+36 (182' LT)	TNW1/TNSB 16+40 (3.0' LT) TO TNSB 11+24 (17.3' LT)
TDR1-304	-	-	-	F	-	-	-	-	-	-	I5SB 501+29 (4.4' LT) TO I5SB 527+31 (19.8' LT)	TSB2 71+93 (27.0' LT) TO TSB1 86+35 (36.8' LT)
TDR1-306	-	-	F	-	-	-	-	-	-	-	I5NB 103+52 (9.1' LT) TO I5NB 114+59 (8.4' LT)	TNB2 35+53 (25.1' LT) TO TNB2 46+64 (25.1' LT)
TDR1-308	-	-	-	-	-	-	F	-	-	-	I5SB 500+30 (17.0' RT) TO I5SB 522+33 (84.4' RT)	TSB5 30+10 (17.0' RT) TO TSB5 52+42 (17.0' RT)
TDR1-309	-	-	-	-	-	-	F	-	-	-	I5NB 101+28 (39.4' LT) TO I5NB 124+93 (30.3' RT)	TNB4 11+53 (5.0' LT) TO TNB4 35+17 (0.7' LT)
TDR1-310	-	-	-	-	-	F	-	-	-	-	I5NB 104+02 (39.6' LT)	TNB3 46+00 (5.0' LT)
TDR1-311	-	-	-	-	-	F	-	-	-	-	I5NB 105+85 (39.5' LT)	TNB3 47+80 (5.0' LT)
TDR2-313	-	-	-	-	-	F	F	-	-	-	I5NB 116+72 (68.7' RT) TO I5NB 124+34 (73.7' RT)	TNBN 31+52 (2.0' RT) TO TNBN 39+27 (6.4' RT)
TDR2-314	-	-	-	-	-	-	F	-	-	-	I5NB 116+65 (61.6' RT) TO I5NB 146+90 (39.1' RT)	TNB4 26+86 (51.0' RT) TO TNB4 57+07 (39.0' RT)
TDR2-315	-	-	-	-	-	-	-	-	-	F	I5NB 106+15 (48.1' RT) TO I5NB 115+92 (42.8' RT)	TNCD4 24+60 (5.8' LT) TO TNCD4 34+50 (3.0' LT)
TDR2-316	-	-	-	-	-	-	-	-	-	F	I5NB 118+52 (54.2' RT) TO I5NB 145+31 (34.0' RT)	TNCD4 37+13 (17.0' RT) TO TNB5 85+47 (47.0' RT)
TDR2-318	-	-	-	-	-	F	-	-	-	-	I5NB 107+66 (39.3' LT)	TNB3 49+60 (5.0' LT)
TDR2-319	-	-	-	-	-	F	-	-	-	-	I5NB 109+48 (39.0' LT)	TNB3 51+41 (5.0' LT)
TDR2-320	-	-	-	-	-	F	-	-	-	-	I5NB 111+30 (38.5' LT)	TNB3 53+21 (5.0' LT)
TDR2-321	-	-	-	-	-	F	-	-	-	-	I5NB 116+76 (36.3' LT)	TNB3 58+62 (5.0' LT)
TDR3-327	-	-	-	-	-	F	F	-	-	-	I5NB 127+99 (14.4' RT) TO I5NB 145+84 (51.2' LT)	TNB3 69+80 (40.9' RT) TO TNB1 67+95 (41.0' RT)
TDR3-328	-	-	-	-	-	-	F	-	-	-	I5SB 523+96 (8.4' LT) TO I5SB 533+25 (0.0' LT)	TCD1 28+68 (27.0' LT) TO TCD1 38+00 (26.9' LT)
TDR3-329	-	-	-	-	-	F	-	-	-	-	I5NB 125+75 (17.6' RT) I5NB 127+99 (14.4' RT)	TNB3 67+56 (44.1' RT) TO TNB3 69+80 (40.9' RT)
TDR3-331	-	-	-	-	-	-	F	-	-	-	I5NB 125+55 (14.6' RT) TO I5NB 127+99 (14.4' RT)	TSB5 53+57 (17.2' RT) TO TSB5 56+01 (17.0' RT)
TDR3-335	-	-	-	-	-	-	F	-	-	-	I5SB 529+09 (54.4' LT) TO I5SB 538+59 (101.7' LT)	TSSB5 63+73 (3.0' LT) TO TSSB5 73+36 (3.0' LT)
TDR3-336	-	-	-	-	-	-	-	-	F	-	I5SB 526+51 (8.0' RT) TO 544+18 (8.0' RT)	TSB6 36+31 (15.0' RT) TO TSB6 54+00 (15.0' RT)
TDR4-339	-	-	-	-	-	-	F	-	-	-	I5SB 538+59 (101.7' LT) TO 547+17 (197' LT)	TSSB1 47+00 (3.0' LT) TO TSSB1 56+00 (4.5' LT)
TDR4-348	-	-	-	-	-	-	-	F	-	-	I5SB 531+00 (15.9' LT) TO I5SB 543+52 (16.0' LT)	TCD2 36+35 (15.1' RT) TO TCD2 48+94 (15.0' RT)
TDR4-350	-	-	-	-	-	-	F	-	-	-	SSB 93+82 (27.0' LT) TO SSB 96+95 (52.3' LT)	TPSSB 68+35 (3.1' RT) TO TPSSB 71+55 (3.0' RT)
TDR4-352	-	-	-	-	-	-	F	-	-	-	NSB 72+53 (5.0' RT) TO NSB 74+15 (5.0' RT)	NSB 72+53 (5.0' RT) TO NSB 74+15 (5.0' RT)
TDR5-360	F										MDSI5 3432+77.6 (10.1' LT) TO MDSI5 3437+27.6 (9.0' LT)	TSB3 77+22 (1.8' LT) TO TSB3 81+72 (0.9' LT)
TDR5-362	-	-	-	-	-	-	F	F	F	-	I5NB 147+00 (2.9' LT) TO I5NB 169+00 (4.0' LT)	TNB4 57+17 (3.0' LT) TO TNB4 79+17 (3.1' LT)
TDR5-363	-	-	-	-	-	-	F	-	-	-	I5SB 548+82 (12.0' LT) TO I5SB 549+00 (12.0' LT)	TCD1 53+49 (29.0' LT) TO TCD1 53+68 (29.0' LT)
TDR5-364	-	-	-	-	-	-	F	-	-	-	I5SB 551+00 (11.0' LT) TO I5SB 563+00 (8.0' LT)	TCD1 55+68 (28.2' LT) TO TCD1 67+75 (24.7' LT)
TDR6-372	-	-	-	-	-	-	F	-	-	-	SBN 59+72 (3.2' LT) TO SBN 61+77 (8.1' LT)	TSNB1 10+44 (14.0' LT) TO TSNB1 12+52 (14.0' LT)
TDR6-374	-	-	-	-	-	-	F	-	-	-	SBN 62+88 (2.8' RT) TO SBN 68+84 (5.1' RT)	TSBN2 22+33 (7.3' LT) TO TSBN2 28+42 (2.8' LT)
TDR7-375	-	F	-	-	-	F	-	-	-	-	I5NB 165+06 (1.7' RT) TO TI5NB 111+12 (32.9' RT)	TNB1 86+88 (68.5' RT) TO TNB1 107+51 (45.0' RT)
TDR7-376	-	-	-	-	-	-	F	-	-	-	I5SB 555+69 (19.9' RT) TO I5SB 562+40 (20.0' RT)	TCD1 60+40 (2.9' RT) TO TCD1 67+15 (3.0' RT)
TDR7-378	-	-	-	-	-	F	-	-	-	-	NNB 16+94 (0.4' LT) TO SNB 27+16 (3.4' RT)	TNNB1 12+80 (14.0' RT) TO TNNB1 14+88 (14.0' RT)
TDR7-383	-	-	-	-	-	F	-	-	-	-	I5NB 167+25 (42.1' RT) TO I5NB 169+24 (42.4' RT)	TNB4 77+43 (39.0' RT) TO TNB4 79+42 (34.7' RT)
TDR7-389	-	-	-	-	-	-	F	-	-	-	SBN 68+84 (24.0' RT) TO SBN 70+00 (26.1' RT)	TSBN2 28+41 (16.0' RT) TO TSBN2 29+59 (16.0' RT)
TDR7-391	-	-	-	-	-	-	F	-	-	-	I5SB 563+29 (56.6' LT) TO I5SB 568+80 (11.6' LT)	TSBN2 30+54 (3.2' LT) TO TSBN2 35+21 (6.3' LT)
TDR8-415	-	-	-	-	-	-	F	F	-	-	I5SB 568+76 (63.8' LT) TO I5SB 579+32 (61.5' LT)	TCD1 73+51 (80.8' LT) TO TCD1 84+10 (38.9' LT)
TDR7-418	-	-	-	-	-	F	-	-	-	-	I5NB 161+52 (45.1' RT) TO I5NB 165+06 (1.7' RT)	TNB1 83+39 (106.6' RT) TO TNB1 86+88 (68.5' RT)
TDR7-420	-	-	-	-	-	F	-	-	-	-	SNB 28+21 (27.7' LT) TO SNB 29+65 (37.2' LT)	TSNB3 30+97 (3.0' RT) TO TSNB3 32+41 (3.0' RT)
TDR5-422	-	-	-	-	F	-	-	-	-	-	NBS 11+39 (1.6' RT) TO NBS 15+94 (11.1' RT)	TNBS2 21+38 (14.0' RT) TO TNBS2 26+00 (14.0' RT)
TDR2-424	-	F	-	-	-	-	-	-	-	-	I5NB 112+44 (35.8' RT) TO I5NB 124+03 (32.8' RT)	TNCD1 90+15 (22.4' LT) TO TNCD1 101+89 (3.0' LT)
TDR8-428	-	-	-	-	-	-	F	F	-	-	I5SB 577+00 (7.6' LT) TO I5SB 590+20 (19.0' LT)	TCD1 81+75 (3.0' RT) TO TCD1 95+06 (3.0' RT)

NOTES:

1. FOR BARRIER PLACEMENT SEE WORK ZONE PLANS AND STRUCTURE NOTES - TEMPORARY DRAINAGE PLAN.
2. STAGED ALIGNMENTS ARE CALLED OFF THE FIRST ALIGNMENT AVAILABLE FOR BARRIER INSTALLATION.
3. SEE STAGED TRAFFIC CONTROL PLANS FOR DETAILS ON STEPS WITHIN THE STAGES.

LEGEND

F - FUNCTIONAL
N - NEW INSTALLATION
R - REMOVE
AJ - ADJUST
AB - ABANDON
- NO WORK TO BE PERFORMED

FILE NAME	PW:_XL3497\PS&E Sheets\Drainage Staging Table Temporary\ADD1_P3497_SH_TDRST_002.dgn
TIME	6:27:54 PM
DATE	4/22/2014
PLOTTED BY	ShannoC
DESIGNED BY	C. MINTEN
ENTERED BY	A. SANCHEZ
CHECKED BY	E. QUINN
PROJ. ENGR.	C. MALONEY
REGIONAL ADM.	K. DAYTON

REVISION	DATE	BY
AD1 - ADDED DRAINAGE CODE TDR5-360	04/25/2014	SM

REGION NO.	STATE	FED.AID PROJ.NO.
10	WASH	

JOB NUMBER 12C501

CONTRACT NO.

LOCATION NO. XL3497

P.E. STAMP BOX DATE

P.E. STAMP BOX DATE

Washington State Department of Transportation

I-5
M ST TO PORTLAND AVE - HOV

TEMPORARY STAGED DRAINAGE TABLE

PLAN REF NO TDRST2

SHEET 631 OF 1763 SHEETS

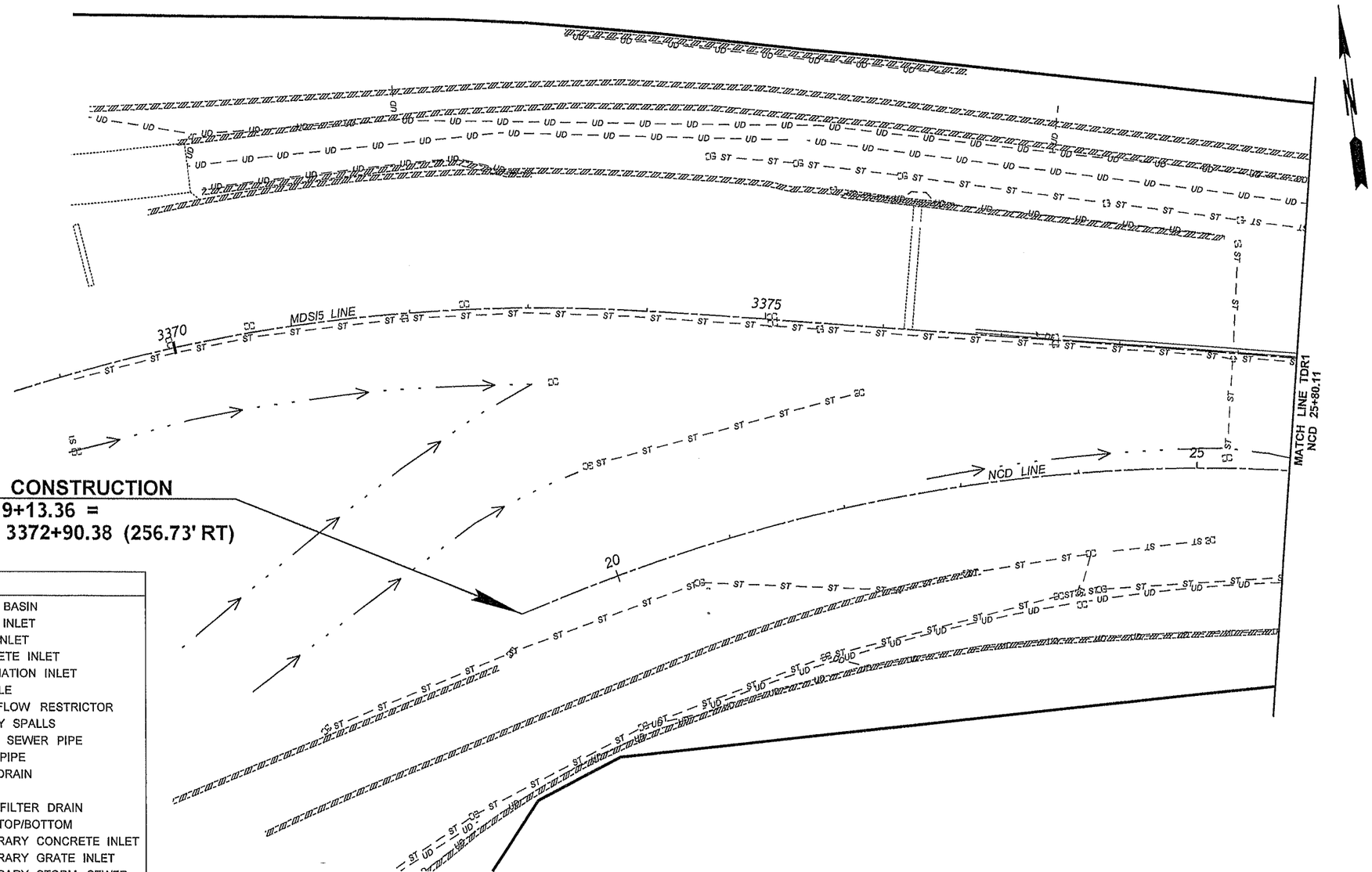

BEGIN CONSTRUCTION
NCD 19+13.36 =
MDSI5 3372+90.38 (256.73' RT)

NOTES:

1. SEE SHEET KM1 VOLUME 1 FOR KEY MAP.

LEGEND

EXISTING CATCH BASIN	CATCH BASIN
EXISTING GRATE INLET	GRATE INLET
EXISTING DROP INLET	DROP INLET
EXISTING CAST METAL INLET	CONCRETE INLET
EXISTING BRIDGE DRAIN	COMBINATION INLET
EXISTING MANHOLE	MANHOLE
EXISTING OPEN FLOW RESTRICTOR	OPEN FLOW RESTRICTOR
DEACTIVATED STORM SEWER	QUARRY SPALLS
EXISTING STORM SEWER	STORM SEWER PIPE
EXISTING DRAIN PIPE	DRAIN PIPE
EXISTING UNDERDRAIN	UNDERDRAIN
EXISTING CULVERT	DITCH
EXISTING DITCH	MEDIA FILTER DRAIN
EXISTING POND TOP/BOTTOM	POND TOP/BOTTOM
EXISTING RETAINING WALL	TEMPORARY CONCRETE INLET
RIGHT OF WAY	TEMPORARY GRATE INLET
CLEAN EXISTING DRAINAGE STRUCTURE	TEMPORARY STORM SEWER
PLUG EXISTING PIPE	TEMPORARY UNDERDRAIN
TEMPORARY DRAINAGE STRUCTURE CODE	TEMPORARY DRAIN PIPE
	TEMPORARY CURB
	TEMPORARY PUMP & CONVEYANCE LINES
	STAND PIPE SUMP (SEE SHEET ECD)

0 50 100
SCALE IN FEET

FILE NAME	PW:_XL3497\PS&E Sheets\Drainage Plan Temporary\P3497_SH_TDR_0001A.dgn
TIME	9:56:01 AM
DATE	3/18/2014
PLOTTED BY	WIIIISt
DESIGNED BY	C. MINTEN
ENTERED BY	S. WILLIAMS
CHECKED BY	E. QUINN
PROJ. ENGR.	J. PEREZ
REGIONAL ADM.	K. DAYTON

REVISION | DATE | BY

REGION NO.	STATE	FED.AID PROJ.NO.
10	WASH	
JOB NUMBER 12C501		
CONTRACT NO.		LOCATION NO. XL3497

CARLA A. MALONEY, STATE OF WASHINGTON, REGISTERED PROFESSIONAL ENGINEER
3/24/14
DATE
P.E. STAMP BOX

DATE
P.E. STAMP BOX

Washington State Department of Transportation

I-5
M ST TO PORTLAND AVE - HOV

TEMPORARY DRAINAGE PLAN

PLAN REF NO TDR1A

SHEET 632 OF 1763 SHEETS

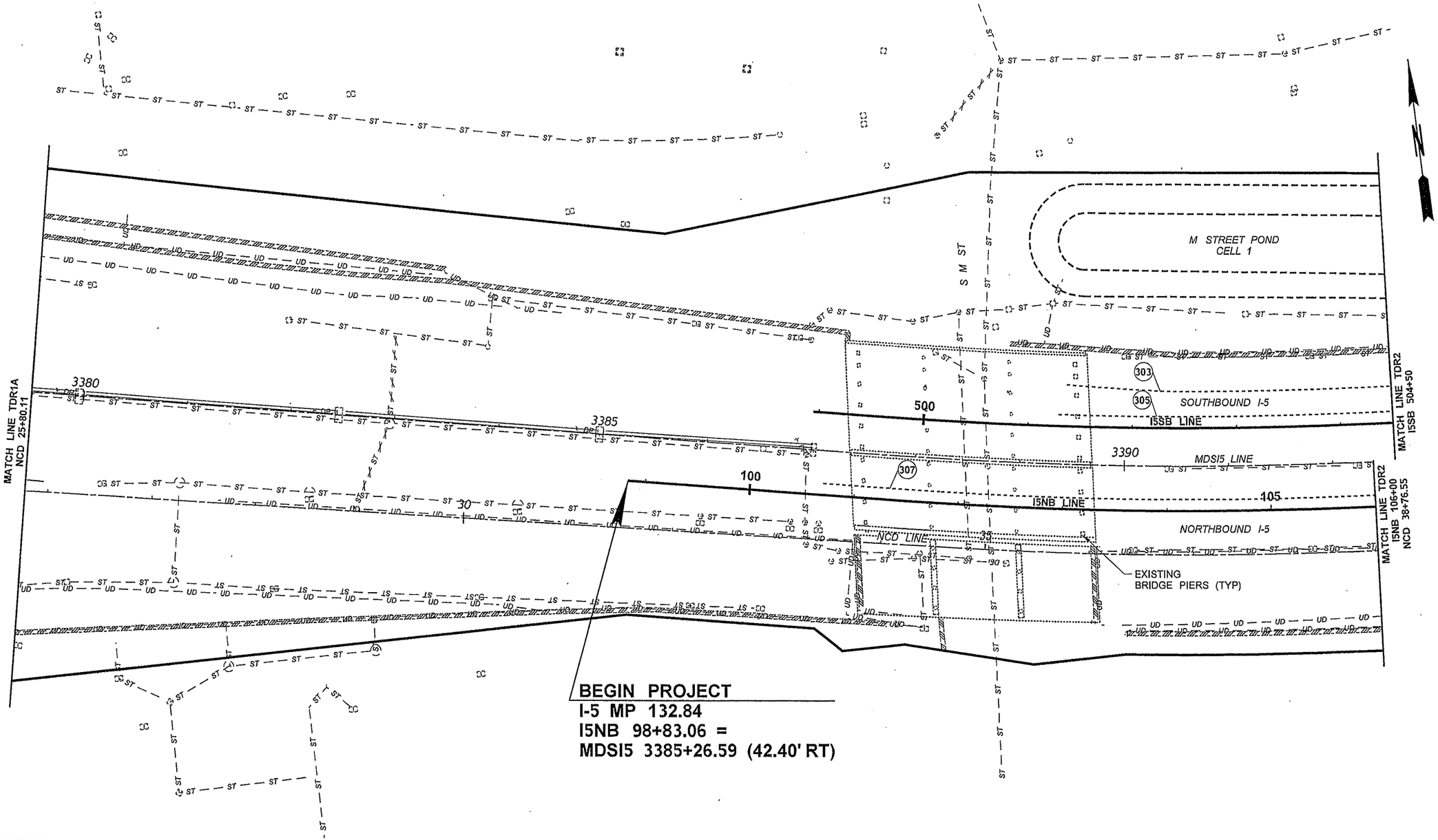

NOTES:

1. SEE SHEET KM1 VOLUME 1 FOR KEY MAP.
2. SEE SHEET TDR1A FOR LEGEND.

FILE NAME	PW:_XL3497\PS&E Sheets\Drainage Plan Temporary\P3497_SH_TDR_001.dgn				REGION NO. 10	STATE WASH	FED.AID PROJ.NO.	Washington State Department of Transportation	I-5 M ST TO PORTLAND AVE - HOV	PLAN REF NO TDR1
TIME	9:56:18 AM									
DATE	3/18/2014									
PLOTTED BY	WillISt				JOB NUMBER 12C501					
DESIGNED BY	C. MINTEN									
ENTERED BY	S. WILLIAMS									
CHECKED BY	E. QUINN				CONTRACT NO.		LOCATION NO. XL3497			
PROJ. ENGR.	J. PEREZ									
REGIONAL ADM.	K. DAYTON	REVISION	DATE	BY					TEMPORARY DRAINAGE PLAN	SHEET 633 OF 1763 SHEETS

CARLA A. MALONEY, STATE OF WASHINGTON, REGISTERED PROFESSIONAL ENGINEER — 3/24/14 DATE — P.E. STAMP BOX

DATE — P.E. STAMP BOX

PROFILE SHT NO.	STRUCTURE CODE
TDP3	312

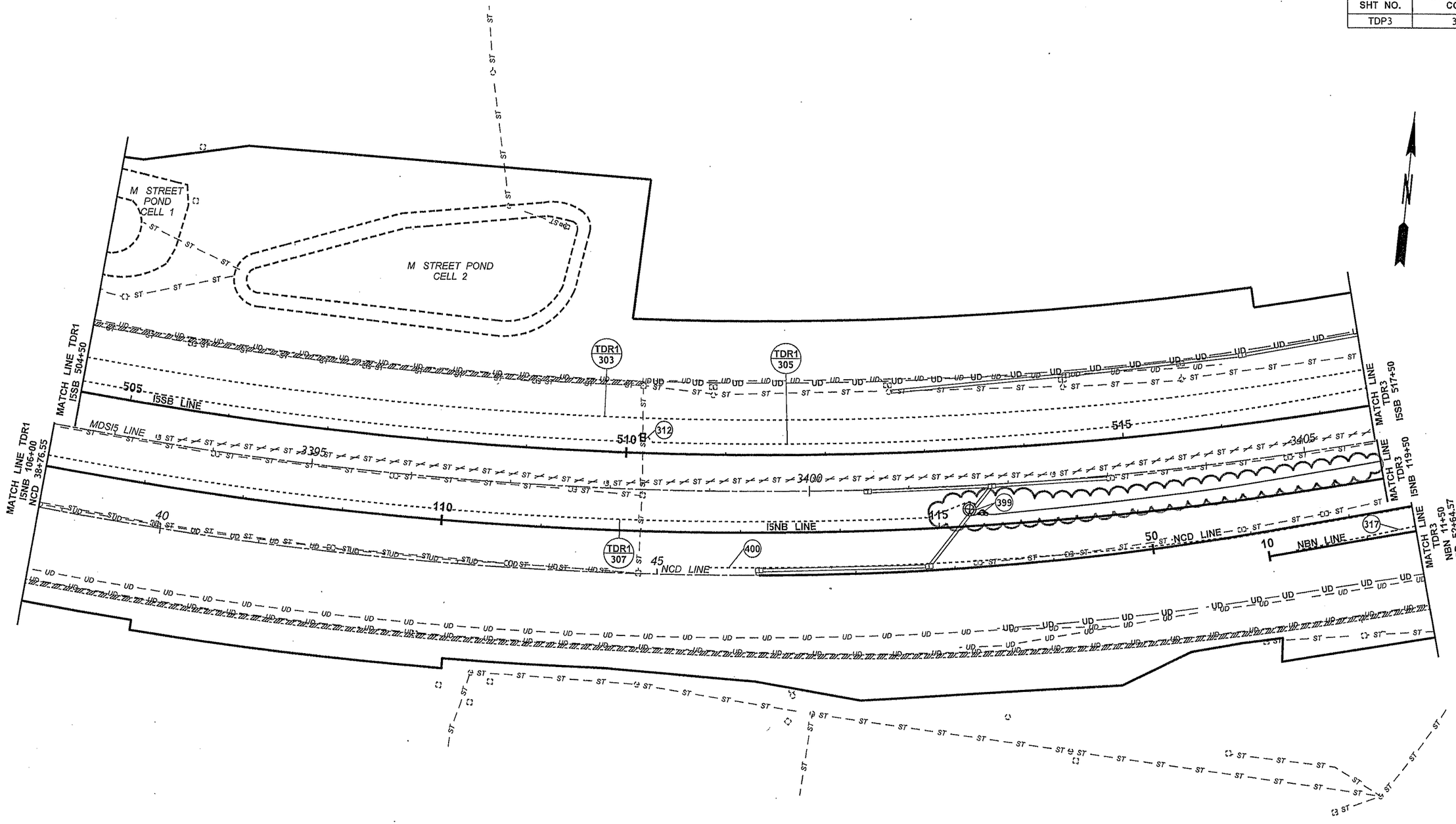

NOTES:

1. SEE SHEET KM1 VOLUME 1 FOR KEY MAP.
2. SEE SHEET TDR1A FOR LEGEND.

FILE NAME	PW:_XL3497\PS&E Sheets\Drainage Plan Temporary\ADD1_P3497_SH_TDR_002.dgn			
TIME	7:50:04 PM			
DATE	4/30/2014			
PLOTTED BY	MerrymS			
DESIGNED BY	C. MINTEN			
ENTERED BY	S. WILLIAMS			
CHECKED BY	E. QUINN			
PROJ. ENGR.	J. PEREZ	AD1 - MOVED STRUCTURE CODE 399	05/02/2014	SM
REGIONAL ADM.	K. DAYTON	REVISION	DATE	BY

REGION NO.	STATE	FED.AID PROJ.NO.
10	WASH	
JOB NUMBER 12C501		
CONTRACT NO.		LOCATION NO. XL3497

CARLA A. MALONEY, STATE OF WASHINGTON, REGISTERED PROFESSIONAL ENGINEER

4/30/14 DATE

P.E. STAMP BOX

P.E. STAMP BOX DATE

Washington State Department of Transportation

I-5

M ST TO PORTLAND AVE - HOV

TEMPORARY DRAINAGE PLAN

PLAN REF NO TDR2

SHEET 634 OF 1763 SHEETS

PROFILE SHT NO.	STRUCTURE CODE
TDP1	322~323
TDP3	324, 401

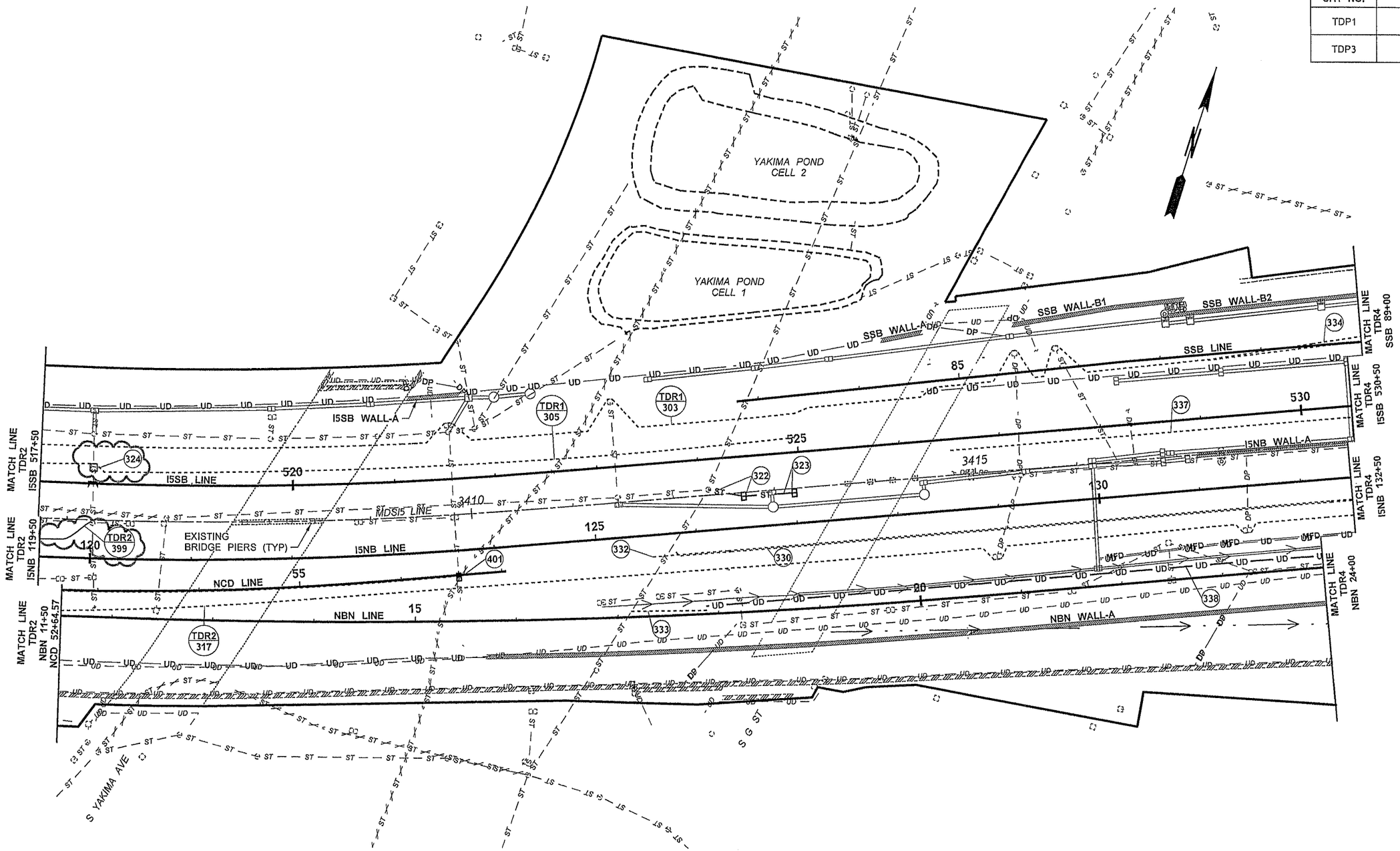

NOTES:

1. SEE SHEET KM1 VOLUME 1 FOR KEY MAP.
2. SEE SHEET TDR1A FOR LEGEND.

FILE NAME	PW:_XL3497\PS&E Sheets\Drainage Plan Temporary\ADD1_P3497_SH_TDR_003.dgn
TIME	3:18:47 PM
DATE	4/21/2014
PLOTTED BY	ShannoC
DESIGNED BY	C. MINTEN
ENTERED BY	S. WILLIAMS
CHECKED BY	E. QUINN
PROJ. ENGR.	J. PEREZ
REGIONAL ADM.	K. DAYTON

REVISION	DATE	BY
AD1 - STRUCTURE TDR2-399 & 324 UPDATED	04/25/2014	SM

REGION NO.	STATE	FED.AID PROJ.NO.
10	WASH	
JOB NUMBER 12C501		
CONTRACT NO.		LOCATION NO. XL3497

CARLA A. MALONEY, STATE OF WASHINGTON, REGISTERED PROFESSIONAL ENGINEER
4/30/14
DATE
P.E. STAMP BOX

DATE
P.E. STAMP BOX

Washington State Department of Transportation

I-5
M ST TO PORTLAND AVE - HOV

TEMPORARY DRAINAGE PLAN

PLAN REF NO TDR3

SHEET 635 OF 1763 SHEETS

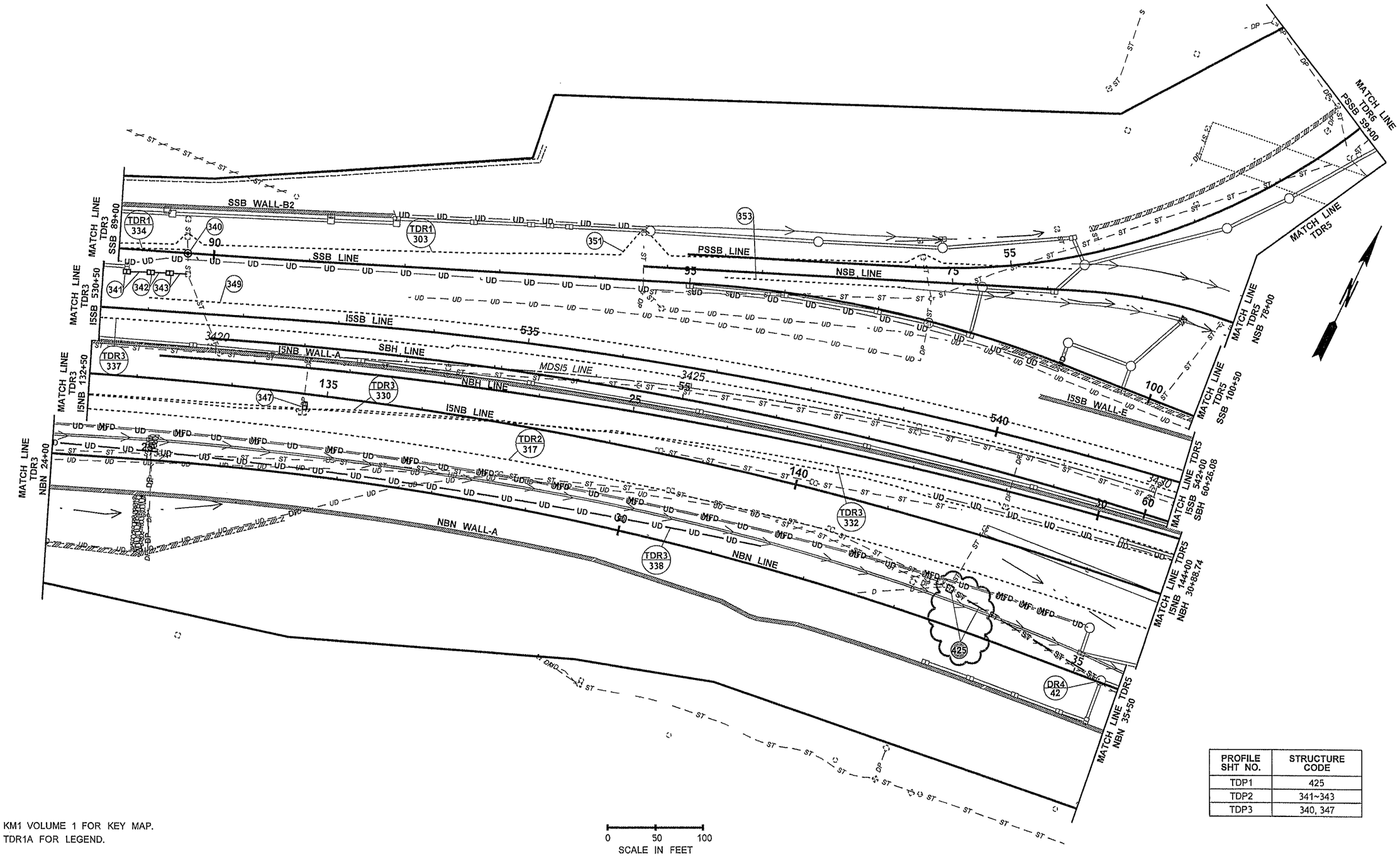

PROFILE SHT NO.	STRUCTURE CODE
TDP1	425
TDP2	341~343
TDP3	340, 347

NOTES:

1. SEE SHEET KM1 VOLUME 1 FOR KEY MAP.
2. SEE SHEET TDR1A FOR LEGEND.

FILE NAME	PW:_XL3497\PS&E Sheets\Drainage Plan Temporary\ADD1_P3497_SH_TDR_004.dgn				REGION NO. 10	STATE WASH	FED.AID PROJ.NO.	PLAN REF NO TDR4
TIME	6:09:58 PM							
DATE	4/22/2014							
PLOTTED BY	ShannoC							
DESIGNED BY	C. MINTEN				JOB NUMBER 12C501			
ENTERED BY	S. WILLIAMS							
CHECKED BY	E. QUINN				CONTRACT NO.		LOCATION NO. XL3497	SHEET 636 OF 1763 SHEETS
PROJ. ENGR.	J. PEREZ	AD1 - DELETED 4-355 ADDED 4-425	04/25/2014	SM				
REGIONAL ADM.	K. DAYTON	REVISION	DATE	BY				

CARLA A. MALINOWSKI STATE OF WASHINGTON 41037 REGISTERED PROFESSIONAL ENGINEER
4/30/14 DATE
P.E. STAMP BOX

DATE
P.E. STAMP BOX

Washington State Department of Transportation

I-5
M ST TO PORTLAND AVE - HOV

TEMPORARY DRAINAGE PLAN

PROFILE SHT NO.	STRUCTURE CODE
TDP2	366~368
TDP5	431~432

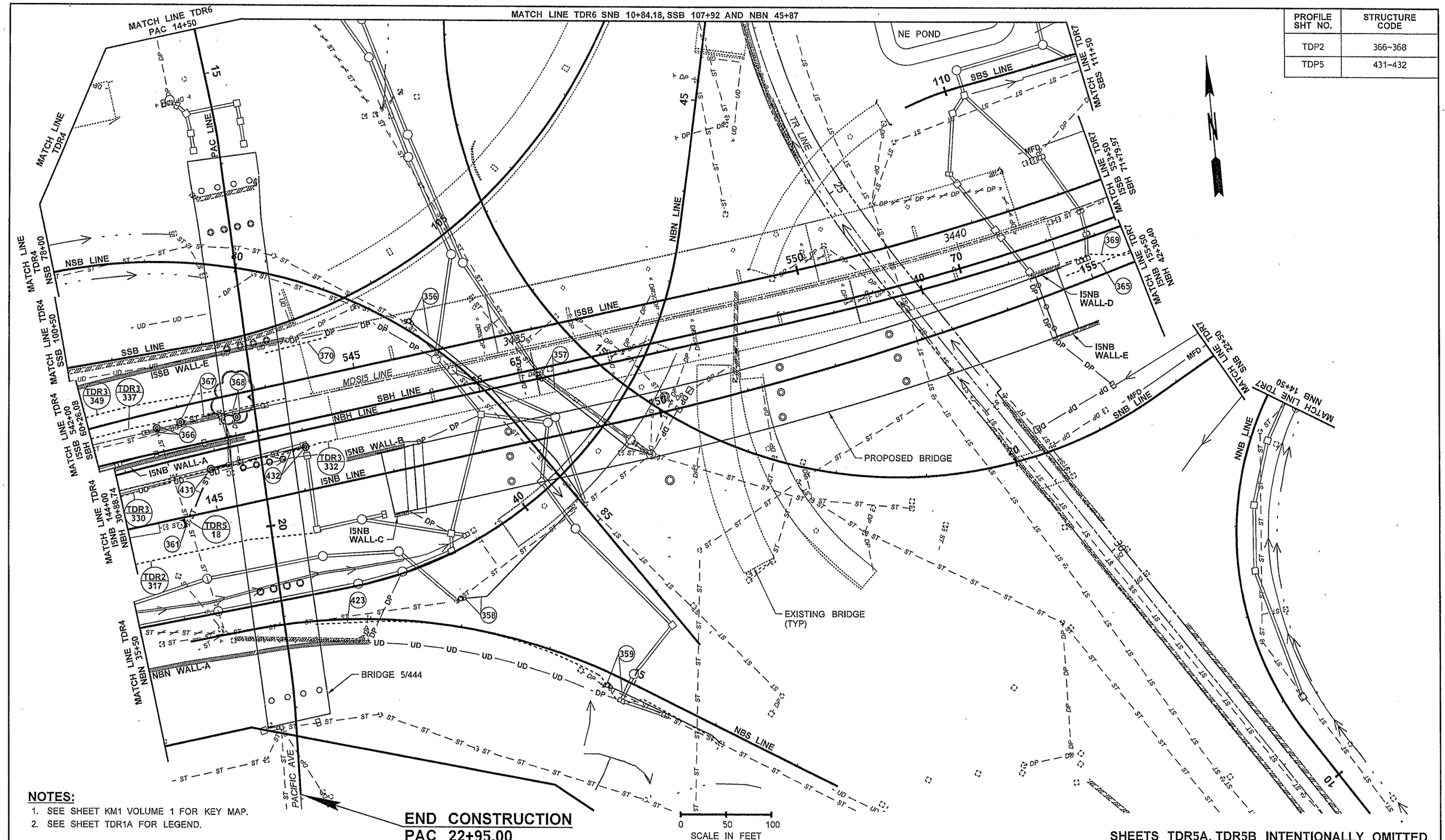

NOTES:

1. SEE SHEET KM1 VOLUME 1 FOR KEY MAP.
2. SEE SHEET TDR1A FOR LEGEND.

END CONSTRUCTION
PAC 22+95.00

SHEETS TDR5A, TDR5B INTENTIONALLY OMITTED

FILE NAME	PW:_XL3497\PS&E Sheets\Drainage Plan Temporary\ADD1_P3497_SH_TDR_005.dgn						
TIME	7:51:18 PM						
DATE	4/30/2014						
PLOTTED BY	MerrymS						
DESIGNED BY	C. MINTEN						
ENTERED BY	S. WILLIAMS						
CHECKED BY	E. QUINN						
PROJ. ENGR.	J. PEREZ	AD1 UPDATED STRUCURE 368	05/02/2014	SM			
REGIONAL ADM.	K. DAYTON	REVISION	DATE	BY			

REGION NO.	STATE	FED.AID PROJ.NO.
10	WASH	
JOB NUMBER 12C501		
CONTRACT NO.		LOCATION NO. XL3497

CARLA A. MALANEY, STATE OF WASHINGTON, REGISTERED PROFESSIONAL ENGINEER, 38489
4/30/14
DATE
P.E. STAMP BOX

DATE
P.E. STAMP BOX

Washington State Department of Transportation

I-5
M ST TO PORTLAND AVE - HOV

TEMPORARY DRAINAGE PLAN

PLAN REF NO TDR5

SHEET 637 OF 1763 SHEETS

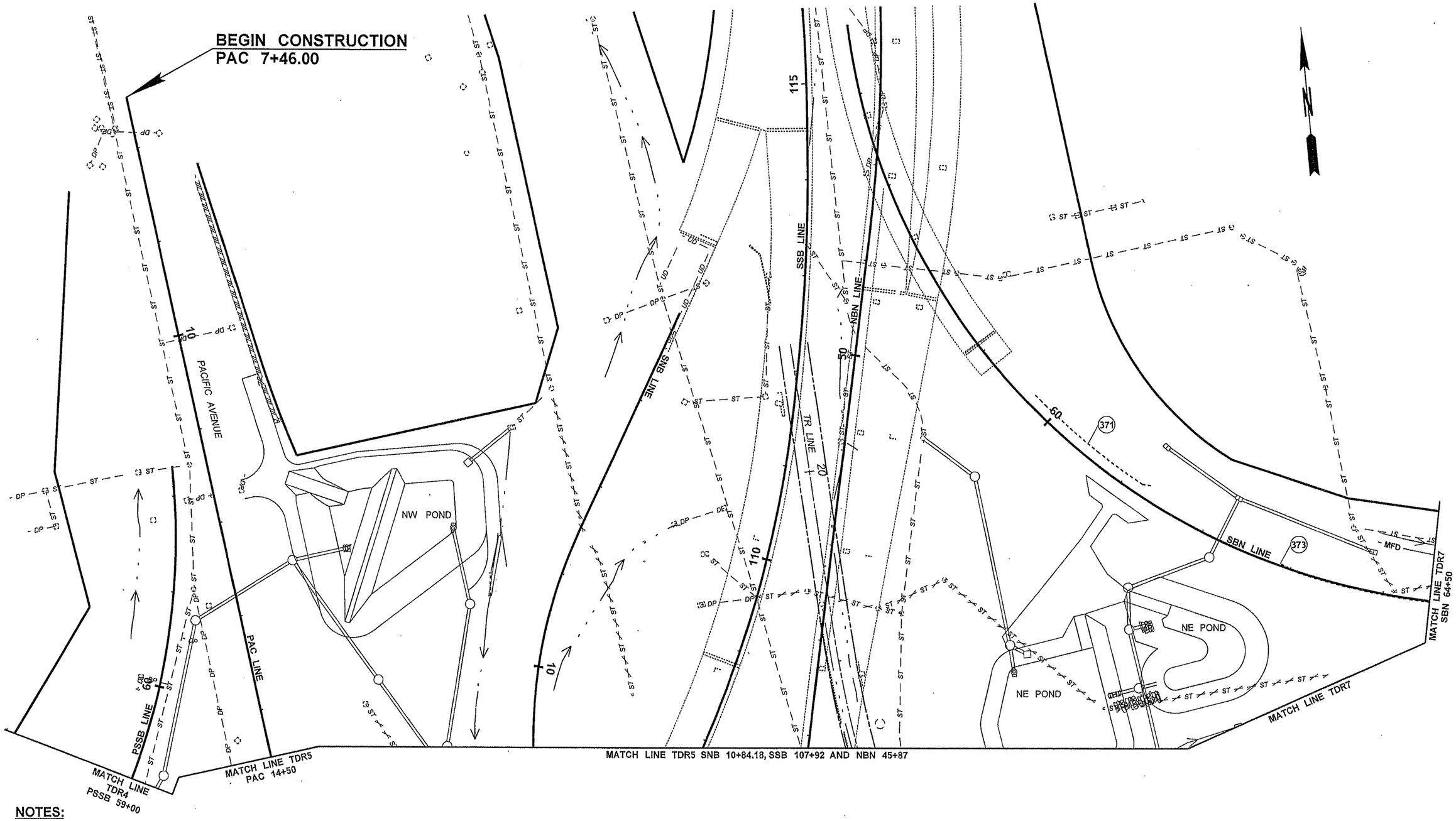

NOTES:

1. SEE SHEET KM1 VOLUME 1 FOR KEY MAP.
2. SEE SHEET TDR1A FOR LEGEND.

0 50 100
SCALE IN FEET

SHEETS TDR5A, TDR5B, AND TDR6A INTENTIONALLY OMITTED

FILE NAME	PW:_XL3497\PS&E Sheets\Drainage Plan Temporary\P3497_SH_TDR_006.dgn				REGION NO. 10	STATE WASH	FED.AID PROJ.NO.
TIME	9:57:42 AM						
DATE	3/18/2014						
PLOTTED BY	WillisI				JOB NUMBER 12C501		
DESIGNED BY	C. MINTEN						
ENTERED BY	S. WILLIAMS						
CHECKED BY	E. QUINN				CONTRACT NO.		LOCATION NO. XL3497
PROJ. ENGR.	J. PEREZ						
REGIONAL ADM.	K. DAYTON	REVISION	DATE	BY			

CARLA A. MALONEY, STATE OF WASHINGTON, REGISTERED PROFESSIONAL ENGINEER
3/24/14
DATE
P.E. STAMP BOX

DATE
P.E. STAMP BOX

Washington State
Department of Transportation

I-5
M ST TO PORTLAND AVE - HOV

TEMPORARY DRAINAGE PLAN

PLAN REF NO
TDR6

SHEET 638 OF 1763 SHEETS

PROFILE SHT NO.	STRUCTURE CODE
TDP3	384~388

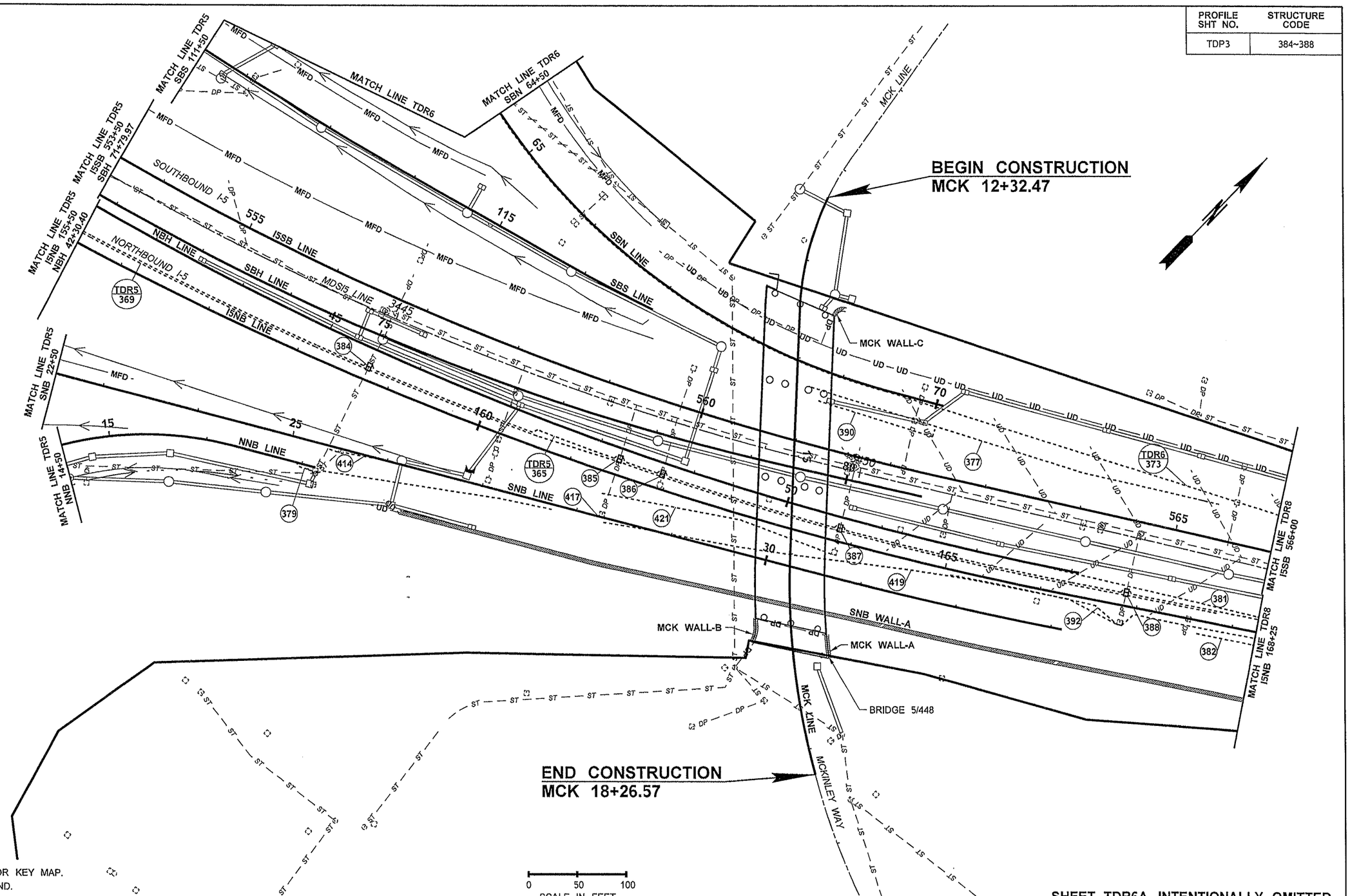

NOTES:

1. SEE SHEET KM1 VOLUME 1 FOR KEY MAP.
2. SEE SHEET TDR1A FOR LEGEND.

SHEET TDR6A INTENTIONALLY OMITTED

FILE NAME	PW:_XL3497\PS&E Sheets\Drainage Plan Temporary\P3497_SH_TDR_007.dgn
TIME	11:55:27 AM
DATE	3/24/2014
PLOTTED BY	SancheA
DESIGNED BY	C. MINTEN
ENTERED BY	S. WILLIAMS
CHECKED BY	E. QUINN
PROJ. ENGR.	J. PEREZ
REGIONAL ADM.	K. DAYTON

REVISION | DATE | BY

REGION NO.	STATE	FED.AID PROJ.NO.
10	WASH	
JOB NUMBER 12C501		
CONTRACT NO.		LOCATION NO. XL3497

CARLA A. MALONEY — STATE OF WASHINGTON — REGISTERED PROFESSIONAL ENGINEER
3/24/14
DATE
P.E. STAMP BOX

DATE
P.E. STAMP BOX

Washington State Department of Transportation

I-5
M ST TO PORTLAND AVE - HOV

TEMPORARY DRAINAGE PLAN

PLAN REF NO TDR7

SHEET 639 OF 1763 SHEETS

PROFILE SHT NO.	STRUCTURE CODE
TDP3	393~397
TDP4	402~405

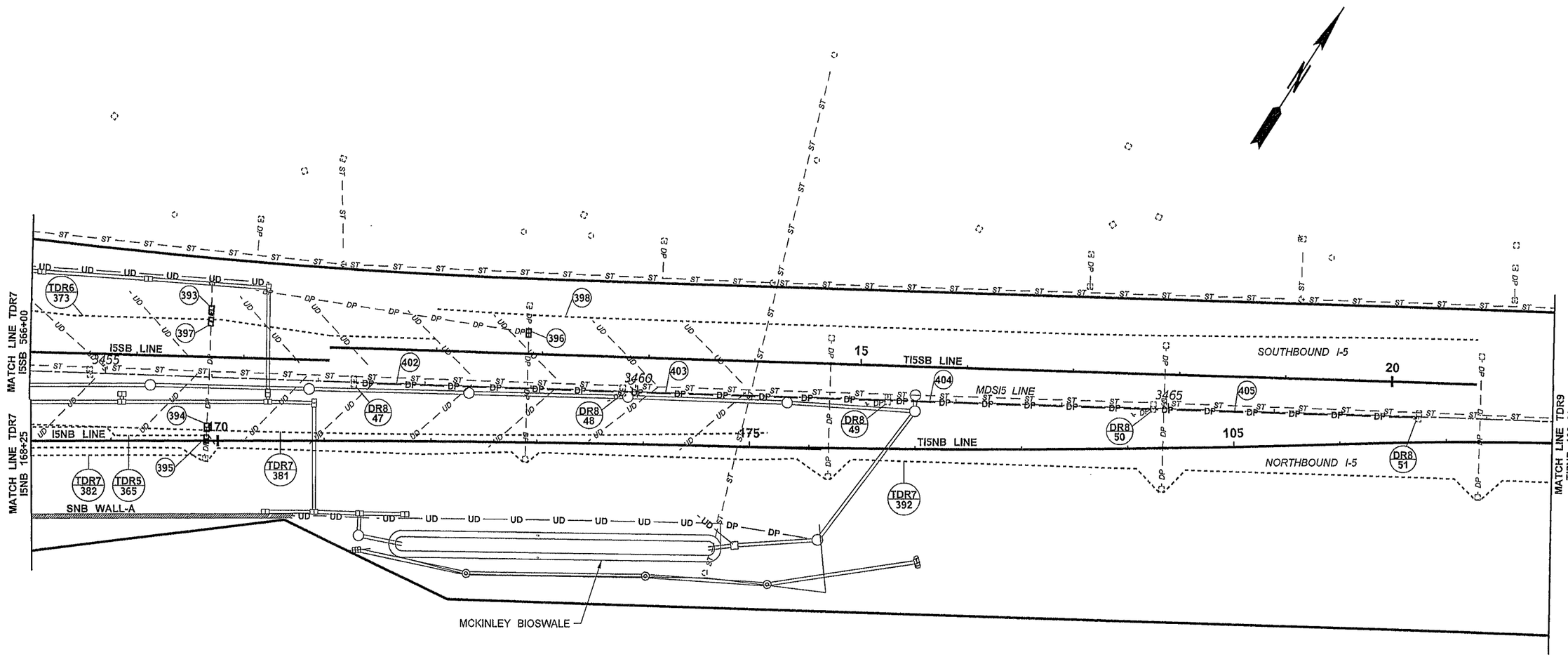

NOTES:

1. SEE SHEET KM1 VOLUME 1 FOR KEY MAP.
2. SEE SHEET TDR1A FOR LEGEND.

0 50 100
SCALE IN FEET

FILE NAME	PW:_XL3497\PS&E Sheets\Drainage Plan Temporary\P3497_SH_TDR_008.dgn
TIME	1:25:37 PM
DATE	3/24/2014
PLOTTED BY	Willist
DESIGNED BY	C. MINTEN
ENTERED BY	S. WILLIAMS
CHECKED BY	E. QUINN
PROJ. ENGR.	J. PEREZ
REGIONAL ADM.	K. DAYTON

REVISION | DATE | BY

REGION NO.	STATE	FED.AID PROJ.NO.
10	WASH	
JOB NUMBER 12C501		
CONTRACT NO.		LOCATION NO. XL3497

CARLA A. MALONEY · STATE OF WASHINGTON · REGISTERED PROFESSIONAL ENGINEER
3/24/14
DATE
P.E. STAMP BOX

DATE
P.E. STAMP BOX

Washington State Department of Transportation

I-5
M ST TO PORTLAND AVE - HOV

TEMPORARY DRAINAGE PLAN

PLAN REF NO TDR8

SHEET 640 OF 1763 SHEETS

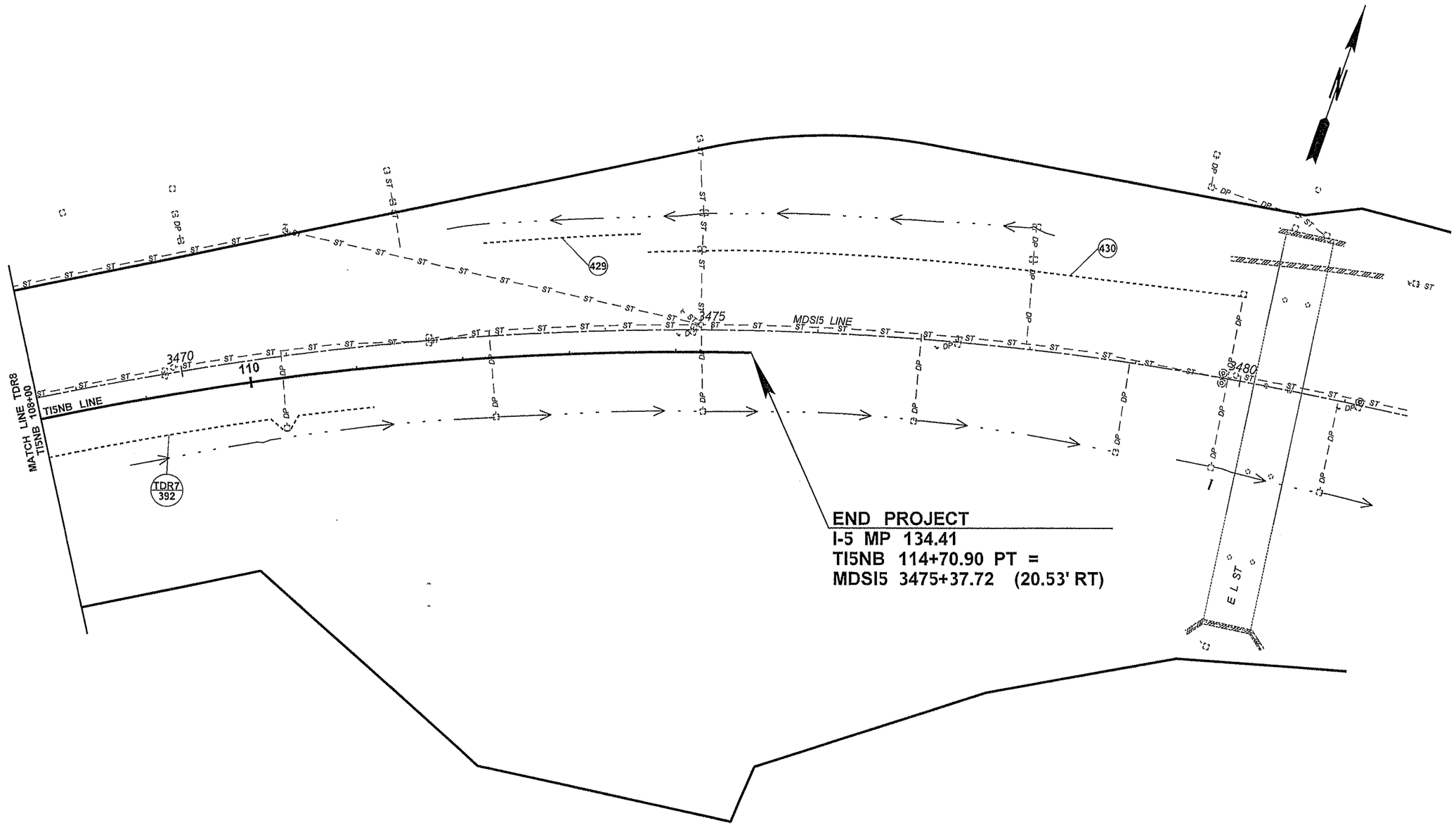

NOTES:

1. SEE SHEET KM1 VOLUME 1 FOR KEY MAP.
2. SEE SHEET TDR1A FOR LEGEND.

0 50 100
SCALE IN FEET

SHEET TDR10, TDR11 INTENTIONALLY OMITTED

FILE NAME	PW:_XL3497\PS&E Sheets\Drainage Plan Temporary\P3497_SH_TDR_009.dgn				REGION NO. 10	STATE WASH	FED.AID PROJ.NO.	CARLA A. MALONEY STATE OF WASHINGTON REGISTERED PROFESSIONAL ENGINEER		I-5 M ST TO PORTLAND AVE - HOV	PLAN REF NO TDR9
TIME	11:25:16 AM							3/24/14 DATE		Washington State Department of Transportation	
DATE	3/21/2014										
PLOTTED BY	ShannoC										
DESIGNED BY	C. MINTEN				JOB NUMBER 12C501						SHEET 641 OF 1763 SHEETS
ENTERED BY	S. WILLIAMS										
CHECKED BY	E. QUINN				CONTRACT NO.		LOCATION NO. XL3497	P.E. STAMP BOX	P.E. STAMP BOX DATE	TEMPORARY DRAINAGE PLAN	
PROJ. ENGR.	J. PEREZ										
REGIONAL ADM.	K. DAYTON	REVISION	DATE	BY							

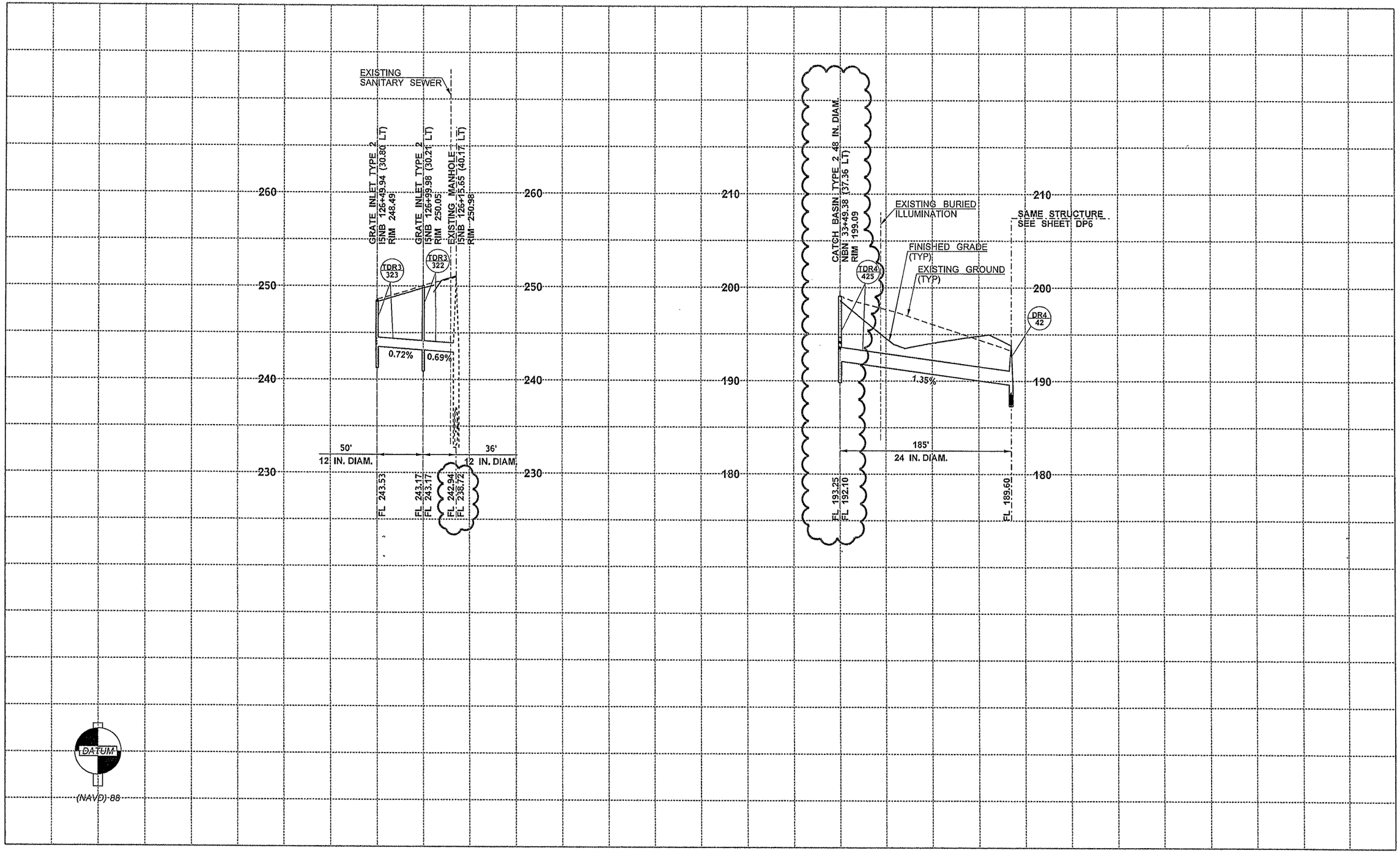

FILE NAME	PW:_XL3497\PS&E Sheets\Drainage Profile Temporary\ADD1_P3497_PR_TDR_001.dgn						
TIME	1:15:48 PM				REGION NO. 10	STATE WASH	FED.AID PROJ.NO.
DATE	4/21/2014						
PLOTTED BY	ShannoC				JOB NUMBER 12C501		
DESIGNED BY	M. KWIATKOWSKI						
ENTERED BY	S. WILLIAMS				CONTRACT NO.	LOCATION NO. XL3497	
CHECKED BY	E. QUINN						
PROJ. ENGR.	J. PEREZ	AD1 FLOW LINE TEXT PROFILE UPDATED	04/25/2014	SM			
REGIONAL ADM.	K. DAYTON	REVISION	DATE	BY			

CARLA J. MALONEY — STATE OF WASHINGTON — REGISTERED PROFESSIONAL ENGINEER
4/30/14
DATE
P.E. STAMP BOX

DATE
P.E. STAMP BOX

Washington State
Department of Transportation

I-5
M ST TO PORTLAND AVE - HOV

TEMPORARY DRAINAGE PROFILE

PLAN REF NO
TDP1

SHEET 642 OF 1763 SHEETS

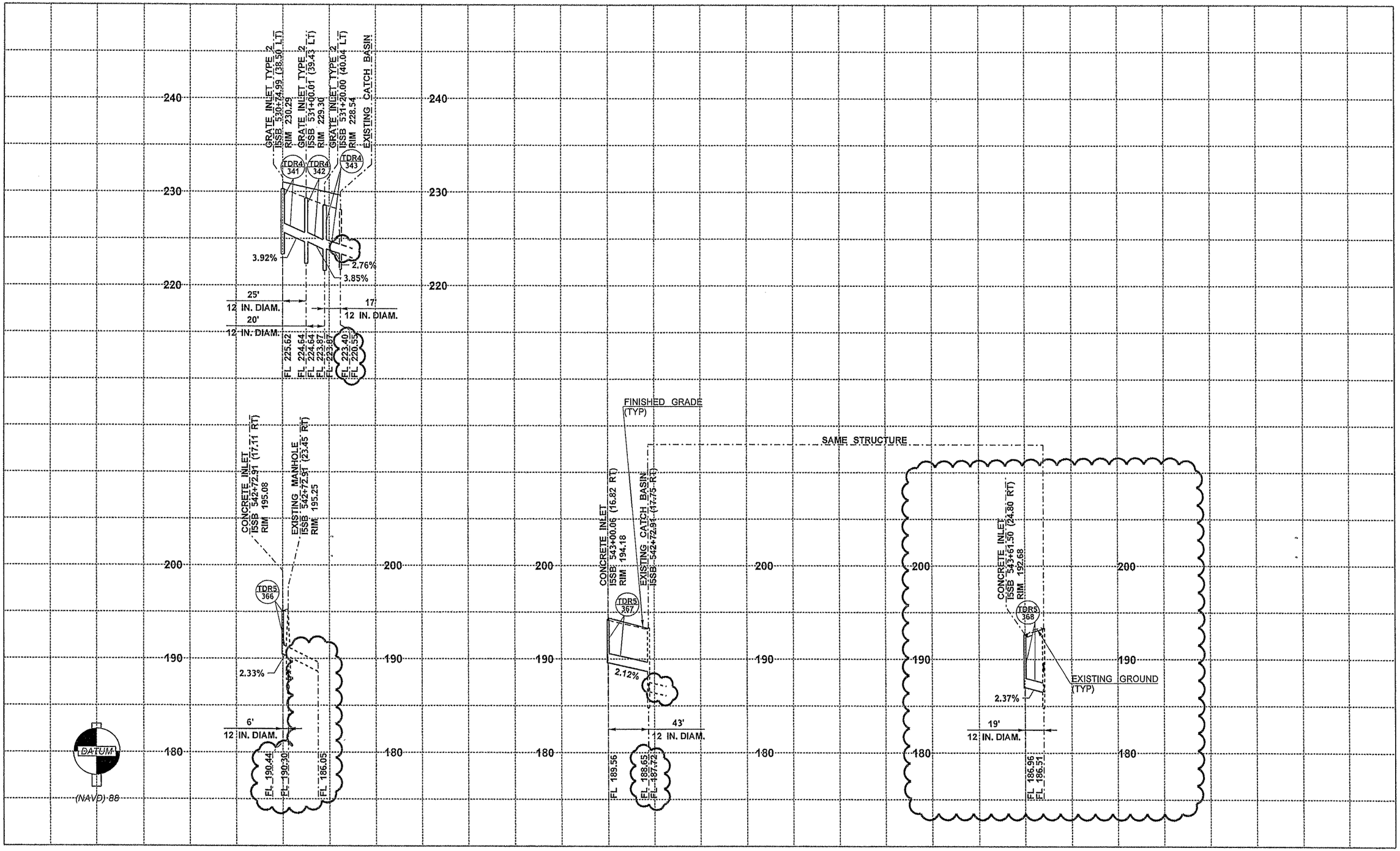

FILE NAME	PW:_XL3497\PS&E Sheets\Drainage Profile Temporary\ADD1_P3497_PR_TDR_002.dgn			
TIME	6:10:53 PM			
DATE	4/22/2014			
PLOTTED BY	ShannoC			
DESIGNED BY	M. KWIATKOWSKI			
ENTERED BY	S. WILLIAMS			
CHECKED BY	E. QUINN			
PROJ. ENGR.	J. PEREZ	AD1 - PIPES AND FLOW LINES UPDATED	04/25/2014	SM
REGIONAL ADM.	K. DAYTON	REVISION	DATE	BY

REGION NO.	STATE	FED.AID PROJ.NO.
10	WASH	
JOB NUMBER 12C501		
CONTRACT NO.		LOCATION NO. XL3497

CARLA A. MALONEY, STATE OF WASHINGTON, REGISTERED PROFESSIONAL ENGINEER
4/30/14
DATE
P.E. STAMP BOX

DATE
P.E. STAMP BOX

Washington State Department of Transportation

I-5
M ST TO PORTLAND AVE - HOV

TEMPORARY DRAINAGE PROFILE

PLAN REF NO TDP2

SHEET 643 OF 1763 SHEETS

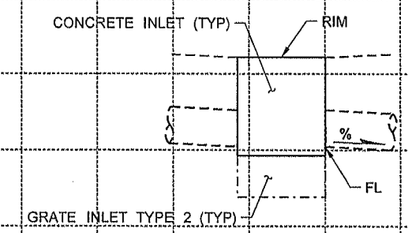

SINGLE STRUCTURE PROFILE DETAIL

CONCRETE INLET / GRATE INLET TYPE 2 - TYPICAL

SINGLE STRUCTURE PROFILE TABLE

CODE	LOCATION	TYPE	RIM	FL (IN)	FL (OUT)
TDR2-312	I5SB 510+16 (10.1 LT)	GRATE INLET TYPE 2	291.04	285.50	285.39
TDR3-324	I5SB 518+02 (10.4 LT)	CATCH BASIN TYPE 2	268.31	260.82	260.77
TDR4-340	I5SB 531+38 (56.4 LT)	CONCRETE INLET	227.92	221.09	221.03
TDR4-347	I5NB 134+78 (12.4 RT)	GRATE INLET TYPE 2	225.11	219.71	219.58
TDR4-355	I5SB 541+74 (18.0 RT)	CONCRETE INLET	197.98	195.45	195.29
TDR7-384	I5NB 158+74 (14.0 LT)	GRATE INLET TYPE 2	155.34	145.03	145.01
TDR7-385	I5NB 161+48 (16.5 LT)	GRATE INLET TYPE 2	147.08	139.54	139.42
TDR7-386	I5NB 161+95 (15.8 LT)	GRATE INLET TYPE 2	145.81	140.35	140.13
TDR7-387	I5NB 163+85 (13.8 LT)	GRATE INLET TYPE 2	139.20	134.75	134.67
TDR7-388	I5NB 166+86 (13.8 LT)	GRATE INLET TYPE 2	129.40	123.91	123.89
TDR8-393	I5SB 567+69 (44.0 LT)	GRATE INLET TYPE 2	120.32	116.32	116.21
TDR8-394	I5SB 567+67 (65.7 RT)	GRATE INLET TYPE 2	120.84	115.53	115.47
TDR8-395	I5NB 169+89 (1.7 LT)	GRATE INLET TYPE 2	120.73	115.63	115.56
TDR8-396	I5SB 570+68 (30.5 LT)	GRATE INLET TYPE 2	112.21	107.41	107.29
TDR8-397	I5SB 567+69 (32.9 LT)	GRATE INLET TYPE 2	120.60	116.00	115.89
TDR3-401	NCD 56+57 (0.2 RT)	GRATE INLET TYPE 2	260.03	253.93	253.93

DATUM

(NAVD)-88

FILE NAME	PW:_XL3497\PS&E Sheets\Drainage Profile Temporary\ADD1_P3497_PR_TDR_003.dgn
TIME	2:01:47 PM
DATE	4/21/2014
PLOTTED BY	ShannoC
DESIGNED BY	M. KWIATKOWSKI
ENTERED BY	S. WILLIAMS
CHECKED BY	E. QUINN
PROJ. ENGR.	J. PEREZ
REGIONAL ADM.	K. DAYTON

REVISION	DATE	BY
AD1 - STRUCTURE TYPE MODIFIED	04/25/2014	SM

REGION NO. 10 | STATE WASH | FED.AID PROJ.NO.

JOB NUMBER 12C501

CONTRACT NO.

LOCATION NO. XL3497

CARLA A. MALONEY, STATE OF WASHINGTON, REGISTERED PROFESSIONAL ENGINEER

4/30/14 DATE

P.E. STAMP BOX

DATE

P.E. STAMP BOX

Washington State Department of Transportation

I-5

M ST TO PORTLAND AVE - HOV

TEMPORARY DRAINAGE PROFILE

PLAN REF NO TDP3

SHEET 644 OF 1763 SHEETS

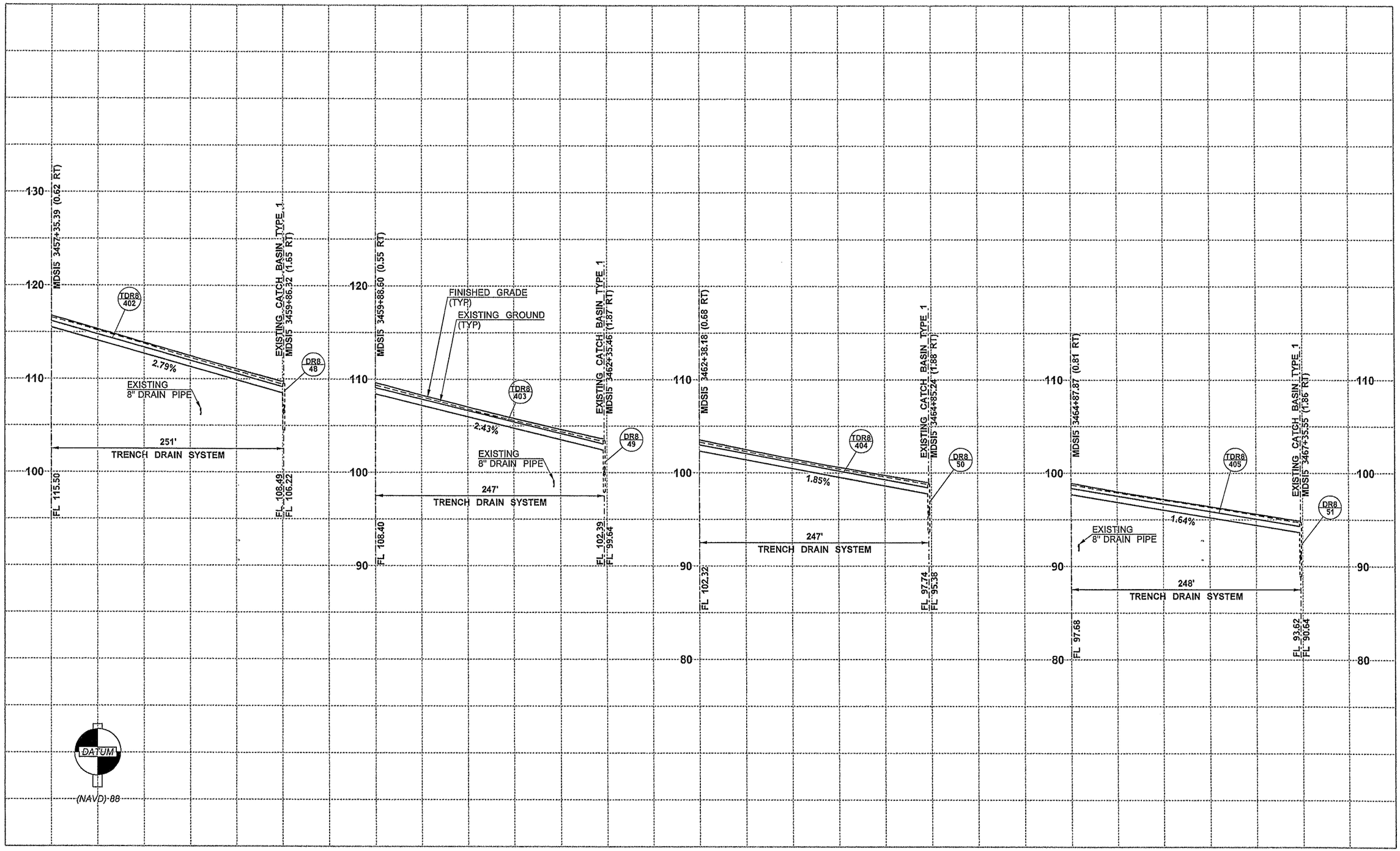

FILE NAME	PW:_XL3497\PS&E Sheets\Drainage Profile Temporary\P3497_PR_TDR_004.dgn				REGION NO.	STATE	FED.AID PROJ.NO.
TIME	1:45:32 PM				10	WASH	
DATE	3/24/2014				JOB NUMBER		
PLOTTED BY	WilliSt				12C501		
DESIGNED BY	M. KWIATKOWSKI				CONTRACT NO.		LOCATION NO.
ENTERED BY	S. WILLIAMS						XL3497
CHECKED BY	E. QUINN						
PROJ. ENGR.	J. PEREZ						
REGIONAL ADM.	K. DAYTON	REVISION	DATE	BY			

CARLA A. MALONEY — STATE OF WASHINGTON — 19037 — REGISTERED PROFESSIONAL ENGINEER

3/24/14
DATE
P.E. STAMP BOX

DATE
P.E. STAMP BOX

Washington State Department of Transportation

I-5
M ST TO PORTLAND AVE - HOV

TEMPORARY DRAINAGE PROFILE

PLAN REF NO
TDP4

SHEET 645 OF 1763 SHEETS

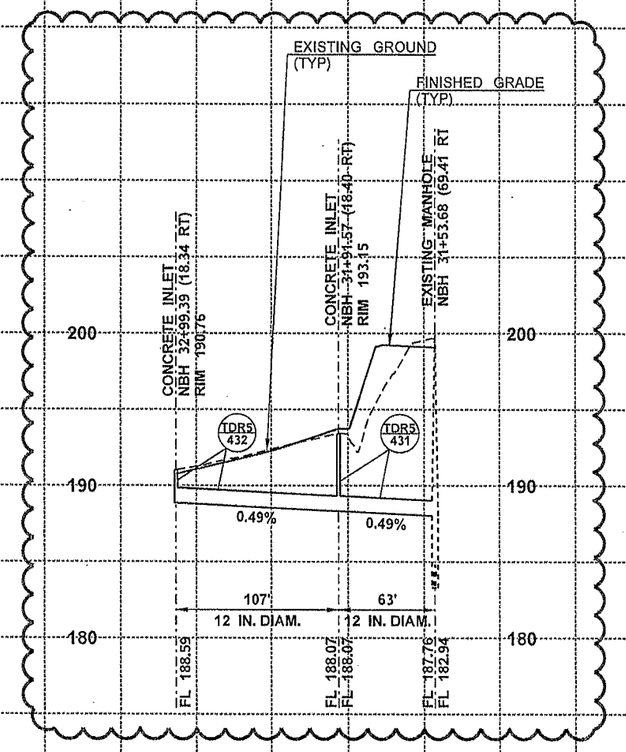

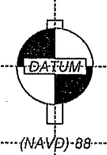

(NAVD)-88

FILE NAME	PW:_XL3497\PS&E Sheets\Drainage Profile Temporary\ADD1_P3497_PR_TDR_005.dgn						
TIME	7:54:14 PM				REGION NO. 10	STATE WASH	FED.AID PROJ.NO.
DATE	4/30/2014						
PLOTTED BY	MerrymS				JOB NUMBER 12C501		
DESIGNED BY	M. KWIATKOWSKI						
ENTERED BY	S. WILLIAMS				CONTRACT NO.	LOCATION NO. XL3497	
CHECKED BY	E. QUINN						
PROJ. ENGR.	J. PEREZ	AD1 PROFILE UPDATED	05/02/2014	SM			
REGIONAL ADM.	K. DAYTON	REVISION	DATE	BY			

CARLA A. MALONEY, STATE OF WASHINGTON, REGISTERED PROFESSIONAL ENGINEER

4/30/14
DATE
P.E. STAMP BOX

DATE
P.E. STAMP BOX

Washington State
Department of Transportation

I-5
M ST TO PORTLAND AVE - HOV

TEMPORARY DRAINAGE PROFILE

PLAN REF NO
TDP5

SHEET 646 OF 1763 SHEETS

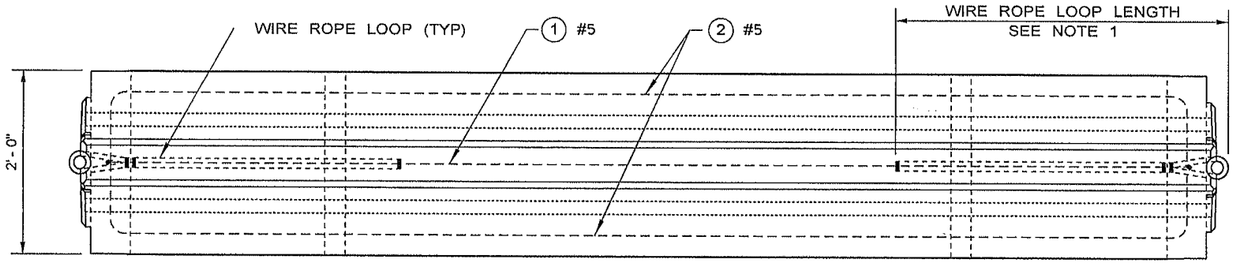

TOP VIEW

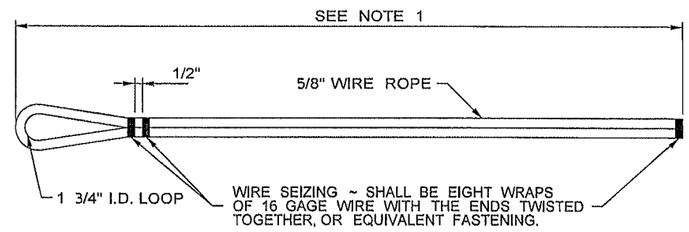

WIRE ROPE LOOP DETAIL

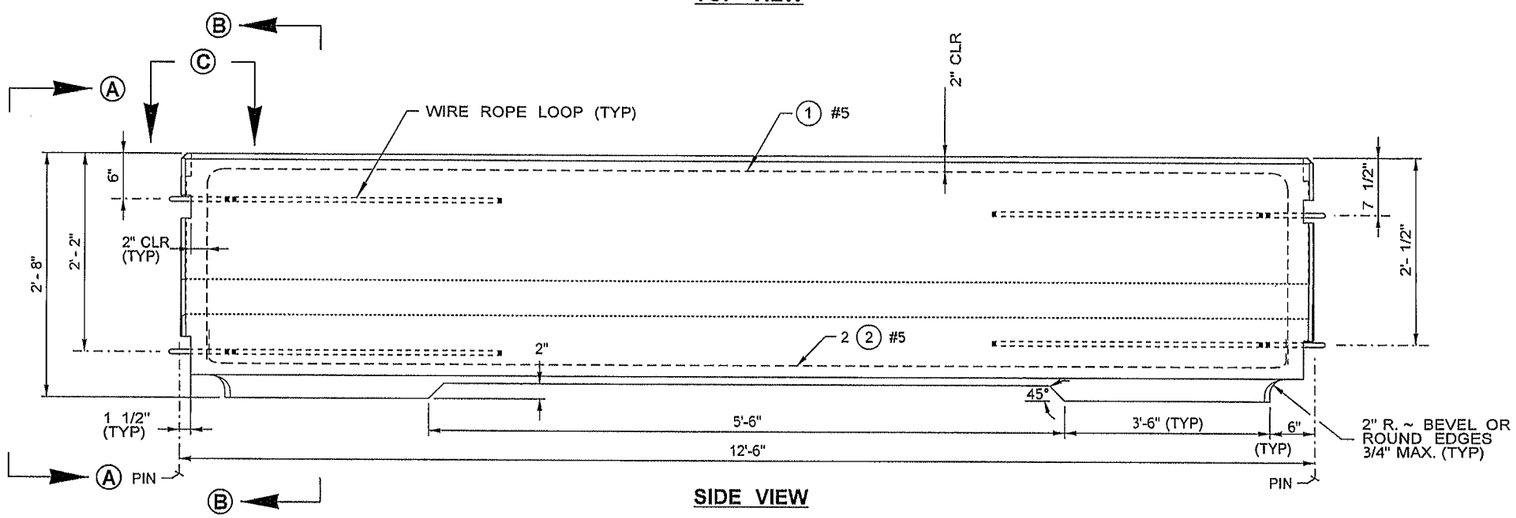

SIDE VIEW

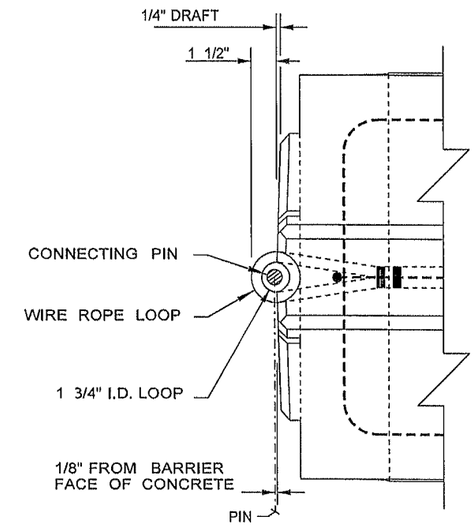

DETAIL C

BARRIER SECTION

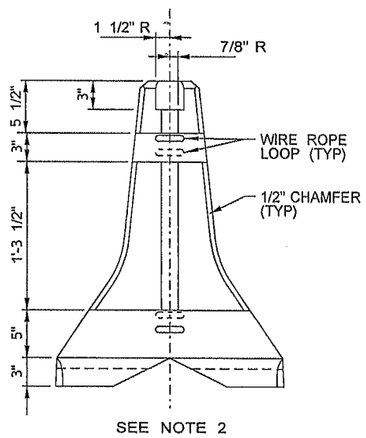

END VIEW A

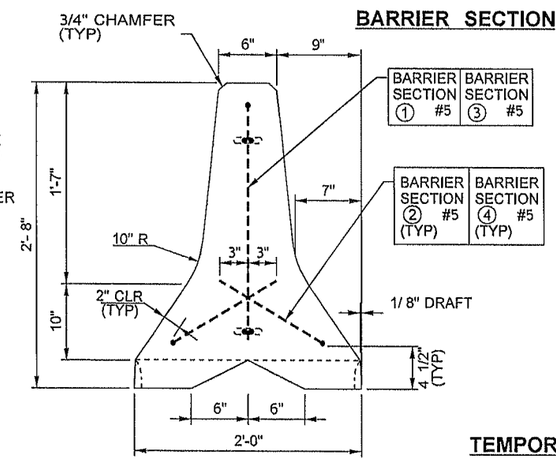

SECTION B

NOTES:

1. WIRE ROPE LOOPS SHALL BE 3' - 8" LONG, EXCEPT FOR THE TOP LOOP OF THE BARRIER TERMINAL, WHICH SHALL BE 2' - 0" LONG.
2. EXCEPT FOR THE LOCATIONS OF THE WIRE ROPE LOOPS, THE DIMENSIONS SHOWN IN END VIEW "A" ARE TYPICAL FOR BOTH ENDS OF A BARRIER SECTION OR OPPOSING ENDS OF BARRIER TERMINALS.
3. CONNECTING AND DRIFT PIN HEAD DESIGNS VARY AMONG DIFFEFERNT MANUFACTURERS. PIN DESIGNS THAT ARE SHAPED DIFFERENTLY THAN THOSE SHOWN IN DETAIL ARE ACCEPTABLE, IF THE BEARING SURFACE IS WITHIN THE MINIMUM AND MAXIMUM WIDTHS SPECIFIED.
4. THE VERTICAL SPACING OF THE WIRE ROPE LOOPS IN A BARRIER TERMINAL IS DETERMINED BY THE END OF THE BARRIER SEGMENT TO WHICH IT IS BEING CONNECTED.
5. SEE STANDARD PLAN C-8 FOR ADDITIONAL INFORMATION AND DETAILS ABOUT CONCRETE BARRIER TYPE 2.

TEMPORARY CONC. BARRIER TYPE 2 WITH SCUPPER

NOT TO SCALE

FILE NAME	PW:_XL3497\PS&E Sheets\Drainage Details Temporary\P3497_SH_TDD_001.dgn				REGION NO.	STATE	FED.AID PROJ.NO.			PLAN REF NO TDD1
TIME	5:13:08 PM				10	WASH			Washington State Department of Transportation	I-5 M ST TO PORTLAND AVE - HOV
DATE	3/24/2014				JOB NUMBER 12C501					SHEET 647 OF 1763 SHEETS
PLOTTED BY	SancheA									
DESIGNED BY	M. KWIATKOWSKI									
ENTERED BY	C. MOLINE				CONTRACT NO.		LOCATION NO.			TEMPORARY DRAINAGE DETAIL
CHECKED BY	E. QUINN						XL3497			
PROJ. ENGR.	J. PEREZ									
REGIONAL ADM.	K. DAYTON	REVISION	DATE	BY				P.E. STAMP BOX DATE	P.E. STAMP BOX DATE	

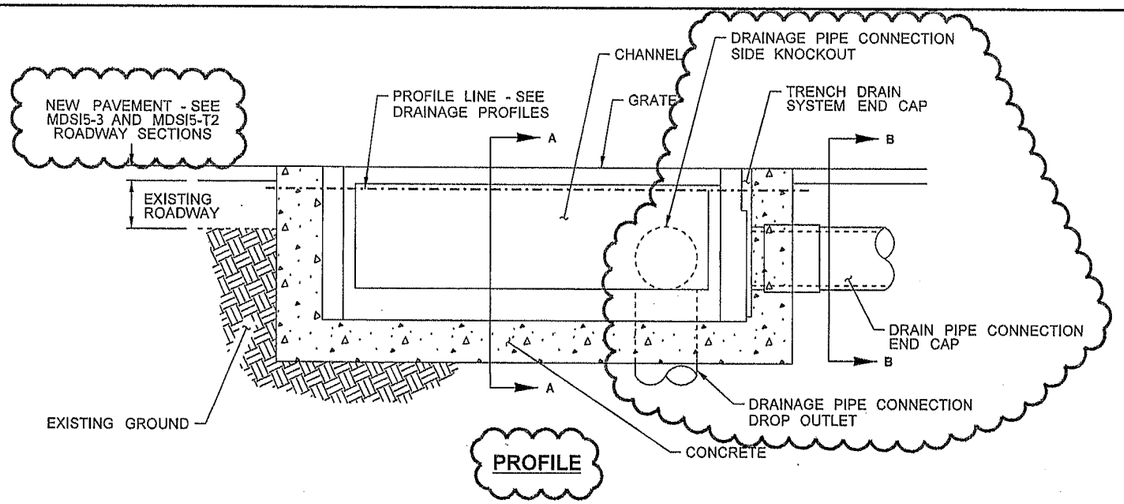

PROFILE

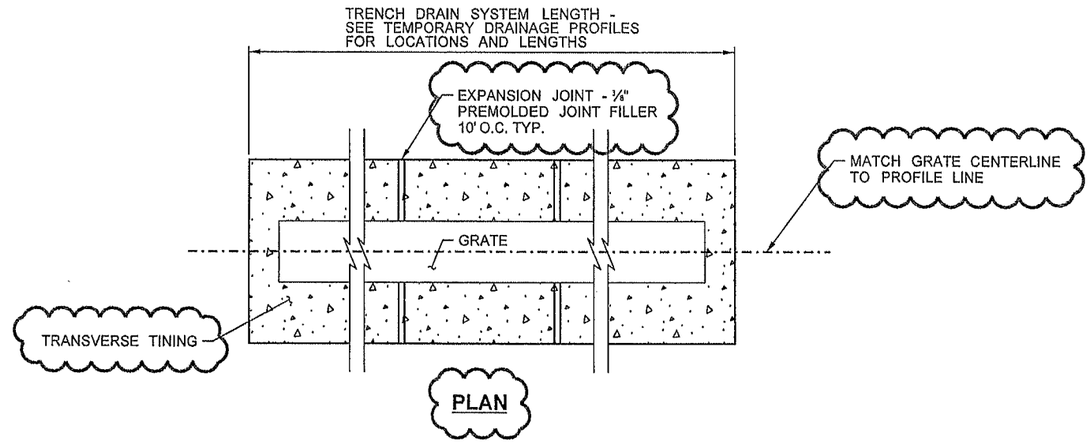

PLAN

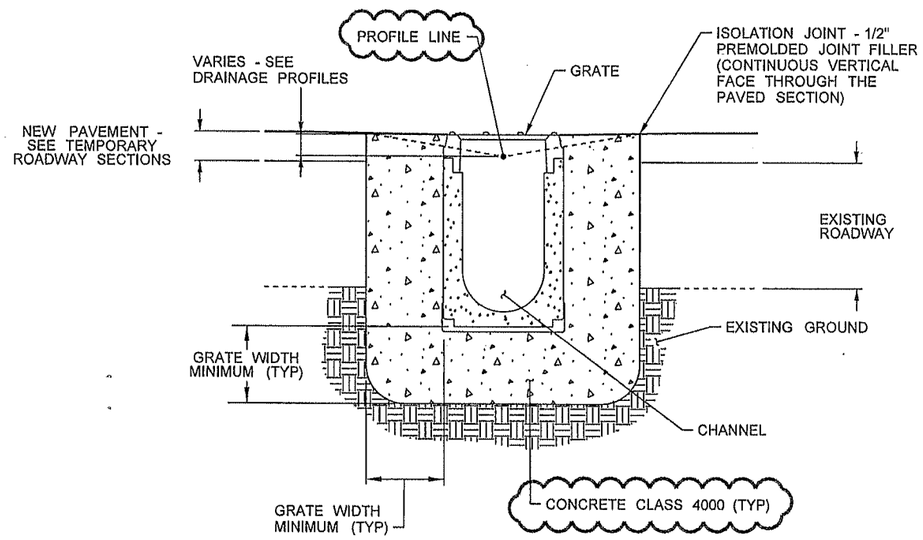

TYPICAL SECTION A-A

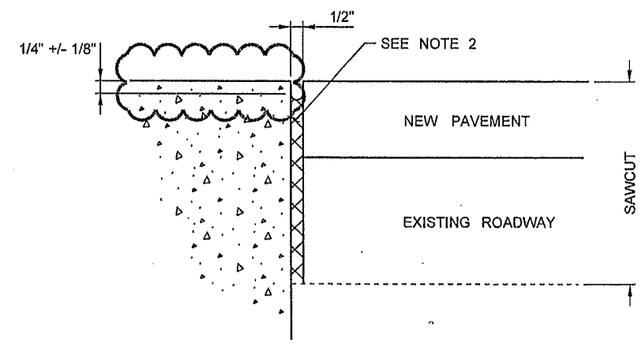

ISOLATION JOINT CROSS-SECTION

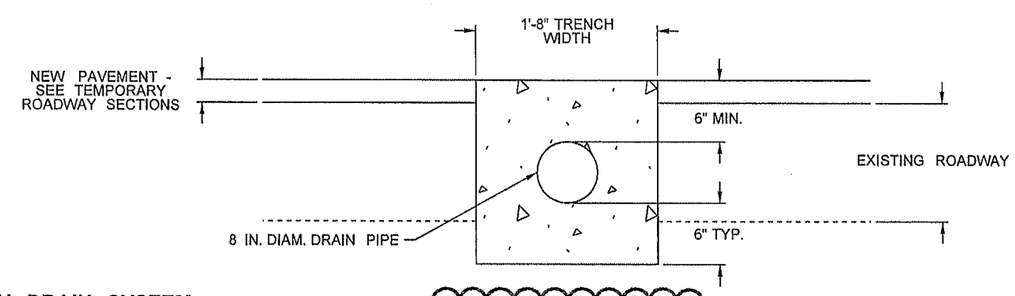

TYPICAL SECTION B-B

NOTES:

1. REFER TO MANUFACTURE'S INSTALLATION GUIDE FOR COMPLETE DETAILS.
2. SAWCUT SHALL BE AS DESCRIBED IN STANDARD SPECIFICATION 5-05.3(8) AND SEALED IN ACCORDANCE WITH STANDARD SPECIFICATION 5-05.3(8)B.

TRENCH DRAIN SYSTEM

NOT TO SCALE

FILE NAME	PW:_XL3497\PS&E Sheets\Drainage Details Temporary\ADD1_P3497_SH_TDD_002.dgn			
TIME	4:30:57 PM			
DATE	4/30/2014			
PLOTTED BY	MerrymS			
DESIGNED BY	B. JUDGE			
ENTERED BY	C. SHANNON			
CHECKED BY	E. QUINN			
PROJ. ENGR.	J. PEREZ	ADD1 - NOTES AND DETAILS UPDATED	05/02/14	CMI
REGIONAL ADM.	K. DAYTON	REVISION	DATE	BY

REGION NO.	STATE	FED.AID PROJ.NO.
10	WASH	
JOB NUMBER 12C501		
CONTRACT NO.	LOCATION NO. XL3497	

CARLA A. MALONEY, STATE OF WASHINGTON, REGISTERED PROFESSIONAL ENGINEER

4/30/14

DATE

P.E. STAMP BOX

DATE

P.E. STAMP BOX

Washington State Department of Transportation

I-5

M ST TO PORTLAND AVE - HOV

TEMPORARY DRAINAGE DETAIL

PLAN REF NO TDD2

SHEET 648 OF 1763 SHEETS

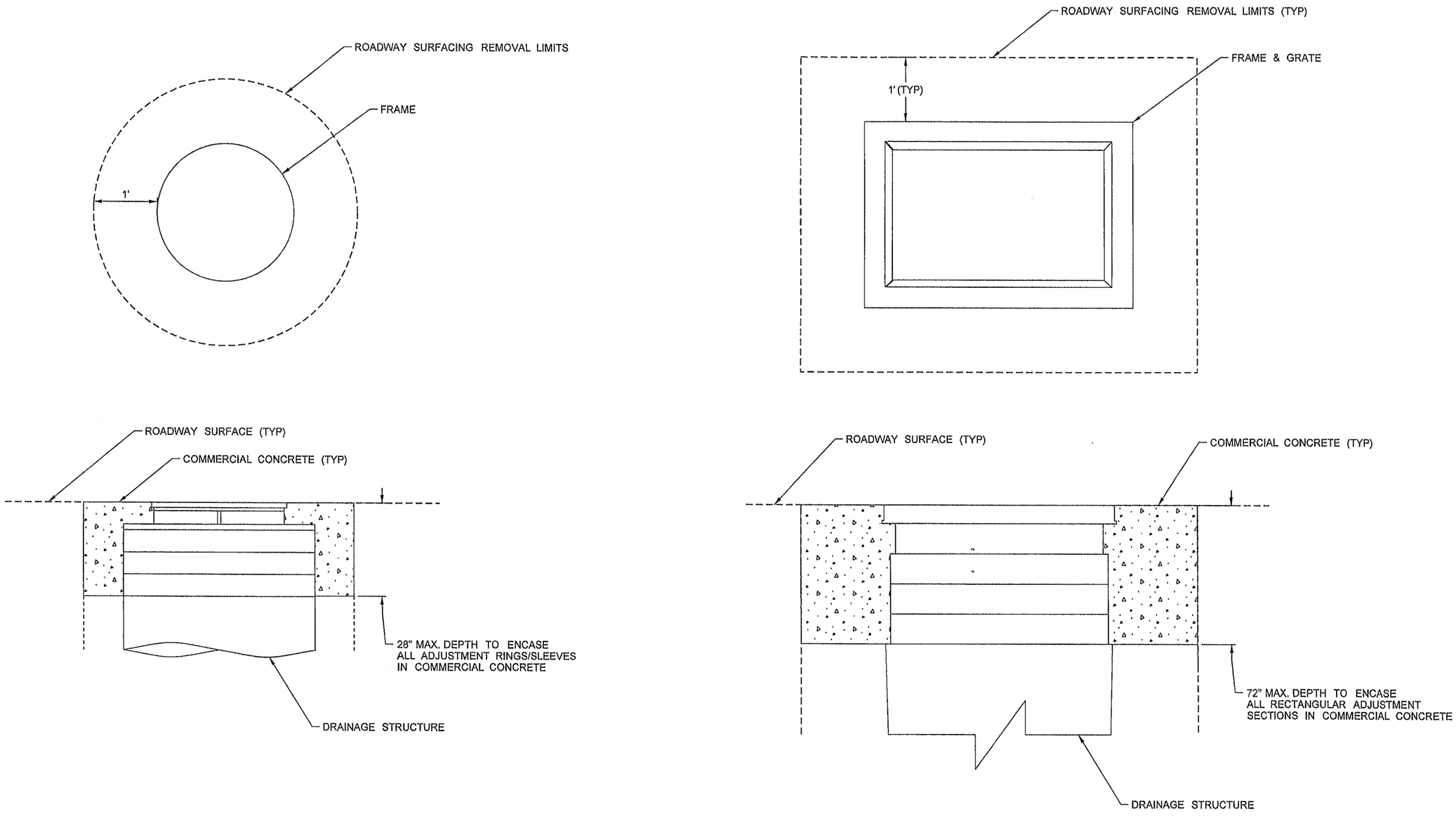

STRUCTURE ADJUSTMENT COLLAR

NOT TO SCALE

FILE NAME	PW:_XL3497\PS&E Sheets\Drainage Details Temporary\P3497_SH_TDD_003.dgn			
TIME	8:14:22 AM			
DATE	2/12/2014			
PLOTTED BY	MolineC			
DESIGNED BY	M. KWIATKOWSKI			
ENTERED BY	C. MOLINE			
CHECKED BY	E. QUINN			
PROJ. ENGR.	J. PEREZ			
REGIONAL ADM.	K. DAYTON	REVISION	DATE	BY

REGION NO.	STATE	FED.AID PROJ.NO.
10	WASH	
JOB NUMBER 12C501		
CONTRACT NO.		LOCATION NO. XL3497

CARLA A. MALONEY, STATE OF WASHINGTON, REGISTERED PROFESSIONAL ENGINEER

3/24/14
DATE
P.E. STAMP BOX

DATE
P.E. STAMP BOX

Washington State Department of Transportation

I-5
M ST TO PORTLAND AVE - HOV

TEMPORARY DRAINAGE DETAIL

PLAN REF NO TDD3

SHEET 649 OF 1763 SHEETS

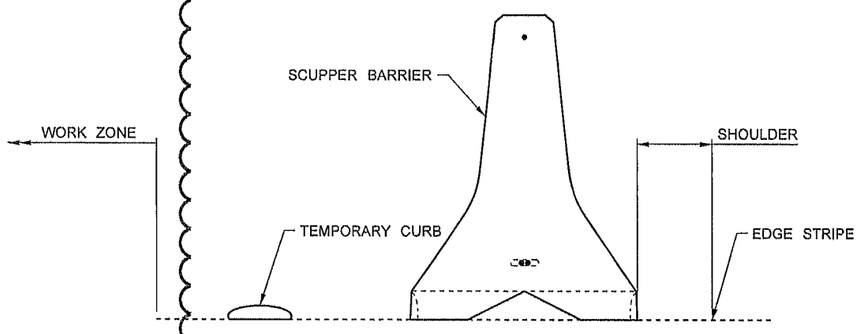

TEMPORARY CURB OFFSET DETAIL

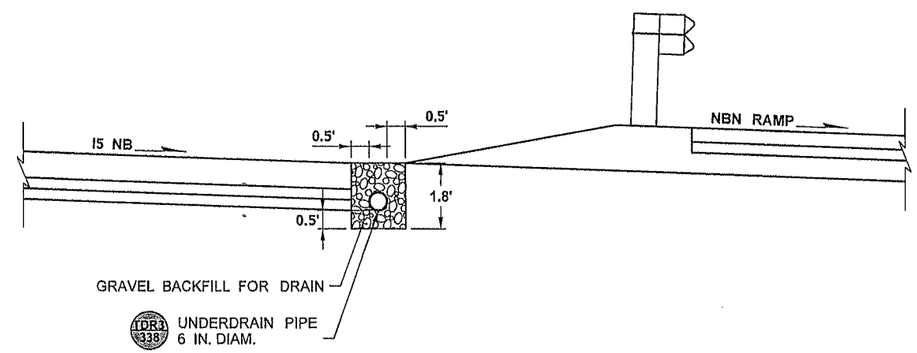

TEMPORARY UNDERDRAIN DETAIL

NOTES:

1. UNDERDRAIN PIPE SHALL EXTEND 5' BEYOND UNDERDRAIN TRENCH AND DAYLIGHT INTO OPEN DITCH.

NOT TO SCALE

FILE NAME	PW:_XL3497\PS&E Sheets\Drainage Details Temporary\ADD1_P3497_SH_TDD_004.dgn			
TIME	6:14:33 PM			
DATE	4/22/2014			
PLOTTED BY	ShannoC			
DESIGNED BY	C. MINTEN			
ENTERED BY	C. MOLINE			
CHECKED BY	E. QUINN			
PROJ. ENGR.	J. PEREZ	AD1 - DETAIL CHANGE & NOTES ADDED	04/25/2014	CM
REGIONAL ADM.	K. DAYTON	REVISION	DATE	BY

REGION NO.	STATE	FED.AID PROJ.NO.
10	WASH	
JOB NUMBER 12C501		
CONTRACT NO.		LOCATION NO. XL3497

CARLA A. MALONEY — STATE OF WASHINGTON — REGISTERED PROFESSIONAL ENGINEER

4/30/14
DATE
P.E. STAMP BOX

DATE
P.E. STAMP BOX

Washington State Department of Transportation

I-5
M ST TO PORTLAND AVE - HOV

TEMPORARY DRAINAGE DETAIL

PLAN REF NO
TDD4

SHEET 650 OF 1763 SHEETS

PLANT MATERIALS LIST

DESCRIPTION	SYM	COMMON NAME	BOTANICAL NAME	QUANT.	SIZE	ROOTS	SPACING	REMARKS
TREES	AM	AMUR MAPLE	ACER GINNALA	55	1½ IN. CAL.	BR	AS SHOWN	SINGLE TRUNK, 3 BRANCHES MIN.
	CS	CANADIAN SERVICEBERRY	AMELANCHIER CANADENSIS	86	1½ IN. CAL.	BR	AS SHOWN	SINGLE TRUNK, 3 BRANCHES MIN.
	IC	INCENSE CEDAR	CALOCEDRUS DECURRENS	186	4-5 FT. HT.	B & B	AS SHOWN	NATURAL FORM
	MA	MARSHAL ASH	FRAXINUS PENNSYLVANICA	37	2 IN. CAL.	B & B	AS SHOWN	SINGLE TRUNK, 3 BRANCHES MIN.
	DF	DOUGLAS FIR	PSEUDOTSUGA MENZIESII	44	4-5 FT. HT.	B & B	AS SHOWN	NATURAL FORM
	RO	NORTHERN RED OAK	QUERCUS RUBRA	27	2 IN. CAL.	B & B	AS SHOWN	SINGLE TRUNK, 3 BRANCHES MIN.
EMERGENT MIX		SLOUGH SEDGE	CAREX OBNUPTA	1,684	4-6"	BR OR PLUG	2' O.C.	
		COMMON RUSH	JUNCUS EFFUSUS	1,684	4-6"	BR OR PLUG	2' O.C.	
		HARDSTEM BULRUSH	SHOENOPLECTUS ACUTUS	1,684	4-6"	BR OR PLUG	2' O.C.	
VINE		VEITCHII BOSTON IVY	PARTHENOCISSUS TRICUSPIDATA 'VEITCHII'	1,748	3-15" HT.	BR OR PLUG	3' O.C.	MULTI-STEM

NOTES:

1. ALL PLANT MATERIAL SPECIFICATIONS FOR SIZE AND CONDITION ARE MINIMUM REQUIREMENTS.
2. SPECIFICATIONS ARE IN ACCORDANCE WITH THE 'AMERICAN STANDARD FOR NURSERY STOCK' LATEST EDITION.
3. IF A CONFLICT OCCURS BETWEEN THESE SPECIFICATIONS AND THE 'A.S.N.S.', THESE SPECIFICATIONS SHALL APPLY.
4. ALL TREES SHALL HAVE STRAIGHT TRUNKS, FULL AND SYMMETRICAL BRANCHING, CENTRAL LEADER, AND BE GROWN TO DEVELOP A FULL CROWN.
5. ALL PATENTED OR TRADEMARKED MATERIAL SHALL BE TAGGED WITH THE APPROPRIATE IDENTIFICATION AT THE TIME OF DELIVERY TO THE PROJECT SITE.
6. ALL BARE ROOT, AND BALLED AND BURLAPPED TREES SHALL BE STAKED AND SECURED WITHIN 48 HOURS AFTER PLANTING.
7. CONTAINER MATERIAL MAY BE SUBSTITUTED FOR BARE ROOT, AND BALLED AND BURLAPPED MATERIAL IF THE CONTAINER AND ROOT MASS ARE EQUAL IN SIZE TO THE SPECIFICATION FOR BARE ROOT AND BALLED AND BURLAPPED MATERIAL.
8. ALL PLANT MATERIAL SHALL BE NURSERY GROWN.
9. PLANT TREES NO CLOSER THAN 30 FEET FROM THE PAVEMENT, UNLESS APPROVED BY THE ENGINEER.

ABBREVIATIONS	
B&B	BALLED AND BURLAPPED
BR	BARE ROOT
CAL.	CALIPER
CONT.	CONTAINER
FT.	FOOT
HT.	HEIGHT
IN.	INCH
MAX.	MAXIMUM
MIN.	MINIMUM
O.C.	ON CENTER
TYP	TYPICAL

T. 20N. R. 3E. W.M.

TREES IN GRASS
4 AMUR MAPLE
6 CANADIAN SERVICEBERRY
23 INCENSE CEDAR
3 MARSHAL ASH

TOPSOIL TYPE A
BARK OR WOOD
CHIP MULCH

VINE 540 L.F.
180 VEITCHII BOSTON IVY

TOPSOIL TYPE A
BARK OR WOOD
CHIP MULCH

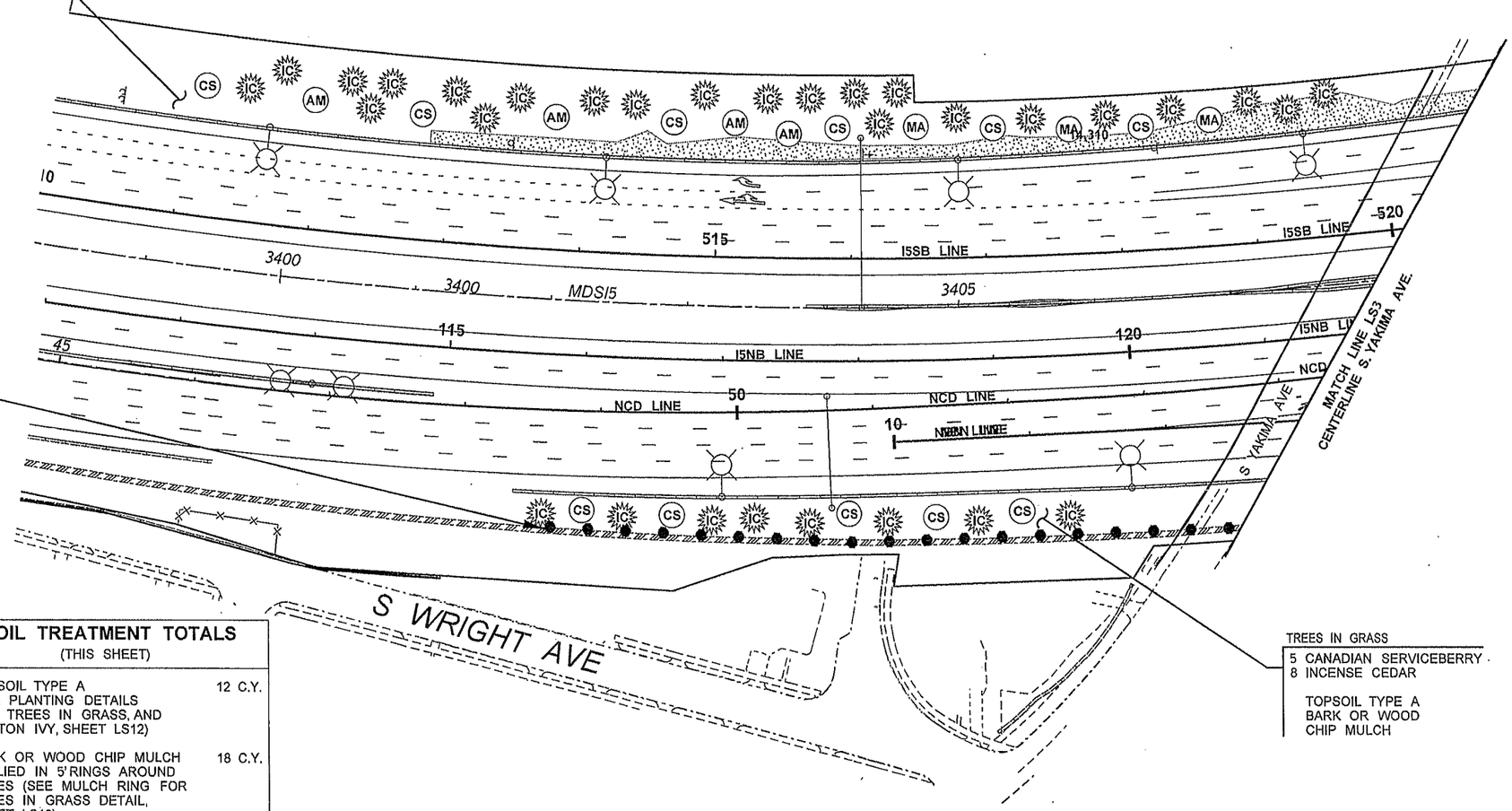

TREES IN GRASS
5 CANADIAN SERVICEBERRY
8 INCENSE CEDAR

TOPSOIL TYPE A
BARK OR WOOD
CHIP MULCH

SOIL TREATMENT TOTALS
(THIS SHEET)

TOPSOIL TYPE A (SEE PLANTING DETAILS FOR TREES IN GRASS, AND BOSTON IVY, SHEET LS12)	12 C.Y.
BARK OR WOOD CHIP MULCH APPLIED IN 5' RINGS AROUND TREES (SEE MULCH RING FOR TREES IN GRASS DETAIL, SHEET LS12)	18 C.Y.
BARK OR WOOD CHIP MULCH APPLIED AS 3" BLANKET (SEE BOSTON IVY PLANTING DETAIL, SHEET LS12)	10 C.Y.
FINE COMPOST APPLIED AS 1" BLANKET PRIOR TO SEEDING, FERTILIZING, AND MULCHING	0.27 ACRE
SEEDING, FERTILIZING, AND MULCHING	0.27 ACRE

PLANT LEGEND

AM	AMUR MAPLE
CS	CANADIAN SERVICEBERRY
IC	INCENSE CEDAR
MA	MARSHAL ASH
	VINE
	SEEDING, FERTILIZING, AND MULCHING

NOTES

1. PRIOR TO SEEDING, FERTILIZING, AND MULCHING, ALL SEEDING AREAS SHALL RECEIVE A 1" BLANKET OF FINE COMPOST
2. SEE SHEET LS1 FOR PLANT MATERIALS LIST
3. SEE SHEET LS12 FOR PLANTING DETAILS
4. SEE DRAINAGE PLANS FOR MFD LOCATIONS AND DETAILS

0 50 100
SCALE IN FEET

N

FILE NAME	PW:_XL3497\PS&E Sheets\Landscaping\P3497_SH_LS_002.dgn
TIME	1:53:32 PM
DATE	3/25/2014
PLOTTED BY	FrettsL
DESIGNED BY	E. WINKLEY, L. FRETTS
ENTERED BY	L. FRETTS
CHECKED BY	E. WINKLEY
PROJ. ENGR.	J. PEREZ
REGIONAL ADM.	K. DAYTON

REVISION | DATE | BY

REGION NO.	STATE	FED.AID PROJ.NO.
10	WASH	
JOB NUMBER 12C501		
CONTRACT NO.		LOCATION NO. XL3497

STATE OF WASHINGTON
REGISTERED LANDSCAPE ARCHITECT
EDWARD J. WINKLEY
CERTIFICATE NO. 985
3/25/14

Washington State
Department of Transportation

I-5
M ST TO PORTLAND AVE - HOV

LANDSCAPING

LS2

SHEET 652 OF 1763 SHEETS

T. 20N. R. 3E. W.M.

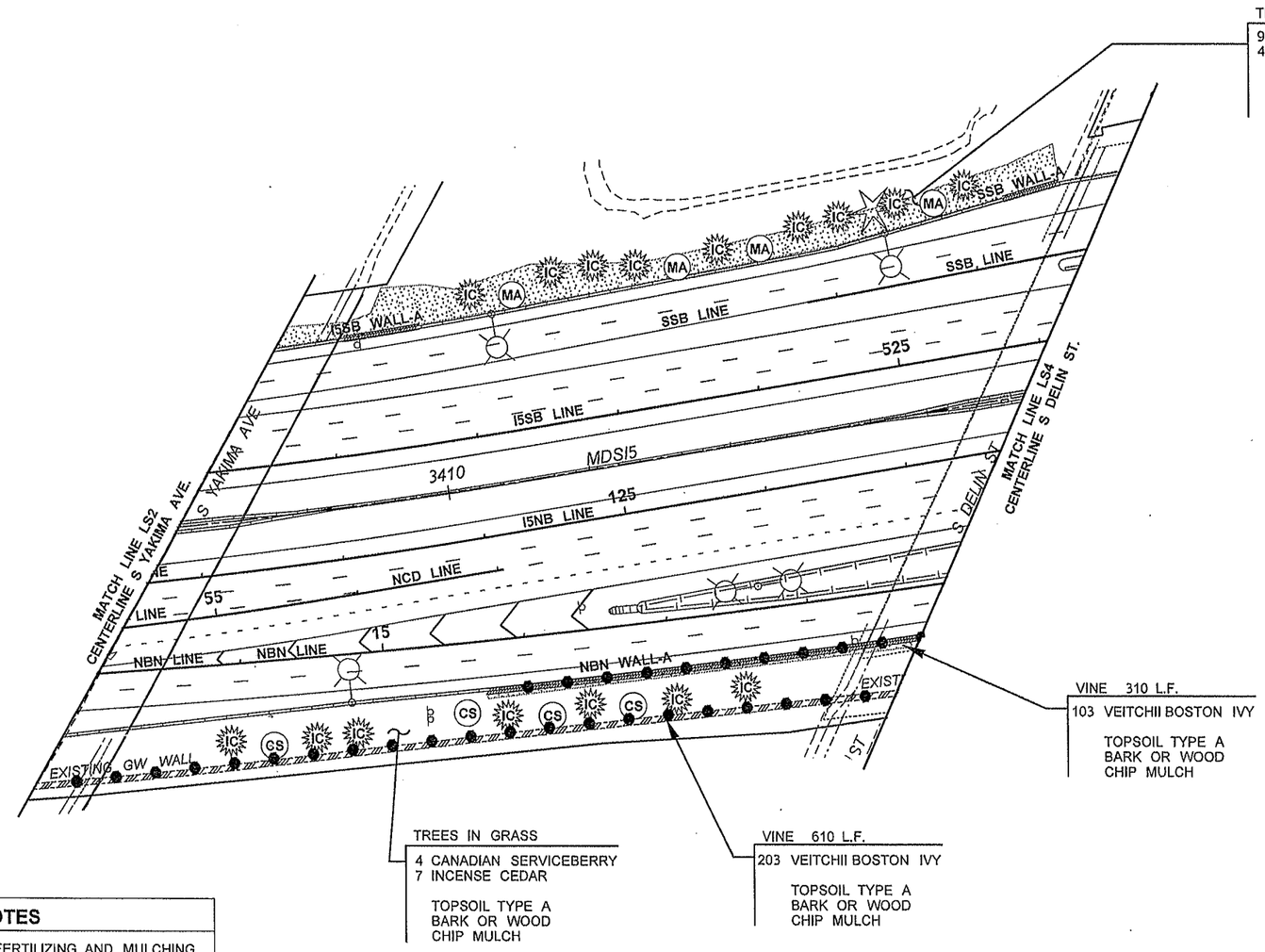

PLANT LEGEND

CS	CANADIAN SERVICEBERRY
IC	INCENSE CEDAR
MA	MARSHAL ASH
● ● ●	VINE
	SEEDING, FERTILIZING, AND MULCHING
	EXISTING TREE TO BE PRESERVED

SOIL TREATMENT TOTALS
(THIS SHEET)

TOPSOIL TYPE A (SEE PLANTING DETAILS FOR TREES IN GRASS, BOSTON IVY, AND PLANTER STRIP DETAIL, SHEET LS12)	17 C.Y.
BARK OR WOOD CHIP MULCH APPLIED IN 5' RINGS AROUND TREES (SEE MULCH RING FOR TREES IN GRASS DETAIL, SHEET LS12)	9 C.Y.
BARK OR WOOD CHIP MULCH APPLIED AS 3" BLANKET (SEE BOSTON IVY PLANTING DETAIL, AND PLANTER STRIP DETAIL, SHEET LS12)	17 C.Y.
FINE COMPOST APPLIED AS 1" BLANKET PRIOR TO SEEDING, FERTILIZING, AND MULCHING	0.30 ACRE
SEEDING, FERTILIZING, AND MULCHING	0.30 ACRE
CONSTRUCTION GEOTEXTILE FOR UNDERGROUND DRAINAGE (SEE PLANTER STRIP DETAIL, SHEET LS12)	242 S.Y.
BACKFILL FOR SAND DRAINS (SEE PLANTER STRIP DETAIL, SHEET LS12)	29 C.Y.

NOTES

1. PRIOR TO SEEDING, FERTILIZING, AND MULCHING, ALL SEEDING AREAS SHALL RECEIVE A 1" BLANKET OF FINE COMPOST
2. SEE SHEET LS1 FOR PLANT MATERIALS LIST
3. SEE SHEET LS12 FOR PLANTING DETAILS
4. EXISTING TREES TO BE PRESERVED SHALL BE FLAGGED BY ENGINEER
5. SEE SHEET LS12 FOR DETAIL REGARDING PLANTER STRIP ALONG NBN WALL A
6. SEE DRAINAGE PLANS FOR MFD LOCATIONS AND DETAILS

0 50 100
SCALE IN FEET

N

FILE NAME	PW:_XL3497\PS&E Sheets\Landscaping\P3497_SH_LS_003.dgn
TIME	1:53:42 PM
DATE	3/25/2014
PLOTTED BY	FrettsL
DESIGNED BY	E. WINKLEY, L. FRETTS
ENTERED BY	L. FRETTS
CHECKED BY	E. WINKLEY
PROJ. ENGR.	J. PEREZ
REGIONAL ADM.	K. DAYTON

REVISION | DATE | BY

REGION NO.	STATE	FED.AID PROJ.NO.
10	WASH	
JOB NUMBER 12C501		
CONTRACT NO.		LOCATION NO. XL3497

STATE OF WASHINGTON
REGISTERED LANDSCAPE ARCHITECT
EDWARD J. WINKLEY
CERTIFICATE NO. 985
3/25/14

Washington State
Department of Transportation

I-5
M ST TO PORTLAND AVE - HOV

LANDSCAPING

LS3

SHEET 653 OF 1763 SHEETS

T. 20N. R. 3E. W.M.

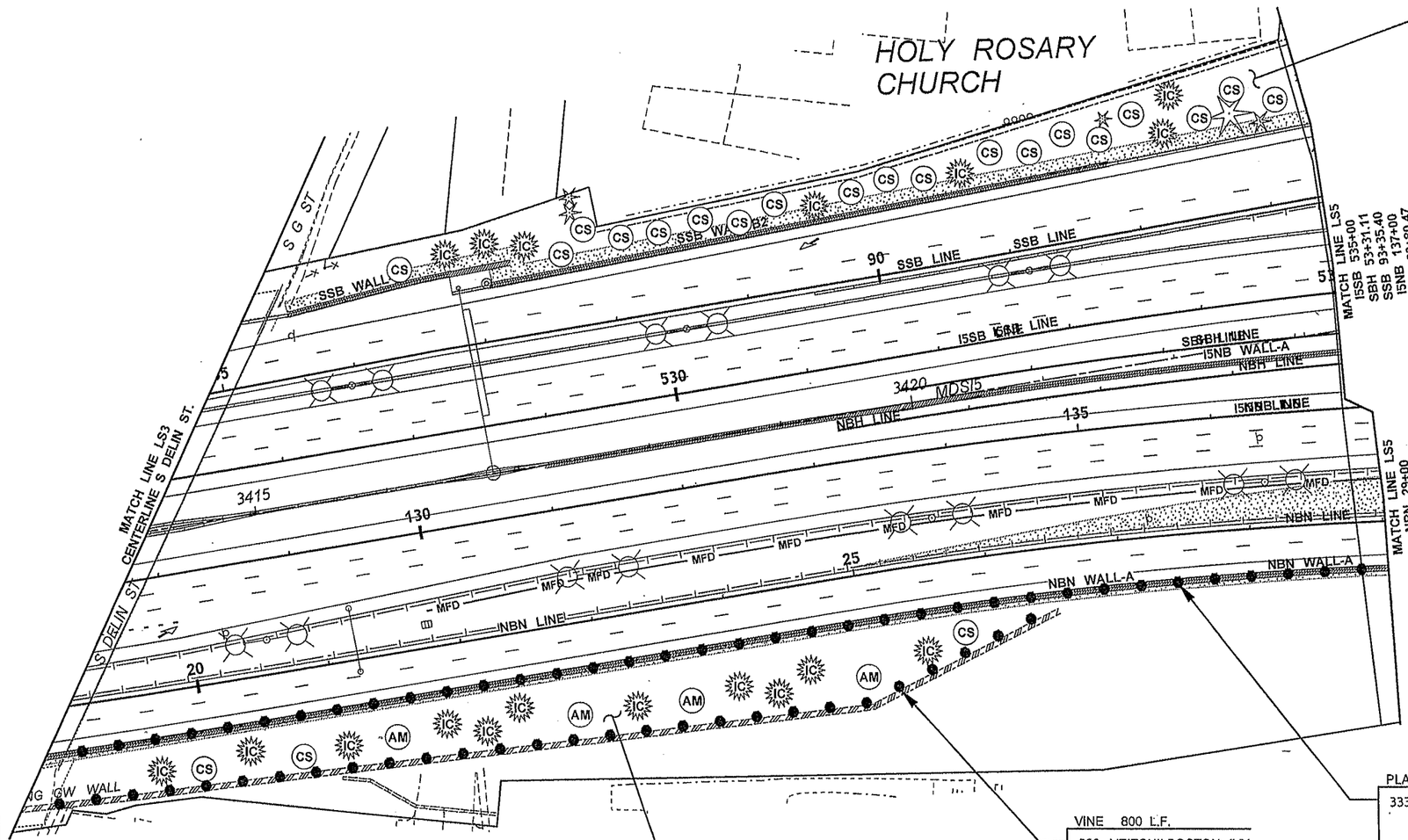

TREES IN GRASS
19 CANADIAN SERVICEBERRY
7 INCENSE CEDAR

TOPSOIL TYPE A
BARK OR WOOD
CHIP MULCH

PLANTER STRIP 1,000 L.F.
333 VEITCHII BOSTON IVY

TOPSOIL TYPE A
BARK OR WOOD
CHIP MULCH

VINE 800 L.F.
268 VEITCHII BOSTON IVY

TOPSOIL TYPE A
BARK OR WOOD
CHIP MULCH

TREES IN GRASS
4 AMUR MAPLE
3 CANADIAN SERVICEBERRY
11 INCENSE CEDAR

TOPSOIL TYPE A
BARK OR WOOD
CHIP MULCH

PLANT LEGEND

AM	AMUR MAPLE
CS	CANADIAN SERVICEBERRY
IC	INCENSE CEDAR
	VINE
	SEEDING, FERTILIZING, AND MULCHING
	EXISTING TREE TO BE PRESERVED

SOIL TREATMENT TOTALS
(THIS SHEET)

TOPSOIL TYPE A (SEE PLANTING DETAILS FOR TREES IN GRASS, BOSTON IVY, AND PLANTER STRIP DETAIL, SHEET LS12)	63 C.Y.
BARK OR WOOD CHIP MULCH APPLIED IN 5' RINGS AROUND TREES (SEE MULCH RING FOR TREES IN GRASS DETAIL, SHEET LS12)	16 C.Y.
BARK OR WOOD CHIP MULCH APPLIED AS 3" BLANKET (SEE BOSTON IVY PLANTING DETAIL, AND PLANTER STRIP DETAIL, SHEET LS12)	26 C.Y.
FINE COMPOST APPLIED AS 1" BLANKET PRIOR TO SEEDING, FERTILIZING, AND MULCHING	0.40 ACRE
SEEDING, FERTILIZING, AND MULCHING	0.40 ACRE
CONSTRUCTION GEOTEXTILE FOR UNDERGROUND DRAINAGE (SEE PLANTER STRIP DETAIL, SHEET LS12)	796 S.Y.
BACKFILL FOR SAND DRAINS (SEE PLANTER STRIP DETAIL, SHEET LS12)	94 C.Y.

NOTES

1. PRIOR TO SEEDING, FERTILIZING, AND MULCHING, ALL SEEDING AREAS SHALL RECEIVE A 1" BLANKET OF FINE COMPOST
2. SEE SHEET LS1 FOR PLANT MATERIALS LIST
3. SEE SHEET LS12 FOR PLANTING DETAILS
4. EXISTING TREES TO BE PRESERVED SHALL BE FLAGGED BY ENGINEER
5. SEE SHEET LS12 FOR DETAIL REGARDING PLANTER STRIP ALONG NBN WALL A
6. SEE DRAINAGE PLANS FOR MFD LOCATIONS AND DETAILS

0 50 100
SCALE IN FEET

FILE NAME	PW:_XL3497\PS&E Sheets\Landscaping\P3497_SH_LS_004.dgn
TIME	1:53:52 PM
DATE	3/25/2014
PLOTTED BY	FrettsL
DESIGNED BY	E. WINKLEY, L. FRETTS
ENTERED BY	L. FRETTS
CHECKED BY	E. WINKLEY
PROJ. ENGR.	J. PEREZ
REGIONAL ADM.	K. DAYTON

REVISION | DATE | BY

REGION NO.	STATE	FED.AID PROJ.NO.
10	WASH	
JOB NUMBER 12C501		
CONTRACT NO.		LOCATION NO. XL3497

STATE OF WASHINGTON
REGISTERED LANDSCAPE ARCHITECT
EDWARD J. WINKLEY
CERTIFICATE NO. 985
3/25/14

Washington State Department of Transportation

I-5
M ST TO PORTLAND AVE - HOV

LANDSCAPING

LS4

SHEET 654 OF 1763 SHEETS

T. 20N. R. 3E. W.M.

PLANT LEGEND

AM	AMUR MAPLE
CS	CANADIAN SERVICEBERRY
IC	INCENSE CEDAR
MA	MARSHAL ASH
DF	DOUGLAS FIR
RO	NORTHERN RED OAK
● ● ●	VINE
	SEEDING, FERTILIZING, AND MULCHING
	EXISTING TREE TO BE PRESERVED

SOIL TREATMENT TOTALS
(THIS SHEET)

TOPSOIL TYPE A (SEE PLANTING DETAILS FOR TREES IN GRASS, BOSTON IVY, AND PLANTER STRIP DETAIL, SHEET LS12)	48 C.Y.
BARK OR WOOD CHIP MULCH APPLIED IN 5' RINGS AROUND TREES (SEE MULCH RING FOR TREES IN GRASS DETAIL, SHEET LS12)	23 C.Y.
BARK OR WOOD CHIP MULCH APPLIED AS 3" BLANKET (SEE BOSTON IVY PLANTING DETAIL, AND PLANTER STRIP DETAIL, SHEET LS12)	7 C.Y.
FINE COMPOST APPLIED AS 1" BLANKET PRIOR TO SEEDING, FERTILIZING, AND MULCHING	1.98 ACRE
SEEDING, FERTILIZING, AND MULCHING	1.98 ACRE
CONSTRUCTION GEOTEXTILE FOR UNDERGROUND DRAINAGE (SEE PLANTER STRIP DETAIL, SHEET LS12)	623 S.Y.
BACKFILL FOR SAND DRAINS (SEE PLANTER STRIP DETAIL, SHEET LS12)	74 C.Y.

NOTES

1. PRIOR TO SEEDING, FERTILIZING, AND MULCHING, ALL SEEDING AREAS SHALL RECEIVE A 1" BLANKET OF FINE COMPOST
2. SEE SHEET LS1 FOR PLANT MATERIALS LIST
3. SEE SHEET LS12 FOR PLANTING DETAILS
4. EXISTING TREES TO BE PRESERVED SHALL BE FLAGGED BY ENGINEER
5. SEE SHEET LS12 FOR DETAIL REGARDING PLANTER STRIP ALONG NBN WALL A
6. SEE DRAINAGE PLANS FOR MFD LOCATIONS AND DETAILS

TREES IN GRASS
5 AMUR MAPLE
7 CANADIAN SERVICEBERRY
14 INCENSE CEDAR
3 MARSHAL ASH
11 DOUGLAS FIR
4 NORTHERN RED OAK

TOPSOIL TYPE A
BARK OR WOOD
CHIP MULCH

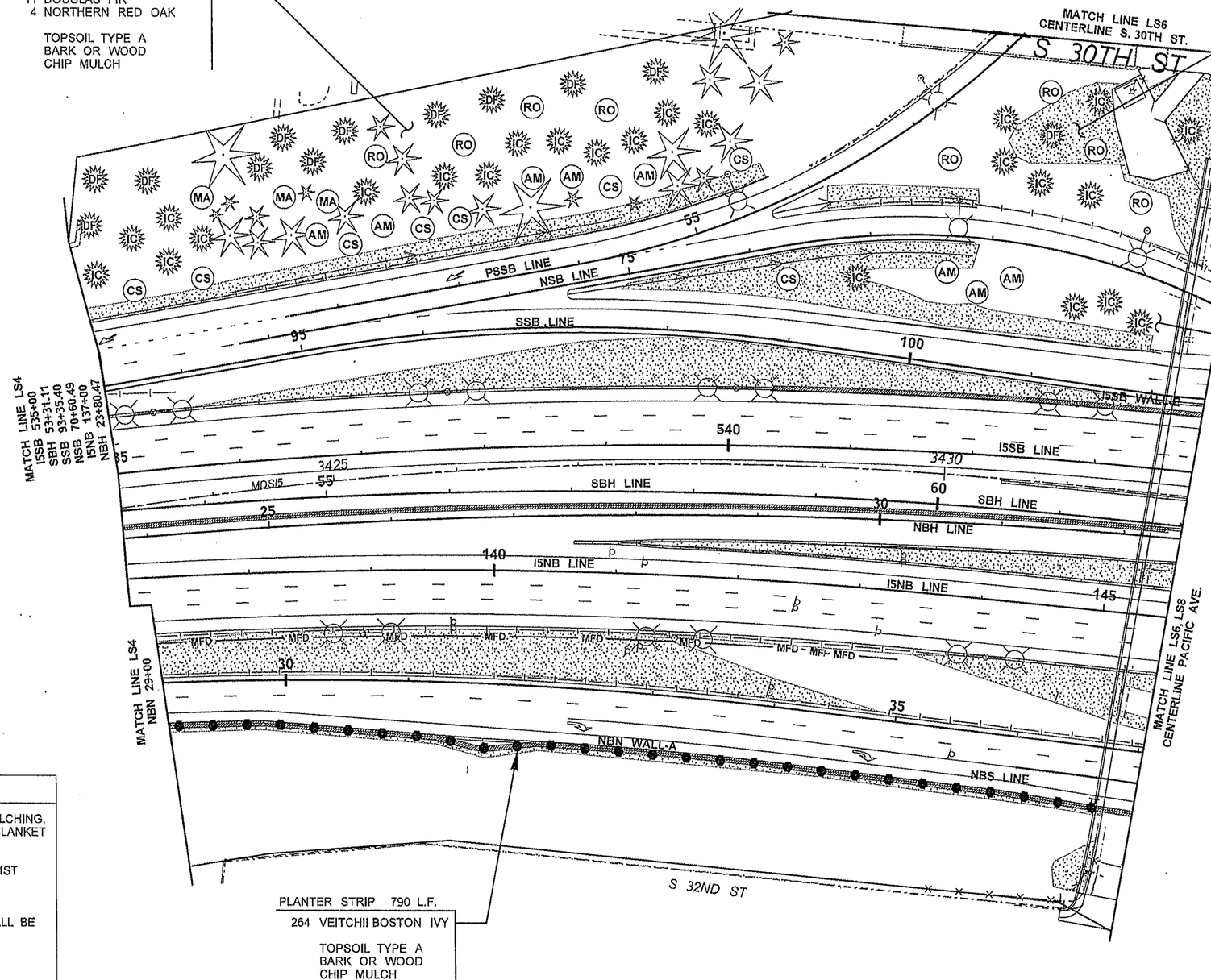

TREES IN GRASS
6 INCENSE CEDAR
1 DOUGLAS FIR
4 NORTHERN RED OAK

TOPSOIL TYPE A
BARK OR WOOD
CHIP MULCH

TREES IN GRASS
3 AMUR MAPLE
1 CANADIAN SERVICEBERRY
4 INCENSE CEDAR

TOPSOIL TYPE A
BARK OR WOOD
CHIP MULCH

PLANTER STRIP 790 L.F.
264 VEITCHII BOSTON IVY

TOPSOIL TYPE A
BARK OR WOOD
CHIP MULCH

0 50 100
SCALE IN FEET

FILE NAME	PW:_XL3497\PS&E Sheets\Landscaping\P3497_SH_LS_005.dgn				REGION NO. 10	STATE WASH	FED.AID PROJ.NO.
TIME	1:54:02 PM						
DATE	3/25/2014						
PLOTTED BY	FrettsL						
DESIGNED BY	E. WINKLEY, L. FRETTS				JOB NUMBER 12C501		
ENTERED BY	L. FRETTS						
CHECKED BY	E. WINKLEY				CONTRACT NO.		LOCATION NO. XL3497
PROJ. ENGR.	J. PEREZ						
REGIONAL ADM.	K. DAYTON	REVISION	DATE	BY			

STATE OF WASHINGTON
REGISTERED LANDSCAPE ARCHITECT
EDWARD J. WINKLEY
CERTIFICATE NO. 985
3/25/14

Washington State
Department of Transportation

I-5
M ST TO PORTLAND AVE - HOV

LANDSCAPING

LS5

SHEET 655 OF 1763 SHEETS

T. 20N. R. 3E. W.M.

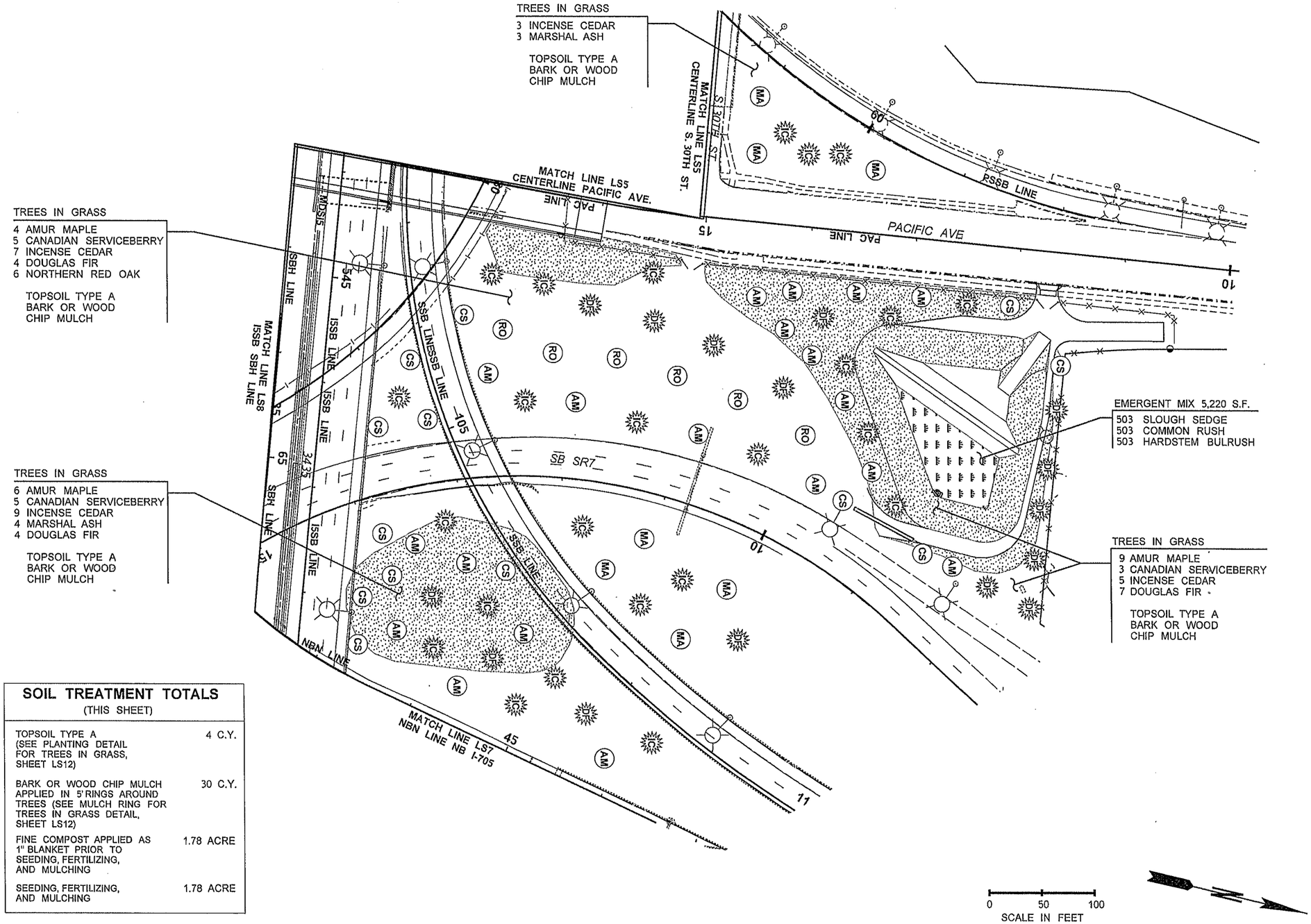

PLANT LEGEND

AM	AMUR MAPLE
CS	CANADIAN SERVICEBERRY
IC	INCENSE CEDAR
MA	MARSHAL ASH
DF	DOUGLAS FIR
RO	NORTHERN RED OAK
	EMERGENT MIX
	SEEDING, FERTILIZING, AND MULCHING

NOTES

1. PRIOR TO SEEDING, FERTILIZING, AND MULCHING, ALL SEEDING AREAS SHALL RECEIVE A 1" BLANKET OF FINE COMPOST
2. SEE SHEET LS1 FOR PLANT MATERIALS LIST
3. SEE SHEET LS12 FOR PLANTING DETAILS
4. SEE DRAINAGE PLANS FOR MFD LOCATIONS AND DETAILS

SOIL TREATMENT TOTALS
(THIS SHEET)

TOPSOIL TYPE A (SEE PLANTING DETAIL FOR TREES IN GRASS, SHEET LS12)	4 C.Y.
BARK OR WOOD CHIP MULCH APPLIED IN 5' RINGS AROUND TREES (SEE MULCH RING FOR TREES IN GRASS DETAIL, SHEET LS12)	30 C.Y.
FINE COMPOST APPLIED AS 1" BLANKET PRIOR TO SEEDING, FERTILIZING, AND MULCHING	1.78 ACRE
SEEDING, FERTILIZING, AND MULCHING	1.78 ACRE

FILE NAME	PW:_XL3497\PS&E Sheets\Landscaping\P3497_SH_LS_006.dgn
TIME	1:54:13 PM
DATE	3/25/2014
PLOTTED BY	FrettsL
DESIGNED BY	E. WINKLEY, L. FRETTS
ENTERED BY	L. FRETTS
CHECKED BY	E. WINKLEY
PROJ. ENGR.	J. PEREZ
REGIONAL ADM.	K. DAYTON

REVISION | DATE | BY

REGION NO.	STATE	FED.AID PROJ.NO.
10	WASH	
JOB NUMBER 12C501		
CONTRACT NO.		LOCATION NO. XL3497

STATE OF WASHINGTON
REGISTERED LANDSCAPE ARCHITECT
EDWARD J. WINKLEY
CERTIFICATE NO. 985
3/25/14

Washington State Department of Transportation

I-5
M ST TO PORTLAND AVE - HOV

LANDSCAPING

LS6

SHEET 656 OF 1763 SHEETS

T. 20N. R. 3E. W.M.

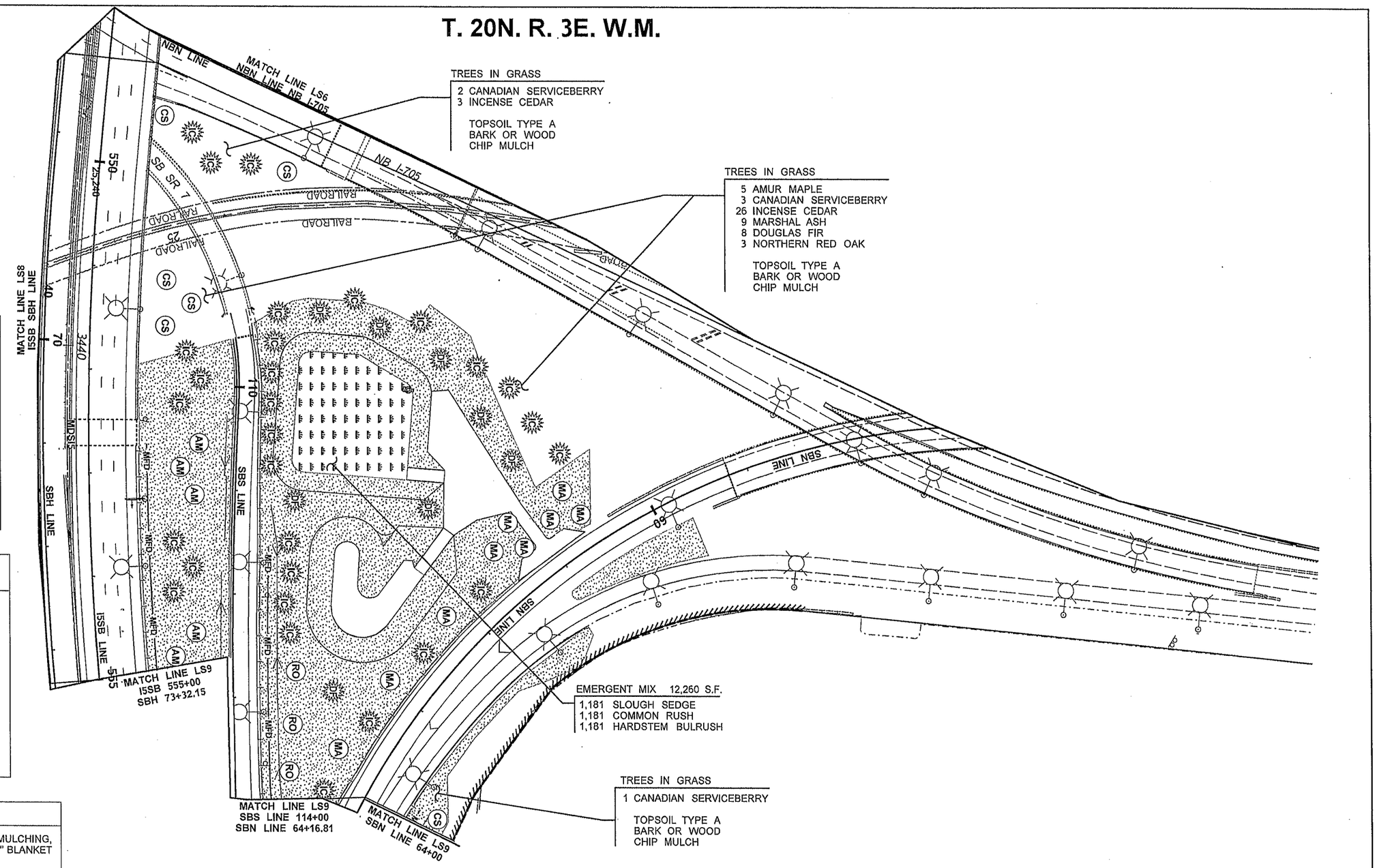

PLANT LEGEND

AM	AMUR MAPLE
CS	CANADIAN SERVICEBERRY
IC	INCENSE CEDAR
MA	MARSHAL ASH
DF	DOUGLAS FIR
RO	NORTHERN RED OAK
	EMERGENT MIX
	SEEDING, FERTILIZING, AND MULCHING

SOIL TREATMENT TOTALS

(THIS SHEET)

TOPSOIL TYPE A (SEE PLANTING DETAIL FOR TREES IN GRASS, SHEET LS12)	4 C.Y.
BARK OR WOOD CHIP MULCH APPLIED IN 5' RINGS AROUND TREES (SEE MULCH RING FOR TREES IN GRASS DETAIL, SHEET LS12)	21 C.Y.
FINE COMPOST APPLIED AS 1" BLANKET PRIOR TO SEEDING, FERTILIZING, AND MULCHING	3.08 ACRE
SEEDING, FERTILIZING, AND MULCHING	3.08 ACRE

NOTES

1. PRIOR TO SEEDING, FERTILIZING, AND MULCHING, ALL SEEDING AREAS SHALL RECEIVE A 1" BLANKET OF FINE COMPOST
2. SEE SHEET LS1 FOR PLANT MATERIALS LIST
3. SEE SHEET LS12 FOR PLANTING DETAILS
4. SEE DRAINAGE PLANS FOR MFD LOCATIONS AND DETAILS

FILE NAME	PW:_XL3497\PS&E Sheets\Landscaping\P3497_SH_LS_007.dgn
TIME	1:54:22 PM
DATE	3/25/2014
PLOTTED BY	FrettsL
DESIGNED BY	E. WINKLEY, L. FRETTS
ENTERED BY	L. FRETTS
CHECKED BY	E. WINKLEY
PROJ. ENGR.	J. PEREZ
REGIONAL ADM.	K. DAYTON

REVISION | DATE | BY

REGION NO.	STATE	FED.AID PROJ.NO.
10	WASH	
JOB NUMBER 12C501		
CONTRACT NO.		LOCATION NO. XL3497

STATE OF WASHINGTON
REGISTERED LANDSCAPE ARCHITECT
EDWARD J. WINKLEY
CERTIFICATE NO. 985
3/25/14

Washington State Department of Transportation

I-5
M ST TO PORTLAND AVE - HOV

LANDSCAPING

LS7

SHEET 657 OF 1763 SHEETS

T. 20N. R. 3E. W.M.

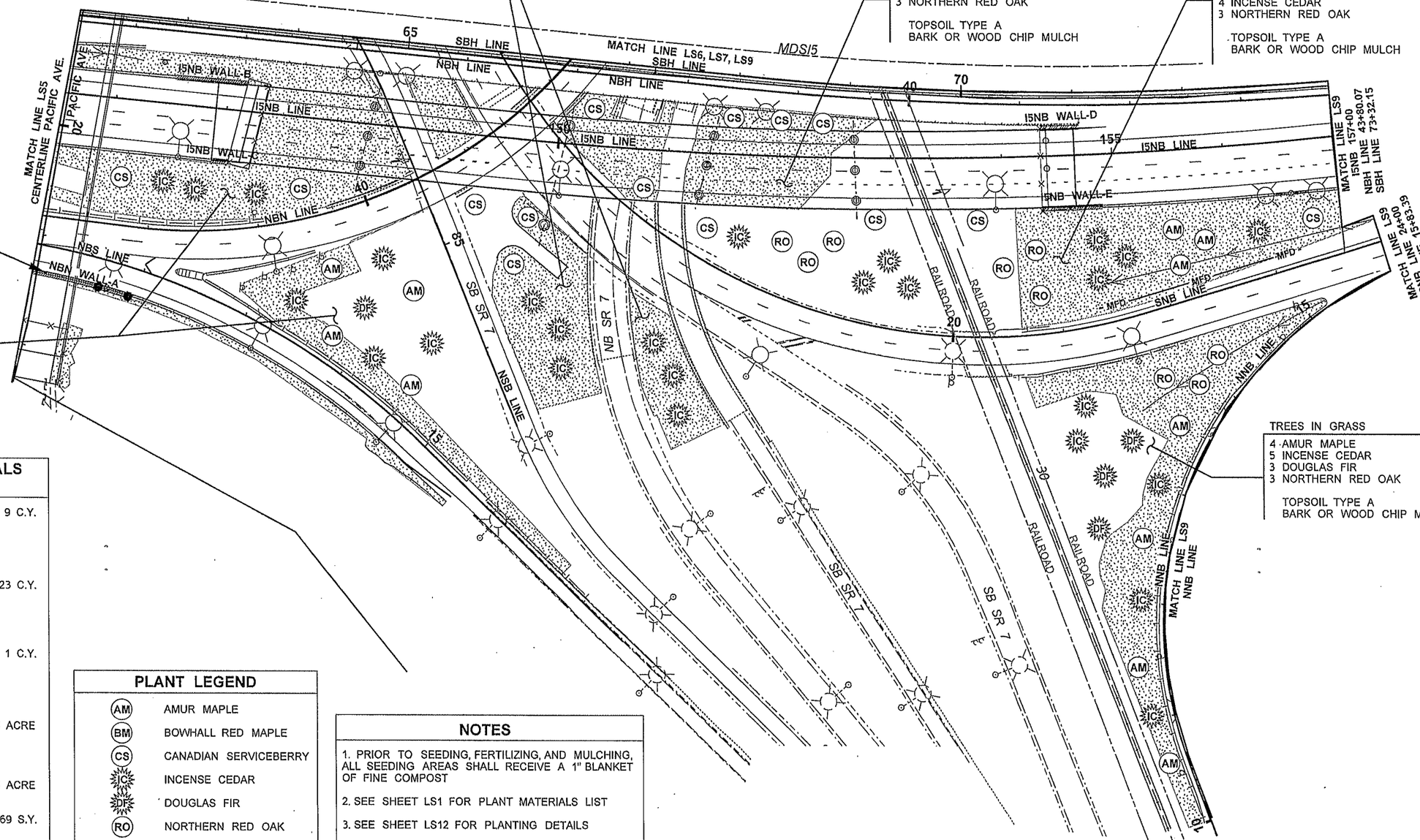

TREES IN GRASS
3 CANADIAN SERVICEBERRY
6 INCENSE CEDAR

TOPSOIL TYPE A
BARK OR WOOD CHIP MULCH

TREES IN GRASS
7 CANADIAN SERVICEBERRY
4 INCENSE CEDAR
3 NORTHERN RED OAK

TOPSOIL TYPE A
BARK OR WOOD CHIP MULCH

TREES IN GRASS
3 AMUR MAPLE
2 CANADIAN SERVICEBERRY
4 INCENSE CEDAR
3 NORTHERN RED OAK

TOPSOIL TYPE A
BARK OR WOOD CHIP MULCH

PLANTER STRIP 80 L.F.
28 VEITCHII BOSTON IVY

TOPSOIL TYPE A
BARK OR WOOD
CHIP MULCH

TREES IN GRASS
4 AMUR MAPLE
2 CANADIAN SERVICEBERRY
7 INCENSE CEDAR
1 DOUGLAS FIR

TOPSOIL TYPE A
BARK OR WOOD CHIP MULCH

TREES IN GRASS
4 AMUR MAPLE
5 INCENSE CEDAR
3 DOUGLAS FIR
3 NORTHERN RED OAK

TOPSOIL TYPE A
BARK OR WOOD CHIP MULCH

SOIL TREATMENT TOTALS
(THIS SHEET)

TOPSOIL TYPE A (SEE PLANTING DETAILS FOR TREES IN GRASS, BOSTON IVY, AND PLANTER STRIP DETAIL, SHEET LS12)	9 C.Y.
BARK OR WOOD CHIP MULCH APPLIED IN 5' RINGS AROUND TREES (SEE MULCH RING FOR TREES IN GRASS DETAIL, SHEET LS12)	23 C.Y.
BARK OR WOOD CHIP MULCH APPLIED AS 3" BLANKET (SEE BOSTON IVY PLANTING DETAIL, AND PLANTER STRIP DETAIL, SHEET LS12)	1 C.Y.
FINE COMPOST APPLIED AS 1" BLANKET PRIOR TO SEEDING, FERTILIZING, AND MULCHING	2.95 ACRE
SEEDING, FERTILIZING, AND MULCHING	2.95 ACRE
CONSTRUCTION GEOTEXTILE FOR UNDERGROUND DRAINAGE (SEE PLANTER STRIP DETAIL, SHEET LS12)	69 S.Y.
BACKFILL FOR SAND DRAINS (SEE PLANTER STRIP DETAIL, SHEET LS12)	8 C.Y.

PLANT LEGEND

AM	AMUR MAPLE
BM	BOWHALL RED MAPLE
CS	CANADIAN SERVICEBERRY
IC	INCENSE CEDAR
DF	DOUGLAS FIR
RO	NORTHERN RED OAK
● ● ●	VINE
	SEEDING, FERTILIZING, AND MULCHING

NOTES

1. PRIOR TO SEEDING, FERTILIZING, AND MULCHING, ALL SEEDING AREAS SHALL RECEIVE A 1" BLANKET OF FINE COMPOST
2. SEE SHEET LS1 FOR PLANT MATERIALS LIST
3. SEE SHEET LS12 FOR PLANTING DETAILS
4. SEE SHEET LS12 FOR DETAIL REGARDING PLANTER STRIP ALONG NBN WALL A
5. SEE DRAINAGE PLANS FOR MFD LOCATIONS AND DETAILS

0 50 100
SCALE IN FEET

FILE NAME	PW:_XL3497\PS&E Sheets\Landscaping\P3497_SH_LS_008.dgn
TIME	1:54:33 PM
DATE	3/25/2014
PLOTTED BY	FrettsL
DESIGNED BY	E. WINKLEY, L. FRETTS
ENTERED BY	L. FRETTS
CHECKED BY	E. WINKLEY
PROJ. ENGR.	J. PEREZ
REGIONAL ADM.	K. DAYTON

REVISION | DATE | BY

REGION NO.	STATE	FED.AID PROJ.NO.
10	WASH	
JOB NUMBER 12C501		
CONTRACT NO.		LOCATION NO. XL3497

STATE OF WASHINGTON
REGISTERED LANDSCAPE ARCHITECT
EDWARD J. WINKLEY
CERTIFICATE NO. 985
3/25/14

Washington State
Department of Transportation

I-5
M ST TO PORTLAND AVE - HOV

LANDSCAPING

LS8

SHEET 658 OF 1763 SHEETS

T. 20N. R. 3E. W.M.

PLANT LEGEND

- AM — AMUR MAPLE
- CS — CANADIAN SERVICEBERRY
- IC — INCENSE CEDAR
- MA — MARSHAL ASH
- VINE
- SEEDING, FERTILIZING, AND MULCHING

SOIL TREATMENT TOTALS
(THIS SHEET)

TOPSOIL TYPE A (SEE PLANTING DETAILS FOR TREES IN GRASS, BOSTON IVY, AND PLANTER STRIP DETAIL, SHEET LS12)	27 C.Y.
BARK OR WOOD CHIP MULCH APPLIED IN 5' RINGS AROUND TREES (SEE MULCH RING FOR TREES IN GRASS DETAIL, SHEET LS12)	4 C.Y.
BARK OR WOOD CHIP MULCH APPLIED AS 3" BLANKET (SEE BOSTON IVY PLANTING DETAIL, AND PLANTER STRIP DETAIL, SHEET LS12)	4 C.Y.
FINE COMPOST APPLIED AS 1" BLANKET PRIOR TO SEEDING, FERTILIZING, AND MULCHING	1.48 ACRE
SEEDING, FERTILIZING, AND MULCHING	1.48 ACRE
CONSTRUCTION GEOTEXTILE FOR UNDERGROUND DRAINAGE (SEE PLANTER STRIP DETAIL, SHEET LS12)	326 S.Y.
BACKFILL FOR SAND DRAINS (SEE PLANTER STRIP DETAIL, SHEET LS12)	39 C.Y.

NOTES

1. PRIOR TO SEEDING, FERTILIZING, AND MULCHING, ALL SEEDING AREAS SHALL RECEIVE A 1" BLANKET OF FINE COMPOST
2. SEE SHEET LS1 FOR PLANT MATERIALS LIST
3. SEE SHEET LS12 FOR PLANTING DETAILS
4. SEE SHEET LS12 FOR DETAIL REGARDING PLANTER STRIP ALONG SBN WALL A
5. SEE DRAINAGE PLANS FOR MFD LOCATIONS AND DETAILS

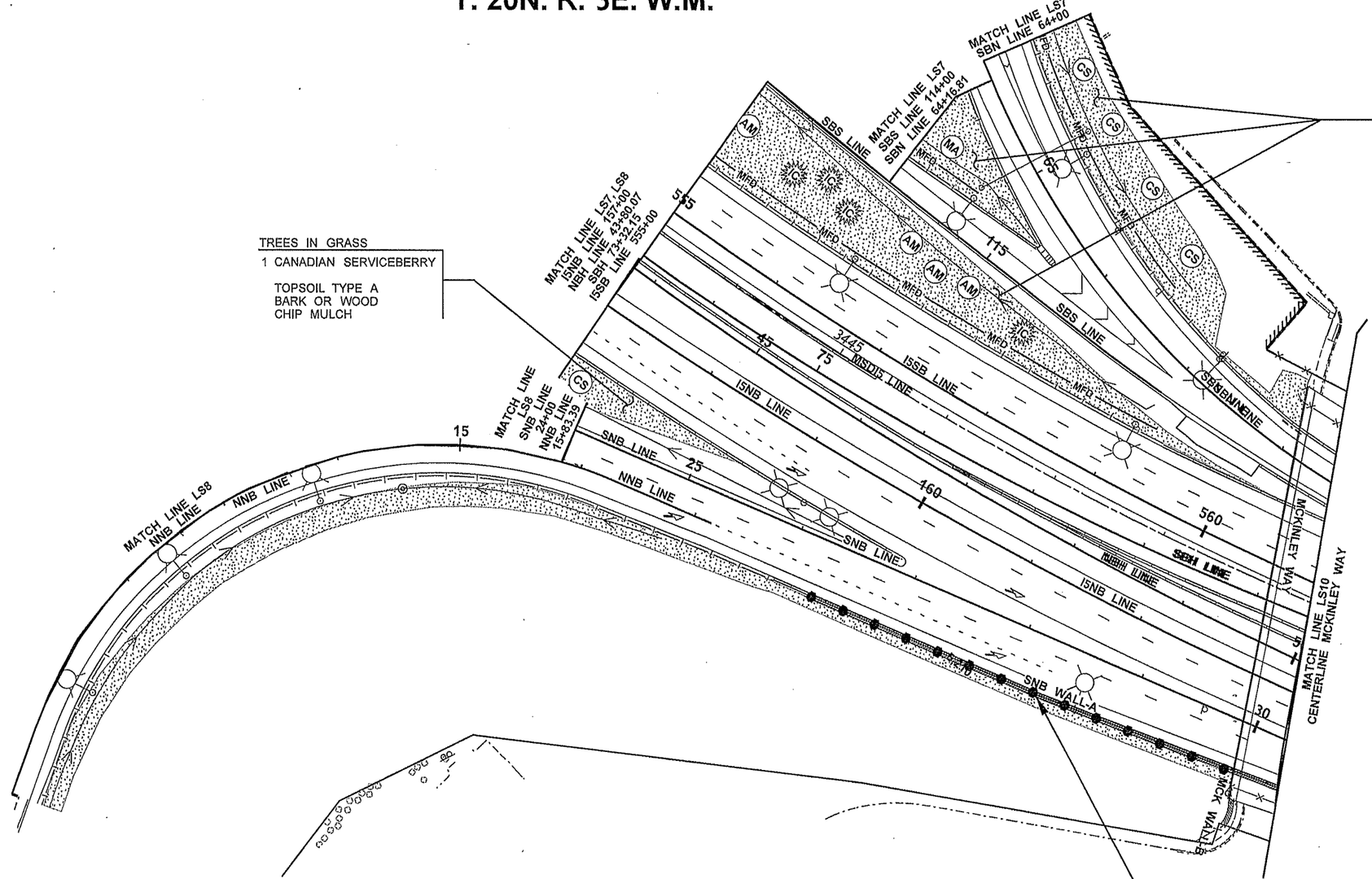

TREES IN GRASS
- 4 AMUR MAPLE
- 4 CANADIAN SERVICEBERRY
- 4 INCENSE CEDAR
- 1 MARSHAL ASH

TOPSOIL TYPE A
BARK OR WOOD
CHIP MULCH

TREES IN GRASS
- 1 CANADIAN SERVICEBERRY

TOPSOIL TYPE A
BARK OR WOOD
CHIP MULCH

PLANTER STRIP 410 L.F.
- 138 VEITCHII BOSTON IVY

TOPSOIL TYPE A
BARK OR WOOD
CHIP MULCH

0 50 100
SCALE IN FEET

FILE NAME	PW:_XL3497\PS&E Sheets\Landscaping\P3497_SH_LS_009.dgn
TIME	1:54:43 PM
DATE	3/25/2014
PLOTTED BY	FrettsL
DESIGNED BY	E. WINKLEY, L. FRETTS
ENTERED BY	L. FRETTS
CHECKED BY	E. WINKLEY
PROJ. ENGR.	J. PEREZ
REGIONAL ADM.	K. DAYTON

REVISION | DATE | BY

REGION NO.	STATE	FED.AID PROJ.NO.
10	WASH	
JOB NUMBER 12C501		
CONTRACT NO.		LOCATION NO. XL3497

STATE OF WASHINGTON
REGISTERED LANDSCAPE ARCHITECT
EDWARD J. WINKLEY
CERTIFICATE NO. 985
3/25/14

Washington State
Department of Transportation

I-5
M ST TO PORTLAND AVE - HOV

LANDSCAPING

LS9

SHEET 659 OF 1763 SHEETS

T. 20N. R. 3E. W.M.

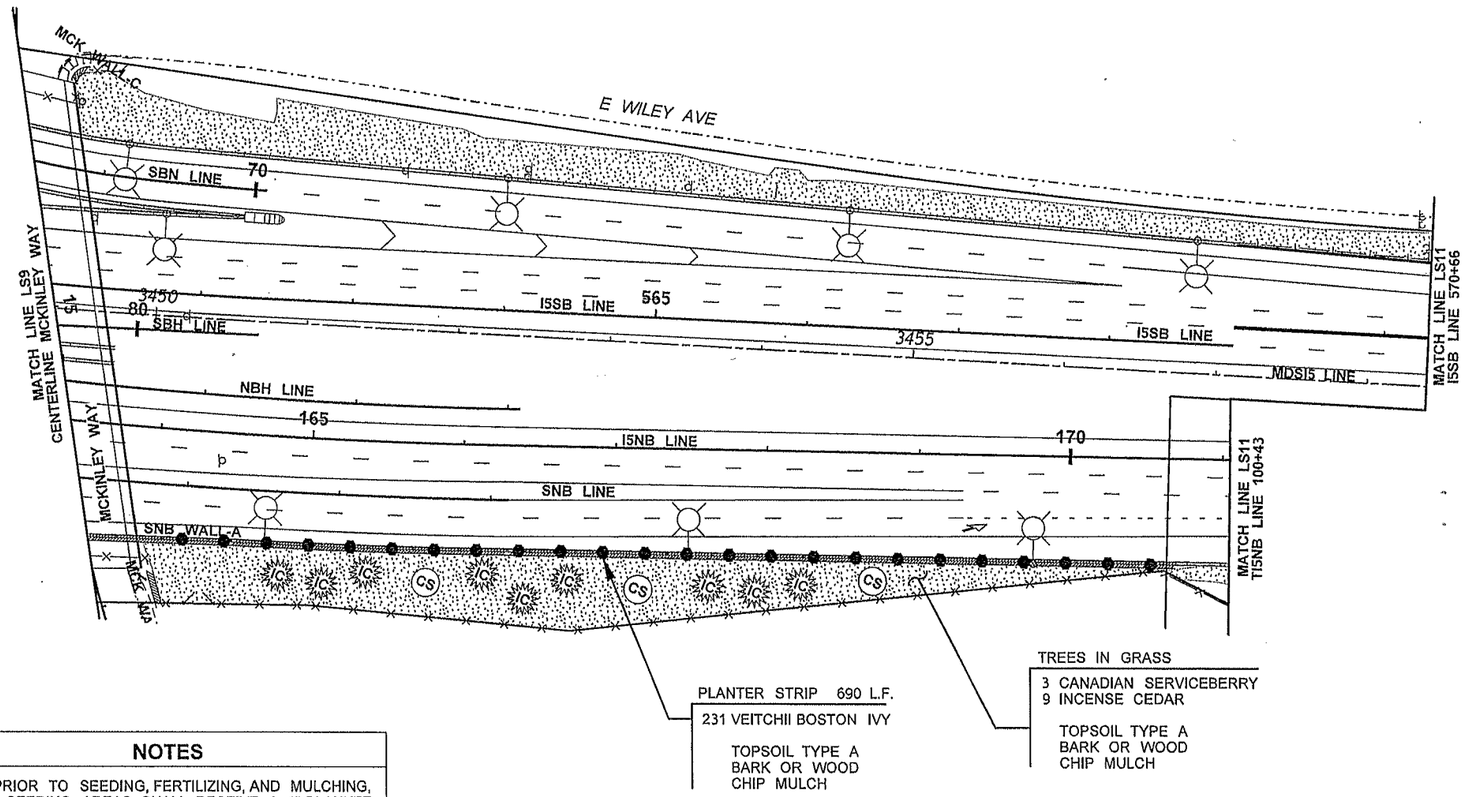

SOIL TREATMENT TOTALS
(THIS SHEET)

TOPSOIL TYPE A (SEE PLANTING DETAILS FOR TREES IN GRASS, BOSTON IVY, AND PLANTER STRIP DETAIL, SHEET LS12)	39 C.Y.
BARK OR WOOD CHIP MULCH APPLIED IN 5' RINGS AROUND TREES (SEE MULCH RING FOR TREES IN GRASS DETAIL, SHEET LS12)	5 C.Y.
BARK OR WOOD CHIP MULCH APPLIED AS 3" BLANKET (SEE BOSTON IVY PLANTING DETAIL, AND PLANTER STRIP DETAIL, SHEET LS12)	6 C.Y.
FINE COMPOST APPLIED AS 1" BLANKET PRIOR TO SEEDING, FERTILIZING, AND MULCHING	1.07 ACRE
SEEDING, FERTILIZING, AND MULCHING	1.07 ACRE
CONSTRUCTION GEOTEXTILE FOR UNDERGROUND DRAINAGE (SEE PLANTER STRIP DETAIL, SHEET LS12)	554 S.Y.
BACKFILL FOR SAND DRAINS (SEE PLANTER STRIP DETAIL, SHEET LS12)	66 C.Y.

NOTES

1. PRIOR TO SEEDING, FERTILIZING, AND MULCHING, ALL SEEDING AREAS SHALL RECEIVE A 1" BLANKET OF FINE COMPOST
2. SEE SHEET LS1 FOR PLANT MATERIALS LIST
3. SEE SHEET LS12 FOR PLANTING DETAILS
4. SEE SHEET LS12 FOR DETAIL REGARDING PLANTER STRIP ALONG SBN WALL A
5. SEE DRAINAGE PLANS FOR MFD LOCATIONS AND DETAILS

PLANT LEGEND

CS	CANADIAN SERVICEBERRY
IC	INCENSE CEDAR
● ● ●	VINE
	SEEDING, FERTILIZING, AND MULCHING

0 50 100
SCALE IN FEET

FILE NAME	PW:_XL3497\PS&E Sheets\Landscaping\P3497_SH_LS_010.dgn
TIME	1:54:54 PM
DATE	3/25/2014
PLOTTED BY	FrettsL
DESIGNED BY	E. WINKLEY, L. FRETTS
ENTERED BY	L. FRETTS
CHECKED BY	E. WINKLEY
PROJ. ENGR.	J. PEREZ
REGIONAL ADM.	K. DAYTON

REVISION | DATE | BY

REGION NO.	STATE	FED.AID PROJ.NO.
10	WASH	
JOB NUMBER 12C501		
CONTRACT NO.		LOCATION NO. XL3497

STATE OF WASHINGTON
REGISTERED LANDSCAPE ARCHITECT
EDWARD J. WINKLEY
CERTIFICATE NO. 985
3/25/14

Washington State Department of Transportation

I-5
M ST TO PORTLAND AVE - HOV

LANDSCAPING

LS10

SHEET 660 OF 1763 SHEETS

T. 20N. R. 3E. W.M.

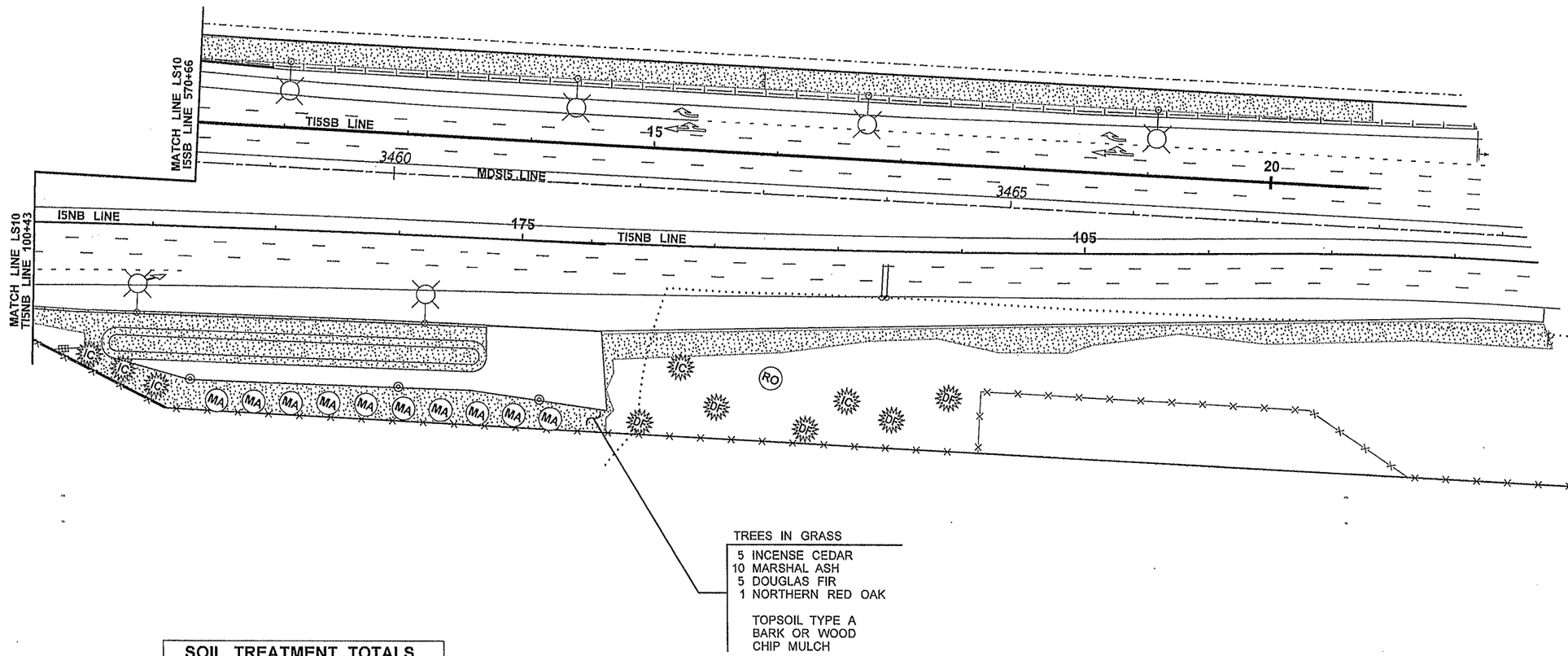

PLANT LEGEND

IC	INCENSE CEDAR
MA	MARSHAL ASH
DF	DOUGLAS FIR
RO	NORTHERN RED OAK
	SEEDING, FERTILIZING, AND MULCHING

SOIL TREATMENT TOTALS
(THIS SHEET)

TOPSOIL TYPE A (SEE PLANTING DETAIL FOR TREES IN GRASS, SHEET LS12)	1 C.Y.
BARK OR WOOD CHIP MULCH APPLIED IN 5' RINGS AROUND TREES (SEE MULCH RING FOR TREES IN GRASS DETAIL, SHEET LS12)	9 C.Y.
FINE COMPOST APPLIED AS 1" BLANKET PRIOR TO SEEDING, FERTILIZING, AND MULCHING	1.33 ACRE
SEEDING, FERTILIZING, AND MULCHING	1.33 ACRE

NOTES

1. PRIOR TO SEEDING, FERTILIZING, AND MULCHING, ALL SEEDING AREAS SHALL RECEIVE A 1" BLANKET OF FINE COMPOST
2. SEE SHEET LS1 FOR PLANT MATERIALS LIST
3. SEE SHEET LS12 FOR PLANTING DETAILS
4. SEE DRAINAGE PLANS FOR MFD LOCATIONS AND DETAILS

0 50 100
SCALE IN FEET

FILE NAME	PW:_XL3497\PS&E Sheets\Landscaping\P3497_SH_LS_011.dgn
TIME	1:55:04 PM
DATE	3/25/2014
PLOTTED BY	FrettsL
DESIGNED BY	E. WINKLEY, L. FRETTS
ENTERED BY	L. FRETTS
CHECKED BY	E. WINKLEY
PROJ. ENGR.	J. PEREZ
REGIONAL ADM.	K. DAYTON

REVISION | DATE | BY

REGION NO.	STATE	FED.AID PROJ.NO.
10	WASH	
JOB NUMBER 12C501		
CONTRACT NO.		LOCATION NO. XL3497

STATE OF WASHINGTON
REGISTERED LANDSCAPE ARCHITECT
EDWARD J. WINKLEY
CERTIFICATE NO. 985
3/25/14

Washington State Department of Transportation

I-5
M ST TO PORTLAND AVE - HOV

LANDSCAPING

LS11

SHEET 661 OF 1763 SHEETS

PLANTING DETAILS

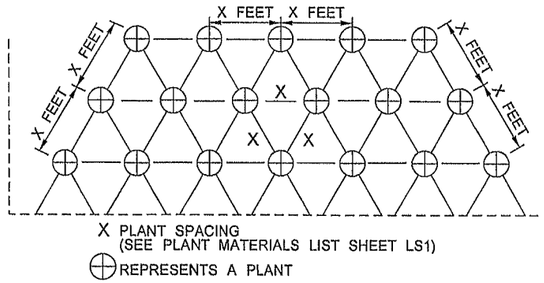

STANDARD PLANTING LAYOUT

NOT TO SCALE

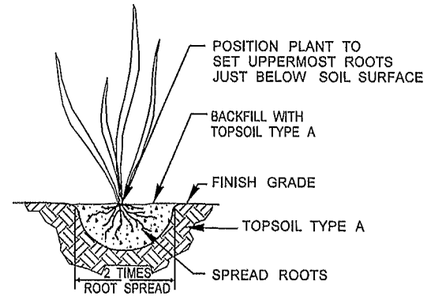

EMERGENT PLANTING DETAIL

NOT TO SCALE

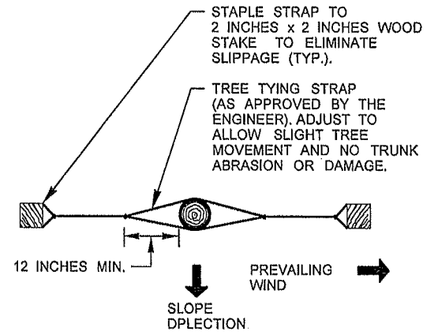

TREE TYING DETAIL

PLAN VIEW

NOT TO SCALE

PLANTING NOTES

ROOT-BALL HANDLING:

FOR B&B STOCK:

COMPLETELY REMOVE ANY BURLAP, FIBERGLASS MATERIALS, AND WIRE BASKETS FROM ROOTBALL BEFORE PLACING INTO PLANTING HOLE.

FOR CONTAINERIZED STOCK:

REMOVE TREE FROM CONTAINER PRIOR TO PLANTING. LOOSEN ROOTS AND STRAIGHTEN ANY ROOTS CIRCLING THE ROOT-BALL. SCARIFY SIDES OF PLANTING HOLE.

FOR BARE ROOT STOCK:

SPREAD ROOTS EVENLY OVER FIRMLY MOUNDED BACKFILL SOIL. PROTECT ROOTS FROM DRYING, EVEN BRIEFLY. KEEP ROOTS MOIST AND COVERED AT ALL TIMES UNTIL DIRECTLY BEFORE PLACEMENT INTO PLANTING HOLE. TRIM BROKEN OR DAMAGED ROOTS BACK TO HEALTHY TISSUE.

WHEN BACK-FILLING IS ALMOST COMPLETE, WATER THOROUGHLY TO SETTLE SOIL AROUND ROOTS.

FINISH FILLING HOLE WITH SOIL, THEN WATER AGAIN TO SETTLE BACKFILL SOIL AFTER PLANTING.

TREE CROWN SHALL BE EVEN WITH FINISH GRADE AT COMPLETION OF PLANTING OPERATIONS.

BARK MULCH:

FEATHER BARK MULCH TO GROUND LEVEL AT PLANT CROWN.

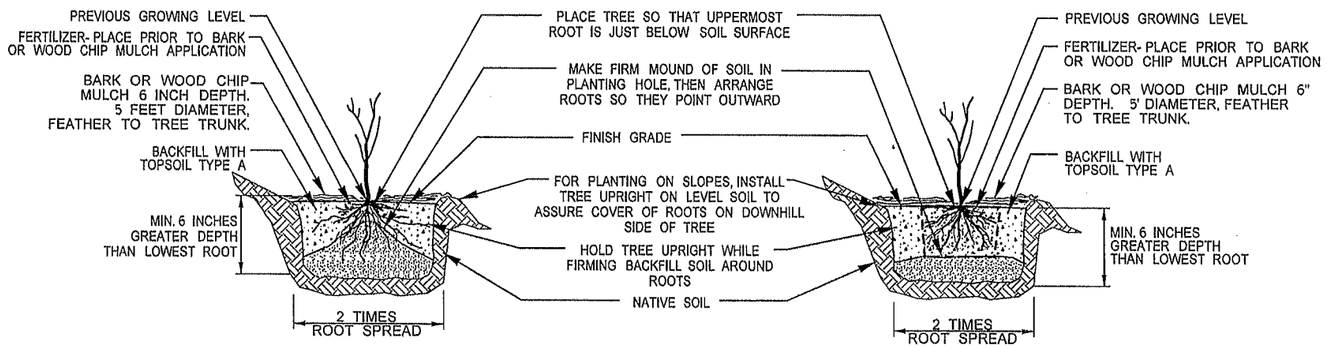

BARE ROOT TREE PLANTING DETAIL

CONTAINER TREE PLANTING DETAIL

PLANTING DETAIL FOR TREES IN GRASS

NOT TO SCALE

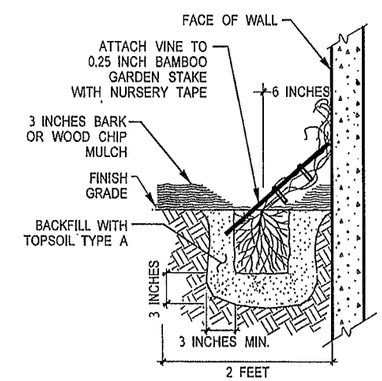

NOTE:
3 INCH BARK OR WOOD CHIP MULCH LAYER TO EXTEND 2 FEET FROM FACE OF WALL

BOSTON IVY PLANTING DETAIL

NOT TO SCALE

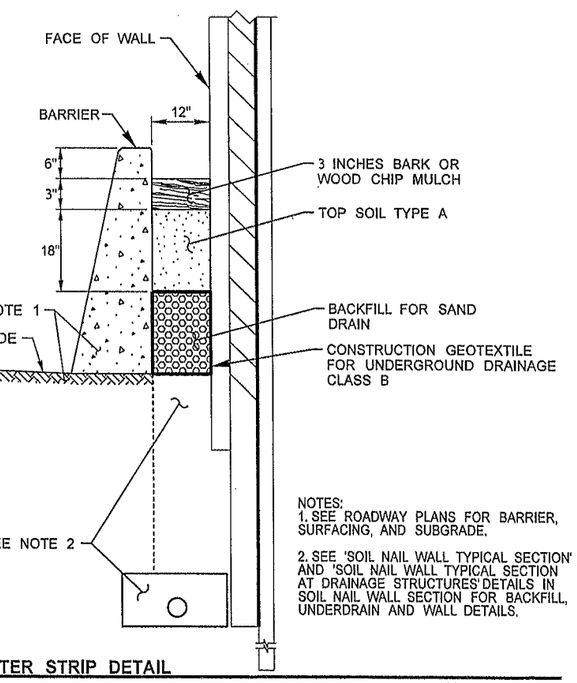

NOTES:
1. SEE ROADWAY PLANS FOR BARRIER, SURFACING, AND SUBGRADE.
2. SEE 'SOIL NAIL WALL TYPICAL SECTION' AND 'SOIL NAIL WALL TYPICAL SECTION AT DRAINAGE STRUCTURES' DETAILS IN SOIL NAIL WALL SECTION FOR BACKFILL, UNDERDRAIN AND WALL DETAILS.

PLANTER STRIP DETAIL

NOT TO SCALE

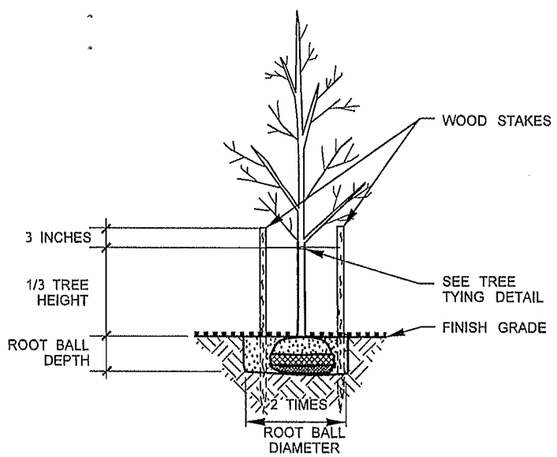

TREE STAKING DETAIL

1-1/2 & 2" CALIPER TREES

NOT TO SCALE

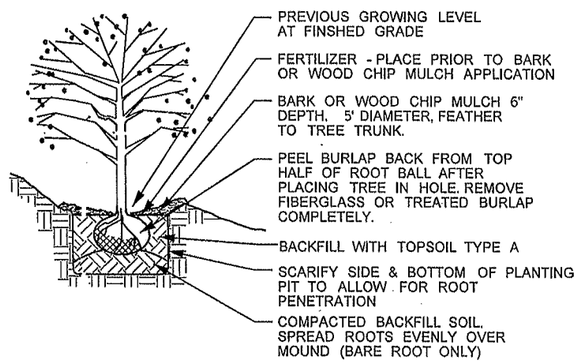

PLANTING DETAIL FOR B&B TREES IN GRASS

NOT TO SCALE

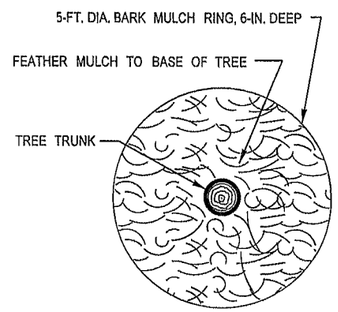

MULCH RING FOR TREES IN GRASS

NOT TO SCALE

FILE NAME	PW:_XL3497\PS&E Sheets\Landscaping\P3497_SH_LS_012.dgn				REGION NO.	STATE	FED.AID PROJ.NO.
TIME	1:55:07 PM				10	WASH	
DATE	3/25/2014				JOB NUMBER		
PLOTTED BY	FrettsL				12C501		
DESIGNED BY	E. WINKLEY, L. FRETTS				CONTRACT NO.		LOCATION NO.
ENTERED BY	L. FRETTS						XL3497
CHECKED BY	E. WINKLEY						
PROJ. ENGR.	J. PEREZ						
REGIONAL ADM.	K. DAYTON	REVISION	DATE	BY			

STATE OF WASHINGTON
REGISTERED LANDSCAPE ARCHITECT

EDWARD J. WINKLEY
CERTIFICATE NO. 985

3/25/14

Washington State Department of Transportation

I-5
M ST TO PORTLAND AVE - HOV

LANDSCAPING

LS12

SHEET 662 OF 1763 SHEETS