Washington State Ferries

Contract Plans

For Construction of:

009321

SR 525

MUKILTEO FERRY TERMINAL (PHASE 2) FERRY TERMINAL CONSTRUCTION

SNOHOMISH COUNTY

VOLUME 6 OF 8

F. A. NO.TIGER-WA-2017-007, CFDA 20933
F. A. NO. PSRC-WA-2017-023, CFDA 20507

ALL ADDENDA INCORPORATED

Washington State Department of Transportation

VOLUME 6 SHEET INDEX

SHT NO.	PLAN NO.	DESCRIPTION
INDEX		
		COVER SHEET
15	IO.14	VOLUME 6 SHEET INDEX
ARCHITECTURAL		
1377	AX00.01	CODE INFORMATION, GENERAL NOTES, INDEX, LEGENDS, AND ABBREVIATIONS
1378	AX01.01	FLOOR PLAN, ELEVATIONS
1379	AX03.01	BUILDING SECTIONS WINDOW AND DOOR SCHEDULES
1380	AX05.01	EXTERIOR DETAILS
1381	AX05.02	EXTERIOR DETAILS
1382	AX05.03	DOOR DETAILS
1383	AX05.04	WINDOW DETAILS
1384	AX06.01	CASEWORK #1 DRAWINGS
1385	AX06.02	CASEWORK #1 SECTIONS
1386	AX06.03	CASEWORK #2 DRAWINGS
1387	AX06.04	DETAILS
1388	SX00.10	ABBREVIATIONS AND SYMBOLS
1389	SX00.11	GENERAL STRUCTURAL NOTES
1390	SX01.10	FOUNDATION AND FLOOR PLAN
1391	SX01.11	TOLL BOOTH PLANS
1392	SX01.12	TOLL BOOTH ELEVATIONS I
1393	SX01.13	TOLL BOOTH ELEVATIONS II
1394	SX01.14	TOLL BOOTH SECTIONS AND DETAILS
1395	SX01.15	TYPICAL DETAILS
ELECTRICAL		
1396	EX01.00	ELECTRICAL SYMBOLS
1397	EX01.01	ELECTRICAL ABBREVIATIONS AND NOTES
1398	EX02.00	TOLLBOOTH ELECTRICAL PLAN
1399	EX02.01	TOLLBOOTH COMMUNICATIONS PLAN
1400	EX02.02	TOLLBOOTH ATTIC ELECTRICAL PLAN
1401	EX02.03	TOOLBOOTH ELEVATIONS
1402	EX03.00	LOOP DETECTOR INSTALLATION
1403	EX04.00	TOOL BOOTH PANELBOARD SCHEDULES
1404	EX04.01	TOOL BOOTH PANELBOARD SCHEDULES
MECHANICAL		
1405	MX01.20	MECHANICAL PLANS AND SECTIONS

kpff

ABBREVIATIONS

A/C	AIR CONDITIONER	MAX	MAXIMUM
AFF	ABOVE FINISH FLOOR	MECH	MECHANICAL
ALUM	ALUMINUM	MIN	MINIMUM
AP	ACCESS PANEL	MTL	METAL
ADJ.	ADJACENT OR ADJUST	NIC	NOT IN CONTRACT
℄	CENTERLINE	NTS	NOT TO SCALE
BLDG	BUILDING	O/	OVER
BLKG	BLOCKING	OC	ON CENTER
CLG	CEILING	OPNG	OPENING
CONT	CONTINUOUS	OH	OPPOSITE HAND
CTR	CENTER	PT	PRESSURE TREAT
DIM	DIMENSION	P-LAM	PLASTIC LAMINATE
DS	DOWNSPOUT	PLYWD	PLYWOOD
EA	EACH	REF	REFERENCE
ELEC	ELECTRICAL	REQ'D	REQUIRED
EQUIP	EQUIPMENT	RO	ROUGH OPENING
EXIST, (E)	EXISTING	SIM	SIMILAR
FF	FINISH FLOOR	SS	STAINLESS STEEL
FOIC	FURNISHED BY OWNER, INSTALLED BY CONTRACTOR	STND	STANDARD
		STL	STEEL
		STRUCT	STRUCTURAL
FTP	FARE TRANSACTION PROCESSOR	T.O.	TOP OF
		TYP	TYPICAL
GALV	GALVANIZED	W/	WITH
GL	GLASS	WD	WOOD
GWB	GYPSUM WALLBOARD	W/O	WITHOUT
HDR	HEADER	UNO	UNLESS NOTED OTHERWISE
HM	HOLLOW METAL		
INSUL	INSULATION OR INSULATED	UPS	UNINTERUPTED POWER SOURCE
MATL	MATERIAL		

SYMBOLS LEGEND

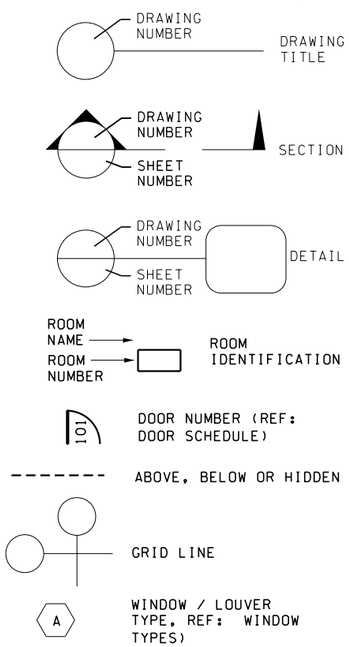

MATERIALS LEGEND

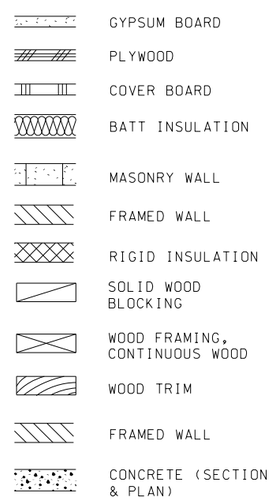

GENERAL NOTES

1. ALL WORK SHALL CONFORM TO APPLICABLE BUILDING CODES AND ORDINANCES. WHERE MORE THAN ONE CODE OR ORDINANCE CONFLICT WITH EACH OTHER, THE MORE RESTRICTIVE CODE SHALL GOVERN.
2. THE CONTRACTOR SHALL VERIFY ALL EXISTING CONDITIONS AT THE SITE AND SHALL NOTIFY ARCHITECT/ENGINEER IMMEDIATELY OF ANY UNCERTAINTIES OR DISCREPANCIES WITH THE DRAWINGS.
3. THE CONTRACTOR SHALL VERIFY THE LOCATIONS OF ALL UTILITIES AT THE SITE, PROTECT THEM FROM DAMAGE AND REPORT ANY DISCREPANCIESWITH THE DRAWINGS.
4. THE CONTRACTOR SHALL INSURE THE HEALTH AND SAFETY OF THE PUBLIC AND ALL WHO ENTER THE BUILDING DURING CONSTRUCTION.
5. THE CONTRACTOR SHALL VERIFY AND COORDINATE THE WORK OF SUBCONTRACTORS AND ALL DRAWINGS PRIOR TO PROCEEDING WITH ANY WORK OR FABRICATION.
6. DRAWINGS SHALL NOT BE SCALED. NOTIFY THE ARCHITECT/ENGINEER IMMEDIATELY OF ANY CONFLICTS.
7. THE CONTRACTOR SHALL BE RESPONSIBLE FOR CONSTRUCTION OF MECHANICAL AND ELECTRICAL WORK AS REQUIRED TO COMPLETE CONSTRUCTION AND SHALL PROVIDE ALL NECESSARY SHAFTS, OPENINGS, BASES AND STRUCTURAL SUPPORT FOR DUCTS, CONDUITS AND EQUIPMENT.
8. DIMENSIONS ON PLANS ARE FACE OF STUD, CENTER OF COLUMN, CENTER OF MULLION OR FACE OF CONCRETE UNLESS OTHERWISE NOTED.
9. LABORATORY TESTING AND INSPECTION REQUIRED FOR ALL EARTHWORK COMPACTION, SITE WELDING, HIGH STRENGTH BOLTING AND ALL STRUCTURAL CONCRETE. CONTRACTOR TO PROVIDE INDEPENDENT TESTING LAB OR COORDINATE A WSDOT INSPECTOR, FOR ALL CODE REQUIRED TESTING.
10. CAULK ALL WINDOW, DOOR, CORNER, AND OTHER WOOD TRIM JOINTS AFTER PRIMING, BUT PRIOR TO APPLICATION OF THE TOP COATS.

PROJECT INFORMATION

OWNER:
WASHINGTON STATE DEPARTMENT OF TRANSPORTATION

ADDRESS:
MUKILTEO FERRY TERMINAL
MUKILTEO, WA

LEGAL DESCRIPTION:
SEE SUNDRY SITE PLAN

PARCEL NO:
EXEMPT

CODE INFORMATION

PERMITTING AGENCY:

GOVERNING CODE:
2015 WASHINGTON STATE BUILDING CODE. INCLUDES ADOPTION OF AND AMENDMENTS TO:
2015 INTERNATIONAL BUILDING CODE,
ICC/ANSI A117.1-09,
2015 INTERNATIONAL MECHANICAL CODE,
2015 INTERNATIONAL FIRE CODE,
2015 UNIFORM PLUMBING CODE,
2015 NATIONAL ELECTRICAL CODE (NFPA 70)

OCCUPANCY GROUPS / FLOOR AREA:
GROUP B - BUSINESS / 69 SF EACH (TYP OF 3)

CONSTRUCTION TYPE:
TYPE V-B

BUILDING SHEET INDEX

SHT. NO.	PLAN NO.	DESCRIPTION
ARCHITECTURAL		
	AX00.01	CODE INFORMATION, GENERAL NOTES, INDEX, LEGENDS & ABBREVIATIONS
	AX01.01	FLOOR PLAN, ELEVATIONS
	AX03.01	BUILDING SECTIONS, WINDOW AND DOOR SCHEDULES
	AX05.01	EXTERIOR DETAILS
	AX05.02	EXTERIOR DETAILS
	AX05.03	DOOR DETAILS
	AX05.04	WINDOW DETAILS
	AX06.01	CASEWORK #1 DRAWINGS
	AX06.02	CASEWORK #1 SECTIONS
	AX06.03	CASEWORK #2 DRAWINGS
	AX06.04	DETAILS
STRUCTURAL		
	SX00.10	ABBREVIATIONS AND SYMBOLS
	SX00.11	GENERAL STRUCTURAL NOTES
	SX00.12	GENERAL STRUCTURAL NOTES
	SX01.10	PLANS
	SX01.11	PLANS
	SX01.12	ELEVATIONS
	SX01.13	ELEVATIONS
	SX01.14	SECTIONS AND DETAILS
	SX01.15	TYPICAL DETAILS
ELECTRICAL		
	EX01.00	ELECTRICAL SYMBOLS
	EX01.01	ELECTRICAL ABBREVIATIONS AND NOTES
	EX02.00	TOLLBOOTH ELECTRICAL PLAN
	EX02.01	TOLLBOOTH COMMUNICATIONS PLAN
	EX02.02	TOLLBOOTH ATTIC ELECTRICAL PLAN
	EX02.03	TOLLBOOTH ELEVATIONS
	EX03.00	LOOP DETECTOR INSTALLATION
	EX04.00	TOLLBOOTH PANELBOARD SCHEDULES
	EX04.01	TOLLBOOTH PANELBOARD SCHEDULES
MECHANICAL		
	MX01.20	MECHANICAL PLAN AND SECTION

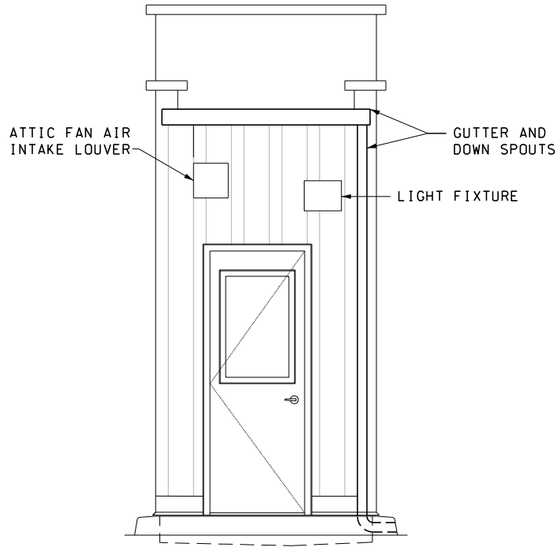

A REAR ELEVATION

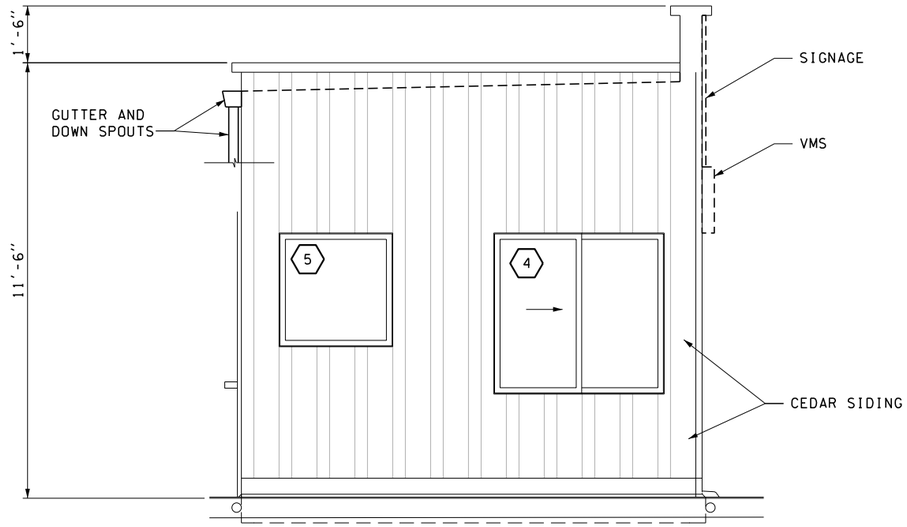

B SIDE ELEVATION

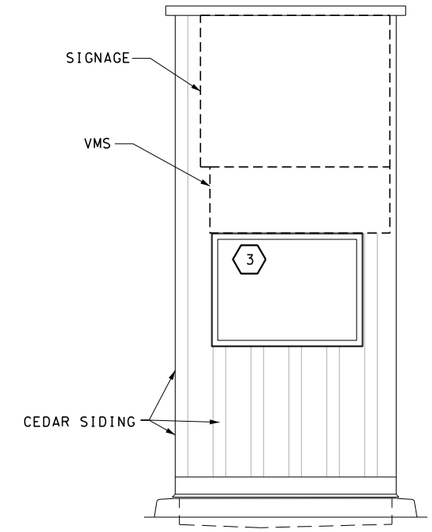

C FRONT ELEVATION

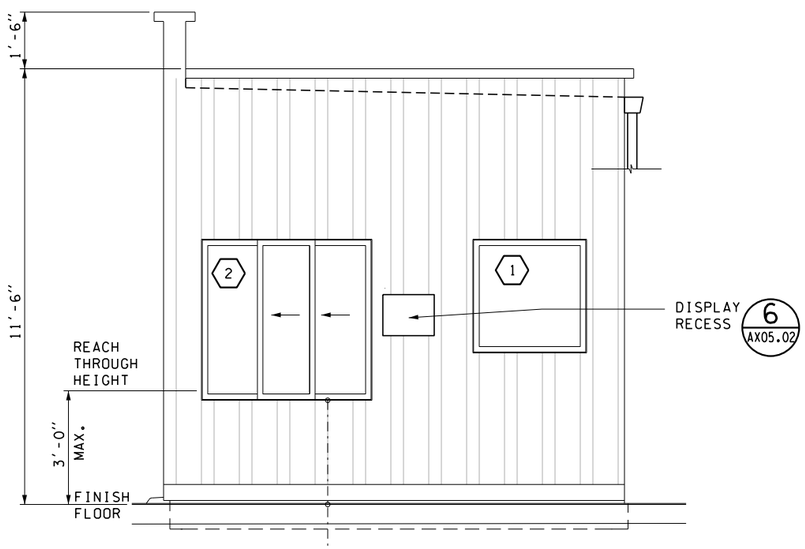

D SERVICE SIDE ELEVATION

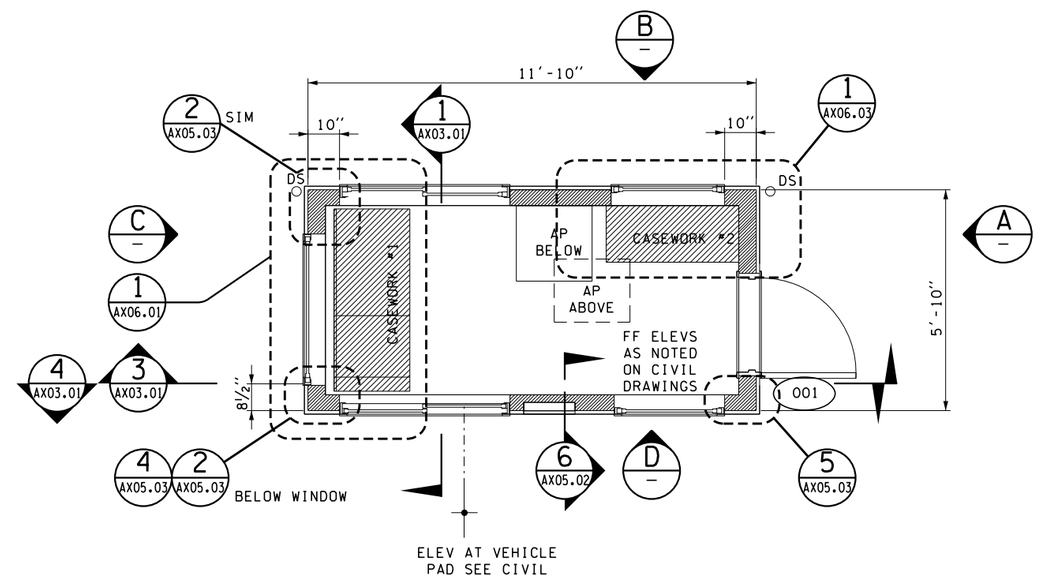

FLOOR PLAN

0 1 2 ¼

FILE NAME: WSF\Mukilteo\14W121_FerryTermConst\CADD\WSF\ $FILES$						
PRINTED: 2:03:17 PM 9/21/2018	LAST PRINTED BY:					FED.AID PROJ.NO.
SUBMITTAL DATE: 9/21/2018	Morin					
DESIGNED BY: S. LEACH	9/21/2018					WA-2017-007-00
ENTERED BY: M. MORIN	9/21/2018					REGION NO. STATE
CHECKED BY: M. SCOTT	9/21/2018					10 WASH
MAR PROJ ENGR: C. TORRES	9/21/2018					JOB NUMBER 18W121
DIR TERM ENGR: N. MCINTOSH		2 ADDENDUM NO. 2	11/01/18			CONTRACT NO.
ASST SECRETARY: A. SCARTON		REVISION	DATE	BY		00****

5257 REGISTERED ARCHITECT
Mark A. Scott
MARK A SCOTT
STATE OF WASHINGTON
9/21/2018

Washington State Department of Transportation
WASHINGTON STATE FERRIES

SR 525
MUKILTEO FERRY TERMINAL (PHASE 2)
FERRY TERMINAL CONSTRUCTION

FLOOR PLAN, ELEVATIONS

AX01.01

SHEET 1378 OF 1521 SHEETS

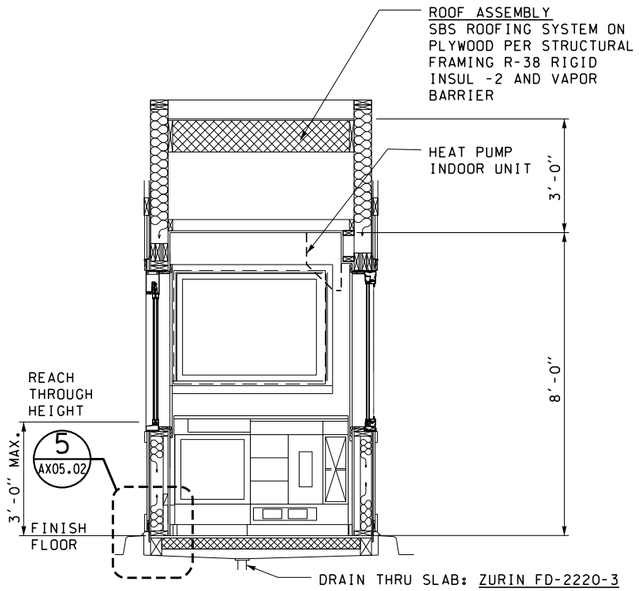

1 AX01.01 BUILDING SECTION

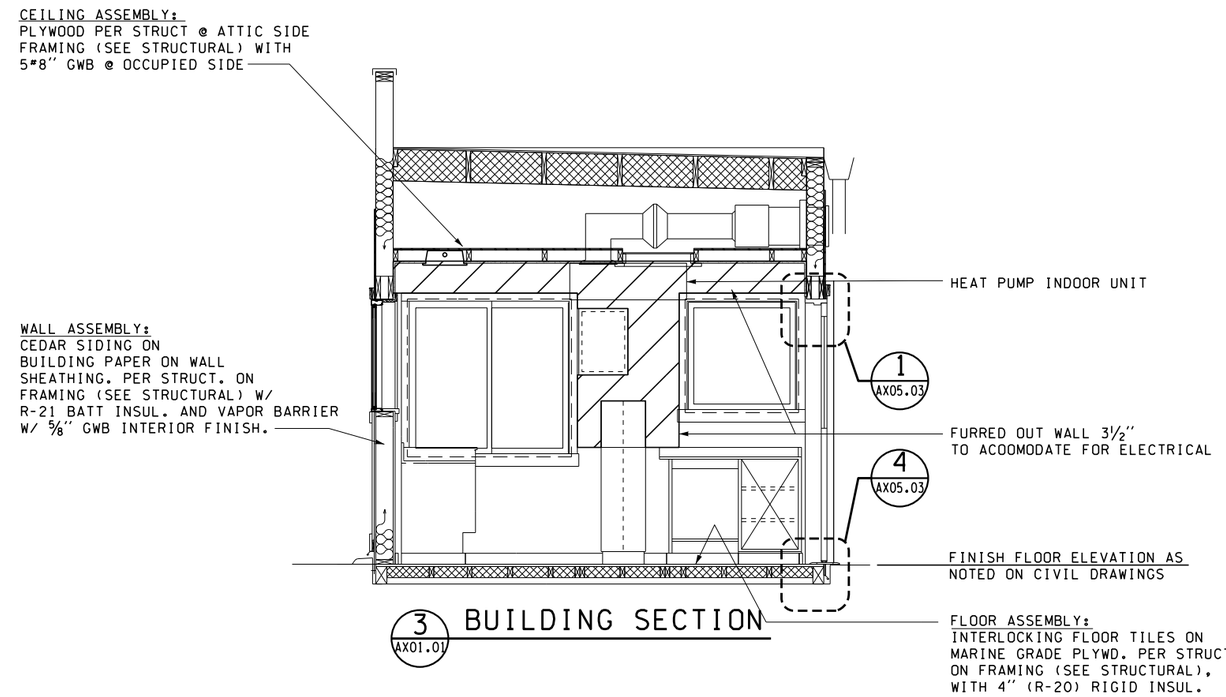

3 AX01.01 BUILDING SECTION

WINDOW SCHEDULE

MARK	SIZE (NOMINAL)	FUNCTION	FRAME	HEAD	SILL	JAMB	REMARKS
1	3'-0"x 3'-0"	FIXED	ALUM	4/AX05.04	4/AX05.04	4/AX05.03	PROVIDE BLINDS
2	4'-6"x 4'-3"	SLIDER	ALUM	1/AX05.04 SIM	4/AX05.04 5/AX05.04	5/AX05.03	SELLER'S WINDOW
3	4'-0"x 3'-0"	FIXED	ALUM	1/AX05.04	4/AX05.04	1/AX05.03 4/AX05.03	PROVIDE BLINDS
4	4'-6"x 4'-3"	SLIDER	ALUM		6/AX05.04	1/AX05.03	
5	3'-0"x 3'-0"	FIXED	ALUM	1/AX05.04	4/AX05.04	5/AX05.03 SIM	

DOOR SCHEDULE

MARK	SIZE	FUNCTION	FRAME	HEAD	SILL	JAMB	REMARKS
001	2'-6"x 7'-0"	SWING	HM	3/AX05.03	6/AX05.03	5/AX05.03	INSUL. HM; 5/8" GLASS (SAFETY GLAZING); 24"x36" REFER TO ARCH. SPEC'S FOR H.M. DOORS AND HARDWARE HARDWARE GROUP #18

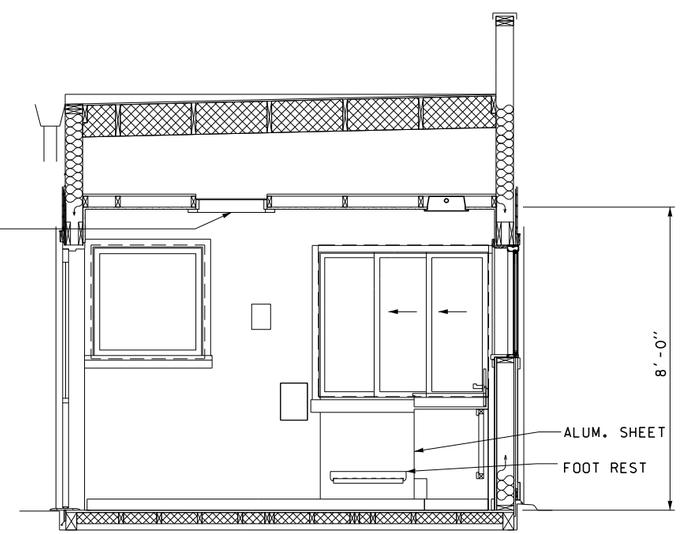

NOTE:

SEE ABOVE FOR TYPICAL NOTES.

4 AX01.01 BUILDING SECTION

0 1 2 1/4

FILE NAME: WSF\Mukilteo\14W121_FerryTermConst\CADD\WSF\ $FILES$						FED.AID PROJ.NO.
PRINTED: 2:03:26 PM 9/21/2018	LAST PRINTED BY:					
SUBMITTAL DATE: 9/21/2018	Morin					
DESIGNED BY: S. LEACH	9/21/2018					WA-2017-007-00
ENTERED BY: M. MORIN	9/21/2018					REGION NO. / STATE
CHECKED BY: M. SCOTT	9/21/2018					10 WASH
MAR PROJ ENGR: C. TORRES	9/21/2018					JOB NUMBER
DIR TERM ENGR: N. MCINTOSH		2 ADDENDUM NO. 2	11/01/18			18W121
ASST SECRETARY: A. SCARTON		REVISION	DATE	BY		CONTRACT NO. 00****

5257 REGISTERED ARCHITECT
Mark A. Scott
MARK A. SCOTT
STATE OF WASHINGTON
9/21/2018

Washington State Department of Transportation
WASHINGTON STATE FERRIES

SR 525
MUKILTEO FERRY TERMINAL (PHASE 2)
FERRY TERMINAL CONSTRUCTION

BUILDING SECTIONS WINDOW AND DOOR SCHEDULES

AX03.01

SHEET 1379 OF 1521 SHEETS

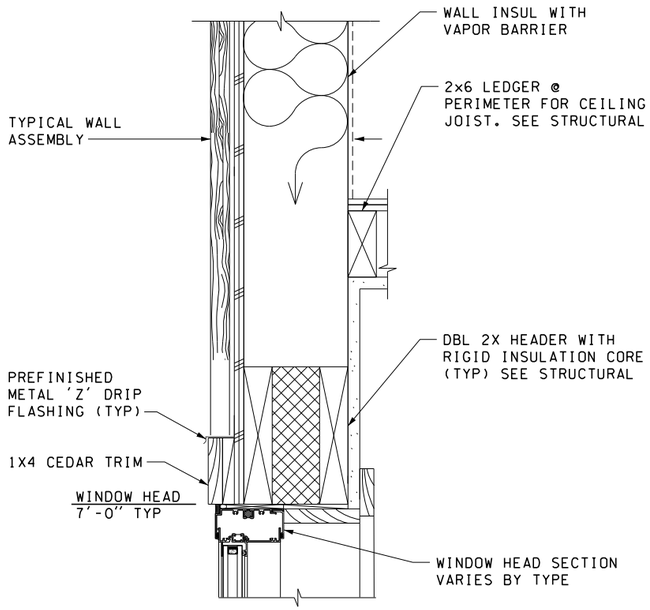

1 EXTEROIR WALL @ CEILING

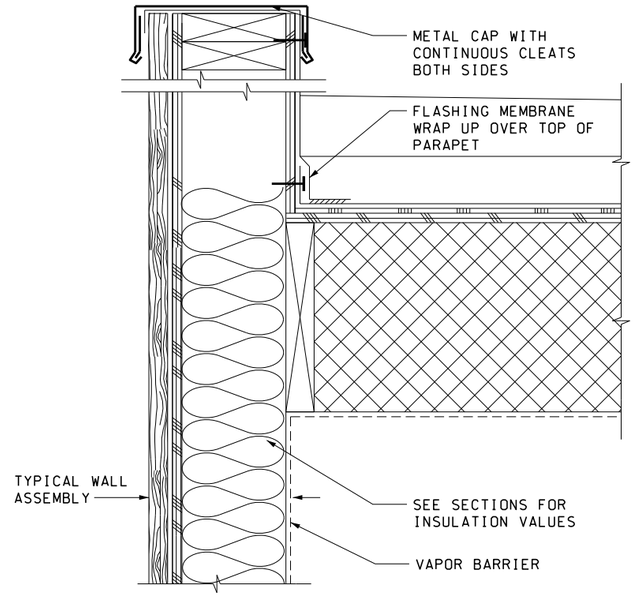

2 WALL @ ROOF/PARAPET

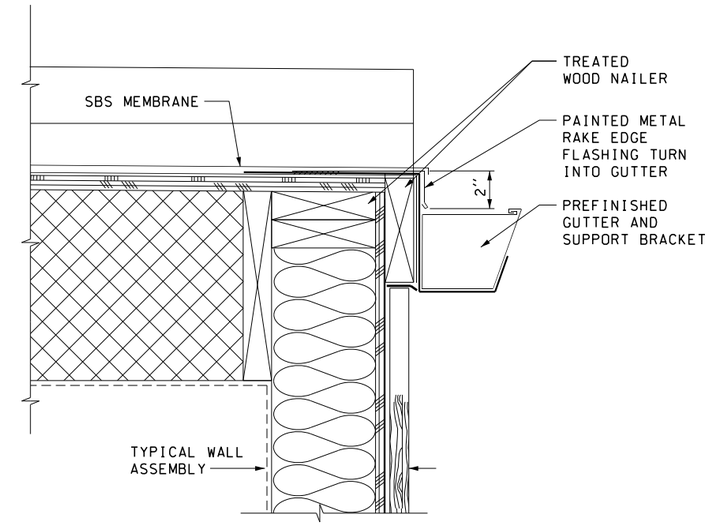

3 ROOF AT GUTTER

TYPICAL WALL ASSEMBLY

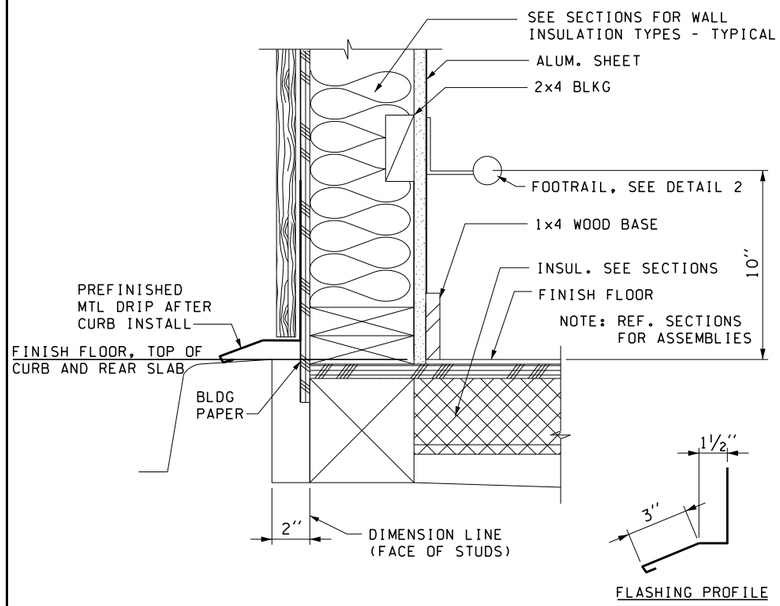

4 BASE OF WALL

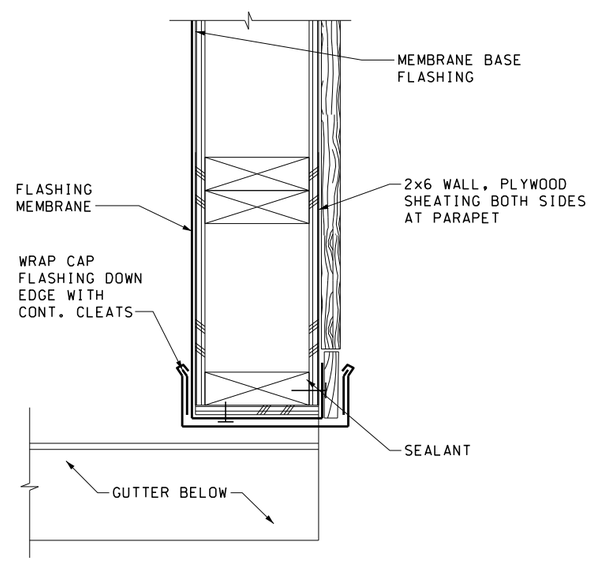

5 FLASHING @ END OF PARAPET WALL

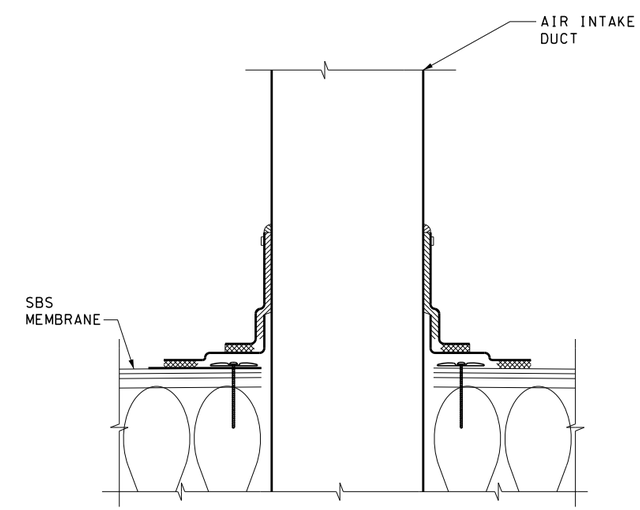

6 FLASHING DETAIL @ ROOF AIR INTAKE

FILE NAME: WSF\Mukilteo\14W121_FerryTermConst\CADD\WSF\ $FILES$						
PRINTED: 2:03:30 PM 9/21/2018	LAST PRINTED BY:					FED.AID PROJ.NO.
SUBMITTAL DATE: 9/21/2018	Morin					WA-2017-007-00
DESIGNED BY: S. LEACH	9/21/2018					REGION NO. STATE
ENTERED BY: M. MORIN	9/21/2018					10 WASH
CHECKED BY: M. SCOTT	9/21/2018					JOB NUMBER 18W121
MAR PROJ ENGR: C. TORRES	9/21/2018					CONTRACT NO.
DIR TERM ENGR: N. MCINTOSH		2 ADDENDUM NO. 2	11/01/18			
ASST SECRETARY: A. SCARTON		REVISION	DATE	BY		00****

5257 REGISTERED ARCHITECT
MARK A. SCOTT
STATE OF WASHINGTON
9/21/2018

Washington State Department of Transportation
WASHINGTON STATE FERRIES

SR 525
MUKILTEO FERRY TERMINAL (PHASE 2)
FERRY TERMINAL CONSTRUCTION

EXTERIOR DETAILS

AX05.01

SHEET 1380 OF 1521 SHEETS

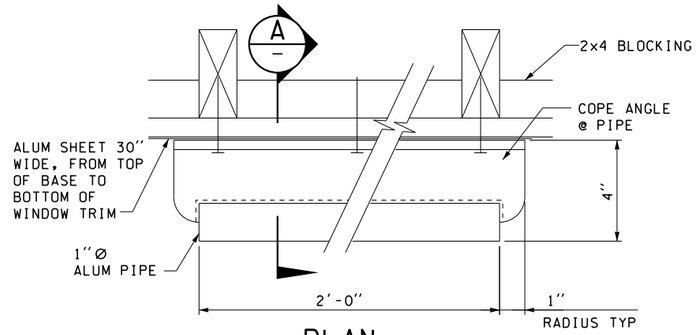

PLAN

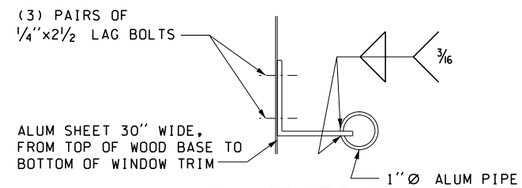

A SECTION

2 FOOT REST AT SELLERS WINDOW

NTS

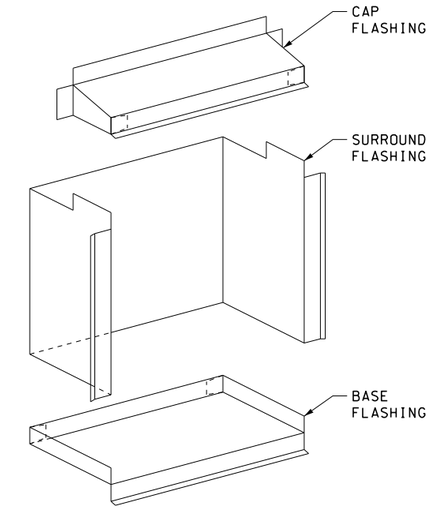

NOTE:
ALL FLASHING PRE-FINISHED METAL.

3 FLASHING DETAIL

NTS

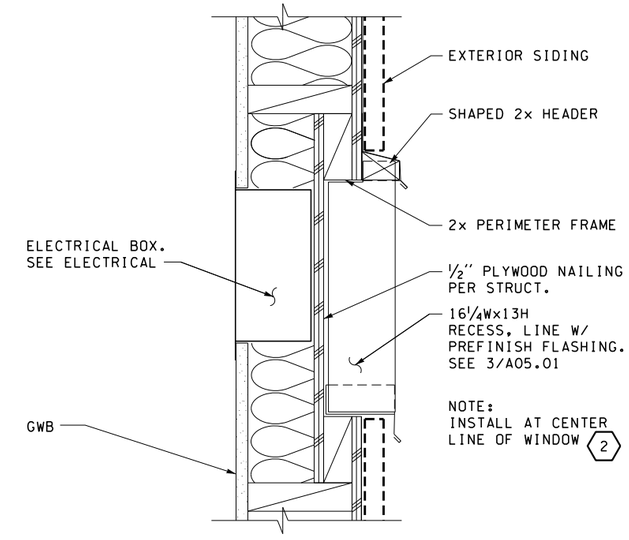

6 DISPLAY RECESS

FILE NAME: WSF\Mukilteo\14W121_FerryTermConst\CADD\WSF\ $FILES$						
PRINTED: 2:03:37 PM 9/21/2018	LAST PRINTED BY:					FED.AID PROJ.NO.
SUBMITTAL DATE: 9/21/2018	Morin					
DESIGNED BY: S. LEACH	9/21/2018					WA-2017-007-00
ENTERED BY: M. MORIN	9/21/2018					REGION NO. STATE
CHECKED BY: M. SCOTT	9/21/2018					10 WASH
MAR PROJ ENGR: C. TORRES	9/21/2018					JOB NUMBER 18W121
DIR TERM ENGR: N. MCINTOSH		2 ADDENDUM NO. 2	11/01/18			CONTRACT NO.
ASST SECRETARY: A. SCARTON		REVISION	DATE	BY		00****

5257 REGISTERED ARCHITECT
Mark A. Scott
MARK A SCOTT
STATE OF WASHINGTON
9/21/2018

Washington State Department of Transportation
WASHINGTON STATE FERRIES

SR 525
MUKILTEO FERRY TERMINAL (PHASE 2)
FERRY TERMINAL CONSTRUCTION

EXTERIOR DETAILS

AX05.02

SHEET 1381 2 OF 1521 SHEETS

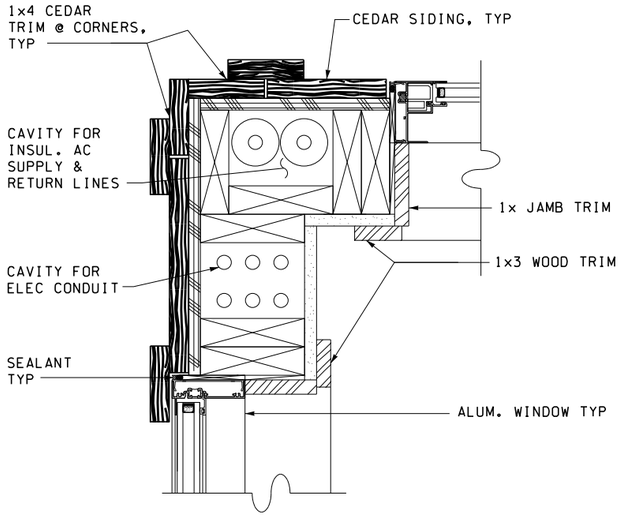

1 PLAN VIEW AT CORNER

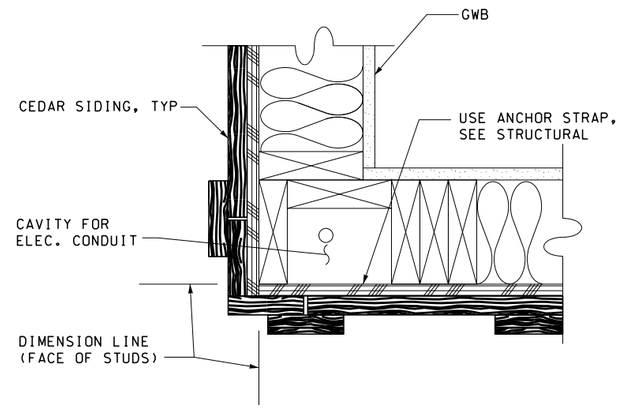

2 PLAN AT CORNER (BELOW WINDOW)

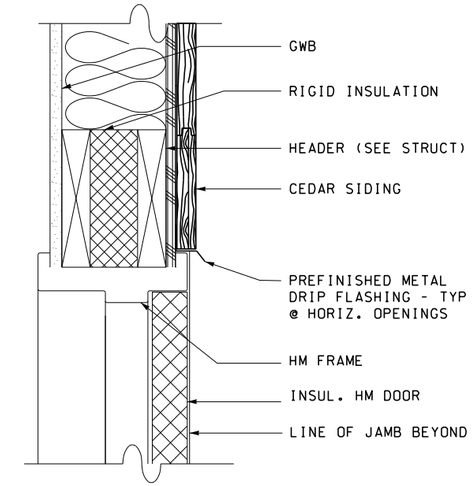

3 DOOR HEAD

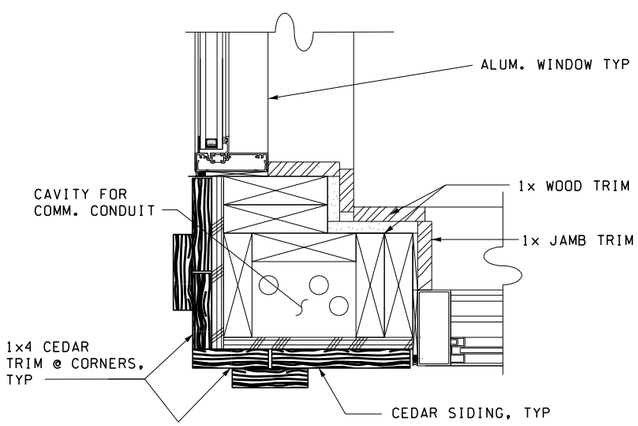

4 PLAN VIEW AT CORNER

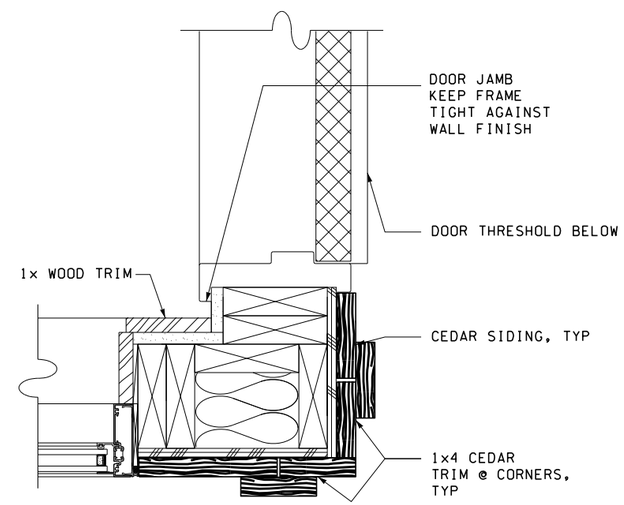

5 PLAN AT CORNER (WINDOW/DOOR JAMB)

NOTE: REF. SECTIONS FOR WALL ASSEMBLY, AND STRUCTURAL FOR FRAMING TYP

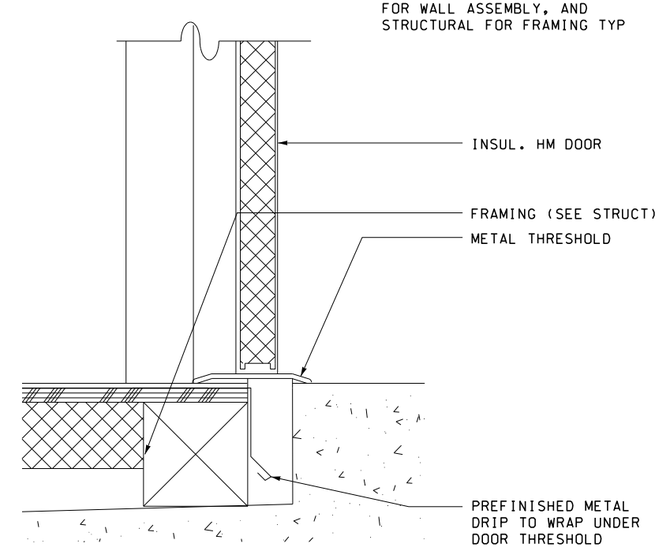

6 DOOR THRESHOLD

0 3 6 1½

FILE NAME: WSF\Mukilteo\14W121_FerryTermConst\CADD\WSF\ $FILES$						
PRINTED: 2:03:44 PM 9/21/2018	LAST PRINTED BY:					FED.AID PROJ.NO.
SUBMITTAL DATE: 9/21/2018	Morin					WA-2017-007-00
DESIGNED BY: S. LEACH	9/21/2018					REGION NO. STATE
ENTERED BY: M. MORIN	9/21/2018					10 WASH
CHECKED BY: M. SCOTT	9/21/2018					JOB NUMBER 18W121
MAR PROJ ENGR: C. TORRES	9/21/2018					
DIR TERM ENGR: N. MCINTOSH		2 ADDENDUM NO. 2	11/01/18			CONTRACT NO.
ASST SECRETARY: A. SCARTON		REVISION	DATE	BY		00****

5257 REGISTERED ARCHITECT
Mark A. Scott
MARK A. SCOTT
STATE OF WASHINGTON
9/21/2018

Washington State Department of Transportation
WASHINGTON STATE FERRIES

SR 525
MUKILTEO FERRY TERMINAL (PHASE 2)
FERRY TERMINAL CONSTRUCTION

DOOR DETAILS

AX05.03

SHEET 1382 OF 1521 SHEETS

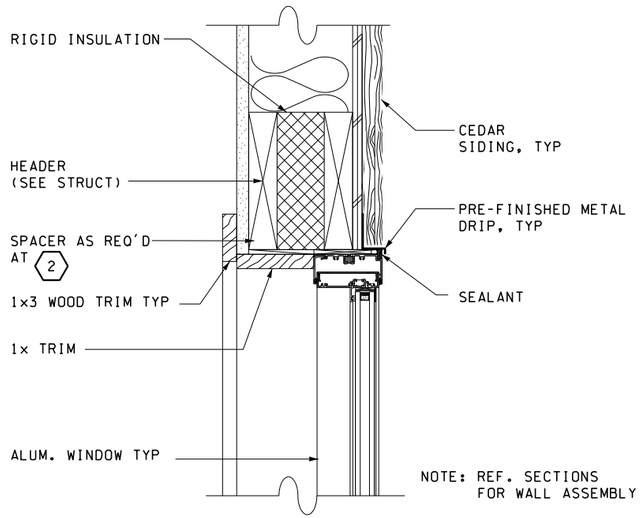

1 FIXED WINDOW HEAD

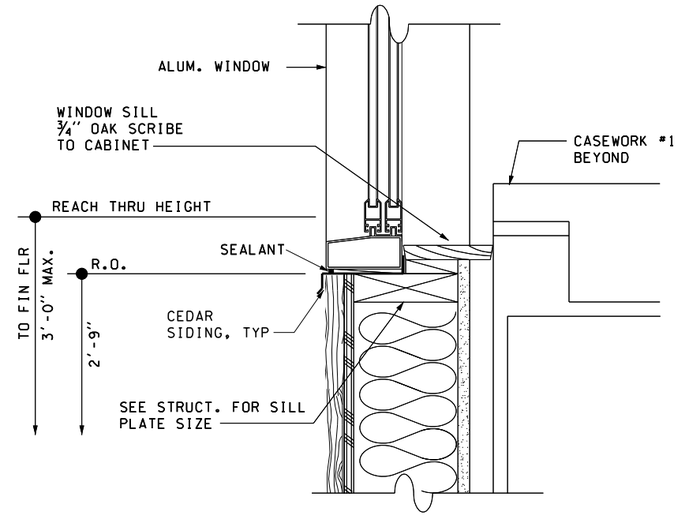

2 SELLER'S WINDOW SILL

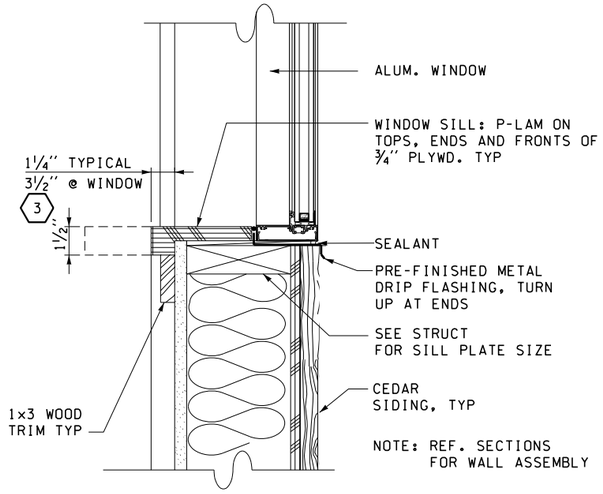

4 FIXED WINDOW SILL

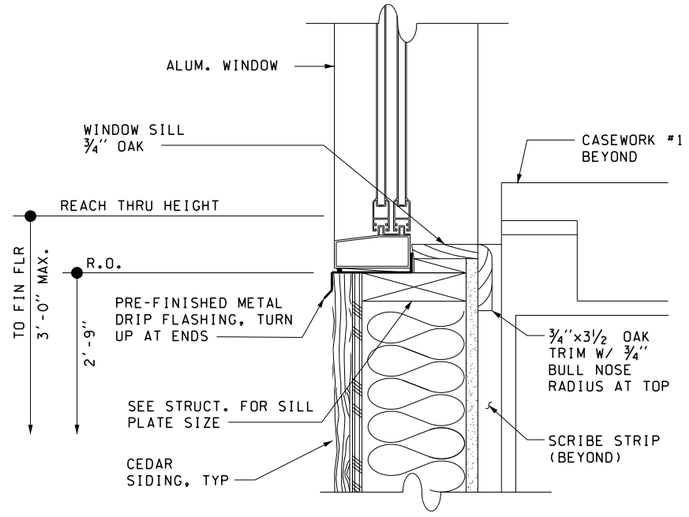

5 SELLER'S WINDOW SILL

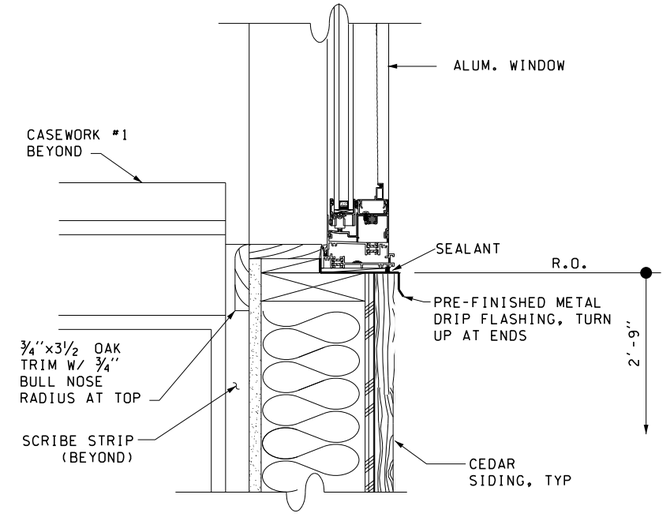

6 OPERABLE WINDOW SILL

FILE NAME: WSF\Mukilteo\14W121_FerryTermConst\CADD\WSF\ $FILES$						
PRINTED: 2:03:50 PM 9/21/2018	LAST PRINTED BY:					FED.AID PROJ.NO.
SUBMITTAL DATE: 9/21/2018	Morin					
DESIGNED BY: S. LEACH	9/21/2018					WA-2017-007-00
ENTERED BY: M. MORIN	9/21/2018					REGION NO. / STATE
CHECKED BY: M. SCOTT	9/21/2018					10 / WASH
MAR PROJ ENGR: C. TORRES	9/21/2018					JOB NUMBER 18W121
DIR TERM ENGR: N. MCINTOSH		2 ADDENDUM NO. 2	11/01/18			CONTRACT NO.
ASST SECRETARY: A. SCARTON		REVISION	DATE	BY		00****

5257 REGISTERED ARCHITECT
Mark A. Scott
MARK A. SCOTT
STATE OF WASHINGTON
9/21/2018

Washington State Department of Transportation
WASHINGTON STATE FERRIES

SR 525
MUKILTEO FERRY TERMINAL (PHASE 2)
FERRY TERMINAL CONSTRUCTION

WINDOW DETAILS

AX05.04

SHEET 1383 OF 1521 SHEETS

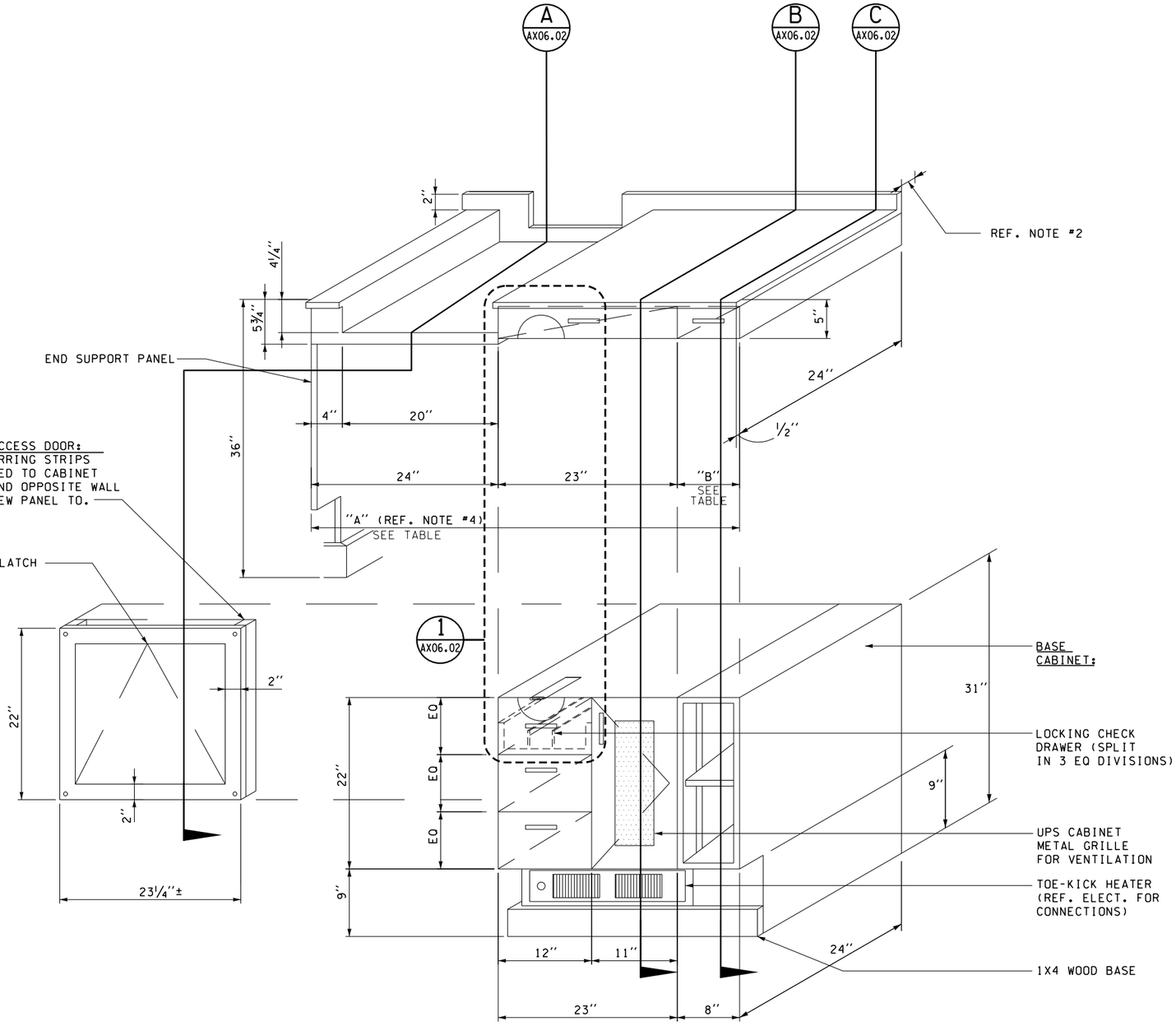

NOTES:

1. CASEWORK FINISH TO BE P-LAM PER SPECIFICATION U.N.O.
2. CASEWORK TO ALLOW A 2" CORD SLOT BEHIND FOR A TOTAL DEPTH OF 26 1/2".
3. ALL EXPOSED FACES/ EDGES TO RECIEVE P-LAM U.N.O.
4. COUNTERTOP TO EXTEND BETWEEN SILLS OF TRANSACTION WINDOWS; INSTALL SCRIBE STRIP. SEE DETAIL 2 AT CABINET AND DETAIL 3 IN FRONT OF CABINET.
5. PROVIDE 12" WIDE REMOVEABLE FILLER TO MATCH PROFILE OF ADJACENT COUNTER. P-LAM OVER PLYWOOD W/ BULLNOSE OAK NOSING.

CASEWORK TABLE

TOLL BOOTH #	DIMENSION	
	A	B
1	55"	8"
2	55"	8"
3	55"	8"
4	87 3/4"	22 3/4"

1 FRONT WALL CASEWORK #1 ISOMETRIC

0 1

3/4

FILE NAME: WSF\Mukilteo\14W121_FerryTermConst\CADD\WSF\ $FILES$					
PRINTED: 2:03:56 PM 9/21/2018	LAST PRINTED BY:				FED.AID PROJ.NO.
SUBMITTAL DATE: 9/21/2018	Morin				WA-2017-007-00
DESIGNED BY: S. LEACH	9/21/2018				REGION NO. STATE
ENTERED BY: M. MORIN	9/21/2018				10 WASH
CHECKED BY: M. SCOTT	9/21/2018				JOB NUMBER
MAR PROJ ENGR: C. TORRES	9/21/2018				18W121
DIR TERM ENGR: N. MCINTOSH		2 ADDENDUM NO. 2	11/01/18		CONTRACT NO.
ASST SECRETARY: A. SCARTON		REVISION	DATE	BY	00****

5257 REGISTERED ARCHITECT
MARK A. SCOTT
STATE OF WASHINGTON
9/21/2018

Washington State Department of Transportation
WASHINGTON STATE FERRIES

SR 525
MUKILTEO FERRY TERMINAL (PHASE 2)
FERRY TERMINAL CONSTRUCTION

CASEWORK #1 DRAWINGS

AX06.01

SHEET 1384 OF 1521 SHEETS

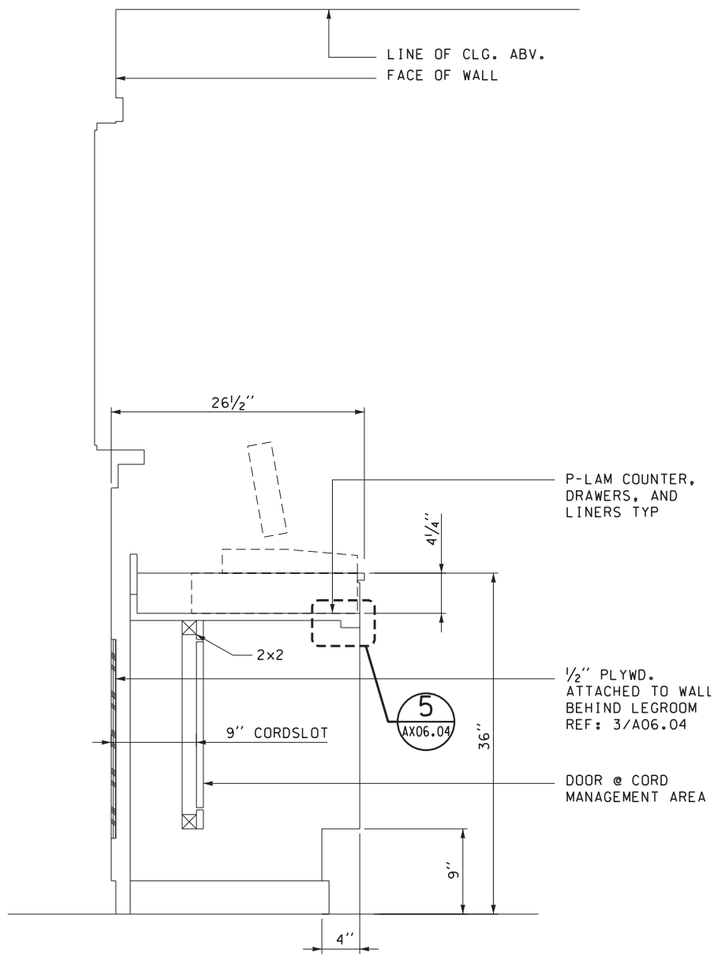

A SECTION-CASEWORK #1
THRU KNEE SPACE

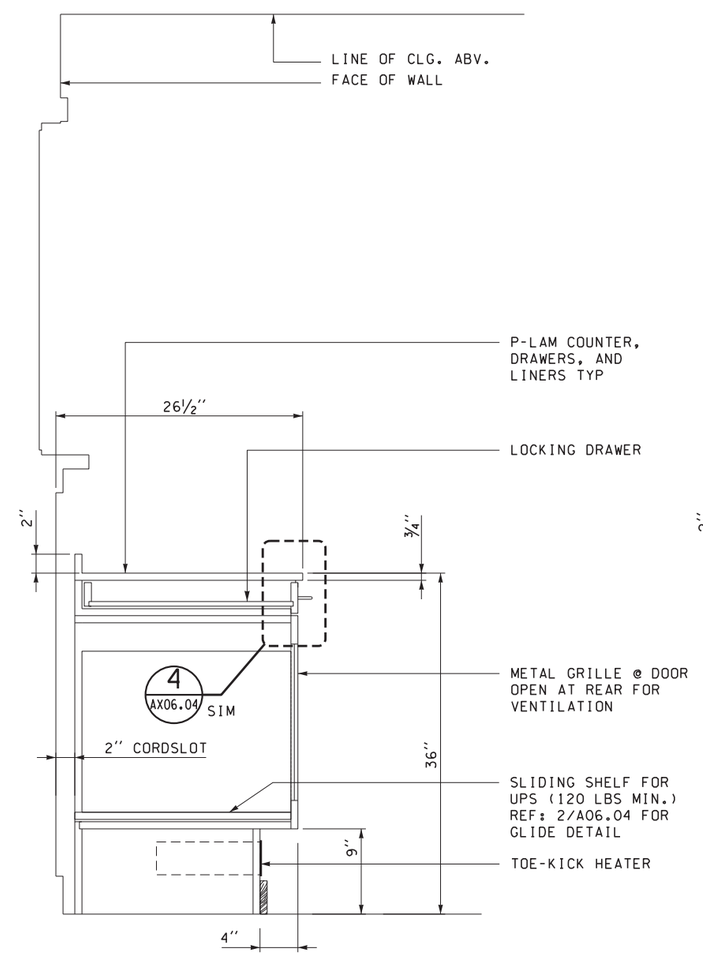

B SECTION-CASEWORK #1
THRU CABINET #1 & #2

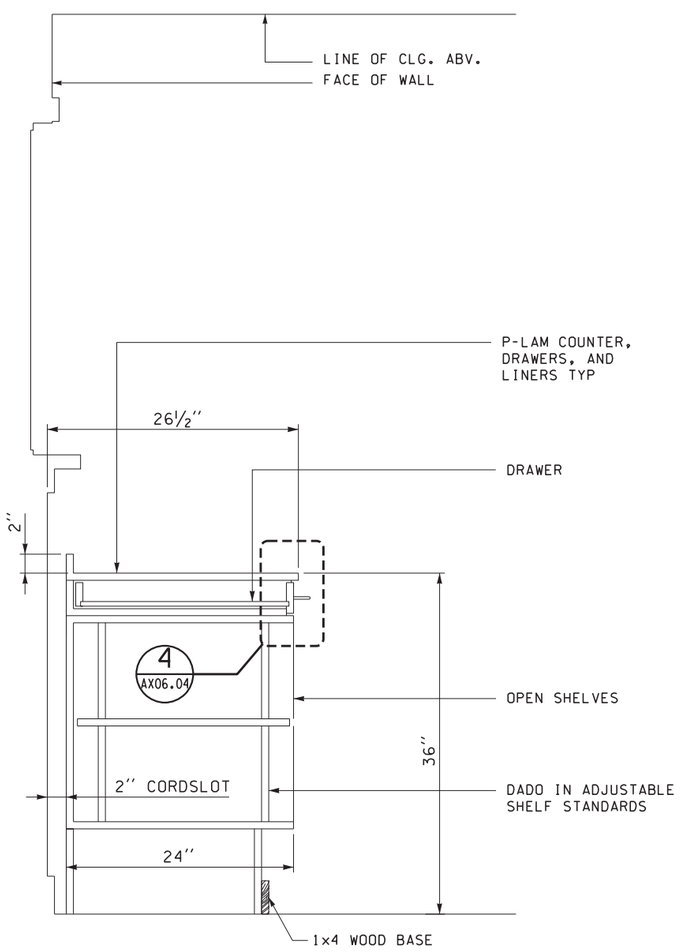

C SECTION-CASEWORK #1
THRU CABINET #1 & #3

0 6 12 ¾

FILE NAME: WSF\Mukilteo\14W121_FerryTermConst\CADD\WSF\ 14w121ax06_02.dlv						
PRINTED: 7:49:48 AM 2/23/2018	LAST PRINTED BY:					FED.AID PROJ.NO.
SUBMITTAL DATE: 12/22/2017	Morin					
DESIGNED BY: S. LEACH	12/22/2017					WA-2017-007-00
ENTERED BY: M. MORIN	12/22/2017					REGION NO. 10 / STATE WASH
CHECKED BY: M. SCOTT	12/22/2017					
MAR PROJ ENGR: C. TORRES	12/22/2017	ADD ENTIRE SHEET				JOB NUMBER 18W121
DIR TERM ENGR: N. MCINTOSH		ADDENDUM 2	10-31-2018			CONTRACT NO. 00****
ASST SECRETARY: A. SCARTON		REVISION	DATE	BY		

5257 REGISTERED ARCHITECT
MARK A. SCOTT
STATE OF WASHINGTON
2/23/2018

cosign

Washington State Department of Transportation
WASHINGTON STATE FERRIES

SR 525
MUKILTEO FERRY TERMINAL (PHASE 2)
FERRY TERMINAL CONSTRUCTION

CASEWORK #1 SECTIONS

AX06.02

SHEET 1385 OF 1521 SHEETS

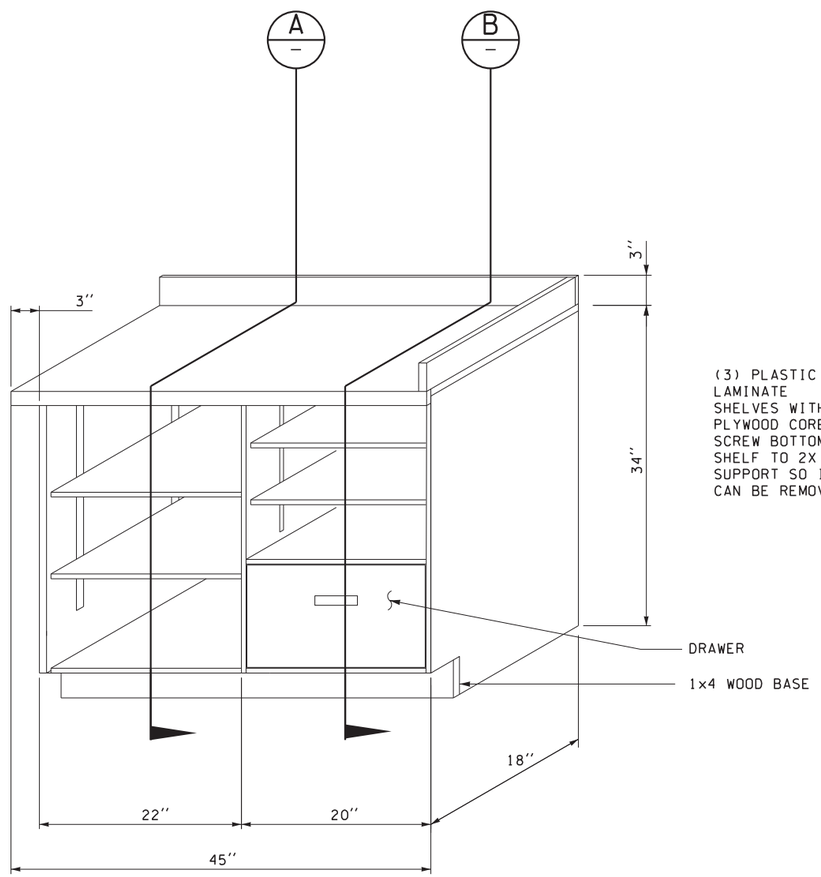

1 CASEWORK #2 ISOMETRIC

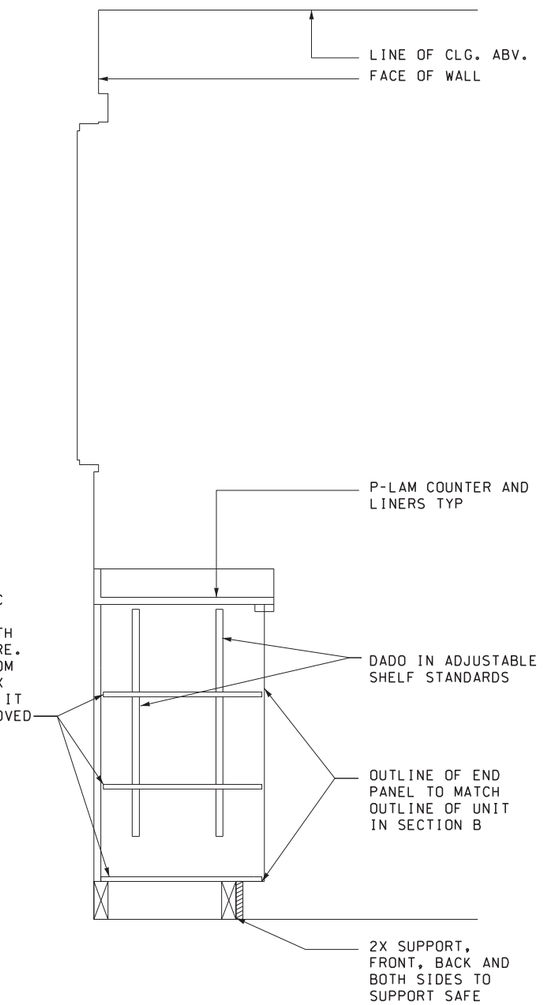

A SECTION
THRU OPEN SHELF

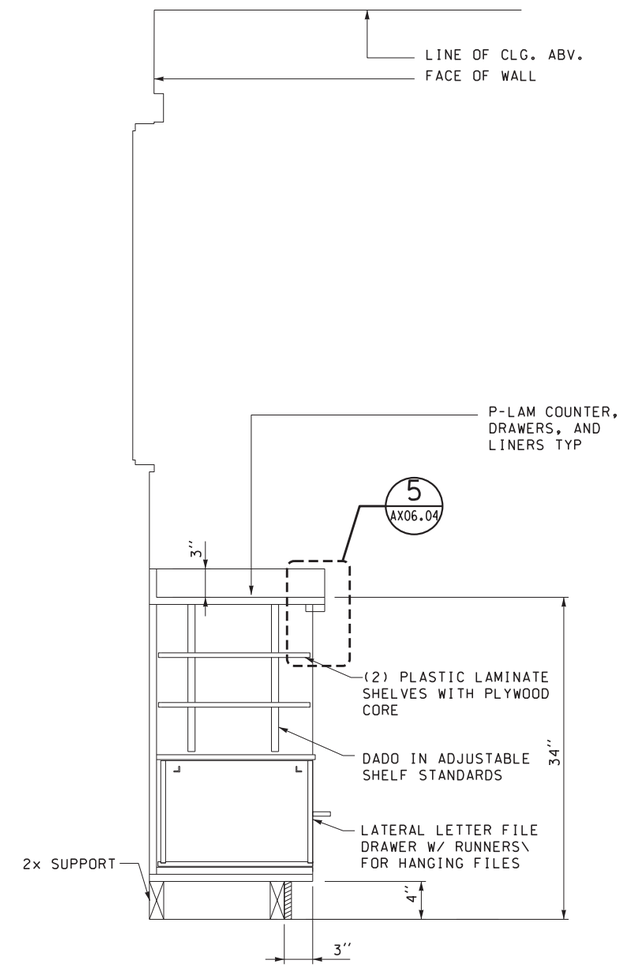

B SECTION
THRU DRAWERS

0 1 3/4

FILE NAME: WSF\Mukilteo\14W121_FerryTermConst\CADD\WSF\ $FILES$						
PRINTED: 2:04:02 PM 9/21/2018	LAST PRINTED BY:					FED.AID PROJ.NO.
SUBMITTAL DATE: 9/21/2018	Morin					
DESIGNED BY: S. LEACH	9/21/2018					WA-2017-007-00
ENTERED BY: M. MORIN	9/21/2018					REGION NO. / STATE
CHECKED BY: M. SCOTT	9/21/2018					10 / WASH
MAR PROJ ENGR: C. TORRES	9/21/2018					JOB NUMBER 18W121
DIR TERM ENGR: N. MCINTOSH						CONTRACT NO.
ASST SECRETARY: A. SCARTON		REVISION	DATE	BY		00****

5257 REGISTERED ARCHITECT
Mark A. Scott
MARK A. SCOTT
STATE OF WASHINGTON
9/21/2018

Washington State Department of Transportation
WASHINGTON STATE FERRIES

SR 525
MUKILTEO FERRY TERMINAL (PHASE 2)
FERRY TERMINAL CONSTRUCTION

CASEWORK #2 DRAWINGS

AX06.03

SHEET 1386 OF 1521 SHEETS

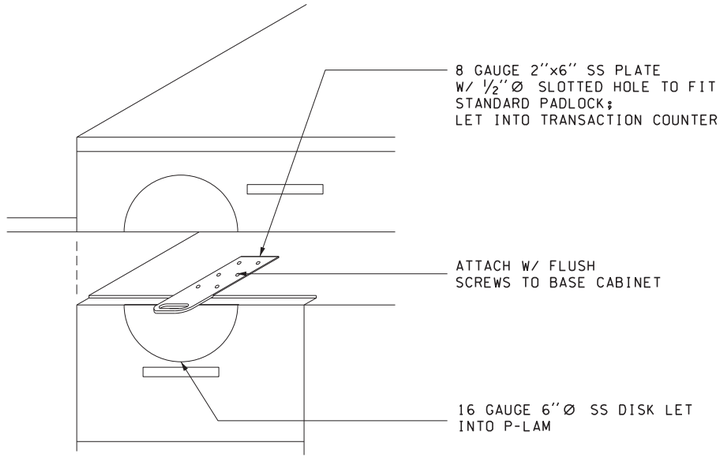

1 LOCKING DRAWER

0 3 6 1 1/2

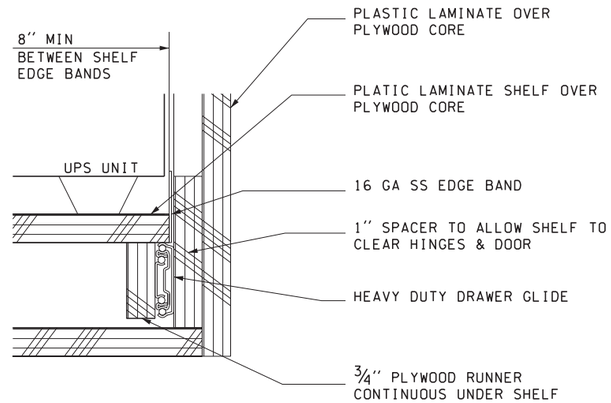

2 UPS SHELF GLIDE

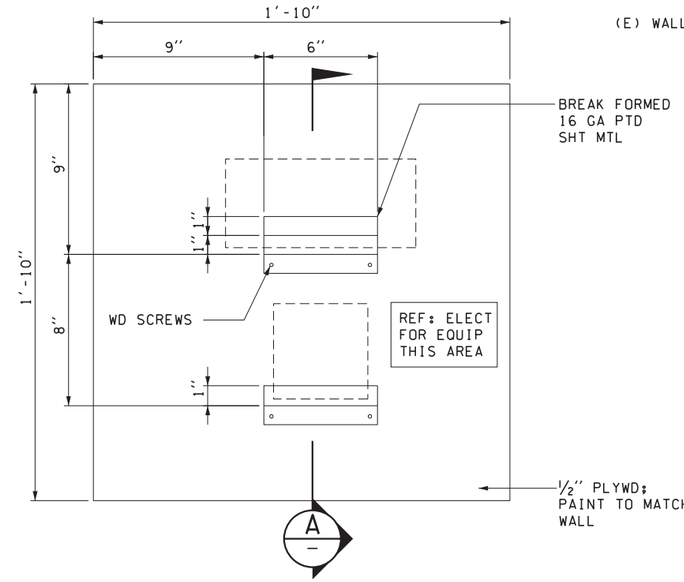

3 PLYWOOD WALL

0 3 6 1 1/2

A SECTION

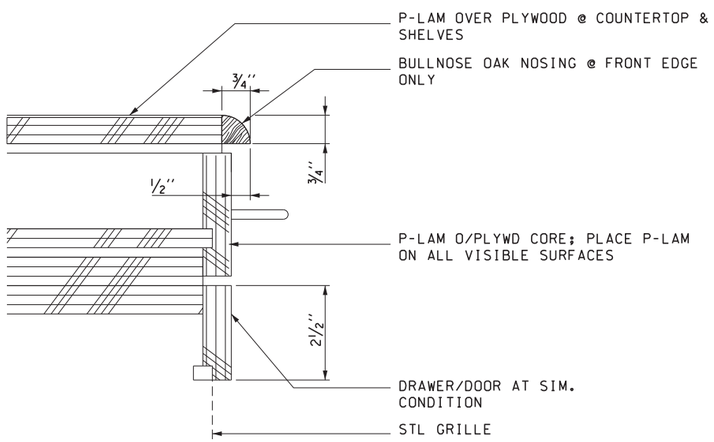

4 DRAWER DETAIL

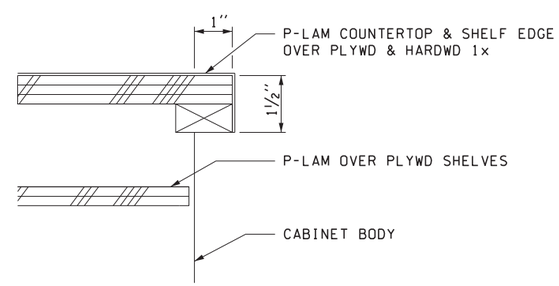

5 COUNTER EDGE DETAIL

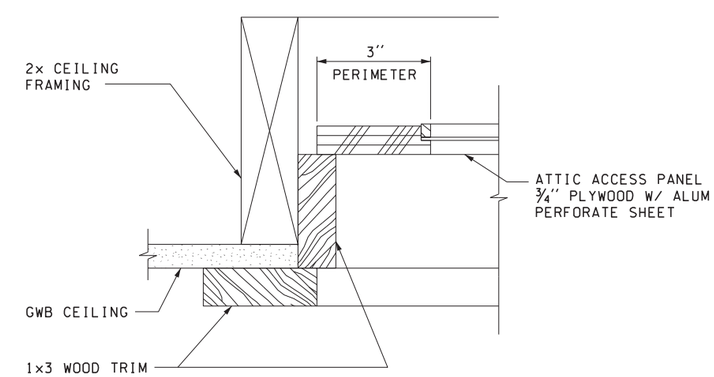

6 ATTIC ACCESS PANEL

0 2 4 3

FILE NAME: WSF\Mukilteo\14W121_FerryTermConst\CADD\WSF\ $FILES$						
PRINTED: 2:04:08 PM 9/21/2018	LAST PRINTED BY:					FED.AID PROJ.NO.
SUBMITTAL DATE: 9/21/2018	Morin					
DESIGNED BY: S. LEACH	9/21/2018					WA-2017-007-00
ENTERED BY: M. MORIN	9/21/2018					REGION NO. STATE
CHECKED BY: M. SCOTT	9/21/2018					10 WASH
MAR PROJ ENGR: C. TORRES	9/21/2018					JOB NUMBER
DIR TERM ENGR: N. MCINTOSH						18W121
ASST SECRETARY: A. SCARTON		REVISION	DATE	BY		CONTRACT NO.
						00****

5257 REGISTERED ARCHITECT
Mark A. Scott
MARK A. SCOTT
STATE OF WASHINGTON
9/21/2018

Washington State
Department of Transportation
WASHINGTON STATE FERRIES

SR 525
MUKILTEO FERRY TERMINAL (PHASE 2)
FERRY TERMINAL CONSTRUCTION

DETAILS

AX06.04

SHEET 1387 OF 1521 SHEETS

STRUCTURAL ABBREVIATIONS

&	AND
@	AT
AB	ANCHOR BOLT
ACI	AMERICAN CONCRETE INSTITUTE
ADDL	ADDITIONAL
ADJ	ADJACENT, ADJUSTABLE
AISC	AMERICAN INSTITUTE OF STEEL CONSTRUCTION
ALT	ALTERNATE
ANCH	ANCHOR
APA	AMERICAN PLYWOOD ASSOCIATION
APPROX	APPROXIMATE
AR	ANCHOR ROD
ARCH	ARCHITECT, ARCHITECTURAL
ASCE	AMERICAN SOCIETY OF CIVIL ENGINEERS
ASTM	AMERICAN SOCIETY FOR TESTING AND MATERIALS
AWS	AMERICAN WELDING SOCIETY
B/	BOTTOM OF
BAL	BALANCE
BC	BOTTOM CHORD
BF	BRACED FRAME, BOTTOM FLANGE
BLDG	BUILDING
BLKG	BLOCKING
BM	BEAM
BOF	BOTTOM OF FOOTING
BOT	BOTTOM
BP, B PL	BASE PLATE
BRG	BEARING
BTWN	BETWEEN
BU	BUILT-UP
C	CAMBER, CHANNEL
CA	CONCRETE (EXPANSION) ANCHOR
CANTIL	CANTILEVER
CAP	CAPACITY
CC	CENTER-TO-CENTER
CG	CENTER OF GRAVITY
CIP	CAST-IN-PLACE
CJ	CONTROL JOINT, CONSTRUCTION JOINT
CJP, CP	COMPLETE JOINT PENETRATION
CL,	CENTERLINE
CLR	CLEAR
COL	COLUMN
CONC	CONCRETE
CONN	CONNECTION
CONST	CONSTRUCTION
CONT	CONTINUE, CONTINUOUS
CONTR	CONTRACTOR
COORD	COORDINATE
CRSI	CONCRETE REINFORCED STEEL INSTITUTE
CTR	CENTER, CENTERED
CU YD	CUBIC YARD
d	PENNYWEIGHT (NAILS)
DB	DIVIDER BEAM, DROPPED BEAM
D-B	DESIGN-BUILD
DBA	DEFORMED BAR ANCHOR
DBL	DOUBLE
DEG	DEGREE
DEMO	DEMOLISH, DEMOLITION
DET	DETAIL
DIA	DIAMETER
DIAG	DIAGONAL
DIAPH	DIAPHRAGM
DICA	DRILLED-IN CONCRETE ANCHOR
DIM	DIMENSION
DIST	DISTANCE
DL	DEAD LOAD
DN	DOWN
DO	DITTO
DP	DEEP
DS	DRAG STRUT
DWG	DRAWING
DWL	DOWEL
(E)	EXISTING
EA	EACH
	EPOXY (ADHESIVE) ANCHOR
EE	EACH END
EF	EACH FACE
EJ	EXPANSION JOINT
EL	ELEVATION
ELEC	ELECTRICAL
EMBED	EMBEDMENT
ENGR	ENGINEER
EQ	EARTHQUAKE, EQUAL
EQUIP	EQUIPMENT
ES	EACH SIDE
ETC	ET CETERA
E-W	EAST-WEST
EW	EACH WAY
EXP	EXPANSION
EXT	EXTERIOR
EXT GR	EXTERIOR GRADE
FD	FLOOR DRAIN
FDN	FOUNDATION
FF	FAR FACE, FINISH FLOOR
FIN	FINISH
FLR	FLOOR
FLG	FLANGE
FS	FAR SIDE
FT	FEET
FTG	FOOTING
GA	GAGE, GAUGE
GALV	GALVANIZED
GB, GR BM	GRADE BEAM
GEN	GENERAL
GL	GLUE LAMINATED WOOD
GLB	GLUE LAMINATED BEAM
GRD	GIRDER
GRND	GROUND
HDR	HEADER
HGR	HANGER
HK	HOOK
HLDN	HOLD DOWN
HORIZ	HORIZONTAL
HPT	HIGH POINT
HSB	HIGH STRENGTH BOLT
HSS	HOLLOW STRUCTURAL SECTION
HT	HEIGHT
IBC	INTERNATIONAL BUILDING CODE
ID	INSIDE DIAMETER
IF	INSIDE FACE
IN	INCH
INCL	INCLUDE
INFO	INFORMATION
INT	INTERIOR
IJ	ISOLATION JOINT
JST	JOIST
JT	JOINT
K	KIP (1,000 LB)
KSF	KIPS PER SQUARE FOOT
KSI	KIPS PER SQUARE INCH
L	LENGTH, ANGLE
LB	POUND
LEV	LEVEL
LF	LINEAL FOOT
LL	LIVE LOAD
LLBB	LONG LEGS BACK TO BACK
LLH	LONG LEG HORIZONTAL
LLV	LONG LEG VERTICAL
LOC	LOCATION, LOCATE
LONGIT	LONGITUDINAL
LPT	LOW POINT
LSH	LONG SLOTTED HOLE
LSL	LAMINATED STRAND LUMBER
MATL	MATERIAL
MAX	MAXIMUM
MB	MACHINE BOLT
MECH	MECHANICAL
MFR	MANUFACTURER
MIN	MINIMUM
MISC	MISCELLANEOUS
MTL	METAL
NF	NEAR FACE
NLG	NAILING
NOM	NOMINAL
NO	NUMBER
N-S	NORTH-SOUTH
NS	NEAR SIDE
NTS	NOT TO SCALE
OC	ON CENTER
OD	OUTSIDE DIAMETER
OF	OUTSIDE FACE
OPNG	OPENING
OPP	OPPOSITE
OSH	OVERSIZED HOLE
PCC	PRECAST CONCRETE
PCF	POUNDS PER CUBIC FOOT
PEN	PENETRATION
PERP	PERPENDICULAR
PL	PLATE, PROPERTY LINE
PLCS	PLACES
PLF	POUNDS PER LINEAR FOOT
PLWD	PLYWOOD
PNL	PANEL
PP, PJP	PARTIAL JOINT PENETRATION
PREFAB	PREFABRICATED
PSF	POUNDS PER SQUARE FOOT
PSI	POUNDS PER SQUARE INCH
PT	POINT, PRESSURE TREATED
PVC	POLYVINYL CHLORIDE
R, RAD	RADIUS
REBAR	REINFORCING STEEL BARS
REF	REFERENCE
REINF	REINFORCING
REM	REMAINDER
REQD	REQUIRED
RTN	RETURN
SCHED	SCHEDULE
SECT	SECTION
SHT	SHEET
SHTHG	SHEATHING
SIM	SIMILAR
SOG	SLAB ON GRADE
SPC	SPACE, SPACED, SPACING
SPEC	SPECIFICATION
SQ	SQUARE
SST	STAINLESS STEEL
SSH	SHORT SLOTTED HOLE
STAG	STAGGER, STAGGERED
STD	STANDARD
STIF	STIFFENER
STIR	STIRRUP
STL	STEEL
STRUCT	STRUCTURAL
SPRT	SUPPORT
SW	SHEAR WALL
SYMM	SYMMETRICAL, SYMMETRY
T/	TOP OF
T&B	TOP AND BOTTOM
T&G	TONGUE AND GROOVE
TC	TOP CHORD
TEMP	TEMPERATURE
THK	THICK, THICKNESS
THRU	THROUGH
TOC	TOP OF CONCRETE
TOF	TOP OF FOOTING
TOW	TOP OF WALL
TR	THREADED ROD
TRANS	TRANSVERSE
TYP	TYPICAL
TWS	THREADED WELDED STUD
UNO	UNLESS NOTED OTHERWISE
VERT	VERTICAL
W	WIDTH, WIDE FLANGE
W/	WITH
WD	WOOD
WHS	WELDED HEADED STUD
W/O	WITHOUT
WP	WORK POINT
WT	WEIGHT
WWF	WELDED WIRE FABRIC

STRUCTURAL SYMBOLS

GENERAL SYMBOLS

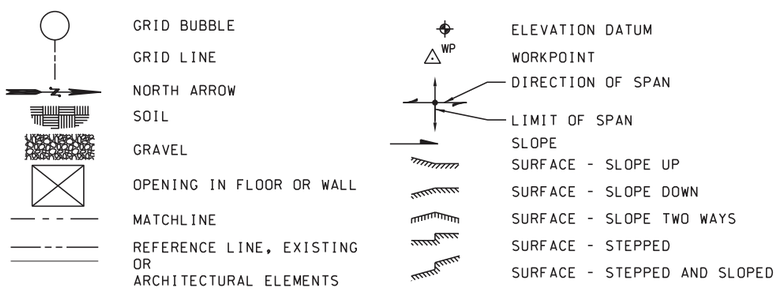

CONCRETE SYMBOLS

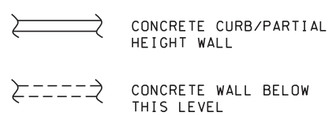

CONNECTORS

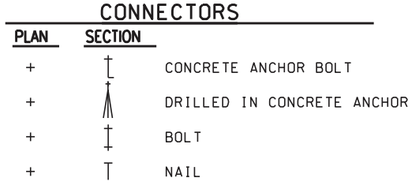

DETAIL IDENTIFIERS

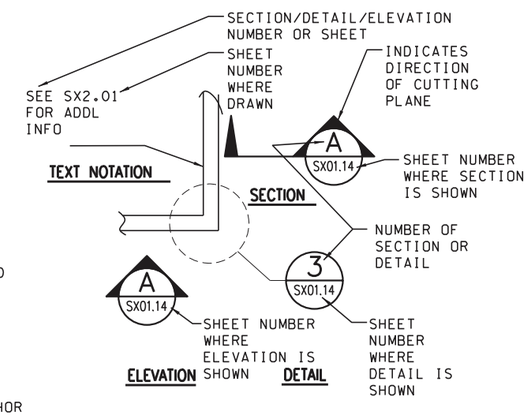

DETAIL LABELS

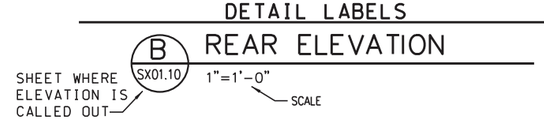

WOOD SYMBOLS

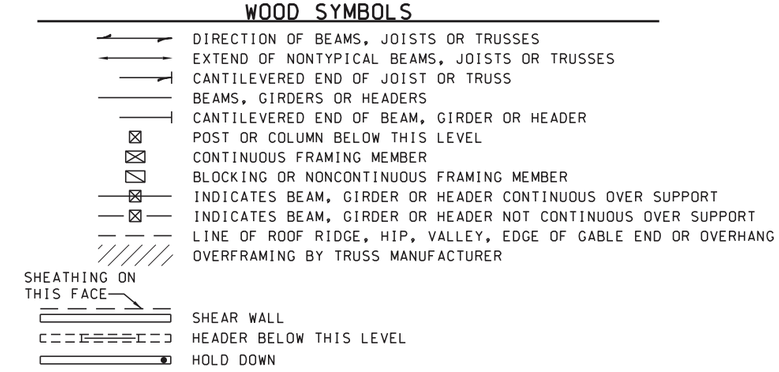

WOOD FRAMING ANNOTATIONS

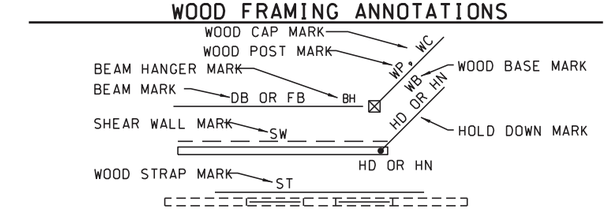

FILE NAME: WSF\Mukilteo\14W121_FerryTermConst\CADD\WSF\ $FILES$						FED.AID PROJ.NO.
PRINTED: 6:49:20 AM 9/21/2018	LAST PRINTED BY:					
SUBMITTAL DATE: 9/21/2018	Morin					WA-2017-007-00
DESIGNED BY: X. LU	9/21/2018					REGION NO. STATE
ENTERED BY: M. MORIN	9/21/2018					10 WASH
CHECKED BY: C. STEARNS	9/21/2018					JOB NUMBER
MAR PROJ ENGR: C. TORRES	9/21/2018					18W121
DIR TERM ENGR: N. MCINTOSH						CONTRACT NO.
ASST SECRETARY: A. SCARTON		REVISION	DATE	BY		00****

CHRISTOPHER STEARNS
STATE OF WASHINGTON
45203
REGISTERED PROFESSIONAL ENGINEER
Design
9/21/2018

Washington State Department of Transportation
WASHINGTON STATE FERRIES

SR 525
MUKILTEO FERRY TERMINAL (PHASE 2)
FERRY TERMINAL CONSTRUCTION

ABBREVIATIONS AND SYMBOLS

SX00.10

GENERAL

ALL TYPICAL DETAILS AND NOTES SHOWN ON THESE DRAWINGS ARE PART OF THE CONSTRUCTION CONTRACT AND SHALL BE PROVIDED BY THE CONTRACTOR. TYPICAL DETAILS MAY NOT NECESSARILY BE INDICATED ON THE PLANS, BUT SHALL APPLY AS SHOWN OR DESCRIBED IN THE DETAILS.

CODES

BUILDING CODE: ALL MATERIALS, WORKMANSHIP, DESIGN, AND CONSTRUCTION SHALL CONFORM TO THE DRAWINGS, SPECIFICATIONS, AND THE INTERNATIONAL BUILDING CODE (IBC), 2015 EDITION, AS AMENDED BY SNOHOMISH COUNTY.

STANDARDS: REFERENCE TO ASTM AND OTHER STANDARDS SHALL MEAN THE LATEST EDITION IN EFFECT ON THE BID DATE, UNLESS NOTED IN THESE DOCUMENTS OR DESIGNATED BY THE GOVERNING CODE.

LOADS

FLOOR DESIGN DATA

IN ADDITION TO THE SELF WEIGHT, THE FOLLOWING LOADS ARE USED FOR DESIGN:

	UNIFORM LIVE LOAD (PSF)	CONCENTRATED LIVE LOAD (KIPS)	SUPERIMPOSED DEAD LOAD (PSF)	REDUCIBLE (SEE NOTE)
FLOOR	50	300	-	NO
CEILING	20	300	-	NO
ROOF	20	300	-	NO

SNOW DESIGN DATA:

SNOW LOAD = 20 PSF

WIND DESIGN DATA:

WIND BASE SHEAR:

LONG		= 1.7 KIPS
TRANS		= 3.8 KIPS
ANALYTICAL PROCEDURE		= DIRECTIONAL PROCEDURE, ASCE 7 CHAPTER 27
ENCLOSURE CLASSIFICATION		= ENCLOSED (ASCE 7 SECTION 26.10)
TYPE OF STRUCTURE		= RIGID (ASCE 7 SECTION 26.2)
BASIC WIND SPEED	V_{3S}	= 100 MPH, 3 SECOND GUST (ASCE 7 FIGURE 26.5-1C)
EXPOSURE CATEGORY		= D (ASCE 7 SECTION 26.7)
DIRECTIONALITY FACTOR	K_d	= 0.85 : MWFRS, COMPONENTS AND CLADDING (ASCE 7 TABLE 26.6-1)
TOPOGRAPHIC FACTOR	K_{ZT}	= 1.0 (ASCE 7 SECTION 26.8)
GUST EFFECT FACTOR	G	= 0.85 (ASCE 7 SECTION 26.9.1)

EARTHQUAKE DESIGN DATA:

BASIC SEISMIC-FORCE-RESISTING SYSTEM: BEARING WALL SYSTEM (N-S)
BEARING WALL SYSTEM (E-W)
EQUIVALENT LATERAL FORCE PROCEDURE

ANALYTICAL PROCEDURE:

SEISMIC BASE SHEAR: V_E = 1.4 KIPS
(ASCE 7 SECTION 12.8.1)

SEISMIC RESPONSE COEFFICIENT: Cs = 0.15
(ASCE 7 SECTION 12.8.1.1)

SEISMIC IMPORTANCE FACTOR I_E = 1.0 (OCCUPANCY CATEGORY [I], ASCE 7 SECTION 11.5.1)

SITE CLASS	= D (ASCE 7 SECTION 11.4.2)
S_S	= 1.47 (ASCE 7 SECTION 11.4.1)
S_1	= 0.57 (ASCE 7 SECTION 11.4.1)
S_{DS}	= 0.98 (ASCE 7 SECTION 11.4.4)
S_{D1}	= 0.57 (ASCE 7 SECTION 11.4.4)
SEISMIC DESIGN CATEGORY	= D (ASCE 7 SECTION 11.6)
RESPONSE MODIFICATION COEFFICIENT	R = 6.5 (ASCE 7 TABLE 12.2-1)

WOOD

REFERENCE STANDARDS: WOOD SHALL CONFORM TO ALL REQUIREMENTS OF THE FOLLOWING DOCUMENTS:

AITC	"TIMBER CONSTRUCTION MANUAL"
NDS	"NATIONAL DESIGN SPECIFICATION FOR WOOD CONSTRUCTION"
AF AND PA SDPWS	"SUPPLEMENT SPECIAL DESIGN PROVISIONS FOR WIND AND SEISMIC"
ANSI A190.1	"STANDARD FOR STRUCTURAL GLUED LAMINATED TIMBER"
ANSI A117	"STANDARD SPECIFICATIONS FOR STRUCTURAL GLUED LAMINATED TIMBER OF SOFTWOOD SPECIES"
TPI 1	"NATIONAL DESIGN STANDARD FOR METAL PLATE CONNECTED WOOD TRUSS CONSTRUCTION"

PLYWOOD: WOOD STRUCTURAL PANELS SHALL CONFORM TO REQUIREMENTS OF US DEPARTMENT OF COMMERCE PS 1 OR PS 2. EACH PANEL SHALL BEAR THE AMERICAN PLYWOOD ASSOCIATION (APA) GRADE MARK. SEE DRAWINGS FOR GRADE AND THICKNESS.

SHEATHING: UNLESS NOTED OTHERWISE, ROOF AND FLOOR PANELS SHALL BE INSTALLED WITH LONG DIMENSION PERPENDICULAR TO SUPPORTS AND CONTINUOUS OVER 2 OR MORE SPANS. PLACE NAILS ⅜" FROM PANEL ENDS AND EDGES. DRIVE ALL NAILS FLUSH WITH SHEATHING SURFACE. BLOCK ALL WALL AND DIAPHRAGM EDGES. BLOCKED SHEARWALL EDGES SHALL USE 2× FRAMING. MINIMUM NAIL PENETRATION INTO SUPPORTS SHALL BE 1½".

SAWN LUMBER: SAWN LUMBER SHALL BE IDENTIFIED BY THE GRADE MARK OF A LUMBER GRADING OR INSPECTION AGENCY APPROVED BY AN ACCREDETITATION BODY COMPLYING WITH US DEPARTMENT OF COMMERCE PS 20. SAWN LUMBER SPECIES AND GRADES SHALL BE AS FOLLOWS EXCEPT WHERE NOTED IN THE DRAWINGS:

USE	SIZE	SPECIES	GRADE
WALL STUDS	2× 3×	HEM-FIR	#2
SILL PLATES	2× 3×	HEM-FIR	UTILITY
JOISTS	2×	HEM-FIR	#2
CURB FRAMING	6×	HEM-FIR	#2

CONNECTORS: DESIGN SHOWN ON DRAWINGS IS BASED ON CONNECTORS MANUFACTURED BY SIMPSON STRONG-TIE IN ACCORDANCE WITH CATALOG "WOOD CONSTRUCTION CONNECTORS" 2017-2018 C-C-2017. SUBSTITUTES SHALL BE SUBMITTED WITH A CURRENT ICC-ES EVALUATION REPORT AND AN ITEMIZED SUBSTITUTION LIST FOR APPROVAL. CONNECTORS SHALL BE INSTALLED IN CONFORMANCE WITH MANUFACTURER'S INSTRUCTIONS.

NAILING NOT SHOWN SHALL BE AS SHOWN IN IBC TABLE 2304.10.1 NAILS SHALL COMPLY WITH ASTM F1667. MINIMUM NAIL DIMENSIONS SHALL BE AS FOLLOWS:

SIZE	DIAMETER	LENGTH
6d	0.113"	2"
8d	0.131"	2½"
10d	0.148"	3"
12d	0.148"	3¼"
16d	0.162"	3½"
20d	0.192"	4"

BOLTS AND LAG SCREWS SHALL CONFORM TO ASTM A307.

PRESERVATIVE TREATED WOOD: ALL WOOD MEMBERS EXPOSED TO WEATHER AND SPECIFIED AS "PT" ON THE DRAWINGS SHALL BE PRESERVATIVE-TREATED IN ACCORDANCE WITH AWPA U1. EACH MEMBER SHALL BE IDENTIFIED BY THE QUALITY MARK OF AN INSPECTION AGENCY LISTED BY THE AMERICAN LUMBER STANDARDS TREATED WOOD PROGRAM, AND COMPLYING WITH IBC SECTION 2303.1.9 FASTENERS IN SUCH WOOD MEMBERS SHALL BE HOT DIPPED ZINC COATED GALVANIZED PER ASTM A153, STAINLESS STEEL, SILICON BRONZE OR COPPER.

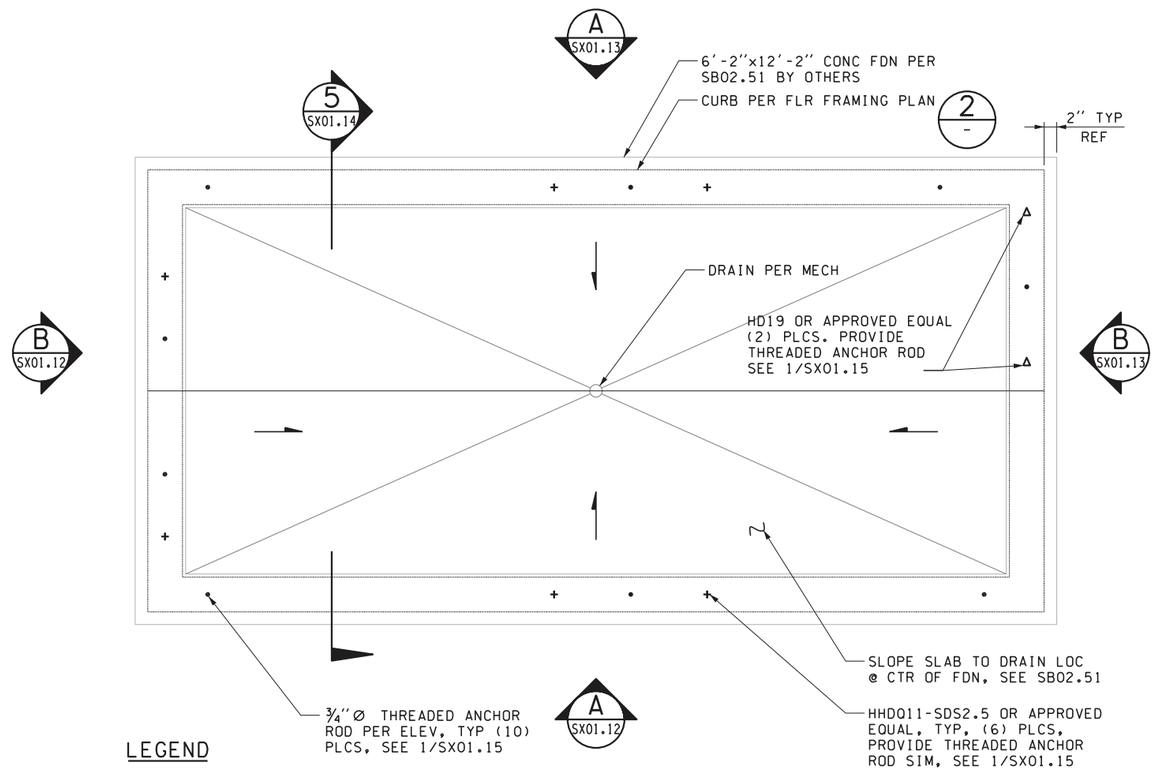

LEGEND

+ 1"Ø HOLD DOWNS

• 3/4"Ø THREADED RODS

△ 1 1/4"Ø HOLD DOWNS

1 / - FOUNDATION PLAN

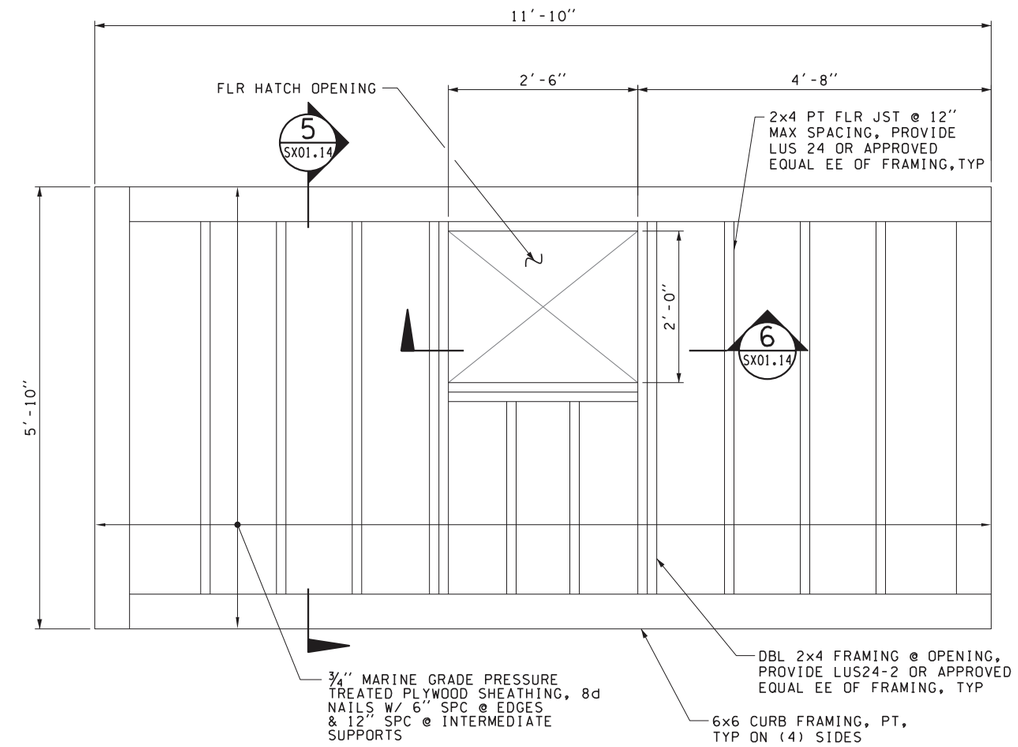

2 / - FLOOR FRAMING PLAN

FILE NAME: WSF\Mukilteo\14W121_FerryTermConst\CADD\WSF\ $FILES$						
PRINTED: 6:49:25 AM 9/21/2018	LAST PRINTED BY:					FED.AID PROJ.NO.
SUBMITTAL DATE: 9/21/2018	Morin					WA-2017-007-00
DESIGNED BY: X. LU	9/21/2018					REGION NO. / STATE
ENTERED BY: M. MORIN	9/21/2018					10 / WASH
CHECKED BY: C. STEARNS	9/21/2018					JOB NUMBER
MAR PROJ ENGR: C. TORRES	9/21/2018					18W121
DIR TERM ENGR: N. MCINTOSH						CONTRACT NO.
ASST SECRETARY: A. SCARTON		REVISION	DATE	BY		00****

CHRISTOPHER STEARNS
STATE OF WASHINGTON
46202
REGISTERED
PROFESSIONAL ENGINEER
9/21/2018

Washington State
Department of Transportation
WASHINGTON STATE FERRIES

SR 525
MUKILTEO FERRY TERMINAL (PHASE 2)
FERRY TERMINAL CONSTRUCTION

FOUNDATION AND FLOOR PLAN

SX01.10

SHEET 1390 OF 1521 SHEETS

LEGEND

1. METAL TIES SHALL BE NOT LESS THAN 16 GALVANIZED GAGE IN THICKNESS BY 1½ INCHES IN WIDTH AND SHALL HAVE A YIELD STRESS NOT LESS THAN 33,000 PSI.
2. METAL TIES SHALL BE CONTINOUS ALONG THE BLOCKINGS.
3. METAL TIES SHALL BE ATTACHED TO BLOCKING IN ACCORDANCE WITH THE MANUFACTURER'S INSTRUCTIONS BUT WITH NOT LESS THAN EIGHT 16d COMMON NAILS ON EACH SIDE OF THE HEADER -JOISTS INTERSECTION.

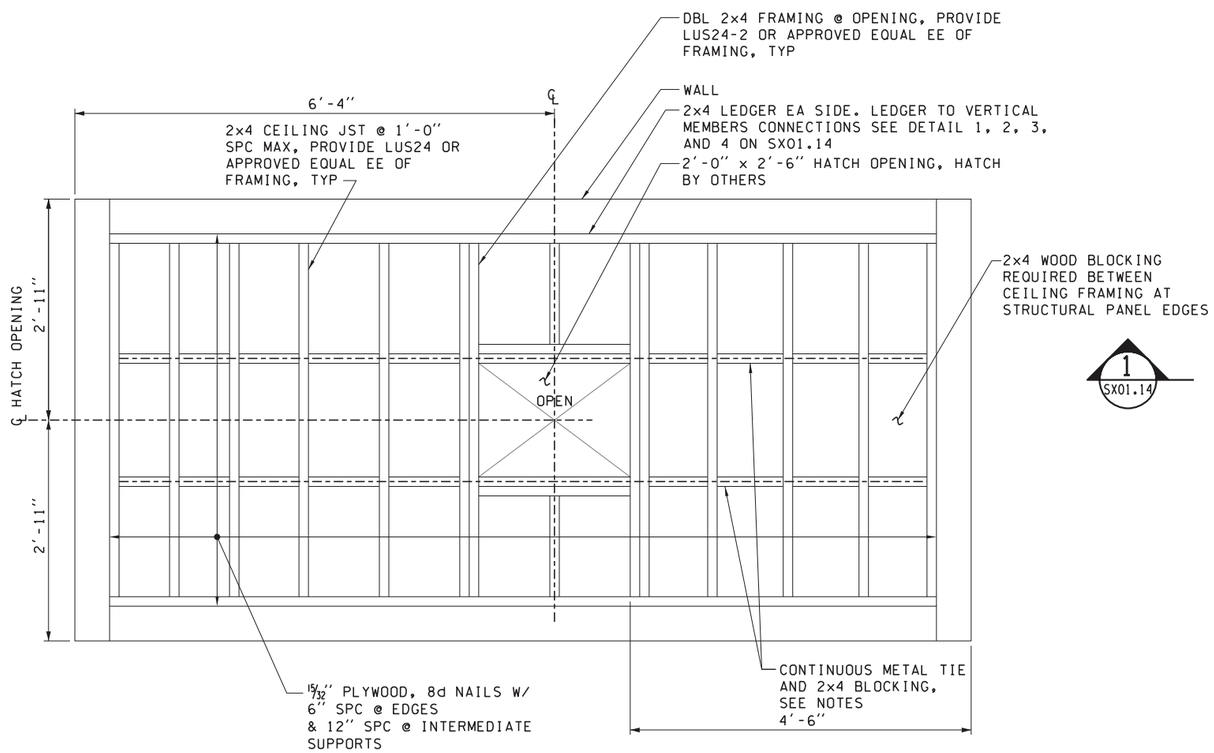

1 CEILING FRAMING PLAN

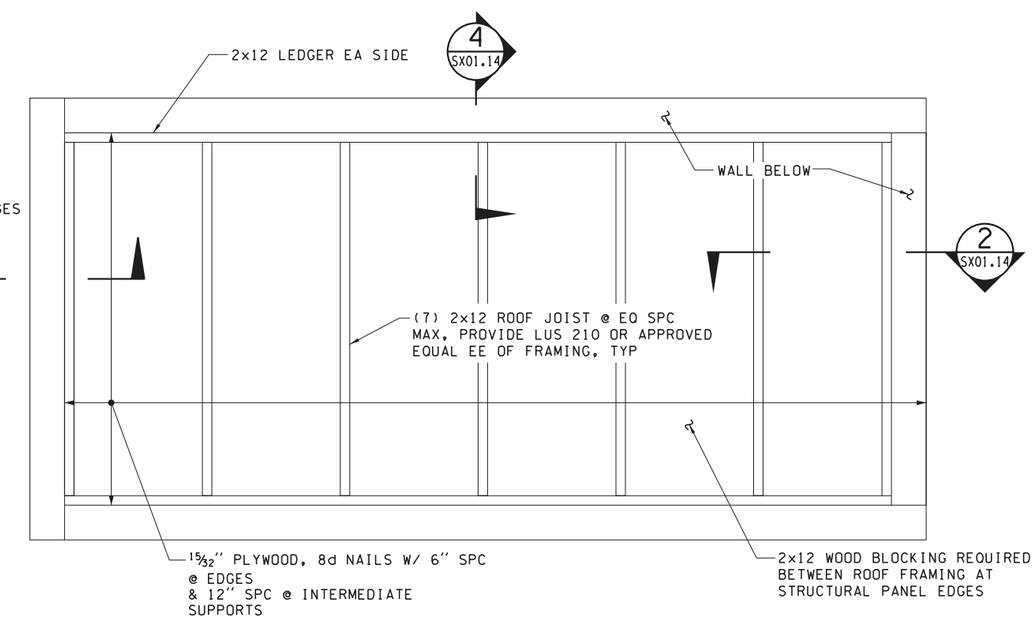

2 ROOF FRAMING PLAN

FILE NAME: WSF\Mukilteo\14W121_FerryTermConst\CADD\WSF\ $FILES$						
PRINTED: 6:49:28 AM 9/21/2018	LAST PRINTED BY:					FED.AID PROJ.NO.
SUBMITTAL DATE: 9/21/2018	Morin					WA-2017-007-00
DESIGNED BY: X. LU	9/21/2018					REGION NO. STATE
ENTERED BY: M. MORIN	9/21/2018					10 WASH
CHECKED BY: C. STEARNS	9/21/2018					JOB NUMBER
MAR PROJ ENGR: C. TORRES	9/21/2018					18W121
DIR TERM ENGR: N. MCINTOSH						CONTRACT NO.
ASST SECRETARY: A. SCARTON		REVISION	DATE	BY		00****

CHRISTOPHER STEARNS
STATE OF WASHINGTON
46202
REGISTERED PROFESSIONAL ENGINEER
Design
9/21/2018

Washington State Department of Transportation
WASHINGTON STATE FERRIES

SR 525
MUKILTEO FERRY TERMINAL (PHASE 2)
FERRY TERMINAL CONSTRUCTION

TOLL BOOTH PLANS

SX01.11

SHEET 1391 OF 1521 SHEETS

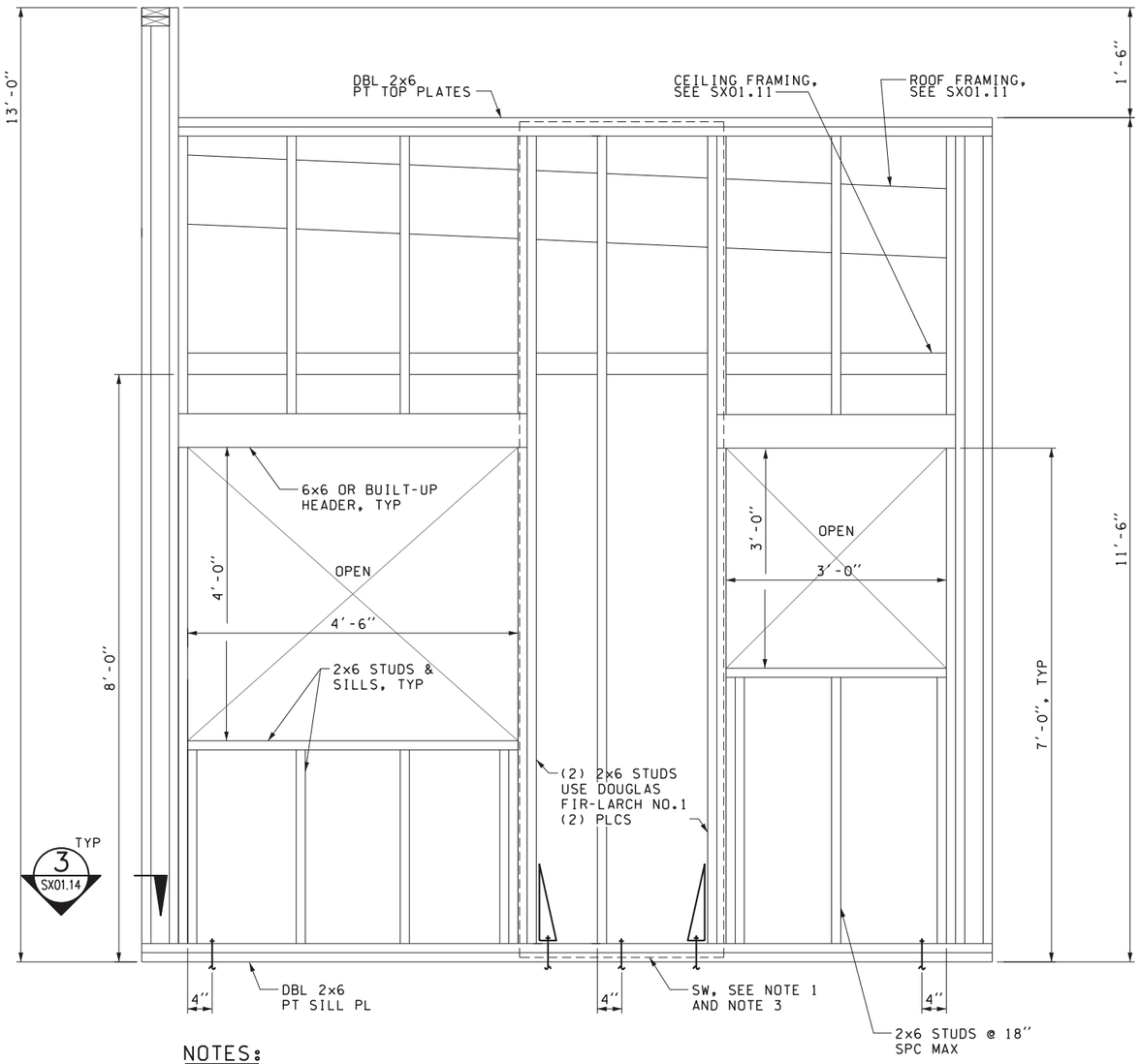

NOTES:

1. SHEAR WALL SHEATHING IS 19/32" PLYWOOD, FASTEN WITH 10d NAILS WITH 3" SPACING AT PANEL EDGE AND 12" SPACING AT INTERMEDIATE SUPPORTS.
2. TYPICAL WALL SHEATHING IS 19/32" PLYWOOD, FASTEN WITH 10d NAILS WITH 6" SPACING AT PANEL EDGES AND 12" SPACING AT INTERMEDIATE SUPPORTS.
3. 2x WOOD BLOCKING REQUIRED BETWEEN STUDS AT STRUCTURAL PANEL EDGES.

A SX01.10 SERVICE SIDE ELEVATION

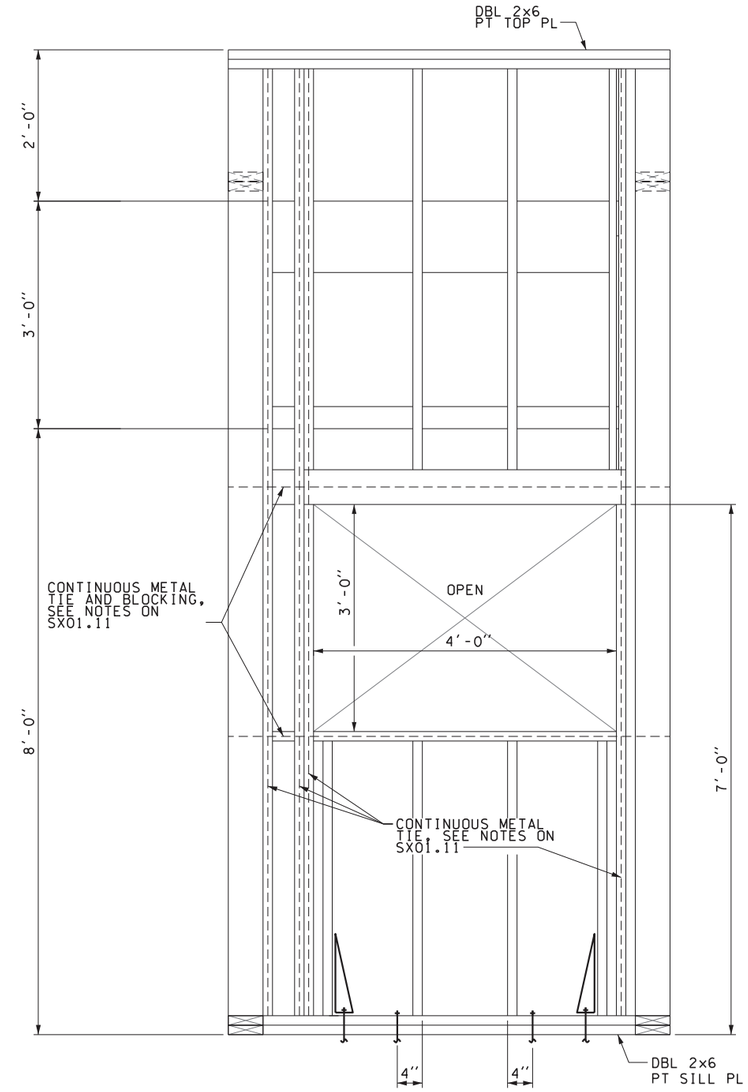

NOTES:

1. SEE A/SX01.12 FOR ADDITIONAL INFORMATION NOT SHOWN.
2. TYPICAL WALL SHEATHING IS 19/32" PLYWOOD, FASTEN WITH 10d NAILS WITH 3" SPACING AT PANEL EDGES AND 12" SPACING AT INTERMEDIATE SUPPORTS.
3. 2x WOOD BLOCKING REQUIRED BETWEEN STUDS AT STRUCTURAL PANEL EDGES.

B SX01.10 FRONT ELEVATION

FILE NAME: WSF\Mukilteo\14W121_FerryTermConst\CADD\WSF\ $FILES$						
PRINTED: 6:49:31 AM 9/21/2018	LAST PRINTED BY:					FED.AID PROJ.NO.
SUBMITTAL DATE: 9/21/2018	Morin					
DESIGNED BY: X. LU	9/21/2018					WA-2017-007-00
ENTERED BY: M. MORIN	9/21/2018					REGION NO. STATE
CHECKED BY: C. STEARNS	9/21/2018					10 WASH
MAR PROJ ENGR: C. TORRES	9/21/2018					JOB NUMBER 18W121
DIR TERM ENGR: N. MCINTOSH						CONTRACT NO.
ASST SECRETARY: A. SCARTON		REVISION	DATE	BY		00****

CHRISTOPHER STEARNS
STATE OF WASHINGTON
46202
REGISTERED
PROFESSIONAL ENGINEER
9/21/2018

Washington State
Department of Transportation
WASHINGTON STATE FERRIES

SR 525
MUKILTEO FERRY TERMINAL (PHASE 2)
FERRY TERMINAL CONSTRUCTION

TOLL BOOTH ELEVATIONS I

SX01.12

SHEET 1392 OF 1521 SHEETS

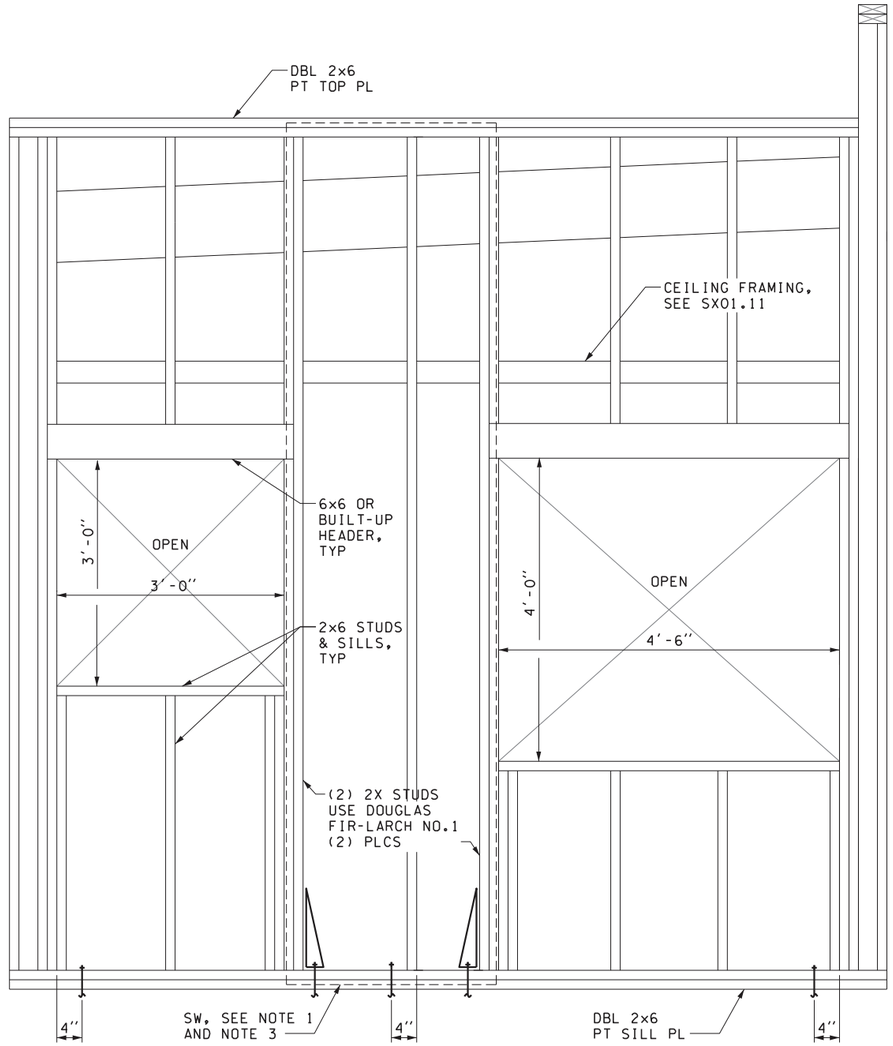

NOTES:

1. SHEAR WALL SHEATHING IS 19/32" PLYWOOD, FASTEN WITH 10d NAILS WITH 3" SPACING AT PANEL EDGE AND 12" SPACING AT INTERMEDIATE SUPPORTS.
2. TYPICAL WALL SHEATHING IS 19/32" PLYWOOD, FASTEN WITH 10d NAILS WITH 6" SPACING AT PANEL EDGES AND 12" SPACING AT INTERMEDIATE SUPPORTS.
3. 2x WOOD BLOCKING REQUIRED BETWEEN STUDS AT STRUCTURAL PANEL EDGES.

A / SX01.10 SIDE ELEVATION

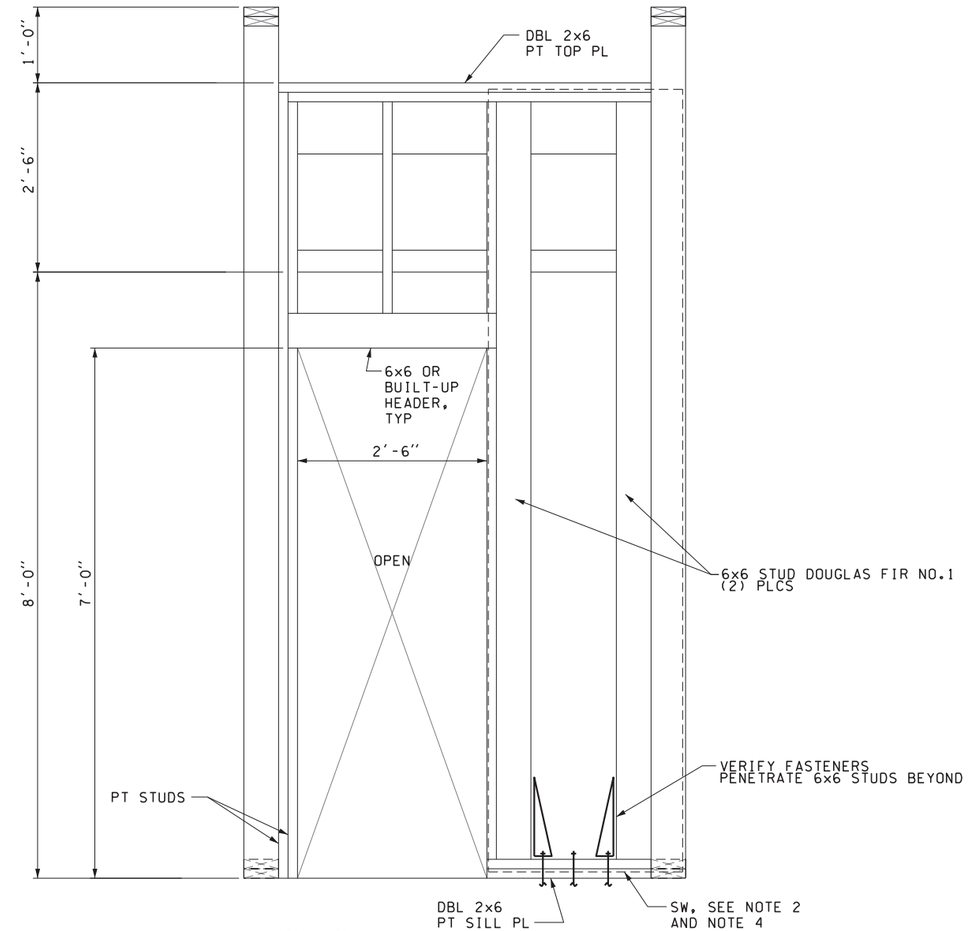

NOTES:

1. SEE A/SX01.13 FOR ADDITIONAL INFORMATION NOT SHOWN.
2. SHEAR WALL SHEATHING IS 19/32" PLYWOOD, FASTEN WITH 10d NAILS WITH 3" SPACING AT PANEL EDGE AND 12" SPACING AT INTERMEDIATE SUPPORTS.
3. TYPICAL WALL SHEATHING IS 19/32" PLYWOOD, FASTEN WITH 10d NAILS WITH 6" SPACING AT PANEL EDGES AND 12" SPACING AT INTERMEDIATE SUPPORTS.
4. 2x WOOD BLOCKING REQUIRED BETWEEN STUDS AT STRUCTURAL PANEL EDGES.

B / SX01.10 REAR ELEVATION

FILE NAME: WSF\Mukilteo\14W121_FerryTermConst\CADD\WSF\ $FILES$						
PRINTED: 6:49:34 AM 9/21/2018	LAST PRINTED BY:					FED.AID PROJ.NO.
SUBMITTAL DATE: 9/21/2018	Morin					WA-2017-007-00
DESIGNED BY: X. LU	9/21/2018					REGION NO. STATE
ENTERED BY: M. MORIN	9/21/2018					10 WASH
CHECKED BY: C. STEARNS	9/21/2018					JOB NUMBER 18W121
MAR PROJ ENGR: C. TORRES	9/21/2018					CONTRACT NO.
DIR TERM ENGR: N. MCINTOSH						
ASST SECRETARY: A. SCARTON		REVISION	DATE	BY		00****

CHRISTOPHER STEARNS
STATE OF WASHINGTON
46202
REGISTERED
PROFESSIONAL ENGINEER
9/21/2018

Washington State
Department of Transportation
WASHINGTON STATE FERRIES

SR 525
MUKILTEO FERRY TERMINAL (PHASE 2)
FERRY TERMINAL CONSTRUCTION

TOLL BOOTH ELEVATIONS II

SX01.13

SHEET 1393 OF 1521 SHEETS

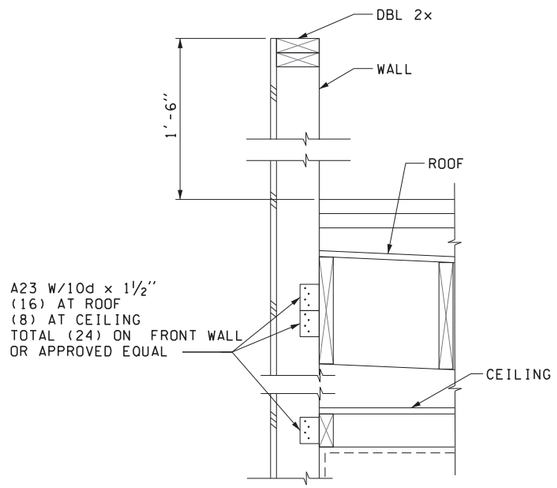

1 SX01.11 DETAIL
ROOF & CEILING TO FRONT WALL CONN

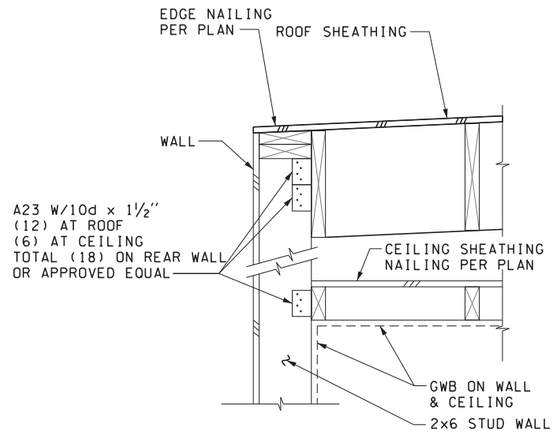

2 SX01.11 DETAIL
ROOF & CEILING TO REAR WALL CONN

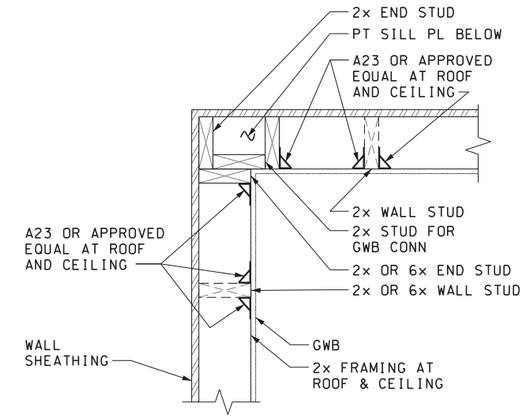

3 SX01.12 DETAIL - TYPICAL
WALL FRAMING AT CORNER

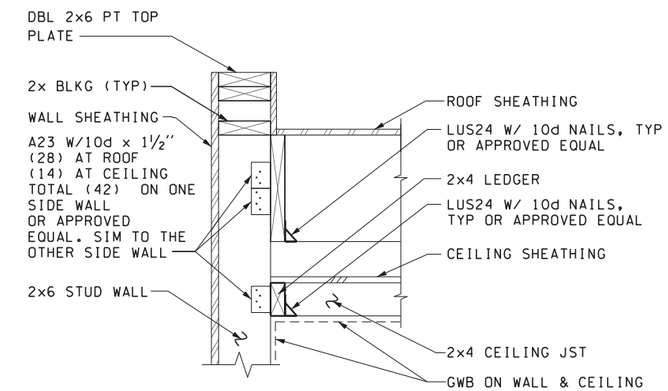

4 SX01.11 DETAIL
ROOF & CEILING TO SIDE WALL

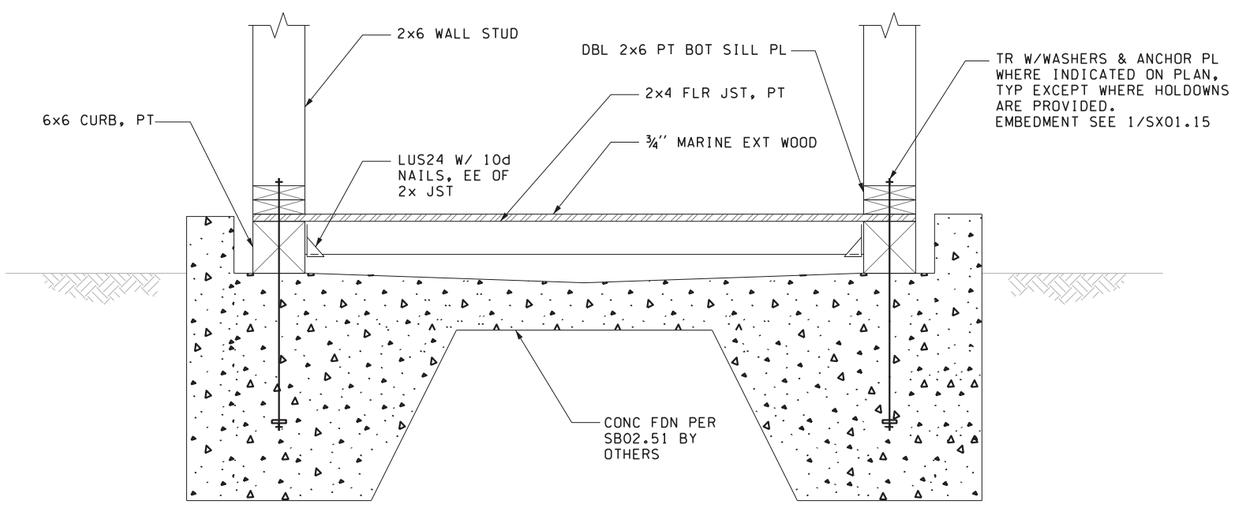

5 SX01.10 SECTION
FOUNDATION AND FLOOR FRAMING

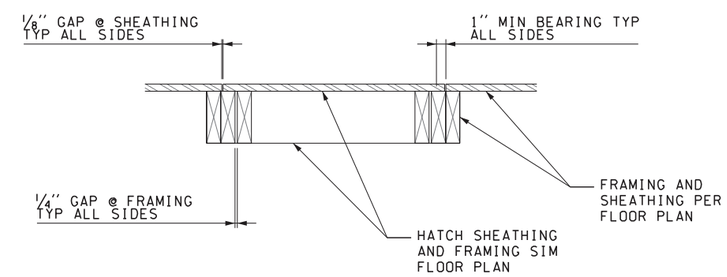

6 SX01.10 FLOOR HATCH

FILE NAME: WSF\Mukilteo\14W121_FerryTermConst\CADD\WSF\ $FILES$						
PRINTED: 6:49:36 AM 9/21/2018	LAST PRINTED BY:					FED.AID PROJ.NO.
SUBMITTAL DATE: 9/21/2018	Morin					
DESIGNED BY: X. LU	9/21/2018					WA-2017-007-00
ENTERED BY: M. MORIN	9/21/2018					REGION NO. 10 / STATE WASH
CHECKED BY: C. STEARNS	9/21/2018					
MAR PROJ ENGR: C. TORRES	9/21/2018					JOB NUMBER 18W121
DIR TERM ENGR: N. MCINTOSH						CONTRACT NO.
ASST SECRETARY: A. SCARTON		REVISION	DATE	BY		00****

CHRISTOPHER STEARNS — STATE OF WASHINGTON — 46202 — REGISTERED PROFESSIONAL ENGINEER
Design 9/21/2018

Washington State
Department of Transportation
WASHINGTON STATE FERRIES

SR 525
MUKILTEO FERRY TERMINAL (PHASE 2)
FERRY TERMINAL CONSTRUCTION

TOLL BOOTH SECTIONS AND DETAILS

SX01.14

SHEET 1394 OF 1521 SHEETS

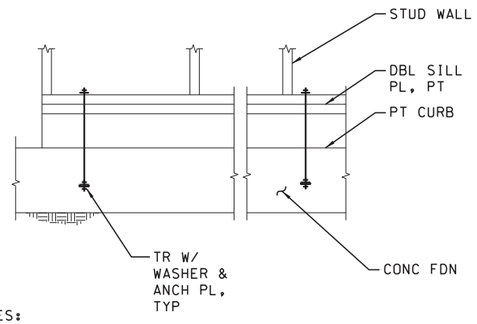

NOTES:

1. 3/4 " DIAMETER THREADED ROD WITH 1'-0" EMBEDMENT INTO CONCRETE FOUNDATION. OTHERS WITH 1'-3½" EMBEDMENT INTO CONCRETE FOUNDATION.
2. LOCATE THREADED ROD WITHIN SILL PLATE PER PLAN. PLACE THREADED ROD TO LOCATE WASHER EDGE WITHIN 1/2" OF SILL EDGE ON SHEATHED SIDE OF WALL FRAMING.
3. USE 3"x3"x3/16" SQUARE PLATE WASHER AT TOP AND BOTTOM OF THREADED ROD. PROVIDED NUT EACH SIDE OF BOTTOM PLATE.
4. DO NOT OVERSIZE HOLES DRILLED THROUGH SILL PLATE. HOLES SHALL BE A MINIMUM 1/32" TO A MAXIMUM OF 1/16" LARGER THAN THE BOLT DIAMETER.
5. SEE PLANS AND ELEVATIONS FOR SILL PLATE THICKNESS AND FASTENING REQUIRED AT SHEAR WALLS.

1 SILL PLATE ANCHORAGE TO CONCRETE

NTS

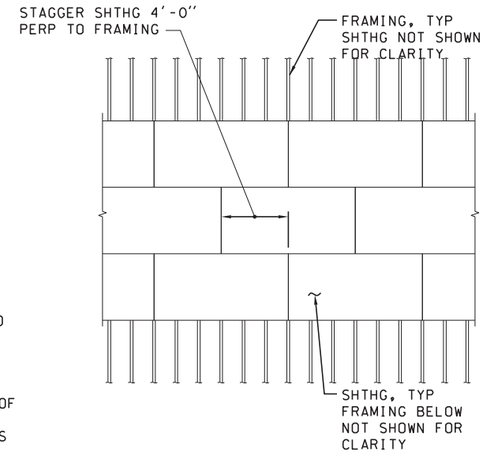

2 TYPICAL SHEATHING PLAN

NTS

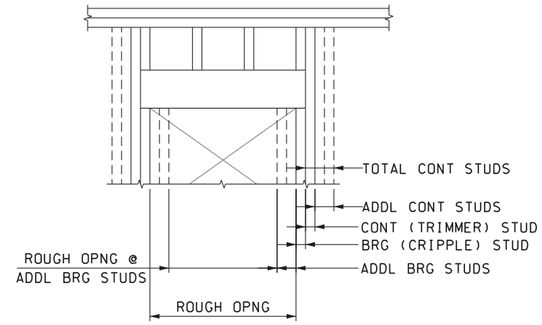

NOTES:

1. FASTEN EACH CONTINUOUS STUD TO INNER STUD WITH STANDARD COMMON 0.131" DIAMETER x 3" FACE NAILS AT 16" ON CENTER FOR FULL HEIGHT OF EACH STUD (NOT SHOWN FOR CLARITY).
2. SEE ELEVATIONS FOR STUD REQUIREMENTS

3 WINDOW/DOOR HEADER AT INTERIOR/EXTERIOR WALLS

NTS

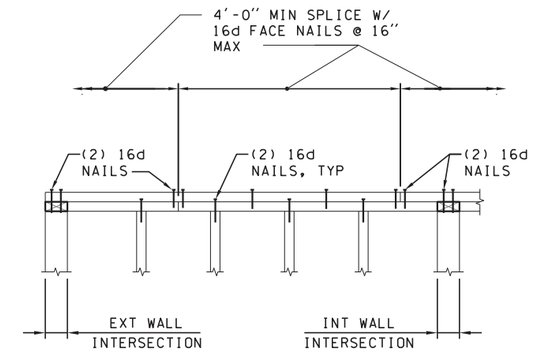

NOTE:

1. STANDARD COMMON "16d NAIL" IS 0.162" DIA x 3½".

4 MINIMUM TOP PLATE SPLICE

NTS

FILE NAME: WSF\Mukilteo\14W121_FerryTermConst\CADD\WSF\ $FILES$						
PRINTED: 6:49:39 AM 9/21/2018	LAST PRINTED BY:					FED.AID PROJ.NO.
SUBMITTAL DATE: 9/21/2018	Morin					
DESIGNED BY: X. LU	9/21/2018					WA-2017-007-00
ENTERED BY: M. MORIN	9/21/2018					REGION NO. STATE
CHECKED BY: C. STEARNS	9/21/2018					10 WASH
MAR PROJ ENGR: C. TORRES	9/21/2018					JOB NUMBER 18W121
DIR TERM ENGR: N. MCINTOSH						CONTRACT NO.
ASST SECRETARY: A. SCARTON		REVISION	DATE	BY		00****

CHRISTOPHER STEARNS, STATE OF WASHINGTON, 46202, REGISTERED PROFESSIONAL ENGINEER
eSign 9/21/2018

Washington State Department of Transportation
WASHINGTON STATE FERRIES

SR 525
MUKILTEO FERRY TERMINAL (PHASE 2)
FERRY TERMINAL CONSTRUCTION

TYPICAL DETAILS

SX01.15

SHEET 1395 OF 1521 SHEETS

ELECTRICAL PLAN SYMBOLS

EQUIPMENT AND DEVICES

$	SINGLE POLE TOGGLE SWITCH
$&	SWITCH WITH SUBSCRIPT &. & CAN BE: 3 = 3-WAY TOGGLE SWITCH 4 = 4-WAY TOGGLE SWITCH b = TOGGLE SWITCH, SWITCH LEG B D = INTEGRAL 0-10V DIMMING DIAL O = INTEGRAL OCCUPANCY SENSOR V = INTEGRAL VACANCY SENSOR
▼	TELEPHONE OUTLET
▽	DATA OUTLET
JB or J	JUNCTION BOX (J-BOX)
	MOTOR CONNECTION
	PANEL OR CABINET
	ENGINE GENERATOR
	RECEPTACLE, 480V, 3 PHASE
	GROUND ROD
T	GROUND TEST WELL
	GROUND CABLE, 2'-6" (MIN) BELOW GRADE
30	NONFUSED DISCONNECT SWITCH. SIZE INDICATED, 3 POLE UNLESS OTHERWISE INDICATED.
60/40 F	FUSED DISCONNECT SWITCH. SIZE INDICATED, (60 = SWITCH RATING, 40 = FUSE RATING) 3 POLE UNLESS OTHERWISE INDICATED
60	
1	COMBINATION MAGNETIC STARTER, NEMA SIZE INDICATED, 3 POLE UNLESS OTHERWISE INDICATED.
T	THERMOSTAT
T	TRANSFORMER (PLAN)
V	VAULT, UTILITY VAULT
	HORN
	TYPE 1 JUNCTION BOX PER STANDARD PLANS
	TYPE 2 JUNCTION BOX PER STANDARD PLANS
	TYPE 8 JUNCTION BOX PER STANDARD PLANS
XX-XXX / XXX	= EQUIP TAG = EQUIP RATING (HP OR WATT)
	FIRST RESPONDER RADIO ENHANCEMENT ANTENNA
S	PAGING SPEAKER
S	WALL MOUNTED PAGING SPEAKER

LIGHTING

A / 310	LIGHT FIXTURE DESIGNATION, SEE LIGHT FIXTURE SCHEDULE FOR TYPE "A" 310 WATTS
E	SURFACE LIGHT FIXTURE ON EMERGENCY POWER TO SCALE ON DRAWINGS
	SURFACE MOUNT LIGHT FIXTURE TO SCALE ON DRAWINGS
	RECESSED LIGHT FIXTURE ON EMERGENCY POWER TO SCALE ON DRAWINGS
	RECESSED OR LINEAR LIGHT FIXTURE TO SCALE ON DRAWINGS
NL	NL = NIGHT LIGHT. UNSWITCHED LIGHT OR ONE OR MORE UNSWITCHED LAMPS AS NOTED.
7b	7b = FED BY CIRCUIT #7, SWITCH LEG B.
	STRIPLIGHT LUMINAIRE
	LINEAR WALL MOUNTED LUMINAIRE
	LIGHT FIXTURE
	LIGHT FIXTURE ON EMERGENCY POWER
	EMERGENCY LIGHTING UNIT
	EXIT SIGN, SURFACE OR CEILING MOUNTED, SINGLE FACE WITH DIRECTIONAL ARROWS AS INDICATED.
	EXIT SIGN, SURFACE OR CEILING MOUNTED, DOUBLE FACE WITH DIRECTIONAL ARROWS AS INDICATED.
	EXIT SIGN, WALL MOUNTED, SINGLE FACE WITH DIRECTIONAL ARROWS AS INDICATED.
	WALL MOUNTED LIGHT FIXTURE
	LIGHT POLE
	WALL WASHER
	IN-GRADE UPLIGHT LUMINAIRE

RECEPTACLES

	DUPLEX RECEPTACLE
GFI	DUPLEX RECEPTACLE, GFI=GROUND FAULT INTERRUPTER PROTECTED
WP	DUPLEX RECEPTACLE, WP = WEATHERPROOF COVER
	SIMPLEX RECEPTACLE
	4-PLEX RECEPTACLE
SP	SURGE PROTECTIVE DUPLEX RECEPTACLE
WR	WEATHER RESISTANT DUPLEX RECEPTACLE

RACEWAY/CIRCUIT DESIGNATIONS

P###	CONDUIT/CIRCUIT TAG, SEE CONDUIT AND CABLE SCHEDULE
L1/3,5	CONDUIT: TICS DENOTE QUANTITY OF WIRES, LONG = NEUTRAL, CROSS TIC = GROUND, MIN ¾"C, #12 AWG UNLESS NOTED OTHERWISE, ARROW = HOMERUN, L1/3,5 = PANEL/CIRCUIT
	LB, LR, OR LL TYPE CONDUIT BODY TURNING AWAY FROM VIEWER
	LB, LR, OR LL TYPE CONDUIT BODY TURNING TOWARDS VIEWER
	LB, LR, OR LL TYPE CONDUIT BODY
	T TYPE CONDUIT BODY
	FLEXIBLE CORD OR CABLE
— HT —	HEAT TRACE
— OP —	OVERHEAD POWER
— BP —	BURIED POWER
— OC —	OVERHEAD COMMUNICATIONS OR CONTROL
— BC —	BURIED COMMUNICATIONS OR CONTROL
————	HEAVY SOLID LINES INDICATE NEW CONDUIT MATERIAL AND EQUIPMENT THAT IS EXPOSED
————	SCREENED SOLID LINES INDICATE EXISTING CONDUIT MATERIAL AND EQUIPMENT THAT IS EXPOSED
- - - - - - - -	HEAVY DASHED LINES INDICATE NEW CONDUIT MATERIAL AND EQUIPMENT THAT IS HIDDEN FROM VIEW
- - - - - - - -	SCREENED DASHED LINES INDICATE EXISTING CONDUIT MATERIAL AND EQUIPMENT THAT IS HIDDEN FROM VIEW

WIRE LABELING

* SOURCE/DESTINATION OF WIRE
* WIRE NUMBER

JB-H127 (T21)

* THE SOURCE OR DESTINATION OF THE WIRE IS THE NEXT DEVICE THAT PROVIDES A TERMINAL FOR THIS WIRE.

FILE NAME: WSF\Mukilteo\14W121_FerryTermConst\CADD\WSF\ 14w121ex01_00 Legend1.dlv						
PRINTED: 12:45:48 PM 12/13/2017		LAST PRINTED BY:				FED.AID PROJ.NO.
SUBMITTAL DATE: 12/22/2017		Morin				WA-2017-007-00
DESIGNED BY:	S. HOLLOWAY	12/22/2017				REGION NO. / STATE
ENTERED BY:	M. MORIN	12/22/2017				10 / WASH
CHECKED BY:	E. RAJAH	12/22/2017				JOB NUMBER
MAR PROJ ENGR:	C. TORRES	12/22/2017				18W121
DIR TERM ENGR:	N. MCINTOSH					CONTRACT NO.
ASST SECRETARY:	A. SCARTON		REVISION	DATE	BY	00****

ELMO W. RAJAH — STATE OF WASHINGTON — 30315 — REGISTERED PROFESSIONAL ENGINEER
12/13/2017

Washington State Department of Transportation
WASHINGTON STATE FERRIES

SR 525
MUKILTEO FERRY TERMINAL (PHASE 2)
FERRY TERMINAL CONSTRUCTION

ELECTRICAL SYMBOLS

EX01.00

SHEET 1396 OF 1521 SHEETS

GENERAL NOTES:

1. DIMENSIONS & SIZES SHOWN ARE IN FEET AND INCHES UNLESS OTHERWISE NOTED.

2. THE CONTRACTOR SHALL FIELD VERIFY THE EXISTING CONDITIONS AS DEPICTED ON THESE PLANS INCLUDING QUANTITIES, LOCATIONS, RATINGS, AND FUNCTION OF EXISTING EQUIPMENT, CONDUIT, AND WIRE. THE CONTRACTOR SHALL FIELD VERIFY ALL DIMENSIONS AND SHALL ASSUME FULL RESPONSIBILITY FOR MEASURED QUANTITIES.

3. THE CONTRACTOR SHALL COORDINATE POWER, CONTROL, AND COMMUNICATIONS SYSTEMS SHUTDOWN WITH THE ENGINEER TO MINIMIZE DISRUPTION OF NORMAL FACILITY OPERATION.

4. CONDUIT AND WIRE NOTED FOR DEMOLITION SHALL BE REMOVED FROM THEIR POINT OF BEGINNING TO WHERE THEY TERMINATE. THE CONTRACTOR SHALL NOTIFY THE ENGINEER OF ALL ABANDONED WIRING ENCOUNTERED.

5. EQUIPMENT DIMENSIONS AND CONFIGURATION SHOWN ARE APPROXIMATE. ACTUAL SIZE AND LAYOUT SHALL BE PER THE ENGINEER APPROVED CONTRACTOR'S SHOP DRAWINGS.

6. CONTRACTOR IS RESPONSIBLE FOR ARRANGING AND PROVIDING TEMPORARY POWER AND LIGHTING FOR WORK AREAS.

7. PROVIDE CONDUIT TAGS FOR ALL EXISTING AND NEW CONDUITS INDICATED ON THE PLANS.

8. SIZE JUNCTION BOXES PER NEC 314.28 UNLESS SHOWN OTHERWISE ON PLANS.

CABLE & CONDUIT ABBREVIATIONS

2"C,10#12,2#12SP,#12G(C10)	2" CONDUIT, TYPE PER SPECIAL PROVISIONS; TEN #12 CONDUCTORS PLUS TWO SPARE #12'S AND A #12 GROUND CONDUCTOR, INSULATION TYPE PER SPECIAL PROVISIONS; "C10" CONDUIT LABEL.
1½"C(C100)	1½" CONDUIT, TYPE PER SPECIAL PROVISIONS; SEE ONE-LINES OR PLANS FOR ENCLOSED CABLE AND WIRE INFORMATION; "C100" CONDUIT LABEL.
¾"EC (F10)	¾" EMPTY CONDUIT WITH PULL STRING, TYPE PER SPECIAL PROVISIONS; "F10" CONDUIT LABEL.
1"LFMC(H10)	1" LIQUIDTIGHT FLEXIBLE METAL CONDUIT, SEE ONE-LINES OR PLANS FOR ENCLOSED CABLE AND WIRE INFORMATION; "H10" CONDUIT LABEL. (LFMC, EC = EMPTY LIQUIDTIGHT FLEXIBLE METAL CONDUIT)
24/C#12(10)	MULTICONDUCTOR CABLE. TWENTY-FOUR CONDUCTORS, SIZE #12; "10" CABLE LABEL.

ABBREVIATIONS

A, AMP(S)	AMPERE(S)
AB	ALLEN-BRADLEY
AF	AMPERE FRAME
AFF	ABOVE FINISH FLOOR
AG	AUXILIARY GUTTER
AIC	AMPERES INTERRUPTING CAPACITY
ALRM	ALARM
ANN, ANNC	ANNUNCIATOR
APPROX	APPROXIMATELY
AT	AMPERE TRIP
ATS	AUTOMATIC TRANSFER SWITCH
AUX	AUXILIARY
AWG	AMERICAN WIRE GAUGE
BKR	BREAKER
BOM	BILL OF MATERIALS
C	CONDUIT, CONDUCTOR
CAB	CABINET
CAT	CATALOG
CB	CIRCUIT BREAKER
℄	CENTERLINE
CDF	CONTROLLED DENSITY FILL
CKT	CIRCUIT
CO	CONDUIT ONLY
COMB	COMBINATION
COMM	COMMUNICATION
CP	CONTROL PANEL
CPT	CONTROL POWER TRANSFORMER
CPU	CENTRAL PROCESSING UNIT
CR	CONTROL RELAY
CS	CONTROL STATION
CT	CURRENT TRANSFORMER
CTRL	CONTROL
CU	COPPER
DC	DIRECT CURRENT
DIA	DIAMETER
DIST	DISTRIBUTION
DN	DOWN
DS	DISCONNECT SWITCH
DWG	DRAWING
E	EAST
EC	EMPTY CONDUIT
EG	ENGINE GENERATOR
EGC	EQUIPMENT GROUND CONDUCTOR
ELEC, ELECT	ELECTRICAL
EMT	ELECTRICAL METALLIC TUBING
ENC	ENCLOSED
EQUIP	EQUIPMENT
EXIST	EXISTING
EWC	ELECTRIC WATER COOLER
FC, FLEX	FLEXIBLE CONDUIT
FDR	FEEDER
FLC	FLUORESCENT, COMPACT
FT	FEET
FS	FLOAT SWITCH
FU, F	FUSE
FVR	FULL VOLTAGE REVERSING
FVNR	FULL VOLTAGE NON-REVERSING
FWD	FORWARD
G, GND	GROUND
GA	GAUGE
GALV	GALVANIZED
GEN	GENERATOR
GFI	GROUND FAULT INTERRUPTER
GL	GREEN LIGHT
GWB	GYPSUM WALL BOARD
HF	HEADFRAME
HGR	HANGER
HH	HANDHOLE
HID	HIGH INTENSITY DISCHARGE
HOA	HAND-OFF-AUTO
HP	HORSEPOWER
HPS	HIGH PRESSURE SODIUM
HPU	HYDRAULIC POWER UNIT
HT	HEAT TRACE
HYD	HYDRAULIC
HPU	HYDRAULIC POWER UNIT
IC	INTERRUPTING CAPACITY
ID	INSIDE DIAMETER
IMC	INTERMEDIATE METAL CONDUIT
IR	INFRARED
J, JB, J-BOX	JUNCTION BOX
JS	JOYSTICK
Kcmil, KCM	THOUSAND CIRCULAR MILLS
KV	KILOVOLT
KVA	KILOVOLT AMPERE
KVAR	KILOVAR(S)
KW	KILOWATT
L	LEFT
LC	LIGHTING CONTACTOR
LCC	LINE CONTROL CABINET
LFC	LIQUIDTIGHT FLEXIBLE CONDUIT
LFMC	LIQUIDTIGHT FLEXIBLE METAL CONDUIT
LOC'D	LOCATED
LT	LIGHT
LS	LIMIT SWITCH
M	MAGNETIC CONTACTOR COILS, METERS, MOTOR
MCB	MAIN CIRCUIT BREAKER
MCC	MOTOR CONTROL CENTER
MCR	MASTER CONTROL RELAY
MH	METAL HALIDE; MANHOLE
MISC	MISCELLANEOUS
MLO	MAIN LUGS ONLY
MM, mm	MILLIMETER(S)
MPZ	MINI POWER ZONE
MS	MOTOR STARTER
MTR	MOTOR
MTS	MANUAL TRANSFER SWITCH
N	NORTH
NCHO	NORMALLY CLOSED HELD OPEN
NEC	NATIONAL ELECTRICAL CODE
NEUT	NEUTRAL
NOHC	NORMALLY OPEN HELD CLOSED
NP	NAMEPLATE
NTS	NOT TO SCALE
OC	ON CENTER
OD	OUTSIDE DIAMETER
OP	OVERHEAD POWER
P	POLE
PA	PUBLIC ADDRESS
PB	PUSHBUTTON
PE, PC	PHOTOELECTRIC SENSOR (PHOTOCELL)
PH	PHASE
PL OR P	PLATE
PLC	PROGRAMMABLE LOGIC CONTROLLER
PNL	PANEL
POS	POINT OF SALE
PR	PAIR
PROX	PROXIMITY
PS	PRESSURE SWITCH
PSE	PUGET SOUND ENERGY
PT	POTENTIAL TRANSFORMER PRESSURE TRANSDUCER
PTT	PUSH TO TEST
PVC	POLYVINYL CHLORIDE CONDUIT
PWR	POWER
R	RELAY, RIGHT
RECPT, RCPT	RECEPTACLE
REQ'D	REQUIRED
RGS	RIGID GALVANIZED STEEL CONDUIT
RGSP	RIGID GALVANIZED STEEL, PVC COATED CONDUIT
RI	REMOTE INDICATOR
RL	RED LIGHT
RM	ROOM
S	SOUTH
(S)	SHIELDED
SF	SUPPLY FAN
SHT	SHEET
SOL	SOLENOID
SP	SPARE
SQD	SQUARE D
SS	SELECTOR SWITCH
SST, SS	STAINLESS STEEL
SW	SWITCH
SWBD	SWITCHBOARD
SWGR	SWITCHGEAR
TDR	TIME DELAY RELAY
TEL	TELEPHONE
TL	TWISTLOCK
TS	TEMPERATURE SWITCH,TOGGLE SWITCH
TSP	TWISTED SHIELDED PAIR
TST	TWISTED SHIELDED TRIAD
TTB	TELEPHONE TERMINAL BOARD
TYP	TYPICAL
UG	UNDERGROUND
UH	UNIT HEATER
UL	UNDERWRITERS LABORATORIES, INC.
UPS	UNINTERRUPTIBLE POWER SUPPLY
UV	UTILITY VAULT
V	VOLTS
W	WATTS, WIRE
W/	WITH
WP	WEATHERPROOF
XFMR	TRANSFORMER

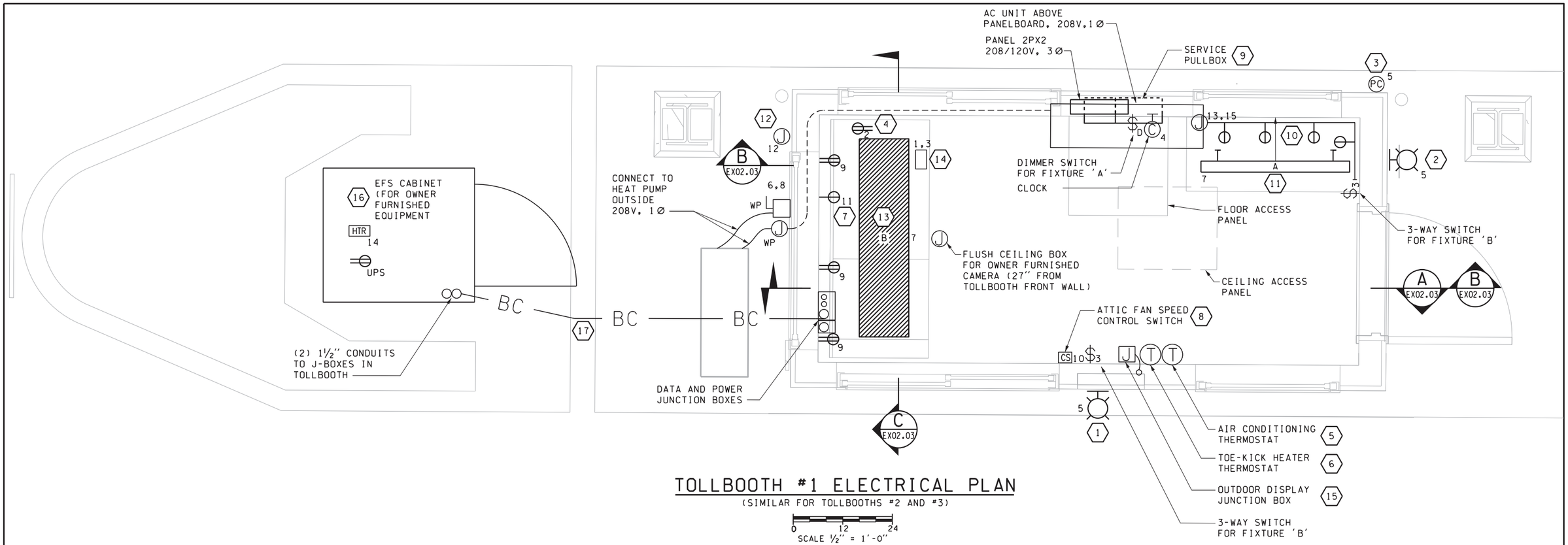

TOLLBOOTH #1 ELECTRICAL PLAN

(SIMILAR FOR TOLLBOOTHS #2 AND #3)

0 12 24
SCALE ½" = 1'-0"

CONSTRUCTION NOTES:

1. FULL CUTOFF LED WALL PACK, 2800 LUMENS, 120 VAC, BRONZE, UL LISTED FOR WET LOCATIONS, MOUNT AT +11'-0" ABOVE GRADE.
2. FULL CUTOFF LED WALL PACK, 2800 LUMENS, 120 VAC, BRONZE, UL LISTED FOR WET LOCATIONS, MOUNT AT +8'-0" ABOVE GRADE.
3. PHOTOCELL FOR OUTSIDE LIGHTS TO BE PER THE STANDARD SPECIFICATION. MOUNT AT ROOF LINE FACING NORTH.
4. CEILING MOUNTED RECEPTACLE FOR VIDEO MONITOR.
5. PROVIDE WIRE AND CONDUIT AS REQUIRED TO CONNECT THERMOSTAT TO THE AIR CONDITIONING UNIT IN ACCORDANCE WITH THE MANUFACTURER'S INSTALLATION INSTRUCTIONS.
6. PROVIDE WIRE AND CONDUIT AS REQUIRED TO CONNECT THERMOSTAT TO THE TOE-KICK HEATER IN ACCORDANCE WITH THE MANUFACTURER'S INSTALLATION INSTRUCTIONS.
7. UPS INPUT RECEPTACLE, NEMA L5-30R OR AS REQUIRED BY THE UPS FURNISHED. PROVIDE UPS COMPATIBLE WITH THE CASEWORK SHOWN ON THE ARCHITECTURAL PLANS. THE UPS SHALL BE 120 VAC INPUT AND OUTPUT, 3000 VA, NEMA 5-15R AND NEMA 5-20R OUTPUT CONNECTIONS, NETWORK MANAGEABLE.
8. THE ATTIC FAN SPEED CONTROL SWITCH IS PROVIDED WITH THE FAN. PROVIDE A DEVICE BOX AND WIRE AND CONDUIT AS REQUIRED TO CONNECT THE SWITCH TO THE ATTIC FAN IN ACCORDANCE WITH THE MANUFACTURER'S INSTALLATION INSTRUCTIONS.
9. SERVICE PULLBOX SHALL BE MOUNTED WITH APPROX. 4" OF DEPTH EXTENDING INTO TOLLBOOTH. PROVIDE (4) 2" BUSHED CONDUIT NIPPLES (2 COMM. AND 2 POWER) IN BOTTOM OF PULLBOX. NIPPLES SHALL OPEN INTO TRANSITION RACEWAY BELOW PULLBOX. PULLBOX TO BE 20"H×10"W×8"D WITH CENTER VERTICAL DIVIDER, HINGED DOOR, NEMA 12.
10. PROVIDE MULTI-OUTLET PLUGMOLD ABOVE COUNTERTOP.
11. 36" WALL MOUNTED LED FIXTURE, DIMMABLE FROM SWITCH "DA", APPROX. 5000 LUMENS, 120 VAC, MOUNT BELOW CEILING.
12. POWER JUNCTION BOX FOR OUTDOOR ELECTRONIC MESSAGE DISPLAY.
13. RECESSED LED FIXTURE, 1x4, APPROX. 5500 LUMENS, 120 VAC, EMERGENCY BATTERY BACKUP.
14. TOE-KICK HEATER, FORCED AIR, 1125 WATTS, 208 VAC, REMOTE THERMOSTAT, COMPATIBLE WITH THE CASEWORK SHOWN ON THE ARCHITECTURAL PLANS.
15. OUTDOOR DISPLAY J-BOX, 8"H×6"W×4"D. MOUNT FLUSH IN WALL. PROVIDE WITH TERMINAL BLOCKS SUITABLE FOR (3) #12 AWG WIRES.
16. OUTDOOR ENCLOSURE FOR RACKMOUNT EQUIPMENT, NEMA 4X, STAINLESS STEEL HARDWARE, 23" EQUIPMENT RACKS RAILS, PAD LOCKABLE, APPROXIMATE OUTSIDE DIMENSIONS 32"H×33"W×37"D, WITH HEAVY-DUTY SLIDING RACK SHELF AT BOTTOM, AND STEEL PANEL FOR MOUNTING DUPLEX RECEPTACLE AND 400 WATT, 120 VAC FORCED AIR CABINET HEATER WITH INTEGRAL THERMOSTAT. MOUNT ENCLOSURE ON 1" GROUT PAD.
17. INSTALL DEFLECTION EXPANSION FITTING IN CONDUITS BETWEEN BULL NOSE AND TOLLBOOTH FOUNDATION. FITTING SHALL BE SUITABLE FOR DIRECT BURIAL.

NOTES:

1. ALL INDOOR CONDUIT SHALL BE EMT OR FLEXIBLE METAL CONDUIT AND SHALL BE CONCEALED, UNLESS IN ATTIC OR APPROVED OTHERWISE BY THE ENGINEER.
2. EQUIPMENT AND DEVICE CIRCUIT NUMBERS ARE SHOWN. PROVIDE CABLE AND CONDUIT TO COMPLETE CIRCUITS AND HOMERUNS AS REQUIRED. INSTALL #12 AWG IN 3/4" CONDUIT UNLESS OTHERWISE INDICATED ON THE PANELBOARD SCHEDULE FOR THE CIRCUIT NUMBER SHOWN. MULTIPLE CIRCUITS ARE PERMITTED IN THE SAME CONDUIT AS LONG AS THE CONDUCTORS ARE DERATED PER NEC BASED ON THE NUMBER OF CURRENT CARRYING CONDUCTORS AND SIZE UP AS NECESSARY. CONDUIT SIZE SHALL ALSO BE INCREASED ACCORDINGLY TO MEET NEC CONDUIT FILL REQUIREMENTS BASED ON THE NUMBER AND SIZE OF CONDUCTORS.

FILE NAME: WSF\Mukilteo\14W121_FerryTermConst\CADD\WSF\ $FILES$

PRINTED: 6:47:37 AM 9/21/2018	LAST PRINTED BY:					FED.AID PROJ.NO.
SUBMITTAL DATE: 9/21/2018	Morin					WA-2017-007-00
DESIGNED BY: S. HOLLOWAY	9/21/2018					REGION NO. / STATE
ENTERED BY: M. MORIN	9/21/2018					10 / WASH
CHECKED BY: E. RAJAH	9/21/2018					JOB NUMBER
MAR PROJ ENGR: C. TORRES	9/21/2018					18W121
DIR TERM ENGR: N. MCINTOSH						CONTRACT NO.
ASST SECRETARY: A. SCARTON		REVISION	DATE	BY		00****

STATE OF WASHINGTON SCOTT T. HOLLOWAY 35432 REGISTERED PROFESSIONAL ENGINEER
cosign 9/21/2018

Washington State Department of Transportation
WASHINGTON STATE FERRIES

SR 525
MUKILTEO FERRY TERMINAL (PHASE 2)
FERRY TERMINAL CONSTRUCTION

TOLLBOOTH ELECTRICAL PLAN

EX02.00

SHEET 1398 OF 1521 SHEETS

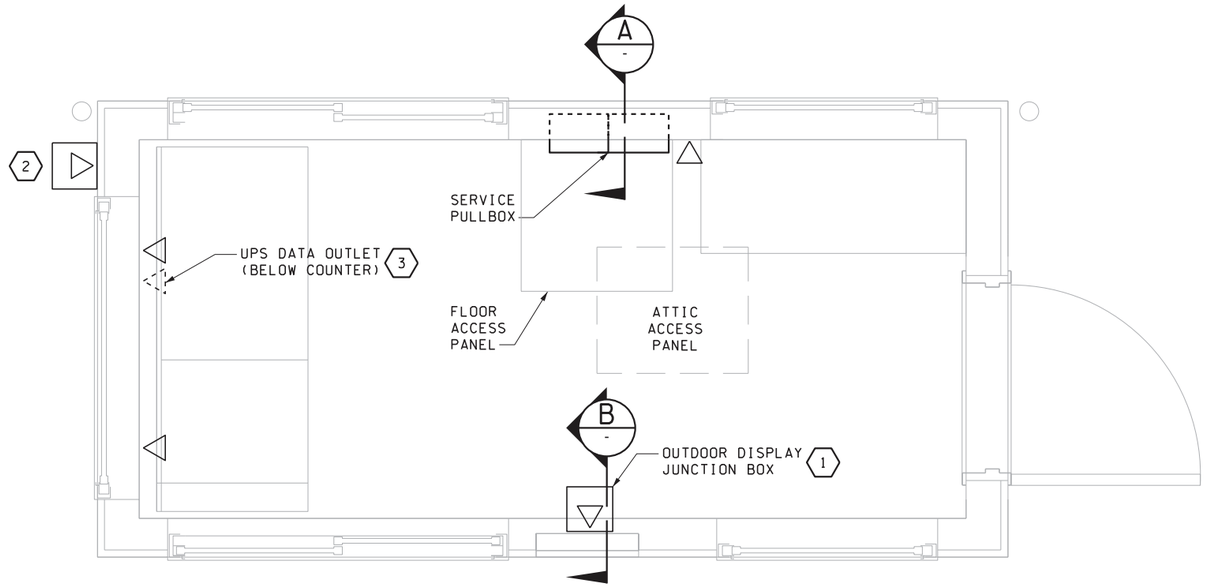

TOLLBOOTH #1 COMMUNICATIONS PLAN

(SIMILAR FOR TOLLBOOTH #2 AND #3)

0 12 24
SCALE 1/2" = 1'-0"

NOTES:

1. ALL INDOOR CONDUIT SHALL BE EMT OR FLEXIBLE METAL CONDUIT AND SHALL BE CONCEALED, UNLESS IN ATTIC OR APPROVED OTHERWISE BY THE ENGINEER.
2. DATA OUTLETS SHALL BE 4-PORT UNLESS OTHERWISE INDICATED. PROVIDE (4) CAT6 CABLES IN 1" CONDUIT FROM EACH 4-PORT OUTLET TO PATCHPANEL IN ATTIC.

CONSTRUCTION NOTES:

1. PROVIDE 4-PORT DATA OUTLET IN OUTDOOR DISPLAY JUNCTION BOX.
2. DATA JUNCTION BOX FOR OUTDOOR ELECTRONIC MESSAGE DISPLAY. PROVIDE A 1-PORT DATA OUTLET IN JUNCATION BOX. PROVIDE (1) CAT6 CABLE IN 3/4" CONDUIT FROM OUTLET TO PATCHPANEL IN ATTIC.
3. PROVIDE A 1-PORT DATA OUTLET IN THE UPS SECTION OF THE CASEWORK. PROVIDE (1) CAT6 CABLE IN 3/4" CONDUIT FROM OUTLET TO PATCHPANEL IN ATTIC.
4. POWER & COMMUNICATIONS JUNCTION BOX SHALL BE A POLYMER CONCRETE UNDERGROUND ENCLOSURE WITH GASKETED AND BOLTED COVER, OPEN BOTTOM, APPROXIMATELY 17"x30", STACKABLE, HUBBELL QUAZITE PART NO. PC1730BA12 OR EQUAL.

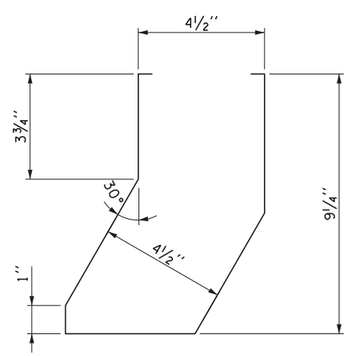

SECTION

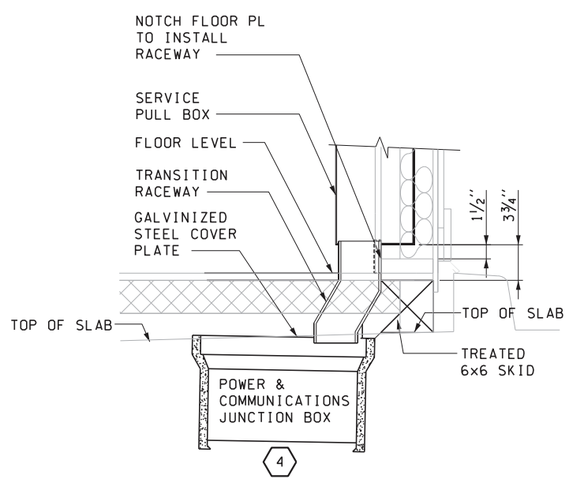

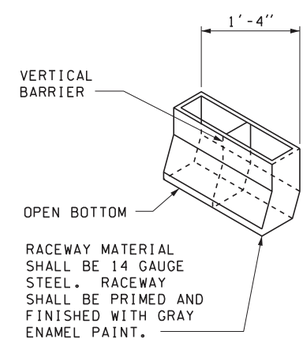

ISOMETRIC

A - TRANSITION RACEWAY SECTION VIEW

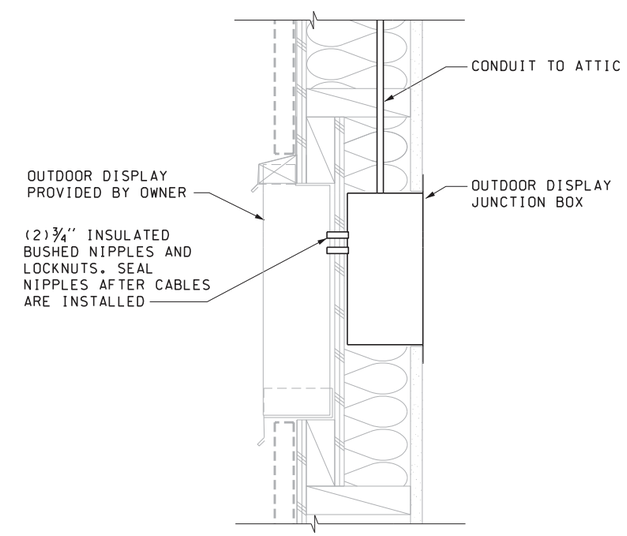

B - SECTION

FILE NAME: WSF\Mukilteo\14W121_FerryTermConst\CADD\WSF\ $FILES$						
PRINTED: 6:47:47 AM 9/21/2018	LAST PRINTED BY:					FED.AID PROJ.NO.
SUBMITTAL DATE: 9/21/2018	Morin					
DESIGNED BY: S. HOLLOWAY	9/21/2018					WA-2017-007-00
ENTERED BY: M. MORIN	9/21/2018					REGION NO. / STATE
CHECKED BY: E. RAJAH	9/21/2018					10 / WASH
MAR PROJ ENGR: C. TORRES	9/21/2018					JOB NUMBER 18W121
DIR TERM ENGR: N. MCINTOSH						CONTRACT NO.
ASST SECRETARY: A. SCARTON		REVISION	DATE	BY		00****

T. HOLLOWAY — STATE OF WASHINGTON — 35432 — REGISTERED PROFESSIONAL ENGINEER
cosign 9/21/2018

Washington State Department of Transportation
WASHINGTON STATE FERRIES

SR 525
MUKILTEO FERRY TERMINAL (PHASE 2)
FERRY TERMINAL CONSTRUCTION

TOLLBOOTH COMMUNICATIONS PLAN

EX02.01

SHEET 1399 OF 1521 SHEETS

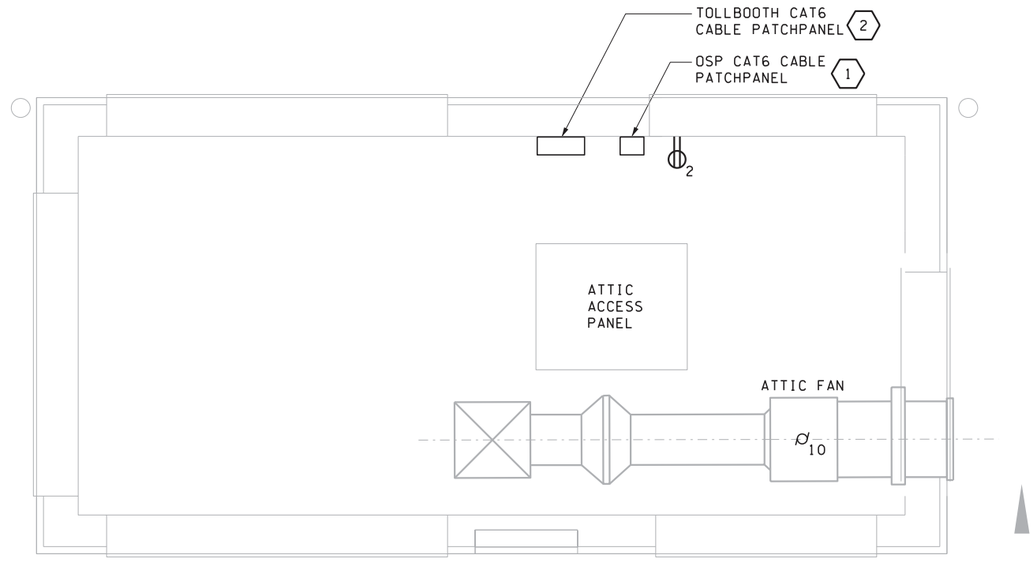

TOLLBOOTH #1 ATTIC ELECTRICAL PLAN

(SIMILAR FOR TOLLBOOTHS #2 AND #3)

0 12 24

SCALE 1/2" = 1'-0"

NOTES:

1. ALL INDOOR CONDUIT SHALL BE EMT OR FLEXIBLE METAL CONDUIT AND SHALL BE CONCEALED, UNLESS IN ATTIC OR APPROVED OTHERWISE BY THE ENGINEER.
2. DATA OUTLETS SHALL BE 4-PORT UNLESS OTHERWISE INDICATED. PROVIDE (4) CAT6 CABLES IN 1" CONDUIT FROM EACH 4-PORT OUTLET TO PATCHPANEL IN ATTIC.
3. EQUIPMENT AND DEVICE CIRCUIT NUMBERS ARE SHOWN. PROVIDE CABLE AND CONDUIT TO COMPLETE CIRCUITS AND HOMERUNS AS REQUIRED. INSTALL #12 AWG IN 3/4" CONDUIT UNLESS OTHERWISE INDICATED ON THE PANELBOARD SCHEDULE FOR THE CIRCUIT NUMBER SHOWN.

CONSTRUCTION NOTES:

1. PROVIDE 12-PORT CAT6 WALL MOUNTED PATCH PANEL FOR OUTSIDE PLANT (OSP) CABLE. PROVIDE 2" CONDUIT FROM ATTIC TO CONTROL SECTION OF SERVICE PULL BOX.
2. PROVIDE 24-PORT CAT6 WALL MOUNTED PATCH PANEL FOR TOLLBOOTH CAT6 CABLES. PROVIDE (24) 3' CAT6 PATCH CABLES.

FILE NAME: WSF\Mukilteo\14W121_FerryTermConst\CADD\WSF\ $FILES$

PRINTED: 6:47:52 AM 9/21/2018	LAST PRINTED BY:					FED.AID PROJ.NO.
SUBMITTAL DATE: 9/21/2018	Morin					
DESIGNED BY: S. HOLLOWAY	9/21/2018					WA-2017-007-00
ENTERED BY: M. MORIN	9/21/2018					REGION NO. STATE
CHECKED BY: E. RAJAH	9/21/2018					10 WASH
MAR PROJ ENGR: C. TORRES	9/21/2018					JOB NUMBER 18W121
DIR TERM ENGR: N. MCINTOSH						CONTRACT NO.
ASST SECRETARY: A. SCARTON		REVISION	DATE	BY		00****

STATE OF WASHINGTON
SCOTT T. HOLLOWAY
35432
REGISTERED
PROFESSIONAL ENGINEER
cosign
9/21/2018

Washington State
Department of Transportation
WASHINGTON STATE FERRIES

SR 525
MUKILTEO FERRY TERMINAL (PHASE 2)
FERRY TERMINAL CONSTRUCTION

TOLLBOOTH ATTIC ELECTRICAL PLAN

EX02.02

SHEET 1400 OF 1521 SHEETS

CONSTRUCTION NOTES:

1. PROVIDE (2) 1" CONDUITS FROM THE DATA JUNCTION BOX TO THE ATTIC.

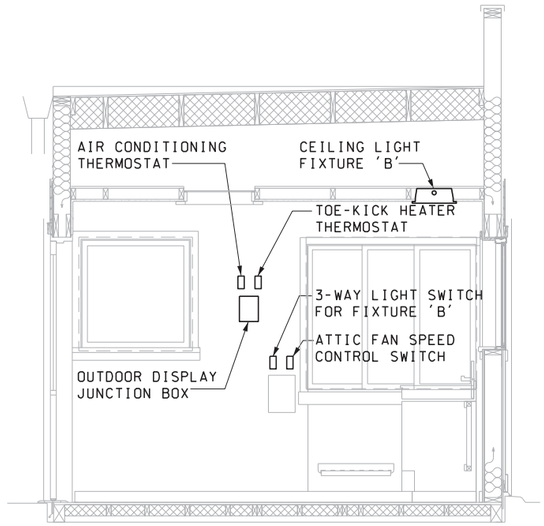

A SECTION
EX02.00

0 1 2
SCALE 1/4" = 1'-0"

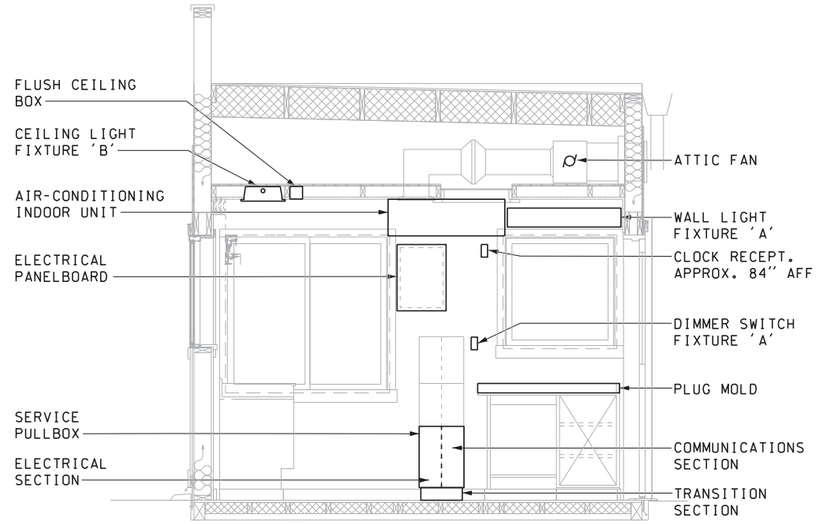

B SECTION
EX02.00

0 1 2
SCALE 1/4" = 1'-0"

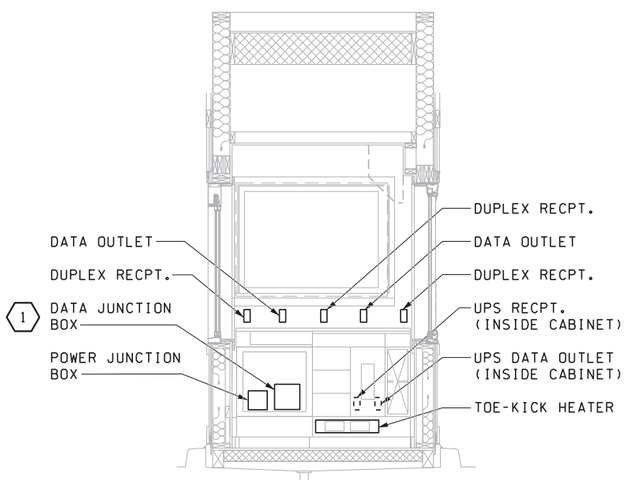

C SECTION
EX02.00

0 1 2
SCALE 1/4" = 1'-0"

FILE NAME: WSF\Mukilteo\14W121_FerryTermConst\CADD\WSF\ $FILES$					
PRINTED: 6:48:02 AM 9/21/2018	LAST PRINTED BY:				FED.AID PROJ.NO.
SUBMITTAL DATE: 9/21/2018	Morin				
DESIGNED BY: S. HOLLOWAY	9/21/2018				WA-2017-007-00
ENTERED BY: M. MORIN	9/21/2018				REGION NO. / STATE
CHECKED BY: E. RAJAH	9/21/2018				10 / WASH
MAR PROJ ENGR: C. TORRES	9/21/2018				JOB NUMBER 18W121
DIR TERM ENGR: N. MCINTOSH					
ASST SECRETARY: A. SCARTON		REVISION	DATE	BY	CONTRACT NO. 00****

STATE OF WASHINGTON SCOTT T. HOLLOWAY 35432 REGISTERED PROFESSIONAL ENGINEER
Scott T. Holloway
cosign 9/21/2018

Washington State Department of Transportation
WASHINGTON STATE FERRIES

SR 525
MUKILTEO FERRY TERMINAL (PHASE 2)
FERRY TERMINAL CONSTRUCTION

TOLLBOOTH ELEVATIONS

EX02.03

SHEET 1401 OF 1521 SHEETS

NOTES:

(1) PREFABRICATED INDUCTIVE LOOP / LEAD-IN ASSEMBLY. THE LOOP / LEAD-IN ASSEMBLY SHALL BE SUITABLE FOR APPLICATION IN WHICH THE LOOP / LEAD-IN ASSEMBLY WILL BE OVERLAID WITH HOT ASPHALT OR EMBEDDED IN CONCRETE. LOOP CABLE, LEAD-IN CABLE, AND SPLICE ENCLOSURE SHALL BE DESIGNED TO MAXIMIZE DURABILITY, MINIMIZE WATER PENETRATION, AND MAINTAIN A FLEXIBLE FORM THAT IS EASY TO INSTALL AND HANDLE. THE LOOP CABLE AND LEAD-IN CABLE SHALL BE DESIGNED TO RESIST THE EFFECTS OF REFLECTIVE CRACKING THAT CAN OCCUR IN ASPHALT. WIRE INSULATION AND CABLE JACKETS SHALL BE CONSTRUCTED WITH THE OPTIMAL THICKNESS OF INSULATION TO PROVIDE RESISTANCE TO MOISTURE AND CHEMICALS AND ENSURE A LONG, TROUBLE FREE LIFE. RENO A&E MODEL PLH OR EQUAL.

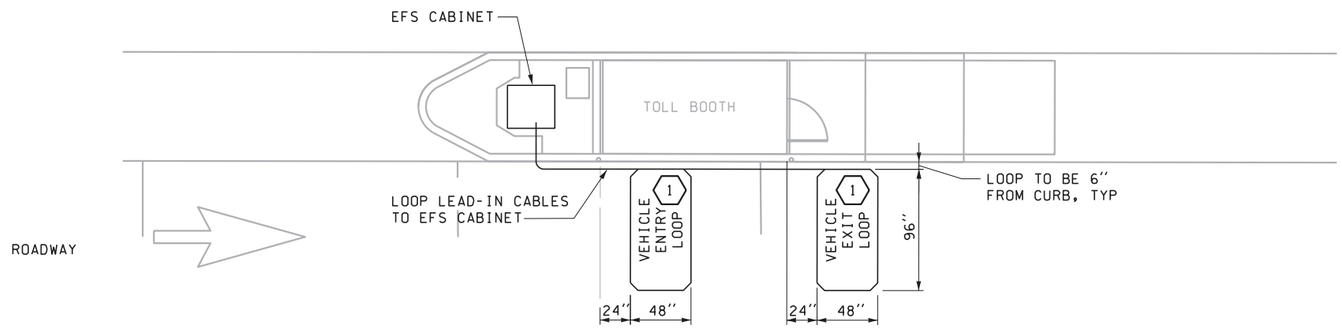

LOOP DETECTOR INSTALLATION AT TOLLBOOTH, TYPICAL

FILE NAME: WSF\Mukilteo\14W121_FerryTermConst\CADD\WSF\ $FILES$						
PRINTED: 6:48:04 AM 9/21/2018	LAST PRINTED BY:					FED.AID PROJ.NO.
SUBMITTAL DATE: 9/21/2018	Morin					
DESIGNED BY: S. HOLLOWAY	9/21/2018					WA-2017-007-00
ENTERED BY: M. MORIN	9/21/2018					REGION NO. STATE
CHECKED BY: E. RAJAH	9/21/2018					10 WASH
MAR PROJ ENGR: C. TORRES	9/21/2018					JOB NUMBER 18W121
DIR TERM ENGR: N. MCINTOSH						
ASST SECRETARY: A. SCARTON		REVISION	DATE	BY		CONTRACT NO. 00****

STATE OF WASHINGTON T. HOLLOWAY 35432 REGISTERED PROFESSIONAL ENGINEER
cosign 9/21/2018

Washington State Department of Transportation
WASHINGTON STATE FERRIES

SR 525
MUKILTEO FERRY TERMINAL (PHASE 2)
FERRY TERMINAL CONSTRUCTION

LOOP DETECTOR INSTALLATION

EX03.00

SHEET 1402 OF 1521 SHEETS

PANEL 2PX2

MOUNTING: RECESSED
NEMA RATING: 1
VOLTAGE: 208/120V, 3PH, 4W
MAIN RATING: 60A MCB
MAIN CABLES: #4
SOURCE: 2PX1
LOCATION: TOLLBOOTH 1
AIC RATINGS: 10,000

CKT	BREAKER	WIRE SIZE	DESCRIPTION	AMPERES A	AMPERES B	AMPERES C	CKT	BREAKER	WIRE SIZE	DESCRIPTION	AMPERES A	AMPERES B	AMPERES C
1	20A/2P	#12	HEATER	6.3	-	-	2	20A/1P	#12	RECEPTACLES CEILING AND ATTIC	1	-	-
3	-	#12	-	-	6.3	-	4	20A/1P	#12	CLOCK	-	1	-
5	20A/1P	#12	LIGHTS - OUTDOOR	-	-	1	6	20A/2P	#12	AIR CONDITIONING UNIT	-	-	6.3
7	20A/1P	#12	LIGHTS - INDOOR	1	-	-	8	-	-	-	6.3	-	-
9	20A/1P	#12	RECEPTACLES FRONT COUNTERTOP	-	4	-	10	20A/1P	#12	ATTIC FAN	-	1.7	-
11	30A/1P	#10	UPS RECEPTACLE	-	-	9.6	12	20A/1P	#12	OUDOOR ELECTRONIC MESSAGE DISPLAY	-	-	7
13	20A/1P	#12	PLUGMOLD	2.5	-	-	14	20A/1P	#12	HEATER EFS CABINET	3.3	-	-
15	20A/1P	#12	PLUGMOLD	-	2.5	-	16	20A/1P	-	SPARE	-	0	-
17	20A/1P	-	SPARE	-	-	0	18	20A/1P	-	SPARE	-	-	0
19	20A/1P	-	SPARE	0	-	-	20	20A/1P	-	SPARE	0	-	-
21	20A/1P	-	SPARE	-	0	-	22	20A/1P	-	SPARE	-	0	-
23	20A/1P	-	SPARE	-	-	0	24	20A/1P	-	SPARE	-	-	0
			TOTAL	10	13	11				TOTAL	11	3	13

NOTES:
1
2.
3.
4.
5.

TOTAL AMPERES	
BUS A	20
BUS B	16
BUS C	24

MAXIMUM KVA
9

SUB-FEED BREAKER	DESCRIPTION	AMPERES A	AMPERES B	AMPERES C
-	-	0	0	0

PANEL 2PX3

MOUNTING: RECESSED
NEMA RATING: 1
VOLTAGE: 208/120V, 3PH, 4W
MAIN RATING: 60A MCB
MAIN CABLES: #4
SOURCE: 2PX1
LOCATION: TOLLBOOTH 2
AIC RATINGS: 10,000

CKT	BREAKER	WIRE SIZE	DESCRIPTION	AMPERES A	AMPERES B	AMPERES C	CKT	BREAKER	WIRE SIZE	DESCRIPTION	AMPERES A	AMPERES B	AMPERES C
1	20A/2P	#12	HEATER	6.3	-	-	2	20A/1P	#12	RECEPTACLES CEILING AND ATTIC	1	-	-
3	-	#12	-	-	6.3	-	4	20A/1P	#12	CLOCK	-	1	-
5	20A/1P	#12	LIGHTS - OUTDOOR	-	-	1	6	20A/2P	#12	AIR CONDITIONING UNIT	-	-	6.3
7	20A/1P	#12	LIGHTS - INDOOR	1	-	-	8	-	-	-	6.3	-	-
9	20A/1P	#12	RECEPTACLES FRONT COUNTERTOP	-	4	-	10	20A/1P	#12	FAN	-	1.7	-
11	30A/1P	#10	UPS RECEPTACLE	-	-	9.6	12	20A/1P	#12	OUDOOR ELECTRONIC MESSAGE DISPLAY	-	-	7
13	20A/1P	#12	PLUGMOLD	2.5	-	-	14	20A/1P	#12	HEATER EFS CABINET	3.3	-	-
15	20A/1P	#12	PLUGMOLD	-	2.5	-	16	20A/1P	-	SPARE	-	0	-
17	20A/1P	-	SPARE	-	-	0	18	20A/1P	-	SPARE	-	-	0
19	20A/1P	-	SPARE	0	-	-	20	20A/1P	-	SPARE	0	-	-
21	20A/1P	-	SPARE	-	0	-	22	20A/1P	-	SPARE	-	0	-
23	20A/1P	-	SPARE	-	-	0	24	20A/1P	-	SPARE	-	-	0
			TOTAL	10	13	11				TOTAL	11	3	13

NOTES:
1
2.
3.
4.
5.

TOTAL AMPERES	
BUS A	20
BUS B	16
BUS C	24

MAXIMUM KVA
9

SUB-FEED BREAKER	DESCRIPTION	AMPERES A	AMPERES B	AMPERES C
-	-	0	0	0

FILE NAME: WSF\Mukilteo\14W121_FerryTermConst\CADD\WSF\ $FILES$
PRINTED: 6:48:07 AM 9/21/2018
SUBMITTAL DATE: 9/21/2018

		LAST PRINTED BY:
DESIGNED BY:	S. HOLLOWAY	9/21/2018
ENTERED BY:	M. MORIN	9/21/2018
CHECKED BY:	E. RAJAH	9/21/2018
MAR PROJ ENGR:	C. TORRES	9/21/2018
DIR TERM ENGR:	N. MCINTOSH	
ASST SECRETARY:	A. SCARTON	

Morin

REVISION	DATE	BY

FED.AID PROJ.NO.
WA-2017-007-00
REGION NO. | STATE
10 | WASH
JOB NUMBER
18W121
CONTRACT NO.
00****

STATE OF WASHINGTON — SCOTT T. HOLLOWAY — 35432 — REGISTERED PROFESSIONAL ENGINEER
cosign 9/21/2018

Washington State Department of Transportation
WASHINGTON STATE FERRIES

SR 525
MUKILTEO FERRY TERMINAL (PHASE 2)
FERRY TERMINAL CONSTRUCTION

TOLLBOOTH
PANELBOARD SCHEDULES

EX04.00

SHEET 1403 OF 1521 SHEETS

PANEL 2PX4

MOUNTING: RECESSED
NEMA RATING: 1
VOLTAGE: 208/120V, 3PH, 4W
MAIN RATING: 60A MCB
MAIN CABLES: #4
SOURCE: 2PX1
LOCATION: TOLLBOOTH 3
AIC RATINGS: 10,000

CKT	BREAKER	WIRE SIZE	DESCRIPTION	AMPERES A	AMPERES B	AMPERES C	CKT	BREAKER	WIRE SIZE	DESCRIPTION	AMPERES A	AMPERES B	AMPERES C
1	20A/2P	#12	HEATER	6.3	-	-	2	20A/1P	#12	RECEPTACLES CEILING AND ATTIC	1	-	-
3	-	#12	-	-	6.3	-	4	20A/1P	#12	CLOCK	-	1	-
5	20A/1P	#12	LIGHTS - OUTDOOR	-	-	1	6	20A/2P	#12	AIR CONDITIONING UNIT	-	-	6.3
7	20A/1P	#12	LIGHTS - INDOOR	1	-	-	8	-	-	-	6.3	-	-
9	20A/1P	#12	RECEPTACLES FRONT COUNTERTOP	-	4	-	10	20A/1P	#12	ATTIC FAN	-	1.7	-
11	30A/1P	#10	UPS RECEPTACLE	-	-	9.6	12	20A/1P	#12	OUDOOR ELECTRONIC MESSAGE DISPLAY	-	-	7
13	20A/1P	#12	PLUGMOLD	2.5	-	-	14	20A/1P	#12	HEATER EFS CABINET	3.3	-	-
15	20A/1P	#12	PLUGMOLD	-	2.5	-	16	20A/1P	-	SPARE	-	0	-
17	20A/1P	-	SPARE	-	-	0	18	20A/1P	-	SPARE	-	-	0
19	20A/1P	-	SPARE	0	-	-	20	20A/1P	-	SPARE	0	-	-
21	20A/1P	-	SPARE	-	0	-	22	20A/1P	-	SPARE	-	0	-
23	20A/1P	-	SPARE	-	-	0	24	20A/1P	-	SPARE	-	-	0
			TOTAL	10	13	11				TOTAL	11	3	13

NOTES:
1
2.
3.
4.
5.

TOTAL AMPERES	
BUS A	20
BUS B	16
BUS C	24

MAXIMUM KVA
9

SUB-FEED BREAKER	DESCRIPTION	AMPERES A	AMPERES B	AMPERES C
-	-	0	0	0

FILE NAME: WSF\Mukilteo\14W121_FerryTermConst\CADD\WSF\ $FILES$

PRINTED: 6:48:16 AM 9/21/2018	LAST PRINTED BY:				FED.AID PROJ.NO.
SUBMITTAL DATE: 9/21/2018	Morin				
DESIGNED BY: S. HOLLOWAY	9/21/2018				WA-2017-007-00
ENTERED BY: M. MORIN	9/21/2018				REGION NO. STATE
CHECKED BY: E. RAJAH	9/21/2018				10 WASH
MAR PROJ ENGR: C. TORRES	9/21/2018				JOB NUMBER 18W121
DIR TERM ENGR: N. MCINTOSH					CONTRACT NO.
ASST SECRETARY: A. SCARTON		REVISION	DATE	BY	00****

SCOTT T. HOLLOWAY STATE OF WASHINGTON 35432 REGISTERED PROFESSIONAL ENGINEER
cosign 9/21/2018

Washington State Department of Transportation
WASHINGTON STATE FERRIES

SR 525
MUKILTEO FERRY TERMINAL (PHASE 2)
FERRY TERMINAL CONSTRUCTION

TOLLBOOTH
PANELBOARD SCHEDULES

EX04.01

SHEET 1404 OF 1521 SHEETS

CONSTRUCTION NOTES:

1. DIFFUSER SHALL BE FLUSH MOUNTED WITH BEVEL EDGES AND A LOUVER PATTERN THAT DIRECTS AIR FLOW IN 2 DIRECTIONS 90°FROM EACH OTHER. MOUNT DIFFUSER TO DIRECT AIR TO THE BACK AND FAR SIDE OF TOLL BOOTH.

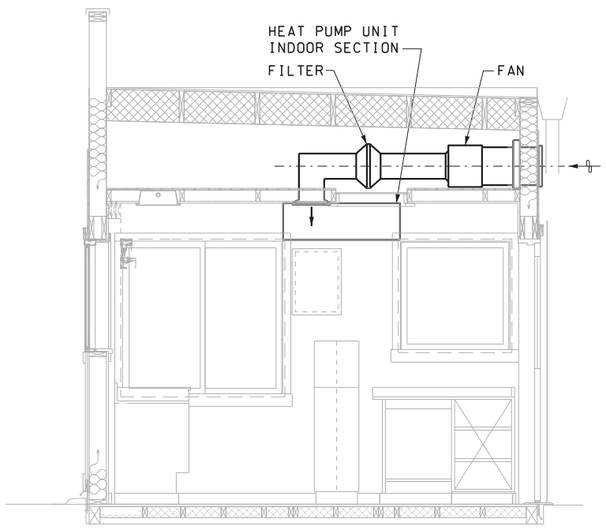

1 SECTION

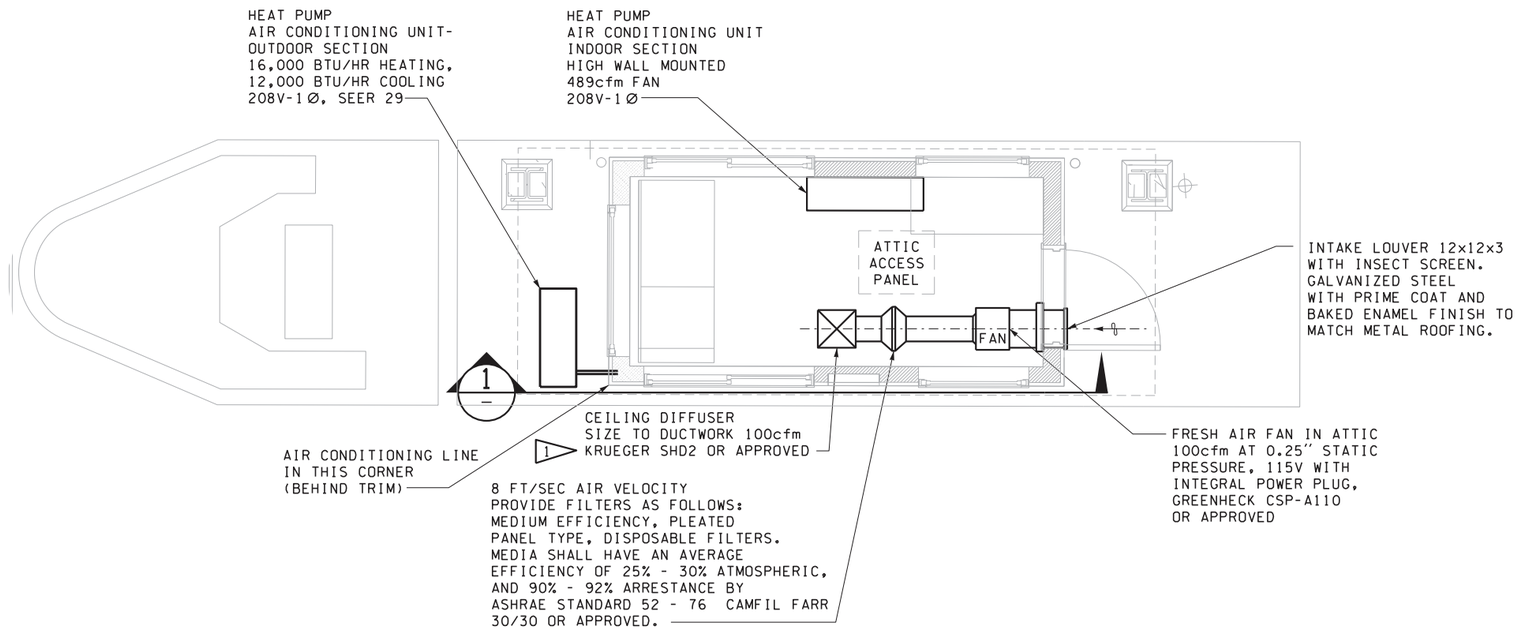

MECHANICAL PLAN AT CEILING

FILE NAME: WSF\Mukilteo\14W121_FerryTermConst\CADD\WSF\ 14w121mx01_20.dlv						
PRINTED: 12:54:02 PM 9/21/2018	LAST PRINTED BY:					FED.AID PROJ.NO.
SUBMITTAL DATE: 9/21/2018	Morin					
DESIGNED BY: N. SANDBERG	9/21/2018					WA-2017-007-00
ENTERED BY: M. MORIN	9/21/2018					REGION NO. / STATE
CHECKED BY: J. SCHUFREIDER	9/21/2018					10 / WASH
MAR PROJ ENGR: C. TORRES	9/21/2018					JOB NUMBER 18W121
DIR TERM ENGR: N. MCINTOSH						CONTRACT NO.
ASST SECRETARY: A. SCARTON		REVISION	DATE	BY		00****

NAOMI L. SANDBERG — STATE OF WASHINGTON — 29810 — REGISTERED PROFESSIONAL ENGINEER
cosign 9/21/2018

Washington State Department of Transportation
WASHINGTON STATE FERRIES

SR 525
MUKILTEO FERRY TERMINAL (PHASE 2)
FERRY TERMINAL CONSTRUCTION

MECHANICAL PLANS AND SECTIONS

MX01.20

SHEET 1405 OF 1521 SHEETS