Washington State Ferries

Contract Plans

For Construction of:

009321

SR 525

MUKILTEO FERRY TERMINAL (PHASE 2) FERRY TERMINAL CONSTRUCTION

SNOHOMISH COUNTY

VOLUME 4 OF 8

F. A. NO. TIGER-WA-2017-007, CFDA 20933
F. A. NO. PSRC-WA-2017-023, CFDA 20507

ALL ADDENDA INCORPORATED

Washington State Department of Transportation

VOLUME 4 SHEET INDEX

INDEX

SHT NO.	PLAN NO.	DESCRIPTION
		COVER SHEET
11	I0.10	VOLUME 4 SHEET INDEX
12	I0.11	VOLUME 4 SHEET INDEX

ARCHITECTURAL - CONT

SHT NO.	PLAN NO.	DESCRIPTION
1027	A06.80	TOLL PLAZA - BLDG SECTIONS
1028	A06.81	TOLL PLAZA - BLDG SECTIONS
1029	A06.82	TOLL PLAZA - BLDG SECTIONS
1030	A06.85	TOLL PLAZA - EXTERIOR DETAILS
1031	A06.86	TOLL PLAZA - EXTERIOR DETAILS
1032	A06.87	TOLL PLAZA - WINDOW DETAILS
1033	A06.88	TOLL PLAZA - WINDOW DETAILS
1034	A06.89	TOLL PLAZA - ROOF DETAILS
1035	A06.90	TOLL PLAZA - ROOF DETAILS
1036	A07.01	TERMINAL - INTERIOR ELEVATIONS
1037	A07.02	TERMINAL - INTERIOR ELEVATIONS
1038	A07.03	TERMINAL - INTERIOR ELEVATIONS
1039	A07.04	TERMINAL - INTERIOR ELEVATIONS
1040	A07.05	TERMINAL - INTERIOR ELEVATIONS
1041	A07.06	TERMINAL - INTERIOR ELEVATIONS
1042	A07.07	TERMINAL - INTERIOR ELEVATIONS
1043	A07.08	TERMINAL - INTERIOR ELEVATIONS
1044	A07.09	TERMINAL - INTERIOR ELEVATIONS
1045	A07.10	TERMINAL - INTERIOR ELEVATIONS
1046	A07.11	TERMINAL - INTERIOR PERSPECTIVE
1047	A07.12	TERMINAL - INTERIOR PERSPECTIVE
1048	A07.20	TERMINAL - INTERIOR DETAILS
1049	A07.21	TERMINAL - INTERIOR DETAILS
1050	A07.22	TERMINAL - INTERIOR DETAILS
1051	A07.23	TERMINAL - INTERIOR DETAILS
1052	A07.24	TERMINAL - INTERIOR DETAILS
1053	A07.25	TERMINAL - INTERIOR DETAILS
1054	A07.26	TERMINAL - INTERIOR DETAILS
1055	A07.27	TERMINAL - INTERIOR DETAILS
1056	A07.28	TERMINAL - INTERIOR DETAILS
1057	A07.29	TERMINAL - INTERIOR DETAILS
1058	A07.30	TERMINAL - INTERIOR DETAILS
1059	A07.40	PARTITION TYPES
1060	A07.41	PARTITION TYPES
1061	A08.00	LEVEL 1 - DOOR SCHEDULE
1062	A08.01	LEVEL 2 - DOOR SCHEDULE
1063	A08.02	DOOR AND FRAME TYPES
1064	A08.03	DOOR AND FRAME DETAILS
1065	A08.10	DOOR DETAILS
1066	A08.11	DOOR DETAILS
1067	A08.12	DOOR DETAILS
1068	A08.13	DOOR DETAILS
1069	A08.14	DOOR DETAILS
1070	A08.15	DOOR DETAILS
1071	A08.16	DOOR DETAILS
1072	A08.17	DOOR DETAILS
1073	A08.20	LOUVER DETAILS
1074	A08.21	LOUVER DETAILS
1075	A08.22	LOUVER DETAILS
1076	A08.30	TERMINAL - FINISH SCHEDULE
1077	A08.31	TERMINAL & TOLL PLAZA - FINISH SCHED
1078	A08.35	NOT USED
1079	A08.40	TOLL - FLOOR DETAILS
1080	A08.50	TOLL PLAZA - DOOR SCHEDULE
1081	A08.60	TOLL - EXTERIOR DETAILS - DOOR

STRUCTURAL

SHT NO.	PLAN NO.	DESCRIPTION
1082	SB00.01	BUILDING STRUCTURAL NOTES
1083	SB00.02	BUILDING STRUCTURAL NOTES
1084	SB00.03	BUILDING STRUCTURAL NOTES, ABBREVIATIONS, AND DRAWING LIST
1085	SB00.04	BUILDING STRUCTURAL SYMBOLS
1086	SB00.05	STATEMENT OF STRUCTURAL SPECIAL INSPECTIONS
1087	SB00.06	STATEMENT OF STRUCTURAL SPECIAL INSPECTIONS
1088	SB00.07	STATEMENT OF STRUCTURAL SPECIAL INSPECTIONS
1089	SB00.08	STATEMENT OF STRUCTURAL SPECIAL INSPECTIONS
1090	SB00.09	STATEMENT OF STRUCTURAL SPECIAL INSPECTIONS
1091	SB00.10	LOAD MAPS (TERMINAL BUILDING)
1092	SB00.11	LOAD MAPS (MAINTENANCE BUILDING)
1093	SB00.51	BUILDING STRUCTURAL NOTES - TOLL PLAZA
1094	SB00.52	BUILDING STRUCTURAL NOTES - TOLL PLAZA
1095	SB00.53	BUILDING STRUCTURAL NOTES, ABBREVS, AND DWG LIST - TOLL PLAZA
1096	SB00.54	BUILDING STRUCTURAL SYMBOLS - TOLL PLAZA
1097	SB00.55	STATEMENT OF STRUCTURAL SPECIAL INSPECTIONS - TOLL PLAZA
1098	SB00.56	STATEMENT OF STRUCTURAL SPECIAL INSPECTIONS - TOLL PLAZA
1099	SB00.57	STATEMENT OF STRUCTURAL SPECIAL INSPECTIONS - TOLL PLAZA
1100	SB00.58	STATEMENT OF STRUCTURAL SPECIAL INSPECTIONS - TOLL PLAZA
1101	SB00.59	LOAD MAPS (TOLL PLAZA)
1102	SB02.00	TERMINAL - LEVEL 1 - OVERALL PLAN
1103	SB02.01	TERMINAL - LEVEL 1 - SECTOR A PLAN
1104	SB02.02	TERMINAL - LEVEL 1 - SECTOR B PLAN
1105	SB02.03	TERMINAL - LEVEL 1 - SECTOR C PLAN
1106	SB02.04	TERMINAL - LEVEL 1 - SECTOR D & E PLANS
1107	SB02.05	TERMINAL - LEVEL 2 - OVERALL PLAN
1108	SB02.06	TERMINAL - LEVEL 2 - SECTOR A PLAN
1109	SB02.07	TERMINAL - LEVEL 2 - SECTOR B PLAN
1110	SB02.08	TERMINAL - LEVEL 2 - SECTOR C PLAN
1111	SB02.09	TERMINAL - LEVEL 2 - SECTOR D & E PLANS
1112	SB02.10	TERMINAL - ROOF FRAMING - OVERALL PLAN
1113	SB02.11	TERMINAL - ROOF FRAMING - SECTOR A PLAN
1114	SB02.12	TERMINAL - ROOF FRAMING - SECTOR B PLAN
1115	SB02.13	TERMINAL - ROOF FRAMING - SECTOR C PLAN
1116	SB02.14	TERMINAL - ROOF DIAPHRAGM - OVERALL PLAN
1117	SB02.15	TERMINAL - ROOF DIAPHRAGM - SECTOR A PLAN
1118	SB02.16	TERMINAL - ROOF DIAPHRAGM - SECTOR B PLAN
1119	SB02.17	TERMINAL - ROOF DIAPHRAGM - SECTOR C PLAN
1120	SB02.50	TOLL PLAZA - OVERALL PLANS
1121	SB02.51	TOLL PLAZA - LEVEL 1 - SECTOR F PLAN
1122	SB02.52	TOLL PLAZA - LEVEL 1 - SECTOR G PLAN
1123	SB02.53	TOLL PLAZA - INTERMEDIATE ROOF - SECTOR F PLAN
1124	SB02.54	TOLL PLAZA - INTERMEDIATE ROOF - SECTOR G PLAN
1125	SB02.55	TOLL PLAZA - ROOF - SECTOR F PLAN
1126	SB02.56	TOLL PLAZA - ROOF - SECTOR G PLAN
1127	SB03.00	PARTIAL PLANS - MAINTENANCE YARD
1128	SB03.01	PARTIAL PLANS - STAIRS
1129	SB03.02	PARTIAL PLANS - STAIRS
1130	SB03.03	PARTIAL PLANS - STUD WALLS
1131	SB03.04	PARTIAL PLANS - BATHROOM FRAMING
1132	SB04.00	SHEAR WALL ELEVATIONS
1133	SB04.01	SHEAR WALL ELEVATIONS
1134	SB04.02	SHEAR WALL ELEVATIONS
1135	SB04.05	CONC SHEAR WALL SECTIONS

STRUCTURAL - CONT

SHT NO.	PLAN NO.	DESCRIPTION
1136	SB04.06	CONC SHEAR WALL SECTIONS
1137	SB04.07	CONC SHEAR WALL DETAILS
1138	SB04.08	CONC WALL ELEVATIONS
1139	SB04.09	CONC WALL ELEVATIONS
1140	SB04.10	WALL ELEVATIONS MAINTENANCE BLDG
1141	SB04.11	GATE ELEVATIONS MAINTENANCE BLDG
1142	SB04.50	SHEAR WALL ELEVATIONS - TOLL PLAZA
1143	SB04.51	WALL ELEVATIONS - TOLL PLAZA
1144	SB05.00	TYPICAL CONCRETE DETAILS
1145	SB05.01	TYPICAL CONCRETE DETAILS
1146	SB05.02	CONCRETE DETAILS
1147	SB05.03	CONCRETE DETAILS
1148	SB05.04	CONCRETE DETAILS
1149	SB05.05	CONCRETE DETAILS
1150	SB05.06	CONCRETE DETAILS
1151	SB05.07	CONCRETE DETAILS
1152	SB05.50	CONCRETE DETAILS - TOLL PLAZA
1153	SB05.51	CONCRETE DETAILS - TOLL PLAZA
1154	SB05.52	CONCRETE DETAILS - TOLL PLAZA
1155	SB05.53	CONCRETE DETAILS - TOLL PLAZA
1156	SB05.54	CONCRETE DETAILS - TOLL PLAZA
1157	SB06.00	STEEL COLUMN SCHEDULE/DETAIL
1158	SB06.01	STEEL COLUMN DETAILS
1159	SB06.02	STEEL COLUMN BASE PLATE DETAILS
1160	SB06.03	STEEL COLUMN BASE PLATE DETAILS
1161	SB06.04	TYPICAL STEEL DETAILS
1162	SB06.05	TYPICAL STEEL DETAILS
1163	SB06.06	TYPICAL STEEL DETAILS
1164	SB06.07	TYPICAL STEEL DETAILS
1165	SB06.08	TYPICAL STEEL DETAILS
1166	SB06.09	TYPICAL STEEL DETAILS
1167	SB06.10	STEEL DETAILS - MAINTENANCE BLDG
1168	SB06.11	STEEL DETAILS - MAINTENANCE BLDG
1169	SB06.12	STEEL DETAILS - MAINTENANCE BLDG
1170	SB06.13	STEEL DETAILS - MAINTENANCE BLDG
1171	SB06.14	VMS SUPPORT FRAME - MAINTENANCE BUILDING
1172	SB06.16	STEEL DETAILS - TERMINAL BLDG
1173	SB06.17	STEEL DETAILS - TERMINAL BLDG
1174	SB06.18	STEEL DETAILS - TERMINAL BLDG
1175	SB06.19	PARTIAL HEIGHT WALL DETAILS - TERMINAL BLDG
1176	SB06.30	STEEL DETAILS - TERMINAL BLDG
1177	SB06.31	STEEL DETAILS - TERMINAL BLDG
1178	SB06.32	STEEL DETAILS - TERMINAL BLDG
1179	SB06.33	STEEL DETAILS - TERMINAL BLDG
1180	SB06.40	STEEL DETAILS - CLADDING SUPPORT
1181	SB06.41	STEEL DETAILS - CLADDING SUPPORT
1182	SB06.42	STEEL DETAILS - CLADDING SUPPORT
1183	SB06.43	STEEL DETAILS - CLADDING SUPPORT
1184	SB06.44	STEEL DETAILS - CLADDING SUPPORT
1185	SB06.45	STEEL DETAILS - CLADDING SUPPORT
1186	SB06.50	STEEL DETAILS - TOLL PLAZA
1187	SB06.51	STEEL COLUMN BASE PLATE DETAILS - TOLL PLAZA
1188	SB07.00	TYPICAL WOOD DETAILS
1189	SB07.01	WOOD DETAILS
1190	SB07.02	WOOD DETAILS
1191	SB07.03	TYPICAL WOOD DETAILS
1192	SB07.50	WOOD DETAILS - TOLL PLAZA
1193	SB07.51	WOOD DETAILS - TOLL PLAZA
1194	SB07.52	WOOD DETAILS - TOLL PLAZA
1195	SB08.00	TYPICAL CFS DETAILS

kpff

VOLUME 4 SHEET INDEX - CONT

SHT NO.	PLAN NO.	DESCRIPTION
STRUCTURAL - CONT		
1196	SB08.01	CFS DETAILS
1197	SB08.50	CFS DETAILS - TOLL PLAZA
1198	SB09.00	TYPICAL CMU DETAILS
1199	SB09.01	TYPICAL CMU DETAILS
1200	SB09.02	TYPICAL CMU DETAILS

kpff

GENERAL NOTES

1. SEE A00.60–62 FOR FA–# ASSEMBLIES
2. SEE A00.65–68 FOR WA–# ASSEMBLIES
3. SEE A00.70–71 FOR RT–# ASSEMBLIES

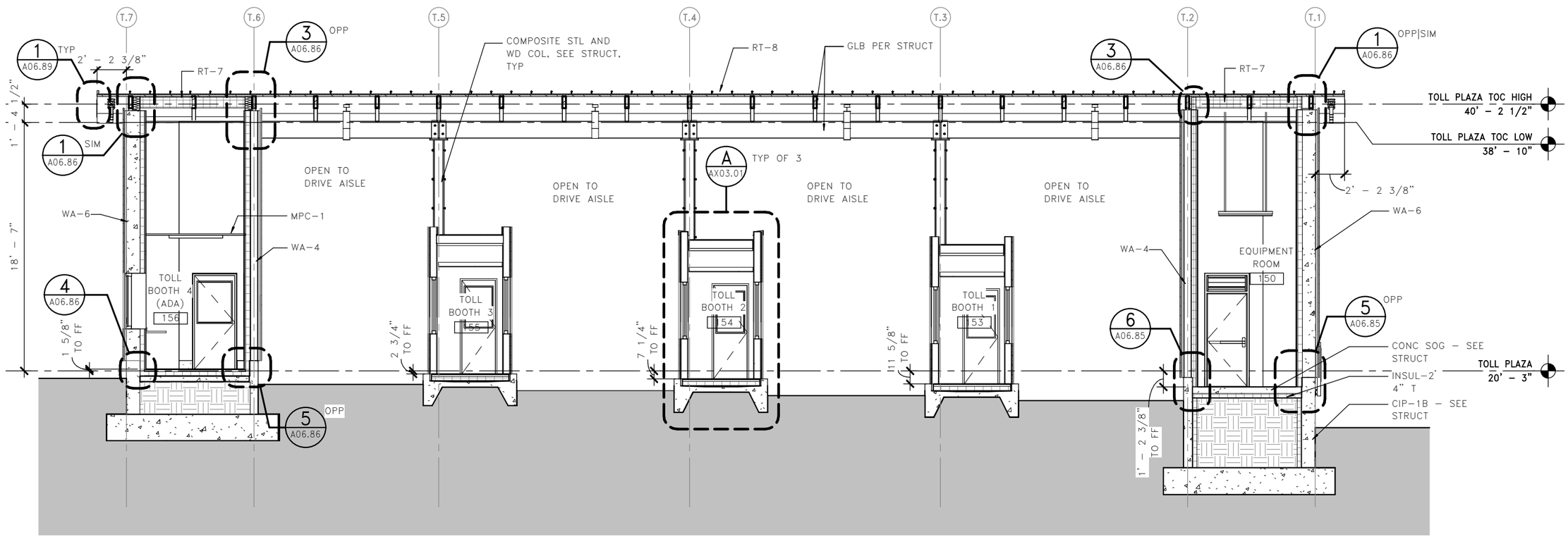

1 A06.80 TOLL PLAZA – BUILDING SECTION

0' 4' 8'

LMN

FILE NAME: PW:\WSF\Mukilteo\14W121_FerryTermConst\CADD\LMN\mft–CENTRAL_90%.rvt						
PRINTED: 9/21/2018 4:48:56 PM	LAST PRINTED BY:					FED.AID PROJ.NO.
SUBMITTAL DATE: 08/23/2018	MFISHER					WA–2017–007–00
DESIGNED BY: H. FITZPATRICK	08/23/2018					REGION NO. 10 / STATE WA
ENTERED BY: G. BISHOP	08/23/2018					JOB NUMBER 18W121
CHECKED BY: M. FISHER	08/23/2018					CONTRACT NO. 00****
MAR PROJ ENGR: C. TORRES						
DGN ENGR MNGR: N. MCINTOSH						
ASST SECRETARY: A. SCARTON		REVISION	DATE	BY		

DATE

4472 REGISTERED ARCHITECT WALT W. NIEHOFF JR. STATE OF WASHINGTON
08/23/18
DATE

Washington State Department of Transportation
WASHINGTON STATE FERRIES

SR 525
MUKILTEO FERRY TERMINAL (PHASE 2)
FERRY TERMINAL CONSTRUCTION

TOLL PLAZA – BLDG SECTIONS

A06.80

SHEET 1027 OF 1521 SHEETS

GENERAL NOTES

1. SEE A00.60–62 FOR FA–# ASSEMBLIES
2. SEE A00.65–68 FOR WA–# ASSEMBLIES
3. SEE A00.70–71 FOR RT–# ASSEMBLIES

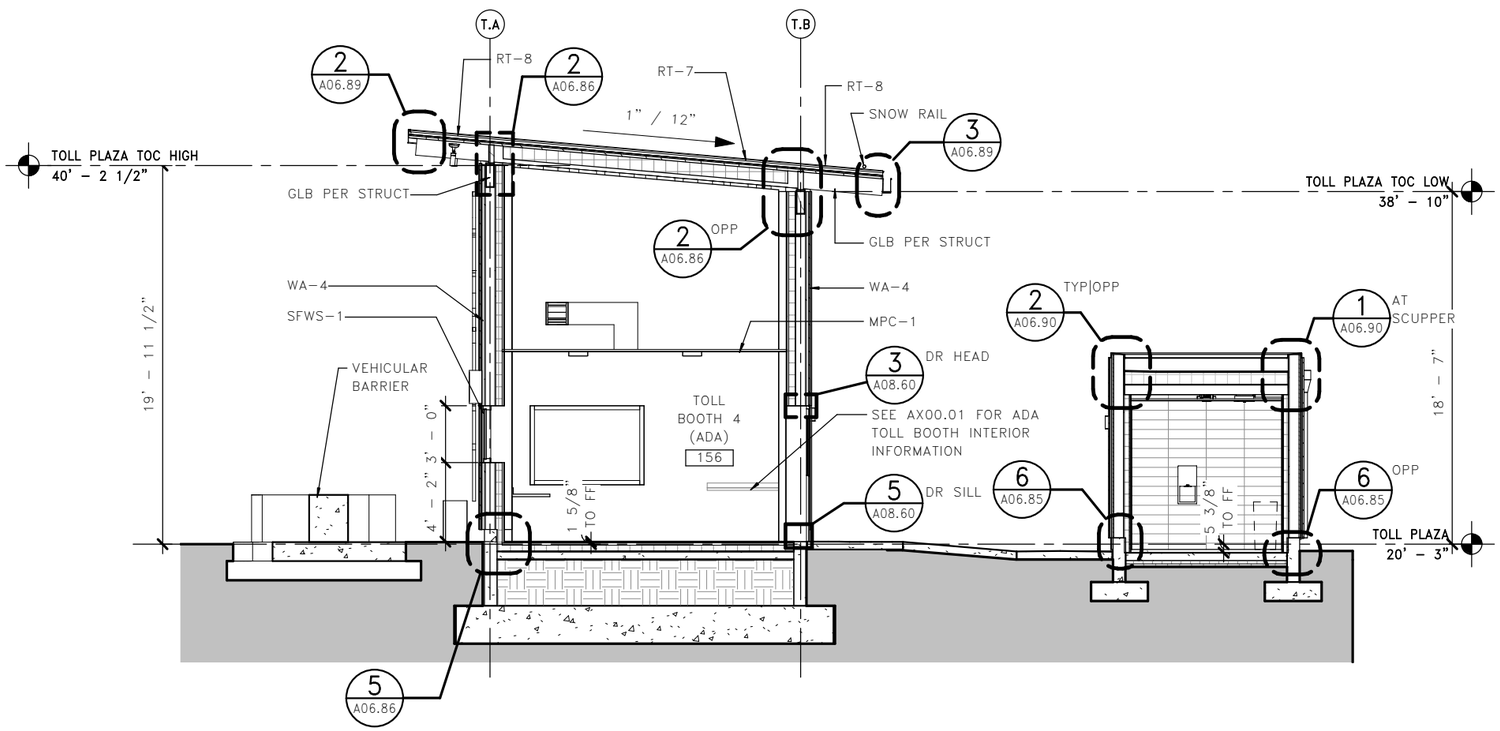

A A06.81 TOLL PLAZA – BUILDING SECTION

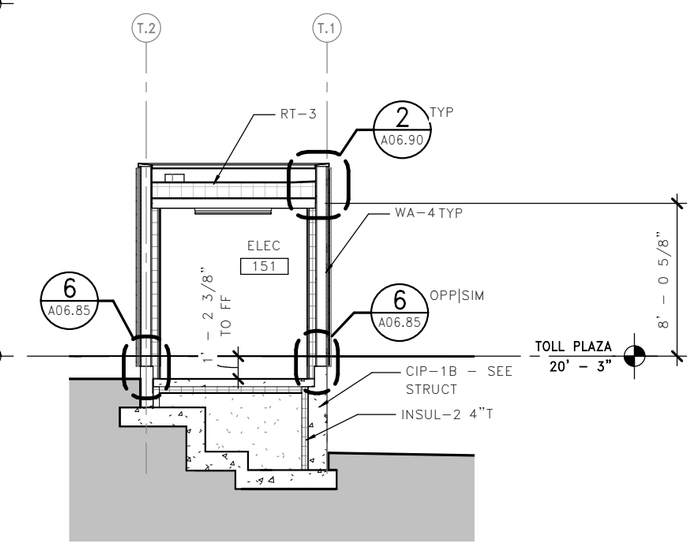

2 A06.81 TOLL PLAZA – BUILDING SECTION

0' 4' 8'

LMN

FILE NAME: PW:\WSF\Mukilteo\14W121_FerryTermConst\CADD\LMN\mft–CENTRAL_90%.rvt						
PRINTED: 9/21/2018 4:48:58 PM		LAST PRINTED BY:				FED.AID PROJ.NO.
SUBMITTAL DATE:	08/23/2018	MFISHER				WA–2017–007–00
DESIGNED BY:	H. FITZPATRICK	08/23/2018				REGION NO. 10 / STATE WA
ENTERED BY:	G. BISHOP	08/23/2018				JOB NUMBER 18W121
CHECKED BY:	M. FISHER	08/23/2018				CONTRACT NO. 00****
MAR PROJ ENGR:	C. TORRES					
DGN ENGR MNGR:	N. MCINTOSH					
ASST SECRETARY:	A. SCARTON		REVISION	DATE	BY	

DATE

4472 REGISTERED ARCHITECT WALT W. NIEHOFF JR. STATE OF WASHINGTON
08/23/18
DATE

Washington State Department of Transportation
WASHINGTON STATE FERRIES

SR 525
MUKILTEO FERRY TERMINAL (PHASE 2)
FERRY TERMINAL CONSTRUCTION

TOLL PLAZA – BLDG SECTIONS

A06.81

SHEET 1028 OF 1521 SHEETS

GENERAL NOTES

1. SEE A00.60–62 FOR FA–# ASSEMBLIES
2. SEE A00.65–68 FOR WA–# ASSEMBLIES
3. SEE A00.70–71 FOR RT–# ASSEMBLIES

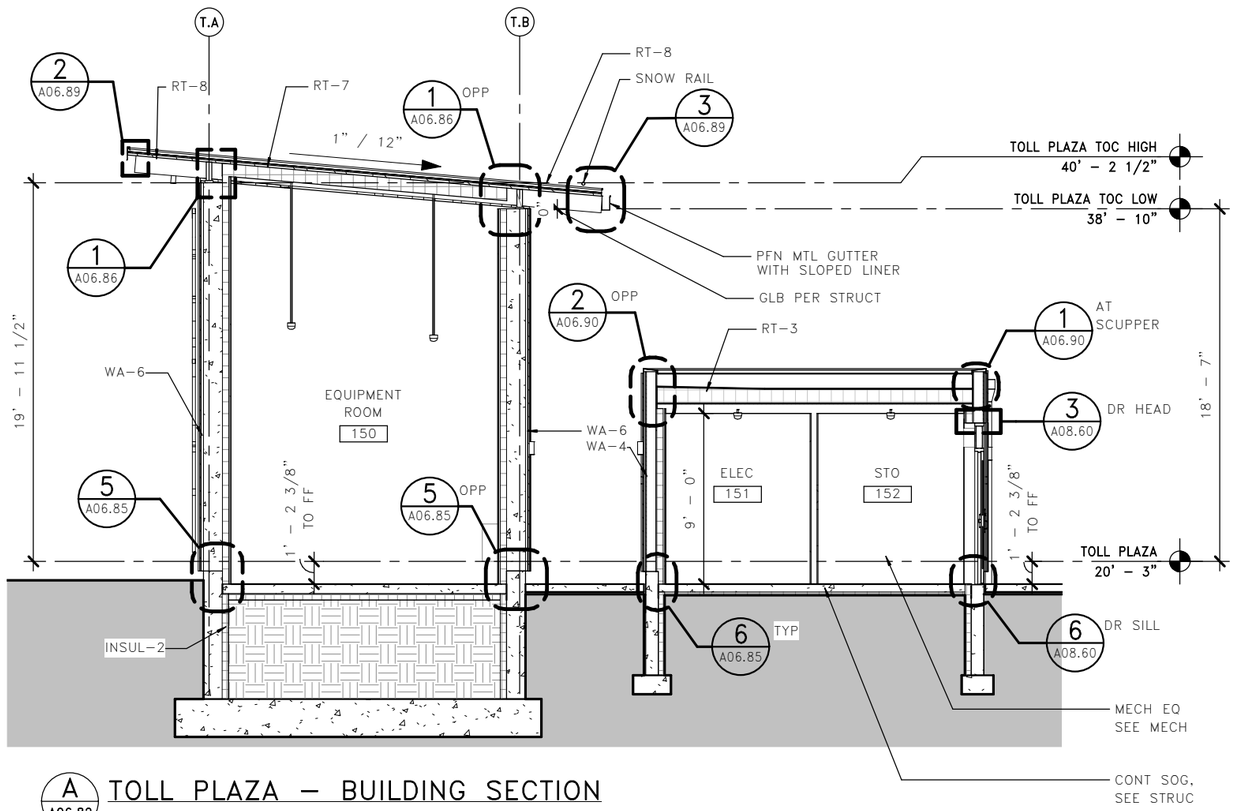

A A06.82 TOLL PLAZA – BUILDING SECTION

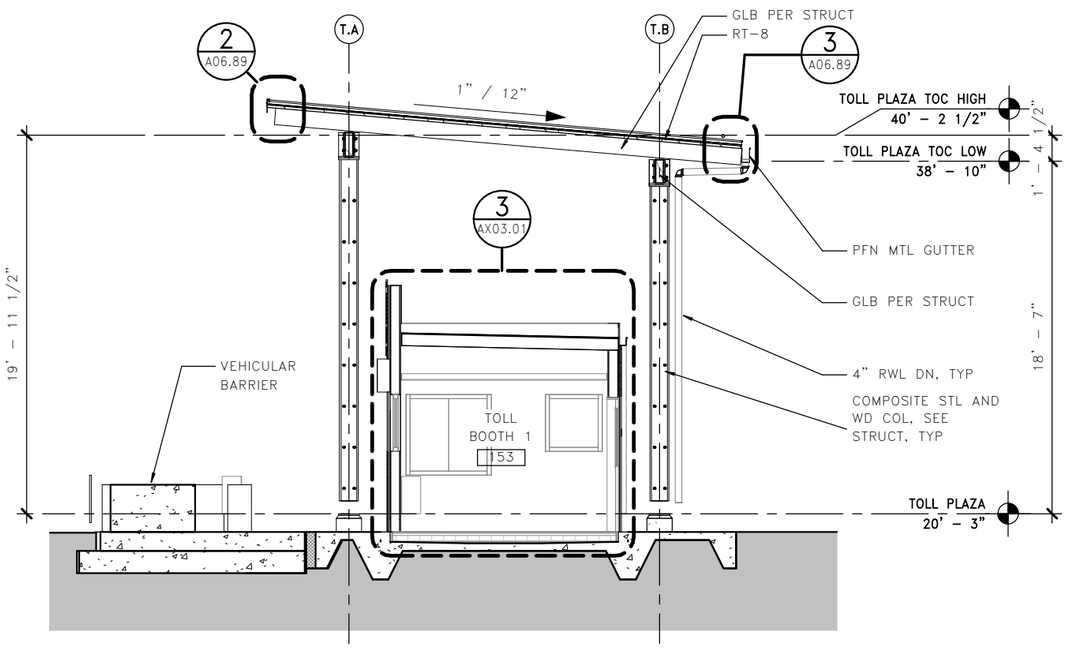

B A06.82 TOLL PLAZA – BUILDING SECTION

0' 4' 8'

LMN

FILE NAME: PW:\WSF\Mukilteo\14W121_FerryTermConst\CADD\LMN\mft–CENTRAL_90%.rvt						
PRINTED: 9/21/2018 4:49:01 PM	LAST PRINTED BY:					FED.AID PROJ.NO.
SUBMITTAL DATE: 08/23/2018	MFISHER					WA–2017–007–00
DESIGNED BY: H. FITZPATRICK	08/23/2018					REGION NO. 10 / STATE WA
ENTERED BY: G. BISHOP	08/23/2018					JOB NUMBER 18W121
CHECKED BY: M. FISHER	08/23/2018					CONTRACT NO. 00****
MAR PROJ ENGR: C. TORRES						
DGN ENGR MNGR: N. MCINTOSH						
ASST SECRETARY: A. SCARTON		REVISION	DATE	BY		

DATE

4472 REGISTERED ARCHITECT
WALT W. NIEHOFF JR.
STATE OF WASHINGTON
08/23/18
DATE

Washington State Department of Transportation
WASHINGTON STATE FERRIES

SR 525
MUKILTEO FERRY TERMINAL (PHASE 2)
FERRY TERMINAL CONSTRUCTION

TOLL PLAZA – BLDG SECTIONS

A06.82

SHEET 1029 OF 1521 SHEETS

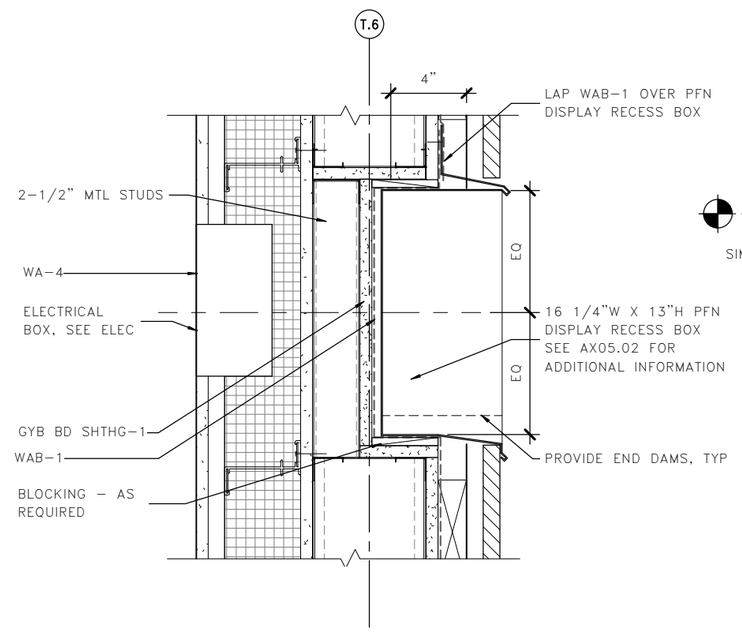

4 A06.85 TOLL - DISPLAY RECESS

0 4" 8"
1 1/2" = 1'-0"

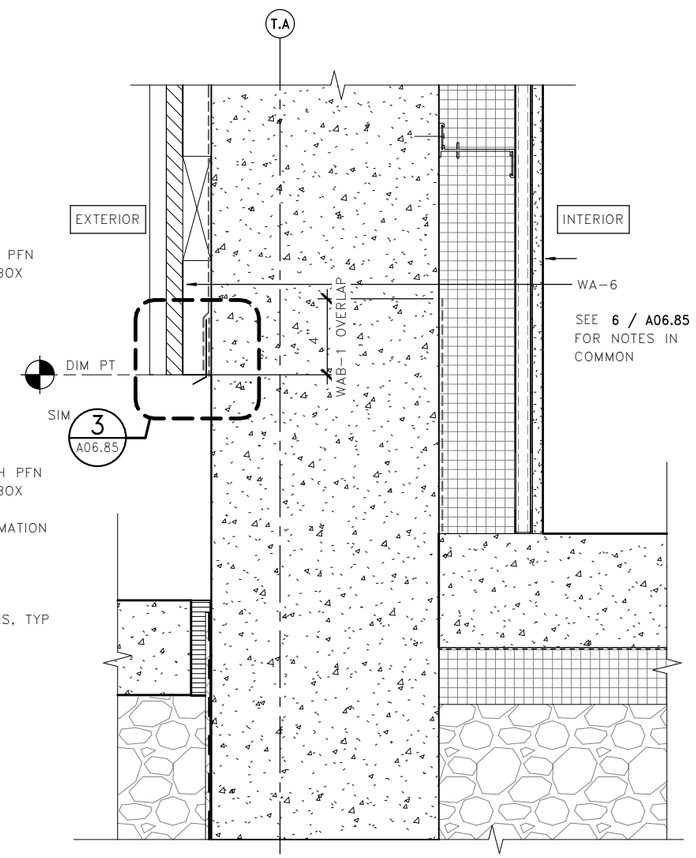

5 A06.85 BASE OF CONC WALL - TOLL

0 4" 8"
1 1/2" = 1'-0"

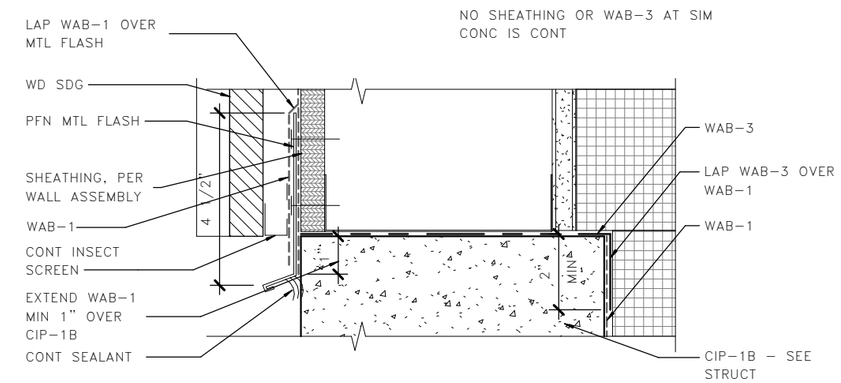

3 A06.85 WD-SDG @ TOLL BASE

0 2" 4"
3" = 1'-0"

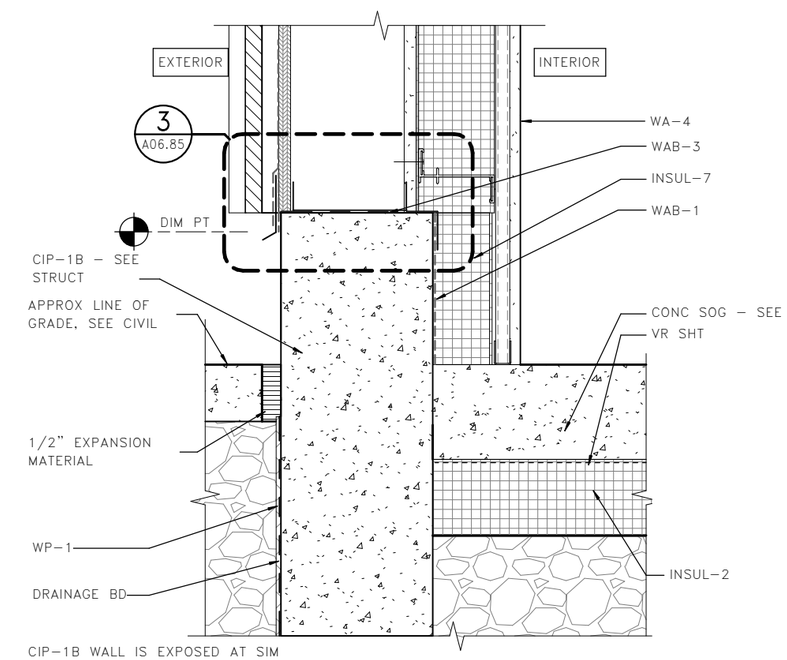

6 A06.85 BASE OF STUD WALL - TOLL

0 4" 8"
1 1/2" = 1'-0"

0 2" 4"

LMN

FILE NAME: PW:\WSF\Mukilteo\14W121_FerryTermConst\CADD\LMN\mft-CENTRAL_90%.rvt						FED.AID PROJ.NO.
PRINTED: 9/21/2018 4:49:05 PM	LAST PRINTED BY:					
SUBMITTAL DATE: 08/23/2018	MFISHER					WA-2017-007-00
DESIGNED BY: H. FITZPATRICK	08/23/2018					REGION NO. 10 / STATE WA
ENTERED BY: G. BISHOP	08/23/2018					
CHECKED BY: M. FISHER	08/23/2018					JOB NUMBER 18W121
MAR PROJ ENGR: C. TORRES						
DGN ENGR MNGR: N. MCINTOSH						CONTRACT NO. 00****
ASST SECRETARY: A. SCARTON		REVISION	DATE	BY		

DATE

4472 REGISTERED ARCHITECT
WALT W. NIEHOFF JR.
STATE OF WASHINGTON
08/23/18
DATE

Washington State Department of Transportation
WASHINGTON STATE FERRIES

SR 525
MUKILTEO FERRY TERMINAL (PHASE 2)
FERRY TERMINAL CONSTRUCTION

TOLL PLAZA - EXTERIOR DETAILS

A06.85

SHEET 1030 OF 1521 SHEETS

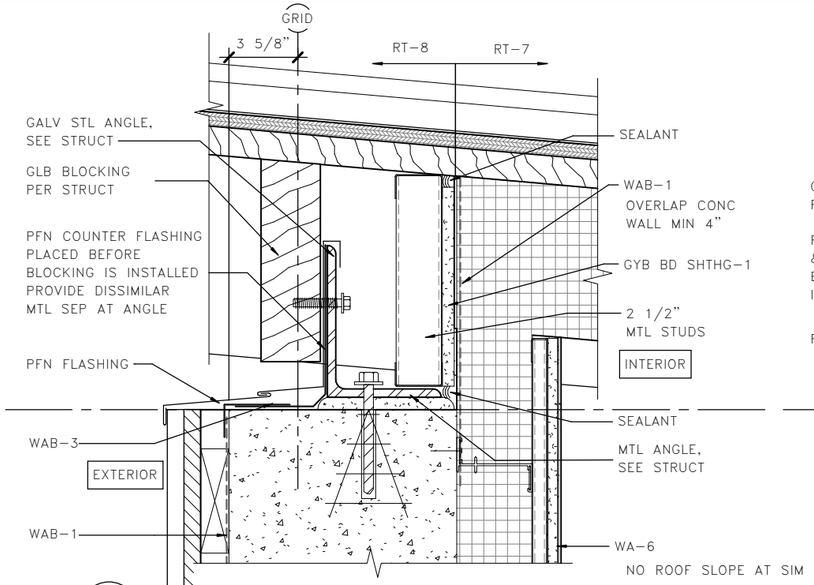

1 A06.86 TOP OF CONC WALL -TOLL

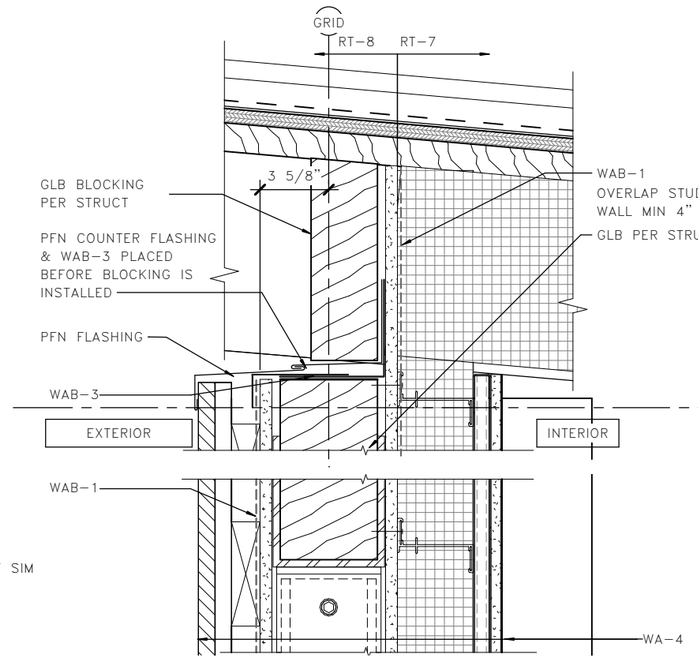

2 A06.86 TOP OF STUD WALL - TOLL

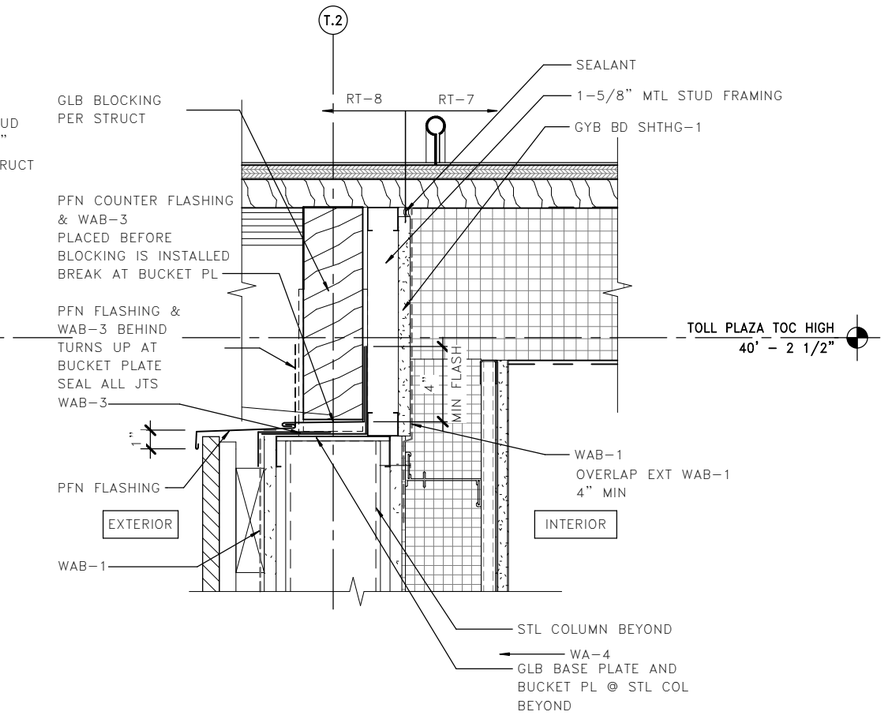

3 A06.86 TOP OF STUD WALL - TOLL

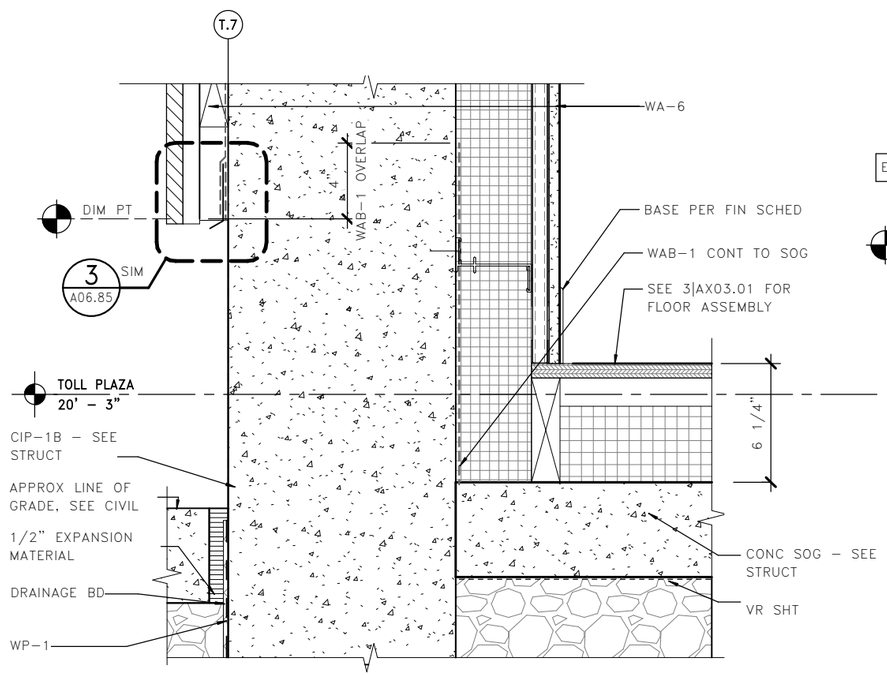

4 A06.86 BASE OF CONC WALL - ADA TOLL

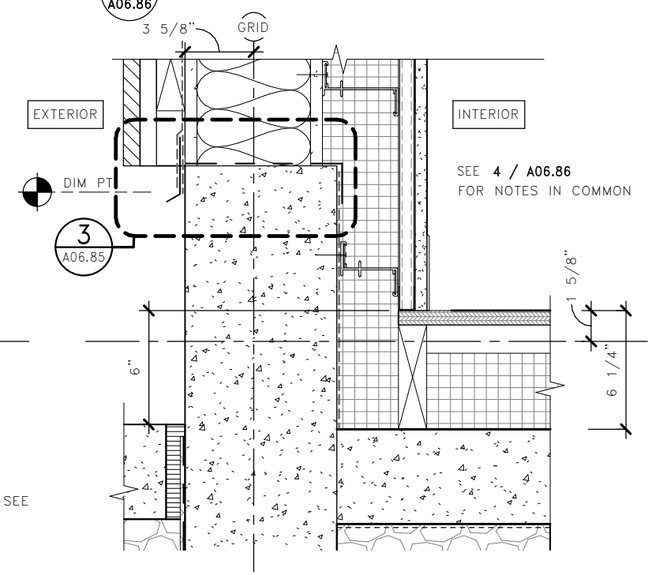

5 A06.86 BASE OF STUD WALL - ADA TOLL

LMN

0 4" 8"

FILE NAME: PW:\WSF\Mukilteo\14W121_FerryTermConst\CADD\LMN\mft-CENTRAL_90%.rvt						
PRINTED: 9/21/2018 4:49:09 PM	LAST PRINTED BY:					FED.AID PROJ.NO.
SUBMITTAL DATE: 08/23/2018	MFISHER					WA-2017-007-00
DESIGNED BY: H. FITZPATRICK	08/23/2018					REGION NO. 10 / STATE WA
ENTERED BY: G. BISHOP	08/23/2018					JOB NUMBER 18W121
CHECKED BY: M. FISHER	08/23/2018					CONTRACT NO. 00****
MAR PROJ ENGR: C. TORRES						
DGN ENGR MNGR: N. MCINTOSH						
ASST SECRETARY: A. SCARTON		REVISION	DATE	BY		

DATE

4472 REGISTERED ARCHITECT WALT W. NIEHOFF JR. STATE OF WASHINGTON

08/23/18
DATE

Washington State Department of Transportation
WASHINGTON STATE FERRIES

SR 525
MUKILTEO FERRY TERMINAL (PHASE 2)
FERRY TERMINAL CONSTRUCTION

TOLL PLAZA - EXTERIOR DETAILS

A06.86

SHEET 1031 OF 1521 SHEETS

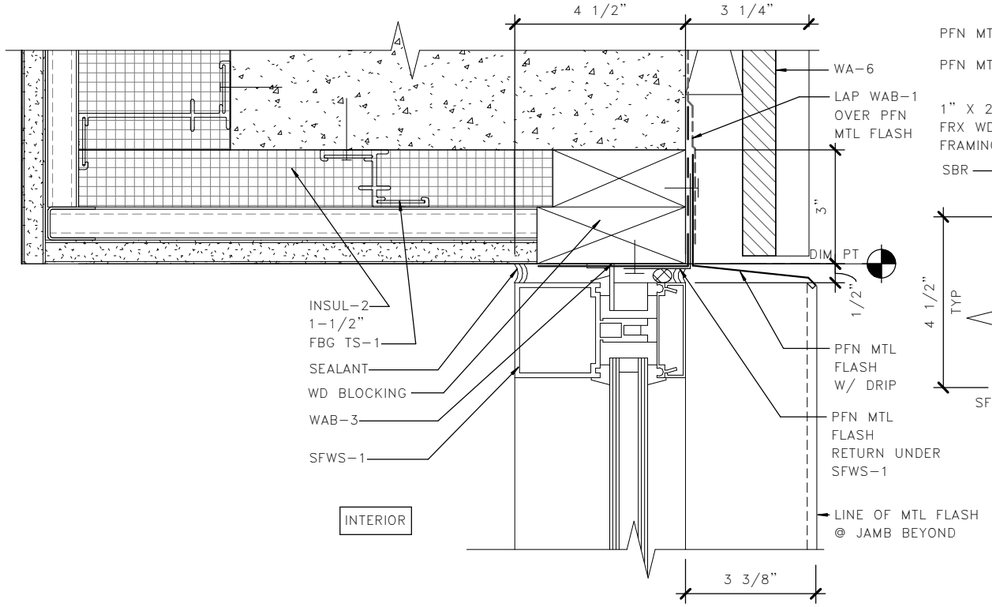

1 A06.87 SFWS-1 HEAD AT CONC – TOLL

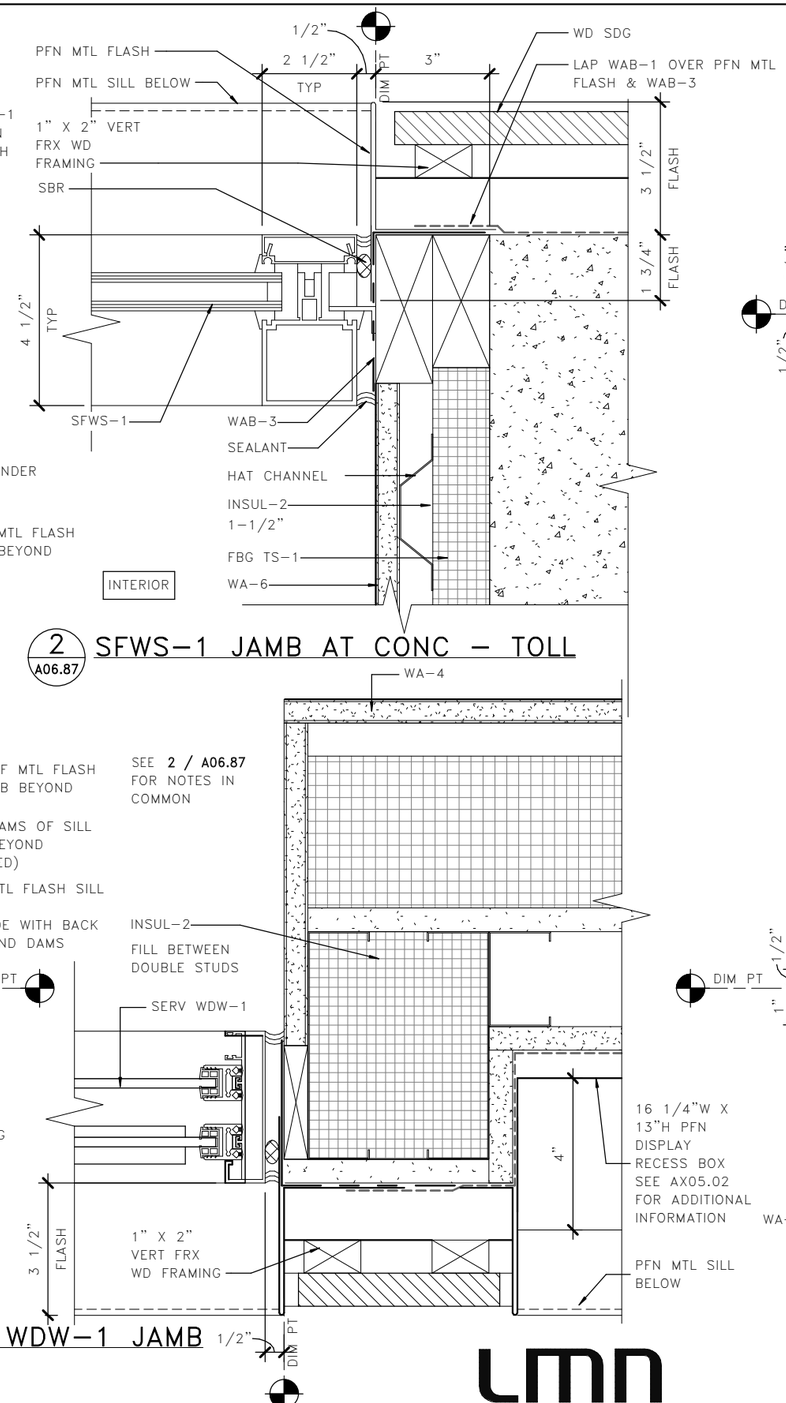

2 A06.87 SFWS-1 JAMB AT CONC – TOLL

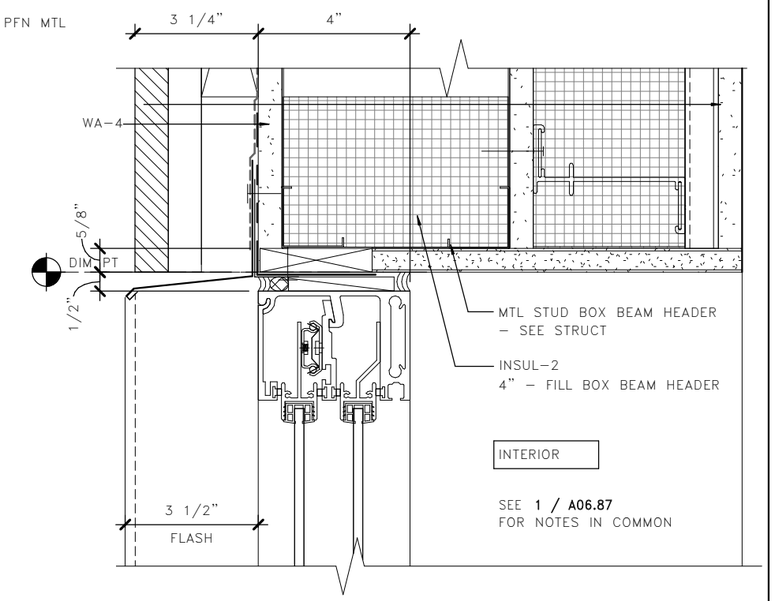

3 A06.87 SERV WDW-1 HEAD

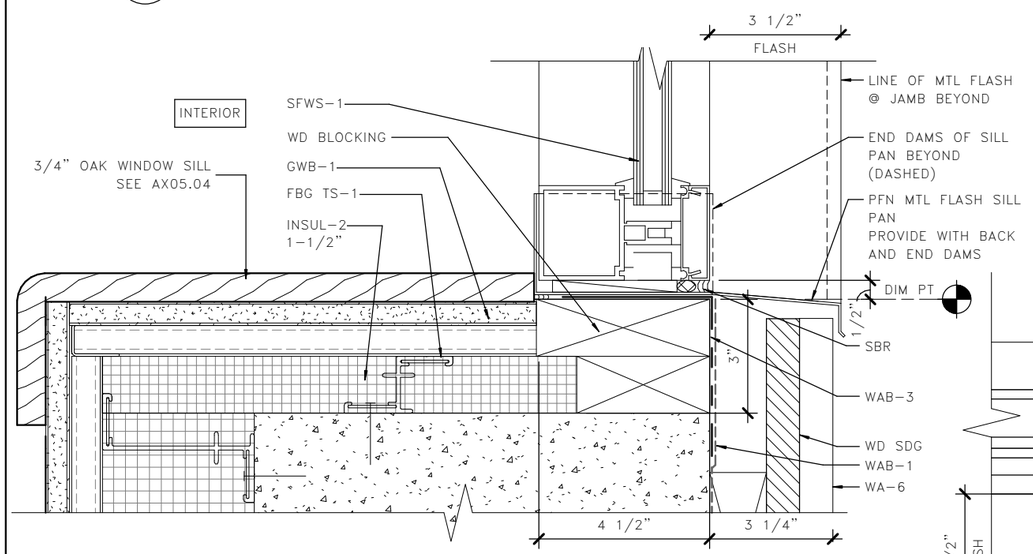

4 A06.87 SFWS-1 SILL AT CONC – TOLL

5 A06.87 SERV WDW-1 JAMB

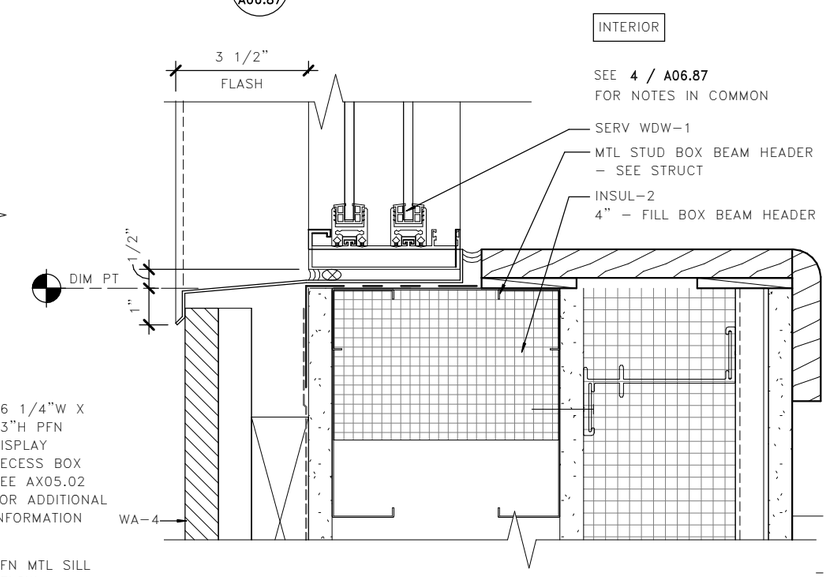

6 A06.87 SERV WDW-1 SILL

0 2" 4"

LMN

FILE NAME: PW:\WSF\Mukilteo\14W121_FerryTermConst\CADD\LMN\mft-CENTRAL_90%.rvt						
PRINTED: 9/21/2018 4:49:14 PM	LAST PRINTED BY:					FED.AID PROJ.NO.
SUBMITTAL DATE: 08/23/2018	MFISHER					WA-2017-007-00
DESIGNED BY: H. FITZPATRICK	08/23/2018					REGION NO. 10 / STATE WA
ENTERED BY: G. BISHOP	08/23/2018					
CHECKED BY: M. FISHER	08/23/2018					JOB NUMBER 18W121
MAR PROJ ENGR: C. TORRES						
DGN ENGR MNGR: N. MCINTOSH						CONTRACT NO. 00****
ASST SECRETARY: A. SCARTON		REVISION	DATE	BY		

DATE

4472 REGISTERED ARCHITECT WALT W. NIEHOFF JR. STATE OF WASHINGTON

08/23/18
DATE

Washington State Department of Transportation
WASHINGTON STATE FERRIES

SR 525
MUKILTEO FERRY TERMINAL (PHASE 2)
FERRY TERMINAL CONSTRUCTION

TOLL PLAZA – WINDOW DETAILS

A06.87

SHEET 1032 OF 1521 SHEETS

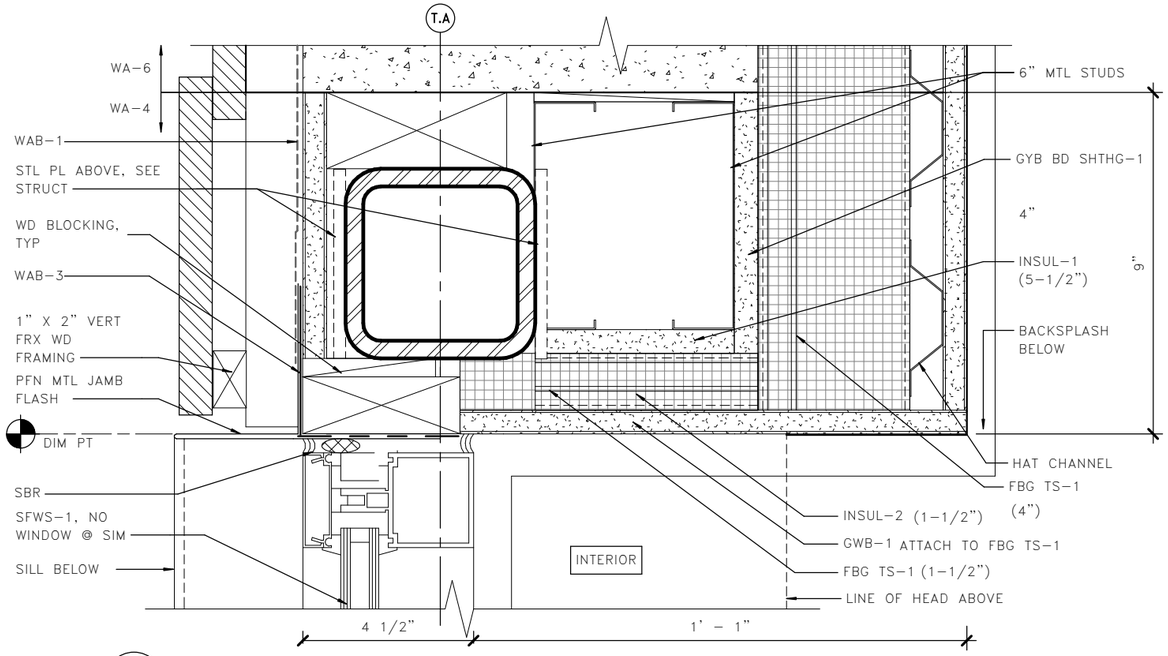

1 A06.88 SFWS-1 JAMB @ STUDS - TOLL

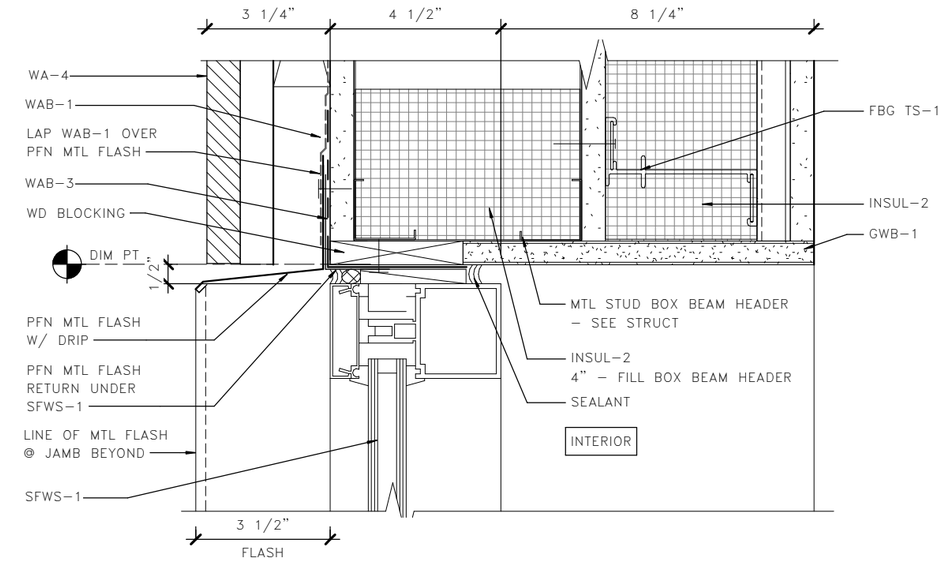

2 A06.88 SFWS-1 HEAD AT STUDS - TOLL

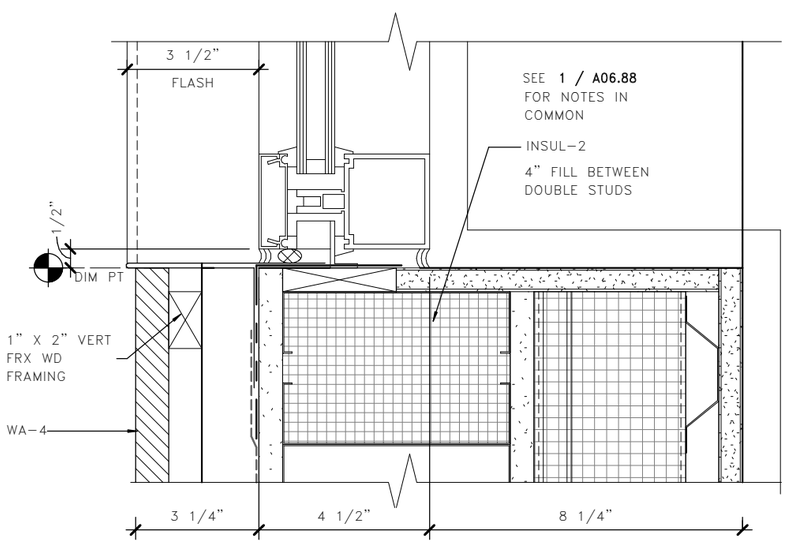

3 A06.88 SFWS-1 JAMB @ STUDS - TOLL

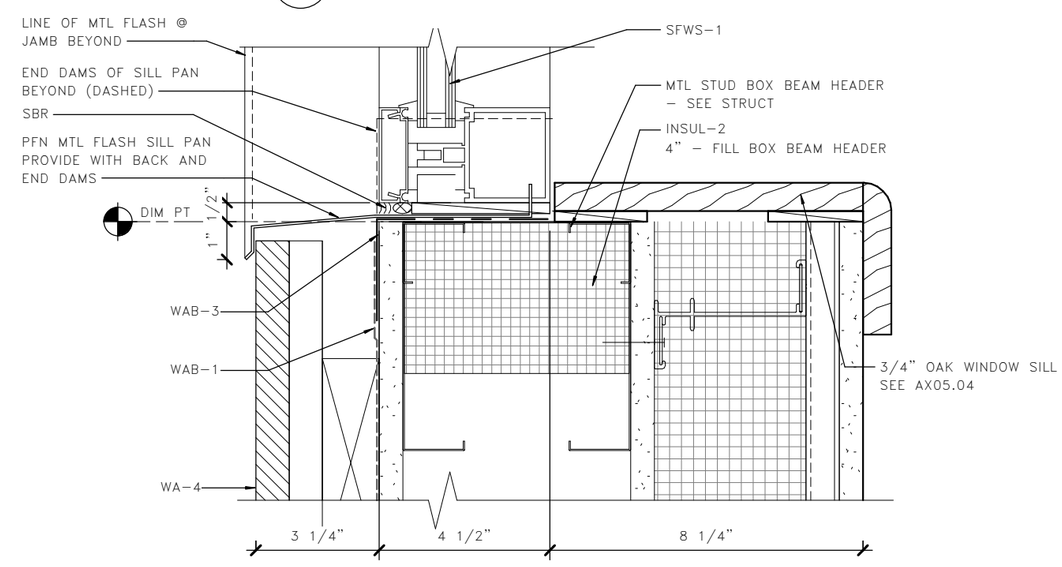

4 A06.88 SFWS-1 SILL AT STUDS - TOLL

0' 10' 20'

LMN

FILE NAME: PW:\WSF\Mukilteo\14W121_FerryTermConst\CADD\LMN\mft-CENTRAL_90%.rvt						
PRINTED: 9/21/2018 4:49:17 PM	LAST PRINTED BY:					FED.AID PROJ.NO.
SUBMITTAL DATE: 08/23/2018	MFISHER					WA-2017-007-00
DESIGNED BY: H. FITZPATRICK	08/23/2018					REGION NO. 10 / STATE WA
ENTERED BY: G. BISHOP	08/23/2018					
CHECKED BY: M. FISHER	08/23/2018					JOB NUMBER 18W121
MAR PROJ ENGR: C. TORRES						
DGN ENGR MNGR: N. MCINTOSH						CONTRACT NO.
ASST SECRETARY: A. SCARTON		REVISION	DATE	BY		00****

DATE

4472 REGISTERED ARCHITECT WALT W. NIEHOFF JR. STATE OF WASHINGTON
08/23/18
DATE

Washington State Department of Transportation
WASHINGTON STATE FERRIES

SR 525
MUKILTEO FERRY TERMINAL (PHASE 2)
FERRY TERMINAL CONSTRUCTION

TOLL PLAZA - WINDOW DETAILS

A06.88

SHEET 1033 OF 1521 SHEETS

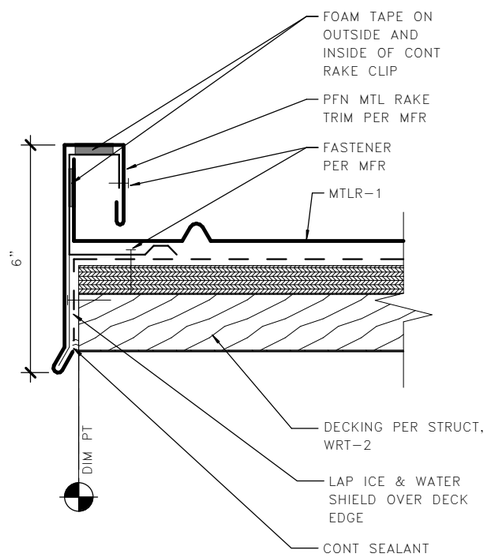

1 A06.89 TOLL CANOPY – RAKE DEATIL

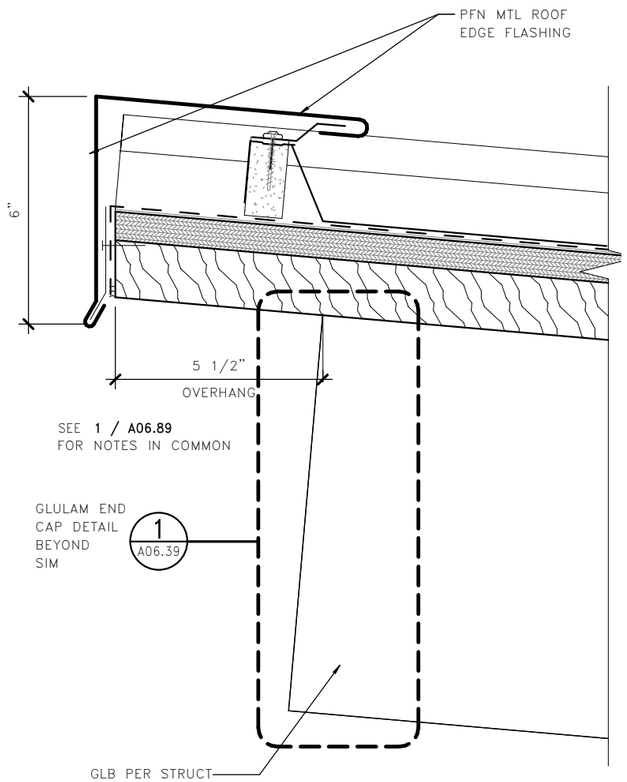

2 A06.89 TOLL CANOPY – EDGE DETAIL

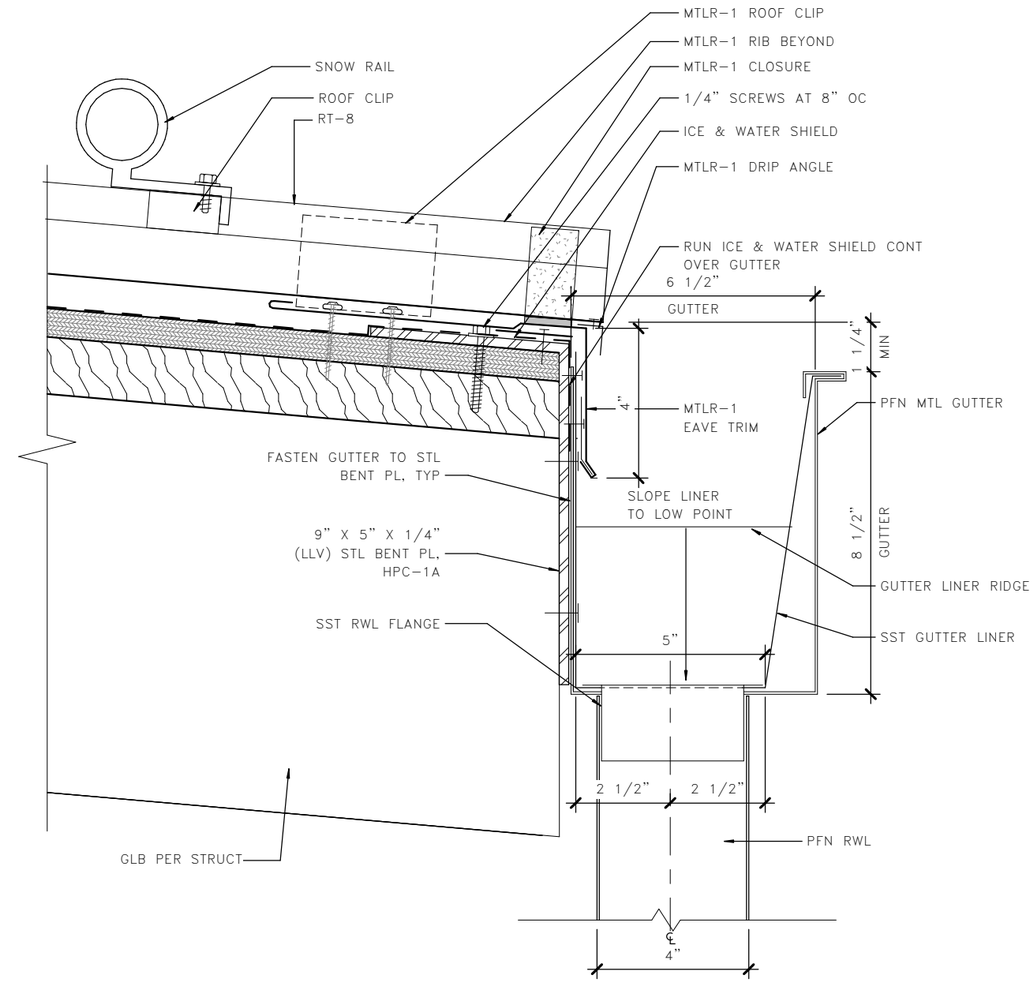

3 A06.89 TOLL CANOPY – GUTTER DETAIL

LMN

0 2" 4"

FILE NAME: PW:\WSF\Mukilteo\14W121_FerryTermConst\CADD\LMN\mft-CENTRAL_90%.rvt						
PRINTED: 9/21/2018 4:49:19 PM	LAST PRINTED BY:					FED.AID PROJ.NO.
SUBMITTAL DATE: 08/23/2018	MFISHER					
DESIGNED BY: H. FITZPATRICK	08/23/2018					WA-2017-007-00
ENTERED BY: G. BISHOP	08/23/2018					REGION NO. 10 / STATE WA
CHECKED BY: M. FISHER	08/23/2018					
MAR PROJ ENGR: C. TORRES						JOB NUMBER 18W121
DGN ENGR MNGR: N. MCINTOSH						CONTRACT NO. 00****
ASST SECRETARY: A. SCARTON		REVISION	DATE	BY		

DATE

4472 REGISTERED ARCHITECT WALT W. NIEHOFF JR. STATE OF WASHINGTON
08/23/18
DATE

Washington State Department of Transportation
WASHINGTON STATE FERRIES

SR 525
MUKILTEO FERRY TERMINAL (PHASE 2)
FERRY TERMINAL CONSTRUCTION

TOLL PLAZA – ROOF DETAILS

A06.89

SHEET 1034 OF 1521 SHEETS

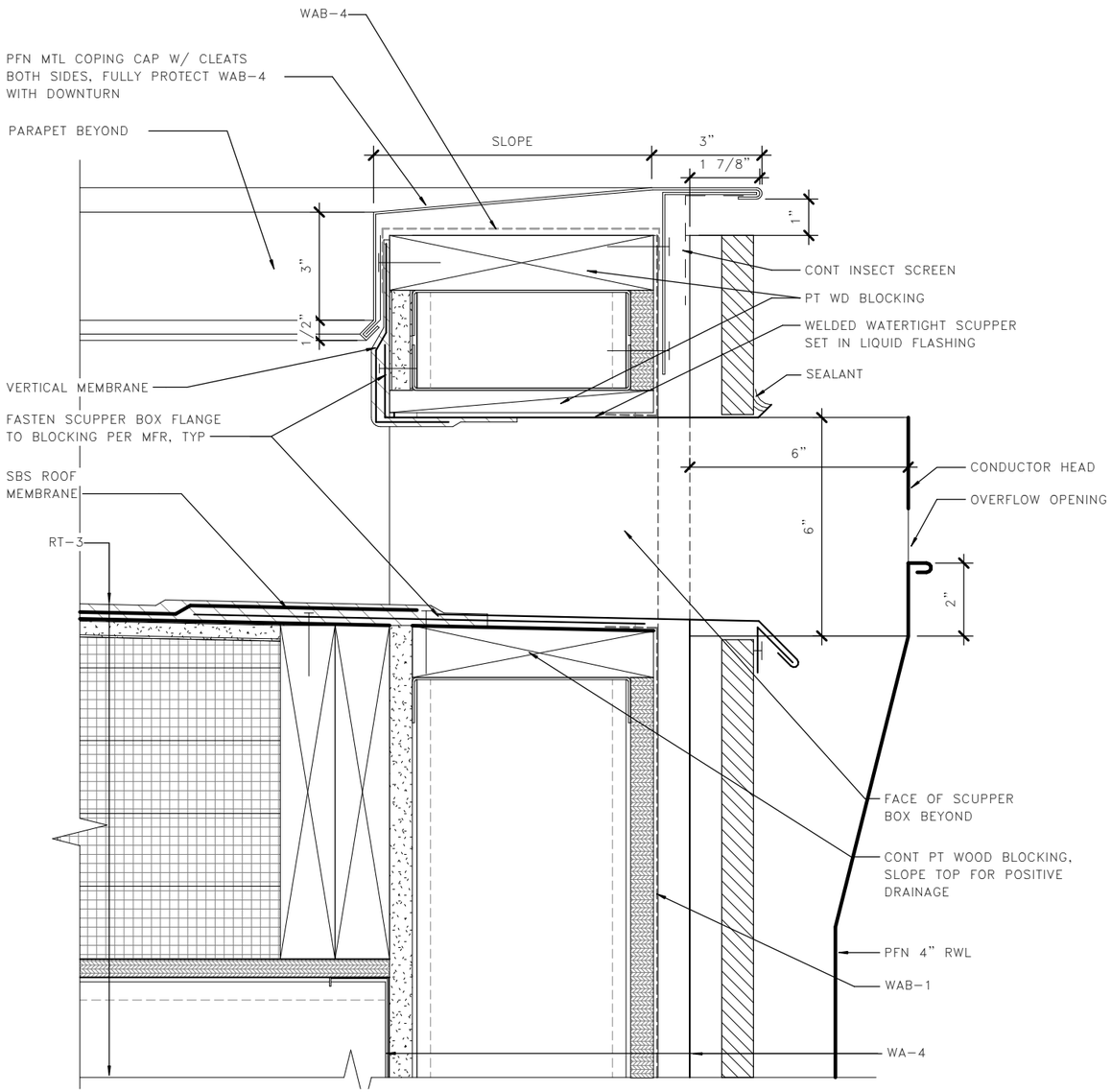

1 A06.90 ROOF EDGE AT SCUPPER – TOLL

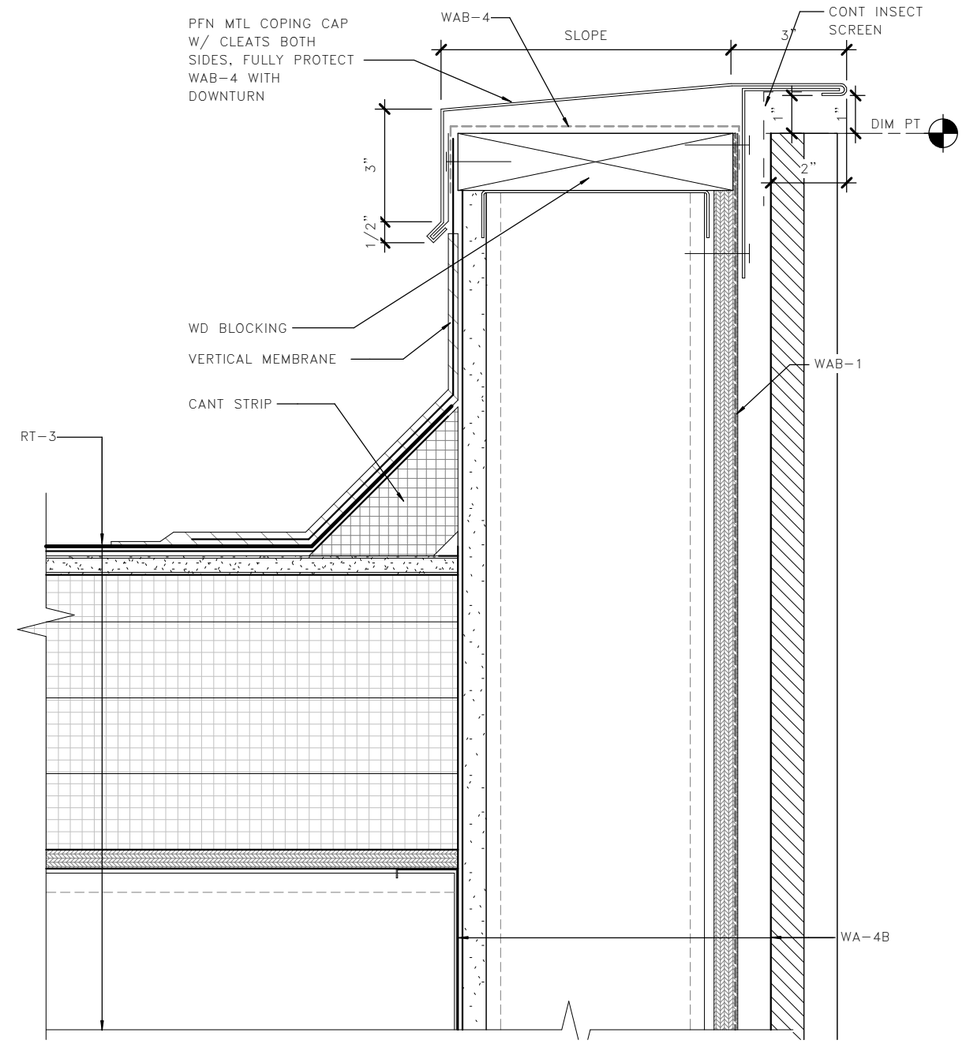

2 A06.90 TYP PARAPET DETAIL – TOLL

LMN

0 2" 4"

FILE NAME: PW:\WSF\Mukilteo\14W121_FerryTermConst\CADD\LMN\mft-CENTRAL_90%.rvt					
PRINTED: 9/21/2018 4:49:21 PM	LAST PRINTED BY:				FED.AID PROJ.NO.
SUBMITTAL DATE: 08/23/2018	MFISHER				WA-2017-007-00
DESIGNED BY: H. FITZPATRICK	08/23/2018				REGION NO. 10 / STATE WA
ENTERED BY: G. BISHOP	08/23/2018				
CHECKED BY: M. FISHER	08/23/2018				JOB NUMBER 18W121
MAR PROJ ENGR: C. TORRES					
DGN ENGR MNGR: N. MCINTOSH					CONTRACT NO. 00****
ASST SECRETARY: A. SCARTON		REVISION	DATE	BY	

DATE

4472 REGISTERED ARCHITECT WALT W. NIEHOFF JR. STATE OF WASHINGTON

08/23/18
DATE

Washington State Department of Transportation
WASHINGTON STATE FERRIES

SR 525
MUKILTEO FERRY TERMINAL (PHASE 2)
FERRY TERMINAL CONSTRUCTION

TOLL PLAZA – ROOF DETAILS

A06.90

SHEET 1035 OF 1521 SHEETS

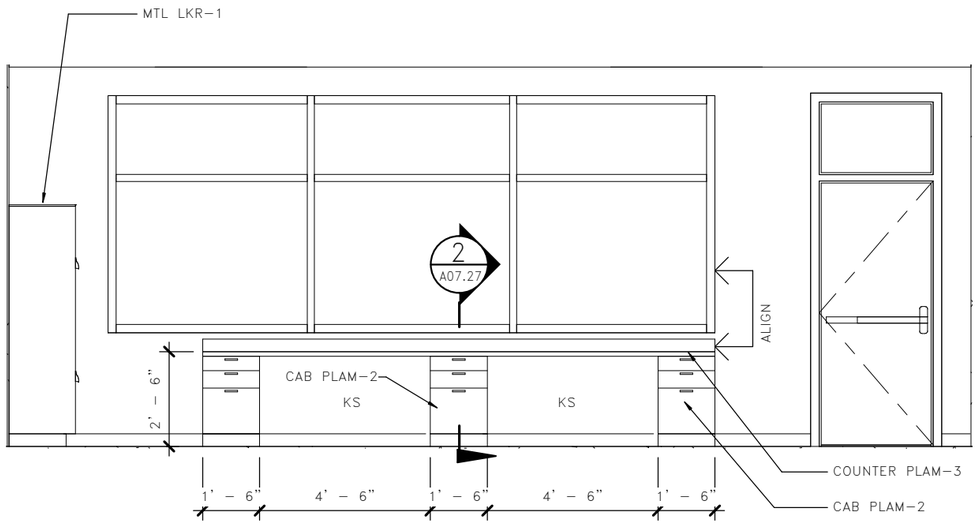

1 A07.01 BREAKROOM 105 – NORTH

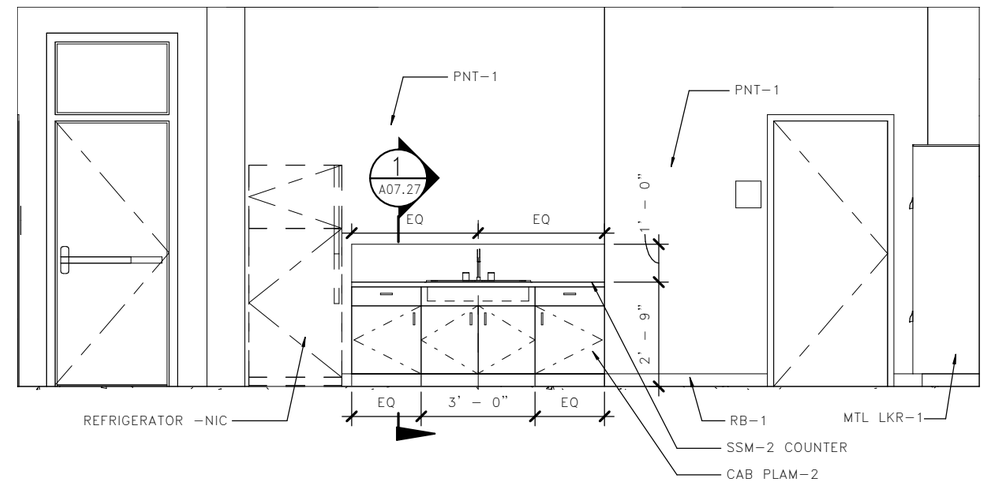

2 A07.01 BREAKROOM 105 – SOUTH

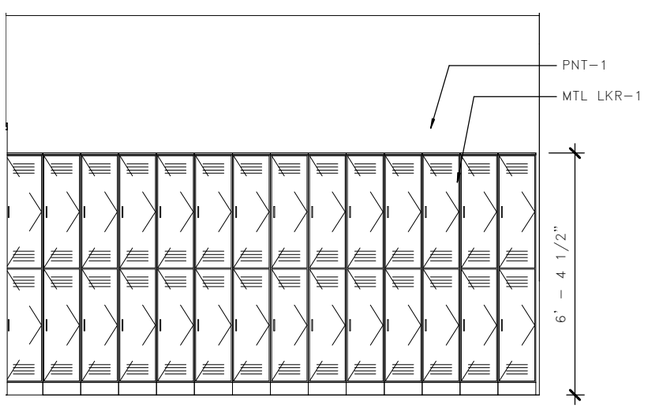

3 A07.01 LOCKERS 106 – WEST

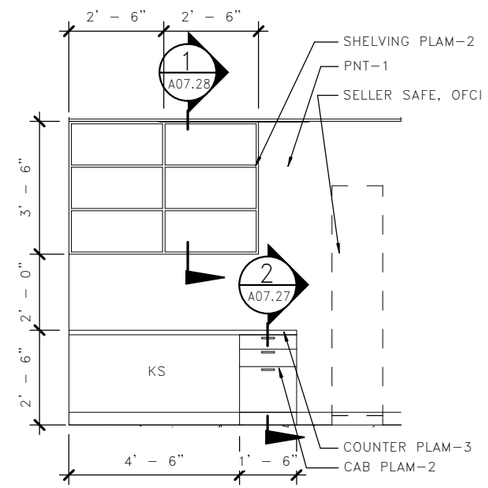

4 A07.01 SELLER SAFE 112 – EAST

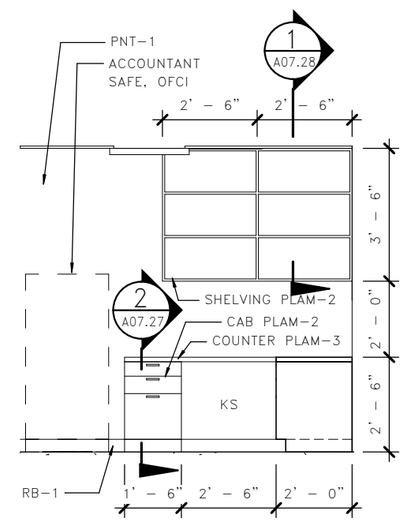

5 A07.01 ACCT RM 113 – WEST

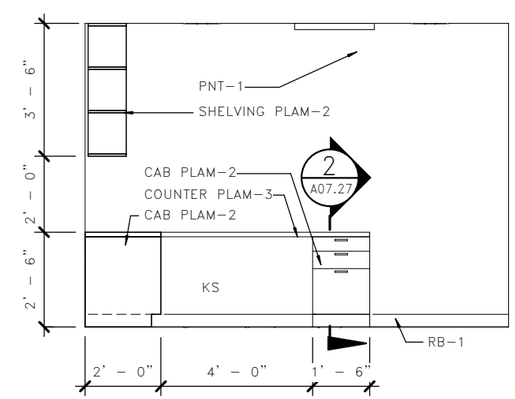

6 A07.01 ACCT RM 113 – NORTH

LMN

0' 2' 4'

FILE NAME: PW:\WSF\Mukilteo\14W121_FerryTermConst\CADD\LMN\mft-CENTRAL_90%.rvt						FED.AID PROJ.NO.
PRINTED: 9/21/2018 4:49:24 PM	LAST PRINTED BY:					
SUBMITTAL DATE: 08/23/2018	MFISHER					WA-2017-007-00
DESIGNED BY: H. FITZPATRICK	08/23/2018					REGION NO. 10 / STATE WA
ENTERED BY: G. BISHOP	08/23/2018					
CHECKED BY: M. FISHER	08/23/2018					JOB NUMBER 18W121
MAR PROJ ENGR: C. TORRES						
DGN ENGR MNGR: N. MCINTOSH						CONTRACT NO. 00****
ASST SECRETARY: A. SCARTON		REVISION	DATE	BY		

DATE

4472 REGISTERED ARCHITECT
WALT W. NIEHOFF JR.
STATE OF WASHINGTON
08/23/18
DATE

Washington State Department of Transportation
WASHINGTON STATE FERRIES

SR 525
MUKILTEO FERRY TERMINAL (PHASE 2)
FERRY TERMINAL CONSTRUCTION

TERMINAL – INTERIOR ELEVATIONS

A07.01

SHEET 1036 OF 1521 SHEETS

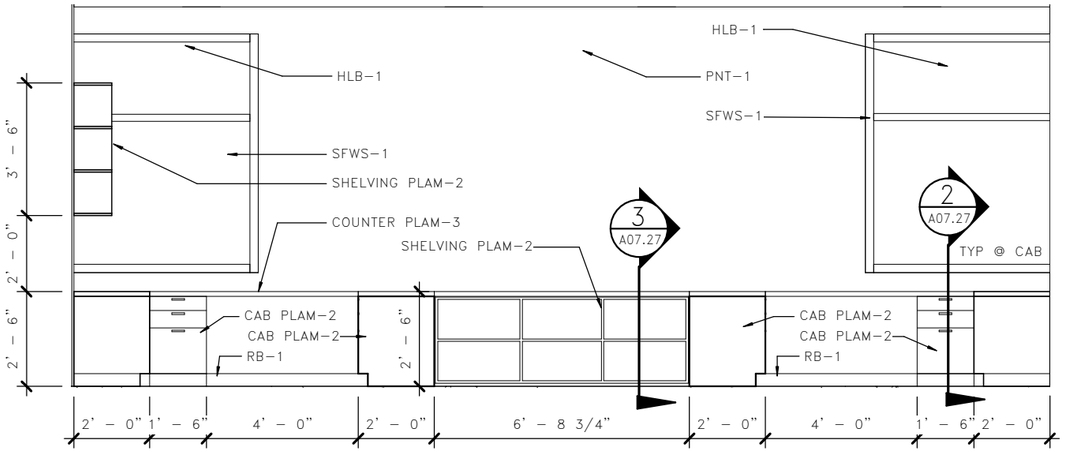

1 A07.02 SUPERVISOR 117 – EAST

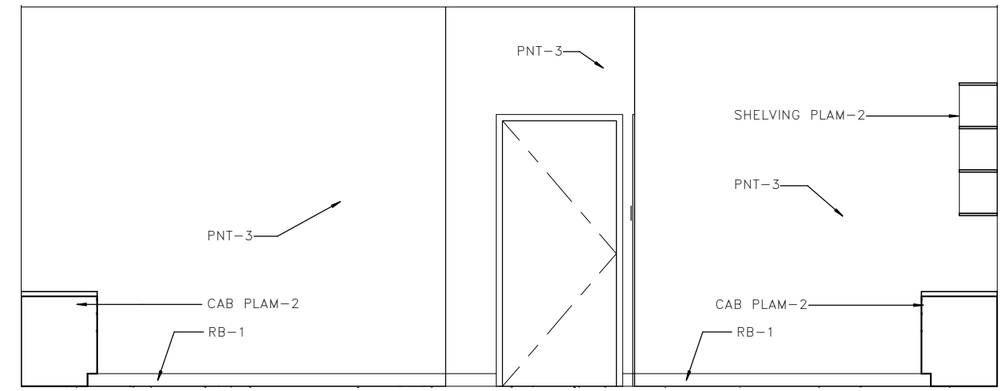

2 A07.02 SUPERVISOR 117 – WEST

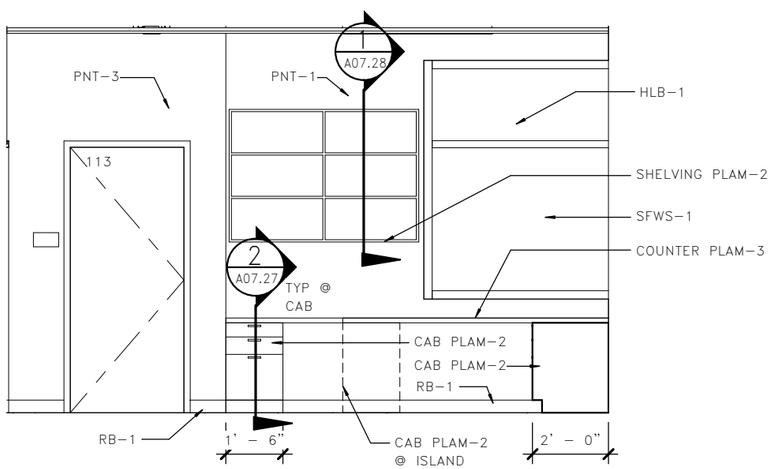

3 A07.02 SUPERVISOR 117 – NORTH

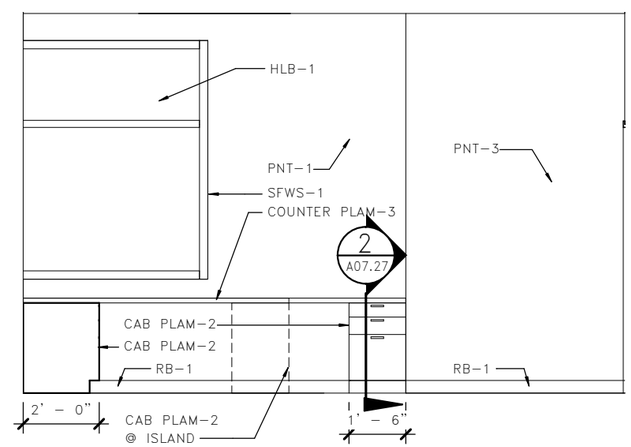

4 A07.02 SUPERVISOR 117 – SOUTH

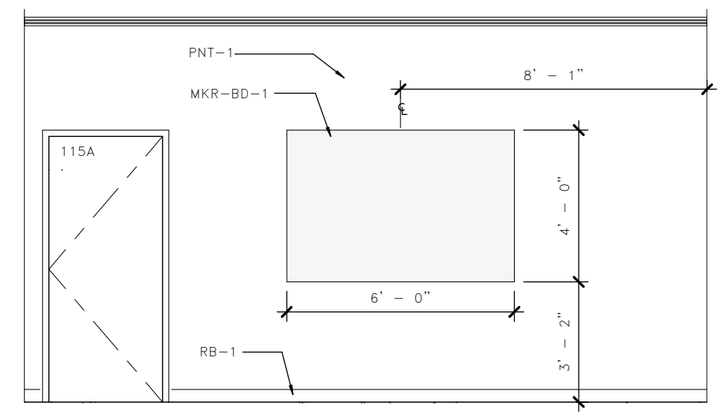

5 A07.02 CONFERENCE 115 – NORTH

LMN

0' 2' 4'

FILE NAME: PW:\WSF\Mukilteo\14W121_FerryTermConst\CADD\LMN\mft-CENTRAL_90%.rvt						
PRINTED: 9/21/2018 4:49:28 PM	LAST PRINTED BY:					FED.AID PROJ.NO.
SUBMITTAL DATE:	MFISHER					WA-2017-007-00
DESIGNED BY: H. FITZPATRICK	08/23/2018					REGION NO. 10 / STATE WA
ENTERED BY: G. BISHOP	08/23/2018					
CHECKED BY: M. FISHER	08/23/2018					JOB NUMBER 18W121
MAR PROJ ENGR: C. TORRES						
DGN ENGR MNGR: N. MCINTOSH						CONTRACT NO. 00****
ASST SECRETARY: A. SCARTON		REVISION	DATE	BY		

DATE

4472 REGISTERED ARCHITECT
WALT W. NIEHOFF JR.
STATE OF WASHINGTON

DATE

Washington State Department of Transportation
WASHINGTON STATE FERRIES

SR 525
MUKILTEO FERRY TERMINAL (PHASE 2)
FERRY TERMINAL CONSTRUCTION

TERMINAL – INTERIOR ELEVATIONS

A07.02

SHEET 1037 OF 1521 SHEETS

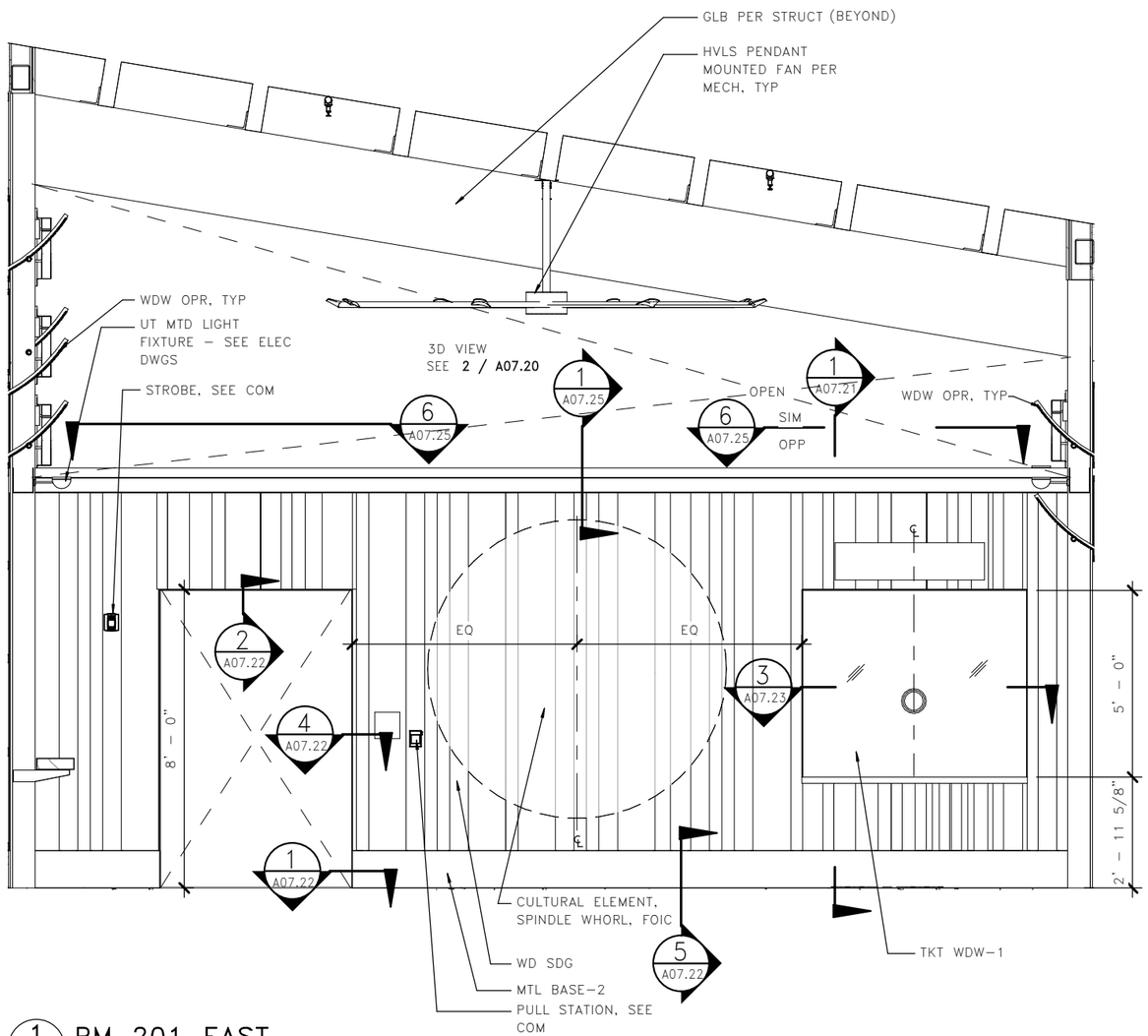

1 A07.03 RM 201 EAST

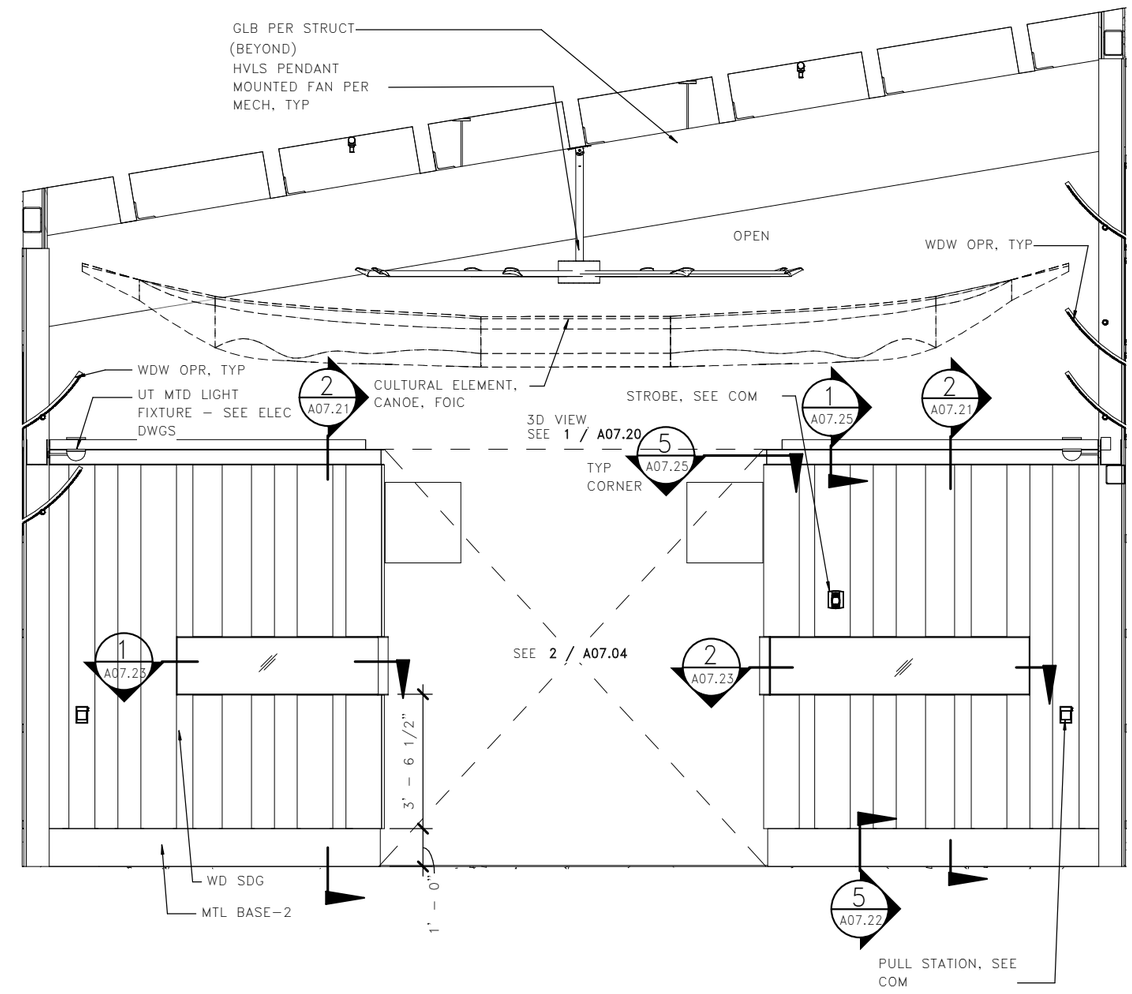

2 A07.03 RM 201 WEST

LMN

0' 2' 4'

FILE NAME: PW:\WSF\Mukilteo\14W121_FerryTermConst\CADD\LMN\mft-CENTRAL_90%.rvt						
PRINTED: 9/21/2018 4:49:32 PM	LAST PRINTED BY:					FED.AID PROJ.NO.
SUBMITTAL DATE: 08/23/2018	MFISHER					WA-2017-007-00
DESIGNED BY: H. FITZPATRICK	08/23/2018					REGION NO. 10 / STATE WA
ENTERED BY: G. BISHOP	08/23/2018					JOB NUMBER 18W121
CHECKED BY: M. FISHER	08/23/2018					CONTRACT NO. 00****
MAR PROJ ENGR: C. TORRES						
DGN ENGR MNGR: N. MCINTOSH						
ASST SECRETARY: A. SCARTON		REVISION	DATE	BY		

DATE

4472 REGISTERED ARCHITECT
WALT W. NIEHOFF JR.
STATE OF WASHINGTON
08/23/18
DATE

Washington State Department of Transportation
WASHINGTON STATE FERRIES

SR 525
MUKILTEO FERRY TERMINAL (PHASE 2)
FERRY TERMINAL CONSTRUCTION

TERMINAL – INTERIOR ELEVATIONS

A07.03

SHEET 1038 OF 1521 SHEETS

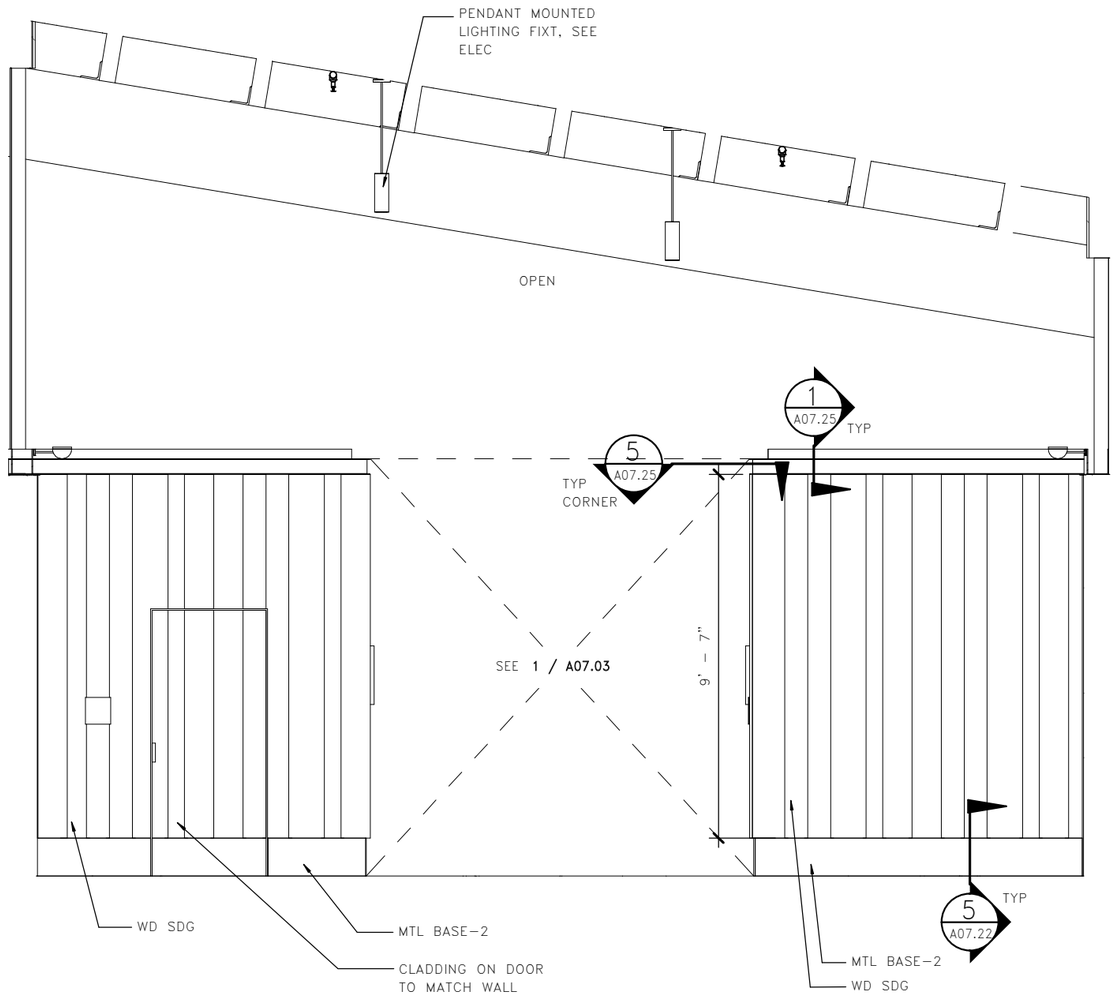

1 A07.04 INTERIOR ELEVATION – VIEW TO EAST

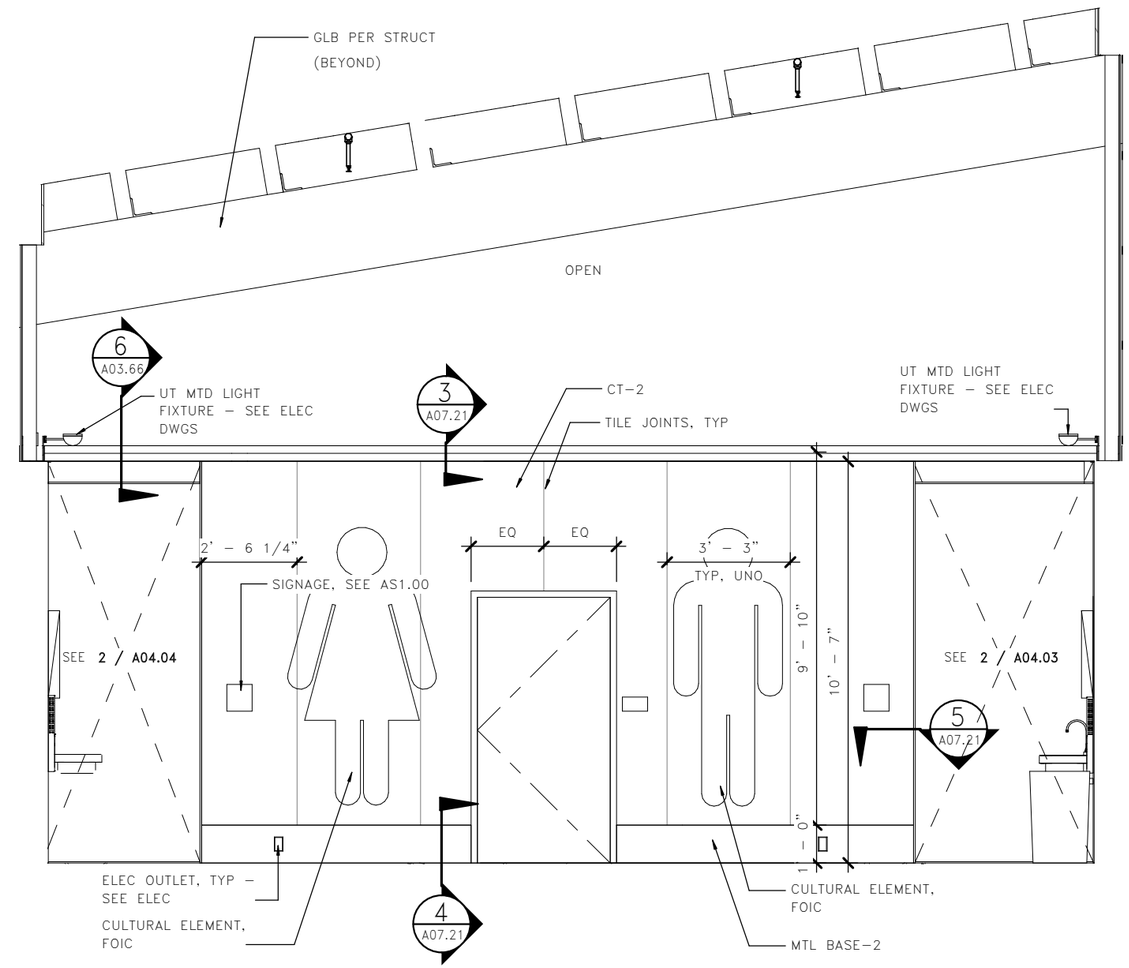

2 A07.04 INTERIOR ELEVATION – VIEW TO WEST

LMN

0' 2' 4'

FILE NAME: PW:\WSF\Mukilteo\14W121_FerryTermConst\CADD\LMN\mft-CENTRAL_90%.rvt						
PRINTED: 9/21/2018 4:49:34 PM	LAST PRINTED BY:					FED.AID PROJ.NO.
SUBMITTAL DATE: 08/23/2018	MFISHER					WA-2017-007-00
DESIGNED BY: H. FITZPATRICK	08/23/2018					REGION NO. 10 / STATE WA
ENTERED BY: G. BISHOP	08/23/2018					
CHECKED BY: M. FISHER	08/23/2018					JOB NUMBER 18W121
MAR PROJ ENGR: C. TORRES						
DGN ENGR MNGR: N. MCINTOSH						CONTRACT NO. 00****
ASST SECRETARY: A. SCARTON		REVISION	DATE	BY		

DATE

4472 REGISTERED ARCHITECT WALT W. NIEHOFF JR. STATE OF WASHINGTON
08/23/18
DATE

Washington State Department of Transportation
WASHINGTON STATE FERRIES

SR 525
MUKILTEO FERRY TERMINAL (PHASE 2)
FERRY TERMINAL CONSTRUCTION

TERMINAL – INTERIOR ELEVATIONS

A07.04

SHEET 1039 OF 1521 SHEETS

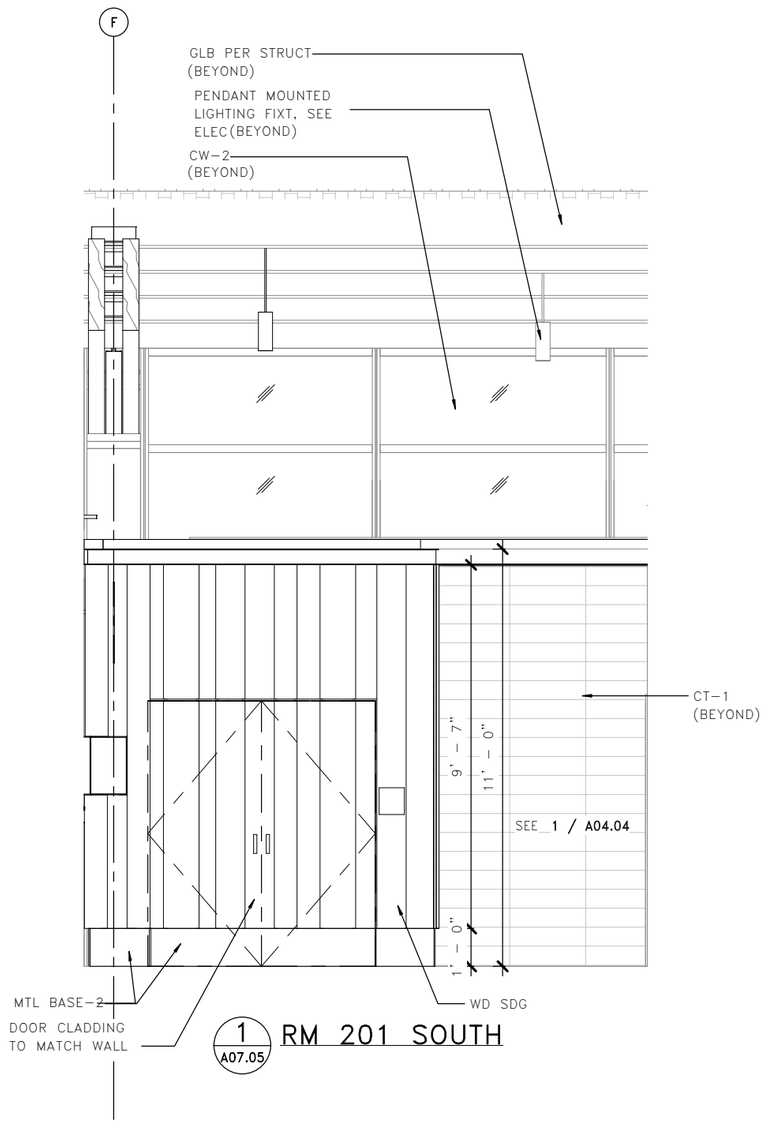

1 A07.05 RM 201 SOUTH

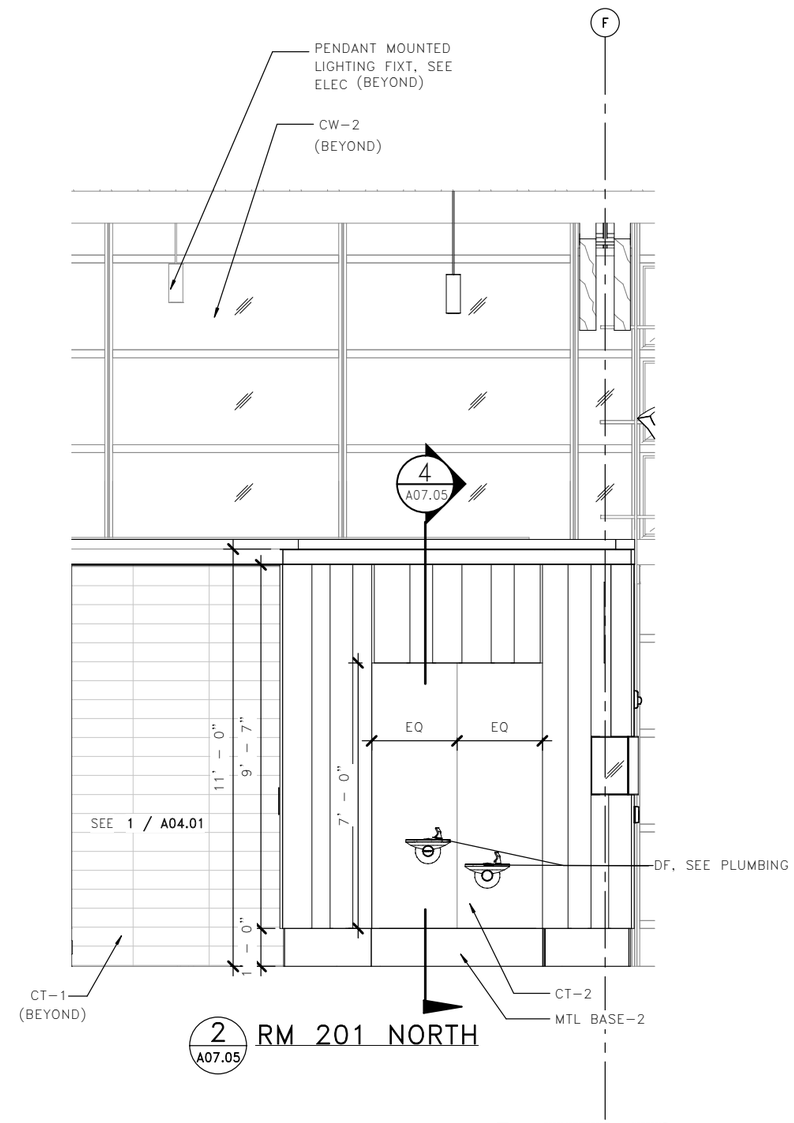

2 A07.05 RM 201 NORTH

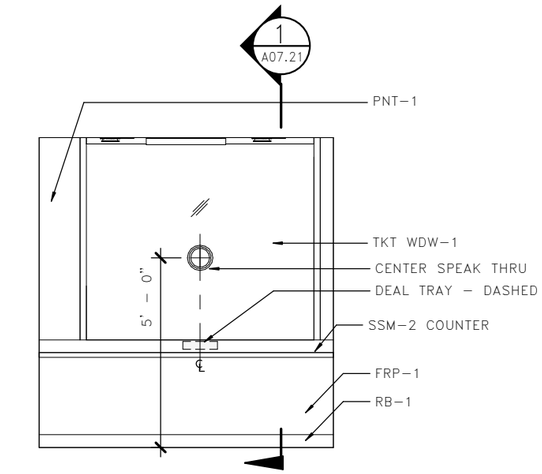

3 A07.05 RM 210 - WEST

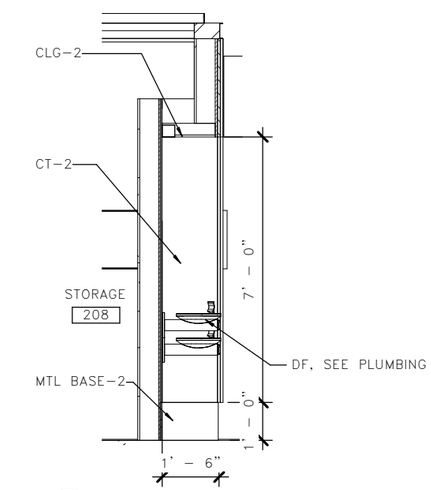

4 A07.05 RM 201 - PARTIAL

0' 2' 4'

LMN

FILE NAME: PW:\WSF\Mukilteo\14W121_FerryTermConst\CADD\LMN\mft-CENTRAL_90%.rvt						
PRINTED: 9/21/2018 4:49:38 PM		LAST PRINTED BY:				FED.AID PROJ.NO.
SUBMITTAL DATE:	08/23/2018	MFISHER				WA-2017-007-00
DESIGNED BY:	H. FITZPATRICK	08/23/2018				REGION NO. 10 / STATE WA
ENTERED BY:	G. BISHOP	08/23/2018				
CHECKED BY:	M. FISHER	08/23/2018				JOB NUMBER 18W121
MAR PROJ ENGR:	C. TORRES					
DGN ENGR MNGR:	N. MCINTOSH					CONTRACT NO. 00****
ASST SECRETARY:	A. SCARTON		REVISION	DATE	BY	

DATE

4472 REGISTERED ARCHITECT WALT W. NIEHOFF JR. STATE OF WASHINGTON

08/23/18
DATE

Washington State Department of Transportation
WASHINGTON STATE FERRIES

SR 525
MUKILTEO FERRY TERMINAL (PHASE 2)
FERRY TERMINAL CONSTRUCTION

TERMINAL - INTERIOR ELEVATIONS

A07.05

SHEET 1040 OF 1521 SHEETS

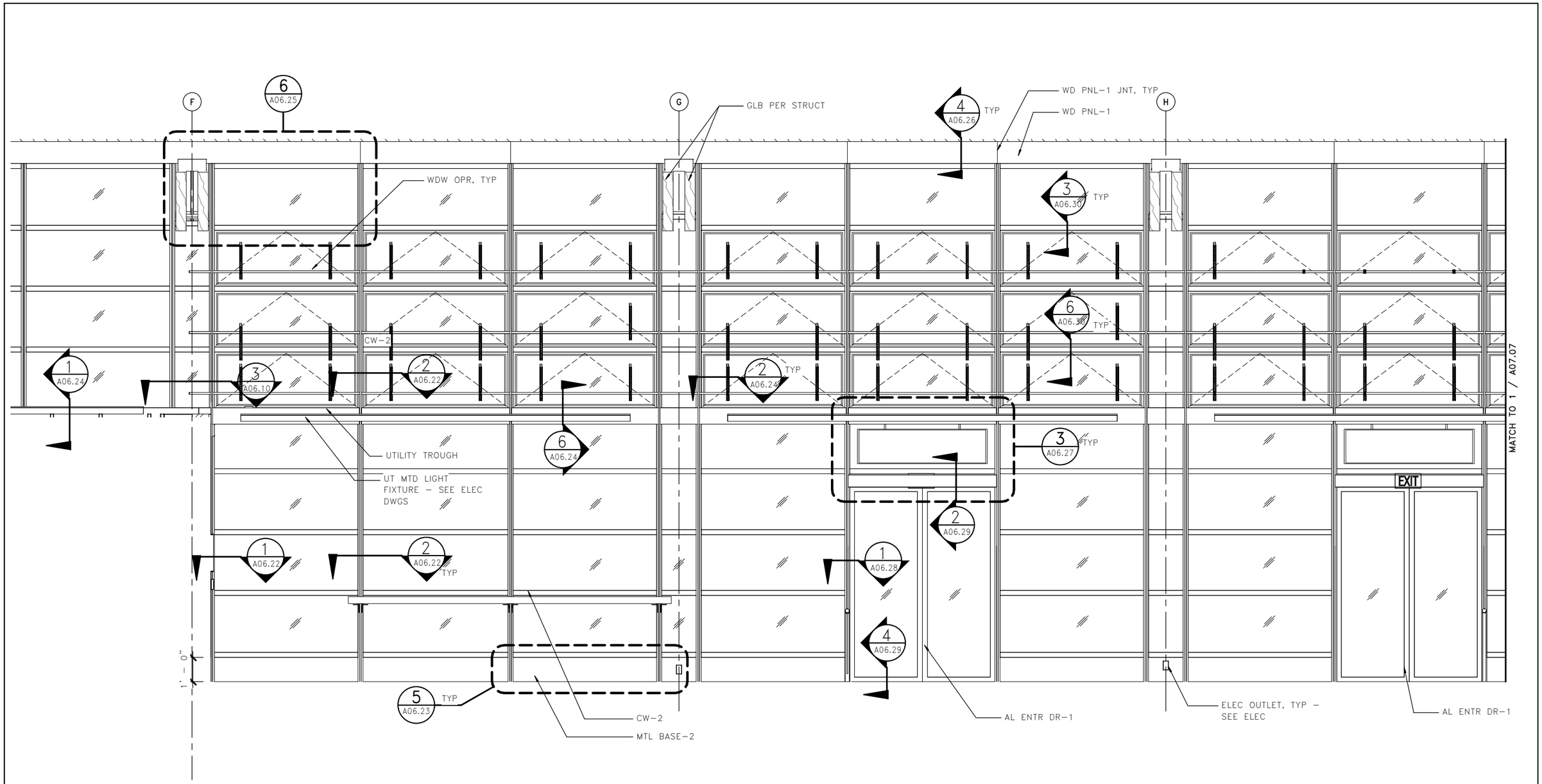

1 A07.06 GREAT HALL 201- NORTH

LMN

0' 2' 4'

FILE NAME: PW:\WSF\Mukilteo\14W121_FerryTermConst\CADD\LMN\mft-CENTRAL_90%.rvt						
PRINTED: 9/21/2018 4:49:45 PM	LAST PRINTED BY:					FED.AID PROJ.NO.
SUBMITTAL DATE: 08/23/2018	MFISHER					WA-2017-007-00
DESIGNED BY: H. FITZPATRICK	08/23/2018					REGION NO. 10 / STATE WA
ENTERED BY: G. BISHOP	08/23/2018					
CHECKED BY: M. FISHER	08/23/2018					JOB NUMBER 18W121
MAR PROJ ENGR: C. TORRES						
DGN ENGR MNGR: N. MCINTOSH						CONTRACT NO. 00****
ASST SECRETARY: A. SCARTON		REVISION	DATE	BY		

DATE

4472 REGISTERED ARCHITECT WALT W. NIEHOFF JR. STATE OF WASHINGTON

08/23/18
DATE

Washington State Department of Transportation
WASHINGTON STATE FERRIES

SR 525
MUKILTEO FERRY TERMINAL (PHASE 2)
FERRY TERMINAL CONSTRUCTION

TERMINAL - INTERIOR ELEVATIONS

A07.06

SHEET 1041 OF 1521 SHEETS

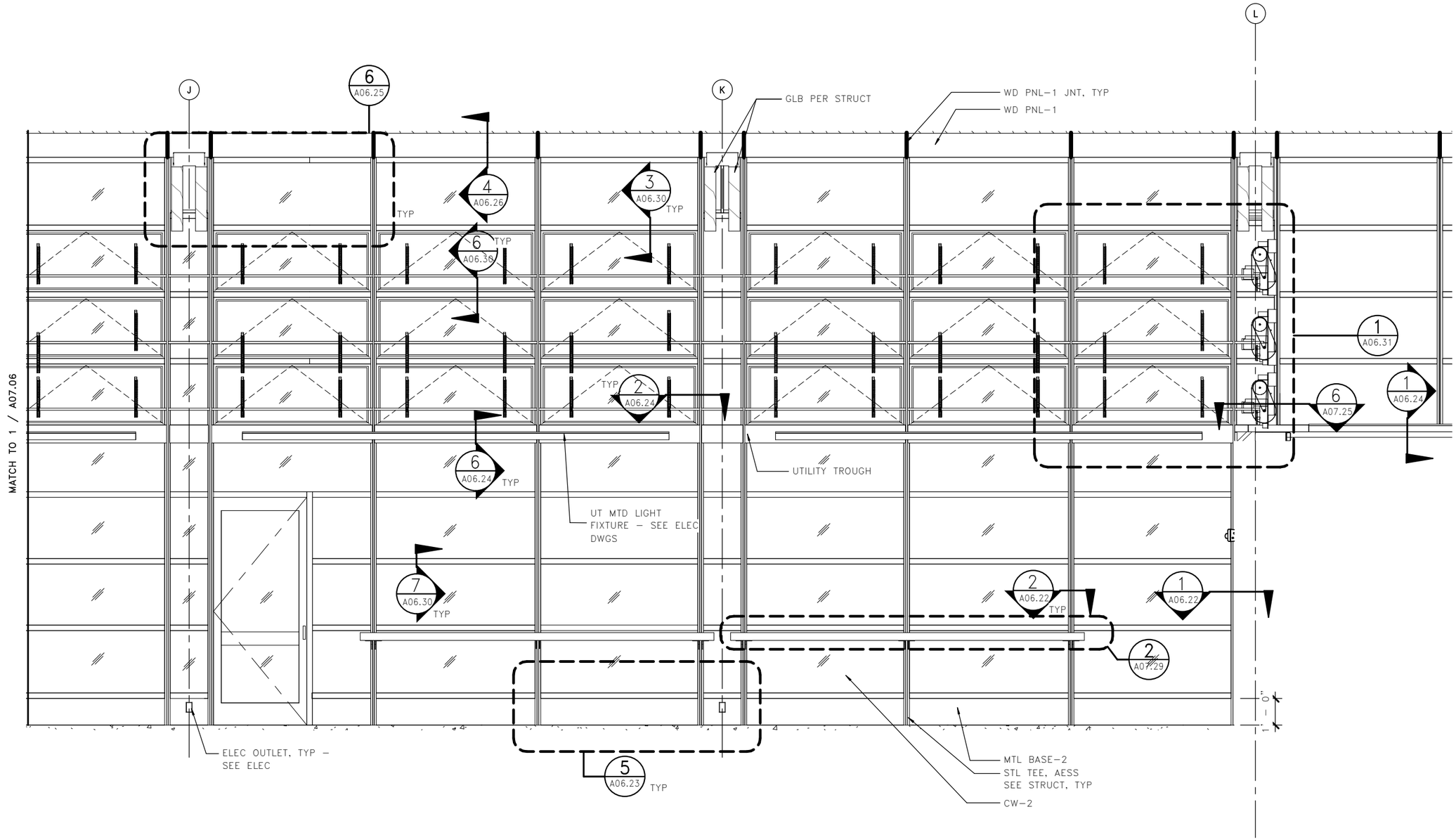

1 A07.07 GREAT HALL 201- NORTH

LMN

0' 2' 4'

FILE NAME: PW:\WSF\Mukilteo\14W121_FerryTermConst\CADD\LMN\mft-CENTRAL_90%.rvt						FED.AID PROJ.NO.
PRINTED: 9/21/2018 4:49:50 PM	LAST PRINTED BY:					
SUBMITTAL DATE: 08/23/2018	MFISHER					WA-2017-007-00
DESIGNED BY: H. FITZPATRICK	08/23/2018					REGION NO. 10 / STATE WA
ENTERED BY: G. BISHOP	08/23/2018					
CHECKED BY: M. FISHER	08/23/2018					JOB NUMBER 18W121
MAR PROJ ENGR: C. TORRES						
DGN ENGR MNGR: N. MCINTOSH						CONTRACT NO. 00****
ASST SECRETARY: A. SCARTON		REVISION	DATE	BY		

DATE

4472 REGISTERED ARCHITECT WALT W. NIEHOFF JR. STATE OF WASHINGTON

08/23/18
DATE

Washington State Department of Transportation
WASHINGTON STATE FERRIES

SR 525
MUKILTEO FERRY TERMINAL (PHASE 2)
FERRY TERMINAL CONSTRUCTION

TERMINAL - INTERIOR ELEVATIONS

A07.07

SHEET 1042 OF 1521 SHEETS

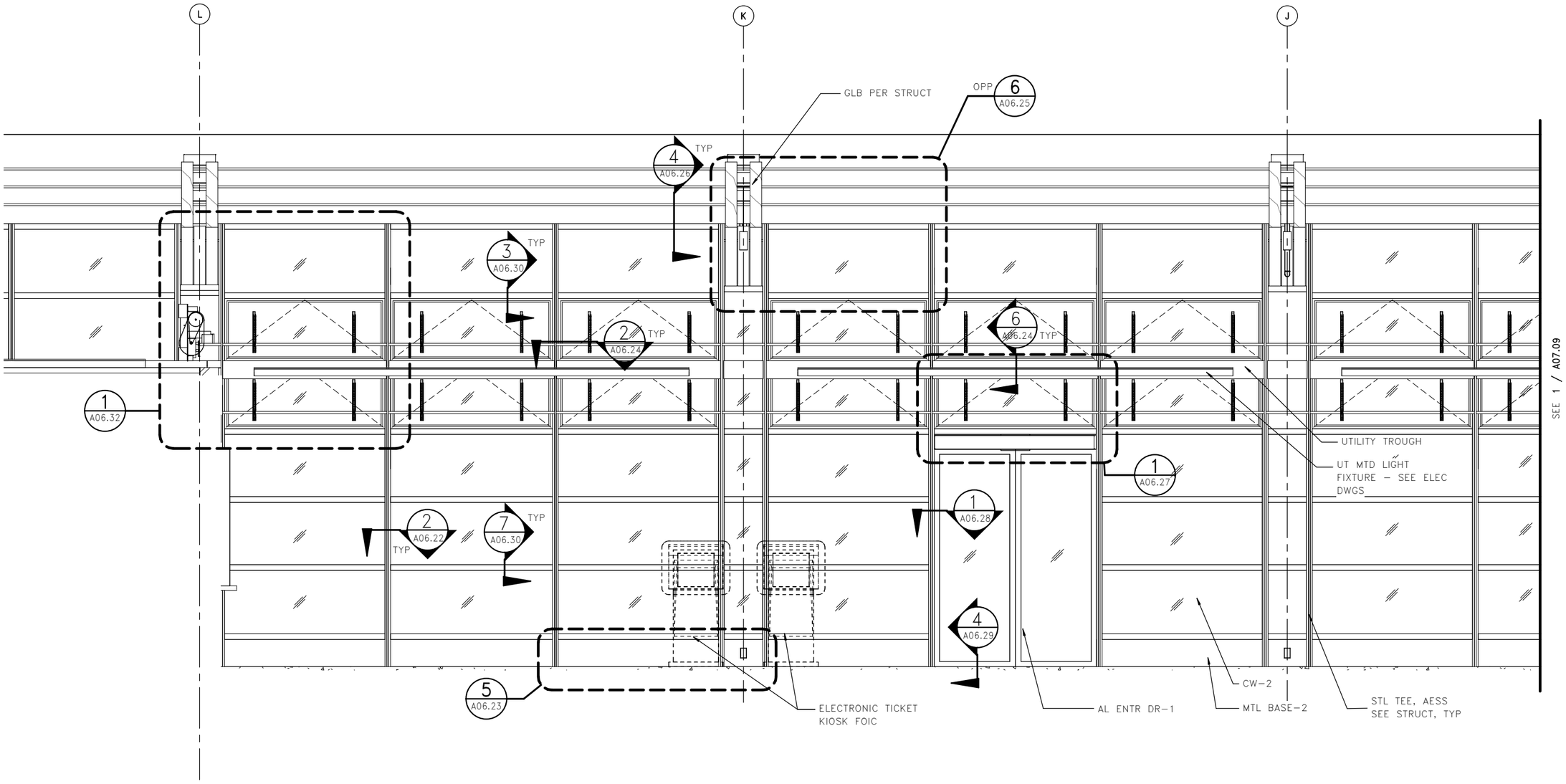

1 A07.08 GREAT HALL ROOM 201 SOUTH

LMN

0' 2' 4'

FILE NAME: PW:\WSF\Mukilteo\14W121_FerryTermConst\CADD\LMN\mft-CENTRAL_90%.rvt						
PRINTED: 9/21/2018 4:49:55 PM	LAST PRINTED BY:					FED.AID PROJ.NO.
SUBMITTAL DATE: 08/23/2018	MFISHER					WA-2017-007-00
DESIGNED BY: H. FITZPATRICK	08/23/2018					REGION NO. 10 / STATE WA
ENTERED BY: G. BISHOP	08/23/2018					
CHECKED BY: M. FISHER	08/23/2018					JOB NUMBER 18W121
MAR PROJ ENGR: C. TORRES						
DGN ENGR MNGR: N. MCINTOSH						CONTRACT NO. 00****
ASST SECRETARY: A. SCARTON		REVISION	DATE	BY		

DATE

4472 REGISTERED ARCHITECT WALT W. NIEHOFF JR. STATE OF WASHINGTON

08/23/18
DATE

Washington State Department of Transportation
WASHINGTON STATE FERRIES

SR 525
MUKILTEO FERRY TERMINAL (PHASE 2)
FERRY TERMINAL CONSTRUCTION

TERMINAL – INTERIOR ELEVATIONS

A07.08

SHEET 1043 OF 1521 SHEETS

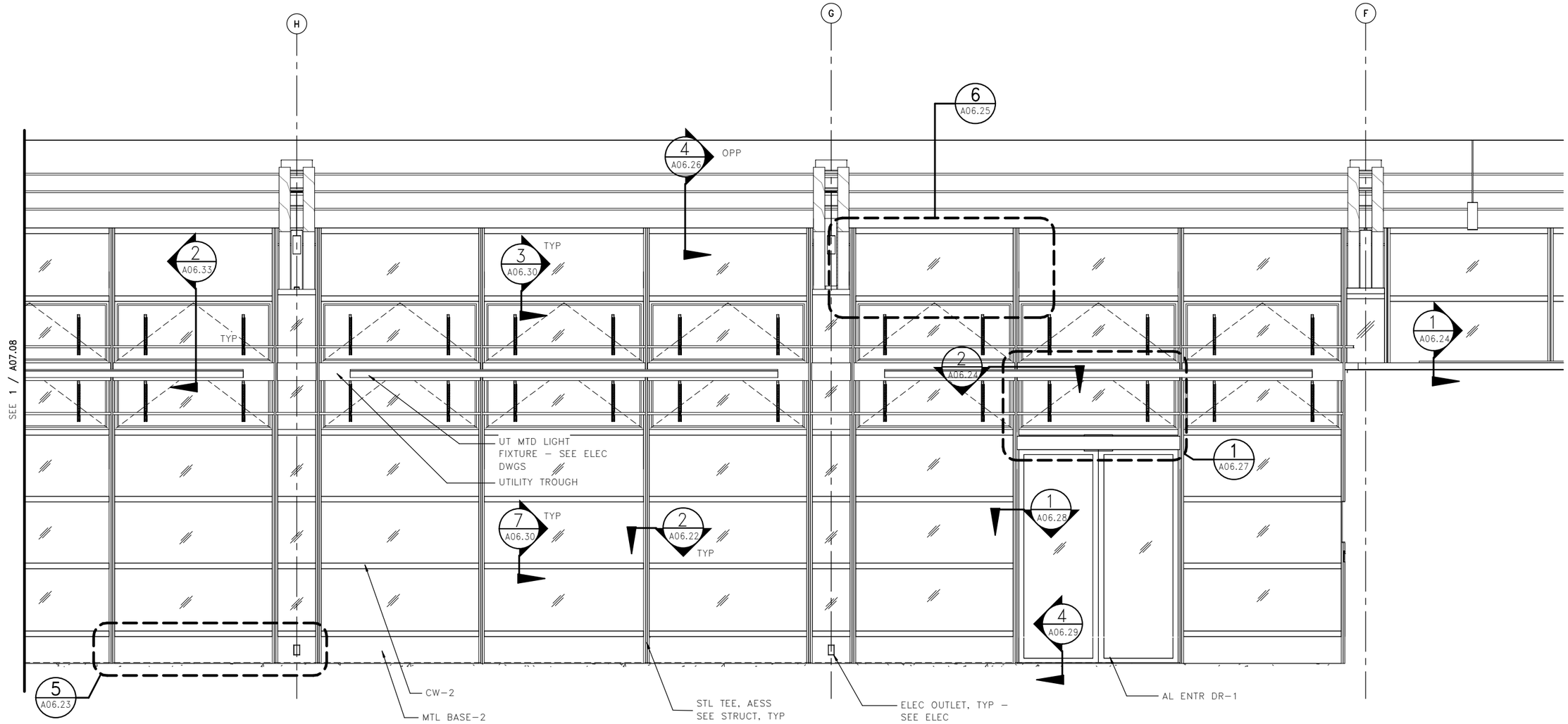

1 A07.09 GREAT HALL ROOM 201 SOUTH

LMN

0' 2' 4'

FILE NAME: PW:\WSF\Mukilteo\14W121_FerryTermConst\CADD\LMN\mft-CENTRAL_90%.rvt						
PRINTED: 9/21/2018 4:50:00 PM	LAST PRINTED BY:					FED.AID PROJ.NO.
SUBMITTAL DATE: 08/23/2018	MFISHER					WA-2017-007-00
DESIGNED BY: H. FITZPATRICK	08/23/2018					REGION NO. 10 / STATE WA
ENTERED BY: G. BISHOP	08/23/2018					JOB NUMBER 18W121
CHECKED BY: M. FISHER	08/23/2018					CONTRACT NO. 00****
MAR PROJ ENGR: C. TORRES						
DGN ENGR MNGR: N. MCINTOSH						
ASST SECRETARY: A. SCARTON		REVISION	DATE	BY		

DATE

4472 REGISTERED ARCHITECT
WALT W. NIEHOFF JR.
STATE OF WASHINGTON
08/23/18
DATE

Washington State Department of Transportation
WASHINGTON STATE FERRIES

SR 525
MUKILTEO FERRY TERMINAL (PHASE 2)
FERRY TERMINAL CONSTRUCTION

TERMINAL – INTERIOR ELEVATIONS

A07.09

SHEET 1044 OF 1521 SHEETS

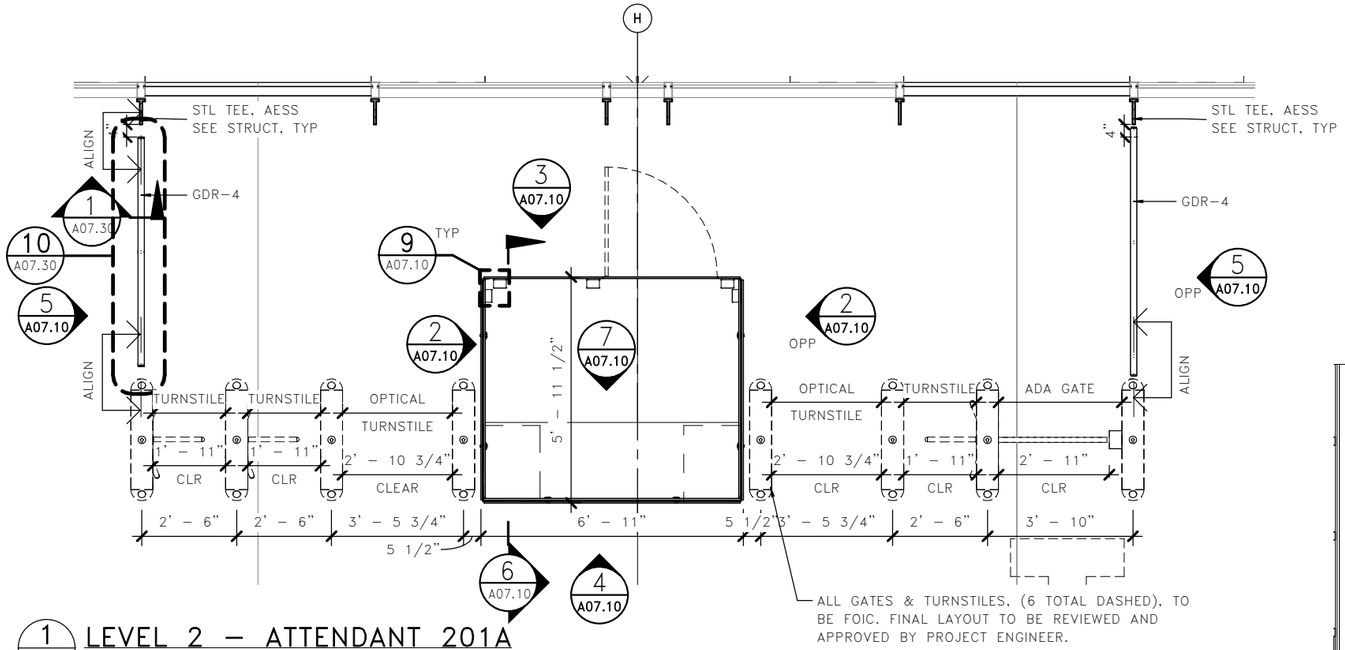

1 A07.10 LEVEL 2 – ATTENDANT 201A
1/4" = 1'-0"

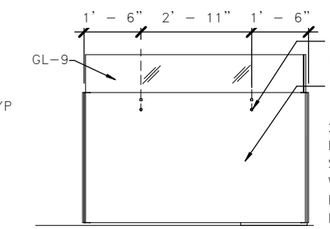

2 A07.10 ATTENDANT 201A E/W
1/4" = 1'-0"

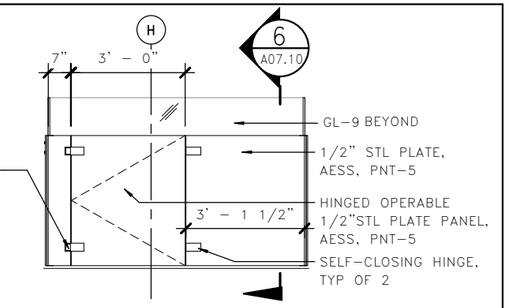

3 A07.10 ATTENDANT 201A NORTH
1/4" = 1'-0"

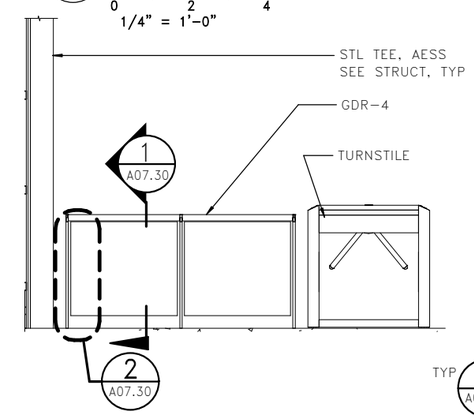

5 A07.10 GREAT HALL 201 WEST
1/4" = 1'-0"

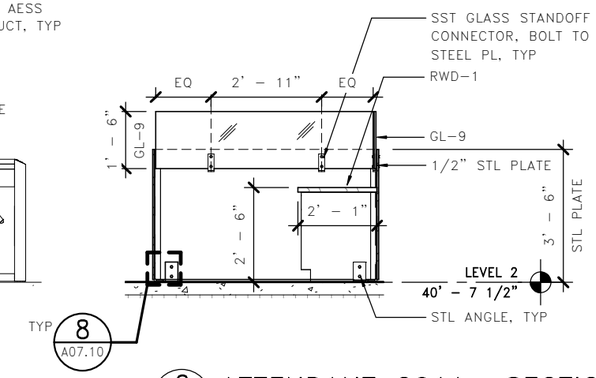

6 A07.10 ATTENDANT 201A SECTION
1/4" = 1'-0"

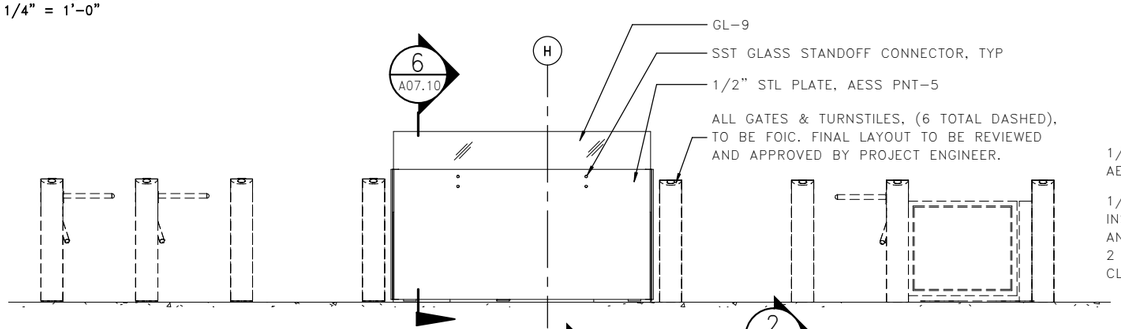

4 A07.10 ATTENDANT 201A – SOUTH
1/4" = 1'-0"

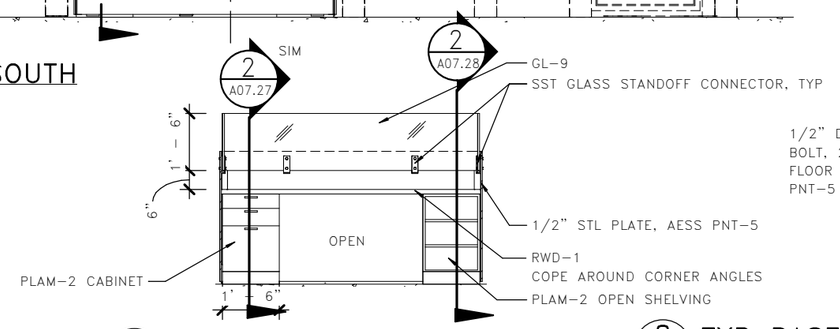

7 A07.10 ATTENDANT 201A – NORTH
1/4" = 1'-0"

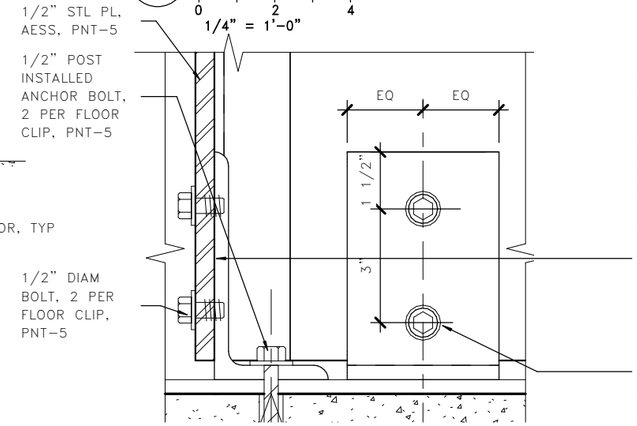

8 A07.10 TYP BASE DETAIL
3" = 1'-0"

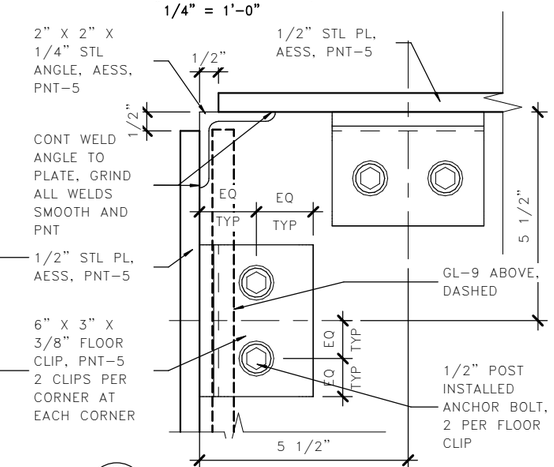

9 A07.10 TYP CORNER DETAIL
3" = 1'-0"

LMN

FILE NAME: PW:\WSF\Mukilteo\14W121_FerryTermConst\CADD\LMN\mft-CENTRAL_90%.rvt						
PRINTED: 9/21/2018 4:50:05 PM	LAST PRINTED BY:					FED.AID PROJ.NO.
SUBMITTAL DATE:	MFISHER					WA-2017-007-00
DESIGNED BY: H. FITZPATRICK	08/23/2018					REGION NO. 10 / STATE WA
ENTERED BY: G. BISHOP	08/23/2018					
CHECKED BY: M. FISHER	08/23/2018					JOB NUMBER 18W121
MAR PROJ ENGR: C. TORRES						
DGN ENGR MNGR: N. MCINTOSH						CONTRACT NO. 00****
ASST SECRETARY: A. SCARTON		REVISION	DATE	BY		

DATE

4472 REGISTERED ARCHITECT
WALT W. NIEHOFF JR.
STATE OF WASHINGTON

DATE

Washington State Department of Transportation
WASHINGTON STATE FERRIES

SR 525
MUKILTEO FERRY TERMINAL (PHASE 2)
FERRY TERMINAL CONSTRUCTION

TERMINAL – INTERIOR ELEVATIONS

A07.10

SHEET 1045 OF 1521 SHEETS

1 A07.11 VIEW TO NORTH EAST

LMN

FILE NAME: PW:\WSF\Mukilteo\14W121_FerryTermConst\CADD\LMN\mft-CENTRAL_90%.rvt						
PRINTED: 9/21/2018 4:50:31 PM	LAST PRINTED BY:					FED.AID PROJ.NO.
SUBMITTAL DATE: 08/23/2018	MFISHER					WA-2017-007-00
DESIGNED BY: H. FITZPATRICK	08/23/2018					REGION NO. 10 / STATE WA
ENTERED BY: G. BISHOP	08/23/2018					
CHECKED BY: M. FISHER	08/23/2018					JOB NUMBER 18W121
MAR PROJ ENGR: C. TORRES						
DGN ENGR MNGR: N. MCINTOSH						CONTRACT NO. 00****
ASST SECRETARY: A. SCARTON		REVISION	DATE	BY		

DATE

4472 REGISTERED ARCHITECT WALT W. NIEHOFF JR. STATE OF WASHINGTON

08/23/18
DATE

Washington State Department of Transportation
WASHINGTON STATE FERRIES

SR 525
MUKILTEO FERRY TERMINAL (PHASE 2)
FERRY TERMINAL CONSTRUCTION

TERMINAL – INTERIOR PERSPECTIVE

A07.11

SHEET 1046 OF 1521 SHEETS

1 A07.12 VIEW TO NORTH WEST

LMN

FILE NAME: PW:\WSF\Mukilteo\14W121_FerryTermConst\CADD\LMN\mft-CENTRAL_90%.rvt						
PRINTED: 9/21/2018 4:50:58 PM	LAST PRINTED BY:					FED.AID PROJ.NO.
SUBMITTAL DATE: 08/23/2018	MFISHER					WA-2017-007-00
DESIGNED BY: H. FITZPATRICK	08/23/2018					REGION NO. / STATE
ENTERED BY: G. BISHOP	08/23/2018					10 / WA
CHECKED BY: M. FISHER	08/23/2018					JOB NUMBER
MAR PROJ ENGR: C. TORRES						18W121
DGN ENGR MNGR: N. MCINTOSH						CONTRACT NO.
ASST SECRETARY: A. SCARTON		REVISION	DATE	BY		00****

DATE

4472 REGISTERED ARCHITECT WALT W. NIEHOFF JR. STATE OF WASHINGTON

08/23/18
DATE

Washington State Department of Transportation
WASHINGTON STATE FERRIES

SR 525
MUKILTEO FERRY TERMINAL (PHASE 2)
FERRY TERMINAL CONSTRUCTION

TERMINAL – INTERIOR PERSPECTIVE

A07.12

SHEET 1047 OF 1521 SHEETS

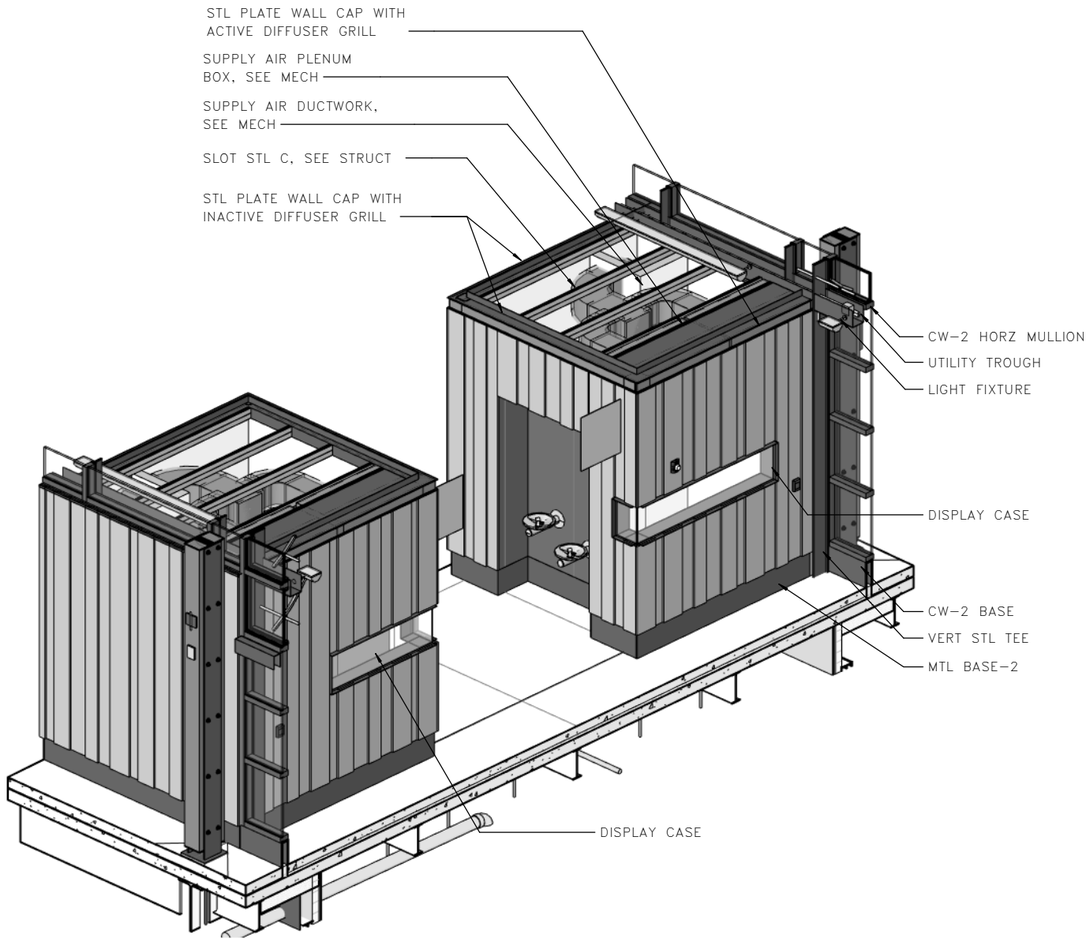

1 A07.20 3D – WEST END OF GREAT HALL

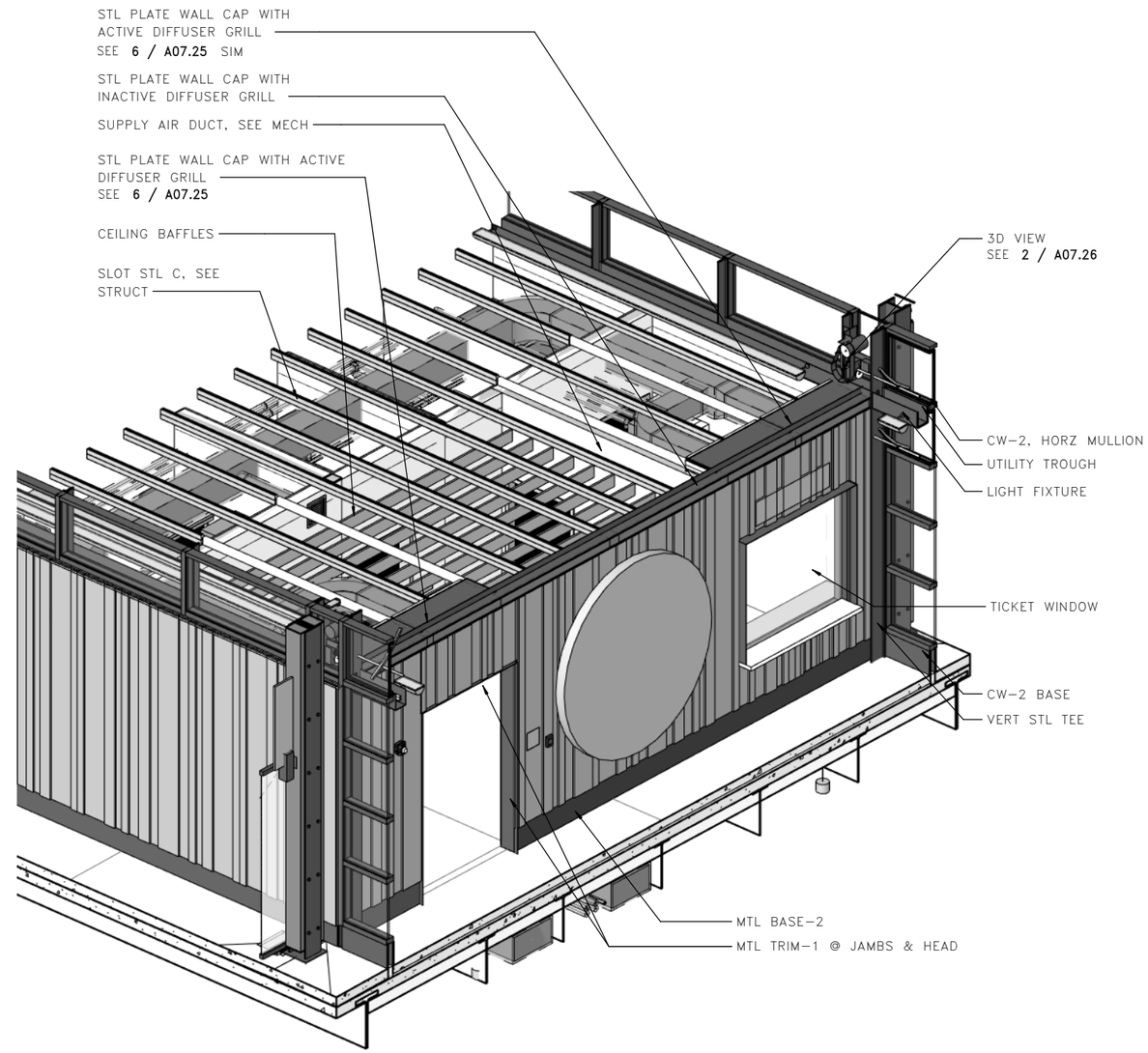

2 A07.20 3D – EAST END OF GREAT HALL

LMN

FILE NAME: PW:\WSF\Mukilteo\14W121_FerryTermConst\CADD\LMN\mft-CENTRAL_90%.rvt						
PRINTED: 9/21/2018 4:51:02 PM	LAST PRINTED BY:					FED.AID PROJ.NO.
SUBMITTAL DATE: 08/23/2018	MFISHER					WA-2017-007-00
DESIGNED BY: H. FITZPATRICK	08/23/2018					
ENTERED BY: G. BISHOP	08/23/2018					REGION NO. 10 / STATE WA
CHECKED BY: M. FISHER	08/23/2018					
MAR PROJ ENGR: C. TORRES						JOB NUMBER 18W121
DGN ENGR MNGR: N. MCINTOSH						
ASST SECRETARY: A. SCARTON		REVISION	DATE	BY		CONTRACT NO. 00****

DATE

4472 REGISTERED ARCHITECT WALT W. NIEHOFF JR. STATE OF WASHINGTON
08/23/18
DATE

Washington State Department of Transportation
WASHINGTON STATE FERRIES

SR 525
MUKILTEO FERRY TERMINAL (PHASE 2)
FERRY TERMINAL CONSTRUCTION

TERMINAL – INTERIOR DETAILS

A07.20

SHEET 1048 OF 1521 SHEETS

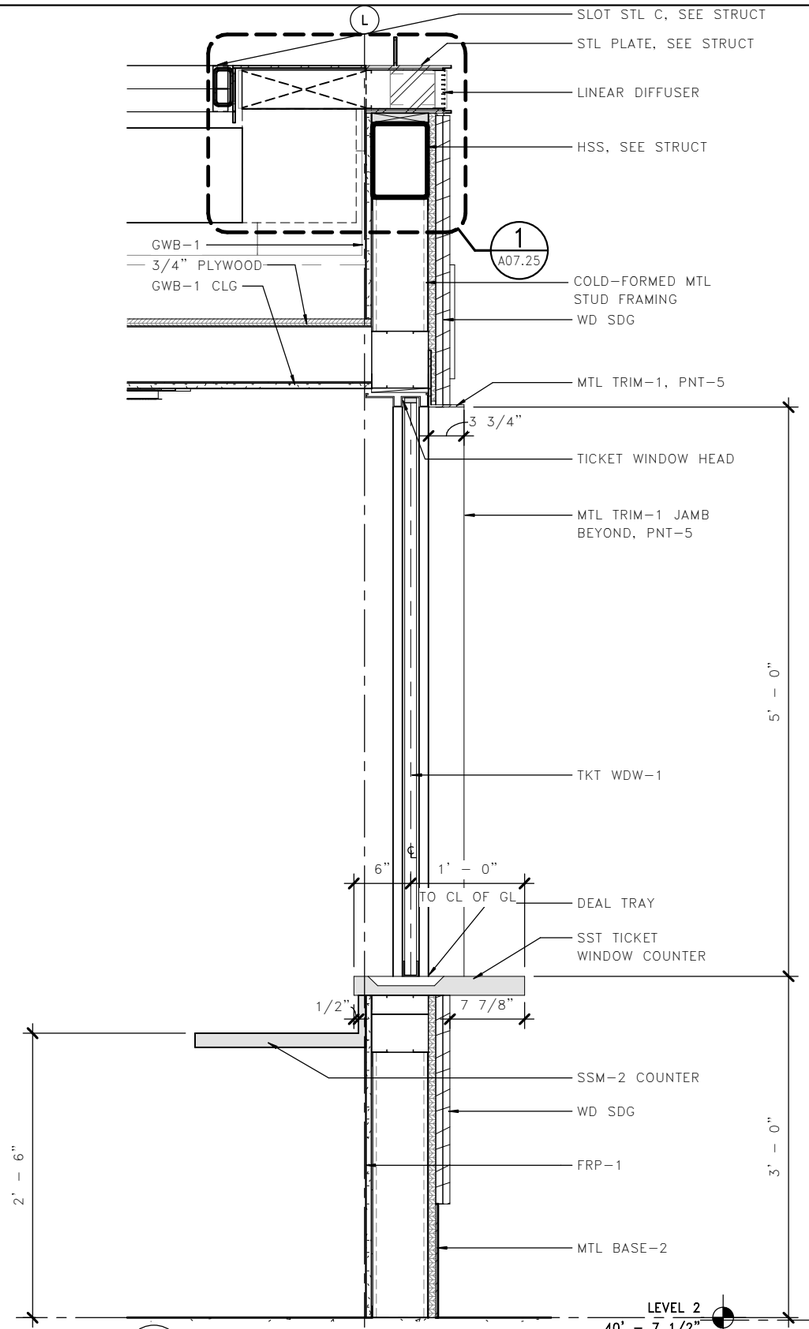

1 A07.21 SECTION @ TICKET WINDOW

0 8" 16"
3/4" = 1'-0"

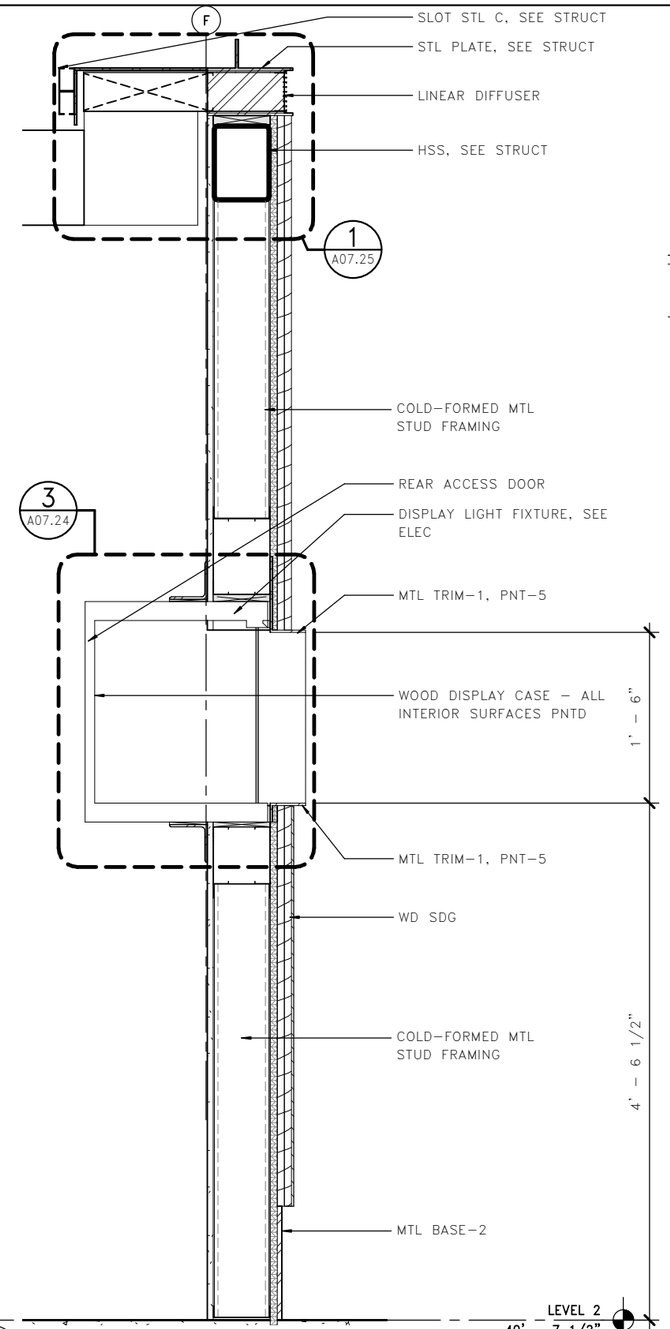

2 A07.21 SECTION @ DISPLAY CASE

0 8" 16"
3/4" = 1'-0"

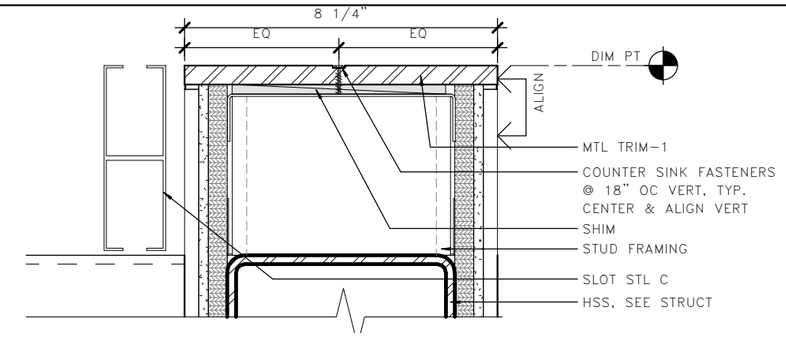

3 A07.21 INTERIOR DETAIL - TOP OF WALL

0 2" 4"
3" = 1'-0"

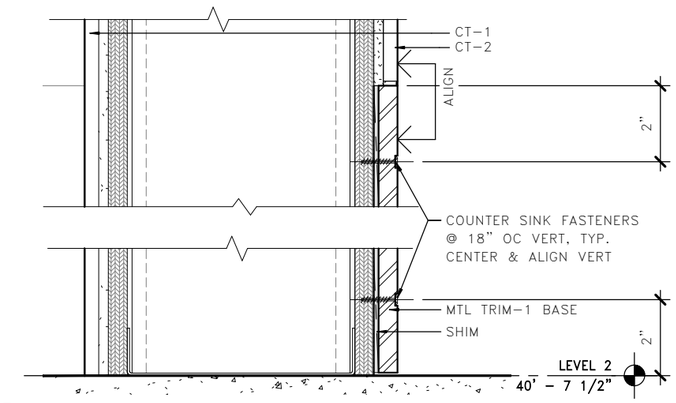

4 A07.21 INTERIOR DETAIL - BASE

0 2" 4"
3" = 1'-0"

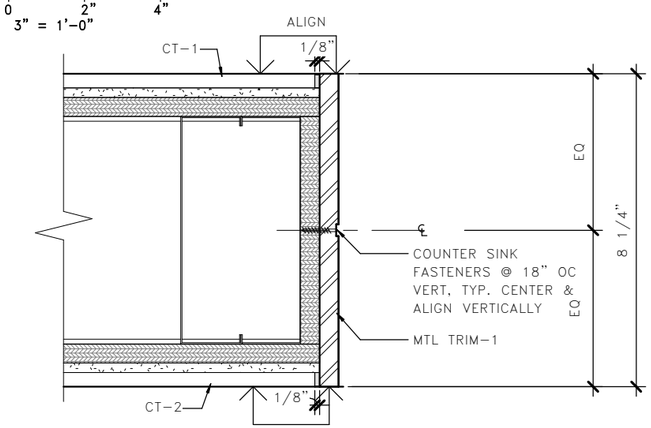

5 A07.21 INTERIOR DETAIL - JAMB

0 2" 4"
3" = 1'-0"

LMN

FILE NAME: PW:\WSF\Mukilteo\14W121_FerryTermConst\CADD\LMN\mft-CENTRAL_90%.rvt						
PRINTED: 9/21/2018 4:51:06 PM	LAST PRINTED BY:					FED.AID PROJ.NO.
SUBMITTAL DATE: 08/23/2018	MFISHER					WA-2017-007-00
DESIGNED BY: H. FITZPATRICK	08/23/2018					REGION NO. 10 / STATE WA
ENTERED BY: G. BISHOP	08/23/2018					JOB NUMBER 18W121
CHECKED BY: M. FISHER	08/23/2018					CONTRACT NO. 00****
MAR PROJ ENGR: C. TORRES						
DGN ENGR MNGR: N. MCINTOSH						
ASST SECRETARY: A. SCARTON		REVISION	DATE	BY		

DATE

4472 REGISTERED ARCHITECT
WALT W. NIEHOFF JR.
STATE OF WASHINGTON
08/23/18
DATE

Washington State Department of Transportation
WASHINGTON STATE FERRIES

SR 525
MUKILTEO FERRY TERMINAL (PHASE 2)
FERRY TERMINAL CONSTRUCTION

TERMINAL - INTERIOR DETAILS

A07.21

SHEET 1049 OF 1521 SHEETS

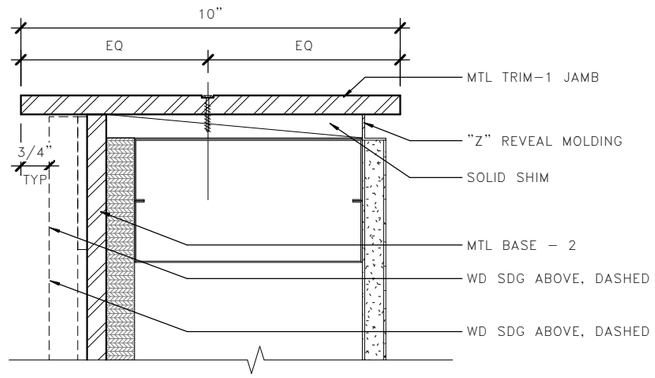

1 A07.22 INTERIOR WALL JAMB DETAIL @ BASE

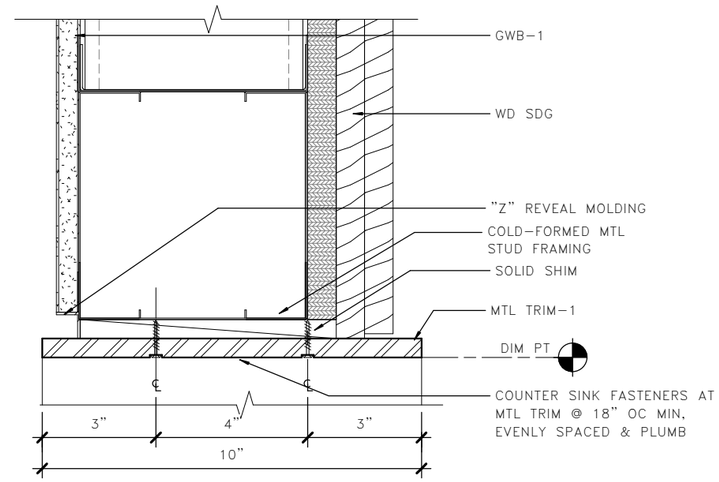

2 A07.22 INTERIOR WALL OPENING HEAD

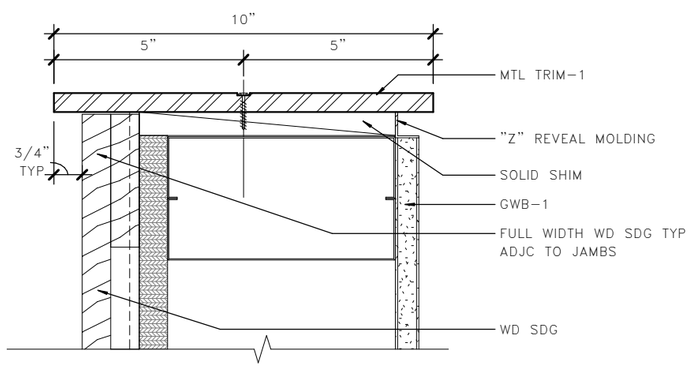

4 A07.22 INTERIOR JAMB DETAIL

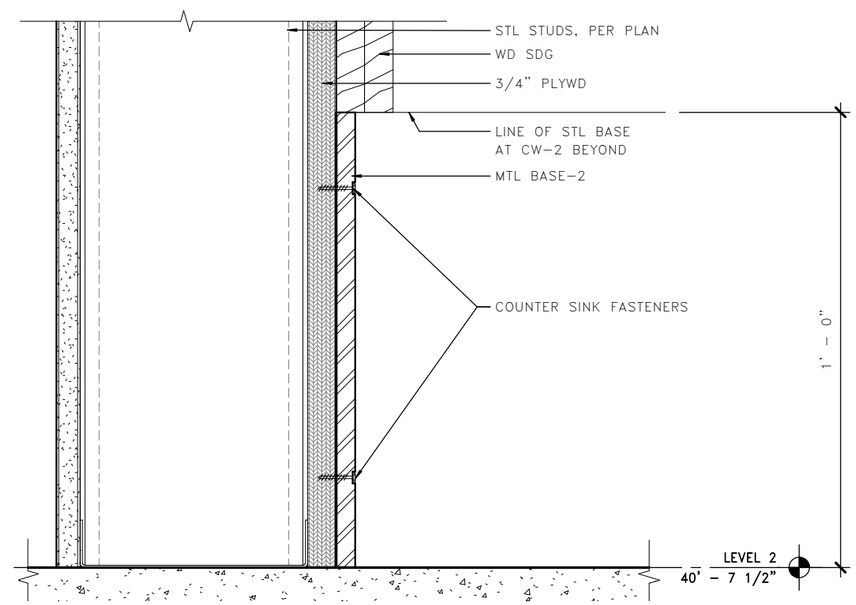

5 A07.22 INTERIOR WALL BASE DETAIL

LMN

0 2" 4"

FILE NAME: PW:\WSF\Mukilteo\14W121_FerryTermConst\CADD\LMN\mft-CENTRAL_90%.rvt						
PRINTED: 9/21/2018 4:51:09 PM	LAST PRINTED BY:					FED.AID PROJ.NO.
SUBMITTAL DATE: 08/23/2018	MFISHER					WA-2017-007-00
DESIGNED BY: H. FITZPATRICK	08/23/2018					REGION NO. 10 / STATE WA
ENTERED BY: G. BISHOP	08/23/2018					JOB NUMBER 18W121
CHECKED BY: M. FISHER	08/23/2018					CONTRACT NO. 00****
MAR PROJ ENGR: C. TORRES						
DGN ENGR MNGR: N. MCINTOSH						
ASST SECRETARY: A. SCARTON		REVISION	DATE	BY		

DATE

4472 REGISTERED ARCHITECT
WALT W. NIEHOFF JR.
STATE OF WASHINGTON
08/23/18
DATE

Washington State Department of Transportation
WASHINGTON STATE FERRIES

SR 525
MUKILTEO FERRY TERMINAL (PHASE 2)
FERRY TERMINAL CONSTRUCTION

TERMINAL – INTERIOR DETAILS

A07.22

SHEET 1050 OF 1521 SHEETS

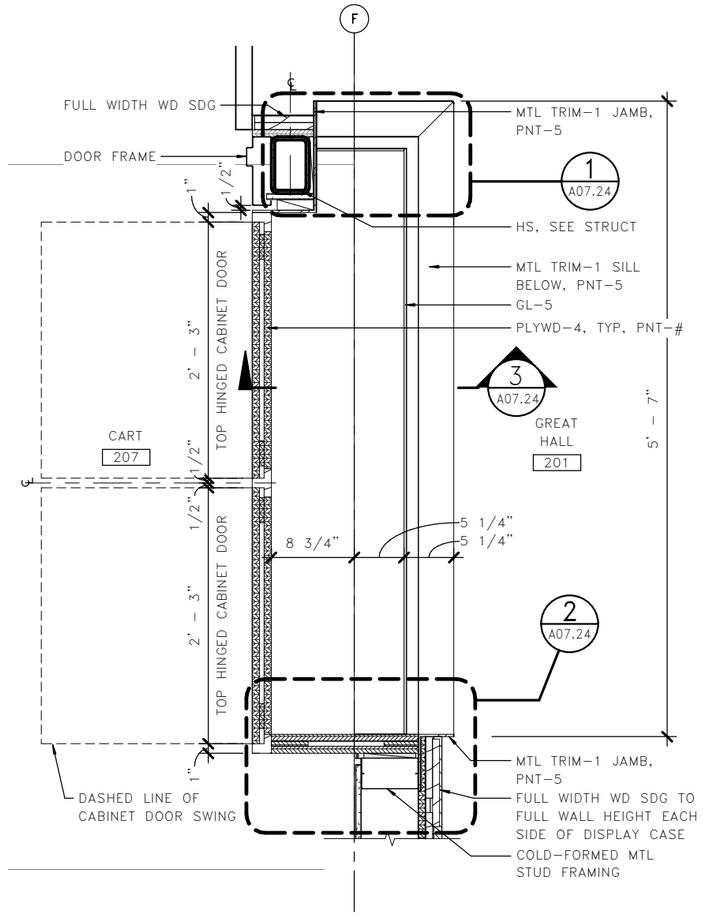

1 A07.23 DIPLAY CASE PLAN SOUTH

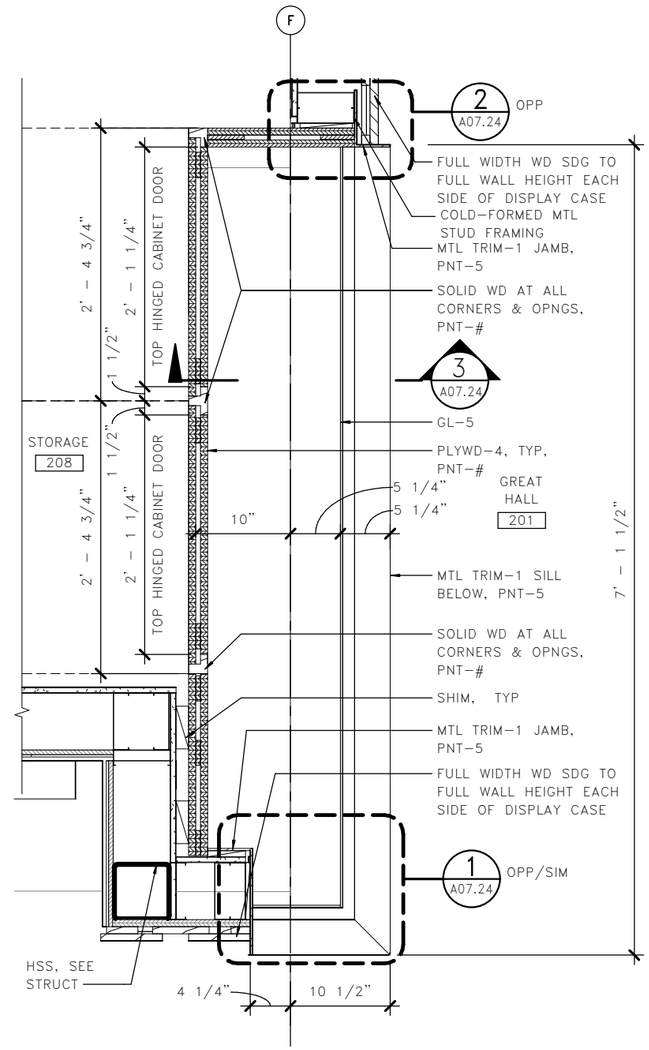

2 A07.23 DISPLAY CASE PLAN NORTH

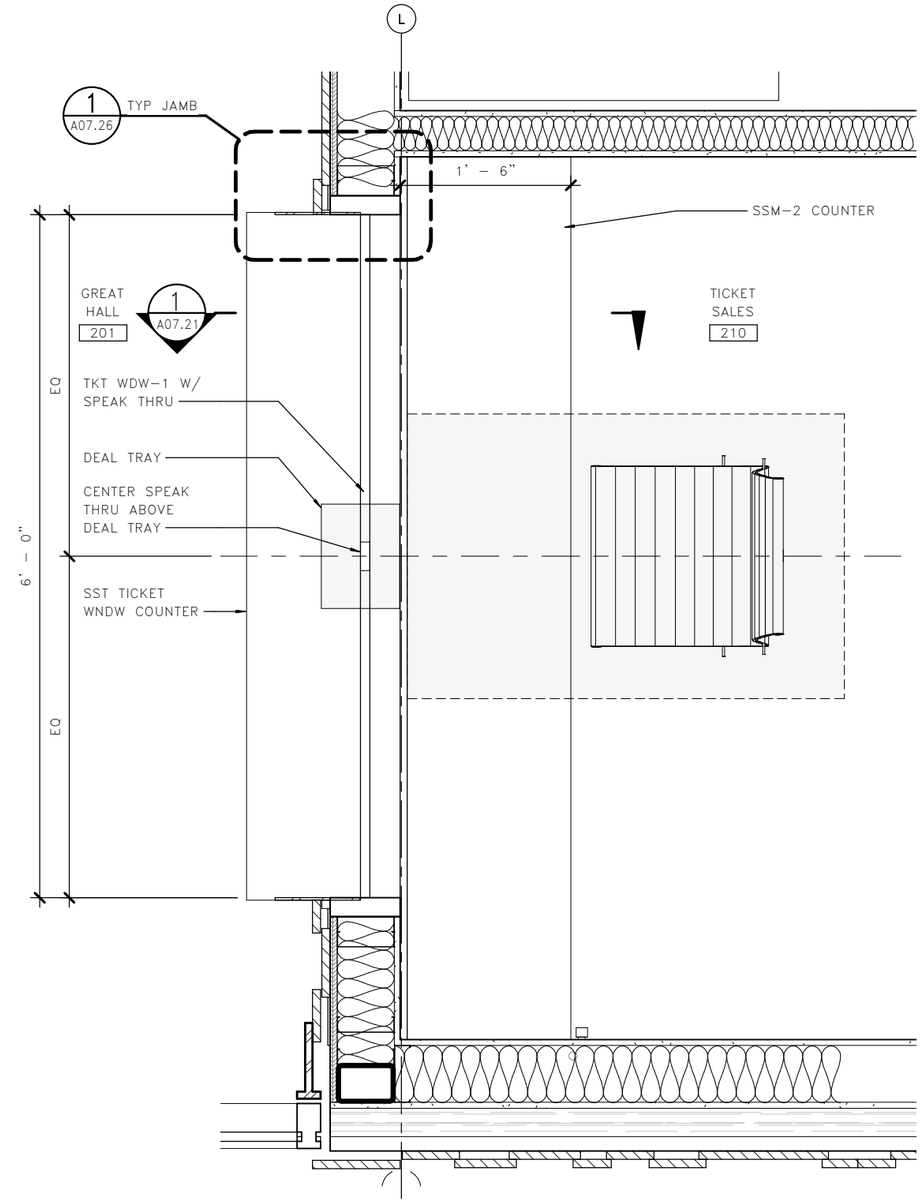

3 A07.23 TB – TICKET WINDOW PLAN

0" 6" 12" 18"

LMN

FILE NAME: PW:\WSF\Mukilteo\14W121_FerryTermConst\CADD\LMN\mft-CENTRAL_90%.rvt						
PRINTED: 9/21/2018 4:51:13 PM	LAST PRINTED BY:					FED.AID PROJ.NO.
SUBMITTAL DATE: 08/23/2018	MFISHER					WA-2017-007-00
DESIGNED BY: H. FITZPATRICK	08/23/2018					REGION NO. 10 / STATE WA
ENTERED BY: G. BISHOP	08/23/2018					JOB NUMBER 18W121
CHECKED BY: M. FISHER	08/23/2018					CONTRACT NO. 00****
MAR PROJ ENGR: C. TORRES						
DGN ENGR MNGR: N. MCINTOSH						
ASST SECRETARY: A. SCARTON		REVISION	DATE	BY		

DATE

4472 REGISTERED ARCHITECT WALT W. NIEHOFF JR. STATE OF WASHINGTON

08/23/18
DATE

Washington State Department of Transportation
WASHINGTON STATE FERRIES

SR 525
MUKILTEO FERRY TERMINAL (PHASE 2)
FERRY TERMINAL CONSTRUCTION

TERMINAL – INTERIOR DETAILS

A07.23

SHEET 1051 OF 1521 SHEETS

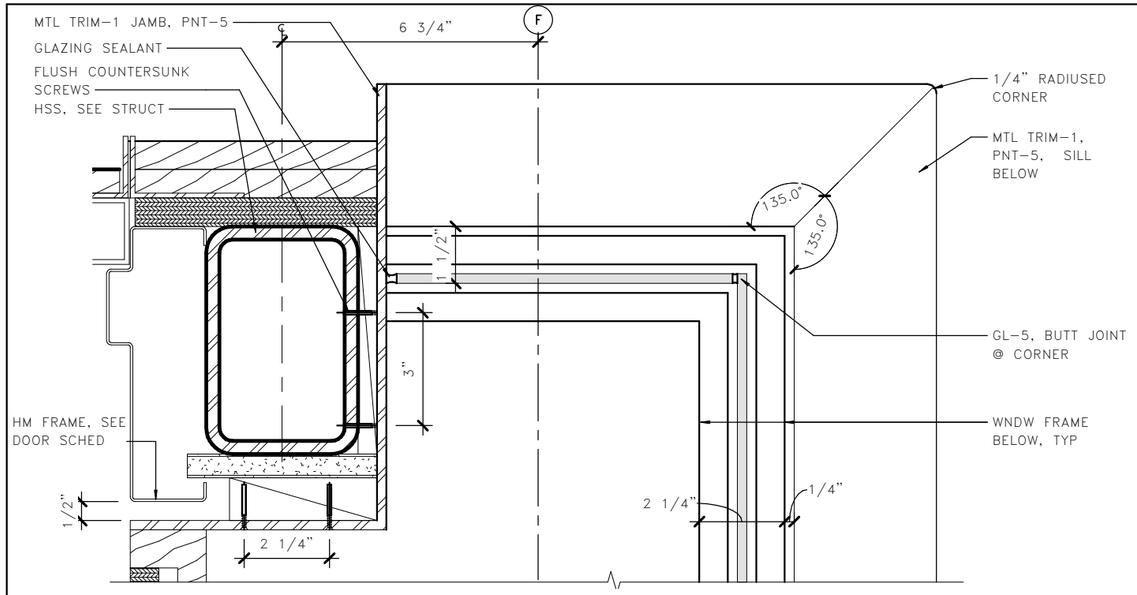

1 A07.24 DISPLAY CASE PLAN DETAIL

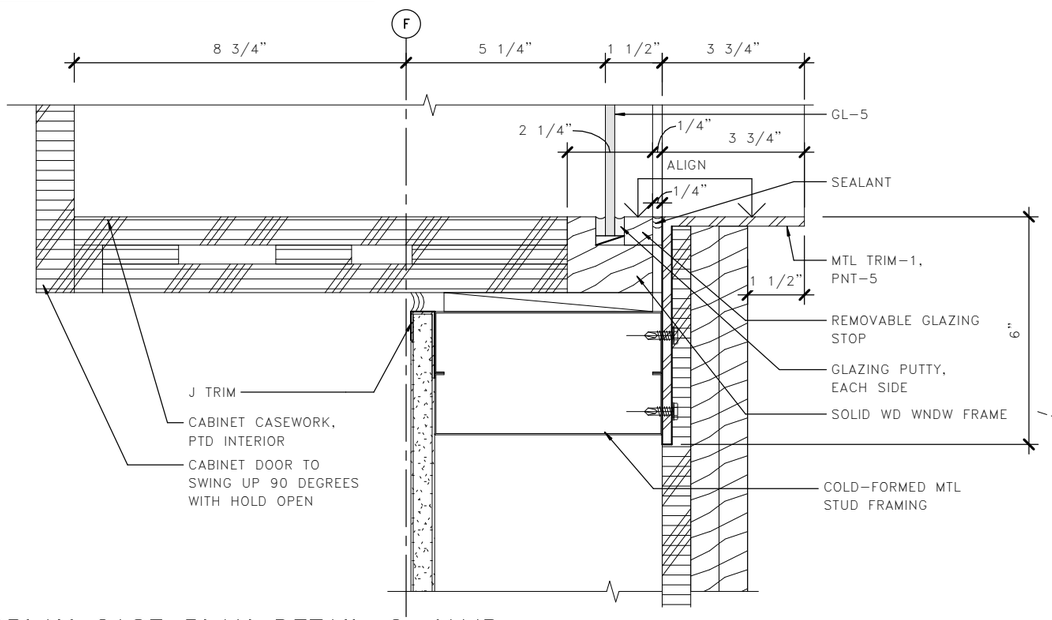

2 A07.24 DISPLAY CASE PLAN DETAIL @ JAMB

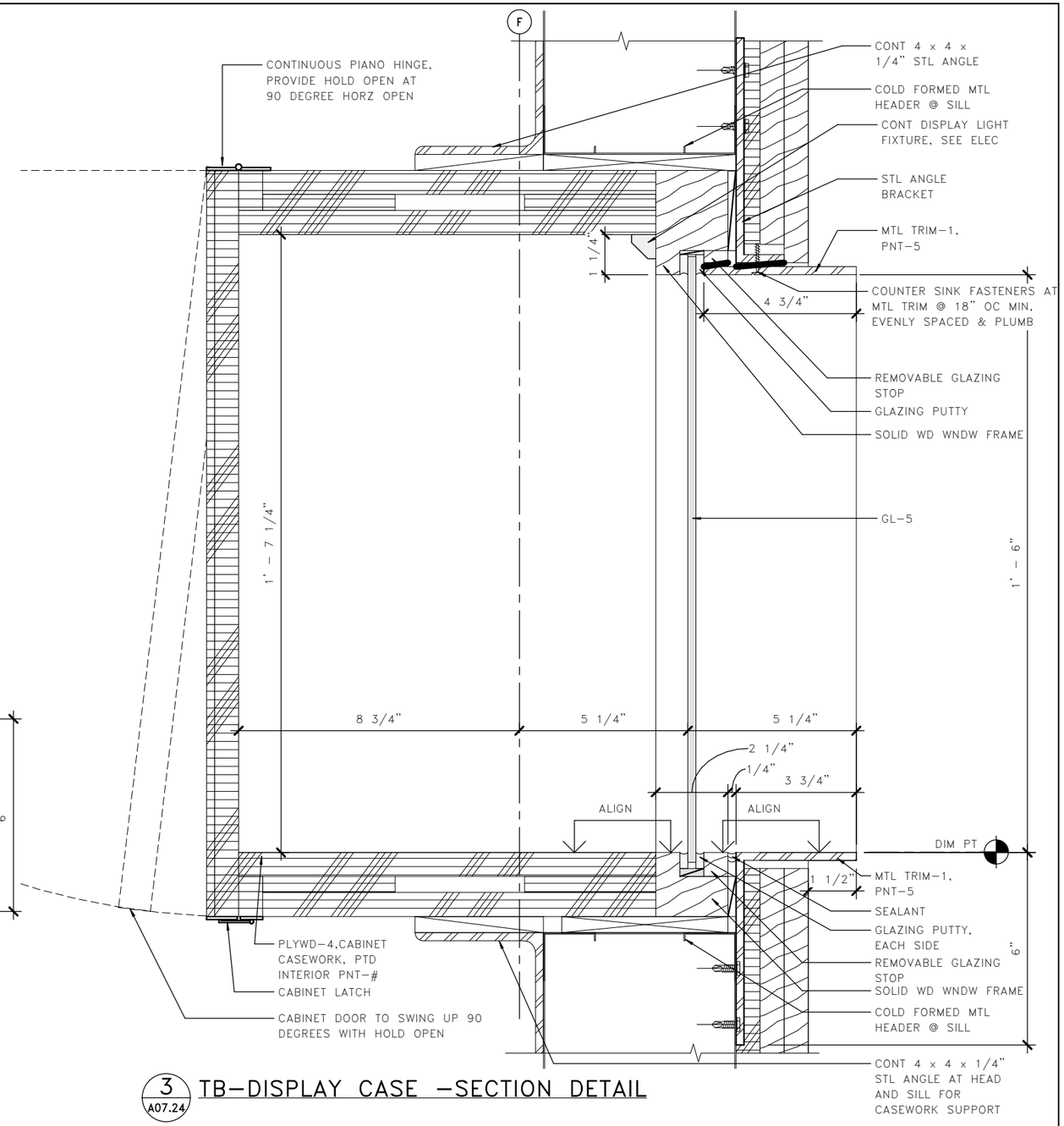

3 A07.24 TB-DISPLAY CASE -SECTION DETAIL

LMN

FILE NAME: PW:\WSF\Mukilteo\14W121_FerryTermConst\CADD\LMN\mft-CENTRAL_90%.rvt						
PRINTED: 9/21/2018 4:51:15 PM		LAST PRINTED BY:				FED.AID PROJ.NO.
SUBMITTAL DATE:	08/23/2018	MFISHER				WA-2017-007-00
DESIGNED BY:	H. FITZPATRICK	08/23/2018				REGION NO. 10 / STATE WA
ENTERED BY:	G. BISHOP	08/23/2018				
CHECKED BY:	M. FISHER	08/23/2018				JOB NUMBER 18W121
MAR PROJ ENGR:	C. TORRES					
DGN ENGR MNGR:	N. MCINTOSH					CONTRACT NO. 00****
ASST SECRETARY:	A. SCARTON		REVISION	DATE	BY	

DATE

4472 REGISTERED ARCHITECT WALT W. NIEHOFF JR. STATE OF WASHINGTON

08/23/18
DATE

Washington State Department of Transportation
WASHINGTON STATE FERRIES

SR 525
MUKILTEO FERRY TERMINAL (PHASE 2)
FERRY TERMINAL CONSTRUCTION

TERMINAL – INTERIOR DETAILS

A07.24

SHEET 1052 OF 1521 SHEETS

NOTE
1. ALL STEEL SHALL RECIEVE PNT-5 WHERE EXPOSED TO VIEW.
2. MECH DIFFUSERS AND CLOSURE PIECES SHALL BE FINISHED TO MATCH PNT-5.

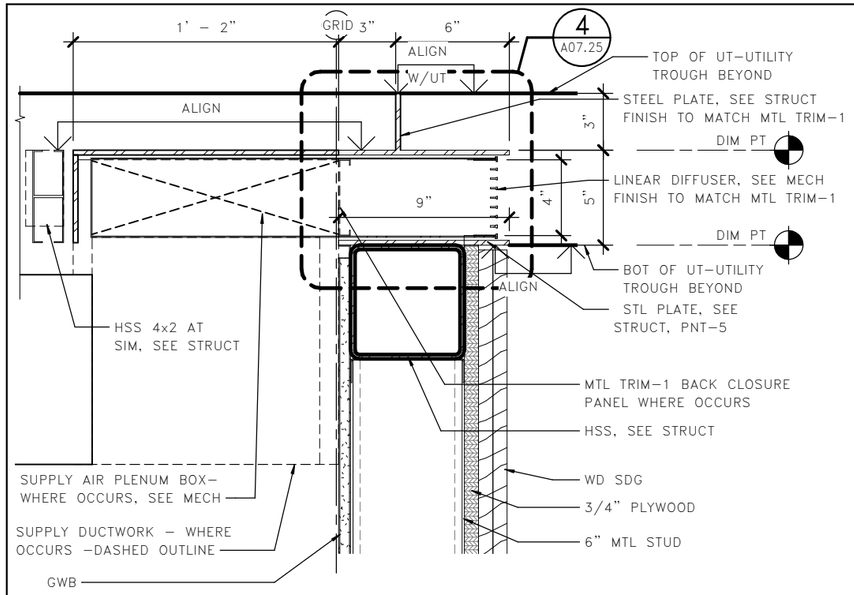

1 A07.25 DIFFUSER SECTION DETAIL
0 4" 8"
1 1/2" = 1'-0"

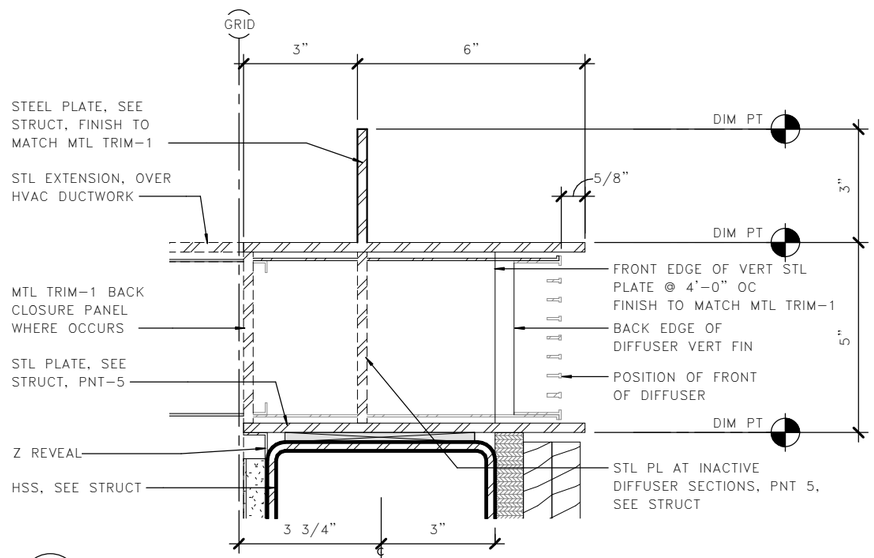

4 A07.25 DIFFUSER PROFILE
0 2" 4"
3" = 1'-0"

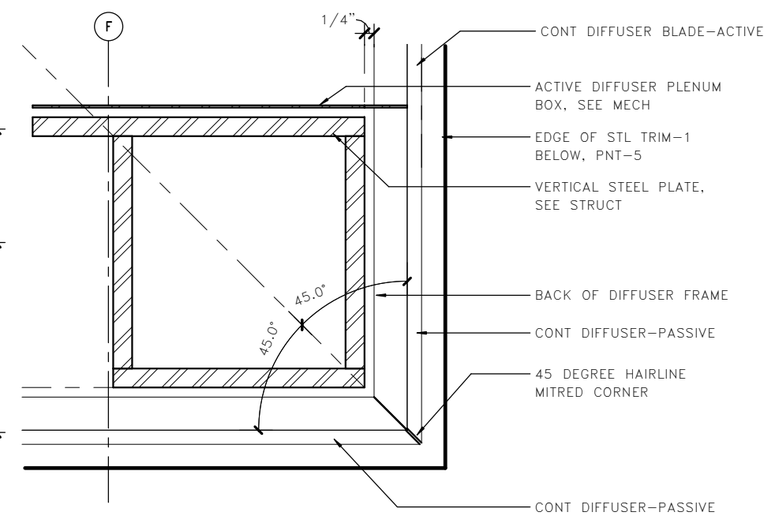

5 A07.25 DIFFUSER CORNER PLAN DETAIL
0 2" 4"
3" = 1'-0"

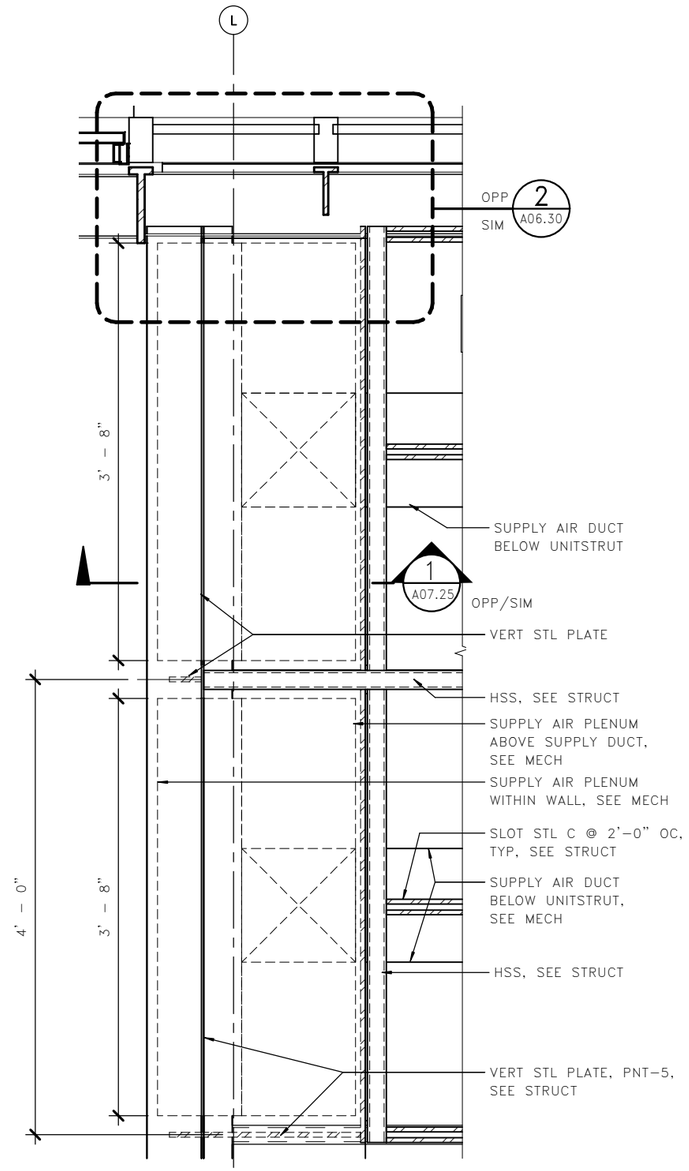

6 A07.25 WALL CAP EXTENSION - PLAN
0 8" 16"
3/4" = 1'-0"

LMN

FILE NAME: PW:\WSF\Mukilteo\14W121_FerryTermConst\CADD\LMN\mft-CENTRAL_90%.rvt						
PRINTED: 9/21/2018 4:51:19 PM	LAST PRINTED BY:					FED.AID PROJ.NO.
SUBMITTAL DATE: 08/23/2018	MFISHER					WA-2017-007-00
DESIGNED BY: H. FITZPATRICK	08/23/2018					REGION NO. 10 / STATE WA
ENTERED BY: G. BISHOP	08/23/2018					
CHECKED BY: M. FISHER	08/23/2018					JOB NUMBER 18W121
MAR PROJ ENGR: C. TORRES						
DGN ENGR MNGR: N. MCINTOSH						CONTRACT NO. 00****
ASST SECRETARY: A. SCARTON		REVISION	DATE	BY		

DATE

4472 REGISTERED ARCHITECT
WALT W. NIEHOFF JR.
STATE OF WASHINGTON
08/23/18
DATE

Washington State Department of Transportation
WASHINGTON STATE FERRIES

SR 525
MUKILTEO FERRY TERMINAL (PHASE 2)
FERRY TERMINAL CONSTRUCTION

TERMINAL - INTERIOR DETAILS

A07.25

SHEET 1053 OF 1521 SHEETS

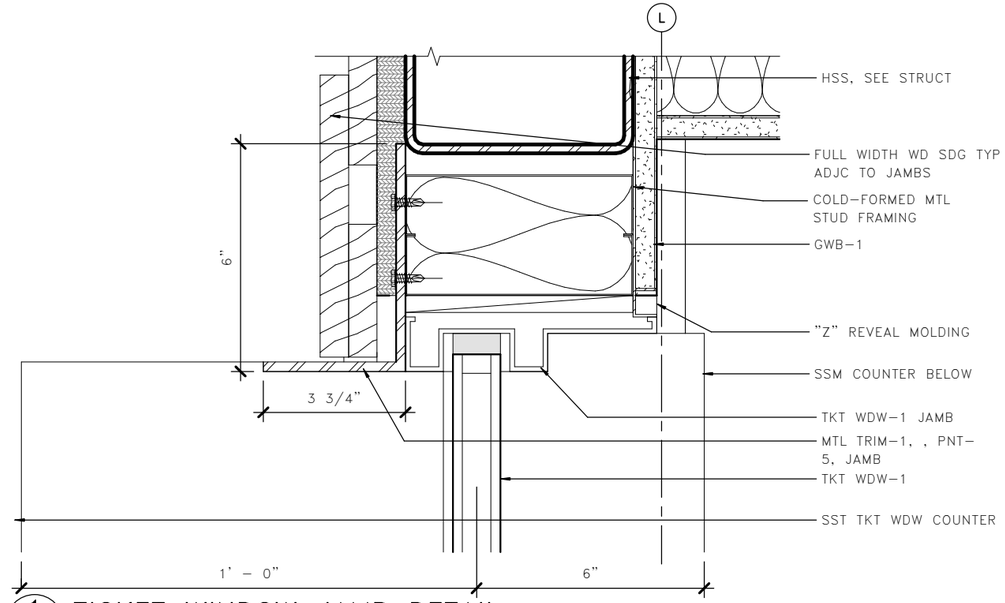

1 A07.26 TICKET WINDOW JAMB DETAIL

0 2" 4"
3" = 1'-0"

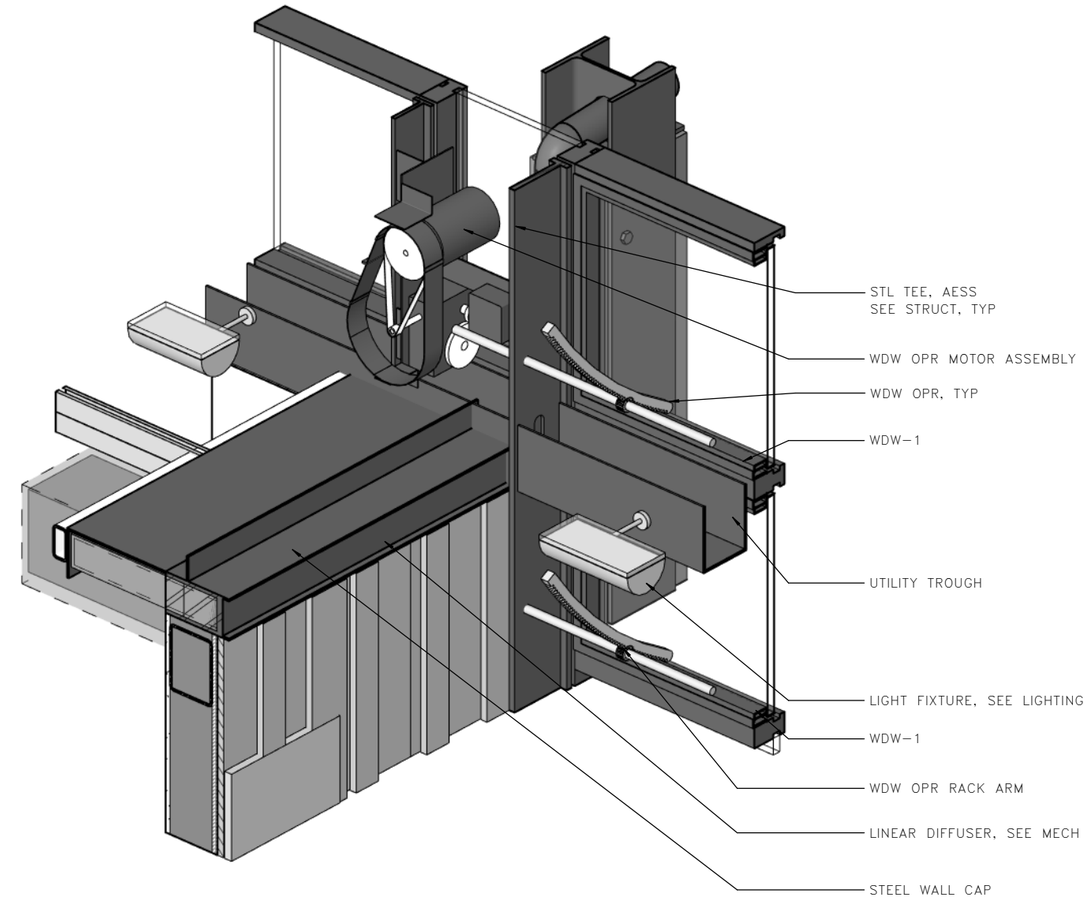

2 A07.26 DIAGRAM - EAST END OF GREAT HALL

LMN

FILE NAME: PW:\WSF\Mukilteo\14W121_FerryTermConst\CADD\LMN\mft-CENTRAL_90%.rvt						
PRINTED: 9/21/2018 4:51:21 PM	LAST PRINTED BY:					FED.AID PROJ.NO.
SUBMITTAL DATE: 08/23/2018	MFISHER					WA-2017-007-00
DESIGNED BY: H. FITZPATRICK	08/23/2018					REGION NO. 10 / STATE WA
ENTERED BY: G. BISHOP	08/23/2018					
CHECKED BY: M. FISHER	08/23/2018					JOB NUMBER 18W121
MAR PROJ ENGR: C. TORRES						
DGN ENGR MNGR: N. MCINTOSH						CONTRACT NO. 00****
ASST SECRETARY: A. SCARTON		REVISION	DATE	BY		

DATE

4472 REGISTERED ARCHITECT
WALT W. NIEHOFF JR.
STATE OF WASHINGTON
08/23/18
DATE

Washington State Department of Transportation
WASHINGTON STATE FERRIES

SR 525
MUKILTEO FERRY TERMINAL (PHASE 2)
FERRY TERMINAL CONSTRUCTION

TERMINAL - INTERIOR DETAILS

A07.26

SHEET 1054 OF 1521 SHEETS

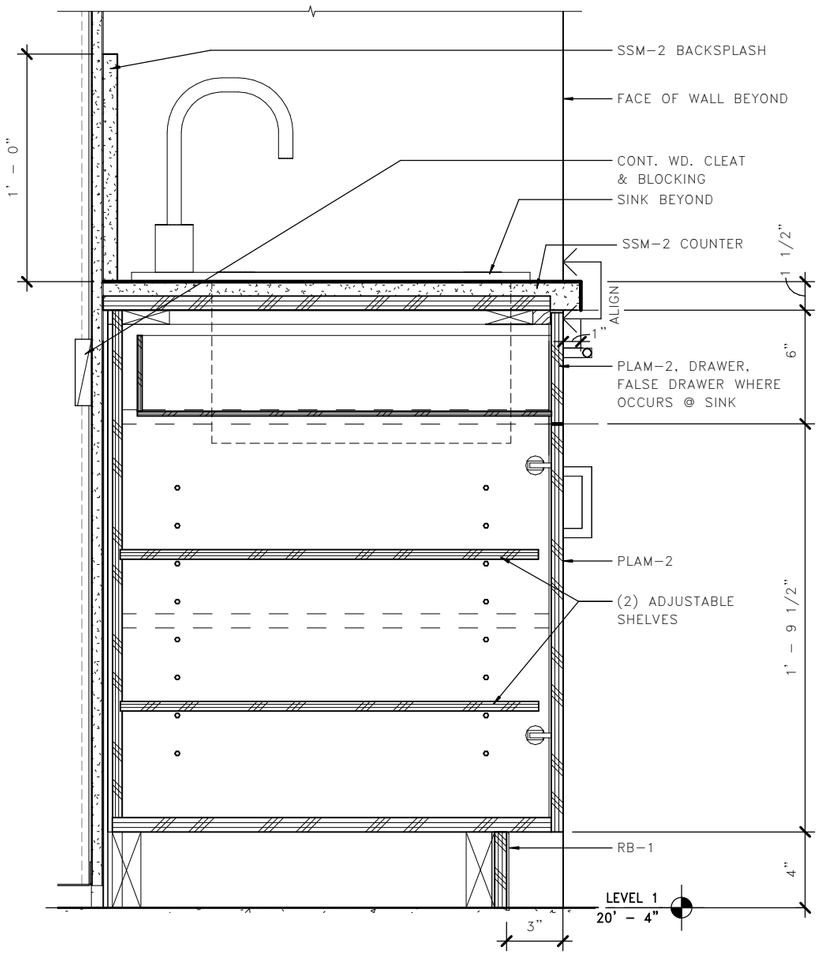

1 A07.27 CABINET SECTION

0 4" 8"
1 1/2" = 1'-0"

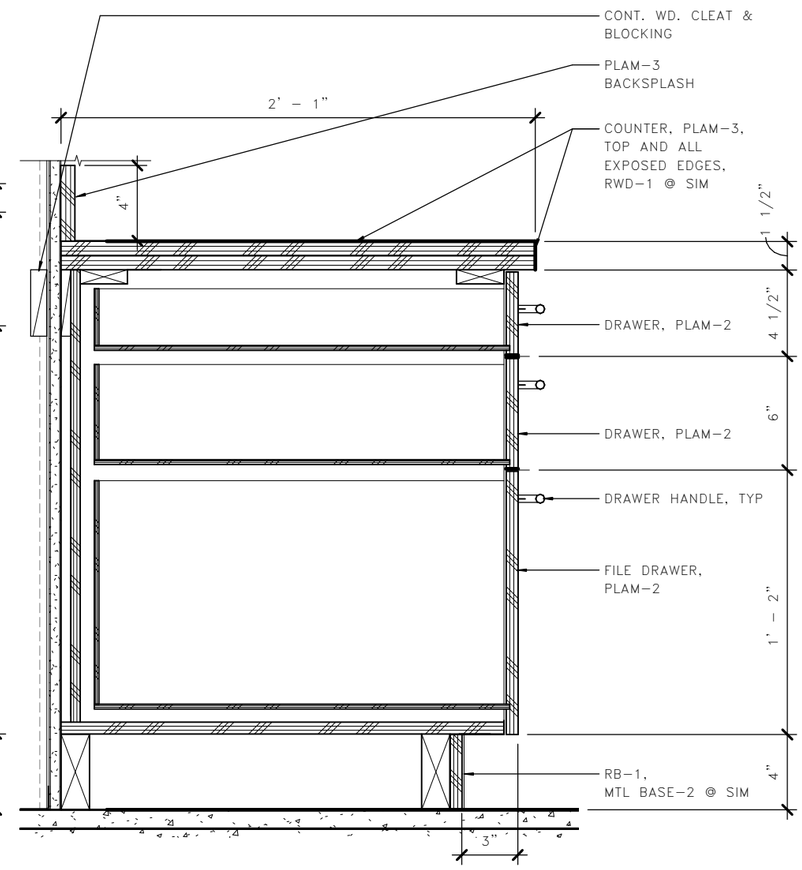

2 A07.27 CABINET SECTION

0 4" 8"
1 1/2" = 1'-0"

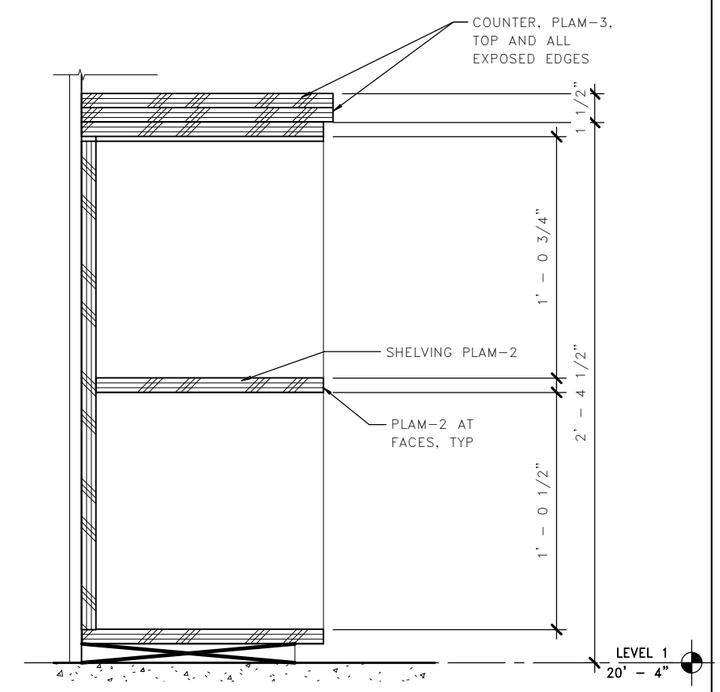

3 A07.27 CABINET SECTION

0 4" 8"
1 1/2" = 1'-0"

LMN

FILE NAME: PW:\WSF\Mukilteo\14W121_FerryTermConst\CADD\LMN\mft-CENTRAL_90%.rvt						
PRINTED: 9/21/2018 4:51:23 PM	LAST PRINTED BY:				FED.AID PROJ.NO.	
SUBMITTAL DATE: 08/23/2018	MFISHER				WA-2017-007-00	
DESIGNED BY: H. FITZPATRICK	08/23/2018				REGION NO. 10	STATE WA
ENTERED BY: G. BISHOP	08/23/2018				JOB NUMBER 18W121	
CHECKED BY: M. FISHER	08/23/2018				CONTRACT NO. 00****	
MAR PROJ ENGR: C. TORRES						
DGN ENGR MNGR: N. MCINTOSH						
ASST SECRETARY: A. SCARTON		REVISION	DATE	BY		

DATE

4472 REGISTERED ARCHITECT
WALT W. NIEHOFF JR.
STATE OF WASHINGTON
08/23/18
DATE

Washington State Department of Transportation
WASHINGTON STATE FERRIES

SR 525
MUKILTEO FERRY TERMINAL (PHASE 2)
FERRY TERMINAL CONSTRUCTION

TERMINAL – INTERIOR DETAILS

A07.27

SHEET 1055 OF 1521 SHEETS

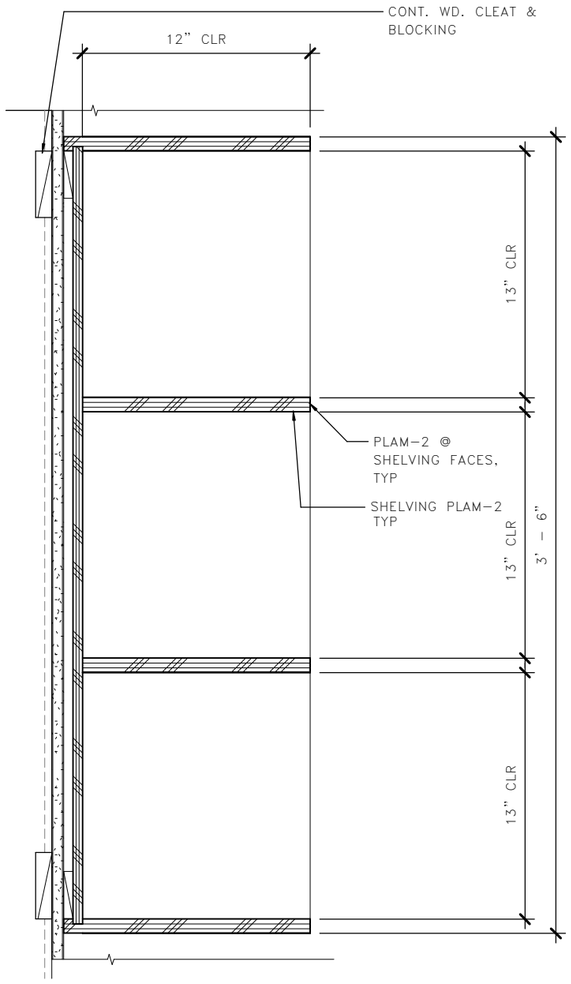

1 A07.28 UPPER CASEWORK SECTION

0 4" 8"
1 1/2" = 1'-0"

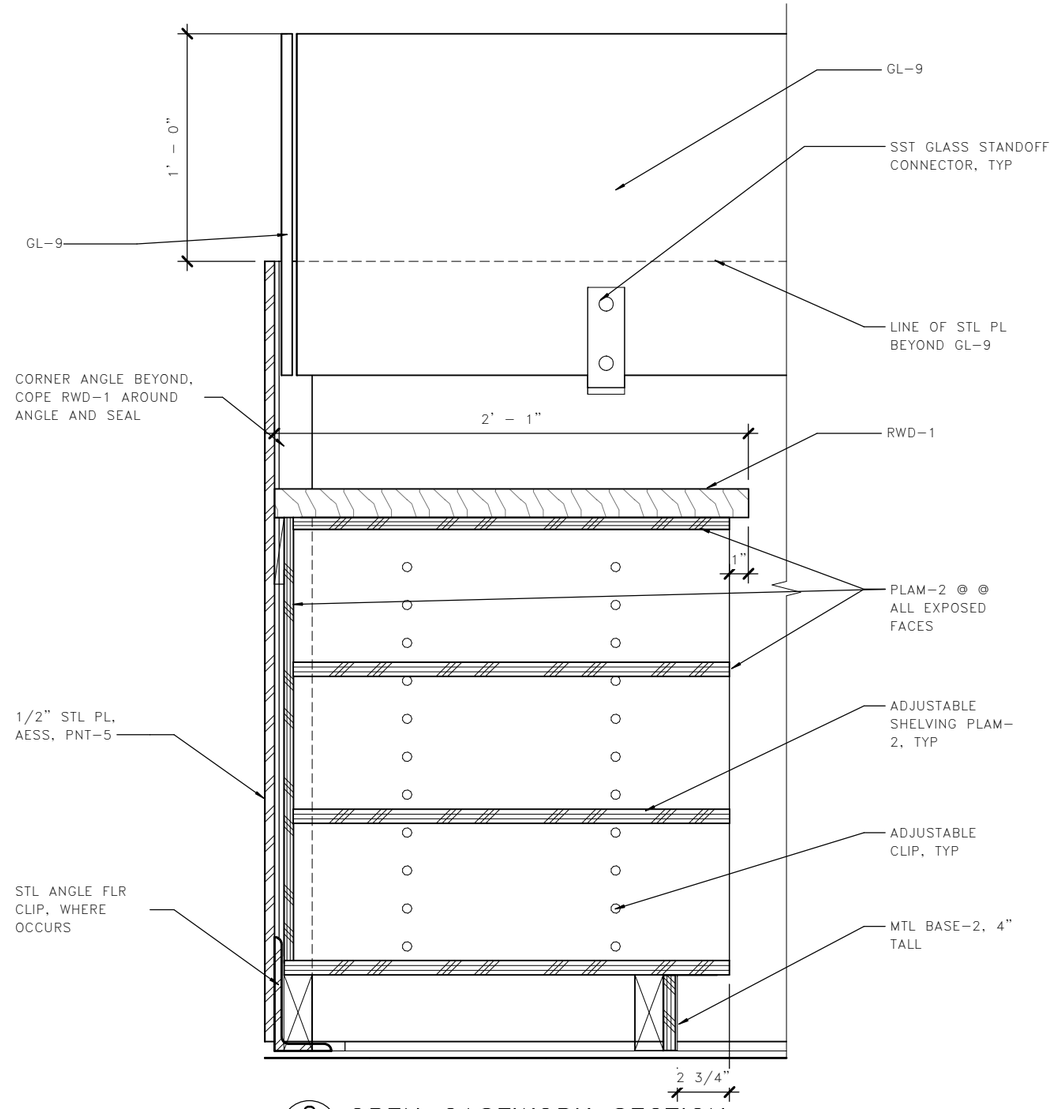

2 A07.28 OPEN CASEWORK SECTION

LMN

FILE NAME: PW:\WSF\Mukilteo\14W121_FerryTermConst\CADD\LMN\mft-CENTRAL_90%.rvt						
PRINTED: 9/21/2018 4:51:23 PM		LAST PRINTED BY:				FED.AID PROJ.NO.
SUBMITTAL DATE:	08/23/2018	MFISHER				WA-2017-007-00
DESIGNED BY:	H. FITZPATRICK	08/23/2018				REGION NO. 10 / STATE WA
ENTERED BY:	G. BISHOP	08/23/2018				
CHECKED BY:	M. FISHER	08/23/2018				JOB NUMBER 18W121
MAR PROJ ENGR:	C. TORRES					
DGN ENGR MNGR:	N. MCINTOSH					CONTRACT NO. 00****
ASST SECRETARY:	A. SCARTON		REVISION	DATE	BY	

DATE

4472 REGISTERED ARCHITECT
WALT W. NIEHOFF JR.
STATE OF WASHINGTON
08/23/18
DATE

Washington State Department of Transportation
WASHINGTON STATE FERRIES

SR 525
MUKILTEO FERRY TERMINAL (PHASE 2)
FERRY TERMINAL CONSTRUCTION

TERMINAL – INTERIOR DETAILS

A07.28

SHEET 1056 OF 1521 SHEETS

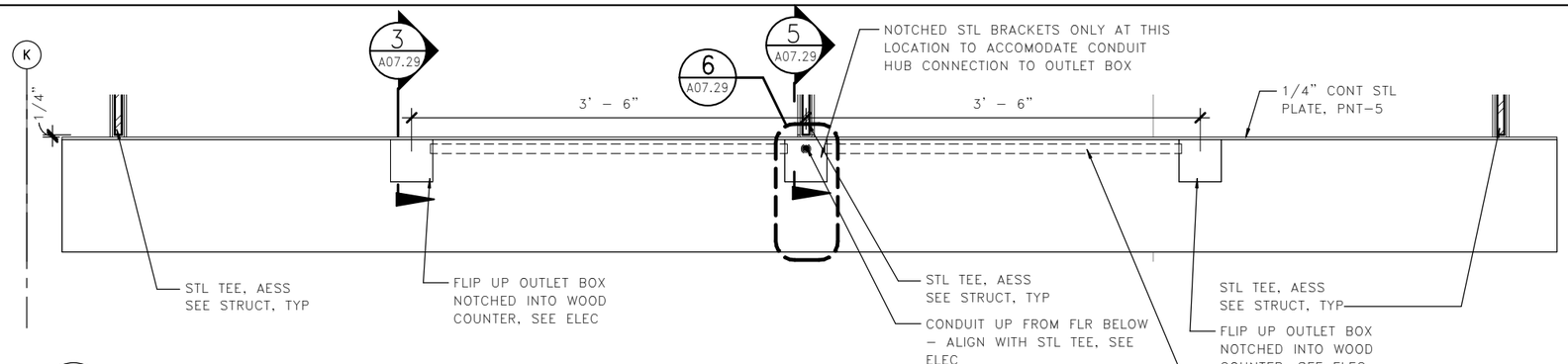

1 A07.29 WOOD COUNTER PLAN LAYOUT

0 8" 16"
3/4" = 1'–0"

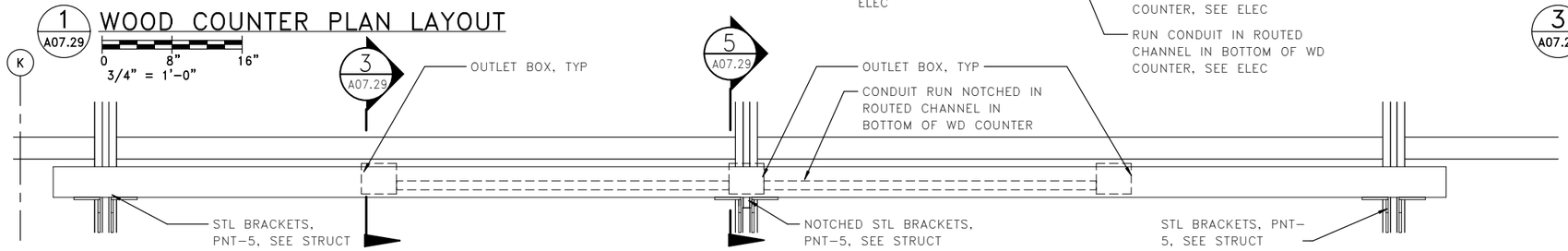

2 A07.29 WOOD COUNTER ELEVATION

0 8" 16"
3/4" = 1'–0"

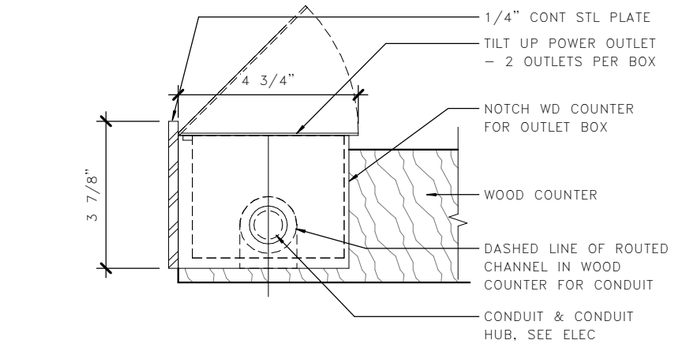

3 A07.29 COUNTER TILT–UP OUTLET BOX

0 2" 4"
3" = 1'–0"

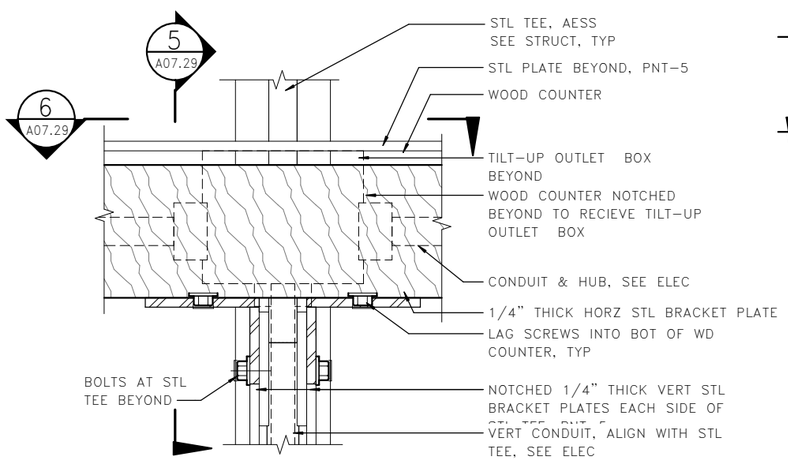

4 A07.29 COUNTER BRACKET FRONT SECTION

0 2" 4"
3" = 1'–0"

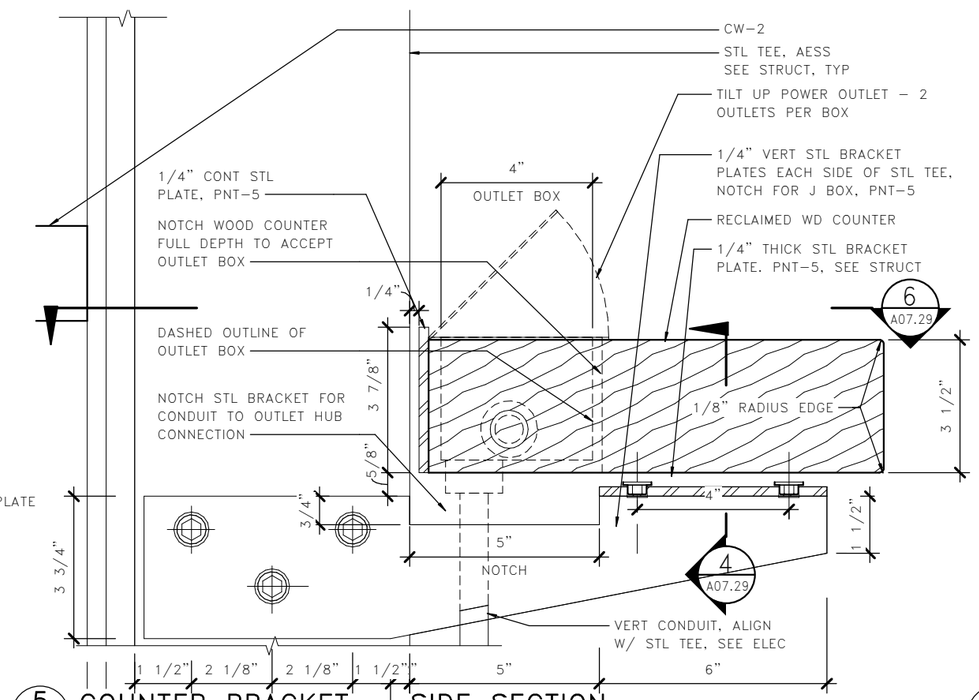

5 A07.29 COUNTER BRACKET – SIDE SECTION

0 2" 4"
3" = 1'–0"

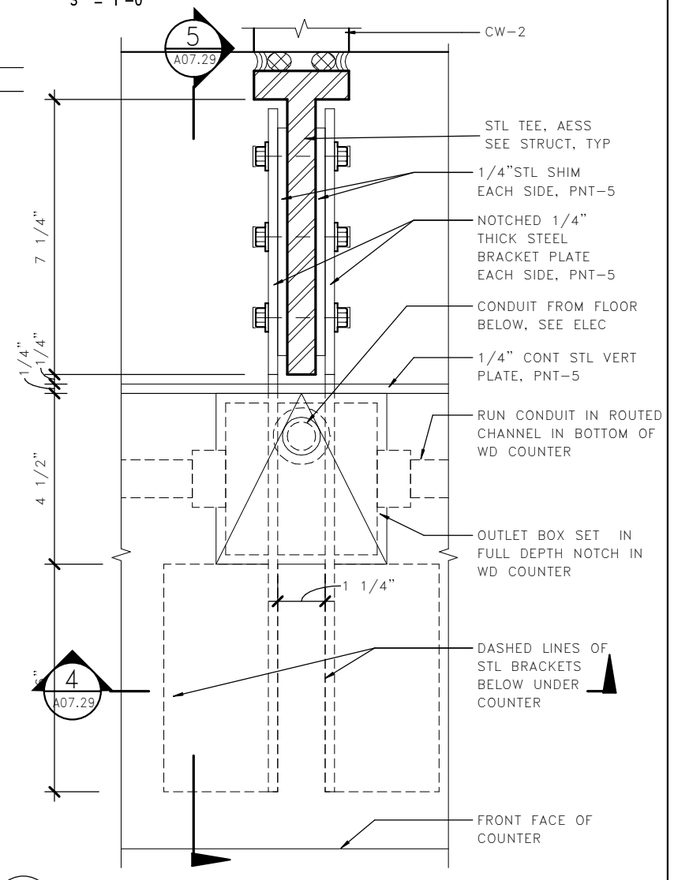

6 A07.29 COUNTER BRACKET – PLAN

0 2" 4"
3" = 1'–0"

LMN

FILE NAME: PW:\WSF\Mukilteo\14W121_FerryTermConst\CADD\LMN\mft-CENTRAL_90%.rvt						
PRINTED: 9/21/2018 4:51:27 PM		LAST PRINTED BY:				FED.AID PROJ.NO.
SUBMITTAL DATE:	08/23/2018	MFISHER				WA-2017-007-00
DESIGNED BY:	H. FITZPATRICK	08/23/2018				REGION NO. 10 / STATE WA
ENTERED BY:	G. BISHOP	08/23/2018				
CHECKED BY:	M. FISHER	08/23/2018				JOB NUMBER 18W121
MAR PROJ ENGR:	C. TORRES					
DGN ENGR MNGR:	N. MCINTOSH					CONTRACT NO. 00****
ASST SECRETARY:	A. SCARTON		REVISION	DATE	BY	

DATE

4472 REGISTERED ARCHITECT WALT W. NIEHOFF JR. STATE OF WASHINGTON
08/23/18
DATE

Washington State Department of Transportation
WASHINGTON STATE FERRIES

SR 525
MUKILTEO FERRY TERMINAL (PHASE 2)
FERRY TERMINAL CONSTRUCTION

TERMINAL – INTERIOR DETAILS

A07.29

SHEET 1057 OF 1521 SHEETS

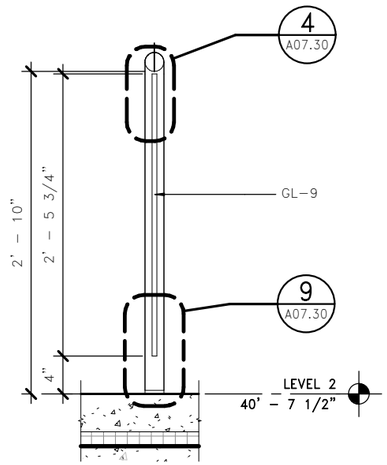

1 A07.30 ATTENDANT DESK RAILING

0 8" 16"
3/4" = 1'-0"

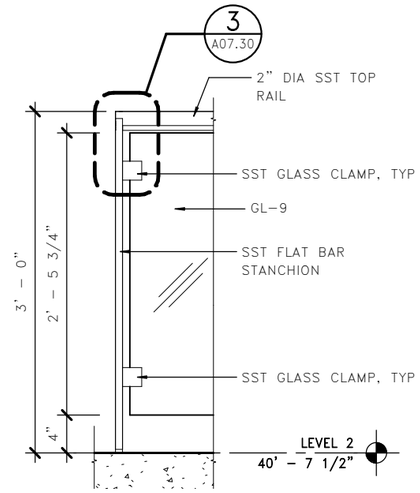

2 A07.30 RAILING 5 DETAIL ELEVATION

0 8" 16"
3/4" = 1'-0"

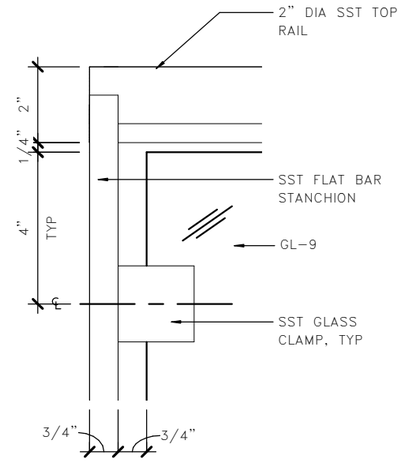

3 A07.30 RAILING 5 DETAIL

0 8" 16"
3" = 1'-0"

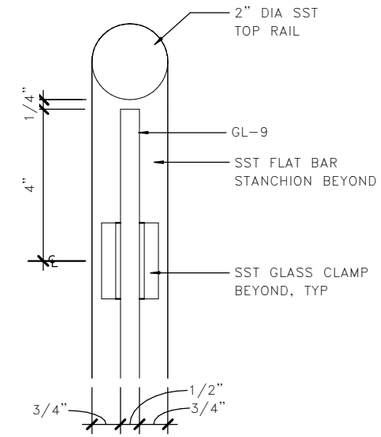

4 A07.30 ATTENDANT RAILING – RAIL

0 2" 4"
3" = 1'-0"

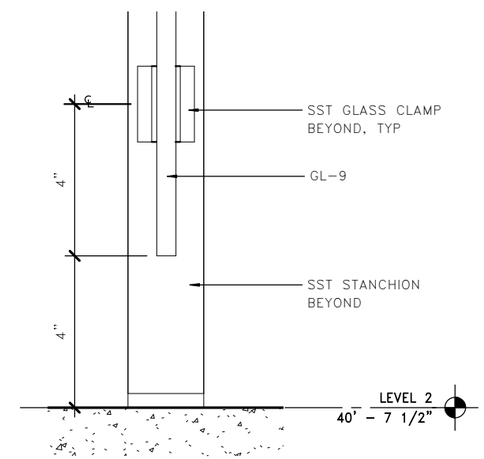

9 A07.30 ATTENDANT RAIL – BASE

0 2" 4"
3" = 1'-0"

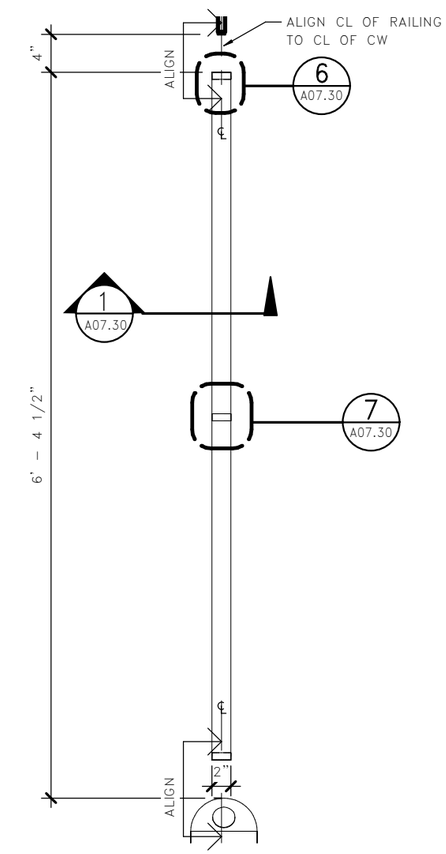

10 A07.30 ATTENDANT DESK RAIL PLAN

0 8" 16"
3/4" = 1'-0"

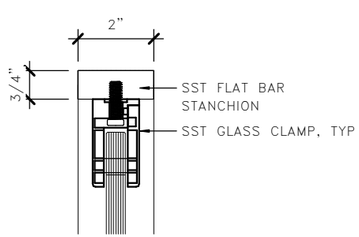

6 A07.30 RAILING PLAN DETAIL

0 2" 4"
3" = 1'-0"

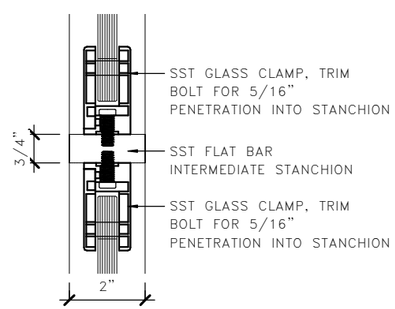

7 A07.30 RAILING PLAN DETAIL

0 8" 16"
3" = 1'-0"

LMN

FILE NAME: PW:\WSF\Mukilteo\14W121_FerryTermConst\CADD\LMN\mft-CENTRAL_90%.rvt						
PRINTED: 9/21/2018 4:51:32 PM		LAST PRINTED BY:				FED.AID PROJ.NO.
SUBMITTAL DATE:	08/23/2018	MFISHER				WA-2017-007-00
DESIGNED BY:	H. FITZPATRICK	08/23/2018				REGION NO. 10 / STATE WA
ENTERED BY:	G. BISHOP	08/23/2018				JOB NUMBER 18W121
CHECKED BY:	M. FISHER	08/23/2018				CONTRACT NO. 00****
MAR PROJ ENGR:	C. TORRES					
DGN ENGR MNGR:	N. MCINTOSH					
ASST SECRETARY:	A. SCARTON		REVISION	DATE	BY	

DATE

4472 REGISTERED ARCHITECT
WALT W. NIEHOFF JR.
STATE OF WASHINGTON
08/23/18
DATE

Washington State Department of Transportation
WASHINGTON STATE FERRIES

SR 525
MUKILTEO FERRY TERMINAL (PHASE 2)
FERRY TERMINAL CONSTRUCTION

TERMINAL – INTERIOR DETAILS

A07.30

SHEET 1058 OF 1521 SHEETS

PARTITION CONFIGURATION

NOTE:

BRACING NOT ALLOWED WHEN STRUCTURE IS OPEN TO VIEW IN PUBLIC AREAS UNO.

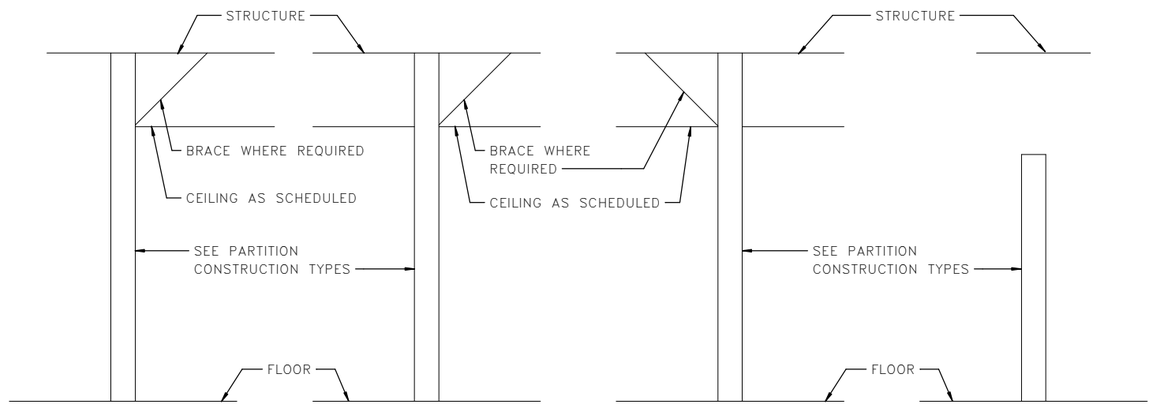

A	STUDS AND GWB CONTINUOUS TO UNDERSIDE OF STRUCTURE
B	STUDS CONTINUOUS TO UNDERSIDE OF STRUCTURE; ONE SIDE OF GWB TO 6" ABOVE CEILING – ONE SIDE GWB TO UNDERSIDE OF STRUCTURE
C	STUDS CONTINUOUS TO UNDERSIDE OF STRUCTURE; GWB TO 6" ABOVE CEILING
D	PARTIAL HEIGHT PARTITION; FINISHED HEIGHT 11'–0" AFF, UNO

MODIFICATIONS

	NO MODIFIER – CONSTRUCT PARTITION DETAIL AS SHOWN AT PARTITION TYPE DETAIL WITHOUT MODIFICATIONS.
a	NO FINISH OR GWB ON THE SIDE OF WALL THAT FACES WALL CAVITY
b	SUBSTITUTE 1/2" PLYWOOD & 1/4" TILE BACKER BOARD FOR GWB AT TILE FACE(S) OF PARTITION ONLY – NO FINISH ON OTHER SIDE OF STUD – COORDINATE WITH ROOM FINISH SCHEDULE AND/OR INTERIOR ELEVATIONS
c	SUBSTITUTE 1/2" PLYWOOD & 1/4" TILE BACKER BOARD FOR GWB AT TILE FACE(S) ON BOTH SIDES OF PARTITION – COORDINATE WITH ROOM FINISH SCHEDULE AND/OR INTERIOR ELVATIONS
d	SUBSTITUTE 1/2" PLYWOOD & 1/4" TILE BACKER BOARD FOR GWB AT TILE FACE(S) OF PARTITION ONLY – COORDINATE WITH ROOM FINISH SCHEDULE AND/OR INTERIOR ELEVATIONS
e	SUBSTITUTE 3/4" PLYWOOD FOR FINISH GWB AT WD SDG FACE(S) OF PARTITION ONLY – COORDINATE WITH ROOM FINISH SCHEDULE AND/OR INTERIOR ELEVATIONS
f	INSUL–5 NOT REQUIRED

INTERIOR PARTITION SCHEDULE NOTES:

THE PARTITION TYPE DESIGNATION IS A 4 UNIT CODE THAT INCLUDES THE FIRE RATING (WHERE APPLICABLE), CONFIGURATION, CONSTRUCTION, AND ANY MODIFICATION TO THE CONSTRUCTION.

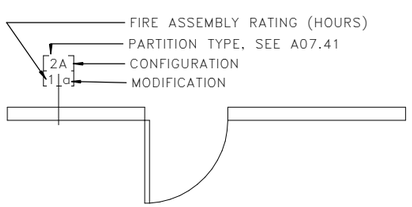

PARTITION TYPE INDICATORS ARE NOTED ON FLOOR PLANS. SEE DRAWING SHEETS A02.00 – A02.08 FOR LOCATION AND EXTENT OR LIMITS OF RATED PARTITIONS.

ALSO SEE EXTERIOR WALL SECTIONS AND DETAILS FOR ADDITIONAL WALL/PARTITION FRAMING NOT SPECIFICALLY IDENTIFIED ON THE FLOOR PLANS.

PARTITION TYPES SHOWN ON THIS SHEET MAY NOT ALL BE USED ON THIS PROJECT.

ALL FIRE RATED ASSEMBLIES ARE BASED UPON IBC/ICC, UL, US GYPSUM AND CURRENT EDITION OF GYPSUM ASSOCIATION FIRE RESISTANCE DESIGN MANUAL GA–600. FIRE RATED PARTITIONS ARE TO BE CONSTRUCTED IN ACCORDANCE WITH THE REQUIREMENTS OF THE TESTING AGENCY(IES) LISTED. REFER TO SPECIFIC TEST REPORTS FOR REQUIRED COMPONENTS AND ASSEMBLY.

ALL OTHER (NON–STRUCTURAL) PARTITIONS ARE TO BE CONSTRUCTED IN ACCORDANCE WITH THE REQUIREMENTS OF THE SPECIFICATIONS, MATERIALS MANUFACTURER, AND INDUSTRY STANDARDS.

ALL GYPSUM BOARD IS TO BE 5/8" THICK, TYPE "X", UNO.

PROVIDE BRACING ABOVE CEILING AS REQUIRED TO LIMIT DEFLECTION TO SPECIFIED ALLOWANCES. BRACING NOT ALLOWED WHEN STRUCTURE IS OPEN TO VIEW IN PUBLIC AREAS UNO.

SEE PROJECT SPECIFICATIONS FOR LIGHT GAGE METAL SUPPORT FRAMING AND ATTACHMENT, GYPSUM BOARD, THERMAL INSULATION, ACOUSTIC TREATMENT, TRIM, AND ACCESSORIES.

BLOCKING / BACKING IS REQUIRED AT THE FOLLOWING LOCATIONS:
A. WALL MOUNTED CABINETS
B. WALL MOUNTED ACCESSORIES AND EQUIPMENT
C. WALL MOUNTED DOORSTOPS
D. WALL MOUNTED DOOR HOLD–OPEN DEVICES AND OR CLOSERS
E. TOILET ROOM PARTITIONS
F. TOILET ROOM ACCESSORIES
G. OTHER LOCATIONS AS REQUIRED BY THE ARCHITECT AND INDUSTRY STANDARDS.

SEE DETAILS 1–7 ON SHEET A07.31 FOR TYPICAL PARTITION CONSTRUCTION INFORMATION.

LMN

FILE NAME: PW:\WSF\Mukilteo\14W121_FerryTermConst\CADD\LMN\mft–CENTRAL_90%.rvt						
PRINTED: 9/21/2018 4:51:33 PM	LAST PRINTED BY:					FED.AID PROJ.NO.
SUBMITTAL DATE: 08/23/2018	MFISHER					WA–2017–007–00
DESIGNED BY: H. FITZPATRICK	08/23/2018					REGION NO. 10 / STATE WA
ENTERED BY: G. BISHOP	08/23/2018					
CHECKED BY: M. FISHER	08/23/2018					JOB NUMBER 18W121
MAR PROJ ENGR: C. TORRES						
DGN ENGR MNGR: N. MCINTOSH						CONTRACT NO.
ASST SECRETARY: A. SCARTON		REVISION	DATE	BY		00****

DATE

4472 REGISTERED ARCHITECT
WALT W. NIEHOFF JR.
STATE OF WASHINGTON
08/23/18
DATE

Washington State Department of Transportation
WASHINGTON STATE FERRIES

SR 525
MUKILTEO FERRY TERMINAL (PHASE 2)
FERRY TERMINAL CONSTRUCTION

PARTITION NOTES

A07.40

SHEET 1059 OF 1521 SHEETS

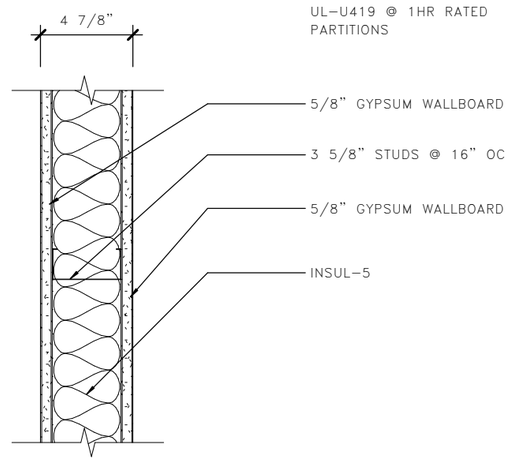

1 A07.41 GWB PARTITION – TYPE 1

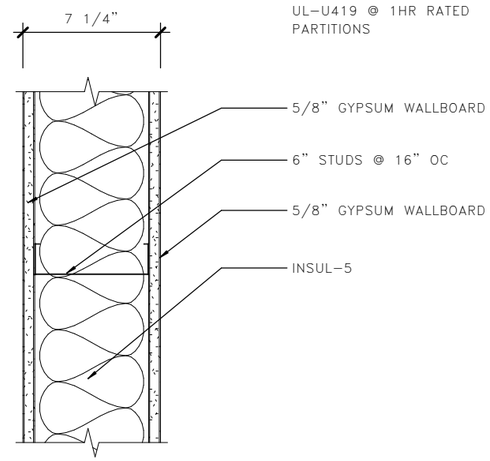

2 A07.41 GWB PARTITION – TYPE 2

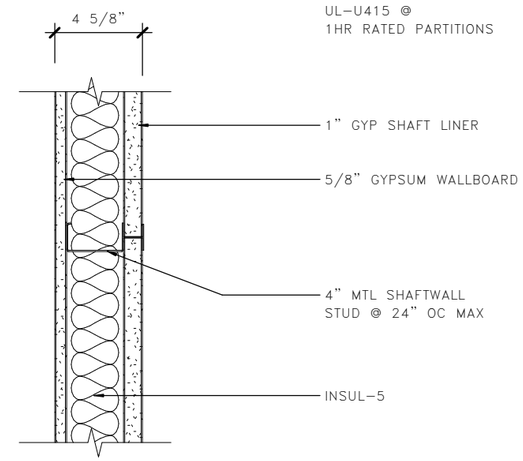

3 A07.41 GWB PARTITION – TYPE 3

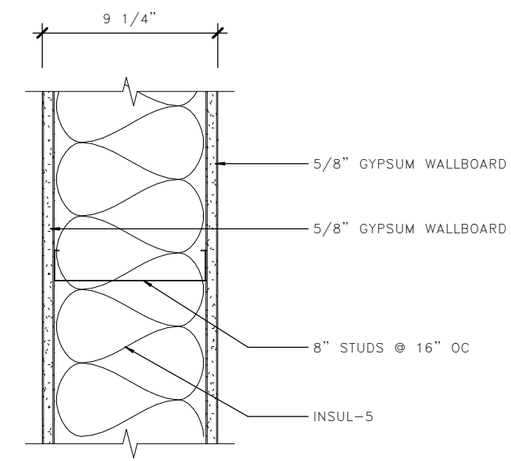

4 A07.41 GWB PARTITION – TYPE 4

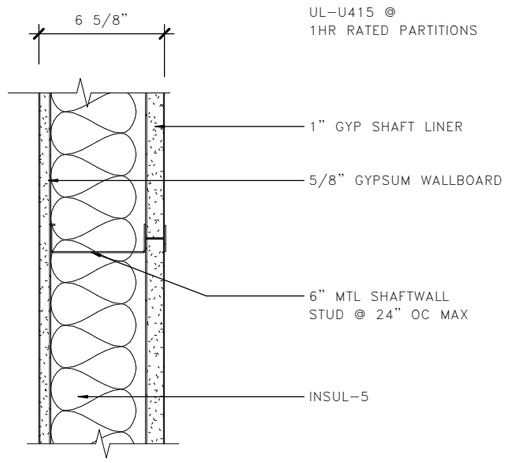

5 A07.41 GWB PARTITION – TYPE 5

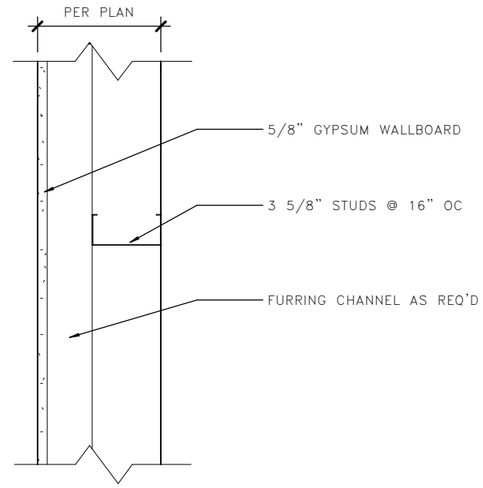

6 A07.31 FURRING PARTITION – TYPE 6

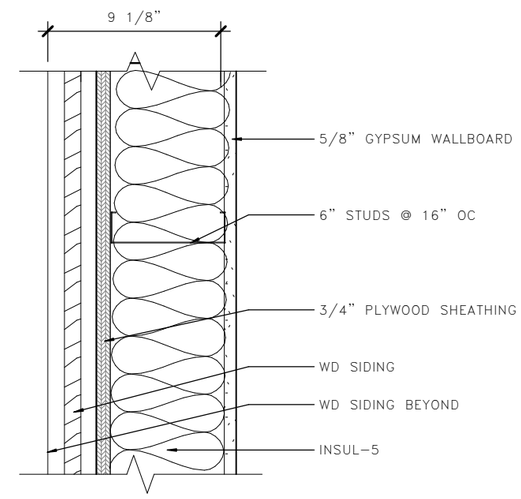

7 A07.31 FURRING PARTITION – TYPE 7

LMN

0 4" 8"

FILE NAME: PW:\WSF\Mukilteo\14W121_FerryTermConst\CADD\LMN\mft-CENTRAL_90%.rvt						
PRINTED: 9/21/2018 4:51:34 PM	LAST PRINTED BY:					FED.AID PROJ.NO.
SUBMITTAL DATE: 08/23/2018	MFISHER					WA-2017-007-00
DESIGNED BY: H. FITZPATRICK	08/23/2018					REGION NO. 10 / STATE WA
ENTERED BY: G. BISHOP	08/23/2018					JOB NUMBER 18W121
CHECKED BY: M. FISHER	08/23/2018					CONTRACT NO. 00****
MAR PROJ ENGR: C. TORRES						
DGN ENGR MNGR: N. MCINTOSH						
ASST SECRETARY: A. SCARTON		REVISION	DATE	BY		

DATE

4472 REGISTERED ARCHITECT WALT W. NIEHOFF JR. STATE OF WASHINGTON

08/23/18
DATE

Washington State Department of Transportation
WASHINGTON STATE FERRIES

SR 525
MUKILTEO FERRY TERMINAL (PHASE 2)
FERRY TERMINAL CONSTRUCTION

PARTITION TYPES

A07.41

SHEET 1060 OF 1521 SHEETS

DOOR NO.	FROM ROOM:NAME	RATING (MIN.)	DOOR OPENING SIZE WIDTH	DOOR OPENING SIZE HEIGHT	PAIR	TYPE	DOOR MATERIAL	DOOR FINISH	GLAZING	STC	UNDERCUT	FRAME TYPE	FRAME MATERIAL	FRAME FINISH	GLAZING (SIDELIGHT, TRANSOM, ETC)	DETAILS JAMB	DETAILS HEAD	DETAILS THRESH	HARDWARE PANIC	HARDWARE ELECTRIC HARDWARE	HARDWARE GROUP	REMARKS
LEVEL 1																						
101	SPRINKLER	NR	3' – 6"	7' – 0"		A	HM	HPC–2	–	–	0'–0"	4	HM	HPC–2	GL–1	4/A08.10	1/A08.10	5/A08.10	–	–	05	ACCESS CONTROL – SEE WSF SECURITY DWGS
102	ELEV EQUIP 1	NR	3' – 6"	7' – 0"		A	HM	HPC–2	–	39	0'–0"	4	HM	HPC–2	GL–1	4/A08.10	1/A08.10	5/A08.10	–	–	05	
103A	MECH	NR	6' – 0"	7' – 0"	Y	AA	HM	HPC–2	–	39	0'–0"	5	HM	HPC–2	GL–1	4/A08.10	1/A08.10	5/A08.10	–	–	06	PROVIDE SOUND PROOFING
103B	MECH	NR	6' – 0"	7' – 0"	Y	AA	HM	HPC–2	–	39	0'–0"	5	HM	HPC–2	GL–1	4/A08.10	1/A08.10	5/A08.10	–	–	06	PROVIDE SOUND PROOFING
104	ELEC	NR	3' – 0"	7' – 0"		A	HM	HPC–2	–	–	0'–0"	4	HM	HPC–2	GL–1	4/A08.10	1/A08.10	5/A08.10	–	–	05	ACCESS CONTROL – SEE WSF SECURITY DWGS
107	TOILET	NR	3' – 0"	7' – 0"		A	HM	PNT	–	–	0'–0"	1	HM	PNT	–	1/A08.03	1/A08.03	–	–	–	07	
109	IT	NR	3' – 0"	7' – 0"		A	HM	HPC–2	–	–	0'–0"	4	HM	HPC–2	GL–1	4/A08.10	1/A08.10	5/A08.10	–	–	05	ACCESS CONTROL – SEE WSF SECURITY DWGS
110A	VEHICLE ATTENDANT	NR	3' – 0"	7' – 0"		A	HM	HPC–2	–	–	0'–0"	4	HM	HPC–2	GL–1	4/A08.10	1/A08.10	5/A08.10	–	–	08	ACCESS CONTROL – SEE WSF SECURITY DWGS
110B	CORRIDOR	NR	3' – 0"	7' – 0"		A	HM	HPC–2	–	–	0'–0"	4	HM	HPC–2	GL–1	4/A08.10	1/A08.10	5/A08.10	–	–	08	ACCESS CONTROL – SEE WSF SECURITY DWGS
111	TOILET	NR	3' – 0"	7' – 0"		A	HM	PNT	–	–	0'–0"	1	HM	PNT	–	1/A08.03	1/A08.03	–	–	–	07	ACCESS CONTROL – SEE WSF SECURITY DWGS
111A	LAV	NR	3' – 0"	7' – 0"		A	HM	PNT	–	–	0'–0"	1	HM	PNT	–	1/A08.03	1/A08.03	–	–	–	10	
112	CORRIDOR	NR	3' – 0"	7' – 0"		A	HM	PNT	–	–	0'–0"	1	HM	PNT	–	1/A08.03	1/A08.03	–	–	–	11	
113	SUPERVISOR	NR	3' – 0"	7' – 0"		A	HM	PNT	–	–	0'–0"	1	HM	PNT	–	1/A08.03	1/A08.03	–	–	–	11	ACCESS CONTROL – SEE WSF SECURITY DWGS
114	WSP	NR	3' – 0"	7' – 0"		A	HM	PNT	–	–	0'–0"	1	HM	PNT	–	1/A08.03	1/A08.03	–	–	–	11	ACCESS CONTROL – SEE WSF SECURITY DWGS
115A	CONFERENCE	NR	3' – 0"	7' – 0"		A	HM	PNT	–	–	0'–0"	1	HM	PNT		1/A08.03	1/A08.03	–	–	–	09	ACCESS CONTROL – SEE WSF SECURITY DWGS
115B	CONFERENCE	NR	3' – 0"	7' – 0"		A	HM	HPC–2	–	–	0'–0"	6	HM	HPC–2	GL–2	4/A08.10	1/A08.10	5/A08.10	–	–	08	SEE A08.11 FOR SIDELIGHT DETAILS
116	BREAKROOM	NR	3' – 0"	7' – 0"		A	HM	PNT	–	–	0'–0"	1	HM	PNT	–	1/A08.03	1/A08.03	–	–	–	09	ACCESS CONTROL – SEE WSF SECURITY DWGS
117	SUPERVISOR	NR	3' – 0"	7' – 0"		A	HM	PNT	–	–	0'–0"	1	HM	PNT	–	1/A08.03	1/A08.03	–	–	–	11	ACCESS CONTROL – SEE WSF SECURITY DWGS
118	VESSEL STOR	NR	3' – 0"	7' – 0"		A	HM	HPC–2	–	–	0'–0"	4	HM	HPC–2	GL–1	4/A08.10	1/A08.10	5/A08.10	–	–	05	ACCESS CONTROL – SEE WSF SECURITY DWGS
LEVEL 1 – MB																						
120	MECH EQUIP	NR	3' – 0"	7' – 4 1/2"		A	HM	MTLP–3A	–	39	0'–0"	1	HM	HPC–2	–	4/A08.15	1/A08.15	3/A08.15	–	–	01	
121	VENDOR EQUIPMENT ROOM	NR	3' – 0"	7' – 8 1/4"		A	HM	MTLP–3A	–	–	0'–0"	1	HM	HPC–2	–	4/A08.15	1/A08.15	3/A08.15	–	–	01	
122	ELEV EQUIP 2	NR	3' – 0"	7' – 8 1/4"		A	HM	MTLP–3A	–	39	0'–0"	1	HM	HPC–2	–	1/A08.17	2/A08.17	3/A08.15	–	–	01	
123	MAIN EQUIPMENT ROOM	NR	3' – 8"	7' – 4 1/2"		A	HM	MTLP–3A	–	–	0'–0"	1	HM	HPC–2	–	4/A08.15	1/A08.15	3/A08.15	–	–	01	ACCESS CONTROL – SEE WSF SECURITY DWGS
124A	ELECTRICAL	NR	4' – 0"	7' – 8 1/4"		A	HM	MTLP–3A	–	39	0'–0"	1	HM	HPC–2	–	4/A08.15	1/A08.15	3/A08.15	–	–	08	ACCESS CONTROL – SEE WSF SECURITY DWGS
124B	ELECTRICAL	NR	3' – 0"	7' – 4 1/2"		A	HM	MTLP–3A	–	39	0'–0"	1	HM	HPC–2	–	4/A08.15	1/A08.15	3/A08.15	–	–	08	ACCESS CONTROL – SEE WSF SECURITY DWGS
125	MAINT STORAGE	NR	6' – 0"	7' – 4 1/2"	Y	AA	HM	MTLP–3A	–	39	0'–0"	2	HM	HPC–2	–	4/A08.15	1/A08.15	3/A08.15	–	–	17	ACCESS CONTROL – SEE WSF SECURITY DWGS
131	JANITOR	NR	3' – 0"	7' – 8 1/4"		A	HM	HPC–2	–	–	0'–0"	1	HM	HPC–2	–	4/A08.16	1/A08.16	3/A08.16	–	–	13	
132	CHASE	NR	2' – 8"	7' – 8 1/4"		A	HM	HPC–2	–	–	0'–0"	1	HM	HPC–2	–	4/A08.16	1/A08.16	3/A08.16	–	–	12	
133	WOMEN	NR	3' – 0"	7' – 8 1/4"		A	HM	HPC–2	–	–	0'–0"	1	HM	HPC–2	–	4/A08.16	1/A08.16	3/A08.16	–	–	13	
134	JANITOR	NR	3' – 0"	7' – 8 1/4"		A	HM	HPC–2	–	–	0'–0"	1	HM	HPC–2	–	4/A08.16	1/A08.16	3/A08.16	–	–	05	
135	WATER ENTRY	NR	3' – 0"	7' – 8 1/4"		A	HM	HPC–2	–	–	0'–0"	1	HM	HPC–2	–	4/A08.16	1/A08.16	3/A08.16	–	–	12	ACCESS CONTROL – SEE WSF SECURITY DWGS

NOTE:
WHERE ACCESS CONTROL IS NOTED IN REMARKS – SEE WSF SECURITY DWGS FOR ADDITIONAL HARDWARE REQUIRED AT DOOR – CONTRACTOR SHALL FULLY COORDINATE PRIOR TO DOOR INSTALLATION

LMN

DOOR NO.	FROM ROOM: NAME	RATING (MIN.)	DOOR OPENING SIZE WIDTH	DOOR OPENING SIZE HEIGHT	DOOR PAIR	DOOR TYPE	DOOR MATERIAL	DOOR FINISH	DOOR GLAZING	STC SOUND RATING	UNDERCUT	FRAME TYPE	FRAME MATERIAL	FRAME FINISH	FRAME GLAZING (SIDELIGHT, TRANSOM, ETC)	DETAILS JAMB	DETAILS HEAD	DETAILS THRESH	HARDWARE PANIC	HARDWARE ELECTRIC HARDWARE	HARDWARE GROUP	REMARKS
TRESTLE																						
225																						
226																						
229																						
LEVEL 2																						
201A	GREAT HALL	NR	5' – 11 1/2"	8' – 6 1/2"	Y	B	AL	–	GL–2		0'–0"	SEE ELEVATION	AL	–	–	1/A06.27	2/A06.28	4/A06.26	–	–	14	
201B	GREAT HALL	NR	5' – 11 1/2"	8' – 6 1/2"	Y	B	AL	–	GL–2		0'–0"	SEE ELEVATION	AL	–	–	1/A06.27	2/A06.28	4/A06.26	–	–	14	
201C	GREAT HALL	NR	3' – 6"	8' – 6 1/2"		C	AL	–	GL–2	–	0'–0"	SEE ELEVATION	AL		–	–	–	–	–	–	08	
201D	GREAT HALL	NR	5' – 11 1/2"	8' – 6 1/2"	Y	B	AL	–	GL–2		0'–0"	SEE ELEVATION	AL	–	–	1/A06.27	2/A06.28	4/A06.26	–	–	14	
201E	GREAT HALL	NR	5' – 11 1/2"	8' – 6 1/2"	Y	B	AL	–	GL–2		0'–0"	SEE ELEVATION	AL	–	–	1/A06.27	2/A06.28	4/A06.26	–	–	14	
202	CORRIDOR	NR	3' – 0"	7' – 0"		A	HM	PNT	–	–	0'–0"	1	HM	PNT	–	1/A08.03	1/A08.03	–	–	–	15	
203A	CORRIDOR	NR	3' – 6"	7' – 0"		A	HM	HPC–2	–	–	0'–0"	1	HM	HPC–2 PNT–5	–	3/A08.12	1/A08.12	4/A08.12	–	–	01	ACCESS CONTROL – SEE WSF SECURITY DWGS
203B	CORRIDOR	NR	3' – 6"	7' – 0"		A	HM	PNT	–	–	0'–0"	1	HM	PNT–5	–	2/A08.14	3/A08.14	6/A08.14	–	–	15	ACCESS CONTROL – SEE WSF SECURITY DWGS
204	JANITOR CLOSET	NR	3' – 0"	7' – 0"		A	HM	PNT–5	–	–	0'–0"	1	HM	PNT	–	1/A08.03	1/A08.03	–	–	–	15	ACCESS CONTROL – SEE WSF SECURITY DWGS
207	CART	NR	6' – 0"	7' – 0"	Y	AA	HM	WD SDG, STN–1	–		0'–0"	2	HM		–	2/A08.13	3/A08.13	6/A08.13	–	–	16	
208	STORAGE	NR	3' – 0"	7' – 0"		A	HM	WD SDG, STN–1	–	–	0'–0"	1	HM	PNT–5	–	2/A08.13 SIM	3/A08.13 SIM	6/A08.13 SIM	–	–	15	ACCESS CONTROL – SEE WSF SECURITY DWGS
210	TICKET SALES	NR	3' – 0"	7' – 0"		A	HM	PNT	–	39	0'–0"	1	HM	PNT–5	–	1/A08.03	1/A08.03	–	–	–	11	ACCESS CONTROL – SEE WSF SECURITY DWGS
211	TICKET SALES	NR	3' – 0"	7' – 0"		A	HM	PNT	–	–	0'–0"	1	HM	PNT	–	1/A08.03	1/A08.03	–	–	–	11	ACCESS CONTROL – SEE WSF SECURITY DWGS
212	CORRIDOR	NR	3' – 0"	7' – 0"		A	HM	PNT	–	–	0'–0"	1	HM	PNT	–	1/A08.03	1/A08.03	–	–	–	15	ACCESS CONTROL – SEE WSF SECURITY DWGS
213A	CORRIDOR	NR	3' – 0"	7' – 0"		A	HM	HPC–2	–	–	0'–0"	1	HM	PNT–5	–	3/A08.12	1/A08.12	4/A08.12	–	–	01	ACCESS CONTROL – SEE WSF SECURITY DWGS
213B	VENDING	NR	3' – 0"	7' – 0"		A	HM	PNT	–	–	0'–0"	1	HM	PNT–5	–	1/A08.03	1/A08.03	–	–	–	15	ACCESS CONTROL – SEE WSF SECURITY DWGS
214	CORRIDOR	NR	3' – 0"	7' – 0"		A	HM	PNT	–	–	0'–0"	1	HM	PNT–5	–	1/A08.03	1/A08.03	–	–	–	15	ACCESS CONTROL – SEE WSF SECURITY DWGS
20																						

NOTE:
WHERE ACCESS CONTROL IS NOTED IN REMARKS – SEE WSF SECURITY DWGS FOR ADDITIONAL HARDWARE REQUIRED AT DOOR – CONTRACTOR SHALL FULLY COORDINATE PRIOR TO DOOR INSTALLATION

LMN

FILE NAME: PW:\WSF\Mukilteo\14W121_FerryTermConst\CADD\LMN\mft-CENTRAL_90%.rvt

PRINTED:	9/21/2018 4:51:40 PM	LAST PRINTED BY:				FED.AID PROJ.NO.
SUBMITTAL DATE:	08/23/2018	MFISHER				WA–2017–007–00
DESIGNED BY:	H. FITZPATRICK	08/23/2018				REGION NO. 10 / STATE WA
ENTERED BY:	G. BISHOP	08/23/2018				
CHECKED BY:	M. FISHER	08/23/2018				JOB NUMBER 18W121
MAR PROJ ENGR:	C. TORRES					
DGN ENGR MNGR:	N. MCINTOSH					CONTRACT NO. 00****
ASST SECRETARY:	A. SCARTON		REVISION	DATE	BY	

DATE

4472 REGISTERED ARCHITECT
WALT W. NIEHOFF JR.
STATE OF WASHINGTON
08/23/18
DATE

Washington State Department of Transportation
WASHINGTON STATE FERRIES

SR 525
MUKILTEO FERRY TERMINAL (PHASE 2)
FERRY TERMINAL CONSTRUCTION

LEVEL 2 – DOOR SCHEDULE

A08.01

SHEET 1062 OF 1521 SHEETS

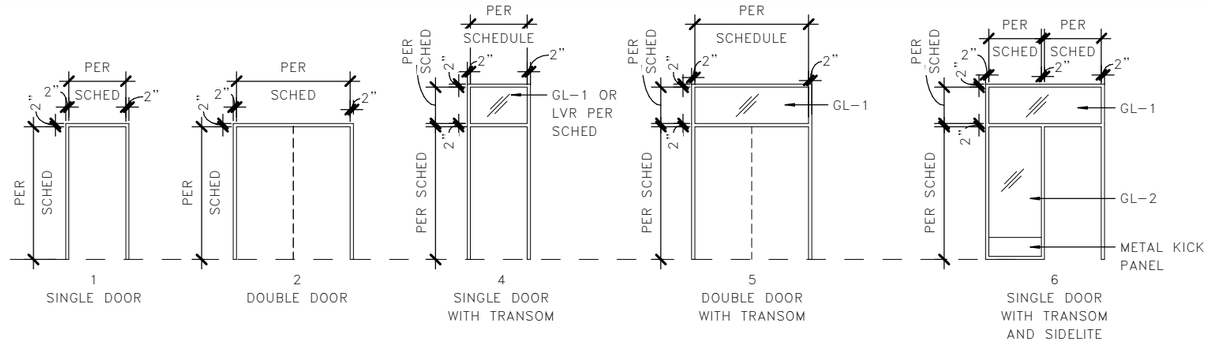

1 / A08.02 DOOR FRAME LEGEND

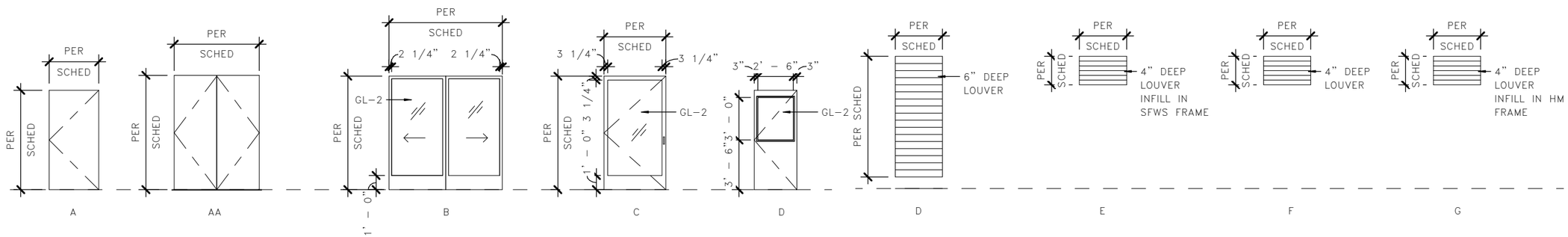

3 / A08.02 DOOR TYPES LEGEND

4 / A08.02 LOUVER TYPES LEGEND

COUNT	KEYNOTE	TYPE	LEVEL	UNIT HEIGHT	UNIT WIDTH	UNIT DEPTH	HEAD	LVR_SILL	JAMB	COMMENTS
1	LVR-1	D	LEVEL 1	9' - 3 1/2"	3' - 6"	6"	3/A08.20	6/A08.20	2/A08.20	TB MECHANICAL RM
1	LVR-1	D	LEVEL 1	9' - 3 1/2"	3' - 6"	6"	3/A08.20	6/A08.20	2/A08.20	TB MECHANICAL RM
1	LVR-2	E	LEVEL 1 - MB	2' - 1 3/4"	3' - 9 3/4"	4"	4/A06.61	4/A06.61	3/A06.62	MB CHASE RM 132 - INFILL TO SFWS-1
1	LVR-3	F	TOLL PLAZA	1'-2"	1'-2"	4"	3/A08.21	6/A08.21	5/A08.21	AIR INTAKE FOR ADA BOOTH
1	LVR-3	G	TOLL PLAZA	1'-2"	3'-0"	4"				EQUIPMENT RM 150 - INFILL TO HM TRANSOM
1	LVR-3	G	TOLL PLAZA	1'-2"	3'-0"	4"				ELEC RM 151 - INFILL TO HM TRANSOM
1	LVR-3	G	TOLL PLAZA	1'-2"	3'-0"	4"				STO RM 152 - INFILL TO HM TRANSOM

LMN

0' 4' 8'

FILE NAME: PW:\WSF\Mukilteo\14W121_FerryTermConst\CADD\LMN\mft-CENTRAL_90%.rvt

PRINTED:	9/21/2018 4:51:43 PM	LAST PRINTED BY:				FED.AID PROJ.NO.
SUBMITTAL DATE:	08/23/2018	MFISHER				WA-2017-007-00
DESIGNED BY:	H. FITZPATRICK	08/23/2018				REGION NO. 10 / STATE WA
ENTERED BY:	G. BISHOP	08/23/2018				JOB NUMBER 18W121
CHECKED BY:	M. FISHER	08/23/2018				CONTRACT NO. 00****
MAR PROJ ENGR:	C. TORRES					
DGN ENGR MNGR:	N. MCINTOSH					
ASST SECRETARY:	A. SCARTON		REVISION	DATE	BY	

DATE

4472 REGISTERED ARCHITECT
WALT W. NIEHOFF JR.
STATE OF WASHINGTON
08/23/18
DATE

Washington State Department of Transportation
WASHINGTON STATE FERRIES

SR 525
MUKILTEO FERRY TERMINAL (PHASE 2)
FERRY TERMINAL CONSTRUCTION

DOOR AND FRAME TYPES

A08.02

SHEET 1063 OF 1521 SHEETS

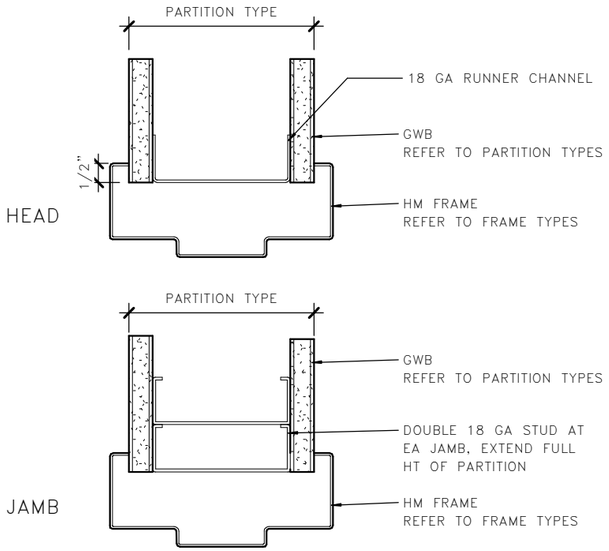

1 A08.03 TYPICAL HM DETAILS

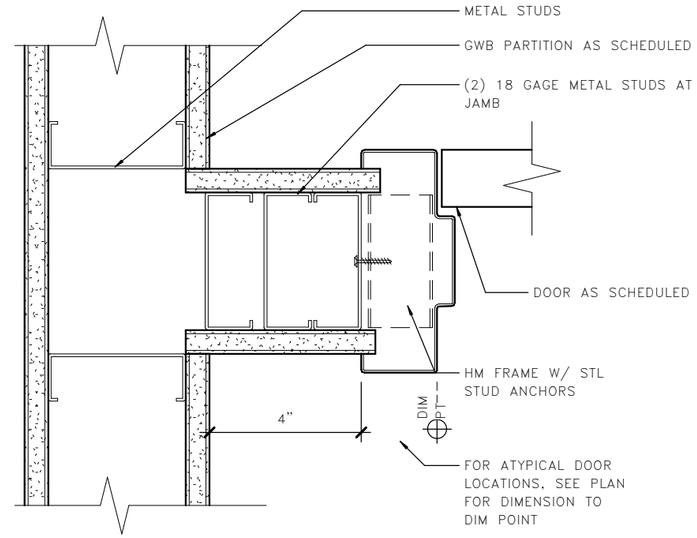

2 A08.03 TYP JAMB LOCATION

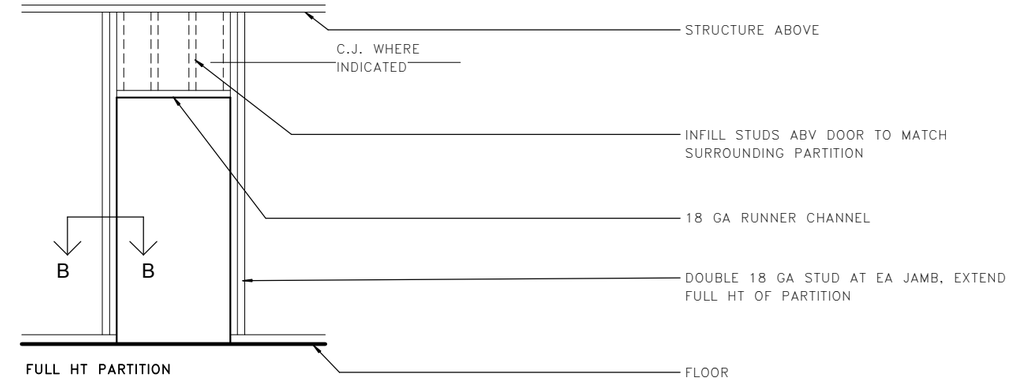

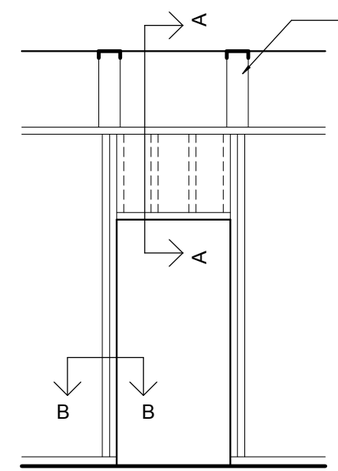

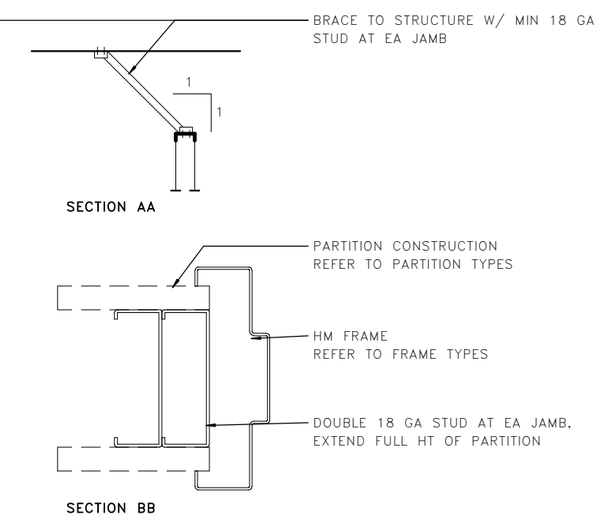

3 A08.03 FRAMING AT DOOR OPENINGS

NTS

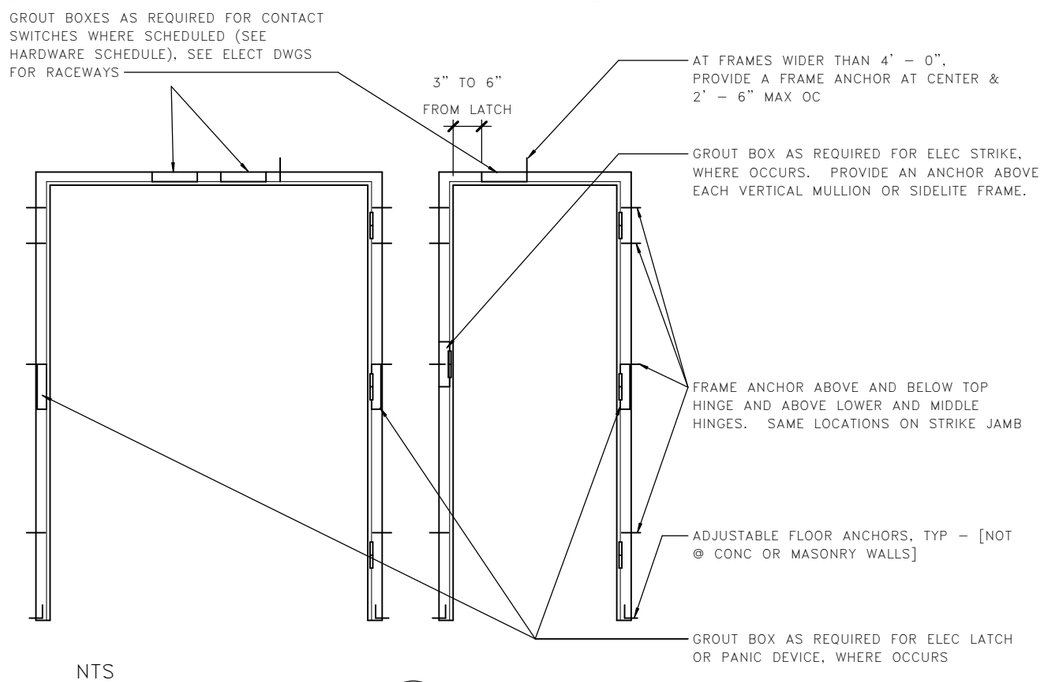

NTS

4 A08.03 FRAME ANCHOR LOCATIONS

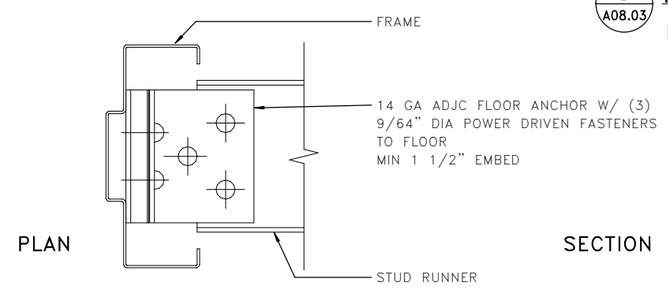

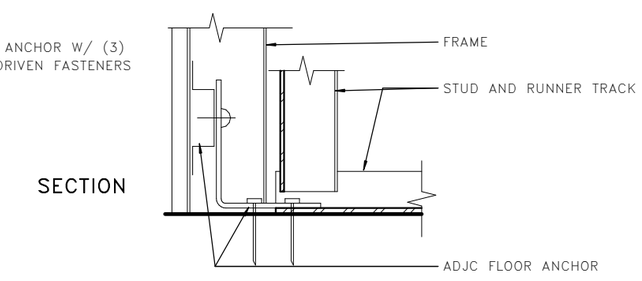

5 A08.03 ADJUSTABLE FLR ANCHOR

LMN

FILE NAME: PW:\WSF\Mukilteo\14W121_FerryTermConst\CADD\LMN\mft-CENTRAL_90%.rvt						
PRINTED: 9/21/2018 4:51:45 PM		LAST PRINTED BY:				FED.AID PROJ.NO.
SUBMITTAL DATE:	08/23/2018	MFISHER				WA-2017-007-00
DESIGNED BY:	H. FITZPATRICK	08/23/2018				REGION NO. 10 / STATE WA
ENTERED BY:	G. BISHOP	08/23/2018				
CHECKED BY:	M. FISHER	08/23/2018				JOB NUMBER 18W121
MAR PROJ ENGR:	C. TORRES					
DGN ENGR MNGR:	N. MCINTOSH					CONTRACT NO. 00****
ASST SECRETARY:	A. SCARTON		REVISION	DATE	BY	

DATE

4472 REGISTERED ARCHITECT WALT W. NIEHOFF JR. STATE OF WASHINGTON

08/23/18
DATE

Washington State Department of Transportation
WASHINGTON STATE FERRIES

SR 525
MUKILTEO FERRY TERMINAL (PHASE 2)
FERRY TERMINAL CONSTRUCTION

DOOR AND FRAME DETAILS

A08.03

SHEET 1064 OF 1521 SHEETS

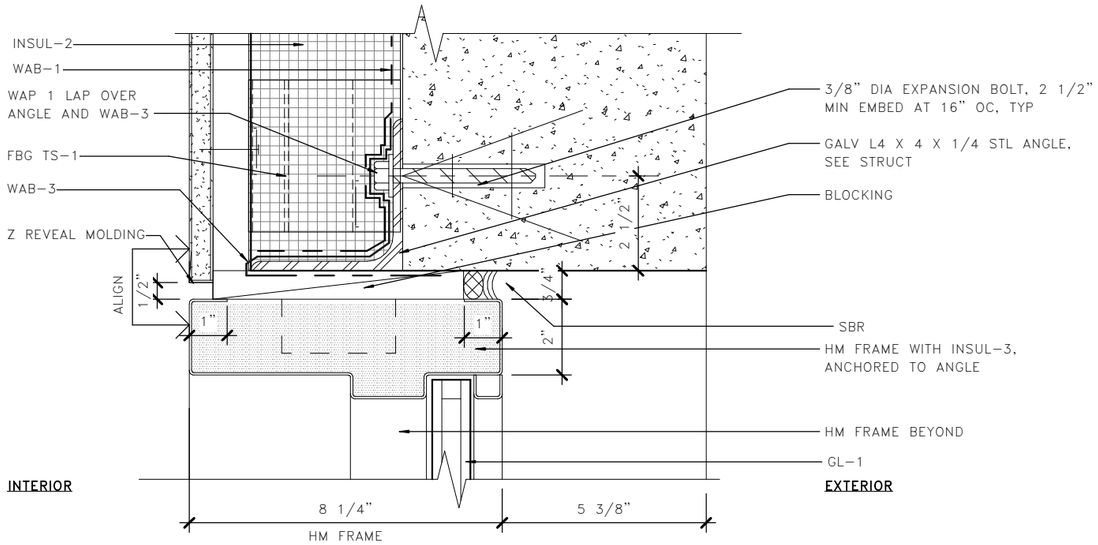

1 A08.10 TRANSOM HEAD

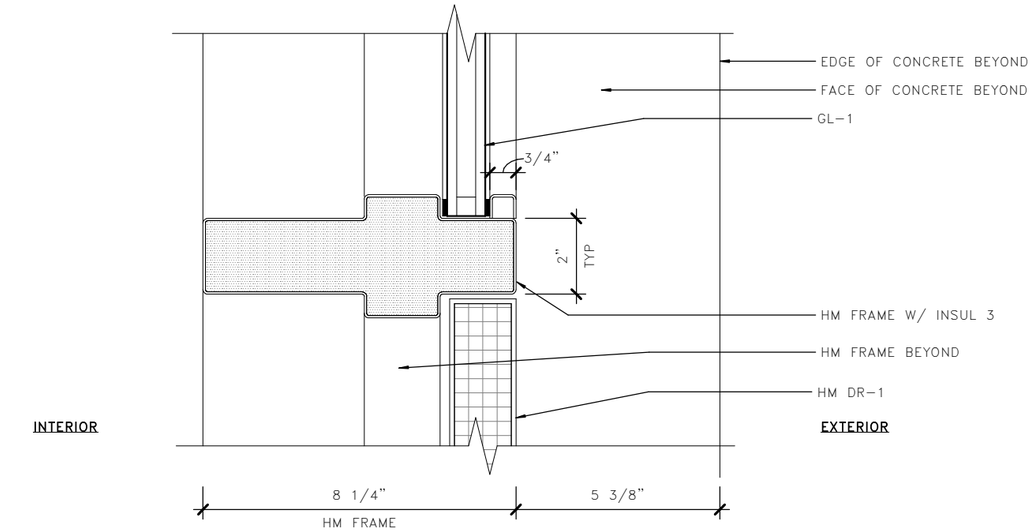

2 A08.10 DOOR HEAD

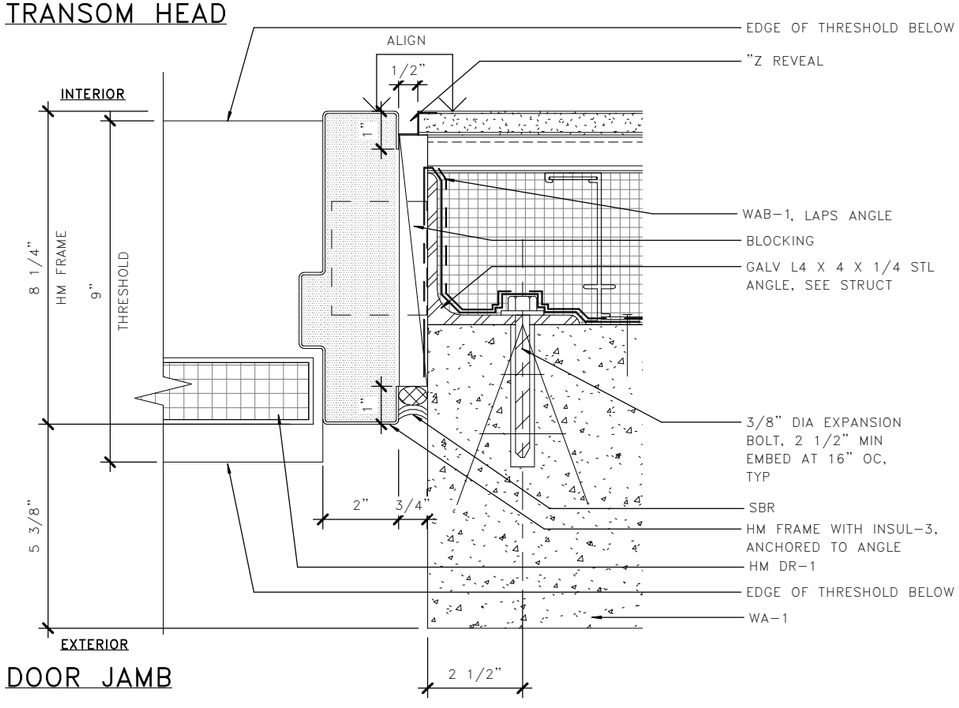

4 A08.10 DOOR JAMB

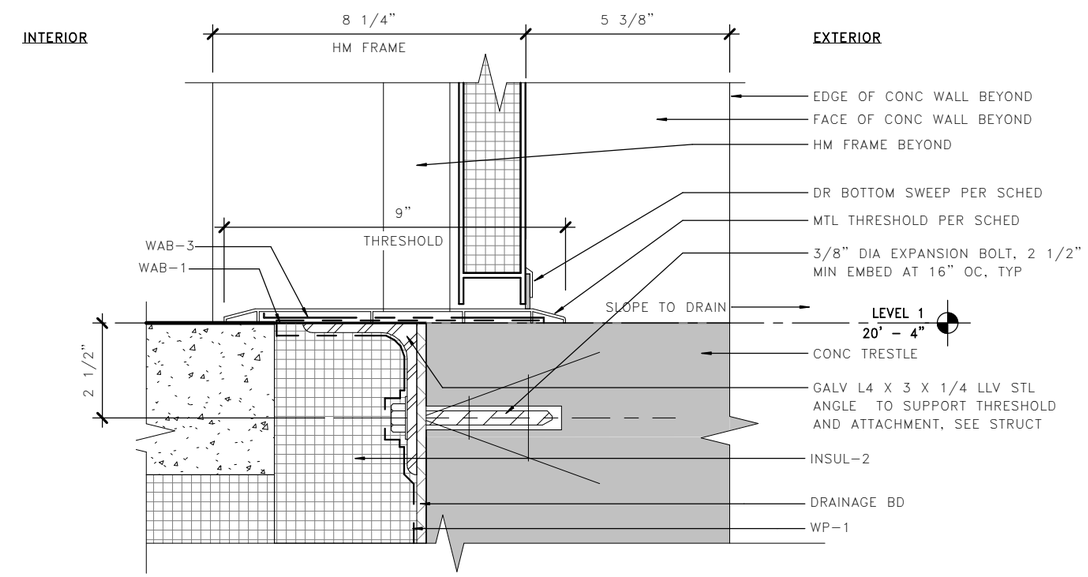

5 A08.10 DOOR THRESHOLD

LMN

0 2" 4"

FILE NAME: PW:\WSF\Mukilteo\14W121_FerryTermConst\CADD\LMN\mft-CENTRAL_90%.rvt						
PRINTED: 9/21/2018 4:51:49 PM	LAST PRINTED BY:					FED.AID PROJ.NO.
SUBMITTAL DATE: 08/23/2018	MFISHER					WA-2017-007-00
DESIGNED BY: H. FITZPATRICK	08/23/2018					REGION NO. 10 / STATE WA
ENTERED BY: G. BISHOP	08/23/2018					
CHECKED BY: M. FISHER	08/23/2018					JOB NUMBER 18W121
MAR PROJ ENGR: C. TORRES						
DGN ENGR MNGR: N. MCINTOSH						CONTRACT NO. 00****
ASST SECRETARY: A. SCARTON		REVISION	DATE	BY		

DATE

4472 REGISTERED ARCHITECT
WALT W. NIEHOFF JR.
STATE OF WASHINGTON
08/23/18
DATE

Washington State Department of Transportation
WASHINGTON STATE FERRIES

SR 525
MUKILTEO FERRY TERMINAL (PHASE 2)
FERRY TERMINAL CONSTRUCTION

DOOR DETAILS

A08.10

SHEET 1065 OF 1521 SHEETS

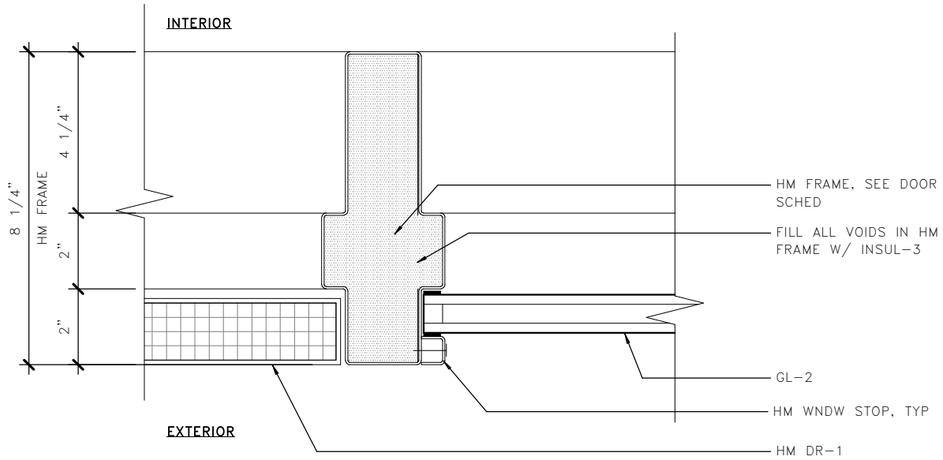

1 A08.11 DOOR JAMB @ SIDELITE

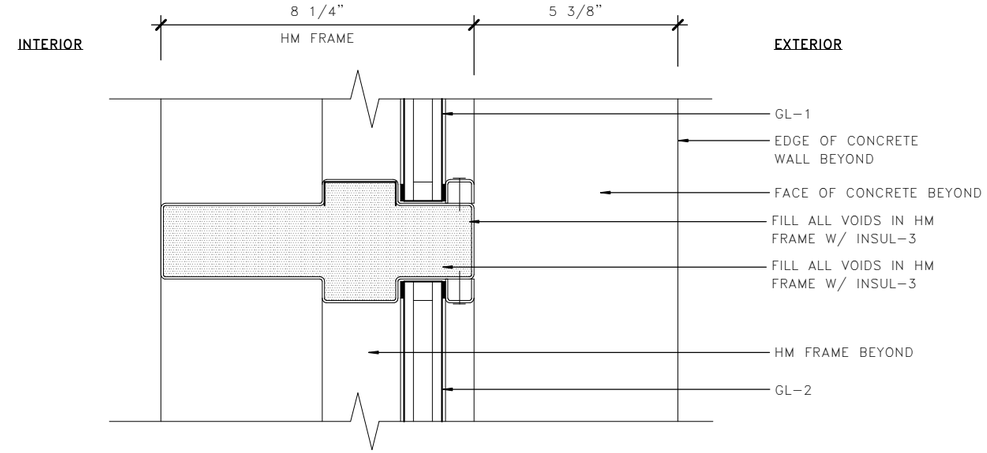

2 A08.11 SIDELITE MULLION, HORIZONTAL

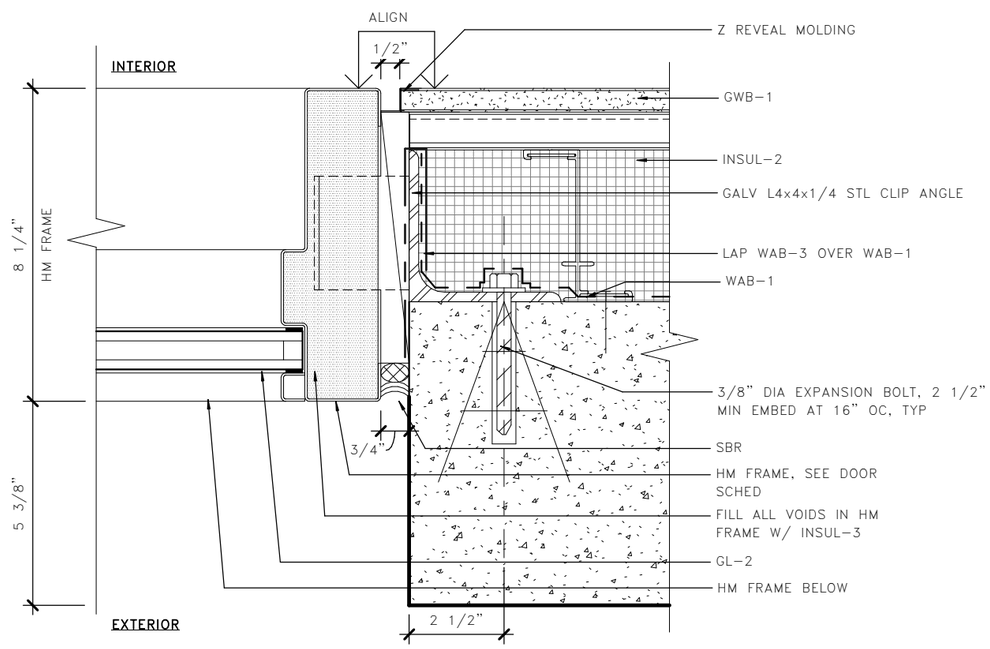

3 A08.11 SIDELITE JAMB

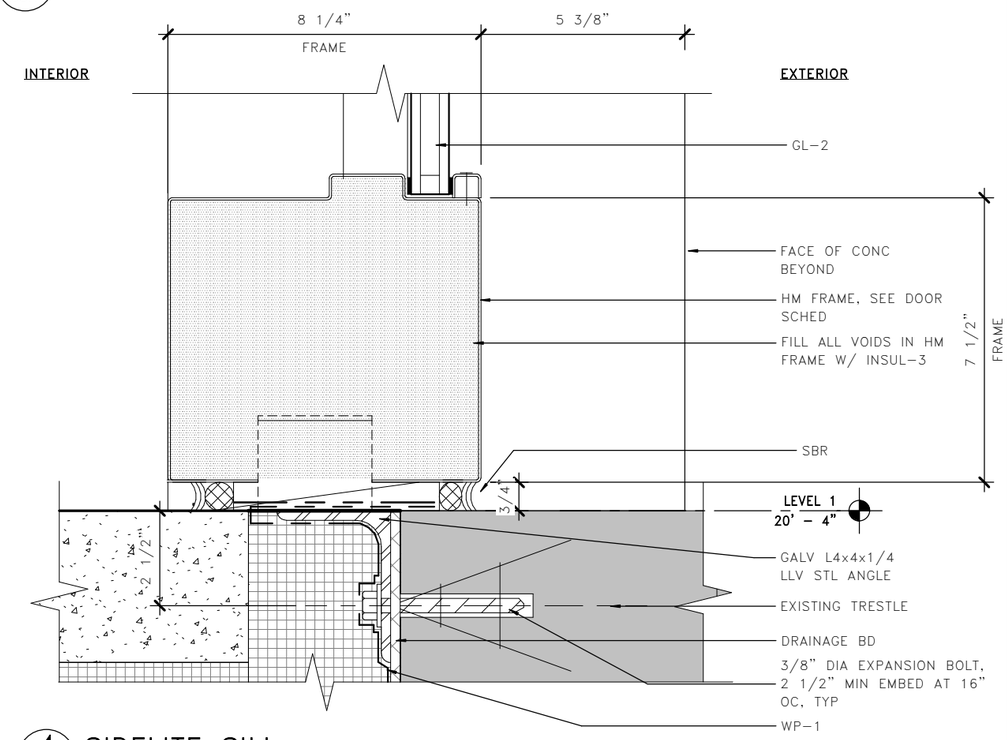

4 A08.11 SIDELITE SILL

0 2" 4"

LMN

FILE NAME: PW:\WSF\Mukilteo\14W121_FerryTermConst\CADD\LMN\mft-CENTRAL_90%.rvt						FED.AID PROJ.NO.
PRINTED: 9/21/2018 4:51:55 PM	LAST PRINTED BY:					WA-2017-007-00
SUBMITTAL DATE: 08/23/2018	MFISHER					REGION NO. 10 / STATE WA
DESIGNED BY: H. FITZPATRICK	08/23/2018					JOB NUMBER 18W121
ENTERED BY: G. BISHOP	08/23/2018					CONTRACT NO. 00****
CHECKED BY: M. FISHER	08/23/2018					
MAR PROJ ENGR: C. TORRES						
DGN ENGR MNGR: N. MCINTOSH						
ASST SECRETARY: A. SCARTON		REVISION	DATE	BY		

DATE

4472 REGISTERED ARCHITECT
WALT W. NIEHOFF JR.
STATE OF WASHINGTON
08/23/18
DATE

Washington State Department of Transportation
WASHINGTON STATE FERRIES

SR 525
MUKILTEO FERRY TERMINAL (PHASE 2)
FERRY TERMINAL CONSTRUCTION

DOOR DETAILS

A08.11

SHEET 1066 OF 1521 SHEETS

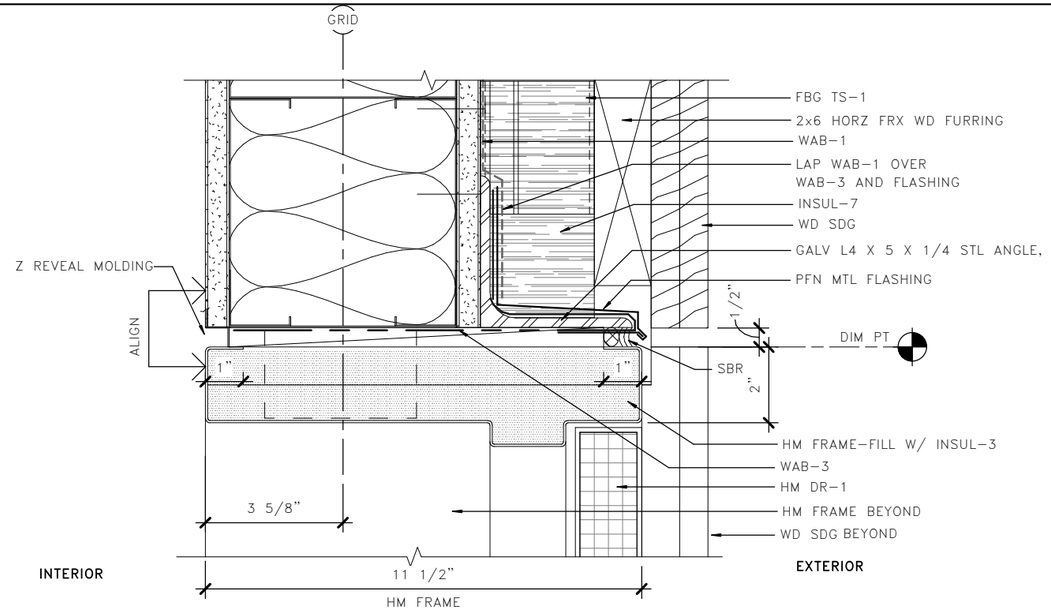

1 A08.12 DOOR HEAD @ LEVEL 2 EXTERIOR

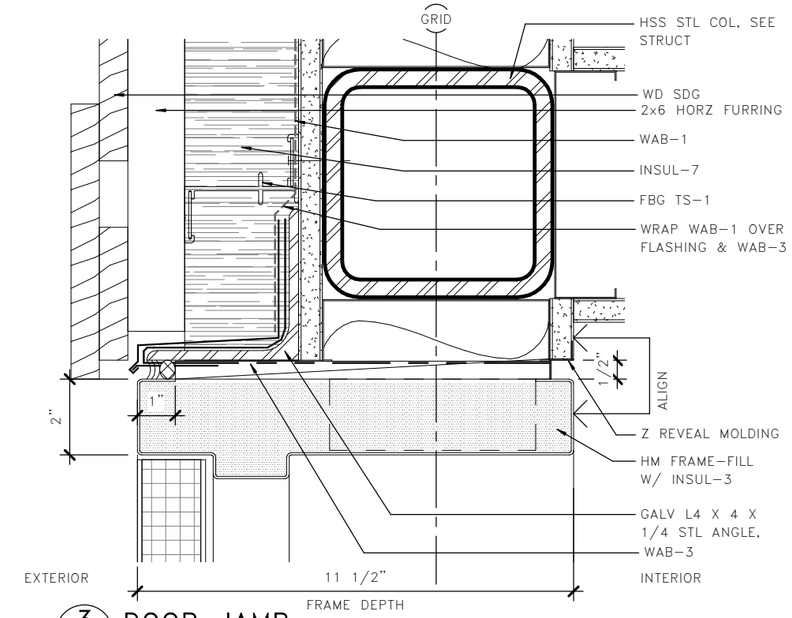

3 A08.12 DOOR JAMB

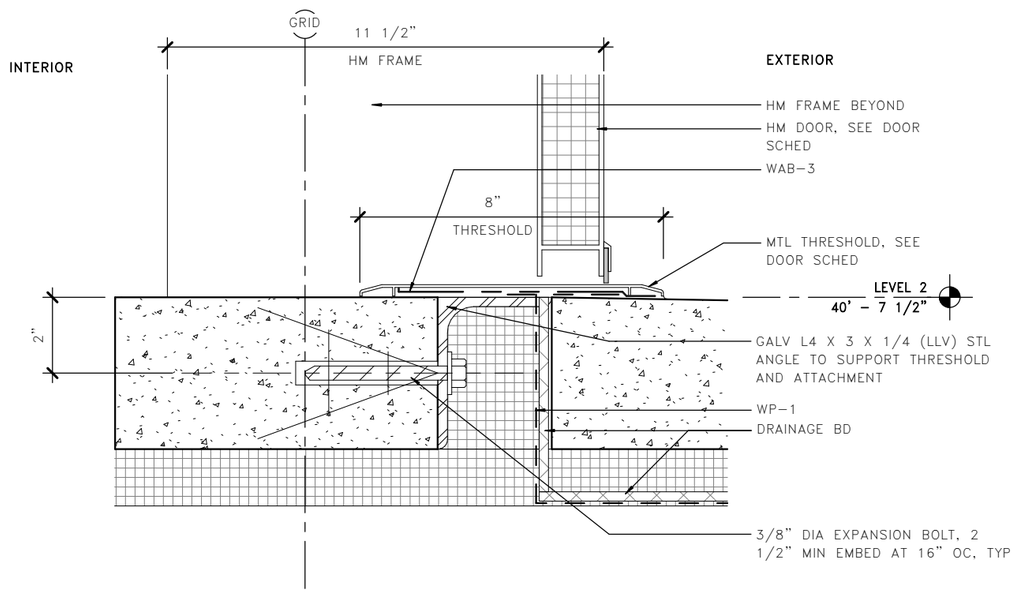

4 A08.12 DOOR THRESHOLD @ LEVEL 2 EXT

LMN

0 2" 4"

FILE NAME: PW:\WSF\Mukilteo\14W121_FerryTermConst\CADD\LMN\mft-CENTRAL_90%.rvt						
PRINTED: 9/21/2018 4:51:57 PM	LAST PRINTED BY:				FED.AID PROJ.NO.	
SUBMITTAL DATE: 08/23/2018	MFISHER				WA-2017-007-00	
DESIGNED BY: H. FITZPATRICK	08/23/2018				REGION NO. 10	STATE WA
ENTERED BY: G. BISHOP	08/23/2018				JOB NUMBER 18W121	
CHECKED BY: M. FISHER	08/23/2018				CONTRACT NO. 00****	
MAR PROJ ENGR: C. TORRES						
DGN ENGR MNGR: N. MCINTOSH						
ASST SECRETARY: A. SCARTON		REVISION	DATE	BY		

DATE

4472 REGISTERED ARCHITECT WALT W. NIEHOFF JR. STATE OF WASHINGTON
08/23/18
DATE

Washington State Department of Transportation
WASHINGTON STATE FERRIES

SR 525
MUKILTEO FERRY TERMINAL (PHASE 2)
FERRY TERMINAL CONSTRUCTION

DOOR DETAILS

A08.12

SHEET 1067 OF 1521 SHEETS

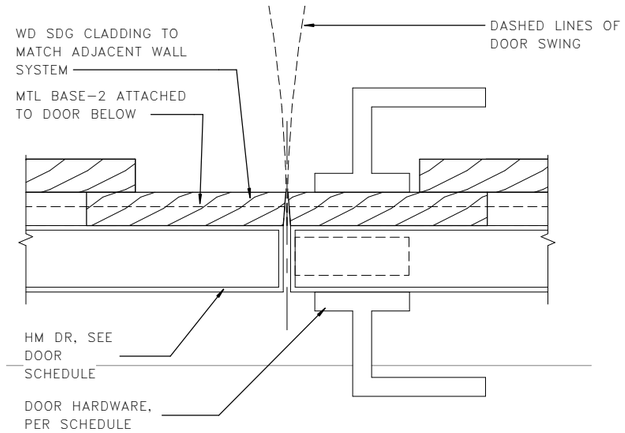

1 A08.13 DOOR DETAIL – LATCH

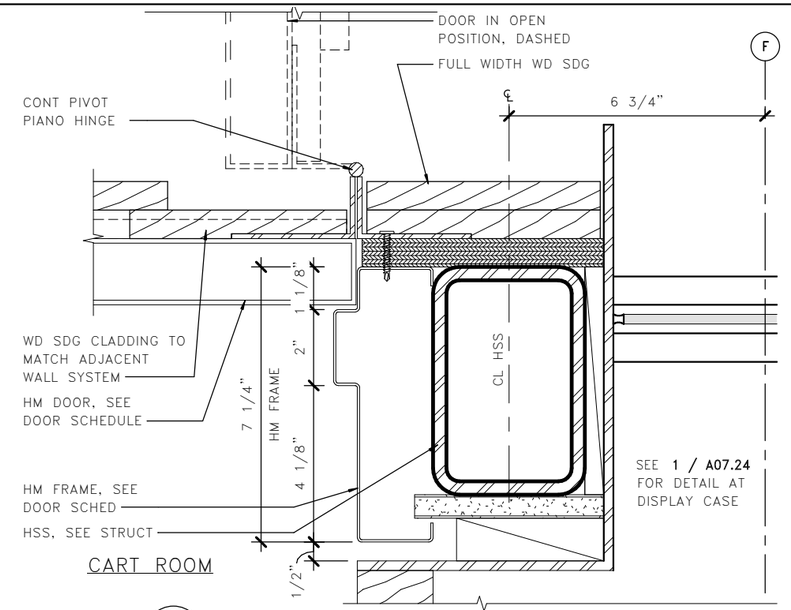

2 A08.13 DOOR DETAIL – JAMB

NO COLUMN OR DISPLAY CASE AT SIM

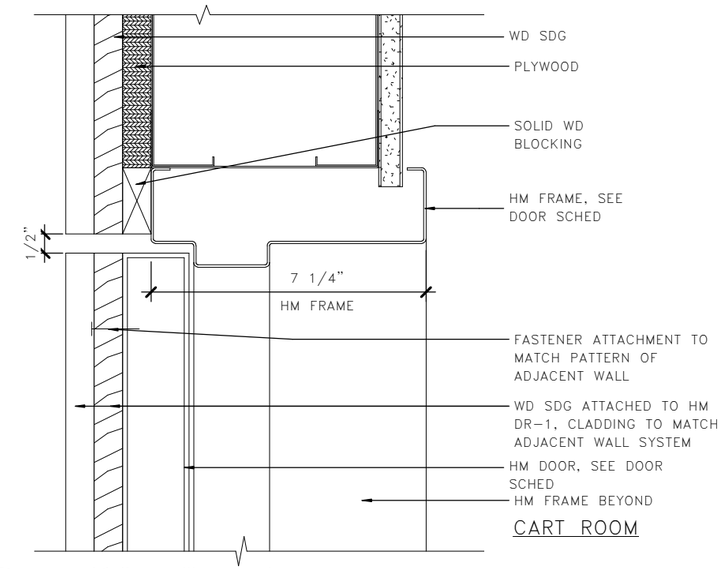

3 A08.13 DOOR DETAIL – HEAD

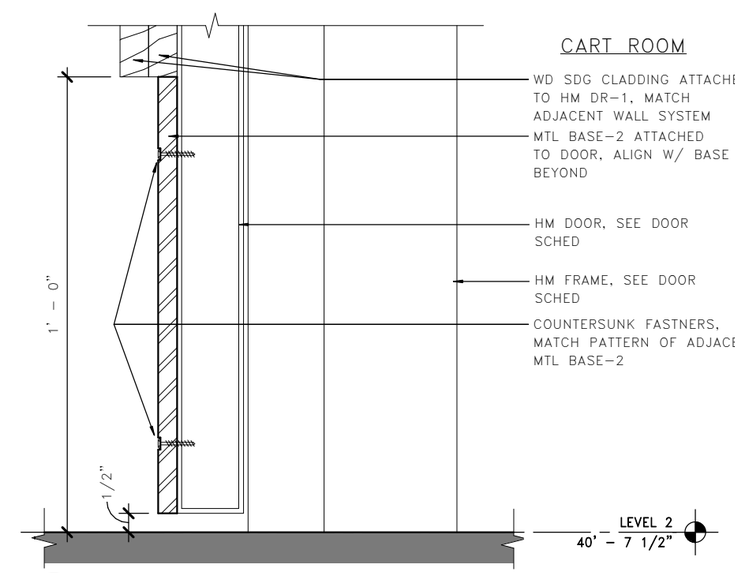

6 A08.13 DOOR DETAIL – SILL

0 2" 4"

LMN

FILE NAME: PW:\WSF\Mukilteo\14W121_FerryTermConst\CADD\LMN\mft-CENTRAL_90%.rvt						
PRINTED: 9/21/2018 4:51:57 PM	LAST PRINTED BY:					FED.AID PROJ.NO.
SUBMITTAL DATE: 08/23/2018	MFISHER					WA-2017-007-00
DESIGNED BY: H. FITZPATRICK	08/23/2018					REGION NO. 10 / STATE WA
ENTERED BY: G. BISHOP	08/23/2018					
CHECKED BY: M. FISHER	08/23/2018					JOB NUMBER 18W121
MAR PROJ ENGR: C. TORRES						
DGN ENGR MNGR: N. MCINTOSH						CONTRACT NO. 00****
ASST SECRETARY: A. SCARTON		REVISION	DATE	BY		

DATE

4472 REGISTERED ARCHITECT WALT W. NIEHOFF JR. STATE OF WASHINGTON

08/23/18
DATE

Washington State Department of Transportation
WASHINGTON STATE FERRIES

SR 525
MUKILTEO FERRY TERMINAL (PHASE 2)
FERRY TERMINAL CONSTRUCTION

DOOR DETAILS

A08.13

SHEET 1068 OF 1521 SHEETS

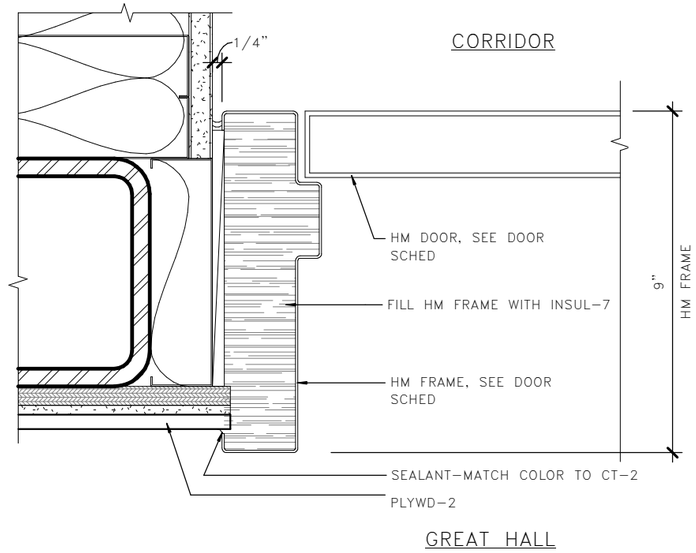

1 A08.14 DOOR DETAIL JAMB

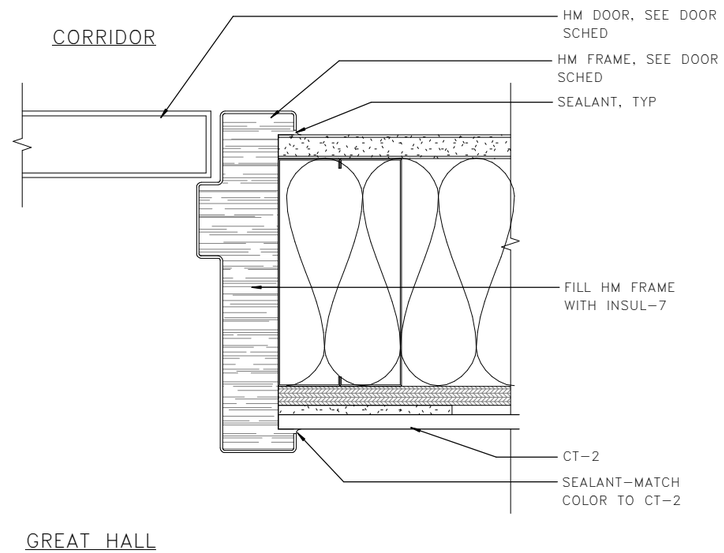

2 A08.14 DOOR DETAIL LATCH JAMB

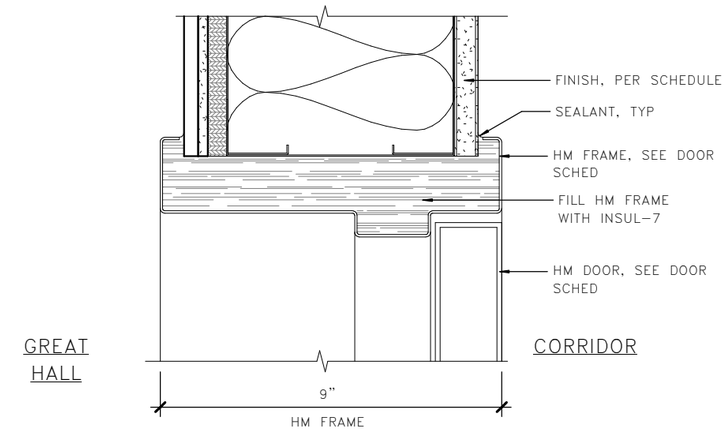

3 A08.14 DOOR DETAIL @ HEAD

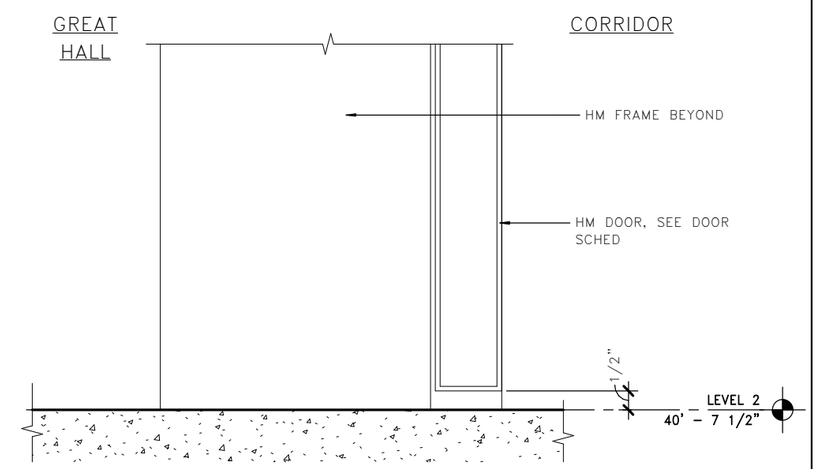

6 A08.14 DOOR DETAIL SILL

0 2" 4"

LMN

FILE NAME: PW:\WSF\Mukilteo\14W121_FerryTermConst\CADD\LMN\mft-CENTRAL_90%.rvt						
PRINTED: 9/21/2018 4:52:00 PM	LAST PRINTED BY:					FED.AID PROJ.NO.
SUBMITTAL DATE: 08/23/2018	MFISHER					WA-2017-007-00
DESIGNED BY: H. FITZPATRICK	08/23/2018					REGION NO. 10 / STATE WA
ENTERED BY: G. BISHOP	08/23/2018					
CHECKED BY: M. FISHER	08/23/2018					JOB NUMBER 18W121
MAR PROJ ENGR: C. TORRES						
DGN ENGR MNGR: N. MCINTOSH						CONTRACT NO. 00****
ASST SECRETARY: A. SCARTON		REVISION	DATE	BY		

DATE

4472 REGISTERED ARCHITECT
WALT W. NIEHOFF JR.
STATE OF WASHINGTON
08/23/18
DATE

Washington State Department of Transportation
WASHINGTON STATE FERRIES

SR 525
MUKILTEO FERRY TERMINAL (PHASE 2)
FERRY TERMINAL CONSTRUCTION

DOOR DETAILS

A08.14

SHEET 1069 OF 1521 SHEETS

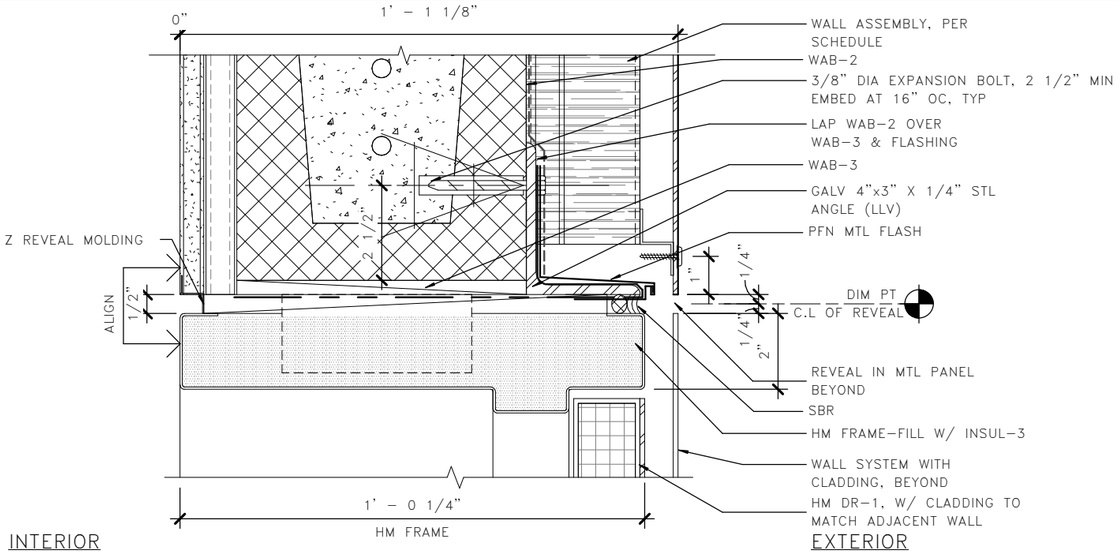

1 A08.15 DOOR DETAIL – HEAD

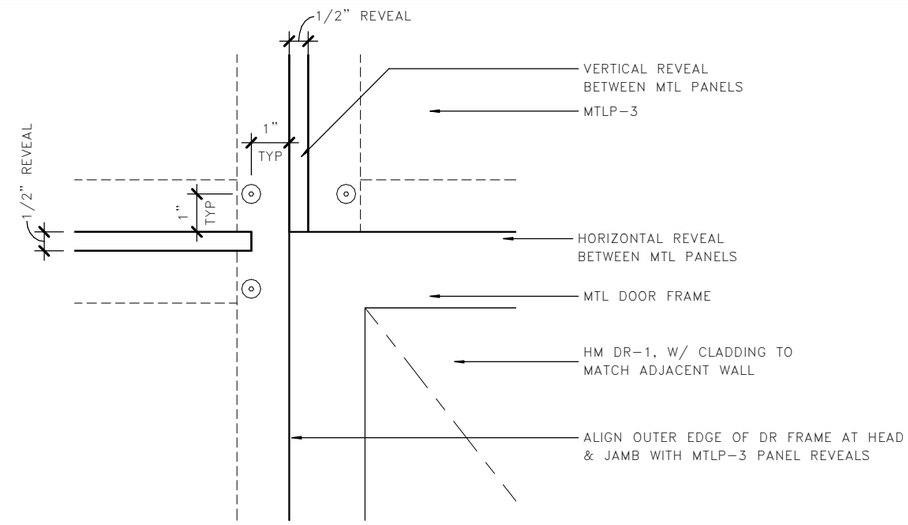

2 A08.15 DOOR ELEVATION @ MTLP–3

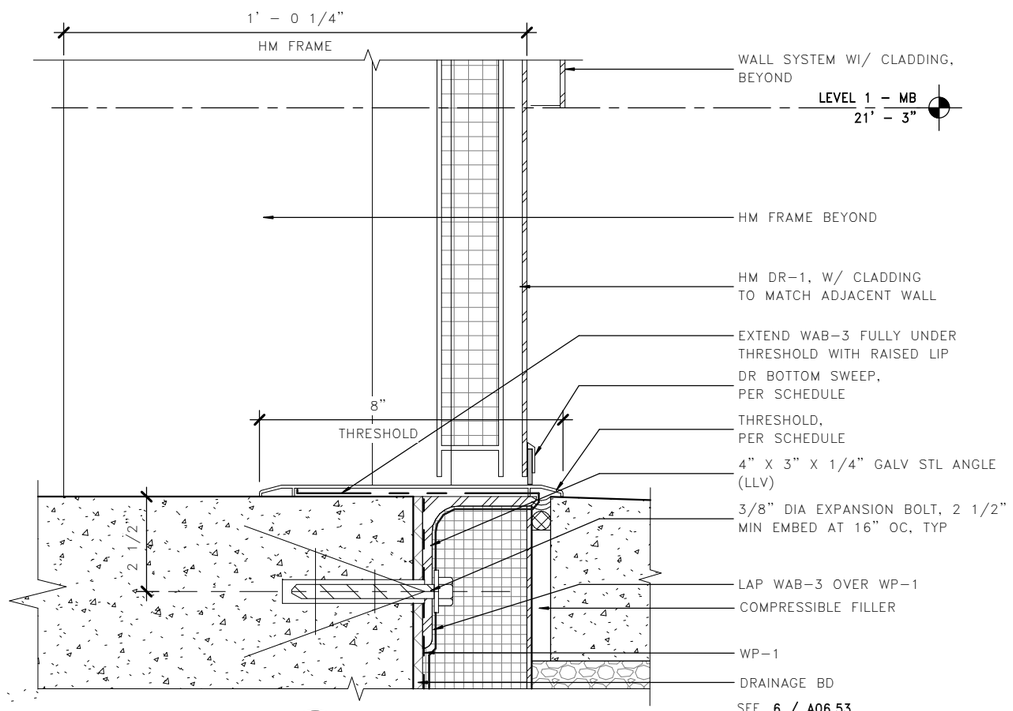

3 A08.15 DOOR DETAIL – SILL

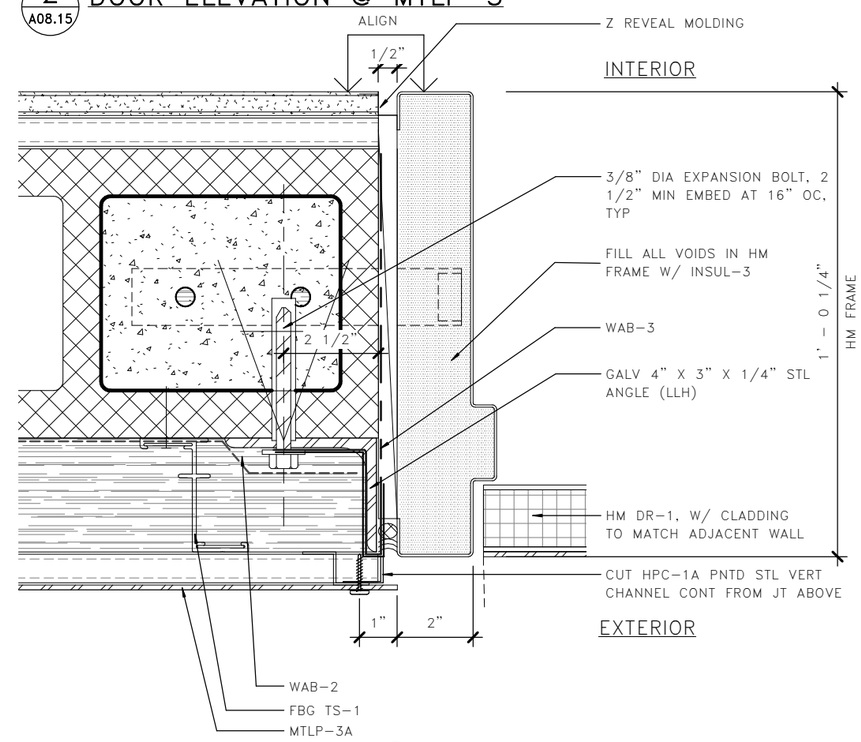

LMN

4 A08.15 DOOR JAMB DETAIL @ MTLP 3

0 2" 4"

FILE NAME: PW:\WSF\Mukilteo\14W121_FerryTermConst\CADD\LMN\mft-CENTRAL_90%.rvt						
PRINTED: 9/21/2018 4:52:04 PM	LAST PRINTED BY:					FED.AID PROJ.NO.
SUBMITTAL DATE: 08/23/2018	MFISHER					WA-2017-007-00
DESIGNED BY: H. FITZPATRICK	08/23/2018					REGION NO. 10 / STATE WA
ENTERED BY: G. BISHOP	08/23/2018					JOB NUMBER 18W121
CHECKED BY: M. FISHER	08/23/2018					CONTRACT NO. 00****
MAR PROJ ENGR: C. TORRES						
DGN ENGR MNGR: N. MCINTOSH						
ASST SECRETARY: A. SCARTON		REVISION	DATE	BY		

DATE

4472 REGISTERED ARCHITECT WALT W. NIEHOFF JR. STATE OF WASHINGTON

08/23/18
DATE

Washington State Department of Transportation
WASHINGTON STATE FERRIES

SR 525
MUKILTEO FERRY TERMINAL (PHASE 2)
FERRY TERMINAL CONSTRUCTION

DOOR DETAILS

A08.15

SHEET 1070 OF 1521 SHEETS

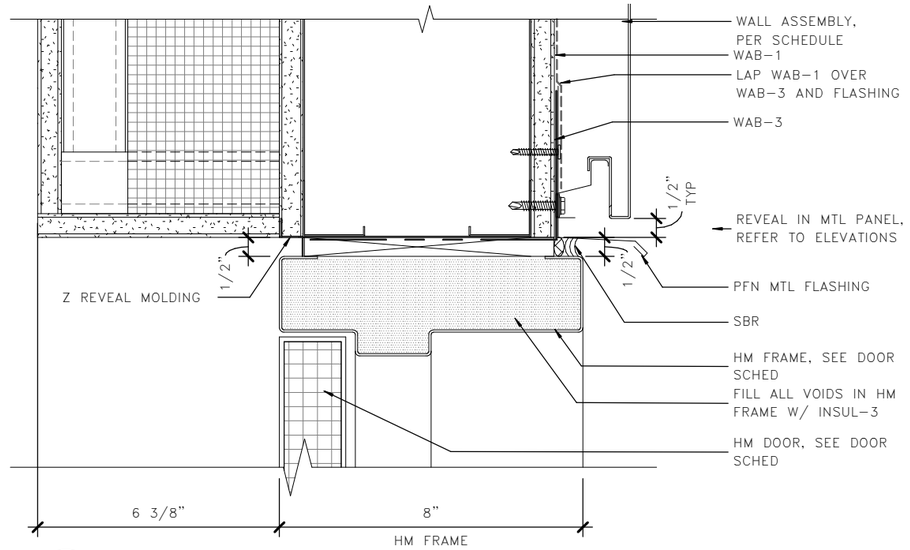

ROOMS 131, 132, 133 & 135 (134 SIM.)

1 A08.16 DOOR DETAIL – HEAD

VENDING

INTERIOR

EXTERIOR

ROOMS 131, 132, 133 & 135 (134 SIM.)

VENDING

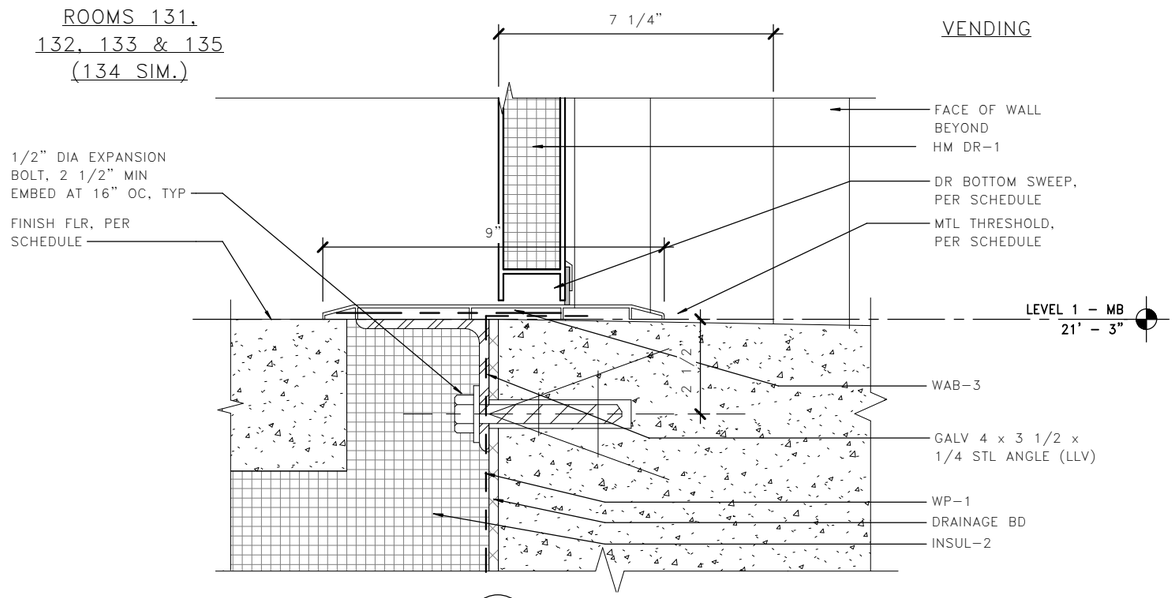

3 A08.16 DOOR DETAIL – SILL

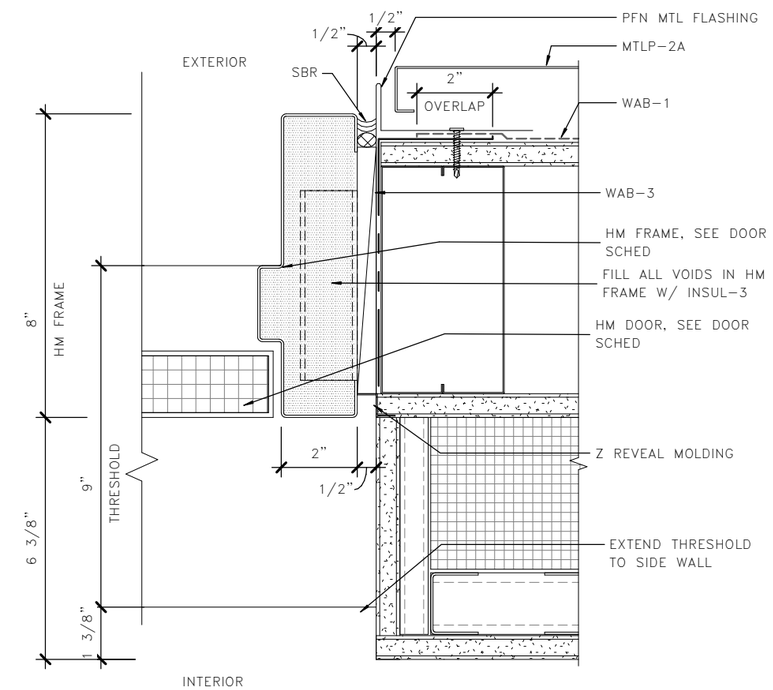

4 A08.16 DOOR DETAIL – JAMB

0 2" 4"

LMN

FILE NAME: PW:\WSF\Mukilteo\14W121_FerryTermConst\CADD\LMN\mft-CENTRAL_90%.rvt						
PRINTED: 9/21/2018 4:52:07 PM	LAST PRINTED BY:					FED.AID PROJ.NO.
SUBMITTAL DATE: 08/23/2018	MFISHER					WA-2017-007-00
DESIGNED BY: H. FITZPATRICK	08/23/2018					REGION NO. 10 / STATE WA
ENTERED BY: G. BISHOP	08/23/2018					
CHECKED BY: M. FISHER	08/23/2018					JOB NUMBER 18W121
MAR PROJ ENGR: C. TORRES						
DGN ENGR MNGR: N. MCINTOSH						CONTRACT NO. 00****
ASST SECRETARY: A. SCARTON		REVISION	DATE	BY		

DATE

4472 REGISTERED ARCHITECT WALT W. NIEHOFF JR. STATE OF WASHINGTON

08/23/18
DATE

Washington State Department of Transportation
WASHINGTON STATE FERRIES

SR 525
MUKILTEO FERRY TERMINAL (PHASE 2)
FERRY TERMINAL CONSTRUCTION

DOOR DETAILS

A08.16

SHEET 1071 OF 1521 SHEETS

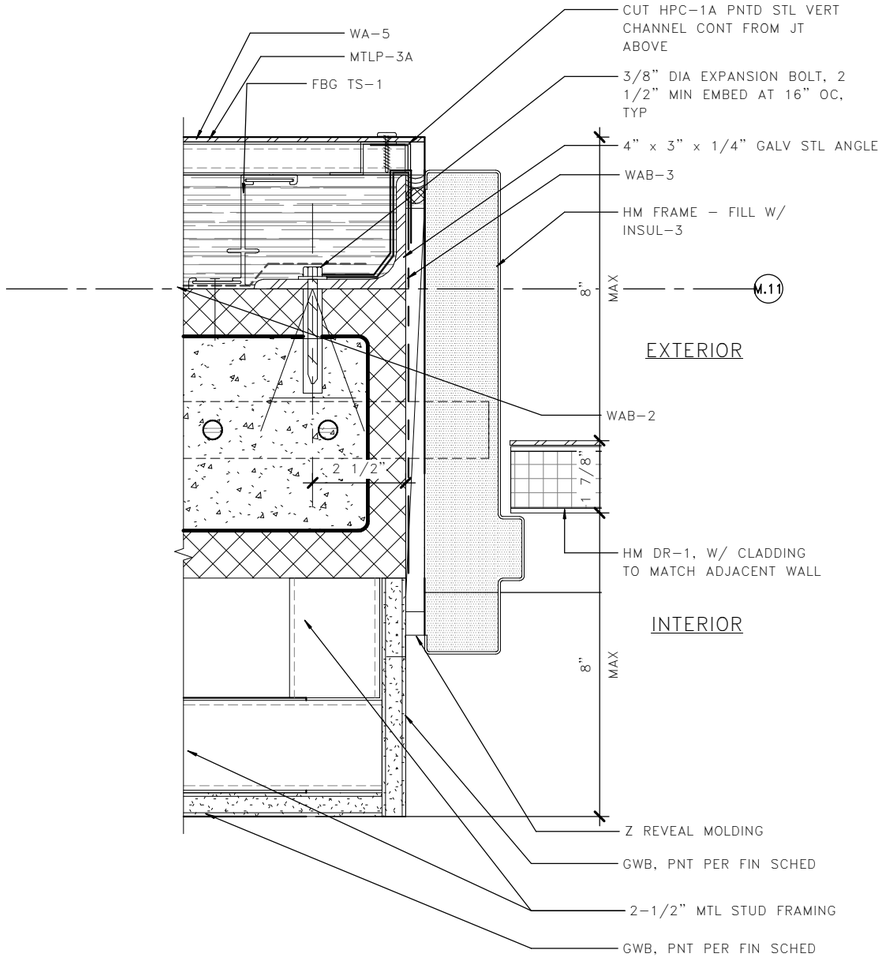

1 A08.17 DOOR 122 - JAMB

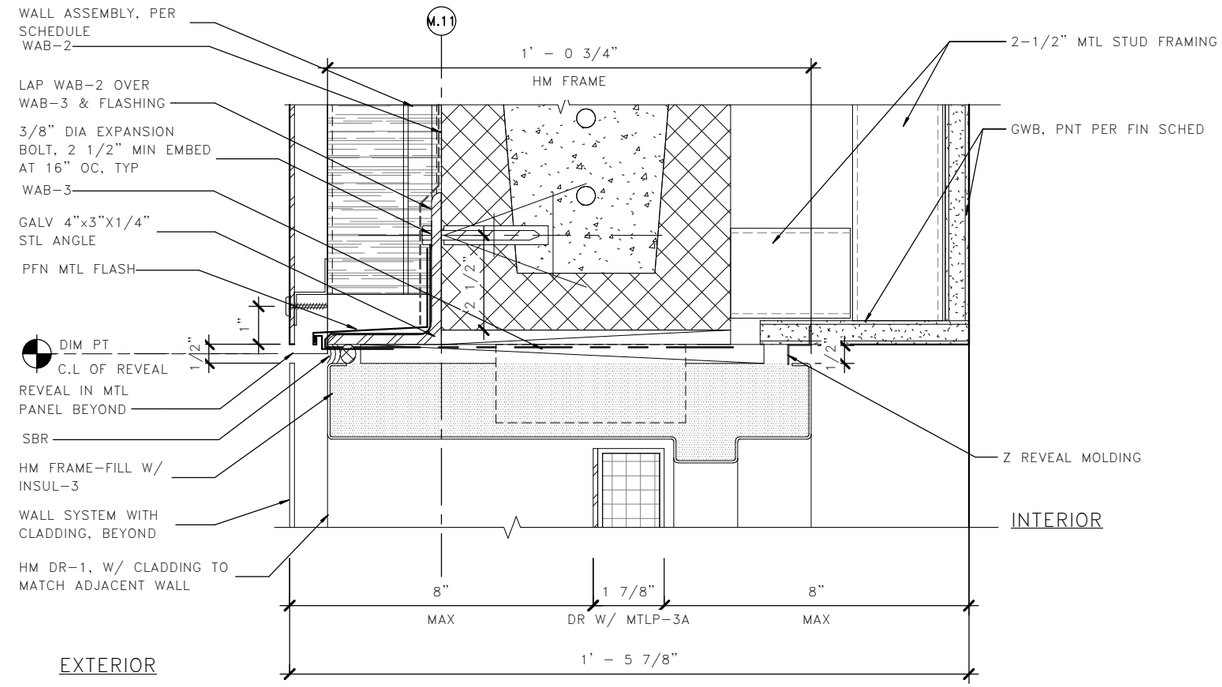

2 A08.17 DOOR 122 - HEAD

LMN

0 2" 4"

FILE NAME: PW:\WSF\Mukilteo\14W121_FerryTermConst\CADD\LMN\mft-CENTRAL_90%.rvt						
PRINTED: 9/21/2018 4:52:10 PM	LAST PRINTED BY:					FED.AID PROJ.NO.
SUBMITTAL DATE: 08/23/2018	MFISHER					WA-2017-007-00
DESIGNED BY: H. FITZPATRICK	08/23/2018					REGION NO. 10 / STATE WA
ENTERED BY: G. BISHOP	08/23/2018					JOB NUMBER 18W121
CHECKED BY: M. FISHER	08/23/2018					CONTRACT NO. 00****
MAR PROJ ENGR: C. TORRES						
DGN ENGR MNGR: N. MCINTOSH						
ASST SECRETARY: A. SCARTON		REVISION	DATE	BY		

DATE

4472 REGISTERED ARCHITECT WALT W. NIEHOFF JR. STATE OF WASHINGTON

08/23/18
DATE

Washington State Department of Transportation
WASHINGTON STATE FERRIES

SR 525
MUKILTEO FERRY TERMINAL (PHASE 2)
FERRY TERMINAL CONSTRUCTION

DOOR DETAILS

A08.17

SHEET 1072 OF 1521 SHEETS

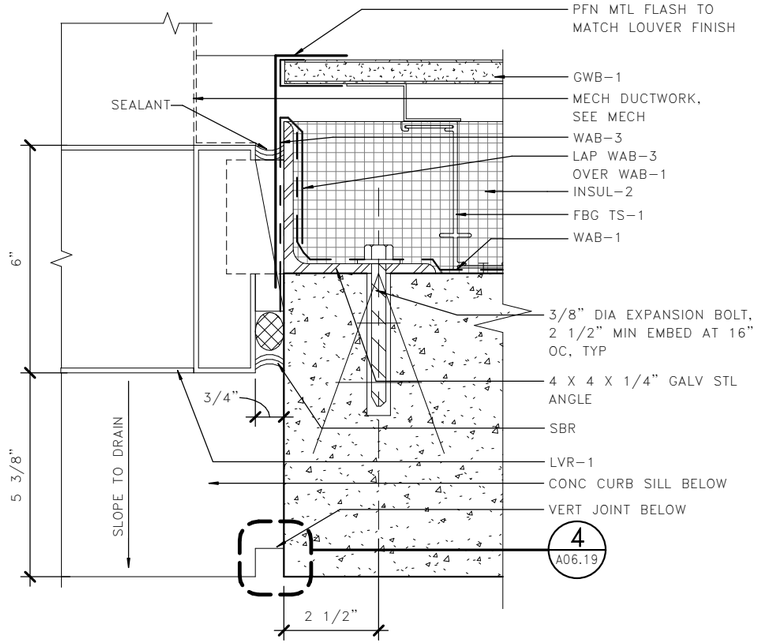

2 A08.20 LOUVER JAMB

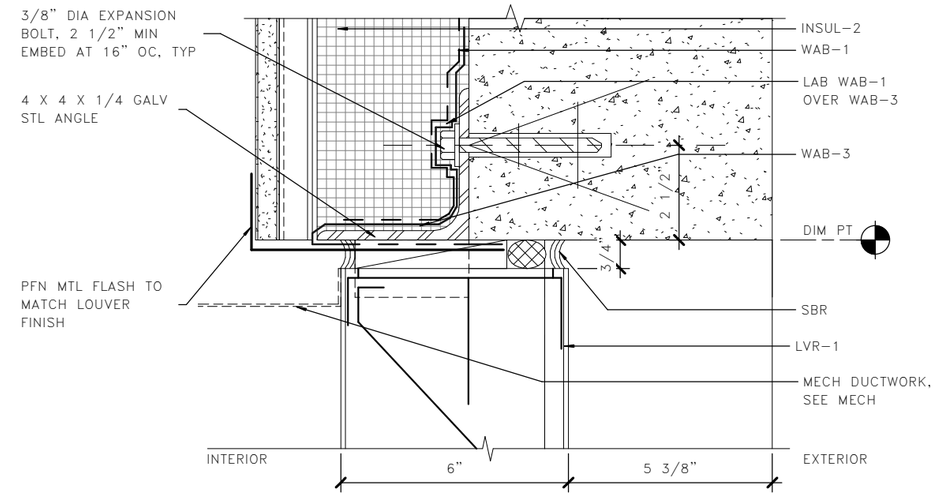

3 A08.20 LOUVER HEAD

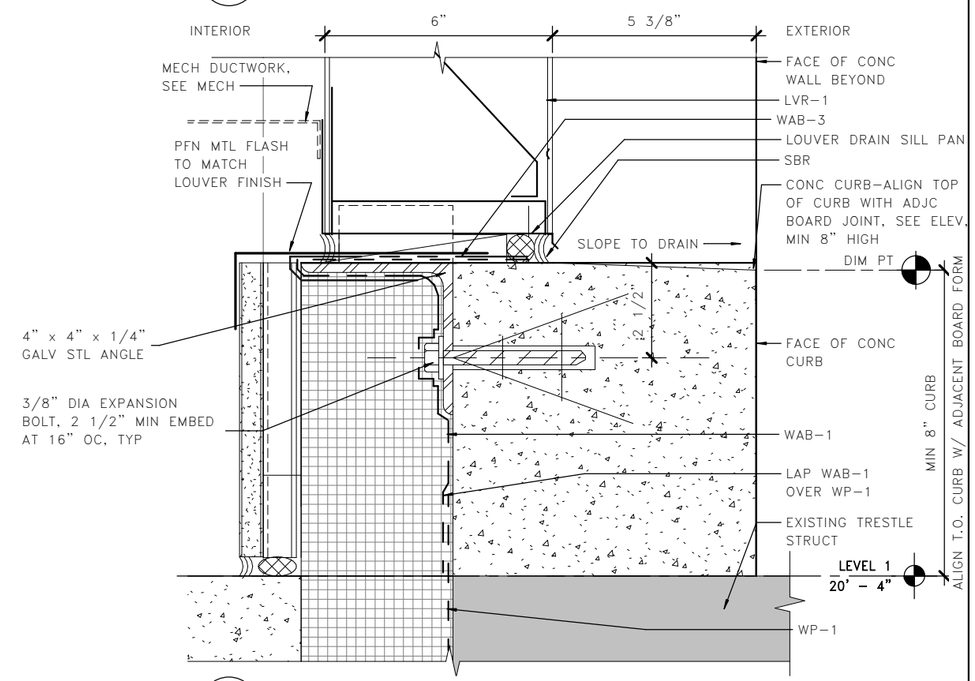

6 A08.20 LOUVER SILL

LMN

FILE NAME: PW:\WSF\Mukilteo\14W121_FerryTermConst\CADD\LMN\mft-CENTRAL_90%.rvt						
PRINTED: 9/21/2018 4:52:13 PM		LAST PRINTED BY:				FED.AID PROJ.NO.
SUBMITTAL DATE:	08/23/2018	MFISHER				
DESIGNED BY:	H. FITZPATRICK	08/23/2018				WA-2017-007-00
ENTERED BY:	G. BISHOP	08/23/2018				REGION NO. 10 / STATE WA
CHECKED BY:	M. FISHER	08/23/2018				
MAR PROJ ENGR:	C. TORRES					JOB NUMBER 18W121
DGN ENGR MNGR:	N. MCINTOSH					
ASST SECRETARY:	A. SCARTON		REVISION	DATE	BY	CONTRACT NO. 00****

DATE

4472 REGISTERED ARCHITECT WALT W. NIEHOFF JR. STATE OF WASHINGTON

08/23/18
DATE

Washington State Department of Transportation
WASHINGTON STATE FERRIES

SR 525
MUKILTEO FERRY TERMINAL (PHASE 2)
FERRY TERMINAL CONSTRUCTION

LOUVER DETAILS

A08.20

SHEET 1073 OF 1521 SHEETS

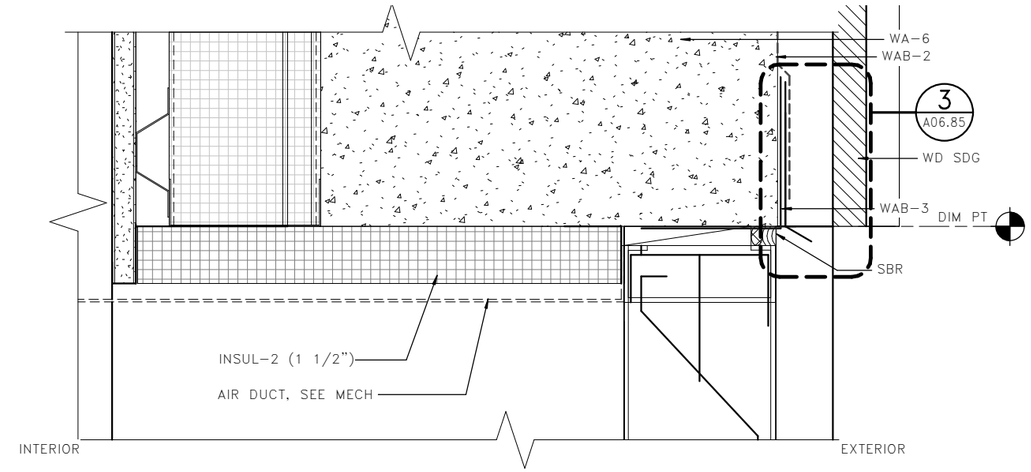

3 A08.21 LOUVER HEAD @ WD SDG

0 2" 4"
3" = 1'-0"

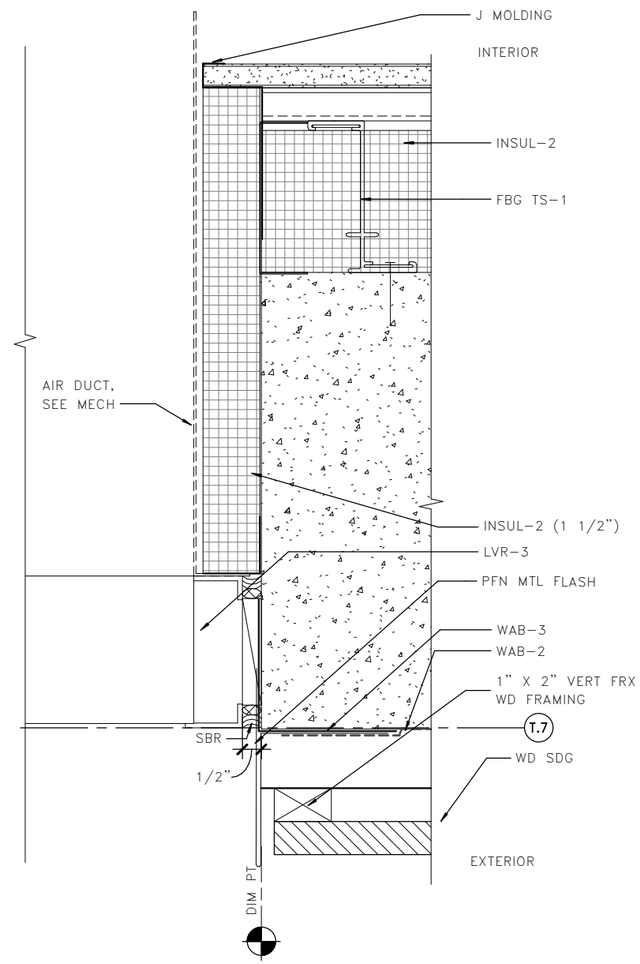

5 A08.21 LOUVER JAMB

0 2" 4"
3" = 1'-0"

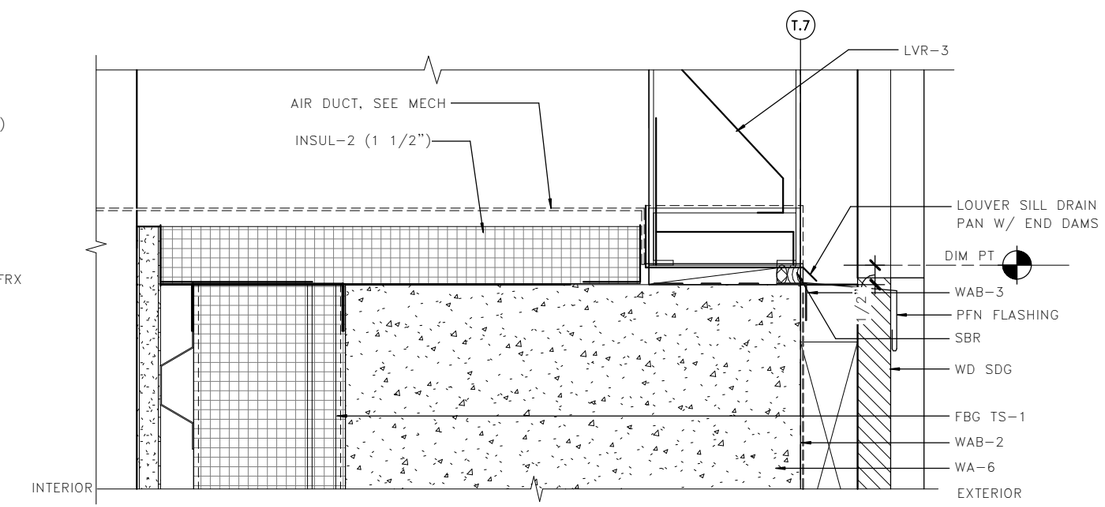

6 A08.21 LOUVER SILL @ WD SDG

0 2" 4"
3" = 1'-0"

LMN

0 2" 4"

FILE NAME: PW:\WSF\Mukilteo\14W121_FerryTermConst\CADD\LMN\mft-CENTRAL_90%.rvt						FED.AID PROJ.NO.
PRINTED: 9/21/2018 4:52:14 PM	LAST PRINTED BY:					
SUBMITTAL DATE: 08/23/2018	MFISHER					WA-2017-007-00
DESIGNED BY: H. FITZPATRICK	08/23/2018					REGION NO. 10 / STATE WA
ENTERED BY: G. BISHOP	08/23/2018					
CHECKED BY: M. FISHER	08/23/2018					JOB NUMBER 18W121
MAR PROJ ENGR: C. TORRES						
DGN ENGR MNGR: N. MCINTOSH						CONTRACT NO. 00****
ASST SECRETARY: A. SCARTON		REVISION	DATE	BY		

DATE

4472 REGISTERED ARCHITECT
WALT W. NIEHOFF JR.
STATE OF WASHINGTON
08/23/18
DATE

Washington State Department of Transportation
WASHINGTON STATE FERRIES

SR 525
MUKILTEO FERRY TERMINAL (PHASE 2)
FERRY TERMINAL CONSTRUCTION

LOUVER DETAILS

A08.21

SHEET 1074 OF 1521 SHEETS

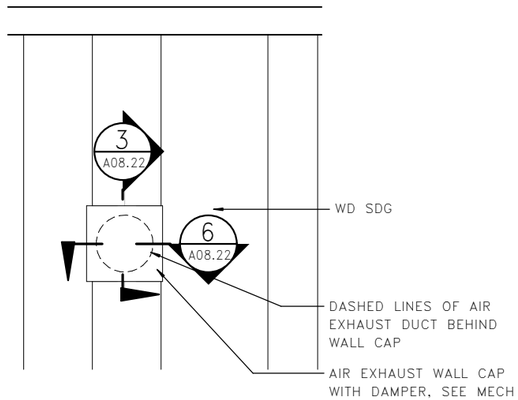

1 A08.22 EXHAUST WALL CAP ELEVATION

0 8" 16"
3/4" = 1'-0"

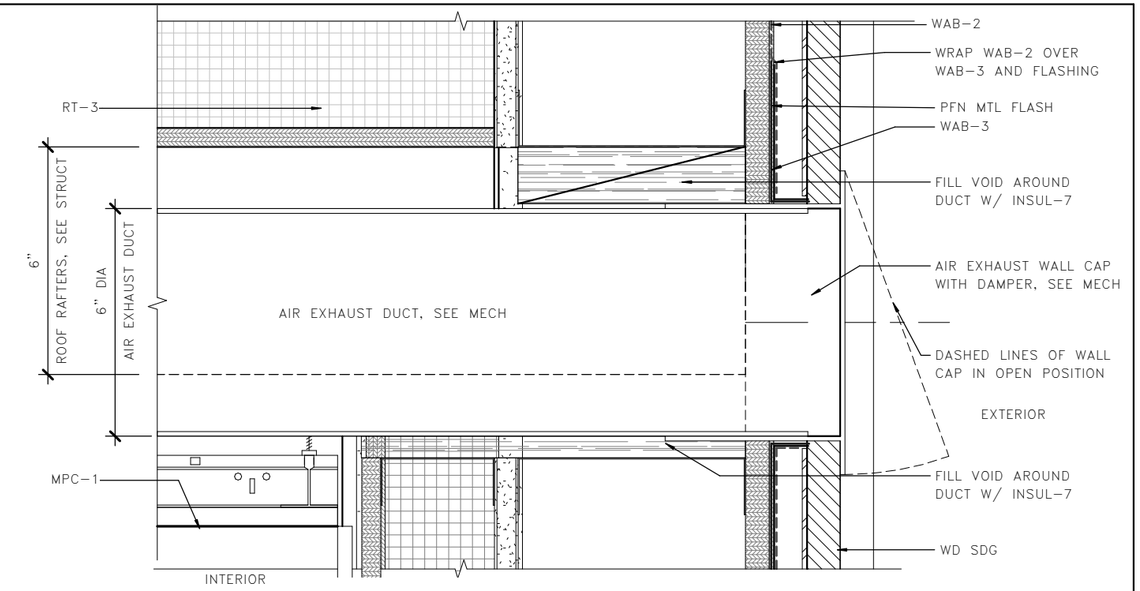

3 A08.22 RESTROOM EXHAUST SECTION DETAIL

0 2" 4"
3" = 1'-0"

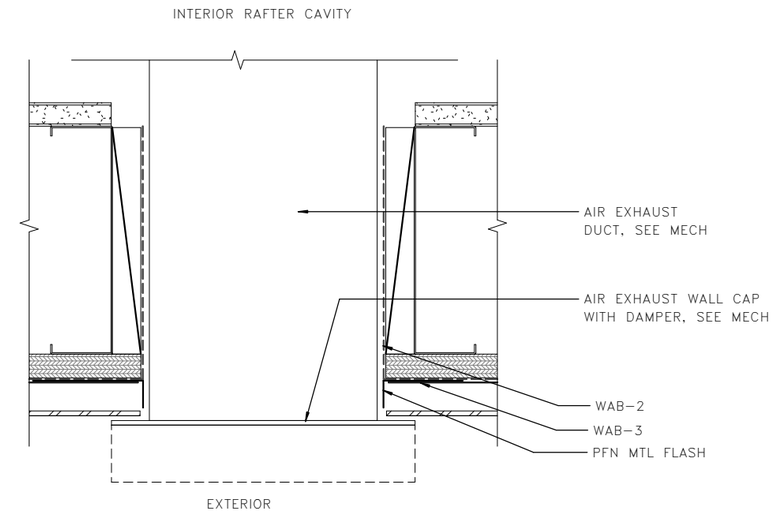

6 A08.22 RESTROOM EXHAUST PLAN DETAIL

0 2" 4"
3" = 1'-0"

LMN

FILE NAME: PW:\WSF\Mukilteo\14W121_FerryTermConst\CADD\LMN\mft-CENTRAL_90%.rvt						
PRINTED: 9/21/2018 4:52:14 PM		LAST PRINTED BY:				FED.AID PROJ.NO.
SUBMITTAL DATE:	08/23/2018	MFISHER				WA-2017-007-00
DESIGNED BY:	H. FITZPATRICK	08/23/2018				REGION NO. 10 / STATE WA
ENTERED BY:	G. BISHOP	08/23/2018				
CHECKED BY:	M. FISHER	08/23/2018				JOB NUMBER 18W121
MAR PROJ ENGR:	C. TORRES					
DGN ENGR MNGR:	N. MCINTOSH					CONTRACT NO. 00****
ASST SECRETARY:	A. SCARTON		REVISION	DATE	BY	

DATE

4472 REGISTERED ARCHITECT
WALT W. NIEHOFF JR.
STATE OF WASHINGTON
08/23/18
DATE

Washington State Department of Transportation
WASHINGTON STATE FERRIES

SR 525
MUKILTEO FERRY TERMINAL (PHASE 2)
FERRY TERMINAL CONSTRUCTION

LOUVER DETAILS

A08.22

SHEET 1075 OF 1521 SHEETS

ROOM NO.	ROOM NAME	FLOOR	BASE	WALLS NORTH	WALLS EAST	WALLS SOUTH	WALLS WEST	CEILING	REMARKS
LEVEL 1									
101	SPRINKLER	CONC-S-3	RB-1	PNT-1	PNT-1	PNT-1	PNT-1	OTS	
102	ELEV EQUIP 1	CONC-S-3	RB-1	PNT-1	PNT-1	PNT-1	PNT-1	OTS	
103	MECH	CONC-S-3	RB-1	PNT-1	PNT-1	PNT-1	PNT-1	OTS	
104	ELEC	RSF-1	RB-1	PNT-1	PNT-1	PNT-1	PNT-1	OTS	
105	BREAKROOM	RSF-1	RB-1	PNT-1/PLAM-1/SSM-2	PNT-1	PNT-1/PLAM-1/SSM-2	PNT-1/MTL LKR-1	MPC-1	SEE ELEVATIONS
106	LOCKERS	RSF-1	RB-1	PNT-1/PLAM-1/SSM-2	PNT-1	PNT-1	PNT-1/MTL LKR-1	MPC-1	SEE ELEVATIONS
107	TOILET	CTF-2	CTB-1	CT-1	CT-1	CT-1	CT-1	PNT-4	EPOXY PAINT
107B	SHOWER	CTF-2	CTB-1	CT-1	CT-1	CT-1	CT-1	PNT-4	EPOXY PAINT
108	VEHICLE ATTENDANT	RSF-1	RB-1	PNT-1/PLAM-1/SSM-2	PNT-1	PNT-1/PLAM-1/SSM-2	PNT-1/MTL LKR-1	APC-1	SEE ELEVATIONS
109	IT	RSF-1	RB-1	PNT-1	PNT-1	PNT-1	PNT-1	OTS	
110	CORRIDOR	RSF-1	RB-1	PNT-1	PNT-1	PNT-1	PNT-1	APC-1	
111	TOILET	POL CONC FIN-1	COVE PROFILE TRIM	CT-1	CT-1	CT-1	CT-1	PNT-4	EPOXY PAINT
111A	LAV	POL CONC FIN-1	COVE PROFILE TRIM	CT-1	CT-1	CT-1	CT-1	PNT-4	EPOXY PAINT
112	SELLER SAFE	CPTT-1	RB-1	PNT-1	PNT-1/PLAM-2/PLAM-3	PNT-1	PNT-1	APC-1	SEE ELEVATIONS
113	SUPERVISOR'S ACCOUNTING ROOM	CPTT-1	RB-1	PNT-1/PLAM-2/PLAM-3	PNT-1	PNT-1	PNT-1/PLAM-2/PLAM-3	APC-1	SEE ELEVATIONS
114	WSP	CPTT-1	RB-1	PNT-1	PNT-1	PNT-1	PNT-1	APC-1	
115	CONFERENCE	CPTT-1	RB-1	PNT-1/ MKR BD-1	PNT-3	PNT-1	PNT-1	APC-1	
116	CORRIDOR	CPTT-1	RB-1	PNT-1	PNT-1	PNT-1	PNT-1	APC-1	
117	SUPERVISOR	CPTT-1	RB-1	PNT-1/PNT-3/HLB-1/PLAM-2/PLAM-3	PNT-1/HLB-1/PLAM-2/PLAM-3	PNT-1/PNT-3/HLB-1/PLAM-2/PLAM-3	PNT-3	APC-1	SEE ELEVATIONS
118	VESSEL STOR	CONC-S-3	RB-1	PNT-1	PNT-1	PNT-1	PNT-1	OTS	
LEVEL 1 - MB									
120	MECH EQUIP	CONC-S-3	RB-1	PNT-1	PNT-1	PNT-1	PNT-1	OTS	
121	VENDOR EQUIPMENT ROOM	CONC-S-3	RB-1	PNT-1	PNT-1	PNT-1	PNT-1	OTS	
122	ELEV EQUIP 2	CONC-S-3	RB-1	PNT-1	PNT-1	PNT-1	PNT-1	OTS	
123	MAIN EQUIPMENT ROOM	CONC-S-3	RB-1	PNT-1	PNT-1	PNT-1	PNT-1	OTS	
124	ELECTRICAL	CONC-S-3	RB-1	PNT-1	PNT-1	PNT-1	PNT-1	OTS	
125	MAINT STORAGE	CONC-S-3	RB-1	PNT-1	PNT-1	PNT-1	PNT-1	OTS	
126	COVERED CART & BULL STORAGE	EXTERIOR	EXTERIOR	EXTERIOR	EXTERIOR	EXTERIOR	EXTERIOR	OTS	
127	TRANSFORMER	EXTERIOR	EXTERIOR	EXTERIOR	EXTERIOR	EXTERIOR	EXTERIOR	OTS	
128	MECHANICAL	EXTERIOR	EXTERIOR	EXTERIOR	EXTERIOR	EXTERIOR	EXTERIOR	OTS	
129	GENERATOR	EXTERIOR	EXTERIOR	EXTERIOR	EXTERIOR	EXTERIOR	EXTERIOR	OTS	
130	VENDING	CONC-S-2	-	ACIP-1	MTLP-2	MTLP-2	OPEN/MTLP-3B	WCP-1	
131	MEN	POL CONC FIN-1	COVE PROFILE TRIM	CT-1/PNT-1	CT-1	CT-1/PNT-1	CT-1/PNT-1	WCP-1	CLERESTORY ABOVE
132	CHASE	CONC-S-2	-	-	PNT-1	-	PNT-1	WCP-1	CLERESTORY ABOVE
133	WOMEN	POL CONC FIN-1	COVE PROFILE TRIM	CT-1/PNT-1	CT-1	CT-1/PNT-1	CT-1/PNT-1	WCP-1	CLERESTORY ABOVE
134	JANITOR	CONC-S-2	RB-1	PNT-1	PNT-1	PNT-1	PNT-1	WCP-1	CLERESTORY ABOVE
135	WATER ENTRY	CONC-S-2	RB-1	PNT-1	PNT-1	PNT-1	PNT-1	WCP-1	CLERESTORY ABOVE

LMN

TERMINAL – LEVEL 2

ROOM NO.	ROOM NAME	FLOOR	BASE	WALLS				CEILING	REMARKS
				NORTH	EAST	SOUTH	WEST		
LEVEL 2									
200	PROMENADE	EXTERIOR	–	–	–	–	–	–	
200SE	STAIR 2	PCT–1, PCCL–1	–	OPEN	OPEN	OPEN	OPEN	OTS	
200SN	STAIR 3	PCT–1, PCCL–1	–	OPEN	OPEN	OPEN	OPEN	OTS	
200SW	STAIR 1	PCT–1, PCCL–1	–	OPEN	OPEN	OPEN	OPEN	OTS	
201	GREAT HALL	POL CONC FIN–1	MTL BASE–2	CW–1/RWD–1/WD SDG	WD SDG–1/TKT WDW–1	CW–1/RWD–1/WD SDG–1	WD SDG–1/CT–2	OTS	SEE ELEVATIONS
202	INVERTERS	CONC–S–3	RB–1	PNT–1	PNT–1	PNT–1	PNT–1	OTS	
203	CORRIDOR	CONC–S–3	RB–1	PNT–1	PNT–1	PNT–1	PNT–1	OTS	
204	JANITOR CLOSET	CONC–S–3	RB–1	PNT–1	PNT–1	PNT–1	PNT–1	OTS	
205	MEN RESTROOM	POL CONC FIN–1	COVE PROFILE TRIM	CT–1	CT–1	CT–1	CT–1	SPCL CLG–1/LMPC–1	
206	WOMEN RESTROOM	POL CONC FIN–1	COVE PROFILE TRIM	CT–1	CT–1	CT–1	CT–1	SPCL CLG–1/LMPC–1	
207	CART	POL CONC FIN–1	RB–1	PNT–1	PNT–1	PNT–1	PNT–1	OTS	
208	STORAGE	CONC–S–3	RB–1	PNT–1	PNT–1	PNT–1	PNT–1	OTS	
209	VENDING	POL CONC FIN–1	MTL BASE–2/RB–1	PNT–1	PNT–1	PNT–1	PNT–1	OTS	
210	TICKET SALES	RSF–1	RB–1	PNT–1	PNT–1	PNT–1	PNT–1/FRP–1/SSM–2/TKT WDW–1	MPC–1	SEE ELEVATIONS
211	LOST FOUND	RSF–1	RB–1	PNT–1	PNT–1	PNT–1	PNT–1	MPC–1	
212	ELEC.	CONC–S–3	RB–1	PNT–1	PNT–1	PNT–1	PNT–1	OTS	
213	CORRIDOR	CONC–S–3	RB–1	PNT–1	PNT–1	PNT–1	PNT–1	OTS	
214	STORAGE	CONC–S–3	RB–1	PNT–1	PNT–1	PNT–1	PNT–1	OTS	

TOLL PLAZA

ROOM NUMBER	ROOM NAME	FLOOR	BASE	WALLS				CEILING	REMARKS
				NORTH	EAST	SOUTH	WEST		
LEVEL 1									
150	EQUIPMENT ROOM	CONC–S–3	RB–1	PNT–1	PNT–1	PNT–1	PNT–1	OTS	
151	ELEC	CONC–S–3	RB–1	PNT–1	PNT–1	PNT–1	PNT–1	OTS	
152	STO	SEE AX03.01	SEE AX03.01	SEE AX03.01	SEE AX03.01	SEE AX03.01	SEE AX03.01	SEE AX03.01	WSF DESIGN
153	TOLL BOOTH 1	SEE AX03.01	SEE AX03.01	SEE AX03.01	SEE AX03.01	SEE AX03.01	SEE AX03.01	SEE AX03.01	WSF DESIGN
154	TOLL BOOTH 2	SEE AX03.01	SEE AX03.01	SEE AX03.01	SEE AX03.01	SEE AX03.01	SEE AX03.01	SEE AX03.01	WSF DESIGN
155	TOLL BOOTH 3	SEE AX03.01	SEE AX03.01	SEE AX03.01	SEE AX03.01	SEE AX03.01	SEE AX03.01	SEE AX03.01	WSF DESIGN
156	TOLL BOOTH 4 (ADA)	SEE AX03.01	RB–1	PNT–1	PNT–1	PNT–1	PNT–1	MPC–1	SHD–1 @ NORTH SFWS
157	TOILET	POL CONC FIN–1	COVE PROFILE TRIM	CT–1	CT–1	CT–1	CT–1	MPC–1	

LMN

FILE NAME: PW:\WSF\Mukilteo\14W121_FerryTermConst\CADD\LMN\mft–CENTRAL_90%.rvt

PRINTED:	9/21/2018 4:52:15 PM	LAST PRINTED BY:				FED.AID PROJ.NO.
SUBMITTAL DATE:	08/23/2018	MFISHER				WA–2017–007–00
DESIGNED BY:	H. FITZPATRICK	08/23/2018				REGION NO. 10 / STATE WA
ENTERED BY:	G. BISHOP	08/23/2018				
CHECKED BY:	M. FISHER	08/23/2018				JOB NUMBER 18W121
MAR PROJ ENGR:	C. TORRES					
DGN ENGR MNGR:	N. MCINTOSH					CONTRACT NO. 00****
ASST SECRETARY:	A. SCARTON		REVISION	DATE	BY	

DATE

4472 REGISTERED ARCHITECT
WALT W. NIEHOFF JR.
STATE OF WASHINGTON
08/23/18
DATE

Washington State Department of Transportation
WASHINGTON STATE FERRIES

SR 525
MUKILTEO FERRY TERMINAL (PHASE 2)
FERRY TERMINAL CONSTRUCTION

TERMINAL & TOLL PLAZA– FINISH SCHED

A08.31

SHEET 1077 OF 1521 SHEETS

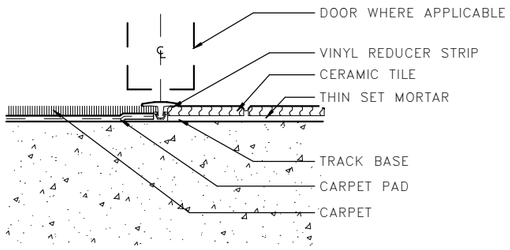

1 A08.40 FLR TRANS CARPET/CERAMIC TILE

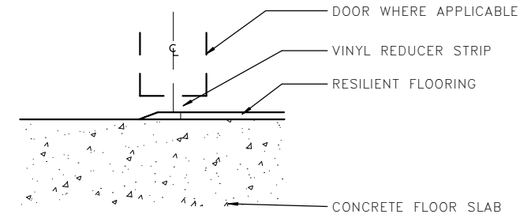

3 A08.40 FLR TRANS CONC/RESILIENT FLR

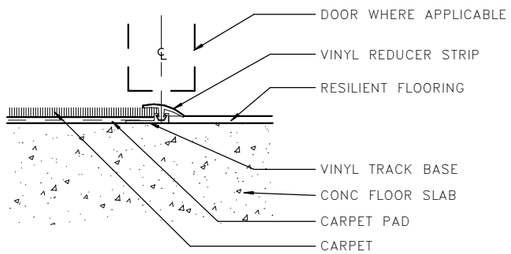

4 A08.40 FLR TRANS CARPET/RESILIENT FLR

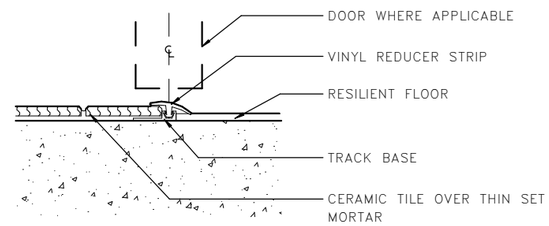

5 A08.40 FLR TRANS CERAMIC TILE/RESILIENT FLR

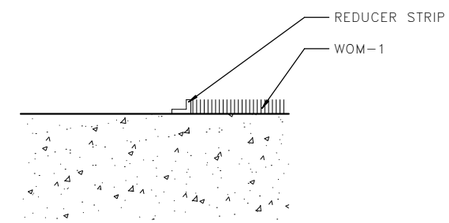

6 A08.40 FLR TRANS CONC/WOM-1

LMN

0 2" 4"

FILE NAME: PW:\WSF\Mukilteo\14W121_FerryTermConst\CADD\LMN\mft-CENTRAL_90%.rvt						
PRINTED: 9/21/2018 4:52:16 PM	LAST PRINTED BY:					FED.AID PROJ.NO.
SUBMITTAL DATE: 08/23/2018	MFISHER					WA-2017-007-00
DESIGNED BY: H. FITZPATRICK	08/23/2018					REGION NO. 10 / STATE WA
ENTERED BY: G. BISHOP	08/23/2018					
CHECKED BY: M. FISHER	08/23/2018					
MAR PROJ ENGR: C. TORRES						JOB NUMBER 18W121
DGN ENGR MNGR: N. MCINTOSH						CONTRACT NO. 00****
ASST SECRETARY: A. SCARTON		REVISION	DATE	BY		

DATE

4472 REGISTERED ARCHITECT WALT W. NIEHOFF JR. STATE OF WASHINGTON
08/23/18
DATE

Washington State Department of Transportation
WASHINGTON STATE FERRIES

SR 525
MUKILTEO FERRY TERMINAL (PHASE 2)
FERRY TERMINAL CONSTRUCTION

TERMINAL -FLOOR DETAILS

A08.40

SHEET 1079 OF 1521 SHEETS

DOOR NO.	FROM ROOM: NAME	RATING (MIN.)	DOOR OPENING SIZE WIDTH	DOOR OPENING SIZE HEIGHT	PAIR	TYPE	DOOR MATERIAL	DOOR FINISH	DOOR GLAZING	STC	UNDERCUT	FRAME TYPE	FRAME MATERIAL	FRAME FINISH	GLAZING (SIDELIGHT, TRANSOM, ETC)	DETAILS JAMB	DETAILS HEAD	DETAILS THRESH	HARDWARE PANIC	HARDWARE ELEC HW	HARDWARE GROUP	REMARKS
TOLL PLAZA																						
137	TOILET	NR	3' – 0"	7' – 5"	–	A	HM	HPC–2	–	–	0'–0"	1	HM	HPC–2	–	2/A08.60	3/A08.60	6/A08.60	–	–	04	
150	EQUIPMENT ROOM	NR	3' – 0"	7' – 0"	–	A	HM	HPC–2	–	–	0'–0"	4	HM	HPC–2	TRANSOM W/ LVR–3	2/A08.60	3/A08.60	6/A08.60	–	–	01	ACCESS CONTROL – SEE WSF SECURITY DWGS
151	ELEC	NR	3' – 0"	7' – 0"	–	A	HM	HPC–2	–	–	0'–0"	4	HM	HPC–2	TRANSOM W/ LVR–3	2/A08.60	3/A08.60	6/A08.60	–	–	02	
152	STO	NR	3' – 0"	7' – 0"	–	A	HM	HPC–2	–	–	0'–0"	4	HM	HPC–2	TRANSOM W/ LVR–3	2/A08.60	3/A08.60	6/A08.60	–	–	01	
156	TOLL BOOTH 4 (ADA)	NR	3' – 0"	7' – 0"	–	D	HM	HPC–2	–	–	0'–0"	1	HM	HPC–2	–	2/A08.60	3/A08.60	5/A08.60	–	–	18	812 SSMES THRESHOLD, ACCESS CONTROL – SEE WSF SECURITY DWGS

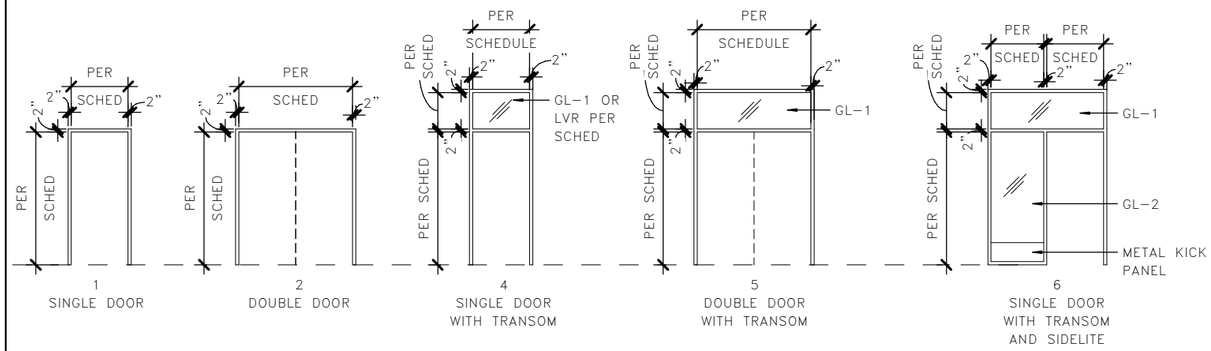

1 A08.50 DOOR FRAME LEGEND

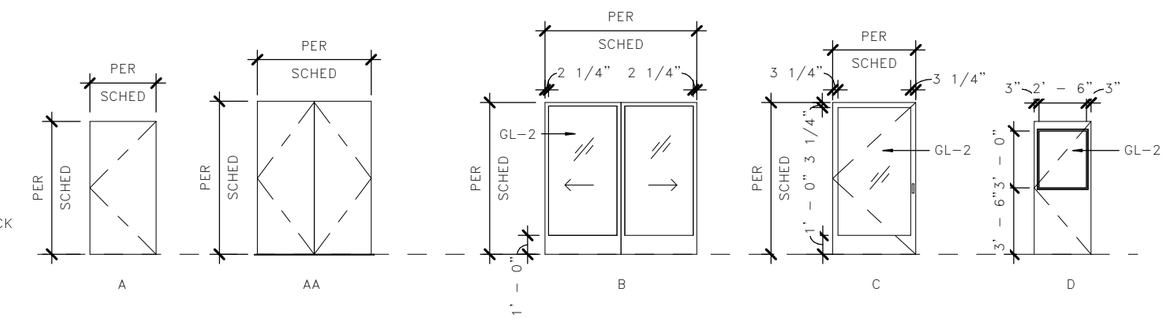

2 A08.50 DOOR TYPES LEGEND

LMN

FILE NAME: PW:\WSF\Mukilteo\14W121_FerryTermConst\CADD\LMN\mft–CENTRAL_90%.rvt						
PRINTED: 9/21/2018 4:52:19 PM	LAST PRINTED BY:					FED.AID PROJ.NO.
SUBMITTAL DATE: 08/23/2018	MFISHER					WA–2017–007–00
DESIGNED BY: H. FITZPATRICK	08/23/2018					REGION NO. 10 / STATE WA
ENTERED BY: G. BISHOP	08/23/2018					JOB NUMBER 18W121
CHECKED BY: M. FISHER	08/23/2018					CONTRACT NO. 00****
MAR PROJ ENGR: C. TORRES						
DGN ENGR MNGR: N. MCINTOSH						
ASST SECRETARY: A. SCARTON		REVISION	DATE	BY		

DATE

4472 REGISTERED ARCHITECT WALT W. NIEHOFF JR. STATE OF WASHINGTON

08/23/18
DATE

Washington State Department of Transportation
WASHINGTON STATE FERRIES

SR 525
MUKILTEO FERRY TERMINAL (PHASE 2)
FERRY TERMINAL CONSTRUCTION

TOLL PLAZA – DOOR SCHEDULE

A08.50

SHEET 1080 OF 1521 SHEETS

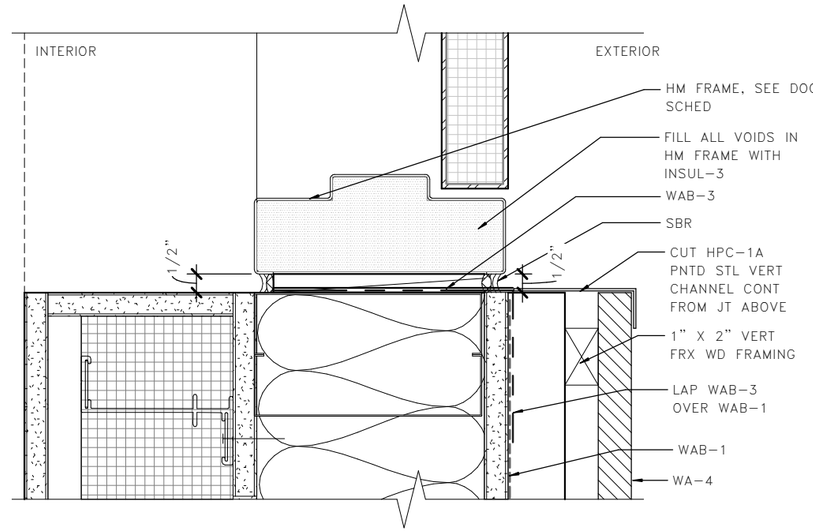

2 A08.60 DOOR JAMB – TYP @ TOLL

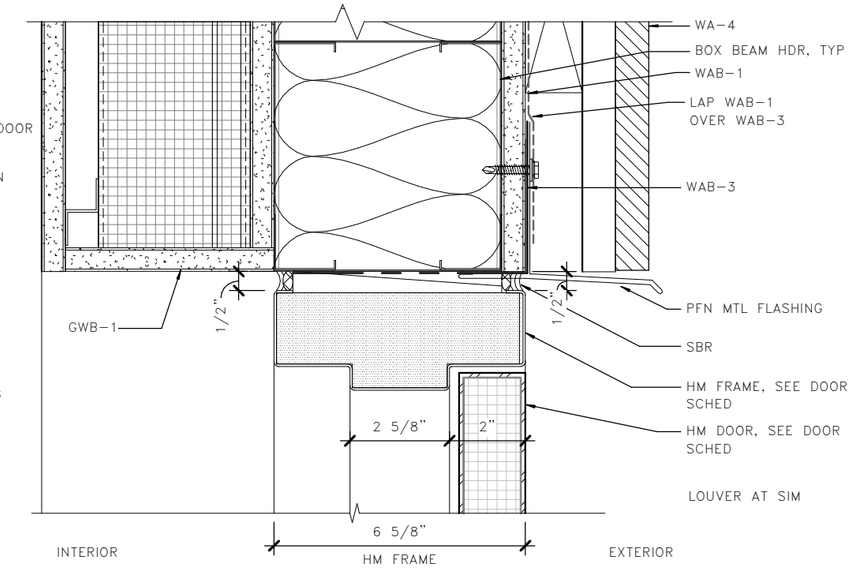

3 A08.60 DOOR HEAD– TYP @ TOLL

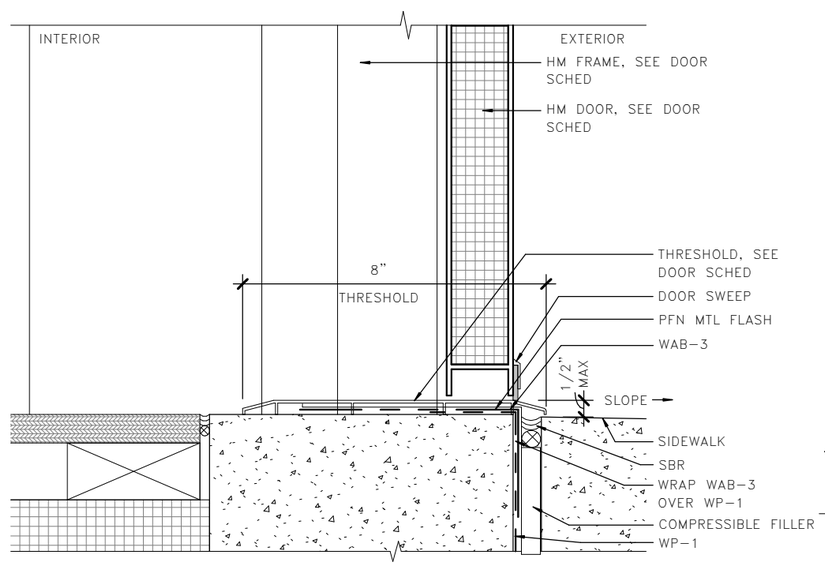

5 A08.60 DOOR THRESHOLD

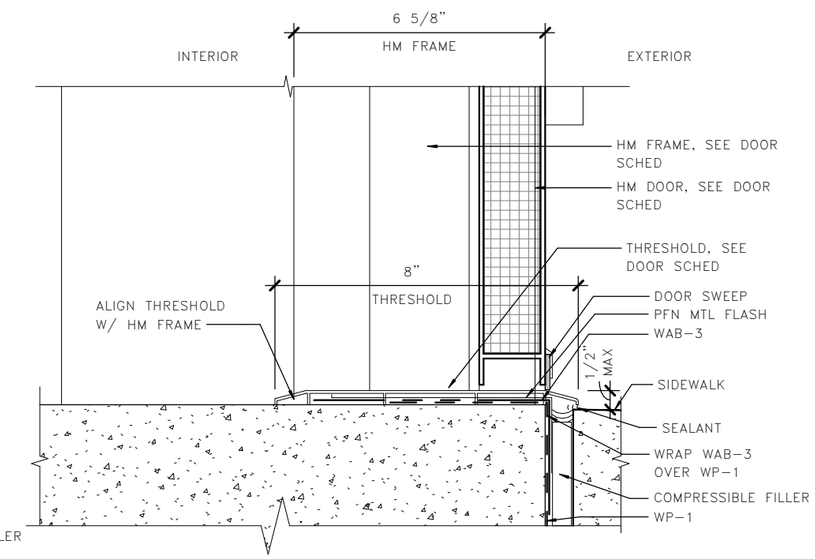

6 A08.60 DOOR THRESHOLD – TYP @ TOLL

LMN

0 2" 4"

FILE NAME: PW:\WSF\Mukilteo\14W121_FerryTermConst\CADD\LMN\mft-CENTRAL_90%.rvt						
PRINTED: 9/21/2018 4:52:23 PM	LAST PRINTED BY:					FED.AID PROJ.NO.
SUBMITTAL DATE: 08/23/2018	MFISHER					WA-2017-007-00
DESIGNED BY: H. FITZPATRICK	08/23/2018					REGION NO. 10 / STATE WA
ENTERED BY: G. BISHOP	08/23/2018					
CHECKED BY: M. FISHER	08/23/2018					JOB NUMBER 18W121
MAR PROJ ENGR: C. TORRES						
DGN ENGR MNGR: N. MCINTOSH						CONTRACT NO. 00****
ASST SECRETARY: A. SCARTON		REVISION	DATE	BY		

DATE

4472 REGISTERED ARCHITECT WALT W. NIEHOFF JR. STATE OF WASHINGTON

08/23/18
DATE

Washington State Department of Transportation
WASHINGTON STATE FERRIES

SR 525
MUKILTEO FERRY TERMINAL (PHASE 2)
FERRY TERMINAL CONSTRUCTION

TOLL – EXTERIOR DETAILS – DOOR

A08.60

SHEET 1081 OF 1521 SHEETS

BUILDING STRUCTURAL NOTES: TERMINAL BUILDING AND MAINTENANCE BUILDING

DESIGN LOADS

ALL DESIGN AND CONSTRUCTION SHALL CONFORM TO THE REQUIREMENTS OF THE INTERNATIONAL BUILDING CODE (IBC), 2012 EDITION, AS AMENDED BY THE CITY OF MUKILTEO.

LIVE LOADS: IN ADDITION TO THE DEAD LOADS, THE FOLLOWING FLOOR LIVE LOADS WERE USED FOR DESIGN. LIVE LOAD REDUCTION IS PER IBC SECTION 1607.10.

		REDUCIBLE	UNREDUCIBLE
CORRIDORS, STAIRS	100 PSF	X	
SIDEWALKS, DRIVEWAYS	250 PSF		X
ASSEMBLY AREAS	100 PSF		X
OFFICES	85 PSF + 15 PSF PARTITION LOAD	X	
CATWALK	40 PSF	X	

REFER TO TABLE 1607.1 IN THE IBC FOR RELEVANT CONCENTRATED LIVE LOADS.

ROOF SNOW LOAD: THE ROOF SNOW LOAD IS DETERMINED USING CHAPTER 7 OF ASCE 7 IN ACCORDANCE WITH IBC SECTION 1608 AND WITH SEAW WHITE PAPER 1–2009:

MINIMUM DESIGN LOAD 25 PSF WITHOUT DRIFT

SEISMIC LOADS: FOR THE TERMINAL BUILDING, THE SEISMIC FORCE RESISTING SYSTEMS (SFRS) USED TO RESIST EARTHQUAKE AND WIND LOADS IS COMPRISED OF SPECIAL REINFORCED CONCRETE SHEAR WALLS DESIGNED IN ACCORDANCE WITH THE PROVISIONS OF ACI 318 "BUILDING CODE REQUIREMENTS FOR STRUCTURAL CONCRETE". EARTHQUAKE DESIGN IS BASED ON THE EQUIVALENT LATERAL FORCE PROCEDURE IN ASCE 7 SECTION 12.8 MODAL ANALYSIS PROCEDURE IN ASCE 7 SECTION 12.9 WITH THE FOLLOWING FACTORS:

SITE CLASS E
ORIGINALLY REPORTED AS SITE CLASS F. SITE SPECIFIC RESPONSE SPECTRUM GENERATED BY HART CROWSER AND RECLASSIFIED AS SITE CLASS E. SEE REPORT DATED 04/28/17.

RISK CATEGORY II (PER WSF TDM–2014)

SEISMIC DESIGN CATEGORY D

RESPONSE SPECTRUM PARAMETERS
(SEE GEOTECHNICAL REPORT BY HART CROWSER DATED 04/28/17)

S_{MS} = 1.2 G
S_{M1} = 1.2 G
S_{DS} = 0.8 G
S_{D1} = 0.8 G
T_L = 10.0 SECONDS

TERMINAL BUILDING – R = 6.0
(SPECIAL REINFORCED CONCRETE SHEARWALLS)

h_n = 61 FT I_E = 1.0
T = 0.43 SECONDS C_S = 0.13
V = BASE SHEAR = 1304 KIPS (AT BASE OF TRESTLE)

SEISMIC LOADS: FOR THE MAINTENANCE BUILDING, THE SEISMIC FORCE RESISTING SYSTEMS (SFRS) USED TO RESIST EARTHQUAKE AND WIND LOADS IS COMPRISED OF SPECIAL REINFORCED CONCRETE SHEAR WALLS DESIGNED IN ACCORDANCE WITH THE PROVISIONS OF ACI 318 "BUILDING CODE REQUIREMENTS FOR STRUCTURAL CONCRETE" AND SPECIAL REINFORCED MASONRY SHEAR WALLS PER ACI 530. EARTHQUAKE DESIGN IS BASED ON THE EQUIVALENT LATERAL FORCE PROCEDURE IN ASCE 7 SECTION 12.8 WITH THE FOLLOWING FACTORS:

SITE CLASS D

RISK CATEGORY II (PER WSF TDM–2014)

SEISMIC DESIGN CATEGORY D

RESPONSE SPECTRUM PARAMETERS
(SEE GEOTECHNICAL REPORT BY HART CROWSER DATED 08/28/17)

S_s = 1.47 G
S_1 = 0.57 G
S_{DS} = 0.98 G
S_{D1} = 0.57 G
T_L = 6.0 SECONDS

MAINTENANCE BUILDING – R = 5.0
(SPECIAL REINFORCED CONCRETE SHEAR WALLS)

h_n = 15 FT I_E = 1.0
T = 0.15 SECONDS C_S = 0.196
V = BASE SHEAR = 42.6 kips

MAINTENANCE BUILDING – R = 5.0
(SPECIAL REINFORCED MASONRY SHEAR WALLS)

h_n = 12 FT I_E = 1.0
T = 0.13 SECONDS C_S = 0.196
V = BASE SHEAR = 33.7 kips

WIND LOADS: WIND LOAD IS DETERMINED USING CHAPTERS 26–31 OF ASCE 7 IN ACCORDANCE WITH IBC SECTION 1609 WITH THE FOLLOWING FACTORS:

RISK CATEGORY IV K_{zt} = 1.0
EXPOSURE CATEGORY D GC_{pi} = 0.18
V_{ult} = 115 MPH V_{asd} = 89 MPH

DESIGN WIND PRESSURES FOR DETERMINING FORCES ON COMPONENTS AND CLADDING SHALL BE DETERMINED USING CHAPTER 30 OF ASCE 7 IN ACCORDANCE WITH IBC SECTION 1609 BY THE WASHINGTON STATE REGISTERED PROFESSIONAL ENGINEER WHO IS RESPONSIBLE FOR THE DESIGN OF SUCH ELEMENTS, UNLESS NOTED OTHERWISE ON THE DRAWINGS.

STORY DRIFTS: THE MAXIMUM LATERAL DISPLACEMENTS WITH RESPECT TO THE LEVEL BELOW (STORY DRIFTS) ARE AS FOLLOWS:

SEISMIC:

TERMINAL BUILDING

INELASTIC STORY DRIFT = 0.5% OF STORY HEIGHT

ELASTIC STORY DRIFT = INELASTIC STORY DRIFT DIVIDED BY Cd/I_E, WHERE Cd/I_E = 5

MAINTENANCE BUILDING

INELASTIC STORY DRIFT = 0.2% OF STORY HEIGHT

ELASTIC STORY DRIFT = INELASTIC STORY DRIFT DIVIDED BY Cd/I_E,
WHERE Cd/I_E = 5 AT CONCRETE WALLS
Cd/I_E = 3.5 AT MASONRY WALLS

WIND:

TERMINAL BUILDING – STORY DRIFT = 0.5% OF STORY HEIGHT

MAINTENANCE BUILDING – STORY DRIFT = 0.2% OF STORY HEIGHT

SOIL LOADS:

ALLOWABLE SOIL–BEARING PRESSURE	2000 PSF DL + LL
	2660 PSF DL + LL + SEISMIC/WIND

GENERAL NOTES

SUBMITTALS: SHOP DRAWINGS SHALL BE SUBMITTED TO THE ARCHITECT PRIOR TO ANY FABRICATION OR CONSTRUCTION FOR ALL STRUCTURAL ITEMS, INCLUDING THE FOLLOWING: CONCRETE OR MASONRY REINFORCEMENT, PRECAST OR PRESTRESSED CONCRETE ITEMS, EMBEDDED STEEL ITEMS, STRUCTURAL STEEL, STEEL DECK, SHEAR STUD LAYOUT, METAL GRATING, GLUED–LAMINATED MEMBERS, CROSS–LAMINATED TIMBER, CONTROL JOINT LAYOUT, CLADDING PANELS, COLD–FORMED STEEL FRAMING, AND STAIRS.

IF THE SHOP DRAWINGS DIFFER FROM OR ADD TO THE DESIGN OF THE STRUCTURAL DRAWINGS, THEY SHALL BEAR THE SEAL AND SIGNATURE OF THE WASHINGTON STATE REGISTERED PROFESSIONAL ENGINEER WHO IS RESPONSIBLE FOR THE DESIGN.

DEFERRED SUBMITTALS: PER IBC SECTION 107.3.4.1, DRAWINGS AND CALCULATIONS FOR THE DESIGN AND FABRICATION OF ITEMS THAT ARE DESIGNED BY OTHERS SHALL BEAR THE SEAL AND SIGNATURE OF THE WASHINGTON STATE REGISTERED PROFESSIONAL ENGINEER WHO IS RESPONSIBLE FOR THE DESIGN AND SHALL BE SUBMITTED TO THE ARCHITECT AND THE BUILDING DEPARTMENT FOR REVIEW PRIOR TO FABRICATION. SUBMITTED CALCULATIONS ARE FOR CURSORY REVIEW ONLY AND WILL GENERALLY NOT BE RETURNED. DEFERRED SUBMITTALS INCLUDE BUT ARE NOT LIMITED TO THE FOLLOWING:

PRECAST CONCRETE
EXTERIOR CLADDING SYSTEMS
PRE–ENGINEERED STEEL STAIRS
EQUIPMENT ANCHORAGE
SEISMIC DESIGN OF NONSTRUCTURAL COMPONENTS
NON–BEARING COLD–FORMED STEEL FRAMING
ROOF ANCHORAGE AND FALL PROTECTION
MONOPOLE COMMUNICATION TOWER

NONSTRUCTURAL COMPONENTS: DESIGN, DETAILING AND ANCHORAGE OF ALL NONSTRUCTURAL COMPONENTS SHALL BE IN ACCORDANCE WITH IBC SECTION 1613, ASCE 7 CHAPTER 13, AND THE PROJECT SPECIFICATIONS. NONSTRUCTURAL COMPONENTS DESIGNED BY OTHERS SHALL NOT INDUCE TORSIONAL LOADING INTO SUPPORTING STEEL STRUCTURAL MEMBERS WITHOUT ADDITIONAL BRACING OF THOSE MEMBERS TO ELIMINATE TORSIONAL FORCES. TORSIONAL BRACING SHALL BE DESIGNED BY THE NONSTRUCTURAL COMPONENT DESIGNER AND APPROVED BY THE ENGINEER.

CLADDING: CLADDING DESIGNED BY OTHERS SHALL BE SUPPORTED AT EACH STORY TO BE CONSISTENT WITH THE DESIGN OF THE BUILDING STRUCTURE. CLADDING DESIGNED BY OTHERS SHALL NOT INDUCE TORSIONAL LOADING INTO SUPPORTING STEEL STRUCTURAL MEMBERS WITHOUT ADDITIONAL BRACING OF THOSE MEMBERS TO ELIMINATE TORSIONAL FORCES, UNLESS OTHERWISE APPROVED BY THE ARCHITECT. TORSIONAL BRACING SHALL BE DESIGNED BY THE CLADDING DESIGNER AND APPROVED BY THE ENGINEER.

INSPECTION: SPECIAL INSPECTION PER IBC CHAPTER 17 SHALL BE PERFORMED BY AN APPROVED TESTING AGENCY AS INDICATED IN THE STATEMENT OF SPECIAL INSPECTIONS AND TESTING. ALL PREPARED SOIL–BEARING SURFACES SHALL BE INSPECTED BY THE GEOTECHNICAL ENGINEER PRIOR TO PLACEMENT OF REINFORCING STEEL. SOILS COMPACTION SHALL BE SUPERVISED BY AN APPROVED TESTING AGENCY OR GEOTECHNICAL ENGINEER.

SPECIAL CONDITIONS: CONTRACTOR SHALL VERIFY ALL LEVELS, DIMENSIONS, AND EXISTING CONDITIONS IN THE FIELD BEFORE PROCEEDING. CONTRACTOR SHALL NOTIFY THE ARCHITECT OF ANY DISCREPANCIES OR FIELD CHANGES PRIOR TO INSTALLATION OR FABRICATION. IN CASE OF DISCREPANCIES BETWEEN THE EXISTING CONDITIONS AND THE DRAWINGS, THE CONTRACTOR SHALL OBTAIN DIRECTION FROM THE ARCHITECT BEFORE PROCEEDING. DIMENSIONS NOTED AS PLUS OR MINUS (±) INDICATE UNVERIFIED DIMENSIONS AND ARE APPROXIMATE. NOTIFY ARCHITECT IMMEDIATELY OF CONFLICTS OR EXCESSIVE VARIATIONS FROM INDICATED DIMENSIONS. NOTED DIMENSIONS TAKE PRECEDENCE OVER SCALED DIMENSIONS––DO NOT SCALE DRAWINGS. DIMENSIONS OF EXISTING CONDITIONS MAY BE BASED ON RECORD DRAWINGS AND ARE TO BE FIELD–VERIFIED BY THE CONTRACTOR.

CONTRACTOR SHALL VERIFY ALL EXISTING CONDITIONS BEFORE COMMENCING ANY DEMOLITION. CONTRACTOR SHALL PROVIDE ADEQUATE SHORING AND BRACING OF ALL STRUCTURAL MEMBERS, EXISTING CONSTRUCTION AND SOIL EXCAVATIONS, AS REQUIRED, AND IN A MANNER SUITABLE TO THE WORK SEQUENCE. TEMPORARY SHORING AND BRACING SHALL NOT BE REMOVED UNTIL ALL FINAL CONNECTIONS HAVE BEEN COMPLETED IN ACCORDANCE WITH THE DRAWINGS AND MATERIALS HAVE ACHIEVED DESIGN STRENGTH. NO REINFORCING BARS IN EXISTING CONSTRUCTION SHALL BE CUT UNLESS DIRECTED TO BY THE ARCHITECT OR AS SHOWN ON THE DRAWINGS.

CONTRACTOR SHALL BE RESPONSIBLE FOR ALL SAFETY PRECAUTIONS AND THE METHODS, TECHNIQUES, SEQUENCES OR PROCEDURES REQUIRED TO PERFORM THE WORK.

SOILS: SEE THE GEOTECHNICAL REPORTS BY HART CROWSER, DATED 04/28/17 FOR THE TERMINAL BUILDING, AND 08/28/17 FOR THE MAINTENANCE BUILDING, FOR MORE COMPLETE INFORMATION. EARTHWORK MATERIAL, BACKFILL AND COMPACTION SHALL BE IN ACCORDANCE WITH THE RECOMMENDATIONS OF THE GEOTECHNICAL REPORTS. BACKFILL BEHIND WALLS SHALL NOT BE PLACED BEFORE THE WALL IS PROPERLY SUPPORTED BY THE FLOOR SLAB OR TEMPORARY BRACING. ALL TOPSOIL ORGANICS AND LOOSE SURFACE SOIL SHALL BE REMOVED FROM BENEATH FILL SUPPORTING CONCRETE SLABS OR PAVING.

MEMBER SPACING: ALL FRAMING MEMBERS SHALL BE EQUALLY SPACED BETWEEN GRID LINES, COLUMNS, AND DIMENSIONED FRAMING UNLESS NOTED OTHERWISE.

CONCRETE

CONCRETE WORK SHALL CONFORM TO ALL REQUIREMENTS OF IBC CHAPTER 19.

CONCRETE MIXES: CONCRETE MIXES SHALL CONFORM TO THE FOLLOWING REQUIREMENTS:

f'c (PSI)	TEST AGE (DAYS)	W/C RATIO	USE
4,000	28	0.5	SLAB–ON–GRADE, FOUNDATIONS, CONCRETE WALLS
5,000	28	0.45	BEAMS, COLUMNS, SLABS, SLABS ON STEEL DECK, TOPPING SLABS* AND SHEAR WALLS

* LIMIT TOTAL WATER CONTENT TO 250 LBS/CUBIC YARD OF CONCRETE

WATER–REDUCING ADMIXTURES MAY BE INCORPORATED IN CONCRETE MIX DESIGNS, BUT SHALL CONFORM TO ASTM C 494, AND BE USED IN STRICT ACCORDANCE WITH THE MANUFACTURER'S RECOMMENDATIONS. $CACL_2$ OR OTHER WATER–SOLUBLE CHLORIDE ADMIXTURES SHALL NOT BE USED.

WATER/CEMENT (W/C) RATIO SHALL BE MEASURED BY WEIGHT AND SHALL BE BASED ON THE TOTAL CEMENTITIOUS MATERIAL. WATER/CEMENT RATIO AND WATER CONTENT SHALL BE DETERMINED BY THE SUPPLIER BASED ON STRENGTH REQUIREMENTS AND SHALL NOT EXCEED THE MAXIMUM WATER/CEMENT RATIO AND/OR WATER CONTENT IF SHOWN ABOVE OR IN THE PROJECT SPECIFICATIONS.

FIELD–MEASURED SLUMP SHALL CONFORM TO THE SUBMITTED CONCRETE MIX DESIGN. TOLERANCE OF SLUMP SHALL CONFORM TO ASTM C 94.

AN AIR–ENTRAINING AGENT CONFORMING TO ASTM C 260 SHALL BE USED IN ALL CONCRETE MIXES FOR FLATWORK WHICH IS EXPOSED TO WEATHER. THE AMOUNT OF ENTRAINED AIR SHALL BE 5 PERCENT ±1 1/2 PERCENT BY VOLUME. THE AMOUNT OF ENTRAINED AIR SHALL BE MEASURED IN THE FIELD AT THE DISCHARGE FROM THE TRUCK.

THE CONTRACTOR SHALL SUBMIT CONCRETE MIX DESIGNS FOR APPROVAL 2 WEEKS PRIOR TO PLACING ANY CONCRETE. THE MIX DESIGN SHALL BE IN CONFORMANCE WITH ACI 318, CHAPTER 5. THE SUBMITTAL SHALL INDICATE WHERE EACH CONCRETE MIX IS TO BE USED ON THE PROJECT, AS WELL AS THE MAXIMUM AGGREGATE SIZE OF EACH MIX. MAXIMUM AGGREGATE SIZE SHALL CONFORM TO THE PROJECT SPECIFICATIONS.

CURING: IF THE AIR TEMPERATURE WILL EXCEED 75 DEGREES F WITHIN 48 HOURS OF PLACING CONCRETE, A MOIST CURE SHALL BE APPLIED TO THE CONCRETE FOR A PERIOD OF 36 HOURS AFTER FINISHING CONCRETE SURFACES. REFER TO THE PROJECT SPECIFICATIONS FOR CURING REQUIREMENTS.

kpff

BUILDING STRUCTURAL NOTES: TERMINAL BUILDING AND MAINTENANCE BUILDING

REINFORCING STEEL

DEFORMED BARS	ASTM A 615, GRADE 60
SPECIAL DUCTILE QUALITY DEFORMED BARS	ASTM A 706, GRADE 60 LOW ALLOY
HEADED DEFORMED BARS	ASTM A 970, HEAD TYPE HA
ADHESIVE REINFORCING DOWELS	ASTM A 615, GRADE 60 ADHESIVE AS REQUIRED PER POST-INSTALLED ANCHORS

SPECIAL DUCTILE QUALITY (SDQ) DEFORMED BARS SHALL BE USED FOR VERTICAL REINFORCING IN SHEAR WALLS, DIAGONAL REINFORCING IN DIAGONALLY REINFORCED COUPLING BEAMS, TOP AND BOTTOM REINFORCING IN ALL OTHER COUPLING BEAMS, AND OTHER REINFORCING DESIGNATED "SDQ" ON THE DRAWINGS. ASTM A 615, GRADE 60, REBAR MAY BE USED IN THESE MEMBERS IF 1) THE ACTUAL YIELD STRENGTH BASED ON MILL TESTS DOES NOT EXCEED THE SPECIFIED YIELD STRENGTH BY MORE THAN 18,000 PSI (RETESTS SHALL NOT EXCEED THIS VALUE BY MORE THAN AN ADDITIONAL 3,000 PSI), AND 2) THE RATIO OF THE ACTUAL ULTIMATE TENSILE STRESS TO THE ACTUAL TENSILE YIELD STRENGTH IS NOT LESS THAN 1.25. MILL TEST CERTIFICATIONS FOR SDQ ASTM A 615, GRADE 60, BARS SHALL BE SUBMITTED TO THE OWNER'S SPECIAL INSPECTOR AND ARCHITECT PRIOR TO PLACING THE BARS.

REINFORCING SHALL BE SUPPORTED AS SPECIFIED BY THE PROJECT SPECIFICATIONS AND THE CRSI MANUAL OF STANDARD PRACTICE. REINFORCING STEEL SHALL BE DETAILED IN ACCORDANCE WITH ACI STANDARD OF PRACTICE AS OUTLINED IN ACI 315, "DETAILS AND DETAILING OF CONCRETE REINFORCEMENT."

LAP ALL REINFORCING BARS AS NOTED ON THE DRAWINGS. WHERE SPLICE LENGTH IS NOT SHOWN, USE TYPE LB (LBT FOR TOP BARS) SPLICE PER DEVELOPMENT AND SPLICE LENGTH SCHEDULE. MECHANICAL SPLICES CALLED OUT ON THE PLANS SHALL BE TYPE 1, UNLESS OTHERWISE NOTED. TYPE 1 SPLICES SHALL DEVELOP 125 PERCENT OF THE YIELD CAPACITY OF THE SPLICED BARS IN BOTH TENSION AND COMPRESSION. TYPE 2 SPLICES SHALL DEVELOP THE SPECIFIED TENSILE STRENGTH OF THE SPLICED BARS IN TENSION IN ADDITION TO MEETING TYPE 1 SPLICE REQUIREMENTS. SUBMIT ICC-ES OR IAPMO-UES REPORT VALID FOR THE 2012 IBC DEMONSTRATING COMPLIANCE OF COUPLERS WITH THESE REQUIRMENTS.

AT THE CONTRACTOR'S OPTION AND WITH THE ARCHITECT'S APPROVAL, HEADED DEFORMED BARS MAY BE USED IN LIEU OF REINFORCING BARS SHOWN WITH STANDARD 90 OR 180 DEGREE HOOKS AND MECHANICAL SPLICES MAY BE USED IN LIEU OF LAP SPLICES. USE OF HEADED DEFORMED BARS IS SUBJECT TO CONFORMANCE WITH ACI 318 SECTION 12.6.1. USE OF MECHANICAL SPLICES IS SUBJECT TO CONFORMANCE WITH ACI 318 SECTION 21.1.6 AND REQUIRES SUBMITTAL OF AN ICC-ES OR IAPMO-UES REPORT VALID FOR THE 2012 IBC.

REINFORCING STEEL SHALL HAVE PROTECTION AS FOLLOWS, UNLESS NOTED OTHERWISE:

USE		COVER
BEAM STIRRUPS AND COLUMN TIES		1 1/2"
INTERIOR SLAB BARS		1 1/2"
NONSTRUCTURAL SLAB-ON-GRADE		MID-DEPTH
STRUCTURAL SLAB-ON-GRADE:	BOTTOM BARS	2"
	TOP BARS	1 1/2"
WALL BARS:	INTERIOR FACES	3/4"
	EXPOSED TO EARTH OR WEATHER	1 1/2" (#5 AND SMALLER)
		2" (#6 AND LARGER)
	EXPOSED TO SALT WATER SPRAY	3"
FOOTING, GRADE BEAM:	BOTTOM BARS	3" (CAST AGAINST EARTH)
	SIDE BARS	1 1/2"
		2" (#6 AND LARGER WHERE EXPOSED TO EARTH OR WEATHER)
	TOP BARS	2"

WELDING OF REINFORCING, WHEN APPROVED BY THE ARCHITECT, SHALL BE PERFORMED USING LOW HYDROGEN ELECTRODES AND PREHEATED IN ACCORDANCE WITH AWS D1.4, REINFORCING STEEL WELDING CODE. WELDERS AND WELDING PROCEDURES SHALL BE QUALIFIED IN ACCORDANCE WITH AWS D1.4. MATERIALS SHALL CONFORM TO THE FOLLOWING:

REINFORCING BARS TO BE WELDED	ASTM A 706, GRADE 60, LOW ALLOY
WELDING ELECTRODES	E80XX

NONSHRINK GROUT: BASE PLATE GROUT SHALL BE NONSHRINK TYPE WITH MINIMUM F'C = 8,000 PSI. ALL OTHER NONSHRINK GROUT SHALL HAVE MINIMUM F'C = 5,000 PSI.

MASONRY

CONCRETE MASONRY: ALL CONCRETE MASONRY UNITS SHALL COMPLY WITH ASTM C 90 WITH AVERAGE NET COMPRESSIVE STRENGTH OF 2150 PSI. ASSEMBLIES SHALL HAVE A MINIMUM COMPRESSIVE STRENGTH OF f'm = 1500 PSI. CONCRETE MASONRY WALLS SHALL BE REINFORCED AS SHOWN ON THE PLANS AND DETAILS. WALLS SHALL BE SOLID GROUTED, UNLESS NOTED OTHERWISE.

MORTAR: ALL MORTAR SHALL BE TYPE S AND SHALL CONFORM TO IBC SECTION 2103.

MASONRY GROUT: GROUT SHALL CONFORM TO TMS 602. GROUT SHALL CONFORM TO PROPORTION SPECIFICATIONS OF TMS 602. MORTAR SAND SHALL BE USED. GROUT SHALL BE POURED IN MAXIMUM LIFTS OF 5'-0". ALL CELLS CONTAINING VERTICAL BARS AND ALL BOND BEAMS SHALL BE FILLED WITH GROUT. WALLS SHALL BE GROUTED SOLID, UNLESS NOTED OTHERWISE.

REINFORCING STEEL: REINFORCING SHALL CONFORM TO IBC SECTION 2103.14 AND TMS 602. DEFORMED BARS SHALL BE GRADE 60 AND SHALL BE SECURELY PLACED.

STRUCTURAL STEEL

REFERENCE SPECIFICATIONS

STRUCTURAL STEEL	AISC 360 – SPECIFICATION FOR STRUCTURAL STEEL BUILDINGS
HIGH STRENGTH BOLTS	RCSC SPECIFICATION FOR STRUCTURAL JOINTS USING HIGH-STRENGTH BOLTS
WELDING	AWS D1.1, TYPICAL AWS D1.3 FOR STEEL DECK AND COLD-FORMED FRAMING AWS D1.8 FOR SUPPLEMENTAL SEISMIC PROVISIONS AWS PREQUALIFIED JOINT DETAILS
WELDER CERTIFICATION	AMERICAN WELDING SOCIETY (AWS) WASHINGTON ASSOCIATION OF BUILDING OFFICIALS (WABO)
STEEL DECKING	STEEL DECK INSTITUTE PUBLICATION NO. 31 AISI S100 – NORTH AMERICAN SPECIFICATION FOR THE DESIGN OF COLD-FORMED STEEL STRUCTURAL MEMBERS

STEEL MATERIALS

WIDE FLANGE SHAPES (W AND WT)	ASTM A 992
PLATES (PL), BARS, ANGLES (L), CHANNELS (C AND MC)	ASTM A 36, UNLESS NOTED OTHERWISE
STRUCTURAL TUBES (HSS)	ASTM A 500, GRADE C
STEEL PIPE	ASTM A 53, GRADE B
STRUCTURAL BOLTS	ASTM A 325 TYPICAL, A 490 AS NOTED
ANCHOR RODS	ASTM F 1554, GRADE 36, UNLESS NOTED OTHERWISE
THREADED RODS	ASTM A 36
WELDING ELECTRODES	70 KSI, LOW HYDROGEN, TYPICAL 60 KSI, MINIMUM, STEEL DECK AND COLD-FORMED FRAMING

STRUCTURAL STEEL DESIGN, FABRICATION AND ERECTION SHALL CONFORM TO THE REQUIREMENTS OF IBC CHAPTER 22. ALL MEMBERS ARE TO BE ERECTED WITH NATURAL MILL CAMBER OR INDUCED CAMBER UP, UNLESS OTHERWISE NOTED ON THE PLANS. SUBSTITUTION OF MEMBER SIZES OR STEEL GRADE WILL NOT BE ALLOWED WITHOUT PRIOR APPROVAL OF THE ARCHITECT. BOLTED CONNECTIONS ARE TO BE OF HIGH STRENGTH ASTM A 325 BOLTS AS SHOWN, UNLESS NOTED OTHERWISE. A MINIMUM OF TWO BOLTS IS REQUIRED FOR ALL BEAM CONNECTIONS. ALTERNATIVE CONNECTIONS TO THOSE SHOWN ON THESE DRAWINGS WILL REQUIRE PRIOR APPROVAL OF THE ARCHITECT.

BEAM CAMBER INDICATED ON DRAWINGS IS THE UPWARD CAMBER REQUIRED IN THE BEAM AS DELIVERED TO THE JOB SITE. CONTRACTOR TO CONSIDER CAMBER LOSS, IF ANY, DUE TO SHIPPING AND HANDLING.

THE CONTRACTOR SHALL BE RESPONSIBLE FOR ALL ERECTION AIDS AND JOINT PREPARATIONS THAT INCLUDE, BUT ARE NOT LIMITED TO, ERECTION ANGLES, LIFT HOLES AND OTHER AIDS, WELDING PROCEDURES, REQUIRED ROOT OPENINGS, ROOT FACE DIMENSIONS, GROOVE ANGLES, BACKING BARS, COPES, SURFACE ROUGHNESS VALUES, AND UNEQUAL PARTS.

GALVANIZING: STRUCTURAL STEEL AND CONNECTIONS, INCLUDING PLATES AND OTHER STEEL ITEMS EMBEDDED IN CONCRETE, WHICH ARE EXPOSED TO WEATHER AND NOT TO BE PAINTED SHALL BE HOT-DIPPED GALVANIZED AFTER FABRICATION IN COMPLIANCE WITH ASTM A 123. ALL FIELD WELDS ON GALVANIZED MATERIAL SHALL BE COATED WITH BRUSH APPLIED ZINC-RICH PAINT COMPLYING WITH THE SPECIFICATIONS.

WELDING: ALL WELDING SHALL BE IN CONFORMANCE WITH AISC AND AWS STANDARDS, AND SHALL BE PERFORMED BY AWS-WABO-CERTIFIED WELDERS USING 70 KSI ELECTRODES AND LOW HYDROGEN PROCESSES. ONLY WELDS THAT ARE PREQUALIFIED, AS DEFINED BY AWS, OR QUALIFIED BY TESTING SHALL BE USED. SHOP DRAWINGS SHALL SHOW ALL WELDING WITH AWS A2.4 SYMBOLS. WELDS SHOWN ON THE DRAWINGS ARE MINIMUM SIZES. INCREASE WELD SIZE TO AWS MINIMUM SIZES BASED ON THICKNESS. MINIMUM WELD SIZE SHALL BE 3/16-INCH, UNLESS NOTED OTHERWISE. THE WELDS SHOWN ARE FOR THE FINAL CONNECTIONS. FIELD WELD SYMBOLS ARE SHOWN WHERE FIELD WELDS ARE REQUIRED BY THE STRUCTURAL DESIGN. WHERE FIELD WELD IS NOT INDICATED, THE CONTRACTOR IS RESPONSIBLE FOR DETERMINING IF A WELD SHOULD BE SHOP OR FIELD-WELDED IN ORDER TO FACILITATE THE STRUCTURAL STEEL ERECTION.

WELDING OF THE SEISMIC FORCE RESISTING SYSTEM SHALL BE EXECUTED IN ACCORDANCE WITH THE PROVISIONS OF AWS D1.8 "STRUCTURAL WELDING CODE – SEISMIC SUPPLEMENT". WELDS ASSOCIATED WITH THE SEISMIC FORCE RESISTING SYSTEM ARE IDENTIFIED WITHIN THESE DRAWINGS AS FOLLOWS:

D1.8	INDICATES WELDS SUBJECT TO THE REQUIREMENTS OF D1.8
D1.8 – DCW	INDICATES DEMAND CRITICAL WELDS SUBJECT TO ADDITIONAL SPECIFIC REQUIREMENTS WITHIN D1.8

THE LOWEST ANTICIPATED SERVICE TEMPERATURE IS 32 DEGREES F.

FIREPROOFING: EXCEPT WHERE PAINTED OR GALVANIZED, STRUCTURAL STEEL SHALL BE FIREPROOFED PER THE SPECIFICATIONS. FIREPROOFING SHALL BE GCP APPLIED TECHNOLOGIES OR APPROVED EQUAL. THICKNESS SHALL BE AS INDICATED ON ICC REPORT NO. ESR-1186. PRIMARY STRUCTURAL FRAME CONSISTS OF ALL COLUMNS, GIRDERS AND BEAMS ATTACHED TO COLUMNS, AND ANY BEAM CARRYING GREATER THAN 500 SQUARE FEET OF FLOOR OR ROOF AREA. ALL OTHER FRAMING IS TO BE CONSIDERED SECONDARY. STRUCTURAL MEMBERS SHALL BE ASSUMED TO BE IN A THERMAL RESTRAINED CONDITION FOR THE PURPOSES OF DETERMINING FIREPROOFING THICKNESS. WHERE SPRAY-APPLIED FIREPROOFING IS EXPOSED TO WEATHER, STRUCTURAL STEEL SHALL BE CONSIDERED EXPOSED TO WEATHER.

STEEL DECK

STEEL DECK SHALL CONFORM TO ASTM A 653. WHERE THE DECK IS LEFT PERMANENTLY EXPOSED, GALVANIZED COATING SHALL CONFORM TO ASTM A 924, G90. IN OTHER AREAS, GALVANIZED COATING SHALL CONFORM TO ASTM A 924, G60. STEEL DECK SHALL CONFORM TO THE FOLLOWING:

fy (PSI)	USE
40,000 MINIMUM	COMPOSITE FLOOR/ROOF SLAB DECK
33,000 MINIMUM	NONCOMPOSITE STEEL ROOF DECK

MINIMUM DECK GAUGES ARE SHOWN ON PLANS AND ARE BASED ON 3-SPAN, UNSHORED CONDITIONS. HEAVIER DECK GAUGES MAY BE REQUIRED FOR CONDITIONS OTHER THAN THESE, DEPENDING ON MANUFACTURER'S AND CONTRACTOR'S LAYOUT. DECK SUPPLIER SHALL VERIFY DECK GAUGES AND CAPACITIES BASED ON ACTUAL DECK LAYOUT AND SPAN CONDITIONS INCLUDING A 70 PSF SUPERIMPOSED DEAD LOAD ALLOWANCE FOR THE ROOF DECK. DEVIATIONS IN DECK GAUGES FROM THOSE SHOWN SHALL BE SUBMITTED TO THE ARCHITECT, ALONG WITH A VALID ICC REPORT FOR APPROVAL PRIOR TO SHOP DETAILING.

DECK WELDING SHALL BE IN ACCORDANCE WITH AWS D1.3, "STRUCTURAL WELDING CODE – SHEET STEEL." WELDERS SHALL BE QUALIFIED BY WABO SHEET STEEL WELDER CERTIFICATION PROGRAM. ARC SPOT WELD SIZES NOTED ARE BASED ON THE NOMINAL (VISIBLE) DIAMETER.

CONTRACTOR SHALL PROVIDE CLOSURE PLATES, FLASHING, AND ALL MISCELLANEOUS COLD-FORMED FRAMING NECESSARY TO COMPLETE THE WORK. THE MINIMUM BEARING SHALL BE 2 INCHES.

COMPOSITE FLOOR/ROOF SLAB DECK: STEEL FLOOR DECK SHALL BE A COMPOSITE TYPE DECK WITH RIBS AT 12 INCHES ON CENTER OF THE SIZE AND GAUGE SHOWN ON THE PLANS AND DETAILS, OR AN APPROVED EQUAL.

FLOOR DECK FASTENING SHALL BE AS FOLLOWS, UNLESS NOTED OTHERWISE, AND EXCEPT AS INDICATED IN TYPICAL COMPOSITE BEAM DETAILS.

MIN 5/8-INCH DIAMETER ARC-SPOT WELDS AT 12 INCHES ON CENTER AT TRANSVERSE AND PERIMETER SUPPORTS

MIN 5/8-INCH DIAMETER ARC-SPOT WELDS AT 18 INCHES ON CENTER AT LONGITUDINAL SUPPORTS

BUTTON PUNCH OR 1 1/2-INCH TOP OR SIDE SEAM WELD AT 18 INCHES ON CENTER AT SIDE LAP CONNECTIONS

NONCOMPOSITE ROOF DECK: STEEL ROOF DECK SHALL BE OF THE SIZE AND GAUGE SHOWN ON THE PLANS OR AN APPROVED EQUAL. ROOF DECK FASTENING SHALL BE AS SHOWN ON THE PLANS. THE MINIMUM END LAP SHALL BE 2 INCHES CENTERED OVER SUPPORTS.

SUSPENDED CEILINGS, LIGHT FIXTURES, PIPES, DUCTS, MECHANICAL OR ELECTRICAL EQUIPMENT, OR OTHER UTILITIES SHALL NOT BE SUPPORTED BY THE NONCOMPOSITE STEEL ROOF DECK WITHOUT APPROVAL OF THE ENGINEER.

HOLES OR COMBINATIONS OF HOLES IN NONCOMPOSITE ROOF DECK, WHICH CUT TWO WEBS WHICH ARE CLOSER THAN 24 INCHES ON CENTER IN ANY DECK SPAN, MAY REQUIRE DECK REINFORCEMENT AND REQUIRE DIRECTION FROM THE ENGINEER.

ANCHORS

POST-INSTALLED ANCHORS: PROVIDE POST-INSTALLED ANCHORS AS SPECIFIED IN THESE DRAWINGS.

USE OF ALTERNATE PRODUCTS, OR OF POST-INSTALLED ANCHORS AT LOCATIONS NOT SHOWN IN THESE DRAWINGS, IS SUBJECT TO THE APPROVAL OF THE ENGINEER. SUBMIT PROPOSED ANCHORS TO THE ENGINEER WITH AN ICC-ES OR IAPMO UES REPORT VALID FOR THE 2012 IBC. SUBMITTED ICC-ES AND IAPMO UES REPORTS SHALL DEMONSTRATE THAT THE ANCHORS ARE SUITABLE FOR USE IN CRACKED CONCRETE OR UNCRACKED, FULLY GROUTED REINFORCED CONCRETE MASONRY UNITS. WHERE ANCHORS RESIST SEISMIC LOADS, SUBMITTED ICC-ES AND IAPMO UES REPORTS SHALL DEMONSTRATE THAT THE ANCHORS ARE SUITABLE FOR THE RESISTANCE OF SEISMIC LOADS.

ADHESIVES SHALL NOT BE INSTALLED PRIOR TO THE CONCRETE REACHING AN AGE OF 21 DAYS AS REQUIRED BY ACI 318.

HEADED SHEAR STUDS AND DEFORMED BAR ANCHORS: ALL HEADED SHEAR STUDS SHALL CONFORM TO ASTM A 108 AND SHALL BE 3/4-INCH DIAMETER HEADED STUDS, UNLESS NOTED OTHERWISE. STUD LENGTHS AFTER WELD SHALL BE AS SHOWN ON THE DRAWINGS. DEFORMED BAR ANCHORS (DBA) SHALL CONFORM TO ASTM A 496 AND SHALL BE OF THE SIZE AND LENGTH SHOWN ON THE DRAWINGS. ALL STUDS AND DEFORMED BAR ANCHORS SHALL BE AUTOMATICALLY END WELDED IN SHOP OR FIELD WITH EQUIPMENT RECOMMENDED BY MANUFACTURER.

COLD-FORMED STEEL

COLD-FORMED STEEL FRAMING MEMBERS SHALL BE OF THE TYPE, SHAPE, SIZE, GAUGE, AND SPACING AS SHOWN ON THE DRAWINGS. MEMBER TYPES AND SIZES SHOWN ON THE DRAWINGS REFER TO MEMBERS AS DEFINED BY THE STEEL STUD MANUFACTURERS ASSOCIATION (SSMA). MEMBERS EQUIVALENT IN SHAPE, SIZE, STIFFNESS, AND STRENGTH BY OTHER MANUFACTURERS MAY BE SUBSTITUTED FOR FRAMING MEMBERS SHOWN. ALTERNATE MEMBERS SHALL BE SUBJECT TO REVIEW AND APPROVAL BY THE ARCHITECT AND STRUCTURAL ENGINEER PRIOR TO FABRICATION AND ERECTION. ALL COLD-FORMED STEEL FRAMING SHALL CONFORM TO THE AISI S100 – "NORTH AMERICAN SPECIFICATION FOR THE DESIGN OF COLD-FORMED STEEL STRUCTURAL MEMBERS." ALL STUDS, TRACKS AND JOISTS SHALL BE GALVANIZED. FASTENINGS SHALL BE AS SHOWN ON THE DRAWINGS. FASTENINGS NOT SHOWN SHALL BE AS RECOMMENDED BY THE MANUFACTURER.

COLD-FORMED STEEL WELDING SHALL BE IN ACCORDANCE WITH AWS D1.3, "SPECIFICATION FOR WELDING SHEET STEEL IN STRUCTURES." WELDERS SHALL BE QUALIFIED BY WABO SHEET STEEL WELDER CERTIFICATION PROGRAM.

kpff

BUILDING STRUCTURAL NOTES: TERMINAL BUILDING AND MAINTENANCE BUILDING

WOOD

IDENTIFICATION: ALL SAWN LUMBER AND PRE-MANUFACTURED WOOD PRODUCTS SHALL BE IDENTIFIED BY THE GRADE MARK OR A CERTIFICATE OF INSPECTION ISSUED BY THE CERTIFYING AGENCY.

SAWN LUMBER: SAWN LUMBER SHALL CONFORM TO "GRADING AND DRESSING RULES," WEST COAST LUMBER INSPECTION BUREAU (WCLIB), LATEST EDITION. LUMBER SHALL BE KILN DRIED AND BE THE SPECIES AND GRADE NOTED BELOW. DESIGN STRESSES ARE BASED ON NDS. ALL LUMBER IN CONTACT WITH CMU, CONCRETE, OR GROUND SURFACES SHALL BE PRESERVATIVE TREATED.

USE	GRADE	FB (PSI) (SINGLE USE)
POSTS		
5"x5" AND LARGER	DOUGLAS FIR-LARCH NO. 1	1,200
4"x4"	DOUGLAS FIR-LARCH NO. 1	1,000

ALL FRAMING ACCESSORIES AND FASTENERS IN CONTACT WITH PRESERVATIVE-TREATED LUMBER SHALL BE GALVANIZED WITH A MINIMUM COATING OF 1.85 OUNCES/SQUARE FOOT.

RATED SHEATHING: WOOD STRUCTURAL PANELS SHALL CONFORM TO THE REQUIREMENTS OF THE LATEST EDITION OF U.S. DEPARTMENT OF COMMERCE (DOC) PS-1 "CONSTRUCTION AND INDUSTRIAL PLYWOOD" OR DOC PS-2 "PERFORMANCE STANDARD FOR WOOD-BASED STRUCTURAL-USE PANELS". EACH PANEL SHALL BEAR THE APA GRADE TRADEMARK OF THE AMERICAN PLYWOOD ASSOCIATION. SHEATHING SHALL BE AS FOLLOWS:

ROOF SHEATHING
15/32" 32/16 C-D INT APA WITH EXTERIOR GLUE (CDX)

ALL ROOF SHEATHING SHALL BE INSTALLED FACE GRAIN PERPENDICULAR TO SUPPORTS OR AS INDICATED ON THE DRAWINGS. SHEATHING SHALL BE UNBLOCKED OR AS INDICATED ON DRAWINGS. INSTALL WITH 1/8" GAP BETWEEN PANELS. ROOF DIAPHRAGM NAILS SHALL BE DRIVEN FLUSH, BUT SHALL NOT FRACTURE THE SURFACE OF SHEATHING. NAILING NOT SHOWN SHALL BE AS INDICATED IN IBC TABLE 2304.9.1. ALL NAILS SHALL BE COMMON.

CROSS LAMINATED TIMBER: CROSS LAMINATED TIMBER(CLT) PANELS SHALL COMPLY WITH ANSI/APA PRG 320-2012, STANDARD FOR PERFORMANCE-RATED CROSS LAMINATED TIMBER. CLT PANEL GRADES SHALL BE AS FOLLOWS:

4 1/8" GRADE V1 OR V2

GLUED LAMINATED MEMBERS: GLUED LAMINATED MEMBERS SHALL BE MANUFACTURED AND IDENTIFIED IN ACCORDANCE WITH AMERICAN INSTITUTE OF TIMBER CONSTRUCTION (AITC) A190.1 "STRUCTURAL GLUE LAMINATED TIMBER". EACH MEMBER SHALL BEAR AN AITC IDENTIFICATION MARK AND BE ACCOMPANIED BY AN AITC CERTIFICATE OF CONFORMANCE. ONE COAT OF END SEALER SHALL BE APPLIED IMMEDIATELY AFTER TRIMMING IN EITHER SHOP OR FIELD. MEMBERS SHALL BE VISUALLY GRADED WESTERN SPECIES PREMIUM GRADE WITH STRENGTH INDICATED AS FOLLOWS:

	COMBINATION SYMBOL	SPECIES	USES
BEAMS	24F-V4	DF/DF	SIMPLE SPAN
	24F-V8	DF/DF	CONTINUOUS OR CANTILEVER SPAN
COLUMNS	2-L2	DF/DF	CRUCIFORM COLUMNS

BUILDING STRUCTURAL ABBREVIATIONS: TERMINAL BLDG AND MAINTENANCE BLDG

AB	ANCHOR BOLT
ADD'L	ADDITIONAL
ADJ	ADJUSTABLE
AFF	ABOVE FINISH FLOOR
AGG	AGGREGATE
ANCH	ANCHOR
ARCH	ARCHITECTURAL
AESS	ARCHITECTURAL EXPOSED STRUCTURAL STEEL
B/	BOTTOM OF
BLDG	BUILDING
BF	BRACED FRAME
BLKG	BLOCKING
BM	BEAM
BN	BOUNDARY NAILING
BOT	BOTTOM
BRG	BEARING
BSMT	BASEMENT
BTWN	BETWEEN
BUR	BUILT-UP ROOF
C	CAMBER
CAP	CAPACITY
CC	CENTER TO CENTER
CFS	COLD-FORMED STEEL
CIP	CAST IN PLACE
CJ	CONSTRUCTION OR CONTROL JOINT
CL	CENTERLINE
CLG	CEILING
CLR	CLEAR
CLT	CROSS LAMINATED TIMBER
CMU	CONCRETE MASONRY UNIT
COL	COLUMN
CONC	CONCRETE
CONN	CONNECTION
CONST	CONSTRUCTION
CONT	CONTINUOUS
CONTR	CONTRACTOR
COORD	COORDINATE
CP	COMPLETE PENETRATION
CTR	CENTER
CY	CUBIC YARD
DB	DIVIDER BEAM
DBA	DEFORMED BAR ANCHOR
DBL	DOUBLE
DEMO	DEMOLISH
DET	DETAIL
DF	DOUGLAS FIR
DIA	DIAMETER
DIAG	DIAGONAL
DKG	DECKING
DN	DOWN
DO	DITTO
DWF	DEFORMED WIRE FABRIC
DWG	DRAWING
DWL	DOWEL
EA	EACH
EF	EACH FACE
EL	ELEVATION
ELECT	ELECTRICAL
ELEV	ELEVATOR
EN	EDGE NAILING
EQ	EQUAL
EQUIP	EQUIPMENT
ES	EACH SIDE
EW	EACH WAY
EX	EXISTING
EXP	EXPANSION
EXT	EXTERIOR
FD	FLOOR DRAIN
FDN	FOUNDATION
FF	FINISH FLOOR
FIN	FINISH
FLG	FLANGE
FLR	FLOOR
FOB	FACE OF BUILDING
FS	FAR SIDE
FT	FEET
FTG	FOOTING
GA	GAUGE
GALV	GALVANIZED
GEN	GENERAL
GL	GLUE LAMINATED BEAM
GOVT	GOVERNMENT
GR	GRADE
GWB	GYPSUM WALL BOARD
HF	HEM-FIR
HGR	HANGER
HK	HOOK
HORIZ	HORIZONTAL
HP	HIGH POINT
HSS	HOLLOW STRUCTURAL SECTION
IBC	INTERNATIONAL BUILDING CODE
ID	INSIDE DIAMETER
IE	INVERT ELEVATION
IF	INSIDE FACE
IN	INCH
INFO	INFORMATION
INT	INTERIOR
JST	JOIST
JT	JOINT
K	KIP (1,000 LBS.)
KSF	KIPS PER SQUARE FOOT
L2	LEVEL 2
LF	LINEAL FOOT
LLH	LONG LEG HORIZONTAL
LLV	LONG LEG VERTICAL
LP	LOW POINT
LSH	LONG SIDE HORIZONTAL
LSV	LONG SIDE VERTICAL
LVL	LAMINATED VENEER LUMBER
MAX	MAXIMUM
MECH	MECHANICAL
MFR	MANUFACTURER
MID	MIDDLE
MIN	MINIMUM
MISC	MISCELLANEOUS
MOM	MOMENT
NIC	NOT IN CONTRACT
NOM	NOMINAL
NO	NUMBER
NS	NEAR SIDE
NS	NONSHRINK
NTS	NOT TO SCALE
OC	ON CENTER
OD	OUTSIDE DIAMETER
OF	OUTSIDE FACE
OPNG	OPENING
OPP	OPPOSITE
P	POST
PC	PIECE
PEN	PENETRATION
PL	PLATE
PL	PROPERTY LINE
PLWD	PLYWOOD
PNL	PANEL
PP	PARTIAL PENETRATION
PSI	POUNDS PER SQUARE INCH
PSF	POUNDS PER SQUARE FOOT
PT	POINT
R	RADIUS
RD	ROOF DRAIN
REINF	REINFORCING
REM	REMAIN(DER)
REQ'D	REQUIRED
RND	ROUND
RO	ROUGH OPENING
RTN	RETURN
SC	SLIP CRITICAL
SCHED	SCHEDULE
SDC	SEISMIC DESIGN CATEGORY
SECT	SECTION
SHT	SHEET
SIM	SIMILAR
SOG	SLAB-ON-GRADE
SP	SPACE
SPEC	SPECIFICATION
SQ	SQUARE
SS	STAINLESS STEEL
ST	SUSTAINED TENSION ANCHOR
STD	STANDARD
STIFF	STIFFENER
STIRR	STIRRUP
STL	STEEL
STRUCT	STRUCTURAL
SUPP	SUPPORT
SYM	SYMMETRICAL
T/	TOP OF
T&B	TOP AND BOTTOM
T&G	TONGUE AND GROOVE
THK	THICK(NESS)
THRU	THROUGH
TRANS	TRANSVERSE
TYP	TYPICAL
UNO	UNLESS NOTED OTHERWISE
VERT	VERTICAL
W/	WITH
WD	WOOD
WHS	WELDED HEADED STUD
WL	WATER LINE
W/O	WITHOUT
WP	WORK POINT
WWF	WELDED WIRE FABRIC

DRAWING LIST: TERMINAL BUILDING AND MAINTENANCE BUILDING

SB00.01	BUILDING STRUCTURAL NOTES
SB00.02	BUILDING STRUCTURAL NOTES
SB00.03	BUILDING STRUCTURAL NOTES, ABBREVIATIONS, AND DRAWING LIST
SB00.04	BUILDING STRUCTURAL SYMBOLS
SB00.05	STATEMENT OF STRUCTURAL SPECIAL INSPECTIONS
SB00.06	STATEMENT OF STRUCTURAL SPECIAL INSPECTIONS
SB00.07	STATEMENT OF STRUCTURAL SPECIAL INSPECTIONS
SB00.08	STATEMENT OF STRUCTURAL SPECIAL INSPECTIONS
SB00.09	STATEMENT OF STRUCTURAL SPECIAL INSPECTIONS
SB00.10	LOAD MAPS (TERMINAL BUILDING)
SB00.11	LOAD MAPS (MAINTENANCE BUILDING)
SB00.51	BUILDING STRUCTURAL NOTES - TOLL PLAZA
SB00.52	BUILDING STRUCTURAL NOTES - TOLL PLAZA
SB00.53	BUILDING STRUCTURAL NOTES, ABBREVS, AND DWG LIST - TOLL PLAZA
SB00.54	BUILDING STRUCTURAL SYMBOLS - TOLL PLAZA
SB00.55	STATEMENT OF STRUCTURAL SPECIAL INSPECTIONS - TOLL PLAZA
SB00.56	STATEMENT OF STRUCTURAL SPECIAL INSPECTIONS - TOLL PLAZA
SB00.57	STATEMENT OF STRUCTURAL SPECIAL INSPECTIONS - TOLL PLAZA
SB00.58	STATEMENT OF STRUCTURAL SPECIAL INSPECTIONS - TOLL PLAZA
SB00.59	LOAD MAPS (TOLL PLAZA)
SB02.00	TERMINAL - LEVEL 1 - OVERALL PLAN
SB02.01	TERMINAL - LEVEL 1 - SECTOR A PLAN
SB02.02	TERMINAL - LEVEL 1 - SECTOR B PLAN
SB02.03	TERMINAL - LEVEL 1 - SECTOR C PLAN
SB02.04	TERMINAL - LEVEL 1 - SECTOR D & E PLANS
SB02.05	TERMINAL - LEVEL 2 - OVERALL PLAN
SB02.06	TERMINAL - LEVEL 2 - SECTOR A PLAN
SB02.07	TERMINAL - LEVEL 2 - SECTOR B PLAN
SB02.08	TERMINAL - LEVEL 2 - SECTOR C PLAN
SB02.09	TERMINAL - LEVEL 2 - SECTOR D & E PLANS
SB02.10	TERMINAL - ROOF FRAMING - OVERALL PLAN
SB02.11	TERMINAL - ROOF FRAMING - SECTOR A PLAN
SB02.12	TERMINAL - ROOF FRAMING - SECTOR B PLAN
SB02.13	TERMINAL - ROOF FRAMING - SECTOR C PLAN
SB02.14	TERMINAL - ROOF DIAPHRAGM - OVERALL PLAN
SB02.15	TERMINAL - ROOF DIAPHRAGM - SECTOR A PLAN
SB02.16	TERMINAL - ROOF DIAPHRAGM - SECTOR B PLAN
SB02.17	TERMINAL - ROOF DIAPHRAGM - SECTOR C PLAN
SB02.50	TOLL PLAZA - OVERALL PLANS
SB02.51	TOLL PLAZA - LEVEL 1 - SECTOR F PLAN
SB02.52	TOLL PLAZA - LEVEL 1 - SECTOR G PLAN
SB02.53	TOLL PLAZA - INTERMEDIATE ROOF - SECTOR F PLAN
SB02.54	TOLL PLAZA - INTERMEDIATE ROOF - SECTOR G PLAN
SB02.55	TOLL PLAZA - ROOF - SECTOR F PLAN
SB02.56	TOLL PLAZA - ROOF - SECTOR G PLAN
SB03.00	PARTIAL PLANS - MAINTENANCE YARD
SB03.01	PARTIAL PLANS - STAIRS
SB03.02	PARTIAL PLANS - STAIRS
SB03.03	PARTIAL PLANS - STUD WALLS
SB03.04	PARTIAL PLANS - BATHROOM FRAMING
SB04.00	SHEAR WALL ELEVATIONS
SB04.01	SHEAR WALL ELEVATIONS
SB04.02	SHEAR WALL ELEVATIONS
SB04.05	CONC SHEAR WALL SECTIONS
SB04.06	CONC SHEAR WALL SECTIONS
SB04.07	CONC SHEAR WALL DETAILS
SB04.08	CONC WALL ELEVATIONS
SB04.09	CONC WALL ELEVATIONS
SB04.10	WALL ELEVATIONS - MAINTENANCE BLDG
SB04.11	GATE ELEVATIONS - MAINTENANCE BLDG
SB04.50	SHEAR WALL ELEVATIONS - TOLL PLAZA
SB04.51	WALL ELEVATIONS - TOLL PLAZA
SB05.00	TYPICAL CONCRETE DETAILS
SB05.01	TYPICAL CONCRETE DETAILS
SB05.02	CONCRETE DETAILS
SB05.03	CONCRETE DETAILS
SB05.04	CONCRETE DETAILS
SB05.05	CONCRETE DETAILS
SB05.06	CONCRETE DETAILS
SB05.07	CONCRETE DETAILS
SB05.50	CONCRETE DETAILS - TOLL PLAZA
SB05.51	CONCRETE DETAILS - TOLL PLAZA
SB05.52	CONCRETE DETAILS - TOLL PLAZA
SB05.53	CONCRETE DETAILS - TOLL PLAZA
SB05.54	CONCRETE DETAILS - TOLL PLAZA
SB06.00	STEEL COLUMN SCHEDULE/DETAILS
SB06.01	STEEL COLUMN DETAILS
SB06.02	STEEL COLUMN BASE PLATE DETAILS
SB06.03	STEEL COLUMN BASE PLATE DETAILS
SB06.04	TYPICAL STEEL DETAILS
SB06.05	TYPICAL STEEL DETAILS
SB06.06	TYPICAL STEEL DETAILS
SB06.07	TYPICAL STEEL DETAILS
SB06.08	TYPICAL STEEL DETAILS
SB06.09	TYPICAL STEEL DETAILS
SB06.10	STEEL DETAILS - MAINTENANCE BLDG
SB06.11	STEEL DETAILS - MAINTENANCE BLDG
SB06.12	STEEL DETAILS - MAINTENANCE BLDG
SB06.13	STEEL DETAILS - MAINTENANCE BLDG
SB06.14	VMS SUPPORT FRAME - MAINTENANCE BLDG
SB06.16	STEEL DETAILS - TERMINAL BLDG
SB06.17	STEEL DETAILS - TERMINAL BLDG
SB06.18	STEEL DETAILS - TERMINAL BLDG
SB06.19	PARTIAL HEIGHT WALL DETAILS - TERMINAL BLDG
SB06.30	STEEL DETAILS - TERMINAL BLDG
SB06.31	STEEL DETAILS - TERMINAL BLDG
SB06.32	STEEL DETAILS - TERMINAL BLDG
SB06.33	STEEL DETAILS - TERMINAL BLDG
SB06.40	STEEL DETAILS - CLADDING SUPPORT
SB06.41	STEEL DETAILS - CLADDING SUPPORT
SB06.42	STEEL DETAILS - CLADDING SUPPORT
SB06.43	STEEL DETAILS - CLADDING SUPPORT
SB06.44	STEEL DETAILS - CLADDING SUPPORT
SB06.45	STEEL DETAILS - CLADDING SUPPORT
SB06.50	STEEL DETAILS - TOLL PLAZA
SB06.51	STEEL COLUMN BASE PLATE DETAILS - TOLL PLAZA
SB07.00	TYPICAL WOOD DETAILS
SB07.01	WOOD DETAILS
SB07.02	WOOD DETAILS
SB07.03	TYPICAL WOOD DETAILS
SB07.50	WOOD DETAILS - TOLL PLAZA
SB07.51	WOOD DETAILS - TOLL PLAZA
SB07.52	WOOD DETAILS - TOLL PLAZA
SB08.00	TYPICAL CFS DETAILS
SB08.01	CFS DETAILS
SB08.50	CFS DETAILS - TOLL PLAZA
SB09.00	TYPICAL CMU DETAILS
SB09.01	TYPICAL CMU DETAILS
SB09.02	TYPICAL CMU DETAILS

kpff

FILE NAME:	14W121SB00_03.dwg		
PRINTED:	2:37:25 PM 9/21/2018	LAST PRINTED BY:	
SUBMITTAL DATE:	08/23/2018	ByronR	
DESIGNED BY:	A. RADKE	08/23/2018	
ENTERED BY:	B. RONIA	08/23/2018	
CHECKED BY:	A. EWING	08/23/2018	
MAR PROJ ENGR	C. TORRES		
DIR TERM ENGR:	N. MCINTOSH		
ASST SECRETARY:	A. SCARTON		REVISION / DATE / BY

FED.AID PROJ.NO. WA-2017-007-00
REGION NO. 10 STATE WASH
JOB NUMBER 18W121
CONTRACT NO. 00****

SARA LOVING ROBERTS — STATE OF WASHINGTON — 38538 — STRUCTURAL ENGINEER — PROFESSIONAL ENGINEER

DATE

08/23/2018
DATE

Washington State Department of Transportation
WASHINGTON STATE FERRIES

SR 525
MUKILTEO FERRY TERMINAL (PHASE 2)
FERRY TERMINAL CONSTRUCTION

BUILDING STRUCTURAL NOTES, ABBREVIATIONS, AND DRAWING LIST

SB00.03

SHEET 1084 OF 1521 SHEETS

File: U:\114000-114350\114177 (Mukilteo Ferry Terminal)\01 General Notes\14W121SB00_03.dwg
Plotted: 9/21/18 at 2:37pm By: DianeL

GENERAL SYMBOLS: TERMINAL BUILDING AND MAINTENANCE BUILDING

- 10 — GRID BUBBLE
- SURFACE – SLOPE UP
- SURFACE – STEPPED
- SURFACE – SLOPE DOWN
- SURFACE – SLOPE TWO WAYS
- UNDISTURBED SOIL, COMPACTED SOIL, BACKFILL, OR ANY PREPARED SUBGRADE. SEE SPECIFICATIONS FOR TYPE OF MATERIAL AND PREPARATION METHOD
- NORTH ARROW
- 1 / SB05.03 — STANDARD SECTION CUT
- 4 / SB04.02 — ELEVATION OF WALL OR FRAME
- 1 / SB05.03 — DETAIL CALLOUT AND BUBBLE
- 100'–0" — SPOT ELEVATION: TOP OF PLYWOOD, TOP OF CONCRETE, TOP OF STEEL
- 100'–0" — TOP OF CONCRETE ELEVATION
- 100'–0" — TOP OF STEEL ELEVATION
- 100'–0" — REFERENCE ELEVATION. REFER TO PLAN UNLESS NOTED OTHERWISE.
- 100'–0" — ELEVATION OF LEVEL
- WP — WORKPOINT
- DIRECTION OF DOWNWARD SLOPE
- DIRECTION OF SPAN

WOOD AND COLD–FORMED STEEL SYMBOLS: TERMINAL BLG AND MAINTENANCE BLDG

- GLULAM SECTION
- SOLID WOOD SECTION
- SOLID WOOD BLOCKING SECTION
- STRONG DIRECTION OF CROSS–LAMINATED TIMBER PANEL
- HINGE CONNECTION
- PLYWOOD SECTION
- BEAM, GIRDER, OR JOIST
- WALL ABOVE THIS LEVEL WITH HEADER BELOW
- WALL BELOW THIS LEVEL WITH HEADER BELOW
- WALL ABOVE THIS LEVEL
- WALL BELOW THIS LEVEL
- SW–X — SHEAR WALL ABOVE. SEE SHEAR WALL SHEATHING AND NAILING SCHEDULE
- SM–X — SHEET METAL WALL TYPE. SEE SCHEDULE ON 1/SB08.00

CONCRETE SYMBOLS: TERMINAL BUILDING AND MAINTENANCE BUILDING

- CONCRETE COLUMN ABOVE OR PASSING THRU LEVEL
- CONCRETE COLUMN BELOW
- STEPPED FOOTING — LOW SIDE
- CONCRETE WALL ABOVE OR PASSING THRU THIS LEVEL
- MASONRY WALL ABOVE OR PASSING THRU LEVEL
- CONCRETE/MASONRY WALL BELOW

STEEL SYMBOLS: TERMINAL BUILDING AND MAINTENANCE BUILDING

- STEEL COLUMN ABOVE OR PASSING THRU LEVEL
- STEEL COLUMN BELOW
- COLUMN SPLICE PER FRAME ELEVATIONS
- S 3/4" — STIFFENER PLATES PER FRAME ELEVATIONS.
- STEEL IN CROSS SECTION
- STEEL EMBED CONN

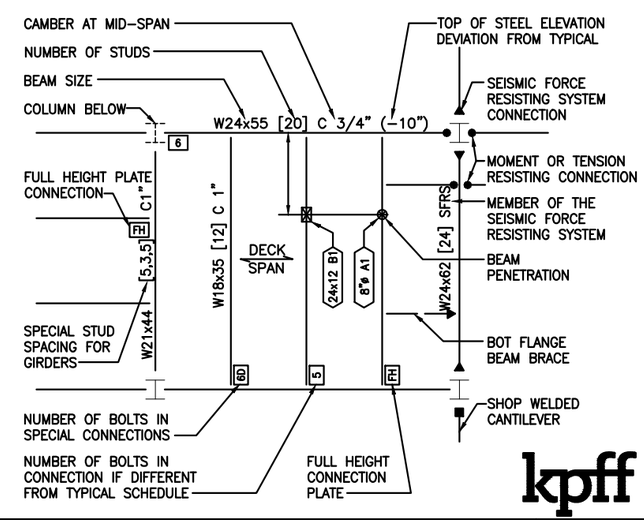

kpff

FILE NAME:	14W121SB00_04.dwg					
PRINTED: 2:37:28 PM 9/21/2018		LAST PRINTED BY:				FED.AID PROJ.NO.
SUBMITTAL DATE:	08/23/2018	3yronR				WA–2017–007–00
DESIGNED BY:	A. RADKE	08/23/2018				REGION NO. / STATE
ENTERED BY:	B. RONIA	08/23/2018				10 / WASH
CHECKED BY:	A. EWING	08/23/2018				JOB NUMBER 18W121
MAR PROJ ENGR	C. TORRES					
DIR TERM ENGR:	N. MCINTOSH					CONTRACT NO.
ASST SECRETARY:	A. SCARTON		REVISION	DATE	BY	00****

DATE

RA LOVING ROBERTS — STATE OF WASHINGTON — 38538 — PROFESSIONAL ENGINEER

08/23/2018
DATE

Washington State Department of Transportation
WASHINGTON STATE FERRIES

SR 525
MUKILTEO FERRY TERMINAL (PHASE 2)
FERRY TERMINAL CONSTRUCTION

BUILDING STRUCTURAL SYMBOLS

SB00.04

SHEET 1085 OF 1521 SHEETS

File: U:\114000–114350\114177 (Mukilteo Ferry Terminal)\01 General Notes\14W121SB00_04.dwg
Plotted: 9/21/18 at 2:37pm By: DianeL

STATEMENT OF STRUCTURAL SPECIAL INSPECTIONS AND TESTING: TERMINAL BUILDING AND MAINTENANCE BUILDING

TABLE 1 – REQUIRED GEOTECHNICAL SPECIAL INSPECTIONS

SYSTEM or MATERIAL	INSPECTION				REMARKS
	IBC CODE REFERENCE	CODE or STANDARD REFERENCE	FREQUENCY (NOTE 6)		
			CONTINUOUS	PERIODIC	
SOILS					
VERIFY MATERIALS BELOW SHALLOW FOUNDATIONS ARE ADEQUATE TO ACHIEVE THE DESIGN BEARING CAPACITY.	TB 1705.6 1705.6	GEOTECHNICAL REPORT		X	BY THE GEOTECHNICAL ENGINEER
VERIFY EXCAVATIONS ARE EXTENDED TO PROPER DEPTH AND HAVE REACHED PROPER MATERIAL.				X	
PERFORM CLASSIFICATION AND TESTING OF COMPACTED FILL MATERIALS.				X	
VERIFY USE OF PROPER MATERIALS, DENSITIES AND LIFT THICKNESSES DURING PLACEMENT AND COMPACTION OF COMPACTED FILL.			X		
PRIOR TO PLACEMENT OF COMPACTED FILL, OBSERVE SUBGRADE AND VERIFY THAT SITE HAS BEEN PREPARED PROPERLY.				X	

TABLE 2 – REQUIRED STRUCTURAL SPECIAL INSPECTIONS

SYSTEM or MATERIAL	INSPECTION				REMARKS
	IBC CODE REFERENCE	CODE or STANDARD REFERENCE	FREQUENCY (NOTE 6)		
			CONTINUOUS	PERIODIC	
FABRICATION					
INSPECTION IN FABRICATION SHOP	1704.2.5				WHERE FABRICATION OF STRUCTURAL LOAD–BEARING MEMBERS AND ASSEMBLIES IS BEING PERFORMED ON THE PREMISES OF A FABRICATOR'S SHOP, SPECIAL INSPECTION OF THE FABRICATED ITEMS SHALL BE AS REQUIRED BY TABLE 2 AND AS REQUIRED ELSEWHERE IN THE STATEMENT OF SPECIAL INSPECTIONS. REFERENCE SECTION 1704.2.5.2 FOR APPROVED FABRICATOR EXCEPTION.

TABLE 2 CONTINUED – REQUIRED STRUCTURAL SPECIAL INSPECTIONS

SYSTEM or MATERIAL	INSPECTION				REMARKS
	IBC CODE REFERENCE	CODE or STANDARD REFERENCE	FREQUENCY (NOTE 6)		
			CONTINUOUS	PERIODIC	
CONCRETE					
INSPECTION OF REINFORCING STEEL, AND PLACEMENT.	TB 1705.3(1) 1705.3 1910.4	ACI 318 1.3.2 ACI 318 3.5 ACI 318 7.1–7.7		X	TOLERANCE AND REINFORCING PLACEMENT PER ACI 318 7.5
INSPECTION OF REINFORCING STEEL WELDING	TB 1705.3(2) 1705.2.2.1.2	ACI 318 3.5.2 AWS D1.4, SECTION 7			EXCEPT AS NOTED OTHERWISE
MATERIAL VERIFICATION OF WELD FILLER METALS	1705.2.2.1.2	ACI 318 3.5.2 AWS D1.4 SECTION 7		X	MANUFACTURER'S CERTIFIED TEST REPORTS
VERIFYING USE OF PROPER WPS'S				X	COPY OF WELDING PROCEDURE SPECIFICATIONS
VERIFYING WELDER QUALIFICATIONS				X	COPY OF QUALIFICATION CARDS
VERIFICATION OF WELDABILITY OF REINFORCING STEEL OTHER THAN ASTM A 706.	TB 1705.2.2 (2.b.1)	AWS D1.4 ACI 318 3.5.2		X	CERTIFIED MILL TEST REPORTS
REINFORCING STEEL RESISTING FLEXURAL AND AXIAL FORCES IN INTERMEDIATE AND SPECIAL MOMENT FRAMES, AND BOUNDARY ELEMENTS OF SPECIAL STRUCTURAL WALLS OF CONCRETE AND SHEAR REINFORCEMENT.	TB 1705.2.2 (2.b.2)	AWS D1.4 ACI 318 3.5.2	X		ALL WELDS VISUALLY INSPECTED PER AWS D1.4 7.5
SHEAR REINFORCEMENT	TB 1705.2.2 (2.b.3)	AWS D1.4 ACI 318 3.5.2	X		
OTHER REINFORCING STEEL	TB 1705.2.2 (2.b.4)	AWS D1.4 ACI 318 3.5.2		X	
INSPECTION OF ANCHORS CAST IN CONCRETE	WAC 51–50–1705	ACI 318 D.9.2		X	ALL ANCHORS SHALL BE VISUALLY INSPECTED
INSPECTION OF ANCHORS POST–INSTALLED IN HARDENED CONCRETE MEMBERS:					
ADHESIVE ANCHORS INSTALLED IN HORIZONTALLY OR UPWARDLY INCLINED ORIENTATIONS TO RESIST SUSTAINED TENSION LOADS.	WAC 51–50–1705	ICC EVALUATION RPT ACI 318 D.9.2.4	X		REFER TO ANCHOR CALLOUTS FOR SUSTAINED TENSION (ST) DESIGNATION
MECHANICAL ANCHORS AND ADHESIVE ANCHORS NOT DEFINED ABOVE.	WAC 51–50–1705	ICC EVALUATION RPT ACI 318 D.9.2		X (NOTE 7)	ALL ANCHORS SHALL BE VISUALLY INSPECTED
VERIFYING USE OF REQUIRED DESIGN MIX.	TB 1705.3(5) 1705.3 1904 1910.2 1910.3	ACI 318 1.3.2 ACI 318 4 ACI 318 5.2–5.4		X	
AT THE TIME FRESH CONCRETE IS SAMPLED TO FABRICATE SPECIMENS FOR STRENGTH TEST, PERFORM SLUMP AND AIR CONTENT TESTS, AND DETERMINE THE TEMPERATURE OF THE CONCRETE.	TB 1705.3(6) 1910.10	ASTM C 172 ASTM C 31 ACI 318 5.6,5.8	X		
INSPECTION OF CONCRETE AND SHOTCRETE PLACEMENT FOR PROPER APPLICATION TECHNIQUES.	TB 1705.3(7) 1705.3 1910.6–8	ACI 318 5.9–5.10	X		
INSPECTION FOR MAINTENANCE OF SPECIFIED CURING TEMPERATURE AND TECHNIQUES.	TB 1705.3(8) 1705.3 1910.9	ACI 318 1.3.2 ACI 318 5.11–5.13		X	
ERECTION OF PRECAST CONCRETE MEMBERS.	TB 1705.3(10) 1705.3	ACI 318 1.3.2 ACI 318 16		X	ALL CONNECTIONS VISUALLY INSPECTED, REFER TO ANCHOR AND WELDING REQUIREMENTS.
INSPECT FORMWORK FOR SHAPE, LOCATION AND DIMENSIONS OF THE CONCRETE MEMBER BEING FORMED.	TB 1705.3(12) 1705.3	ACI 318 6.1.1, 6.2		X	
REINFORCING STEEL MECHANICAL COUPLERS, TERMINATORS AND FORMSAVERS		ICC EVALUATION REPORTS		X	VISUALLY INSPECT FOR CORRECT ASSEMBLY AND LOCATION

kpff

FILE NAME:	14W121SB00_05.dwg				
PRINTED:	2:37:30 PM 9/21/2018	LAST PRINTED BY:			FED.AID PROJ.NO.
SUBMITTAL DATE:	08/23/2018	3yronR			
DESIGNED BY:	A. RADKE	08/23/2018			WA–2017–007–00
ENTERED BY:	B. RONIA	08/23/2018			REGION NO. / STATE
CHECKED BY:	A. EWING	08/23/2018			10 / WASH
MAR PROJ ENGR	C. TORRES				JOB NUMBER 18W121
DIR TERM ENGR:	N. MCINTOSH				CONTRACT NO.
ASST SECRETARY:	A. SCARTON	REVISION	DATE	BY	00****

DATE

STATE OF WASHINGTON — SARA LOVING RODERICK — 38538 — STRUCTURAL ENGINEER — PROFESSIONAL ENGINEER

08/23/2018
DATE

Washington State Department of Transportation
WASHINGTON STATE FERRIES

SR 525
MUKILTEO FERRY TERMINAL (PHASE 2)
FERRY TERMINAL CONSTRUCTION

STATEMENT OF STRUCTURAL SPECIAL INSPECTIONS

SB00.05

SHEET 1086 OF 1521 SHEETS

File: U:\114000–114350\114177 (Mukilteo Ferry Terminal)\01 General Notes\14W121SB00_05.dwg
Plotted: 9/21/18 at 2:37pm By: DianeL

STATEMENT OF STRUCTURAL SPECIAL INSPECTIONS AND TESTING (CONT): TERMINAL BUILDING AND MAINTENANCE BUILDING

TABLE 2 CONTINUED – REQUIRED STRUCTURAL SPECIAL INSPECTIONS

SYSTEM OR MATERIAL	INSPECTION				REMARKS
	IBC CODE REFERENCE	CODE OR STANDARD REFERENCE	FREQUENCY (NOTE 6)		
			CONTINUOUS	PERIODIC	
MASONRY – LEVEL B					
VERIFY DURING CONSTRUCTION:					
SIZE AND LOCATION OF STRUCTURAL ELEMENTS	1705.4	TMS 602: TB 4(4.a) TMS 602: 3.3 F		X	
TYPE, SIZE, AND LOCATION OF ANCHORS, INCLUDING OTHER DETAILS OF ANCHORAGE OF MASONRY TO STRUCTURAL MEMBERS, FRAMES, OR OTHER CONSTRUCTION		TMS 602: TB 4(4.b) TMS 402: 1.16.4.3 TMS 402: 1.17.1		X	
WELDING OF REINFORCEMENT		TMS 602: TB 4(4.c) TMS 402: 2.1.8.7.2 TMS 402: 3.3.3.4(c) TMS 402: 8.3.3.4(b)	X		ALL WELDS VISUALLY INSPECTED PER AWS D1.4: 7.5 REFER TO CONCRETE FOR WELDING REQUIREMENTS
PREPARATION, CONSTRUCTION, AND PROTECTION DURING COLD WEATHER (TEMPERATURE BELOW 40°F) OR HOT WEATHER (ABOVE 90°F)	1705.4 2104.3 2104.4	TMS 602: TB 4(4.d) TMS 602: 1.8 C TMS 602: 1.8 D		X	
PLACEMENT OF GROUT IS IN COMPLIANCE	1705.4	TMS 602: TB 4(4.f) TMS 602: 3.5	X		
OBSERVE PREPARATION OF GROUT SPECIMENS, MORTAR SPECIMENS, AND/OR PRISMS	1705.4 2105.2.2 2105.3	TMS 602: TB 4(5) TMS 602: 1.4 B		X	

SYSTEM or MATERIAL	INSPECTION				REMARKS
	IBC CODE REFERENCE	CODE or STANDARD REFERENCE	FREQUENCY (NOTE 8)		
			OBSERVE	PERFORM	
STEEL					
INSPECTION TASKS PRIOR TO WELDING:					
WELDING PROCEDURE SPECIFICATIONS (WPSs) AVAILABLE	1705.2	AISC 360: TB N5.4–1		X	
MANUFACTURER CERTIFICATIONS FOR WELDING CONSUMABLES AVAILABLE		AISC 360: TB N5.4–1		X	
MATERIAL IDENTIFICATION (TYPE/GRADE)		AISC 360: TB N5.4–1	X		
WELDER IDENTIFICATION SYSTEM		AISC 360: TB N5.4–1	X		
FIT–UP OF GROOVE WELDS (INCLUDING JOINT GEOMETRY): JOINT PREPARATION, DIMENSIONS (ALIGNMENT, ROOT OPENING, ROOT FACE, BEVEL), CLEANLINESS (CONDITION OF STEEL SURFACES), TACKING (TACK WELD QUALITY AND LOCATION), BACKING TYPE AND FIT (IF APPLICABLE)		AISC 360: TB N5.4–1	X		
CONFIGURATION AND FINISH OF ACCESS HOLES		AISC 360: TB N5.4–1	X		
FIT–UP OF FILLET WELDS: DIMENSIONS (ALIGNMENT, GAPS AT ROOT), CLEANLINESS (CONDITION OF STEEL SURFACES), TACKING (TACK WELD QUALITY AND LOCATION), BACKING TYPE AND FIT (IF APPLICABLE)		AISC 360: TB N5.4–1	X		
CHECK WELDING EQUIPMENT		AISC 360: TB N5.4–1		X	
INSPECTION TASKS DURING WELDING:					
USE OF QUALIFIED WELDERS	1705.2	AISC 360: TB N5.4–2	X		
CONTROL AND HANDLING OF WELDING CONSUMABLES: PACKAGING, EXPOSURE CONTROL		AISC 360: TB N5.4–2	X		
NO WELDING OVER CRACKED TACK WELDS		AISC 360: TB N5.4–2	X		
ENVIRONMENTAL CONDITIONS: WIND SPEED WITHIN LIMITS, PRECIPITATION AND TEMPERATURE		AISC 360: TB N5.4–2	X		

TABLE 2 CONTINUED – REQUIRED STRUCTURAL SPECIAL INSPECTIONS

SYSTEM or MATERIAL	INSPECTION				REMARKS
	IBC CODE REFERENCE	CODE or STANDARD REFERENCE	FREQUENCY (NOTE 8)		
			OBSERVE	PERFORM	
STEEL CONTINUED					
INSPECTION TASKS DURING WELDING (CONT):					
WPS FOLLOWED: SETTINGS ON WELDING EQUIPMENT, TRAVEL SPEED, SELECTED WELDING MATERIALS, SHIELDING GAS TYPE/FLOW RATE, PREHEAT APPLIED, INTERPASS TEMPERATURE MAINTAINED (MIN./MAX.), PROPER POSITION (F, V, H, OH)	1705.2	AISC 360: TB N5.4–2	X		
WELDING TECHNIQUES: INTERPASS AND FINAL CLEANING, EACH PASS WITHIN PROFILE LIMITATIONS, EACH PASS MEETS QUALITY REQUIREMENTS		AISC 360: TB N5.4–2	X		
INSPECTION TASKS PRIOR TO BOLTING:					
MANUFACTURER'S CERTIFICATIONS AVAILABLE FOR FASTENER MATERIALS	1705.2	AISC 360: TB N5.6–1		X	
FASTENERS MARKED IN ACCORDANCE WITH ASTM REQUIREMENTS		AISC 360: TB N5.6–1	X		
PROPER FASTENERS SELECTED FOR THE JOINT DETAIL (GRADE, TYPE, BOLT LENGTH IF THREADS ARE TO BE EXCLUDED FROM SHEAR PLANE)		AISC 360: TB N5.6–1	X		
PROPER BOLTING PROCEDURE FOR JOINT DETAIL		AISC 360: TB N5.6–1	X		
CONNECTING ELEMENTS, INCLUDING THE APPROPRIATE FAYING SURFACE CONDITION AND HOLE PREPARATION, IF SPECIFIED, MEET APPLICABLE REQUIREMENTS		AISC 360: TB N5.6–1	X		
PRE–INSTALLATION VERIFICATION TESTING BY INSTALLATION PERSONNEL OBSERVED AND DOCUMENTED FOR FASTENER ASSEMBLIES AND METHODS USED		AISC 360: TB N5.6–1	X		
PROPER STORAGE PROVIDED FOR BOLTS, NUTS, WASHERS AND OTHER FASTENER COMPONENTS		AISC 360: TB N5.6–1	X		
INSPECTION TASKS DURING BOLTING:					
FASTENER ASSEMBLIES, OF SUITABLE CONDITION, PLACED IN ALL HOLES AND WASHERS (IF REQUIRED) ARE POSITIONED AS REQUIRED	1705.2	AISC 360: TB N5.6–2	X		
JOINT BROUGHT TO SNUG–TIGHT CONDITION PRIOR TO THE PRETENSIONING OPERATION		AISC 360: TB N5.6–2	X		
FASTENER COMPONENT NOT TURNED BY THE WRENCH PREVENTED FROM ROTATING		AISC 360: TB N5.6–2	X		
FASTENERS ARE PRETENSIONED IN ACCORDANCE WITH THE RCSC SPECIFICATION, PROGRESSING SYSTEMATICALLY FROM THE MOST RIGID POINT TOWARD THE FREE EDGES		AISC 360: TB N5.6–2	X		
INSPECTION TASKS AFTER BOLTING:					
DOCUMENT ACCEPTANCE OR REJECTION OF BOLTED CONNECTIONS	1705.2	AISC 360: TB N5.6–3		X	
INSPECTION OF STEEL ELEMENTS OF COMPOSITE CONSTRUCTION PRIOR TO CONCRETE PLACEMENT					
PLACEMENT AND INSTALLATION OF STEEL DECK	1705.2	AISC 360: TB N6.1		X	
PLACEMENT AND INSTALLATION OF STEEL HEADED STUD ANCHORS		AISC 360: TB N6.1		X	
DOCUMENT ACCEPTANCE OR REJECTION OF STEEL ELEMENTS		AISC 360: TB N6.1		X	

kpff

FILE NAME:	14W121SB00_06.dwg					
PRINTED:	2:37:33 PM 9/21/2018	LAST PRINTED BY:				FED.AID PROJ.NO.
SUBMITTAL DATE:	08/23/2018	3yronR				WA-2017-007-00
DESIGNED BY:	A. RADKE	08/23/2018				REGION NO. 10 / STATE WASH
ENTERED BY:	B. RONIA	08/23/2018				
CHECKED BY:	A. EWING	08/23/2018				JOB NUMBER 18W121
MAR PROJ ENGR	C. TORRES					
DIR TERM ENGR:	N. MCINTOSH					CONTRACT NO. 00****
ASST SECRETARY:	A. SCARTON		REVISION	DATE	BY	

DATE

DANIEL LOVING SCARTON, STATE OF WASHINGTON, 38538, PROFESSIONAL ENGINEER

08/23/2018
DATE

Washington State Department of Transportation
WASHINGTON STATE FERRIES

SR 525
MUKILTEO FERRY TERMINAL (PHASE 2)
FERRY TERMINAL CONSTRUCTION

STATEMENT OF STRUCTURAL SPECIAL INSPECTIONS

SB00.06

SHEET 1087 OF 1521 SHEETS

File: U:\114000-114350\114177 (Mukilteo Ferry Terminal)\01 General Notes\14W121SB00_06.dwg
Plotted: 9/21/18 at 2:37pm By: DianeL

STATEMENT OF STRUCTURAL SPECIAL INSPECTIONS AND TESTING (CONT): TERMINAL BUILDING AND MAINTENANCE BUILDING

TABLE 2 CONTINUED – REQUIRED STRUCTURAL SPECIAL INSPECTIONS

SYSTEM or MATERIAL	INSPECTION				REMARKS
	IBC CODE REFERENCE	CODE or STANDARD REFERENCE	FREQUENCY (NOTE 6)		
			CONTINUOUS	PERIODIC	
COLD–FORMED STEEL FRAMING					
MATERIAL VERIFICATION OF WELD FILLER METALS	1705.2.2.1.1 1705.2.2.1	AWS D1.3: 6		X	MANUFACTURER'S CERTIFIED TEST REPORTS
VERIFYING USE OF PROPER WPS'S				X	COPY OF WELDING PROCEDURE SPECIFICATIONS
VERIFYING WELDER QUALIFICATIONS				X	COPY OF QUALIFICATION CARDS
WELDED FRAMING CONNECTIONS		AWS D1.3: 6		X	ALL WELDS VISUALLY INSPECTED PER AWS D1.3: 6.1
WOOD					
FABRICATION OF PREFABRICATED STRUCTURAL ELEMENTS	1704.2.5			X	REFER TO INSPECTION IN FABRICATION SHOP REQUIREMENTS
FABRICATION OF HIGH–LOAD DIAPHRAGMS	AF&PA SDPWS TB 4.2 1705.5.1 2306.2			X	VERIFY STRUCTURAL PANEL GRADE AND THICKNESS. VERIFY NOMINAL SIZE OF FRAMING MEMBERS AT ADJOINING PANEL EDGES. VERIFY NAIL OR STAPLE DIAMETER AND LENGTH, NUMBER OF FASTENER LINES AND SPACING BETWEEN FASTENERS IN EACH LINE AND AT EDGE MARGINS

TABLE 2A – REQUIRED STRUCTURAL SPECIAL INSPECTIONS for SEISMIC RESISTANCE

SYSTEM or MATERIAL	INSPECTION				REMARKS
	IBC CODE REFERENCE	CODE or STANDARD REFERENCE	FREQUENCY (NOTE 6)		
			CONTINUOUS	PERIODIC	
GENERAL					
SEISMIC FORCE–RESISTING SYSTEMS (SFRS) IN STRUCTURES ASSIGNED TO SEISMIC DESIGN CATEGORY C, D, E OR F	1704.3.2 1705.11		X		REFERENCE GENERAL STRUCTURAL NOTES FOR OUTLINE OF SFRS SYSTEM. REFERENCE TABLE 2A FOR MATERIAL SPECIFIC INSPECTION REQUIREMENTS.
DESIGNATED SEISMIC SYSTEMS (SECONDARY) IN STRUCTURES ASSIGNED TO SEISMIC DESIGN CATEGORY C, D, E OR F			X		REFERENCE TABLE N1 AND N2 FOR INSPECTION REQUIREMENTS
CONCRETE					
MATERIAL VERIFICATION OF REINFORCING STEEL USED IN MOMENT RESISTING FRAMES AND SHEAR WALL BOUNDARY ELEMENTS	1705.12.1			X	CERTIFIED MILL TEST REPORTS
REINFORCING STEEL AND CONCRETE PLACEMENT IN SPECIAL MOMENT RESISTING FRAMES	1705.11	ACI 318 1.3.5	X		

SYSTEM or MATERIAL	INSPECTION				
	IBC CODE REFERENCE	CODE or STANDARD REFERENCE	FREQUENCY (NOTE 8)		
			OBSERVE	PERFORM	
STEEL					
VISUAL INSPECTION TASKS AFTER WELDING:					
PLACEMENT OF REINFORCING OR CONTOURING FILLET WELDS (IF REQUIRED)	1705.11.1	AISC 341: TB J6–3		X	
INSPECTION OF COMPOSITE STRUCTURES PRIOR TO CONCRETE PLACEMENT:					
MATERIAL IDENTIFICATION OF REINFORCING STEEL (TYPE/GRADE)	1705.11.1	AISC 341: TB J9–1			

TABLE 2A CONTINUED – REQUIRED STRUCTURAL SPECIAL INSPECTIONS FOR SEISMIC RESISTANCE

SYSTEM or MATERIAL	INSPECTION				REMARKS
	IBC CODE REFERENCE	CODE or STANDARD REFERENCE	FREQUENCY (NOTE 6)		
			CONTINUOUS	PERIODIC	
STEEL CONTINUED					
INSPECTION OF COMPOSITE STRUCTURES PRIOR TO CONCRETE PLACEMENT (CONT):					
DETERMINATION OF CARBON EQUIVALENT FOR REINFORCING STEEL OTHER THAN ASTM A706	1705.11.1	AISC 341: TB J9–1	X		
PROPER REINFORCING STEEL SIZE, SPACING AND ORIENTATION		AISC 341: TB J9–1	X		
REINFORCING STEEL HAS NOT BEEN REBENT IN THE FIELD		AISC 341: TB J9–1	X		
REINFORCING STEEL HAS BEEN TIED AND SUPPORTED AS REQUIRED		AISC 341: TB J9–1	X		
REQUIRED REINFORCING STEEL CLEARANCES HAVE BEEN PROVIDED		AISC 341: TB J9–1	X		
COMPOSITE MEMBER HAS REQUIRED SIZE		AISC 341: TB J9–1	X		
INSPECTION OF COMPOSITE STRUCTURES DURING CONCRETE PLACEMENT:					
CONCRETE: MATERIAL IDENTIFICATION (MIX DESIGN, COMPRESSIVE STRENGTH, MAXIMUM LARGE AGGREGATE SIZE, MAXIMUM SLUMP)	1705.11.1	AISC 341: TB J9–2	X		
LIMITS ON WATER ADDED AT THE TRUCK OR PUMP		AISC 341: TB J9–2	X		
PROPER PLACEMENT TECHNIQUES TO LIMIT SEGREGATION		AISC 341: TB J9–2	X		
INSPECTION OF COMPOSITE STRUCTURES AFTER CONCRETE PLACEMENT:					
ACHIEVEMENT OF MINIMUM SPECIFIED CONCRETE COMPRESSIVE STRENGTH AT SPECIFIED AGE	1705.11.1	AISC 341: TB J9–1			
COLD–FORMED STEEL FRAMING					
CONNECTIONS FOR DIAPHRAGM ATTACHMENT, DIAPHRAGM CHORDS, COLLECTORS, BRACING, AND SHEAR WALL ANCHORAGE AND HOLDOWNS	1705.11.3			X	ALL CONNECTIONS VISUALLY INSPECTED
WOOD					
CONNECTIONS FOR DIAPHRAGM CHORDS, COLLECTORS, BRACING, AND SHEAR WALL ANCHORAGE AND HOLDOWNS	1705.11.2			X	ALL FASTENERS/CONNECTIONS VISUALLY INSPECTED NOT REQUIRED IF SHEATHING IS GYPSUM OR FIBER BOARD. NOT REQUIRED FOR WOOD PANEL OR STEEL SHEET ON ONE SIDE ONLY WITH FASTENER SPACING GREATER THAN 4" ON CENTER.

TABLE 2B – REQUIRED STRUCTURAL SPECIAL INSPECTIONS FOR WIND RESISTANCE

SYSTEM OR MATERIAL	INSPECTION				REMARKS
	IBC CODE REFERENCE	CODE OR STANDARD REFERENCE	FREQUENCY (NOTE 6)		
			CONTINUOUS	PERIODIC	
GENERAL					
ROOF CLADDING AND WALL CLADDING	1705.10.3			X	
COLD–FORMED STEEL FRAMING					
CONNECTIONS FOR DIAPHRAGM ATTACHMENT, DIAPHRAGM CHORDS, COLLECTORS, BRACING, AND SHEAR WALL SHEATHING, ANCHORAGE AND HOLD–DOWNS	1705.10.2			X	ALL CONNECTIONS VISUALLY INSPECTED. NOT REQUIRED IF SHEATHING IS GYPSUM BOARD, FIBERBOARD, OR IF SHEATHING IS WOOD STRUCTURAL PANEL OR STEEL SHEET ON ONLY ONE SIDE AND FASTENER SPACING IS MORE THAN 4 INCHES ON CENTER
WOOD					
CONNECTIONS FOR DIAPHRAGM CHORDS, COLLECTORS, BRACING, AND SHEAR WALL ANCHORAGE AND HOLD–DOWNS	1705.10.1			X	ALL CONNECTIONS VISUALLY INSPECTED

kpff

File: U:\114000-114350\114177 (Mukilteo Ferry Terminal)\01 General Notes\14W121SB00_07.dwg
Plotted: 9/21/18 at 2:37pm By: DianeL

FILE NAME:	14W121SB00_07.dwg					
PRINTED:	2:37:36 PM 9/21/2018	LAST PRINTED BY:				FED.AID PROJ.NO.
SUBMITTAL DATE:	08/23/2018	3yronR				WA–2017–007–00
DESIGNED BY:	A. RADKE	08/23/2018				REGION NO. 10 / STATE WASH
ENTERED BY:	B. RONIA	08/23/2018				
CHECKED BY:	A. EWING	08/23/2018				JOB NUMBER 18W121
MAR PROJ ENGR	C. TORRES					
DIR TERM ENGR:	N. MCINTOSH					CONTRACT NO. 00****
ASST SECRETARY:	A. SCARTON		REVISION	DATE	BY	

DATE

DANA LOVING SOARES STATE OF WASHINGTON 38538 PROFESSIONAL ENGINEER

08/23/2018
DATE

Washington State Department of Transportation
WASHINGTON STATE FERRIES

SR 525
MUKILTEO FERRY TERMINAL (PHASE 2)
FERRY TERMINAL CONSTRUCTION

STATEMENT OF STRUCTURAL SPECIAL INSPECTIONS

SB00.07

SHEET 1088 OF 1521 SHEETS

STATEMENT OF STRUCTURAL SPECIAL INSPECTIONS AND TESTING (CONT): TERMINAL BUILDING AND MAINTENANCE BUILDING

TABLE 2C – REQUIRED STRUCTURAL INSPECTIONS for SPECIAL CASES

SYSTEM or MATERIAL	INSPECTION				REMARKS
	IBC CODE REFERENCE	CODE or STANDARD REFERENCE	FREQUENCY (NOTE 6)		
			CONTINUOUS	PERIODIC	
PRE–ENGINEERED STRUCTURES					
FABRICATION AND ERECTION OF PREFABRICATED STAIRS	1705.1.1	MBMA			REFER TO TABLE 2 FOR FABRICATOR, WELDING, AND HIGH STRENGTH BOLTING SPECIAL INSPECTION REQUIREMENTS AND TABLES 3 AND 4 FOR MATERIAL SPECIFIC TESTING REQUIREMENTS. REFER TO DEFERRED SUBMITTAL FOR ADDITIONAL INFORMATION.

TABLE 3 – REQUIRED STRUCTURAL TESTING

SYSTEM or MATERIAL	TESTING				REMARKS
	IBC CODE REFERENCE	CODE or STANDARD REFERENCE	FREQUENCY		
			CONTINUOUS	PERIODIC	
GEOTECHNICAL					
FILL IN–PLACE DENSITY OR PREPARED SUBGRADE DENSITY	1705.6	VARIES; MINIMUM PER IBC APPENDIX J107.5		X	BY THE GEOTECHNICAL ENGINEER
MATERIAL VERIFICATION		VARIES; CLASSIFICATION AND TESTING OF CONTROLLED FILL MATERIALS		X	BY THE GEOTECHNICAL ENGINEER
CONCRETE					
COMPOSITE SAMPLES	1903 1705.3	ASTM C172 ACI 318 5.6	EA 150 CY ONE SET PER DAY MIN		OBTAIN WHEN FRESH CONCRETE IS PLACED FOR EACH MIX DESIGN USED
CONCRETE STRENGTH		ASTM C39	2 CYL – 7 DAYS 2 CYL – 28 DAYS		
CONCRETE SLUMP		ASTM C143	ONE TEST PER COMPOSITE SAMPLE		AT POINT OF PLACEMENT
CONCRETE AIR CONTENT		ASTM C231	ONE TEST PER COMPOSITE SAMPLE		MIN ONE PER DAY
CONCRETE TEMPERATURE		ASTM C1064	ONE TEST PER COMPOSITE SAMPLE		ONE TEST PER HOUR WHEN AIR TEMP IS BELOW 40 DEG F OR ABOVE 80 DEG F
MASONRY					
PRISM TEST METHOD	2105.2.2.2	ASTM C 1314	TESTING EVERY 5,000 SQ FT		
STEEL					
RADIOGRAPHIC (RT) MAGNETIC PARTICLE (MT) AND ULTRASONIC (UT) TESTING OF WELDS	AISC 360 5.0	RT– AWS D1.1 6.16 MT– AWS D1.1 6.14.4 UT– AWS D1.1 6.13 & 6.14.3	PER DRAWINGS		ALL CJP WELDS REQUIRE UT TESTING
PRE–CONSTRUCTION TESTING OF WELDED STUDS	1705.2.2.1	AWS D1.1 7.7.1	EACH SIZE AND TYPE OF STUD EACH SHIFT		
PRE–INSTALLATION TESTING OF WELDED STUDS WELDED THROUGH DECKING	1705.2.2.1	AWS D1.1 7.6	EACH STUD SIZE AND DECK GAUGE COMBINATION		
PRE–INSTALLATION VERIFICATION OF PRETENSIONED HIGH STRENGTH BOLTS	1705.2.1 AISC 360: TB N5.6–1	RCSC SPECIFICATION FOR STRUCTURAL JOINTS USING HIGH–STRENGTH BOLTS, SECTION 7	EACH COMBINATION OF DIAMETER, LENGTH, GRADE, AND LOT TO BE USED IN THE WORK		

TABLE 4 – REQUIRED STRUCTURALTESTING for SEISMIC RESISTANCE

SYSTEM or MATERIAL	TESTING			REMARKS
	IBC CODE REFERENCE	CODE or STANDARD REFERENCE	FREQUENCY	
CONCRETE REINFORCEMENT				
TEST A615 REINFORCEMENT IN SPECIAL MOMENT FRAMES, SPECIAL STRUCTURAL WALLS, AND COUPLING BEAMS CONNECTING SPECIAL STRUCTURAL WALLS	1705.12.1 1705.11.1	ACI 318: 21.1.5.2		NOT REQUIRED IN SDC A OR WHEN CERTIFIED MILL TEST REPORTS ARE PROVIDED. REFER TO DRAWINGS FOR LOCATIONS.
TEST A615 REINFORCEMENT FOR WELDABILITY WHEN SUCH REINFORCEMENT IS TO BE WELDED	1705.12.1 1705.11(1)	ACI 318: 3.5.2		
STEEL				
MT OF K–AREA OF ROLLED WIDE FLANGE COLUMN WEBS ADJACENT TO DOUBLER/CONTINUITY PLATE WELDS	1705.12.2	AISC 341 J6.2a AWS D1.1 6.14.4	EACH PLATE LOCATION	
MAGNETIC PARTICLE (MT) AND ULTRASONIC (UT) TESTING OF COMPLETE JOINT PENETRATION GROOVE (CJP) WELDS IN MATERIALS 5/16" THICK AND GREATER		AISC 341 J6.2b MT – AWS D1.1 6.14.4 UT – AWS D1.1 6.13 & 6.14.3	UT 100% OF WELDS MT 25% OF WELDS	REFER TO DRAWINGS FOR LOCATIONS
UT OF BASE METAL THICKER THAN 1–1/2" SUBJECT TO THROUGH–THICKNESS WELD SHRINKAGE STRAINS		AISC 341 J6.2c AWS D1.1 6.13 & 6.14.3	BEHIND AND ADJACENT TO EACH WELD	
MT OF THERMALLY CUT SURFACES OF BEAM COPES AND ACCESS HOLES AT WELDED SPLICES AND CONNECTIONS WHEN THE FLANGE THICKNESS EXCEEDS 1–1/2" FOR ROLLED SHAPES OR THE WEB THICKNESS EXCEEDS 1–1/2" FOR BUILT–UP SHAPES		AISC 341 J6.2d AWS D1.1 6.14.4	EACH LOCATION	
MT OF THE ENDS OF FLANGE WELDS FROM WHICH WELD TABS HAVE BEEN REMOVED		AISC 341 J6.2f AWS D1.1 6.14.4	EACH LOCATION	

kpff

FILE NAME:	14W121SB00_08.dwg				
PRINTED:	2:37:38 PM 9/21/2018	LAST PRINTED BY:			FED.AID PROJ.NO.
SUBMITTAL DATE:	08/23/2018	3yronR			
DESIGNED BY:	A. RADKE	08/23/2018			WA–2017–007–00
ENTERED BY:	B. RONIA	08/23/2018			REGION NO. 10 STATE WASH
CHECKED BY:	A. EWING	08/23/2018			JOB NUMBER 18W121
MAR PROJ ENGR	C. TORRES				
DIR TERM ENGR:	N. MCINTOSH				CONTRACT NO. 00****
ASST SECRETARY:	A. SCARTON		REVISION	DATE	BY

DATE

STEVEN LOVING RODRIGUEZ STATE OF WASHINGTON 38538 STRUCTURAL ENGINEER PROFESSIONAL ENGINEER

08/23/2018
DATE

Washington State Department of Transportation
WASHINGTON STATE FERRIES

SR 525
MUKILTEO FERRY TERMINAL (PHASE 2)
FERRY TERMINAL CONSTRUCTION

STATEMENT OF STRUCTURAL SPECIAL INSPECTIONS

SB00.08

SHEET 1089 OF 1521 SHEETS

File: U:\114000-114350\114177 (Mukilteo Ferry Terminal)\01 General Notes\14W121SB00_08.dwg
Plotted: 9/21/18 at 2:37pm By: DianeL

STATEMENT OF SPECIAL INSPECTIONS FOR NON-STRUCTURAL SPECIAL INSPECTIONS AND TESTING: TERMINAL BUILDING AND MAINTENANCE BUILDING

TABLE N2 – REQUIRED NON-STRUCTURAL SPECIAL INSPECTIONS for SEISMIC RESISTANCE

SYSTEM or MATERIAL	INSPECTION				REMARKS
	IBC CODE REFERENCE	CODE or STANDARD REFERENCE	FREQUENCY		
			CONTINUOUS	PERIODIC	
ARCHITECTURAL					
INSTALLATION AND ANCHORAGE OF CLADDING AND INTERIOR/EXTERIOR VENEER WEIGHING MORE THAN 5 PSF IN BUILDINGS MORE THAN 30 FEET IN HEIGHT	1704.3.2 1705.11.5			X	REFERENCE ARCHITECTURAL FOR INFORMATION
ERECTION AND FASTENING OF INTERIOR NONBEARING WALLS WEIGHING MORE THAN 15 PSF IN BUILDINGS MORE THAN 30 FEET IN HEIGHT	1704.3.2 1705.11.5			X	
ERECTION AND FASTENING OF EXTERIOR NON-BEARING WALLS IN BUILDINGS MORE THAN 30 FEET IN HEIGHT	1704.3.2 1705.11.5			X	
INSTALLATION OF OTHER SEISMIC SUPPORTS FOR DESIGNATED ARCHITECTURAL SYSTEMS AND THEIR COMPONENTS	1704.3.2 1705.11.5			X	REFERENCE ARCHITECTURAL FOR INFORMATION
ELECTRICAL					
ANCHORAGE OF ELECTRICAL EQUIPMENT FOR EMERGENCY OR STANDBY POWER SYSTEMS	1704.3.2 1705.11.6			X	SEISMIC RESTRAINT OF ELECTRICAL COMPONENTS IS A CONTRACTOR RESPONSIBILITY AND IS LISTED HERE FOR INFORMATION ONLY. REFERENCE ELECTRICAL FOR FURTHER INFORMATION.
ANCHORAGE OF ALL ELECTRICAL EQUIPMENT IN SDC E OR F ONLY				X	
INSTALLATION OF VIBRATION ISOLATION SYSTEMS IN STRUCTURES ASSIGNED TO SDC C, D, E OR F WHERE THE CONSTRUCTION DOCUMENTS REQUIRE A NOMINAL CLEARANCE OF 0.25 INCHES OR LESS BETWEEN THE EQUIPMENT SUPPORT FRAME AND RESTRAINT	1705.11.6 1705.11.8			X	
INSTALLATION OF OTHER SEISMIC SUPPORTS FOR DESIGNATED ELECTRICAL SYSTEMS AND THEIR COMPONENTS	1705.11.6			X	
BUILDING MECHANICAL					
INSTALLATION AND ANCHORAGE OF HVAC DUCTWORK DESIGNED TO CARRY HAZARDOUS MATERIALS	1704.3.2 1705.11.6			X	SEISMIC RESTRAINT OF BUILDING MECHANICAL COMPONENTS IS A CONTRACTOR RESPONSIBILITY AND IS LISTED HERE FOR INFORMATION ONLY. REFERENCE MECHANICAL FOR FURTHER INFORMATION.
INSTALLATION OF FIRE PROTECTION SPRINKLER SYSTEM	1705.11			X	
INSTALLATION OF EQUIPMENT USING COMBUSTIBLE ENERGY SOURCES	1705.11.4			X	
INSTALLATION OF OTHER SEISMIC SUPPORTS FOR DESIGNATED MECHANICAL SYSTEMS AND THEIR COMPONENTS	1705.11.4			X	
INSTALLATION OF VIBRATION ISOLATION SYSTEMS IN STRUCTURES ASSIGNED TO SDC C, D, E OR F WHERE THE CONSTRUCTION DOCUMENTS REQUIRE A NOMINAL CLEARANCE OF 0.25 INCHES OR LESS BETWEEN THE EQUIPMENT SUPPORT FRAME AND RESTRAINT	1705.11.6			X	

TABLE N4 – REQUIRED NON-STRUCTURAL TESTING for SEISMIC RESISTANCE

SYSTEM or MATERIAL	TESTING				REMARKS
	IBC CODE REFERENCE	CODE or STANDARD REFERENCE	FREQUENCY		
MECHANICAL AND ELECTRICAL					
COMPONENT TESTING INCLUDING MOUNTING SYSTEMS OR ANCHORAGE IF CERTIFICATES OF COMPLIANCE ARE NOT AVAILABLE	1705.12.3 1705.12	ASCE 7: 13.2		X	SEISMIC RESTRAINT OF MECHANICAL AND ELECTRICAL COMPONENTS IS A CONTRACTOR RESPONSIBILITY AND IS LISTED HERE FOR INFORMATION ONLY. REFERENCE MECHANICAL AND ELECTRICAL FOR FURTHER INFORMATION.

STATEMENT OF SPECIAL INSPECTION AND TESTING NOTES:

1. SPECIAL INSPECTIONS SHALL CONFORM TO CHAPTER 17 OF THE INTERNATIONAL BUILDING CODE (IBC). REFER TO TABLES 1 AND 2 FOR SPECIAL INSPECTION AND TABLES 3 AND 4 FOR TESTING REQUIREMENTS.

2. REFERENCE CODES AND STANDARDS ARE AS FOLLOWS:

   IBC – 2012
   ACI – 318-11
   AWS – CURRENT EDITION
   ASTM – CURRENT EDITION
   AISC – 360-10
   – 341-10
   RCSC – 2009
   TMS – 402-11, 602-11

3. SPECIAL INSPECTIONS AND ASSOCIATED TESTING SHALL BE PERFORMED BY AN APPROVED ACCREDITED INDEPENDENT AGENCY MEETING THE REQUIREMENTS OF ASTM E329 (MATERIALS), ASTM D3740 (SOILS), ASTM C1077 (CONCRETE), ASTM A880 (STEEL), AND ASTM E543 (NON-DESTRUCTIVE). THE INSPECTION AND TESTING AGENCY SHALL FURNISH TO THE STRUCTURAL ENGINEER AND OWNER A COPY OF THEIR SCOPE OF ACCREDITATION. SPECIAL INSPECTORS SHALL BE CERTIFIED BY THE BUILDING OFFICIAL. WELDING INSPECTORS SHALL BE QUALIFIED PER SECTION 6.1.4.1.1 OF AWS D1.1. [WABO]

4. THE SPECIAL INSPECTOR SHALL OBSERVE THE INDICATED WORK FOR COMPLIANCE WITH THE APPROVED CONSTRUCTION DOCUMENTS. ALL DISCREPANCIES SHALL BE BROUGHT TO THE ATTENTION OF THE CONTRACTOR FOR CORRECTION AND NOTED IN THE INSPECTION REPORTS. ISSUES REQUIRING IMMEDIATE CORRECTIVE ACTIONS OR ENGINEERING INPUT ARE TO BE BROUGHT TO THE ENGINEER'S ATTENTION IMMEDIATELY UPON DISCOVERY.

5. THE SPECIAL INSPECTOR SHALL FURNISH INSPECTION REPORTS FOR EACH INSPECTION TO THE BUILDING OFFICIAL, STRUCTURAL ENGINEER, CONTRACTOR, AND OWNER. THE SPECIAL INSPECTION AGENCY SHALL SUBMIT A FINAL REPORT STATING THAT THE WORK REQUIRING SPECIAL INSPECTION WAS INSPECTED AND IS IN CONFORMANCE WITH THE APPROVED CONSTRUCTION DOCUMENTS AND THAT ALL DISCREPANCIES NOTED IN THE INSPECTION REPORTS HAVE BEEN CORRECTED.

6. CONTINUOUS SPECIAL INSPECTION: SPECIAL INSPECTION BY THE SPECIAL INSPECTOR WHO IS PRESENT WHEN AND WHERE THE WORK TO BE INSPECTED IS BEING PERFORMED. PERIODIC SPECIAL INSPECTION: SPECIAL INSPECTION BY THE SPECIAL INSPECTOR WHO IS INTERMITTENTLY PRESENT WHERE THE WORK TO BE INSPECTED HAS BEEN OR IS BEING PERFORMED.

7. WHERE PERIODIC INSPECTION IS ALLOWED IN ACCORDANCE WITH THE ANCHOR ICC EVALUATION REPORT, INSPECTIONS SHALL BE AS FOLLOWS:

   - FOR ALL ANCHORS, PRIOR TO CONCEALMENT, VERIFY: ANCHOR TYPE, ANCHOR DIMENSIONS, ANCHOR SPACING AND EDGE DISTANCE.
   - FOR EACH ANCHOR TYPE AND SIZE, INSPECTOR SHALL BE ONSITE TO CONTINUOUSLY INSPECT A MINIMUM OF THE FIRST 10 ANCHORS INSTALLED BY EACH INSTALLER FOR
     CONFORMANCE WITH ICC EVALUATION REPORT. PROVIDED ALL ANCHORS ARE INSTALLED CORRECTLY PER MANUFACTURER'S INSTRUCTIONS, PROVIDE PERIODIC INSPECTION
     ON A MINIMUM OF 10% OF THE NEXT 1000 ANCHORS BY EACH INSTALLER AND A MINIMUM OF 5% OF THE REMAINING ANCHORS BY EACH INSTALLER INSPECTIONS SHALL
     OCCUR A MINIMUM OF ONCE PER WEEK AT A RANDOM TIME WHILE ANCHOR INSTALLATION IS ONGOING. ANY NON-COMPLIANCE ISSUES SHALL RESET THE INSPECTION
     REQUIREMENTS TO TEN (10) CONTINUOUS INSPECTIONS. NON-COMPLIANT ANCHORS SHALL BE BROUGHT TO THE ATTENTION OF THE ENGINEER OF RECORD FOR REVIEW AND
     SHALL BE BROUGHT INTO COMPLIANCE BY EITHER TESTING OR RE-INSTALLATION.
   - INSPECTION REPORTS SHALL IDENTIFY NAMES OF INSTALLERS.
     SPECIAL INSPECTOR SHALL PROVIDE DOCUMENTATION AT THE END OF ANCHOR INSTALLATIONS STATING THAT THE MINIMUM NUMBER OF ANCHORS WERE INSPECTED.

8. OBSERVE: OBSERVE THESE ITEMS ON A RANDOM BASIS. OPERATIONS NEED NOT BE DELAYED PENDING THESE INSPECTIONS.
   PERFORM: PERFORM THESE TASKS FOR EACH ELEMENT.

CONTRACTOR RESPONSIBILITY:

FOR SEISMIC DESIGN CATEGORY C, D, E AND F STRUCTURES, THE CONTRACTOR IS RESPONSIBLE FOR THE CONSTRUCTION OF THE MAIN WIND-OR SEISMIC-FORCE-RESISTING SYSTEM, OR A WIND-OR SEISMIC-RESISTING COMPONENT LISTED IN TABLES 2C, 3 AND 4. THE CONTRACTOR SHALL SUBMIT A WRITTEN STATEMENT OF RESPONSIBILITY TO THE BUILDING OFFICIAL AND THE OWNER PRIOR TO THE COMMENCEMENT OF WORK ON THE SYSTEM OR COMPONENT. THE CONTRACTOR'S STATEMENT OF RESPONSIBILITY SHALL CONTAIN THE FOLLOWING:

1. ACKNOWLEDGEMENT OF AWARENESS OF THE SPECIAL REQUIREMENTS CONTAINED IN THE STATEMENT OF SPECIAL INSPECTIONS.

2. ACKNOWLEDGEMENT THAT CONTROL WILL BE EXERCISED TO OBTAIN CONFORMANCE WITH THE CONSTRUCTION DOCUMENTS APPROVED BY THE BUILDING OFFICIAL.

3. PROCEDURES FOR EXERCISING CONTROL WITHIN THE CONTRACTOR'S ORGANIZATION, THE METHOD AND FREQUENCY OF REPORTING AND DISTRIBUTION OF THE REPORTS.

4. IDENTIFICATION AND QUALIFICATIONS OF THE PERSON(S) EXERCISING SUCH CONTROL AND THEIR POSITION(S) IN THE ORGANIZATION.

kpff

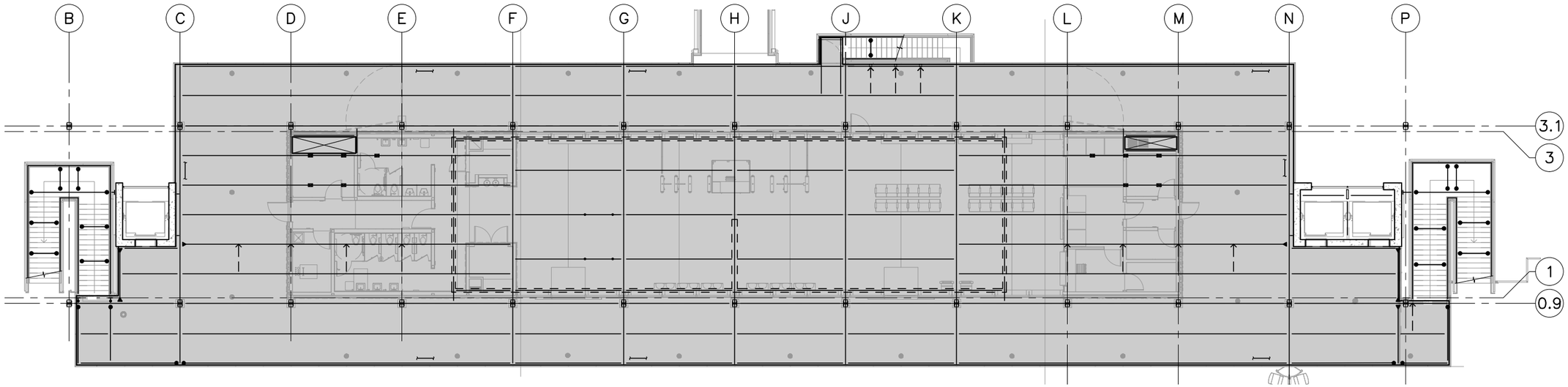

TERMINAL – LEVEL 2 LOAD MAP

LIVE LOAD = 100 psf (UNREDUCIBLE)
SUPERIMPOSED DEAD LOAD = 60 psf

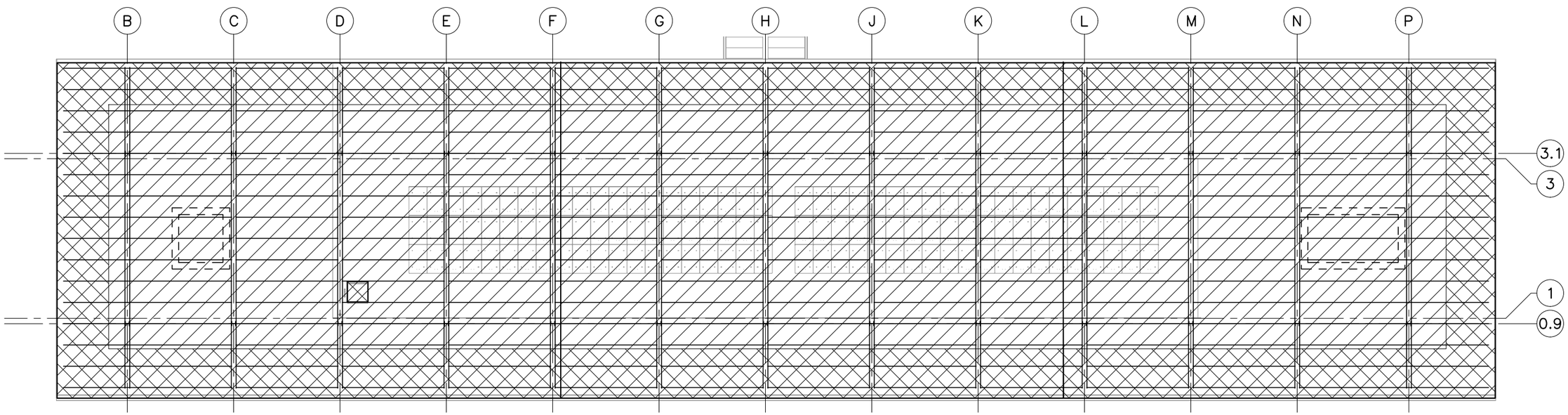

TERMINAL – ROOF LOAD MAP

ROOF LIVE LOAD = 20 psf
SNOW LOAD = 25 psf
SUPERIMPOSED DEAD LOAD = 7 psf

ROOF LIVE LOAD = 20 psf
SNOW LOAD = 25 psf
SUPERIMPOSED DEAD LOAD = 13 psf
(INCLUDES 6 psf FOR PV PANELS)

kpff

FILE NAME:	14W121SB00_10.dwg					
PRINTED: 2:37:45 PM 9/21/2018		LAST PRINTED BY:				FED.AID PROJ.NO.
SUBMITTAL DATE:	08/23/2018	3yronR				WA-2017-007-00
DESIGNED BY:	A. RADKE	08/23/2018				REGION NO. / STATE
ENTERED BY:	B. RONIA	08/23/2018				10 / WASH
CHECKED BY:	A. EWING	08/23/2018				JOB NUMBER
MAR PROJ ENGR	C. TORRES					18W121
DIR TERM ENGR:	N. MCINTOSH					CONTRACT NO.
ASST SECRETARY:	A. SCARTON		REVISION	DATE	BY	00****

DATE

DANA LOVING ROBERTS
STATE OF WASHINGTON
38538
STRUCTURAL ENGINEER
PROFESSIONAL ENGINEER

08/23/2018
DATE

Washington State Department of Transportation
WASHINGTON STATE FERRIES

SR 525
MUKILTEO FERRY TERMINAL (PHASE 2)
FERRY TERMINAL CONSTRUCTION

LOAD MAPS
(TERMINAL BUILDING)

SB00.10

SHEET 1091 OF 1521 SHEETS

File: U:\114000-114350\114177 (Mukilteo Ferry Terminal)\01 General Notes\14W121SB00_10.dwg
Plotted: 9/21/18 at 2:37pm By: DianaL

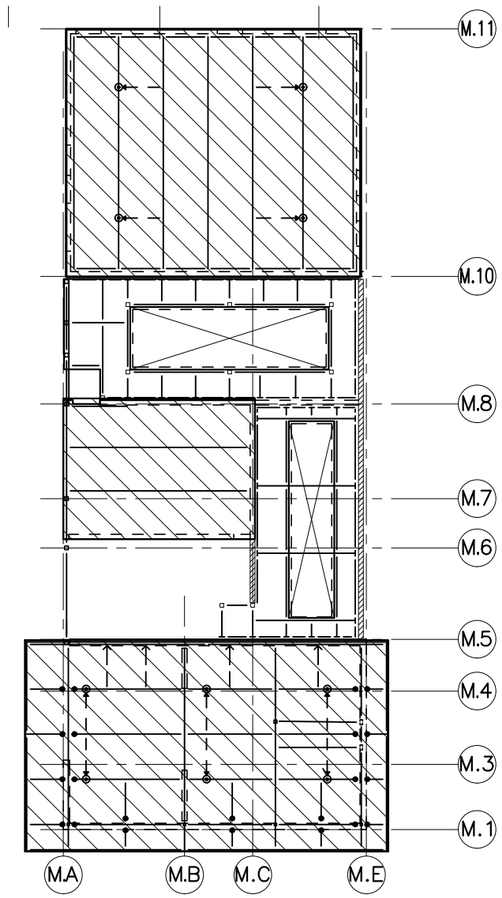

ROOF LIVE LOAD = 20 psf
SNOW LOAD = 25 psf
SUPERIMPOSED DEAD LOAD = 18 psf

MAINTENANCE – ROOF LOAD MAP

kpff

FILE NAME:	14W121SB00_11.dwg					
PRINTED: 2:37:48 PM 9/21/2018		LAST PRINTED BY:				FED.AID PROJ.NO.
SUBMITTAL DATE:	08/23/2018	ByronR				WA-2017-007-00
DESIGNED BY:	A. RADKE	08/23/2018				REGION NO. / STATE
ENTERED BY:	B. RONIA	08/23/2018				10 / WASH
CHECKED BY:	A. EWING	08/23/2018				JOB NUMBER 18W121
MAR PROJ ENGR	C. TORRES					
DIR TERM ENGR:	N. MCINTOSH					CONTRACT NO.
ASST SECRETARY:	A. SCARTON		REVISION	DATE	BY	00****

DATE

STATE OF WASHINGTON — JOSHUA LOVING RODGERS — 38538 — PROFESSIONAL ENGINEER

08/23/2018
DATE

Washington State Department of Transportation
WASHINGTON STATE FERRIES

SR 525
MUKILTEO FERRY TERMINAL (PHASE 2)
FERRY TERMINAL CONSTRUCTION

LOAD MAPS
(MAINTENANCE BUILDING)

SB00.11

SHEET 1092 OF 1521 SHEETS

File: U:\114000-114350\114177 (Mukilteo Ferry Terminal)\01 General Notes\14W121SB00_11.dwg
Plotted: 9/21/18 at 2:37pm By: DianeL

BUILDING STRUCTURAL NOTES: TOLL PLAZA STRUCTURES

DESIGN LOADS

ALL DESIGN AND CONSTRUCTION SHALL CONFORM TO THE REQUIREMENTS OF THE INTERNATIONAL BUILDING CODE (IBC), 2015 EDITION, AS AMENDED BY THE CITY OF MUKILTEO.

LIVE LOADS: IN ADDITION TO THE DEAD LOADS, THE FOLLOWING FLOOR LIVE LOADS WERE USED FOR DESIGN. LIVE LOAD REDUCTION IS PER IBC SECTION 1607.10.

		REDUCIBLE	UNREDUCIBLE
CORRIDORS, STAIRS	100 PSF	X	
SIDEWALKS, DRIVEWAYS	250 PSF		X
OFFICES	50 PSF + 15 PSF PARTITION LOAD	X	
HEAVY STORAGE	250 PSF		X

REFER TO TABLE 1607.1 IN THE IBC FOR RELEVANT CONCENTRATED LIVE LOADS.

ROOF SNOW LOAD: THE ROOF SNOW LOAD IS DETERMINED USING CHAPTER 7 OF ASCE 7 IN ACCORDANCE WITH IBC SECTION 1608 AND WITH SEAW WHITE PAPER 1–2009:

MINIMUM DESIGN LOAD 25 PSF WITHOUT DRIFT

SEISMIC LOADS: THE SEISMIC FORCE RESISTING SYSTEMS (SFRS) USED TO RESIST EARTHQUAKE AND WIND LOADS IS COMPRISED OF SPECIAL REINFORCED CONCRETE SHEAR WALLS DESIGNED IN ACCORDANCE WITH THE PROVISIONS OF ACI 318 "BUILDING CODE REQUIREMENTS FOR STRUCTURAL CONCRETE". EARTHQUAKE DESIGN IS BASED ON THE EQUIVALENT LATERAL FORCE PROCEDURE IN ASCE 7 SECTION 12.8 WITH THE FOLLOWING FACTORS:

SITE CLASS D

RISK CATEGORY II (PER WSF TDM–2014)

SEISMIC DESIGN CATEGORY D

RESPONSE SPECTRUM PARAMETERS
(SEE GEOTECHNICAL REPORT BY HART CROWSER DATED 08/28/17)

S_s = 1.47 G
S_1 = 0.57 G
S_{DS} = 0.98 G
S_{D1} = 0.57 G
T_L = 6.0 SECONDS

TOLL PLAZA – R = 6.0

h_n = 21 FT I_E = 1.0
T = 0.20 SECONDS C_S = 0.163

V = BASE SHEAR = 19 KIPS

WIND LOADS: WIND LOAD IS DETERMINED USING CHAPTERS 26–31 OF ASCE 7 IN ACCORDANCE WITH IBC SECTION 1609 WITH THE FOLLOWING FACTORS:

RISK CATEGORY III K_{zt} = 1.0
EXPOSURE CATEGORY D GC_{pi} = 0.18
V_{ult} = 115 MPH V_{asd} = 89 MPH

DESIGN WIND PRESSURES FOR DETERMINING FORCES ON COMPONENTS AND CLADDING SHALL BE DETERMINED USING CHAPTER 30 OF ASCE 7 IN ACCORDANCE WITH IBC SECTION 1609 BY THE WASHINGTON STATE REGISTERED PROFESSIONAL ENGINEER WHO IS RESPONSIBLE FOR THE DESIGN OF SUCH ELEMENTS, UNLESS NOTED OTHERWISE ON THE DRAWINGS.

STORY DRIFTS: THE MAXIMUM LATERAL DISPLACEMENTS WITH RESPECT TO THE LEVEL BELOW (STORY DRIFTS) ARE AS FOLLOWS:

SEISMIC:

TOLL PLAZA – CANOPY BUILDING

INELASTIC STORY DRIFT = 0.5% OF STORY HEIGHT

ELASTIC STORY DRIFT = INELASTIC STORY DRIFT DIVIDED BY CD/I_E, WHERE CD/I_E = 5

WIND:

TOLL PLAZA – STORY DRIFT = 0.2% OF STORY HEIGHT

SOIL LOADS:

ALLOWABLE SOIL–BEARING PRESSURE 2000 PSF DL + LL
2660 PSF DL + LL + SEISMIC/WIND

GENERAL NOTES

SUBMITTALS: SHOP DRAWINGS SHALL BE SUBMITTED TO THE ARCHITECT PRIOR TO ANY FABRICATION OR CONSTRUCTION FOR ALL STRUCTURAL ITEMS, INCLUDING THE FOLLOWING: CONCRETE REINFORCEMENT, EMBEDDED STEEL ITEMS, STRUCTURAL STEEL, GLUED–LAMINATED MEMBERS, AND CLADDING PANELS.

IF THE SHOP DRAWINGS DIFFER FROM OR ADD TO THE DESIGN OF THE STRUCTURAL DRAWINGS, THEY SHALL BEAR THE SEAL AND SIGNATURE OF THE WASHINGTON STATE REGISTERED PROFESSIONAL ENGINEER WHO IS RESPONSIBLE FOR THE DESIGN.

DEFERRED SUBMITTALS: PER IBC SECTION 107.3.4.1, DRAWINGS AND CALCULATIONS FOR THE DESIGN AND FABRICATION OF ITEMS THAT ARE DESIGNED BY OTHERS SHALL BEAR THE SEAL AND SIGNATURE OF THE WASHINGTON STATE REGISTERED PROFESSIONAL ENGINEER WHO IS RESPONSIBLE FOR THE DESIGN AND SHALL BE SUBMITTED TO THE ARCHITECT AND THE BUILDING DEPARTMENT FOR REVIEW PRIOR TO FABRICATION. SUBMITTED CALCULATIONS ARE FOR CURSORY REVIEW ONLY AND WILL GENERALLY NOT BE RETURNED. DEFERRED SUBMITTALS INCLUDE BUT ARE NOT LIMITED TO THE FOLLOWING:

EXTERIOR CLADDING SYSTEMS
EQUIPMENT ANCHORAGE
SEISMIC DESIGN OF NONSTRUCTURAL COMPONENTS
INTERIOR NON–BEARING COLD–FORMED STEEL FRAMING

NONSTRUCTURAL COMPONENTS: DESIGN, DETAILING AND ANCHORAGE OF ALL NONSTRUCTURAL COMPONENTS SHALL BE IN ACCORDANCE WITH IBC SECTION 1613, ASCE 7 CHAPTER 13, AND THE PROJECT SPECIFICATIONS. NONSTRUCTURAL COMPONENTS DESIGNED BY OTHERS SHALL NOT INDUCE TORSIONAL LOADING INTO SUPPORTING STEEL STRUCTURAL MEMBERS WITHOUT ADDITIONAL BRACING OF THOSE MEMBERS TO ELIMINATE TORSIONAL FORCES. TORSIONAL BRACING SHALL BE DESIGNED BY THE NONSTRUCTURAL COMPONENT DESIGNER AND APPROVED BY THE ENGINEER.

CLADDING: CLADDING DESIGNED BY OTHERS SHALL BE SUPPORTED AT EACH STORY TO BE CONSISTENT WITH THE DESIGN OF THE BUILDING STRUCTURE. CLADDING DESIGNED BY OTHERS SHALL NOT INDUCE TORSIONAL LOADING INTO SUPPORTING STEEL STRUCTURAL MEMBERS WITHOUT ADDITIONAL BRACING OF THOSE MEMBERS TO ELIMINATE TORSIONAL FORCES, UNLESS OTHERWISE APPROVED BY THE ARCHITECT. TORSIONAL BRACING SHALL BE DESIGNED BY THE CLADDING DESIGNER AND APPROVED BY THE ENGINEER.

INSPECTION: SPECIAL INSPECTION PER IBC CHAPTER 17 SHALL BE PERFORMED BY AN APPROVED TESTING AGENCY AS INDICATED IN THE STATEMENT OF SPECIAL INSPECTIONS AND TESTING. ALL PREPARED SOIL–BEARING SURFACES SHALL BE INSPECTED BY THE GEOTECHNICAL ENGINEER PRIOR TO PLACEMENT OF REINFORCING STEEL. SOILS COMPACTION SHALL BE SUPERVISED BY AN APPROVED TESTING AGENCY OR GEOTECHNICAL ENGINEER.

SPECIAL CONDITIONS: CONTRACTOR SHALL VERIFY ALL LEVELS, DIMENSIONS, AND EXISTING CONDITIONS IN THE FIELD BEFORE PROCEEDING. CONTRACTOR SHALL NOTIFY THE ARCHITECT OF ANY DISCREPANCIES OR FIELD CHANGES PRIOR TO INSTALLATION OR FABRICATION. IN CASE OF DISCREPANCIES BETWEEN THE EXISTING CONDITIONS AND THE DRAWINGS, THE CONTRACTOR SHALL OBTAIN DIRECTION FROM THE ARCHITECT BEFORE PROCEEDING. DIMENSIONS NOTED AS PLUS OR MINUS (±) INDICATE UNVERIFIED DIMENSIONS AND ARE APPROXIMATE. NOTIFY ARCHITECT IMMEDIATELY OF CONFLICTS OR EXCESSIVE VARIATIONS FROM INDICATED DIMENSIONS. NOTED DIMENSIONS TAKE PRECEDENCE OVER SCALED DIMENSIONS––DO NOT SCALE DRAWINGS. DIMENSIONS OF EXISTING CONDITIONS MAY BE BASED ON RECORD DRAWINGS AND ARE TO BE FIELD–VERIFIED BY THE CONTRACTOR.

CONTRACTOR SHALL VERIFY ALL EXISTING CONDITIONS BEFORE COMMENCING ANY DEMOLITION. CONTRACTOR SHALL PROVIDE ADEQUATE SHORING AND BRACING OF ALL STRUCTURAL MEMBERS, EXISTING CONSTRUCTION AND SOIL EXCAVATIONS, AS REQUIRED, AND IN A MANNER SUITABLE TO THE WORK SEQUENCE. TEMPORARY SHORING AND BRACING SHALL NOT BE REMOVED UNTIL ALL FINAL CONNECTIONS HAVE BEEN COMPLETED IN ACCORDANCE WITH THE DRAWINGS AND MATERIALS HAVE ACHIEVED DESIGN STRENGTH. NO REINFORCING BARS IN EXISTING CONSTRUCTION SHALL BE CUT UNLESS DIRECTED TO BY THE ARCHITECT OR AS SHOWN ON THE DRAWINGS.

CONTRACTOR SHALL BE RESPONSIBLE FOR ALL SAFETY PRECAUTIONS AND THE METHODS, TECHNIQUES, SEQUENCES OR PROCEDURES REQUIRED TO PERFORM THE WORK.

SOILS: SEE THE GEOTECHNICAL MEMORANDUM BY HART CROWSER, DATED 08/28/17, FOR MORE COMPLETE INFORMATION. EARTHWORK MATERIAL, BACKFILL AND COMPACTION SHALL BE IN ACCORDANCE WITH THE RECOMMENDATIONS OF THE GEOTECHNICAL REPORT. BACKFILL BEHIND WALLS SHALL NOT BE PLACED BEFORE THE WALL IS PROPERLY SUPPORTED BY THE FLOOR SLAB OR TEMPORARY BRACING. ALL TOPSOIL ORGANICS AND LOOSE SURFACE SOIL SHALL BE REMOVED FROM BENEATH FILL SUPPORTING CONCRETE SLABS OR PAVING.

MEMBER SPACING: ALL FRAMING MEMBERS SHALL BE EQUALLY SPACED BETWEEN GRID LINES, COLUMNS, AND DIMENSIONED FRAMING UNLESS NOTED OTHERWISE.

CONCRETE

CONCRETE WORK SHALL CONFORM TO ALL REQUIREMENTS OF IBC CHAPTER 19.

CONCRETE MIXES: CONCRETE MIXES SHALL CONFORM TO THE FOLLOWING REQUIREMENTS:

F'C (PSI)	TEST AGE (DAYS)	W/C RATIO	USE
4,000	28	0.5	SLAB–ON–GRADE, FOUNDATIONS, CONCRETE WALLS
5,000	28	0.45	COLUMNS AND SHEAR WALLS

WATER–REDUCING ADMIXTURES MAY BE INCORPORATED IN CONCRETE MIX DESIGNS, BUT SHALL CONFORM TO ASTM C 494, AND BE USED IN STRICT ACCORDANCE WITH THE MANUFACTURER'S RECOMMENDATIONS. $CACL_2$ OR OTHER WATER–SOLUBLE CHLORIDE ADMIXTURES SHALL NOT BE USED.

WATER/CEMENT (W/C) RATIO SHALL BE MEASURED BY WEIGHT AND SHALL BE BASED ON THE TOTAL CEMENTITIOUS MATERIAL. WATER/CEMENT RATIO AND WATER CONTENT SHALL BE DETERMINED BY THE SUPPLIER BASED ON STRENGTH REQUIREMENTS AND SHALL NOT EXCEED THE MAXIMUM WATER/CEMENT RATIO AND/OR WATER CONTENT IF SHOWN ABOVE OR IN THE PROJECT SPECIFICATIONS.

FIELD–MEASURED SLUMP SHALL CONFORM TO THE SUBMITTED CONCRETE MIX DESIGN. TOLERANCE OF SLUMP SHALL CONFORM TO ASTM C 94.

AN AIR–ENTRAINING AGENT CONFORMING TO ASTM C 260 SHALL BE USED IN ALL CONCRETE MIXES FOR FLATWORK WHICH IS EXPOSED TO WEATHER. THE AMOUNT OF ENTRAINED AIR SHALL BE 5 PERCENT ±1 1/2 PERCENT BY VOLUME. THE AMOUNT OF ENTRAINED AIR SHALL BE MEASURED IN THE FIELD AT THE DISCHARGE FROM THE TRUCK.

THE CONTRACTOR SHALL SUBMIT CONCRETE MIX DESIGNS FOR APPROVAL 2 WEEKS PRIOR TO PLACING ANY CONCRETE. THE MIX DESIGN SHALL BE IN CONFORMANCE WITH ACI 318, CHAPTER 19. THE SUBMITTAL SHALL INDICATE WHERE EACH CONCRETE MIX IS TO BE USED ON THE PROJECT, AS WELL AS THE MAXIMUM AGGREGATE SIZE OF EACH MIX. MAXIMUM AGGREGATE SIZE SHALL CONFORM TO THE PROJECT SPECIFICATIONS.

CURING: IF THE AIR TEMPERATURE WILL EXCEED 75 DEGREES F WITHIN 48 HOURS OF PLACING CONCRETE, A MOIST CURE SHALL BE APPLIED TO THE CONCRETE FOR A PERIOD OF 36 HOURS AFTER FINISHING CONCRETE SURFACES. REFER TO THE PROJECT SPECIFICATIONS FOR CURING REQUIREMENTS.

REINFORCING STEEL

DEFORMED BARS	ASTM A 615, GRADE 60
SPECIAL DUCTILE QUALITY DEFORMED BARS	ASTM A 706, GRADE 60 LOW ALLOY
HEADED DEFORMED BARS	ASTM A 970, HEAD TYPE HA
ADHESIVE REINFORCING DOWELS	ASTM A 615, GRADE 60 ADHESIVE AS REQUIRED PER POST–INSTALLED ANCHORS

SPECIAL DUCTILE QUALITY (SDQ) DEFORMED BARS SHALL BE USED FOR VERTICAL REINFORCING IN SHEAR WALLS, DIAGONAL REINFORCING IN DIAGONALLY REINFORCED COUPLING BEAMS, TOP AND BOTTOM REINFORCING IN ALL OTHER COUPLING BEAMS, AND OTHER REINFORCING DESIGNATED "SDQ" ON THE DRAWINGS. ASTM A 615, GRADE 60, REBAR MAY BE USED IN THESE MEMBERS IF 1) THE ACTUAL YIELD STRENGTH BASED ON MILL TESTS DOES NOT EXCEED THE SPECIFIED YIELD STRENGTH BY MORE THAN 18,000 PSI (RETESTS SHALL NOT EXCEED THIS VALUE BY MORE THAN AN ADDITIONAL 3,000 PSI), AND 2) THE RATIO OF THE ACTUAL ULTIMATE TENSILE STRESS TO THE ACTUAL TENSILE YIELD STRENGTH IS NOT LESS THAN 1.25. MILL TEST CERTIFICATIONS FOR SDQ ASTM A 615, GRADE 60, BARS SHALL BE SUBMITTED TO THE OWNER'S SPECIAL INSPECTOR AND ARCHITECT PRIOR TO PLACING THE BARS.

REINFORCING SHALL BE SUPPORTED AS SPECIFIED BY THE PROJECT SPECIFICATIONS AND THE CRSI MANUAL OF STANDARD PRACTICE. REINFORCING STEEL SHALL BE DETAILED IN ACCORDANCE WITH ACI STANDARD OF PRACTICE AS OUTLINED IN ACI 315, "DETAILS AND DETAILING OF CONCRETE REINFORCEMENT."

LAP ALL REINFORCING BARS AS NOTED ON THE DRAWINGS. WHERE SPLICE LENGTH IS NOT SHOWN, USE TYPE LB (LBT FOR TOP BARS) SPLICE PER DEVELOPMENT AND SPLICE LENGTH SCHEDULE. MECHANICAL SPLICES CALLED OUT ON THE PLANS SHALL BE TYPE 1, UNLESS OTHERWISE NOTED. TYPE 1 SPLICES SHALL DEVELOP 125 PERCENT OF THE YIELD CAPACITY OF THE SPLICED BARS IN BOTH TENSION AND COMPRESSION. TYPE 2 SPLICES SHALL DEVELOP THE SPECIFIED TENSILE STRENGTH OF THE SPLICED BARS IN TENSION IN ADDITION TO MEETING TYPE 1 SPLICE REQUIREMENTS. SUBMIT ICC–ES OR IAPMO–UES REPORT VALID FOR THE 2015 IBC DEMONSTRATING COMPLIANCE OF COUPLERS WITH THESE REQUIREMENTS.

AT THE CONTRACTOR'S OPTION AND WITH THE ARCHITECT'S APPROVAL, HEADED DEFORMED BARS MAY BE USED IN LIEU OF REINFORCING BARS SHOWN WITH STANDARD 90 OR 180 DEGREE HOOKS AND MECHANICAL SPLICES MAY BE USED IN LIEU OF LAP SPLICES. USE OF HEADED DEFORMED BARS IS SUBJECT TO CONFORMANCE WITH ACI 318 SECTION 25.4.4. USE OF MECHANICAL SPLICES IS SUBJECT TO CONFORMANCE WITH ACI 318 SECTION 18.2.7 AND REQUIRES SUBMITTAL OF AN ICC–ES OR IAPMO–UES REPORT VALID FOR THE 2015 IBC.

REINFORCING STEEL SHALL HAVE PROTECTION AS FOLLOWS, UNLESS NOTED OTHERWISE:

USE		COVER	
BEAM STIRRUPS AND COLUMN TIES		1 1/2"	
INTERIOR SLAB BARS		1 1/2"	
NONSTRUCTURAL SLAB–ON–GRADE		MID–DEPTH	
STRUCTURAL SLAB–ON–GRADE:	BOTTOM BARS	2"	
	TOP BARS	1 1/2"	
WALL BARS:	INTERIOR FACES	3/4"	
	EXPOSED TO EARTH OR WEATHER	1 1/2"	(#5 AND SMALLER)
		2"	(#6 AND LARGER)
FOOTING, GRADE BEAM	BOTTOM BARS	3"	(CAST AGAINST EARTH)
	TOP BARS	1 1/2"	
		2"	(#6 AND LARGER WHERE EXPOSED TO EARTH OR WEATHER)
	SIDE BARS	2"	

WELDING OF REINFORCING, WHERE APPROVED BY THE ARCHITECT, SHALL BE PERFORMED USING LOW HYDROGEN ELECTRODES AND PREHEATED IN ACCORDANCE WITH AWS D1.4, REINFORCING STEEL WELDING CODE. WELDERS AND WELDING PROCEDURES SHALL BE QUALIFIED IN ACCORDANCE WITH AWS D1.4. MATERIALS SHALL CONFORM TO THE FOLLOWING:

REINFORCING BARS TO BE WELDED	ASTM A 706, GRADE 60, LOW ALLOY
WELDING ELECTRODES	E80XX

NONSHRINK GROUT: BASE PLATE GROUT SHALL BE NONSHRINK TYPE WITH MINIMUM F'C = 8,000 PSI. ALL OTHER NONSHRINK GROUT SHALL HAVE MINIMUM F'C = 5,000 PSI.

kpff

FILE NAME:	14W121SB00_51.dwg					
PRINTED:	2:37:51 PM 9/21/2018	LAST PRINTED BY:				FED.AID PROJ.NO.
SUBMITTAL DATE:	08/23/2018	3yronR				WA–2017–007–00
DESIGNED BY:	A. RADKE	08/23/2018				REGION NO. / STATE
ENTERED BY:	B. RONIA	08/23/2018				10 / WASH
CHECKED BY:	A. EWING	08/23/2018				JOB NUMBER 18W121
MAR PROJ ENGR	C. TORRES					
DIR TERM ENGR:	N. MCINTOSH					CONTRACT NO.
ASST SECRETARY:	A. SCARTON		REVISION	DATE	BY	00****

DATE

DANA LOVING ROBERTS STATE OF WASHINGTON 38538 PROFESSIONAL ENGINEER

08/23/2018
DATE

Washington State Department of Transportation
WASHINGTON STATE FERRIES

SR 525
MUKILTEO FERRY TERMINAL (PHASE 2)
FERRY TERMINAL CONSTRUCTION

BUILDING STRUCTURAL NOTES – TOLL PLAZA

SB00.51

SHEET 1093 OF 1521 SHEETS

File: U:\114000–114350\114177 (Mukilteo Ferry Terminal)\01 General Notes\14W121SB00_51.dwg
Plotted: 9/21/18 at 2:37pm By: DianaL

BUILDING STRUCTURAL NOTES (CONT): TOLL PLAZA STRUCTURES

STRUCTURAL STEEL

REFERENCE SPECIFICATIONS

STRUCTURAL STEEL	AISC 360 – SPECIFICATION FOR STRUCTURAL STEEL BUILDINGS
HIGH STRENGTH BOLTS	RCSC SPECIFICATION FOR STRUCTURAL JOINTS USING HIGH–STRENGTH BOLTS
WELDING	AWS D1.1, TYPICAL AWS D1.3 FOR STEEL DECK AND COLD–FORMED FRAMING AWS D1.8 FOR SUPPLEMENTAL SEISMIC PROVISIONS AWS PREQUALIFIED JOINT DETAILS
WELDER CERTIFICATION	AMERICAN WELDING SOCIETY (AWS) WASHINGTON ASSOCIATION OF BUILDING OFFICIALS (WABO)
STEEL DECKING	STEEL DECK INSTITUTE PUBLICATION NO. 31

STEEL MATERIALS

WIDE FLANGE SHAPES (W AND WT)	ASTM A 992
PLATES (PL), BARS, ANGLES (L), CHANNELS (C AND MC)	ASTM A 36, UNLESS NOTED OTHERWISE
STRUCTURAL TUBES (HSS)	ASTM A 500, GRADE C
STEEL PIPE	ASTM A 53, GRADE B
STRUCTURAL BOLTS	ASTM A 325 TYPICAL, A 490 AS NOTED
ANCHOR RODS	ASTM F 1554, GRADE 36 UNLESS NOTED OTHERWISE
THREADED RODS	ASTM A 36, UNLESS NOTED OTHERWISE
WELDING ELECTRODES	70 KSI, LOW HYDROGEN, TYPICAL
STEEL DECKING	60 KSI, MINIMUM, STEEL DECK AND COLD–FORMED FRAMING

STRUCTURAL STEEL DESIGN, FABRICATION AND ERECTION SHALL CONFORM TO THE REQUIREMENTS OF IBC CHAPTER 22. ALL MEMBERS ARE TO BE ERECTED WITH NATURAL MILL CAMBER OR INDUCED CAMBER UP, UNLESS OTHERWISE NOTED ON THE PLANS. SUBSTITUTION OF MEMBER SIZES OR STEEL GRADE WILL NOT BE ALLOWED WITHOUT PRIOR APPROVAL OF THE ARCHITECT. BOLTED CONNECTIONS ARE TO BE OF HIGH STRENGTH ASTM A 325 BOLTS AS SHOWN, UNLESS NOTED OTHERWISE. A MINIMUM OF TWO BOLTS IS REQUIRED FOR ALL BEAM CONNECTIONS. ALTERNATIVE CONNECTIONS TO THOSE SHOWN ON THESE DRAWINGS WILL REQUIRE PRIOR APPROVAL OF THE ARCHITECT.

BEAM CAMBER INDICATED ON DRAWINGS IS THE UPWARD CAMBER REQUIRED IN THE BEAM AS DELIVERED TO THE JOB SITE. CONTRACTOR TO CONSIDER CAMBER LOSS, IF ANY, DUE TO SHIPPING AND HANDLING.

THE CONTRACTOR SHALL BE RESPONSIBLE FOR ALL ERECTION AIDS AND JOINT PREPARATIONS THAT INCLUDE, BUT ARE NOT LIMITED TO, ERECTION ANGLES, LIFT HOLES AND OTHER AIDS, WELDING PROCEDURES, REQUIRED ROOT OPENINGS, ROOT FACE DIMENSIONS, GROOVE ANGLES, BACKING BARS, COPES, SURFACE ROUGHNESS VALUES, AND UNEQUAL PARTS.

GALVANIZING: STRUCTURAL STEEL AND CONNECTIONS, INCLUDING PLATES AND OTHER STEEL ITEMS EMBEDDED IN CONCRETE, WHICH ARE EXPOSED TO WEATHER AND NOT TO BE PAINTED SHALL BE HOT–DIPPED GALVANIZED AFTER FABRICATION IN COMPLIANCE WITH ASTM A 123. ALL FIELD WELDS ON GALVANIZED MATERIAL SHALL BE COATED WITH BRUSH APPLIED ZINC–RICH PAINT COMPLYING WITH THE SPECIFICATIONS.

WELDING: ALL WELDING SHALL BE IN CONFORMANCE WITH AISC AND AWS STANDARDS, AND SHALL BE PERFORMED BY AWS–WABO–CERTIFIED WELDERS USING 70 KSI ELECTRODES AND LOW HYDROGEN PROCESSES. ONLY WELDS THAT ARE PREQUALIFIED, AS DEFINED BY AWS, OR QUALIFIED BY TESTING SHALL BE USED. SHOP DRAWINGS SHALL SHOW ALL WELDING WITH AWS A2.4 SYMBOLS. WELDS SHOWN ON THE DRAWINGS ARE MINIMUM SIZES. INCREASE WELD SIZE TO AWS MINIMUM SIZES BASED ON THICKNESS. MINIMUM WELD SIZE SHALL BE 3/16–INCH, UNLESS NOTED OTHERWISE. THE WELDS SHOWN ARE FOR THE FINAL CONNECTIONS. FIELD WELD SYMBOLS ARE SHOWN WHERE FIELD WELDS ARE REQUIRED BY THE STRUCTURAL DESIGN. WHERE FIELD WELD IS NOT INDICATED, THE CONTRACTOR IS RESPONSIBLE FOR DETERMINING IF A WELD SHOULD BE SHOP OR FIELD–WELDED IN ORDER TO FACILITATE THE STRUCTURAL STEEL ERECTION.

FIREPROOFING: EXCEPT WHERE PAINTED OR GALVANIZED, STRUCTURAL STEEL SHALL BE FIREPROOFED PER THE SPECIFICATIONS. FIREPROOFING SHALL BE GCP APPLIED TECHNOLOGIES OR APPROVED EQUAL. THICKNESS SHALL BE AS INDICATED ON ICC REPORT NO. ESR–1186. PRIMARY STRUCTURAL FRAME CONSISTS OF ALL COLUMNS, GIRDERS AND BEAMS ATTACHED TO COLUMNS, AND ANY BEAM CARRYING GREATER THAN 500 SQUARE FEET OF FLOOR OR ROOF AREA. ALL OTHER FRAMING IS TO BE CONSIDERED SECONDARY. STRUCTURAL MEMBERS SHALL BE ASSUMED TO BE IN A THERMAL RESTRAINED CONDITION FOR THE PURPOSES OF DETERMINING FIREPROOFING THICKNESS. WHERE SPRAY–APPLIED FIREPROOFING IS EXPOSED TO WEATHER, STRUCTURAL STEEL SHALL BE CONSIDERED EXPOSED TO WEATHER.

ANCHORS

POST–INSTALLED ANCHORS: PROVIDE POST–INSTALLED ANCHORS AS SPECIFIED IN THESE DRAWINGS.

USE OF ALTERNATE PRODUCTS, OR OF POST–INSTALLED ANCHORS AT LOCATIONS NOT SHOWN IN THESE DRAWINGS, IS SUBJECT TO THE APPROVAL OF THE ARCHITECT. SUBMIT PROPOSED ANCHORS TO THE ARCHITECT WITH AN ICC–ES OR IAPMO UES REPORT VALID FOR THE 2015 IBC. SUBMITTED ICC–ES AND IAPMO UES REPORTS SHALL DEMONSTRATE THAT THE ANCHORS ARE SUITABLE FOR USE IN CRACKED CONCRETE OR UNCRACKED, FULLY GROUTED REINFORCED CONCRETE MASONRY UNITS. WHERE ANCHORS RESIST SEISMIC LOADS, SUBMITTED ICC–ES AND IAPMO UES REPORTS SHALL DEMONSTRATE THAT THE ANCHORS ARE SUITABLE FOR THE RESISTANCE OF SEISMIC LOADS.

ADHESIVES SHALL NOT BE INSTALLED PRIOR TO THE CONCRETE REACHING AN AGE OF 21 DAYS AS REQUIRED BY ACI 318.

HEADED SHEAR STUDS AND DEFORMED BAR ANCHORS: ALL HEADED SHEAR STUDS SHALL CONFORM TO ASTM A 108 AND SHALL BE 3/4–INCH DIAMETER HEADED STUDS, UNLESS NOTED OTHERWISE. STUD LENGTHS AFTER WELD SHALL BE AS SHOWN ON THE DRAWINGS. DEFORMED BAR ANCHORS (DBA) SHALL CONFORM TO ASTM A 496 AND SHALL BE OF THE SIZE AND LENGTH SHOWN ON THE DRAWINGS. ALL STUDS AND DEFORMED BAR ANCHORS SHALL BE AUTOMATICALLY END WELDED IN SHOP OR FIELD WITH EQUIPMENT RECOMMENDED BY MANUFACTURER.

COLD–FORMED STEEL

COLD–FORMED STEEL FRAMING MEMBERS SHALL BE OF THE TYPE, SHAPE, SIZE, GAUGE, AND SPACING AS SHOWN ON THE DRAWINGS. MEMBER TYPES AND SIZES SHOWN ON THE DRAWINGS REFER TO MEMBERS AS DEFINED BY THE STEEL STUD MANUFACTURERS ASSOCIATION (SSMA). MEMBERS EQUIVALENT IN SHAPE, SIZE, STIFFNESS, AND STRENGTH BY OTHER MANUFACTURERS MAY BE SUBSTITUTED FOR FRAMING MEMBERS SHOWN. ALTERNATE MEMBERS SHALL BE SUBJECT TO REVIEW AND APPROVAL BY THE ARCHITECT AND STRUCTURAL ENGINEER PRIOR TO FABRICATION AND ERECTION. ALL COLD–FORMED STEEL FRAMING SHALL CONFORM TO THE AISI S100 – "NORTH AMERICAN SPECIFICATION FOR THE DESIGN OF COLD–FORMED STEEL STRUCTURAL MEMBERS." ALL STUDS, TRACKS AND JOISTS SHALL BE GALVANIZED. FASTENINGS SHALL BE AS SHOWN ON THE DRAWINGS. FASTENINGS NOT SHOWN SHALL BE AS RECOMMENDED BY THE MANUFACTURER.

COLD–FORMED STEEL WELDING SHALL BE IN ACCORDANCE WITH AWS D1.3, "SPECIFICATION FOR WELDING SHEET STEEL IN STRUCTURES." WELDERS SHALL BE QUALIFIED BY WABO SHEET STEEL WELDER CERTIFICATION PROGRAM.

WOOD

SAWN LUMBER: SAWN LUMBER SHALL CONFORM TO "GRADING AND DRESSING RULES," WEST COAST LUMBER INSPECTION BUREAU (WCLIB), LATEST EDITION. LUMBER SHALL BE KILN DRIED AND BE THE SPECIES AND GRADE NOTED BELOW. DESIGN STRESSES ARE BASED ON NDS. ALL LUMBER IN CONTACT WITH CMU, CONCRETE, OR GROUND SURFACES SHALL BE PRESERVATIVE TREATED.

USE	GRADE	FB (PSI) (SINGLE USE)
POSTS		
5"x5" AND LARGER	DOUGLAS FIR–LARCH NO. 1	1,200
4"x4"	DOUGLAS FIR–LARCH NO. 1	1,000

ALL FRAMING ACCESSORIES AND FASTENERS IN CONTACT WITH PRESERVATIVE–TREATED LUMBER SHALL BE GALVANIZED WITH A MINIMUM COATING OF 1.85 OUNCES/SQUARE FOOT.

RATED SHEATHING: WOOD STRUCTURAL PANELS SHALL CONFORM TO THE REQUIREMENTS OF THE LATEST EDITION OF U.S. DEPARTMENT OF COMMERCE (DOC) PS–1 "CONSTRUCTION AND INDUSTRIAL PLYWOOD" OR DOC PS–2 "PERFORMANCE STANDARD FOR WOOD–BASED STRUCTURAL–USE PANELS". EACH PANEL SHALL BEAR THE APA GRADE TRADEMARK OF THE AMERICAN PLYWOOD ASSOCIATION. SHEATHING SHALL BE AS FOLLOWS:

ROOF SHEATHING
15/32" 32/16 C–D INT APA WITH EXTERIOR GLUE (CDX)

SUBFLOORING SHEATHING (TONGUE AND GROOVE, UNLESS EDGES BLOCKED)
23/32" 48/24 C–D INT APA WITH EXTERIOR GLUE (CDX)

SHEAR WALL SHEATING
15/32" 32/16 APA, EXPOSURE 1

ALL ROOF SHEATHING AND SUBFLOORING SHALL BE INSTALLED FACE GRAIN PERPENDICULAR TO SUPPORTS OR AS INDICATED ON THE DRAWINGS. ROOF AND SUBFLOORING SHEATHING SHALL BE UNBLOCKED OR AS INDICATED ON DRAWINGS. INSTALL WITH 1/8" GAP BETWEEN PANELS. SHEAR WALL SHEATHING SHALL BE BLOCKED AT ALL PANEL EDGES AS INDICATED IN THE SHEAR WALL SCHEDULE, UNLESS NOTED OTHERWISE. FLOOR DIAPHRAGM AND SHEAR WALL NAILS SHALL BE DRIVEN FLUSH, BUT SHALL NOT FRACTURE THE SURFACE OF SHEATHING. NAILING NOT SHOWN SHALL BE AS INDICATED IN IBC TABLE 2304.10.1. ALL NAILS SHALL BE COMMON.

GLUED FLOOR AND ROOF SYSTEM: ALL PLYWOOD SHALL BE GLUED TO THE FLOOR JOISTS. THE FIELD–GLUED FLOOR SYSTEM SHALL BE INSTALLED ACCORDING TO THE RECOMMENDATIONS OF THE AMERICAN PLYWOOD ASSOCIATION. GLUE SHALL BE APPLIED TO THE JOISTS AND TO THE GROOVE IN THE EDGE OF THE T&G PANELS. GLUE SHALL MEET THE REQUIREMENTS OF THE AMERICAN PLYWOOD ASSOCIATION ADHESIVE SPECIFICATION AFG–01 AND SHALL BE APPLIED AS DIRECTED BY THE GLUE MANUFACTURER. GLUE MAY BE APPLIED MANUALLY OR WITH PNEUMATIC OR ELECTRIC EQUIPMENT.

GLUED LAMINATED MEMBERS: GLUED LAMINATED MEMBERS SHALL BE MANUFACTURED AND IDENTIFIED IN ACCORDANCE WITH AMERICAN INSTITUTE OF TIMBER CONSTRUCTION (AITC) A190.1 "STRUCTURAL GLUE LAMINATED TIMBER". EACH MEMBER SHALL BEAR AN AITC IDENTIFICATION MARK AND BE ACCOMPANIED BY AN AITC CERTIFICATE OF CONFORMANCE. ONE COAT OF END SEALER SHALL BE APPLIED IMMEDIATELY AFTER TRIMMING IN EITHER SHOP OR FIELD. MEMBERS SHALL BE VISUALLY GRADED WESTERN SPECIES PREMIUM GRADE WITH STRENGTH INDICATED AS FOLLOWS:

	COMBINATION SYMBOL	SPECIES	USES
BEAMS	24F – V4	DF/DF	SIMPLE SPAN
	24F – V8	DF/DF	CONTINUOUS OR CANTILEVER SPAN
COLUMNS	2–L2	DF/DF	CRUCIFORM COLUMNS

2" & 3" TONGUE AND GROOVE DECKING: DECKING, FASTENING, AND INSTALLATION, SHALL BE PER IBC 2304.9 AND AITC 112. IBC TO CONTROL WHERE CONFLICTS BETWEEN DOCUMENTS EXIST. ALL LAY UP TO BE BY CONTROLLED RANDOM PATTERN. END JOINTS IN MID–SPAN SHALL BE END MATCHED OR USE #10 GAGE METAL SPLINE AND DRIVE FIT INTO PRECUT SLOT IN BOARD.

kpff

File: U:\114000-114350\114177 (Mukilteo Ferry Terminal)\01 General Notes\14W121SB00_52.dwg
Plotted: 9/21/18 at 2:37pm By: DianeL

FILE NAME:	14W121SB00_52.dwg				
PRINTED:	2:37:53 PM 9/21/2018	LAST PRINTED BY:			
SUBMITTAL DATE:	08/23/2018	ByronR			
DESIGNED BY:	A. RADKE	08/23/2018			
ENTERED BY:	B. RONIA	08/23/2018			
CHECKED BY:	A. EWING	08/23/2018			
MAR PROJ ENGR	C. TORRES				
DIR TERM ENGR:	N. MCINTOSH				
ASST SECRETARY:	A. SCARTON		REVISION	DATE	BY

FED.AID PROJ.NO. WA-2017-007-00
REGION NO. 10 STATE WASH
JOB NUMBER 18W121
CONTRACT NO. 00****

DATE

SARA LOVING ROBERTS STATE OF WASHINGTON 38538 PROFESSIONAL ENGINEER STRUCTURAL ENGINEER
08/23/2018 DATE

Washington State Department of Transportation
WASHINGTON STATE FERRIES

SR 525
MUKILTEO FERRY TERMINAL (PHASE 2)
FERRY TERMINAL CONSTRUCTION
BUILDING STRUCTURAL NOTES – TOLL PLAZA

SB00.52
SHEET 1094 OF 1521 SHEETS

BUILDING STRUCTURAL ABBREVIATIONS: TOLL PLAZA STRUCTURES

AB	ANCHOR BOLT
ADD'L	ADDITIONAL
ADJ	ADJUSTABLE
AFF	ABOVE FINISH FLOOR
AGG	AGGREGATE
ANCH	ANCHOR
ARCH	ARCHITECTURAL
AESS	ARCHITECTURAL EXPOSED STRUCTURAL STEEL
B/	BOTTOM OF
BLDG	BUILDING
BF	BRACED FRAME
BLKG	BLOCKING
BM	BEAM
BN	BOUNDARY NAILING
BOT	BOTTOM
BRG	BEARING
BSMT	BASEMENT
BTWN	BETWEEN
BUR	BUILT-UP ROOF
C	CAMBER
CAP	CAPACITY
CC	CENTER TO CENTER
CFS	COLD-FORMED STEEL
CIP	CAST IN PLACE
CJ	CONSTRUCTION OR CONTROL JOINT
CL	CENTERLINE
CLG	CEILING
CLR	CLEAR
CLT	CROSS LAMINATED TIMBER
CMU	CONCRETE MASONRY UNIT
COL	COLUMN
CONC	CONCRETE
CONN	CONNECTION
CONST	CONSTRUCTION
CONT	CONTINUOUS
CONTR	CONTRACTOR
COORD	COORDINATE
CP	COMPLETE PENETRATION
CTR	CENTER
CY	CUBIC YARD
DB	DIVIDER BEAM
DBA	DEFORMED BAR ANCHOR
DBL	DOUBLE
DEMO	DEMOLISH
DET	DETAIL
DF	DOUGLAS FIR
DIA	DIAMETER
DIAG	DIAGONAL
DKG	DECKING
DN	DOWN
DO	DITTO
DWF	DEFORMED WIRE FABRIC
DWG	DRAWING
DWL	DOWEL
EA	EACH
EF	EACH FACE
EL	ELEVATION
ELECT	ELECTRICAL
ELEV	ELEVATOR
EN	EDGE NAILING
EQ	EQUAL
EQUIP	EQUIPMENT
ES	EACH SIDE
EW	EACH WAY
EX	EXISTING
EXP	EXPANSION
EXT	EXTERIOR
FD	FLOOR DRAIN
FDN	FOUNDATION
FF	FINISH FLOOR
FIN	FINISH
FLG	FLANGE
FLR	FLOOR
FOB	FACE OF BUILDING
FS	FAR SIDE
FT	FEET
FTG	FOOTING
GA	GAUGE
GALV	GALVANIZED
GEN	GENERAL
GL	GLUE LAMINATED BEAM
GOVT	GOVERNMENT
GR	GRADE
GWB	GYPSUM WALL BOARD
HF	HEM-FIR
HGR	HANGER
HK	HOOK
HORIZ	HORIZONTAL
HP	HIGH POINT
HSS	HOLLOW STRUCTURAL SECTION
IBC	INTERNATIONAL BUILDING CODE
ID	INSIDE DIAMETER
IE	INVERT ELEVATION
IF	INSIDE FACE
IN	INCH
INFO	INFORMATION
INT	INTERIOR
JST	JOIST
JT	JOINT
K	KIP (1,000 LBS.)
KSF	KIPS PER SQUARE FOOT
L2	LEVEL 2
LF	LINEAL FOOT
LLH	LONG LEG HORIZONTAL
LLV	LONG LEG VERTICAL
LP	LOW POINT
LSH	LONG SIDE HORIZONTAL
LSV	LONG SIDE VERTICAL
LVL	LAMINATED VENEER LUMBER
MAX	MAXIMUM
MECH	MECHANICAL
MFR	MANUFACTURER
MID	MIDDLE
MIN	MINIMUM
MISC	MISCELLANEOUS
MOM	MOMENT
NIC	NOT IN CONTRACT
NOM	NOMINAL
NO	NUMBER
NS	NEAR SIDE
NS	NONSHRINK
NTS	NOT TO SCALE
OC	ON CENTER
OD	OUTSIDE DIAMETER
OF	OUTSIDE FACE
OPNG	OPENING
OPP	OPPOSITE
P	POST
PC	PIECE
PEN	PENETRATION
PL	PLATE
PL	PROPERTY LINE
PLWD	PLYWOOD
PNL	PANEL
PP	PARTIAL PENETRATION
PSI	POUNDS PER SQUARE INCH
PSF	POUNDS PER SQUARE FOOT
PT	POINT
R	RADIUS
RD	ROOF DRAIN
REINF	REINFORCING
REM	REMAIN(DER)
REQ'D	REQUIRED
RND	ROUND
RO	ROUGH OPENING
RTN	RETURN
SC	SLIP CRITICAL
SCHED	SCHEDULE
SDC	SEISMIC DESIGN CATEGORY
SECT	SECTION
SHT	SHEET
SIM	SIMILAR
SOG	SLAB-ON-GRADE
SP	SPACE
SPEC	SPECIFICATION
SQ	SQUARE
SS	STAINLESS STEEL
ST	SUSTAINED TENSION ANCHOR
STD	STANDARD
STIFF	STIFFENER
STIRR	STIRRUP
STL	STEEL
STRUCT	STRUCTURAL
SUPP	SUPPORT
SYM	SYMMETRICAL
T/	TOP OF
T&B	TOP AND BOTTOM
T&G	TONGUE AND GROOVE
THK	THICK(NESS)
THRU	THROUGH
TRANS	TRANSVERSE
TYP	TYPICAL
UNO	UNLESS NOTED OTHERWISE
VERT	VERTICAL
W/	WITH
WD	WOOD
WHS	WELDED HEADED STUD
WL	WATER LINE
W/O	WITHOUT
WP	WORK POINT
WWF	WELDED WIRE FABRIC

DRAWING LIST: TOLL PLAZA STRUCTURES

SB00.51	BUILDING STRUCTURAL NOTES – TOLL PLAZA
SB00.52	BUILDING STRUCTURAL NOTES – TOLL PLAZA
SB00.53	BUILDING STRUC NOTES, ABBREV'S, AND DWG LIST – TOLL PLAZA
SB00.54	BUILDING STRUCTURAL SYMBOLS – TOLL PLAZA
SB00.55	STATEMENT OF STRUCTURAL SPECIAL INSPECTIONS – TOLL PLAZA
SB00.56	STATEMENT OF STRUCTURAL SPECIAL INSPECTIONS – TOLL PLAZA
SB00.57	STATEMENT OF STRUCTURAL SPECIAL INSPECTIONS – TOLL PLAZA
SB00.58	STATEMENT OF STRUCTURAL SPECIAL INSPECTIONS – TOLL PLAZA
SB00.59	LOAD MAPS (TOLL PLAZA)
SB02.50	TOLL PLAZA – OVERALL PLANS
SB02.51	TOLL PLAZA – LEVEL 1 – SECTOR F PLAN
SB02.52	TOLL PLAZA – LEVEL 1 – SECTOR G PLAN
SB02.53	TOLL PLAZA – INTERMEDIATE ROOF – SECTOR F PLAN
SB02.54	TOLL PLAZA – INTERMEDIATE ROOF – SECTOR G PLAN
SB02.55	TOLL PLAZA – ROOF – SECTOR F PLAN
SB02.56	TOLL PLAZA – ROOF – SECTOR G PLAN
SB04.50	SHEAR WALL ELEVATIONS – TOLL PLAZA
SB04.51	WALL ELEVATIONS – TOLL PLAZA
SB05.00	TYPICAL CONCRETE DETAILS
SB05.01	TYPICAL CONCRETE DETAILS
SB05.50	CONCRETE DETAILS – TOLL PLAZA
SB05.51	CONCRETE DETAILS – TOLL PLAZA
SB05.52	CONCRETE DETAILS – TOLL PLAZA
SB05.53	CONCRETE DETAILS – TOLL PLAZA
SB06.04	TYPICAL STEEL DETAILS
SB06.05	TYPICAL STEEL DETAILS
SB06.06	TYPICAL STEEL DETAILS
SB06.07	TYPICAL STEEL DETAILS
SB06.08	TYPICAL STEEL DETAILS
SB06.50	STEEL DETAILS – TOLL PLAZA
SB06.51	STEEL DETAILS – TOLL PLAZA
SB07.50	WOOD DETAILS – TOLL PLAZA
SB07.51	WOOD DETAILS – TOLL PLAZA
SB07.52	WOOD DETAILS – TOLL PLAZA
SB08.00	TYPICAL CFS DETAILS
SB08.01	CFS DETAILS
SB08.50	CFS DETAILS – TOLL PLAZA

kpff

File: U:\114000-114350\114177 (Mukilteo Ferry Terminal)\01 General Notes\14W121SB00_53.dwg
Plotted: 9/21/18 at 2:37pm By: DianeL

FILE NAME:	14W121SB00_53.dwg					
PRINTED:	2:37:56 PM 9/21/2018	LAST PRINTED BY:				FED.AID PROJ.NO.
SUBMITTAL DATE:	08/23/2018	3yronR				
DESIGNED BY:	A. RADKE	08/23/2018				WA-2017-007-00
ENTERED BY:	B. RONIA	08/23/2018				REGION NO. / STATE
CHECKED BY:	A. EWING	08/23/2018				10 / WASH
MAR PROJ ENGR	C. TORRES					JOB NUMBER 18W121
DIR TERM ENGR:	N. MCINTOSH					CONTRACT NO.
ASST SECRETARY:	A. SCARTON		REVISION	DATE	BY	00****

DATE

DANA LOVING ROBERTS — STATE OF WASHINGTON — 38538 — STRUCTURAL ENGINEER — PROFESSIONAL ENGINEER
08/23/2018
DATE

Washington State Department of Transportation
WASHINGTON STATE FERRIES

SR 525
MUKILTEO FERRY TERMINAL (PHASE 2)
FERRY TERMINAL CONSTRUCTION

BUILDING STRUCTURAL NOTES, ABBREVS, AND DWG LIST – TOLL PLAZA

SB00.53

SHEET 1095 OF 1521 SHEETS

GENERAL SYMBOLS: TOLL PLAZA STRUCTURES

10	GRID BUBBLE
	SURFACE – SLOPE UP
	SURFACE – STEPPED
	SURFACE – SLOPE DOWN
	SURFACE – SLOPE TWO WAYS
	UNDISTURBED SOIL, COMPACTED SOIL, BACKFILL, OR ANY PREPARED SUBGRADE. SEE SPECIFICATIONS FOR TYPE OF MATERIAL AND PREPARATION METHOD
	NORTH ARROW
1 SB05.03	STANDARD SECTION CUT
4 SB04.02	ELEVATION OF WALL OR FRAME
1 SB05.03	DETAIL CALLOUT AND BUBBLE

100'–0"	SPOT ELEVATION: TOP OF PLYWOOD TOP OF CONCRETE TOP OF STEEL
100'–0"	TOP OF CONCRETE ELEVATION
100'–0"	TOP OF STEEL ELEVATION
100'–0"	REFERENCE ELEVATION. REFER TO PLAN UNLESS NOTED OTHERWISE.
100'–0"	ELEVATION OF LEVEL
WP	WORKPOINT
	DIRECTION OF DOWNWARD SLOPE
	DIRECTION OF SPAN

WOOD AND COLD–FORMED STEEL SYMBOLS: TOLL PLAZA STRUCTURES

	GLULAM SECTION
	SOLID WOOD SECTION
	SOLID WOOD BLOCKING SECTION
	PLYWOOD SECTION
	BEAM, GIRDER, OR JOIST
	WALL ABOVE THIS LEVEL WITH HEADER BELOW
	WALL BELOW THIS LEVEL WITH HEADER BELOW
	WALL ABOVE THIS LEVEL
	WALL BELOW THIS LEVEL
SW–X	SHEAR WALL ABOVE. SEE SHEAR WALL SHEATHING AND NAILING SCHEDULE

STEEL SYMBOLS: TOLL PLAZA STRUCTURES

	STEEL COLUMN ABOVE OR PASSING THRU LEVEL
	STEEL COLUMN BELOW
	STEEL IN CROSS SECTION
	STEEL EMBED CONN

CONCRETE SYMBOLS: TOLL PLAZA STRUCTURES

	CONCRETE COLUMN ABOVE OR PASSING THRU LEVEL
	CONCRETE COLUMN BELOW
LOW SIDE	STEPPED FOOTING
	CONCRETE WALL ABOVE OR PASSING THRU THIS LEVEL
	CONCRETE WALL BELOW

kpff

FILE NAME:	14W121SB00_54.dwg					
PRINTED: 2:38:01 PM 9/21/2018		LAST PRINTED BY:				FED.AID PROJ.NO.
SUBMITTAL DATE:	08/23/2018	3yronR				
DESIGNED BY:	A. RADKE	08/23/2018				WA–2017–007–00
ENTERED BY:	B. RONIA	08/23/2018				REGION NO. / STATE
CHECKED BY:	A. EWING	08/23/2018				10 / WASH
MAR PROJ ENGR	C. TORRES					JOB NUMBER 18W121
DIR TERM ENGR:	N. MCINTOSH					CONTRACT NO.
ASST SECRETARY:	A. SCARTON		REVISION	DATE	BY	00****

DATE

DARA LOVING ROBERTS — STATE OF WASHINGTON — 38538 — PROFESSIONAL ENGINEER

08/23/2018
DATE

Washington State Department of Transportation
WASHINGTON STATE FERRIES

SR 525
MUKILTEO FERRY TERMINAL (PHASE 2)
FERRY TERMINAL CONSTRUCTION

BUILDING STRUCTURAL SYMBOLS – TOLL PLAZA

SB00.54

SHEET 1096 OF 1521 SHEETS

File: U:\114000-114350\114177 (Mukilteo Ferry Terminal)\01 General Notes\14W121SB00_54.dwg
Plotted: 9/21/18 at 2:38pm By: DianeL

STATEMENT OF STRUCTURAL SPECIAL INSPECTIONS AND TESTING: TOLL PLAZA STRUCTURES

TABLE 1 – REQUIRED GEOTECHNICAL SPECIAL INSPECTIONS

SYSTEM OR MATERIAL	INSPECTION				REMARKS
	IBC CODE REFERENCE	CODE OR STANDARD REFERENCE	FREQUENCY (NOTE 6)		
			CONTINUOUS	PERIODIC	
SOILS					
VERIFY MATERIALS BELOW SHALLOW FOUNDATIONS ARE ADEQUATE TO ACHIEVE THE DESIGN BEARING CAPACITY.	TB 1705.6 1705.6	GEOTECHNICAL REPORT		X	BY THE GEOTECHNICAL ENGINEER
VERIFY EXCAVATIONS ARE EXTENDED TO PROPER DEPTH AND HAVE REACHED PROPER MATERIAL.				X	
PERFORM CLASSIFICATION AND TESTING OF COMPACTED FILL MATERIALS.				X	
VERIFY USE OF PROPER MATERIALS, DENSITIES AND LIFT THICKNESSES DURING PLACEMENT AND COMPACTION OF COMPACTED FILL.			X		
PRIOR TO PLACEMENT OF COMPACTED FILL, INSPECT SUBGRADE AND VERIFY THAT SITE HAS BEEN PREPARED PROPERLY.				X	

TABLE 2 – REQUIRED STRUCTURAL SPECIAL INSPECTIONS

SYSTEM OR MATERIAL	INSPECTION				REMARKS
	IBC CODE REFERENCE	CODE OR STANDARD REFERENCE	FREQUENCY (NOTE 6)		
			CONTINUOUS	PERIODIC	
FABRICATION					
INSPECTION IN FABRICATION SHOP	1704.2.5				WHERE FABRICATION OF STRUCTURAL, LOAD–BEARING OR LATERAL LOAD–RESISTING MEMBERS OR ASSEMBLIES IS BEING PERFORMED ON THE PREMISES OF A FABRICATOR'S SHOP, SPECIAL INSPECTION OF THE FABRICATED ITEMS SHALL BE AS REQUIRED BY TABLE 2 AND AS REQUIRED ELSEWHERE IN THE STATEMENT OF SPECIAL INSPECTIONS. REFERENCE SECTION 1704.2.5.1 FOR APPROVED FABRICATOR EXCEPTION.
CONCRETE					
INSPECT REINFORCEMENT, INCLUDING EMBEDMENTS AND VERIFY PLACEMENT.	TB 1705.3(1) 1705.3 1908.4	ACI 318: 20, 25.2–25.3, 26.6.1–26.6.3, 26.8, 26.13.3		X	TOLERANCE AND REINFORCING PLACEMENT PER ACI 318: 26.6
INSPECTION OF REINFORCING STEEL WELDING	TB 1705.3(2) 1705.3.1	ACI 318: 26.6.4 AWS D1.4: 7			EXCEPT AS NOTED OTHERWISE
MATERIAL VERIFICATION OF WELD FILLER METALS	1705.3.1			X	MANUFACTURER'S CERTIFIED TEST REPORTS
VERIFYING USE OF PROPER WELDING PROCEDURE SPECIFICATIONS				X	COPY OF WELDING PROCEDURE SPECIFICATIONS
VERIFYING WELDER QUALIFICATIONS				X	COPY OF QUALIFICATION CARDS
VERIFY WELDABILITY OF REINFORCING STEEL OTHER THAN ASTM A 706.	TB 1705.3 (2.a)	AWS D1.4 ACI 318: 26.6.4		X	CERTIFIED MILL TEST REPORTS
INSPECT SINGLE PASS FILLET WELDS, MAXIMUM 5/16"	TB 1705.3 (2.b)			X	
INSPECT ALL OTHER WELDS	TB 1705.3 (2.c)		X		ALL WELDS VISUALLY INSPECTED PER AWS D1.4: 7.5
INSPECT ANCHORS CAST IN CONCRETE	WAC 51–50–1705	ACI 318 17.8.2		X	ALL ANCHORS SHALL BE VISUALLY INSPECTED

TABLE 2 – REQUIRED STRUCTURAL SPECIAL INSPECTIONS (CONT)

SYSTEM OR MATERIAL	INSPECTION				REMARKS
	IBC CODE REFERENCE	CODE OR STANDARD REFERENCE	FREQUENCY (NOTE 6)		
			CONTINUOUS	PERIODIC	
CONCRETE CONTINUED					
INSPECT ANCHORS POST–INSTALLED IN HARDENED CONCRETE MEMBERS:					
ADHESIVE ANCHORS INSTALLED IN HORIZONTALLY OR UPWARDLY INCLINED ORIENTATIONS TO RESIST SUSTAINED TENSION LOADS.	WAC 51–50–1705	ACI 355.4 ICC/IAPMO EVALUATION REPORT ACI 318: 17.8.2.4, 26.13.3	X		REFER TO ANCHOR CALLOUTS FOR SUSTAINED TENSION (ST) DESIGNATION
MECHANICAL ANCHORS AND ADHESIVE ANCHORS NOT DEFINED ABOVE.	WAC 51–50–1705	ACI 355.4 ICC/IAPMO EVALUATION REPORT ACI 318: 17.2, 26.13.3		X (NOTE 7)	ALL ANCHORS SHALL BE VISUALLY INSPECTED
VERIFY USE OF REQUIRED DESIGN MIX.	TB 1705.3(5) 1705.3 1904 1908.2 1908.3	ACI 318: 19, 26.4.3–26.4.4, 26.13.3		X	
PRIOR TO CONCRETE PLACEMENT, FABRICATE SPECIMENS FOR STRENGTH TESTS, PERFORM SLUMP AND AIR CONTENT TESTS, AND DETERMINE THE TEMPERATURE OF THE CONCRETE.	TB 1705.3(6) 1908.10	ASTM C 172 ASTM C 31 ACI 318: 26.4, 26.12	X		
INSPECT CONCRETE AND SHOTCRETE PLACEMENT FOR PROPER APPLICATION TECHNIQUES.	TB 1705.3(7) 1705.3 1908.6–8	ACI 318: 26.5, 26.13.3	X		
VERIFY CURING METHOD AND DURATION OF CURING FOR EACH MEMBER.		ACI 318: 26.13.3.3(b)		X	
VERIFY MAINTENANCE OF SPECIFIED CURING TEMPERATURE AND TECHNIQUES.	TB 1705.3(8) 1705.3 1908.9	ACI 318: 26.5.3–26.5.5, 26.13.3		X	
INSPECT FORMWORK FOR SHAPE, LOCATION AND DIMENSIONS OF THE CONCRETE MEMBER BEING FORMED.	TB 1705.3(12) 1705.3	ACI 318: 26.11.1.2(b)		X	
INSPECT REINFORCING STEEL MECHANICAL COUPLERS, TERMINATORS AND FORM SAVERS		ICC/IAPMO EVALUATION REPORTS		X	VISUALLY INSPECT FOR CORRECT ASSEMBLY AND LOCATION
STEEL					
INSPECTION TASKS PRIOR TO WELDING:					
WELDING PROCEDURE SPECIFICATIONS (WPS) AVAILABLE	1705.2	AISC 360: TB N5.4–1 AISC 360: N5.4		X	
MANUFACTURER CERTIFICATIONS FOR WELDING CONSUMABLES AVAILABLE				X	
MATERIAL IDENTIFICATION (TYPE/GRADE)			X		
WELDER IDENTIFICATION SYSTEM			X		
FIT–UP OF GROOVE WELDS (INCLUDING JOINT GEOMETRY): JOINT PREPARATION, DIMENSIONS (ALIGNMENT, ROOT OPENING, ROOT FACE, BEVEL), CLEANLINESS (CONDITION OF STEEL SURFACES), TACKING (TACK WELD QUALITY AND LOCATION), BACKING TYPE AND FIT (IF APPLICABLE)			X		
CONFIGURATION AND FINISH OF ACCESS HOLES			X		
FIT–UP OF FILLET WELDS: DIMENSIONS (ALIGNMENT, GAPS AT ROOT), CLEANLINESS (CONDITION OF STEEL SURFACES), TACKING (TACK WELD QUALITY AND LOCATION), BACKING TYPE AND FIT (IF APPLICABLE)			X		
CHECK WELDING EQUIPMENT					FABRICATOR OR ERECTOR SHALL OBSERVE

kpff

FILE NAME:	14W121SB00_55.dwg					
PRINTED: 2:38:03 PM 9/21/2018	LAST PRINTED BY:					FED.AID PROJ.NO.
SUBMITTAL DATE: 08/23/2018	3yronR					WA–2017–007–00
DESIGNED BY: A. RADKE	08/23/2018					REGION NO. / STATE
ENTERED BY: B. RONIA	08/23/2018					10 / WASH
CHECKED BY: A. EWING	08/23/2018					JOB NUMBER
MAR PROJ ENGR C. TORRES						18W121
DIR TERM ENGR: N. MCINTOSH						CONTRACT NO.
ASST SECRETARY: A. SCARTON		REVISION	DATE	BY		00****

DATE

DANA LOVING ROBERTS STATE OF WASHINGTON 38538 PROFESSIONAL ENGINEER

08/23/2018
DATE

Washington State Department of Transportation
WASHINGTON STATE FERRIES

SR 525
MUKILTEO FERRY TERMINAL (PHASE 2)
FERRY TERMINAL CONSTRUCTION

STATEMENT OF STRUCTURAL SPECIAL INSPECTIONS – TOLL PLAZA

SB00.55

SHEET 1097 OF 1521 SHEETS

File: U:\114000-114350\114177 (Mukilteo Ferry Terminal)\01 General Notes\14W121SB00_55.dwg
Plotted: 9/21/18 at 2:38pm By: DianaL

STATEMENT OF STRUCTURAL SPECIAL INSPECTIONS AND TESTING: TOLL PLAZA STRUCTURES

TABLE 2 – REQUIRED STRUCTURAL SPECIAL INSPECTIONS (CONT)

SYSTEM OR MATERIAL	INSPECTION				REMARKS
	IBC CODE REFERENCE	CODE OR STANDARD REFERENCE	FREQUENCY (NOTE 6)		
			CONTINUOUS	PERIODIC	
STEEL CONTINUED					
INSPECTION TASKS DURING WELDING:					
USE OF QUALIFIED WELDERS	1705.2	AISC 360: TB N5.4–2 AISC 360: N5.4	X		
CONTROL AND HANDLING OF WELDING CONSUMABLES: PACKAGING, EXPOSURE CONTROL			X		
NO WELDING OVER CRACKED TACK WELDS			X		
ENVIRONMENTAL CONDITIONS: WIND SPEED WITHIN LIMITS, PRECIPITATION AND TEMPERATURE			X		
WPS FOLLOWED: SETTINGS ON WELDING EQUIPMENT, TRAVEL SPEED, SELECTED WELDING MATERIALS, SHIELDING GAS TYPE/FLOW RATE, PREHEAT APPLIED, INTERPASS TEMPERATURE MAINTAINED (MIN./MAX.), PROPER POSITION (F, V, H, OH)			X		
WELDING TECHNIQUES: INTERPASS AND FINAL CLEANING, EACH PASS WITHIN PROFILE LIMITATIONS, EACH PASS MEETS QUALITY REQUIREMENTS			X		
INSPECTION TASKS AFTER WELDING:					
WELDS CLEANED	1705.2	AISC 360: TB N5.4–3 AISC 360: N5.4	X		
SIZE, LENGTH AND LOCATION OF WELDS				X	
WELDS MEET VISUAL ACCEPTANCE CRITERIA: CRACK PROHIBITION, WELD/BASE–METAL FUSION, CRATER CROSS SECTION, WELD PROFILES, WELD SIZE, UNDERCUT, POROSITY				X	
ARC STRIKES				X	
K–AREA				X	
BACKING REMOVED AND WELD TABS REMOVED (IF REQUIRED)				X	
REPAIR ACTIVITIES				X	
DOCUMENT ACCEPTANCE OR REJECTION OF WELDED JOINT OR MEMBER				X	
INSPECTION TASKS PRIOR TO BOLTING:					
MANUFACTURER'S CERTIFICATIONS AVAILABLE FOR FASTENER MATERIALS	1705.2	AISC 360: TB N5.6–1 AISC 360: N5.6		X	
FASTENERS MARKED IN ACCORDANCE WITH ASTM REQUIREMENTS			X		
PROPER FASTENERS SELECTED FOR THE JOINT DETAIL (GRADE, TYPE, BOLT LENGTH IF THREADS ARE TO BE EXCLUDED FROM SHEAR PLANE)			X		
PROPER BOLTING PROCEDURE FOR JOINT DETAIL			X		
CONNECTING ELEMENTS, INCLUDING THE APPROPRIATE FAYING SURFACE CONDITION AND HOLE PREPARATION, IF SPECIFIED, MEET APPLICABLE REQUIREMENTS			X		
PRE–INSTALLATION VERIFICATION TESTING BY INSTALLATION PERSONNEL OBSERVED AND DOCUMENTED FOR FASTENER ASSEMBLIES AND METHODS USED			X		
PROPER STORAGE PROVIDED FOR BOLTS, NUTS, WASHERS AND OTHER FASTENER COMPONENTS			X		

TABLE 2 – REQUIRED STRUCTURAL SPECIAL INSPECTIONS (CONT)

SYSTEM OR MATERIAL	INSPECTION				REMARKS
	IBC CODE REFERENCE	CODE OR STANDARD REFERENCE	FREQUENCY (NOTE 6)		
			CONTINUOUS	PERIODIC	
STEEL CONTINUED					
INSPECTION TASKS DURING BOLTING:					
FASTENER ASSEMBLIES, OF SUITABLE CONDITION, PLACED IN ALL HOLES AND WASHERS (IF REQUIRED) ARE POSITIONED AS REQUIRED	1705.2	AISC 360: TB N5.6–2 AISC 360: N5.6	X		
JOINT BROUGHT TO SNUG–TIGHT CONDITION PRIOR TO THE PRETENSIONING OPERATION			X		
FASTENER COMPONENT NOT TURNED BY THE WRENCH PREVENTED FROM ROTATING			X		
FASTENERS ARE PRETENSIONED IN ACCORDANCE WITH THE RCSC SPECIFICATION, PROGRESSING SYSTEMATICALLY FROM THE MOST RIGID POINT TOWARD THE FREE EDGES			X		
INSPECTION TASKS AFTER BOLTING:					
DOCUMENT ACCEPTANCE OR REJECTION OF BOLTED CONNECTIONS	1705.2	AISC 360: TB N5.6–3		X	
COLD–FORMED STEEL FRAMING					
MATERIAL VERIFICATION OF WELDING CONSUMABLES		AISI S100: APP. A E2a		X	MANUFACTURER'S CERTIFIED TEST REPORTS
VERIFYING USE OF PROPER WPS				X	COPY OF WELDING PROCEDURE SPECIFICATIONS
VERIFYING WELDER QUALIFICATIONS				X	COPY OF QUALIFICATION CARDS
WELDED FRAMING CONNECTIONS		AWS D1.3: 6		X	ALL WELDS VISUALLY INSPECTED PER AWS D1.3: 6.1

TABLE 2A – REQUIRED STRUCTURAL SPECIAL INSPECTIONS FOR SEISMIC RESISTANCE

SYSTEM OR MATERIAL	INSPECTION				REMARKS
	IBC CODE REFERENCE	CODE OR STANDARD REFERENCE	FREQUENCY (NOTE 6)		
			CONTINUOUS	PERIODIC	
GENERAL					
SEISMIC FORCE–RESISTING SYSTEMS (SFRS) IN STRUCTURES ASSIGNED TO SEISMIC DESIGN CATEGORY C, D, E OR F	1704.3.2 1705.12		X		REFERENCE GENERAL STRUCTURAL NOTES FOR OUTLINE OF SFRS SYSTEM. REFERENCE TABLE 2A FOR MATERIAL SPECIFIC INSPECTION REQUIREMENTS.
DESIGNATED SEISMIC SYSTEMS (SECONDARY) IN STRUCTURES ASSIGNED TO SEISMIC DESIGN CATEGORY C, D, E OR F			X		REFERENCE TABLE N1 AND N2 FOR INSPECTION REQUIREMENTS.
CONCRETE					
MATERIAL VERIFICATION OF REINFORCING STEEL USED IN MOMENT RESISTING FRAMES AND SHEAR WALL BOUNDARY ELEMENTS	1704.5(7) 1705.12			X	CERTIFIED MILL TEST REPORTS
WOOD					
CONNECTIONS FOR DRAG STRUTS, BRACING, AND SHEAR WALL ANCHORAGE AND HOLD–DOWNS	1705.12.2			X	ALL CONNECTIONS VISUALLY INSPECTED

kpff

FILE NAME:	14W121SB00_56.dwg				
PRINTED:	2:38:06 PM 9/21/2018	LAST PRINTED BY:			FED.AID PROJ.NO.
SUBMITTAL DATE:	08/23/2018	3yronR			
DESIGNED BY:	A. RADKE	08/23/2018			WA–2017–007–00
ENTERED BY:	B. RONIA	08/23/2018			REGION NO. 10 / STATE WASH
CHECKED BY:	A. EWING	08/23/2018			JOB NUMBER 18W121
MAR PROJ ENGR	C. TORRES				
DIR TERM ENGR:	N. MCINTOSH				CONTRACT NO. 00****
ASST SECRETARY:	A. SCARTON	REVISION	DATE	BY	

DATE

DARA LOVING ROBERTS — STATE OF WASHINGTON — 38538 — PROFESSIONAL ENGINEER

08/23/2018
DATE

Washington State Department of Transportation
WASHINGTON STATE FERRIES

SR 525
MUKILTEO FERRY TERMINAL (PHASE 2)
FERRY TERMINAL CONSTRUCTION

STATEMENT OF STRUCTURAL SPECIAL INSPECTIONS – TOLL PLAZA

SB00.56

SHEET 1098 OF 1521 SHEETS

File: U:\114000–114350\114177 (Mukilteo Ferry Terminal)\01 General Notes\14W121SB00_56.dwg
Plotted: 9/21/18 at 2:38pm By: DianeL

STATEMENT OF STRUCTURAL SPECIAL INSPECTIONS AND TESTING: TOLL PLAZA STRUCTURES

TABLE 2B – REQUIRED STRUCTURAL SPECIAL INSPECTIONS FOR WIND RESISTANCE

SYSTEM OR MATERIAL	INSPECTION				REMARKS
	IBC CODE REFERENCE	CODE OR STANDARD REFERENCE	FREQUENCY (NOTE 6)		
			CONTINUOUS	PERIODIC	
GENERAL					
INSPECT FASTENING OF ROOF DECK, ROOF FRAMING CONNECTIONS, WALL CONNECTIONS TO ROOF AND FLOOR DIAPHRAGMS AND FRAMING.	1705.11.3			X	
WOOD					
CONNECTIONS FOR DRAG STRUTS, BRACING, AND SHEAR WALL ANCHORAGE AND HOLD–DOWNS	1705.11.1			X	ALL CONNECTIONS VISUALLY INSPECTED

TABLE 3 – REQUIRED STRUCTURAL TESTING

SYSTEM OR MATERIAL	INSPECTION				REMARKS
	IBC CODE REFERENCE	CODE OR STANDARD REFERENCE	FREQUENCY		
			CONTINUOUS	PERIODIC	
GEOTECHNICAL					
FILL IN–PLACE DENSITY OR PREPARED SUBGRADE DENSITY	1705.6	VARIES; MINIMUM PER IBC APPENDIX J107.5		X	BY THE GEOTECHNICAL ENGINEER
MATERIAL VERIFICATION		VARIES; CLASSIFICATION AND TESTING OF CONTROLLED FILL MATERIALS		X	BY THE GEOTECHNICAL ENGINEER
CONCRETE					
COMPOSITE SAMPLES	1903 1705.3	ASTM C 172 ACI 318: 26.12	ONE SAMPLE FOR EA 150 CY NOR LESS THAN 5,000 SQ FT OF SLABS AND WALLS, ONE SET PER DAY MIN		OBTAIN WHEN FRESH CONCRETE IS PLACED FOR EACH MIX DESIGN USED
CONCRETE STRENGTH, UNO		ASTM C 39 ACI 318: 26.12	EACH SAMPLE: 1 CYL – 7 DAYS 3 CYL – TEST AGE 1 CYL – HOLD		(NOTE 9) REFER TO GENERAL NOTES FOR TEST AGE. FOR 6 BY 12–INCH CYLINDERS, 2 CYLINDERS AT TEST AGE IS PERMITTED. CYL = CYLINDER
CONCRETE SLUMP		ASTM C 143	ONE TEST PER COMPOSITE SAMPLE		AT POINT OF PLACEMENT
CONCRETE AIR CONTENT		ASTM C 231	ONE TEST PER COMPOSITE SAMPLE		MIN ONE PER DAY
CONCRETE TEMPERATURE		ASTM C 1064	ONE TEST PER COMPOSITE SAMPLE		ONE TEST PER HOUR WHEN AIR TEMP IS BELOW 40 DEG F OR ABOVE 80 DEG F

TABLE 3 – REQUIRED STRUCTURAL TESTING (CONT)

SYSTEM OR MATERIAL	INSPECTION				REMARKS
	IBC CODE REFERENCE	CODE OR STANDARD REFERENCE	FREQUENCY		
			CONTINUOUS	PERIODIC	
STEEL					
RADIOGRAPHIC (RT) MAGNETIC PARTICLE (MT) AND ULTRASONIC (UT) TESTING OF WELDS	AISC 360 N5.5	RT– AWS D1.1: 6.16 MT– AWS D1.1: 6.14.4 UT– AWS D1.1: 6.13 & 6.14.3	PER DRAWINGS		ALL CJP WELDS IN MATERIALS 5/16" OR GREATER REQUIRE UT TESTING
PRE–CONSTRUCTION TESTING OF WELDED STUDS	1705.2.2	AWS D1.1: 7.7.1	EACH SIZE AND TYPE OF STUD EACH SHIFT		
PRE–INSTALLATION VERIFICATION OF PRETENSIONED HIGH STRENGTH BOLTS	1705.2.1 AISC 360: TB N5.6–1	RCSC SPECIFICATION FOR STRUCTURAL JOINTS USING HIGH–STRENGTH BOLTS, SECTION 7	EACH COMBINATION OF DIAMETER, LENGTH, GRADE, AND LOT TO BE USED IN THE WORK		

TABLE 4 – REQUIRED STRUCTURAL TESTING FOR SEISMIC RESISTANCE

SYSTEM OR MATERIAL	INSPECTION			REMARKS
	IBC CODE REFERENCE	CODE OR STANDARD REFERENCE	FREQUENCY	
CONCRETE REINFORCEMENT				
TEST ASTM A 615 REINFORCEMENT IN SPECIAL MOMENT FRAMES, SPECIAL STRUCTURAL WALLS, AND COUPLING BEAMS AND WALL PIERS CONNECTING SPECIAL STRUCTURAL WALLS	1704.5(7) 1705.13	ACI 318: 20.2.2.5		NOT REQUIRED IN SEISMIC DESIGN CATEGORY A OR WHEN CERTIFIED MILL TEST REPORTS ARE PROVIDED. REFER TO DRAWINGS FOR LOCATIONS.
TEST ASTM A 615 REINFORCEMENT FOR WELDABILITY WHEN SUCH REINFORCEMENT IS TO BE WELDED	1704.5(6) 1705.13	ACI 318: 26.6.4		
STEEL				
MT OF K–AREA OF ROLLED WIDE FLANGE COLUMN WEBS ADJACENT TO DOUBLER/CONTINUITY PLATE WELDS	1705.13.1	AISC 341: J6.2a AWS D1.1: 6.14.4	EACH PLATE LOCATION	
MAGNETIC PARTICLE (MT) AND ULTRASONIC (UT) TESTING OF COMPLETE JOINT PENETRATION GROOVE (CJP) WELDS IN MATERIALS 5/16" THICK AND GREATER		AISC 341: J6.2b MT – AWS D1.1: 6.14.4 UT – AWS D1.1: 6.13 & 6.14.3	UT 100% OF WELDS MT 25% OF WELDS	REFER TO DRAWINGS FOR LOCATIONS
UT OF BASE METAL THICKER THAN 1–1/2" SUBJECT TO THROUGH–THICKNESS WELD SHRINKAGE STRAINS		AISC 341: J6.2c AWS D1.1: 6.13 & 6.14.3	BEHIND AND ADJACENT TO EACH WELD	
MT OF THE ENDS OF FLANGE WELDS FROM WHICH WELD TABS HAVE BEEN REMOVED		AISC 341: J6.2f AWS D1.1: 6.14.4	EACH LOCATION	

TABLE N2 – REQ'D NONSTRUCTURAL SPECIAL INSPECTIONS FOR SEISMIC RESISTANCE

SYSTEM OR MATERIAL	INSPECTION				REMARKS
	IBC CODE REFERENCE	CODE OR STANDARD REFERENCE	FREQUENCY		
			CONTINUOUS	PERIODIC	
ARCHITECTURAL					
INSTALLATION AND ANCHORAGE OF ACCESS FLOORS	1704.3.2 1705.12.5.1			X	REFERENCE ARCHITECTURAL FOR INFORMATION
INSTALLATION AND ANCHORAGE OF STORAGE RACKS	1704.3.2 1705.12.7	ASCE 7: 15.5.3		X	FOR RACKS OVER 8 FEET IN HEIGHT
INSTALLATION OF OTHER SEISMIC SUPPORTS FOR DESIGNATED ARCHITECTURAL SYSTEMS AND THEIR COMPONENTS	1704.3.2 1705.12.5			X	REFERENCE ARCHITECTURAL FOR INFORMATION

kpff

File: U:\114000–114350\114177 (Mukilteo Ferry Terminal)\01 General Notes\14W121SB00_57.dwg
Plotted: 9/21/18 at 2:38pm By: DianeL

FILE NAME:	14W121SB00_57.dwg					
PRINTED:	2:38:09 PM 9/21/2018	LAST PRINTED BY:				FED.AID PROJ.NO.
SUBMITTAL DATE:	08/23/2018	3yronR				
DESIGNED BY:	A. RADKE	08/23/2018				WA–2017–007–00
ENTERED BY:	B. RONIA	08/23/2018				REGION NO. / STATE
CHECKED BY:	A. EWING	08/23/2018				10 / WASH
MAR PROJ ENGR	C. TORRES					JOB NUMBER 18W121
DIR TERM ENGR:	N. MCINTOSH					CONTRACT NO. 00****
ASST SECRETARY:	A. SCARTON		REVISION	DATE	BY	

DATE

STATE OF WASHINGTON — SARA LOVING ROGERS — 38538 — STRUCTURAL ENGINEER — PROFESSIONAL ENGINEER

08/23/2018
DATE

Washington State Department of Transportation
WASHINGTON STATE FERRIES

SR 525
MUKILTEO FERRY TERMINAL (PHASE 2)
FERRY TERMINAL CONSTRUCTION

STATEMENT OF STRUCTURAL SPECIAL INSPECTIONS – TOLL PLAZA

SB00.57

SHEET 1099 OF 1521 SHEETS

STATEMENT OF STRUCTURAL SPECIAL INSPECTIONS AND TESTING: TOLL PLAZA STRUCTURES

TABLE N2 – REQUIRED NONSTRUCTURAL SPECIAL INSPECTIONS FOR SEISMIC RESISTANCE (CONT)

SYSTEM OR MATERIAL	INSPECTION				REMARKS
	IBC CODE REFERENCE	CODE OR STANDARD REFERENCE	FREQUENCY		
			CONTINUOUS	PERIODIC	
ELECTRICAL					
ANCHORAGE OF ELECTRICAL EQUIPMENT FOR EMERGENCY OR STANDBY POWER SYSTEMS	1704.3.2 1705.12.6			X	SEISMIC RESTRAINT OF ELECTRICAL COMPONENTS IS A CONTRACTOR RESPONSIBILITY AND IS LISTED HERE FOR INFORMATION ONLY. REFERENCE ELECTRICAL FOR FURTHER INFORMATION.
ANCHORAGE OF ALL ELECTRICAL EQUIPMENT IN SEISMIC DESIGN CATEGORY E OR F ONLY				X	
INSTALLATION OF VIBRATION ISOLATION SYSTEMS IN STRUCTURES ASSIGNED TO SEISMIC DESIGN CATEGORY C, D, E OR F WHERE THE CONSTRUCTION DOCUMENTS REQUIRE A NOMINAL CLEARANCE OF 0.25 INCHES OR LESS BETWEEN THE EQUIPMENT SUPPORT FRAME AND RESTRAINT	1705.12.6 1705.12.8			X	
INSTALLATION OF OTHER SEISMIC SUPPORTS FOR DESIGNATED ELECTRICAL SYSTEMS AND THEIR COMPONENTS	1705.12.6			X	
PROCESS MECHANICAL AND PLUMBING					
INSTALLATION AND ANCHORAGE OF PIPING SYSTEMS DESIGNED TO CARRY HAZARDOUS MATERIALS AND ASSOCIATED MECHANICAL UNITS	1704.3.2 1705.12.6			X	SEISMIC RESTRAINT OF PROCESS MECHANICAL COMPONENTS IS A CONTRACTOR RESPONSIBILITY AND IS LISTED HERE FOR INFORMATION ONLY. REFERENCE MECHANICAL FOR FURTHER INFORMATION.
INSTALLATION OF EQUIPMENT USING COMBUSTIBLE ENERGY SOURCES	1705.12.4			X	
INSTALLATION OF OTHER SEISMIC SUPPORTS FOR DESIGNATED MECHANICAL SYSTEMS AND THEIR COMPONENTS				X	
BUILDING MECHANICAL AND PLUMBING					
INSTALLATION AND ANCHORAGE OF HVAC DUCTWORK DESIGNED TO CARRY HAZARDOUS MATERIALS	1704.3.2 1705.12.6			X	SEISMIC RESTRAINT OF BUILDING MECHANICAL COMPONENTS IS A CONTRACTOR RESPONSIBILITY AND IS LISTED HERE FOR INFORMATION ONLY. REFERENCE MECHANICAL FOR FURTHER INFORMATION.
INSTALLATION OF FIRE PROTECTION SPRINKLER SYSTEM	1705.12			X	
INSTALLATION OF EQUIPMENT USING COMBUSTIBLE ENERGY SOURCES	1705.12.4			X	
INSTALLATION OF OTHER SEISMIC SUPPORTS FOR DESIGNATED MECHANICAL SYSTEMS AND THEIR COMPONENTS				X	
INSTALLATION OF VIBRATION ISOLATION SYSTEMS IN STRUCTURES ASSIGNED TO SEISMIC DESIGN CATEGORY C, D, E OR F WHERE THE CONSTRUCTION DOCUMENTS REQUIRE A NOMINAL CLEARANCE OF 0.25 INCHES OR LESS BETWEEN THE EQUIPMENT SUPPORT FRAME AND RESTRAINT	1705.12.6			X	

TABLE N4 – REQUIRED NONSTRUCTURAL TESTING FOR SEISMIC RESISTANCE

SYSTEM OR MATERIAL	INSPECTION				REMARKS
	IBC CODE REFERENCE	CODE OR STANDARD REFERENCE	FREQUENCY		
MECHANICAL AND ELECTRICAL					
COMPONENT TESTING INCLUDING MOUNTING SYSTEMS OR ANCHORAGE IF CERTIFICATES OF COMPLIANCE ARE NOT AVAILABLE	1705.13 1705.13.2 1705.13.3	ASCE 7: 13.2		X	SEISMIC RESTRAINT OF MECHANICAL AND ELECTRICAL COMPONENTS IS A CONTRACTOR RESPONSIBILITY AND IS LISTED HERE FOR INFORMATION ONLY. REFERENCE MECHANICAL AND ELECTRICAL FOR FURTHER INFORMATION.

STATEMENT OF SPECIAL INSPECTION AND TESTING NOTES:

1. SPECIAL INSPECTIONS SHALL CONFORM TO CHAPTER 17 OF THE INTERNATIONAL BUILDING CODE (IBC) AND THE REFERENCE CODES AND STANDARDS LISTED IN NOTE 2. REFER TO TABLES 1 AND 2 FOR SPECIAL INSPECTION AND TABLES 3 AND 4 FOR TESTING REQUIREMENTS.

2. REFERENCE CODES AND STANDARDS ARE AS FOLLOWS:

   IBC 2015
   ACI 318–14
   AWC SDPWS 2015
   AWS CURRENT EDITION
   ASTM CURRENT EDITION
   AISC 360–10
   341–10
   RCSC 2009

3. SPECIAL INSPECTIONS AND ASSOCIATED TESTING SHALL BE PERFORMED BY AN APPROVED QUALIFIED TESTING AND INSPECTING AGENCY MEETING THE REQUIREMENTS OF ASTM E 329 (MATERIALS), ASTM D 3740 (SOILS), ASTM C 1077 (CONCRETE), ASTM A 880 (STEEL), AND ASTM E 543 (NON–DESTRUCTIVE). THE TESTING AND INSPECTING AGENCY SHALL FURNISH TO THE STRUCTURAL ENGINEER AND OWNER A COPY OF THEIR SCOPE OF ACCREDITATION. SPECIAL INSPECTORS SHALL BE CERTIFIED BY THE BUILDING OFFICIAL. WELDING INSPECTORS SHALL BE QUALIFIED PER SECTION 6.1.4.1.1 OF AWS D1.1. AND WABO.

4. THE SPECIAL INSPECTOR SHALL OBSERVE THE INDICATED WORK FOR COMPLIANCE WITH THE APPROVED CONSTRUCTION DOCUMENTS. ALL DISCREPANCIES SHALL BE BROUGHT TO THE ATTENTION OF THE CONTRACTOR FOR CORRECTION AND NOTED IN THE INSPECTION REPORTS. ISSUES REQUIRING IMMEDIATE CORRECTIVE ACTIONS OR ENGINEERING INPUT ARE TO BE BROUGHT TO THE ENGINEER'S ATTENTION IMMEDIATELY UPON DISCOVERY.

5. THE SPECIAL INSPECTOR SHALL FURNISH INSPECTION REPORTS FOR EACH INSPECTION TO THE BUILDING OFFICIAL, STRUCTURAL ENGINEER, CONTRACTOR, AND OWNER. THE TESTING AND INSPECTING AGENCY SHALL SUBMIT A FINAL REPORT STATING THAT THE WORK REQUIRING SPECIAL INSPECTION WAS INSPECTED AND IS IN CONFORMANCE WITH THE APPROVED CONSTRUCTION DOCUMENTS AND THAT ALL DISCREPANCIES NOTED IN THE INSPECTION REPORTS HAVE BEEN CORRECTED.

6. CONTINUOUS SPECIAL INSPECTION: SPECIAL INSPECTION BY THE SPECIAL INSPECTOR WHO IS PRESENT WHEN AND WHERE THE WORK TO BE INSPECTED IS BEING PERFORMED. PERIODIC SPECIAL INSPECTION: SPECIAL INSPECTION BY THE SPECIAL INSPECTOR WHO IS INTERMITTENTLY PRESENT WHERE THE WORK TO BE INSPECTED HAS BEEN OR IS BEING PERFORMED.

7. WHERE PERIODIC INSPECTION IS ALLOWED IN ACCORDANCE WITH THE ANCHOR ICC/IAPMO EVALUATION REPORT, INSPECTIONS SHALL BE AS FOLLOWS:
   - FOR ALL ANCHORS, PRIOR TO CONCEALMENT, VERIFY: ANCHOR TYPE, ANCHOR DIMENSIONS, ANCHOR SPACING AND EDGE DISTANCE.
   - FOR EACH ANCHOR TYPE AND SIZE, INSPECTOR SHALL BE ONSITE TO CONTINUOUSLY INSPECT A MINIMUM OF THE FIRST 10 ANCHORS INSTALLED BY EACH INSTALLER FOR CONFORMANCE WITH ICC/IAPMO EVALUATION REPORT. PROVIDED ALL ANCHORS ARE INSTALLED CORRECTLY PER MANUFACTURER'S INSTRUCTIONS, PROVIDE PERIODIC INSPECTION ON A MINIMUM OF 10% OF THE NEXT 1000 ANCHORS BY EACH INSTALLER AND A MINIMUM OF 5% OF THE REMAINING ANCHORS BY EACH INSTALLER. INSPECTIONS SHALL OCCUR A MINIMUM OF ONCE PER WEEK AT A RANDOM TIME WHILE ANCHOR INSTALLATION IS ONGOING. ANY NON–COMPLIANCE ISSUES SHALL RESET THE INSPECTION REQUIREMENTS TO TEN (10) CONTINUOUS INSPECTIONS. NON–COMPLIANT ANCHORS SHALL BE BROUGHT TO THE ATTENTION OF THE ENGINEER OF RECORD FOR REVIEW AND SHALL BE BROUGHT INTO COMPLIANCE BY EITHER TESTING OR RE–INSTALLATION.
   - INSPECTION REPORTS SHALL IDENTIFY NAMES OF INSTALLERS.
   - SPECIAL INSPECTOR SHALL PROVIDE DOCUMENTATION AT THE END OF ANCHOR INSTALLATIONS STATING THAT THE MINIMUM NUMBER OF ANCHORS WERE INSPECTED.

8. OBSERVE: OBSERVE THESE ITEMS ON A RANDOM BASIS. OPERATIONS NEED NOT BE DELAYED PENDING THESE INSPECTIONS. PERFORM: PERFORM THESE TASKS FOR EACH ELEMENT.

9. INDICATED CONCRETE TESTING MEETS MINIMUM REQUIREMENTS FOR STRUCTURAL TESTING TO BE PROVIDED BY THE APPROVED QUALIFIED TESTING AND INSPECTING AGENCY. ADDITIONAL TESTING FOR CONSTRUCTION CONSIDERATIONS ARE NOT INDICATED AND SHALL BE DETERMINED BY THE CONTRACTOR AND PROVIDED AT CONTRACTOR'S EXPENSE.

CONTRACTOR RESPONSIBILITY:

FOR SEISMIC DESIGN CATEGORY C, D, E AND F STRUCTURES, THE CONTRACTOR IS RESPONSIBLE FOR THE CONSTRUCTION OF THE MAIN WIND OR SEISMIC FORCE–RESISTING SYSTEM, OR A WIND OR SEISMIC FORCE–RESISTING COMPONENT LISTED IN TABLES 2C, 3 AND 4. THE CONTRACTOR SHALL SUBMIT A WRITTEN STATEMENT OF RESPONSIBILITY TO THE BUILDING OFFICIAL AND THE OWNER PRIOR TO THE COMMENCEMENT OF WORK ON THE SYSTEM OR COMPONENT. THE CONTRACTOR'S STATEMENT OF RESPONSIBILITY SHALL CONTAIN THE FOLLOWING:

1. ACKNOWLEDGEMENT OF AWARENESS OF THE SPECIAL REQUIREMENTS CONTAINED IN THE STATEMENT OF SPECIAL INSPECTIONS.

2. ACKNOWLEDGEMENT THAT CONTROL WILL BE EXERCISED TO OBTAIN CONFORMANCE WITH THE CONSTRUCTION DOCUMENTS APPROVED BY THE BUILDING OFFICIAL.

3. PROCEDURES FOR EXERCISING CONTROL WITHIN THE CONTRACTOR'S ORGANIZATION, THE METHOD AND FREQUENCY OF REPORTING AND DISTRIBUTION OF THE REPORTS.

4. IDENTIFICATION AND QUALIFICATIONS OF THE PERSON(S) EXERCISING SUCH CONTROL AND THEIR POSITION(S) IN THE ORGANIZATION.

kpff

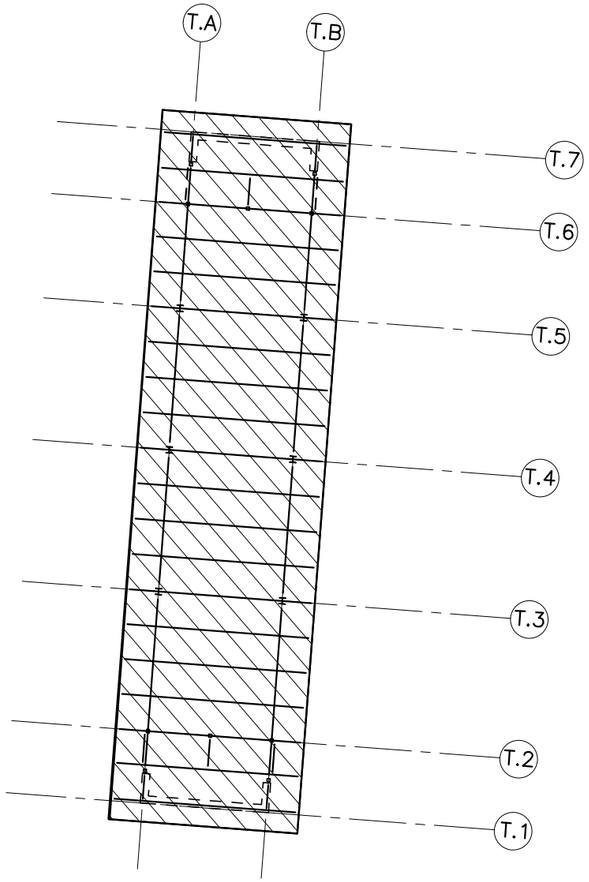

ROOF LIVE LOAD = 20 psf
SNOW LOAD = 25 psf
SUPERIMPOSED DEAD LOAD = 18 psf

TOLL PLAZA – ROOF LOAD MAP

kpff

FILE NAME:	14W121SB00_59.dwg					
PRINTED: 2:38:14 PM 9/21/2018		LAST PRINTED BY:				FED.AID PROJ.NO.
SUBMITTAL DATE:	08/23/2018	3yronR				WA-2017-007-00
DESIGNED BY:	A. RADKE	08/23/2018				REGION NO. / STATE
ENTERED BY:	B. RONIA	08/23/2018				10 / WASH
CHECKED BY:	A. EWING	08/23/2018				JOB NUMBER 18W121
MAR PROJ ENGR	C. TORRES					
DIR TERM ENGR:	N. MCINTOSH					CONTRACT NO.
ASST SECRETARY:	A. SCARTON		REVISION	DATE	BY	00****

DATE

08/23/2018
DATE

Washington State Department of Transportation
WASHINGTON STATE FERRIES

SR 525
MUKILTEO FERRY TERMINAL (PHASE 2)
FERRY TERMINAL CONSTRUCTION

LOAD MAPS
(TOLL PLAZA)

SB00.59

SHEET 1101 OF 1521 SHEETS

File: U:\114000-114350\114177 (Mukilteo Ferry Terminal)\01 General Notes\14W121SB00_59.dwg
Plotted: 9/21/18 at 2:38pm By: DianeL

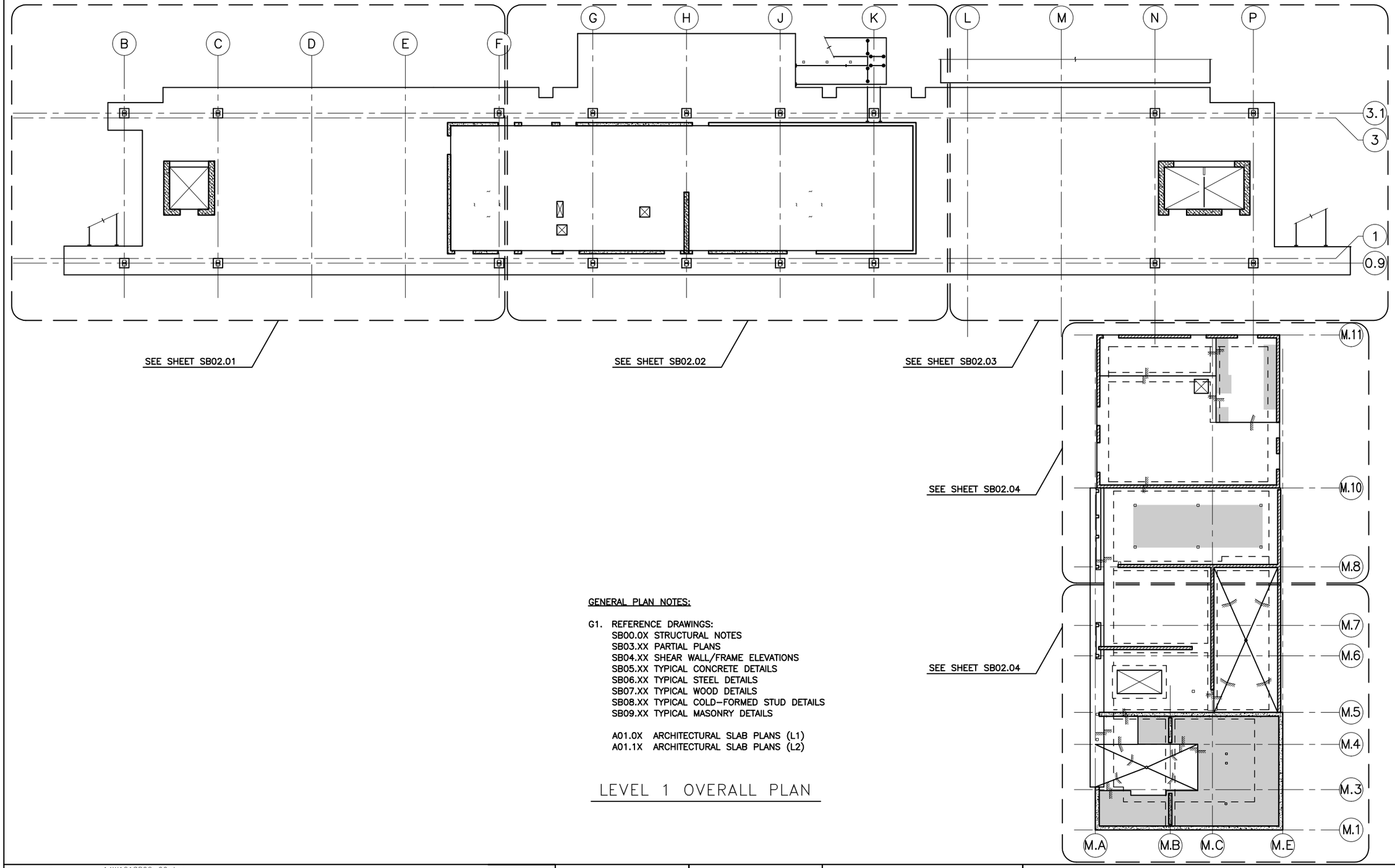

GENERAL PLAN NOTES:

G1. REFERENCE DRAWINGS:
SB00.0X STRUCTURAL NOTES
SB03.XX PARTIAL PLANS
SB04.XX SHEAR WALL/FRAME ELEVATIONS
SB05.XX TYPICAL CONCRETE DETAILS
SB06.XX TYPICAL STEEL DETAILS
SB07.XX TYPICAL WOOD DETAILS
SB08.XX TYPICAL COLD-FORMED STUD DETAILS
SB09.XX TYPICAL MASONRY DETAILS

A01.0X ARCHITECTURAL SLAB PLANS (L1)
A01.1X ARCHITECTURAL SLAB PLANS (L2)

LEVEL 1 OVERALL PLAN

kpff

FILE NAME:	14W121SB02_00.dwg					
PRINTED: 2:38:17 PM 9/21/2018		LAST PRINTED BY:				FED.AID PROJ.NO.
SUBMITTAL DATE:	08/23/2018	ByronR				WA-2017-007-00
DESIGNED BY:	A. RADKE	08/23/2018				REGION NO. / STATE
ENTERED BY:	B. RONIA	08/23/2018				10 / WASH
CHECKED BY:	A. EWING	08/23/2018				JOB NUMBER 18W121
MAR PROJ ENGR	C. TORRES					
DIR TERM ENGR:	N. MCINTOSH					CONTRACT NO.
ASST SECRETARY:	A. SCARTON		REVISION	DATE	BY	00****

DATE

DANA LOVING ROBERTS STATE OF WASHINGTON 38538 PROFESSIONAL ENGINEER

08/23/2018
DATE

Washington State Department of Transportation
WASHINGTON STATE FERRIES

SR 525
MUKILTEO FERRY TERMINAL (PHASE 2)
FERRY TERMINAL CONSTRUCTION

TERMINAL – LEVEL 1 – OVERALL PLAN

SB02.00

SHEET 1102 OF 1521 SHEETS

File: U:\114000-114350\114177 (Mukilteo Ferry Terminal)\02 Plans\14W121SB02_00.dwg
Plotted: 9/21/18 at 2:38pm By: DianeL

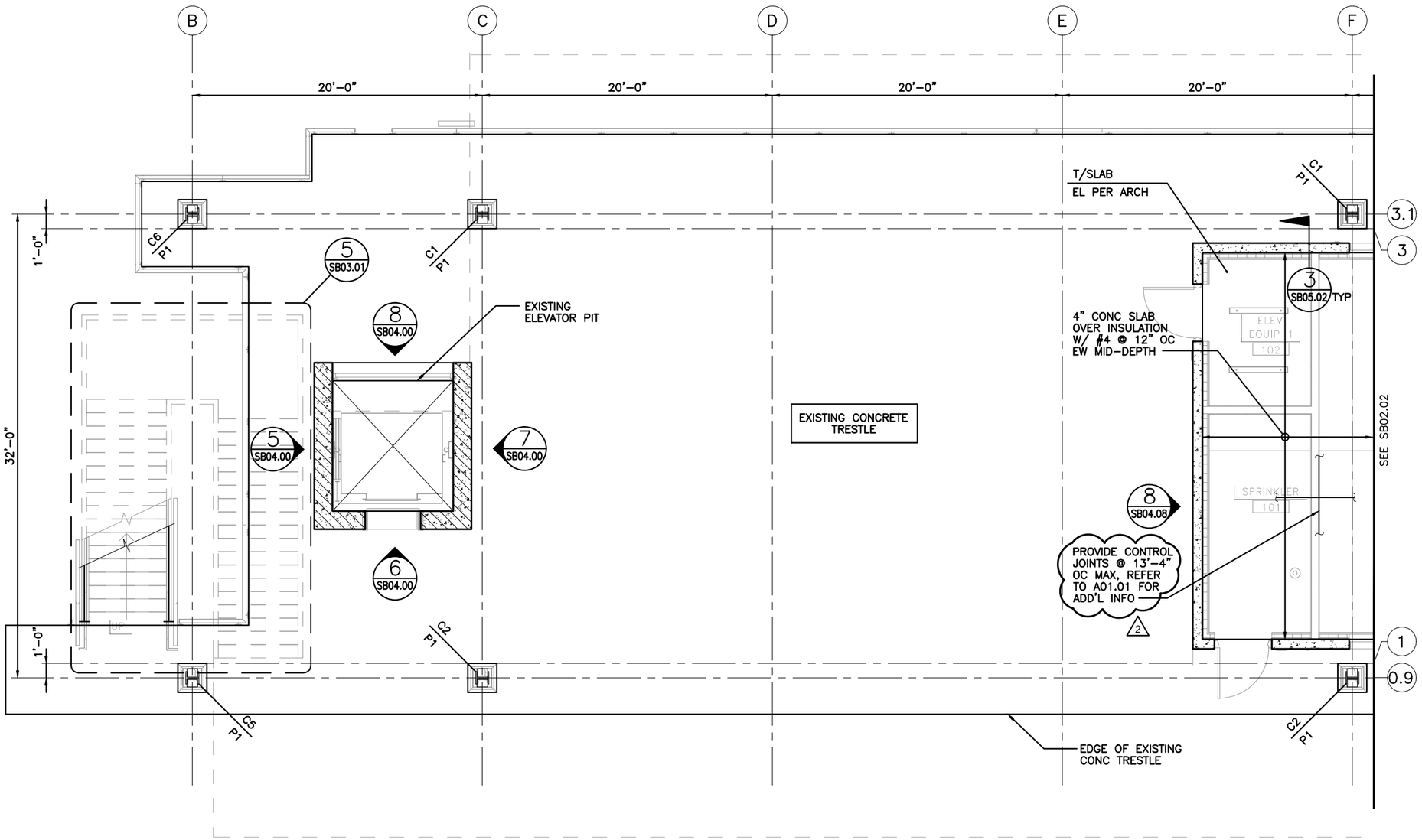

LEVEL 1 SECTOR A PLAN

GENERAL PLAN NOTES:

G1. REFERENCE DRAWINGS:
SB00.0X STRUCTURAL NOTES
SB03.XX PARTIAL PLANS
SB04.XX SHEAR WALL/FRAME ELEVATIONS
SB05.XX TYPICAL CONCRETE DETAILS
SB06.XX TYPICAL STEEL DETAILS
SB07.XX TYPICAL WOOD DETAILS
SB08.XX TYPICAL COLD-FORMED STUD DETAILS
SB09.XX TYPICAL MASONRY DETAILS

A01.0X ARCHITECTURAL SLAB PLANS (L1)
A01.1X ARCHITECTURAL SLAB PLANS (L2)

CONCRETE PLAN NOTES:

C1. TOP OF EXISTING CONCRETE ELEVATION = 20'-3"± (VERIFY IN FIELD)

C2. PX INDICATES CONCRETE PLINTH PER SB05.02.

C3. INDICATES SHEAR WALL REQUIRED FOR LATERAL FORCE RESISTING SYSTEM. WALLS ARE REQUIRED FOR FULL HEIGHT AS SHOWN.

STEEL PLAN NOTES:

S1. CX INDICATES STEEL AND WOOD COLUMN PER SB06.00.

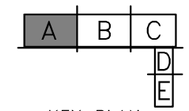

KEY PLAN

kpff

FILE NAME:	14W121SB02_01.dwg					
PRINTED:	2:50:09 PM 11/1/2018	LAST PRINTED BY:				FED.AID PROJ.NO.
SUBMITTAL DATE:	08/23/2018	ByronP				
DESIGNED BY:	A. RADKE	08/23/2018				WA-2017-007-00
ENTERED BY:	B. RONIA	08/23/2018				REGION NO. / STATE
CHECKED BY:	A. EWING	08/23/2018				10 / WASH
MAR PROJ ENGR	C. TORRES					JOB NUMBER
DIR TERM ENGR:	N. MCINTOSH		1 ADDENDUM NO. 2	11/01/18	AE	18W121
ASST SECRETARY:	A. SCARTON		REVISION	DATE	BY	CONTRACT NO. 00****

DATE

STEVEN LOVING ROBERTS
STATE OF WASHINGTON
38538
STRUCTURAL ENGINEER
PROFESSIONAL ENGINEER

11/01/2018
DATE

Washington State
Department of Transportation
WASHINGTON STATE FERRIES

SR 525
MUKILTEO FERRY TERMINAL (PHASE 2)
FERRY TERMINAL CONSTRUCTION

TERMINAL – LEVEL 1 – SECTOR A PLAN

SB02.01

SHEET 1103 OF 1521 SHEETS

File: U:\114000-114350\114177 (Mukilteo Ferry Terminal)\02 Plans\14W121SB02_01.dwg
Plotted: 11/1/18 at 2:50pm By: BrianE

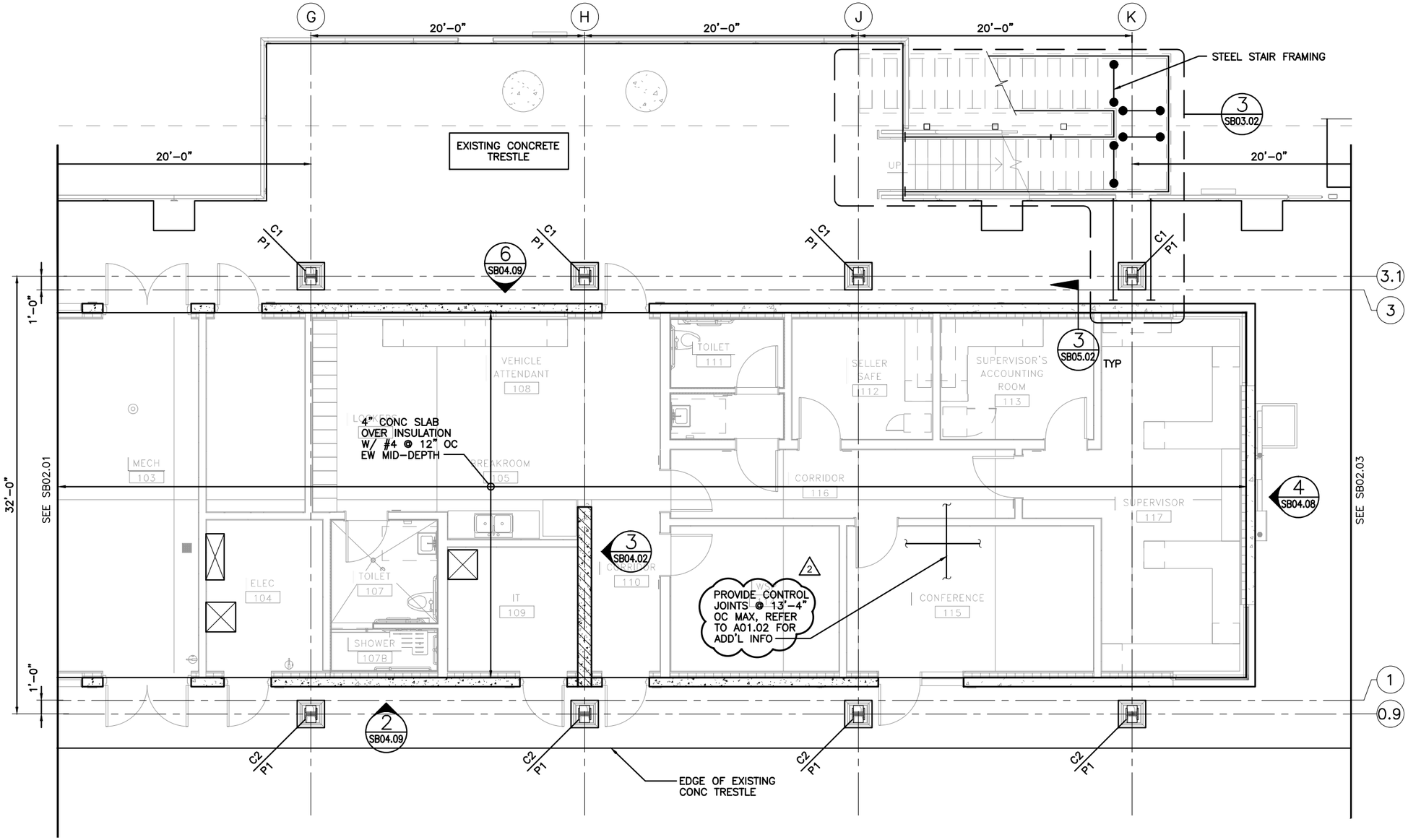

LEVEL 1 SECTOR B PLAN

GENERAL PLAN NOTES:

G1. REFERENCE DRAWINGS:
SB00.0X STRUCTURAL NOTES
SB03.XX PARTIAL PLANS
SB04.XX SHEAR WALL/FRAME ELEVATIONS
SB05.XX TYPICAL CONCRETE DETAILS
SB06.XX TYPICAL STEEL DETAILS
SB07.XX TYPICAL WOOD DETAILS
SB08.XX TYPICAL COLD-FORMED STUD DETAILS
SB09.XX TYPICAL MASONRY DETAILS

A01.0X ARCHITECTURAL SLAB PLANS (L1)
A01.1X ARCHITECTURAL SLAB PLANS (L2)

CONCRETE PLAN NOTES:

C1. TOP OF EXISTING CONCRETE ELEVATION = 20'-3"± (VERIFY IN FIELD)

C2. PX INDICATES CONCRETE PLINTH PER SB05.02.

C3. INDICATES SHEAR WALL REQUIRED FOR LATERAL FORCE RESISTING SYSTEM. WALLS ARE REQUIRED FOR FULL HEIGHT AS SHOWN.

STEEL PLAN NOTES:

S1. CX INDICATES STEEL AND WOOD COLUMN PER SB06.00.

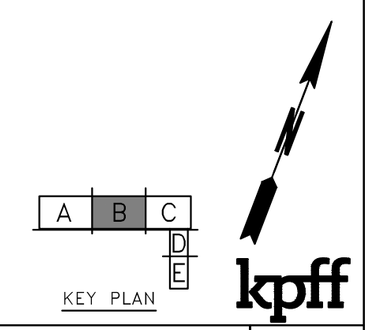

FILE NAME:	14W121SB02_02.dwg					
PRINTED: 2:50:14 PM 11/1/2018	LAST PRINTED BY:					FED.AID PROJ.NO.
SUBMITTAL DATE: 08/23/2018	ByronR					WA-2017-007-00
DESIGNED BY: A. RADKE	08/23/2018					REGION NO. / STATE
ENTERED BY: B. RONIA	08/23/2018					10 / WASH
CHECKED BY: A. EWING	08/23/2018					JOB NUMBER 18W121
MAR PROJ ENGR C. TORRES						
DIR TERM ENGR: N. MCINTOSH		1 ADDENDUM NO. 2	11/01/18	AE		CONTRACT NO.
ASST SECRETARY: A. SCARTON		REVISION	DATE	BY		00****

DATE

DENNIS LOVING ROBERTS, STATE OF WASHINGTON, 38538, STRUCTURAL ENGINEER, PROFESSIONAL ENGINEER

11/01/2018
DATE

Washington State Department of Transportation
WASHINGTON STATE FERRIES

SR 525
MUKILTEO FERRY TERMINAL (PHASE 2)
FERRY TERMINAL CONSTRUCTION

TERMINAL – LEVEL 1 – SECTOR B PLAN

SB02.02

SHEET 1104 OF 1521 SHEETS

File: U:\114000-114350\114177 (Mukilteo Ferry Terminal)\02 Plans\14W121SB02_02.dwg
Plotted: 11/1/18 at 2:50pm By: BrianE

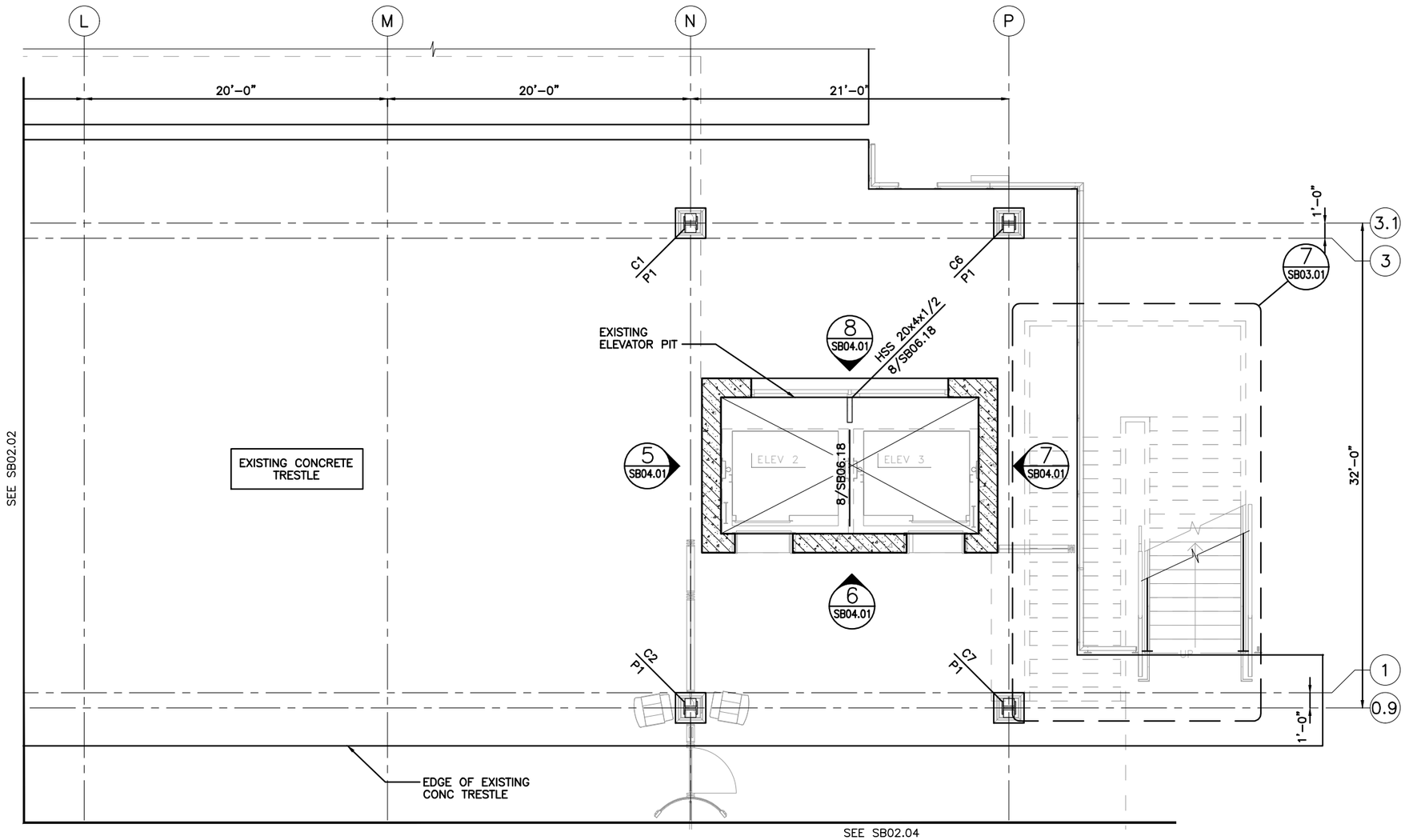

GENERAL PLAN NOTES:

G1. REFERENCE DRAWINGS:
SB00.0X STRUCTURAL NOTES
SB03.XX PARTIAL PLANS
SB04.XX SHEAR WALL/FRAME ELEVATIONS
SB05.XX TYPICAL CONCRETE DETAILS
SB06.XX TYPICAL STEEL DETAILS
SB07.XX TYPICAL WOOD DETAILS
SB08.XX TYPICAL COLD-FORMED STUD DETAILS
SB09.XX TYPICAL MASONRY DETAILS

A01.0X ARCHITECTURAL SLAB PLANS (L1)
A01.1X ARCHITECTURAL SLAB PLANS (L2)

CONCRETE PLAN NOTES:

C1. TOP OF EXISTING CONCRETE ELEVATION = 20'-3"± (VERIFY IN FIELD)

C2. PX INDICATES CONCRETE PLINTH PER SB05.02.

C3. INDICATES SHEAR WALL REQUIRED FOR LATERAL FORCE RESISTING SYSTEM. WALLS ARE REQUIRED FOR FULL HEIGHT AS SHOWN.

STEEL PLAN NOTES:

S1. CX INDICATES STEEL AND WOOD COLUMN PER SB06.00.

LEVEL 1 SECTOR C PLAN

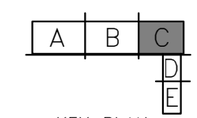

KEY PLAN

kpff

FILE NAME:	14W121SB02_03.dwg					
PRINTED:	2:38:27 PM 9/21/2018	LAST PRINTED BY:				FED.AID PROJ.NO.
SUBMITTAL DATE:	08/23/2018	3yronR				
DESIGNED BY:	A. RADKE	08/23/2018				WA-2017-007-00
ENTERED BY:	B. RONIA	08/23/2018				REGION NO. / STATE
CHECKED BY:	A. EWING	08/23/2018				10 / WASH
MAR PROJ ENGR	C. TORRES					JOB NUMBER 18W121
DIR TERM ENGR:	N. MCINTOSH					
ASST SECRETARY:	A. SCARTON		REVISION	DATE	BY	CONTRACT NO. 00****

DATE

08/23/2018
DATE

Washington State Department of Transportation
WASHINGTON STATE FERRIES

SR 525
MUKILTEO FERRY TERMINAL (PHASE 2)
FERRY TERMINAL CONSTRUCTION

TERMINAL – LEVEL 1 – SECTOR C PLAN

SB02.03

SHEET 1105 OF 1521 SHEETS

File: U:\114000-114350\114177 (Mukilteo Ferry Terminal)\02 Plans\14W121SB02_03.dwg
Plotted: 9/21/18 at 2:38pm By: DianeL

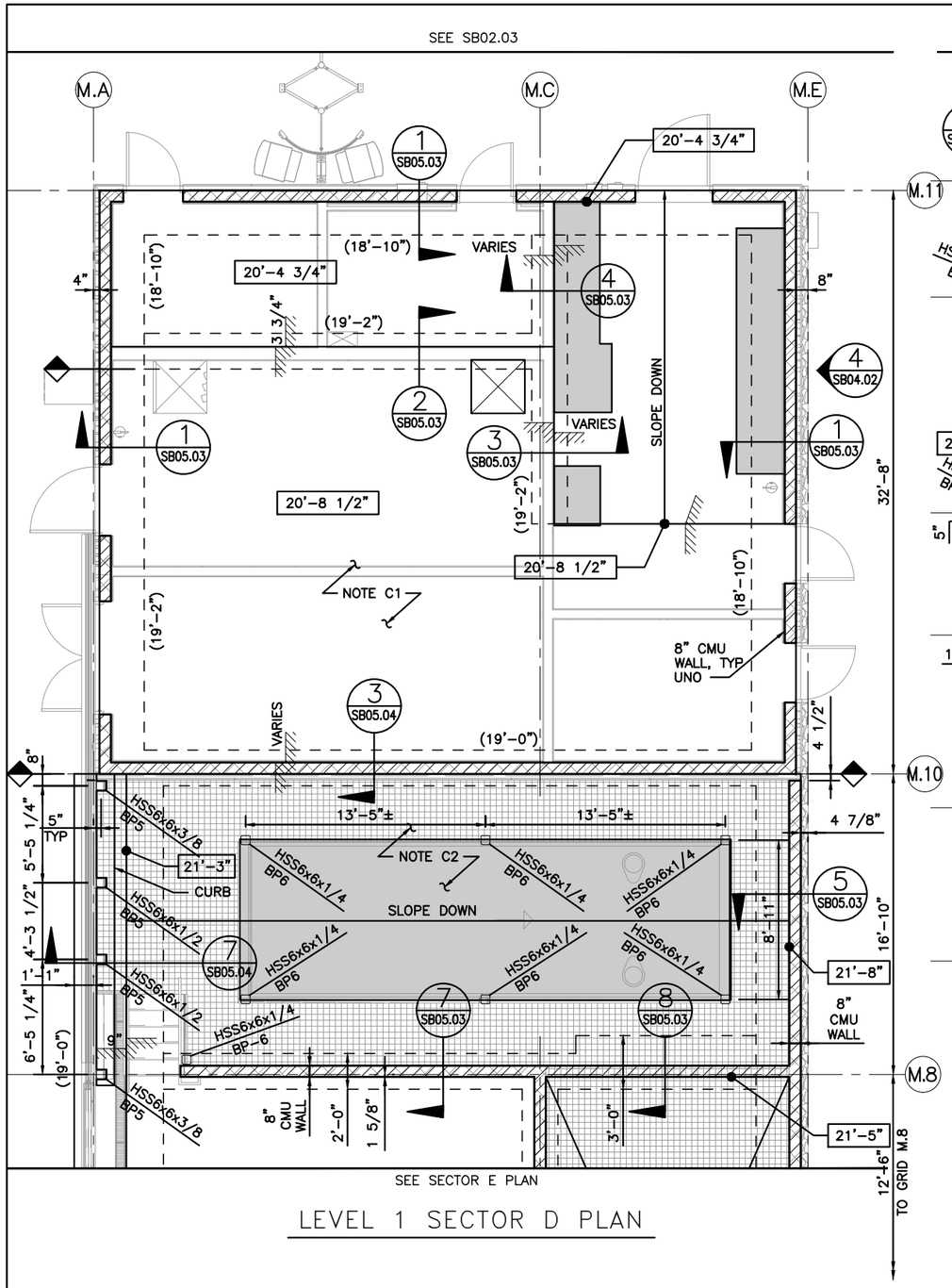

LEVEL 1 SECTOR D PLAN

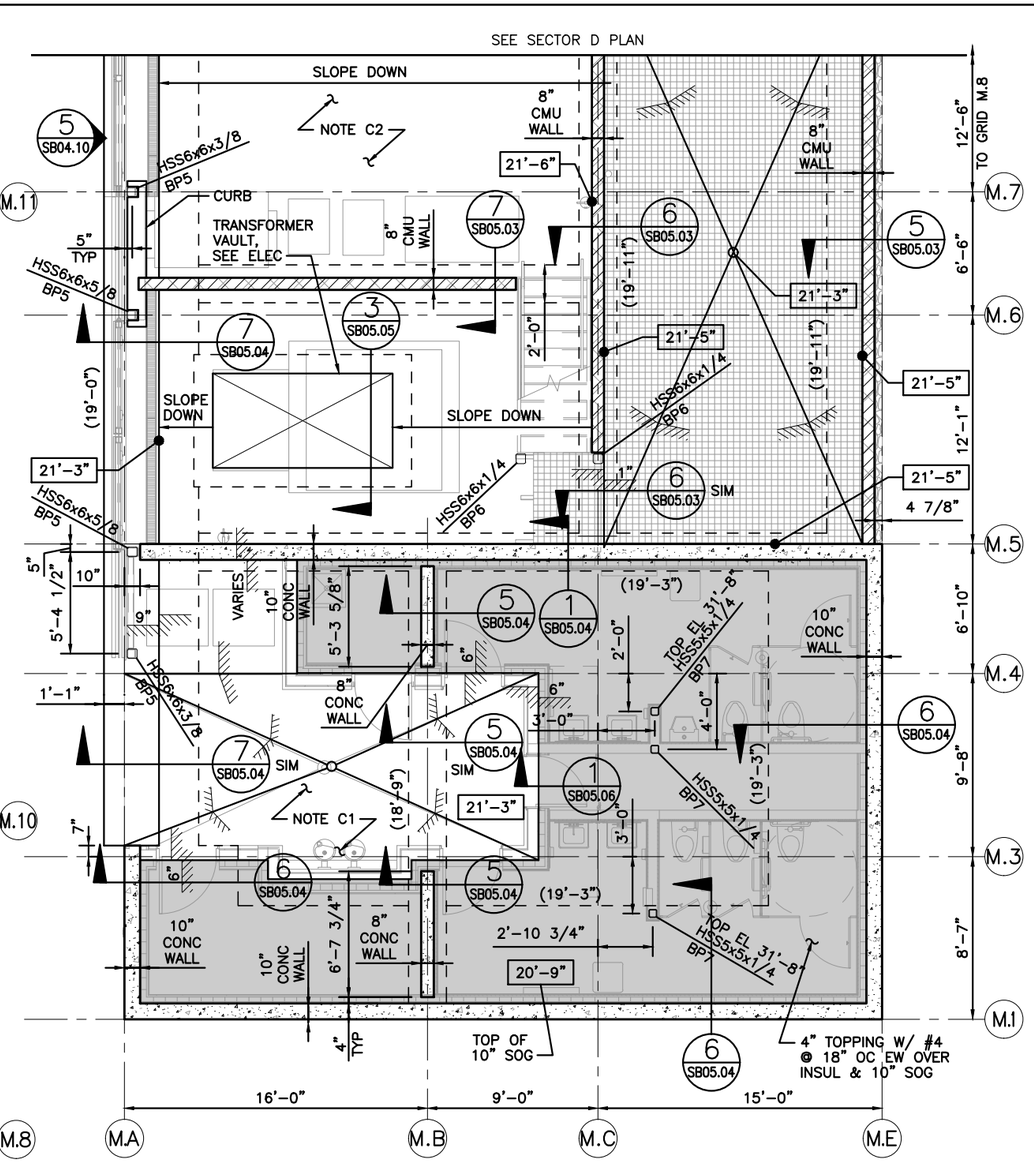

LEVEL 1 SECTOR E PLAN

GENERAL PLAN NOTES:

G1. REFERENCE DRAWINGS:
SB00.0X STRUCTURAL NOTES
SB03.XX PARTIAL PLANS
SB04.XX SHEAR WALL/FRAME ELEVATIONS
SB05.XX TYPICAL CONCRETE DETAILS
SB06.XX TYPICAL STEEL DETAILS
SB07.XX TYPICAL WOOD DETAILS
SB08.XX TYPICAL COLD-FORMED STUD DETAILS
SB09.XX TYPICAL MASONRY DETAILS

A01.0X ARCHITECTURAL SLAB PLANS (L1)

CONCRETE PLAN NOTES:

C1. 10" SOG W/ #4 @ 18" OC EW T&B, GRIDS M.1–M.5 AND GRIDS M.10–M.11.

C2. 12" SOG W/ #4 @ 18" OC EW T&B, GRIDS M.5–M.10.

C3. X'-XX" INDICATES TOP OF CONCRETE ELEVATION.

C4. (X'-X") INDICATES BOTTOM OF FOOTING ELEVATION.

C5. IN SLABS ON GRADE, PLACE EAST-WEST REINFORCING IN THE BOTTOM LAYER OF BOTH THE TOP AND BOTTOM MAT.

C6. REFER TO SB05.05 FOR TYPICAL SOG OPENING DETAILS.

C7. INDICATES EQUIPMENT PAD PER 6/SB05.01 TYP, UNO.

STEEL PLAN NOTES:

S1. BPX INDICATES BASE PLATE PER SB06.03.

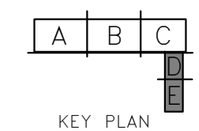

KEY PLAN

kpff

FILE NAME:	14W121SB02_04.dwg					
PRINTED: 2:38:31 PM 9/21/2018		LAST PRINTED BY:				FED.AID PROJ.NO.
SUBMITTAL DATE:	08/23/2018	3yronR				WA-2017-007-00
DESIGNED BY:	A. RADKE	08/23/2018				REGION NO. / STATE
ENTERED BY:	B. RONIA	08/23/2018				10 / WASH
CHECKED BY:	A. EWING	08/23/2018				JOB NUMBER
MAR PROJ ENGR	C. TORRES					18W121
DIR TERM ENGR:	N. MCINTOSH					CONTRACT NO.
ASST SECRETARY:	A. SCARTON		REVISION	DATE	BY	00****

DATE

08/23/2018
DATE

Washington State Department of Transportation
WASHINGTON STATE FERRIES

SR 525
MUKILTEO FERRY TERMINAL (PHASE 2)
FERRY TERMINAL CONSTRUCTION

TERMINAL – LEVEL 1 –
SECTOR D & E PLANS

SB02.04

SHEET 1106 OF 1521 SHEETS

File: U:\114000-114350\114177 (Mukilteo Ferry Terminal)\02 Plans\14W121SB02_04.dwg
Plotted: 9/21/18 at 2:38pm By: DianeL

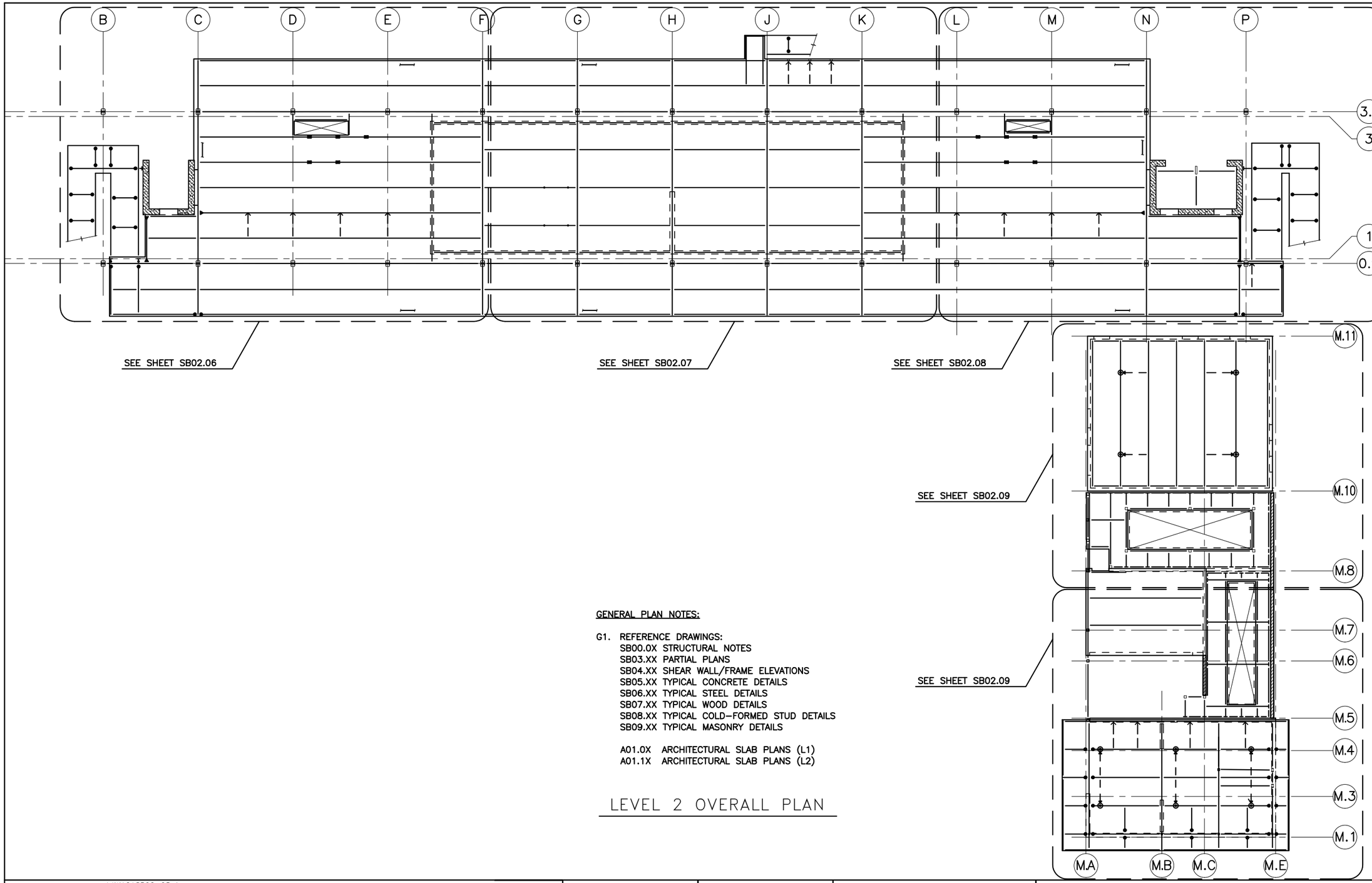

GENERAL PLAN NOTES:

G1. REFERENCE DRAWINGS:
SB00.0X STRUCTURAL NOTES
SB03.XX PARTIAL PLANS
SB04.XX SHEAR WALL/FRAME ELEVATIONS
SB05.XX TYPICAL CONCRETE DETAILS
SB06.XX TYPICAL STEEL DETAILS
SB07.XX TYPICAL WOOD DETAILS
SB08.XX TYPICAL COLD-FORMED STUD DETAILS
SB09.XX TYPICAL MASONRY DETAILS

A01.0X ARCHITECTURAL SLAB PLANS (L1)
A01.1X ARCHITECTURAL SLAB PLANS (L2)

LEVEL 2 OVERALL PLAN

kpff

FILE NAME:	14W121SB02_05.dwg					
PRINTED: 2:38:33 PM 9/21/2018		LAST PRINTED BY:				FED.AID PROJ.NO.
SUBMITTAL DATE:	08/23/2018	3yronR				WA-2017-007-00
DESIGNED BY:	A. RADKE	08/23/2018				REGION NO. STATE
ENTERED BY:	B. RONIA	08/23/2018				10 WASH
CHECKED BY:	A. EWING	08/23/2018				JOB NUMBER 18W121
MAR PROJ ENGR	C. TORRES					
DIR TERM ENGR:	N. MCINTOSH					CONTRACT NO.
ASST SECRETARY:	A. SCARTON		REVISION	DATE	BY	00****

DATE

STEVEN LOVING RODRIGUEZ
STATE OF WASHINGTON
38538
PROFESSIONAL ENGINEER
08/23/2018
DATE

Washington State
Department of Transportation
WASHINGTON STATE FERRIES

SR 525
MUKILTEO FERRY TERMINAL (PHASE 2)
FERRY TERMINAL CONSTRUCTION

TERMINAL – LEVEL 2 – OVERALL PLAN

SB02.05

SHEET 1107 OF 1521 SHEETS

File: U:\114000-114350\114177 (Mukilteo Ferry Terminal)\02 Plans\14W121SB02_05.dwg
Plotted: 9/21/18 at 2:38pm By: DianeL

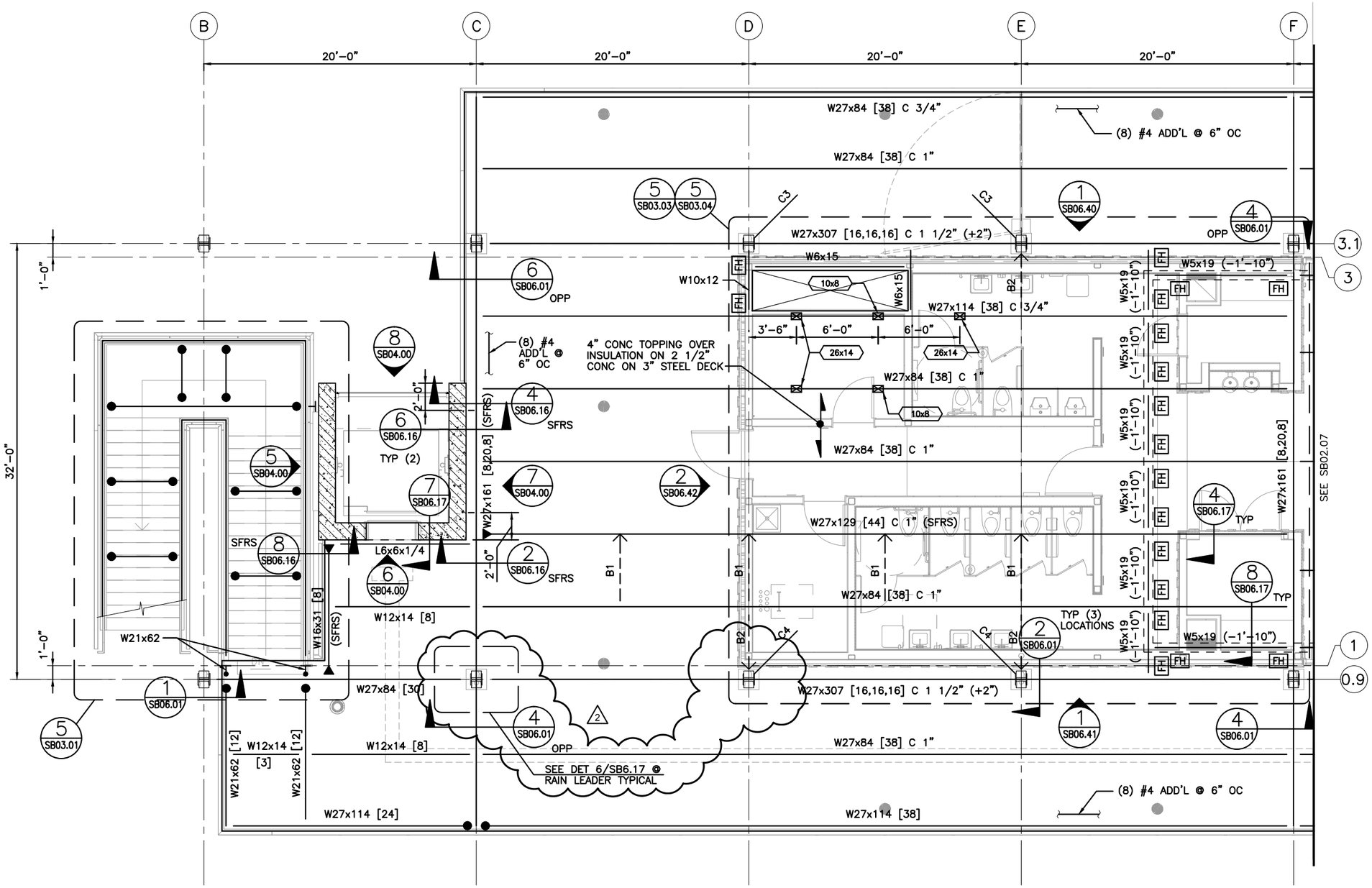

LEVEL 2 SECTOR A PLAN

GENERAL PLAN NOTES:

G1. REFERENCE DRAWINGS:
SB00.0X STRUCTURAL NOTES
SB03.XX PARTIAL PLANS
SB04.XX SHEAR WALL/FRAME ELEVATIONS
SB05.XX TYPICAL CONCRETE DETAILS
SB06.XX TYPICAL STEEL DETAILS
SB07.XX TYPICAL WOOD DETAILS
SB08.XX TYPICAL COLD-FORMED STUD DETAILS
SB09.XX TYPICAL MASONRY DETAILS

A01.0X ARCHITECTURAL SLAB PLANS (L1)
A01.1X ARCHITECTURAL SLAB PLANS (L2)

STEEL PLAN NOTES:

S1. TOP OF STEEL SHALL BE 39'-8 1/2", UNO.

S2. (X'-X") INDICATES TOP OF STEEL DEVIATION FROM TYP.

S3. CX INDICATES STEEL AND WOOD COLUMN PER SB06.00.

S4. BX INDICATES KICKER BRACE PER 5/SB06.07.

S5. CONCRETE SLAB ON STEEL DECK
A) DECK GAUGE: 22
B) DECK SECTION PROPERTIES:
WEIGHT = 1.68 psf
$I = 0.69\ in^4$
$S^+ = 0.433\ in^3$
$S^- = 0.471\ in^3$
C) REINFORCING: #4 @ 12" OC, EW

S6. SFRS INDICATES ELEMENT OR CONNECTION IS PART OF THE SEISMIC FORCE RESISTING SYSTEM.

CONCRETE PLAN NOTES:

C1. INDICATES BAR IS CONTINUOUS TO SLAB EXTENTS.

C2. 4" CONCRETE TOPPING SLAB TO BE REINFORCED WITH #4 @ 18" OC EACH WAY, UNO.

C3. INDICATES SHEAR WALL REQUIRED FOR LATERAL FORCE RESISTING SYSTEM. WALLS ARE REQUIRED FOR FULL HEIGHT AS SHOWN.

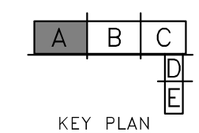

KEY PLAN

kpff

FILE NAME:	14W121SB02_06.dwg					
PRINTED: 2:50:19 PM 11/1/2018		LAST PRINTED BY:				FED.AID PROJ.NO.
SUBMITTAL DATE: 08/23/2018		ByronR				WA-2017-007-00
DESIGNED BY:	A. RADKE	08/23/2018				REGION NO. / STATE
ENTERED BY:	B. RONIA	08/23/2018				10 / WASH
CHECKED BY:	A. EWING	08/23/2018				JOB NUMBER
MAR PROJ ENGR	C. TORRES					18W121
DIR TERM ENGR:	N. MCINTOSH		△ ADDENDUM NO. 2	11/01/18	AE	CONTRACT NO.
ASST SECRETARY:	A. SCARTON		REVISION	DATE	BY	00****

DATE

11/01/2018
DATE

Washington State Department of Transportation
WASHINGTON STATE FERRIES

SR 525
MUKILTEO FERRY TERMINAL (PHASE 2)
FERRY TERMINAL CONSTRUCTION

TERMINAL – LEVEL 2 – SECTOR A PLAN

SB02.06

SHEET 1108 OF 1521 SHEETS

File: U:\114000-114350\114177 (Mukilteo Ferry Terminal)\02 Plans\14W121SB02_06.dwg
Plotted: 11/1/18 at 2:50pm By: BrianE

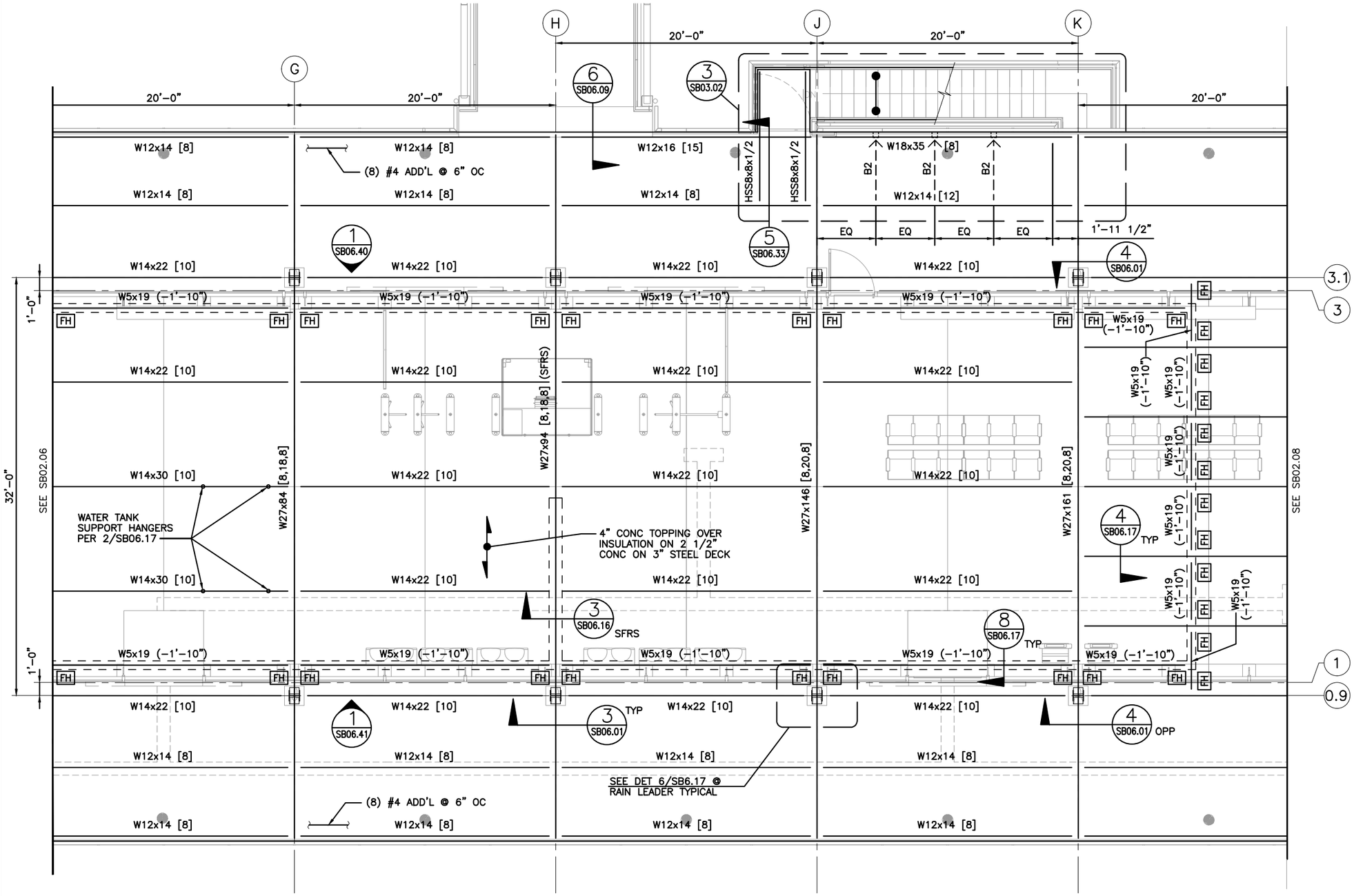

LEVEL 2 SECTOR B PLAN

GENERAL PLAN NOTES:

G1. REFERENCE DRAWINGS:
SB00.0X STRUCTURAL NOTES
SB03.XX PARTIAL PLANS
SB04.XX SHEAR WALL/FRAME ELEVATIONS
SB05.XX TYPICAL CONCRETE DETAILS
SB06.XX TYPICAL STEEL DETAILS
SB07.XX TYPICAL WOOD DETAILS
SB08.XX TYPICAL COLD-FORMED STUD DETAILS
SB09.XX TYPICAL MASONRY DETAILS

A01.0X ARCHITECTURAL SLAB PLANS (L1)
A01.1X ARCHITECTURAL SLAB PLANS (L2)

STEEL PLAN NOTES:

S1. TOP OF STEEL SHALL BE 39'-8 1/2", UNO.

S2. (X'-X") INDICATES TOP OF STEEL DEVIATION FROM TYP.

S3. CX INDICATES STEEL AND WOOD COLUMN PER SB06.00.

S4. BX INDICATES KICKER BRACE PER 5/SB06.07.

S5. CONCRETE SLAB ON STEEL DECK
A) DECK GAUGE: 22
B) DECK SECTION PROPERTIES:
WEIGHT = 1.68 psf
$I = 0.69\ in^4$
$S^+ = 0.433\ in^3$
$S^- = 0.471\ in^3$
C) REINFORCING: #4 @ 12" OC, EW

S6. SFRS INDICATES ELEMENT OR CONNECTION IS PART OF THE SEISMIC FORCE RESISTING SYSTEM.

CONCRETE PLAN NOTES:

C1. INDICATES BAR IS CONTINUOUS TO SLAB EXTENTS.

C2. 4" CONCRETE TOPPING SLAB TO BE REINFORCED WITH #4 @ 18" OC EACH WAY, UNO.

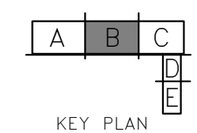

KEY PLAN

kpff

FILE NAME:	14W121SB02_07.dwg					
PRINTED: 2:38:40 PM 9/21/2018	LAST PRINTED BY:					FED.AID PROJ.NO.
SUBMITTAL DATE: 08/23/2018	3yronR					WA-2017-007-00
DESIGNED BY: A. RADKE	08/23/2018					REGION NO. / STATE
ENTERED BY: B. RONIA	08/23/2018					10 / WASH
CHECKED BY: A. EWING	08/23/2018					JOB NUMBER 18W121
MAR PROJ ENGR C. TORRES						
DIR TERM ENGR: N. MCINTOSH						CONTRACT NO.
ASST SECRETARY: A. SCARTON		REVISION	DATE	BY		00****

DATE

08/23/2018
DATE

Washington State Department of Transportation
WASHINGTON STATE FERRIES

SR 525
MUKILTEO FERRY TERMINAL (PHASE 2)
FERRY TERMINAL CONSTRUCTION

TERMINAL – LEVEL 2 – SECTOR B PLAN

SB02.07

SHEET 1109 OF 1521 SHEETS

File: U:\114000-114350\114177 (Mukilteo Ferry Terminal)\02 Plans\14W121SB02_07.dwg
Plotted: 9/21/18 at 2:38pm By: DianeL

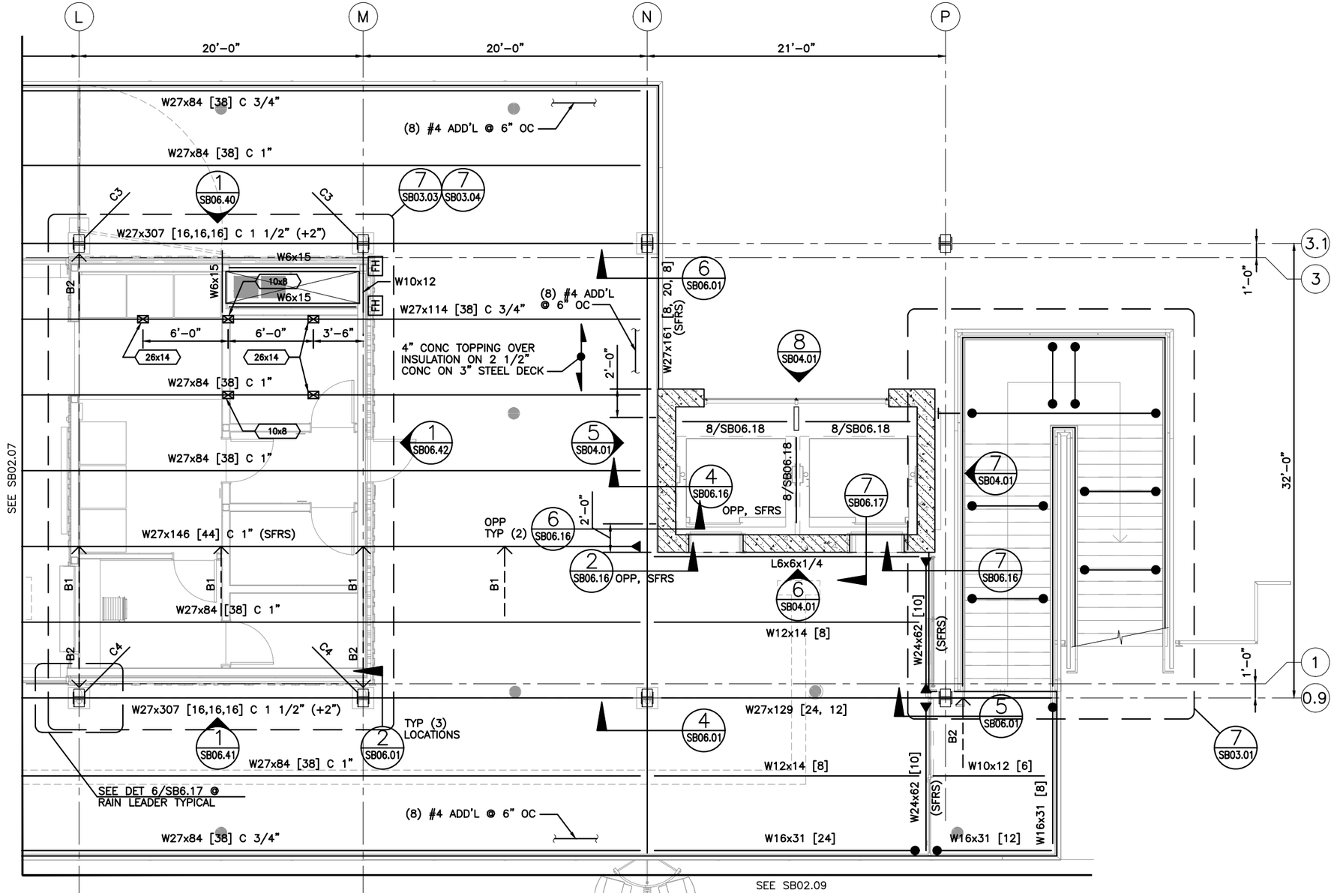

LEVEL 2 SECTOR C PLAN

GENERAL PLAN NOTES:

G1. REFERENCE DRAWINGS:
SB00.0X STRUCTURAL NOTES
SB03.XX PARTIAL PLANS
SB04.XX SHEAR WALL/FRAME ELEVATIONS
SB05.XX TYPICAL CONCRETE DETAILS
SB06.XX TYPICAL STEEL DETAILS
SB07.XX TYPICAL WOOD DETAILS
SB08.XX TYPICAL COLD-FORMED STUD DETAILS
SB09.XX TYPICAL MASONRY DETAILS

A01.0X ARCHITECTURAL SLAB PLANS (L1)
A01.1X ARCHITECTURAL SLAB PLANS (L2)

STEEL PLAN NOTES:

S1. TOP OF STEEL SHALL BE 39'-8 1/2", UNO.

S2. (X'-X") INDICATES TOP OF STEEL DEVIATION FROM TYP.

S3. CX INDICATES STEEL AND WOOD COLUMN PER SB06.00.

S4. BX INDICATES KICKER BRACE PER 5/SB06.07.

S5. CONCRETE SLAB ON STEEL DECK
A) DECK GAUGE: 22
B) DECK SECTION PROPERTIES:
WEIGHT = 1.68 psf
$I = 0.69\ in^4$
$S^+ = 0.433\ in^3$
$S^- = 0.471\ in^3$
C) REINFORCING: #4 @ 12" OC, EW

S6. SFRS INDICATES ELEMENT OR CONNECTION IS PART OF THE SEISMIC FORCE RESISTING SYSTEM.

CONCRETE PLAN NOTES:

C1. INDICATES BAR IS CONTINUOUS TO SLAB EXTENTS.

C2. 4" CONCRETE TOPPING SLAB TO BE REINFORCED WITH #4 @ 18" OC EACH WAY, UNO.

C3. INDICATES SHEAR WALL REQUIRED FOR LATERAL FORCE RESISTING SYSTEM. WALLS ARE REQUIRED FOR FULL HEIGHT AS SHOWN.

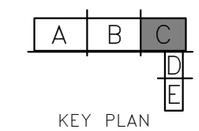

KEY PLAN

kpff

FILE NAME:	14W121SB02_08.dwg					
PRINTED: 2:38:45 PM 9/21/2018	LAST PRINTED BY:					FED.AID PROJ.NO.
SUBMITTAL DATE: 08/23/2018	3yronR					WA-2017-007-00
DESIGNED BY: A. RADKE	08/23/2018					REGION NO. / STATE
ENTERED BY: B. RONIA	08/23/2018					10 / WASH
CHECKED BY: A. EWING	08/23/2018					JOB NUMBER
MAR PROJ ENGR C. TORRES						18W121
DIR TERM ENGR: N. MCINTOSH						CONTRACT NO.
ASST SECRETARY: A. SCARTON		REVISION	DATE	BY		00****

DATE

08/23/2018
DATE

Washington State Department of Transportation
WASHINGTON STATE FERRIES

SR 525
MUKILTEO FERRY TERMINAL (PHASE 2)
FERRY TERMINAL CONSTRUCTION

TERMINAL – LEVEL 2 – SECTOR C PLAN

SB02.08

SHEET 1110 OF 1521 SHEETS

File: U:\114000-114350\114177 (Mukilteo Ferry Terminal)\02 Plans\14W121SB02_08.dwg
Plotted: 9/21/18 at 2:38pm By: DianeL

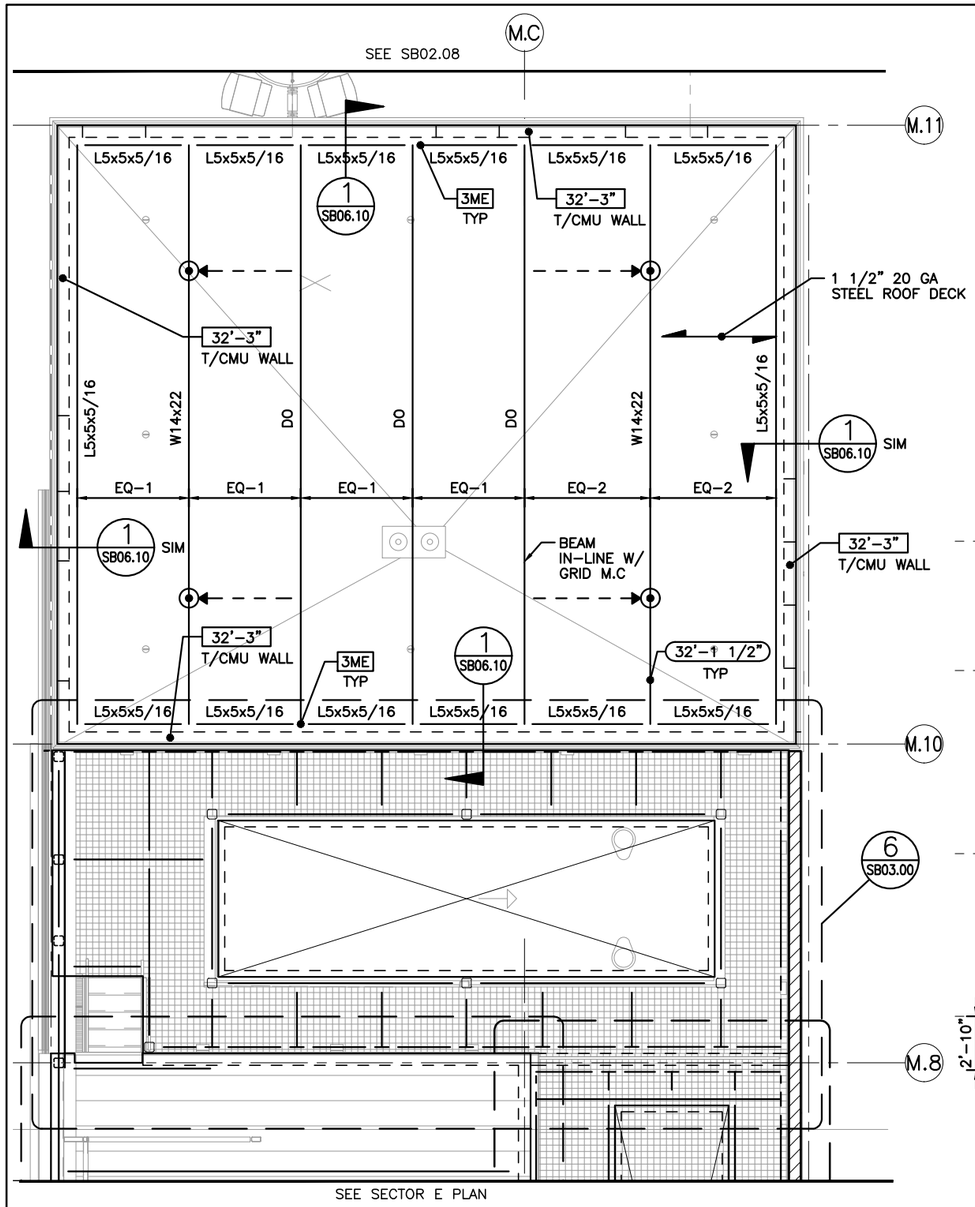

LEVEL 2 SECTOR D PLAN

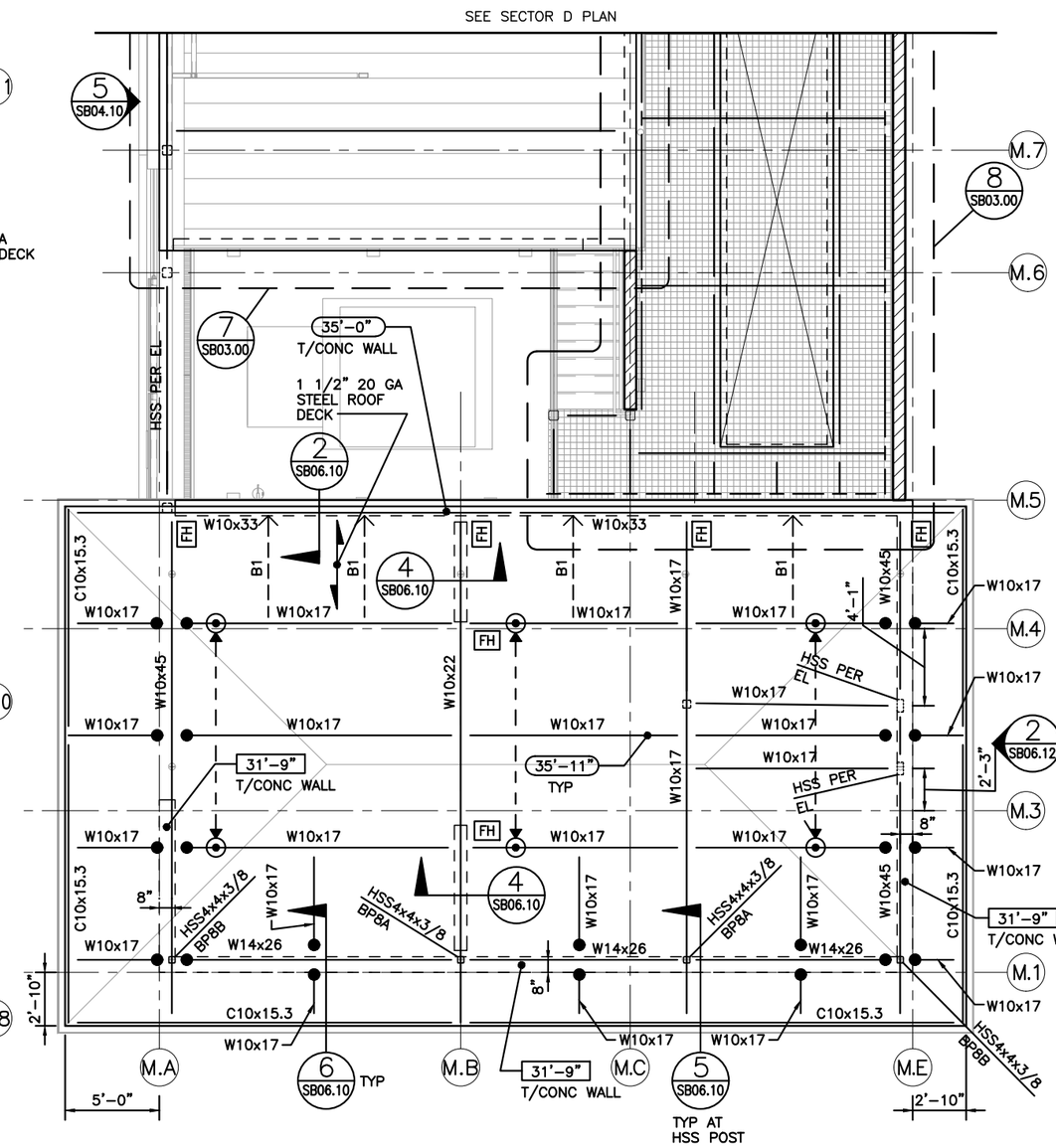

LEVEL 2 SECTOR E PLAN

GENERAL PLAN NOTES:

G1. REFERENCE DRAWINGS:
SB00.0X STRUCTURAL NOTES
SB03.XX PARTIAL PLANS
SB04.XX SHEAR WALL/FRAME ELEVATIONS
SB05.XX TYPICAL CONCRETE DETAILS
SB06.XX TYPICAL STEEL DETAILS
SB07.XX TYPICAL WOOD DETAILS
SB08.XX TYPICAL COLD-FORMED STUD DETAILS
SB09.XX TYPICAL MASONRY DETAILS

STEEL PLAN NOTES:

S1. (X'-X") INDICATES TOP OF STEEL ELEVATION.

S2. (X'-X") INDICATES TOP OF STEEL DEVIATION FROM TYP.

S3. BPX INDICATES BASE PLATE PER SB06.03.

S4. BX INDICATES KICKER BRACE PER 5/SB06.07.

S5. STEEL DECK
A) DECK GAUGE: 20
B) DECK SECTION PROPERTIES:
WEIGHT = 2.3 psf
$I = 0.219\ in^4/ft$
$S^+ = 0.230\ in^3/ft$
$S^- = 0.237\ in^3/ft$

S6. INDICATES FALL ARREST ANCHOR POINT PER 7/SB06.13.

CONCRETE PLAN NOTES:

C1. X'-X" INDICATES TOP OF CONCRETE/ CMU WALL ELEVATION.

MASONRY PLAN NOTES:

M1. XME INDICATES STEEL BEAM CONNECTION TO CMU WALL PER 5/SB09.01.

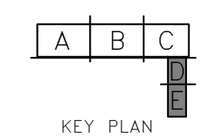

KEY PLAN

kpff

File: U:\114000-114350\114177 (Mukilteo Ferry Terminal)\02 Plans\14W121SB02_09.dwg
Plotted: 9/21/18 at 2:38pm By: DianeL

FILE NAME:	14W121SB02_09.dwg					
PRINTED: 2:38:49 PM 9/21/2018		LAST PRINTED BY:				FED.AID PROJ.NO.
SUBMITTAL DATE:	08/23/2018	3yronR				WA-2017-007-00
DESIGNED BY:	A. RADKE	08/23/2018				REGION NO. / STATE
ENTERED BY:	B. RONIA	08/23/2018				10 / WASH
CHECKED BY:	A. EWING	08/23/2018				JOB NUMBER
MAR PROJ ENGR	C. TORRES					18W121
DIR TERM ENGR:	N. MCINTOSH					CONTRACT NO.
ASST SECRETARY:	A. SCARTON		REVISION	DATE	BY	00****

DATE

STATE OF WASHINGTON — SARA LOVING HODGES — 38538 — PROFESSIONAL ENGINEER

08/23/2018
DATE

Washington State
Department of Transportation
WASHINGTON STATE FERRIES

SR 525
MUKILTEO FERRY TERMINAL (PHASE 2)
FERRY TERMINAL CONSTRUCTION

TERMINAL – LEVEL 2 –
SECTOR D & E PLANS

SB02.09

SHEET 1111 OF 1521 SHEETS

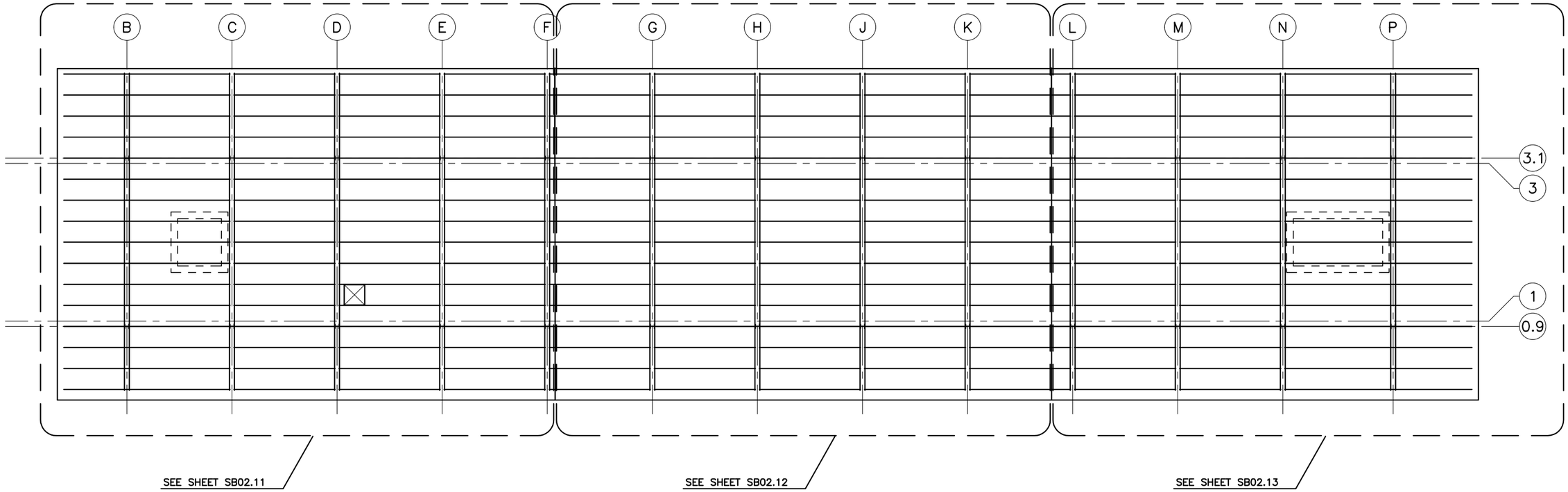

GENERAL PLAN NOTES:

G1. REFERENCE DRAWINGS:
SB00.0X STRUCTURAL NOTES
SB03.XX PARTIAL PLANS
SB04.XX SHEAR WALL/FRAME ELEVATIONS
SB05.XX TYPICAL CONCRETE DETAILS
SB06.XX TYPICAL STEEL DETAILS
SB07.XX TYPICAL WOOD DETAILS
SB08.XX TYPICAL COLD-FORMED STUD DETAILS
SB09.XX TYPICAL MASONRY DETAILS

ROOF FRAMING OVERALL PLAN

kpff

FILE NAME:	14W121SB02_10.dwg					
PRINTED: 2:38:52 PM 9/21/2018		LAST PRINTED BY:				FED.AID
SUBMITTAL DATE:	08/23/2018	3yronR				PROJ.NO.
DESIGNED BY:	A. RADKE	08/23/2018				WA-2017-007-00
ENTERED BY:	B. RONIA	08/23/2018				REGION NO. / STATE
CHECKED BY:	A. EWING	08/23/2018				10 / WASH
MAR PROJ ENGR	C. TORRES					JOB NUMBER
DIR TERM ENGR:	N. MCINTOSH					18W121
ASST SECRETARY:	A. SCARTON		REVISION	DATE	BY	CONTRACT NO. 00****

DATE

DANA LOVING ROBERTS — STATE OF WASHINGTON — 38538 — STRUCTURAL ENGINEER — PROFESSIONAL ENGINEER

08/23/2018
DATE

Washington State Department of Transportation
WASHINGTON STATE FERRIES

SR 525
MUKILTEO FERRY TERMINAL (PHASE 2)
FERRY TERMINAL CONSTRUCTION

TERMINAL – ROOF FRAMING – OVERALL PLAN

SB02.10

SHEET 1112 OF 1521 SHEETS

File: U:\114000-114350\114177 (Mukilteo Ferry Terminal)\02 Plans\14W121SB02_10.dwg
Plotted: 9/21/18 at 2:38pm By: DianeL

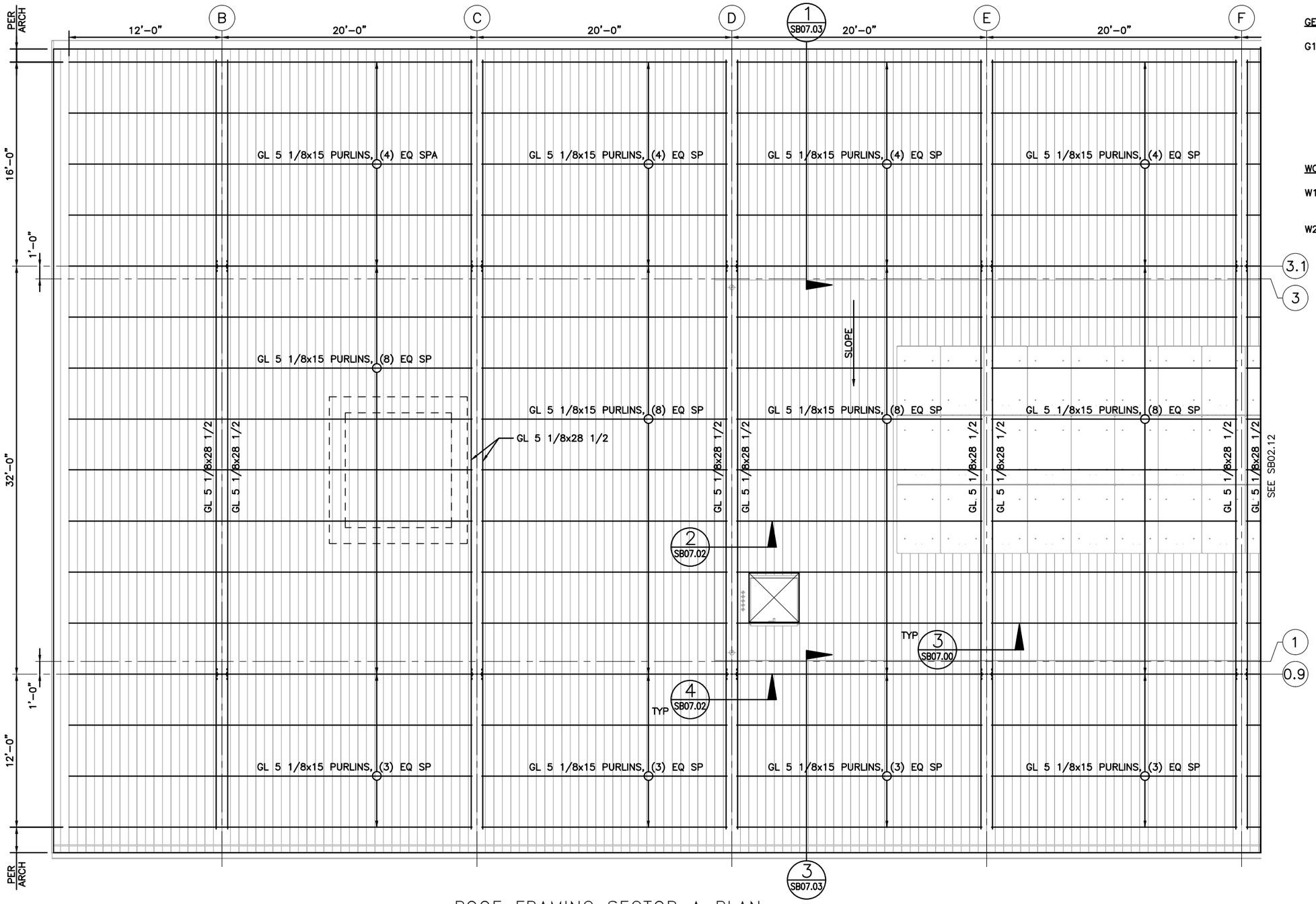

ROOF FRAMING SECTOR A PLAN

GENERAL PLAN NOTES:

G1. REFERENCE DRAWINGS:
SB00.0X STRUCTURAL NOTES
SB03.XX PARTIAL PLANS
SB04.XX SHEAR WALL/FRAME ELEVATIONS
SB05.XX TYPICAL CONCRETE DETAILS
SB06.XX TYPICAL STEEL DETAILS
SB07.XX TYPICAL WOOD DETAILS
SB08.XX TYPICAL COLD-FORMED STUD DETAILS
SB09.XX TYPICAL MASONRY DETAILS

WOOD PLAN NOTES:

W1. ROOF SLOPE AND TOP OF WOOD FRAMING PER ARCH.

W2. SEE SB02.14 FOR ROOF DIAPHRAGM PLANS.

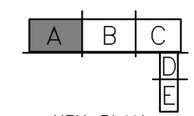

KEY PLAN

kpff

FILE NAME:	14W121SB02_11.dwg					
PRINTED: 2:38:55 PM 9/21/2018		LAST PRINTED BY:				FED.AID PROJ.NO.
SUBMITTAL DATE:	08/23/2018	3yronR				WA-2017-007-00
DESIGNED BY:	A. RADKE	08/23/2018				REGION NO. 10 / STATE WASH
ENTERED BY:	B. RONIA	08/23/2018				
CHECKED BY:	A. EWING	08/23/2018				JOB NUMBER 18W121
MAR PROJ ENGR	C. TORRES					
DIR TERM ENGR:	N. MCINTOSH					CONTRACT NO. 00****
ASST SECRETARY:	A. SCARTON		REVISION	DATE	BY	

DATE

WA LOVING ROBERTS — STATE OF WASHINGTON — 38538 — STRUCTURAL ENGINEER — PROFESSIONAL ENGINEER

08/23/2018
DATE

Washington State Department of Transportation
WASHINGTON STATE FERRIES

SR 525
MUKILTEO FERRY TERMINAL (PHASE 2)
FERRY TERMINAL CONSTRUCTION

TERMINAL – ROOF FRAMING – SECTOR A PLAN

SB02.11

SHEET 1113 OF 1521 SHEETS

File: U:\114000-114350\114177 (Mukilteo Ferry Terminal)\02 Plans\14W121SB02_11.dwg
Plotted: 9/21/18 at 2:38pm By: DianeL

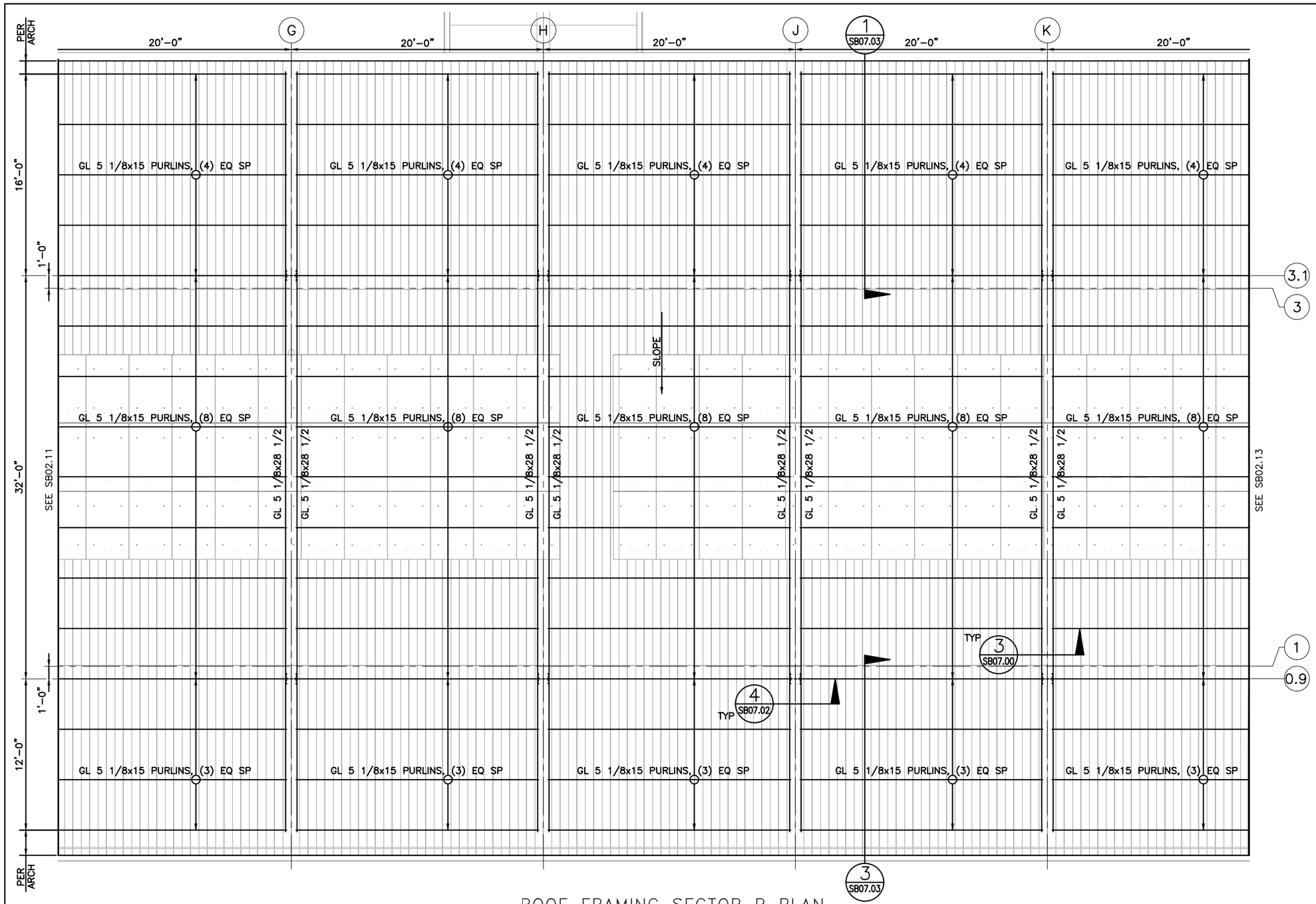

ROOF FRAMING SECTOR B PLAN

GENERAL PLAN NOTES:

G1. REFERENCE DRAWINGS:
SB00.0X STRUCTURAL NOTES
SB03.XX PARTIAL PLANS
SB04.XX SHEAR WALL/FRAME ELEVATIONS
SB05.XX TYPICAL CONCRETE DETAILS
SB06.XX TYPICAL STEEL DETAILS
SB07.XX TYPICAL WOOD DETAILS
SB08.XX TYPICAL COLD-FORMED STUD DETAILS
SB09.XX TYPICAL MASONRY DETAILS

WOOD PLAN NOTES:

W1. ROOF SLOPE AND TOP OF WOOD FRAMING PER ARCH.

W2. SEE SB02.14 FOR ROOF DIAPHRAGM PLANS.

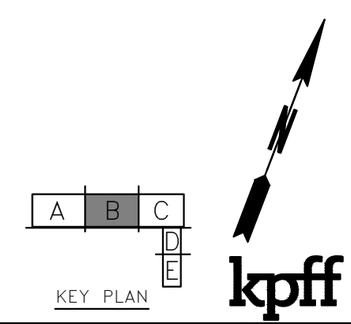

KEY PLAN

FILE NAME:	14W121SB02_12.dwg					
PRINTED:	2:38:58 PM 9/21/2018	LAST PRINTED BY:				FED.AID PROJ.NO.
SUBMITTAL DATE:	08/23/2018	3yronR				WA-2017-007-00
DESIGNED BY:	A. RADKE	08/23/2018				REGION NO. / STATE
ENTERED BY:	B. RONIA	08/23/2018				10 / WASH
CHECKED BY:	A. EWING	08/23/2018				JOB NUMBER 18W121
MAR PROJ ENGR	C. TORRES					
DIR TERM ENGR:	N. MCINTOSH					CONTRACT NO.
ASST SECRETARY:	A. SCARTON		REVISION	DATE	BY	00****

DATE

08/23/2018
DATE

Washington State Department of Transportation
WASHINGTON STATE FERRIES

SR 525
MUKILTEO FERRY TERMINAL (PHASE 2)
FERRY TERMINAL CONSTRUCTION

TERMINAL – ROOF FRAMING – SECTOR B PLAN

SB02.12

SHEET 1114 OF 1521 SHEETS

File: U:\114000-114350\114177 (Mukilteo Ferry Terminal)\02 Plans\14W121SB02_12.dwg
Plotted: 9/21/18 at 2:38pm By: DianeL

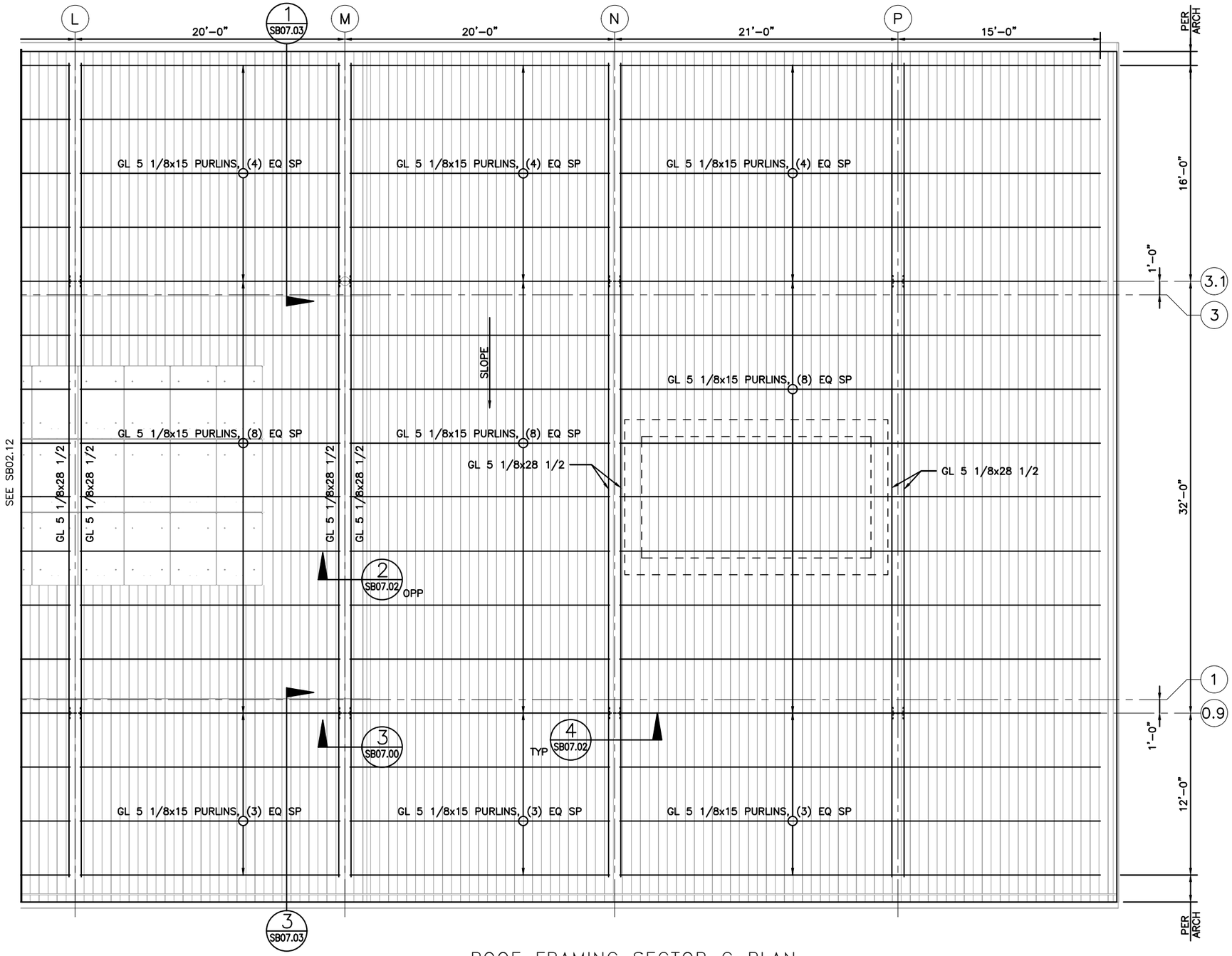

ROOF FRAMING SECTOR C PLAN

GENERAL PLAN NOTES:

G1. REFERENCE DRAWINGS:
SB00.0X STRUCTURAL NOTES
SB03.XX PARTIAL PLANS
SB04.XX SHEAR WALL/FRAME ELEVATIONS
SB05.XX TYPICAL CONCRETE DETAILS
SB06.XX TYPICAL STEEL DETAILS
SB07.XX TYPICAL WOOD DETAILS
SB08.XX TYPICAL COLD-FORMED STUD DETAILS
SB09.XX TYPICAL MASONRY DETAILS

WOOD PLAN NOTES:

W1. ROOF SLOPE AND TOP OF WOOD FRAMING PER ARCH.

W2. SEE SB02.14 FOR ROOF DIAPHRAGM PLANS.

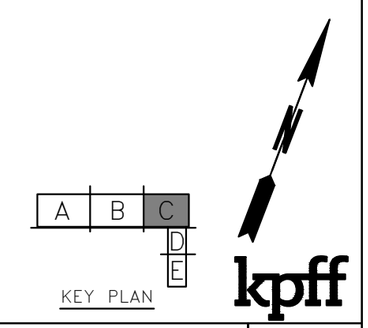

KEY PLAN

FILE NAME:	14W121SB02_13.dwg					
PRINTED: 2:39:01 PM 9/21/2018		LAST PRINTED BY:				FED.AID PROJ.NO.
SUBMITTAL DATE:	08/23/2018	3yronR				WA-2017-007-00
DESIGNED BY:	A. RADKE	08/23/2018				REGION NO. 10 / STATE WASH
ENTERED BY:	B. RONIA	08/23/2018				JOB NUMBER 18W121
CHECKED BY:	A. EWING	08/23/2018				CONTRACT NO. 00****
MAR PROJ ENGR	C. TORRES					
DIR TERM ENGR:	N. MCINTOSH					
ASST SECRETARY:	A. SCARTON		REVISION	DATE	BY	

DATE

08/23/2018
DATE

Washington State Department of Transportation
WASHINGTON STATE FERRIES

SR 525
MUKILTEO FERRY TERMINAL (PHASE 2)
FERRY TERMINAL CONSTRUCTION

TERMINAL – ROOF FRAMING – SECTOR C PLAN

SB02.13

SHEET 1115 OF 1521 SHEETS

File: U:\114000-114350\114177 (Mukilteo Ferry Terminal)\02 Plans\14W121SB02_13.dwg
Plotted: 9/21/18 at 2:39pm By: DianeL

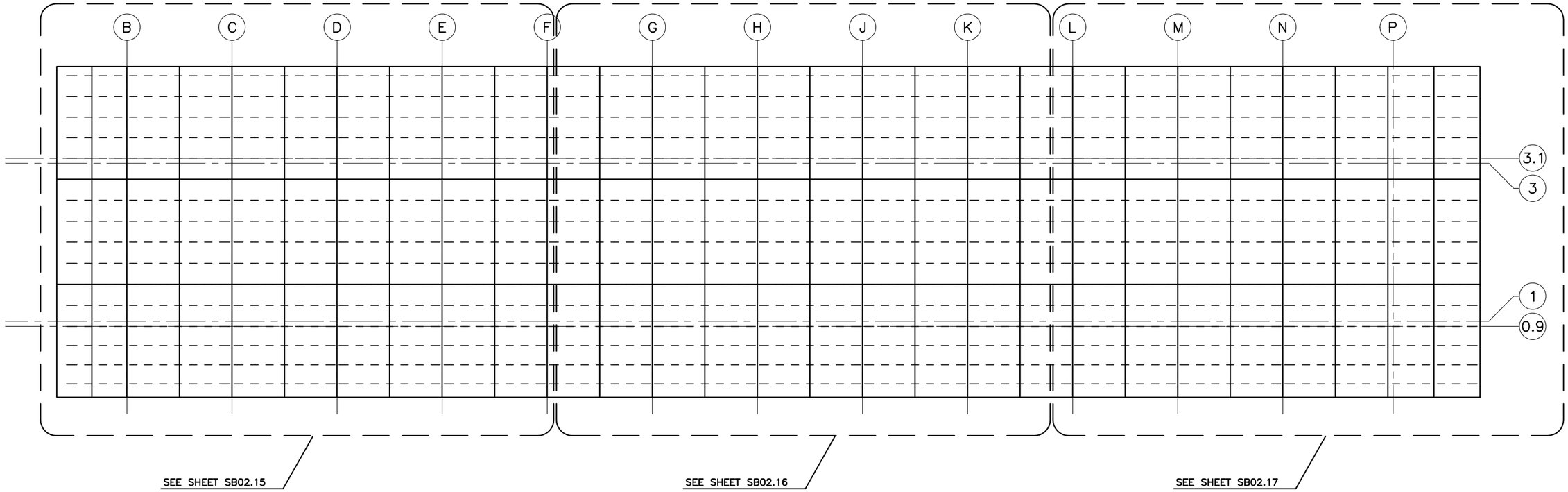

GENERAL PLAN NOTES:

G1. REFERENCE DRAWINGS:
SB00.0X STRUCTURAL NOTES
SB03.XX PARTIAL PLANS
SB04.XX SHEAR WALL/FRAME ELEVATIONS
SB05.XX TYPICAL CONCRETE DETAILS
SB06.XX TYPICAL STEEL DETAILS
SB07.XX TYPICAL WOOD DETAILS
SB08.XX TYPICAL COLD-FORMED STUD DETAILS
SB09.XX TYPICAL MASONRY DETAILS

ROOF DIAPHRAGM OVERALL PLAN

kpff

FILE NAME:	14W121SB02_14.dwg					
PRINTED:	2:39:04 PM 9/21/2018	LAST PRINTED BY:				FED.AID
SUBMITTAL DATE:	08/23/2018	3yronR				PROJ.NO.
DESIGNED BY:	A. RADKE	08/23/2018				WA-2017-007-00
ENTERED BY:	B. RONIA	08/23/2018				REGION NO. / STATE
CHECKED BY:	A. EWING	08/23/2018				10 / WASH
MAR PROJ ENGR	C. TORRES					JOB NUMBER
DIR TERM ENGR:	N. MCINTOSH					18W121
ASST SECRETARY:	A. SCARTON		REVISION	DATE	BY	CONTRACT NO.
						00****

DATE

SARA LOVING ROBERTS
STATE OF WASHINGTON
38538
STRUCTURAL ENGINEER
PROFESSIONAL ENGINEER
08/23/2018
DATE

Washington State Department of Transportation
WASHINGTON STATE FERRIES

SR 525
MUKILTEO FERRY TERMINAL (PHASE 2)
FERRY TERMINAL CONSTRUCTION

TERMINAL – ROOF DIAPHRAGM – OVERALL PLAN

SB02.14

SHEET 1116 OF 1521 SHEETS

File: U:\114000-114350\114177 (Mukilteo Ferry Terminal)\02 Plans\14W121SB02_14.dwg
Plotted: 9/21/18 at 2:39pm By: DianeL

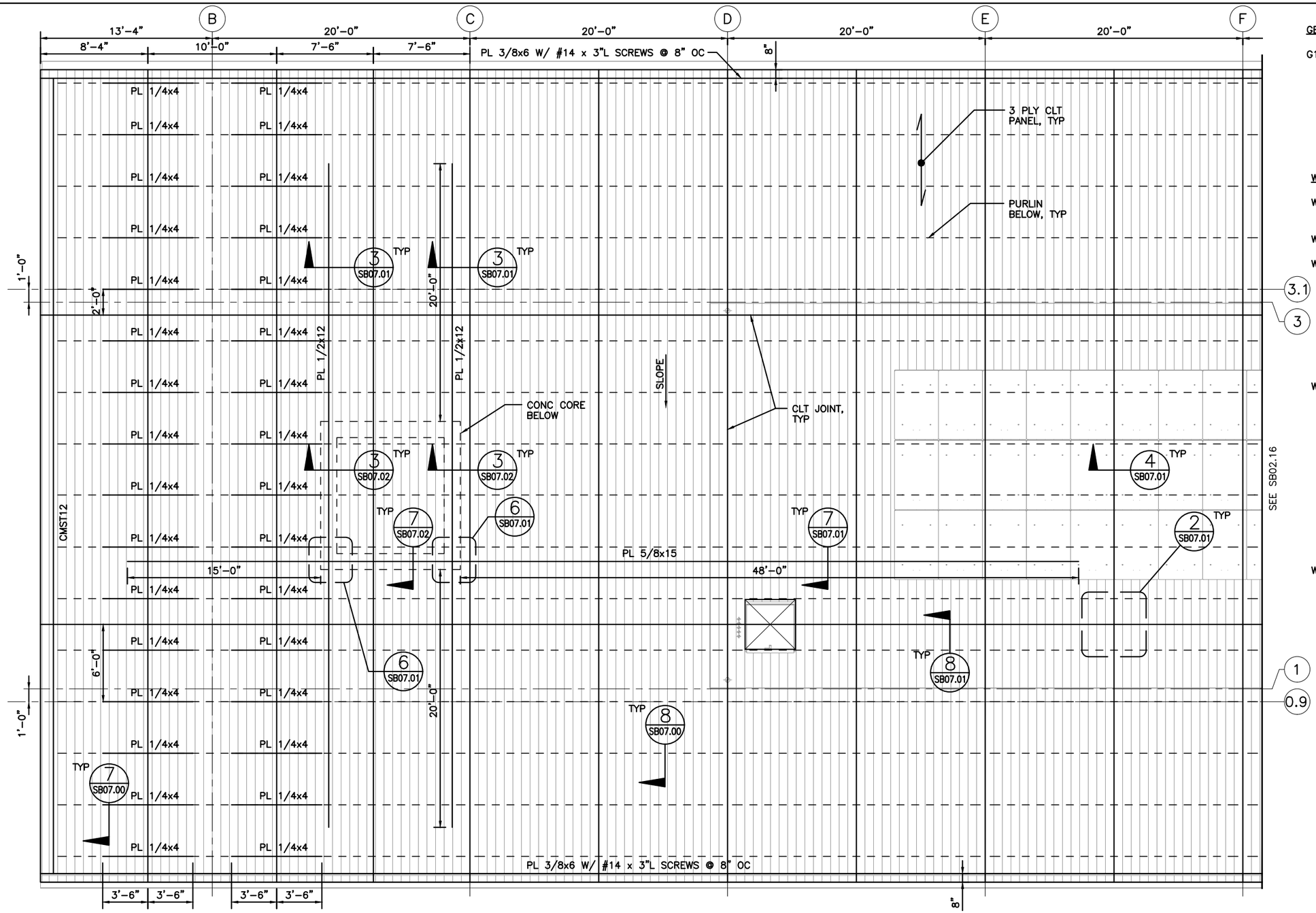

ROOF DIAPHRAGM SECTOR A PLAN

GENERAL PLAN NOTES:

G1. REFERENCE DRAWINGS:
SB00.0X STRUCTURAL NOTES
SB03.XX PARTIAL PLANS
SB04.XX SHEAR WALL/FRAME ELEVATIONS
SB05.XX TYPICAL CONCRETE DETAILS
SB06.XX TYPICAL STEEL DETAILS
SB07.XX TYPICAL WOOD DETAILS
SB08.XX TYPICAL COLD-FORMED STUD DETAILS
SB09.XX TYPICAL MASONRY DETAILS

WOOD PLAN NOTES:

W1. ROOF SLOPE AND TOP OF WOOD FRAMING PER ARCH.

W2. SEE SB02.10 FOR ROOF FRAMING PLANS.

W3. CROSS LAMINATED TIMBER (CLT)
CLT GRADE: V1 OR V2
CLT PROPERTIES:

$F_bS_{EFF,0}$	=	2050 lb-ft/ft (MIN)
IE	=	$96(10^6)$ lb-ft^2/ft (MIN)
GA	=	$0.53(10^6)$ lb/ft (MIN)
$F_bS_{EFF,90}$	=	165 lb-ft/ft (MIN)
IE	=	$3.6(10^6)$ lb-ft^2/ft (MIN)
$GA_{EFF,90}$	=	$0.53(10^6)$ lb/ft (MIN)

W3a.
- SCREWS AND CONNECTIONS FOR CLT BASED UPON DOUG FIR (LARCH).
- FOR BID: IF ALTERNATE WOOD SPECIES ARE PROVIDED, SPACING OF SCREWS TO BE DECREASED BASED UPON SPECIFIC GRAVITY OF ALT WOOD SPECIES.
- CONTRACTOR SHALL SUBMIT REVISED CONNECTION SPACING FOR REVIEW APPROVAL AS PART OF SHOP DRAWING PROCESS. REVISED CONNECTIONS AND SPACING SHALL BE DEVELOPED & SIGNED/SEALED BY LICENSED ENGINEER IN THE STATE OF WA.

W4. CMST12 – INDICATES SIMPSON STRONG TIE CMST12 STRAP, OR APPROVED EQUAL.

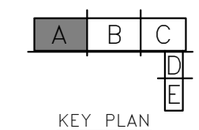

KEY PLAN

kpff

FILE NAME:	14W121SB02_15.dwg					
PRINTED: 2:39:07 PM 9/21/2018		LAST PRINTED BY:				FED.AID PROJ.NO.
SUBMITTAL DATE:	08/23/2018	3yronR				WA-2017-007-00
DESIGNED BY:	A. RADKE	08/23/2018				REGION NO. / STATE
ENTERED BY:	B. RONIA	08/23/2018				10 / WASH
CHECKED BY:	A. EWING	08/23/2018				JOB NUMBER 18W121
MAR PROJ ENGR	C. TORRES					
DIR TERM ENGR:	N. MCINTOSH					CONTRACT NO.
ASST SECRETARY:	A. SCARTON		REVISION	DATE	BY	00****

DATE

STATE OF WASHINGTON — IN LOVING MEMORY — 38538 — PROFESSIONAL ENGINEER

08/23/2018
DATE

Washington State Department of Transportation
WASHINGTON STATE FERRIES

SR 525
MUKILTEO FERRY TERMINAL (PHASE 2)
FERRY TERMINAL CONSTRUCTION

TERMINAL – ROOF DIAPHRAGM – SECTOR A PLAN

SB02.15

SHEET 1117 OF 1521 SHEETS

File: U:\114000-114355\114177 (Mukilteo Ferry Terminal)\02 Plans\14W121SB02_15.dwg
Plotted: 9/21/18 at 2:39pm By: DianeL

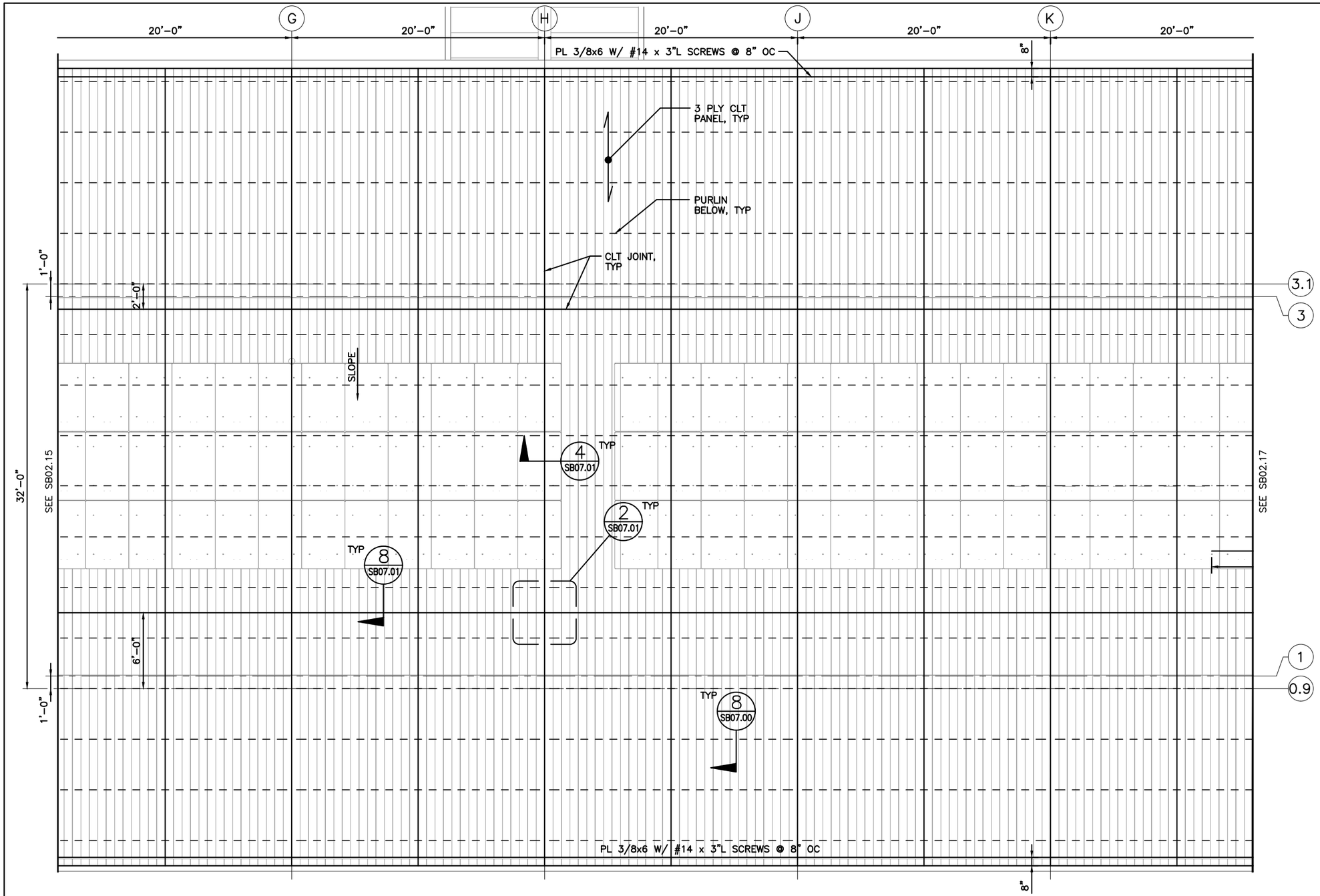

ROOF DIAPHRAGM SECTOR B PLAN

GENERAL PLAN NOTES:

G1. REFERENCE DRAWINGS:
SB00.0X STRUCTURAL NOTES
SB03.XX PARTIAL PLANS
SB04.XX SHEAR WALL/FRAME ELEVATIONS
SB05.XX TYPICAL CONCRETE DETAILS
SB06.XX TYPICAL STEEL DETAILS
SB07.XX TYPICAL WOOD DETAILS
SB08.XX TYPICAL COLD-FORMED STUD DETAILS
SB09.XX TYPICAL MASONRY DETAILS

WOOD PLAN NOTES:

W1. ROOF SLOPE AND TOP OF WOOD FRAMING PER ARCH.

W2. SEE SB02.10 FOR ROOF FRAMING PLANS.

W3. CROSS LAMINATED TIMBER (CLT)
CLT GRADE: V1 OR V2
CLT PROPERTIES:

$F_b S_{EFF,0}$	=	2050 lb-ft/ft (MIN)
IE	=	$96(10^6)$ lb-ft^2/ft (MIN)
GA	=	$0.53(10^6)$ lb/ft (MIN)
$F_b S_{EFF,90}$	=	165 lb-ft/ft (MIN)
IE	=	$3.6(10^6)$ lb-ft^2/ft (MIN)
$GA_{EFF,90}$	=	$0.53(10^6)$ lb/ft (MIN)

W3a.
- SCREWS AND CONNECTIONS FOR CLT BASED UPON DOUG FIR (LARCH).
- FOR BID: IF ALTERNATE WOOD SPECIES ARE PROVIDED, SPACING OF SCREWS TO BE DECREASED BASED UPON SPECIFIC GRAVITY OF ALT WOOD SPECIES.
- CONTRACTOR SHALL SUBMIT REVISED CONNECTION SPACING FOR REVIEW APPROVAL AS PART OF SHOP DRAWING PROCESS. REVISED CONNECTIONS AND SPACING SHALL BE DEVELOPED & SIGNED/SEALED BY LICENSED ENGINEER IN THE STATE OF WA.

W4. CMST12 – INDICATES SIMPSON STRONG TIE CMST12 STRAP, OR APPROVED EQUAL.

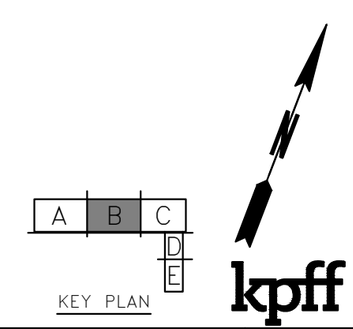

FILE NAME:	14W121SB02_16.dwg					FED.AID PROJ.NO.
PRINTED: 2:39:10 PM 9/21/2018		LAST PRINTED BY:				
SUBMITTAL DATE:	08/23/2018	3yronR				WA-2017-007-00
DESIGNED BY:	A. RADKE	08/23/2018				REGION NO. / STATE
ENTERED BY:	B. RONIA	08/23/2018				10 / WASH
CHECKED BY:	A. EWING	08/23/2018				JOB NUMBER 18W121
MAR PROJ ENGR	C. TORRES					
DIR TERM ENGR:	N. MCINTOSH					CONTRACT NO.
ASST SECRETARY:	A. SCARTON		REVISION	DATE	BY	00****

DATE

08/23/2018
DATE

Washington State Department of Transportation
WASHINGTON STATE FERRIES

SR 525
MUKILTEO FERRY TERMINAL (PHASE 2)
FERRY TERMINAL CONSTRUCTION

TERMINAL – ROOF DIAPHRAGM – SECTOR B PLAN

SB02.16

SHEET 1118 OF 1521 SHEETS

File: U:\114000-114350\114177 (Mukilteo Ferry Terminal)\02 Plans\14W121SB02_16.dwg
Plotted: 9/21/18 at 2:39pm By: DianeL

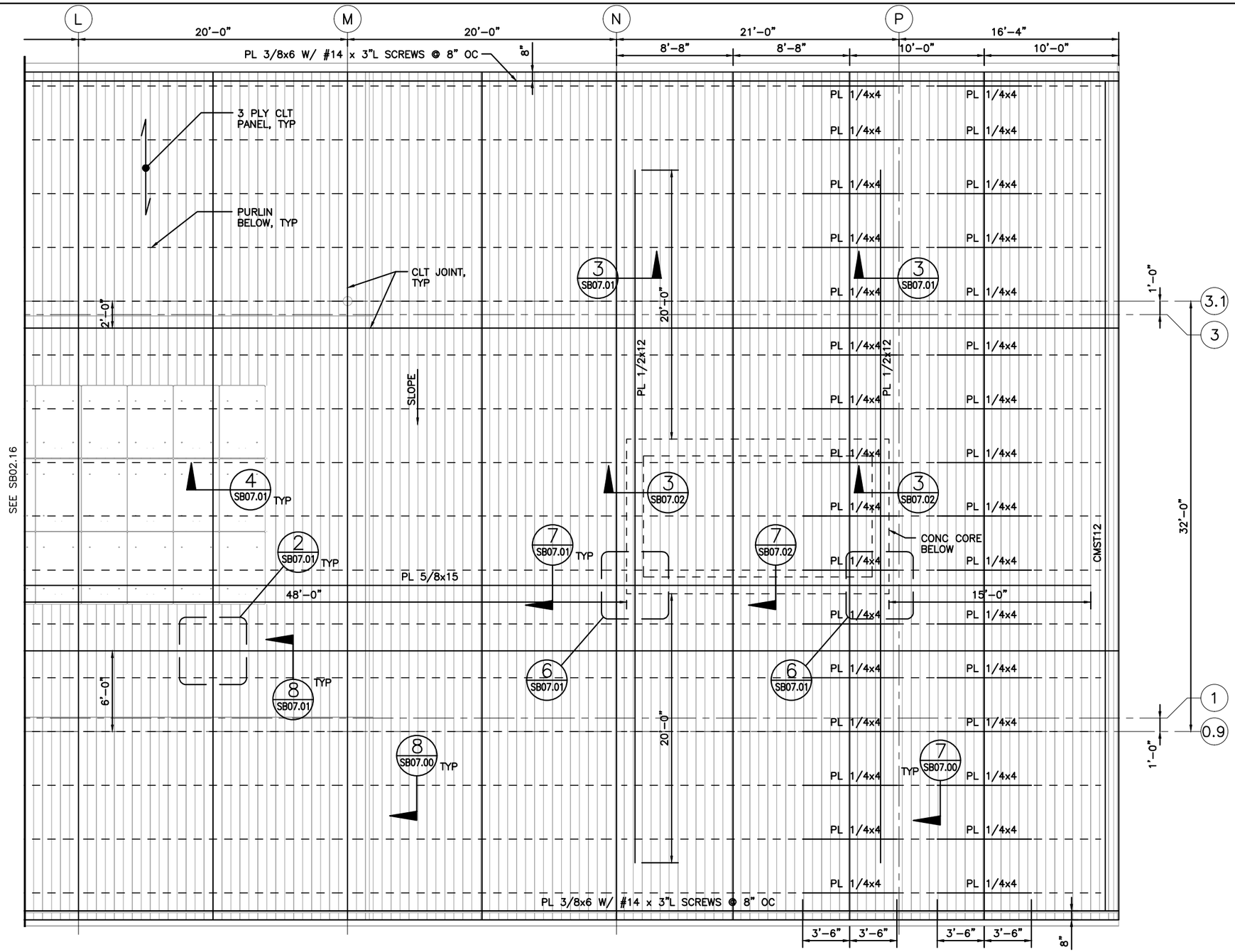

ROOF DIAPHRAGM SECTOR C PLAN

GENERAL PLAN NOTES:

G1. REFERENCE DRAWINGS:
SB00.0X STRUCTURAL NOTES
SB03.XX PARTIAL PLANS
SB04.XX SHEAR WALL/FRAME ELEVATIONS
SB05.XX TYPICAL CONCRETE DETAILS
SB06.XX TYPICAL STEEL DETAILS
SB07.XX TYPICAL WOOD DETAILS
SB08.XX TYPICAL COLD-FORMED STUD DETAILS
SB09.XX TYPICAL MASONRY DETAILS

WOOD PLAN NOTES:

W1. ROOF SLOPE AND TOP OF WOOD FRAMING PER ARCH.

W2. SEE SB02.10 FOR ROOF FRAMING PLANS.

W3. CROSS LAMINATED TIMBER (CLT)
CLT GRADE: V1 OR V2
CLT PROPERTIES:
$F_bS_{EFF,0}$ = 2050 lb-ft/ft (MIN)
IE = $96(10^6)$ lb-ft^2/ft (MIN)
GA = $0.53(10^6)$ lb/ft (MIN)
$F_bS_{EFF,90}$ = 165 lb-ft/ft (MIN)
IE = $3.6(10^6)$ lb-ft^2/ft (MIN)
$GA_{EFF,90}$ = $0.53(10^6)$ lb/ft (MIN)

W3a.
- SCREWS AND CONNECTIONS FOR CLT BASED UPON DOUG FIR (LARCH).
- FOR BID: IF ALTERNATE WOOD SPECIES ARE PROVIDED, SPACING OF SCREWS TO BE DECREASED BASED UPON SPECIFIC GRAVITY OF ALT WOOD SPECIES.
- CONTRACTOR SHALL SUBMIT REVISED CONNECTION SPACING FOR REVIEW APPROVAL AS PART OF SHOP DRAWING PROCESS. REVISED CONNECTIONS AND SPACING SHALL BE DEVELOPED & SIGNED/SEALED BY LICENSED ENGINEER IN THE STATE OF WA.

W4. CMST12 – INDICATES SIMPSON STRONG TIE CMST12 STRAP, OR APPROVED EQUAL.

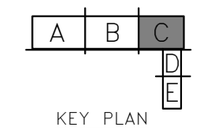

KEY PLAN

kpff

FILE NAME:	14W121SB02_17.dwg					
PRINTED: 2:39:13 PM 9/21/2018		LAST PRINTED BY:				FED.AID PROJ.NO.
SUBMITTAL DATE:	08/23/2018	3yronR				WA-2017-007-00
DESIGNED BY:	A. RADKE	08/23/2018				REGION NO. / STATE
ENTERED BY:	B. RONIA	08/23/2018				10 / WASH
CHECKED BY:	A. EWING	08/23/2018				JOB NUMBER
MAR PROJ ENGR	C. TORRES					18W121
DIR TERM ENGR:	N. MCINTOSH					CONTRACT NO.
ASST SECRETARY:	A. SCARTON		REVISION	DATE	BY	00****

DATE

08/23/2018
DATE

Washington State Department of Transportation
WASHINGTON STATE FERRIES

SR 525
MUKILTEO FERRY TERMINAL (PHASE 2)
FERRY TERMINAL CONSTRUCTION

TERMINAL – ROOF DIAPHRAGM – SECTOR C PLAN

SB02.17
SHEET 1119 OF 1521 SHEETS

File: U:\114000-114350\114177 (Mukilteo Ferry Terminal)\02 Plans\14W121SB02_17.dwg
Plotted: 9/21/18 at 2:39pm By: DianeL

GENERAL PLAN NOTES:

G1. REFERENCE DRAWINGS:
SB00.0X STRUCTURAL NOTES
SB03.XX PARTIAL PLANS
SB04.XX SHEAR WALL/FRAME ELEVATIONS
SB05.XX TYPICAL CONCRETE DETAILS
SB06.XX TYPICAL STEEL DETAILS
SB07.XX TYPICAL WOOD DETAILS
SB08.XX TYPICAL COLD-FORMED STUD DETAILS
SB09.XX TYPICAL MASONRY DETAILS

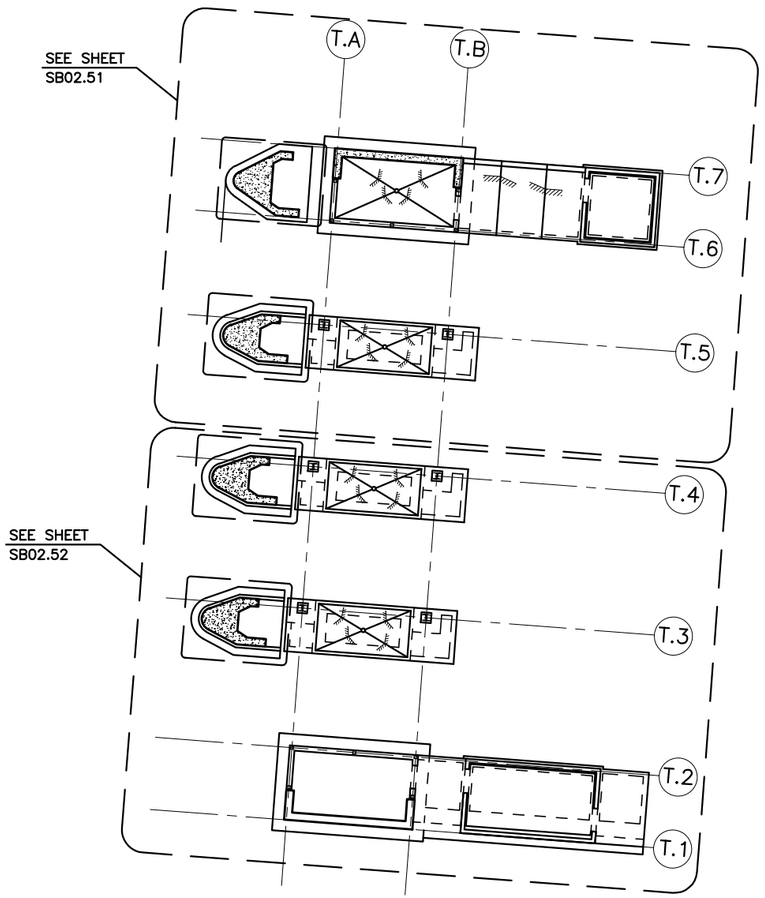

TOLL PLAZA – LEVEL 1
OVERALL PLAN

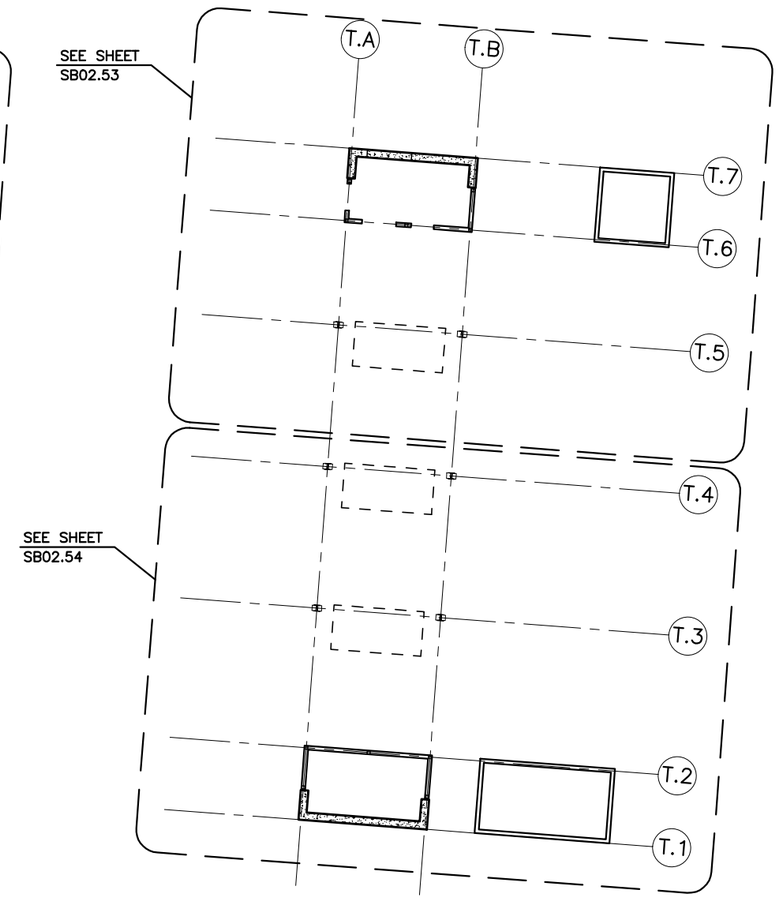

TOLL PLAZA – INTERMEDIATE
ROOF OVERALL PLAN

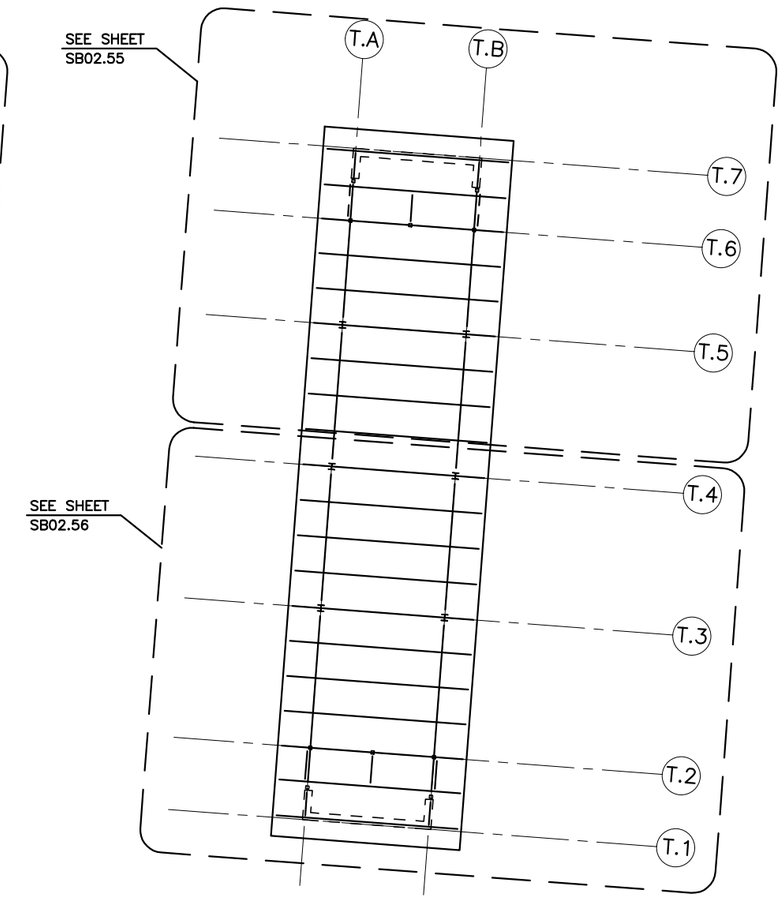

TOLL PLAZA –
ROOF OVERALL PLAN

kpff

FILE NAME:	14W121SB02_50.dwg					
PRINTED: 2:39:16 PM 9/21/2018		LAST PRINTED BY:				FED.AID PROJ.NO.
SUBMITTAL DATE:	08/23/2018	3yronR				WA-2017-007-00
DESIGNED BY:	A. RADKE	08/23/2018				REGION NO. 10 / STATE WASH
ENTERED BY:	B. RONIA	08/23/2018				
CHECKED BY:	A. EWING	08/23/2018				JOB NUMBER 18W121
MAR PROJ ENGR	C. TORRES					
DIR TERM ENGR:	N. MCINTOSH					CONTRACT NO. 00****
ASST SECRETARY:	A. SCARTON		REVISION	DATE	BY	

DATE

DANA LOVING ROBERTS
STATE OF WASHINGTON
38538
PROFESSIONAL ENGINEER
08/23/2018
DATE

Washington State
Department of Transportation
WASHINGTON STATE FERRIES

SR 525
MUKILTEO FERRY TERMINAL (PHASE 2)
FERRY TERMINAL CONSTRUCTION

TOLL PLAZA – OVERALL PLANS

SB02.50

SHEET 1120 OF 1521 SHEETS

File: U:\114000-114350\114177 (Mukilteo Ferry Terminal)\02 Plans\14W121SB02_50.dwg
Plotted: 9/21/18 at 2:39pm By: DianeL

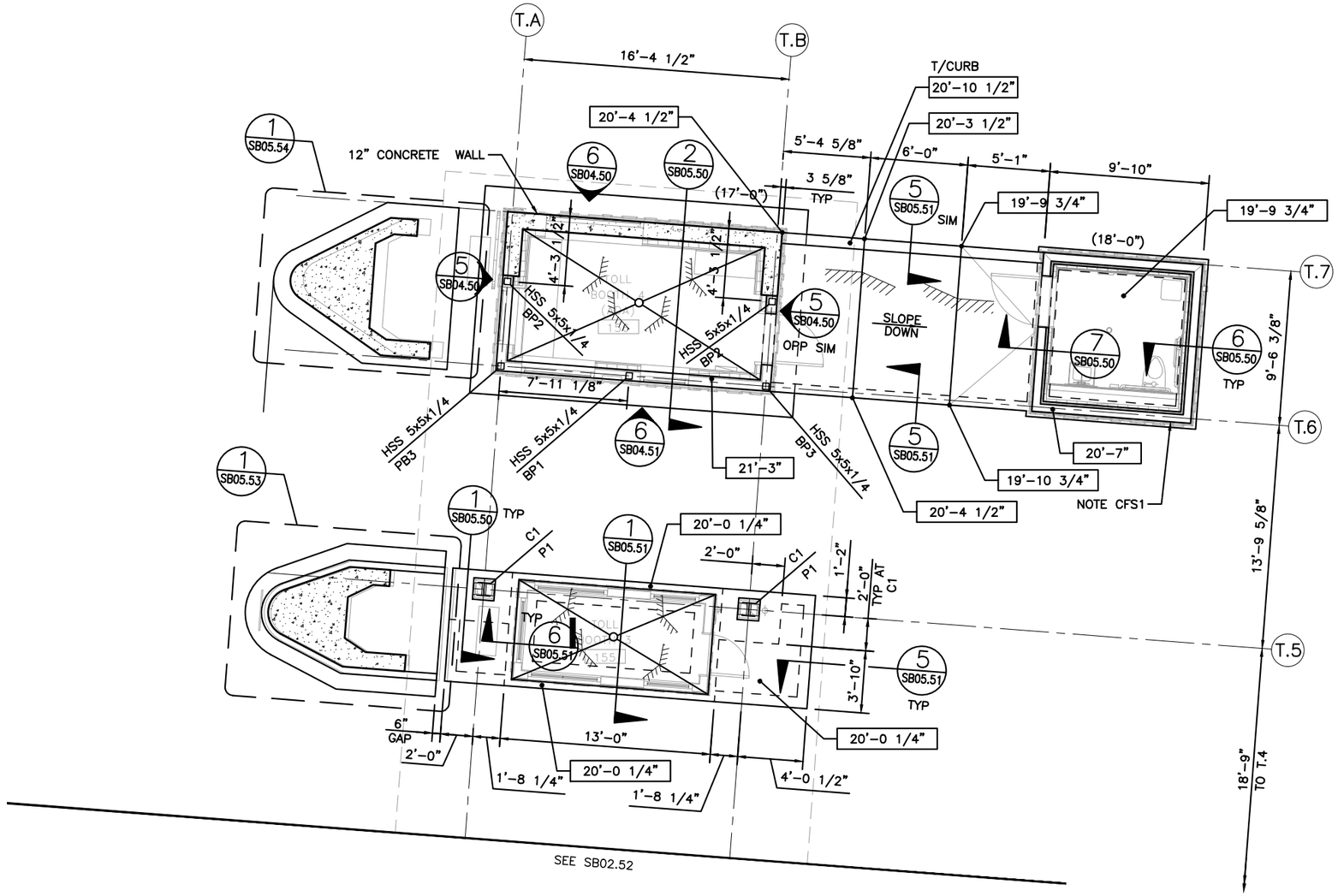

LEVEL 1 SECTOR F PLAN

GENERAL PLAN NOTES:

G1. REFERENCE DRAWINGS:
SB00.0X STRUCTURAL NOTES
SB03.XX PARTIAL PLANS
SB04.XX SHEAR WALL/FRAME ELEVATIONS
SB05.XX TYPICAL CONCRETE DETAILS
SB06.XX TYPICAL STEEL DETAILS
SB07.XX TYPICAL WOOD DETAILS
SB08.XX TYPICAL COLD-FORMED STUD DETAILS
SB09.XX TYPICAL MASONRY DETAILS

FOUNDATION PLAN NOTES:

F1. (X'-XX") INDICATES BOTTOM OF FOOTING ELEVATION.

F2. SLAB-ON-GRADE TO BE 5" THICK WITH #4 @ 12" OC, EACH WAY, MID-DEPTH.

F3. PROVIDE CONTROL JOINTS IN SLABS ON GRADE @ 8' OC, EACH WAY.

CONCRETE PLAN NOTES:

C1. X'-XX" INDICATES TOP OF CONCRETE ELEVATION.

C2. P1 INDICATES CONCRETE PLINTH PER 1/SB05.50.

STEEL PLAN NOTES:

S1. C1 INDICATES STEEL AND WOOD COLUMN PER 1/SB06.50 AND 6/SB06.50.

S2. BPX INDICATES BASE PLATE PER SB06.51.

COLD-FORMED STUD FRAMING NOTES:

CFS1. COLD-FORMED STUD WALLS TO BE 600S162-33 @ 16" OC, SHEATHED PER SW-4 ON 1/SB08.00.

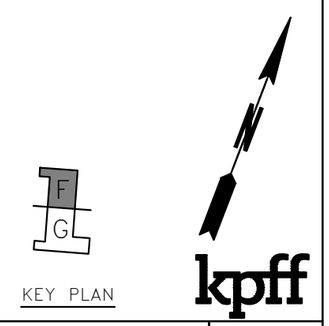

KEY PLAN

kpff

FILE NAME:	14W121SB02_51.dwg					
PRINTED: 2:39:19 PM 9/21/2018		LAST PRINTED BY:				FED.AID PROJ.NO.
SUBMITTAL DATE:	08/23/2018	3yronR				WA-2017-007-00
DESIGNED BY:	A. RADKE	08/23/2018				REGION NO. / STATE
ENTERED BY:	B. RONIA	08/23/2018				10 / WASH
CHECKED BY:	A. EWING	08/23/2018				JOB NUMBER 18W121
MAR PROJ ENGR	C. TORRES					
DIR TERM ENGR:	N. MCINTOSH					CONTRACT NO.
ASST SECRETARY:	A. SCARTON		REVISION	DATE	BY	00****

DATE

08/23/2018
DATE

Washington State Department of Transportation
WASHINGTON STATE FERRIES

SR 525
MUKILTEO FERRY TERMINAL (PHASE 2)
FERRY TERMINAL CONSTRUCTION

TOLL PLAZA – LEVEL 1 – SECTOR F PLAN

SB02.51

SHEET 1121 OF 1521 SHEETS

File: U:\114000-114350\114177 (Mukilteo Ferry Terminal)\02 Plans\14W121SB02_51.dwg
Plotted: 9/21/18 at 2:39pm By: DianeL

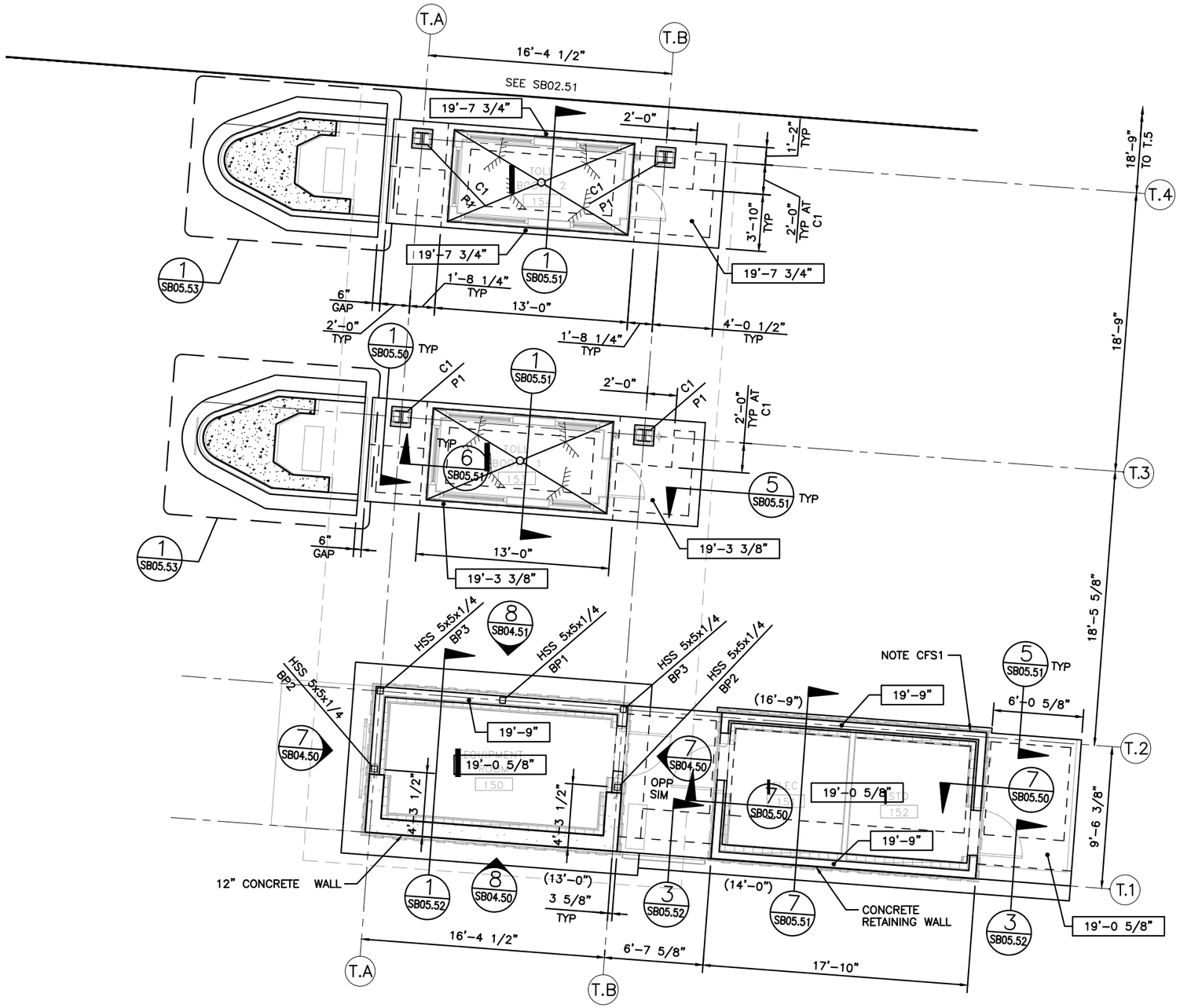

LEVEL 1 SECTOR G PLAN

GENERAL PLAN NOTES:

G1. REFERENCE DRAWINGS:
SB00.0X STRUCTURAL NOTES
SB03.XX PARTIAL PLANS
SB04.XX SHEAR WALL/FRAME ELEVATIONS
SB05.XX TYPICAL CONCRETE DETAILS
SB06.XX TYPICAL STEEL DETAILS
SB07.XX TYPICAL WOOD DETAILS
SB08.XX TYPICAL COLD-FORMED STUD DETAILS
SB09.XX TYPICAL MASONRY DETAILS

FOUNDATION PLAN NOTES:

F1. (X'-XX") INDICATES BOTTOM OF FOOTING ELEVATION.

F2. SLAB-ON-GRADE TO BE 5" THICK WITH #4 @ 12" OC, EACH WAY, MID-DEPTH.

F3. PROVIDE CONTROL JOINTS IN SLABS ON GRADE @ 8' OC, EACH WAY.

CONCRETE PLAN NOTES:

C1. X'-XX" INDICATES TOP OF CONCRETE ELEVATION.

C2. P1 INDICATES CONCRETE PLINTH PER 1/SB05.50.

STEEL PLAN NOTES:

S1. C1 INDICATES STEEL AND WOOD COLUMN PER 1/SB06.50 AND 6/SB06.50.

S2. BPX INDICATES BASE PLATE PER SB06.51.

COLD-FORMED STUD FRAMING NOTES:

CFS1. COLD-FORMED STUD WALLS TO BE 600S162-33 @ 16" OC, SHEATHED PER SW-4 ON 1/SB08.00.

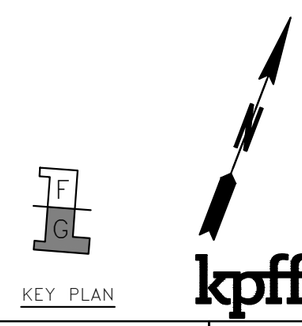

KEY PLAN

kpff

FILE NAME:	14W121SB02_52.dwg					
PRINTED: 2:39:24 PM 9/21/2018		LAST PRINTED BY:				FED.AID PROJ.NO.
SUBMITTAL DATE:	08/23/2018	3yronR				WA-2017-007-00
DESIGNED BY:	A. RADKE	08/23/2018				REGION NO. / STATE
ENTERED BY:	B. RONIA	08/23/2018				10 / WASH
CHECKED BY:	A. EWING	08/23/2018				JOB NUMBER 18W121
MAR PROJ ENGR	C. TORRES					
DIR TERM ENGR:	N. MCINTOSH					CONTRACT NO.
ASST SECRETARY:	A. SCARTON		REVISION	DATE	BY	00****

DATE

08/23/2018
DATE

Washington State Department of Transportation
WASHINGTON STATE FERRIES

SR 525
MUKILTEO FERRY TERMINAL (PHASE 2)
FERRY TERMINAL CONSTRUCTION

TOLL PLAZA – LEVEL 1 – SECTOR G PLAN

SB02.52

SHEET 1122 OF 1521 SHEETS

File: U:\114000-114350\114177 (Mukilteo Ferry Terminal)\02 Plans\14W121SB02_52.dwg
Plotted: 9/21/18 at 2:39pm By: DianeL

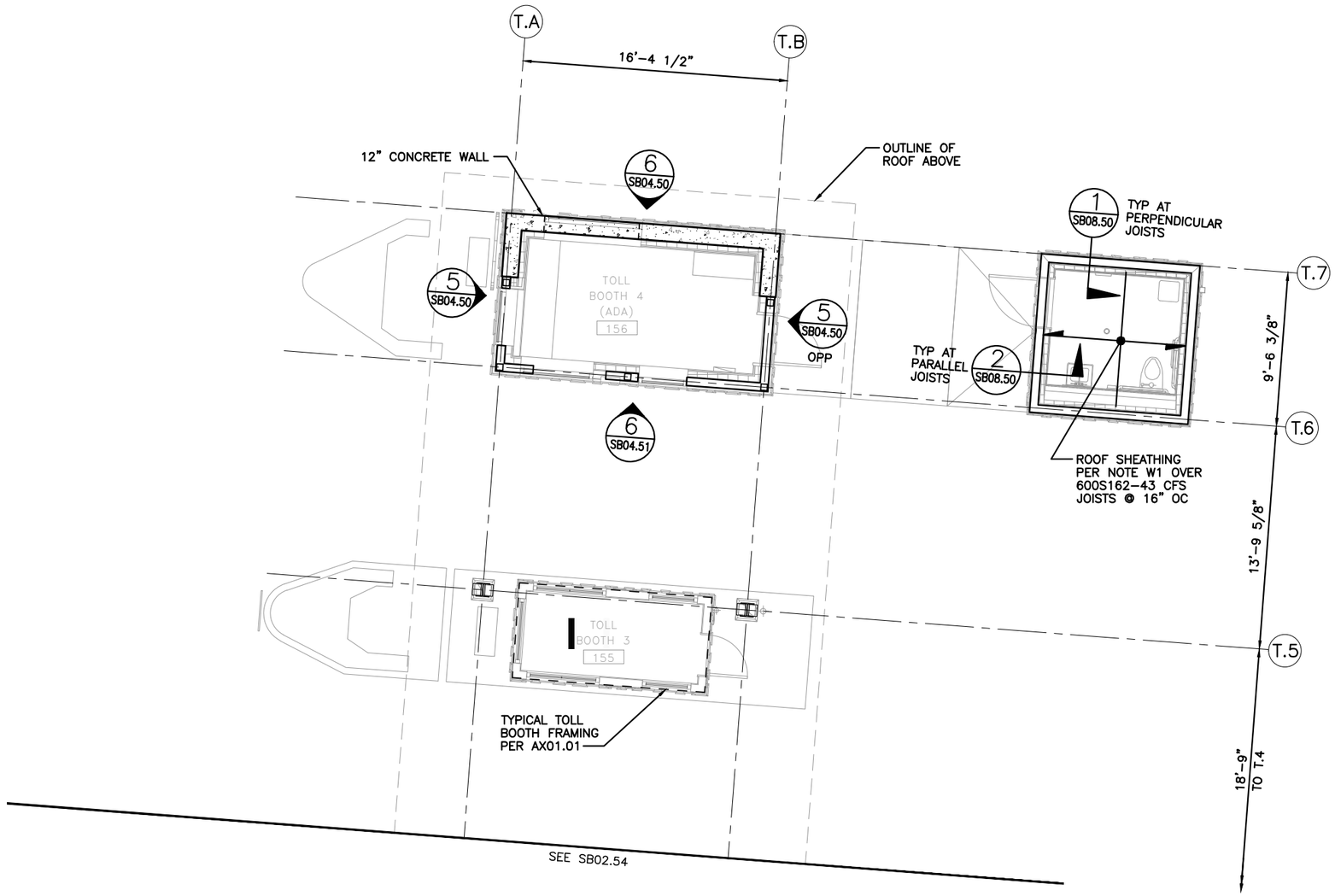

INTERMEDIATE ROOF SECTOR F PLAN

GENERAL PLAN NOTES:

G1. REFERENCE DRAWINGS:
SB00.0X STRUCTURAL NOTES
SB03.XX PARTIAL PLANS
SB04.XX SHEAR WALL/FRAME ELEVATIONS
SB05.XX TYPICAL CONCRETE DETAILS
SB06.XX TYPICAL STEEL DETAILS
SB07.XX TYPICAL WOOD DETAILS
SB08.XX TYPICAL COLD-FORMED STUD DETAILS
SB09.XX TYPICAL MASONRY DETAILS

WOOD FRAMING PLAN NOTES:

W1. ROOF CONSTRUCTION TO BE 15/32" RATED SHEATHING PER STRUCTURAL NOTES. FASTEN TO JOISTS WITH #8 SCREWS @ 6" OC AT ALL PANEL EDGES AND 12" OC @ ALL OTHER SUPPORTS. STAGGER PANEL JOINTS.

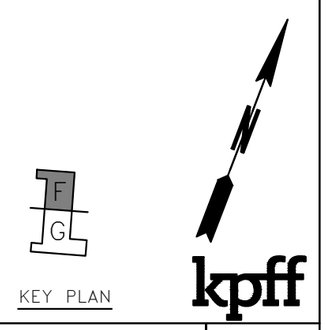

KEY PLAN

kpff

FILE NAME:	14W121SB02_53.dwg					
PRINTED:	2:39:27 PM 9/21/2018	LAST PRINTED BY:				FED.AID PROJ.NO.
SUBMITTAL DATE:	08/23/2018	3yronR				WA-2017-007-00
DESIGNED BY:	A. RADKE	08/23/2018				REGION NO. / STATE
ENTERED BY:	B. RONIA	08/23/2018				10 / WASH
CHECKED BY:	A. EWING	08/23/2018				JOB NUMBER 18W121
MAR PROJ ENGR	C. TORRES					
DIR TERM ENGR:	N. MCINTOSH					CONTRACT NO.
ASST SECRETARY:	A. SCARTON		REVISION	DATE	BY	00****

DATE

STATE OF WASHINGTON — ALEX LOVING RODRIGUEZ — 38538 — PROFESSIONAL ENGINEER

08/23/2018
DATE

Washington State
Department of Transportation
WASHINGTON STATE FERRIES

SR 525
MUKILTEO FERRY TERMINAL (PHASE 2)
FERRY TERMINAL CONSTRUCTION

TOLL PLAZA – INTERMEDIATE ROOF – SECTOR F PLAN

SB02.53

SHEET 1123 OF 1521 SHEETS

File: U:\114000-114350\114177 (Mukilteo Ferry Terminal)\02 Plans\14W121SB02_53.dwg
Plotted: 9/21/18 at 2:39pm By: DianeL

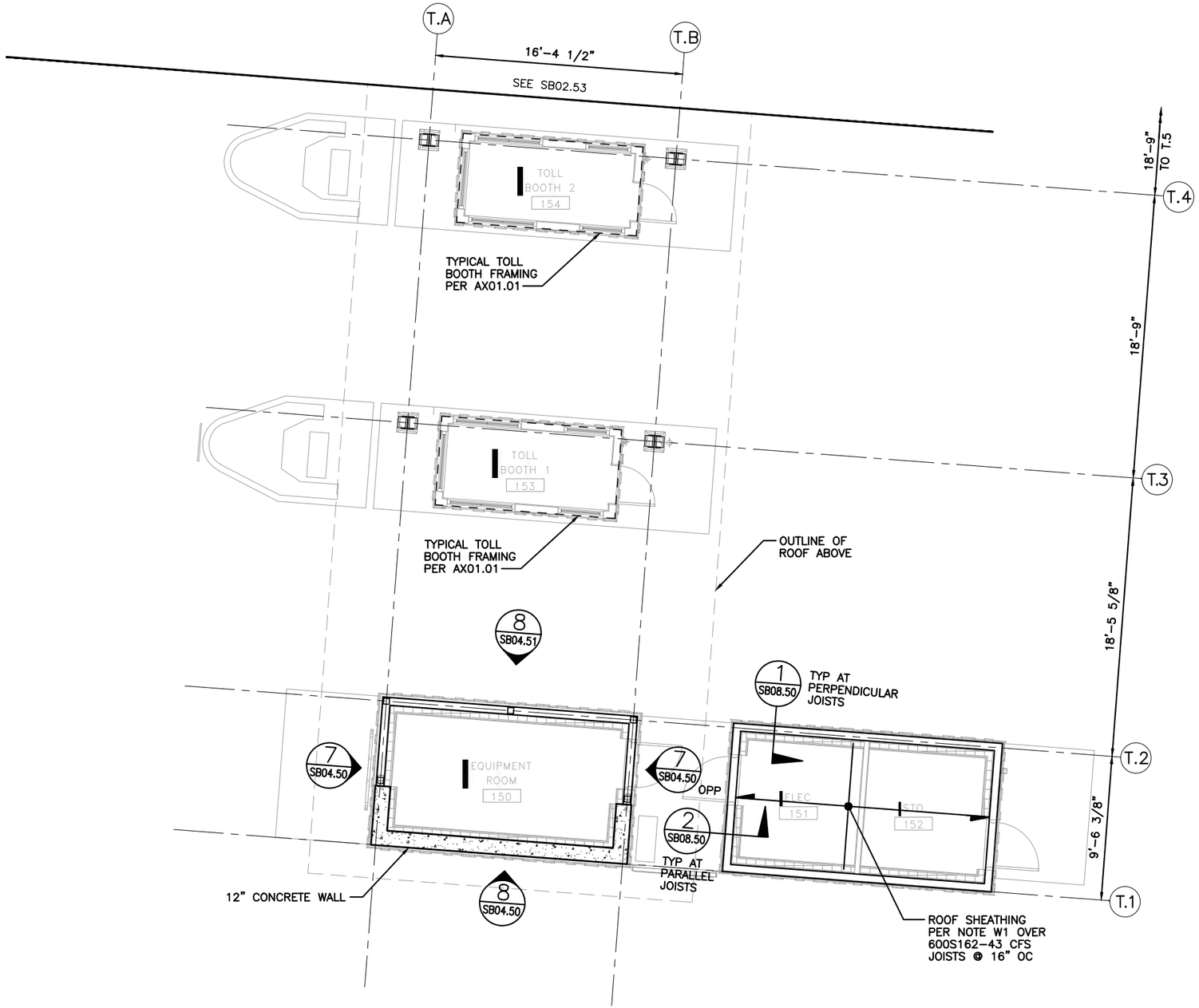

INTERMEDIATE ROOF SECTOR G PLAN

GENERAL PLAN NOTES:

G1. REFERENCE DRAWINGS:
SB00.0X STRUCTURAL NOTES
SB03.XX PARTIAL PLANS
SB04.XX SHEAR WALL/FRAME ELEVATIONS
SB05.XX TYPICAL CONCRETE DETAILS
SB06.XX TYPICAL STEEL DETAILS
SB07.XX TYPICAL WOOD DETAILS
SB08.XX TYPICAL COLD-FORMED STUD DETAILS
SB09.XX TYPICAL MASONRY DETAILS

WOOD FRAMING PLAN NOTES:

W1. ROOF CONSTRUCTION TO BE 15/32" RATED SHEATHING PER STRUCTURAL NOTES. FASTEN TO JOISTS WITH #8 SCREWS @ 6" OC AT ALL PANEL EDGES AND 12" OC @ ALL OTHER SUPPORTS. STAGGER PANEL JOINTS.

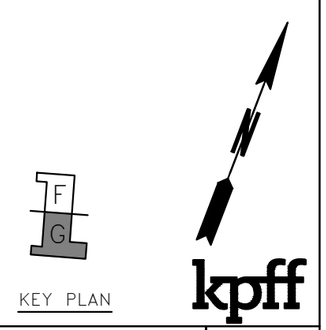

KEY PLAN

kpff

FILE NAME:	14W121SB02_54.dwg					
PRINTED: 2:39:31 PM 9/21/2018		LAST PRINTED BY:				FED.AID PROJ.NO.
SUBMITTAL DATE:	08/23/2018	ZyronR				
DESIGNED BY:	A. RADKE	08/23/2018				WA-2017-007-00
ENTERED BY:	B. RONIA	08/23/2018				REGION NO. / STATE
CHECKED BY:	A. EWING	08/23/2018				10 / WASH
MAR PROJ ENGR	C. TORRES					JOB NUMBER 18W121
DIR TERM ENGR:	N. MCINTOSH					CONTRACT NO.
ASST SECRETARY:	A. SCARTON		REVISION	DATE	BY	00****

DATE

DANA LOVING ROBERTS STATE OF WASHINGTON 38538 PROFESSIONAL ENGINEER
08/23/2018
DATE

Washington State Department of Transportation
WASHINGTON STATE FERRIES

SR 525
MUKILTEO FERRY TERMINAL (PHASE 2)
FERRY TERMINAL CONSTRUCTION

TOLL PLAZA – INTERMEDIATE ROOF – SECTOR G PLAN

SB02.54

SHEET 1124 OF 1521 SHEETS

File: U:\114000-114350\114177 (Mukilteo Ferry Terminal)\02 Plans\14W121SB02_54.dwg
Plotted: 9/21/18 at 2:39pm By: DianeL

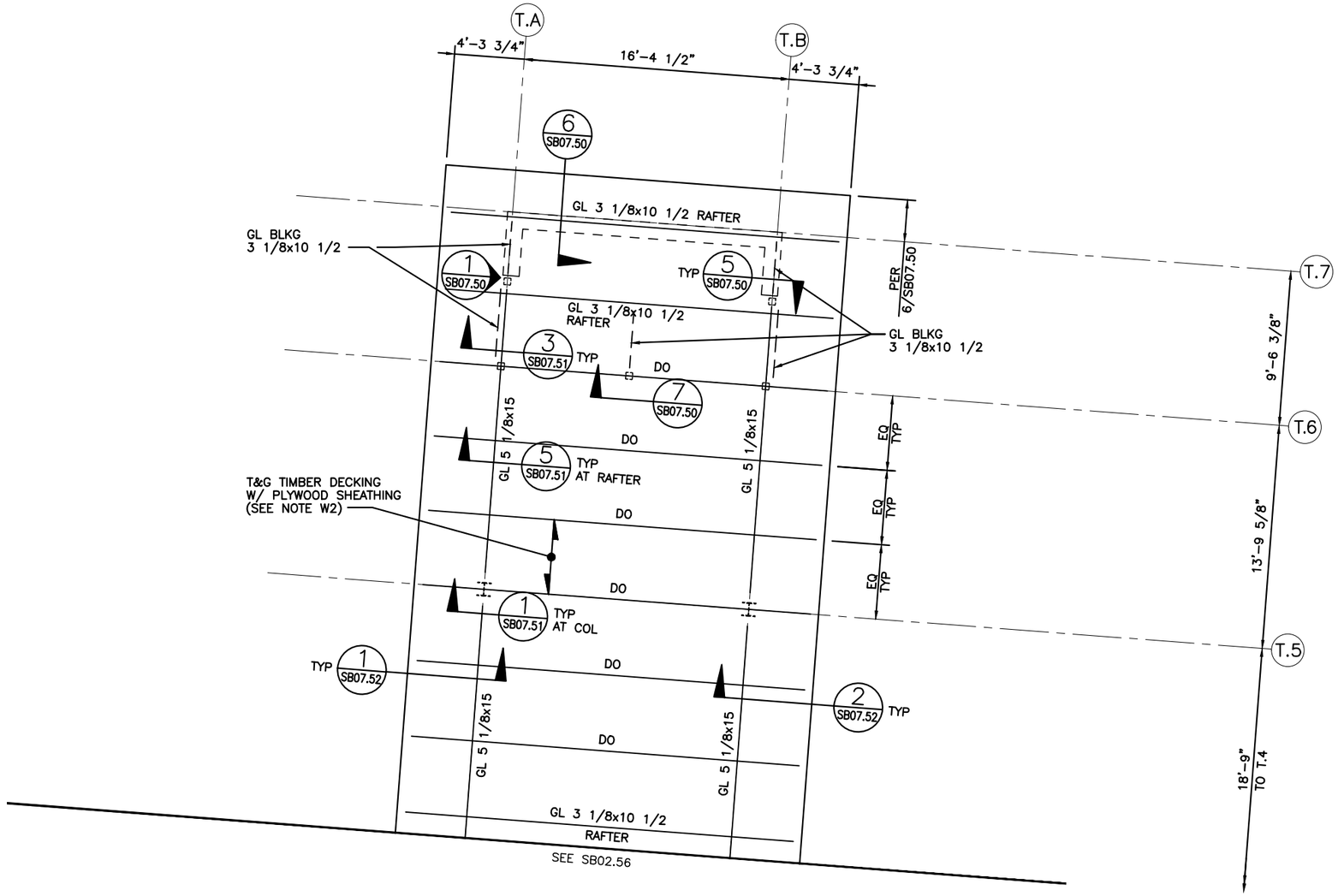

ROOF SECTOR F PLAN

GENERAL PLAN NOTES:

G1. REFERENCE DRAWINGS:
SB00.0X STRUCTURAL NOTES
SB03.XX PARTIAL PLANS
SB04.XX SHEAR WALL/FRAME ELEVATIONS
SB05.XX TYPICAL CONCRETE DETAILS
SB06.XX TYPICAL STEEL DETAILS
SB07.XX TYPICAL WOOD DETAILS
SB08.XX TYPICAL COLD-FORMED STUD DETAILS
SB09.XX TYPICAL MASONRY DETAILS

WOOD FRAMING PLAN NOTES:

W1. "GL" INDICATES GLULAM BEAMS.

W2. ROOF CONSTRUCTION TO BE 15/32" PLYWOOD ROOF SHEATHING ATTACHED TO TIMBER DECKING WITH 16 GA x 1 1/2" STAPLES WITH 7/16" CROWN @ 6" OC AT ALL PANEL EDGES AND @ 12" OC AT 2'-0" SPACING ALONG SHEATHING. TIMBER DECKING SHALL BE 2x6 TONGUE AND GROOVE, DOUGLAS FIR LARCH SELECT GRADE. INSTALL DECK IN CONTROLLED RANDOM LAY-UP ARRANGEMENT PER AITC 112. ATTACH DECKING TO SUPPORTING FRAMING WITH (2) 16d @ EACH GL MEMBER AND 16d @ 6" OC AT ALL FRAMING BELOW. EACH PIECE SHALL BE TOENAILED THROUGH THE TONGUE AND EACH SUPPORT WITH (1) 10d COMMON NAIL.

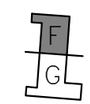

KEY PLAN

kpff

FILE NAME:	14W121SB02_55.dwg					
PRINTED:	2:39:34 PM 9/21/2018	LAST PRINTED BY:				FED.AID PROJ.NO.
SUBMITTAL DATE:	08/23/2018	3yronR				WA-2017-007-00
DESIGNED BY:	A. RADKE	08/23/2018				REGION NO. / STATE
ENTERED BY:	B. RONIA	08/23/2018				10 / WASH
CHECKED BY:	A. EWING	08/23/2018				JOB NUMBER
MAR PROJ ENGR	C. TORRES					18W121
DIR TERM ENGR:	N. MCINTOSH					CONTRACT NO.
ASST SECRETARY:	A. SCARTON		REVISION	DATE	BY	00****

DATE

DANIEL LOVING RODRIGUES
STATE OF WASHINGTON
38538
PROFESSIONAL ENGINEER

08/23/2018
DATE

Washington State
Department of Transportation
WASHINGTON STATE FERRIES

SR 525
MUKILTEO FERRY TERMINAL (PHASE 2)
FERRY TERMINAL CONSTRUCTION

TOLL PLAZA – ROOF –
SECTOR F PLAN

SB02.55

SHEET 1125 OF 1521 SHEETS

File: U:\114000-114350\114177 (Mukilteo Ferry Terminal)\02 Plans\14W121SB02_55.dwg
Plotted: 9/21/18 at 2:39pm By: DianeL

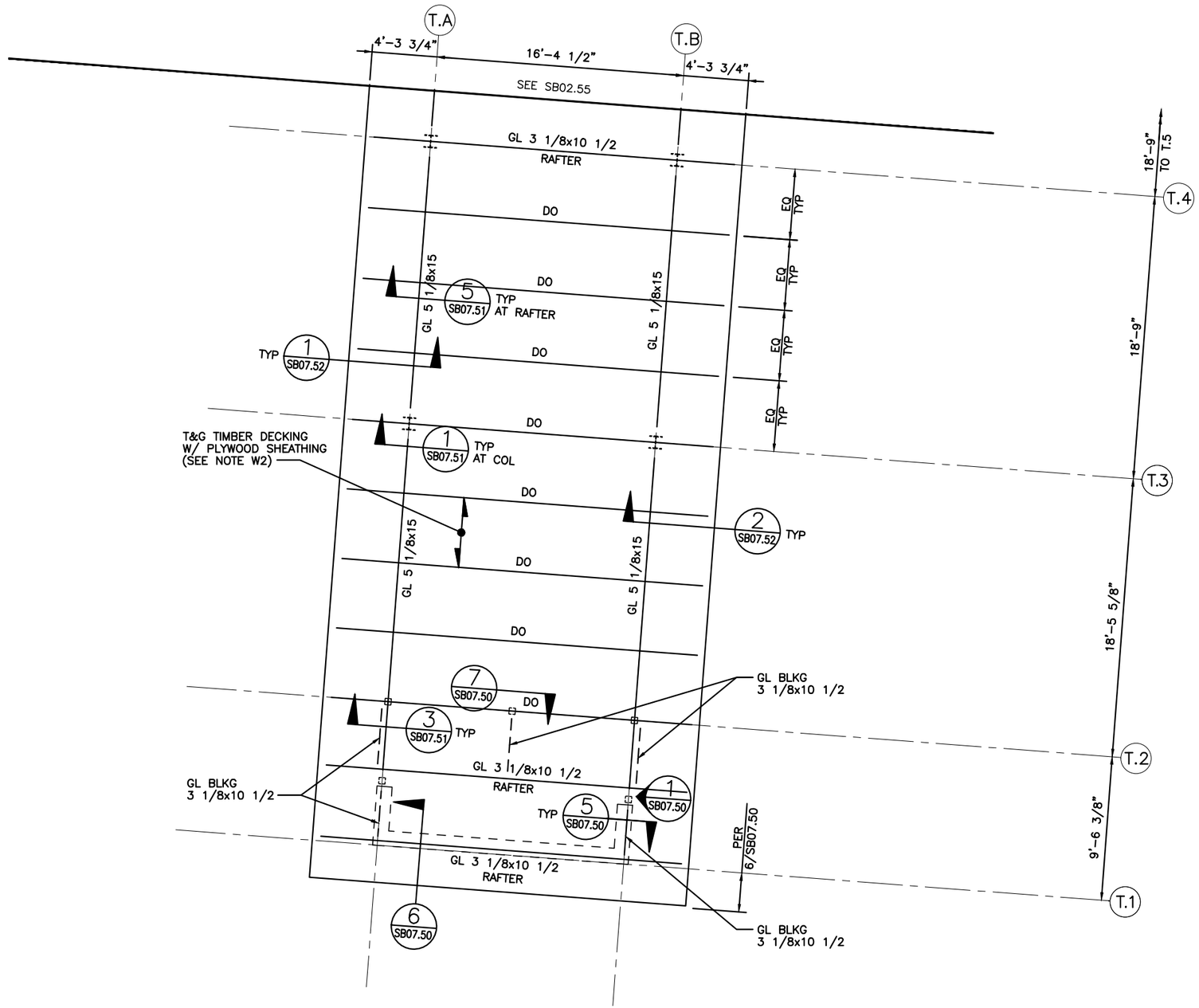

ROOF SECTOR G PLAN

GENERAL PLAN NOTES:

G1. REFERENCE DRAWINGS:
SB00.0X STRUCTURAL NOTES
SB03.XX PARTIAL PLANS
SB04.XX SHEAR WALL/FRAME ELEVATIONS
SB05.XX TYPICAL CONCRETE DETAILS
SB06.XX TYPICAL STEEL DETAILS
SB07.XX TYPICAL WOOD DETAILS
SB08.XX TYPICAL COLD-FORMED STUD DETAILS
SB09.XX TYPICAL MASONRY DETAILS

WOOD FRAMING PLAN NOTES:

W1. "GL" INDICATES GLULAM BEAMS.

W2. ROOF CONSTRUCTION TO BE 15/32" PLYWOOD ROOF SHEATHING ATTACHED TO TIMBER DECKING WITH 16 GA x 1 1/2" STAPLES WITH 7/16" CROWN @ 6" OC AT ALL PANEL EDGES AND @ 12" OC AT 2'-0" SPACING ALONG SHEATHING. TIMBER DECKING SHALL BE 2x6 TONGUE AND GROOVE, DOUGLAS FIR LARCH SELECT GRADE. INSTALL DECK IN CONTROLLED RANDOM LAY-UP ARRANGEMENT PER AITC 112. ATTACH DECKING TO SUPPORTING FRAMING WITH (2) 16d @ EACH GL MEMBER AND 16d @ 6" OC AT AT ALL FRAMING BELOW. EACH PIECE SHALL BE TOENAILED THROUGH THE TONGUE AND EACH SUPPORT WITH (1) 10d COMMON NAIL.

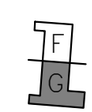

KEY PLAN

kpff

File: U:\114000-114350\114177 (Mukilteo Ferry Terminal)\02 Plans\14W121SB02_56.dwg
Plotted: 9/21/18 at 2:39pm By: DianeL

FILE NAME:	14W121SB02_56.dwg					
PRINTED: 2:39:37 PM 9/21/2018	LAST PRINTED BY:					FED.AID PROJ.NO.
SUBMITTAL DATE: 08/23/2018	3yronR					
DESIGNED BY: A. RADKE	08/23/2018					WA-2017-007-00
ENTERED BY: B. RONIA	08/23/2018					REGION NO. / STATE
CHECKED BY: A. EWING	08/23/2018					10 / WASH
MAR PROJ ENGR C. TORRES						JOB NUMBER 18W121
DIR TERM ENGR: N. MCINTOSH						CONTRACT NO.
ASST SECRETARY: A. SCARTON		REVISION	DATE	BY		00****

DATE

STATE OF WASHINGTON
SARA LOVING ROGERS
38538
PROFESSIONAL ENGINEER
08/23/2018
DATE

Washington State Department of Transportation
WASHINGTON STATE FERRIES

SR 525
MUKILTEO FERRY TERMINAL (PHASE 2)
FERRY TERMINAL CONSTRUCTION

TOLL PLAZA – ROOF – SECTOR G PLAN

SB02.56

SHEET 1126 OF 1521 SHEETS

PARTIAL PLAN NOTES:

P1. CATWALK DESIGNED FOR 40 PSF LIVE LOAD, IN CONJUNCTION WITH 500 LB CONCENTRATED LOAD OVER 2'x2' SQUARE AREA.

STEEL PLAN NOTES:

S1. (X'-X") INDICATES TOP OF STEEL ELEVATION.

S2. STEEL DECK GAGE AND PROPERTIES PER NOTE S5 ON SB02.09.

S3. ALL STEEL FRAMING AND BAR GRATING TO BE GALVANIZED.

CONCRETE PLAN NOTES:

C1. [X'-X"] INDICATES TOP OF CONCRETE/ CMU WALL ELEVATION.

C2. XE INDICATES STEEL BEAM CONNECTION TO CONCRETE WALL PER 7/SB06.04.

MASONRY PLAN NOTES:

M1. XME INDICATES STEEL BEAM CONNECTION TO CMU WALL PER 5/SB09.01.

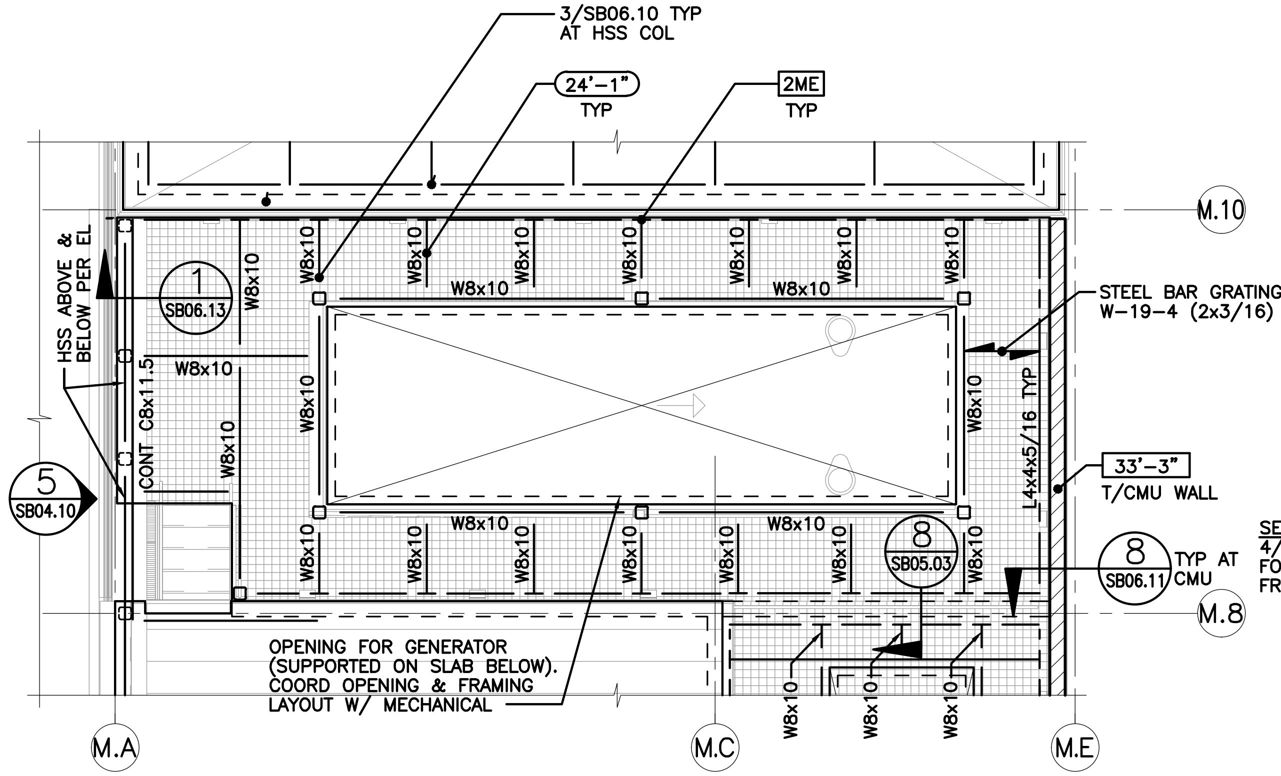

6 GENERATOR FRAMING PLAN

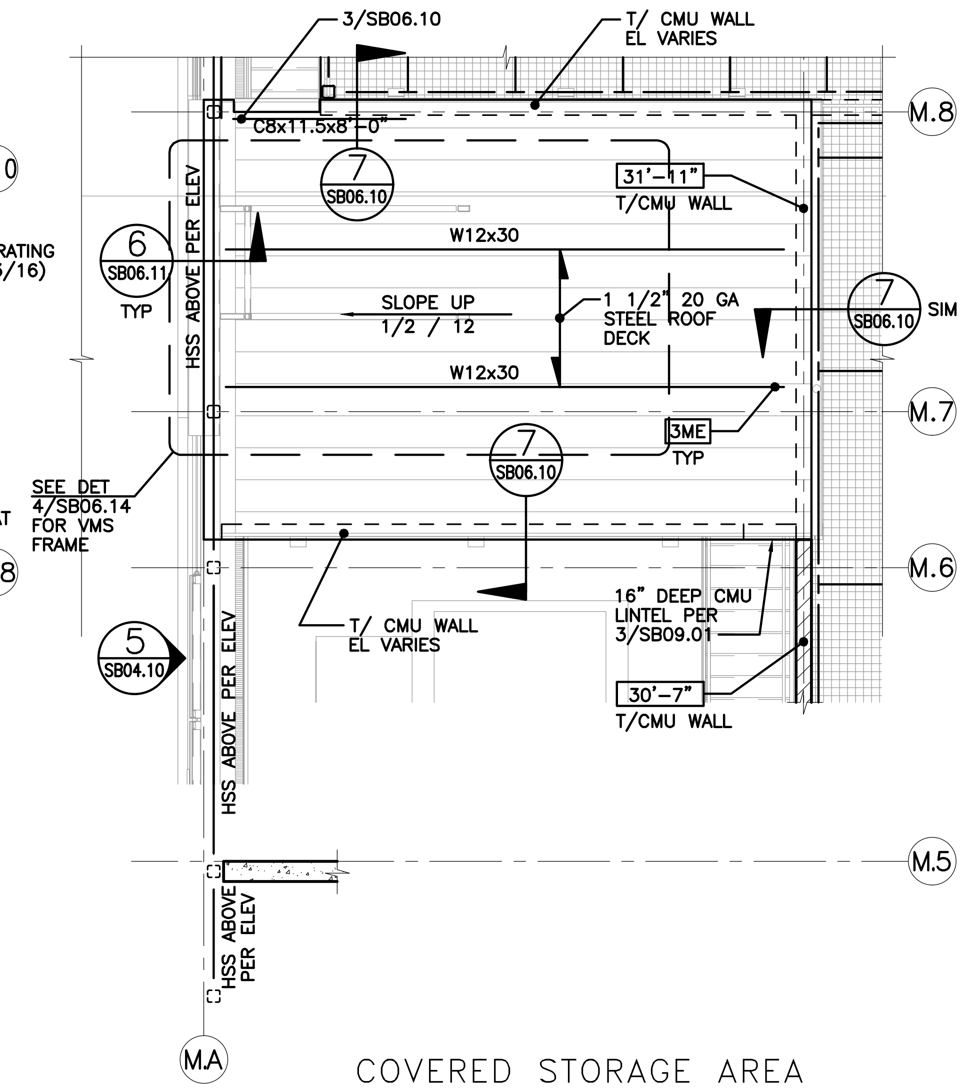

7 COVERED STORAGE AREA FRAMING PLAN

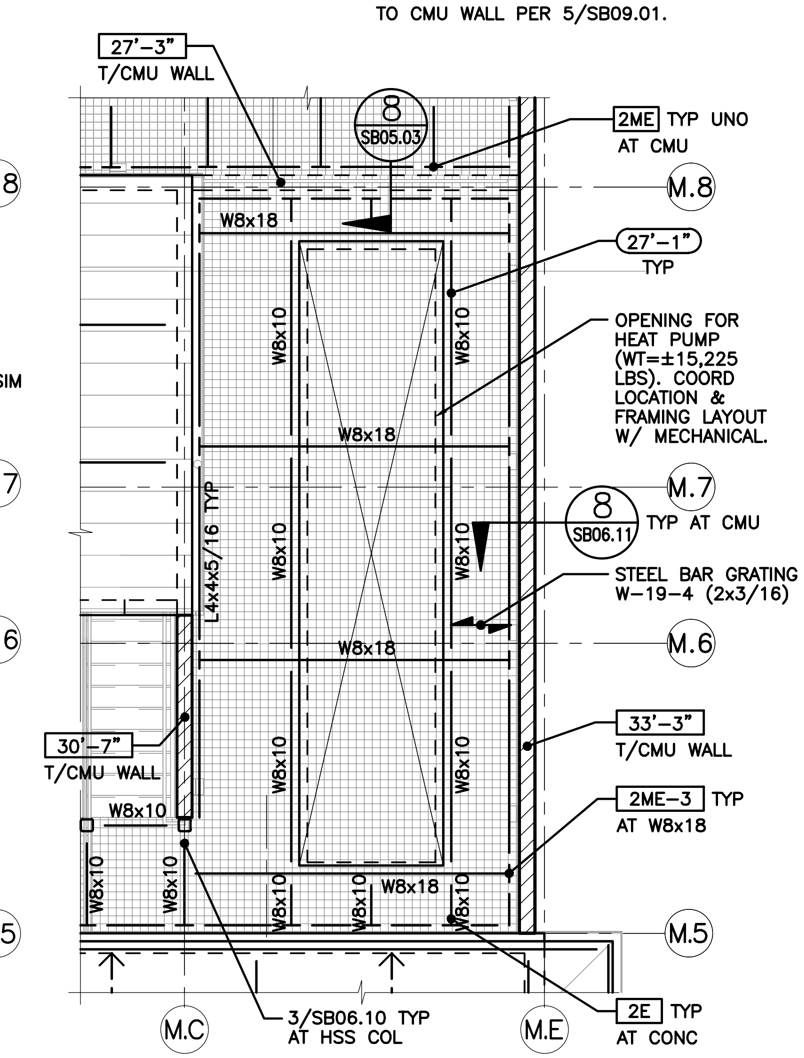

8 HEAT PUMP FRAMING PLAN

FILE NAME:	14W121SB03_00.dwg				
PRINTED:	2:39:48 PM 9/21/2018	LAST PRINTED BY:			
SUBMITTAL DATE:	08/23/2018	ByronR			
DESIGNED BY:	A. RADKE	08/23/2018			
ENTERED BY:	B. RONIA	08/23/2018			
CHECKED BY:	A. EWING	08/23/2018			
MAR PROJ ENGR	C. TORRES				
DIR TERM ENGR:	N. MCINTOSH				
ASST SECRETARY:	A. SCARTON		REVISION	DATE	BY

FED.AID PROJ.NO. WA-2017-007-00
REGION NO. 10 STATE WASH
JOB NUMBER 18W121
CONTRACT NO. 00****

DATE

SARA LOVING ROBERTS STATE OF WASHINGTON 38538 STRUCTURAL ENGINEER PROFESSIONAL ENGINEER

08/23/2018 DATE

Washington State Department of Transportation
WASHINGTON STATE FERRIES

SR 525
MUKILTEO FERRY TERMINAL (PHASE 2)
FERRY TERMINAL CONSTRUCTION

PARTIAL PLANS - MAINTENANCE YARD

SB03.00

SHEET 1127 OF 1521 SHEETS

kpff

File: U:\114000-114350\114177 (Mukilteo Ferry Terminal)\02 Plans\14W121SB03_00.dwg
Plotted: 9/21/18 at 2:39pm By: DianeL

STAIR NOTES:

1. ALL STEEL TO BE PAINTED.
2. STAIR TREADS PER ARCHITECT.
3. STAIR TENSION RESISTING CONNECTIONS PER 4/SB06.30, UNO.
4. HX INDICATES HSS CONNECTION TYPE PER 2/SB06.30 OR 3/SB06.30.

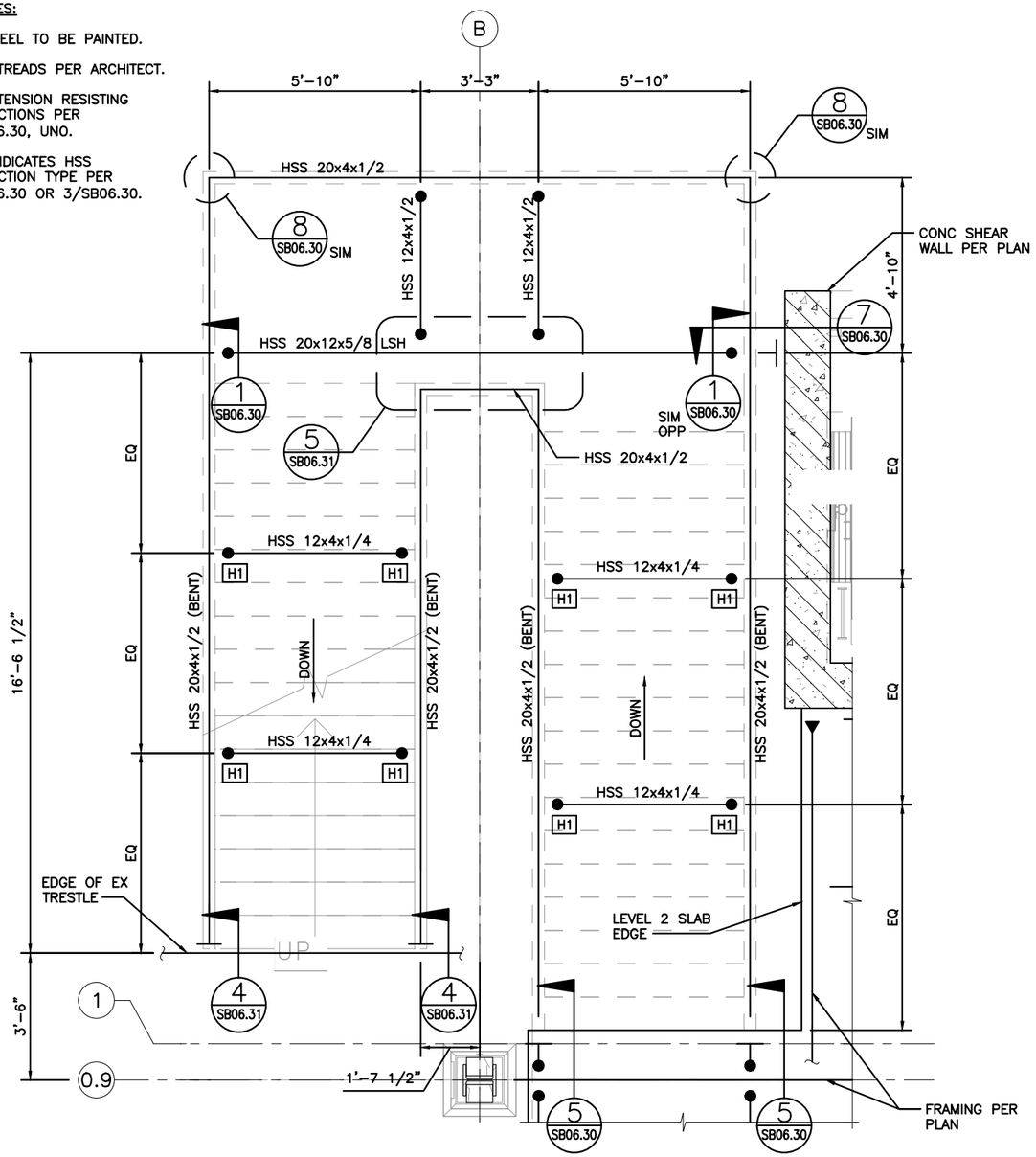

5 TERMINAL STAIR 1 PLAN

STAIR NOTES:

1. ALL STEEL TO BE PAINTED.
2. STAIR TREADS PER ARCHITECT.
3. STAIR TENSION RESISTING CONNECTIONS PER 4/SB06.30, UNO.
4. HX INDICATES HSS CONNECTION TYPE PER 2/SB06.30 OR 3/SB06.30.

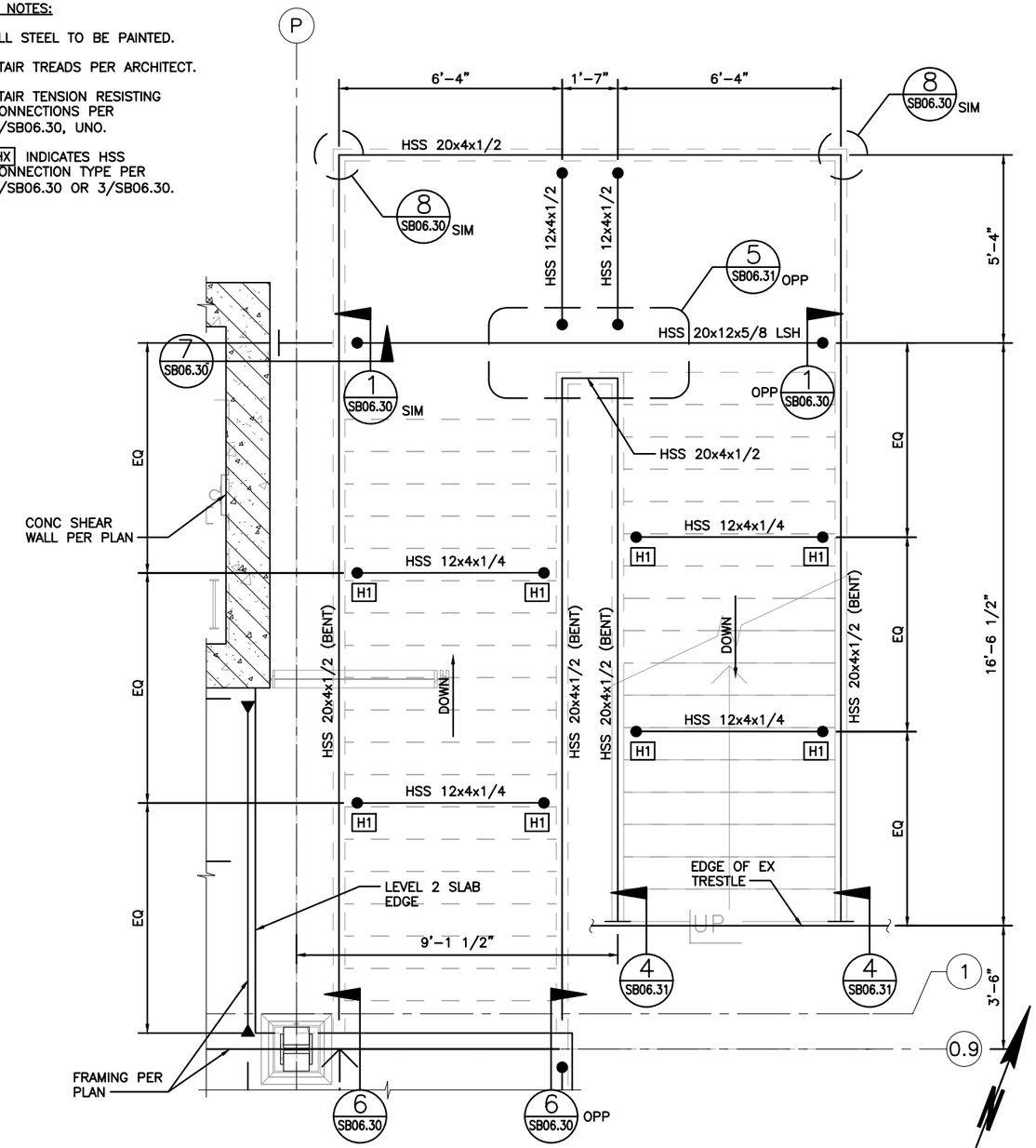

7 TERMINAL STAIR 2 PLAN

kpff

FILE NAME:	14W121SB03_01.dwg					FED.AID PROJ.NO.
PRINTED: 2:39:53 PM 9/21/2018		LAST PRINTED BY:				
SUBMITTAL DATE:	08/23/2018	3yronR				WA-2017-007-00
DESIGNED BY:	A. RADKE	08/23/2018				REGION NO. / STATE
ENTERED BY:	B. RONIA	08/23/2018				10 / WASH
CHECKED BY:	A. EWING	08/23/2018				JOB NUMBER 18W121
MAR PROJ ENGR	C. TORRES					
DIR TERM ENGR:	N. MCINTOSH					CONTRACT NO.
ASST SECRETARY:	A. SCARTON		REVISION	DATE	BY	00****

DATE

08/23/2018
DATE

Washington State Department of Transportation
WASHINGTON STATE FERRIES

SR 525
MUKILTEO FERRY TERMINAL (PHASE 2)
FERRY TERMINAL CONSTRUCTION

PARTIAL PLANS – STAIRS

SB03.01

SHEET 1128 OF 1521 SHEETS

File: U:\114000-114350\114177 (Mukilteo Ferry Terminal)\02 Plans\14W121SB03_01.dwg
Plotted: 9/21/18 at 2:39pm By: DianeL

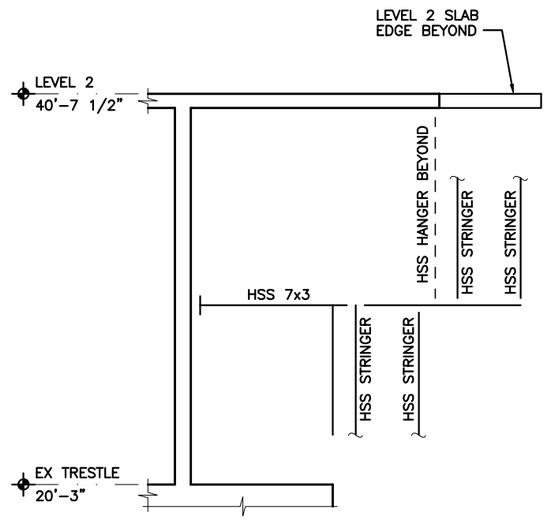

2 / - TERMINAL STAIR 3 SECTION

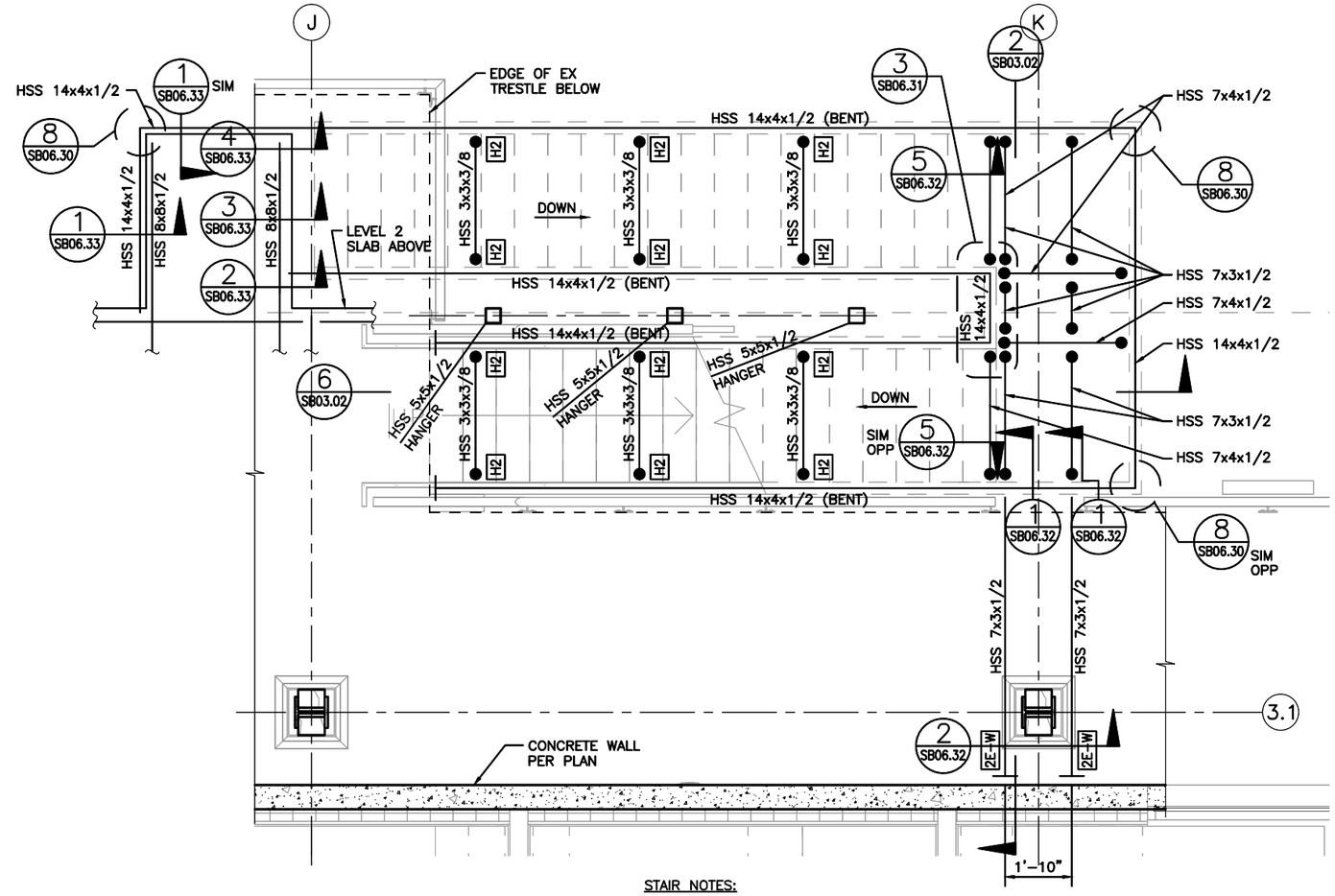

STAIR NOTES:

1. ALL STEEL TO BE PAINTED.
2. STAIR TREADS PER ARCHITECT.
3. STAIR TENSION RESISTING CONNECTIONS PER 4/SB06.30, UNO.
4. HX INDICATES HSS CONNECTION TYPE PER 2/SB06.30 OR 3/SB06.30.

3 / - TERMINAL STAIR 3 PARTIAL PLAN

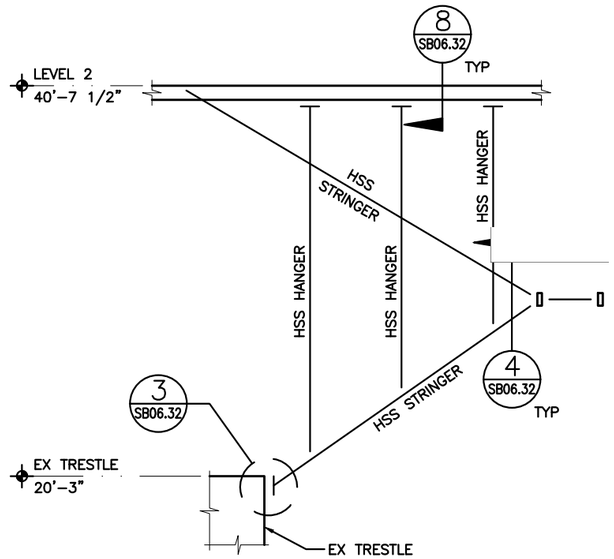

6 / - TERMINAL STAIR 3 SECTION

FILE NAME:	14W121SB03_02.dwg					FED.AID PROJ.NO.
PRINTED: 2:39:56 PM 9/21/2018		LAST PRINTED BY:				
SUBMITTAL DATE:	08/23/2018	3yronR				WA-2017-007-00
DESIGNED BY:	A. RADKE	08/23/2018				REGION NO. / STATE
ENTERED BY:	B. RONIA	08/23/2018				10 / WASH
CHECKED BY:	A. EWING	08/23/2018				JOB NUMBER 18W121
MAR PROJ ENGR	C. TORRES					
DIR TERM ENGR:	N. MCINTOSH					CONTRACT NO. 00****
ASST SECRETARY:	A. SCARTON		REVISION	DATE	BY	

DATE

08/23/2018
DATE

Washington State Department of Transportation
WASHINGTON STATE FERRIES

SR 525
MUKILTEO FERRY TERMINAL (PHASE 2)
FERRY TERMINAL CONSTRUCTION

PARTIAL PLANS – STAIRS

SB03.02

SHEET 1129 OF 1521 SHEETS

kpff

File: U:\114000-114350\114177 (Mukilteo Ferry Terminal)\02 Plans\14W121SB03_02.dwg
Plotted: 9/21/18 at 2:39pm By: DianeL

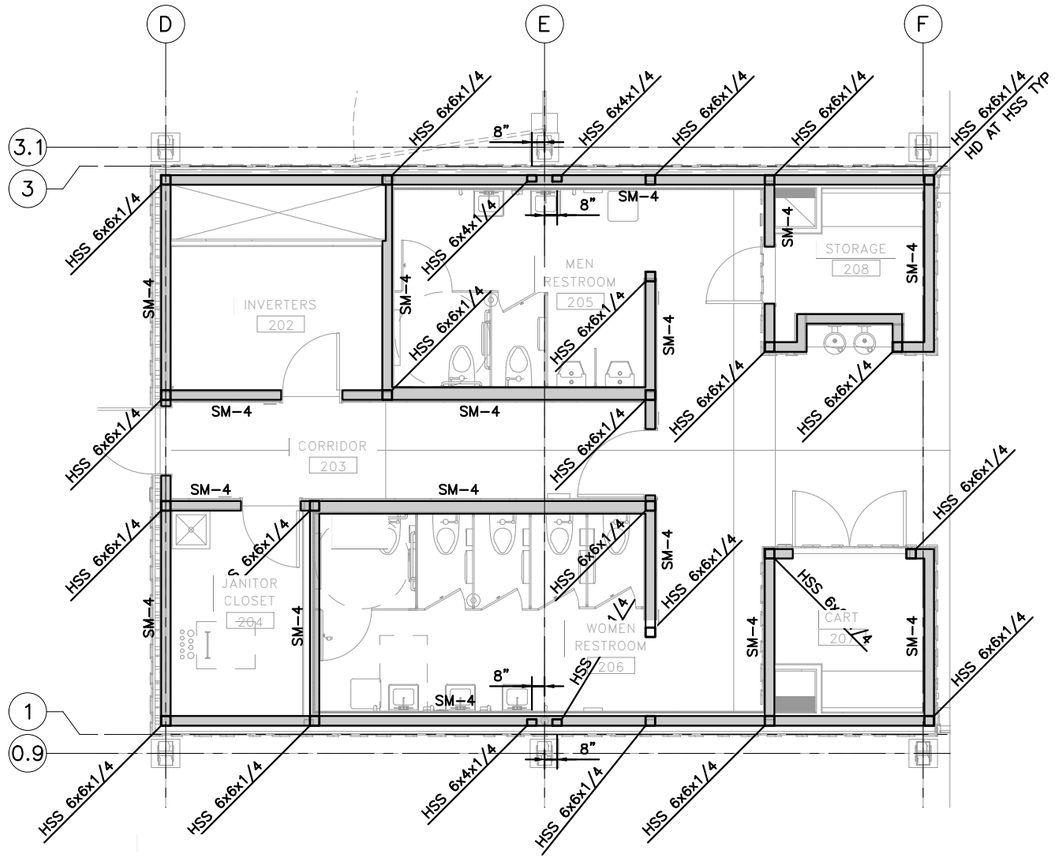

5 - WEST COLD-FORMED STUD WALL PARTIAL PLAN

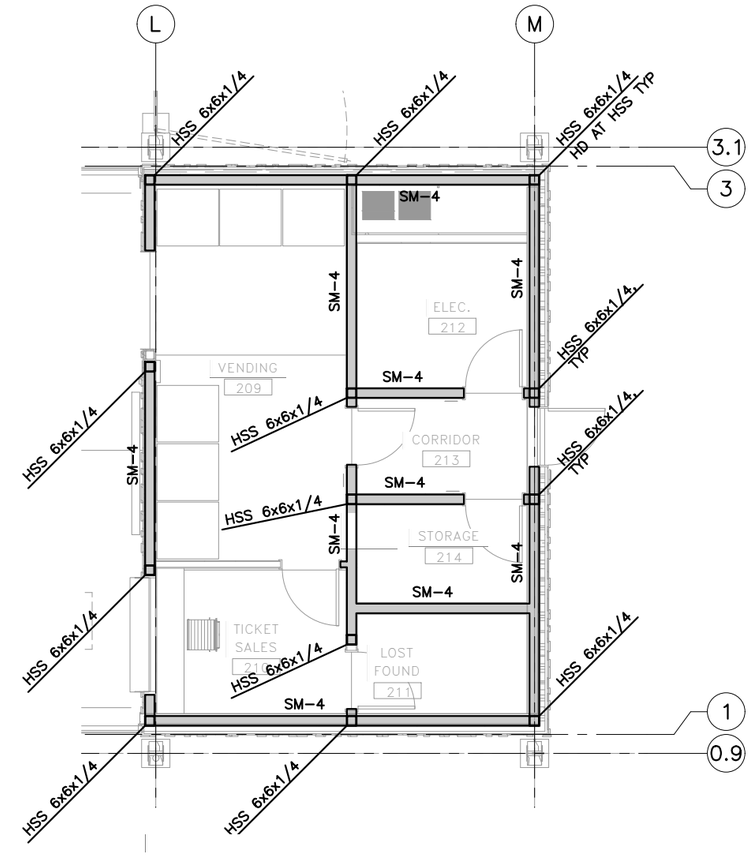

7 - EAST COLD-FORMED STUD WALL PARTIAL PLAN

COLD-FORMED STUD FRAMING NOTES:

CFS1. SEE ARCHITECTURAL TO LOCATE WALLS.

CFS2. SM-X INDICATES SHEAR WALL PER 1/SB08.00.

CFS3. HD INDICATES HOLD-DOWN PER 8/SB08.01.

CFS4. HSS COLUMN LOCATIONS TO COINCIDE AT WALL CORNERS/ENDS AS SHOWN, TYP UNO.

kpff

FILE NAME:	14W121SB03_03.dwg					
PRINTED: 2:40:01 PM 9/21/2018		LAST PRINTED BY:				FED.AID PROJ.NO.
SUBMITTAL DATE:	08/23/2018	3yronR				WA-2017-007-00
DESIGNED BY:	A. RADKE	08/23/2018				REGION NO. 10 / STATE WASH
ENTERED BY:	B. RONIA	08/23/2018				
CHECKED BY:	A. EWING	08/23/2018				JOB NUMBER 18W121
MAR PROJ ENGR	C. TORRES					
DIR TERM ENGR:	N. MCINTOSH					CONTRACT NO. 00****
ASST SECRETARY:	A. SCARTON		REVISION	DATE	BY	

DATE

STATE OF WASHINGTON — SARA LOVING ROBERTS — 38538 — STRUCTURAL ENGINEER — PROFESSIONAL ENGINEER

08/23/2018
DATE

Washington State Department of Transportation
WASHINGTON STATE FERRIES

SR 525
MUKILTEO FERRY TERMINAL (PHASE 2)
FERRY TERMINAL CONSTRUCTION

PARTIAL PLANS – STUD WALLS

SB03.03

SHEET 1130 OF 1521 SHEETS

File: U:\114000-114350\114177 (Mukilteo Ferry Terminal)\02 Plans\14W121SB03_03.dwg
Plotted: 9/21/18 at 2:40pm By: DianeL

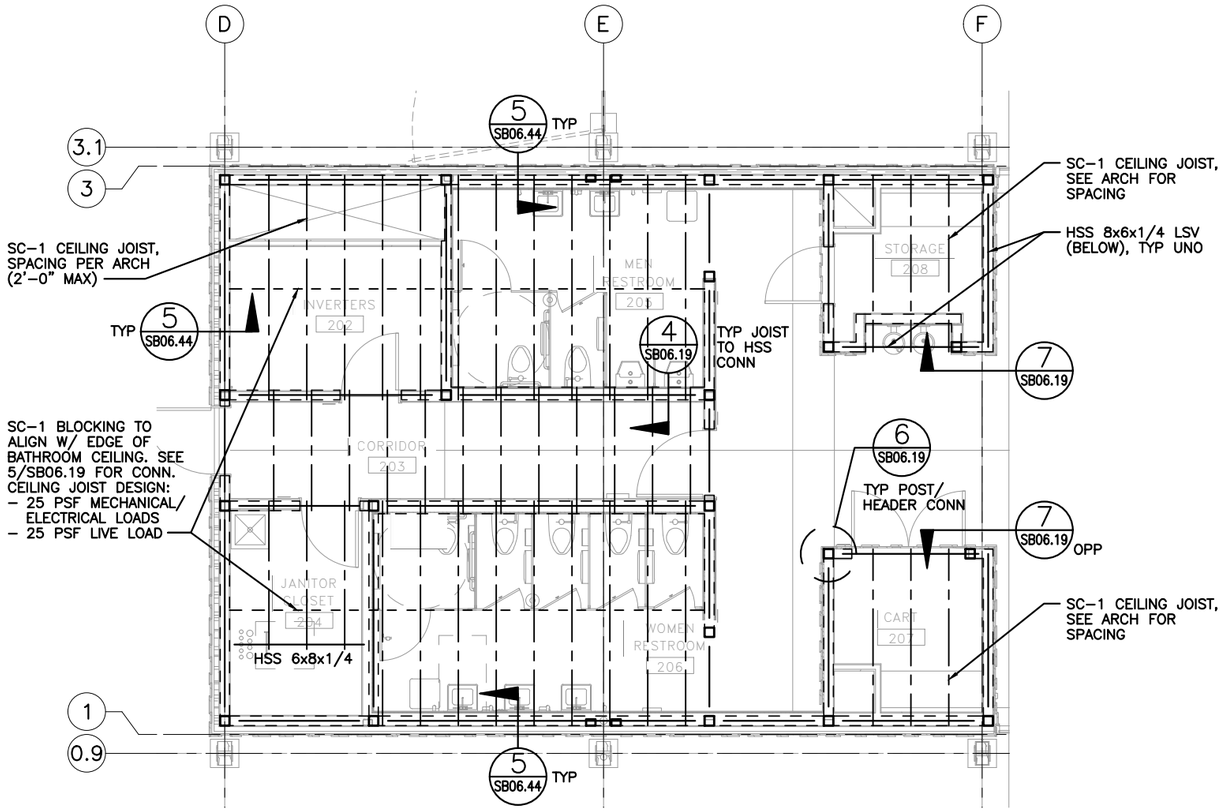

5 / - WEST CEILING FRAMING PARTIAL PLAN

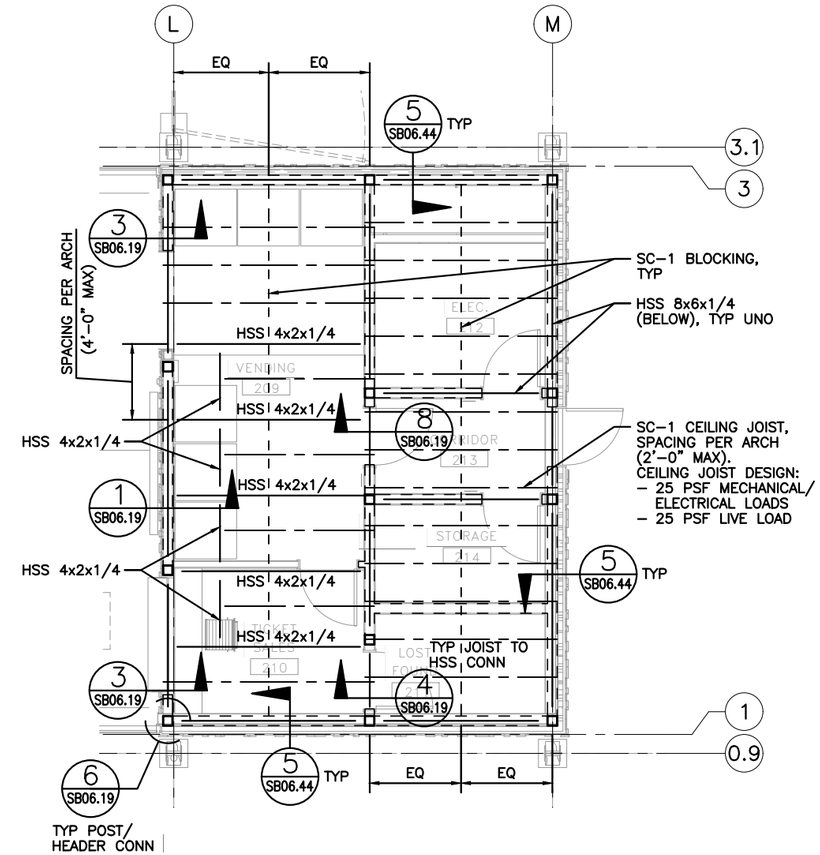

7 / - EAST CEILING FRAMING PARTIAL PLAN

CEILING FRAMING NOTES:

C1. ALL SC-1 JOISTS TO ALIGN WITH STUDS BELOW.

C2. TOP OF JOISTS AT ELEVATION 50'-3", UNO.

C3. SC-1: (SLOTTED CHANNEL FRAMING SYSTEM (4 7/8"x1 5/8") WITH THE FOLLOWING SECTION PROPERTIES (MIN):

I_x = 2.8 in
S_x = 1.15 in
I_y = 0.67 in
S_y = 0.82 in
GRADE 33 ksi STEEL

kpff

FILE NAME:	14W121SB03_04.dwg					
PRINTED: 2:40:06 PM 9/21/2018		LAST PRINTED BY:				FED.AID PROJ.NO.
SUBMITTAL DATE:	08/23/2018	3yronR				WA-2017-007-00
DESIGNED BY:	A. RADKE	08/23/2018				REGION NO. STATE
ENTERED BY:	B. RONIA	08/23/2018				10 WASH
CHECKED BY:	A. EWING	08/23/2018				JOB NUMBER 18W121
MAR PROJ ENGR	C. TORRES					
DIR TERM ENGR:	N. MCINTOSH					CONTRACT NO.
ASST SECRETARY:	A. SCARTON		REVISION	DATE	BY	00****

DATE

08/23/2018
DATE

Washington State Department of Transportation
WASHINGTON STATE FERRIES

SR 525
MUKILTEO FERRY TERMINAL (PHASE 2)
FERRY TERMINAL CONSTRUCTION

PARTIAL PLANS – BATHROOM FRAMING

SB03.04

SHEET 1131 OF 1521 SHEETS

File: U:\114000-114350\114177 (Mukilteo Ferry Terminal)\02 Plans\14W121SB03_04.dwg
Plotted: 9/21/18 at 2:40pm By: DianeL

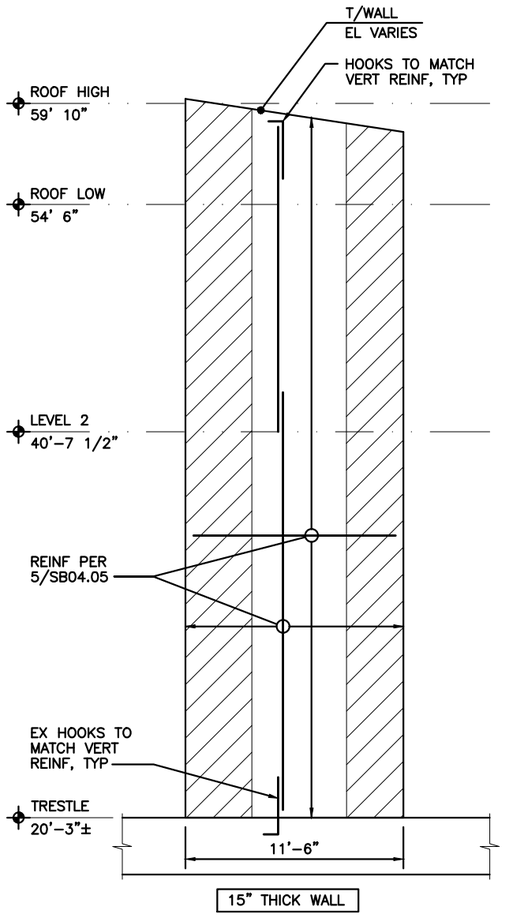

5
-
TERMINAL WEST
CORE – WEST WALL

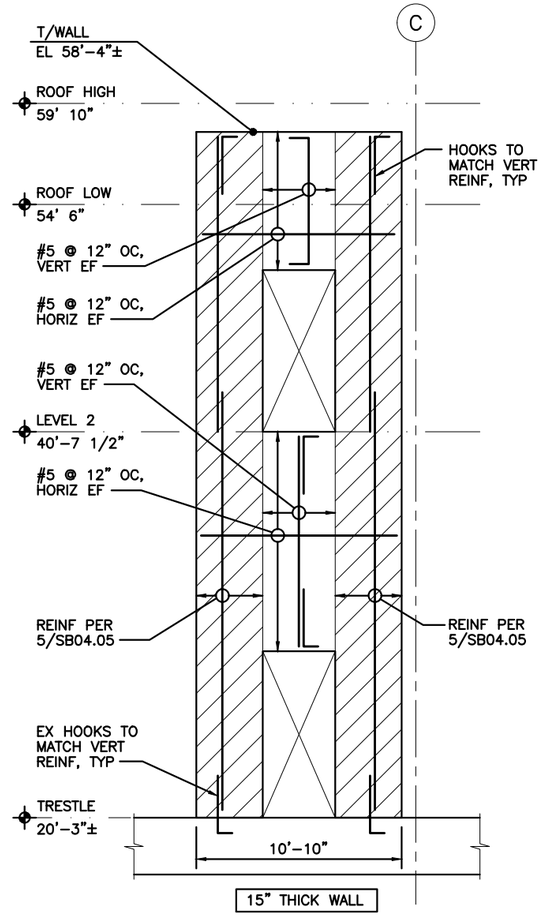

6
-
TERMINAL WEST
CORE – SOUTH WALL

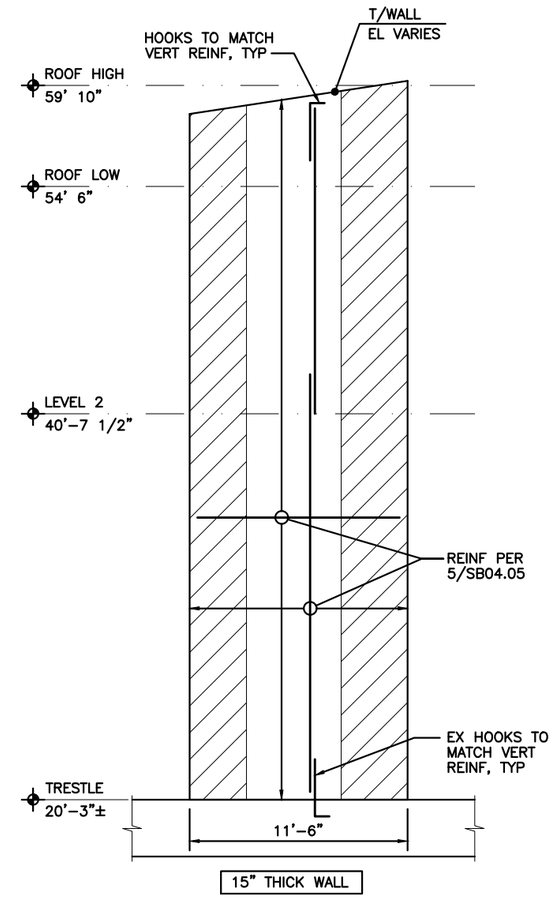

7
-
TERMINAL WEST
CORE – EAST WALL

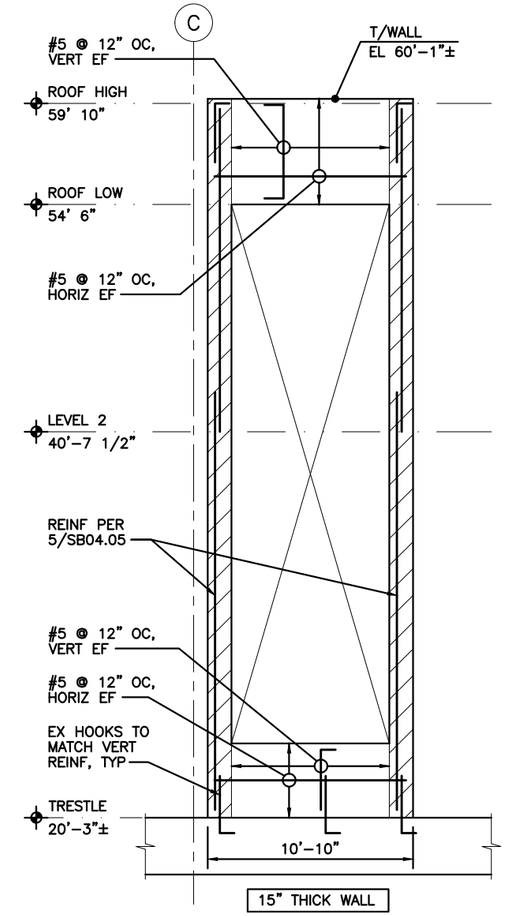

8
-
TERMINAL WEST
CORE – NORTH WALL

NOTES:

1. SEE SB04.07 FOR TYPICAL SHEAR WALL NOTES AND DETAILS
2. CORE WALL REINFORCEMENT PER 5/SB04.05 UNO.
3. VERTICAL SHEAR WALL REINFORCEMENT SHALL BE DEVELOPED INTO EXISTING TRESTLE A DISTANCE OF Ldh USING HOOKED REBAR DOWELS WITH SIZE AND SPACING TO MATCH VERTICAL WALL REINFORCING.
4. INDICATES SPECIAL BOUNDARY ZONES (SBZ).

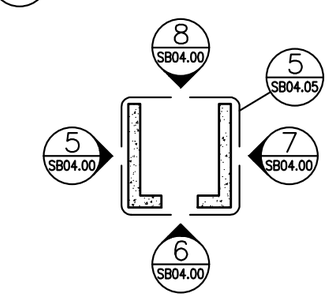

KEY PLAN

kpff

FILE NAME:	14W121SB04_00.dwg					
PRINTED: 2:40:09 PM 9/21/2018		LAST PRINTED BY:				FED.AID PROJ.NO.
SUBMITTAL DATE:	08/23/2018	3yronR				WA-2017-007-00
DESIGNED BY:	A. RADKE	08/23/2018				REGION NO. / STATE
ENTERED BY:	B. RONIA	08/23/2018				10 / WASH
CHECKED BY:	A. EWING	08/23/2018				JOB NUMBER
MAR PROJ ENGR	C. TORRES					18W121
DIR TERM ENGR:	N. MCINTOSH					CONTRACT NO.
ASST SECRETARY:	A. SCARTON		REVISION	DATE	BY	00****

DATE

08/23/2018
DATE

Washington State Department of Transportation
WASHINGTON STATE FERRIES

SR 525
MUKILTEO FERRY TERMINAL (PHASE 2)
FERRY TERMINAL CONSTRUCTION

SHEAR WALL ELEVATIONS

SB04.00

SHEET 1132 OF 1521 SHEETS

File: U:\114000-114350\114177 (Mukilteo Ferry Terminal)\03 Elevations\14W121SB04_00.dwg
Plotted: 9/21/18 at 2:40pm By: DianeL

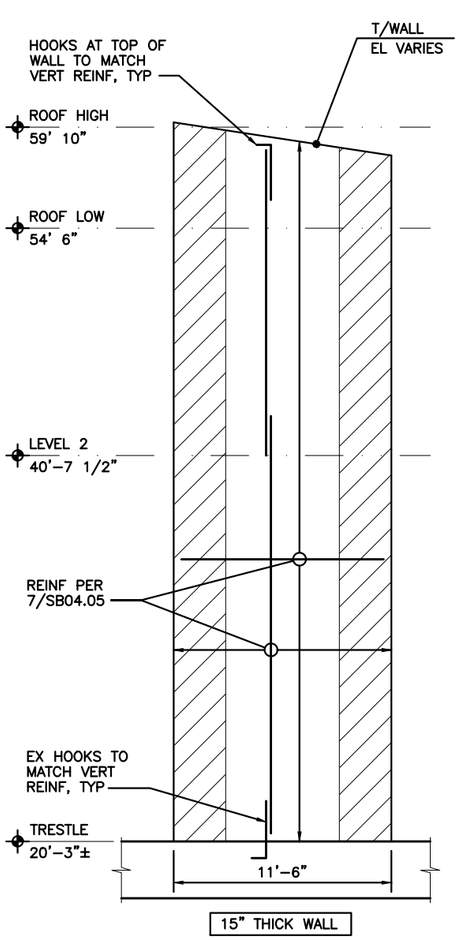

5 / -
TERMINAL EAST CORE – WEST WALL

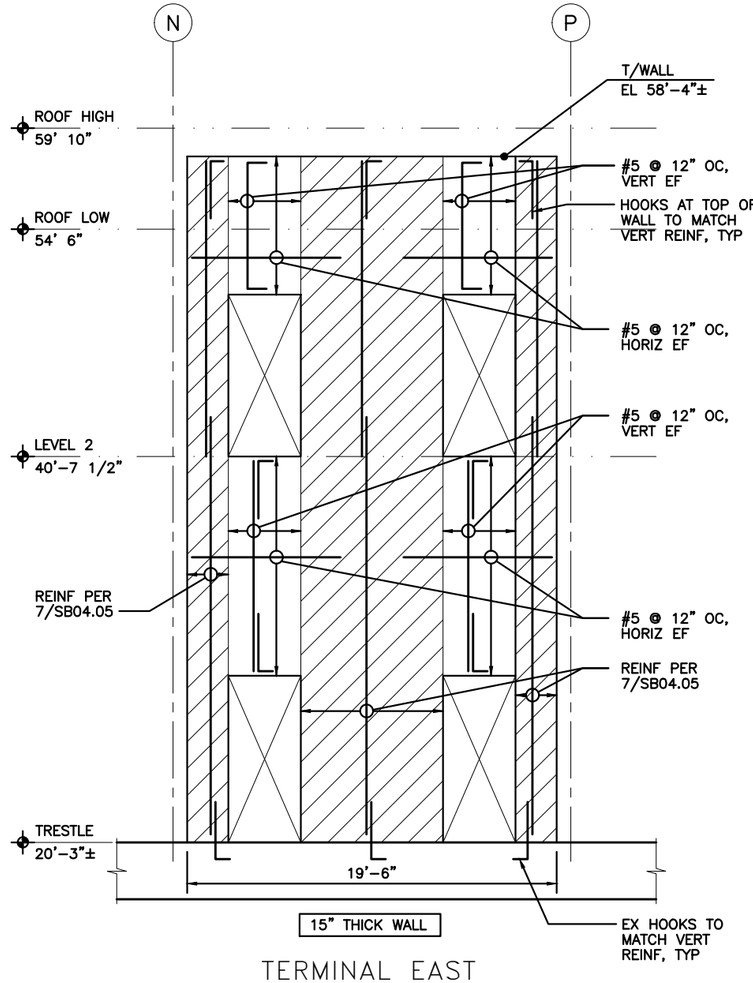

6 / -
TERMINAL EAST CORE – SOUTH WALL

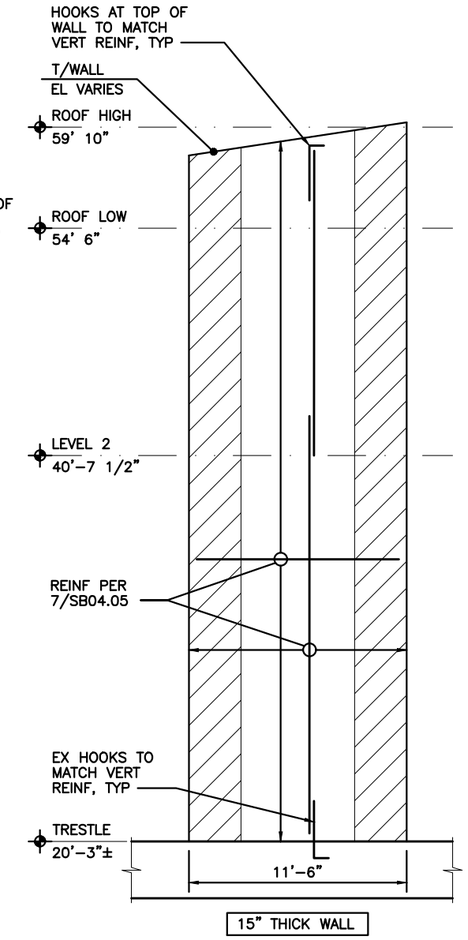

7 / -
TERMINAL EAST CORE – EAST WALL

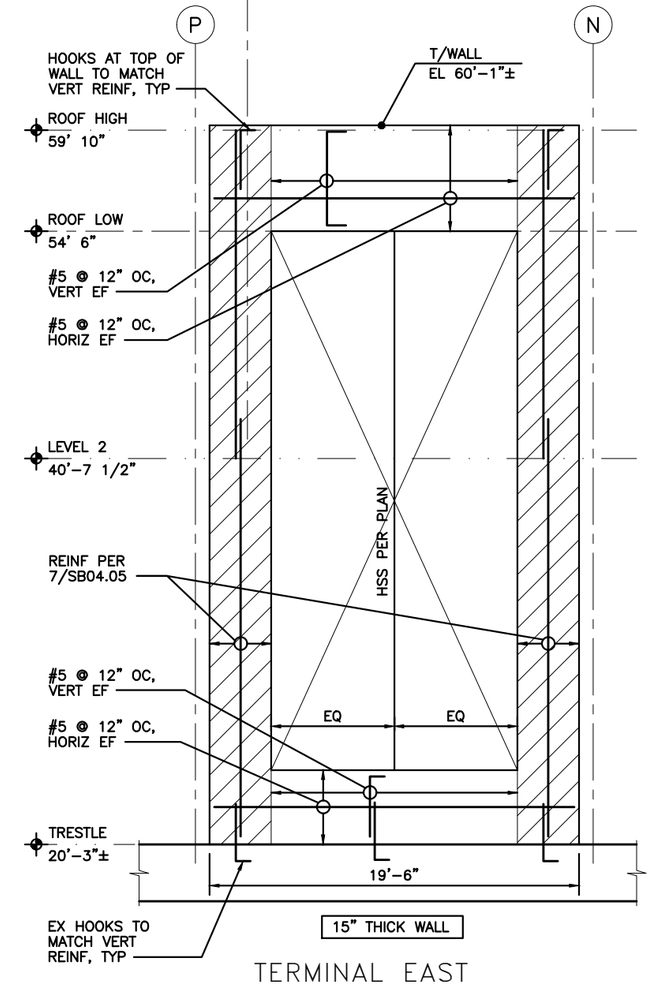

8 / -
TERMINAL EAST CORE – NORTH WALL

NOTES:

1. SEE SB04.07 FOR TYPICAL SHEAR WALL NOTES AND DETAILS
2. CORE WALL REINFORCEMENT PER 7/SB04.05 UNO.
3. VERTICAL SHEAR WALL REINFORCEMENT SHALL BE DEVELOPED INTO EXISTING TRESTLE A DISTANCE OF Ldh USING HOOKED REBAR DOWELS WITH SIZE AND SPACING TO MATCH VERTICAL WALL REINFORCING.
4. INDICATES SPECIAL BOUNDARY ZONES (SBZ).

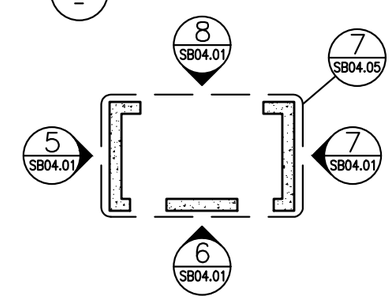

KEY PLAN

kpff

FILE NAME:	14W121SB04_01.dwg					
PRINTED: 2:40:11 PM 9/21/2018		LAST PRINTED BY:				FED.AID PROJ.NO.
SUBMITTAL DATE:	08/23/2018	3yronR				WA-2017-007-00
DESIGNED BY:	A. RADKE	08/23/2018				REGION NO. / STATE
ENTERED BY:	B. RONIA	08/23/2018				10 / WASH
CHECKED BY:	A. EWING	08/23/2018				JOB NUMBER
MAR PROJ ENGR	C. TORRES					18W121
DIR TERM ENGR:	N. MCINTOSH					CONTRACT NO.
ASST SECRETARY:	A. SCARTON		REVISION	DATE	BY	00****

DATE

STATE OF WASHINGTON — SAM LOVING RODRIGUEZ — 38538 — PROFESSIONAL ENGINEER

08/23/2018
DATE

Washington State Department of Transportation
WASHINGTON STATE FERRIES

SR 525
MUKILTEO FERRY TERMINAL (PHASE 2)
FERRY TERMINAL CONSTRUCTION

SHEAR WALL ELEVATIONS

SB04.01

SHEET 1133 OF 1521 SHEETS

File: U:\114000-114350\114177 (Mukilteo Ferry Terminal)\03 Elevations\14W121SB04_01.dwg
Plotted: 9/21/18 at 2:40pm By: DianeL

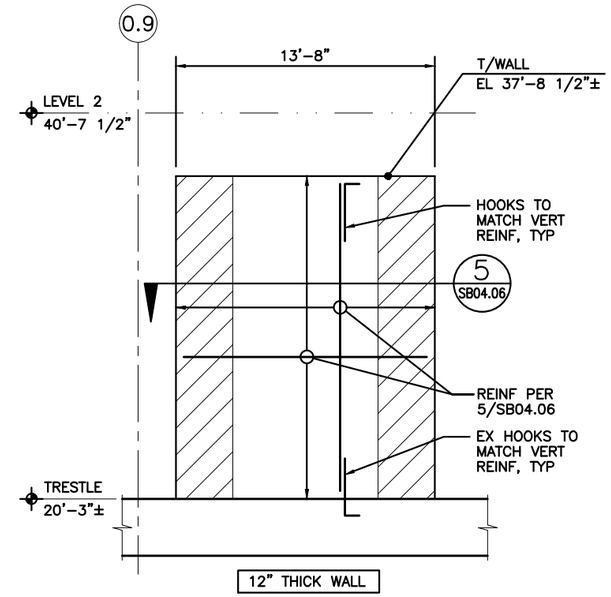

NOTES:

1. SEE SB04.07 FOR TYPICAL SHEAR WALL NOTES AND DETAILS.
2. CORE WALL REINFORCEMENT PER 5/SB04.06 UNO.
3. VERTICAL SHEAR WALL REINFORCEMENT SHALL BE DEVELOPED INTO EXISTING TRESTLE A DISTANCE OF Ldh USING HOOKED REBAR DOWELS WITH SIZE AND SPACING TO MATCH VERTICAL WALL REINFORCING.
4. INDICATES SPECIAL BOUNDARY ZONES (SBZ).

3 / - TERMINAL BLDG INTERIOR WALL

kpff

FILE NAME:	14W121SB04_02.dwg					
PRINTED: 2:40:14 PM 9/21/2018		LAST PRINTED BY:				FED.AID PROJ.NO.
SUBMITTAL DATE:	08/23/2018	3yronR				WA-2017-007-00
DESIGNED BY:	A. RADKE	08/23/2018				REGION NO. / STATE
ENTERED BY:	B. RONIA	08/23/2018				10 / WASH
CHECKED BY:	A. EWING	08/23/2018				JOB NUMBER 18W121
MAR PROJ ENGR	C. TORRES					
DIR TERM ENGR:	N. MCINTOSH					CONTRACT NO. 00****
ASST SECRETARY:	A. SCARTON		REVISION	DATE	BY	

DATE

DANIEL LOVING SCARTON, STATE OF WASHINGTON, 38538, PROFESSIONAL ENGINEER

08/23/2018
DATE

Washington State Department of Transportation
WASHINGTON STATE FERRIES

SR 525
MUKILTEO FERRY TERMINAL (PHASE 2)
FERRY TERMINAL CONSTRUCTION

SHEAR WALL ELEVATIONS

SB04.02

SHEET 1134 OF 1521 SHEETS

File: U:\114000-114350\114177 (Mukilteo Ferry Terminal)\03 Elevations\14W121SB04_02.dwg
Plotted: 9/21/18 at 2:40pm By: DianeL

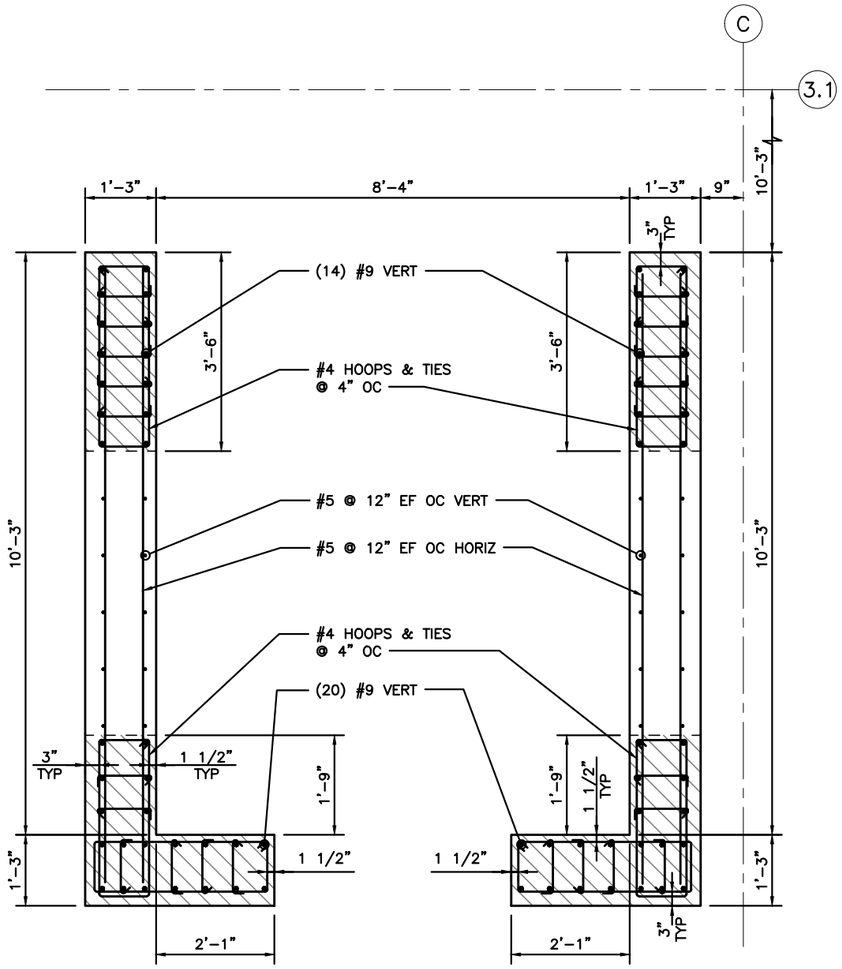

NOTES:
1. SEE SB04.07 FOR TYPICAL SHEAR WALL NOTES AND DETAILS.

5 / - TERMINAL BUILDING WEST CORE

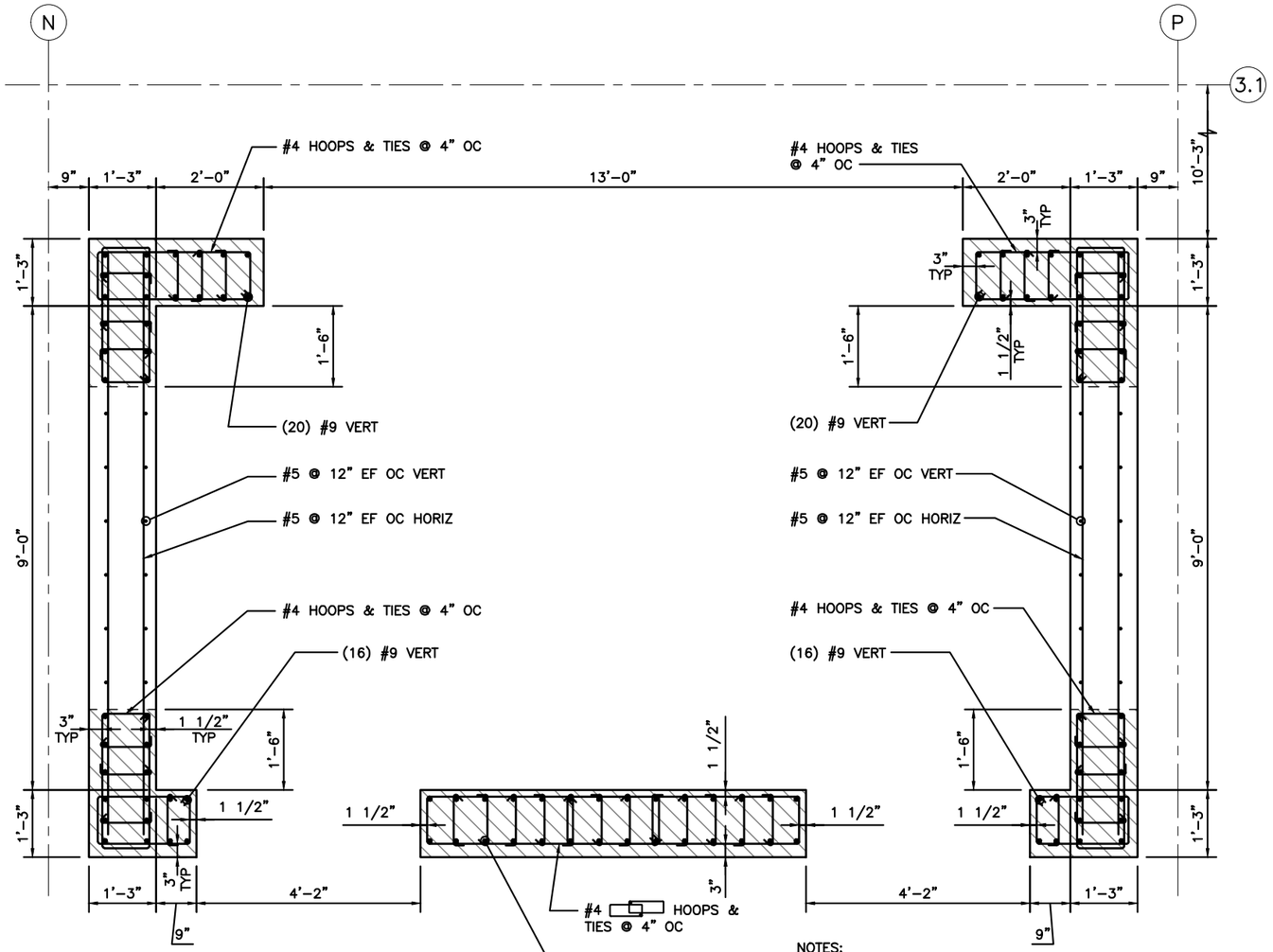

NOTES:
1. SEE SB04.07 FOR TYPICAL SHEAR WALL NOTES AND DETAILS.

7 / - TERMINAL BUILDING EAST CORE

kpff

FILE NAME:	14W121SB04_05.dwg					
PRINTED: 2:40:17 PM 9/21/2018		LAST PRINTED BY:				FED.AID PROJ.NO.
SUBMITTAL DATE:	08/23/2018	3yronR				WA-2017-007-00
DESIGNED BY:	A. RADKE	08/23/2018				REGION NO. / STATE
ENTERED BY:	B. RONIA	08/23/2018				10 / WASH
CHECKED BY:	A. EWING	08/23/2018				JOB NUMBER 18W121
MAR PROJ ENGR	C. TORRES					
DIR TERM ENGR:	N. MCINTOSH					CONTRACT NO. 00****
ASST SECRETARY:	A. SCARTON		REVISION	DATE	BY	

DATE

STATE OF WASHINGTON — SASHA LOVING HODGES — 38538 — PROFESSIONAL ENGINEER

08/23/2018
DATE

Washington State Department of Transportation
WASHINGTON STATE FERRIES

SR 525
MUKILTEO FERRY TERMINAL (PHASE 2)
FERRY TERMINAL CONSTRUCTION

CONC SHEAR WALL SECTIONS

SB04.05

SHEET 1135 OF 1521 SHEETS

File: U:\114000-114350\114177 (Mukilteo Ferry Terminal)\03 Elevations\14W121SB04_05.dwg
Plotted: 9/21/18 at 2:40pm By: DianeL

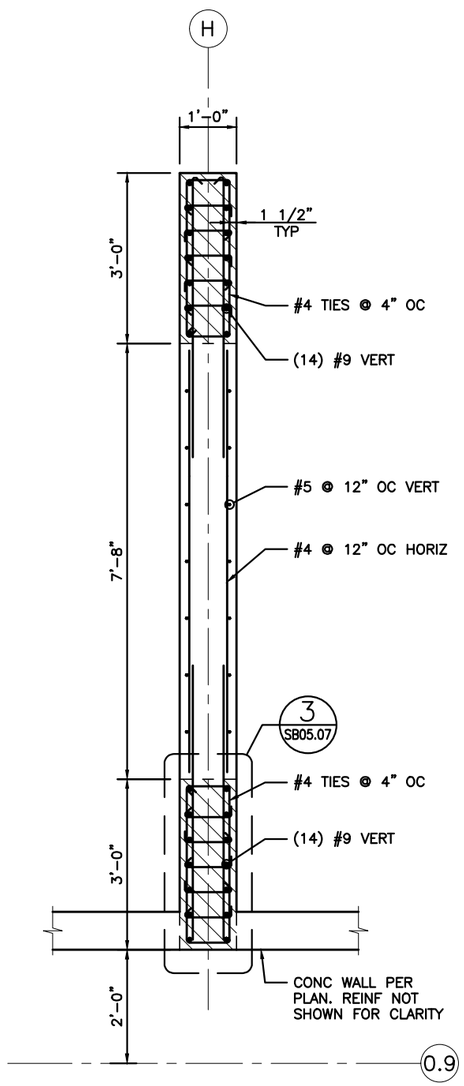

NOTES:
1. SEE SB04.07 FOR TYPICAL SHEAR WALL NOTES AND DETAILS.

5 / - TERMINAL BLDG GRID H WALL

kpff

FILE NAME:	14W121SB04_06.dwg					
PRINTED: 2:40:19 PM 9/21/2018		LAST PRINTED BY:				FED.AID PROJ.NO.
SUBMITTAL DATE:	08/23/2018	3yronR				
DESIGNED BY:	A. RADKE	08/23/2018				WA-2017-007-00
ENTERED BY:	B. RONIA	08/23/2018				REGION NO. / STATE
CHECKED BY:	A. EWING	08/23/2018				10 / WASH
MAR PROJ ENGR	C. TORRES					JOB NUMBER 18W121
DIR TERM ENGR:	N. MCINTOSH					CONTRACT NO.
ASST SECRETARY:	A. SCARTON		REVISION	DATE	BY	00****

DATE

08/23/2018
DATE

Washington State Department of Transportation
WASHINGTON STATE FERRIES

SR 525
MUKILTEO FERRY TERMINAL (PHASE 2)
FERRY TERMINAL CONSTRUCTION

CONC SHEAR WALL SECTIONS

SB04.06

SHEET 1136 OF 1521 SHEETS

File: U:\114000-114350\114177 (Mukilteo Ferry Terminal)\03 Elevations\14W121SB04_06.dwg
Plotted: 9/21/18 at 2:40pm By: DianeL

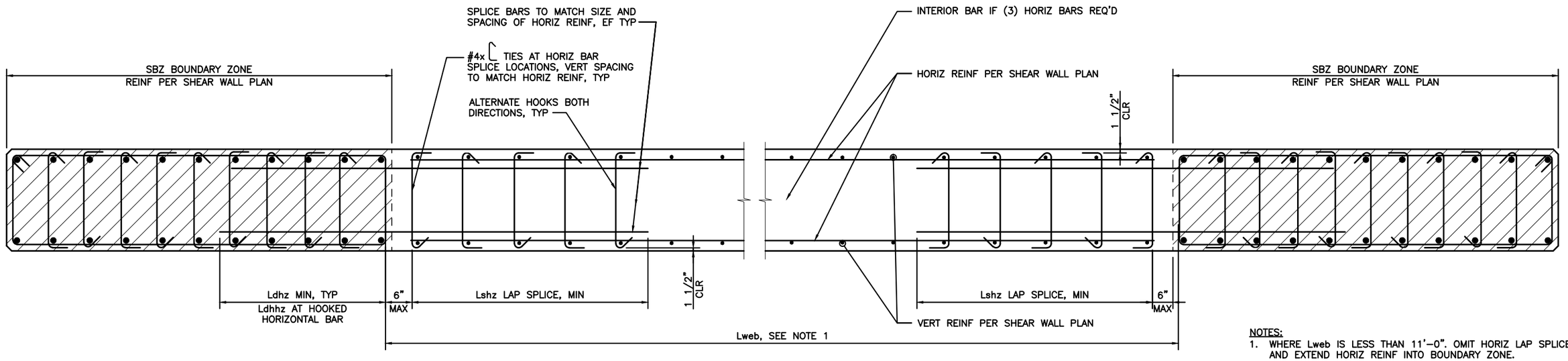

NOTES:
1. WHERE Lweb IS LESS THAN 11'-0". OMIT HORIZ LAP SPLICE AND EXTEND HORIZ REINF INTO BOUNDARY ZONE.
2. WHERE LENGTH OF SBZ – 2" < LDHZ, PROVIDE HOOKED HORIZONTAL BAR.
3. HOOP AND TIE REINFORCING IN SBZ IS #5 @ 4" OC UNO.

1/- SECTION – CONCRETE SHEAR WALL AT SPECIAL BOUNDARY ZONE (SBZ)

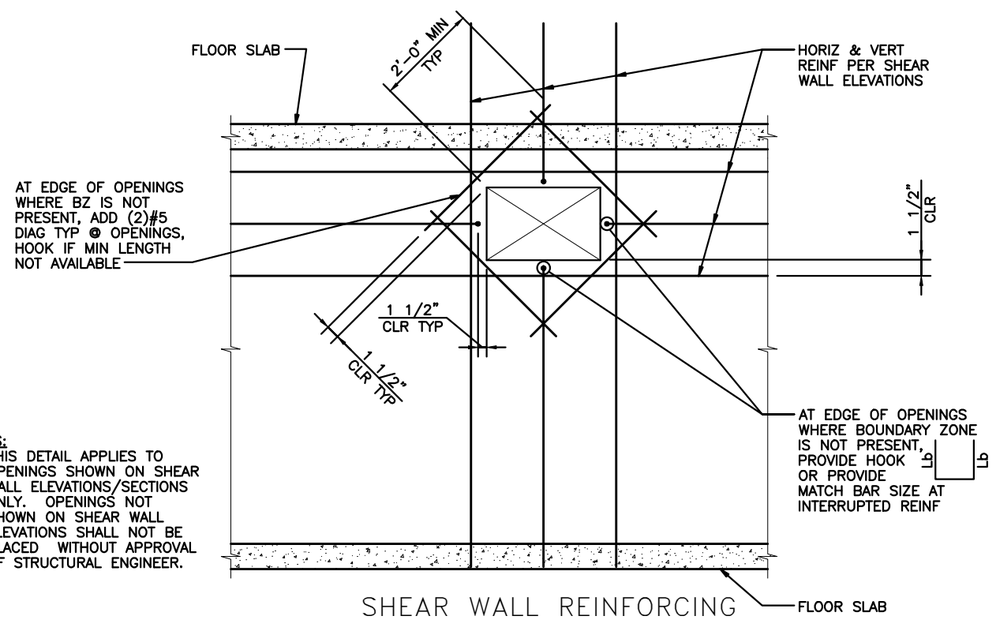

NOTES:
1. THIS DETAIL APPLIES TO OPENINGS SHOWN ON SHEAR WALL ELEVATIONS/SECTIONS ONLY. OPENINGS NOT SHOWN ON SHEAR WALL ELEVATIONS SHALL NOT BE PLACED WITHOUT APPROVAL OF STRUCTURAL ENGINEER.

5/- SHEAR WALL REINFORCING AROUND OPENINGS

SIZE	f'c = 5000 psi					
	Ldbz	Ldvt	Ldhz	Lsbz	Lsvt	Lshz
#5	17	17	21	21	21	28
#6	21	21	25	25	25	33
#7	25	27	37	37	41	48
#8	37	44	42	42	52	55
#9	42	54	48	48	64	62
#10	48	66	54	54	78	70
#11	54	29	60	60	86	78

ABBREVIATIONS

Ldbz = DEVELOPMENT LENGTH FOR VERTICAL REINFORCEMENT IN BOUNDARY ZONES

Ldvt = DEVELOPMENT LENGTH FOR VERTICAL REINFORCEMENT OUTSIDE OF BOUNDARY ZONES

Ldhz = DEVELOPMENT LENGTH FOR HORIZONTAL REINFORCEMENT

Lsbz = LAP SPLICE LENGTH FOR VERTICAL REINFORCEMENT IN BOUNDARY ZONES

Lsvt = LAP SPLICE LENGTH FOR VERTICAL REINFORCEMENT OUTSIDE OF BOUNDARY ZONES

Lshz = LAP SPLICE LENGTH FOR HORIZONTAL REINFORCEMENT

NOTES:
1. LENGTHS ARE SHOWN IN INCHES.
2. WHERE BARS OF DIFFERENT SIZE ARE LAPPED, USE SPLICE LENGTH REQUIRED FOR SMALLER BAR.

7/- SHEAR WALL DEVELOPMENT & SPLICE LENGTH SCHEDULE

SHEAR WALL NOTES:

1. SEE PLANS FOR FRAMING INFORMATION.
2. BOUNDARY ZONES ARE INDICATED ON SHEAR WALL PLANS. VERTICAL REINFORCEMENT AND TIES ARE SHOWN IN SHEAR WALL PLANS.
3. SEE 7/SB04.07 FOR SPLICE LENGTHS.
4. HOOP AND TIE SPACING SHALL BE 4" OC OVER ENTIRE LENGTH OF VERTICAL LAP SPLICE WITHIN OBZ. IF OFFSET BARS ARE USED IN VERTICAL LAP SPLICES, EXTEND 4" OC SPACING TO 6" BEYOND POINT OF BEND.
5. BOUNDARY ZONE HOOPS AND TIES SHALL EXTEND INTO FOOTING 12" MINIMUM.
6. HORIZONTAL CONSTRUCTION JOINTS IN SHEAR WALLS AT FLOOR AND ROOF FRAMING SHALL BE LOCATED SUCH THAT THE JOINT IS 3" MINIMUM FROM THE CENTERLINE OF ANY WELDED HEADED STUDS FOR EMBEDDED CONNECTIONS, UNLESS OTHERWISE APPROVED BY THE ENGINEER.
7. ▨ INDICATES SPECIAL BOUNDARY ZONES (SBZ).

8/- SHEAR WALL NOTES

kpff

FILE NAME:	14W121SB04_07.dwg					
PRINTED: 2:40:22 PM 9/21/2018	LAST PRINTED BY:					FED.AID PROJ.NO.
SUBMITTAL DATE: 08/23/2018	3yronR					
DESIGNED BY: A. RADKE	08/23/2018					WA-2017-007-00
ENTERED BY: B. RONIA	08/23/2018					REGION NO. / STATE
CHECKED BY: A. EWING	08/23/2018					10 / WASH
MAR PROJ ENGR C. TORRES						JOB NUMBER 18W121
DIR TERM ENGR: N. MCINTOSH						CONTRACT NO.
ASST SECRETARY: A. SCARTON		REVISION	DATE	BY		00****

DATE

DATE

Washington State Department of Transportation
WASHINGTON STATE FERRIES

SR 525
MUKILTEO FERRY TERMINAL (PHASE 2)
FERRY TERMINAL CONSTRUCTION

CONC SHEAR WALL DETAILS

SB04.07

SHEET 1137 OF 1521 SHEETS

File: U:\114000-114350\114177 (Mukilteo Ferry Terminal)\03 Elevations\14W121SB04_07.dwg
Plotted: 9/21/18 at 2:40pm By: DianeL

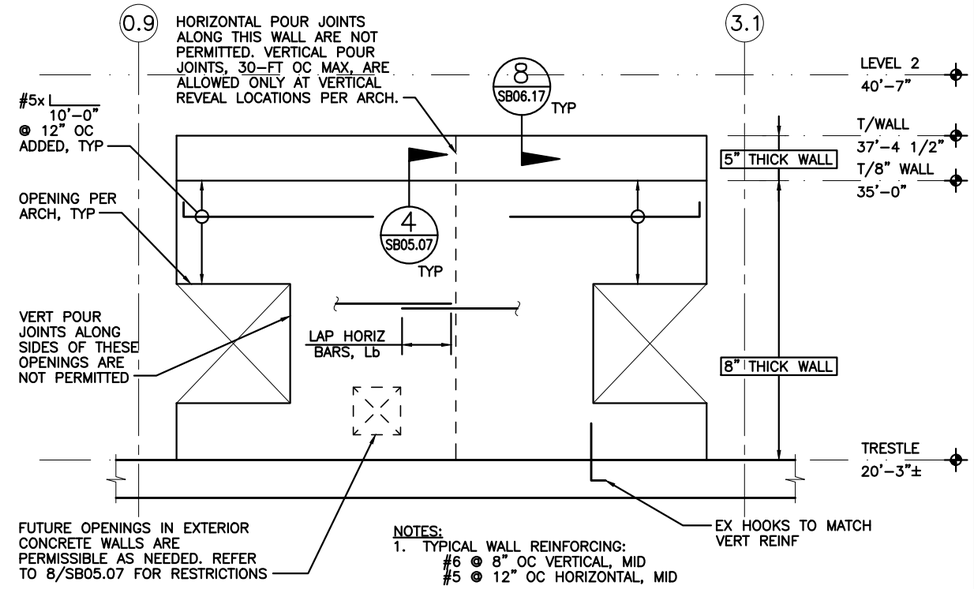

NOTES:
1. TYPICAL WALL REINFORCING:
#6 @ 8" OC VERTICAL, MID
#5 @ 12" OC HORIZONTAL, MID

4 – TERMINAL – EAST MID WALL

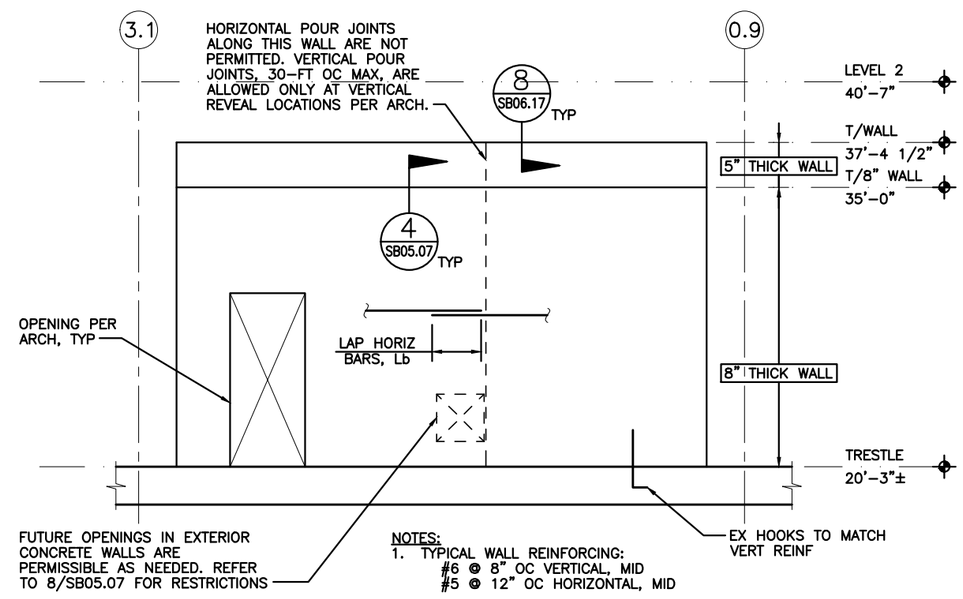

NOTES:
1. TYPICAL WALL REINFORCING:
#6 @ 8" OC VERTICAL, MID
#5 @ 12" OC HORIZONTAL, MID

8 – TERMINAL – WEST MID WALL

kpff

FILE NAME:	14W121SB04_08.dwg					
PRINTED:	2:40:24 PM 9/21/2018	LAST PRINTED BY:				FED.AID PROJ.NO.
SUBMITTAL DATE:	08/23/2018	3yronR				WA-2017-007-00
DESIGNED BY:	A. RADKE	08/23/2018				REGION NO. / STATE
ENTERED BY:	B. RONIA	08/23/2018				10 / WASH
CHECKED BY:	A. EWING	08/23/2018				JOB NUMBER
MAR PROJ ENGR	C. TORRES					18W121
DIR TERM ENGR:	N. MCINTOSH					CONTRACT NO.
ASST SECRETARY:	A. SCARTON		REVISION	DATE	BY	00****

DATE

STATE OF WASHINGTON — JAMES LOVING RODRIGUES — 38538 — PROFESSIONAL ENGINEER

08/23/2018
DATE

Washington State Department of Transportation
WASHINGTON STATE FERRIES

SR 525
MUKILTEO FERRY TERMINAL (PHASE 2)
FERRY TERMINAL CONSTRUCTION

CONCRETE WALL ELEVATIONS

SB04.08

SHEET 1138 OF 1521 SHEETS

File: U:\114000-114350\114177 (Mukilteo Ferry Terminal)\03 Elevations\14W121SB04_08.dwg
Plotted: 9/21/18 at 2:40pm By: DianeL

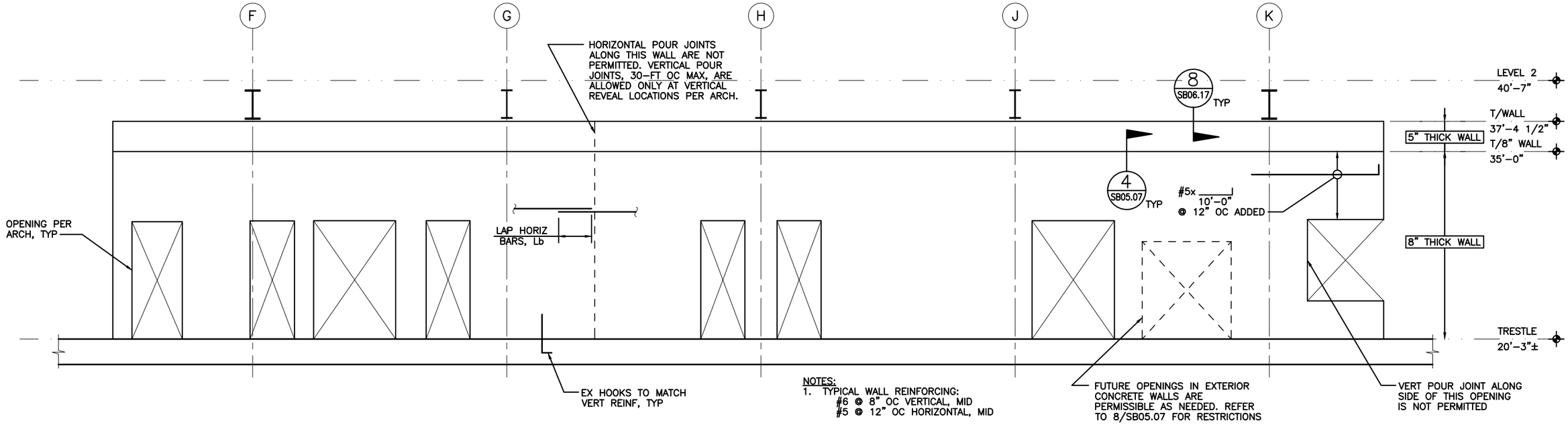

2 / - TERMINAL – SOUTH MID WALL ELEVATION

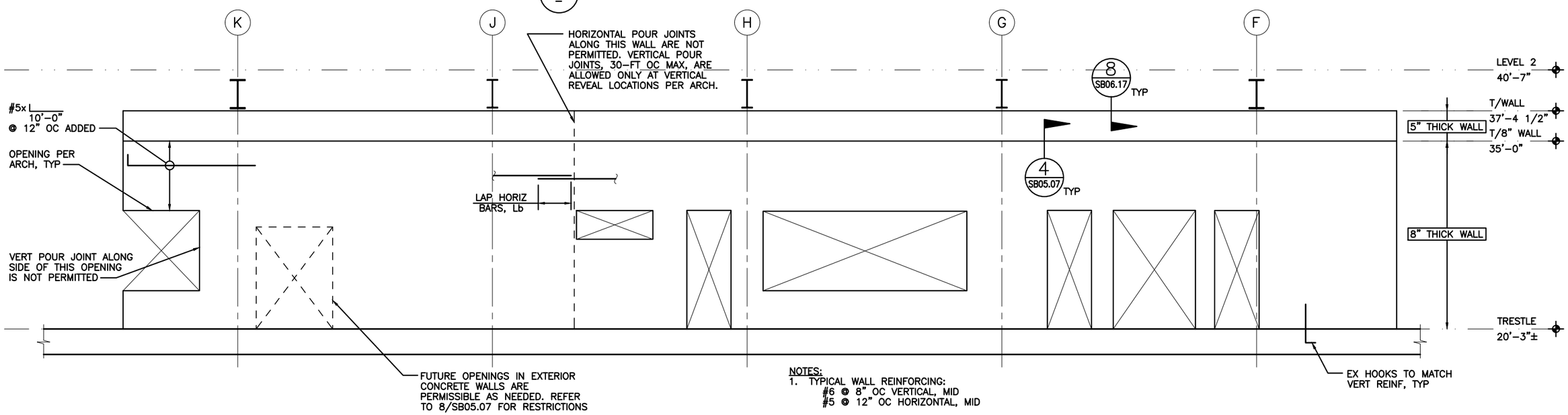

6 / - TERMINAL – NORTH MID WALL ELEVATION

kpff

FILE NAME:	14W121SB04_09.dwg					
PRINTED: 2:40:27 PM 9/21/2018		LAST PRINTED BY:				FED.AID PROJ.NO.
SUBMITTAL DATE:	08/23/2018	ByronR				
DESIGNED BY:	A. RADKE	08/23/2018				WA-2017-007-00
ENTERED BY:	B. RONIA	08/23/2018				REGION NO. / STATE
CHECKED BY:	A. EWING	08/23/2018				10 / WASH
MAR PROJ ENGR	C. TORRES					JOB NUMBER 18W121
DIR TERM ENGR:	N. MCINTOSH					CONTRACT NO.
ASST SECRETARY:	A. SCARTON		REVISION	DATE	BY	00****

DATE

DANA LOVING ROBERTS STATE OF WASHINGTON 38538 PROFESSIONAL ENGINEER
08/23/2018
DATE

Washington State Department of Transportation
WASHINGTON STATE FERRIES

SR 525
MUKILTEO FERRY TERMINAL (PHASE 2)
FERRY TERMINAL CONSTRUCTION

CONCRETE WALL ELEVATIONS

SB04.09

SHEET 1139 OF 1521 SHEETS

File: U:\114000-114350\114177 (Mukilteo Ferry Terminal)\03 Elevations\14W121SB04_09.dwg
Plotted: 9/21/18 at 2:40pm By: DianeL

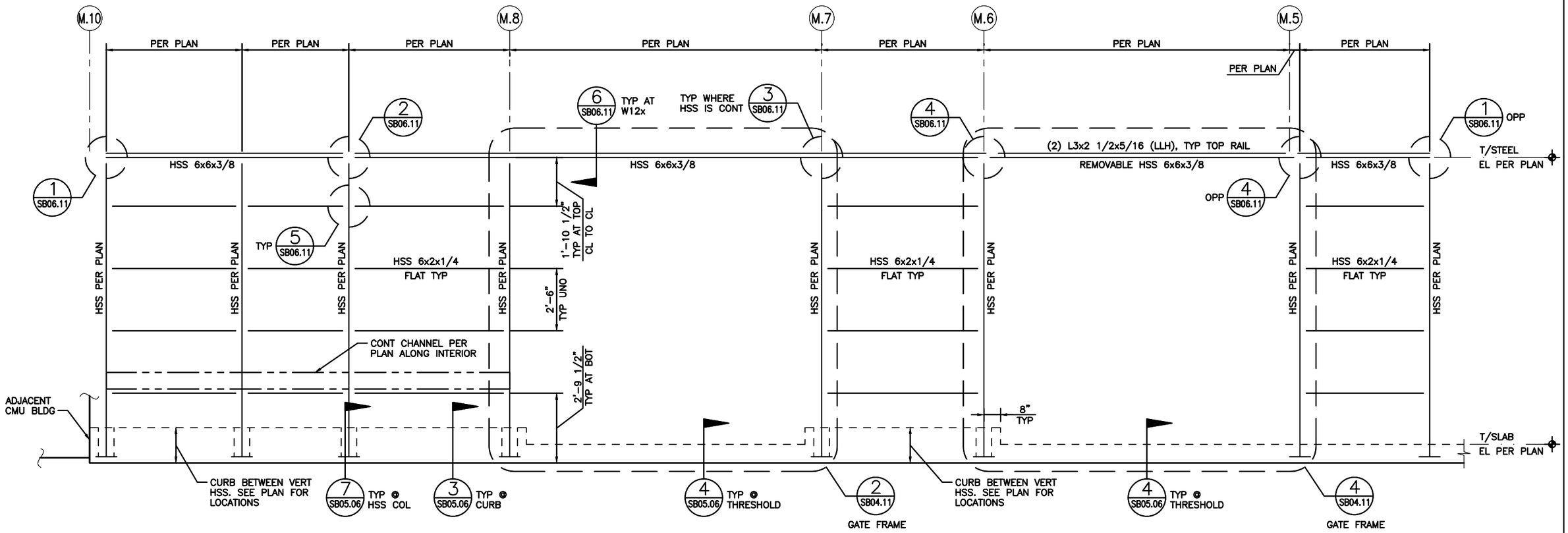

5 / - WALL ELEVATION – MAINTENANCE BLDG

kpff

FILE NAME:	14W121SB04_10.dwg					
PRINTED: 2:40:30 PM 9/21/2018		LAST PRINTED BY:				FED.AID PROJ.NO.
SUBMITTAL DATE:	08/23/2018	ByronR				WA-2017-007-00
DESIGNED BY:	A. RADKE	08/23/2018				REGION NO. / STATE
ENTERED BY:	B. RONIA	08/23/2018				10 / WASH
CHECKED BY:	A. EWING	08/23/2018				JOB NUMBER
MAR PROJ ENGR	C. TORRES					18W121
DIR TERM ENGR:	N. MCINTOSH					CONTRACT NO.
ASST SECRETARY:	A. SCARTON		REVISION	DATE	BY	00****

DATE

08/23/2018
DATE

Washington State Department of Transportation
WASHINGTON STATE FERRIES

SR 525
MUKILTEO FERRY TERMINAL (PHASE 2)
FERRY TERMINAL CONSTRUCTION

WALL ELEVATIONS – MAINTENANCE BLDG

SB04.10

SHEET 1140 OF 1521 SHEETS

File: U:\114000-114350\114177 (Mukilteo Ferry Terminal)\03 Elevations\14W121SB04_10.dwg
Plotted: 9/21/18 at 2:40pm By: DianeL

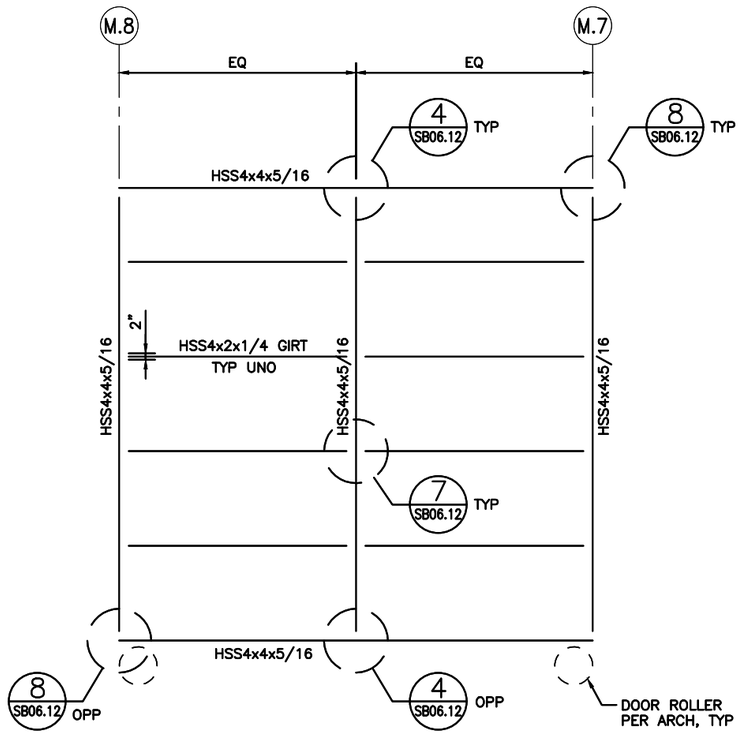

NOTES:
1. GATE FRAME SHOWN FOR SIZES AND CONNECTION DETAILS. SEE ARCH DWGS FOR DIMENSIONAL CONTROL.

2 - GATE ELEVATION – MAINTENANCE BLDG

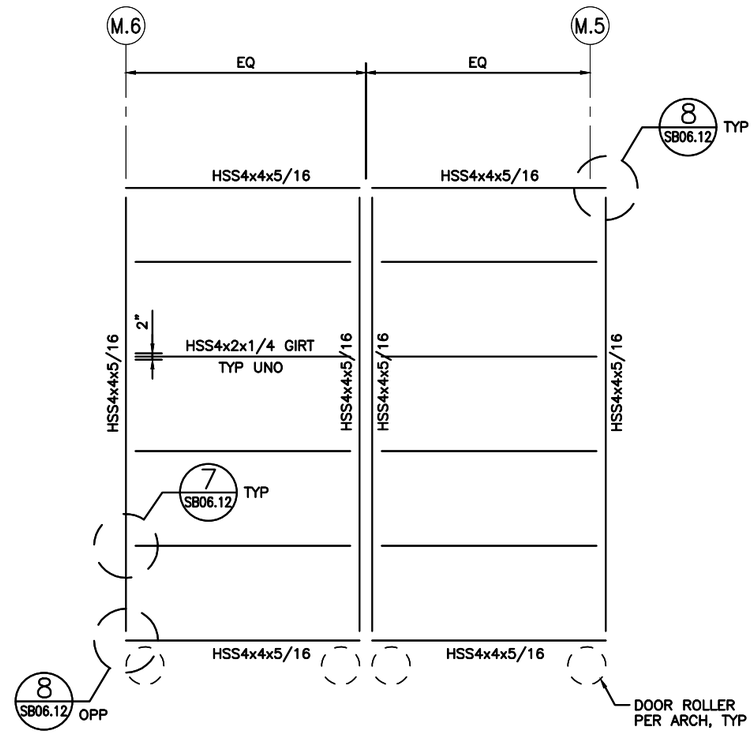

NOTES:
1. GATE FRAME SHOWN FOR SIZES AND CONNECTION DETAILS. SEE ARCH DWGS FOR DIMENSIONAL CONTROL.

4 - GATE ELEVATION – MAINTENANCE BLDG

kpff

FILE NAME:	14W121SB04_11.dwg					
PRINTED: 2:40:33 PM 9/21/2018		LAST PRINTED BY:				FED.AID PROJ.NO.
SUBMITTAL DATE:	08/23/2018	3yronR				
DESIGNED BY:	A. RADKE	08/23/2018				WA-2017-007-00
ENTERED BY:	B. RONIA	08/23/2018				REGION NO. / STATE
CHECKED BY:	A. EWING	08/23/2018				10 / WASH
MAR PROJ ENGR	C. TORRES					JOB NUMBER 18W121
DIR TERM ENGR:	N. MCINTOSH					CONTRACT NO.
ASST SECRETARY:	A. SCARTON		REVISION	DATE	BY	00****

DATE

08/23/2018
DATE

Washington State Department of Transportation
WASHINGTON STATE FERRIES

SR 525
MUKILTEO FERRY TERMINAL (PHASE 2)
FERRY TERMINAL CONSTRUCTION

GATE ELEVATIONS – MAINTENANCE BLDG

SB04.11

SHEET 1141 OF 1521 SHEETS

File: U:\114000-114350\114177 (Mukilteo Ferry Terminal)\03 Elevations\14W121SB04_11.dwg
Plotted: 9/21/18 at 2:40pm By: DianeL

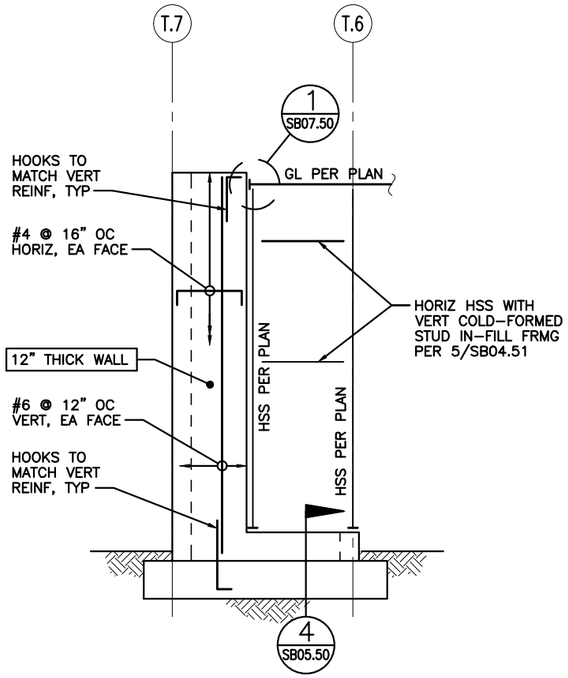

5 / -
TOLL PLAZA – SHEAR WALL ELEVATION

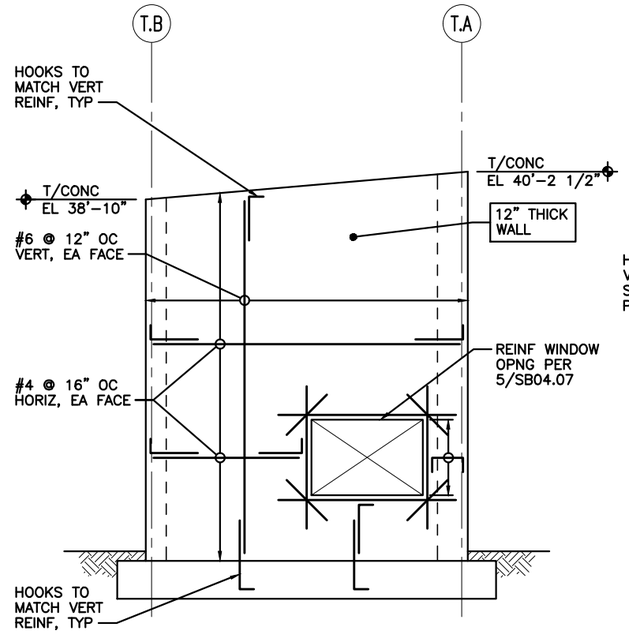

6 / -
TOLL PLAZA – SHEAR WALL ELEVATION

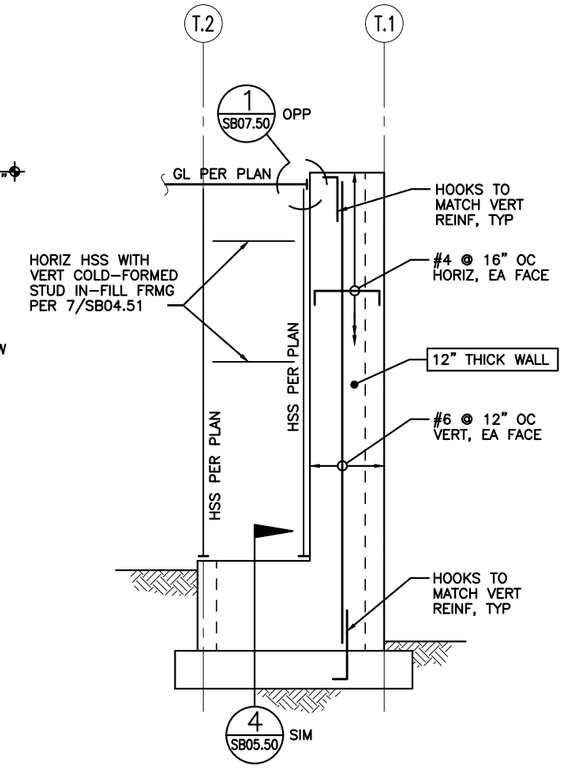

7 / -
TOLL PLAZA – SHEAR WALL ELEVATION

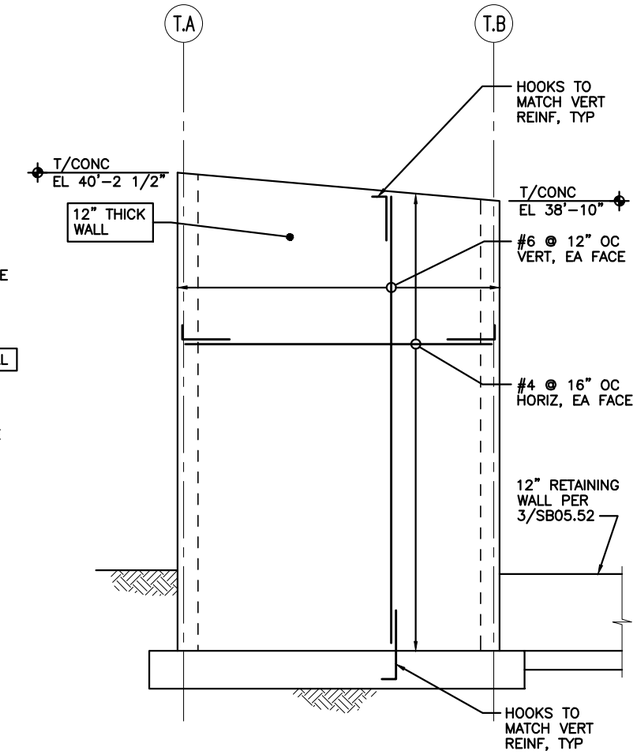

8 / -
TOLL PLAZA – SHEAR WALL ELEVATION

kpff

FILE NAME:	14W121SB04_50.dwg					
PRINTED: 2:40:35 PM 9/21/2018		LAST PRINTED BY:				FED.AID PROJ.NO.
SUBMITTAL DATE:	08/23/2018	3yronR				
DESIGNED BY:	A. RADKE	08/23/2018				WA-2017-007-00
ENTERED BY:	B. RONIA	08/23/2018				REGION NO. / STATE
CHECKED BY:	A. EWING	08/23/2018				10 / WASH
MAR PROJ ENGR	C. TORRES					JOB NUMBER 18W121
DIR TERM ENGR:	N. MCINTOSH					CONTRACT NO.
ASST SECRETARY:	A. SCARTON		REVISION	DATE	BY	00****

DATE

STEVEN LOVING RODRIGUEZ — STATE OF WASHINGTON — 38538 — STRUCTURAL ENGINEER — PROFESSIONAL ENGINEER

08/23/2018
DATE

Washington State Department of Transportation
WASHINGTON STATE FERRIES

SR 525
MUKILTEO FERRY TERMINAL (PHASE 2)
FERRY TERMINAL CONSTRUCTION

SHEAR WALL ELEVATIONS – TOLL PLAZA

SB04.50

SHEET 1142 OF 1521 SHEETS

File: U:\114000-114350\114177 (Mukilteo Ferry Terminal)\03 Elevations\14W121SB04_50.dwg
Plotted: 9/21/18 at 2:40pm By: DianeL

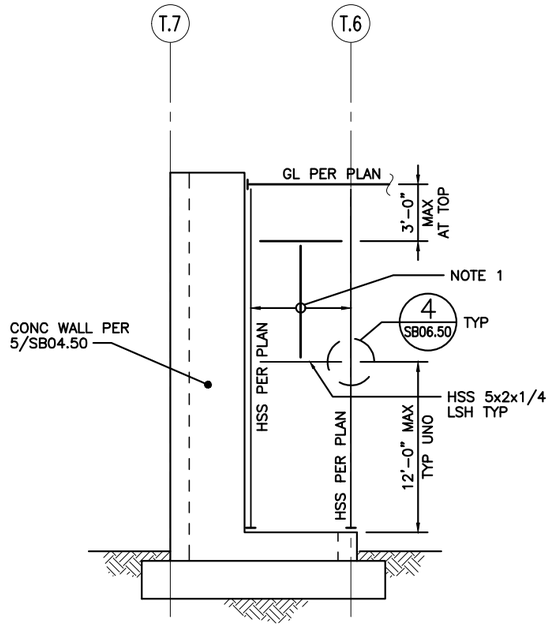

NOTES:
1. COLD-FORMED STUD VERTICAL IN-FILL FRAMING PER 3/SB08.00. FRAMING AROUND WINDOW/DOOR OPENINGS PER 3/SB08.00 TYP UNO.

TOLL PLAZA – WALL ELEVATION

5 / -

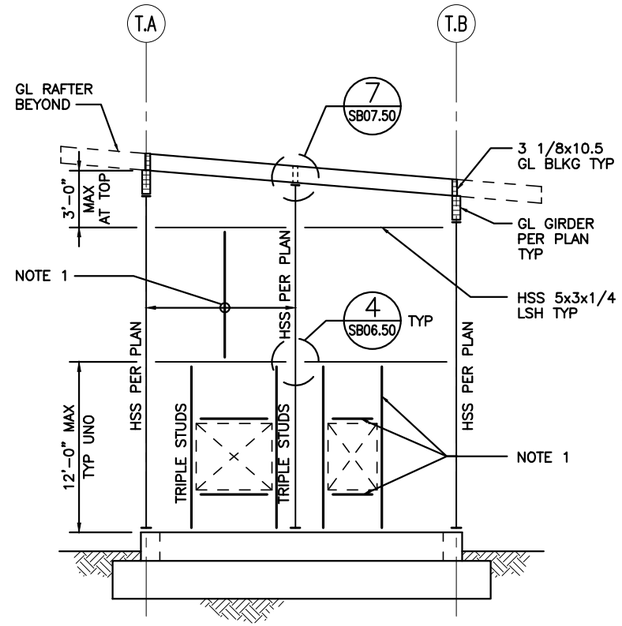

NOTES:
1. COLD-FORMED STUD VERTICAL IN-FILL FRAMING PER 3/SB08.00. FRAMING AROUND WINDOW/DOOR OPENINGS PER 3/SB08.00 TYP UNO.

TOLL PLAZA – WALL ELEVATION

6 / -

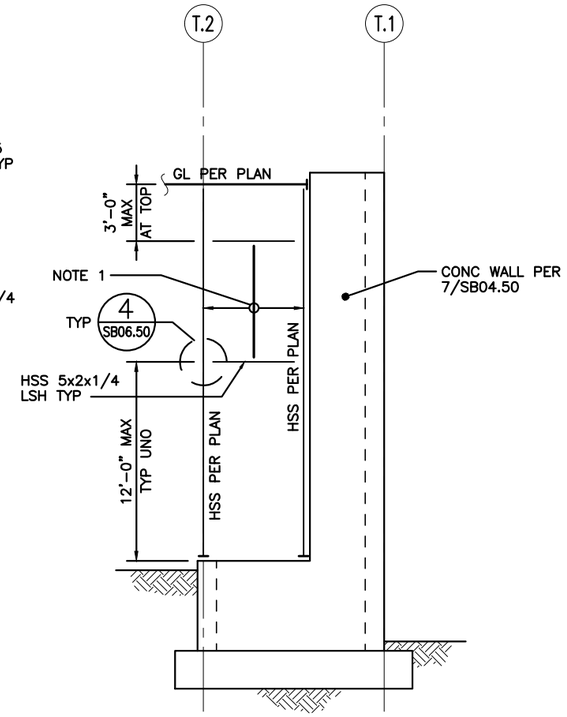

NOTES:
1. COLD-FORMED STUD VERTICAL IN-FILL FRAMING PER 3/SB08.00. FRAMING AROUND WINDOW/DOOR OPENINGS PER 3/SB08.00 TYP UNO.

TOLL PLAZA – WALL ELEVATION

7 / -

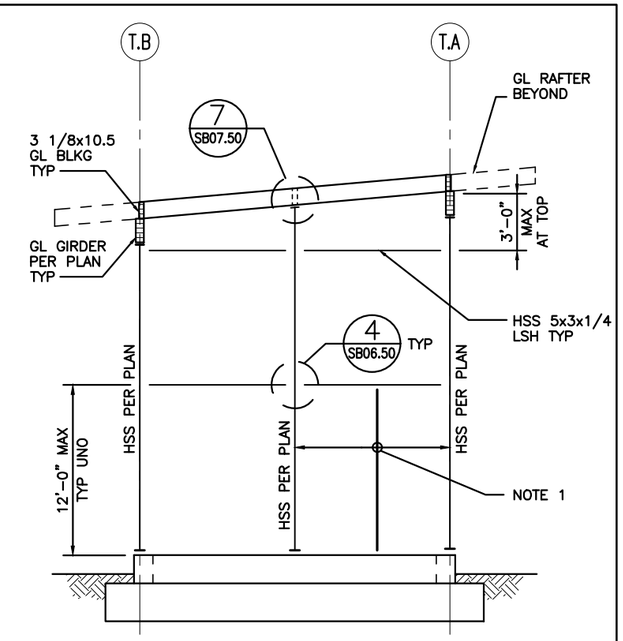

NOTES:
1. COLD-FORMED STUD VERTICAL IN-FILL FRAMING PER 3/SB08.00. FRAMING AROUND WINDOW/DOOR OPENINGS PER 3/SB08.00 TYP UNO.

TOLL PLAZA – WALL ELEVATION

8 / -

kpff

FILE NAME:	14W121SB04_51.dwg					
PRINTED:	2:40:38 PM 9/21/2018	LAST PRINTED BY:				FED.AID PROJ.NO.
SUBMITTAL DATE:	08/23/2018	3yronR				
DESIGNED BY:	A. RADKE	08/23/2018				WA-2017-007-00
ENTERED BY:	B. RONIA	08/23/2018				REGION NO. 10 STATE WASH
CHECKED BY:	A. EWING	08/23/2018				JOB NUMBER 18W121
MAR PROJ ENGR	C. TORRES					
DIR TERM ENGR:	N. MCINTOSH					CONTRACT NO. 00****
ASST SECRETARY:	A. SCARTON		REVISION	DATE	BY	

DATE

STATE OF WASHINGTON — JOSHUA LOVING RODRIGUES — 38538 — STRUCTURAL ENGINEER — PROFESSIONAL ENGINEER

08/23/2018
DATE

Washington State Department of Transportation
WASHINGTON STATE FERRIES

SR 525
MUKILTEO FERRY TERMINAL (PHASE 2)
FERRY TERMINAL CONSTRUCTION

WALL ELEVATIONS – TOLL PLAZA

SB04.51

SHEET 1143 OF 1521 SHEETS

File: U:\114000-114350\114177 (Mukilteo Ferry Terminal)\03 Elevations\14W121SB04_51.dwg
Plotted: 9/21/18 at 2:40pm By: DianeL

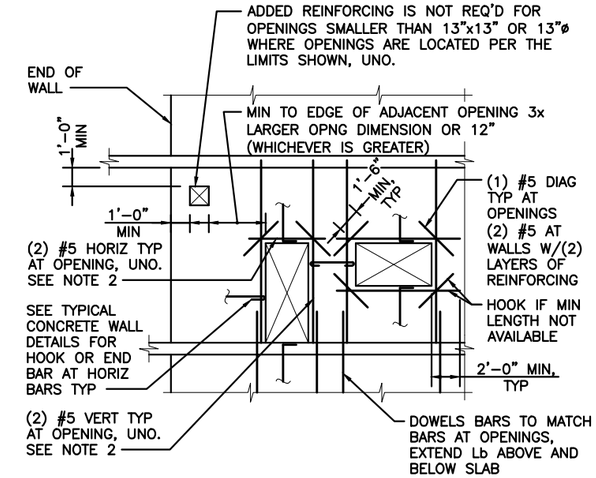

NOTES:
1. BARS SHOWN ARE IN ADDITION TO WALL REINFORCING NOTED ELSEWHERE.
2. PROVIDE AN ADDITIONAL BAR FOR EACH HORIZONTAL OR VERTICAL BAR INTERRUPTED BY OPENING.
3. PROVIDE HOOKS AT ALL INTERRUPTED BARS AS SHOWN.

4 TYPICAL CONCRETE WALL REINF

f'c= 4,000 psi
fy = 60,000 psi

Size	Ld	Ldt	Lb	Lbt	Ldh
#4	19 (28)	25 (37)	25 (37)	32 (48)	9
#5	24 (36)	31 (46)	31 (46)	40 (60)	12
#6	28 (43)	37 (55)	37 (55)	48 (72)	14
#7	42 (62)	54 (81)	54 (81)	70 (105)	17
#8	47 (71)	62 (92)	62 (92)	80 (120)	19
#9	54 (80)	70 (104)	70 (104)	90 (136)	21

f'c= 5,000 psi
fy = 60,000 psi

Size	Ld	Ldt	Lb	Lbt	Ldh
#4	17 (25)	22 (33)	22 (33)	29 (43)	8
#5	21 (32)	28 (41)	28 (41)	36 (54)	11
#6	25 (38)	33 (50)	33 (50)	43 (65)	13
#7	37 (56)	48 (72)	48 (72)	63 (94)	15
#8	42 (64)	55 (83)	55 (83)	72 (108)	17
#9	48 (72)	62 (93)	62 (93)	81 (121)	19

NOTES:

1. USE THE LENGTHS IN THIS SCHEDULE, UNLESS NOTED OTHERWISE.
2. USE LENGTH IN ( ) WHEN BAR COVER IS db OR LESS OR BAR CLEAR SPACING IS 2db OR LESS.
3. A TOP BAR IS A HORIZONTAL BAR WITH MORE THAN 12" OF FRESH CONCRETE CAST BELOW IT.

ABBREVIATIONS:

db = BAR DIAMETER
Ld = TENSION DEVELOPMENT LENGTH
Ldt = TENSION DEVELOPMENT LENGTH FOR A TOP BAR
Lb = CLASS B LAP SPLICE LENGTH, 1.3 Ld
Lbt = CLASS B LAP SPLICE LENGTH FOR A TOP BAR, 1.3 Ldt
Ldh = TENSION DEVELOPMENT LENGTH FOR A STANDARD HOOK

7 DEVELOPMENT LENGTH AND SPLICE SCHEDULE

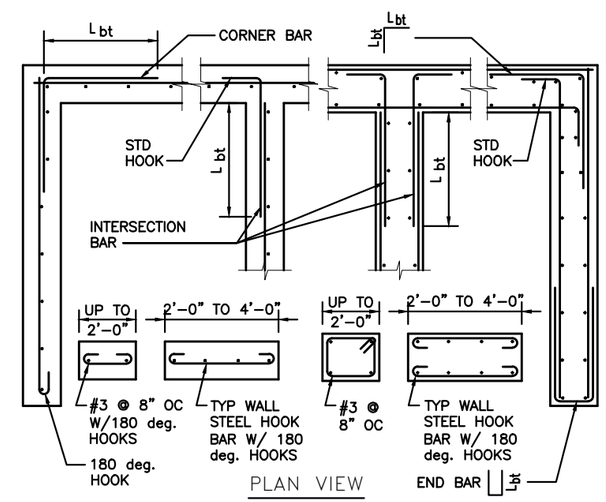

8 TYPICAL CONCRETE WALL DETAILS

kpff

FILE NAME:	14W121SB05_00.dwg					
PRINTED:	2:40:40 PM 9/21/2018	LAST PRINTED BY:				FED.AID PROJ.NO.
SUBMITTAL DATE:	08/23/2018	3yronR				WA-2017-007-00
DESIGNED BY:	A. RADKE	08/23/2018				REGION NO. / STATE
ENTERED BY:	B. RONIA	08/23/2018				10 / WASH
CHECKED BY:	A. EWING	08/23/2018				JOB NUMBER 18W121
MAR PROJ ENGR	C. TORRES					
DIR TERM ENGR:	N. MCINTOSH					CONTRACT NO.
ASST SECRETARY:	A. SCARTON		REVISION	DATE	BY	00****

DATE

DARA LOVING ROBERTS, STATE OF WASHINGTON, 38538, PROFESSIONAL ENGINEER
08/23/2018
DATE

Washington State Department of Transportation
WASHINGTON STATE FERRIES

SR 525
MUKILTEO FERRY TERMINAL (PHASE 2)
FERRY TERMINAL CONSTRUCTION

TYPICAL CONCRETE DETAILS

SB05.00
SHEET 1144 OF 1521 SHEETS

File: U:\114000-114350\114177 (Mukilteo Ferry Terminal)\04 Details\14W121SB05_00.dwg
Plotted: 9/21/18 at 2:40pm By: DianeL

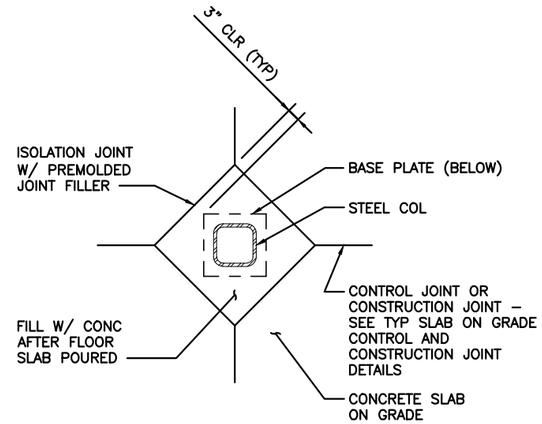

2 TYPICAL ISOLATION JOINT AT STEEL COLUMN

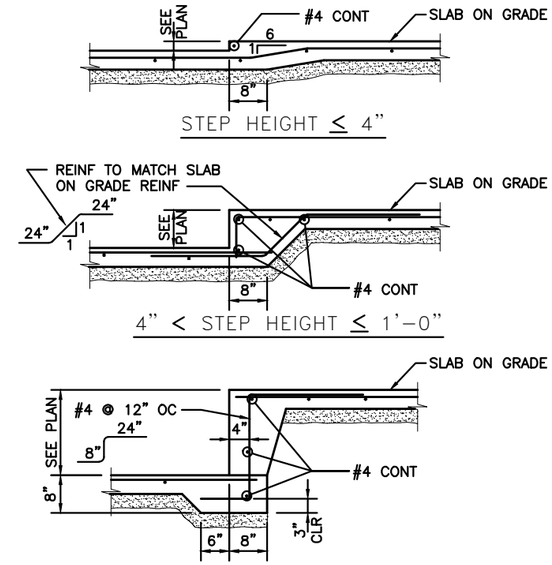

3 TYPICAL SOG STEP DETAIL

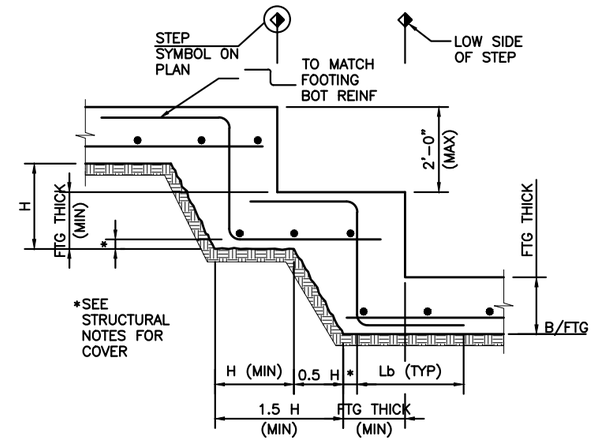

4 TYPICAL STEPPED FOOTING

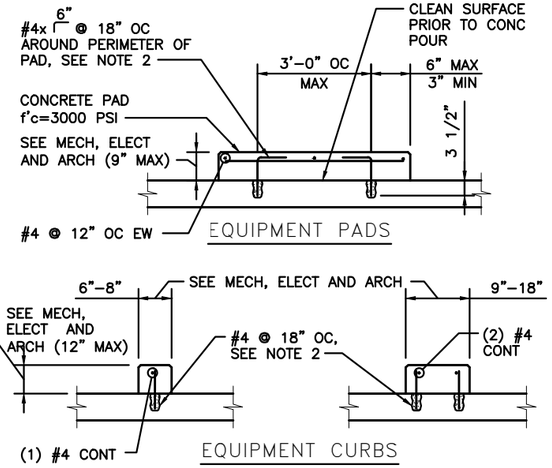

NOTES:
1. EQUIPMENT PAD SIZE TO BE 6" LARGER THAN EQUIPMENT IN EACH DIRECTION, UNO. COORDINATE EXACT SIZE AND LOCATION OF CURB AND PADS WITH EQUIPMENT PROVIDED.
2. ATTACH REBAR TO SLAB WITH HILTI HIT-RE 500-V3 ADHESIVE, OR APPROVED EQUAL.

6 TYPICAL EQUIP CURB & PADS

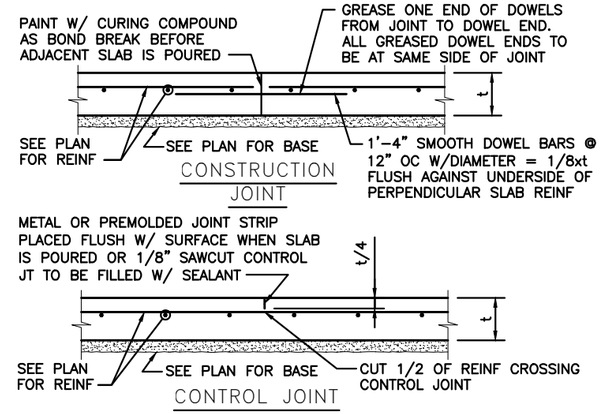

NOTES:
1. REFER TO PLAN FOR SLAB THICKNESS AND REINFORCING.
2. CONTROL JOINTS TO BE SPACED @ 15'-0" OC MAX, EACH WAY, UNO. RATIO OF DISTANCE BETWEEN CONTROL JOINTS IN EACH DIRECTION FOR A SLAB PANEL SHALL NOT EXCEED 1.5. CONSTRUCTION JOINTS PER THIS DETAIL SHALL BE CONSIDERED AS CONTROL JOINTS FOR CONTROL JOINT SPACING REQUIREMENTS.
3. SEE 3/SB05.01 FOR STEPPED SLAB DETAILS AT DEPRESSIONS.

7 SOG CONTROL/CONST JOINTS

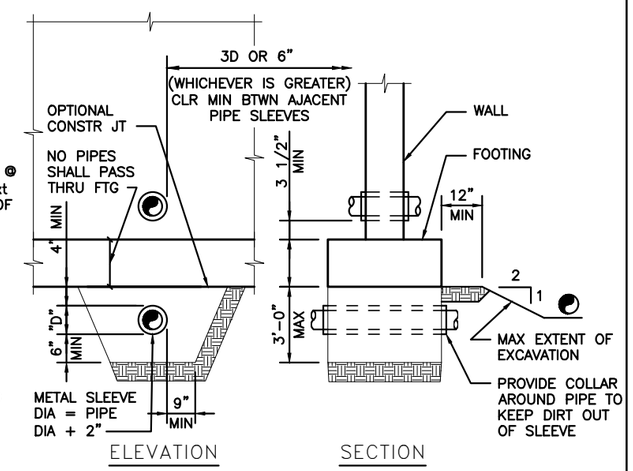

NOTES:
1. STEP FOOTING PER TYPICAL STEPPED FOOTING DETAIL AS REQUIRED TO SATISFY THESE CONDITONS.
2. GENERAL CONTRACTOR TO COORDINATE EXACT DEPTH AND LOCATION OF PIPE.
3. "D" SHALL NOT EXCEED 8".

8 TYP PIPE AT FOOTING

kpff

FILE NAME:	14W121SB05_01.dwg					
PRINTED:	2:40:43 PM 9/21/2018	LAST PRINTED BY:				FED.AID PROJ.NO.
SUBMITTAL DATE:	08/23/2018	3yronR				WA-2017-007-00
DESIGNED BY:	A. RADKE	08/23/2018				REGION NO. 10 / STATE WASH
ENTERED BY:	B. RONIA	08/23/2018				
CHECKED BY:	A. EWING	08/23/2018				JOB NUMBER 18W121
MAR PROJ ENGR	C. TORRES					
DIR TERM ENGR:	N. MCINTOSH					CONTRACT NO. 00****
ASST SECRETARY:	A. SCARTON		REVISION	DATE	BY	

DATE

DALLA LOVING RODRIGUES — STATE OF WASHINGTON — 38538 — PROFESSIONAL ENGINEER

08/23/2018
DATE

Washington State Department of Transportation
WASHINGTON STATE FERRIES

SR 525
MUKILTEO FERRY TERMINAL (PHASE 2)
FERRY TERMINAL CONSTRUCTION

TYPICAL CONCRETE DETAILS

SB05.01

SHEET 1145 OF 1521 SHEETS

File: U:\114000-114350\114177 (Mukilteo Ferry Terminal)\04 Details\14W121SB05_01.dwg
Plotted: 9/21/18 at 2:40pm By: DianeL

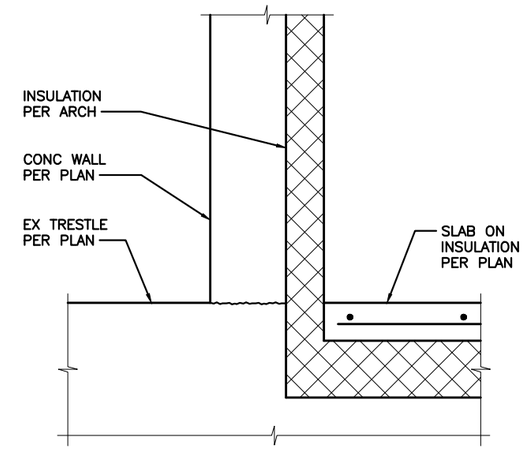

3 TERM BLDG TOPPING SLAB ON INSULATION

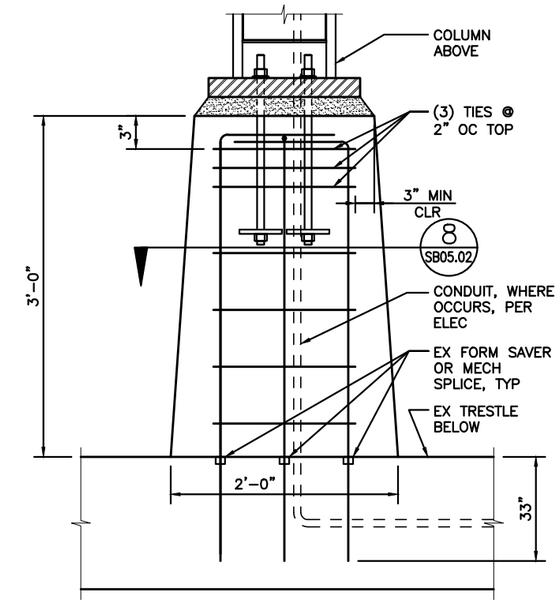

4 COLUMN PLINTH – P1

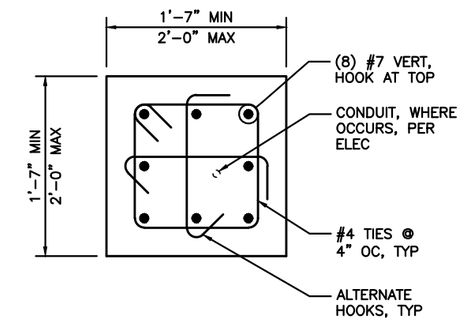

NOTE:
1. MINIMUM CROSS SECTION DIMENSION AT TOP OF PLINTH.

8 PLINTH CROSS SECTION

kpff

FILE NAME:	14W121SB05_02.dwg					
PRINTED: 2:40:46 PM 9/21/2018		LAST PRINTED BY:				FED.AID PROJ.NO.
SUBMITTAL DATE:	08/23/2018	3yronR				WA-2017-007-00
DESIGNED BY:	A. RADKE	08/23/2018				REGION NO. / STATE
ENTERED BY:	B. RONIA	08/23/2018				10 / WASH
CHECKED BY:	A. EWING	08/23/2018				JOB NUMBER
MAR PROJ ENGR	C. TORRES					18W121
DIR TERM ENGR:	N. MCINTOSH					CONTRACT NO.
ASST SECRETARY:	A. SCARTON		REVISION	DATE	BY	00****

DATE

DANA LOVING ROBERTS — STATE OF WASHINGTON — 38538 — PROFESSIONAL ENGINEER — AGRICULTURAL ENGINEER

08/23/2018
DATE

Washington State Department of Transportation
WASHINGTON STATE FERRIES

SR 525
MUKILTEO FERRY TERMINAL (PHASE 2)
FERRY TERMINAL CONSTRUCTION

CONCRETE DETAILS

SB05.02

SHEET 1146 OF 1521 SHEETS

File: U:\114000-114350\114177 (Mukilteo Ferry Terminal)\04 Details\14W121SB05_02.dwg
Plotted: 9/21/18 at 2:40pm By: DianaL

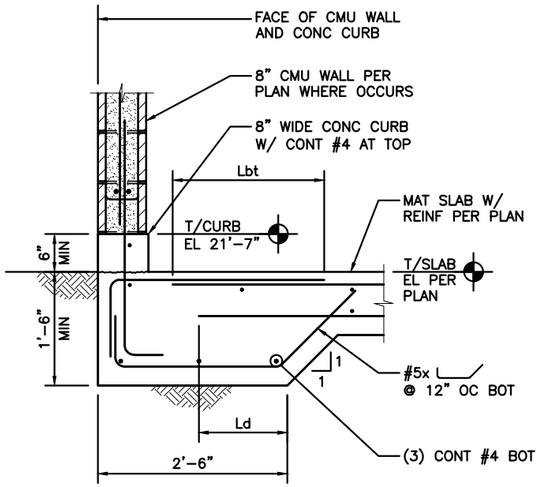

1 MAINTENANCE BUILDING – FOUNDATION SECTION

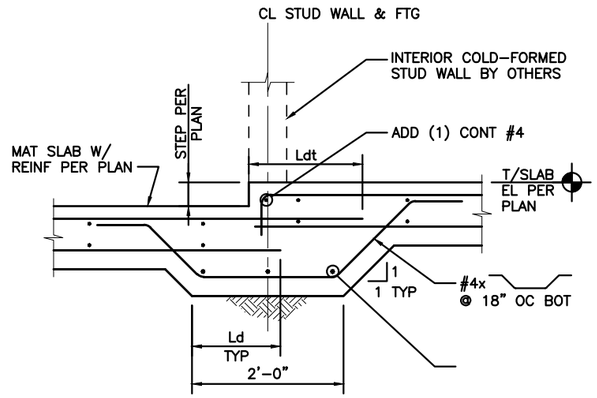

2 MAINTENANCE BUILDING – FOUNDATION SECTION

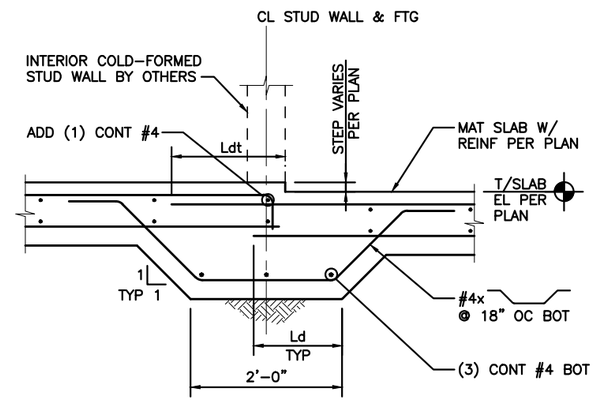

3 MAINTENANCE BUILDING – FOUNDATION SECTION

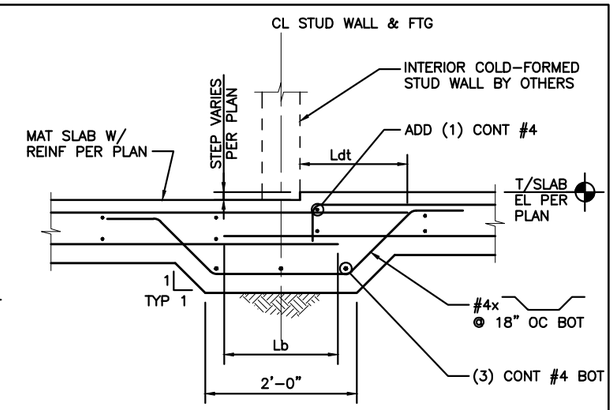

4 MAINTENANCE BUILDING – FOUNDATION SECTION

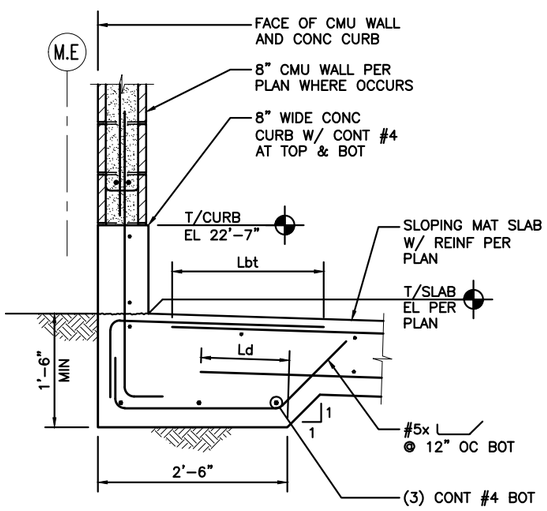

5 MAINTENANCE BUILDING – FOUNDATION SECTION

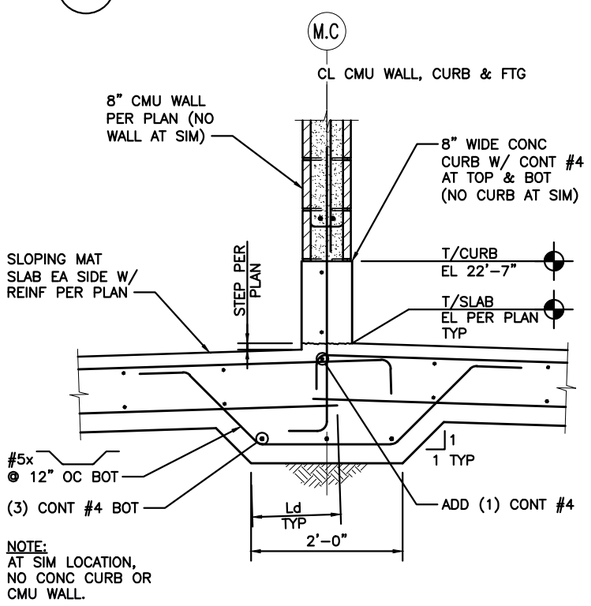

6 MAINTENANCE BUILDING – FOUNDATION SECTION

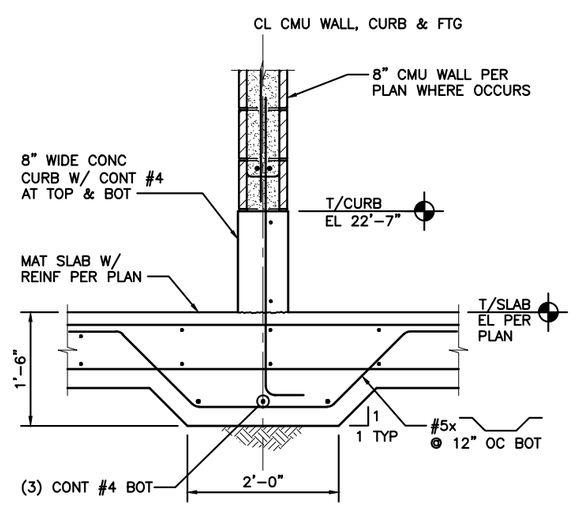

7 MAINTENANCE BUILDING – FOUNDATION SECTION

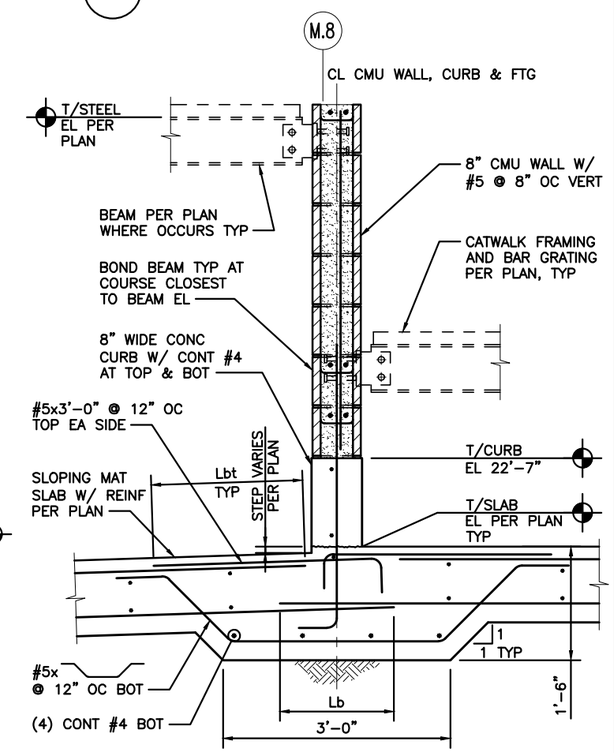

8 MAINTENANCE BUILDING – FOUNDATION SECTION

kpff

FILE NAME:	14W121SB05_03.dwg					
PRINTED:	2:40:48 PM 9/21/2018	LAST PRINTED BY:				FED.AID PROJ.NO.
SUBMITTAL DATE:	08/23/2018	3yronR				WA-2017-007-00
DESIGNED BY:	A. RADKE	08/23/2018				REGION NO. / STATE
ENTERED BY:	B. RONIA	08/23/2018				10 / WASH
CHECKED BY:	A. EWING	08/23/2018				JOB NUMBER 18W121
MAR PROJ ENGR	C. TORRES					
DIR TERM ENGR:	N. MCINTOSH					CONTRACT NO.
ASST SECRETARY:	A. SCARTON		REVISION	DATE	BY	00****

DATE

08/23/2018
DATE

Washington State Department of Transportation
WASHINGTON STATE FERRIES

SR 525
MUKILTEO FERRY TERMINAL (PHASE 2)
FERRY TERMINAL CONSTRUCTION

CONCRETE DETAILS

SB05.03

SHEET 1147 OF 1521 SHEETS

File: U:\114000-114350\114177 (Mukilteo Ferry Terminal)\04 Details\14W121SB05_03.dwg
Plotted: 9/21/18 at 2:40pm By: DianeL

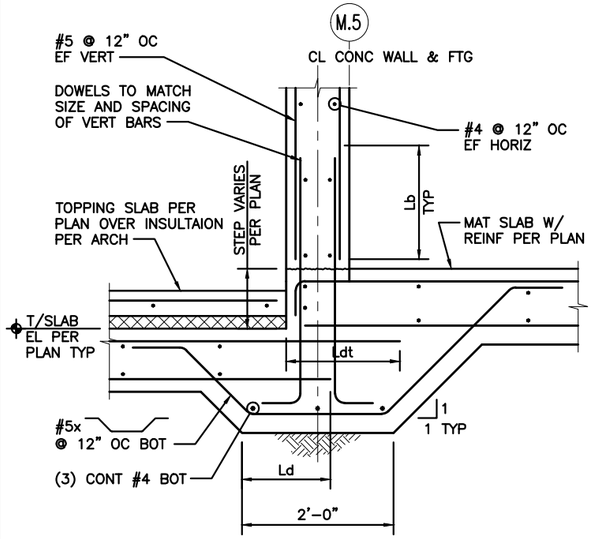

MAINTENANCE BUILDING – FOUNDATION SECTION

1

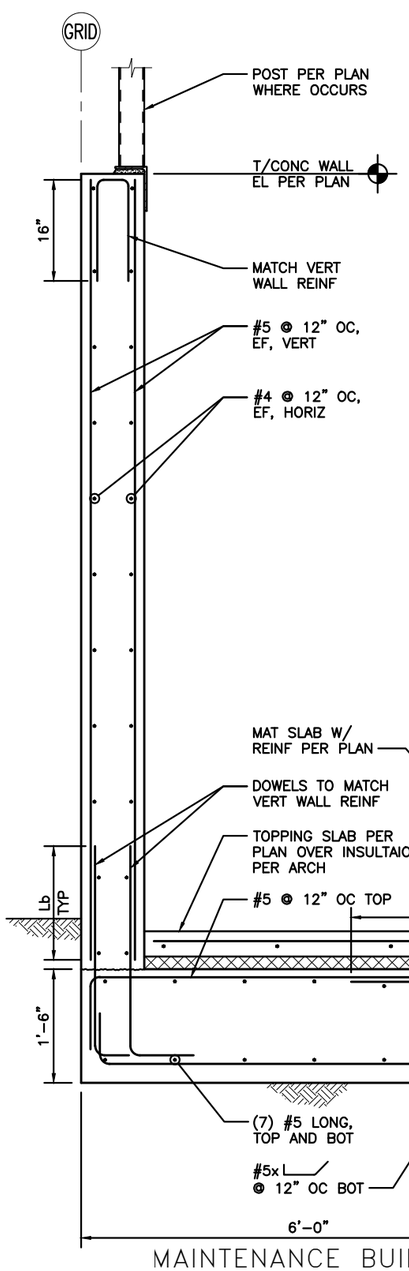

MAINTENANCE BUILDING – CLERESTORY CONCRETE WALL SECTION

6

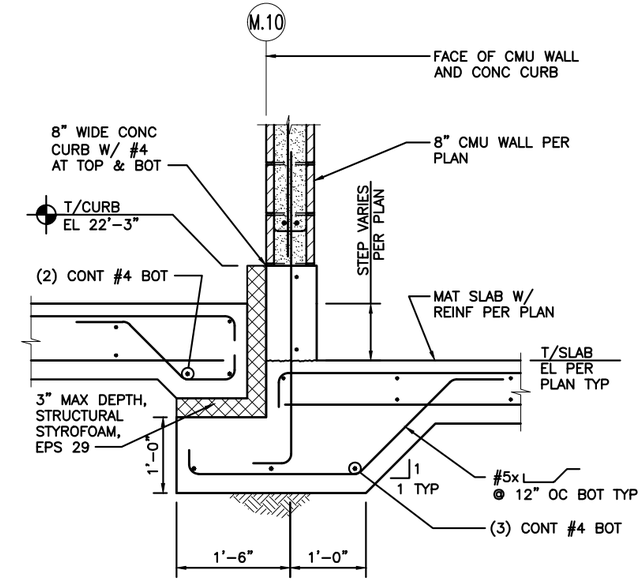

MAINTENANCE BUILDING – FOUNDATION SECTION

3

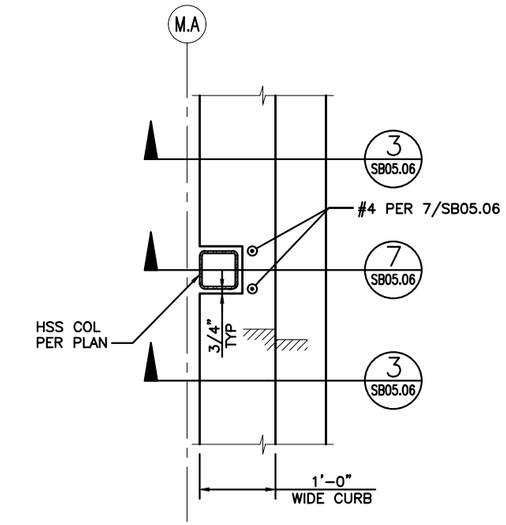

MAINTENANCE BUILDING – CURB DETAIL AT HSS COL

4

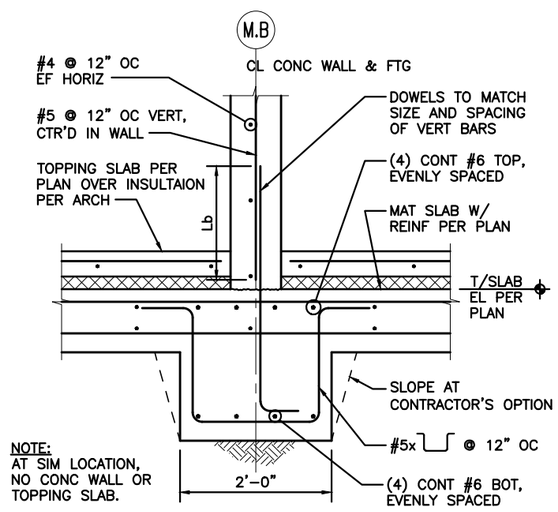

MAINTENANCE BUILDING – FOUNDATION SECTION

5

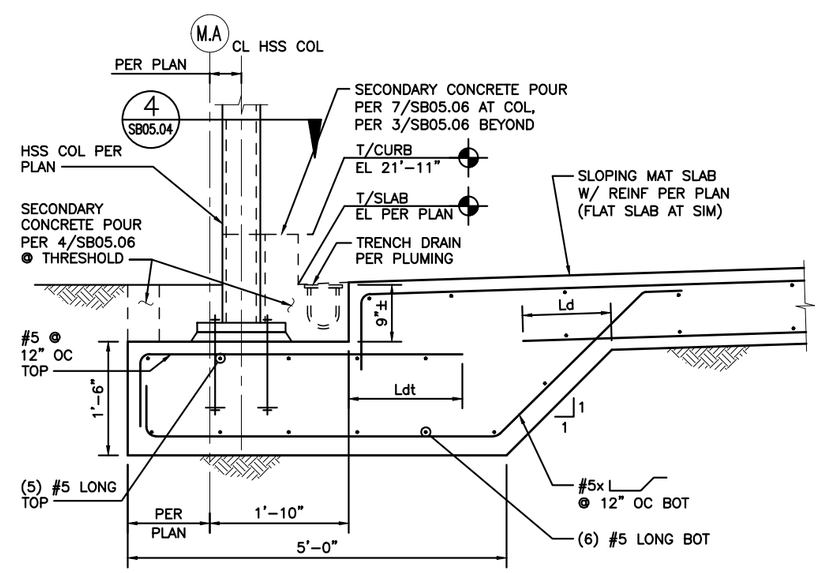

MAINTENANCE BUILDING – FOUNDATION SECTION

7

kpff

FILE NAME:	14W121SB05_04.dwg					
PRINTED: 2:40:51 PM 9/21/2018	LAST PRINTED BY:					FED.AID PROJ.NO.
SUBMITTAL DATE: 08/23/2018	3yronR					WA-2017-007-00
DESIGNED BY: A. RADKE	08/23/2018					REGION NO. / STATE
ENTERED BY: B. RONIA	08/23/2018					10 / WASH
CHECKED BY: A. EWING	08/23/2018					JOB NUMBER 18W121
MAR PROJ ENGR C. TORRES						
DIR TERM ENGR: N. MCINTOSH						CONTRACT NO.
ASST SECRETARY: A. SCARTON		REVISION	DATE	BY		00****

DATE

08/23/2018
DATE

Washington State Department of Transportation
WASHINGTON STATE FERRIES

SR 525
MUKILTEO FERRY TERMINAL (PHASE 2)
FERRY TERMINAL CONSTRUCTION

CONCRETE DETAILS

SB05.04

SHEET 1148 OF 1521 SHEETS

File: U:\114000-114350\114177 (Mukilteo Ferry Terminal)\04 Details\14W121SB05_04.dwg
Plotted: 9/21/18 at 2:40pm By: DianeL

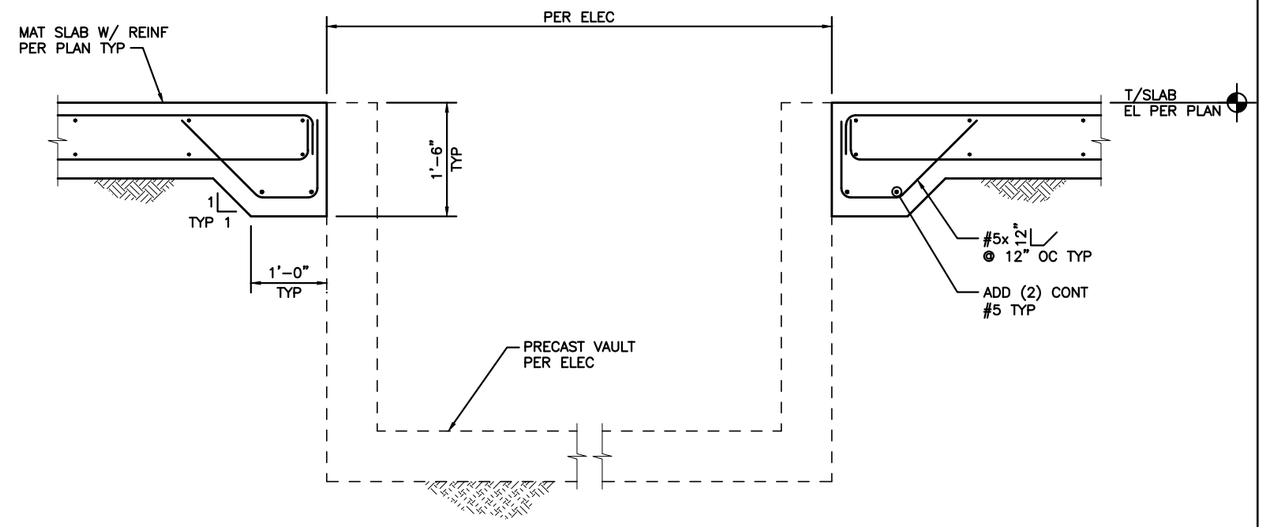

3 TRANSFORMER VAULT

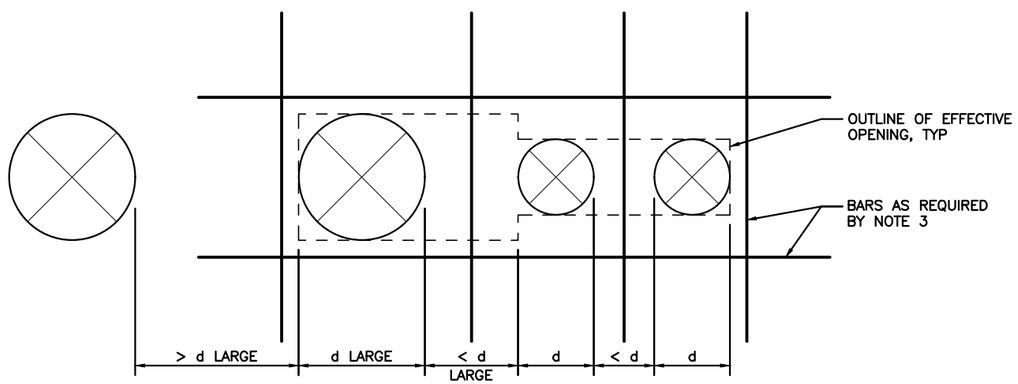

NOTES:

1. DETAIL FOR USE WHERE PENETRATIONS ARE LESS THAN 1'-0" LONG AND WIDE. IF THE EFFECTIVE OPENING LENGTH OR WIDTH IS GREATER THAN 1'-0", FOLLOW THE TRIM REQUIREMENTS PER 7/SB05.05.
2. SPREAD INTERRUPTED REINFORCING AROUND PENETRATIONS.
3. AT MULTIPLE SLAB PENETRATIONS, WHERE THE CLEAR DISTANCE BETWEEN ADJACENT PENETRATIONS IS LESS THAN THE DIAMETER OF THE LARGER PENETRATION, PROVIDE (1) #4 TOP AND BOTTOM TRIM BARS ALL AROUND THE EFFECTIVE OPENING AND BETWEEN PENETRATIONS. EXTEND TRIM BARS 1'-6" PAST THE EFFECTIVE OPENING EDGE. DIAGONAL BARS ARE NOT REQUIRED AT THESE CONDITIONS.
4. THE CLEAR DISTANCE BETWEEN ADJACENT PENETRATIONS SHALL NOT BE LESS THAN THE GREATER OF 1/2x DIAMETER OF THE PENETRATION OR 2".
5. PENETRATIONS ARE NOT PERMITTED WITHIN 4'-0" OF COLUMNS UNLESS NOTED OTHERWISE OR APPROVED BY ENGINEER.

5 TYPICAL SLAB ON GRADE PENETRATIONS

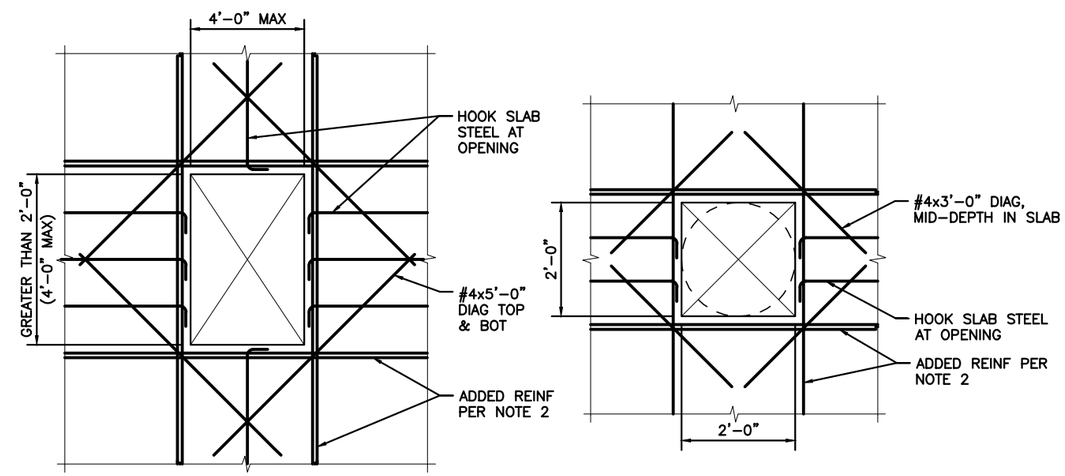

NOTES:

1. ALL OPENINGS NOT SHOWN ON THE STRUCTURAL DRAWINGS THAT ARE LARGER THAN 1'-0" SQUARE SHALL BE SUBMITTED TO THE ENGINEER FOR APPROVAL. NO OPENINGS ARE PERMITTED WITHIN 4'-0" OF COLUMNS UNLESS NOTED OTHERWISE OR APPROVED BY ENGINEER.
2. ADDITIONAL REINFORCING AT OPENING SHALL MATCH BAR SIZE, QUANTITY, AND EXTENTS OF REINFORCING INTERRUPTED BY OPENING. PLACE HALF OF ADDED BARS ON EACH SIDE OF OPENING. AT MINIMUM, PROVIDE (2) #4 TOP AND BOTTOM AT EACH SIDE AT LARGE OPENINGS AND (1) #4 TOP AND BOTTOM EACH SIDE AT SMALL OPENINGS, WITH A 2'-0" MINIMUM EXTENSION BEYOND THE OPENING.

7 TYPICAL SLAB ON GRADE OPENING

kpff

FILE NAME:	14W121SB05_05.dwg					FED.AID PROJ.NO.
PRINTED: 2:40:54 PM 9/21/2018		LAST PRINTED BY:				
SUBMITTAL DATE:	08/23/2018	3yronR				WA-2017-007-00
DESIGNED BY:	A. RADKE	08/23/2018				REGION NO. / STATE
ENTERED BY:	B. RONIA	08/23/2018				10 / WASH
CHECKED BY:	A. EWING	08/23/2018				JOB NUMBER 18W121
MAR PROJ ENGR	C. TORRES					
DIR TERM ENGR:	N. MCINTOSH					CONTRACT NO.
ASST SECRETARY:	A. SCARTON		REVISION	DATE	BY	00****

DATE

08/23/2018
DATE

Washington State Department of Transportation
WASHINGTON STATE FERRIES

SR 525
MUKILTEO FERRY TERMINAL (PHASE 2)
FERRY TERMINAL CONSTRUCTION

CONCRETE DETAILS

SB05.05

SHEET 1149 OF 1521 SHEETS

File: U:\114000-114350\114177 (Mukilteo Ferry Terminal)\04 Details\14W121SB05_05.dwg
Plotted: 9/21/18 at 2:40pm By: DianeL

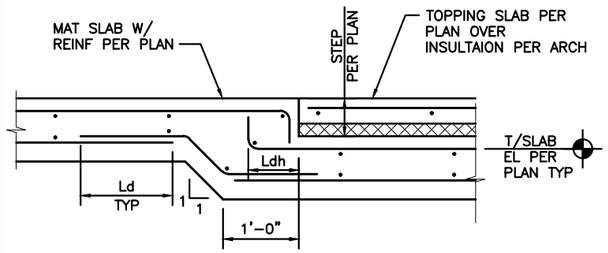

1 MAINTENANCE BUILDING – SLAB STEP SECTION

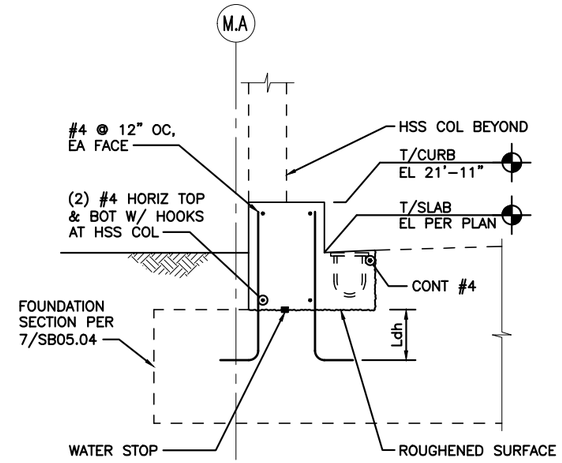

3 MAINTENANCE BUILDING – SECONDARY CONCRETE POUR

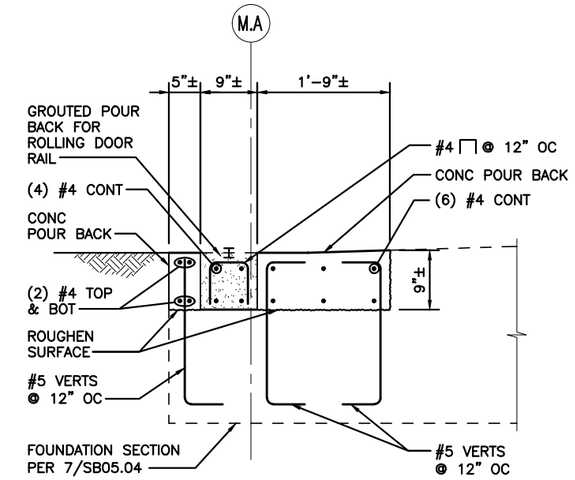

4 MAINTENANCE BUILDING – SECONDARY CONCRETE POUR

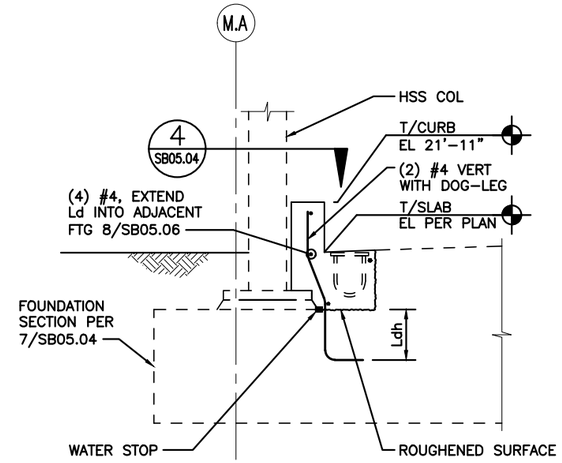

7 MAINTENANCE BUILDING – SECONDARY CONCRETE POUR

kpff

FILE NAME:	14W121SB05_06.dwg					
PRINTED:	2:40:56 PM 9/21/2018	LAST PRINTED BY:				FED.AID PROJ.NO.
SUBMITTAL DATE:	08/23/2018	3yronR				
DESIGNED BY:	A. RADKE	08/23/2018				WA-2017-007-00
ENTERED BY:	B. RONIA	08/23/2018				REGION NO. / STATE
CHECKED BY:	A. EWING	08/23/2018				10 / WASH
MAR PROJ ENGR	C. TORRES					JOB NUMBER 18W121
DIR TERM ENGR:	N. MCINTOSH					CONTRACT NO.
ASST SECRETARY:	A. SCARTON		REVISION	DATE	BY	00****

DATE

STATE OF WASHINGTON — ANN LOVING GOODRICH — 38538 — PROFESSIONAL ENGINEER

08/23/2018
DATE

Washington State Department of Transportation
WASHINGTON STATE FERRIES

SR 525
MUKILTEO FERRY TERMINAL (PHASE 2)
FERRY TERMINAL CONSTRUCTION

CONCRETE DETAILS

SB05.06

SHEET 1150 OF 1521 SHEETS

File: U:\114000-114350\114177 (Mukilteo Ferry Terminal)\04 Details\14W121SB05_06.dwg
Plotted: 9/21/18 at 2:40pm By: DianeL

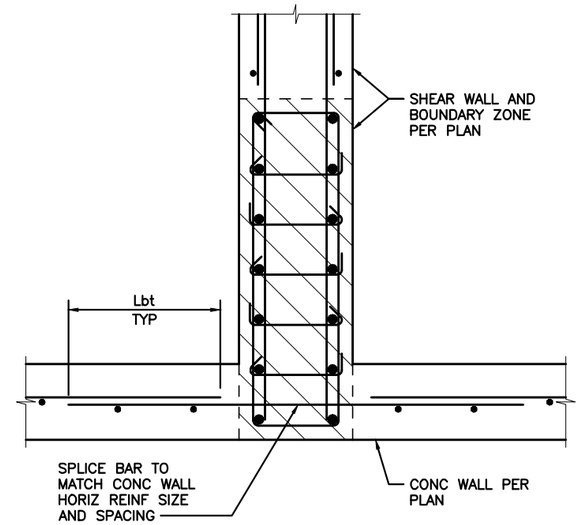

3 CONCRETE WALL DETAIL

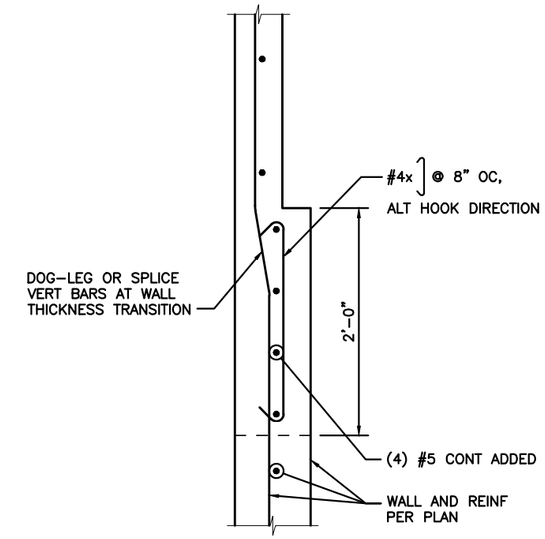

4 CONCRETE WALL DETAIL

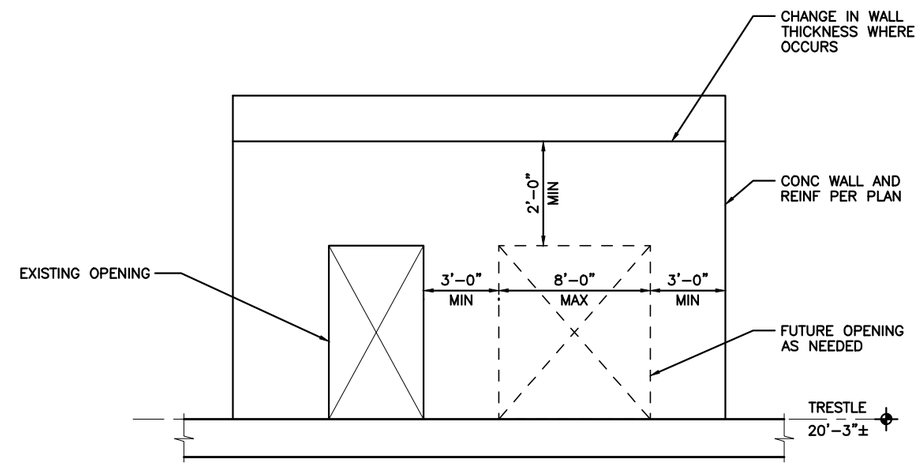

NOTES:
1. OPENINGS THAT DO NOT MEET THE GIVEN CRITERIA SHOULD BE EVALUATED ON A CASE BY CASE BASIS, AND SUPPLEMENTAL STRUCTURE MAY BE REQUIRED.

8 FUTURE WALL OPENING DETAIL

kpff

FILE NAME:	14W121SB05_07.dwg					
PRINTED: 2:40:59 PM 9/21/2018		LAST PRINTED BY:				FED.AID PROJ.NO.
SUBMITTAL DATE:	08/23/2018	3yronR				WA-2017-007-00
DESIGNED BY:	A. RADKE	08/23/2018				REGION NO. / STATE
ENTERED BY:	B. RONIA	08/23/2018				10 / WASH
CHECKED BY:	A. EWING	08/23/2018				JOB NUMBER
MAR PROJ ENGR	C. TORRES					18W121
DIR TERM ENGR:	N. MCINTOSH					CONTRACT NO.
ASST SECRETARY:	A. SCARTON		REVISION	DATE	BY	00****

DATE

DANA LOVING ROBERTS — STATE OF WASHINGTON — 38538 — AGRICULTURAL ENGINEER — PROFESSIONAL ENGINEER

08/23/2018
DATE

Washington State Department of Transportation
WASHINGTON STATE FERRIES

SR 525
MUKILTEO FERRY TERMINAL (PHASE 2)
FERRY TERMINAL CONSTRUCTION

CONCRETE DETAILS

SB05.07

SHEET 1151 OF 1521 SHEETS

File: U:\114000-114350\114177 (Mukilteo Ferry Terminal)\04 Details\14W121SB05_07.dwg
Plotted: 9/21/18 at 2:40pm By: DianeL

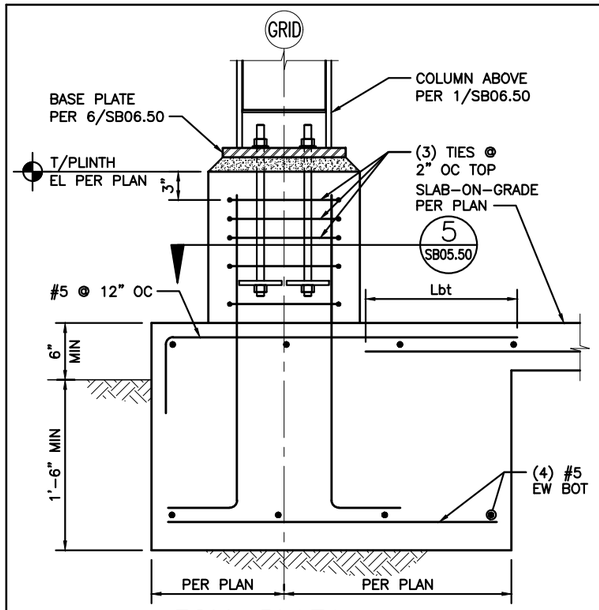

1 TOLL PLAZA – FOUNDATION SECTION

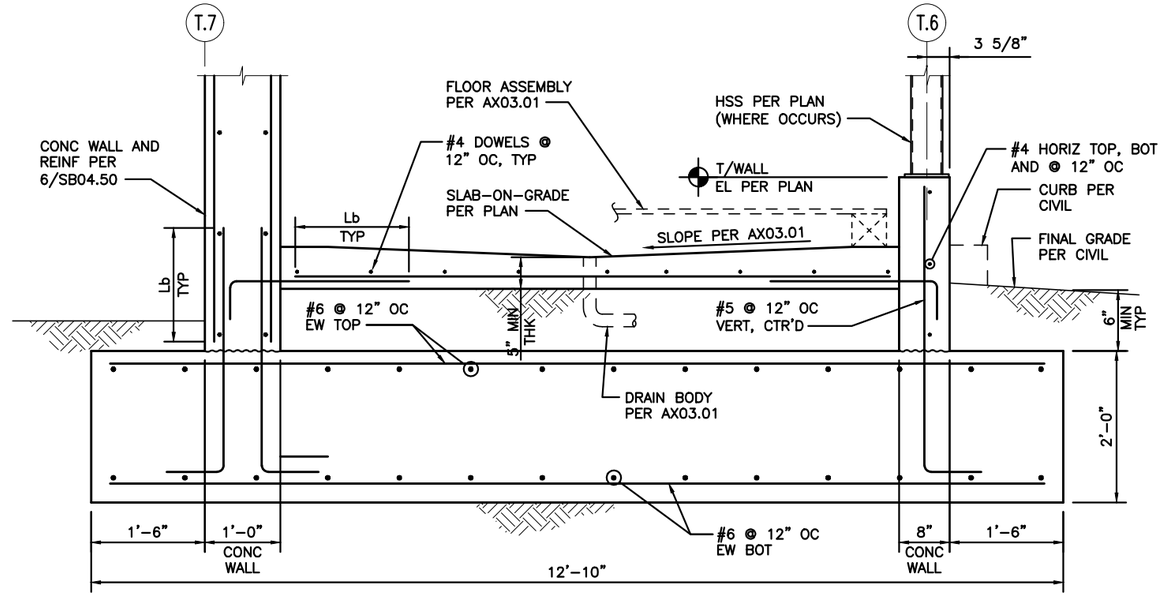

2 TOLL PLAZA – FOUNDATION SECTION

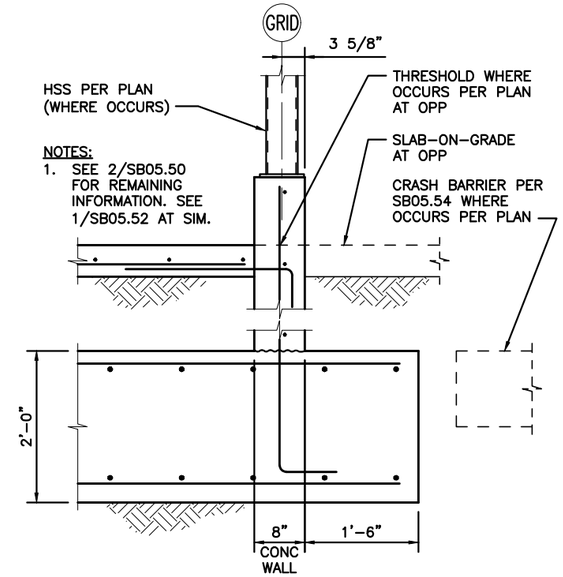

4 TOLL PLAZA – FOUNDATION SECTION

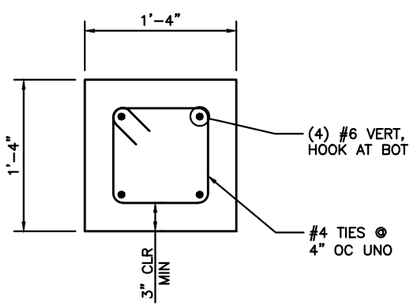

5 PLINTH CROSS SECTION

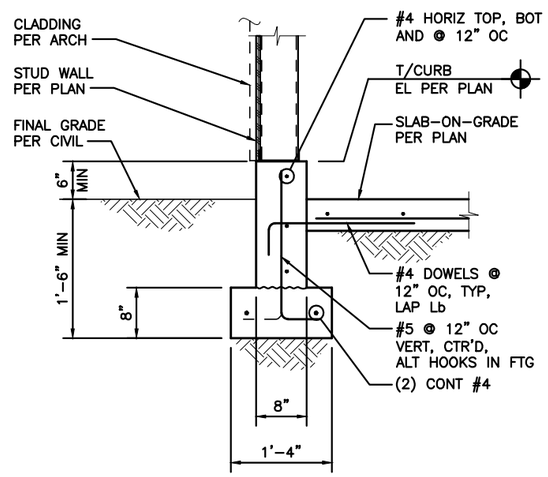

6 TOLL PLAZA – FDN SECTION

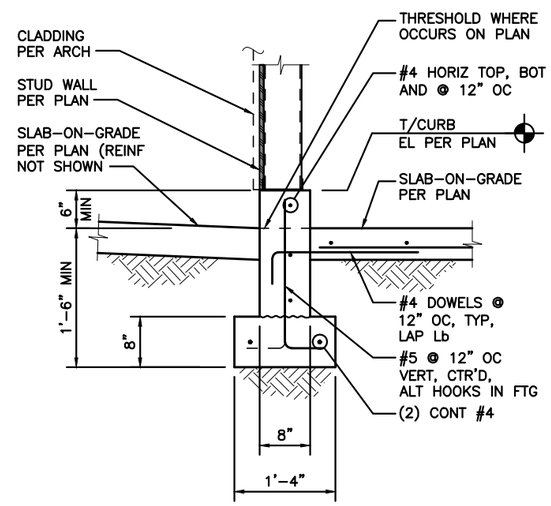

7 TOLL PLAZA – FDN SECTION

kpff

File: U:\114000-114350\114177 (Mukilteo Ferry Terminal)\04 Details\14W121SB05_50.dwg
Plotted: 9/21/18 at 2:41pm By: DianeL

FILE NAME:	14W121SB05_50.dwg					
PRINTED: 2:41:01 PM 9/21/2018		LAST PRINTED BY:				FED.AID PROJ.NO.
SUBMITTAL DATE:	08/23/2018	ZyronR				WA-2017-007-00
DESIGNED BY:	A. RADKE	08/23/2018				REGION NO. / STATE
ENTERED BY:	B. RONIA	08/23/2018				10 / WASH
CHECKED BY:	A. EWING	08/23/2018				JOB NUMBER
MAR PROJ ENGR	C. TORRES					18W121
DIR TERM ENGR:	N. MCINTOSH					CONTRACT NO.
ASST SECRETARY:	A. SCARTON		REVISION	DATE	BY	00****

DATE

DONNA LOVING ROBERTS
STATE OF WASHINGTON
38538
PROFESSIONAL ENGINEER
08/23/2018
DATE

Washington State
Department of Transportation
WASHINGTON STATE FERRIES

SR 525
MUKILTEO FERRY TERMINAL (PHASE 2)
FERRY TERMINAL CONSTRUCTION

CONCRETE DETAILS – TOLL PLAZA

SB05.50

SHEET
1152
OF
1521
SHEETS

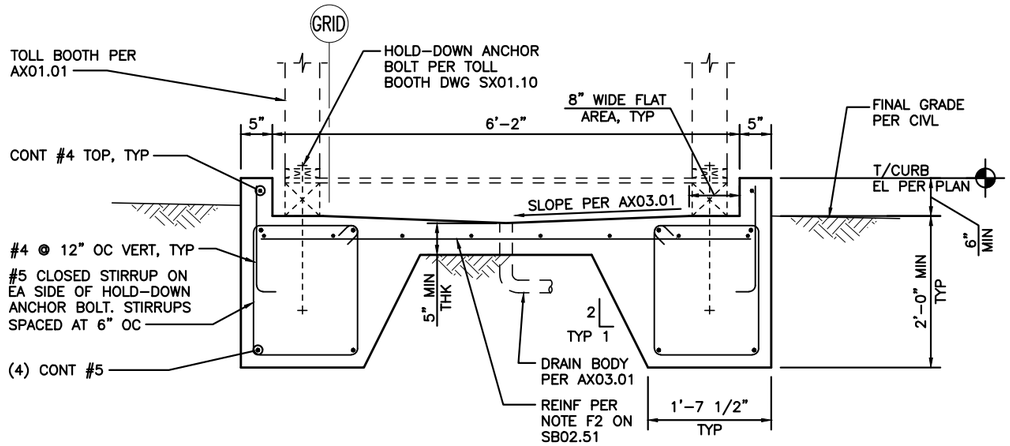

1 TOLL PLAZA – FOUNDATION SECTION

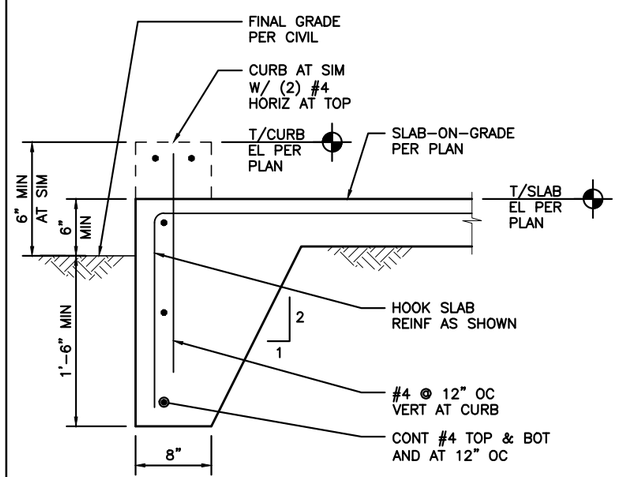

5 TOLL PLAZA – THICKENED SLAB EDGE

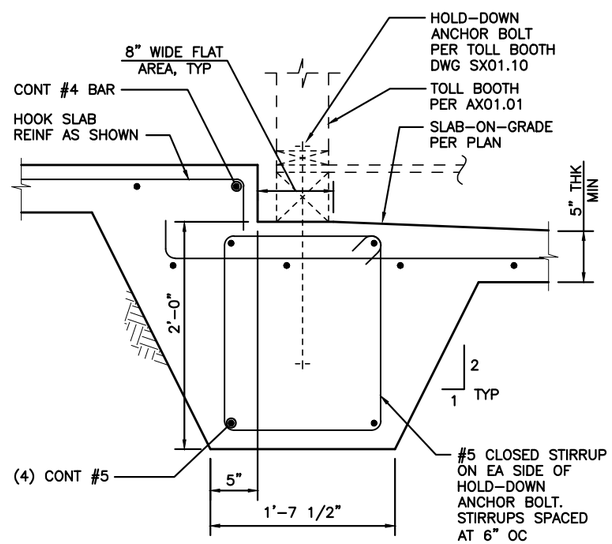

6 TOLL PLAZA – FOUNDATION SECTION

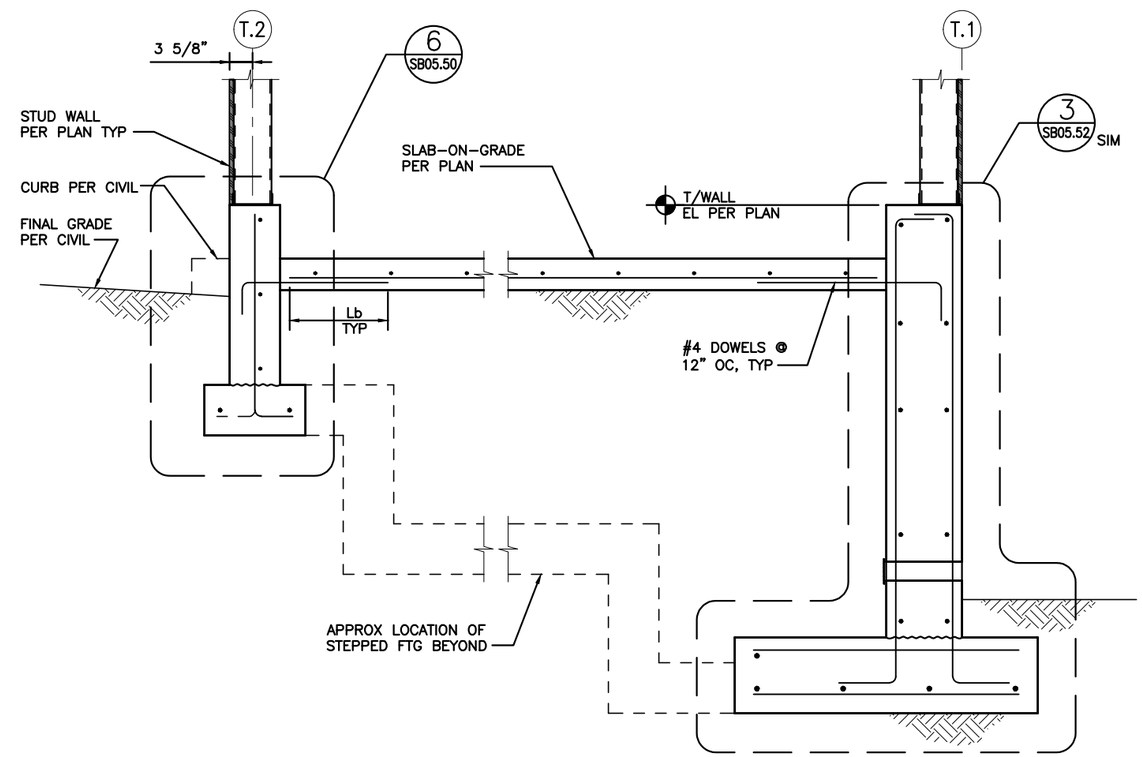

7 TOLL PLAZA – FOUNDATION SECTION

kpff

FILE NAME:	14W121SB05_51.dwg					
PRINTED: 2:41:05 PM 9/21/2018		LAST PRINTED BY:				FED.AID PROJ.NO.
SUBMITTAL DATE:	08/23/2018	ByronR				
DESIGNED BY:	A. RADKE	08/23/2018				WA-2017-007-00
ENTERED BY:	B. RONIA	08/23/2018				REGION NO. / STATE
CHECKED BY:	A. EWING	08/23/2018				10 / WASH
MAR PROJ ENGR	C. TORRES					JOB NUMBER 18W121
DIR TERM ENGR:	N. MCINTOSH					
ASST SECRETARY:	A. SCARTON		REVISION	DATE	BY	CONTRACT NO. 00****

DATE

DONA LOVING ROBERTS STATE OF WASHINGTON 38538 PROFESSIONAL ENGINEER

08/23/2018
DATE

Washington State Department of Transportation
WASHINGTON STATE FERRIES

SR 525
MUKILTEO FERRY TERMINAL (PHASE 2)
FERRY TERMINAL CONSTRUCTION

CONCRETE DETAILS – TOLL PLAZA

SB05.51

SHEET 1153 OF 1521 SHEETS

File: U:\114000-114350\114177 (Mukilteo Ferry Terminal)\04 Details\14W121SB05_51.dwg
Plotted: 9/21/18 at 2:41pm By: DianeL

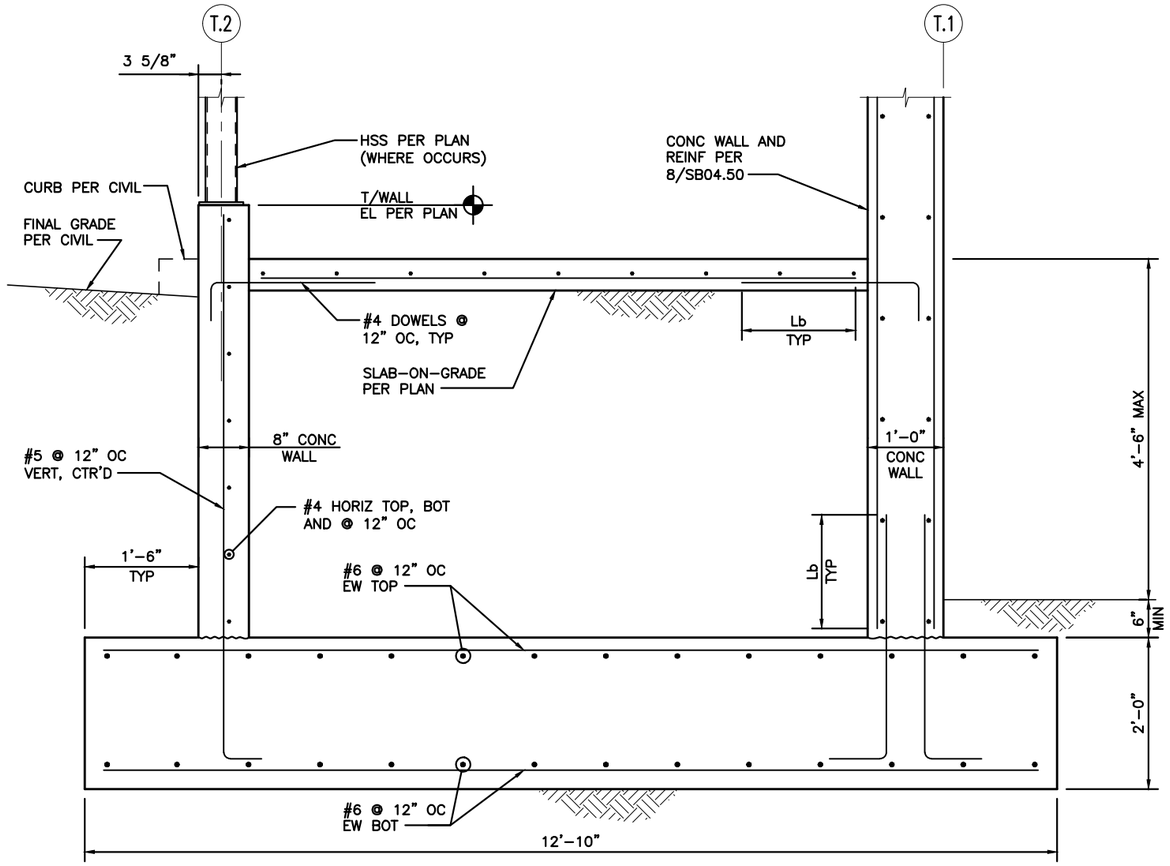

1 TOLL PLAZA – FOUNDATION SECTION

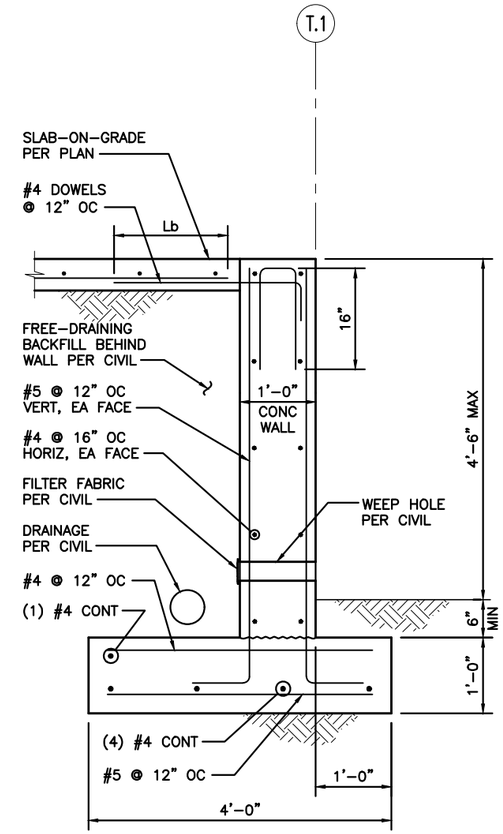

3 TOLL PLAZA – FDN SECTION

kpff

FILE NAME:	14W121SB05_52.dwg					
PRINTED: 2:41:07 PM 9/21/2018		LAST PRINTED BY:				FED.AID PROJ.NO.
SUBMITTAL DATE:	08/23/2018	ByronR				WA-2017-007-00
DESIGNED BY:	A. RADKE	08/23/2018				REGION NO. / STATE
ENTERED BY:	B. RONIA	08/23/2018				10 / WASH
CHECKED BY:	A. EWING	08/23/2018				JOB NUMBER 18W121
MAR PROJ ENGR	C. TORRES					
DIR TERM ENGR:	N. MCINTOSH					CONTRACT NO.
ASST SECRETARY:	A. SCARTON		REVISION	DATE	BY	00****

DATE

08/23/2018
DATE

Washington State Department of Transportation
WASHINGTON STATE FERRIES

SR 525
MUKILTEO FERRY TERMINAL (PHASE 2)
FERRY TERMINAL CONSTRUCTION

CONCRETE DETAILS – TOLL PLAZA

SB05.52

SHEET 1154 OF 1521 SHEETS

File: U:\114000-114350\114177 (Mukilteo Ferry Terminal)\04 Details\14W121SB05_52.dwg
Plotted: 9/21/18 at 2:41pm By: DianeL

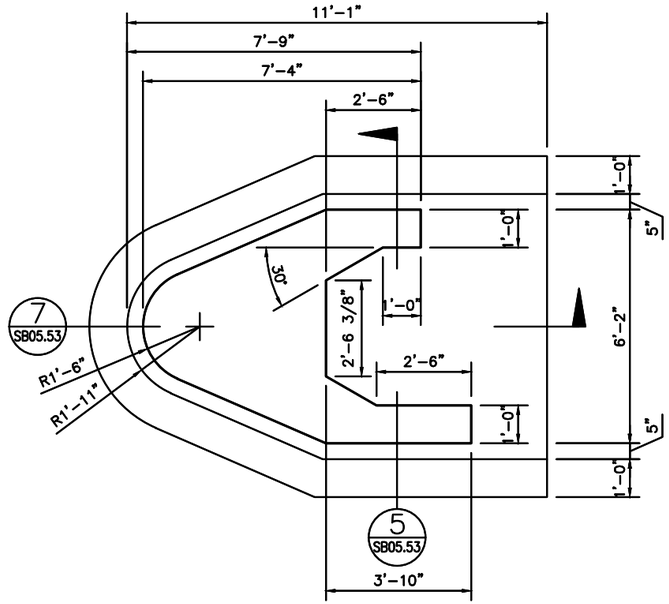

1 CRASH BARRIER – PARTIAL PLAN

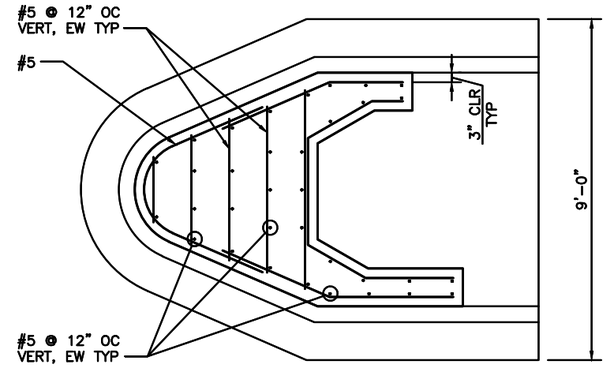

2 CRASH BARRIER – REINFORCING PLAN

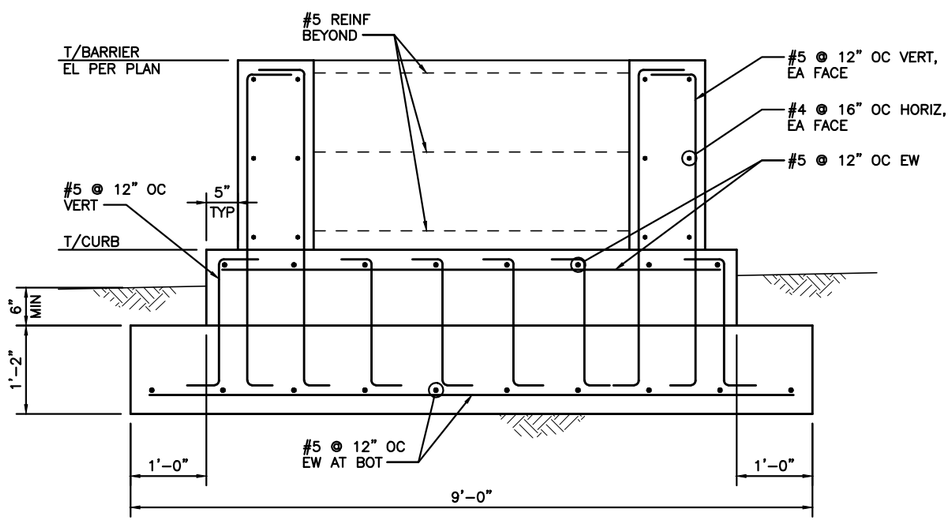

5 CRASH BARRIER – SECTION

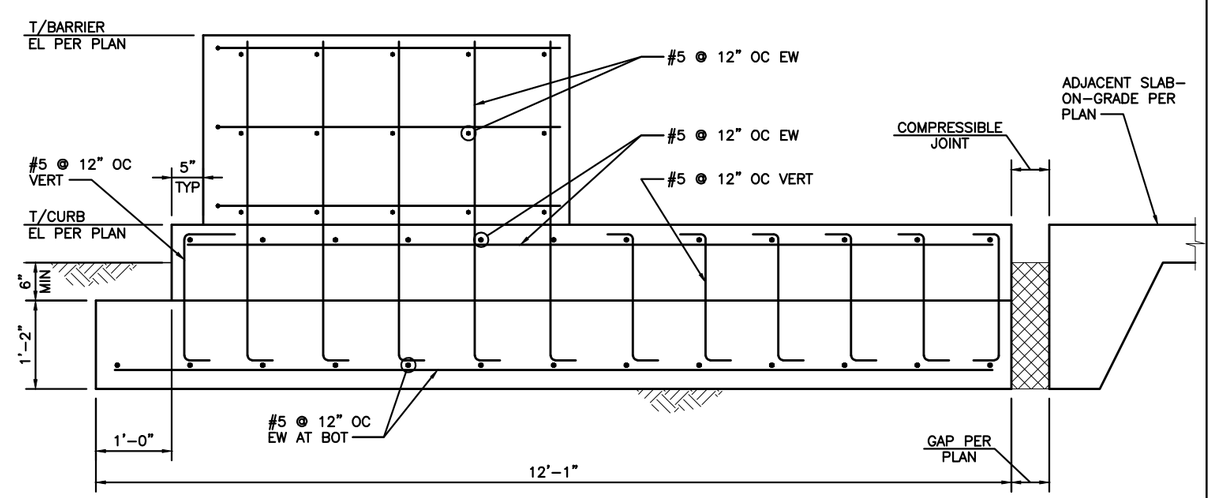

7 CRASH BARRIER – SECTION

kpff

FILE NAME:	14W121SB05_53.dwg					
PRINTED: 2:41:10 PM 9/21/2018		LAST PRINTED BY:				FED.AID PROJ.NO.
SUBMITTAL DATE:	08/23/2018	3yronR				WA-2017-007-00
DESIGNED BY:	A. RADKE	08/23/2018				REGION NO. / STATE
ENTERED BY:	B. RONIA	08/23/2018				10 / WASH
CHECKED BY:	A. EWING	08/23/2018				JOB NUMBER
MAR PROJ ENGR	C. TORRES					18W121
DIR TERM ENGR:	N. MCINTOSH					CONTRACT NO.
ASST SECRETARY:	A. SCARTON		REVISION	DATE	BY	00****

DATE

STEVEN LOVING ROBERTS — STATE OF WASHINGTON — 38538 — AGRICULTURAL ENGINEER — PROFESSIONAL ENGINEER

08/23/2018
DATE

Washington State Department of Transportation
WASHINGTON STATE FERRIES

SR 525
MUKILTEO FERRY TERMINAL (PHASE 2)
FERRY TERMINAL CONSTRUCTION

CONCRETE DETAILS – TOLL PLAZA

SB05.53

SHEET 1155 OF 1521 SHEETS

File: U:\114000-114350\114177 (Mukilteo Ferry Terminal)\04 Details\14W121SB05_53.dwg
Plotted: 9/21/18 at 2:41pm By: DianeL

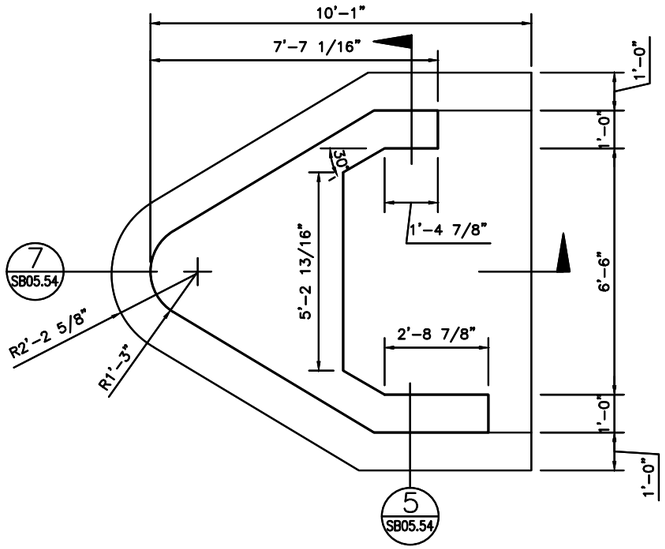

1 CRASH BARRIER – PARTIAL PLAN

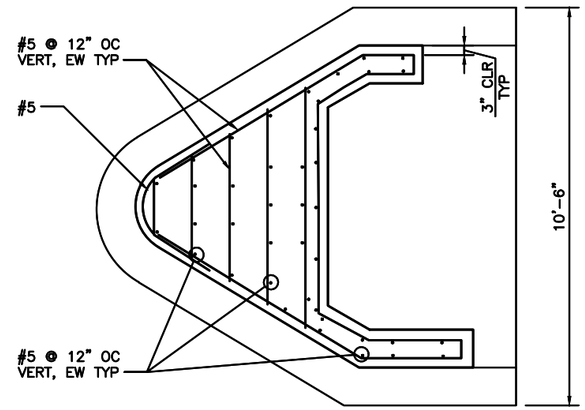

2 CRASH BARRIER – REINFORCING PLAN

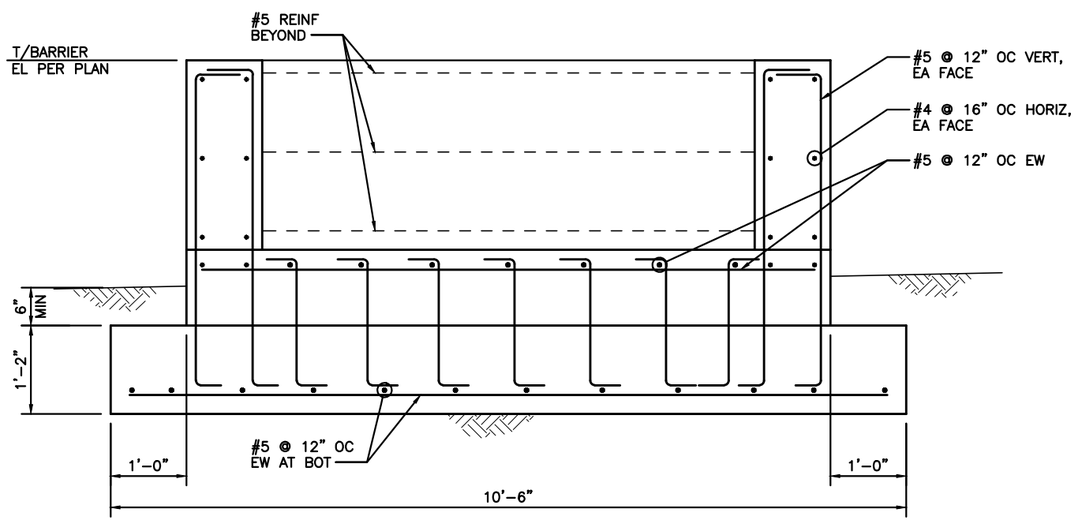

5 CRASH BARRIER – SECTION

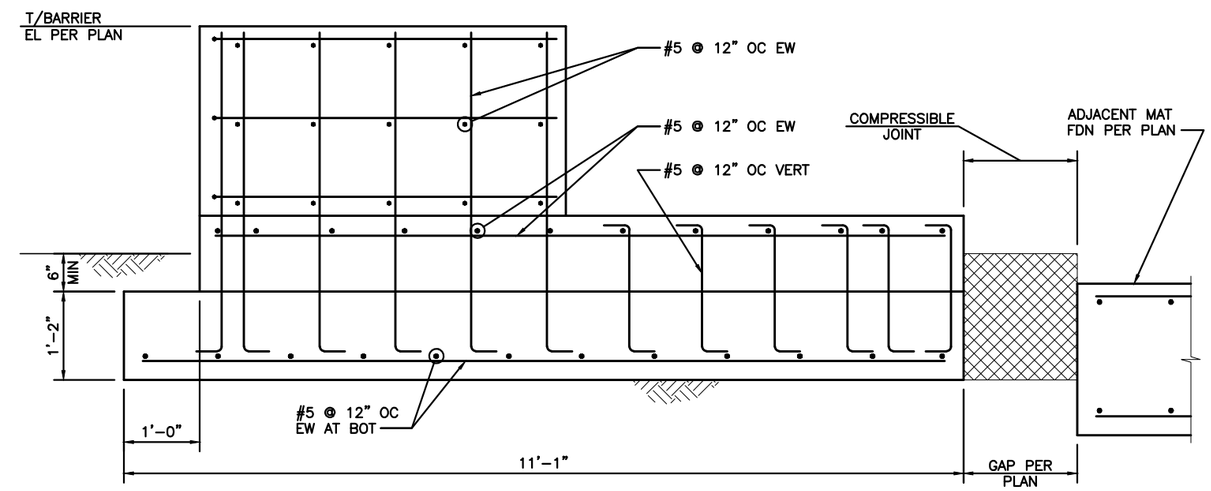

7 CRASH BARRIER – SECTION

kpff

FILE NAME:	14W121SB05_54.dwg					
PRINTED: 2:41:12 PM 9/21/2018		LAST PRINTED BY:				FED.AID PROJ.NO.
SUBMITTAL DATE:	08/23/2018	3yronR				WA-2017-007-00
DESIGNED BY:	A. RADKE	08/23/2018				REGION NO. / STATE
ENTERED BY:	B. RONIA	08/23/2018				10 / WASH
CHECKED BY:	A. EWING	08/23/2018				JOB NUMBER
MAR PROJ ENGR	C. TORRES					18W121
DIR TERM ENGR:	N. MCINTOSH					CONTRACT NO.
ASST SECRETARY:	A. SCARTON		REVISION	DATE	BY	00****

DATE

SARA LOVING ROBERTS
STATE OF WASHINGTON
38538
PROFESSIONAL ENGINEER
PROFESSIONAL SEAL AND SIGNATURE

08/23/2018
DATE

Washington State Department of Transportation
WASHINGTON STATE FERRIES

SR 525
MUKILTEO FERRY TERMINAL (PHASE 2)
FERRY TERMINAL CONSTRUCTION

CONCRETE DETAILS – TOLL PLAZA

SB05.54

SHEET 1156 OF 1521 SHEETS

File: U:\114000-114350\114177 (Mukilteo Ferry Terminal)\04 Details\14W121SB05_54.dwg
Plotted: 9/21/18 at 2:41pm By: DianeL

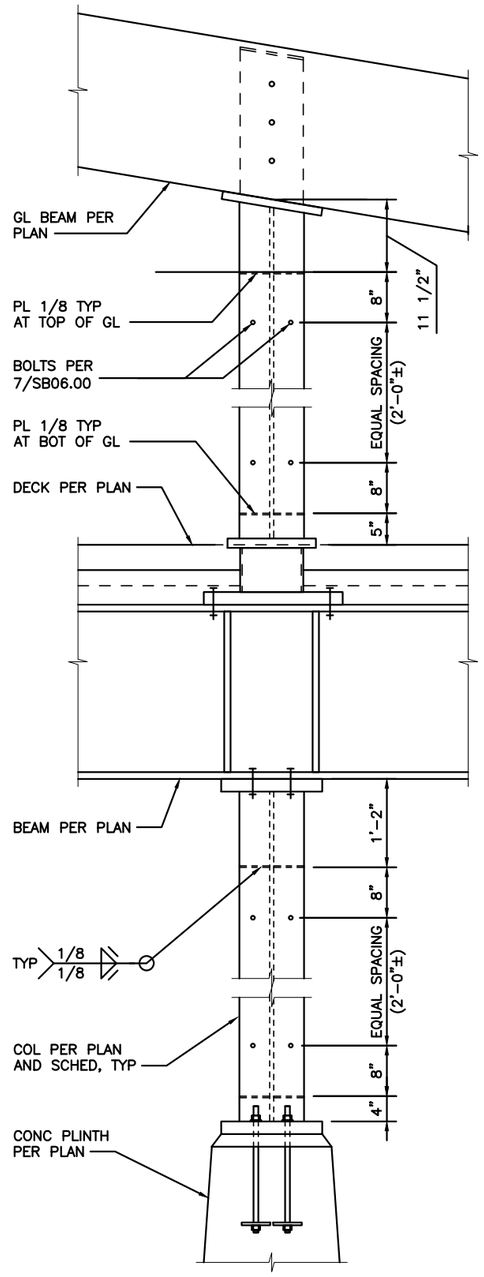

6 TYPICAL COLUMN ELEVATION

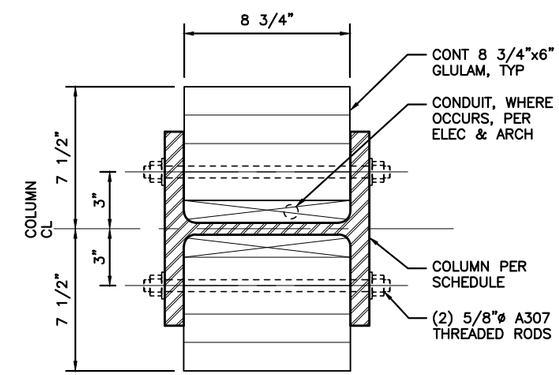

NOTES:
1. SEE 6/SB06.00 FOR TYPICAL COLUMN ELEVATION.

7 TYPICAL COLUMN SECTION

TERMINAL BUILDING COLUMN SCHEDULE

LEVEL	COLUMN TYPE						
	C1	C2	C3	C4	C5	C6	C7
ROOF HIGH							
ROOF LOW							
LEVEL 2	W10x49 BP2	W10x49 BP2	W10x49 BP2	W10x49 BP2	W10x88	W10x88	W10x88 BP2
LEVEL 1	W10x88 BP3 BP1	W10x88 BP3 BP1			BP1	BP1	W10x88 BP3 BP1

NOTES:
1. PROVIDE COLUMN PLINTH PER 4/SB05.02.
2. BP1 INDICATES BASE PLATE PER 8/SB06.02.
   BP2 INDICATES BASE PLATE PER 7/SB06.02.
   BP3 INDICATES BASE PLATE PER 6/SB06.02.
3. SEE 7/SB06.00 FOR TYPICAL COLUMN SECTION.
4. SEE 6/SB06.00 FOR TYPICAL COLUMN ELEVATION.

8 TERMINAL BUILDING COLUMN SCHEDULE

kpff

FILE NAME:	14W121SB06_00.dwg					
PRINTED:	2:41:15 PM 9/21/2018	LAST PRINTED BY:				FED.AID PROJ.NO.
SUBMITTAL DATE:	08/23/2018	3yronR				WA-2017-007-00
DESIGNED BY:	A. RADKE	08/23/2018				REGION NO. 10 / STATE WASH
ENTERED BY:	B. RONIA	08/23/2018				JOB NUMBER 18W121
CHECKED BY:	A. EWING	08/23/2018				CONTRACT NO. 00****
MAR PROJ ENGR	C. TORRES					
DIR TERM ENGR:	N. MCINTOSH					
ASST SECRETARY:	A. SCARTON		REVISION	DATE	BY	

DATE

STATE OF WASHINGTON — AN LOVING ADORERS — 38538 — PROFESSIONAL ENGINEER

08/23/2018
DATE

Washington State Department of Transportation
WASHINGTON STATE FERRIES

SR 525
MUKILTEO FERRY TERMINAL (PHASE 2)
FERRY TERMINAL CONSTRUCTION

STEEL COLUMN SCHEDULE/DETAILS

SB06.00

SHEET 1157 OF 1521 SHEETS

File: U:\114000-114350\114177 (Mukilteo Ferry Terminal)\04 Details\14W121SB06_00.dwg
Plotted: 9/21/18 at 2:41pm By: DianeL

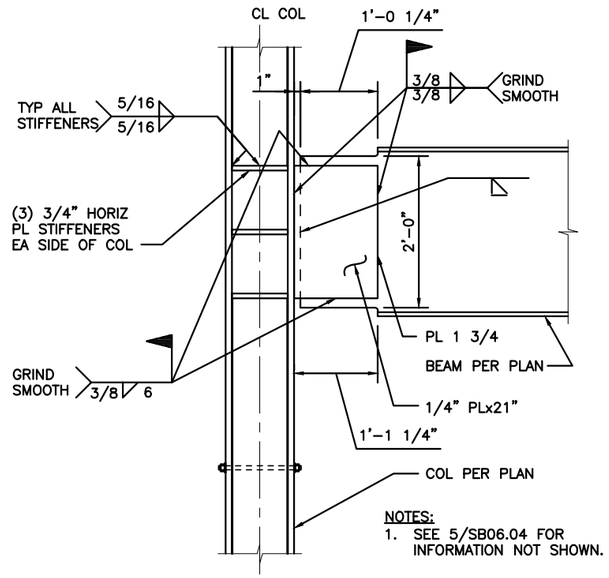

NOTES:
1. SEE 5/SB06.04 FOR INFORMATION NOT SHOWN.

1 TERM BLDG – L2 CONN

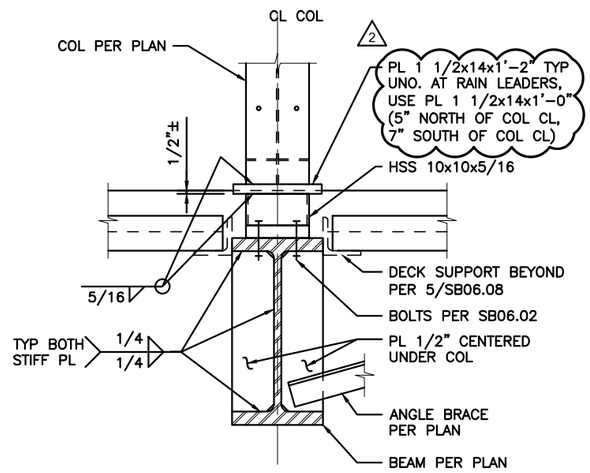

2 COL TRANSFER CONN

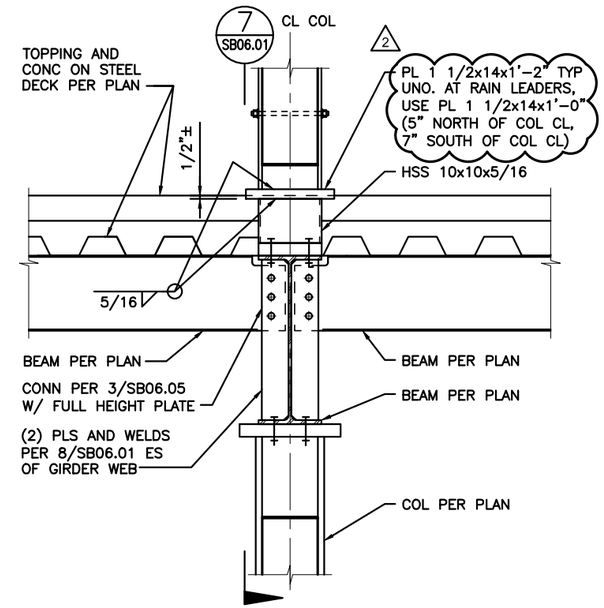

3 TERM BLDG – L2 CONN

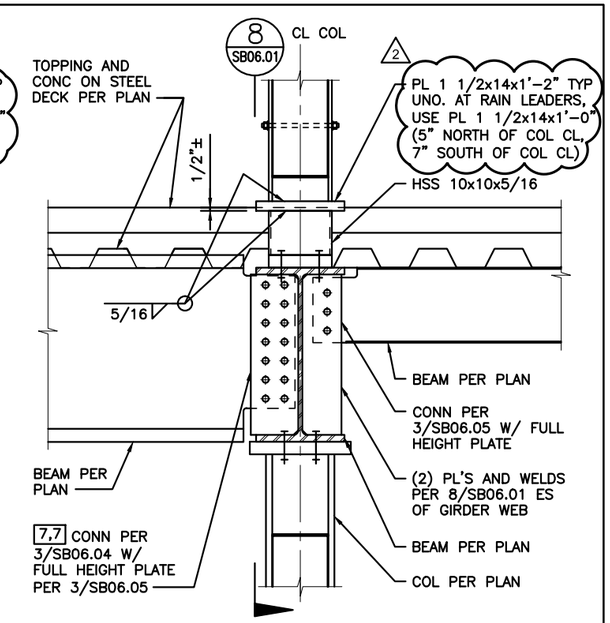

4 TERM BLDG – L2 CONN

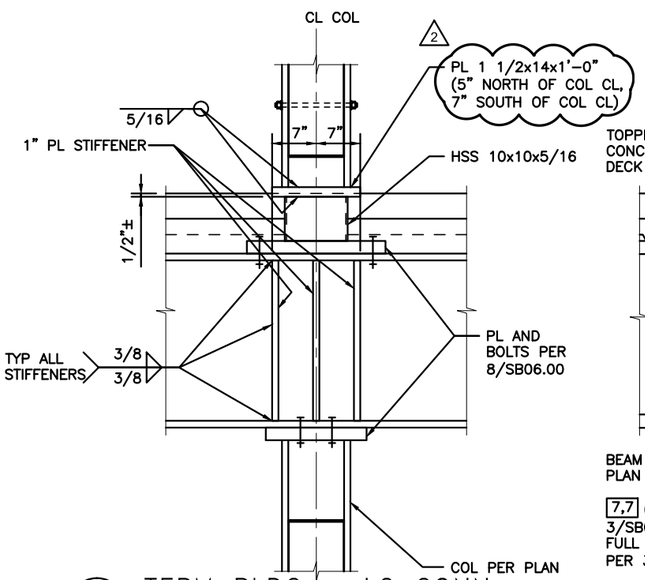

5 TERM BLDG – L2 CONN

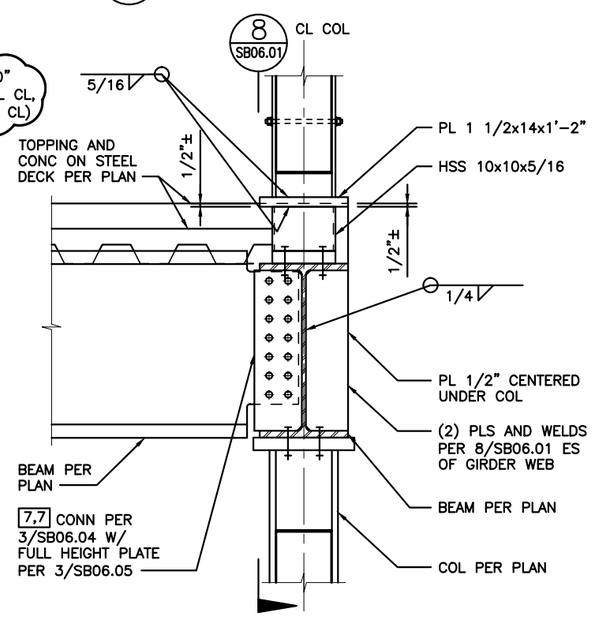

6 TERM BLDG – L2 CONN

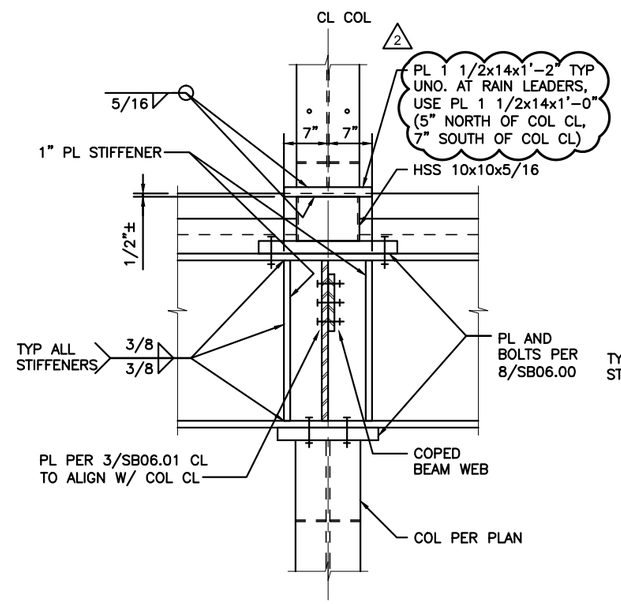

7 TERM BLDG – L2 COL CONN

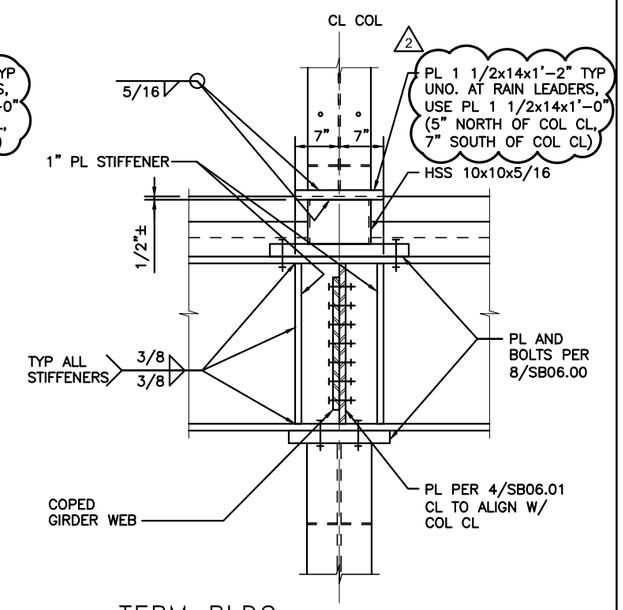

8 TERM BLDG – L2 COL CONN

kpff

FILE NAME:	14W121SB06_01.dwg					
PRINTED: 2:50:23 PM 11/1/2018		LAST PRINTED BY:				FED.AID PROJ.NO.
SUBMITTAL DATE:	08/23/2018	ByronR				WA-2017-007-00
DESIGNED BY:	A. RADKE	08/23/2018				REGION NO. / STATE
ENTERED BY:	B. RONIA	08/23/2018				10 / WASH
CHECKED BY:	A. EWING	08/23/2018				JOB NUMBER 18W121
MAR PROJ ENGR	C. TORRES					
DIR TERM ENGR:	N. MCINTOSH		△ ADDENDUM NO. 2	11/01/18	AE	CONTRACT NO. 00****
ASST SECRETARY:	A. SCARTON		REVISION	DATE	BY	

DATE

GENA LOVING ROBERTS — STATE OF WASHINGTON — 38558 — PROFESSIONAL ENGINEER

11/01/2018
DATE

Washington State Department of Transportation
WASHINGTON STATE FERRIES

SR 525
MUKILTEO FERRY TERMINAL (PHASE 2)
FERRY TERMINAL CONSTRUCTION

STEEL COLUMN DETAILS

SB06.01

SHEET 1158 OF 1521 SHEETS

File: U:\114000-114350\114177 (Mukilteo Ferry Terminal)\04 Details\14W121SB06_01.dwg
Plotted: 11/1/18 at 2:50pm By: BrianE

NOTES:
1. 5" ON NORTH SIDE AT COL C7. 2

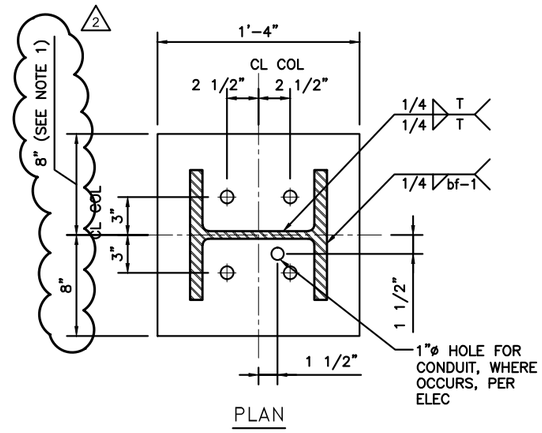

PLAN

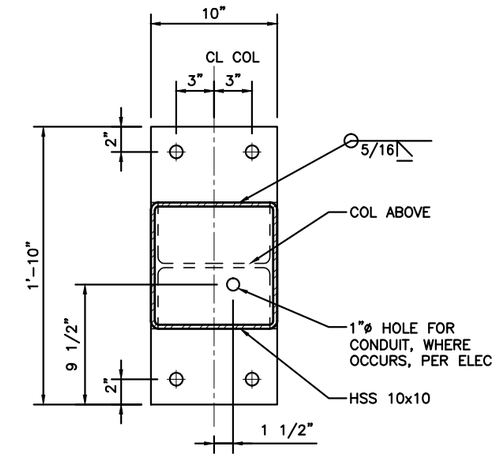

PLAN

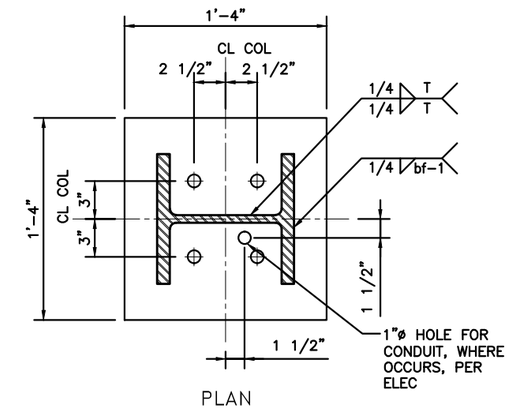

PLAN

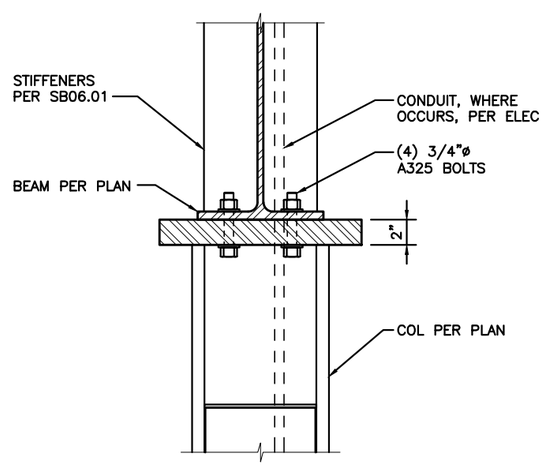

6 BP3 – COLUMN BASE PLATE

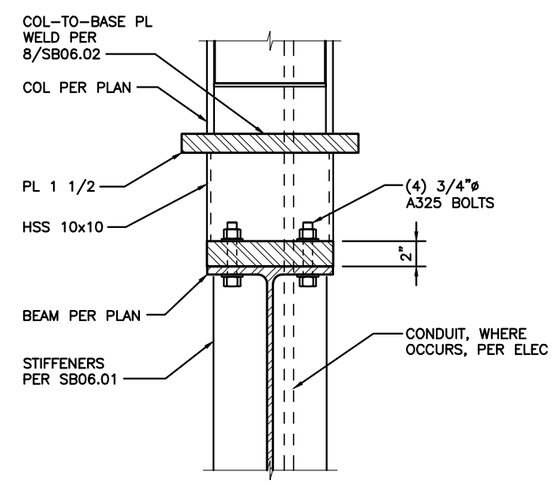

7 BP2 – COLUMN BASE PLATE

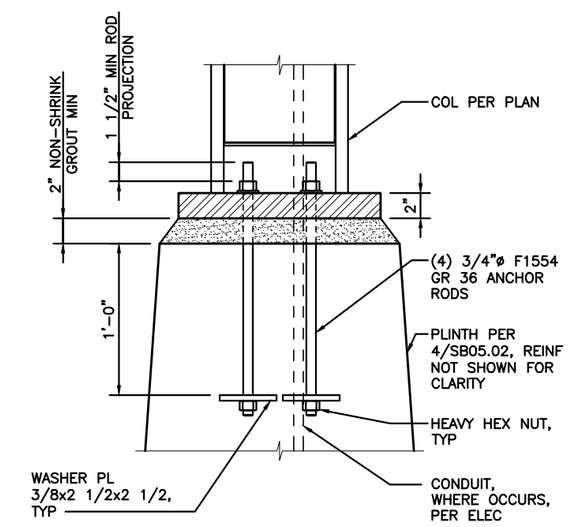

8 BP1 – COLUMN BASE PLATE

kpff

FILE NAME:	14W121SB06_02.dwg					
PRINTED:	2:50:27 PM 11/1/2018	LAST PRINTED BY:				FED.AID PROJ.NO.
SUBMITTAL DATE:	08/23/2018	ByronR				WA-2017-007-00
DESIGNED BY:	A. RADKE	08/23/2018				REGION NO. / STATE
ENTERED BY:	B. RONIA	08/23/2018				10 / WASH
CHECKED BY:	A. EWING	08/23/2018				JOB NUMBER
MAR PROJ ENGR	C. TORRES					18W121
DIR TERM ENGR:	N. MCINTOSH		△ ADDENDUM NO. 2	11/01/18	AE	CONTRACT NO.
ASST SECRETARY:	A. SCARTON		REVISION	DATE	BY	00****

DATE

STATE OF WASHINGTON — LOYD NO. ROBERTS — 38538 — STRUCTURAL ENGINEER — PROFESSIONAL ENGINEER

11/01/2018
DATE

Washington State Department of Transportation
WASHINGTON STATE FERRIES

SR 525
MUKILTEO FERRY TERMINAL (PHASE 2)
FERRY TERMINAL CONSTRUCTION

STEEL COLUMN BASE PLATE DETAILS

SB06.02

SHEET 1159 OF 1521 SHEETS

File: U:\114000-114350\114177 (Mukilteo Ferry Terminal)\04 Details\14W121SB06_02.dwg
Plotted: 11/1/18 at 2:50pm By: BrianE

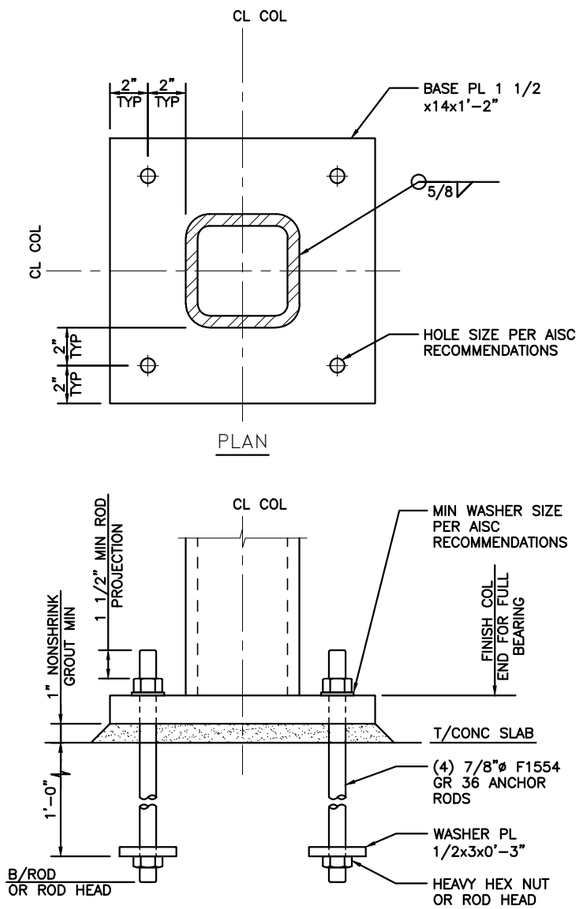

5 BP5 – HSS BASE PL

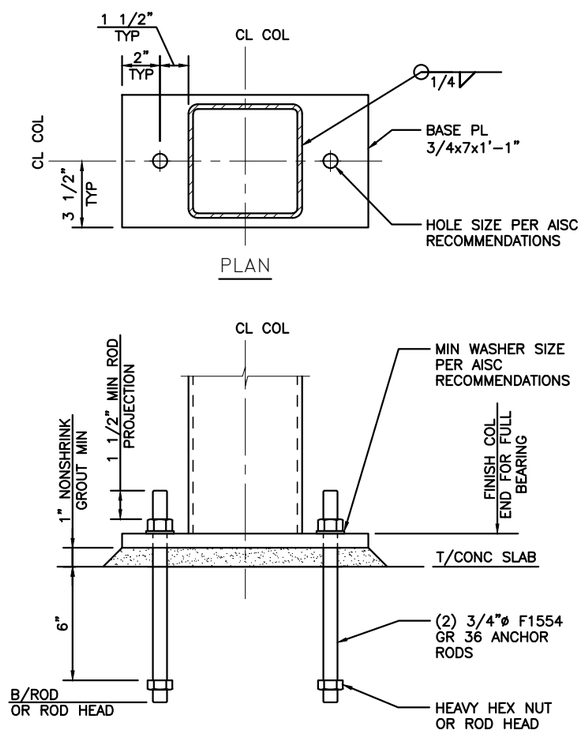

6 BP6 – HSS BASE PL

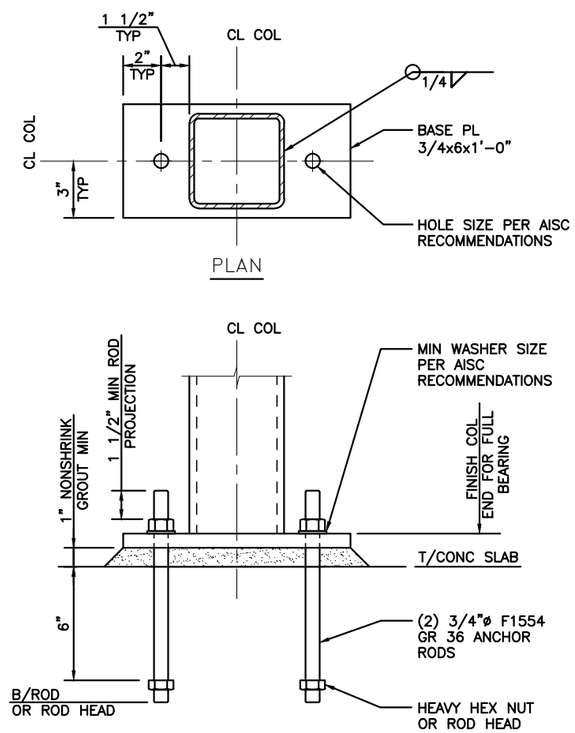

7 BP7 – HSS BASE PL

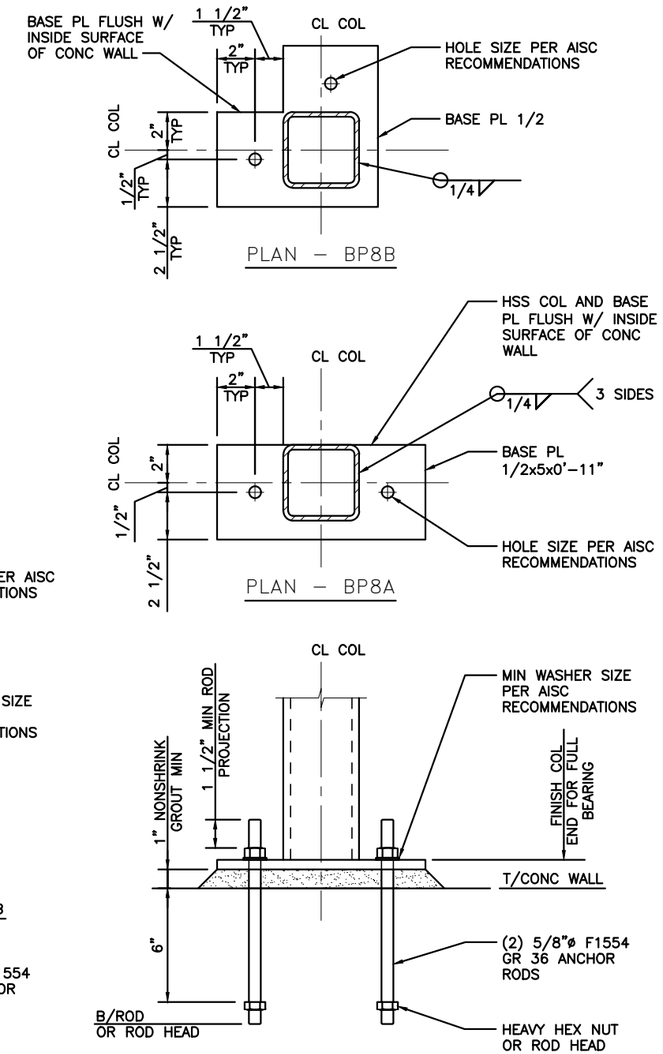

8 BP8A & BP8B – HSS BASE PL

kpff

FILE NAME:	14W121SB06_03.dwg					
PRINTED: 2:41:23 PM 9/21/2018		LAST PRINTED BY:				FED.AID PROJ.NO.
SUBMITTAL DATE:	08/23/2018	3yronR				WA-2017-007-00
DESIGNED BY:	A. RADKE	08/23/2018				REGION NO. / STATE
ENTERED BY:	B. RONIA	08/23/2018				10 / WASH
CHECKED BY:	A. EWING	08/23/2018				JOB NUMBER
MAR PROJ ENGR	C. TORRES					18W121
DIR TERM ENGR:	N. MCINTOSH					CONTRACT NO.
ASST SECRETARY:	A. SCARTON		REVISION	DATE	BY	00****

DATE

DANIEL LOVING RODRIGUES — STATE OF WASHINGTON — 38538 — PROFESSIONAL ENGINEER

08/23/2018
DATE

Washington State Department of Transportation
WASHINGTON STATE FERRIES

SR 525
MUKILTEO FERRY TERMINAL (PHASE 2)
FERRY TERMINAL CONSTRUCTION

STEEL COLUMN BASE PLATE DETAILS

SB06.03

SHEET 1160 OF 1521 SHEETS

File: U:\114000-114350\114177 (Mukilteo Ferry Terminal)\04 Details\14W121SB06_03.dwg
Plotted: 9/21/18 at 2:41pm By: DianeL

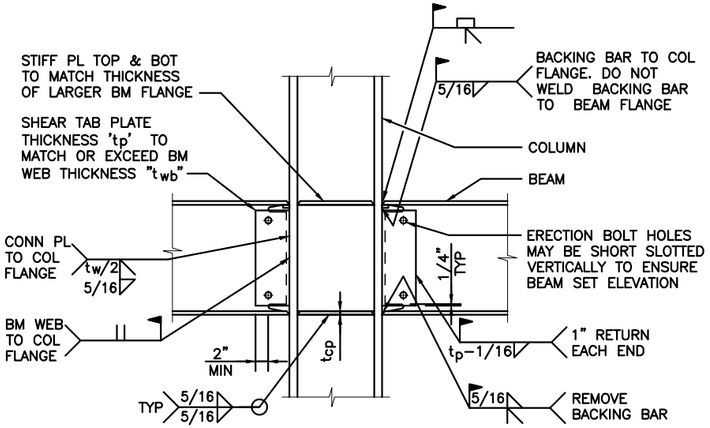

NOTES:
1. PROVIDE WELD ACCESS HOLES.
2. WELDS ARE SEISMIC CRITICAL, SEE SPECIFICATION.
3. AT BOTTOM FLANGE, REMOVE BACKING BAR AND BACKGOUGE BEFORE PLACING BACKING FILLET.
4. TO BE USED WHERE INDICATED BY ⊢◄H►⊣ ON PLAN.

1 TYPICAL CANTILEVER CONNECTION

DOUBLE LINE CONNECTION SCHEDULE "B"			
CONNECTION TYPE X,Y	BOLT SIZE	PLATE THICKNESS	WELD SIZE "W"
3,Y	7/8"ø	3/8"	1/4"
4,Y	7/8"ø	7/16"	5/16"
5,Y	7/8"ø	1/2"	5/16"
6,Y	7/8"ø	1/2"	5/16"
7,Y	7/8"ø	9/16"	3/8"
8,Y	7/8"ø	9/16"	3/8"
9,Y	7/8"ø	5/8"	7/16"

NOTES:
1. X = NUMBER OF BOLTS IN 1ST LINE.
   Y = NUMBER OF BOLTS IN 2ND LINE.

EXAMPLE BOLT PATTERNS

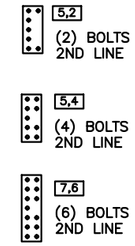

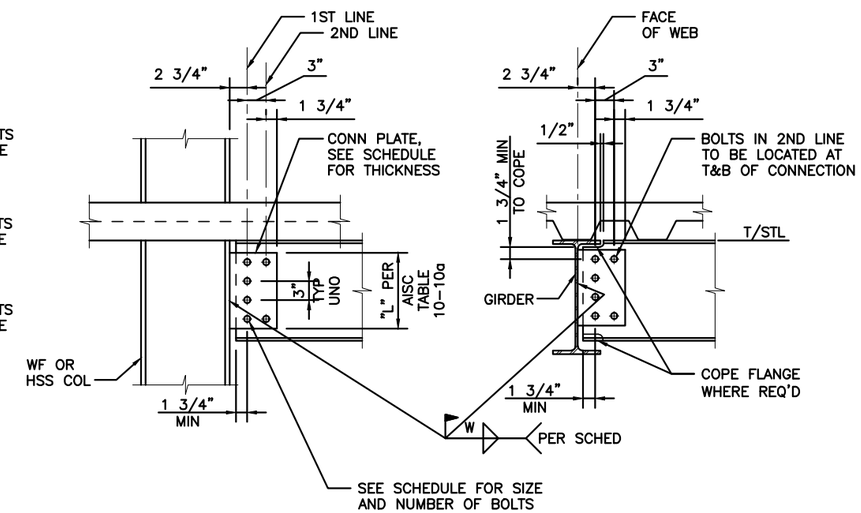

BEAM TO COLUMN FLANGE

BEAM TO BEAM

3 TYPICAL DOUBLE LINE BOLTED BEAM CONNECTION

STANDARD BOLTED CONN SCHEDULE			
BEAM SIZE	# & SIZE OF BOLTS REQ'D	PLATE THICK	WELD SIZE (W)
W6	(2) 3/4"ø @ 2" GA	1/4"	3/16"
W8, C8	(2) 7/8"ø	1/4"	3/16"
W10	(2) 7/8"ø	1/4"	3/16"
W12	(3) 7/8"ø	1/4"	3/16"
W14	(3) 7/8"ø	1/4"	3/16"
W16	(4) 7/8"ø	1/4"	3/16"
W18	(4) 7/8"ø	5/16"	1/4"
W21	(5) 7/8"ø	5/16"	1/4"
W24	(6) 7/8"ø	5/16"	1/4"
W27	(7) 7/8"ø	3/8"	1/4"

NOTES:
1. SHORT SLOTTED HOLES MAY BE USED AT ALL COLUMN CONNECTIONS AS AN OPTION.
2. FOR BEAM TO COLUMN WEB CONNECTION AT W14 AND SMALLER COLUMNS, USE EXTENDED PLATE DETAIL.

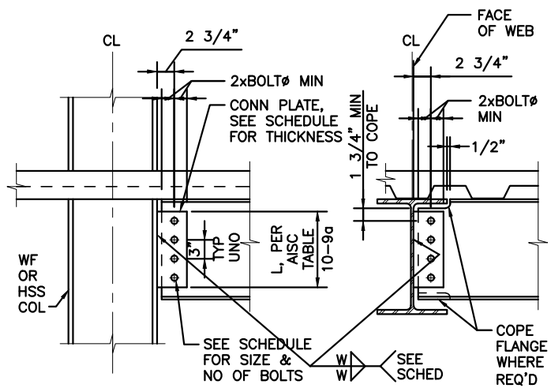

BEAM TO COLUMN

BEAM TO BEAM

5 TYPICAL BOLTED BEAM CONNECTIONS

EMBEDDED PLATE CONNECTION SCHEDULE									
TYPE	# OF BOLTS REQ'D	PLATE SIZE	# OF HORIZ ROWS OF STUDS	# OF STUDS PER ROW	STUD SPACING X	STUD SPACING Y	MIN STUD LENGTH	DOUBLE ANGLE SIZE	MIN. WALL THICK
2E	2	PL 5/8x10x0'-11"	2	2	7"	7"	5"	L5x3 1/2x5/16	8"
2E-W	2	PL 5/8x12x0'-11"	2	2	7"	7"	5"	L5x3 1/2x5/16	8"
3E	3	PL 5/8x11x1'-2"	3	2	8"	5"	5"	L5x3 1/2x5/16	8"
4E	4	PL 5/8x14x1'-5"	3	2	11"	6 1/2"	6"	L5x3 1/2x5/16	9"
5E	5	PL 3/4x15x1'-8 1/2"	4	2	12"	5 1/2"	6"	L5x3 1/2x5/16	9"
6E	6	PL 3/4x16x2'-2"	5	2	13"	5"	6"	L5x3 1/2x5/16	9"

NOTES:
1. BOLTS TO BE SNUG TIGHT. DO NOT TIGHTEN FULLY.
2. BOLT DIAMETERS TO BE SAME AS SHOWN ON STANDARD BOLTED BEAM CONNECTION.

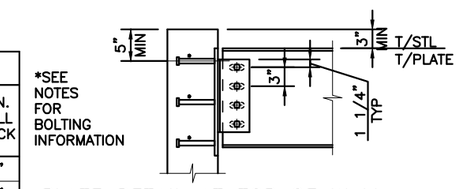

PLATE DETAIL AT TOP OF WALL

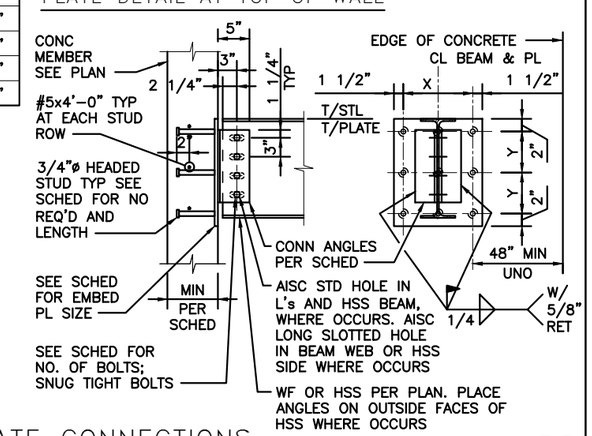

7 TYPICAL EMBEDDED PLATE CONNECTIONS

kpff

FILE NAME:	14W121SB06_04.dwg					
PRINTED:	2:41:26 PM 9/21/2018	LAST PRINTED BY:				FED.AID PROJ.NO.
SUBMITTAL DATE:	08/23/2018	3yronR				WA-2017-007-00
DESIGNED BY:	A. RADKE	08/23/2018				REGION NO. / STATE
ENTERED BY:	B. RONIA	08/23/2018				10 / WASH
CHECKED BY:	A. EWING	08/23/2018				JOB NUMBER 18W121
MAR PROJ ENGR	C. TORRES					
DIR TERM ENGR:	N. MCINTOSH					CONTRACT NO.
ASST SECRETARY:	A. SCARTON		REVISION	DATE	BY	00****

DATE

STATE OF WASHINGTON — JAN LOVING RODRIGUEZ — 38538 — STRUCTURAL ENGINEER — PROFESSIONAL ENGINEER

08/23/2018
DATE

Washington State Department of Transportation
WASHINGTON STATE FERRIES

SR 525
MUKILTEO FERRY TERMINAL (PHASE 2)
FERRY TERMINAL CONSTRUCTION

TYPICAL STEEL DETAILS

SB06.04

SHEET 1161 OF 1521 SHEETS

File: U:\114000-114350\114177 (Mukilteo Ferry Terminal)\04 Details\14W121SB06_04.dwg
Plotted: 9/21/18 at 2:41pm By: DianeL

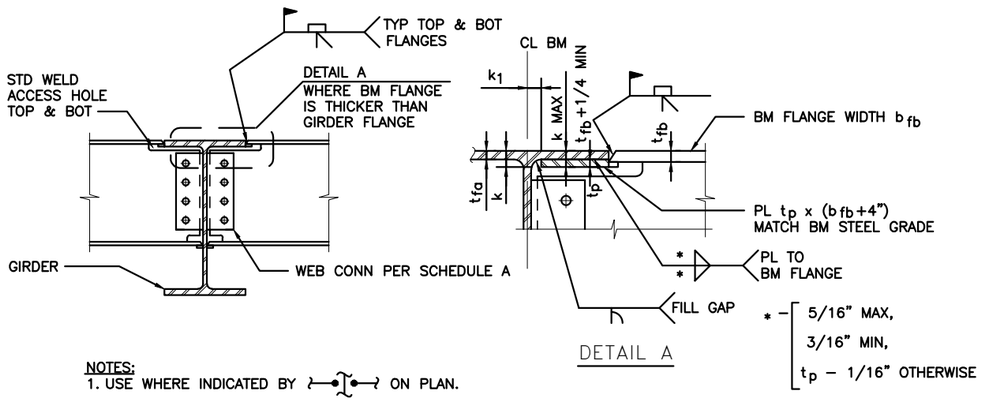

NOTES:
1. USE WHERE INDICATED BY ON PLAN.
2. PLATE THICKNESS "tp" DEFINED BY REQ'D TOTAL BUILT-UP BM FLANGE THICKNESS, (TO THE NEAREST 1/16 INCH) BUT NOT LESS THAN 1/4".

1 TYPICAL MOMENT CONNECTION AT BEAM

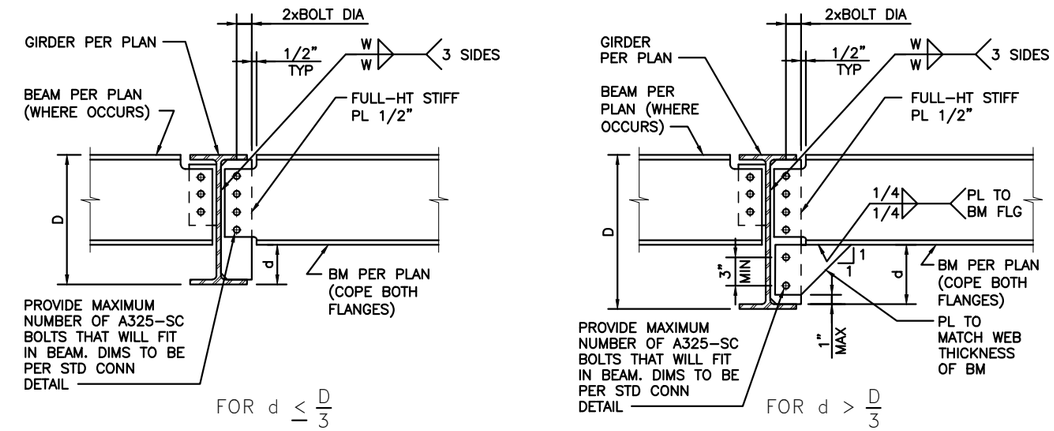

NOTES:
1. FH DESIGNATION ON PLAN.
2. WELD SIZE "W" AND BOLT SIZE PER 5/SB06.04.

3 TYPICAL BEAM-TO-GIRDER FULL-HEIGHT PLATE CONNECTION

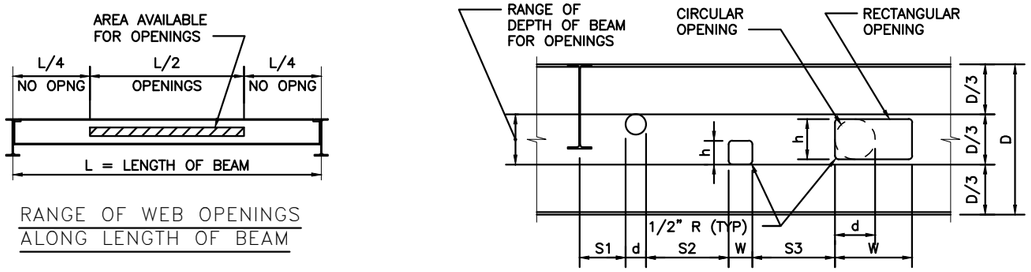

d = DIA CIRCULAR OPENING ≤ D/3
h = HEIGHT RECTANGULAR OPENING ≤ D/4
W = WIDTH RECTANGULAR OPENING ≤ D/4
S1 = MIN DISTANCE TO CL TRANSVERSE MEMBER = D OR 12", WHICHEVER IS LARGER.
S2 OR S3 = MIN DISTANCE BETWEEN OPENINGS BASED ON LARGER OPENING = 3xd OR 3xh OR 3xW, WHICHEVER IS LARGER

OPENING SIZE AND SPACING

NOTES:
1. THIS DETAIL MAY BE USED FOR SHOP OR FIELD CUT OPENINGS WITHOUT CONSULTING THE STRUCTURAL ENGINEER. ANY OPENING OUTSIDE THESE CONSTRAINTS MUST BE APPROVED BY THE STRUCTURAL ENGINEER.
2. ALL FIELD CUT OPENINGS MUST MEET THERMAL CUTTING REQUIREMENTS IN CHAPTER M OF AISC 360.

5 TYPICAL BEAM WEB PENETRATIONS

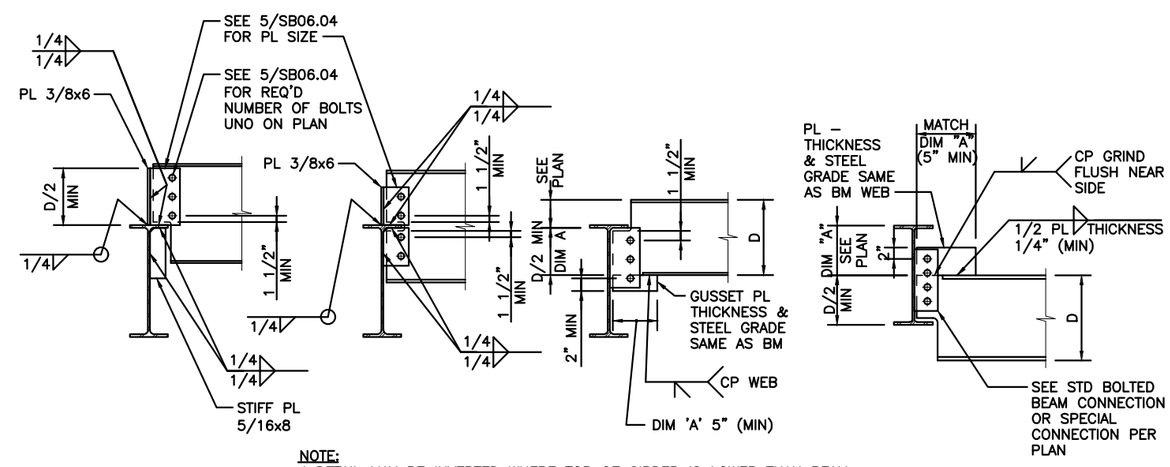

NOTE:
1. DETAIL MAY BE INVERTED WHERE TOP OF GIRDER IS LOWER THAN BEAM.

7 TYPICAL CONNECTIONS FOR BEAMS AT DIFFERENT ELEVATIONS

kpff

FILE NAME:	14W121SB06_05.dwg					
PRINTED: 2:41:29 PM 9/21/2018		LAST PRINTED BY:				FED.AID PROJ.NO.
SUBMITTAL DATE:	08/23/2018	3yronR				WA-2017-007-00
DESIGNED BY:	A. RADKE	08/23/2018				REGION NO. / STATE
ENTERED BY:	B. RONIA	08/23/2018				10 / WASH
CHECKED BY:	A. EWING	08/23/2018				JOB NUMBER
MAR PROJ ENGR	C. TORRES					18W121
DIR TERM ENGR:	N. MCINTOSH					CONTRACT NO.
ASST SECRETARY:	A. SCARTON		REVISION	DATE	BY	00****

DATE

STATE OF WASHINGTON — JAMES LOVING HODGES — 38538 — PROFESSIONAL ENGINEER — PROFESSIONAL ENGINEER

08/23/2018
DATE

Washington State Department of Transportation
WASHINGTON STATE FERRIES

SR 525
MUKILTEO FERRY TERMINAL (PHASE 2)
FERRY TERMINAL CONSTRUCTION

TYPICAL STEEL DETAILS

SB06.05

SHEET 1162 OF 1521 SHEETS

File: U:\114000-114350\114177 (Mukilteo Ferry Terminal)\04 Details\14W121SB06_05.dwg
Plotted: 9/21/18 at 2:41pm By: DianeL

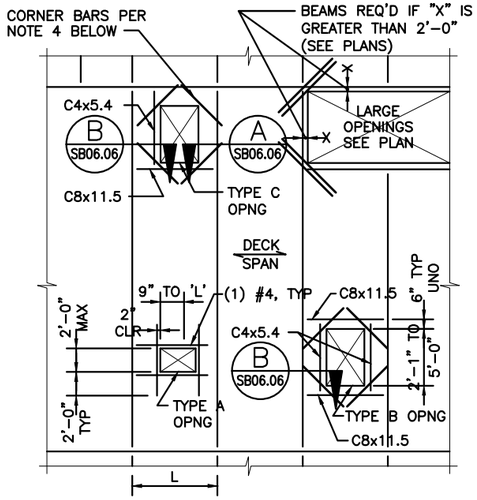

PLAN

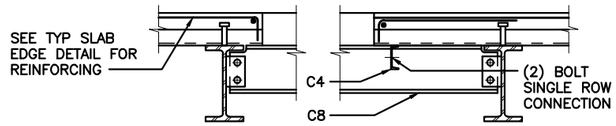

SECTION A SECTION B

NOTES:
1. OPENINGS SMALLER THAN 9" DO NOT NEED REINFORCING.
2. OPENINGS BETWEEN 9" AND 2'-0", WITHOUT EDGE FRAMING, SHALL HAVE REINFORCING PER OPENING TYPE A.
3. BARS PARALLEL TO DECK FLUTES TO BE IN NEAREST LOWER FLUTE, 3/4" CLEAR FROM BOTTOM. BARS PERPENDICULAR TO FLUTES TO BE 3/4" CLEAR ABOVE DECKING.
4. OPENINGS LARGER THAN 2'-0" WILL REQUIRE EDGE FRAMING PER OPENING TYPES B OR C.
5. CORNER BARS TO BE PROVIDED AT ALL INSIDE CORNERS AS FOLLOWS:
   (1)#4x3'-0" FOR 6'-0" AND SMALLER OPENINGS
   (2)#4x4'-0" FOR OPENINGS LARGER THAN 6'-0"
6. BLOCK OUT UNSUPPORTED OPENINGS PRIOR TO PLACING CONCRETE. REMOVE BLOCKOUT AND CUT DECK AFTER CONCRETE HAS CURED.
7. CONTRACTOR TO COORDINATE OPENING SIZE AND LOCATION WITH ARCHITECTURAL DRAWINGS AND MECHANICAL AND ELECTRICAL CONTRACTORS.
8. EDGE FRAMING FOR OPENINGS LARGER THAN 5'-0" TO BE AS SHOWN ON FRAMING PLANS.

1 TYPICAL SLAB OPENINGS

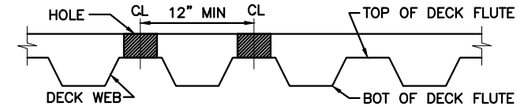

HOLE THRU TOP OF DECK FLUTES

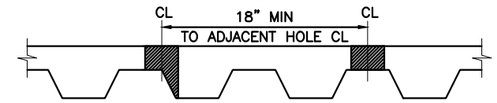

HOLE THRU DECK WEB AND/OR BOTTOM OF DECK FLUTE

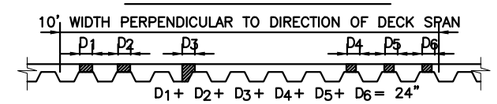

24" MAXIMUM TOTAL WIDTH OF HOLES IN 10' WIDTH

NOTES:
1. NO HOLE SHALL CUT THROUGH MORE THAN ONE DECK WEB.
2. WHERE HOLES ARE CUT AFTER CONCRETE IS PLACED, NO REBAR OTHER THAN WELDED WIRE FABRIC SHALL BE CUT.

CRITERIA FOR CUTTING ROUND HOLES < 6"ø IN SLAB ON METAL DECK W/O DECK REINFORCEMENT

3 HOLES IN SLAB ON DECK

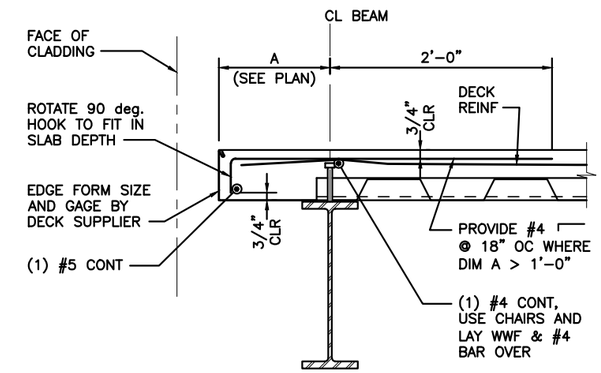

4 TYPICAL SLAB EDGE AT PERIMETER

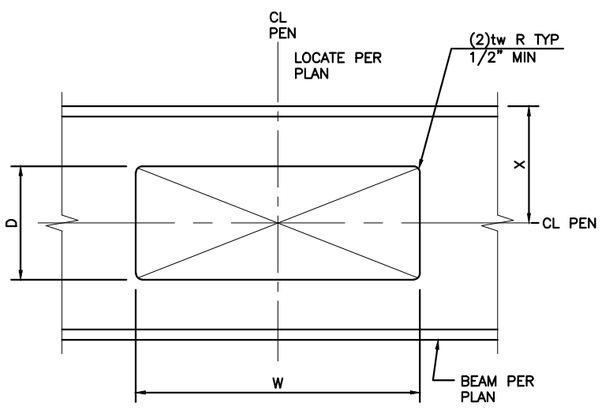

NOTES:
1. DIMENSION "X"=1/2 BEAM DEPTH UNLESS NOTED OTHERWISE.
2. SEE 5/SB06.05 FOR PENETRATIONS NOT DESIGNATED ON PLAN.
3. REFER TO 5/SB06.05 FOR PENETRATION SPACING REQUIREMENTS, UNLESS NOTED OTHERWISE ON PLAN.

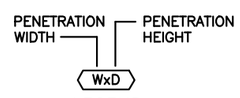

LEGEND

5 BEAM PENETRATION DETAIL

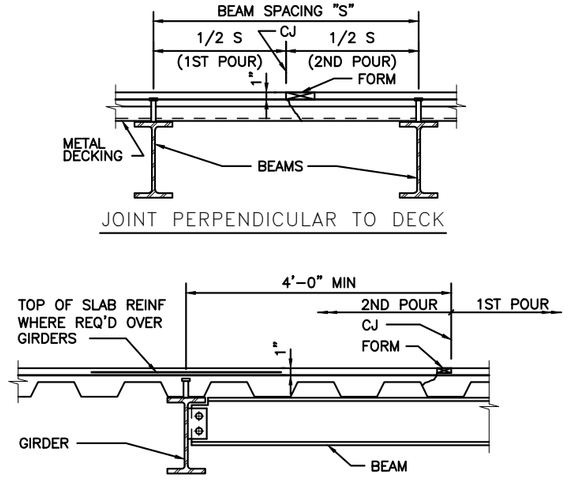

JOINT PERPENDICULAR TO DECK

JOINT PARALLEL TO DECK

7 SLAB CONSTRUCTION JOINT

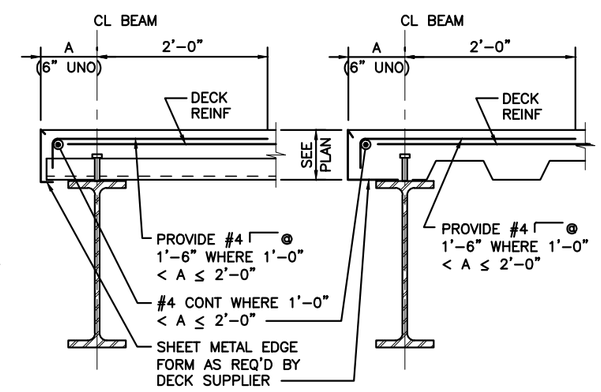

8 TYPICAL SLAB EDGE AT OPENING

kpff

FILE NAME:	14W121SB06_06.dwg					
PRINTED: 2:41:32 PM 9/21/2018		LAST PRINTED BY:				FED.AID PROJ.NO.
SUBMITTAL DATE:	08/23/2018	3yronR				WA-2017-007-00
DESIGNED BY:	A. RADKE	08/23/2018				REGION NO. / STATE
ENTERED BY:	B. RONIA	08/23/2018				10 / WASH
CHECKED BY:	A. EWING	08/23/2018				JOB NUMBER
MAR PROJ ENGR	C. TORRES					18W121
DIR TERM ENGR:	N. MCINTOSH					CONTRACT NO.
ASST SECRETARY:	A. SCARTON		REVISION	DATE	BY	00****

DATE

STATE OF WASHINGTON — SARA LOVING ROBERTS — 38538 — PROFESSIONAL ENGINEER

08/23/2018
DATE

Washington State Department of Transportation
WASHINGTON STATE FERRIES

SR 525
MUKILTEO FERRY TERMINAL (PHASE 2)
FERRY TERMINAL CONSTRUCTION

TYPICAL STEEL DETAILS

SB06.06

SHEET 1163 OF 1521 SHEETS

File: U:\114000-114350\114177 (Mukilteo Ferry Terminal)\04 Details\14W121SB06_06.dwg
Plotted: 9/21/18 at 2:41pm By: DianeL

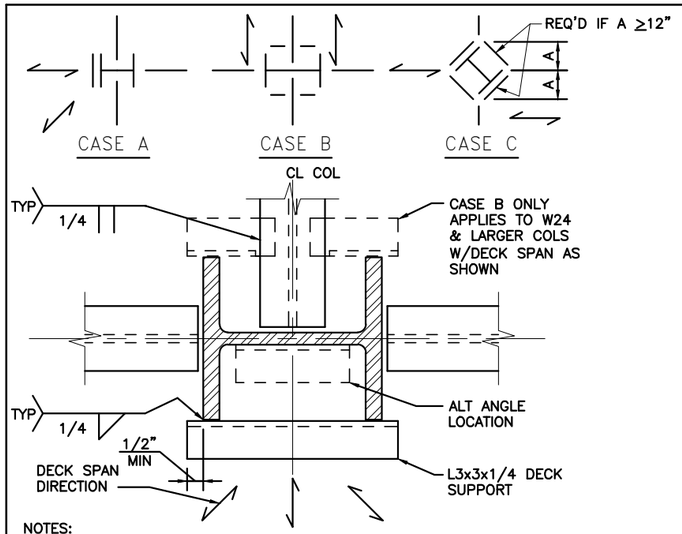

NOTES:
1. SLAB SUPPORT ANGLES ARE REQUIRED AT ALL COLUMN LOCATIONS WHERE THERE IS NO BEAM OR OTHER SUPPORT FOR SLAB AT COLUMN PENETRATION.
2. IN ADDITIONS TO PERMANENT SLAB SUPPORT ANGLES, THE CONTRACTOR SHALL PROVIDE END CLOSURES AND MISCELLANEOUS DECK SUPPORTS AT OTHER LOCATIONS REQUIRED TO SUPPORT DECK UNTIL CONCRETE CURES.

1 TYPICAL DECK SUPPORT AT COLUMN

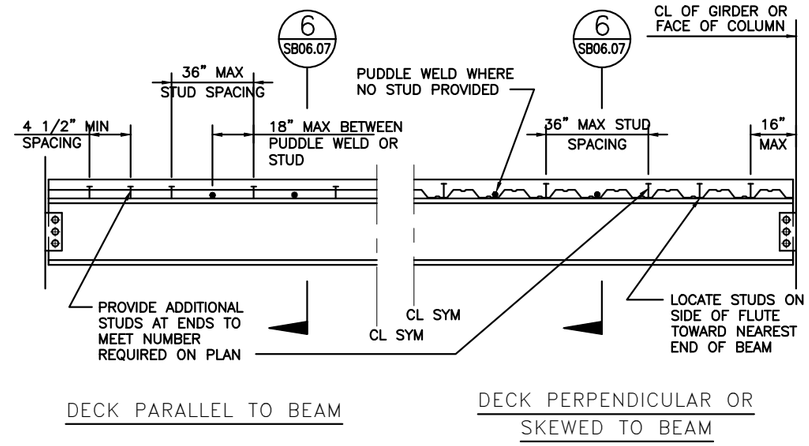

NOTES:
1. HEADED SHEAR STUDS TO BE 3/4"ø x 4 1/2" LONG AFTER WELDING.
2. THE MINIMUM NUMBER OF STUDS REQUIRED IS SHOWN AS [X] ON FRAMING PLANS. NO STUDS ARE REQUIRED WHERE [0] APPEARS OR WHERE NO DESIGNATION IS GIVEN. ADDITIONAL STUDS MAY BE REQUIRED TO MEET THE ABOVE MAXIMUM SPACING REQUIREMENTS.
3. IF TWO STUDS ARE REQUIRED IN ONE FLUTE THE TRANSVERSE SPACING SHALL BE 3" MINIMUM.

2 TYPICAL COMPOSITE BEAM DETAIL

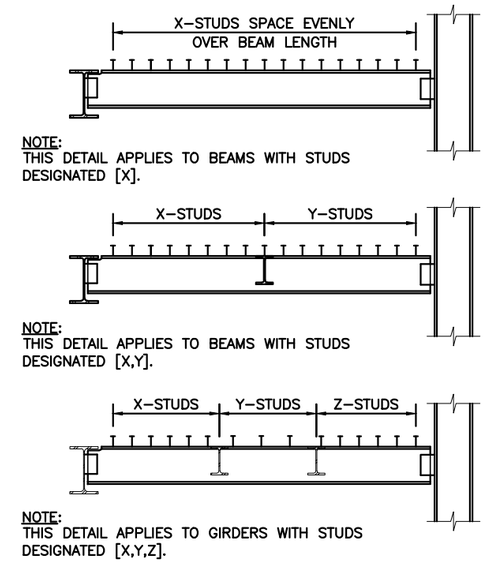

4 TYPICAL STUD SPACING

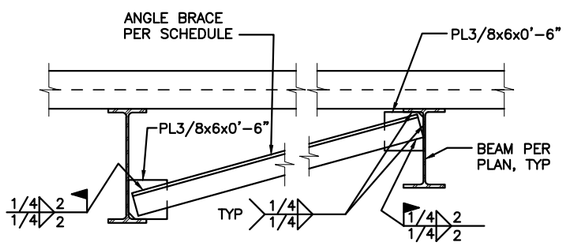

MARK	BRACE
B1	L3 1/2x3 1/2x1/4
B2	L4x4x1/4
B3	L4x4x5/16

NOTES:
1. LOCATE BRACING AT MIDSPAN OF GIRDERS, UNLESS NOTED OTHERWISE.
2. B1 DESIGNATION ON PLAN, ARROW POINTS TO BEAM WITH BOTTOM FLANGE BRACE CONNECTION.
3. BRACING TO BE INSTALLED AFTER CONCRETE ON STEEL DECK HAS BEEN POURED, AND BEFORE ROOF FRAMING HAS BEEN ERECTED.

5 TYPICAL DIAGONAL BOTTOM FLANGE BRACING

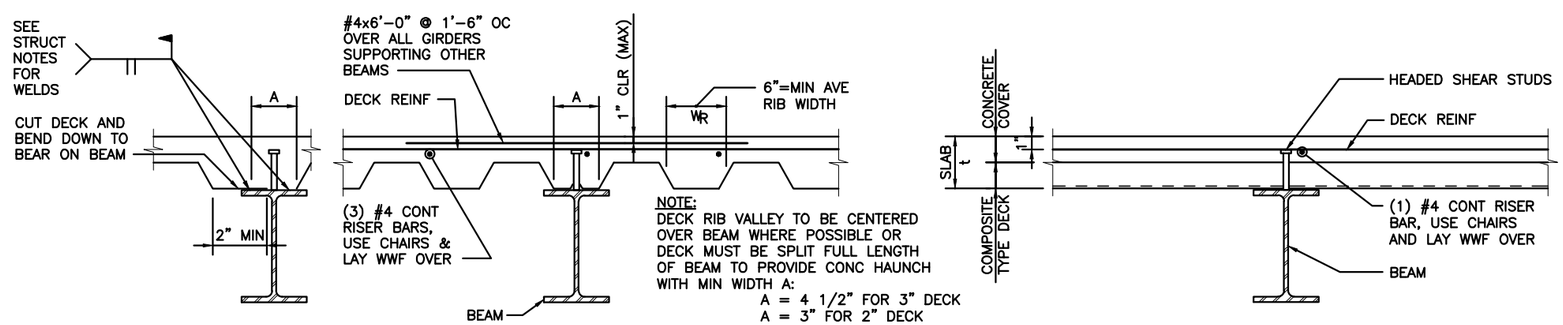

6 COMPOSITE BEAM TO COMPOSITE SLAB

kpff

FILE NAME:	14W121SB06_07.dwg					FED.AID PROJ.NO.
PRINTED:	2:41:34 PM 9/21/2018	LAST PRINTED BY:				
SUBMITTAL DATE:	08/23/2018	3yronR				WA-2017-007-00
DESIGNED BY:	A. RADKE	08/23/2018				REGION NO. / STATE
ENTERED BY:	B. RONIA	08/23/2018				10 / WASH
CHECKED BY:	A. EWING	08/23/2018				JOB NUMBER 18W121
MAR PROJ ENGR	C. TORRES					
DIR TERM ENGR:	N. MCINTOSH					CONTRACT NO.
ASST SECRETARY:	A. SCARTON		REVISION	DATE	BY	00****

DATE

08/23/2018
DATE

Washington State Department of Transportation
WASHINGTON STATE FERRIES

SR 525
MUKILTEO FERRY TERMINAL (PHASE 2)
FERRY TERMINAL CONSTRUCTION

TYPICAL STEEL DETAILS

SB06.07

SHEET 1164 OF 1521 SHEETS

File: U:\114000-114350\114177 (Mukilteo Ferry Terminal)\04 Details\14W121SB06_07.dwg
Plotted: 9/21/18 at 2:41pm By: DianeL

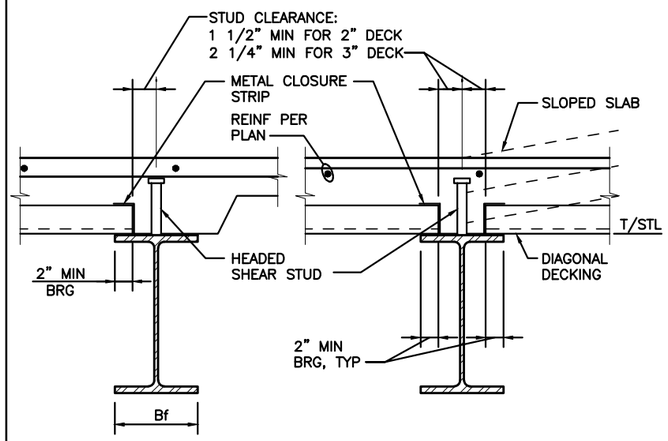

NOTE:
1. FOR CONTINUOUS METAL CLOSURE STRIPS, MINIMUM BEAM WIDTH bf = 7" FOR 2" DECK AND 8 1/2" FOR 3" DECK. FOR NARROWER BEAMS USE INDIVIDUAL CLOSURES AT EACH HIGH DECK FLUTE. 2" MINIMUM BEARING CONTROLS.

1 TYPICAL DECK DISCONTINUITIES

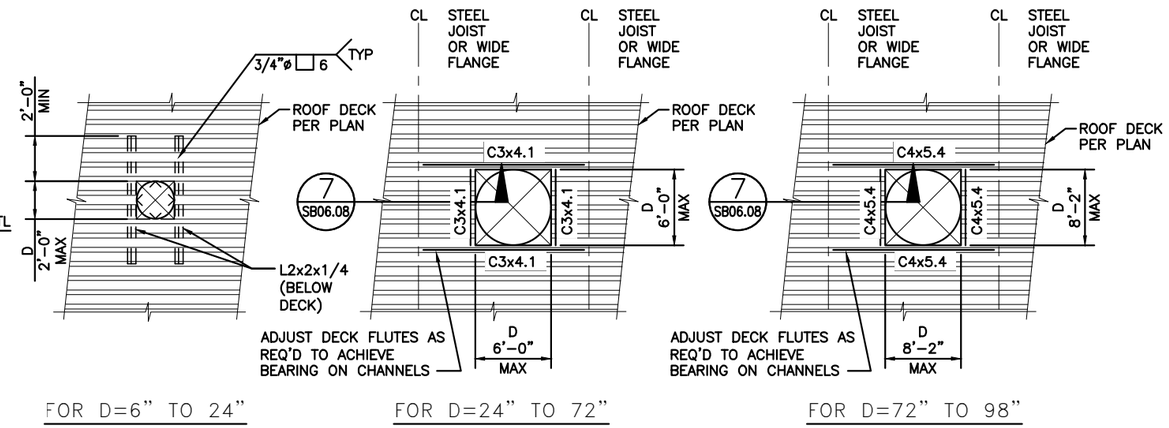

NOTES:
1. HOLES LESS THAN 6"ø AND CUTTING NO MORE THAN 1 WEB REQUIRE NO REINFORCEMENT.
2. ALL METAL DECK OPENINGS SHOWN ABOVE APPLY ONLY TO DUCTWORK, PIPING, ROOF HATCHES AND SMALL AIR SHAFTS.
3. THESE REINFORCED OPENINGS ARE NOT INTENDED TO SUPPORT MECHANICAL EQUIPMENT.

2 TYPICAL ROOF OPENINGS – PLAN

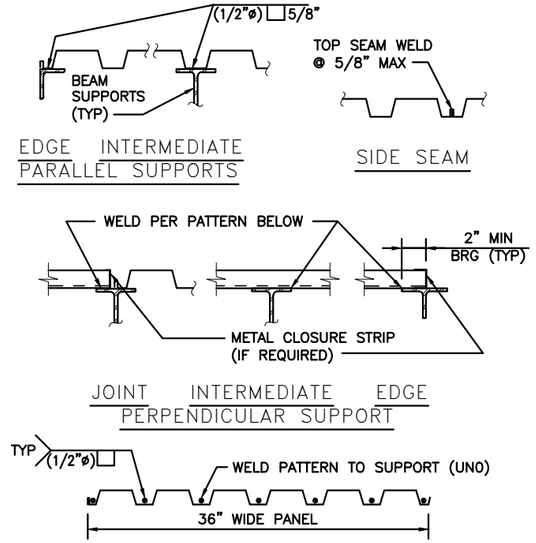

4 TYPICAL ROOF DECK WELDING

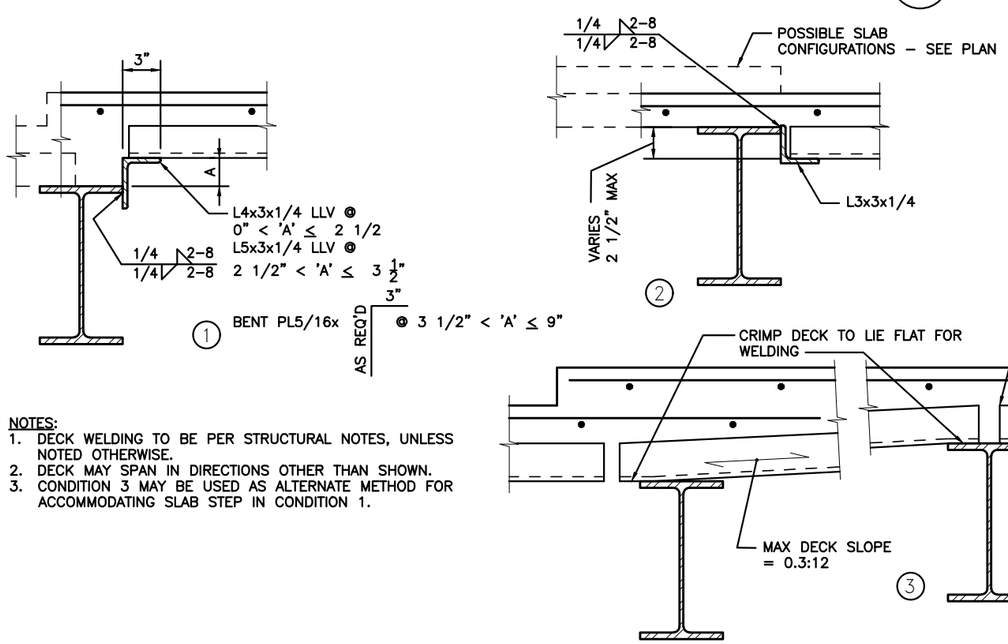

NOTES:
1. DECK WELDING TO BE PER STRUCTURAL NOTES, UNLESS NOTED OTHERWISE.
2. DECK MAY SPAN IN DIRECTIONS OTHER THAN SHOWN.
3. CONDITION 3 MAY BE USED AS ALTERNATE METHOD FOR ACCOMMODATING SLAB STEP IN CONDITION 1.

5 TYPICAL DECK SUPPORT CONDITIONS

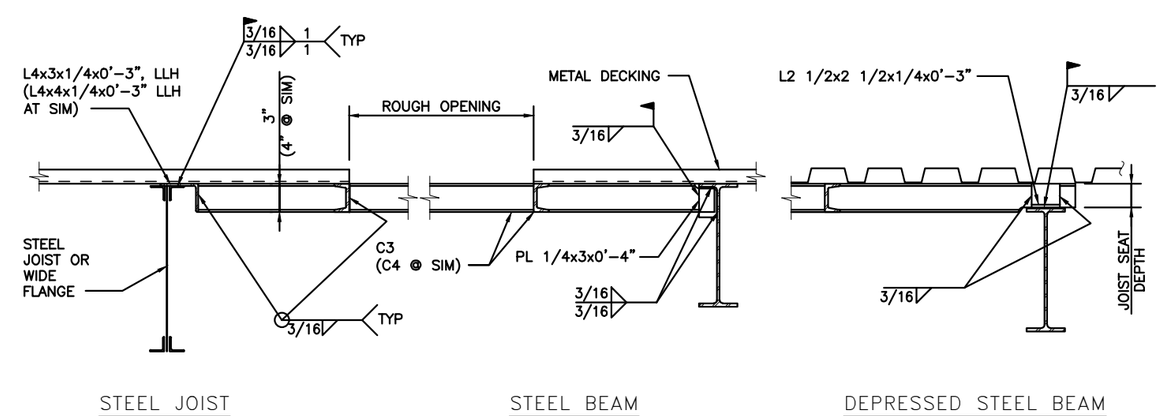

7 TYPICAL ROOF OPENINGS – SECTION

kpff

FILE NAME:	14W121SB06_08.dwg					
PRINTED: 2:41:38 PM 9/21/2018	LAST PRINTED BY:					FED.AID PROJ.NO.
SUBMITTAL DATE: 08/23/2018	3yronR					WA-2017-007-00
DESIGNED BY: A. RADKE	08/23/2018					REGION NO. 10 / STATE WASH
ENTERED BY: B. RONIA	08/23/2018					
CHECKED BY: A. EWING	08/23/2018					JOB NUMBER 18W121
MAR PROJ ENGR C. TORRES						
DIR TERM ENGR: N. MCINTOSH						CONTRACT NO. 00****
ASST SECRETARY: A. SCARTON		REVISION	DATE	BY		

DATE

DANA LOVING RODRIGUES, STATE OF WASHINGTON, 38538, PROFESSIONAL ENGINEER
08/23/2018
DATE

Washington State Department of Transportation
WASHINGTON STATE FERRIES

SR 525
MUKILTEO FERRY TERMINAL (PHASE 2)
FERRY TERMINAL CONSTRUCTION

TYPICAL STEEL DETAILS

SB06.08

SHEET 1165 OF 1521 SHEETS

File: U:\114000-114350\114177 (Mukilteo Ferry Terminal)\04 Details\14W121SB06_08.dwg
Plotted: 9/21/18 at 2:41pm By: DianeL

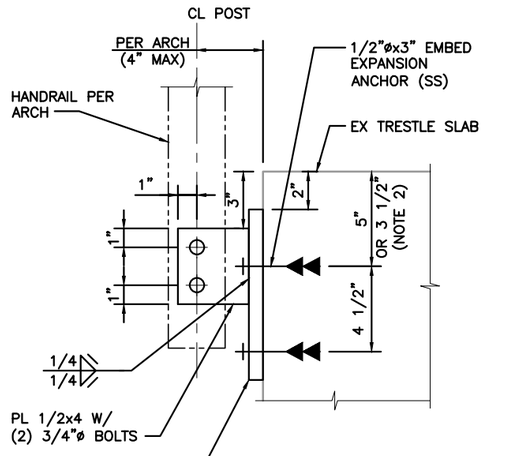

NOTES:
1. HANDRAIL STANCHION SPACING NOT TO EXCEED 5'-0".
2. FLIP PLATE & ANCHOR BOLT LOCATIONS AS NEEDED TO ACCOMMODATE INSTALLATION. MAINTAIN SAME ELEV OF KNIFE PLATE.

1 TYPICAL GUARDRAIL AT L1

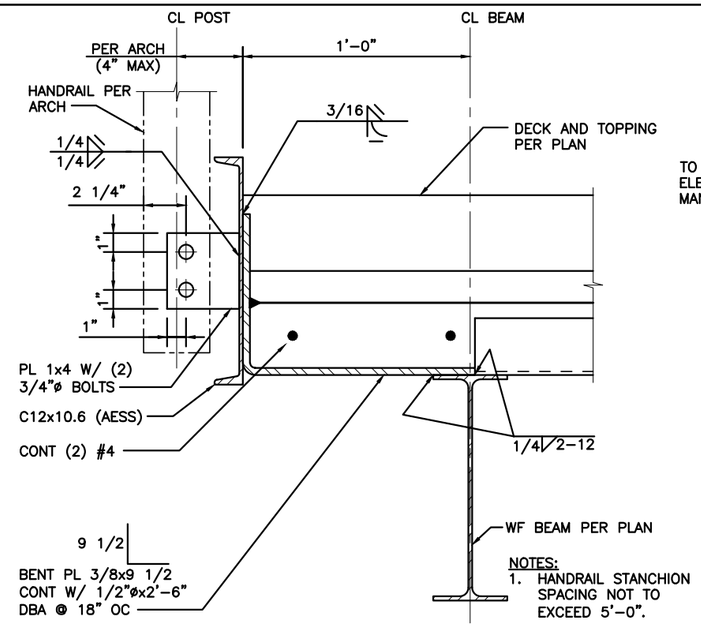

NOTES:
1. HANDRAIL STANCHION SPACING NOT TO EXCEED 5'-0".

2 TYPICAL GUARDRAIL AT L2

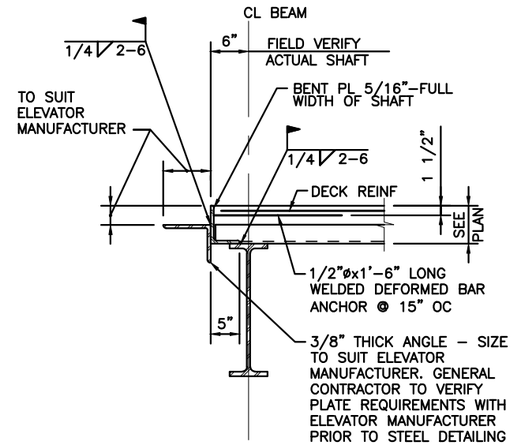

3 SLAB EDGE AT ELEVATOR DOOR SILLS

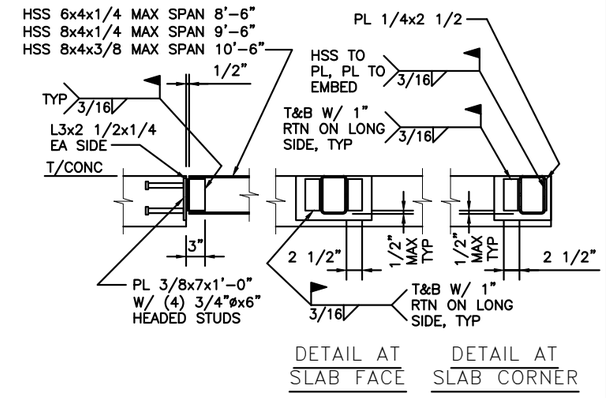

NOTES:
1. DIVIDER BEAMS DESIGNED FOR MAXIMUM LATERAL DEFLECTION OF:
   1/8" FOR MAXIMUM UNFACTORED SERVICE NORMAL LOAD OF 1.8K
   1/4" FOR MAXIMUM UNFACTORED SERVICE SEISMIC LOAD OF 3.5K

4 ELEVATOR DIVIDER BEAM TO CONCRETE

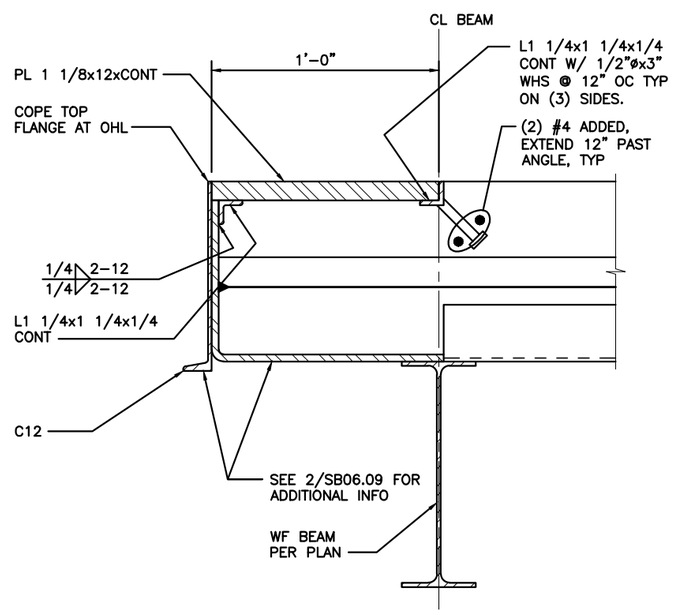

6 THRESHOLD AT OHL

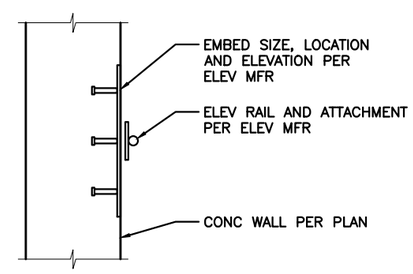

PLAN

NOTES:
1. POST-INSTALLED ANCHORAGE MAY BE USED IN LIEU OF EMBED AT CONTRACTOR'S OPTION. POST-INSTALLED ANCHORS, SIZES, AND LOCATIONS TO BE PER ELEVATOR MANUFACTURER.

7 TYP EMBED DETAIL AT ELEV RAIL

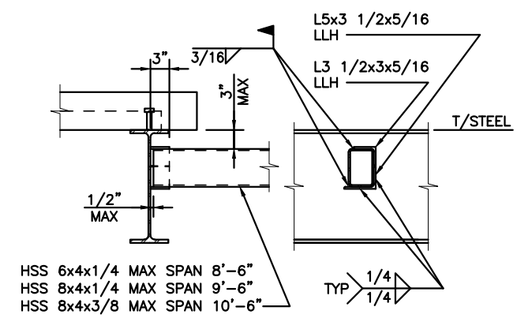

NOTES:
1. DIVIDER BEAMS DESIGNED FOR MAXIMUM LATERAL DEFLECTION OF:
   1/8" FOR MAXIMUM UNFACTORED SERVICE NORMAL LOAD OF 1.8K
   1/4" FOR MAXIMUM UNFACTORED SERVICE SEISMIC LOAD OF 3.5K

8 SLAB EDGE AT ELEVATOR DOOR SILLS

kpff

FILE NAME:	14W121SB06_09.dwg					
PRINTED:	2:41:40 PM 9/21/2018	LAST PRINTED BY:				FED.AID PROJ.NO.
SUBMITTAL DATE:	08/23/2018	3yronR				WA-2017-007-00
DESIGNED BY:	A. RADKE	08/23/2018				REGION NO. / STATE
ENTERED BY:	B. RONIA	08/23/2018				10 / WASH
CHECKED BY:	A. EWING	08/23/2018				JOB NUMBER 18W121
MAR PROJ ENGR	C. TORRES					
DIR TERM ENGR:	N. MCINTOSH					CONTRACT NO.
ASST SECRETARY:	A. SCARTON		REVISION	DATE	BY	00****

DATE

08/23/2018
DATE

Washington State Department of Transportation
WASHINGTON STATE FERRIES

SR 525
MUKILTEO FERRY TERMINAL (PHASE 2)
FERRY TERMINAL CONSTRUCTION

TYPICAL STEEL DETAILS

SB06.09

SHEET 1166 OF 1521 SHEETS

File: U:\114000-114350\114177 (Mukilteo Ferry Terminal)\04 Details\14W121SB06_09.dwg
Plotted: 9/21/18 at 2:41pm By: DianeL

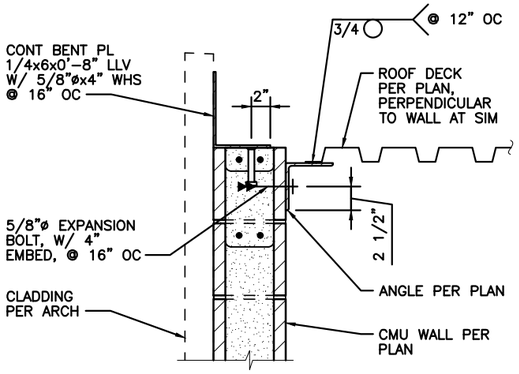

1 MAINTENANCE BLDG – CONNECTION

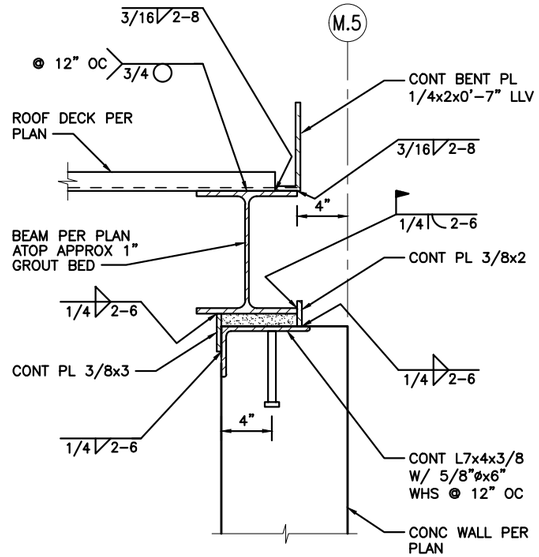

2 MAINTENANCE BLDG – CONNECTION

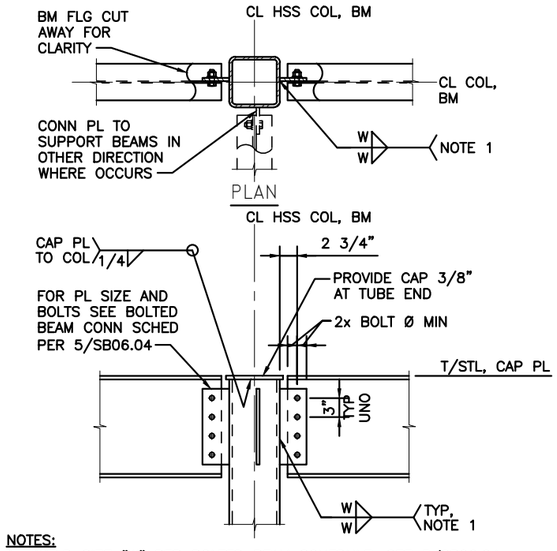

NOTES:
1. WELD SIZE "W" PER BOLTED BEAM SCHEDULE. SEE 5/SB06.04.

3 MAINTENANCE BLDG – BEAM TO HSS COLUMN

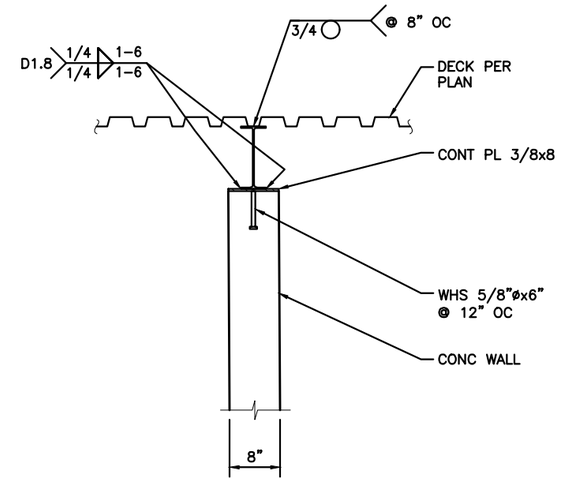

4 MAINTENANCE BLDG – DRAG CONNECTION

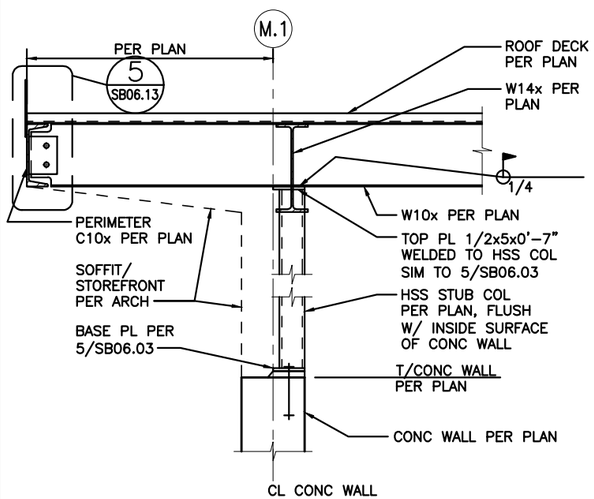

5 MAINTENANCE BLDG – CONNECTION

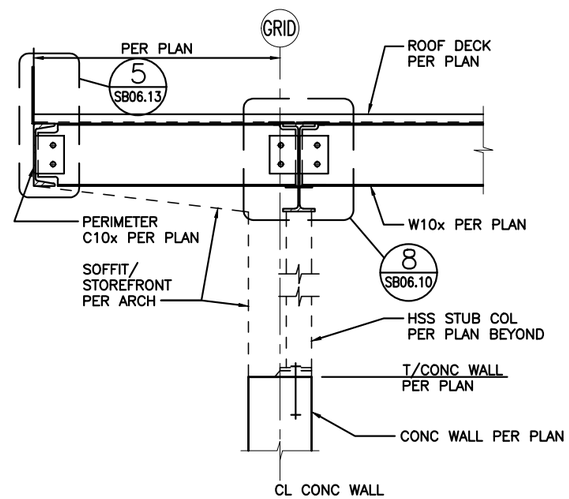

6 MAINTENANCE BLDG – CONNECTION

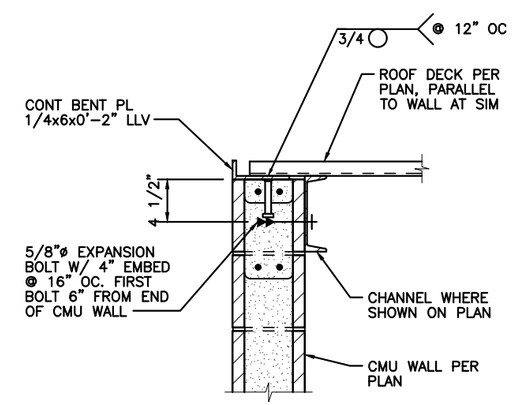

7 MAINTENANCE BLDG – CONNECTION

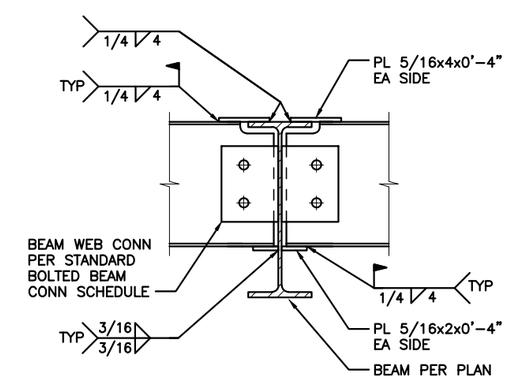

8 MAINTENANCE BLDG – MOMENT CONN TO BM

kpff

FILE NAME:	14W121SB06_10.dwg					
PRINTED: 2:41:43 PM 9/21/2018		LAST PRINTED BY:				FED.AID PROJ.NO.
SUBMITTAL DATE:	08/23/2018	3yronR				WA-2017-007-00
DESIGNED BY:	A. RADKE	08/23/2018				REGION NO. / STATE
ENTERED BY:	B. RONIA	08/23/2018				10 / WASH
CHECKED BY:	A. EWING	08/23/2018				JOB NUMBER
MAR PROJ ENGR	C. TORRES					18W121
DIR TERM ENGR:	N. MCINTOSH					CONTRACT NO.
ASST SECRETARY:	A. SCARTON		REVISION	DATE	BY	00****

DATE

STATE OF WASHINGTON — SARA LOVING RODRIGUES — 38538 — PROFESSIONAL ENGINEER

08/23/2018
DATE

Washington State Department of Transportation
WASHINGTON STATE FERRIES

SR 525
MUKILTEO FERRY TERMINAL (PHASE 2)
FERRY TERMINAL CONSTRUCTION

STEEL DETAILS – MAINTENANCE BLDG

SB06.10

SHEET 1167 OF 1521 SHEETS

File: U:\114000-114350\114177 (Mukilteo Ferry Terminal)\04 Details\14W121SB06_10.dwg
Plotted: 9/21/18 at 2:41pm By: DianeL

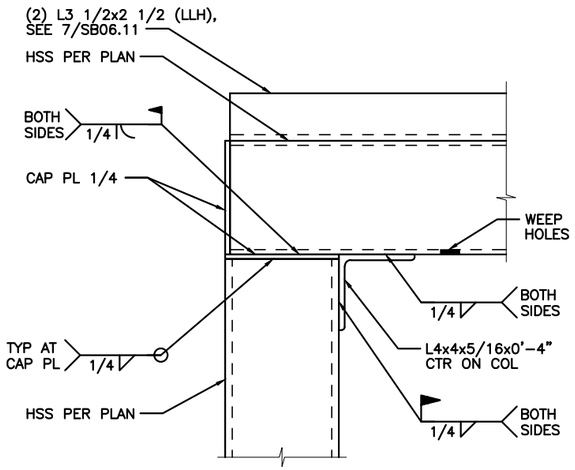

1 MAINTENANCE BLDG – DETAIL

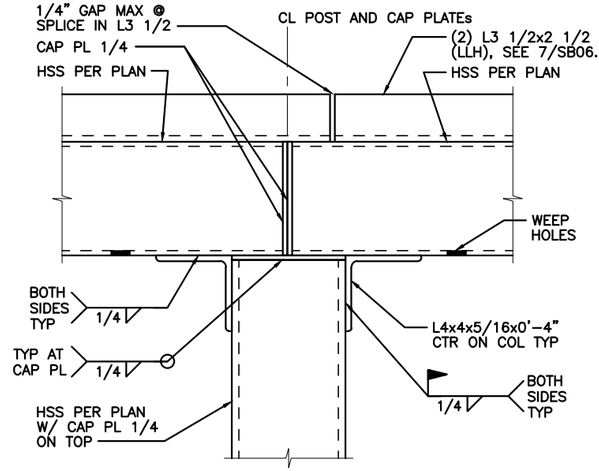

2 MAINTENANCE BLDG – DETAIL

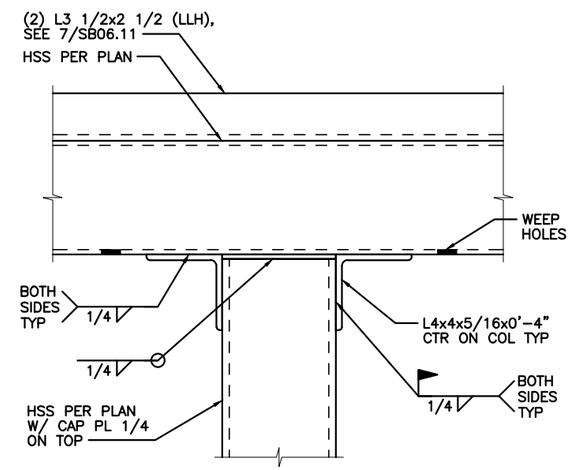

3 MAINTENANCE BLDG – DETAIL

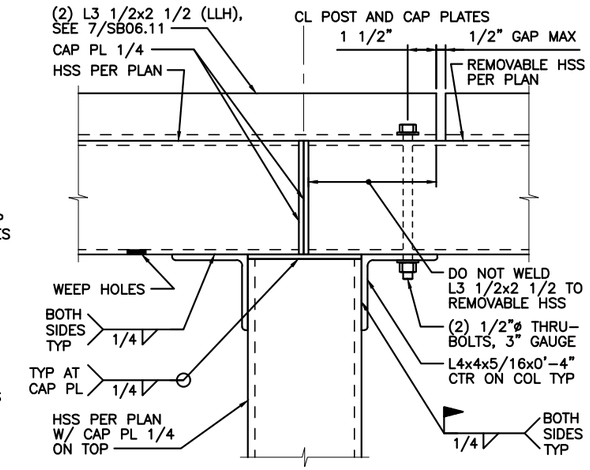

4 MAINTENANCE BLDG – DETAIL

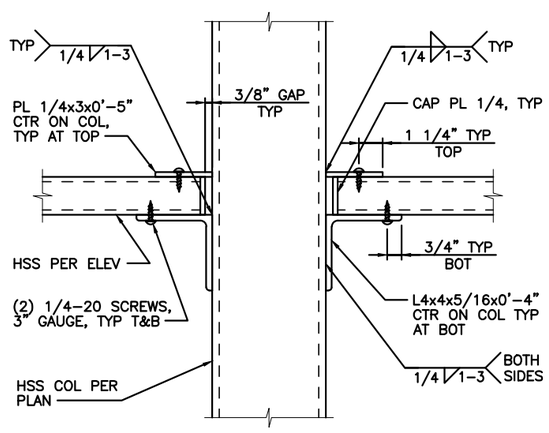

5 MAINTENANCE BLDG – DETAIL

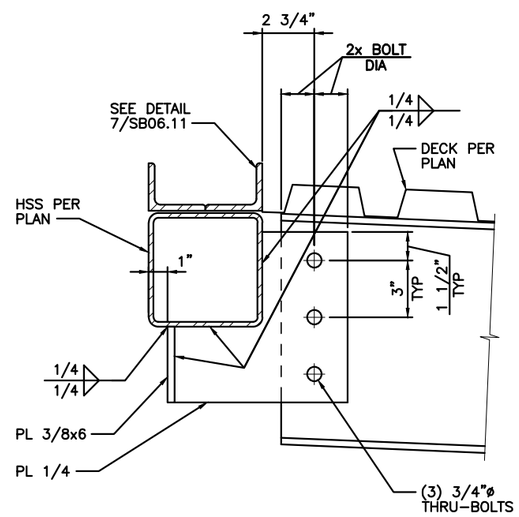

6 MAINTENANCE BLDG – CONNECTION

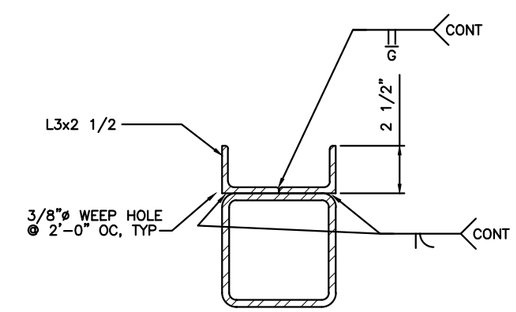

7 MAINTENANCE BLDG – DETAIL

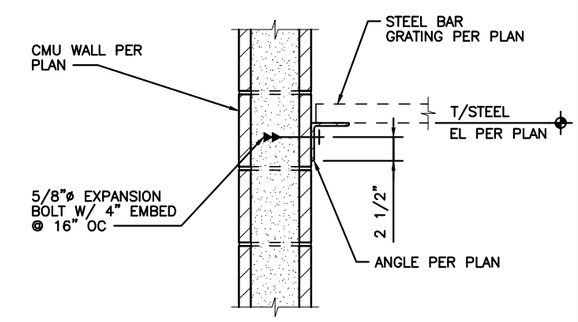

8 MAINTENANCE BLDG – DETAIL

kpff

FILE NAME:	14W121SB06_11.dwg					
PRINTED: 2:41:46 PM 9/21/2018		LAST PRINTED BY:				FED.AID PROJ.NO.
SUBMITTAL DATE:	08/23/2018	3yronR				WA-2017-007-00
DESIGNED BY:	A. RADKE	08/23/2018				REGION NO. / STATE
ENTERED BY:	B. RONIA	08/23/2018				10 / WASH
CHECKED BY:	A. EWING	08/23/2018				JOB NUMBER
MAR PROJ ENGR	C. TORRES					18W121
DIR TERM ENGR:	N. MCINTOSH					CONTRACT NO.
ASST SECRETARY:	A. SCARTON		REVISION	DATE	BY	00****

DATE

DANIEL LOVING RODRIGUES — STATE OF WASHINGTON — 38538 — PROFESSIONAL ENGINEER

08/23/2018
DATE

Washington State Department of Transportation
WASHINGTON STATE FERRIES

SR 525
MUKILTEO FERRY TERMINAL (PHASE 2)
FERRY TERMINAL CONSTRUCTION

STEEL DETAILS – MAINTENANCE BLDG

SB06.11

SHEET 1168 OF 1521 SHEETS

File: U:\114000-114350\114177 (Mukilteo Ferry Terminal)\04 Details\14W121SB06_11.dwg
Plotted: 9/21/18 at 2:41pm By: DianeL

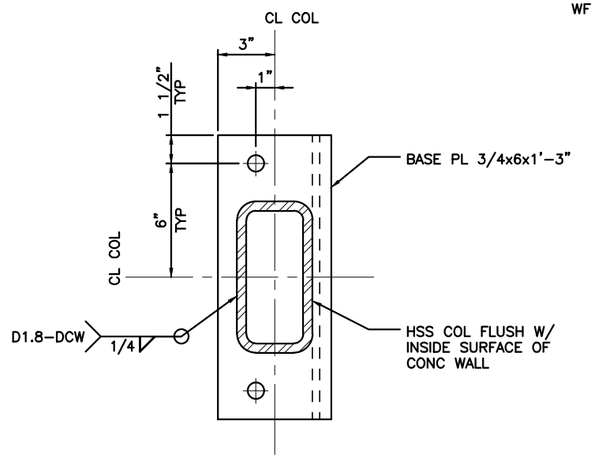

PLAN

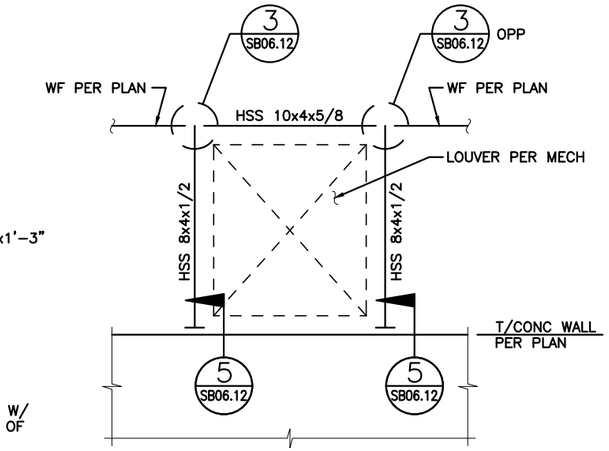

2 MAINTENANCE BLDG – MOMENT FRAME ELEVATION

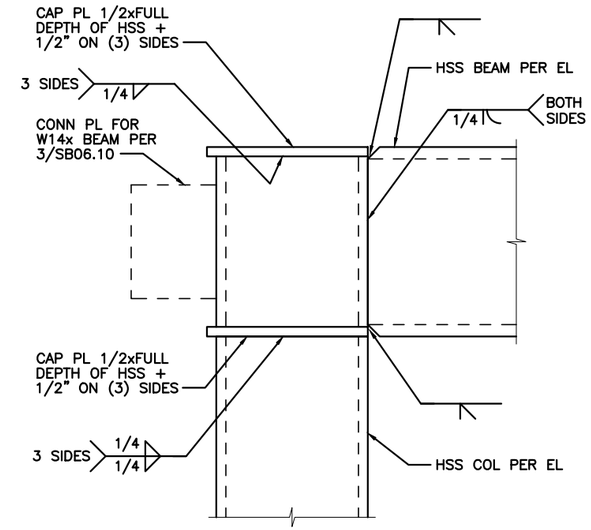

3 MAINTENANCE BLDG – MOMENT FRAME DETAIL

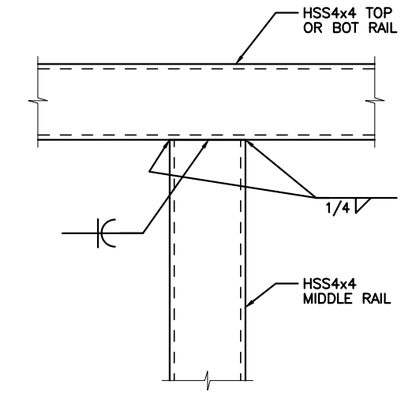

4 MAINTENANCE BLDG – GATE MIDDLE TO TOP RAIL CONN

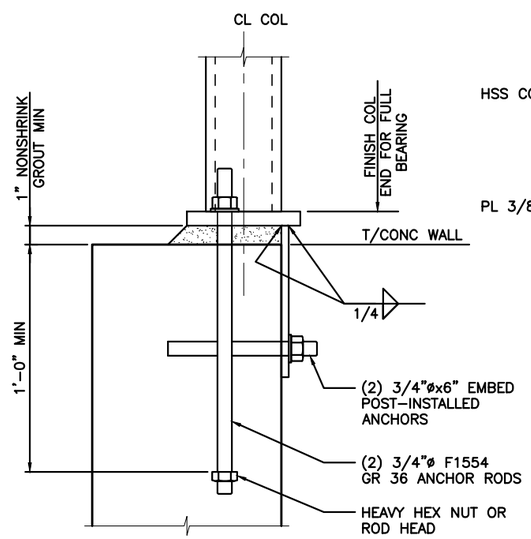

SECTION

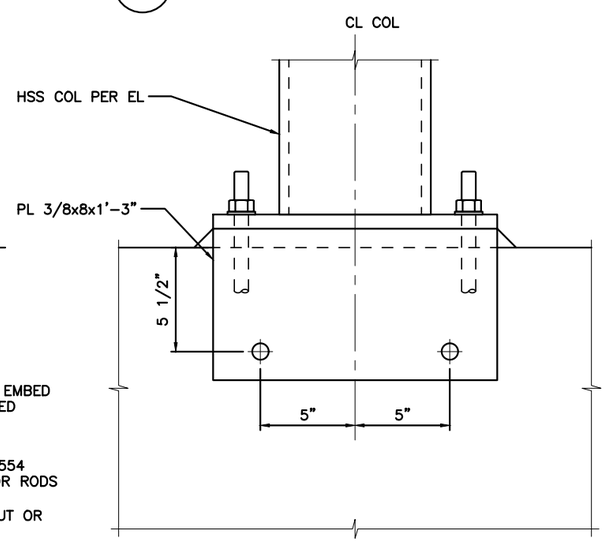

SIDE

5 MOMENT FRAME – HSS BASE PL

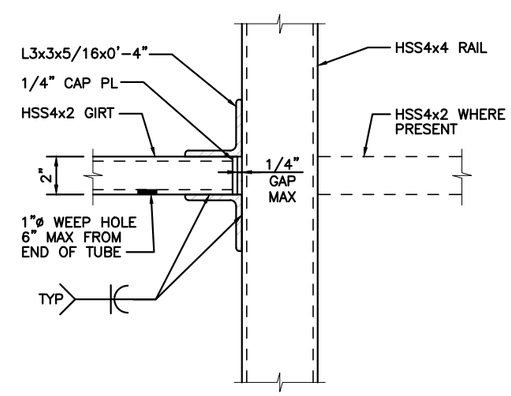

7 MAINTENANCE BLDG – GATE GIRT TO RAIL CONNECTION

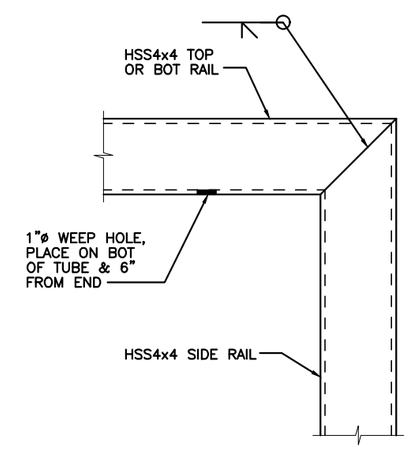

8 MAINTENANCE BLDG – GATE CORNER CONNECTION

kpff

FILE NAME:	14W121SB06_12.dwg					FED.AID PROJ.NO.
PRINTED:	2:41:49 PM 9/21/2018	LAST PRINTED BY:				
SUBMITTAL DATE:	08/23/2018	3yronR				WA-2017-007-00
DESIGNED BY:	A. RADKE	08/23/2018				REGION NO. / STATE
ENTERED BY:	B. RONIA	08/23/2018				10 / WASH
CHECKED BY:	A. EWING	08/23/2018				JOB NUMBER 18W121
MAR PROJ ENGR	C. TORRES					
DIR TERM ENGR:	N. MCINTOSH					CONTRACT NO.
ASST SECRETARY:	A. SCARTON		REVISION	DATE	BY	00****

DATE

STATE OF WASHINGTON — JAMES LOVING RODRIGUES — 38538 — PROFESSIONAL ENGINEER

08/23/2018
DATE

Washington State Department of Transportation
WASHINGTON STATE FERRIES

SR 525
MUKILTEO FERRY TERMINAL (PHASE 2)
FERRY TERMINAL CONSTRUCTION

STEEL DETAILS – MAINTENANCE BLDG

SB06.12

SHEET 1169 OF 1521 SHEETS

File: U:\114000-114350\114177 (Mukilteo Ferry Terminal)\04 Details\14W121SB06_12.dwg
Plotted: 9/21/18 at 2:41pm By: DianeL

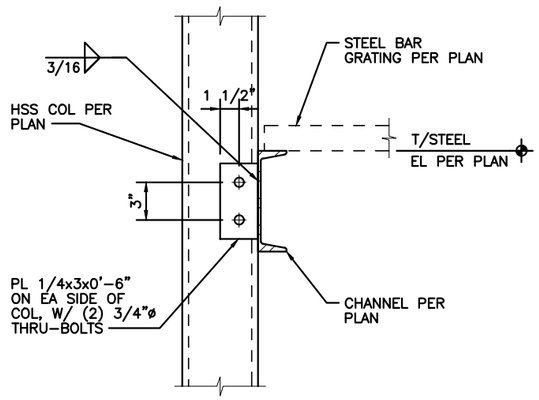

1 MAINTENANCE BLDG – DETAIL

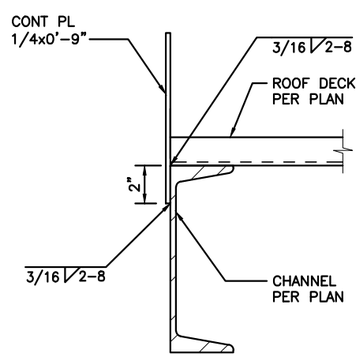

5 MAINTENANCE BLDG – ROOF PERIMETER SECTION

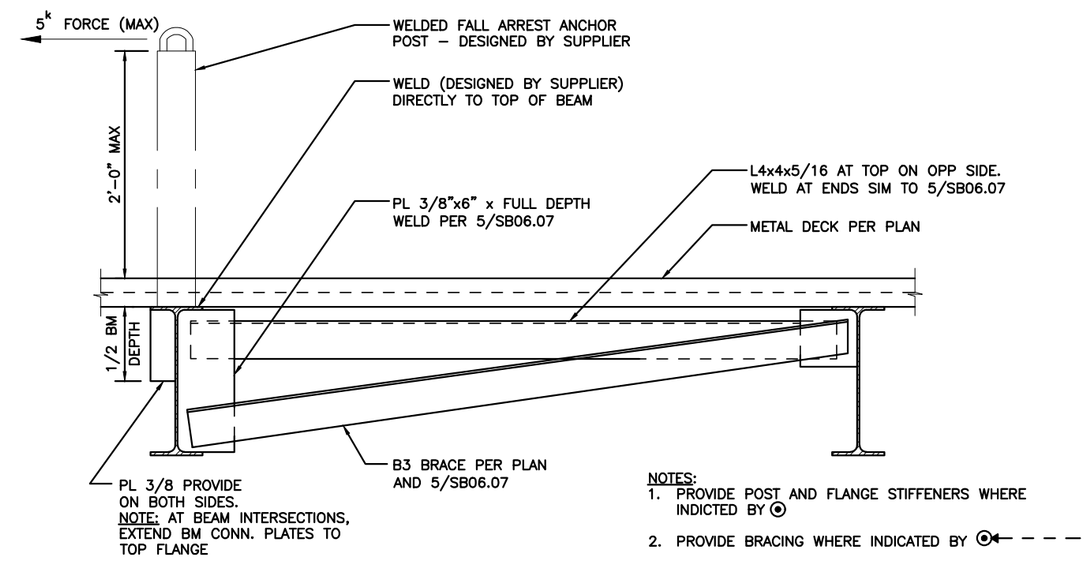

NOTES:
1. PROVIDE POST AND FLANGE STIFFENERS WHERE INDICTED BY ⊙
2. PROVIDE BRACING WHERE INDICATED BY ⊙←– – –

7 MAINTENANCE BLDG – FALL ARREST ANCHOR BRACING

kpff

FILE NAME:	14W121SB06_13.dwg					
PRINTED: 2:41:51 PM 9/21/2018		LAST PRINTED BY:				FED.AID PROJ.NO.
SUBMITTAL DATE:	08/23/2018	3yronR				WA-2017-007-00
DESIGNED BY:	A. RADKE	08/23/2018				REGION NO. 10 / STATE WASH
ENTERED BY:	B. RONIA	08/23/2018				
CHECKED BY:	A. EWING	08/23/2018				JOB NUMBER 18W121
MAR PROJ ENGR	C. TORRES					
DIR TERM ENGR:	N. MCINTOSH					CONTRACT NO. 00****
ASST SECRETARY:	A. SCARTON		REVISION	DATE	BY	

DATE

STATE OF WASHINGTON 38538 PROFESSIONAL ENGINEER — SARA LOVING SCARTON

08/23/2018
DATE

Washington State Department of Transportation
WASHINGTON STATE FERRIES

SR 525
MUKILTEO FERRY TERMINAL (PHASE 2)
FERRY TERMINAL CONSTRUCTION

STEEL DETAILS – MAINTENANCE BLDG

SB06.13

SHEET 1170 OF 1521 SHEETS

File: U:\114000-114350\114177 (Mukilteo Ferry Terminal)\04 Details\14W121SB06_13.dwg
Plotted: 9/21/18 at 2:41pm By: DiCneL

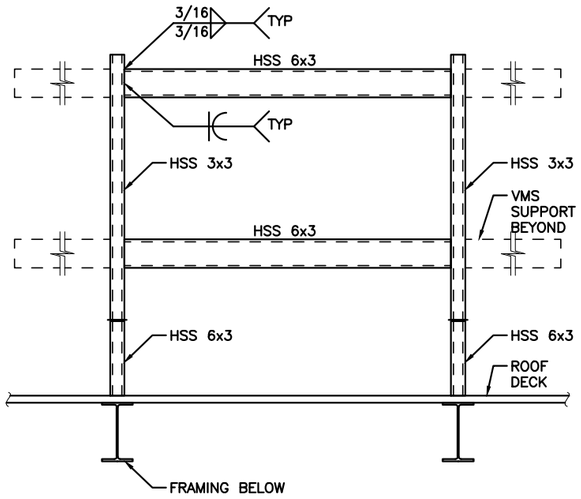

1 VMS BACK UP FRAME

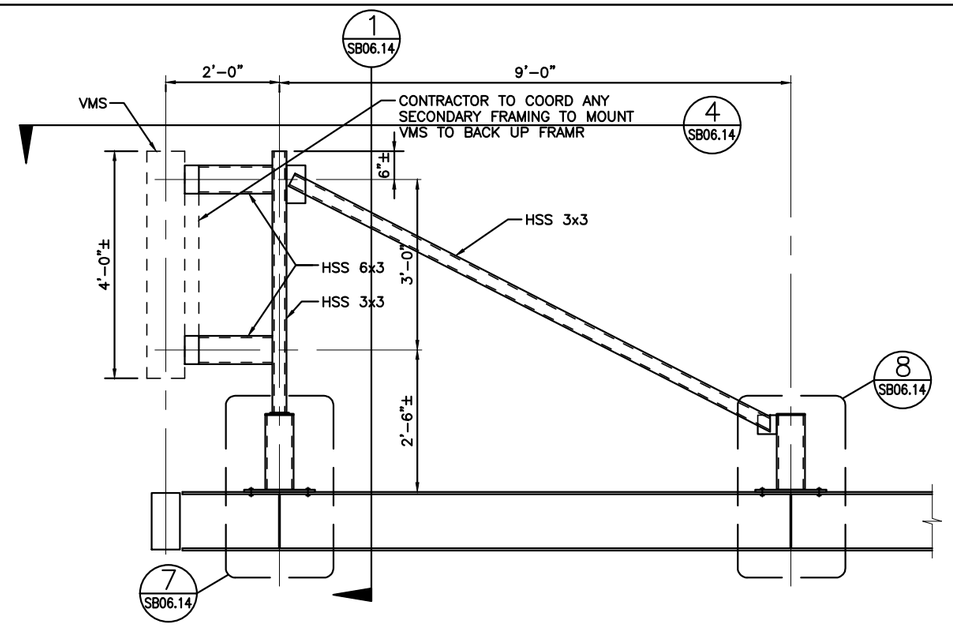

2 VMS BACK UP FRAME

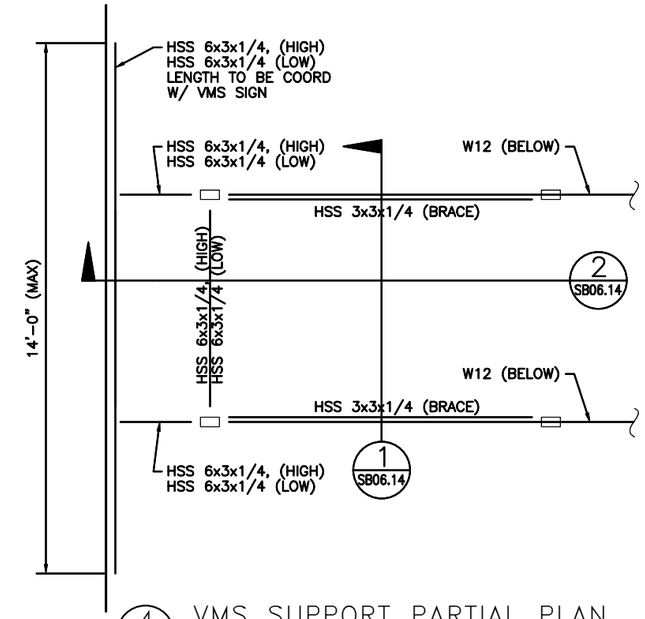

4 VMS SUPPORT PARTIAL PLAN

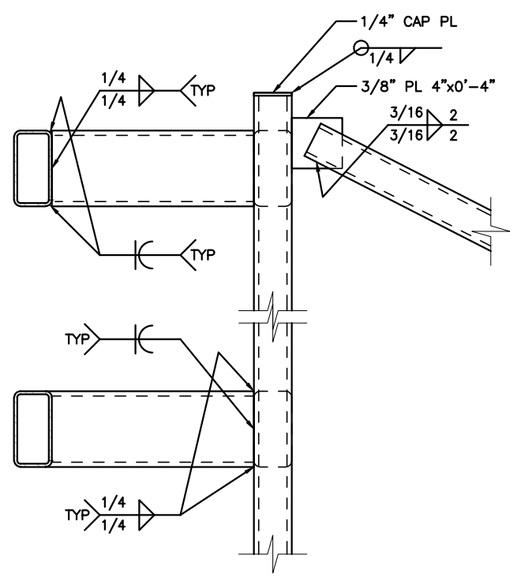

6 DETAIL

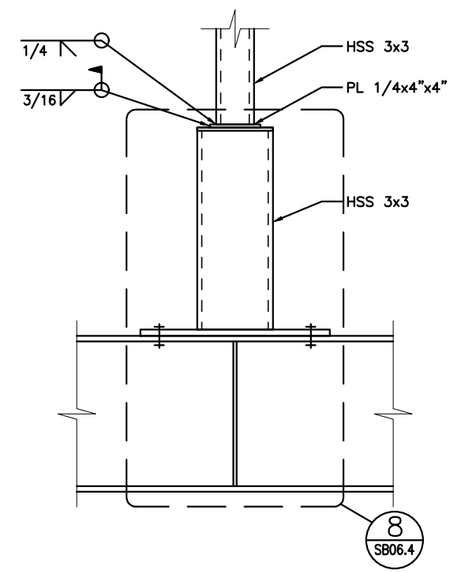

7 DETAIL

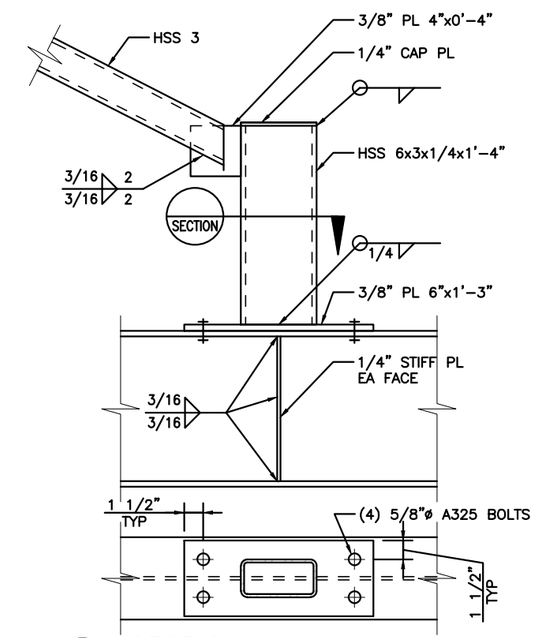

8 SECTION

kpff

FILE NAME:	14W121SB06_14.dwg					FED.AID PROJ.NO.
PRINTED: 2:41:55 PM 9/21/2018		LAST PRINTED BY:				
SUBMITTAL DATE:	08/23/2018	3yronR				WA-2017-007-00
DESIGNED BY:	A. RADKE	08/23/2018				REGION NO. / STATE
ENTERED BY:	B. RONIA	08/23/2018				10 / WASH
CHECKED BY:	A. EWING	08/23/2018				JOB NUMBER
MAR PROJ ENGR	C. TORRES					18W121
DIR TERM ENGR:	N. MCINTOSH					CONTRACT NO.
ASST SECRETARY:	A. SCARTON		REVISION	DATE	BY	00****

DATE

STATE OF WASHINGTON — JAMES LOVING MOORE — 38538 — PROFESSIONAL ENGINEER

08/23/2018
DATE

Washington State Department of Transportation
WASHINGTON STATE FERRIES

SR 525
MUKILTEO FERRY TERMINAL (PHASE 2)
FERRY TERMINAL CONSTRUCTION

VMS SUPPORT FRAME – MAINTENANCE BUILDING

SB06.14

SHEET 1171 OF 1521 SHEETS

File: U:\114000-114350\114177 (Mukilteo Ferry Terminal)\04 Details\14W121SB06_14.dwg
Plotted: 9/21/18 at 2:41pm By: DianeL

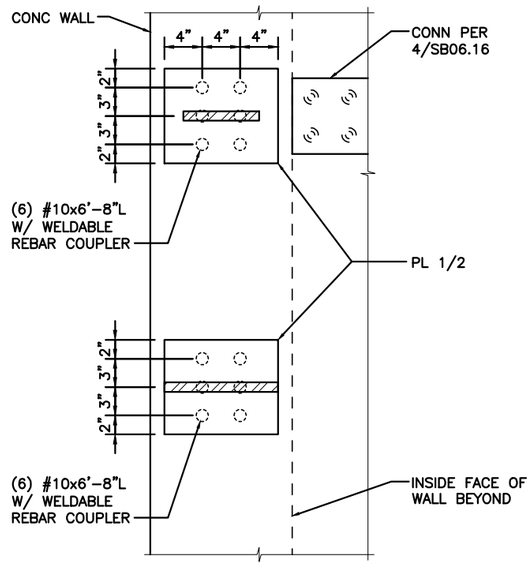

1 TERM BLDG – DRAG CONN

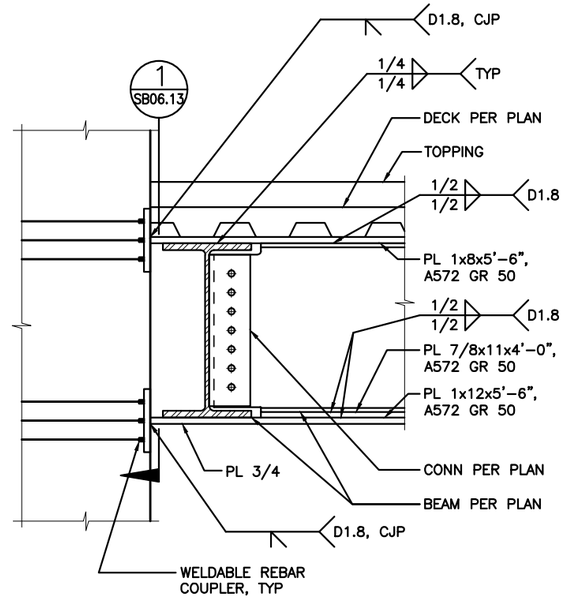

2 TERM BLDG – BEAM DRAG CONN

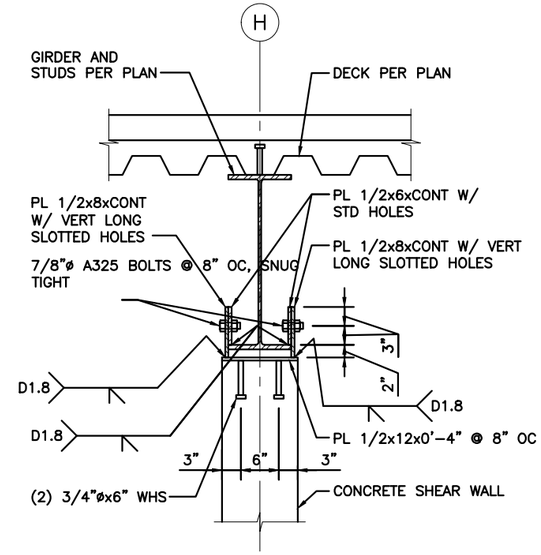

3 TERM BLDG – GIRDER DRAG CONN

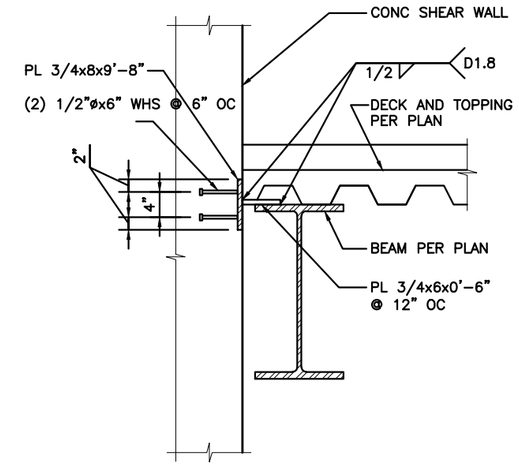

4 TERM BLDG – GIRDER DRAG CONN

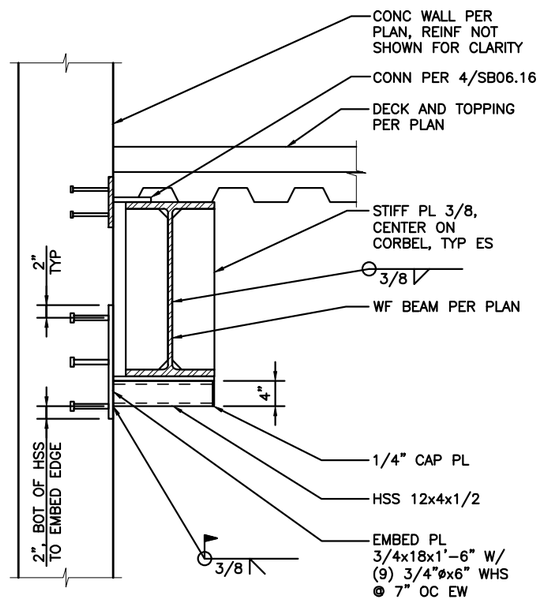

6 TERM BLDG – BEAM CORBEL CONN

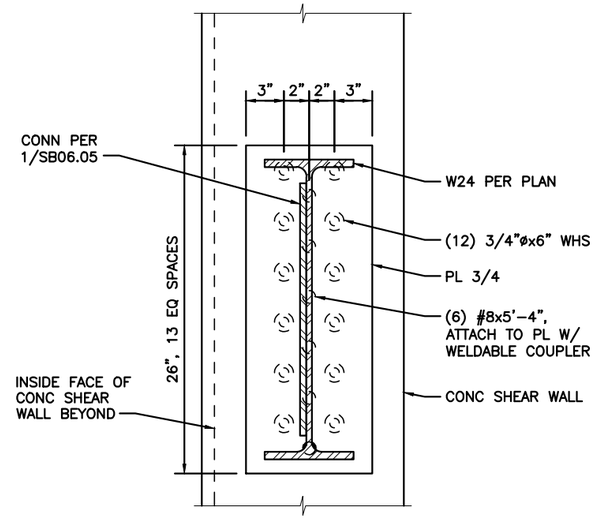

7 TERM BLDG – BEAM DRAG CONN

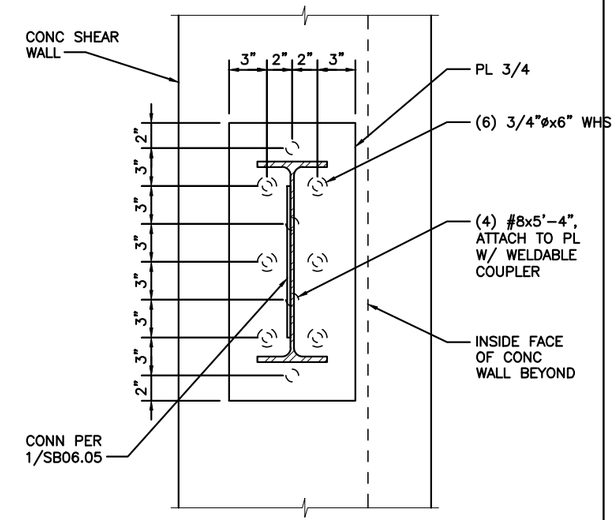

8 TERM BLDG – BEAM DRAG CONN

kpff

File: U:\114000-114350\114177 (Mukilteo Ferry Terminal)\04 Details\14W121SB06_16.dwg
Plotted: 9/21/18 at 2:41pm By: DianeL

FILE NAME:	14W121SB06_16.dwg					
PRINTED: 2:41:57 PM 9/21/2018		LAST PRINTED BY:				FED.AID PROJ.NO.
SUBMITTAL DATE:	08/23/2018	3yronR				WA-2017-007-00
DESIGNED BY:	A. RADKE	08/23/2018				REGION NO. / STATE
ENTERED BY:	B. RONIA	08/23/2018				10 / WASH
CHECKED BY:	A. EWING	08/23/2018				JOB NUMBER
MAR PROJ ENGR	C. TORRES					18W121
DIR TERM ENGR:	N. MCINTOSH					CONTRACT NO.
ASST SECRETARY:	A. SCARTON		REVISION	DATE	BY	00****

DATE

STATE OF WASHINGTON 38538 PROFESSIONAL ENGINEER — JAMES LOVING ROBERTS

08/23/2018
DATE

Washington State Department of Transportation
WASHINGTON STATE FERRIES

SR 525
MUKILTEO FERRY TERMINAL (PHASE 2)
FERRY TERMINAL CONSTRUCTION

STEEL DETAILS – TERMINAL BLDG

SB06.16

SHEET 1172 OF 1521 SHEETS

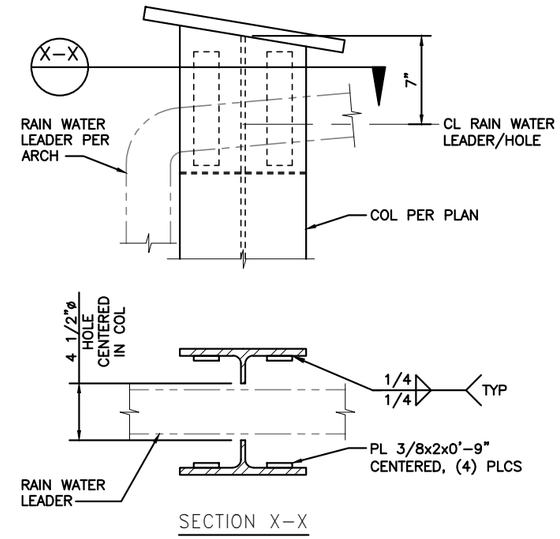

1 TERM BLDG – RAIN LEADER COL PENETRATION

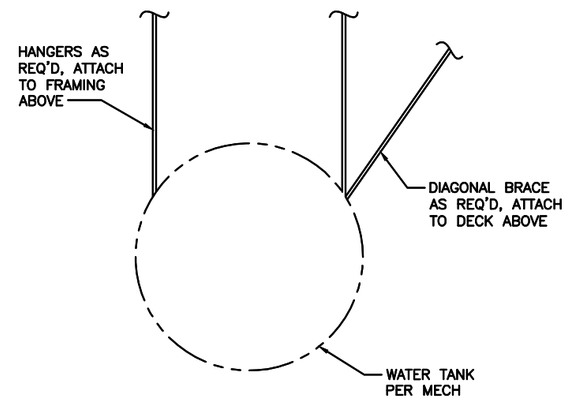

NOTES:
1. LOCATION OF TANK PER MECHANICAL.
2. DESIGN OF HANGERS AND BRACING PER CONTRACTOR.
3. MAX WEIGHT = 30,000 LBS (TANK AND WATER).

2 TERM BLDG – WATER TANK SUPPORT

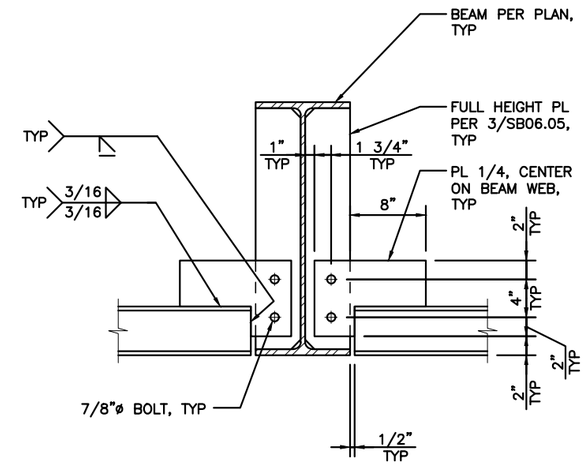

3 TERM BLDG – BEAM CONN AT BOT FLANGE

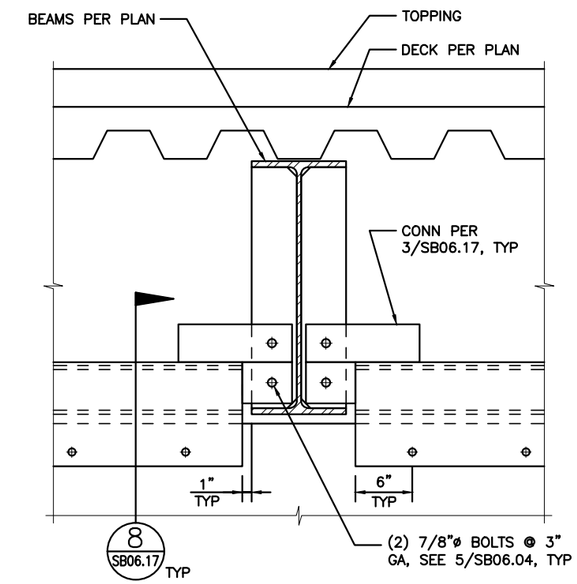

4 TERM BLDG – CONC WALL CONN

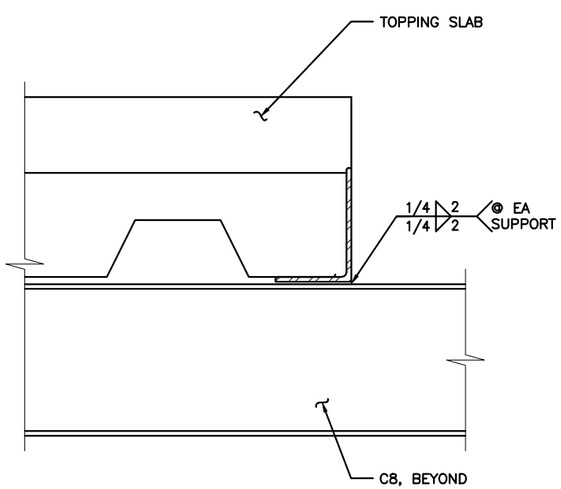

5 DETAIL

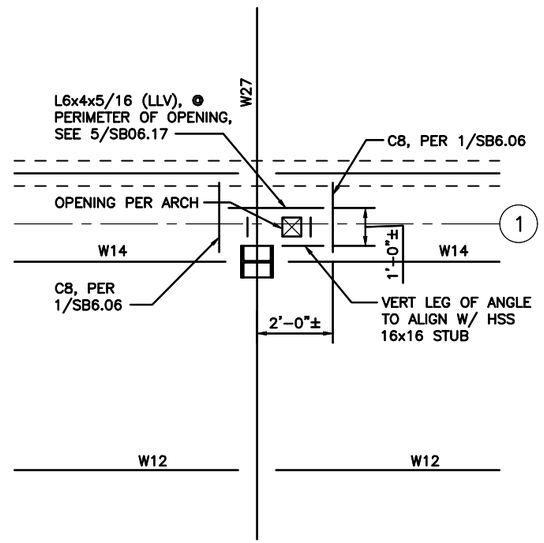

6 PARTIAL PLAN–TERM BLDG RAIN LEADER PENETRATION

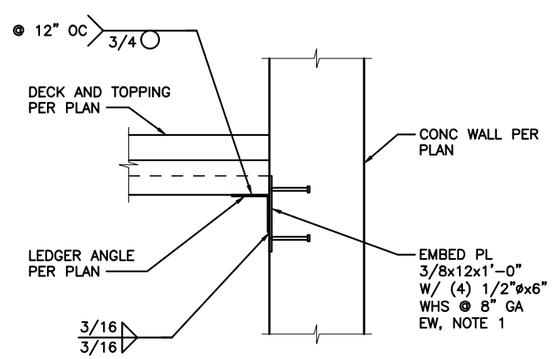

NOTES:
1. EMBEDS TO BE SPACED AT 4'–0" OC (MAX) AND PLACED WITHIN 1'–0" OF END OF LEDGER ANGLE.

7 TERM BLDG – LEDGER ANGLE CONN

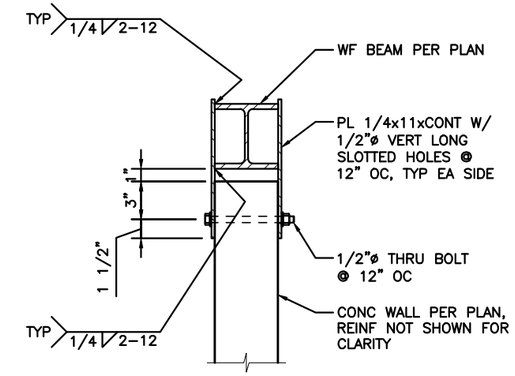

NOTES:
1. SEE 4/SB06.17 FOR ADDITIONAL INFORMATION.

8 TERM BLDG – CONC WALL CONN

kpff

FILE NAME:	14W121SB06_17.dwg					
PRINTED:	2:42:00 PM 9/21/2018	LAST PRINTED BY:				FED.AID PROJ.NO.
SUBMITTAL DATE:	08/23/2018	3yronR				WA-2017-007-00
DESIGNED BY:	A. RADKE	08/23/2018				REGION NO. 10 / STATE WASH
ENTERED BY:	B. RONIA	08/23/2018				
CHECKED BY:	A. EWING	08/23/2018				JOB NUMBER 18W121
MAR PROJ ENGR	C. TORRES					
DIR TERM ENGR:	N. MCINTOSH					CONTRACT NO. 00****
ASST SECRETARY:	A. SCARTON		REVISION	DATE	BY	

DATE

08/23/2018
DATE

Washington State Department of Transportation
WASHINGTON STATE FERRIES

SR 525
MUKILTEO FERRY TERMINAL (PHASE 2)
FERRY TERMINAL CONSTRUCTION

STEEL DETAILS – TERMINAL BLDG

SB06.17

SHEET 1173 OF 1521 SHEETS

File: U:\114000-114350\114177 (Mukilteo Ferry Terminal)\04 Details\14W121SB06_17.dwg
Plotted: 9/21/18 at 2:42pm By: DianeL

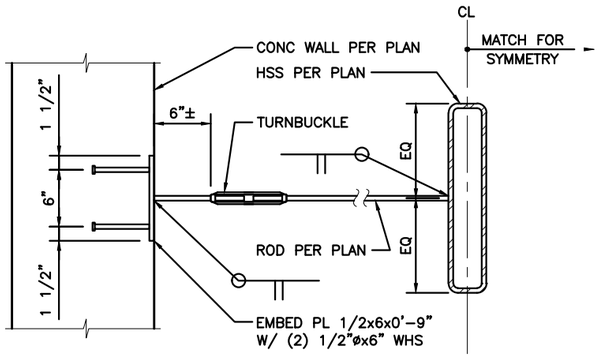

TERMINAL BLDG – ELEV SUPPORT DETAIL
1

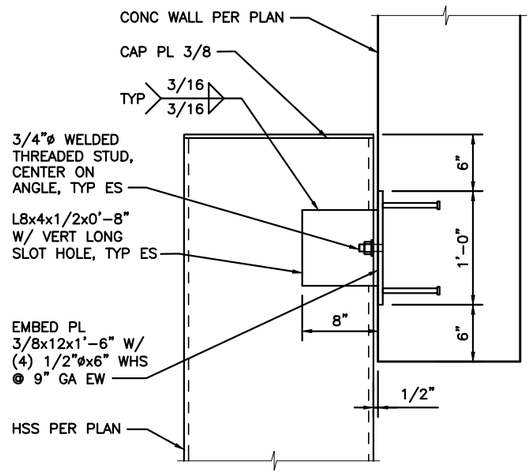

TERMINAL BLDG – ELEV SUPPORT DETAIL
2

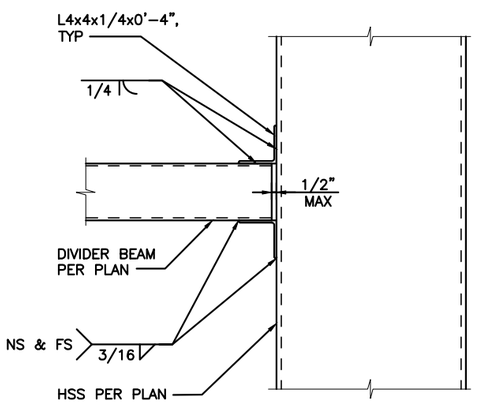

TERMINAL BLDG – ELEV SUPPORT DETAIL
5

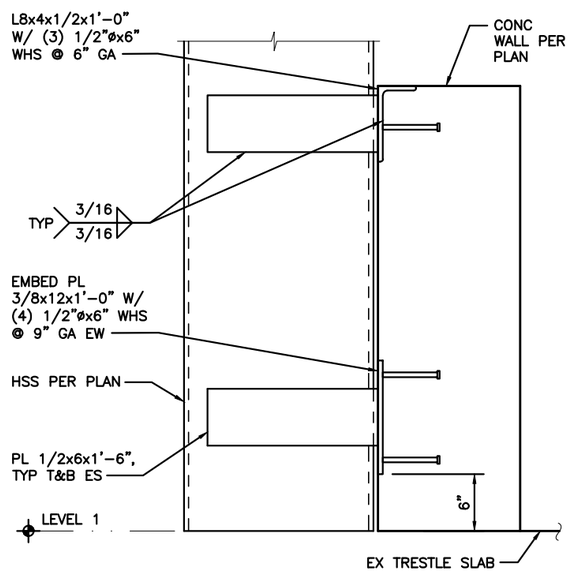

TERMINAL BLDG – ELEV SUPPORT DETAIL
6

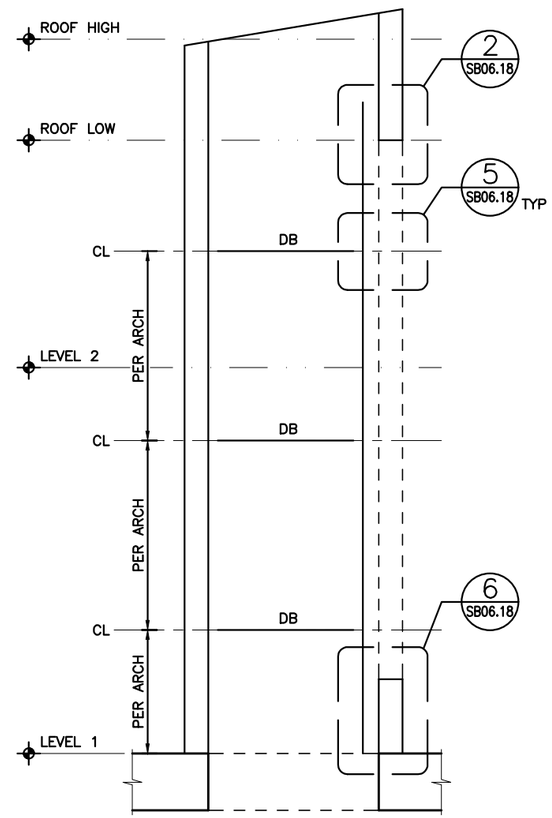

TERMINAL BLDG – ELEV 2 & 3 SUPPORT
7

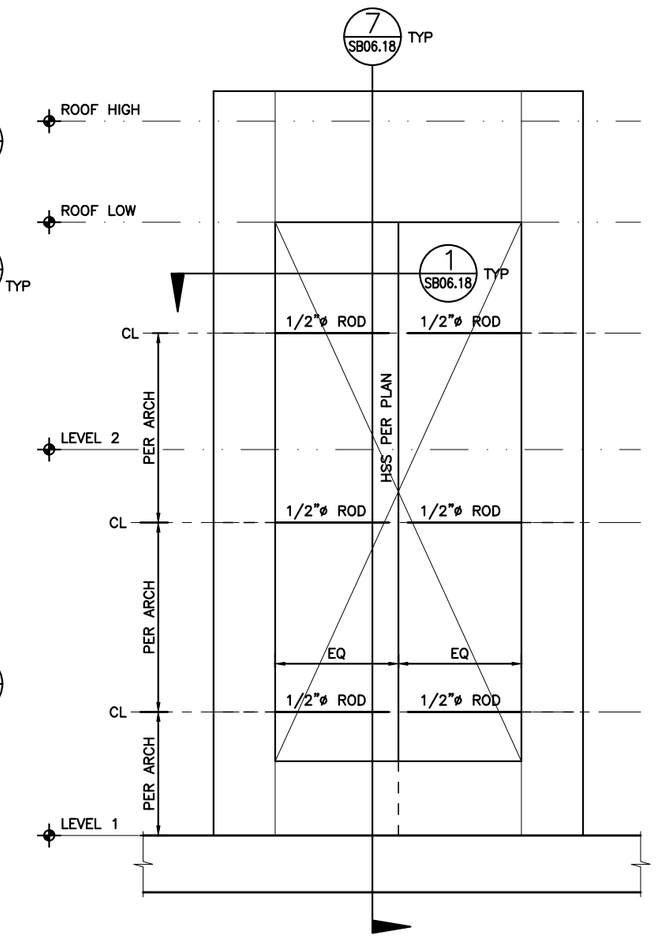

TERMINAL BLDG – ELEV 2 & 3 SUPPORT
8

kpff

FILE NAME:	14W121SB06_18.dwg					FED.AID PROJ.NO.
PRINTED:	2:42:03 PM 9/21/2018	LAST PRINTED BY:				
SUBMITTAL DATE:	08/23/2018	3yronR				WA-2017-007-00
DESIGNED BY:	A. RADKE	08/23/2018				REGION NO. 10 / STATE WASH
ENTERED BY:	B. RONIA	08/23/2018				
CHECKED BY:	A. EWING	08/23/2018				JOB NUMBER 18W121
MAR PROJ ENGR	C. TORRES					
DIR TERM ENGR:	N. MCINTOSH					CONTRACT NO. 00****
ASST SECRETARY:	A. SCARTON		REVISION	DATE	BY	

DATE

DANA LOVING ROBERTS, STATE OF WASHINGTON, 38538, PROFESSIONAL ENGINEER
08/23/2018
DATE

Washington State Department of Transportation
WASHINGTON STATE FERRIES

SR 525
MUKILTEO FERRY TERMINAL (PHASE 2)
FERRY TERMINAL CONSTRUCTION

STEEL DETAILS – TERMINAL BLDG

SB06.18

SHEET 1174 OF 1521 SHEETS

File: U:\114000-114350\114177 (Mukilteo Ferry Terminal)\04 Details\14W121SB06_18.dwg
Plotted: 9/21/18 at 2:42pm By: DianeL

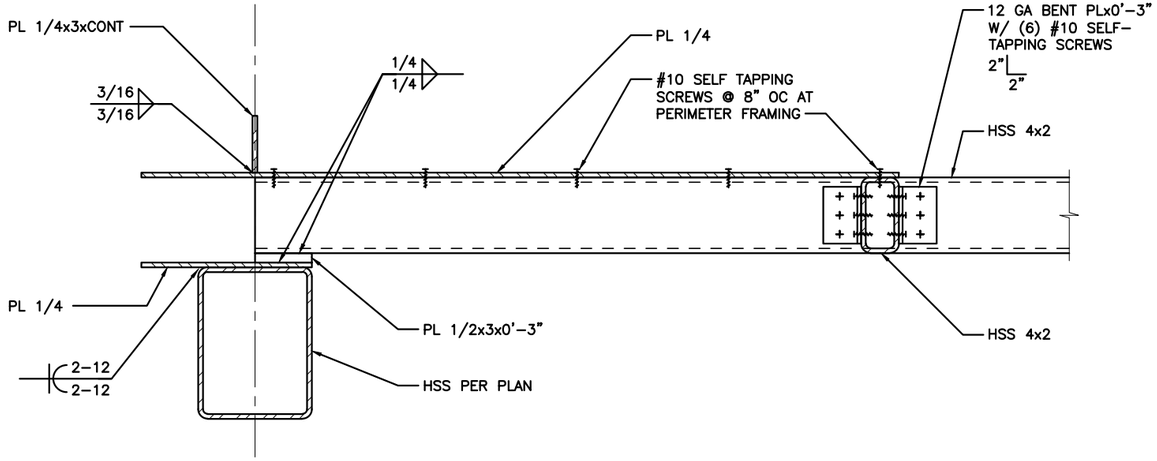

1 FRAMING AT LINEAR DIFFUSER

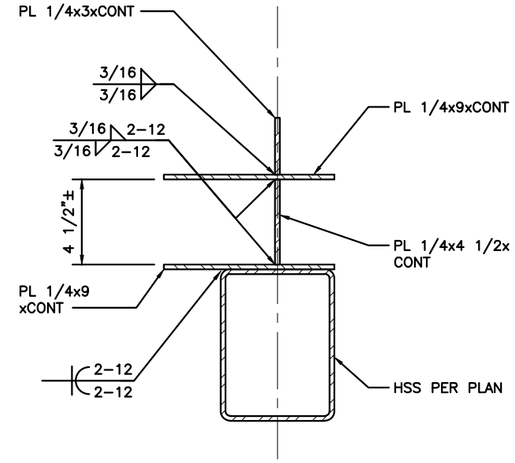

3 BLANK LINEAR DIFFUSER DETAIL

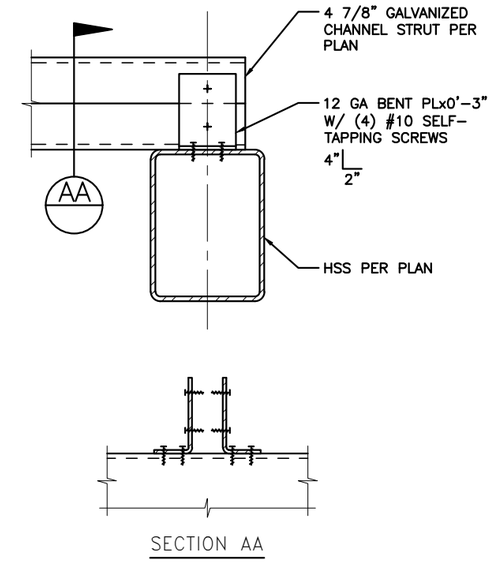

4 TYPICAL STRUT CONNECTION

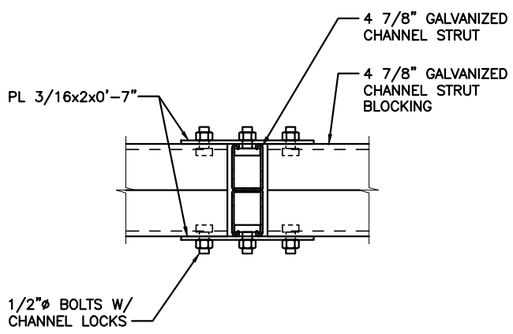

5 BLOCKING CONNECTION

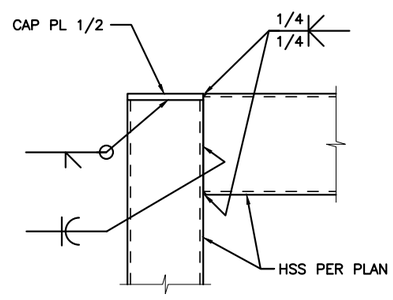

6 POST/HEADER CONNECTION

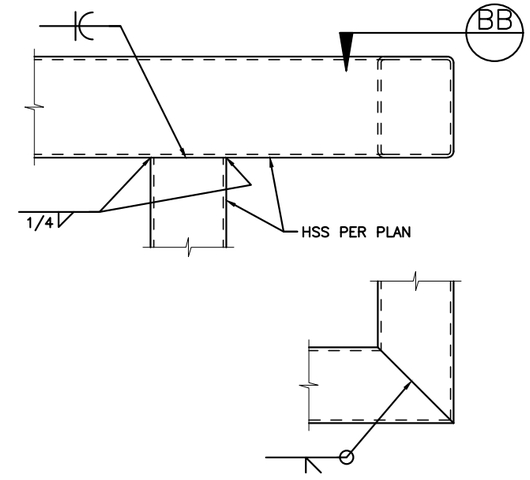

PLAN VIEW BB

7 CANTILEVERED HEADER CONN

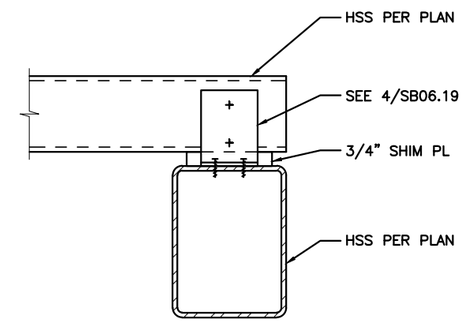

8 SHIMMED HSS CONN

kpff

FILE NAME:	14W121SB06_19.dwg					
PRINTED: 2:42:06 PM 9/21/2018		LAST PRINTED BY:				FED.AID PROJ.NO.
SUBMITTAL DATE:	08/23/2018	ByronR				WA-2017-007-00
DESIGNED BY:	A. RADKE	08/23/2018				REGION NO. / STATE
ENTERED BY:	B. RONIA	08/23/2018				10 / WASH
CHECKED BY:	A. EWING	08/23/2018				JOB NUMBER
MAR PROJ ENGR	C. TORRES					18W121
DIR TERM ENGR:	N. MCINTOSH					CONTRACT NO.
ASST SECRETARY:	A. SCARTON		REVISION	DATE	BY	00****

DATE

DANA LOVING ROBERTS — STATE OF WASHINGTON — 38538 — PROFESSIONAL ENGINEER

08/23/2018
DATE

Washington State Department of Transportation
WASHINGTON STATE FERRIES

SR 525
MUKILTEO FERRY TERMINAL (PHASE 2)
FERRY TERMINAL CONSTRUCTION

PARTIAL HEIGHT WALL DETAILS – TERMINAL BLDG

SB06.19

SHEET 1175 OF 1521 SHEETS

File: U:\114000-114350\114177 (Mukilteo Ferry Terminal)\04 Details\14W121SB06_19.dwg
Plotted: 9/21/18 at 2:42pm By: DianeL

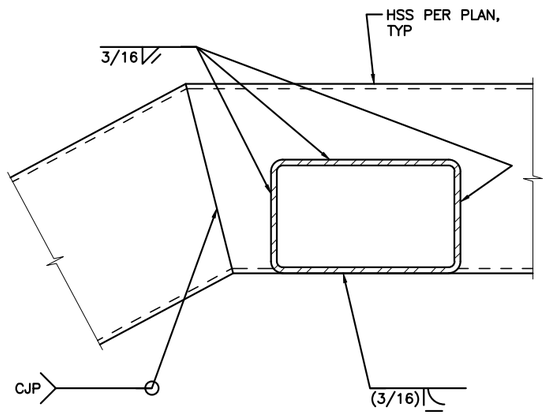

NOTES:
1. AT SIMILAR CONDITION ORIENTATION AND SLOPE OF MEMBERS PER PLAN.

1 STAIR LANDING CONN – STAIR 1 AND 2

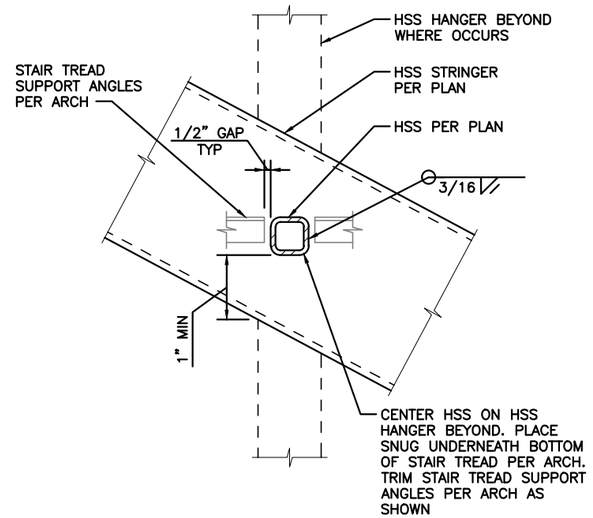

2 STAIR HSS TO HSS CONN – TYPE H2

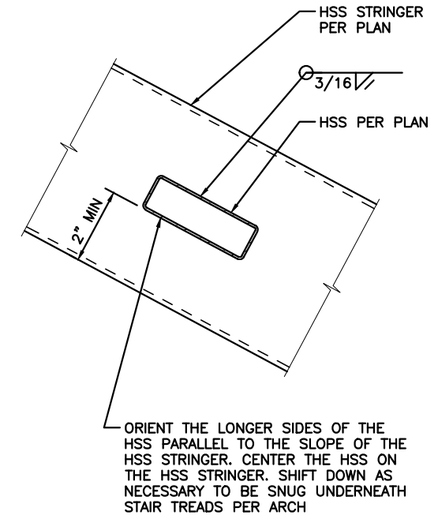

3 STAIR HSS TO HSS CONN – TYPE H1

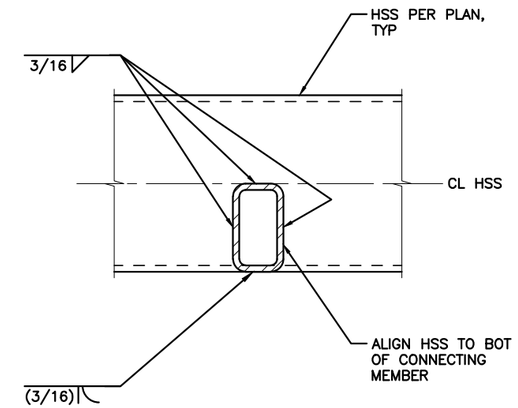

4 STAIR HSS TO HSS CONN

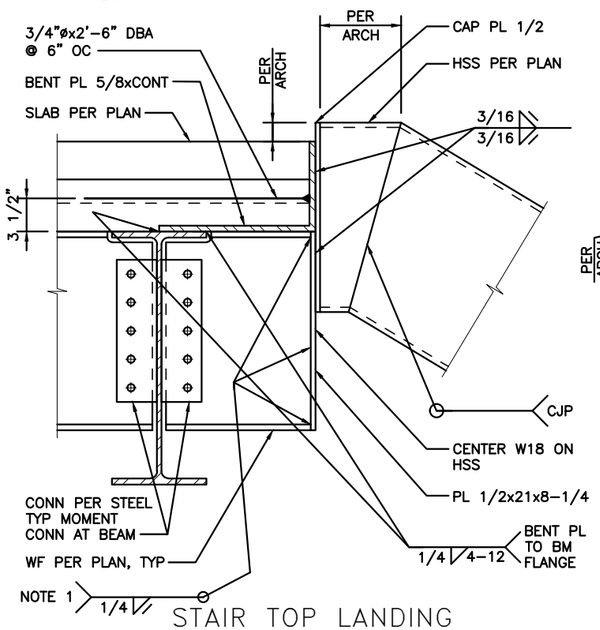

5 STAIR TOP LANDING CONN – STAIR 1

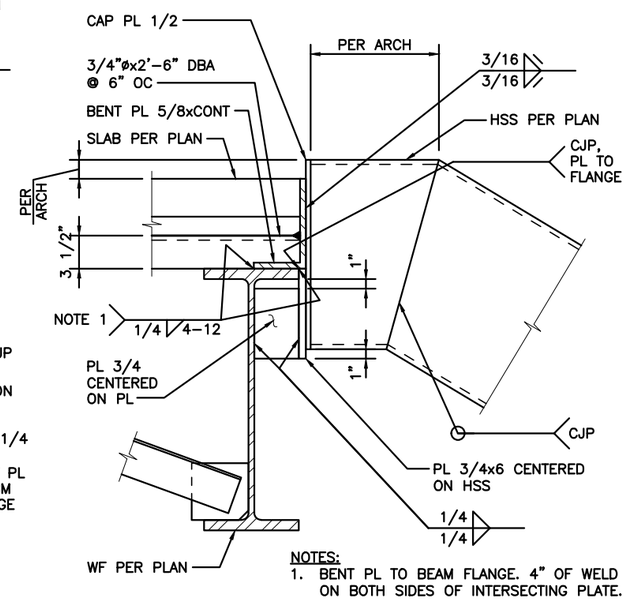

NOTES:
1. BENT PL TO BEAM FLANGE. 4" OF WELD ON BOTH SIDES OF INTERSECTING PLATE.

6 STAIR TOP LANDING CONN – STAIR 2

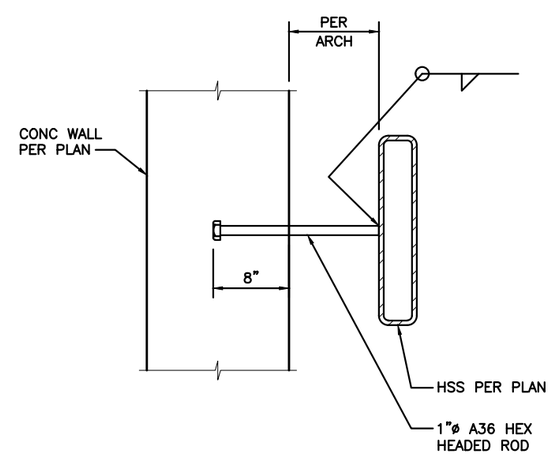

7 ROD CONNECTION – STAIR 1 AND 2

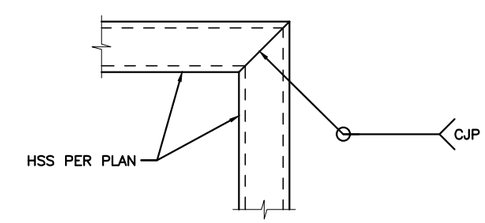

NOTES:
1. AT SIMILAR CONDITION ORIENTATION OF MEMBERS PER PLAN.

8 STAIR LANDING CONN

kpff

FILE NAME:	14W121SB06_30.dwg					
PRINTED: 2:42:08 PM 9/21/2018		LAST PRINTED BY:				FED.AID PROJ.NO.
SUBMITTAL DATE:	08/23/2018	3yronR				WA-2017-007-00
DESIGNED BY:	A. RADKE	08/23/2018				REGION NO. / STATE
ENTERED BY:	B. RONIA	08/23/2018				10 / WASH
CHECKED BY:	A. EWING	08/23/2018				JOB NUMBER 18W121
MAR PROJ ENGR	C. TORRES					
DIR TERM ENGR:	N. MCINTOSH					CONTRACT NO.
ASST SECRETARY:	A. SCARTON		REVISION	DATE	BY	00****

DATE

08/23/2018
DATE

Washington State Department of Transportation
WASHINGTON STATE FERRIES

SR 525
MUKILTEO FERRY TERMINAL (PHASE 2)
FERRY TERMINAL CONSTRUCTION

STEEL DETAILS – TERMINAL BLDG

SB06.30

SHEET 1176 OF 1521 SHEETS

File: U:\114000-114350\114177 (Mukilteo Ferry Terminal)\04 Details\14W121SB06_30.dwg
Plotted: 9/21/18 at 2:42pm By: DianeL

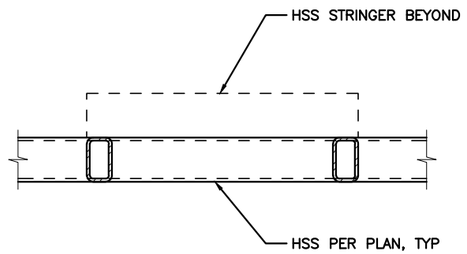

1 STAIR LANDING CONN – STAIR 1 AND 2

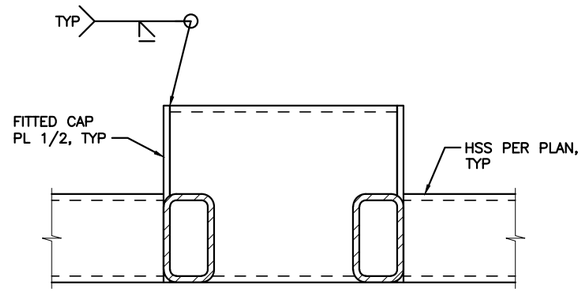

2 STAIR LANDING CONN – STAIR 3

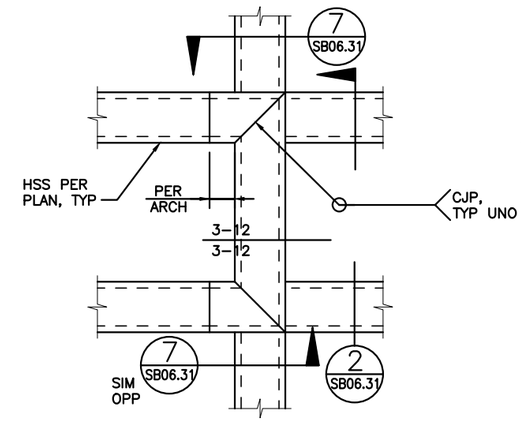

PLAN

3 STAIR LANDING CONN – STAIR 3

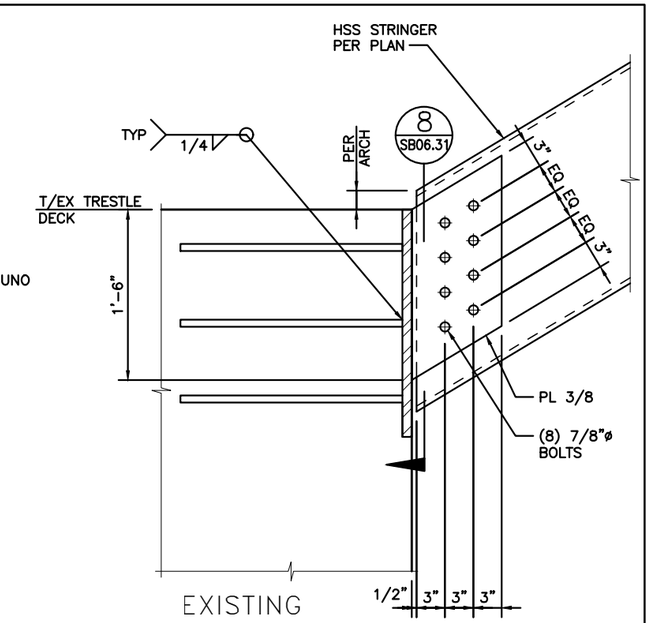

4 EXISTING EMBED – STAIR 1 AND 2

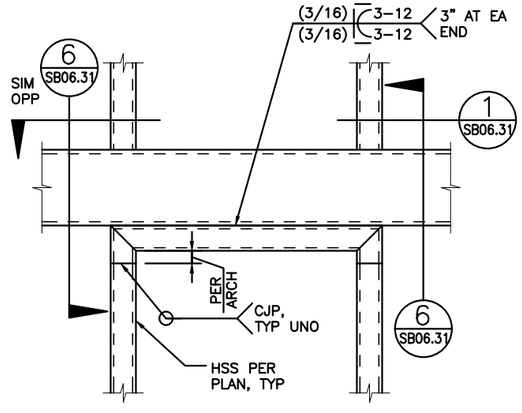

PLAN

5 STAIR LANDING CONN – STAIR 1 AND 2

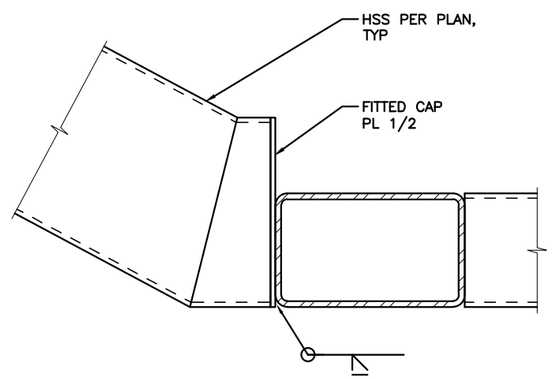

NOTES:
1. AT SIMILAR CONDITION ORIENTATION AND SLOPE OF MEMBERS PER PLAN.

6 STAIR LANDING CONN – STAIR 1 AND 2

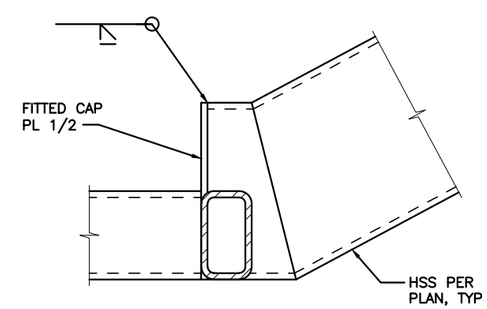

NOTES:
1. AT SIMILAR CONDITION ORIENTATION AND SLOPE OF MEMBERS PER PLAN.

7 STAIR LANDING CONN – STAIR 3

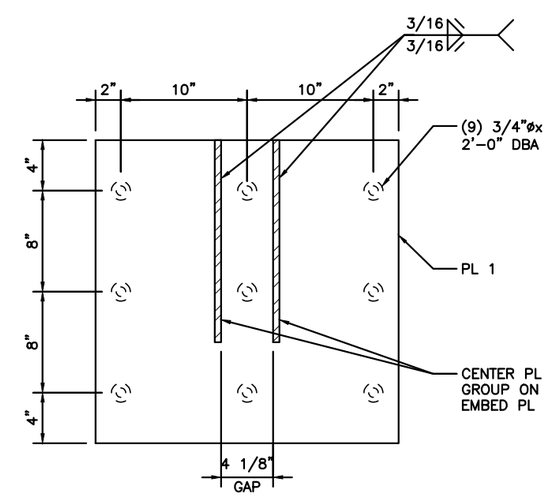

8 EXISTING EMBED – STAIR 1 AND 2

kpff

FILE NAME:	14W121SB06_31.dwg					
PRINTED: 2:42:12 PM 9/21/2018		LAST PRINTED BY:				FED.AID PROJ.NO.
SUBMITTAL DATE:	08/23/2018	3yronR				WA-2017-007-00
DESIGNED BY:	A. RADKE	08/23/2018				REGION NO. / STATE
ENTERED BY:	B. RONIA	08/23/2018				10 / WASH
CHECKED BY:	A. EWING	08/23/2018				JOB NUMBER 18W121
MAR PROJ ENGR	C. TORRES					
DIR TERM ENGR:	N. MCINTOSH					CONTRACT NO. 00****
ASST SECRETARY:	A. SCARTON		REVISION	DATE	BY	

DATE

STATE OF WASHINGTON — JAN LOVING RODRIGUEZ — 38538 — STRUCTURAL ENGINEER — PROFESSIONAL ENGINEER

08/23/2018
DATE

Washington State Department of Transportation
WASHINGTON STATE FERRIES

SR 525
MUKILTEO FERRY TERMINAL (PHASE 2)
FERRY TERMINAL CONSTRUCTION

STEEL DETAILS – TERMINAL BLDG

SB06.31

SHEET 1177 OF 1521 SHEETS

File: U:\114000-114350\114177 (Mukilteo Ferry Terminal)\04 Details\14W121SB06_31.dwg
Plotted: 9/21/18 at 2:42pm By: DianeL

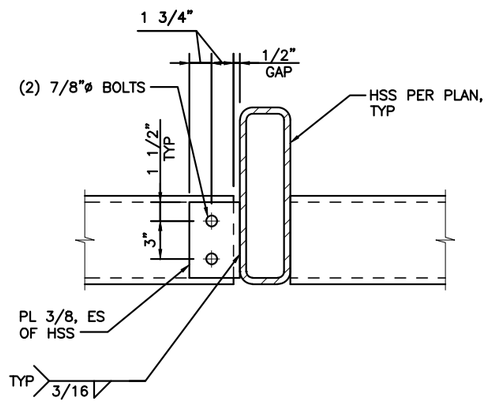

1 HSS BOLTED CONN – STAIR 3

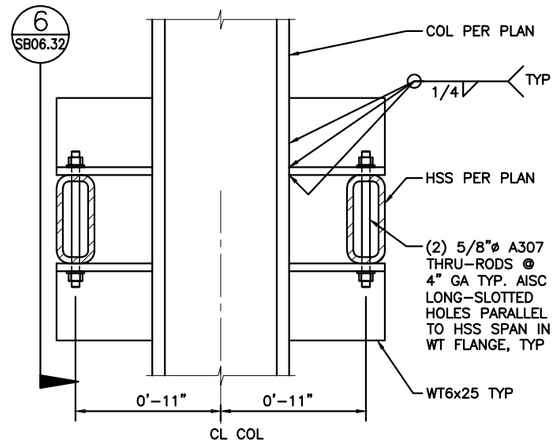

2 HSS TO COL CONN – STAIR 3

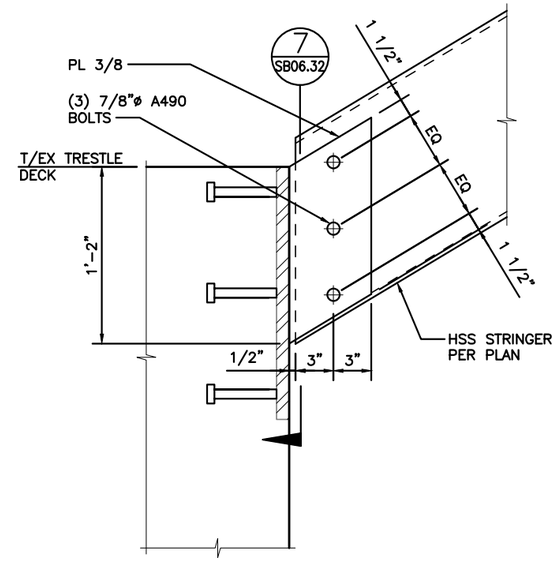

3 EXISTING EMBED – STAIR 3

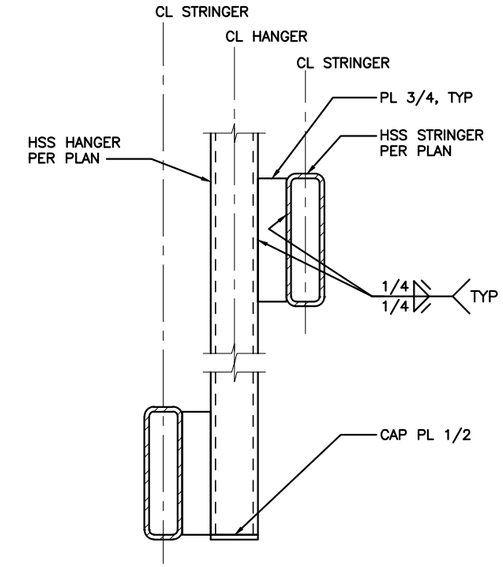

4 HANGER CONN – STAIR 3

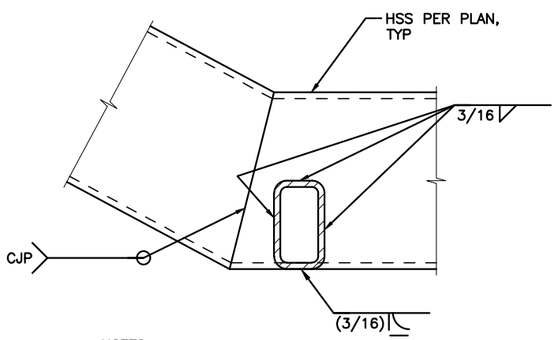

NOTES:
1. AT SIMILAR CONDITION ORIENTATION AND SLOPE OF MEMBERS PER PLAN.

5 STAIR LANDING CONN – STAIR 3

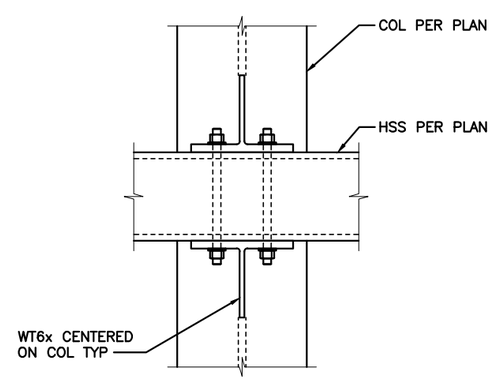

6 HSS TO COL CONN – STAIR 3

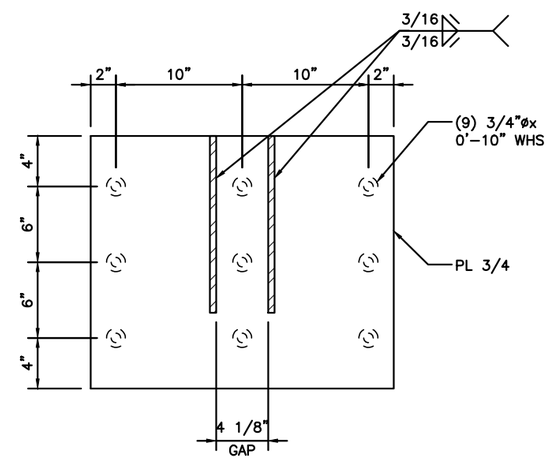

7 EXISTING EMBED – STAIR 3

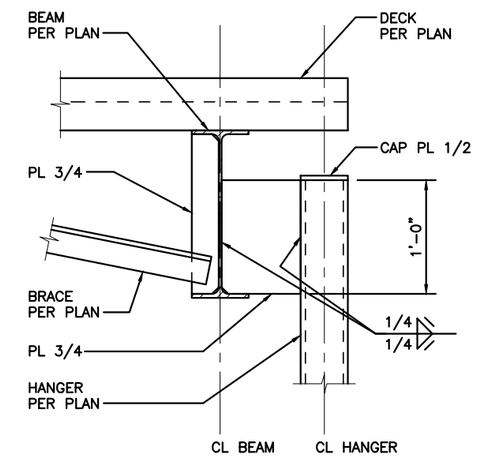

8 HANGER BEAM CONN – STAIR 3

kpff

FILE NAME:	14W121SB06_32.dwg					
PRINTED: 2:42:14 PM 9/21/2018		LAST PRINTED BY:				FED.AID PROJ.NO.
SUBMITTAL DATE:	08/23/2018	3yronR				WA-2017-007-00
DESIGNED BY:	A. RADKE	08/23/2018				REGION NO. / STATE
ENTERED BY:	B. RONIA	08/23/2018				10 / WASH
CHECKED BY:	A. EWING	08/23/2018				JOB NUMBER
MAR PROJ ENGR	C. TORRES					18W121
DIR TERM ENGR:	N. MCINTOSH					CONTRACT NO.
ASST SECRETARY:	A. SCARTON		REVISION	DATE	BY	00****

DATE

DANA LOVING ROBERTS, STATE OF WASHINGTON, 38538, PROFESSIONAL ENGINEER

08/23/2018
DATE

Washington State Department of Transportation
WASHINGTON STATE FERRIES

SR 525
MUKILTEO FERRY TERMINAL (PHASE 2)
FERRY TERMINAL CONSTRUCTION

STEEL DETAILS – TERMINAL BLDG

SB06.32

SHEET 1178 OF 1521 SHEETS

File: U:\114000-114350\114177 (Mukilteo Ferry Terminal)\04 Details\14W121SB06_32.dwg
Plotted: 9/21/18 at 2:42pm By: DianaL

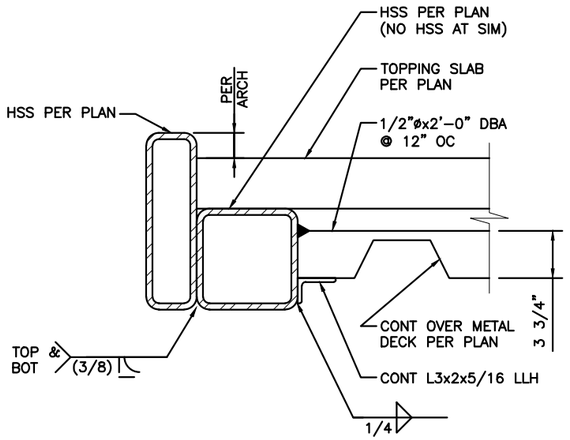

1 STAIR TOP LANDING CONN – STAIR 3

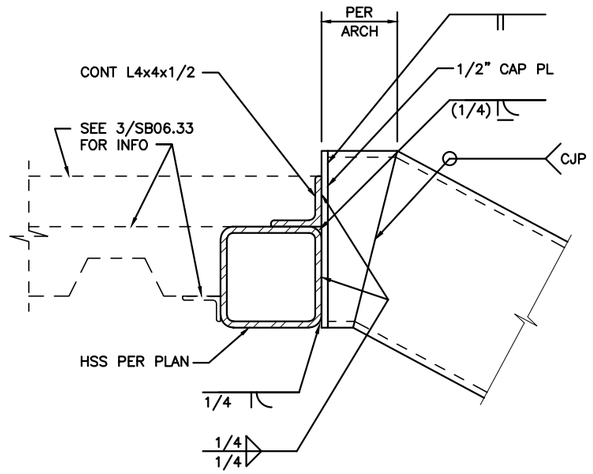

2 STAIR TOP LANDING CONN – STAIR 3

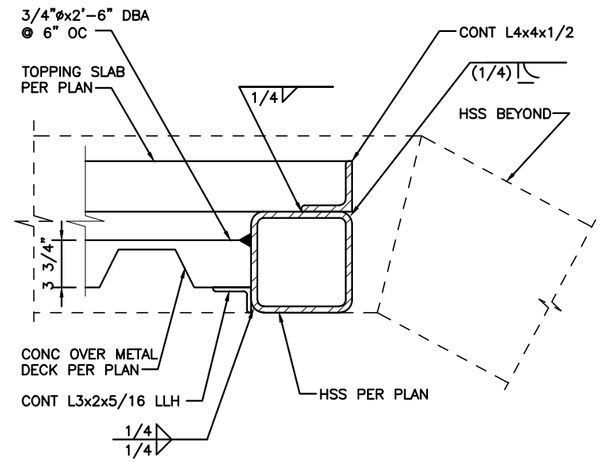

3 STAIR TOP LANDING CONN – STAIR 3

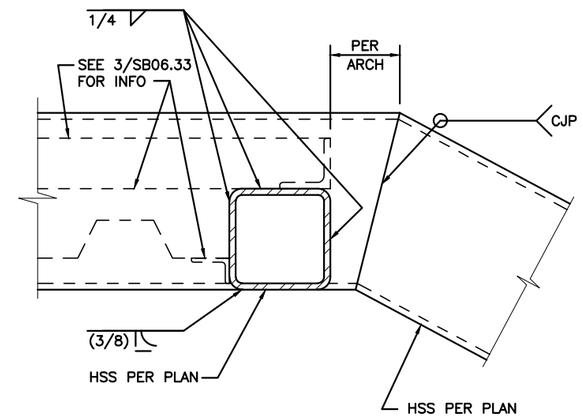

4 STAIR TOP LANDING CONN – STAIR 3

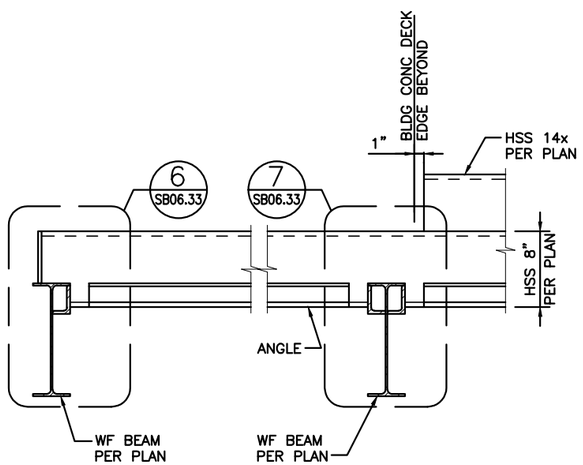

5 LANDING SUPPORT SECTION – STAIR 3

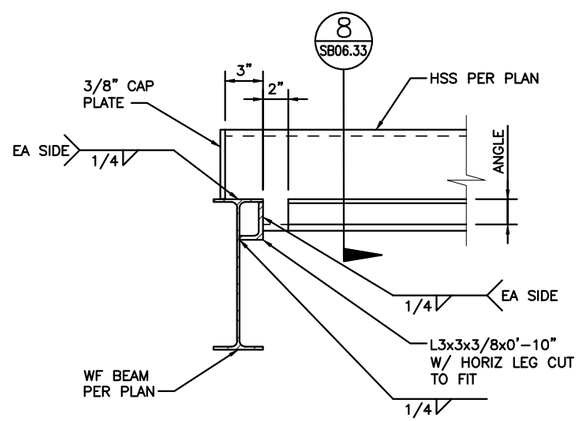

6 LANDING SUPPORT INTERIOR CONN – STAIR 3

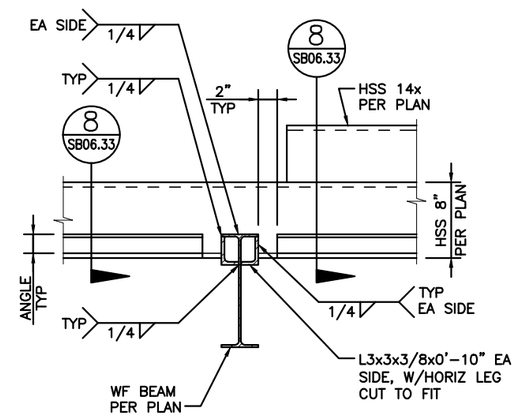

7 LANDING SUPPORT INTERIOR CONN – STAIR 3

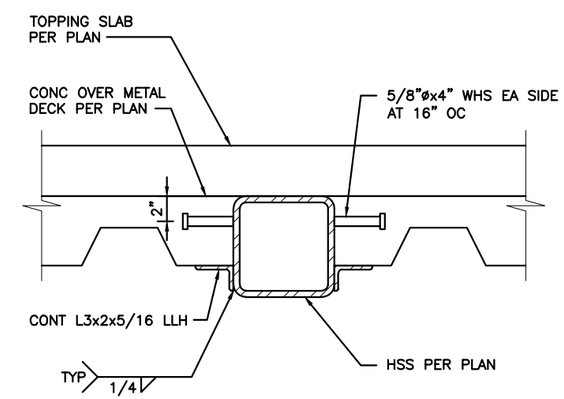

8 LANDING SUPPORT INTERIOR SECTION – STAIR 3

kpff

FILE NAME:	14W121SB06_33.dwg					
PRINTED: 2:42:17 PM 9/21/2018		LAST PRINTED BY:				FED.AID PROJ.NO.
SUBMITTAL DATE:	08/23/2018	3yronR				WA-2017-007-00
DESIGNED BY:	A. RADKE	08/23/2018				REGION NO. / STATE
ENTERED BY:	B. RONIA	08/23/2018				10 / WASH
CHECKED BY:	A. EWING	08/23/2018				JOB NUMBER 18W121
MAR PROJ ENGR	C. TORRES					
DIR TERM ENGR:	N. MCINTOSH					CONTRACT NO.
ASST SECRETARY:	A. SCARTON		REVISION	DATE	BY	00****

DATE

DANA LOVING ROBERTS, STATE OF WASHINGTON, 38538, PROFESSIONAL ENGINEER

08/23/2018
DATE

Washington State Department of Transportation
WASHINGTON STATE FERRIES

SR 525
MUKILTEO FERRY TERMINAL (PHASE 2)
FERRY TERMINAL CONSTRUCTION

STEEL DETAILS – TERMINAL BLDG

SB06.33

SHEET 1179 OF 1521 SHEETS

File: U:\114000-114350\114177 (Mukilteo Ferry Terminal)\04 Details\14W121SB06_33.dwg
Plotted: 9/21/18 at 2:42pm By: DianeL

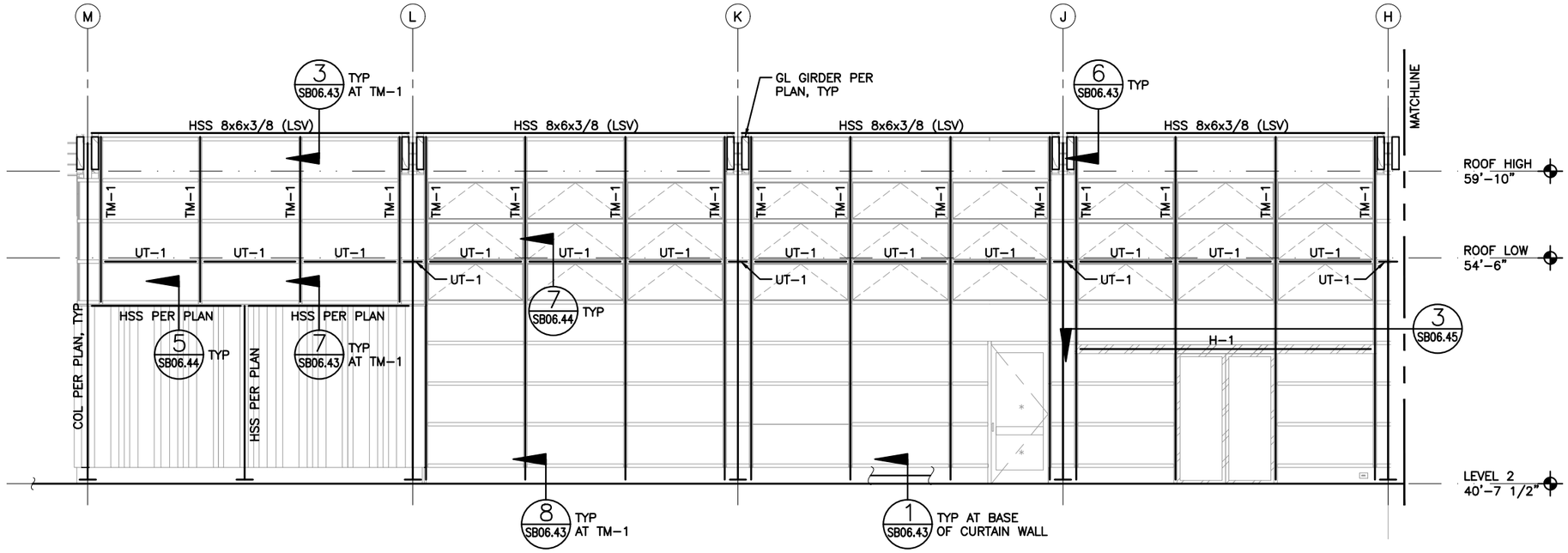

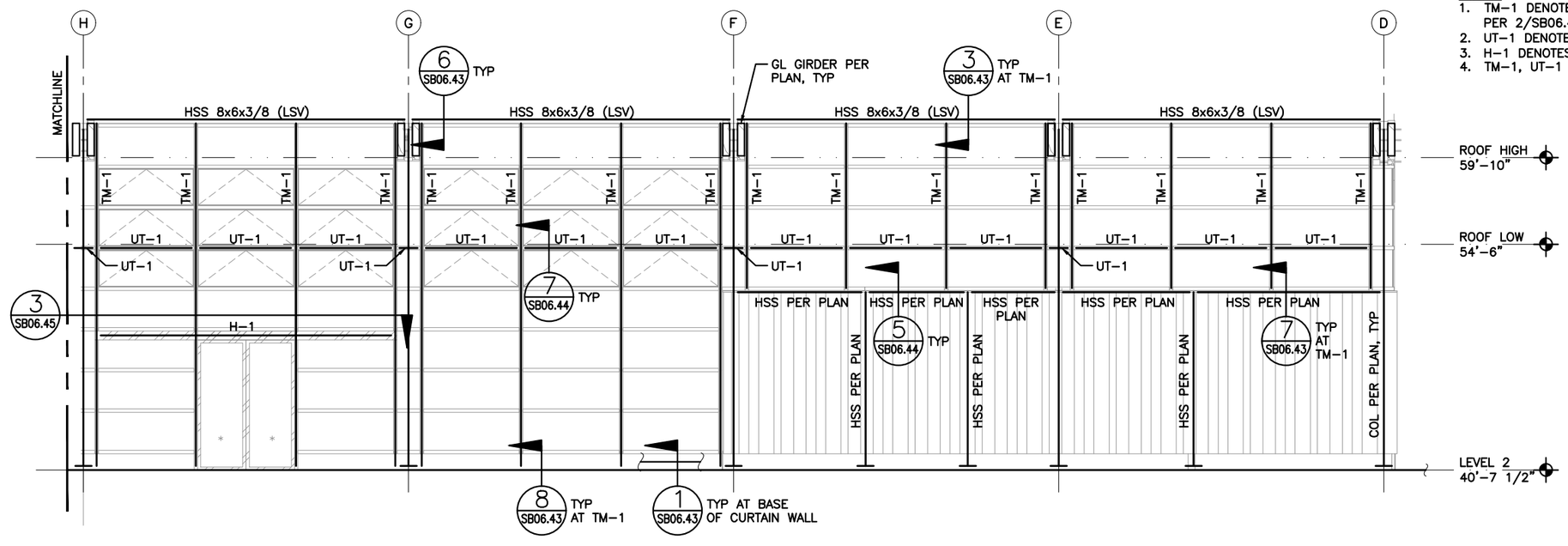

NOTES:
1. TM-1 DENOTES T-MULLION VERTICAL SUPPORT PER 2/SB06.43.
2. UT-1 DENOTES UTILITY TROUGH PER 3/SB06.44.
3. H-1 DENOTES BOX HEADER PER 3/SB06.45.
4. TM-1, UT-1 AND H-1 MEMBERS TO BE AESS.

1 CLADDING SUPPORT ELEVATION – NORTH

kpff

FILE NAME:	14W121SB06_40.dwg					FED.AID PROJ.NO.
PRINTED: 2:42:20 PM 9/21/2018		LAST PRINTED BY:				WA-2017-007-00
SUBMITTAL DATE:	08/23/2018	3yronR				REGION NO. / STATE
DESIGNED BY:	A. RADKE	08/23/2018				10 / WASH
ENTERED BY:	B. RONIA	08/23/2018				JOB NUMBER
CHECKED BY:	A. EWING	08/23/2018				18W121
MAR PROJ ENGR	C. TORRES					CONTRACT NO.
DIR TERM ENGR:	N. MCINTOSH					00****
ASST SECRETARY:	A. SCARTON		REVISION	DATE	BY	

DATE

STATE OF WASHINGTON — SARA LOVING HOBBS — 38538 — PROFESSIONAL ENGINEER

08/23/2018
DATE

Washington State Department of Transportation
WASHINGTON STATE FERRIES

SR 525
MUKILTEO FERRY TERMINAL (PHASE 2)
FERRY TERMINAL CONSTRUCTION

STEEL DETAILS – CLADDING SUPPORT

SB06.40

SHEET 1180 OF 1521 SHEETS

File: U:\114000-114350\114177 (Mukilteo Ferry Terminal)\04 Details\14W121SB06_40.dwg
Plotted: 9/21/18 at 2:42pm By: DianeL

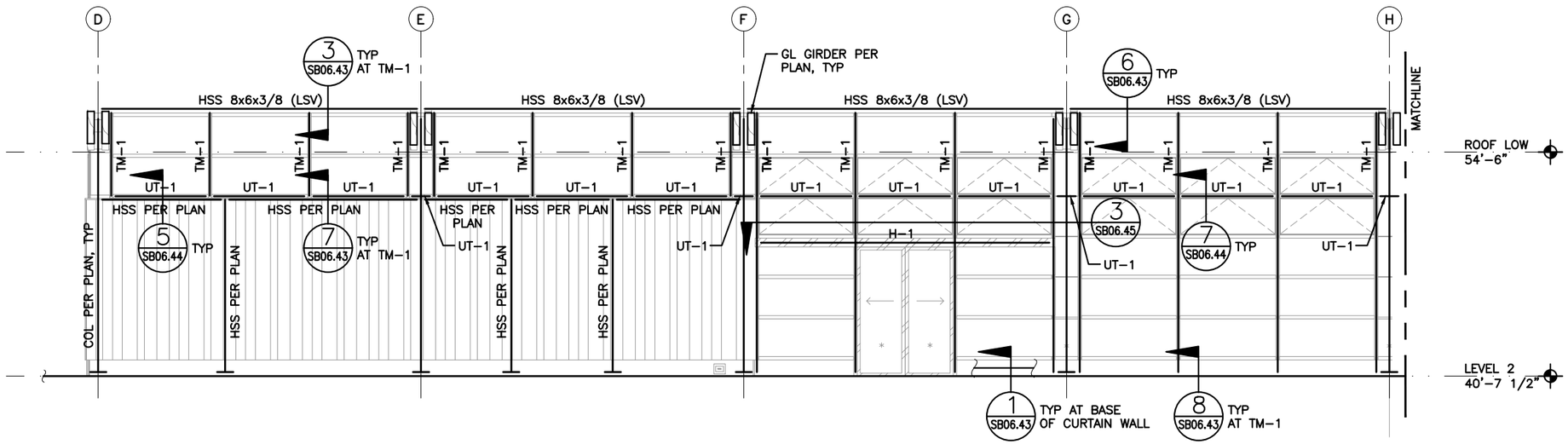

NOTES:
1. TM-1 DENOTES T-MULLION VERTICAL SUPPORT PER 2/SB06.43.
2. UT-1 DENOTES UTILITY TROUGH PER 3/SB06.44.
3. H-1 DENOTES BOX HEADER PER 3/SB06.45.
4. TM-1, UT-1 AND H-1 MEMBERS TO BE AESS.

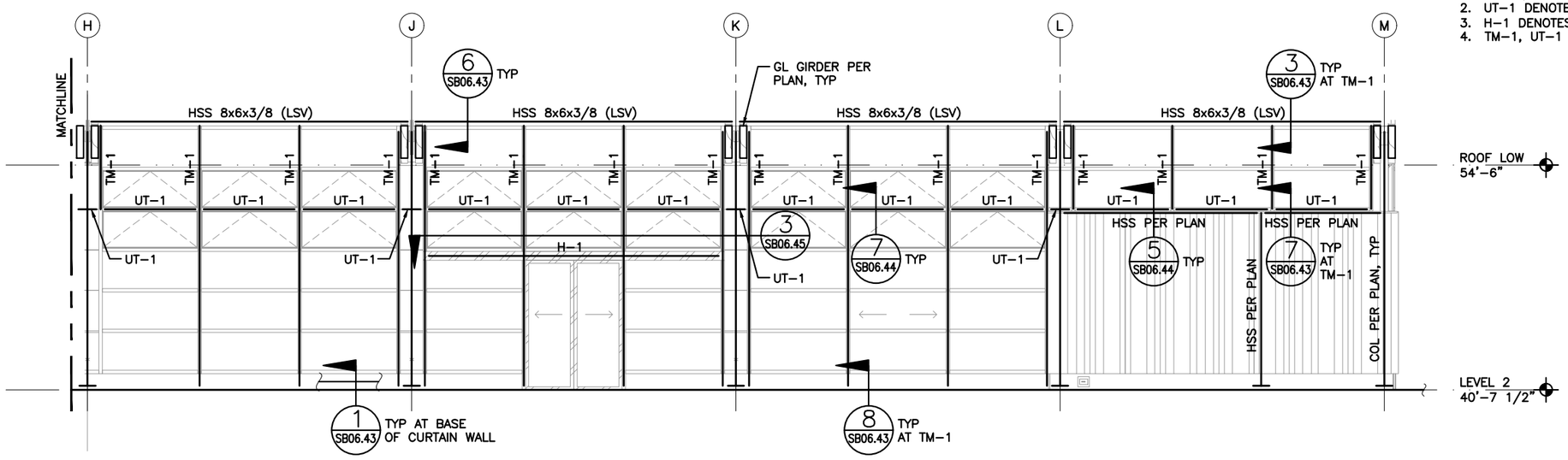

1 CLADDING SUPPORT ELEVATION – SOUTH

kpff

FILE NAME:	14W121SB06_41.dwg					
PRINTED: 2:42:23 PM 9/21/2018		LAST PRINTED BY:				FED.AID PROJ.NO.
SUBMITTAL DATE:	08/23/2018	ByronR				WA-2017-007-00
DESIGNED BY:	A. RADKE	08/23/2018				REGION NO. / STATE
ENTERED BY:	B. RONIA	08/23/2018				10 / WASH
CHECKED BY:	A. EWING	08/23/2018				JOB NUMBER 18W121
MAR PROJ ENGR	C. TORRES					
DIR TERM ENGR:	N. MCINTOSH					CONTRACT NO.
ASST SECRETARY:	A. SCARTON		REVISION	DATE	BY	00****

DATE

STATE OF WASHINGTON — AN LOVING AMERICA'S — 38538 — PROFESSIONAL ENGINEER — Sarah Scarton

08/23/2018
DATE

Washington State Department of Transportation
WASHINGTON STATE FERRIES

SR 525
MUKILTEO FERRY TERMINAL (PHASE 2)
FERRY TERMINAL CONSTRUCTION

STEEL DETAILS – CLADDING SUPPORT

SB06.41

SHEET 1181 OF 1521 SHEETS

File: U:\114000-114350\114177 (Mukilteo Ferry Terminal)\04 Details\14W121SB06_41.dwg
Plotted: 9/21/18 at 2:42pm By: DianeL

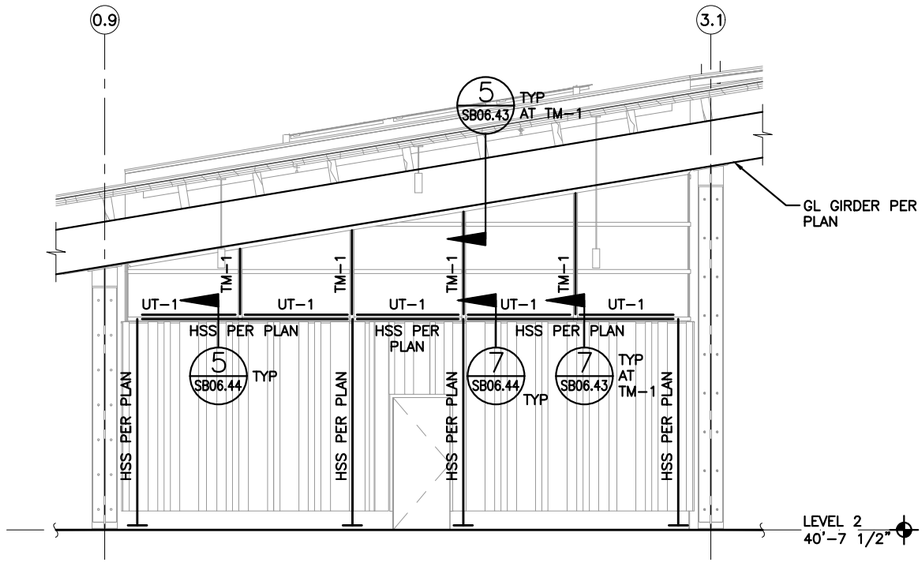

NOTES:
1. TM-1 DENOTES T-MULLION VERTICAL SUPPORT PER 2/SB06.43.
2. UT-1 DENOTES UTILITY TROUGH PER 3/SB06.44.
3. TM-1 AND UT-1 MEMBERS TO BE AESS.

1 CLADDING SUPPORT ELEVATION – EAST

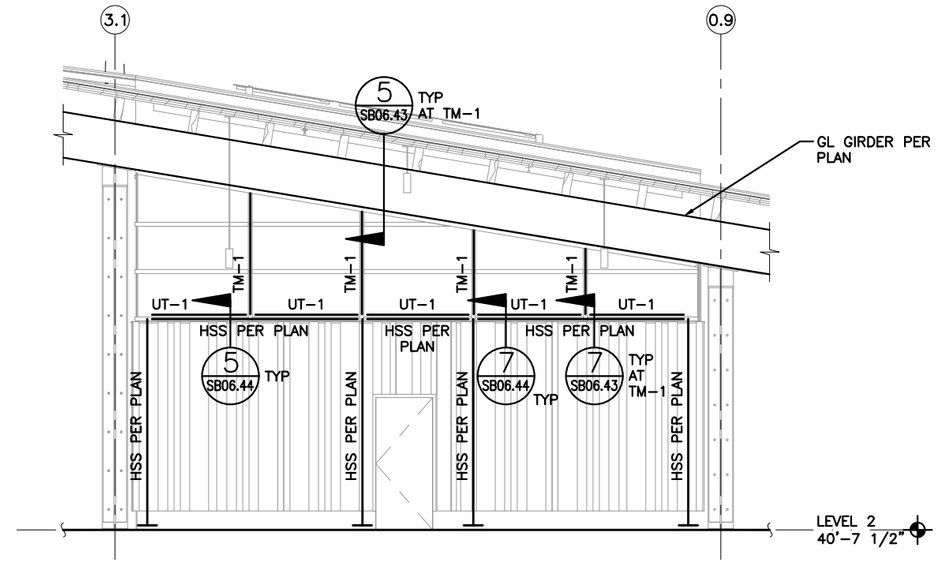

NOTES:
1. TM-1 DENOTES T-MULLION VERTICAL SUPPORT PER 2/SB06.43.
2. UT-1 DENOTES UTILITY TROUGH PER 3/SB06.44.
3. TM-1 AND UT-1 MEMBERS TO BE AESS.

2 CLADDING SUPPORT ELEVATION – WEST

kpff

FILE NAME:	14W121SB06_42.dwg					
PRINTED: 2:42:25 PM 9/21/2018		LAST PRINTED BY:				FED.AID PROJ.NO.
SUBMITTAL DATE:	08/23/2018	3yronR				WA-2017-007-00
DESIGNED BY:	A. RADKE	08/23/2018				REGION NO. 10 / STATE WASH
ENTERED BY:	B. RONIA	08/23/2018				
CHECKED BY:	A. EWING	08/23/2018				JOB NUMBER 18W121
MAR PROJ ENGR	C. TORRES					
DIR TERM ENGR:	N. MCINTOSH					CONTRACT NO. 00****
ASST SECRETARY:	A. SCARTON		REVISION	DATE	BY	

DATE

08/23/2018
DATE

Washington State Department of Transportation
WASHINGTON STATE FERRIES

SR 525
MUKILTEO FERRY TERMINAL (PHASE 2)
FERRY TERMINAL CONSTRUCTION

STEEL DETAILS – CLADDING SUPPORT

SB06.42

SHEET 1182 OF 1521 SHEETS

File: U:\114000-114350\114177 (Mukilteo Ferry Terminal)\04 Details\14W121SB06_42.dwg
Plotted: 9/21/18 at 2:42pm By: DianeL

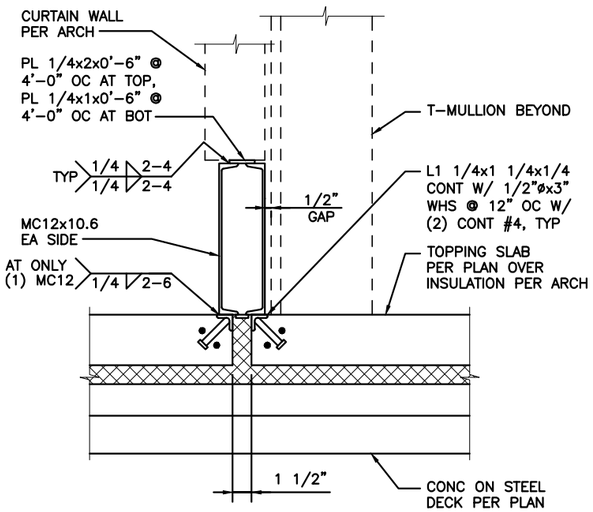

1 SECTION AT BASE OF CURTAIN WALL

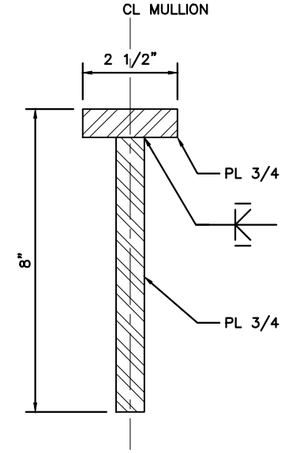

NOTES:
1. SEE 4/SB06.44 FOR PENETRATION IN T-MULLION AT UTILITY TROUGH.

2 T-MULLION DETAIL

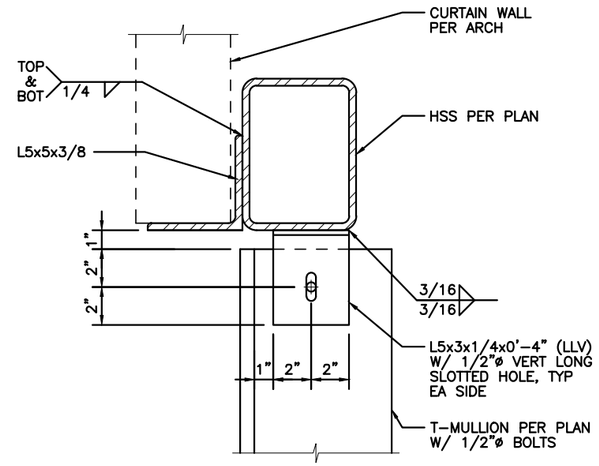

3 T-MULLION AT HSS GIRT

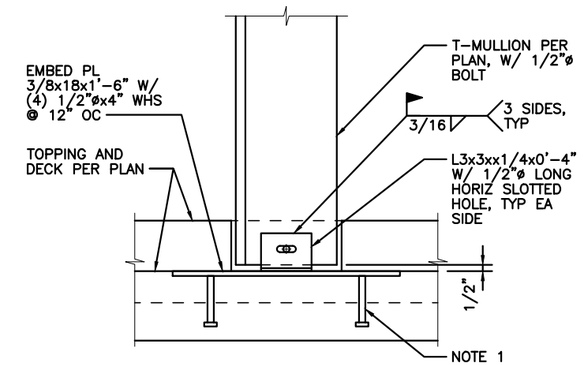

SECTION

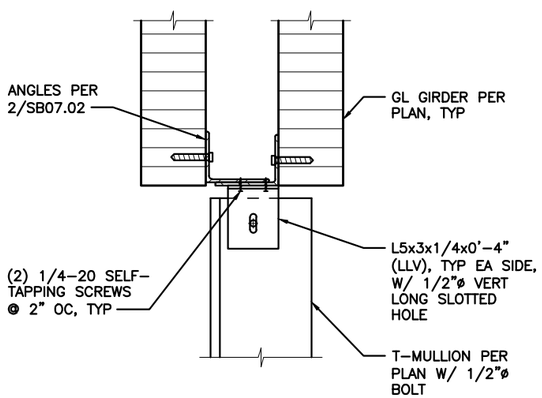

5 T-MULLION CONN TO GL GIRGER

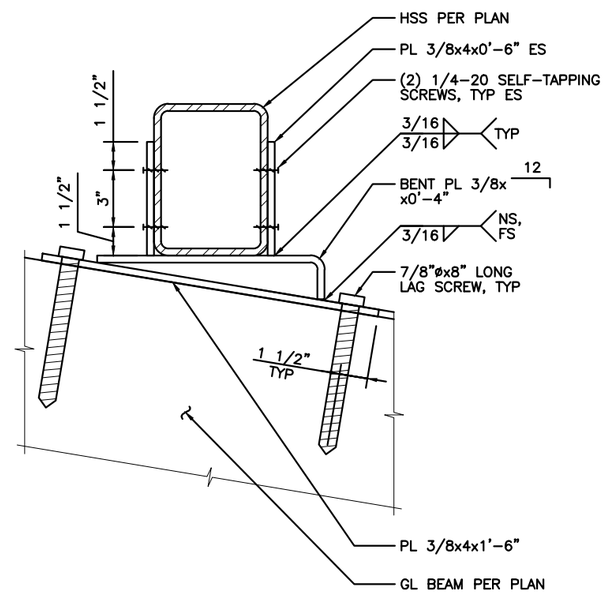

6 HSS GIRT CONNECTION

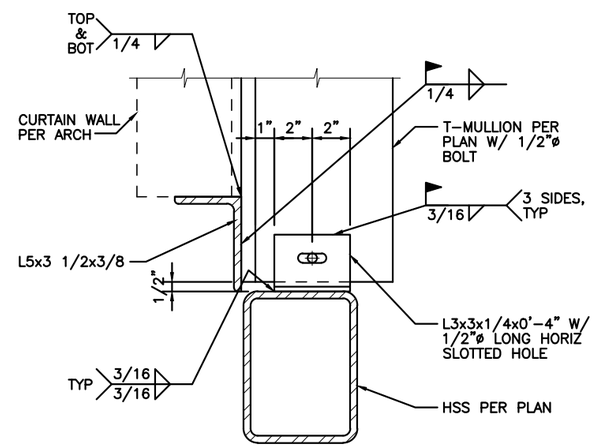

7 T-MULLION AT HSS GIRT

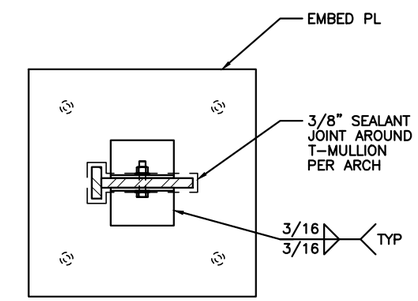

PLAN

NOTES:
1. EMBED TO BE LOCATED WITH STUDS PLACED IN DOWN FLUTES OF DECK.
2. BLOCK OUT TO BE FILLED WITH CONCRETE TO MATCH TOPPING AFTER INSTALLATION OF T-MULLION.

8 T-MULLION BASE DETAIL

kpff

FILE NAME:	14W121SB06_43.dwg					FED.AID PROJ.NO.
PRINTED:	2:42:28 PM 9/21/2018	LAST PRINTED BY:				
SUBMITTAL DATE:	08/23/2018	3yronR				
DESIGNED BY:	A. RADKE	08/23/2018				WA-2017-007-00
ENTERED BY:	B. RONIA	08/23/2018				REGION NO. / STATE
CHECKED BY:	A. EWING	08/23/2018				10 / WASH
MAR PROJ ENGR	C. TORRES					JOB NUMBER 18W121
DIR TERM ENGR:	N. MCINTOSH					
ASST SECRETARY:	A. SCARTON		REVISION	DATE	BY	CONTRACT NO. 00****

DATE

08/23/2018
DATE

Washington State Department of Transportation
WASHINGTON STATE FERRIES

SR 525
MUKILTEO FERRY TERMINAL (PHASE 2)
FERRY TERMINAL CONSTRUCTION

STEEL DETAILS – CLADDING SUPPORT

SB06.43

SHEET 1183 OF 1521 SHEETS

File: U:\114000-114350\114177 (Mukilteo Ferry Terminal)\04 Details\14W121SB06_43.dwg
Plotted: 9/21/18 at 2:42pm By: DianeL

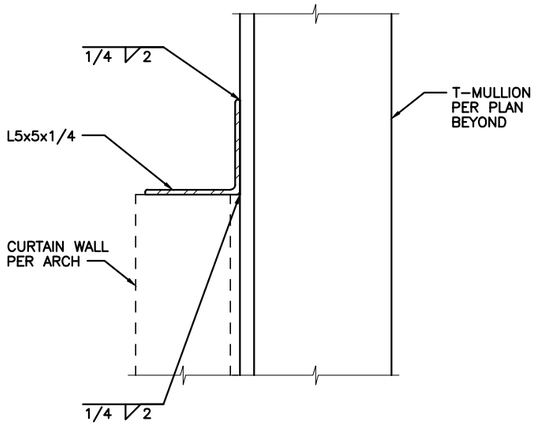

1 HEAD DETAIL AT CURTAIN WALL

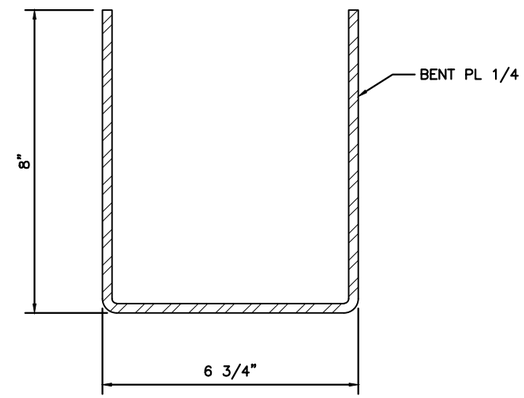

3 UTILITY TROUGH DETAIL

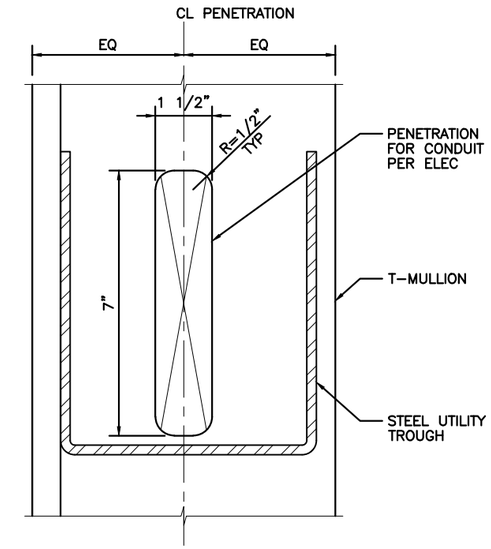

4 T-MULLION PENETRATION DETAIL

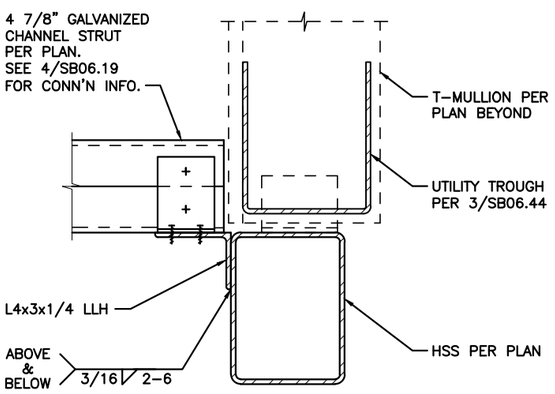

5 STRUT CONNECTION AT EXTERIOR WALL

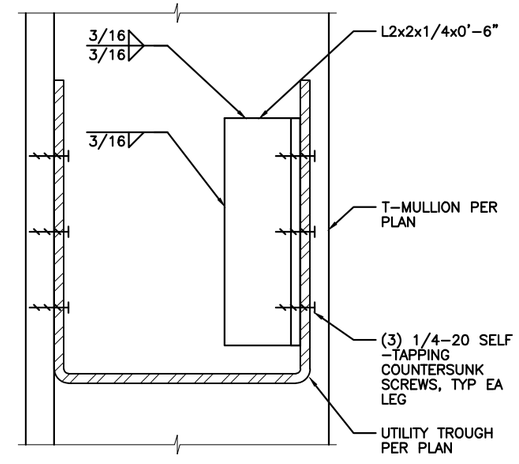

SECTION

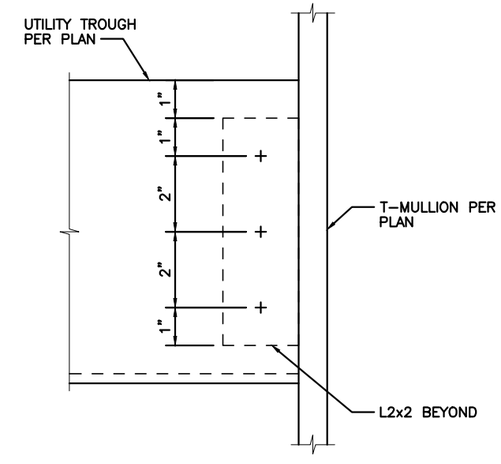

ELEVATION

7 UTILITY TROUGH CONNECTION

kpff

FILE NAME:	14W121SB06_44.dwg					
PRINTED: 2:42:31 PM 9/21/2018		LAST PRINTED BY:				FED.AID PROJ.NO.
SUBMITTAL DATE:	08/23/2018	3yronR				WA-2017-007-00
DESIGNED BY:	A. RADKE	08/23/2018				REGION NO. / STATE
ENTERED BY:	B. RONIA	08/23/2018				10 / WASH
CHECKED BY:	A. EWING	08/23/2018				JOB NUMBER 18W121
MAR PROJ ENGR	C. TORRES					
DIR TERM ENGR:	N. MCINTOSH					CONTRACT NO. 00****
ASST SECRETARY:	A. SCARTON		REVISION	DATE	BY	

DATE

DANIEL LOVING RODRIGUES — STATE OF WASHINGTON — 38538 — PROFESSIONAL ENGINEER

08/23/2018
DATE

Washington State Department of Transportation
WASHINGTON STATE FERRIES

SR 525
MUKILTEO FERRY TERMINAL (PHASE 2)
FERRY TERMINAL CONSTRUCTION

STEEL DETAILS – CLADDING SUPPORT

SB06.44

SHEET 1184 OF 1521 SHEETS

File: U:\114000-114350\114177 (Mukilteo Ferry Terminal)\04 Details\14W121SB06_44.dwg
Plotted: 9/21/18 at 2:42pm By: DianeL

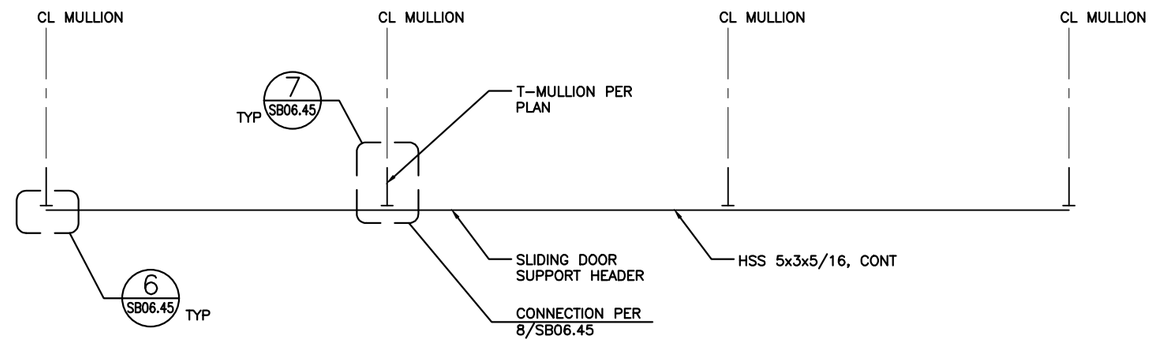

3 SLIDING DOOR HEADER PARTIAL PLAN

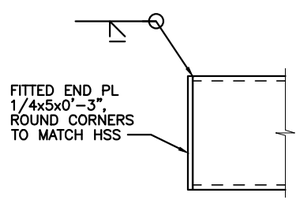

ELEVATION

6 SLIDING DOOR SUPPORT END RAIL

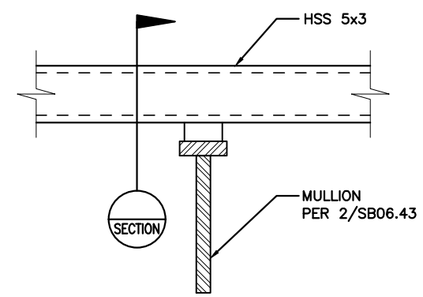

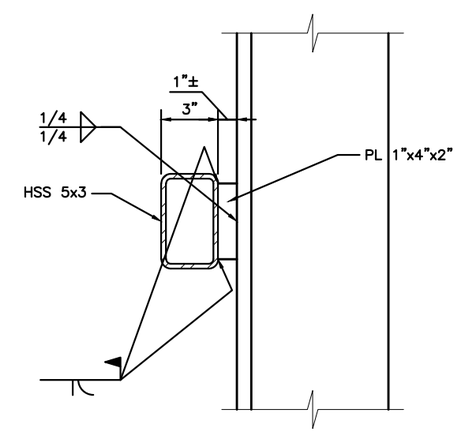

SECTION

7 DETAIL

kpff

FILE NAME:	14W121SB06_45.dwg					
PRINTED: 2:42:34 PM 9/21/2018		LAST PRINTED BY:				FED.AID PROJ.NO.
SUBMITTAL DATE:	08/23/2018	3yronR				WA-2017-007-00
DESIGNED BY:	A. RADKE	08/23/2018				REGION NO. / STATE
ENTERED BY:	B. RONIA	08/23/2018				10 / WASH
CHECKED BY:	A. EWING	08/23/2018				JOB NUMBER
MAR PROJ ENGR	C. TORRES					18W121
DIR TERM ENGR:	N. MCINTOSH					CONTRACT NO.
ASST SECRETARY:	A. SCARTON		REVISION	DATE	BY	00****

DATE

WA LOVING ROBERTS STATE OF WASHINGTON 38538 PROFESSIONAL ENGINEER AGRICULTURAL ENGINEER

08/23/2018
DATE

Washington State Department of Transportation
WASHINGTON STATE FERRIES

SR 525
MUKILTEO FERRY TERMINAL (PHASE 2)
FERRY TERMINAL CONSTRUCTION

STEEL DETAILS – CLADDING SUPPORT

SB06.45

SHEET 1185 OF 1521 SHEETS

File: U:\114000-114350\114177 (Mukilteo Ferry Terminal)\04 Details\14W121SB06_45.dwg
Plotted: 9/21/18 at 2:42pm By: DianaL

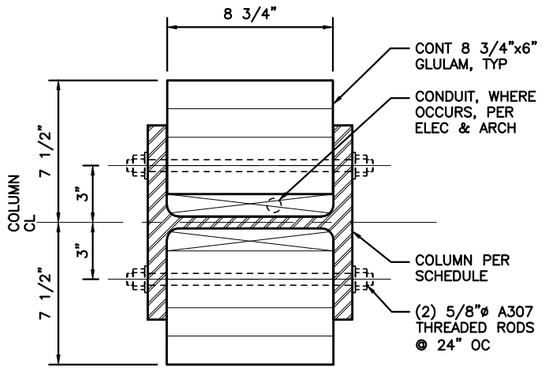

1 TYPICAL COLUMN SECTION

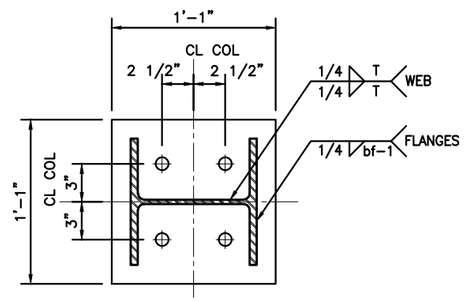

PLAN

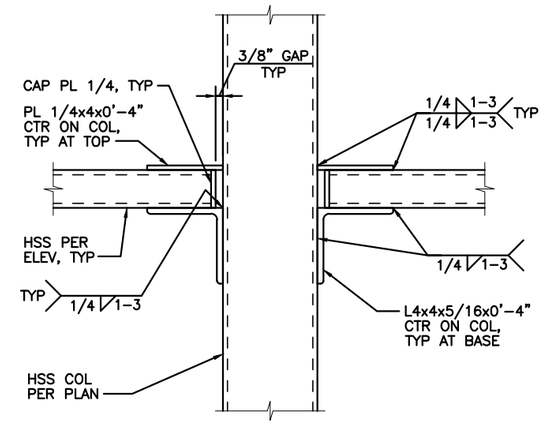

4 HSS GIRT CONNECTION TO HSS COLUMN

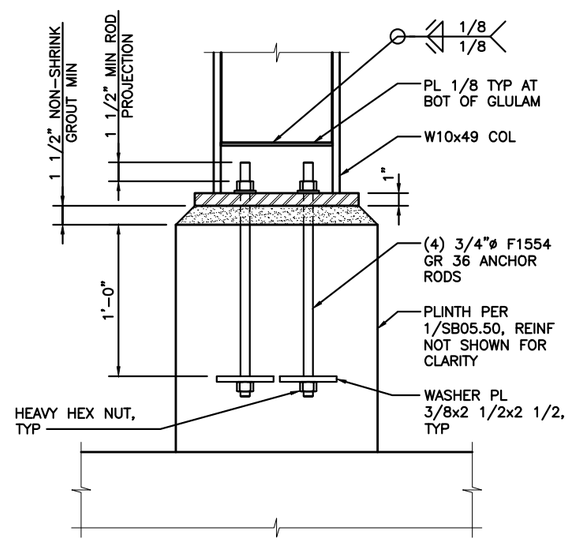

6 COLUMN BASE PLATE

kpff

FILE NAME:	14W121SB06_50.dwg					
PRINTED: 2:42:36 PM 9/21/2018		LAST PRINTED BY:				FED.AID PROJ.NO.
SUBMITTAL DATE:	08/23/2018	ZyronR				WA-2017-007-00
DESIGNED BY:	A. RADKE	08/23/2018				REGION NO. / STATE
ENTERED BY:	B. RONIA	08/23/2018				10 / WASH
CHECKED BY:	A. EWING	08/23/2018				JOB NUMBER 18W121
MAR PROJ ENGR	C. TORRES					
DIR TERM ENGR:	N. MCINTOSH					CONTRACT NO.
ASST SECRETARY:	A. SCARTON		REVISION	DATE	BY	00****

DATE

08/23/2018
DATE

Washington State Department of Transportation
WASHINGTON STATE FERRIES

SR 525
MUKILTEO FERRY TERMINAL (PHASE 2)
FERRY TERMINAL CONSTRUCTION

STEEL DETAILS – TOLL PLAZA

SB06.50

SHEET 1186 OF 1521 SHEETS

File: U:\114000-114350\114177 (Mukilteo Ferry Terminal)\04 Details\14W121SB06_50.dwg
Plotted: 9/21/18 at 2:42pm By: DianeL

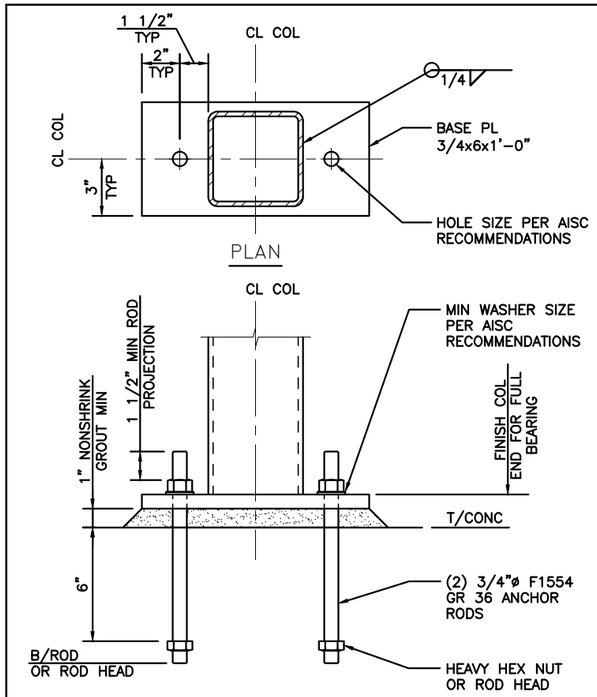

1 BP1 – HSS BASE PL

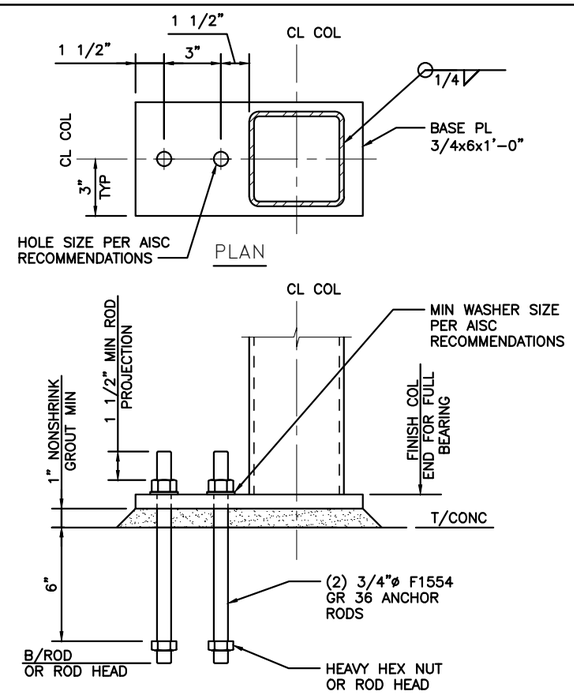

2 BP2 – HSS BASE PL

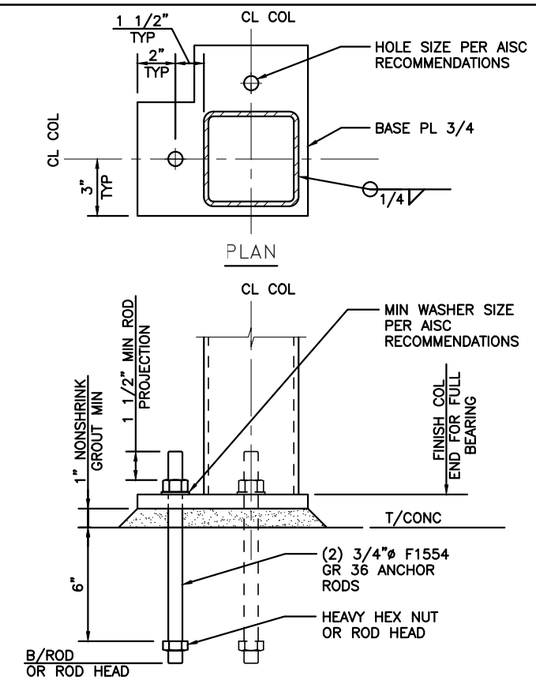

3 BP3 – HSS BASE PL

kpff

FILE NAME:	14W121SB06_51.dwg					
PRINTED: 2:42:39 PM 9/21/2018		LAST PRINTED BY:				FED.AID PROJ.NO.
SUBMITTAL DATE:	08/23/2018	3yronR				WA-2017-007-00
DESIGNED BY:	A. RADKE	08/23/2018				REGION NO. / STATE
ENTERED BY:	B. RONIA	08/23/2018				10 / WASH
CHECKED BY:	A. EWING	08/23/2018				JOB NUMBER 18W121
MAR PROJ ENGR	C. TORRES					
DIR TERM ENGR:	N. MCINTOSH					CONTRACT NO. 00****
ASST SECRETARY:	A. SCARTON		REVISION	DATE	BY	

DATE

DANA LOVING ROBERTS STATE OF WASHINGTON 38538 PROFESSIONAL ENGINEER

08/23/2018
DATE

Washington State Department of Transportation
WASHINGTON STATE FERRIES

SR 525
MUKILTEO FERRY TERMINAL (PHASE 2)
FERRY TERMINAL CONSTRUCTION

STEEL COLUMN BASE PLATE DETAILS – TOLL PLAZA

SB06.51

SHEET 1187 OF 1521 SHEETS

File: U:\114000-114350\114177 (Mukilteo Ferry Terminal)\04 Details\14W121SB06_51.dwg
Plotted: 9/21/18 at 2:42pm By: DianaL

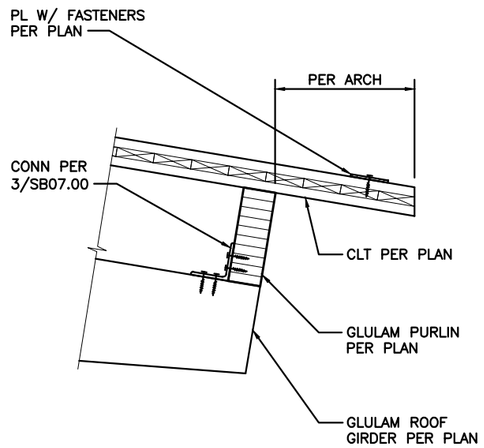

1 TERMINAL BLDG – SOUTH ROOF EDGE

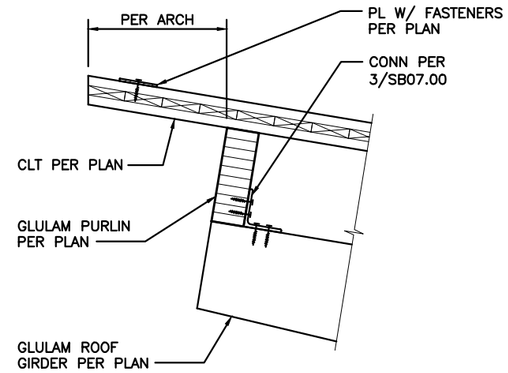

2 TERMINAL BLDG – NORTH ROOF EDGE

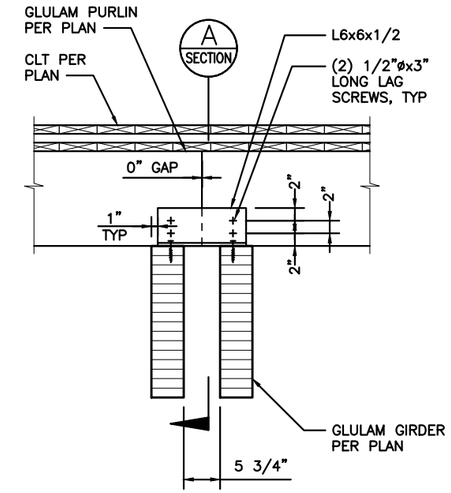

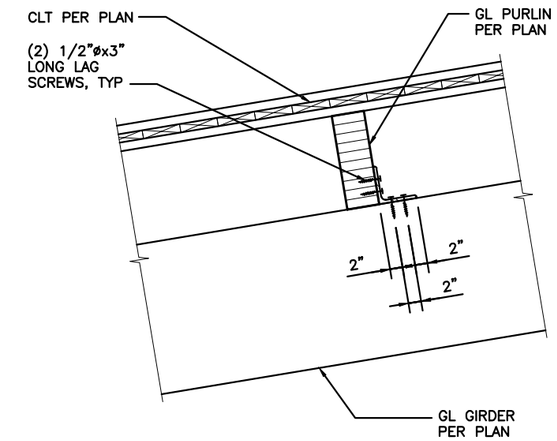

SECTION A

3 GLULAM PURLIN TO GIRDER CONNECTION

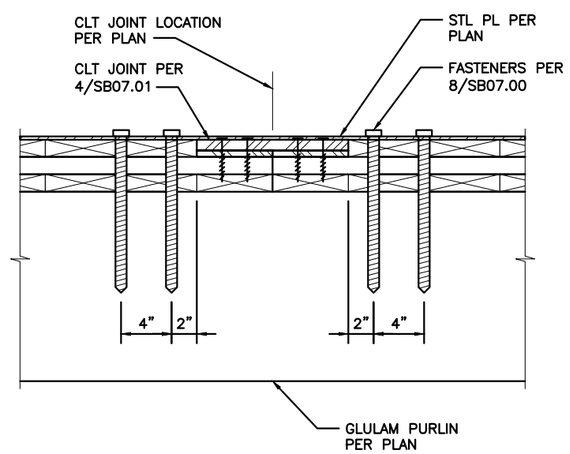

6 CLT SPLICE PLATE

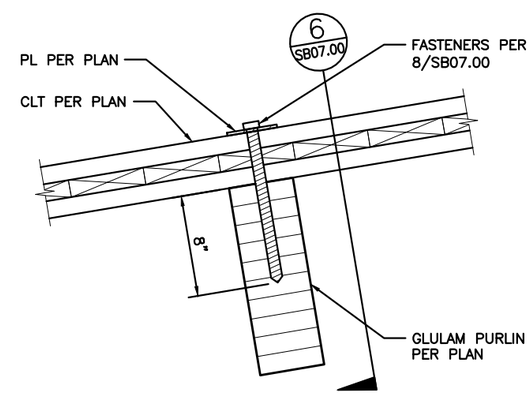

7 CLT SPLICE PLATE

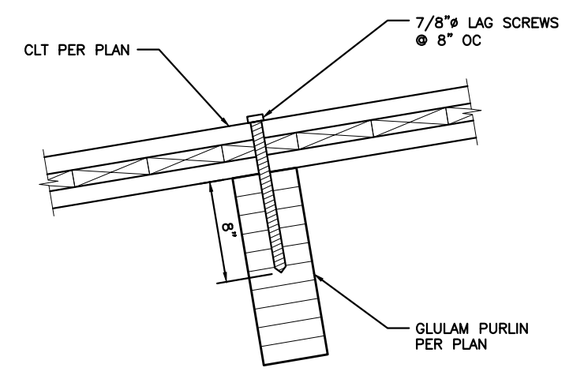

8 CLT – PURLIN CONNECTION

kpff

FILE NAME:	14W121SB07_00.dwg					
PRINTED: 2:42:41 PM 9/21/2018		LAST PRINTED BY:				FED.AID
SUBMITTAL DATE:	08/23/2018	3yronR				PROJ.NO.
DESIGNED BY:	A. RADKE	08/23/2018				WA-2017-007-00
ENTERED BY:	B. RONIA	08/23/2018				REGION NO. / STATE
CHECKED BY:	A. EWING	08/23/2018				10 / WASH
MAR PROJ ENGR	C. TORRES					JOB NUMBER
DIR TERM ENGR:	N. MCINTOSH					18W121
ASST SECRETARY:	A. SCARTON		REVISION	DATE	BY	CONTRACT NO. 00****

DATE

DANA LOVING ROBERTS — STATE OF WASHINGTON — 38538 — AGRICULTURAL ENGINEER — PROFESSIONAL ENGINEER

08/23/2018
DATE

Washington State Department of Transportation
WASHINGTON STATE FERRIES

SR 525
MUKILTEO FERRY TERMINAL (PHASE 2)
FERRY TERMINAL CONSTRUCTION

TYPICAL WOOD DETAILS

SB07.00

SHEET 1188 OF 1521 SHEETS

File: U:\114000-114350\114177 (Mukilteo Ferry Terminal)\04 Details\14W121SB07_00.dwg
Plotted: 9/21/18 at 2:42pm By: DianaL

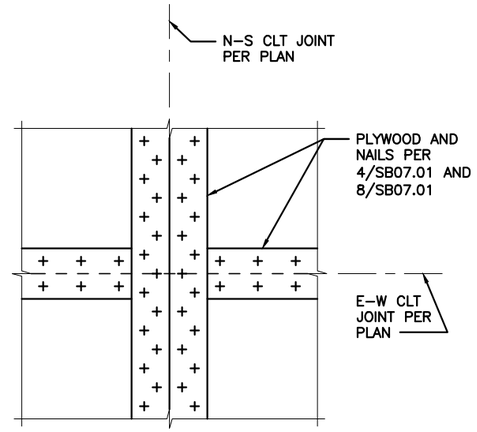

2 CLT CORNER JOINT

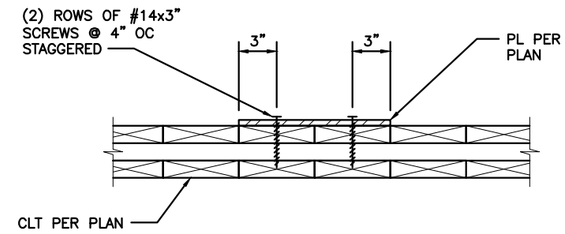

3 N-S DRAG PLATE

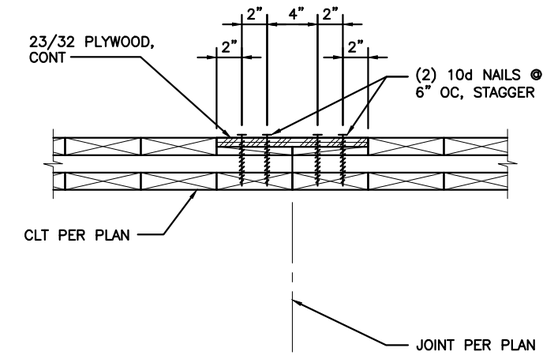

4 N-S 3-PLY CLT JOINT

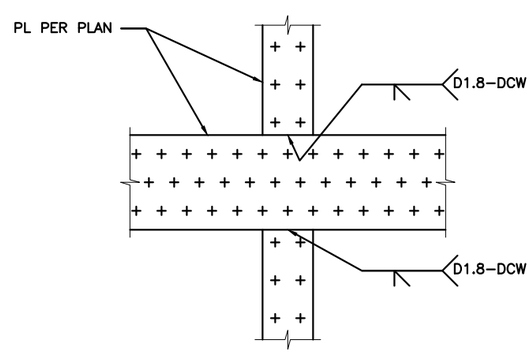

6 DRAG PLATE INTERSECTION

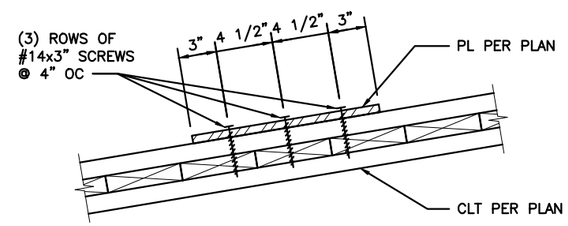

7 E-W DRAG PLATE

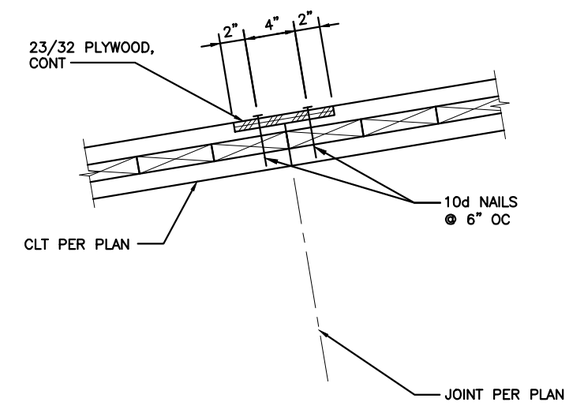

8 E-W 3-PLY CLT JOINT

kpff

FILE NAME:	14W121SB07_01.dwg					
PRINTED: 2:42:44 PM 9/21/2018		LAST PRINTED BY:				FED.AID PROJ.NO.
SUBMITTAL DATE:	08/23/2018	3yronR				WA-2017-007-00
DESIGNED BY:	A. RADKE	08/23/2018				REGION NO. / STATE
ENTERED BY:	B. RONIA	08/23/2018				10 / WASH
CHECKED BY:	A. EWING	08/23/2018				JOB NUMBER
MAR PROJ ENGR	C. TORRES					18W121
DIR TERM ENGR:	N. MCINTOSH					CONTRACT NO.
ASST SECRETARY:	A. SCARTON		REVISION	DATE	BY	00****

DATE

DANA LOVING ROBERTS
STATE OF WASHINGTON
38538
PROFESSIONAL ENGINEER
AGRICULTURAL ENGINEERING

08/23/2018
DATE

Washington State Department of Transportation
WASHINGTON STATE FERRIES

SR 525
MUKILTEO FERRY TERMINAL (PHASE 2)
FERRY TERMINAL CONSTRUCTION

WOOD DETAILS

SB07.01

SHEET 1189 OF 1521 SHEETS

File: U:\114000-114350\114177 (Mukilteo Ferry Terminal)\04 Details\14W121SB07_01.dwg
Plotted: 9/21/18 at 2:42pm By: DianaL

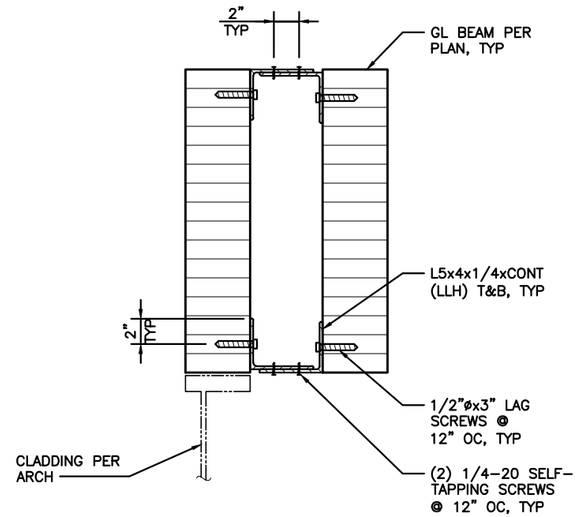

2 ROOF – CLADDING SUPPORT

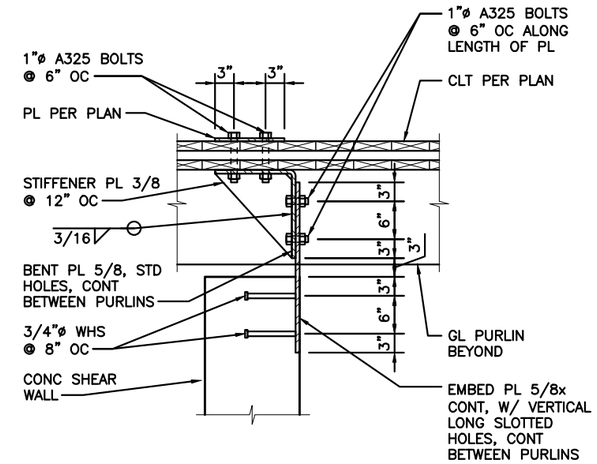

3 ROOF – SHEAR WALL CONN

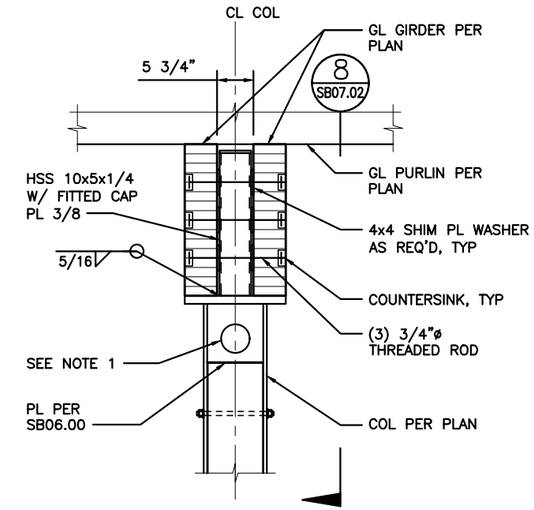

NOTES:
1. SEE 1/SB06.17 FOR DETAILING OF PENETRATIONS AT RAIN LEADERS.

4 COL TO GLULAM CONNECTION

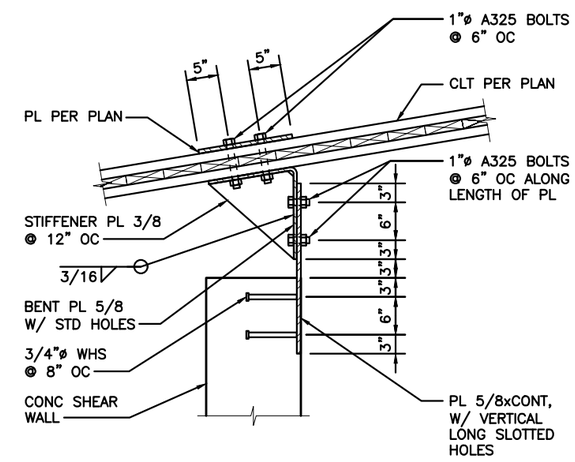

7 ROOF – SHEAR WALL CONN

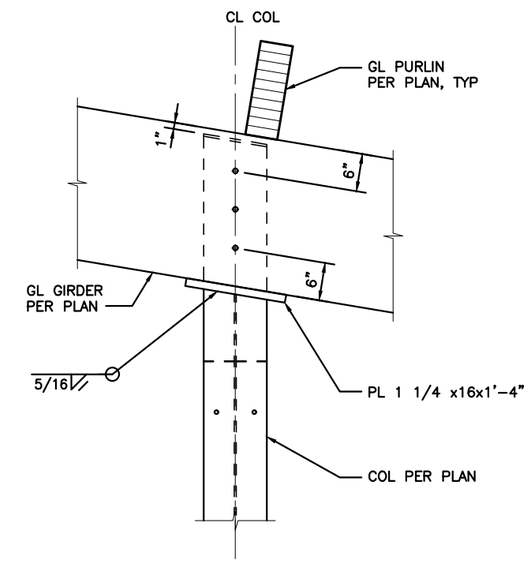

8 COL TO GLULAM CONN

kpff

FILE NAME:	14W121SB07_02.dwg					
PRINTED: 2:42:47 PM 9/21/2018		LAST PRINTED BY:				FED.AID PROJ.NO.
SUBMITTAL DATE:	08/23/2018	3yronR				WA-2017-007-00
DESIGNED BY:	A. RADKE	08/23/2018				REGION NO. 10 / STATE WASH
ENTERED BY:	B. RONIA	08/23/2018				
CHECKED BY:	A. EWING	08/23/2018				JOB NUMBER 18W121
MAR PROJ ENGR	C. TORRES					
DIR TERM ENGR:	N. MCINTOSH					CONTRACT NO. 00****
ASST SECRETARY:	A. SCARTON		REVISION	DATE	BY	

DATE

DANA LOVING ROBERTS, STATE OF WASHINGTON, 38538, PROFESSIONAL ENGINEER

08/23/2018
DATE

Washington State Department of Transportation
WASHINGTON STATE FERRIES

SR 525
MUKILTEO FERRY TERMINAL (PHASE 2)
FERRY TERMINAL CONSTRUCTION

WOOD DETAILS

SB07.02

SHEET 1190 OF 1521 SHEETS

File: U:\114000-114350\114177 (Mukilteo Ferry Terminal)\04 Details\14W121SB07_02.dwg
Plotted: 9/21/18 at 2:42pm By: DianeL

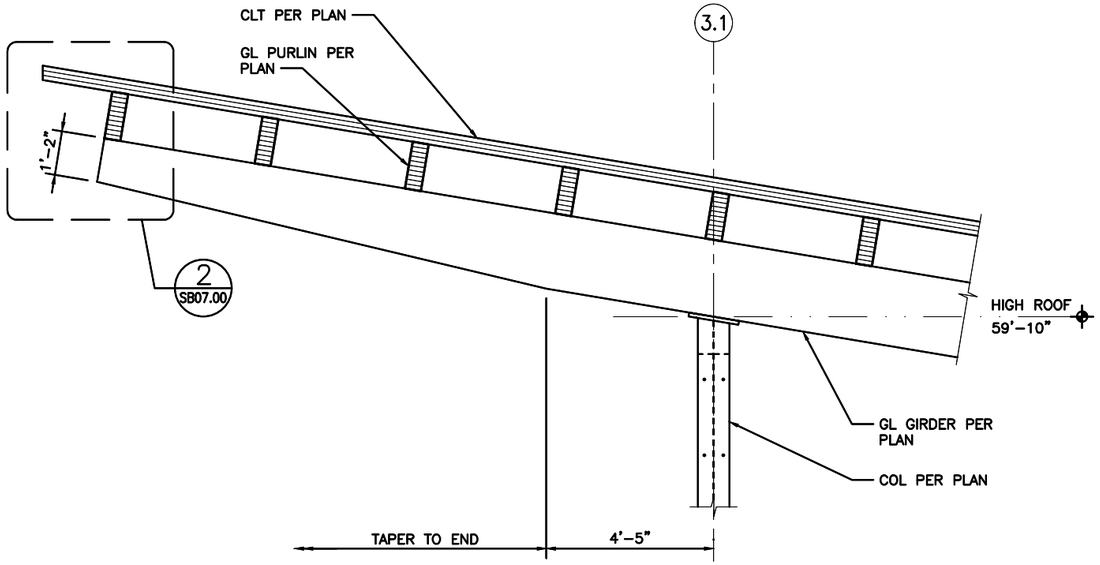

1 GL GIRDER END DETAIL

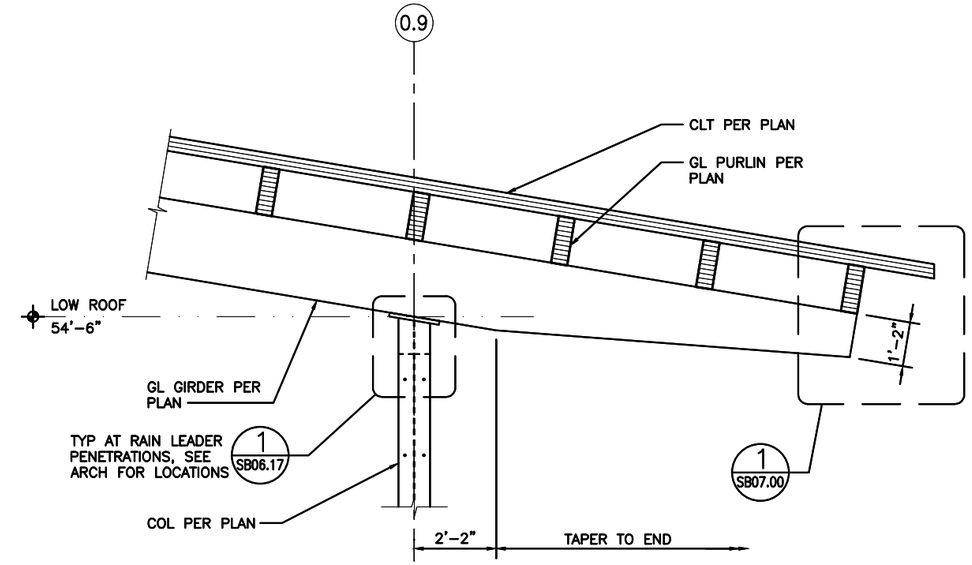

3 GL GIRDER END DETAIL

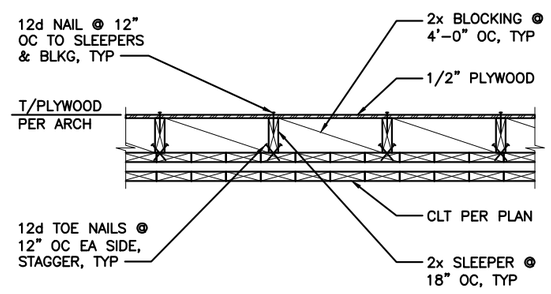

NOTES:
1. REFER TO ARCHITECTURAL FOR LOCATION AND EXTENT OF SLEEPER SYSTEM.

6 TYPICAL SLEEPER FRAMING

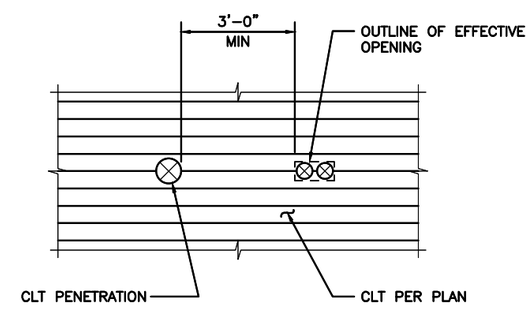

NOTES:
1. COORDINATE PENETRATIONS WITH ARCHITECTURAL, MECHANICAL, ELECTRICAL, AND PLUMBING.
2. PENETRATIONS SHALL NOT DISRUPT MORE THAN (2) PLIES OF CLT IN EITHER DIRECTION.
3. PENETRATIONS SHALL BE LOCATED 1'-6" CLEAR FROM SPLICES AND SUPPORT PURLINS.

7 CLT PENETRATION DETAIL

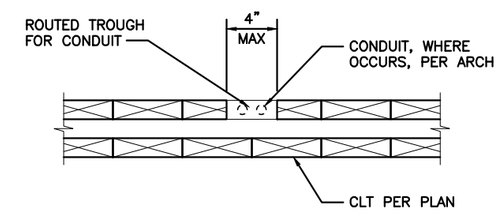

NOTES:
1. REFER TO ARCHITECTURAL AND ELECTRICAL FOR TROUGH LOCATIONS AND EXTENTS.
2. TROUGH SHALL ALWAYS BE CUT PARALLEL TO TO TOP PLY OF CLT.
3. TROUGH SHALL NOT BE DEEPER THAN TOP PLY OF CLT.
4. TROUGH SHALL NOT BE WITHIN 8" OF END OF CLT.

8 CLT CONDUIT TROUGH DETAIL

kpff

FILE NAME:	14W121SB07_03.dwg					
PRINTED:	2:42:50 PM 9/21/2018	LAST PRINTED BY:				FED.AID PROJ.NO.
SUBMITTAL DATE:	08/23/2018	ByronR				WA-2017-007-00
DESIGNED BY:	A. RADKE	08/23/2018				REGION NO. / STATE
ENTERED BY:	B. RONIA	08/23/2018				10 / WASH
CHECKED BY:	A. EWING	08/23/2018				JOB NUMBER
MAR PROJ ENGR	C. TORRES					18W121
DIR TERM ENGR:	N. MCINTOSH					CONTRACT NO.
ASST SECRETARY:	A. SCARTON		REVISION	DATE	BY	00****

DATE

DANA LOVING ROBERTS STATE OF WASHINGTON 38538 PROFESSIONAL ENGINEER

08/23/2018
DATE

Washington State Department of Transportation
WASHINGTON STATE FERRIES

SR 525
MUKILTEO FERRY TERMINAL (PHASE 2)
FERRY TERMINAL CONSTRUCTION

TYPICAL WOOD DETAILS

SB07.03

SHEET 1191 OF 1521 SHEETS

File: U:\114000-114350\114177 (Mukilteo Ferry Terminal)\04 Details\14W121SB07_03.dwg
Plotted: 9/21/18 at 2:42pm By: DianeL

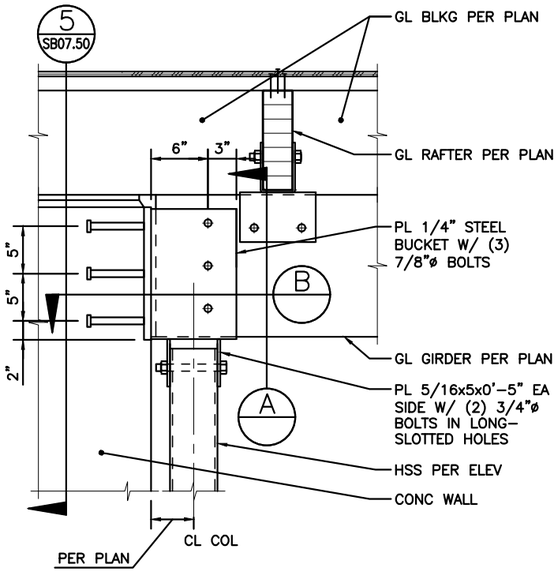

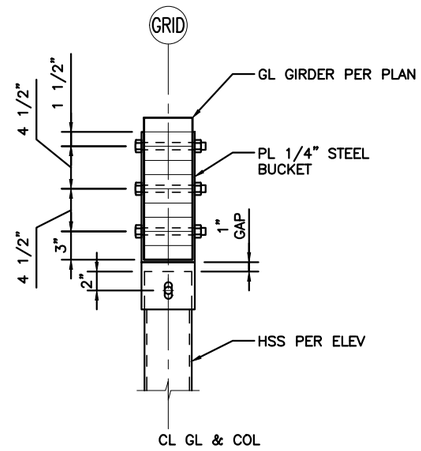

SECTION A

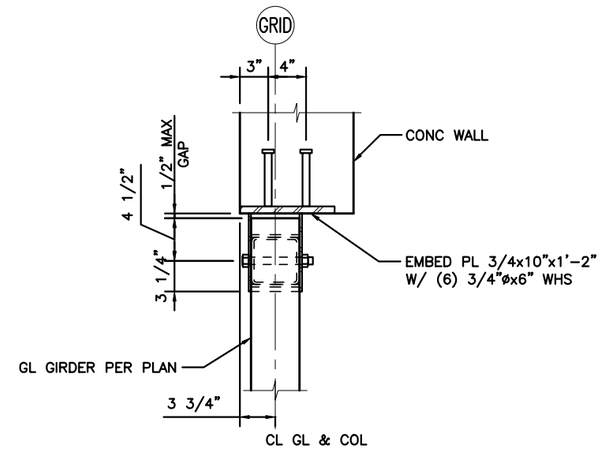

SECTION B

1 SECTION AT ROOF

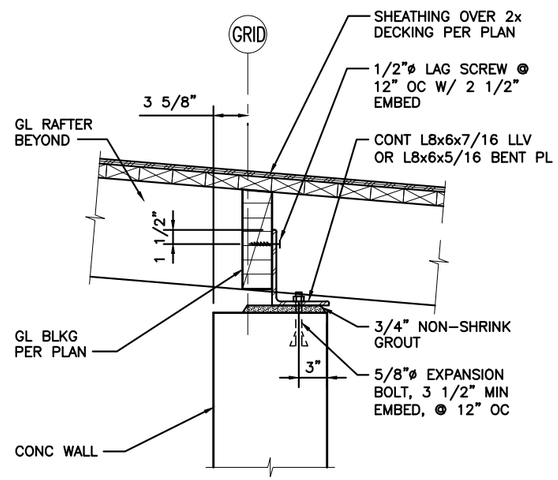

5 SECTION AT ROOF

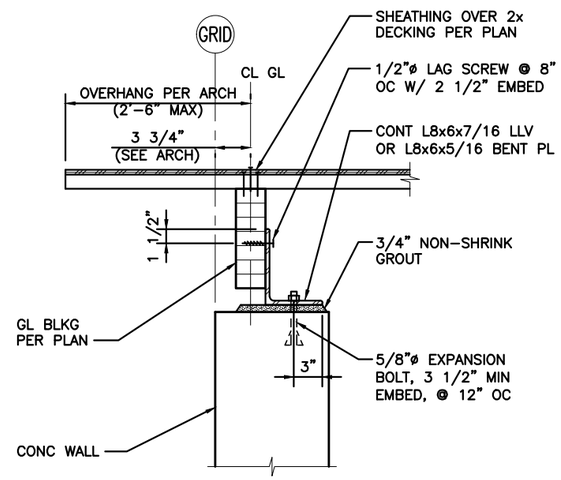

6 SECTION AT ROOF

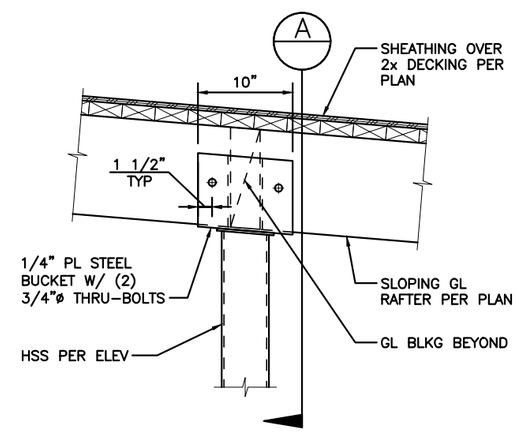

7 SECTION AT ROOF

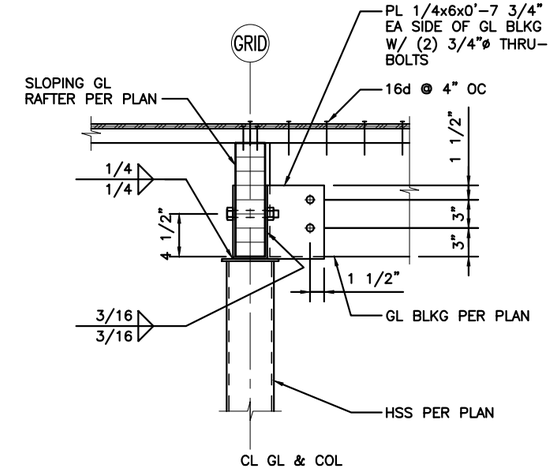

SECTION A

kpff

FILE NAME:	14W121SB07_50.dwg					
PRINTED: 2:42:52 PM 9/21/2018		LAST PRINTED BY:				FED.AID PROJ.NO.
SUBMITTAL DATE:	08/23/2018	3yronR				WA-2017-007-00
DESIGNED BY:	A. RADKE	08/23/2018				REGION NO. STATE
ENTERED BY:	B. RONIA	08/23/2018				10 WASH
CHECKED BY:	A. EWING	08/23/2018				JOB NUMBER
MAR PROJ ENGR	C. TORRES					18W121
DIR TERM ENGR:	N. MCINTOSH					CONTRACT NO.
ASST SECRETARY:	A. SCARTON		REVISION	DATE	BY	00****

DATE

STATE OF WASHINGTON — SASHA LOVING HODGES — 38538 — PROFESSIONAL ENGINEER

08/23/2018
DATE

Washington State Department of Transportation
WASHINGTON STATE FERRIES

SR 525
MUKILTEO FERRY TERMINAL (PHASE 2)
FERRY TERMINAL CONSTRUCTION

WOOD DETAILS – TOLL PLAZA

SB07.50

SHEET 1192 OF 1521 SHEETS

File: U:\114000-114350\114177 (Mukilteo Ferry Terminal)\04 Details\14W121SB07_50.dwg
Plotted: 9/21/18 at 2:42pm By: DianeL

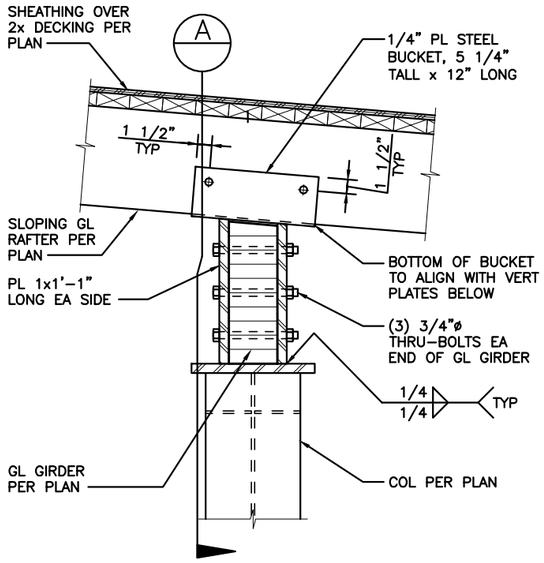

1 SECTION AT ROOF

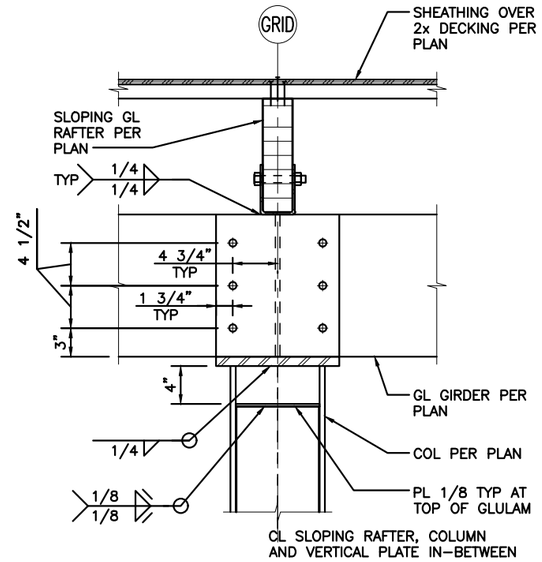

SECTION A

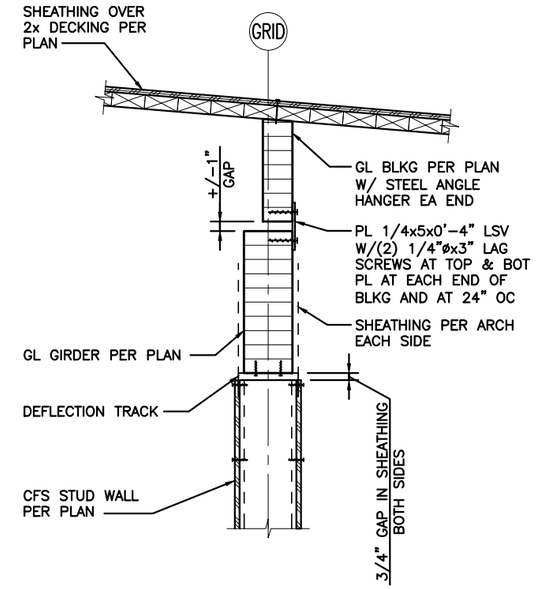

3 SECTION AT ROOF

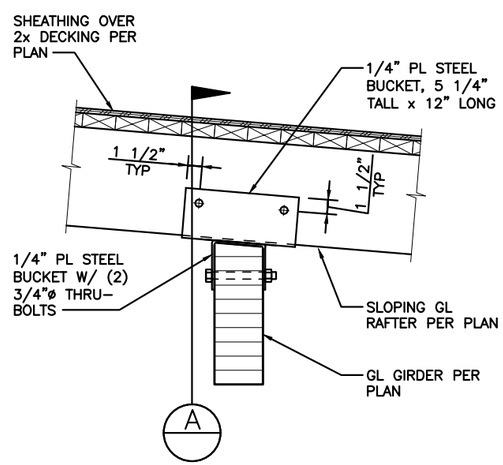

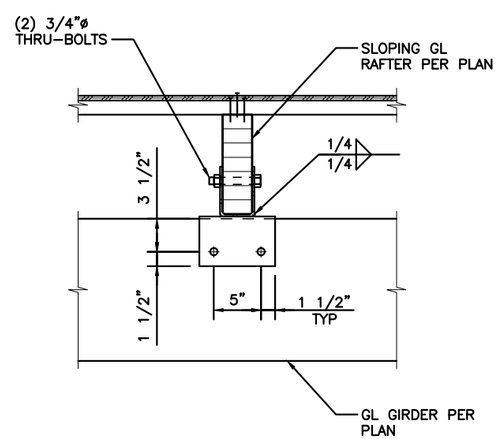

SECTION A

5 SECTION AT ROOF

kpff

FILE NAME:	14W121SB07_51.dwg					
PRINTED: 2:42:55 PM 9/21/2018		LAST PRINTED BY:				FED.AID PROJ.NO.
SUBMITTAL DATE:	08/23/2018	3yronR				WA-2017-007-00
DESIGNED BY:	A. RADKE	08/23/2018				REGION NO. / STATE
ENTERED BY:	B. RONIA	08/23/2018				10 / WASH
CHECKED BY:	A. EWING	08/23/2018				JOB NUMBER
MAR PROJ ENGR	C. TORRES					18W121
DIR TERM ENGR:	N. MCINTOSH					CONTRACT NO.
ASST SECRETARY:	A. SCARTON		REVISION	DATE	BY	00****

DATE

DANA LOVING SOMERS STATE OF WASHINGTON 38538 PROFESSIONAL ENGINEER

08/23/2018
DATE

Washington State Department of Transportation
WASHINGTON STATE FERRIES

SR 525
MUKILTEO FERRY TERMINAL (PHASE 2)
FERRY TERMINAL CONSTRUCTION

WOOD DETAILS – TOLL PLAZA

SB07.51

SHEET 1193 OF 1521 SHEETS

File: U:\114000-114350\114177 (Mukilteo Ferry Terminal)\04 Details\14W121SB07_51.dwg
Plotted: 9/21/18 at 2:42pm By: DianeL

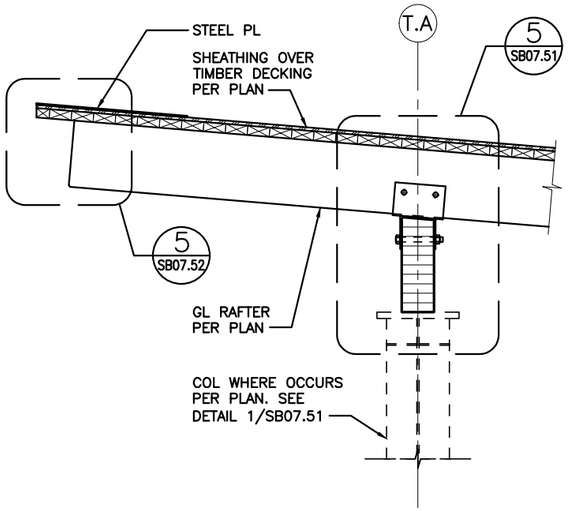

1 GL RAFTER END SECTION

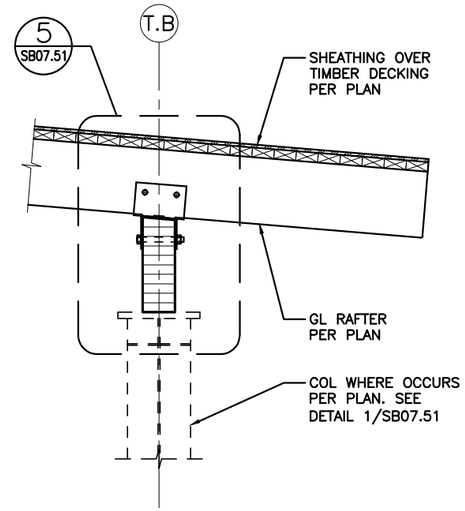

2 GL RAFTER END SECTION

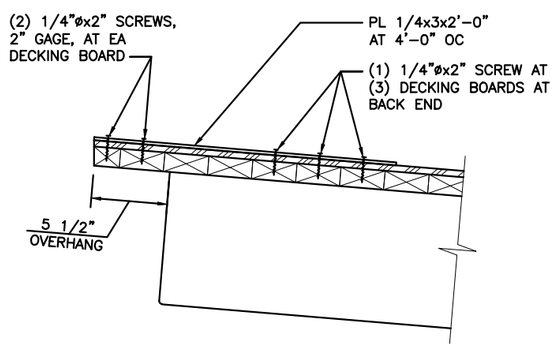

NOTES:
1. NO SIGNAGE ATTACHMENT IS ALLOWED AT DECKING EDGE.

5 DECKING OVERHANG DETAIL

kpff

FILE NAME:	14W121SB07_52.dwg					
PRINTED: 2:42:58 PM 9/21/2018		LAST PRINTED BY:				FED.AID PROJ.NO.
SUBMITTAL DATE:	08/23/2018	3yronR				WA-2017-007-00
DESIGNED BY:	A. RADKE	08/23/2018				REGION NO. / STATE
ENTERED BY:	B. RONIA	08/23/2018				10 / WASH
CHECKED BY:	A. EWING	08/23/2018				JOB NUMBER
MAR PROJ ENGR	C. TORRES					18W121
DIR TERM ENGR:	N. MCINTOSH					CONTRACT NO.
ASST SECRETARY:	A. SCARTON		REVISION	DATE	BY	00****

DATE

STATE OF WASHINGTON — SARA LOVING ROBERTS — 38538 — GEOTECHNICAL ENGINEER — PROFESSIONAL ENGINEER

08/23/2018
DATE

Washington State Department of Transportation
WASHINGTON STATE FERRIES

SR 525
MUKILTEO FERRY TERMINAL (PHASE 2)
FERRY TERMINAL CONSTRUCTION

WOOD DETAILS – TOLL PLAZA

SB07.52

SHEET 1194 OF 1521 SHEETS

File: U:\114000-114350\114177 (Mukilteo Ferry Terminal)\04 Details\14W121SB07_52.dwg
Plotted: 9/21/18 at 2:42pm By: DianaL

SHEAR WALL SCHEDULE (2015 IBC)								
WALL TYPE	SHEATHING TYPE	MINIMUM STUD THICKNESS	TOP AND BOTTOM TRACK	SHEATHING FASTENER	SCREW SPACING AT PANEL EDGES	TOP AND BOTTOM TRACK ATTACHMENT		SHEAR CAPACITY (PLF)
						TO LIGHT-GAGE TRACK	TO CONCRETE	
SM-4	0.027" SHEET STEEL	S162-43	T200-54	#8	4" OC	#8 @ 6" OC	PER 8/SB08.00 & 3/SB08.01	400
SW-4	15/32" WOOD SHTG	S162-43	T200-54	#8	4" OC	#8 @ 6" OC	PER 8/SB08.00	532

NOTES:

1. PROVIDE BRIDGING AT ALL SHEAR WALLS PER 4/SB08.01, PROVIDE BRIDGING ANCHORAGE PER 5/SB08.00.
2. FOR STUD ATTACHMENT TO TOP AND BOTTOM TRACK REFERENCE 7/SB08.00.
3. STUD AND TRACK THICKNESS MAY BE GOVERNED BY BEARING WALL REQUIREMENTS. REFERENCE PLAN NOTES FOR BEARING WALL INFORMATION.
4. PROVIDE FASTENERS @ 12" OC ALONG INTERMEDIATE FRAMING MEMBERS.
5. FOR BOTTOM TRACK DETAIL, REFERENCE 8/SB08.00 AND 3/SB08.01.
6. SHEAR CAPACITY VALUES ARE ASD VALUES FOR SEISMIC AND WIND.
7. AT HSS MEMBERS, USE 1/4-20 SCREWS IN LIEU OF #8 SCREWS, WITH SAME SPACING AS FOR #8 SCREWS.

1 COLD-FORMED SHEAR WALL SCHEDULE

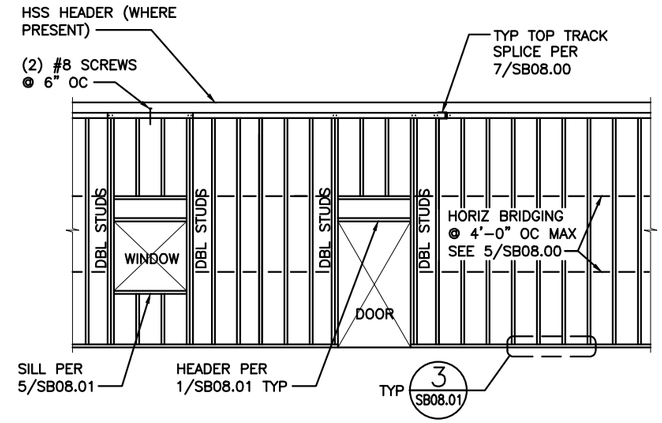

WINDOW OPENINGS DOOR OPENINGS TYPICAL

STUD WALL SCHEDULE			
USE	STUD DESIGNATION	SPACING	MAX HT
INTERIOR	600S162-43	16" OC	12'-0"
INTERIOR	600S162-54	16" OC	19'-6"
EXTERIOR	600S162-54	16" OC	12'-0"

NOTES:

1. REF ARCH FOR LOCATION AND WALL THICKNESS.
2. TOP & BOT TRACKS SHALL BE 54 MIL MIN THICKNESS W/ 1 1/2" MIN LEGS.
3. PLACE DOUBLE STUDS BOXED, UNO.

3 TYPICAL COLD-FORMED STUD WALL ELEVATIONS

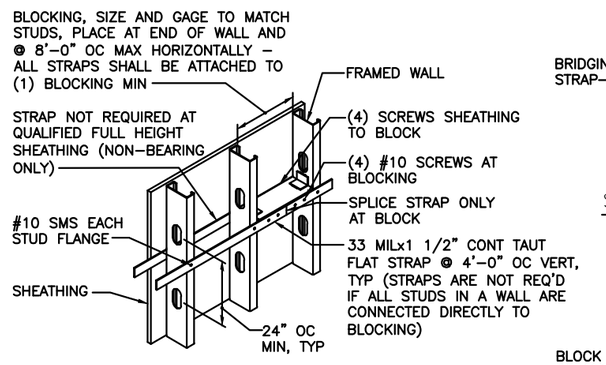

NOTES:

1. QUALIFIED SHEATHING SHALL BE FULL HEIGHT AND IS GWB, PW OR OSB ONLY.
2. STRAPS BOTH SIDES OF STUDS ARE REQUIRED AT BEARING WALLS. INSTALL BRIDGING PRIOR TO SUPPORTED FRAMING.
3. ALTERNATE BRIDGING NOT ALLOWED AT STUDS > 6".

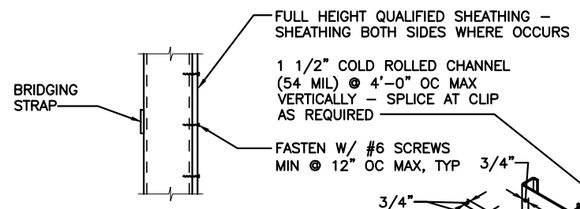

SECTION AT QUALIFIED SHEATHING

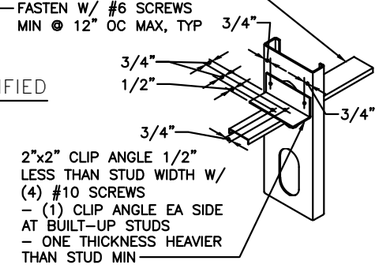

ALTERNATE STUD LATERAL BRIDGING W/ SCREW ATTACHMENT

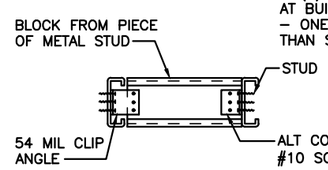

STUD BLOCKING

5 TYPICAL COLD-FORMED STEEL STUD BRIDGING

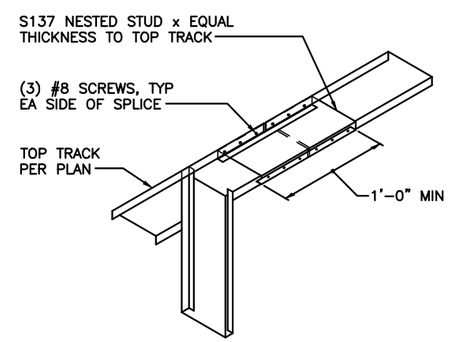

NOTES:

1. TOP & BOTTOM TRACK SPLICES SHALL BE STAGGERED 4'-0" MIN.

7 TYPICAL TRACK SPLICE

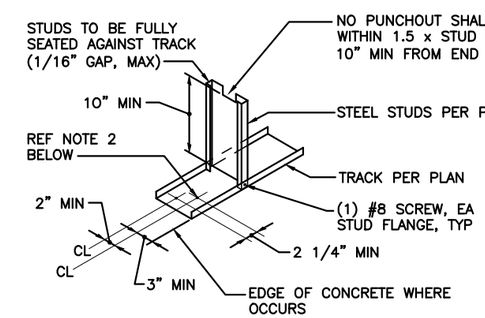

NOTES:

1. THIS DETAIL APPLIES TO TOP AND BOTTOM TRACKS OF ALL STRUCTURAL STEEL STUD WALLS, UNO.
2. UNLESS NOTED OTHERWISE ON SHEAR WALL SCHEDULE:
   a. AT TRACK TO TRACK, ATTACH W/ (2) #10 SCREWS @ 12" OC.
   b. AT STRUCTURAL STEEL, ATTACH TRACK W/ (2) 0.145 DIAMETER PAF @ 6" OC.
   c. AT CONCRETE, ATTACH TRACK W/ (2) 0.145 DIAMETER PAF @ 12" OC W/ 3/4" EMBED.

8 TYPICAL BOTTOM TRACK CONNECTION

kpff

FILE NAME:	14W121SB08_00.dwg					
PRINTED:	2:43:01 PM 9/21/2018	LAST PRINTED BY:				FED.AID PROJ.NO.
SUBMITTAL DATE:	08/23/2018	ByronR				WA-2017-007-00
DESIGNED BY:	A. RADKE	08/23/2018				REGION NO. / STATE
ENTERED BY:	B. RONIA	08/23/2018				10 / WASH
CHECKED BY:	A. EWING	08/23/2018				JOB NUMBER
MAR PROJ ENGR	C. TORRES					18W121
DIR TERM ENGR:	N. MCINTOSH					CONTRACT NO.
ASST SECRETARY:	A. SCARTON		REVISION	DATE	BY	00****

DATE

DARA LOVING ROBERTS STATE OF WASHINGTON 38538 STRUCTURAL ENGINEER PROFESSIONAL ENGINEER

08/23/2018
DATE

Washington State Department of Transportation
WASHINGTON STATE FERRIES

SR 525
MUKILTEO FERRY TERMINAL (PHASE 2)
FERRY TERMINAL CONSTRUCTION

TYPICAL CFS DETAILS

SB08.00

SHEET 1195 OF 1521 SHEETS

File: U:\114000-114350\114177 (Mukilteo Ferry Terminal)\04 Details\14W121SB08_00.dwg
Plotted: 9/21/18 at 2:43pm By: DianeL

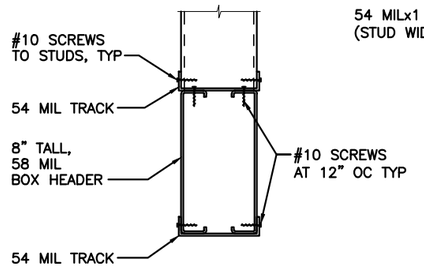

TYPICAL BOX HEADER SECTION

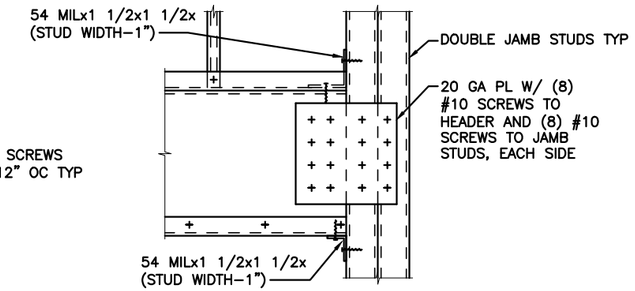

TYPICAL BOX HEADER JAMB CONNECTION

1 TYPICAL COLD-FORMED HEADER

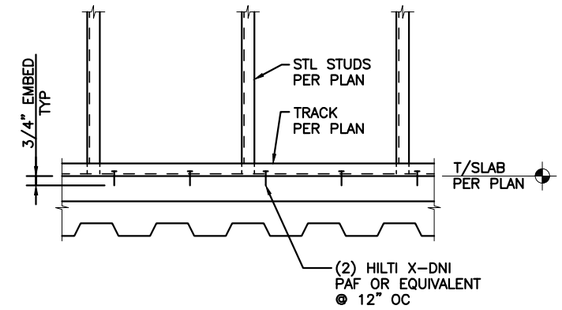

3 TYPICAL SHEAR WALL TO CONCRETE SLAB CONNECTION

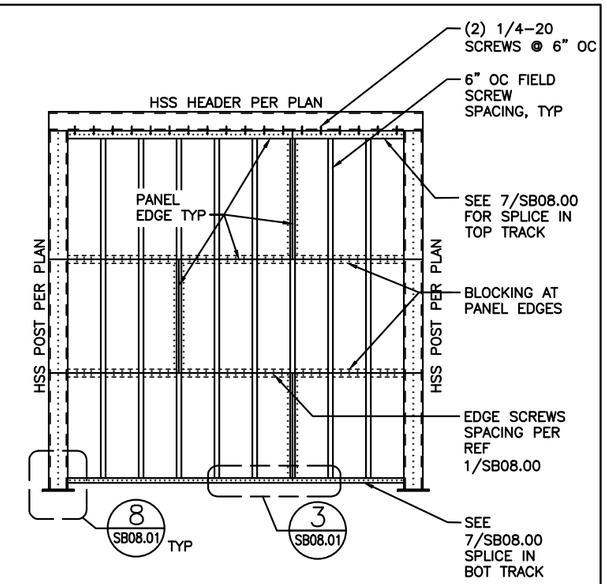

4 TYPICAL COLD-FORMED SHEAR WALL FASTENING

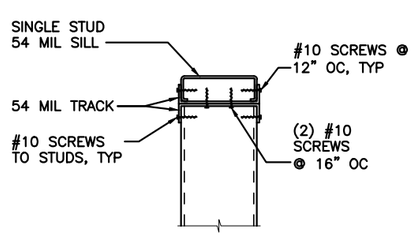

TYPICAL SILL

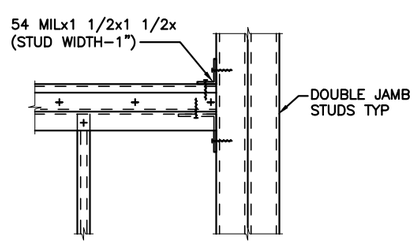

TYPICAL SILL JAMB CONNECTION

5 TYPICAL COLD-FORMED SILL

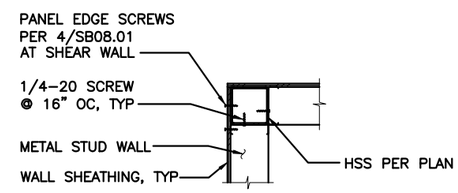

INTERIOR WALL CORNER

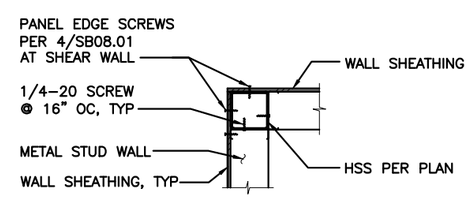

EXTERIOR WALL CORNER

7 TYPICAL SHEAR WALL CORNER

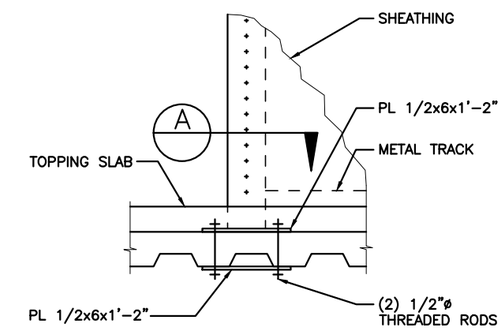

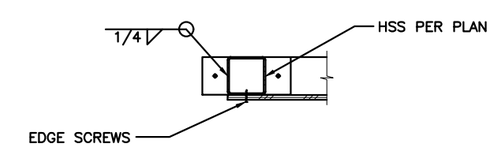

SECTION A-A

8 TYPICAL HOLD DOWN

kpff

FILE NAME:	14W121SB08_01.dwg					FED.AID PROJ.NO.
PRINTED: 2:43:03 PM 9/21/2018		LAST PRINTED BY:				
SUBMITTAL DATE:	08/23/2018	3yronR				WA-2017-007-00
DESIGNED BY:	A. RADKE	08/23/2018				REGION NO. / STATE
ENTERED BY:	B. RONIA	08/23/2018				10 / WASH
CHECKED BY:	A. EWING	08/23/2018				JOB NUMBER 18W121
MAR PROJ ENGR	C. TORRES					
DIR TERM ENGR:	N. MCINTOSH					CONTRACT NO.
ASST SECRETARY:	A. SCARTON		REVISION	DATE	BY	00****

DATE

08/23/2018
DATE

Washington State Department of Transportation
WASHINGTON STATE FERRIES

SR 525
MUKILTEO FERRY TERMINAL (PHASE 2)
FERRY TERMINAL CONSTRUCTION

CFS DETAILS

SB08.01

SHEET 1196 OF 1521 SHEETS

File: U:\114000-114350\114177 (Mukilteo Ferry Terminal)\04 Details\14W121SB08_01.dwg
Plotted: 9/21/18 at 2:43pm By: DianeL

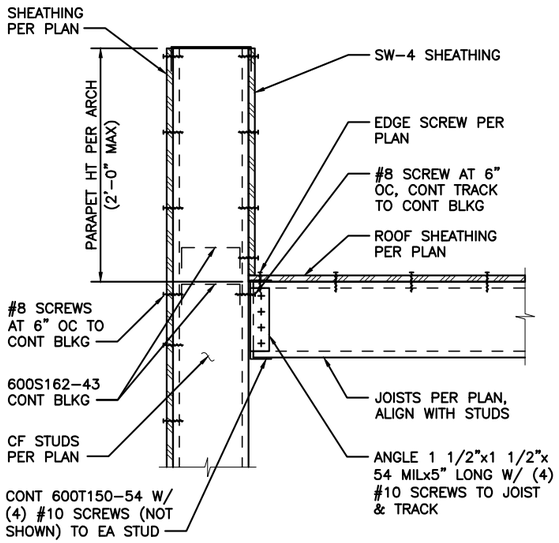

1 SECTION AT ROOF – JOISTS PERPENDICULAR

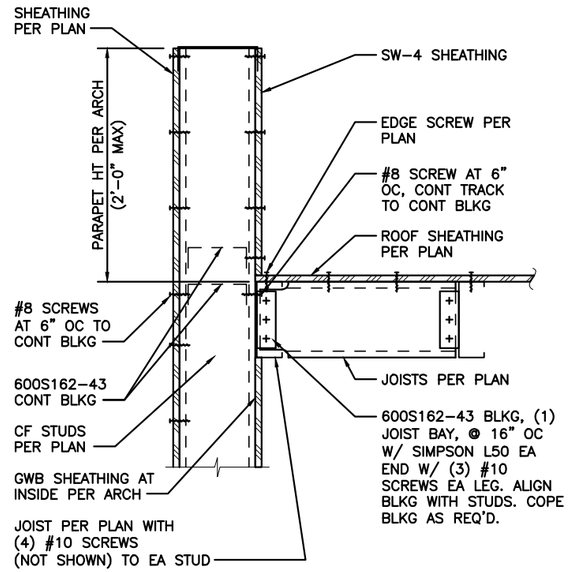

2 SECTION AT ROOF – JOISTS PARALLEL

kpff

FILE NAME:	14W121SB08_50.dwg					
PRINTED: 2:43:06 PM 9/21/2018		LAST PRINTED BY:				FED.AID PROJ.NO.
SUBMITTAL DATE:	08/23/2018	3yronR				WA-2017-007-00
DESIGNED BY:	A. RADKE	08/23/2018				REGION NO. / STATE
ENTERED BY:	B. RONIA	08/23/2018				10 / WASH
CHECKED BY:	A. EWING	08/23/2018				JOB NUMBER
MAR PROJ ENGR	C. TORRES					18W121
DIR TERM ENGR:	N. MCINTOSH					CONTRACT NO.
ASST SECRETARY:	A. SCARTON		REVISION	DATE	BY	00****

DATE

DANA LOVING ROBERTS, STATE OF WASHINGTON, 38538, PROFESSIONAL ENGINEER

08/23/2018
DATE

Washington State Department of Transportation
WASHINGTON STATE FERRIES

SR 525
MUKILTEO FERRY TERMINAL (PHASE 2)
FERRY TERMINAL CONSTRUCTION

CFS DETAILS – TOLL PLAZA

SB08.50

SHEET 1197 OF 1521 SHEETS

File: U:\114000-114350\114177 (Mukilteo Ferry Terminal)\04 Details\14W121SB08_50.dwg
Plotted: 9/21/18 at 2:43pm By: DianaL

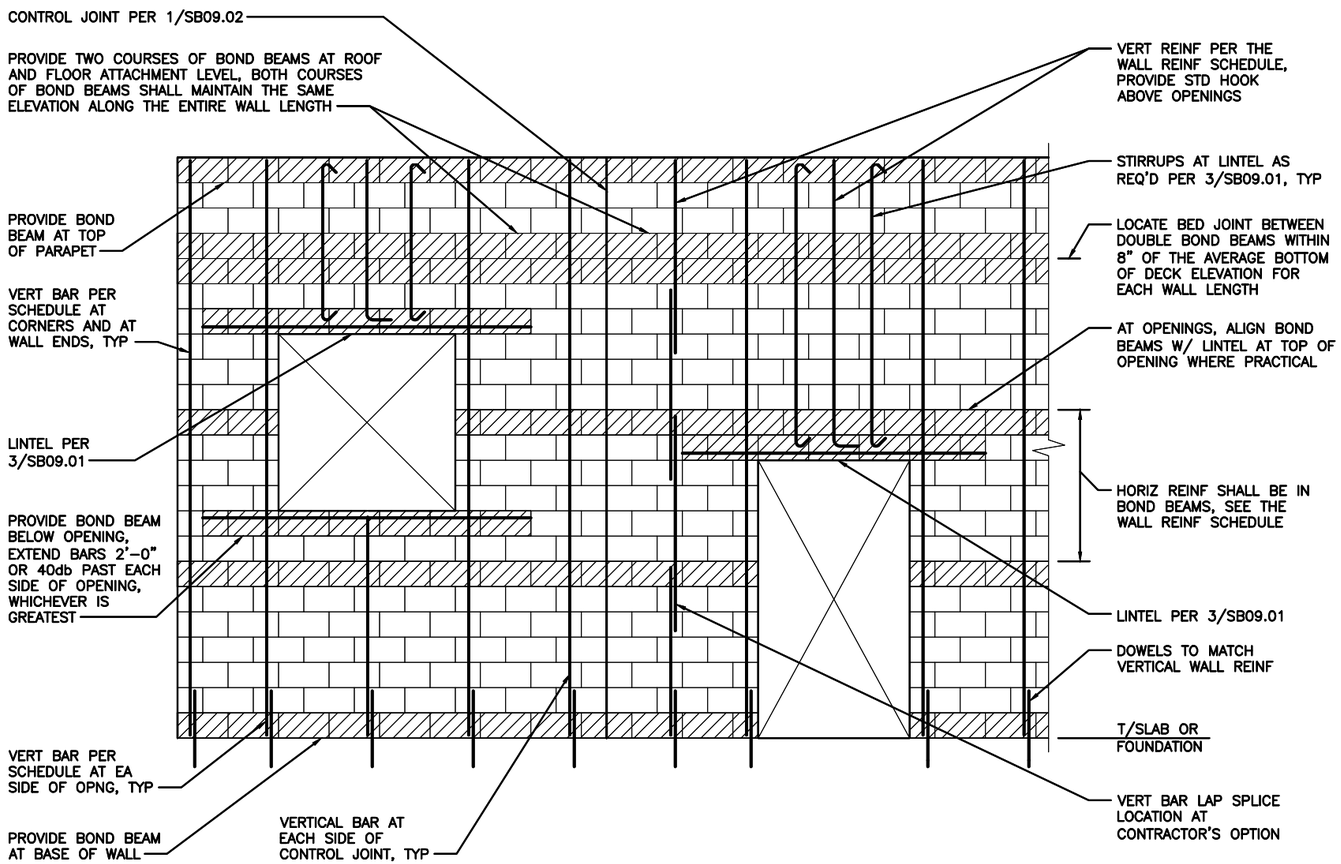

1 TYPICAL CMU WALL REINFORCEMENT

TYPICAL CMU WALL REINFORCEMENT			
WALL THICKNESS	MAX WALL HEIGHT	VERTICAL REINFORCEMENT	HORIZONTAL REINFORCEMENT
8"	14'-0"	#5 @ 16" OC	(2) #4 @ 48" OC
–	–	–	–

NOTES:
1. THIS DETAIL PROVIDES MINIMUM REINFORCEMENT, UNLESS NOTED OTHERWISE. MORE STRINGENT SPECIFIC DETAILS SHALL TAKE PRECEDENCE OVER THESE MINIMUMS.
2. THIS DETAIL APPLIES FOR RUNNING BOND ONLY.
3. MINIMUM BAR AND DOWEL LAP LENGTHS TO BE (2'-0" MIN), UNO.
4. CENTER VERTICAL BARS IN WALL. WALLS WITH ONE HORIZONTAL CURTAIN SHALL HAVE HORIZONTAL BARS TIGHT TO VERTICAL BARS. WALLS WITH TWO HORIZONTAL CURTAINS SHALL HAVE HORIZONTAL BARS CENTERED IN THE WALL WITH A CLEAR DISTANCE BETWEEN HORIZONTAL BARS OF 2".

kpff

FILE NAME:	14W121SB09_00.dwg					
PRINTED: 2:43:09 PM 9/21/2018	LAST PRINTED BY:					FED.AID PROJ.NO.
SUBMITTAL DATE: 08/23/2018	3yronR					WA-2017-007-00
DESIGNED BY: A. RADKE	08/23/2018					REGION NO. / STATE
ENTERED BY: B. RONIA	08/23/2018					10 / WASH
CHECKED BY: A. EWING	08/23/2018					JOB NUMBER 18W121
MAR PROJ ENGR C. TORRES						
DIR TERM ENGR: N. MCINTOSH						CONTRACT NO. 00****
ASST SECRETARY: A. SCARTON		REVISION	DATE	BY		

DATE

STATE OF WASHINGTON — SARA LOVING RODGERS — 38538 — STRUCTURAL ENGINEER — PROFESSIONAL ENGINEER

08/23/2018
DATE

Washington State Department of Transportation
WASHINGTON STATE FERRIES

SR 525
MUKILTEO FERRY TERMINAL (PHASE 2)
FERRY TERMINAL CONSTRUCTION

TYPICAL CMU DETAILS

SB09.00

SHEET 1198 OF 1521 SHEETS

File: U:\114000-114350\114177 (Mukilteo Ferry Terminal)\04 Details\14W121SB09_00.dwg
Plotted: 9/21/18 at 2:43pm By: DianeL

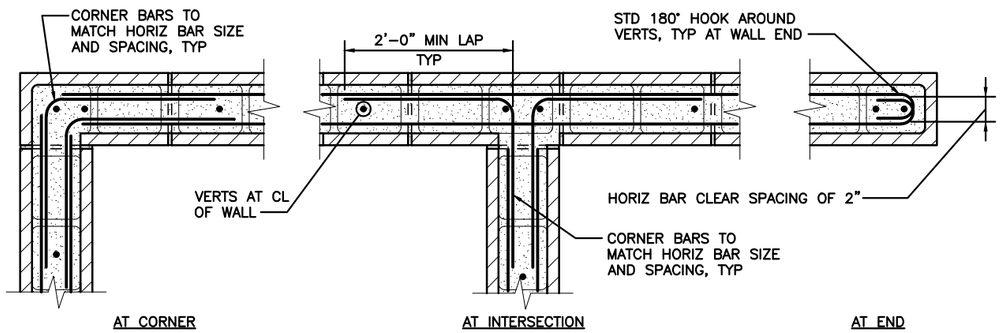

TWO HORIZONTAL REINFORCING CURTAINS

NOTES:
1. COORDINATE REINFORCING WITH CONTROL JOINT LOCATIONS PER 1/SB09.02.

1 TYPICAL CMU WALL REINFORCEMENT – PLAN

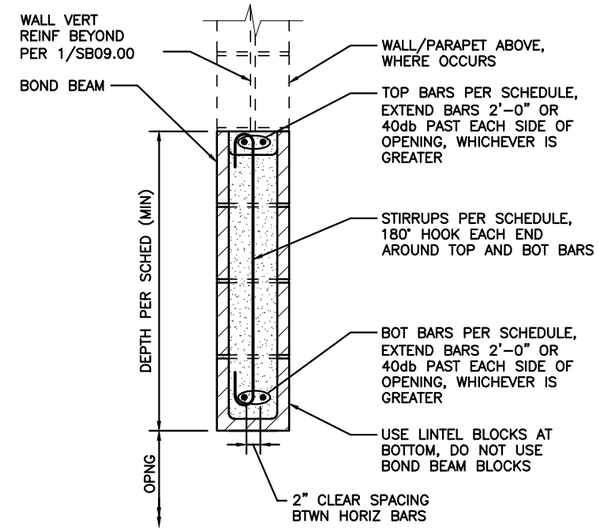

SECTION

CMU LINTEL BEAM SCHEDULE				
MIN DEPTH	TOP BARS	BOT BARS	STIRRUPS	REMARKS
16"	(2) #5	(2) #5	#4 @ 8" OC	MAX SPAN 6'-0"
24"	(2) #5	(2) #5	#4 @ 8" OC	MAX SPAN 8'-0"

3 TYPICAL CMU LINTEL BEAM

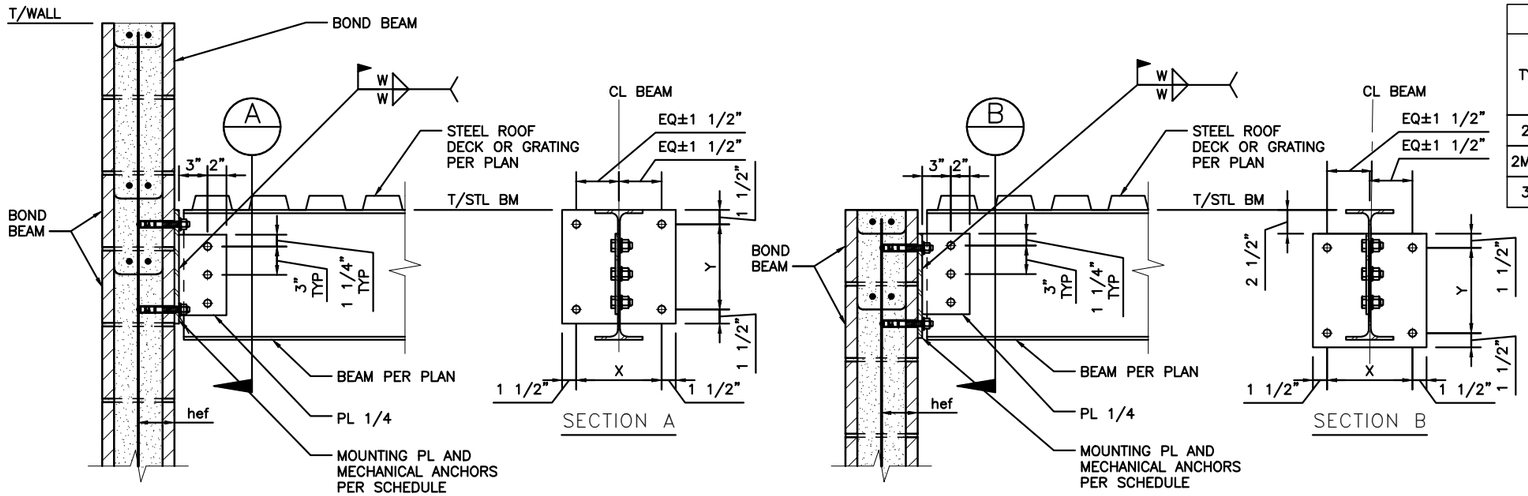

MOUNTING PLATE CONNECTION SCHEDULE									
TYPE	NUMBER OF BOLTS TO BEAM	MOUNTING PLATE SIZE	NUMBER OF HORIZONTAL ROWS OF MECHANICAL ANCHORS	MECHANICAL ANCHOR DIAMETER	MECHANICAL ANCHOR SPACING		h ef	W	MIN NOMINAL WALL THICKNESS
					X	Y			
2ME	2	PL 3/8x11x0'-11"	2	3/4"	8"	8"	4"	3/16"	8"
2ME-3	2	PL 3/8x11x1'-7"	3	3/4"	8"	8"	4"	3/16"	8"
3ME	3	PL 3/8x11x1'-7"	3	3/4"	8"	8"	4"	3/16"	8"

NOTES:
1. BOLT DIAMETER TO BE SAME AS SHOWN ON STANDARD BOLTED BEAM CONNECTION, 5/SB06.04.
2. HORIZONTALLY SHORT SLOT BOLT HOLES IN THE BEAM WEB. BOLTS SHALL BE SLIP CRITICAL.
3. MECHANICAL ANCHORS SHALL BE PLACED 1 1/2" MINIMUM CLEAR OF HEAD JOINTS.

5 TYPICAL STEEL BEAM TO WALL CONNECTION

kpff

FILE NAME:	14W121SB09_01.dwg					
PRINTED: 2:43:12 PM 9/21/2018	LAST PRINTED BY:					FED.AID PROJ.NO.
SUBMITTAL DATE: 08/23/2018	3yronR					
DESIGNED BY: A. RADKE	08/23/2018					WA-2017-007-00
ENTERED BY: B. RONIA	08/23/2018					REGION NO. / STATE
CHECKED BY: A. EWING	08/23/2018					10 / WASH
MAR PROJ ENGR C. TORRES						JOB NUMBER 18W121
DIR TERM ENGR: N. MCINTOSH						CONTRACT NO.
ASST SECRETARY: A. SCARTON		REVISION	DATE	BY		00****

DATE

DARA LOVING ROBERTS, STATE OF WASHINGTON, 38538, PROFESSIONAL ENGINEER

08/23/2018
DATE

Washington State Department of Transportation
WASHINGTON STATE FERRIES

SR 525
MUKILTEO FERRY TERMINAL (PHASE 2)
FERRY TERMINAL CONSTRUCTION

TYPICAL CMU DETAILS

SB09.01

SHEET 1199 OF 1521 SHEETS

File: U:\114000-114350\114177 (Mukilteo Ferry Terminal)\04 Details\14W121SB09_01.dwg
Plotted: 9/21/18 at 2:43pm By: DianeL

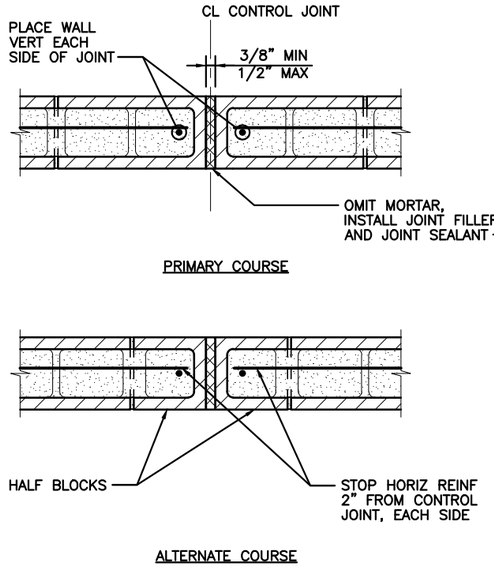

STRAIGHT WALL

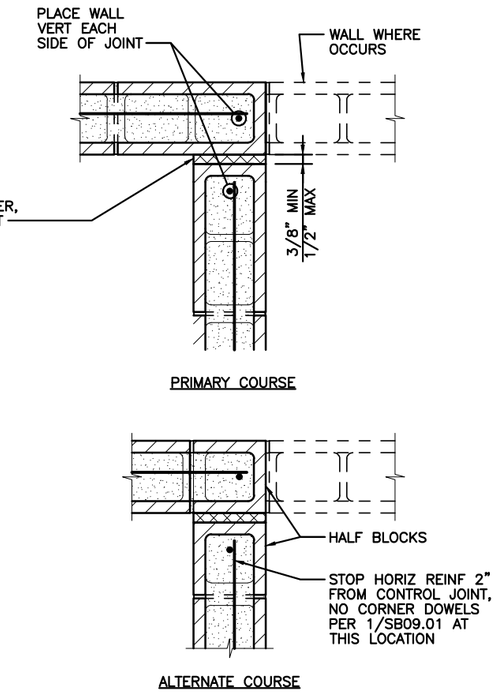

WALL CORNER OR TEE INTERSECTION

NOTES:
1. CONTROL JOINT SPACING SHALL NOT EXCEED 24'-0", UNLESS NOTED OTHERWISE.
2. SEE ARCHITECTURAL DRAWINGS FOR CONTROL JOINT LOCATIONS.

1 TYPICAL MASONRY CONTROL JOINT

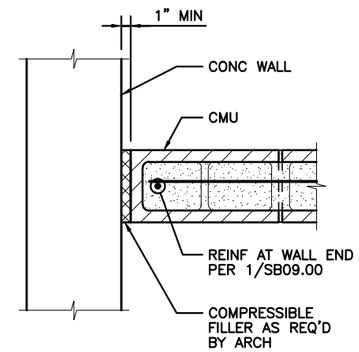

2 TYPICAL CMU WALL ENDS AT CONC WALL

kpff

FILE NAME:	14W121SB09_02.dwg					
PRINTED: 2:43:14 PM 9/21/2018		LAST PRINTED BY:				FED.AID PROJ.NO.
SUBMITTAL DATE:	08/23/2018	3yronR				WA-2017-007-00
DESIGNED BY:	A. RADKE	08/23/2018				REGION NO. / STATE
ENTERED BY:	B. RONIA	08/23/2018				10 / WASH
CHECKED BY:	A. EWING	08/23/2018				JOB NUMBER
MAR PROJ ENGR	C. TORRES					18W121
DIR TERM ENGR:	N. MCINTOSH					CONTRACT NO.
ASST SECRETARY:	A. SCARTON		REVISION	DATE	BY	00****

DATE

STEVEN LOVING ROBERTS STATE OF WASHINGTON 38538 PROFESSIONAL ENGINEER

08/23/2018
DATE

Washington State Department of Transportation
WASHINGTON STATE FERRIES

SR 525
MUKILTEO FERRY TERMINAL (PHASE 2)
FERRY TERMINAL CONSTRUCTION

TYPICAL CMU DETAILS

SB09.02

SHEET 1200 OF 1521 SHEETS

File: U:\114000-114350\114177 (Mukilteo Ferry Terminal)\04 Details\14W121SB09_02.dwg
Plotted: 9/21/18 at 2:43pm By: DianaL