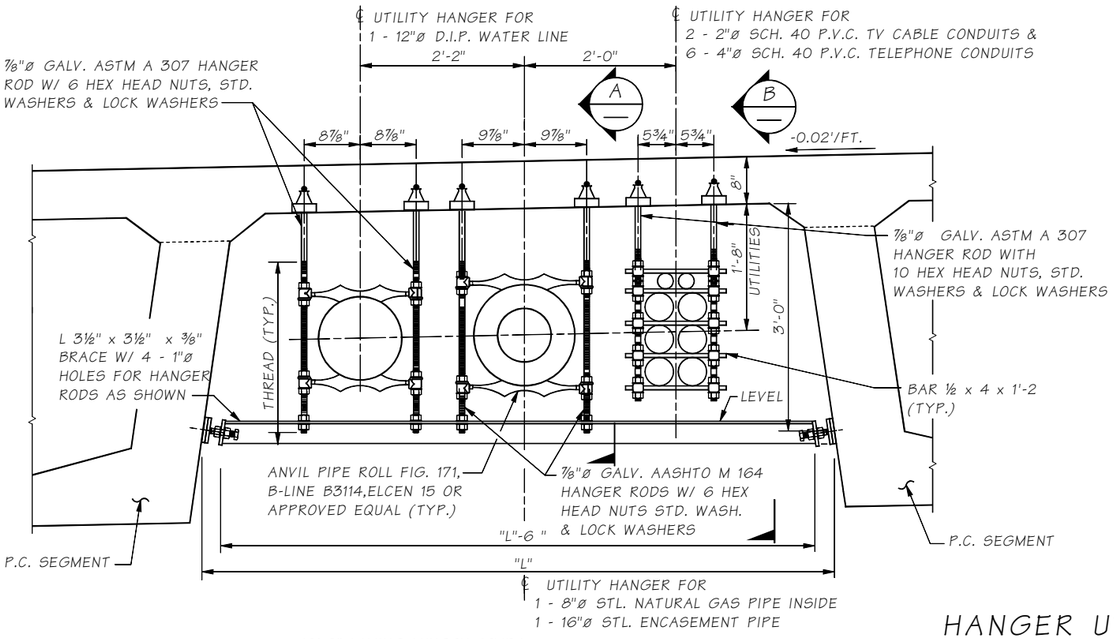

HANGER UTILITY SUPPORT

ALL DIMENSIONS NORMAL TO 134TH CONSTR. LINE

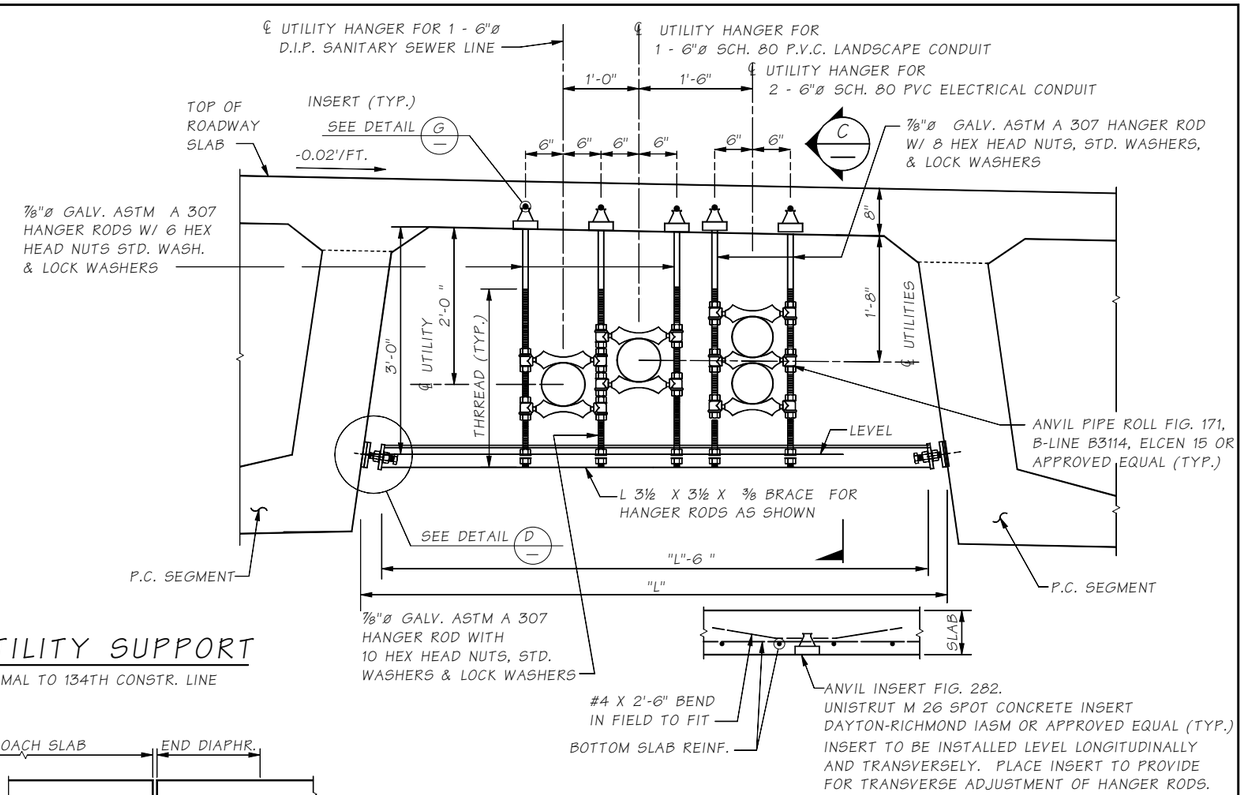

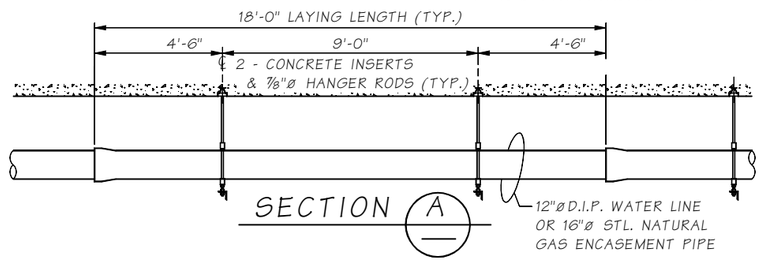

SECTION A

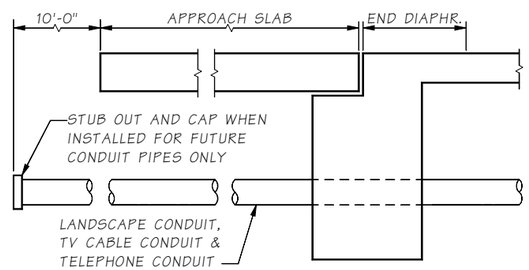

UTILITY CONDUIT PLACEMENT DETAIL

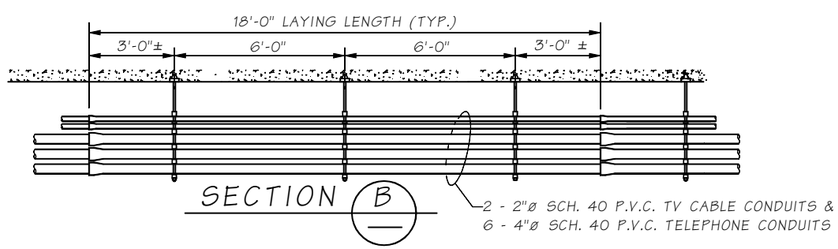

SECTION B

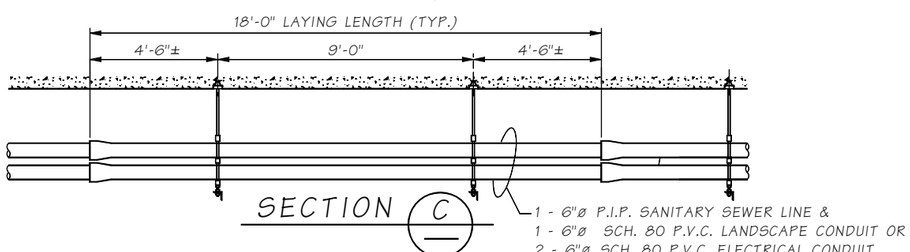

SECTION C

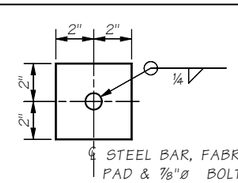

SECTION F

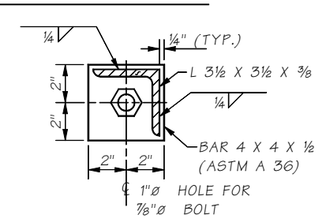

SECTION E

NOTE:

1. ALL MATERIALS SHALL BE GALVANIZED AFTER FABRICATION PER AASHTO M 111 OR AASHTO M 232 EXCEPT ANVIL PIPE ROLL.
2. PAINT PIPE ROLL WITH THREE COATS OF GALVANIZING REPAIR PAINT. SEE STD. SPEC. 9-08.2.

DETAIL G

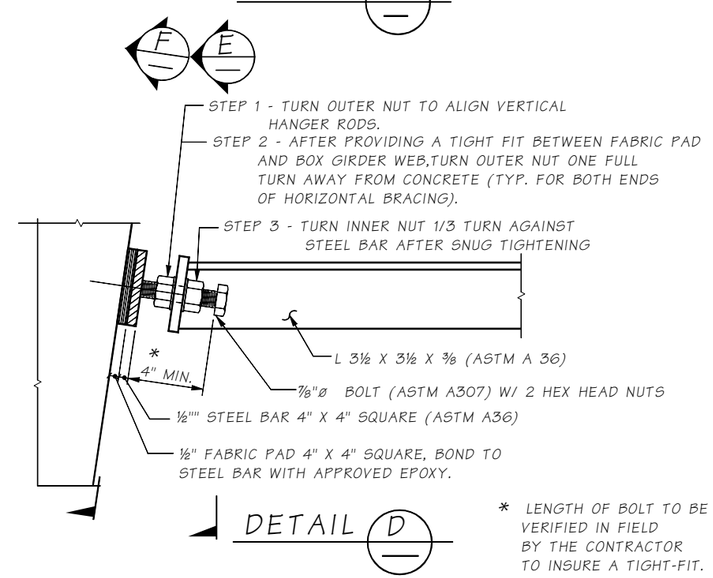

DETAIL D

* LENGTH OF BOLT TO BE VERIFIED IN FIELD BY THE CONTRACTOR TO INSURE A TIGHT-FIT.

Bridge Design Engr.	M:\STANDARDS\Utilities\UTILITY HANGERS FOR CONC BOX.man							
Supervisor					REGION NO.	STATE	FED. AID PROJ. NO.	SHEET NO.	TOTAL SHEETS
Designed By					10	WASH.			
Checked By									
Detailed By					JOB NUMBER				
Bridge Projects Engr.									
Prelim. Plan By									
Architect/Specialist	DATE	REVISION	BY	APP'D					

BRIDGE AND STRUCTURES OFFICE

Washington State Department of Transportation

UTILITY HANGER DETAILS FOR CONCRETE BOX STRUCTURES

BRIDGE SHEET NO.

SHEET OF SHEETS

SR JOB NO. SHEET

10.8-A1-2,

Tue .Jul 15 14:07:06 2008