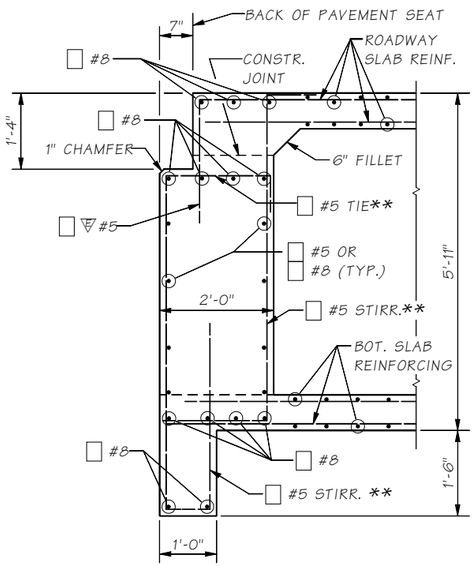

SECTION A

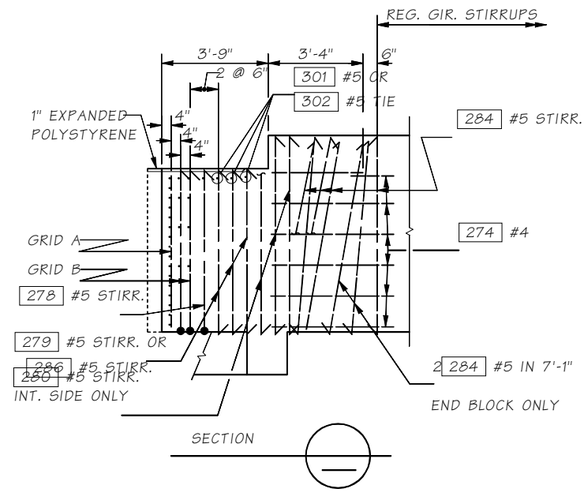

SECTION

GIR. C SHOWN, GIR. A SIMILAR

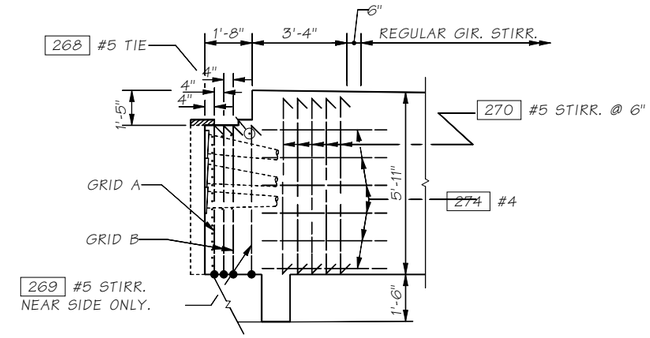

SECTION C

NOTES:
1. TOP SLAB & TRAFFIC BARR NOT SHOWN.
2. 271 273 281 & 283 SH BENT OVER ANCHORAGES FIELD AFTER POST-TENSIO
3. CONCRETE MUST BE WELL IN ANCHORAGE ZONES.
4. RECESS ANCHORAGES ARE TO MAINTAIN ℄'S NORMAL

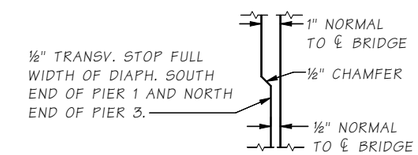

DETAIL E

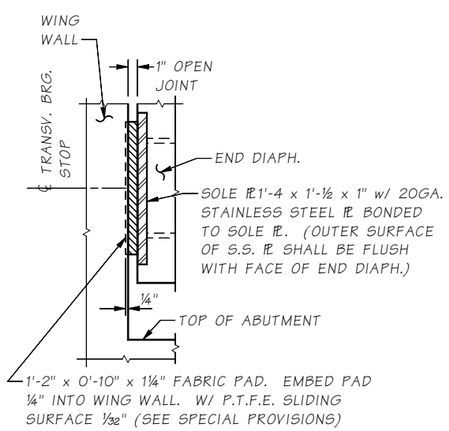

SECTION D

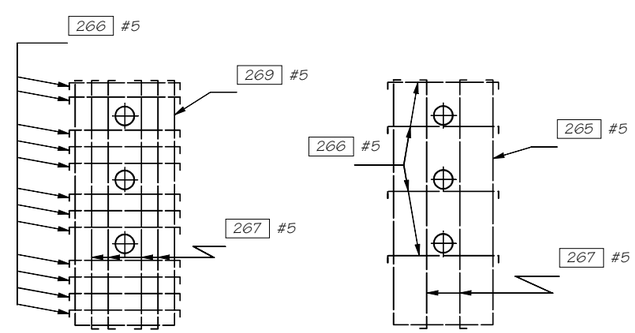

GRID A — INT. GIRDER

GRID B — INT. GIRDER

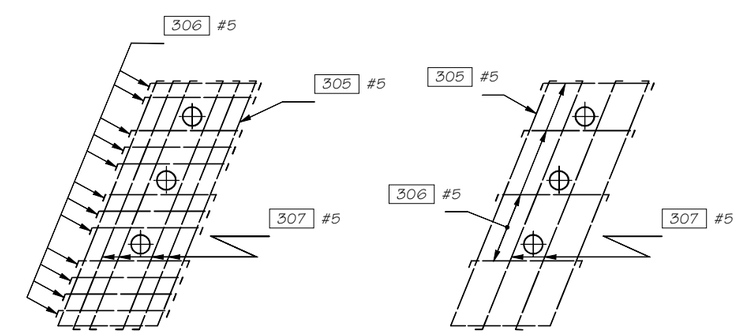

GRID A — EXT. GIRDER

284 #5 STIRR. INSIDE FACE

GRID B — EXT. GIRDER

Bridge Design Engr.	M:\STANDARDS\Girders\PT CONC BOX\END BLOCK REINF DETAILS.MAN							
Supervisor					REGION NO.	STATE	FED. AID PROJ. NO.	SHEET NO. / TOTAL SHEETS
Designed By					10	WASH.		
Checked By								
Detailed By					JOB NUMBER			
Bridge Projects Engr.								
Prelim. Plan By								
Architect/Specialist	DATE	REVISION	BY	APP'D				

Tue Apr 29 13:50:45 2008

BRIDGE AND STRUCTURES OFFICE

Washington State Department of Transportation

STANDARD PRESTRESSED CONCRETE GIRDERS

TYPICAL GIRDER END BLOCK REINFORCEMENT

BRIDGE SHEET NO.

SHEET OF SHEETS

SR JOB NO. SHEET

5.9-A1-1