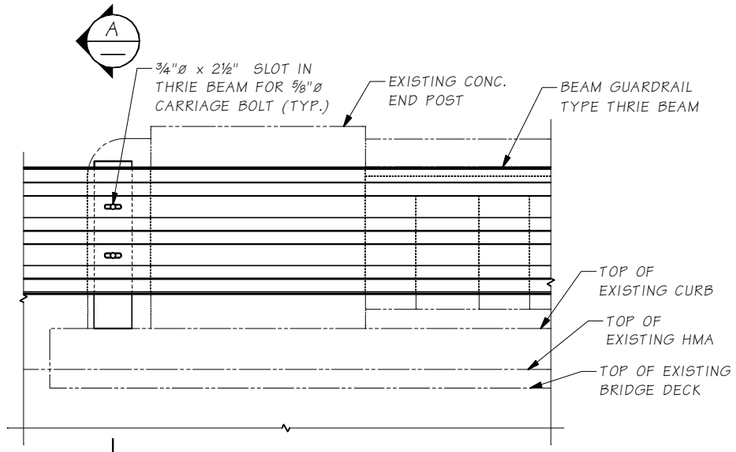

ELEVATION
RAIL END POST

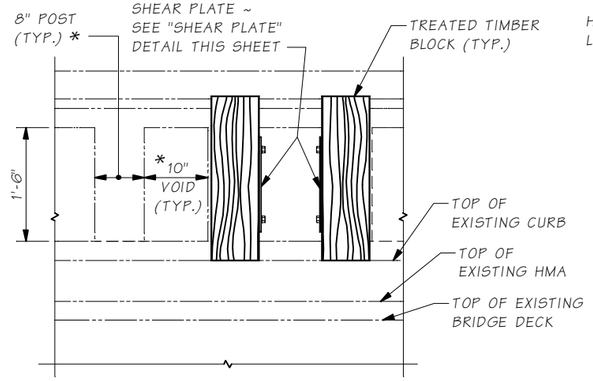

BALUSTER POST
INSIDE ELEVATION
THRIE BEAM NOT SHOWN FOR CLARITY

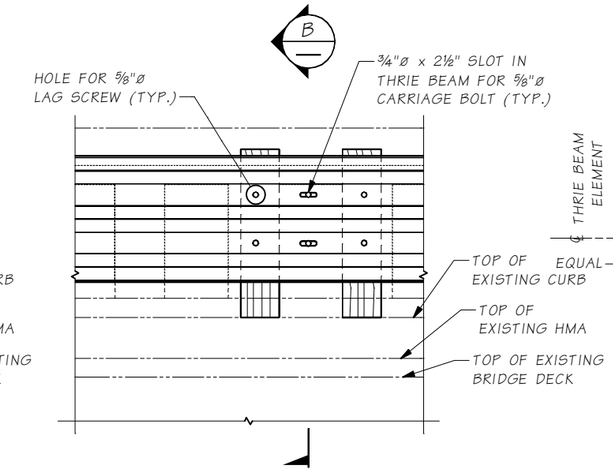

BALUSTER POST
INSIDE ELEVATION

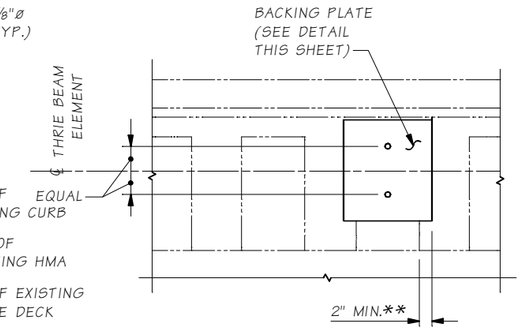

** ADJUST BLOCKOUT SPACING AS NEEDED TO MAINTAIN EDGE CLEARANCE.

BALUSTER POST
OUTSIDE ELEVATION
THRIE BEAM NOT SHOWN FOR CLARITY

NOTES:

* SEE GENERAL NOTE NO. 5 ON BRIDGE SHEET NO. 1.

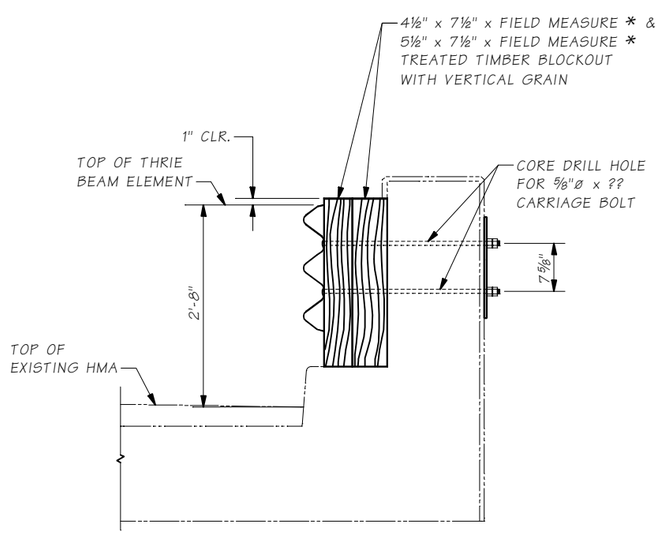

SECTION A
REQUIRED AT ?? LOCATIONS

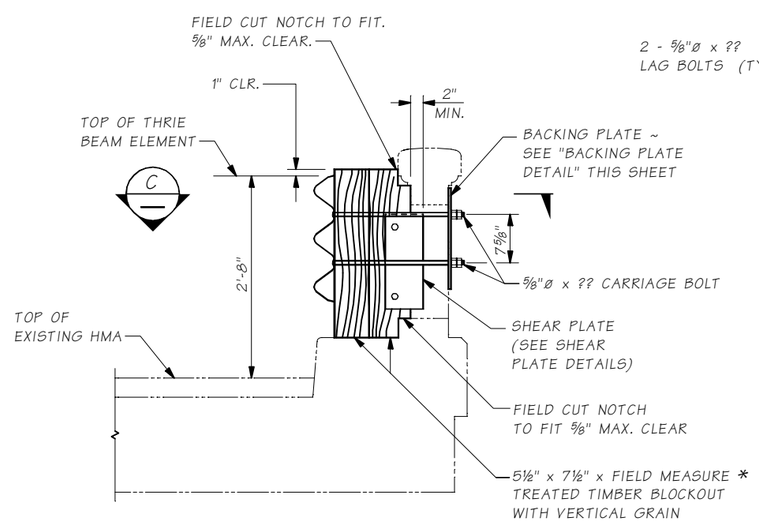

SECTION B
?? ASSEMBLIES

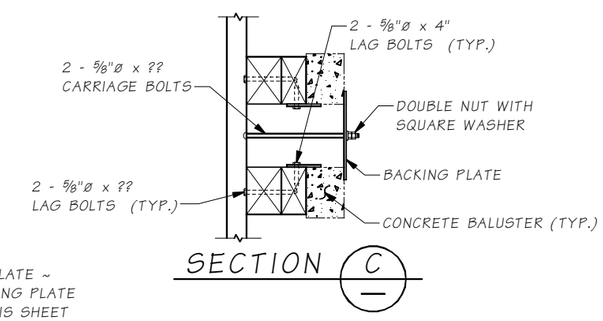

SECTION C

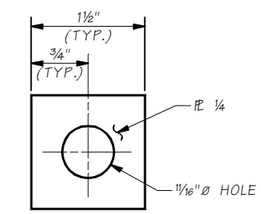

SQUARE WASHER

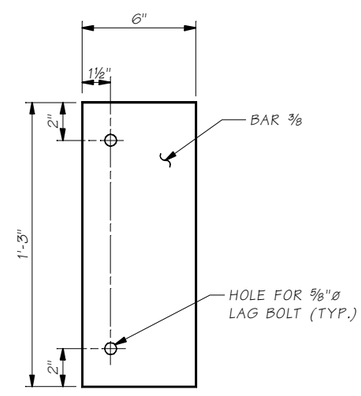

SHEAR PLATE

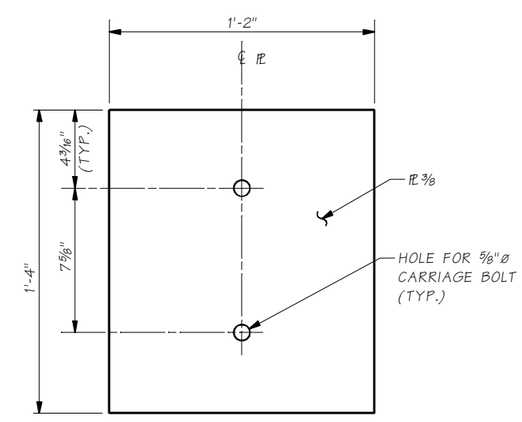

BACKING PLATE
DETAIL

Bridge Design Engr.	M:\STANDARDS\Traffic Barriers\Rail Retrofit\BALUSTER STANDARD.MAN								
Supervisor					REGION NO.	STATE	FED. AID PROJ. NO.	SHEET NO.	TOTAL SHEETS
Designed By					10	WASH.			
Checked By									
Detailed By					JOB NUMBER				
Bridge Projects Engr.									
Prelim. Plan By									
Architect/Specialist	DATE	REVISION	BY	APP'D					

Tue May 08 08:05:06 2012

BRIDGE AND STRUCTURES OFFICE

Washington State Department of Transportation

STANDARD
RAIL RETROFITS

Thrie Beam Retrofit Concrete Baluster

BRIDGE SHEET NO. 0

SHEET OF SHEETS

SR JOB NO. 10.4-A1-1 SHEET 0