MODERN BUILDING SYSTEMS
PO Box 110 • 9493 Porter Rd • Aumsville, OR 97325
800.682.1422 ModernBuildingSystems.com

JOB #2019-42 Hoffman Ticket Booth

SHEET NO 1	OF	
CALCULATED BY MCL	DATE	4/11/2019
CHECKED BY	DATE	
SCALE		

STRUCTURAL CALCULATIONS (PER 2015 IBC) FOR 13' X 40' MODULAR

MATERIAL SUMMARY	MS-1 --> MS-2
ROOF FRAMING ANALYSIS	RF-1
EXTERIOR WALL STUD	STUD-1
FLOOR FRAMING ANALYSIS	FLR-1
LATERAL FORCE ANALYSIS	LFA-1 --> LFA-5
LOADING ANALYSIS	L-1 --> L-5

4/12/19

KENNETH A. RASMUSSEN STATE OF WASHINGTON 21543 REGISTERED PROFESSIONAL ENGINEER

REGISTERED PROFESSIONAL ENGINEER 13431 OREGON SEPT. 18, 1998 KENNETH A. RASMUSSEN

MODERN BUILDING SYSTEMS
PO Box 110 • 9493 Porter Rd • Aumsville, OR 97325
800.682.1422 ModernBuildingSystems.com

JOB #2019-42 Hoffman Ticket Booth		
SHEET NO MS-1	OF MS-2	
CALCULATED BY MCL	DATE	4/11/2019
CHECKED BY	DATE	
SCALE		

MATERIAL SUMMARY FOR
13' X 40' MODULAR

ROOF FRAMING:

TYP RF RAFTER	USE	800S250-54 (50 ksi) @ 24" O.C.	SEE RF-1
TYP 3'-0" OR LESS OPENING HDR	USE	(2) 550S162-33 (33 ksi) w/ WEB STIFFENERS @ ENDS	SEE RF-1

COLUMNS:

EXTERIOR WALL STUD	USE	550S162-33 (33 ksi) @ 24" O.C.	STUD-1
INTERIOR WALL STUD	USE	350S162-33 (33 ksi) @ 24" O.C.	

FLOOR FRAMING:

TYP FLR JOIST	USE	800S250-54 (50 ksi) @ 24" O.C.	SEE FLR-1

MODERN BUILDING SYSTEMS
PO Box 110 • 9493 Porter Rd • Aumsville, OR 97325
800.682.1422 ModernBuildingSystems.com

JOB #2019-42 Hoffman Ticket Booth

SHEET NO MS-2	OF MS-2	
CALCULATED BY MCL	DATE	4/11/2019
CHECKED BY	DATE	
SCALE		

SHEATHING:

ROOF	USE	USE MIN 15/32" SHTG w/ #8 SCREWS AT 6" EDGE & 12" FIELD (UNBLOCKED) (AISI S213, TABLE D2-1) UPGRADE TO 23/32" SHTG AT ROOF	SEE LFA-1,2
EXT ENDWALLS	USE	USE MIN 7/16" SHTG w/ #8 SCREWS AT 6" EDGE & 12" FIELD (BLOCKED) (AISI S213, TABLEC2.1.3) UPGRADE TO 23/32" SHTG	SEE LFA-1
EXT SIDEWALLS	USE	USE MIN 7/16" SHTG w/ #8 SCREWS AT 6" EDGE & 12" FIELD (BLOCKED) (AISI S213, TABLEC2.1.3) UPGRADE TO 23/32" SHTG	SEE LFA-2
FLOOR	USE	USE MIN 15/32" SHTG w/ #8 SCREWS AT 6" EDGE & 12" FIELD (UNBLOCKED) (AISI S213, TABLE D2-1) UPGRADE TO 23/32" SHTG AT FLOOR	SEE LFA-1,2
SHEAR WALL HOLD DOWNS	USE	USE MIN SIMP S/HDU6 w/ (12) #14 SD SCREWS TO DBL STUD AND 5/8"DIA. ANCHORBOLT	SEE LFA-3
SIDEWALL TOP PLATE SPLICE	USE	USE MIN SIMP ST6215 w/ (10) #10 SCREWS EA END	SEE LFA-4

MODERN BUILDING SYSTEMS
9493 Porter Road SE • PO Box 110
AUMSVILLE, OREGON 97325
503-749-4949 • Fax 503-749-4950

JOB 2019-42
SHEET NO. RF-1 OF RF-1
CALCULATED BY MCL DATE 4-10-19
CHECKED BY DATE
SCALE

ROOF RAFTER

DL = 12psf , SL = 25psf , D+S = 37psf , (TRY 800S250-54 @ 2' O.C)

BENDING

$M = \frac{wL^2}{8} = \frac{37psf(2')\,12.67^2}{8} = 1485\ lb\text{-}ft\,(12) = 17.8\ k\text{-}in$

$17.8\ k\text{-}in \leq 39.13\ k\text{-}in$ ∴ OK FOR BENDING
(SSMA PG 11)

SHEAR

$V = \frac{3}{2}\frac{wL}{2} = \frac{3}{2}\frac{(37psf)(2')\,12.67'}{2} = 703^{\#} \leq 2091^{\#}$ ∴ OK FOR SHEAR
(SSMA PG 11)

DEFLECTION

$\Delta = \frac{5wL^4}{384EI} = \frac{5(37)(2)(12.67')}{384(29\times10^6)(7.378)}\,12^3 = 0.200''$

$\Delta_{ALLOW} = \frac{L}{180} = \frac{(12.67)(12)}{180} = .845'' \geq .200''$ ∴ OK FOR DEFLECTION

$\boxed{\text{USE 800S250-54 (50ksi) @ 24" O.C.}}$

HEADER LOADING

$w = 37psf\left(\frac{12.67'}{2}\right) = 215\ plf$, SPAN = 3'

$215\ plf \leq 931.4\ plf$ ∴ OK
(SSMA PG 65)

$\boxed{\text{USE (2) 550S162-33 (33ksi) WITH WEB STIFFENERS @ ENDS}}$

MODERN BUILDING SYSTEMS
9493 Porter Road SE • PO Box 110
AUMSVILLE, OREGON 97325
503-749-4949 • Fax 503-749-4950

JOB 2019-AZ
SHEET NO. STUD-1 OF STUD-1
CALCULATED BY MCL DATE 4-10-19
CHECKED BY DATE
SCALE

WALL STUD ANALYSIS (TRY 550S162-33)

GRAVITY LOAD

$$DL = \left[\overset{RF}{12psf}\left(\frac{12.67'}{2}\right) + \overset{WALL}{10psf}(8')\right] 2' = 312^{\#}$$

$$SL = \left[\overset{RF}{25psf}\left(\frac{12.67'}{2}\right)\right] 2' = 317^{\#}$$

$$DLS = \underline{629^{\#}} \text{ (AXIAL)}$$

O.O.P WIND LOAD

$$p_{net} = \lambda K_{zt} p_{net30} \qquad \text{(ASCE 7-10, CH 30, EQN 30.5-1)}$$

$$= (1.0)(1.0)(35.3psf)\overset{ASD}{(0.6)} = 21.2psf, \text{ SAY } \underline{20} \text{ PSF (LATERAL)}$$

PER SSMA PG 40, 550S162-33 (33KSI) IS ADEQUATE ∴
(ATTACHED)

$\boxed{\text{USE 550S162-33 (33KSI) STUDS @ 24" O.C}}$

MODERN BUILDING SYSTEMS
9493 Porter Road SE • PO Box 110
AUMSVILLE, OREGON 97325
503-749-4949 • Fax 503-749-4950

JOB 2019-42
SHEET NO. FLR-1 OF FLR-
CALCULATED BY MCL DATE 4-11-19
CHECKED BY DATE
SCALE

FLOOR JOIST ANALYSIS - OFFICE LOADING, (TRY 800S250-54 @ 2'0 C)

DL = 10psf, LL = 50psf, CONC LOAD = 2K, D+L = 60psf

BENDING

$$M_1 = \frac{wL^2}{8} = \frac{(60psf)(2)(12.67)^2}{8} = 2408\ lb\text{-}ft\ (12) = 28.9\ k\text{-}in$$

$28.9\ k\text{-}in \leq 39.13\ k\text{-}in$ ∴ OK
(SSMA PG 11)

CONC LOAD @ CNTR

$$M_2 = R_1\left(a + \frac{R_1}{2w}\right) = 500\left(5.1 + \frac{500}{2(40)}\right) = 2862\ lb\text{-}ft\ (12) = 34.3\ k\text{-}in$$

$34.3\ k\text{-}in \leq 39.13\ k\text{-}in$ ∴ OK FOR BENDING

SHEAR

$$V = \frac{3}{2}\frac{wL}{2} = \frac{3}{2}\frac{(60)(2)(12.67)}{2} = 1140^{\#} \leq 2091^{\#}$$ ∴ OK
(SSMA PG-11)

CONC LOAD @ SUPPORT (SIMPLIFIED)

$$V = \frac{3}{2}\left[\frac{Pb}{s} + \frac{ws}{2}\right] = \frac{3}{2}\left[\frac{1000(12.07')}{12.67'} + \frac{(10)(12.67)}{2}\right] = 1524^{\#} \leq 2091^{\#}$$

∴ OK FOR SHEAR

DEFLECTION

$$\Delta = \frac{5wL^4}{384EI} = \frac{5(60)(2)(12.67)^4}{384(29\times10^6)(7.378)}\ 12^3 = .325''$$

$$\Delta_{ALLOW} = \frac{L}{180} = \frac{(12.67)(12)}{180} = .845'' \geq .325''$$ ∴ OK FOR DEFLECTION

$\boxed{\text{USE 800S250-54 (50 ksi) @ 24" O.C}}$

MODERN BUILDING SYSTEMS
PO Box 110 • 9493 Porter Rd • Aumsville, OR 97325
800.682.1422 ModernBuildingSystems.com

JOB # 2019-42 Hoffman Ticket Booth		
SHEET NO LFA-1	OF LFA-~~4~~ 6	
CALCULATED BY MCL	DATE	4/11/2019
CHECKED BY	DATE	
SCALE		

SHEAR DIAPHRAGM DESIGN

BUILDING INFORMATION:

BUILDING LENGTH (L) =	39.67 '
BUILDING WIDTH (B) =	12.67 '
SHEAR WALL PLATE HEIGHT =	8.00 '
ROOF OVERHANG =	0.00 '
TRANSVERSE LOADING WIND =	8540 #
LONGITUDINAL LOADING WIND =	2974 #

TRANSVERSE **(WIND CONTROLS)**

WIND = 8540 #

ROOF = WIND / 2 = 4270 #

108 plf

39.67 '

Vrf = ROOF / 2 WALLS = 2135 #

2135 #

Lrf = 12.67 '

v rf = 169 plf

<370 plf (WIND) OK

USE MIN 15/32" SHTG w/ #8 SCREWS AT 6" EDGE & 12" FIELD (UNBLOCKED) (AISI S213, TABLE D2-1) UPGRADE TO 23/32" SHTG AT ROOF

SHEAR WALL PIER LENGTHS

9.17 '	0.00 '	Lwall =	9.17 '
0.00 '	0.00 '		
0.00 '	0.00 '	*v* wall =	233 plf

<455 plf (WIND) OK

USE MIN 7/16" SHTG w/ #8 SCREWS AT 6" EDGE & 12" FIELD (BLOCKED) (AISI S213, TABLEC2.1.3) UPGRADE TO 23/32" SHTG

Vflr = 2135 #

Lflr = 12.67 '

v flr = 169 plf

<370 plf (WIND) - OK

USE MIN 15/32" SHTG w/ #8 SCREWS AT 6" EDGE & 12" FIELD (UNBLOCKED) (AISI S213, TABLE D2-1) UPGRADE TO 23/32" SHTG AT FLOOR

MODERN BUILDING SYSTEMS
PO Box 110 • 9493 Porter Rd • Aumsville, OR 97325
800.682.1422 ModernBuildingSystems.com

JOB # 2019-42 Hoffman Ticket Booth

SHEET NO LFA-2	OF LFA-46		
CALCULATED BY MCL	DATE	4/11/2019	
CHECKED BY	DATE		
SCALE			

SHEAR DIAPHRAGM DESIGN (CON'T)

LONGITUDINAL **(WIND CONTROLS)**

WIND = 2974 #

ROOF = WIND / 2 = 1487 #

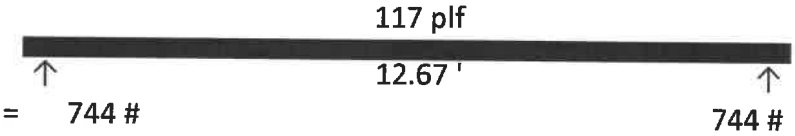

Vrf = ROOF / 2 WALLS = 744 #

Lrf = 39.67 '

v rf = 19 plf

<278 plf (CASE 3) (WIND) OK

USE MIN 15/32" SHTG w/ #8 SCREWS AT 6" EDGE & 12" FIELD (UNBLOCKED) (AISI S213, TABLE D2-1) UPGRADE TO 23/32" SHTG AT ROOF

SHEAR WALL PIER LENGTHS

16.00 '	0.00 '	Lwall =	16.00 '
0.00 '	0.00 '		
0.00 '	0.00 '	*v* wall =	46 plf

<455 plf (WIND) OK

USE MIN 7/16" SHTG w/ #8 SCREWS AT 6" EDGE & 12" FIELD (BLOCKED) (AISI S213, TABLEC2.1.3) UPGRADE TO 23/32" SHTG

Vflr = 744 #

Lflr = 39.67 '

v flr = 19 plf

<278 plf (CASE 3) (WIND) - OK

USE MIN 15/32" SHTG w/ #8 SCREWS AT 6" EDGE & 12" FIELD (UNBLOCKED) (AISI S213, TABLE D2-1) UPGRADE TO 23/32" SHTG AT FLOOR

MODERN BUILDING SYSTEMS
PO Box 110 • 9493 Porter Rd • Aumsville, OR 97325
800.682.1422 ModernBuildingSystems.com

JOB # 2019-42 Hoffman Ticket Booth

SHEET NO LFA-3	OF LFA-~~4~~6	
CALCULATED BY MCL	DATE	4/11/2019
CHECKED BY	DATE	
SCALE		

SHEARWALL HOLD DOWNS (TRANSVERSE)

	UNIT SHEAR =	233 plf
	PIER WIDTH =	9.17 '
	ROOF TRIB WIDTH =	3.00 '
Mot =	233plf X 9.17' X 8' =	17080 lb-ft
Mr =	[3'(12psf)+8'(10psf)] X 9.17'^2/2 X 0.6	2926 lb-ft
T=C=M/b	(17080 - 2926)lb-ft / (9.17 - 0.5)'	1632 # X 3 = 4896# (Overstrength)
	VALUE (SIMP C-CF-2017 PG 243)	4895 # ~~DF~~

USE MIN SIMP S/HDU6 w/ (12) #14 SD SCREWS TO DBL STUD AND 5/8"DIA. ANCHORBOLT

SHEARWALL HOLD DOWNS (LONGIT)

	UNIT SHEAR =	46 plf
	PIER WIDTH =	16.00 '
	ROOF TRIB WIDTH =	6.34 '
Mot =	46plf X 16' X 8' =	5948 lb-ft
Mr =	[6.34'(12psf)+8'(10psf)] X 16'^2/2 X 0.6	11982 lb-ft
T=C=M/b	(5948 - 11982)lb-ft / (16 - 0.5)'	-389 #

0

NO ADDT'L HOLD DOWNS REQ'D

MODERN BUILDING SYSTEMS
PO Box 110 • 9493 Porter Rd • Aumsville, OR 97325
800.682.1422 ModernBuildingSystems.com

JOB # 2019-42 Hoffman Ticket Booth

SHEET NO LFA-4	OF LFA-~~4~~ 6		
CALCULATED BY MCL	DATE	4/11/2019	
CHECKED BY	DATE		
SCALE			

SIDEWALL TOP PLATE SPLICE

T=C=M/b (108plf X 39.67'^2)/(8 X 12.67') 1671 #

VALUE (SIMP C-CFS-17 PG 279) = 1765 # DF

N ~~= 1671# / 1765# EA =~~ ~~12 NAILS~~ 12 (MIN)

USE MIN SIMP ST6215 w/ (10) #10 SCREWS EA END

ENDWALL TOP PLATE SPLICE

T=C=M/b (117plf X 12.67'^2)/(8 X 39.67') 59 #

PER NAIL VALUE (SIMP C-2017 PG 305) 171 # DF

N = 59# / 171# EA = 4 NAILS 4 (MIN)

~~USE MIN SIMP CS-18 w/ (4) N-10's EA END~~

SHEAR TRANSFER AT M.L.

$$v = \frac{Vay'}{I} = \frac{2135\# \times (39.67' \times 12.67' / 2)(12.67' / 4)}{(39.67' \times 12.67'^3) / 12} = 253 \text{ plf}$$

V = 253plf X (39.67'/2) / 2 X 2 = 5014 #

PER BOLT VALUE (NDS 2015 TABLE 12A) (600# X 1.6)= 960 # LVL or GLB: G=0.50

N= 5014# / 960# EA = 7 BOLTS 7 (MIN)

~~USE MIN (7) - 5/8 in DIA M.B.'s AT RIDGE BEAM~~

MODERN BUILDING SYSTEMS
9493 Porter Road SE • PO Box 110
AUMSVILLE, OREGON 97325
503-749-4949 • Fax 503-749-4950

JOB 2019-42
SHEET NO. LFA-5 OF LFA-6
CALCULATED BY MCL DATE 4-12-19
CHECKED BY DATE
SCALE

WELD STUD ANALYSIS @ WALL TO FLR RIM CONN

w_{MAX} = 169plf (SEE LFA-1)

5/8" ø WELD STUD CAPACITY (PER AISI MANUAL)

BOLT SHEAR

$P_n = \frac{6.71k}{2.4} = 2.80k$ (TABLE IV-7)

BEARING ON CONNECTED MEMBER (TABLE IV-8D)

$P_n = \frac{2.29k}{2.5} = 916^{\#}$ CONTROLS

$S_{MAX} = \frac{916^{\#}}{169plf} = 5.4' \rightarrow \underline{\underline{5'}}$ O.C

USE 5/8" ø DIA WELD STUDS @ 5'-0" O.C.

MODERN BUILDING SYSTEMS
9493 Porter Road SE • PO Box 110
AUMSVILLE, OREGON 97325
503-749-4949 • Fax 503-749-4950

JOB 2019-42
SHEET NO. LFA-6 OF LFA-6
CALCULATED BY MCL DATE 4-15-19
CHECKED BY DATE
SCALE

ANCHORAGE AT BASE

SLIDING

TRANSVERSE LOADING $V_T = 8540^{\#}$

LONGITUDINAL LOADING $V_L = 2974^{\#}$

OVERTURNING - TRANSVERSE

$$M_G = \left(\frac{8540^{\#}}{2}\right)10' + \left(\frac{8540^{\#}}{2}\right)1' + 9938^{\#}\left(\frac{12.67'}{2}\right) = 110\ \text{k-ft}$$

$$M_R = 20555^{\#}\left(\frac{12.67'}{2}\right) = 130\ \text{k-ft}\ (0.6) = 78\ \text{k-ft}$$

NET OVERTURNING FORCE @ SIDEWALL

$$\uparrow P = \frac{(130-78)\ \text{k-ft}}{12.67'} = \underline{4104^{\#}}$$

OVERTURNING - LONGITUDINAL

$$M_G = \left(\frac{2974^{\#}}{2}\right)10' + \left(\frac{2974^{\#}}{2}\right)1' + 9938^{\#}\left(\frac{39.67'}{2}\right) = 213\ \text{k-ft}$$

$$M_R = 20555^{\#}\left(\frac{39.67'}{2}\right) = 408\ \text{k-ft}\ (0.6) = 245\ \text{k-ft} \geq 213\ \text{k-ft}$$

$\therefore$ NO NET OVERTURNING

MODERN BUILDING SYSTEMS
PO Box 110 • 9493 Porter Rd • Aumsville, OR 97325
800.682.1422 ModernBuildingSystems.com

JOB #	2019-42 Hoffman Ticket Boot		
SHEET NO	L-1	OF	L-5
CALCULATED BY	MCL	DATE	4/11/2019
CHECKED BY		DATE	
SCALE			

WIND ANALYSIS FOR ENCLOSED SIMPLE DIAPHRAGM LOW-RISE BUILDINGS - BASED ON IBC 2015 / ASCE 7-10 CHAPTER 28, PART 2

INPUT DATA

Risk Category =	RC	II		(Table 1.5-1)
Basic Wind Speed =	Vult	140	Vasd =108	mph (3 sec gust)(Fig 26.5-1)
Exposure Category =	EC	D		(Sec. 26.7)
Topographic Factor =	Kzt	1.00		(Sec. 26.8 & 26.8-1)
Adjustment Factor =	Lambda	1.47		(Sec 28.6-1)
Building Length =	L	39.67	ft	
Building width =	B	12.67	ft	10:40:54 AM
Building Height to Eave =	he	11.00	ft	
Building Height to Ridge =	hr	12.00	ft	
Eave Overhang	oh	0.00	ft	
Building End Zone =	a	3.00	ft	
Roof Pitch =	RP	1 or less	:12	
Approx. Roof Angle =	RA	0 to 5	degrees	(Ref. Fig. 28.6-1)

OUTPUT

Wind Pressure, ps30 (Fig. 28.6-1)

Horizontal	A-ps30	31.10	psf
Horizontal	B-ps30	-16.10	psf
Horizontal	C-ps30	20.60	psf
Horizontal	D-ps30	-9.60	psf
Vertical	E-ps30	-37.30	psf
Vertical	F-ps30	-21.20	psf
Vertical	G-ps30	-26.00	psf
Vertical	H-ps30	-16.40	psf
O.H.	Eoh-ps30	-52.30	psf
O.H.	Goh-ps30	-40.90	psf

MODERN BUILDING SYSTEMS
PO Box 110 • 9493 Porter Rd • Aumsville, OR 97325
800.682.1422 ModernBuildingSystems.com

JOB #	2019-42 Hoffman Ticket Boo		
SHEET NO	L-2	OF	L-5
CALCULATED BY	MCL	DATE	4/11/2019
CHECKED BY		DATE	
SCALE			

Wind Pressure, ps

ps = Lambda * Kzt * ps30

				Min Loading
Horizontal	A-ps	45.72	psf	16.00
Horizontal	B-ps	-23.67	psf	8.00
Horizontal	C-ps	30.28	psf	16.00
Horizontal	D-ps	-14.11	psf	8.00
Vertical	E-ps	-54.83	psf	0.00
Vertical	F-ps	-31.16	psf	0.00
Vertical	G-ps	-38.22	psf	0.00
Vertical	H-ps	-24.11	psf	0.00
O.H.	Eoh-ps	-76.88	psf	
O.H.	Goh-ps	-60.12	psf	

CASE A - Transverse Wind

				Min Loading	
	A-tw	3017	lbs	1056	lbs
Set to 0	B-tw	-142	lbs	48	lbs
	C-tw	11216	lbs	5926	lbs
Set to 0	D-tw	-475	lbs	269	lbs
Total		14233	lbs (SD)	7299	lbs
Convert to ASD x		0.6		0.6	
Total Force on building side L =		**8540**	**lbs (ASD)**	**4380**	lbs

CASE B - Longitudinal Wind

	A-lw	1543	lbs	540	lbs
	C-lw	3413	lbs	1803	lbs
Total		4956	lbs (SD)	2343	lbs
Convert to ASD x		0.6		0.6	
Total Force on building end B =		**2974**	**lbs (ASD)**	**1406**	**lbs**

CASE A - Transverse Uplift

w/ gable end OH uplift	E-up	-2084	lbs
w/ gable end OH uplift	F-up	-1185	lbs
w/ gable end OH uplift	G-up	-8152	lbs
w/ gable end OH uplift	H-up	-5142	lbs
sidewall eaves OH uplift	Eoh-up	0	lbs
sidewall eaves OH uplift	Goh-up	0	lbs
Total		**-16563**	**lbs (SD)**
Convert to ASD x		0.6	
Total Uplift Force =		**-9938**	**lbs (ASD)**

MODERN BUILDING SYSTEMS
PO Box 110 • 9493 Porter Rd • Aumsville, OR 97325
800.682.1422 ModernBuildingSystems.com

JOB #2019-42 Hoffman Ticket Booth

SHEET NO L-3	OF	L-5
CALCULATED BY MCL	DATE	4/9/2019
CHECKED BY	DATE	
SCALE		

13' x 39.67' MODULAR

SEISMIC per IBC 2015 / ASCE 7-10

ASCE 7-10 Table 1.5-1	Risk Category		II	
ASCE 7-10 Table 1.5-2	Seismic Importance Factor	Ie =	1.00	
ASCE 7-10 Table 12.2-1	Response Modification Factor	R =	6.50	
USGS Data	Spectral Response Accel.	Ss =	1.372	
ASCE 7-10 11.4.2	Site Class D			
ASCE 7-10 Table 11.4-1	Site Coefficient	Fa =	1.000	
ASCE 7-10 Eqn. 11.4-1	Sms = Ss * Fa	Sms =	1.372	
ASCE 7-10 Eqn 11.4-3	Sds = 2/3 * Sms	Sds =	0.915	
ASCE 7-10 Table 11.6-1	Seismic Design Cat.		D	
ASCE 7-10 Eqn 12.8-1	V = Cs * W = (Sds /(R/Ie) * W)* 0.7	V =	0.099	W
IBC 2015 1605.3.1	Note: 0.7 converts to ASD			
ASCE 7-10 Eqn 12.8-5		Vmin =	0.010	W

Building Weight

	Roof (psf)		Exterior Wall (psf)
Stl 24 Ga	1.3	Smoothwall	1.3
23/32 Shtg	2.5	23/32 Shtg	2.5
Stl Rafters	1.4	R-21U	1.3
R-38L	1.8	Stl Studs	0.6
5/8 Gyp	2.8	5/8 Gyp	2.8
	0		0
	0		0
Total	9.8		8.5

	Interior Wall (psf)		Floor (psf)
5/8 Gyp	2.8	Misc	1.0
Stl Studs	0.6	23/32 Shtg	2.5
5/8 Gyp	2.8	Stl Flr Joists	1.4
	0	R-30U	1.6
	0	Stl Flr Rim	4.5
	0	Stl 26 Ga	1.0
Total	6.2		12.0

MODERN BUILDING SYSTEMS
PO Box 110 • 9493 Porter Rd • Aumsville, OR 97325
800.682.1422 ModernBuildingSystems.com

JOB #2019-42 Hoffman Ticket Booth

SHEET NO L-4	OF	L-5	
CALCULATED BY	MCL	DATE	4/9/2019
CHECKED BY		DATE	
SCALE			

Building Weight (con't)

No Snow	12.67 '	39.67 '	0.0 psf	=	0	lbs
Roof =	12.67 '	39.67 '	9.8 psf	=	4926	lbs
Ext. Wall =	8.00 '	104.68 '	8.5 psf	=	7118	lbs
Int. Wall =	8.00 '	50.00 '	6.2 psf	=	2480	lbs
Floor =	12.67 '	39.67 '	12.0 psf	=	6031	lbs
Chassis =				=	0	lbs
				=	0	lbs
Total				**W=**	**20555**	**lbs**

STEMWALL CONSTRUCTION

Wr = Total DL tributary to roof = 9725 lbs

Vx= Story shear at roof = Wr x Cs = **0.96** k

V= Total base shear = W x Cs = **2.02** k

L-5 of L-5

ATC Hazards by Location

Search Information

Address:	841 Alaskan Way, Seattle, WA 98104, USA
Coordinates:	47.6028266, -122.33807000000001
Elevation:	16 ft
Timestamp:	2019-04-09T18:39:14.830Z
Hazard Type:	Seismic
Reference Document:	ASCE7-10
Risk Category:	II
Site Class:	D

MCER Horizontal Response Spectrum

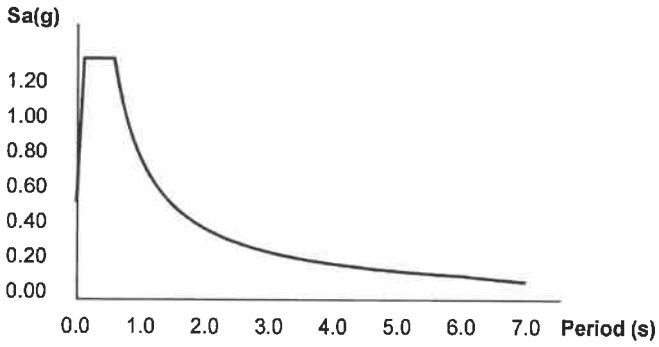

Design Horizontal Response Spectrum

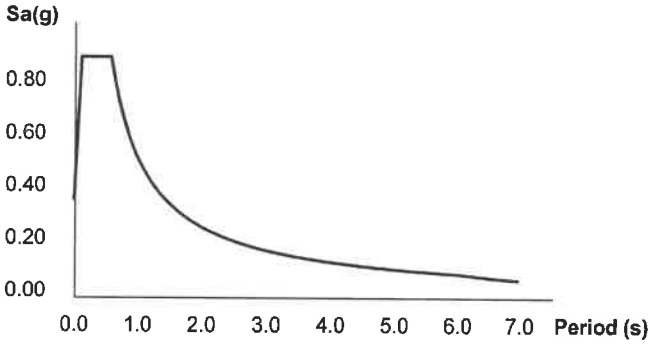

Basic Parameters

Name	Value	Description
S_S	1.372	MCE_R ground motion (period=0.2s)
S_1	0.531	MCE_R ground motion (period=1.0s)
S_{MS}	1.372	Site-modified spectral acceleration value
S_{M1}	0.797	Site-modified spectral acceleration value
S_{DS}	0.915	Numeric seismic design value at 0.2s SA
S_{D1}	0.531	Numeric seismic design value at 1.0s SA

▾Additional Information

Name	Value	Description
SDC	D	Seismic design category
F_a	1	Site amplification factor at 0.2s
F_v	1.5	Site amplification factor at 1.0s
CR_S	0.968	Coefficient of risk (0.2s)
CR_1	0.939	Coefficient of risk (1.0s)

1. *Fiberboard* panels shall comply with AHA A194.1 or ASTM C 208.
2. *Nominal* shear strengths shall be given in Table C2.1-2.
3. *Fiberboard* shall be applied perpendicular to framing with strap *blocking* behind the horizontal joint and with solid *blocking* between the first two end *studs*, at each end of the wall, or applied vertically with all edges attached to framing members.
4. Screws used to attach *fiberboard* shall be a minimum No. 8 in accordance with ASTM C1513. Head style shall be selected to provide a flat bearing surface in contact with the sheathing with a head diameter not less than 0.43 inches (10.9 mm). Screws shall be driven so that their flat bearing surface is flush with the surface of the sheathing.

Table C2.1-1
United States and Mexico
Nominal Shear Strength (R_n) for Wind and Other In-Plane Loads for Shear Walls [1,4,6,7,8]
(Pounds Per Foot)

Assembly Description	Maximum Aspect Ratio (h/w)	Fastener Spacing at Panel Edges[2] (Inches)			
		6	4	3	2
15/32" structural 1 sheathing (4-ply), one side	2:1	1065 [3]	-	-	-
7/16" rated sheathing (OSB), one side	2:1	910 [3]	1410	1735	1910
7/16" rated sheathing (OSB), one side oriented perpendicular to framing	2:1	1020	-	-	-
7/16" rated sheathing (OSB), one side	2:1 [5]	-	1025	1425	1825
0.018" steel sheet, one side	2:1	485	-	-	-
0.027" steel sheet, one side	4:1	-	1,000 [9]	1085 [9]	1170 [9]
	2:1 [5]	647	710	778	845

1. *Nominal strengths* shall be multiplied by the *resistance factor* (ϕ) to determine *design strength* or divided by the *safety factor* (Ω) to determine *allowable strengths* as set forth in Section C2.1.
2. Screws in the field of the panel shall be installed 12 inches (305 mm) o.c. unless otherwise shown.
3. Where fully blocked gypsum board is applied to the opposite side of this assembly, per Table C2.1-2 with screw spacing at 7 inches (178 mm) o.c. edge and 7 inches (178 mm) o.c. field, these *nominal strengths* are permitted to be increased by 30%.
4. See Section C2.1 for requirements for sheathing applied to both sides of wall.
5. *Shear wall* height to width aspect ratio's (h/w) greater than 2:1, but not exceeding 4:1, shall be permitted provided the *nominal strength* is multiplied by 2w/h. See Section C2.1.
6. Shear values are permitted for use in seismic design where the seismic response modification factor, R, is taken equal to or less than 3, subject to the limitations in Section C1.1.
7. For wood structural panel sheathed shear walls, tabulated R_n values shall be applicable for short-term load duration (wind loads). For other in-plane lateral loads of normal or permanent load duration as defined by the AF&PA NDS, the values in the table above for wood structural panel sheathed shear walls shall be multiplied by 0.63 (normal) or 0.56 (permanent).
8. For SI: 1" = 25.4 mm, 1 foot = 0.305 m, 1 lb = 4.45 N.
9. For these assemblies, the *designation thickness* of *stud*, *track* and *blocking* shall be a minimum of 43 mils.

$\Omega = 2.0$

Table D2-1
United States and Mexico
Nominal Shear Strength (R_n) for Diaphragms with Wood Sheathing[1, 4]
(Pounds Per Foot)

Membrane Material	Screw Size	Thickness (in.)	Blocked				Unblocked	
			Screw spacing at diaphragm boundary edges and at all continuous panel edges (in.)				Screws spaced maximum of 6" on all supported edges	
			6	4	2.5	2	Load perpendicular to unblocked edges and continuous panel joints	All other configurations
			Screw spacing at all other panel edges (in.)					
			6	6	4	3		
Structural I	See note 2	3/8	768	1022	1660	2045	685	510
		7/16	768	1127	1800	2255	755	565
		15/32	925	1232	1970	2465	825	615
C-D, C-C and other graded wood structural panels[3]	See note 2	3/8	690	920	1470	1840	615	460
		7/16	760	1015	1620	2030	680	505
		15/32	832	1110	1770	2215	740	555

1. For SI: 1" = 25.4 mm, 1 foot = 0.305 m, 1 lb = 4.45 N.
2. No. 8 screws (minimum) shall be used when framing members have a *designation thickness* of 54 mils or less and No. 10 screws (minimum) shall be used when framing members have a *designation thickness* greater than 54 mils.
3. Wood structural panels shall conform to DOC PS-1 and PS-2.
4. For wood structural panel sheathed diaphragms, tabulated R_n values shall be applicable for short-term load duration (wind or seismic loads). For other in-plane lateral loads of normal or permanent load duration as defined by the AF&PA NDS, the values in the table above for wood structural panel sheathed diaphragms shall be multiplied by 0.75 (normal) or 0.67 (permanent).

$\Omega = 2.0$

D3 Special Seismic Requirements

D3.1 General

Where the seismic response modification coefficient, R, used to determine the lateral forces is taken greater than 3, the requirements of this section shall apply in addition to the requirements of Sections D1 and D2.

Diaphragms shall be defined as flexible or rigid, in accordance with the *applicable building code.*

D3.2 Wood Diaphragms

The aspect ratio (length/width) of a *diaphragm* sheathed with wood structural sheathing shall be limited to 4:1 where all edges of the wood structural panel sheathing are attached to framing members or to intermittent *blocking*. Where there is no intermittent *blocking*, the aspect ratio shall be limited to 3:1. Wood structural panel sheathing shall be arranged so that

Combined Axial and Lateral Loads

20 psf Lateral Load

Wall Height (ft)	Spacing (in) oc	350S162				362S137				362S162				362S200			
		33 ksi		50 ksi		33 ksi		50 ksi		33 ksi		50 ksi		33 ksi		50 ksi	
		33	43	54	68	33	43	54	68	33	43	54	68	33	43	54	68
8	12	1.16	1.89	3.36	4.46	0.91	1.53	2.77	3.80	1.23	1.99	3.55	4.76	1.55	2.56	4.49	6.01
	16	0.90	1.62	3.11	4.21	0.67	1.28	2.54	3.56	0.98	1.72	3.30	4.50	1.27	2.27	4.20	5.72
	24	0.43 [3]	1.11 [4]	2.64	3.72	0.24 [3]	0.81 [4]	2.11	3.10	0.50 [4]	1.21	2.82	4.01	0.74 [4]	1.71	3.65	5.18
9	12	0.90	1.57	2.91	3.92	0.68	1.26	2.43	3.37	0.97	1.68	3.12	4.23	1.25	2.19	3.94	5.34
	16	0.60 [3]	1.26	2.62	3.62	0.41 [3]	0.97 [4]	2.16	3.08	0.67 [4]	1.36	2.82	3.92	0.92	1.85	3.60	5.00
	24	-	0.69 [3]	2.08 [4]	3.06	-	0.44 [3]	1.66 [3]	2.55 [4]	0.13 [3]	0.78 [3]	2.27 [4]	3.34	0.32 [3]	1.21 [4]	2.97	4.37
10	12	0.64 [3]	1.25	2.45	3.37	0.46 [3]	0.99 [4]	2.07	2.91	0.71 [4]	1.36	2.67	3.66	0.95	1.82	3.38	4.65
	16	0.32 [3]	0.91 [3]	2.14 [4]	3.03	0.16 [3]	0.66 [3]	1.77 [4]	2.59	0.38 [3]	1.01 [3]	2.34	3.32	0.59 [3]	1.43 [4]	3.00	4.27
	24	-	0.29 [3]	1.56 [3]	2.43 [3]	-	-	1.22 [3]	2.01 [3]	-	0.38 [3]	1.74 [3]	2.69 [4]	-	0.74 [3]	2.32 [3]	3.58 [4]
12	12	0.18 [2]	0.67 [3]	1.62 [3]	2.33 [4]	-	0.48 [3]	1.36 [3]	2.02 [4]	0.24 [2]	0.76 [3]	1.81 [3]	2.58 [4]	0.41 [3]	1.11 [3]	2.32 [4]	3.32
	16	-	0.30 [2]	1.29 [3]	1.97 [3]	-	0.13 [2]	1.04 [3]	1.67 [3]	-	0.38 [2]	1.45 [3]	2.20 [3]	-	0.69 [3]	1.92 [3]	2.91 [4]
	24	-	-	0.70 [2]	1.35 [2]	-	-	0.48 [2]	1.06 [2]	-	-	0.84 [2]	1.55 [2]	-		1.21 [2]	2.19 [3]
14	12	-	0.22 [2]	1.00 [2]	1.54 [3]	-	-	0.82 [2]	1.31 [3]	-	0.29 [2]	1.14 [2]	1.73 [3]	-	0.54 [2]	1.49 [3]	2.28 [3]
	16	-	-	0.68 [2]	1.20 [2]	-	-	0.50 [1]	0.97 [2]	-	-	0.79 [2]	1.36 [2]	-	0.12 [2]	1.10 [2]	1.88 [3]
	24	-	-	0.13 [1]	0.60 [1]	-	-		0.39 [1]	-	-	0.21 [1]	0.73 [1]	-		0.43 [1]	1.18 [2]
16	12	-	-	0.57 [1]	0.98 [2]	-	-	0.42 [1]	0.80 [2]	-	-	0.66 [1]	1.12 [2]	-	0.12 [1]	0.91 [2]	1.53 [2]
	16	-	-	0.26 [1]	0.66 [1]	-	-	0.13 [1]	0.49 [1]	-	-	0.34 [1]	0.77 [1]	-	-	0.54 [1]	1.15 [2]
	24	-	-	-	0.11 [1]	-	-	-	-	-	-	-	0.19 [1]	-	-	-	0.50 [1]

20 psf Lateral Load

Wall Height (ft)	Spacing (in) oc	400S137				400S162				400S200				550S162			
		33 ksi		50 ksi		33 ksi		50 ksi		33 ksi		50 ksi		33 ksi		50 ksi	
		33	43	54	68	33	43	54	68	33	43	54	68	33	43	54	68
8	12	1.06	1.74	3.14	4.41	1.42	2.25	4.04	5.57	1.76	2.88	5.10	6.97	1.93	2.95	5.22	7.06
	16	0.83	1.50	2.92	4.18	1.17	1.99	3.79	5.31	1.48	2.60	4.82	6.69	1.74	2.77	5.05	6.89
	24	0.40 [4]	1.04	2.50	3.72	0.70	1.50	3.32	4.81	0.97	2.06	4.28	6.14	1.35	2.41	4.70	6.55
9	12	0.84	1.49	2.83	4.07	1.17	1.95	3.64	5.08	1.47	2.53	4.59	6.36	1.75	2.77	5.03	6.90
	16	0.57 [4]	1.20	2.56	3.77	0.87	1.64	3.34	4.76	1.15	2.19	4.25	6.01	1.50	2.54	4.80	6.67
	24	-	0.67 [3]	2.06	3.21	0.33 [3]	1.07 [4]	2.78	4.16	0.55 [4]	1.56	3.61	5.35	1.03	2.09	4.36	6.23
10	12	0.62 [4]	1.22	2.49	3.62	0.90	1.64	3.21	4.54	1.18	2.17	4.05	5.69	1.54	2.56	4.76	6.69
	16	0.31 [3]	0.89 [4]	2.18	3.28	0.57 [3]	1.29	2.87	4.17	0.81 [4]	1.78	3.66	5.29	1.24	2.28	4.48	6.40
	24	-	0.30 [3]	1.61 [3]	2.65 [4]	-	0.64 [3]	2.24 [4]	3.48	0.15 [3]	1.07 [3]	2.94	4.54	0.69	1.74	3.94	5.85
12	12	0.19 [3]	0.70 [3]	1.78 [4]	2.67	0.41 [3]	1.03 [3]	2.33 [4]	3.38	0.61 [3]	1.44 [4]	2.96	4.31	1.08	2.07	4.10	5.91
	16	-	0.32 [3]	1.42 [3]	2.27 [3]	-	0.62 [3]	1.94 [3]	2.96 [4]	0.20 [3]	0.99 [3]	2.52 [4]	3.84	0.70 [4]	1.69	3.72	5.51
	24	-	-	0.79 [2]	1.58 [3]	-	-	1.25 [2]	2.20 [3]	-	0.20 [2]	1.73 [3]	3.00 [3]	-	0.99 [4]	3.01	4.76
14	12	-	0.25 [2]	1.15 [3]	1.82 [3]	-	0.50 [3]	1.56 [3]	2.35 [3]	0.14 [2]	0.81 [3]	2.01 [3]	3.05 [4]	0.61 [3]	1.53	3.34	4.97
	16	-	-	0.79 [2]	1.42 [2]	-	-	1.16 [2]	1.92 [3]	-	0.35 [2]	1.57 [3]	2.58 [3]	0.17 [3]	1.08 [3]	2.88 [4]	4.48
	24	-	-	0.16 [1]	0.73 [1]	-	-	0.48 [1]	1.18 [2]	-	-	0.79 [2]	1.76 [2]	-	0.26 [3]	2.05 [3]	3.59 [3]
16	12	-	-	0.67 [2]	1.17 [2]	-	-	0.98 [2]	1.58 [3]	-	0.32 [2]	1.30 [2]	2.10 [3]	0.18 [3]	1.00 [3]	2.57 [4]	3.97
	16	-	-	0.32 [1]	0.80 [2]	-	-	0.60 [1]	1.17 [2]	-	-	0.87 [2]	1.65 [2]	-	0.51 [3]	2.07 [3]	3.43 [3]
	24	-	-	-	0.15 [1]	-	-	-	0.48 [1]	-	-	0.14 [1]	0.89 [1]	-	-	1.19 [2]	2.48 [3]

20 psf Lateral Load

Wall Height (ft)	Spacing (in) oc	600S137					600S162					600S200				
		33 ksi		50 ksi			33 ksi		50 ksi			33 ksi		50 ksi		
		33	43	54	68	97	33	43	54	68	97	33	43	54	68	97
8	12	1.42	2.17	3.53	4.77	7.30	2.00	3.02	5.25	7.10	11.06	2.43	3.86	7.01	9.55	15.23
	16	1.27	2.02	3.40	4.65	7.20	1.82	2.85	5.10	6.95	10.91	2.25	3.66	6.81	9.36	15.04
	24	0.97	1.73	3.15	4.40	6.99	1.47	2.53	4.79	6.65	10.61	1.88	3.27	6.42	9.00	14.67
9	12	1.29	2.04	3.41	4.66	7.21	1.85	2.87	5.11	6.96	10.91	2.26	3.65	6.73	9.25	14.84
	16	1.10	1.85	3.25	4.50	7.07	1.62	2.66	4.91	6.76	10.72	2.02	3.40	6.48	9.01	14.60
	24	0.73	1.48	2.93	4.18	6.80	1.18	2.25	4.51	6.38	10.34	1.56	2.91	5.98	8.54	14.12
10	12	1.15	1.90	3.28	4.53	7.09	1.67	2.71	4.94	6.79	10.74	2.06	3.41	6.41	8.89	14.37
	16	0.92	1.67	3.08	4.33	6.92	1.40	2.45	4.69	6.55	10.50	1.77	3.11	6.10	8.59	14.06
	24	0.47	1.22	2.69	3.94	6.58	0.86	1.94	4.20	6.06	10.01	1.22	2.51	5.49	8.01	13.47
12	12	0.82	1.56	2.97	4.21	6.80	1.25	2.28	4.48	6.37	10.29	1.60	2.86	5.63	8.00	13.16
	16	0.50	1.24	2.68	3.92	6.54	0.88	1.92	4.11	6.00	9.91	1.22	2.44	5.19	7.58	12.72
	24	-	0.63 [4]	2.13	3.36	6.03	0.19 [3]	1.24	3.43	5.30	9.18	0.50 [4]	1.66	4.37	6.77	11.86
14	12	0.46 [4]	1.17	2.59	3.81	6.42	0.79	1.78	3.79	5.58	9.63	1.11	2.24	4.71	6.92	11.64
	16	-	0.76 [4]	2.21	3.42	6.05	0.35 [3]	1.33 [4]	3.33	5.10	9.09	0.64 [4]	1.73	4.18	6.38	11.06
	24	-	0.01 [3]	1.50 [3]	2.68 [4]	5.35	-	0.52 [3]	2.49 [3]	4.21	8.09	-	0.79 [3]	3.19 [4]	5.39	9.97
16	12	-	0.76 [3]	2.15 [4]	3.33	5.92	0.35 [3]	1.26 [4]	3.03	4.64	8.21	0.62 [3]	1.62	3.76	5.75	9.94
	16	-	0.28 [3]	1.69 [3]	2.84 [4]	5.44	-	0.75 [3]	2.52 [3]	4.08	7.58	0.10 [3]	1.04 [3]	3.16 [4]	5.13	9.25
	24	-	-	0.85 [2]	1.95 [3]	4.56 [3]	-	-	1.60 [3]	3.09 [3]	6.44 [4]	-	-	2.09 [3]	4.03 [3]	8.00

If no note, deflection meets L/720

[1]Deflection meets L/120 *[2]Deflection meets L/240* *[3]Deflection meets L/360* *[4]Deflection meets L/600*

See Table Notes on page 37.

Copyright © 2014 by the SSMA

SSMA

Section	Design Thickness (in)	Fy (ksi)	Gross Properties							Effective Properties						Torsional Properties						Lu (in)
			Area (in²)	Weight (lb/ft)	Ix (in⁴)	Sx (in³)	Rx (in)	Iy (in⁴)	Ry (in)	Ixe (in⁴)	Sxe (in³)	Mal (in-k)	Mad (in-k)	Vag (lb)	Vanet (lb)	Jx1000 (in⁴)	Cw (in⁶)	Xo (in)	m (in)	Ro (in)	ß	
250S137-33	0.0346	33	0.197	0.67	0.203	0.163	1.015	0.052	0.515	0.203	0.158	3.11	3.10	975	399	0.079	0.076	-1.141	0.677	1.612	0.499	35.6
250S137-43	0.0451	33	0.255	0.87	0.261	0.208	1.010	0.067	0.511	0.261	0.205	4.53 [2]	4.60	1265	394	0.173	0.096	-1.129	0.670	1.599	0.501	33.6
250S137-54	0.0566	50	0.316	1.07	0.318	0.255	1.004	0.080	0.504	0.318	0.244	8.22 [2]	8.34	2353	565	0.337	0.115	-1.115	0.663	1.583	0.504	27.1
250S137-68	0.0713	50	0.390	1.33	0.386	0.309	0.994	0.095	0.495	0.386	0.308	10.65 [2]	10.67	2866	519	0.661	0.138	-1.096	0.653	1.561	0.507	26.8
250S137-97	0.1017	50	0.533	1.81	0.506	0.405	0.975	0.120	0.475	0.506	0.405	14.75	14.75	3798	429	1.839	0.176	-1.057	0.633	1.514	0.513	26.5
250S162-33	0.0346	33	0.223	0.76	0.235	0.188	1.027	0.087	0.624	0.235	0.180	3.55	3.56	975	399	0.089	0.146	-1.470	0.859	1.898	0.401	44.1
250S162-43	0.0451	33	0.289	0.98	0.302	0.242	1.022	0.111	0.620	0.302	0.240	5.22 [2]	5.25	1265	394	0.196	0.184	-1.457	0.852	1.885	0.402	42.1
250S162-54	0.0566	50	0.358	1.22	0.370	0.296	1.016	0.135	0.613	0.370	0.284	9.42 [2]	9.46	2353	565	0.383	0.223	-1.443	0.845	1.868	0.403	33.9
250S162-68	0.0713	50	0.443	1.51	0.450	0.360	1.007	0.162	0.605	0.450	0.357	12.11 [2]	12.21	2866	519	0.752	0.268	-1.424	0.835	1.846	0.405	33.7
250S162-97	0.1017	50	0.61	2.07	0.596	0.477	0.989	0.209	0.586	0.596	0.477	16.93	16.93	3798	429	2.102	0.346	-1.386	0.815	1.801	0.408	33.5
250S200-33	0.0346	33	0.258	0.88	0.279	0.223	1.040	0.154	0.773	0.276	0.197	3.90	4.09	975	399	0.103	0.302	-1.926	1.108	2.321	0.312	56.0
250S200-43	0.0451	33	0.334	1.14	0.358	0.287	1.036	0.198	0.769	0.358	0.278	5.49	5.66	1265	394	0.227	0.382	-1.914	1.101	2.308	0.312	56.1
250S200-54	0.0566	50	0.415	1.41	0.440	0.352	1.030	0.241	0.763	0.44	0.321	9.60	10.11	2353	565	0.443	0.464	-1.899	1.093	2.291	0.313	45.5
250S200-68	0.0713	50	0.515	1.75	0.537	0.430	1.022	0.293	0.754	0.537	0.417	13.84	14.27	2866	519	0.872	0.561	-1.881	1.084	2.270	0.313	43.4
250S200-97	0.1017	50	0.711	2.42	0.718	0.575	1.005	0.386	0.736	0.718	0.575	19.82	19.82	3798	429	2.452	0.735	-1.843	1.063	2.224	0.314	43.4
250S250-43	0.0451	33	0.379	1.29	0.426	0.341	1.060	0.336	0.941	0.426	0.297	5.87	6.24	1265	394	0.257	0.638	-2.404	1.359	2.791	0.258	66.8
250S250-54	0.0566	50	0.471	1.60	0.524	0.419	1.055	0.412	0.935	0.521	0.341	10.22	11.02	2353	565	0.503	0.778	-2.389	1.351	2.774	0.258	54.1
250S250-68	0.0713	50	0.586	1.99	0.643	0.514	1.047	0.503	0.926	0.643	0.446	13.35	14.59	2866	519	0.993	0.944	-2.371	1.341	2.752	0.258	54.5
250S250-97	0.1017	50	0.813	2.77	0.864	0.692	1.031	0.670	0.908	0.864	0.663	22.31	23.26	3798	429	2.803	1.245	-2.332	1.32	2.707	0.258	52.4
350S137-33	0.0346	33	0.232	0.79	0.441	0.252	1.380	0.059	0.503	0.441	0.223	4.41	4.54	1024	487	0.093	0.153	-1.016	0.621	1.786	0.676	34.8
350S137-43	0.0451	33	0.300	1.02	0.568	0.324	1.375	0.075	0.498	0.568	0.307	6.07	6.38	1739	631	0.204	0.193	-1.005	0.615	1.774	0.679	34.7
350S137-54	0.0566	50	0.372	1.27	0.696	0.398	1.367	0.090	0.492	0.696	0.366	10.95	11.42	3372	947	0.398	0.233	-0.991	0.607	1.759	0.683	28.0
350S137-68	0.0713	50	0.461	1.57	0.849	0.485	1.357	0.107	0.482	0.849	0.472	14.12	14.53	4202	897	0.782	0.28	-0.973	0.598	1.738	0.687	27.9
350S137-97	0.1017	50	0.635	2.16	1.130	0.646	1.334	0.136	0.462	1.13	0.629	22.9	23.49	5704	775	2.189	0.361	-0.935	0.579	1.693	0.695	25.2
350S162-33	0.0346	33	0.258	0.88	0.508	0.290	1.404	0.098	0.617	0.508	0.257	5.08	5.22	1024	487	0.103	0.277	-1.324	0.796	2.026	0.573	42.7
350S162-43	0.0451	33	0.334	1.14	0.654	0.374	1.400	0.125	0.612	0.654	0.357	7.05	7.31	1739	631	0.227	0.350	-1.312	0.789	2.014	0.575	42.6
350S162-54	0.0566	50	0.415	1.41	0.804	0.460	1.392	0.152	0.606	0.804	0.426	12.74	13.05	3372	947	0.443	0.426	-1.298	0.782	1.998	0.578	34.5
350S162-68	0.0713	50	0.515	1.75	0.985	0.563	1.383	0.184	0.597	0.985	0.549	16.44	16.84	4202	897	0.872	0.514	-1.280	0.772	1.977	0.581	34.5
350S162-97	0.1017	50	0.711	2.42	1.320	0.754	1.362	0.238	0.578	1.32	0.738	26.18	26.76	5704	775	2.452	0.672	-1.242	0.752	1.932	0.587	31.7
350S200-33	0.0346	33	0.292	0.99	0.598	0.342	1.431	0.175	0.773	0.597	0.283	5.59	5.95	1024	487	0.117	0.541	-1.76	1.039	2.396	0.461	53.7
350S200-43	0.0451	33	0.379	1.29	0.771	0.441	1.426	0.224	0.768	0.771	0.41	8.09	8.36	1739	631	0.257	0.687	-1.748	1.032	2.383	0.462	53.7
350S200-54	0.0566	50	0.471	1.60	0.95	0.543	1.420	0.274	0.762	0.95	0.47	14.07	14.86	3372	947	0.503	0.838	-1.733	1.024	2.367	0.464	43.5
350S200-68	0.0713	50	0.586	1.99	1.167	0.667	1.411	0.333	0.754	1.167	0.638	19.10	19.68	4202	897	0.993	1.018	-1.715	1.014	2.345	0.465	43.5
350S200-97	0.1017	50	0.813	2.77	1.576	0.901	1.393	0.440	0.736	1.576	0.884	30.51	31.08	5704	775	2.803	1.347	-1.676	0.994	2.300	0.469	40.7
350S250-43	0.0451	33	0.424	1.44	0.906	0.518	1.461	0.380	0.946	0.906	0.431	8.52	9.000	1739	631	0.288	1.151	-2.22	1.286	2.821	0.381	64.3
350S250-54	0.0566	50	0.528	1.80	1.118	0.639	1.455	0.467	0.94	1.113	0.494	14.78	15.92	3372	947	0.564	1.409	-2.205	1.278	2.804	0.382	52.1
350S250-68	0.0713	50	0.657	2.24	1.376	0.787	1.447	0.570	0.931	1.376	0.661	19.78	21.31	4202	897	1.114	1.718	-2.186	1.268	2.782	0.383	52.2
350S250-97	0.1017	50	0.915	3.11	1.870	1.069	1.430	0.762	0.913	1.870	0.998	33.58	35.43	5704	775	3.154	2.291	-2.147	1.248	2.736	0.384	49.5
362S137-33	0.0346	33	0.236	0.80	0.479	0.264	1.424	0.059	0.501	0.479	0.232	4.59	4.73	1024	521	0.094	0.165	-1.003	0.615	1.813	0.694	34.7
362S137-43	0.0451	33	0.306	1.04	0.616	0.340	1.419	0.075	0.497	0.616	0.320	6.32	6.65	1739	676	0.207	0.208	-0.991	0.608	1.801	0.697	34.6
362S137-54	0.0566	50	0.379	1.29	0.756	0.417	1.411	0.091	0.490	0.756	0.381	11.42	11.91	3372	1016	0.405	0.251	-0.978	0.601	1.785	0.700	27.9
362S137-68	0.0713	50	0.470	1.60	0.922	0.509	1.401	0.109	0.480	0.922	0.493	14.77	15.24	4370	1004	0.797	0.302	-0.959	0.592	1.764	0.704	27.8
362S137-97	0.1017	50	0.648	2.20	1.229	0.678	1.377	0.137	0.46	1.229	0.662	24.1	24.67	5943	875	2.233	0.390	-0.922	0.573	1.720	0.713	25.1
362S162-33	0.0346	33	0.262	0.89	0.551	0.304	1.450	0.099	0.616	0.551	0.268	5.29	5.43	1024	521	0.105	0.297	-1.308	0.789	2.048	0.592	42.6
362S162-43	0.0451	33	0.340	1.16	0.710	0.392	1.445	0.127	0.611	0.710	0.372	7.34	7.62	1739	676	0.230	0.376	-1.297	0.782	2.036	0.594	42.5
362S162-54	0.0566	50	0.422	1.44	0.873	0.481	1.438	0.154	0.604	0.873	0.444	13.28	13.59	3372	1016	0.451	0.457	-1.283	0.774	2.020	0.597	34.4
362S162-68	0.0713	50	0.524	1.78	1.069	0.590	1.429	0.186	0.596	1.069	0.574	17.18	17.65	4370	1004	0.887	0.552	-1.264	0.765	1.998	0.600	34.3
362S162-97	0.1017	50	0.724	2.46	1.435	0.792	1.408	0.241	0.577	1.435	0.776	27.52	28.08	5943	875	2.496	0.723	-1.226	0.745	1.954	0.606	31.5
362S200-33	0.0346	33	0.297	1.01	0.648	0.358	1.478	0.177	0.772	0.647	0.294	5.81	6.19	1024	521	0.118	0.577	-1.741	1.030	2.411	0.478	53.6
362S200-43	0.0451	33	0.385	1.31	0.836	0.461	1.474	0.227	0.767	0.836	0.427	8.43	8.70	1739	676	0.261	0.734	-1.729	1.024	2.398	0.480	53.5
362S200-54	0.0566	50	0.479	1.63	1.030	0.568	1.467	0.277	0.761	1.030	0.490	14.66	15.47	3372	1016	0.511	0.896	-1.715	1.016	2.382	0.482	43.3
362S200-68	0.0713	50	0.595	2.02	1.265	0.698	1.458	0.337	0.753	1.265	0.666	19.95	20.51	4370	1004	1.008	1.089	-1.696	1.006	2.360	0.484	43.3
362S200-97	0.1017	50	0.826	2.81	1.711	0.944	1.44	0.446	0.735	1.711	0.928	32.03	32.57	5943	875	2.847	1.441	-1.658	0.986	2.315	0.487	40.5
362S250-43	0.0451	33	0.43	1.46	0.98	0.541	1.51	0.385	0.946	0.98	0.449	8.88	9.35	1739	676	0.292	1.230	-2.199	1.277	2.830	0.396	64.2
362S250-54	0.0566	50	0.535	1.82	1.21	0.668	1.504	0.473	0.94	1.205	0.514	15.40	16.54	3372	1016	0.571	1.506	-2.184	1.269	2.813	0.397	52.0
362S250-68	0.0713	50	0.666	2.27	1.49	0.822	1.496	0.578	0.931	1.49	0.689	20.63	22.17	4370	1004	1.129	1.837	-2.165	1.259	2.791	0.398	52.0
362S250-97	0.1017	50	0.927	3.16	2.027	1.118	1.478	0.772	0.912	2.027	1.046	35.17	36.93	5943	875	3.197	2.452	-2.126	1.239	2.746	0.400	49.3
362S300-54	0.0566	50	0.592	2.01	1.390	0.767	1.533	0.734	1.114	1.312	0.529	15.83	17.34	3372	1016	0.632	2.316	-2.659	1.522	3.265	0.337	60.2
362S300-68	0.0713	50	0.738	2.51	1.716	0.947	1.525	0.900	1.105	1.684	0.716	21.44	23.42	4370	1004	1.250	2.833	-2.640	1.512	3.243	0.337	60.4
362S300-97	0.1017	50	1.029	3.50	2.343	1.292	1.509	1.213	1.086	2.32	1.150	34.42	36.41	5943	875	3.548	3.803	-2.600	1.491	3.196	0.338	60.9
400S137-33	0.0346	33	0.249	0.85	0.603	0.301	1.556	0.061	0.496	0.603	0.259	5.12	5.29	976	595	0.099	0.204	-0.965	0.597	1.897	0.741	34.5
400S137-43	0.0451	33	0.323	1.10	0.776	0.388	1.551	0.078	0.491	0.776	0.359	7.09	7.47	1739	810	0.219	0.257	-0.954	0.591	1.885	0.744	34.3
400S137-54	0.0566	50	0.401	1.36	0.953	0.477	1.542	0.094	0.484	0.953	0.428	12.82	13.38	3372	1223	0.428	0.311	-0.940	0.583	1.870	0.747	27.7
400S137-68	0.0713	50	0.497	1.69	1.165	0.582	1.531	0.112	0.475	1.165	0.558	16.70	17.44	4871	1356	0.842	0.375	-0.922	0.574	1.849	0.751	27.6
400S137-97	0.1017	50	0.686	2.33	1.557	0.779	1.507	0.142	0.454	1.557	0.764	27.81	28.33	6658	1207	2.365	0.486	-0.885	0.555	1.806	0.760	24.8
400S162-33	0.0346	33	0.275	0.94	0.692	0.346	1.586	0.103	0.611	0.692	0.299	5.91	6.07	976	595	0.110	0.363	-1.263	0.768	2.118	0.644	42.3
400S162-43	0.0451	33	0.357	1.21	0.892	0.446	1.581	0.131	0.606	0.892	0.417	8.23	8.54	1739	810	0.242	0.460	-1.252	0.761	2.106	0.647	42.2
400S162-54	0.0566	50	0.443	1.51	1.098	0.549	1.574	0.159	0.600	1.098	0.498	14.90	15.25	3372	1223	0.473	0.560	-1.238	0.754	2.090	0.649	34.1
400S162-68	0.0713	50	0.550	1.87	1.346	0.673	1.564	0.192	0.591	1.346	0.648	19.41	20.15	4871	1356	0.933	0.677	-1.220	0.745	2.069	0.653	34.0
400S162-97	0.1017	50	0.762	2.59	1.812	0.906	1.542	0.249	0.572	1.812	0.892	31.64	32.15	6658	1207	2.628	0.889	-1.182	0.725	2.025	0.659	31.1
400S200-33	0.0346	33	0.310	1.05	0.812	0.406	1.619	0.183	0.769	0.812	0.328	6.49	6.90	976	595	0.124	0.697	-1.688	1.007	2.462	0.530	53.1

[1] Web height-to-thickness ratio exceeds 200. Web stiffeners are required at all support points and concentrated loads.

[2] Allowable moment includes cold work of forming.

See Table Notes on page 7.

Structural (S) Section Properties

SSMA

Section	Design Thickness (in)	Fy (ksi)	Gross Properties							Effective Properties						Torsional Properties						Lu (in)
			Area (in^2)	Weight (lb/ft)	Ix (in^4)	Sx (in^3)	Rx (in)	Iy (in^4)	Ry (in)	Ixe (in^4)	Sxe (in^3)	Mal (in-k)	Mad (in-k)	Vag (lb)	Vanet (lb)	Jx1000 (in^4)	Cw (in^6)	Xo (in)	m (in)	Ro (in)	ß	
400S200-43	0.0451	33	0.402	1.37	1.047	0.524	1.615	0.235	0.764	1.047	0.478	9.45	9.74	1739	810	0.272	0.886	-1.676	1.000	2.449	0.532	53.0
400S200-54	0.0566	50	0.500	1.70	1.292	0.646	1.608	0.287	0.758	1.292	0.549	16.43	17.31	3372	1223	0.534	1.083	-1.662	0.993	2.433	0.534	42.9
400S200-68	0.0713	50	0.622	2.12	1.589	0.795	1.599	0.349	0.750	1.589	0.751	22.48	23.04	4871	1356	1.054	1.318	-1.643	0.983	2.412	0.536	42.9
400S200-97	0.1017	50	0.864	2.94	2.155	1.077	1.579	0.462	0.731	2.155	1.063	36.68	37.17	6658	1207	2.978	1.749	-1.605	0.963	2.368	0.540	39.9
400S250-43	0.0451	33	0.447	1.52	1.224	0.612	1.655	0.399	0.945	1.224	0.503	9.93	10.41	1739	810	0.303	1.486	-2.139	1.252	2.864	0.443	63.7
400S250-54	0.0566	50	0.556	1.89	1.512	0.756	1.649	0.49	0.938	1.506	0.576	17.24	18.42	3372	1223	0.594	1.821	-2.124	1.244	2.848	0.444	51.6
400S250-68	0.0713	50	0.693	2.36	1.864	0.932	1.64	0.599	0.929	1.864	0.775	23.19	24.76	4871	1356	1.174	2.225	-2.105	1.235	2.826	0.445	51.6
400S250-97	0.1017	50	0.966	3.29	2.541	1.271	1.622	0.801	0.911	2.541	1.191	40.06	41.47	6658	1207	3.329	2.978	-2.066	1.214	2.78	0.448	48.8
400S300-54	0.0566	50	0.613	2.09	1.732	0.866	1.681	0.760	1.114	1.637	0.592	17.72	19.25	3372	1223	0.655	2.802	-2.594	1.496	3.285	0.377	59.9
400S300-68	0.0713	50	0.764	2.60	2.139	1.070	1.673	0.933	1.105	2.099	0.805	24.09	26.05	4871	1356	1.295	3.432	-2.574	1.486	3.263	0.378	60.0
400S300-97	0.1017	50	1.067	3.63	2.928	1.464	1.656	1.258	1.086	2.897	1.307	39.12	40.72	6658	1207	3.679	4.619	-2.535	1.465	3.216	0.379	60.3
550S137-33	0.0346	33	0.301	1.02	1.283	0.467	2.064	0.067	0.472	1.283	0.453	8.95	7.48	699	699	0.12	0.411	-0.841	0.536	2.278	0.864	33.7
550S137-43	0.0451	33	0.391	1.33	1.655	0.602	2.059	0.085	0.467	1.655	0.592	13.08	11.6	1550	1199	0.265	0.52	-0.83	0.53	2.268	0.866	31.7
550S137-54	0.0566	50	0.486	1.65	2.039	0.741	2.049	0.103	0.46	2.039	0.714	24.03	20.88	3093	1881	0.519	0.632	-0.817	0.523	2.254	0.868	25.4
550S137-68	0.0713	50	0.604	2.05	2.503	0.91	2.036	0.123	0.451	2.503	0.909	31.42	28.89	5350	2532	1.023	0.764	-0.801	0.514	2.234	0.871	24.9
550S137-97	0.1017	50	0.838	2.85	3.38	1.229	2.008	0.155	0.43	3.38	1.229	44.72	44.72	9518	3026	2.891	0.997	-0.766	0.497	2.192	0.878	23.9
550S162-33	0.0346	33	0.327	1.11	1.458	0.530	2.112	0.113	0.589	1.458	0.512	10.11	8.63	699	699	0.130	0.713	-1.114	0.697	2.459	0.795	41.4
550S162-43	0.0451	33	0.424	1.44	1.883	0.685	2.107	0.145	0.584	1.883	0.681	14.79 [2]	13.14	1550	1199	0.288	0.905	-1.103	0.691	2.448	0.797	39.2
550S162-54	0.0566	50	0.528	1.80	2.324	0.845	2.098	0.176	0.577	2.324	0.811	26.86 [2]	23.52	3093	1881	0.564	1.105	-1.090	0.684	2.434	0.800	31.6
550S162-68	0.0713	50	0.657	2.24	2.861	1.040	2.086	0.212	0.568	2.861	1.031	34.94 [2]	32.28	5350	2532	1.114	1.342	-1.072	0.675	2.414	0.803	31.1
550S162-97	0.1017	50	0.915	3.11	3.886	1.413	2.061	0.276	0.549	3.886	1.413	50.13	50.13	9518	3026	3.154	1.775	-1.037	0.656	2.372	0.809	30
550S200-33	0.0346	33	0.362	1.23	1.694	0.616	2.164	0.204	0.751	1.678	0.559	11.05	9.80	699	699	0.144	1.326	-1.508	0.925	2.742	0.698	51.9
550S200-43	0.0451	33	0.469	1.60	2.189	0.796	2.159	0.261	0.746	2.189	0.776	15.33	13.96	1550	1199	0.318	1.691	-1.496	0.918	2.731	0.700	51.7
550S200-54	0.0566	50	0.585	1.99	2.706	0.984	2.152	0.32	0.739	2.706	0.901	26.98	24.84	3093	1881	0.624	2.072	-1.483	0.911	2.716	0.702	41.8
550S200-68	0.0713	50	0.729	2.48	3.341	1.215	2.141	0.389	0.731	3.341	1.17	38.83	35.92	5350	2532	1.235	2.531	-1.465	0.902	2.695	0.705	39.6
550S200-97	0.1017	50	1.016	3.46	4.563	1.659	2.119	0.515	0.712	4.563	1.659	57.25	57.25	9518	3026	3.504	3.384	-1.428	0.882	2.652	0.710	38.6
550S250-43	0.0451	33	0.515	1.75	2.524	0.918	2.215	0.445	0.93	2.524	0.817	16.15	14.74	1550	1199	0.349	2.837	-1.933	1.163	3.083	0.607	62.6
550S250-54	0.0566	50	0.641	2.18	3.126	1.137	2.208	0.547	0.923	3.084	0.95	28.44	26.11	3093	1881	0.685	3.486	-1.919	1.155	3.067	0.609	50.7
550S250-68	0.0713	50	0.800	2.72	3.866	1.406	2.198	0.669	0.914	3.864	1.233	36.91	35.43	5350	2532	1.356	4.274	-1.900	1.146	3.046	0.611	50.6
550S250-97	0.1017	50	1.118	3.80	5.304	1.929	2.178	0.897	0.895	5.304	1.837	61.77	60.32	9518	3026	3.855	5.761	-1.862	1.126	3.002	0.615	47.6
600S137-33	0.0346	33	0.318	1.08	1.582	0.527	2.229	0.069	0.464	1.548	0.455	8.98	8.19	638	638	0.127	0.500	-0.807	0.519	2.416	0.889	33.5
600S137-43	0.0451	33	0.413	1.41	2.042	0.681	2.223	0.087	0.459	2.041	0.645	12.74	11.82	1416	1240	0.280	0.633	-0.796	0.513	2.406	0.890	33.3
600S137-54	0.0566	50	0.514	1.75	2.518	0.839	2.213	0.105	0.452	2.518	0.777	23.26	21.24	2823	1947	0.549	0.769	-0.784	0.506	2.391	0.893	26.8
600S137-68	0.0713	50	0.640	2.18	3.094	1.031	2.200	0.125	0.443	3.094	1.030	30.84	28.89	5350	2879	1.084	0.930	-0.768	0.497	2.371	0.895	26.5
600S137-97	0.1017	50	0.889	3.03	4.188	1.396	2.170	0.159	0.422	4.188	1.396	50.80 [2]	50.80	10472	3805	3.066	1.216	-0.734	0.480	2.330	0.901	23.6
600S137-118	0.1242	50	1.065	3.62	4.913	1.638	2.147	0.176	0.406	4.913	1.638	61.69	61.69	12526	3622	5.477	1.391	-0.709	0.467	2.298	0.905	22.9
600S162-33	0.0346	33	0.344	1.17	1.793	0.598	2.282	0.116	0.581	1.793	0.577	11.41	9.47	638	638	0.137	0.861	-1.072	0.677	2.587	0.828	41.1
600S162-43	0.0451	33	0.447	1.52	2.316	0.772	2.276	0.148	0.576	2.316	0.767	16.68 [2]	14.46	1416	1240	0.303	1.095	-1.062	0.670	2.577	0.830	39.0
600S162-54	0.0566	50	0.556	1.89	2.860	0.953	2.267	0.180	0.570	2.860	0.916	30.33 [2]	25.90	2823	1947	0.594	1.337	-1.049	0.663	2.562	0.832	31.4
600S162-68	0.0713	50	0.693	2.36	3.525	1.175	2.255	0.218	0.560	3.525	1.164	39.47 [2]	35.69	5350	2879	1.174	1.626	-1.032	0.655	2.543	0.835	30.8
600S162-97	0.1017	50	0.966	3.29	4.797	1.599	2.229	0.283	0.541	4.797	1.599	56.73 [2]	56.72	10472	3805	3.329	2.153	-0.997	0.636	2.501	0.841	29.8
600S162-118	0.1242	50	1.158	3.94	5.652	1.884	2.209	0.321	0.526	5.652	1.884	68.94 [2]	68.93	12526	3622	5.956	2.487	-0.971	0.623	2.470	0.845	29.1
600S200-33	0.0346	33	0.379	1.29	2.075	0.692	2.340	0.209	0.743	2.058	0.621	12.28	10.77	638	638	0.151	1.593	-1.457	0.901	2.855	0.740	51.6
600S200-43	0.0451	33	0.492	1.67	2.683	0.894	2.335	0.268	0.739	2.683	0.873	17.24	15.39	1416	1240	0.334	2.033	-1.446	0.894	2.844	0.742	51.4
600S200-54	0.0566	50	0.613	2.09	3.319	1.106	2.327	0.328	0.732	3.319	1.015	30.40	27.38	2823	1947	0.655	2.493	-1.432	0.887	2.829	0.744	41.6
600S200-68	0.0713	50	0.764	2.60	4.101	1.367	2.316	0.400	0.723	4.101	1.317	43.71 [2]	39.69	5350	2879	1.295	3.047	-1.415	0.878	2.809	0.746	39.3
600S200-97	0.1017	50	1.067	3.63	5.612	1.871	2.293	0.530	0.705	5.612	1.871	64.53 [2]	63.67	10472	3805	3.679	4.080	-1.378	0.859	2.767	0.752	38.3
600S200-118	0.1242	50	1.283	4.36	6.641	2.214	2.275	0.611	0.690	6.641	2.214	78.44 [2]	78.44	12526	3622	6.595	4.753	-1.351	0.845	2.735	0.756	37.6
600S250-43	0.0451	33	0.537	1.83	3.082	1.027	2.396	0.458	0.923	3.082	0.918	18.14	16.21	1416	1240	0.364	3.411	-1.874	1.136	3.179	0.652	62.4
600S250-54	0.0566	50	0.670	2.28	3.819	1.273	2.388	0.562	0.917	3.766	1.069	32.00	28.71	2823	1947	0.715	4.194	-1.860	1.129	3.163	0.654	50.5
600S250-68	0.0713	50	0.836	2.84	4.727	1.576	2.378	0.688	0.908	4.723	1.386	41.49	39.07	5350	2879	1.416	5.145	-1.842	1.119	3.142	0.656	50.4
600S250-97	0.1017	50	1.169	3.98	6.496	2.165	2.357	0.923	0.889	6.496	2.063	69.38 [2]	66.81	10472	3805	4.030	6.947	-1.803	1.100	3.098	0.661	47.3
600S250-118	0.1242	50	1.407	4.79	7.713	2.571	2.342	1.075	0.874	7.713	2.498	85.92 [2]	86.83	12526	3622	7.234	8.142	-1.775	1.085	3.066	0.665	46.6
600S300-54	0.0566	50	0.726	2.47	4.319	1.440	2.439	0.875	1.098	4.014	1.106	33.13	29.62	2823	1947	0.775	6.452	-2.299	1.372	3.527	0.575	59.1
600S300-68	0.0713	50	0.907	3.09	5.354	1.785	2.430	1.075	1.089	5.221	1.446	43.30	40.53	5350	2879	1.537	7.937	-2.280	1.363	3.505	0.577	59.0
600S300-97	0.1017	50	1.271	4.32	7.381	2.460	2.410	1.454	1.070	7.280	2.247	67.28	64.67	10472	3805	4.381	10.776	-2.241	1.343	3.461	0.581	58.8
600S300-118	0.1242	50	1.531	5.21	8.785	2.928	2.395	1.704	1.055	8.713	2.797	94.24 [2]	90.37	12526	3622	7.872	12.683	-2.212	1.328	3.427	0.583	55.3
600S350-54	0.0566	50	0.825	2.81	5.022	1.674	2.467	1.491	1.344	4.721	1.335	39.97	36.56	2823	1947	0.881	12.942	-3.037	1.787	4.137	0.461	74.4
600S350-68	0.0713	50	1.032	3.51	6.237	2.079	2.459	1.841	1.336	6.166	1.771	53.01	49.69	5350	2879	1.748	15.968	-3.018	1.777	4.115	0.462	74.4
600S350-97	0.1017	50	1.449	4.93	8.631	2.877	2.441	2.518	1.318	8.631	2.593	77.64	78.36	10472	3805	4.994	21.811	-2.979	1.757	4.071	0.464	74.4
600S350-118	0.1242	50	1.748	5.95	10.304	3.435	2.428	2.978	1.305	10.304	3.268	108.43 [2]	107.66	12526	3622	8.990	25.791	-2.951	1.742	4.038	0.466	70.6
800S137-33 [1]	0.0346	33	0.388	1.32	3.198	0.799	2.873	0.073	0.435	2.998	0.622	12.30	10.71	474	474	0.155	0.957	-0.696	0.460	2.987	0.946	32.5
800S137-43	0.0451	33	0.503	1.71	4.134	1.033	2.866	0.093	0.430	4.001	0.896	17.70	15.78	1051	1051	0.341	1.214	-0.687	0.454	2.978	0.947	32.2
800S137-54	0.0566	50	0.627	2.13	5.110	1.277	2.855	0.112	0.423	4.974	1.083	32.42	28.47	2091	2091	0.670	1.478	-0.676	0.448	2.964	0.948	25.9
800S137-68	0.0713	50	0.782	2.66	6.303	1.576	2.839	0.134	0.414	6.285	1.468	43.96	39.57	4221	3367	1.325	1.789	-0.661	0.440	2.944	0.950	25.6
800S137-97	0.1017	50	1.093	3.72	8.597	2.149	2.805	0.169	0.394	8.597	2.149	64.35	63.91	10885	5938	3.767	2.349	-0.630	0.423	2.902	0.953	25.0
800S137-118	0.1242	50	1.314	4.47	10.147	2.537	2.779	0.188	0.378	10.147	2.537	95.56	95.56	16235	7115	6.755	2.694	-0.608	0.411	2.870	0.955	21.9
800S162-33 [1]	0.0346	33	0.413	1.41	3.582	0.896	2.943	0.125	0.550	3.384	0.710	14.03	12.61	474	474	0.165	1.630	-0.936	0.607	3.137	0.911	40.1
800S162-43	0.0451	33	0.537	1.83	4.633	1.158	2.937	0.160	0.546	4.500	1.019	20.14	18.33	1051	1051	0.364	2.076	-0.926	0.601	3.128	0.912	39.8
800S162-54	0.0566	50	0.670	2.28	5.736	1.434	2.927	0.194	0.539	5.600	1.229	36.79	32.81	2091	2091	0.715	2.539	-0.914	0.594	3.113	0.914	32.1
800S162-68	0.0713	50	0.836	2.84	7.089	1.772	2.913	0.235	0.530	7.070	1.663	49.80	45.11	4221	3367	1.416	3.093	-0.899	0.586	3.094	0.916	31.9
800S162-97	0.1017	50	1.169	3.98	9.713	2.428	2.883	0.305	0.510	9.713	2.428	72.70	71.93	10885	5938	4.030	4.114	-0.866	0.568	3.053	0.919	31.4

[1] *Web height-to-thickness ratio exceeds 200. Web stiffeners are required at all support points and concentrated loads.*
[2] *Allowable moment includes cold work of forming.*

See Table Notes on page 7.

SSMA

Section	Design Thickness (in)	Fy (ksi)	Gross Properties							Effective Properties						Torsional Properties						Lu (in)
			Area (in^2)	Weight (lb/ft)	Ix (in^4)	Sx (in^3)	Rx (in)	Iy (in^4)	Ry (in)	Ixe (in^4)	Sxe (in^3)	Mal (in-k)	Mad (in-k)	Vag (lb)	Vanet (lb)	Jx1000 (in^4)	Cw (in^6)	Xo (in)	m (in)	Ro (in)	ß	
800S162-118	0.1242	50	1.407	4.79	11.504	2.876	2.860	0.345	0.496	11.504	2.876	105.23 [2]	105.23	16235	7115	7.234	4.766	-0.842	0.556	3.022	0.922	28.0
800S200-33[1]	0.0346	33	0.448	1.52	4.096	1.024	3.023	0.227	0.712	4.096	0.816	16.12	14.52	474	474	0.179	2.971	-1.288	0.817	3.363	0.853	50.6
800S200-43	0.0451	33	0.582	1.98	5.302	1.325	3.018	0.292	0.708	5.302	1.293	25.54	20.99	1051	1051	0.395	3.797	-1.277	0.811	3.353	0.855	50.3
800S200-54	0.0566	50	0.726	2.47	6.573	1.643	3.009	0.357	0.701	6.573	1.499	44.87	37.37	2091	2091	0.775	4.663	-1.265	0.804	3.338	0.856	40.7
800S200-68	0.0713	50	0.907	3.09	8.140	2.035	2.996	0.435	0.692	8.140	1.964	65.21 [2]	54.70	4221	3367	1.537	5.712	-1.248	0.796	3.319	0.859	38.4
800S200-97	0.1017	50	1.271	4.32	11.203	2.801	2.969	0.576	0.673	11.203	2.801	96.63 [2]	89.76	10885	5938	4.381	7.684	-1.214	0.777	3.278	0.863	37.2
800S200-118	0.1242	50	1.531	5.21	13.316	3.329	2.949	0.665	0.659	13.316	3.329	117.95 [2]	117.55	16235	7115	7.872	8.981	-1.188	0.764	3.247	0.866	36.5
800S250-43	0.0451	33	0.627	2.13	6.015	1.504	3.097	0.500	0.893	6.015	1.313	25.95	22.06	1051	1051	0.425	6.374	-1.675	1.043	3.632	0.787	61.5
800S250-54	0.0566	50	0.783	2.66	7.465	1.866	3.088	0.614	0.886	7.378	1.525	45.66	39.13	2091	2091	0.836	7.850	-1.661	1.036	3.617	0.789	49.8
800S250-68	0.0713	50	0.978	3.33	9.261	2.315	3.077	0.752	0.877	9.240	2.059	61.65	53.75	4221	3367	1.658	9.652	-1.644	1.027	3.597	0.791	49.6
800S250-97	0.1017	50	1.372	4.67	12.789	3.197	3.053	1.009	0.857	12.789	3.054	102.70[2]	93.42	10885	5938	4.731	13.091	-1.607	1.008	3.555	0.796	46.4
800S250-118	0.1242	50	1.655	5.63	15.242	3.810	3.035	1.175	0.843	15.242	3.707	127.51[2]	122.92	16235	7115	8.511	15.395	-1.580	0.994	3.524	0.799	45.6
800S300-54	0.0566	50	0.839	2.86	8.358	2.090	3.156	0.960	1.069	7.862	1.535	45.96	40.22	2091	2091	0.896	12.076	-2.073	1.271	3.924	0.721	58.6
800S300-68	0.0713	50	1.050	3.57	10.382	2.595	3.145	1.179	1.060	10.082	2.145	64.21	55.47	4221	3367	1.779	14.888	-2.055	1.262	3.903	0.723	58.4
800S300-97	0.1017	50	1.474	5.02	14.375	3.594	3.123	1.595	1.040	14.170	3.304	98.92	89.89	10885	5938	5.082	20.304	-2.017	1.243	3.860	0.727	58.1
800S300-118	0.1242	50	1.779	6.05	17.167	4.292	3.106	1.871	1.025	17.022	4.108	138.41[2]	126.69	16235	7115	9.149	23.979	-1.989	1.229	3.828	0.730	54.5
800S350-54	0.0566	50	0.938	3.19	9.683	2.421	3.212	1.646	1.325	9.191	1.869	55.96	49.74	2091	2091	1.002	22.897	-2.766	1.668	4.441	0.612	73.1
800S350-68	0.0713	50	1.174	4.00	12.046	3.012	3.203	2.034	1.316	11.909	2.596	77.73	68.05	4221	3367	1.990	28.308	-2.748	1.658	4.421	0.614	72.9
800S350-97	0.1017	50	1.652	5.62	16.737	4.184	3.183	2.784	1.298	16.737	3.785	113.34	108.67	10885	5938	5.696	38.834	-2.710	1.639	4.377	0.617	72.7
800S350-118	0.1242	50	1.997	6.79	20.041	5.010	3.168	3.295	1.285	20.041	4.762	158.02[2]	150.37	16235	7115	10.267	46.068	-2.682	1.624	4.345	0.619	68.9
1000S162-43[1]	0.0451	33	0.627	2.13	8.025	1.605	3.577	0.168	0.518	7.523	1.302	25.74	22.49	836	836	0.425	3.430	-0.823	0.545	3.707	0.951	38.8
1000S162-54	0.0566	50	0.783	2.66	9.950	1.990	3.565	0.204	0.511	9.391	1.572	47.07	40.37	1661	1661	0.836	4.198	-0.812	0.538	3.692	0.952	31.3
1000S162-68	0.0713	50	0.978	3.33	12.325	2.465	3.550	0.246	0.502	11.978	2.154	64.51	56.35	3345	3345	1.658	5.121	-0.798	0.531	3.673	0.953	31.0
1000S162-97	0.1017	50	1.372	4.67	16.967	3.393	3.516	0.320	0.483	16.967	3.269	97.89	92.56	9864	7177	4.731	6.827	-0.768	0.514	3.631	0.955	30.4
1000S162-118	0.1242	50	1.655	5.63	20.169	4.034	3.491	0.363	0.468	20.169	4.034	120.77	120.34	16235	9536	8.511	7.924	-0.746	0.502	3.600	0.957	30.0
1000S200-43[1]	0.0451	33	0.672	2.29	9.085	1.817	3.676	0.309	0.677	8.602	1.470	29.05	26.14	836	836	0.456	6.236	-1.147	0.743	3.910	0.914	49.3
1000S200-54	0.0566	50	0.839	2.86	11.278	2.256	3.666	0.378	0.671	10.769	1.705	51.05	46.62	1661	1661	0.896	7.665	-1.135	0.737	3.896	0.915	39.8
1000S200-68	0.0713	50	1.050	3.57	13.994	2.799	3.652	0.460	0.662	13.665	2.420	72.46	64.50	3345	3345	1.779	9.401	-1.120	0.729	3.876	0.917	39.6
1000S200-97	0.1017	50	1.474	5.02	19.336	3.867	3.622	0.609	0.643	19.336	3.741	112.00	104.73	9864	7177	5.082	12.679	-1.088	0.711	3.836	0.920	39.0
1000S200-118	0.1242	50	1.779	6.05	23.052	4.610	3.599	0.703	0.629	23.052	4.610	138.04	135.74	16235	9536	9.149	14.848	-1.064	0.699	3.805	0.922	38.7
1000S250-43[1]	0.0451	33	0.717	2.44	10.203	2.041	3.771	0.531	0.860	10.203	1.617	31.95	27.67	836	836	0.486	10.481	-1.518	0.965	4.155	0.867	60.7
1000S250-54	0.0566	50	0.896	3.05	12.677	2.535	3.762	0.653	0.854	12.660	1.879	56.26	49.16	1661	1661	0.957	12.922	-1.505	0.958	4.140	0.868	49.1
1000S250-68	0.0713	50	1.121	3.81	15.751	3.150	3.749	0.799	0.844	15.741	2.768	82.89	68.13	3345	3345	1.899	15.909	-1.488	0.950	4.121	0.870	48.8
1000S250-97	0.1017	50	1.576	5.36	21.827	4.365	3.722	1.072	0.825	21.827	4.181	140.63[2]	120.13	9864	7177	5.433	21.632	-1.454	0.932	4.080	0.873	45.6
1000S250-118	0.1242	50	1.904	6.48	26.080	5.216	3.701	1.249	0.810	26.080	5.082	174.84[2]	159.80	16235	9536	9.788	25.490	-1.428	0.918	4.049	0.876	44.8
1000S300-54	0.0566	50	0.953	3.24	14.076	2.815	3.844	1.024	1.037	13.440	1.902	56.96	50.69	1661	1661	1.017	19.888	-1.892	1.185	4.408	0.816	58.1
1000S300-68	0.0713	50	1.192	4.06	17.509	3.502	3.832	1.258	1.027	17.099	2.802	83.89	70.40	3345	3345	2.020	24.551	-1.874	1.176	4.388	0.818	57.8
1000S300-97	0.1017	50	1.677	5.71	24.318	4.864	3.808	1.702	1.007	23.970	4.499	134.69	115.62	9864	7177	5.783	33.570	-1.838	1.158	4.346	0.821	57.4
1000S300-118	0.1242	50	2.028	6.90	29.109	5.822	3.789	1.997	0.992	28.861	5.586	188.23[2]	164.19	16235	9536	10.427	39.725	-1.811	1.144	4.315	0.824	53.8
1000S350-54	0.0566	50	1.052	3.58	16.220	3.244	3.927	1.768	1.297	15.577	2.328	69.69	62.97	1661	1661	1.123	36.575	-2.546	1.566	4.857	0.725	72.2
1000S350-68	0.0713	50	1.317	4.48	20.204	4.041	3.917	2.185	1.288	20.026	3.417	102.32	86.60	3345	3345	2.232	45.277	-2.529	1.557	4.837	0.727	72.0
1000S350-97	0.1017	50	1.855	6.31	28.148	5.630	3.895	2.992	1.270	28.148	5.118	153.25	139.74	9864	7177	6.397	62.280	-2.492	1.538	4.795	0.730	71.6
1000S350-118	0.1242	50	2.245	7.64	33.772	6.754	3.878	3.543	1.256	33.772	6.427	213.25[2]	194.46	16235	9536	11.544	74.030	-2.465	1.524	4.764	0.732	67.8
1200S162-54[1]	0.0566	50	0.896	3.05	15.730	2.622	4.190	0.212	0.486	14.298	1.914	57.31	46.75	1377	1377	0.957	6.340	-0.732	0.493	4.281	0.971	30.5
1200S162-68	0.0713	50	1.121	3.81	19.518	3.253	4.173	0.255	0.477	18.390	2.645	79.19	66.14	2771	2771	1.899	7.739	-0.719	0.485	4.261	0.972	30.2
1200S162-97	0.1017	50	1.576	5.36	26.966	4.494	4.137	0.331	0.459	26.735	4.091	122.49	111.30	8147	7411	5.433	10.331	-0.691	0.470	4.219	0.973	29.5
1200S162-118	0.1242	50	1.904	6.48	32.145	5.357	4.109	0.376	0.444	32.145	5.168	154.74	147.23	14986	11037	9.788	12.002	-0.670	0.459	4.187	0.974	29.0
1200S200-54[1]	0.0566	50	0.953	3.24	17.662	2.944	4.306	0.393	0.643	16.334	2.073	62.07	54.74	1377	1377	1.017	11.550	-1.032	0.681	4.474	0.947	39.0
1200S200-68	0.0713	50	1.192	4.06	21.947	3.658	4.291	0.479	0.634	20.864	2.963	88.71	76.55	2771	2771	2.020	14.176	-1.017	0.673	4.455	0.948	38.7
1200S200-97	0.1017	50	1.677	5.71	30.417	5.069	4.258	0.635	0.615	30.175	4.660	139.51	126.86	8147	7411	5.783	19.150	-0.987	0.656	4.414	0.950	38.1
1200S200-118	0.1242	50	2.028	6.90	36.347	6.058	4.234	0.732	0.601	36.347	5.865	175.59	166.80	14986	11037	10.427	22.451	-0.964	0.644	4.384	0.952	37.7
1200S250-54[1]	0.0566	50	1.009	3.43	19.681	3.280	4.416	0.683	0.823	18.433	2.149	64.34	58.39	1377	1377	1.078	19.505	-1.378	0.892	4.699	0.914	48.3
1200S250-68	0.0713	50	1.263	4.30	24.484	4.081	4.402	0.836	0.813	23.575	3.007	90.04	81.59	2771	2771	2.141	24.034	-1.362	0.884	4.679	0.915	48.1
1200S250-97	0.1017	50	1.779	6.05	34.016	5.669	4.373	1.121	0.794	33.835	5.037	150.82	135.37	8147	7411	6.134	32.734	-1.329	0.867	4.639	0.918	47.5
1200S250-118	0.1242	50	2.152	7.32	40.726	6.788	4.350	1.307	0.779	40.726	6.541	195.84	178.57	14986	11037	11.065	38.619	-1.305	0.854	4.608	0.920	47.1
1200S300-54[1]	0.0566	50	1.066	3.63	21.699	3.617	4.512	1.074	1.004	21.043	2.272	68.04	60.65	1377	1377	1.138	30.051	-1.743	1.111	4.940	0.876	57.4
1200S300-68	0.0713	50	1.335	4.54	27.020	4.503	4.499	1.320	0.994	26.510	3.317	99.32	84.79	2771	2771	2.262	37.126	-1.726	1.103	4.921	0.877	57.2
1200S300-97	0.1017	50	1.881	6.40	37.616	6.269	4.472	1.786	0.974	37.085	5.831	174.57	141.05	8147	7411	6.484	50.853	-1.691	1.085	4.880	0.880	56.7
1200S300-118	0.1242	50	2.276	7.75	45.106	7.518	4.452	2.095	0.959	44.727	7.232	243.67[2]	201.68	14986	11037	11.704	60.251	-1.666	1.071	4.849	0.882	53.0
1200S350-54[1]	0.0566	50	1.165	3.96	24.860	4.143	4.620	1.866	1.266	24.087	2.787	83.46	75.92	1377	1377	1.244	54.279	-2.363	1.478	5.341	0.804	71.4
1200S350-68	0.0713	50	1.460	4.97	30.996	5.166	4.608	2.306	1.257	30.916	4.061	121.59	104.89	2771	2771	2.473	67.251	-2.346	1.469	5.322	0.806	71.2
1200S350-97	0.1017	50	2.059	7.01	43.269	7.211	4.584	3.159	1.239	43.269	6.590	197.31	170.84	8147	7411	7.098	92.672	-2.310	1.450	5.281	0.809	70.8
1200S350-118	0.1242	50	2.494	8.48	51.992	8.665	4.566	3.741	1.225	51.992	8.260	274.07[2]	238.96	14986	11037	12.821	110.302	-2.284	1.436	5.250	0.811	66.9
1400S162-54[1]	0.0566	50	1.009	3.43	23.302	3.329	4.805	0.218	0.464	20.365	2.256	67.54	52.13	1177	1177	1.078	8.980	-0.667	0.454	4.873	0.981	29.7
1400S162-68	0.0713	50	1.263	4.30	28.952	4.136	4.787	0.262	0.456	26.375	3.135	93.85	74.56	2365	2365	2.141	10.966	-0.654	0.447	4.853	0.982	29.4
1400S162-97	0.1017	50	1.779	6.05	40.115	5.731	4.748	0.340	0.437	38.897	4.915	147.14	127.96	6939	6939	6.134	14.651	-0.628	0.433	4.810	0.983	28.7
1400S162-118	0.1242	50	2.152	7.32	47.928	6.847	4.719	0.385	0.423	47.772	6.282	188.07	171.63	12745	11287	11.065	17.032	-0.609	0.422	4.777	0.984	28.1
1400S200-54[1]	0.0566	50	1.066	3.63	25.951	3.707	4.935	0.406	0.617	23.199	2.440	73.05	61.67	1177	1177	1.138	16.355	-0.946	0.633	5.062	0.965	38.2
1400S200-68	0.0713	50	1.335	4.54	32.284	4.612	4.918	0.494	0.608	29.797	3.505	104.93	87.10	2365	2365	2.262	20.083	-0.932	0.625	5.043	0.966	37.9
1400S200-97	0.1017	50	1.881	6.40	44.853	6.408	4.883	0.655	0.590	43.616	5.580	167.07	146.98	6939	6939	6.484	27.156	-0.904	0.609	5.001	0.967	37.3
1400S200-118	0.1242	50	2.276	7.75	53.698	7.671	4.857	0.755	0.576	53.520	7.096	212.47	195.62	12745	11287	11.704	31.861	-0.883	0.598	4.970	0.968	36.8
1400S250-54[1]	0.0566	50	1.122	3.82	28.702	4.100	5.057	0.707	0.794	26.141	2.527	75.65	66.58	1177	1177	1.198	27.675	-1.272	0.835	5.275	0.942	47.6

[1] Web height-to-thickness ratio exceeds 200. Web stiffeners are required at all support points and concentrated loads.
[2] Allowable moment includes cold work of forming.
See Table Notes on page 7.

Table Notes

1. Values are for unpunched members.
2. Total load deflection is limited to L/360.
3. Headers are made from two boxed or back-to-back members.
4. Allowable moment, shear, and web crippling are based on twice the capacity of a single member. The moment of inertia is based on twice the value of the single member.
5. Web crippling check is based on 1" of bearing at end supports.
6. Members are assumed adequately braced for bending.
7. Allowable loads are for simply supported headers with uniform bending loads only.
8. See page 5 for additional table notes.

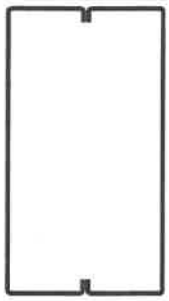

Boxed Header

Back-to-Back Header

Header Allowable Uniform Loads (PLF)

Section	Yield Strength (ksi)	Span						
		3 (ft)	4 (ft)	5 (ft)	6 (ft)	8 (ft)	10 (ft)	12 (ft)
550S162-33	33	931.4e	698.5e	460.1e	319.5e	179.7e	115.0e	73.8e
550S162-43	33	1946.5e	1094.9e	700.8e	486.6e	273.7e	164.6e	95.3e
550S162-54	50	3484.7e	1960.1e	1254.5e	871.2e	396.8e	203.2	117.6
550S162-68	50	4782.6e	2690.2e	1721.7e	1157.8e	488.5e	250.1	144.7
600S137-33	33	850.8e	638.1e	436.5e	303.1e	170.5e	109.1e	75.8e
600S162-33	33	850.8e	638.1e	504.9e	350.6e	197.2e	126.2e	87.6e
600S200-33	33	850.8e	638.1e	510.5e	398.7e	224.2e	143.5e	99.7e
600S137-43	33	1751.1e	985.0e	630.4e	437.8e	246.3e	157.6e	103.2e
600S162-43	33	1887.6e	1205.1e	771.3e	535.6e	301.3e	192.8e	117.1e
600S200-43	33	1887.6e	1282.4e	820.7e	569.9e	320.6e	205.2e	135.7e
600S250-43	33	1887.6e	1350.7e	864.4e	600.3e	337.7e	216.1e	150.1e
600S137-54	50	3146.8e	1770.1e	1132.9e	786.7e	429.8e	220.1	127.3
600S162-54	50	3763.8e	2158.3e	1381.3e	959.3e	488.3e	250.0e	144.7
600S200-54	50	3763.8e	2281.9e	1460.4e	1014.2e	566.7e	290.1e	167.9
600S250-54	50	3763.8e	2392.7e	1531.4e	1063.4e	598.2e	329.1e	190.5
600S137-68	50	4280.5e	2407.8e	1541.0e	1070.1e	528.3e	270.5	156.5
600S162-68	50	5288.3e	2974.7e	1903.8e	1322.1e	601.7e	308.1	178.3
600S200-68	50	5880.1e	3307.5e	2116.8e	1470.0e	700.0e	358.4	207.4
600S250-68	50	5788.2e	3255.8e	2083.7e	1447.0e	806.3e	412.8e	238.9
600S137-97	50	7526.5e	4233.7e	2709.5e	1694.8e	715	366.1	211.8
600S162-97	50	8403.7e	4727.1e	3025.3e	1941.3e	819	419.3	242.7
600S200-97	50	9432.6e	5305.9e	3395.7e	2270.9e	958.0e	490.5	283.9
600S250-97	50	9898.1e	5567.7e	3563.3e	2474.5e	1109.0e	567.8	328.6
600S137-118	50	9138.7e	5140.5e	3289.9e	1987.9e	838.7	429.4	248.5
600S162-118	50	10212.8e	5744.7e	3676.6e	2287.3e	965	494.1	285.9
600S200-118	50	11620.3e	6536.4e	4183.3e	2687.4e	1133.7	580.5	335.9
600S250-118	50	12729.2e	7160.2e	4582.5e	3121.2e	1316.7e	674.2	390.1
800S137-33	33	632.0e	474.0e	379.2e	316.0e	223.2e	142.8e	99.2e
800S162-33	33	632.0e	474.0e	379.2e	316.0e	237.0e	168.1e	116.7e
800S200-33	33	632.0e	474.0e	379.2e	316.0e	237.0e	189.6e	134.5e
800S137-43	33	1401.5e	1051.2e	840.9e	584.3e	328.7e	210.3e	146.1e
800S162-43	33	1401.5e	1051.2e	840.9e	678.8e	381.8e	244.4e	169.7e
800S200-43	33	1401.5e	1051.2e	840.9e	700.8e	437.2e	279.8e	194.3e
800S250-43	33	1401.5e	1051.2e	840.9e	700.8e	459.5e	294.1e	204.2e
800S137-54	50	2788.4e	2091.3e	1518.3e	1054.4e	593.1e	379.6e	251.6e
800S162-54	50	2788.4e	2091.3e	1673.0e	1215.2e	683.6e	437.5e	283.3e
800S200-54	50	2788.4e	2091.3e	1673.0e	1384.1e	778.6e	498.3e	332.5e
800S250-54	50	2788.4e	2091.3e	1673.0e	1394.2e	815.2e	521.7e	362.3e
800S137-68	50	5627.6e	3297.6e	2110.4e	1465.6e	824.4e	527.6e	317.9e
800S162-68	50	5627.6e	3759.1e	2405.8e	1670.7e	939.8e	601.4e	357.6e
800S200-68	50	5627.6e	4220.7e	2917.3e	2025.9e	1139.6e	711.5e	411.8e
800S250-68	50	5627.6e	4220.7e	2866.9e	1990.9e	1119.9e	716.7e	467.4e
800S137-97	50	9468.1e	5325.8e	3408.5e	2367.0e	1331.5e	751.5e	434.9
800S162-97	50	10657.1e	5994.6e	3836.6e	2664.3e	1498.7e	849.0e	491.3
800S200-97	50	13297.5e	7479.8e	4787.1e	3324.4e	1870.0e	979.3e	566.7
800S250-97	50	13839.9e	7785.0e	4982.4e	3460.0e	1946.2e	1117.9e	646.9e
800S137-118	50	14157.3e	7963.5e	5096.6e	3539.3e	1732.3e	886.9	513.3
800S162-118	50	15589.2e	8768.9e	5612.1e	3897.3e	1964.0e	1005.5e	581.9
800S200-118	50	17414.8e	9795.8e	6269.3e	4353.7e	2273.2e	1163.9e	673.5
800S250-118	50	18210.1e	10243.2e	6555.6e	4552.5e	2560.8e	1332.2e	771

"e" web stiffeners required at ends.

S/HDU Holdowns

The S/HDU series of holdowns combines performance with ease of installation. The pre-deflected geometry virtually eliminates material stretch, resulting in low deflection under load. Installation using self-drilling screws into the studs reduces installation time and saves labor cost.

Material: 118 mil (10 ga.)

Finish: Galvanized

Installation:

- Use all specified fasteners; see General Notes
- Use standard #14 self-drilling screws to fasten to studs
- Anchor bolt washer is not required
- See SB, SSTB and PAB anchor bolts on pp. 236–241 for cast-in-place anchorage options
- See SET-XP® and AT-XP® adhesive products for anchor bolt retrofit options

Codes: See p. 11 for Code Reference Key Chart

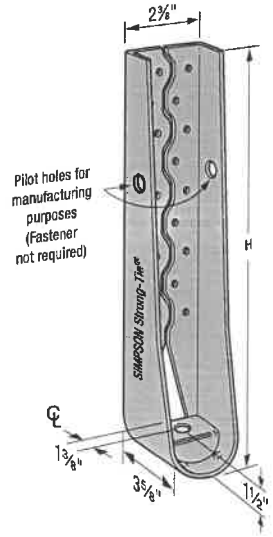

S/HDU
U.S. Patents 5,979,130 and 6,112,495

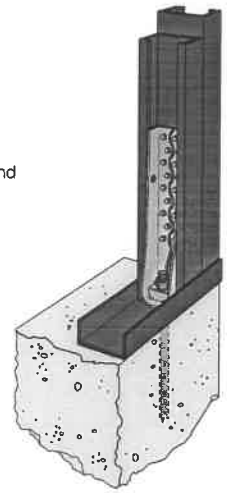

Typical S/HDU Installation

Model	H (in.)	Fasteners: Anchor Bolt Diameter[1] (in.)	Fasteners: Stud Fasteners[7]	Stud Member Thickness[2] mil (ga.)	ASD (lb.): Tension Load	ASD (lb.): Deflection at ASD Load[5]	LRFD (lb.): Tension Load	LRFD (lb.): Deflection at LRFD Load[5]	Nominal Tension Load[6] (lb.)	Code Ref.
S/HDU4	7⅞	⅝	(6) #14	2–33 (2–20)	2,320	0.093	3,705	0.149	5,685	IP1, L2, FL
				2–43 (2–18)	3,825	0.115	6,105	0.190	9,365	
				2–54 (2–16)	3,970	0.093	6,345	0.156	9,730	
				Steel fixture	4,470	0.063	7,165	0.103	12,120	
S/HDU6	10⅝	⅝	(12) #14	2–33 (2–20)	4,895	0.125	8,495	0.250	10,470	
				2–43 (2–18)	6,125	0.119	9,690	0.250	15,460	
				2–54 (2–16)	6,125	0.108	9,785	0.234	15,005	
				Steel fixture	5,995	0.060	9,580	0.136	14,695	
S/HDU9	12⅞	⅞	(18) #14	2–33 (2–20)	6,965	0.103	11,125	0.189	13,165	
				2–43 (2–18)	9,255	0.125	15,485	0.250	21,810	
				2–54 (2–16)	9,990	0.106	15,960	0.225	24,480	
				Steel fixture	12,715	0.125	20,510	0.177	31,455	
S/HDU11	16⅝	⅞	(27) #14	2–33 (2–20)	6,965	0.103	11,125	0.189	13,165	
				2–43 (2–18)	9,595	0.096	15,330	0.162	23,515	
				2–54 (2–16)	9,675	0.110	15,460	0.158	23,710	
		⅞ with heavy hex nut	(27) #14	2–43 (2–18)[6]	11,100	0.125	17,500	0.250	24,955	
				2–54 (2–16)[6]	12,175	0.125	19,445	0.243	29,825	
				Steel fixture[6]	12,945	0.111	20,680	0.163	31,715	

These products are available with additional corrosion protection. Additional products on this page may also be available with this option. Check with Simpson Strong-Tie for details.

1. The Designer shall specify the foundation anchor material type, embedment and configuration. Some of the tabulated holdown tension loads exceed the tension strength of typical ASTM A36 or A307 anchor bolts.
2. Stud design by Specifier. Tabulated loads are based on a minimum stud thickness for fastener connection.
3. ¼" self-drilling screws may be substituted for #14 self-tapping screws.
4. A heavy hex nut for the anchor bolt is required to achieve the table loads for S/HDU11.
5. Deflection at ASD or LRFD includes fastener slip, holdown deformation and anchor rod elongation for holdowns installed up to 4" above top of concrete. Holdowns may be installed raised, up to 18" above top of concrete, with no load reduction provided that additional elongation of the anchor rod is accounted for.
6. The Nominal Tension Load is based on the tested average ultimate (peak) load and is provided for design in accordance with section C5 of AISI S213 that requires a holdown to have a nominal strength to resist the lesser of the amplified seismic load or the maximum force the system can deliver.
7. See pp. 138 through 171 for more information on Simpson Strong-Tie fasteners.

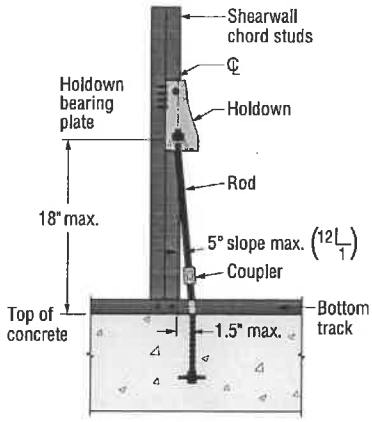

Holdown Raised Off CFS Bottom Track

Typical S-HDU Floor-Floor Installation

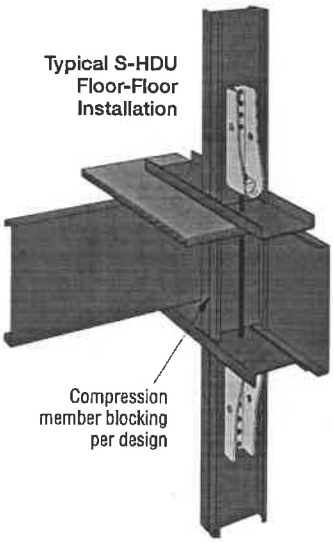

C-CF-2017 ©2017 SIMPSON STRONG-TIE COMPANY INC.

HRS/ST/FHA/PS/LSTA/LSTI/MST/MSTA/MSTC/MSTI Strap Ties

SIMPSON Strong-Tie

Codes: See p. 11 for Code Reference Key Chart

Model No.	Connector Material Thick. mil (ga.)	Dimensions (in.)		Fasteners[4] (Total) Rafter/Stud/Joist Thickness			Allowable ASD Tension Load (lb.)			Code Ref.
		W	L	33 mil (20 ga.)	43 mil (18 ga.)	54 mil (16 ga.)	33 mil (20 ga.)	43 mil (18 ga.)	54 mil (16 ga.)	
LSTA9	33 (20)	1¼	9	(8) #10	(8) #10	(8) #10	705	1,120	1,190	IP1, L2, FL
LSTA12		1¼	12	(10) #10	(10) #10	(8) #10	885	1,190	1,190	
LSTA15		1¼	15	(12) #10	(12) #10	(10) #10	1,060	1,190	1,190	
LSTA18		1¼	18	(14) #10	(12) #10	(10) #10	1,190	1,190	1,190	
LSTA21		1¼	21	(14) #10	(12) #10	(10) #10	1,190	1,190	1,190	
LSTA24		1¼	24	(14) #10	(12) #10	(10) #10	1,190	1,190	1,190	
ST292		2⅛	9⅝	(12) #10	(10) #10	(10) #10	1,060	1,240	1,240	
ST2122		2⅛	12⅝	(16) #10	(12) #10	(10) #10	1,415	1,502	1,502	
ST2115		¾	16⅝	(8) #10	(6) #10	(4) #10	630	630	630	
ST2215		2⅛	16⅝	(20) #10	(14) #10	(10) #10	1,765	1,825	1,825	
LSTA30	43 (18)	1¼	30	(18) #10	(12) #10	(10) #10	1,555	1,555	1,555	
LSTA36		1¼	36	(18) #10	(16) #10	(14) #10	1,555	1,555	1,555	
LSTI49		3¾	49	(32) #10	(32) #10	(20) #10	2,830	4,050	4,050	
LSTI73		3¾	73	(46) #10	(32) #10	(20) #10	4,050	4,050	4,050	
MSTA9		1¼	9	(8) #10	(8) #10	(8) #10	705	1,050	1,555	
MSTA12		1¼	12	(10) #10	(10) #10	(8) #10	885	1,315	1,555	
MSTA15		1¼	15	(12) #10	(12) #10	(10) #10	1,060	1,555	1,555	
MSTA18		1¼	18	(14) #10	(12) #10	(10) #10	1,235	1,555	1,555	
MSTA21		1¼	21	(16) #10	(12) #10	(10) #10	1,415	1,555	1,555	
MSTA24		1¼	24	(18) #10	(12) #10	(10) #10	1,555	1,555	1,555	
MSTA30	54 (16)	1¼	30	(22) #10	(16) #10	(12) #10	1,945	1,950	1,950	
MSTA36		1¼	36	(24) #10	(18) #10	(16) #10	1,950	1,950	1,950	
ST6215		2⅛	16⅝	(20) #10	(16) #10	(10) #10	1,765	2,025	2,025	
ST6224		2⅛	23⅝	(28) #10	(20) #10	(12) #10	2,455	2,455	2,455	
ST9		1¼	9	(8) #10	(8) #10	(8) #10	705	1,050	1,350	
ST12		1¼	11⅝	(10) #10	(10) #10	(8) #10	885	1,315	1,350	
ST18		1¼	17¾	(14) #10	(12) #10	(12) #10	1,235	1,350	1,350	
ST22		1¼	21⅝	(20) #10	(20) #10	(20) #10	1,350	1,350	1,350	
MSTC28		3	28¼	(36) #10	(36) #10	(30) #10	3,180	4,600	4,600	
MSTC40		3	40¼	(52) #10	(46) #10	(46) #10	4,595	4,600	4,600	
MSTC52		3	52¼	(54) #10	(42) #10	(42) #10	4,600	4,600	4,600	
MSTC66	68 (14)	3	65¾	(66) #10	(46) #10	(30) #10	5,795	5,795	5,795	
MSTC78		3	77¾	(66) #10	(46) #10	(30) #10	5,795	5,795	5,795	
ST6236		2⅛	33⅛	(40) #10	(30) #10	(18) #10	3,535	3,760	3,760	
HRS6	97 (12)	1⅜	6	(6) #10	(6) #10	(6) #10	530	790	1,600	
HRS8		1⅜	8	(10) #10	(10) #10	(10) #10	885	1,315	2,670	
HRS12		1⅜	12	(14) #10	(14) #10	(12) #10	1,235	1,840	2,710	
FHA6		1⅞	6⅜	(8) #10	(8) #10	(8) #10	705	1,050	2,045	
FHA12		1⅞	11⅝	(8) #10	(8) #10	(8) #10	705	1,050	2,045	
FHA18		1⅞	17¾	(8) #10	(8) #10	(8) #10	705	1,050	2,045	
FHA24		1⅞	23⅞	(8) #10	(8) #10	(8) #10	705	1,050	2,045	
FHA30		1⅞	30	(8) #10	(8) #10	(8) #10	705	1,050	2,045	
MSTI26		2⅛	26	(26) #10	(26) #10	(22) #10	2,300	3,420	5,025	
MSTI36		2⅛	36	(36) #10	(36) #10	(22) #10	3,180	4,735	5,025	
MSTI48		2⅛	48	(48) #10	(40) #10	(22) #10	4,240	5,025	5,025	
MSTI60		2⅛	60	(58) #10	(40) #10	(22) #10	5,025	5,025	5,025	
MST27		2⅛	27	(30) #10	(30) #10	(22) #10	2,650	3,945	5,025	170
MST37		2⅛	37	(42) #10	(40) #10	(34) #10	3,710	5,025	5,025	
MST48		2⅛	48	(54) #10	(54) #10	(46) #10	4,770	5,155	5,155	
MST60	118 (10)	2⅛	60	(68) #10	(68) #10	(62) #10	5,820	6,420	6,650	
MST72		2⅛	72	(80) #10	(72) #10	(64) #10	6,650	6,650	6,650	

These products are available with additional corrosion protection. Additional products on this page may also be available with this option. Check with Simpson Strong-Tie for details.

1. Use half of the fasteners in each member being connected to achieve the listed loads.
2. Loads are based on lesser of steel capacity or fastener calculation.
3. Not all fastener holes need to be filled, as additional fastener holes are provided. Install fasteners symmetrically.
4. See pp. 138 through 171 for more information on Simpson Strong-Tie fasteners.

C-CF-2017 ©2017 SIMPSON STRONG-TIE COMPANY INC.