DRAWN BY: FERN LIDDELL

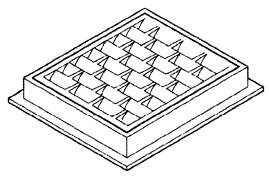

FRAME AND VANED GRATE

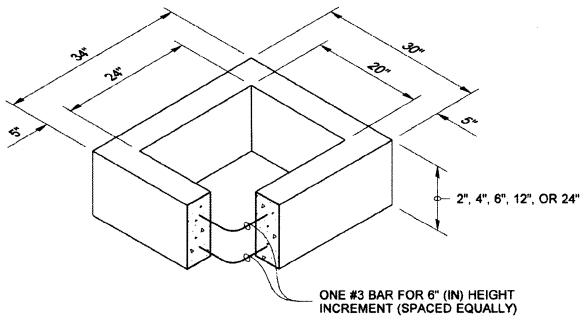

RECTANGULAR ADJUSTMENT SECTION

PIPE ALLOWANCES	
PIPE MATERIAL	MAXIMUM INSIDE DIAMETER (INCHES)
REINFORCED OR PLAIN CONCRETE	12"
ALL METAL PIPE	15"
CPSSP * (STD. SPEC. SECT. 9-05.20)	12"
SOLID WALL PVC (STD. SPEC. SECT. 9-05.12(1))	15"
PROFILE WALL PVC (STD. SPEC. SECT. 9-05.12(2))	15"

* CORRUGATED POLYETHYLENE STORM SEWER PIPE

NOTES

1. As acceptable alternatives to the rebar shown in the **PRECAST BASE SECTION**, fibers (placed according to the Standard Specifications), or wire mesh having a minimum area of 0.12 square inches per foot shall be used with the minimum required rebar shown in the **ALTERNATIVE PRECAST BASE SECTION**. Wire mesh shall not be placed in the knockouts.
2. The knockout diameter shall not be greater than 20" (in). Knockouts shall have a wall thickness of 2" (in) minimum to 2.5" (in) maximum. Provide a 1.5" (in) minimum gap between the knockout wall and the outside of the pipe. After the pipe is installed, fill the gap with joint mortar in accordance with **Standard Specification Section 9-04.3**.
3. The maximum depth from the finished grade to the lowest pipe invert shall be 5' (ft).
4. The frame and grate may be installed with the flange down, or integrally cast into the adjustment section with flange up.
5. The Precast Base Section may have a rounded floor, and the walls may be sloped at a rate of 1 : 24 or steeper.
6. The opening shall be measured at the top of the **Precast Base Section**.
7. All pickup holes shall be grouted full after the basin has been placed.

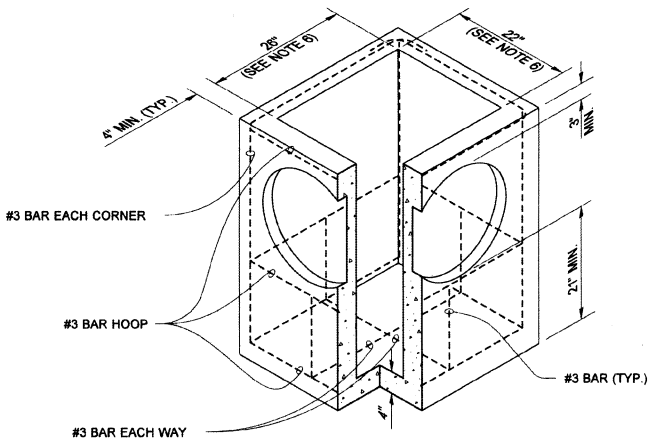

PRECAST BASE SECTION

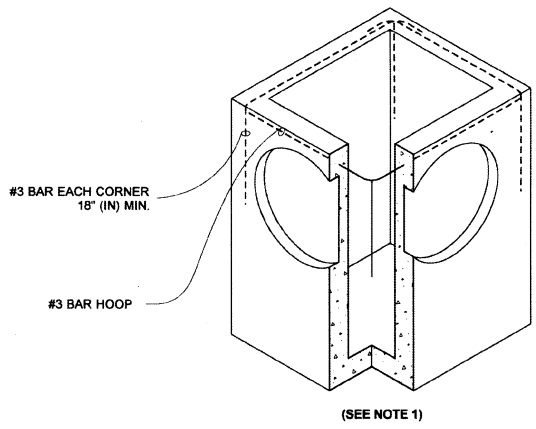

(SEE NOTE 1)

ALTERNATIVE PRECAST BASE SECTION

JULIE HEILMAN STATE OF WASHINGTON 41819 REGISTERED PROFESSIONAL ENGINEER

Julie Heilman 2020.09.01 07:52:50 -07'00'

CATCH BASIN TYPE 1

STANDARD PLAN B-5.20-03

SHEET 1 OF 1 SHEET

APPROVED FOR PUBLICATION
Roark, Steve Digitally signed by Roark, Steve Date: 2020.09.09 09:45:23 -07'00'
STATE DESIGN ENGINEER
Washington State Department of Transportation

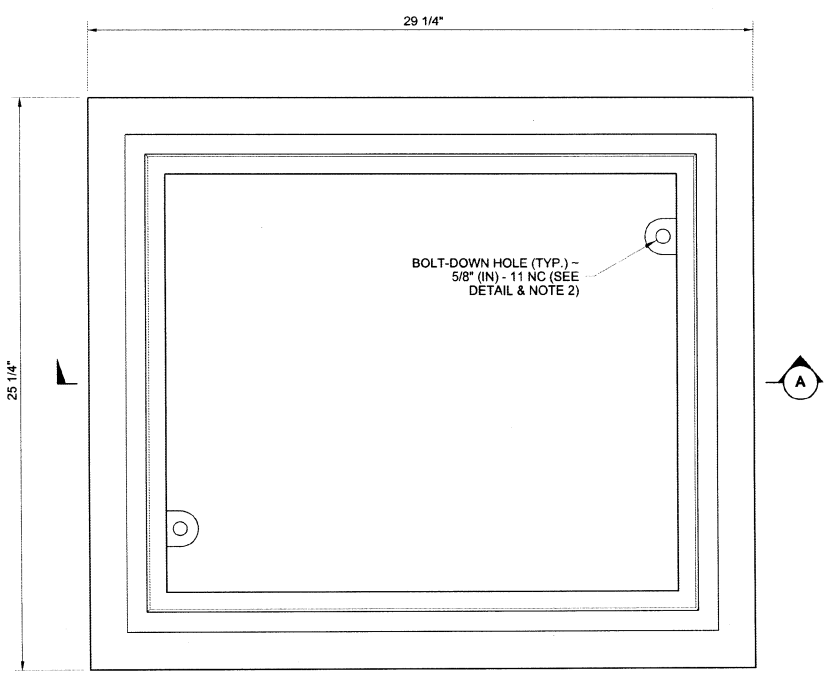

TOP

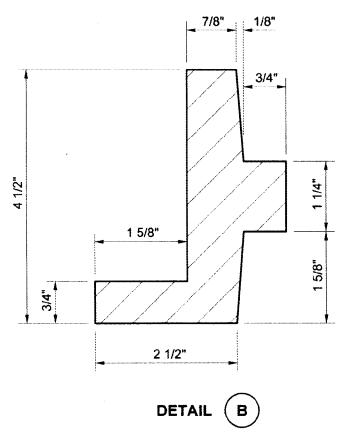

DETAIL (B)

NOTES

1. This frame is designed to accommodate 20" (in) × 24" (in) grates or covers as shown on **Standard Plans B-30.20, B-30.30, B-30.40,** and **B-30.50.**
2. Bolt-down capability is required on all frames, grates, and covers, unless specified otherwise in the Contract. Provide 2 holes in the frame that are vertically aligned with the grate or cover slots. The frame shall accept the 304 Stainless Steel (S.S.) 5/8" (in) - 11 NC × 2" (in) allen head cap screw by being tapped, or other approved mechanism. Location of bolt-down holes varies by manufacturer.
3. Refer to **Standard Specification Section 9-05.15** and **9-05.15(2)** for additional requirements.

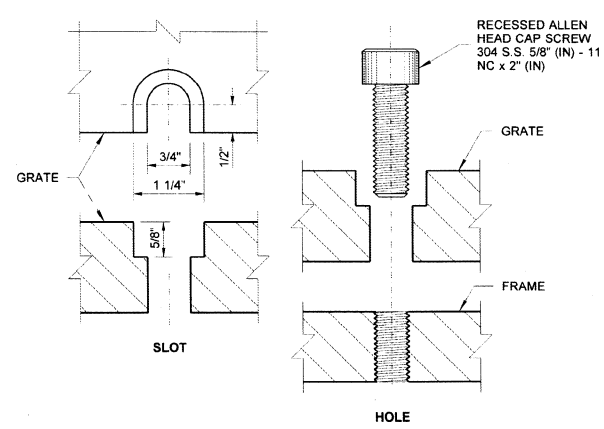

BOLT-DOWN DETAILS
SEE NOTE 2

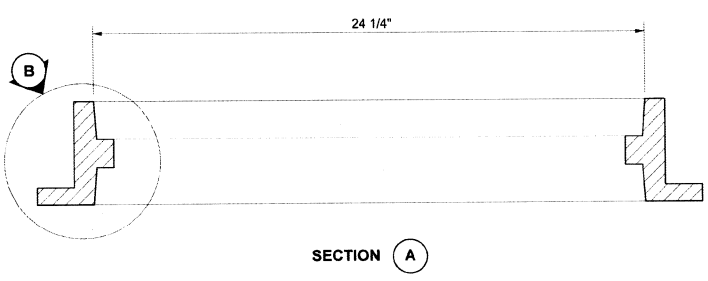

SECTION (A)

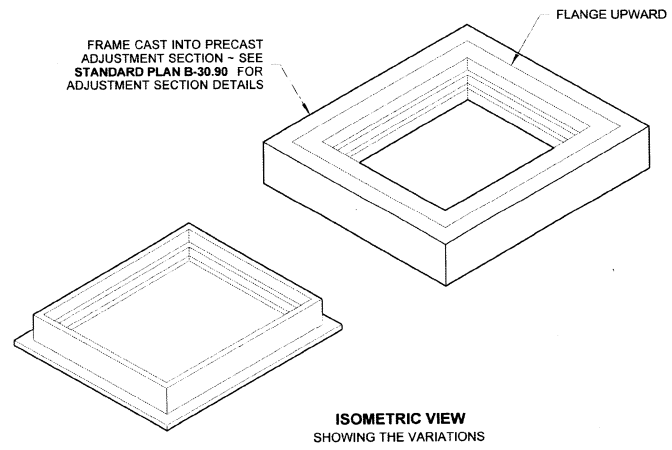

ISOMETRIC VIEW
SHOWING THE VARIATIONS

JULIE HEILMAN STATE OF WASHINGTON 41819 REGISTERED PROFESSIONAL ENGINEER

Heilman, Julie Feb 20 2018 12:52 PM

RECTANGULAR FRAME (REVERSIBLE)

STANDARD PLAN B-30.10-03

SHEET 1 OF 1 SHEET

APPROVED FOR PUBLICATION
Carpenter, Jeff Feb 27 2018 7:55 AM
STATE DESIGN ENGINEER
Washington State Department of Transportation

DRAWN BY: FERN LIDDELL

0 1" 2"
TWO INCHES AT FULL SCALE. IF NOT, SCALE ACCORDINGLY

STATE: WASHINGTON
S25 T34N R26E W.M.
FAP NO.: STPUS-Z924(003)

SHEET: 15 OF: 27
JOB NO.: 15063
DWG: DETAILS

CITY OF OMAK
OKANOGAN COUNTY WASHINGTON
ENGH ROAD SR215/US97
INTERSECTION IMPROVEMENTS
MISCELLANEOUS DETAILS

MICHAEL M. MESKIMEN STATE OF WASHINGTON 39376 REGISTERED PROFESSIONAL ENGINEER

No.	REVISION	DATE	APPD

DATE: DEC 2021
DRAWN: ASC
CHECKED: JFR
APPROVED: MMM

Gray & Osborne, Inc.
CONSULTING ENGINEERS
180 IRON HORSE COURT
YAKIMA, WA 98901 • (509) 453-4833

DRAWN BY: FERN LIDDELL

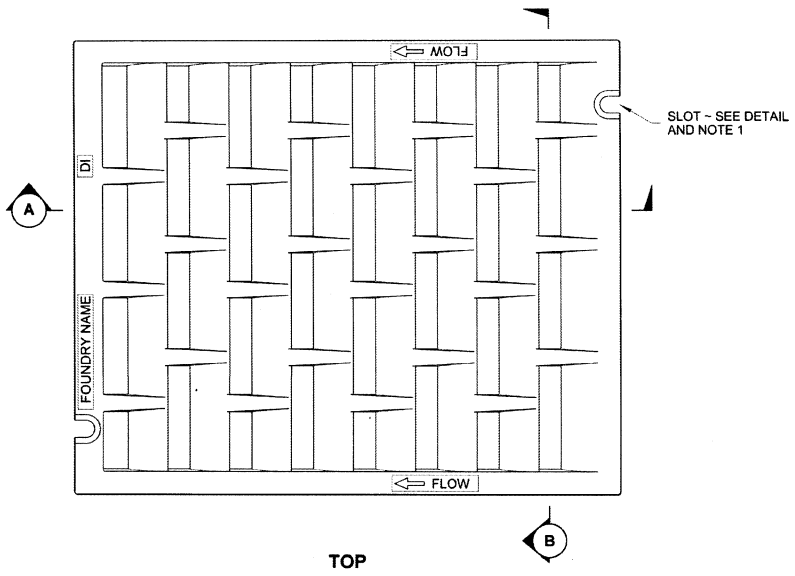

TOP

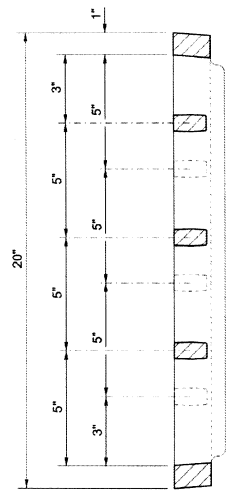

SECTION (B)

NOTES

1. Bolt-down capability is required on all frames, grates, and covers, unless specified otherwise in the Contract. Provide 2 holes in the frame that are vertically aligned with the grate or cover slots. The frame shall accept the 304 Stainless Steel (S.S.) 5/8" (in) - 11 NC × 2" (in) allen head cap screw by being tapped, or other approved mechanism. Location of bolt-down holes varies by manufacturer.
2. Refer to **Standard Specification Section 9-05.15** and **9-05.15(2)** for additional requirements.
3. For frame details, see **Standard Plan B-30.10**.

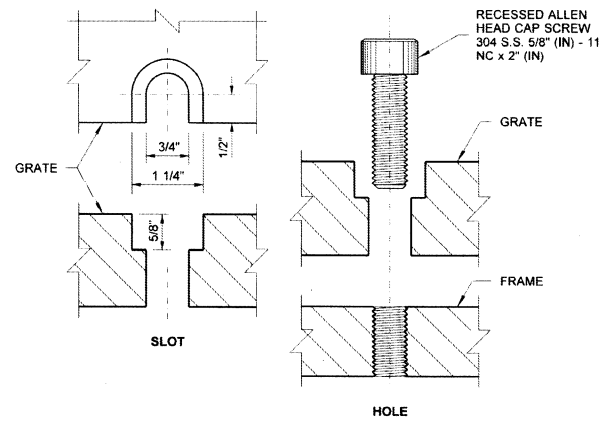

BOLT-DOWN DETAILS
SEE NOTE 1

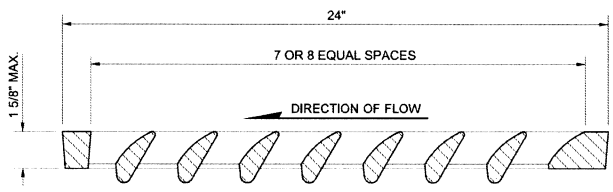

SECTION (A)

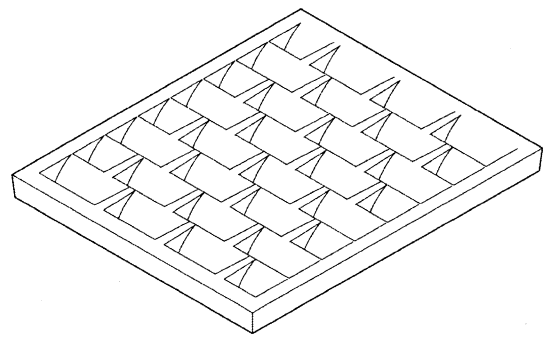

ISOMETRIC

JULIE HEILMAN
STATE OF WASHINGTON
4819
REGISTERED
PROFESSIONAL ENGINEER

Heilman, Julie
Feb 20 2018 12:54 PM

RECTANGULAR VANED GRATE

STANDARD PLAN B-30.30-03

SHEET 1 OF 1 SHEET

APPROVED FOR PUBLICATION
Carpenter, Jeff
Feb 27 2018 7:58 AM
STATE DESIGN ENGINEER
Washington State Department of Transportation

DRAWN BY: FERN LIDDELL

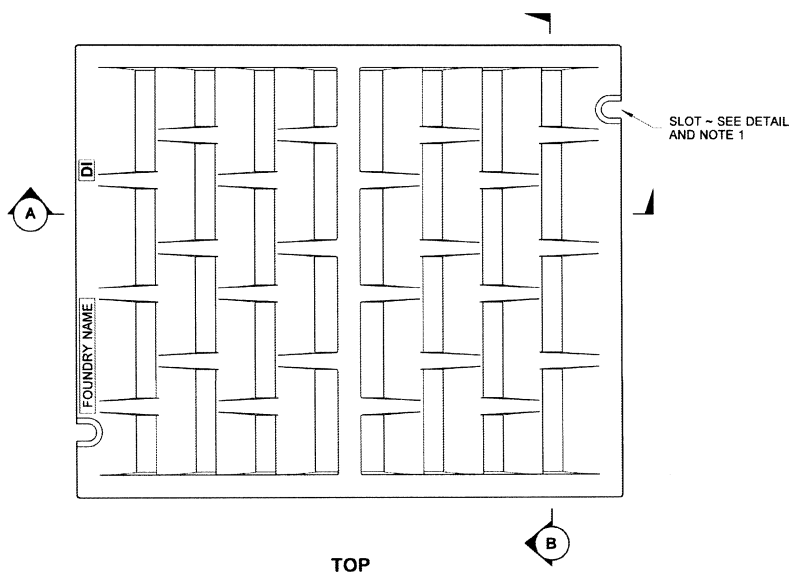

TOP

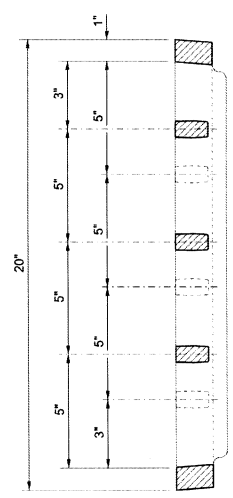

SECTION (B)

NOTES

1. Bolt-down capability is required on all frames, grates, and covers, unless specified otherwise in the Contract. Provide 2 holes in the frame that are vertically aligned with the grate or cover slots. The frame shall accept the 304 Stainless Steel (S.S.) 5/8" (in) - 11 NC × 2" (in) allen head cap screw by being tapped, or other approved mechanism. Location of bolt-down holes varies by manufacturer.
2. Refer to **Standard Specification Section 9-05.15,** and **9-05.15(2)** for additional requirements.
3. For frame details, see **Standard Plan B-30.10.**

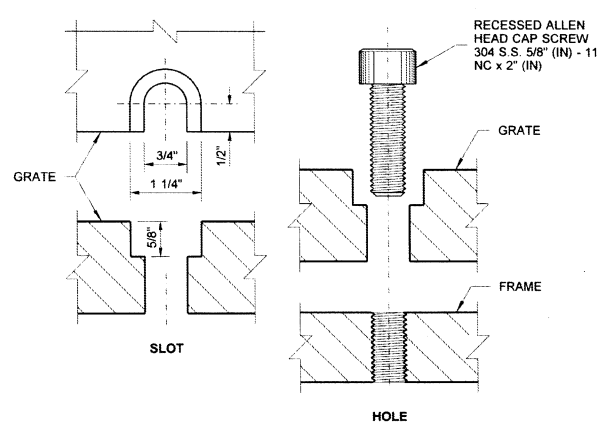

BOLT-DOWN DETAILS
SEE NOTE 1

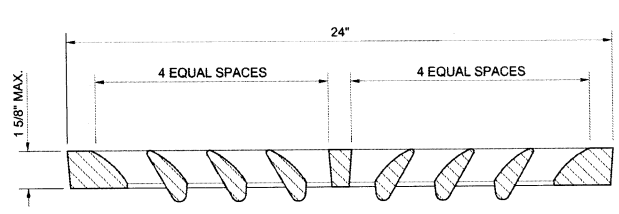

SECTION (A)

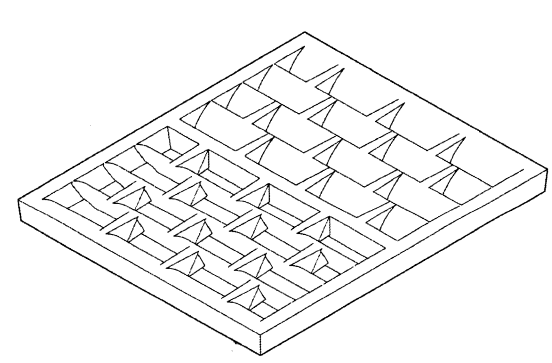

ISOMETRIC

JULIE HEILMAN
STATE OF WASHINGTON
4819
REGISTERED
PROFESSIONAL ENGINEER

Heilman, Julie
Feb 20 2018 12:54 PM

RECTANGULAR BI-DIRECTIONAL VANED GRATE

STANDARD PLAN B-30.40-03

SHEET 1 OF 1 SHEET

APPROVED FOR PUBLICATION
Carpenter, Jeff
Feb 27 2018 7:58 AM
STATE DESIGN ENGINEER
Washington State Department of Transportation

0 1" 2"
TWO INCHES AT FULL SCALE. IF NOT, SCALE ACCORDINGLY

STATE: WASHINGTON
S25 T34N R26E W.M.
FAP NO.: STPUS-2924(003)

SHEET: 16
OF: 27
JOB NO.: 15063
DWG: DETAILS

CITY OF OMAK
OKANOGAN COUNTY WASHINGTON

ENGH ROAD SR215/US97
INTERSECTION IMPROVEMENTS

MISCELLANEOUS DETAILS

MICHAEL M. MESKIMEN
STATE OF WASHINGTON
39378
REGISTERED
PROFESSIONAL ENGINEER

No.	REVISION	DATE	APPD

DATE: DEC 2021
DRAWN: ASC
CHECKED: JFR
APPROVED: MMM

Gray & Osborne, Inc.
CONSULTING ENGINEERS
180 IRON HORSE COURT
YAKIMA, WA 98901 • (509) 453-4833

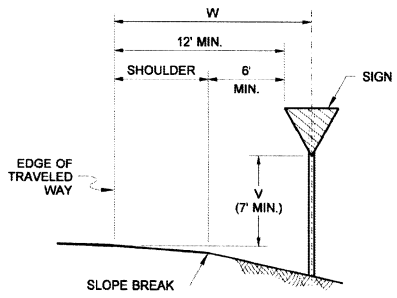

SIGN INSTALLATION IN FILL SECTION

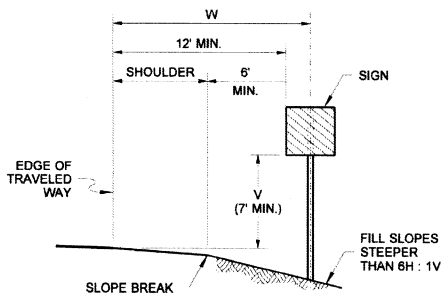

SIGN INSTALLATION ON STEEP FILL SLOPES

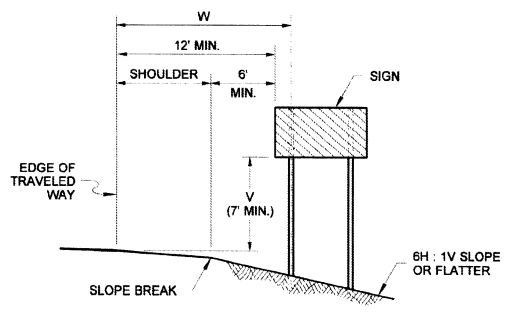

MULTIPLE SIGN POST INSTALLATION IN FILL SECTION

NOTES

1. Refer to the Sign Specification Sheet of the Contract for the 'V' and 'W' distances.
2. The minimum vertical distance from the bottom of the sign to the ground shall not be less than 7' (ft) for signs located within the Design Clear Zone.

DRAWN BY: FERN LIDDELL

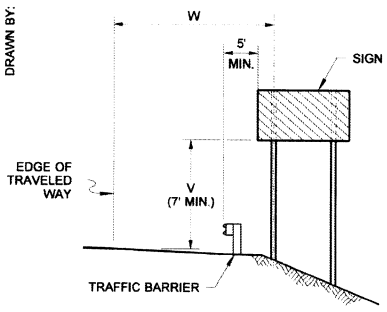

SIGN INSTALLATION BEHIND TRAFFIC BARRIER

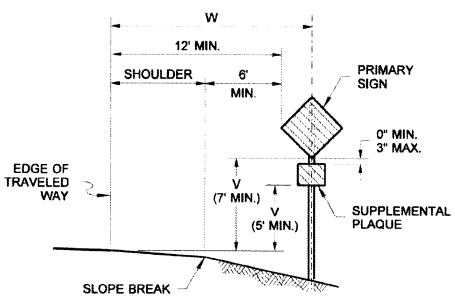

SIGN WITH SUPPLEMENTAL PLAQUE INSTALLATION IN FILL SECTION

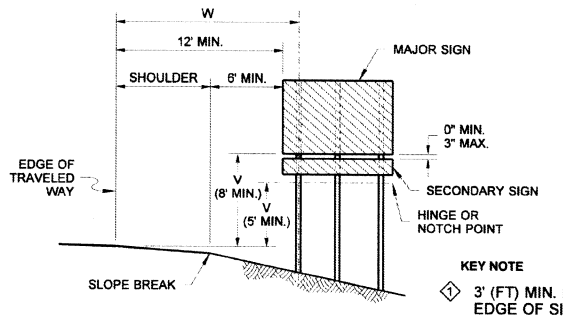

KEY NOTE

1 3' (FT) MIN. FROM ANY POINT ALONG BOTTOM EDGE OF SIGN PANEL TO THE GROUND

GUIDE OR DIRECTIONAL SIGN WITH SECONDARY SIGN INSTALLATION ON EXPRESSWAYS AND FREEWAYS

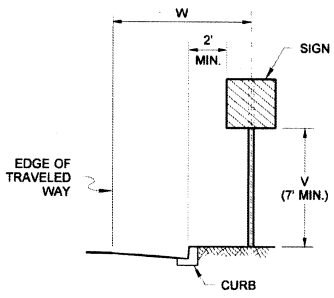

SIGN INSTALLATION IN CURB SECTION

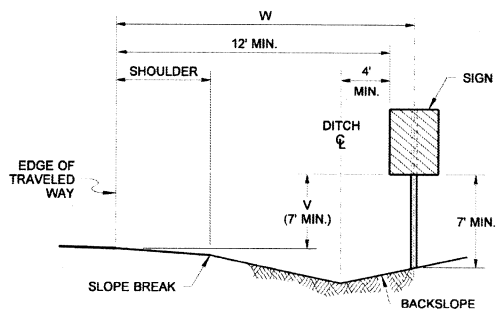

SIGN INSTALLATION IN DITCH SECTION

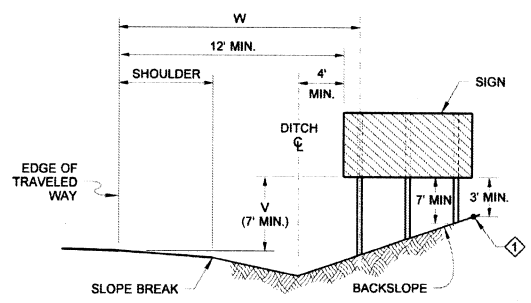

MULTIPLE SIGN POST INSTALLATION IN DITCH SECTION

Aug 20, 2021

GROUND MOUNTED SIGN PLACEMENT

STANDARD PLAN G-20.10-03

SHEET 1 OF 1 SHEET

APPROVED FOR PUBLICATION
Aug 20, 2021
STATE DESIGN ENGINEER
Washington State Department of Transportation

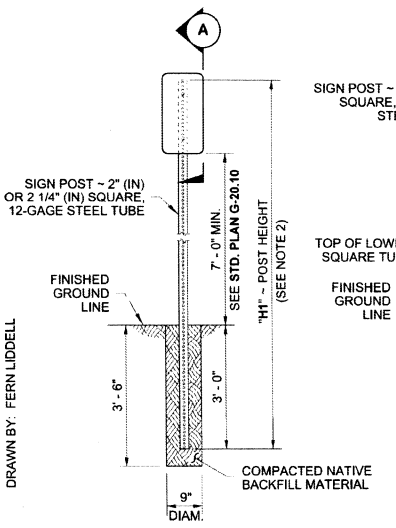

ELEVATION

TYPE ST-1 SIGN SUPPORT

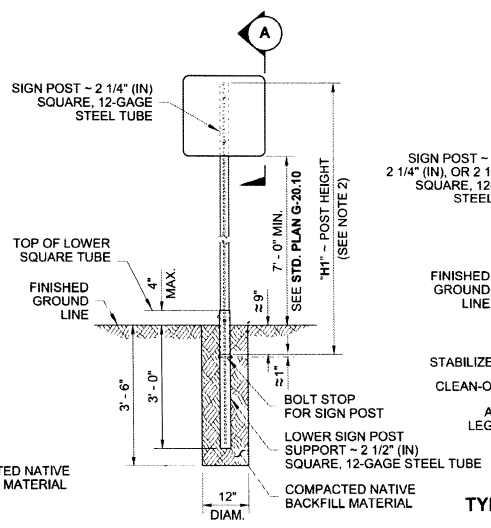

ELEVATION

TYPE ST-2 SIGN SUPPORT

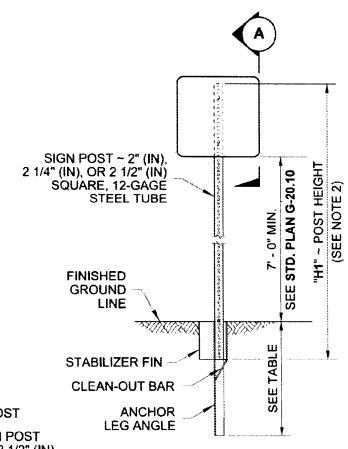

ELEVATION

TYPE ST-3 SIGN SUPPORT

BURIED DEPTH	POST SIZE
2' - 6"	2", 2 1/4"
3' - 0"	2 1/2"

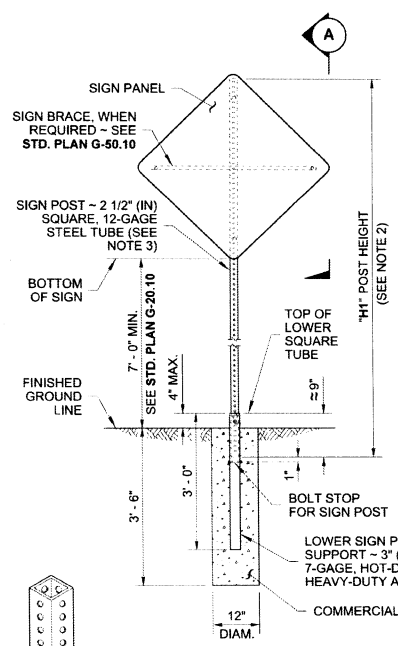

ELEVATION

TYPE ST-4 SIGN SUPPORT

NOTES

1. Dimensions for the parts used to assemble the base connections are intentionally not shown. Base connections are patented, manufactured products that are in compliance with NCHRP 350 crash test criteria. The base connection details are shown on this plan only to illustrate how the parts are assembled.
2. For "**H1**", refer to the Sign Specification Sheet in the Contract.
3. A 2" (in) post with a 2 1/4" (in) PSST anchor or a 2 1/4" (in) post with a 2 1/2" (in) PSST anchor may be substituted. See Contract Plans.
4. Perforated square steel post shall meet the requirements of **Standard Specification, Section 9-06**.
5. Use only base connection manufacturer supplied hardware that meets the requirements of **Standard Specification, Sections 9-06** and **9-28**.

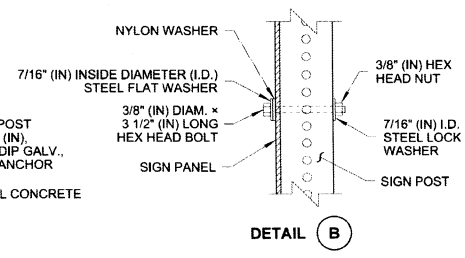

DETAIL B

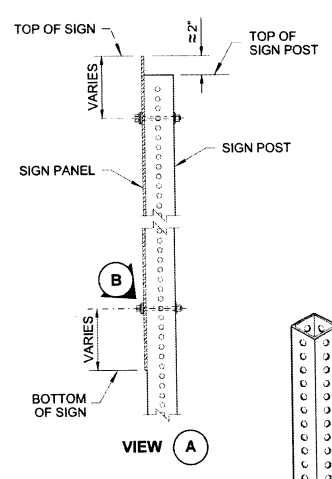

VIEW A

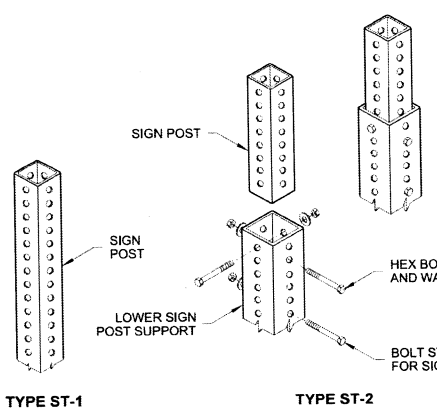

TYPE ST-1 **TYPE ST-2**

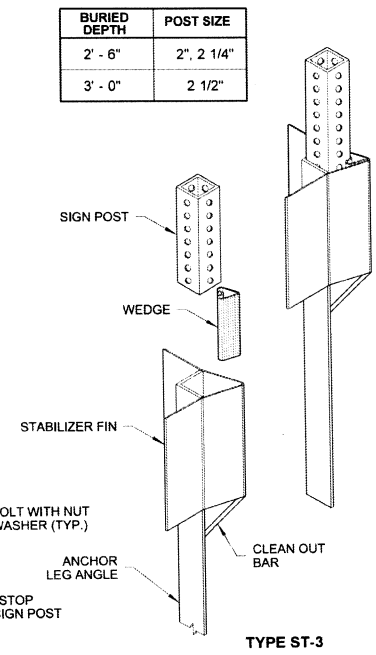

TYPE ST-3

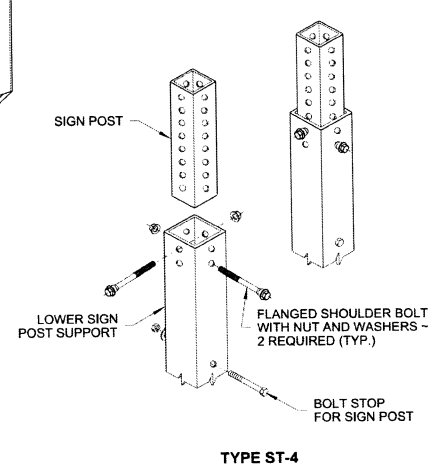

TYPE ST-4

Nisbet, John
Aug 5 2019 1:46 PM

STEEL SIGN SUPPORT TYPES ST-1 - ST-4 INSTALLATION DETAILS STANDARD PLAN G-24.50-05

SHEET 1 OF 1 SHEET

APPROVED FOR PUBLICATION
Roark, Steve
Aug 7 2019 11:54 AM
STATE DESIGN ENGINEER
Washington State Department of Transportation

DRAWN BY: FERN LIDDELL

0 1" 2"
TWO INCHES AT FULL SCALE. IF NOT, SCALE ACCORDINGLY

STATE: WASHINGTON
S25 T34N R28E W.M.
FAP NO.: STPUS-7924(003)

SHEET: 17
OF: 27
JOB NO.: 15063
DWG: DETAILS

CITY OF OMAK
OKANOGAN COUNTY WASHINGTON

ENGH ROAD SR215/US97 INTERSECTION IMPROVEMENTS

MISCELLANEOUS DETAILS

No.	REVISION	DATE	APPD

DATE: DEC 2021
DRAWN: ASC
CHECKED: JFR
APPROVED: MMM

Gray & Osborne, Inc.
CONSULTING ENGINEERS
180 IRON HORSE COURT
YAKIMA, WA 98901 • (509) 453-4833

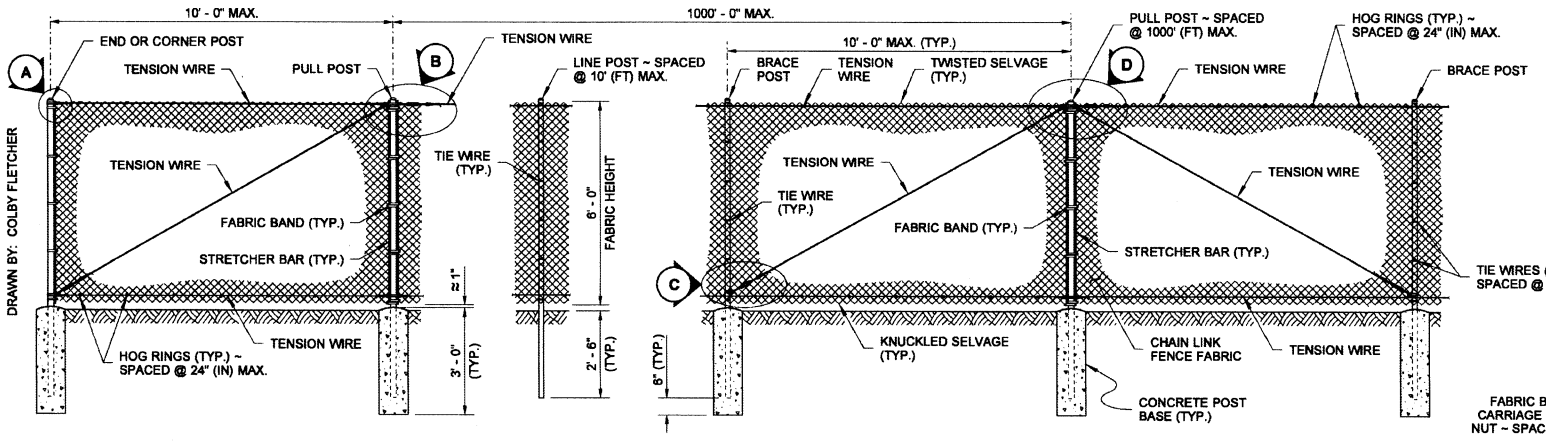

TYPE 3

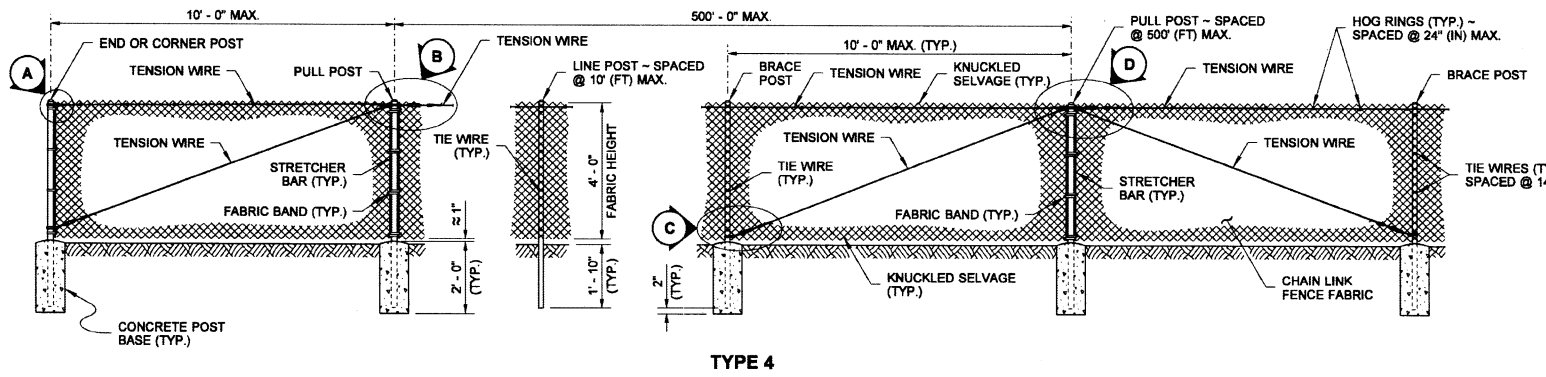

TYPE 4

NOTES

1. All concrete post bases shall be 10" (in) minimum diameter.
2. Along the top and bottom, using Hog Rings, fasten the Chain Link Fence Fabric to the Tension Wire within the limits of the first full fabric weave.
3. Details are illustrative and shall not limit hardware design or post selection of any particular fence type.
4. Fencing shall be used for security and boundary delineation only.

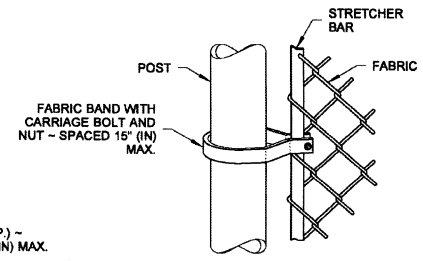

METHOD OF FASTENING STRETCHER BAR TO POST

POST AND RAIL SPECIFICATIONS			
POST	PIPE	ROLL FORMED	
	NOM. SIZE (SCH. 40) I.D.	SECTION	WEIGHT (lb/ft)
END, CORNER, OR PULL POST	2 1/2" DIAM.	Y	5.10
LINE OR BRACE POST	2" DIAM.	Z	1.85

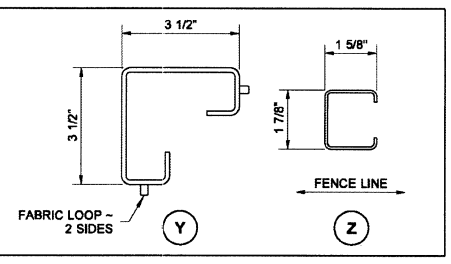

Barry, Ed
Jul 14 2015 11:14 AM

CHAIN LINK FENCE TYPES 3 AND 4

STANDARD PLAN L-20.10-03

SHEET 1 OF 2 SHEETS

APPROVED FOR PUBLICATION
Carpenter, Jeff
Jul 14 2015 11:24 AM
STATE DESIGN ENGINEER
Washington State Department of Transportation

NOTES

1. Dotted Extension Line shall be the same color as the line it is extending.
2. Edge Line shall be white on the right edge of traveled way, and yellow on the left edge of traveled way (on one-way roadways). Solid Lane Line shall be white.
3. The distance between the lines of the Double Centerline shall be 12" everywhere, except 4" for left-turn channelization and narrow roadways with lane widths of 10 feet or less. Local Agencies (on non-state routes) may specify a 4" distance for all locations.

   The distance between the lines of the Double Lane Line shall be 4".

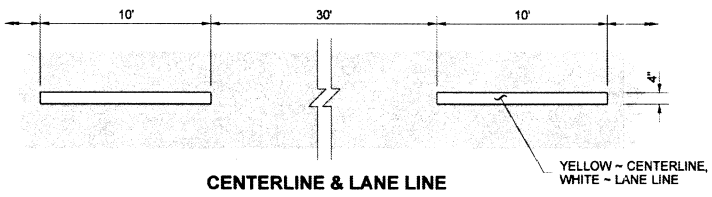

CENTERLINE & LANE LINE

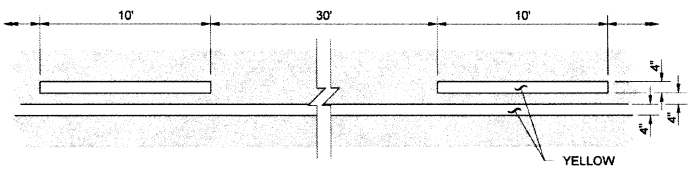

NO-PASS LINE & TWO-WAY LEFT-TURN CENTERLINE

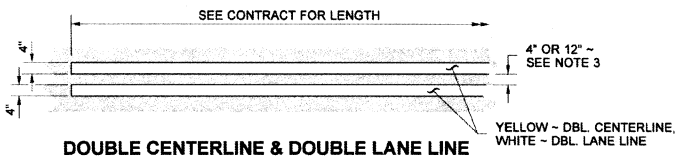

DOUBLE CENTERLINE & DOUBLE LANE LINE

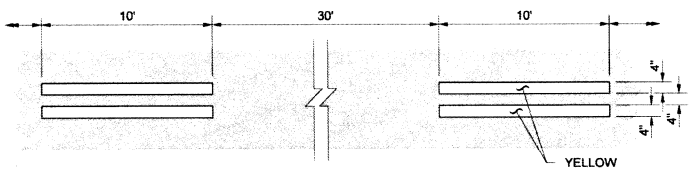

REVERSIBLE LANE LINE

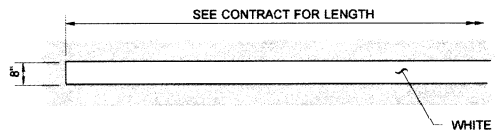

WIDE EDGE LINE & WIDE SOLID LANE LINE

OPTION TO USE AS CIRCULATORY ON ROUNDABOUT APPLICATIONS

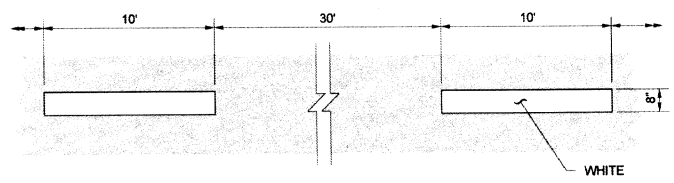

WIDE BROKEN LANE LINE

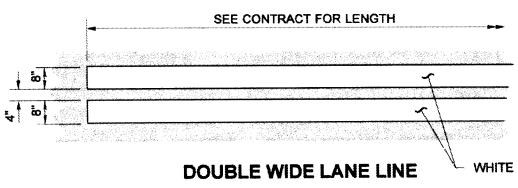

DOUBLE WIDE LANE LINE

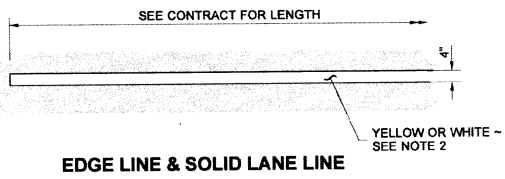

EDGE LINE & SOLID LANE LINE

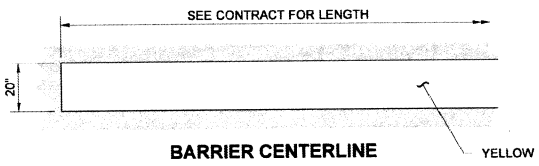

BARRIER CENTERLINE

Walsh, Brian
Sep 23 2020 3:46 PM

LONGITUDINAL MARKING PATTERNS

STANDARD PLAN M-20.10-03

SHEET 1 OF 2 SHEETS

APPROVED FOR PUBLICATION
Date: 2020.09.25 14:58:51 -07'00'
STATE DESIGN ENGINEER
Washington State Department of Transportation

DRAWN BY: FERN LIDDELL

0 1" 2"
TWO INCHES AT FULL SCALE. IF NOT, SCALE ACCORDINGLY

STATE: WASHINGTON
S25 T34N R26E W.M.
FAP NO.: STPUS-7924(003)

SHEET: 18
OF: 27
JOB NO.: 15063
DWG: DETAILS

CITY OF OMAK
OKANOGAN COUNTY WASHINGTON

ENGH ROAD SR215/US97
INTERSECTION IMPROVEMENTS

MISCELLANEOUS DETAILS

No.	REVISION	DATE	APPD

DATE: DEC 2021
DRAWN: ASC
CHECKED: JFR
APPROVED: MMM

Gray & Osborne, Inc.
CONSULTING ENGINEERS
180 IRON HORSE COURT
YAKIMA, WA 98901 • (509) 453-4833

DRAWN BY: FERN LIDDELL

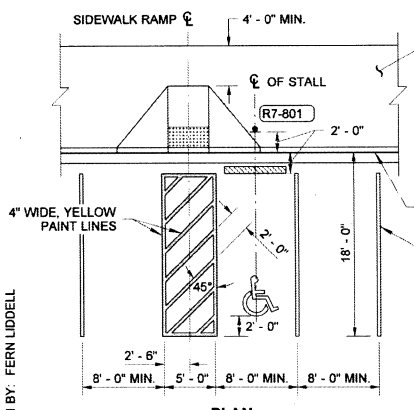

PLAN
ONE ACCESSIBLE STALL
90° PARKING STALL ARRANGEMENT

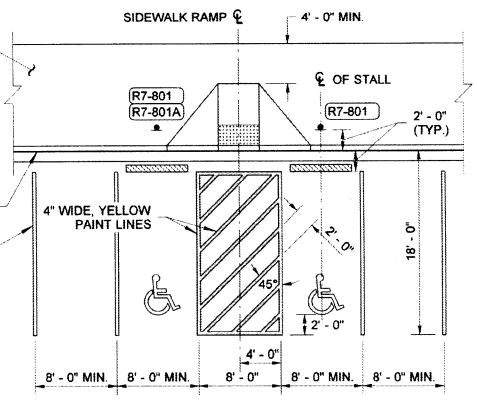

PLAN
TWO ACCESSIBLE STALLS
90° PARKING STALL ARRANGEMENT

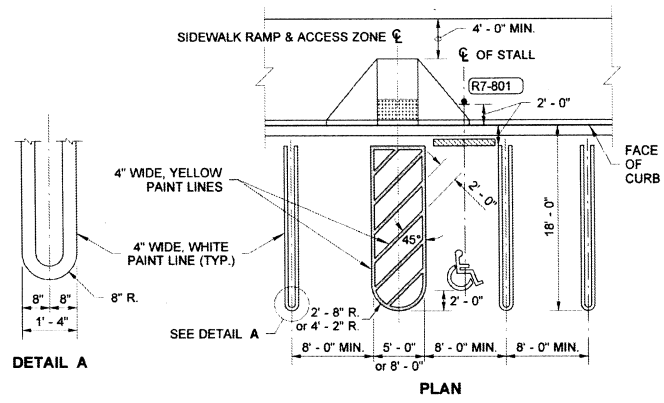

DETAIL A

PLAN
ALTERNATIVE PARKING STALL MARKINGS
USE ONLY WHEN SPECIFIED IN THE CONTRACT

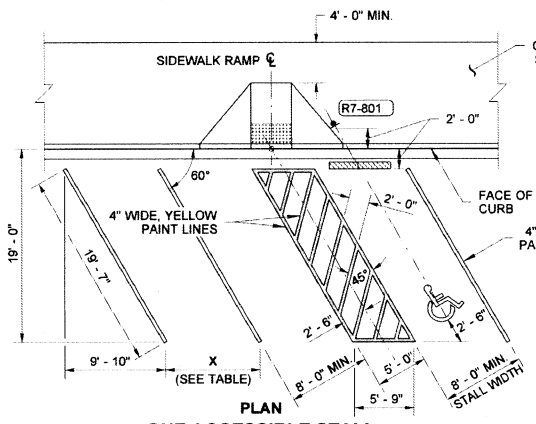

STALL WIDTH	X
8' - 0"	9' - 3"
9' - 0"	10' - 5"
10' - 0"	11' - 7"
11' - 0"	12' - 8"
12' - 0"	13' - 10"

PLAN
ONE ACCESSIBLE STALL
60° PARKING STALL ARRANGEMENT

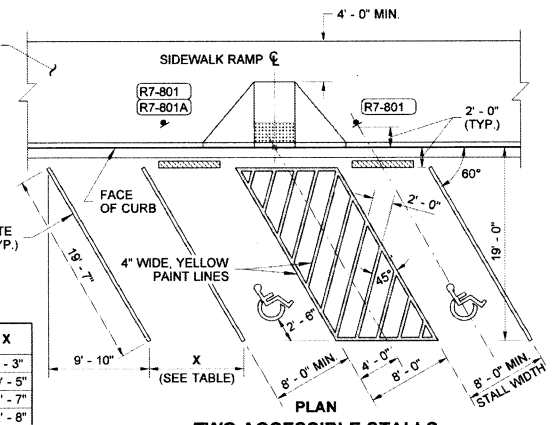

PLAN
TWO ACCESSIBLE STALLS
60° PARKING STALL ARRANGEMENT

NOTES

1. Three, four and five accessible stall arrangements may be either 60° (angled) or 90° (perpendicular) parking arrangements. See Contract.
2. An Access Parking Space Symbol is required for each accessible parking stall. A blue background and white border are required when the symbol is installed on a cement concrete surface.
3. All accessible stalls shall have wheel stops. Place wheel stops in other stalls when specified in the contract. Wheel stops shall be approximately 6" high and a minimum of 6' long.
4. Refer to the Standard Plans for sidewalk ramp, detectable warning pattern, and curb details.

LEGEND

- R7-801 — Reserved Parking Sign and post with R7-801A Plaque, if indicated (See Sign Fabrication Manual)
- Access Parking Space Symbol
- Manufactured wheel stop
- Detectable Warning Pattern

THEODORE J. TREPANIER — STATE OF WASHINGTON — 25335 — REGISTERED PROFESSIONAL ENGINEER
EXPIRES AUGUST 9, 2009

NOTE: THIS PLAN IS NOT A LEGAL ENGINEERING DOCUMENT BUT AN ELECTRONIC DUPLICATE. THE ORIGINAL, SIGNED BY THE ENGINEER AND APPROVED FOR PUBLICATION, IS KEPT ON FILE AT THE WASHINGTON STATE DEPARTMENT OF TRANSPORTATION. A COPY MAY BE OBTAINED UPON REQUEST.

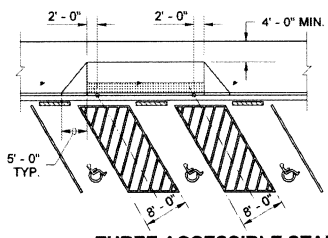

THREE ACCESSIBLE STALLS

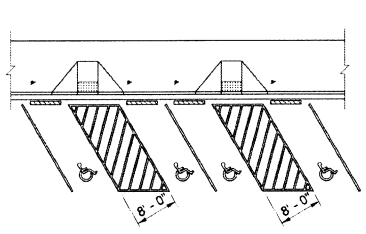

FOUR ACCESSIBLE STALLS

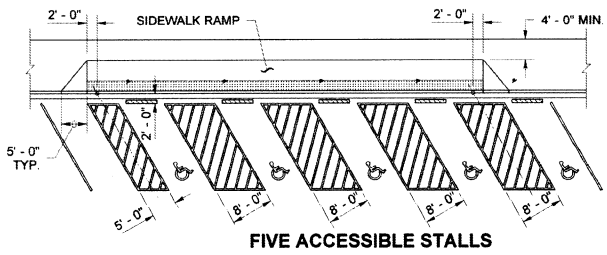

FIVE ACCESSIBLE STALLS

PARKING SPACE LAYOUTS

STANDARD PLAN M-17.10-02

SHEET 1 OF 1 SHEET

APPROVED FOR PUBLICATION
Pasco Bakotich III — STATE DESIGN ENGINEER — *07-03-08* — DATE
Washington State Department of Transportation

DRAWN BY FERN LIDDELL

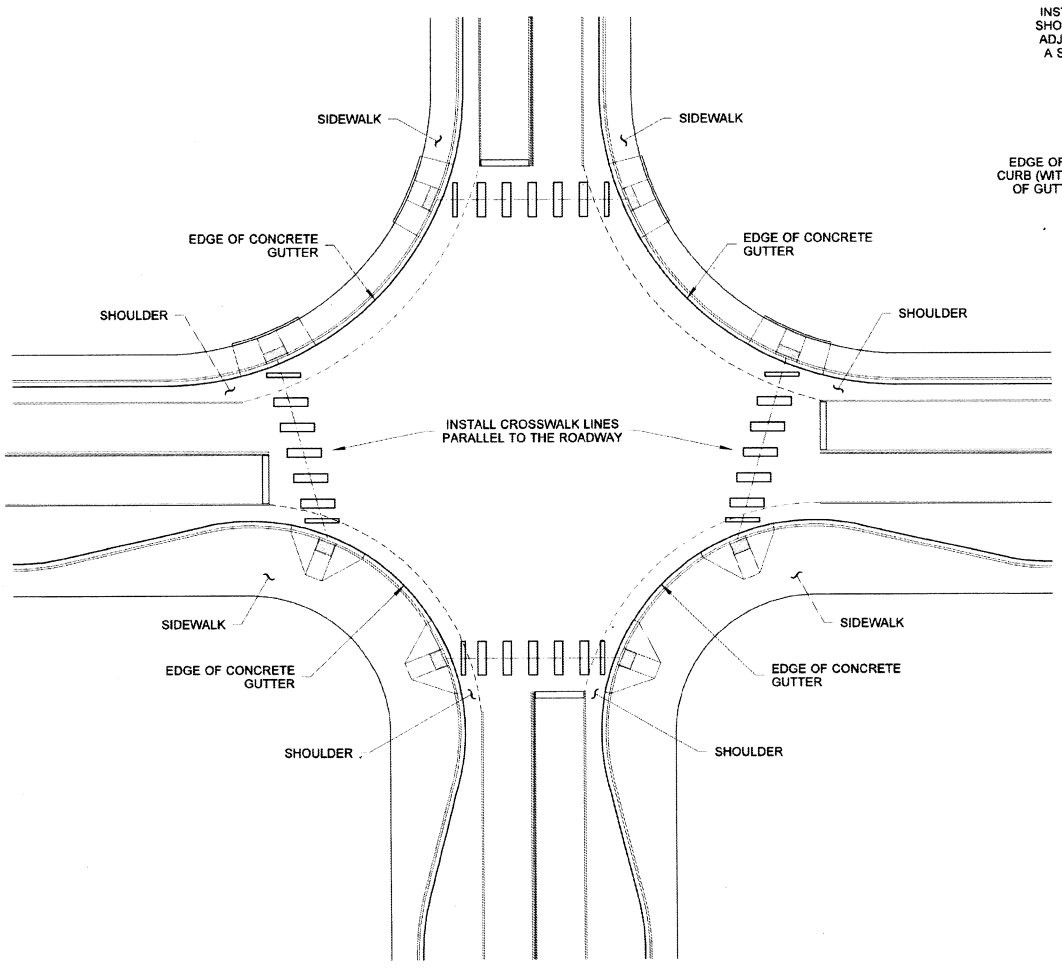

TYPICAL APPLICATIONS

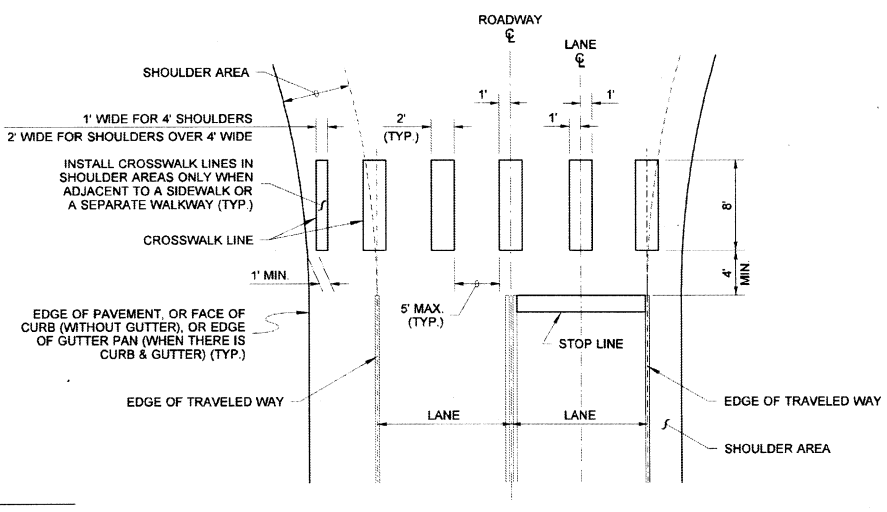

DETAIL

NOTES

1. See the Contract Plans for locations of crosswalk centerlines.
2. To the maximum extent possible, curb ramp centerline should be perpendicular to the crosswalk centerline.
3. To the maximum extent possible, crosswalks should be perpendicular to the centerline of the traveled way.

THEODORE J. TREPANIER — STATE OF WASHINGTON — 25335 — REGISTERED PROFESSIONAL ENGINEER
EXPIRES AUGUST 9, 2007

NOTE: THIS PLAN IS NOT A LEGAL ENGINEERING DOCUMENT BUT AN ELECTRONIC DUPLICATE. THE ORIGINAL, SIGNED BY THE ENGINEER AND APPROVED FOR PUBLICATION, IS KEPT ON FILE AT THE WASHINGTON STATE DEPARTMENT OF TRANSPORTATION. A COPY MAY BE OBTAINED UPON REQUEST.

CROSSWALK LAYOUT

STANDARD PLAN M-15.10-01

SHEET 1 OF 1 SHEET

APPROVED FOR PUBLICATION
Ken L. Smith — STATE DESIGN ENGINEER — *02-06-07* — DATE
Washington State Department of Transportation

0 1" 2"
TWO INCHES AT FULL SCALE. IF NOT, SCALE ACCORDINGLY

STATE: WASHINGTON
S25 T34N R26E, W.M.
FAP NO.: STPUS-2924(003)

SHEET: 19
OF: 27
JOB NO.: 15063
DWG: DETAILS

CITY OF OMAK
OKANOGAN COUNTY WASHINGTON
ENGH ROAD SR215/US97
INTERSECTION IMPROVEMENTS
MISCELLANEOUS DETAILS

MICHAEL M. MESKIMEN — STATE OF WASHINGTON — 39378 — REGISTERED PROFESSIONAL ENGINEER

No.	REVISION	DATE	APPD

DATE: DEC 2021
DRAWN: ASC
CHECKED: JFR
APPROVED: MMM

Gray & Osborne, Inc.
CONSULTING ENGINEERS
180 IRON HORSE COURT
YAKIMA, WA 98901 • (509) 453-4833

DRAWN BY: LISA CYFORD

NOTE

1. If Rumble Strips are present, install marking outside of the Rumble Strip.

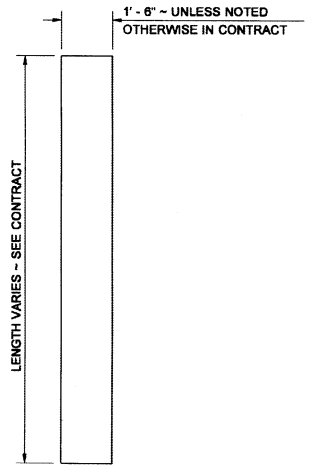

STOP LINE

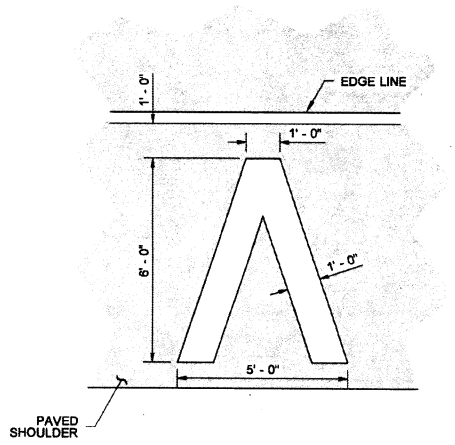

MARKING AREA = 11.73 SQ.FT.

HALF-MILE MARKER

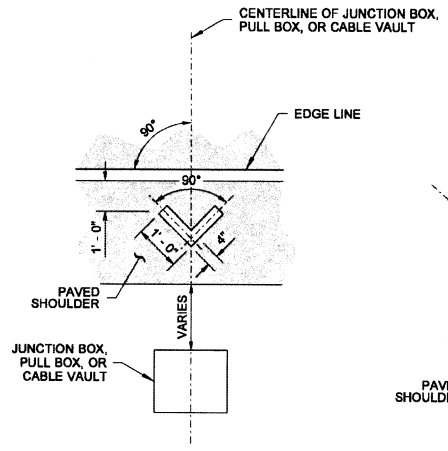

MARKING AREA = 0.56 SQ. FT.

JUNCTION BOX, PULL BOX, OR CABLE VAULT MARKINGS

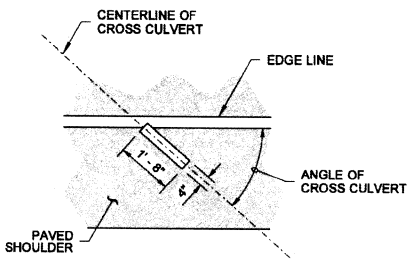

MARKING AREA = 0.56 SQ.FT.

CROSS CULVERT

DRAINAGE MARKING

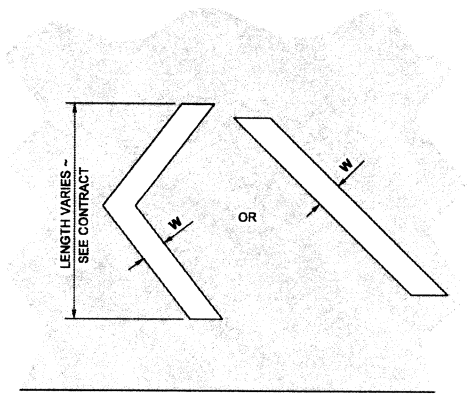

WHITE OR YELLOW ~ SEE CONTRACT

CHEVRON OR DIAGONAL

CROSSHATCH MARKING

W = 8" (IN) FOR POSTED SPEED LIMIT OF 40 MPH OR LOWER
W = 12" (IN) FOR POSTED SPEED LIMIT OF 45 MPH OR HIGHER

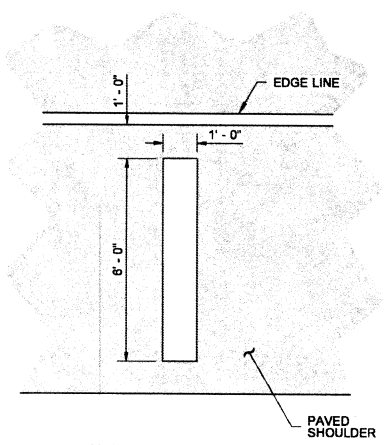

MARKING AREA = 6.00 SQ.FT.

FULL MILE MARKER

AERIAL SURVEILLANCE MARKERS

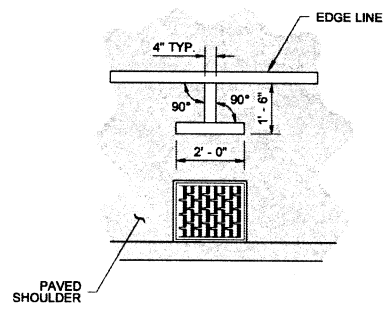

MARKING AREA = 1.06 SQ.FT.

DRAINAGE STRUCTURE INLET

DRAINAGE MARKING

BRIAN J. WALSH
STATE OF WASHINGTON
36103
REGISTERED
PROFESSIONAL ENGINEER

Walsh, Brian
Jun 24 2014 2:35 PM

SYMBOL MARKINGS MISCELLANEOUS

STANDARD PLAN M-24.60-04

SHEET 1 OF 2 SHEETS

APPROVED FOR PUBLICATION
Bakotich, Pasco
Jun 24 2014 4:43 PM
STATE DESIGN ENGINEER
Washington State Department of Transportation

NOTE

Use the dimensions shown on this plan for each type of Traffic Arrow being placed on roadways with a posted speed limit of 40 mph or lower.

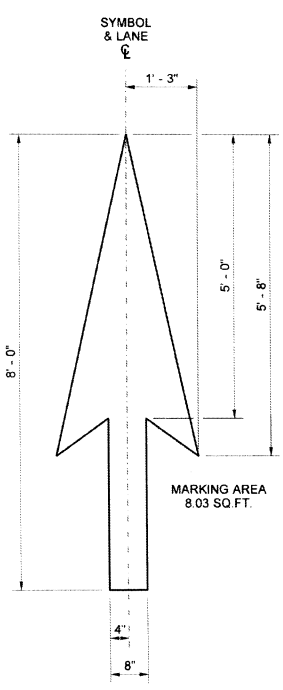

TYPE 1S TRAFFIC ARROW

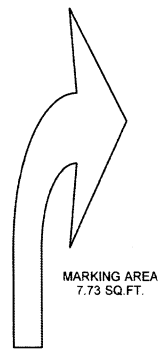

TYPE 2SR (RIGHT) TRAFFIC ARROW

MIRROR IMAGE OF TYPE 2SL TRAFFIC ARROW (SHOWN AT REDUCED SCALE)

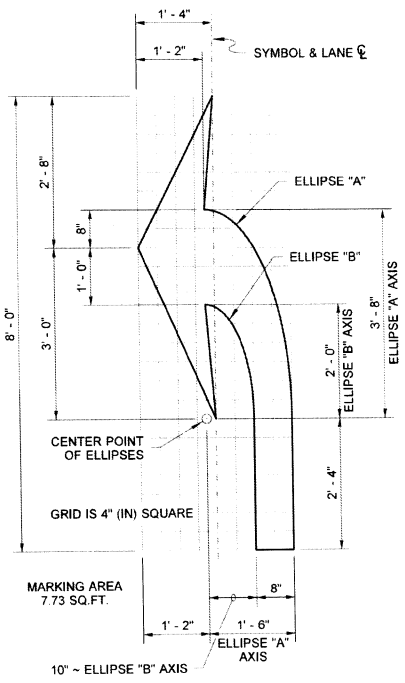

TYPE 2SL (LEFT) TRAFFIC ARROW

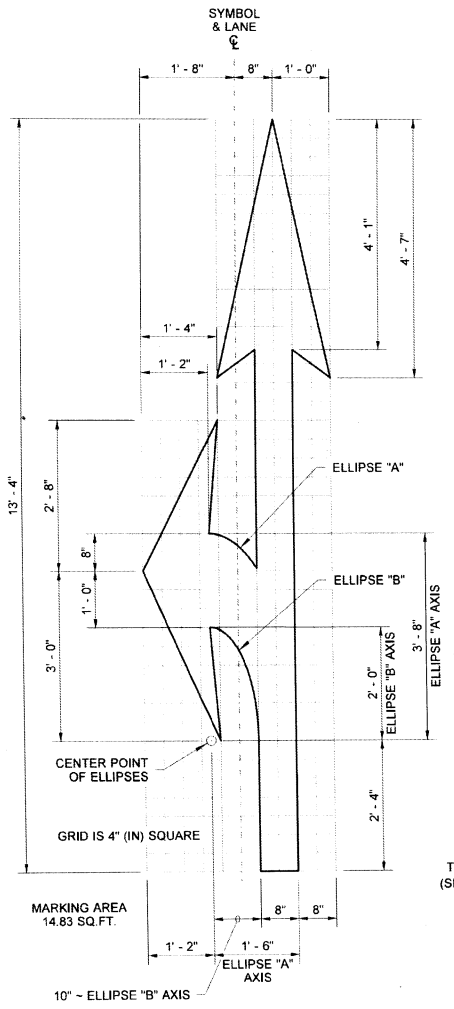

TYPE 3SL (LEFT) TRAFFIC ARROW

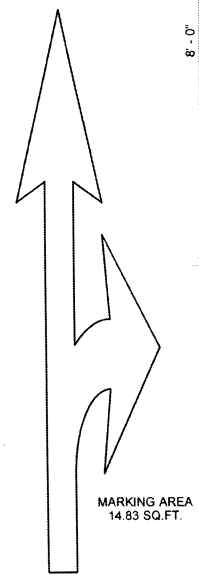

TYPE 3SR (RIGHT) TRAFFIC ARROW

MIRROR IMAGE OF TYPE 3SL TRAFFIC ARROW (SHOWN AT REDUCED SCALE)

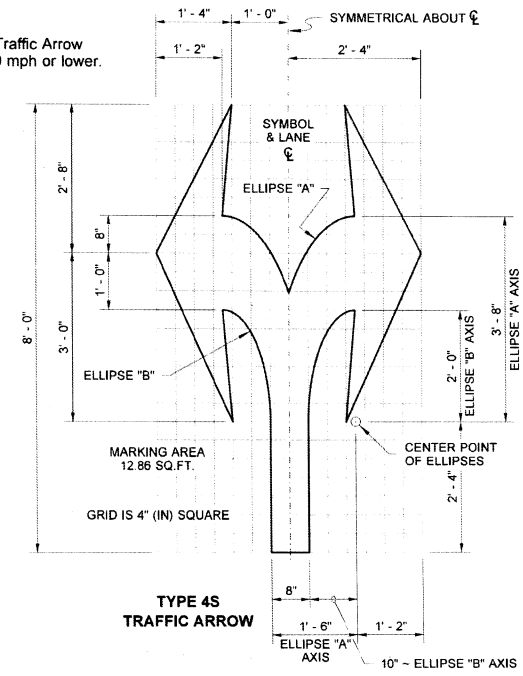

TYPE 4S TRAFFIC ARROW

BRIAN J. WALSH
STATE OF WASHINGTON
36103
REGISTERED
PROFESSIONAL ENGINEER

Walsh, Brian
Apr 16 2015 2:21 PM

SYMBOL MARKINGS ~ TRAFFIC ARROWS FOR LOW-SPEED ROADWAYS

STANDARD PLAN M-24.40-02

SHEET 1 OF 2 SHEETS

APPROVED FOR PUBLICATION
Bakotich, Pasco
Apr 20 2015 10:11 AM
STATE DESIGN ENGINEER
Washington State Department of Transportation

DRAWN BY: COLBY FLETCHER

0 1" 2"
TWO INCHES AT FULL SCALE. IF NOT, SCALE ACCORDINGLY

STATE: WASHINGTON
S25 T34N R26E, W.M.
FAP NO.: STPUS-7924(003)

SHEET: 20
OF: 27
JOB NO.: 15063
DWG: DETAILS

CITY OF OMAK
OKANOGAN COUNTY WASHINGTON

ENGH ROAD SR215/US97 INTERSECTION IMPROVEMENTS

MISCELLANEOUS DETAILS

MICHAEL M. MESKIMEN
STATE OF WASHINGTON
30378
REGISTERED
PROFESSIONAL ENGINEER

No.	REVISION	DATE	APPD

DATE: DEC 2021
DRAWN: ASC
CHECKED: JFR
APPROVED: MMM

Gray & Osborne, Inc.
CONSULTING ENGINEERS
180 IRON HORSE COURT
YAKIMA, WA 98901 • (509) 453-4833

DRAWN BY: FERN LIDDELL

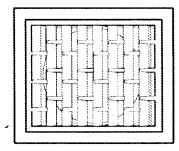

PLAN VIEW
FRAME AND VANED GRATE

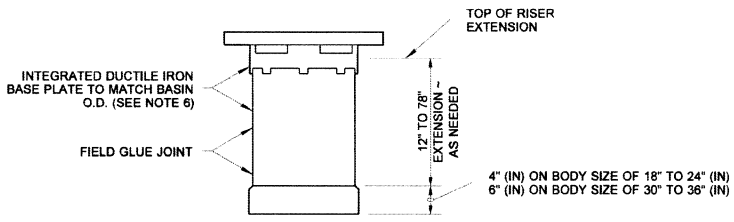

RISER EXTENSION

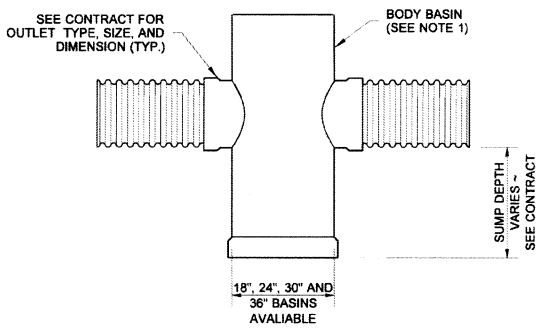

BASIN BODY

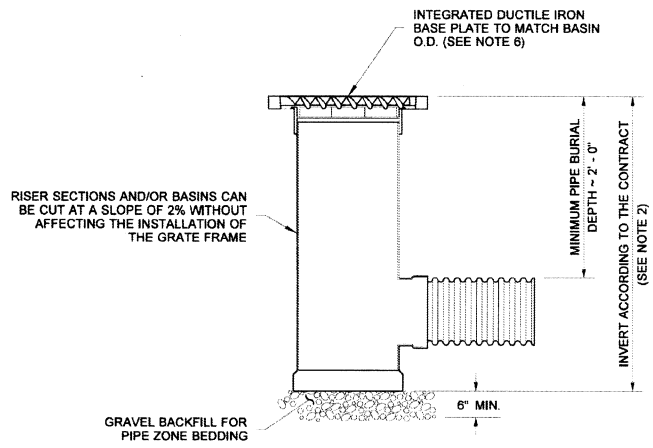

ELEVATION VIEW

NOTES

1. Drain basin to be custom manufactured according to plan details. Risers are needed for basins over 84" (in) due to shipping restrictions. The maximum depth from finished grade to the lowest invert shall be 8' (ft).
2. Drainage connections shall utilize flexible elastometric seals conforming to **ASTM F477** and shall meet the requirements of **ASTM D3212**.
3. Risers can be trimmed down to 3" (in) extension without interfering with the installation of the frame.
4. These structures can be used for Type 1, Type 1L, and Type 2 structures. Usage for the Type 2 structures shall be limited to pipe size use only.
5. Basins shall be manufactured from PVC pipe stock meeting the requirements of **ASTM D1784**, cell classification **12454**.
6. Ductile iron castings for PVC catch basins shall conform to the requirements of **ASTM A536**, **grade 70-50-05**, and shall meet the proof load testing requirements of **AASHTO M 306**.
7. Bolt-down capability is required on all frames, grates, and covers, unless specified otherwise in the Contract. Provide 2 holes in the frame that are vertically aligned with the grate or cover slots. The frame shall accept the 304 Stainless Steel (S.S.) 5/8" (in) - 11 NC × 2" (in) allen head cap screw by being tapped, or other approved mechanism. Location of bolt-down holes varies by manufacturer.
8. This item requires approval from HQ Hydraulics before use on a project.
9. Optional ladder is available for 36" diameter catch basin.

JULIE HEILMAN
STATE OF WASHINGTON
41619
REGISTERED
PROFESSIONAL ENGINEER

Aug 17, 2021

CATCH BASIN - PVC

STANDARD PLAN B-10.70-02

SHEET 1 OF 1 SHEET

APPROVED FOR PUBLICATION
Aug 17, 2021
STATE DESIGN ENGINEER
Washington State Department of Transportation

0 1" 2"
TWO INCHES AT FULL SCALE. IF NOT, SCALE ACCORDINGLY

STATE: WASHINGTON
S25 T34N R28E W.M.
FAP NO.: STPUS-2924(003)

SHEET: 21
OF: 27
JOB NO.: 15063
DWG: DETAILS

CITY OF OMAK
OKANOGAN COUNTY WASHINGTON

ENGH ROAD SR215/US97
INTERSECTION IMPROVEMENTS

MISCELLANEOUS DETAILS

MICHAEL M. MESKIMEN
STATE OF WASHINGTON
39378
REGISTERED
PROFESSIONAL ENGINEER

No.	REVISION	DATE	APPD

DATE: DEC 2021
DRAWN: ASC
CHECKED: JFR
APPROVED: MMM

Gray & Osborne, Inc.
CONSULTING ENGINEERS
180 IRON HORSE COURT
YAKIMA, WA 98901 • (509) 453-4833

STATE: WASHINGTON
S25 T34N R26E, W.M.
FAP NO.: STPUS-Z924(003)

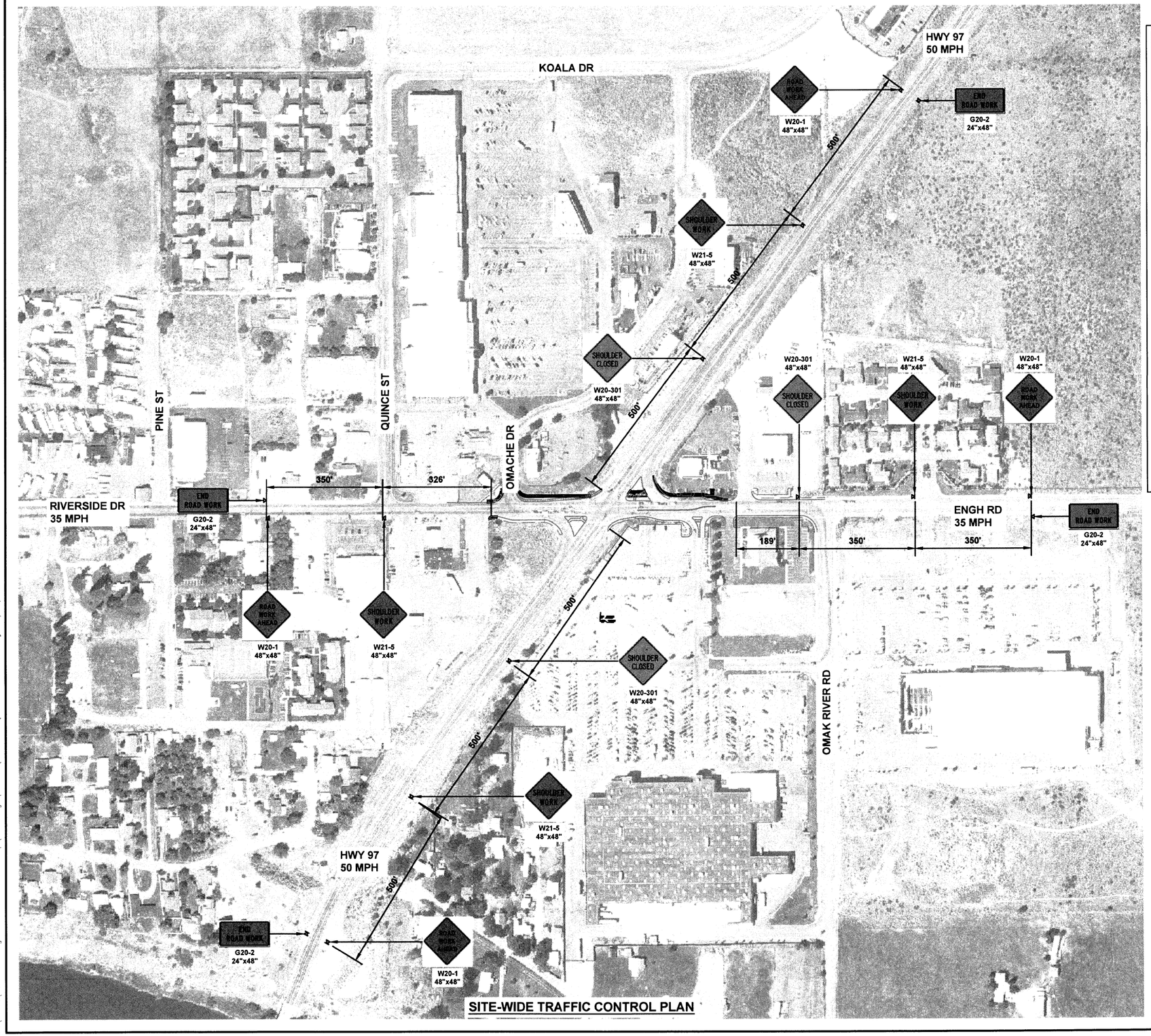

SITE-WIDE TRAFFIC CONTROL PLAN

LEGEND

- FLAGGING STATION
- TEMPORARY SIGN LOCATION
- CHANNELIZING DEVICES
- PROTECTIVE VEHICLE

SIGN SPACING = X (1)		
RURAL HIGHWAYS	60 / 65 MPH	800' +/-
RURAL ROADS	45 / 55 MPH	500' +/-
RURAL ROADS & URBAN ARTERIALS	35 / 40 MPH	350' +/-
RURAL ROADS, URBAN ARTERIALS, RESIDENTIAL & BUSINESS DISTRICTS	25 / 30 MPH	200' +/- (2)
URBAN STREETS	25 MPH OR LESS	100' +/- (2)

(1) ALL SPACING MAY BE ADJUSTED TO ACCOMMODATE INTERSECTIONS AND DRIVEWAYS.
(2) THIS SPACING MAY BE REDUCED IN URBAN AREAS TO FIT ROADWAY CONDITIONS.

CHANNELIZATION DEVICE SPACING (FEET)		
MPH	TAPER	TANGENT
50/65	10 TO 20	80
35/45	10 TO 20	60
25/30	10 TO 20	40

MINIMUM SHOULDER TAPER LENGTH = L/3 (feet)										
SHOULDER WIDTH (feet)	Posted Speed (mph)									
	25	30	35	40	45	50	55	60	65	70
8'	40	40	60	90	120	130	150	160	170	190
10'	40	60	90	90	150	170	190	200	220	240
USE A 3 DEVICES TAPER FOR SHOULDERS LESS THEN 8'										
BUFFER DATA (FOR PROTECTIVE VEHICLE SPACING)										
LONGITUDINAL BUFFER SPACE = B										
SPEED (MPH)	25	30	35	40	45	50	55	60	65	70
LENGTH (feet)	155	200	250	305	360	425	495	570	645	730

NOTES:

1. ALL SIGNS ARE BLACK ON ORANGE, UNLESS NOTED.
2. ALL SIGNS WITHIN WSDOT RIGHT-OF-WAY SHALL BE 48"X48".
3. EXTENDING THE CHANNELIZING DEVICE TAPER ACROSS THE SHOULDER IS RECOMMENDED.
4. SEE SPECIAL PROVISIONS FOR WORK HOUR RESTRICTIONS.
5. THE CONTRACTOR SHALL PROVIDE CHANNELIZATION DEVICES AND PROTECTIVE VEHICLES PER THE TABLES.
6. SIGNS SHALL BE MOUNTED CLASS 'A' IF THEY WILL BE OUT 3 DAYS OR MORE.

150' 75' 0 150' 300'
SCALE: 1"=150'

0 1" 2"
TWO INCHES AT FULL SCALE. IF NOT, SCALE ACCORDINGLY

Gray & Osborne, Inc.
CONSULTING ENGINEERS
150 IRON HORSE COURT
YAKIMA, WA 98901 • (509) 453-4833

DATE: DEC 2021
DRAWN: ASC
CHECKED: JFR
APPROVED: MMM

No.	REVISION	DATE	APPD

MICHAEL M. MESSIMEN
STATE OF WASHINGTON
30078
REGISTERED PROFESSIONAL ENGINEER

CITY OF OMAK
OKANOGAN COUNTY WASHINGTON
ENGH ROAD SR215/US97
INTERSECTION IMPROVEMENTS
TRAFFIC CONTROL PLAN

SHEET: 22
OF: 27
JOB NO.: 15063
DWG: TRAFFIC CONTROL

M:\OMAK\15063.00 Engh Road-Intersection Imp\01 Design\Planset\G-SHEETS\TRAFFIC CONTROL.dwg, 12/17/2021 2:17 PM, JULIO RENTERIA

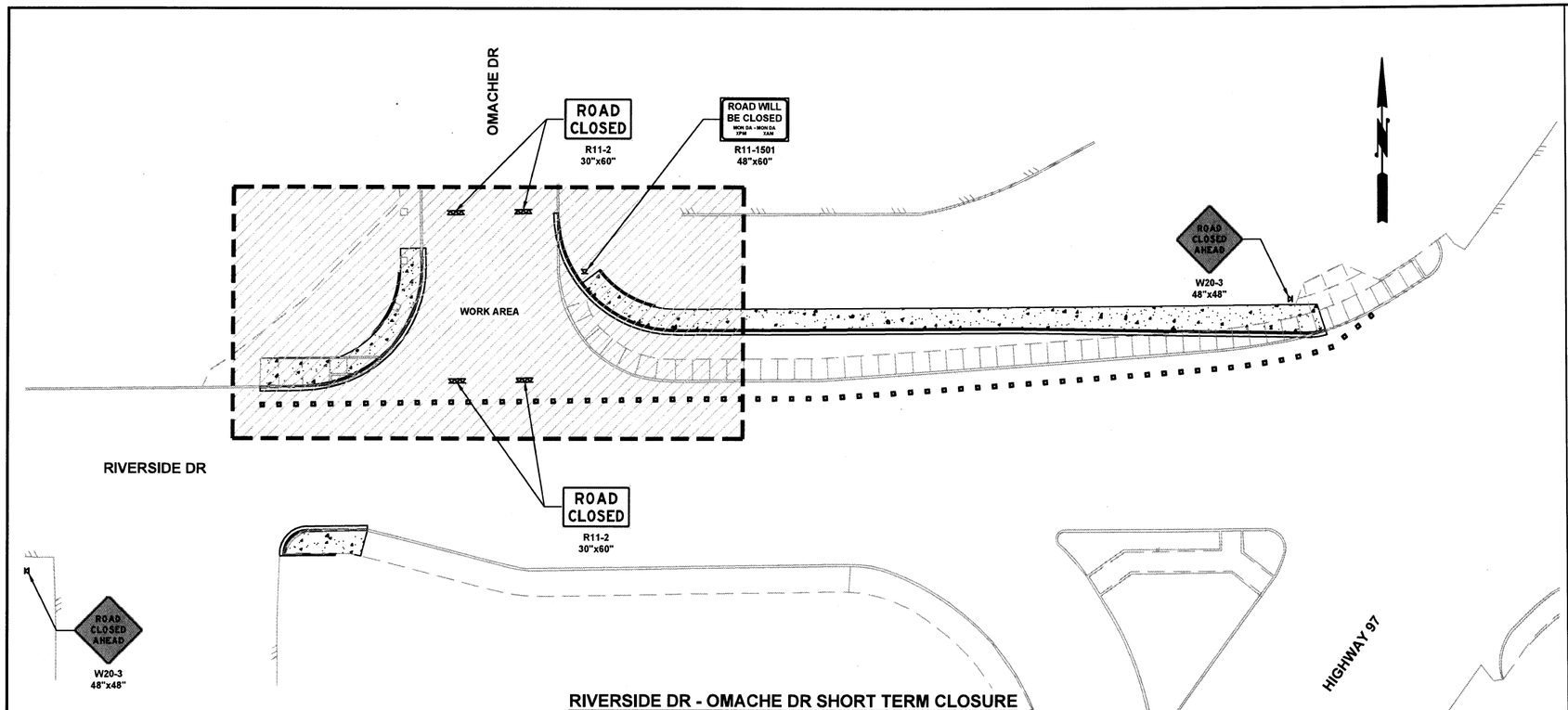

RIVERSIDE DR - OMACHE DR SHORT TERM CLOSURE

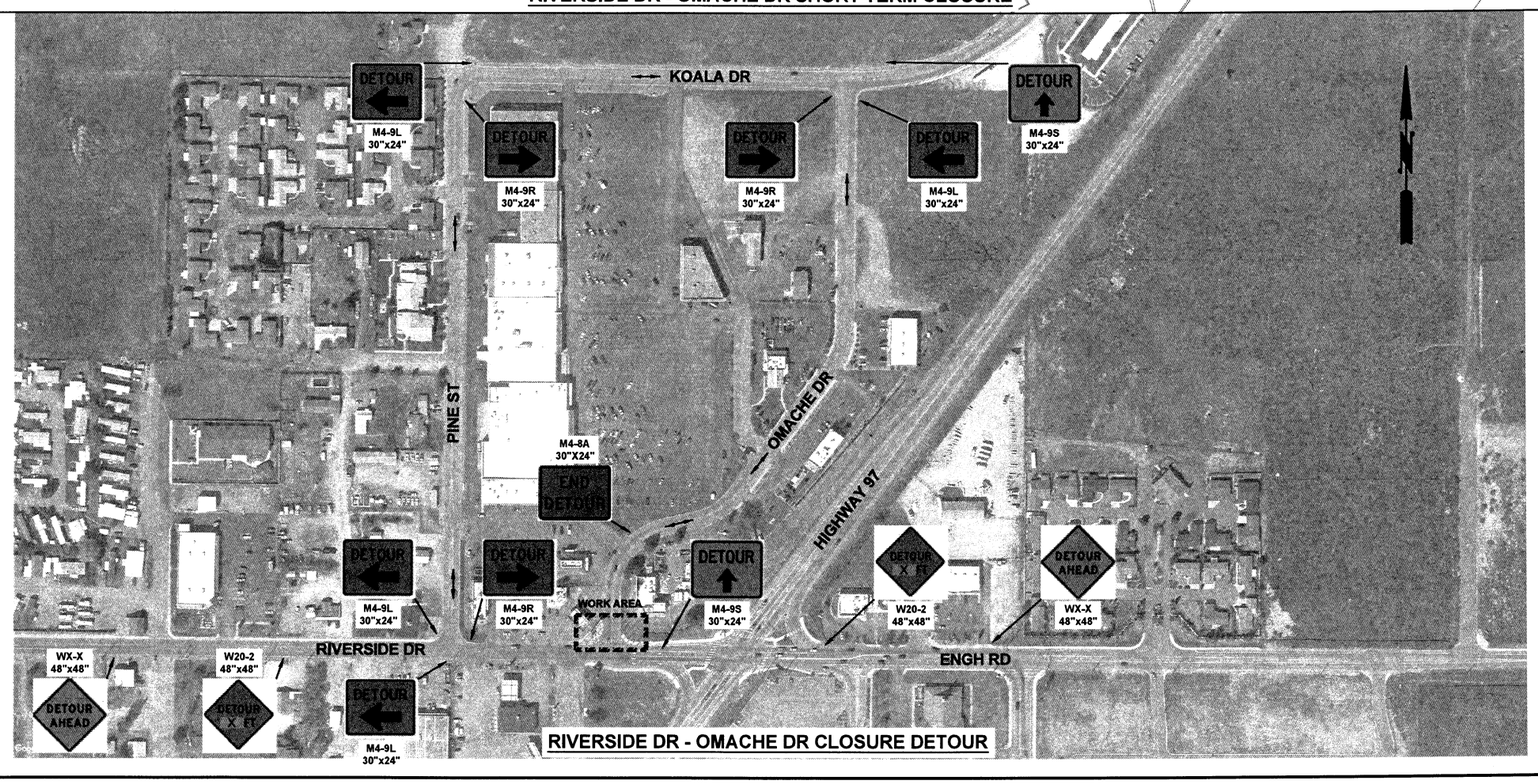

RIVERSIDE DR - OMACHE DR CLOSURE DETOUR

STATE: WASHINGTON
S25 T34N R26E, W.M.
FAP NO.: STPUS-Z924(003)

LEGEND

- FLAGGING STATION
- TEMPORARY SIGN LOCATION
- CHANNELIZING DEVICES
- PROTECTIVE VEHICLE
- TYPE 3 BARRICADE

SIGN SPACING = X (1)		
RURAL HIGHWAYS	60 / 65 MPH	800' +/-
RURAL ROADS	45 / 55 MPH	500' +/-
RURAL ROADS & URBAN ARTERIALS	35 / 40 MPH	350' +/-
RURAL ROADS, URBAN ARTERIALS, RESIDENTIAL & BUSINESS DISTRICTS	25 / 30 MPH	200' +/- (2)
URBAN STREETS	25 MPH OR LESS	100' +/- (2)

(1) ALL SPACING MAY BE ADJUSTED TO ACCOMMODATE INTERSECTIONS AND DRIVEWAYS.
(2) THIS SPACING MAY BE REDUCED IN URBAN AREAS TO FIT ROADWAY CONDITIONS.

CHANNELIZATION DEVICE SPACING (FEET)		
MPH	TAPER	TANGENT
50/65	10 TO 20	80
35/45	10 TO 20	60
25/30	10 TO 20	40

MINIMUM SHOULDER TAPER LENGTH = L/3 (feet)

SHOULDER WIDTH (feet)	Posted Speed (mph)									
	25	30	35	40	45	50	55	60	65	70
8'	40	40	60	90	120	130	150	160	170	190
10'	40	60	90	90	150	170	190	200	220	240

USE A 3 DEVICES TAPER FOR SHOULDERS LESS THEN 8'

BUFFER DATA (FOR PROTECTIVE VEHICLE SPACING)

LONGITUDINAL BUFFER SPACE = B

SPEED (MPH)	25	30	35	40	45	50	55	60	65	70
LENGTH (feet)	155	200	250	305	360	425	495	570	645	730

NOTES:

1. ALL SIGNS ARE BLACK ON ORANGE, UNLESS NOTED.
2. ALL SIGNS WITHIN WSDOT RIGHT-OF-WAY SHALL BE 48"X48".
3. EXTENDING THE CHANNELIZING DEVICE TAPER ACROSS THE SHOULDER IS RECOMMENDED.
4. SEE SPECIAL PROVISIONS FOR WORK HOUR RESTRICTIONS.
5. THE CONTRACTOR SHALL PROVIDE CHANNELIZATION DEVICES AND PROTECTIVE VEHICLES PER THE TABLES.
6. SIGNS SHALL BE MOUNTED CLASS 'A' IF THEY WILL BE OUT 3 DAYS OR MORE.

0 1" 2"
TWO INCHES AT FULL SCALE. IF NOT, SCALE ACCORDINGLY

Gray & Osborne, Inc.
CONSULTING ENGINEERS
150 IRON HORSE COURT
YAKIMA, WA 98901 • (509) 453-4833

DATE: DEC 2021
DRAWN: ASC
CHECKED: JFR
APPROVED: MMM

No.	REVISION	DATE	APPD

MICHAEL M. MESKIMEN
STATE OF WASHINGTON
36176
REGISTERED PROFESSIONAL ENGINEER

CITY OF OMAK
OKANOGAN COUNTY WASHINGTON
ENGH ROAD SR215/US97
INTERSECTION IMPROVEMENTS
SHORT TERM ROAD CLOSURE & DETOUR ROUTE
(WSDOT TRAFFIC CONTROL PLAN TC13)

SHEET: 23
OF: 27
JOB NO.: 15063
DWG: TRAFFIC CONTROL

M:\OMAK\15063.00 Engh Road-Intersection Imp\01 Design\Planset\G-SHEETS\TRAFFIC CONTROL.dwg, 12/17/2021 2:17 PM, JULIO RENTERIA

STATE: WASHINGTON
S25 T34N R26E, W.M.
FAP NO.: STPUS-Z924(003)

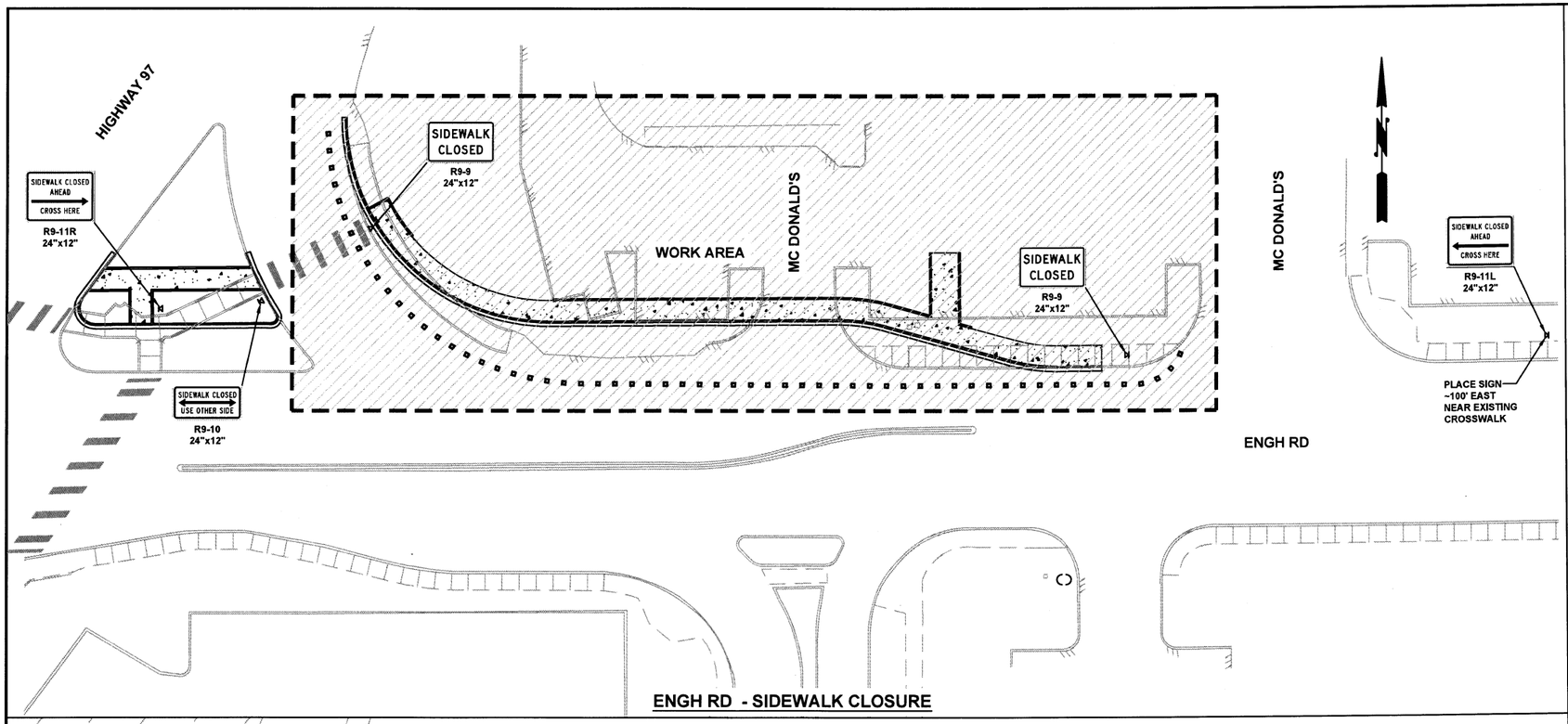

ENGH RD - SIDEWALK CLOSURE

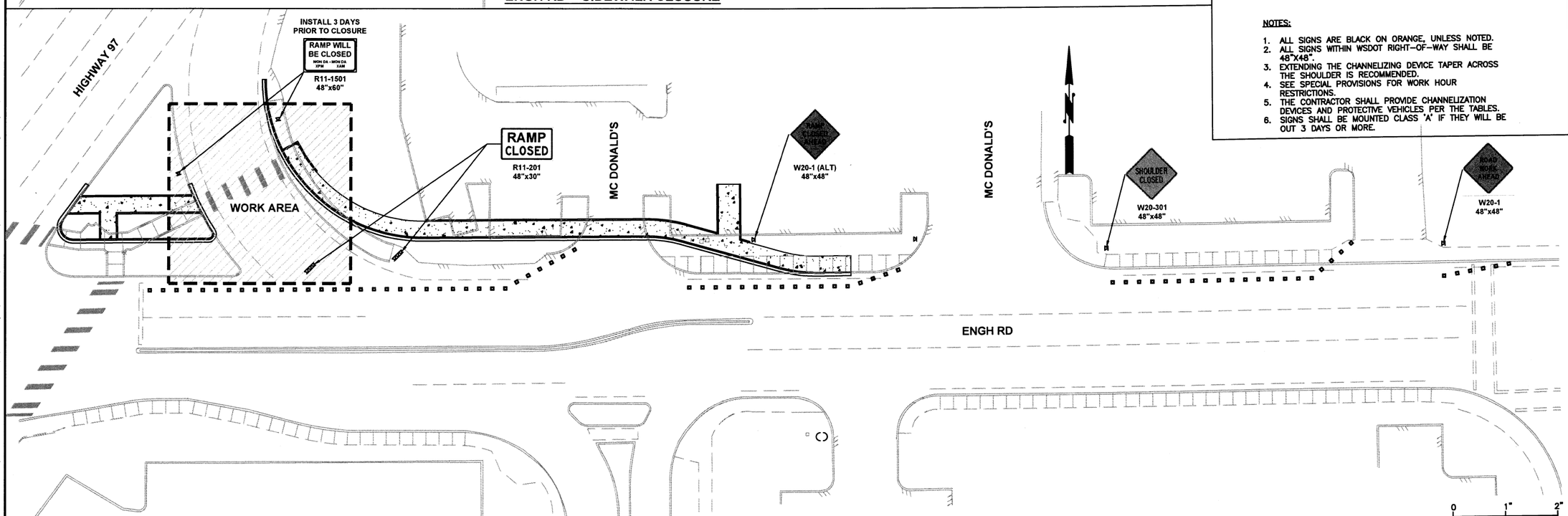

ENGH RD - HIGHWAY 97 NORTH BOUND SHORT TERM ON-RAMP CLOSURE

0 1" 2"
TWO INCHES AT FULL SCALE.
IF NOT, SCALE ACCORDINGLY

LEGEND

- FLAGGING STATION
- TEMPORARY SIGN LOCATION
- CHANNELIZING DEVICES
- PROTECTIVE VEHICLE
- TYPE 3 BARRICADE

SIGN SPACING = X (1)		
RURAL HIGHWAYS	60 / 65 MPH	800' +/-
RURAL ROADS	45 / 55 MPH	500' +/-
RURAL ROADS & URBAN ARTERIALS	35 / 40 MPH	350' +/-
RURAL ROADS, URBAN ARTERIALS, RESIDENTIAL & BUSINESS DISTRICTS	25 / 30 MPH	200' +/- (2)
URBAN STREETS	25 MPH OR LESS	100' +/- (2)

(1) ALL SPACING MAY BE ADJUSTED TO ACCOMMODATE INTERSECTIONS AND DRIVEWAYS.
(2) THIS SPACING MAY BE REDUCED IN URBAN AREAS TO FIT ROADWAY CONDITIONS.

CHANNELIZATION DEVICE SPACING (FEET)		
MPH	TAPER	TANGENT
50/65	10 TO 20	80
35/45	10 TO 20	60
25/30	10 TO 20	40

MINIMUM SHOULDER TAPER LENGTH = L/3 (feet)

SHOULDER WIDTH (feet)	Posted Speed (mph)									
	25	30	35	40	45	50	55	60	65	70
8'	40	40	60	90	120	130	150	160	170	190
10'	40	60	90	90	150	170	190	200	220	240

USE A 3 DEVICES TAPER FOR SHOULDERS LESS THEN 8'

BUFFER DATA (FOR PROTECTIVE VEHICLE SPACING)

LONGITUDINAL BUFFER SPACE = B

SPEED (MPH)	25	30	35	40	45	50	55	60	65	70
LENGTH (feet)	155	200	250	305	360	425	495	570	645	730

NOTES:

1. ALL SIGNS ARE BLACK ON ORANGE, UNLESS NOTED.
2. ALL SIGNS WITHIN WSDOT RIGHT-OF-WAY SHALL BE 48"X48".
3. EXTENDING THE CHANNELIZING DEVICE TAPER ACROSS THE SHOULDER IS RECOMMENDED.
4. SEE SPECIAL PROVISIONS FOR WORK HOUR RESTRICTIONS.
5. THE CONTRACTOR SHALL PROVIDE CHANNELIZATION DEVICES AND PROTECTIVE VEHICLES PER THE TABLES.
6. SIGNS SHALL BE MOUNTED CLASS 'A' IF THEY WILL BE OUT 3 DAYS OR MORE.

Gray & Osborne, Inc.
CONSULTING ENGINEERS
190 IRON HORSE COURT
YAKIMA, WA 98901 • (509) 453-4833

DATE: DEC 2021	DRAWN: ASC	CHECKED: JFR	APPROVED: MMM

No.	REVISION	DATE	APPD

MICHAEL M. MESKIMEN
STATE OF WASHINGTON
30378
REGISTERED PROFESSIONAL ENGINEER

CITY OF OMAK
OKANOGAN COUNTY WASHINGTON
ENGH ROAD SR215/US97
INTERSECTION IMPROVEMENTS
SIDEWALK CLOSURE &
SHORT TERM OFF-RAMP CLOSURE
(WSDOT TRAFFIC CONTROL PLAN TC13 & TC16)

SHEET: 25
OF: 27
JOB NO.: 15063
DWG: TRAFFIC CONTROL

M:\OMAK\15063.00 Engh Road-Intersection Imp\01 Design\Planset\G-SHEETS\TRAFFIC CONTROL.dwg, 12/17/2021 2:17 PM, JULIO RENTERIA

STATE: WASHINGTON
S25 T34N R26E, W.M.
FAP NO.: STPUS-Z924(003)

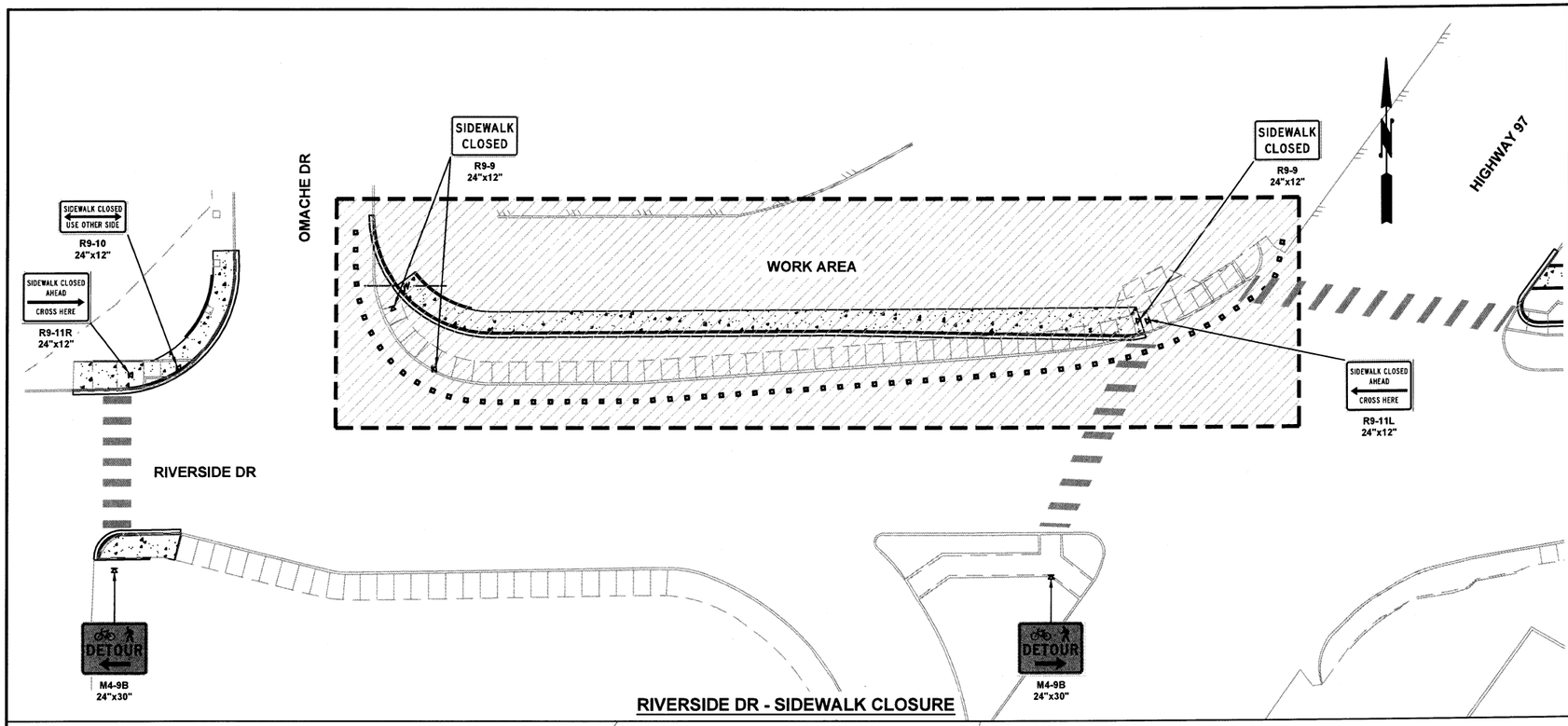

RIVERSIDE DR - SIDEWALK CLOSURE

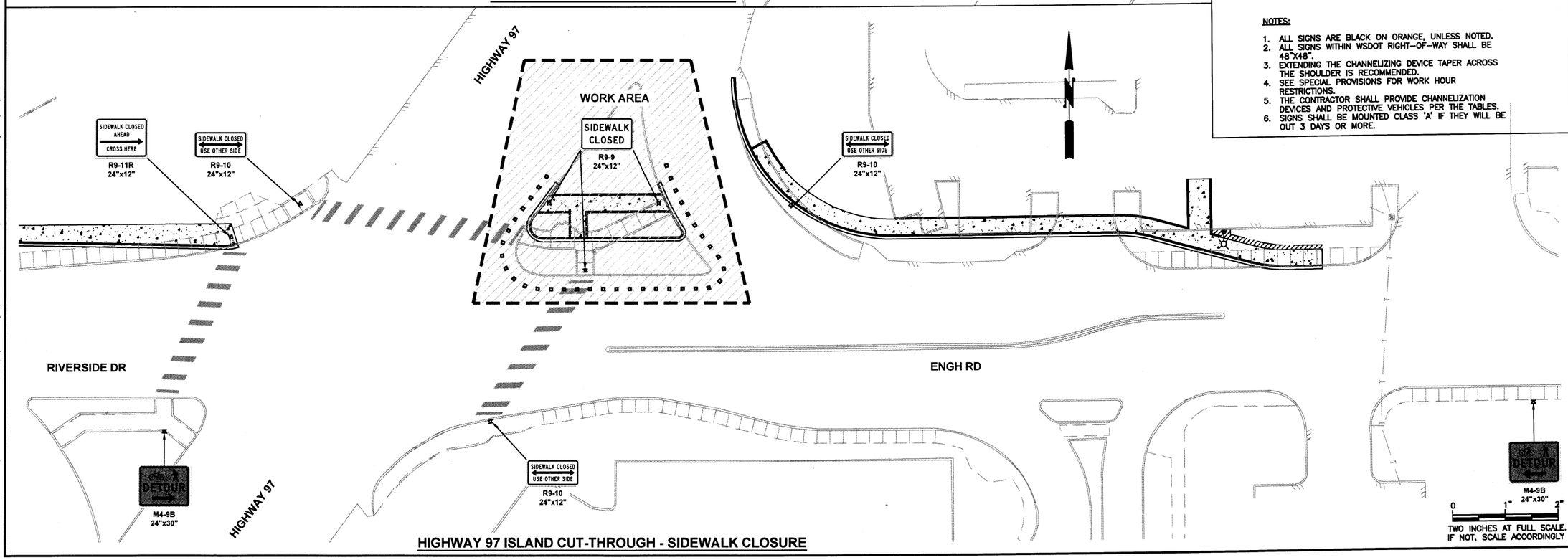

HIGHWAY 97 ISLAND CUT-THROUGH - SIDEWALK CLOSURE

LEGEND

- FLAGGING STATION
- TEMPORARY SIGN LOCATION
- CHANNELIZING DEVICES
- PROTECTIVE VEHICLE
- TYPE 3 BARRICADE

SIGN SPACING = X (1)		
RURAL HIGHWAYS	60 / 65 MPH	800' +/-
RURAL ROADS	45 / 55 MPH	500' +/-
RURAL ROADS & URBAN ARTERIALS	35 / 40 MPH	350' +/-
RURAL ROADS, URBAN ARTERIALS, RESIDENTIAL & BUSINESS DISTRICTS	25 / 30 MPH	200' +/- (2)
URBAN STREETS	25 MPH OR LESS	100' +/- (2)

(1) ALL SPACING MAY BE ADJUSTED TO ACCOMMODATE INTERSECTIONS AND DRIVEWAYS.
(2) THIS SPACING MAY BE REDUCED IN URBAN AREAS TO FIT ROADWAY CONDITIONS.

CHANNELIZATION DEVICE SPACING (FEET)		
MPH	TAPER	TANGENT
50/65	10 TO 20	80
35/45	10 TO 20	60
25/30	10 TO 20	40

MINIMUM SHOULDER TAPER LENGTH = L/3 (feet)

SHOULDER WIDTH (feet)	Posted Speed (mph)									
	25	30	35	40	45	50	55	60	65	70
8'	40	40	60	90	120	130	150	160	170	190
10'	40	60	90	90	150	170	190	200	220	240

USE A 3 DEVICES TAPER FOR SHOULDERS LESS THEN 8'

BUFFER DATA (FOR PROTECTIVE VEHICLE SPACING)

LONGITUDINAL BUFFER SPACE = B

SPEED (MPH)	25	30	35	40	45	50	55	60	65	70
LENGTH (feet)	155	200	250	305	360	425	495	570	645	730

NOTES:

1. ALL SIGNS ARE BLACK ON ORANGE, UNLESS NOTED.
2. ALL SIGNS WITHIN WSDOT RIGHT-OF-WAY SHALL BE 48"X48".
3. EXTENDING THE CHANNELIZING DEVICE TAPER ACROSS THE SHOULDER IS RECOMMENDED.
4. SEE SPECIAL PROVISIONS FOR WORK HOUR RESTRICTIONS.
5. THE CONTRACTOR SHALL PROVIDE CHANNELIZATION DEVICES AND PROTECTIVE VEHICLES PER THE TABLES.
6. SIGNS SHALL BE MOUNTED CLASS 'A' IF THEY WILL BE OUT 3 DAYS OR MORE.

Gray & Osborne, Inc.
CONSULTING ENGINEERS
180 IRON HORSE COURT
YAKIMA, WA 98901 • (509) 453-4833

DATE: DEC 2021
DRAWN: ASC
CHECKED: JFR
APPROVED: MMM

No.	REVISION	DATE	APPD

MICHAEL M. MESKIMEN
STATE OF WASHINGTON
30376
REGISTERED PROFESSIONAL ENGINEER

CITY OF OMAK
OKANOGAN COUNTY WASHINGTON
ENGH ROAD SR215/US97
INTERSECTION IMPROVEMENTS
SIDEWALK CLOSURES
(WSDOT TRAFFIC CONTROL PLAN TC16)

SHEET: 24
OF: 27

JOB NO.: 15063
DWG: TRAFFIC CONTROL

M:\OMAK\15063.00 Engh Road-Intersection Imp\01 Design\Planset\G-SHEETS\TRAFFIC CONTROL.dwg, 12/17/2021 2:17 PM, JULIO RENTERIA

MINIMUM LANE CLOSURE TAPER LENGTH = L (feet)

LANE WIDTH (feet)	Posted Speed (mph)									
	25	30	35	40	45	50	55	60	65	70
10	105	150	205	270	450	500	550	-	-	-
11	115	165	225	295	495	550	605	660	-	-
12	125	180	245	320	540	600	660	720	780	840

MINIMUM SHOULDER TAPER LENGTH = L/3 (feet)

SHOULDER WIDTH (feet)	Posted Speed (mph)									
	25	30	35	40	45	50	55	60	65	70
8'	40	40	60	90	120	130	150	160	170	190
10'	40	60	90	90	150	170	190	200	220	240

USE A MINIMUM 3 DEVICES TAPER FOR SHOULDER LESS THEN 8'

SIGN SPACING = X (1)

FREEWAYS & EXPRESSWAYS	55 / 70 MPH	1500' ±
RURAL HIGHWAYS	60 / 65 MPH	800' ±
RURAL ROADS	45 / 55 MPH	500' ±
RURAL ROADS & URBAN ARTERIALS	35 / 40 MPH	350' ±
RURAL ROADS & URBAN ARTERIALS RESIDENTIAL & BUSINESS DISTRICTS	25 / 30 MPH	200' ± (2)
URBAN STREETS	25 MPH OR LESS	100' ± (2)

(1) ALL SPACING MAY BE ADJUSTED TO ACCOMMODATE INTERCHANGE RAMPS AT-GRADE INTERSECTIONS AND DRIVEWAYS.
(2) THIS SPACING MAY BE REDUCED IN URBAN AREAS TO FIT ROADWAY CONDITIONS.

CHANNELIZATION DEVICE SPACING (feet)

MPH	TAPER	TANGENT
50/70	40	80
35/45	30	60
25/30	20	40

BUFFER DATA

LONGITUDINAL BUFFER SPACE = B

SPEED (MPH)	25	30	35	40	45	50	55	60	65	70
LENGTH (feet)	155	200	250	305	360	425	495	570	645	730

TRANSPORTABLE ATTENUATOR ROLL AHEAD DISTANCE = R

HOST VEHICLE WEIGHT 9,900 TO 22,000 lbs.			HOST VEHICLE WEIGHT > 22,000 lbs.		
< 45 MPH	45-55 MPH	> 55 MPH	< 45 MPH	45-55 MPH	> 55 MPH
100'	123'	172'	74'	100'	150'

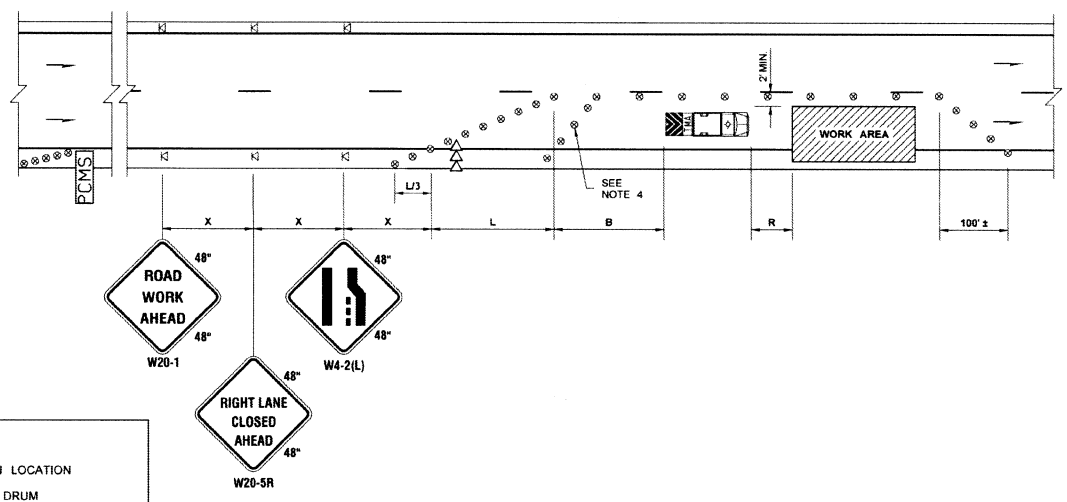

PCMS

1	2
RIGHT LANE CLOSURE	1 MILE AHEAD
2.0 SEC	2.0 SEC

FIELD LOCATE 1 MILE ± IN ADVANCE OF LANE CLOSURE SIGNING.

LEGEND

- TEMPORARY SIGN LOCATION
- TRAFFIC SAFETY DRUM
- SEQUENTIAL ARROW SIGN
- TRANSPORTABLE ATTENUATOR
- PCMS PORTABLE CHANGEABLE MESSAGE SIGN

NOTES

1. SEE SPECIAL PROVISIONS FOR WORK HOUR RESTRICTIONS.
2. EXTEND DEVICE TAPER AT L/3 ACROSS SHOULDER.
3. DEVICES SHALL NOT ENCROACH INTO THE ADJACENT LANE.
4. USE TRANSVERSE DEVICES IN CLOSED LANE EVERY 1000' (FT) (RECOMMENDED).
5. DEVICE SPACING FOR THE DOWNSTREAM TAPER SHALL BE 20' (FT).
6. ALL SIGNS ARE BLACK ON ORANGE.

SINGLE-LANE CLOSURE FOR MULTI-LANE ROADWAYS

NOT TO SCALE

FILE NAME	S:\Design R P& S\4-Standards\2-Plan Sheet Library\02-PSL Work in Progress\Fern\(TC1-TC-17) Buffer Data table replacement\TC-3.dgn			REGION NO. / STATE	FED.AID PROJ.NO.	Washington State Department of Transportation	Plot 1
TIME	8:18:31 AM			WASH			PLAN REF NO TC3
DATE	1/3/2018			JOB NUMBER			SHEET OF SHEETS
PLOTTED BY	liddelf						
DESIGNED BY				CONTRACT NO.	LOCATION NO.		
ENTERED BY							
CHECKED BY							
PROJ. ENGR.							
REGIONAL ADM.		REVISION	DATE	BY		P.E. STAMP BOX DATE	TRAFFIC CONTROL PLAN

SIGN SPACING = X (1)

RURAL ROADS & URBAN ARTERIALS	35 / 40 MPH	350' ±
RURAL ROADS, URBAN ARTERIALS, RESIDENTIAL & BUSINESS DISTRICTS	25 / 30 MPH	200' ± (2)
URBAN STREETS	25 MPH OR LESS	100' ± (2)

(1) ALL SPACING MAY BE ADJUSTED TO ACCOMMODATE INTERSECTIONS AND DRIVEWAYS.
(2) THIS SPACING MAY BE REDUCED IN URBAN AREAS TO FIT ROADWAY CONDITIONS.

MINIMUM SHOULDER TAPER LENGTH = L/3 (feet)

SHOULDER WIDTH (feet)	Posted Speed (mph)									
	25	30	35	40	45	50	55	60	65	70
8'	40	40	60	90	-	-	-	-	-	-
10'	40	60	90	90	-	-	-	-	-	-

USE A 3 DEVICES TAPER FOR SHOULDERS LESS THEN 8'

BUFFER DATA

LONGITUDINAL BUFFER SPACE = B

SPEED (MPH)	25	30	35	40	45	50	55	60	65	70
LENGTH (feet)	155	200	250	305	360	425	495	570	645	730

TRANSPORTABLE ATTENUATOR ROLL AHEAD DISTANCE = R

HOST VEHICLE WEIGHT 9,900 TO 22,000 lbs.			HOST VEHICLE WEIGHT > 22,000 lbs.		
< 45 MPH	45-55 MPH	> 55 MPH	< 45 MPH	45-55 MPH	> 55 MPH
100'	123'	172'	74'	100'	150'

PROTECTIVE VEHICLE (WORK VEHICLE) = R

NO SPECIFIED DISTANCE REQUIRED

CHANNELIZATION DEVICE SPACING (feet)

MPH	TAPER	TANGENT
35/40	30	60
25/30	20	40

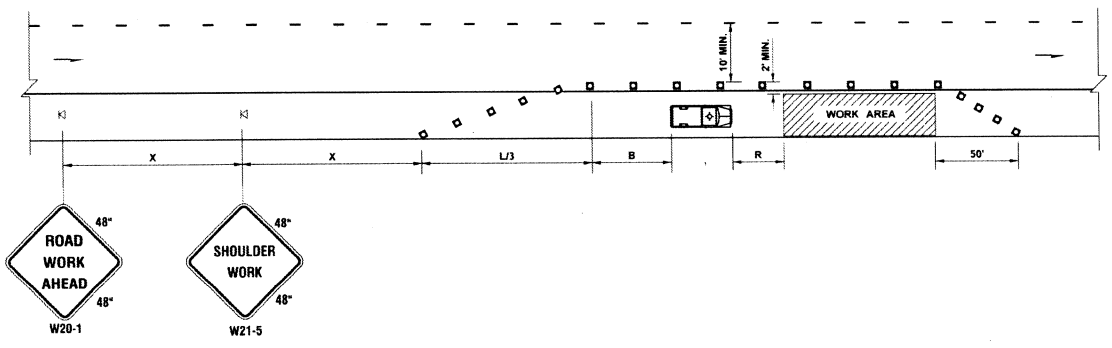

LEGEND

- TEMPORARY SIGN LOCATION
- CHANNELIZING DEVICES
- PROTECTIVE VEHICLE

NOTES

1. DEVICE SPACING FOR THE DOWNSTREAM TAPER SHALL BE 20' (FT).
2. ALL SIGNS ARE BLACK ON ORANGE.

SHOULDER CLOSURE - LOW SPEED

(40 MPH OR LESS)

NOT TO SCALE

FILE NAME	S:\Design R P& S\4-Standards\2-Plan Sheet Library\01-Published PSL\(TC) Work Zone Traffic Control\(TC-5) Shoulder Closure - Low Speed (40 MPH or Less)\TC-5.dgn			REGION NO. / STATE	FED.AID PROJ.NO.	Washington State Department of Transportation	Plot 1
TIME	2:59:41 PM			WASH			PLAN REF NO TC5
DATE	1/2/2018			JOB NUMBER			SHEET OF SHEETS
PLOTTED BY	liddelf						
DESIGNED BY				CONTRACT NO.	LOCATION NO.		
ENTERED BY							
CHECKED BY							
PROJ. ENGR.							
REGIONAL ADM.		REVISION	DATE	BY		P.E. STAMP BOX DATE	TRAFFIC CONTROL PLAN

STATE: WASHINGTON
S25 T34N R26E W.M.
FAP NO.: STPUS-2924(003)

0 1" 2"
TWO INCHES AT FULL SCALE. IF NOT, SCALE ACCORDINGLY

SHEET: 26
OF: 27
JOB NO.: 15063
DWG: TRAFFIC CONTROL

CITY OF OMAK
OKANOGAN COUNTY WASHINGTON

ENGH ROAD SR215/US97 INTERSECTION IMPROVEMENTS

TRAFFIC CONTROL DETAILS

MICHAEL M. MESKIMEN STATE OF WASHINGTON 39378 REGISTERED PROFESSIONAL ENGINEER

No.	REVISION	DATE	APPD

DATE: DEC 2021
DRAWN: ASC
CHECKED: JFR
APPROVED: MMM

Gray & Osborne, Inc.
CONSULTING ENGINEERS
180 IRON HORSE COURT
YAKIMA, WA 98901 • (509) 453-4833

MINIMUM SHOULDER TAPER LENGTH = L/3 (feet)

SHOULDER WIDTH (feet)	Posted Speed (mph)									
	25	30	35	40	45	50	55	60	65	70
8'	40	40	60	90	120	130	150	160	170	190
10'	40	60	90	90	150	170	190	200	220	240

USE A MINIMUM 3 DEVICES TAPER FOR SHOULDER LESS THEN 8'

SIGN SPACING = X (1)

FREEWAYS & EXPRESSWAYS	55 / 70 MPH	1500' ±
RURAL HIGHWAYS	60 / 65 MPH	800' ±
RURAL ROADS	45 / 55 MPH	500' ±
RURAL ROADS & URBAN ARTERIALS	35 / 40 MPH	350' ±
RURAL ROADS & URBAN ARTERIALS RESIDENTIAL & BUSINESS DISTRICTS	25 / 30 MPH	200' ± (2)
URBAN STREETS	25 MPH OR LESS	100' ± (2)

(1) ALL SPACING MAY BE ADJUSTED TO ACCOMMODATE INTERCHANGE RAMPS AT-GRADE INTERSECTIONS AND DRIVEWAYS
(2) THIS SPACING MAY BE REDUCED IN URBAN AREAS TO FIT ROADWAY CONDITIONS

CHANNELIZATION DEVICE SPACING (feet)

MPH	TAPER	TANGENT
50/70	40	80
35/45	30	60
25/30	20	40

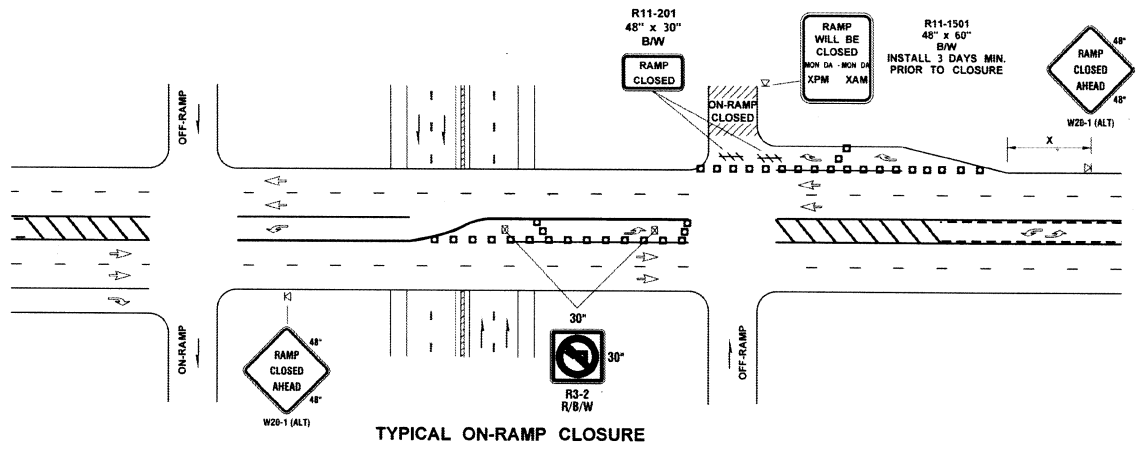

TYPICAL ON-RAMP CLOSURE

PCMS

1	2
EXIT XXX CLOSED	USE EXIT XXX
2.0 SEC	2.0 SEC

FIELD LOCATE

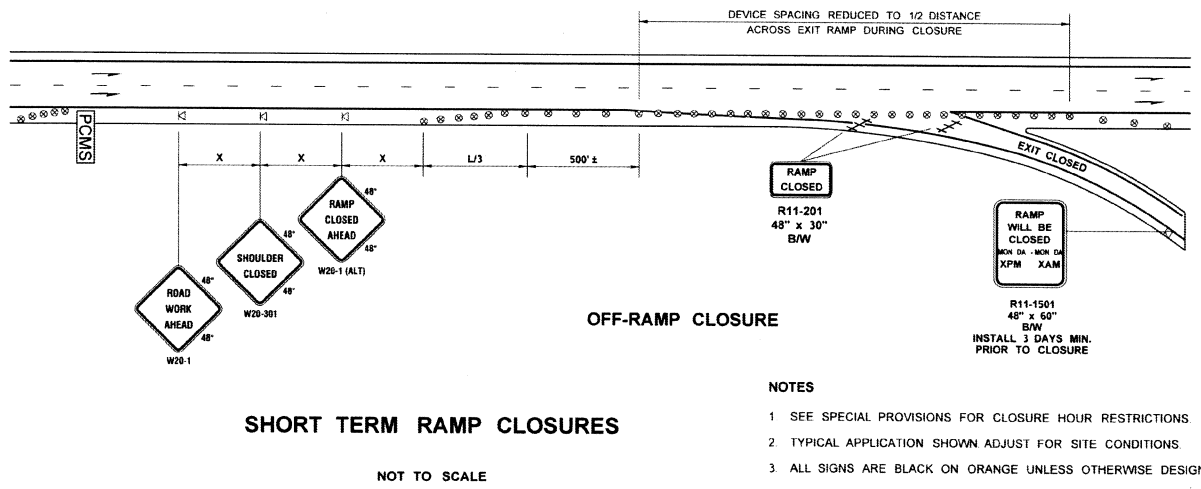

OFF-RAMP CLOSURE

LEGEND

- TYPE 3 BARRICADE
- TEMPORARY SIGN LOCATION
- CHANNELIZING DEVICES
- TRAFFIC SAFETY DRUM
- PCMS PORTABLE CHANGEABLE MESSAGE SIGN
- TEMPORARY SIGN LOCATION (5' MOUNTING HEIGHT)

NOTES

1. SEE SPECIAL PROVISIONS FOR CLOSURE HOUR RESTRICTIONS.
2. TYPICAL APPLICATION SHOWN. ADJUST FOR SITE CONDITIONS.
3. ALL SIGNS ARE BLACK ON ORANGE UNLESS OTHERWISE DESIGNATED.

SHORT TERM RAMP CLOSURES

NOT TO SCALE

FILE NAME	S:\Design R P& S\4-Standards\2-Plan Sheet Library\01-Published PSL\(TC) Work Zone Traffic Control\(TC-13) Short Term Ramp Closure\TC-13.dgn				
TIME	8:40:40 AM				
DATE	1/2/2018				
PLOTTED BY	liddelf				
DESIGNED BY					
ENTERED BY					
CHECKED BY					
PROJ. ENGR.					
REGIONAL ADM.		REVISION	DATE	BY	

REGION NO. / STATE: WASH — FED.AID PROJ.NO. — JOB NUMBER — CONTRACT NO. — LOCATION NO — P.E. STAMP BOX — DATE

Washington State Department of Transportation

TRAFFIC CONTROL PLAN

Plot 1 — PLAN REF NO TC13 — SHEET OF SHEETS

NO PARKING R8-3 24" x 30" R/W — INSTALL ON TYPE 2 BARRICADES THROUGHOUT THE WORK AREA 24 HOURS PRIOR TO IMPLEMENTING TRAFFIC CONTROL. PRIOR NOTIFICATION OF LOCAL LAW ENFORCEMENT REQUIRED.

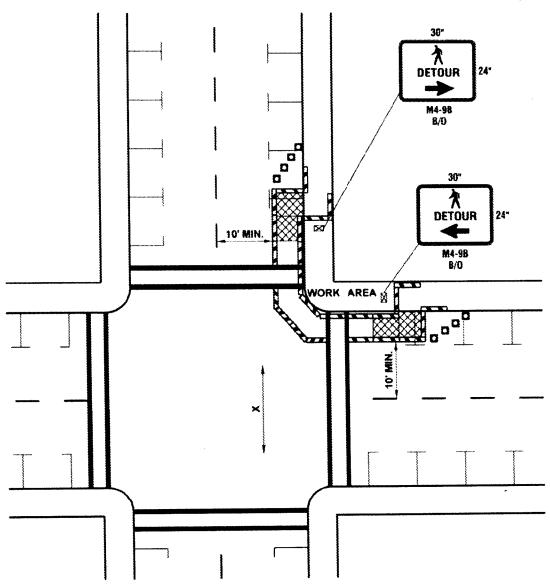

SIDEWALK DIVERSION

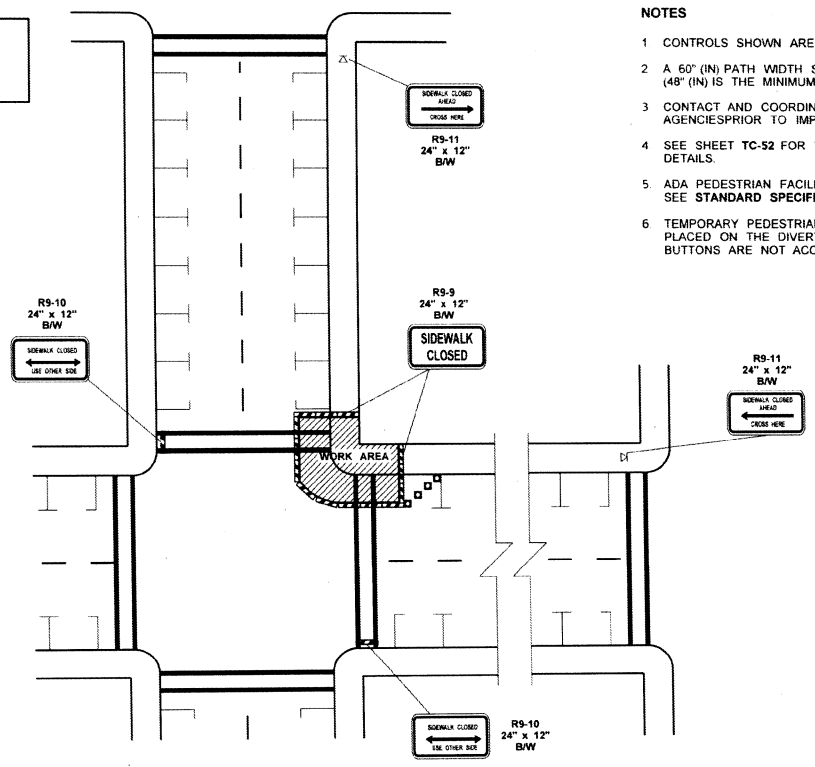

SIDEWALK DETOUR

NOTES

1. CONTROLS SHOWN ARE FOR PEDESTRIAN TRAFFIC ONLY.
2. A 60" (IN) PATH WIDTH SHOULD BE MAINTAINED (48" (IN) IS THE MINIMUM).
3. CONTACT AND COORDINATE IMPACTED TRANSIT AGENCIESPRIOR TO IMPLEMENTING ANY CLOSURES.
4. SEE SHEET **TC-52** FOR TEMPORARY PEDESTRIAN RAMP DETAILS.
5. ADA PEDESTRIAN FACILITIES MUST BE MAINTAINED. SEE **STANDARD SPECIFICATION 1-10.2(1)B.**
6. TEMPORARY PEDESTRIAN PUSH BUTTONS SHALL BE PLACED ON THE DIVERTED PATH WHEN EXISTING BUTTONS ARE NOT ACCESSIBLE TO PEDESTRIANS

LEGEND

- TEMPORARY SIGN LOCATION
- CHANNELIZING DEVICES
- PEDESTRIAN CHANNELIZING DEVICES
- TEMPORARY PEDESTRIAN RAMP FOR SIDEWALKS

INTERSECTION PEDESTRIAN TRAFFIC CONTROL

NOT TO SCALE

FILE NAME	S:\Design R P& S\4-Standards\2-Plan Sheet Library\01-Published PSL\(TC) Work Zone Traffic Control\(TC-16) Intersection Pedestrian Traffic Control\TC-16.dgn				
TIME	11:26:56 AM				
DATE	1/9/2018				
PLOTTED BY	liddelf				
DESIGNED BY					
ENTERED BY					
CHECKED BY					
PROJ. ENGR.					
REGIONAL ADM.		REVISION	DATE	BY	

REGION NO. / STATE: WASH — FED.AID PROJ.NO. — JOB NUMBER — CONTRACT NO. — LOCATION NO — P.E. STAMP BOX — DATE

Washington State Department of Transportation

PEDESTRIAN CONTROL AND PROTECTION

Plot 1 — PLAN REF NO TC16 — SHEET OF SHEETS

STATE: WASHINGTON
S25 T34N R26E, W.M.
FAP NO.: STPUS-7924(003)

0 1" 2"
TWO INCHES AT FULL SCALE. IF NOT, SCALE ACCORDINGLY

SHEET: 27 OF: 27
JOB NO.: 15063
DWG: TRAFFIC CONTROL

CITY OF OMAK
OKANOGAN COUNTY WASHINGTON

ENGH ROAD SR215/US97 INTERSECTION IMPROVEMENTS

TRAFFIC CONTROL DETAILS

MICHAEL M. MESKIMEN — STATE OF WASHINGTON — 30378 — REGISTERED PROFESSIONAL ENGINEER

No.	REVISION	DATE	APPD

DATE: DEC 2021
DRAWN: ASC
CHECKED: JFR
APPROVED: MMM

Gray & Osborne, Inc.
CONSULTING ENGINEERS
180 IRON HORSE COURT
YAKIMA, WA 98901 • (509) 453-4833