GENERAL NOTES

1. DETAILS ARE NOT TO SCALE (NTS).
2. ALL SYMBOL MARKINGS SHALL BE THERMOPLASTIC UNLESS OTHERWISE NOTED.
3. ALL LONGITUDNAL MARKINGS SHALL BE PAINTED UNLESS OTHERWISE NOTED.

ABBREVIATIONS

COK	CITY OF KIRKLAND
EX	EXISTING
LT	LEFT
RT	RIGHT
PI	POINT OF INTERSECTION
PC	POINT OF CURVATURE
PT	POINT OF TANGENCY
PCC	POINT OF COMPOUND CURVATURE
PRC	POINT OF REVERSE CURVATURE
TWLT	TWO WAY LEFT TURN

LEGEND

- HIGHWAY RIGHT-OF-WAY
- LIMITED ACCESS
- TEMPORARY CONSTRUCTION EASEMENT
- SECTION LINE
- RETAINING WALL
- CONCRETE BARRIER
- CONCRETE CURB
- EXTRUDED CURB
- GUARDRAIL
- IMPACT ATTENUATOR
- CONSTRUCTION ALIGNMENT
- CONTROL POINT

STRIPING LEGEND

1. PAINTED WHITE EDGE STRIPE (PER COK PLAN NO. CK-R.35)
2. PAINTED WHITE LANE STRIPE (PER COK PLAN NO. CK-R.31)
3. PAINTED WHITE WIDE DOTTED ENTRY STRIPE (SEE DETAIL)
4. PAINTED WHITE WIDE DOTTED CIRCULATING STRIPE (SEE DETAIL)
5. PAINTED YELLOW EDGE STRIPE (SEE DETAIL)
6. PAINTED YELLOW TWLT STRIPE (PER COK PLAN NO. CK-R.31)
7. PAINTED DOUBLE YELLOW CENTERLINE STRIPE (PER COK PLAN NO. CK-R.31)
8. THERMOPLASTIC STOP LINE (PER COK PLAN NO. CK-R.28)
9. THERMOPLASTIC CROSSWALK AND BIKE LANE CROSSING (PER COK PLAN NO. CK-R.28 AND CK-R.36C)
10. PAINTED WHITE WIDE SOLID STRIPE (SEE DETAIL)
11. PAINTED WHITE DIAGONAL CROSSHATCH STRIPE (SEE DETAIL)
12. PAINTED WHITE YIELD LINE SYMBOL (SEE DETAIL)
13. PAINTED BIKE LANE EXTENSION STRIPE (PER COK PLAN NO. CK-R.36 AND DETAIL)
14. PAINTED YELLOW HATCHING STRIPE (SEE DETAIL)
15. PROFILED MMA WHITE WIDE DOTTED LANE LINE (WSDOT Std.PLAN M-20.10-03)
16. PROFILED MMA WHITE EDGE LINE (WSDOT Std.PLAN M-20.10-03)
17. PROFILED MMA YELLOW EDGE LINE (WSDOT Std.PLAN M-20.10-03)
18. PROFILED MMA WHITE WIDE SOLID LANE LINE (WSDOT Std.PLAN M-20.10-03)
19. PROFILED MMA WHITE WIDE EDGE LINE (WSDOT Std.PLAN M-20.10-03)
20. MMA WHITE STOP LINE (WSDOT Std.PLAN M-24.60-04)

SYMBOL MARKING LEGEND

1. PLASTIC ROUNDABOUT CIRCLE MARKING (SEE DETAIL)
2. PLASTIC WHITE TRAFFIC ARROW TYPE 1 (SEE DETAIL)
3. PLASTIC WHITE TRAFFIC ARROW TYPE 2 (SEE DETAIL)
4. PLASTIC WHITE TRAFFIC ARROW TYPE 3 (SEE DETAIL)
5. PLASTIC WHITE TRAFFIC ARROW TYPE 4 (SEE DETAIL)
6. PLASTIC WHITE TRAFFIC ARROW TYPE 5 (SEE DETAIL)
7. PLASTIC BICYCLE LANE SYMBOL (PER COK PLAN NO. CK-R.34)
8. PLASTIC LEFT ONLY SYMBOL (SEE DETAIL)
9. PLASTIC RIGHT ONLY SYMBOL (SEE DETAIL)
10. PLASTIC BICYCLE AND PEDESTRIAN LANE MARKING (PER COK PLAN NO. CK-R.34B)
11. MMA WHITE TRAFFIC ARROW TYPE 3R (WSDOT Std.PLAN M-24.20-02)
12. MMA WHITE TRAFFIC ARROW TYPE 3L (WSDOT Std.PLAN M-24.20-02)
13. MMA WHITE TRAFFIC ARROW TYPE 6L (WSDOT Std.PLAN M-24.20-02)
14. PLASTIC WHITE TRAFFIC ARROW TYPE 6 (SEE DETAIL)
15. PLASTIC WHITE TWLT TRAFFIC ARROW (PER COK PLAN NO. CK-R.30)
16. MMA GREEN COLORED BIKE CROSSING MARKING (PER COK PLAN NO. CK-R.36C)

T.26N. R.5E. W.M.

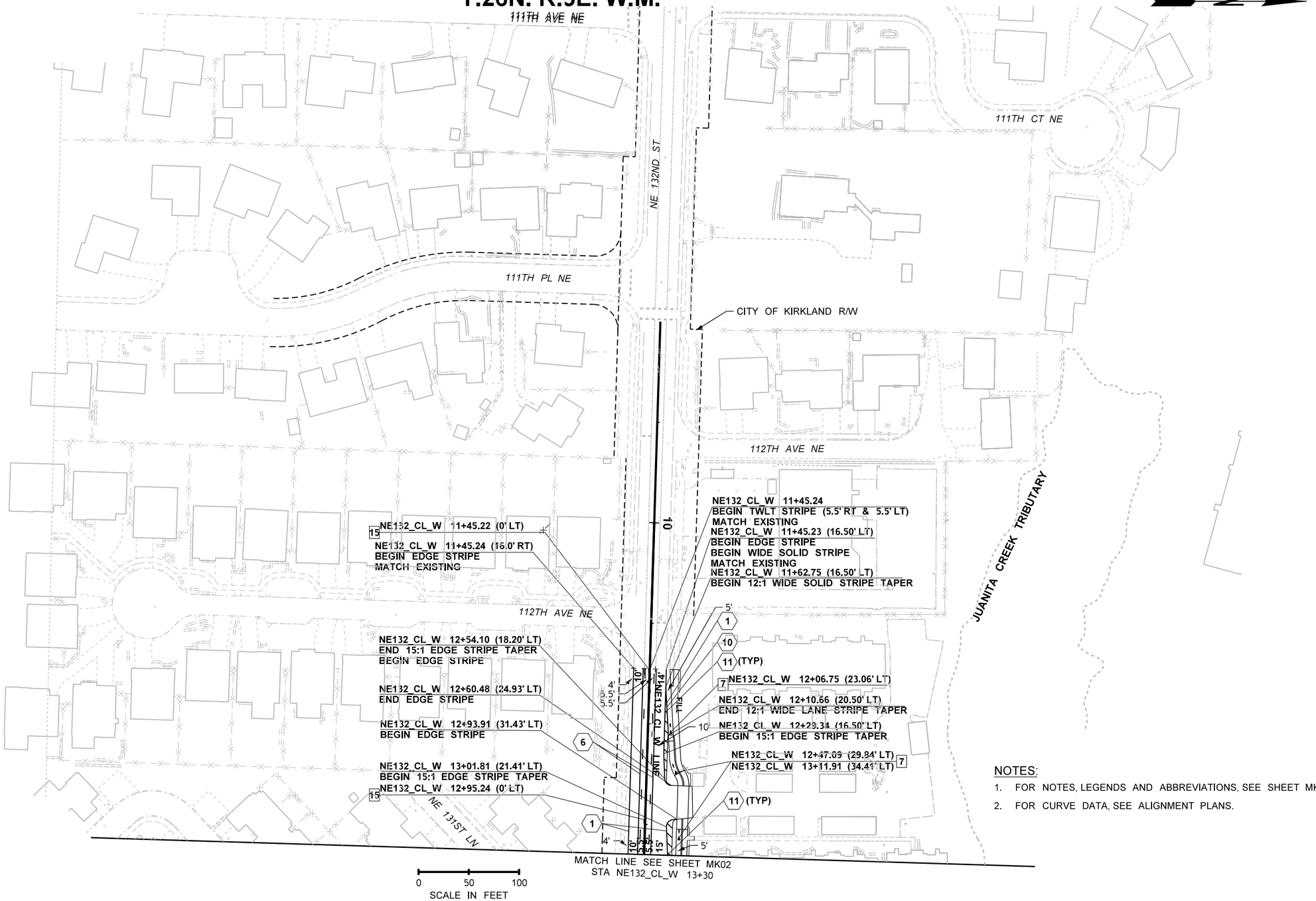

NOTES:

1. FOR NOTES, LEGENDS AND ABBREVIATIONS, SEE SHEET MK00.
2. FOR CURVE DATA, SEE ALIGNMENT PLANS.

FILE NAME	XL5464_PS_MK_01.dgn
TIME	2:12:46 AM
DATE	1/8/2022
PLOTTED BY	wsppw14ics02$
DESIGNED BY	
ENTERED BY	M. AUDAR
CHECKED BY	A. MIZUTA
PROJ. ENGR.	E. PAO
REGIONAL ADM.	

PRELIMINARY
NOT FOR CONSTRUCTION

REVISION | DATE | BY

REGION NO.	STATE	FED.AID PROJ.NO.
10	WASH	
JOB NUMBER		
CONTRACT NO.		LOCATION NO. XL-5464

P.E. STAMP BOX DATE

P.E. STAMP BOX DATE

Washington State Department of Transportation
GRAHAM
WSP
1001 Fourth Ave, Suite 3100, Seattle, WA 98154
Tel: (206) 382-5200

I-405
NE 132ND STREET INTERCHANGE PROJECT

PAVEMENT MARKING PLAN

PLAN REF NO **MK01**

SHEET OF SHEETS

T.26N. R.5E. W.M.

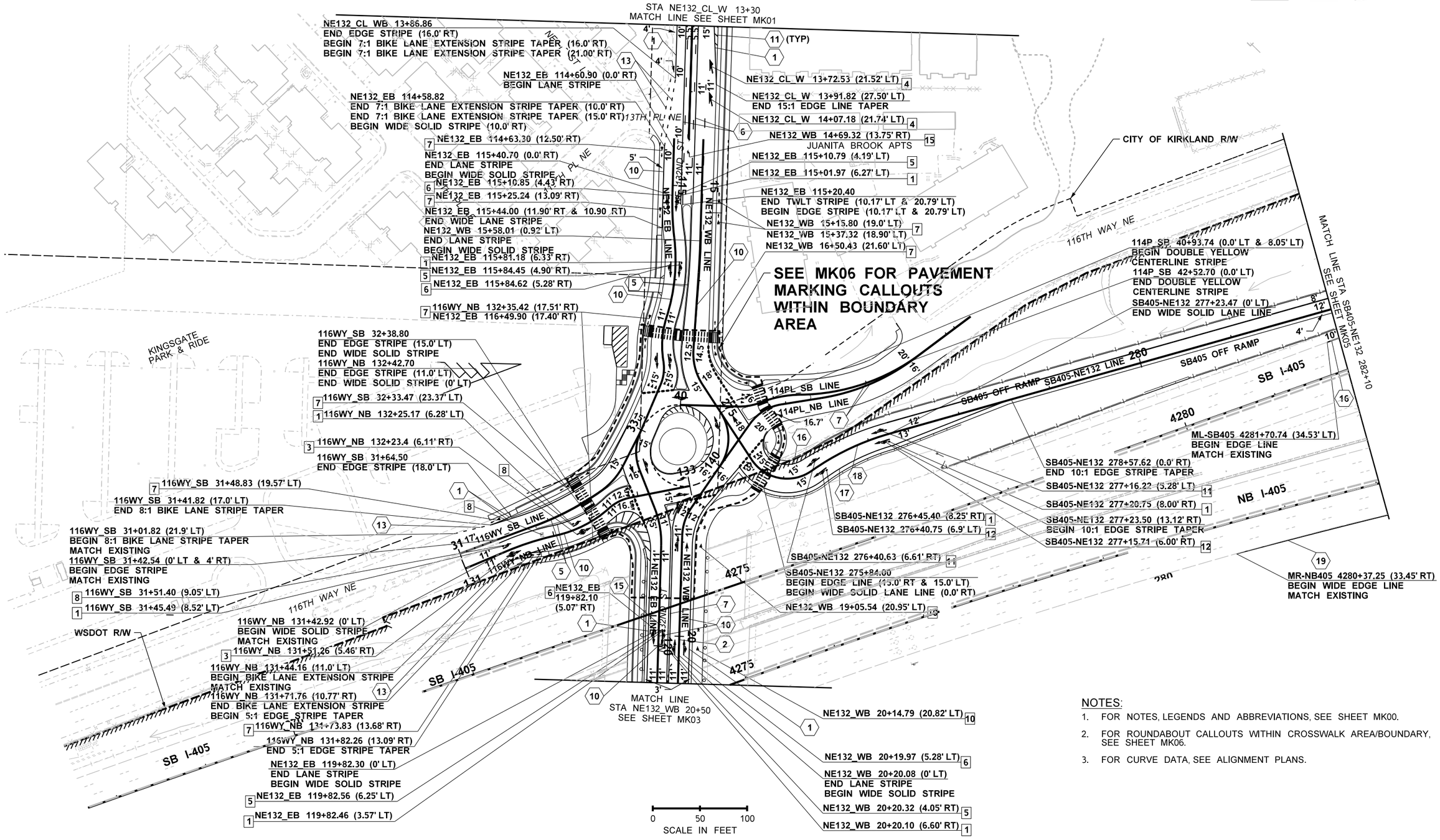

NOTES:

1. FOR NOTES, LEGENDS AND ABBREVIATIONS, SEE SHEET MK00.
2. FOR ROUNDABOUT CALLOUTS WITHIN CROSSWALK AREA/BOUNDARY, SEE SHEET MK06.
3. FOR CURVE DATA, SEE ALIGNMENT PLANS.

FILE NAME	XL5464_PS_MK_02.dgn
TIME	2:12:37 AM
DATE	1/8/2022
PLOTTED BY	wsppw14ics02$
DESIGNED BY	
ENTERED BY	M. AUDAR
CHECKED BY	A. MIZUTA
PROJ. ENGR.	E. PAO
REGIONAL ADM.	

PRELIMINARY
NOT FOR CONSTRUCTION

REVISION	DATE	BY

REGION NO.	STATE	FED.AID PROJ.NO.
10	WASH	
JOB NUMBER		
CONTRACT NO.		LOCATION NO. XL-5464

P.E. STAMP BOX DATE

P.E. STAMP BOX DATE

Washington State Department of Transportation
GRAHAM
WSP
1001 Fourth Ave, Suite 3100, Seattle, WA 98154
Tel: (206) 382-5200

I-405
NE 132ND STREET INTERCHANGE PROJECT

PAVEMENT MARKING PLAN

PLAN REF NO
MK02
SHEET
OF
SHEETS

T.26N. R.5E. W.M.

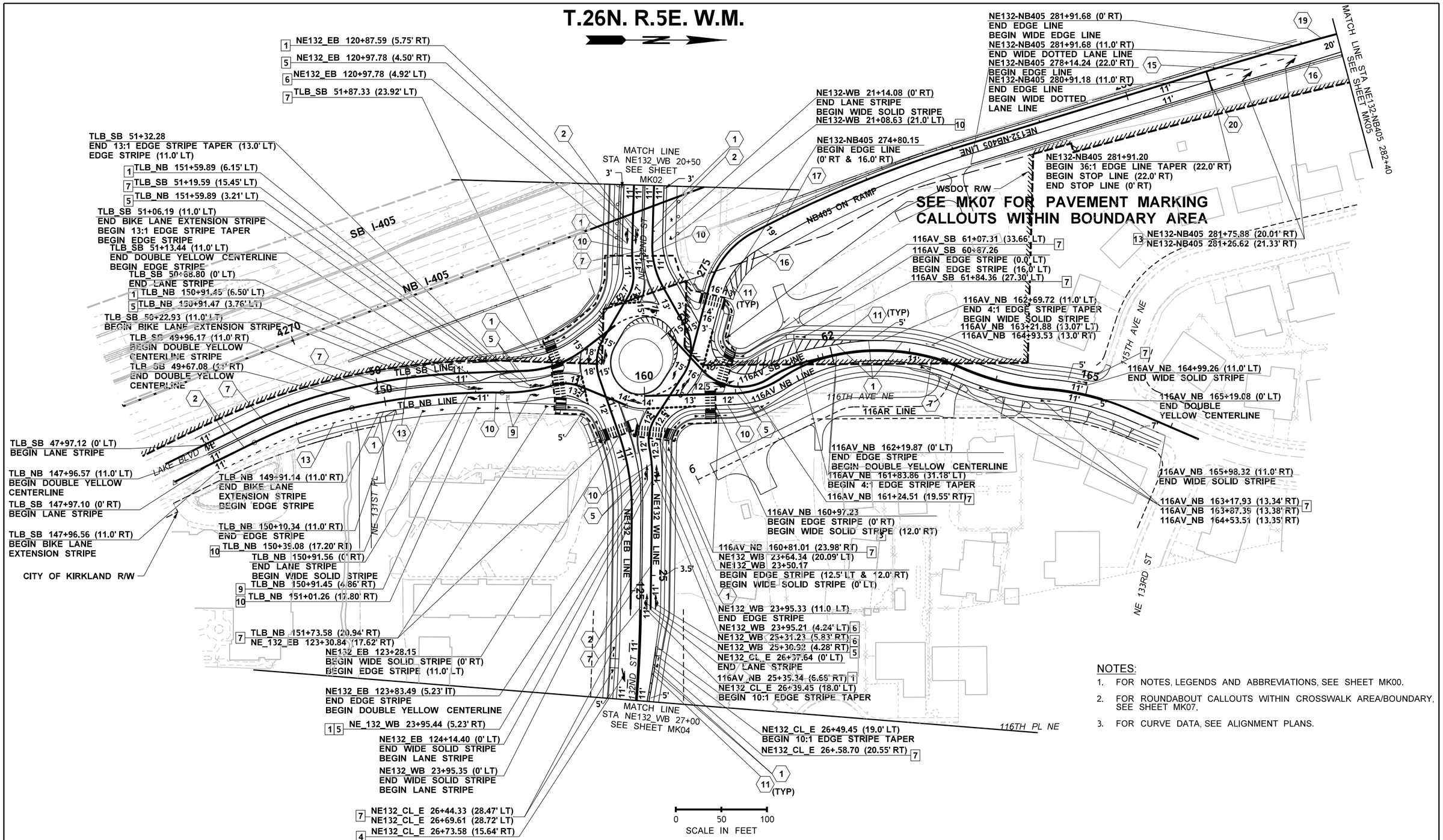

NOTES:

1. FOR NOTES, LEGENDS AND ABBREVIATIONS, SEE SHEET MK00.
2. FOR ROUNDABOUT CALLOUTS WITHIN CROSSWALK AREA/BOUNDARY, SEE SHEET MK07.
3. FOR CURVE DATA, SEE ALIGNMENT PLANS.

FILE NAME	XL5464_PS_MK_03.dgn
TIME	2:12:32 AM
DATE	1/8/2022
PLOTTED BY	wsppw14ics02$
DESIGNED BY	
ENTERED BY	M. AUDAR
CHECKED BY	A. MIZUTA
PROJ. ENGR.	E. PAO
REGIONAL ADM.	

PRELIMINARY
NOT FOR CONSTRUCTION

REVISION	DATE	BY

REGION NO.	STATE	FED.AID PROJ.NO.
10	WASH	
JOB NUMBER		
CONTRACT NO.		LOCATION NO. XL-5464

P.E. STAMP BOX — DATE

P.E. STAMP BOX — DATE

Washington State Department of Transportation
GRAHAM WSP
1001 Fourth Ave, Suite 3100, Seattle, WA 98154
Tel: (206) 382-5200

I-405
NE 132ND STREET INTERCHANGE PROJECT

PAVEMENT MARKING PLAN

PLAN REF NO **MK03**
SHEET
OF
SHEETS

T.26N. R.5E. W.M.

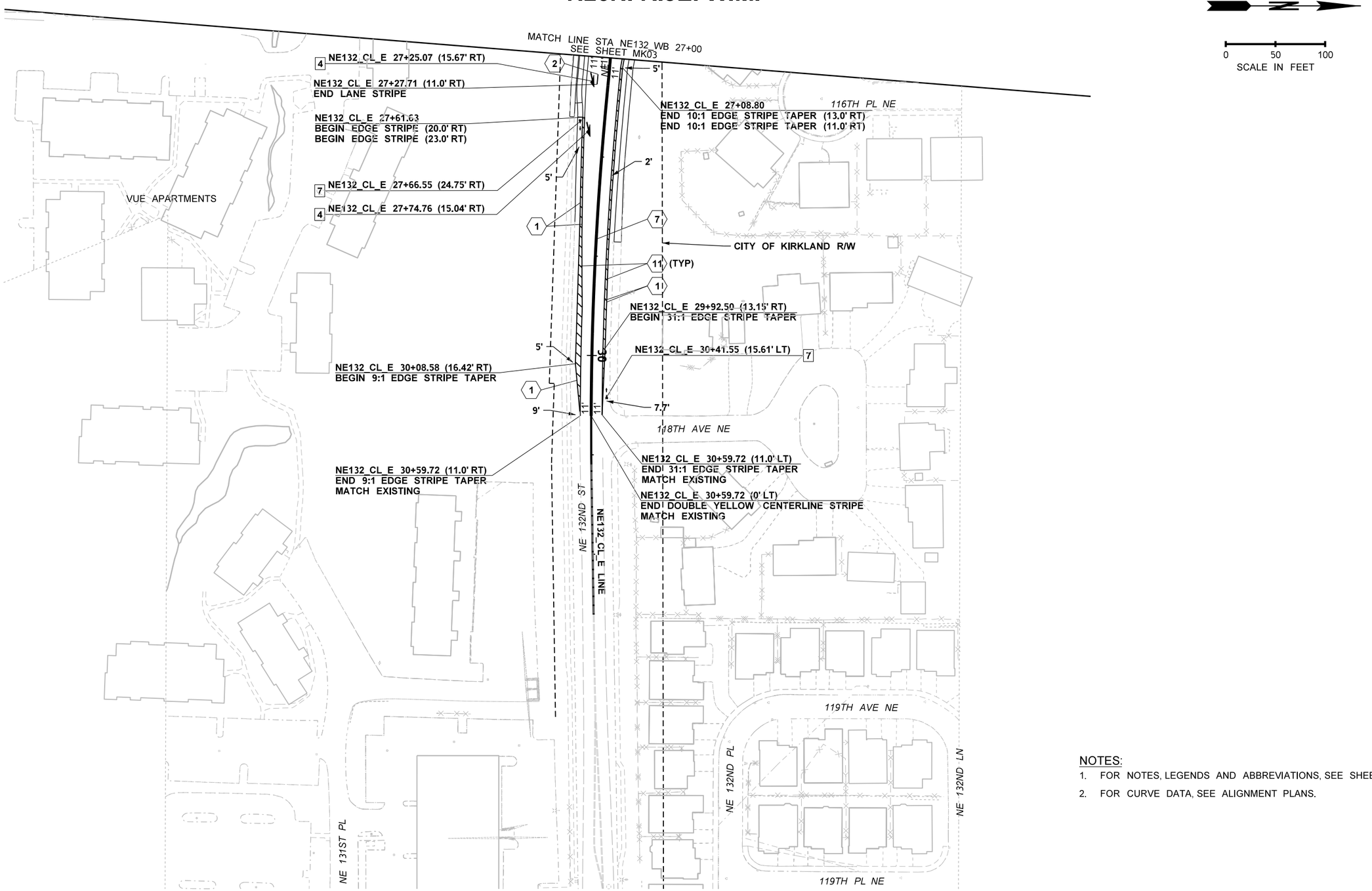

NOTES:

1. FOR NOTES, LEGENDS AND ABBREVIATIONS, SEE SHEET MK00.
2. FOR CURVE DATA, SEE ALIGNMENT PLANS.

FILE NAME	XL5464_PS_MK_04.dgn
TIME	2:12:35 AM
DATE	1/8/2022
PLOTTED BY	wsppw14ics02$
DESIGNED BY	
ENTERED BY	M. AUDAR
CHECKED BY	A. MIZUTA
PROJ. ENGR.	E. PAO
REGIONAL ADM.	

PRELIMINARY
NOT FOR CONSTRUCTION

REVISION	DATE	BY

REGION NO.	STATE	FED.AID PROJ.NO.
10	WASH	
JOB NUMBER		
CONTRACT NO.		LOCATION NO. XL-5464

P.E. STAMP BOX DATE

P.E. STAMP BOX DATE

Washington State Department of Transportation
GRAHAM
WSP
1001 Fourth Ave, Suite 3100, Seattle, WA 98154
Tel: (206) 382-5200

I-405
NE 132ND STREET INTERCHANGE PROJECT

PAVEMENT MARKING PLAN

PLAN REF NO **MK04**

SHEET OF SHEETS

T.26N. R.5E. W.M.

NOTES:

1. FOR NOTES, LEGENDS AND ABBREVIATIONS, SEE SHEET MK00.
2. FOR CURVE DATA, SEE ALIGNMENT PLANS.

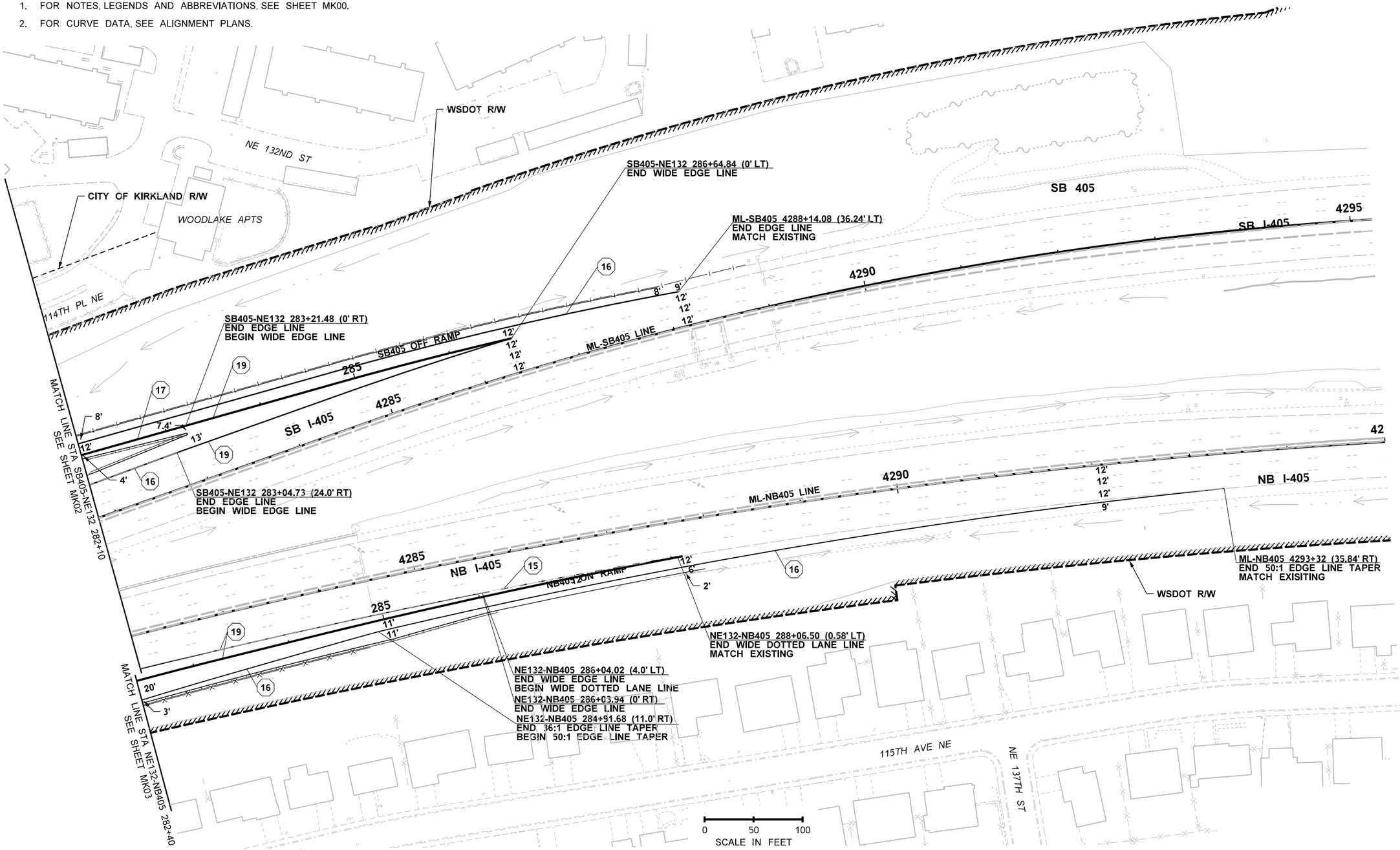

FILE NAME	XL5464_PS_MK_05.dgn				REGION NO. 10	STATE WASH	FED.AID PROJ.NO.
TIME	2:12:20 AM				JOB NUMBER		
DATE	1/8/2022						
PLOTTED BY	wsppw14ics02$						
DESIGNED BY							
ENTERED BY	M. AUDAR						
CHECKED BY	A. MIZUTA				CONTRACT NO.		LOCATION NO. XL-5464
PROJ. ENGR.	E. PAO						
REGIONAL ADM.		REVISION	DATE	BY			

PRELIMINARY
NOT FOR CONSTRUCTION

P.E. STAMP BOX DATE

P.E. STAMP BOX DATE

Washington State Department of Transportation
GRAHAM
WSP
1001 Fourth Ave, Suite 3100, Seattle, WA 98154
Tel: (206) 382-5200

I-405
NE 132ND STREET INTERCHANGE PROJECT

PAVEMENT MARKING PLAN

PLAN REF NO
MK05
SHEET
OF
SHEETS

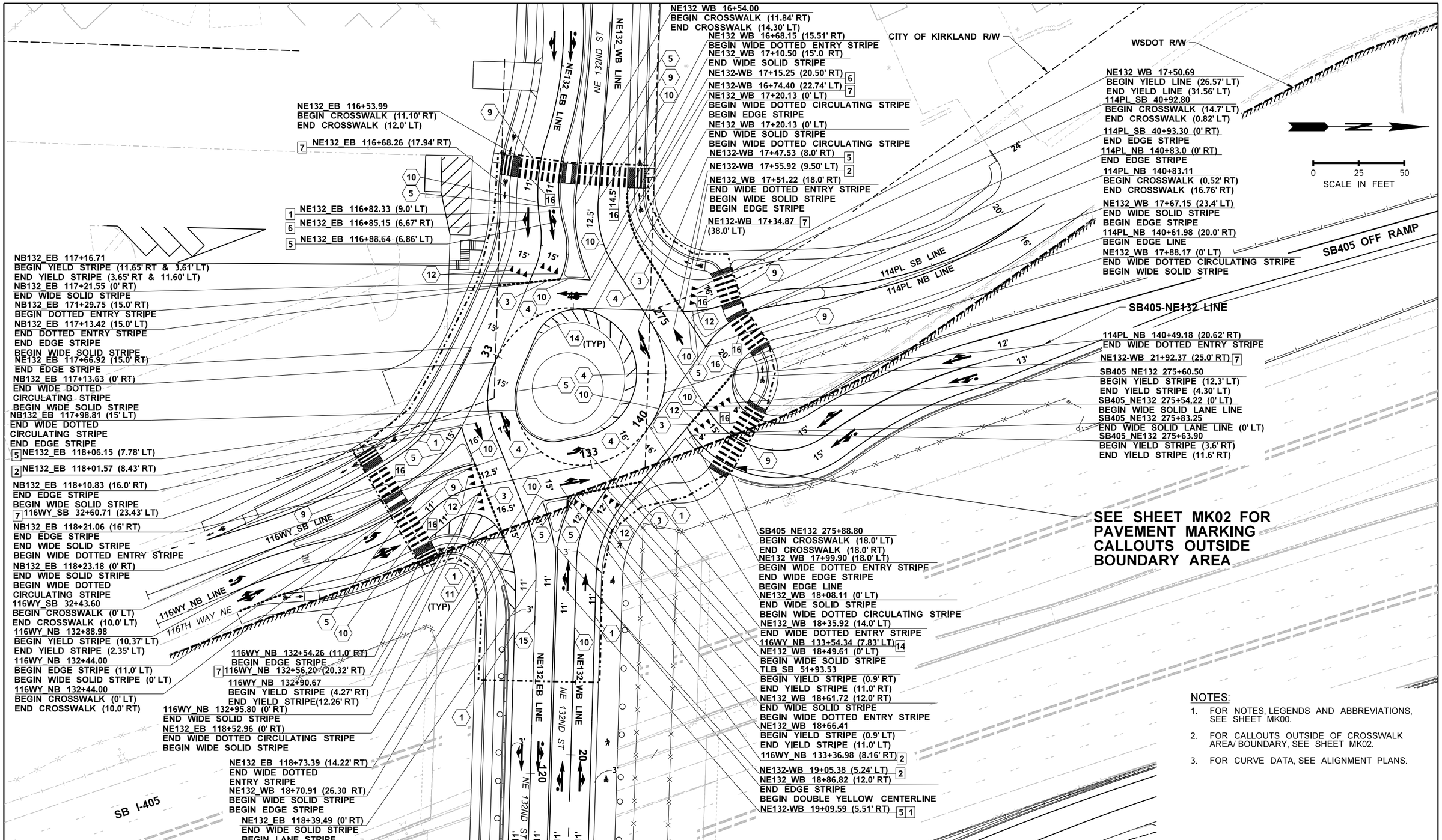

NOTES:

1. FOR NOTES, LEGENDS AND ABBREVIATIONS, SEE SHEET MK00.
2. FOR CALLOUTS OUTSIDE OF CROSSWALK AREA/ BOUNDARY, SEE SHEET MK02.
3. FOR CURVE DATA, SEE ALIGNMENT PLANS.

FILE NAME	XL5464_PS_MK_06.dgn
TIME	2:12:36 AM
DATE	1/8/2022
PLOTTED BY	wsppw14ics02$
DESIGNED BY	W. DSOUZA
ENTERED BY	M. AUDAR
CHECKED BY	A. MIZUTA
PROJ. ENGR.	E. PAO
REGIONAL ADM.	

PRELIMINARY
NOT FOR CONSTRUCTION

REVISION	DATE	BY

REGION NO.	STATE	FED.AID PROJ.NO.
10	WASH	
JOB NUMBER		
CONTRACT NO.		LOCATION NO. XL-5464

P.E. STAMP BOX DATE

P.E. STAMP BOX DATE

Washington State Department of Transportation
GRAHAM
WSP
1001 Fourth Ave, Suite 3100, Seattle, WA 98154
Tel: (206) 382-5200

I-405
NE 132ND STREET INTERCHANGE PROJECT

PAVEMENT MARKING PLAN
INTERSECTION #1

PLAN REF NO
MK06
SHEET
OF
SHEETS

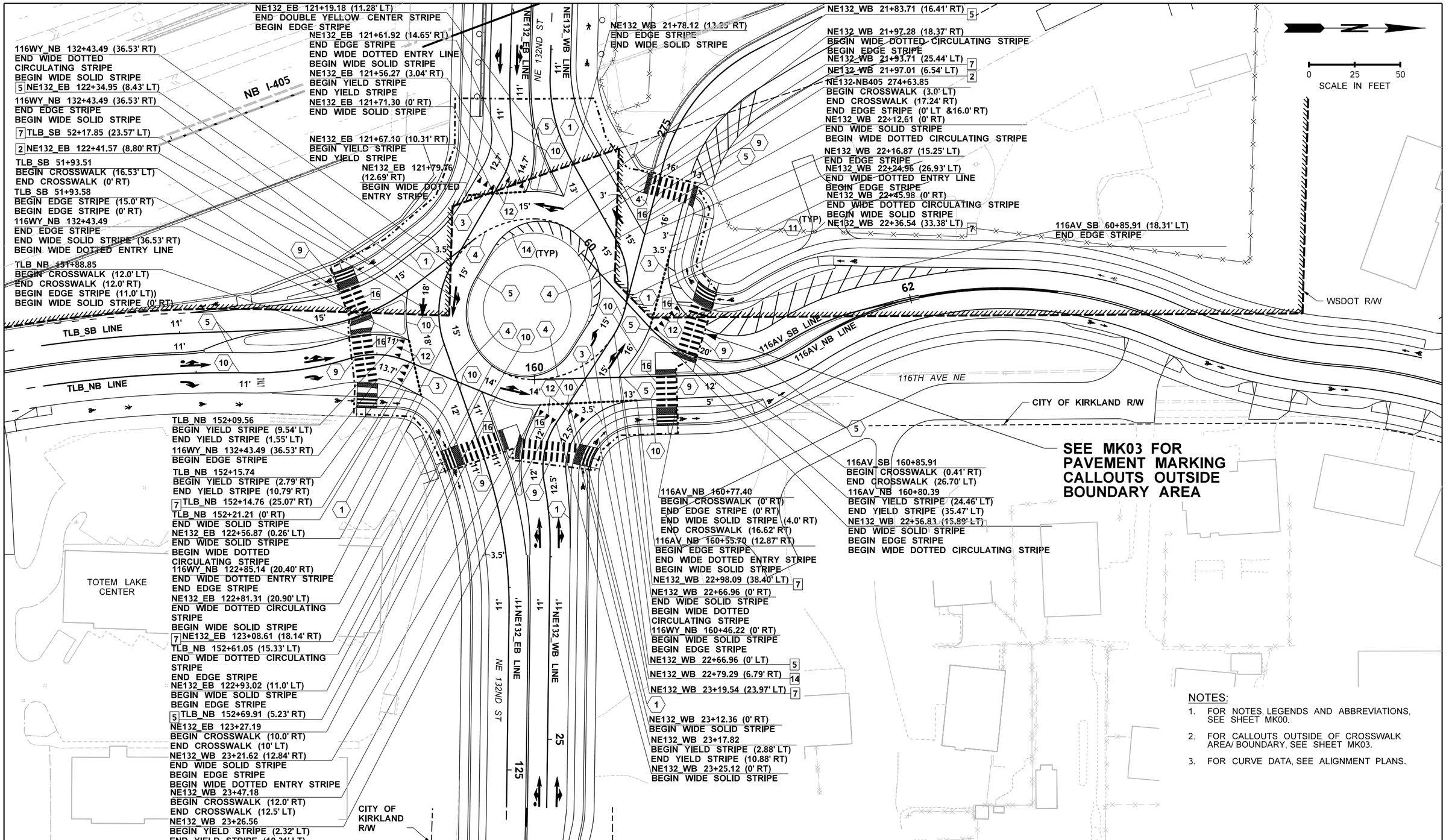

NOTES:

1. FOR NOTES, LEGENDS AND ABBREVIATIONS, SEE SHEET MK00.
2. FOR CALLOUTS OUTSIDE OF CROSSWALK AREA/ BOUNDARY, SEE SHEET MK03.
3. FOR CURVE DATA, SEE ALIGNMENT PLANS.

FILE NAME	XL5464_PS_MK_07.dgn
TIME	2:12:45 AM
DATE	1/8/2022
PLOTTED BY	wsppw14ics02$
DESIGNED BY	W. DSOUZA
ENTERED BY	M. AUDAR
CHECKED BY	A. MIZUTA
PROJ. ENGR.	E. PAO
REGIONAL ADM.	

PRELIMINARY
NOT FOR CONSTRUCTION

REVISION | DATE | BY

REGION NO. 10 | STATE WASH | FED.AID PROJ.NO.
JOB NUMBER
CONTRACT NO. | LOCATION NO. XL-5464

P.E. STAMP BOX DATE
P.E. STAMP BOX DATE

Washington State Department of Transportation
GRAHAM
WSP
1001 Fourth Ave, Suite 3100, Seattle, WA 98154
Tel: (206) 382-5200

I-405
NE 132ND STREET INTERCHANGE PROJECT

PAVEMENT MARKING PLAN
INTERSECTION #2

PLAN REF NO **MK07**
SHEET OF SHEETS

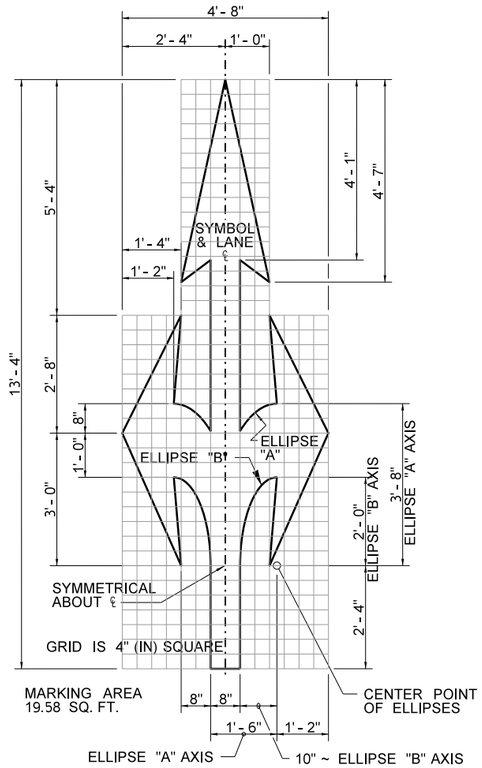

TRAFFIC ARROW TYPE 2 DETAIL

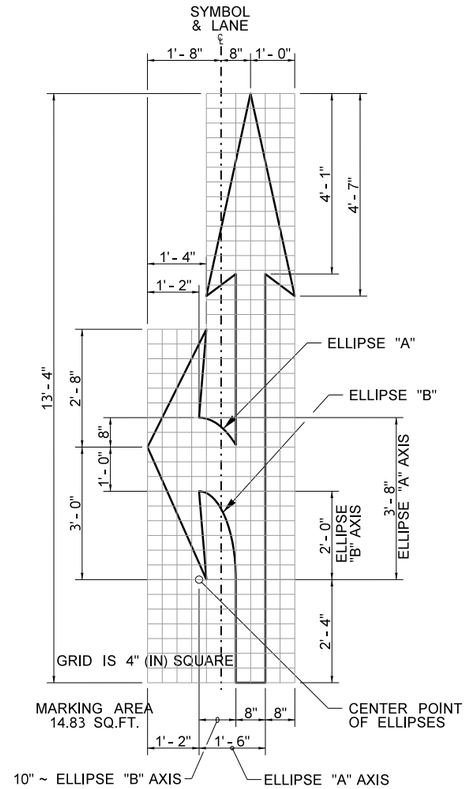

TRAFFIC ARROW TYPE 4 DETAIL

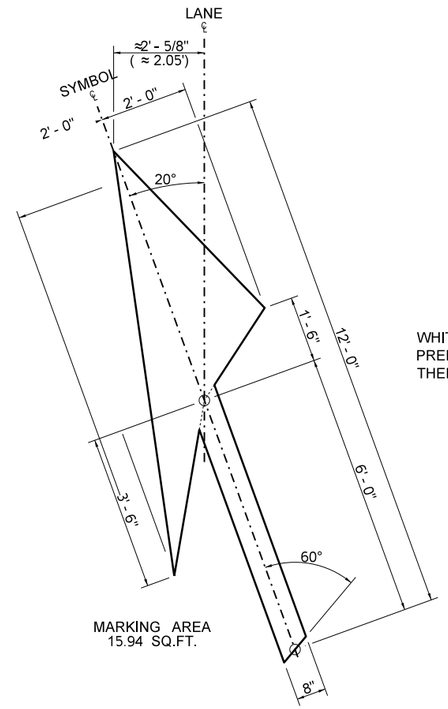

TRAFFIC ARROW TYPE 3 DETAIL

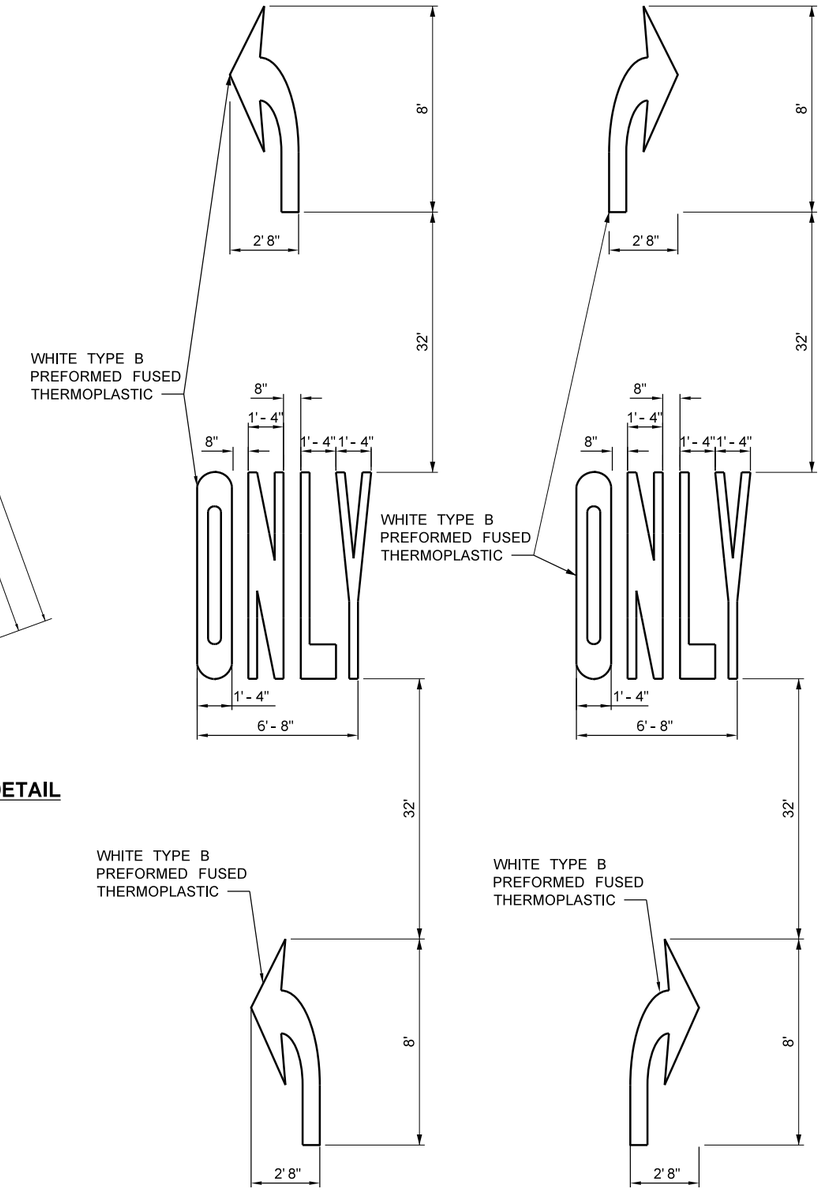

PLASTIC "LEFT ONLY" DETAIL **PLASTIC "RIGHT ONLY" DETAIL**

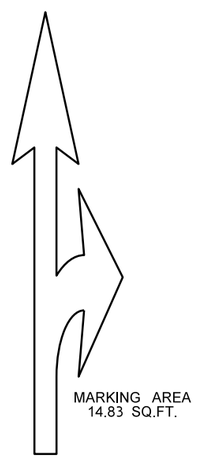

TRAFFIC ARROW TYPE 5 DETAIL

MIRROR IMAGE OF TYPE 3SL TRAFFIC ARROW

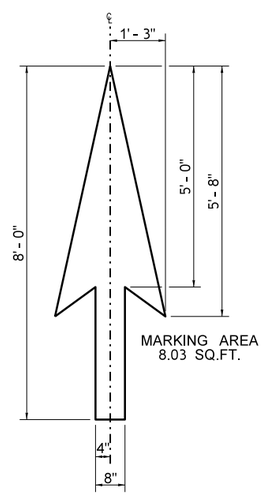

TRAFFIC ARROW TYPE 1 DETAIL

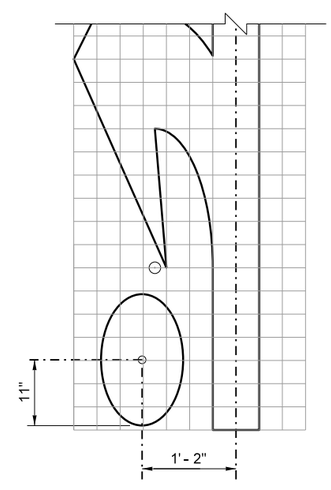

ROUNDABOUT CIRCLE MARKING DETAIL

FILE NAME	XL5464_PS_MKD_01.dgn
TIME	2:12:10 AM
DATE	1/8/2022
PLOTTED BY	wsppw14ics02$
DESIGNED BY	W. DSOUZA
ENTERED BY	M. AUDAR
CHECKED BY	A. MIZUTA
PROJ. ENGR.	E. PAO
REGIONAL ADM.	

PRELIMINARY
NOT FOR CONSTRUCTION

REVISION	DATE	BY

REGION NO.	STATE	FED.AID PROJ.NO.
10	WASH	
JOB NUMBER		
CONTRACT NO.		LOCATION NO. XL-5464

P.E. STAMP BOX DATE

P.E. STAMP BOX DATE

Washington State Department of Transportation
GRAHAM WSP
1001 Fourth Ave, Suite 3100, Seattle, WA 98154
Tel: (206) 382-5200

I-405
NE 132ND STREET INTERCHANGE PROJECT

PAVEMENT MARKING DETAILS

PLAN REF NO **MKD01**
SHEET OF SHEETS

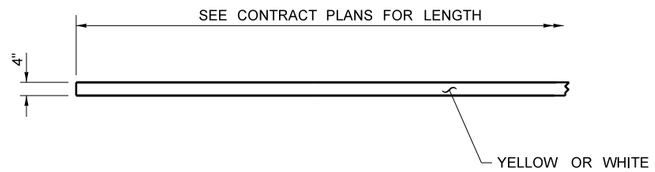

EDGE STRIPE DETAIL

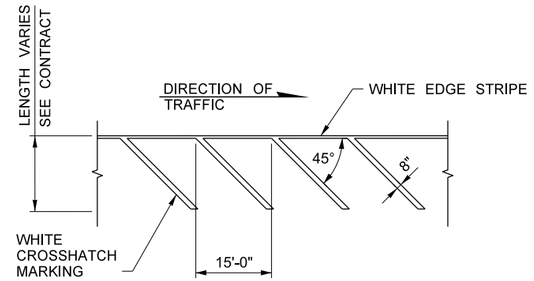

WHITE DIAGONAL CROSSHATCH STRIPE DETAIL

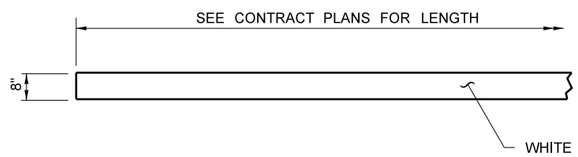

WIDE SOLID LANE STRIPE DETAIL

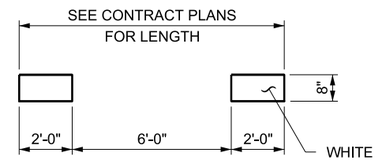

BIKE LANE EXTENSION STRIPE DETAIL

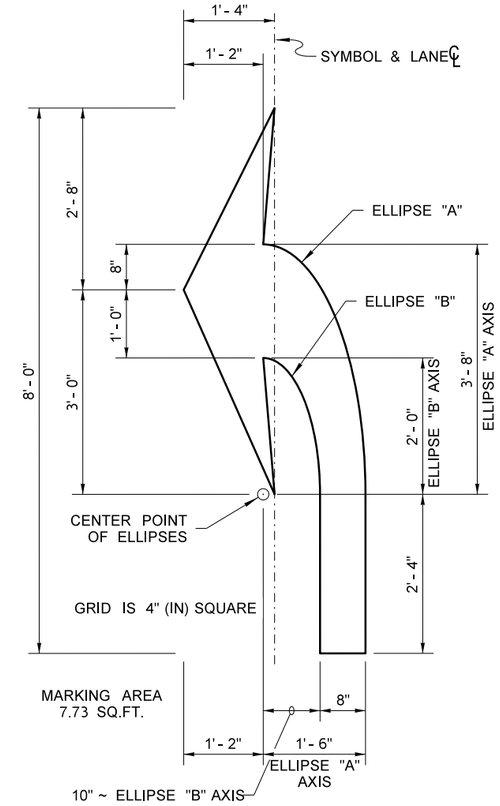

TRAFFIC ARROW TYPE 6 DETAIL

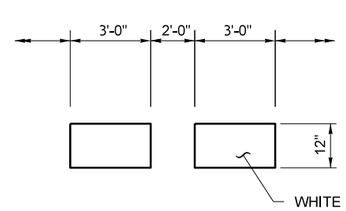

WIDE DOTTED ENTRY STRIPE DETAIL

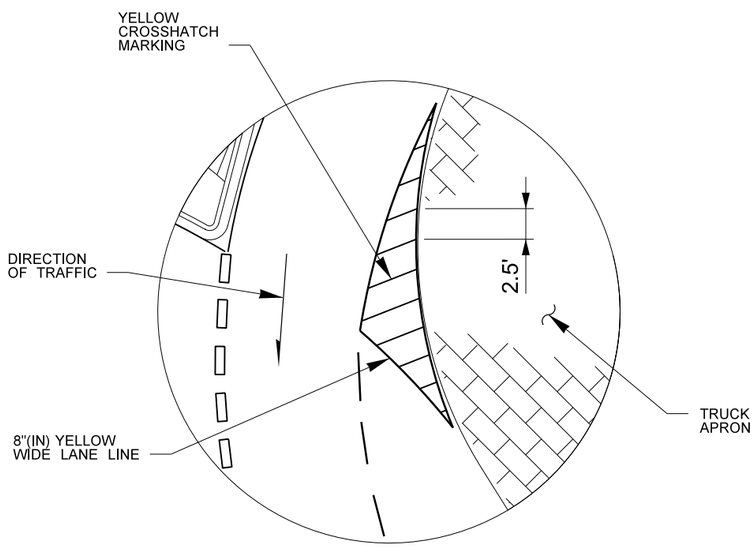

HATCHING STRIPE DETAIL

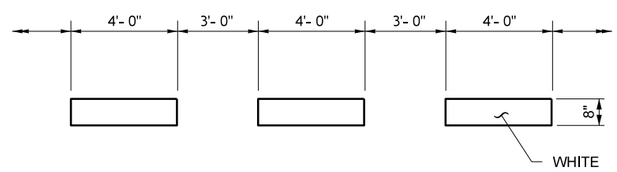

WIDE DOTTED CIRCULATING STRIPE DETAIL

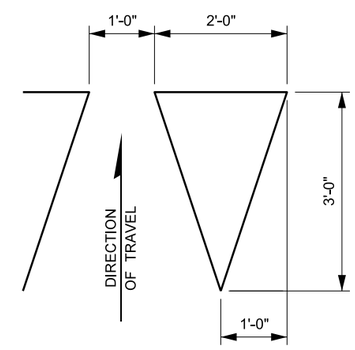

YIELD LINE SYMBOL DETAIL

FILE NAME	XL5464_PS_MKD_02.dgn					
TIME	2:12:44 AM					
DATE	1/8/2022					
PLOTTED BY	wsppw14ics02$					
DESIGNED BY	W. DSOUZA					
ENTERED BY	M. AUDAR					
CHECKED BY	A. MIZUTA					
PROJ. ENGR.	E. PAO					
REGIONAL ADM.		REVISION	DATE	BY		

PRELIMINARY
NOT FOR CONSTRUCTION

REGION NO.	STATE	FED.AID PROJ.NO.
10	WASH	
JOB NUMBER		
CONTRACT NO.		LOCATION NO. XL-5464

P.E. STAMP BOX — DATE

P.E. STAMP BOX — DATE

Washington State Department of Transportation
GRAHAM
WSP
1001 Fourth Ave, Suite 3100, Seattle, WA 98154
Tel: (206) 382-5200

I-405
NE 132ND STREET INTERCHANGE PROJECT

PAVEMENT MARKING DETAILS

PLAN REF NO
MKD02
SHEET
OF
SHEETS