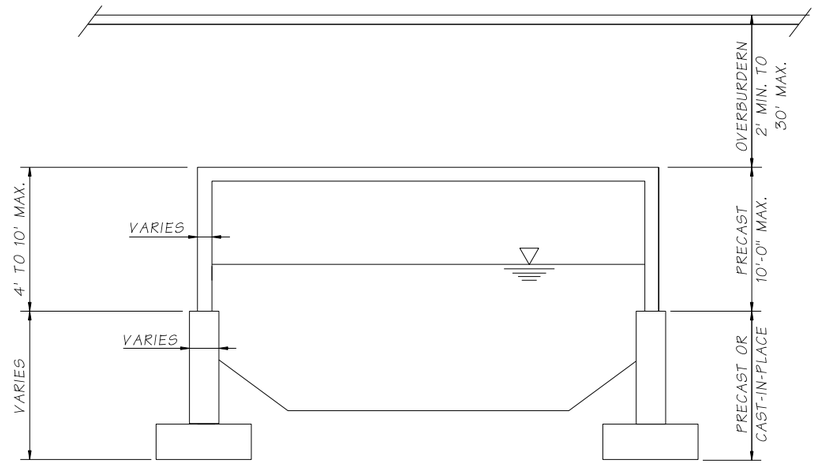


## GEOMETRY

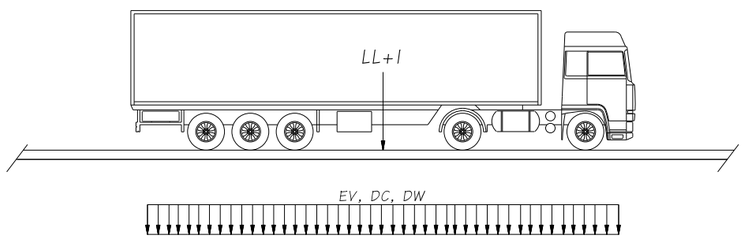


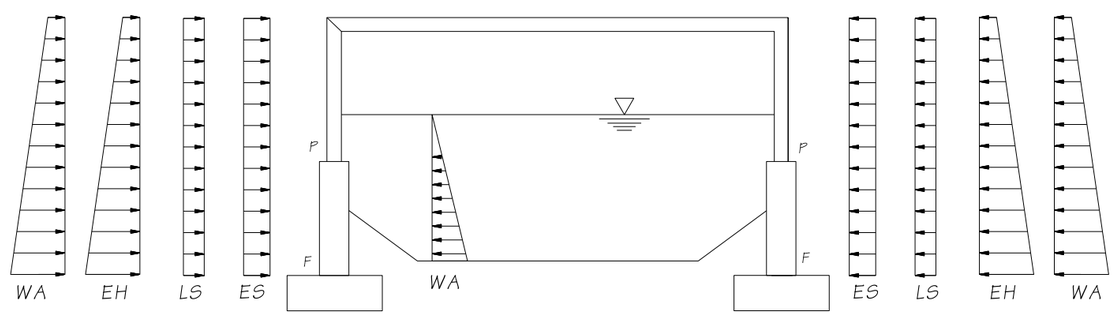


## LOADING DIAGRAMS

P = PINNED CONNECTION
F = FIXED CONNECTION

## GENERAL NOTES

1. THE FISH PASSAGE CULVERTS ARE BURIED STRUCTURES. THE DESIGN OF THE FISH PASSAGE CULVERTS SHALL COMPLY WITH THE CHAPTER 2 TECHNICAL PROVISIONS ON THE PROJECT IN ADDITION TO THE PROVISIONS BELOW. IN THE EVENT THAT THERE ARE CONFLICTING PROVISIONS, THE CHAPTER 2 TECHNICAL REQUIREMENTS GOVERN.
2. ALL MATERIAL AND WORKMANSHIP SHALL BE IN ACCORDANCE WITH THE REQUIREMENTS OF THE WASHINGTON STATE DEPARTMENT OF TRANSPORTATION STANDARD SPECIFICATIONS FOR ROAD, BRIDGE, AND MUNICIPAL CONSTRUCTION DATED 2021, AND AMENDMENTS AS OF THE DATE OF THE CONTRACT.
3. THE CULVERT TO BE DESIGNED IN ACCORDANCE WITH THE REQUIREMENTS OF THE AASHTO LRFD BRIDGE DESIGN SPECIFICATIONS 9TH EDITION.
4. THE CULVERT SHALL BE DESIGNED FOR SCOUR PER HYDRAULIC REPORT.
5. THE PRECASTER SHALL MODEL THE CULVERT AS A RIGID FRAME WITH A PIN CONNECTION BETWEEN BOTTOM OF CULVERT/TOP OF FOOTING AND AT THE TOP OF ANY WINGWALLS.
6. THE PRECAST CONCRETE SHALL BE CLASS 5000, 6000, OR 7000 SELF CONSOLIDATING CONCRETE (SCC). OTHER CONCRETE SHALL BE CLASS 4000, UNLESS NOTED OTHERWISE.
7. THE FABRICATOR SHALL DESIGN FOR LIFTING AND TRANSPORTING FOR SUBMITTAL PER STD. SPEC. SECTION 7-02.3(6)A2.
8. ALL STEEL PLATES AND SHAPES SHALL BE ASTM A36 OR ASTM A 992. ALL BOLTS, NUTS AND WASHERS (UNLESS NOTED OTHERWISE) SHALL BE ASTM A 307 AND COMPLY WITH STD. SPEC. SECT. 9-16.3(4), AND RESIN BONDED ANCHORS SHALL BE ASTM A 193 GRADE B7, OR ASTM A 449. ALL STEEL PLATES SHALL BE GALVANIZED IN ACCORDANCE WITH AASHTO M 111 AFTER FABRICATION. BOLTS AND HARDWARE SHALL BE GALVANIZED IN ACCORDANCE WITH AASHTO M 232.
9. UNLESS OTHERWISE SHOWN IN THE PLANS, CONCRETE COVER MEASURED FROM THE FACE OF CONCRETE TO THE FACE OF ANY REINFORCING STEEL SHALL BE 2" AT THE TOP OF THE TOP SLAB, 1½" AT THE BOTTOM OF THE TOP SLAB, 3" AT THE BOTTOM OF FOOTINGS, AND 2" AT ALL OTHER LOCATIONS.
10. THE BACKFILL ON BOTH SIDES OF THE CULVERT TO BE PLACED IN SEQUENCE AND COMPACTED IN ACCORDANCE TO THE STD. SPEC 2-09.3(1)E. THE MAXIMUM FIELD HEIGHT DIFFERENCE MEASURED FROM SIDE TO SIDE NO MORE 2'-0". IF THE CONTRACTOR WISHES TO EXCEED THIS DIFFERENTIAL, SUPPORTING EVIDENCE MUST BE SUBMITTED.

## LOAD COMBINATIONS

THE BURIED STRUCTURES TO BE DESIGNED WITH THE LIMIT STATES SHOWN BELOW:

STRENGTH I = g p DC + g p DW+ 1.35/0.90 EH + 1.35/0.90 EV + 1.50/0.75 ES +1.75 LS + 1.75 (L+I) + 1.00 WA + 1.00 B + 0.50/1.20 TU

SERVICE = 1.00 DC + 1.00 DW + 1.00 EH + 1.00 EV + 1.00 ES + 1.0 LS + 1.00 (L+I) + 1.00 WA + 1.00 B + 1.00/1.20 TU

EXTREME I = 1.00 DC + 1.00 DW + 1.00 EH + 1.00 EV + 1.00 ES + 1.00 LS + gEQ L + 1.00 WA

EXTREME II = 1.00 DC + 1.00 DW + 1.00 EH + 1.00 EV + 1.00 ES + 1.00 LS + gEQ L + 1.00 WA

SE = FORCE EFFECT DUE TO SETTLEMENT
DW = DEAD LOAD OF WEARING SURFACE AND UTILITIES
DC = WEIGHT OF SUPERSTRUCTURE
EH = EARTH PRESSURE
EV = VERTICAL EARTH PRESSURE
LL + I = LIVE LOAD PLUS IMPACT
LS = LIVE LOAD SURCHARGE
WA = HYDRO-STATIC PRESSURE

g p FOR DC = 1.25 MAX./0.90 MIN.
g p FOR DW = 1.50 MAX./0.65 MIN.
Ø = 1.00 FOR FLEXURE
Ø = 0.90 FOR SHEAR

NOTES:
CT = VEHICULAR COLLISION FORCE
EXTREME II LIMIT STATE IS FOR VEHICULAR COLLISION

| | |
|---|---|
| FILE NAME | XL5464_PS_FC_01.dgn |
| TIME | 2:15:48 AM |
| DATE | 1/8/2022 |
| PLOTTED BY | wsppw14ics02$ |
| DESIGNED BY | C. NEISIUS |
| ENTERED BY | P. AROONLAP |
| CHECKED BY | |
| PROJ. ENGR. | E. PAO |
| REGIONAL ADM. | |

**PRELIMINARY**
NOT FOR CONSTRUCTION

REVISION | DATE | BY

REGION NO. 10 | STATE WASH | FED.AID PROJ.NO.
JOB NUMBER
CONTRACT NO. | LOCATION NO.

P.E. STAMP BOX DATE
P.E. STAMP BOX DATE

Washington State Department of Transportation
GRAHAM
WSP
1001 Fourth Ave, Suite 3100, Seattle, WA 98154
Tel: (206) 382-5200

I-405
NE 132ND STREET INTERCHANGE PROJECT

GENERAL NOTES

PLAN REF NO FC01
SHEET
OF
SHEETS

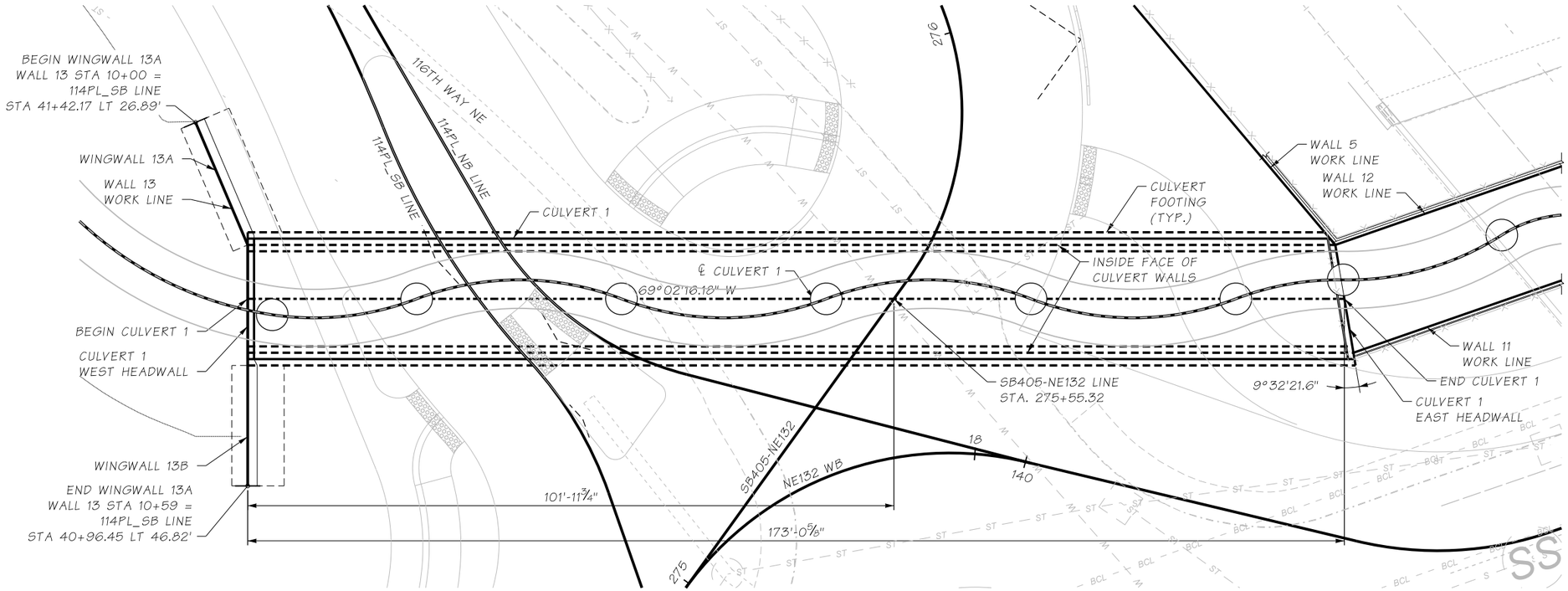


PLAN - CULVERT 1

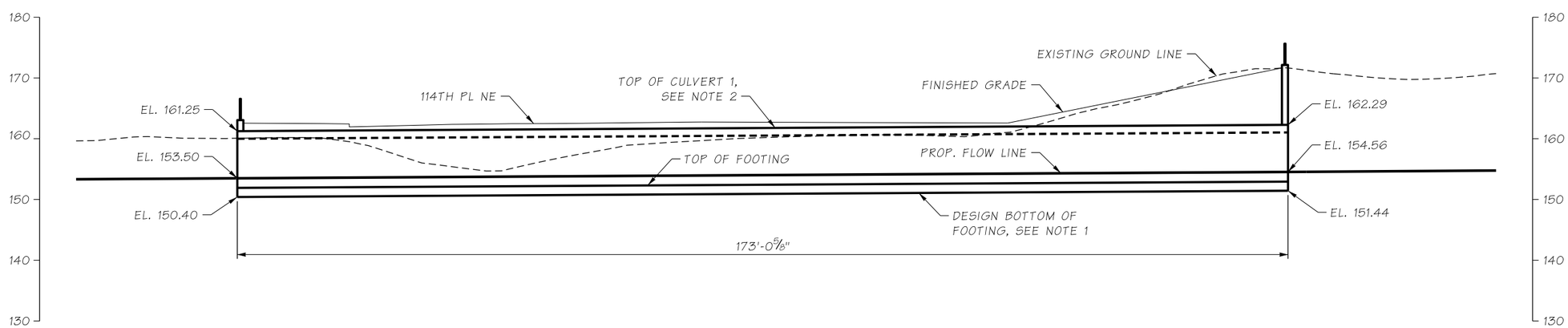


ELEVATION - CULVERT 1

NOTES:

1. DESIGN BOTTOM OF FOOTING MATCHES HIGHEST ELEVATION ALLOWED TO MITIGATE AGAINST THE DESIGN SCOUR.
2. TOP OF CULVERT ELEVATION IS BASED ON ASSUMING A 1'-0" THICK TOP SLAB. ACTUAL ELEVATION IS TO BE DETERMINED BASED ON PRECASTER SPECIFIED SLAB DIMENSIONS.
3. FOR FOR TYPICAL CULVERT SECTION, SEE PLAN REF. NO. FC05.

| | |
|---|---|
| FILE NAME | XL5464_PS_FC_02.dgn |
| TIME | 2:15:15 AM |
| DATE | 1/8/2022 |
| PLOTTED BY | wsppw14ics02$ |
| DESIGNED BY | Y. POLYAKOV |
| ENTERED BY | M. AUDAR |
| CHECKED BY | |
| PROJ. ENGR. | E. PAO |
| REGIONAL ADM. | |

**PRELIMINARY**
NOT FOR CONSTRUCTION

| REVISION | DATE | BY |
|---|---|---|
| | | |

| REGION NO. | STATE | FED.AID PROJ.NO. |
|---|---|---|
| 10 | WASH | |
| JOB NUMBER | | |
| CONTRACT NO. | | LOCATION NO. |

P.E. STAMP BOX DATE

P.E. STAMP BOX DATE

Washington State Department of Transportation
GRAHAM
WSP
1001 Fourth Ave, Suite 3100, Seattle, WA 98154
Tel: (206) 382-5200

I-405
NE 132ND STREET INTERCHANGE PROJECT

CULVERT 1 PLAN AND ELEVATION

PLAN REF NO
FC02

SHEET
OF
SHEETS

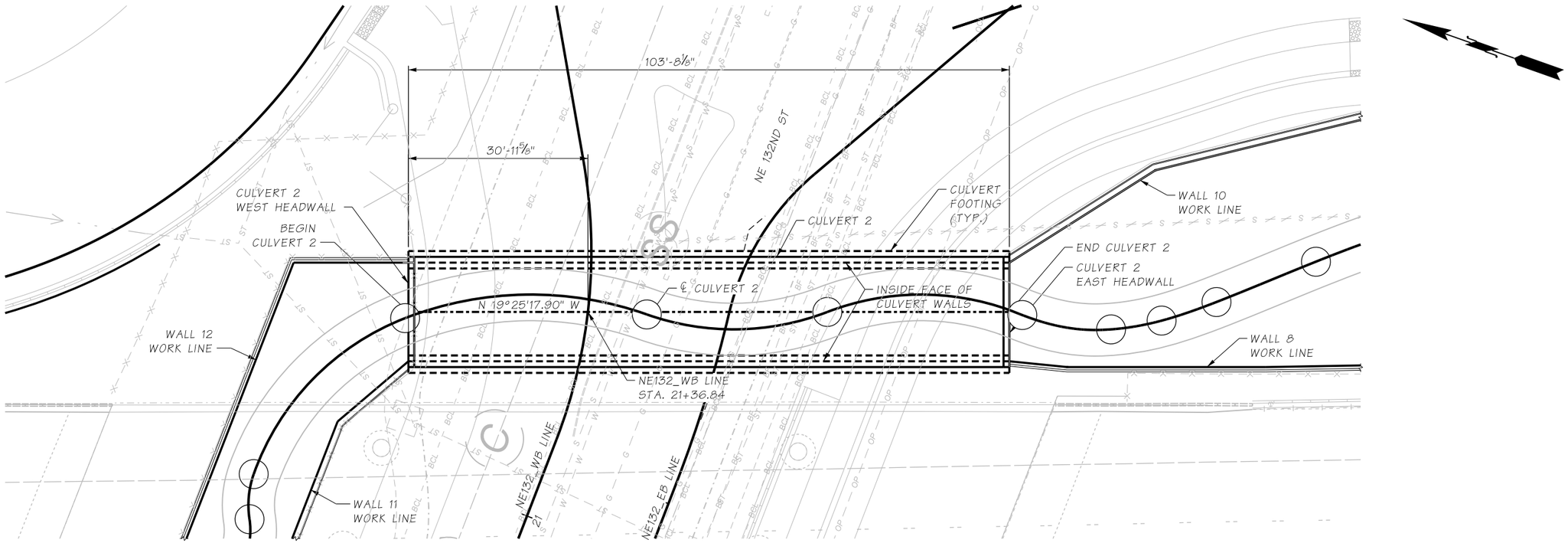


PLAN - CULVERT 2

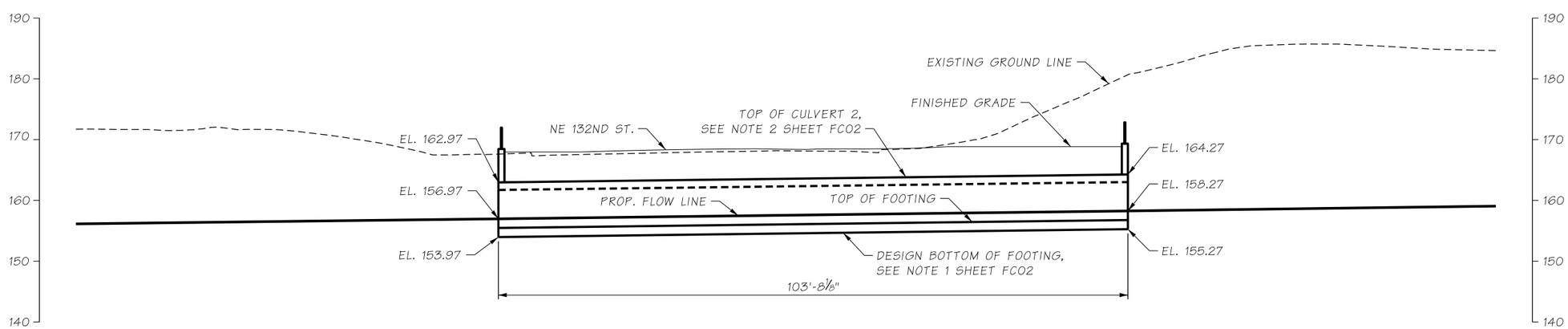


ELEVATION - CULVERT 2

| | | | | | | | |
|---|---|---|---|---|---|---|---|
| FILE NAME | XL5464_PS_FC_03.dgn | | | | | | |
| TIME | 2:16:00 AM | | | | | | |
| DATE | 1/8/2022 | | | | | | |
| PLOTTED BY | wsppw14ics02$ | | | | | | |
| DESIGNED BY | Y. POLYAKOV | **PRELIMINARY** | | | | | |
| ENTERED BY | M. AUDAR | | | | | | |
| CHECKED BY | | NOT FOR CONSTRUCTION | | | | | |
| PROJ. ENGR. | E. PAO | | | | | | |
| REGIONAL ADM. | | REVISION | DATE | BY | | | |

| REGION NO. | STATE | FED.AID PROJ.NO. |
|---|---|---|
| 10 | WASH | |
| JOB NUMBER | | |
| CONTRACT NO. | | LOCATION NO. |

P.E. STAMP BOX DATE

P.E. STAMP BOX DATE

Washington State Department of Transportation
GRAHAM
WSP
1001 Fourth Ave, Suite 3100, Seattle, WA 98154
Tel: (206) 382-5200

I-405
NE 132ND STREET INTERCHANGE PROJECT

CULVERT 2 PLAN AND ELEVATION

PLAN REF NO
FC03

SHEET
OF
SHEETS

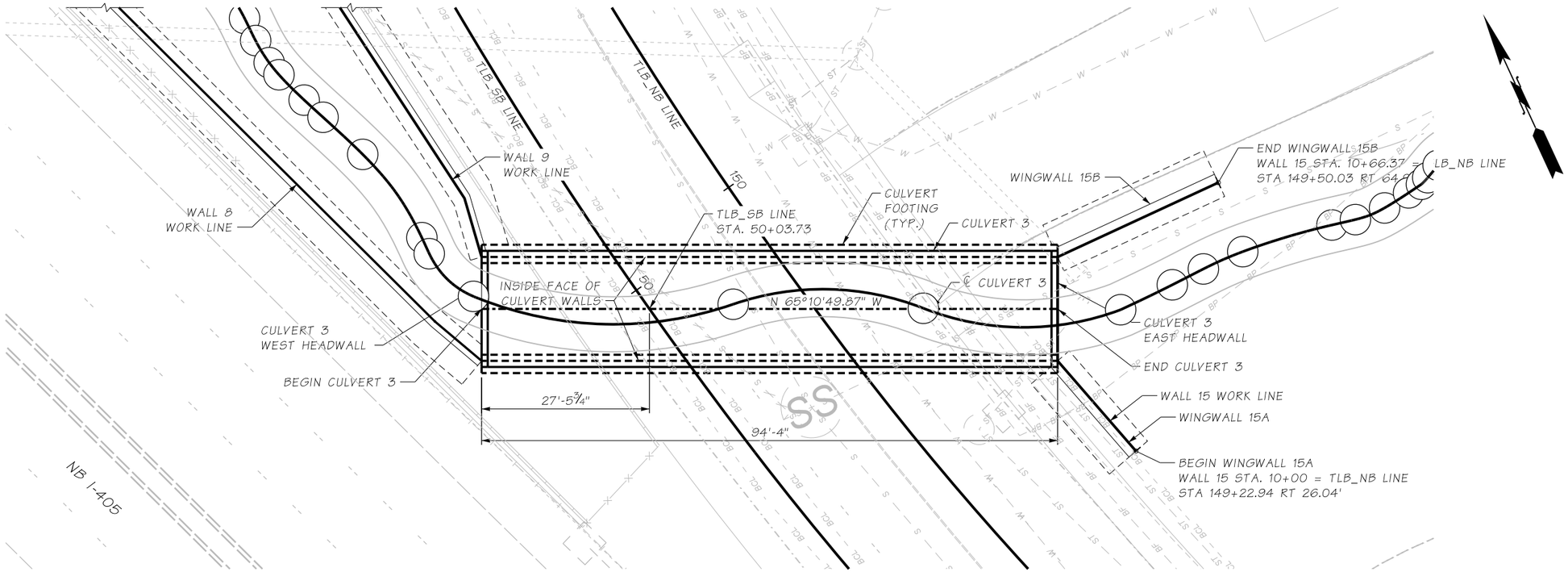


PLAN - CULVERT 3

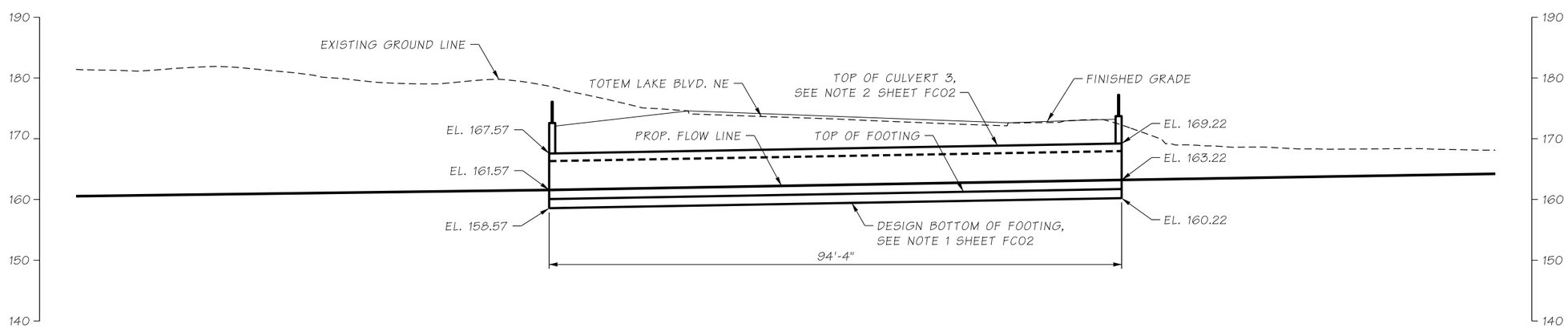


ELEVATION - CULVERT 3

| | | | | | | | |
|---|---|---|---|---|---|---|---|
| FILE NAME | XL5464_PS_FC_04.dgn | | | | REGION NO. 10 | STATE WASH | FED.AID PROJ.NO. |
| TIME | 2:15:36 AM | | | | | | |
| DATE | 1/8/2022 | | | | | | |
| PLOTTED BY | wsppw14ics02$ | **PRELIMINARY** | | | JOB NUMBER | | |
| DESIGNED BY | Y. POLYAKOV | | | | | | |
| ENTERED BY | M. AUDAR | NOT FOR CONSTRUCTION | | | | | |
| CHECKED BY | | | | | CONTRACT NO. | | LOCATION NO. |
| PROJ. ENGR. | E. PAO | | | | | | |
| REGIONAL ADM. | | REVISION | DATE | BY | | | |

P.E. STAMP BOX DATE

P.E. STAMP BOX DATE

Washington State Department of Transportation
GRAHAM
WSP
1001 Fourth Ave, Suite 3100, Seattle, WA 98154
Tel: (206) 382-5200

I-405
NE 132ND STREET INTERCHANGE
PROJECT

CULVERT 3 PLAN AND ELEVATION

PLAN REF NO
FC04

SHEET
OF
SHEETS

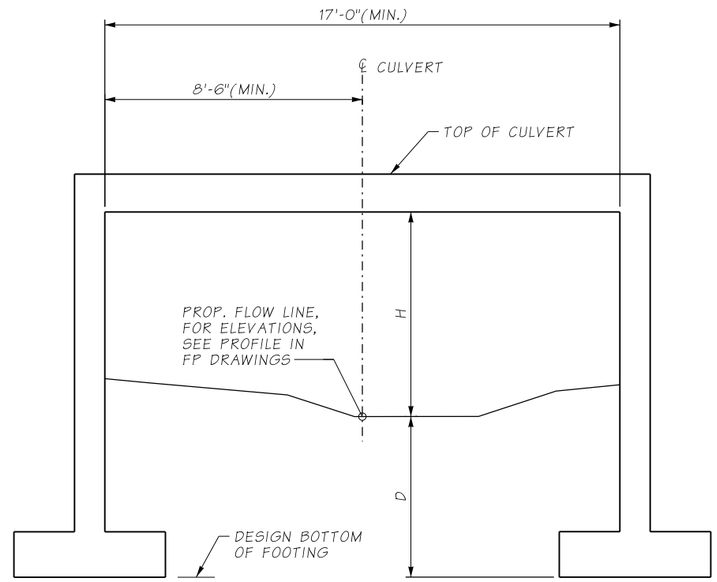


| CULVERT MINIMUM DIMENSIONS | | |
|---|---|---|
| | H | D |
| CULVERT 1 | 6.75' | 3.1' |
| CULVERT 2 | 5.00' | 3.0' |
| CULVERT 3 | 5.00' | 3.0' |

## TYPICAL SECTION

TAKEN PERPENDICULAR TO CULVERT CENTERLINE

| | |
|---|---|
| FILE NAME | XL5464_PS_FC_05.dgn |
| TIME | 2:15:01 AM |
| DATE | 1/8/2022 |
| PLOTTED BY | wsppw14ics02$ |
| DESIGNED BY | |
| ENTERED BY | |
| CHECKED BY | |
| PROJ. ENGR. | E. PAO |
| REGIONAL ADM. | |

**PRELIMINARY**

NOT FOR CONSTRUCTION

| REVISION | DATE | BY |
|---|---|---|
| | | |

| REGION NO. | STATE | FED.AID PROJ.NO. |
|---|---|---|
| 10 | WASH | |
| JOB NUMBER | | |
| CONTRACT NO. | | LOCATION NO. |

P.E. STAMP BOX DATE

P.E. STAMP BOX DATE

Washington State Department of Transportation

GRAHAM

WSP

1001 Fourth Ave, Suite 3100, Seattle, WA 98154
Tel: (206) 382-5200

I-405
NE 132ND STREET INTERCHANGE PROJECT

CULVERT TYPICAL SECTION

PLAN REF NO FC05

SHEET OF SHEETS

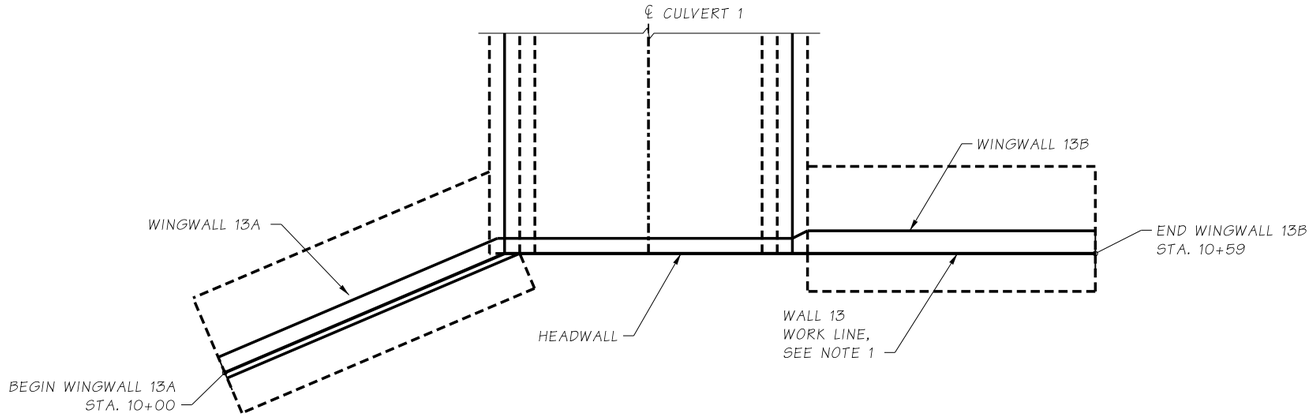


## PLAN - CULVERT 1 WEST ENTRANCE

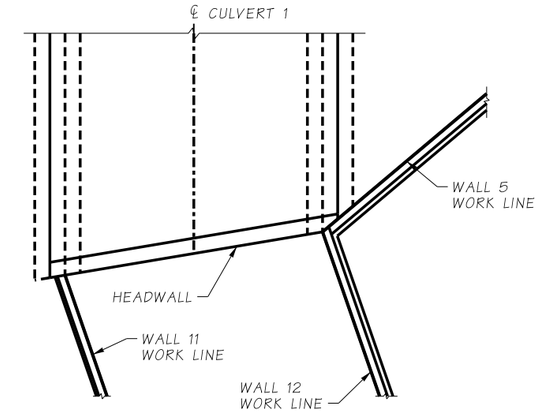


## PLAN - CULVERT 1 EAST ENTRANCE

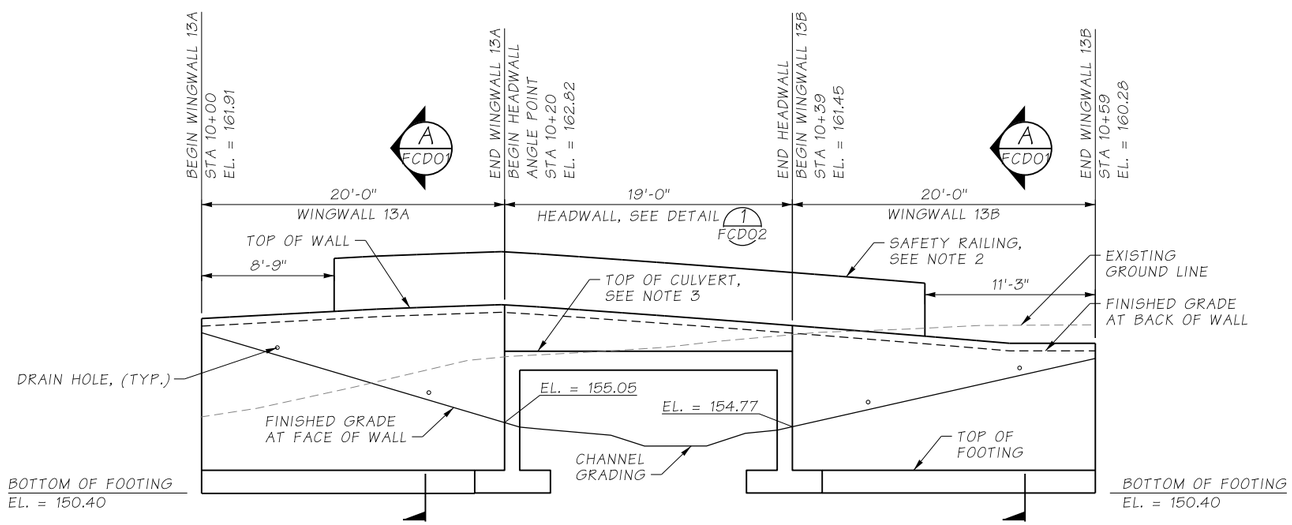


## ELEVATION - CULVERT 1 WEST ENTRANCE

DEVELOPED ELEVATION ALONG WALL 13 WORK LINE

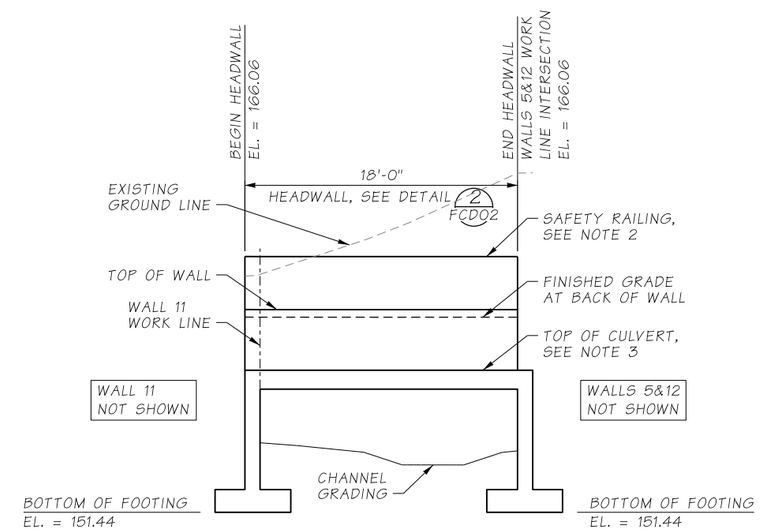


## ELEVATION - CULVERT 1 EAST ENTRANCE

DEVELOPED ELEVATION ALONG EAST END OF CULVERT

NOTES:

1. FOR WALL 13 ALIGNMENT DATA, SEE PLAN REF. NO. FC02.
2. FOR SAFETY RAILING DETAILS, SEE PLAN REF. NO. WRD10 & WRD11.
3. FOR TOP OF CULVERT ELEVATION, SEE PLAN REF. NO. FC02.

| | |
|---|---|
| FILE NAME | XL5464_PS_FC_06.dgn |
| TIME | 2:15:55 AM |
| DATE | 1/8/2022 |
| PLOTTED BY | wsppw14ics02$ |
| DESIGNED BY | Y. POLYAKOV |
| ENTERED BY | M. AUDAR |
| CHECKED BY | |
| PROJ. ENGR. | E. PAO |
| REGIONAL ADM. | |

**PRELIMINARY**
NOT FOR CONSTRUCTION

| REVISION | DATE | BY |
|---|---|---|
| | | |

| REGION NO. | STATE | FED.AID PROJ.NO. |
|---|---|---|
| 10 | WASH | |
| JOB NUMBER | | |
| CONTRACT NO. | | LOCATION NO. |

P.E. STAMP BOX DATE

P.E. STAMP BOX DATE

Washington State Department of Transportation
GRAHAM
WSP
1001 Fourth Ave, Suite 3100, Seattle, WA 98154
Tel: (206) 382-5200

I-405
NE 132ND STREET INTERCHANGE PROJECT

CULVERT 1 WALL PLAN AND ELEVATION

PLAN REF NO FC06

SHEET OF SHEETS

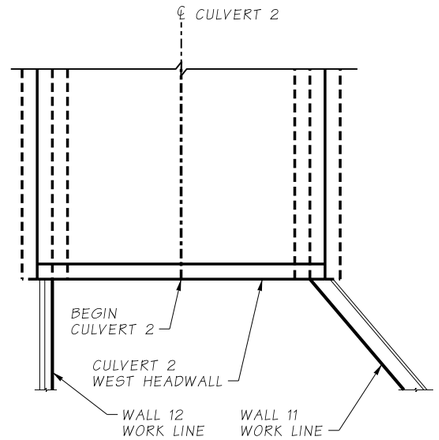


## PLAN - CULVERT 2 WEST ENTRANCE

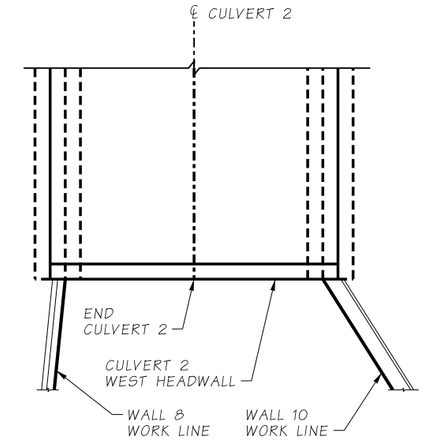


## PLAN - CULVERT 2 EAST ENTRANCE

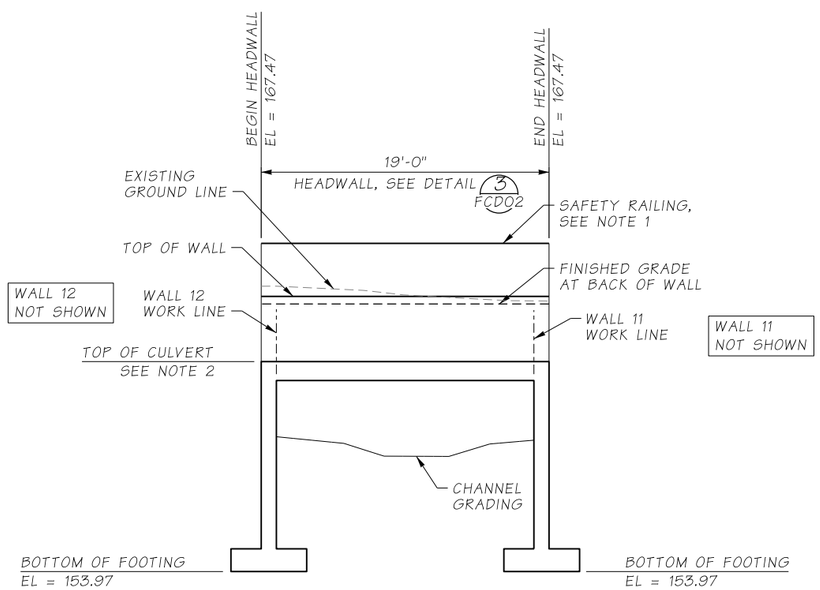


## ELEVATION - CULVERT 2 WEST ENTRANCE

DEVELOPED ELEVATION ALONG WEST END OF CULVERT

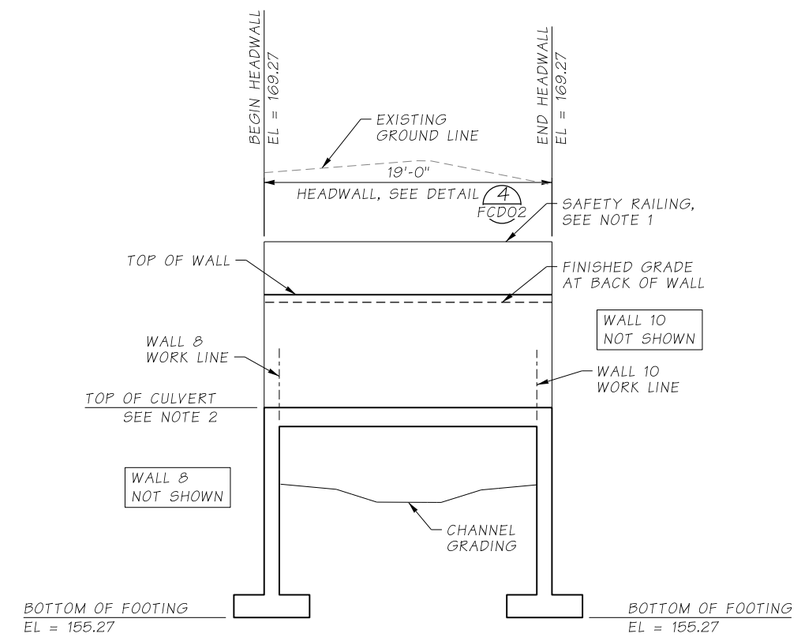


## ELEVATION - CULVERT 2 EAST ENTRANCE

DEVELOPED ELEVATION ALONG EAST END OF CULVERT

NOTES:

1. FOR SAFETY RAILING DETAILS, SEE PLAN REF. NO. WRD10 & WRD11.
2. FOR TOP OF CULVERT ELEVATION, SEE PLAN REF. NO. FC03.

| | |
|---|---|
| FILE NAME | XL5464_PS_FC_07.dgn |
| TIME | 2:15:53 AM |
| DATE | 1/8/2022 |
| PLOTTED BY | wsppw14ics02$ |
| DESIGNED BY | Y. POLYAKOV |
| ENTERED BY | M. AUDAR |
| CHECKED BY | |
| PROJ. ENGR. | E. PAO |
| REGIONAL ADM. | |

**PRELIMINARY**
NOT FOR CONSTRUCTION

| REVISION | DATE | BY |
|---|---|---|
| | | |

| REGION NO. | STATE | FED.AID PROJ.NO. |
|---|---|---|
| 10 | WASH | |
| JOB NUMBER | | |
| CONTRACT NO. | | LOCATION NO. |

P.E. STAMP BOX DATE

P.E. STAMP BOX DATE

Washington State Department of Transportation
GRAHAM
WSP
1001 Fourth Ave, Suite 3100, Seattle, WA 98154
Tel: (206) 382-5200

I-405
NE 132ND STREET INTERCHANGE PROJECT

CULVERT 2 WALL PLAN AND ELEVATION

PLAN REF NO FC07

SHEET OF SHEETS

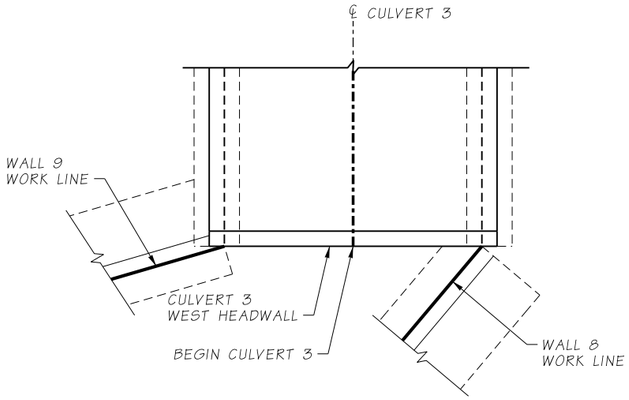


## PLAN - CULVERT 3 WEST ENTRANCE

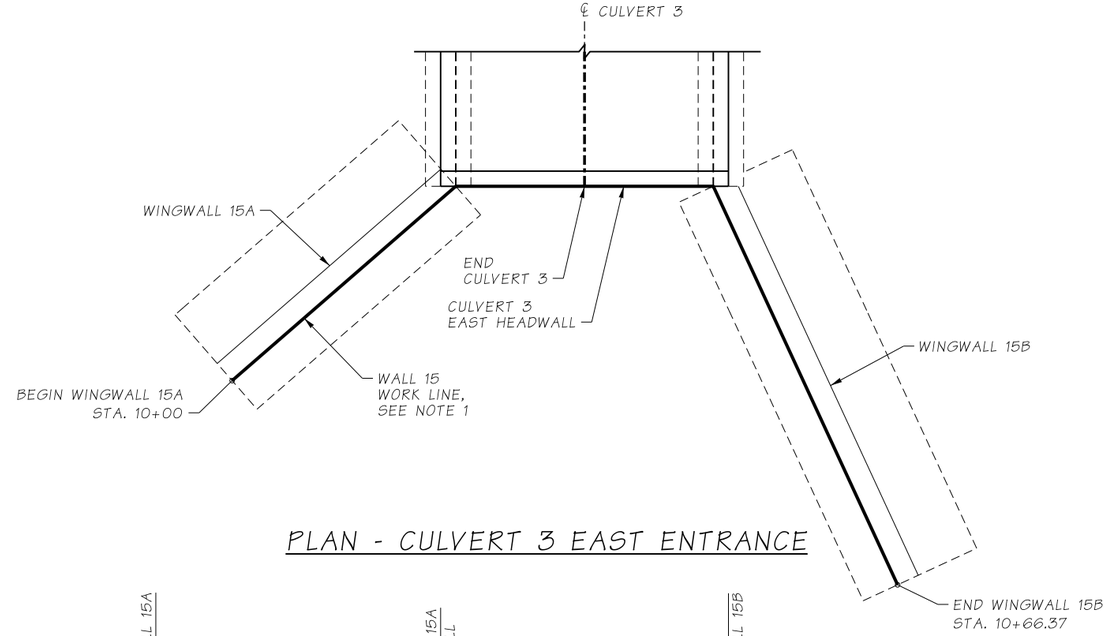


## PLAN - CULVERT 3 EAST ENTRANCE

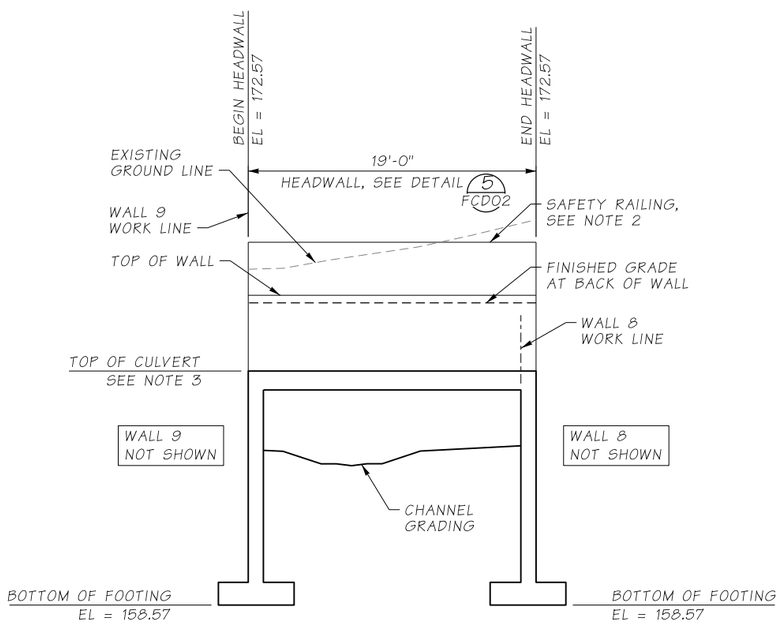


## ELEVATION - CULVERT 3 WEST ENTRANCE

DEVELOPED ELEVATION ALONG WEST END OF CULVERT

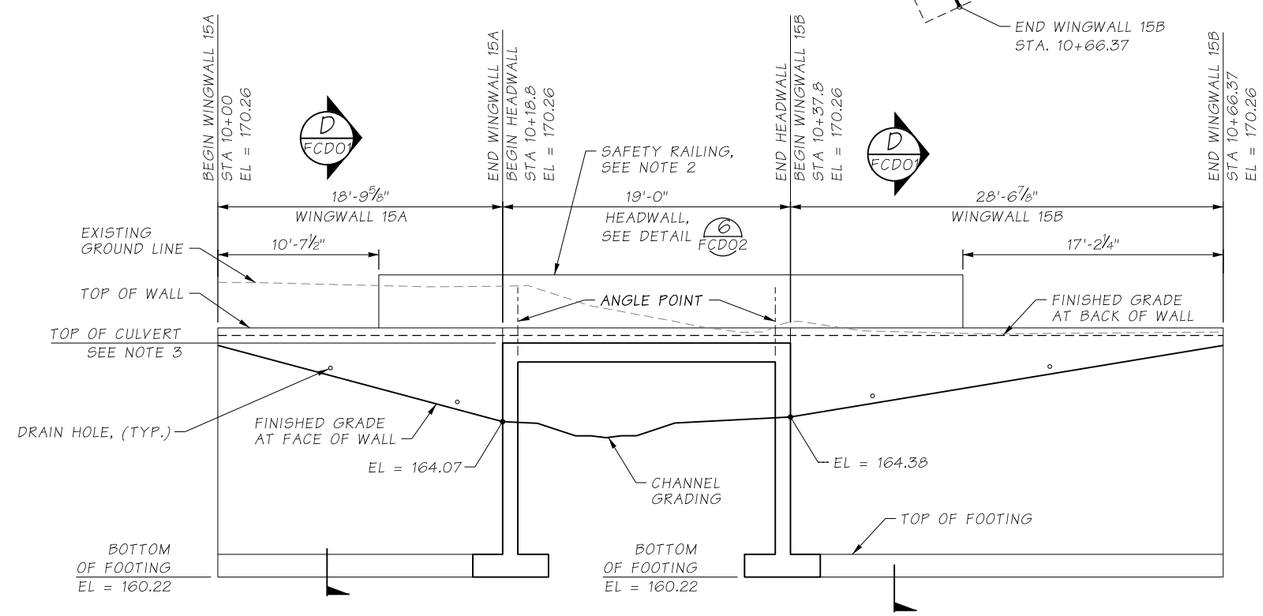


## ELEVATION - CULVERT 3 EAST ENTRANCE

DEVELOPED ELEVATION ALONG WALL 15 WORK LINE

NOTES:

1. FOR WALL 15 ALIGNMENT DATA, SEE PLAN REF. NO. FC04.
2. FOR SAFETY RAILING DETAILS, SEE PLAN REF. NO. WRD10 & WRD11.
3. FOR TOP OF CULVERT ELEVATION, SEE PLAN REF. NO. FC04.

| | |
|---|---|
| FILE NAME | XL5464_PS_FC_08.dgn |
| TIME | 2:16:02 AM |
| DATE | 1/8/2022 |
| PLOTTED BY | wsppw14ics02$ |
| DESIGNED BY | Y. POLYAKOV |
| ENTERED BY | M. AUDAR |
| CHECKED BY | |
| PROJ. ENGR. | E. PAO |
| REGIONAL ADM. | |

**PRELIMINARY**
NOT FOR CONSTRUCTION

| REVISION | DATE | BY |
|---|---|---|
| | | |

| REGION NO. | STATE | FED.AID PROJ.NO. |
|---|---|---|
| 10 | WASH | |
| JOB NUMBER | | |
| CONTRACT NO. | | LOCATION NO. |

P.E. STAMP BOX DATE

P.E. STAMP BOX DATE

Washington State Department of Transportation
GRAHAM
WSP
1001 Fourth Ave, Suite 3100, Seattle, WA 98154
Tel: (206) 382-5200

I-405
NE 132ND STREET INTERCHANGE
PROJECT

CULVERT 3 WALL PLAN AND ELEVATION

PLAN REF NO
FC08

SHEET
OF
SHEETS

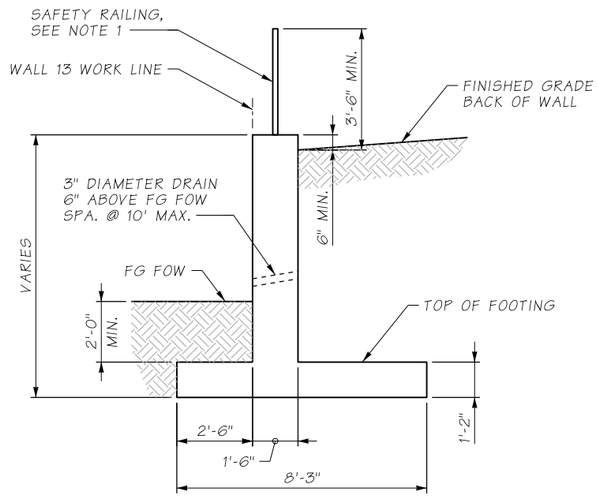


SECTION A FC06

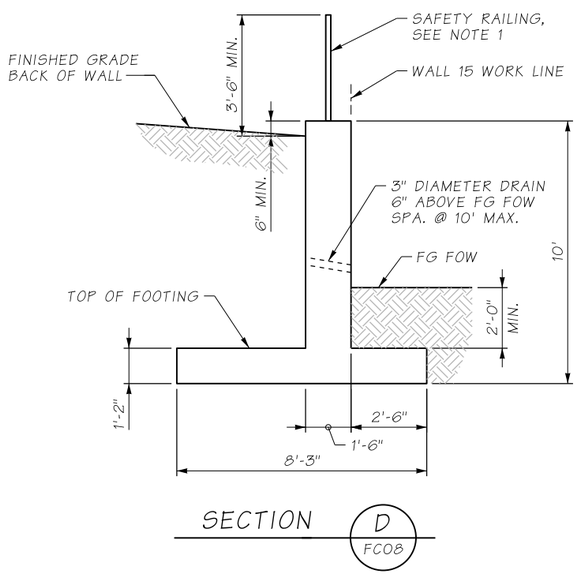


SECTION D FC08

NOTES:

1. FOR SAFETY RAILING DETAILS, SEE PLAN REF. NO. WRD10 & WRD11.

| | | | | | | |
|---|---|---|---|---|---|---|
| FILE NAME | XL5464_PS_FCD_01.dgn | | | | | |
| TIME | 2:15:20 AM | | | | | |
| DATE | 1/8/2022 | | | | | |
| PLOTTED BY | wsppw14ics02$ | | | | | |
| DESIGNED BY | | | | | | |
| ENTERED BY | | | | | | |
| CHECKED BY | | | | | | |
| PROJ. ENGR. | E. PAO | | | | | |
| REGIONAL ADM. | | REVISION | DATE | BY | | |

**PRELIMINARY**
NOT FOR CONSTRUCTION

| REGION NO. | STATE | FED.AID PROJ.NO. |
|---|---|---|
| 10 | WASH | |
| JOB NUMBER | | |
| CONTRACT NO. | | LOCATION NO. |

P.E. STAMP BOX DATE

P.E. STAMP BOX DATE

Washington State
Department of Transportation
GRAHAM
wsp
1001 Fourth Ave, Suite 3100, Seattle, WA 98154
Tel: (206) 382-5200

I-405
NE 132ND STREET INTERCHANGE
PROJECT

CULVERT WINGWALL DETAILS

PLAN REF NO
FCD01

SHEET
OF
SHEETS

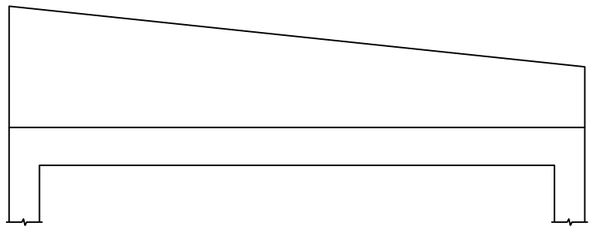

DETAIL 1
CULVERT 1 CIP
WEST HEADWALL
FC06

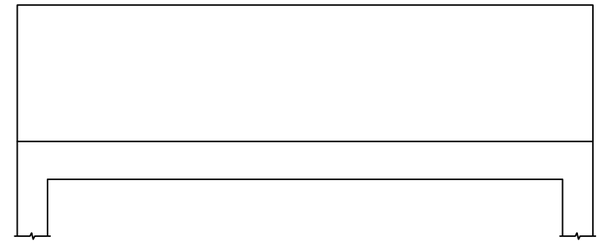

DETAIL 2
CULVERT 1 CIP
EAST HEADWALL
FC06

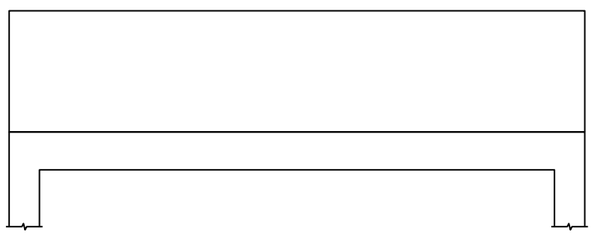

DETAIL 3
CULVERT 2 CIP
WEST HEADWALL
FC07

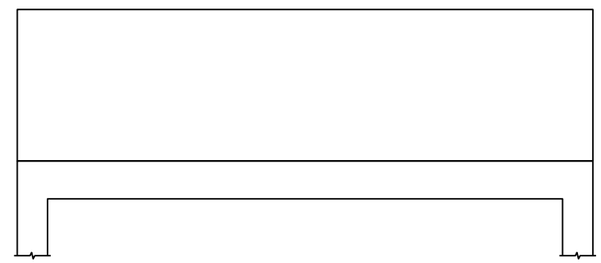

DETAIL 4
CULVERT 2 CIP
EAST HEADWALL
FC07

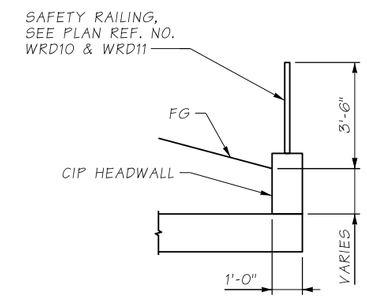


HEADWALL TYPICAL SECTION

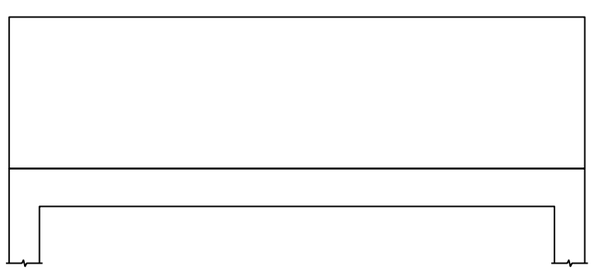

DETAIL 5
CULVERT 3 CIP
WEST HEADWALL
FC08

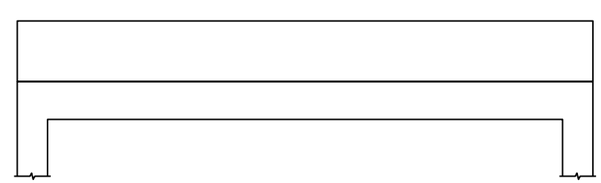

DETAIL 6
CULVERT 3 CIP
EAST HEADWALL
FC08

| | |
|---|---|
| FILE NAME | XL5464_PS_FCD_02.dgn |
| TIME | 2:15:05 AM |
| DATE | 1/8/2022 |
| PLOTTED BY | wsppw14ics02$ |
| DESIGNED BY | |
| ENTERED BY | |
| CHECKED BY | |
| PROJ. ENGR. | E. PAO |
| REGIONAL ADM. | |

**PRELIMINARY**
NOT FOR CONSTRUCTION

| REVISION | DATE | BY |
|---|---|---|
| | | |

| REGION NO. | STATE | FED.AID PROJ.NO. |
|---|---|---|
| 10 | WASH | |
| JOB NUMBER | | |
| CONTRACT NO. | | LOCATION NO. |

P.E. STAMP BOX DATE

P.E. STAMP BOX DATE

Washington State Department of Transportation
GRAHAM
wsp
1001 Fourth Ave, Suite 3100, Seattle, WA 98154
Tel: (206) 382-5200

I-405
NE 132ND STREET INTERCHANGE PROJECT

CULVERT HEADWALL DETAILS

PLAN REF NO
FCD02

SHEET
OF
SHEETS