T.26N. R.5E. W.M.

DRAINAGE PROFILE REFERENCE TABLE	
TRUNK 1	DP01
TRUNK 2	DP01

NOTES:

1. SEE SITE PREP PLANS FOR EXISTING DRAINAGE REMOVAL AND ABANDONMENTS. SEE ALIGNMENT AND ROW PLANS FOR ROADWAY ALIGNMENTS. SEE UTILITY PLANS FOR EXISTING UTILITIES AND UTILITY RELOCATIONS.

FILE NAME	XL5464_PS_DR_01.dgn
TIME	1:51:42 AM
DATE	1/8/2022
PLOTTED BY	wsppw14ics02$
DESIGNED BY	T. HOTINGER
ENTERED BY	G. RIMANDO
CHECKED BY	J. ZIGWEID
PROJ. ENGR.	E. PAO
REGIONAL ADM.	

PRELIMINARY
NOT FOR CONSTRUCTION

REVISION	DATE	BY

REGION NO.	STATE	FED.AID PROJ.NO.
10	WASH	
JOB NUMBER		
CONTRACT NO.		LOCATION NO. XL-5464

P.E. STAMP BOX DATE

P.E. STAMP BOX DATE

Washington State Department of Transportation
GRAHAM
WSP
1001 Fourth Ave, Suite 3100, Seattle, WA 98154
Tel: (206) 382-5200

I-405
NE 132ND STREET INTERCHANGE PROJECT

DRAINAGE PLAN

PLAN REF NO **DR01**

SHEET OF SHEETS

T.26N. R.5E. W.M.

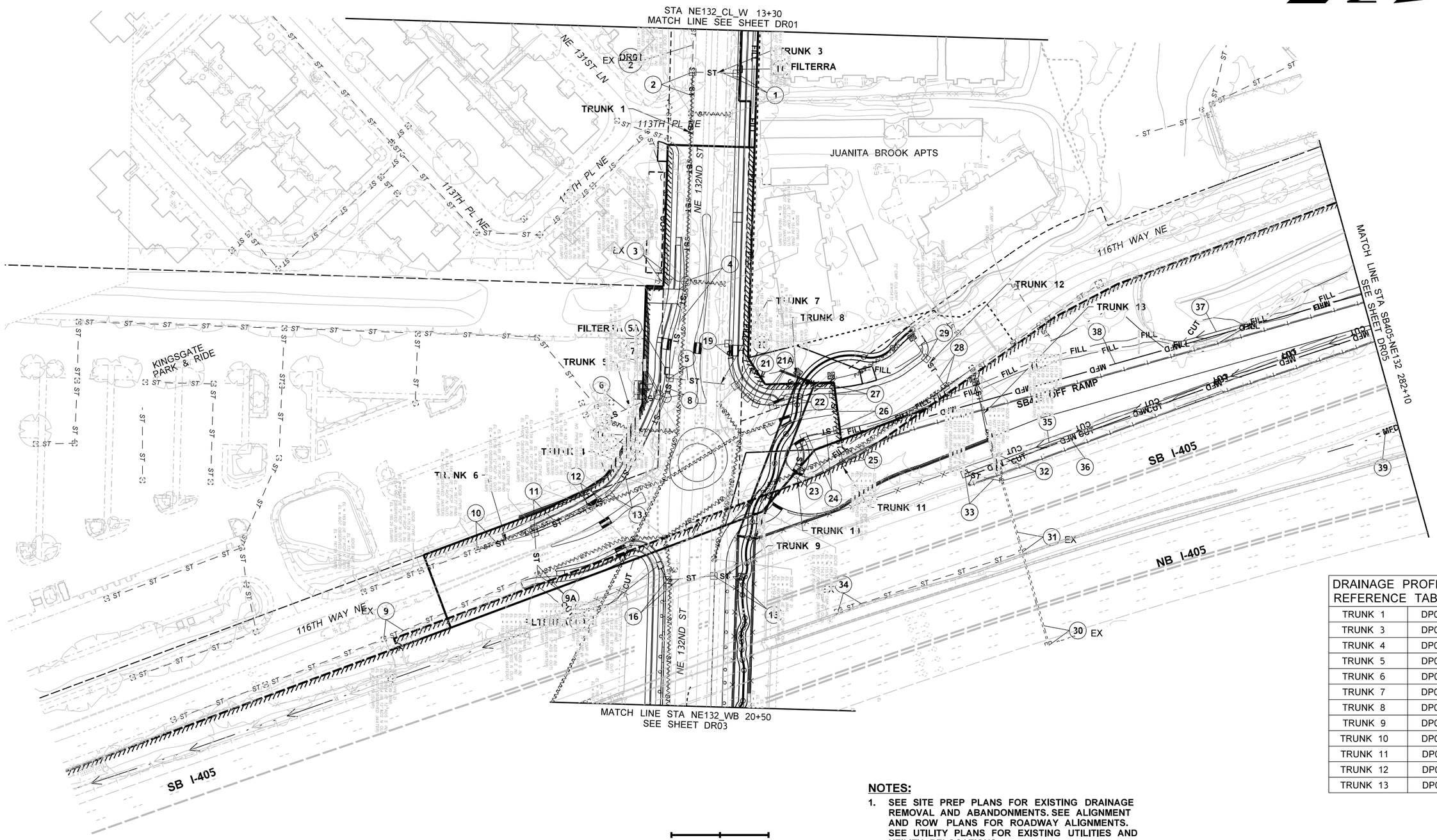

DRAINAGE PROFILE REFERENCE TABLE	
TRUNK 1	DP01
TRUNK 3	DP01
TRUNK 4	DP02
TRUNK 5	DP02
TRUNK 6	DP02
TRUNK 7	DP03
TRUNK 8	DP03
TRUNK 9	DP03
TRUNK 10	DP03
TRUNK 11	DP04
TRUNK 12	DP04
TRUNK 13	DP04

NOTES:

1. SEE SITE PREP PLANS FOR EXISTING DRAINAGE REMOVAL AND ABANDONMENTS. SEE ALIGNMENT AND ROW PLANS FOR ROADWAY ALIGNMENTS. SEE UTILITY PLANS FOR EXISTING UTILITIES AND UTILITY RELOCATIONS.

FILE NAME	XL5464_PS_DR_02.dgn
TIME	1:51:35 AM
DATE	1/8/2022
PLOTTED BY	wsppw14ics02$
DESIGNED BY	T. HOTINGER
ENTERED BY	G. RIMANDO
CHECKED BY	J. ZIGWEID
PROJ. ENGR.	E. PAO
REGIONAL ADM.	

PRELIMINARY
NOT FOR CONSTRUCTION

REVISION | DATE | BY

REGION NO. 10 | STATE WASH | FED.AID PROJ.NO.
JOB NUMBER
CONTRACT NO. | LOCATION NO. XL-5464

P.E. STAMP BOX DATE
P.E. STAMP BOX DATE

Washington State Department of Transportation
GRAHAM
WSP
1001 Fourth Ave, Suite 3100, Seattle, WA 98154
Tel: (206) 382-5200

I-405
NE 132ND STREET INTERCHANGE PROJECT

DRAINAGE PLAN

PLAN REF NO **DR02**
SHEET OF SHEETS

T.26N. R.5E. W.M.

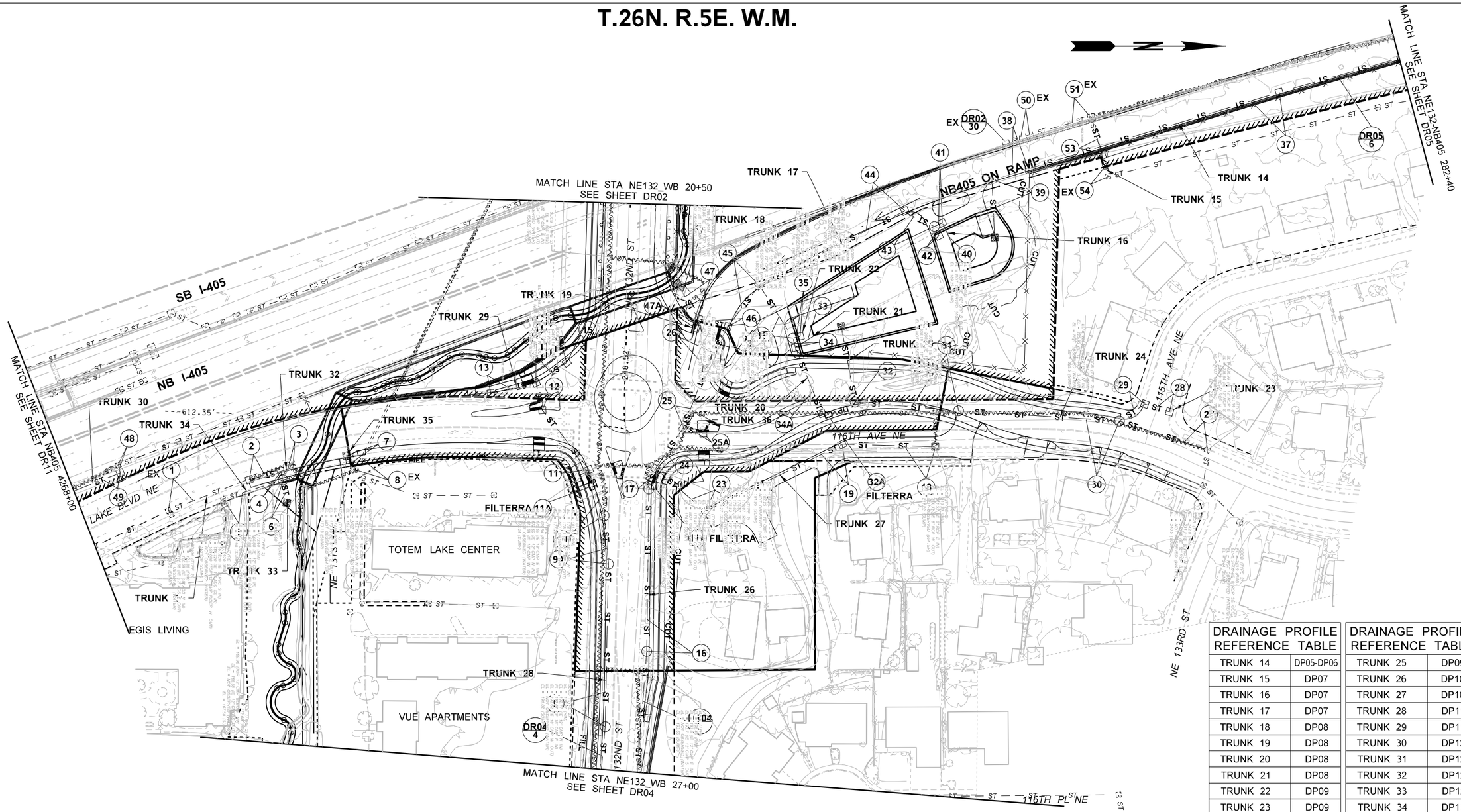

DRAINAGE PROFILE REFERENCE TABLE	
TRUNK 14	DP05-DP06
TRUNK 15	DP07
TRUNK 16	DP07
TRUNK 17	DP07
TRUNK 18	DP08
TRUNK 19	DP08
TRUNK 20	DP08
TRUNK 21	DP08
TRUNK 22	DP09
TRUNK 23	DP09
TRUNK 24	DP09

DRAINAGE PROFILE REFERENCE TABLE	
TRUNK 25	DP09
TRUNK 26	DP10
TRUNK 27	DP10
TRUNK 28	DP11
TRUNK 29	DP11
TRUNK 30	DP12
TRUNK 31	DP12
TRUNK 32	DP12
TRUNK 33	DP12
TRUNK 34	DP13
TRUNK 35	DP13
TRUNK 36	DP13

NOTES:

1. SEE SITE PREP PLANS FOR EXISTING DRAINAGE REMOVAL AND ABANDONMENTS. SEE ALIGNMENT AND ROW PLANS FOR ROADWAY ALIGNMENTS. SEE UTILITY PLANS FOR EXISTING UTILITIES AND UTILITY RELOCATIONS.

FILE NAME	XL5464_PS_DR_03.dgn
TIME	1:51:54 AM
DATE	1/8/2022
PLOTTED BY	wsppw14ics02$
DESIGNED BY	T. HOTINGER
ENTERED BY	G. RIMANDO
CHECKED BY	J. ZIGWEID
PROJ. ENGR.	E. PAO
REGIONAL ADM.	

PRELIMINARY
NOT FOR CONSTRUCTION

REVISION | DATE | BY

REGION NO. 10 | STATE WASH | FED.AID PROJ.NO.
JOB NUMBER
CONTRACT NO. | LOCATION NO. XL-5464

P.E. STAMP BOX DATE
P.E. STAMP BOX DATE

Washington State Department of Transportation
GRAHAM
WSP
1001 Fourth Ave, Suite 3100, Seattle, WA 98154
Tel: (206) 382-5200

I-405
NE 132ND STREET INTERCHANGE PROJECT

DRAINAGE PLAN

PLAN REF NO **DR03**
SHEET
OF
SHEETS

T.26N. R.5E. W.M.

NOTES:

1. SEE SITE PREP PLANS FOR EXISTING DRAINAGE REMOVAL AND ABANDONMENTS. SEE ALIGNMENT AND ROW PLANS FOR ROADWAY ALIGNMENTS. SEE UTILITY PLANS FOR EXISTING UTILITIES AND UTILITY RELOCATIONS.

DRAINAGE PROFILE REFERENCE TABLE	
TRUNK 26	DP10
TRUNK 28	DP11

0 50 100
SCALE IN FEET

FILE NAME	XL5464_PS_DR_04.dgn
TIME	1:51:31 AM
DATE	1/8/2022
PLOTTED BY	wsppw14ics02$
DESIGNED BY	T. HOTINGER
ENTERED BY	G. RIMANDO
CHECKED BY	J. ZIGWEID
PROJ. ENGR.	E. PAO
REGIONAL ADM.	

PRELIMINARY
NOT FOR CONSTRUCTION

REVISION | DATE | BY

REGION NO.	STATE	FED.AID PROJ.NO.
10	WASH	
JOB NUMBER		
CONTRACT NO.		LOCATION NO. XL-5464

P.E. STAMP BOX DATE

P.E. STAMP BOX DATE

Washington State Department of Transportation
GRAHAM
WSP
1001 Fourth Ave, Suite 3100, Seattle, WA 98154
Tel: (206) 382-5200

I-405
NE 132ND STREET INTERCHANGE PROJECT

DRAINAGE PLAN

PLAN REF NO
DR04
SHEET
OF
SHEETS

T.26N. R.5E. W.M.

NOTES:

1. SEE SITE PREP PLANS FOR EXISTING DRAINAGE REMOVAL AND ABANDONMENTS. SEE ALIGNMENT AND ROW PLANS FOR ROADWAY ALIGNMENTS. SEE UTILITY PLANS FOR EXISTING UTILITIES AND UTILITY RELOCATIONS.

DRAINAGE PROFILE REFERENCE TABLE	
TRUNK 14	DP05-DP06

FILE NAME	XL5464_PS_DR_05.dgn
TIME	1:51:32 AM
DATE	1/8/2022
PLOTTED BY	wsppw14ics02$
DESIGNED BY	T. HOTINGER
ENTERED BY	G. RIMANDO
CHECKED BY	J. ZIGWEID
PROJ. ENGR.	E. PAO
REGIONAL ADM.	

PRELIMINARY
NOT FOR CONSTRUCTION

REVISION	DATE	BY

REGION NO.	STATE	FED.AID PROJ.NO.
10	WASH	
JOB NUMBER		
CONTRACT NO.		LOCATION NO. XL-5464

P.E. STAMP BOX — DATE

P.E. STAMP BOX — DATE

Washington State Department of Transportation
GRAHAM
WSP
1001 Fourth Ave, Suite 3100, Seattle, WA 98154
Tel: (206) 382-5200

I-405
NE 132ND STREET INTERCHANGE PROJECT

DRAINAGE PLAN

PLAN REF NO **DR05**

SHEET OF SHEETS

T.26N. R.5E. W.M.

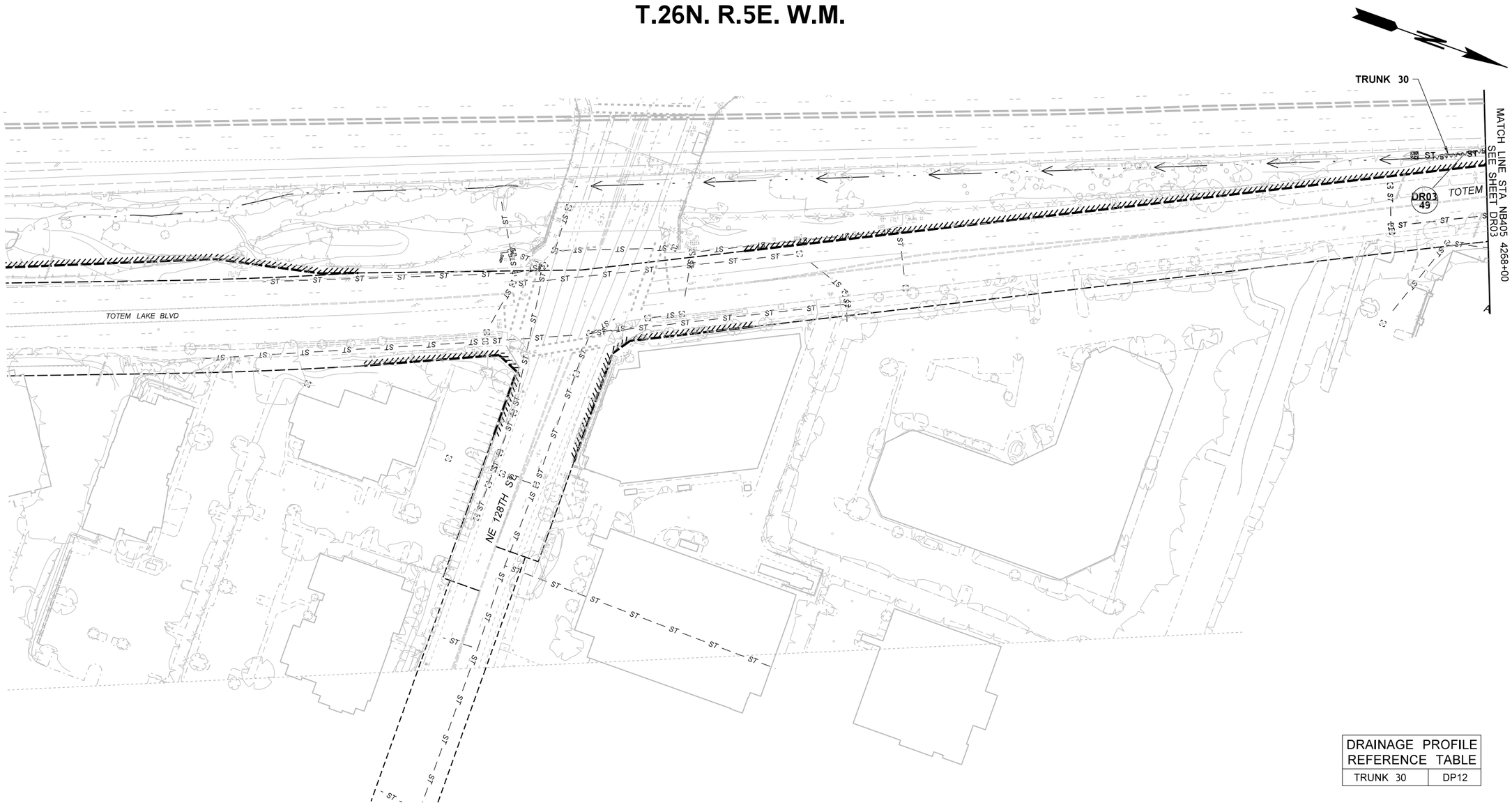

DRAINAGE PROFILE REFERENCE TABLE	
TRUNK 30	DP12

NOTES:

1. SEE SITE PREP PLANS FOR EXISTING DRAINAGE REMOVAL AND ABANDONMENTS. SEE ALIGNMENT AND ROW PLANS FOR ROADWAY ALIGNMENTS. SEE UTILITY PLANS FOR EXISTING UTILITIES AND UTILITY RELOCATIONS.

0 50 100
SCALE IN FEET

FILE NAME	XL5464_PS_DR_11.dgn
TIME	1:51:42 AM
DATE	1/8/2022
PLOTTED BY	wsppw14ics02$
DESIGNED BY	T. HOTINGER
ENTERED BY	G. RIMANDO
CHECKED BY	J. ZIGWEID
PROJ. ENGR.	E. PAO
REGIONAL ADM.	

PRELIMINARY
NOT FOR CONSTRUCTION

REVISION	DATE	BY

REGION NO.	STATE	FED.AID PROJ.NO.
10	WASH	
JOB NUMBER		
CONTRACT NO.		LOCATION NO. XL-5464

P.E. STAMP BOX DATE

P.E. STAMP BOX DATE

Washington State Department of Transportation
GRAHAM
WSP
1001 Fourth Ave, Suite 3100, Seattle, WA 98154
Tel: (206) 382-5200

I-405
NE 132ND STREET INTERCHANGE PROJECT

DRAINAGE PLAN

PLAN REF NO
DR11
SHEET
OF
SHEETS

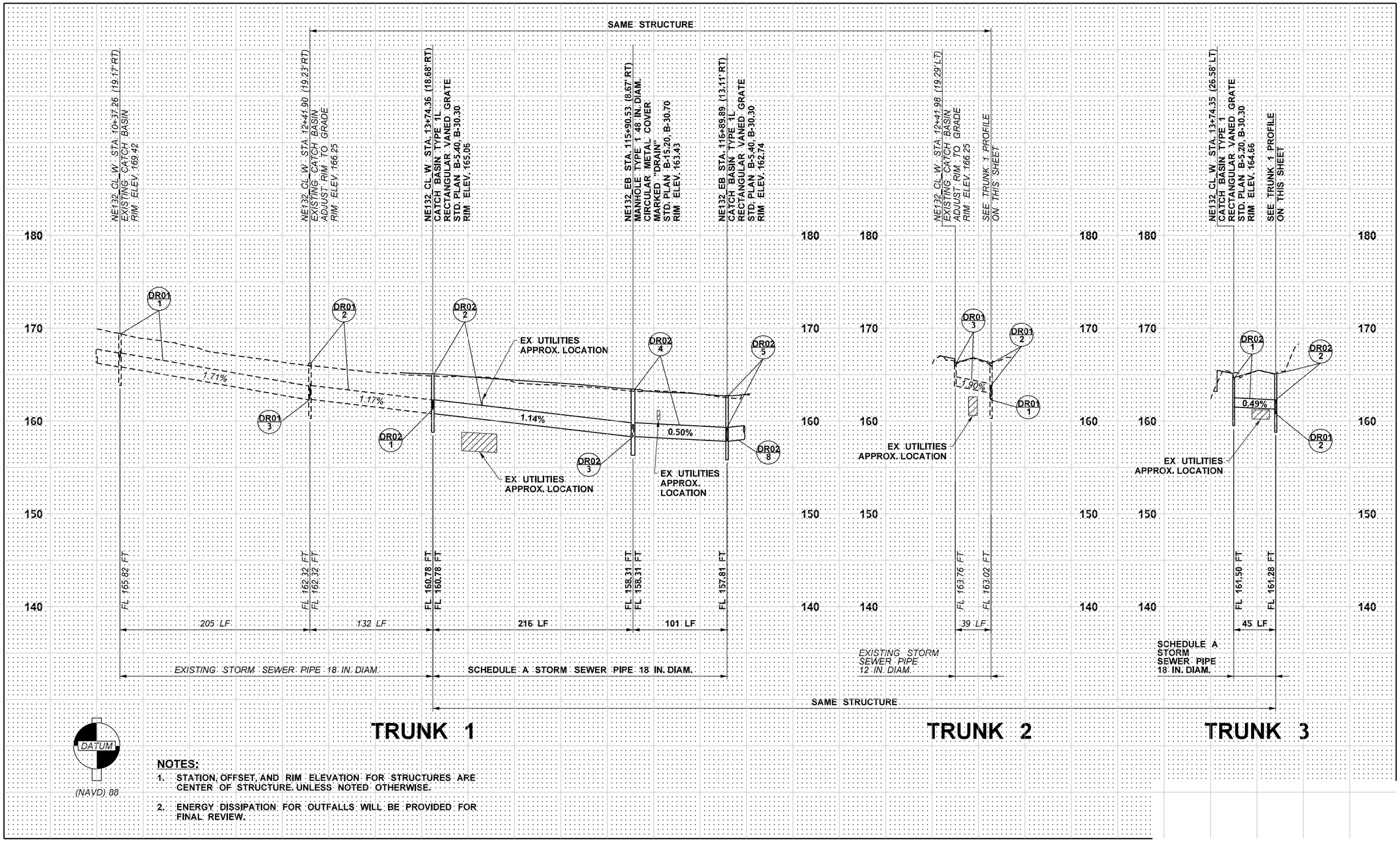

NOTES:

1. STATION, OFFSET, AND RIM ELEVATION FOR STRUCTURES ARE CENTER OF STRUCTURE. UNLESS NOTED OTHERWISE.
2. ENERGY DISSIPATION FOR OUTFALLS WILL BE PROVIDED FOR FINAL REVIEW.

FILE NAME	XL5464_PS_DP_01.dgn
TIME	1:51:54 AM
DATE	1/8/2022
PLOTTED BY	wsppw14ics02$
DESIGNED BY	T. HOTINGER
ENTERED BY	G. RIMANDO
CHECKED BY	J. ZIGWEID
PROJ. ENGR.	E. PAO
REGIONAL ADM.	

PRELIMINARY
NOT FOR CONSTRUCTION

REVISION	DATE	BY

REGION NO.	STATE	FED.AID PROJ.NO.
10	WASH	
JOB NUMBER		
CONTRACT NO.		LOCATION NO. XL-5464

P.E. STAMP BOX DATE

P.E. STAMP BOX DATE

Washington State Department of Transportation
GRAHAM
WSP
1001 Fourth Ave, Suite 3100, Seattle, WA 98154
Tel: (206) 382-5200

I-405
NE 132ND STREET INTERCHANGE PROJECT

DRAINAGE PROFILES

PLAN REF NO DP01
SHEET
OF
SHEETS

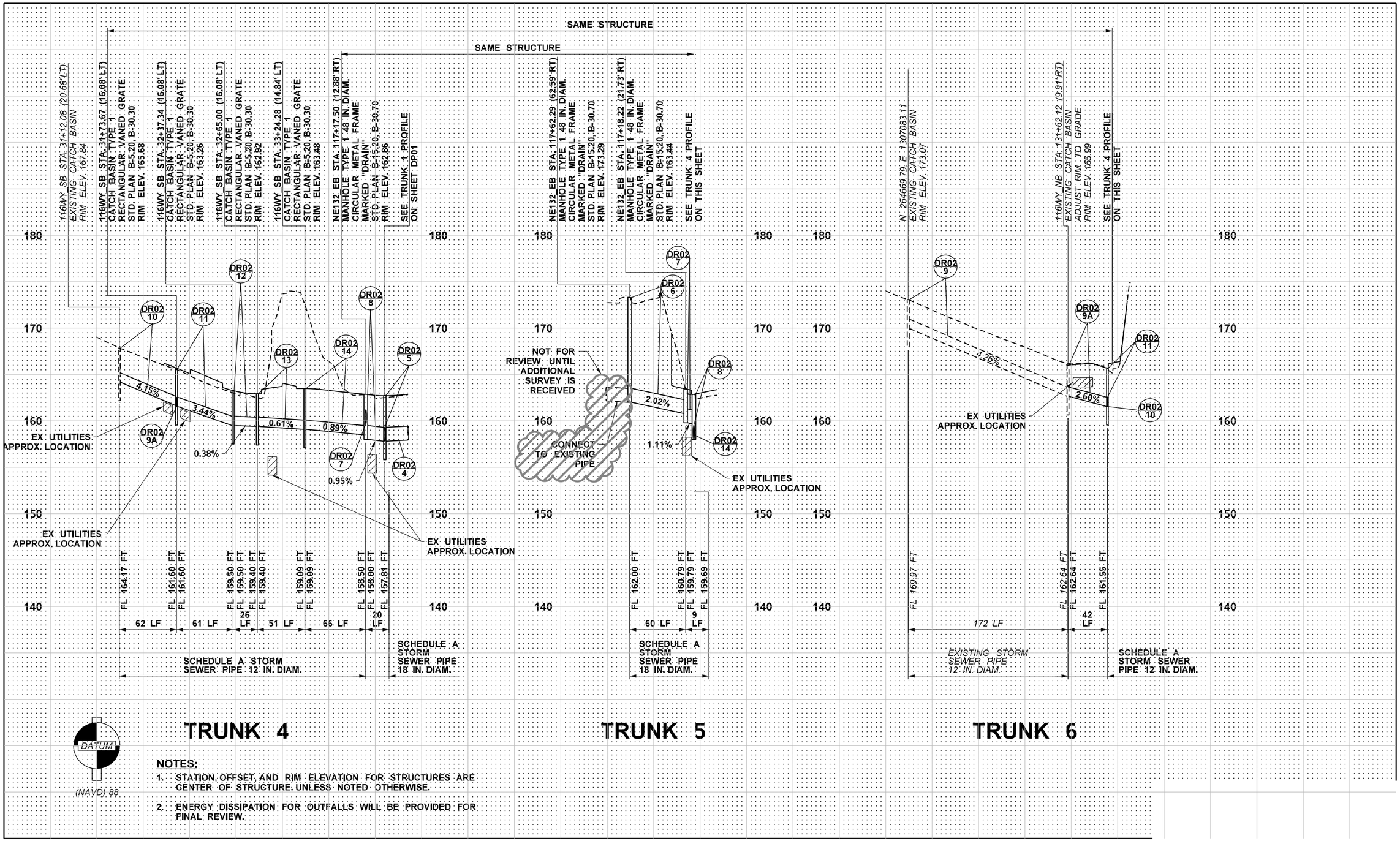

NOTES:

1. STATION, OFFSET, AND RIM ELEVATION FOR STRUCTURES ARE CENTER OF STRUCTURE. UNLESS NOTED OTHERWISE.
2. ENERGY DISSIPATION FOR OUTFALLS WILL BE PROVIDED FOR FINAL REVIEW.

FILE NAME	XL5464_PS_DP_02.dgn
TIME	1:52:00 AM
DATE	1/8/2022
PLOTTED BY	wsppw14ics02$
DESIGNED BY	T. HOTINGER
ENTERED BY	G. RIMANDO
CHECKED BY	J. ZIGWEID
PROJ. ENGR.	E. PAO
REGIONAL ADM.	

PRELIMINARY
NOT FOR CONSTRUCTION

REVISION	DATE	BY

REGION NO.	STATE	FED.AID PROJ.NO.
10	WASH	
JOB NUMBER		
CONTRACT NO.		LOCATION NO. XL-5464

P.E. STAMP BOX DATE

P.E. STAMP BOX DATE

Washington State Department of Transportation
GRAHAM
WSP
1001 Fourth Ave, Suite 3100, Seattle, WA 98154
Tel: (206) 382-5200

I-405
NE 132ND STREET INTERCHANGE PROJECT

DRAINAGE PROFILES

PLAN REF NO DP02

SHEET OF SHEETS

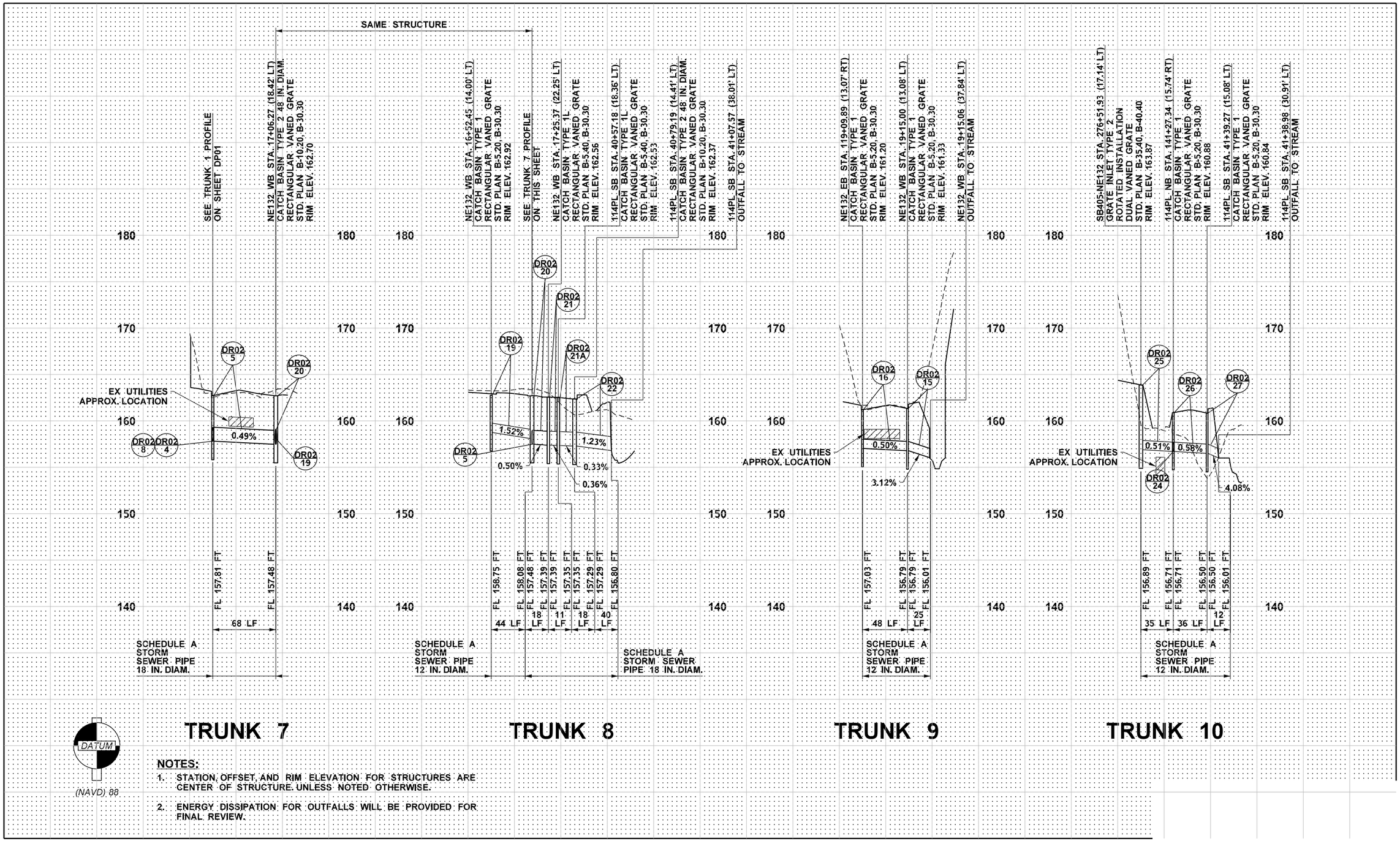

NOTES:

1. STATION, OFFSET, AND RIM ELEVATION FOR STRUCTURES ARE CENTER OF STRUCTURE. UNLESS NOTED OTHERWISE.
2. ENERGY DISSIPATION FOR OUTFALLS WILL BE PROVIDED FOR FINAL REVIEW.

FILE NAME	XL5464_PS_DP_03.dgn
TIME	1:52:02 AM
DATE	1/8/2022
PLOTTED BY	wsppw14ics02$
DESIGNED BY	T. HOTINGER
ENTERED BY	G. RIMANDO
CHECKED BY	J. ZIGWEID
PROJ. ENGR.	E. PAO
REGIONAL ADM.	

PRELIMINARY
NOT FOR CONSTRUCTION

REVISION	DATE	BY

REGION NO.	STATE	FED.AID PROJ.NO.
10	WASH	
JOB NUMBER		
CONTRACT NO.		LOCATION NO. XL-5464

P.E. STAMP BOX DATE

P.E. STAMP BOX DATE

Washington State Department of Transportation
GRAHAM
WSP
1001 Fourth Ave, Suite 3100, Seattle, WA 98154
Tel: (206) 382-5200

I-405
NE 132ND STREET INTERCHANGE PROJECT

DRAINAGE PROFILES

PLAN REF NO DP03

SHEET OF SHEETS

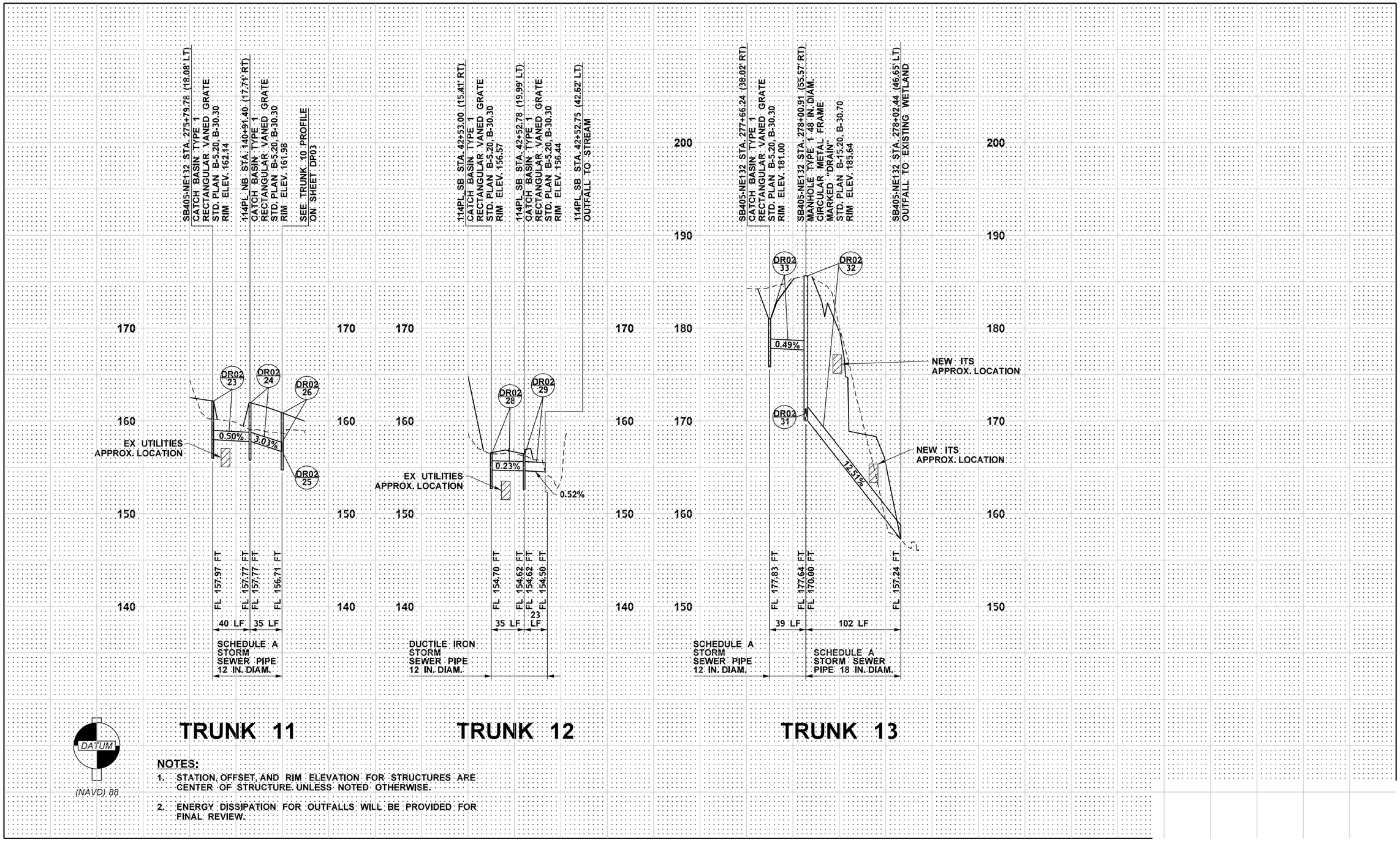

NOTES:

1. STATION, OFFSET, AND RIM ELEVATION FOR STRUCTURES ARE CENTER OF STRUCTURE. UNLESS NOTED OTHERWISE.
2. ENERGY DISSIPATION FOR OUTFALLS WILL BE PROVIDED FOR FINAL REVIEW.

FILE NAME	XL5464_PS_DP_04.dgn
TIME	1:52:02 AM
DATE	1/8/2022
PLOTTED BY	wsppw14ics02$
DESIGNED BY	T. HOTINGER
ENTERED BY	G. RIMANDO
CHECKED BY	J. ZIGWEID
PROJ. ENGR.	E. PAO
REGIONAL ADM.	

PRELIMINARY
NOT FOR CONSTRUCTION

REVISION | DATE | BY

REGION NO.	STATE	FED.AID PROJ.NO.
10	WASH	
JOB NUMBER		
CONTRACT NO.		LOCATION NO. XL-5464

P.E. STAMP BOX DATE

P.E. STAMP BOX DATE

Washington State Department of Transportation
GRAHAM
WSP
1001 Fourth Ave, Suite 3100, Seattle, WA 98154
Tel: (206) 382-5200

I-405
NE 132ND STREET INTERCHANGE PROJECT

DRAINAGE PROFILES

PLAN REF NO
DP04
SHEET
OF
SHEETS

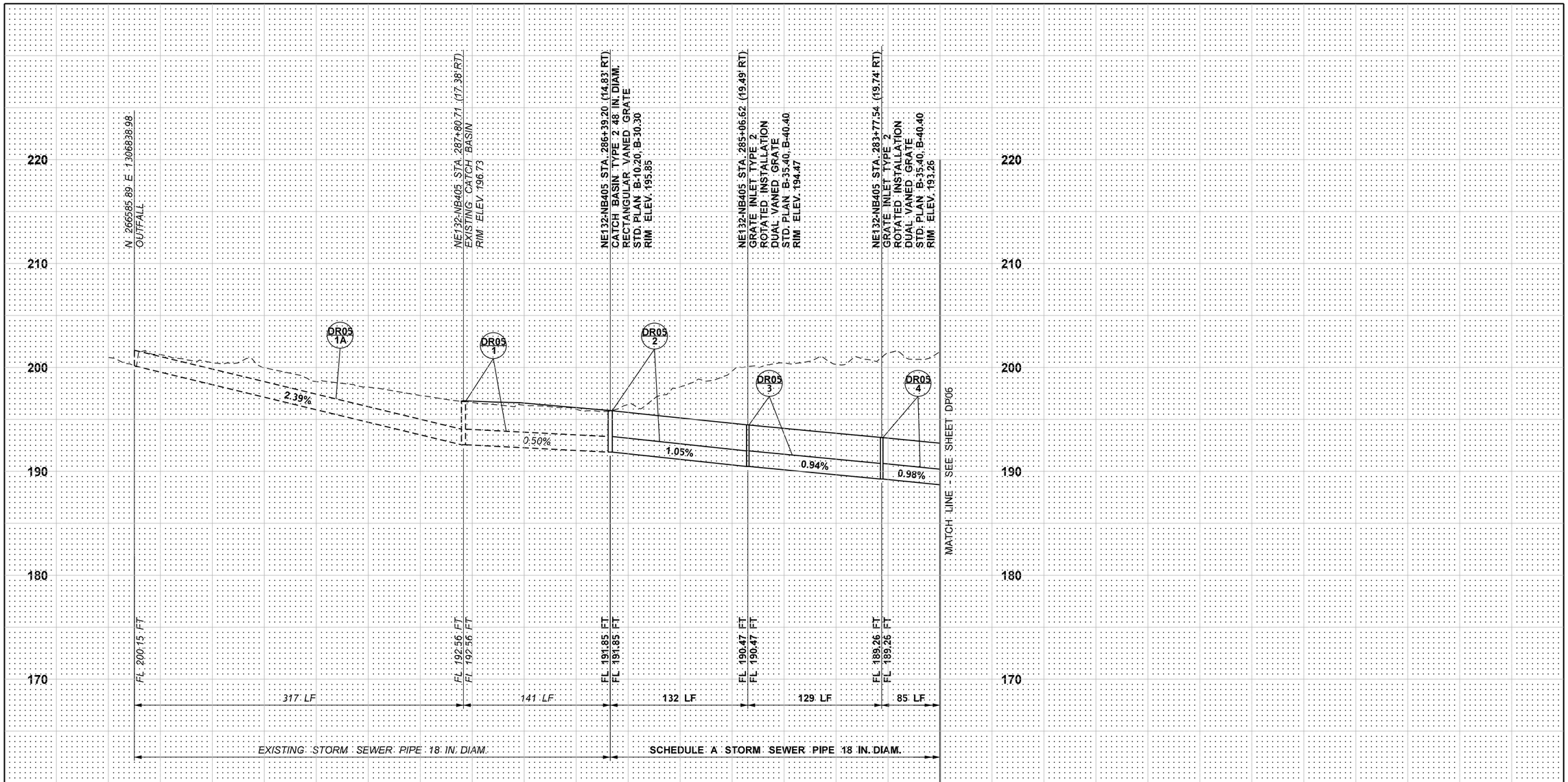

TRUNK 14

DATUM

(NAVD) 88

NOTES:

1. STATION, OFFSET, AND RIM ELEVATION FOR STRUCTURES ARE CENTER OF STRUCTURE. UNLESS NOTED OTHERWISE.
2. ENERGY DISSIPATION FOR OUTFALLS WILL BE PROVIDED FOR FINAL REVIEW.

FILE NAME	XL5464_PS_DP_05.dgn
TIME	1:51:56 AM
DATE	1/8/2022
PLOTTED BY	wsppw14ics02$
DESIGNED BY	T. HOTINGER
ENTERED BY	G. RIMANDO
CHECKED BY	J. ZIGWEID
PROJ. ENGR.	E. PAO
REGIONAL ADM.	

PRELIMINARY
NOT FOR CONSTRUCTION

REVISION	DATE	BY

REGION NO.	STATE	FED.AID PROJ.NO.
10	WASH	
JOB NUMBER		
CONTRACT NO.		LOCATION NO. XL-5464

P.E. STAMP BOX DATE

P.E. STAMP BOX DATE

Washington State Department of Transportation
GRAHAM
WSP
1001 Fourth Ave, Suite 3100, Seattle, WA 98154
Tel: (206) 382-5200

I-405
NE 132ND STREET INTERCHANGE PROJECT

DRAINAGE PROFILES

PLAN REF NO DP05

SHEET OF SHEETS

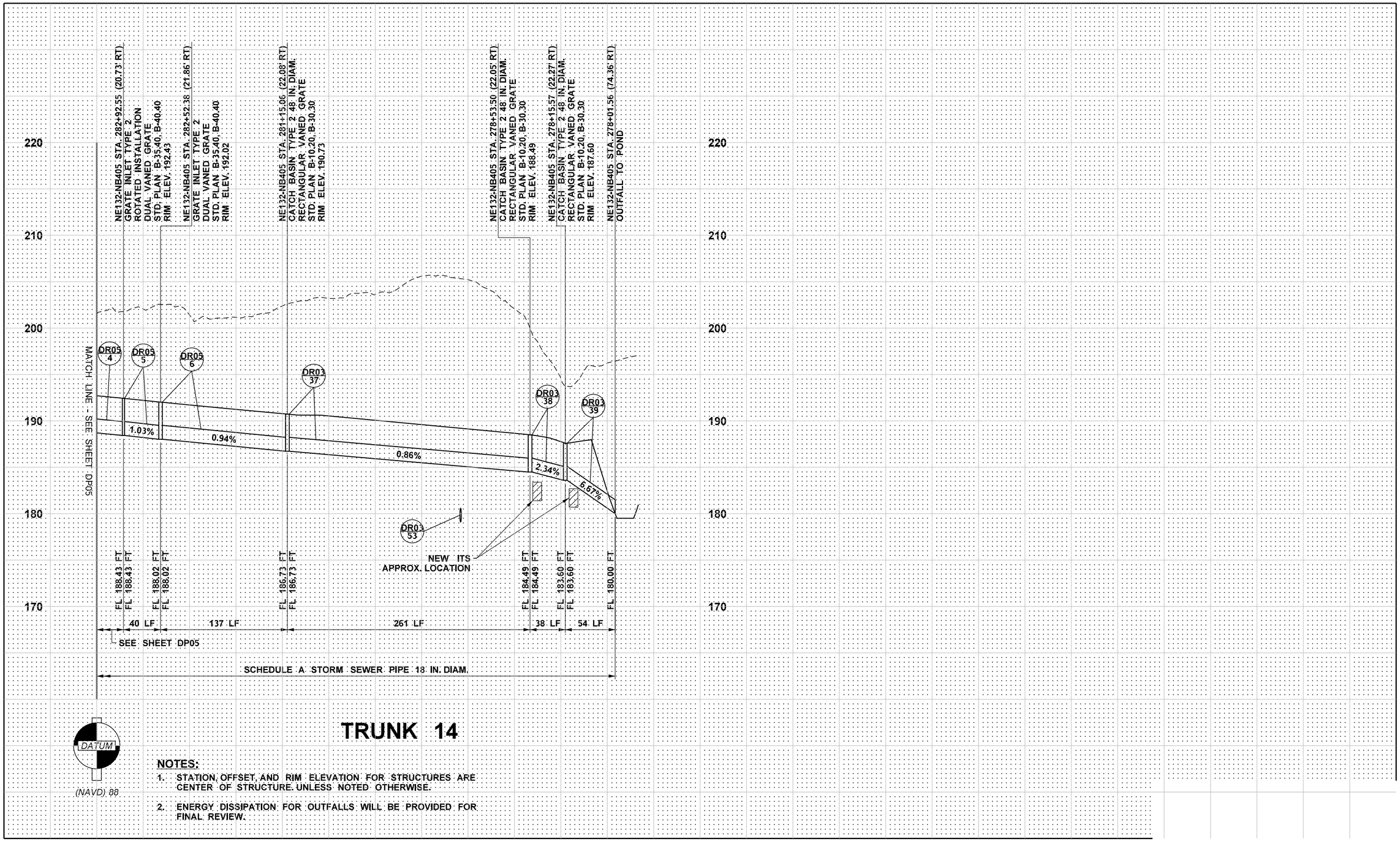

TRUNK 14

NOTES:

1. STATION, OFFSET, AND RIM ELEVATION FOR STRUCTURES ARE CENTER OF STRUCTURE. UNLESS NOTED OTHERWISE.
2. ENERGY DISSIPATION FOR OUTFALLS WILL BE PROVIDED FOR FINAL REVIEW.

FILE NAME	XL5464_PS_DP_06.dgn
TIME	1:51:59 AM
DATE	1/8/2022
PLOTTED BY	wsppw14ics02$
DESIGNED BY	T. HOTINGER
ENTERED BY	G. RIMANDO
CHECKED BY	J. ZIGWEID
PROJ. ENGR.	E. PAO
REGIONAL ADM.	

PRELIMINARY
NOT FOR CONSTRUCTION

REVISION	DATE	BY

REGION NO.	STATE	FED.AID PROJ.NO.
10	WASH	
JOB NUMBER		
CONTRACT NO.		LOCATION NO. XL-5464

P.E. STAMP BOX DATE

P.E. STAMP BOX DATE

Washington State Department of Transportation
GRAHAM
WSP
1001 Fourth Ave, Suite 3100, Seattle, WA 98154
Tel: (206) 382-5200

I-405
NE 132ND STREET INTERCHANGE PROJECT

DRAINAGE PROFILES

PLAN REF NO
DP06
SHEET
OF
SHEETS

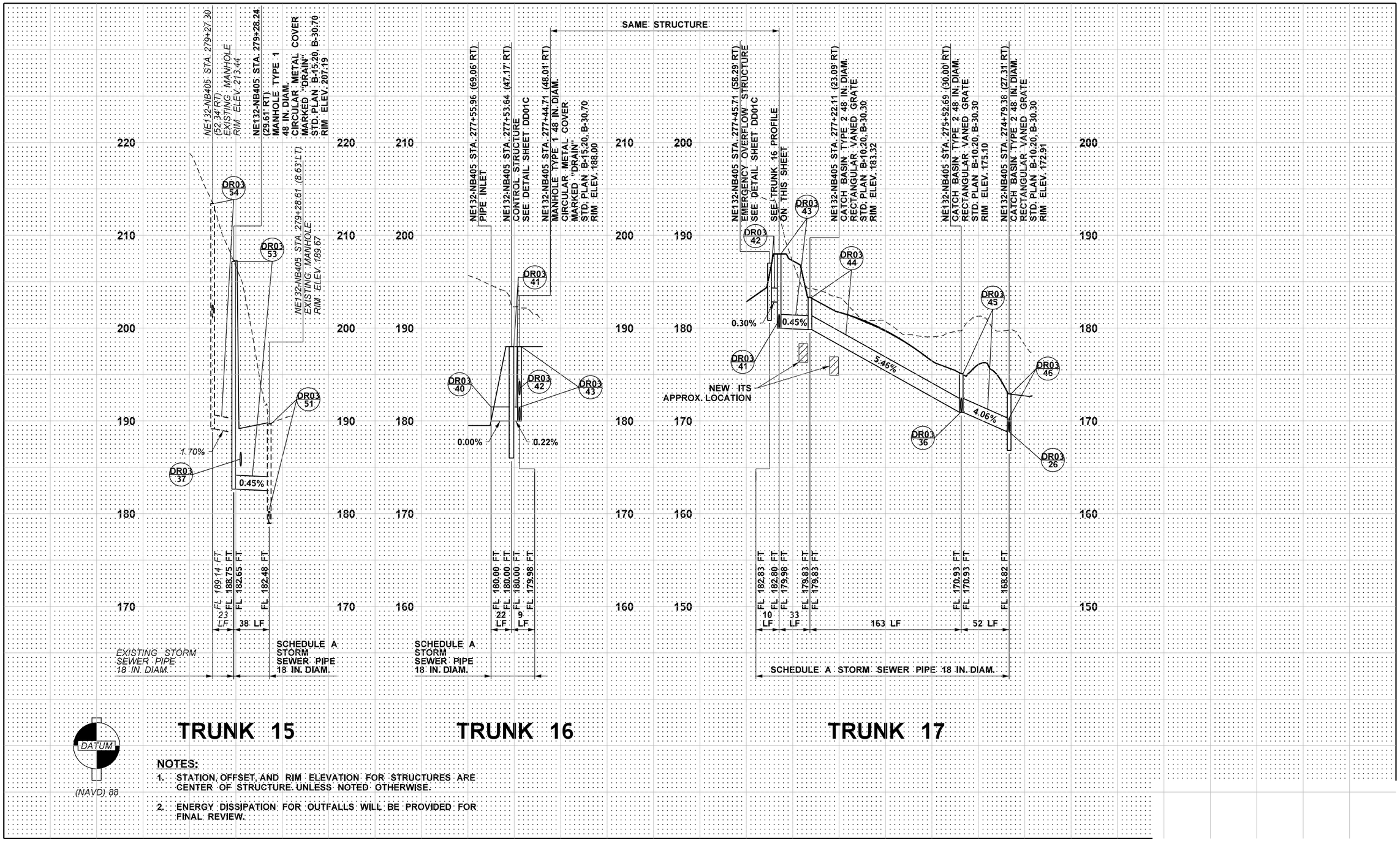

NOTES:

1. STATION, OFFSET, AND RIM ELEVATION FOR STRUCTURES ARE CENTER OF STRUCTURE. UNLESS NOTED OTHERWISE.
2. ENERGY DISSIPATION FOR OUTFALLS WILL BE PROVIDED FOR FINAL REVIEW.

FILE NAME	XL5464_PS_DP_07.dgn
TIME	1:51:31 AM
DATE	1/8/2022
PLOTTED BY	wsppw14ics02$
DESIGNED BY	T. HOTINGER
ENTERED BY	G. RIMANDO
CHECKED BY	J. ZIGWEID
PROJ. ENGR.	E. PAO
REGIONAL ADM.	

PRELIMINARY
NOT FOR CONSTRUCTION

REVISION	DATE	BY

REGION NO.	STATE	FED.AID PROJ.NO.
10	WASH	
JOB NUMBER		
CONTRACT NO.		LOCATION NO. XL-5464

P.E. STAMP BOX DATE

P.E. STAMP BOX DATE

Washington State Department of Transportation
GRAHAM
WSP
1001 Fourth Ave, Suite 3100, Seattle, WA 98154
Tel: (206) 382-5200

I-405
NE 132ND STREET INTERCHANGE PROJECT

DRAINAGE PROFILES

PLAN REF NO DP07

SHEET OF SHEETS

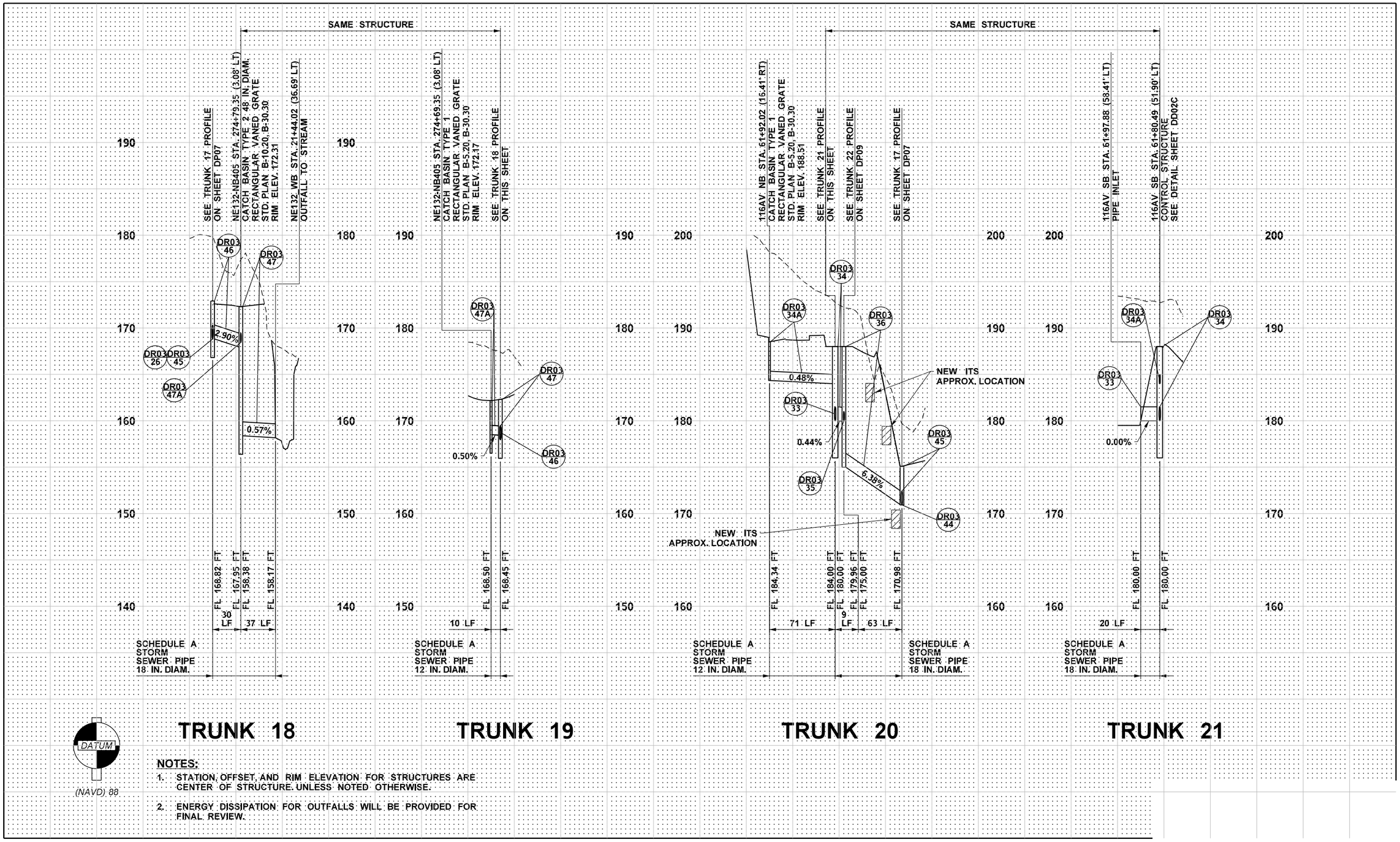

NOTES:

1. STATION, OFFSET, AND RIM ELEVATION FOR STRUCTURES ARE CENTER OF STRUCTURE. UNLESS NOTED OTHERWISE.
2. ENERGY DISSIPATION FOR OUTFALLS WILL BE PROVIDED FOR FINAL REVIEW.

FILE NAME	XL5464_PS_DP_08.dgn
TIME	1:51:30 AM
DATE	1/8/2022
PLOTTED BY	wsppw14ics02$
DESIGNED BY	T. HOTINGER
ENTERED BY	G. RIMANDO
CHECKED BY	J. ZIGWEID
PROJ. ENGR.	E. PAO
REGIONAL ADM.	

PRELIMINARY
NOT FOR CONSTRUCTION

REVISION | DATE | BY

REGION NO.	STATE	FED.AID PROJ.NO.
10	WASH	
JOB NUMBER		
CONTRACT NO.		LOCATION NO. XL-5464

P.E. STAMP BOX DATE

P.E. STAMP BOX DATE

Washington State Department of Transportation
GRAHAM
WSP
1001 Fourth Ave, Suite 3100, Seattle, WA 98154
Tel: (206) 382-5200

I-405
NE 132ND STREET INTERCHANGE PROJECT

DRAINAGE PROFILES

PLAN REF NO DP08

SHEET OF SHEETS

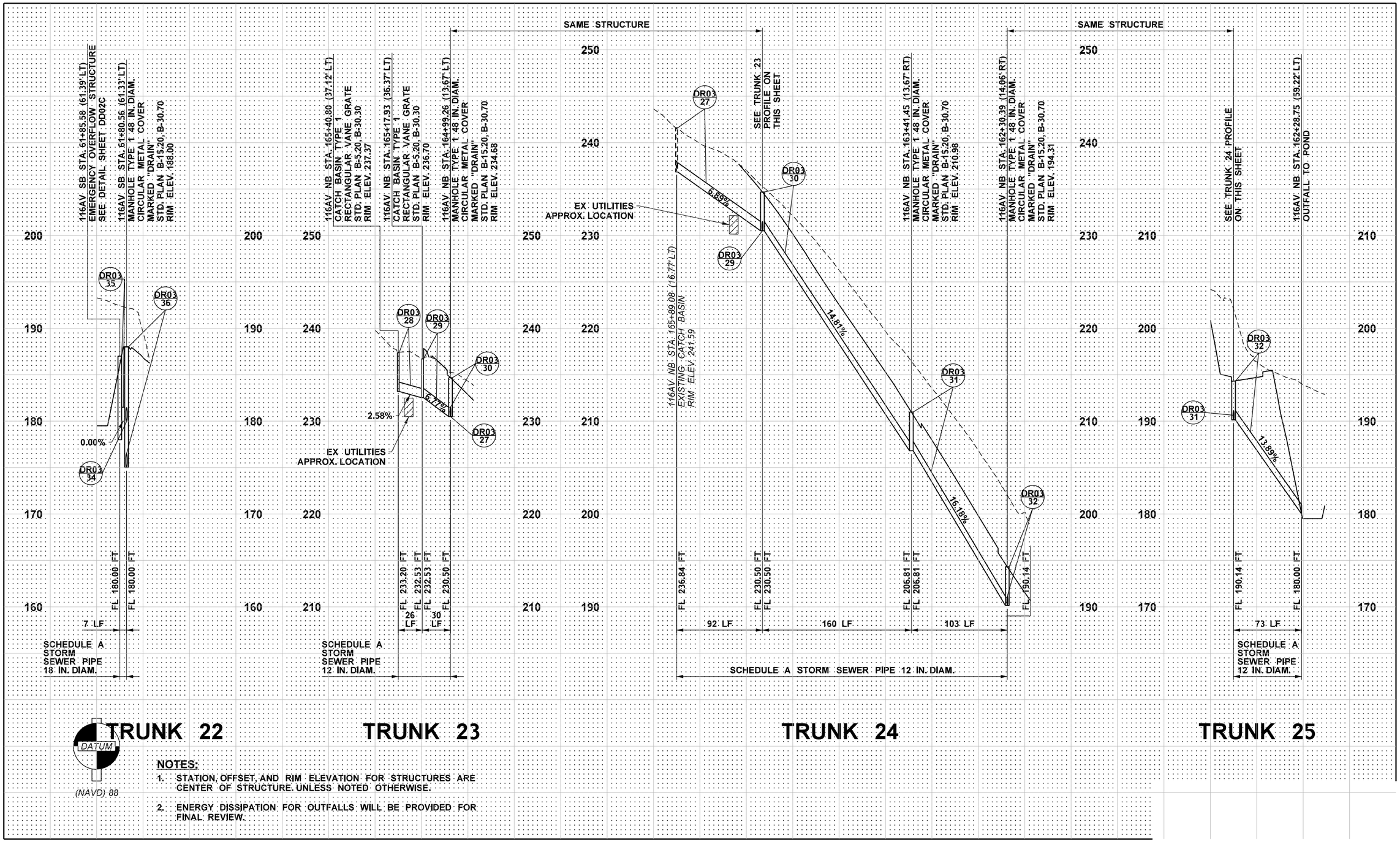

NOTES:

1. STATION, OFFSET, AND RIM ELEVATION FOR STRUCTURES ARE CENTER OF STRUCTURE. UNLESS NOTED OTHERWISE.
2. ENERGY DISSIPATION FOR OUTFALLS WILL BE PROVIDED FOR FINAL REVIEW.

FILE NAME	XL5464_PS_DP_09.dgn
TIME	1:52:08 AM
DATE	1/8/2022
PLOTTED BY	wsppw14ics02$
DESIGNED BY	T. HOTINGER
ENTERED BY	G. RIMANDO
CHECKED BY	J. ZIGWEID
PROJ. ENGR.	E. PAO
REGIONAL ADM.	

PRELIMINARY
NOT FOR CONSTRUCTION

REVISION	DATE	BY

REGION NO.	STATE	FED.AID PROJ.NO.
10	WASH	
JOB NUMBER		
CONTRACT NO.		LOCATION NO. XL-5464

P.E. STAMP BOX DATE

P.E. STAMP BOX DATE

Washington State Department of Transportation
GRAHAM
WSP
1001 Fourth Ave, Suite 3100, Seattle, WA 98154
Tel: (206) 382-5200

I-405
NE 132ND STREET INTERCHANGE PROJECT

DRAINAGE PROFILES

PLAN REF NO DP09

SHEET OF SHEETS

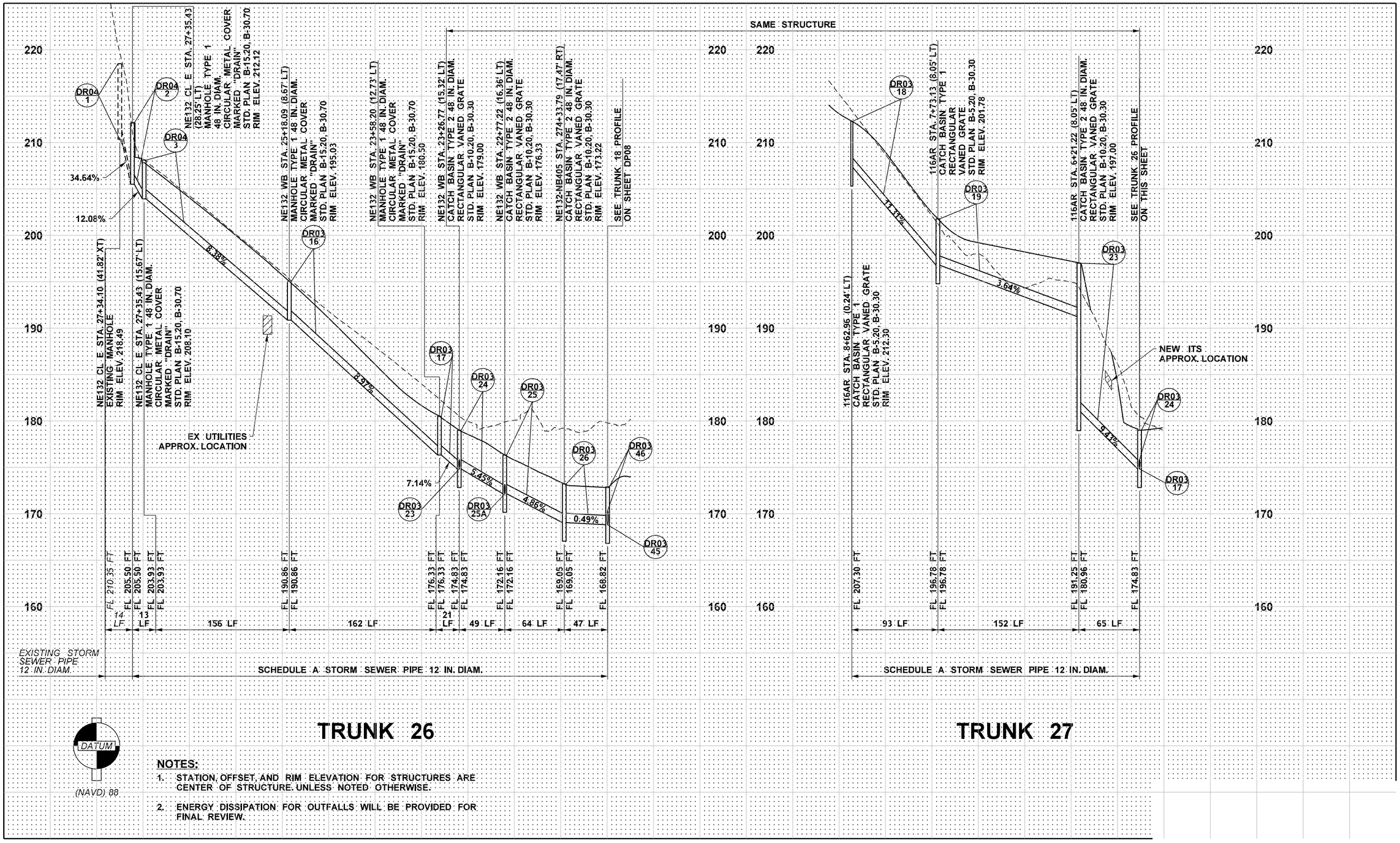

NOTES:

1. STATION, OFFSET, AND RIM ELEVATION FOR STRUCTURES ARE CENTER OF STRUCTURE. UNLESS NOTED OTHERWISE.
2. ENERGY DISSIPATION FOR OUTFALLS WILL BE PROVIDED FOR FINAL REVIEW.

FILE NAME	XL5464_PS_DP_10.dgn
TIME	1:52:14 AM
DATE	1/8/2022
PLOTTED BY	wsppw14ics02$
DESIGNED BY	T. HOTINGER
ENTERED BY	G. RIMANDO
CHECKED BY	J. ZIGWEID
PROJ. ENGR.	E. PAO
REGIONAL ADM.	

PRELIMINARY
NOT FOR CONSTRUCTION

REVISION	DATE	BY

REGION NO.	STATE	FED.AID PROJ.NO.
10	WASH	
JOB NUMBER		
CONTRACT NO.		LOCATION NO. XL-5464

P.E. STAMP BOX — DATE

P.E. STAMP BOX — DATE

Washington State Department of Transportation
GRAHAM
WSP
1001 Fourth Ave, Suite 3100, Seattle, WA 98154
Tel: (206) 382-5200

I-405
NE 132ND STREET INTERCHANGE PROJECT

DRAINAGE PROFILES

PLAN REF NO
DP10
SHEET
OF
SHEETS

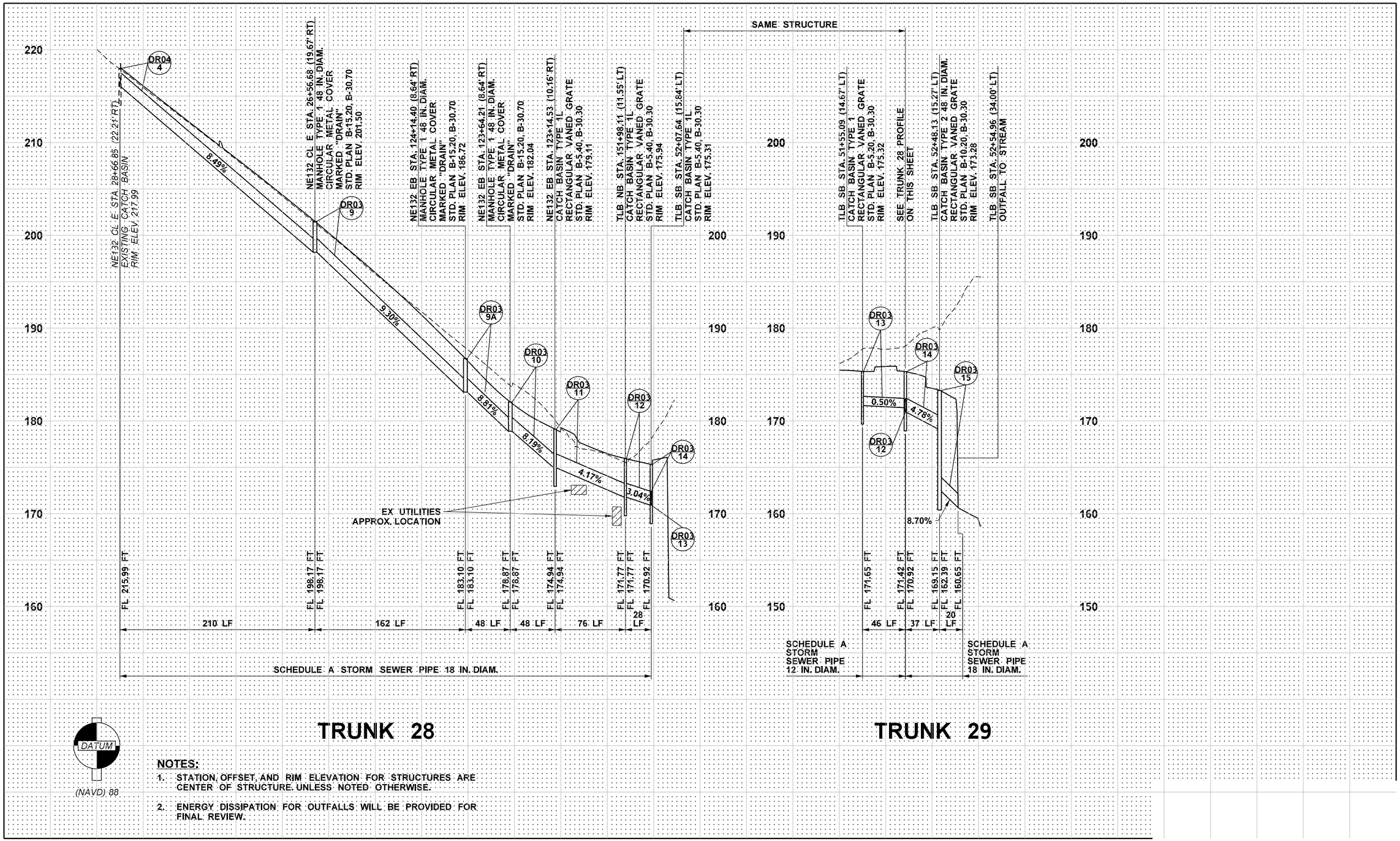

NOTES:

1. STATION, OFFSET, AND RIM ELEVATION FOR STRUCTURES ARE CENTER OF STRUCTURE. UNLESS NOTED OTHERWISE.
2. ENERGY DISSIPATION FOR OUTFALLS WILL BE PROVIDED FOR FINAL REVIEW.

FILE NAME	XL5464_PS_DP_11.dgn
TIME	1:52:17 AM
DATE	1/8/2022
PLOTTED BY	wsppw14ics02$
DESIGNED BY	T. HOTINGER
ENTERED BY	G. RIMANDO
CHECKED BY	J. ZIGWEID
PROJ. ENGR.	E. PAO
REGIONAL ADM.	

PRELIMINARY
NOT FOR CONSTRUCTION

REVISION	DATE	BY

REGION NO.	STATE	FED.AID PROJ.NO.
10	WASH	
JOB NUMBER		
CONTRACT NO.		LOCATION NO. XL-5464

P.E. STAMP BOX DATE

P.E. STAMP BOX DATE

Washington State Department of Transportation
GRAHAM
WSP
1001 Fourth Ave, Suite 3100, Seattle, WA 98154
Tel: (206) 382-5200

I-405
NE 132ND STREET INTERCHANGE PROJECT

DRAINAGE PROFILES

PLAN REF NO DP11
SHEET OF SHEETS

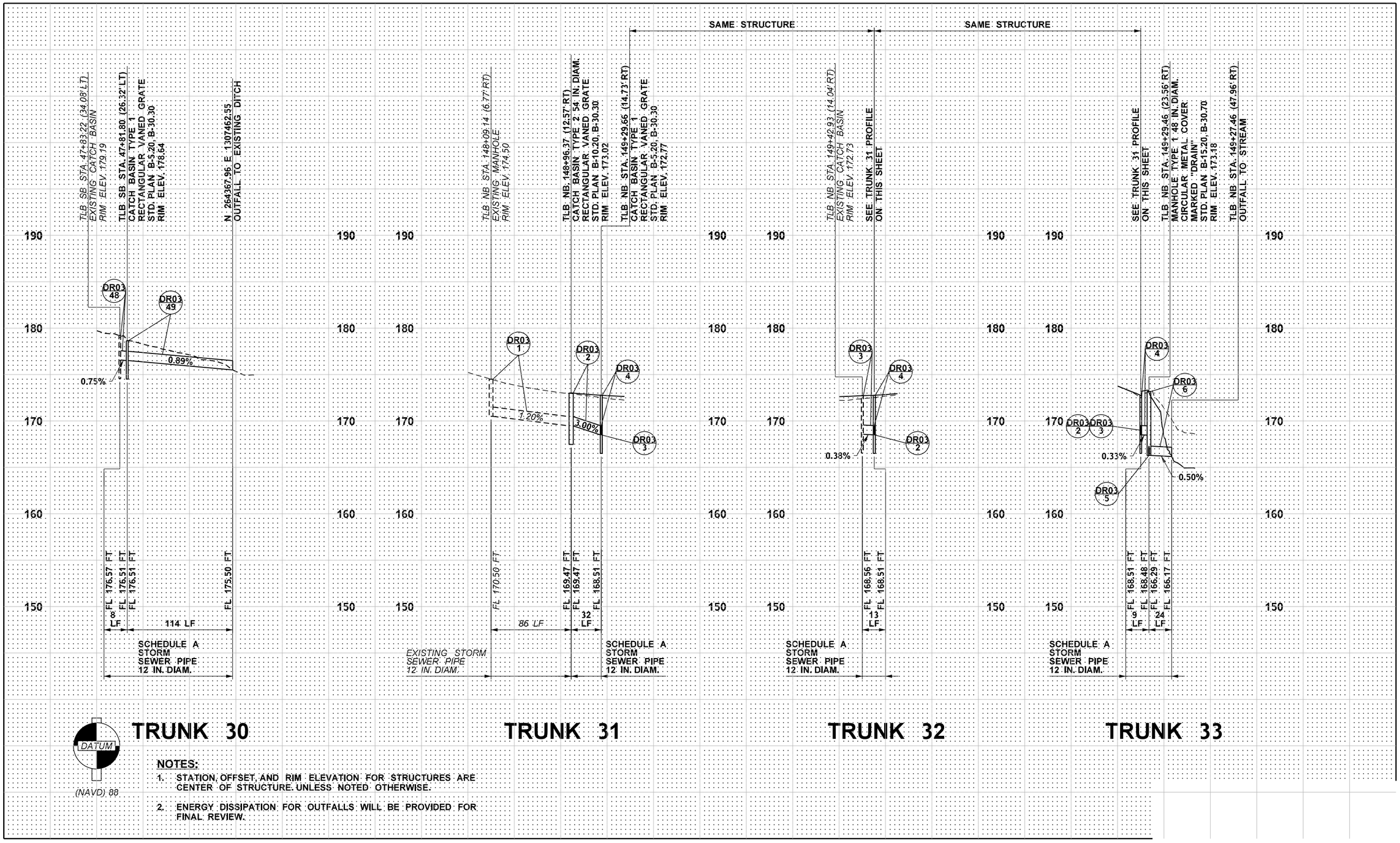

NOTES:

1. STATION, OFFSET, AND RIM ELEVATION FOR STRUCTURES ARE CENTER OF STRUCTURE. UNLESS NOTED OTHERWISE.
2. ENERGY DISSIPATION FOR OUTFALLS WILL BE PROVIDED FOR FINAL REVIEW.

FILE NAME	XL5464_PS_DP_12.dgn
TIME	1:52:17 AM
DATE	1/8/2022
PLOTTED BY	wsppw14ics02$
DESIGNED BY	T. HOTINGER
ENTERED BY	G. RIMANDO
CHECKED BY	J. ZIGWEID
PROJ. ENGR.	E. PAO
REGIONAL ADM.	

PRELIMINARY
NOT FOR CONSTRUCTION

REVISION	DATE	BY

REGION NO.	STATE	FED.AID PROJ.NO.
10	WASH	
JOB NUMBER		
CONTRACT NO.		LOCATION NO. XL-5464

P.E. STAMP BOX DATE

P.E. STAMP BOX DATE

Washington State Department of Transportation
GRAHAM
WSP
1001 Fourth Ave, Suite 3100, Seattle, WA 98154
Tel: (206) 382-5200

I-405
NE 132ND STREET INTERCHANGE PROJECT

DRAINAGE PROFILES

PLAN REF NO DP12
SHEET OF SHEETS

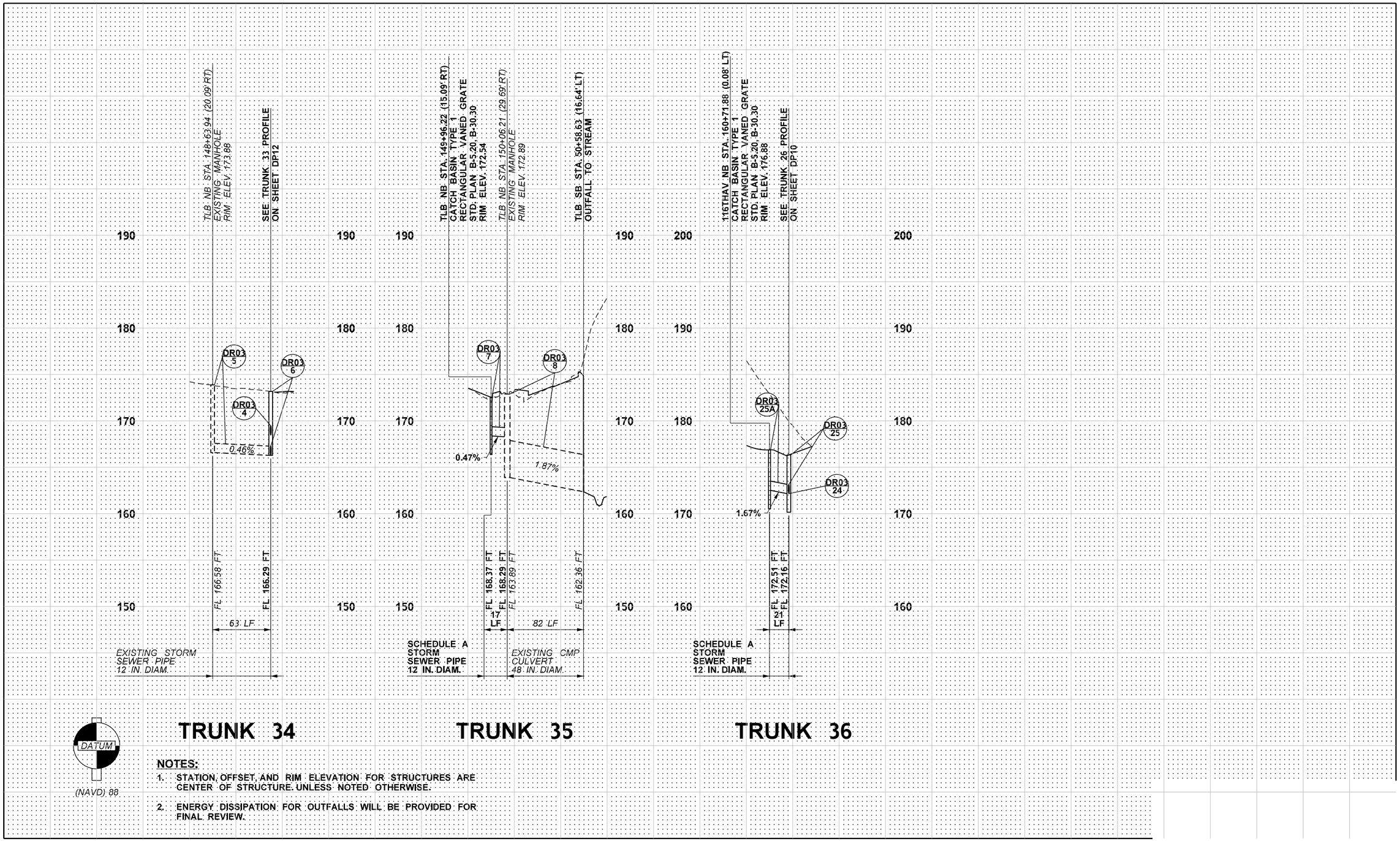

NOTES:

1. STATION, OFFSET, AND RIM ELEVATION FOR STRUCTURES ARE CENTER OF STRUCTURE. UNLESS NOTED OTHERWISE.
2. ENERGY DISSIPATION FOR OUTFALLS WILL BE PROVIDED FOR FINAL REVIEW.

FILE NAME	XL5464_PS_DP_13.dgn
TIME	1:51:18 AM
DATE	1/8/2022
PLOTTED BY	wsppw14ics02$
DESIGNED BY	T. HOTINGER
ENTERED BY	G. RIMANDO
CHECKED BY	J. ZIGWEID
PROJ. ENGR.	E. PAO
REGIONAL ADM.	

PRELIMINARY
NOT FOR CONSTRUCTION

REVISION	DATE	BY

REGION NO.	STATE	FED.AID PROJ.NO.
10	WASH	
JOB NUMBER		
CONTRACT NO.		LOCATION NO. XL-5464

P.E. STAMP BOX DATE

P.E. STAMP BOX DATE

Washington State Department of Transportation
GRAHAM
WSP
1001 Fourth Ave, Suite 3100, Seattle, WA 98154
Tel: (206) 382-5200

I-405
NE 132ND STREET INTERCHANGE PROJECT

DRAINAGE PROFILES

PLAN REF NO
DP13
SHEET
OF
SHEETS

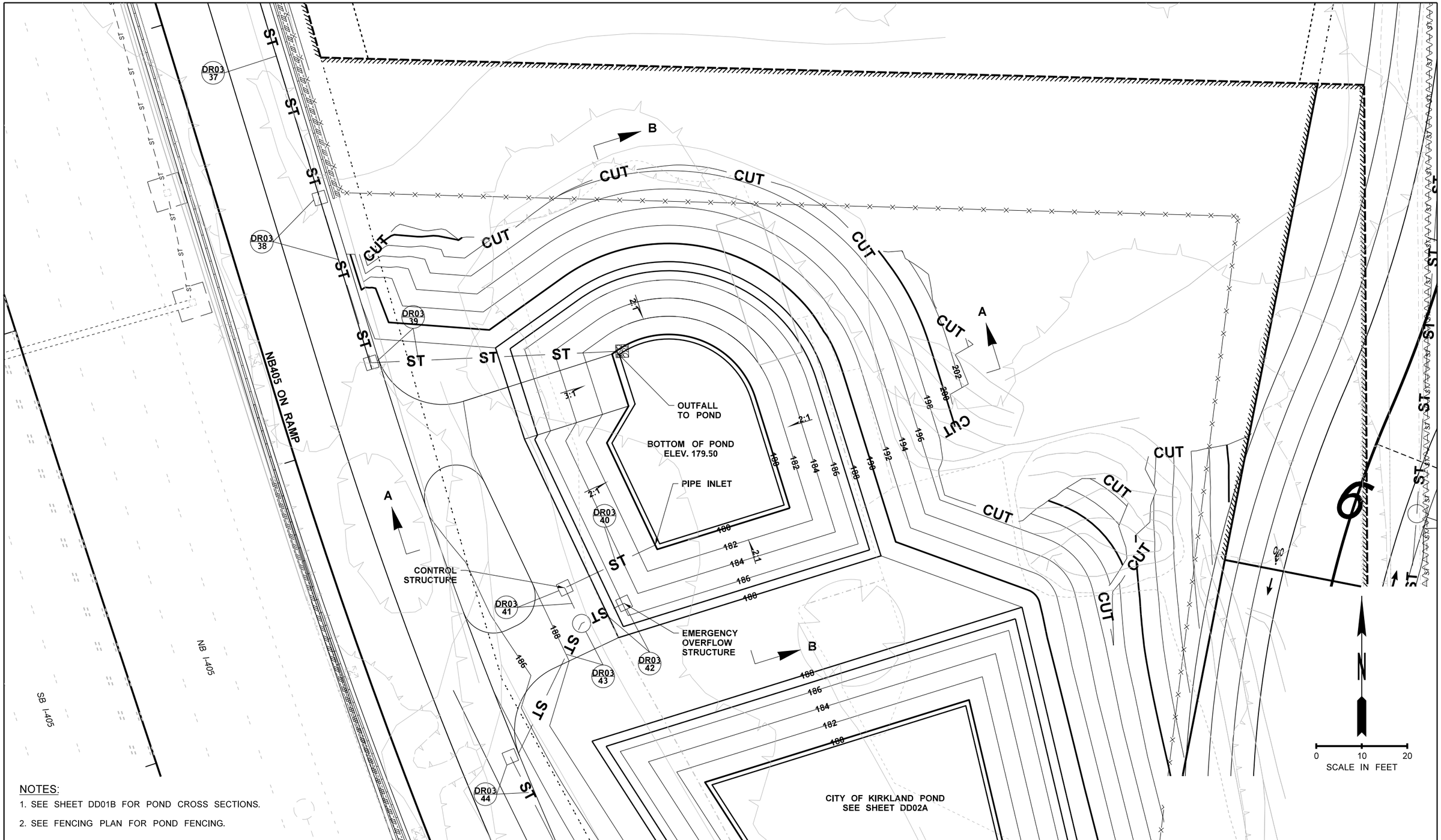

NOTES:

1. SEE SHEET DD01B FOR POND CROSS SECTIONS.
2. SEE FENCING PLAN FOR POND FENCING.

FILE NAME	XL5464_DE_DD_01A.dgn
TIME	1:51:50 AM
DATE	1/8/2022
PLOTTED BY	wsppw14ics02$
DESIGNED BY	T. HOTINGER
ENTERED BY	G. RIMANDO
CHECKED BY	J. ZIGWEID
PROJ. ENGR.	E. PAO
REGIONAL ADM.	

PRELIMINARY
NOT FOR CONSTRUCTION

REVISION	DATE	BY

REGION NO.	STATE	FED.AID PROJ.NO.
10	WASH	
JOB NUMBER		
CONTRACT NO.		LOCATION NO. XL-5464

P.E. STAMP BOX DATE

P.E. STAMP BOX DATE

Washington State Department of Transportation
GRAHAM
WSP
1001 Fourth Ave, Suite 3100, Seattle, WA 98154
Tel: (206) 382-5200

I-405
NE 132ND STREET INTERCHANGE PROJECT

POND DETAILS

PLAN REF NO
DD01A

SHEET
OF
SHEETS

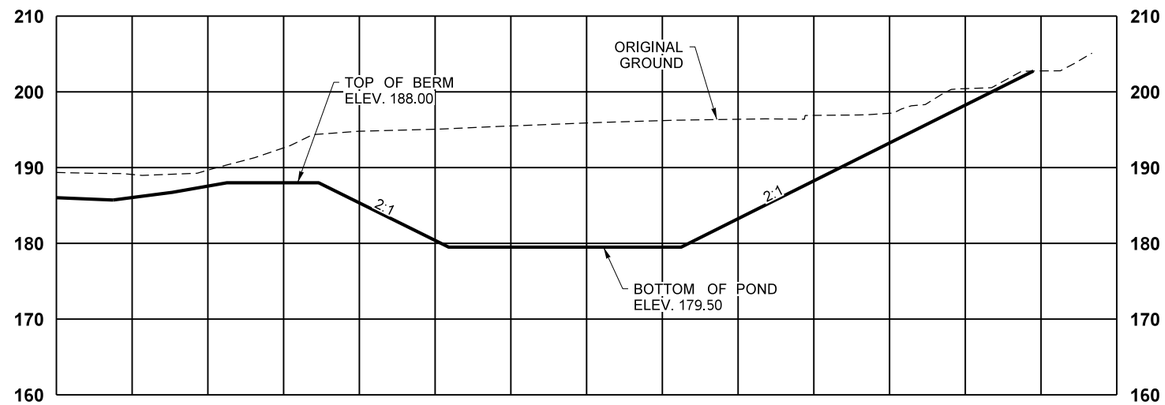

SECTION A-A (SHEET DD01A)
HORZ: 1"=20'
VERT: 1"=20'

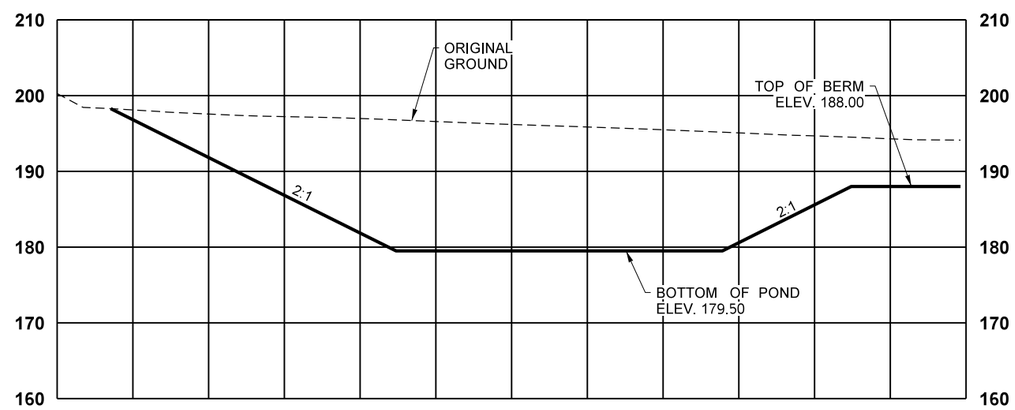

SECTION B-B (SHEET DD01A)
HORZ: 1"=20'
VERT: 1"=20'

FILE NAME	XL5464_DE_DD_01B.dgn
TIME	1:51:43 AM
DATE	1/8/2022
PLOTTED BY	wsppw14ics02$
DESIGNED BY	T. HOTINGER
ENTERED BY	G. RIMANDO
CHECKED BY	J. ZIGWEID
PROJ. ENGR.	E. PAO
REGIONAL ADM.	

PRELIMINARY
NOT FOR CONSTRUCTION

REVISION	DATE	BY

REGION NO.	STATE	FED.AID PROJ.NO.
10	WASH	
JOB NUMBER		
CONTRACT NO.		LOCATION NO. XL-5464

P.E. STAMP BOX DATE

P.E. STAMP BOX DATE

Washington State Department of Transportation
GRAHAM
WSP
1001 Fourth Ave, Suite 3100, Seattle, WA 98154
Tel: (206) 382-5200

I-405
NE 132ND STREET INTERCHANGE PROJECT

POND DETAILS

PLAN REF NO
DD01B
SHEET
OF
SHEETS

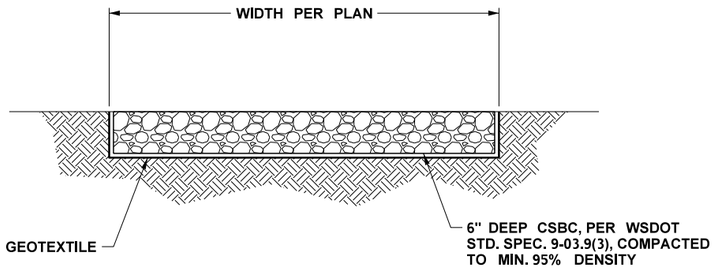

WSDOT POND ACCESS ROAD DETAIL

N.T.S.

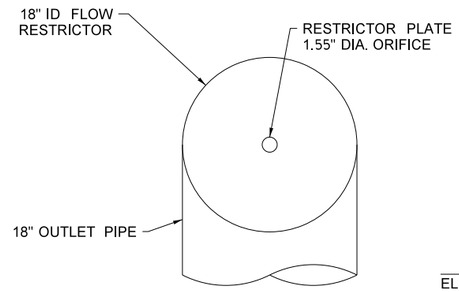

FLOW RESTRICTOR PLATE PLAN VIEW

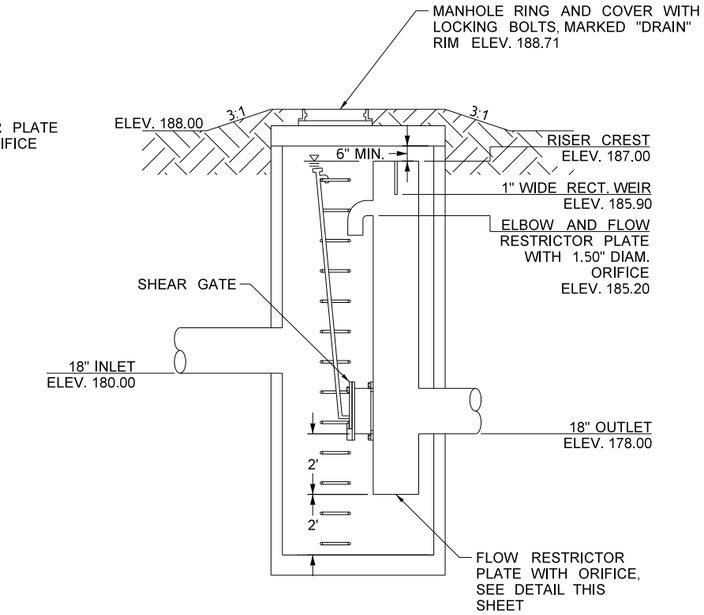

DR03-41 CONTROL STRUCTURE DETAIL

N.T.S.

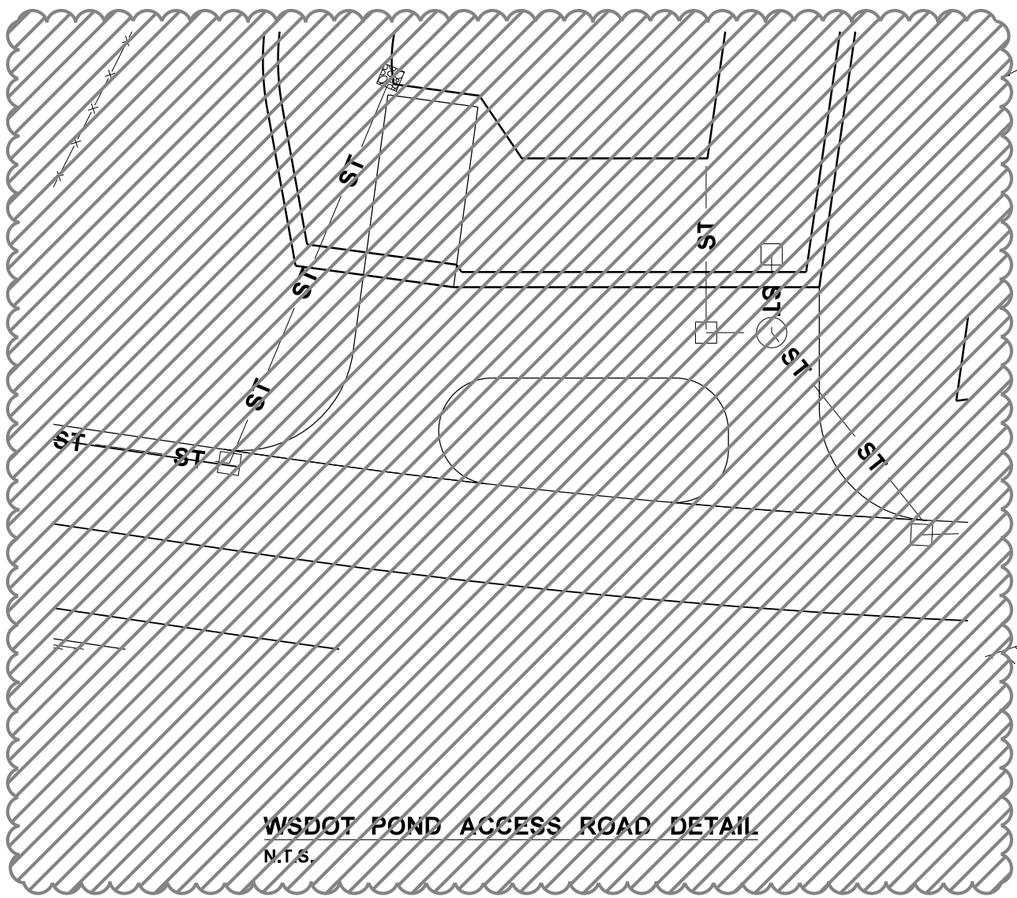

WSDOT POND ACCESS ROAD DETAIL

N.T.S.

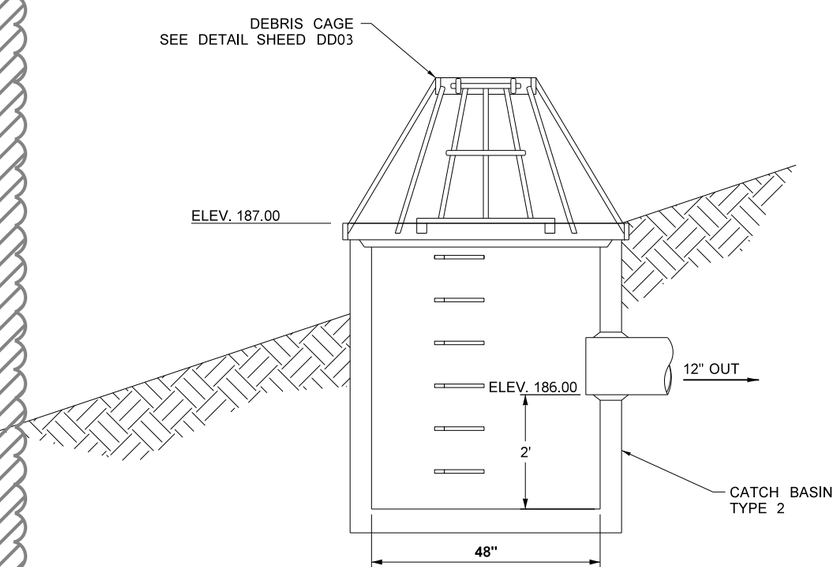

DR03-42 EMERGENCY OVERFLOW STRUCTURE DETAIL

N.T.S.

FILE NAME	XL5464_DE_DD_01C.dgn
TIME	1:51:56 AM
DATE	1/8/2022
PLOTTED BY	wsppw14ics02$
DESIGNED BY	T. HOTINGER
ENTERED BY	G. RIMANDO
CHECKED BY	J. ZIGWEID
PROJ. ENGR.	E. PAO
REGIONAL ADM.	

PRELIMINARY
NOT FOR CONSTRUCTION

REVISION	DATE	BY

REGION NO.	STATE	FED.AID PROJ.NO.
10	WASH	
JOB NUMBER		
CONTRACT NO.		LOCATION NO. XL-5464

P.E. STAMP BOX DATE

P.E. STAMP BOX DATE

Washington State Department of Transportation
GRAHAM
WSP
1001 Fourth Ave, Suite 3100, Seattle, WA 98154
Tel: (206) 382-5200

I-405
NE 132ND STREET INTERCHANGE PROJECT

POND DETAILS

PLAN REF NO DD01C

SHEET OF SHEETS

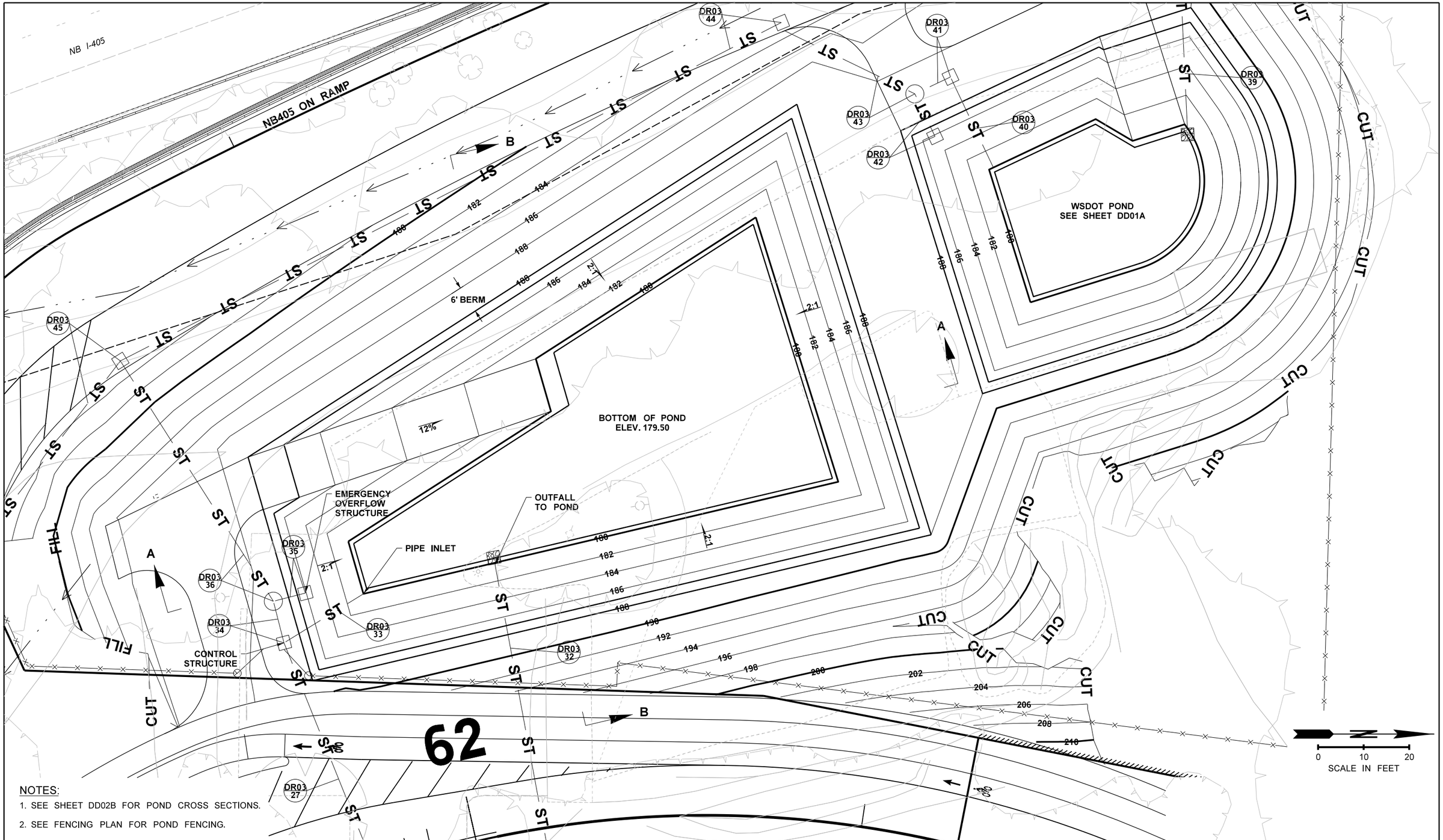

NOTES:

1. SEE SHEET DD02B FOR POND CROSS SECTIONS.
2. SEE FENCING PLAN FOR POND FENCING.

FILE NAME	XL5464_DE_DD_02A.dgn
TIME	1:51:54 AM
DATE	1/8/2022
PLOTTED BY	wsppw14ics02$
DESIGNED BY	T. HOTINGER
ENTERED BY	G. RIMANDO
CHECKED BY	J. ZIGWEID
PROJ. ENGR.	E. PAO
REGIONAL ADM.	

PRELIMINARY
NOT FOR CONSTRUCTION

REVISION	DATE	BY

REGION NO.	STATE	FED.AID PROJ.NO.
10	WASH	
JOB NUMBER		
CONTRACT NO.		LOCATION NO. XL-5464

P.E. STAMP BOX — DATE

P.E. STAMP BOX — DATE

Washington State Department of Transportation
GRAHAM
WSP
1001 Fourth Ave, Suite 3100, Seattle, WA 98154
Tel: (206) 382-5200

I-405
NE 132ND STREET INTERCHANGE PROJECT

POND DETAILS

PLAN REF NO
DD02A

SHEET
OF
SHEETS

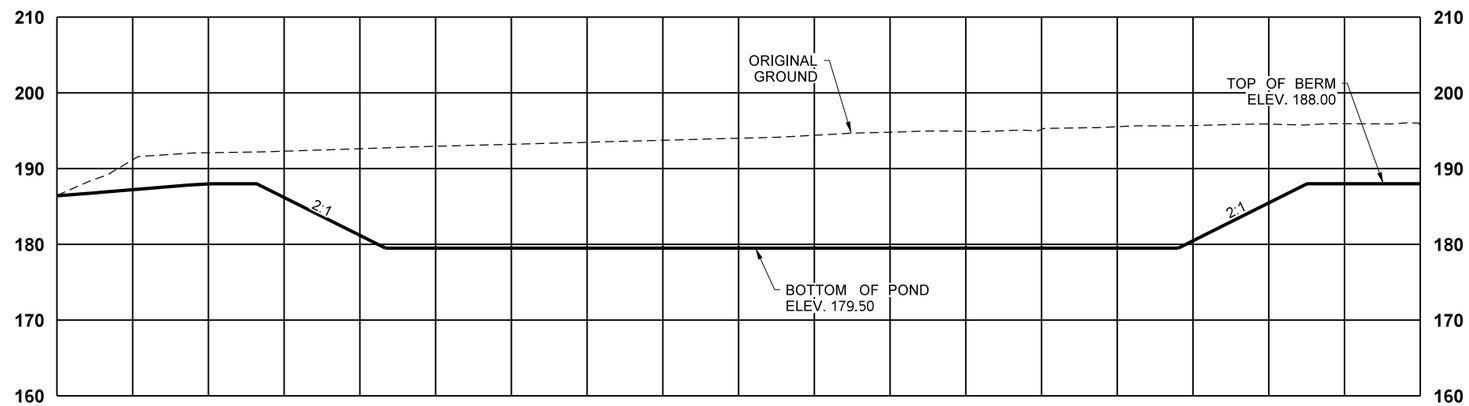

SECTION A-A (SHEET DD02A)
HORZ: 1"=20'
VERT: 1"=20'

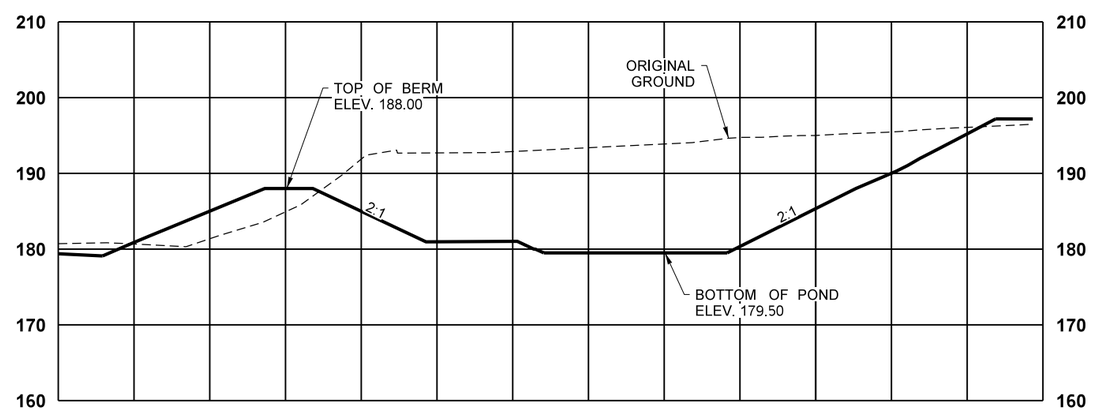

SECTION B-B (SHEET DD02A)
HORZ: 1"=20'
VERT: 1"=20'

FILE NAME	XL5464_DE_DD_02B.dgn
TIME	1:51:53 AM
DATE	1/8/2022
PLOTTED BY	wsppw14ics02$
DESIGNED BY	T. HOTINGER
ENTERED BY	G. RIMANDO
CHECKED BY	J. ZIGWEID
PROJ. ENGR.	E. PAO
REGIONAL ADM.	

PRELIMINARY
NOT FOR CONSTRUCTION

REVISION	DATE	BY

REGION NO.	STATE	FED.AID PROJ.NO.
10	WASH	
JOB NUMBER		
CONTRACT NO.		LOCATION NO. XL-5464

P.E. STAMP BOX DATE

P.E. STAMP BOX DATE

Washington State Department of Transportation
GRAHAM
WSP
1001 Fourth Ave, Suite 3100, Seattle, WA 98154
Tel: (206) 382-5200

I-405
NE 132ND STREET INTERCHANGE PROJECT

POND DETAILS

PLAN REF NO
DD02B
SHEET
OF
SHEETS

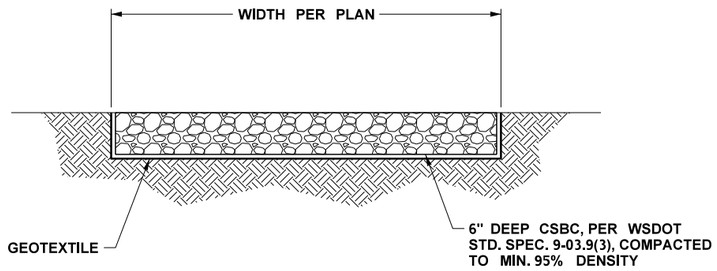

COK POND ACCESS ROAD DETAIL

N.T.S.

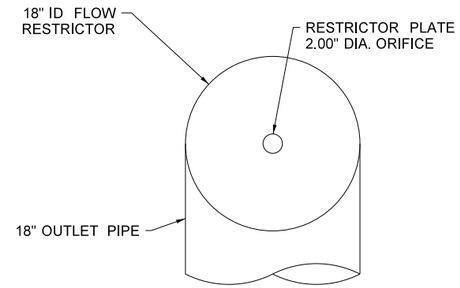

FLOW RESTRICTOR PLATE PLAN VIEW

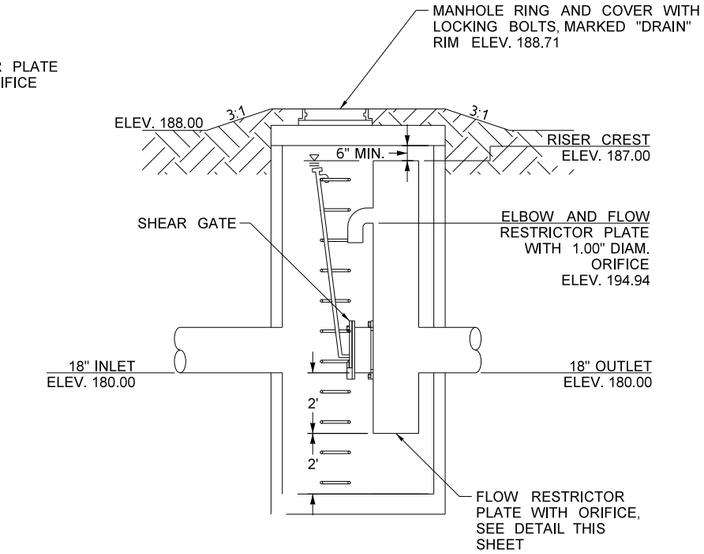

DR03-34 CONTROL STRUCTURE DETAIL

N.T.S.

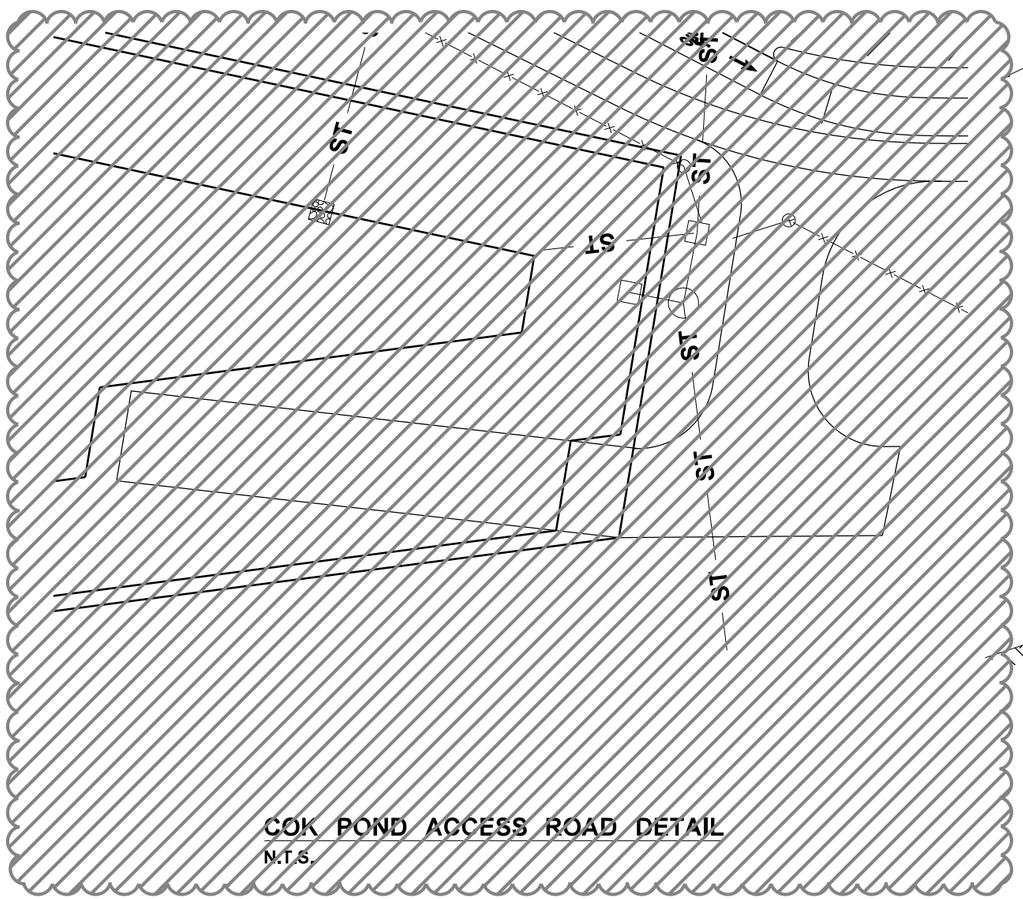

COK POND ACCESS ROAD DETAIL

N.T.S.

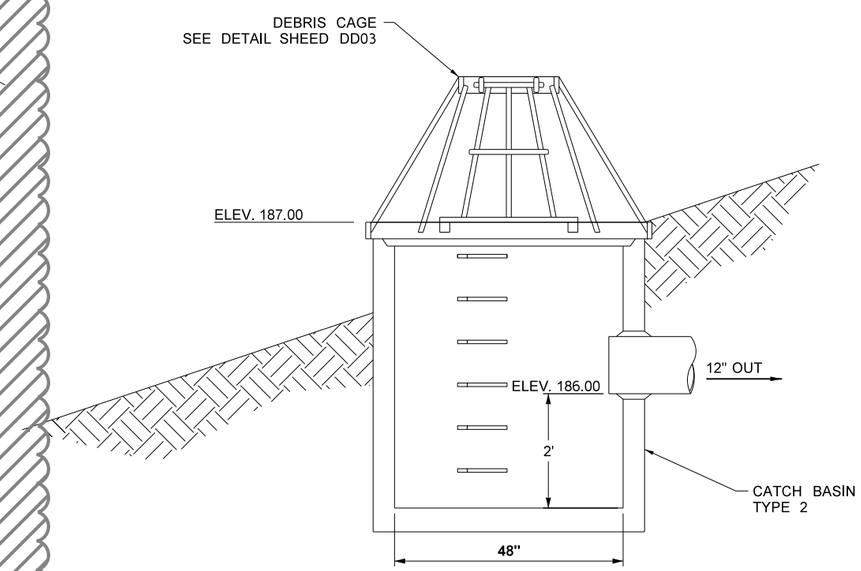

DR03-35 EMERGENCY OVERFLOW STRUCTURE DETAIL

N.T.S.

FILE NAME	XL5464_DE_DD_02C.dgn
TIME	1:51:29 AM
DATE	1/8/2022
PLOTTED BY	wsppw14ics02$
DESIGNED BY	T. HOTINGER
ENTERED BY	G. RIMANDO
CHECKED BY	J. ZIGWEID
PROJ. ENGR.	E. PAO
REGIONAL ADM.	

PRELIMINARY

NOT FOR CONSTRUCTION

REVISION	DATE	BY

REGION NO.	STATE	FED.AID PROJ.NO.
10	WASH	
JOB NUMBER		
CONTRACT NO.		LOCATION NO. XL-5464

P.E. STAMP BOX DATE

P.E. STAMP BOX DATE

Washington State Department of Transportation

GRAHAM WSP

1001 Fourth Ave, Suite 3100, Seattle, WA 98154
Tel: (206) 382-5200

I-405
NE 132ND STREET INTERCHANGE PROJECT

POND DETAILS

PLAN REF NO DD02C

SHEET OF SHEETS

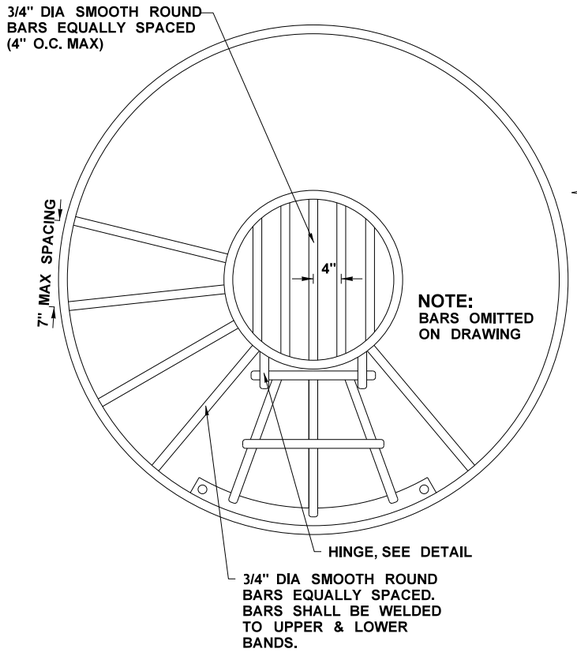

PLAN VIEW

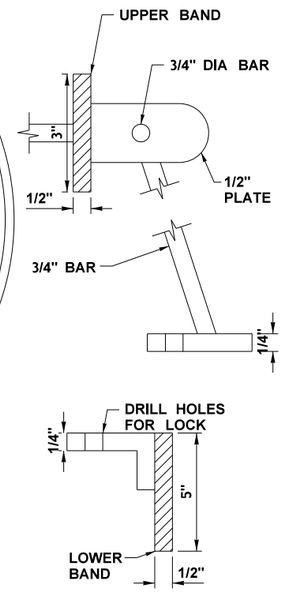

HINGE DETAIL

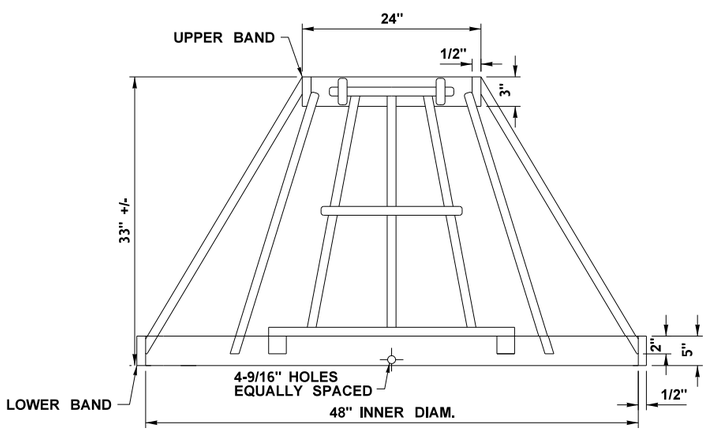

ELEVATION VIEW

NOTE:
ALL PARTS MUST BE EITHER ALUMINUM OR STAINLESS STEEL. NO GALVANIZED MATERIAL TO BE USED.

DEBRIS CAGE DETAIL

N.T.S.

FILE NAME	XL5464_DE_DD_03.dgn
TIME	1:51:25 AM
DATE	1/8/2022
PLOTTED BY	wsppw14ics02$
DESIGNED BY	T. HOTINGER
ENTERED BY	G. RIMANDO
CHECKED BY	J. ZIGWEID
PROJ. ENGR.	E. PAO
REGIONAL ADM.	

PRELIMINARY
NOT FOR CONSTRUCTION

REVISION	DATE	BY

REGION NO.	STATE	FED.AID PROJ.NO.
10	WASH	
JOB NUMBER		
CONTRACT NO.		LOCATION NO. XL-5464

P.E. STAMP BOX DATE

P.E. STAMP BOX DATE

Washington State Department of Transportation
GRAHAM
WSP
1001 Fourth Ave, Suite 3100, Seattle, WA 98154
Tel: (206) 382-5200

I-405
NE 132ND STREET INTERCHANGE PROJECT

POND DETAILS

PLAN REF NO DD03

SHEET OF SHEETS

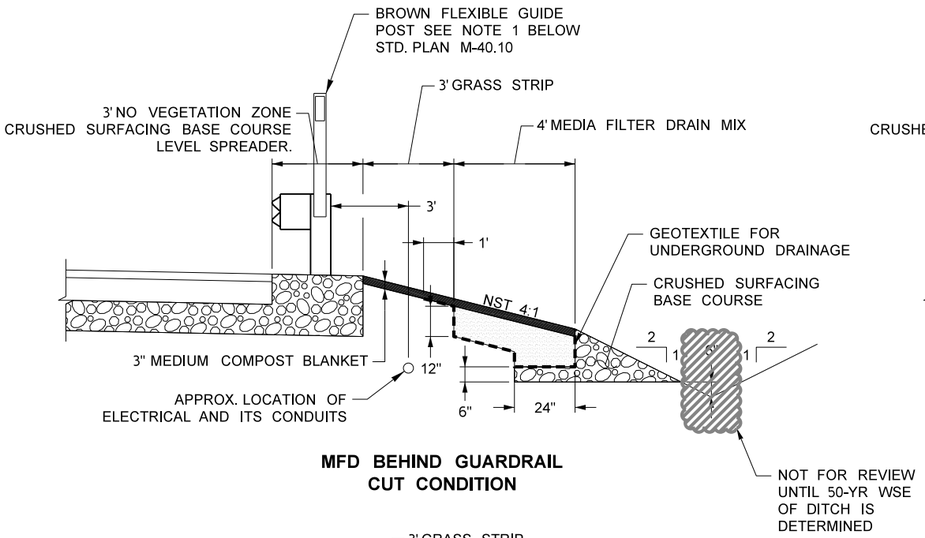

MFD BEHIND GUARDRAIL CUT CONDITION

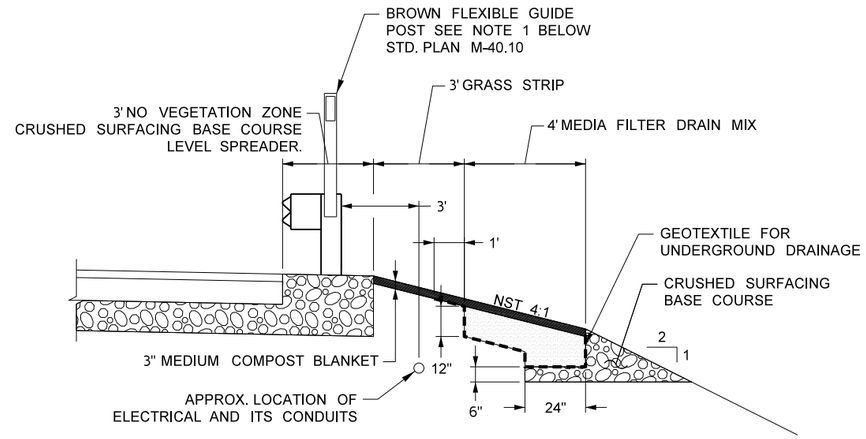

MFD BEHIND GUARDRAIL FILL CONDITION

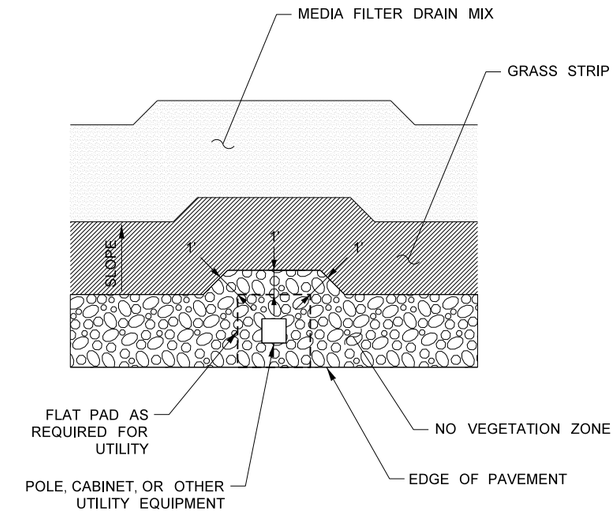

MFD AROUND ELECTRICAL UTILITIES PLAN

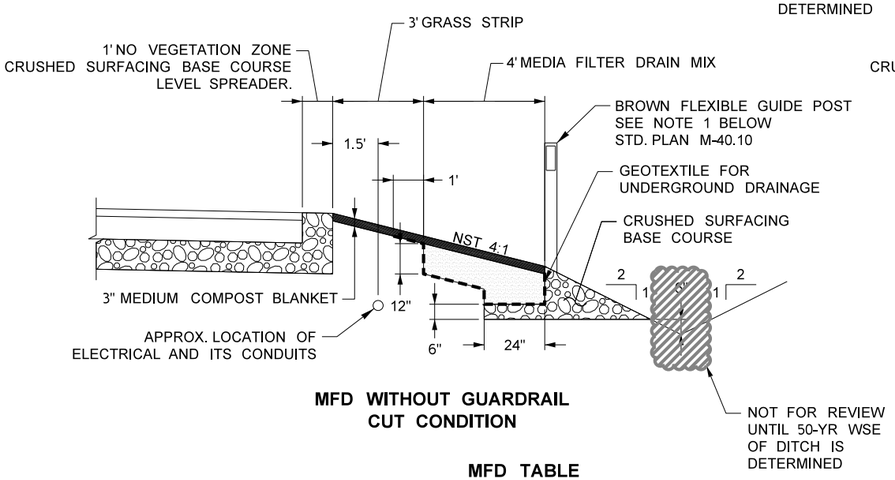

MFD WITHOUT GUARDRAIL CUT CONDITION

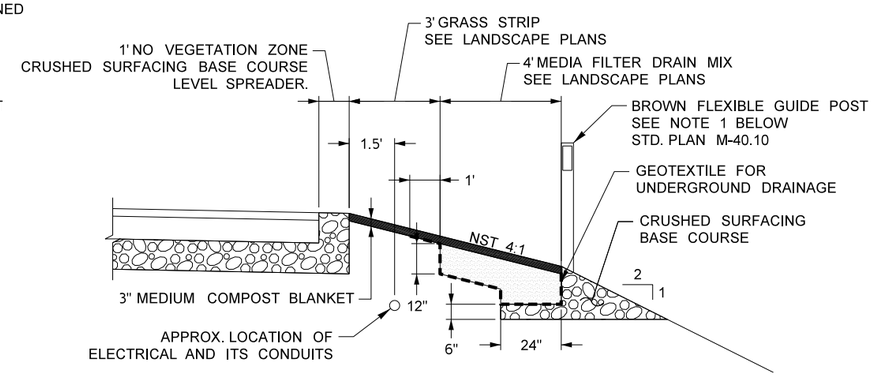

MFD WITHOUT GUARDRAIL FILL CONDITION

MFD TABLE

STRUCTURE NOTE	BEGINNING STATION	BEGINNING OFFSET	ENDING STATION	ENDING OFFSET
DR02-36	ML 4277+41.01	54.27' LT	ML 4281+89.57	54.88' LT
DR02-38	ML 4277+25.52	125.93' LT	ML 4287+94.93	54.56' LT
DR02-39	ML 4281+53.88	46.06' RT	ML 4287+49.20	46.64' RT
DR05-8	ML 4288+63.69	46.66' RT	ML 4291+64.27	50.10' RT

NOTE:

1. INSTALL FLEXIBLE GUIDE POSTS (WITH NON-RELECTIVE SHEETING) AT THE BEGINNING AND END OF THE MFD AND ALONG THE LENGTH OF THE MFD AT 500-FT SPACING (MAX).
2. GRASS STRIP AND MEDIA FILTER DRAIN MIX TO BE PLANTED WITH EROSION CONTROL SEED. SEE PLANTING PLANS.

MEDIA FILTER DRAIN MIX

AMENDMENT	QUANTITY
MINERAL AGGREGATE SHALL MEET ALL REQUIREMENTS FOR THE WSDOT STANDARD SPEC. 9-03.4 AGGREGATE FOR BITUMINOUS SURFACE TREATMENT - CRUSHED SCREENINGS 3/8-INCH TO NO. 4 WITH THE EXCEPTION OF: THE FRACTURE REQUIREMENTS SHALL BE AT LEAST TWO FRACTURED FACES AND WILL APPLY TO MATERIAL RETAINED ON THE U.S. NO. 4 SIEVE IN ACCORDANCE WITH FOP FOR AASHTO T 335.	3 CUBIC YARDS
PERLITE: WSDOT STANDARD SPEC. 9-14.5(9) HORTICULTURAL GRADE	1 CUBIC YARD PER 3 CUBIC YARDS OF MINERAL AGGREGATE
DOLOMITE: WSDOT STANDARD SPEC. 9-14.5(5) AGRICULTURAL GRADE	40 POUNDS PER CUBIC YARD OF PERLITE
GYPSUM: WSDOT STANDARD SPEC. 9-14.5(6) AGRICULTURAL GRADE	12 POUNDS PER CUBIC YARD OF PERLITE

MEDIA FILTER DRAIN (MFD) DETAILS

N.T.S.

FILE NAME	XL5464_DE_DD_04.dgn
TIME	1:51:34 AM
DATE	1/8/2022
PLOTTED BY	wsppw14ics02$
DESIGNED BY	T. HOTINGER
ENTERED BY	G. RIMANDO
CHECKED BY	J. ZIGWEID
PROJ. ENGR.	E. PAO
REGIONAL ADM.	

PRELIMINARY
NOT FOR CONSTRUCTION

REVISION | DATE | BY

REGION NO. 10 | STATE WASH | FED.AID PROJ.NO.
JOB NUMBER
CONTRACT NO. | LOCATION NO. XL-5464

P.E. STAMP BOX DATE
P.E. STAMP BOX DATE

Washington State Department of Transportation
GRAHAM
WSP
1001 Fourth Ave, Suite 3100, Seattle, WA 98154
Tel: (206) 382-5200

I-405
NE 132ND STREET INTERCHANGE PROJECT

DRAINAGE DETAILS

PLAN REF NO DD04
SHEET OF SHEETS

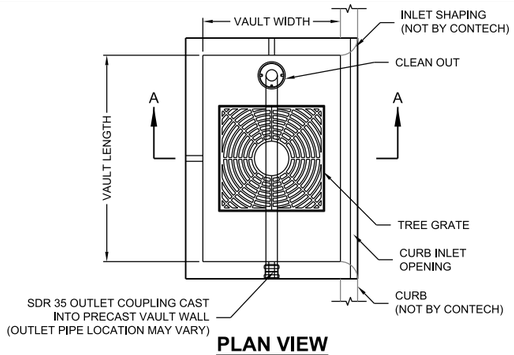

PLAN VIEW

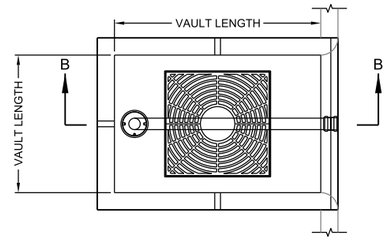

PLAN VIEW

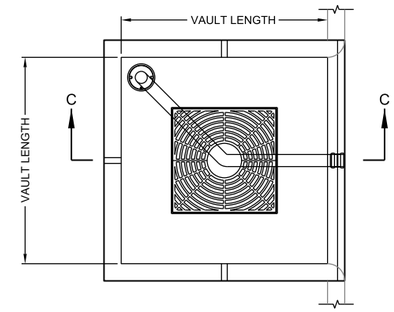

PLAN VIEW

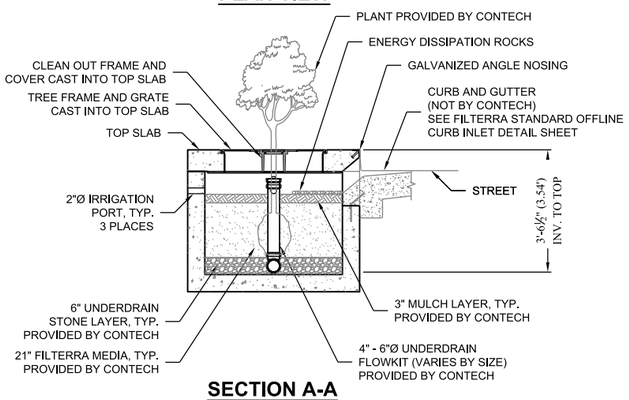

SECTION A-A

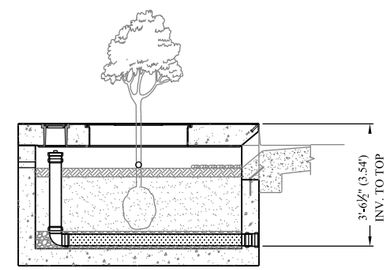

SECTION B-B

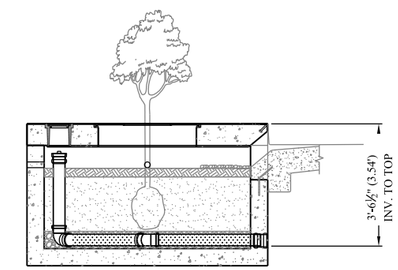

SECTION C-C

NOTE:

1. TREE/SHRUB SELECTION FOR FILTERRA UNITS WILL BE PROVIDED FOR FINAL REVIEW.

FT LONG SIDE INLET CONFIGURATION

DESIGNATION	AVAILABILITY	MEDIA BAY SIZE	VAULT SIZE (L x W)	OUTLET PIPE DIA	TREE GRATE QTY & SIZE
FT0604	N/A CA	6 x 4	6 x 4	4" SDR 35	(1) 3' x 3'
FT06504	CA ONLY	6.5 x 4	6.5 x 4	4" SDR 35	(1) 3' x 3'
FT078045	MID-ATL ONLY	7.83 x 4.5	7.83 x 4.5	4" SDR 35	(1) 3' x 3'
FT0804	N/A MID-ATL	8 x 4	8 x 4	4" SDR 35	(1) 3' x 3'
FT0806	ALL	8 x 6	8 x 6	4" SDR 35	(1) 4' x 4'
FT1006	ALL	10 x 6	10 x 6	6" SDR 35	(1) 4' x 4'
FT1206	ALL	12 x 6	12 x 6	6" SDR 35	(2) 4' x 4'
FT1307	ALL	13 x 7	13 x 7	6" SDR 35	(2) 4' x 4'
FT1408	CALL CONTECH	14 x 8	14 x 8	6" SDR 35	(2) 4' x 4'
FT1608	CALL CONTECH	16 x 8	16 x 8	6" SDR 35	(2) 4' x 4'
FT1808	CALL CONTECH	18 x 8	18 x 8	6" SDR 35	(2) 4' x 4'
FT2008	CALL CONTECH	20 x 8	20 x 8	6" SDR 35	(3) 4' x 4'
FT2208	CALL CONTECH	22 x 8	22 x 8	6" SDR 35	(3) 4' x 4'

N/A = NOT AVAILABLE

FT SHORT SIDE INLET CONFIGURATION

DESIGNATION	AVAILABILITY	MEDIA BAY SIZE	VAULT SIZE (W x L)	OUTLET PIPE DIA	TREE GRATE QTY & SIZE
FT0406	N/A CA	4 x 6	4 x 6	4" SDR 35	(1) 3' x 3'
FT04065	CA ONLY	4 x 6.5	4 x 6.5	4" SDR 35	(1) 3' x 3'
FT0408	N/A MID-ATL	4 x 8	4 x 8	4" SDR 35	(1) 3' x 3'
FT045078	MID-ATL ONLY	4.5 x 7.83	4.5 x 7.83	4" SDR 35	(1) 3' x 3'
FT0608	ALL	6 x 8	6 x 8	4" SDR 35	(1) 4' x 4'
FT0610	ALL	6 x 10	6 x 10	6" SDR 35	(1) 4' x 4'
FT0612	ALL	6 x 12	6 x 12	6" SDR 35	(2) 4' x 4'
FT0713	ALL	7 x 13	7 x 13	6" SDR 35	(2) 4' x 4'

N/A = NOT AVAILABLE

FT SQUARE INLET CONFIGURATION

DESIGNATION	AVAILABILITY	MEDIA BAY SIZE	VAULT SIZE (W x L)	OUTLET PIPE DIA	TREE GRATE QTY & SIZE
FT0404	ALL	4 x 4	4 x 4	4" SDR 35	(1) 3' x 3'
FT0606	ALL	6 x 6	6 x 6	4" SDR 35	(1) 3' x 3'

N/A = NOT AVAILABLE

INTERNAL PIPE CONFIGURATION MAY VARY
DEPENDING UPON OUTLET LOCATION.

filterra
THIS PRODUCT MAY BE PROTECTED BY ONE OR MORE OF THE FOLLOWING U.S. PATENTS: 6,277,274; 6,569,321; 7,625,485; 7,625,251; 7,833,412 - RELATED FOREIGN PATENTS.

The design and information shown on this drawing is provided as a service to the project owner, engineer and contractor by Contech Engineered Solutions LLC or one of its affiliated companies ("Contech"). Neither this drawing, nor any part thereof, may be used, reproduced or modified in any manner without the prior written consent of Contech. Failure to comply is done at the user's own risk and Contech expressly disclaims any liability or responsibility for such use. If discrepancies between the supplied information upon which the drawing is based and actual field conditions are encountered as site work progresses, these discrepancies must be reported to Contech immediately for re-evaluation of the design. Contech accepts no liability for designs based on missing, incomplete or inaccurate information supplied by others.

CONTECH®
ENGINEERED SOLUTIONS LLC
www.ContechES.com
9025 Centre Pointe Dr., Suite 400, West Chester, OH 45069
800-338-1122 513-645-7000 513-645-7993 FAX

FILTERRA OFFLINE (FT) CONFIGURATION DETAIL

E:\COMMON\CAD\TREATMENT\54 FILTERRA\40 STANDARD DRAWINGS\FT - OFFLINE\LAYOUT DETAILS\DWG\FILTERRA STANDARD OFFLINE CONFIG DTL.DWG 11/1/2017 11:31 AM

FILE NAME	XL5464_DE_DD_05.dgn
TIME	1:52:10 AM
DATE	1/8/2022
PLOTTED BY	wsppw14ics02$
DESIGNED BY	T. HOTINGER
ENTERED BY	G. RIMANDO
CHECKED BY	J. ZIGWEID
PROJ. ENGR.	E. PAO
REGIONAL ADM.	

PRELIMINARY
NOT FOR CONSTRUCTION

REVISION | DATE | BY

REGION NO. 10 | STATE WASH | FED.AID PROJ.NO.
JOB NUMBER
CONTRACT NO.
LOCATION NO. XL-5464

P.E. STAMP BOX DATE
P.E. STAMP BOX DATE

Washington State Department of Transportation
GRAHAM
WSP
1001 Fourth Ave, Suite 3100, Seattle, WA 98154
Tel: (206) 382-5200

I-405
NE 132ND STREET INTERCHANGE PROJECT

DRAINAGE DETAILS

PLAN REF NO DD05
SHEET
OF
SHEETS