GENERAL NOTES

1. DETAILS ARE NOT TO SCALE (NTS).
2. ALL SYMBOL MARKINGS SHALL BE THERMOPLASTIC UNLESS OTHERWISE NOTED.
3. ALL LONGITUDNAL MARKINGS SHALL BE PAINTED UNLESS OTHERWISE NOTED.

ABBREVIATIONS

COK	CITY OF KIRKLAND
EX	EXISTING
LT	LEFT
RT	RIGHT
PI	POINT OF INTERSECTION
PC	POINT OF CURVATURE
PT	POINT OF TANGENCY
PCC	POINT OF COMPOUND CURVATURE
PRC	POINT OF REVERSE CURVATURE
TWLT	TWO WAY LEFT TURN

LEGEND

- HIGHWAY RIGHT-OF-WAY
- LIMITED ACCESS
- TEMPORARY CONSTRUCTION EASEMENT
- SECTION LINE
- RETAINING WALL
- CONCRETE BARRIER
- CONCRETE CURB
- EXTRUDED CURB
- GUARDRAIL
- IMPACT ATTENUATOR
- CONSTRUCTION ALIGNMENT
- CONTROL POINT

STRIPING LEGEND

1. PAINTED WHITE EDGE STRIPE (SEE DETAIL)
2. PAINTED WHITE LANE STRIPE (PER COK PLAN NO. CK-R.31)
3. PAINTED WHITE WIDE DOTTED ENTRY STRIPE (SEE DETAIL)
4. PAINTED WHITE WIDE DOTTED CIRCULATING STRIPE (SEE DETAIL)
5. PAINTED YELLOW EDGE STRIPE (SEE DETAIL)
6. PAINTED YELLOW TWLT STRIPE (PER COK PLAN NO. CK-R.31)
7. PAINTED DOUBLE YELLOW CENTERLINE STRIPE (PER COK PLAN NO. CK-R.31)
8. THERMOPLASTIC STOP LINE (PER COK PLAN NO. CK-R.28)
9. THERMOPLASTIC CROSSWALK (PER COK PLAN NO. CK-R.28)
10. PAINTED WHITE WIDE SOLID STRIPE (SEE DETAIL)
11. PAINTED WHITE DIAGONAL CROSSHATCH STRIPE (SEE DETAIL)
12. PAINTED WHITE YIELD LINE SYMBOL (SEE DETAIL)
13. PAINTED BIKE LANE EXTENSION STRIPE (SEE DETAIL)
14. PAINTED YELLOW HATCHING STRIPE (SEE DETAIL)
15. PAINTED WHITE DOTTED LANE STRIP (SEE DETAIL)

SYMBOL MARKING LEGEND

1. PLASTIC ROUNDABOUT CIRCLE MARKING (SEE DETAIL)
2. PLASTIC WHITE TRAFFIC ARROW TYPE 1 (SEE DETAIL)
3. PLASTIC WHITE TRAFFIC ARROW TYPE 2 (SEE DETAIL)
4. PLASTIC WHITE TRAFFIC ARROW TYPE 3 (SEE DETAIL)
5. PLASTIC WHITE TRAFFIC ARROW TYPE 4 (SEE DETAIL)
6. PLASTIC WHITE TRAFFIC ARROW TYPE 5 (SEE DETAIL)
7. PLASTIC BICYCLE LANE SYMBOL (PER COK PLAN NO. CK-R.34)
8. PLASTIC LEFT ONLY SYMBOL (SEE DETAIL)
9. PLASTIC RIGHT ONLY SYMBOL (SEE DETAIL)
10. PLASTIC BICYLE AND PEDESTRIAN LANE MARKING (PER COK PLAN NO. CK-R.34B)

T.26N. R.5E. W.M.

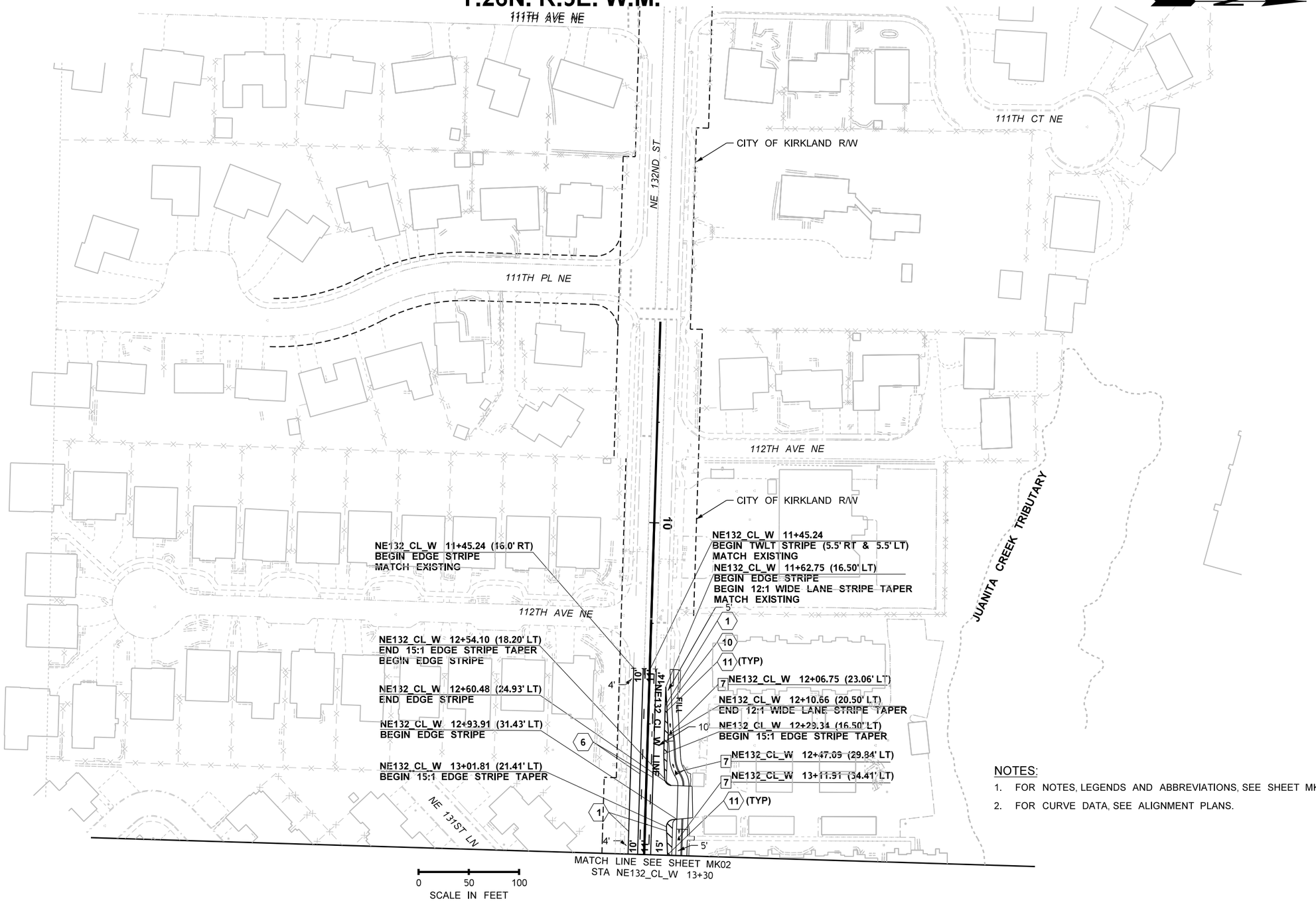

NOTES:

1. FOR NOTES, LEGENDS AND ABBREVIATIONS, SEE SHEET MK00.
2. FOR CURVE DATA, SEE ALIGNMENT PLANS.

FILE NAME	XL5464_PS_MK_01.dgn
TIME	10:53:16 PM
DATE	12/30/2021
PLOTTED BY	wsppw14ics02$
DESIGNED BY	
ENTERED BY	M. AUDAR
CHECKED BY	A. MIZUTA
PROJ. ENGR.	E. PAO
REGIONAL ADM.	

PRELIMINARY
NOT FOR CONSTRUCTION

REVISION	DATE	BY

REGION NO.	STATE	FED.AID PROJ.NO.
10	WASH	
JOB NUMBER		
CONTRACT NO.		LOCATION NO. XL-5464

P.E. STAMP BOX DATE

P.E. STAMP BOX DATE

Washington State Department of Transportation
GRAHAM
WSP
1001 Fourth Ave, Suite 3100, Seattle, WA 98154
Tel: (206) 382-5200

I-405
NE 132ND STREET INTERCHANGE PROJECT

PAVEMENT MARKING PLAN

PLAN REF NO
MK01
SHEET
OF
SHEETS

T.26N. R.5E. W.M.

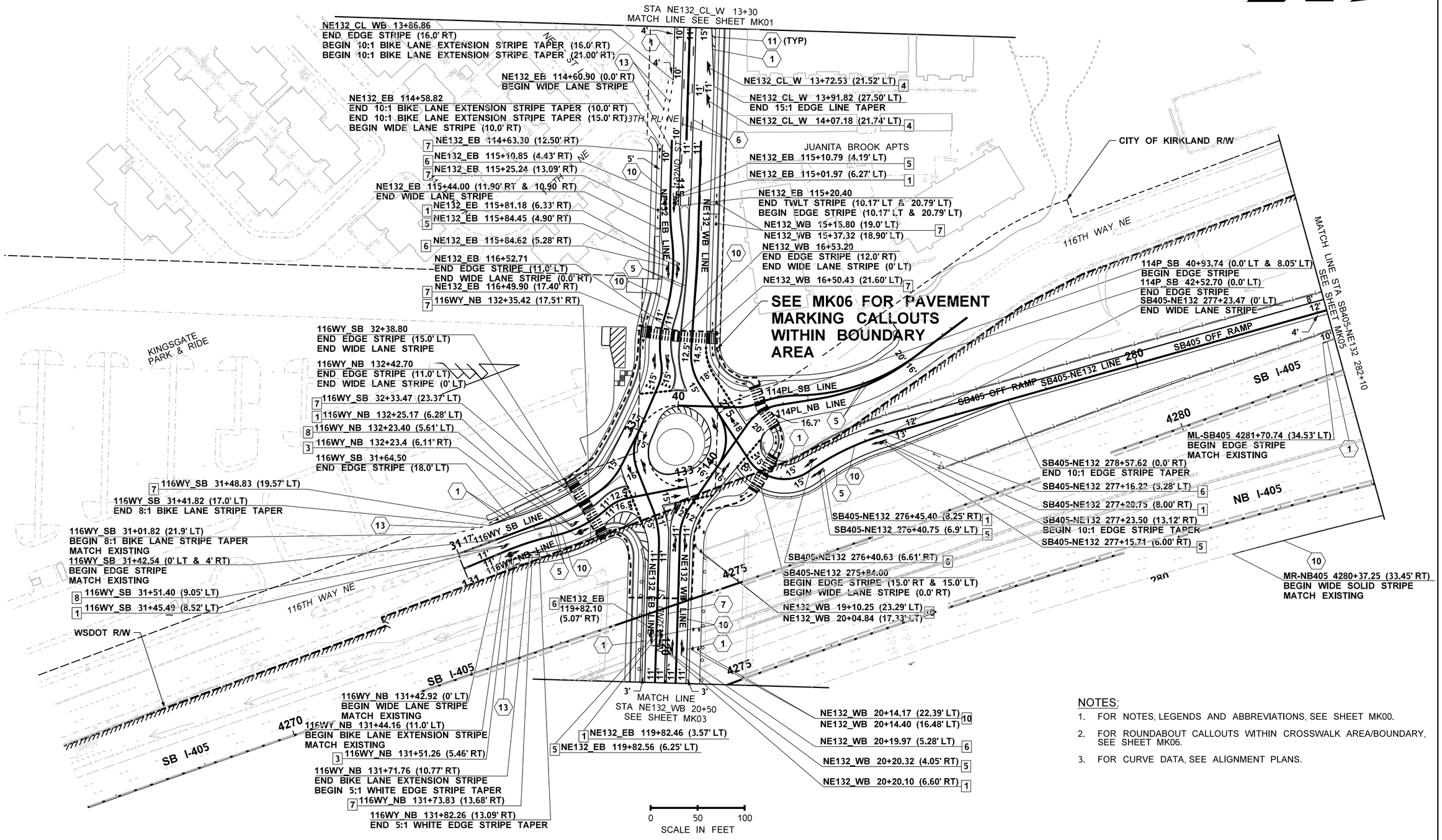

NOTES:

1. FOR NOTES, LEGENDS AND ABBREVIATIONS, SEE SHEET MK00.
2. FOR ROUNDABOUT CALLOUTS WITHIN CROSSWALK AREA/BOUNDARY, SEE SHEET MK06.
3. FOR CURVE DATA, SEE ALIGNMENT PLANS.

FILE NAME	XL5464_PS_MK_02.dgn
TIME	10:53:28 PM
DATE	12/30/2021
PLOTTED BY	wsppw14ics02$
DESIGNED BY	
ENTERED BY	M. AUDAR
CHECKED BY	A. MIZUTA
PROJ. ENGR.	E. PAO
REGIONAL ADM.	

PRELIMINARY
NOT FOR CONSTRUCTION

REVISION	DATE	BY
	10/13/21	GR

REGION NO.	STATE	FED.AID PROJ.NO.
10	WASH	
JOB NUMBER		
CONTRACT NO.		LOCATION NO. XL-5464

P.E. STAMP BOX — DATE

P.E. STAMP BOX — DATE

Washington State Department of Transportation
GRAHAM WSP
1001 Fourth Ave, Suite 3100, Seattle, WA 98154
Tel: (206) 382-5200

I-405
NE 132ND STREET INTERCHANGE PROJECT

PAVEMENT MARKING PLAN

PLAN REF NO **MK02**

SHEET OF SHEETS

T.26N. R.5E. W.M.

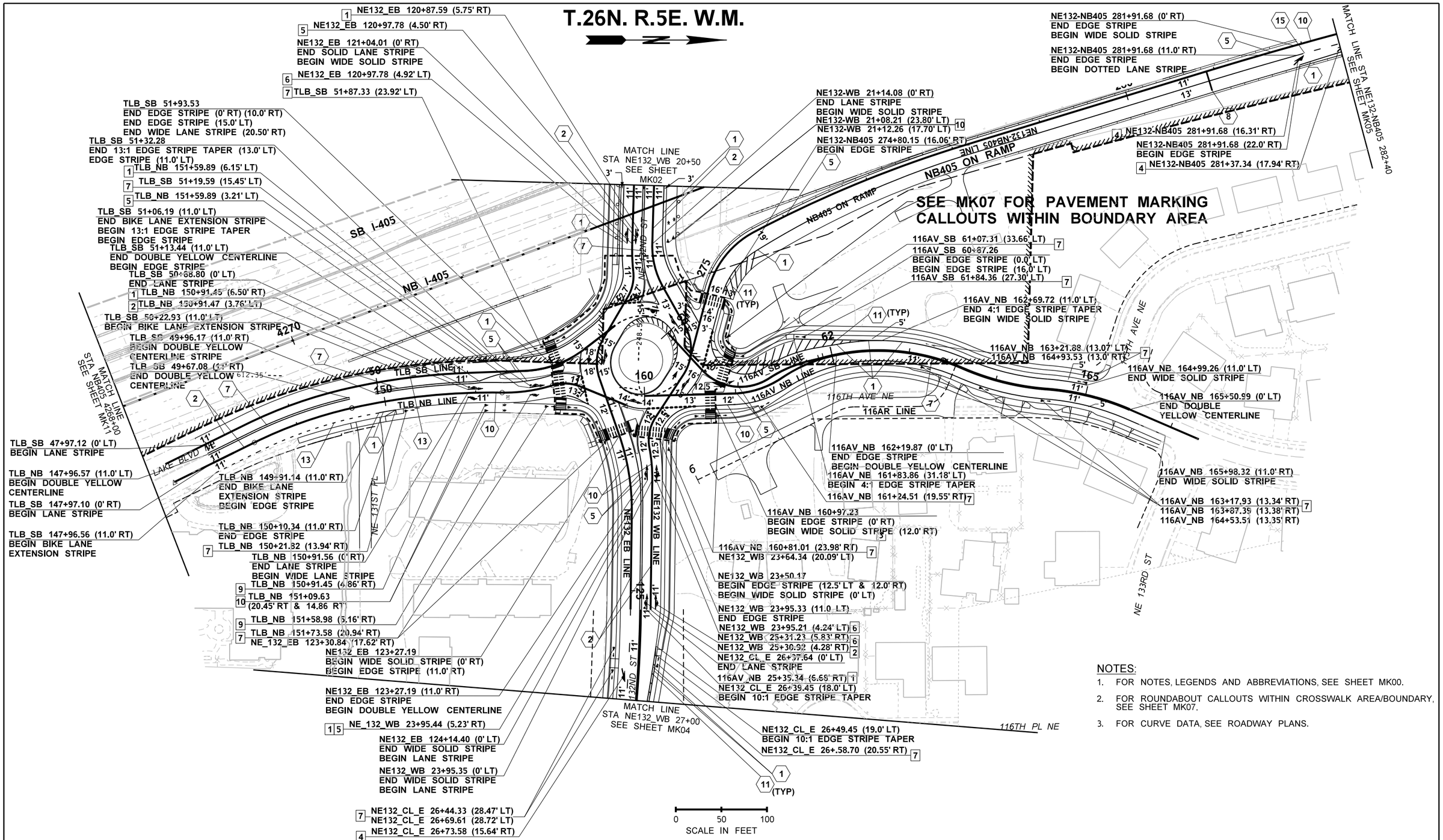

NOTES:

1. FOR NOTES, LEGENDS AND ABBREVIATIONS, SEE SHEET MK00.
2. FOR ROUNDABOUT CALLOUTS WITHIN CROSSWALK AREA/BOUNDARY, SEE SHEET MK07.
3. FOR CURVE DATA, SEE ROADWAY PLANS.

FILE NAME	XL5464_PS_MK_03.dgn
TIME	10:53:16 PM
DATE	12/30/2021
PLOTTED BY	wsppw14ics02$
DESIGNED BY	
ENTERED BY	M. AUDAR
CHECKED BY	A. MIZUTA
PROJ. ENGR.	E. PAO
REGIONAL ADM.	

PRELIMINARY
NOT FOR CONSTRUCTION

REVISION	DATE	BY
REV1	10/13/21	GR

REGION NO.	STATE	FED.AID PROJ.NO.
10	WASH	
JOB NUMBER		
CONTRACT NO.		LOCATION NO. XL-5464

P.E. STAMP BOX DATE

P.E. STAMP BOX DATE

Washington State Department of Transportation
GRAHAM
WSP
1001 Fourth Ave, Suite 3100, Seattle, WA 98154
Tel: (206) 382-5200

I-405
NE 132ND STREET INTERCHANGE PROJECT

PAVEMENT MARKING PLAN

PLAN REF NO **MK03**
SHEET OF SHEETS

T.26N. R.5E. W.M.

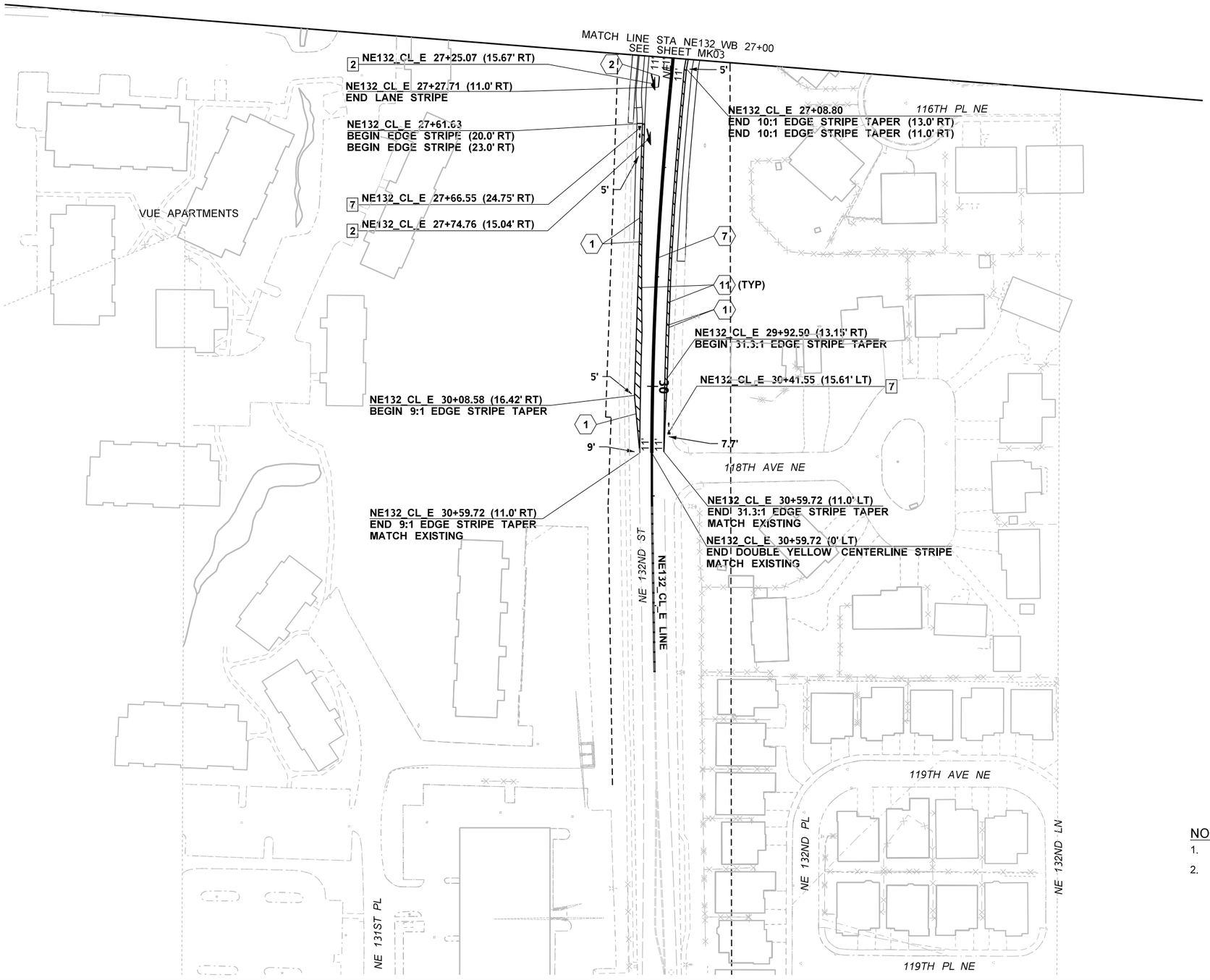

0 50 100
SCALE IN FEET

NOTES:

1. FOR NOTES, LEGENDS AND ABBREVIATIONS, SEE SHEET MK00.
2. FOR CURVE DATA, SEE ALIGNMENT PLANS.

FILE NAME	XL5464_PS_MK_04.dgn
TIME	10:53:31 PM
DATE	12/30/2021
PLOTTED BY	wsppw14ics02$
DESIGNED BY	
ENTERED BY	M. AUDAR
CHECKED BY	A. MIZUTA
PROJ. ENGR.	E. PAO
REGIONAL ADM.	

PRELIMINARY
NOT FOR CONSTRUCTION

REVISION	DATE	BY

REGION NO.	STATE	FED.AID PROJ.NO.
10	WASH	
JOB NUMBER		
CONTRACT NO.		LOCATION NO. XL-5464

P.E. STAMP BOX DATE

P.E. STAMP BOX DATE

Washington State Department of Transportation
GRAHAM
WSP
1001 Fourth Ave, Suite 3100, Seattle, WA 98154
Tel: (206) 382-5200

I-405
NE 132ND STREET INTERCHANGE PROJECT

PAVEMENT MARKING PLAN

PLAN REF NO
MK04
SHEET
OF
SHEETS

T.26N. R.5E. W.M.

NOTES:

1. FOR NOTES, LEGENDS AND ABBREVIATIONS, SEE SHEET MK00.
2. FOR CURVE DATA, SEE ALIGNMENT PLANS.

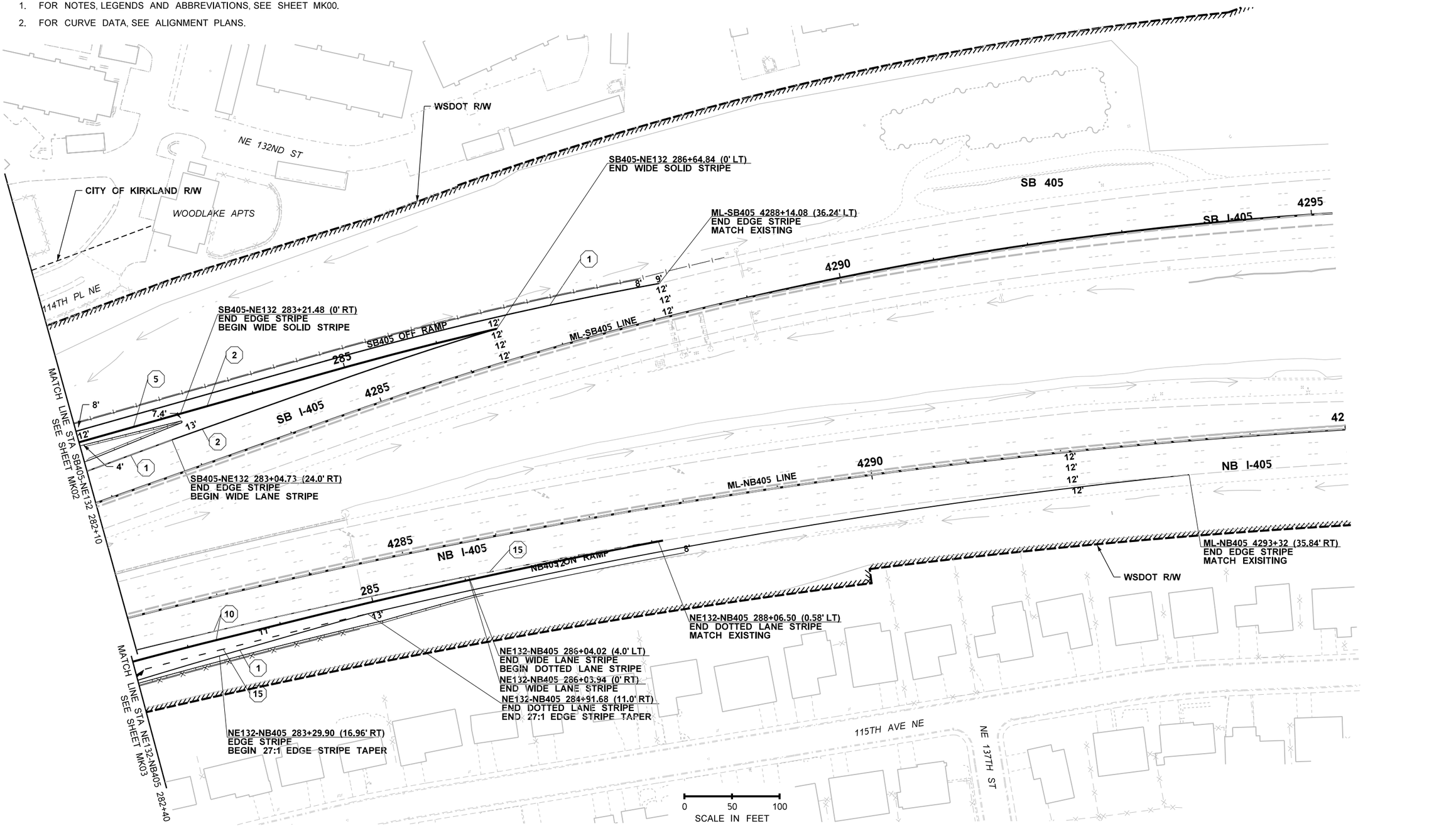

FILE NAME	XL5464_PS_MK_05.dgn				REGION NO. 10	STATE WASH	FED.AID PROJ.NO.
TIME	10:53:19 PM				JOB NUMBER		
DATE	12/30/2021						
PLOTTED BY	wsppw14ics02$	**PRELIMINARY**			CONTRACT NO.		LOCATION NO. XL-5464
DESIGNED BY		NOT FOR CONSTRUCTION					
ENTERED BY	M. AUDAR						
CHECKED BY	A. MIZUTA						
PROJ. ENGR.	E. PAO						
REGIONAL ADM.		REVISION	DATE	BY			

P.E. STAMP BOX DATE

P.E. STAMP BOX DATE

Washington State Department of Transportation
GRAHAM
WSP
1001 Fourth Ave, Suite 3100, Seattle, WA 98154
Tel: (206) 382-5200

I-405
NE 132ND STREET INTERCHANGE PROJECT

PAVEMENT MARKING PLAN

PLAN REF NO **MK05**

SHEET OF SHEETS

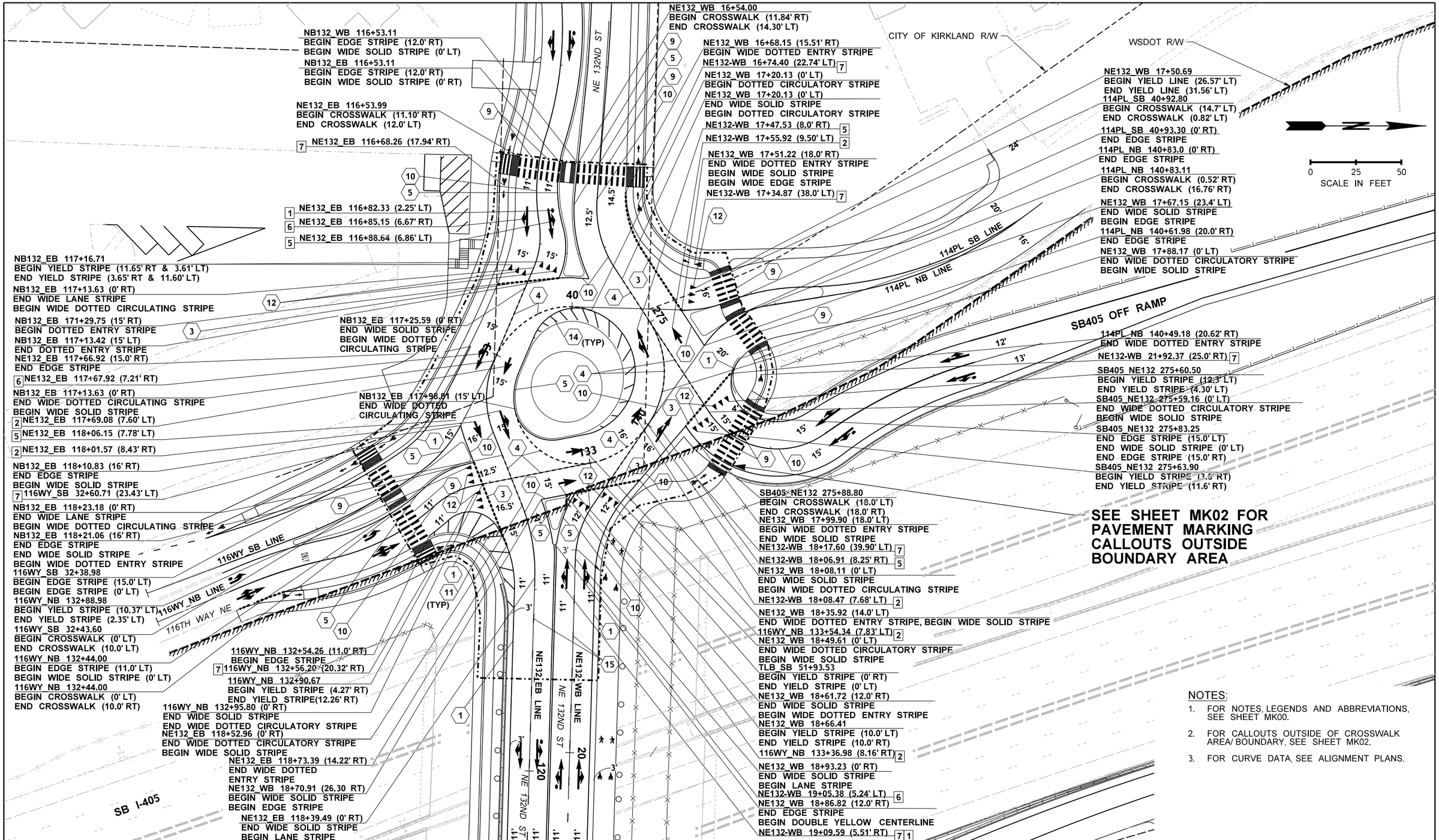

SEE SHEET MK02 FOR PAVEMENT MARKING CALLOUTS OUTSIDE BOUNDARY AREA

NOTES:

1. FOR NOTES, LEGENDS AND ABBREVIATIONS, SEE SHEET MK00.
2. FOR CALLOUTS OUTSIDE OF CROSSWALK AREA/ BOUNDARY, SEE SHEET MK02.
3. FOR CURVE DATA, SEE ALIGNMENT PLANS.

FILE NAME	XL5464_PS_MK_06.dgn
TIME	10:53:15 PM
DATE	12/30/2021
PLOTTED BY	wsppw14ics02$
DESIGNED BY	W. DSOUZA
ENTERED BY	M. AUDAR
CHECKED BY	A. MIZUTA
PROJ. ENGR.	E. PAO
REGIONAL ADM.	

PRELIMINARY
NOT FOR CONSTRUCTION

REVISION | DATE | BY

REGION NO. 10 | STATE WASH | FED.AID PROJ.NO.
JOB NUMBER
CONTRACT NO. | LOCATION NO. XL-5464

P.E. STAMP BOX DATE
P.E. STAMP BOX DATE

Washington State Department of Transportation
GRAHAM
WSP
1001 Fourth Ave, Suite 3100, Seattle, WA 98154
Tel: (206) 382-5200

I-405
NE 132ND STREET INTERCHANGE PROJECT

PAVEMENT MARKING PLAN
INTERSECTION #1

PLAN REF NO **MK06**
SHEET OF SHEETS

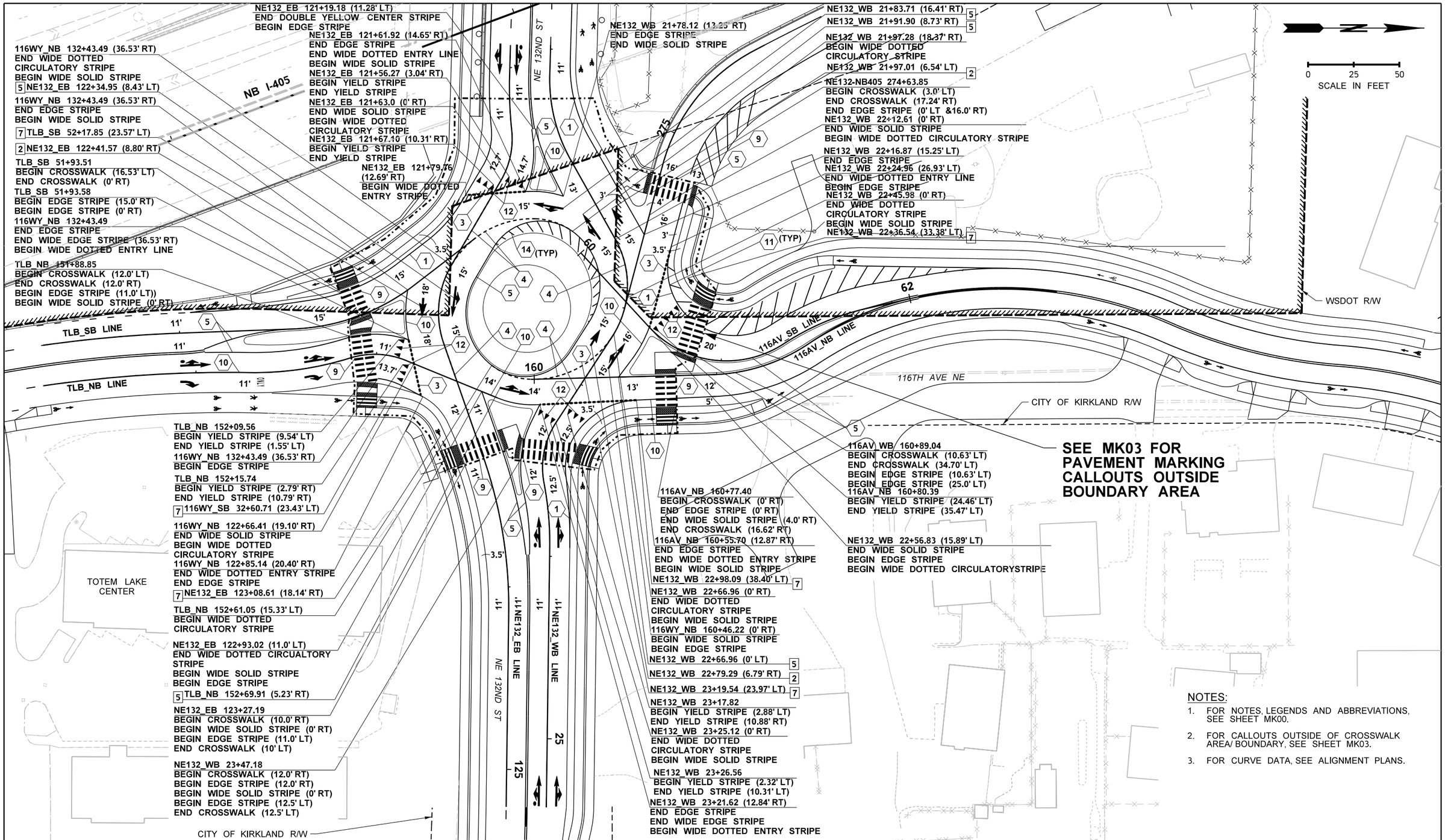

NOTES:

1. FOR NOTES, LEGENDS AND ABBREVIATIONS, SEE SHEET MK00.
2. FOR CALLOUTS OUTSIDE OF CROSSWALK AREA/ BOUNDARY, SEE SHEET MK03.
3. FOR CURVE DATA, SEE ALIGNMENT PLANS.

FILE NAME	XL5464_PS_MK_07.dgn
TIME	10:53:18 PM
DATE	12/30/2021
PLOTTED BY	wsppw14ics02$
DESIGNED BY	W. DSOUZA
ENTERED BY	M. AUDAR
CHECKED BY	A. MIZUTA
PROJ. ENGR.	E. PAO
REGIONAL ADM.	

PRELIMINARY
NOT FOR CONSTRUCTION

REVISION | DATE | BY

REGION NO. 10 | STATE WASH | FED.AID PROJ.NO.
JOB NUMBER
CONTRACT NO. | LOCATION NO. XL-5464

P.E. STAMP BOX DATE
P.E. STAMP BOX DATE

Washington State Department of Transportation
GRAHAM
WSP
1001 Fourth Ave, Suite 3100, Seattle, WA 98154
Tel: (206) 382-5200

I-405
NE 132ND STREET INTERCHANGE PROJECT
PAVEMENT MARKING PLAN
INTERSECTION #2

PLAN REF NO
MK07
SHEET
OF
SHEETS

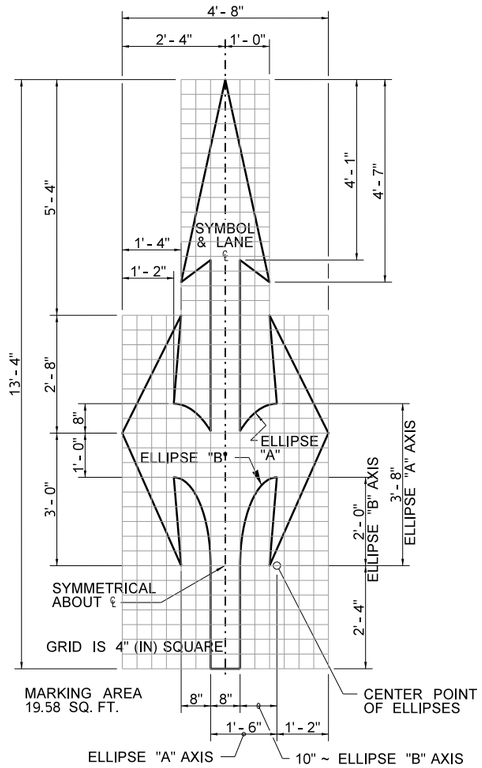

TRARRIC ARROW TYPE 2 DETAIL

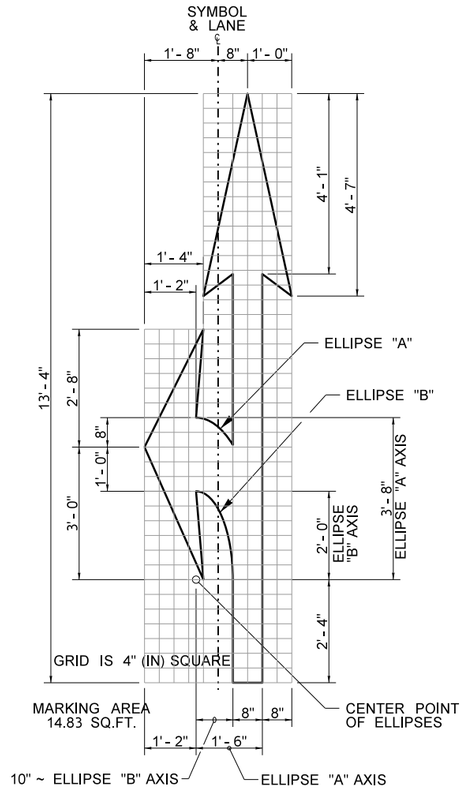

TRAFFIC ARROW TYPE 4 DETAIL

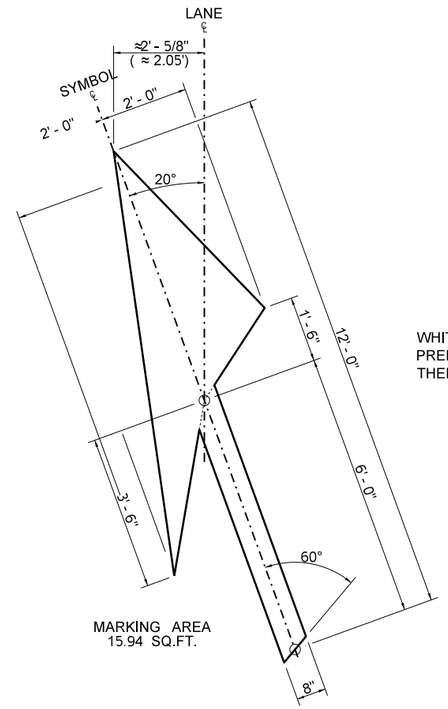

TRAFFIC ARROW TYPE 3 DETAIL

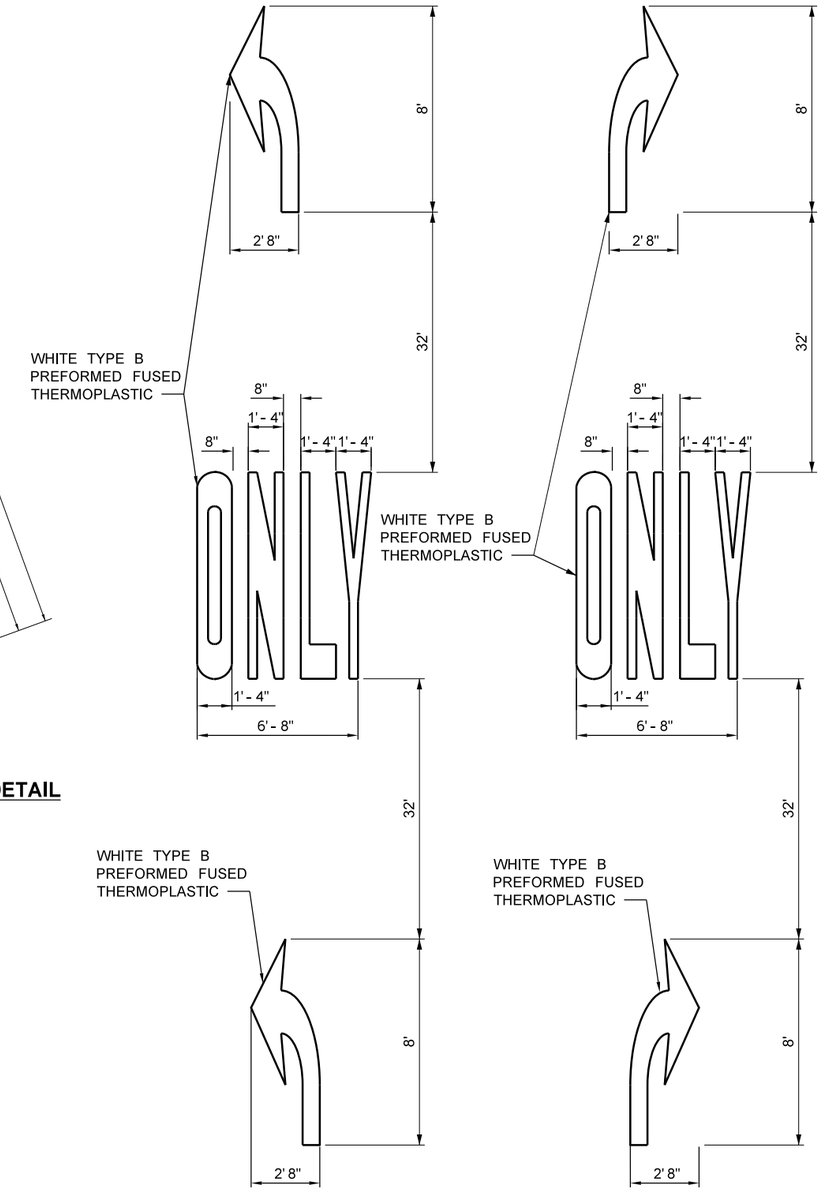

PLASTIC "LEFT ONLY" DETAIL **PLASTIC "RIGHT ONLY" DETAIL**

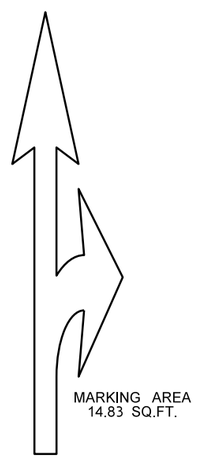

TRAFFIC ARROW TYPE 5 DETAIL

MIRROR IMAGE OF TYPE 3SL TRAFFIC ARROW

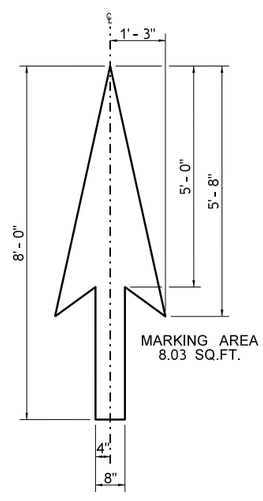

TRAFFIC ARROW TYPE 1 DETAIL

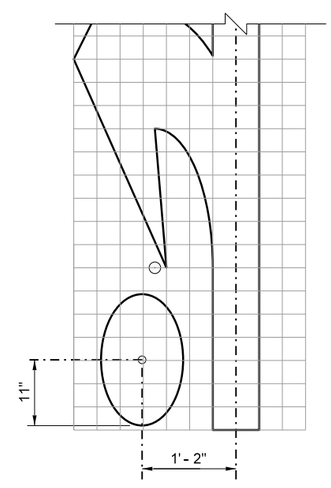

ROUNDABOUT CIRCLE MARKING DETAIL

FILE NAME	XL5464_PS_MKD_01.dgn
TIME	10:53:06 PM
DATE	12/30/2021
PLOTTED BY	wsppw14ics02$
DESIGNED BY	W. DSOUZA
ENTERED BY	M. AUDAR
CHECKED BY	A. MIZUTA
PROJ. ENGR.	E. PAO
REGIONAL ADM.	

PRELIMINARY
NOT FOR CONSTRUCTION

REVISION	DATE	BY

REGION NO.	STATE	FED.AID PROJ.NO.
10	WASH	
JOB NUMBER		
CONTRACT NO.		LOCATION NO. XL-5464

P.E. STAMP BOX DATE

P.E. STAMP BOX DATE

Washington State Department of Transportation
GRAHAM WSP
1001 Fourth Ave, Suite 3100, Seattle, WA 98154
Tel: (206) 382-5200

I-405
NE 132ND STREET INTERCHANGE PROJECT

PAVEMENT MARKING DETAILS

PLAN REF NO **MKD01**
SHEET OF SHEETS

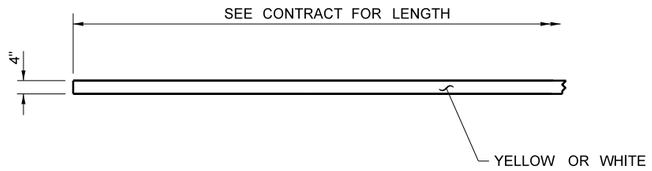

EDGE STRIP DETAIL

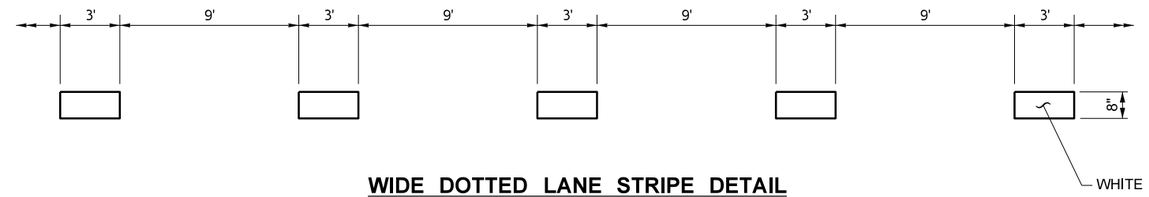

WIDE DOTTED LANE STRIPE DETAIL

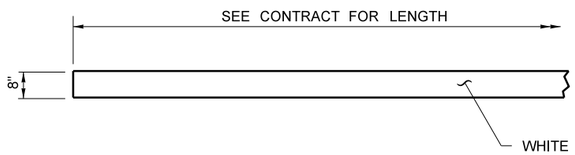

WIDE SOLID LANE STRIPE DETAIL

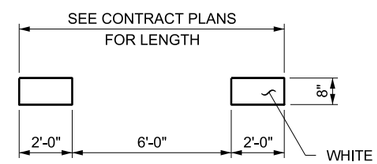

BIKE LANE EXTENSION STRIPE DETAIL

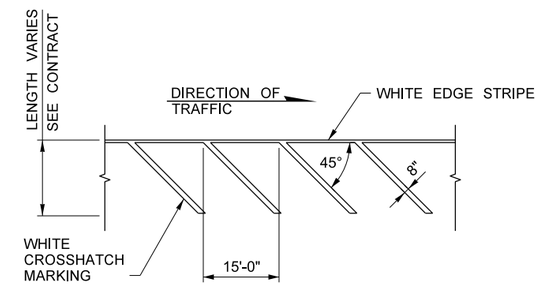

WHITE DIAGONAL CROSSHATCH STRIPE DETAIL

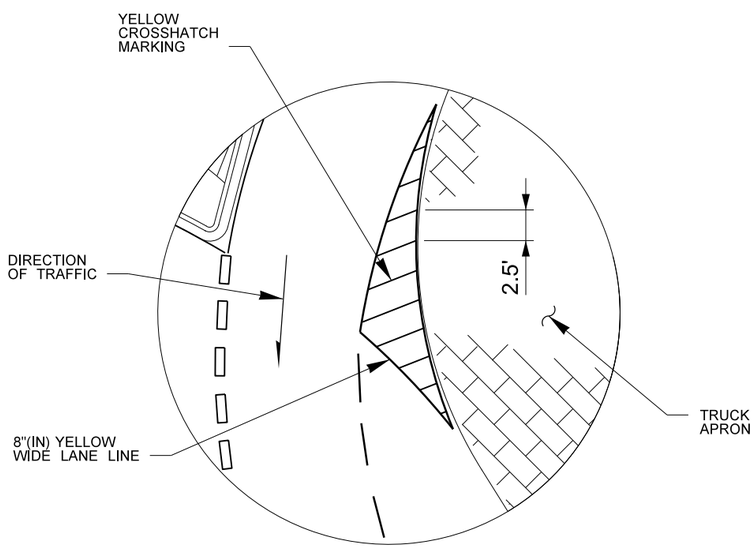

HATCHING STRIPE DETAIL

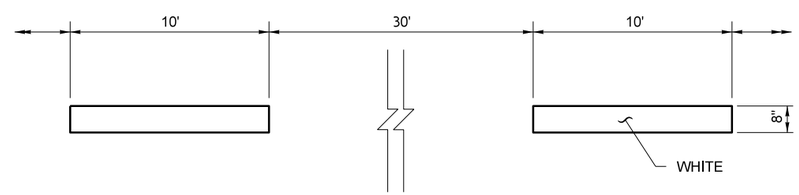

WIDE DOTTED ENTRY STRIPE DETAIL

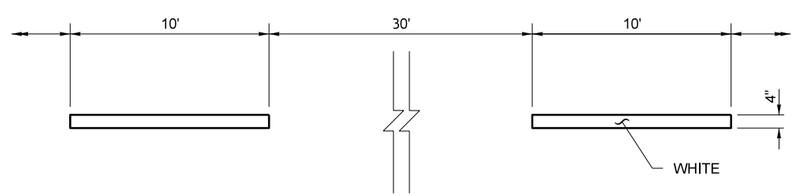

WIDE DOTTED CIRCULATING STRIPE DETAIL

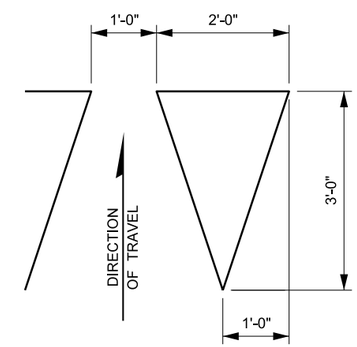

YIELD LINE SYMBOL DETAIL

FILE NAME	XL5464_PS_MKD_02.dgn
TIME	10:53:13 PM
DATE	12/30/2021
PLOTTED BY	wsppw14ics02$
DESIGNED BY	W. DSOUZA
ENTERED BY	M. AUDAR
CHECKED BY	A. MIZUTA
PROJ. ENGR.	E. PAO
REGIONAL ADM.	

PRELIMINARY
NOT FOR CONSTRUCTION

REVISION	DATE	BY

REGION NO.	STATE	FED.AID PROJ.NO.
10	WASH	
JOB NUMBER		
CONTRACT NO.		LOCATION NO. XL-5464

P.E. STAMP BOX — DATE

P.E. STAMP BOX — DATE

Washington State Department of Transportation
GRAHAM
WSP
1001 Fourth Ave, Suite 3100, Seattle, WA 98154
Tel: (206) 382-5200

I-405
NE 132ND STREET INTERCHANGE PROJECT

PAVEMENT MARKING DETAILS

PLAN REF NO
MKD02

SHEET
OF
SHEETS