FISH PASSAGE SHEET LOCATION MAP

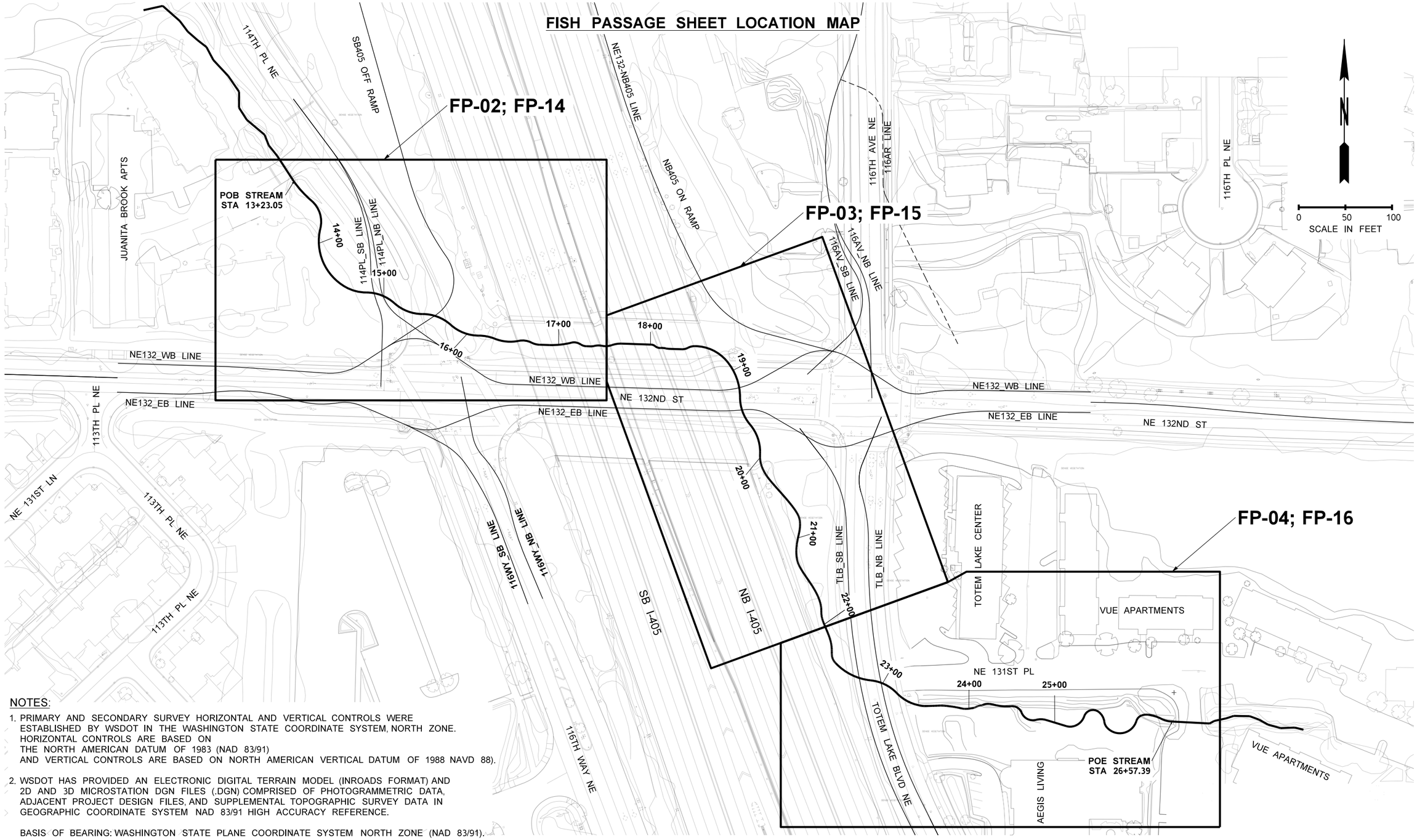

NOTES:

1. PRIMARY AND SECONDARY SURVEY HORIZONTAL AND VERTICAL CONTROLS WERE ESTABLISHED BY WSDOT IN THE WASHINGTON STATE COORDINATE SYSTEM, NORTH ZONE. HORIZONTAL CONTROLS ARE BASED ON THE NORTH AMERICAN DATUM OF 1983 (NAD 83/91) AND VERTICAL CONTROLS ARE BASED ON NORTH AMERICAN VERTICAL DATUM OF 1988 NAVD 88).

2. WSDOT HAS PROVIDED AN ELECTRONIC DIGITAL TERRAIN MODEL (INROADS FORMAT) AND 2D AND 3D MICROSTATION DGN FILES (.DGN) COMPRISED OF PHOTOGRAMMETRIC DATA, ADJACENT PROJECT DESIGN FILES, AND SUPPLEMENTAL TOPOGRAPHIC SURVEY DATA IN GEOGRAPHIC COORDINATE SYSTEM NAD 83/91 HIGH ACCURACY REFERENCE.

BASIS OF BEARING: WASHINGTON STATE PLANE COORDINATE SYSTEM NORTH ZONE (NAD 83/91).

FILE NAME	XL5464_PS_FP_01.dgn
TIME	10:51:23 PM
DATE	12/30/2021
PLOTTED BY	wsppw14ics02$
DESIGNED BY	A.SHANMUGHAM
ENTERED BY	A.SHANMUGHAM
CHECKED BY	C.BUITRAGO
PROJ. ENGR.	E. PAO
REGIONAL ADM.	

PRELIMINARY
NOT FOR CONSTRUCTION

REVISION	DATE	BY

REGION NO.	STATE	FED.AID PROJ.NO.
10	WASH	
JOB NUMBER		
CONTRACT NO.		LOCATION NO. XL-5464

P.E. STAMP BOX — DATE

P.E. STAMP BOX — DATE

Washington State Department of Transportation
GRAHAM
WSP
1001 Fourth Ave, Suite 3100, Seattle, WA 98154
Tel: (206) 382-5200

I-405
NE 132ND STREET INTERCHANGE PROJECT

FISH PASSAGE SHEET LOCATION MAP

PLAN REF NO
FP01

SHEET
OF
SHEETS

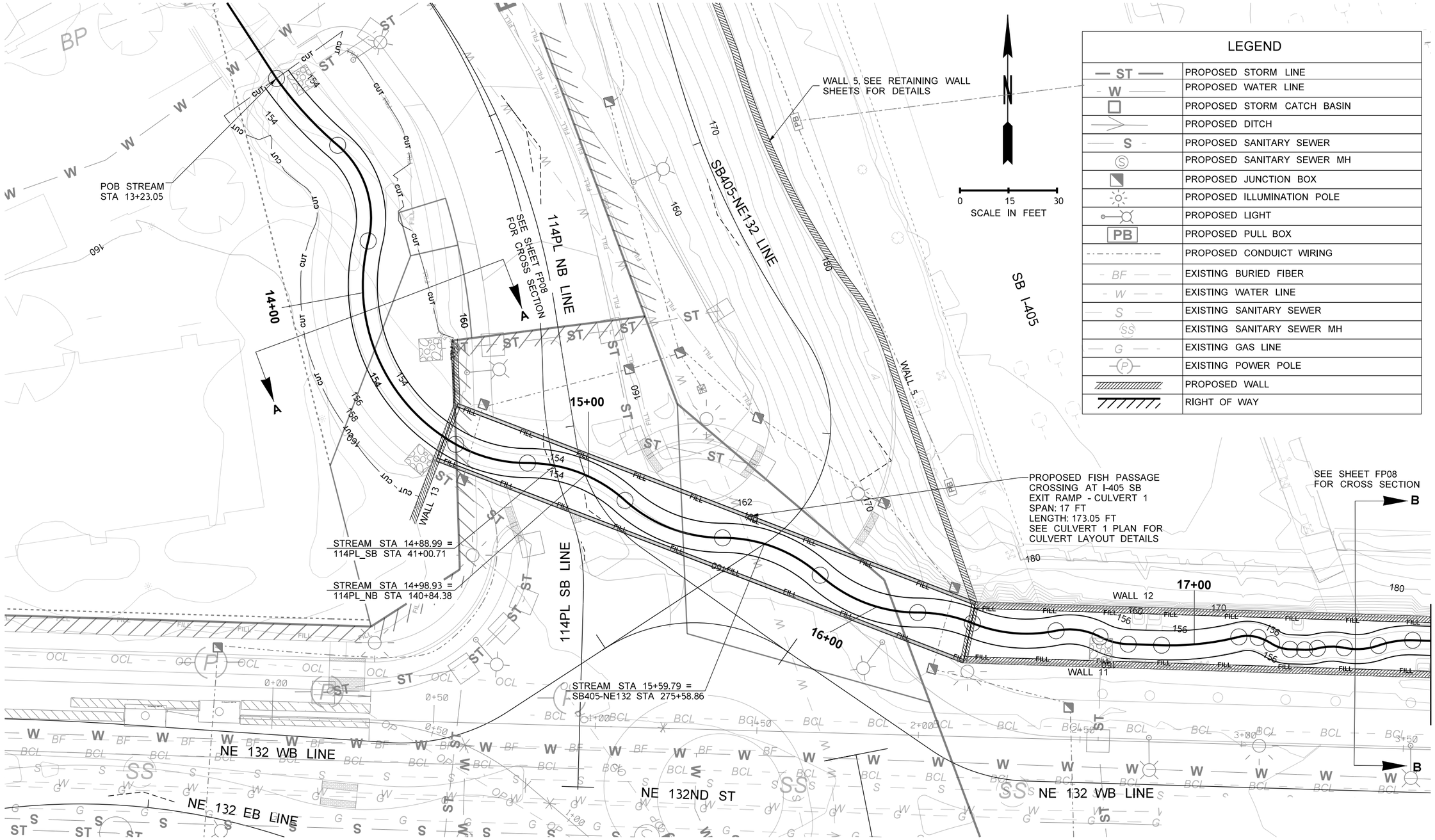

FILE NAME	XL5464_PS_FP_02.dgn
TIME	10:51:20 PM
DATE	12/30/2021
PLOTTED BY	wsppw14ics02$
DESIGNED BY	A.SHANMUGHAM
ENTERED BY	A.SHANMUGHAM
CHECKED BY	C.BUITRAGO
PROJ. ENGR.	E. PAO
REGIONAL ADM.	

PRELIMINARY
NOT FOR CONSTRUCTION

REVISION	DATE	BY

REGION NO.	STATE	FED.AID PROJ.NO.
10	WASH	
JOB NUMBER		
CONTRACT NO.		LOCATION NO. XL-5464

P.E. STAMP BOX DATE

P.E. STAMP BOX DATE

Washington State Department of Transportation
GRAHAM
WSP
1001 Fourth Ave, Suite 3100, Seattle, WA 98154
Tel: (206) 382-5200

I-405
NE 132ND STREET INTERCHANGE PROJECT

STREAM ALIGNMENT AND GRADING PLAN

PLAN REF NO
FP02
SHEET
OF
SHEETS

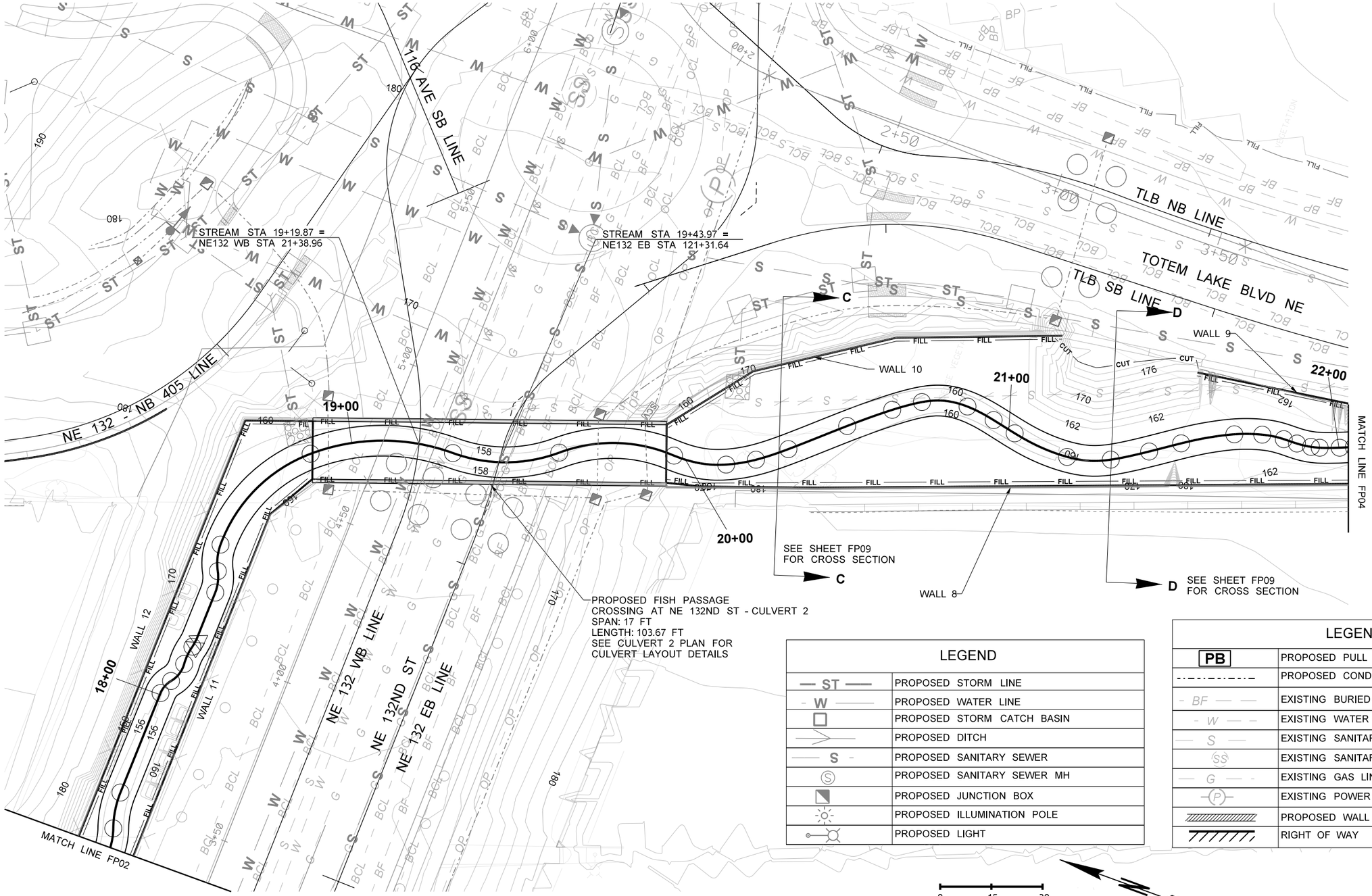

LEGEND	
— ST —	PROPOSED STORM LINE
- W —	PROPOSED WATER LINE
□	PROPOSED STORM CATCH BASIN
	PROPOSED DITCH
— S -	PROPOSED SANITARY SEWER
Ⓢ	PROPOSED SANITARY SEWER MH
	PROPOSED JUNCTION BOX
	PROPOSED ILLUMINATION POLE
	PROPOSED LIGHT

LEGEND	
PB	PROPOSED PULL BOX
- - - - - -	PROPOSED CONDUIT WIRING
- BF — —	EXISTING BURIED FIBER
- W — -	EXISTING WATER LINE
— S —	EXISTING SANITARY SEWER
SS	EXISTING SANITARY SEWER MH
— G — -	EXISTING GAS LINE
(P)	EXISTING POWER POLE
	PROPOSED WALL
	RIGHT OF WAY

FILE NAME	XL5464_PS_FP_03.dgn
TIME	10:51:19 PM
DATE	12/30/2021
PLOTTED BY	wsppw14ics02$
DESIGNED BY	A.SHANMUGHAM
ENTERED BY	A.SHANMUGHAM
CHECKED BY	C.BUITRAGO
PROJ. ENGR.	E. PAO
REGIONAL ADM.	

PRELIMINARY
NOT FOR CONSTRUCTION

REVISION	DATE	BY

REGION NO.	STATE	FED.AID PROJ.NO.
10	WASH	
JOB NUMBER		
CONTRACT NO.		LOCATION NO. XL-5464

P.E. STAMP BOX DATE

P.E. STAMP BOX DATE

Washington State Department of Transportation
GRAHAM
WSP
1001 Fourth Ave, Suite 3100, Seattle, WA 98154
Tel: (206) 382-5200

I-405
NE 132ND STREET INTERCHANGE PROJECT

STREAM ALIGNMENT AND GRADING PLAN

PLAN REF NO
FP03

SHEET
OF
SHEETS

MATCH LINE SHEET FP03

VUE APARTMENTS

N

0 15 30
SCALE IN FEET

SEE SHEET FP10
FOR CROSS SECTION

WALL 9

WALL 8

STREAM STA 22+74.19 =
TLB SB STA 49+93.73

STREAM STA 22+98.20 =
TLB NB STA 149+79.43

23+00

24+00

25+00

26+00

PROPOSED FISH PASSAGE
CROSSING AT TOTEM LAKE BLVD
- CULVERT 3
SPAN: 17 FT
LENGTH: 94.34 FT
SEE CULVERT 3 PLAN FOR
CULVERT LAYOUT DETAILS

WALL 15

SEE SHEET FP11
FOR CROSS SECTION

SEE SHEET FP11
FOR CROSS SECTION

POE STREAM
STA 26+57.39

NB I-405

NEW PED

EXISTING PED

TLB NB LINE

TOTEM LAKE BLVD NE

TLB SB LINE

AEGIS LIVING

LEGEND

ST	PROPOSED STORM LINE
W	PROPOSED WATER LINE
	PROPOSED STORM CATCH BASIN
	PROPOSED DITCH
S	PROPOSED SANITARY SEWER
S	PROPOSED SANITARY SEWER MH
	PROPOSED JUNCTION BOX
	PROPOSED ILLUMINATION POLE
	PROPOSED LIGHT

LEGEND

PB	PROPOSED PULL BOX
	PROPOSED CONDUIT WIRING
BF	EXISTING BURIED FIBER
W	EXISTING WATER LINE
S	EXISTING SANITARY SEWER
SS	EXISTING SANITARY SEWER MH
G	EXISTING GAS LINE
P	EXISTING POWER POLE
	PROPOSED WALL
	RIGHT OF WAY

FILE NAME	XL5464_PS_FP_04.dgn
TIME	10:51:43 PM
DATE	12/30/2021
PLOTTED BY	wsppw14ics02$
DESIGNED BY	A.SHANMUGHAM
ENTERED BY	A.SHANMUGHAM
CHECKED BY	C.BUITRAGO
PROJ. ENGR.	E. PAO
REGIONAL ADM.	

PRELIMINARY
NOT FOR CONSTRUCTION

REVISION	DATE	BY

REGION NO.	STATE	FED.AID PROJ.NO.
10	WASH	
JOB NUMBER		
CONTRACT NO.		LOCATION NO. XL-5464

P.E. STAMP BOX DATE

P.E. STAMP BOX DATE

Washington State
Department of Transportation
GRAHAM
WSP
1001 Fourth Ave, Suite 3100, Seattle, WA 98154
Tel: (206) 382-5200

I-405
NE 132ND STREET INTERCHANGE PROJECT

STREAM ALIGNMENT AND GRADING PLAN

PLAN REF NO
FP04

SHEET
OF
SHEETS

CURVE AND TANGENT DATA

P.I. STATION	DELTA	RADIUS	TANGENT	LENGTH	NORTHING	EASTING
13+23.05					265214.83	1306763.86
13+37.16	13°51'00.70" LT	116.21	14.11	28.09	265203.35	1306772.07
13+51.14					265194.16	1306782.79
13+69.40	63°24'08.50" RT	29.57	18.27	32.72	265182.28	1306796.66
13+83.86					265164.56	1306792.25
14+26.87	74°32'06.03" LT	56.52	43.00	73.52	265122.83	1306781.86
14+57.39					265101.69	1306819.31
14+69.24	29°31'32.36" LT	45.00	11.86	23.19	265095.86	1306829.63
14+80.58					265095.87	1306841.49
14+97.88	42°04'44.18" RT	45.00	17.31	33.05	265095.90	1306858.80
15+13.62					265084.31	1306871.66
15+30.93	42°04'44.18" LT	45.00	17.31	33.05	265072.73	1306884.53
15+46.67					265072.75	1306901.84
15+63.98	42°04'44.18" RT	45.00	17.31	33.05	265072.78	1306919.15
15+79.72					265061.20	1306932.01
15+97.03	42°04'44.18" LT	45.00	17.31	33.05	265049.61	1306944.87
16+12.77					265049.64	1306962.18
16+21.54	22°03'34.51" RT	45.00	8.77	17.33	265049.65	1306970.95
16+30.10					265046.36	1306979.09
16+43.67	33°34'37.93" LT	45.00	13.58	26.37	265041.28	1306991.68
16+56.47					265044.01	1307004.98
16+63.74	38°57'24.80" RT	20.57	7.28	13.99	265045.47	1307012.10
16+70.46					265042.13	1307018.57
16+75.07	25°32'23.17" LT	20.36	4.62	9.08	265040.01	1307022.67
16+79.53	S 88°10'40.05" E			10.35	265039.86	1307027.28
16+89.89					265039.53	1307037.63
17+02.01	15°58'14.65" LT	86.44	12.13	24.09	265039.15	1307049.74
17+13.98					265042.11	1307061.50
17+17.09	31°31'00.36" RT	11.04	3.11	6.07	265042.87	1307064.52
17+20.05					265041.94	1307067.49
17+22.36	15°01'29.72" RT	17.54	2.31	4.60	265041.25	1307069.70
17+24.65					265040.01	1307071.65
17+27.72	30°34'15.43" LT	11.24	3.07	6.00	265038.37	1307074.25
17+30.65	S 88°10'40.05" E			4.49	265038.27	1307077.32
17+35.13					265038.13	1307081.81
17+37.16	15°50'15.55" LT	14.59	2.03	4.03	265038.06	1307083.83
17+39.17					265038.55	1307085.80
17+43.42	25°34'32.41" RT	18.73	4.25	8.36	265039.58	1307089.93
17+47.53					265038.73	1307094.09
17+53.04	30°50'46.13" LT	19.98	5.51	10.76	265037.63	1307099.50
17+58.29					265039.45	1307104.70
17+63.74	21°13'20.01" RT	29.09	5.45	10.78	265041.25	1307109.84
17+69.06	S 88°03'49.31" E			31.42	265041.06	1307115.29
18+00.49					265040.00	1307146.70
18+02.96	37°55'16.46" RT	7.21	2.48	4.77	265039.92	1307149.17
18+05.26					265038.33	1307151.07
18+08.67	44°22'04.45" LT	8.37	3.41	6.48	265036.14	1307153.69
18+11.74					265036.41	1307157.09
18+14.58	19°49'34.74" RT	16.25	2.84	5.62	265036.64	1307159.92
18+17.36	S 74°41'02.56" E			0.25	265035.89	1307162.66
18+17.61	S 81°01'07.08" E			2.19	265035.82	1307162.90
18+19.80	S 88°10'40.05" E			14.80	265035.48	1307165.07
18+34.60					265035.01	1307179.86
18+37.88	30°09'42.64" LT	12.16	3.28	6.40	265034.90	1307183.14
18+41.00					265036.46	1307186.02
18+45.03	28°28'44.42" RT	15.88	4.03	7.89	265038.37	1307189.57
18+48.90					265038.36	1307193.60
18+69.51	49°13'34.78" RT	45.00	20.62	38.66	265038.31	1307214.21
18+87.56					265022.67	1307227.64
19+09.80	40°40'32.21" RT	60.00	22.24	42.60	265005.79	1307242.12
19+30.15					264983.55	1307242.10

CURVE AND TANGENT DATA

P.I. STATION	DELTA	RADIUS	TANGENT	LENGTH	NORTHING	EASTING
19+46.76	40°30'08.71" LT	45.00	16.60	31.81	264966.95	1307242.09
19+61.97					264954.32	1307252.87
19+80.10	43°53'37.07" RT	45.00	18.13	34.47	264940.52	1307264.63
19+96.44					264922.42	1307263.55
20+04.42	27°20'00.23" LT	32.82	7.98	15.66	264914.45	1307263.07
20+12.10					264907.16	1307266.30
20+16.54	10°47'32.36" LT	47.08	4.45	8.87	264903.09	1307268.10
20+20.96					264899.44	1307270.64
20+25.97	6°46'49.56" LT	84.52	5.01	10.00	264895.32	1307273.49
20+30.96	S 41°28'25.06" E			18.51	264891.57	1307276.80
20+49.48					264877.70	1307289.06
20+56.49	3°26'08.52" RT	233.79	7.01	14.02	264872.45	1307293.70
20+63.50					264866.92	1307298.03
20+68.00	6°42'39.33" RT	76.87	4.51	9.00	264863.37	1307300.80
20+72.50					264859.52	1307303.15
20+79.51	33°55'25.04" RT	23.00	7.02	13.62	264853.53	1307306.79
20+86.12					264846.52	1307306.47
20+90.44	9°32'53.70" RT	51.82	4.33	8.64	264842.20	1307306.28
20+94.75	S 12°08'41.53" W			7.28	264837.97	1307305.37
21+02.03					264830.85	1307303.84
21+10.54	15°43'59.37" LT	61.56	8.51	16.91	264822.53	1307302.05
21+18.94					264814.05	1307302.58
21+25.52	25°51'25.58" LT	28.68	6.58	12.94	264807.48	1307302.99
21+31.88					264801.74	1307306.23
21+37.62	4°54'45.58" LT	133.92	5.75	11.48	264796.74	1307309.05
21+43.36	S 34°21'28.99" E			9.68	264792.00	1307312.29
21+53.04					264784.01	1307317.76
21+60.97	9°23'06.54" RT	96.61	7.93	15.83	264777.46	1307322.23
21+68.87					264770.27	1307325.58
21+72.97	9°17'26.29" RT	50.47	4.10	8.18	264766.52	1307327.24
21+77.05					264762.55	1307328.27
21+80.30	12°46'55.66" RT	28.99	3.25	6.47	264759.41	1307329.09
21+83.52	S 1°46'37.96" E			4.06	264756.16	1307329.19
21+87.58					264752.10	1307329.31
21+89.71	9°46'38.39" LT	24.85	2.13	4.24	264749.98	1307329.38
21+91.82					264747.90	1307329.81
21+93.10	5°15'26.73" LT	27.79	1.28	2.55	264746.65	1307330.06
21+94.37					264745.42	1307330.43
21+97.30	4°41'56.32" LT	71.41	2.93	5.86	264742.63	1307331.32
22+00.23	S 22°51'02.29" E			4.17	264739.92	1307332.44
22+04.40					264736.08	1307334.06
22+08.85	1°25'35.75" RT	357.32	4.45	8.90	264731.98	1307335.78
22+13.29					264727.84	1307337.41
22+21.81	21°37'43.79" RT	44.56	8.51	16.82	264719.92	1307340.52
22+30.12	S 0°12'17.25" W			2.89	264711.40	1307340.49
22+33.01					264708.52	1307340.48
22+38.41	42°53'07.46" LT	13.76	5.41	10.30	264703.11	1307340.46
22+43.31					264699.14	1307344.12
22+66.06	41°32'13.80" LT	60.00	22.75	43.50	264682.41	1307359.55
22+86.80					264680.12	1307382.19
23+03.41	40°30'08.71" RT	45.00	16.60	31.81	264678.44	1307398.70
23+18.61					264666.44	1307410.18
23+35.92	42°04'44.18" LT	45.00	17.31	33.05	264653.93	1307422.14
23+51.66					264652.66	1307439.40
23+56.36	1°56'23.99" LT	277.40	4.70	9.39	264652.66	1307444.10
23+61.06	N 87°47'13.98" E			5.72	264652.81	1307448.79
23+66.77					264653.03	1307454.50
23+70.30	6°43'34.25" RT	60.00	3.53	7.04	264653.17	1307458.03
23+73.81					264652.89	1307461.54
23+81.45	7°21'47.28" RT	118.68	7.64	15.25	264652.29	1307469.15
23+89.07	S 78°07'24.50" E			3.95	264650.72	1307476.63

CURVE AND TANGENT DATA

P.I. STATION	DELTA	RADIUS	TANGENT	LENGTH	NORTHING	EASTING
23+93.01					264649.91	1307480.49
23+95.62	17°38'54.81" LT	16.78	2.60	5.17	264649.37	1307483.04
23+98.18					264649.63	1307485.63
24+00.50	3°09'01.34" LT	84.35	2.32	4.64	264649.87	1307487.94
24+02.82	N 81°04'39.35" E			2.53	264650.23	1307490.23
24+05.35					264650.62	1307492.72
24+06.10	7°26'40.35" LT	11.56	0.75	1.50	264650.85	1307493.44
24+06.85	N 64°51'46.92" E			2.64	264651.17	1307494.12
24+09.49					264652.29	1307496.51
24+10.92	18°56'36.93" RT	8.59	1.43	2.84	264652.90	1307497.81
24+12.33					264653.05	1307499.23
24+13.43	10°45'23.69" LT	11.74	1.11	2.20	264653.17	1307500.33
24+14.53					264653.49	1307501.39
24+15.36	5°06'16.19" LT	18.71	0.83	1.67	264653.74	1307502.19
24+16.20					264654.05	1307502.96
24+19.47	28°06'50.50" RT	13.09	3.28	6.42	264655.28	1307506.00
24+22.62					264654.94	1307509.26
24+25.24	9°00'24.70" RT	33.22	2.62	5.22	264654.66	1307511.86
24+27.84					264653.98	1307514.38
24+37.23	20°35'19.00" LT	51.69	9.39	18.57	264651.54	1307523.45
24+46.42					264652.44	1307532.79
24+54.56	74°06'34.74" RT	10.79	8.15	13.95	264653.23	1307540.90
24+60.37					264645.64	1307543.88
24+72.18	84°09'04.50" LT	13.09	11.82	19.22	264634.64	1307548.19
24+79.59					264637.81	1307559.57
24+85.05	32°26'46.92" RT	18.78	5.46	10.64	264639.28	1307564.83
24+90.22	S 73°07'02.57" E			22.65	264637.69	1307570.06
25+12.88					264631.11	1307591.74
25+17.55	35°25'46.76" LT	14.63	4.67	9.05	264629.76	1307596.21
25+21.92					264631.24	1307600.64
25+30.16	52°44'57.09" LT	16.61	8.24	15.30	264633.86	1307608.45
25+37.22					264641.67	1307611.09
25+50.65	107°05'59.85"RT	9.92	13.43	18.55	264654.39	1307615.40
25+55.76					264646.53	1307626.29
25+62.53	47°03'33.83" RT	15.54	6.77	12.76	264642.57	1307631.78
25+68.52					264635.86	1307632.62
25+72.24	35°18'01.38" LT	11.67	3.71	7.19	264632.17	1307633.08
25+75.72					264629.43	1307635.59
26+08.44	120°58'33.79"LT	18.52	32.72	39.11	264605.28	1307657.67
26+14.82					264636.64	1307667.01
26+19.35	53°46'44.25" RT	8.92	4.52	8.37	264640.98	1307668.30
26+23.20					264642.50	1307672.56
26+26.87	26°22'40.40" RT	15.69	3.68	7.22	264643.73	1307676.02
26+30.42					264643.30	1307679.67
26+37.86	21°00'10.10" RT	40.15	7.44	14.72	264642.43	1307687.06
26+45.13					264638.96	1307693.65
26+51.38	27°09'50.34" LT	25.86	6.25	12.26	264636.05	1307699.18
26+57.39					264635.99	1307705.43

FILE NAME	XL5464_PS_FP_05.dgn
TIME	10:51:35 PM
DATE	12/30/2021
PLOTTED BY	wsppw14ics02$
DESIGNED BY	A.SHANMUGHAM
ENTERED BY	A.SHANMUGHAM
CHECKED BY	C.BUITRAGO
PROJ. ENGR.	E. PAO
REGIONAL ADM.	

PRELIMINARY
NOT FOR CONSTRUCTION

REVISION | DATE | BY

REGION NO. 10 | STATE WASH | FED.AID PROJ.NO.
JOB NUMBER
CONTRACT NO. | LOCATION NO. XL-5464

P.E. STAMP BOX DATE
P.E. STAMP BOX DATE

Washington State Department of Transportation
GRAHAM
WSP
1001 Fourth Ave, Suite 3100, Seattle, WA 98154
Tel: (206) 382-5200

I-405
NE 132ND STREET INTERCHANGE PROJECT

I-405 STREAM ALIGNMENT GEOMETRY TABLE

PLAN REF NO FP05
SHEET OF SHEETS

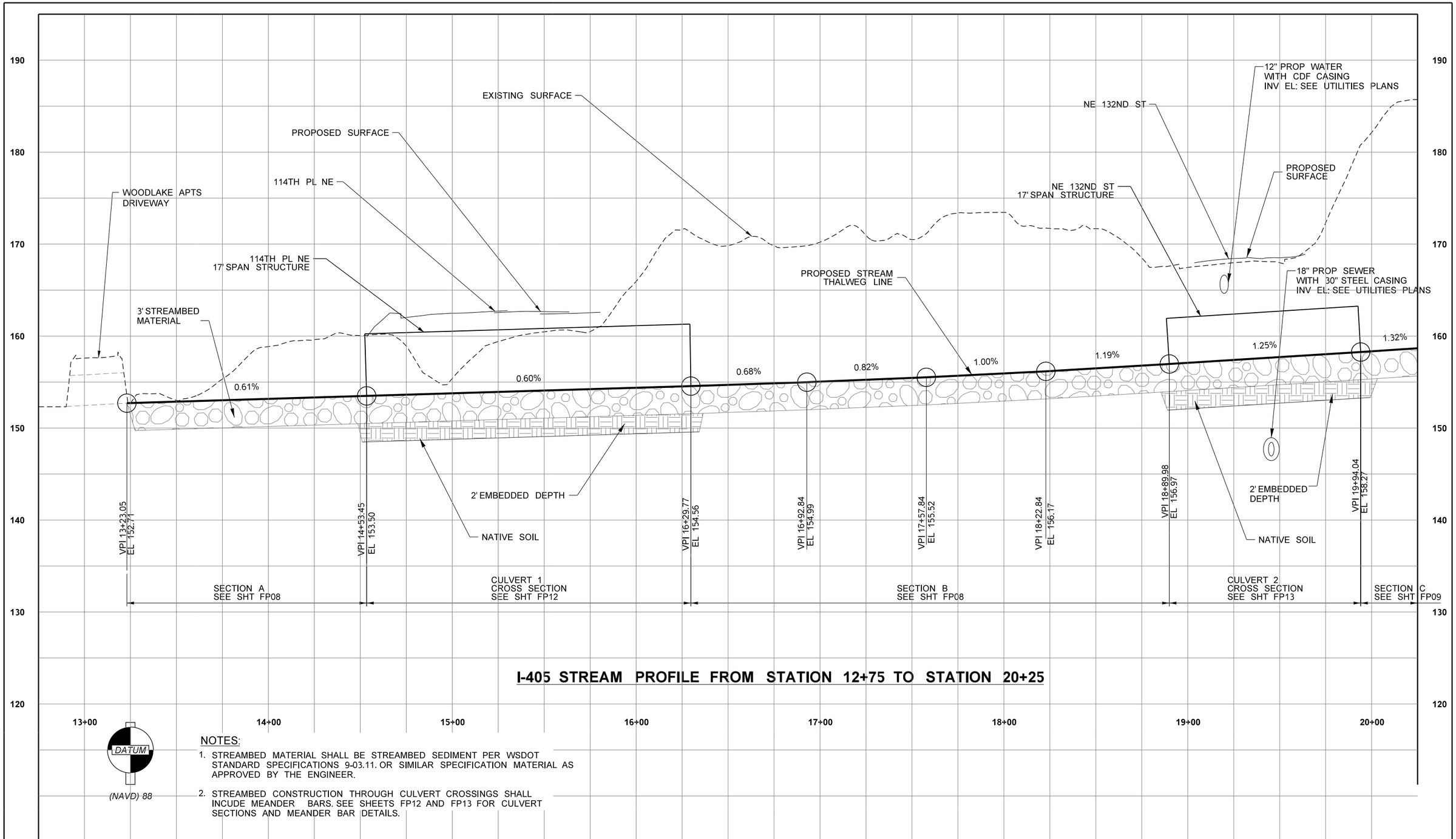

I-405 STREAM PROFILE FROM STATION 12+75 TO STATION 20+25

NOTES:

1. STREAMBED MATERIAL SHALL BE STREAMBED SEDIMENT PER WSDOT STANDARD SPECIFICATIONS 9-03.11. OR SIMILAR SPECIFICATION MATERIAL AS APPROVED BY THE ENGINEER.
2. STREAMBED CONSTRUCTION THROUGH CULVERT CROSSINGS SHALL INCUDE MEANDER BARS. SEE SHEETS FP12 AND FP13 FOR CULVERT SECTIONS AND MEANDER BAR DETAILS.

FILE NAME	XL5464_PS_FP_06.dgn
TIME	10:50:45 PM
DATE	12/30/2021
PLOTTED BY	wsppw14ics02$
DESIGNED BY	A.SHANMUGHAM
ENTERED BY	A.SHANMUGHAM
CHECKED BY	C.BUITRAGO
PROJ. ENGR.	E. PAO
REGIONAL ADM.	

PRELIMINARY
NOT FOR CONSTRUCTION

REVISION	DATE	BY

REGION NO.	STATE	FED.AID PROJ.NO.
10	WASH	
JOB NUMBER		
CONTRACT NO.		LOCATION NO. XL-5464

P.E. STAMP BOX DATE

P.E. STAMP BOX DATE

Washington State Department of Transportation
GRAHAM
WSP
1001 Fourth Ave, Suite 3100, Seattle, WA 98154
Tel: (206) 382-5200

I-405
NE 132ND STREET INTERCHANGE PROJECT

I-405 STREAM PROFILE

PLAN REF NO
FP06
SHEET
OF
SHEETS

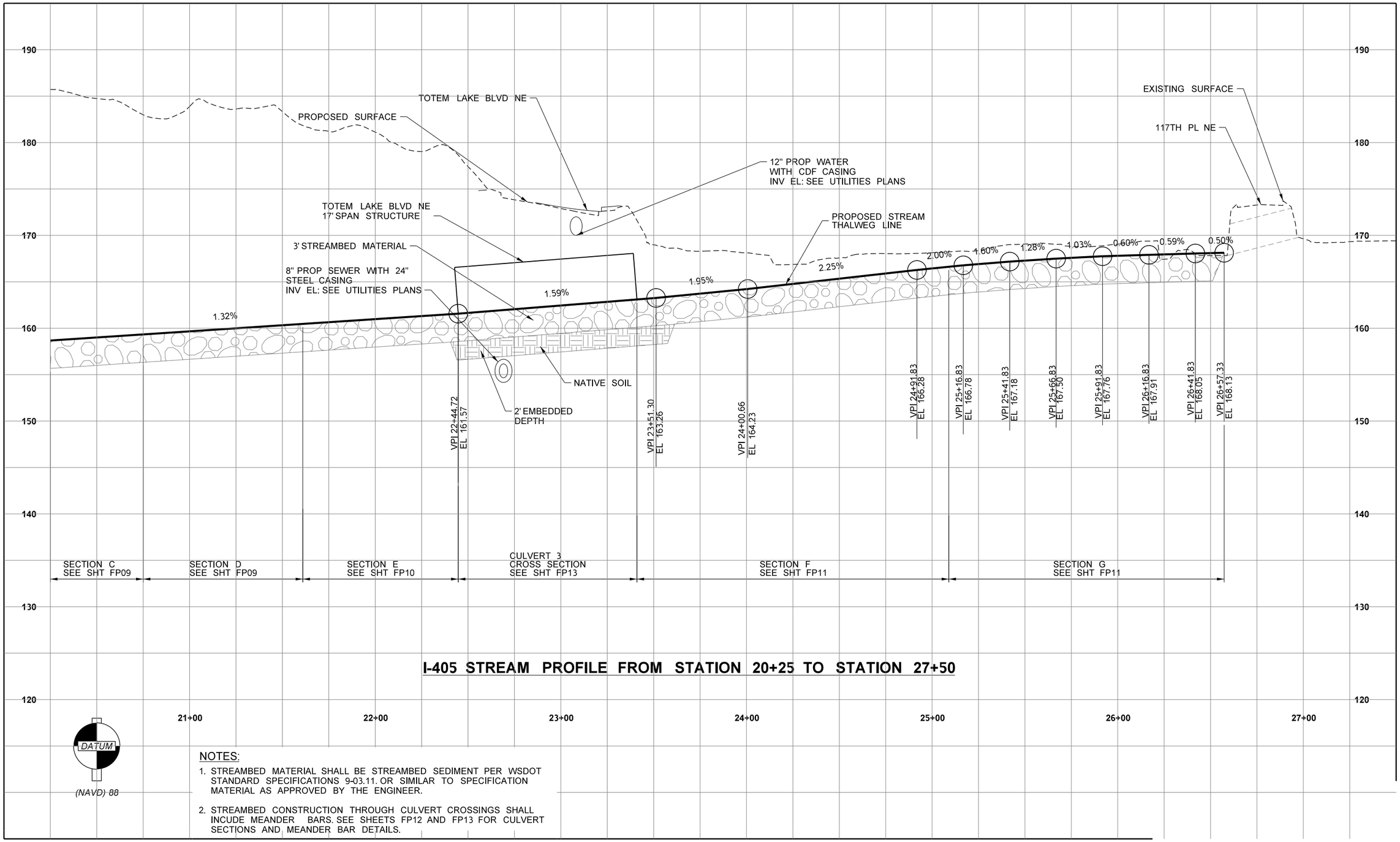

I-405 STREAM PROFILE FROM STATION 20+25 TO STATION 27+50

NOTES:

1. STREAMBED MATERIAL SHALL BE STREAMBED SEDIMENT PER WSDOT STANDARD SPECIFICATIONS 9-03.11. OR SIMILAR TO SPECIFICATION MATERIAL AS APPROVED BY THE ENGINEER.
2. STREAMBED CONSTRUCTION THROUGH CULVERT CROSSINGS SHALL INCUDE MEANDER BARS. SEE SHEETS FP12 AND FP13 FOR CULVERT SECTIONS AND MEANDER BAR DETAILS.

FILE NAME	XL5464_PS_FP_07.dgn
TIME	10:51:17 PM
DATE	12/30/2021
PLOTTED BY	wsppw14ics02$
DESIGNED BY	A.SHANMUGHAM
ENTERED BY	A.SHANMUGHAM
CHECKED BY	C.BUITRAGO
PROJ. ENGR.	E. PAO
REGIONAL ADM.	

PRELIMINARY
NOT FOR CONSTRUCTION

REVISION	DATE	BY

REGION NO.	STATE	FED.AID PROJ.NO.
10	WASH	
JOB NUMBER		
CONTRACT NO.		LOCATION NO. XL-5464

P.E. STAMP BOX DATE

P.E. STAMP BOX DATE

Washington State Department of Transportation
GRAHAM
WSP
1001 Fourth Ave, Suite 3100, Seattle, WA 98154
Tel: (206) 382-5200

I-405
NE 132ND STREET INTERCHANGE PROJECT

I-405 STREAM PROFILE

PLAN REF NO
FP07
SHEET
OF
SHEETS

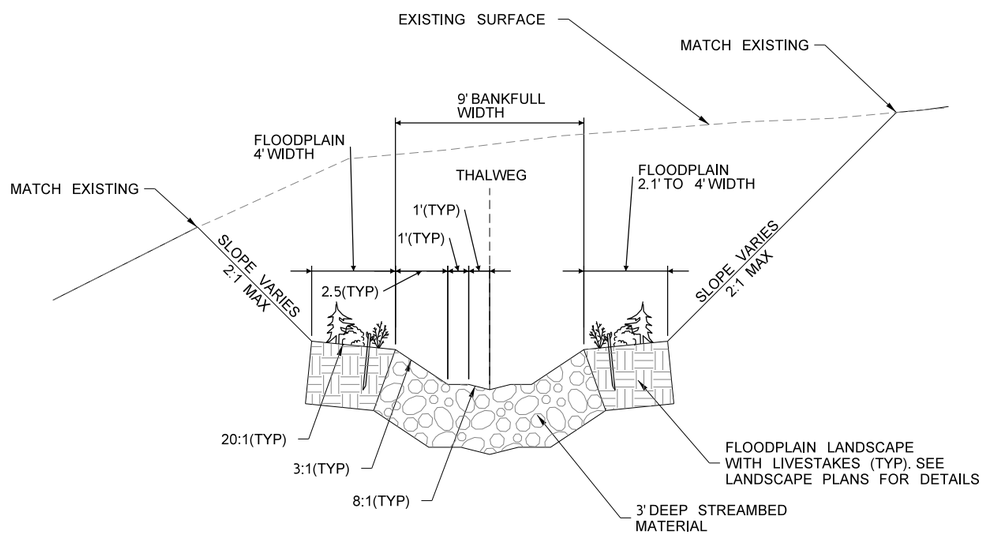

TYPICAL SECTION-A
STATION 13+23 TO STATION 14+53

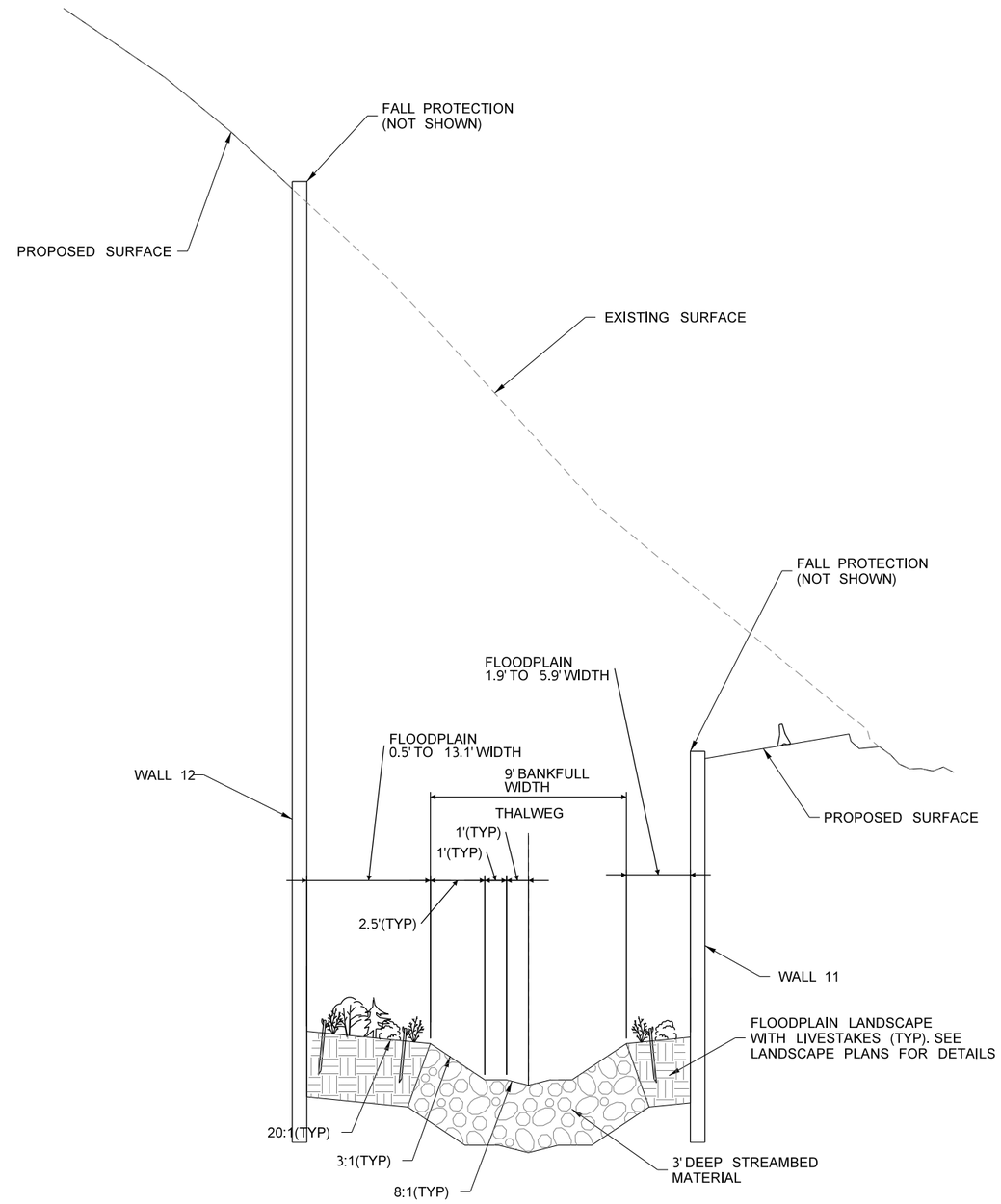

TYPICAL SECTION-B
STATION 16+30 TO STATION 18+88

FILE NAME	XL5464_PS_FP_08.dgn
TIME	10:51:32 PM
DATE	12/30/2021
PLOTTED BY	wsppw14ics02$
DESIGNED BY	A.SHANMUGHAM
ENTERED BY	A.SHANMUGHAM
CHECKED BY	C.BUITRAGO
PROJ. ENGR.	E. PAO
REGIONAL ADM.	

PRELIMINARY
NOT FOR CONSTRUCTION

REVISION	DATE	BY

REGION NO.	STATE	FED.AID PROJ.NO.
10	WASH	
JOB NUMBER		
CONTRACT NO.		LOCATION NO. XL-5464

P.E. STAMP BOX DATE

P.E. STAMP BOX DATE

Washington State Department of Transportation
GRAHAM
WSP
1001 Fourth Ave, Suite 3100, Seattle, WA 98154
Tel: (206) 382-5200

I-405
NE 132ND STREET INTERCHANGE PROJECT

I-405 STREAM CROSS SECTION

PLAN REF NO
FP08

SHEET
OF
SHEETS

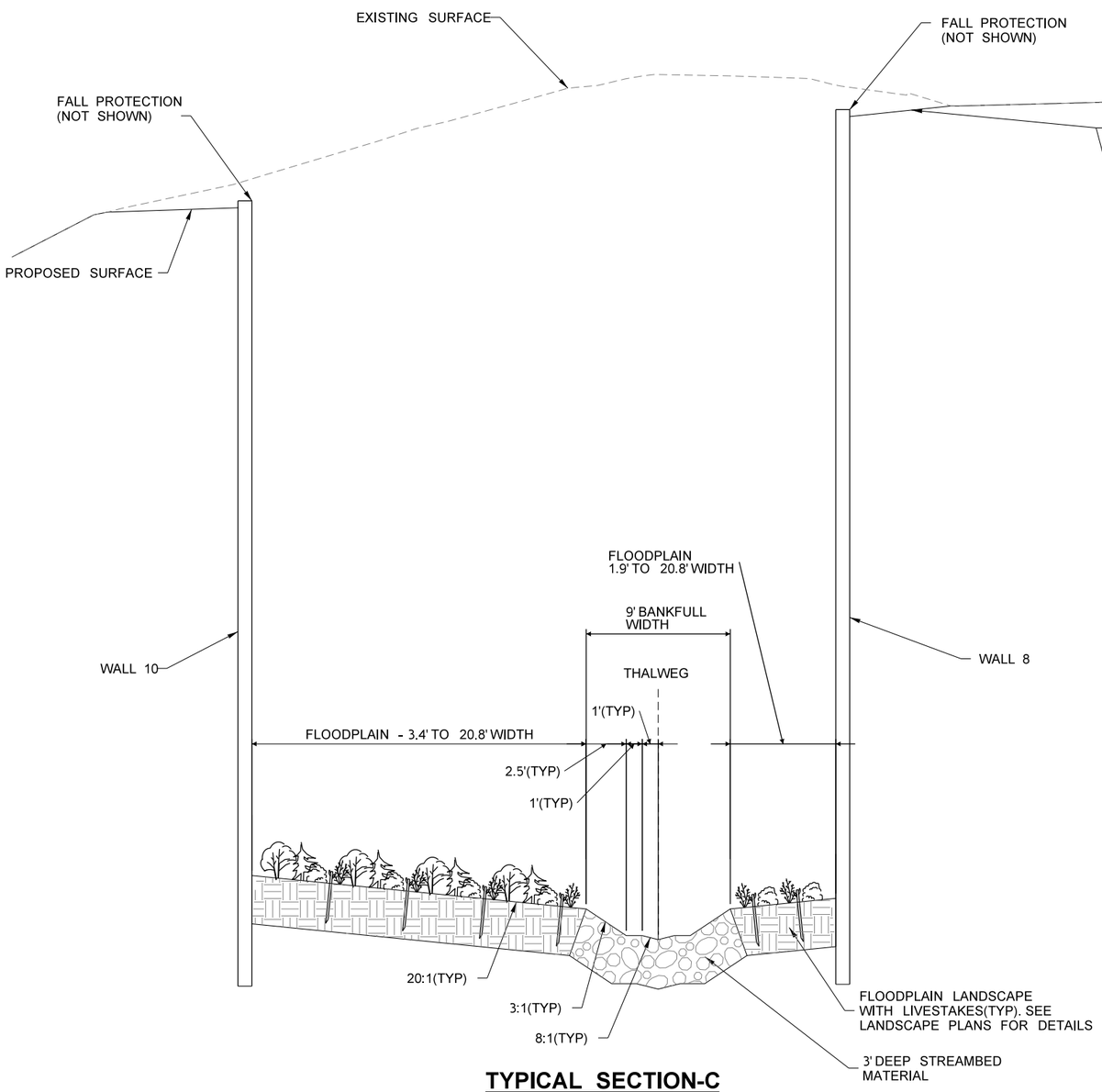

TYPICAL SECTION-C
STATION 19+94 TO STATION 20+99

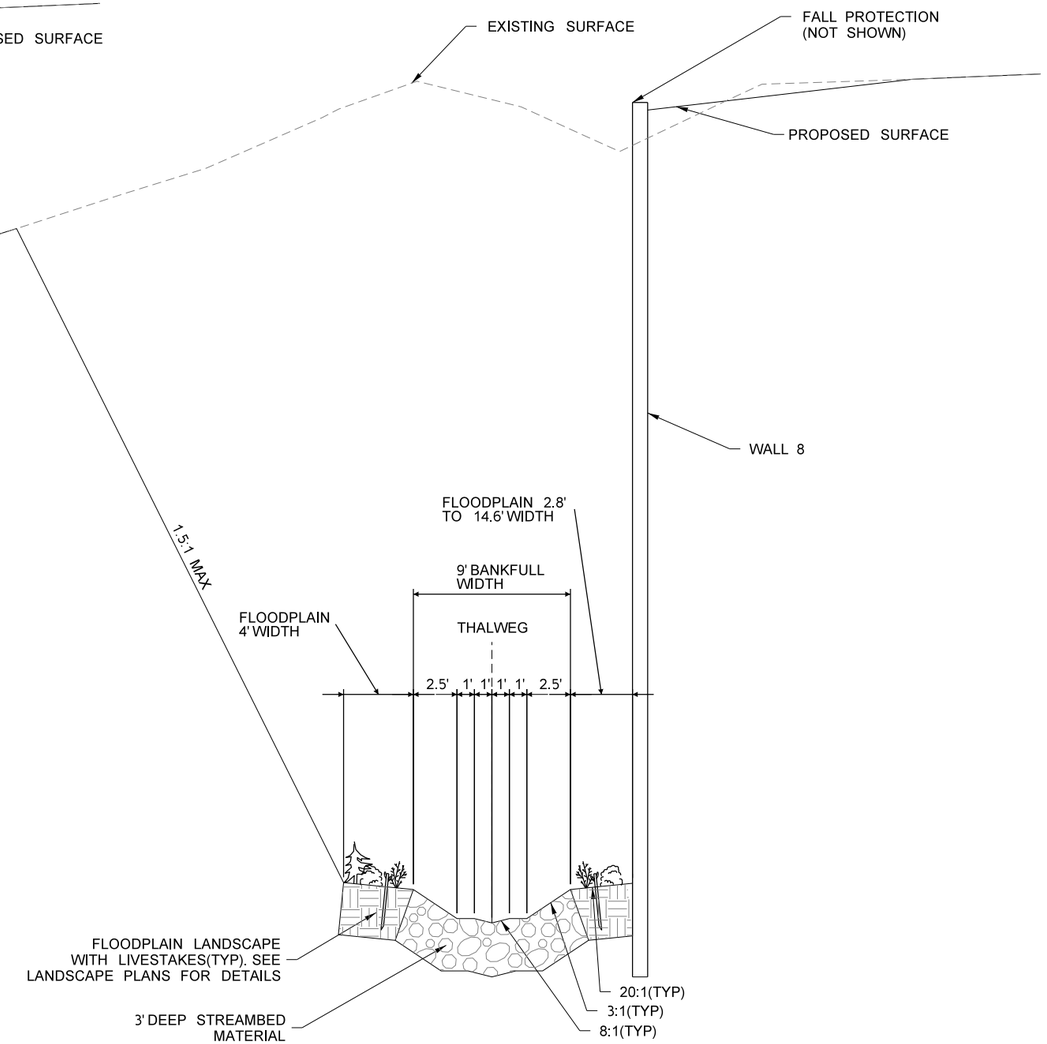

TYPICAL SECTION-D
STATION 20+99 TO STATION 21+61

FILE NAME	XL5464_PS_FP_09.dgn						
TIME	10:51:19 PM						
DATE	12/30/2021						
PLOTTED BY	wsppw14ics02$						
DESIGNED BY	A.SHANMUGHAM						
ENTERED BY	A.SHANMUGHAM						
CHECKED BY	C.BUITRAGO						
PROJ. ENGR.	E. PAO						
REGIONAL ADM.		REVISION	DATE	BY			

PRELIMINARY
NOT FOR CONSTRUCTION

REGION NO.	STATE	FED.AID PROJ.NO.
10	WASH	
JOB NUMBER		
CONTRACT NO.		LOCATION NO. XL-5464

P.E. STAMP BOX — DATE

P.E. STAMP BOX — DATE

Washington State
Department of Transportation
GRAHAM
WSP
1001 Fourth Ave, Suite 3100, Seattle, WA 98154
Tel: (206) 382-5200

I-405
NE 132ND STREET INTERCHANGE PROJECT

I-405 STREAM CROSS SECTION

PLAN REF NO
FP09

SHEET
OF
SHEETS

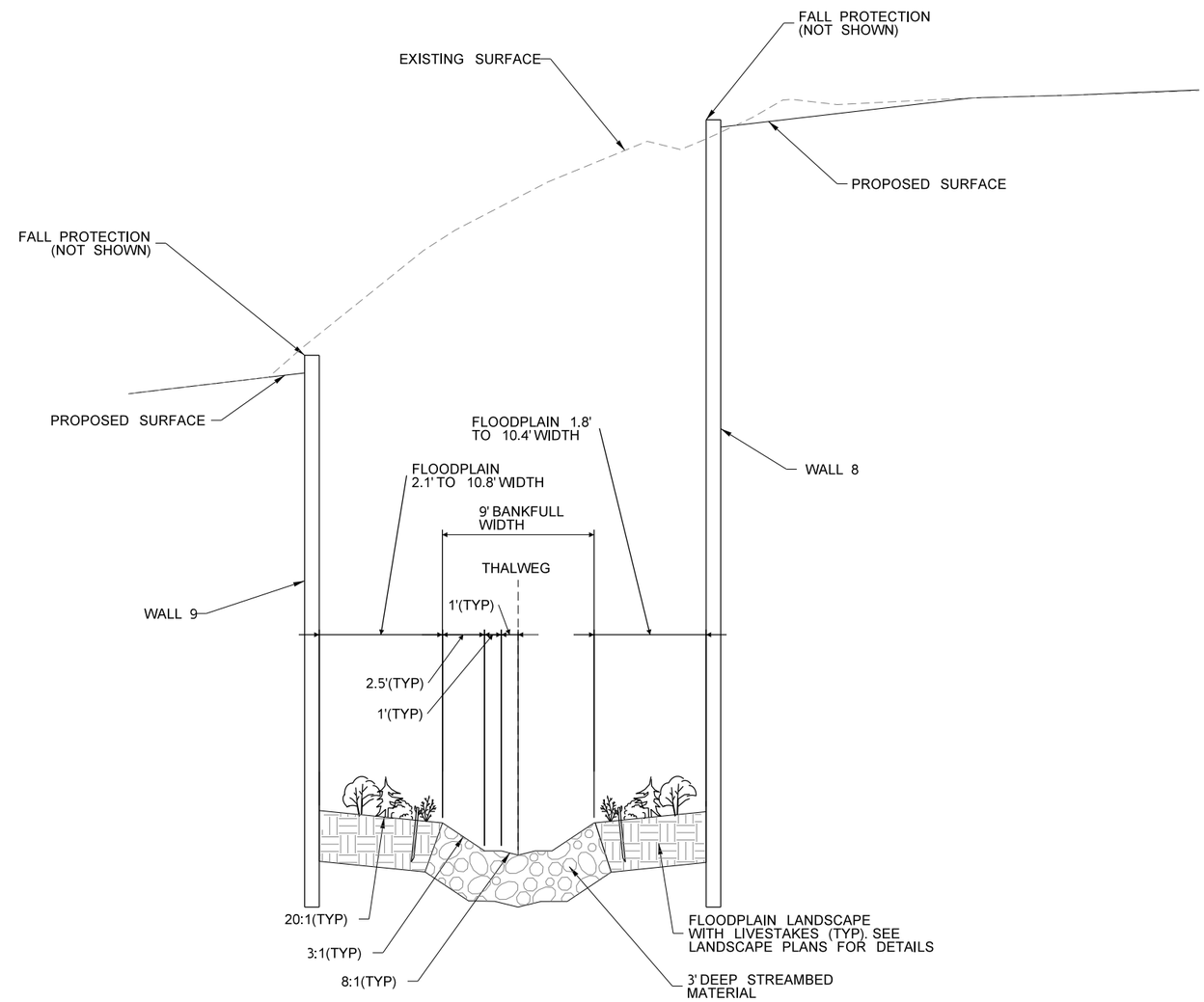

TYPICAL SECTION-E
STATION 21+61 TO STATION 22+45

FILE NAME	XL5464_PS_FP_10.dgn
TIME	10:51:07 PM
DATE	12/30/2021
PLOTTED BY	wsppw14ics02$
DESIGNED BY	A.SHANMUGHAM
ENTERED BY	A.SHANMUGHAM
CHECKED BY	C.BUITRAGO
PROJ. ENGR.	E. PAO
REGIONAL ADM.	

PRELIMINARY
NOT FOR CONSTRUCTION

REVISION	DATE	BY

REGION NO.	STATE	FED.AID PROJ.NO.
10	WASH	
JOB NUMBER		
CONTRACT NO.		LOCATION NO. XL-5464

P.E. STAMP BOX DATE

P.E. STAMP BOX DATE

Washington State
Department of Transportation
GRAHAM
WSP
1001 Fourth Ave, Suite 3100, Seattle, WA 98154
Tel: (206) 382-5200

I-405
NE 132ND STREET INTERCHANGE
PROJECT

I-405 STREAM CROSS SECTION

PLAN REF NO
FP10

SHEET
OF
SHEETS

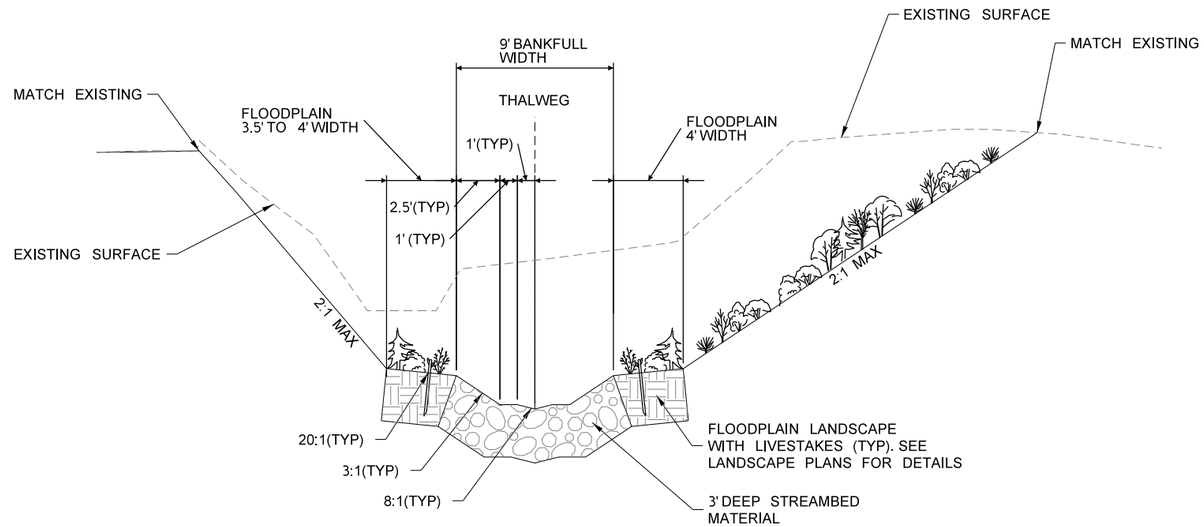

TYPICAL SECTION-F
STATION 23+41 TO STATION 24+56

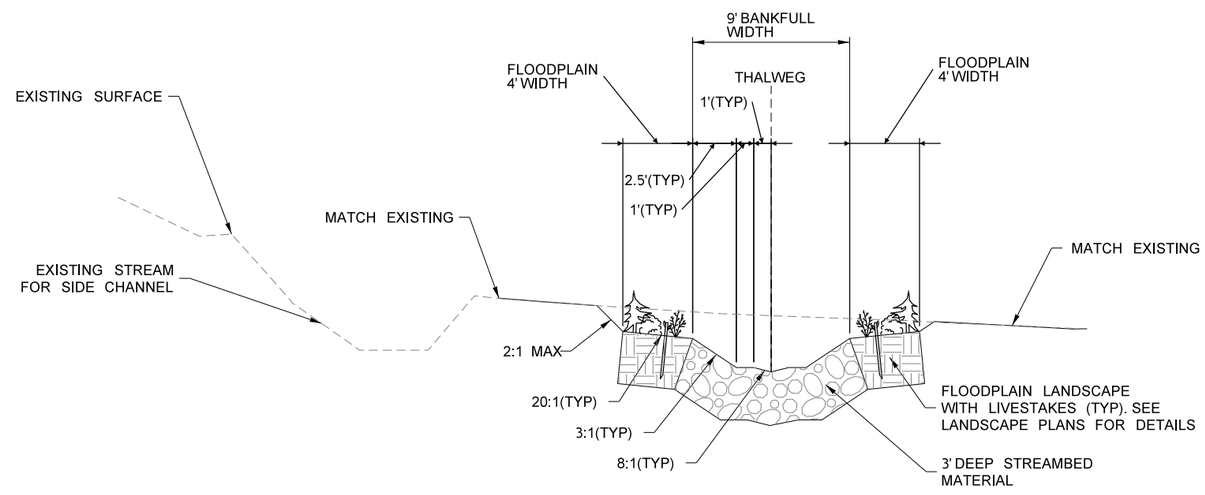

TYPICAL SECTION-G
STATION 24+56 TO STATION 26+57

FILE NAME	XL5464_PS_FP_11.dgn						
TIME	10:51:13 PM				REGION NO. 10	STATE WASH	FED.AID PROJ.NO.
DATE	12/30/2021				JOB NUMBER		
PLOTTED BY	wsppw14ics02$	PRELIMINARY					
DESIGNED BY	A.SHANMUGHAM						
ENTERED BY	A.SHANMUGHAM						
CHECKED BY	C.BUITRAGO	NOT FOR CONSTRUCTION			CONTRACT NO.	LOCATION NO. XL-5464	
PROJ. ENGR.	E. PAO						
REGIONAL ADM.		REVISION	DATE	BY			

P.E. STAMP BOX DATE

P.E. STAMP BOX DATE

Washington State Department of Transportation
GRAHAM
WSP
1001 Fourth Ave, Suite 3100, Seattle, WA 98154
Tel: (206) 382-5200

I-405
NE 132ND STREET INTERCHANGE PROJECT

I-405 STREAM CROSS SECTION

PLAN REF NO FP11

SHEET OF SHEETS

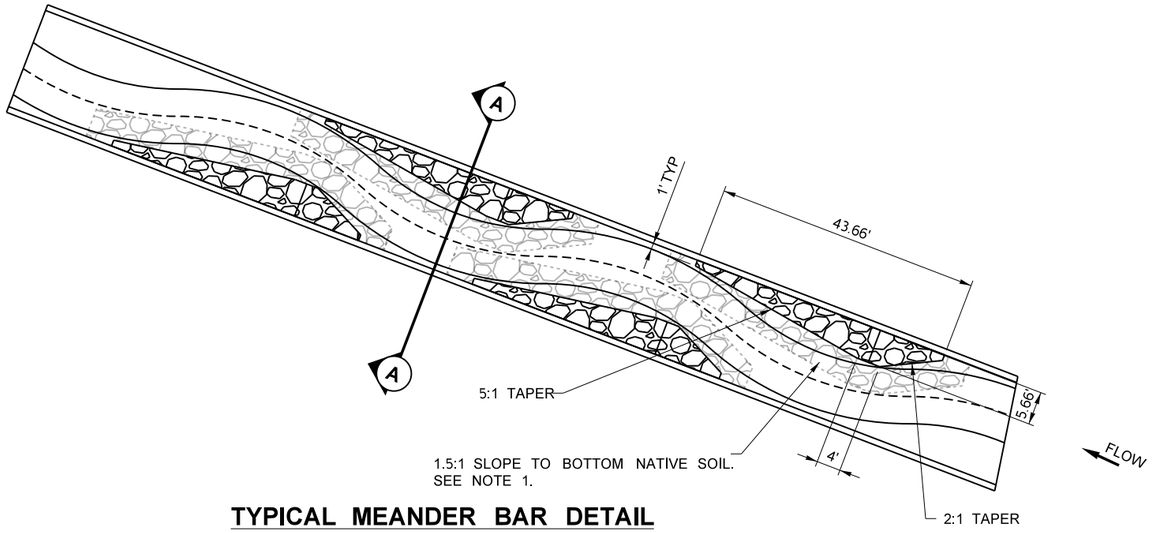

TYPICAL MEANDER BAR DETAIL
N.T.S.

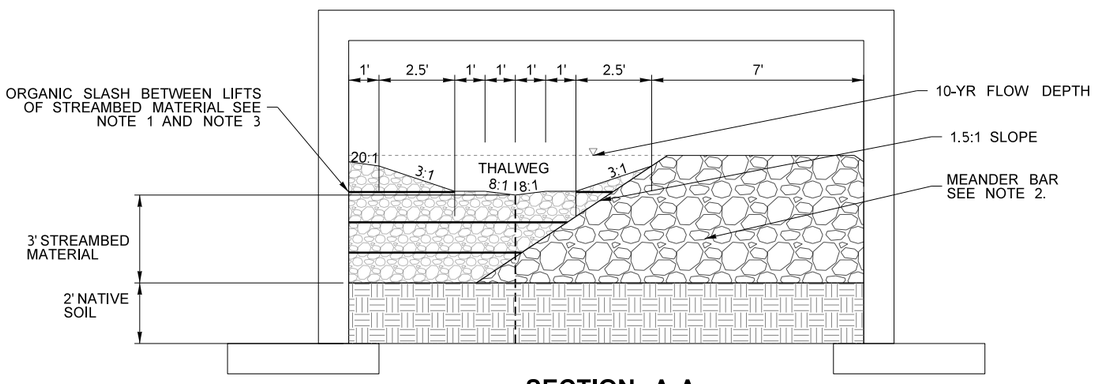

SECTION A-A
N.T.S.

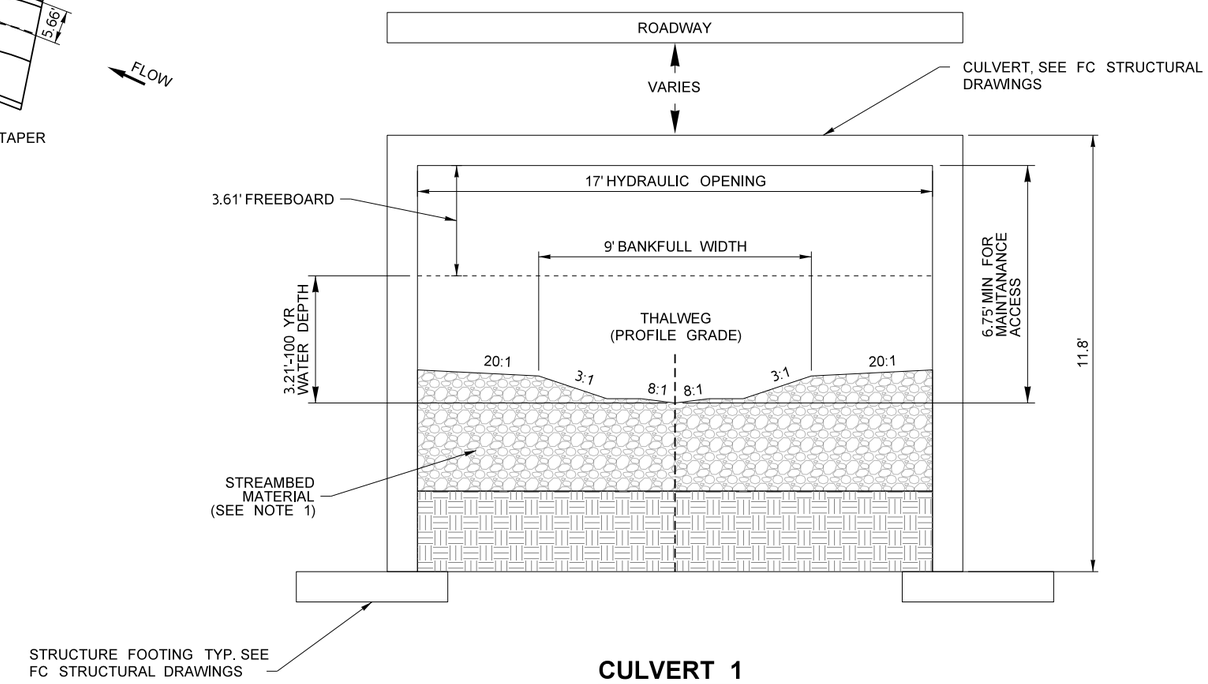

CULVERT 1
TYPICAL CROSS-SECTION
(114TH PLACE NE)
N.T.S.

NOTES:

1. PLACE MEANDER BAR AND STREAMBED MATERIAL IN 12" LIFTS. ORGANIC SLASH TO BE ADDED TO STREAMBED MATERIAL BETWEEN EACH LIFT. THOROUGHLY WASH STREAMBED WITH A PRESSURIZED HOSE AT EACH LIFT TO SEAL THE BED.
2. MEANDER BAR: 9 PARTS 6-INCH STREAMBED COBBLES SHALL BE MIXED THOROUGHLY WITH 1-PART STREAMBED SEDIMENT, IN 12-INCH LIFTS.
3. MATERIAL SHALL BE STREAMBED SEDIMENT PER WSDOT STANDARD SPECIFICATIONS SECTION 9-03.11. OR SIMILAR TO SPECIFICATION MATERIAL AS APPROVED BY THE ENGINEER.
4. ORGANIC SLASH SHALL BE LIVE FASCINES OR TREE BRANCH MATERIALS.
5. SEE FC STRUCTURAL PLANS FOR THE 3 SIDED CULVERT PLAN PROFILE AND DETAILS.

FILE NAME	XL5464_PS_FP_12.dgn
TIME	10:51:38 PM
DATE	12/30/2021
PLOTTED BY	wsppw14ics02$
DESIGNED BY	OWEN PORKKA
ENTERED BY	OWEN PORKKA
CHECKED BY	C. BUITRAGO
PROJ. ENGR.	E. PAO
REGIONAL ADM.	

PRELIMINARY
NOT FOR CONSTRUCTION

REVISION	DATE	BY

REGION NO.	STATE	FED.AID PROJ.NO.
10	WASH	
JOB NUMBER		
CONTRACT NO.		LOCATION NO. XL-5464

P.E. STAMP BOX DATE

P.E. STAMP BOX DATE

Washington State Department of Transportation
GRAHAM
WSP
1001 Fourth Ave, Suite 3100, Seattle, WA 98154
Tel: (206) 382-5200

I-405
NE 132ND STREET INTERCHANGE PROJECT

CULVERT SECTIONS AND MEANDER BAR DETAILS

PLAN REF NO
FP12
SHEET
OF
SHEETS

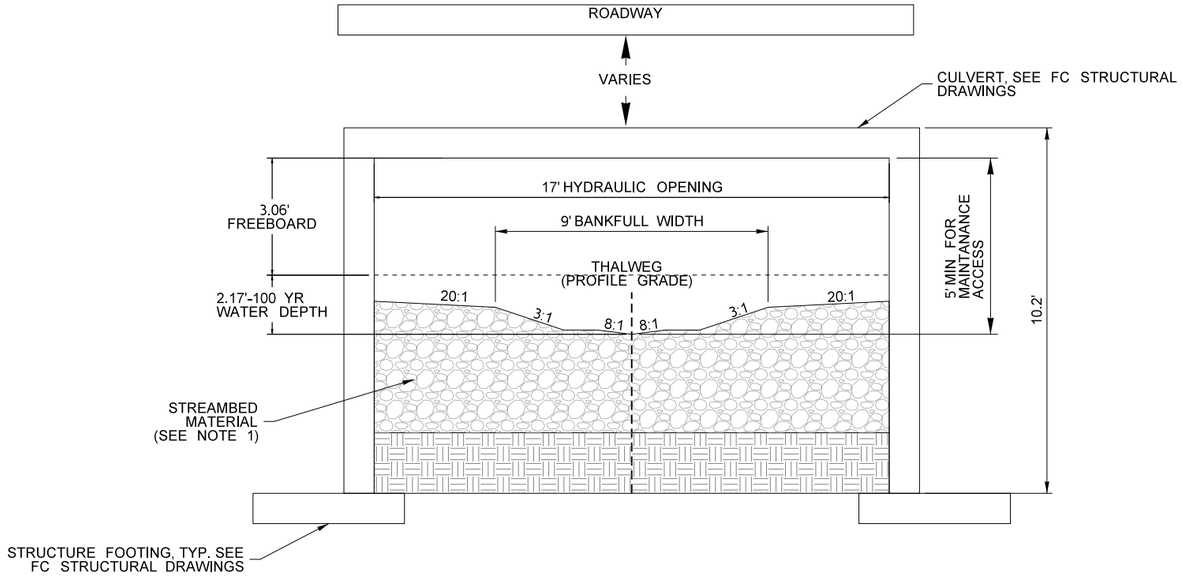

CULVERT 2 - TYPICAL CROSS-SECTION (NE 132ND ST)
N.T.S.

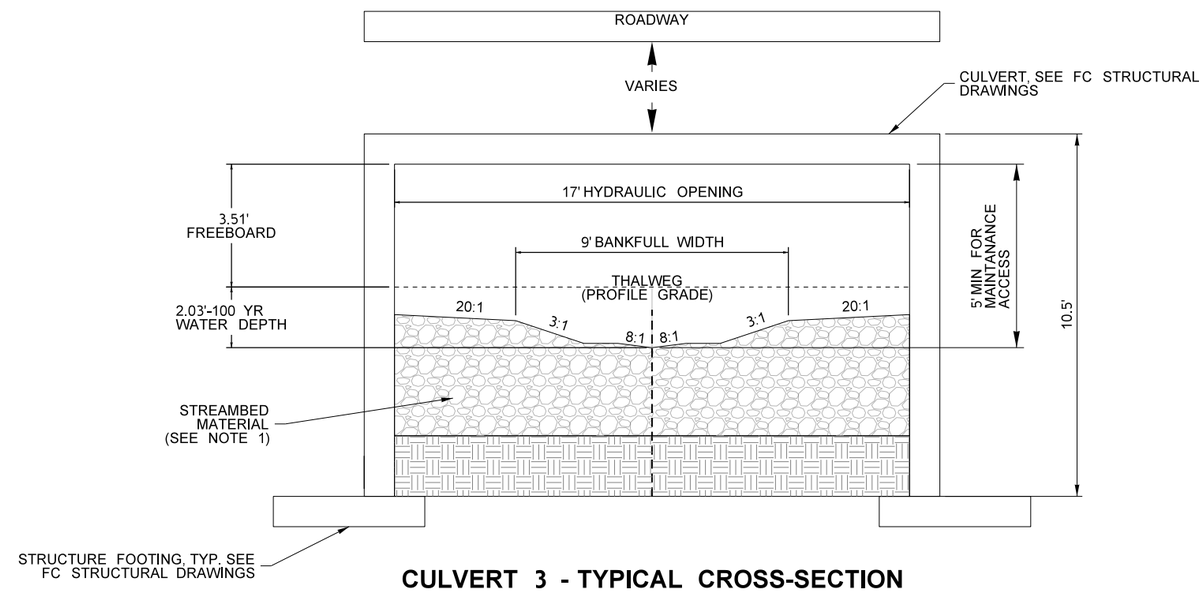

CULVERT 3 - TYPICAL CROSS-SECTION (TOTEM LAKE BLVD NE)
N.T.S.

NOTES:

1. PLACE MEANDER BAR AND STREAMBED MATERIAL IN 12" LIFTS. ORGANIC SLASH TO BE ADDED TO STREAMBED MATERIAL BETWEEN EACH LIFT. THOROUGHLY WASH STREAMBED WITH A PRESSURIZED HOSE AT EACH LIFT TO SEAL THE BED.
2. MEANDER BAR: 9 PARTS 6-INCH STREAMBED COBBLES SHALL BE MIXED THOROUGHLY WITH 1-PART STREAMBED SEDIMENT, IN 12-INCH LIFTS.
3. MATERIAL SHALL BE STREAMBED SEDIMENT PER WSDOT STANDARD SPECIFICATIONS SECTION 9-03.11. OR SIMILAR TO SPECIFICATION AS APPROVED BY THE ENGINEER.
4. ORGANIC SLASH SHALL BE LIVE FASCINES OR TREE BRANCH MATERIALS.
5. SEE FC STRUCTURAL PLANS FOR THE 3 SIDED CULVERT PLAN PROFILE AND DETAILS.

FILE NAME	XL5464_PS_FP_13.dgn
TIME	10:51:26 PM
DATE	12/30/2021
PLOTTED BY	wsppw14ics02$
DESIGNED BY	O. PORKKA
ENTERED BY	O. PORKKA
CHECKED BY	C. BUITRAGO
PROJ. ENGR.	E. PAO
REGIONAL ADM.	

PRELIMINARY
NOT FOR CONSTRUCTION

REVISION	DATE	BY

REGION NO.	STATE	FED.AID PROJ.NO.
10	WASH	
JOB NUMBER		
CONTRACT NO.		LOCATION NO. XL-5464

P.E. STAMP BOX DATE

P.E. STAMP BOX DATE

Washington State Department of Transportation
GRAHAM
WSP
1001 Fourth Ave, Suite 3100, Seattle, WA 98154
Tel: (206) 382-5200

I-405
NE 132ND STREET INTERCHANGE PROJECT

CULVERT SECTIONS AND MEANDER BAR DETAILS

PLAN REF NO FP13
SHEET
OF
SHEETS

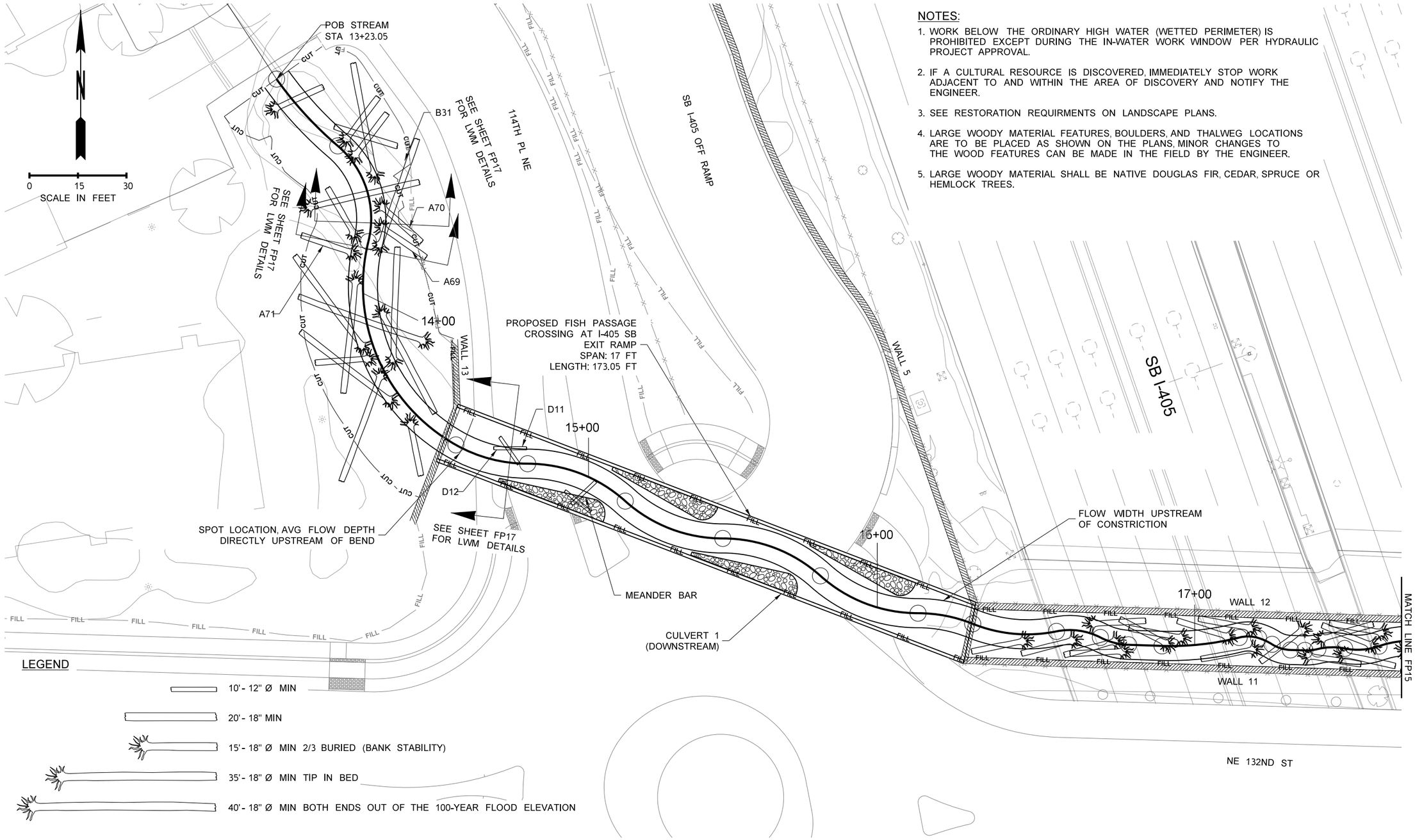

NOTES:

1. WORK BELOW THE ORDINARY HIGH WATER (WETTED PERIMETER) IS PROHIBITED EXCEPT DURING THE IN-WATER WORK WINDOW PER HYDRAULIC PROJECT APPROVAL.
2. IF A CULTURAL RESOURCE IS DISCOVERED, IMMEDIATELY STOP WORK ADJACENT TO AND WITHIN THE AREA OF DISCOVERY AND NOTIFY THE ENGINEER.
3. SEE RESTORATION REQUIRMENTS ON LANDSCAPE PLANS.
4. LARGE WOODY MATERIAL FEATURES, BOULDERS, AND THALWEG LOCATIONS ARE TO BE PLACED AS SHOWN ON THE PLANS, MINOR CHANGES TO THE WOOD FEATURES CAN BE MADE IN THE FIELD BY THE ENGINEER.
5. LARGE WOODY MATERIAL SHALL BE NATIVE DOUGLAS FIR, CEDAR, SPRUCE OR HEMLOCK TREES.

FILE NAME	XL5464_PS_FP_14.dgn
TIME	10:51:17 PM
DATE	12/30/2021
PLOTTED BY	wsppw14ics02$
DESIGNED BY	A.SHANMUGHAM
ENTERED BY	A.SHANMUGHAM
CHECKED BY	C.BUITRAGO
PROJ. ENGR.	E. PAO
REGIONAL ADM.	

PRELIMINARY
NOT FOR CONSTRUCTION

REVISION	DATE	BY

REGION NO.	STATE	FED.AID PROJ.NO.
10	WASH	
JOB NUMBER		
CONTRACT NO.		LOCATION NO. XL-5464

P.E. STAMP BOX — DATE

P.E. STAMP BOX — DATE

Washington State Department of Transportation
GRAHAM
WSP
1001 Fourth Ave, Suite 3100, Seattle, WA 98154
Tel: (206) 382-5200

I-405
NE 132ND STREET INTERCHANGE PROJECT

STREAM LWM AND HABITAT FEATURES PLAN

PLAN REF NO
FP14

SHEET
OF
SHEETS

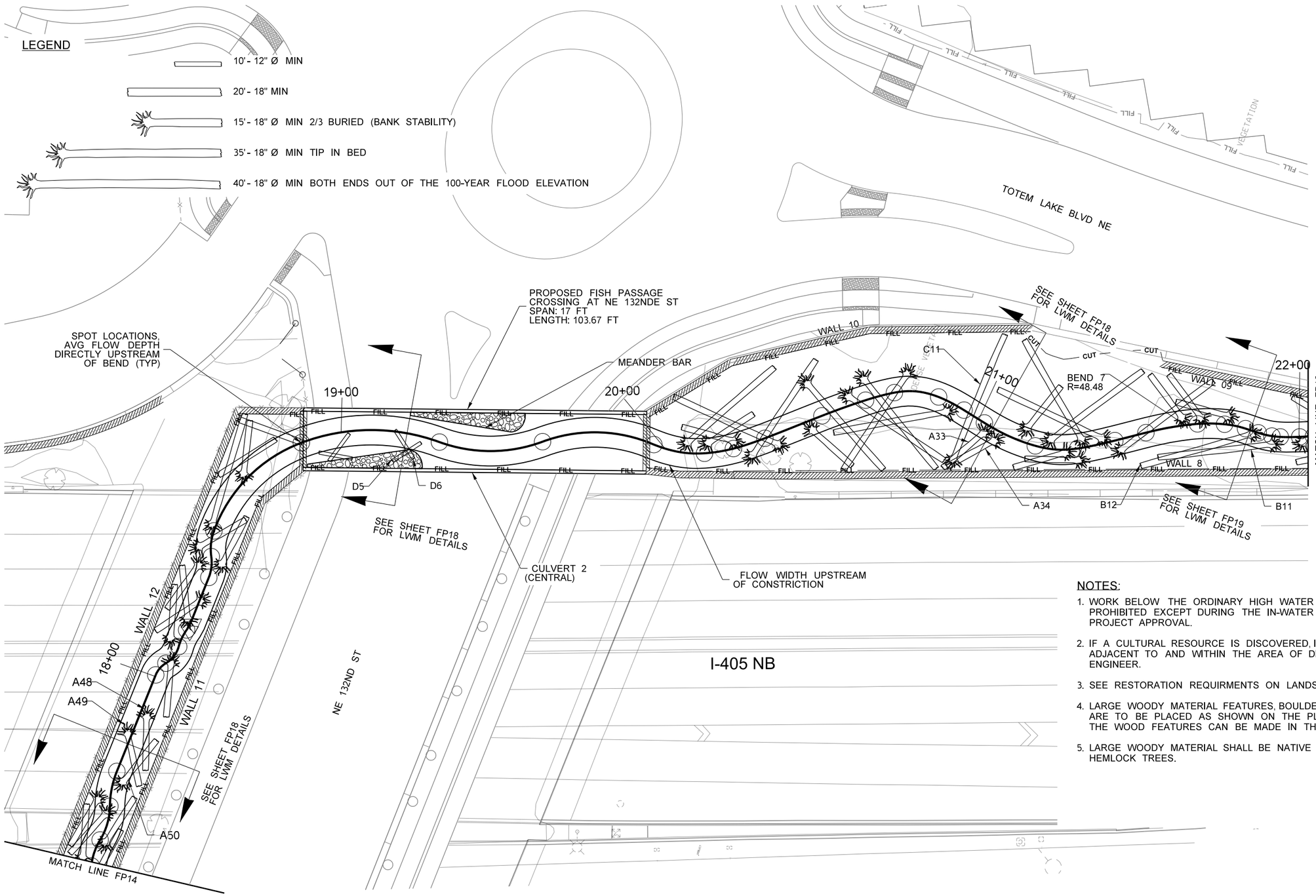

NOTES:

1. WORK BELOW THE ORDINARY HIGH WATER (WETTED PERIMETER) IS PROHIBITED EXCEPT DURING THE IN-WATER WORK WINDOW PER HYDRAULIC PROJECT APPROVAL.
2. IF A CULTURAL RESOURCE IS DISCOVERED, IMMEDIATELY STOP WORK ADJACENT TO AND WITHIN THE AREA OF DISCOVERY AND NOTIFY THE ENGINEER.
3. SEE RESTORATION REQUIRMENTS ON LANDSCAPE PLANS.
4. LARGE WOODY MATERIAL FEATURES, BOULDERS, AND THALWEG LOCATIONS ARE TO BE PLACED AS SHOWN ON THE PLANS, MINOR CHANGES TO THE WOOD FEATURES CAN BE MADE IN THE FIELD BY THE ENGINEER.
5. LARGE WOODY MATERIAL SHALL BE NATIVE DOUGLAS FIR, CEDAR, SPRUCE OR HEMLOCK TREES.

FILE NAME	XL5464_PS_FP_15.dgn
TIME	10:51:37 PM
DATE	12/30/2021
PLOTTED BY	wsppw14ics02$
DESIGNED BY	A.SHANMUGHAM
ENTERED BY	A.SHANMUGHAM
CHECKED BY	C.BUITRAGO
PROJ. ENGR.	E. PAO
REGIONAL ADM.	

PRELIMINARY
NOT FOR CONSTRUCTION

REVISION | DATE | BY

REGION NO. 10 | STATE WASH | FED.AID PROJ.NO.
JOB NUMBER
CONTRACT NO. | LOCATION NO. XL-5464

P.E. STAMP BOX DATE
P.E. STAMP BOX DATE

Washington State Department of Transportation
GRAHAM
WSP
1001 Fourth Ave, Suite 3100, Seattle, WA 98154
Tel: (206) 382-5200

I-405
NE 132ND STREET INTERCHANGE PROJECT

STREAM LWM AND HABITAT FEATURES PLAN

PLAN REF NO **FP15**
SHEET OF SHEETS

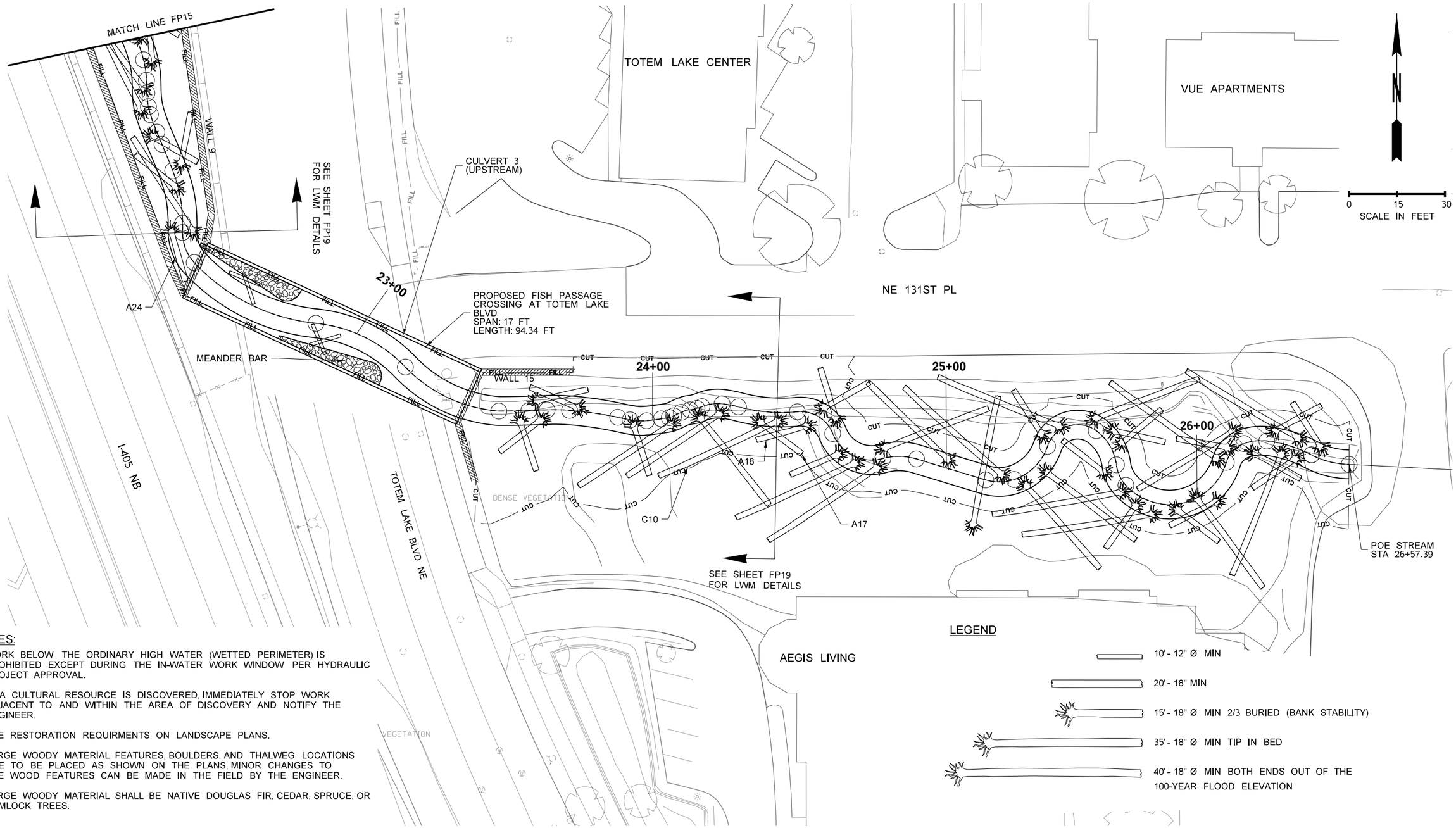

NOTES:

1. WORK BELOW THE ORDINARY HIGH WATER (WETTED PERIMETER) IS PROHIBITED EXCEPT DURING THE IN-WATER WORK WINDOW PER HYDRAULIC PROJECT APPROVAL.
2. IF A CULTURAL RESOURCE IS DISCOVERED, IMMEDIATELY STOP WORK ADJACENT TO AND WITHIN THE AREA OF DISCOVERY AND NOTIFY THE ENGINEER.
3. SEE RESTORATION REQUIRMENTS ON LANDSCAPE PLANS.
4. LARGE WOODY MATERIAL FEATURES, BOULDERS, AND THALWEG LOCATIONS ARE TO BE PLACED AS SHOWN ON THE PLANS, MINOR CHANGES TO THE WOOD FEATURES CAN BE MADE IN THE FIELD BY THE ENGINEER.
5. LARGE WOODY MATERIAL SHALL BE NATIVE DOUGLAS FIR, CEDAR, SPRUCE, OR HEMLOCK TREES.

LEGEND

- 10' - 12" Ø MIN
- 20' - 18" MIN
- 15' - 18" Ø MIN 2/3 BURIED (BANK STABILITY)
- 35' - 18" Ø MIN TIP IN BED
- 40' - 18" Ø MIN BOTH ENDS OUT OF THE 100-YEAR FLOOD ELEVATION

FILE NAME	XL5464_PS_FP_16.dgn
TIME	10:51:25 PM
DATE	12/30/2021
PLOTTED BY	wsppw14ics02$
DESIGNED BY	A.SHANMUGHAM
ENTERED BY	A.SHANMUGHAM
CHECKED BY	C.BUITRAGO
PROJ. ENGR.	E. PAO
REGIONAL ADM.	

PRELIMINARY
NOT FOR CONSTRUCTION

REVISION	DATE	BY

REGION NO.	STATE	FED.AID PROJ.NO.
10	WASH	
JOB NUMBER		
CONTRACT NO.		LOCATION NO. XL-5464

P.E. STAMP BOX DATE

P.E. STAMP BOX DATE

Washington State Department of Transportation
GRAHAM
WSP
1001 Fourth Ave, Suite 3100, Seattle, WA 98154
Tel: (206) 382-5200

I-405
NE 132ND STREET INTERCHANGE PROJECT

STREAM LWM AND HABITAT FEATURES PLAN

PLAN REF NO
FP16
SHEET
OF
SHEETS

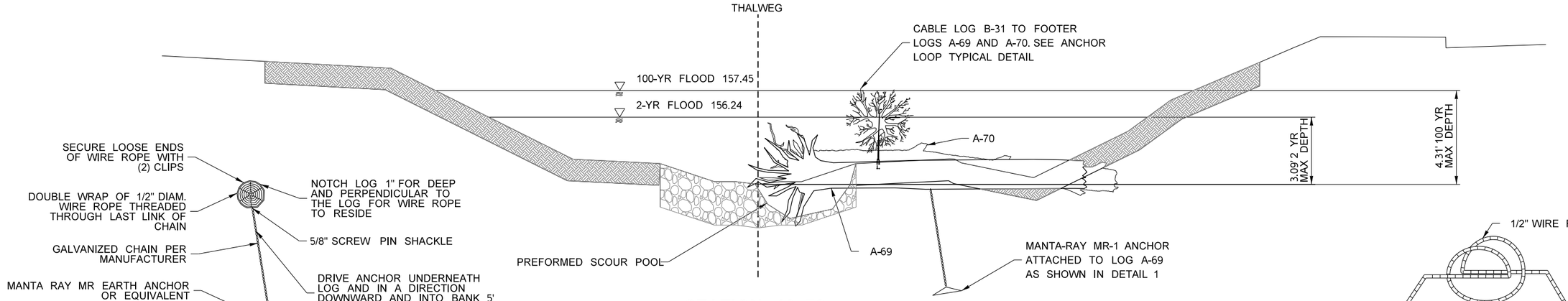

STATION 13+78
SEE SHEET FP14 FOR PLAN VIEW

DETAIL 1: LARGE WOODY DEBRIS EARTH ANCHOR

NOT TO SCALE

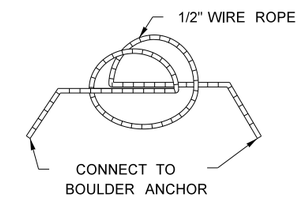

DETAIL 3: CABLE ANCHOR LOOP

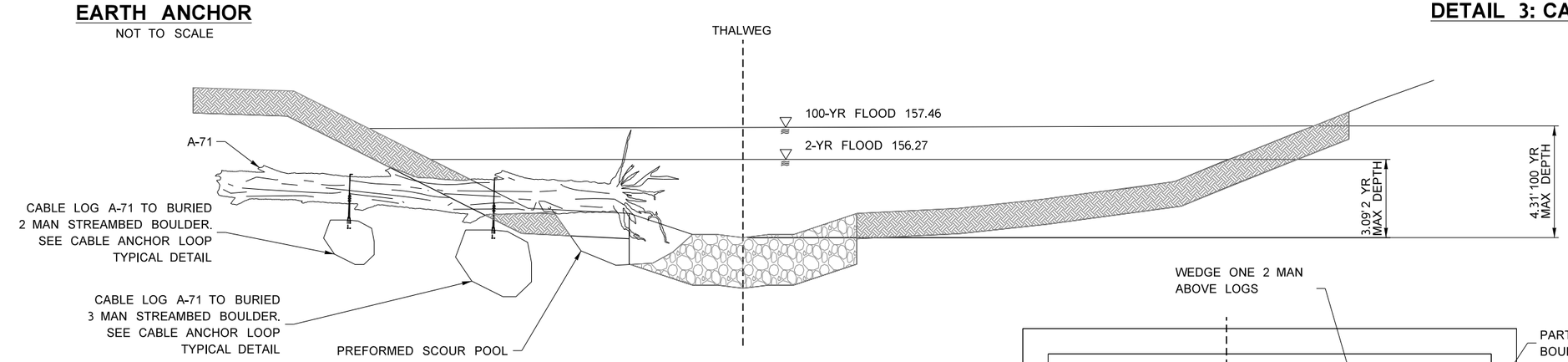

STATION 13+88
SEE SHEET FP14 FOR PLAN VIEW

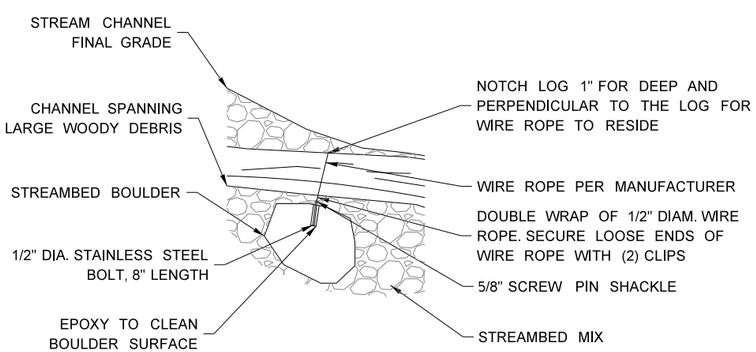

DETAIL 2: STREAMBED BOULDER ANCHOR

NOT TO SCALE

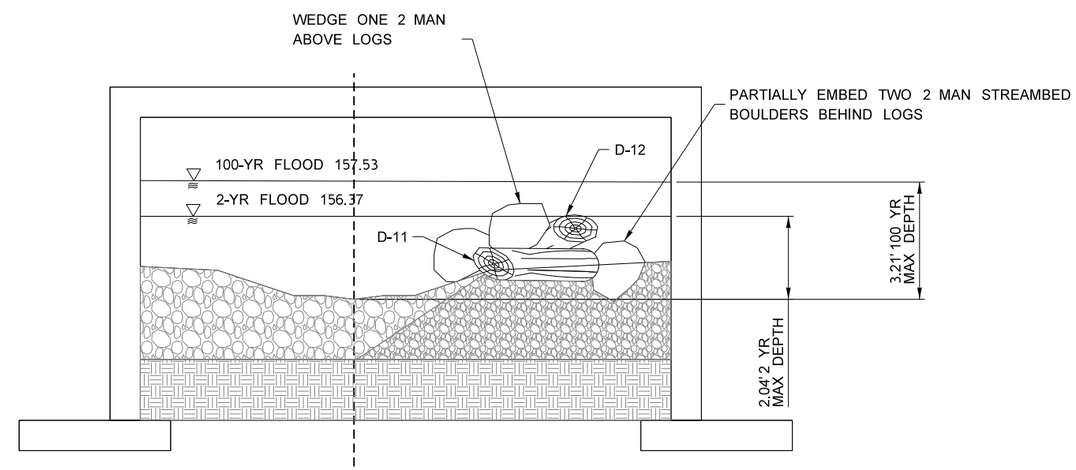

STATION 14+74
SEE SHEET FP14 FOR PLAN VIEW

FILE NAME	XL5464_PS_FP_17.dgn				REGION NO. 10	STATE WASH	FED.AID PROJ.NO.
TIME	10:50:53 PM				JOB NUMBER		
DATE	12/30/2021						
PLOTTED BY	wsppw14ics02$	**PRELIMINARY**			CONTRACT NO.		LOCATION NO.
DESIGNED BY	A.SHANMUGHAM	NOT FOR CONSTRUCTION					XL-5464
ENTERED BY	A.SHANMUGHAM						
CHECKED BY	C.BUITRAGO						
PROJ. ENGR.	E. PAO						
REGIONAL ADM.		REVISION	DATE	BY			

P.E. STAMP BOX DATE

P.E. STAMP BOX DATE

Washington State Department of Transportation
GRAHAM
WSP
1001 Fourth Ave, Suite 3100, Seattle, WA 98154
Tel: (206) 382-5200

I-405
NE 132ND STREET INTERCHANGE PROJECT

I-405 LWM DETAILS

PLAN REF NO **FP17**

SHEET OF SHEETS

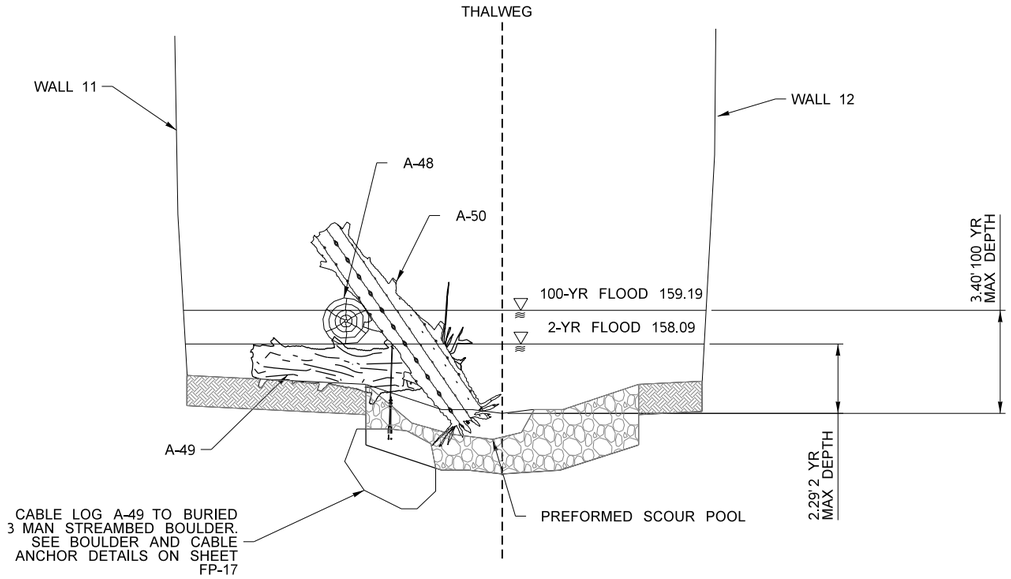

STATION 17+77
SEE SHEET FP15 FOR PLAN VIEW

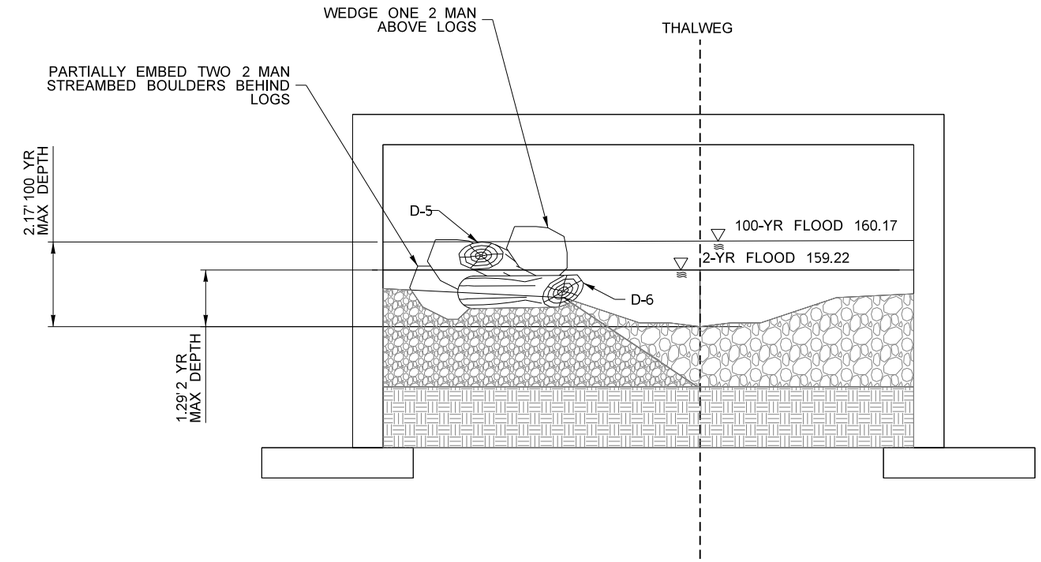

STATION 19+20
SEE SHEET FP15 FOR PLAN VIEW

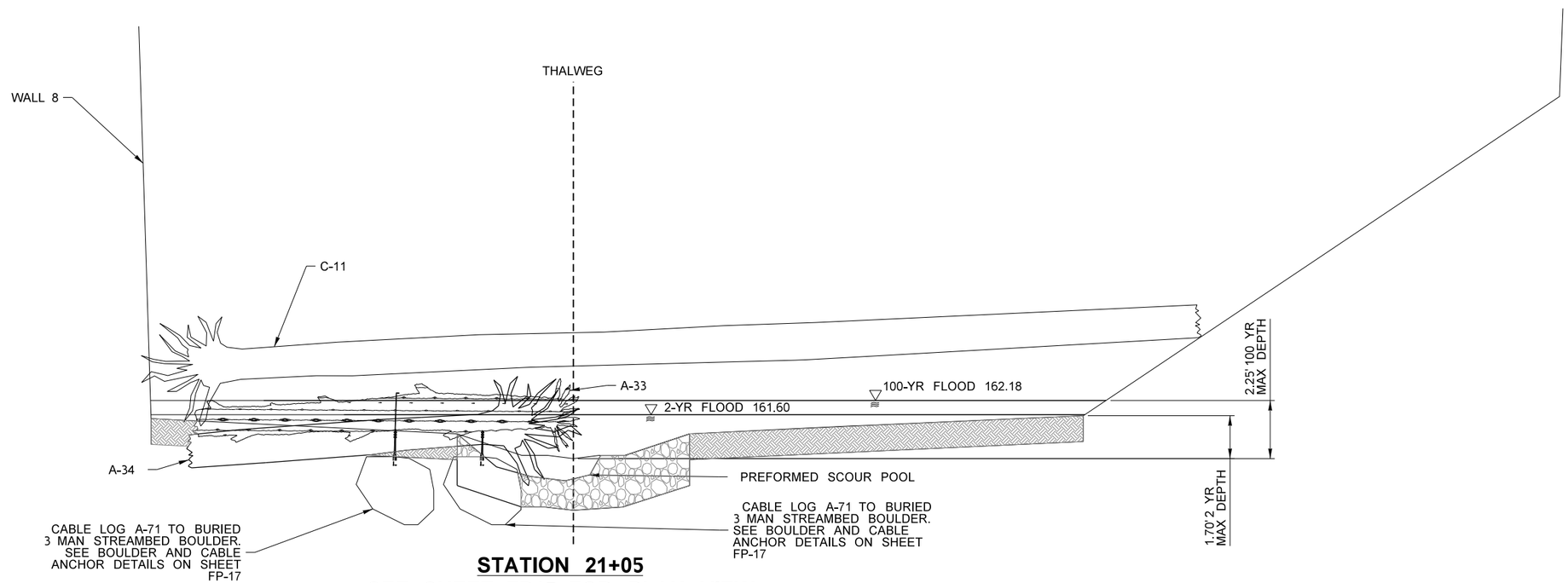

STATION 21+05
SEE SHEET FP15 FOR PLAN VIEW

FILE NAME	XL5464_PS_FP_18.dgn
TIME	10:51:16 PM
DATE	12/30/2021
PLOTTED BY	wsppw14ics02$
DESIGNED BY	A.SHANMUGHAM
ENTERED BY	A.SHANMUGHAM
CHECKED BY	C.BUITRAGO
PROJ. ENGR.	E. PAO
REGIONAL ADM.	

PRELIMINARY
NOT FOR CONSTRUCTION

REVISION	DATE	BY

REGION NO.	STATE	FED.AID PROJ.NO.
10	WASH	
JOB NUMBER		
CONTRACT NO.		LOCATION NO. XL-5464

P.E. STAMP BOX DATE

P.E. STAMP BOX DATE

Washington State Department of Transportation
GRAHAM
WSP
1001 Fourth Ave, Suite 3100, Seattle, WA 98154
Tel: (206) 382-5200

I-405
NE 132ND STREET INTERCHANGE PROJECT

I-405 LWM DETAILS

PLAN REF NO **FP18**

SHEET OF SHEETS

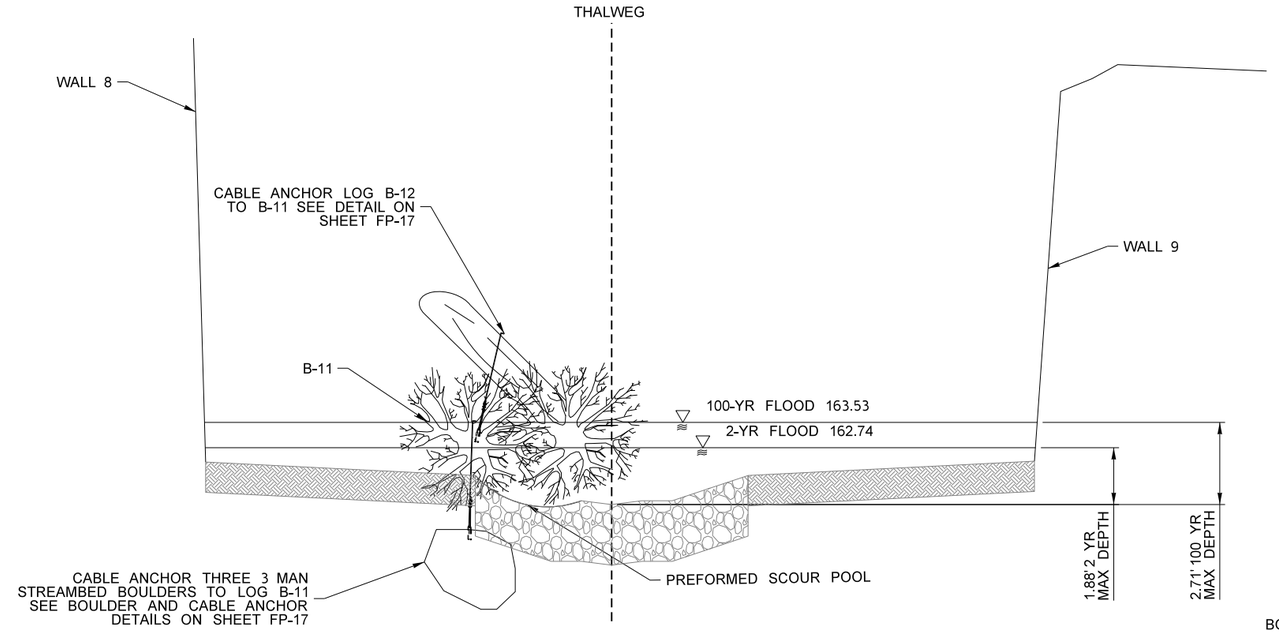

STATION 21+85
SEE SHEET FP15 FOR PLAN VIEW

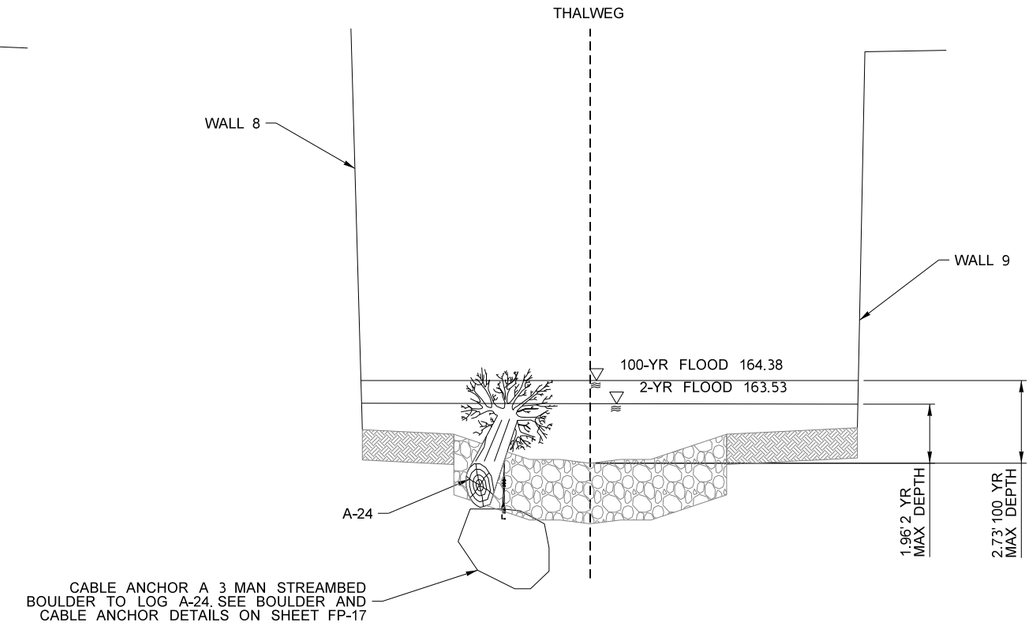

STATION 22+32
SEE SHEET FP16 FOR PLAN VIEW

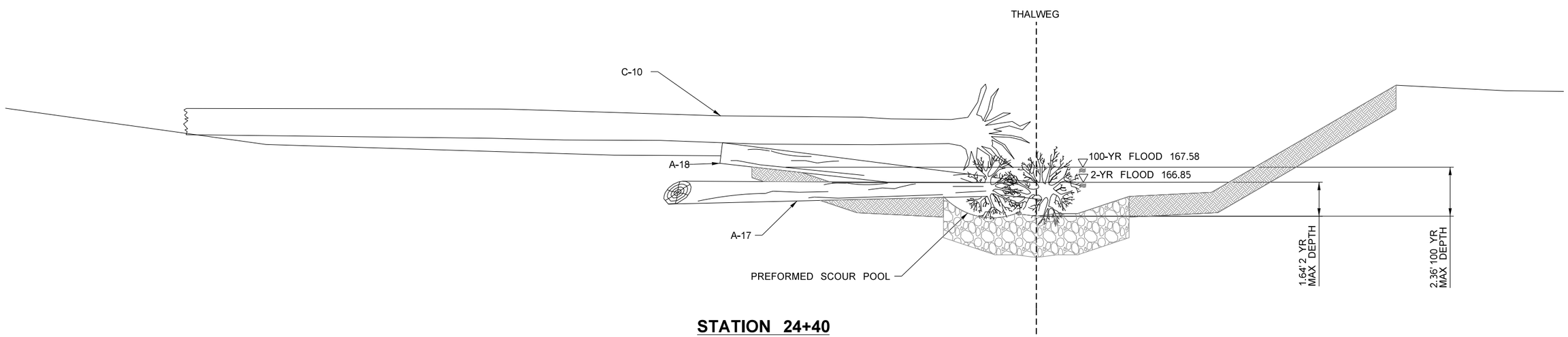

STATION 24+40
SEE SHEET FP16 FOR PLAN VIEW

FILE NAME	XL5464_PS_FP_19.dgn						
TIME	10:51:11 PM				REGION NO. 10	STATE WASH	FED.AID PROJ.NO.
DATE	12/30/2021				JOB NUMBER		
PLOTTED BY	wsppw14ics02$	**PRELIMINARY**					
DESIGNED BY	A.SHANMUGHAM						
ENTERED BY	A.SHANMUGHAM	NOT FOR CONSTRUCTION					
CHECKED BY	C.BUITRAGO				CONTRACT NO.		LOCATION NO. XL-5464
PROJ. ENGR.	E. PAO						
REGIONAL ADM.		REVISION	DATE	BY			

P.E. STAMP BOX DATE

P.E. STAMP BOX DATE

Washington State Department of Transportation
GRAHAM
WSP
1001 Fourth Ave, Suite 3100, Seattle, WA 98154
Tel: (206) 382-5200

I-405
NE 132ND STREET INTERCHANGE PROJECT

I-405 LWM DETAILS

PLAN REF NO **FP19**

SHEET OF SHEETS

LWM CONTROL TABLE

LWD STATION	LOGS ID NO.	ANCHOR REQUIREMENTS		
		REQUIRED VERTICAL BALLAST	LOG/BALLAST/ANCHOR NOTES	NOTES
13+32				TBD
13+56				TBD
13+70				TBD
13+78	A69	2138	STEM PARTIALLY BURIED, CABLE PINNED TO B31, MANTA RAY ANCHOR	BASELOG
	A70	2095	STEM PARTIALLY BURIED, CABLE PINNED TO B31	ATTACHED
13+88	B31	4072	CABLE PINNED TO A69 AND A70	STACKED
	A71	1640	STEM PARTIALLY BURIED, 1-2 MAN BOULDER & 1-3 MAN BOULDER ANCHORS	BASELOG
16+07				TBD
14+14				TBD
14+20				TBD
14+28				TBD
14+43				TBD
14+74 (SEE NOTE 1)	D11	466	2-MAN BOULDER BALLASTS	BASELOG
	D12	395	2-MAN BOULDERS BALLASTS	STACKED
15+00				TBD
16+38				TBD
16+55				TBD
16+72				TBD
16+87				TBD
17+00				TBD
17+14				TBD
17+32				TBD
17+39				TBD
17+49				TBD
17+52				TBD
17+77	A49	1718	1-3 MAN BURIED BOULDER ANCHOR	BASELOG
	A50	-301		STACKED
	A48	-63		STACKED
18+06				TBD
18+23				TBD
18+40				TBD
18+68				TBD
18+97				TBD
19+20 (SEE NOTE 1)	D5	484	2-2 MAN BOULDER BALLASTS	BASELOG
	D6	114	1-2 MAN BOULDERS BALLASTS	STACKED
20+12				TBD
20+31				TBD
20+46				TBD
20+49				TBD
20+74				TBD
21+05	A33	1382	PARTIALLY BURIED, 1-3 MAN BURIED BOULDER ANCHOR	KEYLOG
	A34	1324	PARTIALLY BURIED, 1-3 MAN BURIED BOULDER ANCHOR	STACKED
	C11	-1591	SPANNING ACROSS 100-FLOOD LEVEL	STACKED
21+12				TBD
21+28				TBD
21+39				TBD
21+70				TBD
21+85	B11	4153	PARTIALLY BURIED AND 3-3 MAN BOULDER ANCHORS	KEYLOG
	B12	-755	CABLE ANCHORED TO LOG B11	STACKED
22+07				TBD
22+18				TBD
22+32	A-24	1343	1-3 MAN BOULDER ANCHOR	BASELOG
22+60 (SEE NOTE 1)	D3	457	1-2' BOULDER BALLAST	STACKED
	D4	321	1-2' BOULDER BALLAST	STACKED
22+70				TBD

LWM CONTROL TABLE

LWD STATION	LOGS ID NO.	ANCHOR REQUIREMENTS		
		REQUIRED VERTICAL BALLAST	LOG/BALLAST/ANCHOR NOTES	NOTES
23+64				TBD
23+70				TBD
24+04				TBD
24+21				TBD
24+40	A17	1467	STEM PARTIALLY BURIED	KEYLOG
	A18	2304		STACKED
	C10	-2777		STACKED
24+53				TBD
24+66				TBD
24+71				TBD
24+78				TBD
24+98				TBD
25+11				TBD
25+25				TBD
25+31				TBD
25+44				TBD
25+54				TBD
25+63				TBD
25+70				TBD
25+81				TBD
26+04	A8	1787	PARTIALLY BURIED	KEYLOG
	B1	-2258		STACKED
	A9	-920		STACKED
26+18	A6	1722	PARTIALLY BURIED	KEYLOG
	B2	-582		STACKED
	C3	-2786		STACKED
26+38	A2	-90	PARTIALLY BURIED	KEYLOG
	A1	-1187		STACKED
	C1	-2792		STACKED
26+41	A3	1549		KEYLOG
	A4	-249		STACKED
	C2	-2813		STACKED

LOG SCHEDULE

LOG NUMBER	LOG LENGTH	LOG DIAMETER	ROOTWAD DIAMETER
A	15	1.5	YES
B	35	1.5	YES
C	40	1.5	YES
D	10	1.0	NO
E	20	1.5	NO

STREAMBED BOULDERS

ONE MAN	12"-18"
TWO MAN	18"-28"
THREE MAN	28"-36
FOUR MAN	36"-48"

NOTES:

1. MOBILE WOOD DEBRIS. DESIGNED TO BE STABLE FOR A 10 YEAR FLOOD EVENT.
2. TBD = TO BE DETERMINED.