CONTRACT PLANS
SEG 2B RETAINING WALLS (W56 & W57) WALL 9.90L (A&B)

I-405 MP 9.83 TO MP 10.14

I-405; RENTON TO BELLEVUE WIDENING AND EXPRESS TOLL LANES PROJECT
VOLUME 7
FINAL

KING COUNTY

Washington State
Department of Transportation

11/19/2021

Sensitive

VOLUME 7

REV NO.	INCLUDED	REV. DATE	SUB. NO.	PLAN REF NO.		SHEET TITLE	SHEET DESCRIPTION
B	X	11/19/21	2020	W56	1	RETAINING WALL PLAN AND PROFILE	WALL 09.90L-A (1 OF 4)
B	X	11/19/21	2020	W56	2	RETAINING WALL PLAN AND PROFILE	WALL 09.90L-A (2 OF 4)
B	X	11/19/21	2020	W56	3	RETAINING WALL PLAN AND PROFILE	WALL 09.90L-A (3 OF 4)
B	X	11/19/21	2020	W56	4	RETAINING WALL PLAN AND PROFILE	WALL 09.90L-A (4 OF 4)
B	X	11/19/21	2020	W56	5	RETAINING WALL DETAILS	WALL 09.90L-A
B	X	11/19/21	2020	W56	6	RETAINING BARRIER DETAILS	WALL 09.85L
B	X	11/19/21	2020	W56	7	RETAINING WALL OVEREXCAVATION DETAILS	WALL 09.90L-A & 09.90L-B
B	X	11/19/21	2020	W57	1	RETAINING WALL PLAN AND PROFILE	WALL 09.90L-B (1 OF 3)
B	X	11/19/21	2020	W57	2	RETAINING WALL PLAN AND PROFILE	WALL 09.90L-B (2 OF 3)
B	X	11/19/21	2020	W57	3	RETAINING WALL PLAN AND PROFILE	WALL 09.90L-B (3 OF 3)
B	X	11/19/21	2020	W57	4	RETAINING WALL DETAILS	WALL 09.90L-B (1 OF 3)
B	X	11/19/21	2020	W57	5	RETAINING WALL DETAILS	WALL 09.90L-B (2 OF 3)
B	X	11/19/21	2020	W57	6	RETAINING WALL DETAILS	WALL 09.90L-B (3 OF 3)
B	X	11/19/21	2020	W57	7	GEOFOAM DETAILS	WALL 09.90L-B (1 OF 2)
B	X	11/19/21	2020	W57	8	GEOFOAM DETAILS	WALL 09.90L-B (2 OF 2)

REV NO.	INCLUDED	REV. DATE	SUB. NO.	PLAN REF NO.		SHEET TITLE	SHEET DESCRIPTION

NO.	ISSUE DATE	ISSUE RECORD - DESCRIPTION	DESIGNED BY	ENTERED BY	CHECKED BY	DESIGN MANAGER:
B	11/19/2021	FINAL	NA	NA	ERK	P. DICKMAN

REGION NO.	STATE
10	WASH

XL5467

CONTRACT NO.

C9242

DATE

P.E. STAMP BOX

DATE

P.E. STAMP BOX

Washington State Department of Transportation

FLATIRON LANE

PARSONS

I-405
RENTON TO BELLEVUE
EXPRESS TOLL LANES

INDEX OF SHEETS - VOL 7

PLAN REF NO

IN07-4

WALL 09.90L-A NOTES:

1. STRUCTURAL EARTH WALLS (SEW) HAVE BEEN DESIGNED FOR GLOBAL STABILITY IN ACCORDANCE WITH THE FOLLOWING REQUIREMENTS:

   AASHTO LRFD BRIDGE DESIGN SPECIFICATONS 8TH EDITION (2017), WSDOT GEOTECHNICAL DESIGN MANUAL (2015), AND WSDOT BRIDGE DESIGN MANUAL (2018).

2. SEW SHALL BE DESIGNED BY THE MANUFACTURER IN ACCORDANCE WITH THE SE WALL SOIL PARAMETER RECOMMENDATIONS AND THE EXTERNAL GLOBAL STABILITY REQUIRMENTS PROVIDED IN THE GEOTECHNICAL ENGINEERING REPORT: WALL PACKAGE 1 - RETAINING WALLS 9.90L-A AND 9.90L-B GEOTECHNICAL DESIGN MEMORANDUM - DATE: 11/19/21.

3. SEE SHEET W56-5 FOR WALL FINISH REQUIREMENTS.

4. STATION AND W-ELEVATIONS SHOWN ALONG WALL REPRESENT WALL 09.90L STATIONING AND TOP OF WALL AT FACE OF TRAFFIC BARRIER. SEE WALL TYPICAL SECTION ON SHEET W56-5.

5. STATION AND F-ELEVATIONS REPRESENT FINISHED GRADE AT FRONT FACE OF WALL.

6. CONTRACTOR PROPOSED BOTTOM OF WALL AND STEPPING OF THE LEVELING PAD TO FIT THE MANUFACTURER'S SEW SYSTEM SHALL BE SHOWN ON THE WALL SHOP DRAWINGS.

7. ALL MATERIALS AND WORKMANSHIP SHALL BE IN ACCORDANCE WITH THE REQUIREMENTS OF THE WASHINGTON STATE DEPARTMENT OF TRANSPORTATION "STANDARD SPECIFICATIONS FOR ROADS, BRIDGE, AND MUNICIPAL CONSTRUCTION", ENGLISH UNITS, DATED 2018, AMENDED JANUARY 7, 2019 AND THE GENERAL SPECIAL PROVISIONS AS INCLUDED IN THE REQUEST FOR PROPOSAL, I-405, RENTON TO BELLEVUE WIDENING AND ETL PROJECT, DATED DECEMBER 2018, INCLUDING SECTIONS:

   6-13.GR6 STRUCTURAL EARTH WALLS

8. WALL 09.90L-A LAYOUT STATIONING IS PROVIDED AS OFFSET FROM SB I-405 LINE.

9. SEE SHEETS AL-36, RS-19 & RS-20, PR-44 & PV-36 FOR ROADWAY ALIGNMENT, SECTIONS, PROFILE AND PAVING, RESPECTIVELY.

10. SEE TRAFFIC CONTROL PLAN SEGMENT 2A SHEET MOT-36, STAGE 1, PHASE 2 FOR WORK ZONE AND TRAFFIC STAGE.

11. SEE SHEET DR-36 FOR DRAINAGE PLAN.

12. SEE SHEETS TS-36 AND IL-36 FOR ITS AND ILLUMINATION PLANS, RESPECTIVELY.

13. SEE SHEET SN-36 FOR SIGNING PLAN.

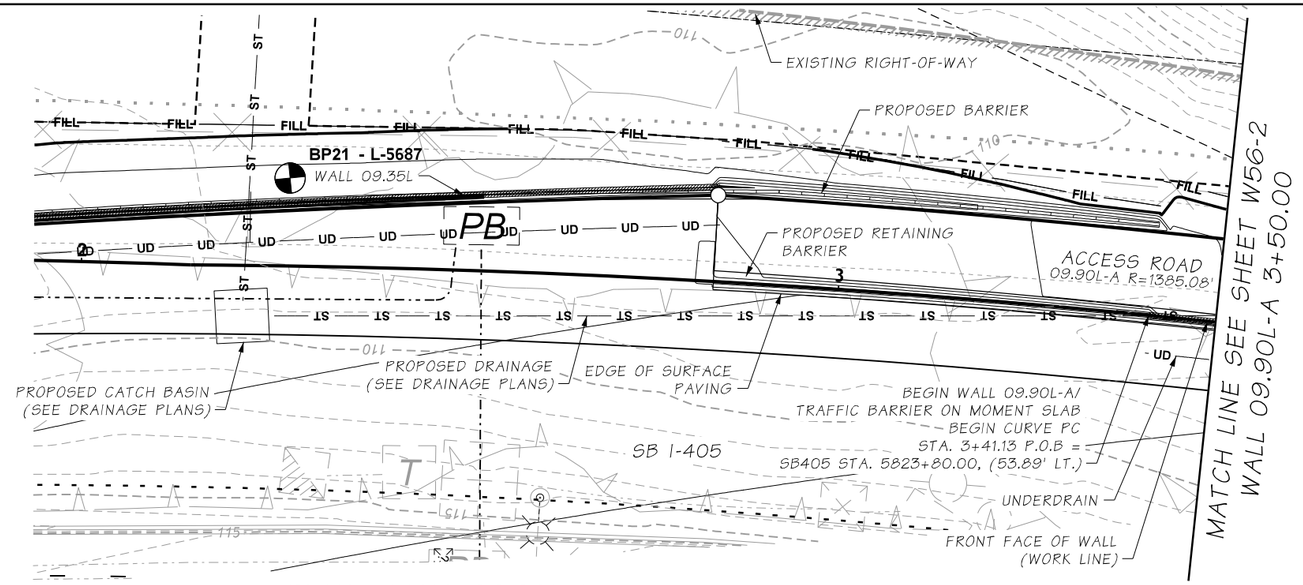

PLAN - WALL 09.90L-A

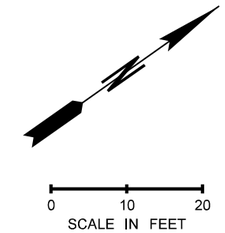

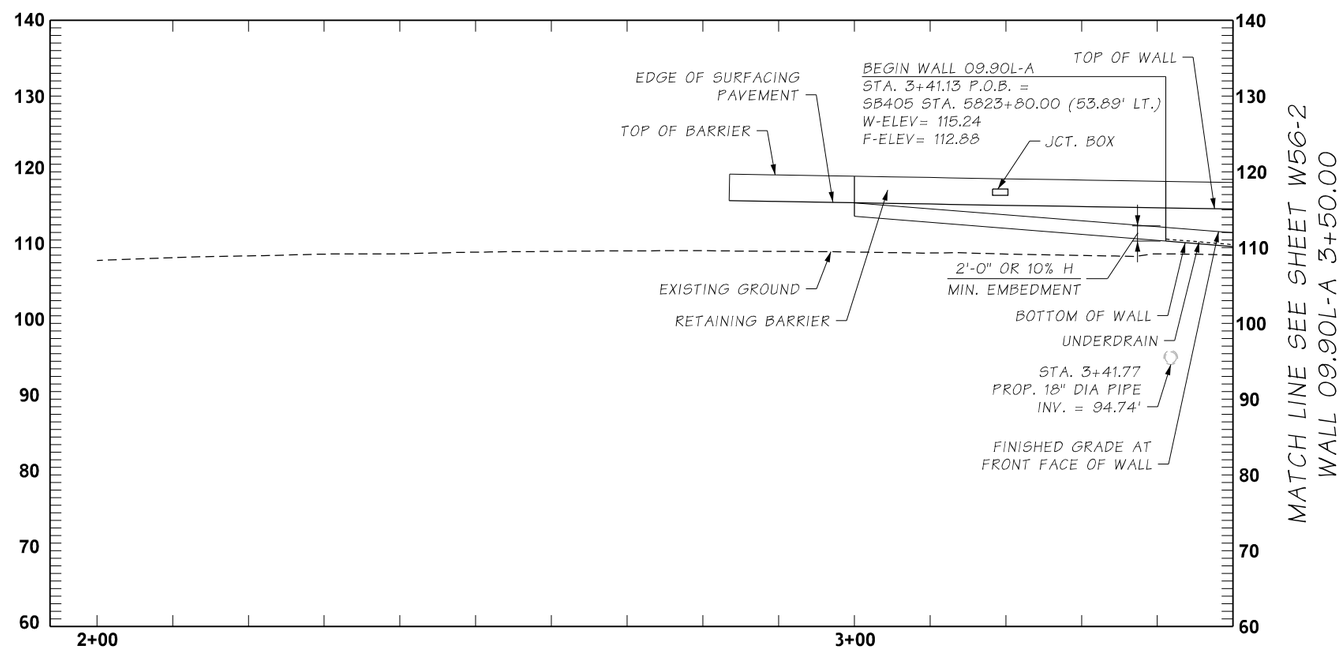

REFLECTED ELEVATION - WALL 09.90L-A

WALL TYPE: STRUCTURAL EARTH (SEW)

DATUM

(NAVD) 88

FILE NAME	c:\pw_working\wastate\parsons_p005295d\dms32768\XL5467_PP_W56-1.dgn				REGION NO. 10	STATE WASH	FED.AID PROJ.NO.
TIME	3:00:31 PM				JOB NUMBER XL5467		
DATE	1/6/2022						
PLOTTED BY	p005295D						
DESIGNED BY	W. METWALLY				CONTRACT NO. C9242		LOCATION NO.
ENTERED BY	M. ALEKSANYAN						
CHECKED BY	E. KELLEY						
PROJ. ENGR.	J. LEFOTU						
REGIONAL ADM.	L. HODGSON	REVISION	DATE	BY			

ERIC R. KELLEY — STATE OF WASHINGTON — 44060 — STRUCTURAL ENGINEER — PROFESSIONAL ENGINEER

DATE

P.E. STAMP BOX

DATE

P.E. STAMP BOX

Washington State Department of Transportation

FLATIRON LANE

PARSONS

I-405; RENTON TO BELLEVUE WIDENING AND EXPRESS TOLL LANES PROJECT

RETAINING WALL PLAN AND PROFILE WALL 09.90L-A (1 OF 4)

PLAN REF NO W56-1

SHEET OF SHEETS

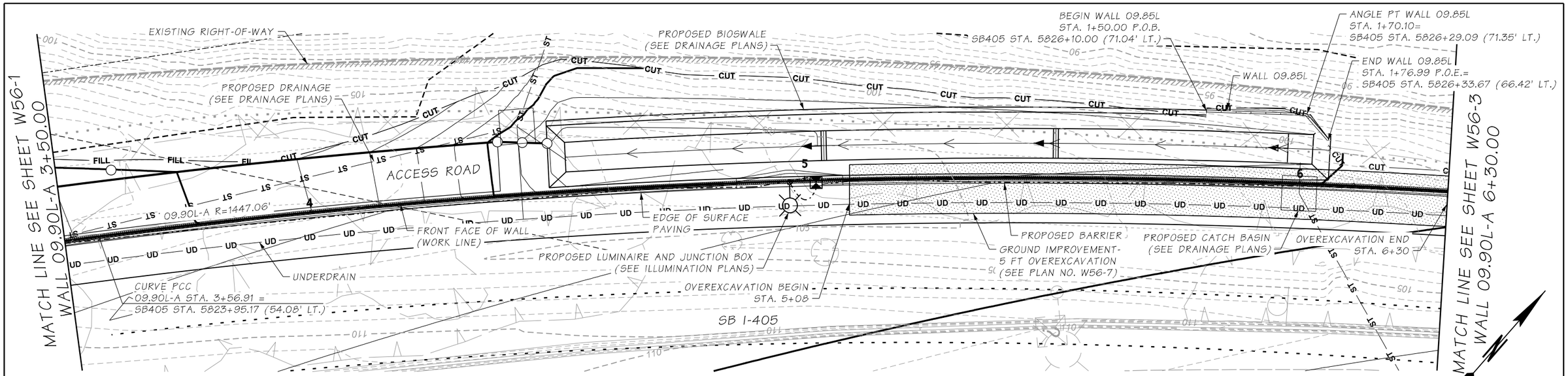

PLAN - WALL 09.90L-A

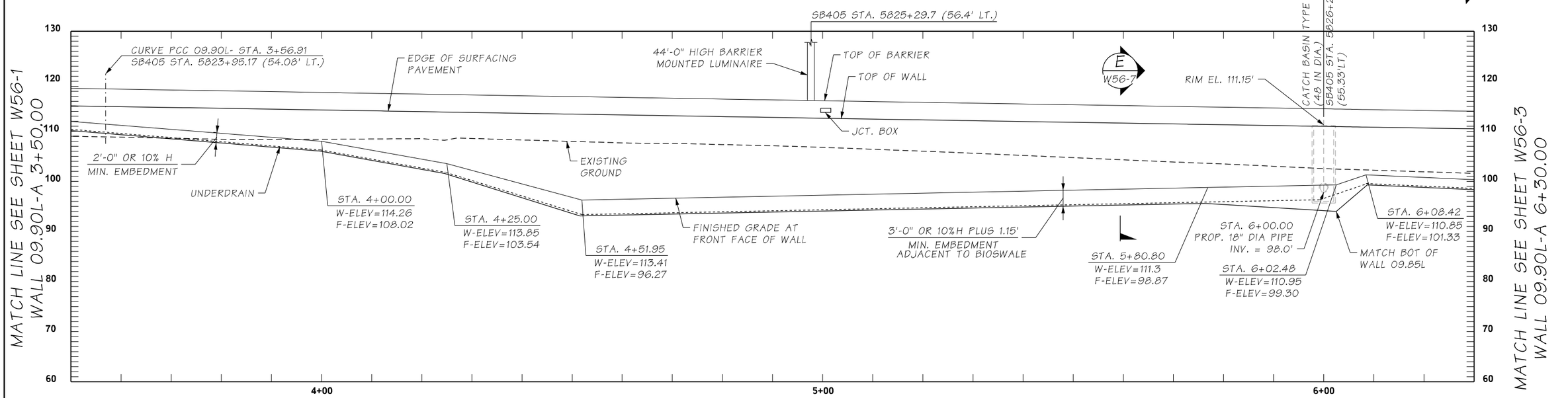

REFLECTED ELEVATION - WALL 09.90L-A

NOTES:

1. SEE SHEET W56-1 FOR NOTES.
2. SEE SHEET W56-6 FOR WALL 09.85L.

WALL TYPE: STRUCTURAL EARTH (SEW)

FILE NAME	c:\pw_working\wastate\parsons_p005295d\dms32768\XL5467_PP_W56-2.dgn				REGION NO. 10	STATE WASH	FED.AID PROJ.NO.
TIME	5:29:14 PM						
DATE	12/9/2021						
PLOTTED BY	p005295D				JOB NUMBER XL5467		
DESIGNED BY	W. METWALLY						
ENTERED BY	M. ALEKSANYAN						
CHECKED BY	E. KELLEY				CONTRACT NO. C9242		LOCATION NO.
PROJ. ENGR.	J. LEFOTU						
REGIONAL ADM.	L. HODGSON	REVISION	DATE	BY			

ERIC R. KELLEY — STATE OF WASHINGTON — 44000 — STRUCTURAL ENGINEER — PROFESSIONAL ENGINEER

DATE

P.E. STAMP BOX

DATE

P.E. STAMP BOX

Washington State Department of Transportation

FLATIRON LANE

PARSONS

I-405; RENTON TO BELLEVUE WIDENING AND EXPRESS TOLL LANES PROJECT

RETAINING WALL PLAN AND PROFILE
WALL 09.90L-A (2 OF 4)

PLAN REF NO W56-2

SHEET OF SHEETS

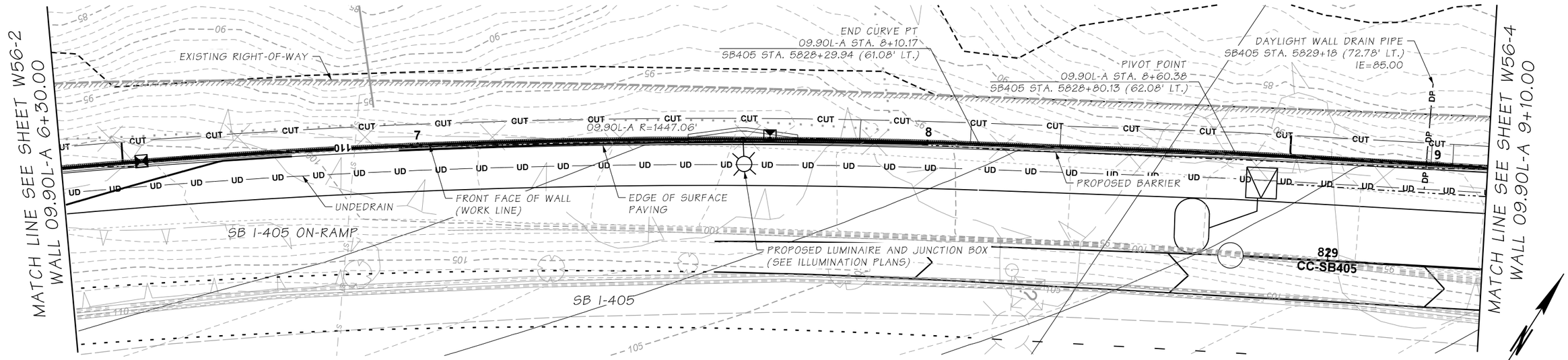

PLAN - WALL 09.90L-A

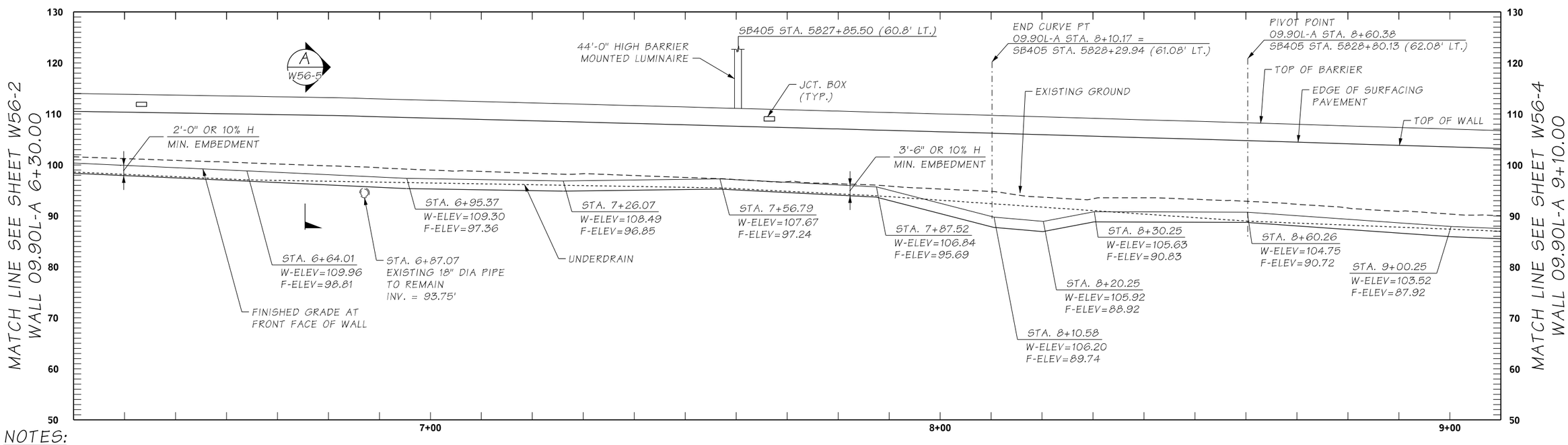

NOTES:

1. SEE SHEET W56-1 FOR NOTES

REFLECTED ELEVATION - WALL 09.90L-A

WALL TYPE: STRUCTURAL EARTH (SEW)

FILE NAME	c:\pw_working\wastate\parsons_p005295d\dms32768\XL5467_PP_W56-3.dgn				REGION NO. 10	STATE WASH	FED.AID PROJ.NO.
TIME	10:19:31 AM				JOB NUMBER XL5467		
DATE	12/9/2021				CONTRACT NO. C9242		LOCATION NO.
PLOTTED BY	p005295D						
DESIGNED BY	W. METWALLY						
ENTERED BY	M. ALEKSANYAN						
CHECKED BY	E. KELLEY						
PROJ. ENGR.	J. LEFOTU						
REGIONAL ADM.	L. HODGSON	REVISION	DATE	BY			

ERIC R. KELLEY — STATE OF WASHINGTON — 44060 — STRUCTURAL ENGINEER — PROFESSIONAL ENGINEER

DATE

P.E. STAMP BOX

DATE

P.E. STAMP BOX

Washington State Department of Transportation

FLATIRON LANE

PARSONS

I-405; RENTON TO BELLEVUE WIDENING AND EXPRESS TOLL LANES PROJECT

RETAINING WALL PLAN AND PROFILE
WALL 09.90L-A (3 OF 4)

PLAN REF NO W56-3

SHEET OF SHEETS

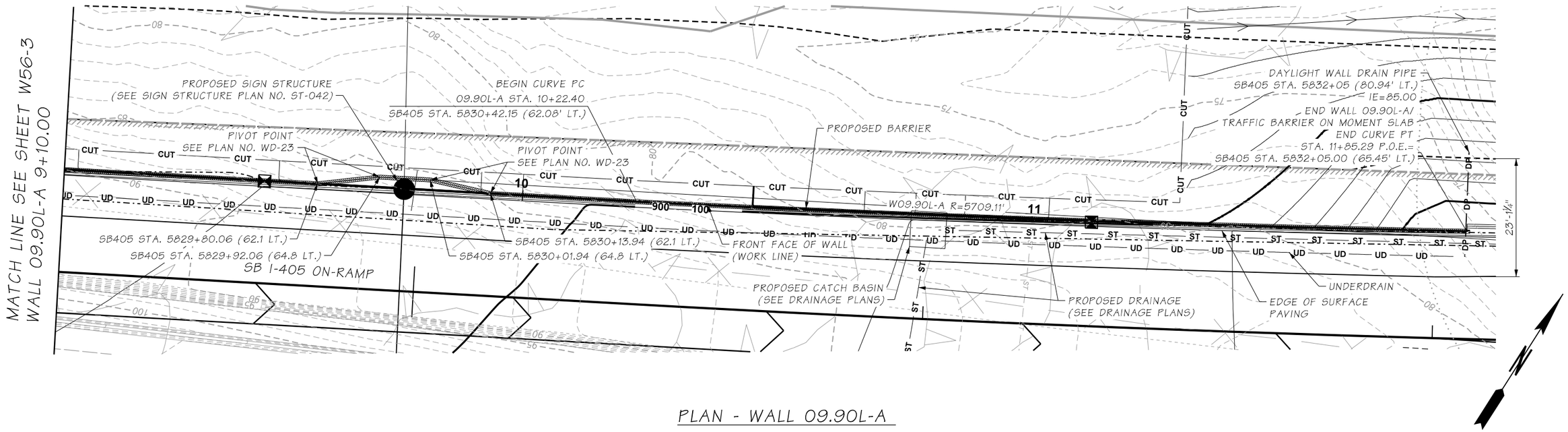

PLAN - WALL 09.90L-A

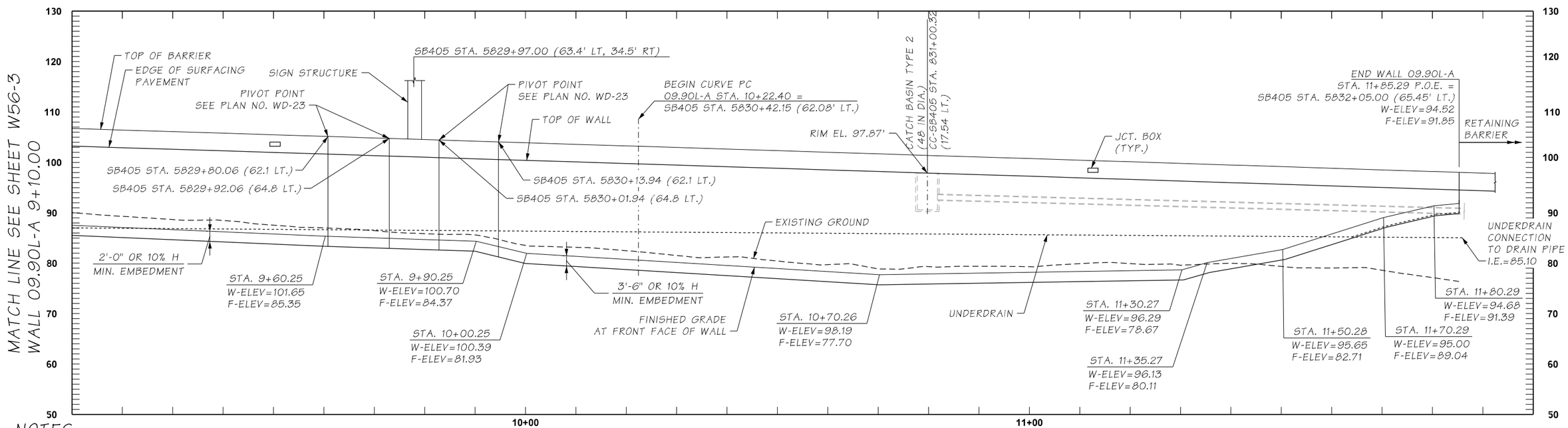

NOTES:

1. SEE SHEET W56-1 FOR NOTES

REFLECTED ELEVATION - WALL 09.90L-A

WALL TYPE: STRUCTURAL EARTH (SEW)

FILE NAME	c:\pw_working\wastate\parsons_p005295d\dms32768\XL5467_PP_W56-4.dgn				REGION NO. 10	STATE WASH	FED.AID PROJ.NO.
TIME	10:23:02 AM				JOB NUMBER XL5467		
DATE	12/9/2021						
PLOTTED BY	p005295D						
DESIGNED BY	W. METWALLY				CONTRACT NO. C9242		LOCATION NO.
ENTERED BY	M. ALEKSANYAN						
CHECKED BY	E. KELLEY						
PROJ. ENGR.	J. LEFOTU						
REGIONAL ADM.	L. HODGSON	REVISION	DATE	BY			

ERIC R. KELLEY — STATE OF WASHINGTON — 44060 — STRUCTURAL ENGINEER — PROFESSIONAL ENGINEER

P.E. STAMP BOX — DATE

P.E. STAMP BOX — DATE

Washington State Department of Transportation

FLATIRON LANE

PARSONS

I-405; RENTON TO BELLEVUE WIDENING AND EXPRESS TOLL LANES PROJECT

RETAINING WALL PLAN AND PROFILE
WALL 09.90L-A (4 OF 4)

PLAN REF NO W56-4

SHEET OF SHEETS

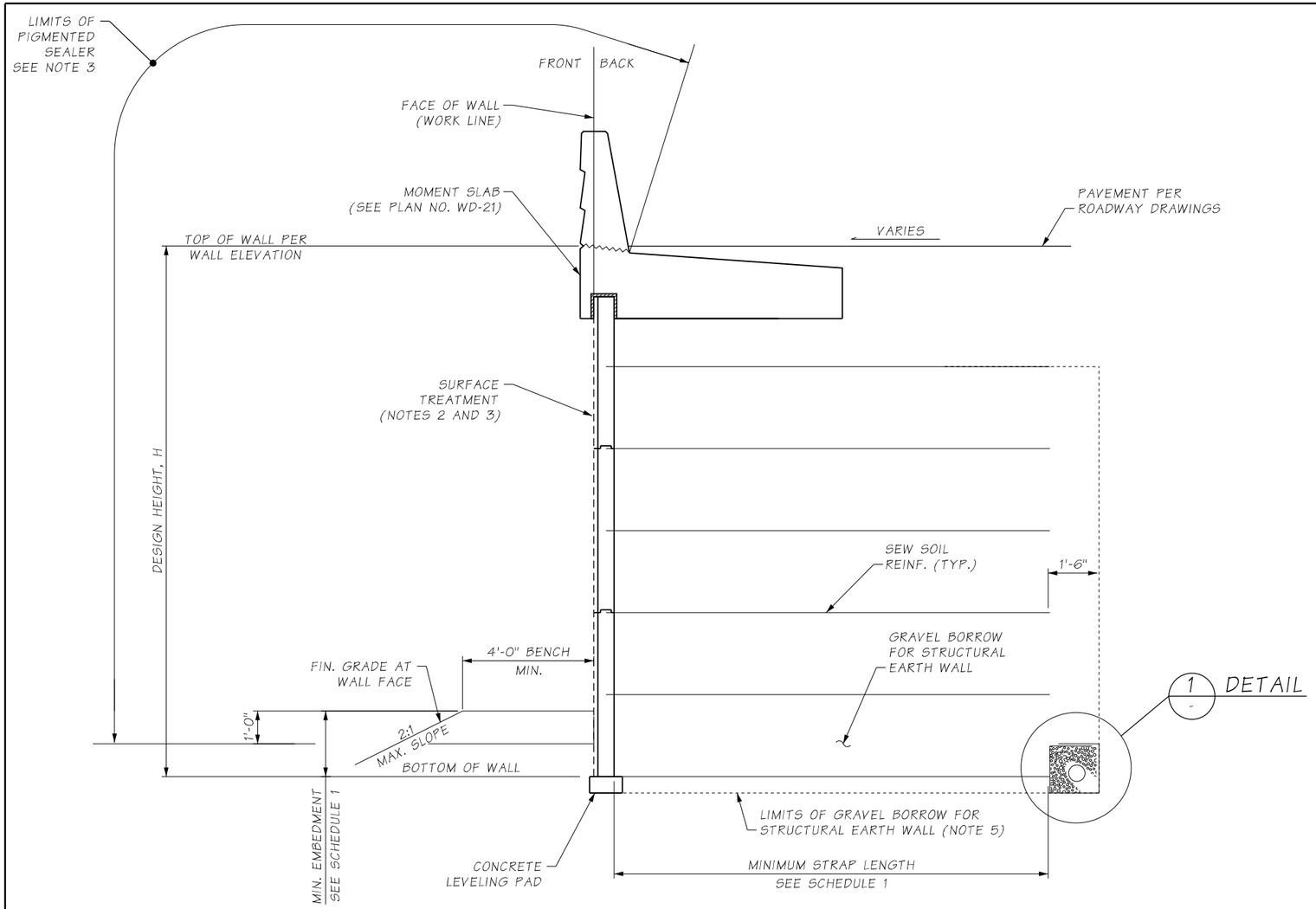

TYPICAL SECTION A W56-3

NOTES:

1. ALL CAST-IN-PLACE CONCRETE SHALL BE CLASS 4000, UNLESS OTHERWISE NOTED.
2. CONCRETE WALL PANEL FINISH SHALL BE ASHLAR STONE PATTERN SURFACE TEXTURE IN ACCORDANCE WITH THE INTERSTATE-405 URBAN DESIGN CRITERIA AND STANDARD SPECIFICATIONS, AND THE GENERAL SPECIAL PROVISIONS SECTIONS 6-02.2.OPT13.GB6 AND 6-02.3(14).OPT12.GR6 FOR ASHLAR STONE FINISH.
3. WALL SURFACES SHALL BE FINISHED WITH WSDOT STANDARD COLOR: MT. ST. HELENS PIGMENTED SEALER FROM TOP OF WALL TO MIN. 1-FT BELOW GRADE. SEW BARRIER SHALL BE FINISHED WITH WSDOT STANDARD COLOR MT. BAKER PIGMENTED SEALER.
4. SEE ELEVATONS FOR PROFILES OF UNDERDRAINS. THE WALL DESIGN SHALL INCLUDE WATER LOADING FROM THE BASE OF THE WALL UP TO THE ELEVATIONS OF THE UNDERDRAIN SYSTEM.
5. WSDOT SPECIFIED GRAVEL BORROW FOR SEWS SHALL BE USED. SILT CONTENT OF THE WALL FILL SHALL BE LESS THAN 15% IF STEEL REINFORCED SYSTEMS ARE USED. THE FILL MATERIAL SHALL EXTEND AT LEAST 18 INCH BEHIND THE STEEL REINFORCEMENT FOR CORROSION PROTECTION.
6. WSDOT GRAVEL BORROW SHALL BE USED IN THE BACKFILL WEDGE AREA BEHIND THE SEW. THE BACKFILL WEDGE BACKSLOPE SHALL BE CONSTRUCTED AT A MINIMUM INCLINATION OF 1H:1V.
7. PRECAST WALL PANELS ARE CONSIDERED TO BE RIGID CONCRETE FACING PANELS. THE WALL DESIGNER SHALL SELECT THE APPROPRIATE JOINT WIDTH BASED ON THE ESTIMATED DIFFERENTIAL SETTLEMENTS AS PROVIDED IN THE GEOTECHNICAL ENGINEERING REPORT: WALL PACKAGE 1 - RETAINING WALLS 9.90L-A AND 9.90L-B GEOTECHNICAL DESIGN MEMORANDUM - DATE: 11/19/21. DIFFERENTIAL SETTLEMENT LIMITS SHALL BE BASED ON THE AREA OF THE PANEL AND THE JOINT WIDTH AS GIVEN IN AASHTO TABLE C11.10.4.1-1.

UNDERDRAIN NOTES:

1. ALL UNDERDRAIN OUTLETS THAT DAYLIGHT TO SURFACE SHALL BE FITTED WITH A FLAP TYPE ANTI-RODENT ENTRY FITTING. EXTEND PIPE A MIN. 1'-0" AT OUTLET, AS REQUIRED TO ATTACH FITTING.
2. CORE HOLE IN PANEL FOR UNDERDRAIN OUTLET. LOCATION OF OUTLET MAY BE FIELD ADJUSTED TO CORE PANEL. PROVIDE SEALANT AROUND PIPE ON EXTERIOR OF WALL.
3. UNDERDRAIN ALIGNMENTS AND ELEVATIONS PROVIDED MAY BE ADJUSTED IF REQUIRED WITH WALL DESIGN IN THE FIELD. UNDERDRAIN OUTLETS SHALL BE PLACED ON MIN. SLOPE OF 0.2% AND MAX. SLOPE OF 2.0%.
4. UNDERDRAIN OUTLETS SHALL BE SPACED AT NO MORE THAN 300 FT. SEE DRAINAGE PLANS FOR UNDERDRAIN CLEANOUT REQUIRMENTS AND DETAILS.

SCHEDULE 1

BEGIN STATION	END STATION	MINIMUM STRAP LENGTH	MINIMUM WALL EMBEDMENT
3+41.13	3+98	8.0 FT	2.0 FT
3+98	5+08	0.7H OR 8.0 FT	2.0 FT
5+08	6+30	1.0H OR 8.0 FT	3.0 FT
6+30	7+60	0.8H OR 8.0 FT	2.0 FT
7+60	8+30	0.8H OR 8.0 FT	3.5 FT
8+30	10+08	0.8H OR 8.0 FT	2.0 FT
10+08	11+35	0.8H OR 8.0 FT	3.0 FT
11+35	11+85.29	0.8H OR 8.0 FT	2.0 FT

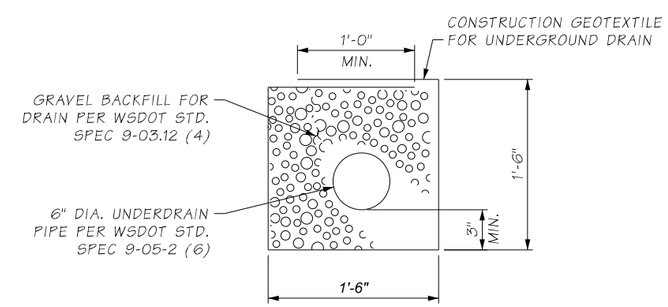

DETAIL 1

FILE NAME	c:\pw_working\wastate\parsons_p005295d\dms32768\XL5467_DE_W56-5.dgn					
TIME	2:59:22 PM					
DATE	1/6/2022					
PLOTTED BY	p005295D					
DESIGNED BY	W. METWALLY					
ENTERED BY	M. ALEKSANYAN					
CHECKED BY	E. KELLEY					
PROJ. ENGR.	J. LEFOTU					
REGIONAL ADM.	L. HODGSON	REVISION	DATE	BY		

REGION NO.	STATE	FED.AID PROJ.NO.
10	WASH	
JOB NUMBER XL5467		
CONTRACT NO. C9242		LOCATION NO.

ERIC R. KELLEY — STATE OF WASHINGTON — 44060 — STRUCTURAL ENGINEER — PROFESSIONAL ENGINEER

DATE
P.E. STAMP BOX

DATE
P.E. STAMP BOX

Washington State Department of Transportation

FLATIRON LANE

PARSONS

I-405; RENTON TO BELLEVUE WIDENING AND EXPRESS TOLL LANES PROJECT

RETAINING WALL DETAILS
WALL 09.90L-A

PLAN REF NO W56-5

SHEET OF SHEETS

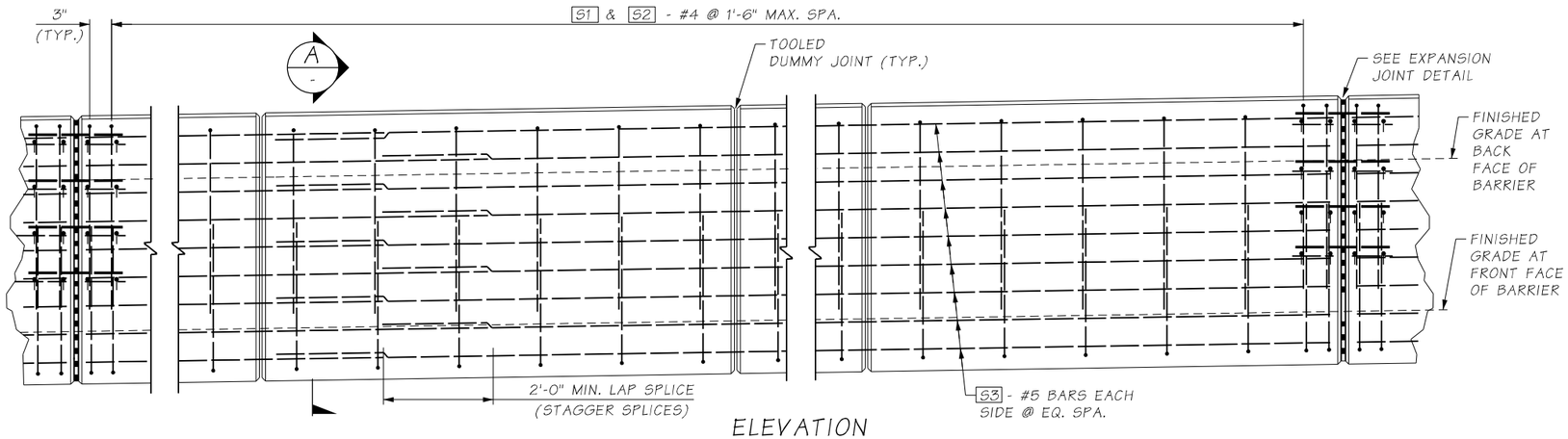

ELEVATION

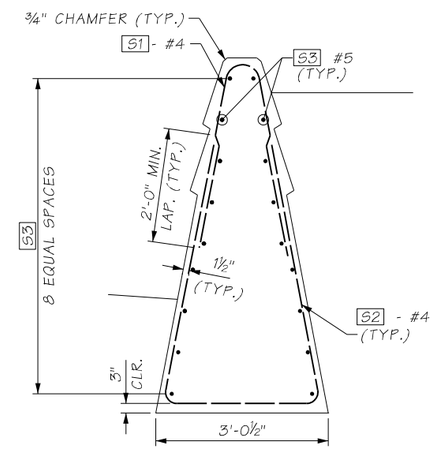

SECTION A

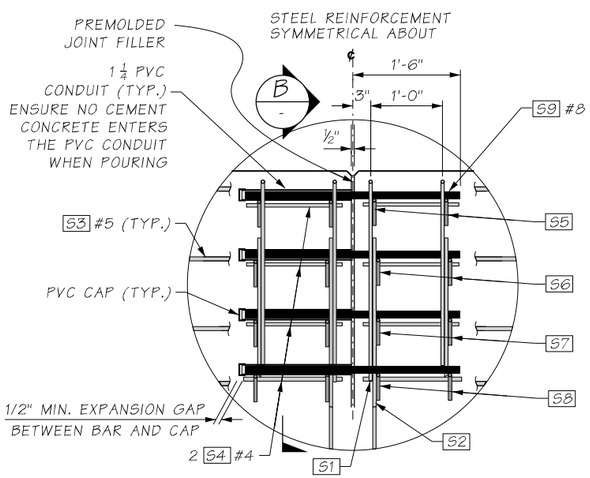

EXPANSION JOINT DETAIL

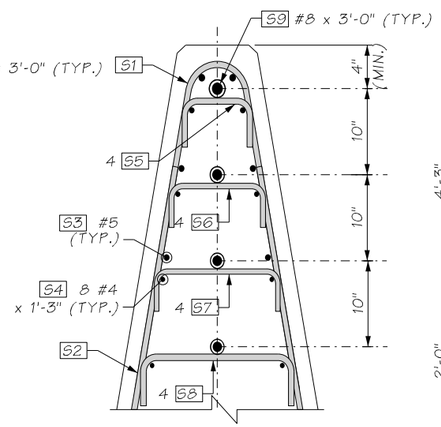

SECTION B

(AESTHETIC PATTERN NOT SHOWN)

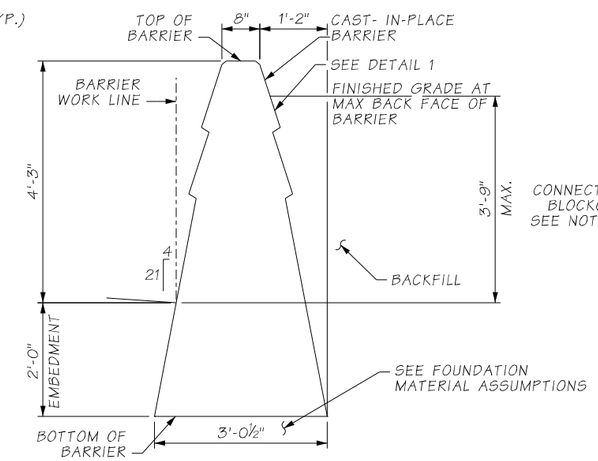

TYPICAL SECTION

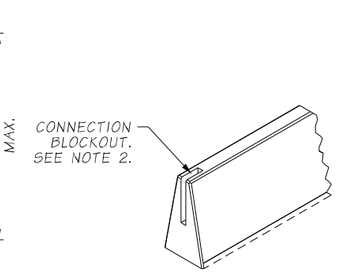

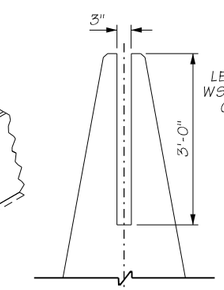

CONCRETE BLOCKOUT

(AESTHETIC PATTERN NOT SHOWN)

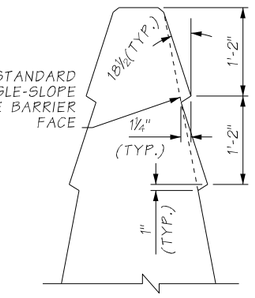

DETAIL 1

WALL 09.85L GEOTECHNICAL PARAMETERS:

NATIVE MATERIAL.

BACKFILL UNIT WEIGHT: γ = 125 PCF

BACKFILL ANGLE OF INTERNAL FRICTION: ϕ_f = 36°

EARTH PRESSURE COEFFICIENTS =
Ka = 0.35
Kae= 0.79
Kp = 6.00

FOUNDATION MATERIAL

ASSUMPTIONS:
1. BARRIER IS BEARING ON EXISTING SOIL
2. ϕ_f = 36°, OR BETTER
3. SLIDING COEFFICIENT μ_s = 0.8xTAN(ϕ_f) = 0.58

EMBEDMENT BEARING RESISTANCE, KSF

EFF. BASE WIDTH, B':	NOMINAL	EXTREME	STRENGTH	SERVICE (1" SETTLEMENT)
3-0½"	11	13	6	13

REINFORCING STEEL BENDING DIAGRAM

SEE STD. SPEC. 9-07.1(2) FOR BENDING DIAMETERS

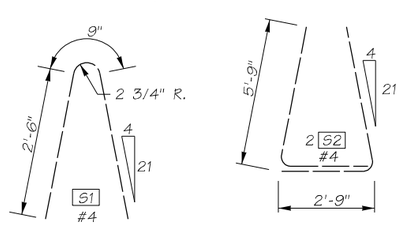

S5	7¼"
S6	11"
S7	15"
S8	19"

S5 #4
S6 #4
S7 #4
S8 #4

NOTES:

1. ALL CONCRETE SHALL BE CLASS 4000, EXCEPT AS NOTED.
2. PROVIDE ROUGHENED SURFACE AT CONSTRUCTION JOINTS.

WALL 09.85L SCHEDULE

STATION	TOP WALL ELEV	W-ELEV	F-ELEV
1+50.00	99.8	99.23	97.10
1+70.10	99.8	99.31	95.48
1+76.99	99.8	98.96	98.46

W56-6

FILE NAME	c:\pw_working\wastate\parsons_p005295d\dms32768\XL5467_DE_W56-6.dgn
TIME	5:06:09 PM
DATE	1/4/2022
PLOTTED BY	p005295D
DESIGNED BY	N. ALA
ENTERED BY	C. FUNG
CHECKED BY	E. KELLEY
PROJ. ENGR.	J. LEFOTU
REGIONAL ADM.	L. HODGSON

REVISION | DATE | BY

REGION NO. 10 | STATE WASH | FED.AID PROJ.NO.

JOB NUMBER XL5467

CONTRACT NO. C9242 | LOCATION NO.

ERIC R. KELLEY — STATE OF WASHINGTON — 44060 — STRUCTURAL ENGINEER — PROFESSIONAL ENGINEER

DATE

P.E. STAMP BOX

DATE

P.E. STAMP BOX

Washington State Department of Transportation

FLATIRON LANE

PARSONS

I-405; RENTON TO BELLEVUE WIDENING AND EXPRESS TOLL LANES PROJECT

RETAINING BARRIER DETAILS
WALL 09.85L

PLAN REF NO W56-6

SHEET OF SHEETS

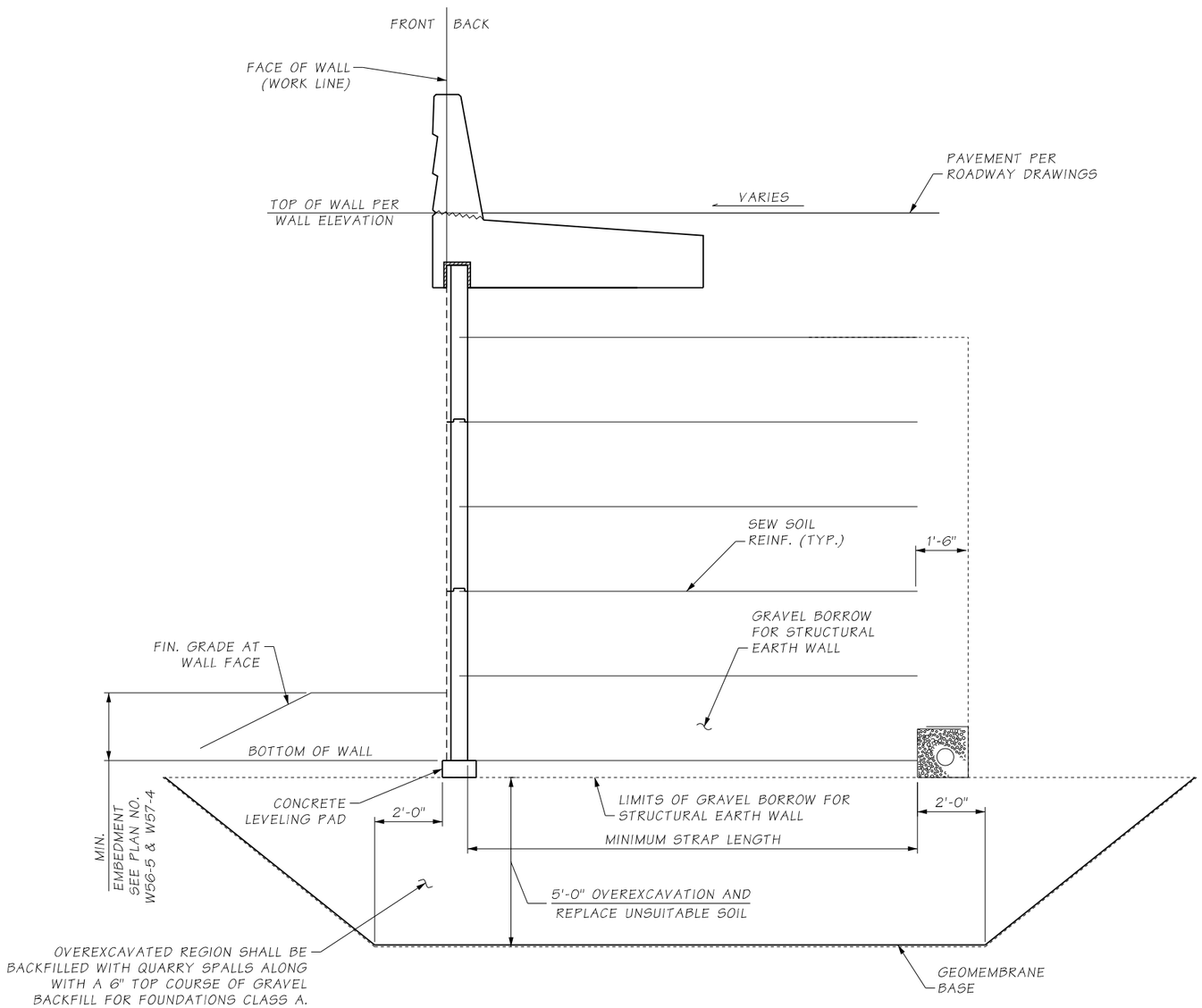

TYPICAL SECTION AT OVEREXCAVATION (E)
W56-2
W57-2

FILE NAME	c:\pw_working\wastate\parsons_p005295d\dms32768\XL5467_DE_W56-7.dgn				REGION NO. 10	STATE WASH	FED.AID PROJ.NO.
TIME	5:33:51 PM						
DATE	12/9/2021						
PLOTTED BY	p005295D				JOB NUMBER XL5467		
DESIGNED BY	W. METWALLY						
ENTERED BY	M. ALEKSANYAN						
CHECKED BY	E. KELLEY				CONTRACT NO. C9242		LOCATION NO.
PROJ. ENGR.	J. LEFOTU						
REGIONAL ADM.	L. HODGSON	REVISION	DATE	BY			

ERIC R. KELLEY — STATE OF WASHINGTON — 44060 — STRUCTURAL ENGINEER — PROFESSIONAL ENGINEER

DATE
P.E. STAMP BOX

DATE
P.E. STAMP BOX

Washington State Department of Transportation

FLATIRON LANE

PARSONS

I-405; RENTON TO BELLEVUE WIDENING AND EXPRESS TOLL LANES PROJECT

RETAINING WALL OVEREXCAVATION DETAILS
WALL 09.90L-A & 09.90L-B

PLAN REF NO
W56-7

SHEET
OF
SHEETS

WALL 09.90L-B NOTES:

1. SEE PLAN NO. W56-1 FOR ADDITIONAL NOTES.
2. WALL 09.90L-B LAYOUT STATIONING IS PROVIDED AS OFFSET FROM SB I-405 LINE.
3. SEE SHEETS AL-36 & AL-37, RS-21 & RS-52, PR-44 & PV-45, AND PV-36 & PV-37 FOR ROADWAY ALIGNMENT, SECTIONS, PROFILE, AND PAVING, RESPECTIVELY.
4. SEE TRAFFIC CONTROL PLAN SEGMENT 2A SHEET MOT-36 & MOT-37, STAGE 1, PHASE 2 FOR WORK ZONE AND TRAFFIC STAGE.
5. SEE SHEET DR-36 & DR-37 FOR DRAINAGE PLANS.
6. SEE SHEETS TS-36 & TS-37 AND IL-36 & IL-37 FOR ITS AND ILLUMINATION PLANS, RESPECTIVELY.
7. SEE SHEET SN-36 & SN-37 FOR SIGNING PLANS.

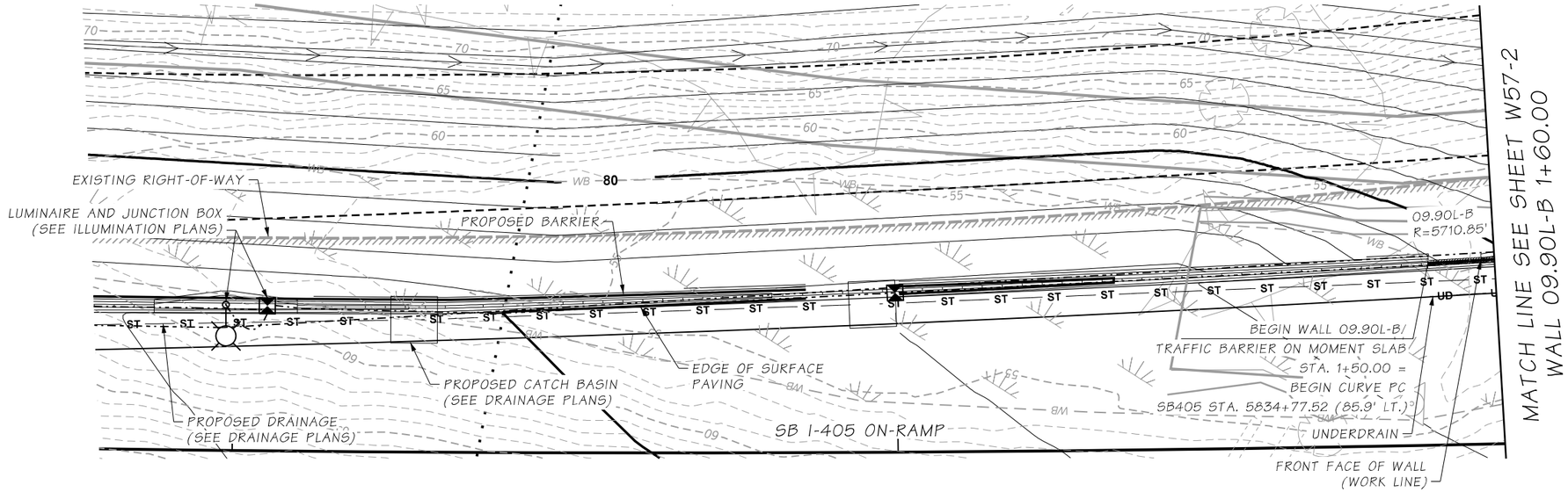

PLAN - WALL 09.90L-B

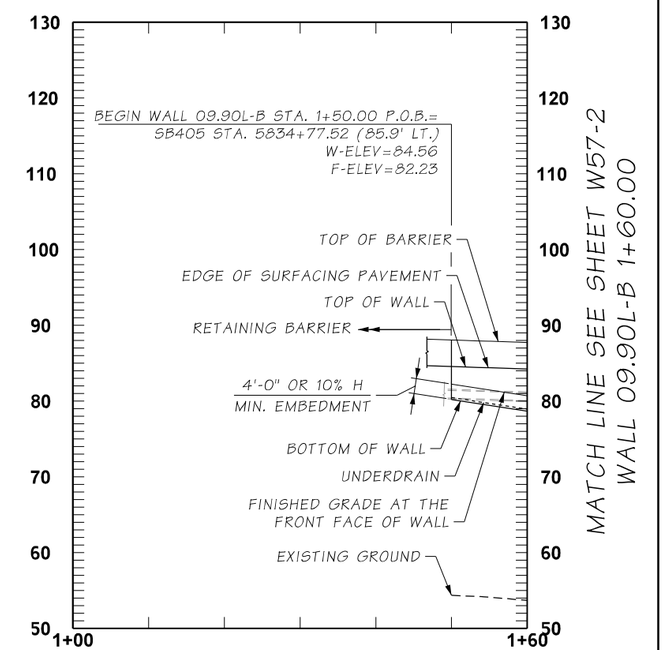

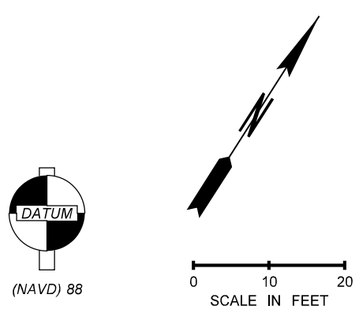

REFLECTED ELEVATION - WALL 09.90L-B

WALL TYPE: STRUCTURAL EARTH (SEW)

FILE NAME	c:\pw_working\wastate\parsons_p005295d\dms32768\XL5467_PP_W57-1.dgn						
TIME	11:14:36 AM				REGION NO. 10	STATE WASH	FED.AID PROJ.NO.
DATE	12/9/2021						
PLOTTED BY	p005295D						
DESIGNED BY	W. METWALLY				JOB NUMBER XL5467		
ENTERED BY	M. ALEKSANYAN						
CHECKED BY	E. KELLEY				CONTRACT NO. C9242		LOCATION NO.
PROJ. ENGR.	J. LEFOTU						
REGIONAL ADM.	L. HODGSON	REVISION	DATE	BY			

ERIC R. KELLEY — STATE OF WASHINGTON — 44060 — STRUCTURAL ENGINEER — PROFESSIONAL ENGINEER

P.E. STAMP BOX — DATE

P.E. STAMP BOX — DATE

Washington State Department of Transportation

FLATIRON LANE

PARSONS

I-405; RENTON TO BELLEVUE WIDENING AND EXPRESS TOLL LANES PROJECT

RETAINING WALL PLAN AND PROFILE WALL 09.90L-B (1 OF 3)

PLAN REF NO W57-1

SHEET OF SHEETS

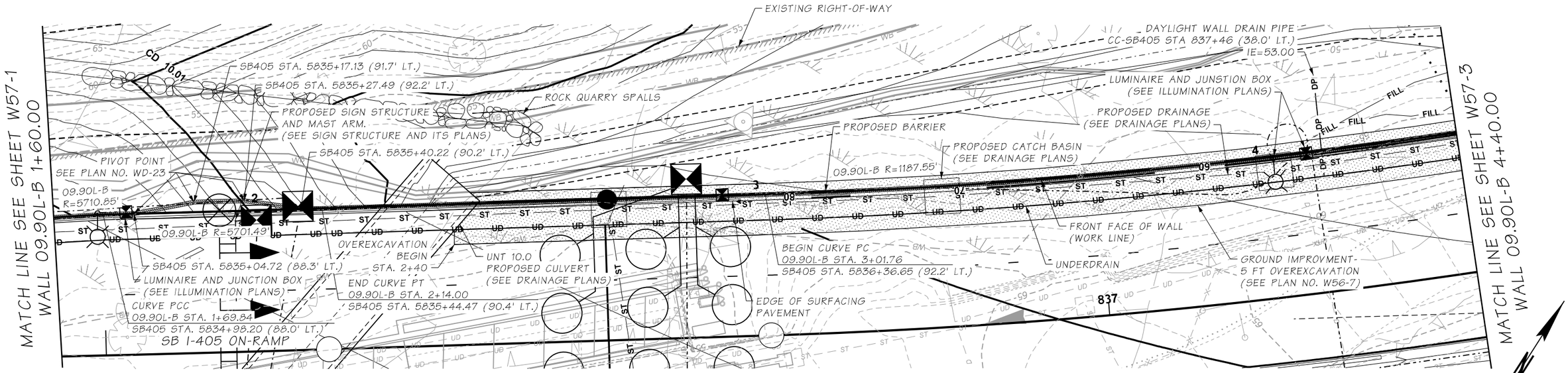

PLAN - WALL 09.90L-B

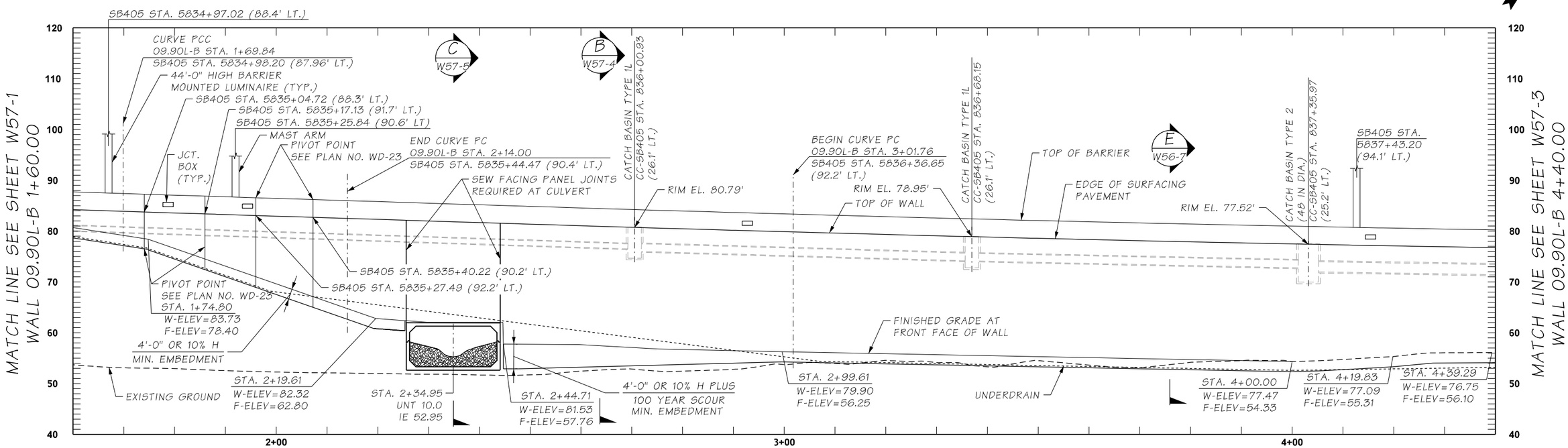

REFLECTED ELEVATION - WALL 09.90L-B

NOTES:

1. SEE SHEET W57-1 FOR NOTES

WALL TYPE: STRUCTURAL EARTH (SEW)

FILE NAME	c:\pw_working\wastate\parsons_p005295d\dms32768\XL5467_PP_W57-2.dgn				REGION NO. 10	STATE WASH	FED.AID PROJ.NO.
TIME	5:30:29 PM				JOB NUMBER XL5467		
DATE	12/9/2021				CONTRACT NO. C9242		LOCATION NO.
PLOTTED BY	p005295D						
DESIGNED BY	W. METWALLY						
ENTERED BY	M. ALEKSANYAN						
CHECKED BY	E. KELLEY						
PROJ. ENGR.	J. LEFOTU						
REGIONAL ADM.	L. HODGSON	REVISION	DATE	BY			

ERIC R. KELLEY — STATE OF WASHINGTON — 40069 — STRUCTURAL ENGINEER — PROFESSIONAL ENGINEER

DATE

P.E. STAMP BOX

DATE

P.E. STAMP BOX

Washington State Department of Transportation

FLATIRON LANE

PARSONS

I-405; RENTON TO BELLEVUE WIDENING AND EXPRESS TOLL LANES PROJECT

RETAINING WALL PLAN AND PROFILE
WALL 09.90L-B (2 OF 3)

PLAN REF NO W57-2

SHEET OF SHEETS

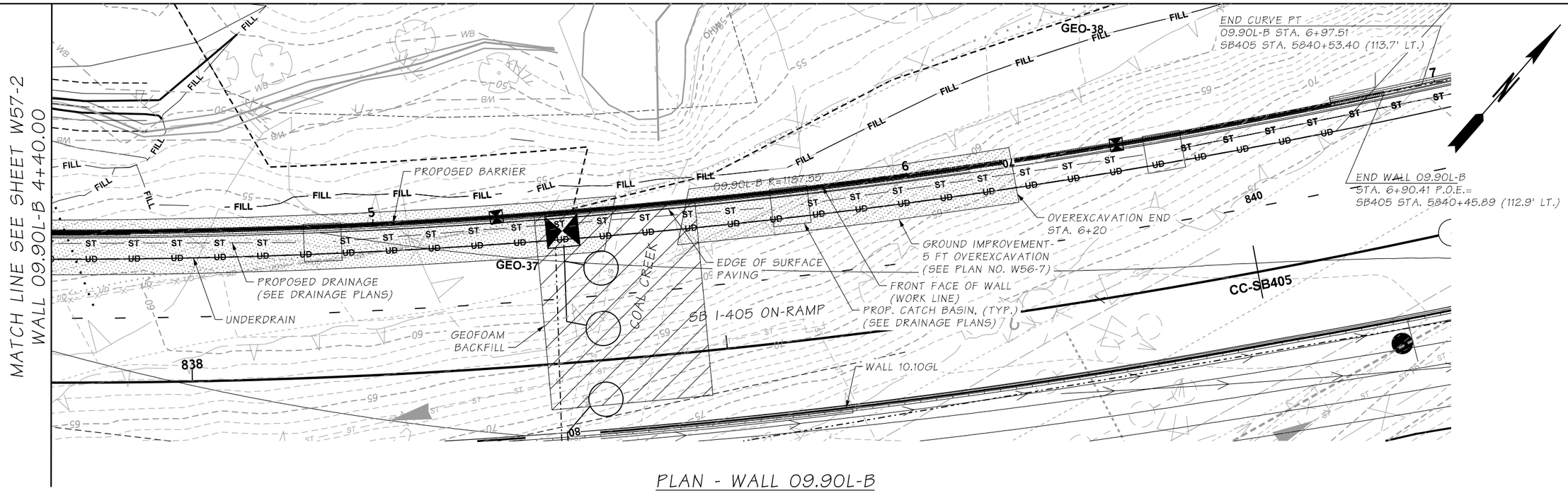

PLAN - WALL 09.90L-B

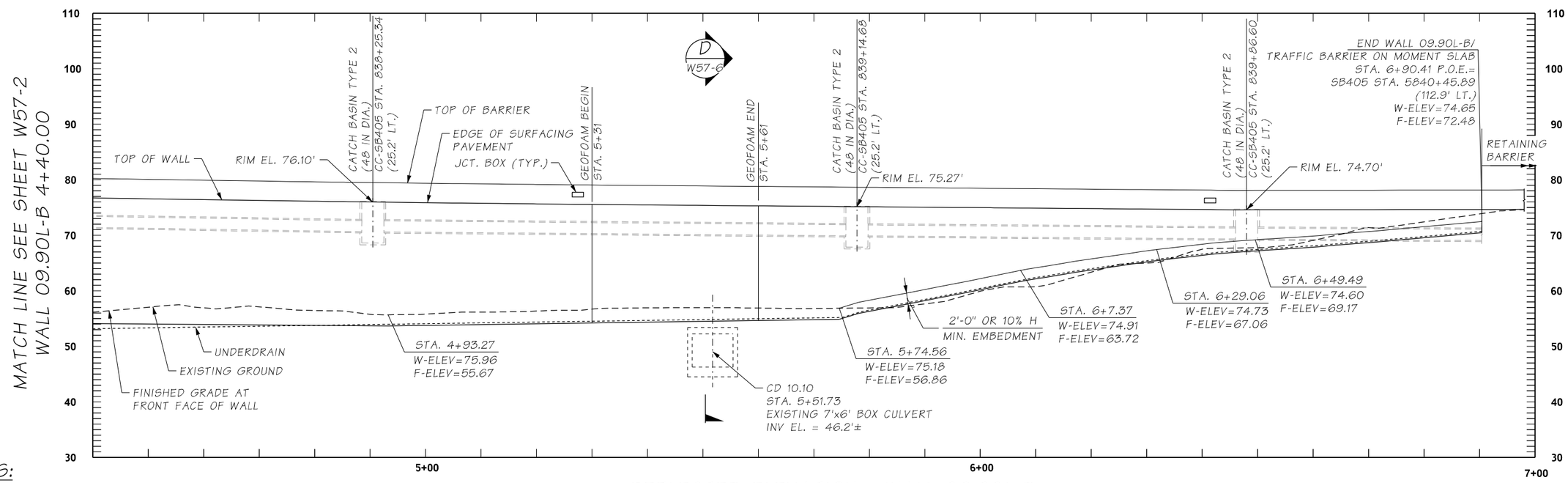

NOTES:

1. SEE SHEET W57-1 FOR NOTES

REFLECTED ELEVATION - WALL 09.90L-B

WALL TYPE: STRUCTURAL EARTH (SEW)

FILE NAME	c:\pw_working\wastate\parsons_p005295d\dms32768\XL5467_PP_W57-3.dgn				REGION NO. 10	STATE WASH	FED.AID PROJ.NO.
TIME	11:22:42 AM				JOB NUMBER XL5467		
DATE	12/9/2021						
PLOTTED BY	p005295D						
DESIGNED BY	W. METWALLY						
ENTERED BY	M. ALEKSANYAN						
CHECKED BY	E. KELLEY				CONTRACT NO. C9242		LOCATION NO.
PROJ. ENGR.	J. LEFOTU						
REGIONAL ADM.	L. HODGSON	REVISION	DATE	BY			

ERIC R. KELLEY — STATE OF WASHINGTON — 44060 — STRUCTURAL ENGINEER — PROFESSIONAL ENGINEER

DATE

P.E. STAMP BOX

DATE

P.E. STAMP BOX

Washington State Department of Transportation

FLATIRON LANE

PARSONS

I-405; RENTON TO BELLEVUE WIDENING AND EXPRESS TOLL LANES PROJECT

RETAINING WALL PLAN AND PROFILE
WALL 09.90L-B (3 OF 3)

PLAN REF NO W57-3

SHEET OF SHEETS

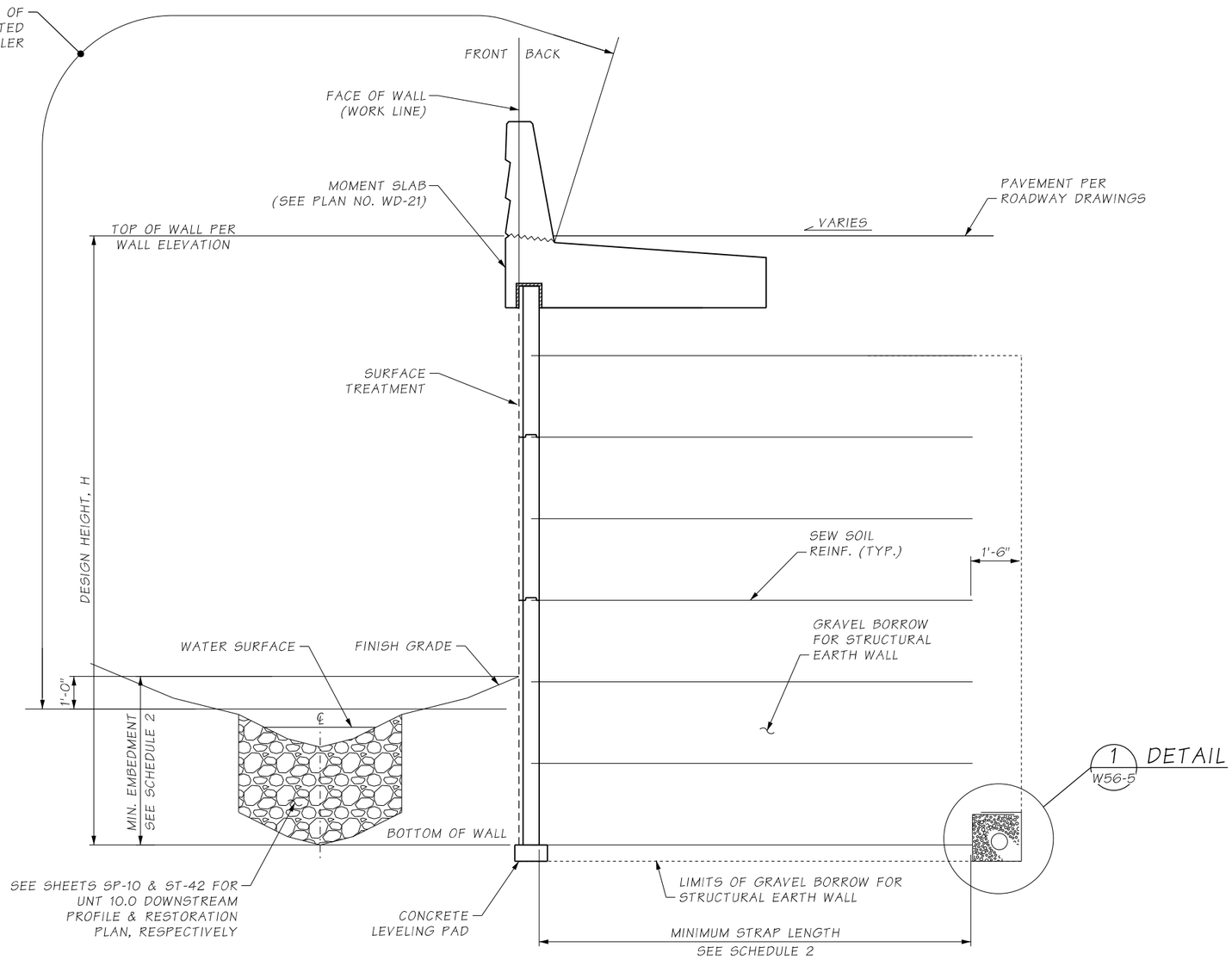

SECTION B W57-2

NOTES:

1. SEE PLAN NO. W56-5 FOR ADDITIONAL NOTES AND DETAILS.

SCHEDULE 2

BEGIN STATION	END STATION	MINIMUM STRAP LENGTH	MINIMUM WALL EMBEDMENT
1+50	2+40	0.8H OR 8.0 FT	4.0 FT
2+40	3+80	0.8H OR 8.0 FT	4.0 FT
3+80	6+20	1.0H OR 8.0 FT	2.0 FT
6+20	6+90.41	0.75H OR 8.0 FT	2.0 FT

FILE NAME	c:\pw_working\wastate\parsons_p005295d\dms32768\XL5467_DE_W57-4.dgn
TIME	11:35:29 AM
DATE	12/9/2021
PLOTTED BY	p005295D
DESIGNED BY	W. METWALLY
ENTERED BY	M. ALEKSANYAN
CHECKED BY	E. KELLEY
PROJ. ENGR.	J. LEFOTU
REGIONAL ADM.	L. HODGSON

REVISION | DATE | BY

REGION NO. 10 | STATE WASH | FED.AID PROJ.NO.

JOB NUMBER XL5467

CONTRACT NO. C9242 | LOCATION NO.

ERIC R. KELLEY — STATE OF WASHINGTON — 44060 — STRUCTURAL ENGINEER — PROFESSIONAL ENGINEER

DATE — P.E. STAMP BOX

DATE — P.E. STAMP BOX

Washington State Department of Transportation

FLATIRON LANE

PARSONS

I-405; RENTON TO BELLEVUE WIDENING AND EXPRESS TOLL LANES PROJECT

RETAINING WALL DETAILS
WALL 09.90L-B (1 OF 3)

PLAN REF NO W57-4

SHEET OF SHEETS

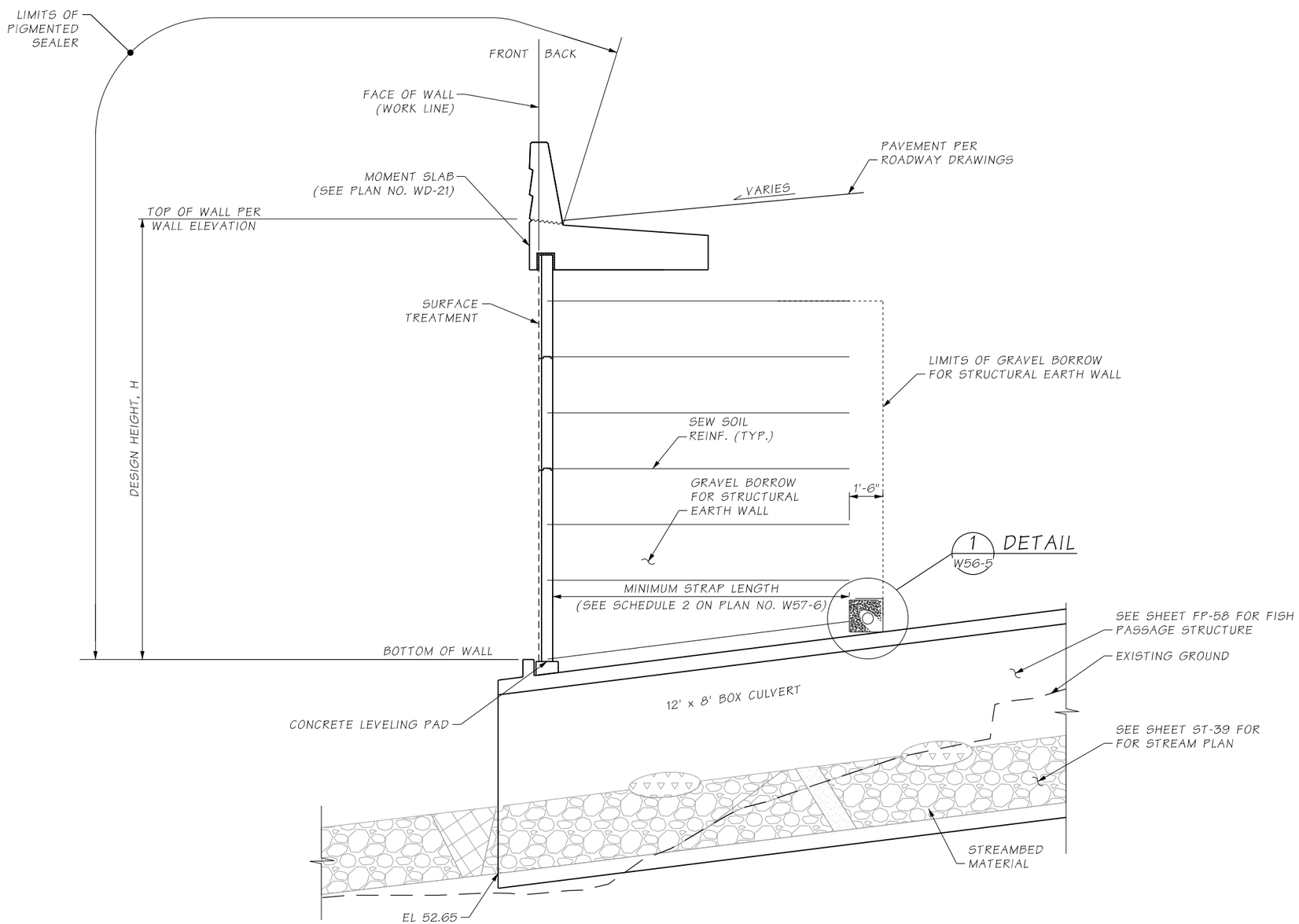

TYPICAL SECTION AT NEW UNT 10.00 FISH PASSAGE C W57-2

FILE NAME	c:\pw_working\wastate\parsons_p005295d\dms32768\XL5467_DE_W57-5.dgn						
TIME	11:39:52 AM				REGION NO. 10	STATE WASH	FED.AID PROJ.NO.
DATE	12/9/2021						
PLOTTED BY	p005295D				JOB NUMBER XL5467		
DESIGNED BY	W. METWALLY						
ENTERED BY	M. ALEKSANYAN				CONTRACT NO. C9242		LOCATION NO.
CHECKED BY	E. KELLEY						
PROJ. ENGR.	J. LEFOTU						
REGIONAL ADM.	L. HODGSON	REVISION	DATE	BY			

ERIC R. KELLEY — STATE OF WASHINGTON — 44060 — STRUCTURAL ENGINEER — PROFESSIONAL ENGINEER

P.E. STAMP BOX — DATE

P.E. STAMP BOX — DATE

Washington State Department of Transportation

FLATIRON LANE

PARSONS

I-405; RENTON TO BELLEVUE WIDENING AND EXPRESS TOLL LANES PROJECT

RETAINING WALL DETAILS
WALL 09.90L-B (2 OF 3)

PLAN REF NO W57-5

SHEET OF SHEETS

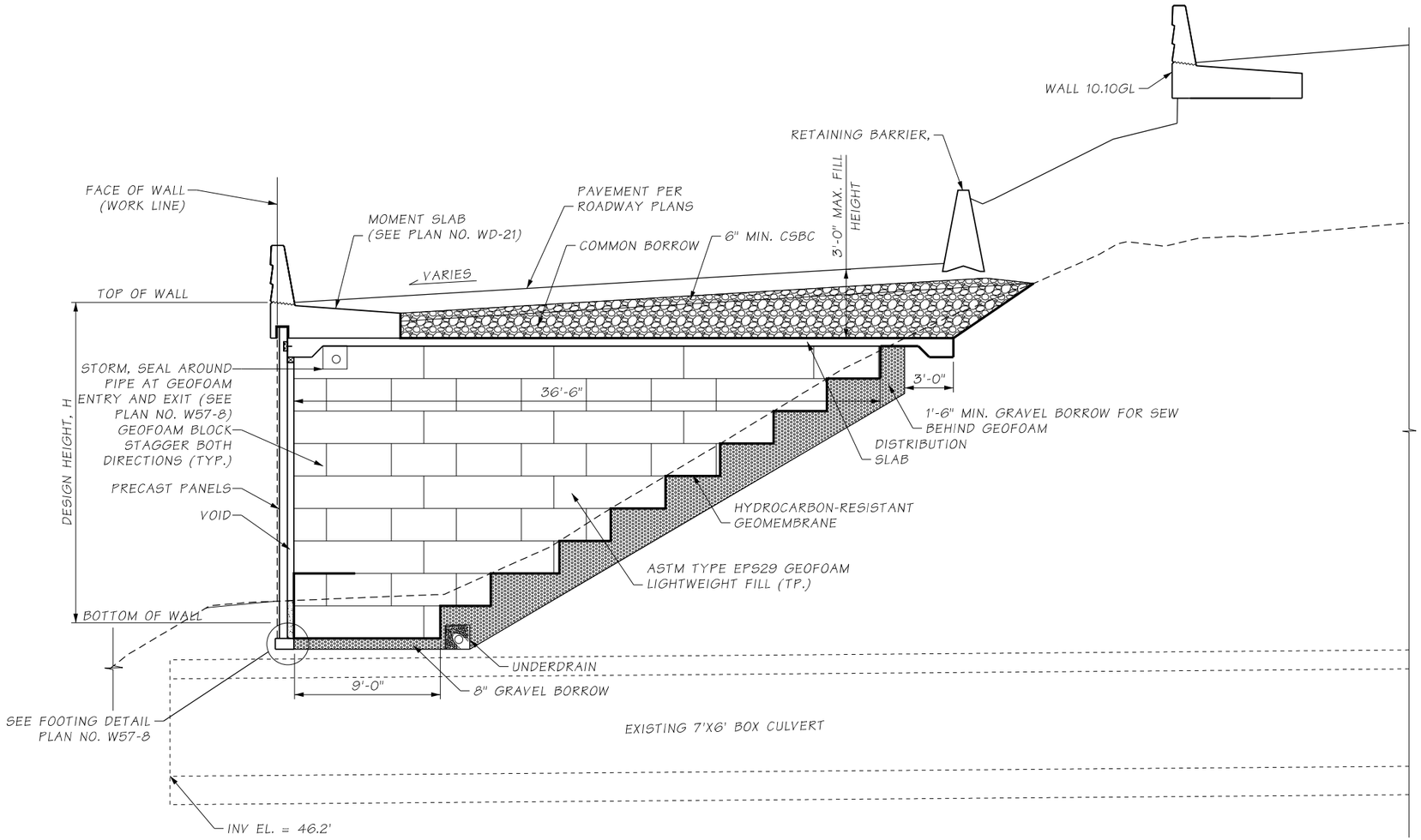

SECTION AT EXISTING UNT 10.10 (D) W57-3

NOTE:

1. THE EPS GEOFOAM LIGHTWEIGHT FILL HAVE BEEN DESIGNED IN ACCORDANCE WITH NCHRP PROJECT 24-11 (02). ALL OTHER STRUCTURAL COMPONENTS HAVE BEEN DESIGNED IN ACCORDANCE WITH THE REQUIREMENTS OF THE AASHTO LRFD BRIDGE DESIGN SPECIFICATION, 8TH EDITION.

FILE NAME	c:\pw_working\wastate\parsons_p005295d\dms32768\XL5467_DE_W57-6.dgn
TIME	11:46:59 AM
DATE	12/9/2021
PLOTTED BY	p005295D
DESIGNED BY	W. METWALLY
ENTERED BY	M. ALEKSANYAN
CHECKED BY	E. KELLEY
PROJ. ENGR.	J. LEFOTU
REGIONAL ADM.	L. HODGSON

REVISION	DATE	BY

REGION NO.	STATE	FED.AID PROJ.NO.
10	WASH	
JOB NUMBER XL5467		
CONTRACT NO. C9242		LOCATION NO.

ERIC R. KELLEY, STATE OF WASHINGTON, 44060, STRUCTURAL ENGINEER, PROFESSIONAL ENGINEER

P.E. STAMP BOX DATE

P.E. STAMP BOX DATE

Washington State Department of Transportation

FLATIRON LANE

PARSONS

I-405; RENTON TO BELLEVUE WIDENING AND EXPRESS TOLL LANES PROJECT

RETAINING WALL DETAILS
WALL 09.90L-B (3 OF 3)

PLAN REF NO W57-6

SHEET OF SHEETS

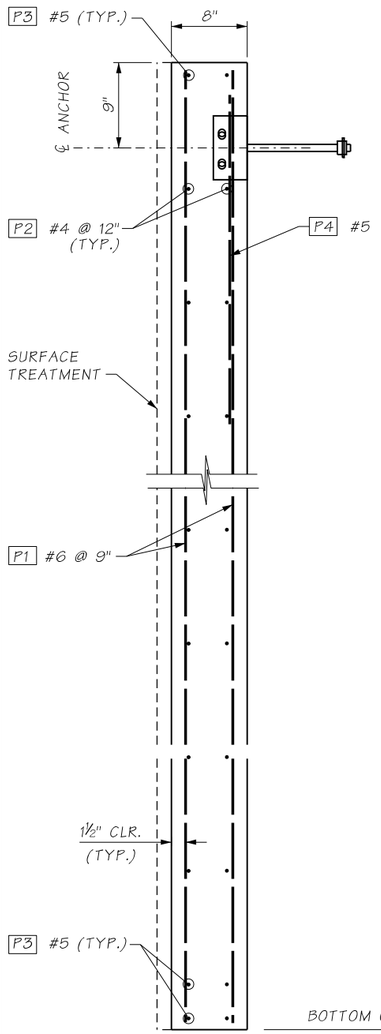

PANEL SECTION

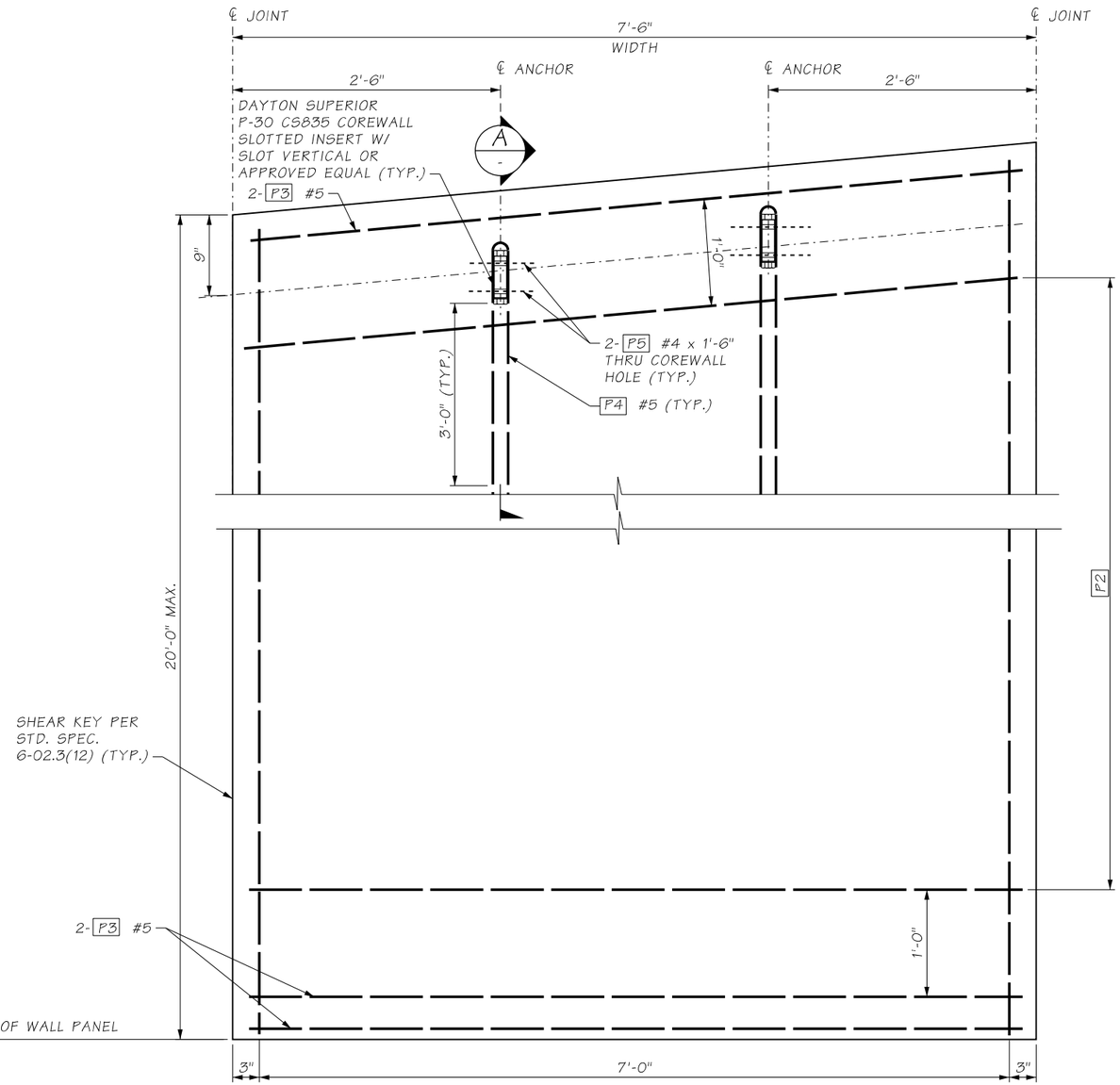

PANEL ELEVATION

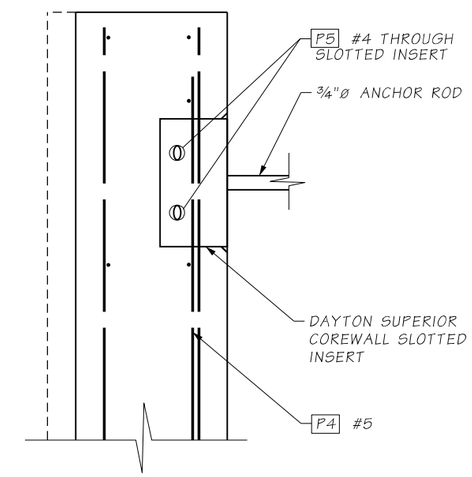

SECTION A
-

LOAD DISTRIBUTION SLAB NOT SHOWN FOR CLARITY

NOTES:

1. THE WALL PANELS SHOWN HAVE NOT BEEN EVALUATED FOR SHIPPING AND ERECTION LOADS. THE CONTRACTOR SHALL PROVIDE ADDITIONAL BRACING OR REINFORCING AS REQUIRED FOR SHIPPING AND ERECTION.
2. ERECTION INSERTS SHALL NOT INTERFERE WITH GEOFOAM OR SHALL BE REMOVED PRIOR TO GEOFOAM PLACEMENT.
3. PANEL CONNECTION TO LOAD DISTRIBUTION SLAB SHALL NOT BE USED FOR LIFTING.
4. PANELS SHALL HAVE A KEYED JOINT. A SMOOTH JOINT SHALL BE PROVIDED AT THE FIRST AND LAST PANELS.
5. THE WALL PANEL TO DISTRIBUTION SLAB CONNECTION ASSEMBLY SHALL BE HOT DIP GALVANIZED.

W57-7

FILE NAME	c:\pw_working\wastate\parsons_p005295d\dms32768\XL5467_DE_W57-7.dgn						
TIME	11:52:51 AM				REGION NO. 10	STATE WASH	FED.AID PROJ.NO.
DATE	12/9/2021						
PLOTTED BY	p005295D				JOB NUMBER XL5467		
DESIGNED BY	W. METWALLY						
ENTERED BY	M. ALEKSANYAN				CONTRACT NO. C9242		LOCATION NO.
CHECKED BY	E. KELLEY						
PROJ. ENGR.	J. LEFOTU						
REGIONAL ADM.	L. HODGSON	REVISION	DATE	BY			

ERIC R. KELLEY — STATE OF WASHINGTON — 44060 — STRUCTURAL ENGINEER — PROFESSIONAL ENGINEER

DATE

P.E. STAMP BOX

DATE

P.E. STAMP BOX

Washington State Department of Transportation

FLATIRON LANE

PARSONS

I-405; RENTON TO BELLEVUE WIDENING AND EXPRESS TOLL LANES PROJECT

GEOFOAM DETAILS
WALL 09.90L-B (1 OF 2)

PLAN REF NO W57-7

SHEET OF SHEETS

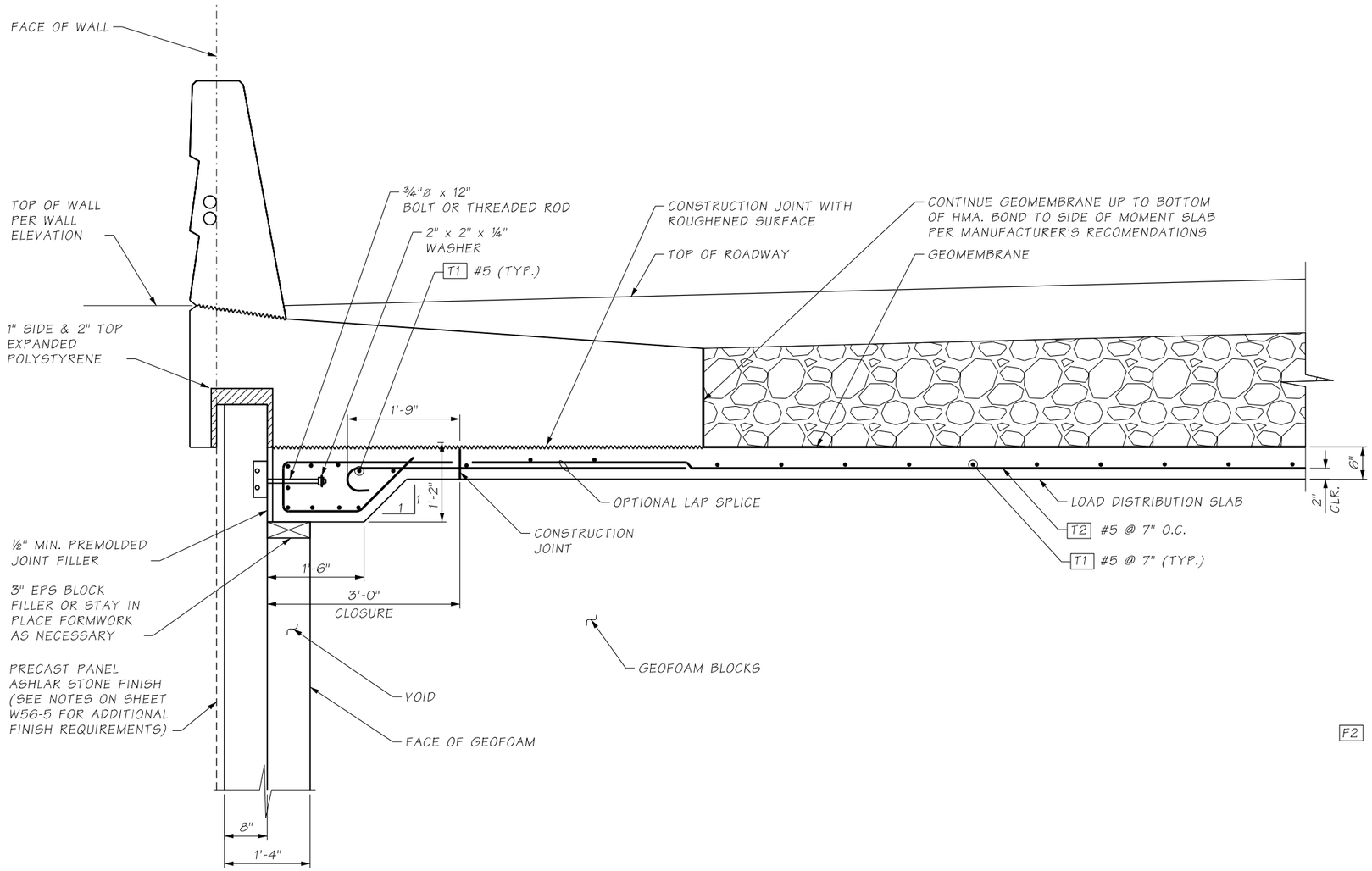

GEOFOAM WALLS WITH MOMENT SLAB BARRIER DETAIL

BENDING DIAGRAM

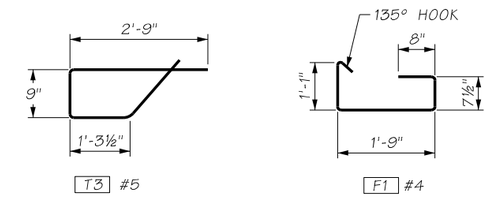

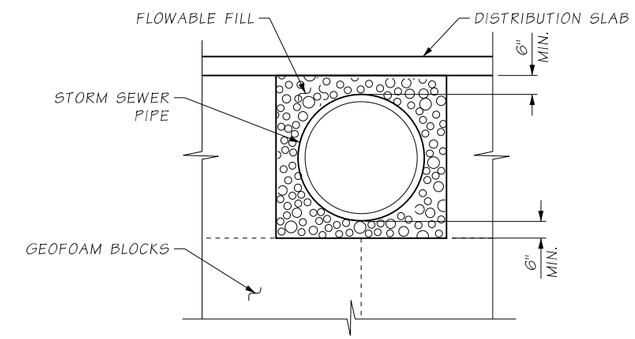

PIPE SECTION IN GEOFOAM

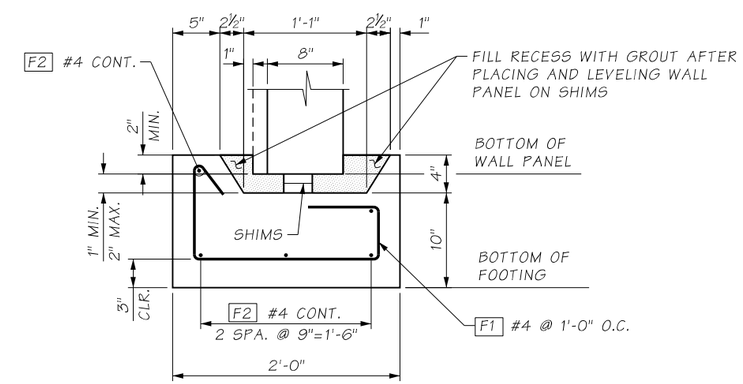

FOOTING DETAIL FOR PRECAST PANEL

W57-8

FILE NAME	c:\pw_working\wastate\parsons_p005295d\dms32768\XL5467_DE_W57-8.dgn						
TIME	12:00:36 PM				REGION NO. 10	STATE WASH	FED.AID PROJ.NO.
DATE	12/9/2021						
PLOTTED BY	p005295D						
DESIGNED BY	W. METWALLY				JOB NUMBER XL5467		
ENTERED BY	M. ALEKSANYAN						
CHECKED BY	E. KELLEY				CONTRACT NO. C9242		LOCATION NO.
PROJ. ENGR.	J. LEFOTU						
REGIONAL ADM.	L. HODGSON	REVISION	DATE	BY			

ERIC R. KELLEY — STATE OF WASHINGTON — 44060 — STRUCTURAL ENGINEER — PROFESSIONAL ENGINEER

DATE

P.E. STAMP BOX

DATE

P.E. STAMP BOX

Washington State Department of Transportation

FLATIRON LANE

PARSONS

I-405; RENTON TO BELLEVUE WIDENING AND EXPRESS TOLL LANES PROJECT

GEOFOAM DETAILS
WALL 09.90L-B (2 OF 2)

PLAN REF NO W57-8

SHEET OF SHEETS

CONTRACT PLANS
WALLS TYPICAL DETAILS

I-405; RENTON TO BELLEVUE WIDENING
AND EXPRESS TOLL LANES PROJECT

VOLUME 8

FINAL

KING COUNTY

Washington State
Department of Transportation

11/19/2021

VOLUME 8

REV NO.	INCLUDED	REV. DATE	SUB. NO.	PLAN REF NO.		SHEET TITLE	SHEET DESCRIPTION
B				W109	2	RETIANING WALL DETAIL	WALL 13.25L (2 OF 2)
B				W110	1	RETAINING WALL PLAN AND PROFILE	WALL 13.26L (1 OF 2)
B				W110	2	RETIANING WALL DETAIL	WALL 13.26L (2 OF 2)
B				W111	1	RETAINING WALL PLAN AND PROFILE	12.35L (1 OF 3)
B				W111	2	RETAINING WALL PLAN AND PROFILE	12.35L (2 OF 3)
B				W111	3	RETAINING WALL DETAIL	12.35L (3 OF 3)
B				W112	1	RETAINING WALL PLAN AND PROFILE	12.35R (1 OF 3)
B				W112	2	RETAINING WALL PLAN AND PROFILE	12.35R (2 OF 3)
B				W112	3	RETIANING WALL DETAIL	12.35R (3 OF 3)
B				W113	1	RETAINING WALL PLAN AND PROFILE	13.00R (1 OF 2)
B				W113	2	RETIANING WALL DETAIL	13.00R (1 OF 2)
B				W114	1	RETAINING WALL PLAN AND PROFILE	12.40ABUT (1 OF 2)
B				W114	2	RETIANING WALL DETAIL	12.40ABUT (2 OF 2)
B				WD	1	RETAINING WALL TYPICAL DETAILS	PEDESTRIAN FENCE
B				WD	2	RETAINING WALL TYPICAL DETAILS	FALL PROTECTION FENCE
B				WD	3	RETAINING WALL TYPICAL DETAILS	FENCE BASE AND CONNECTIONS
B				WD	4	RETAINING WALL TYPICAL DETAILS	PRECAST/CIP CONCRETE
B				WD	5	RETAINING WALL TYPICAL DETAILS	PRECAST/CIP CONCRETE
B				WD	6	RETAINING WALL TYPICAL DETAILS	WALL DRAINS
B				WD	7	RETAINING WALL TYPICAL DETAILS	WALL DRAINS
B				WD		RETAINING WALL TYPICAL DETAILS	
B				WD		RETAINING WALL TYPICAL DETAILS	
B				WD		RETAINING WALL TYPICAL DETAILS	
B	X	11/19/21	2020	WD	21	RETAINING WALL	SEW MOMENT SLAB DETAILS (1 OF 4)
B	X	11/19/21	2020	WD	22	RETAINING WALL	SEW MOMENT SLAB DETAILS (2 OF 4)
B	X	11/19/21	2020	WD	23	RETAINING WALL	SEW MOMENT SLAB DETAILS (3 OF 4)
B	X	11/19/21	2020	WD	24	RETAINING WALL	SEW MOMENT SLAB DETAILS (4 OF 4)
B				NWD	1	NOISE WALL	SECTIONS AND DETAILS
B				NWD	2	NOISE WALL	SECTIONS AND DETAILS
A				NWD	3		
A				NWD	1-1	NOISE WALL EAST 10(1) AND 10(2)	PRECAST SECTIONS AND DETAILS
A				NWD	1-2	NOISE WALL EAST 10(1) AND 10(2)	PRECAST CAP DETAILS
A				NWD	1-3	NOISE WALL EAST 10(1) AND 10(2)	PRECAST SECTIONS AND DETAILS
A				NWD	1-4	NOISE WALL EAST 10(1) AND 10(2)	PRECAST SECTIONS AND DETAILS
A				NWD	1-5	NOISE WALL EAST 10(1) AND 10(2)	PRECAST SECTIONS AND DETAILS
A				NWD	1-6	NOISE WALL EAST 10(1) AND 10(2)	DRILLED SHAFT SCHEDULE
A				NWD	1-7	NOISE WALL EAST 10 - CPF	NOISE WALL DETAILS
A				NWD	4-1	NOISE WALL DETAILS-23'-0" MAX. EXP. WALL	NOISE WALL EAST 11
A				NWD	4-2	NOISE WALL DETAILS-19'-6" MAX. EXP. WALL	NOISE WALL EAST 11
A				NWD	4-3	NOISE WALL DETAILS-12-0" MAX. EXP. WALL	NOISE WALL EAST 11
A				NWD	4-4	NOISE WALL DETAILS MAX HEIGHT 22'-0"	NOISE WALL EAST 11
A				NWD	4-5	NOISE WALL DETAILS MAX HEIGHT 22'-0"	NOISE WALL EAST 11
A				NWD	4-6	NOISE WALL DETAILS MAX HEIGHT 32'-4"	NOISE WALL EAST 11
A				NWD	4-7	NOISE WALL DETAILS MAX HEIGHT 32'-4"	NOISE WALL EAST 11
A				NWD	4-8	NOISE WALL DETAILS	NOISE WALL EAST 11
A				NWD	4-9	NOISE WALL DETAILS	NOISE WALL EAST 11
A				NWD	4-10	NOISE WALL DETAILS	NOISE WALL EAST 11
A				NWD	4-11	NOISE WALL SHAFT SCHEDULE	NOISE WALL EAST 11
A				NWD	5		
A				NWD	6		
B				NWD	7-1	NOISE WALL DETAILS	NOISE WALL WEST 5(1)
B				NWD	7-2	NOISE WALL DETAILS	NOISE WALL WEST 5(1)
B				NWD	7-3	NOISE WALL DETAILS	NOISE WALL WEST 5(1)
B				NW1	1	NOISE WALL PLAN AND PROFILE	NOISEWALL EAST 10 (1) (1 OF 2)
B				NW1	2	NOISE WALL PLAN AND PROFILE	NOISEWALL EAST 10 (1) (2 OF 2)
B				NW2	1	NOISE WALL PLAN AND PROFILE	NOISEWALL EAST 10 (2) (1 OF 2)
B				NW2	2	NOISE WALL PLAN AND PROFILE	NOISEWALL EAST 10 (2) (1 OF 2)

REV NO.	INCLUDED	REV. DATE	SUB. NO.	PLAN REF NO.		SHEET TITLE	SHEET DESCRIPTION
B				NW3	1	NOISE WALL PLAN AND PROFILE	CONCRETE PROTECTIVE FENCE (1 OF 2)
B				NW3	2	NOISE WALL PLAN AND PROFILE	CONCRETE PROTECTIVE FENCE (2 OF 2)
B				NW4	1	NOISE WALL PLAN AND PROFILE	NOISE WALL EAST 11 (1 OF 7)
B				NW4	2	NOISE WALL PLAN AND PROFILE	NOISE WALL EAST 11 (2OF 7)
B				NW4	3	NOISE WALL PLAN AND PROFILE	NOISE WALL EAST 11 (3 OF 7)
B				NW4	4	NOISE WALL PLAN AND PROFILE	NOISE WALL EAST 11 (4 OF 7)
B				NW4	5	NOISE WALL PLAN AND PROFILE	NOISE WALL EAST 11 (5 OF 7)
B				NW4	6	NOISE WALL PLAN AND PROFILE	NOISE WALL EAST 11 (6 OF 7)
B				NW4	7	NOISE WALL PLAN AND PROFILE	NOISE WALL EAST 11 (7 OF 7)
B				NW4	8	GRADE BEAM DETAILS	NOISE WALL EAST 11
B				NW4	9	GRADE BEAM DETAILS	NOISE WALL EAST 11
B				NW6	1	NOISE WALL PLAN AND PROFILE	NOISE WALL 6 (1 OF 5)
B				NW6	2	NOISE WALL PLAN AND PROFILE	NOISE WALL 6 (2 OF 5)
B				NW6	3	NOISE WALL PLAN AND PROFILE	NOISE WALL 6 (3 OF 5)
B				NW6	4	NOISE WALL PLAN AND PROFILE	NOISE WALL 6 (4 OF 5)
B				NW6	5	NOISE WALL PLAN AND PROFILE	NOISE WALL 6 (5 OF 5)
B				NWD6	1	NOISE WALL DETAILS	NOISE WALL WEST 6
B				NWD6	2	NOISE WALL DETAILS	NOISE WALL WEST 6

NO.	ISSUE DATE	ISSUE RECORD - DESCRIPTION	DESIGNED BY	ENTERED BY	CHECKED BY	DESIGN MANAGER:
B	11/19/2021	FINAL	NA	NA	ERK	P. DICKMAN

REGION NO.	STATE
10	WASH

CONTRACT NO.

DATE
P.E. STAMP BOX

DATE
P.E. STAMP BOX

Washington State Department of Transportation

FLATIRON LANE

wood.

I-405
RENTON TO BELLEVUE
EXPRESS TOLL LANES

INDEX OF SHEETS - VOL 8

PLAN REF NO
IN08-2

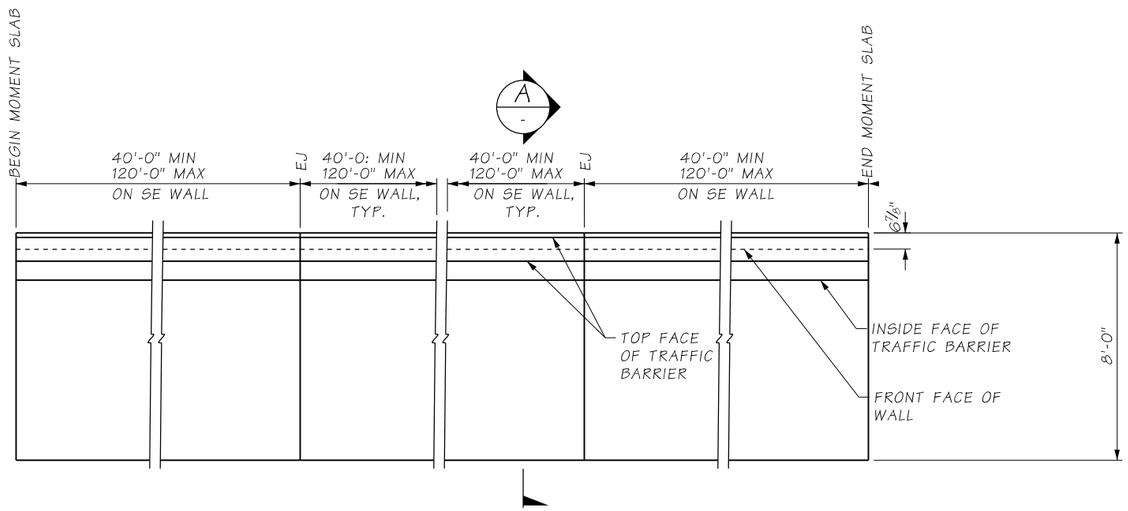

TYPICAL PLAN - MOMENT SLAB ON SE WALL

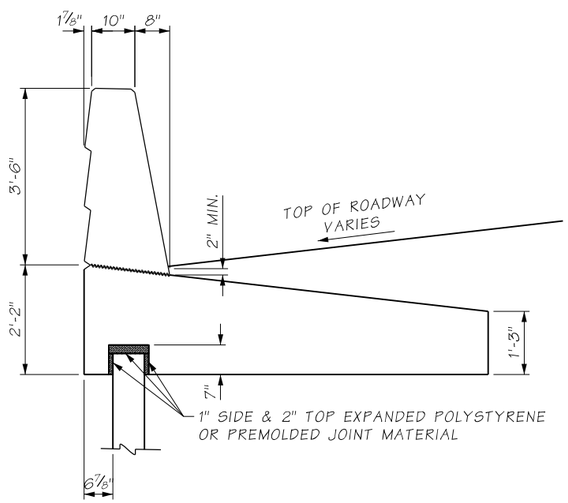

SECTION A

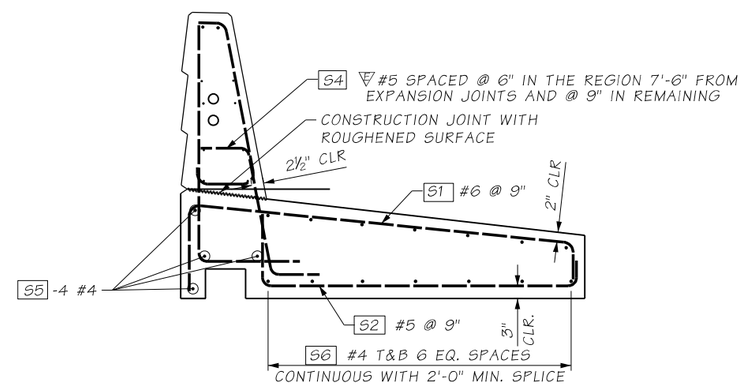

SECTION A

BENDING DIAGRAM

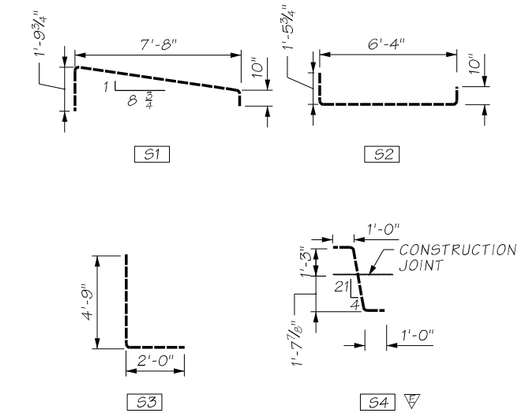

ALL DIMENSIONS ARE OUT TO OUT
▽ = EPOXY COATED REINFORCING STEEL

NOTES:

1. ALL MATERIALS AND WORKMANSHIP SHALL BE IN ACCORDANCE WITH THE REQUIREMENTS OF THE WASHINGTON STATE DEPARTMENT OF TRANSPORTATION "STANDARD SPECIFICATION FOR ROADS, BRIDGES AND MUNICIPAL CONSTRUCTION, ENGLISH UNITS, DATED 2018 AND AMENDED JANUARY 7, 2019.
2. MOMENT SLAB BARRIER HAS BEEN DESIGN FOR TL-4 LOADING.
3. THE CONCRETE SHALL BE CLASS 4000 UNLESS OTHERWISE NOTED.
4. REINFORCING BARS SHALL CONFORM TO ASTM A706 GRADE 60 UNLESS OTHERWISE NOTED.
5. ALL LONGITUDINAL REINFORCING BARS IN THE MOMENT SLAB AND BARRIERS SHALL BE CUT AT EXPANSION JOINTS AND ½" PERMOLDED JOINT FILLER SHALL BE USED TO FORM EXPANSION JOINTS.
6. ALL EXPOSED CONCRETE CORNERS SHALL BE CHAMFERED 3/4", UNLESS NOTED OTHERWISE.

WD-21

FILE NAME	c:\pw_working\wastate\parsons_p005295d\dms32768\XL5467_DE_WD-21.dgn					
TIME	1:01:33 PM					
DATE	12/9/2021					
PLOTTED BY	p005295D					
DESIGNED BY	K. KRONBAUER					
ENTERED BY	M. ALEKSANYAN					
CHECKED BY	E. KELLEY					
PROJ. ENGR.	J. LEFOTU					
REGIONAL ADM.	L. HODGSON	REVISION	DATE	BY		

REGION NO.	STATE	FED.AID PROJ.NO.
10	WASH	
JOB NUMBER XL5467		
CONTRACT NO. C9242		LOCATION NO.

ERIC R. KELLEY — STATE OF WASHINGTON — 44060 — STRUCTURAL ENGINEER — PROFESSIONAL ENGINEER

P.E. STAMP BOX — DATE

P.E. STAMP BOX — DATE

Washington State Department of Transportation

FLATIRON LANE

PARSONS

I-405; RENTON TO BELLEVUE WIDENING AND EXPRESS TOLL LANES PROJECT

RETAINING WALL
SEW MOMENT SLAB DETAILS (1 OF 4)

PLAN REF NO WD-21

SHEET OF SHEETS

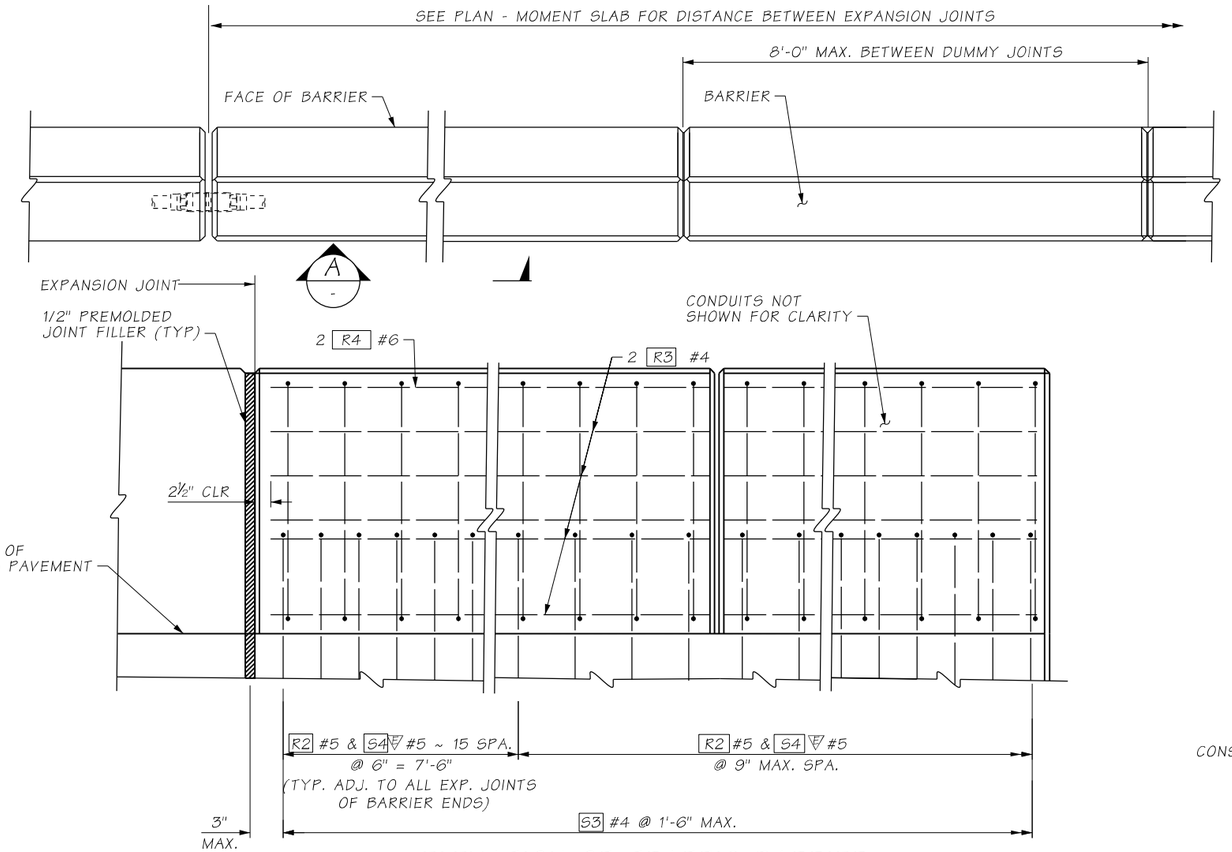

ELEVATION OF TRAFFIC BARRIER

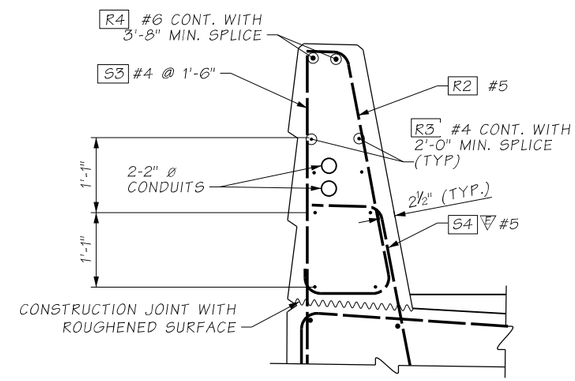

REINF. SECTION-TRAFFIC BARRIER

BENDING DIAGRAM

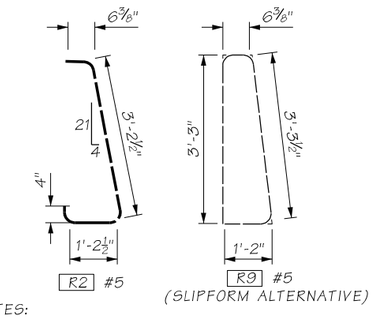

NOTES:

1. DIMENSIONS TO POINT OF INTERSECTION.
2. BARS R1, R5, R6, R7, AND R8 ARE NOT USED.
3. ALL DIMENSIONS ARE OUT TO OUT.

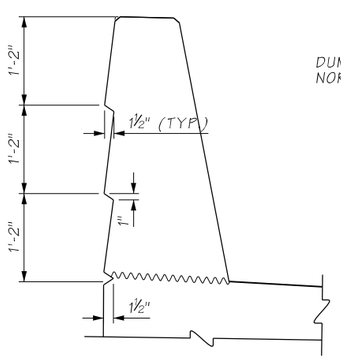

BARRIER FINISH DETAIL

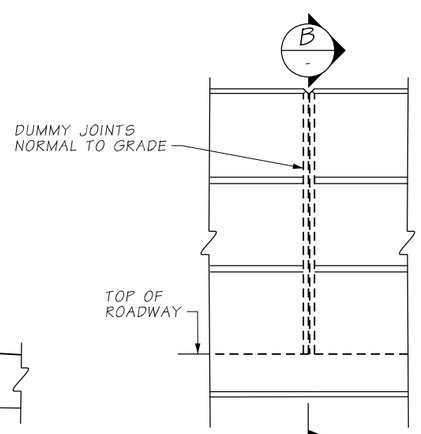

VIEW A

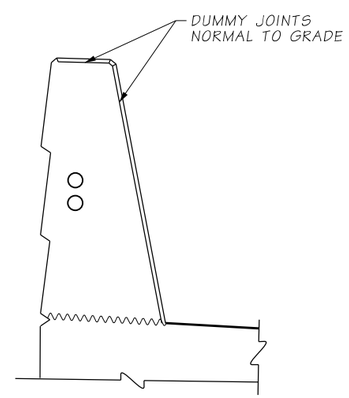

SECTION B

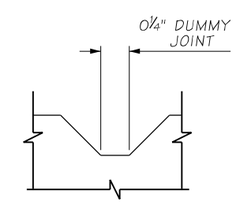

DUMMY JOINT DETAIL

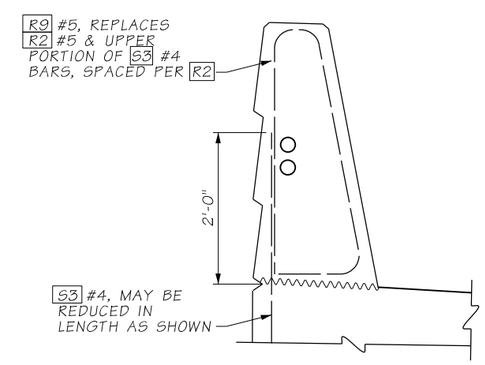

SLIPFORM ALTERNATIVE

WD-22

FILE NAME	c:\pw_working\wastate\parsons_p005295d\dms32768\XL5467_DE_WD-22.dgn				REGION NO. 10	STATE WASH	FED.AID PROJ.NO.
TIME	1:09:06 PM				JOB NUMBER XL5467		
DATE	12/9/2021						
PLOTTED BY	p005295D						
DESIGNED BY	K. KRONBAUER				CONTRACT NO. C9242		LOCATION NO.
ENTERED BY	M. ALEKSANYAN						
CHECKED BY	E. KELLEY						
PROJ. ENGR.	J. LEFOTU						
REGIONAL ADM.	L. HODGSON	REVISION	DATE	BY			

ERIC R. KELLEY — STATE OF WASHINGTON — 44060 — STRUCTURAL ENGINEER — PROFESSIONAL ENGINEER

DATE
P.E. STAMP BOX

DATE
P.E. STAMP BOX

Washington State Department of Transportation

FLATIRON LANE

PARSONS

I-405; RENTON TO BELLEVUE WIDENING AND EXPRESS TOLL LANES PROJECT

RETAINING WALL
SEW MOMENT SLAB DETAILS (2 OF 4)

PLAN REF NO WD-22

SHEET OF SHEETS

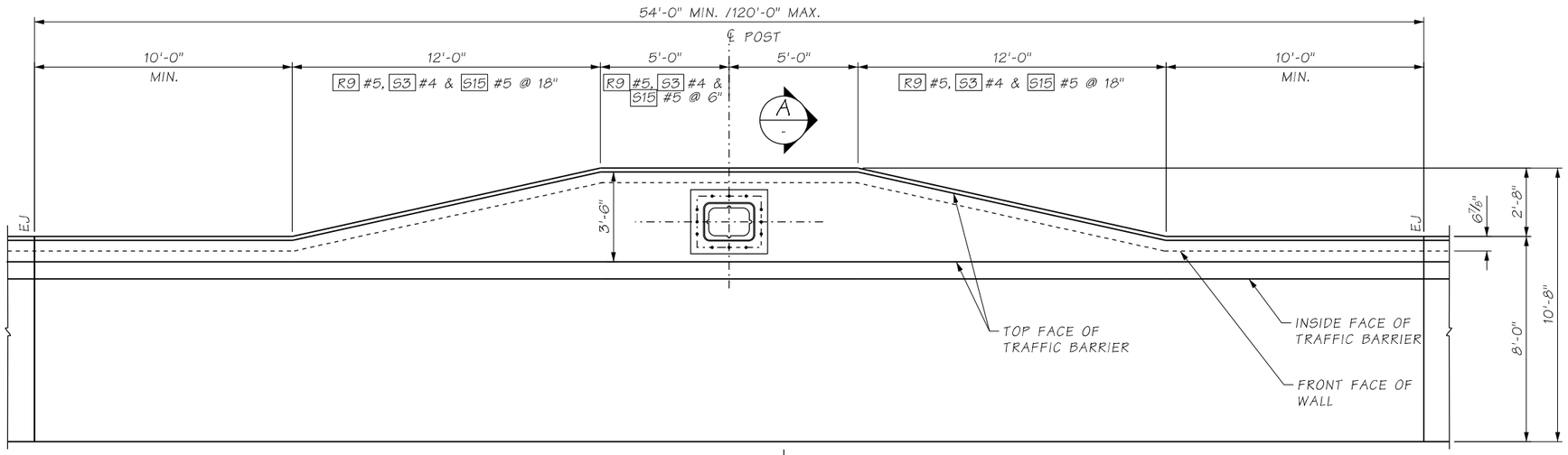

TYPICAL PLAN - MOMENT SLAB W/ SIGN STRUCTURE OR MAST ARM

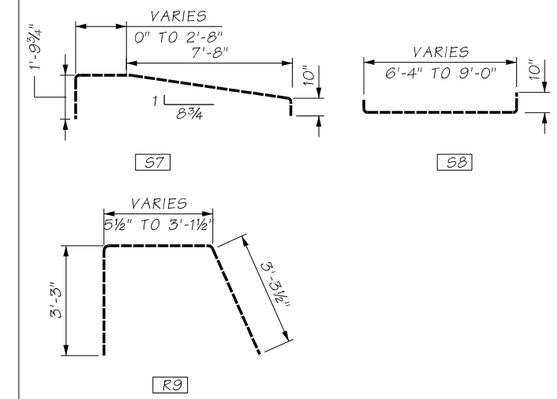

NOTE:

1. THE REINFORCEMENT SHOWN FOR THE SIGN STRUCTURE SHALL BE VERIFIED BY THE SIGN STRUCTURE ENGINEER OF RECORD AND MODIFIED IF REQUIRED.
2. THE MOMENT SLAB WITH SIGN STRUCTURE HAS BEEN DESIGNED FOR A MINIMUM STRENGTH/EXTREME BEARING PRESSURE OF 2 KSF.
3. THE MOMENT SLAB HAS BEEN DESIGNED FOR THE FOLLOWING FORCES AT THE BASE PLATE:

   MOMENT ABOUT AXIS NORMAL TO THE MOMENT SLAB: 705 KIPS-FT
   SHEAR PARALLEL TO THE MOMENT SLAB: 30.2 KIPS
   AXIAL: 22.4 KIPS

   FORCES GREATER THAN ONE OR MORE OF THOSE LISTED ABOVE SHALL REQUIRE APPROVAL BY THE EOR.

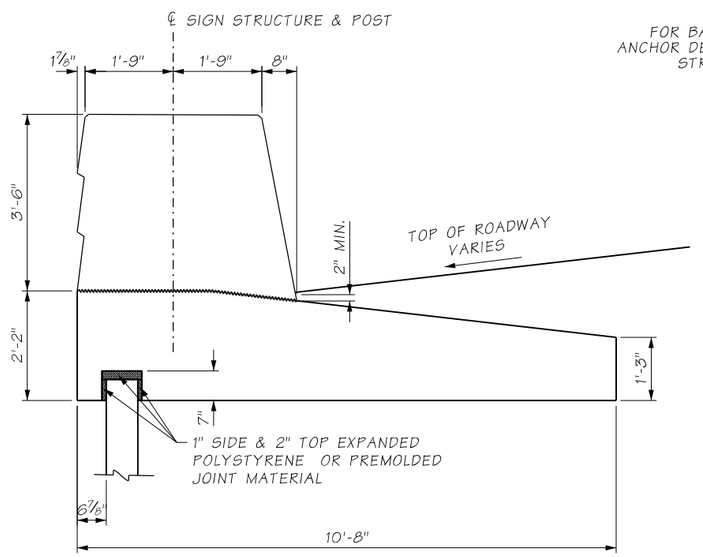

SECTION A

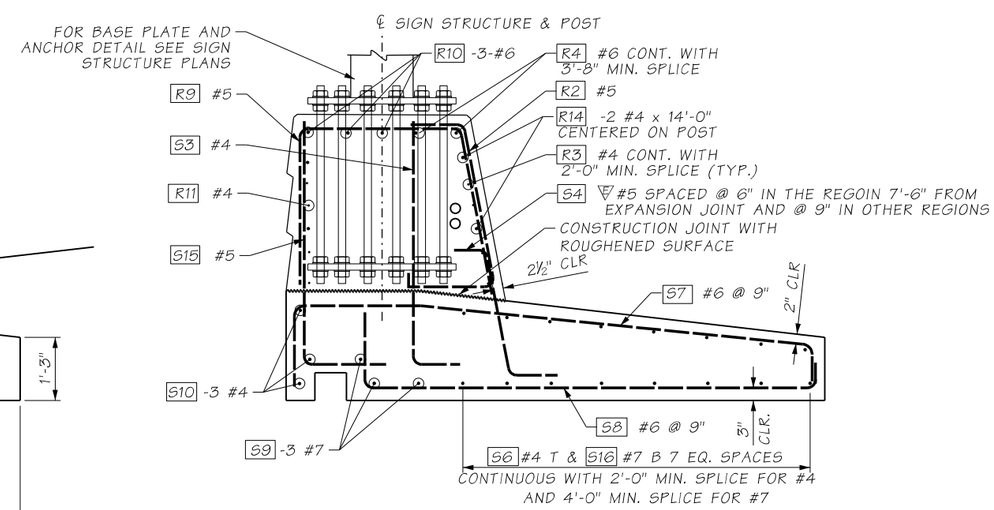

SECTION A

WD-23

FILE NAME	c:\pw_working\wastate\parsons_p005295d\dms32768\XL5467_DE_WD-23.dgn						
TIME	1:21:58 PM				REGION NO. 10	STATE WASH	FED.AID PROJ.NO.
DATE	12/9/2021						
PLOTTED BY	p005295D						
DESIGNED BY	K. KRONBAUER				JOB NUMBER XL5467		
ENTERED BY	M. ALEKSANYAN						
CHECKED BY	E. KELLEY				CONTRACT NO. C9242		LOCATION NO.
PROJ. ENGR.	J. LEFOTU						
REGIONAL ADM.	L. HODGSON	REVISION	DATE	BY			

ERIC R. KELLEY — STATE OF WASHINGTON — 44066 — STRUCTURAL ENGINEER — PROFESSIONAL ENGINEER

DATE
P.E. STAMP BOX

DATE
P.E. STAMP BOX

Washington State Department of Transportation

FLATIRON LANE

PARSONS

I-405; RENTON TO BELLEVUE WIDENING AND EXPRESS TOLL LANES PROJECT

RETAINING WALL
SEW MOMENT SLAB DETAILS (3 OF 4)

PLAN REF NO WD-23

SHEET OF SHEETS

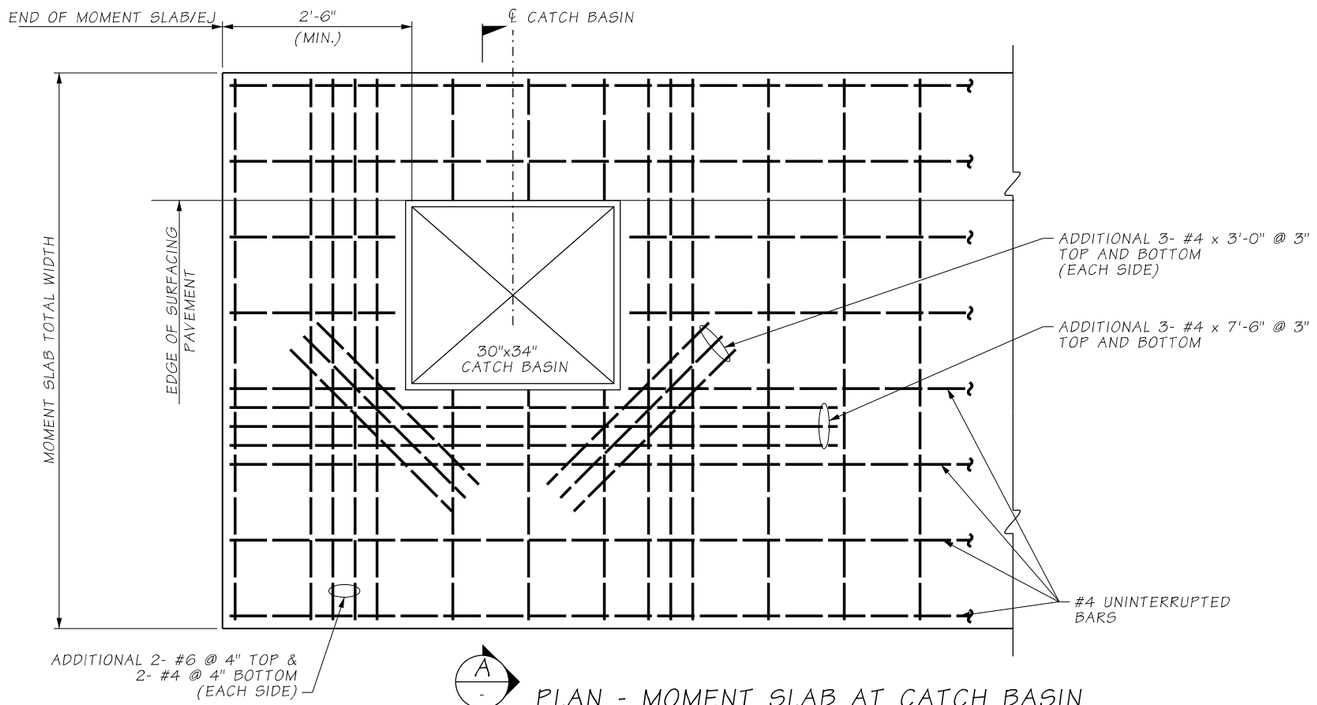

A

PLAN - MOMENT SLAB AT CATCH BASIN

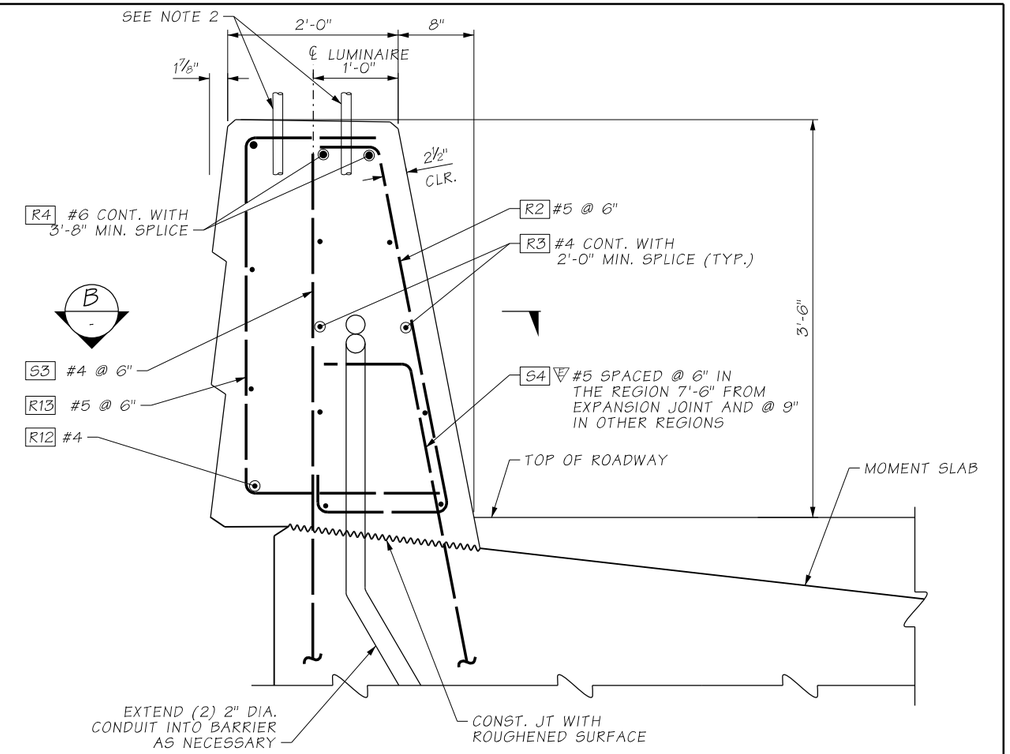

SECTION - MOMENT SLAB W/ LUMINAIRE

BENDING DIAGRAM

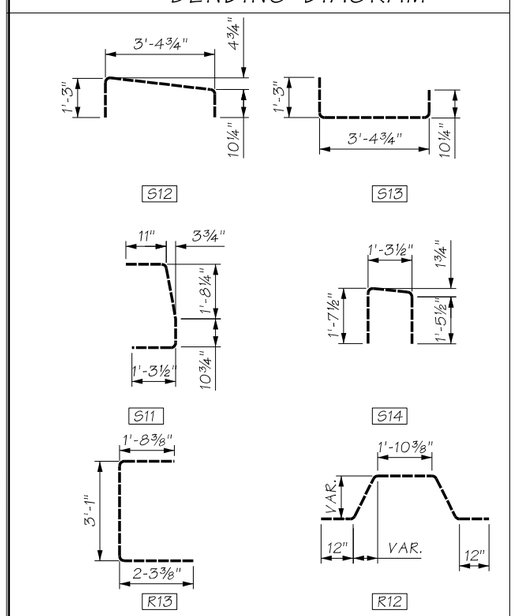

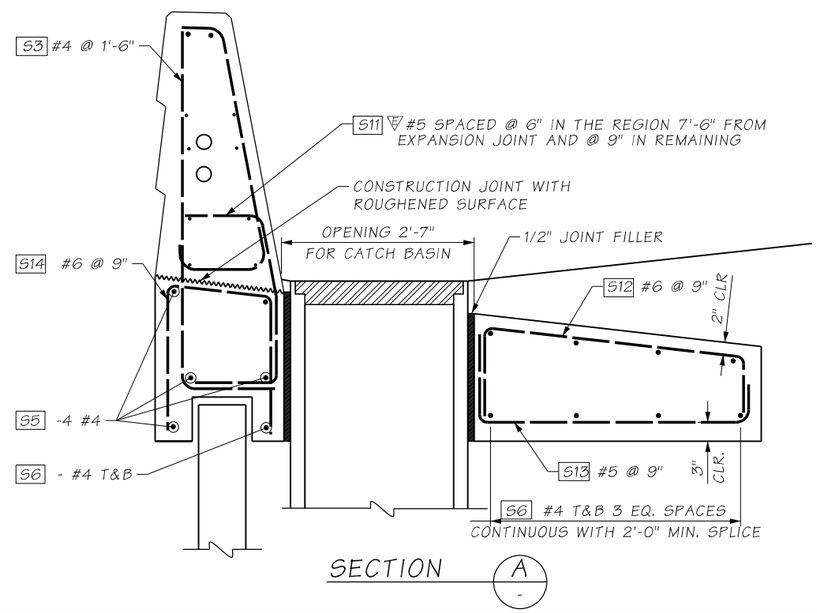

SECTION A

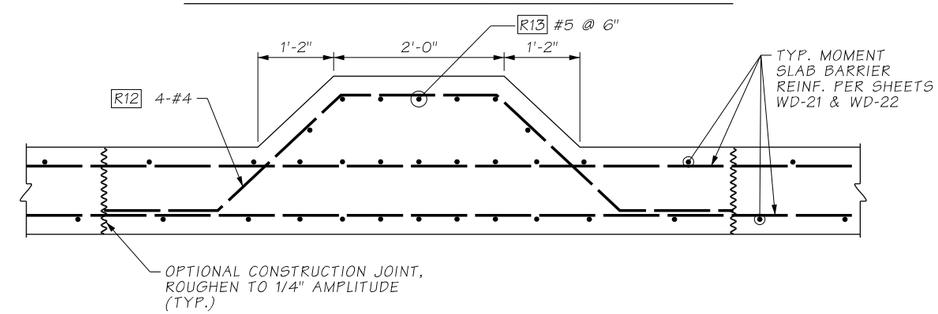

SECTION B

NOTES:

1. SEE WD-21 & WD-22 FOR ADDITIONAL INFO.
2. REFER TO WSDOT STANDARD PLAN J-28.60 FOR STEEL LIGHT STANDARD BARRIER MOUNTED BASE REQUIREMENTS.
3. THE MOMENT SLAB WITH LUMINAIRE HAS BEEN DESIGNED FOR THE FOLLOWING POLE BASE FORCES:
   MOMENT ABOUT AXIS PARALLEL TO THE MOMENT SLAB: 38 KIP-FT
   SHEAR PERPENDICULAR TO THE MOMENT SLAB: 1.7 KIP
   AXIAL: 1.7 KIP
   FOR POLES WITH FORCES GREATER THAN THOSE LISTED ABOVE SHALL REQUIRE APPROVAL BY THE EOR.

WD-24

FILE NAME	c:\pw_working\wastate\parsons_p005295d\dms32768\XL5467_DE_WD-24.dgn					
TIME	1:38:37 PM					
DATE	12/9/2021					
PLOTTED BY	p005295D					
DESIGNED BY	B. CHRISTOPHERSEN					
ENTERED BY	M. ALEKSANYAN					
CHECKED BY	E. KELLEY					
PROJ. ENGR.	J. LEFOTU					
REGIONAL ADM.	L. HODGSON	REVISION	DATE	BY		

REGION NO.	STATE	FED.AID PROJ.NO.
10	WASH	
JOB NUMBER XL5467		
CONTRACT NO. C9242		LOCATION NO.

ERIC R. KELLEY — STATE OF WASHINGTON — 44086 — STRUCTURAL ENGINEER — PROFESSIONAL ENGINEER

P.E. STAMP BOX — DATE

P.E. STAMP BOX — DATE

Washington State Department of Transportation

FLATIRON LANE

PARSONS

I-405; RENTON TO BELLEVUE WIDENING AND EXPRESS TOLL LANES PROJECT

RETAINING WALL
SEW MOMENT SLAB DETAILS (4 OF 4)

PLAN REF NO WD-24

SHEET OF SHEETS