POINT OF MINIMUM VERTICAL CLEARANCE:
BXW STA. 294+60.63 (38.01' RT.)
CM STA. 148+52.23 (28.99' LT.)
BXW STA. 296+18.67 (38.12' RT.)
BXW STA. 299+44.34 (49.27' RT.)
SR5 STA. 332+72.38 (70.00' RT.)

BRIDGE WITH APPROACH FILLS
WF74G GIRDERS = 13" (PRELIMINARY, NOT FOR DESIGN)
"A" DIMENSION = 13"
CAST-IN-PLACE CONC. SHALL BE 4000 PSI
DECK PROTECTIVE SYSTEM 1 (EPOXY COATED REBARS)

I-5 JOB NO. SHEET BB001

SEC. 21, T.19N., R.2E., W.M.
CITY OF LAKEWOOD
I-5

AS-BUILT

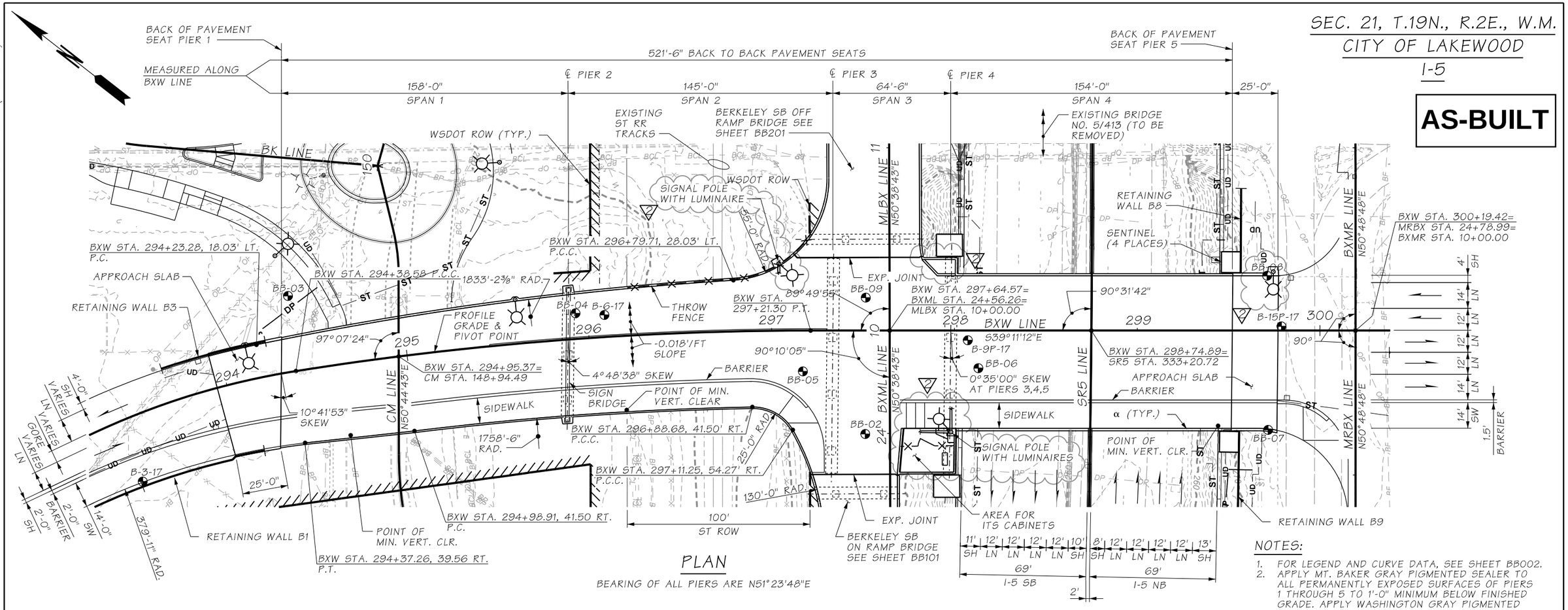

PLAN

BEARING OF ALL PIERS ARE N51°23'48"E

NOTES:

1. FOR LEGEND AND CURVE DATA, SEE SHEET BB002.
2. APPLY MT. BAKER GRAY PIGMENTED SEALER TO ALL PERMANENTLY EXPOSED SURFACES OF PIERS 1 THROUGH 5 TO 1'-0" MINIMUM BELOW FINISHED GRADE. APPLY WASHINGTON GRAY PIGMENTED SEALER TO BARRIERS AND GIRDERS, SEE TYPICAL SECTIONS FOR LIMITS.

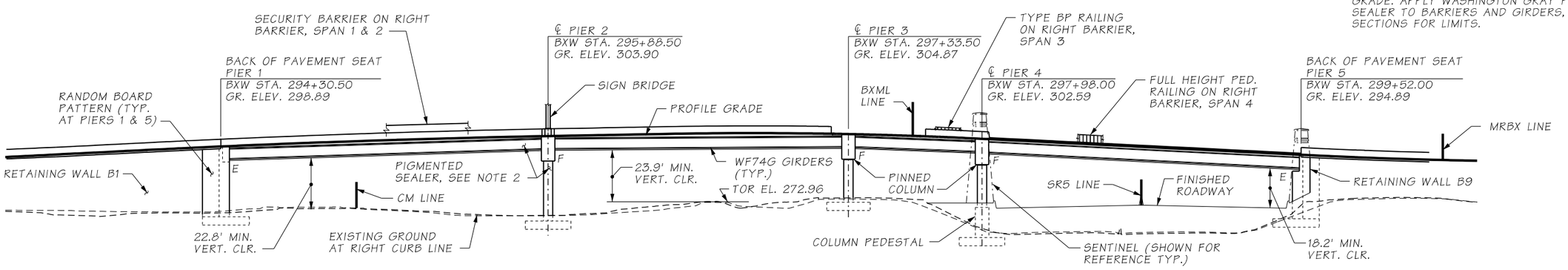

REF. ELEV. 230

DATUM

ELEVATION

GRADE ELEVATIONS ARE FINISH GRADES AT TOP OF BRIDGE DECK ON BXW LINE AND ARE EQUAL TO PROFILE GRADE

P.C. GIRDERS (WF74G)

CONTINUOUS FOR LIVE LOAD

LOADING: HL93

ATKINSON
JUN 06 2019
RSA
RELEASED FOR CONSTRUCTION

FILE NAME	c:\pwworking\jacobs_b&i\fongac\dms20633\PS_BB001.dgn			
TIME	7:28:01 AM			
DATE	6/6/2019			
PLOTTED BY	FongAC	REV 2 - RFI0118	06/06/2019	
DESIGNED BY	C. CAYWOOD	REV 1 - RFI0011	11/28/2018	
ENTERED BY	R. REISER	REV 0 - RELEASED FOR CONSTRUCTION	10/23/2018	
CHECKED BY	K. DUSENBERRY	REV B - FINAL REVIEW	9/28/2018	
PROJ. ENGR.	C. MEADE	REV A - PRELIMINARY REVIEW	8/9/2018	
REGIONAL ADM.	J. WYNANDS	REVISION	DATE	BY

REGION NO.	STATE	FED.AID PROJ.NO.
10	WASH	
JOB NUMBER		
CONTRACT NO. C9133		LOCATION NO.

STATE OF WASHINGTON COREY J. CAYWOOD 38733 STRUCTURAL ENGINEER PROFESSIONAL ENGINEER
6/6/19
DATE
P.E. STAMP BOX

DATE
P.E. STAMP BOX

Washington State Department of Transportation

ATKINSON / JACOBS CONSTRUCTION

I-5
STEILACOOM-DUPONT RD TO THORNE LN CORRIDOR IMPROVEMENTS
MP 120.01 TO MP 124.45
BERKELEY OVERPASS

PLAN AND ELEVATION

PLAN REF NO BB001

SHEET 1192 OF 1456 SHEETS

GENERAL NOTES:

1. ALL MATERIAL AND WORKMANSHIP SHALL BE IN ACCORDANCE WITH THE REQUIREMENTS OF THE WASHINGTON STATE DEPARTMENT OF TRANSPORTATION STANDARD SPECIFICATIONS FOR ROAD, BRIDGE, AND MUNICIPAL CONSTRUCTION DATED 2016, AND AMENDMENTS.
2. THIS STRUCTURE HAS BEEN DESIGNED IN ACCORDANCE WITH THE REQUIREMENTS OF THE AASHTO LRFD BRIDGE DESIGN SPECIFICATIONS 8TH EDITION 2017. THIS STRUCTURE HAS BEEN DESIGNED FOR A 2" HMA FUTURE WEARING SURFACE.
3. THE SEISMIC DESIGN OF THIS STRUCTURE HAS BEEN COMPLETED IN ACCORDANCE WITH THE REQUIREMENTS OF THE AASHTO GUIDE SPECIFICATIONS FOR LRFD SEISMIC BRIDGE DESIGN 2ND EDITION WITH INTERIM REVISIONS THROUGH 2015, AS MODIFIED BY THE WSDOT BRIDGE DESIGN MANUAL, JUNE 2017. THE SEISMIC DESIGN WAS PERFORMED USING THE FOLLOWING:
   - SEISMIC DESIGN CATEGORY: C
   - SITE CLASS: C
   - PEAK GROUND ACCELERATION: 0.50G (SITE CLASS C)
   - 0.2 SECOND SPECTRAL ACCELERATION: 1.12G (SITE CLASS C)
   - 1.0 SECOND SPECTRAL ACCELERATION: 0.41G (SITE CLASS C)
4. THE CONCRETE IN THE BRIDGE DECK SHALL BE CLASS 4000D. THE CONCRETE IN BRIDGE APPROACH SLABS SHALL BE CLASS 4000A. ALL OTHER CAST-IN-PLACE CONCRETE SHALL BE CLASS 4000.
5. THE BACKFILL BEHIND THE ABUTMENTS MAY BE PLACED BEFORE OR AFTER PLACEMENT OF THE SUPERSTRUCTURE, IN ACCORDANCE WITH SECTION 2-03.3(14)I OF THE STANDARD SPECIFICATIONS.
6. UNLESS OTHERWISE SHOWN IN THE PLANS, CONCRETE COVER MEASURED FROM THE FACE OF CONCRETE TO THE FACE OF ANY REINFORCING STEEL SHALL BE 2½" AT THE TOP OF THE BRIDGE DECK, 1" AT THE BOTTOM OF THE BRIDGE DECK, 3" AT THE BOTTOM OF FOOTINGS, AND 2" AT ALL OTHER LOCATIONS.
7. FALSEWORK SHALL BE CAREFULLY RELEASED TO PREVENT IMPACT OR UNDUE STRESS IN THE STRUCTURE.
8. CONDUITS, JUNCTION BOXES, AND UTILITIES ARE SHOWN FOR REFERENCE ONLY. THE CONTRACTOR SHALL COORDINATE THESE PLANS WITH THE ELECTRICAL, I.T.S. AND OTHER CIVIL PLANS.

CURVE DATA

P.I. STA.	Δ	RADIUS	TANGENT	LENGTH	BACK TANGENT BRG.
BXW 293+14.44	35°27'13" RT.	415.00'	132.66'	256.80'	S83°38'22"E
BXW 295+80.23	8°59'57" RT.	1800.00'	141.65'	282.72'	S48°11'09"E
SR5 334+16.10	6°11'54" LT.	11701.00'	633.53'	1265.83'	N53°58'37"E

AS-BUILT

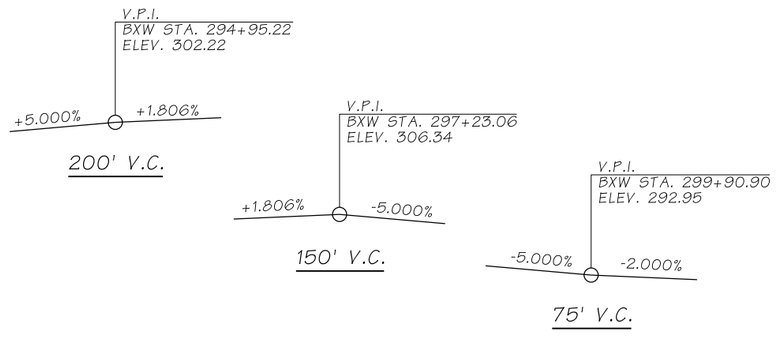

BXW LINE PROFILE

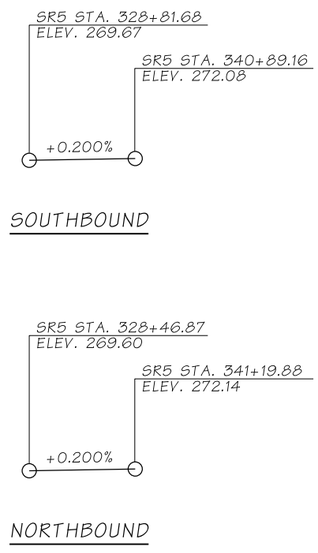

SR5 LINE PROFILE

LEGEND

- SOIL BORING LOCATION
- α 2- 2"ø CONDUIT IN TRAFFIC BARRIER FOR FULL LENGTH OF BRIDGE AND APPROACH SLAB
- BCL BURIED COMMUNICATIONS - EXISTING
- BF BURIED FIBER - EXISTING
- BP BURIED POWER - EXISTING
- DP DRAIN PIPE - EXISTING
- G GAS - EXISTING
- OP OVERHEAD POWER - EXISTING
- ST STORM SEWER - EXISTING
- W WATER - EXISTING
- UD UNDERDRAIN - PROPOSED
- ST STORM SEWER - PROPOSED
- CATCH BASIN - PROPOSED
- LIGHT STANDARD

ATKINSON

OCT 24 2018

RELEASED FOR CONSTRUCTION

MRD.

FILE NAME	D:\ICS_workdir\13524\20633_623\PS_BB002.dgn				
TIME	2:41:48 PM				
DATE	10/22/2018				
PLOTTED BY	USLAS0-APP064$				
DESIGNED BY	C. CAYWOOD				
ENTERED BY	R. REISER	REV 0 - RELEASED FOR CONSTRUCTION	10/23/2018		
CHECKED BY	K. DUSENBERRY	REV B - FINAL REVIEW	9/28/2018		
PROJ. ENGR.	C. MEADE	REV A - PRELIMINARY REVIEW	8/9/2018		
REGIONAL ADM.	J. WYNANDS	REVISION	DATE	BY	

REGION NO. 10 | STATE WASH | FED.AID PROJ.NO.

JOB NUMBER

CONTRACT NO. C8811 | LOCATION NO.

CORY J. CAYWOOD, STATE OF WASHINGTON, 38139, STRUCTURAL ENGINEER, PROFESSIONAL ENGINEER — 10/24/18 — DATE — P.E. STAMP BOX

DATE — P.E. STAMP BOX

Washington State Department of Transportation

ATKINSON / JACOBS CONSTRUCTION

I-5
STEILACOOM-DUPONT RD TO THORNE LN
CORRIDOR IMPROVEMENTS
MP 120.01 TO MP 124.45
BERKELEY OVERPASS

GENERAL NOTES AND GEOMETRY

PLAN REF NO BB002

SHEET 1193 OF 1456 SHEETS

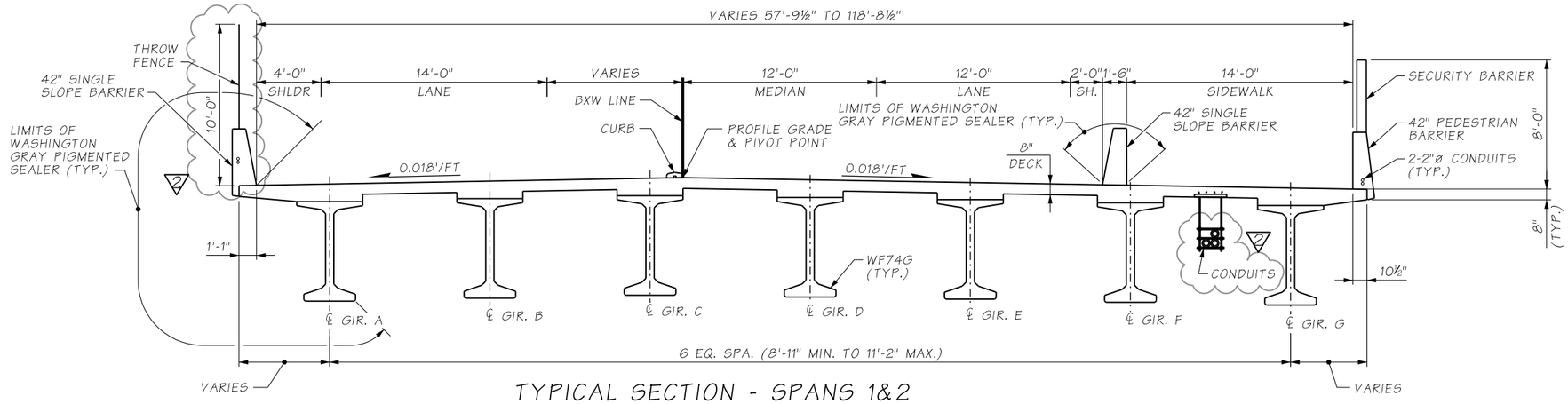

TYPICAL SECTION - SPANS 1&2

SPAN 2 SHOWN, SPAN 1 SIMILAR

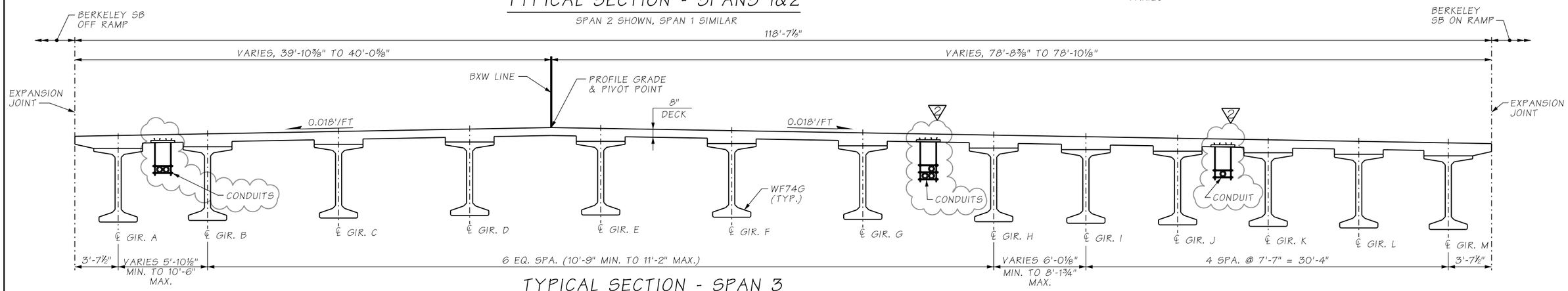

TYPICAL SECTION - SPAN 3

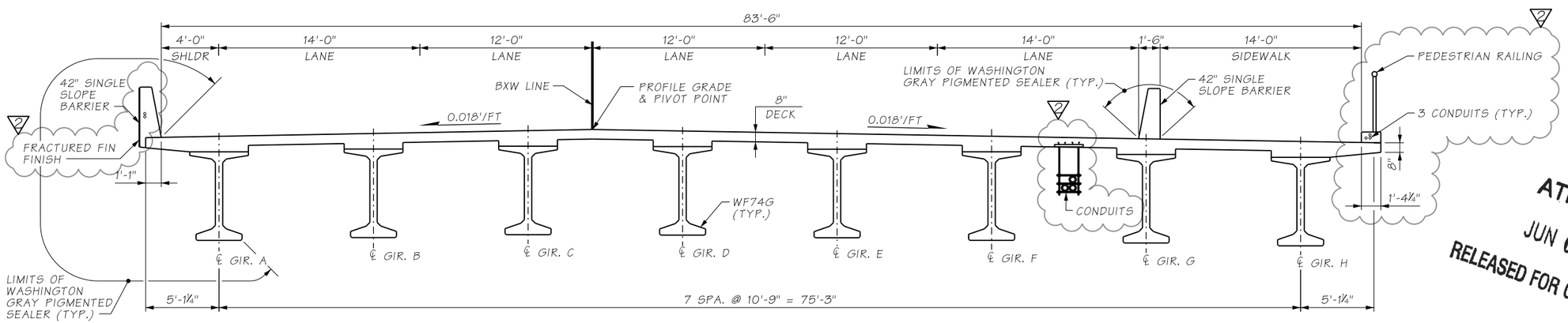

TYPICAL SECTION - SPAN 4

ATKINSON
JUN 06 2019 RSA
RELEASED FOR CONSTRUCTION

AS-BUILT

FILE NAME	D:\ICS_workdir\29552\20633_150\PS_BB003.dgn						
TIME	2:47:54 PM				REGION NO.	STATE	FED.AID PROJ.NO.
DATE	6/5/2019				10	WASH	
PLOTTED BY	USLAS0-APP064$	REV 2 - RFI0118	06/06/2019		JOB NUMBER		
DESIGNED BY	C. CAYWOOD	REV 1 - RFI0011	11/28/2018				
ENTERED BY	R. REISER	REV 0 - RELEASED FOR CONSTRUCTION	10/23/2018				
CHECKED BY	K. DUSENBERRY	REV B - FINAL REVIEW	9/28/2018		CONTRACT NO.		LOCATION NO.
PROJ. ENGR.	C. MEADE	REV A - PRELIMINARY REVIEW	8/9/2018		C9133		
REGIONAL ADM.	J. WYNANDS	REVISION	DATE	BY			

CORY J. CAYWOOD, STATE OF WASHINGTON, 38759, STRUCTURAL ENGINEER, PROFESSIONAL ENGINEER
6/6/19
DATE
P.E. STAMP BOX

DATE
P.E. STAMP BOX

Washington State Department of Transportation

ATKINSON CONSTRUCTION / JACOBS

I-5
STEILACOOM-DUPONT RD TO THORNE LN CORRIDOR IMPROVEMENTS
MP 120.01 TO MP 124.45
BERKELEY OVERPASS

TYPICAL SECTIONS

PLAN REF NO BB003

SHEET 1194 OF 1456 SHEETS

NOTES:

1. FOR LEGEND SEE SHEET BB002.

AS-BUILT

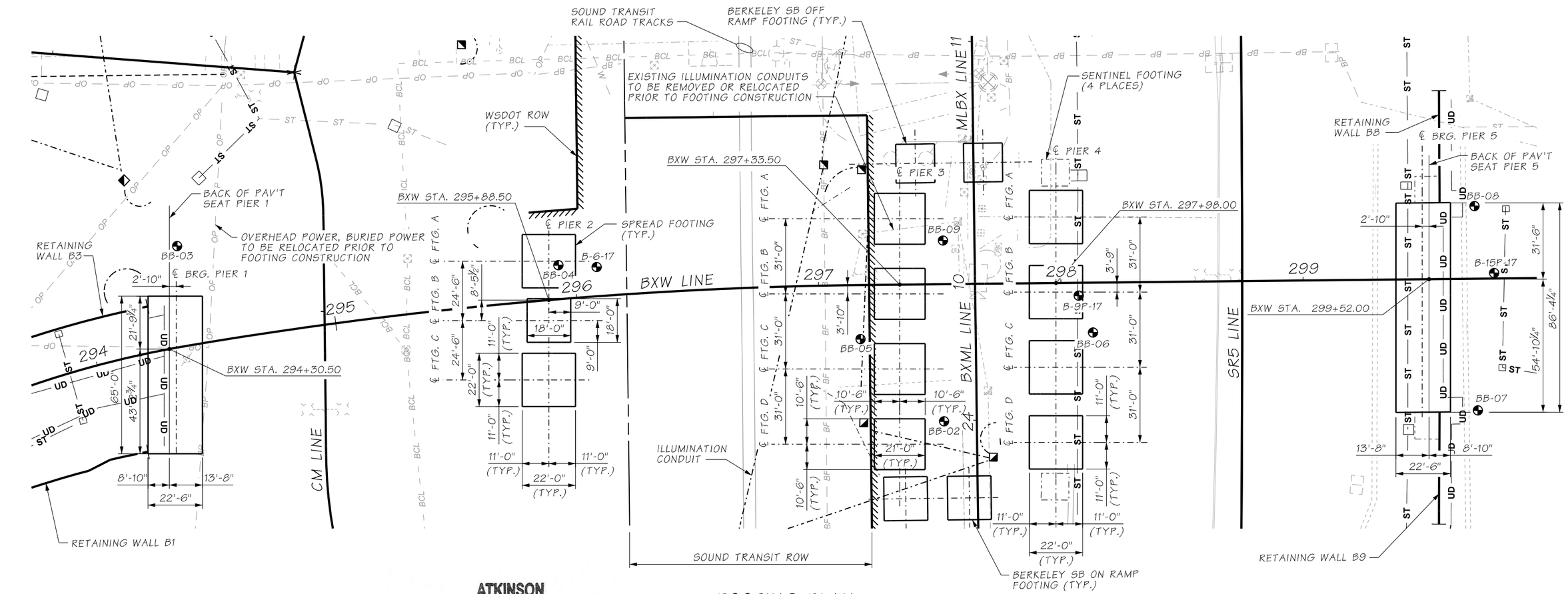

FOOTING PLAN

BEARING OF ALL PIERS ARE N51°23'48"E

ATKINSON

OCT 24 2018

RELEASED FOR CONSTRUCTION

FILE NAME	c:\pwworking\jacobs_b&l\reiserrw\dms20633\PS_BB004.dgn			
TIME	4:03:24 PM			
DATE	10/23/2018			
PLOTTED BY	reiserrw			
DESIGNED BY	C. CAYWOOD			
ENTERED BY	R. REISER	REV 0 - RELEASED FOR CONSTRUCTION	10/23/2018	
CHECKED BY	K. DUSENBERRY	REV B - FINAL REVIEW	9/28/2018	
PROJ. ENGR.	C. MEADE	REV A - PRELIMINARY REVIEW	8/9/2018	
REGIONAL ADM.	J. WYNANDS	REVISION	DATE	BY

REGION NO.	STATE	FED.AID PROJ.NO.
10	WASH	
JOB NUMBER		
CONTRACT NO.		LOCATION NO.
C8811		

P.E. STAMP BOX — DATE 10/24/18

P.E. STAMP BOX — DATE

Washington State Department of Transportation

ATKINSON CONSTRUCTION / JACOBS

I-5
STEILACOOM-DUPONT RD TO THORNE LN
CORRIDOR IMPROVEMENTS
MP 120.01 TO MP 124.45
BERKELEY OVERPASS

FOOTING PLAN

PLAN REF NO BB004

SHEET 1195 OF 1456 SHEETS

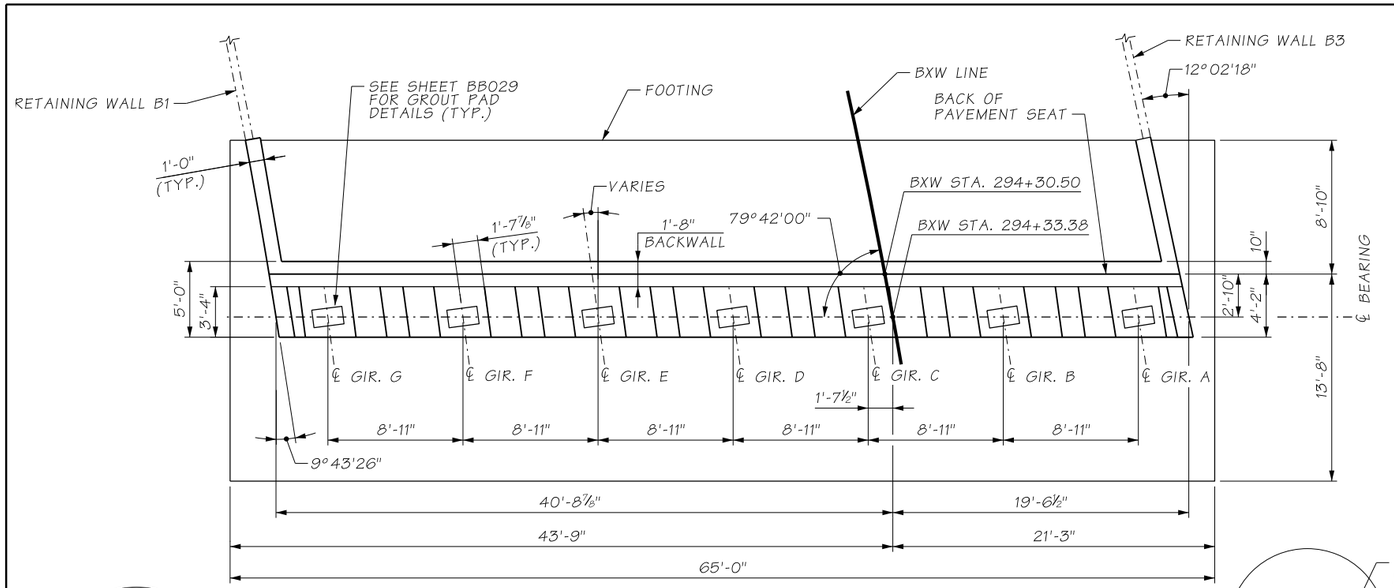

PLAN

TOP OF SIDE/CURTAIN WALL ELEVATIONS		
LOCATION	LEFT SIDE	RIGHT SIDE
ELEV. A	297.05	296.09
ELEV. B	297.44	296.54
ELEV. C	297.89	297.00
ELEV. D	298.03	297.17

TOP OF GROUT PAD ELEVATIONS	
GIRDER	ELEVATION
A	291.21
B	291.30
C	291.33
D	291.10
E	290.87
F	290.63
G	290.39

NOTES:

1. APPLY MT. BAKER GRAY PIGMENTED SEALER TO ALL PERMANENTLY EXPOSED CONCRETE SURFACES TO 1'-0" MIN. BELOW FINISHED GROUND.
2. USE VARIABLE DEPTH RANDOM BOARD PATTERN AS INDICATED. ALL DIMENSIONS SHOWN ARE TO STRUCTURAL FACE OF CONCRETE. INCREASE THICKNESS AS REQUIRED FOR VARIABLE DEPTH RANDOM BOARD PATTERN.

AS-BUILT

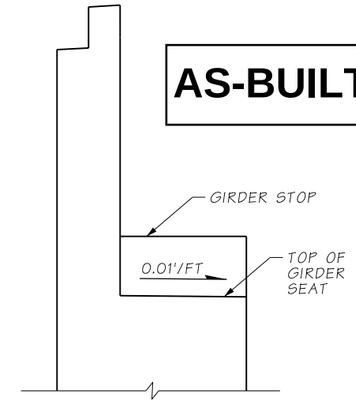

SECTION A

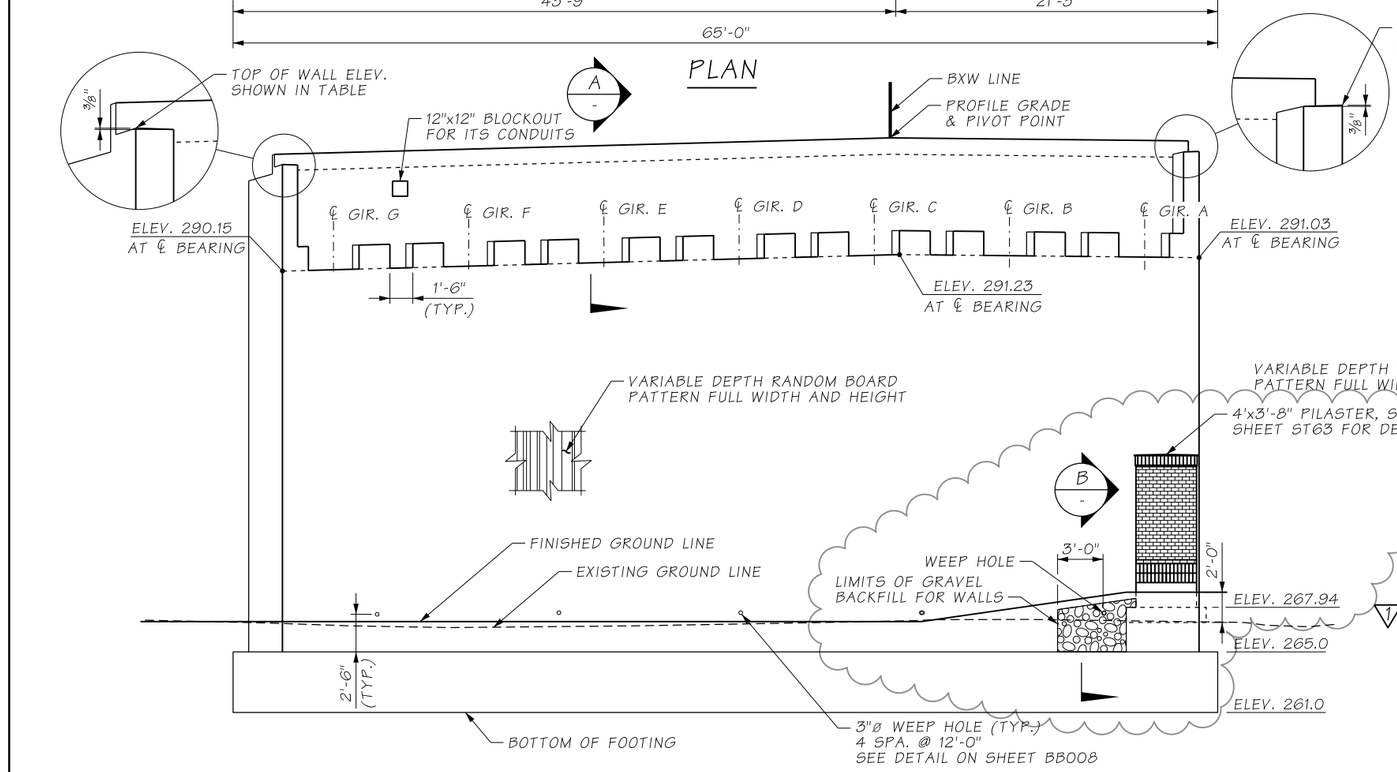

ELEVATION - FRONT

SHOWN LOOKING BACK ON STATION

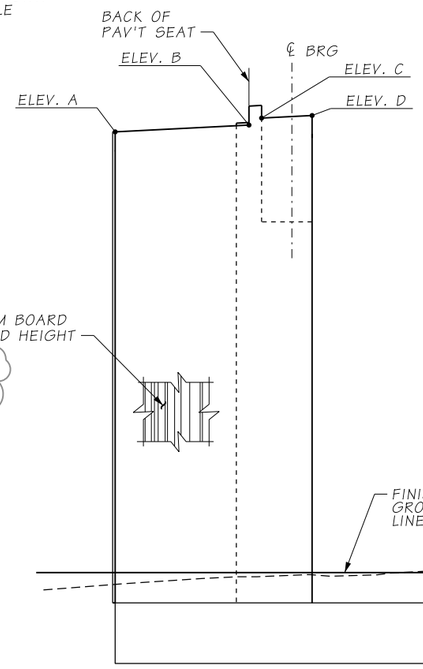

ELEVATION - SIDE

RIGHT SIDE SHOWN, LEFT SIDE SIMILAR

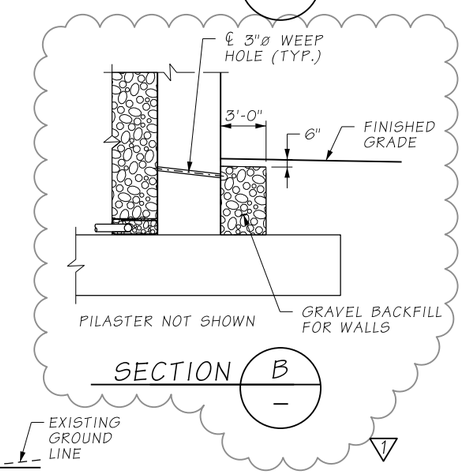

SECTION B

ATKINSON
JAN 06 2021 KTW
RELEASED FOR CONSTRUCTION

FILE NAME	D:\ICS_workdir\73610\20633_620\PS_BB005.dgn						
TIME	9:41:05 AM				REGION NO. 10	STATE WASH	FED.AID PROJ.NO.
DATE	1/6/2021						
PLOTTED BY	USLAS0-APP064$				JOB NUMBER		
DESIGNED BY	T. PAGE						
ENTERED BY	R. REISER	REV 1 - RFI0558	01/06/2021				
CHECKED BY	J. XU	REV 0 - RELEASED FOR CONSTRUCTION	10/23/2018		CONTRACT NO. C9133		LOCATION NO.
PROJ. ENGR.	C. MEADE	REV A - FINAL REVIEW	9/28/2018				
REGIONAL ADM.	J. WYNANDS	REVISION	DATE	BY			

CORY J. CAYWOOD, STATE OF WASHINGTON, 38188, STRUCTURAL ENGINEER, PROFESSIONAL ENGINEER
01/06/21
DATE
P.E. STAMP BOX

DATE
P.E. STAMP BOX

Washington State Department of Transportation

ATKINSON / JACOBS CONSTRUCTION

I-5
STEILACOOM-DUPONT RD TO THORNE LN CORRIDOR IMPROVEMENTS
MP 120.01 TO MP 124.45
BERKELEY OVERPASS

PIER 1
PLAN AND ELEVATIONS

PLAN REF NO BB005

SHEET 1196 OF 1456 SHEETS

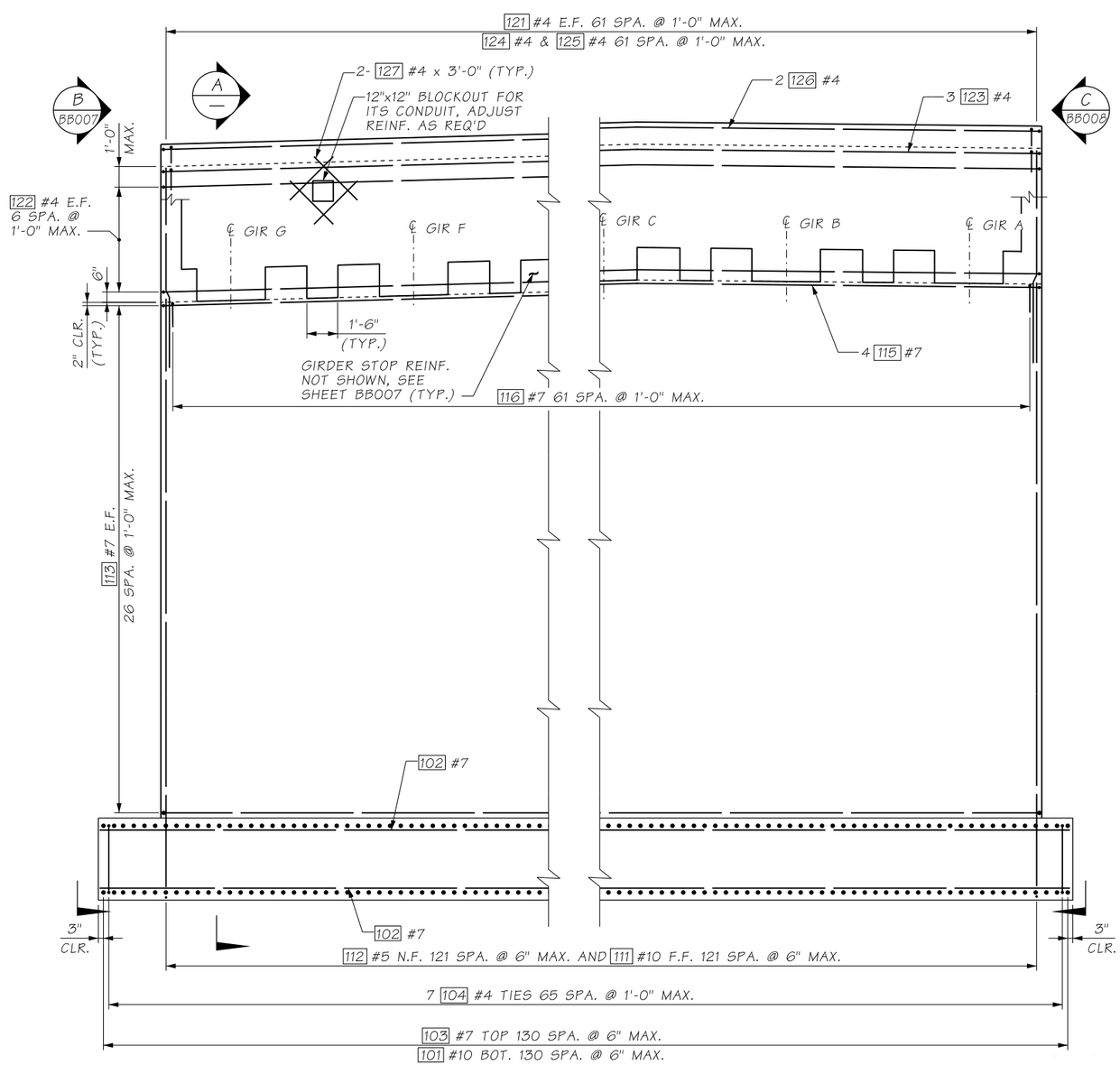

ELEVATION - FRONT

SHOWN LOOKING BACK ON STATION

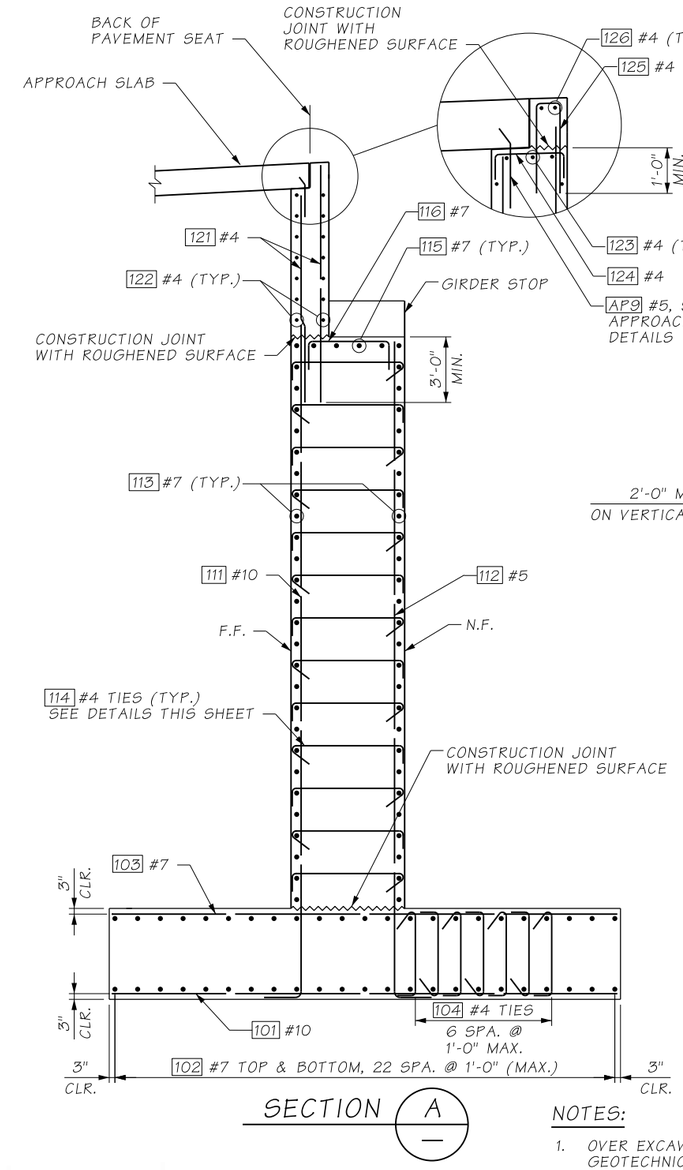

SECTION A

AS-BUILT

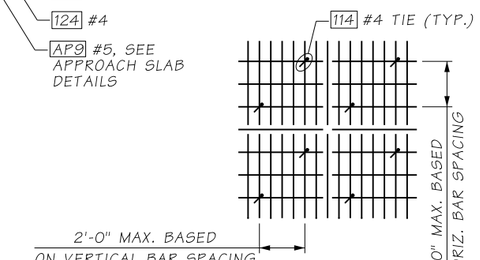

TIE BAR SPACING DETAIL

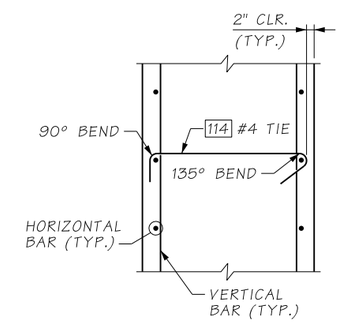

TIE BAR DETAIL

NOTES:

1. OVER EXCAVATION BELOW FOOTING IS REQUIRED. SEE GEOTECHNICAL MEMO FOR ADDITIONAL INFORMATION.
2. LAP SPLICES MAY BE ADDED AT CONTRACTORS OPTION. MINIMUM LAP SPLICE SHALL BE AS FOLLOWS, UNLESS NOTED OTHERWISE:
   - #4= 2'-9"
   - #5= 3'-6"
   - #6= 4'-0"
   - #7= 4'-9"
   - #8= 5'-6"
   - #9= 6'-9"
   - #10= 8'-3"

ATKINSON

OCT 24 2018

RELEASED FOR CONSTRUCTION

FILE NAME	D:\ICS_workdir\13523\20633_1101\PS_BB006.dgn						
TIME	2:41:25 PM				REGION NO.	STATE	FED.AID PROJ.NO.
DATE	10/22/2018				10	WASH	
PLOTTED BY	USLAS0-APP064$				JOB NUMBER		
DESIGNED BY	T. PAGE						
ENTERED BY	R. REISER						
CHECKED BY	J. XU	REV 0 - RELEASED FOR CONSTRUCTION	10/23/2018		CONTRACT NO.		LOCATION NO.
PROJ. ENGR.	C. MEADE	REV A - FINAL REVIEW	9/28/2018		C8811		
REGIONAL ADM.	J. WYNANDS	REVISION	DATE	BY			

CORY J. CATWOOD, STATE OF WASHINGTON, 38756, STRUCTURAL ENGINEER, PROFESSIONAL ENGINEER — 10/24/18 — DATE — P.E. STAMP BOX

MRD. — DATE — P.E. STAMP BOX

Washington State Department of Transportation

ATKINSON / JACOBS CONSTRUCTION

I-5
STEILACOOM-DUPONT RD TO THORNE LN
CORRIDOR IMPROVEMENTS
MP 120.01 TO MP 124.45
BERKELEY OVERPASS

PIER 1 SECTIONS AND DETAILS (1 OF 3)

PLAN REF NO BB006

SHEET 1197 OF 1456 SHEETS

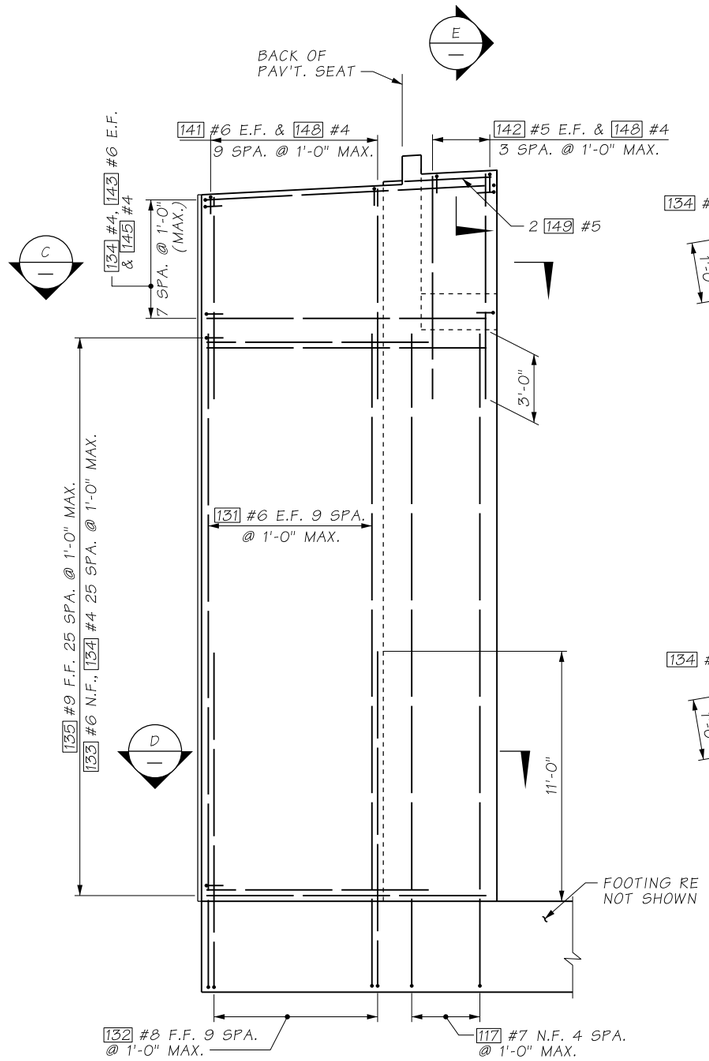

VIEW B / BB006
RIGHT SIDE

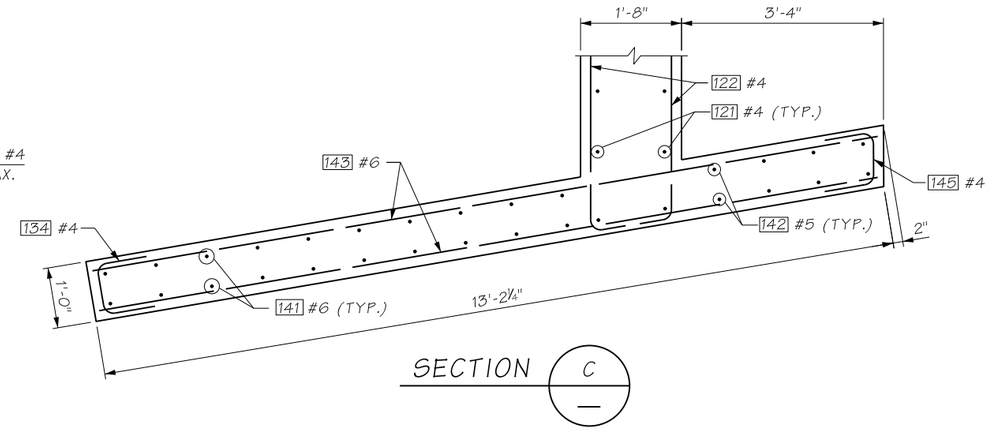

SECTION C

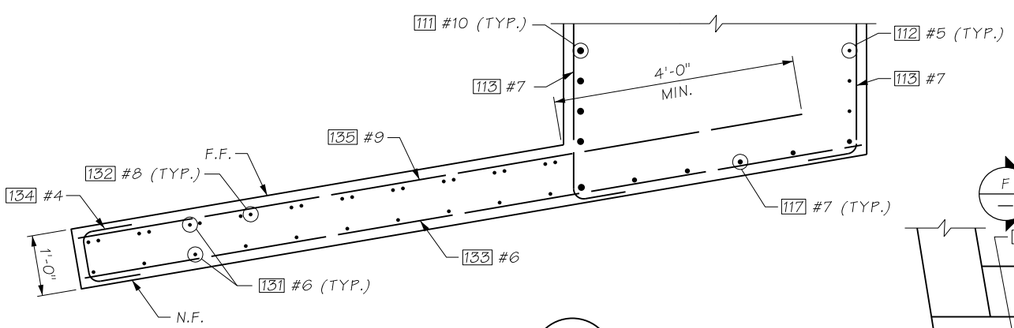

SECTION D

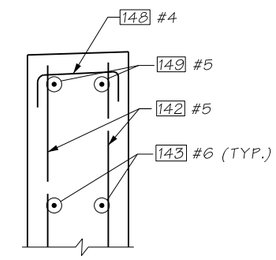

SECTION E

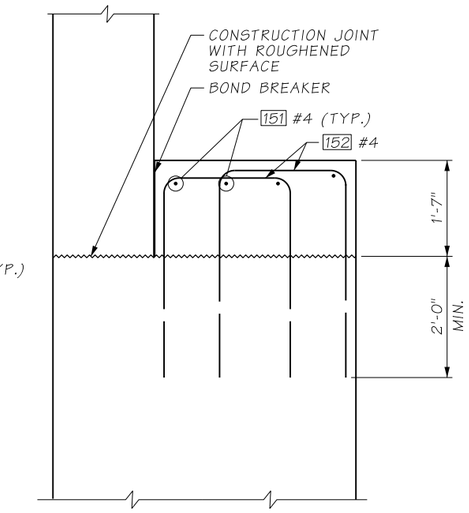

SECTION F

AS-BUILT

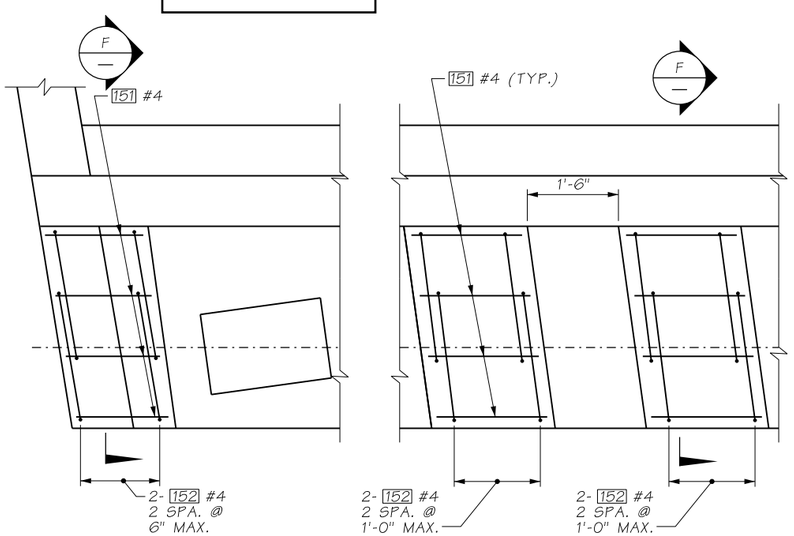

EXTERIOR

INTERIOR

PLAN - GIRDER STOPS

ATKINSON

OCT 24 2018

RELEASED FOR CONSTRUCTION

MRD.

FILE NAME	D:\ICS_workdir\13523\20633_1113\PS_BB007.dgn						
TIME	2:41:34 PM				REGION NO.	STATE	FED.AID PROJ.NO.
DATE	10/22/2018				10	WASH	
PLOTTED BY	USLAS0-APP064$				JOB NUMBER		
DESIGNED BY	T. PAGE						
ENTERED BY	R. REISER						
CHECKED BY	J. XU	REV 0 - RELEASED FOR CONSTRUCTION	10/23/2018		CONTRACT NO.		LOCATION NO.
PROJ. ENGR.	C. MEADE	REV A - FINAL REVIEW	9/28/2018		C8811		
REGIONAL ADM.	J. WYNANDS	REVISION	DATE	BY			

CORY J. CAYWOOD, STATE OF WASHINGTON, 38759, STRUCTURAL ENGINEER, PROFESSIONAL ENGINEER
10/24/18
DATE
P.E. STAMP BOX

DATE
P.E. STAMP BOX

Washington State Department of Transportation

ATKINSON / JACOBS CONSTRUCTION

I-5
STEILACOOM-DUPONT RD TO THORNE LN
CORRIDOR IMPROVEMENTS
MP 120.01 TO MP 124.45
BERKELEY OVERPASS

PIER 1 SECTIONS AND DETAILS
(2 OF 3)

PLAN REF NO
BB007

SHEET
1198
OF
1456
SHEETS

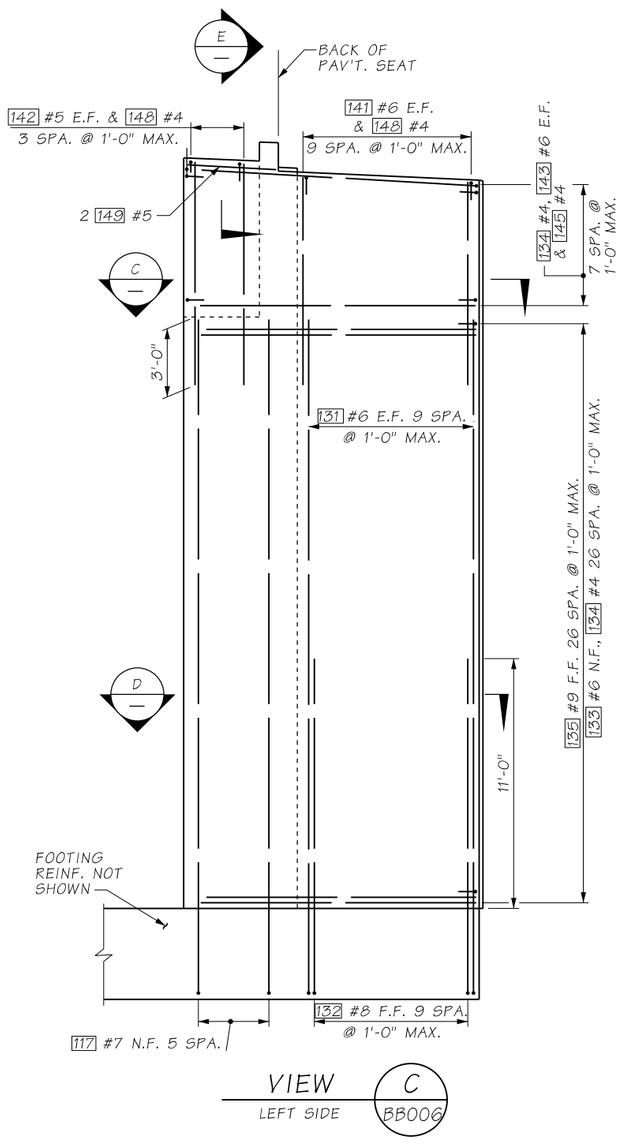

VIEW C / BB006
LEFT SIDE

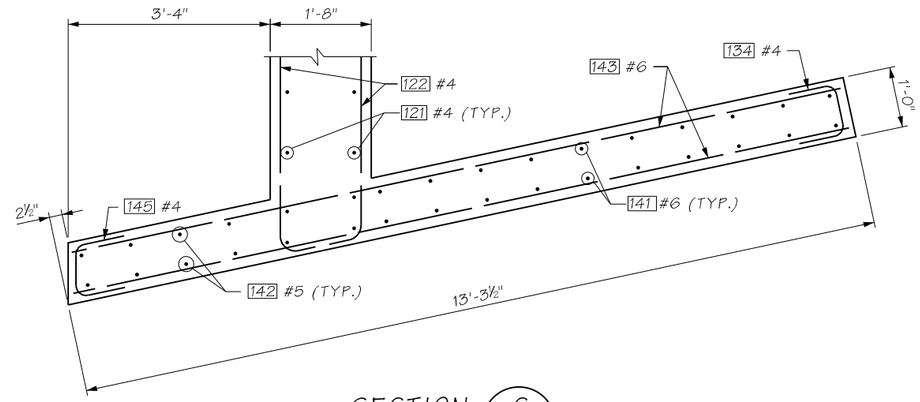

SECTION C

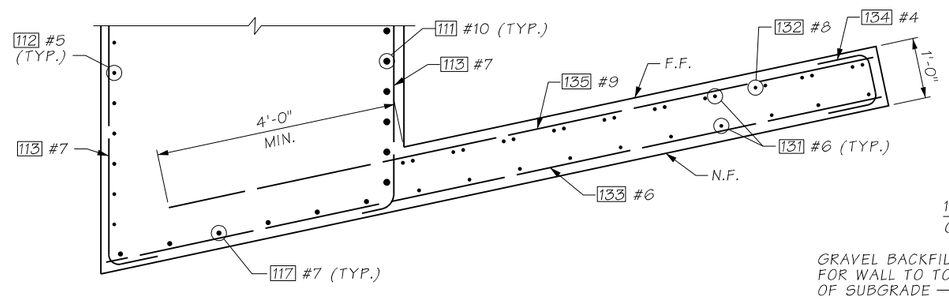

SECTION D

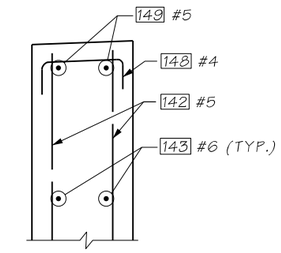

SECTION E

AS-BUILT

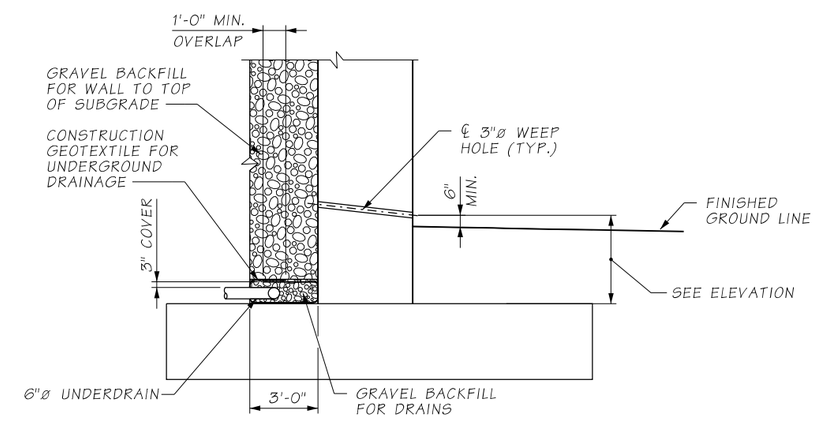

DRAINAGE DETAIL

ATKINSON

OCT 24 2018

RELEASED FOR CONSTRUCTION

MRD.

FILE NAME	c:\pwworking\jacobs_b&i\reiserrw\dms20633\PS_BB008.dgn				REGION NO. 10	STATE WASH	FED.AID PROJ.NO.
TIME	4:18:12 PM				JOB NUMBER		
DATE	10/23/2018						
PLOTTED BY	reiserrw						
DESIGNED BY	T. PAGE						
ENTERED BY	R. REISER						
CHECKED BY	J. XU	REV 0 - RELEASED FOR CONSTRUCTION	10/23/2018		CONTRACT NO. C8811		LOCATION NO.
PROJ. ENGR.	C. MEADE	REV A - FINAL REVIEW	9/28/2018				
REGIONAL ADM.	J. WYNANDS	REVISION	DATE	BY			

P.E. STAMP BOX — DATE 10/24/18

P.E. STAMP BOX — DATE

Washington State Department of Transportation

ATKINSON CONSTRUCTION / JACOBS

I-5
STEILACOOM-DUPONT RD TO THORNE LN CORRIDOR IMPROVEMENTS
MP 120.01 TO MP 124.45
BERKELEY OVERPASS

PIER 1 SECTIONS AND DETAILS (3 OF 3)

PLAN REF NO BB008

SHEET 1199 OF 1456 SHEETS

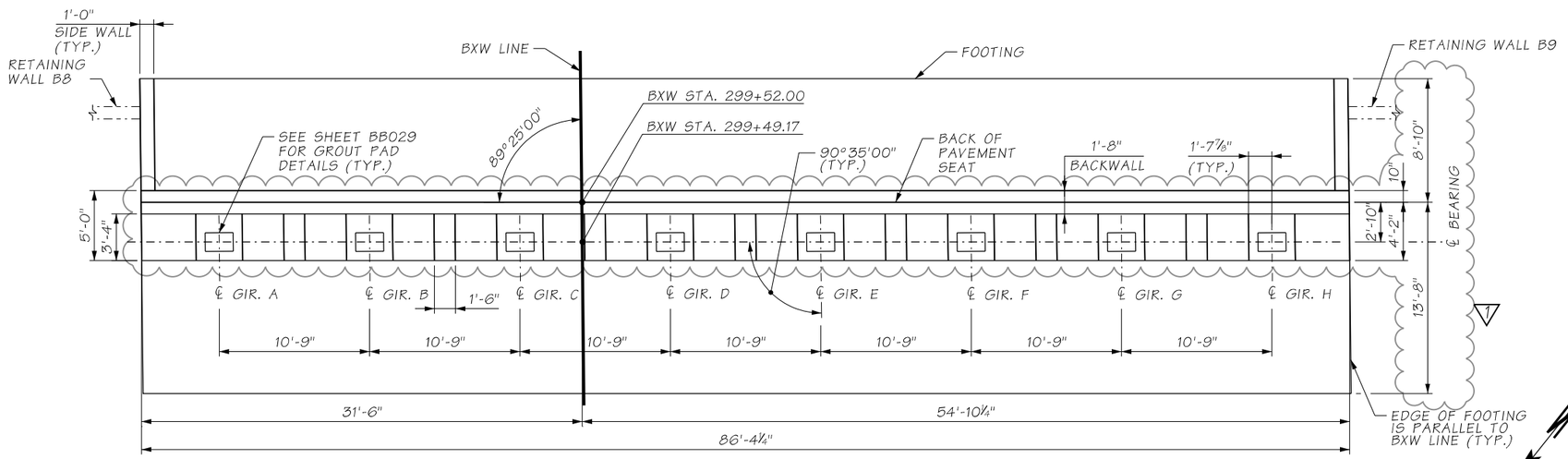

PLAN

NOTES:

1. APPLY MT. BAKER GRAY PIGMENTED SEALER TO ALL PERMANENTLY EXPOSED CONCRETE SURFACES TO 1'-0" MIN. BELOW FINISHED GROUND.
2. USE VARIABLE DEPTH RANDOM BOARD PATTERN AS INDICATED. ALL DIMENSIONS SHOWN ARE TO STRUCTURAL FACE OF CONCRETE. INCREASE THICKNESS AS REQUIRED FOR VARIABLE DEPTH RANDOM BOARD PATTERN.

TOP OF CURTAIN WALL ELEVATIONS		
LOCATION	LEFT SIDE	RIGHT SIDE
ELEV. A	293.06	292.68
ELEV. B	292.63	292.25

TOP OF GROUT PAD ELEVATIONS	
GIRDER	ELEVATION
A	286.70
B	286.90
C	287.10
D	287.07
E	286.88
F	286.69
G	286.51
H	286.32

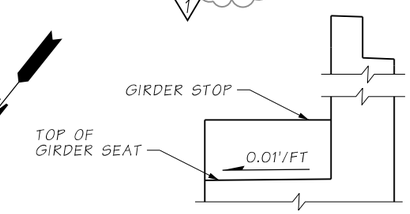

SECTION A

AS-BUILT

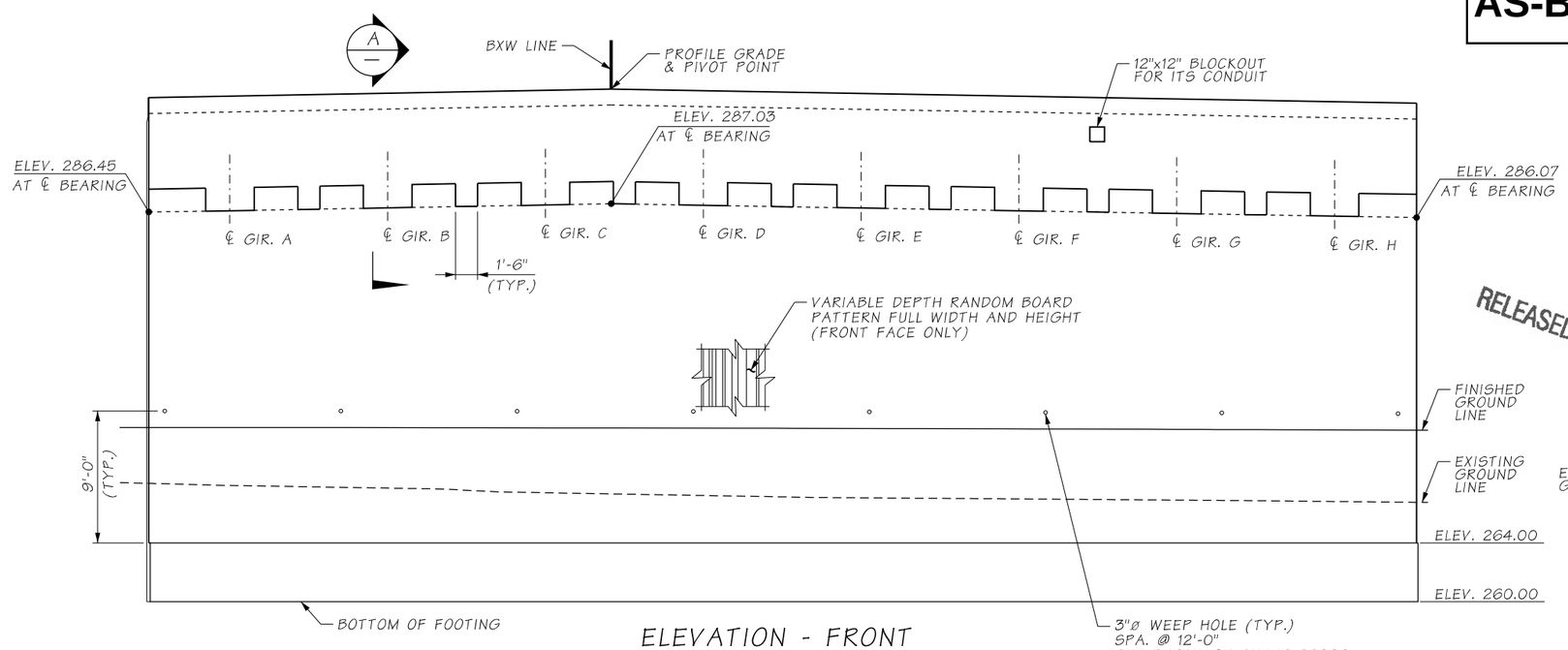

ELEVATION - FRONT

SHOWN LOOKING AHEAD ON STATION

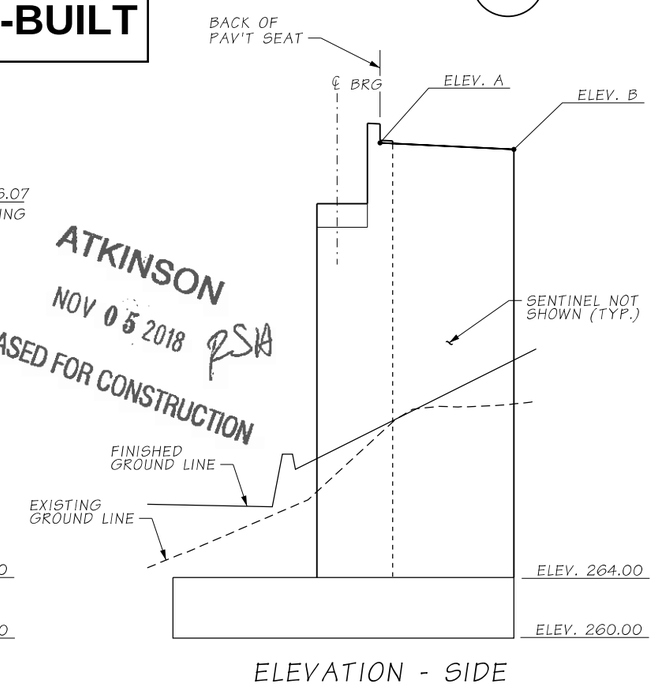

ELEVATION - SIDE

RIGHT SIDE SHOWN, LEFT SIDE SIMILAR

ATKINSON
NOV 05 2018
RELEASED FOR CONSTRUCTION

FILE NAME	c:\pwworking\jacobs_b&i\reiserrw\dms20633\PS_BB009.dgn						
TIME	11:50:13 AM				REGION NO. 10	STATE WASH	FED.AID PROJ.NO.
DATE	11/2/2018						
PLOTTED BY	reiserrw				JOB NUMBER		
DESIGNED BY	T. PAGE						
ENTERED BY	R. REISER	REV 1 - RFI0006	11/05/2018				
CHECKED BY	J. XU	REV 0 - RELEASED FOR CONSTRUCTION	10/23/2018		CONTRACT NO. C8811		LOCATION NO.
PROJ. ENGR.	C. MEADE	REV A - FINAL REVIEW	9/28/2018				
REGIONAL ADM.	J. WYNANDS	REVISION	DATE	BY			

P.E. STAMP BOX — DATE 11/5/18

P.E. STAMP BOX — DATE

Washington State Department of Transportation

ATKINSON CONSTRUCTION / JACOBS

I-5
STEILACOOM-DUPONT RD TO THORNE LN
CORRIDOR IMPROVEMENTS
MP 120.01 TO MP 124.45
BERKELEY OVERPASS

PIER 5
PLAN AND ELEVATION

PLAN REF NO BB009

SHEET 1200 OF 1456 SHEETS

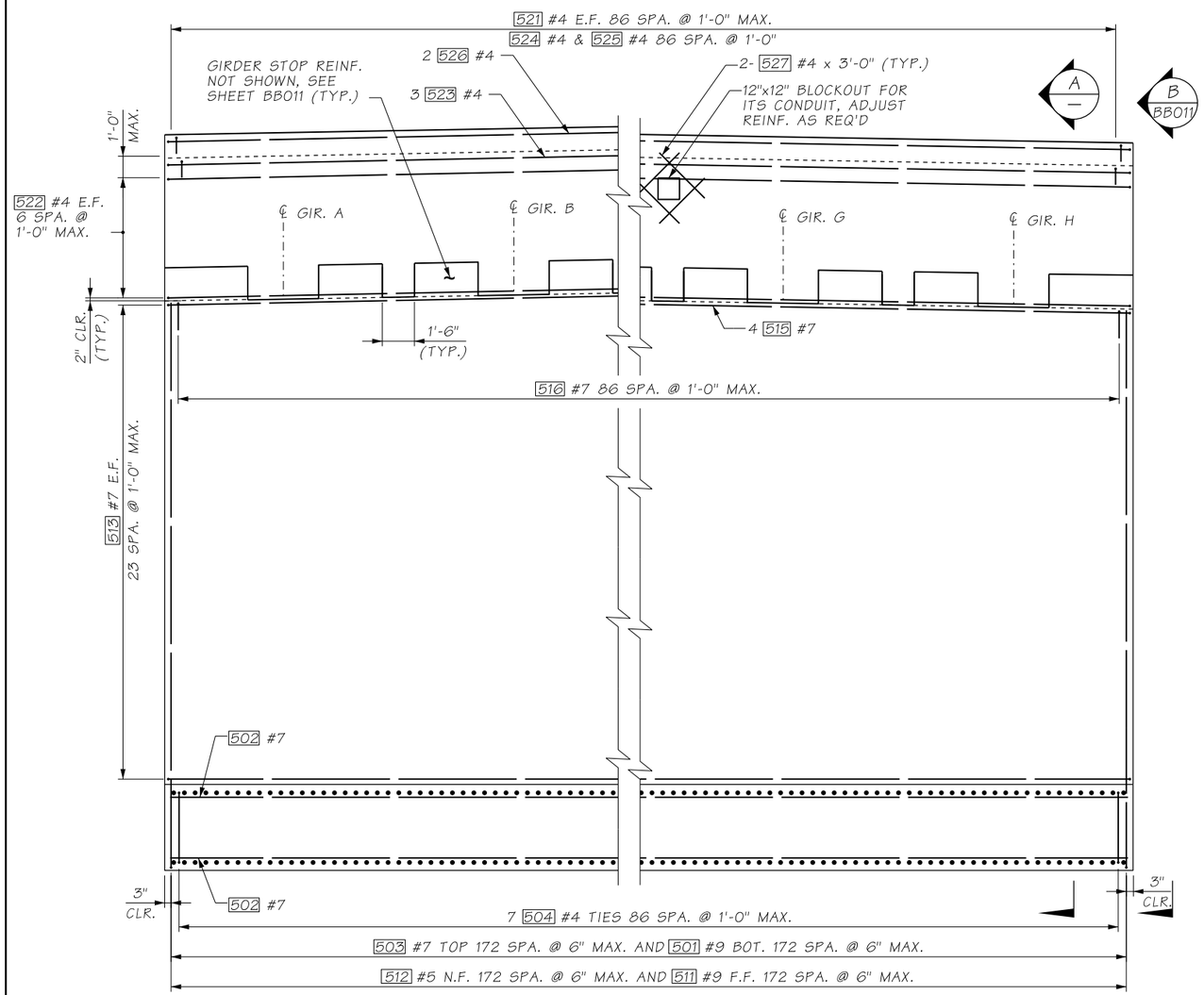

ELEVATION - FRONT

SHOWN LOOKING AHEAD ON STATION

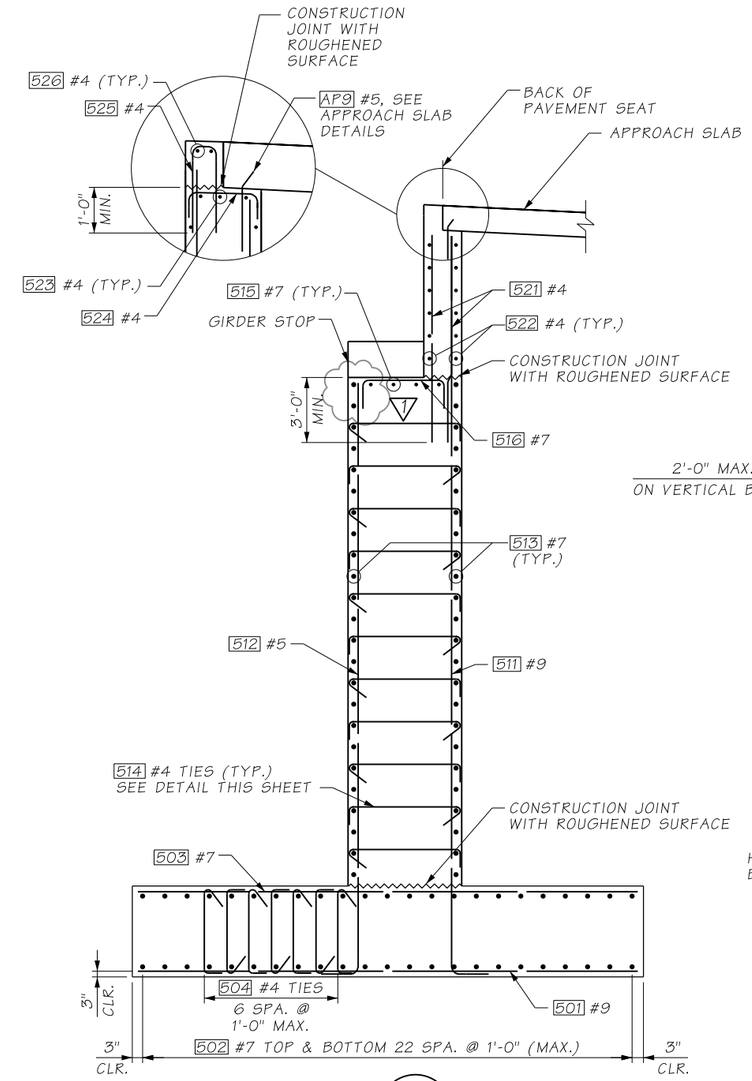

SECTION A

AS-BUILT

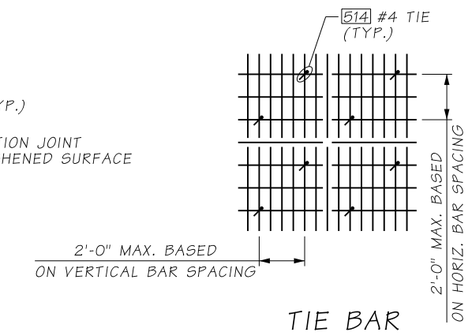

TIE BAR SPACING DETAIL

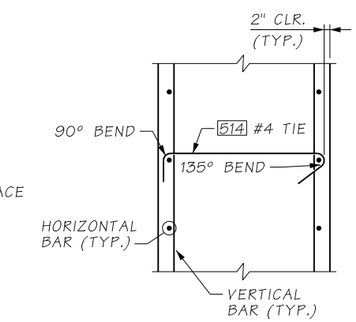

TIE BAR DETAIL

NOTES:

1. OVER EXCAVATION BELOW FOOTING IS REQUIRED. SEE GEOTECHNICAL MEMO FOR ADDITIONAL INFORMATION.
2. LAP SPLICES MAY BE ADDED AT CONTRACTORS OPTION. MINIMUM LAP SPLICE SHALL BE AS FOLLOWS, UNLESS NOTED OTHERWISE:
   #4= 2'-9"
   #5= 3'-6"
   #6= 4'-0"
   #7= 4'-9"
   #8= 5'-6"
   #9= 6'-9"
   #10= 8'-3"

ATKINSON

DEC 04 2019 KW

RELEASED FOR CONSTRUCTION

FILE NAME	D:\ICS_workdir\41281\20633_1117\PS_BB010.dgn						
TIME	11:14:17 AM				REGION NO.	STATE	FED.AID PROJ.NO.
DATE	12/2/2019				10	WASH	
PLOTTED BY	USLAS0-APP064$				JOB NUMBER		
DESIGNED BY	T. PAGE						
ENTERED BY	R. REISER	REV 1 - RFI0029	12/03/2019				
CHECKED BY	J. XU	REV 0 - RELEASED FOR CONSTRUCTION	10/23/2018		CONTRACT NO.		LOCATION NO.
PROJ. ENGR.	C. MEADE	REV A - FINAL REVIEW	9/28/2018		C9133		
REGIONAL ADM.	J. WYNANDS	REVISION	DATE	BY			

CORY J. CAYWOOD, STATE OF WASHINGTON, 38133, STRUCTURAL ENGINEER, PROFESSIONAL ENGINEER — 12/2/19

P.E. STAMP BOX — DATE

P.E. STAMP BOX — DATE

Washington State Department of Transportation

ATKINSON CONSTRUCTION / JACOBS

I-5
STEILACOOM-DUPONT RD TO THORNE LN
CORRIDOR IMPROVEMENTS
MP 120.01 TO MP 124.45
BERKELEY OVERPASS

PIER 5 SECTIONS AND DETAILS (1 OF 2)

PLAN REF NO BB010

SHEET 1201 OF 1456 SHEETS

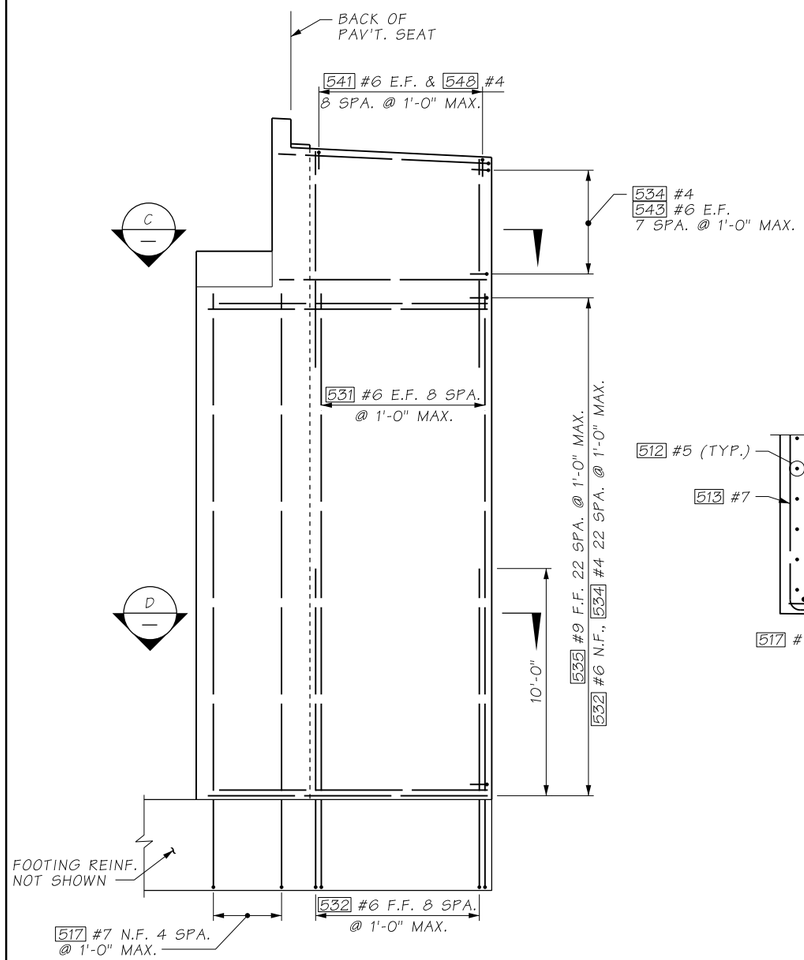

VIEW B / BB010

RIGHT SIDE SHOWN, LEFT SIDE SIMILAR

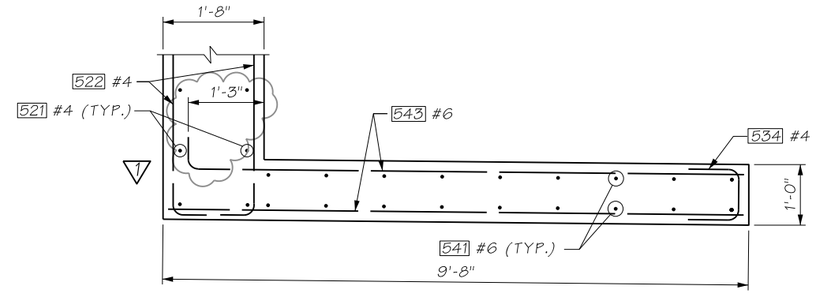

SECTION C

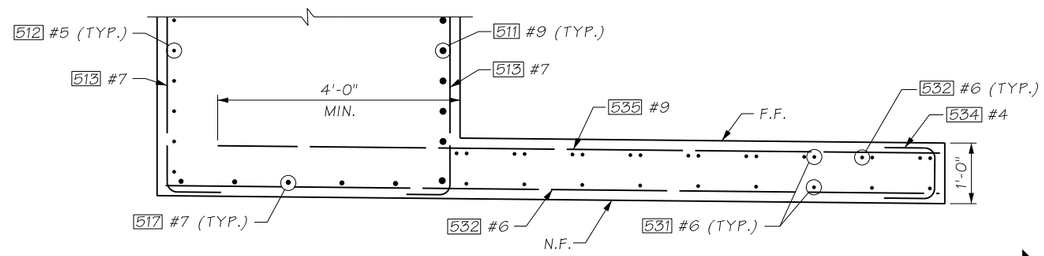

SECTION D

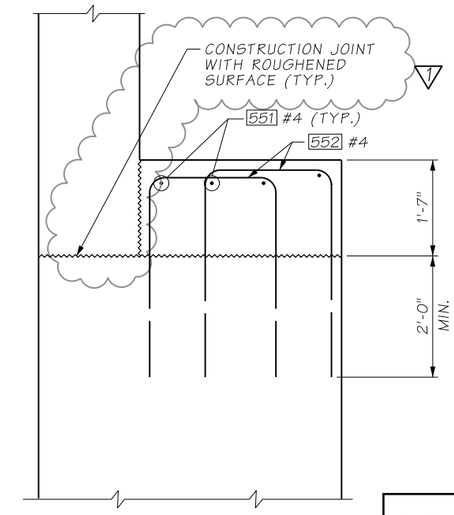

SECTION F

AS-BUILT

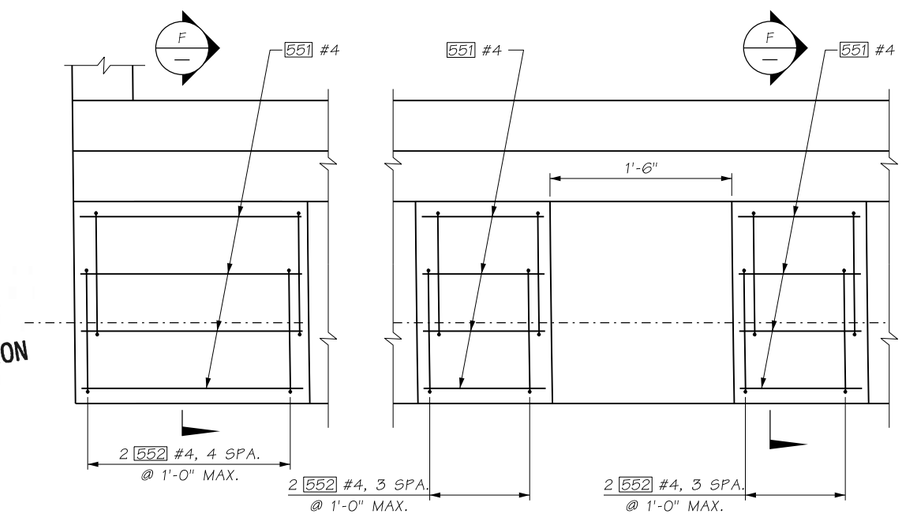

EXTERIOR

INTERIOR

PLAN - GIRDER STOPS

ATKINSON

DEC 04 2019

RELEASED FOR CONSTRUCTION

FILE NAME	D:\ICS_workdir\41281\20633_1144\PS_BB011.dgn			
TIME	11:14:20 AM			
DATE	12/2/2019			
PLOTTED BY	USLAS0-APP064$			
DESIGNED BY	T. PAGE			
ENTERED BY	R. REISER	REV 1 - RFI0031, RFI0081	12/03/2019	
CHECKED BY	J. XU	REV 0 - RELEASED FOR CONSTRUCTION	10/23/2018	
PROJ. ENGR.	C. MEADE	REV A - FINAL REVIEW	9/28/2018	
REGIONAL ADM.	J. WYNANDS	REVISION	DATE	BY

REGION NO.	STATE	FED.AID PROJ.NO.
10	WASH	
JOB NUMBER		
CONTRACT NO.		LOCATION NO.
C9133		

CORY J. CAYWOOD, STATE OF WASHINGTON, 38759, STRUCTURAL ENGINEER, PROFESSIONAL ENGINEER

12/2/19

DATE

P.E. STAMP BOX

P.E. STAMP BOX

DATE

Washington State Department of Transportation

ATKINSON / JACOBS CONSTRUCTION

I-5
STEILACOOM-DUPONT RD TO THORNE LN CORRIDOR IMPROVEMENTS
MP 120.01 TO MP 124.45
BERKELEY OVERPASS

PIER 5 SECTIONS AND DETAILS (2 OF 2)

PLAN REF NO BB011

SHEET 1202 OF 1456 SHEETS

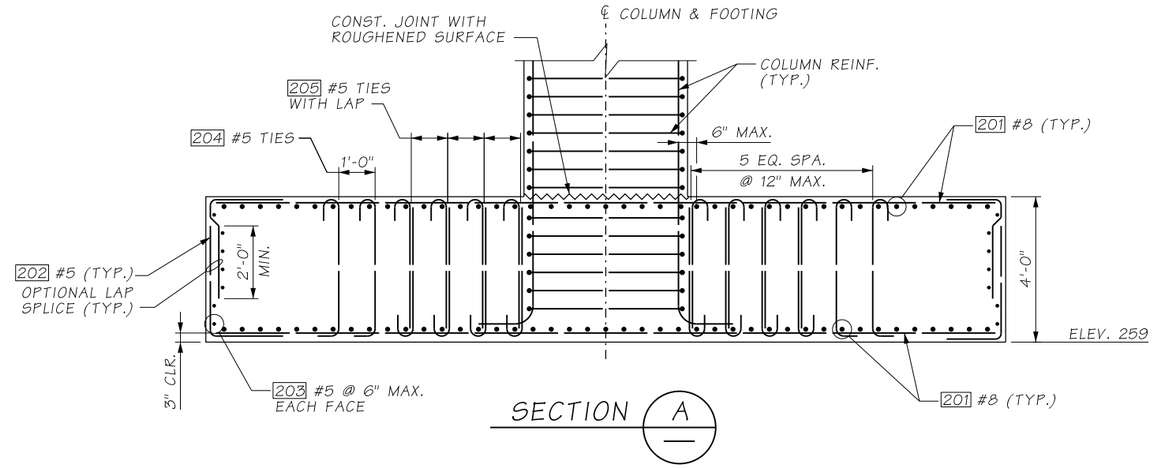

SECTION A

AS-BUILT

ATKINSON

OCT 24 2018

RELEASED FOR CONSTRUCTION

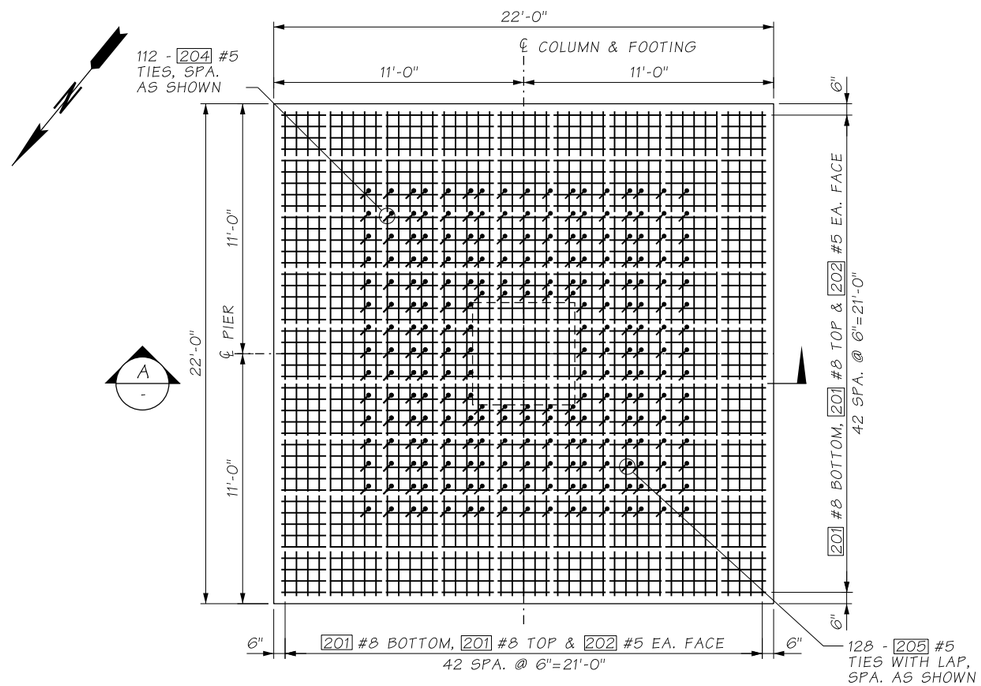

PLAN

FOOTINGS A & C

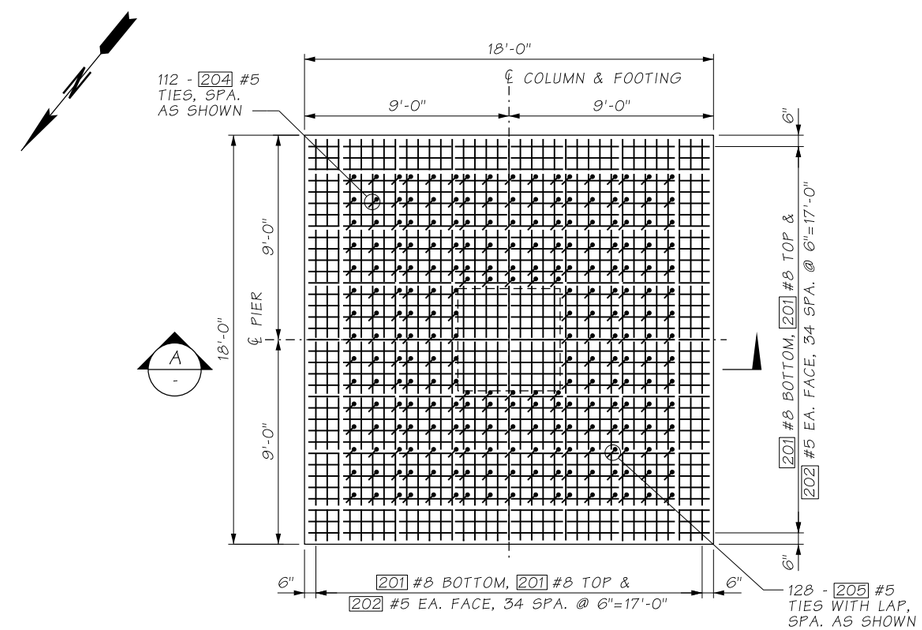

PLAN

FOOTING B

FILE NAME	D:\ICS_workdir\13523\20633_680\PS_BB012.dgn						
TIME	2:40:47 PM				REGION NO.	STATE	FED.AID PROJ.NO.
DATE	10/22/2018				10	WASH	
PLOTTED BY	USLAS0-APP064$				JOB NUMBER		
DESIGNED BY	K. YOUNG						
ENTERED BY	R. REISER						
CHECKED BY	A. FONG	REV 0 - RELEASED FOR CONSTRUCTION	10/23/2018		CONTRACT NO.		LOCATION NO.
PROJ. ENGR.	C. MEADE	REV A - FINAL REVIEW	9/28/2018		C8811		
REGIONAL ADM.	J. WYNANDS	REVISION	DATE	BY			

CORY J. CAYWOOD, STATE OF WASHINGTON, 38139, STRUCTURAL ENGINEER, PROFESSIONAL ENGINEER — 10/24/18

P.E. STAMP BOX — DATE

P.E. STAMP BOX — DATE

Washington State Department of Transportation

ATKINSON CONSTRUCTION / JACOBS

I-5
STEILACOOM-DUPONT RD TO THORNE LN
CORRIDOR IMPROVEMENTS
MP 120.01 TO MP 124.45
BERKELEY OVERPASS

PIER 2 FOOTINGS

PLAN REF NO BB012

SHEET 1203 OF 1456 SHEETS

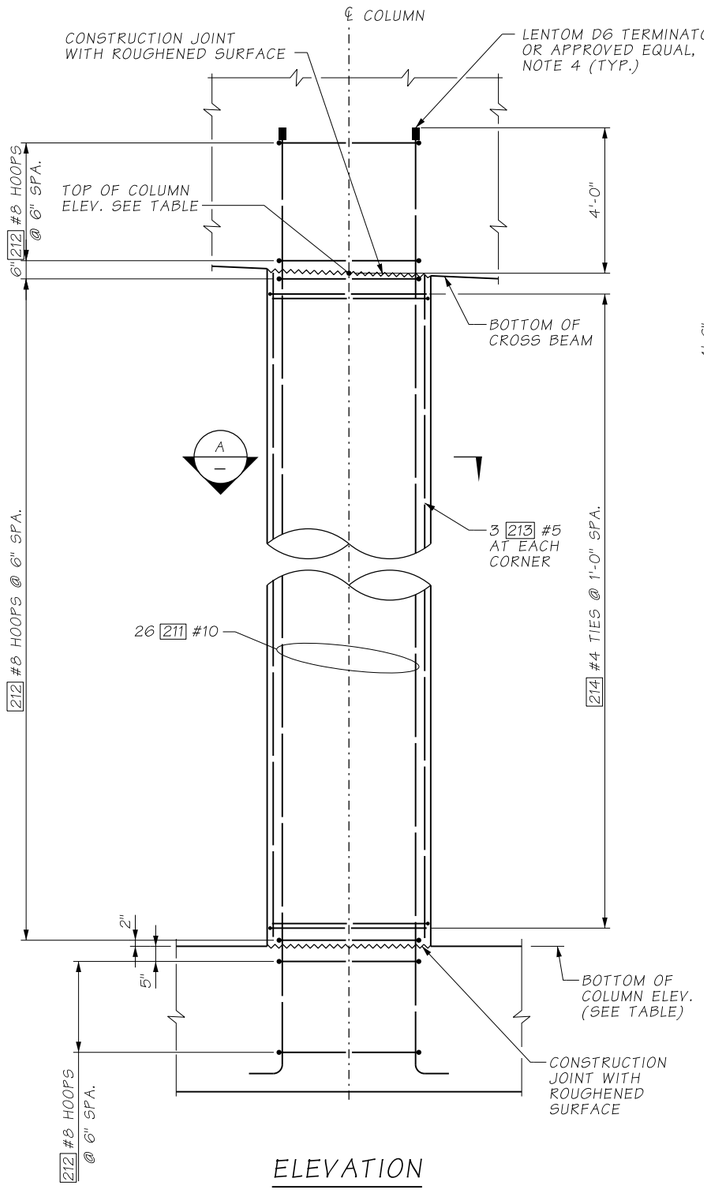

ELEVATION

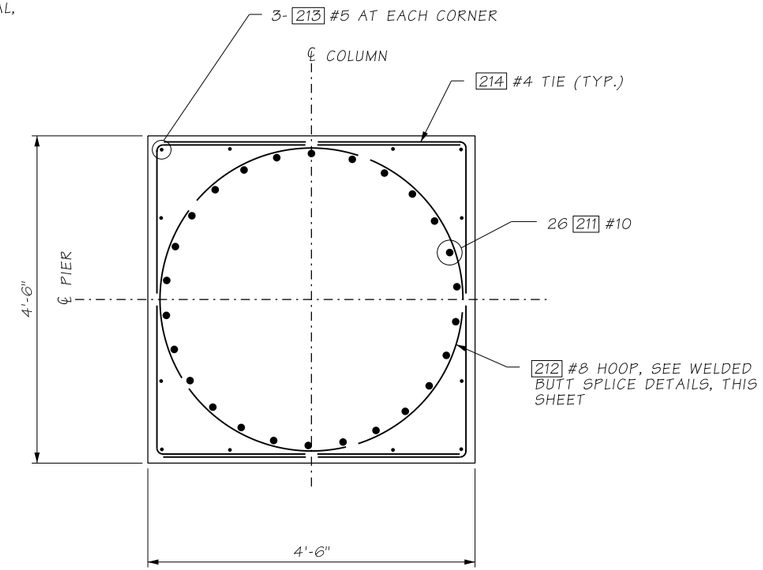

SECTION A

COLUMN GEOMETRY			
PIER NO.	COLUMN	TOP OF COL. ELEV. (FT)	BOT. OF COL. ELEV. (FT)
2	A	291.40	263.00
	B	291.50	263.00
	C	291.02	263.00

NOTES:

1. NO WELDING OF HOOPS IS PERMITTED AFTER THE COLUMN CAGE IS ASSEMBLED. HOOPS SHALL BE SHOP WELDED AND THEN ASSEMBLED AROUND THE COLUMN LONGITUDINAL STEEL.
2. ALL HOOPS SHALL BE WELDED IN ACCORDANCE WITH THE WELDED BUTT SPLICE DETAILS ON THIS SHEET.
3. STAGGER WELDED BUTT SPLICES AROUND THE COLUMN A MINIMUM DISTANCE OF ⅓ OF THE HOOP CIRCUMFERENCE.
4. BAR TERMINATORS AT TOP OF COLUMN REINF. SHALL MEET REQUIREMENTS OF ASTM A970 CLASS HA.

AS-BUILT

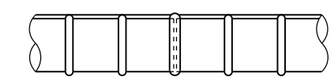

RESISTANCE BUTT JOINT DETAIL

SEE SPECIAL PROVISIONS FOR APPROVAL AND TESTING REQUIREMENTS.

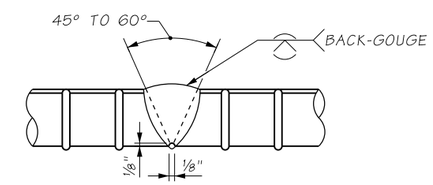

SINGLE V-GROOVE WELD

AWS D1.4 FIGURE 3.2(A)

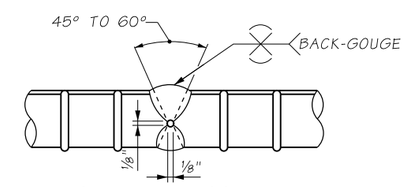

DOUBLE V-GROOVE WELD

AWS D1.4 FIGURE 3.2(B)

MANUAL DIRECT BUTT JOINT DETAILS

ALL BACKING SHALL BE REMOVED. SEE SPECIAL PROVISIONS FOR RT TESTING FREQUENCY.

WELDED BUTT SPLICE DETAILS

ATKINSON

OCT 24 2018

RELEASED FOR CONSTRUCTION

MRD.

FILE NAME	D:\ICS_workdir\13606\20633_668\PS_BB013.dgn					
TIME	10:31:22 AM				REGION NO. 10	STATE WASH	FED.AID PROJ.NO.
DATE	10/23/2018				JOB NUMBER	
PLOTTED BY	USLAS0-APP064$					
DESIGNED BY	K. YOUNG					
ENTERED BY	R. REISER					
CHECKED BY	A. FONG	REV 0 - RELEASED FOR CONSTRUCTION	10/23/2018		CONTRACT NO. C8811	LOCATION NO.
PROJ. ENGR.	C. MEADE	REV A - FINAL REVIEW	9/28/2018			
REGIONAL ADM.	J. WYNANDS	REVISION	DATE	BY		

CORY J. CAYWOOD, STATE OF WASHINGTON, 38756, STRUCTURAL ENGINEER, PROFESSIONAL ENGINEER — 10/24/18 — DATE — P.E. STAMP BOX

DATE — P.E. STAMP BOX

Washington State Department of Transportation

ATKINSON / JACOBS CONSTRUCTION

I-5
STEILACOOM-DUPONT RD TO THORNE LN
CORRIDOR IMPROVEMENTS
MP 120.01 TO MP 124.45
BERKELEY OVERPASS

PIER 2
COLUMN DETAILS

PLAN REF NO BB013

SHEET 1204 OF 1456 SHEETS

NOTES:

1. MINIMUM LAP SPLICES FOR CROSSBEAM ARE AS FOLLOWS, UNLESS NOTED OTHERWISE:
   #5= 2'-0"
   #6= 2'-6"
   #7= 2'-10"
   #8= 3'-2"
   #9= 3'-9"
   #10= 6'-9"
2. FOR ADDITIONAL REINFORCEMENT AROUND BLOCKOUT, SEE SHEET BB015.

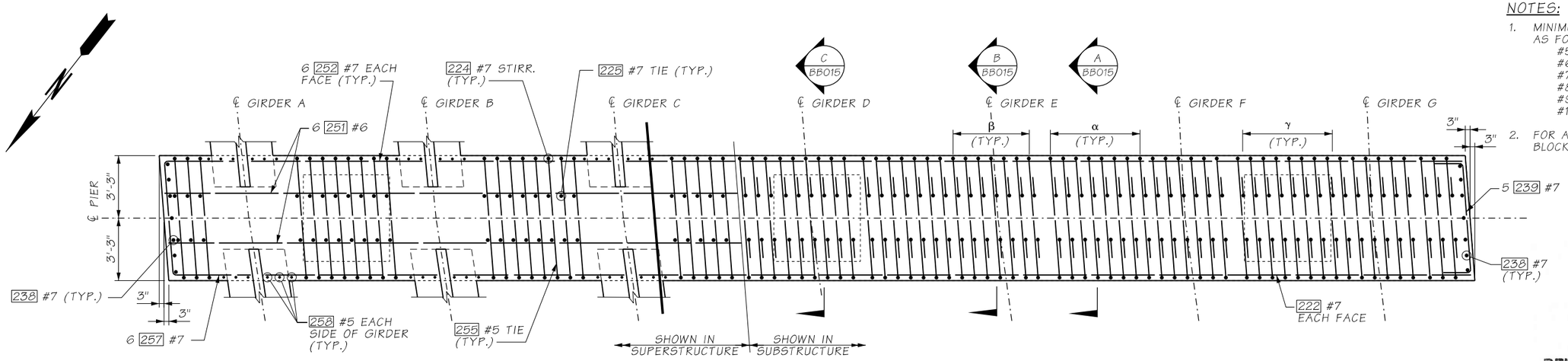

PLAN

ATKINSON

OCT 24 2018

RELEASED FOR CONSTRUCTION

AS-BUILT

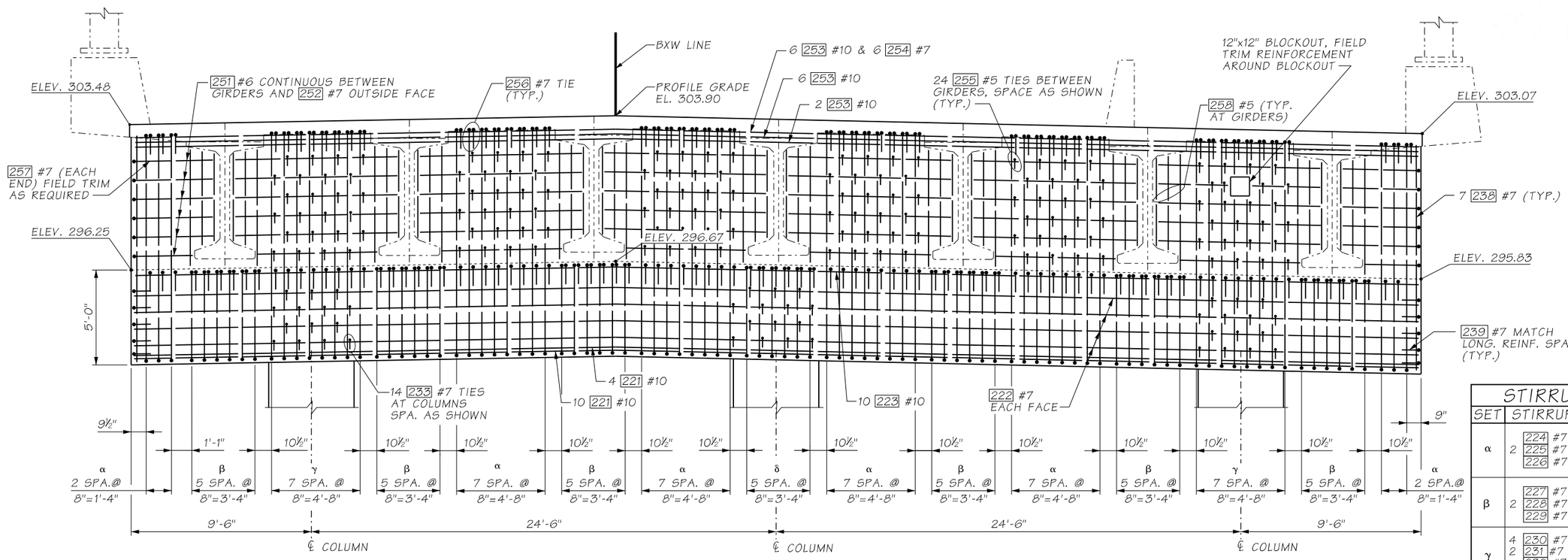

ELEVATION

DECK ELEVATIONS AND DIMENSIONS ARE MEASURED AT ℄ OF PIER

STIRRUP / TIE SETS		
SET	STIRRUPS/TIES	NOTE
α	2 224 #7 STIRRUP 2 225 #7 TIE 2 226 #7 TIE	BETWEEN/OUTSIDE GIRDERS
β	2 227 #7 STIRRUP 2 228 #7 TIE 2 229 #7 TIE	UNDER GIRDERS
γ	4 230 #7 STIRRUP 2 231 #7 TIE 2 232 #7 TIE 2 233 #7 TIE	AT COLUMNS & BETWEEN GIRDERS BUNDLE STIRRUPS (2 BARS PER BUNDLE)
δ	2 234 #7 STIRRUP 2 235 #7 TIE 2 236 #7 TIE 2 237 #7 TIE	AT COLUMNS & UNDER GIRDERS

FILE NAME	c:\pwworking\jacobs_b&i\reiserrw\dms20633\PS_BB014.dgn				REGION NO. 10	STATE WASH	FED.AID PROJ.NO.
TIME	4:35:10 PM				JOB NUMBER		
DATE	10/22/2018						
PLOTTED BY	reiserrw						
DESIGNED BY	K. YOUNG						
ENTERED BY	R. REISER						
CHECKED BY	A. FONG	REV 0 - RELEASED FOR CONSTRUCTION	10/23/2018		CONTRACT NO. C8811		LOCATION NO.
PROJ. ENGR.	C. MEADE	REV A - FINAL REVIEW	9/28/2018				
REGIONAL ADM.	J. WYNANDS	REVISION	DATE	BY			

P.E. STAMP BOX — DATE 10/24/18

P.E. STAMP BOX — DATE

Washington State Department of Transportation

ATKINSON CONSTRUCTION / JACOBS

I-5
STEILACOOM-DUPONT RD TO THORNE LN CORRIDOR IMPROVEMENTS
MP 120.01 TO MP 124.45
BERKELEY OVERPASS

PIER 2 CROSS BEAM PLAN AND ELEVATION

PLAN REF NO BB014

SHEET 1205 OF 1456 SHEETS

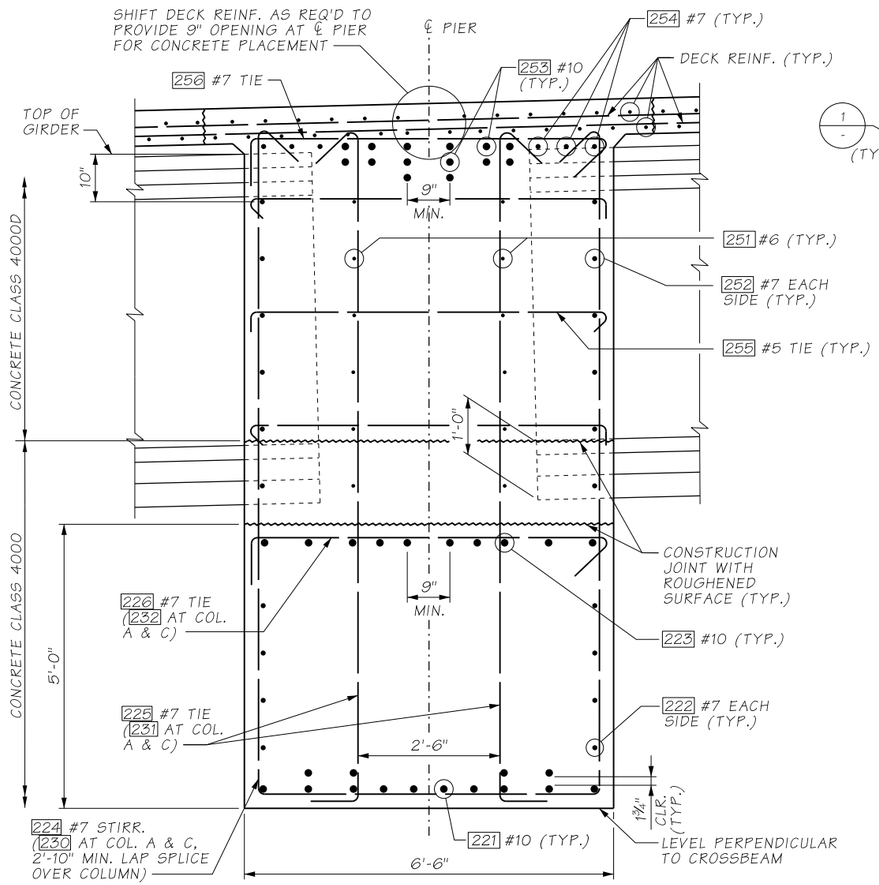

SECTION A BB014
BETWEEN GIRDERS

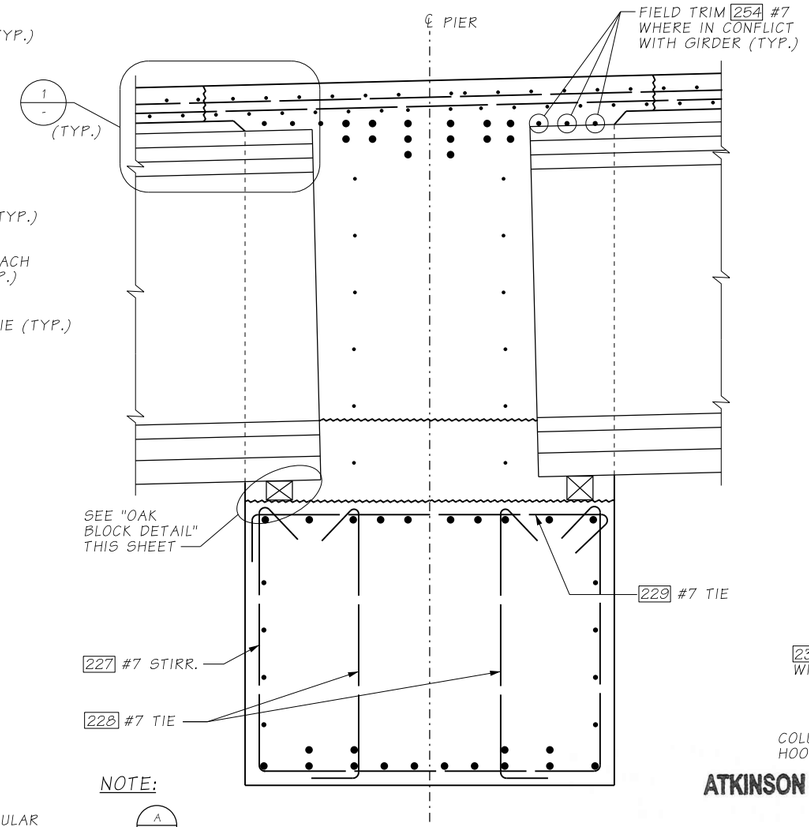

NOTE:
SEE A - FOR INFORMATION NOT SHOWN.

SECTION B BB014
AT GIRDERS

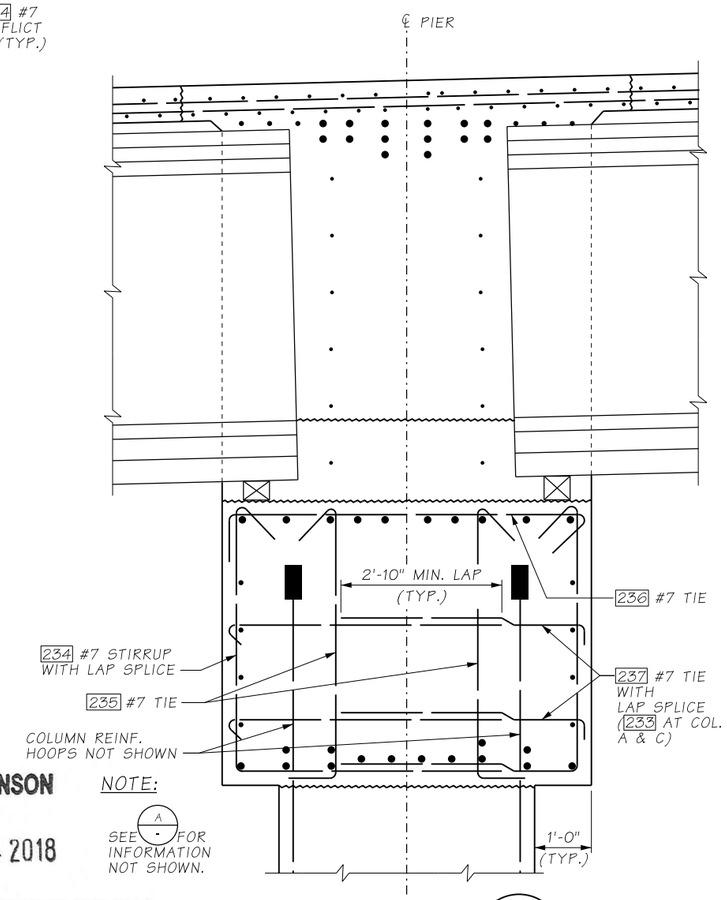

NOTE:
SEE A - FOR INFORMATION NOT SHOWN.

SECTION C BB014
AT COLUMNS (AT GIRDERS SHOWN)

ATKINSON

OCT 24 2018

RELEASED FOR CONSTRUCTION

MRD.

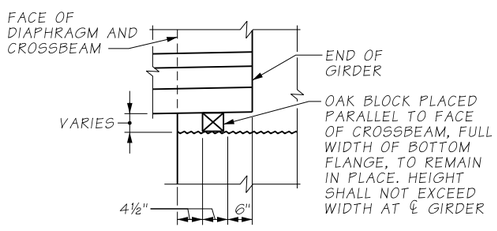

OAK BLOCK DETAIL

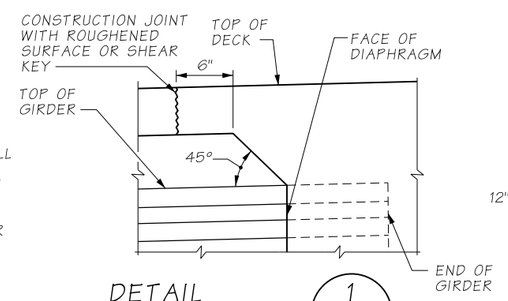

DETAIL 1 —
REINFORCING NOT SHOWN FOR CLARITY

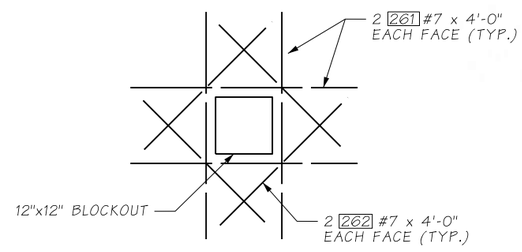

ADDITIONAL REINFORCEMENT AROUND BLOCKOUT

TOP OF OAK BLOCK ELEVATIONS

GIRDER	BACK STATION	AHEAD STATION
A	296.57	296.67
B	296.73	296.83
C	296.89	296.99
D	296.75	296.86
E	296.56	296.67
F	296.37	296.47
G	296.17	296.28

AS-BUILT

NOTES:

1. GIRDERS SHALL BE HELD RIGIDLY IN PLACE UNTIL AFTER DIAPHRAGMS ARE PLACED.
2. CUT/RELEASE GIRDER TEMPORARY STRANDS BEFORE CASTING DIAPHRAGM AND BRIDGE DECK. SEE TEMPORARY STRAND CUTTING SEQUENCE.
3. EXTENDED STRANDS AND GIRDER REINFORCING NOT SHOWN FOR CLARITY.
4. LONGITUDINAL DIMENSIONS ARE NORMAL TO ℄ PIER.
5. FOR CONCRETE PLACEMENT PROCEDURE SEE "SUPERSTRUCTURE CONSTRUCTION SEQUENCE" SHEET.

FILE NAME	D:\ICS_workdir\13523\20633_679\PS_BB015.dgn
TIME	2:41:07 PM
DATE	10/22/2018
PLOTTED BY	USLAS0-APP064$
DESIGNED BY	K. YOUNG
ENTERED BY	R. REISER
CHECKED BY	A. FONG
PROJ. ENGR.	C. MEADE
REGIONAL ADM.	J. WYNANDS

REVISION	DATE	BY
REV 0 - RELEASED FOR CONSTRUCTION	10/23/2018	
REV A - FINAL REVIEW	9/28/2018	

REGION NO.	STATE	FED.AID PROJ.NO.
10	WASH	
JOB NUMBER		
CONTRACT NO. C8811		LOCATION NO.

CORY J. CAYWOOD, STATE OF WASHINGTON, 38755, STRUCTURAL ENGINEER, PROFESSIONAL ENGINEER
10/24/18
DATE
P.E. STAMP BOX

P.E. STAMP BOX
DATE

Washington State Department of Transportation

ATKINSON / JACOBS CONSTRUCTION

I-5
STEILACOOM-DUPONT RD TO THORNE LN CORRIDOR IMPROVEMENTS
MP 120.01 TO MP 124.45
BERKELEY OVERPASS

PIER 2 CROSS BEAM DETAILS

PLAN REF NO BB015

SHEET 1206 OF 1456 SHEETS

AS-BUILT

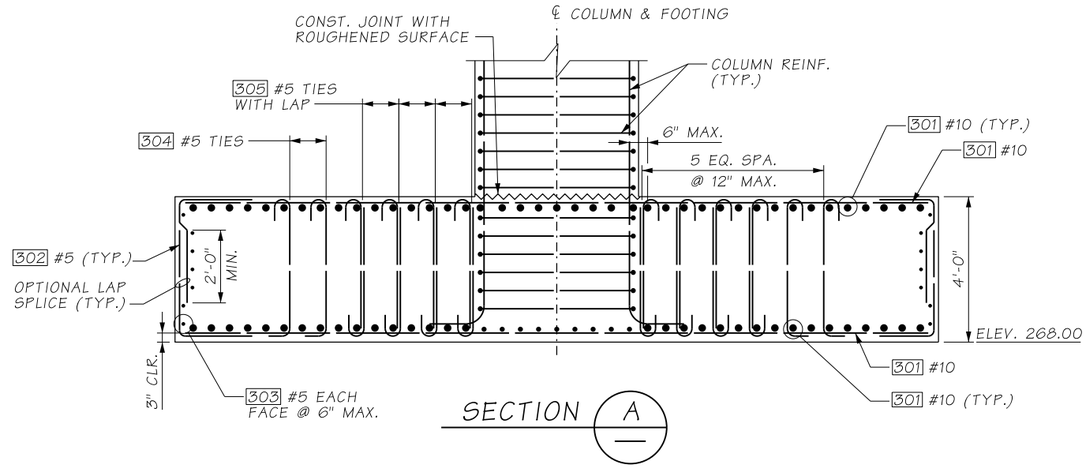

SECTION A

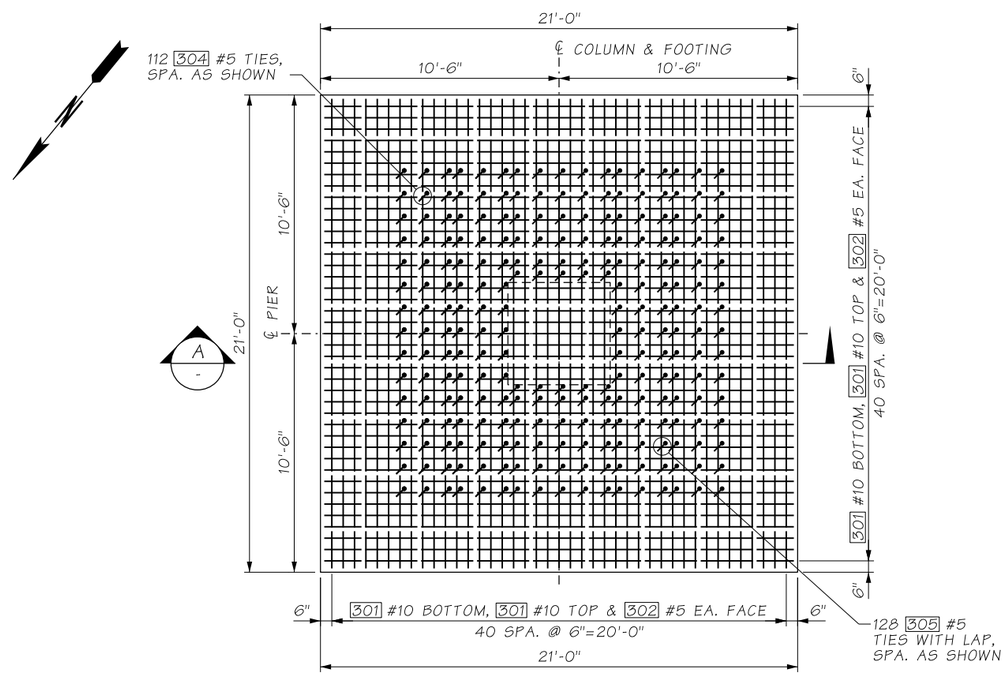

PLAN

FOOTINGS A, B, C & D

ATKINSON

OCT 24 2018

RELEASED FOR CONSTRUCTION

MRD.

FILE NAME	D:\ICS_workdir\13734\20633_1191\PS_BB016.dgn						
TIME	8:27:46 AM						
DATE	10/24/2018						
PLOTTED BY	USLAS0-APP064$						
DESIGNED BY	K. BICHICH						
ENTERED BY	R. REISER						
CHECKED BY	G. CALLAHAN	REV 0 - RELEASED FOR CONSTRUCTION	10/23/2018				
PROJ. ENGR.	C. MEADE	REV A - FINAL REVIEW	9/28/2018				
REGIONAL ADM.	J. WYNANDS	REVISION	DATE	BY			

REGION NO.	STATE	FED.AID PROJ.NO.
10	WASH	
JOB NUMBER		
CONTRACT NO.		LOCATION NO.
C8811		

CORY J. CAYWOOD, STATE OF WASHINGTON, 38139, STRUCTURAL ENGINEER, PROFESSIONAL ENGINEER

10/24/18

DATE

P.E. STAMP BOX

P.E. STAMP BOX

DATE

Washington State Department of Transportation

ATKINSON / JACOBS CONSTRUCTION

I-5
STEILACOOM-DUPONT RD TO THORNE LN
CORRIDOR IMPROVEMENTS
MP 120.01 TO MP 124.45
BERKELEY OVERPASS

PIER 3 FOOTINGS

PLAN REF NO BB016

SHEET 1207 OF 1456 SHEETS

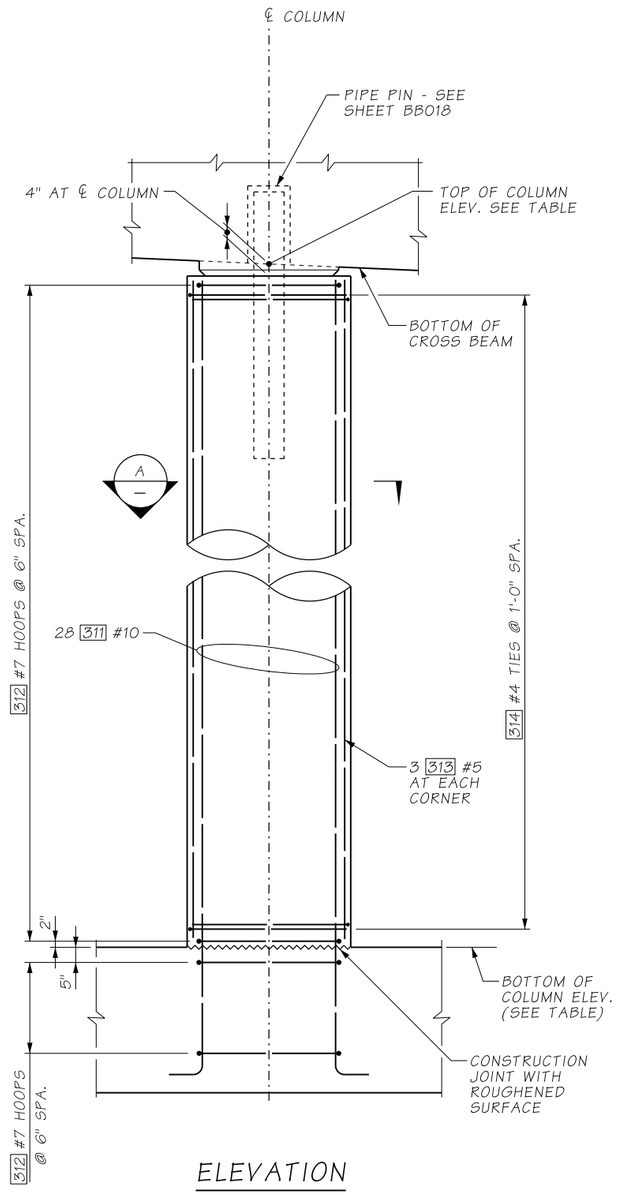

ELEVATION

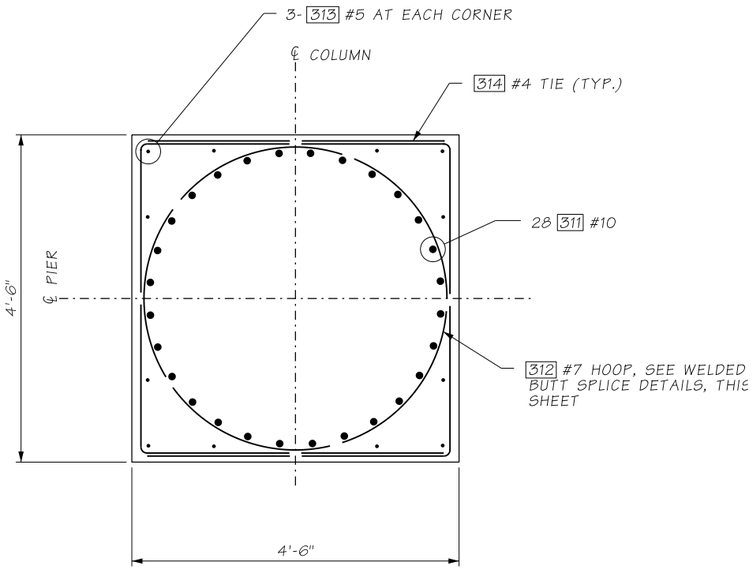

SECTION A

COLUMN GEOMETRY			
PIER NO.	COLUMN	TOP OF COL. ELEV. (FT)	BOT. OF COL. ELEV. (FT)
3	A	291.87	272.00
	B	292.30	272.00
	C	291.75	272.00
	D	291.19	272.00

NOTES:

1. NO WELDING OF HOOPS IS PERMITTED AFTER THE COLUMN CAGE IS ASSEMBLED. HOOPS SHALL BE SHOP WELDED AND THEN ASSEMBLED AROUND THE COLUMN LONGITUDINAL STEEL.
2. ALL HOOPS SHALL BE WELDED IN ACCORDANCE WITH THE WELDED BUTT SPLICE DETAILS ON THIS SHEET.
3. STAGGER WELDED BUTT SPLICES AROUND THE COLUMN A MINIMUM DISTANCE OF ⅓ OF THE HOOP CIRCUMFERENCE.

AS-BUILT

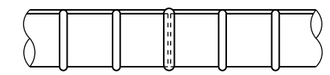

RESISTANCE BUTT JOINT DETAIL

SEE SPECIAL PROVISIONS FOR APPROVAL AND TESTING REQUIREMENTS.

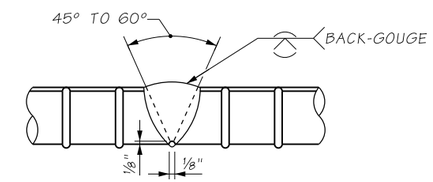

SINGLE V-GROOVE WELD

AWS D1.4 FIGURE 3.2(A)

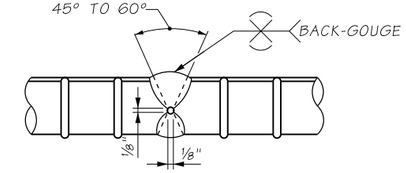

DOUBLE V-GROOVE WELD

AWS D1.4 FIGURE 3.2(B)

MANUAL DIRECT BUTT JOINT DETAILS

ALL BACKING SHALL BE REMOVED. SEE SPECIAL PROVISIONS FOR RT TESTING FREQUENCY.

WELDED BUTT SPLICE DETAILS

ATKINSON

OCT 24 2018

RELEASED FOR CONSTRUCTION

MRD.

FILE NAME	D:\ICS_workdir\13607\20633_1145\PS_BB017.dgn					
TIME	10:31:35 AM				REGION NO. 10	STATE WASH	FED.AID PROJ.NO.
DATE	10/23/2018					
PLOTTED BY	USLAS0-APP064$				JOB NUMBER	
DESIGNED BY	K. BICHICH					
ENTERED BY	R. REISER					
CHECKED BY	G. CALLAHAN	REV 0 - RELEASED FOR CONSTRUCTION	10/23/2018		CONTRACT NO. C8811	LOCATION NO.
PROJ. ENGR.	C. MEADE	REV A - FINAL REVIEW	9/28/2018			
REGIONAL ADM.	J. WYNANDS	REVISION	DATE	BY		

CORY J. CAYWOOD, STATE OF WASHINGTON, 38193, STRUCTURAL ENGINEER, PROFESSIONAL ENGINEER — 10/24/18 — DATE — P.E. STAMP BOX

DATE — P.E. STAMP BOX

Washington State Department of Transportation

ATKINSON / JACOBS CONSTRUCTION

I-5
STEILACOOM-DUPONT RD TO THORNE LN CORRIDOR IMPROVEMENTS
MP 120.01 TO MP 124.45
BERKELEY OVERPASS

PIER 3
COLUMN DETAILS

PLAN REF NO BB017

SHEET 1208 OF 1456 SHEETS

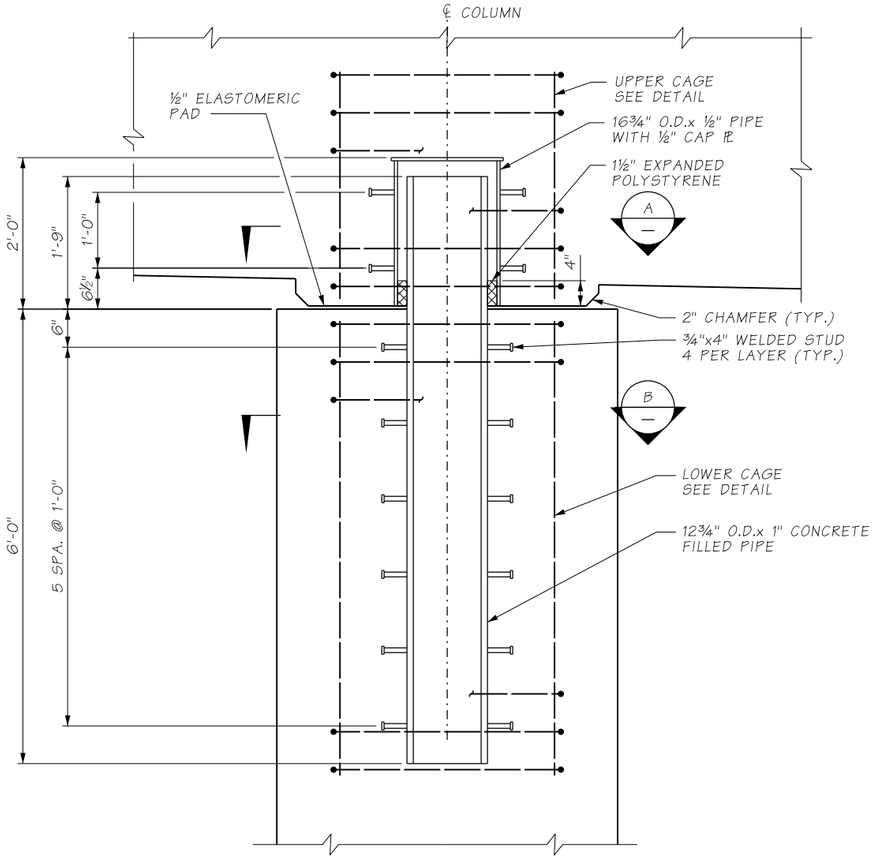

COLUMN PIPE PIN DETAIL

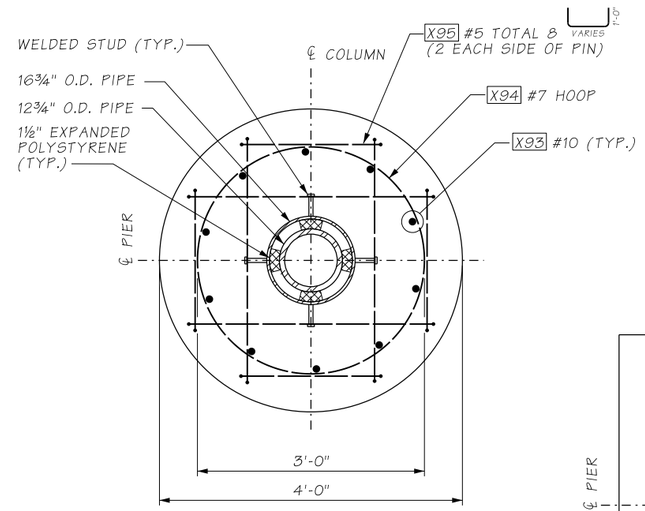

SECTION A

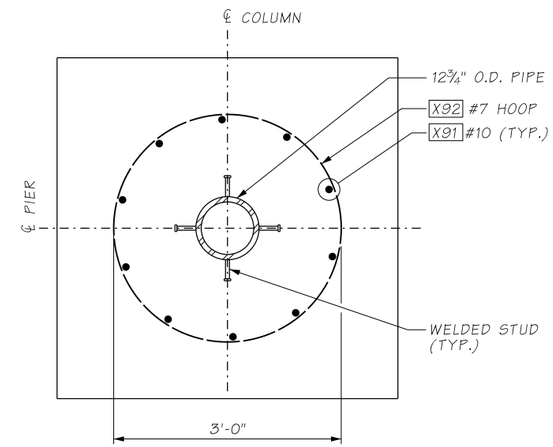

SECTION B

NOTES:

1. BAR MARKS ARE DESIGNATED AS FOLLOWS: X01, WHERE "X"= PIER NUMBER.
2. 12¾" O.D. STEEL PIPE SHALL BE ASTM A106 GR. C. 16¾" O.D. STEEL PIPE SHALL BE ASTM A36.
3. STEEL PIPES SHALL BE GALVANIZED AFTER FABRICATION IN ACCORDANCE WITH AASHTO M 232.

AS-BUILT

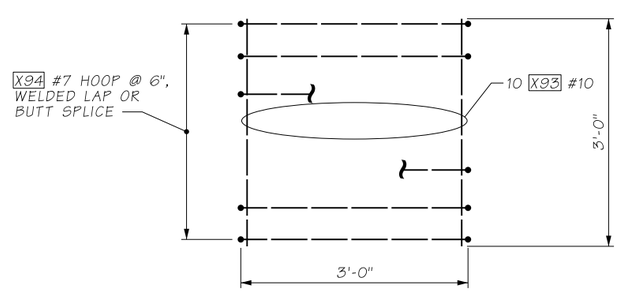

UPPER CAGE

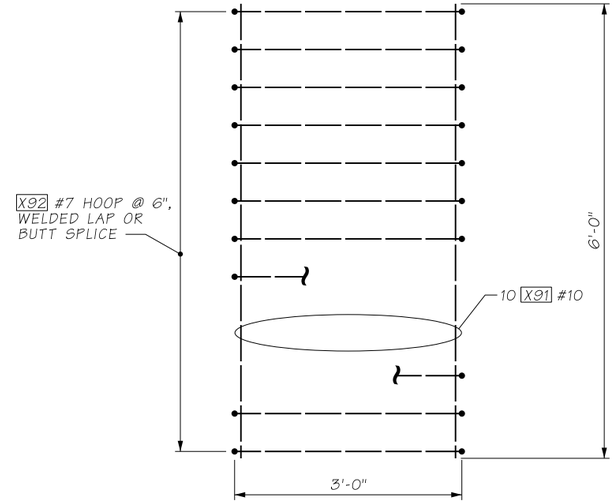

LOWER CAGE

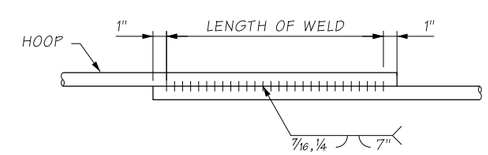

WELDED LAP SPLICE DETAIL

WELDING SHALL MEET THE REQUIREMENTS OF STD. SPEC. 6-02.3(24)E.

ATKINSON

OCT 24 2018

RELEASED FOR CONSTRUCTION

FILE NAME	D:\ICS_workdir\13523\20633_627\PS_BB018.dgn						
TIME	2:40:47 PM				REGION NO. / STATE	FED.AID PROJ.NO.	
DATE	10/22/2018				10 / WASH		
PLOTTED BY	USLAS0-APP064$				JOB NUMBER		
DESIGNED BY	G. CALLAHAN						
ENTERED BY	R. REISER						
CHECKED BY	C. CAYWOOD	REV 0 - RELEASED FOR CONSTRUCTION	10/23/2018		CONTRACT NO.	LOCATION NO.	
PROJ. ENGR.	C. MEADE	REV A - FINAL REVIEW	9/28/2018		C8811		
REGIONAL ADM.	J. WYNANDS	REVISION	DATE	BY			

P.E. STAMP BOX — DATE 10/24/18

P.E. STAMP BOX — DATE

Washington State Department of Transportation

ATKINSON CONSTRUCTION / JACOBS

I-5
STEILACOOM-DUPONT RD TO THORNE LN CORRIDOR IMPROVEMENTS
MP 120.01 TO MP 124.45
BERKELEY OVERPASS

PIER 3 & PIER 4 COLUMN PINS

PLAN REF NO BB018

SHEET 1209 OF 1456 SHEETS

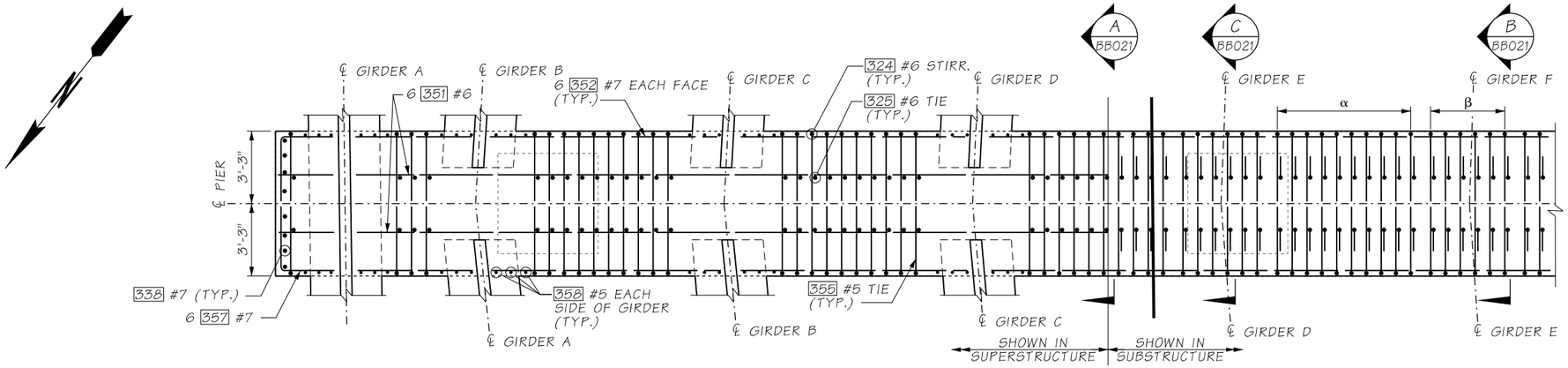

PLAN

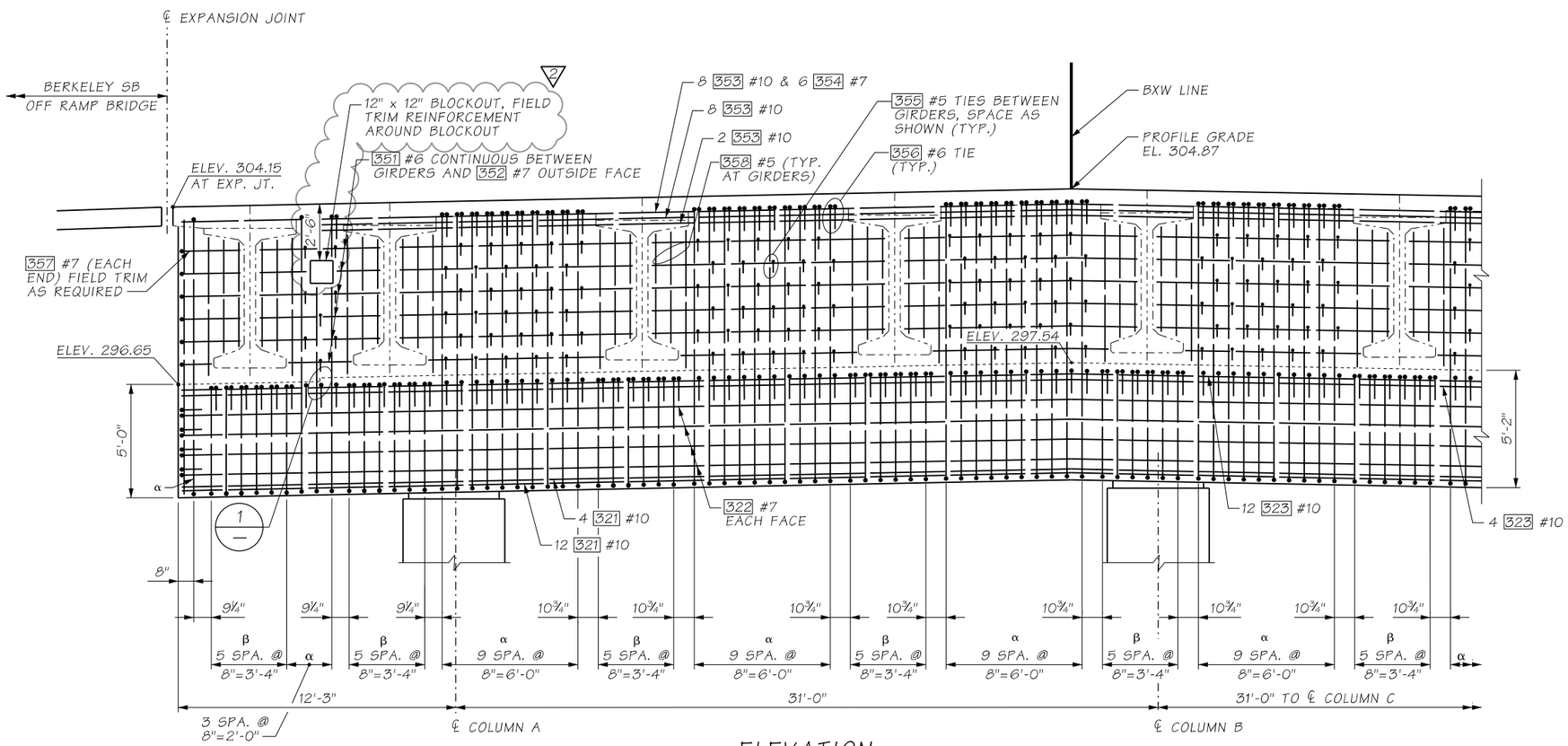

ELEVATION

DECK ELEVATIONS AND DIMENSIONS ARE MEASURED AT ℄ OF PIER

NOTES:

1. MINIMUM LAP SPLICES FOR CROSSBEAM ARE AS FOLLOWS, UNLESS NOTED OTHERWISE:
   #5= 2'-0"
   #6= 2'-6"
   #7= 2'-10"
   #8= 3'-2"
   #9= 3'-8"
   #10= 6'-9"
2. FOR ADDITIONAL REINFORCEMENT AROUND BLOCKOUT, SEE SHEET BB022.

AS-BUILT

ATKINSON
MAY 22 2019 KTW
RELEASED FOR CONSTRUCTION

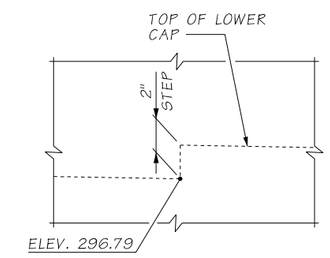

DETAIL 1

STIRRUP / TIE SETS		
SET	STIRRUPS/TIES	NOTE
α	2 324 #6 STIRRUP 325 #6 TIE 326 #6 TIE	BETWEEN/OUTSIDE GIRDERS
β	2 327 #6 STIRRUP 328 #6 TIE 329 #6 TIE	UNDER GIRDERS

FILE NAME	c:\pwworking\jacobs_b&i\fongac\dms20633\PS_BB019.dgn			
TIME	11:19:23 AM			
DATE	5/21/2019			
PLOTTED BY	FongAC			
DESIGNED BY	K. BICHICH	REV 2 - RFI 0099	05/22/2019	
ENTERED BY	R. REISER	REV 1 - RFI 0044	3/04/2019	
CHECKED BY	G. CALLAHAN	REV 0 - RELEASED FOR CONSTRUCTION	10/23/2018	
PROJ. ENGR.	C. MEADE	REV A - FINAL REVIEW	9/28/2018	
REGIONAL ADM.	J. WYNANDS	REVISION	DATE	BY

REGION NO.	STATE	FED.AID PROJ.NO.
10	WASH	
JOB NUMBER		
CONTRACT NO.		LOCATION NO.
C9133		

CORY J. CAYWOOD STATE OF WASHINGTON 38759 PROFESSIONAL ENGINEER
5/22/19
DATE
P.E. STAMP BOX

P.E. STAMP BOX
DATE

Washington State Department of Transportation
ATKINSON CONSTRUCTION / JACOBS

I-5
STEILACOOM-DUPONT RD TO THORNE LN
CORRIDOR IMPROVEMENTS
MP 120.01 TO MP 124.45
BERKELEY OVERPASS

PIER 3 CROSS BEAM
PLAN AND ELEVATION (1 OF 2)

PLAN REF NO BB019
SHEET 1210 OF 1456 SHEETS

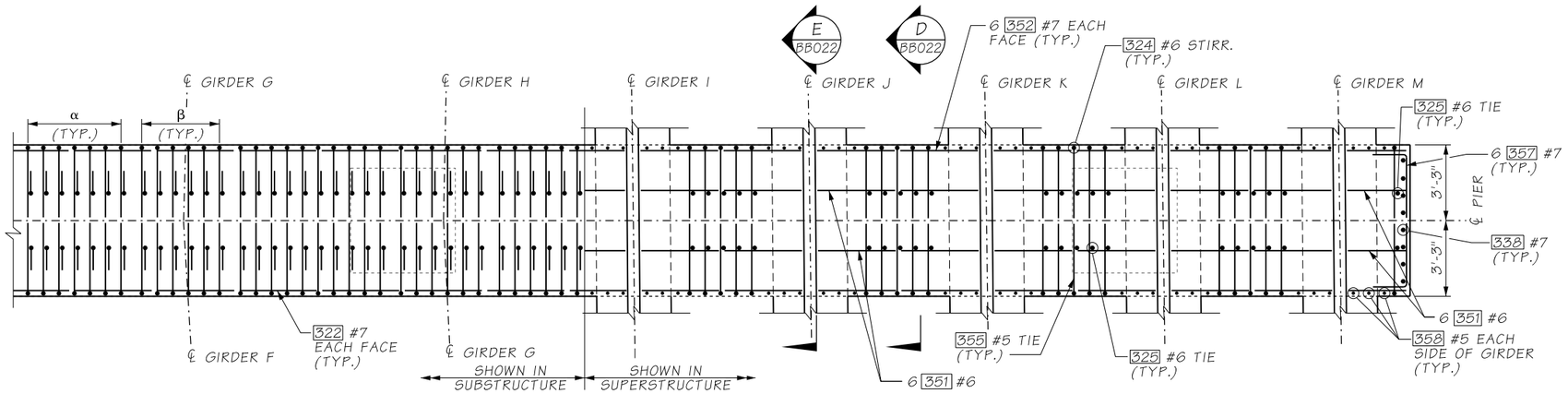

PLAN

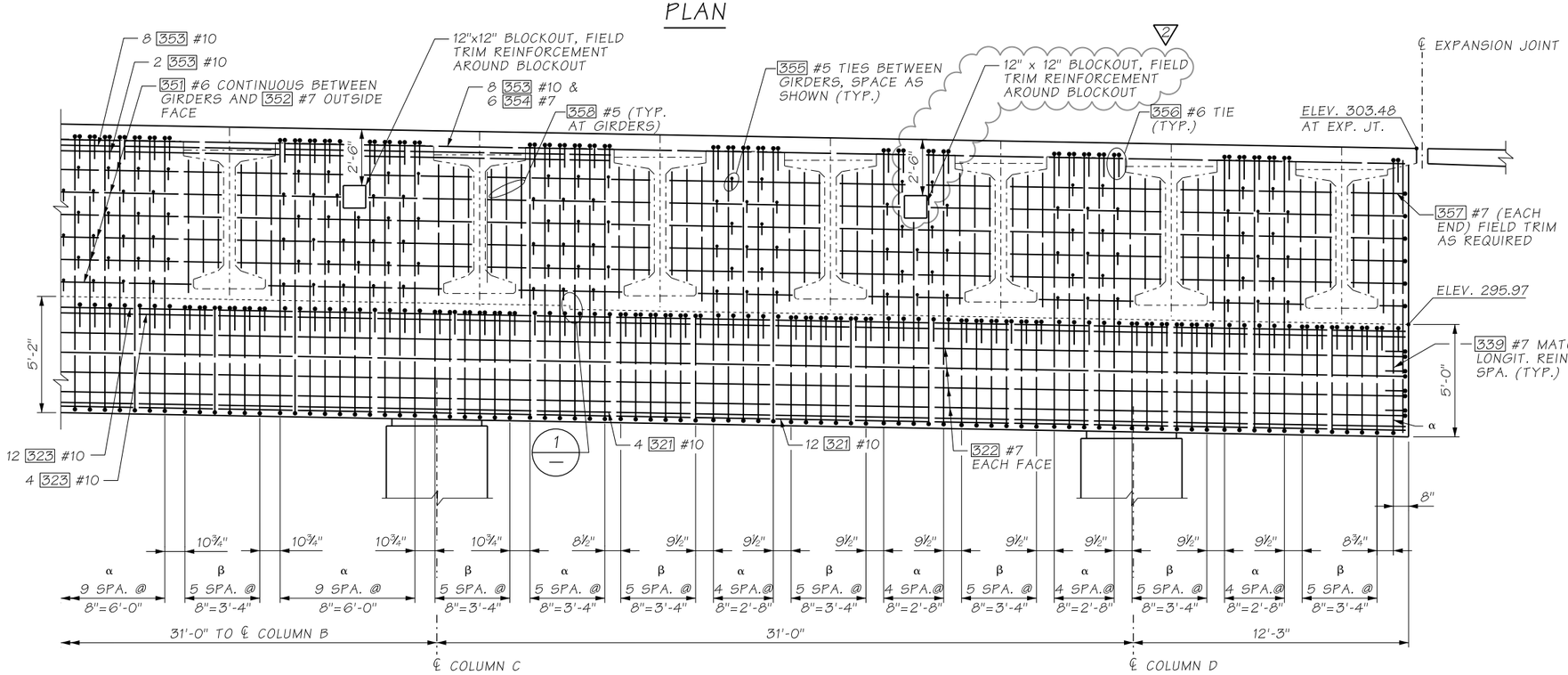

ELEVATION

DECK ELEVATIONS AND DIMENSIONS ARE MEASURED AT ℄ OF PIER

NOTES:

1. MINIMUM LAP SPLICES FOR CROSSBEAM ARE AS FOLLOWS, UNLESS NOTED OTHERWISE:
   #5= 2'-0"
   #6= 2'-6"
   #7= 2'-10"
   #8= 3'-2"
   #9= 3'-8"
   #10= 6'-9"
2. FOR ADDITIONAL REINFORCEMENT AROUND BLOCKOUT, SEE SHEET BB022.

AS-BUILT

ATKINSON

MAY 22 2019 KTW

RELEASED FOR CONSTRUCTION

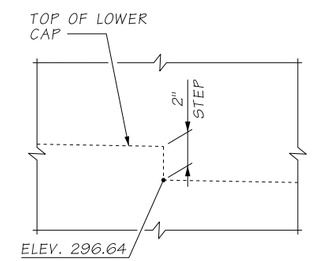

DETAIL 1

STIRRUP / TIE SETS		
SET	STIRRUPS/TIES	NOTE
α	2 { 324 #6 STIRRUP, 325 #6 TIE, 326 #6 TIE }	BETWEEN/OUTSIDE GIRDERS
β	2 { 327 #6 STIRRUP, 328 #6 TIE, 329 #6 TIE }	UNDER GIRDERS

FILE NAME	D:\ICS_workdir\28277\20633_1120\PS_BB020.dgn				REGION NO. 10	STATE WASH	FED.AID PROJ.NO.
TIME	10:52:41 AM						
DATE	5/21/2019						
PLOTTED BY	USLAS0-APP064$				JOB NUMBER		
DESIGNED BY	K. BICHICH	REV 2 - RFI 0099	05/22/2019				
ENTERED BY	R. REISER	REV 1 - RFI 0044	3/04/2019				
CHECKED BY	G. CALLAHAN	REV 0 - RELEASED FOR CONSTRUCTION	10/23/2018		CONTRACT NO. C9133		LOCATION NO.
PROJ. ENGR.	C. MEADE	REV A - FINAL REVIEW	9/28/2018				
REGIONAL ADM.	J. WYNANDS	REVISION	DATE	BY			

CORY J. CAYWOOD, STATE OF WASHINGTON, 38139, STRUCTURAL ENGINEER, PROFESSIONAL ENGINEER — 5/22/19 DATE — P.E. STAMP BOX

DATE — P.E. STAMP BOX

Washington State Department of Transportation

ATKINSON CONSTRUCTION / JACOBS

I-5
STEILACOOM-DUPONT RD TO THORNE LN CORRIDOR IMPROVEMENTS
MP 120.01 TO MP 124.45
BERKELEY OVERPASS

PIER 3 CROSS BEAM PLAN AND ELEVATION (2 OF 2)

PLAN REF NO BB020

SHEET 1211 OF 1456 SHEETS

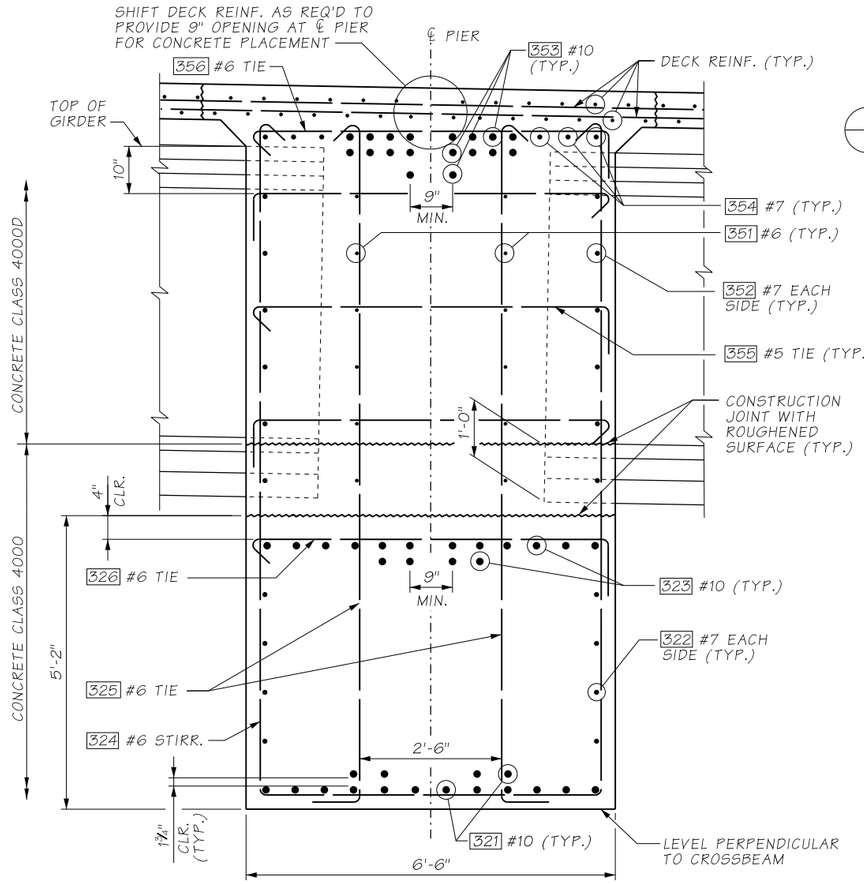

SECTION A
BETWEEN GIRDERS
BB019

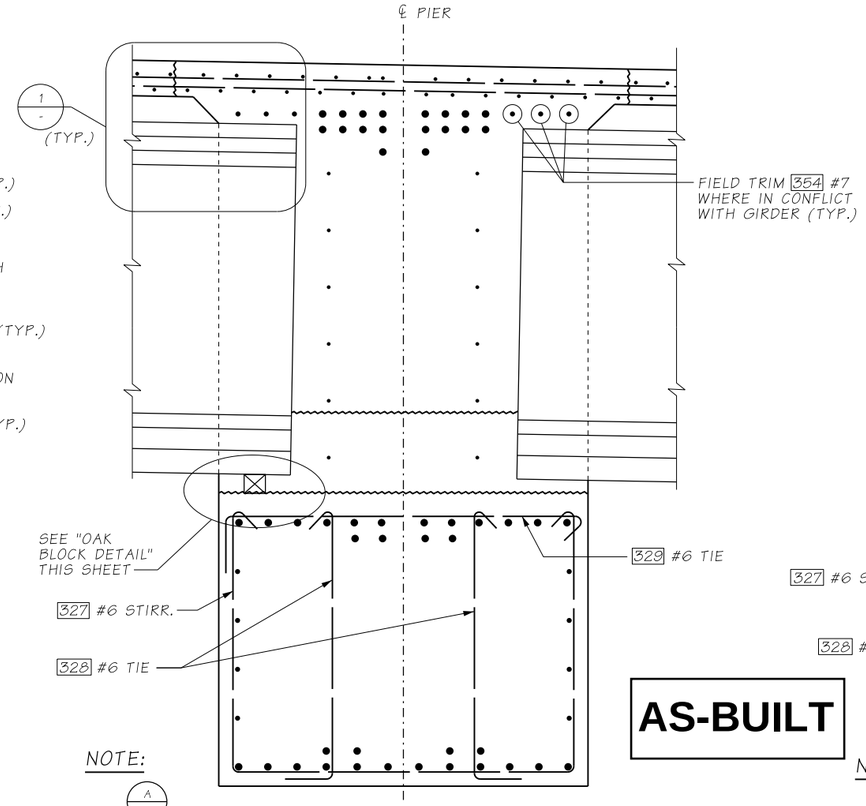

NOTE:

SEE A FOR INFORMATION NOT SHOWN.

SECTION B
AT GIRDERS
BB019

AS-BUILT

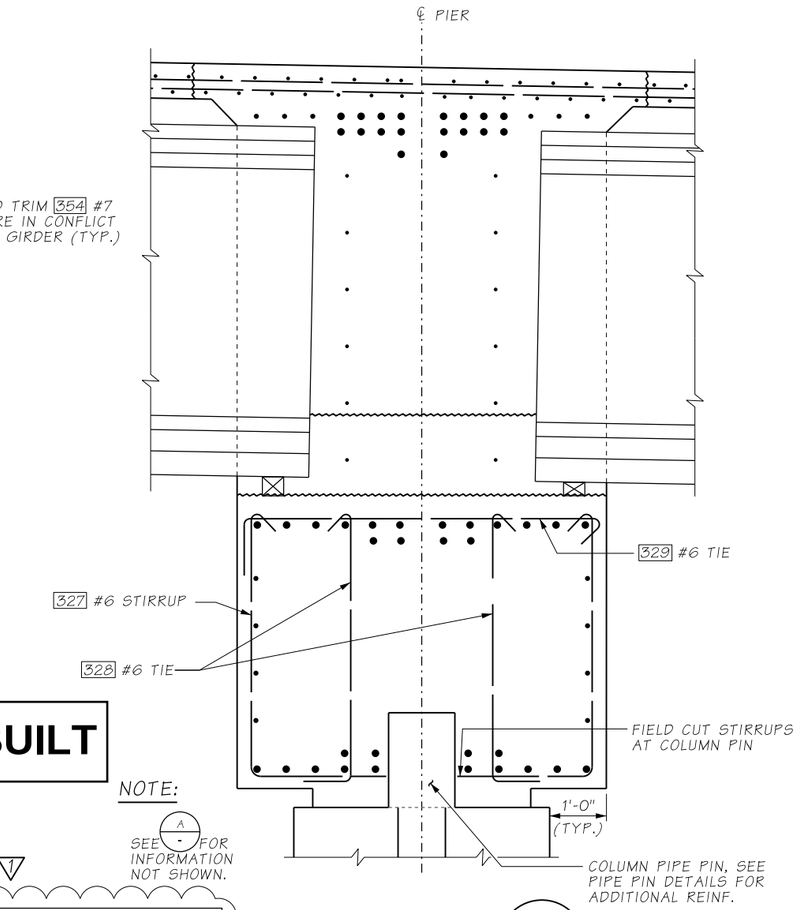

NOTE:

SEE A FOR INFORMATION NOT SHOWN.

SECTION C
AT COLUMNS (AT GIRDERS SHOWN, BETWEEN GIRDERS SIMILAR)
BB019

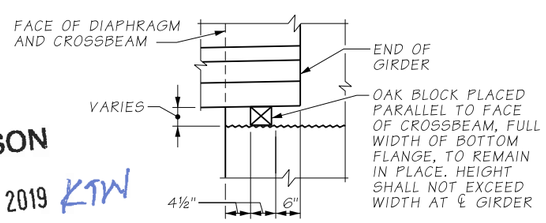

OAK BLOCK DETAIL

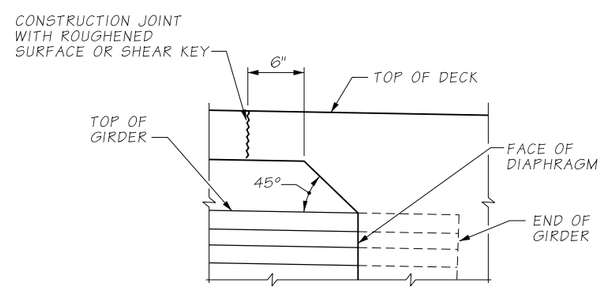

DETAIL 1
REINFORCING NOT SHOWN FOR CLARITY

1

TOP OF OAK BLOCK ELEVATIONS

SPAN 2 GIRDERS		SPAN 3 GIRDERS	
GIRDER	ELEVATION	GIRDER	ELEVATION
--	--	3A	296.93
2A	297.44	3B	297.32
2B	297.64	3C	297.53
2C	297.84	3D	297.73
2D	297.93	3E	297.82
2E	297.73	3F	297.62
2F	297.53	3G	297.42
2G	297.33	3H	297.22
--	--	3I	296.63
--	--	3J	296.56
--	--	3K	296.45
--	--	3L	296.59
--	--	3M	296.46

NOTES:

1. GIRDERS SHALL BE HELD RIGIDLY IN PLACE UNTIL AFTER DIAPHRAGMS ARE PLACED.
2. CUT/RELEASE GIRDER TEMPORARY STRANDS BEFORE CASTING DIAPHRAGM AND BRIDGE DECK. SEE TEMPORARY STRAND CUTTING SEQUENCE.
3. EXTENDED STRANDS AND GIRDER REINFORCING NOT SHOWN FOR CLARITY.
4. LONGITUDINAL DIMENSIONS ARE NORMAL TO ℄ PIER.
5. FOR CONCRETE PLACEMENT PROCEDURE SEE "SUPERSTRUCTURE CONSTRUCTION SEQUENCE" SHEET.

ATKINSON
MAY 03 2019 KTW
RELEASED FOR CONSTRUCTION

FILE NAME	D:\ICS_workdir\26462\20633_721\PS_BB021.dgn					
TIME	7:19:31 PM				REGION NO. 10	STATE WASH	FED.AID PROJ.NO.
DATE	4/28/2019				JOB NUMBER	
PLOTTED BY	USLAS0-APP064$					
DESIGNED BY	K. BICHICH					
ENTERED BY	R. REISER	REV 1 - RFI0082	05/03/2019			
CHECKED BY	G. CALLAHAN	REV 0 - RELEASED FOR CONSTRUCTION	10/23/2018		CONTRACT NO. C9133	LOCATION NO.
PROJ. ENGR.	C. MEADE	REV A - FINAL REVIEW	9/28/2018			
REGIONAL ADM.	J. WYNANDS	REVISION	DATE	BY		

CORY J. CAYWOOD, STATE OF WASHINGTON, 38755, STRUCTURAL ENGINEER, PROFESSIONAL ENGINEER
5/2/19
DATE
P.E. STAMP BOX

DATE
P.E. STAMP BOX

Washington State Department of Transportation

ATKINSON / JACOBS CONSTRUCTION

I-5
STEILACOOM-DUPONT RD TO THORNE LN CORRIDOR IMPROVEMENTS
MP 120.01 TO MP 124.45
BERKELEY OVERPASS

PIER 3 CROSS BEAM DETAILS (1 OF 2)

PLAN REF NO BB021

SHEET 1212 OF 1456 SHEETS

AS-BUILT

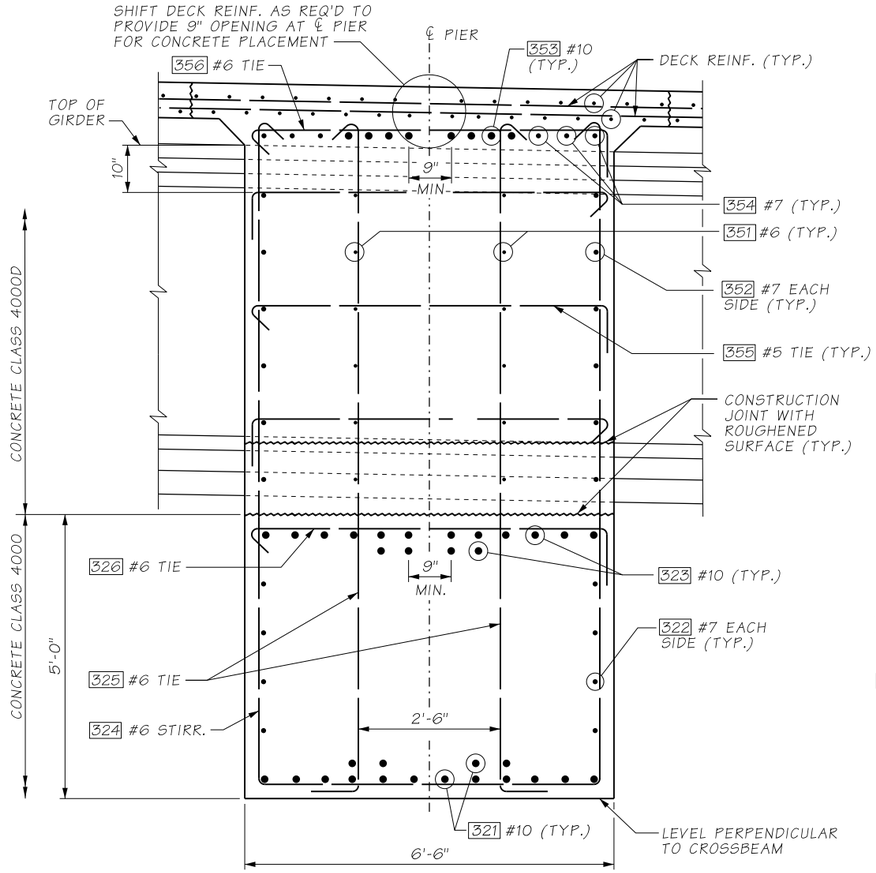

SECTION D / BB020
BETWEEN GIRDERS

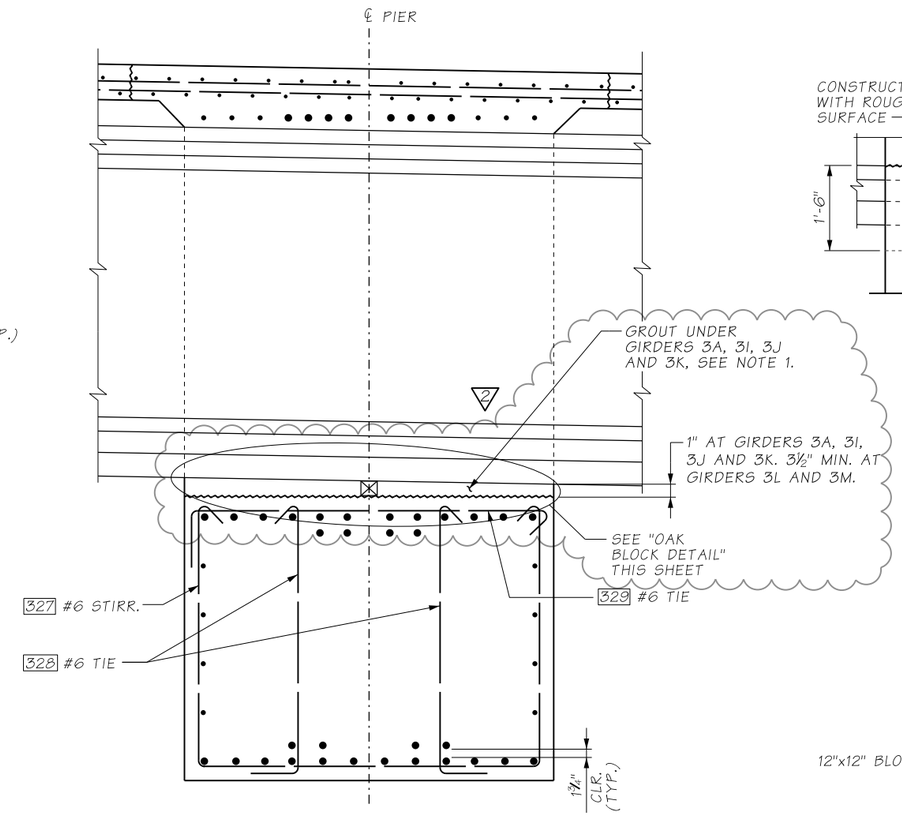

NOTE:

SEE D - FOR INFORMATION NOT SHOWN.

SECTION E / BB020
AT GIRDERS

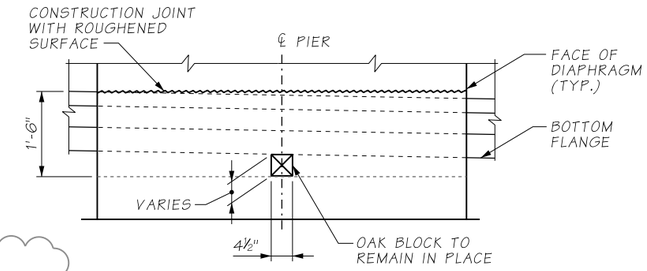

OAK BLOCK DETAIL

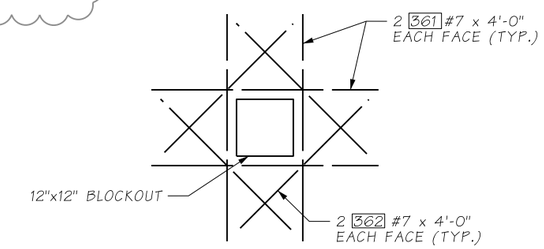

ADDITIONAL REINFORCEMENT AROUND BLOCKOUT

2

NOTES:

1. FOR GIRDERS 3A, 3I, 3J, AND 3K, FILL GAP BETWEEN BOTTOM OF GIRDER AND TOP OF LOWER CROSS BEAM WITH FLOWABLE GROUT. GROUT SHALL BE SIKAGROUT-212 AND PLACED IN ACCORDANCE WITH MANUFACTURER'S WRITTEN INSTRUCTIONS. TAKE SPECIAL CARE TO ENSURE ENTIRE GAP IS FILLED WITH GROUT. MINIMIZE TIME BETWEEN POURING THE GROUT AND PLACING THE NEXT STAGE OF THE CROSS BEAM TO LOCK IN THE GIRDER BOTTOM FLANGES. MAXIMUM TIME BETWEEN GROUTING AND CONCRETE POUR SHALL BE 3 DAYS.

ATKINSON
MAY 03 2019 KTW
RELEASED FOR CONSTRUCTION

FILE NAME	D:\ICS_workdir\26606\20633_1215\PS_BB022.dgn						
TIME	1:24:54 PM				REGION NO. 10	STATE WASH	FED.AID PROJ.NO.
DATE	4/30/2019						
PLOTTED BY	USLAS0-APP064$				JOB NUMBER		
DESIGNED BY	K. BICHICH	REV 2 - RFI0082	05/03/2019				
ENTERED BY	R. REISER	REV 1 - RFI 0044	3/04/2019				
CHECKED BY	G. CALLAHAN	REV 0 - RELEASED FOR CONSTRUCTION	10/23/2018		CONTRACT NO. C9133		LOCATION NO.
PROJ. ENGR.	C. MEADE	REV A - FINAL REVIEW	9/28/2018				
REGIONAL ADM.	J. WYNANDS	REVISION	DATE	BY			

CORY J. CAYWOOD, STATE OF WASHINGTON, 38759, STRUCTURAL ENGINEER, PROFESSIONAL ENGINEER
5/2/19
DATE
P.E. STAMP BOX

DATE
P.E. STAMP BOX

Washington State Department of Transportation

ATKINSON / JACOBS CONSTRUCTION

I-5
STEILACOOM-DUPONT RD TO THORNE LN
CORRIDOR IMPROVEMENTS
MP 120.01 TO MP 124.45
BERKELEY OVERPASS

PIER 3 CROSS BEAM DETAILS (2 OF 2)

PLAN REF NO BB022

SHEET 1213 OF 1456 SHEETS

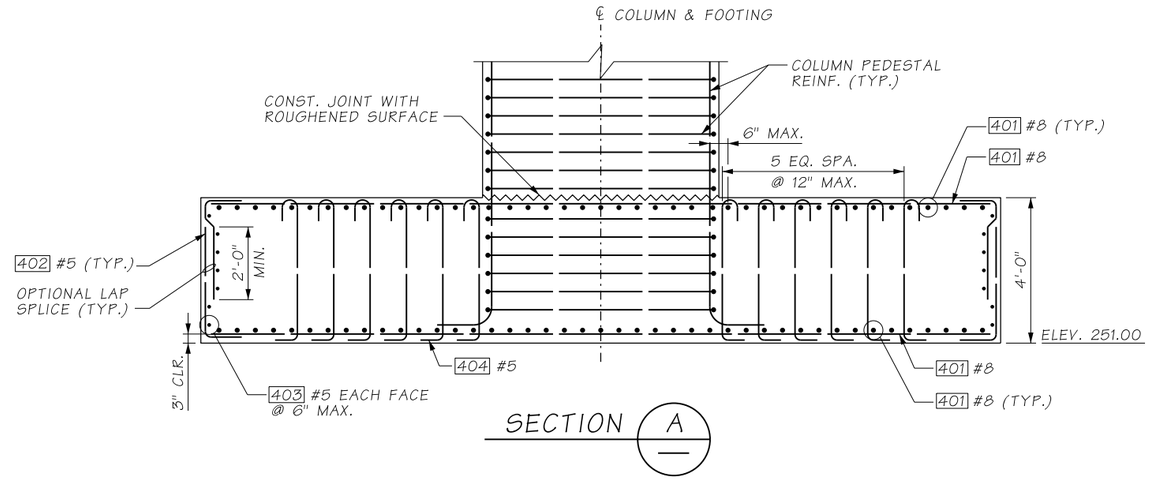

SECTION A

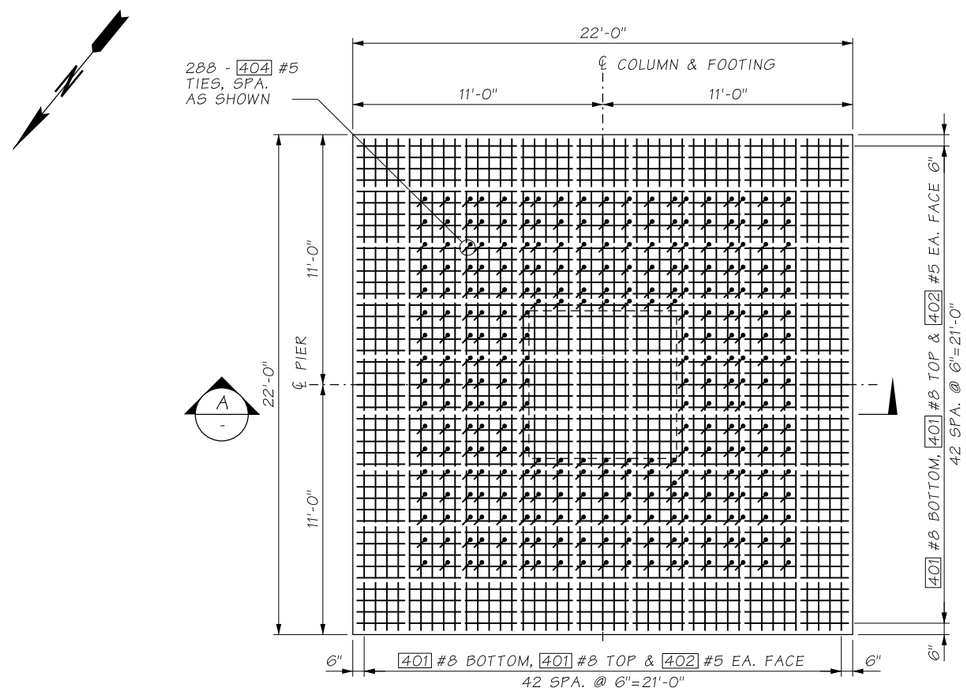

PLAN

FOOTINGS A, B, C & D

AS-BUILT

ATKINSON

OCT 24 2018

RELEASED FOR CONSTRUCTION

MRD.

FILE NAME	D:\ICS_workdir\13523\20633_1192\PS_BB023.dgn				REGION NO. 10	STATE WASH	FED.AID PROJ.NO.
TIME	2:42:06 PM						
DATE	10/22/2018						
PLOTTED BY	USLAS0-APP064$				JOB NUMBER		
DESIGNED BY	G. CALLAHAN						
ENTERED BY	R. REISER						
CHECKED BY	A. FONG	REV 0 - RELEASED FOR CONSTRUCTION	10/23/2018		CONTRACT NO. C8811		LOCATION NO.
PROJ. ENGR.	C. MEADE	REV A - FINAL REVIEW	9/28/2018				
REGIONAL ADM.	J. WYNANDS	REVISION	DATE	BY			

CORY J. CAYWOOD, STATE OF WASHINGTON, 38758, STRUCTURAL ENGINEER, PROFESSIONAL ENGINEER — 10/24/18 — DATE — P.E. STAMP BOX

DATE — P.E. STAMP BOX

Washington State Department of Transportation

ATKINSON CONSTRUCTION / JACOBS

I-5
STEILACOOM-DUPONT RD TO THORNE LN
CORRIDOR IMPROVEMENTS
MP 120.01 TO MP 124.45
BERKELEY OVERPASS

PIER 4 FOOTINGS

PLAN REF NO BB023

SHEET 1214 OF 1456 SHEETS

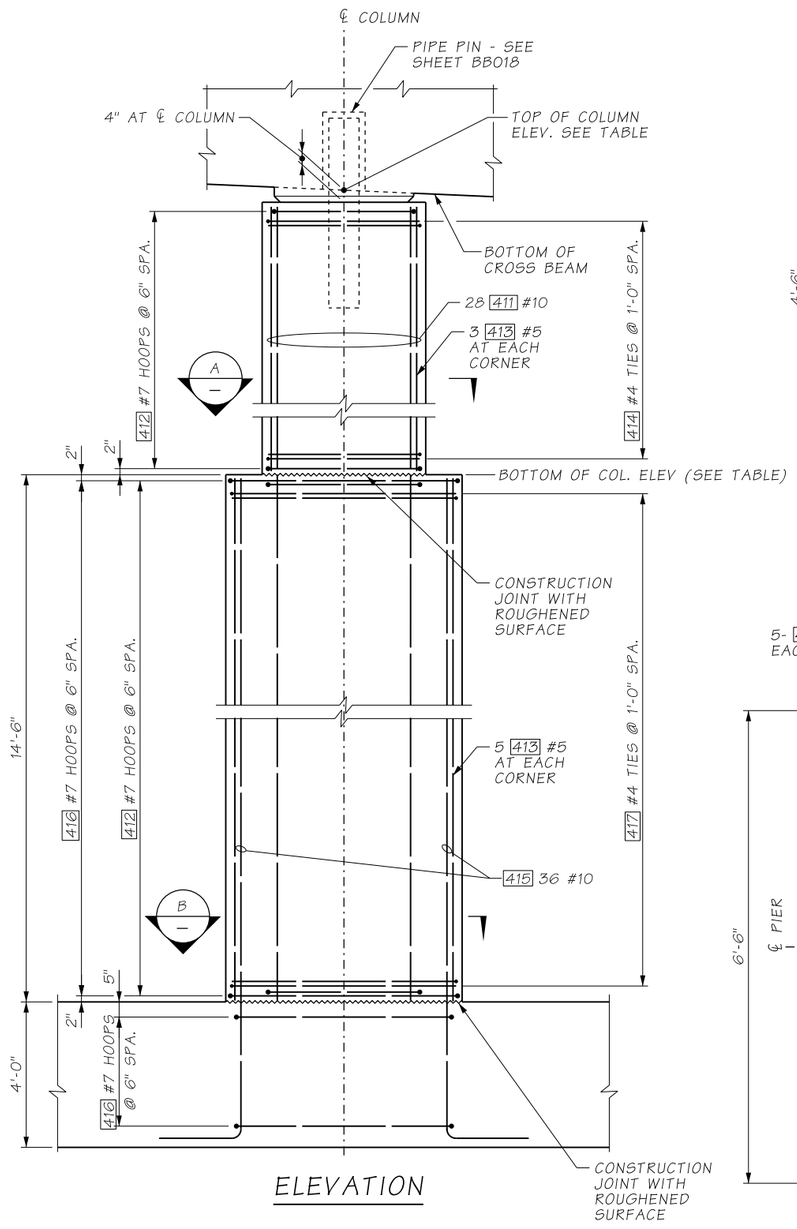

ELEVATION

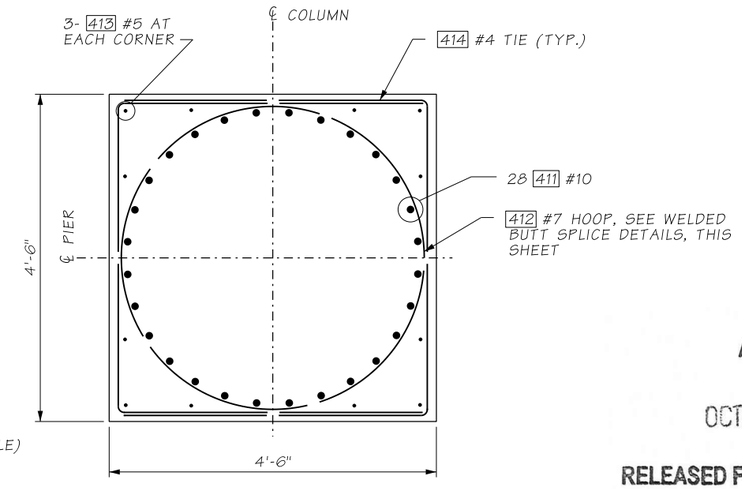

SECTION A

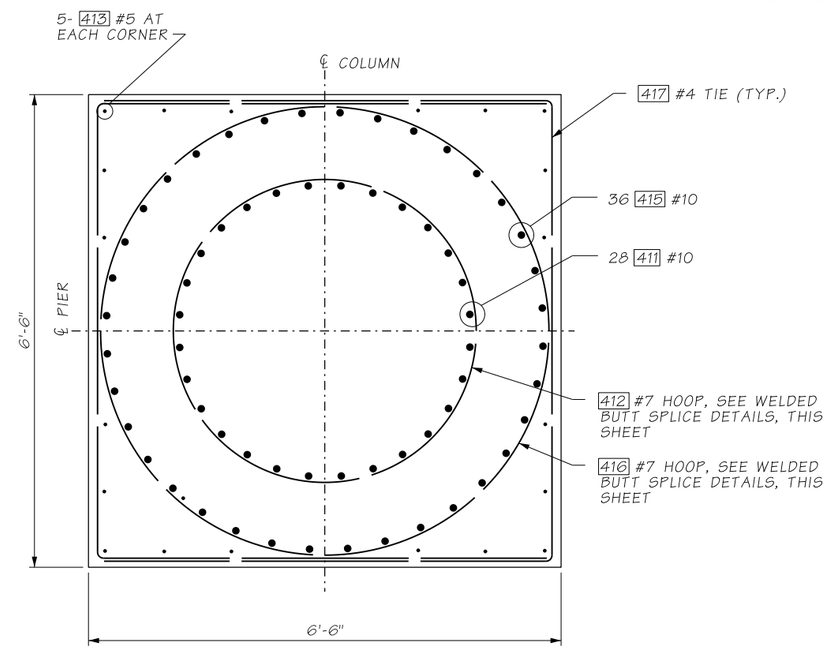

SECTION B

ATKINSON

OCT 24 2018

RELEASED FOR CONSTRUCTION

MRD.

NOTES:

1. NO WELDING OF HOOPS IS PERMITTED AFTER THE COLUMN CAGE IS ASSEMBLED. HOOPS SHALL BE SHOP WELDED AND THEN ASSEMBLED AROUND THE COLUMN LONGITUDINAL STEEL.
2. ALL HOOPS SHALL BE WELDED IN ACCORDANCE WITH THE WELDED BUTT SPLICE DETAILS ON THIS SHEET.
3. STAGGER WELDED BUTT SPLICES AROUND THE COLUMN A MINIMUM DISTANCE OF ⅓ OF THE HOOP CIRCUMFERENCE.

AS-BUILT

COLUMN GEOMETRY

PIER NO.	COLUMN	TOP OF COL. ELEV. (FT)	BOT. OF COL. ELEV. (FT)
4	A	289.47	269.50
	B	289.87	269.50
	C	289.33	269.50
	D	288.79	269.50

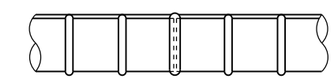

RESISTANCE BUTT JOINT DETAIL

SEE SPECIAL PROVISIONS FOR APPROVAL AND TESTING REQUIREMENTS.

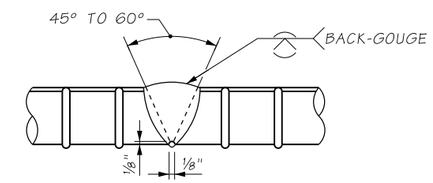

SINGLE V-GROOVE WELD

AWS D1.4 FIGURE 3.2(A)

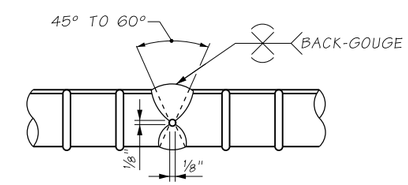

DOUBLE V-GROOVE WELD

AWS D1.4 FIGURE 3.2(B)

MANUAL DIRECT BUTT JOINT DETAILS

ALL BACKING SHALL BE REMOVED. SEE SPECIAL PROVISIONS FOR RT TESTING FREQUENCY.

WELDED BUTT SPLICE DETAILS

FILE NAME	D:\ICS_workdir\13735\20633_1185\PS_BB024.dgn				REGION NO. 10	STATE WASH	FED.AID PROJ.NO.
TIME	8:32:46 AM				JOB NUMBER		
DATE	10/24/2018						
PLOTTED BY	USLAS0-APP064$						
DESIGNED BY	G. CALLAHAN						
ENTERED BY	R. REISER						
CHECKED BY	A. FONG	REV 0 - RELEASED FOR CONSTRUCTION	10/23/2018		CONTRACT NO. C8811		LOCATION NO.
PROJ. ENGR.	C. MEADE	REV A - FINAL REVIEW	9/28/2018				
REGIONAL ADM.	J. WYNANDS	REVISION	DATE	BY			

CORY J. CAYWOOD, STATE OF WASHINGTON, 38139, STRUCTURAL ENGINEER, PROFESSIONAL ENGINEER — 10/24/18 — DATE — P.E. STAMP BOX

DATE — P.E. STAMP BOX

Washington State Department of Transportation

ATKINSON CONSTRUCTION / JACOBS

I-5
STEILACOOM-DUPONT RD TO THORNE LN CORRIDOR IMPROVEMENTS
MP 120.01 TO MP 124.45
BERKELEY OVERPASS

PIER 4
COLUMN DETAILS

PLAN REF NO BB024

SHEET 1215 OF 1456 SHEETS

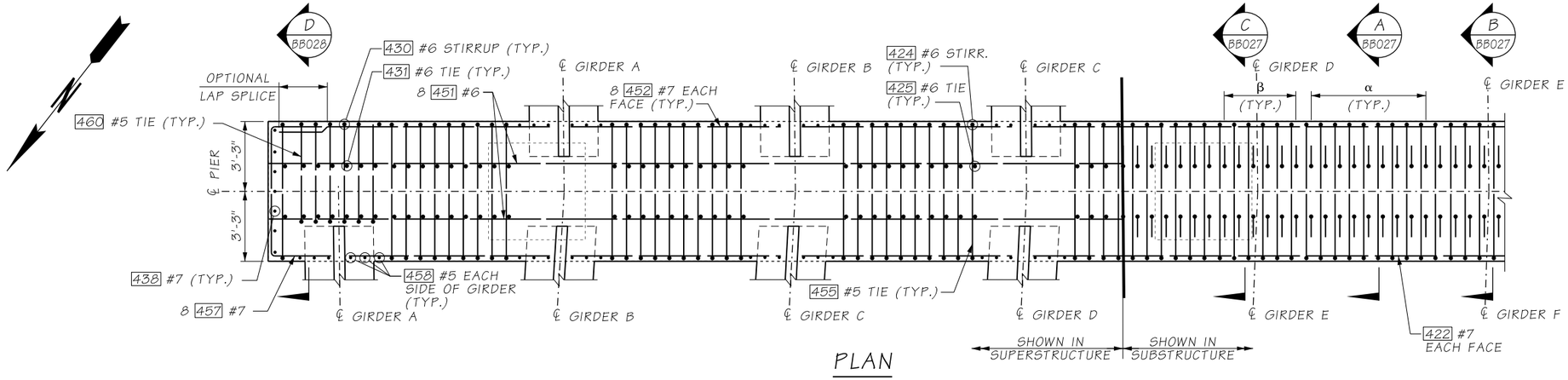

PLAN

NOTES:

1. MINIMUM LAP SPLICES FOR CROSSBEAM ARE AS FOLLOWS, UNLESS NOTED OTHERWISE:
   #5= 2'-0"
   #6= 2'-6"
   #7= 2'-10"
   #8= 3'-2"
   #9= 3'-8"
   #10= 6'-9"

AS-BUILT

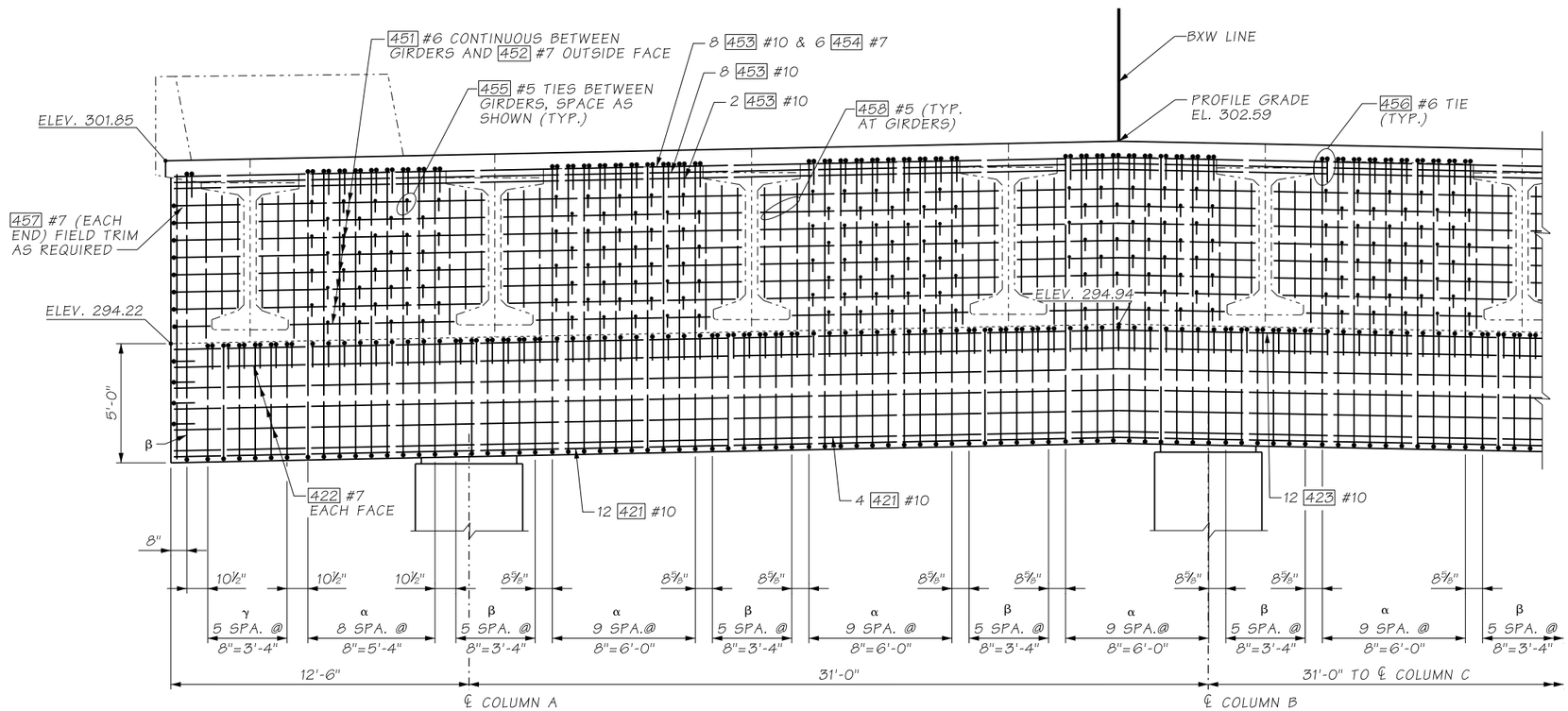

ELEVATION

DECK ELEVATIONS AND DIMENSIONS ARE MEASURED AT ℄ OF PIER

ATKINSON

OCT 24 2018

RELEASED FOR CONSTRUCTION

MRD.

STIRRUP / TIE SETS		
SET	STIRRUPS/TIES	NOTE
α	2 424 #6 STIRRUP 425 #6 TIE 426 #6 TIE	BETWEEN/OUTSIDE GIRDERS
β	2 427 #6 STIRRUP 428 #6 TIE 429 #6 TIE	UNDER GIRDERS
γ	2 430 #6 STIRRUP 431 #6 TIE 432 #6 TIE	SPAN 3 GIRDER TERMINATION

FILE NAME	D:\ICS_workdir\13523\20633_1183\PS_BB025.dgn
TIME	2:42:06 PM
DATE	10/22/2018
PLOTTED BY	USLAS0-APP064$
DESIGNED BY	G. CALLAHAN
ENTERED BY	R. REISER
CHECKED BY	A. FONG
PROJ. ENGR.	C. MEADE
REGIONAL ADM.	J. WYNANDS

REVISION	DATE	BY
REV 0 - RELEASED FOR CONSTRUCTION	10/23/2018	
REV A - FINAL REVIEW	9/28/2018	

REGION NO.	STATE	FED.AID PROJ.NO.
10	WASH	
JOB NUMBER		
CONTRACT NO. C8811		LOCATION NO.

CORY J. CAYWOOD, STATE OF WASHINGTON, 38755, STRUCTURAL ENGINEER, PROFESSIONAL ENGINEER — 10/24/18 — DATE — P.E. STAMP BOX

P.E. STAMP BOX — DATE

Washington State Department of Transportation

ATKINSON / JACOBS CONSTRUCTION

I-5
STEILACOOM-DUPONT RD TO THORNE LN
CORRIDOR IMPROVEMENTS
MP 120.01 TO MP 124.45
BERKELEY OVERPASS

PIER 4 CROSS BEAM
PLAN AND ELEVATION (1 OF 2)

PLAN REF NO BB025

SHEET 1216 OF 1456 SHEETS

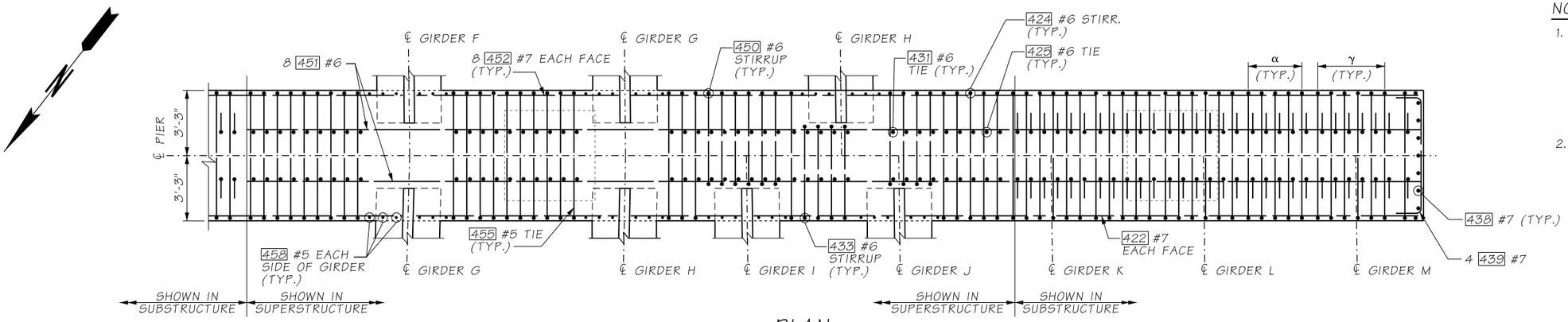

PLAN

NOTES:

1. MINIMUM LAP SPLICES FOR CROSSBEAM ARE AS FOLLOWS:
   #5= 2'-0"
   #6= 2'-6"
   #7= 2'-10"
   #8= 3'-2"
   #9= 3'-8"
   #10= 6'-9"
2. FOR ADDITIONAL REINFORCEMENT AROUND BLOCKOUT, SEE SHEET BB028.

AS-BUILT

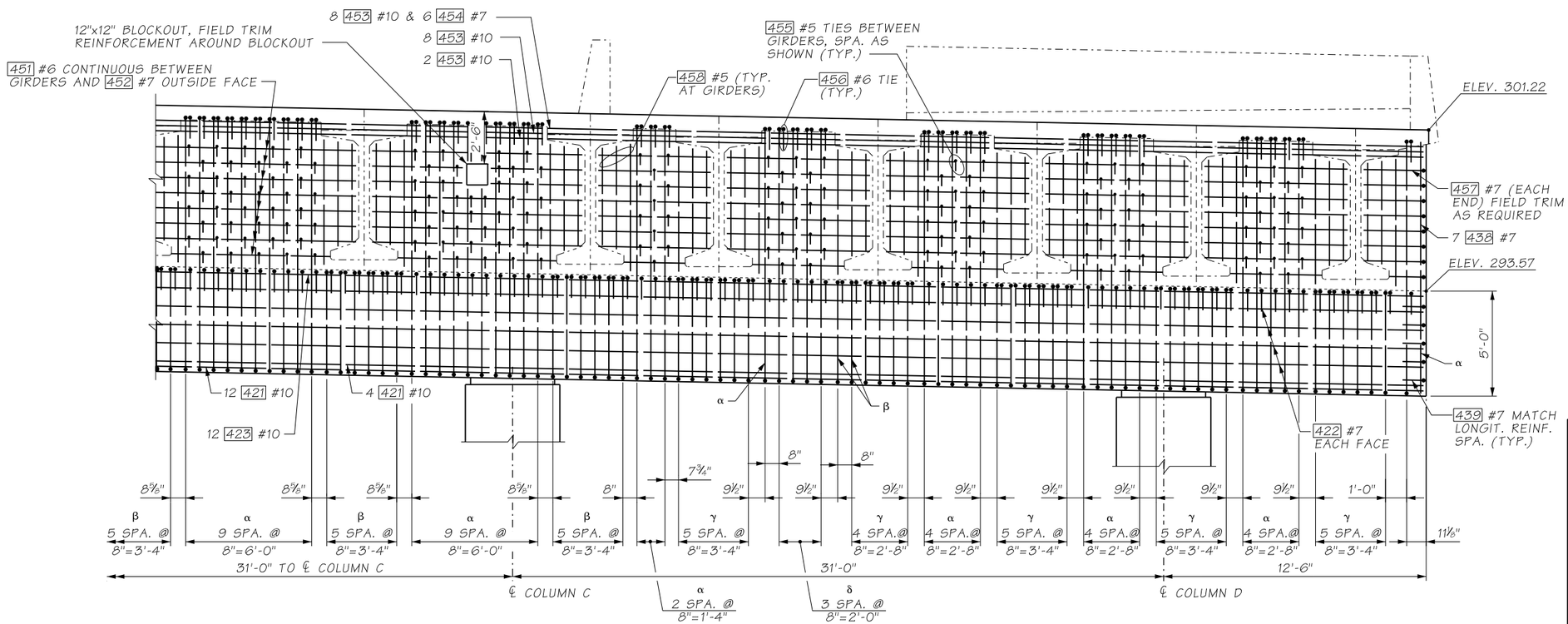

ELEVATION

DECK ELEVATIONS AND DIMENSIONS ARE MEASURED AT ℄ OF PIER

ATKINSON

OCT 24 2018

RELEASED FOR CONSTRUCTION

STIRRUP / TIE SETS		
SET	STIRRUPS/TIES	NOTE
α	2 424 #6 STIRRUP 425 #6 TIE 426 #6 TIE	BETWEEN/OUTSIDE GIRDERS
β	2 427 #6 STIRRUP 428 #6 TIE 429 #6 TIE	UNDER GIRDERS
γ	2 430 #6 STIRRUP 431 #6 TIE 432 #6 TIE	SPAN 3 GIRDER TERMINATION
δ	2 433 #6 STIRRUP 434 #6 TIE 435 #6 TIE	SPAN 4 GIRDER TERMINATION

FILE NAME	D:\ICS_workdir\13523\20633_1186\PS_BB026.dgn
TIME	2:41:57 PM
DATE	10/22/2018
PLOTTED BY	USLAS0-APP064$
DESIGNED BY	G. CALLAHAN
ENTERED BY	R. REISER
CHECKED BY	A. FONG
PROJ. ENGR.	C. MEADE
REGIONAL ADM.	J. WYNANDS

REVISION	DATE	BY
REV 0 - RELEASED FOR CONSTRUCTION	10/23/2018	
REV A - FINAL REVIEW	9/28/2018	

REGION NO.	STATE	FED.AID PROJ.NO.
10	WASH	
JOB NUMBER		
CONTRACT NO.		LOCATION NO.
C8811		

P.E. STAMP BOX — DATE 10/24/18

P.E. STAMP BOX — DATE

Washington State Department of Transportation

ATKINSON / JACOBS CONSTRUCTION

I-5
STEILACOOM-DUPONT RD TO THORNE LN
CORRIDOR IMPROVEMENTS
MP 120.01 TO MP 124.45
BERKELEY OVERPASS

PIER 4 CROSS BEAM
PLAN AND ELEVATION (2 OF 2)

PLAN REF NO BB026

SHEET 1217 OF 1456 SHEETS

AS-BUILT

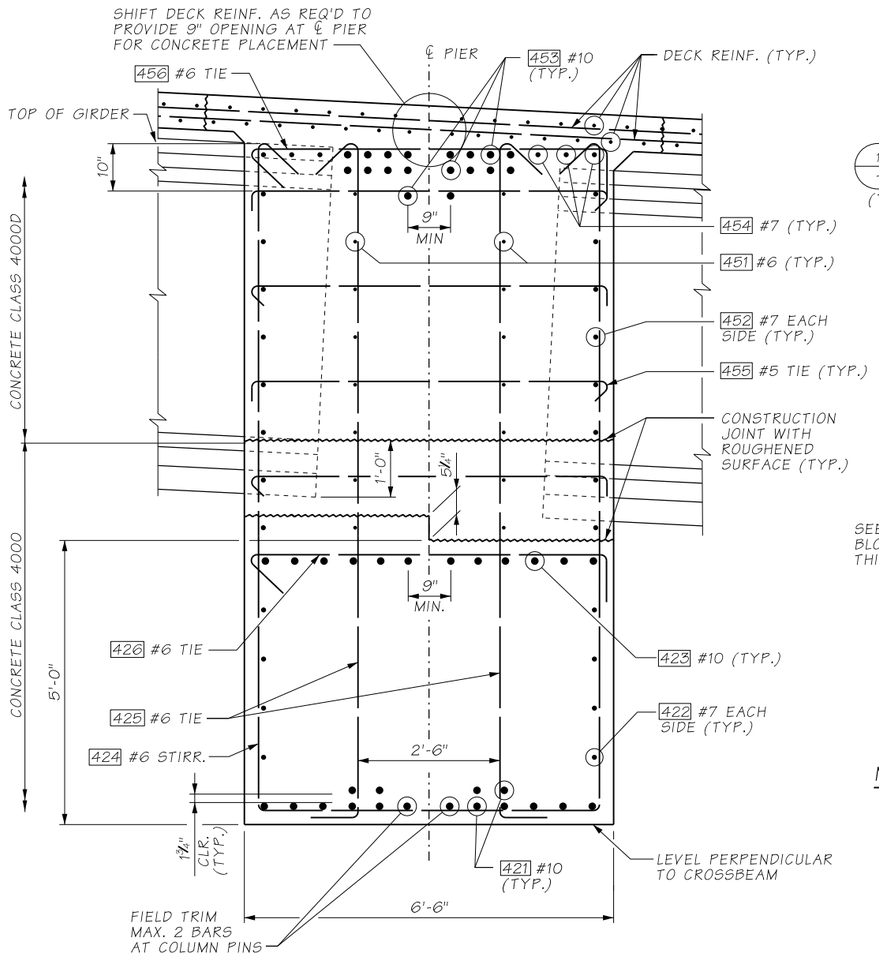

SECTION A / BB025
BETWEEN GIRDERS

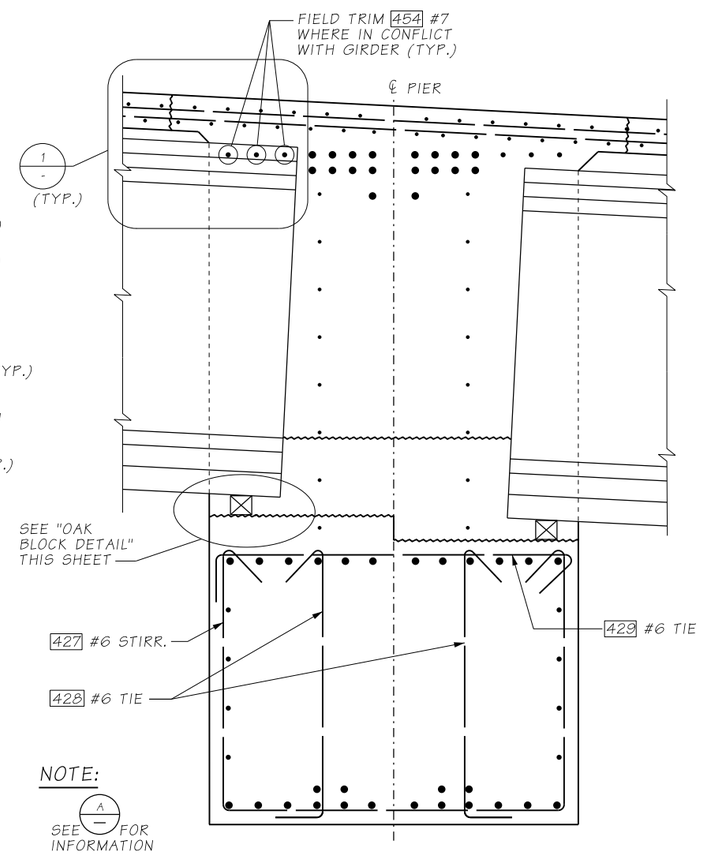

NOTE:
SEE A FOR INFORMATION NOT SHOWN.

SECTION B / BB025
AT GIRDERS

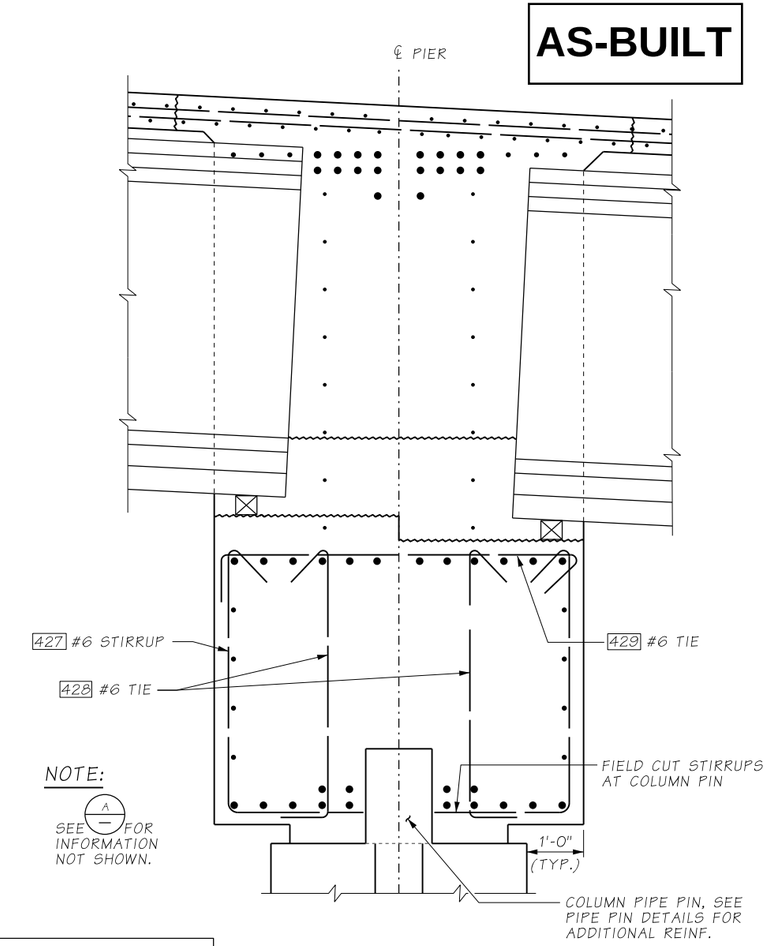

NOTE:
SEE A FOR INFORMATION NOT SHOWN.

SECTION C / BB025
AT COLUMNS (AT GIRDERS SHOWN, BETWEEN GIRDERS SIMILAR)

TOP OF OAK BLOCK ELEVATIONS

GIRDER	BACK STATION	AHEAD STATION
A	1 295.10	294.83
B	295.30	295.03
C	295.50	295.22
D	295.70	295.20
E	295.68	295.01
F	295.49	294.82
G	295.30	294.63
H	295.11	294.45
I	294.86	-
J	294.73	-
K	294.59	-
L	294.46	-
M	294.33	-

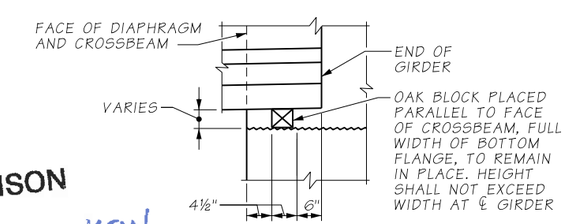

OAK BLOCK DETAIL

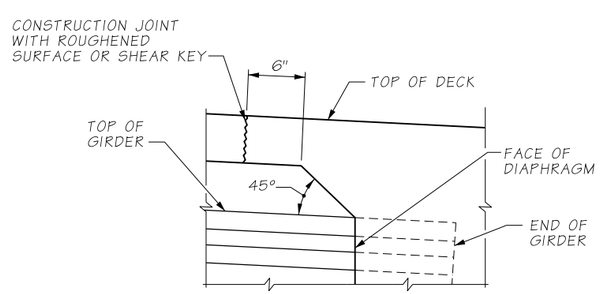

DETAIL 1
REINFORCING NOT SHOWN FOR CLARITY

NOTES:

1. GIRDERS SHALL BE HELD RIGIDLY IN PLACE UNTIL AFTER DIAPHRAGMS ARE PLACED.
2. CUT/RELEASE GIRDER TEMPORARY STRANDS BEFORE CASTING DIAPHRAGM AND BRIDGE DECK. SEE TEMPORARY STRAND CUTTING SEQUENCE.
3. EXTENDED STRANDS AND GIRDER REINFORCING NOT SHOWN FOR CLARITY.
4. LONGITUDINAL DIMENSIONS ARE NORMAL TO ℄ PIER.
5. FOR CONCRETE PLACEMENT PROCEDURE SEE "SUPERSTRUCTURE CONSTRUCTION SEQUENCE" SHEET.

ATKINSON
MAY 03 2019 KTW
RELEASED FOR CONSTRUCTION

FILE NAME	D:\ICS_workdir\26473\20633_1121\PS_BB027.dgn				REGION NO.	STATE	FED.AID PROJ.NO.
TIME	9:11:26 AM				10	WASH	
DATE	4/29/2019				JOB NUMBER		
PLOTTED BY	USLAS0-APP064$						
DESIGNED BY	G. CALLAHAN						
ENTERED BY	R. REISER	REV 1 - RFI0082	05/03/2019				
CHECKED BY	A. FONG	REV 0 - RELEASED FOR CONSTRUCTION	10/23/2018		CONTRACT NO.		LOCATION NO.
PROJ. ENGR.	C. MEADE	REV A - FINAL REVIEW	9/28/2018		C9133		
REGIONAL ADM.	J. WYNANDS	REVISION	DATE	BY			

CORY J. CAYWOOD, STATE OF WASHINGTON, 38759, STRUCTURAL ENGINEER, PROFESSIONAL ENGINEER
5/2/19
DATE
P.E. STAMP BOX

DATE
P.E. STAMP BOX

Washington State Department of Transportation
ATKINSON / JACOBS CONSTRUCTION

I-5
STEILACOOM-DUPONT RD TO THORNE LN CORRIDOR IMPROVEMENTS
MP 120.01 TO MP 124.45
BERKELEY OVERPASS

PIER 4 CROSS BEAM DETAILS (1 OF 2)

PLAN REF NO BB027
SHEET 1218 OF 1456 SHEETS

NOTES:

1. TRANSVERSE BARS 430 , 431 & 432 SHOWN FOR SPAN 3 GIRDER TERMINATIONS. TRANSVERSE BARS 433 , 434 & 435 SHALL BE OPPOSITE HAND FOR SPAN 4 GIRDER TERMINATIONS.

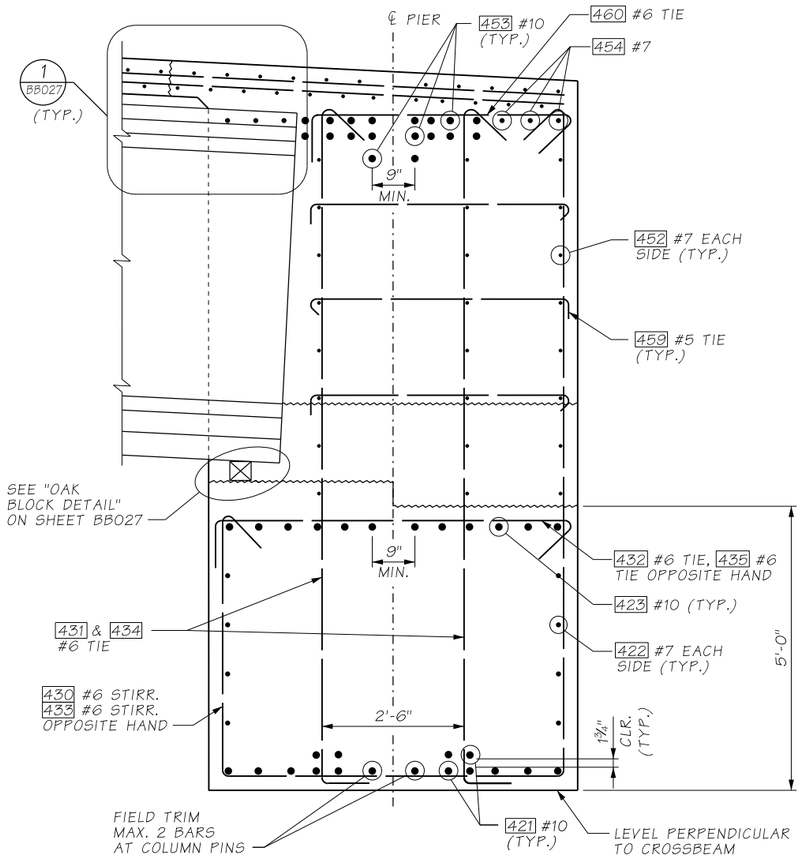

SECTION D BB025
AT GIRDERS

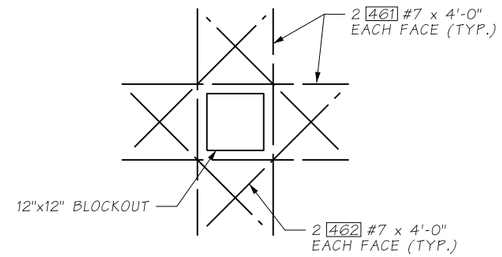

ADDITIONAL REINFORCEMENT AROUND BLOCKOUT

AS-BUILT

ATKINSON

OCT 24 2018

RELEASED FOR CONSTRUCTION

MRD.

FILE NAME	D:\ICS_workdir\13523\20633_1217\PS_BB028.dgn					
TIME	2:41:44 PM				REGION NO. 10	STATE WASH	FED.AID PROJ.NO.
DATE	10/22/2018					
PLOTTED BY	USLAS0-APP064$				JOB NUMBER	
DESIGNED BY	G. CALLAHAN					
ENTERED BY	R. REISER					
CHECKED BY	A. FONG	REV 0 - RELEASED FOR CONSTRUCTION	10/23/2018		CONTRACT NO. C8811	LOCATION NO.
PROJ. ENGR.	C. MEADE	REV A - FINAL REVIEW	9/28/2018			
REGIONAL ADM.	J. WYNANDS	REVISION	DATE	BY		

CORY J. CATWOOD, STATE OF WASHINGTON, 38139, STRUCTURAL ENGINEER, PROFESSIONAL ENGINEER
10/24/18
DATE
P.E. STAMP BOX

DATE
P.E. STAMP BOX

Washington State Department of Transportation

ATKINSON / JACOBS CONSTRUCTION

I-5
STEILACOOM-DUPONT RD TO THORNE LN
CORRIDOR IMPROVEMENTS
MP 120.01 TO MP 124.45
BERKELEY OVERPASS

PIER 4 CROSS BEAM DETAILS (2 OF 2)

PLAN REF NO BB028

SHEET 1219 OF 1456 SHEETS

AS-BUILT

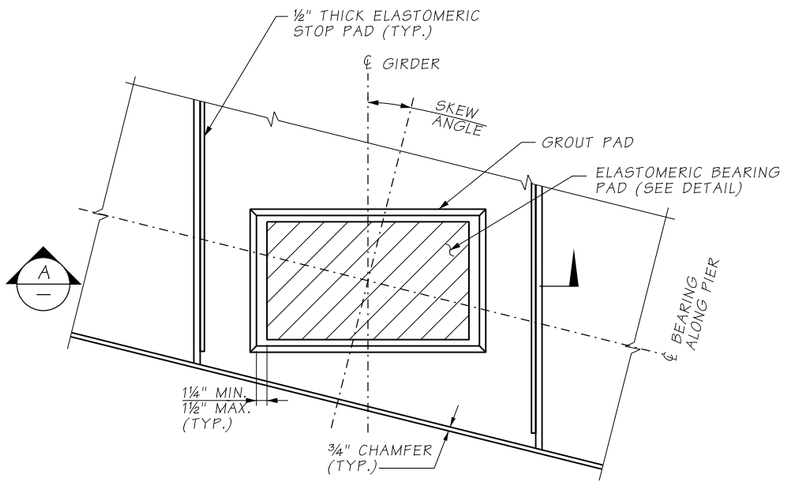

GROUT PAD DETAIL

GIRDER NOT SHOWN FOR CLARITY

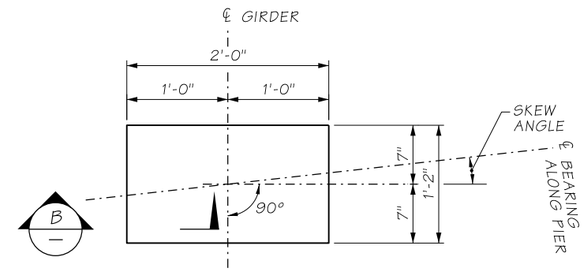

ELASTOMERIC BEARING PAD

PIERS 1 AND 5

LAMINATED ELASTOMERIC BEARING PAD

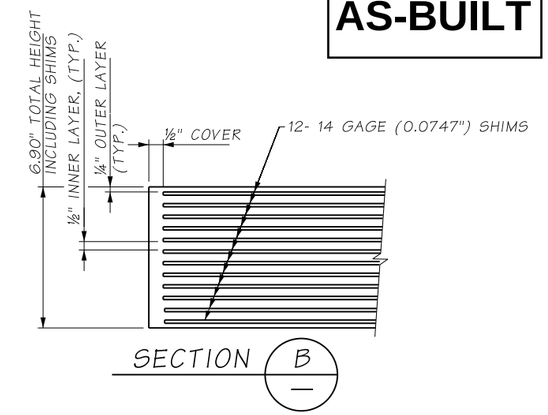

SECTION B —

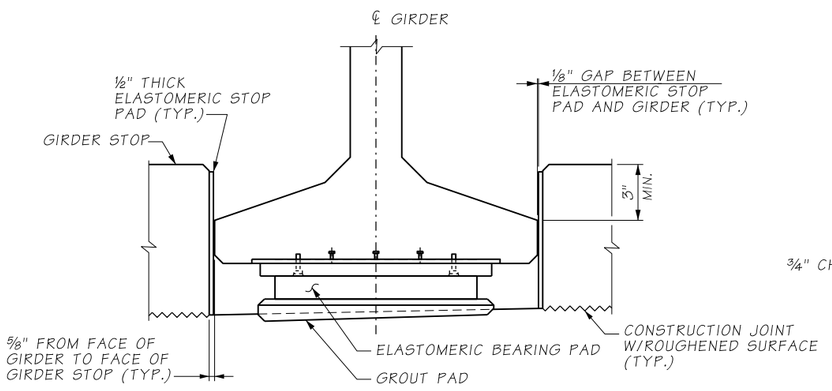

SECTION A —

GUIDEBAR NOT SHOWN FOR CLARITY

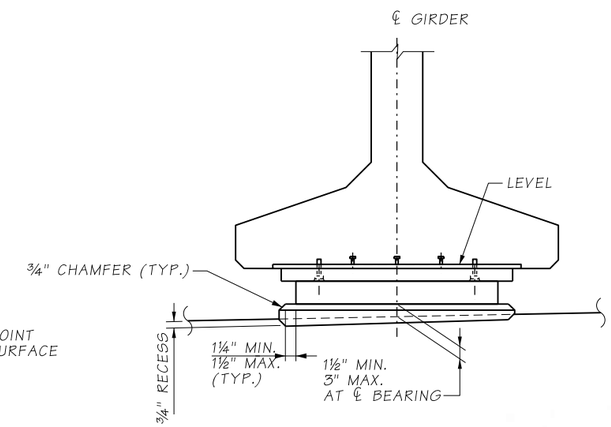

GROUT PAD ELEVATION

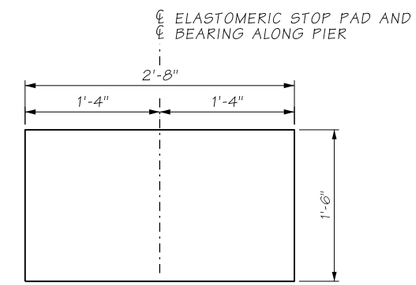

ELASTOMERIC STOP PAD

SHEAR MODULUS= 165 PSI

NOTES:

1. GIRDER STOPS SHALL BE CONSTRUCTED AFTER GIRDER PLACEMENT.
2. THE ELASTOMERIC STOP PADS SHALL BE BONDED TO GIRDER STOPS WITH APPROVED ADHESIVE.

ATKINSON

OCT 24 2018

RELEASED FOR CONSTRUCTION

MRD.

BEARING DESIGN TABLE		
AASHTO METHOD B DESIGN / SERVICE I LIMIT STATE	PIER 1	PIER 5
DEAD LOAD (DL) REACTION	274 KIPS	274 KIPS
LIVE LOAD REACTION (W/O IMPACT)	144 KIPS	144 KIPS
UNLOADED HEIGHT	6.90 IN	6.90 IN
LOADED HEIGHT (DL)	6.82 IN	6.82 IN
SHEAR MODULUS	165 PSI	165 PSI

FILE NAME	D:\ICS_workdir\13523\20633_723\PS_BB029.dgn						
TIME	2:40:49 PM				REGION NO. 10	STATE WASH	FED.AID PROJ.NO.
DATE	10/22/2018				JOB NUMBER		
PLOTTED BY	USLAS0-APP064$						
DESIGNED BY	K. YOUNG						
ENTERED BY	R. REISER						
CHECKED BY	G. CALLAHAN	REV 0 - RELEASED FOR CONSTRUCTION	10/23/2018		CONTRACT NO. C8811		LOCATION NO.
PROJ. ENGR.	C. MEADE	REV A - FINAL REVIEW	9/28/2018				
REGIONAL ADM.	J. WYNANDS	REVISION	DATE	BY			

GARY J. CAYWOOD, STATE OF WASHINGTON, 38795, STRUCTURAL ENGINEER, PROFESSIONAL ENGINEER — 10/24/18 — DATE — P.E. STAMP BOX

P.E. STAMP BOX — DATE

Washington State Department of Transportation

ATKINSON / JACOBS CONSTRUCTION

I-5
STEILACOOM-DUPONT RD TO THORNE LN
CORRIDOR IMPROVEMENTS
MP 120.01 TO MP 124.45
BERKELEY OVERPASS

ELASTOMERIC BEARING DETAILS

PLAN REF NO BB029

SHEET 1220 OF 1456 SHEETS

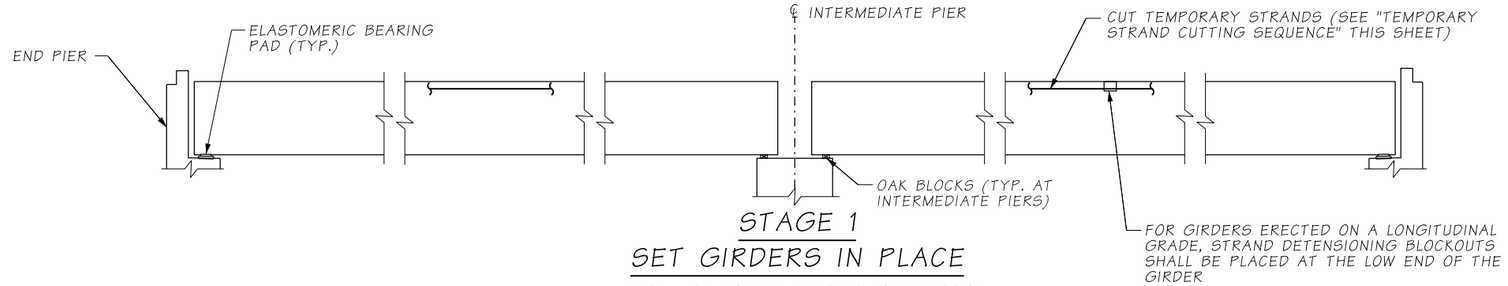

STAGE 1
SET GIRDERS IN PLACE

INSTALL TEMPORARY BRACING FOR ERECTION IN ACCORDANCE WITH STD. SPEC. SECTION 6-02.3(17)F4.

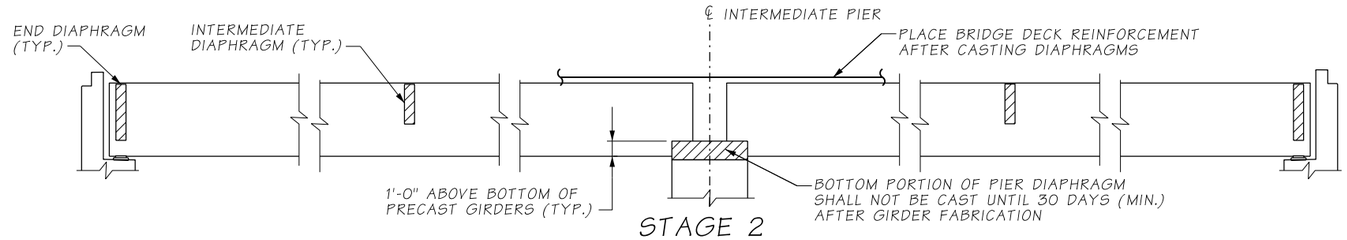

STAGE 2
CAST DIAPHRAGMS AND PLACE BRIDGE DECK REINFORCEMENT

INSTALL TEMPORARY BRACING FOR DIAPHRAGM AND DECK PLACEMENT IN ACCORDANCE WITH STD. SPEC. SECTION 6-02.3(17)F5.

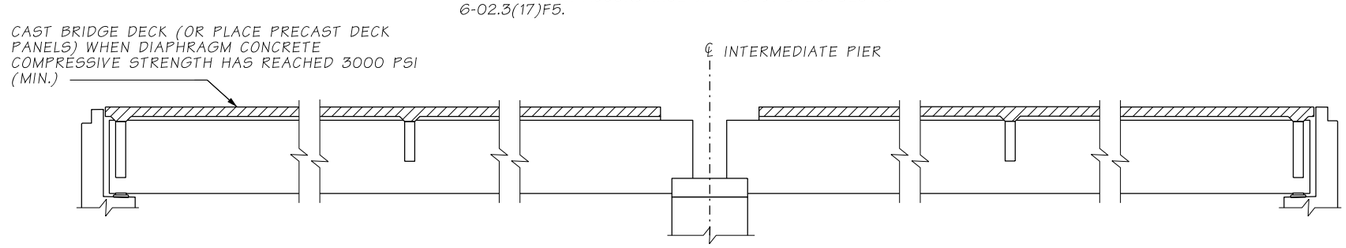

STAGE 3
CAST BRIDGE DECK

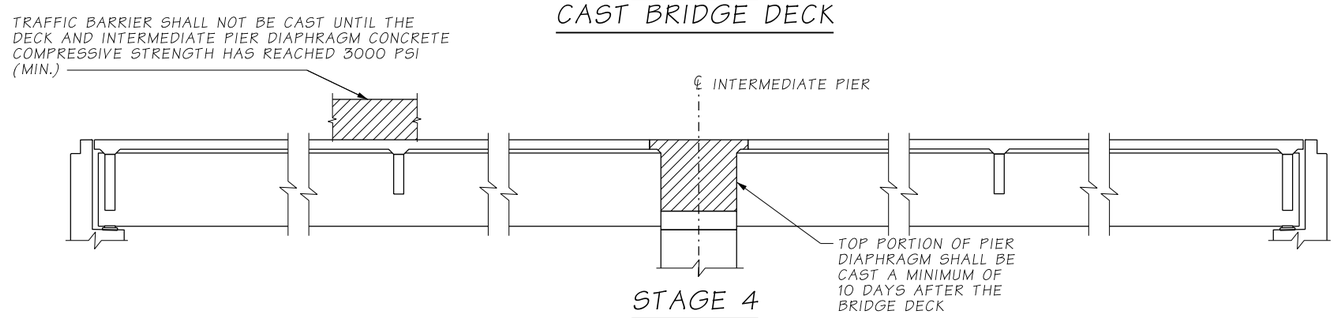

STAGE 4
COMPLETE DIAPHRAGMS

CONSTRUCTION SEQUENCE ~ SUPERSTRUCTURE

TEMPORARY STRAND CUTTING SEQUENCE

AS-BUILT

1. ERECT AND BRACE GIRDERS.
2. JUST PRIOR TO CUTTING THE TEMPORARY STRANDS, REMOVE EXPANDED POLYSTYRENE IN BLOCKOUTS IN TOP FLANGE OF GIRDERS. ONCE THE EXPANDED POLYSTYRENE HAS BEEN REMOVED FROM THE STRAND DETENSIONING BLOCKOUT, PREVENT MOISTURE FROM ENTERING THE BLOCKOUT UNTIL THE TEMPORARY TOP STRAND IS CUT AND THE BLOCKOUT FILLED WITH GROUT.
3. CUT STRANDS IN BLOCKOUTS. STRANDS MAY BE CUT BY USING A CUTTING TORCH AND MOVING THE FLAME BACK AND FORTH OVER THE LENGTH OF EXPOSED STRAND TO LET INDIVIDUAL WIRES BREAK ONE AT A TIME TO LESSEN THE SHOCK TO THE GIRDER. STRANDS SHALL BE RELEASED IN A SYMMETRICAL MANNER ABOUT THE GIRDER CENTERLINE STARTING WITH THOSE NEAREST THE CENTERLINE AND WORKING OUTWARDS. FOR POST-TENSIONED TEMPORARY TOP STRANDS, ACTIVELY RESTRAIN THE STRAND CHUCKS AT THE GIRDER ENDS DURING CUTTING.
4. WITHIN 24 HOURS OF CUTTING THE TEMPORARY STRANDS, FILL THE BLOCKOUTS WITH A GROUT CONFORMING TO STD. SPEC. 9-20.3(2). REMOVE ALL MOISTURE IN BLOCKOUTS PRIOR TO FILLING THEM WITH GROUT.

ATKINSON

OCT 24 2018

RELEASED FOR CONSTRUCTION

MRD.

NOTE:

NO LIVE LOAD SHALL BE ALLOWED ON THE SPANS UNTIL THE COMPRESSIVE STRENGTH OF THE TOP PORTION OF THE PIER DIAPHRAGM HAS REACHED 3000 PSI (MIN.).

FILE NAME	D:\ICS_workdir\13523\20633_724\PS_BB030.dgn						
TIME	2:41:16 PM				REGION NO. 10	STATE WASH	FED.AID PROJ.NO.
DATE	10/22/2018				JOB NUMBER		
PLOTTED BY	USLAS0-APP064$						
DESIGNED BY	A. FONG						
ENTERED BY	R. REISER						
CHECKED BY	S. CHEUNG	REV 0 - RELEASED FOR CONSTRUCTION	10/23/2018		CONTRACT NO. C8811		LOCATION NO.
PROJ. ENGR.	C. MEADE	REV A - FINAL REVIEW	9/28/2018				
REGIONAL ADM.	J. WYNANDS	REVISION	DATE	BY			

CORY J. CAYWOOD, STATE OF WASHINGTON, 38198, STRUCTURAL ENGINEER, PROFESSIONAL ENGINEER — 10/24/18 — DATE — P.E. STAMP BOX

DATE — P.E. STAMP BOX

Washington State Department of Transportation

ATKINSON / JACOBS CONSTRUCTION

I-5
STEILACOOM-DUPONT RD TO THORNE LN CORRIDOR IMPROVEMENTS
MP 120.01 TO MP 124.45
BERKELEY OVERPASS

SUPERSTRUCTURE CONSTRUCTION SEQUENCE

PLAN REF NO BB030

SHEET 1221 OF 1456 SHEETS

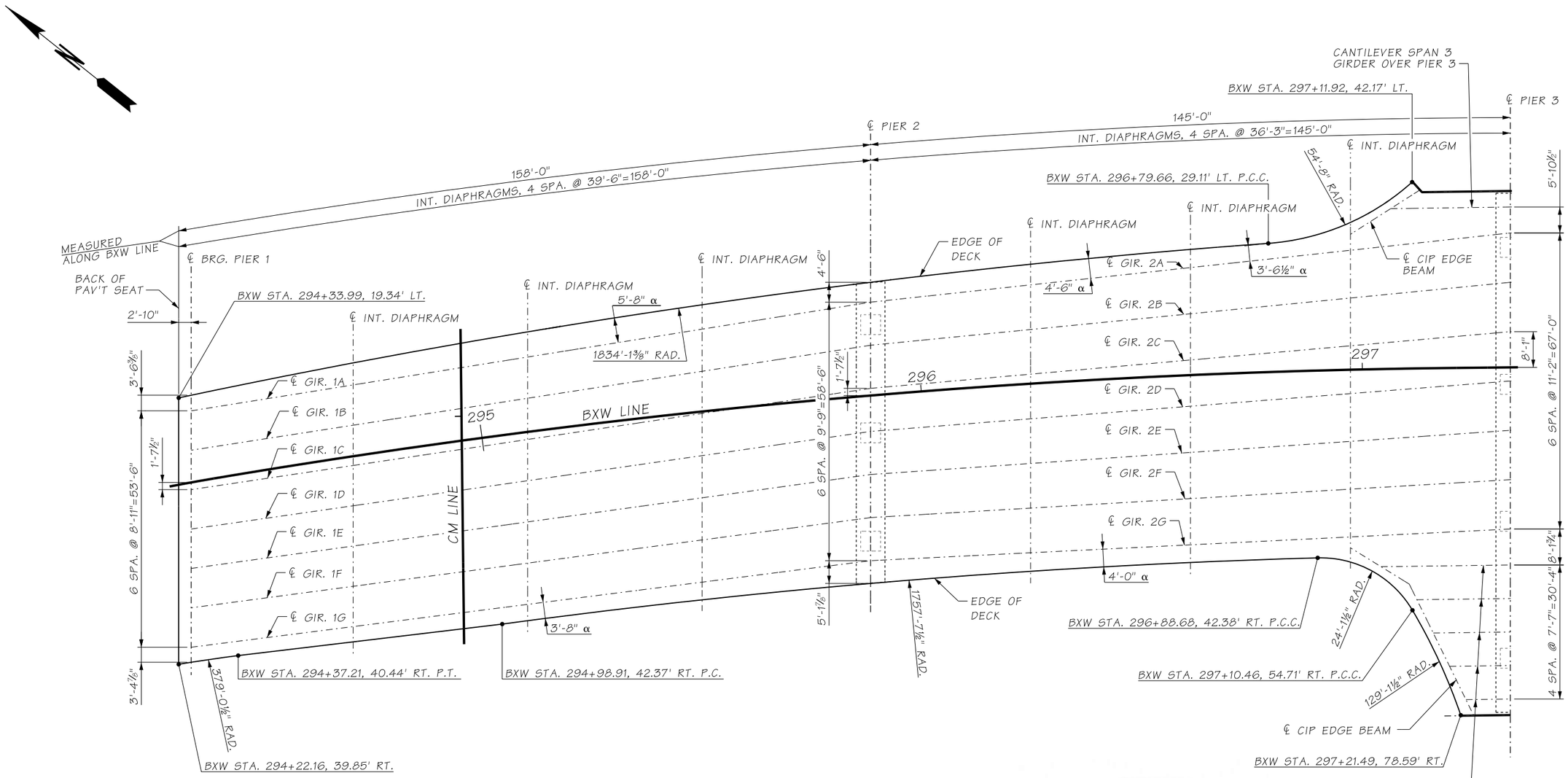

FRAMING PLAN
SPAN - 1 & 2

BEARING OF ALL PIERS ARE N51°23'48"E

α OVERHANG DIMENSIONS ARE MAX./MIN. PER SPAN

ATKINSON

OCT 24 2018

RELEASED FOR CONSTRUCTION

MRD.

AS-BUILT

FILE NAME	D:\ICS_workdir\13720\20633_725\PS_BB031.dgn					
TIME	6:48:41 AM					
DATE	10/24/2018					
PLOTTED BY	USLAS0-APP064$					
DESIGNED BY	A. FONG					
ENTERED BY	R. REISER					
CHECKED BY	S. CHEUNG	REV 0 - RELEASED FOR CONSTRUCTION	10/23/2018			
PROJ. ENGR.	C. MEADE	REV A - FINAL REVIEW	9/28/2018			
REGIONAL ADM.	J. WYNANDS	REVISION	DATE	BY		

REGION NO.	STATE	FED.AID PROJ.NO.
10	WASH	
JOB NUMBER		
CONTRACT NO.		LOCATION NO.
C8811		

CORY J. CAYWOOD, STATE OF WASHINGTON, 38198, STRUCTURAL ENGINEER, PROFESSIONAL ENGINEER
10/24/18
DATE
P.E. STAMP BOX

DATE
P.E. STAMP BOX

Washington State Department of Transportation

ATKINSON / JACOBS CONSTRUCTION

I-5
STEILACOOM-DUPONT RD TO THORNE LN
CORRIDOR IMPROVEMENTS
MP 120.01 TO MP 124.45
BERKELEY OVERPASS

FRAMING PLAN
(1 OF 2)

PLAN REF NO
BB031

SHEET 1222 OF 1456 SHEETS

AS-BUILT

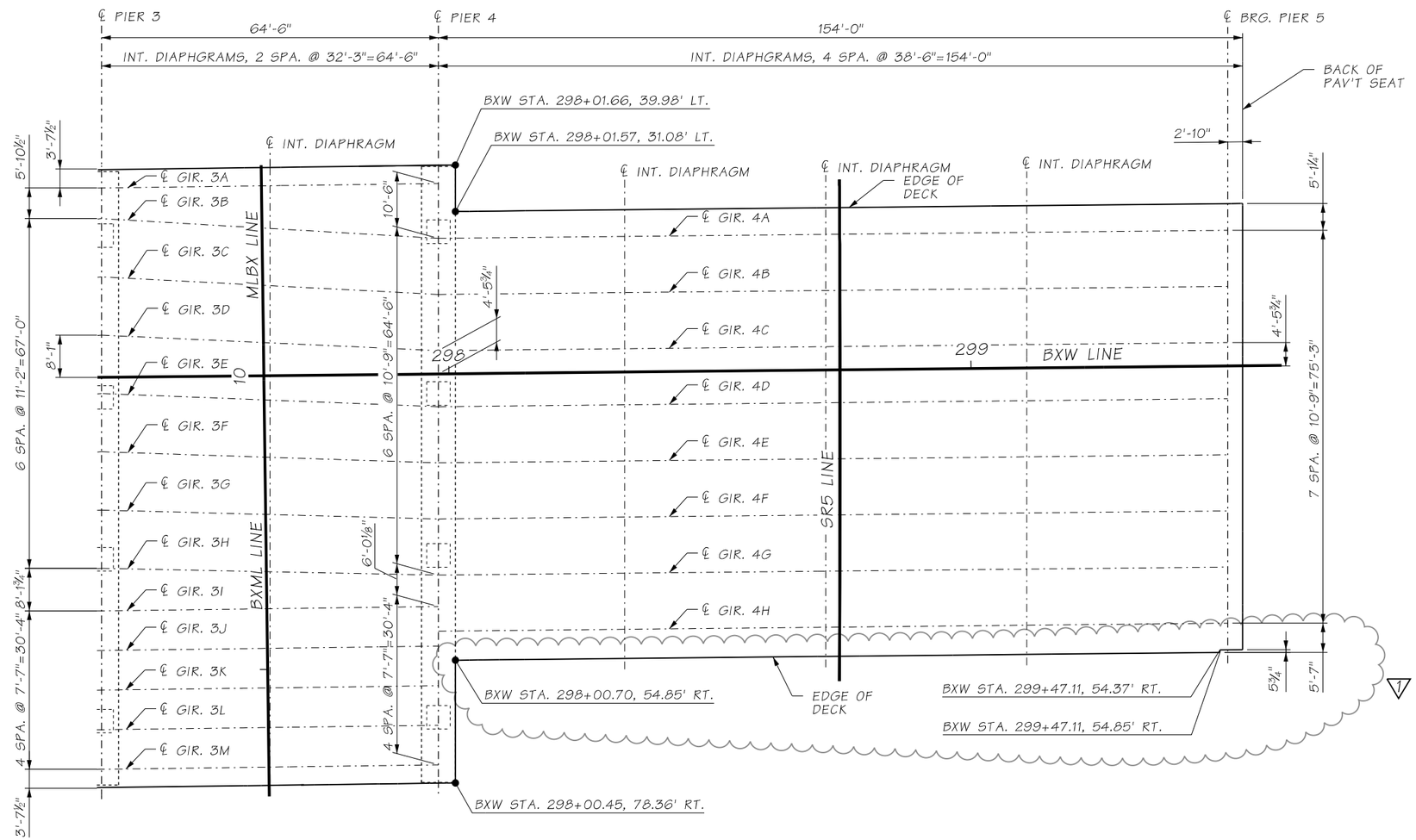

FRAMING PLAN
SPAN - 3 & 4

BEARING OF ALL PIERS ARE N51°23'48"E

ATKINSON
JUN 06 2019 RSA
RELEASED FOR CONSTRUCTION

FILE NAME	c:\pwworking\jacobs_b&i\reiserrw\dms20633\PS_BB032.dgn						
TIME	6:19:12 AM				REGION NO. 10	STATE WASH	FED.AID PROJ.NO.
DATE	6/4/2019						
PLOTTED BY	ReiserRW						
DESIGNED BY	A. FONG				JOB NUMBER		
ENTERED BY	R. REISER	REV 1 - RFI0118	06/06/2019				
CHECKED BY	S. CHEUNG	REV 0 - RELEASED FOR CONSTRUCTION	10/23/2018		CONTRACT NO. C9133		LOCATION NO.
PROJ. ENGR.	C. MEADE	REV A - FINAL REVIEW	9/28/2018				
REGIONAL ADM.	J. WYNANDS	REVISION	DATE	BY			

COREY J. CAYWOOD — STATE OF WASHINGTON — 38132 — STRUCTURAL ENGINEER — PROFESSIONAL ENGINEER
6/6/19
DATE
P.E. STAMP BOX

DATE
P.E. STAMP BOX

Washington State Department of Transportation

ATKINSON CONSTRUCTION / JACOBS

I-5
STEILACOOM-DUPONT RD TO THORNE LN
CORRIDOR IMPROVEMENTS
MP 120.01 TO MP 124.45
BERKELEY OVERPASS

FRAMING PLAN
(2 OF 2)

PLAN REF NO BB032

SHEET 1223 OF 1456 SHEETS

GIRDER SCHEDULE

4

SPAN	GIRDER	GIRDER SERIES	PLAN LENGTH (ALONG GIRDER GRADE) (SEE GIRDER NOTE 1)	CANTILEVER LENGTH	INT. DIAPH. TYPE	END 1 TYPE	END 2 TYPE	GIRDER END DETAILS					MIN. CONC. COMP. STRENGTH		NO. OF STRANDS (SEE GIRDER NOTE 2)				LOCATION OF C.G. STRANDS			STRAIGHT STRAND TO EXTEND				"A" DIMENSION AT ℄ BEARINGS	SPAN CAMBER AND MIDSPAN DEFLECTION			CANTILEVER CAMBER AND END DEFLECTION			REINFORCEMENT DETAILS						SHIPPING AND HANDLING DETAILS					
																						END 1		END 2									ZONE 1		ZONE 2		ZONE 3						
								L_d	$\Theta 1$ (DEG)	$\Theta 2$ (DEG)	P1	P2	@ 28 DAYS F'C (KSI)	@ RELEASE F'CI (KSI)	BOTTOM STRAIGHT	TOP STRAIGHT	HARPED	TEMPORARY	E	F_{CL}	Fo	STRANDS	EXTENSION LENGTH	STRANDS	EXTENSION LENGTH		SCREED CAMBER, C	LOWER BOUND D @ 40 DAYS	UPPER BOUND D @ 120 DAYS	SCREED CAMBER, C	LOWER BOUND D @ 40 DAYS	UPPER BOUND D @ 120 DAYS	SPACING ***	LENGTH	SPACING	LENGTH **	SPACING	LENGTH **	MAX. MIDSPAN VERTICAL DEFLECTION @ SHIPPING	L	L_1	L_2	$K\Theta$ ($1x10^4$ KIP-IN/RAD)	WCC
1	A	WF74G	154'-9⅞"	-	PAR	B	D	1'-0"	99.08	99.08	1'-0"	-	10.1	8.4	46	0	24	6	4⅛"	5½"	1'-3"	-	-	**** *	3'-0"	9¼"	4⅜"	3⅛"	6⅞"	-	-	-	3½"	1'-9"	6"	12'-0"	9"	3'-9"	7¼"	5'-0"	13'-0"	13'-0"	4.0	6'-0"
1	B	WF74G	154'-8⅜"	-	PAR	B	D	1'-0"	98.78	98.78	1'-0"	-	9.6	7.9	46	0	20	6	4⅛"	5¼"	1'-1"	-	-	**** *	3'-0"	9¼"	3⅞"	2⅞"	6½"	-	-	-	3½"	1'-9"	6"	12'-0"	9"	3'-9"	7"	5'-0"	13'-0"	13'-0"	4.0	6'-0"
1	C	WF74G	154'-7"	-	PAR	B	D	1'-0"	98.48	98.48	1'-0"	-	9.6	7.9	46	0	20	6	4⅛"	5¼"	1'-1"	-	-	**** *	3'-0"	9¼"	3⅞"	2⅞"	6½"	-	-	-	3½"	1'-9"	6"	12'-0"	9"	3'-9"	7"	5'-0"	13'-0"	13'-0"	4.0	6'-0"
1	D	WF74G	154'-5⅝"	-	PAR	B	D	1'-0"	98.17	98.17	1'-0"	-	8.8	7.7	46	0	12	4	4⅛"	4"	9"	-	-	**** *	3'-0"	9¼"	3½"	2⅝"	5⅞"	-	-	-	3½"	1'-9"	6"	12'-0"	9"	3'-9"	6¾"	5'-0"	13'-0"	13'-0"	4.0	6'-0"
1	E	WF74G	154'-4¼"	-	PAR	B	D	1'-0"	97.87	97.87	1'-0"	-	10.6	8.6	46	0	26	6	4⅛"	5⅞"	1'-4"	-	-	**** *	3'-0"	9¼"	4⅛"	3"	6¾"	-	-	-	3½"	1'-9"	6"	12'-0"	9"	3'-9"	7⅜"	5'-0"	13'-0"	13'-0"	4.0	6'-0"
1	F	WF74G	154'-2⅞"	-	PAR	B	D	1'-0"	97.56	97.56	1'-0"	-	10.7	8.7	46	0	26	6	4⅛"	5⅞"	1'-4"	-	-	**** *	3'-0"	9¼"	4¼"	3"	6¾"	-	-	-	3½"	1'-9"	6"	12'-0"	9"	3'-9"	7¼"	5'-0"	13'-0"	13'-0"	4.0	6'-0"
1	G	WF74G	154'-1⅝"	-	PAR	B	D	1'-0"	97.26	97.26	1'-0"	-	10.5	8.4	46	0	24	6	4⅛"	5½"	1'-3"	-	-	**** *	3'-0"	9¼"	4⅛"	3"	6¾"	-	-	-	3½"	1'-9"	6"	12'-0"	9"	3'-9"	7¼"	5'-0"	13'-0"	13'-0"	4.0	6'-0"
2	A	WF74G	141'-7¾"	-	PAR	D	D	-	96.17	96.17	-	-	10.1	8.4	46	0	22	4	4⅛"	5⅜"	1'-2"	**** *	3'-0"	****	3'-0"	9¼"	3⅜"	2⅞"	6⅜"	-	-	-	3½"	1'-9"	6"	12'-0"	9"	3'-9"	6⅜"	5'-0"	6'-2"	6'-2"	4.0	6'-0"
2	B	WF74G	141'-6"	-	PAR	D	D	-	95.62	95.62	-	-	9.5	7.7	46	0	16	2	4⅛"	4¾"	11"	**** *	3'-0"	****	3'-0"	9¼"	3¼"	2⅝"	6¼"	-	-	-	3½"	1'-9"	6"	12'-0"	9"	3'-9"	6⅝"	5'-0"	6'-2"	6'-2"	4.0	6'-0"
2	C	WF74G	141'-4½"	-	PAR	D	D	-	95.06	95.06	-	-	9.5	7.7	46	0	16	2	4⅛"	4¾"	11"	**** *	3'-0"	****	3'-0"	9¼"	3¼"	2⅝"	6¼"	-	-	-	3½"	1'-9"	6"	12'-0"	9"	3'-9"	6⅝"	5'-0"	6'-2"	6'-2"	4.0	6'-0"
2	D	WF74G	141'-3⅛"	-	PAR	D	D	-	94.50	94.50	-	-	8.8	7.3	46	0	12	4	4⅛"	4"	9"	**** *	3'-0"	****	3'-0"	9¼"	3"	2½"	5⅞"	-	-	-	3½"	1'-9"	6"	12'-0"	9"	3'-9"	6"	5'-0"	6'-2"	6'-2"	4.0	6'-0"
2	E	WF74G	141'-1⅞"	-	PAR	D	D	-	93.94	93.94	-	-	10.5	8.4	46	0	22	4	4⅛"	5⅜"	1'-2"	**** *	3'-0"	****	3'-0"	9¼"	3⅜"	2¾"	6¼"	-	-	-	3½"	1'-9"	6"	12'-0"	9"	3'-9"	6⅜"	5'-0"	6'-2"	6'-2"	4.0	6'-0"
2	F	WF74G	141'-0⅞"	-	PAR	D	D	-	93.38	93.38	-	-	10.5	8.4	46	0	22	4	4⅛"	5⅜"	1'-2"	**** *	3'-0"	****	3'-0"	9¼"	3⅜"	2¾"	6¼"	-	-	-	3½"	1'-9"	6"	12'-0"	9"	3'-9"	6⅜"	5'-0"	6'-2"	6'-2"	4.0	6'-0"
2	G	WF74G	141'-0"	-	PAR	D	D	-	92.82	92.82	-	-	10.5	8.4	46	0	22	4	4⅛"	5⅜"	1'-2"	**** *	3'-0"	****	3'-0"	9¼"	3⅜"	2⅞"	6⅜"	-	-	-	3½"	1'-9"	6"	12'-0"	9"	3'-9"	6⅜"	5'-0"	6'-2"	6'-2"	4.0	6'-0"
3	A*	WF74G	88'-10¾"	26'-4¾"	PAR	D	D	-	148.22	90.75	-	-	9.0	7.5	2	8	16	0	2"	10¾"	2'-9"	**** **	4"	**** **	3'-0"	13⅜" / 9½"	0"	¾"	1⅝"	0"	-¼"	-⅜"	3½"	1'-9"	6"	12'-0"	9"	3'-9"	⅛"	3'-0"	15'-0"	6'-0"	5.0	6'-0"
3	B	WF74G	60'-7⅝"	-	PAR	D	D	-	86.64	86.64	-	-	8.0	6.0	24	0	8	2	2⅝"	4"	3'-3"	****	3'-0"	****	3'-0"	9¼"	⅛"	½"	1⅛"	-	-	-	3½"	1'-9"	6"	12'-0"	9"	3'-9"	1⅛"	5'-0"	6'-2"	6'-2"	4.0	6'-0"
3	C	WF74G	60'-7⅜"	-	PAR	D	D	-	87.01	87.01	-	-	8.0	6.0	24	0	8	2	2⅝"	4"	3'-3"	****	3'-0"	****	3'-0"	9¼"	⅛"	½"	1⅛"	-	-	-	3½"	1'-9"	6"	12'-0"	9"	3'-9"	1⅛"	5'-0"	6'-2"	6'-2"	4.0	6'-0"
3	D	WF74G	60'-7⅛"	-	PAR	D	D	-	87.39	87.39	-	-	8.0	6.0	24	0	10	4	2⅝"	4"	3'-3"	****	3'-0"	****	3'-0"	9¼"	⅛"	½"	1⅛"	-	-	-	3½"	1'-9"	6"	12'-0"	9"	3'-9"	1⅛"	5'-0"	6'-2"	6'-2"	4.0	6'-0"
3	E	WF74G	60'-7"	-	PAR	D	D	-	87.76	87.76	-	-	8.0	6.0	24	0	8	2	2⅝"	4"	3'-1"	****	3'-0"	****	3'-0"	9¼"	⅛"	½"	1⅛"	-	-	-	3½"	1'-9"	6"	12'-0"	9"	3'-9"	1⅛"	5'-0"	6'-2"	6'-2"	4.0	6'-0"
3	F	WF74G	60'-6⅞"	-	PAR	D	D	-	88.13	88.13	-	-	8.0	6.0	24	0	8	2	2⅝"	4"	3'-1"	****	3'-0"	****	3'-0"	9¼"	⅛"	½"	1⅛"	-	-	-	3½"	1'-9"	6"	12'-0"	9"	3'-9"	1⅛"	5'-0"	6'-2"	6'-2"	4.0	6'-0"
3	G	WF74G	60'-6⅝"	-	PAR	D	D	-	88.50	88.50	-	-	8.0	6.0	24	0	8	2	2⅝"	4"	3'-1"	****	3'-0"	****	3'-0"	9¼"	⅛"	½"	1⅛"	-	-	-	3½"	1'-9"	6"	12'-0"	9"	3'-9"	1⅛"	5'-0"	6'-2"	6'-2"	4.0	6'-0"
3	H	WF74G	60'-6½"	-	PAR	D	D	-	88.88	88.88	-	-	8.0	6.0	24	0	8	2	2⅝"	4"	3'-1"	****	3'-0"	****	3'-0"	9¼"	⅛"	½"	1⅛"	-	-	-	3½"	1'-9"	6"	12'-0"	9"	3'-9"	1⅛"	5'-0"	6'-2"	6'-2"	4.0	6'-0"
3	I*	WF74G	91'-1¼"	28'-7¼"	PAR	D	D	-	32.41	90.75	-	-	9.0	7.5	2	8	16	0	2"	10¾"	2'-9"	**** **	4"	**** **	3'-0"	15⅝" / 11"	0"	¾"	1¾"	¼"	-¼"	-½"	3½"	1'-9"	6"	12'-0"	9"	3'-9"	-⅛"	3'-0"	6'-0"	6'-0"	5.0	6'-0"
3	J*	WF74G	83'-4¼"	20'-10⅛"	PAR	D	D	-	64.62	90.75	-	-	9.0	7.5	6	8	14	0	2"	10⅜"	2'-8"	**** **	4"	**** **	3'-0"	14⅞" / 11"	0"	¾"	1¾"	0"	0"	-⅛"	3½"	1'-9"	6"	12'-0"	9"	3'-9"	¼"	3'-0"	6'-0"	6'-0"	5.0	6'-0"
3	K*	WF74G	79'-7⅞"	17'-1⅞"	PAR	D	D	-	64.62	90.75	-	-	9.0	7.5	6	8	14	0	2"	10⅜"	2'-8"	**** **	4"	**** **	3'-0"	14¼" / 11"	⅛"	⅝"	1½"	0"	0"	0"	3½"	1'-9"	6"	12'-0"	9"	3'-9"	⅛"	3'-0"	6'-0"	6'-0"	5.0	6'-0"
3	L*	WF74G	75'-11½"	13'-5½"	PAR	D	D	-	64.62	90.75	-	-	9.0	7.5	10	8	16	0	2¾"	10¾"	2'-9"	**** **	4"	**** **	3'-0"	11"	⅛"	¾"	1¾"	0"	0"	0"	3½"	1'-9"	6"	12'-0"	9"	3'-9"	½"	3'-0"	6'-0"	6'-0"	5.0	6'-0"
3	M*	WF74G	72'-3⅛"	9'-9⅛"	PAR	D	D	-	64.62	90.75	-	-	9.0	7.5	10	8	16	0	2¾"	10¾"	2'-9"	**** **	4"	**** **	3'-0"	11"	⅛"	¾"	1⅝"	0"	0"	0"	3½"	1'-9"	6"	12'-0"	9"	3'-9"	½"	3'-0"	6'-0"	6'-0"	5.0	6'-0"
4	A	WF74G	150'-4¼"	-	FULL	D	B	1'-0"	90.58	90.58	-	1'-0"	9.3	8.0	46	0	20	8	4⅛"	5¼"	1'-1"	****	3'-0"	-	-	11¾"	3⅝"	2⅞"	6¼"	-	-	-	3½"	1'-9"	6"	12'-0"	9"	3'-9"	6"	5'-0"	11'-0"	11'-0"	4.0	6'-0"
4	B	WF74G	150'-4¼"	-	FULL	D	B	1'-0"	90.58	90.58	-	1'-0"	9.3	8.0	46	0	20	8	4⅛"	5¼"	1'-1"	****	3'-0"	-	-	11¾"	3½"	2¾"	6⅛"	-	-	-	3½"	1'-9"	6"	12'-0"	9"	3'-9"	6"	5'-0"	11'-0"	11'-0"	4.0	6'-0"
4	C	WF74G	150'-4¼"	-	FULL	D	B	1'-0"	90.58	90.58	-	1'-0"	9.4	8.0	46	0	20	8	4⅛"	5¼"	1'-1"	****	3'-0"	-	-	11¾"	3½"	2¾"	6⅛"	-	-	-	3½"	1'-9"	6"	12'-0"	9"	3'-9"	6"	5'-0"	11'-0"	11'-0"	4.0	6'-0"
4	D	WF74G	150'-4¼"	-	FULL	D	B	1'-0"	90.58	90.58	-	1'-0"	8.6	7.2	40	0	20	4	3⅝"	5¼"	1'-1"	****	3'-0"	-	-	11¾"	3⅜"	2½"	5⅞"	-	-	-	3½"	1'-9"	6"	12'-0"	9"	3'-9"	6½"	5'-0"	11'-0"	11'-0"	4.0	6'-0"
4	E	WF74G	150'-4¼"	-	FULL	D	B	1'-0"	90.58	90.58	-	1'-0"	8.7	7.2	40	0	20	4	3⅝"	5¼"	1'-1"	****	3'-0"	-	-	11¾"	3⅜"	2½"	5⅞"	-	-	-	3½"	1'-9"	6"	12'-0"	9"	3'-9"	6½"	5'-0"	11'-0"	11'-0"	4.0	6'-0"
4	F	WF74G	150'-4¼"	-	FULL	D	B	1'-0"	90.58	90.58	-	1'-0"	9.9	8.5	46	0	24	8	4⅛"	5½"	1'-3"	****	3'-0"	-	-	11¾"	3⅝"	2⅞"	6⅜"	-	-	-	3½"	1'-9"	6"	12'-0"	9"	3'-9"	6¼"	5'-0"	11'-0"	11'-0"	4.0	6'-0"
4	G	WF74G	150'-4¼"	-	FULL	D	B	1'-0"	90.58	90.58	-	1'-0"	9.9	8.5	46	0	24	8	4⅛"	5½"	1'-3"	****	3'-0"	-	-	11¾"	3⅝"	2⅞"	6⅜"	-	-	-	3½"	1'-9"	6"	12'-0"	9"	3'-9"	6¼"	5'-0"	11'-0"	11'-0"	4.0	6'-0"
4	H	WF74G	150'-4¼"	-	FULL	D	B	1'-0"	90.58	90.58	-	1'-0"	9.8	8.4	46	0	24	8	4⅛"	5½"	1'-3"	****	3'-0"	-	-	11¾"	3⅞"	3"	6½"	-	-	-	3½"	1'-9"	6"	12'-0"	9"	3'-9"	6¼"	5'-0"	11'-0"	11'-0"	4.0	6'-0"

GIRDER NOTES

1. PLAN LENGTH SHALL BE INCREASED AS NECESSARY TO COMPENSATE FOR SHORTENING DUE TO PRESTRESS AND SHRINKAGE.
2. ALL PRETENSIONED AND TEMPORARY STRANDS SHALL BE 0.6"ø AASHTO M203 GRADE 270 LOW RELAXATION STRANDS, JACKED TO 202.5 KSI.

LEGEND

*	CANTILEVER GIRDERS. SEE BB038 FOR DETAILS	****	BOTTOM STRAIGHT: 5 6 9 10 11 12 13 14
**	VARIES AT CANTILEVER LENGTHS. SEE BB038 FOR DETAILS	**** *	BOTTOM STRAIGHT: 3 4 5 6 9 10 11 12 17 18 19 20
***	G2 #5 BARS IN ZONE 1 ARE BUNDLED	**** **	BOTTOM STRAIGHT: 1 2 ~ TOP STRAIGHT: 3 4 SEE BB038 FOR ADDITIONAL EXTENSIONS

ATKINSON
MAY 03 2019 KTW
RELEASED FOR CONSTRUCTION

AS-BUILT

FILE NAME	D:\ICS_workdir\26609\20633_729\PS_BB033.dgn			
TIME	1:54:41 PM			
DATE	4/30/2019	REV 4 - RFI0082	05/03/2019	
PLOTTED BY	USLAS0-APP064$	REV 3 - RFI0056	03/14/2019	
DESIGNED BY	T. FU	REV 2 - RFI0035	02/06/2019	
ENTERED BY	R. REISER	REV 1 - RFI0022	01/09/2019	
CHECKED BY	S. CHEUNG	REV 0 - RELEASED FOR CONSTRUCTION	10/23/2018	
PROJ. ENGR.	C. MEADE	REV A - FINAL REVIEW	9/28/2018	
REGIONAL ADM.	J. WYNANDS	REVISION	DATE	BY

REGION NO. 10 | STATE WASH | FED.AID PROJ.NO.
JOB NUMBER
CONTRACT NO. C9133 | LOCATION NO.

CORY J. CAYWOOD, STATE OF WASHINGTON, 38733, STRUCTURAL ENGINEER, PROFESSIONAL ENGINEER — 5/2/19
P.E. STAMP BOX — DATE
P.E. STAMP BOX — DATE

Washington State Department of Transportation
ATKINSON / JACOBS CONSTRUCTION

I-5
STEILACOOM-DUPONT RD TO THORNE LN CORRIDOR IMPROVEMENTS
MP 120.01 TO MP 124.45
BERKELEY OVERPASS

GIRDER DETAILS (1 OF 6)

PLAN REF NO BB033
SHEET 1224 OF 1456 SHEETS

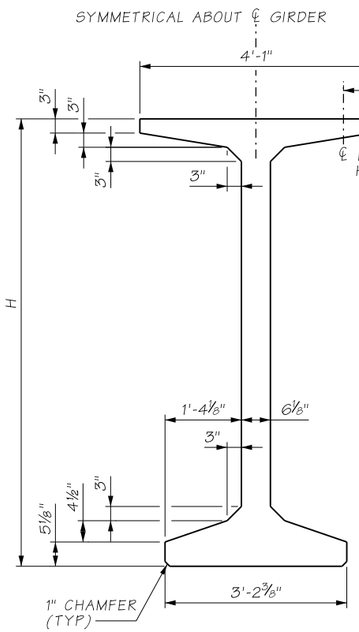

SECTION A/BB038

REINFORCEMENT AND STRANDS NOT SHOWN

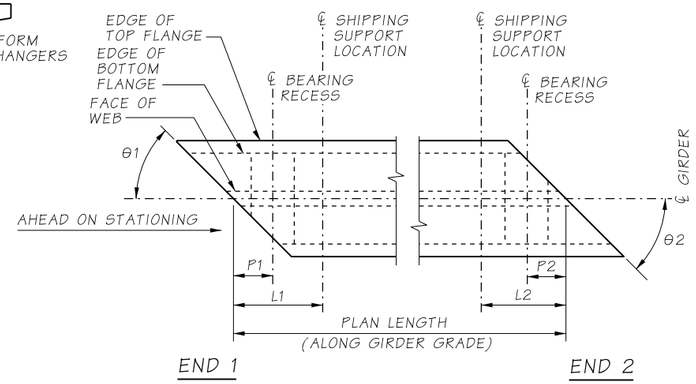

GIRDER PLAN

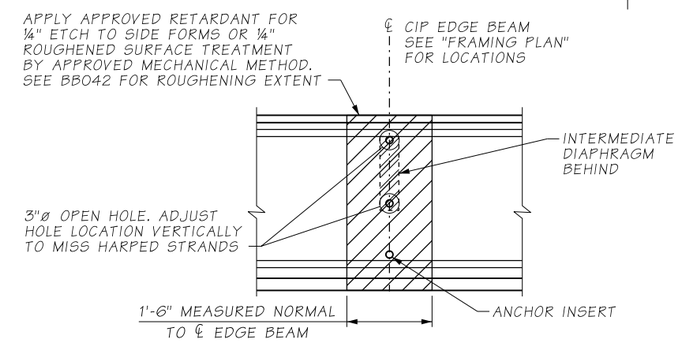

ROUGHENED SURFACE DETAIL

APPLIES TO SPAN 2 GIRDER SURFACES WHERE CIP EDGE BEAM CONNECTS. SEE "FRAMING PLAN" FOR LOCATIONS

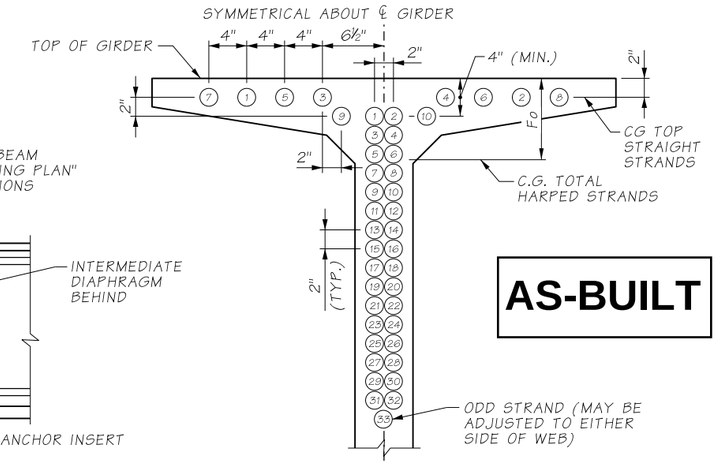

AS-BUILT

VIEW B/BB038

TOP STRAIGHT STRAND AND HARPED STRAND LOCATION SEQUENCE SHALL BE AS SHOWN (1), (2) ETC.

3"ø OPEN HOLE. ADJUST HOLE LOCATION VERTICALLY TO MISS HARPED STRANDS. OMIT HOLES AND PLACE INSERTS ON THE INTERIOR FACE OF EXTERIOR GIRDERS EXCEPT WHERE CIP EDGE BEAM CONNECTS TO GIRDER. SEE "ROUGHENED SURFACE DETAIL" THIS SHEET. PLACE HOLES AND INSERTS PARALLEL TO DIAPHRAGM CENTERLINE. INSERTS SHALL BE 1"ø MEADOWBURKE MX-3 HI-TENSILE, 1"ø x 5½" WILLIAMS F22 OPEN FERRULE INSERT, 1"ø x 4⅝" DAYTON-SUPERIOR F-62 FLARED THIN SLAB FERRULE INSERT OR APPROVED EQUAL

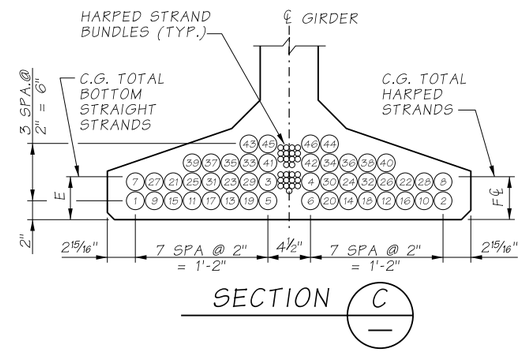

SECTION C

BOTTOM STRAIGHT STRAND LOCATION SEQUENCE SHALL BE AS SHOWN (1), (2) ETC.

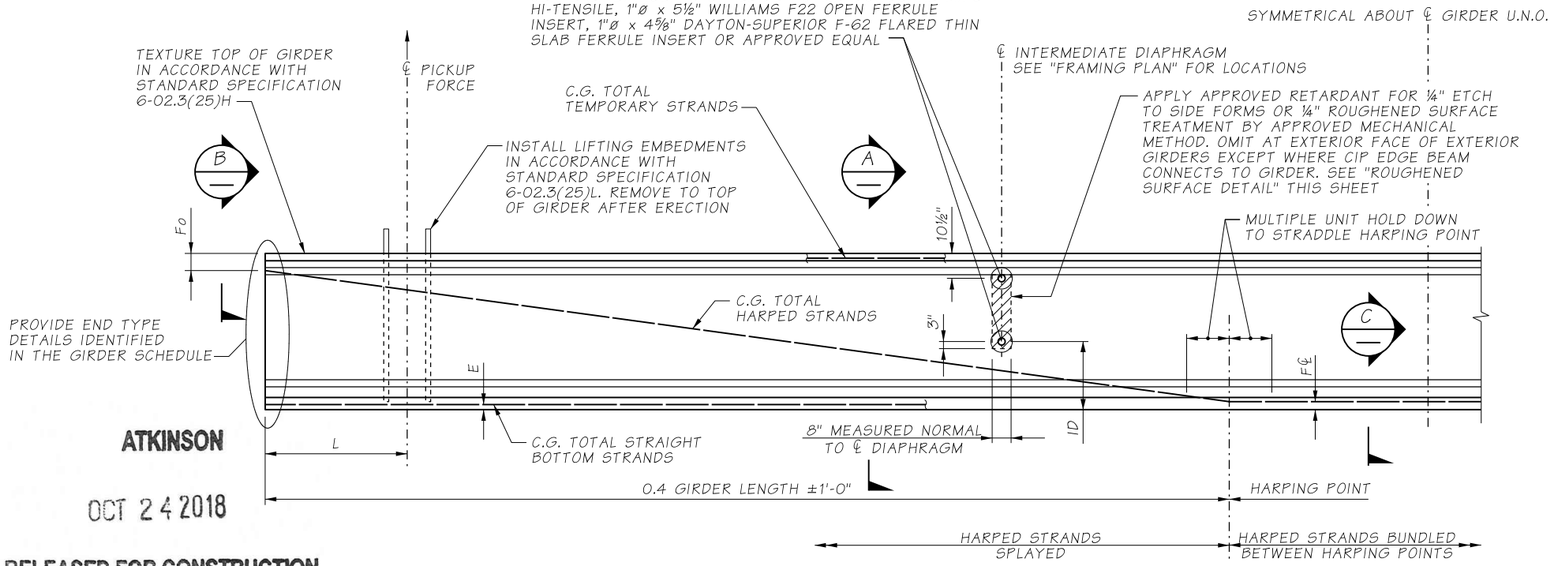

GIRDER ELEVATION

APPLIES TO TYPICAL GIRDERS. SEE SHEET BB038 FOR CANTILEVER GIRDERS

GIRDER SERIES	H GIRDER HEIGHT	ID PARTIAL DEPTH INT. DIAPHRAGM	ID FULL DEPTH INT. DIAPHRAGM
WF36G	3'-0"	1'-2⅛"	1'-2⅛"
WF42G	3'-6"	1'-6"	1'-2⅛"
WF50G	4'-2"	1'-9½"	1'-2⅛"
WF58G	4'-10"	2'-3"	1'-2⅛"
WF66G	5'-6"	2'-4¾"	1'-2⅛"
WF74G	6'-2"	2'-8"	1'-2⅛"
WF83G	6'-10⅝"	2'-1⅝"	1'-2⅛"
WF95G	7'-10½"	3'-1½"	1'-2⅛"
WF100G	8'-4"	2'-8"	1'-2⅛"

ATKINSON

OCT 24 2018

RELEASED FOR CONSTRUCTION

FILE NAME	D:\ICS_workdir\13523\20633_730\PS_BB034.dgn
TIME	2:40:57 PM
DATE	10/22/2018
PLOTTED BY	USLAS0-APP064$
DESIGNED BY	T. FU
ENTERED BY	R. REISER
CHECKED BY	S. CHEUNG
PROJ. ENGR.	C. MEADE
REGIONAL ADM.	J. WYNANDS

REVISION	DATE	BY
REV 0 - RELEASED FOR CONSTRUCTION	10/23/2018	
REV A - FINAL REVIEW	9/28/2018	

REGION NO.	STATE	FED.AID PROJ.NO.
10	WASH	
JOB NUMBER		
CONTRACT NO. C8811		LOCATION NO.

P.E. STAMP BOX — DATE 10/24/18

P.E. STAMP BOX — DATE

Washington State Department of Transportation

ATKINSON / JACOBS CONSTRUCTION

I-5
STEILACOOM-DUPONT RD TO THORNE LN
CORRIDOR IMPROVEMENTS
MP 120.01 TO MP 124.45
BERKELEY OVERPASS

GIRDER DETAILS (2 OF 6)

PLAN REF NO BB034

SHEET 1225 OF 1456 SHEETS

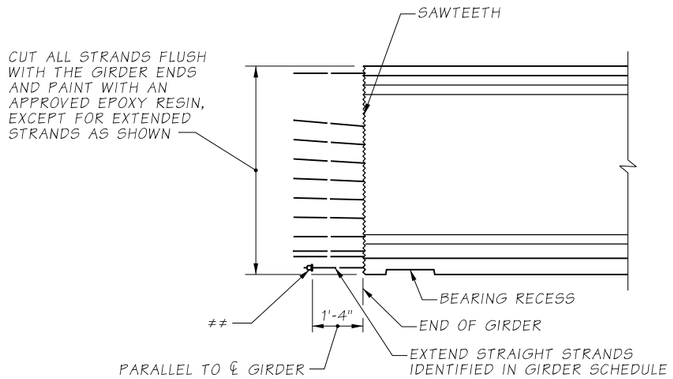

END TYPE A

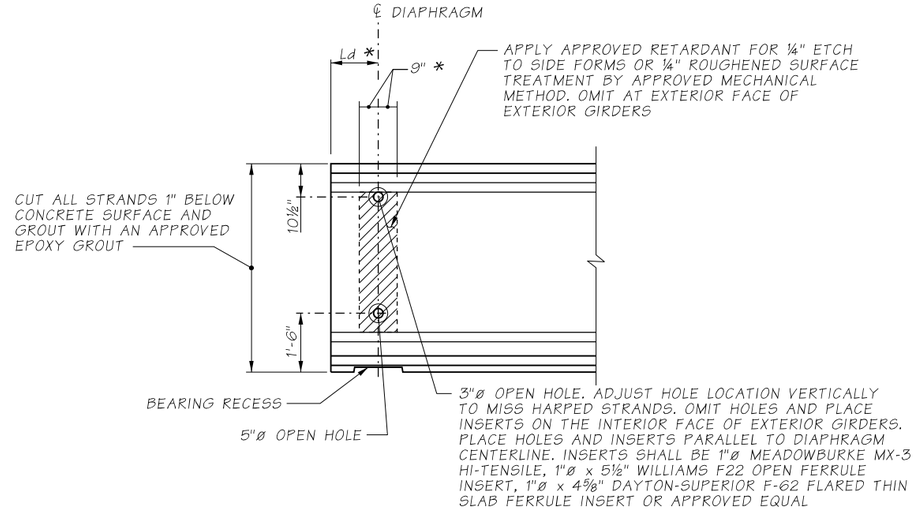

END TYPE B

* MEASURED NORMAL TO ℄ DIAPHRAGM

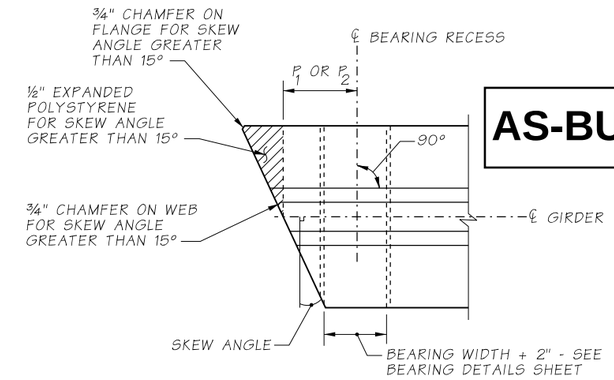

AS-BUILT

PLAN

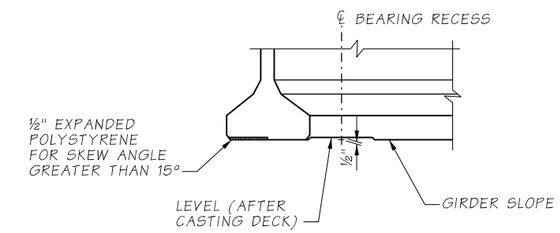

ELEVATION

BEARING RECESS AND BOTTOM FLANGE SPALL PROTECTION DETAIL

BEARING RECESS FORMS SHALL BE CONSTRUCTED AND FASTENED TO AVOID GIRDER DAMAGE DURING STRAND RELEASE.

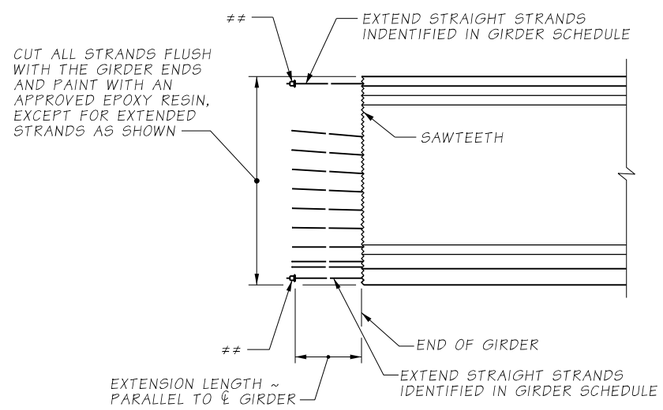

END TYPE D

≠≠ STRAND CHUCK TACK WELDED TO ASTM A36 PL ½x4x0'-4 WITH ¾"ø HOLE PRIOR TO INSTALLING ON STRAND, ASTM A108 2¾"øx1⅛" STEEL STRAND ANCHOR, OR APPROVED EQUAL (TYP.). VERIFY STRAND GRIPS ARE SEATED TIGHTLY IMMEDIATELY BEFORE PLACING DIAPHRAGM CONCRETE. SECURELY TIE ANCHOR TO THE REBAR CAGE TO PREVENT DISPLACEMENT DURING CONCRETE PLACEMENT.

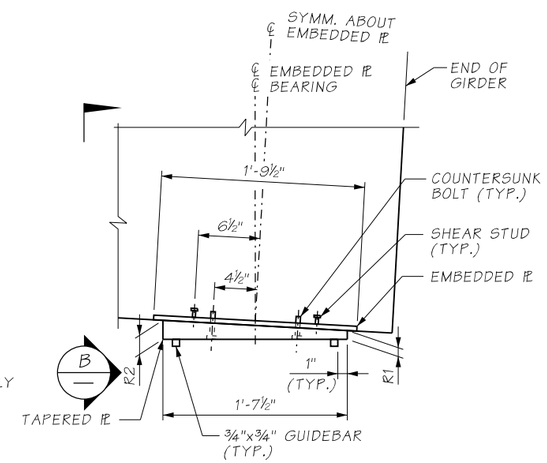

EMBEDDED PLATE DETAIL

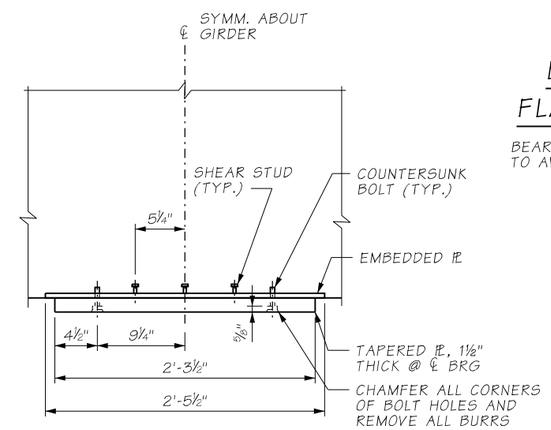

VIEW B

GUIDEBAR NOT SHOWN FOR CLARITY

NOTES:

1. EMBEDDED PLATE USED AT PIERS 1 AND 5 IN LIEU OF BEARING RECESS.
2. STEEL SURFACES SHALL BE GALVANIZED AS PER WSDOT STANDARD SPECIFICATIONS (M 41-10).
3. COUNTERSUNK BOLTS SHALL BE GALVANIZED SAE GRADE 5 BOLTS.

1

EMBEDDED PLATE THICKNESS		
PIER	R1	R2
1	1¼"	1⅞"
5	1"	2"

DIMENSION "R1" IS TOWARDS END OF GIRDER

SAWTEETH DETAIL

SAWTEETH SHALL BE FULL WIDTH OVER AREA SHOWN

ATKINSON
APR 21 2020 KRW
RELEASED FOR CONSTRUCTION

FILE NAME	c:\pwworking\jacobs_b&l\reiserrw\dms20633\PS_BB035.dgn				REGION NO.	STATE	FED.AID PROJ.NO.
TIME	1:53:34 PM				10	WASH	
DATE	4/13/2020				JOB NUMBER		
PLOTTED BY	ReiserRW						
DESIGNED BY	T. FU						
ENTERED BY	R. REISER	REV 1 - RFI0070	04/17/2020				
CHECKED BY	S. CHEUNG	REV 0 - RELEASED FOR CONSTRUCTION	10/23/2018		CONTRACT NO.		LOCATION NO.
PROJ. ENGR.	C. MEADE	REV A - FINAL REVIEW	9/28/2018		C9133		
REGIONAL ADM.	J. WYNANDS	REVISION	DATE	BY			

CORY J. CAYWOOD, STATE OF WASHINGTON, 38755, STRUCTURAL ENGINEER, PROFESSIONAL ENGINEER
4/16/20
DATE
P.E. STAMP BOX

DATE
P.E. STAMP BOX

Washington State Department of Transportation

ATKINSON CONSTRUCTION / JACOBS

I-5
STEILACOOM-DUPONT RD TO THORNE LN CORRIDOR IMPROVEMENTS
MP 120.01 TO MP 124.45
BERKELEY OVERPASS

GIRDER DETAILS (3 OF 6)

PLAN REF NO BB035

SHEET 1226 OF 1456 SHEETS

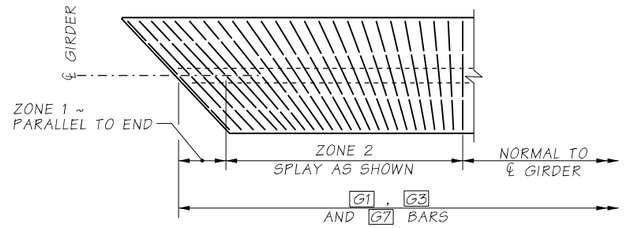

PLAN
TRANSVERSE REINFORCING AT SKEWED ENDS

LENGTHS OF G3 AND G7 VARY WITH SKEW.
ONLY TRANSVERSE REINFORCEMENT SHOWN

GIRDER REINFORCEMENT NOTES

1. DEFORMED WELDED WIRE REINFORCEMENT MAY BE SUBSTITUTED FOR MILD REINFORCEMENT IN ACCORDANCE WITH STANDARD SPECIFICATION 6-02.3(25)A.
2. EVERY OTHER BUNDLED G2 STIRRUP IN ZONE 1 MAY BE FIELD TRIMMED ABOVE THE GIRDER TO PROVIDE ADEQUATE CLEARANCE FOR END DIAPHRAGM AND TRANSVERSE DECK REINFORCING. (2)

GIRDER SERIES	NO. OF G5 BARS
WF36G	3
WF42G	4
WF50G	5
WF58G	6
WF66G	7
WF74G	7
WF83G	8
WF95G	9
WF100G	10

AS-BUILT

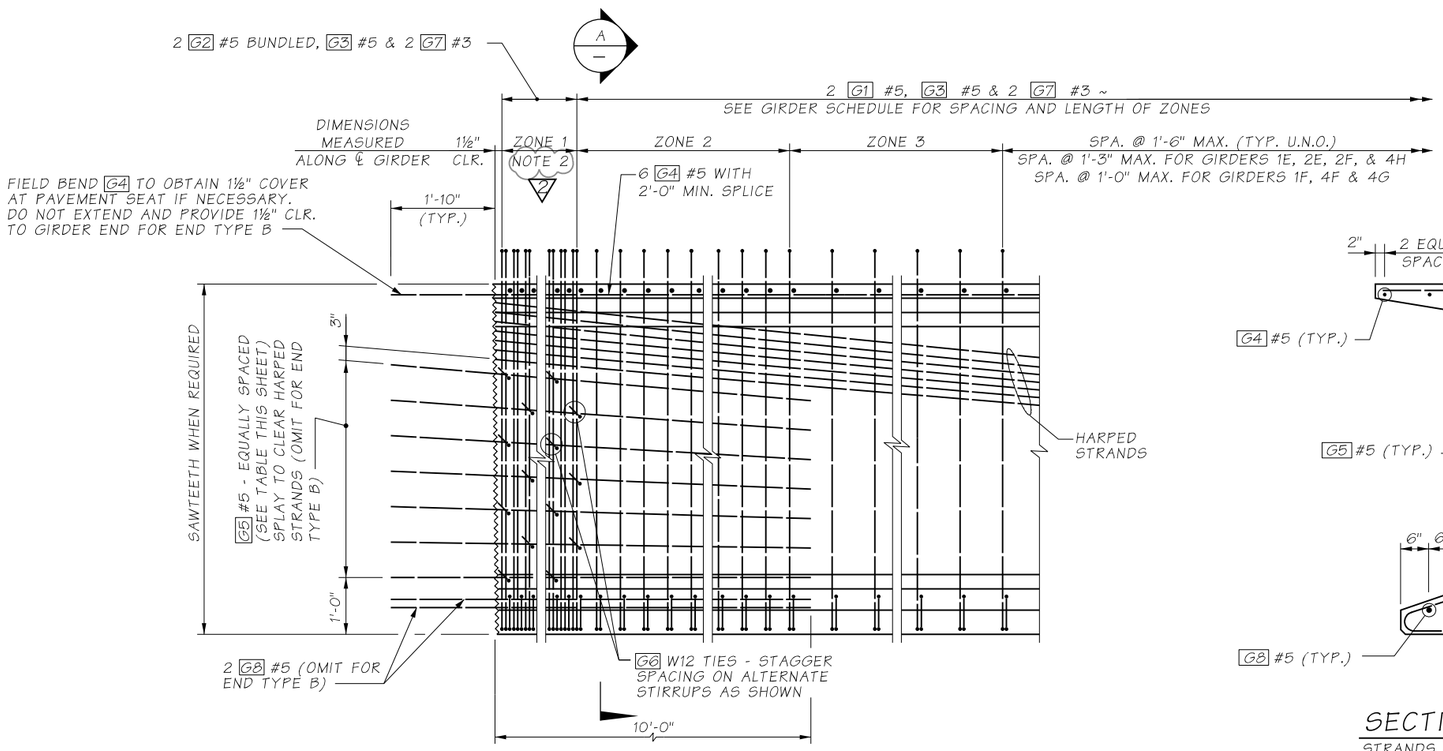

REINFORCEMENT END ELEVATION

STRAIGHT AND TEMPORARY STRANDS NOT SHOWN FOR CLARITY.
WF74G SHOWN, OTHERS SIMILAR.
APPLIES TO TYPICAL GIRDERS.
SEE SHEET BB038 FOR CANTILEVER GIRDERS

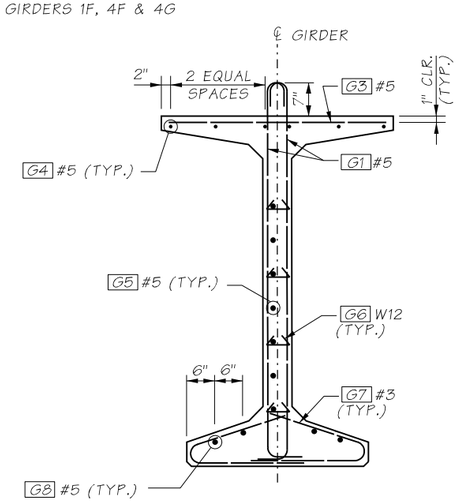

SECTION A
STRANDS NOT SHOWN

ATKINSON
APR 21 2020 KRW
RELEASED FOR CONSTRUCTION

BENDING DIAGRAM
(ALL DIMENSIONS ARE OUT TO OUT)

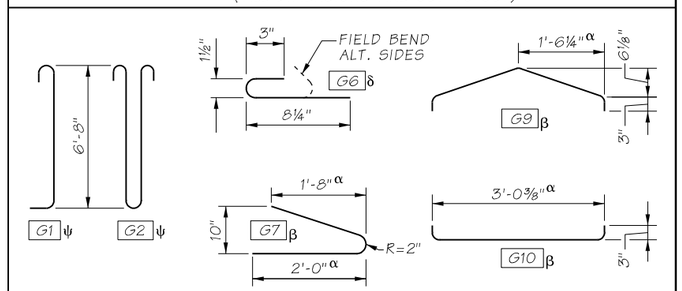

α - VARIES FOR SKEWED ENDS.
δ - #3 OR #4 MAY BE SUBSTITUTED. FIELD BENDING IS OPTIONAL.
β - PAIRS OF G7 BARS, OR G9 AND G10 BARS, MAY BE USED INTERCHANGEABLY AS BOTTOM FLANGE TIES.
ψ - 1 G2 MAY BE SUBSTITUTED FOR 2 G1 WITHIN ZONE 1.

FILE NAME	c:\pwworking\jacobs_b&i\reiserrw\dms20633\PS_BB036.dgn						
TIME	2:05:25 PM				REGION NO. 10	STATE WASH	FED.AID PROJ.NO.
DATE	4/13/2020						
PLOTTED BY	ReiserRW				JOB NUMBER		
DESIGNED BY	T. FU	REV 2 - RFI0158	04/17/2020				
ENTERED BY	R. REISER	REV 1 - RFI0035	02/06/2019				
CHECKED BY	S. CHEUNG	REV 0 - RELEASED FOR CONSTRUCTION	10/23/2018		CONTRACT NO. C9133		LOCATION NO.
PROJ. ENGR.	C. MEADE	REV A - FINAL REVIEW	9/28/2018				
REGIONAL ADM.	J. WYNANDS	REVISION	DATE	BY			

COREY J. CAYWOOD, STATE OF WASHINGTON, 38759, STRUCTURAL ENGINEER, PROFESSIONAL ENGINEER
4/16/20
DATE
P.E. STAMP BOX

DATE
P.E. STAMP BOX

Washington State Department of Transportation

ATKINSON CONSTRUCTION / JACOBS

I-5
STEILACOOM-DUPONT RD TO THORNE LN CORRIDOR IMPROVEMENTS
MP 120.01 TO MP 124.45
BERKELEY OVERPASS

GIRDER DETAILS (4 OF 6)

PLAN REF NO BB036

SHEET 1227 OF 1456 SHEETS

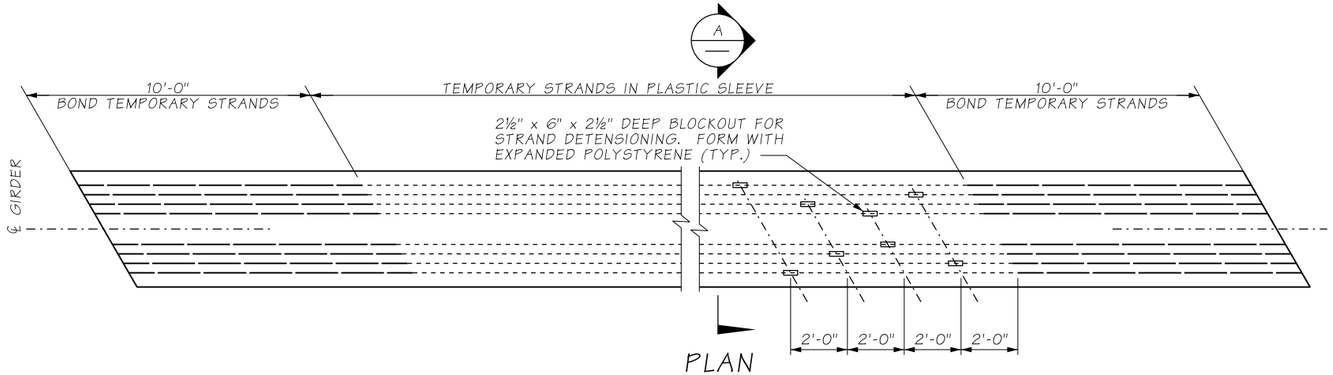

PLAN

PRE-TENSIONED TEMPORARY TOP STRANDS ALTERNATE

SEE GIRDER SCHEDULE FOR NUMBER OF TEMPORARY STRANDS REQUIRED

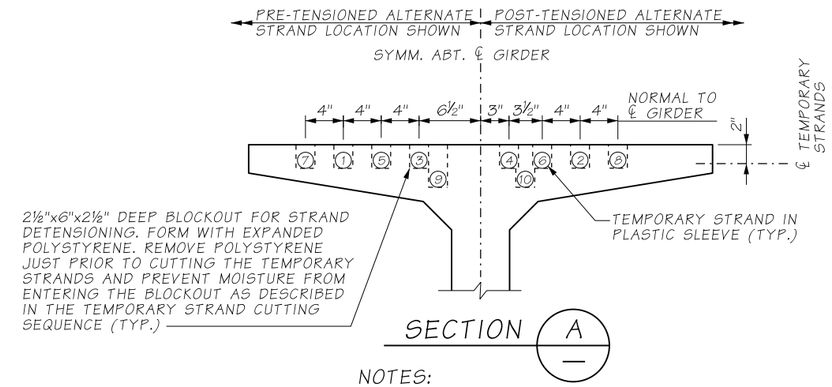

SECTION A

NOTES:

1. TEMPORARY STRAND LOCATION SEQUENCE SHALL BE AS SHOWN 1, 2 ETC.

AS-BUILT

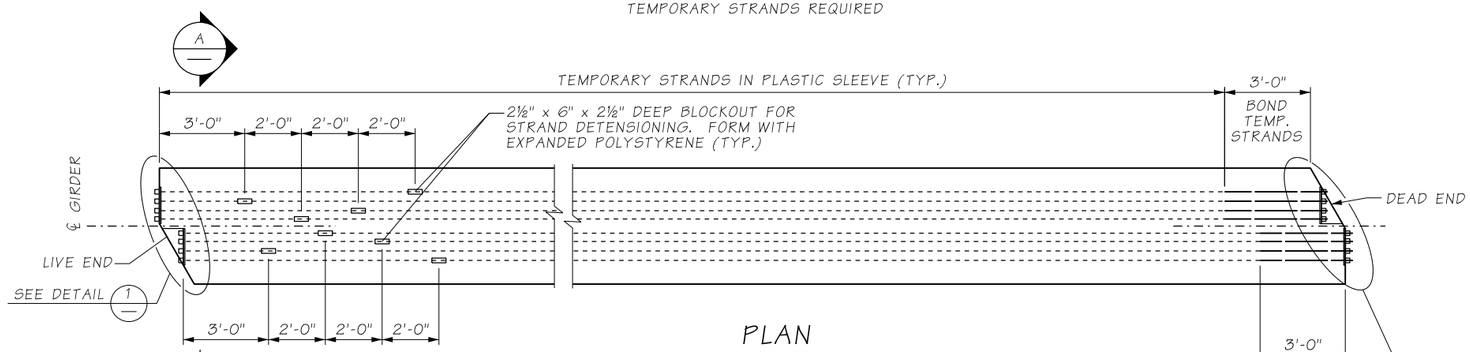

PLAN

POST-TENSIONED TEMPORARY TOP STRANDS ALTERNATE

SEE GIRDER SCHEDULE FOR NUMBER OF TEMPORARY STRANDS REQUIRED

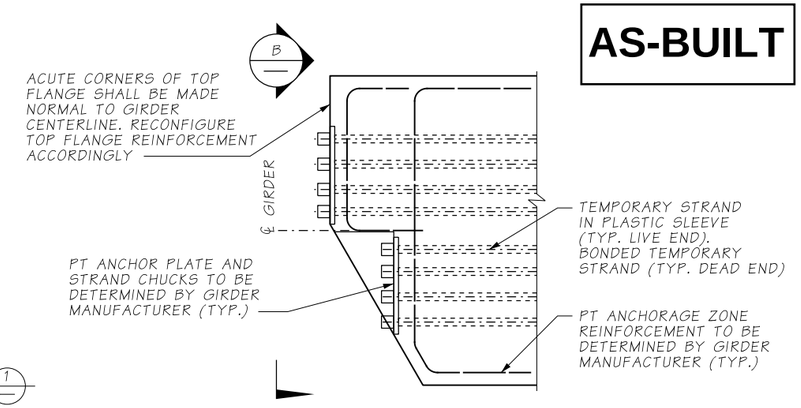

DETAIL 1

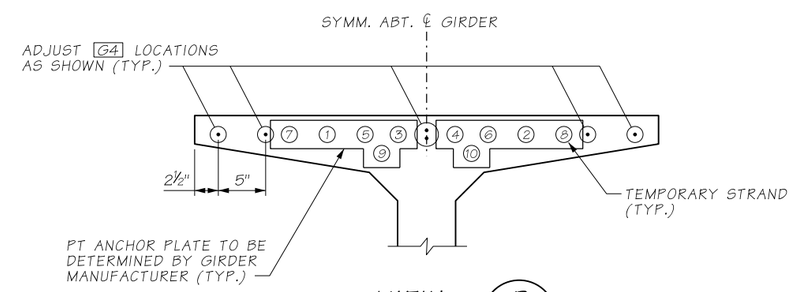

VIEW B

TEMPORARY STRAND NOTES:

1. TEMPORARY TOP STRANDS SHALL BE EITHER PRETENSIONED OR POST-TENSIONED IN ACCORDANCE WITH STANDARD SPECIFICATION SECTION 6-02.3(25)L.
2. FOR GIRDERS ERECTED ON A LONGITUDINAL GRADE, STRAND DETENSIONING BLOCKOUTS SHALL BE PLACED AT THE LOW END OF THE GIRDER.
3. SEE "TEMPORARY STRAND CUTTING SEQUENCE" ON CONSTRUCTION SEQUENCE SHEET FOR TEMPORARY STRAND DETENSIONING PROCEDURE.

ATKINSON

OCT 24 2018

RELEASED FOR CONSTRUCTION

MRD.

FILE NAME	D:\ICS_workdir\13523\20633_733\PS_BB037.dgn						
TIME	2:41:16 PM				REGION NO. 10	STATE WASH	FED.AID PROJ.NO.
DATE	10/22/2018						
PLOTTED BY	USLAS0-APP064$				JOB NUMBER		
DESIGNED BY	T. FU						
ENTERED BY	R. REISER						
CHECKED BY	S. CHEUNG	REV 0 - RELEASED FOR CONSTRUCTION	10/23/2018		CONTRACT NO. C8811		LOCATION NO.
PROJ. ENGR.	C. MEADE	REV A - FINAL REVIEW	9/28/2018				
REGIONAL ADM.	J. WYNANDS	REVISION	DATE	BY			

CORY J. CAYWOOD, STATE OF WASHINGTON, 38193, STRUCTURAL ENGINEER, PROFESSIONAL ENGINEER — 10/24/18 DATE — P.E. STAMP BOX

P.E. STAMP BOX — DATE

Washington State Department of Transportation

ATKINSON / JACOBS CONSTRUCTION

I-5
STEILACOOM-DUPONT RD TO THORNE LN
CORRIDOR IMPROVEMENTS
MP 120.01 TO MP 124.45
BERKELEY OVERPASS

GIRDER DETAILS (5 OF 6)

PLAN REF NO BB037

SHEET 1228 OF 1456 SHEETS

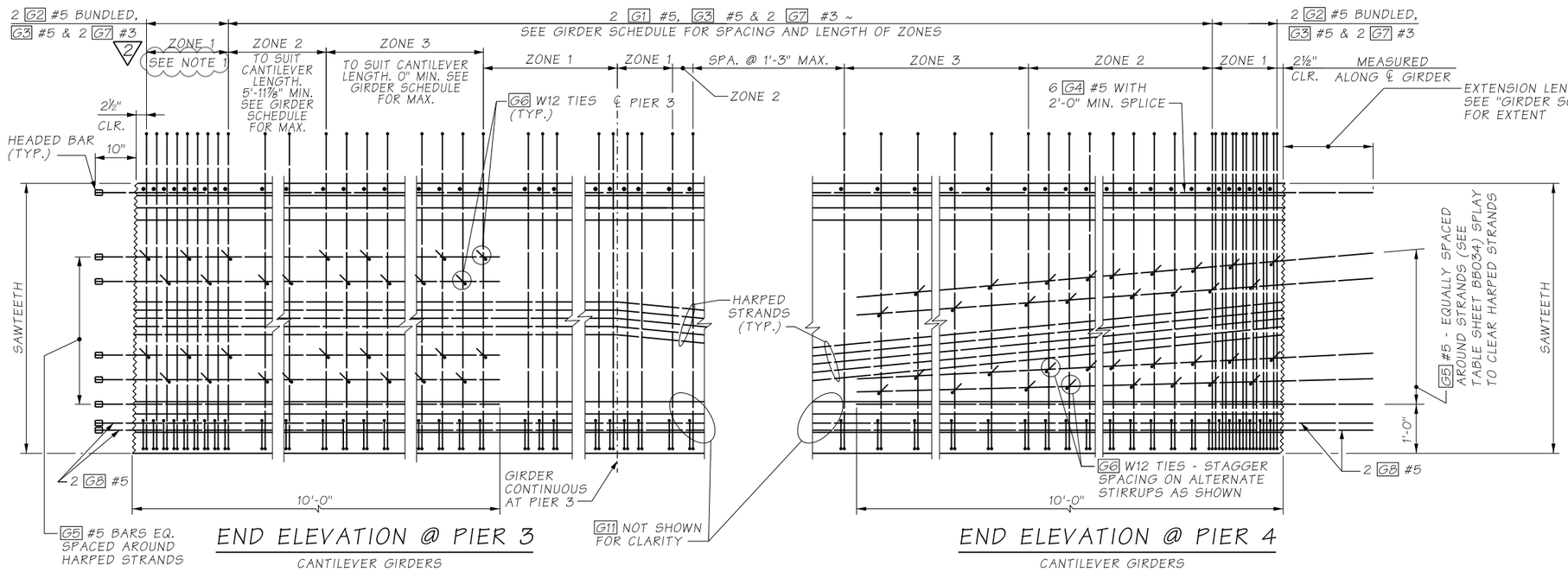

END ELEVATION @ PIER 3

CANTILEVER GIRDERS

END ELEVATION @ PIER 4

CANTILEVER GIRDERS

NOTES:

1. FOR GIRDERS 3A, 3L, AND 3M, FIELD TRIM STIRRUPS IN ZONE 1 ON CANTILEVER END TO MAINTAIN 2 1/2" MINIMUM CLEAR COVER TO TOP OF DECK. STIRRUPS SHALL MAINTAIN A MINIMUM LENGTH OF 5" FROM TOP OF GIRDER AFTER TRIMMING. FIELD BEND ANY REMAINING STIRRUPS OUTSIDE OF ZONE 1 TO MAINTAIN 2 1/2" CLEAR COVER TO TOP OF DECK.

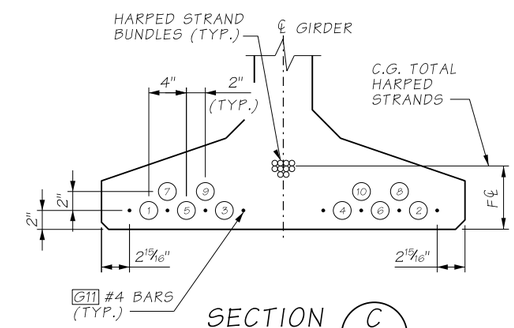

SECTION C

BOTTOM STRAIGHT STRAND LOCATION SEQUENCE SHALL BE AS SHOWN (1), (2) ETC.

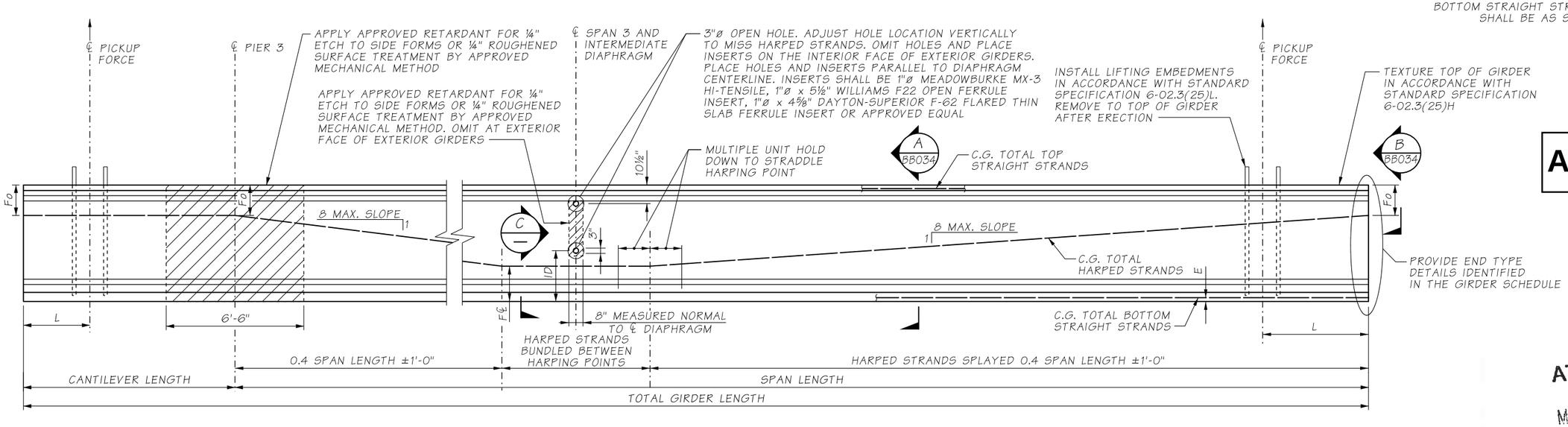

CANTILEVER GIRDER ELEVATION

AS-BUILT

ATKINSON

MAY 03 2019 KTW

RELEASED FOR CONSTRUCTION

FILE NAME	D:\ICS_workdir\26543\20633_1195\PS_BB038.dgn						
TIME	7:02:56 AM				REGION NO. 10	STATE WASH	FED.AID PROJ.NO.
DATE	4/30/2019						
PLOTTED BY	USLAS0-APP064$				JOB NUMBER		
DESIGNED BY	T. FU	REV 2 - RFI0082	05/03/2019				
ENTERED BY	R. REISER	REV 1 - RFI0017	01/09/2019				
CHECKED BY	S. CHEUNG	REV 0 - RELEASED FOR CONSTRUCTION	10/23/2018		CONTRACT NO. C9133		LOCATION NO.
PROJ. ENGR.	C. MEADE	REV A - FINAL REVIEW	9/28/2018				
REGIONAL ADM.	J. WYNANDS	REVISION	DATE	BY			

CORY J. CAYWOOD, STATE OF WASHINGTON, 38759, STRUCTURAL ENGINEER, PROFESSIONAL ENGINEER — 5/2/19 — DATE — P.E. STAMP BOX

DATE — P.E. STAMP BOX

Washington State Department of Transportation

ATKINSON CONSTRUCTION / JACOBS

I-5
STEILACOOM-DUPONT RD TO THORNE LN CORRIDOR IMPROVEMENTS
MP 120.01 TO MP 124.45
BERKELEY OVERPASS

GIRDER DETAILS (6 OF 6)

PLAN REF NO BB038

SHEET 1229 OF 1456 SHEETS

AS-BUILT

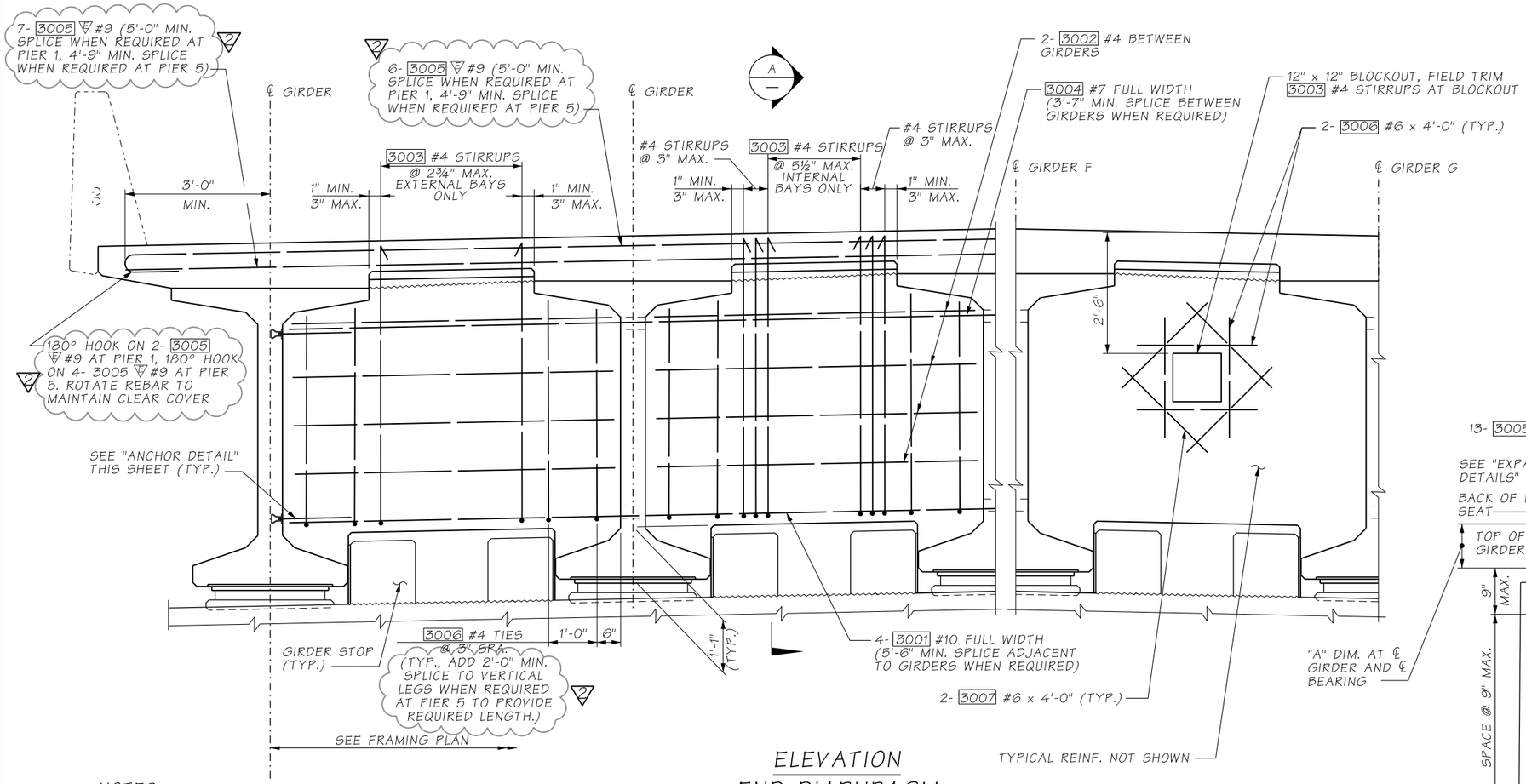

ELEVATION
END DIAPHRAGM

DIMENSIONS ARE ALONG ℄ DIAPHRAGM

NOTES:

1. GIRDERS SHALL BE HELD RIGIDLY IN PLACE WHEN DIAPHRAGMS ARE PLACED.
2. IT MAY BE NECESSARY TO THREAD #7 AND #10 REINFORCING BARS THROUGH HOLES IN GIRDERS PRIOR TO PLACING EXTERIOR GIRDERS.
3. CUT/RELEASE GIRDER TEMPORARY STRANDS BEFORE CASTING DIAPHRAGM. SEE TEMPORARY STRAND CUTTING SEQUENCE.
4. FOR CONCRETE PLACEMENT PROCEDURE SEE CONSTRUCTION SEQUENCE SHEETS.

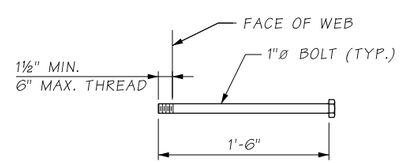

ANCHOR DETAIL

ASTM A-307

ATKINSON
FEB 20 2020 KTW
RELEASED FOR CONSTRUCTION

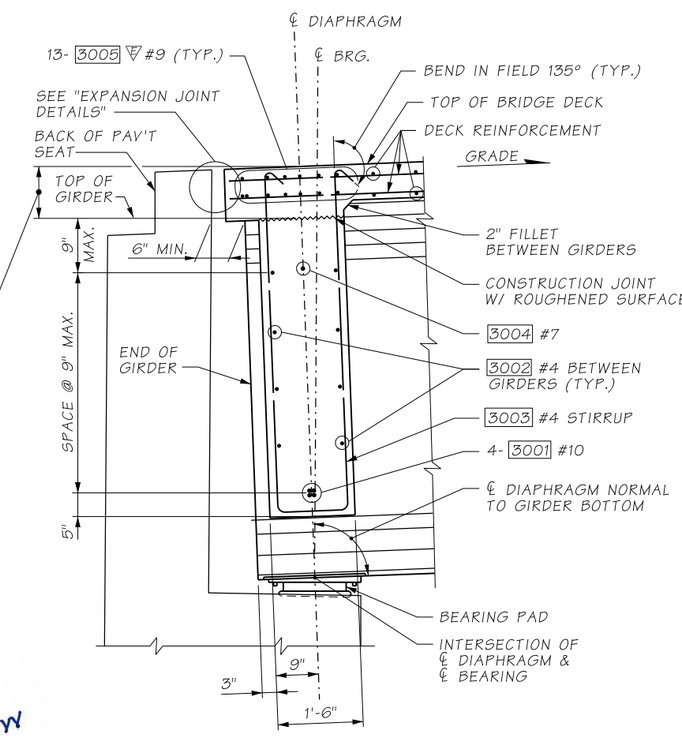

SECTION A

LONGITUDINAL DIMENSIONS ARE NORMAL TO DIAPHRAGM. (GIRDER STOP NOT SHOWN FOR CLARITY)

FILE NAME	D:\ICS_workdir\47054\20633_1114\PS_BB039.dgn				REGION NO. 10	STATE WASH	FED.AID PROJ.NO.
TIME	7:45:42 AM						
DATE	2/20/2020						
PLOTTED BY	USLAS0-APP064$						
DESIGNED BY	K. BICHICH	REV 2 - RFI0113, RFI0183, RFI0231	02/20/2020		JOB NUMBER		
ENTERED BY	R. REISER	REV 1 - RFI0055	03/19/2019				
CHECKED BY	C. CAYWOOD	REV 0 - RELEASED FOR CONSTRUCTION	10/23/2018		CONTRACT NO. C9133		LOCATION NO.
PROJ. ENGR.	C. MEADE	REV A - FINAL REVIEW	9/28/2018				
REGIONAL ADM.	J. WYNANDS	REVISION	DATE	BY			

CORY J. CAYWOOD, STATE OF WASHINGTON, 38755, STRUCTURAL ENGINEER, PROFESSIONAL ENGINEER — 2/20/20 DATE — P.E. STAMP BOX

P.E. STAMP BOX — DATE

Washington State Department of Transportation

ATKINSON / JACOBS CONSTRUCTION

I-5
STEILACOOM-DUPONT RD TO THORNE LN
CORRIDOR IMPROVEMENTS
MP 120.01 TO MP 124.45
BERKELEY OVERPASS

END DIAPHRAGMS AT PIERS 1 AND 5

PLAN REF NO BB039

SHEET 1230 OF 1456 SHEETS

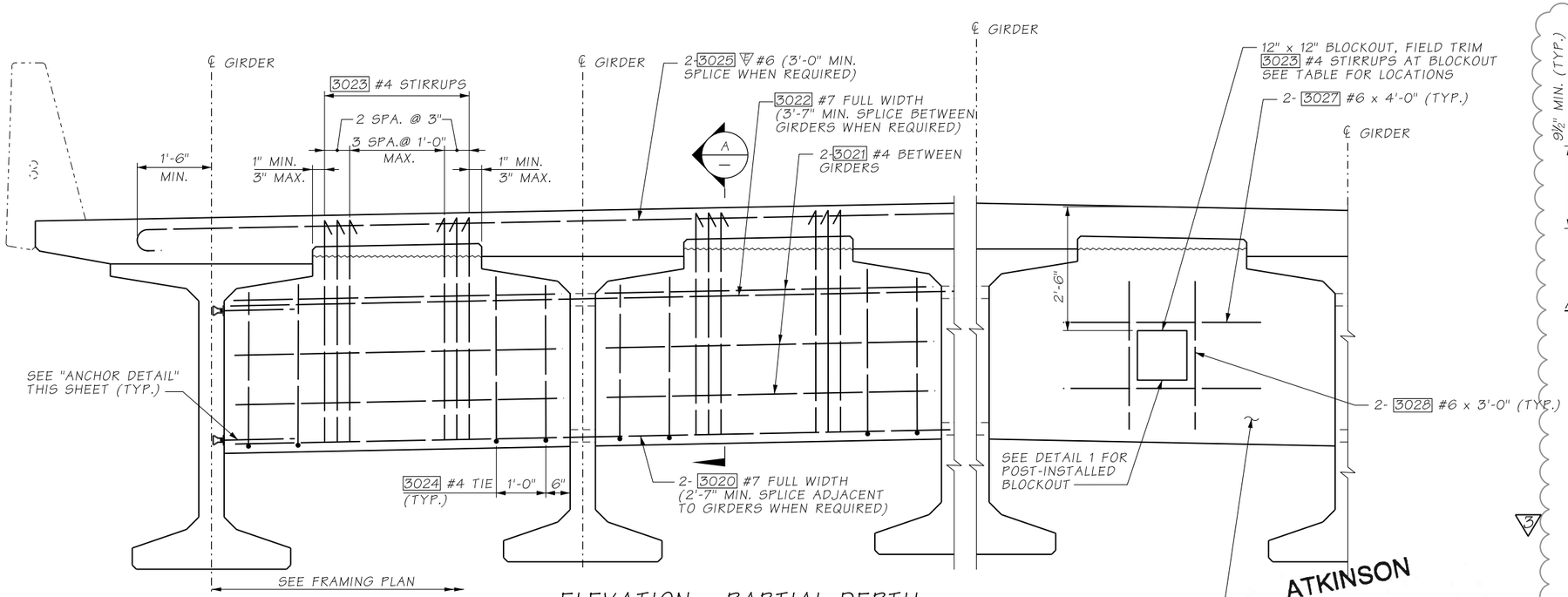

ELEVATION - PARTIAL DEPTH INTERMEDIATE DIAPHRAGM

DIMENSIONS ARE ALONG ℄ DIAPHRAGM
SPANS 1, 3 & 4 SHOWN, SPAN 2 SIMILAR 3

ATKINSON
FEB 20 2020 KTW
RELEASED FOR CONSTRUCTION

AS-BUILT

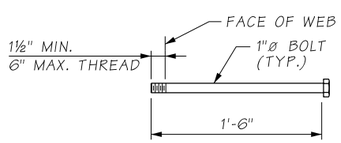

ANCHOR DETAIL

ASTM A-307

NOTES:

1. GIRDERS SHALL BE HELD RIGIDLY IN PLACE WHEN DIAPHRAGMS ARE PLACED.
2. IT MAY BE NECESSARY TO THREAD #7 REINFORCING BARS THROUGH HOLES IN GIRDERS PRIOR TO PLACING EXTERIOR GIRDERS.
3. CUT/RELEASE GIRDER TEMPORARY STRANDS BEFORE CASTING DIAPHRAGM. SEE TEMPORARY STRAND CUTTING SEQUENCE.
4. FOR CONCRETE PLACEMENT PROCEDURE SEE CONSTRUCTION SEQUENCE SHEETS.

BLOCKOUT LOCATIONS	
SPAN	LOCATION
SPAN 1	BETWEEN GIRDERS 1F & 1G
SPAN 2	BETWEEN GIRDERS 2F & 2G
SPAN 3	BETWEEN GIRDERS 3A & 3B BETWEEN GIRDERS 3G & 3H BETWEEN GIRDERS 3J & 3K

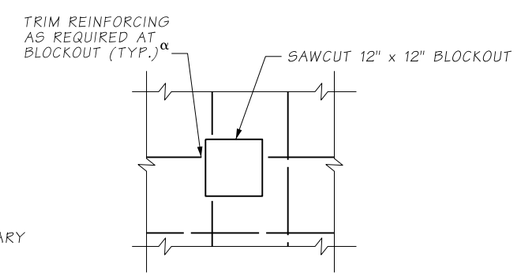

DETAIL 1

POST-INSTALLED BLOCKOUT, APPLIES AT SPAN 3 BETWEEN GIRDERS 3A & 3B, AND 3J & 3K

αREMOVE TRIMMED REINFORCING TO 1" MINIMUM BEYOND CONCRETE SURFACE, PATCH BACK WITH GROUT.

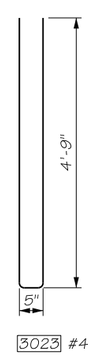

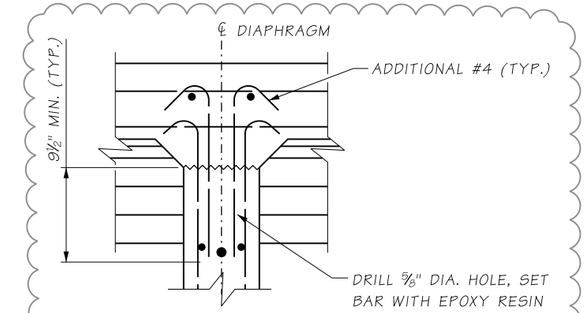

OPTION 1
ADDITIONAL DRILLED IN BAR

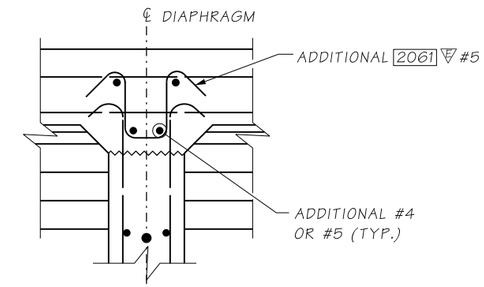

OPTION 2
ADDITIONAL HAT BAR

DETAIL 2

APPLIES FOR LOCATIONS WHERE 3023 #4 STIRRUPS ARE TOO SHORT TO PROVIDE 135° BENDS

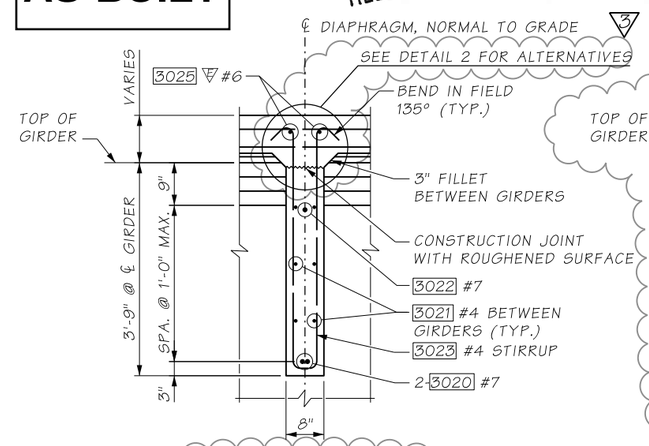

AT SPANS 1, 3 AND 4

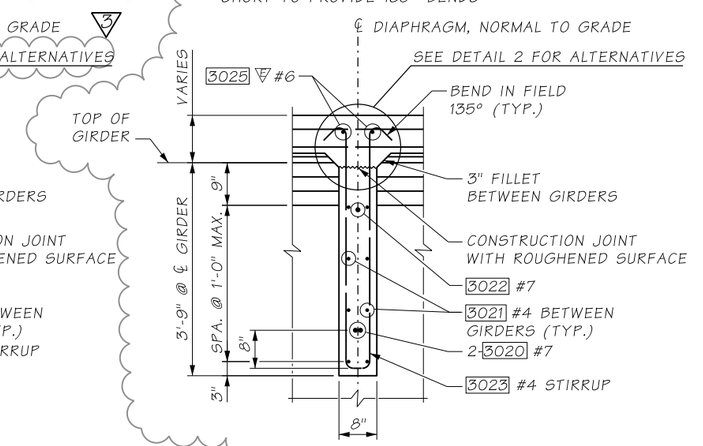

AT SPAN 2

SECTION A

LONGITUDINAL DIMENSIONS ARE NORMAL TO DIAPHRAGM

FILE NAME	D:\ICS_workdir\47055\20633_1151\PS_BB040.dgn					
TIME	7:51:11 AM			REGION NO. 10	STATE WASH	FED.AID PROJ.NO.
DATE	2/20/2020					
PLOTTED BY	USLAS0-APP064$	REV 3 - RFI0090, RFI0148, RFI0185	02/20/2020	JOB NUMBER		
DESIGNED BY	A. FONG	REV 2 - RFI0178	09/19/2019			
ENTERED BY	R. REISER	REV 1 - RFI0099	05/22/2019			
CHECKED BY	C. CAYWOOD	REV 0 - RELEASED FOR CONSTRUCTION	10/23/2018	CONTRACT NO. C9133		LOCATION NO.
PROJ. ENGR.	C. MEADE	REV A - FINAL REVIEW	9/28/2018			
REGIONAL ADM.	J. WYNANDS	REVISION	DATE	BY		

CORY J. CAYWOOD, STATE OF WASHINGTON, 38733, STRUCTURAL ENGINEER, PROFESSIONAL ENGINEER
2/20/20
DATE
P.E. STAMP BOX

DATE
P.E. STAMP BOX

Washington State Department of Transportation

ATKINSON / JACOBS CONSTRUCTION

I-5
STEILACOOM-DUPONT RD TO THORNE LN
CORRIDOR IMPROVEMENTS
MP 120.01 TO MP 124.45
BERKELEY OVERPASS

PARTIAL DEPTH INTERMEDIATE DIAPHRAGM DETAILS

PLAN REF NO BB040

SHEET 1231 OF 1456 SHEETS

AS-BUILT

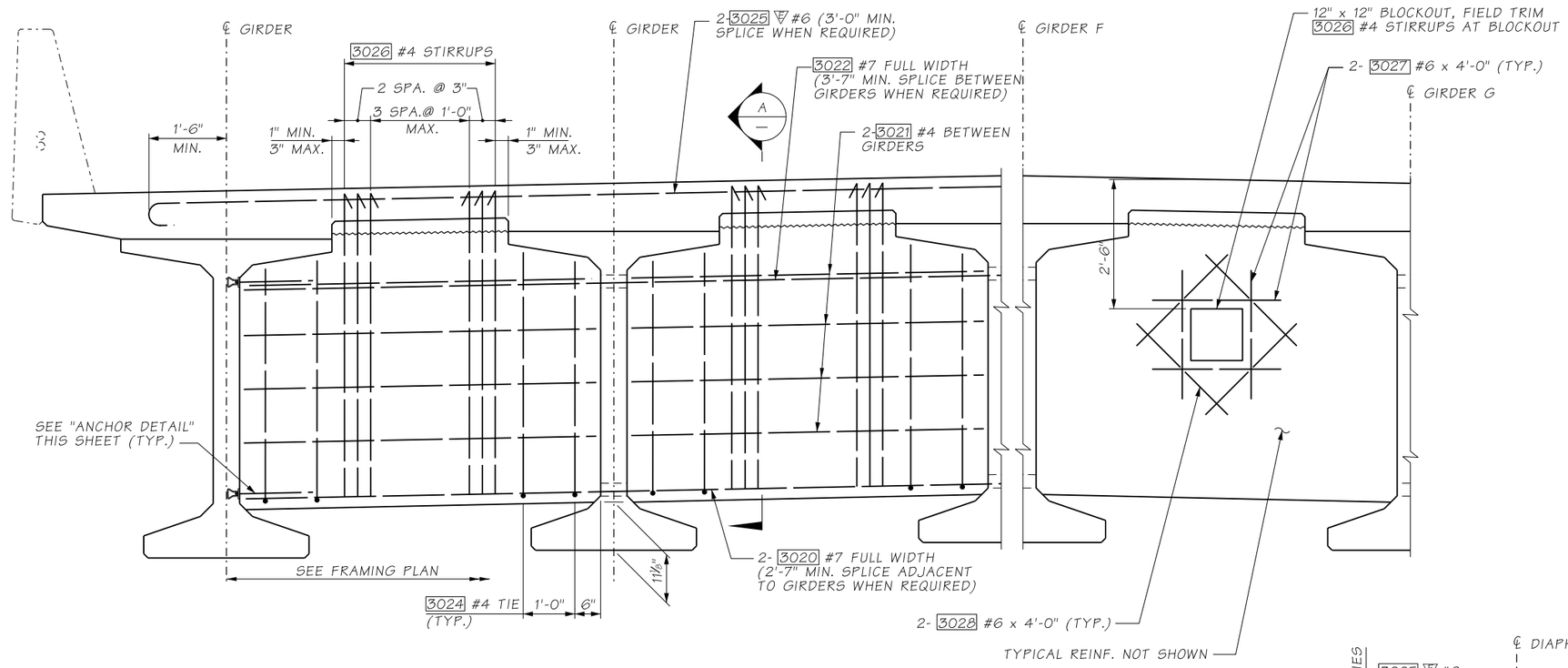

ELEVATION - FULL DEPTH INTERMEDIATE DIAPHRAGM

DIMENSIONS ARE ALONG ℄ DIAPHRAGM

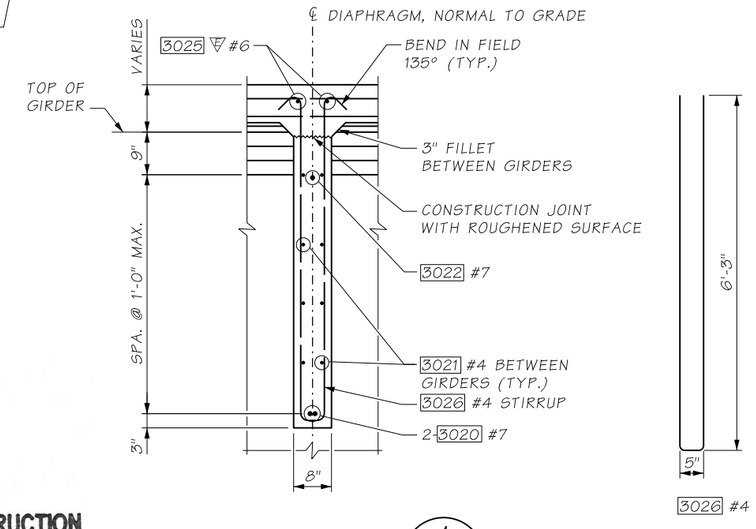

SECTION A

LONGITUDINAL DIMENSIONS ARE NORMAL TO DIAPHRAGM

NOTES:

1. GIRDERS SHALL BE HELD RIGIDLY IN PLACE WHEN DIAPHRAGMS ARE PLACED.
2. IT MAY BE NECESSARY TO THREAD #7 REINFORCING BARS THROUGH HOLES IN GIRDERS PRIOR TO PLACING EXTERIOR GIRDERS.
3. CUT/RELEASE GIRDER TEMPORARY STRANDS BEFORE CASTING DIAPHRAGM. SEE TEMPORARY STRAND CUTTING SEQUENCE.
4. FOR CONCRETE PLACEMENT PROCEDURE SEE "SUPERSTRUCTURE CONSTRUCTION SEQUENCE" SHEETS.

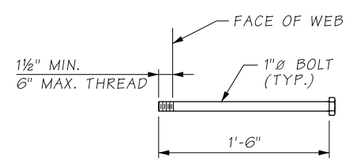

ANCHOR DETAIL

ASTM A-307

ATKINSON

OCT 24 2018

RELEASED FOR CONSTRUCTION

MRW.

FILE NAME	D:\ICS_workdir\13523\20633_1199\PS_BB041.dgn				REGION NO.	STATE	FED.AID PROJ.NO.
TIME	2:41:51 PM				10	WASH	
DATE	10/22/2018				JOB NUMBER		
PLOTTED BY	USLAS0-APP064$						
DESIGNED BY	A. FONG						
ENTERED BY	R. REISER						
CHECKED BY	C. CAYWOOD	REV 0 - RELEASED FOR CONSTRUCTION	10/23/2018		CONTRACT NO.		LOCATION NO.
PROJ. ENGR.	C. MEADE	REV A - FINAL REVIEW	9/28/2018		C8811		
REGIONAL ADM.	J. WYNANDS	REVISION	DATE	BY			

CORY J. CAYWOOD, STATE OF WASHINGTON, 38159, STRUCTURAL ENGINEER, PROFESSIONAL ENGINEER — 10/24/18 — DATE — P.E. STAMP BOX

P.E. STAMP BOX — DATE

Washington State Department of Transportation

ATKINSON CONSTRUCTION / JACOBS

I-5
STEILACOOM-DUPONT RD TO THORNE LN
CORRIDOR IMPROVEMENTS
MP 120.01 TO MP 124.45
BERKELEY OVERPASS

FULL DEPTH INTERMEDIATE DIAPHRAGM DETAILS

PLAN REF NO BB041

SHEET 1232 OF 1456 SHEETS

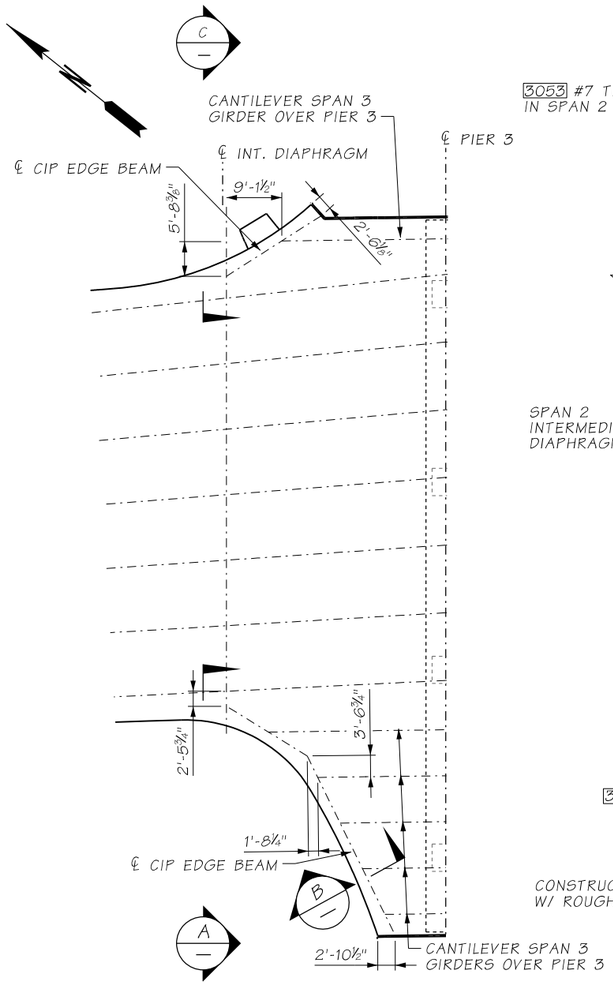

PLAN CIP EDGE BEAM AT CANTILEVER GIRDERS

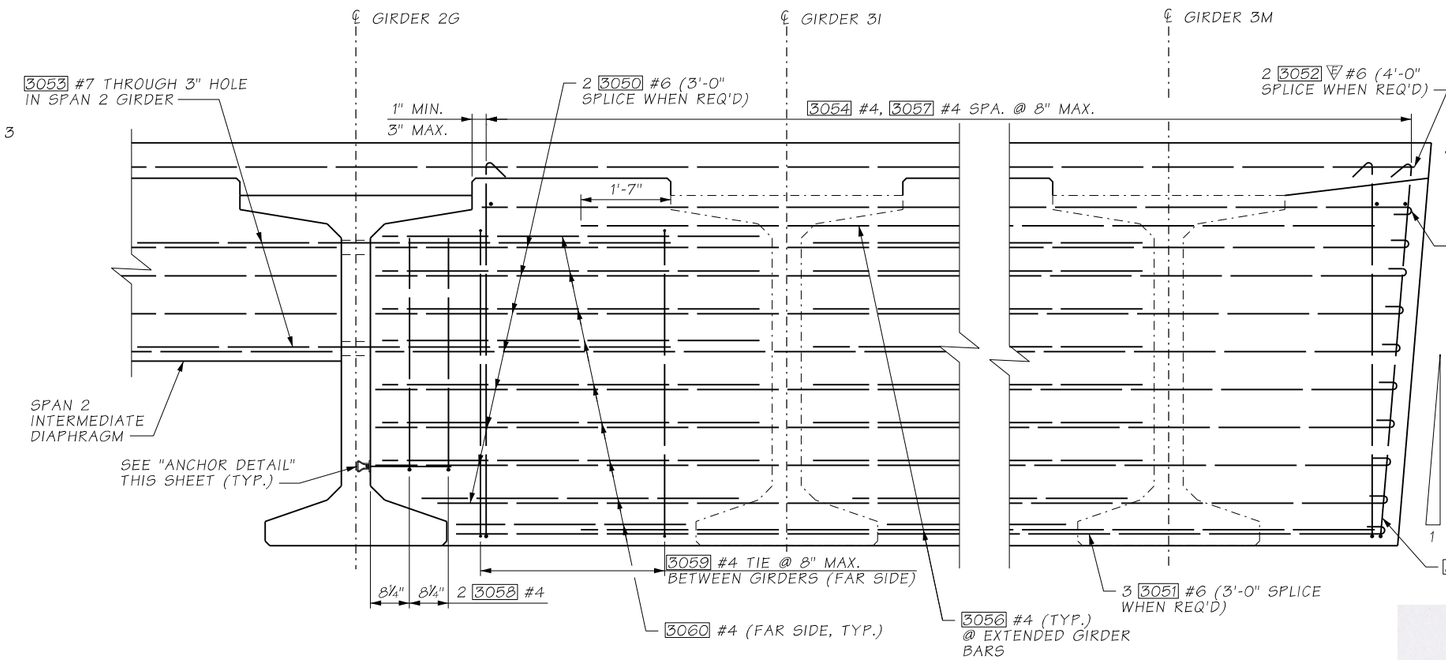

SECTION A

NOTES:

1. FIELD BEND HORIZONTAL REINFORCING AT ANGLE POINTS IN EDGE BEAM.
2. WHERE 3054 #4 STIRRUPS ARE TOO SHORT TO PROVIDE FULL 135° FIELD BEND IN DECK, IT IS ACCEPTABLE TO ADD #4 WITH 2'-0" MINIMUM LAP SPLICE TO PROVIDE FULL 135° BEND AT TOP OF BARS.

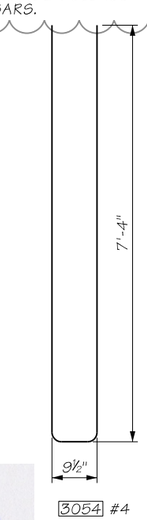

ATKINSON
APR 21 2020 KAW
RELEASED FOR CONSTRUCTION

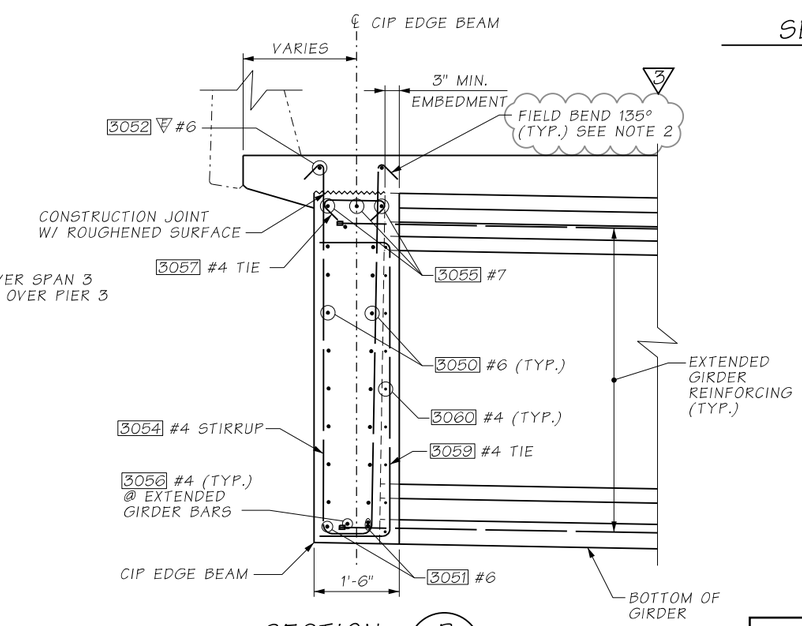

SECTION B

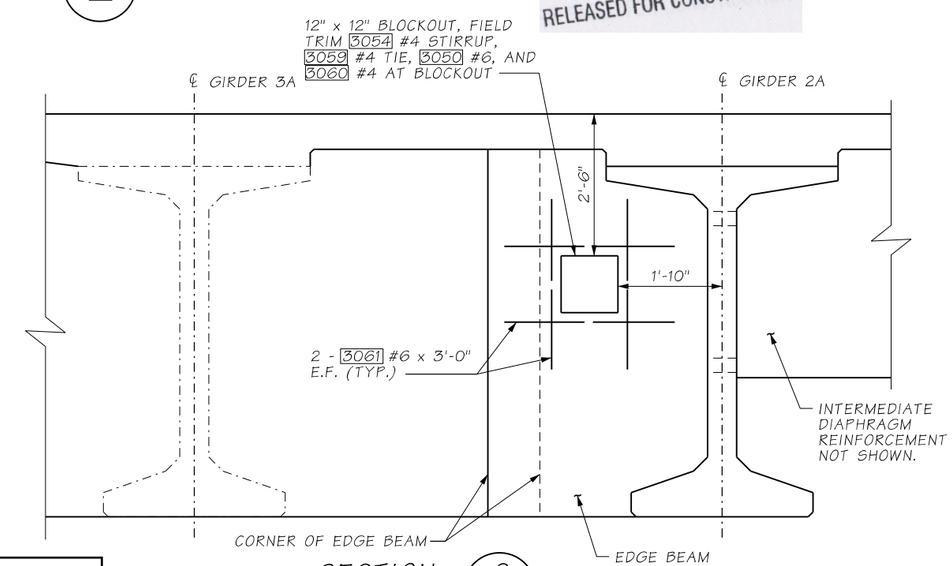

SECTION C

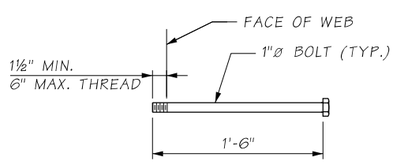

ANCHOR DETAIL

ASTM A-307

AS-BUILT

FILE NAME	c:\pwworking\jacobs_b&i\reiserrw\dms20633\PS_BB042.dgn			
TIME	11:51:54 AM			
DATE	4/15/2020			
PLOTTED BY	ReiserRW	REV 3 - RFI0127	04/17/2020	
DESIGNED BY	T. FU	REV 2 - RFI0069, RFI0099	05/22/2019	
ENTERED BY	R. REISER	REV 1 - RFI0017, RFI0019	01/09/2019	
CHECKED BY	S. CHEUNG	REV 0 - RELEASED FOR CONSTRUCTION	10/23/2018	
PROJ. ENGR.	C. MEADE	REV A - FINAL REVIEW	9/28/2018	
REGIONAL ADM.	J. WYNANDS	REVISION	DATE	BY

REGION NO.	STATE	FED.AID PROJ.NO.
10	WASH	
JOB NUMBER		
CONTRACT NO. C9133		LOCATION NO.

CORY J. CAYWOOD, STATE OF WASHINGTON, 38795, STRUCTURAL ENGINEER, PROFESSIONAL ENGINEER
4/16/20
DATE
P.E. STAMP BOX

DATE
P.E. STAMP BOX

Washington State Department of Transportation

ATKINSON / JACOBS CONSTRUCTION

I-5
STEILACOOM-DUPONT RD TO THORNE LN CORRIDOR IMPROVEMENTS
MP 120.01 TO MP 124.45
BERKELEY OVERPASS

CIP EDGE BEAM AT CANTILEVER GIRDERS

PLAN REF NO BB042

SHEET 1233 OF 1456 SHEETS

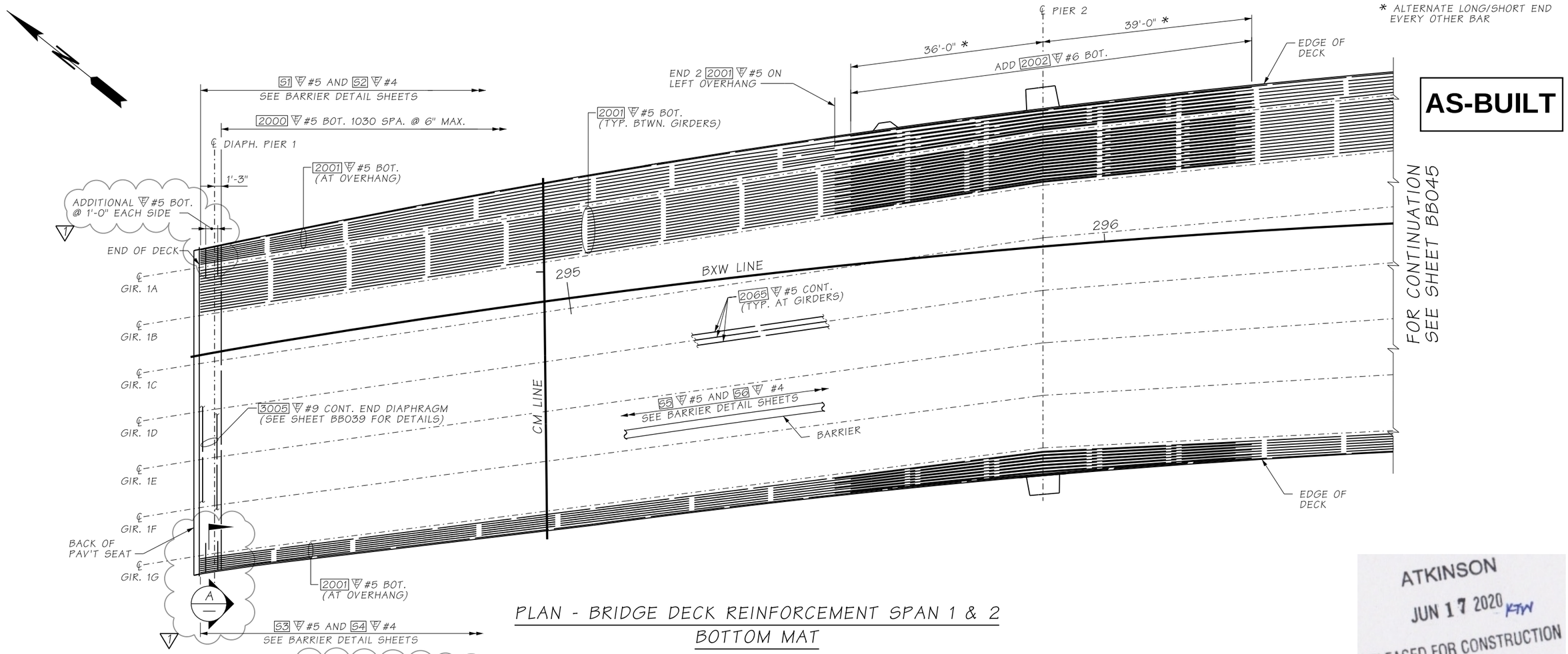

PLAN - BRIDGE DECK REINFORCEMENT SPAN 1 & 2 BOTTOM MAT

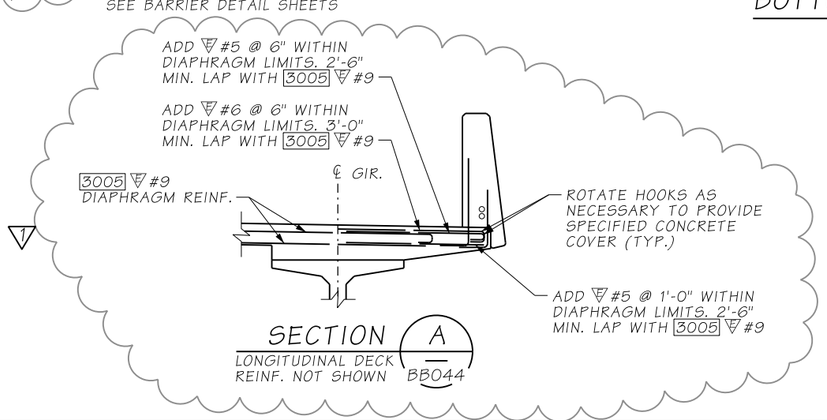

NOTES:

1. MINIMUM REBAR SPLICE LENGTH, UNLESS AS NOTED:
   #4 = 2'-0"
   #5 = 2'-6"
   #6 = 3'-0"
   BETWEEN #6 & #4 = 3'-0" (NO STAGGER REQUIRED)
   BETWEEN #7 & #4 = 3'-6" (NO STAGGER REQUIRED)

2. a) LOCATION OF SPLICES AT CONTRACTORS OPTION, UNLESS OTHERWISE NOTED.

   b) NO SPLICES OF REBAR ARE ALLOWED WITHIN 15'-0" FROM THE CENTERLINE OF THE PIER FOR LONGITUDINAL REINFORCEMENT UNLESS NOTED OTHERWISE.

3. ALL SPLICES SHALL BE STAGGERED SO NOT MORE THAN 50% OF THE REBAR IS SPLICED AT THE SAME LOCATION.

ATKINSON
JUN 17 2020 KTW
RELEASED FOR CONSTRUCTION

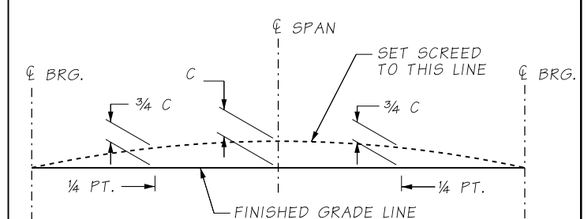

SCREED SETTING DIMENSIONS

FOR DIMENSION "C" SEE GIRDER SCHEDULE

FILE NAME	D:\ICS_workdir\54045\20633_1554\PS_BB043.dgn			
TIME	11:08:14 AM			
DATE	6/12/2020			
PLOTTED BY	USLAS0-APP064$			
DESIGNED BY	S. RAY			
ENTERED BY	R. REISER	REV 1 - RFI0171	06/18/2020	
CHECKED BY	G. CALLAHAN	REV 0 - RELEASED FOR CONSTRUCTION	04/05/2019	
PROJ. ENGR.	C. MEADE	REV A - FINAL REVIEW	03/11/2019	
REGIONAL ADM.	J. WYNANDS	REVISION	DATE	BY

REGION NO.	STATE	FED.AID PROJ.NO.
10	WASH	
JOB NUMBER		
CONTRACT NO. C9133		LOCATION NO.

CORY J. CAYWOOD, STATE OF WASHINGTON, 38158, STRUCTURAL ENGINEER, PROFESSIONAL ENGINEER
6/15/20
DATE
P.E. STAMP BOX

P.E. STAMP BOX DATE

Washington State Department of Transportation

ATKINSON / JACOBS CONSTRUCTION

I-5
STEILACOOM-DUPONT RD TO THORNE LN
CORRIDOR IMPROVEMENTS
MP 120.01 TO MP 124.45
BERKELEY OVERPASS

PLAN - BRIDGE DECK REINFORCING SPAN 1 & 2 BOTTOM MAT

PLAN REF NO BB043

SHEET 1234 OF 1456 SHEETS

* ALTERNATE LONG/SHORT END EVERY OTHER BAR

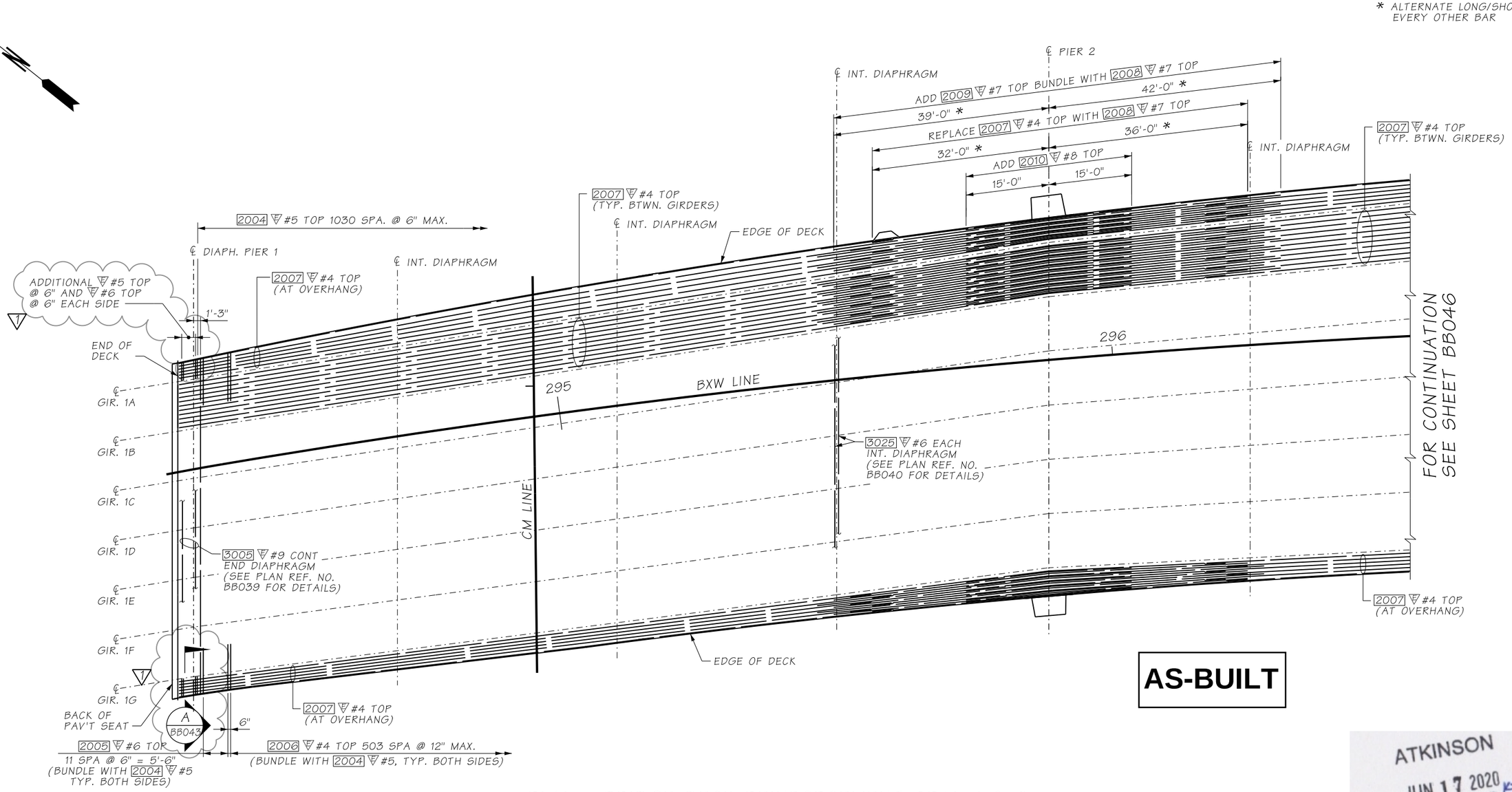

AS-BUILT

ATKINSON
JUN 17 2020 KTW
RELEASED FOR CONSTRUCTION

PLAN - BRIDGE DECK REINFORCEMENT SPAN 1 & 2
TOP MAT

NOTES:

1. SEE SHEET BB043 FOR NOTES.

FILE NAME	D:\ICS_workdir\54045\20633_1464\PS_BB044.dgn						
TIME	11:08:05 AM				REGION NO. 10	STATE WASH	FED.AID PROJ.NO.
DATE	6/12/2020						
PLOTTED BY	USLAS0-APP064$						
DESIGNED BY	S. RAY				JOB NUMBER		
ENTERED BY	R. REISER	REV 1 - RFI0171	06/18/2020				
CHECKED BY	G. CALLAHAN	REV 0 - RELEASED FOR CONSTRUCTION	04/05/2019		CONTRACT NO. C9133		LOCATION NO.
PROJ. ENGR.	C. MEADE	REV A - FINAL REVIEW	03/11/2019				
REGIONAL ADM.	J. WYNANDS	REVISION	DATE	BY			

CORY J. CAYWOOD, STATE OF WASHINGTON, 38759, STRUCTURAL ENGINEER, PROFESSIONAL ENGINEER
6/15/20
DATE
P.E. STAMP BOX

DATE
P.E. STAMP BOX

Washington State Department of Transportation

ATKINSON / JACOBS CONSTRUCTION

I-5
STEILACOOM-DUPONT RD TO THORNE LN
CORRIDOR IMPROVEMENTS
MP 120.01 TO MP 124.45
BERKELEY OVERPASS

PLAN - BRIDGE DECK REINFORCING SPAN 1 & 2 TOP MAT

PLAN REF NO BB044

SHEET 1235 OF 1456 SHEETS

* ALTERNATE LONG/SHORT END EVERY OTHER BAR

AS-BUILT

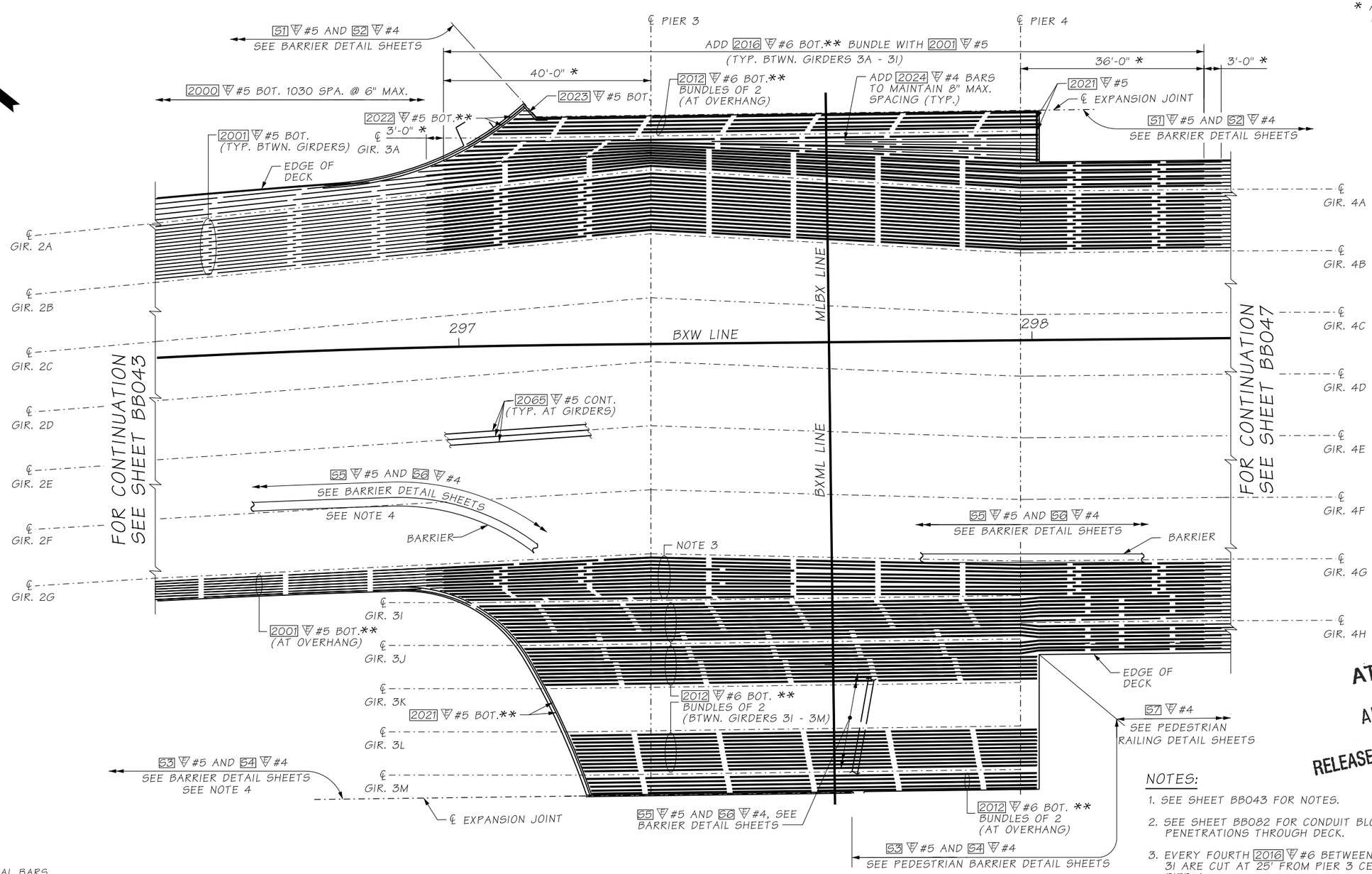

** END LONGITUDINAL BARS 2012 #6 2016 #6, AND 2001 #5 TO AVOID CONFLICT WITH 2021 #5 AND 2022 #5 SEE NOTE 4

PLAN - BRIDGE DECK REINFORCEMENT SPAN 2, 3 & 4 BOTTOM MAT

ATKINSON
APR 08 2019 KTW
RELEASED FOR CONSTRUCTION

NOTES:

1. SEE SHEET BB043 FOR NOTES.
2. SEE SHEET BB082 FOR CONDUIT BLOCKOUT DETAILS FOR PENETRATIONS THROUGH DECK.
3. EVERY FOURTH 2016 #6 BETWEEN GIRDERS 2G AND 3I ARE CUT AT 25' FROM PIER 3 CENTER LINE TOWARDS PIER 4.
4. WHERE IN CONFLICT WITH BOTTOM MAT OF REINFORCING, PLACE 52 #4 AND 54 #4 ON TOP OF BOTTOM REINFORCING MAT AT CURVED BARRIER LOCATIONS.

FILE NAME	D:\ICS_workdir\24876\20633_1555\PS_BB045.dgn						
TIME	7:49:48 AM				REGION NO.	STATE	FED.AID PROJ.NO.
DATE	4/5/2019				10	WASH	
PLOTTED BY	USLAS0-APP064$				JOB NUMBER		
DESIGNED BY	S. RAY						
ENTERED BY	R. REISER						
CHECKED BY	G. CALLAHAN	REV 0 - RELEASED FOR CONSTRUCTION	04/05/2019		CONTRACT NO.		LOCATION NO.
PROJ. ENGR.	C. MEADE	REV A - FINAL REVIEW	03/11/2019		C8811		
REGIONAL ADM.	J. WYNANDS	REVISION	DATE	BY			

CORY J. CAYWOOD, STATE OF WASHINGTON, 38133, STRUCTURAL, PROFESSIONAL ENGINEER
4/5/19
DATE
P.E. STAMP BOX

DATE
P.E. STAMP BOX

Washington State Department of Transportation

ATKINSON / JACOBS CONSTRUCTION

I-5
STEILACOOM-DUPONT RD TO THORNE LN CORRIDOR IMPROVEMENTS
MP 120.01 TO MP 124.45
BERKELEY OVERPASS

PLAN - BRIDGE DECK REINFORCING SPAN 2, 3 & 4 BOTTOM MAT

PLAN REF NO BB045

SHEET 1236 OF 1456 SHEETS

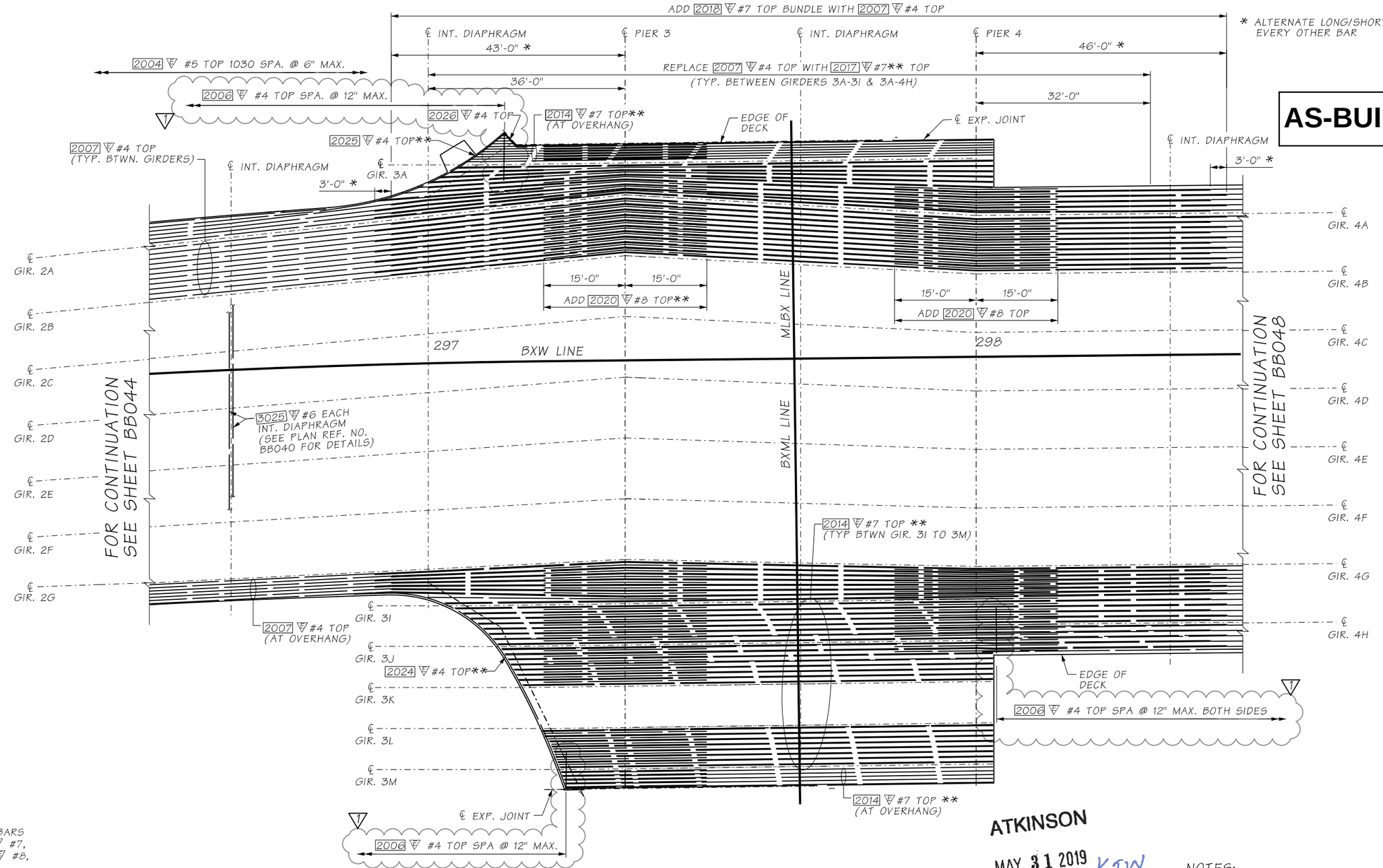

** END LONGITUDINAL BARS 2017 #7, 2018 #7, 2014 #7, 2020 #8, AND 2007 #4 TO AVOID CONFLICT WITH 2024 #4 AND 2025 #4

PLAN - BRIDGE DECK REINFORCEMENT SPAN 2, 3 & 4 TOP MAT

ATKINSON

MAY 31 2019 KTW

RELEASED FOR CONSTRUCTION

NOTES:

1. SEE SHEET BB043 FOR NOTES.

FILE NAME	c:\pwworking\jacobs_b&i\caywoocj\dms20633\PS_BB046.dgn						
TIME	8:45:34 AM						
DATE	5/30/2019						
PLOTTED BY	caywoocj						
DESIGNED BY	S. RAY						
ENTERED BY	R. REISER	REV 1 - RFI110	05/29/2019				
CHECKED BY	G. CALLAHAN	REV 0 - RELEASED FOR CONSTRUCTION	04/05/2019				
PROJ. ENGR.	C. MEADE	REV A - FINAL REVIEW	03/11/2019				
REGIONAL ADM.	J. WYNANDS	REVISION	DATE	BY			

REGION NO.	STATE	FED.AID PROJ.NO.
10	WASH	
JOB NUMBER		
CONTRACT NO.		LOCATION NO.
C9133		

P.E. STAMP BOX — DATE 5/30/2019

P.E. STAMP BOX — DATE

Washington State Department of Transportation

ATKINSON CONSTRUCTION / JACOBS

I-5
STEILACOOM-DUPONT RD TO THORNE LN
CORRIDOR IMPROVEMENTS
MP 120.01 TO MP 124.45
BERKELEY OVERPASS

PLAN - BRIDGE DECK REINFORCING SPAN 2, 3 & 4 TOP MAT

PLAN REF NO BB046

SHEET 1237 OF 1456 SHEETS

AS-BUILT

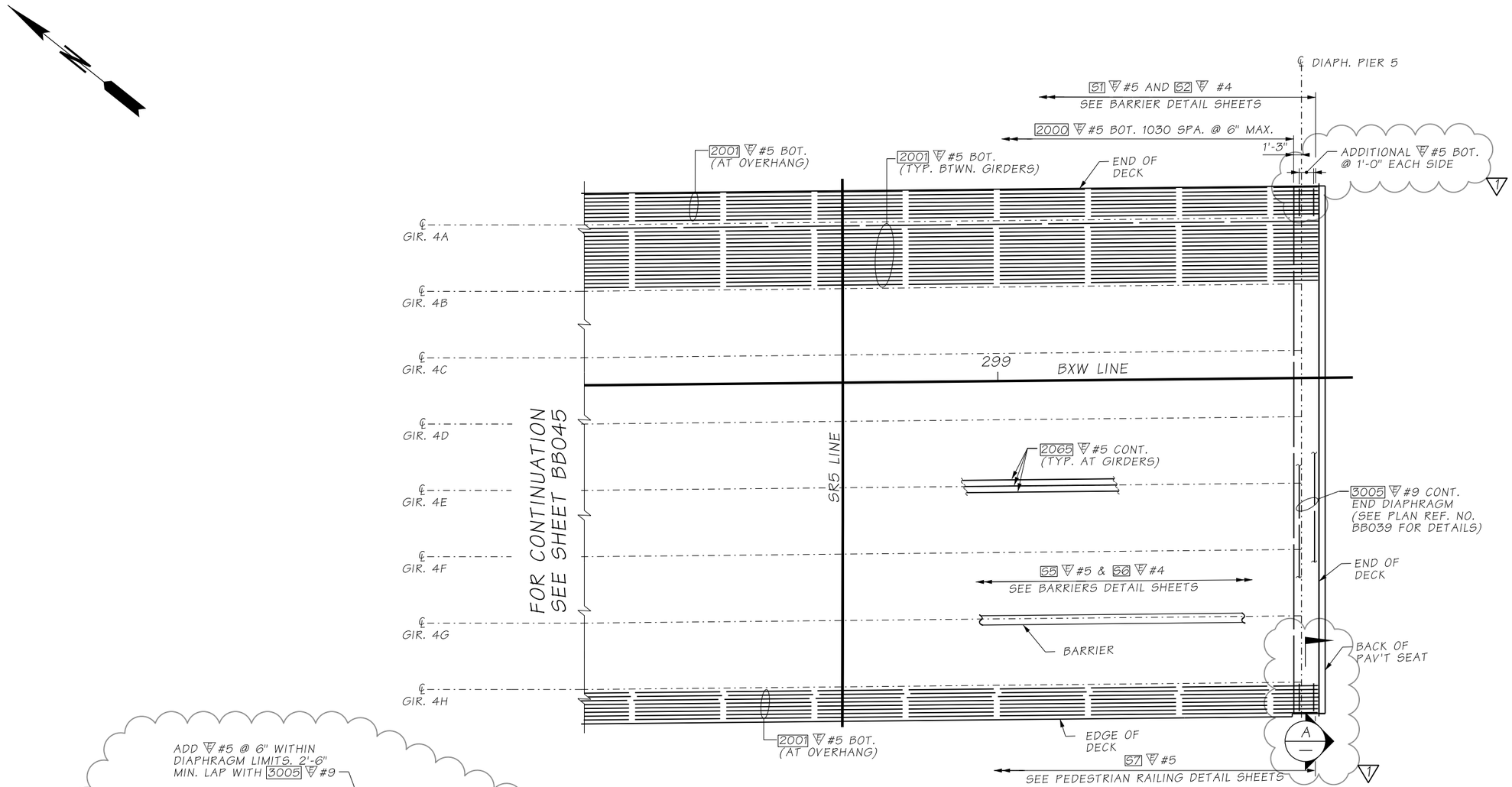

PLAN - BRIDGE DECK REINFORCEMENT SPAN 4
BOTTOM MAT

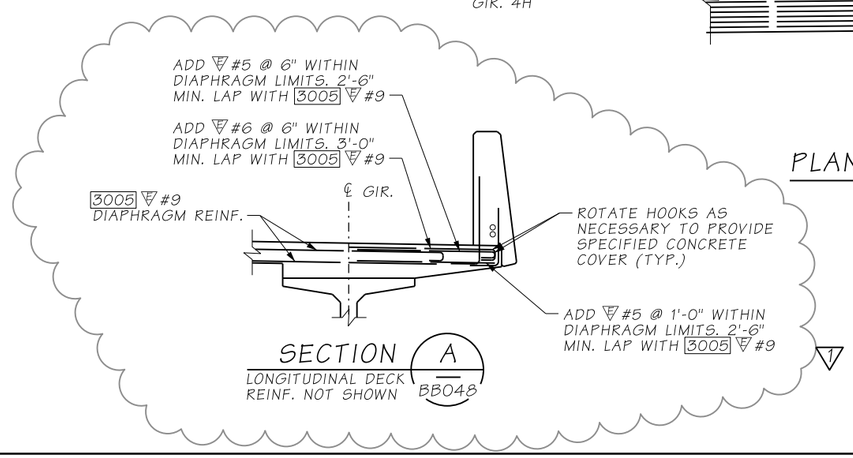

SECTION A
LONGITUDINAL DECK REINF. NOT SHOWN
BB048

ATKINSON
JUN 17 2020 KTW
RELEASED FOR CONSTRUCTION

NOTES:

1. SEE SHEET BB043 FOR NOTES.

FILE NAME	D:\ICS_workdir\54045\20633_1543\PS_BB047.dgn			
TIME	11:08:06 AM			
DATE	6/12/2020			
PLOTTED BY	USLAS0-APP064$			
DESIGNED BY	S. RAY			
ENTERED BY	R. REISER	REV 1 - RFI0171	06/18/2020	
CHECKED BY	G. CALLAHAN	REV 0 - RELEASED FOR CONSTRUCTION	04/05/2019	
PROJ. ENGR.	C. MEADE	REV A - FINAL REVIEW	03/11/2019	
REGIONAL ADM.	J. WYNANDS	REVISION	DATE	BY

REGION NO.	STATE	FED.AID PROJ.NO.
10	WASH	
JOB NUMBER		
CONTRACT NO. C9133		LOCATION NO.

CORY J. CAYWOOD STATE OF WASHINGTON 38759 STRUCTURAL ENGINEER PROFESSIONAL ENGINEER
6/15/20
DATE
P.E. STAMP BOX

DATE
P.E. STAMP BOX

Washington State Department of Transportation
ATKINSON CONSTRUCTION / JACOBS

I-5
STEILACOOM-DUPONT RD TO THORNE LN
CORRIDOR IMPROVEMENTS
MP 120.01 TO MP 124.45
BERKELEY OVERPASS

PLAN - BRIDGE DECK REINFORCING SPAN 4 BOTTOM MAT

PLAN REF NO BB047
SHEET 1238 OF 1456 SHEETS

AS-BUILT

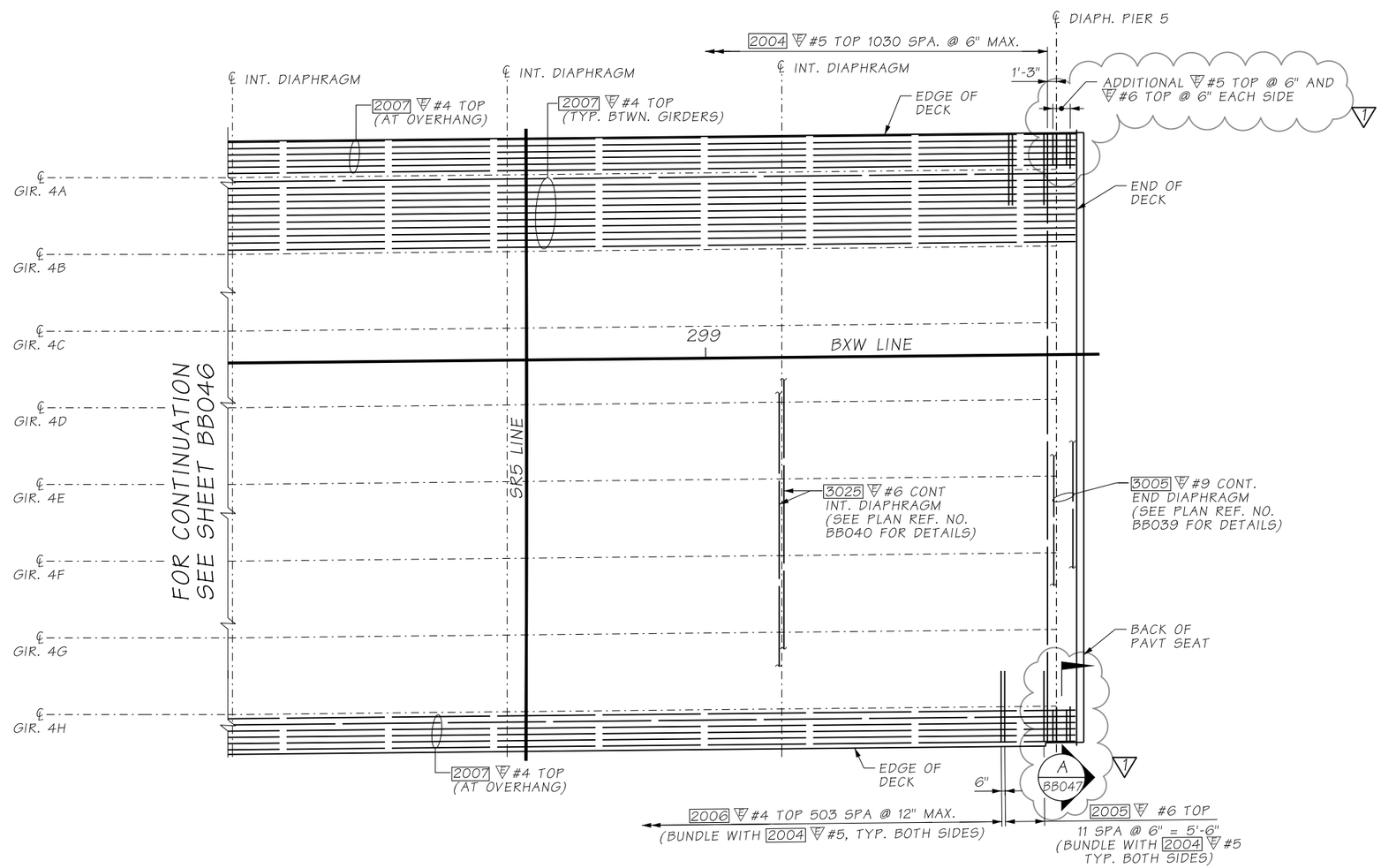

PLAN - BRIDGE DECK REINFORCEMENT SPAN 4
TOP MAT

ATKINSON
JUN 17 2020 KTW
RELEASED FOR CONSTRUCTION

NOTES:

1. SEE SHEET BB043 FOR NOTES.

FILE NAME	D:\ICS_workdir\54045\20633_1545\PS_BB048.dgn						
TIME	11:08:07 AM				REGION NO. 10	STATE WASH	FED.AID PROJ.NO.
DATE	6/12/2020						
PLOTTED BY	USLAS0-APP064$						
DESIGNED BY	S.RAY				JOB NUMBER		
ENTERED BY	R. REISER	REV 1 - RFI0171	06/18/2020				
CHECKED BY	G. CALLAHAN	REV 0 - RELEASED FOR CONSTRUCTION	04/05/2019		CONTRACT NO. C9133		LOCATION NO.
PROJ. ENGR.	C. MEADE	REV A - FINAL REVIEW	03/11/2019				
REGIONAL ADM.	J. WYNANDS	REVISION	DATE	BY			

CORY J. CAYWOOD, STATE OF WASHINGTON, 38759, STRUCTURAL ENGINEER, PROFESSIONAL ENGINEER
6/15/20
DATE
P.E. STAMP BOX

P.E. STAMP BOX
DATE

Washington State Department of Transportation

ATKINSON CONSTRUCTION / JACOBS

I-5
STEILACOOM-DUPONT RD TO THORNE LN
CORRIDOR IMPROVEMENTS
MP 120.01 TO MP 124.45
BERKELEY OVERPASS

PLAN - BRIDGE DECK REINFORCING
SPAN 4 TOP MAT

PLAN REF NO
BB048

SHEET 1239 OF 1456 SHEETS

AS-BUILT

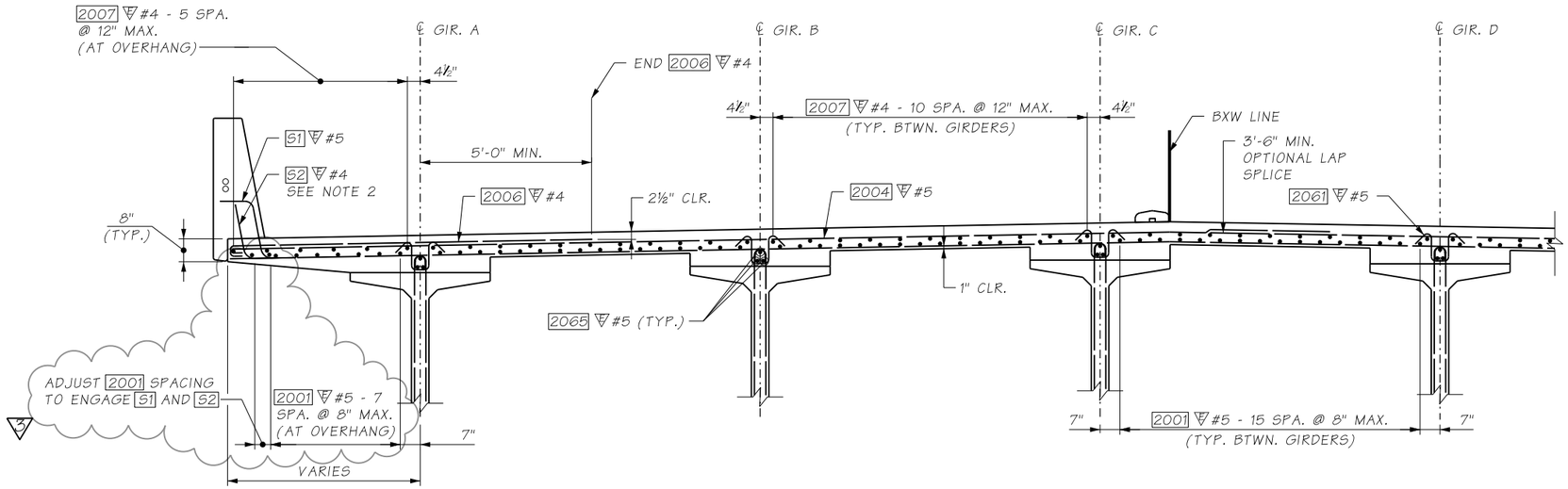

SECTION NEAR MIDSPAN - TYPICAL DECK REINFORCING

SHOWN NEAR MIDSPAN SPAN 1 AND SPAN 2

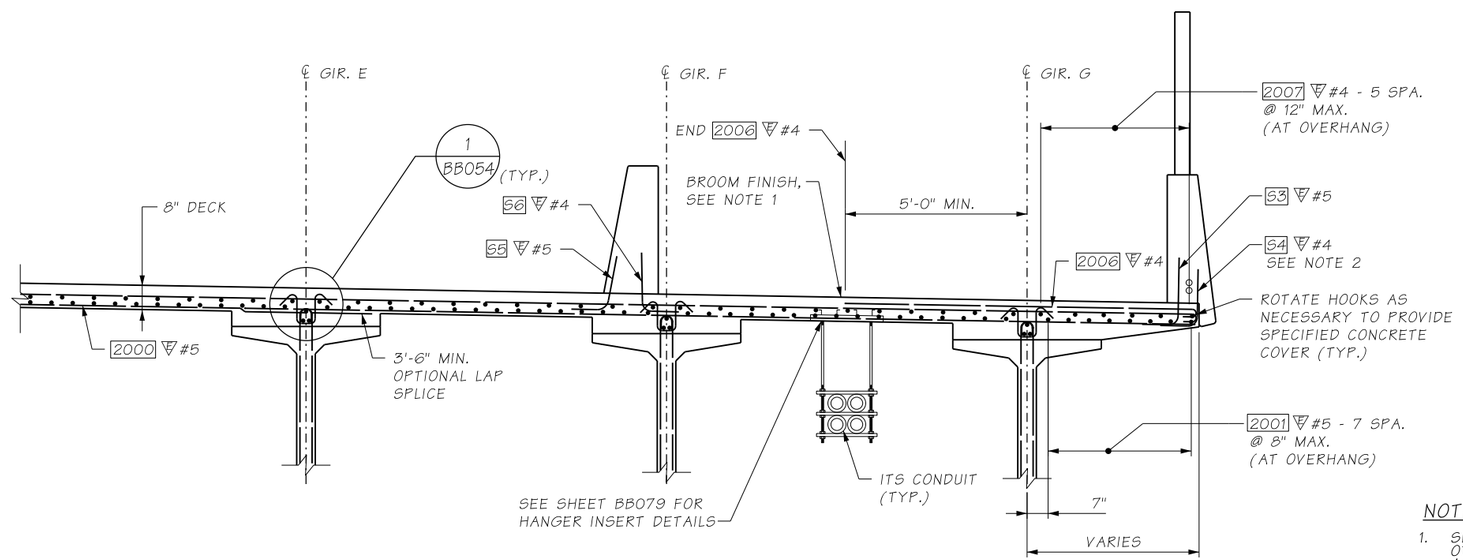

SECTION NEAR MIDSPAN - TYPICAL DECK REINFORCING

SHOWN NEAR MIDSPAN SPAN 1 AND SPAN 2

ATKINSON
JUN 17 2020 KTW
RELEASED FOR CONSTRUCTION

NOTES:

1. SIDEWALK SHALL RECEIVE BROOM FINISH. ALL OTHER SURFACES SHALL BE FINISHED IN ACCORDANCE WITH STANDARD SPECIFICATION 6-02.3(10)D5 UNLESS NOTED OTHERWISE.
2. PLACE S2 #4 AND S4 #4 ON TOP OF BOTTOM REINFORCING MAT AT CURVED BARRIER LOCATIONS WHERE IN CONFLICT WITH BOTTOM MAT.
3. PLACE S5 #5 AND S6 #4 FORM SAVER BARS ON TOP OF THE BOTTOM REINFORCING MAT.

FILE NAME	D:\ICS_workdir\54045\20633_1495\PS_BB049.dgn			
TIME	11:08:03 AM			
DATE	6/12/2020			
PLOTTED BY	USLAS0-APP064$	REV 3 - RFI0157	06/18/2020	
DESIGNED BY	S. RAY	REV 2 - RFI0088	04/17/2020	
ENTERED BY	R. REISER	REV 1 - RFI110	05/29/2019	
CHECKED BY	G. CALLAHAN	REV 0 - RELEASED FOR CONSTRUCTION	04/05/2019	
PROJ. ENGR.	C. MEADE	REV A - FINAL REVIEW	03/11/2019	
REGIONAL ADM.	J. WYNANDS	REVISION	DATE	BY

REGION NO.	STATE	FED.AID PROJ.NO.
10	WASH	
JOB NUMBER		
CONTRACT NO. C9133		LOCATION NO.

CORY J. CAYWOOD, STATE OF WASHINGTON, 38759, STRUCTURAL ENGINEER, PROFESSIONAL ENGINEER
6/15/20
DATE
P.E. STAMP BOX

P.E. STAMP BOX
DATE

Washington State Department of Transportation

ATKINSON / JACOBS CONSTRUCTION

I-5
STEILACOOM-DUPONT RD TO THORNE LN CORRIDOR IMPROVEMENTS
MP 120.01 TO MP 124.45
BERKELEY OVERPASS

TYPICAL SECTION - DECK REINFORCING SPAN 1 & 2 (1 OF 2)

PLAN REF NO BB049

SHEET 1240 OF 1456 SHEETS

AS-BUILT

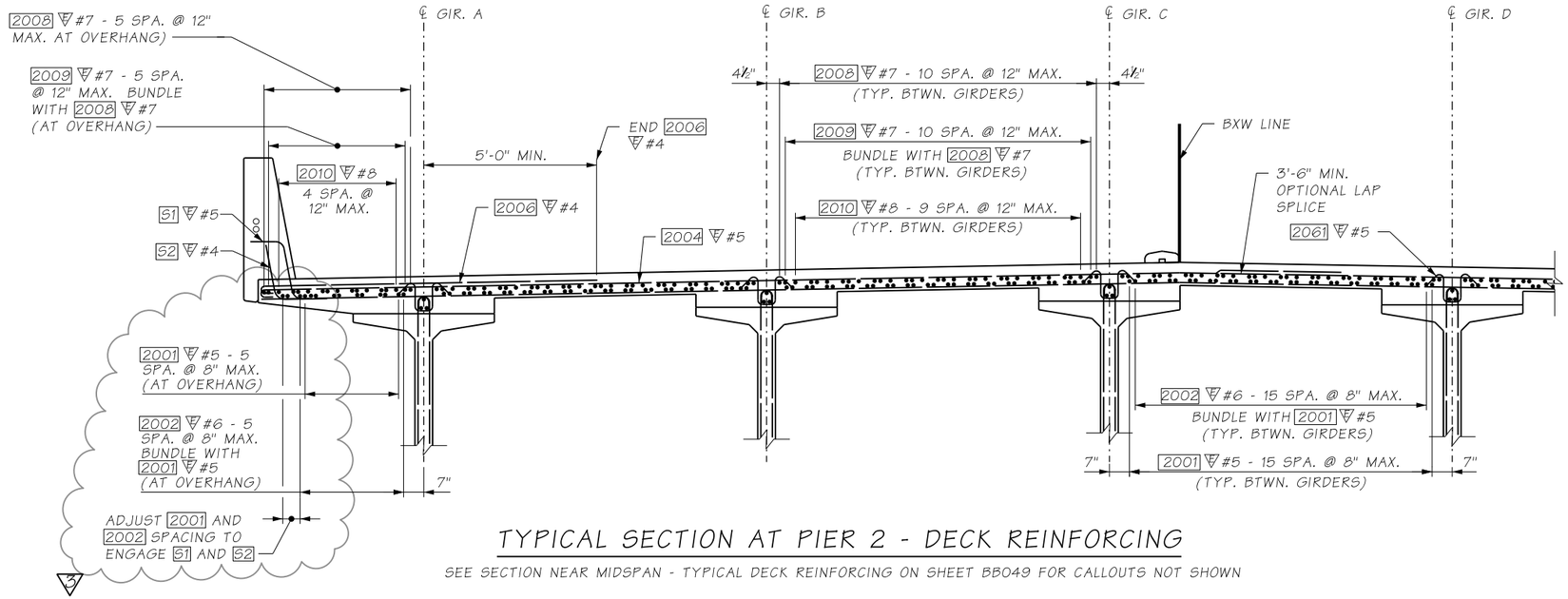

TYPICAL SECTION AT PIER 2 - DECK REINFORCING

SEE SECTION NEAR MIDSPAN - TYPICAL DECK REINFORCING ON SHEET BB049 FOR CALLOUTS NOT SHOWN

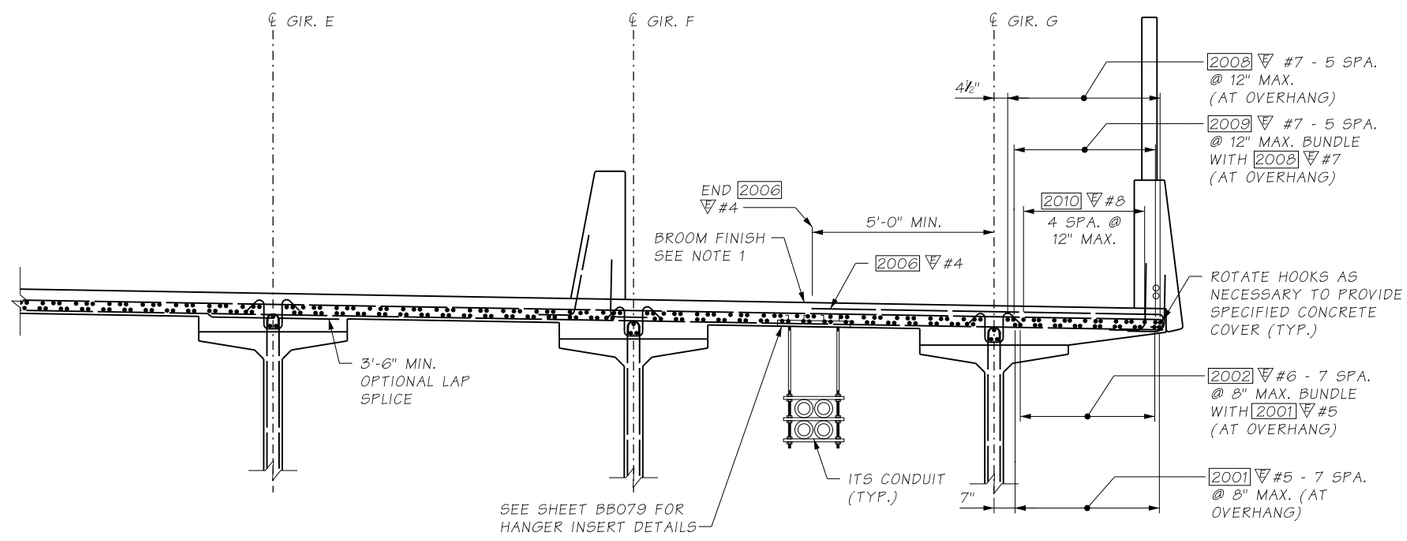

TYPICAL SECTION AT PIER 2 - DECK REINFORCING

SEE SECTION NEAR MIDSPAN - TYPICAL DECK REINFORCING ON SHEET BB049 FOR CALLOUTS NOT SHOWN

ATKINSON
JUN 17 2020 KTW
RELEASED FOR CONSTRUCTION

NOTES:

1. SIDEWALK SHALL RECEIVE BROOM FINISH. ALL OTHER SURFACES SHALL BE FINISHED IN ACCORDANCE WITH STANDARD SPECIFICATION 6-02.3(10)D5 UNLESS OTHERWISE NOTED.
2. PLACE S5 #5 AND S6 #4 FORM SAVER BARS ON TOP OF THE BOTTOM REINFORCING MAT.

FILE NAME	D:\ICS_workdir\54045\20633_1594\PS_BB050.dgn			
TIME	11:08:07 AM			
DATE	6/12/2020			
PLOTTED BY	USLAS0-APP064$	REV 3 - RFI0157	06/18/2020	
DESIGNED BY	S. RAY	REV 2 - RFI0088	04/17/2020	
ENTERED BY	R. REISER	REV 1 - RFI110	05/29/2019	
CHECKED BY	G. CALLAHAN	REV 0 - RELEASED FOR CONSTRUCTION	04/05/2019	
PROJ. ENGR.	C. MEADE	REV A - FINAL REVIEW	03/11/2019	
REGIONAL ADM.	J. WYNANDS	REVISION	DATE	BY

REGION NO.	STATE	FED.AID PROJ.NO.
10	WASH	
JOB NUMBER		
CONTRACT NO. C9133		LOCATION NO.

CORY J. CAYWOOD, STATE OF WASHINGTON, 38759, STRUCTURAL ENGINEER, PROFESSIONAL ENGINEER
6/15/20
DATE
P.E. STAMP BOX

P.E. STAMP BOX
DATE

Washington State Department of Transportation

ATKINSON CONSTRUCTION / JACOBS

I-5
STEILACOOM-DUPONT RD TO THORNE LN CORRIDOR IMPROVEMENTS
MP 120.01 TO MP 124.45
BERKELEY OVERPASS

TYPICAL SECTION - DECK REINFORCING SPAN 1 & 2 (2 OF 2)

PLAN REF NO BB050

SHEET 1241 OF 1456 SHEETS

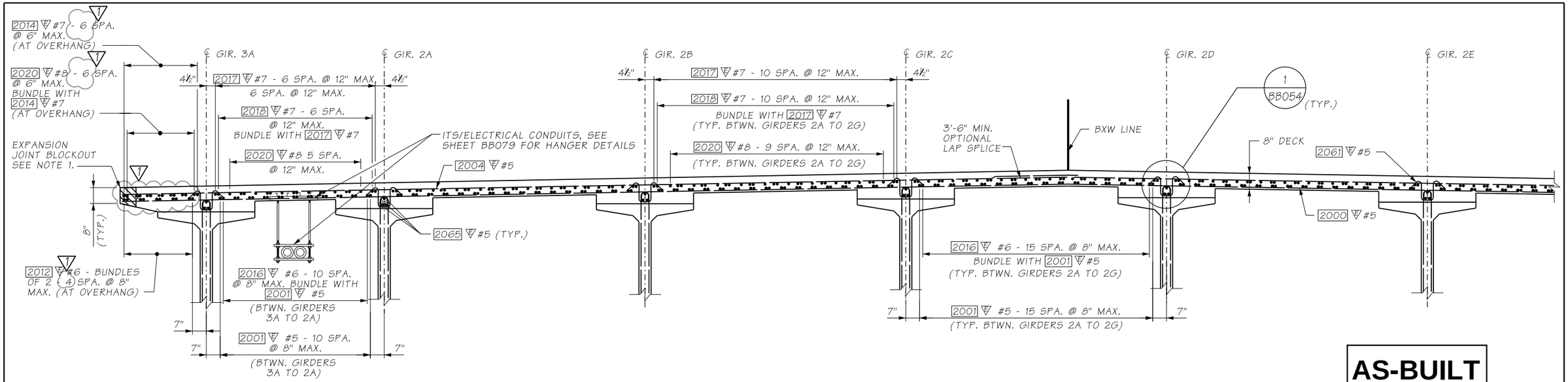

TYPICAL SECTION AT PIER 3 & MID SPAN OF SPAN 3 - DECK REINFORCING

AS-BUILT

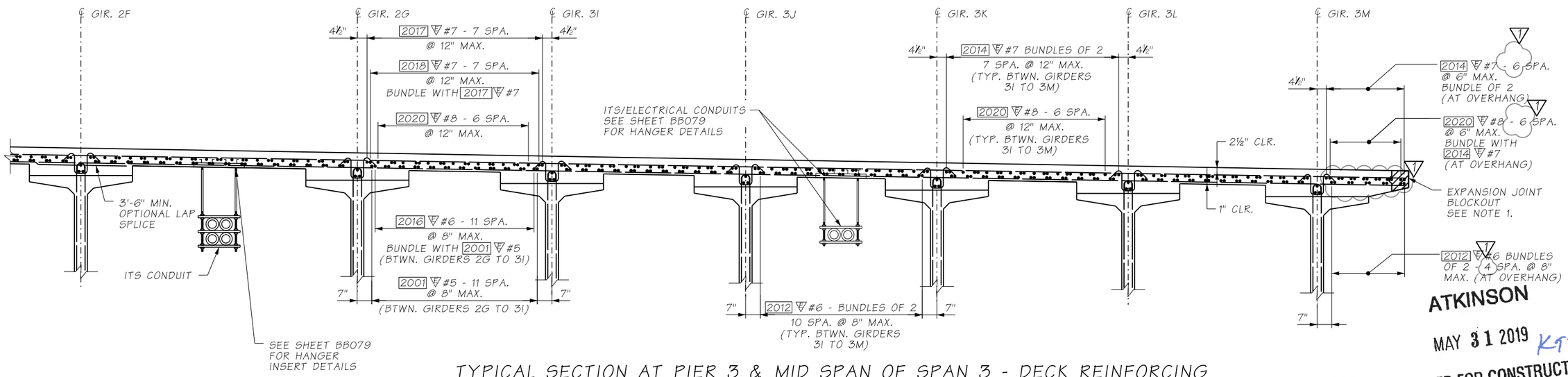

TYPICAL SECTION AT PIER 3 & MID SPAN OF SPAN 3 - DECK REINFORCING

ATKINSON

MAY 31 2019 KTW

RELEASED FOR CONSTRUCTION

NOTES:

1. ADJUST DECK REINFORCING IN EXPANSION JOINT BLOCKOUT AS NEEDED TO AVOID CONFLICT WITH STRIP SEAL RAILS.

FILE NAME	D:\ICS_workdir\28908\20633_1602\PS_BB051.dgn				REGION NO. 10	STATE WASH	FED.AID PROJ.NO.
TIME	3:49:11 PM				JOB NUMBER		
DATE	5/30/2019						
PLOTTED BY	USLAS0-APP064$						
DESIGNED BY	S. RAY				CONTRACT NO. C9133		LOCATION NO.
ENTERED BY	R. REISER	REV 1 - RFI110	05/29/2019				
CHECKED BY	G. CALLAHAN	REV 0 - RELEASED FOR CONSTRUCTION	04/05/2019				
PROJ. ENGR.	C. MEADE	REV A - FINAL REVIEW	03/11/2019				
REGIONAL ADM.	J. WYNANDS	REVISION	DATE	BY			

CORY J. CAYWOOD — STATE OF WASHINGTON — 18739 — STRUCTURAL ENGINEER — PROFESSIONAL ENGINEER — 5/30/19

P.E. STAMP BOX — DATE

P.E. STAMP BOX — DATE

Washington State Department of Transportation

ATKINSON CONSTRUCTION / JACOBS

I-5
STEILACOOM-DUPONT RD TO THORNE LN CORRIDOR IMPROVEMENTS
MP 120.01 TO MP 124.45
BERKELEY OVERPASS

TYPICAL SECTION - DECK REINFORCING SPAN 3

PLAN REF NO BB051

SHEET 1242 OF 1456 SHEETS

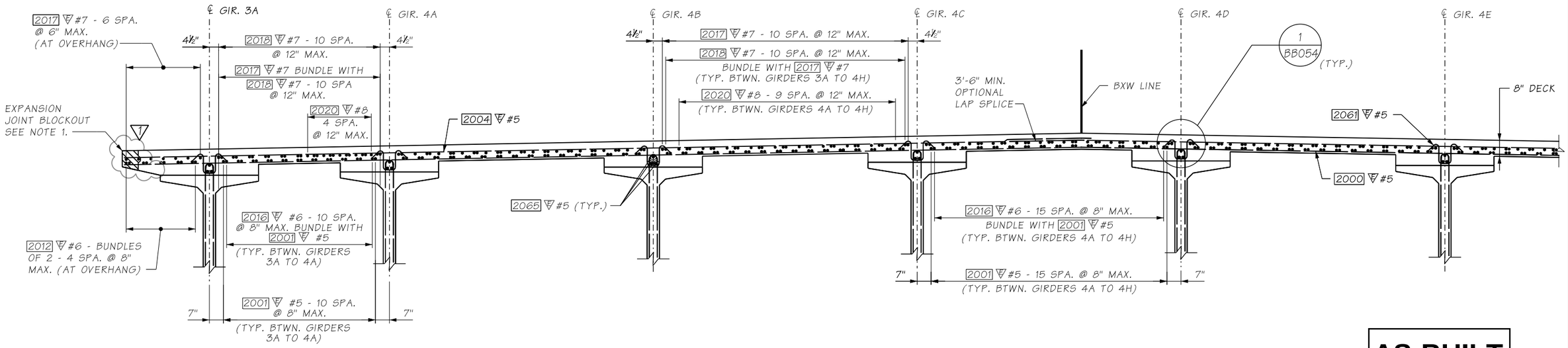

TYPICAL SECTION AT PIER 4 - DECK REINFORCING

AS-BUILT

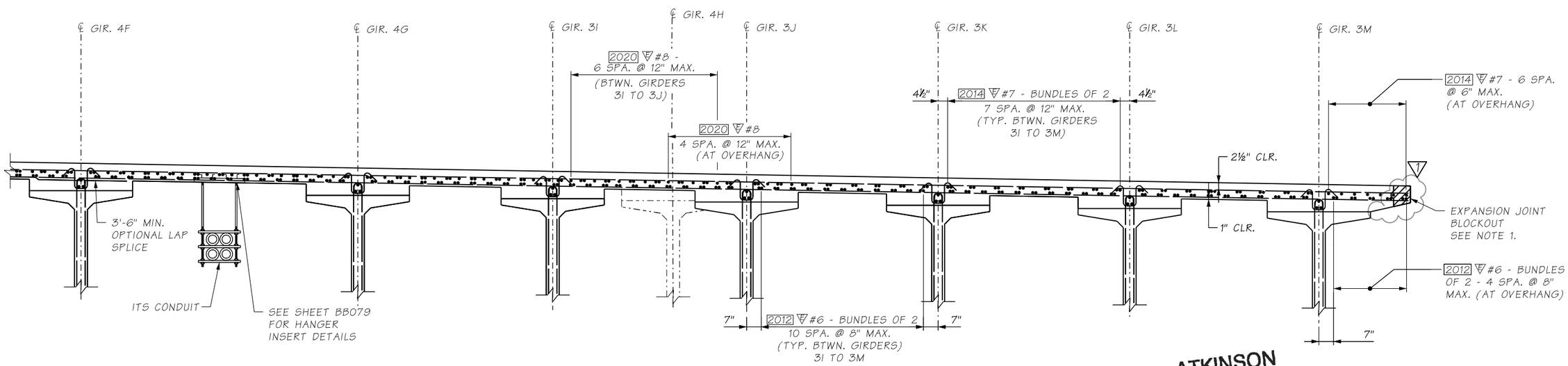

TYPICAL SECTION AT PIER 4 - DECK REINFORCING

ATKINSON

MAY 31 2019 KTW

RELEASED FOR CONSTRUCTION

NOTES:

1. ADJUST DECK REINFORCING IN EXPANSION JOINT BLOCKOUT AS NEEDED TO AVOID CONFLICT WITH STRIP SEAL RAILS.

FILE NAME	D:\ICS_workdir\28909\20633_1604\PS_BB052.dgn				REGION NO. 10	STATE WASH	FED.AID PROJ.NO.
TIME	3:49:21 PM						
DATE	5/30/2019						
PLOTTED BY	USLAS0-APP064$				JOB NUMBER		
DESIGNED BY	S. RAY						
ENTERED BY	R. REISER	REV 1 - RFI110	05/29/2019				
CHECKED BY	G. CALLAHAN	REV 0 - RELEASED FOR CONSTRUCTION	04/05/2019		CONTRACT NO. C9133		LOCATION NO.
PROJ. ENGR.	C. MEADE	REV A - FINAL REVIEW	03/11/2019				
REGIONAL ADM.	J. WYNANDS	REVISION	DATE	BY			

CORT J. CAYWOOD — STATE OF WASHINGTON — 38133 — STRUCTURAL — PROFESSIONAL ENGINEER — 5/30/2019

P.E. STAMP BOX — DATE

P.E. STAMP BOX — DATE

Washington State Department of Transportation

ATKINSON CONSTRUCTION / JACOBS

I-5
STEILACOOM-DUPONT RD TO THORNE LN
CORRIDOR IMPROVEMENTS
MP 120.01 TO MP 124.45
BERKELEY OVERPASS

TYPICAL SECTION - DECK REINFORCING SPAN 4 (1 OF 2)

PLAN REF NO BB052

SHEET 1243 OF 1456 SHEETS

AS-BUILT

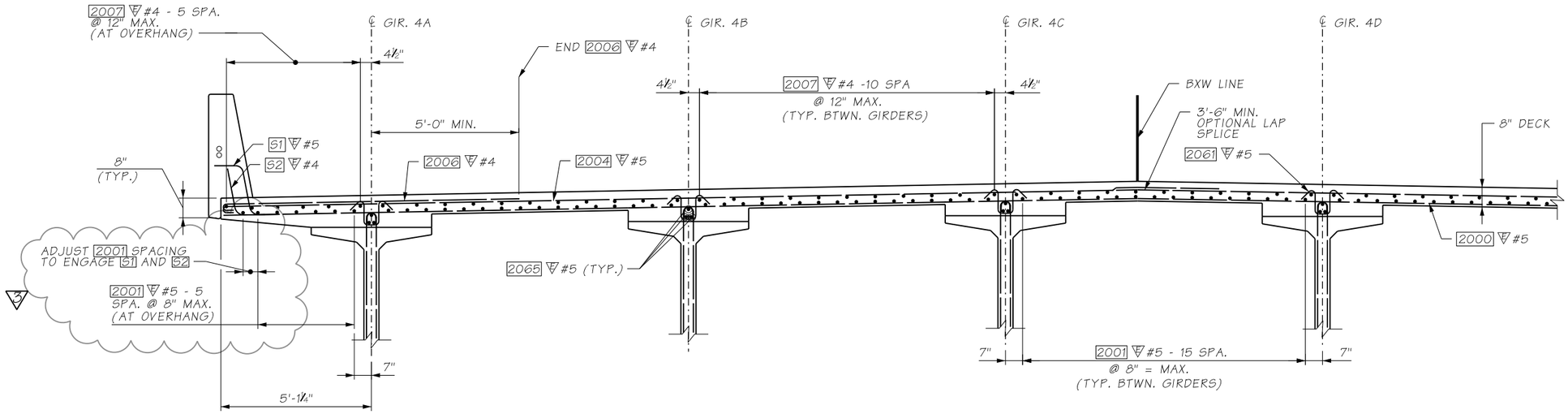

SECTION NEAR MIDSPAN - TYPICAL DECK REINFORCING

SHOWN NEAR MIDSPAN SPAN 4

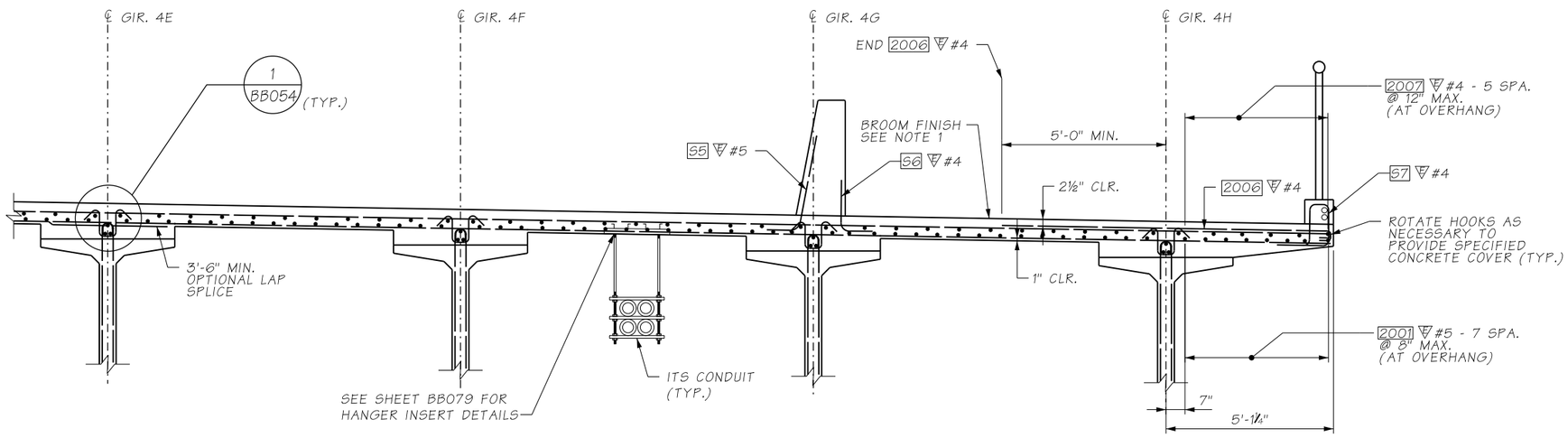

ATKINSON
JUN 17 2020 KTW
RELEASED FOR CONSTRUCTION

SECTION NEAR MIDSPAN - TYPICAL DECK REINFORCING

SHOWN NEAR MIDSPAN SPAN 4

NOTES:

1. SIDEWALK SHALL RECEIVE BROOM FINISH. ALL OTHER SURFACES SHALL BE FINISHED IN ACCORDANCE WITH STANDARD SPECIFICATION 6-02.3(10)D5 UNLESS NOTED OTHERWISE.
2. PLACE S5 #5 AND S6 #4 FORM SAVER BARS ON TOP OF THE BOTTOM REINFORCING MAT.

FILE NAME	D:\ICS_workdir\54045\20633_1595\PS_BB053.dgn						
TIME	11:08:21 AM				REGION NO.	STATE	FED.AID PROJ.NO.
DATE	6/12/2020				10	WASH	
PLOTTED BY	USLAS0-APP064$	REV 3 - RFI0157	06/18/2020		JOB NUMBER		
DESIGNED BY	S. RAY	REV 2 - RFI0088	04/17/2020				
ENTERED BY	R. REISER	REV 1 - RFI110	05/29/2019				
CHECKED BY	G. CALLAHAN	REV 0 - RELEASED FOR CONSTRUCTION	04/05/2019		CONTRACT NO.		LOCATION NO.
PROJ. ENGR.	C. MEADE	REV A - FINAL REVIEW	03/11/2019		C9133		
REGIONAL ADM.	J. WYNANDS	REVISION	DATE	BY			

CORY J. CAYWOOD
STATE OF WASHINGTON
38755
STRUCTURAL ENGINEER
PROFESSIONAL ENGINEER
6/15/20
DATE
P.E. STAMP BOX

DATE
P.E. STAMP BOX

Washington State
Department of Transportation

ATKINSON / JACOBS
CONSTRUCTION

I-5
STEILACOOM-DUPONT RD TO THORNE LN
CORRIDOR IMPROVEMENTS
MP 120.01 TO MP 124.45
BERKELEY OVERPASS

TYPICAL SECTION - DECK REINFORCING
SPAN 4 (2 OF 2)

PLAN REF NO
BB053

SHEET
1244
OF
1456
SHEETS

AS-BUILT

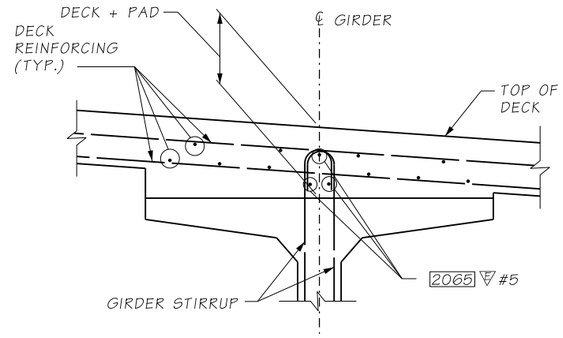

CASE 1

APPLIES FOR LOCATIONS WHERE DECK + PAD <= 11½"

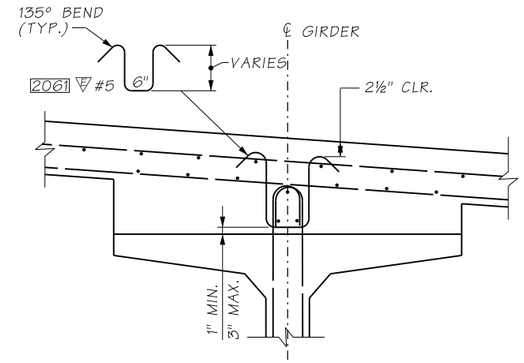

CASE 2

APPLIES FOR LOCATIONS WHERE DECK + PAD > 11½"
(SEE CASE 1 FOR CALLOUTS NOT SHOWN)

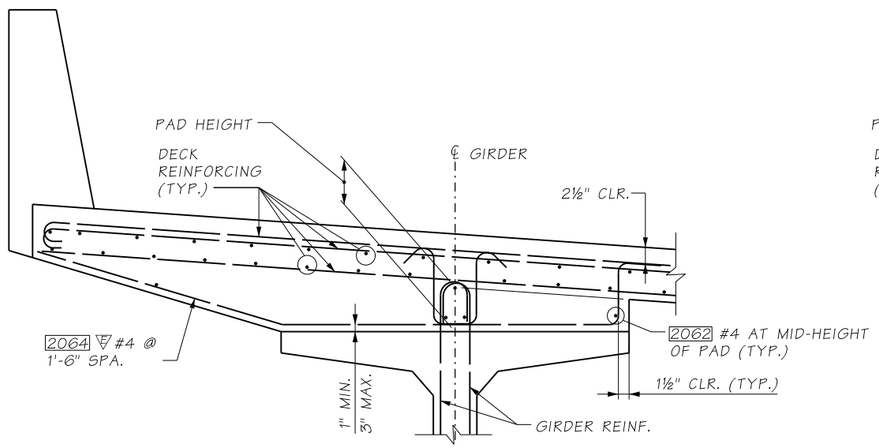

EXTERIOR GIRDER

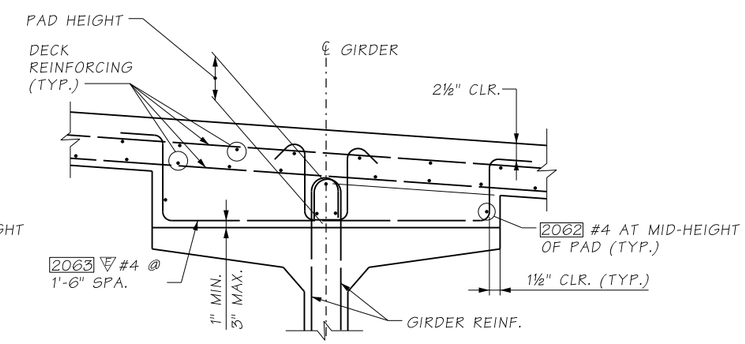

INTERIOR GIRDER

CASE 3

GIRDER PAD REINF.
APPLIES FOR LOCATIONS WHERE PAD HEIGHT > 6"

DETAIL 1

ATKINSON
APR 08 2019 KTW
RELEASED FOR CONSTRUCTION

NOTES:

1. 2061 #5 BARS ARE REQUIRED AT ALL GIRDER STIRRUPS WHERE CASE 2 APPLIES. FOR BUNDLED STIRRUPS AT GIRDER ENDS, ONE 2061 #5 IS REQUIRED PER BUNDLE OF GIRDER STIRRUPS. PROVIDE 2061 #5 WITH VARIABLE HEIGHTS IN SUFFICIENT QUANTITIES TO ACCOMMODATE VARIATIONS IN GIRDER CAMBER. THESE BARS SHALL BE PLACED NORMAL TO THE GIRDER FLANGE.

FILE NAME	D:\ICS_workdir\24825\20633_1250\PS_BB054.dgn						
TIME	10:46:20 AM				REGION NO.	STATE	FED.AID PROJ.NO.
DATE	4/4/2019				10	WASH	
PLOTTED BY	USLAS0-APP064$				JOB NUMBER		
DESIGNED BY	S. RAY						
ENTERED BY	R. REISER						
CHECKED BY	G. CALLAHAN	REV 0 - RELEASED FOR CONSTRUCTION	04/05/2019		CONTRACT NO.		LOCATION NO.
PROJ. ENGR.	C. MEADE	REV A - FINAL REVIEW	03/11/2019		C8811		
REGIONAL ADM.	J. WYNANDS	REVISION	DATE	BY			

CORT J. CAYWOOD — STATE OF WASHINGTON — 38133 — STRUCTURAL ENGINEER — PROFESSIONAL ENGINEER
4/5/19
DATE
P.E. STAMP BOX

DATE
P.E. STAMP BOX

Washington State Department of Transportation

ATKINSON CONSTRUCTION / JACOBS

I-5
STEILACOOM-DUPONT RD TO THORNE LN
CORRIDOR IMPROVEMENTS
MP 120.01 TO MP 124.45
BERKELEY OVERPASS

DECK REINFORCING DETAILS

PLAN REF NO BB054

SHEET 1245 OF 1456 SHEETS

AS-BUILT

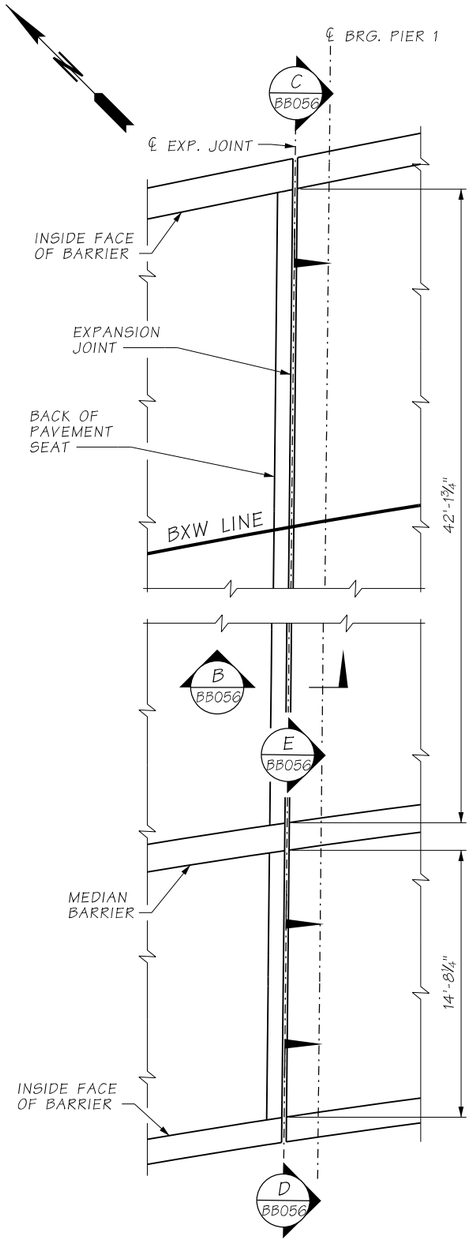

PLAN - PIER 1

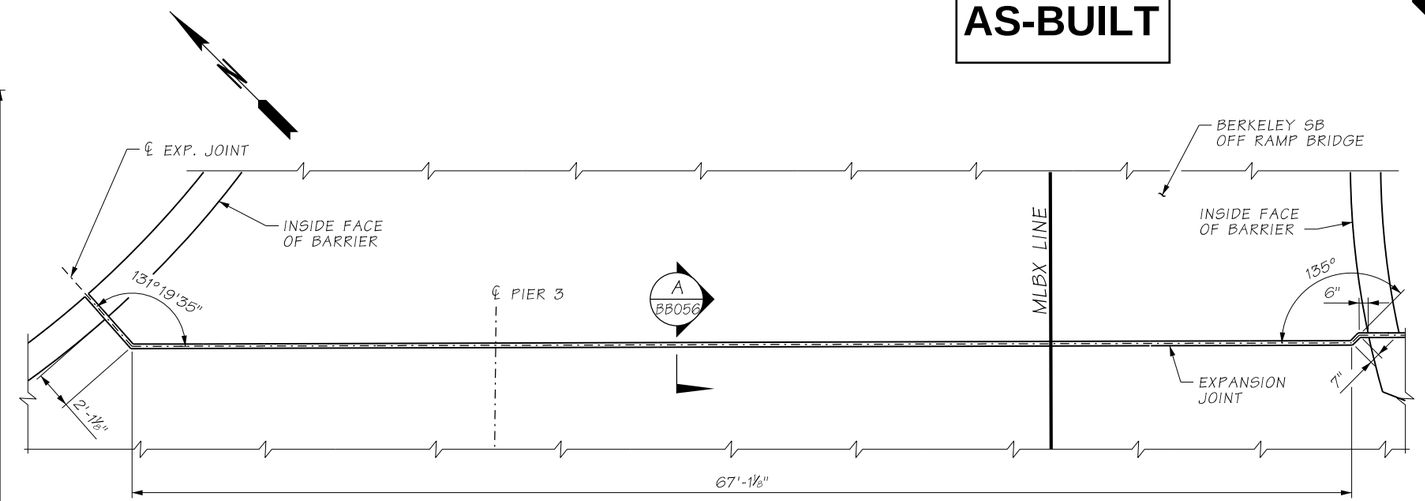

PLAN - OVERPASS TO SB OFF RAMP

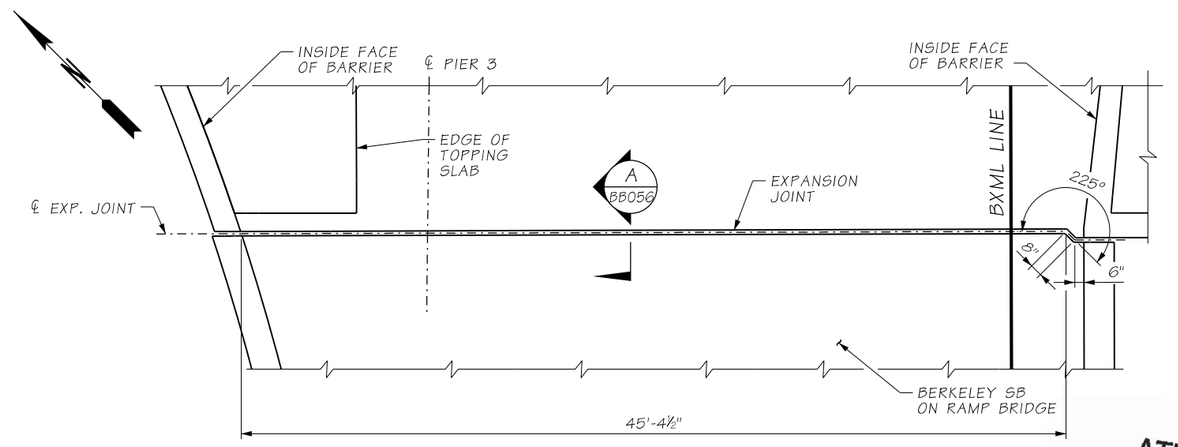

PLAN - OVERPASS TO SB ON RAMP

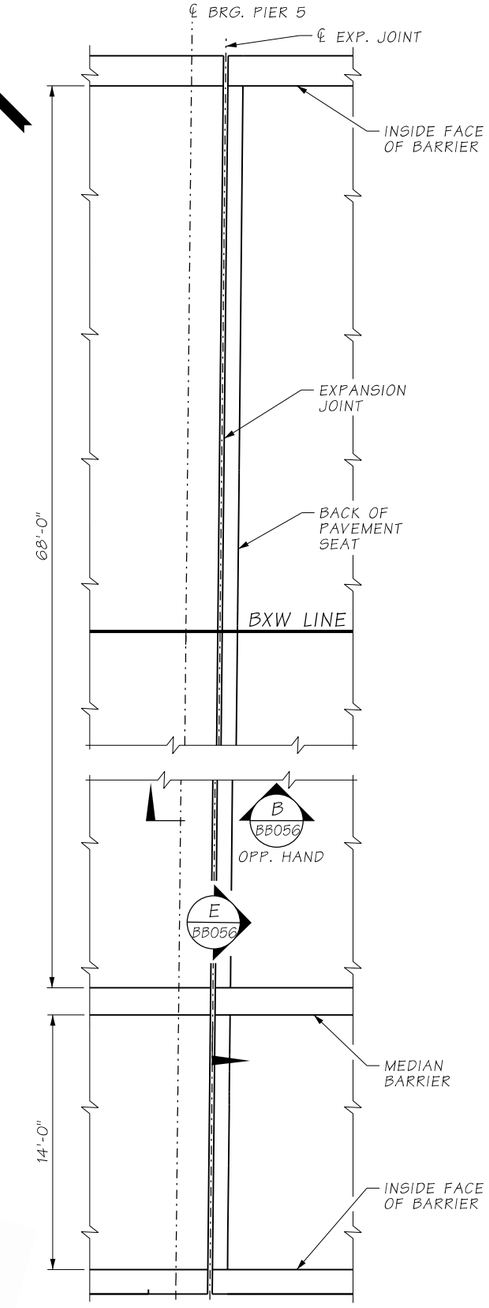

PLAN - PIER 5

ATKINSON
JUN 07 2019
RELEASED FOR CONSTRUCTION
KTW

FILE NAME	c:\pwworking\jacobs_b&i\caywoocj\dms20633\PS_BB055.dgn						
TIME	8:00:44 AM				REGION NO. 10	STATE WASH	FED.AID PROJ.NO.
DATE	6/6/2019						
PLOTTED BY	caywoocj				JOB NUMBER		
DESIGNED BY	G.C. DE GRELLE						
ENTERED BY	R. REISER						
CHECKED BY	A. FONG	REV 0 - RELEASED FOR CONSTRUCTION	06/06/2019		CONTRACT NO. C9133		LOCATION NO.
PROJ. ENGR.	C. MEADE	REV A - FINAL REVIEW	04/19/2019				
REGIONAL ADM.	J. WYNANDS	REVISION	DATE	BY			

STATE OF WASHINGTON — CORY J. CAYWOOD — 38759 — STRUCTURAL ENGINEER — PROFESSIONAL ENGINEER
6/7/19
DATE
P.E. STAMP BOX

DATE
P.E. STAMP BOX

Washington State Department of Transportation

ATKINSON CONSTRUCTION / JACOBS

I-5
STEILACOOM-DUPONT RD TO THORNE LN
CORRIDOR IMPROVEMENTS
MP 120.01 TO MP 124.45
BERKELEY OVERPASS

EXPANSION JOINTS
PLAN

PLAN REF NO BB055

SHEET 1246 OF 1456 SHEETS

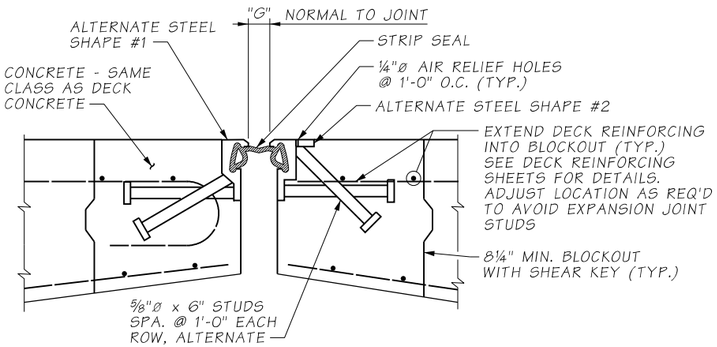

SECTION A
BB055

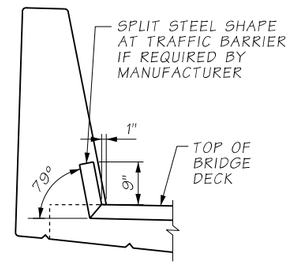

SECTION C
BB055
FOR STRIP SEAL SINGLE SLOPE BARRIER

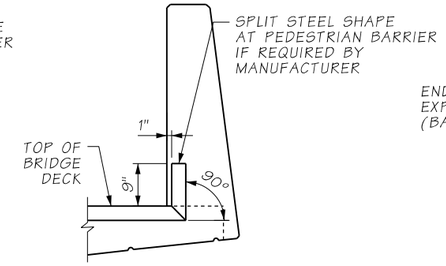

SECTION D
BB055
FOR STRIP SEAL PEDESTRIAN BARRIER

NOTES:

1. FABRICATE STEEL EMBEDMENTS FOR EXPANSION JOINTS TO PROVIDE PROFILE AS SHOWN. STEEL EMDEDMENTS MAY BE CURVED OR CHORDED.

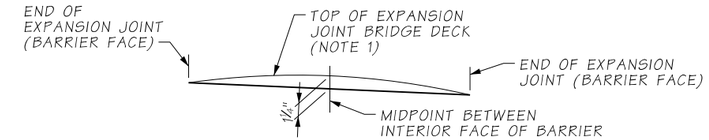

PROFILE - OVERPASS TO SB ON RAMP EXPANSION JOINT

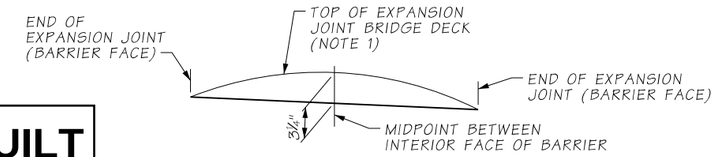

PROFILE - OVERPASS TO SB OFF RAMP EXPANSION JOINT

AS-BUILT

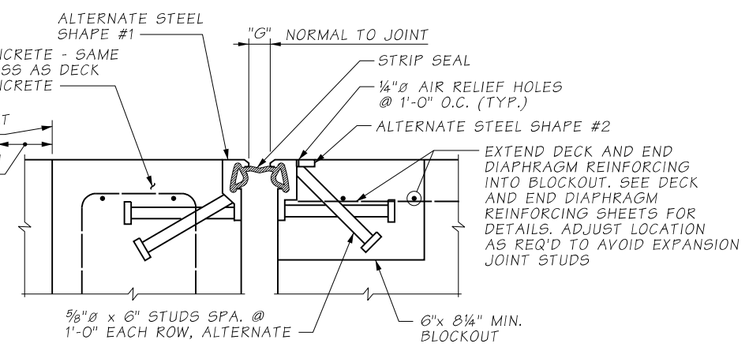

SECTION B
BB055

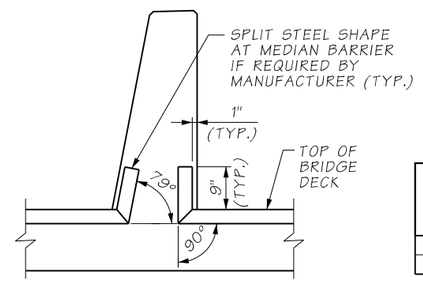

SECTION E
BB055
FOR STRIP SEAL MEDIAN BARRIER

PIER 1 - 4" MOTION RANGE

MANUFACTURER	ITEM NAME	OPENING "G" NORMAL TO JT.		MIN. INSTALLATION WIDTH NORMAL TO JOINT	OPENING "G" NORMAL TO JT.		
		MIN.	MAX.		@40°F	@64°F	@80°F
D. S. BROWN	A2R-400 OR E2M-SEAL ψ	½"	4½"	2"	2½"	2"	1¾"
WATSON BOWMAN ACME	WABO STRIP SEAL SE-400	0"	4"	1½"	2½"	2"	1¾"

PIER 5 - 4" MOTION RANGE

MANUFACTURER	ITEM NAME	OPENING "G" NORMAL TO JT.		MIN. INSTALLATION WIDTH NORMAL TO JOINT	OPENING "G" NORMAL TO JT.		
		MIN.	MAX.		@40°F	@64°F	@80°F
D. S. BROWN	A2R-400 OR E2M-SEAL ψ	½"	4½"	2"	2½"	2"	1¾"
WATSON BOWMAN ACME	WABO STRIP SEAL SE-400	0"	4"	1½"	2½"	2"	1¾"

OVERPASS TO SB ON RAMP - 4" MOTION RANGE

MANUFACTURER	ITEM NAME	OPENING "G" NORMAL TO JT.		MIN. INSTALLATION WIDTH NORMAL TO JOINT	OPENING "G" NORMAL TO JT.		
		MIN.	MAX.		@40°F	@64°F	@80°F
D. S. BROWN	A2R-400 OR E2M-SEAL ψ	½"	4½"	2"	2"	2"	2"
WATSON BOWMAN ACME	WABO STRIP SEAL SE-400	0"	4"	1½"	2"	2"	2"

OVERPASS TO SB OFF RAMP - 4" MOTION RANGE

MANUFACTURER	ITEM NAME	OPENING "G" NORMAL TO JT.		MIN. INSTALLATION WIDTH NORMAL TO JOINT	OPENING "G" NORMAL TO JT.		
		MIN.	MAX.		@40°F	@64°F	@80°F
D. S. BROWN	A2R-400 OR E2M-SEAL ψ	½"	4½"	2"	2"	2"	2"
WATSON BOWMAN ACME	WABO STRIP SEAL SE-400	0"	4"	1½"	2"	2"	2"

ψ USE E2M-SEAL WITH SSE2M SHAPE ONLY

STEEL SHAPE TYPES

MANUFACTURER	ITEM NAME	BRIDGE DECK			TRAFFIC BARRIERS					
		T, S			W, V			Y, X		
		TYPE	S	T	TYPE	V	W	TYPE	X	Y
D. S. BROWN	DSB STRIP SEAL	SSCM2	1¼"	3¾"	SSA2, α	1¼"	2"	SSE2M, α	1"	1½"
WATSON BOWMAN ACME	WABO STRIP SEAL	M, R, P	2¾"	3¼"	A	1¼"	2"	E	1½"	1½"

α ALTERNATIVELY, TRIM VERTICAL LEG OF SSCM2 SHAPE FOR USE IN TRAFFIC BARRIER

ATKINSON
JUN 07 2019
RELEASED FOR CONSTRUCTION
KTW

FILE NAME	c:\pwworking\jacobs_b&i\youngkl2\dms20633\PS_BB056.dgn
TIME	7:44:17 AM
DATE	6/7/2019
PLOTTED BY	youngkl2
DESIGNED BY	G.C. DE GRELLE
ENTERED BY	R. REISER
CHECKED BY	A. FONG
PROJ. ENGR.	C. MEADE
REGIONAL ADM.	J. WYNANDS

REVISION	DATE	BY
REV 0 - RELEASED FOR CONSTRUCTION	06/06/2019	
REV A - FINAL REVIEW	04/19/2019	

REGION NO.	STATE	FED.AID PROJ.NO.
10	WASH	
JOB NUMBER		
CONTRACT NO.		LOCATION NO.
C9133		

P.E. STAMP BOX — DATE 6/7/19

P.E. STAMP BOX — DATE

Washington State Department of Transportation

ATKINSON CONSTRUCTION / JACOBS

I-5
STEILACOOM-DUPONT RD TO THORNE LN
CORRIDOR IMPROVEMENTS
MP 120.01 TO MP 124.45
BERKELEY OVERPASS

EXPANSION JOINTS DETAILS

PLAN REF NO BB056

SHEET 1247 OF 1456 SHEETS

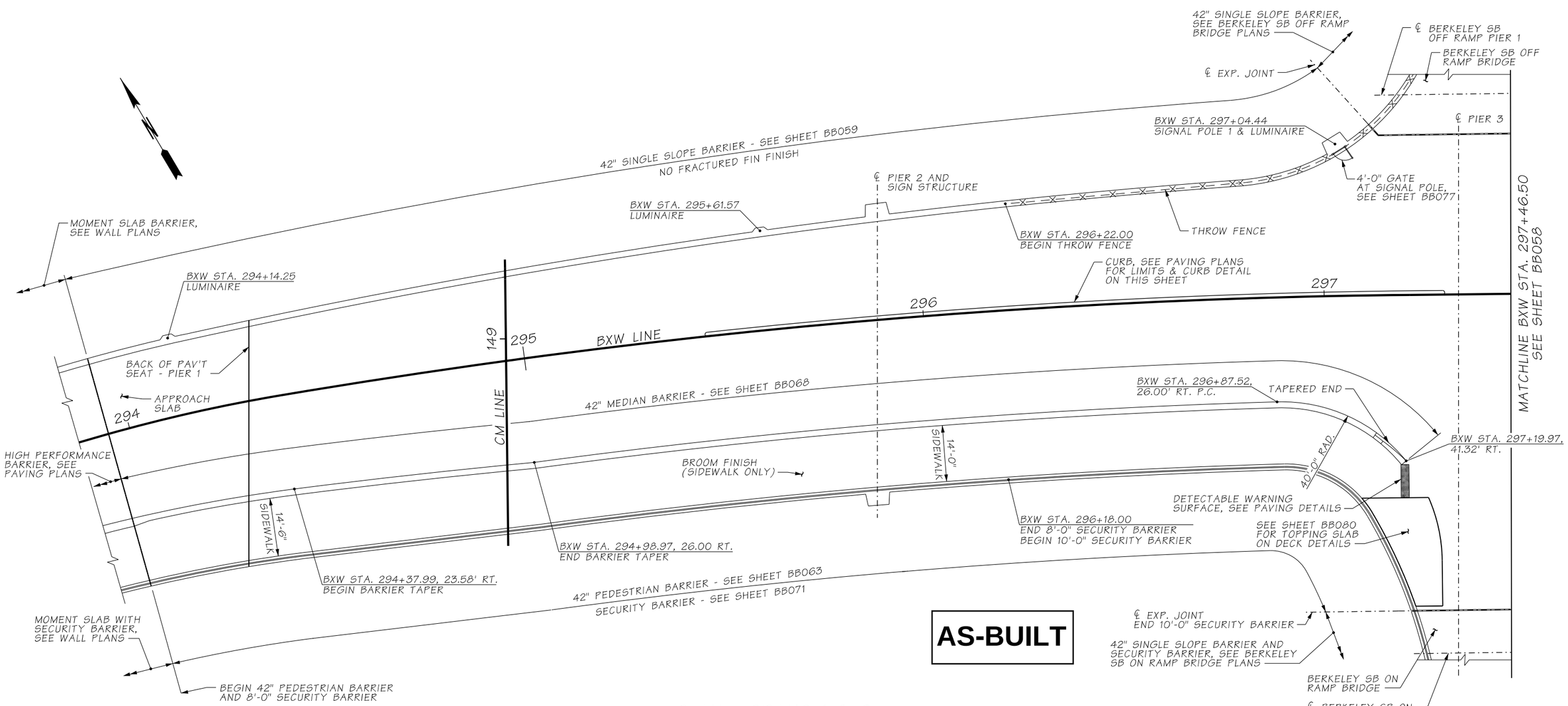

AS-BUILT

PLAN - SPANS 1 & 2

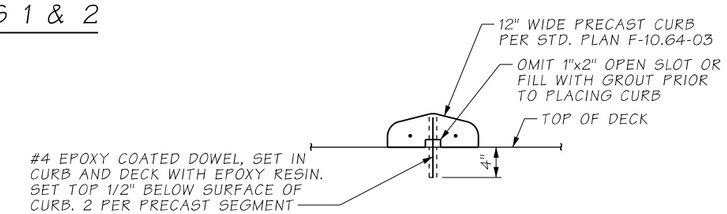

CURB DETAIL

ATKINSON
JUN 07 2019
KTW
RELEASED FOR CONSTRUCTION

FILE NAME	c:\pwworking\jacobs_b&i\jeg_huangy1\dms20633\PS_BB057.dgn						
TIME	9:50:41 AM				REGION NO.	STATE	FED.AID PROJ.NO.
DATE	6/6/2019				10	WASH	
PLOTTED BY	HUANGY1				JOB NUMBER		
DESIGNED BY	Y. HUANG						
ENTERED BY	R. REISER						
CHECKED BY	C. CAYWOOD	REV 0 - RELEASED FOR CONSTRUCTION	06/06/2019		CONTRACT NO.		LOCATION NO.
PROJ. ENGR.	C. MEADE	REV A - FINAL REVIEW	04/19/2019		C9133		
REGIONAL ADM.	J. WYNANDS	REVISION	DATE	BY			

CORY J. CAYWOOD, STATE OF WASHINGTON, 38759, STRUCTURAL ENGINEER, PROFESSIONAL ENGINEER
6/7/19
DATE
P.E. STAMP BOX

DATE
P.E. STAMP BOX

Washington State Department of Transportation

ATKINSON CONSTRUCTION / JACOBS

I-5
STEILACOOM-DUPONT RD TO THORNE LN
CORRIDOR IMPROVEMENTS
MP 120.01 TO MP 124.45
BERKELEY OVERPASS

BARRIER, RAILING & MISCELLANEOUS
GENERAL PLAN (1 OF 2)

PLAN REF NO
BB057

SHEET 1248 OF 1456 SHEETS

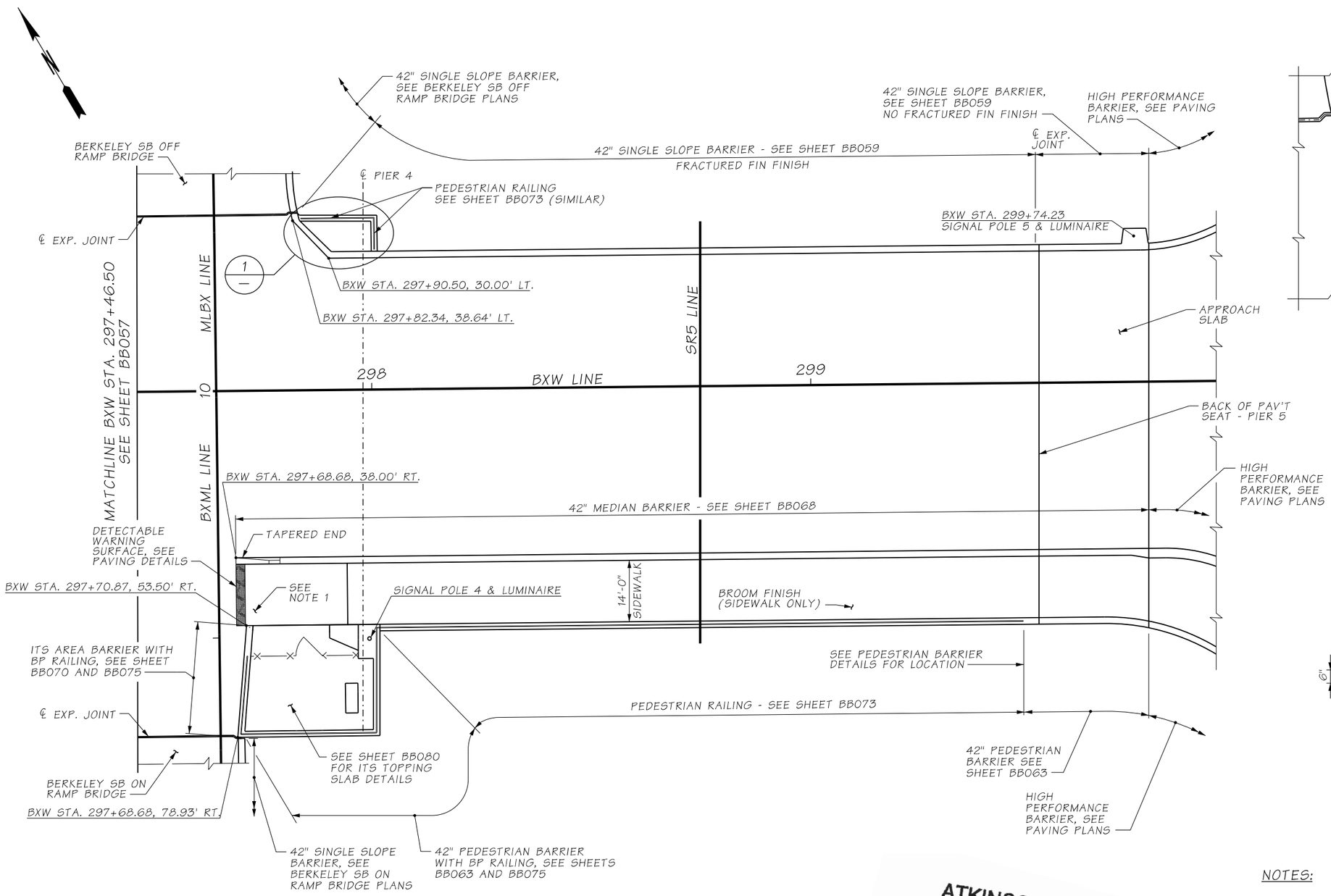

PLAN - SPANS 3 & 4

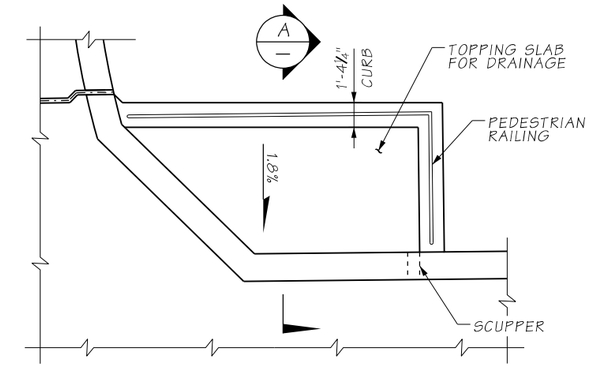

DETAIL 1

AS-BUILT

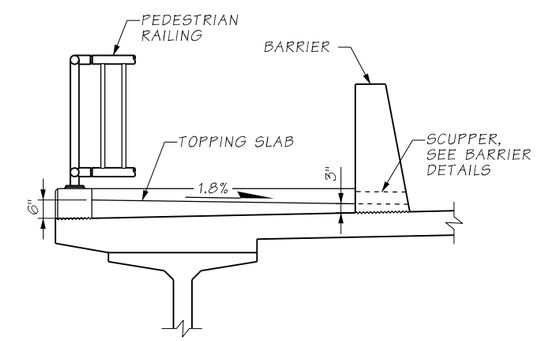

SECTION A

NOTES:

1. SEE SHEET PVD51 FOR CURB RAMP ELEVATIONS. CAST BLOCKOUT IN DECK SLAB WITHIN LIMITS OF CURB RAMP SIMILAR TO CONDUIT BLOCKOUT ON SHEET BB082. PLACE CONCRETE IN BLOCKOUT AFTER PRIMARY POUR OF DECK SLAB TO CURB RAMP ELEVATIONS SHOWN ON PVD51.

ATKINSON
JUN 07 2019 KTW
RELEASED FOR CONSTRUCTION

FILE NAME	c:\pwworking\jacobs_b&i\jeg_huangy1\dms20633\PS_BB058.dgn						
TIME	9:58:16 AM				REGION NO. 10	STATE WASH	FED.AID PROJ.NO.
DATE	6/6/2019				JOB NUMBER		
PLOTTED BY	HUANGY1						
DESIGNED BY	Y. HUANG						
ENTERED BY	R. REISER						
CHECKED BY	C. CAYWOOD	REV 0 - RELEASED FOR CONSTRUCTION	06/06/2019		CONTRACT NO. C9133		LOCATION NO.
PROJ. ENGR.	C. MEADE	REV A - FINAL REVIEW	04/19/2019				
REGIONAL ADM.	J. WYNANDS	REVISION	DATE	BY			

CORY J. CAYWOOD, STATE OF WASHINGTON, 38755, STRUCTURAL ENGINEER, PROFESSIONAL ENGINEER
6/7/19
DATE
P.E. STAMP BOX

DATE
P.E. STAMP BOX

Washington State Department of Transportation

ATKINSON CONSTRUCTION / JACOBS

I-5
STEILACOOM-DUPONT RD TO THORNE LN CORRIDOR IMPROVEMENTS
MP 120.01 TO MP 124.45
BERKELEY OVERPASS

BARRIER, RAILING & MISCELLANEOUS GENERAL PLAN (2 OF 2)

PLAN REF NO BB058

SHEET 1249 OF 1456 SHEETS

AS-BUILT

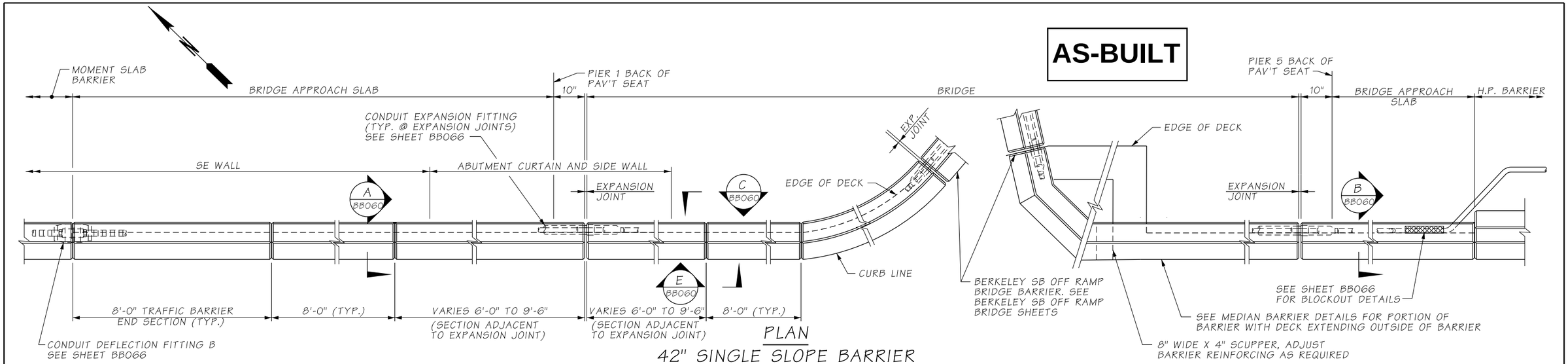

PLAN

42" SINGLE SLOPE BARRIER

BARRIER CONTINUOUS BETWEEN BRIDGE DECK EXPANSION JOINTS. CONSTRUCTION JOINTS WITH SHEAR KEYS ARE PERMISSIBLE AT DUMMY JOINT LOCATIONS. FORM JOINTS BETWEEN DUMMY JOINTS SHALL NOT BE PERMITTED.

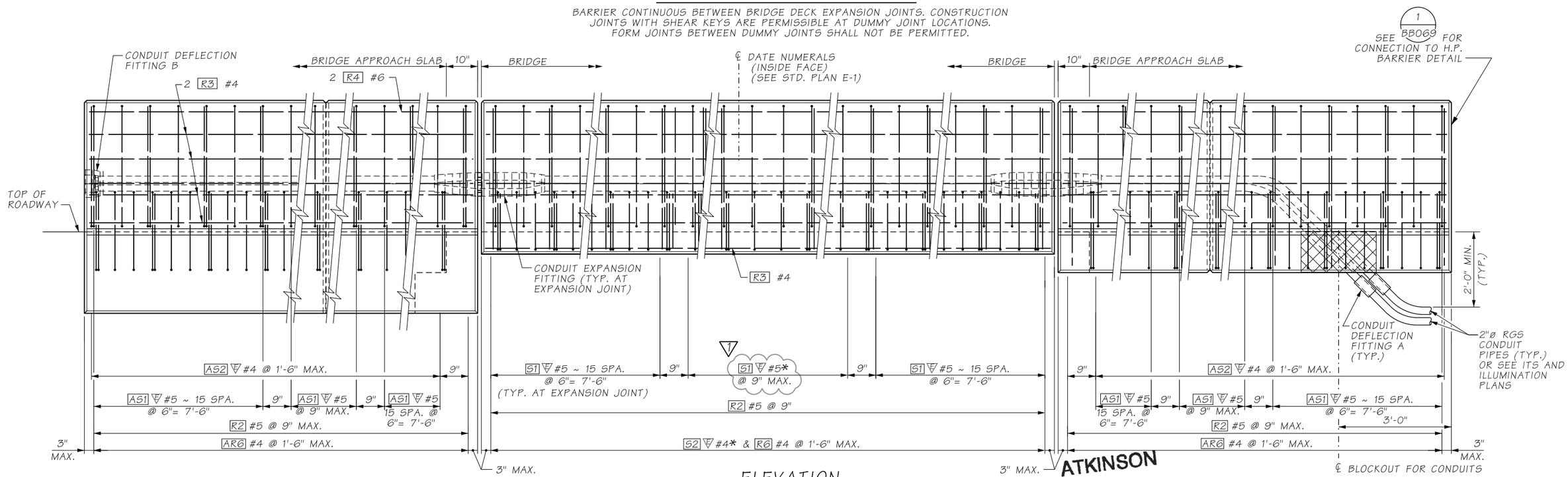

ELEVATION

END OF 42" SINGLE SLOPE

* SEE SHEET BB061 AND BB062 FOR S2 #4 AND R2 #5 SPACING AT SIGNAL POLE AND SIGN STRUCTURE POLE. SEE SHEET BB062 FOR S1 #5 SPACING AT SIGN STRUCTURE POLE.

ATKINSON

JUL 09 2019 KTW

RELEASED FOR CONSTRUCTION

NOTES:

1. TRAFFIC BARRIER HAS BEEN DESIGNED FOR TL-4 LOADING.

FILE NAME	D:\ICS_workdir\31665\20633_1197\PS_BB059.dgn			
TIME	5:09:34 PM			
DATE	7/1/2019			
PLOTTED BY	USLAS0-APP064$			
DESIGNED BY	Y. HUANG			
ENTERED BY	R. REISER	REV 1 - RFI0145	07/03/2019	
CHECKED BY	C. CAYWOOD	REV 0 - RELEASED FOR CONSTRUCTION	06/06/2019	
PROJ. ENGR.	C. MEADE	REV A - FINAL REVIEW	04/19/2019	
REGIONAL ADM.	J. WYNANDS	REVISION	DATE	BY

REGION NO.	STATE	FED.AID PROJ.NO.
10	WASH	
JOB NUMBER		
CONTRACT NO.		LOCATION NO.
C9133		

CORY J. CAYWOOD, STATE OF WASHINGTON, 38183, STRUCTURAL ENGINEER, PROFESSIONAL ENGINEER

P.E. STAMP BOX — DATE 7/3/19

P.E. STAMP BOX — DATE

Washington State Department of Transportation

ATKINSON / JACOBS CONSTRUCTION

I-5
STEILACOOM-DUPONT RD TO THORNE LN CORRIDOR IMPROVEMENTS
MP 120.01 TO MP 124.45
BERKELEY OVERPASS

42" SINGLE SLOPE BARRIER DETAILS (1 OF 4)

PLAN REF NO BB059

SHEET 1250 OF 1456 SHEETS

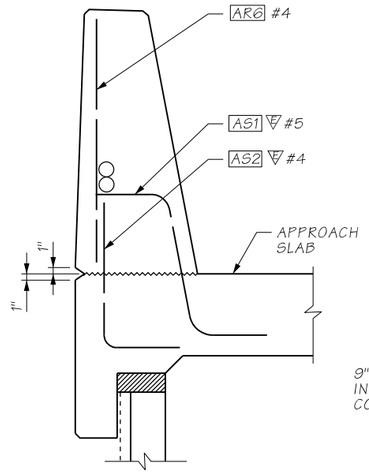

SECTION A BB059

ON APPROACH SLAB OVER SE OR ABUTMENT WALL

FOR DETAILS NOT SHOWN SEE "TYPICAL SECTION - 42" SINGLE SLOPE BARRIER"

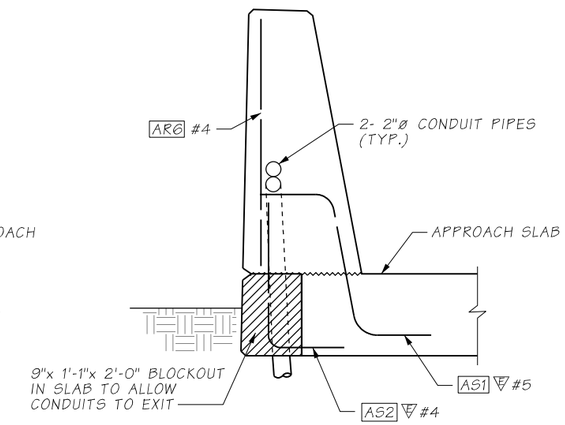

SECTION B BB059

ON APPROACH SLAB AT GRADE

FOR DETAILS NOT SHOWN SEE "TYPICAL SECTION - 42" SINGLE SLOPE BARRIER"

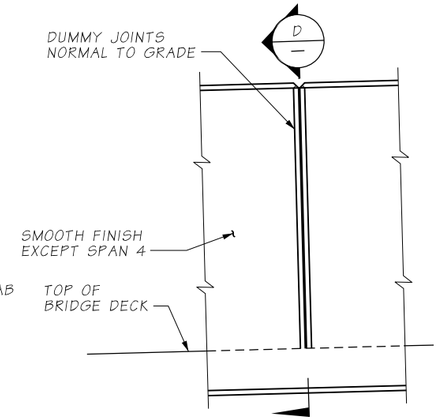

VIEW C BB059

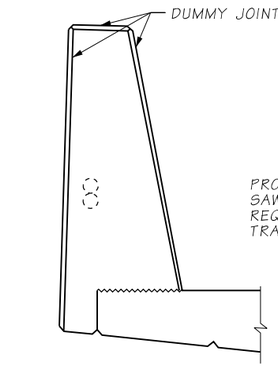

SECTION D

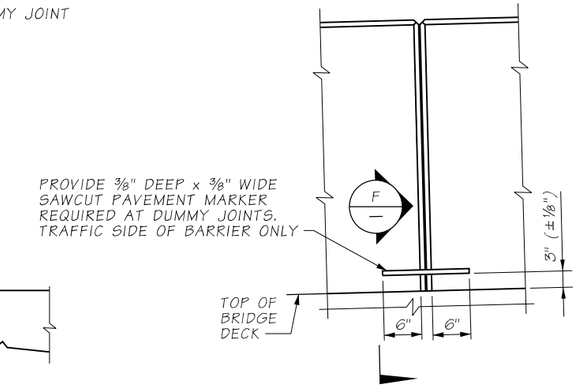

VIEW E BB059

AS-BUILT

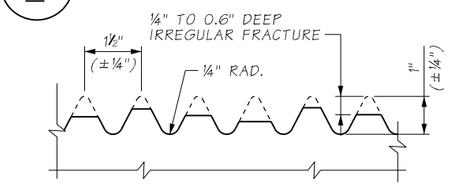

FRACTURED FIN FINISH

BACK OF BARRIER ON SPAN 4 ONLY, OMIT DUMMY JOINTS ON BACK OF BARRIER FOR LOCATIONS WITH FRACTURED FIN FINISH

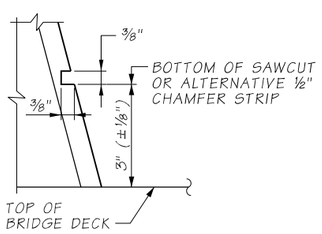

SECTION F

PAVEMENT MARKER DETAIL

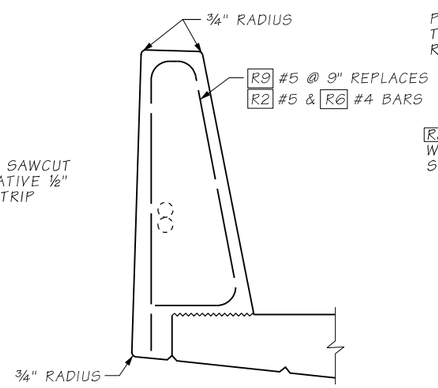

SLIPFORM ALTERNATIVE

SEE "TYPICAL SECTION - TRAFFIC BARRIER" FOR ADDITIONAL DETAILS.

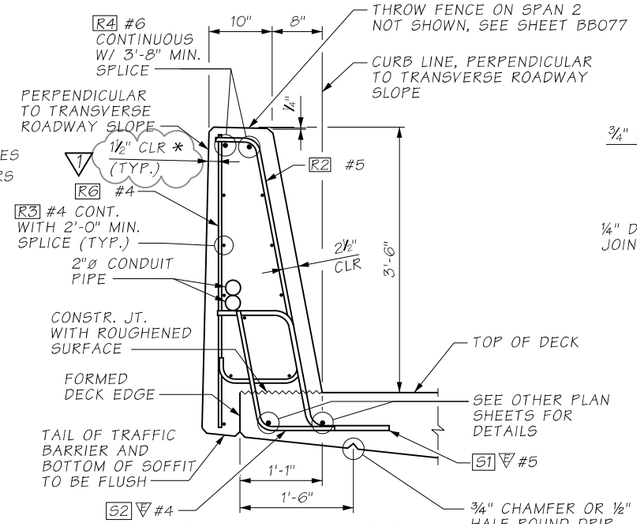

TYPICAL SECTION

42" SINGLE SLOPE BARRIER

SHOWN ON BRIDGE, SEE SECTION A & B FOR BARRIER ON APPROACH SLAB

1 * USE 2" CLEAR FOR SLIP FORM ALTERNATIVE

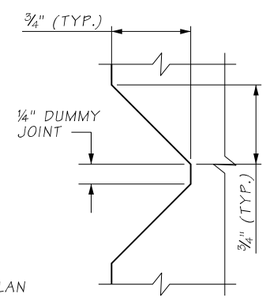

DUMMY JOINT DETAIL

ATKINSON
APR 22 2020 KTW
RELEASED FOR CONSTRUCTION

BENDING DIAGRAM

ALL DIMENSIONS ARE OUT TO OUT.
≠ = DIMENSIONS TO POINTS OF INTERSECTION.

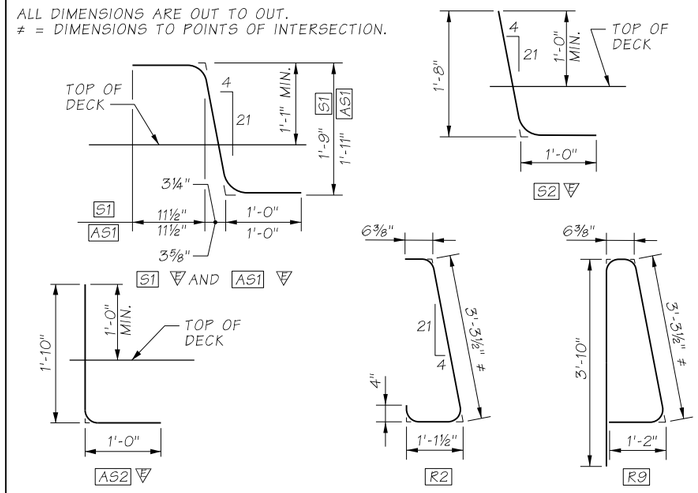

FILE NAME	c:\pwworking\jacobs_b&i\reiserrw\dms20633\PS_BB060.dgn						
TIME	9:10:38 AM				REGION NO. 10	STATE WASH	FED.AID PROJ.NO.
DATE	4/15/2020						
PLOTTED BY	ReiserRW				JOB NUMBER		
DESIGNED BY	Y. HUANG						
ENTERED BY	R. REISER	REV 1 - RFI0200	04/17/2020				
CHECKED BY	C. CAYWOOD	REV 0 - RELEASED FOR CONSTRUCTION	06/06/2019		CONTRACT NO. C9133		LOCATION NO.
PROJ. ENGR.	C. MEADE	REV A - FINAL REVIEW	04/19/2019				
REGIONAL ADM.	J. WYNANDS	REVISION	DATE	BY			

CORY J. CAYWOOD, STATE OF WASHINGTON, 38393, STRUCTURAL ENGINEER, PROFESSIONAL ENGINEER
4/20/20
DATE
P.E. STAMP BOX

DATE
P.E. STAMP BOX

Washington State Department of Transportation

ATKINSON / JACOBS CONSTRUCTION

I-5
STEILACOOM-DUPONT RD TO THORNE LN CORRIDOR IMPROVEMENTS
MP 120.01 TO MP 124.45
BERKELEY OVERPASS

42" SINGLE SLOPE BARRIER DETAILS (2 OF 4)

PLAN REF NO BB060

SHEET 1251 OF 1456 SHEETS

AS-BUILT

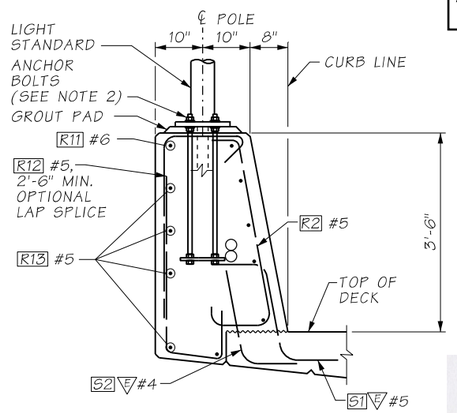

SECTION A

LIGHT STANDARD ON BRIDGE SHOWN, LIGHT STANDARD ON APPROACH SLAB SIMILAR.

ATKINSON
APR 22 2020 KTW
RELEASED FOR CONSTRUCTION

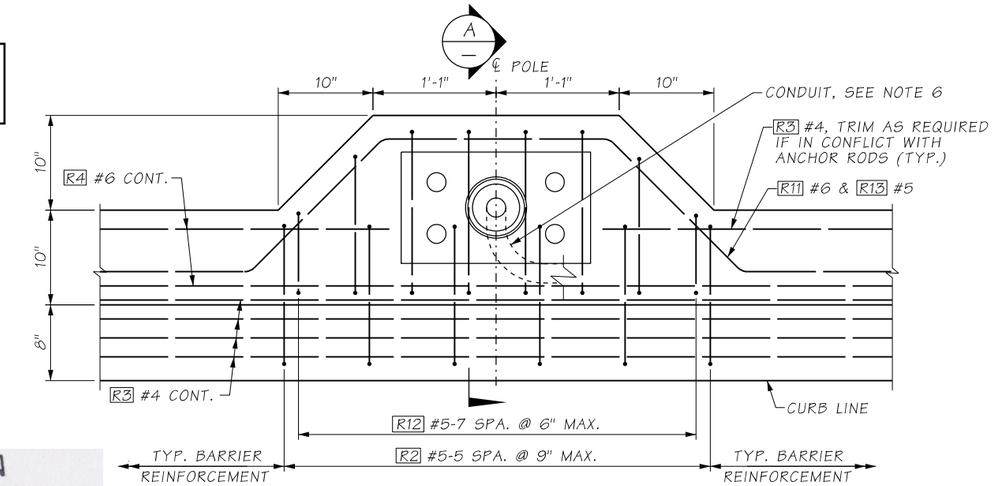

PLAN - AT LIGHT STANDARD

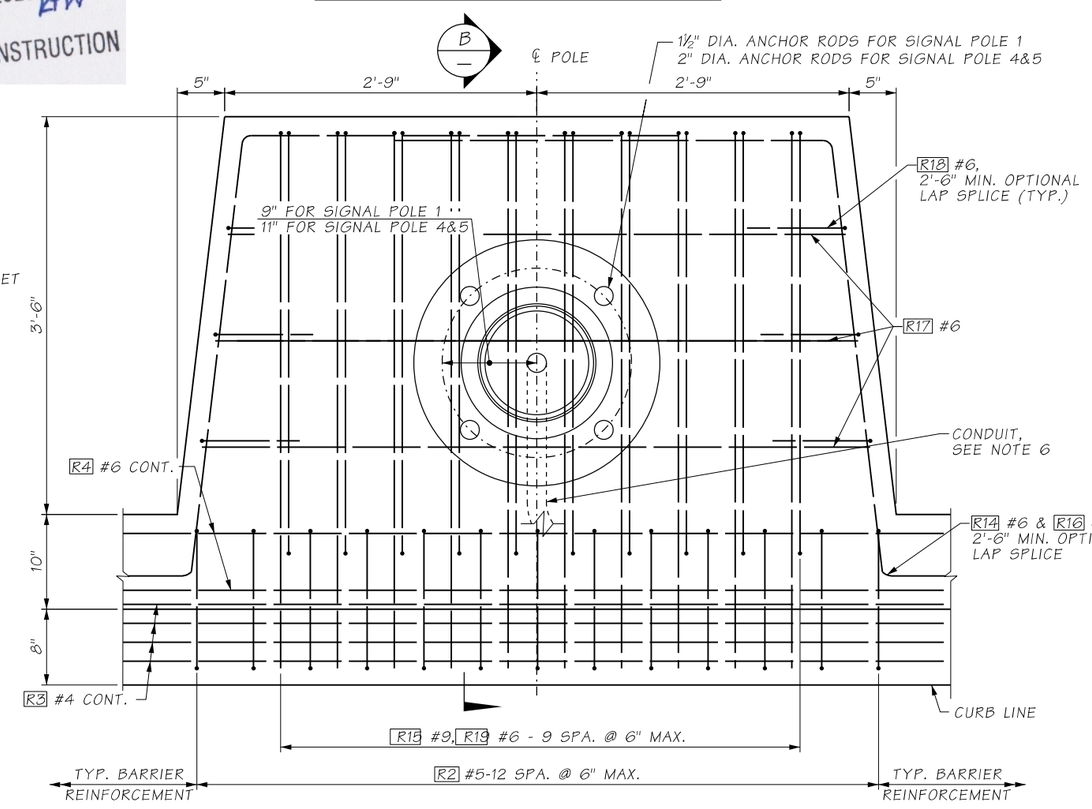

PLAN - AT SIGNAL POLE

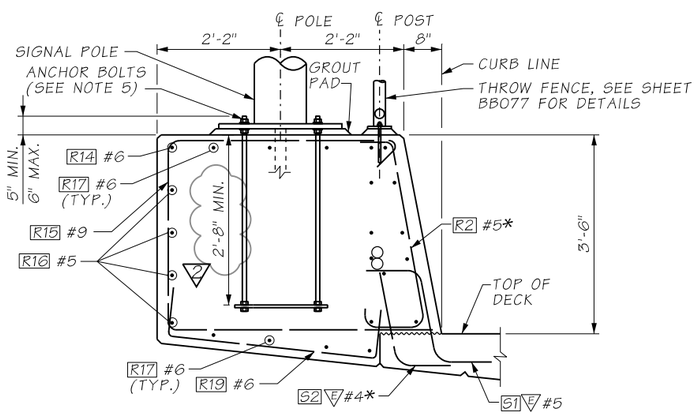

SECTION B

SIGNAL POLE ON BRIDGE SHOWN, SIGNAL POLE ON APPROACH SLAB SIMILAR.

* S2 #4 AND R2 #5 BARS SHALL BE AT 4" SPA. WITHIN THE LIMIT OF CONCRETE BUMP OUT.

BENDING DIAGRAM

ALL DIMENSIONS ARE OUT TO OUT

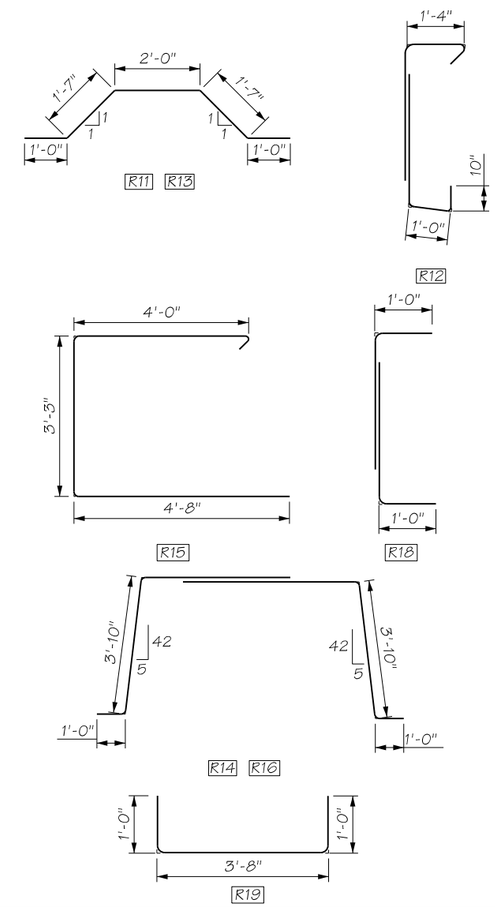

NOTES:

1. FOR DETAILS OF LUMINAIRES AND SIGNALS REFER TO ILLUMINATION, ITS AND SIGNAL PLANS.
2. LUMINAIRE POLES ARE PER CITY OF LAKEWOOD STANDARDS. ANCHOR BOLTS SHALL BE AS SPECIFIED BY MANUFACTURER'S DETAILS.
3. VERIFY SIGNAL POLE ANCHOR BOLT SIZES AND SPACING WITH POLE MANUFACTURER.
4. ALL ANCHOR RODS SHALL BE GALVANIZED AFTER FABRICATION IN ACCORDANCE WITH ASTM F 2329.
5. MATERIAL SPECIFICATIONS FOR SIGNAL POLES:
   ANCHOR RODS — ASTM F1554 GR.105
   STEEL PLATES — ASTM 36
6. SEE ITS, ILLUMINATION AND SIGNAL PLANS FOR CONDUIT DETAILS.

FILE NAME	c:\pwworking\jacobs_b&l\reiserrw\dms20633\PS_BB061.dgn						
TIME	9:36:38 AM				REGION NO. 10	STATE WASH	FED.AID PROJ.NO.
DATE	4/15/2020						
PLOTTED BY	ReiserRW						
DESIGNED BY	Y. HUANG	REV 2 - RFI0277	04/17/2020		JOB NUMBER		
ENTERED BY	R. REISER	REV 1 - RFI0129	06/25/2019				
CHECKED BY	K. YOUNG	REV 0 - RELEASED FOR CONSTRUCTION	06/06/2019		CONTRACT NO. C9133		LOCATION NO.
PROJ. ENGR.	C. MEADE	REV A - FINAL REVIEW	04/19/2019				
REGIONAL ADM.	J. WYNANDS	REVISION	DATE	BY			

CORY J. CAYWOOD — STATE OF WASHINGTON — 36759 — STRUCTURAL ENGINEER — PROFESSIONAL ENGINEER
4/20/20
DATE
P.E. STAMP BOX

P.E. STAMP BOX
DATE

Washington State Department of Transportation

ATKINSON CONSTRUCTION / JACOBS

I-5
STEILACOOM-DUPONT RD TO THORNE LN CORRIDOR IMPROVEMENTS
MP 120.01 TO MP 124.45
BERKELEY OVERPASS

42" SINGLE SLOPE BARRIER DETAILS (3 OF 4)

PLAN REF NO BB061

SHEET 1252 OF 1456 SHEETS

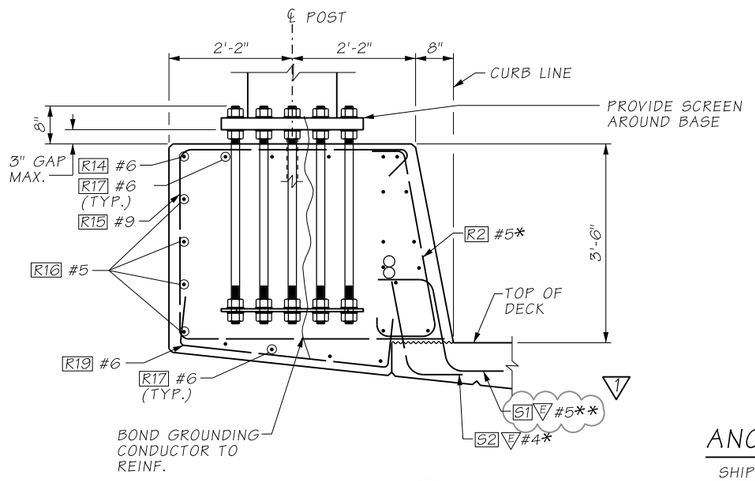

SECTION A

1 * S2 E #4 AND R2 #5 BARS SHALL BE AT 4" SPA. WITHIN THE LIMIT OF CONCRETE BUMP OUT.

** S1 E #5 SHALL BE AT 4½" SPA. WITHIN THE LIMIT OF CONCRETE BUMP OUT.

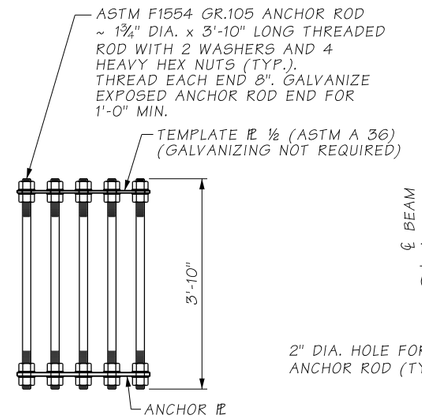

ANCHOR ROD ARRAY

SHIP THE ANCHOR ROD ARRAY ASSEMBLY AS A COMPLETE UNIT

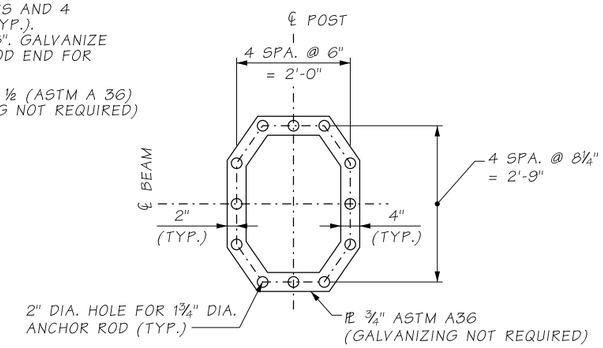

ANCHOR PL DETAIL

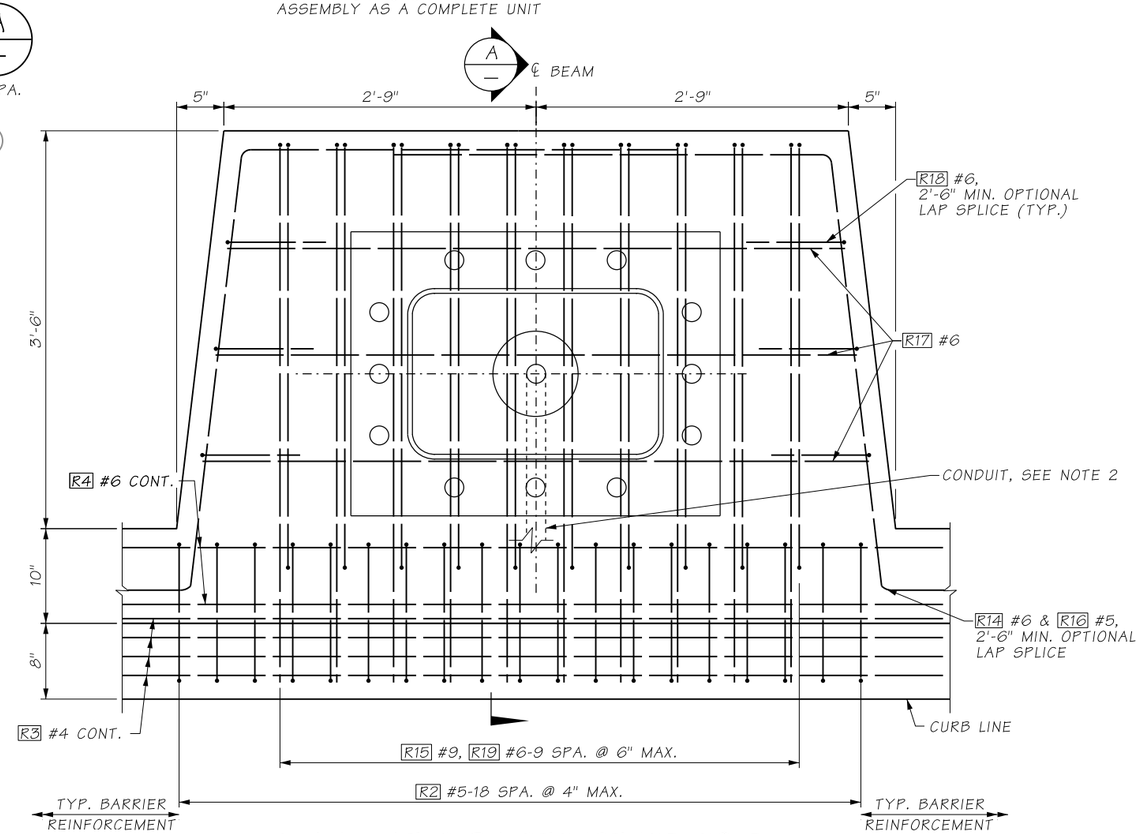

PLAN - AT SIGN STRUCTURE POLE

BENDING DIAGRAM

ALL DIMENSIONS ARE OUT TO OUT

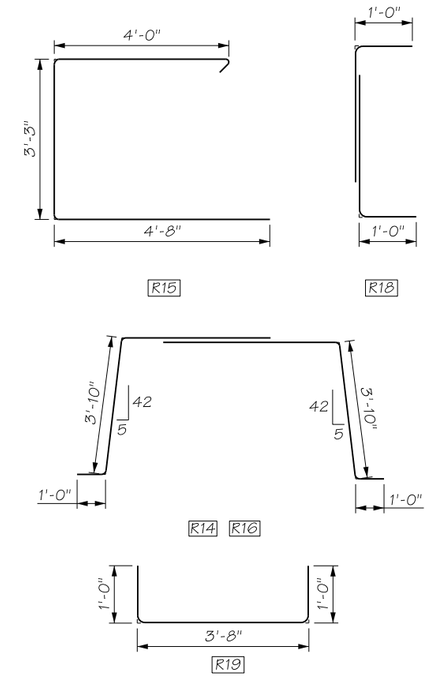

AS-BUILT

ATKINSON

JUL 09 2019 KTW

RELEASED FOR CONSTRUCTION

NOTES:

1. ALL ANCHOR RODS SHALL BE GALVANIZED AFTER FABRICATION IN ACCORDANCE WITH ASTM F 2329.
2. SEE ITS AND ILLUMINATION PLANS FOR CONDUIT DETAILS.

FILE NAME	D:\ICS_workdir\31778\20633_2010\PS_BB062.dgn			
TIME	12:24:37 PM			
DATE	7/3/2019			
PLOTTED BY	USLAS0-APP064$			
DESIGNED BY	Y. HUANG			
ENTERED BY	R. REISER	REV 1 - RFI0145	07/03/2019	
CHECKED BY	K. YOUNG	REV 0 - RELEASED FOR CONSTRUCTION	06/06/2019	
PROJ. ENGR.	C. MEADE	REV A - FINAL REVIEW	04/19/2019	
REGIONAL ADM.	J. WYNANDS	REVISION	DATE	BY

REGION NO.	STATE	FED.AID PROJ.NO.
10	WASH	
JOB NUMBER		
CONTRACT NO.		LOCATION NO.
C9133		

CORY J. CAYWOOD, STATE OF WASHINGTON, 38739, STRUCTURAL ENGINEER, PROFESSIONAL ENGINEER — 7/3/19 DATE — P.E. STAMP BOX

DATE — P.E. STAMP BOX

Washington State Department of Transportation

ATKINSON CONSTRUCTION / JACOBS

I-5
STEILACOOM-DUPONT RD TO THORNE LN
CORRIDOR IMPROVEMENTS
MP 120.01 TO MP 124.45
BERKELEY OVERPASS

42" SINGLE SLOPE BARRIER DETAILS (4 OF 4)

PLAN REF NO BB062

SHEET 1253 OF 1456 SHEETS

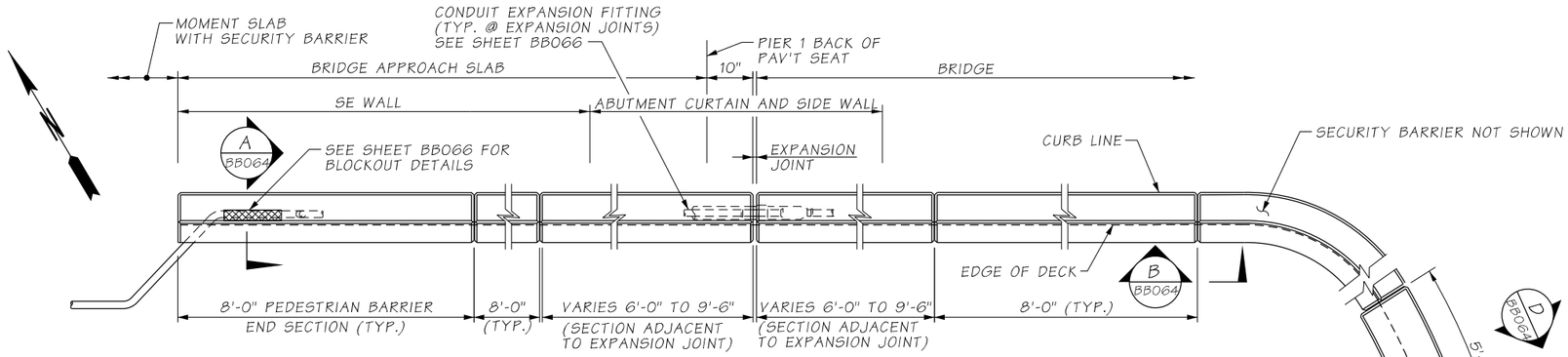

PLAN
PEDESTRIAN BARRIER

BARRIER CONTINUOUS BETWEEN BRIDGE DECK EXPANSION JOINTS.
CONSTRUCTION JOINTS WITH SHEAR KEYS ARE PERMISSIBLE AT DUMMY JOINT LOCATIONS.
FORM JOINTS BETWEEN DUMMY JOINTS SHALL NOT BE PERMITTED.

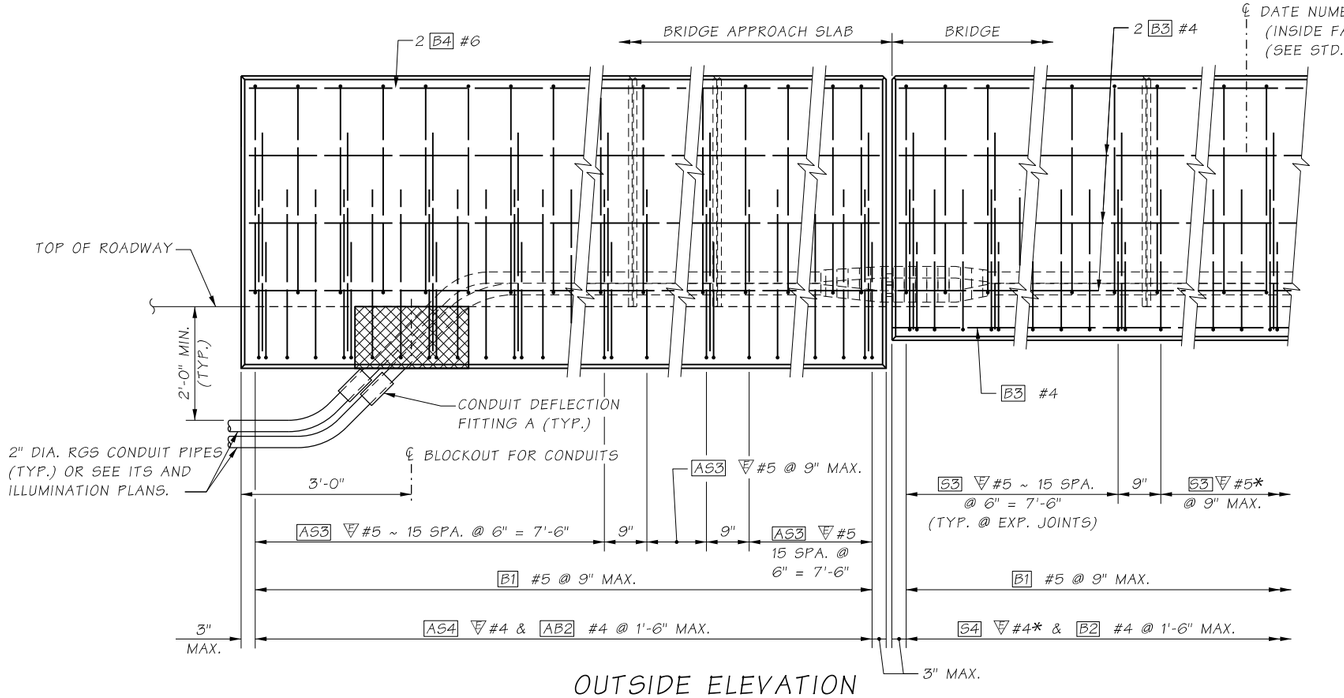

OUTSIDE ELEVATION
END OF PEDESTRIAN BARRIER

OUTSIDE ELEVATION OF PIER 1 SHOWN, PIER 5 OPPOSITE HAND
* SEE SHEET BB065 FOR S3 #5, S4 #4 AND B1 #5 SPACING AT SIGNAL POLE AND SIGN STRUCTURE POLE.

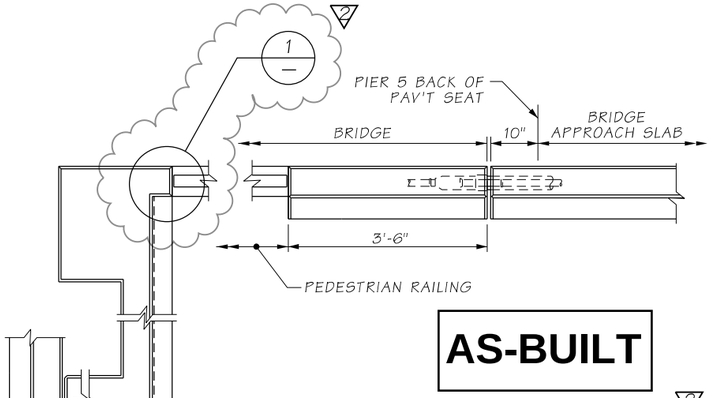

AS-BUILT

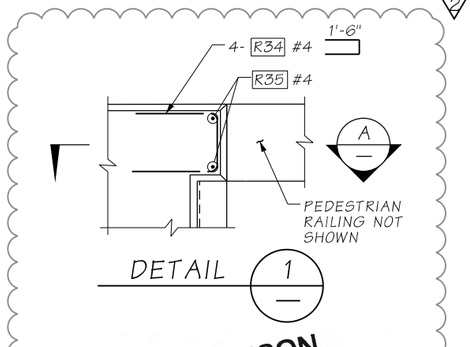

DETAIL 1

ATKINSON
NOV 06 2019 KTN
RELEASED FOR CONSTRUCTION

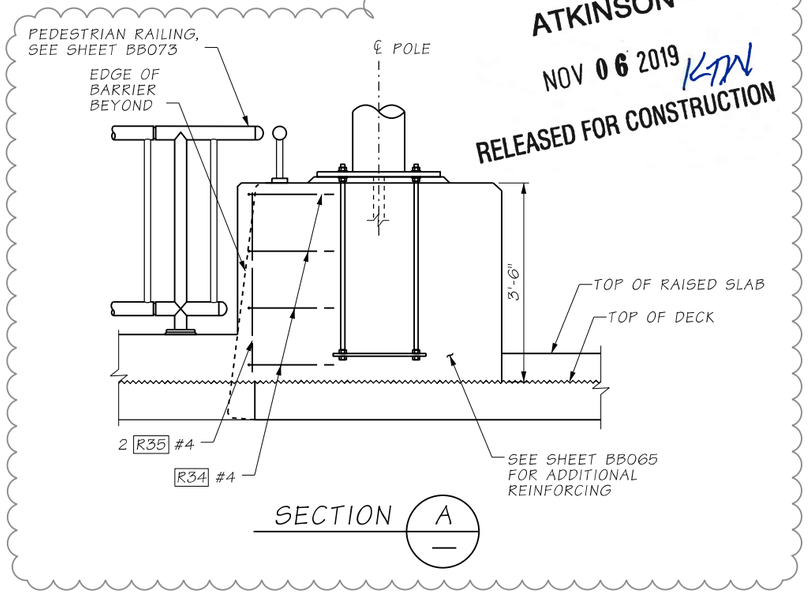

SECTION A

FILE NAME	c:\pwworking\jacobs_b&i\youngkl2\dms20633\PS_BB063.dgn						
TIME	11:44:21 AM				REGION NO.	STATE	FED.AID PROJ.NO.
DATE	11/5/2019				10	WASH	
PLOTTED BY	youngkl2				JOB NUMBER		
DESIGNED BY	Y. HUANG	REV 2 - RFI0290	11/06/2019				
ENTERED BY	R. REISER	REV 1 - RFI0145	07/03/2019				
CHECKED BY	C. CAYWOOD	REV 0 - RELEASED FOR CONSTRUCTION	06/06/2019		CONTRACT NO.		LOCATION NO.
PROJ. ENGR.	C. MEADE	REV A - FINAL REVIEW	04/19/2019		C9133		
REGIONAL ADM.	J. WYNANDS	REVISION	DATE	BY			

CORY J. CAYWOOD — STATE OF WASHINGTON — 38755 — STRUCTURAL ENGINEER — PROFESSIONAL ENGINEER
11/5/19
DATE
P.E. STAMP BOX

DATE
P.E. STAMP BOX

Washington State Department of Transportation

ATKINSON CONSTRUCTION / JACOBS

I-5
STEILACOOM-DUPONT RD TO THORNE LN CORRIDOR IMPROVEMENTS
MP 120.01 TO MP 124.45
BERKELEY OVERPASS

42" PEDESTRIAN BARRIER DETAILS (1 OF 3)

PLAN REF NO BB063

SHEET 1254 OF 1456 SHEETS

AS-BUILT

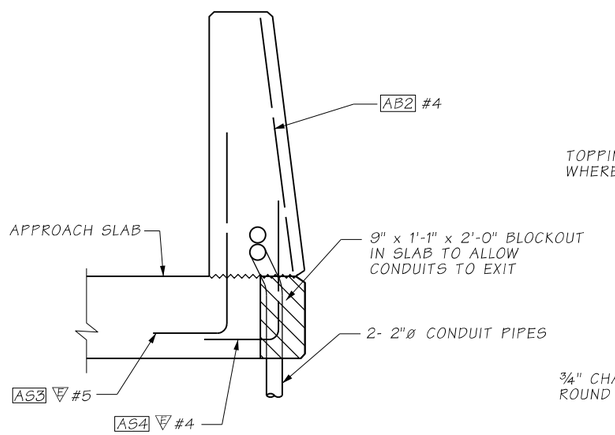

SECTION A / BB063

BRIDGE APPROACH SLAB

FOR DETAILS NOT SHOWN SEE "TYPICAL SECTION - PEDESTRIAN BARRIER"

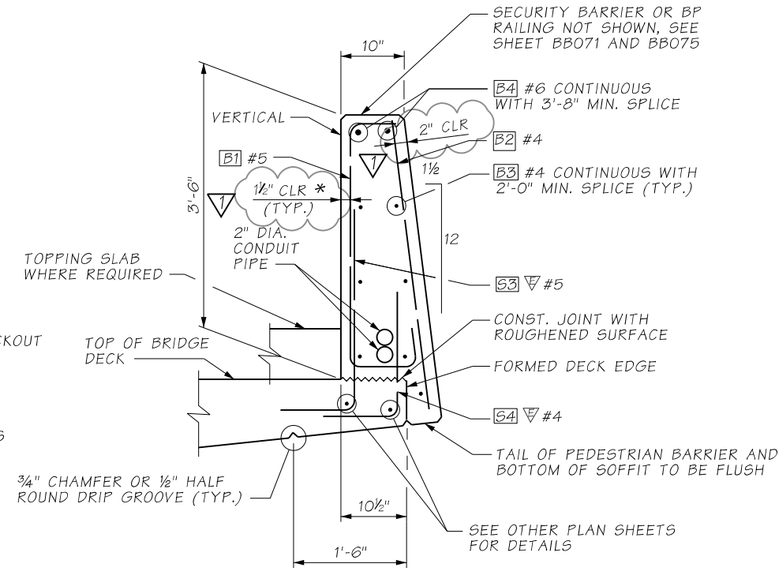

TYPICAL SECTION
PEDESTRIAN BARRIER

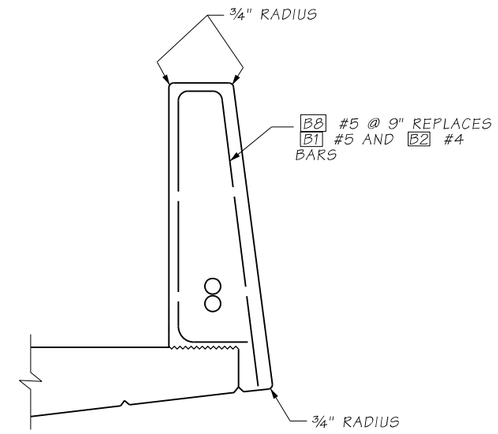

SLIPFORM
ALTERNATE

SEE TYPICAL SECTION - PEDESTRIAN BARRIER FOR ADDITIONAL DETAILS

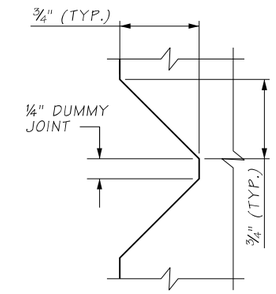

DUMMY JOINT
DETAIL

ATKINSON
APR 22 2020 KTW
RELEASED FOR CONSTRUCTION

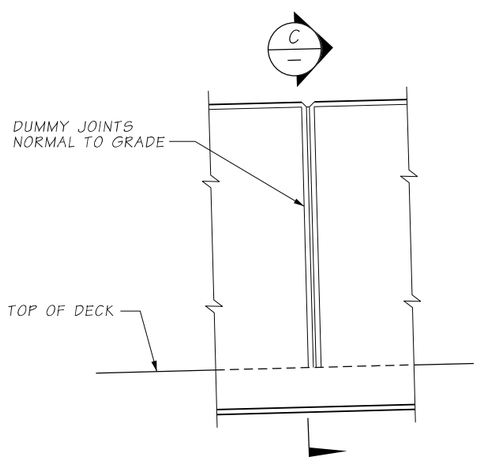

VIEW B / BB063

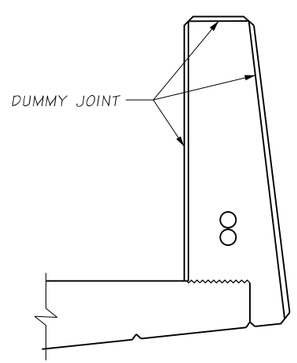

SECTION C

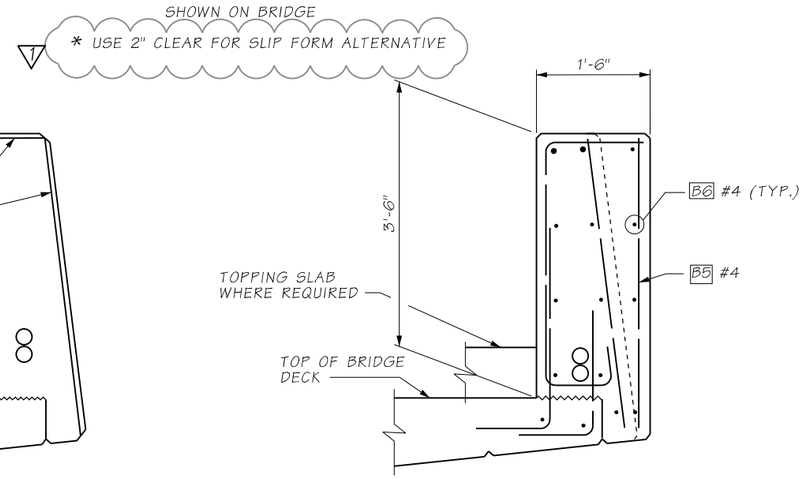

SECTION D / BB063

FOR DETAILS NOT SHOWN SEE TYPICAL SECTION PEDESTRIAN BARRIER

BENDING DIAGRAM

ALL DIMENSIONS ARE OUT TO OUT
▽ = EPOXY COATED REINFORCING STEEL

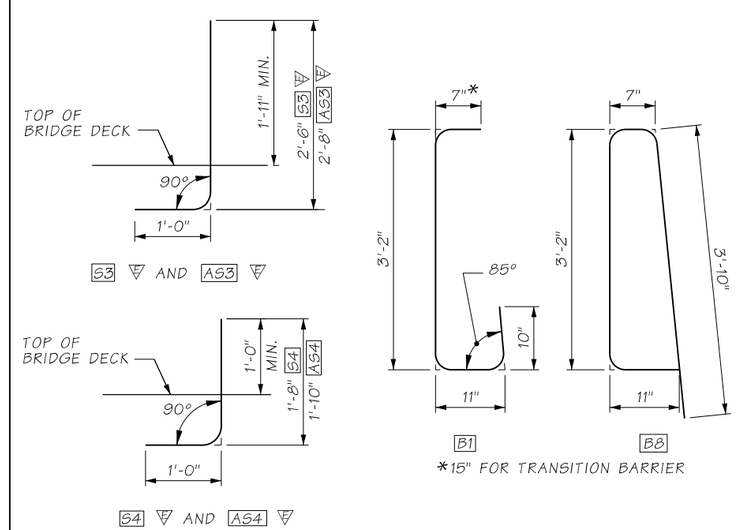

FILE NAME	c:\pwworkIng\jacobs_b&I\youngkI2\dms20633\PS_BB064.dgn						
TIME	11:48:07 AM				REGION NO. 10	STATE WASH	FED.AID PROJ.NO.
DATE	4/20/2020						
PLOTTED BY	youngkI2						
DESIGNED BY	Y. HUANG				JOB NUMBER		
ENTERED BY	R. REISER	REV 1- RFI0200	04/17/2020				
CHECKED BY	C. CAYWOOD	REV 0 - RELEASED FOR CONSTRUCTION	06/06/2019		CONTRACT NO. C9133		LOCATION NO.
PROJ. ENGR.	C. MEADE	REV A - FINAL REVIEW	04/19/2019				
REGIONAL ADM.	J. WYNANDS	REVISION	DATE	BY			

CORY J. CAYWOOD, STATE OF WASHINGTON, 38153, STRUCTURAL ENGINEER, PROFESSIONAL ENGINEER
4/20/20
DATE
P.E. STAMP BOX

DATE
P.E. STAMP BOX

Washington State Department of Transportation

ATKINSON CONSTRUCTION / JACOBS

I-5
STEILACOOM-DUPONT RD TO THORNE LN CORRIDOR IMPROVEMENTS
MP 120.01 TO MP 124.45
BERKELEY OVERPASS

42" PEDESTRIAN BARRIER DETAILS (2 OF 3)

PLAN REF NO BB064

SHEET 1255 OF 1456 SHEETS

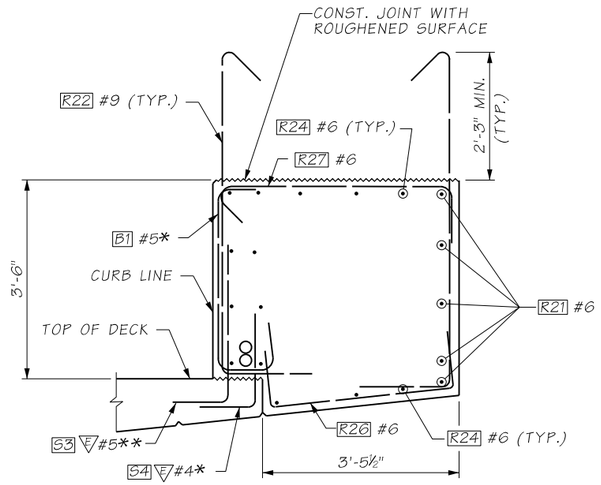

SECTION A

* S4 #4 AND B1 #5 BARS SHALL BE AT 4" SPA. WITHIN THE LIMIT OF CONCRETE BUMP OUT.

** S3 #5 BARS SHALL BE AT 4½" SPA. WITHIN THE LIMIT OF CONCRETE BUMP OUT.

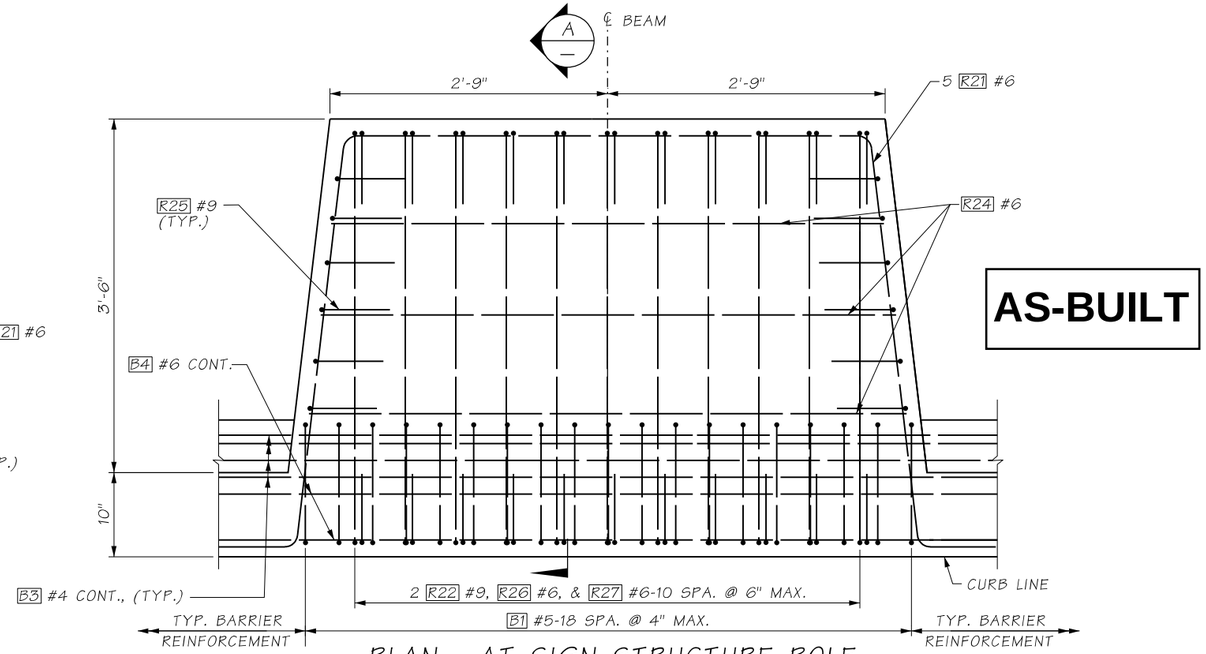

AS-BUILT

PLAN - AT SIGN STRUCTURE POLE

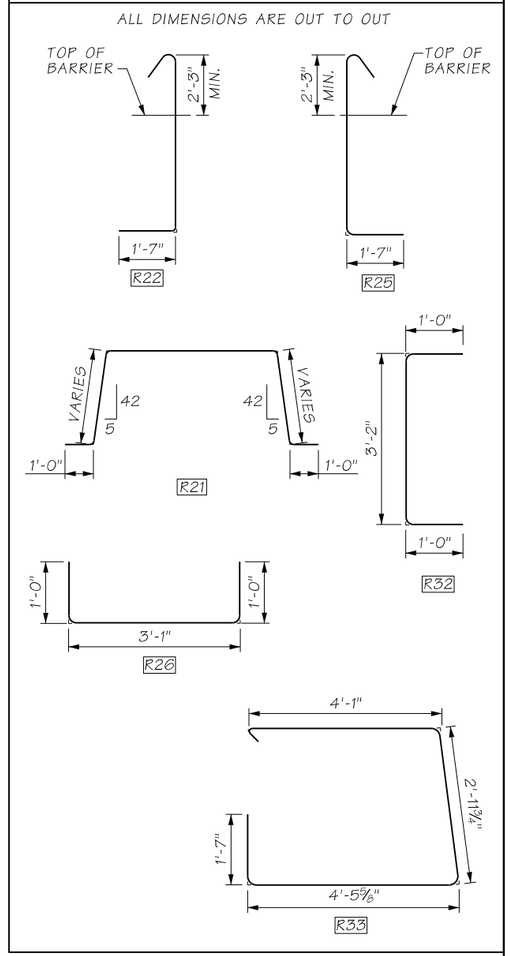

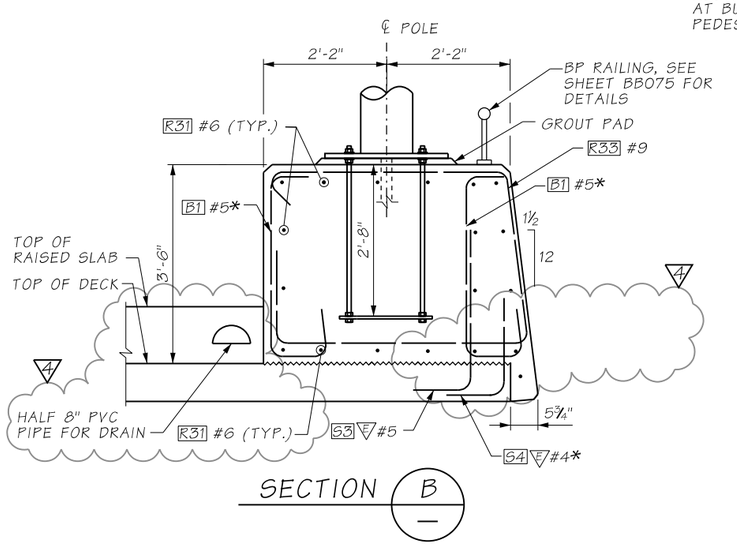

SECTION B

* S4 #4 AND B1 #5 BARS SHALL BE AT 6" SPA. WITHIN THE LIMIT OF CONCRETE BUMP OUT.

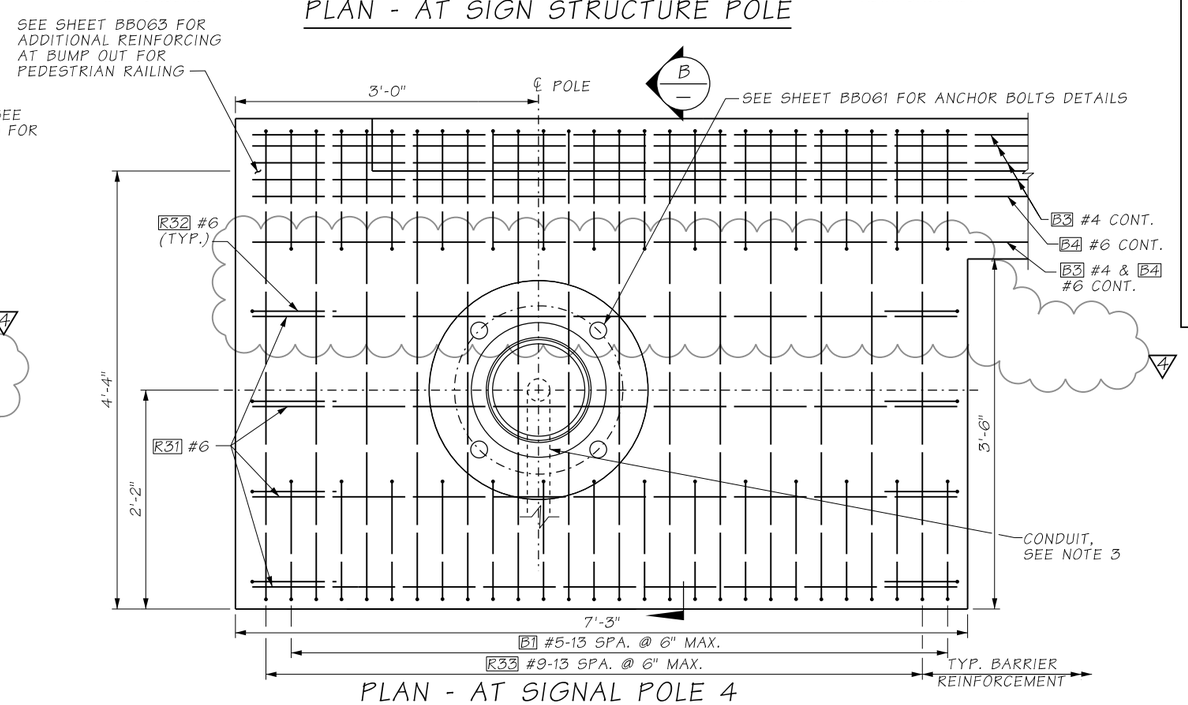

PLAN - AT SIGN POLE 4

ATKINSON
JUN 08 2020 KPW
RELEASED FOR CONSTRUCTION

NOTES:

1. VERIFY SIGNAL POLE ANCHOR BOLT SIZES AND SPACING WITH POLE MANUFACTURER.
2. ALL ANCHOR RODS SHALL BE GALVANIZED AFTER FABRICATION IN ACCORDANCE WITH ASTM F 2329.
3. SEE ITS, ILLUMINATION AND SIGNAL PLANS FOR CONDUIT DETAILS.

FILE NAME	c:\pwworking\jacobs_b&i\reiserrw\dms20633\PS_BB065.dgn					
TIME	12:27:04 PM					
DATE	6/1/2020	REV 4 - RFI0312	06/02/2020			
PLOTTED BY	ReiserRW	REV 3 - RFI0277	04/17/2020			
DESIGNED BY	Y. HUANG	REV 2 - RFI0290	11/06/2019			
ENTERED BY	R. REISER	REV 1 - RFI0145	07/03/2019			
CHECKED BY	K. YOUNG	REV 0 - RELEASED FOR CONSTRUCTION	06/06/2019			
PROJ. ENGR.	C. MEADE	REV A - FINAL REVIEW	04/19/2019			
REGIONAL ADM.	J. WYNANDS	REVISION	DATE	BY		

REGION NO.	STATE	FED.AID PROJ.NO.
10	WASH	
JOB NUMBER		
CONTRACT NO.		LOCATION NO.
C9133		

STATE OF WASHINGTON — CORY J. CAYWOOD — 38755 — STRUCTURAL ENGINEER — PROFESSIONAL ENGINEER

6/1/20
DATE
P.E. STAMP BOX

DATE
P.E. STAMP BOX

Washington State Department of Transportation

ATKINSON CONSTRUCTION / JACOBS

I-5
STEILACOOM-DUPONT RD TO THORNE LN
CORRIDOR IMPROVEMENTS
MP 120.01 TO MP 124.45
BERKELEY OVERPASS

42" PEDESTRIAN BARRIER DETAILS (3 OF 3)

PLAN REF NO
BB065

SHEET 1256 OF 1456 SHEETS

JUNCTION BOX LOCATIONS

LEFT BARRIER		RIGHT BARRIER	
STATION	"TS" OR "LT"	STATION	"TS" OR "LT"
BXW 294+00	TS	BXW 294+00	TS
BXW 294+09	LT	BXW 294+09	LT
BXW 295+58	TS	BXW 295+48	TS
BXW 295+66	LT	~~BXW 295+56~~	~~LT~~
BXW 296+77	TS	BXW 297+17	TS
BXW 296+85	LT	BXW 297+20	LT
BXW 296+93	TS	BXW 299+64	TS
BXW 297+00	LT	BXW 299+72	LT
BXW 298+14	TS		
~~BXW 298+22~~	~~LT~~		
BXW 299+64	TS		
BXW 299+72	LT		

TS = TRAFFIC SYSTEM
LT = LIGHTING SYSTEM

JUNCTION BOX LOCATIONS SHOWN ARE APPROXIMATE. CENTER JUNCTION BOX INSTALLATION BETWEEN BARRIER DUMMY JOINTS.

INSTALL ALL CONDUIT RUNS TO DRAIN TO A BRIDGE END OR PROVIDE DRAIN AT ALL LOW POINTS IN CONDUIT RUN ON BRIDGE.

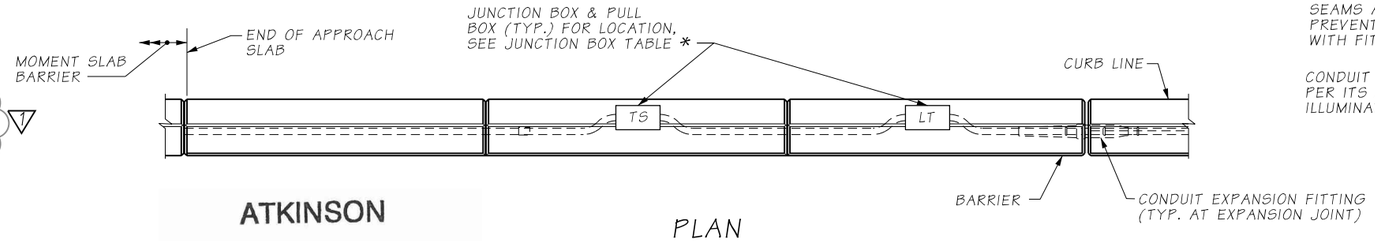

PLAN

* NEMA 4X IN STATIONARY FORM BARRIER, OR NEMA 3X IN SLIP FORM BARRIER. MOUNT JUNCTION BOX SO COVER IS FLUSH WITH BARRER, CAN BE RECESSED UP TO 1/8".

ATKINSON
AUG 06 2019
CSC
RELEASED FOR CONSTRUCTION

AS-BUILT

A
BB067

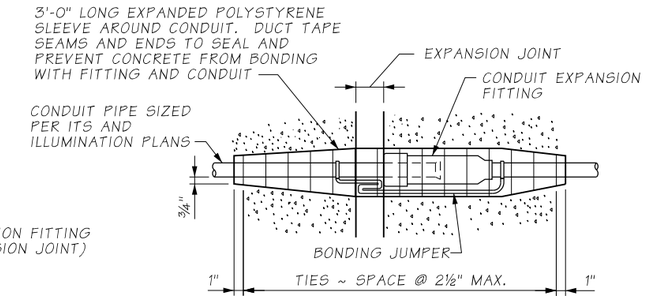

CONDUIT EXPANSION FITTING

CONDUIT FITTING - (TYPE AX FOR MOVEMENT OF ± 2") AT BRIDGE EXPANSION JOINTS

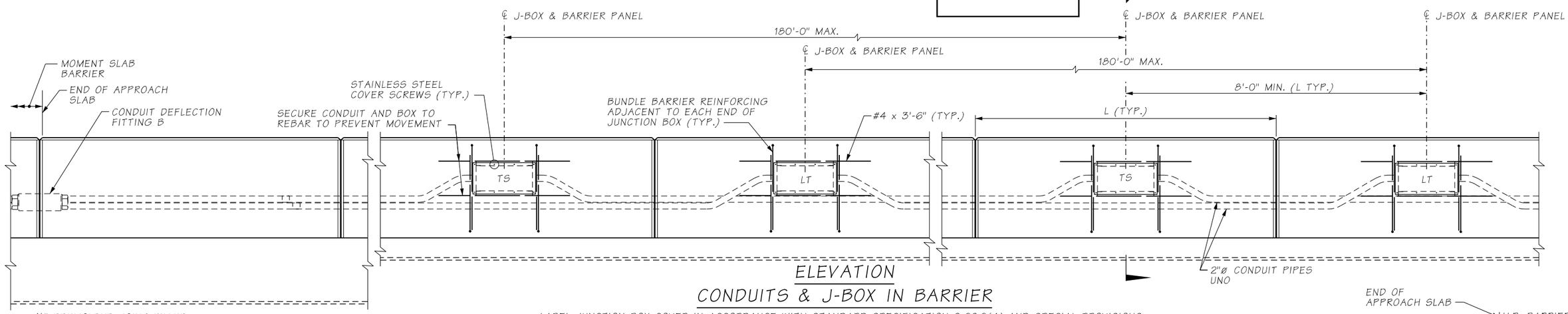

ELEVATION
CONDUITS & J-BOX IN BARRIER

LABEL JUNCTION BOX COVER IN ACCORDANCE WITH STANDARD SPECIFICATION 9-29.2(4) AND SPECIAL PROVISIONS. ADJACENT JUNCTION BOXES ARE SHOWN CENTERED BETWEEN ADJACENT DUMMY JOINTS. IF THE DISTANCE BETWEEN ADJACENT DUMMY JOINTS IS 16'-0" OR GREATER, PLACE ADJACENT JUNCTION BOXES SYMMETRICALLY ON EITHER SIDE OF THE CENTER OF ONE DUMMY PANEL WHILE MAINTAINING 8'-0" MINIMUM BETWEEN CENTER LINES OF THE JUNCTION BOXES.

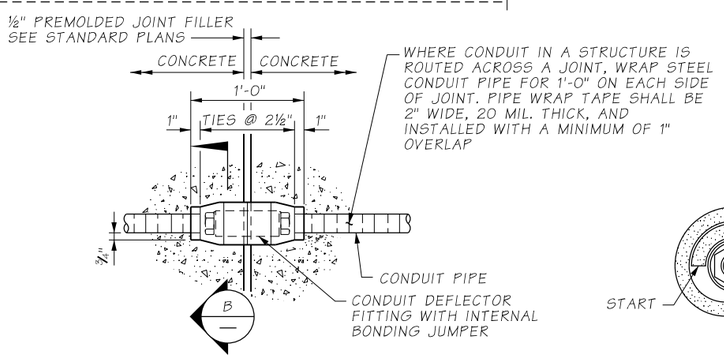

CONDUIT DEFLECTION FITTING B

CONDUIT FITTING - TYPE DX FOR DEFLECTION OF 30° AND ¾" MOVEMENT.

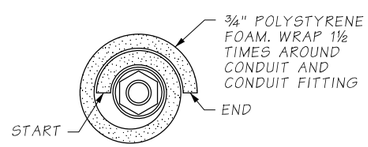

SECTION B

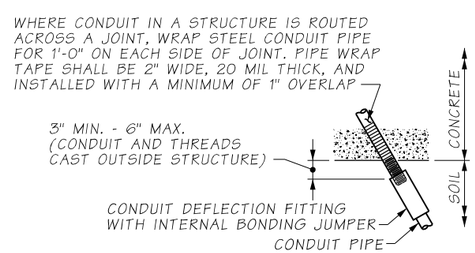

CONDUIT DEFLECTION FITTING A

CONDUIT FITTING - TYPE DX FOR DEFLECTION OF 30° AND ¾" MOVEMENT. PLACE AT CONDUIT PIPE EXIT FROM STRUCTURE AND SHALL BE IN NEUTRAL STATE AFTER INSTALLATION.

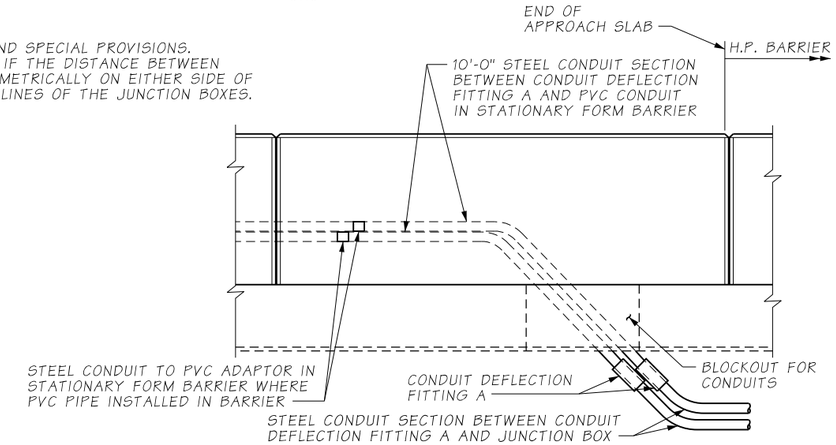

END ELEVATION
AT H.P. BARRIER

FILE NAME	c:\pwworking\jacobs_b&i\jeg_huangy1\dms20633\PS_BB066.dgn						
TIME	2:57:57 PM						
DATE	8/1/2019						
PLOTTED BY	HUANGY1						
DESIGNED BY	Y. HUANG						
ENTERED BY	R. REISER	REV 1 - RFI0152	08/07/2019				
CHECKED BY	C. CAYWOOD	REV 0 - RELEASED FOR CONSTRUCTION	06/06/2019				
PROJ. ENGR.	C. MEADE	REV A - FINAL REVIEW	04/19/2019				
REGIONAL ADM.	J. WYNANDS	REVISION	DATE	BY			

REGION NO.	STATE	FED.AID PROJ.NO.
10	WASH	
JOB NUMBER		
CONTRACT NO. C9133		LOCATION NO.

CORY J. CAYWOOD — STATE OF WASHINGTON — 38193 — STRUCTURAL ENGINEER — PROFESSIONAL ENGINEER
9/5/19
DATE
P.E. STAMP BOX

DATE
P.E. STAMP BOX

Washington State Department of Transportation

ATKINSON CONSTRUCTION / JACOBS

I-5
STEILACOOM-DUPONT RD TO THORNE LN CORRIDOR IMPROVEMENTS
MP 120.01 TO MP 124.45
BERKELEY OVERPASS

42" SINGLE SLOPE & PEDESTRIAN BARRIER CONDUIT DETAILS (1 OF 2)

PLAN REF NO BB066

SHEET 1257 OF 1456 SHEETS

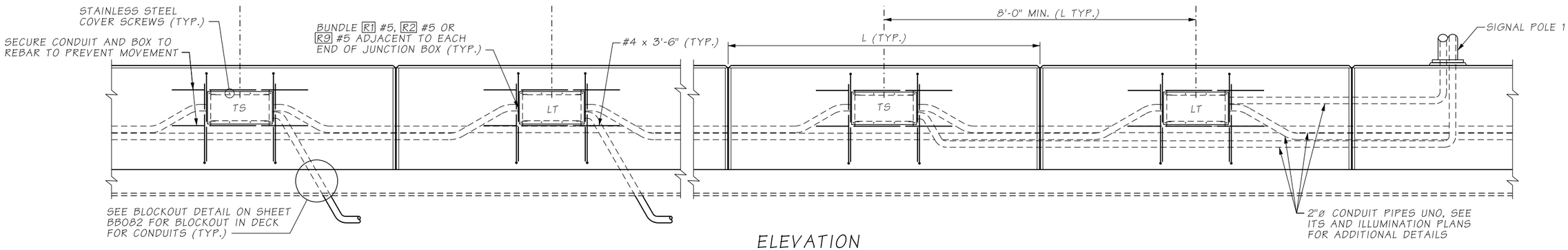

ELEVATION
CONDUITS & J-BOX IN 42" SINGLE SLOPE BARRIER NEAR SIGNAL POLE 1

LABEL JUNCTION BOX COVER IN ACCORDANCE WITH STANDARD SPECIFICATION 9-29.2(4) AND SPECIAL PROVISIONS. ADJACENT JUNCTION BOXES ARE SHOWN CENTERED BETWEEN ADJACENT DUMMY JOINTS. IF THE DISTANCE BETWEEN ADJACENT DUMMY JOINTS IS 16'-0" OR GREATER, PLACE ADJACENT JUNCTION BOXES SYMMETRICALLY ON EITHER SIDE OF THE CENTER OF ONE DUMMY PANEL WHILE MAINTAINING 8'-0" MINIMUM BETWEEN CENTER LINES OF THE JUNCTION BOXES.

AS-BUILT

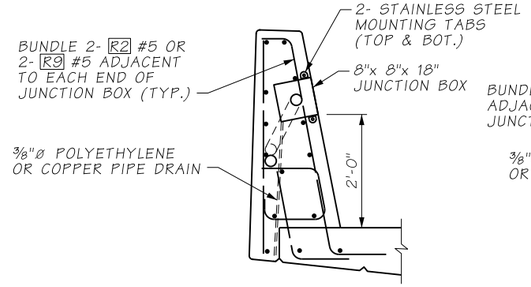

42" SINGLE SLOPE BARRIER

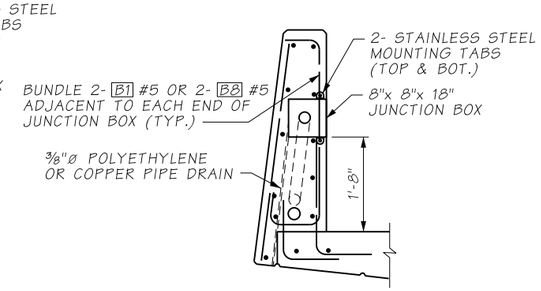

PEDESTRIAN BARRIER

SECTION A
BB066

ATKINSON
JUN 07 2019
RELEASED FOR CONSTRUCTION
KTW

FILE NAME	D:\ICS_workdir\29354\20633_1252\PS_BB067.dgn						
TIME	3:21:23 PM				REGION NO. 10	STATE WASH	FED.AID PROJ.NO.
DATE	6/4/2019						
PLOTTED BY	USLAS0-APP064$				JOB NUMBER		
DESIGNED BY	Y. HUANG						
ENTERED BY	R. REISER						
CHECKED BY	C. CAYWOOD	REV 0 - RELEASED FOR CONSTRUCTION	06/06/2019		CONTRACT NO. C9133		LOCATION NO.
PROJ. ENGR.	C. MEADE	REV A - FINAL REVIEW	04/19/2019				
REGIONAL ADM.	J. WYNANDS	REVISION	DATE	BY			

CORY J. CAYWOOD, STATE OF WASHINGTON, 38195, STRUCTURAL ENGINEER, PROFESSIONAL ENGINEER
6/7/19
DATE
P.E. STAMP BOX

DATE
P.E. STAMP BOX

Washington State Department of Transportation

ATKINSON / JACOBS CONSTRUCTION

I-5
STEILACOOM-DUPONT RD TO THORNE LN CORRIDOR IMPROVEMENTS
MP 120.01 TO MP 124.45
BERKELEY OVERPASS

42" SINGLE SLOPE & PEDESTRIAN BARRIER CONDUIT DETAILS (2 OF 2)

PLAN REF NO BB067

SHEET 1258 OF 1456 SHEETS

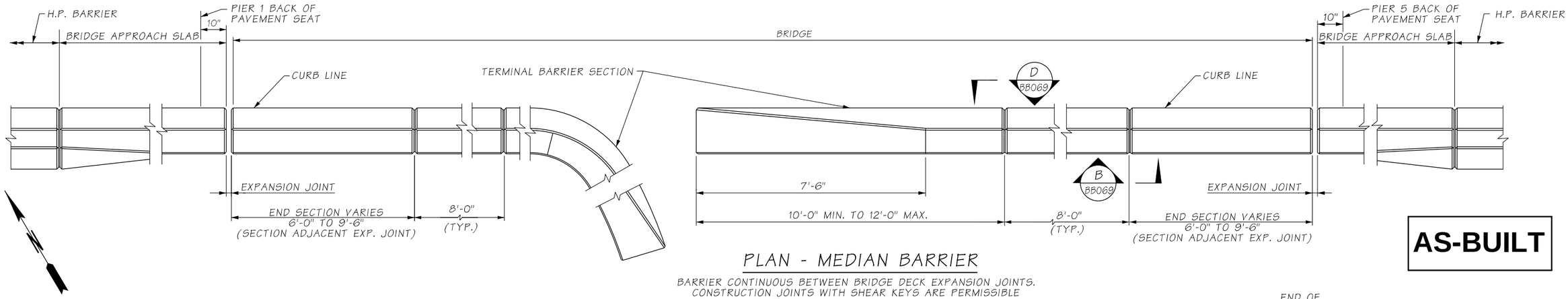

AS-BUILT

PLAN - MEDIAN BARRIER

BARRIER CONTINUOUS BETWEEN BRIDGE DECK EXPANSION JOINTS. CONSTRUCTION JOINTS WITH SHEAR KEYS ARE PERMISSIBLE AT DUMMY JOINT LOCATIONS. FORM JOINTS BETWEEN DUMMY JOINTS SHALL NOT BE PERMITTED.

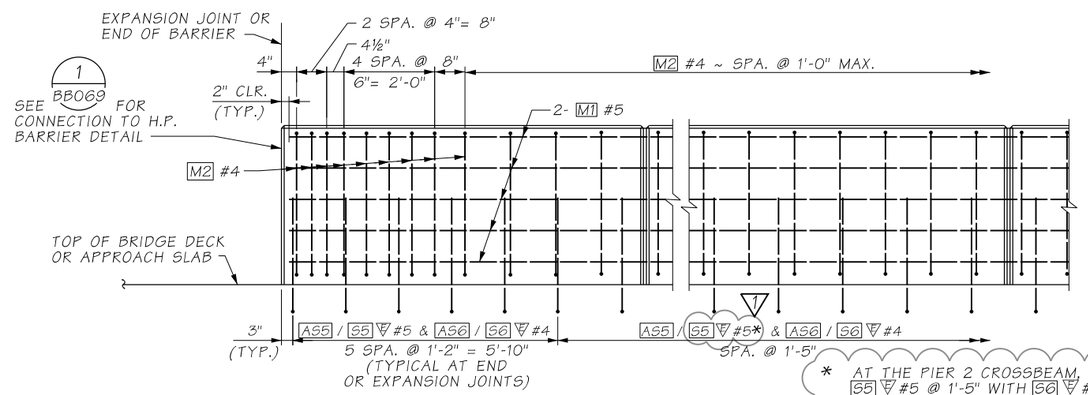

TYPICAL ELEVATION

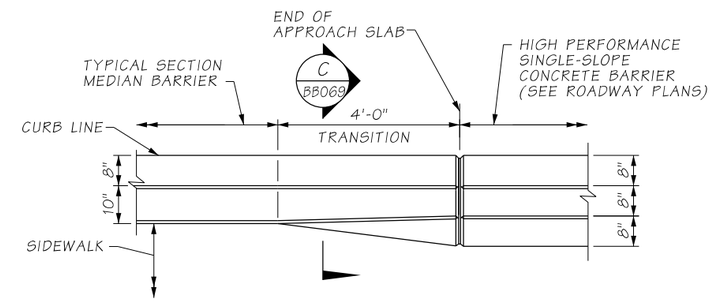

TRANSITION SECTION

MEDIAN BARRIER

APPLIES AT ENDS OF APPROACH SLABS ON BOTH ENDS OF BRIDGE

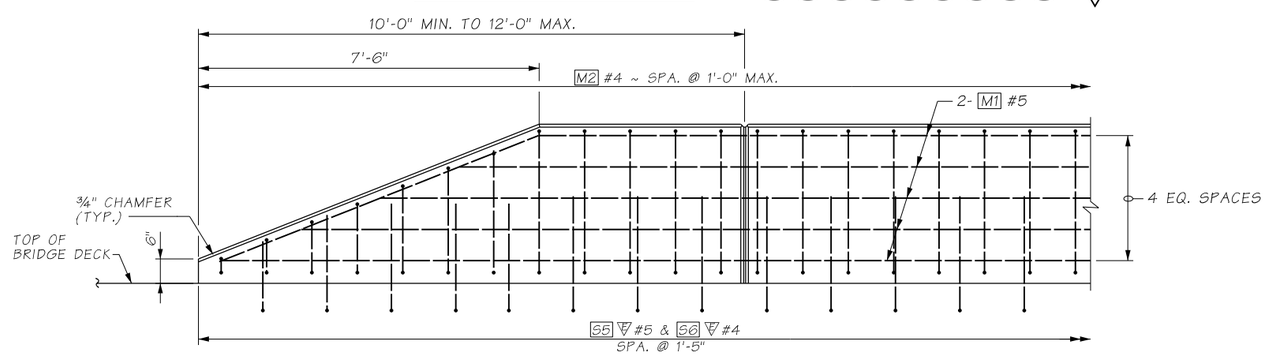

TERMINAL ELEVATION

APPLIES AT ENDS NEAR CROSSWALK BETWEEN PIER 3 & 4

ATKINSON
APR 22 2020 KTW
RELEASED FOR CONSTRUCTION

FILE NAME	c:\pwworking\jacobs_b&i\reiserrw\dms20633\PS_BB068.dgn						
TIME	10:33:55 AM				REGION NO. 10	STATE WASH	FED.AID PROJ.NO.
DATE	4/15/2020						
PLOTTED BY	ReiserRW				JOB NUMBER		
DESIGNED BY	Y. HUANG						
ENTERED BY	R. REISER	REV 1 - RFI0260	04/17/2020				
CHECKED BY	K. BICHICH	REV 0 - RELEASED FOR CONSTRUCTION	06/06/2019		CONTRACT NO. C9133		LOCATION NO.
PROJ. ENGR.	C. MEADE	REV A - FINAL REVIEW	04/19/2019				
REGIONAL ADM.	J. WYNANDS	REVISION	DATE	BY			

P.E. STAMP BOX — 4/20/20 DATE

P.E. STAMP BOX — DATE

Washington State Department of Transportation

ATKINSON CONSTRUCTION / JACOBS

I-5
STEILACOOM-DUPONT RD TO THORNE LN CORRIDOR IMPROVEMENTS
MP 120.01 TO MP 124.45
BERKELEY OVERPASS

42" MEDIAN BARRIER DETAILS (1 OF 2)

PLAN REF NO BB068

SHEET 1259 OF 1456 SHEETS

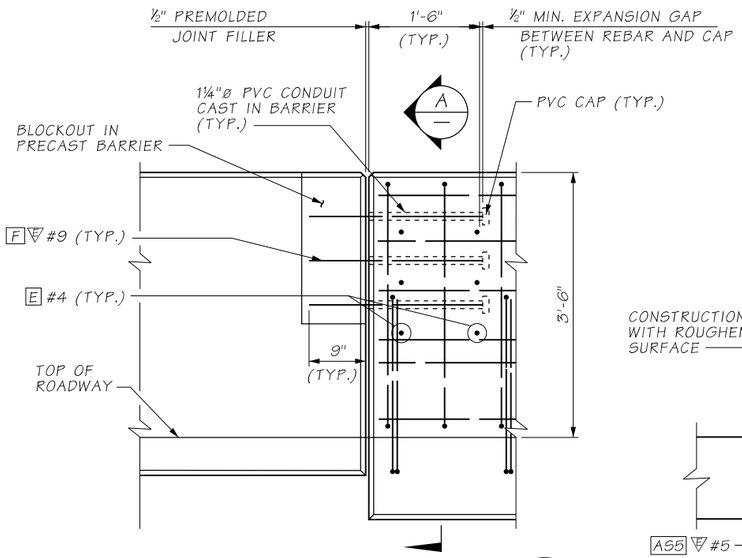

H.P. BARRIER CONNECTION 1 / BB068

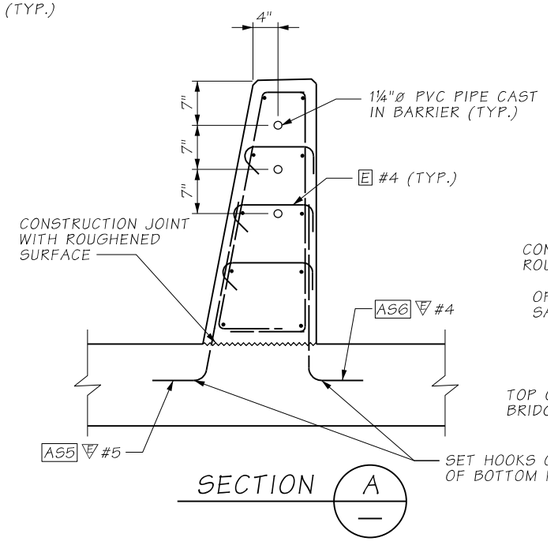

SECTION A

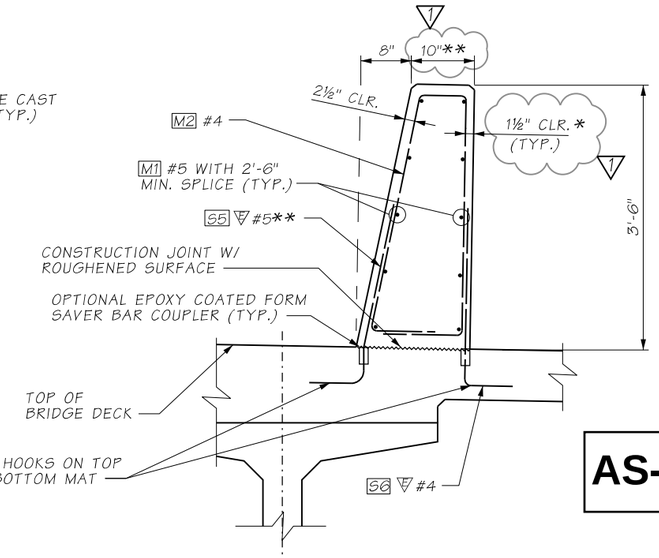

TYPICAL SECTION MEDIAN BARRIER

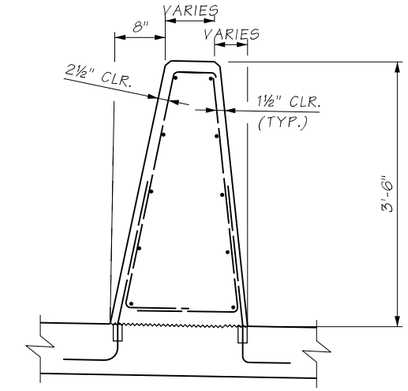

SECTION C / MEDIAN BARRIER TRANSITION / BB068

AS-BUILT

* USE 2" CLEAR FOR SLIP FORM ALTERNATIVE.

** WIDTH OF TOP OF BARRIER VARIES IN SPAN 4, FROM 10" TO 1'-0" DUE TO MIS-ALIGNMENT OF FORM SAVERS.

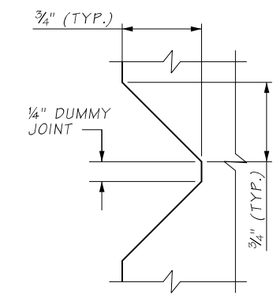

DUMMY JOINT DETAIL

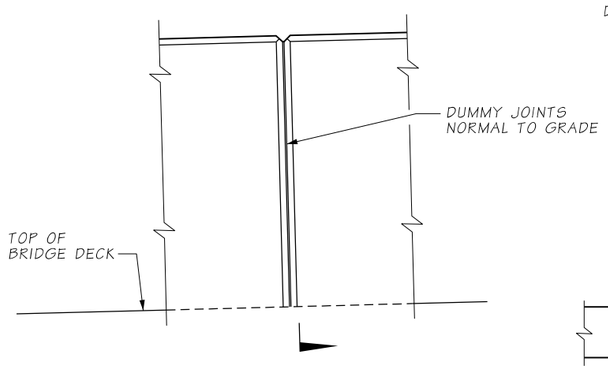

VIEW B / BB068

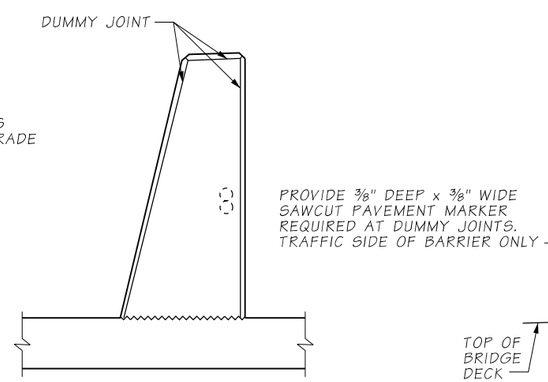

SECTION C

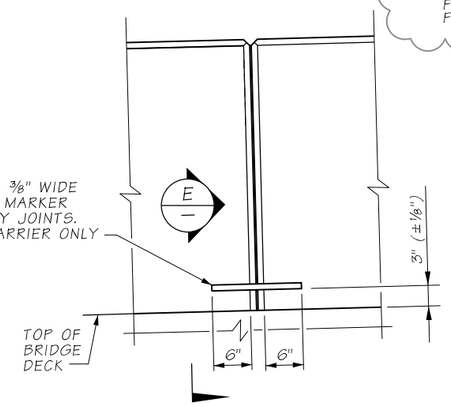

VIEW D / BB068

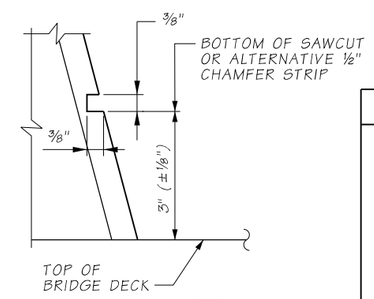

SECTION E / PAVEMENT MARKER DETAIL

BENDING DIAGRAM

ALL DIMENSIONS ARE OUT TO OUT

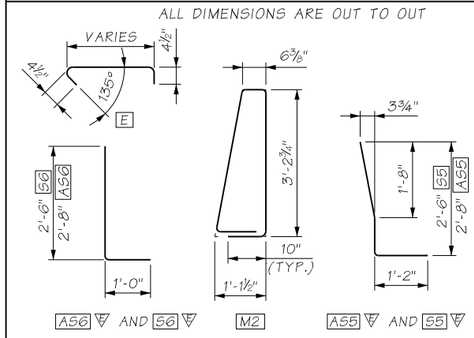

ATKINSON
APR 22 2020 krw
RELEASED FOR CONSTRUCTION

FILE NAME	c:\pwworking\jacobs_b&i\reiserrw\dms20633\PS_BB069.dgn				REGION NO.	STATE	FED.AID PROJ.NO.
TIME	10:21:50 AM				10	WASH	
DATE	4/15/2020						
PLOTTED BY	ReiserRW				JOB NUMBER		
DESIGNED BY	Y. HUANG						
ENTERED BY	R. REISER	REV 1 - RFI0200, RFI0236	04/17/2020				
CHECKED BY	C. CAYWOOD	REV 0 - RELEASED FOR CONSTRUCTION	06/06/2019		CONTRACT NO.		LOCATION NO.
PROJ. ENGR.	C. MEADE	REV A - FINAL REVIEW	04/19/2019		C9133		
REGIONAL ADM.	J. WYNANDS	REVISION	DATE	BY			

CORY J. CAYWOOD — STATE OF WASHINGTON — 38133 — STRUCTURAL PROFESSIONAL ENGINEER
4/20/20
DATE
P.E. STAMP BOX

DATE
P.E. STAMP BOX

Washington State Department of Transportation

ATKINSON CONSTRUCTION / JACOBS

I-5
STEILACOOM-DUPONT RD TO THORNE LN CORRIDOR IMPROVEMENTS
MP 120.01 TO MP 124.45
BERKELEY OVERPASS

42" MEDIAN BARRIER DETAILS (2 OF 2)

PLAN REF NO
BB069

SHEET 1260 OF 1456 SHEETS

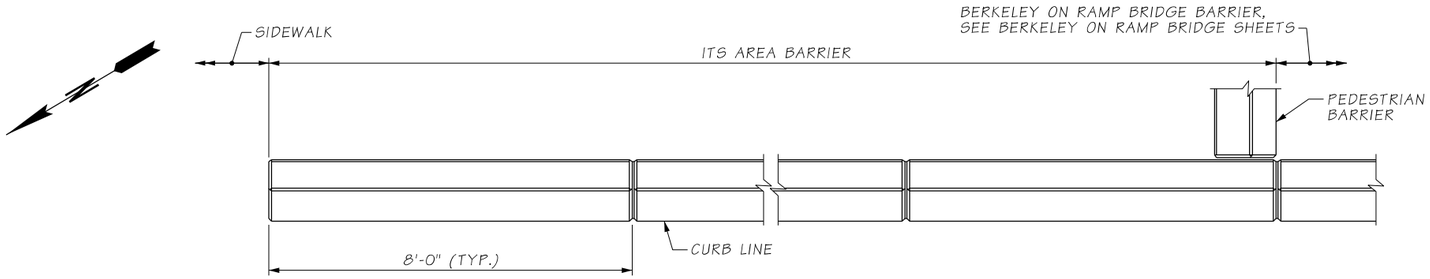

PLAN - ITS AREA BARRIER

BARRIER CONTINUOUS BETWEEN BRIDGE DECK EXPANSION JOINTS. CONSTRUCTION JOINTS WITH SHEAR KEYS ARE PERMISSIBLE AT DUMMY JOINT LOCATIONS. FORM JOINTS BETWEEN DUMMY JOINTS SHALL NOT BE PERMITTED.

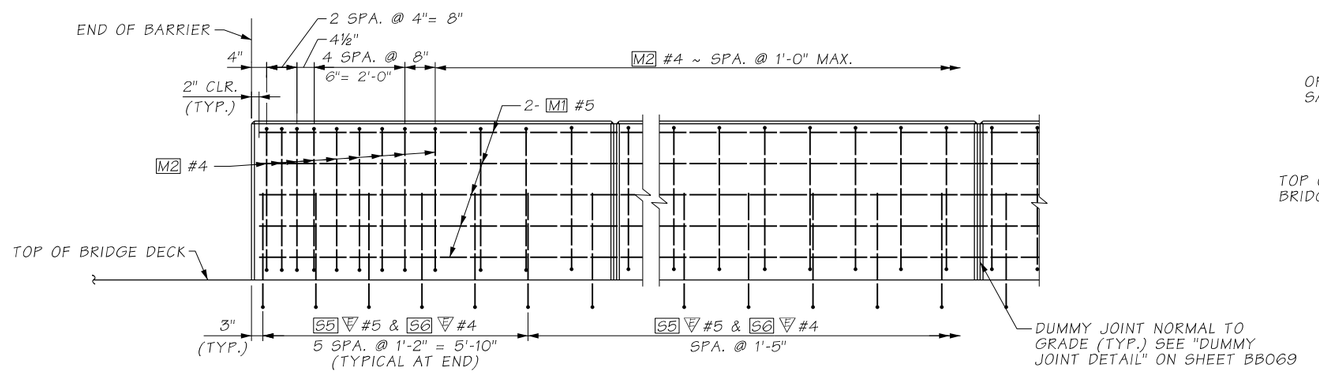

TYPICAL ELEVATION

NOTES:

1. SEE SHEET BB069 FOR BAR BENDING DIAGRAMS.

AS-BUILT

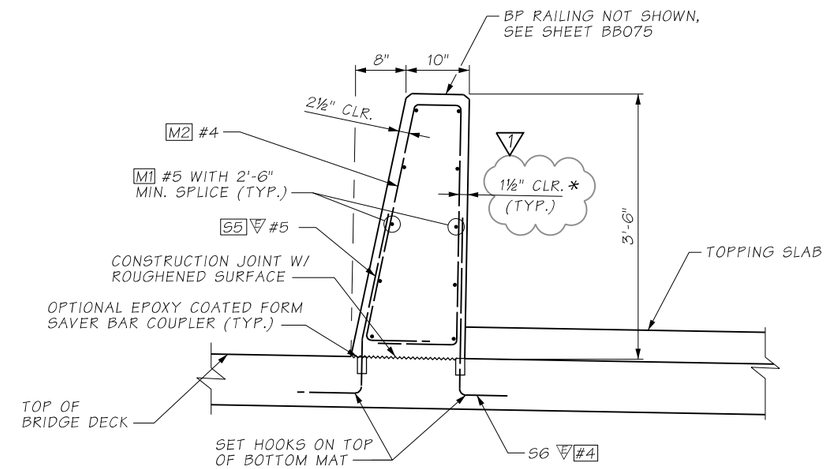

TYPICAL SECTION - ITS AREA BARRIER

1 * USE 2" CLEAR FOR SLIP FORM ALTERNATIVE

ATKINSON
APR 22 2020 KTW
RELEASED FOR CONSTRUCTION

FILE NAME	c:\pwworking\jacobs_b&i\reiserrw\dms20633\PS_BB070.dgn			
TIME	10:29:15 AM			
DATE	4/15/2020			
PLOTTED BY	ReiserRW			
DESIGNED BY	Y. HUANG			
ENTERED BY	R. REISER	REV 1 - RFI0200	04/17/2020	
CHECKED BY	K. BICHICH	REV 0 - RELEASED FOR CONSTRUCTION	06/06/2019	
PROJ. ENGR.	C. MEADE	REV A - FINAL REVIEW	04/19/2019	
REGIONAL ADM.	J. WYNANDS	REVISION	DATE	BY

REGION NO.	STATE	FED.AID PROJ.NO.
10	WASH	
JOB NUMBER		
CONTRACT NO. C9133		LOCATION NO.

CORY J. CAYWOOD, STATE OF WASHINGTON, 38759, STRUCTURAL ENGINEER, PROFESSIONAL ENGINEER
4/20/20
DATE
P.E. STAMP BOX

DATE
P.E. STAMP BOX

Washington State Department of Transportation

ATKINSON CONSTRUCTION / JACOBS

I-5
STEILACOOM-DUPONT RD TO THORNE LN
CORRIDOR IMPROVEMENTS
MP 120.01 TO MP 124.45
BERKELEY OVERPASS

ITS AREA BARRIER DETAILS

PLAN REF NO BB070

SHEET 1261 OF 1456 SHEETS

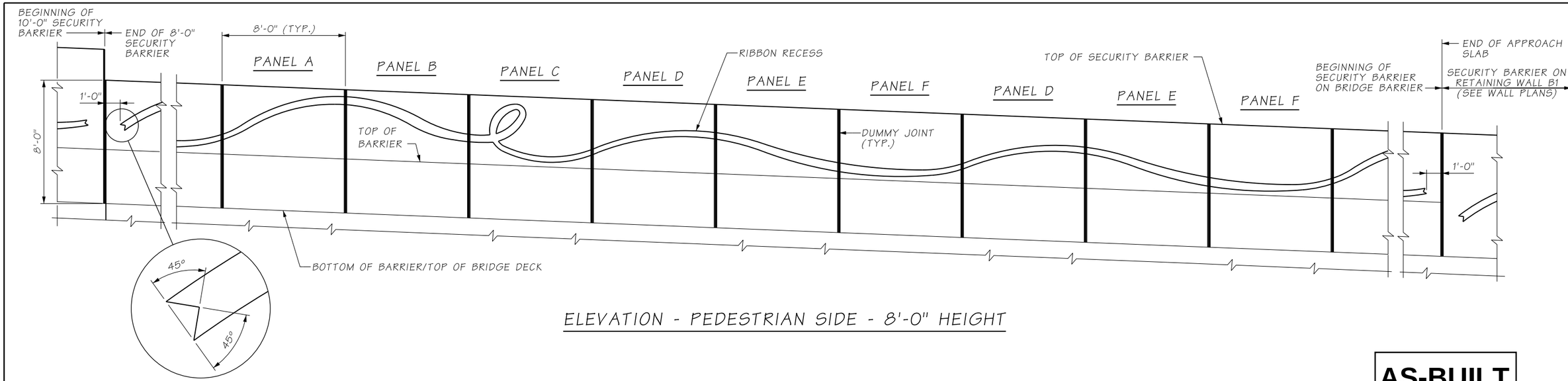

ELEVATION - PEDESTRIAN SIDE - 8'-0" HEIGHT

RIBBON END DETAIL

AS-BUILT

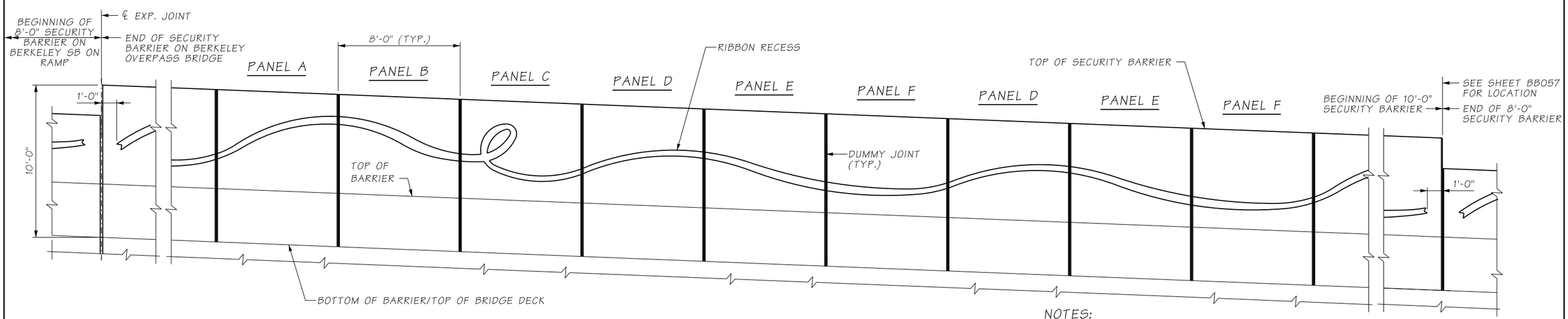

ELEVATION - PEDESTRIAN SIDE - 10'-0" HEIGHT

NOTES:

1. RIBBON PATTERN ON PEDESTRIAN SIDE SHALL CONSIST OF PANEL A THROUGH F. PANEL SEQUENCE SHALL BE AS FOLLOWS: PANEL A -> PANEL B -> PANEL C -> PANEL D -> PANEL E -> PANEL F -> PANEL D -> PANEL E -> PANEL F. REPEAT SAME PATTERN FOR THE FULL LENGTH OF THE SECURITY BARRIER.
2. DUMMY JOINTS SHALL BE NORMAL TO FINISHED GRADE AND LINED UP WITH DUMMY JOINTS ON THE PEDESTRIAN BARRIER.
3. PRIOR TO CONSTRUCTION OF SECURITY BARRIER, SUBMIT TYPE 2 WORKING DRAWINGS FOR APPROVAL INCLUDING ELEVATION OF WALL WITH RIBBON LAYOUT ALONG FULL LENGTH OF SECURITY BARRIER ON BRIDGE.
4. MT. BAKER GRAY PIGMENTED SEALER SHALL BE USED FOR RIBBON RECESS.
5. SEE SHEET BB057 FOR LOCATION AND HEIGHT OF SECURITY BARRIER.

ATKINSON
APR 21 2020 KW
RELEASED FOR CONSTRUCTION

FILE NAME	D:\ICS_workdir\50654\20633_1907\PS_BB071.dgn			
TIME	1:11:31 PM			
DATE	4/15/2020			
PLOTTED BY	USLAS0-APP064$			
DESIGNED BY	K. YOUNG			
ENTERED BY	R. REISER	REV 1 - RFI0258	04/17/2020	
CHECKED BY	C. CAYWOOD	REV 0 - RELEASED FOR CONSTRUCTION	06/06/2019	
PROJ. ENGR.	C. MEADE	REV A - FINAL REVIEW	04/19/2019	
REGIONAL ADM.	J. WYNANDS	REVISION	DATE	BY

REGION NO.	STATE	FED.AID PROJ.NO.
10	WASH	
JOB NUMBER		
CONTRACT NO. C9133		LOCATION NO.

CORY J. CAYWOOD, STATE OF WASHINGTON, 38759, STRUCTURAL ENGINEER, PROFESSIONAL ENGINEER
4/16/20
DATE
P.E. STAMP BOX

DATE
P.E. STAMP BOX

Washington State Department of Transportation

ATKINSON CONSTRUCTION / JACOBS

I-5
STEILACOOM-DUPONT RD TO THORNE LN
CORRIDOR IMPROVEMENTS
MP 120.01 TO MP 124.45
BERKELEY OVERPASS

SECURITY BARRIER DETAILS (1 OF 2)

PLAN REF NO BB071

SHEET 1262 OF 1456 SHEETS

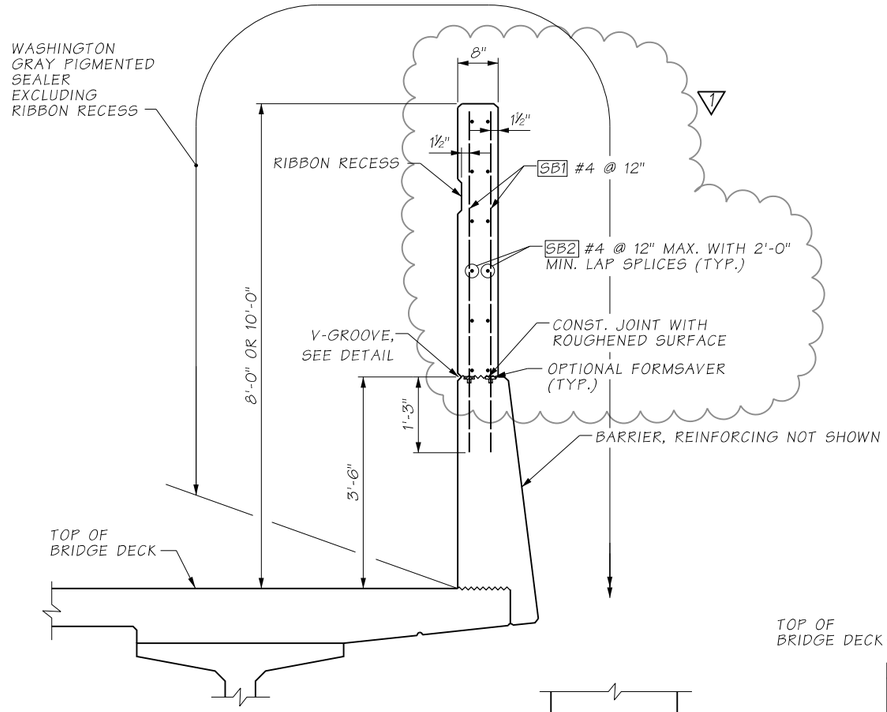

TYPICAL SECTION
SECURITY BARRIER

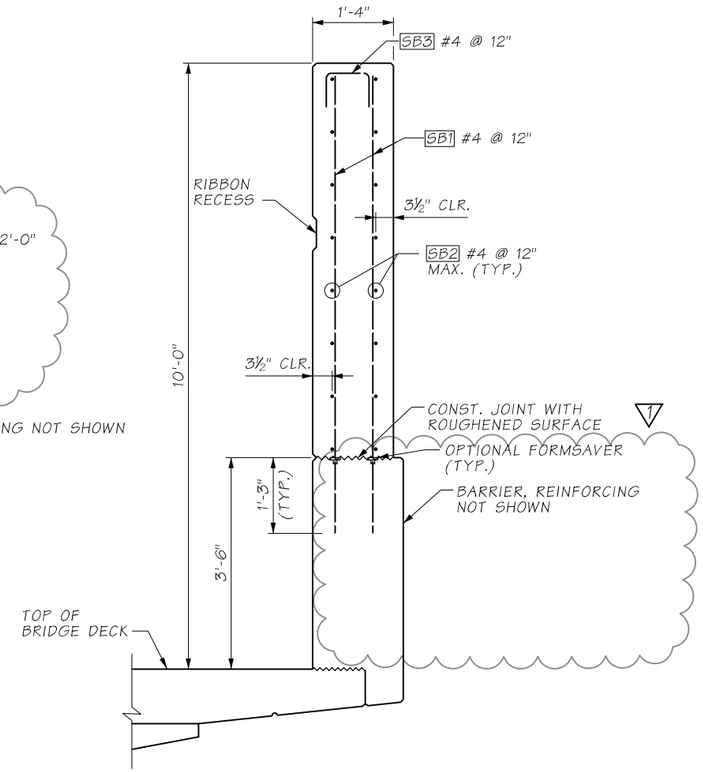

SECURITY BARRIER AT
BARRIER TRANSITION

APPLIES FOR 5'-0" LENGTH ADJACENT TO BERKELEY ON RAMP BRIDGE, SEE TYPICAL SECTION FOR PIGMENTED SEALER

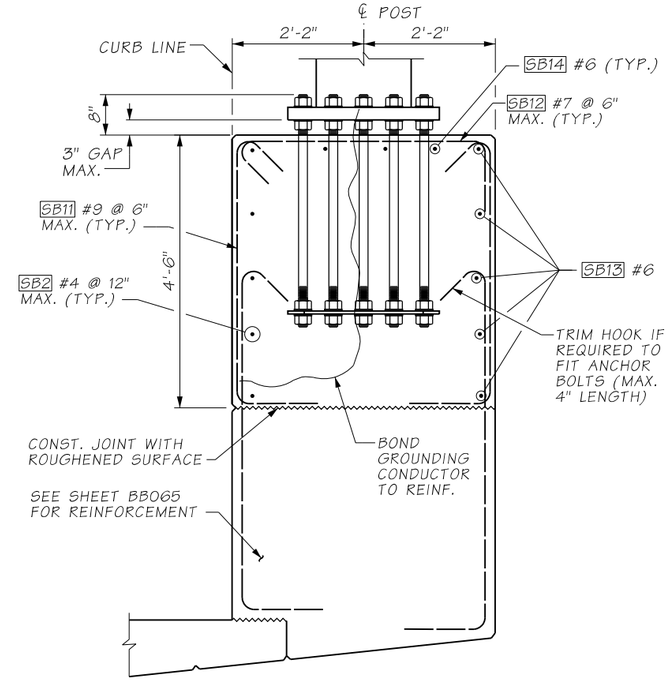

SECTION A

SEE SHEET BB065 FOR PEDESTRIAN BARRIER DETAILS AT SIGN STRUCTURE

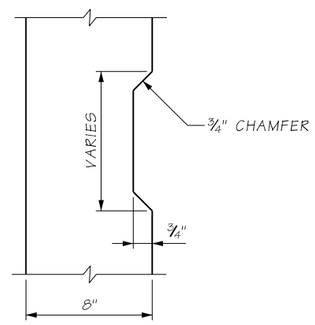

RIBBON RECESS

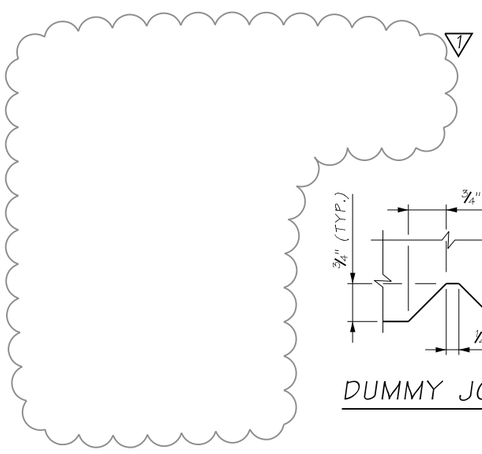

DUMMY JOINT

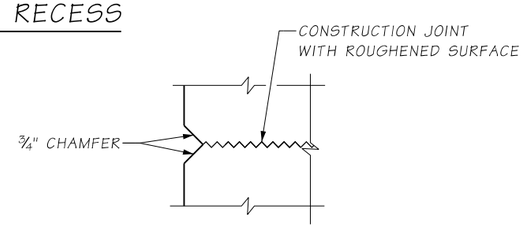

V-GROOVE DETAIL

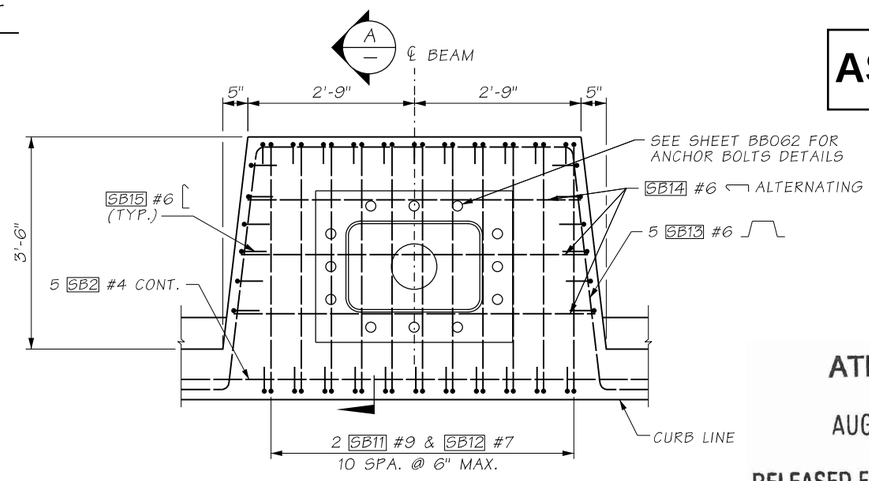

PLAN - AT SIGN STRUCTURE POLE

AS-BUILT

ATKINSON
AUG 06 2019
CSC
RELEASED FOR CONSTRUCTION

FILE NAME	c:\pwworking\jacobs_b&i\jeg_huangy1\dms20633\PS_BB072.dgn						
TIME	1:28:30 PM				REGION NO.	STATE	FED.AID PROJ.NO.
DATE	8/1/2019				10	WASH	
PLOTTED BY	HUANGY1				JOB NUMBER		
DESIGNED BY	K. YOUNG						
ENTERED BY	R. REISER	REV 1 - RFI0152	08/07/2019				
CHECKED BY	C. CAYWOOD	REV 0 - RELEASED FOR CONSTRUCTION	06/06/2019		CONTRACT NO.		LOCATION NO.
PROJ. ENGR.	C. MEADE	REV A - FINAL REVIEW	04/19/2019		C9133		
REGIONAL ADM.	J. WYNANDS	REVISION	DATE	BY			

CORY J. CAYWOOD — STATE OF WASHINGTON — 38153 — STRUCTURAL ENGINEER — PROFESSIONAL ENGINEER
9/15/19
DATE
P.E. STAMP BOX

DATE
P.E. STAMP BOX

Washington State Department of Transportation

ATKINSON CONSTRUCTION / JACOBS

I-5
STEILACOOM-DUPONT RD TO THORNE LN
CORRIDOR IMPROVEMENTS
MP 120.01 TO MP 124.45
BERKELEY OVERPASS

SECURITY BARRIER DETAILS (2 OF 2)

PLAN REF NO BB072

SHEET 1263 OF 1456 SHEETS

MAT'L	PART	MATERIAL SPECIFICATION	
ALUMINUM	PIPES (2)	UNLESS NOTED OTHERWISE	ASTM B 221 6005A-T5
		POSTS	ASTM B 221 6005A-T5 SCHEDULE 40 WITH HEAT TREATING OR ASTM B 221 6005A-T5 SCHEDULE 80 WITHOUT HEAT TREATING
	BAR	ASTM B 221 6005A-T5	
STEEL	DRIVE PINS	ASTM A 276 TYPE 302 STAINLESS STEEL	

NOTES:

1. PIPE RAILING AND PIPE RAILING SPLICES SHALL BE BENT TO THE HORIZONTAL CURVE WHERE THE RADIUS OF CURVATURE IS LESS THAN 200'. THESE ITEMS MAY BE HEATED TO NOT MORE THAN 400°F FOR A PERIOD NOT TO EXCEED 30 MINUTES TO FACILITATE FORMING OR BENDING TO HORIZONTAL CURVATURE.
2. SHOP DRAWINGS OF RAILING SHALL BE SUBMITTED FOR APPROVAL SHOWING COMPLETE DIMENSIONS AND DETAILS OF FABRICATION AND INCLUDING AN ERECTION DIAGRAM. MATERIAL SPECIFICATIONS SHALL BE PROVIDED IN THE SHOP DRAWINGS FOR ALL COMPONENTS.
3. CUTTING SHALL BE DONE BY SAWING OR MILLING AND ALL CUTS SHALL BE TRUE AND SMOOTH. FLAME CUTTING WILL NOT BE PERMITTED.
4. WELDING OF ALUMINUM SHALL CONFORM TO STD. SPEC. SECTION 9-28.14(3).
5. ALL ALUMINUM PARTS SHALL BE POWDER COATED WSDOT CASCADE GREEN.
6. PIPE RAILING, PIPE BALUSTERS AND PIPE RAILING SPLICES SHALL BE ADEQUATELY WRAPPED TO INSURE SURFACE PROTECTION DURING HANDLING AND TRANSPORTATION TO THE JOB SITE.

AS-BUILT

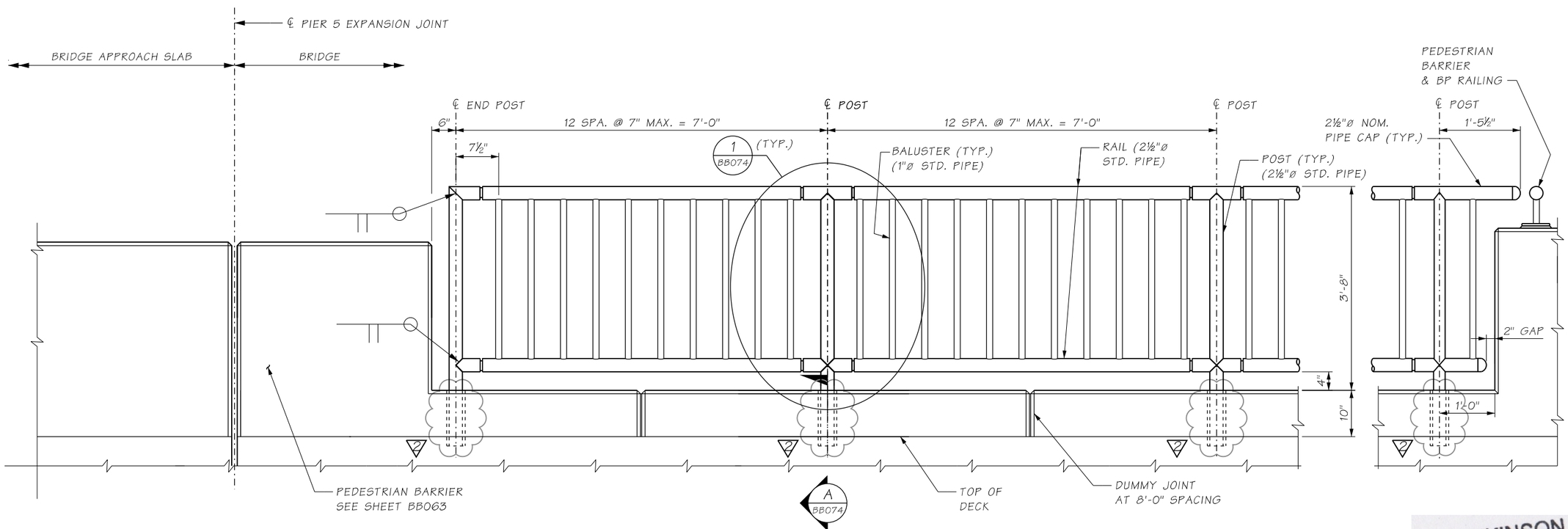

ELEVATION

BALUSTERS NORMAL TO GRADE.
TOP & BOTTOM RAILS PARALLEL TO GRADE.

ATKINSON
APR 21 2020 KW
RELEASED FOR CONSTRUCTION

FILE NAME	c:\pwworking\jacobs_b&l\youngkl2\dms20633\PS_BB073.dgn			
TIME	5:08:38 PM			
DATE	4/14/2020			
PLOTTED BY	youngkl2			
DESIGNED BY	K. BICHICH	REV 2 - RFI0225, RFI0272	04/20/2020	
ENTERED BY	R. REISER	REV 1 - RFI0290	11/06/2019	
CHECKED BY	C. CAYWOOD	REV 0 - RELEASED FOR CONSTRUCTION	06/06/2019	
PROJ. ENGR.	C. MEADE	REV A - FINAL REVIEW	04/19/2019	
REGIONAL ADM.	J. WYNANDS	REVISION	DATE	BY

REGION NO.	STATE	FED.AID PROJ.NO.
10	WASH	
JOB NUMBER		
CONTRACT NO. C9133		LOCATION NO.

CORY J. CAYWOOD, STATE OF WASHINGTON, 38759, STRUCTURAL ENGINEER, PROFESSIONAL ENGINEER
4/16/20
DATE
P.E. STAMP BOX

P.E. STAMP BOX
DATE

Washington State Department of Transportation
ATKINSON CONSTRUCTION / JACOBS

I-5
STEILACOOM-DUPONT RD TO THORNE LN
CORRIDOR IMPROVEMENTS
MP 120.01 TO MP 124.45
BERKELEY OVERPASS

PEDESTRIAN RAILING
(1 OF 2)

PLAN REF NO BB073
SHEET 1264 OF 1456 SHEETS

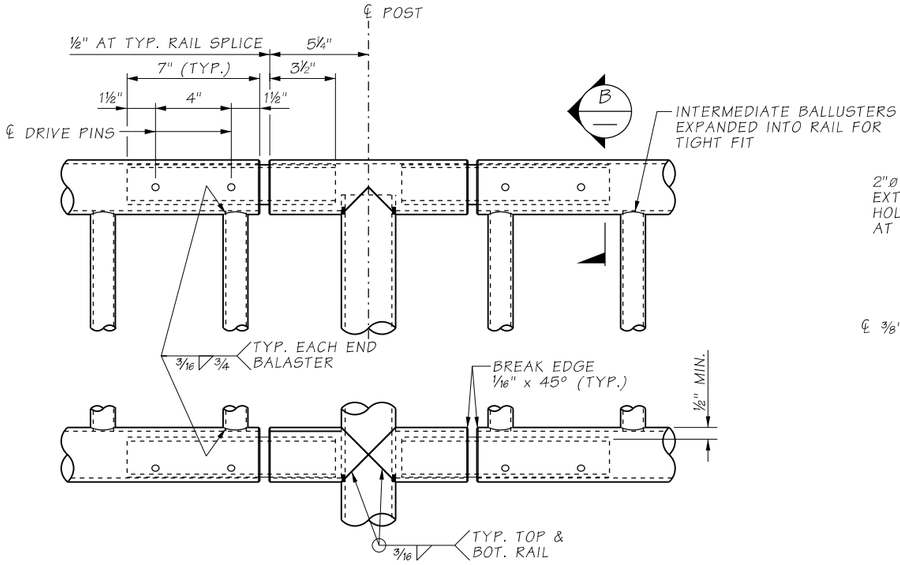

DETAIL 1 BB072

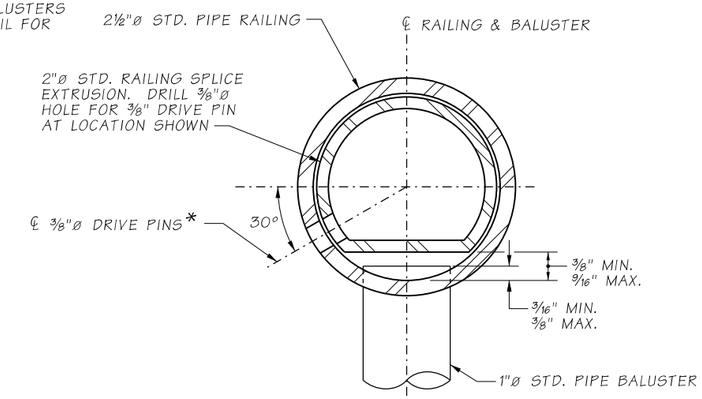

SECTION B
OPTION #1

* LOCATE ON OPPOSITE SIDE OF TRAFFIC. DRIVE PINS SHALL BE DRIVEN FLUSH WITH THE OUTSIDE FACE OF THE RAILING.

NOTES:

1. GROUT SHALL MEET THE REQUIREMENTS OF STD. SPEC. SECTION 9-20.3(2).

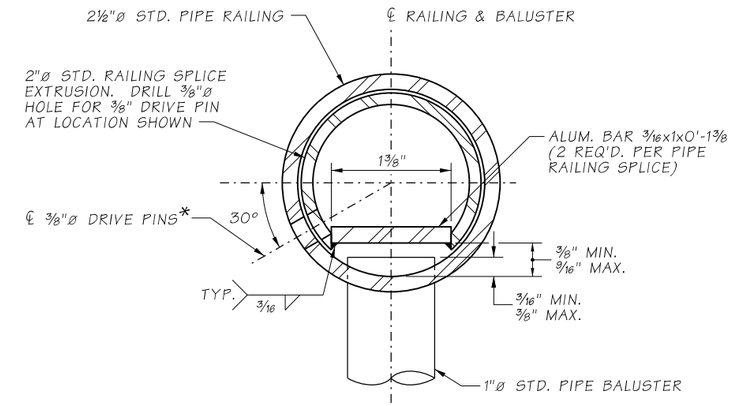

SECTION B
OPTION #2

* LOCATE ON OPPOSITE SIDE OF TRAFFIC. DRIVE PINS SHALL BE DRIVEN FLUSH WITH THE OUTSIDE FACE OF THE RAILING.

AS-BUILT

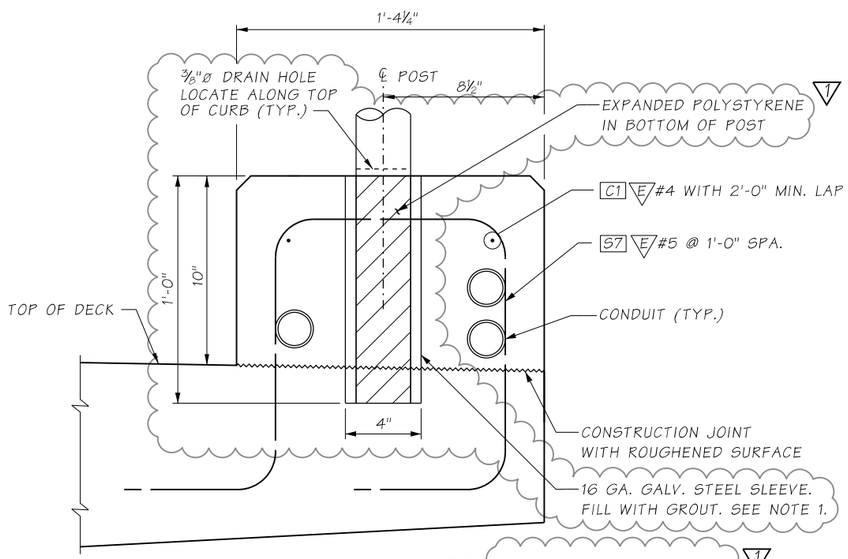

SECTION A
BRIDGE DECK SHOWN
APPROACH SLAB SIMILAR
BB073

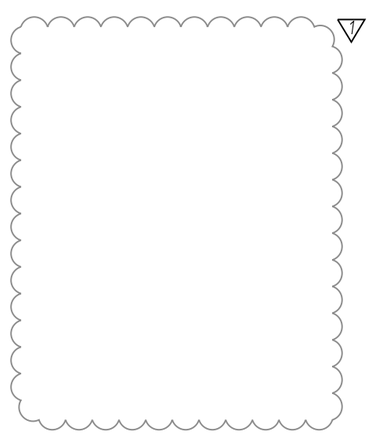

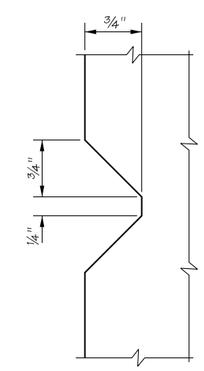

DUMMY JOINT
PRESENT ON INSIDE AND TOP FACE OF CURB

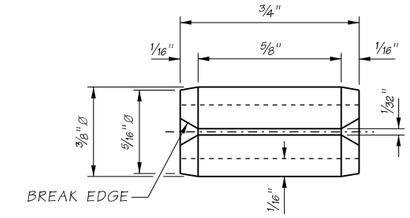

DRIVE PIN DETAIL
SLOTTED TYPE SPRING PIN (ANSI B18.8.2)

BENDING DIAGRAM
ALL DIMENSIONS ARE OUT TO OUT

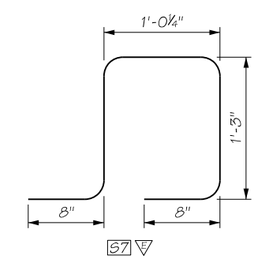

ATKINSON
APR 21 2020 KAW
RELEASED FOR CONSTRUCTION

FILE NAME	c:\pwworking\jacobs_b&i\caywoocj\dms20633\PS_BB074.dgn				REGION NO.	STATE	FED.AID PROJ.NO.
TIME	7:54:54 AM				10	WASH	
DATE	4/15/2020						
PLOTTED BY	caywoocj				JOB NUMBER		
DESIGNED BY	K. BICHICH						
ENTERED BY	R. REISER	REV 1 - RFI0225	04/20/2020				
CHECKED BY	C. CAYWOOD	REV 0 - RELEASED FOR CONSTRUCTION	06/06/2019		CONTRACT NO.		LOCATION NO.
PROJ. ENGR.	C. MEADE	REV A - FINAL REVIEW	04/19/2019		C9133		
REGIONAL ADM.	J. WYNANDS	REVISION	DATE	BY			

CORY J. CAYWOOD, STATE OF WASHINGTON, 38159, STRUCTURAL ENGINEER, PROFESSIONAL ENGINEER
4/16/20
DATE
P.E. STAMP BOX

DATE
P.E. STAMP BOX

Washington State Department of Transportation

ATKINSON / JACOBS CONSTRUCTION

I-5
STEILACOOM-DUPONT RD TO THORNE LN
CORRIDOR IMPROVEMENTS
MP 120.01 TO MP 124.45
BERKELEY OVERPASS

PEDESTRIAN RAILING
(2 OF 2)

PLAN REF NO
BB074

SHEET 1265 OF 1456 SHEETS

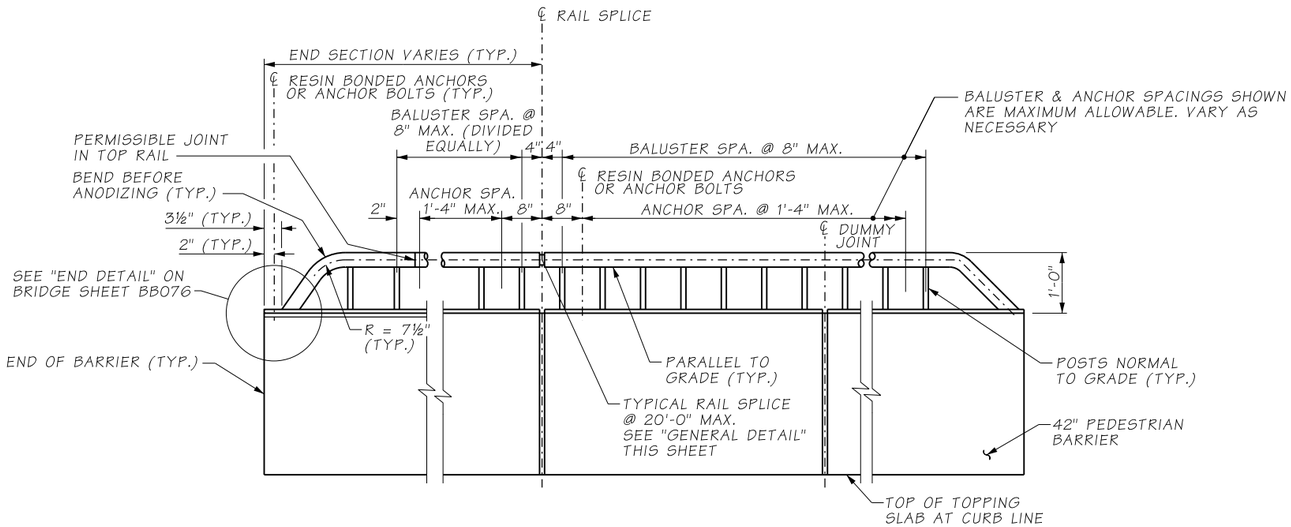

ELEVATION

BALUSTER AND GUARDRAIL SECTION ATTACHMENT DETAILS NOT SHOWN

β LOCATE ON OPPOSITE SIDE OF TRAFFIC. DRIVE PINS SHALL BE DRIVEN FLUSH WITH THE OUTSIDE FACE OF THE RAILING.

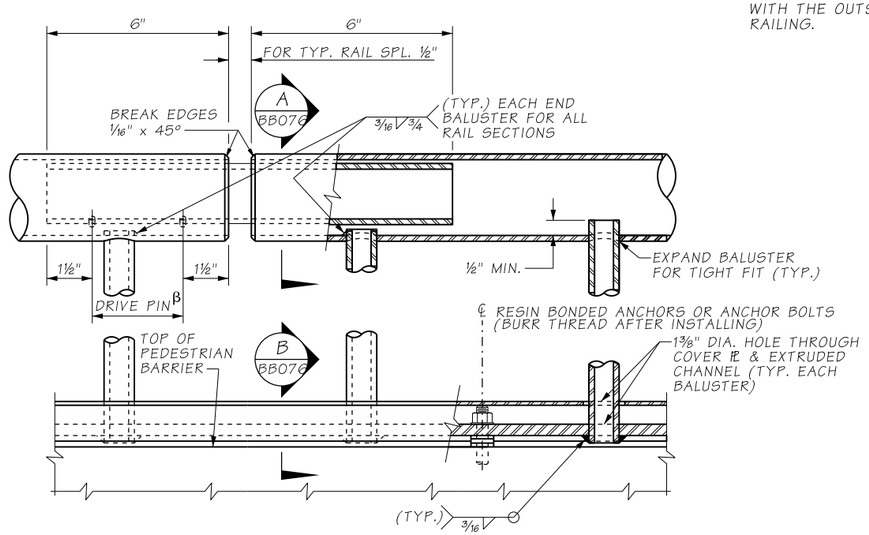

GENERAL DETAIL

NOTES:

1. PIPE RAILING AND PIPE RAILING SPLICES SHALL BE BENT TO THE HORIZONTAL CURVE WHERE THE RADIUS OF CURVATURE IS LESS THAN 200'. THESE ITEMS MAY BE HEATED TO NOT MORE THAN 400°F FOR A PERIOD NOT TO EXCEED 30 MINUTES TO FACILITATE FORMING OR BENDING TO HORIZONTAL CURVATURE.
2. SHOP DRAWINGS OF RAILING SHALL BE SUBMITTED FOR APPROVAL SHOWING COMPLETE DIMENSIONS AND DETAILS OF FABRICATION AND INCLUDING AN ERECTION DIAGRAM. MATERIAL SPECIFICATIONS SHALL BE PROVIDED IN THE SHOP DRAWINGS FOR ALL COMPONENTS.
3. CUTTING SHALL BE DONE BY SAWING OR MILLING AND ALL CUTS SHALL BE TRUE AND SMOOTH. FLAME CUTTING WILL NOT BE PERMITTED.
4. WELDING OF ALUMINUM SHALL CONFORM TO STD. SPEC. SECTION 9-28.14(3).
5. ALL ALUMINUM PARTS SHALL BE POWDER COATED WSDOT CASCADE GREEN.
6. PIPE RAILING, PIPE BALUSTERS AND PIPE RAILING SPLICES SHALL BE ADEQUATELY WRAPPED TO INSURE SURFACE PROTECTION DURING HANDLING AND TRANSPORTATION TO THE JOB SITE.

AS-BUILT

ATKINSON
JUN 07 2019 KTW
RELEASED FOR CONSTRUCTION

FILE NAME	D:\ICS_workdir\29354\20633_1911\PS_BB075.dgn						
TIME	3:21:44 PM				REGION NO.	STATE	FED.AID PROJ.NO.
DATE	6/4/2019				10	WASH	
PLOTTED BY	USLAS0-APP064$				JOB NUMBER		
DESIGNED BY	K. BICHICH						
ENTERED BY	R. REISER						
CHECKED BY	C. CAYWOOD	REV 0 - RELEASED FOR CONSTRUCTION	06/06/2019		CONTRACT NO.		LOCATION NO.
PROJ. ENGR.	C. MEADE	REV A - FINAL REVIEW	04/19/2019		C9133		
REGIONAL ADM.	J. WYNANDS	REVISION	DATE	BY			

CORY J. CAYWOOD — STATE OF WASHINGTON — 38133 — STRUCTURAL ENGINEER — PROFESSIONAL ENGINEER
6/7/19
DATE
P.E. STAMP BOX

DATE
P.E. STAMP BOX

Washington State Department of Transportation

ATKINSON CONSTRUCTION / JACOBS

I-5
STEILACOOM-DUPONT RD TO THORNE LN CORRIDOR IMPROVEMENTS
MP 120.01 TO MP 124.45
BERKELEY OVERPASS

BP RAILING
(1 OF 2)

PLAN REF NO BB075

SHEET 1266 OF 1456 SHEETS

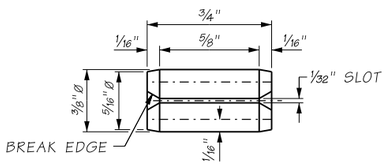

DRIVE PIN DETAIL

SLOTTED TYPE SPRING PIN (ANSI B18.8.2)

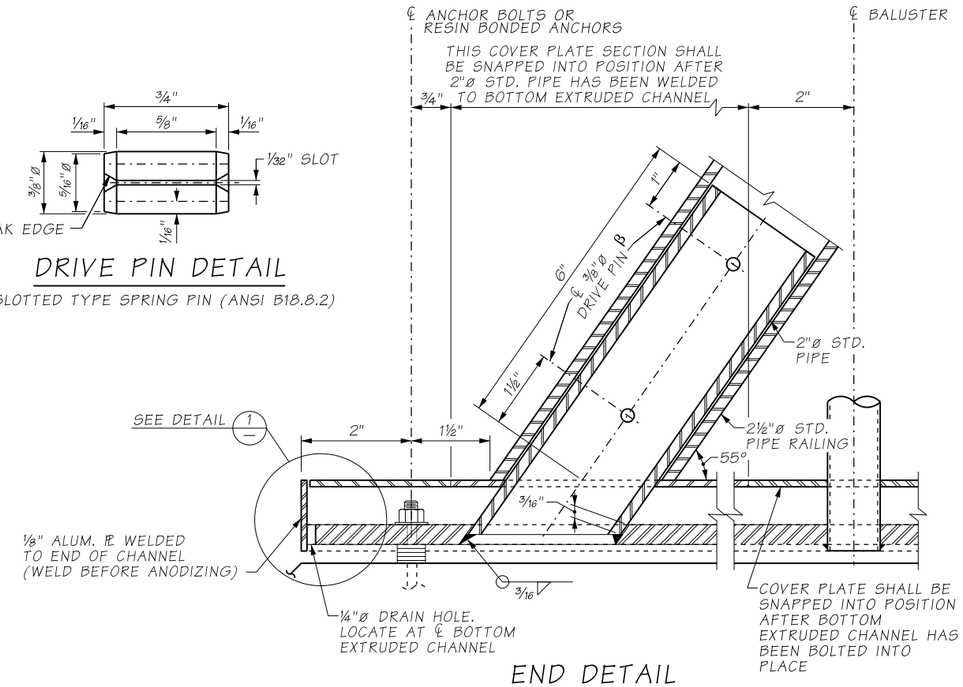

END DETAIL

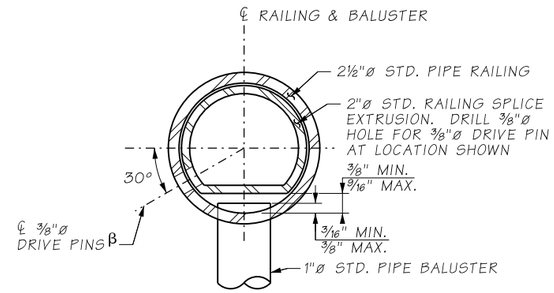

SECTION A / BB075

OPTION 1

β LOCATE ON OPPOSITE SIDE OF TRAFFIC. DRIVE PINS SHALL BE DRIVEN FLUSH WITH THE OUTSIDE FACE OF THE RAILING.

AS-BUILT

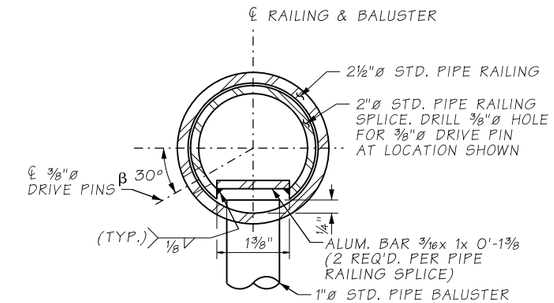

SECTION A / BB075

OPTION 2

β LOCATE ON OPPOSITE SIDE OF TRAFFIC. DRIVE PINS SHALL BE DRIVEN FLUSH WITH THE OUTSIDE FACE OF THE RAILING.

MAT'L	PART	MATERIAL SPECIFICATION
ALUMINUM	PIPES	ASTM B221-6005-T5 OR 6005A-T5 ASTM B241-6061-T6 OR B429
ALUMINUM	EXTRUDED CHANNELS, COVER PLATES & BAR	ASTM B221-6005-T5 OR 6005A-T5
STEEL	ANCHOR BOLTS, NUTS & WASHERS	STANDARD SPECIFICATION SECTION 9-06.5(4) (GALVANIZE IN ACCORDANCE WITH AASHTO SPECIFICATION M 232)
STEEL	STRIP	ASTM A36
STEEL	DRIVE PINS	ASTM A276 OR A240 TYPE 302 STAINLESS STEEL

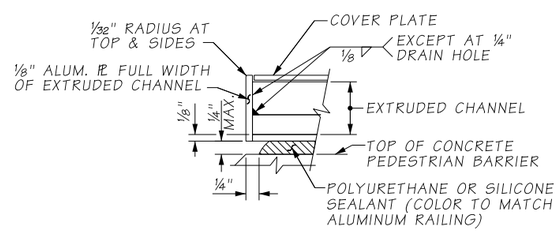

DETAIL 1 / —

DRAIN HOLES NOT SHOWN

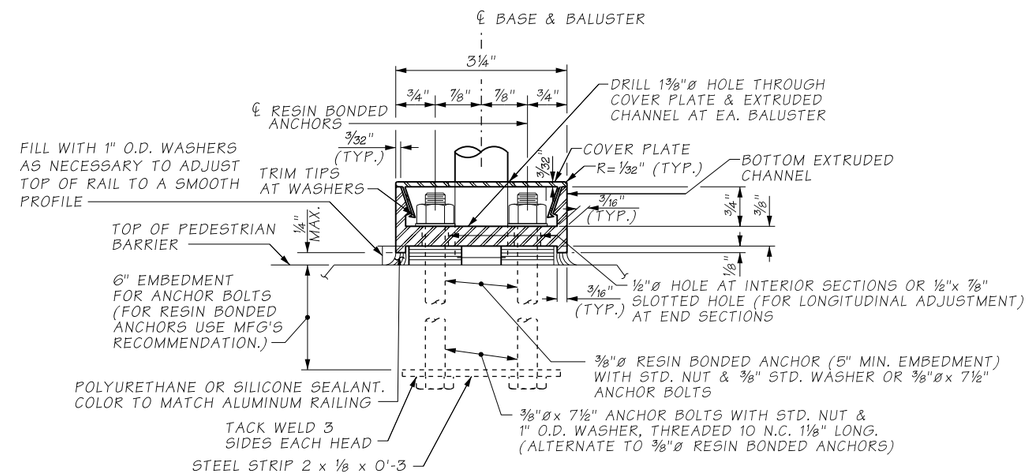

SECTION B / BB075

ANCHOR BOLTS SHALL BE POSITIONED IN A JIG DURING WELDING

ATKINSON
JUN 07 2019
RELEASED FOR CONSTRUCTION
KTW

FILE NAME	D:\ICS_workdir\29354\20633_1912\PS_BB076.dgn						
TIME	3:21:49 PM				REGION NO. 10	STATE WASH	FED.AID PROJ.NO.
DATE	6/4/2019				JOB NUMBER		
PLOTTED BY	USLAS0-APP064$						
DESIGNED BY	K. BICHICH						
ENTERED BY	R. REISER						
CHECKED BY	C. CAYWOOD	REV 0 - RELEASED FOR CONSTRUCTION	06/06/2019		CONTRACT NO. C9133		LOCATION NO.
PROJ. ENGR.	C. MEADE	REV A - FINAL REVIEW	04/19/2019				
REGIONAL ADM.	J. WYNANDS	REVISION	DATE	BY			

CORY J. CAYWOOD, STATE OF WASHINGTON, 38755, STRUCTURAL ENGINEER, PROFESSIONAL ENGINEER
6/7/19
DATE
P.E. STAMP BOX

DATE
P.E. STAMP BOX

Washington State Department of Transportation

ATKINSON / JACOBS CONSTRUCTION

I-5
STEILACOOM-DUPONT RD TO THORNE LN CORRIDOR IMPROVEMENTS
MP 120.01 TO MP 124.45
BERKELEY OVERPASS

BP RAILING (2 OF 2)

PLAN REF NO BB076

SHEET 1267 OF 1456 SHEETS

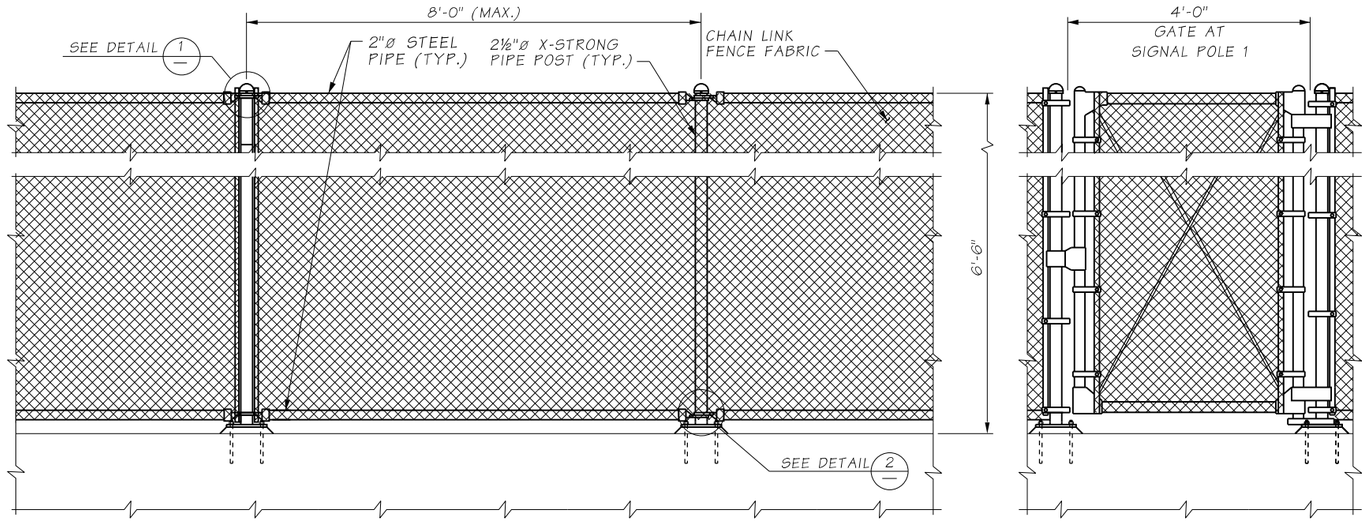

ELEVATION

THROW FENCE NOTES:

1. ALL ELEMENTS OF FENCE SHALL BE HOT DIPPED GALVANIZED AFTER FABRICATION.
2. STEEL PIPES FOR POSTS AND LONGITUDINAL MEMBERS SHALL CONFORM TO ASTM SPECIFICATION A53 GRADE B GALVANIZE PER AASHTO M 111.
3. ANCHOR BOLTS SHALL CONFORM TO ASTM SPECIFICATION F1554 GRADE 55 GALVANIZE PER ASTM F2329.
4. ALL HARDWARE SHALL CONFORM TO AASHTO SPECIFICATION M 183 GALVANIZE PER AASHTO M 111 & M232 UNLESS NOTED OTHERWISE.
5. FABRIC SHALL BE STEEL WITH A GALVANIZED FINISH WOVEN IN A 2" CHAIN LINK DIAMOND MESH. (1)
6. FABRIC TIES SHALL BE INSTALLED TO ALL FRAMES IN ACCORDANCE WITH GOOD TRADE PRACTICES AT 1'-0" CENTERS MAXIMUM SPACING.
7. SEE SHEET BB057 FOR THROW FENCE LIMITS.

AS-BUILT

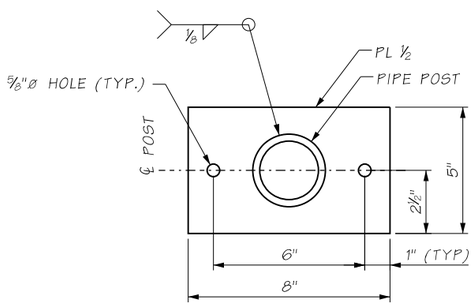

BASE PLATE DETAIL

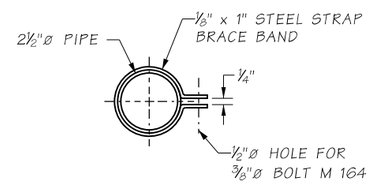

BRACE BAND

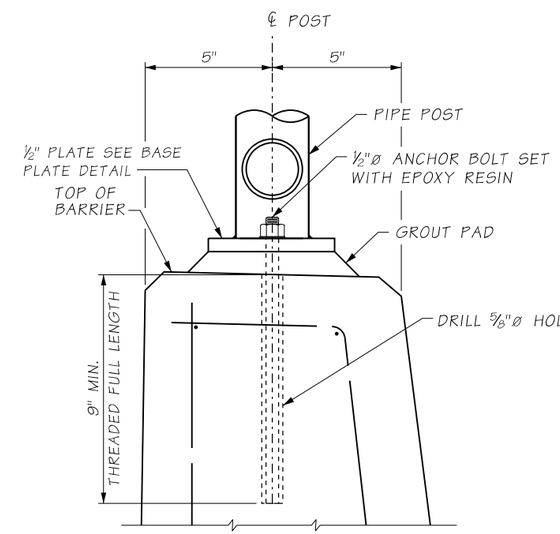

DETAIL 3

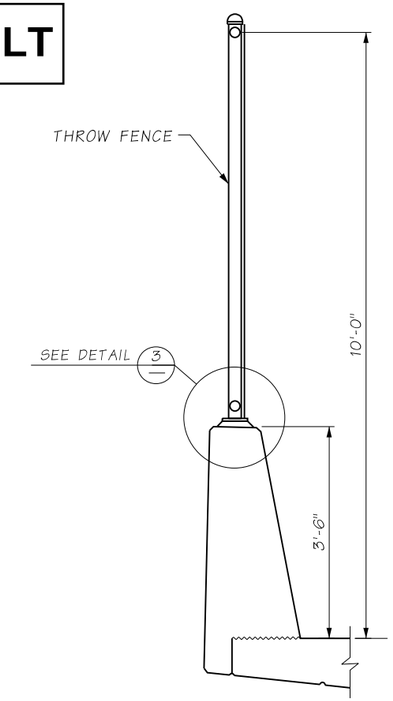

TYPICAL SECTION

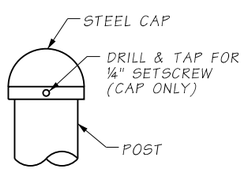

DETAIL 1

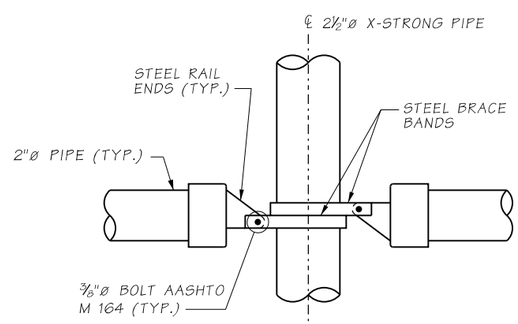

DETAIL 2

ATKINSON
APR 22 2020 krw
RELEASED FOR CONSTRUCTION

FILE NAME	c:\pwworking\jacobs_b&i\youngkl2\dms20633\PS_BB077.dgn						
TIME	2:07:07 PM				REGION NO. 10	STATE WASH	FED.AID PROJ.NO.
DATE	4/14/2020						
PLOTTED BY	youngkl2				JOB NUMBER		
DESIGNED BY	K. YOUNG						
ENTERED BY	R. REISER	REV 1 - RFI0294	04/17/2020				
CHECKED BY	C. CAYWOOD	REV 0 - RELEASED FOR CONSTRUCTION	06/06/2019		CONTRACT NO. C9133		LOCATION NO.
PROJ. ENGR.	C. MEADE	REV A - FINAL REVIEW	04/19/2019				
REGIONAL ADM.	J. WYNANDS	REVISION	DATE	BY			

CORY J. CAYWOOD, STATE OF WASHINGTON, 38759, STRUCTURAL ENGINEER, PROFESSIONAL ENGINEER
4/16/20
DATE
P.E. STAMP BOX

DATE
P.E. STAMP BOX

Washington State Department of Transportation

ATKINSON CONSTRUCTION / JACOBS

I-5
STEILACOOM-DUPONT RD TO THORNE LN
CORRIDOR IMPROVEMENTS
MP 120.01 TO MP 124.45
BERKELEY OVERPASS

THROW FENCE

PLAN REF NO BB077

SHEET 1268 OF 1456 SHEETS

AS-BUILT

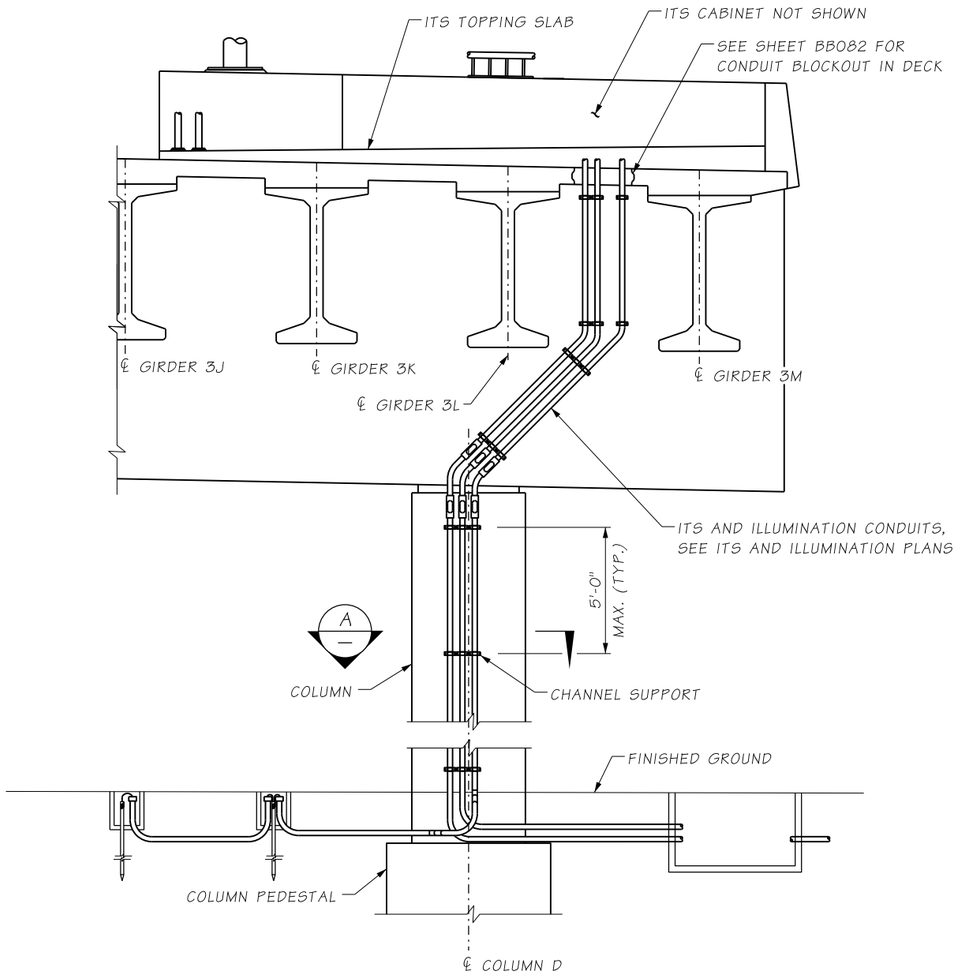

ELEVATION

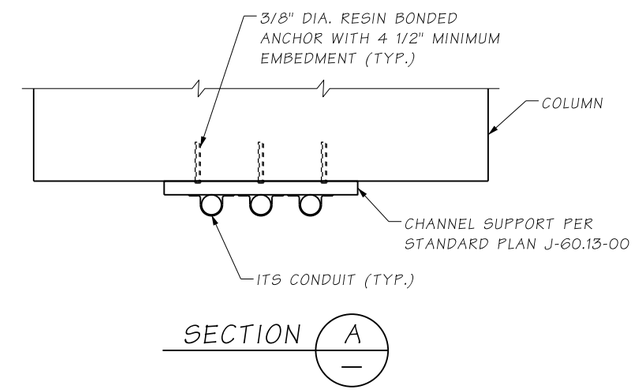

ATKINSON
JUN 07 2019
RELEASED FOR CONSTRUCTION
KTW

FILE NAME	D:\ICS_workdir\29354\20633_2018\PS_BB078.dgn						
TIME	3:22:23 PM				REGION NO. 10	STATE WASH	FED.AID PROJ.NO.
DATE	6/4/2019						
PLOTTED BY	USLAS0-APP064$				JOB NUMBER		
DESIGNED BY	C. CAYWOOD						
ENTERED BY	R. REISER						
CHECKED BY	A. FONG	REV 0 - RELEASED FOR CONSTRUCTION	06/06/2019		CONTRACT NO. C9133		LOCATION NO.
PROJ. ENGR.	C. MEADE	REV A - FINAL REVIEW	04/19/2019				
REGIONAL ADM.	J. WYNANDS	REVISION	DATE	BY			

CORY J. CAYWOOD, STATE OF WASHINGTON, 38759, STRUCTURAL ENGINEER, PROFESSIONAL ENGINEER
6/7/19
DATE
P.E. STAMP BOX

DATE
P.E. STAMP BOX

Washington State Department of Transportation

ATKINSON / JACOBS CONSTRUCTION

I-5
STEILACOOM-DUPONT RD TO THORNE LN CORRIDOR IMPROVEMENTS
MP 120.01 TO MP 124.45
BERKELEY OVERPASS

ITS CONDUIT SUPPORTS
PIER 4

PLAN REF NO BB078

SHEET 1269 OF 1456 SHEETS

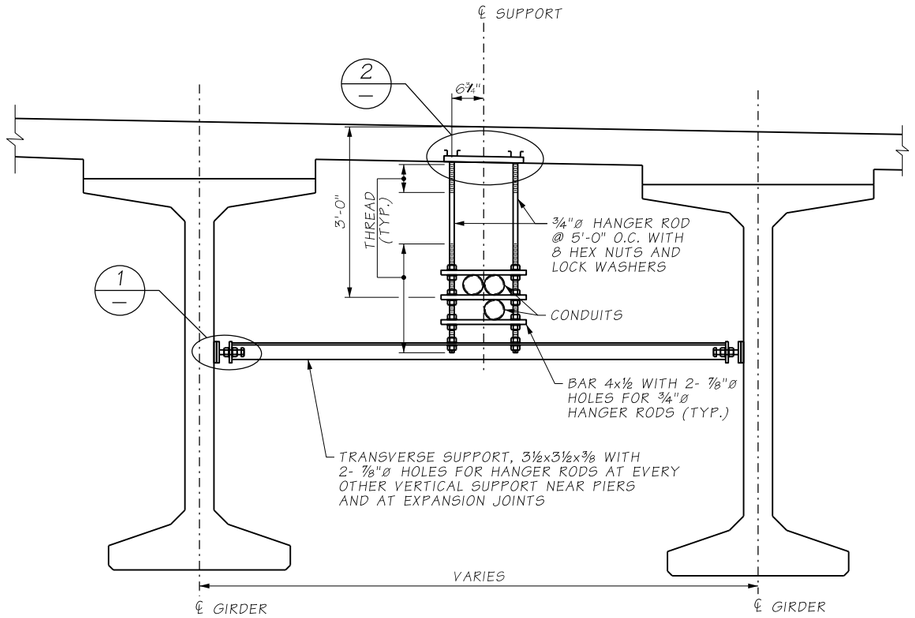

CONDUIT SUPPORT - BETWEEN GIRDERS

SEE ITS, ILLUMINATION, SIGNAL AND UTILITY PLANS FOR ADDITIONAL INFORMATION ON CONDUIT SIZE AND LOCATIONS

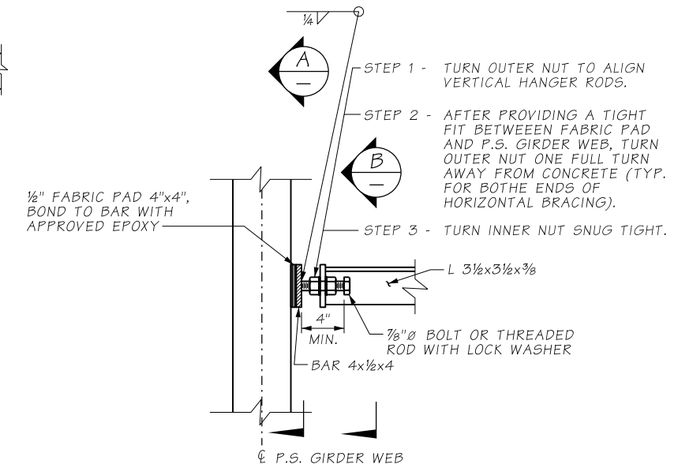

DETAIL 1

AS-BUILT

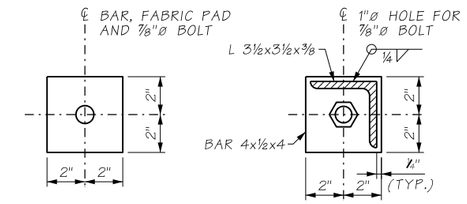

SECTION A

SECTION B

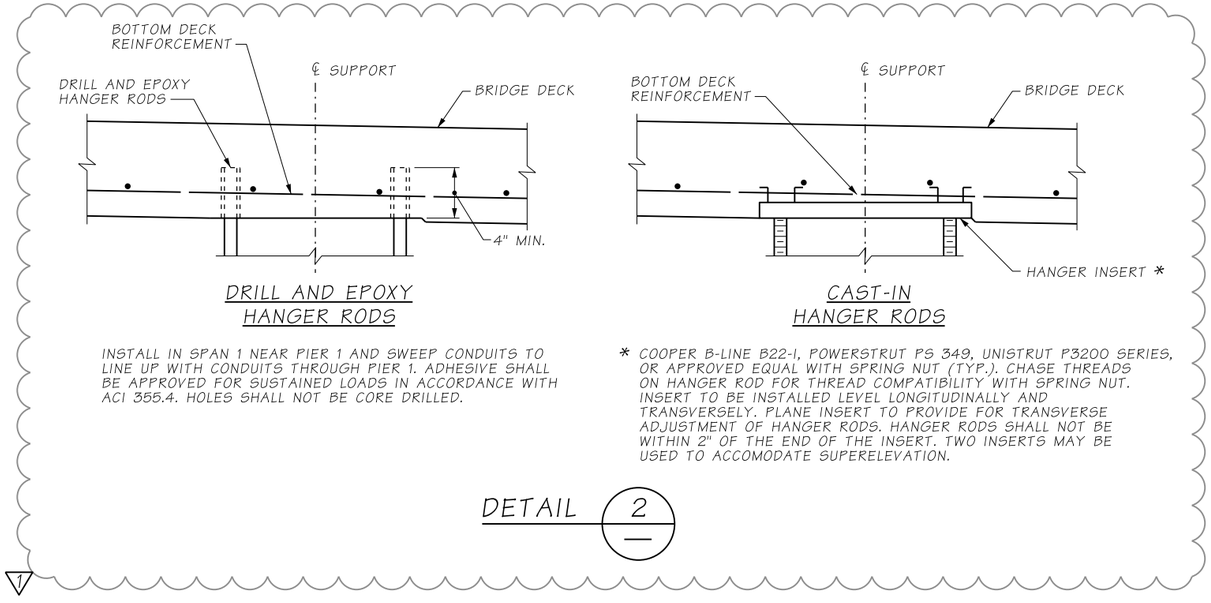

DRILL AND EPOXY HANGER RODS

CAST-IN HANGER RODS

INSTALL IN SPAN 1 NEAR PIER 1 AND SWEEP CONDUITS TO LINE UP WITH CONDUITS THROUGH PIER 1. ADHESIVE SHALL BE APPROVED FOR SUSTAINED LOADS IN ACCORDANCE WITH ACI 355.4. HOLES SHALL NOT BE CORE DRILLED.

* COOPER B-LINE B22-I, POWERSTRUT PS 349, UNISTRUT P3200 SERIES, OR APPROVED EQUAL WITH SPRING NUT (TYP.). CHASE THREADS ON HANGER ROD FOR THREAD COMPATIBILITY WITH SPRING NUT. INSERT TO BE INSTALLED LEVEL LONGITUDINALLY AND TRANSVERSELY. PLANE INSERT TO PROVIDE FOR TRANSVERSE ADJUSTMENT OF HANGER RODS. HANGER RODS SHALL NOT BE WITHIN 2" OF THE END OF THE INSERT. TWO INSERTS MAY BE USED TO ACCOMODATE SUPERELEVATION.

DETAIL 2

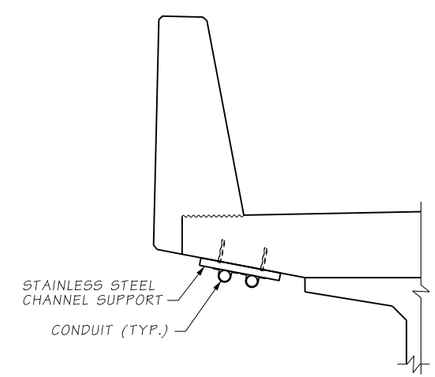

CONDUIT SUPPORT - OVERHANG

APPLIES NEAR SIGNAL POLE 1. SEE ITS, ILLUMINATION, AND SIGNAL PLANS FOR ADDITIONAL INFORMATION. SEE STANDARD PLAN J-60.13 FOR ADDITIONAL DETAILS.

ATKINSON
JUN 08 2020 KRW
RELEASED FOR CONSTRUCTION

PIPE HANGER NOTES:

1. MATERIALS:
   PLATES & ANGLES ASTM A36
   BOLTS ASTM A307
2. GALVANIZED ALL PIPE HANGERS AND HARDWARE IN ACCORDANCE WITH AASHTO M111 AND AASHTO M232.

FILE NAME	D:\ICS_workdir\53502\20633_1978\PS_BB079.dgn				REGION NO.	STATE	FED.AID PROJ.NO.
TIME	12:24:42 PM				10	WASH	
DATE	6/1/2020				JOB NUMBER		
PLOTTED BY	USLAS0-APP064$						
DESIGNED BY	C. CAYWOOD						
ENTERED BY	R. REISER	REV 1 - RFI0401	06/02/2020		CONTRACT NO.		LOCATION NO.
CHECKED BY	A. FONG	REV 0 - RELEASED FOR CONSTRUCTION	06/06/2019		C9133		
PROJ. ENGR.	C. MEADE	REV A - FINAL REVIEW	04/19/2019				
REGIONAL ADM.	J. WYNANDS	REVISION	DATE	BY			

CORY J. CAYWOOD, STATE OF WASHINGTON, 38733, STRUCTURAL ENGINEER, PROFESSIONAL ENGINEER
6/1/20
DATE
P.E. STAMP BOX

P.E. STAMP BOX
DATE

Washington State Department of Transportation

ATKINSON CONSTRUCTION / JACOBS

I-5
STEILACOOM-DUPONT RD TO THORNE LN
CORRIDOR IMPROVEMENTS
MP 120.01 TO MP 124.45
BERKELEY OVERPASS

CONDUIT SUPPORTS UNDER DECK

PLAN REF NO BB079

SHEET 1270 OF 1456 SHEETS

NOTES:

1. SEE ITS, ILLUMINATION, AND SIGNAL PLANS FOR JUNCTION BOX, CABINET, AND POLE LOCATIONS.
2. CONDUITS NOT SHOWN. SEE ITS, ILLUMINATION, AND SIGNAL PLANS FOR CONDUIT ROUTING.
3. ALL JUNCTION BOXES AND CABINETS REQUIRE DRAIN TUBE THROUGH DECK. SEE STD PLAN J40.40-01. FOR INSTALLATION OF DRAIN TUBE THROUGH DECK, DRILL HOLE IN DECK AND SEAL SPACE BETWEEN DRAIN TUBE AND HOLE IN DECK. TAKE SPECIAL CARE TO PREVENT CONCRETE BREAKOUT OF DECK DURING DRILLING OF HOLES IN DECK.

AS-BUILT

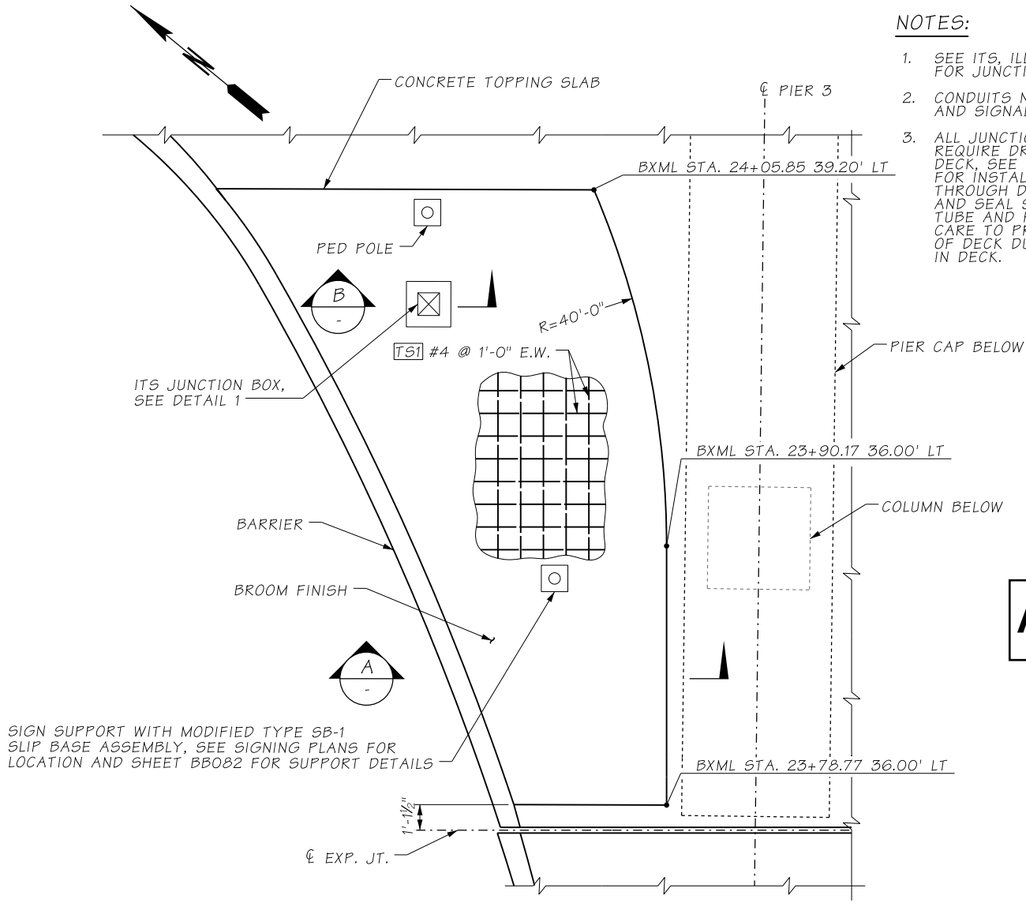

PLAN - ITS JUNCTION AREA

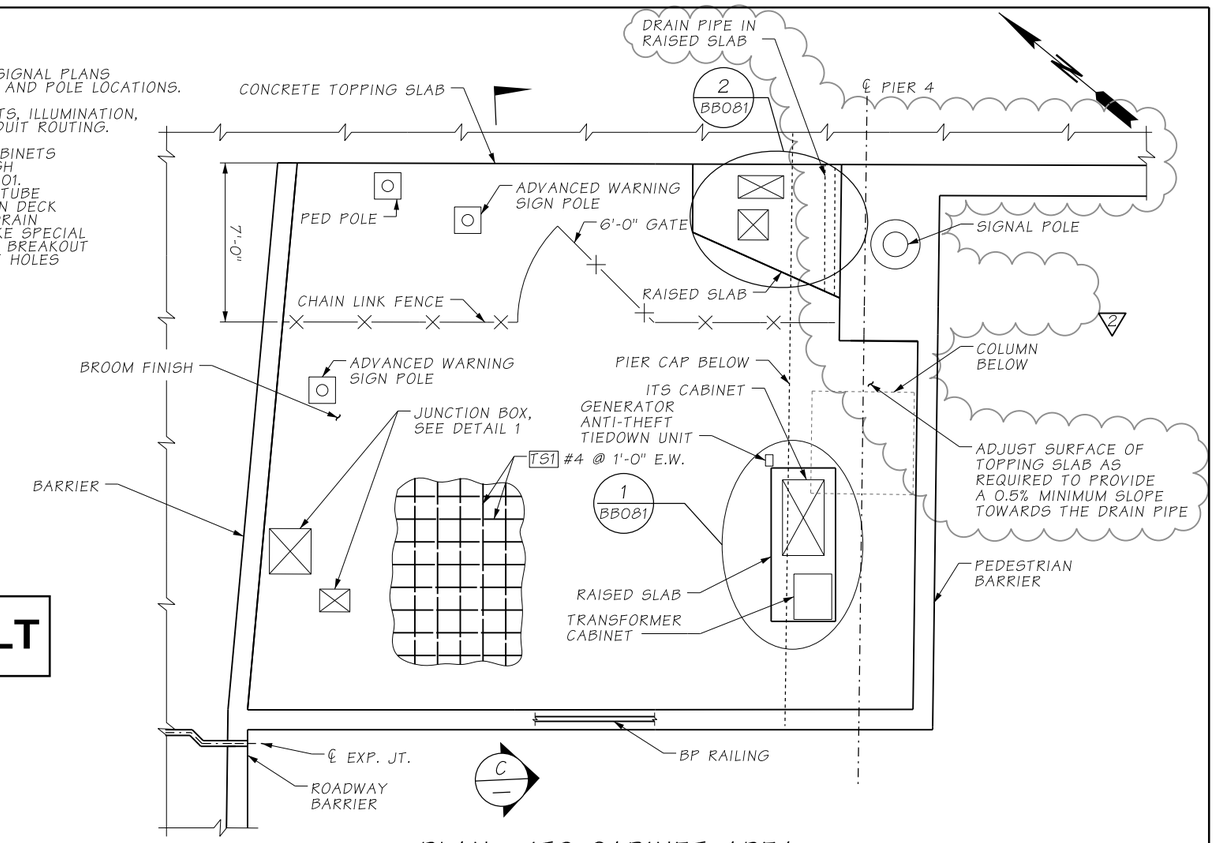

PLAN - ITS CABINET AREA

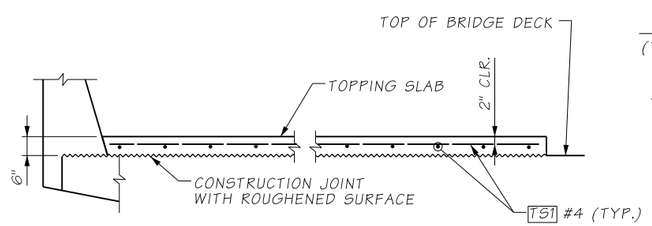

SECTION A

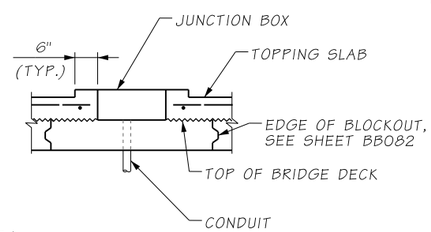

SECTION B

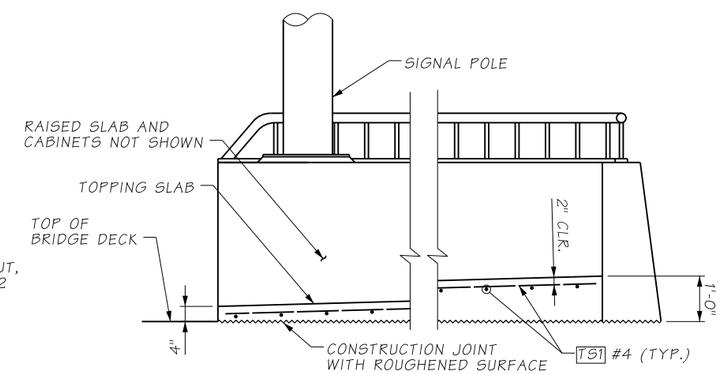

SECTION C

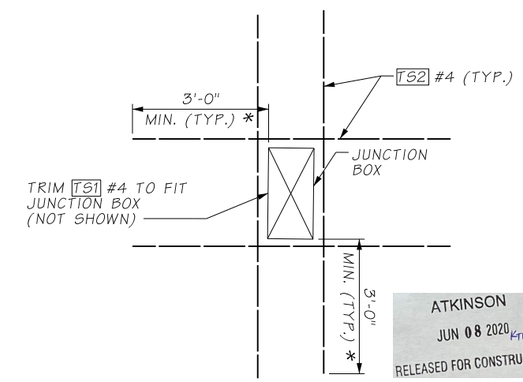

ATKINSON
JUN 08 2020 KTW
RELEASED FOR CONSTRUCTION

DETAIL 1

* TRIM BARS AS REQUIRED AT EDGE OF TOPPING SLAB

FILE NAME	D:\ICS_workdir\53502\20633_1937\PS_BB080.dgn				REGION NO.	STATE	FED.AID PROJ.NO.
TIME	12:24:32 PM				10	WASH	
DATE	6/1/2020				JOB NUMBER		
PLOTTED BY	USLAS0-APP064$						
DESIGNED BY	K. BICHICH	REV 2 - RFI0312	06/02/2020		CONTRACT NO.		LOCATION NO.
ENTERED BY	R. REISER	REV 1 - RFI0262	10/21/2019		C9133		
CHECKED BY	C. CAYWOOD	REV 0 - RELEASED FOR CONSTRUCTION	06/06/2019				
PROJ. ENGR.	C. MEADE	REV A - FINAL REVIEW	04/19/2019				
REGIONAL ADM.	J. WYNANDS	REVISION	DATE	BY			

CORY J. CAYWOOD, STATE OF WASHINGTON, 38759, STRUCTURAL ENGINEER, PROFESSIONAL ENGINEER
6/1/20
DATE
P.E. STAMP BOX

DATE
P.E. STAMP BOX

Washington State Department of Transportation

ATKINSON / JACOBS CONSTRUCTION

I-5
STEILACOOM-DUPONT RD TO THORNE LN
CORRIDOR IMPROVEMENTS
MP 120.01 TO MP 124.45
BERKELEY OVERPASS

ITS TOPPING SLABS
PLANS AND SECTIONS

PLAN REF NO
BB080

SHEET 1271 OF 1456 SHEETS

NOTES:

1. SEE ITS, ILLUMINATION, AND SIGNAL PLANS FOR JUNCTION BOX LOCATIONS.
2. THE BOTTOM OF THE DRAIN PIPE SHALL BE ENCLOSED WITH ACRYLIC PLASTIC TO AVOID FILLING WITH CONCRETE.

AS-BUILT

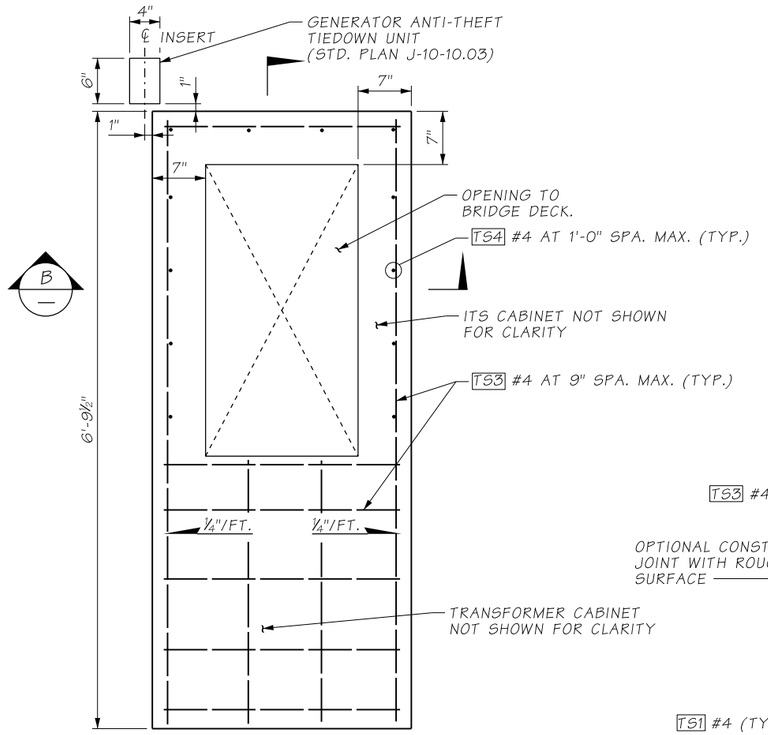

DETAIL 1 / BB080

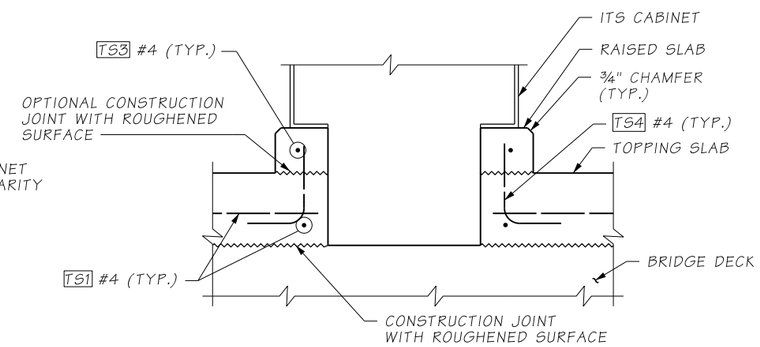

SECTION B

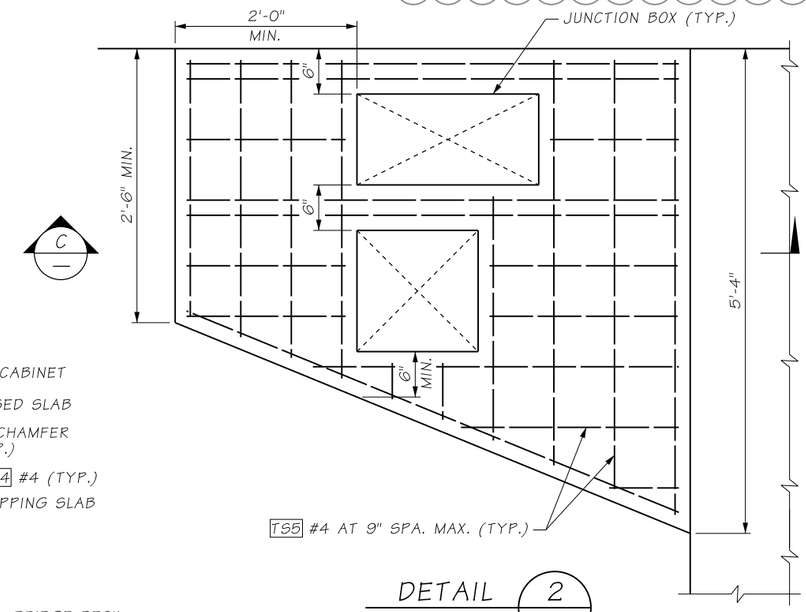

DETAIL 2 / BB080

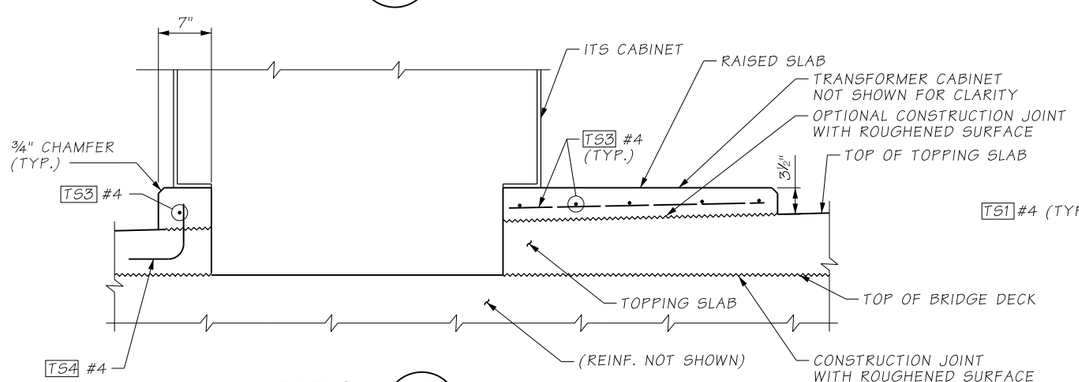

SECTION A

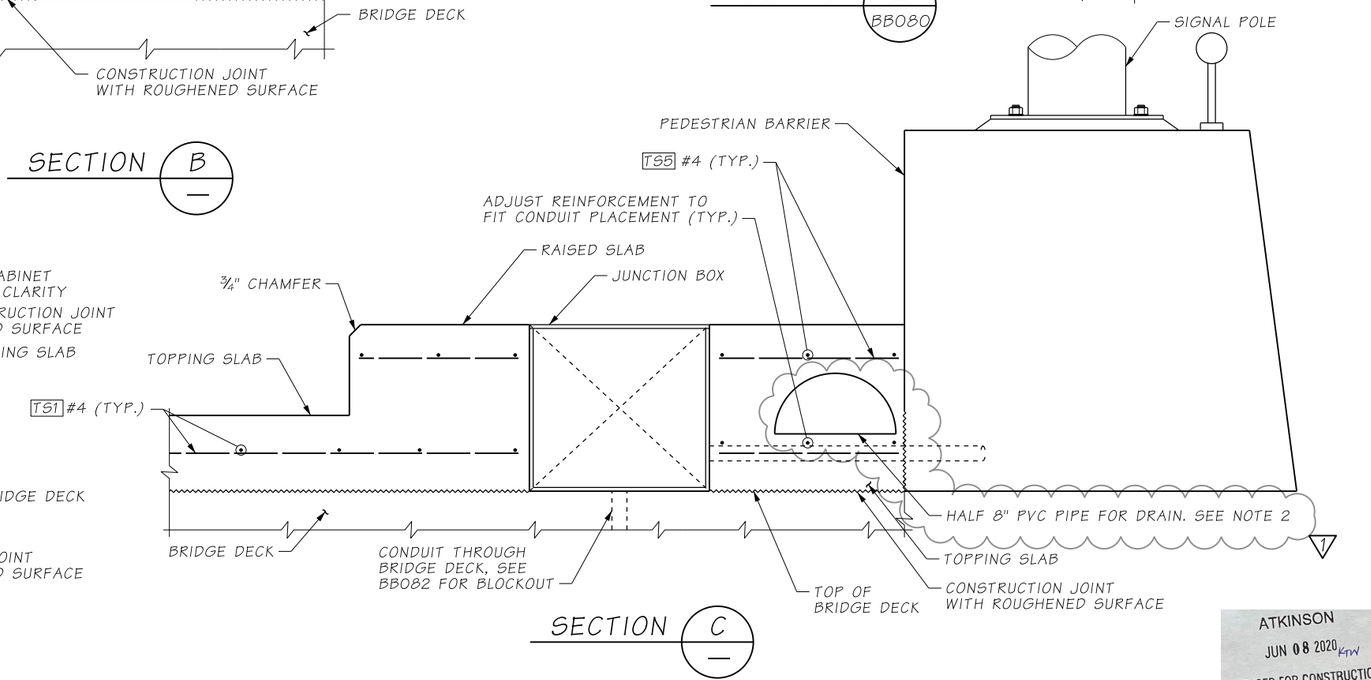

SECTION C

ATKINSON
JUN 08 2020 KPW
RELEASED FOR CONSTRUCTION

FILE NAME	D:\ICS_workdir\53502\20633_1938\PS_BB081.dgn						
TIME	12:24:22 PM				REGION NO.	STATE	FED.AID PROJ.NO.
DATE	6/1/2020				10	WASH	
PLOTTED BY	USLAS0-APP064$				JOB NUMBER		
DESIGNED BY	K. BICHICH						
ENTERED BY	R. REISER	REV 1 - RFI0312	06/02/2020		CONTRACT NO.		LOCATION NO.
CHECKED BY	C. CAYWOOD	REV 0 - RELEASED FOR CONSTRUCTION	06/06/2019		C9133		
PROJ. ENGR.	C. MEADE	REV A - FINAL REVIEW	04/19/2019				
REGIONAL ADM.	J. WYNANDS	REVISION	DATE	BY			

CORY J. CAYWOOD, STATE OF WASHINGTON, 38139, STRUCTURAL ENGINEER, PROFESSIONAL ENGINEER — 6/1/20 — DATE — P.E. STAMP BOX

DATE — P.E. STAMP BOX

Washington State Department of Transportation

ATKINSON CONSTRUCTION / JACOBS

I-5
STEILACOOM-DUPONT RD TO THORNE LN CORRIDOR IMPROVEMENTS
MP 120.01 TO MP 124.45
BERKELEY OVERPASS

ITS TOPPING SLABS DETAILS (1 OF 3)

PLAN REF NO BB081

SHEET 1272 OF 1456 SHEETS

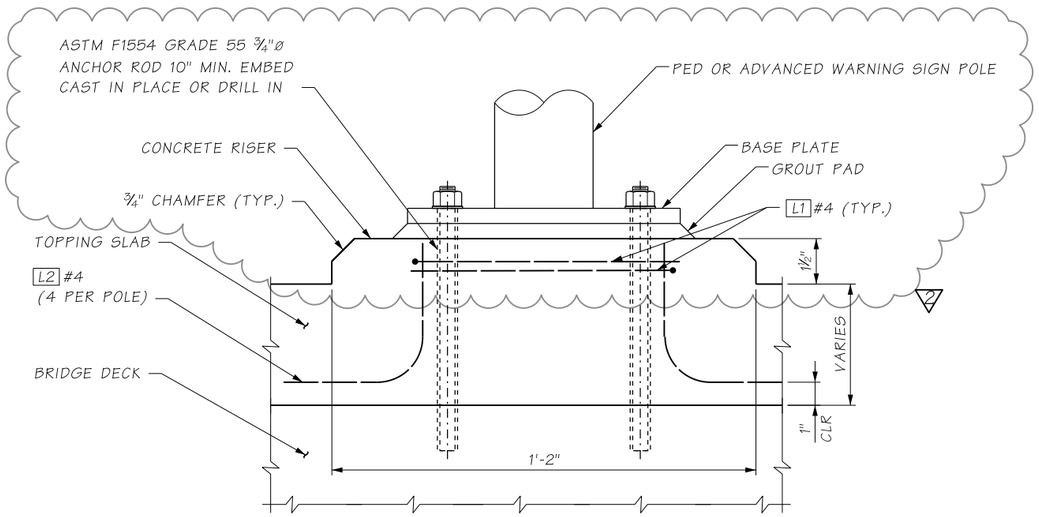

PED AND ADVANCED WARNING SIGN POLE PEDESTAL

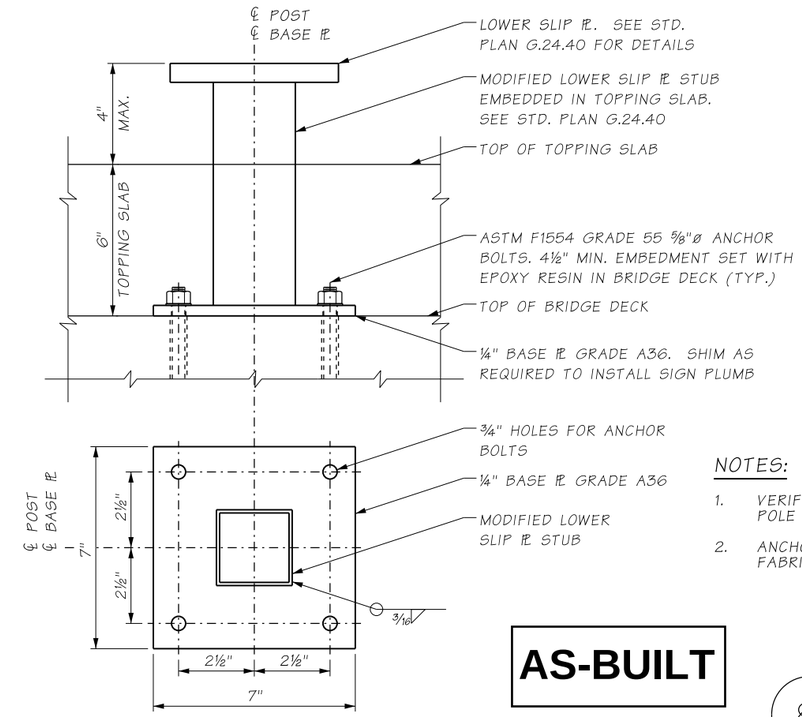

MODIFIED TYPE SB-1 SLIP BASE ASSEMBLY

SEE STD. PLAN G.24.40 FOR DETAILS NOT SHOWN.

BENDING DIAGRAM

ALL DIMENSIONS ARE OUT TO OUT

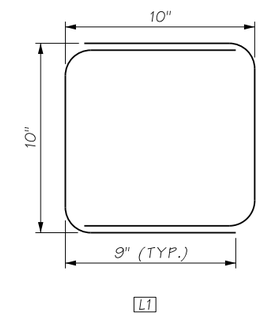

NOTES:

1. VERIFY ANCHOR ROD SIZES AND SPACING WITH POLE MANUFACTURER.
2. ANCHOR RODS SHALL BE GALVANIZED AFTER FABRICATION IN ACCORDANCE WITH ASTM F2329.

AS-BUILT

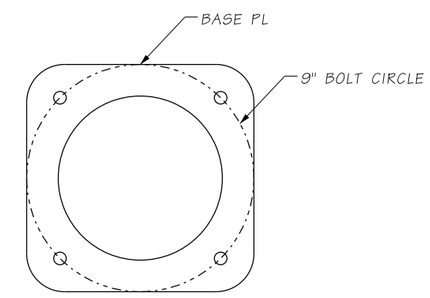

ANCHOR ROD LAYOUT

ATKINSON
JUN 08 2020 KRW
RELEASED FOR CONSTRUCTION

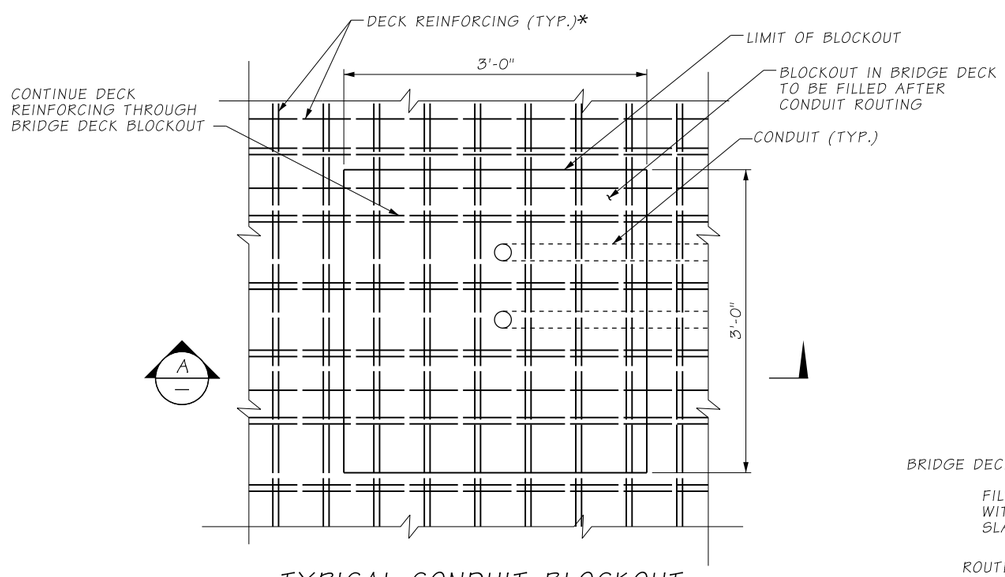

TYPICAL CONDUIT BLOCKOUT

SEE CONDUIT BLOCKOUT LOCATIONS TABLE FOR LOCATIONS, SEE ITS, ILLUMINATION, AND SIGNAL PLANS FOR CONDUIT LOCATIONS.

*ADJUST LOCATION OF DECK REINFORCING TO FIT CONDUITS PRIOR TO CASTING BRIDGE DECK

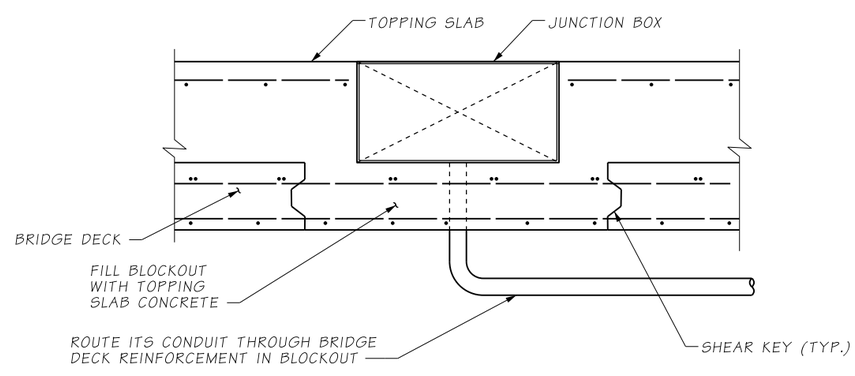

SECTION A

CONDUIT BLOCKOUT LOCATIONS	
DESCRIPTION	LOCATION
LEFT EDGE OF DECK NEAR SIGNAL POLE 1	BXW STA. 296+81.00
LEFT EDGE OF DECK NEAR SIGNAL POLE 1	BXW STA. 296+89.00
LEFT SIDE NEAR PIER 4	BXW STA. 297+93.56, 30.54' LT.
RIGHT SIDE JUNCTION BOX	BXW STA. 297+18.16, 55.53' RT.
RIGHT SIDE ITS AREA	BXW STA. 297+92.83, 54.50' RT.
RIGHT SIDE ITS AREA	BXW STA. 297+92.53, 71.07' RT.

FILE NAME	D:\ICS_workdir\53502\20633_1982\PS_BB082.dgn				REGION NO. 10	STATE WASH	FED.AID PROJ.NO.
TIME	12:24:38 PM						
DATE	6/1/2020						
PLOTTED BY	USLAS0-APP064$				JOB NUMBER		
DESIGNED BY	K. BICHICH	REV 2 - RFI0398	06/02/2020				
ENTERED BY	R. REISER	REV 1 - RFI0262	10/21/2019				
CHECKED BY	C. CAYWOOD	REV 0 - RELEASED FOR CONSTRUCTION	06/06/2019		CONTRACT NO. C9133		LOCATION NO.
PROJ. ENGR.	C. MEADE	REV A - FINAL REVIEW	04/19/2019				
REGIONAL ADM.	J. WYNANDS	REVISION	DATE	BY			

CORY J. CAYWOOD, STATE OF WASHINGTON, 38733, STRUCTURAL ENGINEER, PROFESSIONAL ENGINEER — 6/1/20
DATE
P.E. STAMP BOX

DATE
P.E. STAMP BOX

Washington State Department of Transportation

ATKINSON CONSTRUCTION / JACOBS

I-5
STEILACOOM-DUPONT RD TO THORNE LN CORRIDOR IMPROVEMENTS
MP 120.01 TO MP 124.45
BERKELEY OVERPASS

ITS TOPPING SLABS DETAILS (2 OF 3)

PLAN REF NO BB082

SHEET 1273 OF 1456 SHEETS

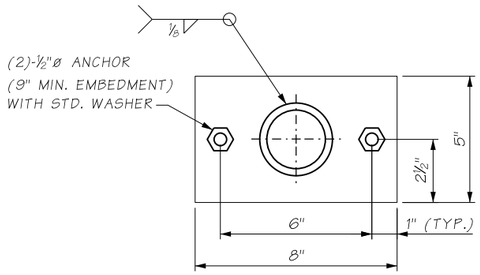

BASE PLATE

TYPICAL BASE PLATE SHOWN, INCREASE AS REQUIRED FOR GATE HINGE SUPPORT.

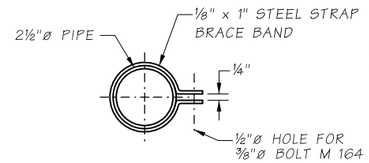

BRACE BAND

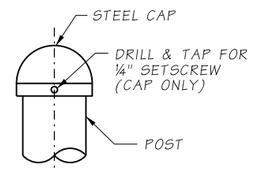

DETAIL 1

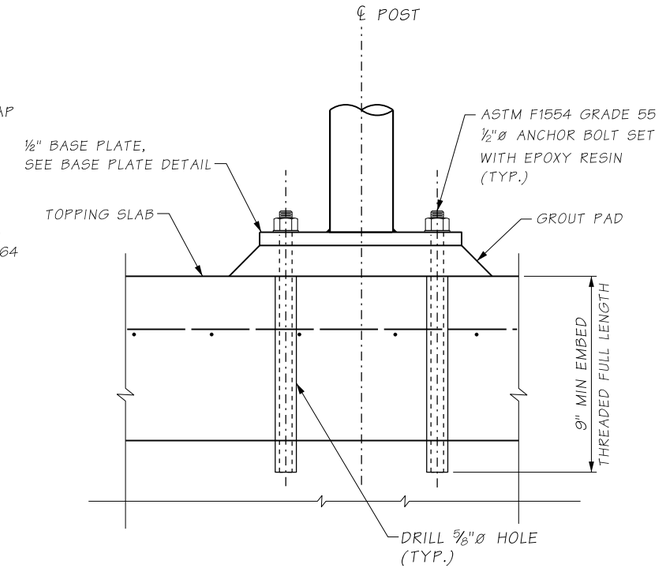

DETAIL 2

FENCE NOTES:

1. ALL ELEMENTS OF FENCE SHALL BE HOT DIPPED GALVANIZED AFTER FABRICATION.
2. STEEL PIPES FOR POSTS AND LONGITUDINAL MEMBERS SHALL CONFORM TO ASTM SPECIFICATION A53 GRADE B GALVANIZE PER AASHTO M 111.
3. ALL HARDWARE SHALL CONFORM TO AASHTO SPECIFICATION M 183 GALVANIZE PER AASHTO M 111 & M232 UNLESS NOTED OTHERWISE.
4. FABRIC SHALL BE STEEL WITH A GALVANIZED FINISH WOVEN IN A 2" CHAIN LINK DIAMOND MESH.
5. FABRIC TIES SHALL BE INSTALLED TO ALL FRAMES IN ACCORDANCE WITH GOOD TRADE PRACTICES AT 1'-0" CENTERS MAXIMUM SPACING.
6. SEE STD. PLANS L-20.10 AND L-30.10 FOR CONNECTION DETAILS.

AS-BUILT

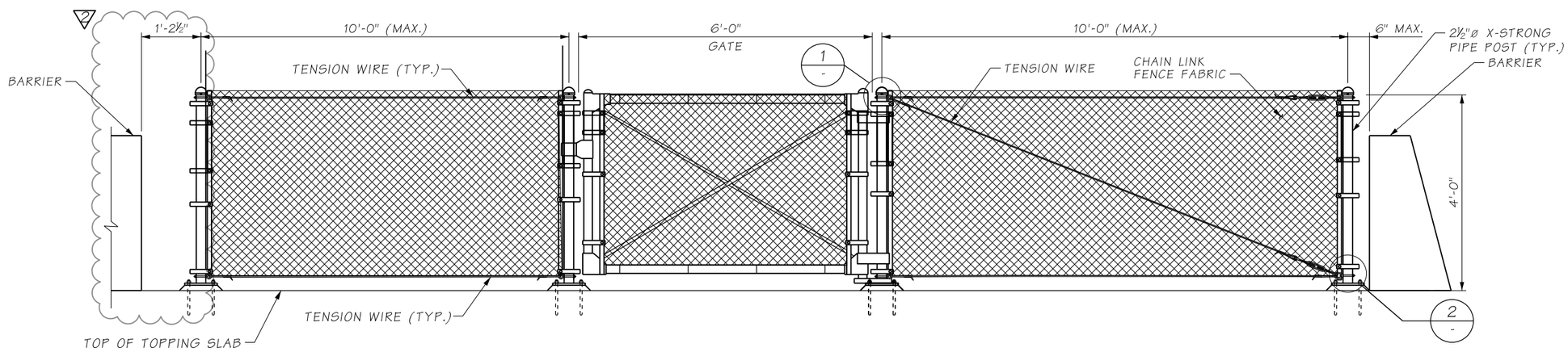

ELEVATION

CHAIN LINK FENCE

ATKINSON
NOV 15 2021 KTW
RELEASED FOR CONSTRUCTION

FILE NAME	D:\ICS_workdir\91771\20633_2013\PS_BB083.dgn						
TIME	12:27:17 PM				REGION NO.	STATE	FED.AID PROJ.NO.
DATE	11/9/2021				10	WASH	
PLOTTED BY	USLAS0-APP064$				JOB NUMBER		
DESIGNED BY	K. BICHICH	REV 2 - RFI0662	11/17/2021				
ENTERED BY	R. REISER	REV 1 - RFI0294	04/17/2020				
CHECKED BY	C, CAYWOOD	REV 0 - RELEASED FOR CONSTRUCTION	06/06/2019		CONTRACT NO.		LOCATION NO.
PROJ. ENGR.	C. MEADE	REV A - FINAL REVIEW	04/19/2019		C9133		
REGIONAL ADM.	J. WYNANDS	REVISION	DATE	BY			

CORY J. CAYWOOD, STATE OF WASHINGTON, 38755, STRUCTURAL ENGINEER, PROFESSIONAL ENGINEER
11/15/21
DATE
P.E. STAMP BOX

DATE
P.E. STAMP BOX

Washington State Department of Transportation

ATKINSON / JACOBS CONSTRUCTION

I-5
STEILACOOM-DUPONT RD TO THORNE LN
CORRIDOR IMPROVEMENTS
MP 120.01 TO MP 124.45
BERKELEY OVERPASS

ITS TOPPING SLABS DETAILS (3 OF 3)

PLAN REF NO BB083

SHEET 1274 OF 1456 SHEETS

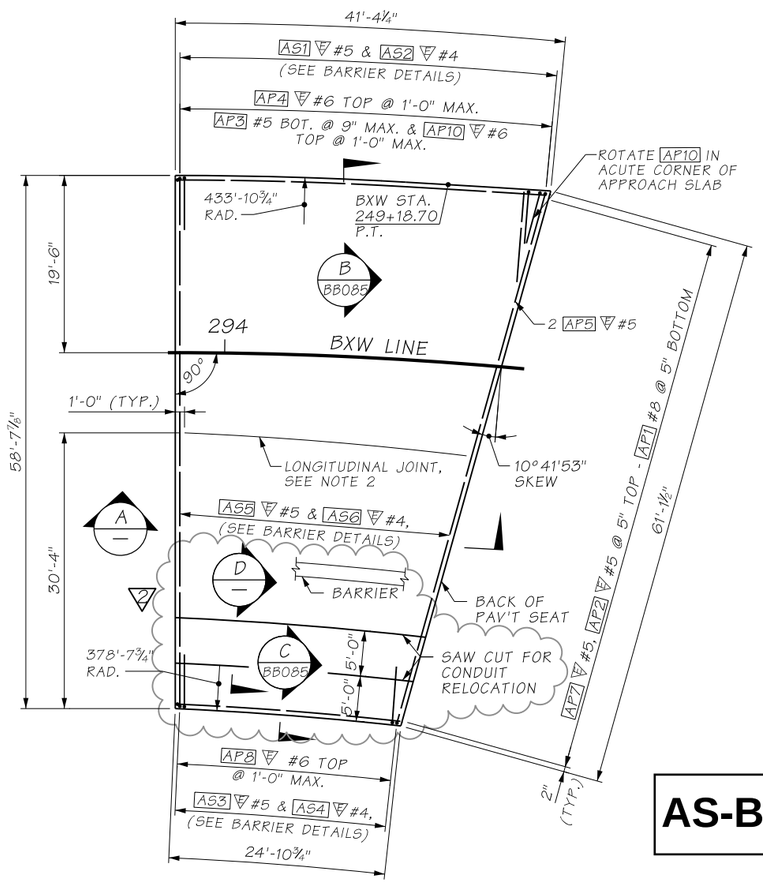

PIER 1 - PLAN

AS-BUILT

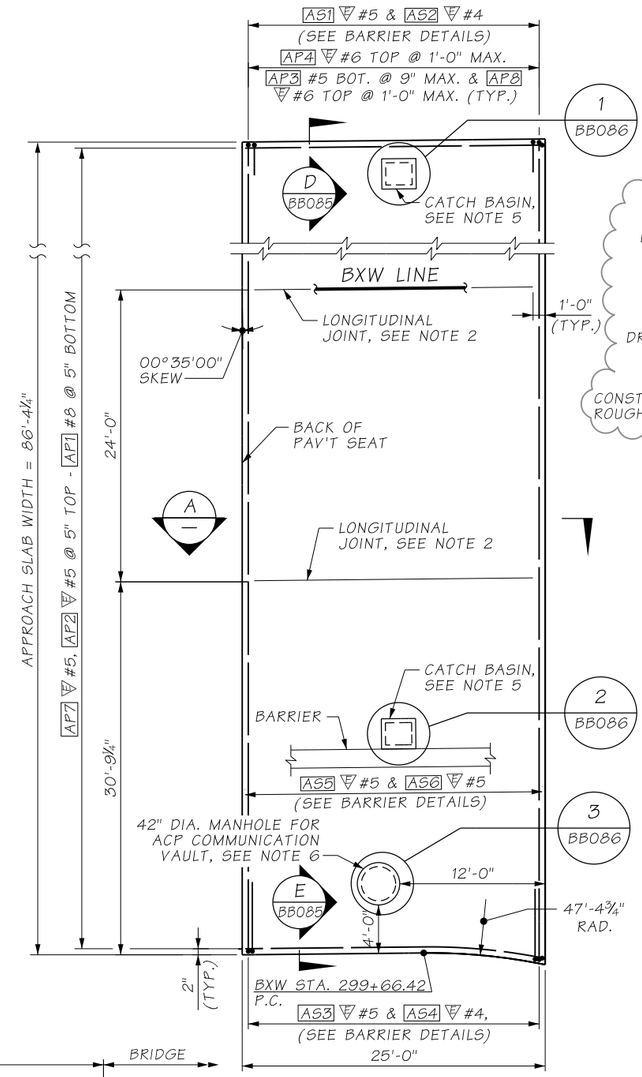

PIER 5 - PLAN

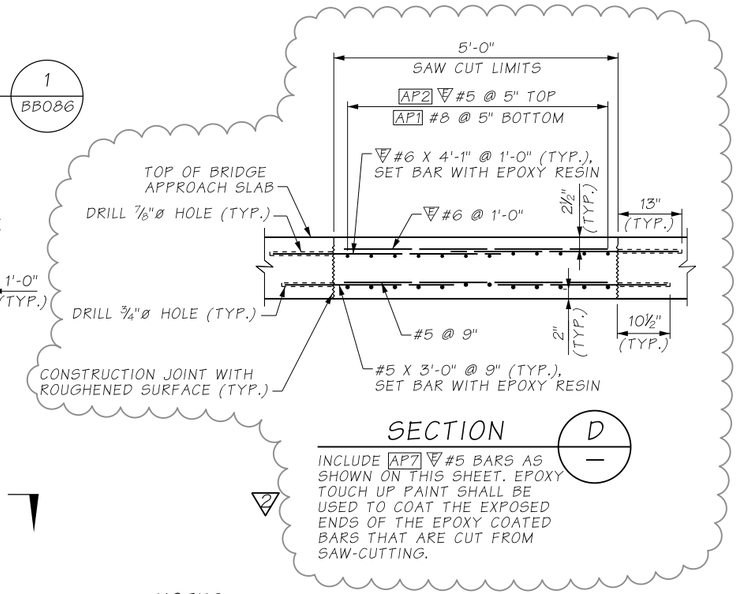

NOTES:

1. ALL EDGES OF BRIDGE APPROACH SLAB SHALL HAVE ½" RADIUS, EXCEPT AT LONGITUDINAL JOINTS AND ADJACENT TO ABUTMENTS.
2. LONGITUDINAL JOINTS SHALL BE CONSTRUCTED AND SEALED IN ACCORDANCE WITH STD. SPEC. SECTION 5-05.3(8). JOINTS MAY BE EITHER A SAWCUT CRACK CONTROL JOINT OR A CONSTRUCTION JOINT. SAWCUT JOINTS SHALL TERMINATE 1'-0" BEFORE REACHING EDGE OF SLAB AND MUST BE SAW CUT AS SOON AS POSSIBLE AFTER PLACEMENT OF CONCRETE. SEE "LONGITUDINAL JOINT DETAIL" ON BRIDGE APPROACH SLAB DETAILS 2 OF 2.
3. THE MINIMUM LAP SPLICE OF #5 IS 2'-0", #5 IS 2'-6", #6 IS 3'-0", AND #8 IS 3'-3". ALL LAP SPLICES SHALL BE STAGGERED SO THAT NO MORE THAN 50% OF REBAR IS SPLICED AT THE SAME LOCATION. LAP SPLICES SHALL BE LOCATED WITHIN THE MIDDLE HALF OF THE BRIDGE APPROACH SLAB. OPTIONAL SPLICES ARE ALLOWED FOR AP4 #6.
4. FOR BARRIER DETAILS, SEE BARRIER SHEETS.
5. SEE DRAINAGE PLANS FOR CATCH BASIN LOCATIONS.
6. SEE JBLM COMMUNICATION PLANS FOR ADDITIONAL DETAILS.

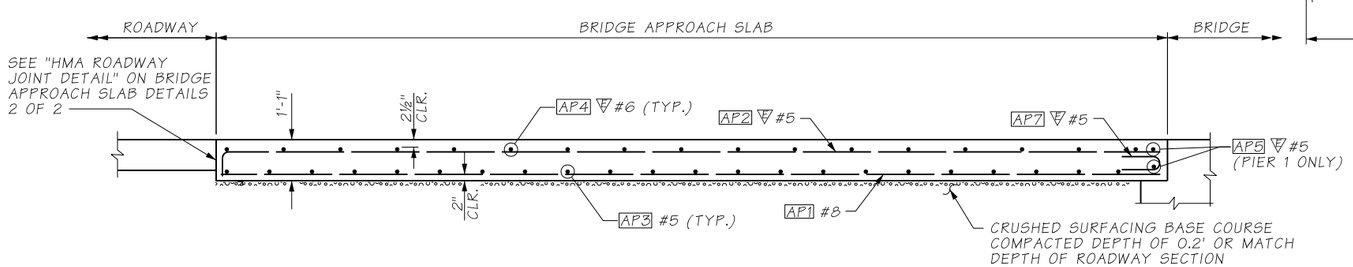

SECTION A

BENDING DIAGRAM

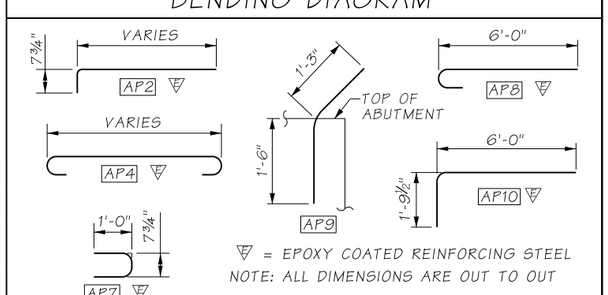

= EPOXY COATED REINFORCING STEEL

NOTE: ALL DIMENSIONS ARE OUT TO OUT

ATKINSON
MAR 16 2020 KTW
RELEASED FOR CONSTRUCTION

FILE NAME	D:\ICS_workdir\48396\20633_1299\PS_BB084.dgn						
TIME	6:38:52 AM				REGION NO.	STATE	FED.AID PROJ.NO.
DATE	3/16/2020				10	WASH	
PLOTTED BY	USLAS0-APP064$						
DESIGNED BY	C. CAYWOOD	REC 2 - RFI0408	03/16/2020		JOB NUMBER		
ENTERED BY	R. REISER	REV 1 - RFI0152	08/07/2019				
CHECKED BY	A. FONG	REV 0 - RELEASED FOR CONSTRUCTION	06/06/2019		CONTRACT NO.		LOCATION NO.
PROJ. ENGR.	C. MEADE	REV A - FINAL REVIEW	04/19/2019		C9133		
REGIONAL ADM.	J. WYNANDS	REVISION	DATE	BY			

CORY J. CAYWOOD, STATE OF WASHINGTON, 38759, STRUCTURAL ENGINEER, PROFESSIONAL ENGINEER
3/16/20
DATE
P.E. STAMP BOX

DATE
P.E. STAMP BOX

Washington State Department of Transportation

ATKINSON CONSTRUCTION / JACOBS

I-5
STEILACOOM-DUPONT RD TO THORNE LN
CORRIDOR IMPROVEMENTS
MP 120.01 TO MP 124.45

APPROACH SLAB DETAILS (1 OF 3)

PLAN REF NO
BB084

SHEET 1275 OF 1456 SHEETS

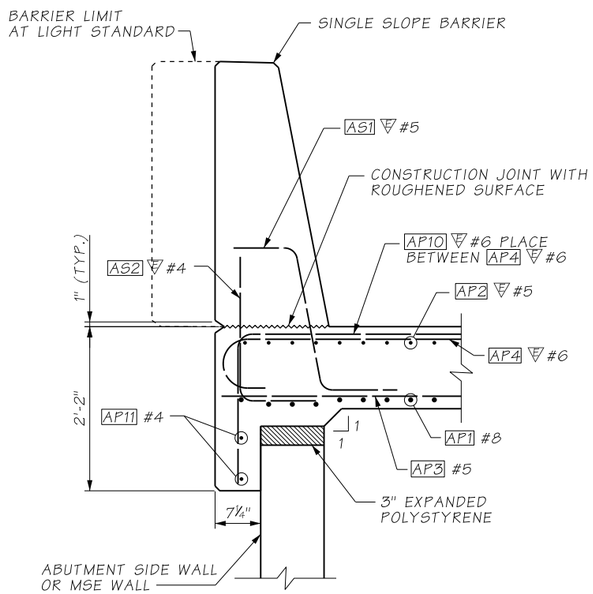

SECTION B
PIER 1 (LEFT) BB084

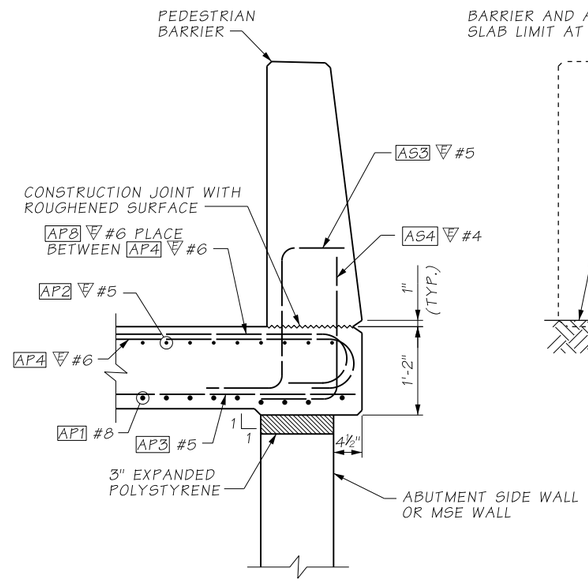

SECTION C
PIER 1 (RIGHT) BB084

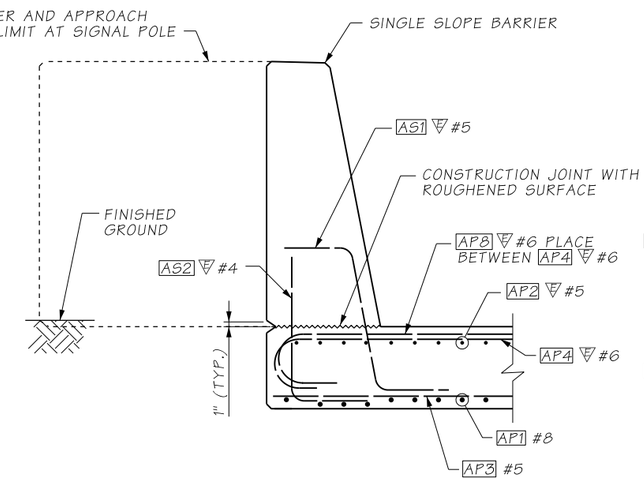

SECTION D
PIER 5 (LEFT) BB084

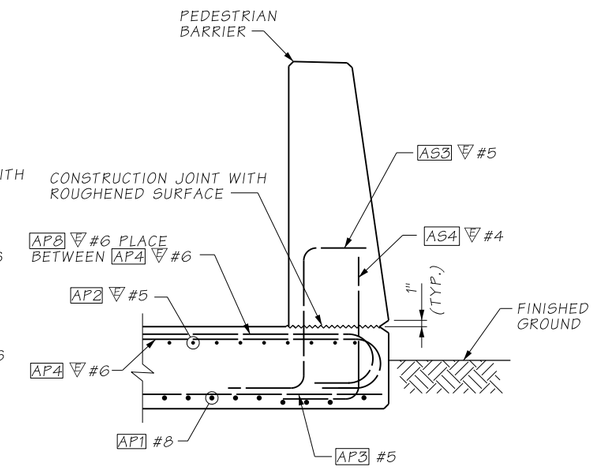

SECTION E
PIER 5 (RIGHT) BB084

AS-BUILT

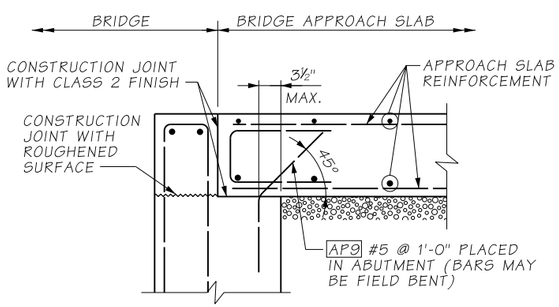

ANCHOR DETAIL

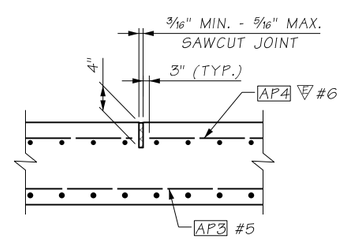

LONGITUDINAL JOINT DETAIL

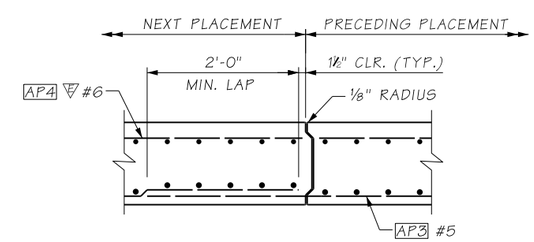

ALTERNATE LONGITUDINAL JOINT DETAIL

EDGE PRECEDING PLACEMENT ONLY WITH ⅛" RADIUS

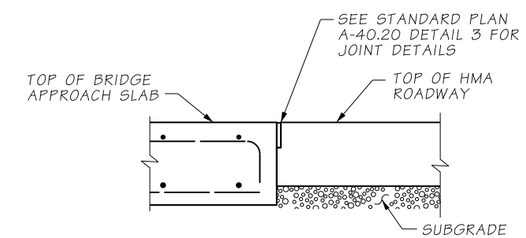

HMA ROADWAY JOINT DETAIL

ATKINSON
JUN 07 2019
RELEASED FOR CONSTRUCTION
KTW

FILE NAME	D:\ICS_workdir\29354\20633_1300\PS_BB085.dgn					
TIME	3:21:33 PM				REGION NO. 10	STATE WASH	FED.AID PROJ.NO.
DATE	6/4/2019				JOB NUMBER	
PLOTTED BY	USLAS0-APP064$					
DESIGNED BY	C. CAYWOOD					
ENTERED BY	R. REISER					
CHECKED BY	A. FONG	REV 0 - RELEASED FOR CONSTRUCTION	06/06/2019		CONTRACT NO. C9133	LOCATION NO.
PROJ. ENGR.	C. MEADE	REV A - FINAL REVIEW	04/19/2019			
REGIONAL ADM.	J. WYNANDS	REVISION	DATE	BY		

CORY J. CAYWOOD, STATE OF WASHINGTON, 38193, STRUCTURAL ENGINEER, PROFESSIONAL ENGINEER
6/7/19
DATE
P.E. STAMP BOX

DATE
P.E. STAMP BOX

Washington State Department of Transportation
ATKINSON / JACOBS CONSTRUCTION

I-5
STEILACOOM-DUPONT RD TO THORNE LN
CORRIDOR IMPROVEMENTS
MP 120.01 TO MP 124.45
BERKELEY OVERPASS

APPROACH SLAB DETAILS (2 OF 3)

PLAN REF NO BB085

SHEET 1276 OF 1456 SHEETS

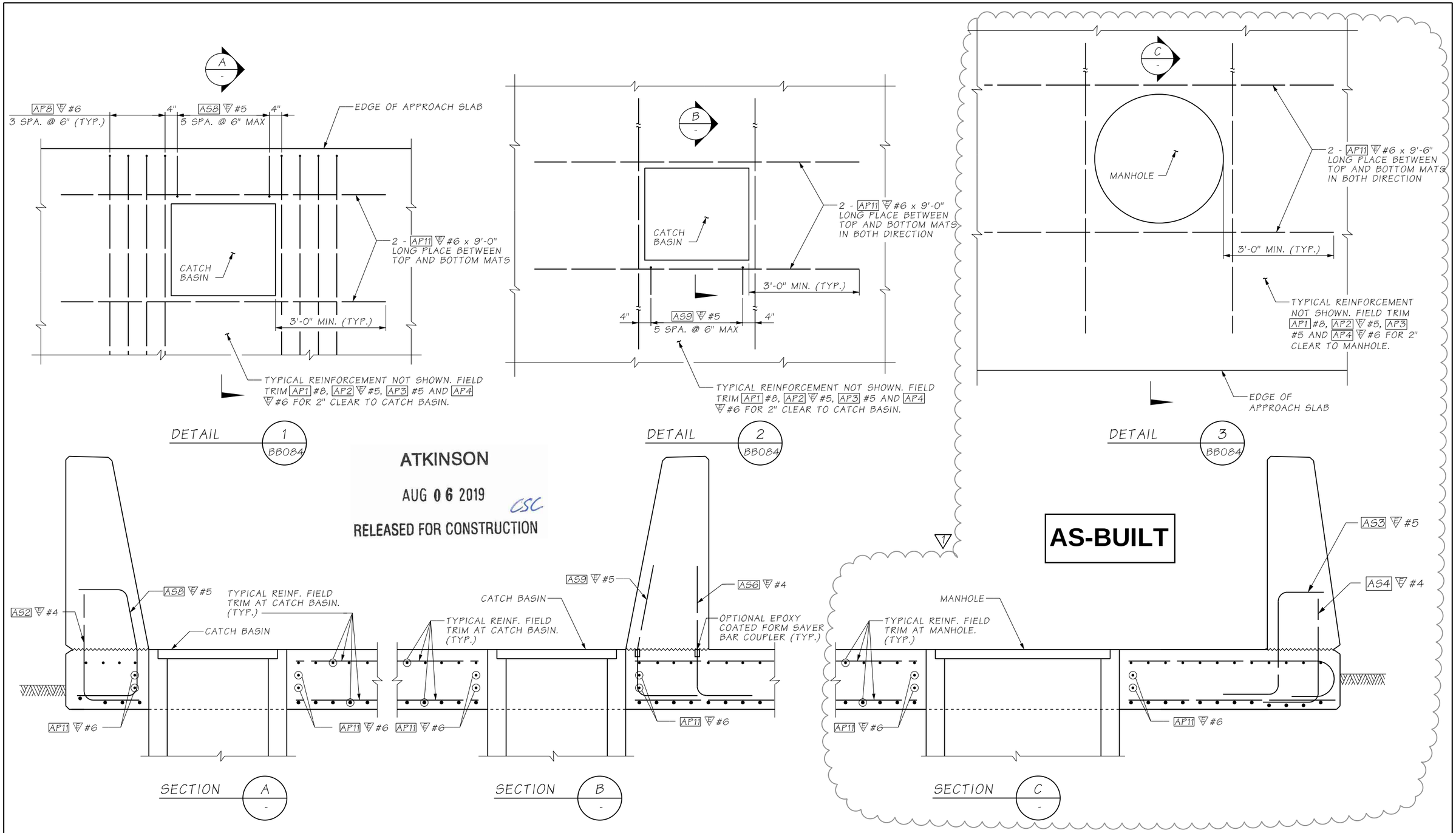

ATKINSON
AUG 06 2019
CSC
RELEASED FOR CONSTRUCTION

FILE NAME	c:\pwworking\jacobs_b&l\jeg_huangy1\dms20633\PS_BB086.dgn			
TIME	2:39:38 PM			
DATE	8/1/2019			
PLOTTED BY	HUANGY1			
DESIGNED BY	A. FONG			
ENTERED BY	A. FONG	REV 1 - RFI0152	08/07/2019	
CHECKED BY	C. CAYWOOD	REV 0 - RELEASED FOR CONSTRUCTION	06/06/2019	
PROJ. ENGR.	C. MEADE	REV A - FINAL REVIEW	04/19/2019	
REGIONAL ADM.	J. WYNANDS	REVISION	DATE	BY

REGION NO.	STATE	FED.AID PROJ.NO.
10	WASH	
JOB NUMBER		
CONTRACT NO. C9133		LOCATION NO.

CORY J. CAYWOOD, STATE OF WASHINGTON, 38759, STRUCTURAL ENGINEER, PROFESSIONAL ENGINEER
8/5/19
DATE
P.E. STAMP BOX

DATE
P.E. STAMP BOX

Washington State Department of Transportation
ATKINSON CONSTRUCTION / JACOBS

I-5
STEILACOOM-DUPONT RD TO THORNE LN
CORRIDOR IMPROVEMENTS
MP 120.01 TO MP 124.45
BERKELEY OVERPASS

APPROACH SLAB DETAILS (3 OF 3)

PLAN REF NO BB086
SHEET 1277 OF 1456 SHEETS

S = BAR IS INCLUDED IN SUBSTRUCTURE QUANTITIES

E = BAR IS TO BE EPOXY COATED

V = BAR DIMENSIONS VARY BETWEEN DIMENSIONS SHOWN ON THIS LINE AND THE FOLLOWING LINE

T = TRANSVERSE OR S = SEISMIC

MARK NO.	LOCATION	SIZE	NO. REQ'D	BEND TYPE	T OR S	SUBSTR.	EPOXY	VARIES	NO. EACH	DIMENSIONS (OUT TO OUT) U FT	U IN	W FT	W IN	X FT	X IN	Y FT	Y IN	Z FT	Z IN	ANGLE θ_1 DEG.	θ_2 DEG.	LENGTH FT	LENGTH IN	WEIGHT LBS
	PIER 1 FOOTING																							
101	Bottom of Footing	10	132	50		S				22	0.0											22	0.0	12497
102	Top and Bottom of Footing	7	92	50		S				34	7.5											34	7.0	6512
103	Top of Footing	7	132	50		S				22	0.0											22	0.0	5936
104	Bottom of Footing	4	462	58	T	S				3	6.0											4	2.0	1283
	PIER 1 WALL																							
111A	Far Face Right Side	10	82	54				V	1	29	1.8											30	8.0	11180
										31	2.8											32	9.0	
111B	Far Face Left Side	10	40	54				V	1	30	0.4											31	6.0	5530
										31	2.8											32	9.0	
112A	Near Face Right Side	5	82	54				V	1	28	8.8											29	5.0	2606
										30	9.8											31	6.0	
112B	Near Face Left Side	5	40	54				V	1	29	7.4											30	4.0	1290
										30	9.8											31	6.0	
113	Horizontal	7	108	54						32	5.1											33	5.0	7375
114	Ties	4	416	58	T					4	8.0											5	4.0	1481
115	Top Wall, Longitudional	7	8	50						32	5.6											32	6.0	531
116	Top Wall, Transverse	7	62	56	T					3	8.0											5	8.0	714
	PIER 1, END TYPE B																							
121A	Vertical Far Face	3	62	50						10	1.5											10	1.0	236
121B	Vertical Near Face	3	62	50						11	7.9											11	8.0	272
122	Horizontal Each Face	4	28	50						31	5.6											31	6.0	588
123	Top, Horizontal	4	6	50						31	5.6											31	6.0	126
124	Top, Stirrup	4	62	56	T					1	4.0											1	11.0	79
125	Pavement Seat, Stirrup	4	62	74	T					0	6.0	2	1.0	2	1.0							4	6.0	186
126	Pavement Seat Top	4	4	50						31	5.6											31	6.0	84
127	Conduit Blockout	4	8	50						3	0.0											3	0.0	16
	PIER 1 WINGWALL																							
117A	Right Wingwall	7	5	54						29	9.8											29	10.0	305
117B	Left Wingwall	7	6	54						29	8.4											30	8.0	376
131A	Right Wingwall	6	10	54						28	9.8											29	8.0	445
131B	Left Wingwall	6	10	54						29	8.4											30	7.0	459
132	Vertical, Bottom Wingwall	8	20	54						15	10.0											16	11.0	905
133	Wingwall Near Face, Lower	6	53	50						12	11.5											12	11.0	1031
134	Wingwall	4	5	56	T					0	8.0											1	3.0	4
135	Horizontal Far Face	9	53	50						12	0.0											12	0.0	2163
141	Wingwall, Side wall	6	20	50				V	1	8	9.3											8	9.0	271
										9	2.9											9	3.0	
142	Right Wingwall	5	8	50				V	1	9	8.3											9	8.0	82
										9	10.2											9	10.0	
143A	Upper WingwallHorizontal,max	6	8	50				V	4	12	9.0											12	9.0	154
										12	11.5											12	11.0	
143B	Upper WingwallHorizontal,min	6	8	50				V	4	12	8.2											12	8.0	153
										12	10.2											12	10.0	
149	Sidewall, Horizontal Top	5	4	50						3	11.1											3	11.0	16
151A	Girder Stop, Max Long	4	48	54						1	8.0											2	3.0	71
151B	Girder Stop, Min Long	4	8	54						1	4.0											1	11.0	10
152	Girder Stop	4	84	74						2	1.0	3	5.0	3	5.0							8	8.0	489
	PIER 2 FOOTING																							
201B	Top Bot Footing Footing B	8	140	50						17	8.0											17	8.0	6603
201A	Top Bot Footing Footing A C	8	344	50						21	8.0											21	8.0	19898
202	Each Face Vertical	5	484	54						1	9.5											2	6.0	1260
203A	Side Footing Horiz Max	5	56	50						21	8.0											21	8.0	1265
203B	Side Footing Horiz Min	5	28	50						17	8.0											17	8.0	516
204	Footing Ties, 90 degree bend	5	336	59						3	7.0											4	10.0	1703
205	Top Bot Footing, Spliced	5	768	51						3	7.0											4	2.0	3329
	PIER 2 COLUMN																							
211A	Vertical Col A	10	26	54						36	1.8											37	8.0	4211
211B	Vertical Col B	10	26	54						36	3.0											37	9.0	4223
211C	Vertical Col C	10	26	54						35	9.2											37	3.0	4169
212	Column Hoop	8	212	66						4	2.0	0	0.0									12	10.0	7261
213A	Corner Vertical Col A	5	12	50						28	2.8											28	3.0	353
213B	Corner Vertical Col B	5	12	50						28	4.0											28	4.0	355
213C	Corner Vertical Col C	5	12	50						27	7.0											27	7.0	345
214	Corner Stirrup	4	174	74	T					4	10.0	4	1.0	4	1.0							12	10.0	1491
	PIER 2 CROSSBEAM																							
221	Pos Horiz Bot Reinforcement	10	28	50						37	2.5											37	3.0	4484
222	Torsional Steel	7	16	50						35	3.0											35	3.0	1153
223	Neg Horiz Bot Reinforcement	10	20	50						37	2.5											37	3.0	3202
224	Stirrup Between Girder	7	38	72	T					6	2.0	11	8.0	11	8.0							30	8.0	2379
225	Vert Tie Between Girder	7	76	58	T					11	8.0											13	5.0	2081
226	Top Tie Between Girder	7	38	58	T					6	2.0											7	11.0	613
227	Beta Region Stirrup	7	36	72	T					6	2.0	4	8.0	4	8.0							16	8.0	1224
228	Vert Tie Beta	7	72	58	T					4	8.0											6	5.0	941
229	Horizontal Tie Beta	7	36	58	T					6	2.0											7	11.0	581
230	Pos Horiz Bot Gamma Region	7	64	90	T					16	11.0	4	6.0	11	8.0	0	9.0	0	0.0	90	135	16	11.0	2213
231	Gamma Region Vert Tie	7	32	54	T					11	8.0											12	8.0	827
232	Top Horiz Tie Gamma Region	7	16	58	T					6	2.0											7	11.0	258
233	Bot Horiz Tie Gamma Region	7	56	54	T					4	6.0											5	6.0	628
234	Delta Region Stirrup Spliced	7	12	90						4	6.0	4	6.0	11	8.0	0	9.0	0	0.0	135	90	9	11.0	243
235	Delta Region Vert Tie	7	12	58	T					4	8.0											6	5.0	157
236	Delta Region Horiz Tie	7	6	58	T					6	2.0											7	11.0	97
237	Delta Region Horiz CenterTie	7	28	57	T					4	6.0											5	3.0	300
238	Edge Vert	7	14	50						11	8.0											11	8.0	334
239	Bottom Edge Tie	7	10	56	T					6	2.0											8	2.0	166
251	Upper Inside Longitudional	6	24	50						35	1.0											35	1.0	1265
252	Upper Outside Longit	7	72	50						9	0.0											9	0.0	1325
253	Upper Top Inside	10	28	50						37	2.5											37	3.0	4483
254	Upper Top Outside	7	12	50						35	3.0											35	3.0	865
255	Upper Center Horiz Tie	5	144	58	T					6	2.0											6	12.0	1050
256	Top Center Horiz Tie	7	54	58	T					6	2.0											7	11.0	872
257	Top Edge Tie	7	12	74						6	2.0	4	2.0	4	2.0							14	2.0	347
258A	Furthest Girder Vertical	5	28	50						6	2.0											6	2.0	180

S = BAR IS INCLUDED IN SUBSTRUCTURE QUANTITIES

E = BAR IS TO BE EPOXY COATED

V = BAR DIMENSIONS VARY BETWEEN DIMENSIONS SHOWN ON THIS LINE AND THE FOLLOWING LINE

T = TRANSVERSE OR S = SEISMIC

MARK NO.	LOCATION	SIZE	NO. REQ'D	BEND TYPE	T OR S	SUBSTR.	EPOXY	VARIES	NO. EACH	DIMENSIONS (OUT TO OUT) U FT	U IN	W FT	W IN	X FT	X IN	Y FT	Y IN	Z FT	Z IN	ANGLE θ_1 DEG.	θ_2 DEG.	LENGTH FT	LENGTH IN	WEIGHT LBS
258B	Center Girder Vertical	5	28	50						4	11.0											4	11.0	144
258C	Nearest Girder Vertical	5	28	50						4	8.0											4	8.0	136
261	Blockout Diagonal	7	8	50						4	0.0											4	0.0	65
262	Blockout Vertical	7	8	50						4	0.0											4	0.0	65
	PIER 3 FOOTING																							
301	Top Bot Footing	9	656	50						20	8.0											20	8.0	46095
302	Each Face Vertical	5	656	54						2	9.5											3	6.0	2392
303	Side Footing Horiz	5	112	50						20	8.0											20	8.0	2414
304	Footing Ties, 90 degree bend	5	448	59						3	7.0											4	10.0	2271
305	Top Bot Footing, Spliced	5	1024	51						3	5.1											4	0.0	4272
	PIER 3 COLUMN																							
311A	Vertical Col A	10	28	54						23	1.4											24	7.0	2965
311B	Vertical Col B	10	28	54						23	6.6											25	0.0	3017
311C	Vertical Col C	10	28	54						23	0.0											24	6.0	2951
311D	Vertical Col D	10	28	54						22	5.3											23	11.0	2883
312	Column Hoop	7	183	66						4	2.0	0	0.0									12	10.0	4811
313A	Corner Vertical Col A	5	12	50						19	2.4											19	2.0	240
313B	Corner Vertical Col B	5	12	50						19	7.6											19	8.0	246
313C	Corner Vertical Col C	5	12	50						19	1.0											19	1.0	239
313D	Corner Vertical Col D	5	12	50						18	6.3											18	6.0	232
314	Corner Stirrup	4	158	74	T					4	2.0	4	1.0	4	1.0							12	2.0	1283
	PIER 3 CROSSBEAM																							
321	Pos Horiz Bot Reinforcement	10	48	50						43	6.1											43	6.0	8988
322A	Torsional Steel Bent	7	16	54						40	10.8											41	11.0	1370
322B	Torsional Steel Straight	7	8	50						40	10.8											40	11.0	669
323	Neg Horiz Bot Reinforcement	10	48	50						43	6.1											43	6.0	8988
324	Stirrup Alpha	7	92	72	T					6	2.0	11	10.0	11	10.0							30	12.0	5823
325	Vert Tie Alpha	7	184	58	T					11	8.0											13	5.0	5039
326	Top Tie Alpha	7	92	58	T					6	2.0											7	11.0	1485
327	Beta Region Stirrup	6	78	72	T					6	2.0	4	8.0	4	8.0							16	6.0	1929
328	Vert Tie Beta	6	156	58	T					4	8.0											6	2.0	1442
329	Horizontal Tie Beta	6	78	58	T					6	2.0											7	8.0	897
338	Edge Vert	7	14	50						11	10.0											11	10.0	339
339	Bottom Edge Tie	7	8	56	T					6	2.0											8	2.0	133
351	Upper Inside Longitudional	6	24	50						59	10.0											59	10.0	2157
352A	Upper Torsional 11 2 Max	7	60	50						10	4.0											10	4.0	1267
352B	Upper Torsional 11 2 Min	7	12	50						7	7.6											7	8.0	187
352C	Upper Torsional 8 Max	7	10	50						7	3.8											7	4.0	150
352D	Upper Torsional 8 Min	7	2	50						4	7.4											4	7.0	19
352E	Upper Torsional 7-7 Max	7	40	50						6	9.0											6	9.0	552
352F	Upper Torsional 7-7 Min	7	8	50						4	0.6											4	1.0	66
353A	Upper Top Inside Edge Beam	10	8	50						43	1.4											43	1.0	1484
353B	Upper Top Inside NoEdge Beam	10	20	50						37	7.2											37	7.0	3236
354	Upper Top Outside	7	12	50						60	0.0											60	0.0	1472
355	Upper Center Horiz Tie	5	267	58	T					6	2.0											6	12.0	1947
356	Top Center Horiz Tie	7	89	58	T					6	2.0											7	11.0	1437
357A	Top Edge Tie	7	10	74						6	2.0	2	5.0	2	5.0							10	8.0	217
357B	Top Edge Tie Short	7	2	74						6	2.0	1	0.9	1	0.9							7	11.0	32
358A	Furthest Girder Vertical	5	52	50						6	2.0											6	2.0	334
358B	Center Girder Vertical	5	52	50						4	11.0											4	11.0	267
358C	Nearest Girder Vertical	5	52	50						4	8.0											4	8.0	253
361	Blockout Diagonal	7	16	50						4	0.0											4	0.0	131
362	Blockout Vertical	7	16	50						4	0.0											4	0.0	131
	PIER3 COLUMN PINS																							
391	Lower Cage Vert.	10	10	50						6	0.0											6	0.0	258
392	Lower Cage Hoop	7	13	66						3	0.0	0	9.0									9	11.0	264
393	Upper Cage Vert.	10	10	50						3	0.0											3	0.0	129
394	Upper Cage Hoop	7	7	66						3	0.0	0	9.0									9	11.0	142
395a	Upper Cage Horz. Short	5	4	74						1	10.0	1	0.0	1	0.0							3	7.0	15
395b	Upper Cage Horz. Long	5	4	74						3	3.0	1	0.0	1	0.0							4	12.0	21
	PIER 4 FOOTING																							
401	Top Bot Footing	8	688	50						21	8.0											21	8.0	39797
402	Each Face Vertical	5	688	54						2	9.5											3	6.0	2508
403	Side Footing Horiz	5	112	50						21	8.0											21	8.0	2531
404	Footing Ties, 90 degree bend	5	1152	59						3	7.0											4	10.0	5840
	PIER 4 COLUMN																							
411A	Vertical Col A	10	28	54						33	11.6											35	6.0	4273
411B	Vertical Col B	10	28	54						34	4.4											35	10.0	4321
411C	Vertical Col C	10	28	54						33	10.0											35	4.0	4256
411D	Vertical Col D	10	28	54						33	3.5											34	9.0	4191
412	Upper Column Hoop	7	280	66						4	2.0	0	0.0									12	10.0	7361
413A	Corner Vertical Col A	5	12	50						19	4.6											19	5.0	243
413B	Corner Vertical Col B	5	12	50						19	9.4											19	9.0	248
413C	Corner Vertical Col C	5	12	50						19	3.0											19	3.0	241
413D	Corner Vertical Col D	5	12	50						18	8.5											18	8.0	234
413E	Corner Vertical Lower Column	5	80	50						14	2.0											14	2.0	1182
414	Upper Corner Tie	4	162	74	T					4	2.0	4	1.0	4	1.0							12	2.0	1316
415	Vertical Lower Col	10	144	54						18	1.0											19	7.0	12129
416	Lower Column Hoop	7	120	66						6	2.0	0	0.0									19	2.0	4696
417	Lower Corner Tie	4	120	74	T					6	2.0	6	1.0	6	1.0							18	2.0	1456
	PIER 4 CROSSBEAM																							
421	Pos Horiz Bot Reinforcement	10	48	50						43	8.1											43	8.0	9022
422	Torsional Steel	7	24	50						40	8.4											40	8.0	1997
423	Neg Horiz Bot Reinforcement	10	36	50						43	8.1											43	8.0	6767
424	Stirrup Alpha	6	88	72	T					6	2.0	11	9.0	11	9.0							30	8.0	4049
425	Vert Tie Alpha	6	176	58	T					11	9.0											13	3.0	3499
426	Top Tie Alpha	6	88	58	T					6	2.0											7	8.0	1012
427	Beta Region Stirrup	6	43	72	T					6	2.0	4	8.0	4	8.0							16	6.0	1064
428	Vert Tie Beta	6	86	58	T					4	8.0											6	2.0	795
429	Horizontal Tie Beta	6	43	58	T					6	2.0											7	8.0	494
430	Stirrup Gamma	6	35	72	T					6	2.0	4	8.0	11	10.0							23	8.0	1242
431	Vert Tie Gamma	6	70	58	T					11	10.0											13	4.0	1400
432	Top Tie Gamma	6	35	58	T					6	2.0											7	8.0	402

CONTINUED ON SHEET BB088

BENDING DIAGRAMS

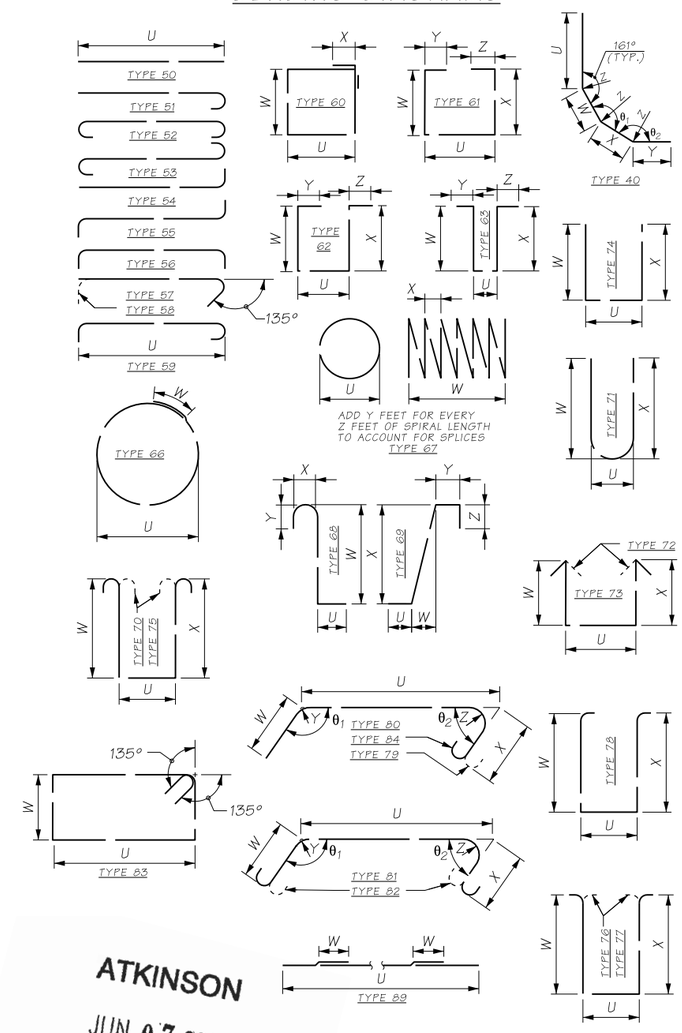

ATKINSON
JUN 07 2019
KTW
RELEASED FOR CONSTRUCTION

AS-BUILT

NOTES:

1. ALL REINFORCING BARS ON THIS SHEET SHALL BE ASTM A 706 UNLESS SHOWN OTHERWISE.
2. REINFORCING FOR TRAFFIC BARRIERS NOT SHOWN IN THE BAR LIST, SEE TRAFFIC BARRIER SHEET.
3. NUMBER AND LENGTH OF BARS TO BE DETERMINED BY THE CONTRACTOR FROM PLANS.

* DETERMINED BY CONTRACTOR.

FILE NAME	D:\ICS_workdir\29354\20633_2007\PS_BB087.dgn			
TIME	3:21:52 PM			
DATE	6/4/2019			
PLOTTED BY	USLAS0-APP064$			
DESIGNED BY	A. GASCA			
ENTERED BY	R. REISER			
CHECKED BY	A. FONG	REV 0 - RELEASED FOR CONSTRUCTION	06/06/2019	
PROJ. ENGR.	C. MEADE	REV A - FINAL REVIEW	04/19/2019	
REGIONAL ADM.	J. WYNANDS	REVISION	DATE	BY

REGION NO.	STATE	FED.AID PROJ.NO.
10	WASH	
JOB NUMBER		
CONTRACT NO. C9133	LOCATION NO.	

DATE
P.E. STAMP BOX

DATE
P.E. STAMP BOX

Washington State Department of Transportation

ATKINSON / JACOBS CONSTRUCTION

I-5
STEILACOOM-DUPONT RD TO THORNE LN CORRIDOR IMPROVEMENTS
MP 120.01 TO MP 124.45
BERKELEY OVERPASS

BAR LIST (1 OF 3)

PLAN REF NO BB087

SHEET 1278 OF 1456 SHEETS

S = BAR IS INCLUDED IN SUBSTRUCTURE QUANTITIES

E = BAR IS TO BE EPOXY COATED

V = BAR DIMENSIONS VARY BETWEEN DIMENSIONS SHOWN ON THIS LINE AND THE FOLLOWING LINE

T = TRANSVERSE OR S = SEISMIC

MARK NO.	LOCATION	SIZE	NO. REQ'D	BEND TYPE	T OR S	SUBSTR.	EPOXY	VARIES	NO. EACH	DIMENSIONS (OUT TO OUT) U FT	U IN	W FT	W IN	X FT	X IN	Y FT	Y IN	Z FT	Z IN	ANGLE θ_1 DEG.	θ_2 DEG.	LENGTH FT	LENGTH IN	WEIGHT LBS
433	Stirrup Delta	6	4	72	T				6	2.0	4	8.0	11	10.0								23	8.0	142
434	Vert Tie Delta	6	8	58	T				6	2.0												6	2.0	74
435	Horizontal Tie Beta	6	4	58	T				7	8.0												7	8.0	46
438	Edge Vert	7	14	50					12	0.0												12	0.0	343
439	Bottom Edge Tie	7	8	56	T				6	2.0												8	2.0	133
451	Upper Inside Longitudional	6	48	50					40	5.8												40	6.0	2918
452A	Upper Torsional 10 @ Max	7	78	50					9	11.0												9	11.0	1581
452B	Upper Torsional 10 @ Min	7	13	50					7	2.6												7	3.0	192
452C	Upper Torsional 10 Max	7	6	50					9	2.0												9	2.0	112
452D	Upper Torsional 10 Min	7	1	50					6	7.8												6	8.0	14
452E	Upper Torsional 7-7 Max	7	24	50					6	9.0												6	9.0	331
452F	Upper Torsional 7-7 Min	7	4	50					4	0.6												4	1.0	33
452G	Upper Torsional 6 Max	7	6	50					7	3.8												7	4.0	90
452H	Upper Torsional 6 Min	7	1	50					4	7.4												4	7.0	9
453	Upper Top Inside	10	54	50					43	3.4												43	3.0	10058
454	Upper Top Outside	7	18	50					41	0.8												41	1.0	1511
455	Upper Center Horiz Tie	5	368	58	T				6	2.0												6	12.0	2683
456	Top Center Horiz Tie	6	94	58	T				6	2.0												6	8.0	1081
457N	Top Edge Tie North Higher	7	7	74					6	2.0	2	8.1	2	8.1								11	2.0	159
457N	Top Edge Tie North Lower	7	1	74					6	2.0	1	0.9	1	0.9								7	11.0	16
457S	Top Edge Tie South Upper	7	7	74					6	2.0	2	3.4	2	3.4								10	4.0	148
457S	Top Edge Tie South Lower	7	1	74					6	2.0	0	8.2	0	8.2								7	2.0	15
458A	Furthest Girder Vertical	5	42	50					6	2.0												6	2.0	270
458B	Center Girder Vertical	5	42	50					4	11.0												4	11.0	215
458C	Nearest Girder Vertical	5	42	50					4	8.0												4	8.0	204
461	Blockout Diagonal	7	16	50					4	0.0												4	0.0	131
462	Blockout Vertical	7	16	50					4	0.0												4	0.0	131
PIER 4 COLUMN PINS																								
491	Lower Cage Vert.	10	10	50					6	0.0												6	0.0	258
492	Lower Cage Hoop	7	13	66					3	0.0	0	9.0										9	11.0	264
493	Upper Cage Vert.	10	10	50					3	0.0												3	0.0	129
494	Upper Cage Hoop	7	7	66					3	0.0	0	9.0										9	11.0	142
495a	Upper Cage Horz. Short	5	4	74					1	10.0	1	0.0	1	0.0								3	7.0	15
495b	Upper Cage Horz. Long	5	4	74					3	3.0	1	0.0	1	0.0								4	12.0	21
PIER 5 FOOTING																								
501	Bottom of Footing	9	173	50		S			22	0.0												22	0.0	12941
502	Top and Bottom of Footing	7	92	50		S		V	46 60	0.0												60	0.0	8520
									30	7.3												30	7.0	
503	Top of Footing	7	173	50		S			22	0.0												22	0.0	7780
504	Footing Ties	4	609	58	T	S			3	6.0												4	2.0	1692
PIER 5 WALL																								
511	Far Face Bent	9	173	54					10	6.0												11	10.0	6956
511a	Far Face Straight	9	63	50				V	1 22	3.4												22	3.0	4836
									22	10.4												22	10.0	
511b	Far Face Straight	9	110	50				V	1 21	10.8												21	11.0	8372
									22	10.4												22	10.0	
512	Near Face Bent	5	173	54					7	3.0												7	11.0	1435
512a	Near Face Straight	5	63	50				V	1 22	0.4												22	0.0	1467
									22	7.4												22	7.0	
512b	Near Face Straight	5	110	50				V	1 22	7.8												22	8.0	2596
									22	7.4												22	7.0	
513	Each Face Bent	7	96	54				V	48 59	0.0												59	12.0	9099
									31	9.2												32	9.0	
514	Ties	4	242	58	T				4	8.0												5	4.0	861
515	Top Seat of Girder Bent	7	8	54				V	2 59	0.0												59	12.0	757
									31	7.2												32	7.0	
516	Top Seat of Girder	7	87	56					4	0.0												5	12.0	1061
517	Near Face	7	10	54				V	5	25 6.8												26	7.0	547
									25	11.4												26	11.0	
PIER 5 BACKWALL																								
521a	Each Face Vert. (straight)	4	87	50					9	10.2												9	10.0	573
521b	Each Face Vert. (Lapped)	4	87	89					9	5.3	2	9.0										9	5.0	548
522a	Each Face Horiz. Bent	4	28	54					39	0.0												39	7.0	740
522b	Each Face Horiz. Straight	4	14	50					13	6.3												13	6.0	126
523a	Below Approach Slab Bent	4	6	54					39	0.0												39	7.0	159
523b	Below Approach Slab Straight	4	3	50					13	6.3												13	6.0	27
524	Below Approach Slab	4	87	56					1	4.0												2	5.0	143
525	Below Approach Slab	4	87	74					0	6.0	1	11.0	1	11.0								4	1.0	240
526a	Top of Backwall Bent	4	4	54					39	0.0												39	7.0	106
526b	Top of Backwall Straight	4	2	50					13	6.3												13	6.0	18
527	Around Conduit Opening	4	8	50					3	0.0												3	0.0	16
PIER 5 WINGWALL																								
531	Each Face Vert.	6	18	54				V	9	26 0.4												26	11.0	721
									25	7.8												26	6.0	
532a	Near Face Horz.	6	46	50					9	10.0												9	10.0	679
532b	Near Face Vert.	6	18	54					13	10.0												14	8.0	397
534	End of wingwall	6	62	56					0	8.0												2	4.0	220
535	Far Face Horz.	9	46	50					9	0.0												9	0.0	1408
541	Each Face Vert.	6	36	50				V	4	9	0.2											9	0.0	499
										9	5.3											9	5.0	
543a	Far Face Vert.	6	16	54						6	6.0											7	4.0	177
543b	Near Face Vert.	6	16	50						6	6.0											6	6.0	156
548	Top of wingwall	4	9	56						0	8.0											1	9.0	11
PIER 5 GIRDER STOPS																								
551a	Exterior Girder Stop Horz.	4	8	50						3	6.8											3	7.0	19
551b	Interior Girder Stop Horz.	4	56	50						2	7.6											2	8.0	98
552	Girder Stop Vert.	4	132	74						2	0.0	3	5.0	3	5.0							8	7.0	760
DECK REINFORCING																								
2000	Bot. Trans. Main Span1	5	307	89	T		E	V	1	60	3.6	2	6.0									63	3.6	21467
										68	3.6	2	6.0									70	3.6	
2000	Bot Tran Main Span2 Straight	5	177	89	T		E	V	1	68	3.6	2	6.0									70	3.6	13368
										71	6.4	2	6.0									74	0.4	
2000	Bot Tran Main Span4 Small	5	7	89	T		E			118	3.1	2	6.0									120	3.1	882

S = BAR IS INCLUDED IN SUBSTRUCTURE QUANTITIES

E = BAR IS TO BE EPOXY COATED

V = BAR DIMENSIONS VARY BETWEEN DIMENSIONS SHOWN ON THIS LINE AND THE FOLLOWING LINE

T = TRANSVERSE OR S = SEISMIC

MARK NO.	LOCATION	SIZE	NO. REQ'D	BEND TYPE	T OR S	SUBSTR.	EPOXY	VARIES	NO. EACH	DIMENSIONS (OUT TO OUT) U FT	U IN	W FT	W IN	X FT	X IN	Y FT	Y IN	Z FT	Z IN	ANGLE θ_1 DEG.	θ_2 DEG.	LENGTH FT	LENGTH IN	WEIGHT LBS
2000	Bot Tran Main Span4 Small	5	7	89	T		E			118	3.1	2	6.0									120	3.1	882
2000	Bot Tran Main Span2 Curve	5	95	89	T		E	V	1	118	9.1	2	6.0									121	3.1	9674
										71	6.4	2	6.0									74	0.4	
2000	Bot Tran Main Span3	5	130	89	T		E			118	3.1	2	6.0									120	3.1	16372
2000	Bot Tran Main Span2 Pier3	5	21	89	T		E			118	3.1	2	6.0									120	3.1	2645
2000	Bot Tran Main Span4	5	294	89	T		E			85	0.0	2	6.0									87	6.0	26828
2001	Bot. Long. Btwn Girders	5	96	89			E			518	6.0	2	6.0									538	6.0	53914
2001	Bot. Long. at Overhang	5	13	89			E			518	6.0	2	6.0									538	6.0	7301
2001	Bot. Long. at OH end @ P2	5	2	89			E			119	6.0	2	6.0									122	0.0	254
2001	Bot. Long. at OH end @ P3	5	2	89			E			262	0.0	2	6.0									272	0.0	567
2001	Bot. Lon - P3&P4	5	7	89			E			118	0.0	2	6.0									120	6.0	880
2001	Bot. Lon - P3&P4	5	3	89			E	V	1	253	6.0	2	6.0									263	6.0	815
										247	6.0	2	6.0									257	6.0	
2001	Bot. Lon OH - P4 - Span 4	5	8	89			E			118	0.0	2	6.0									120	6.0	1005
2002	Bot. Long. - Pier 2 Add.	6	111	89			E			75	0.0	3	0.0									78	0.0	13003
2004	Top. Trans. Main Span1	5	618	51			E	V	1	31	7.8											32	2.7	21977
										35	4.8											35	11.7	
2004	Top Tran Main Span2 Pier3	5	42	51			E			59	0.0											59	6.9	2609
2004	Top Tran Main Span2 Pier3	5	21	50	T		E			6	4.6											6	4.6	140
2004	Top Tran Main Span4 Small	5	6	50	T		E			6	4.6											6	4.6	40
2004	Top Tran Main Span4 Small	5	14	51			E			59	0.0											59	6.9	870
2004	Top Tran Main Span2 Straight	5	358	51			E	V	1	37	0.2											37	7.1	13733
										35	4.8											35	11.7	
2004	Top Tran Main Span3	5	130	50	T		E			6	4.6											6	4.6	865
2004	Top Tran Main Span2 Curve	5	184	51			E	V	1	37	0.2											37	7.1	9347
										59	3.0											59	9.9	
2004	Top Tran Main Span3	5	260	51			E			59	0.0											59	6.9	16154
2004	Top Tran Main Span4	5	586	51			E			44	0.0											44	6.9	27241
2005	Top. Trans. End Span4 Gir 4A	6	12	51			E			9	11.5											10	7.8	192
2005	Top. Trans. End Span1 Gir 1G	6	12	51			E			8	2.6											8	10.9	161
2005	Top. Trans. End Span1 Gir 1A	6	12	51			E			8	6.0											9	2.3	166
2005	Top. Trans. End Span4 Gir 4H	6	12	51			E			9	11.5											10	7.8	192
2006	Top. Trans. OH Span2 Gir 2A	4	89	51			E	V	1	9	5.2											9	11.2	568
										8	8.0											9	2.0	
2006	Top. Trans. OH Span3 Gir3M	4	65	51			E			8	3.0											8	9.0	390
2006	Top. Trans. OH Span3 Gir3A	4	65	51			E			8	5.9											8	11.9	390
2006	Top. Trans. OH Span2 Gir 2G	4	89	51			E	V	1	10	0.5											10	6.5	600
										9	1.9											9	7.9	
2006	Top. Trans. OH Span1 Gir 1A	4	148	51			E	V	1	9	5.2											9	11.2	945
										8	8.2											9	2.2	
2006	Top. Trans. OH Span1 Gir 1G	4	148	51			E	V	1	10	0.5											10	6.5	952
										8	2.6											8	8.6	
2006	Top. Trans. OH Span4 Gir3M	4	3	51			E			8	3.0											8	9.0	18
2006	Top. Trans. OH Span4 Gir3A	4	3	51			E			8	5.9											8	11.9	18
2006	Top. Trans. OH Span2F3 Gir3A	4	11	51			E			8	5.9											8	11.9	66
2006	Top. Trans. OH Span2 Curve	4	48	51			E	V	1	10	0.5											10	6.5	324
										9	1.9											9	7.9	
2006	Top. Trans. OH Span4 Gir4H	4	140	51			E			10	1.4											10	7.4	992
2006	Top. Trans. OH Span4 Gir4A	4	140	51			E			10	1.2											10	7.2	991
2006	Top. Trans. OH Span2 Curve	4	48	51			E	V	1	9	5.2											9	11.2	306
										8	8.0											9	2.0	
2006	Top. Trans. OH Span2F3 Gir3	4	11	51			E			8	3.0											8	9.0	64
2007	Top Longit. - Span 2	4	66	89			E			73	0.0	2	0.0									75	0.0	3306
2007	Top Longit. Overhang- Span 2	4	11	89			E			73	0.0	2	0.0									75	0.0	551
2007	Top Longit. Overhang- Span 1	4	12	89			E			127	0.0	2	0.0									133	0.0	1066
2007	Top Long. Span 4	4	89	89			E			110	6.0	2	0.0									114	6.0	6807
2007	Top Longit. Overhang- Cut	4	2	89			E	V	1	61	0.0	2	0.0									63	0.0	83
										58	9.0	2	0.0									60	9.0	
2007	Top Longit. - Span 1	4	66	89			E			127	0.0	2	0.0									133	0.0	5863
2008	Top Longit. - Pier2	7	78	89			E			68	0.0	3	6.0									71	6.0	11400
2009	Top Longit. - Pier2	7	78	89			E			81	0.0	3	6.0									84	6.0	13473
2010	Top Longit. - Pier2	8	70	50			E			30	0.0											30	0.0	5606
2012	Bot. Long - P3&P4 Gir 3J -3M	6	68	89			E	V	1	87	10.6	3	0.0									90	10.6	8823
										78	10.8	3	0.0									81	10.8	
2012	Bot. Lon - P3&P4 Gir 3K - 3I	6	30	89			E	V	1	129	5.6	3	0.0									135	5.6	5935
										121	11.8	3	0.0									127	11.8	
2012	Bot. Lon - P3&P4 OH 3A	6	10	89			E			87	9.9	3	0.0									90	9.9	1364
2014	Top Long Pier3&4 OH	7	5	89			E	V	1	6	0.0	3	6.0									6	0.0	33
										0	6.0	3	6.0									0	6.0	
2014	Top Long Pier3&4 OH	7	5	89			E			78	4.4	3	6.0									81	10.4	837
2014	Top Long Pier3&4 OH	7	7	89			E			92	9.2	3	6.0									96	3.2	1377
2014	Top Long Pier3&4 3J-3M	7	42	89			E	V	1	79	5.6	3	6.0									82	11.6	7515
										88	7.2	3	6.0									92	1.2	
2014	Top Long Pier3&4 3I-3K	7	22	89			E	V	1	137	6.0	3	6.0									144	6.0	6273
										127	6.0	3	6.0									134	6.0	
2016	Bot. Long. - P3&4	6	110	89			E			140	6.0	3	0.0									146	6.0	24202
2016	Bot. Long. - P3&4 2G-3I	6	3	89			E	V	1	134	3.0	3	0.0									140	3.0	639
										137	3.5	3	0.0									143	3.5	
2016	Bot. Long. - P3&4 2A-3A	6	3	89			E	V	1	97	1.8	3	0.0									100	1.8	458
										100	1.2	3	0.0									103	1.2	
2016	Bot. Long. - P3&4 2G-3I Cut	6	3	89			E	V	1	65	0.0	3	0.0									68	0.0	282
										57	0.0	3	0.0									57	0.0	
2017	Top Long Pier3&4	7	78	89			E			132	6.0	3	6.0									139	6.0	22242
2017	Top Long Pier3&4	7	3	89			E	V	1	98	3.0	3	6.0									101	9.0	643
										104	6.0	3	6.0									108	0.0	
2017	Top Long Pier3&4 Cut	7	3	89			E			52	7.0	3	6.0									52	7.0	322
2017	Top Long Pier3&4 Cut	7	4	89			E	V	1	17	5.8	3	6.0									17	5.8	158
										21	3.2	3	6.0									21	3.2	
2018	Top Long Pier3&4	7	78	89			E			153	6.0	3	6.0									160	6.0	25590
2018	Top Long Pier3&4	7	1	50			E			51	0.0											51	0.0	104
2018	Top Long Pier3&4	7	6	89			E	V	1	98	3.0	3	6.0									101	9.0	1311
										108	6.0	3	6.0									112	0.0	
2020	Top Long Pier3&4 Additn.	8	176	50			E			30	0.0											30	0.0	14098

CONTINUED ON SHEET BB089

BENDING DIAGRAMS

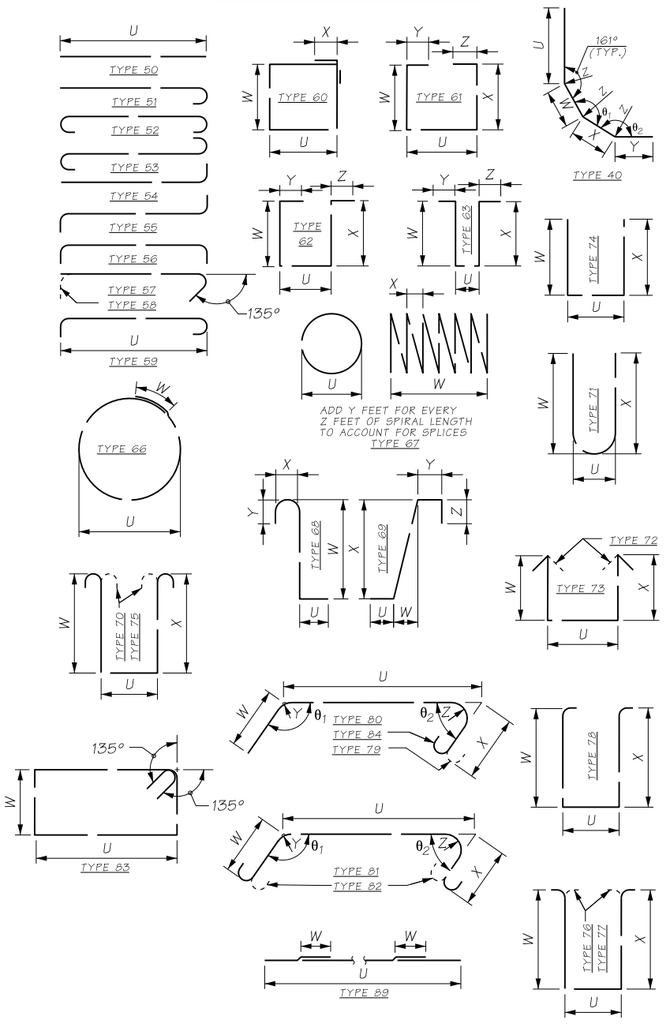

AS-BUILT

NOTES:

1. SEE SHEET BB087 FOR NOTES.

ATKINSON

JUN 07 2019 KTW

RELEASED FOR CONSTRUCTION

FILE NAME	D:\ICS_workdir\29354\20633_2020\PS_BB088.dgn				
TIME	3:22:11 PM				
DATE	6/4/2019				
PLOTTED BY	USLAS0-APP064$				
DESIGNED BY	A. GASCA				
ENTERED BY	R. REISER				
CHECKED BY	A. FONG	REV 0 - RELEASED FOR CONSTRUCTION	06/06/2019		
PROJ. ENGR.	C. MEADE	REV A - FINAL REVIEW	04/19/2019		
REGIONAL ADM.	J. WYNANDS	REVISION	DATE	BY	

REGION NO.	STATE	FED.AID PROJ.NO.
10	WASH	
JOB NUMBER		
CONTRACT NO. C9133		LOCATION NO.

P.E. STAMP BOX DATE

P.E. STAMP BOX DATE

Washington State Department of Transportation

ATKINSON / JACOBS CONSTRUCTION

I-5
STEILACOOM-DUPONT RD TO THORNE LN
CORRIDOR IMPROVEMENTS
MP 120.01 TO MP 124.45
BERKELEY OVERPASS

BAR LIST (2 OF 3)

PLAN REF NO BB088

SHEET 1279 OF 1456 SHEETS

S = BAR IS INCLUDED IN SUBSTRUCTURE QUANTITIES

E = BAR IS TO BE EPOXY COATED

V = BAR DIMENSIONS VARY BETWEEN DIMENSIONS SHOWN ON THIS LINE AND THE FOLLOWING LINE

T = TRANSVERSE OR S = SEISMIC

MARK NO.	LOCATION	SIZE	NO. REQ'D	BEND TYPE	T OR S	SUBSTR.	EPOXY	VARIES	NO. EACH	DIMENSIONS (OUT TO OUT) U FT	U IN	W FT	W IN	X FT	X IN	Y FT	Y IN	Z FT	Z IN	ANGLE θ_1 DEG.	ANGLE θ_2 DEG.	LENGTH FT	LENGTH IN	WEIGHT LBS
2020	Top Long Pier3&4 Additn.	8	12	50			E	V	1	30	0.0											30	0.0	913
										27	0.0											27	0.0	
2021	Bot. Near P3	5	2	51			E			52	4.8											52	11.7	110
2021	Bot.Exp. Joint - P4	5	2	51			E			9	10.8											9	5.7	20
2022	Bot. Near P3	5	2	51			E			37	10.8											38	5.7	80
2024	Bot. Lon - P3&P4 Extra	4	2	89			E	V	1	57	0.0	2	0.0									59	0.0	73
										48	6.0	2	0.0									50	6.0	
2024	Bot. Lon - P3&P4 Extra	4	2	50			E			33	8.0											33	8.0	45
2024	Bot. Lon - P3&P4 Extra	4	1	50			E			28	9.0											28	9.0	19
2024	Top Long. Curve	4	1	89			E			58	4.2	2	0.0									60	4.2	40
2025	Top Long. Curve	4	1	50			E			34	6.0											34	6.0	23
2026	Top Long. Bend	4	1	50			E			3	4.8											3	4.8	2
2065	Bot. Gir. RF 4H	5	3	89			E			153	0.0	2	6.0									158	0.0	494
2065	Bot. Gir. RF 3I - 3M	5	15	89			E	V	1	98	0.0	2	6.0									100	6.0	1408
										77	0.0	2	6.0									79	6.0	
2065	Bot. Gir. RF 3A	5	3	89			E			87	9.8	2	6.0									90	3.8	283
2065	Bot. Gir. RF 2A-2G	5	21	89			E			518	6.0	2	6.0									538	6.0	11794
	PIER 1 END DIAPHRAGM																							
3001	Bottom of Diaphragm	10	4	50						52	7.9											52	8.0	906
3002	End Diaphragm Horz.	4	72	50						8	0.9											8	1.0	388
3003	Stirrups	4	96	74	T					1	2.0	6	3.6	6	3.6							13	7.0	872
3004	CL Diaphragm Horz.	7	1	50						52	7.9											52	8.0	108
3005	Top of Diaphragm Straight	9	9	50						59	6.0											59	6.0	1821
3005	Top of Diaphragm Hooked	9	8	51						32	3.0											33	6.0	911
3006	Blockout	6	4	50						4	0.0											4	0.0	24
3007	Blockout	6	4	50						4	0.0											4	0.0	24
3006	Ties between girders	4	60	74				V	12	1	2.0	6	0.6	6	0.6							13	1.0	513
										1	2.0	5	9.6	5	9.6							12	7.0	
	PIER 5 END DIAPHRAGM																							
3001	Bottom of Diaphragm	10	8	50						42	8.4											42	8.0	1470
3002	End Diaphragm Horz.	4	84	50						9	10.9											9	11.0	556
3003	Stirrups	4	150	74	T					1	2.0	6	3.4	6	3.4							13	7.0	1359
3004	CL Diaphragm Horz.	7	2	50						40	0.0											40	0.0	164
3005	Top of Diaphragm Straight	9	18	50						43	1.5											43	2.0	2639
3005	Top of Diaphragm Hooked	9	8	51						43	1.5											44	4.0	1207
3006	Blockout	6	4	50						4	0.0											4	0.0	24
3007	Blockout	6	4	50						4	0.0											4	0.0	24
3006	Ties between girders	4	70	74				V	14	1	2.0	6	0.6	6	0.6							13	1.0	599
										1	2.0	5	9.6	5	9.6							12	7.0	
	PARTIAL DEPTH INTERMEDIATE DIAPHRAGMS SPAN 1																							
3020	Bottom of Diaphragm	7	4	50				V	2	53	10.9											53	11.0	446
										55	1.9											55	2.0	
3020	Bottom of Diaphragm	7	2	50						56	4.9											56	5.0	231
3021	Between Girders Horz.	4	72	50				V	36	8	3.4											8	3.0	404
										8	6.0											8	6.0	
3021	Between Girders Horz.	4	36	50						8	8.4											8	8.0	209
3022	Top of Diaphragm	7	2	50				V	1	53	10.9											53	11.0	223
										55	1.9											55	2.0	
3022	Top of Diaphragm	7	1	50						56	4.9											56	5.0	115
3023	Stirrups	4	144	74	T					0	5.0	4	9.0	4	9.0							9	9.0	937
3024	Between Girders Vert.	4	72	74	T			V	36	0	5.0	3	1.0	3	1.0							6	5.0	318
										0	6.0	3	3.0	3	3.0							6	10.0	
3025	Top of Diaphragm Horz.	6	2	52						57	9.0											59	2.0	178
3025	Top of Diaphragm Horz.	6	8	51				V	4	31	7.5											32	4.0	384
										31	0.0											31	8.0	
3027	Blockout	6	12	50						4	0.0											4	0.0	72
3028	Blockout	6	12	50						4	0.0											4	0.0	72
	PARTIAL DEPTH INTERMEDIATE DIAPHRAGMS SPAN 2																							
3020	Bottom of Diaphragm	7	4	50						59	9.4											59	9.0	489
3020	Bottom of Diaphragm	7	8	50				V	4	32	2.9											32	3.0	536
										33	3.7											33	4.0	
3021	Between Girders Horz.	4	72	50				V	36	9	3.1											9	3.0	454
										9	7.4											9	7.0	
3021	Between Girders Horz.	4	36	50						9	11.6											9	12.0	240
3022	Top of Diaphragm	7	3	50				V	1	59	9.4											59	9.0	284
										32	8.9											32	9.0	
3022	Top of Diaphragm	7	2	50						33	9.7											33	10.0	138
3023	Stirrups	4	144	74	T					0	5.0	4	9.0	4	9.0							9	9.0	937
3024	Between Girders Vert.	4	72	74	T			V	36	0	5.0	3	1.0	3	1.0							6	5.0	316
										0	5.0	3	3.0	3	3.0							6	9.0	
3025	Top of Diaphragm Horz.	6	8	51				V	4	33	3.8											34	0.0	415
										34	4.5											35	1.0	
3025	Top of Diaphragm Horz.	6	4	51						35	5.3											36	2.0	217
3027	Blockout	6	12	50						4	0.0											4	0.0	72
3028	Blockout	6	12	50						4	0.0											4	0.0	72
	PARTIAL DEPTH INTERMEDIATE DIAPHRAGMS SPAN 3																							
3020	Bottom of Diaphragm	7	4	50						56	6.5											56	6.0	462
3021	Between Girders Horz.	4	36	50						10	1.4											10	1.0	243
3021	Between Girders Horz.	4	24	50						6	9.0											6	9.0	108
3021	Between Girders Horz.	4	12	50				V	6	7	5.0											7	5.0	55
										6	3.0											6	3.0	
3022	Top of Diaphragm	7	2	50						57	0.5											57	0.0	233
3023	Stirrups	4	126	74	T					0	5.0	4	9.0	4	9.0							9	9.0	820
3024	Between Girders Vert.	4	48	74	T			V	24	0	5.0	3	1.0	3	1.0							6	5.0	211
										0	5.0	3	3.0	3	3.0							6	9.0	
3025	Top of Diaphragm Horz.	6	4	51						58	8.1											59	4.0	357
3027	Blockout	6	8	50						4	0.0											4	0.0	48
3028	Blockout	6	8	50						4	0.0											4	0.0	48
	FULL DEPTH INTERMEDIATE DIAPHRAGM																							
3020	Bottom of Diaphragm	7	12	50						38	6.0											38	6.0	944
3021	Between Girders	4	210	50						9	11.0											9	11.0	1391
3022	Top of Diaphragm Center	7	6	50						39	0.0											39	0.0	478
3024	Ties	4	84	74	T			V	42	0	5.0	4	6.0	4	6.0							9	3.0	533

S = BAR IS INCLUDED IN SUBSTRUCTURE QUANTITIES

E = BAR IS TO BE EPOXY COATED

V = BAR DIMENSIONS VARY BETWEEN DIMENSIONS SHOWN ON THIS LINE AND THE FOLLOWING LINE

T = TRANSVERSE OR S = SEISMIC

MARK NO.	LOCATION	SIZE	NO. REQ'D	BEND TYPE	T OR S	SUBSTR.	EPOXY	VARIES	NO. EACH	DIMENSIONS (OUT TO OUT) U FT	U IN	W FT	W IN	X FT	X IN	Y FT	Y IN	Z FT	Z IN	ANGLE θ_1 DEG.	ANGLE θ_2 DEG.	LENGTH FT	LENGTH IN	WEIGHT LBS
										0	5.0	4	9.0	4	9.0							9	9.0	
3025	Top of Diaphragm Hangers	6	12	51						40	7.5											41	4.0	745
3026	Stirrups	4	168	74	T					0	5.0	6	3.0	6	3.0							12	8.0	1430
3027	Blockout	6	6	50						4	0.0											4	0.0	36
3028	Blockout	6	6	50						4	0.0											4	0.0	36
	EDGE BEAM																							
3050	Side Longitudinal GirderA	6	16	51				V	2	22	10.1											23	6.0	561
										22	6.1											23	2.0	
3050	Side Longitudinal H-M	6	16	51				V	2	51	4.1											52	0.0	1254
										51	8.1											52	4.0	
3051	Bottom Longitudinal	6	6	51				V	3	49	11.0											50	7.0	326
										21	1.0											21	9.0	
3052	Top Longitudinal	7	4	51				V	2	56	8.1											57	6.0	352
										27	10.2											28	8.0	
3053	Hanger Longitudinal	7	4	50				V	2	13	9.3											13	9.0	128
										17	7.6											17	8.0	
3054	Stirrup	4	107	74	T					0	11.0	7	4.0	7	4.0							15	5.0	1101
3055	Top Longitudinal	7	6	51				V	3	49	5.7											50	3.0	440
										20	7.7											21	5.0	
3056	Extended Girder Bars	6	4	51				V	2	11	11.4											12	8.0	174
										44	6.1											45	2.0	
3057	Top Ties	6	105	55	T					1	0.0											2	6.0	382
3058	Stirrup at Girder	4	4	74	T					1	0.0	4	1.0	4	1.0							8	12.0	24

BENDING DIAGRAMS

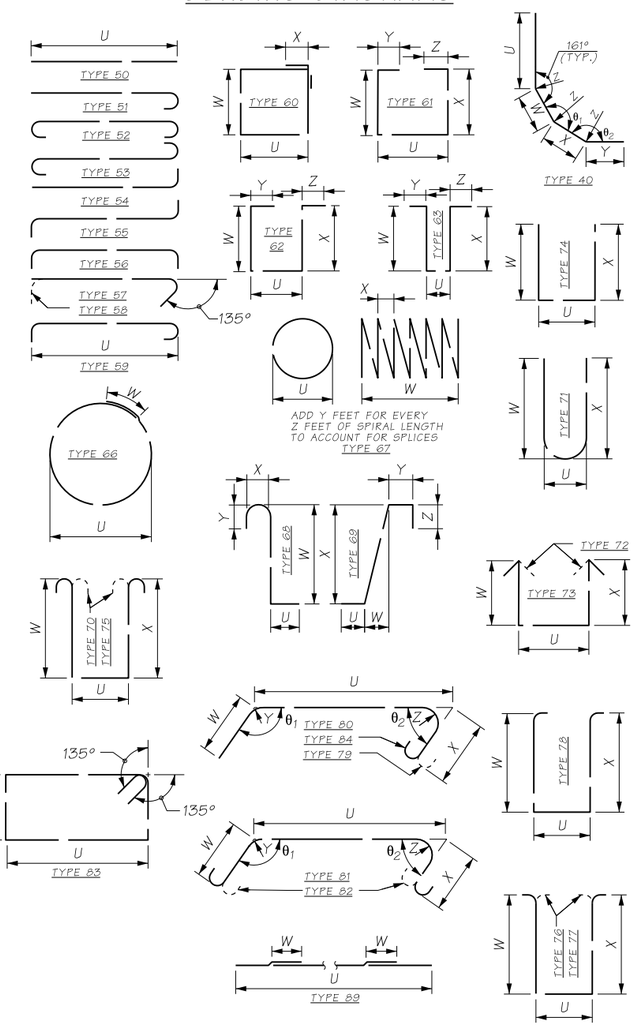

AS-BUILT

ATKINSON
JUN 07 2019
KTW
RELEASED FOR CONSTRUCTION

NOTES:

1. SEE SHEET BB087 FOR NOTES.

FILE NAME	D:\ICS_workdir\29354\20633_2039\PS_BB089.dgn			
TIME	3:22:18 PM			
DATE	6/4/2019			
PLOTTED BY	USLAS0-APP064$			
DESIGNED BY	A. GASCA			
ENTERED BY	R. REISER			
CHECKED BY	A. FONG	REV 0 - RELEASED FOR CONSTRUCTION	06/06/2019	
PROJ. ENGR.	C. MEADE	REV A - FINAL REVIEW	04/19/2019	
REGIONAL ADM.	J. WYNANDS	REVISION	DATE	BY

REGION NO.	STATE	FED.AID PROJ.NO.
10	WASH	
JOB NUMBER		
CONTRACT NO. C9133		LOCATION NO.

P.E. STAMP BOX — DATE

P.E. STAMP BOX — DATE

Washington State Department of Transportation

ATKINSON / JACOBS CONSTRUCTION

I-5
STEILACOOM-DUPONT RD TO THORNE LN
CORRIDOR IMPROVEMENTS
MP 120.01 TO MP 124.45
BERKELEY OVERPASS

BAR LIST (3 OF 3)

PLAN REF NO BB089

SHEET 1280 OF 1456 SHEETS

BRIDGE WITH APPROACH FILL
WF83G GIRDERS
"A" DIMENSION = 9¼" (PRELIMINARY, NOT FOR DESIGN)
CAST-IN-PLACE CONC. SHALL BE 4000 PSI
DECK PROTECTIVE SYSTEM 1 (EPOXY COATED REBARS)

POINT OF MINIMUM VERTICAL CLEARANCE: N/A

SHEET BB101

I-5 JOB NO.

SEC. 21, T.19N., R.2E., W.M.
CITY OF LAKEWOOD

I-5

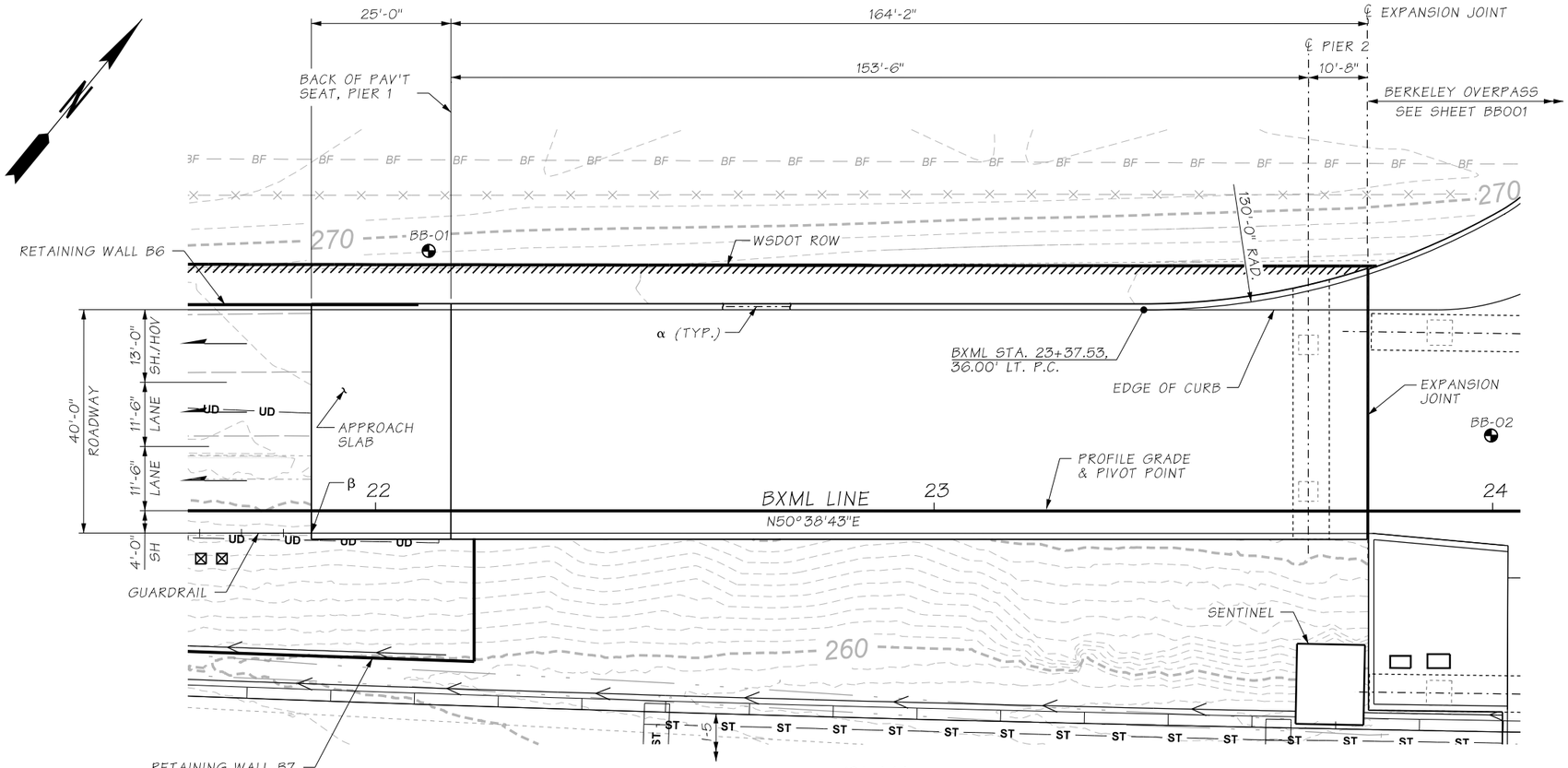

PLAN

BEARING OF BOTH PIERS ARE NORMAL TO BXML LINE

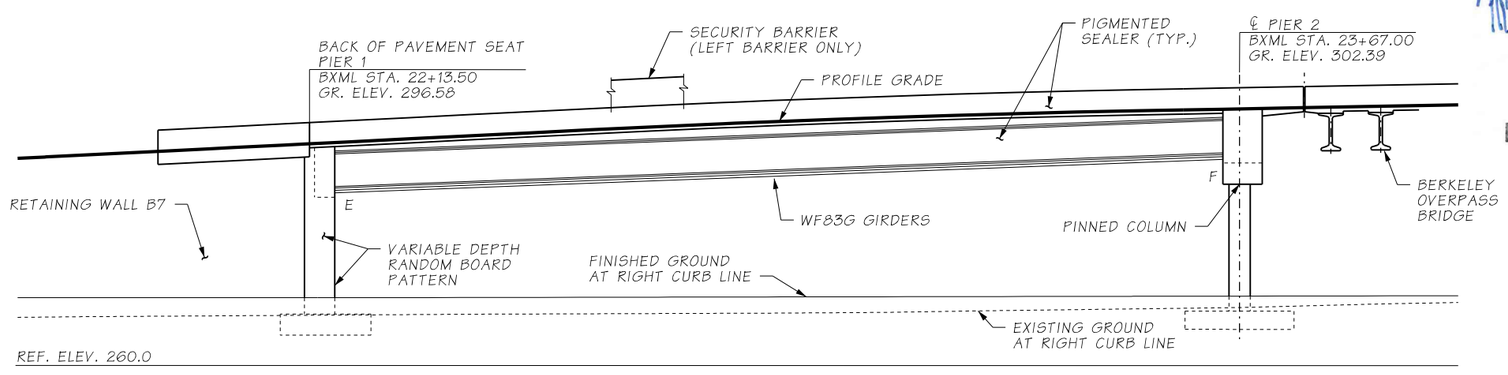

DATUM
N.A.V.D. 88

ELEVATION

GRADE ELEVATIONS ARE FINISH GRADES AT TOP OF BRIDGE DECK ON BXML LINE AND ARE EQUAL TO PROFILE GRADE

NOTES:

1. FROM BXML STATION 23+57.67 TO EXPANSION JOINT AT BXML STATION 23+77.67, PROVIDE LINEAR TRANSITION BETWEEN BXML AND BXW ROADWAY SURFACE ELEVATIONS.
2. APPLY MT. BAKER GRAY PIGMENTED SEALER TO ALL PERMANENTLY EXPOSED SURFACES OF PIERS 1 AND 2 TO 1'-0" MINIMUM BELOW FINISHED GRADE. APPLY WASHINGTON GRAY PIGMENTED SEALER TO BARRIERS AND GIRDERS, SEE TYPICAL SECTION FOR LIMITS.

LEGEND

- SOIL BORING LOCATION
- α 2-2"ø CONDUIT IN TRAFFIC BARRIER FOR FULL LENGTH OF BRIDGE AND APPROACH SLAB
- β GUARDRAIL CONNECTION TYPE D (STD. PLAN C-24.10.01)
- ⊠ JUNCTION BOX SEE ITS AND ILLUMINATION PLANS FOR TYPE AND LOCATION
- BF BURIED FIBER - EXISTING
- FENCE - EXISTING
- ST STORM SEWER - PROPOSED
- UD UNDERDRAIN - PROPOSED
- CATCH BASIN - PROPOSED

MRV.
ATKINSON
FEB 05 2019
RELEASED FOR CONSTRUCTION

AS-BUILT

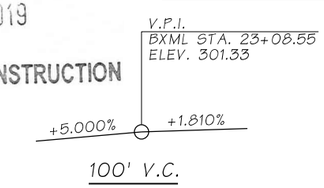

BXML LINE PROFILE

P.C. GIRDERS (WF83G)
LOADING: HL-93

FILE NAME	c:\pwworking\jacobs_b&i\caywoocj\dms20633\PS_BB101.dgn						
TIME	3:00:26 PM				REGION NO. 10	STATE WASH	FED.AID PROJ.NO.
DATE	2/4/2019						
PLOTTED BY	caywoocj				JOB NUMBER		
DESIGNED BY	C. CAYWOOD						
ENTERED BY	R. REISER	REV 0 - RELEASED FOR CONSTRUCTION	02/06/2019		CONTRACT NO. C8811		LOCATION NO.
CHECKED BY	A. FONG	REV B - FINAL REVIEW	12/18/2018				
PROJ. ENGR.	C. MEADE	REV A - PRELIMINARY REVIEW	8/9/2018				
REGIONAL ADM.	J. WYNANDS	REVISION	DATE	BY			

CORY J. CAYWOOD, STATE OF WASHINGTON, 38133, STRUCTURAL ENGINEER, PROFESSIONAL ENGINEER
2/5/19
DATE
P.E. STAMP BOX

DATE
P.E. STAMP BOX

Washington State Department of Transportation

ATKINSON CONSTRUCTION / JACOBS

I-5
STEILACOOM-DUPONT RD TO THORNE LN CORRIDOR IMPROVEMENTS
MP 120.01 TO MP 124.45
BERKELEY SB ON RAMP BRIDGE

PLAN AND ELEVATION

PLAN REF NO BB101

SHEET 1281 OF 1456 SHEETS

GENERAL NOTES:

1. ALL MATERIAL AND WORKMANSHIP SHALL BE IN ACCORDANCE WITH THE REQUIREMENTS OF THE WASHINGTON STATE DEPARTMENT OF TRANSPORTATION STANDARD SPECIFICATIONS FOR ROAD, BRIDGE, AND MUNICIPAL CONSTRUCTION DATED 2016, AND AMENDMENTS.
2. THIS STRUCTURE HAS BEEN DESIGNED IN ACCORDANCE WITH THE REQUIREMENTS OF THE AASHTO LRFD BRIDGE DESIGN SPECIFICATIONS 8TH EDITION 2017. THIS STRUCTURE HAS BEEN DESIGNED FOR A 3" HMA FUTURE WEARING SURFACE.
3. THE SEISMIC DESIGN OF THIS STRUCTURE HAS BEEN COMPLETED IN ACCORDANCE WITH THE REQUIREMENTS OF THE AASHTO GUIDE SPECIFICATIONS FOR LRFD SEISMIC BRIDGE DESIGN 2ND EDITION WITH INTERIM REVISIONS THROUGH 2015, AS MODIFIED BY THE WSDOT BRIDGE DESIGN MANUAL, JUNE 2017. THE SEISMIC DESIGN WAS PERFORMED USING THE FOLLOWING:
   - SEISMIC DESIGN CATEGORY: C
   - SITE CLASS: C
   - PEAK GROUND ACCELERATION: 0.50G (SITE CLASS C)
   - 0.2 SECOND SPECTRAL ACCELERATION: 1.12G (SITE CLASS C)
   - 1.0 SECOND SPECTRAL ACCELERATION: 0.41G (SITE CLASS C)
4. THE CONCRETE IN THE BRIDGE DECK SHALL BE CLASS 4000D. THE CONCRETE IN BRIDGE APPROACH SLABS SHALL BE CLASS 4000A. ALL OTHER CAST-IN-PLACE CONCRETE SHALL BE CLASS 4000.
5. THE BACKFILL BEHIND THE ABUTMENTS MAY BE PLACED BEFORE OR AFTER PLACEMENT OF THE SUPERSTRUCTURE, IN ACCORDANCE WITH SECTION 2-03.3(14)I OF THE STANDARD SPECIFICATIONS.
6. UNLESS OTHERWISE SHOWN IN THE PLANS, CONCRETE COVER MEASURED FROM THE FACE OF CONCRETE TO THE FACE OF ANY REINFORCING STEEL SHALL BE 2½" AT THE TOP OF THE BRIDGE DECK, 1" AT THE BOTTOM OF THE BRIDGE DECK, 3" AT THE BOTTOM OF FOOTINGS, AND 2" AT ALL OTHER LOCATIONS.
7. FALSEWORK SHALL BE CAREFULLY RELEASED TO PREVENT IMPACT OR UNDUE STRESS IN THE STRUCTURE.
8. CONDUITS, JUNCTION BOXES, AND UTILITIES ARE SHOWN FOR REFERENCE ONLY. THE CONTRACTOR SHALL COORDINATE THESE PLANS WITH THE ELECTRICAL, I.T.S. AND OTHER CIVIL PLANS.

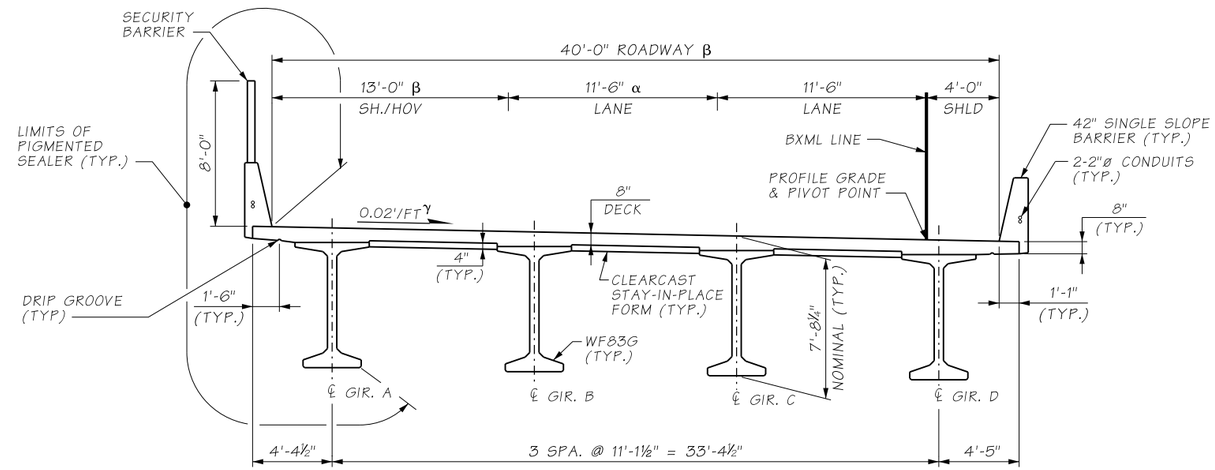

TYPICAL SECTION

α HOV AND LANE WIDTH VARIES FOR STATIONS GREATER THAN BXML STA. 23+00.14

β ROADWAY WIDTH VARIES FOR STATIONS GREATER THAN BXML STA. 23+37.53

γ SEE NOTE 1 ON SHEET BB101 FOR INFORMATION ON DECK SURFACE TRANSITION BETWEEN BERKELEY SB ON RAMP AND BERKELEY OVERPASS BRIDGE

AS-BUILT

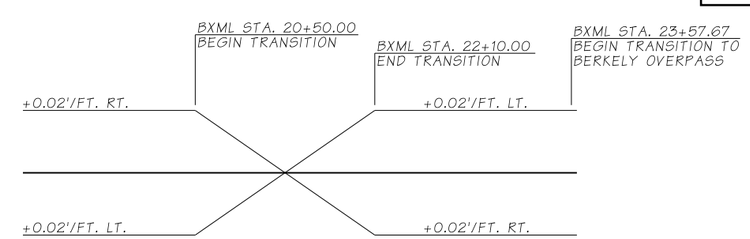

BXML SUPERELEVATION DIAGRAM

ATKINSON

FEB 05 2019

RELEASED FOR CONSTRUCTION

FILE NAME	D:\ICS_workdir\20963\20633_153\PS_BB102.dgn					
TIME	2:39:12 PM				REGION NO. 10	STATE WASH	FED.AID PROJ.NO.
DATE	2/4/2019					
PLOTTED BY	USLAS0-APP064$					
DESIGNED BY	C. CAYWOOD				JOB NUMBER	
ENTERED BY	R. REISER	REV 0 - RELEASED FOR CONSTRUCTION	02/06/2019			
CHECKED BY	A. FONG	REV B - FINAL REVIEW	12/18/2018		CONTRACT NO. C8811	LOCATION NO.
PROJ. ENGR.	C. MEADE	REV A - PRELIMINARY REVIEW	8/9/2018			
REGIONAL ADM.	J. WYNANDS	REVISION	DATE	BY		

CORY J. CAYWOOD — STATE OF WASHINGTON — 38198 — STRUCTURAL ENGINEER — PROFESSIONAL ENGINEER — 2/5/19

P.E. STAMP BOX — DATE

P.E. STAMP BOX — DATE

Washington State Department of Transportation

ATKINSON / JACOBS CONSTRUCTION

I-5
STEILACOOM-DUPONT RD TO THORNE LN
CORRIDOR IMPROVEMENTS
MP 120.01 TO MP 124.45
BERKELEY SB ON RAMP BRIDGE

GENERAL NOTES AND TYPICAL SECTION

PLAN REF NO BB102

SHEET 1282 OF 1456 SHEETS

NOTES:

1. FOR LEGEND SEE SHEET BB101.

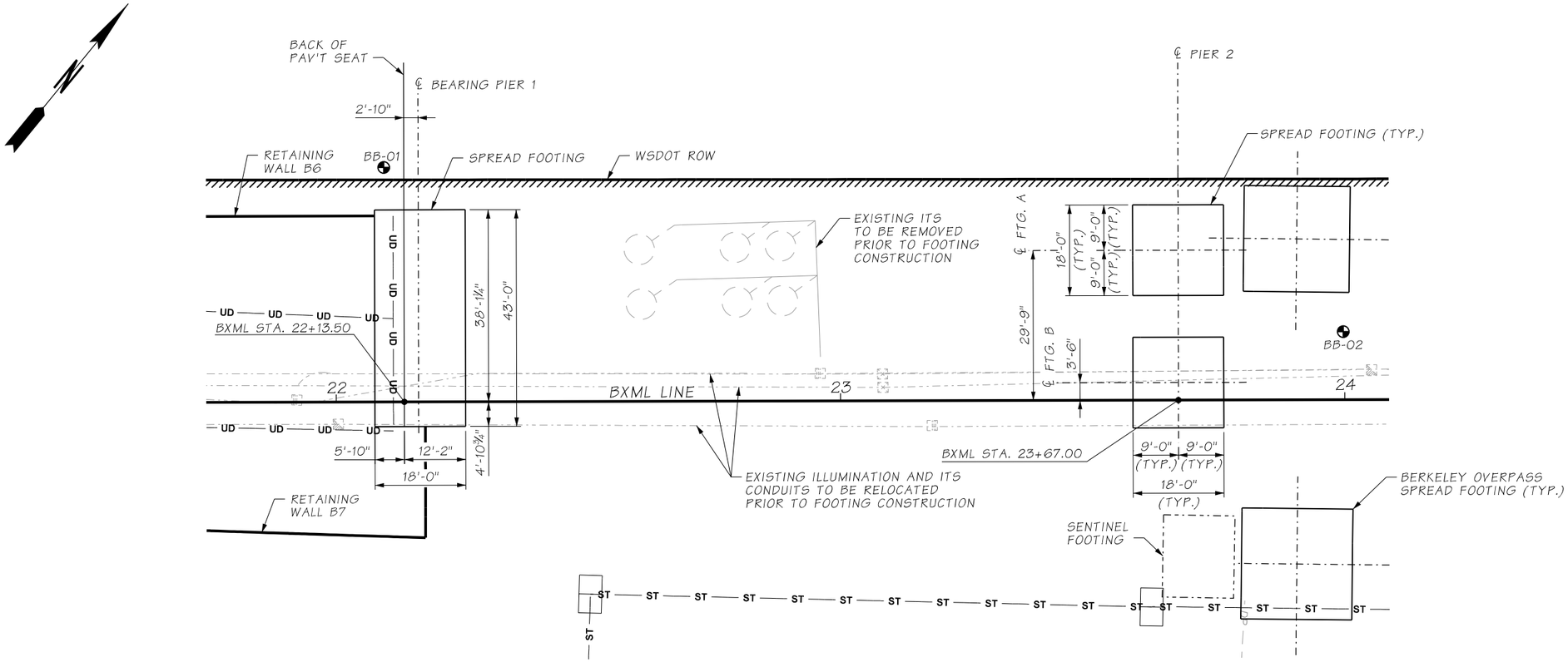

AS-BUILT

FOOTING PLAN

BEARING OF BOTH PIERS ARE NORMAL TO BXML LINE

ATKINSON

FEB 05 2019

RELEASED FOR CONSTRUCTION

FILE NAME	c:\pwworking\jacobs_b&i\reiserrw\dms20633\PS_BB103.dgn						
TIME	1:23:24 PM				REGION NO.	STATE	FED.AID PROJ.NO.
DATE	1/21/2019				10	WASH	
PLOTTED BY	reiserrw				JOB NUMBER		
DESIGNED BY	C. CAYWOOD						
ENTERED BY	R. REISER	REV 0 - RELEASED FOR CONSTRUCTION	02/06/2019		CONTRACT NO.		LOCATION NO.
CHECKED BY	A. FONG	REV B - FINAL REVIEW	12/18/2018		C8811		
PROJ. ENGR.	C. MEADE	REV A - PRELIMINARY REVIEW	08/09/2018				
REGIONAL ADM.	J. WYNANDS	REVISION	DATE	BY			

STATE OF WASHINGTON — CLINT J. CAYWOOD — 38759 — STRUCTURAL ENGINEER — PROFESSIONAL ENGINEER

2/5/19

DATE

P.E. STAMP BOX

DATE

P.E. STAMP BOX

Washington State Department of Transportation

ATKINSON CONSTRUCTION / JACOBS

I-5
STEILACOOM-DUPONT RD TO THORNE LN
CORRIDOR IMPROVEMENTS
MP 120.01 TO MP 124.45
BERKELEY SB ON RAMP BRIDGE

FOOTING PLAN

PLAN REF NO BB103

SHEET 1283 OF 1456 SHEETS

NOTES:

1. APPLY MT. BAKER GRAY PIGMENTED SEALER TO ALL PERMANENTLY EXPOSED CONCRETE SURFACES TO 1'-0" MIN. BELOW FINISHED GROUND.
2. USE VARIABLE DEPTH RANDOM BOARD PATTERN AS INDICATED. ALL DIMENSIONS SHOWN ARE TO STRUCTURAL FACE OF CONCRETE. INCREASE THICKNESS AS REQUIRED FOR VARIABLE DEPTH RANDOM BOARD PATTERN.

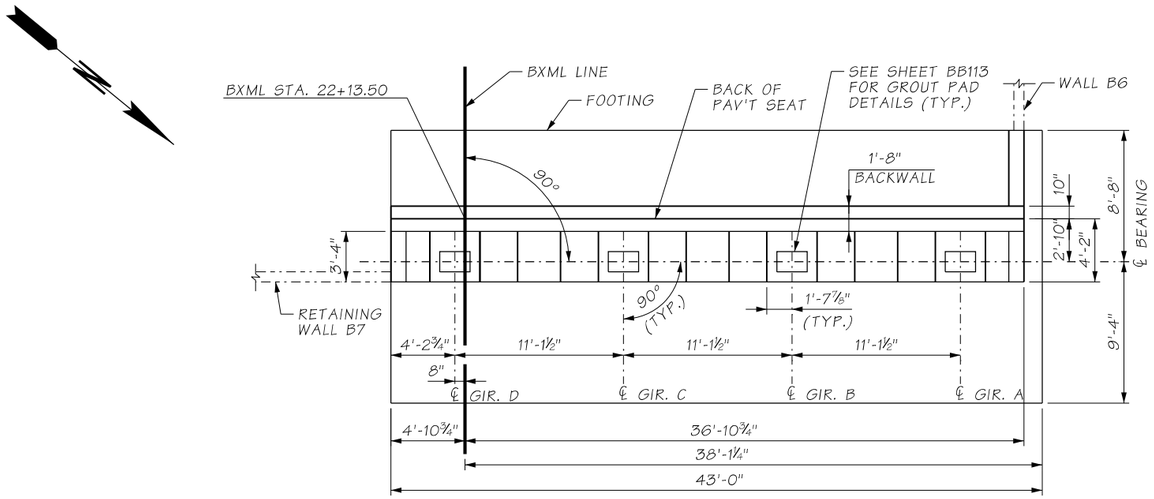

PLAN

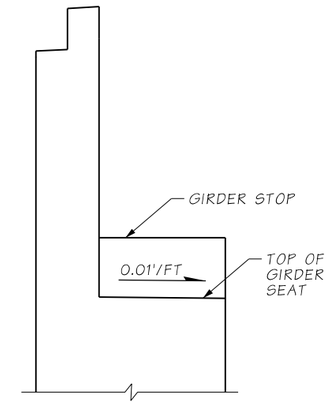

SECTION A

TOP OF CURTAIN WALL ELEVATIONS		
LOCATION	LEFT SIDE	RIGHT SIDE
ELEV. A	295.72	-
ELEV. B	296.03	295.19
ELEV. C	296.51	295.69
ELEV. D	296.68	295.85

TOP OF GROUT PAD ELEVATIONS	
GIRDER	ELEVATION
A	289.53
B	289.31
C	289.08
D	288.86

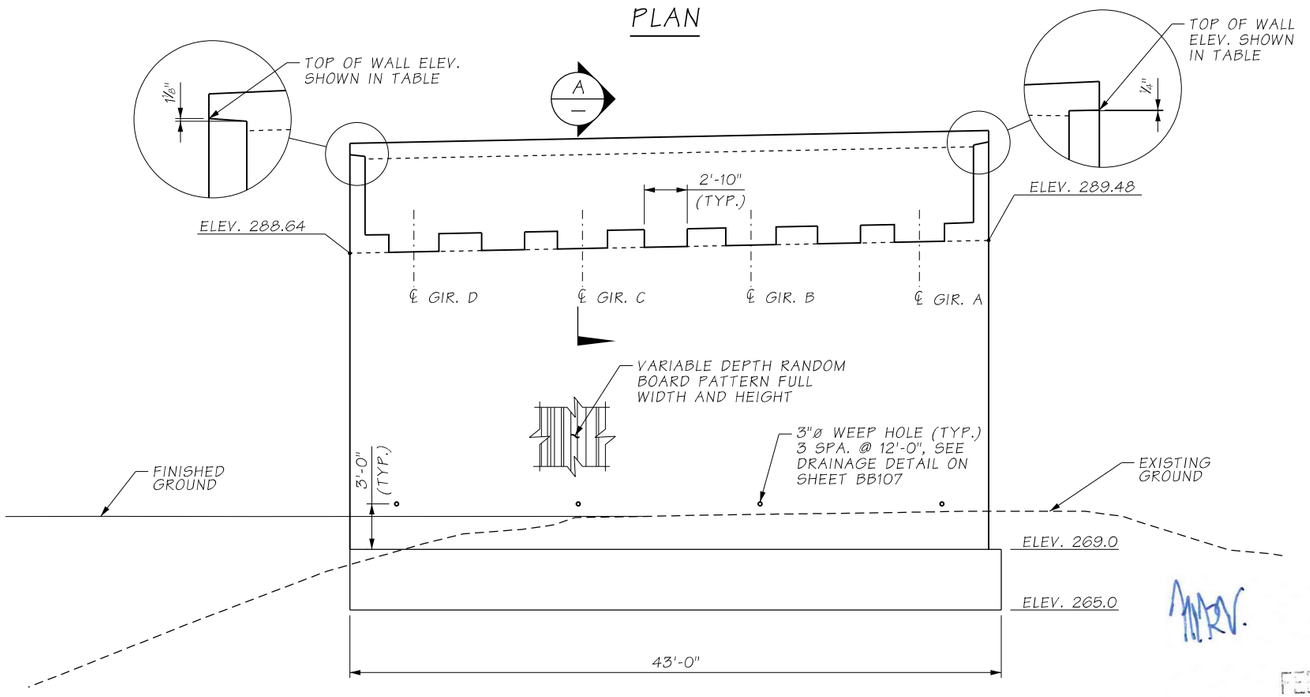

ELEVATION - FRONT

SHOWN LOOKING BACK ON STATION

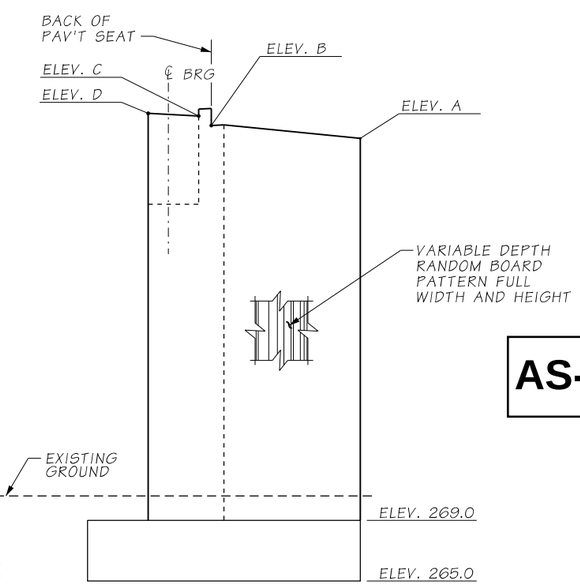

ELEVATION - SIDE

LEFT SIDE SHOWN

AS-BUILT

ATKINSON

FEB 05 2019

RELEASED FOR CONSTRUCTION

FILE NAME	c:\pwworking\jacobs_b&i\reiserrw\dms20633\PS_BB104.dgn						
TIME	1:30:13 PM				REGION NO. 10	STATE WASH	FED.AID PROJ.NO.
DATE	1/21/2019				JOB NUMBER		
PLOTTED BY	reiserrw						
DESIGNED BY	G. CALLAHAN						
ENTERED BY	R. REISER						
CHECKED BY	C. CAYWOOD	REV 0 - RELEASED FOR CONSTRUCTION	02/06/2019		CONTRACT NO. C8811		LOCATION NO.
PROJ. ENGR.	C. MEADE	REV A - FINAL REVIEW	12/18/2018				
REGIONAL ADM.	J. WYNANDS	REVISION	DATE	BY			

STATE OF WASHINGTON CLAY J. CAYWOOD 38759 STRUCTURAL ENGINEER PROFESSIONAL ENGINEER

2/5/19

DATE

P.E. STAMP BOX

DATE

P.E. STAMP BOX

Washington State Department of Transportation

ATKINSON CONSTRUCTION / JACOBS

I-5
STEILACOOM-DUPONT RD TO THORNE LN
CORRIDOR IMPROVEMENTS
MP 120.01 TO MP 124.45
BERKELEY SB ON RAMP BRIDGE

PIER 1
PLAN AND ELEVATION

PLAN REF NO BB104

SHEET 1284 OF 1456 SHEETS

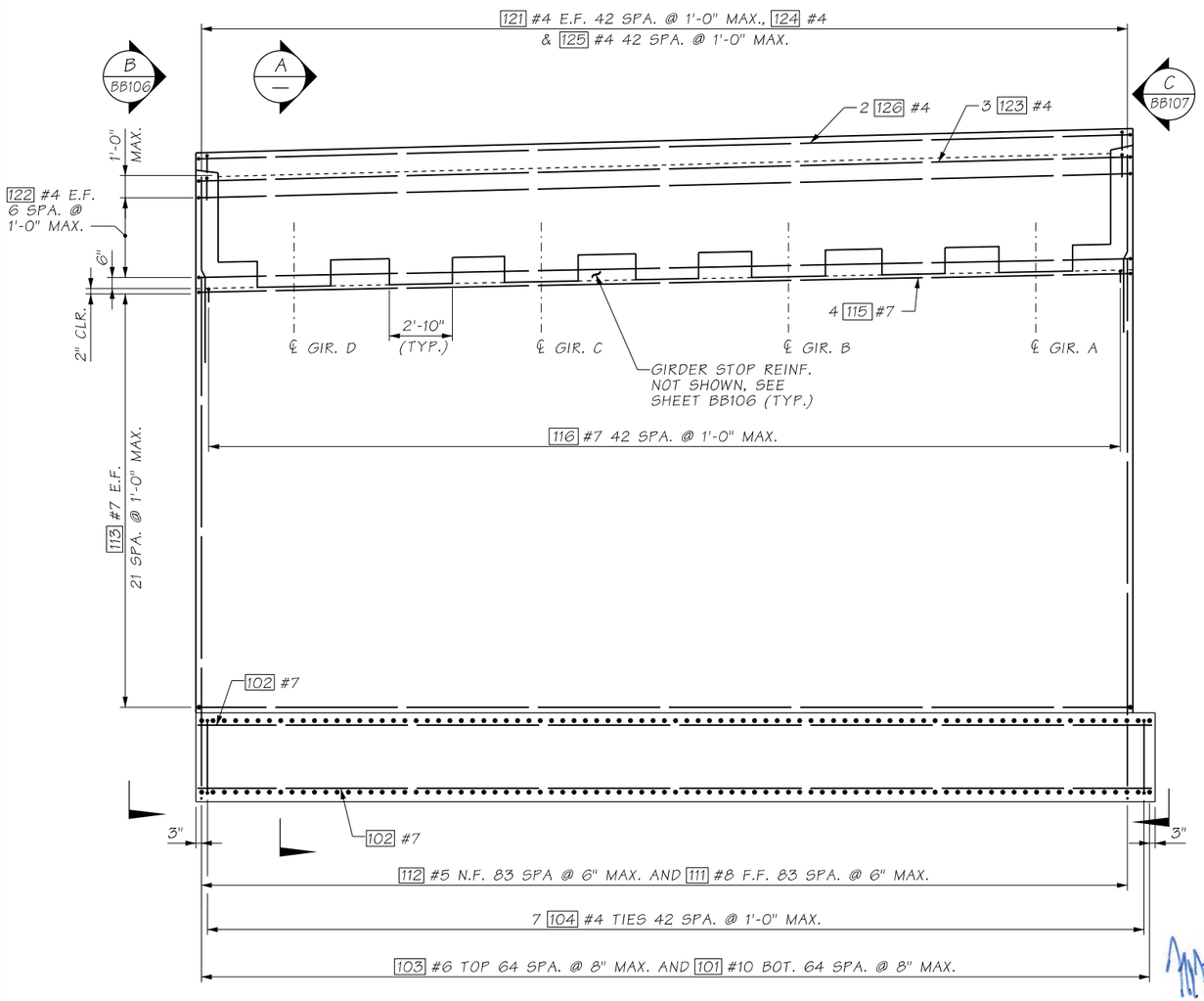

ELEVATION - FRONT

SHOWN LOOKING BACK ON STATION

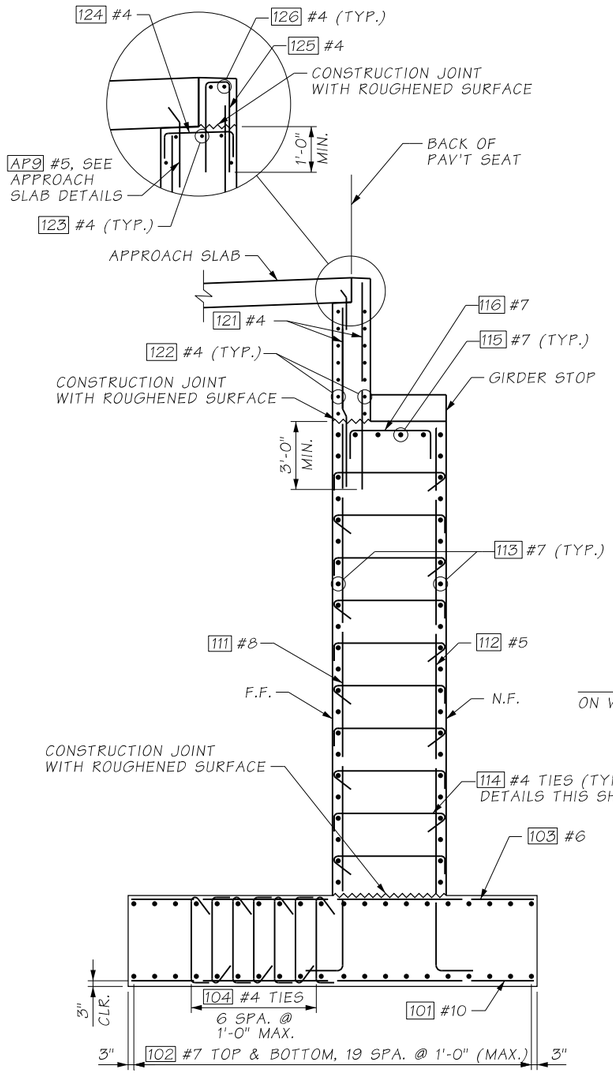

SECTION A

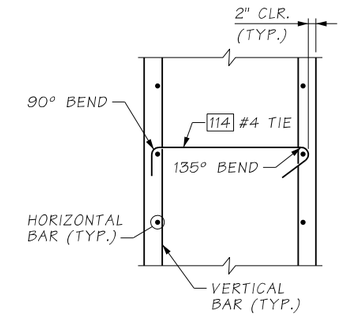

TIE BAR DETAIL

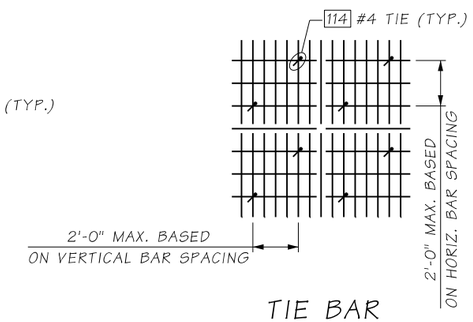

TIE BAR SPACING DETAIL

AS-BUILT

NOTES:

1. LAP SPLICES MAY BE ADDED AT CONTRACTORS OPTION. MINIMUM LAP SPLICE LENGTHS SHALL BE AS FOLLOWS, UNLESS NOTED OTHERWISE:
   - #4= 2'-9"
   - #5= 3'-6"
   - #6= 4'-0"
   - #7= 4'-9"
   - #8= 5'-6"
   - #9= 6'-9"
   - #10= 8'-3"

ATKINSON

FEB 05 2019

RELEASED FOR CONSTRUCTION

FILE NAME	c:\pwworking\jacobs_b&i\reiserrw\dms20633\PS_BB105.dgn						
TIME	1:36:39 PM				REGION NO. 10	STATE WASH	FED.AID PROJ.NO.
DATE	1/21/2019						
PLOTTED BY	reiserrw				JOB NUMBER		
DESIGNED BY	G. CALLAHAN						
ENTERED BY	R. REISER						
CHECKED BY	C. CAYWOOD	REV 0 - RELEASED FOR CONSTRUCTION	02/06/2019		CONTRACT NO. C8811		LOCATION NO.
PROJ. ENGR.	C. MEADE	REV A - FINAL REVIEW	12/18/2018				
REGIONAL ADM.	J. WYNANDS	REVISION	DATE	BY			

P.E. STAMP BOX — DATE 2/5/19

P.E. STAMP BOX — DATE

Washington State Department of Transportation

ATKINSON CONSTRUCTION / JACOBS

I-5
STEILACOOM-DUPONT RD TO THORNE LN
CORRIDOR IMPROVEMENTS
MP 120.01 TO MP 124.45
BERKELEY SB ON RAMP BRIDGE

PIER 1 SECTIONS AND DETAILS
(1 OF 3)

PLAN REF NO BB105

SHEET 1285 OF 1456 SHEETS

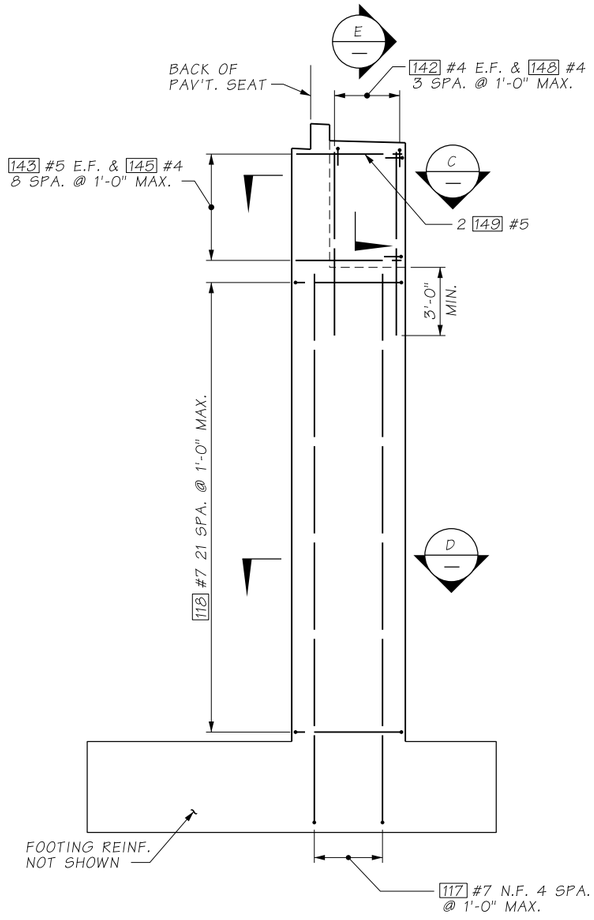

VIEW B / BB105
RIGHT SIDE

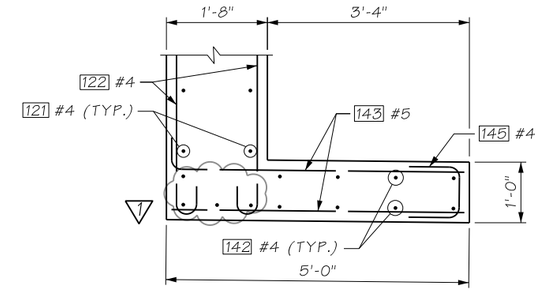

SECTION C

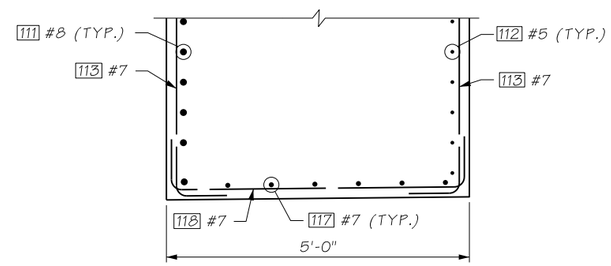

SECTION D

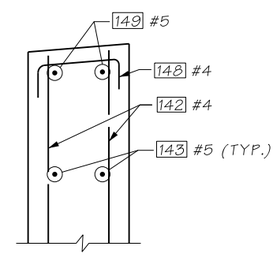

SECTION E

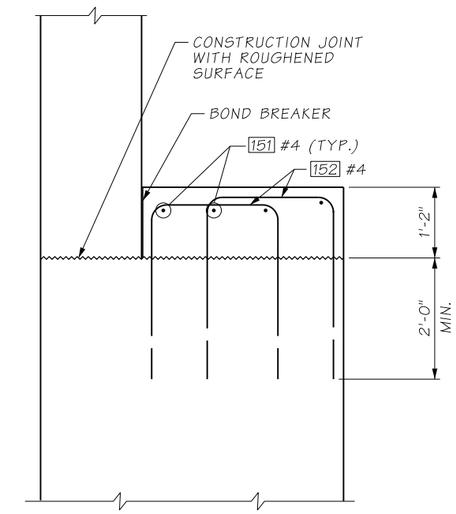

SECTION F

AS-BUILT

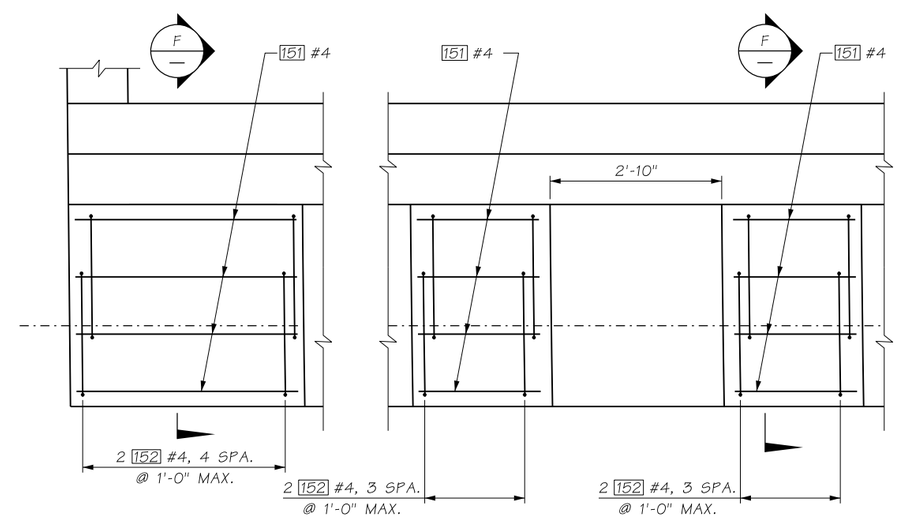

EXTERIOR INTERIOR

PLAN - GIRDER STOPS

ATKINSON
JAN 07 2020 KTW
RELEASED FOR CONSTRUCTION

FILE NAME	D:\ICS_workdir\43594\20633_1347\PS_BB106.dgn				REGION NO. 10	STATE WASH	FED.AID PROJ.NO.
TIME	8:02:55 AM						
DATE	12/30/2019						
PLOTTED BY	USLAS0-APP064$				JOB NUMBER		
DESIGNED BY	G. CALLAHAN						
ENTERED BY	R. REISER	REV 1 - RFI0121	01/02/2020				
CHECKED BY	C. CAYWOOD	REV 0 - RELEASED FOR CONSTRUCTION	02/06/2019		CONTRACT NO. C9133		LOCATION NO.
PROJ. ENGR.	C. MEADE	REV A - FINAL REVIEW	12/18/2018				
REGIONAL ADM.	J. WYNANDS	REVISION	DATE	BY			

CORY J. CAYWOOD — STATE OF WASHINGTON — 38133 — STRUCTURAL ENGINEER — PROFESSIONAL ENGINEER
12/30/19
DATE
P.E. STAMP BOX

DATE
P.E. STAMP BOX

Washington State
Department of Transportation

ATKINSON CONSTRUCTION / JACOBS

I-5
STEILACOOM-DUPONT RD TO THORNE LN
CORRIDOR IMPROVEMENTS
MP 120.01 TO MP 124.45
BERKELEY SB ON RAMP BRIDGE

PIER 1 SECTIONS AND DETAILS
(2 OF 3)

PLAN REF NO
BB106

SHEET 1286 OF 1456 SHEETS

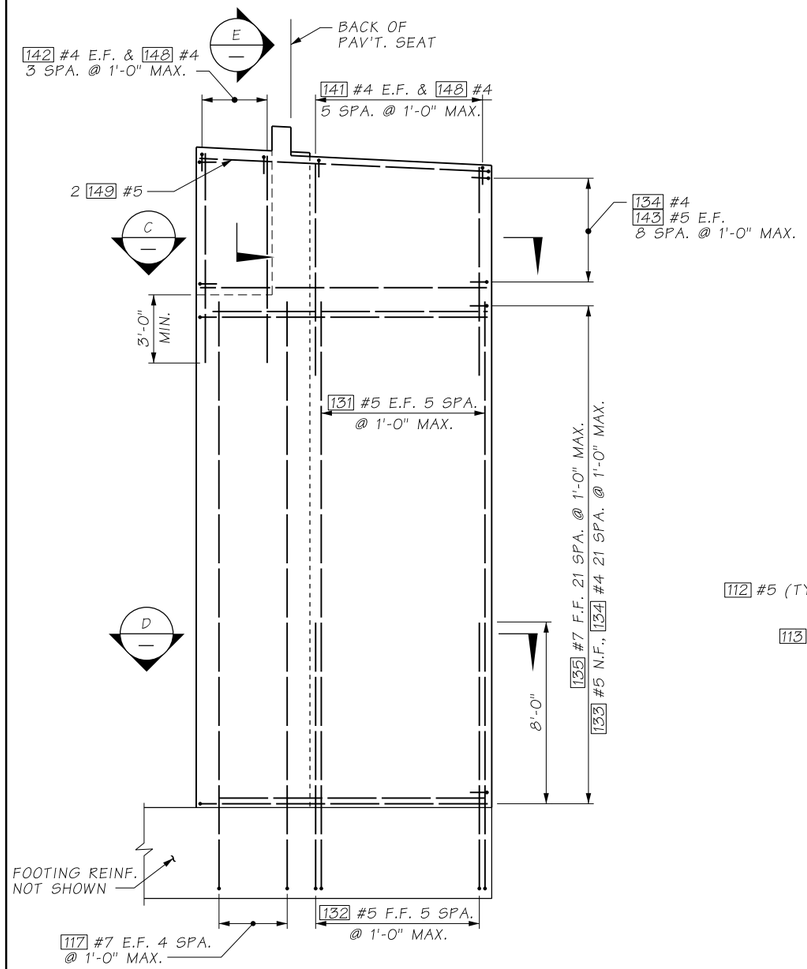

VIEW C / BB105
LEFT SIDE

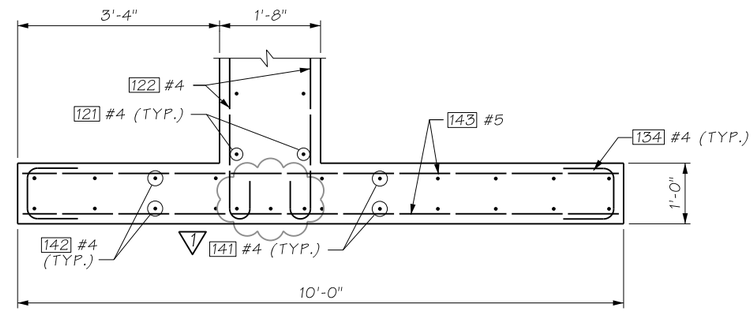

SECTION C

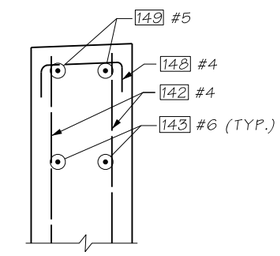

SECTION E

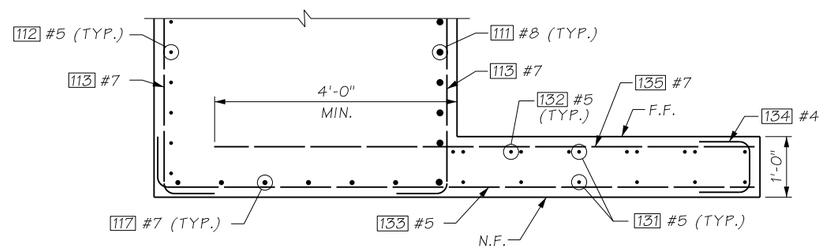

SECTION D

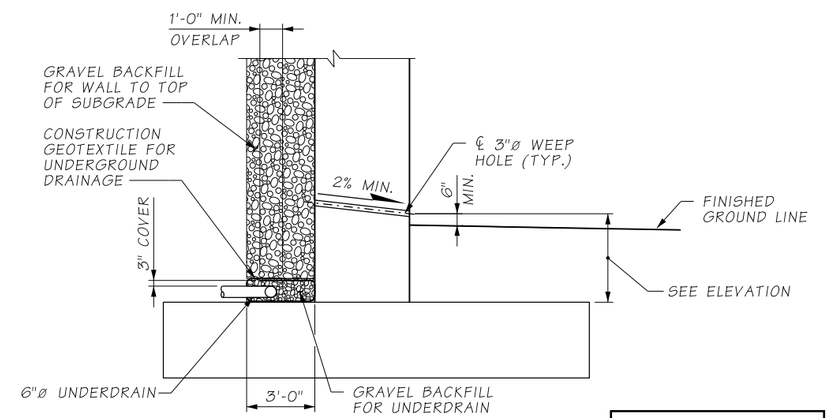

DRAINAGE DETAIL

AS-BUILT

ATKINSON
JAN 07 2020 KTW
RELEASED FOR CONSTRUCTION

FILE NAME	D:\ICS_workdir\43594\20633_1348\PS_BB107.dgn				REGION NO. 10	STATE WASH	FED.AID PROJ.NO.
TIME	8:02:55 AM						
DATE	12/30/2019						
PLOTTED BY	USLAS0-APP064$				JOB NUMBER		
DESIGNED BY	G. CALLAHAN						
ENTERED BY	R. REISER	REV 1 - RFI0121	01/02/2020		CONTRACT NO. C9133	LOCATION NO.	
CHECKED BY	C. CAYWOOD	REV 0 - RELEASED FOR CONSTRUCTION	02/06/2019				
PROJ. ENGR.	C. MEADE	REV A - FINAL REVIEW	12/18/2018				
REGIONAL ADM.	J. WYNANDS	REVISION	DATE	BY			

CORY J. CAYWOOD, STATE OF WASHINGTON, 38759, STRUCTURAL ENGINEER, PROFESSIONAL ENGINEER
12/30/19
DATE
P.E. STAMP BOX

P.E. STAMP BOX
DATE

Washington State Department of Transportation

ATKINSON / JACOBS CONSTRUCTION

I-5
STEILACOOM-DUPONT RD TO THORNE LN
CORRIDOR IMPROVEMENTS
MP 120.01 TO MP 124.45
BERKELEY SB ON RAMP BRIDGE

PIER 1 SECTIONS AND DETAILS
(3 OF 3)

PLAN REF NO BB107

SHEET 1287 OF 1456 SHEETS

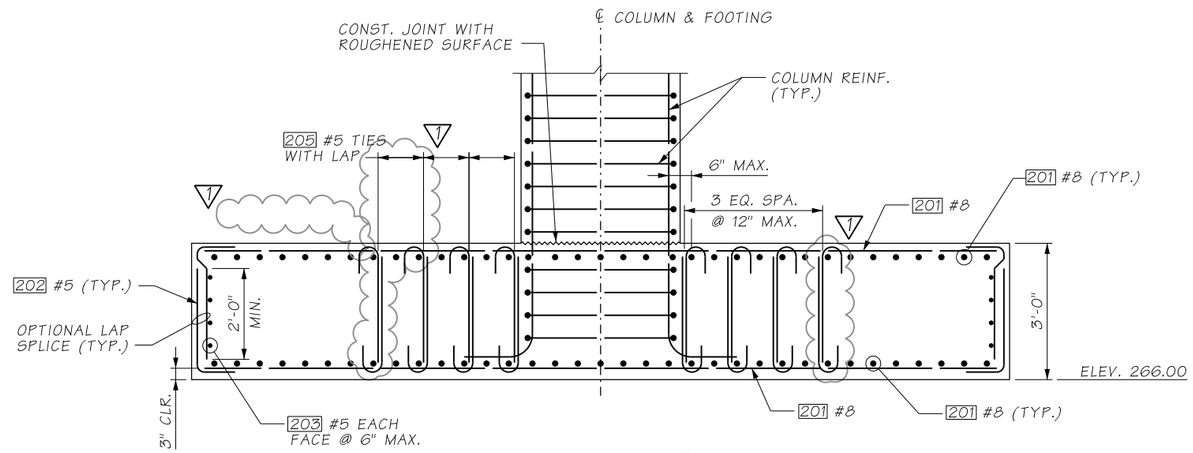

SECTION A

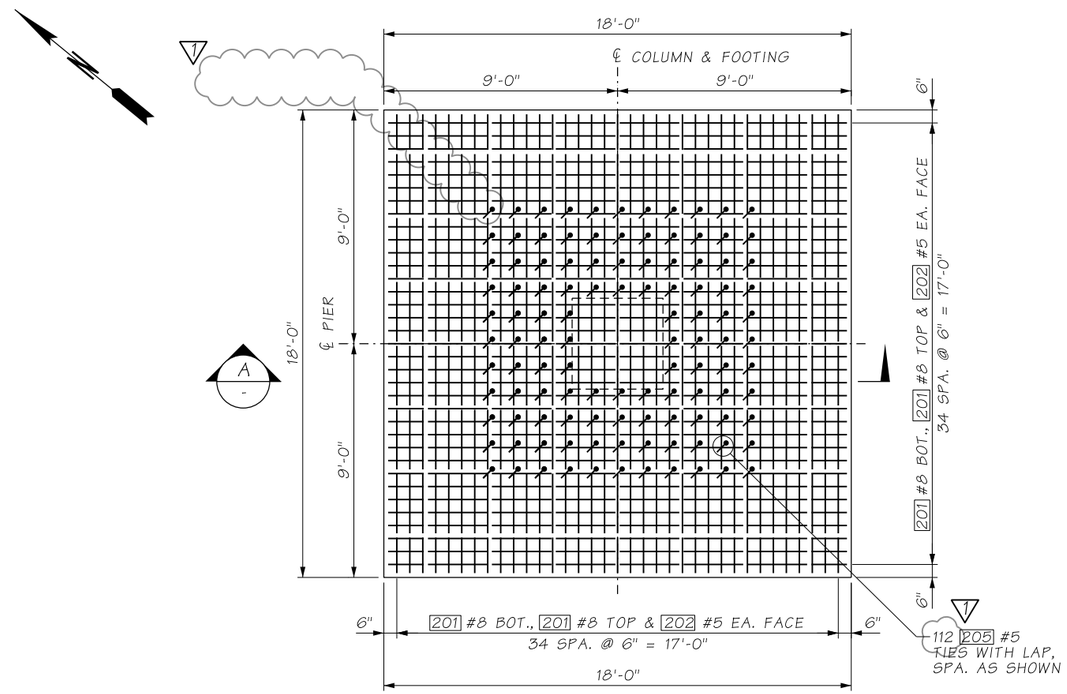

PLAN
FOOTINGS A & B

AS-BUILT

ATKINSON
JAN 07 2020 KTW
RELEASED FOR CONSTRUCTION

FILE NAME	D:\ICS_workdir\43594\20633_1460\PS_BB108.dgn						
TIME	8:02:55 AM				REGION NO. 10	STATE WASH	FED.AID PROJ.NO.
DATE	12/30/2019						
PLOTTED BY	USLAS0-APP064$				JOB NUMBER		
DESIGNED BY	A. FONG						
ENTERED BY	R. REISER	REV 1 - RFI0092	01/02/2020				
CHECKED BY	G. CALLAHAN	REV 0 - RELEASED FOR CONSTRUCTION	02/06/2019		CONTRACT NO. C9133		LOCATION NO.
PROJ. ENGR.	C. MEADE	REV A - FINAL REVIEW	12/18/2018				
REGIONAL ADM.	J. WYNANDS	REVISION	DATE	BY			

CORY J. CAYWOOD, STATE OF WASHINGTON, 38755, PROFESSIONAL ENGINEER — 12/30/19
P.E. STAMP BOX — DATE

P.E. STAMP BOX — DATE

Washington State Department of Transportation

ATKINSON CONSTRUCTION / JACOBS

I-5
STEILACOOM-DUPONT RD TO THORNE LN
CORRIDOR IMPROVEMENTS
MP 120.01 TO MP 124.45
BERKELEY SB ON RAMP BRIDGE

PIER 2 FOOTINGS

PLAN REF NO BB108

SHEET 1288 OF 1456 SHEETS

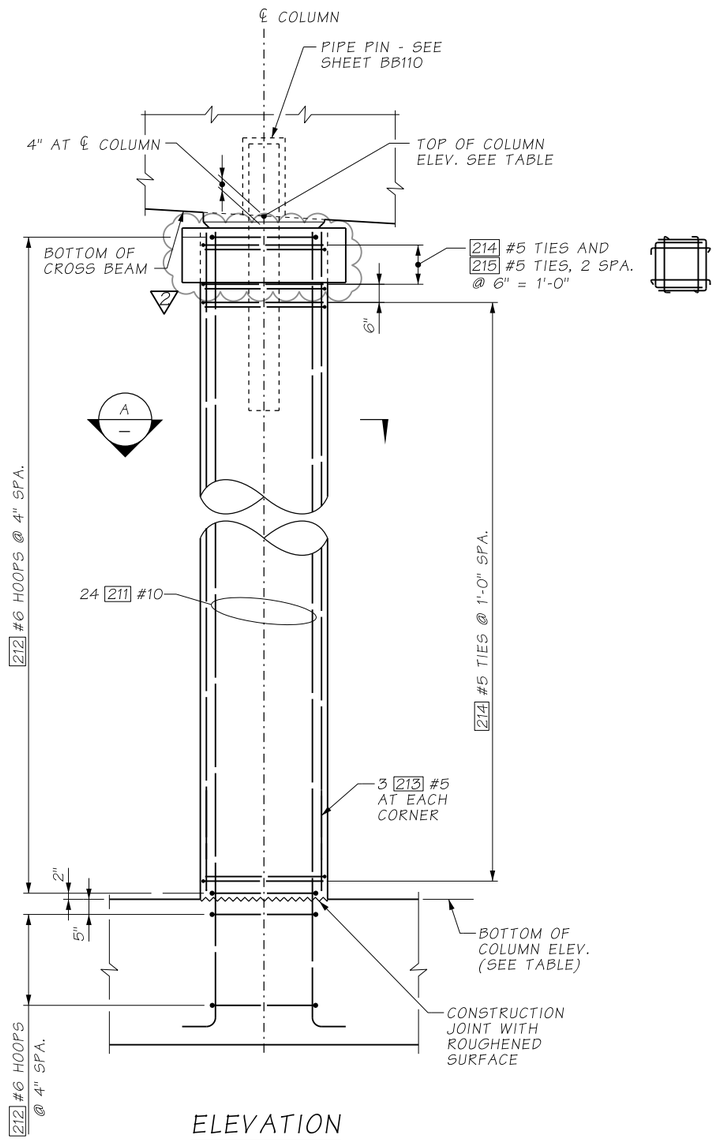

ELEVATION

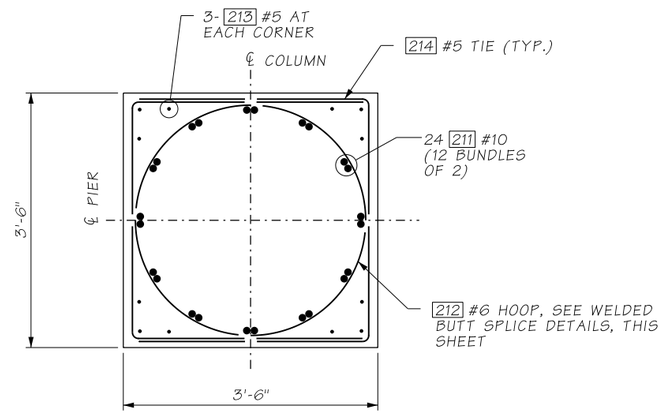

SECTION A

AS-BUILT

NOTES:

1. NO WELDING OF HOOPS IS PERMITTED AFTER THE COLUMN CAGE IS ASSEMBLED. HOOPS SHALL BE SHOP WELDED AND THEN ASSEMBLED AROUND THE COLUMN LONGITUDINAL STEEL.
2. ALL HOOPS SHALL BE WELDED IN ACCORDANCE WITH THE WELDED BUTT SPLICE DETAILS ON THIS SHEET.
3. STAGGER WELDED BUTT SPLICES AROUND THE COLUMN A MINIMUM DISTANCE OF ⅓ OF THE HOOP CIRCUMFERENCE.

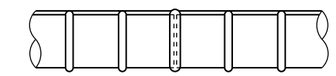

RESISTANCE BUTT JOINT DETAIL

SEE SPECIAL PROVISIONS FOR APPROVAL AND TESTING REQUIREMENTS.

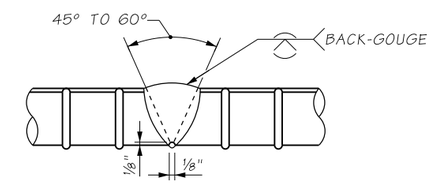

SINGLE V-GROOVE WELD

AWS D1.4 FIGURE 3.2(A)

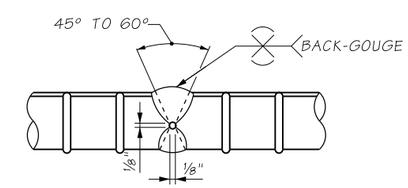

DOUBLE V-GROOVE WELD

AWS D1.4 FIGURE 3.2(B)

MANUAL DIRECT BUTT JOINT DETAILS

ALL BACKING SHALL BE REMOVED. SEE SPECIAL PROVISIONS FOR RT TESTING FREQUENCY.

WELDED BUTT SPLICE DETAILS

ATKINSON
JAN 07 2021 KTW
RELEASED FOR CONSTRUCTION

COLUMN GEOMETRY

PIER NO.	COLUMN	TOP OF COL. ELEV. (FT)	BOT. OF COL. ELEV. (FT)
2	A	291.61	269.00
	B	290.95	269.00

FILE NAME	D:\ICS_workdir\73639\20633_1461\PS_BB109.dgn						
TIME	1:28:26 PM				REGION NO.	STATE	FED.AID PROJ.NO.
DATE	1/6/2021				10	WASH	
PLOTTED BY	USLAS0-APP064$				JOB NUMBER		
DESIGNED BY	K. BICHICH	REV 2 - RFI0519	01/07/2021				
ENTERED BY	R. REISER	REV 1 - RFI0045	01/02/2020				
CHECKED BY	A. FONG	REV 0 - RELEASED FOR CONSTRUCTION	02/06/2019		CONTRACT NO.		LOCATION NO.
PROJ. ENGR.	C. MEADE	REV A - FINAL REVIEW	12/18/2018		C9133		
REGIONAL ADM.	J. WYNANDS	REVISION	DATE	BY			

CORY J. CAYWOOD, STATE OF WASHINGTON, 38758, STRUCTURAL ENGINEER, PROFESSIONAL ENGINEER
01/07/21
DATE
P.E. STAMP BOX

DATE
P.E. STAMP BOX

Washington State Department of Transportation

ATKINSON CONSTRUCTION / JACOBS

I-5
STEILACOOM-DUPONT RD TO THORNE LN CORRIDOR IMPROVEMENTS
MP 120.01 TO MP 124.45
BERKELEY SB ON RAMP BRIDGE

PIER 2
COLUMN DETAILS

PLAN REF NO
BB109

SHEET 1289 OF 1456 SHEETS

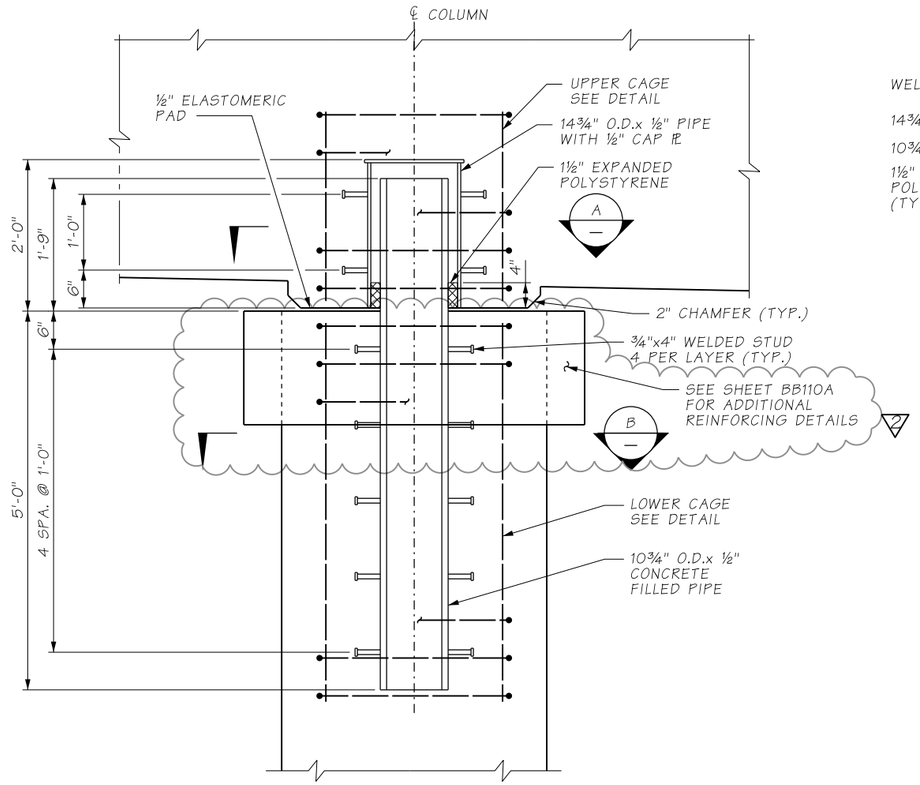

COLUMN PIPE PIN DETAIL

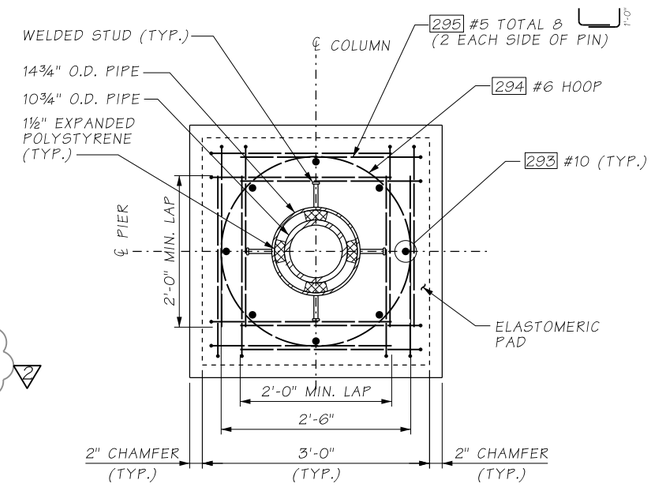

SECTION A

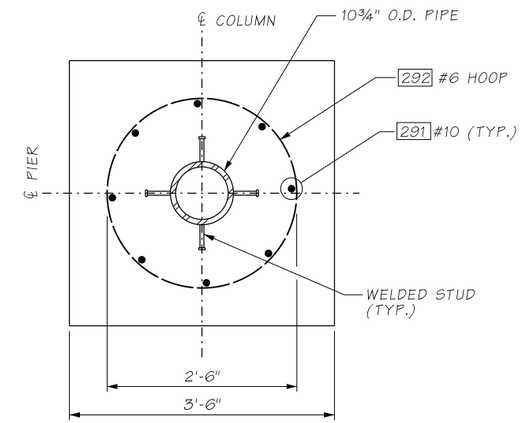

SECTION B

NOTES:

1. 10¾" O.D. STEEL PIPE SHALL BE ASTM A106 GR. C. 14¾" O.D. STEEL PIPE SHALL BE ASTM A36.
2. STEEL PIPES SHALL BE GALVANIZED AFTER FABRICATION IN ACCORDANCE WITH AASHTO M 232.

AS-BUILT

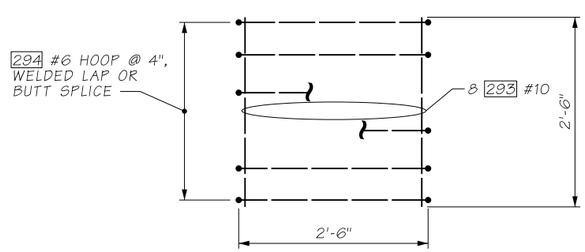

UPPER CAGE

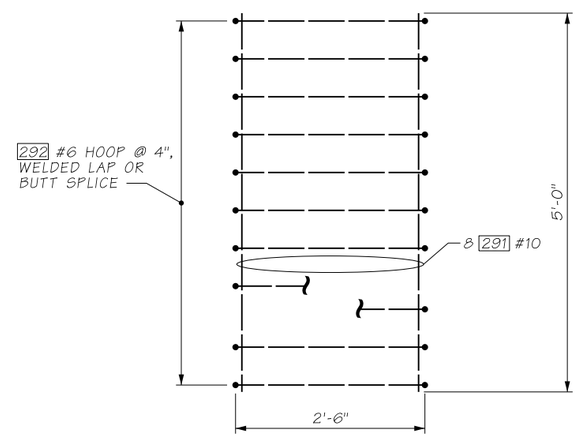

LOWER CAGE

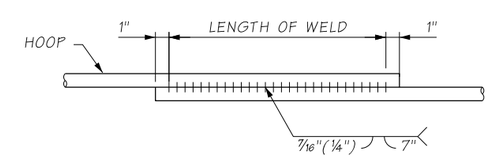

WELDED LAP SPLICE DETAIL

WELDING SHALL MEET THE REQUIREMENTS OF STD. SPEC. 6-02.3(24)E.

ATKINSON
JAN 07 2021 KTW
RELEASED FOR CONSTRUCTION

FILE NAME	D:\ICS_workdir\73683\20633_1488\PS_BB110.dgn						
TIME	8:59:29 AM				REGION NO. 10	STATE WASH	FED.AID PROJ.NO.
DATE	1/7/2021						
PLOTTED BY	USLAS0-APP064$						
DESIGNED BY	K. BICHICH	REV 2 - RFI0519	01/07/2021		JOB NUMBER		
ENTERED BY	R. REISER	REV 1 - RFI0120	01/02/2020				
CHECKED BY	A. FONG	REV 0 - RELEASED FOR CONSTRUCTION	02/06/2019		CONTRACT NO. C9133		LOCATION NO.
PROJ. ENGR.	C. MEADE	REV A - FINAL REVIEW	12/18/2018				
REGIONAL ADM.	J. WYNANDS	REVISION	DATE	BY			

CORY J. CAYWOOD, STATE OF WASHINGTON, 38155, STRUCTURAL ENGINEER, PROFESSIONAL ENGINEER
01/07/21
DATE
P.E. STAMP BOX

P.E. STAMP BOX
DATE

Washington State Department of Transportation

ATKINSON / JACOBS CONSTRUCTION

I-5
STEILACOOM-DUPONT RD TO THORNE LN CORRIDOR IMPROVEMENTS
MP 120.01 TO MP 124.45
BERKELEY SB ON RAMP BRIDGE

PIER 2 COLUMN PINS (1 OF 2)

PLAN REF NO BB110

SHEET 1290 OF 1456 SHEETS

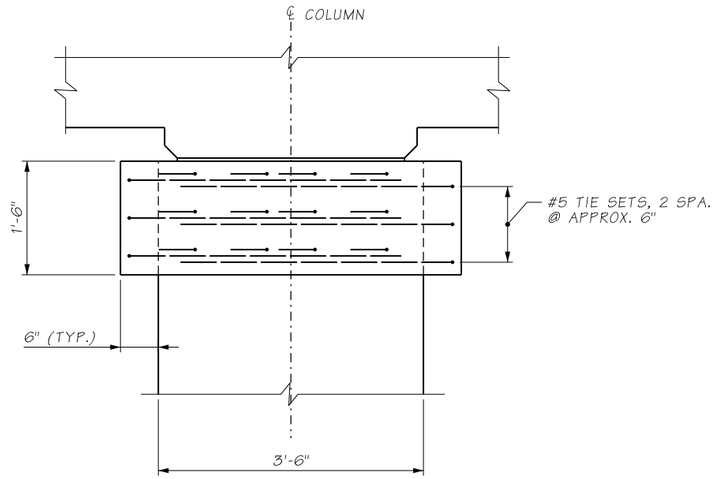

VIEW A

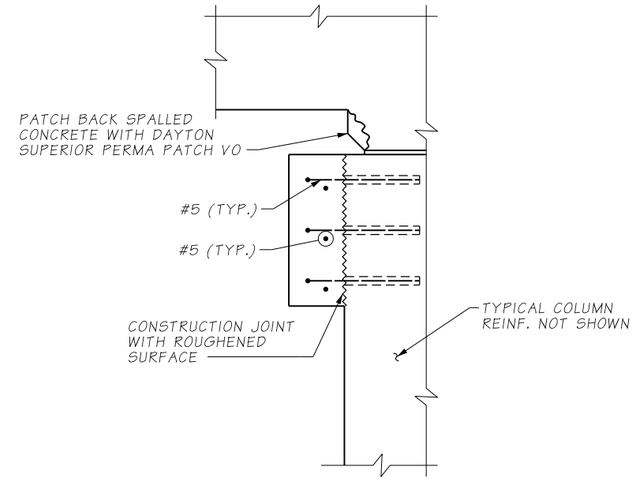

SECTION B

NOTES:

1. REMOVE ANY REMAINING LOOSE OR UNSOUND CONCRETE FROM THE TOP OF COLUMNS OR BOTTOM OF CAP BEAMS ABOVE COLUMNS.
2. REMOVE ANY CONCRETE BETWEEN THE TOP OF COLUMNS AND BOTTOM OF CAP BEAMS TO PREVENT FUTURE SPALLING.
3. ROUGHEN REMAINING PORTIONS OF COLUMN SURFACES WHICH WILL HAVE CONCRETE PLACED AGAINST IT.
4. FOR ANY CAP BEAM SPALLING ABOVE THE COLUMNS LARGER THAN 2 SQUARE INCHES, PATCH BACK WITH DAYTON SUPERIOR PERMA PATCH VO. PATCHING SHALL BE DONE IN ACCORDANCE WITH MANUFACTURER'S INSTRUCTIONS. EDGES MAY BE FEATHERED TO AVOID SAW CUTTING AND ADDITIONAL CONCRETE REMOVAL.
5. INSTALL REINFORCING FOR COLUMN CONCRETE, FORM AND PLACE CONCRETE AROUND TOP OF COLUMNS. DRILLED HOLES FOR REINFORCING SHALL NOT BE CORE DRILLED.

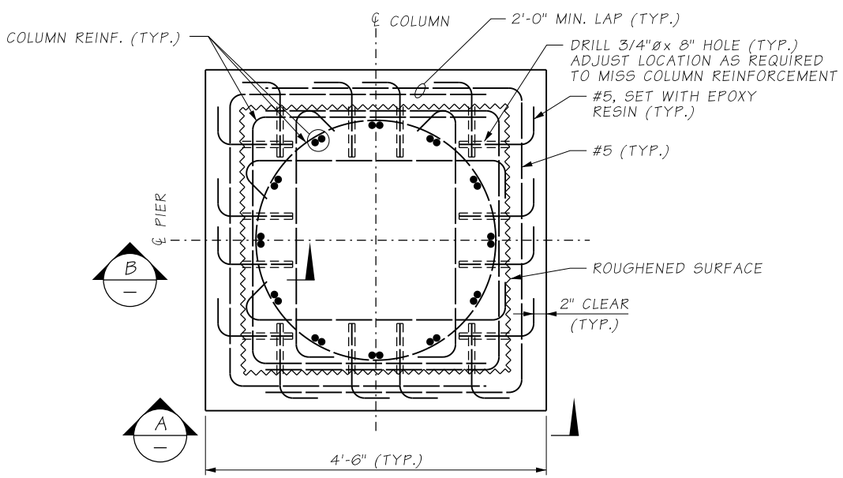

PLAN AT TOP OF COLUMNS - SPALL REPAIR

SEE NOTES FOR ADDITIONAL REQUIREMENTS

AS-BUILT

ATKINSON
JAN 07 2021 KTW
RELEASED FOR CONSTRUCTION

FILE NAME	D:\ICS_workdir\73684\20633_2526\PS_BB110A.dgn						
TIME	9:07:29 AM				REGION NO. 10	STATE WASH	FED.AID PROJ.NO.
DATE	1/7/2021						
PLOTTED BY	USLAS0-APP064$				JOB NUMBER		
DESIGNED BY	K. YOUNG						
ENTERED BY	R. REISER						
CHECKED BY	C. CAYWOOD				CONTRACT NO. C9133		LOCATION NO.
PROJ. ENGR.	C. MEADE	REV 0 - RFI0519	01/07/2021				
REGIONAL ADM.	J. WYNANDS	REVISION	DATE	BY			

CORY J. CAYWOOD, STATE OF WASHINGTON, 38159, STRUCTURAL ENGINEER, PROFESSIONAL ENGINEER
01/07/21
DATE
P.E. STAMP BOX

DATE
P.E. STAMP BOX

Washington State Department of Transportation

ATKINSON CONSTRUCTION / JACOBS

I-5
STEILACOOM-DUPONT RD TO THORNE LN
CORRIDOR IMPROVEMENTS
MP 120.01 TO MP 124.45
BERKELEY SB ON RAMP BRIDGE

PIER 2 COLUMN PINS
(2 OF 2)

PLAN REF NO BB110A

SHEET 1291 OF 1456 SHEETS

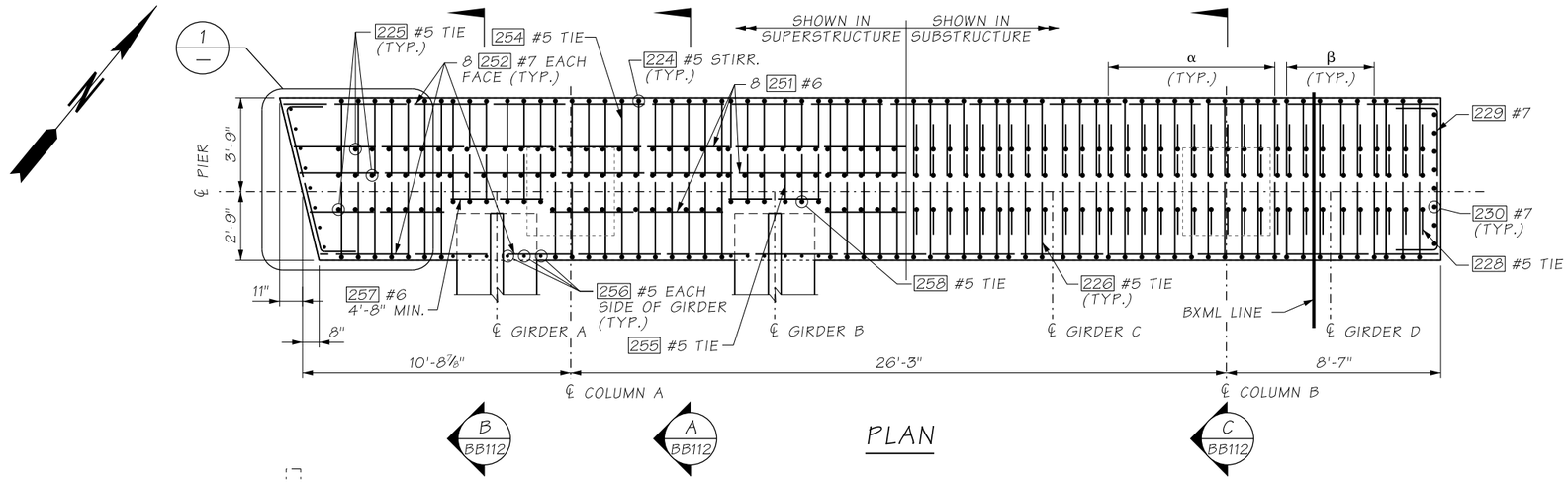

PLAN

NOTES:

1. MINIMUM LAP SPLICES ARE AS FOLLOWS, UNLESS NOTED OTHERWISE:
   #5= 2'-0"
   #6= 2'-6"
   #7= 2'-10"
   #8= 3'-2"
   #9= 3'-8"
   #10= 6'-9"

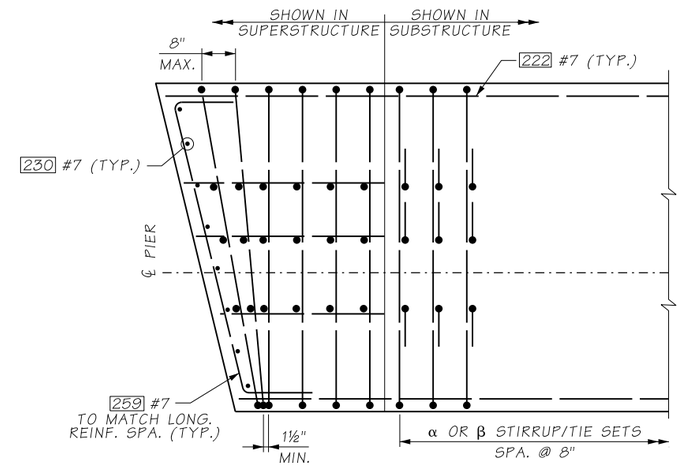

DETAIL 1

AS-BUILT

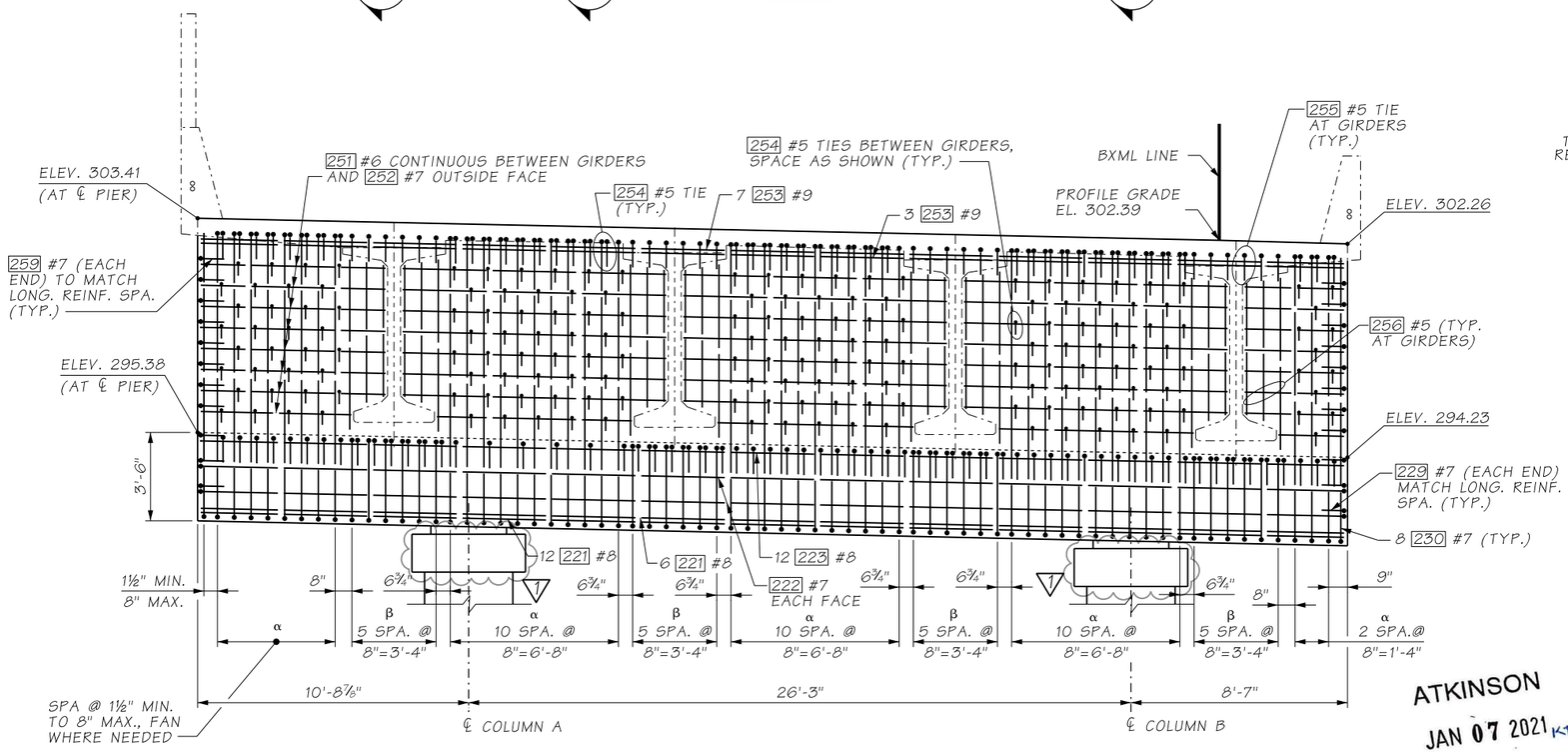

ELEVATION

DECK ELEVATIONS AND DIMENSIONS ARE MEASURED AT ℄ OF PIER

ATKINSON
JAN 07 2021 KTW
RELEASED FOR CONSTRUCTION

STIRRUP / TIE SETS		
SET	STIRRUPS/TIES	NOTE
α	3 224 #5 STIRRUP 225 #5 TIE 226 #5 TIE	BETWEEN/OUTSIDE GIRDERS
β	2 225 #5 TIE 226 #5 TIE 227 #5 STIRRUP 228 #5 TIE	UNDER GIRDERS

FILE NAME	D:\ICS_workdir\73639\20633_1209\PS_BB111.dgn				REGION NO.	STATE	FED.AID PROJ.NO.
TIME	1:28:38 PM				10	WASH	
DATE	1/6/2021						
PLOTTED BY	USLAS0-APP064$				JOB NUMBER		
DESIGNED BY	T. FU						
ENTERED BY	R. REISER	REV 1 - RFI0519	01/07/2021				
CHECKED BY	G. CALLAHAN	REV 0 - RELEASED FOR CONSTRUCTION	02/06/2019		CONTRACT NO.		LOCATION NO.
PROJ. ENGR.	C. MEADE	REV A - FINAL REVIEW	12/18/2018		C9133		
REGIONAL ADM.	J. WYNANDS	REVISION	DATE	BY			

CORY J. CAYWOOD, STATE OF WASHINGTON, 38139, STRUCTURAL ENGINEER, PROFESSIONAL ENGINEER
01/07/21
DATE
P.E. STAMP BOX

DATE
P.E. STAMP BOX

Washington State Department of Transportation

ATKINSON CONSTRUCTION / JACOBS

I-5
STEILACOOM-DUPONT RD TO THORNE LN
CORRIDOR IMPROVEMENTS
MP 120.01 TO MP 124.45
BERKELEY SB ON RAMP BRIDGE

PIER 2 CROSS BEAM
PLAN AND ELEVATION

PLAN REF NO
BB111

SHEET 1292 OF 1456 SHEETS

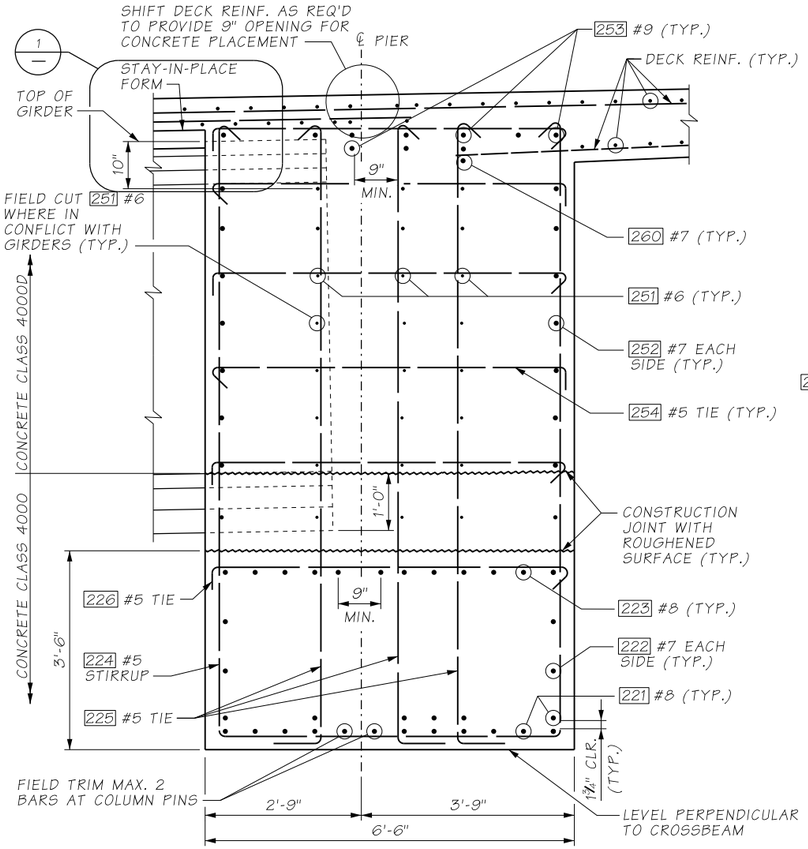

SECTION A / BB111
BETWEEN GIRDERS

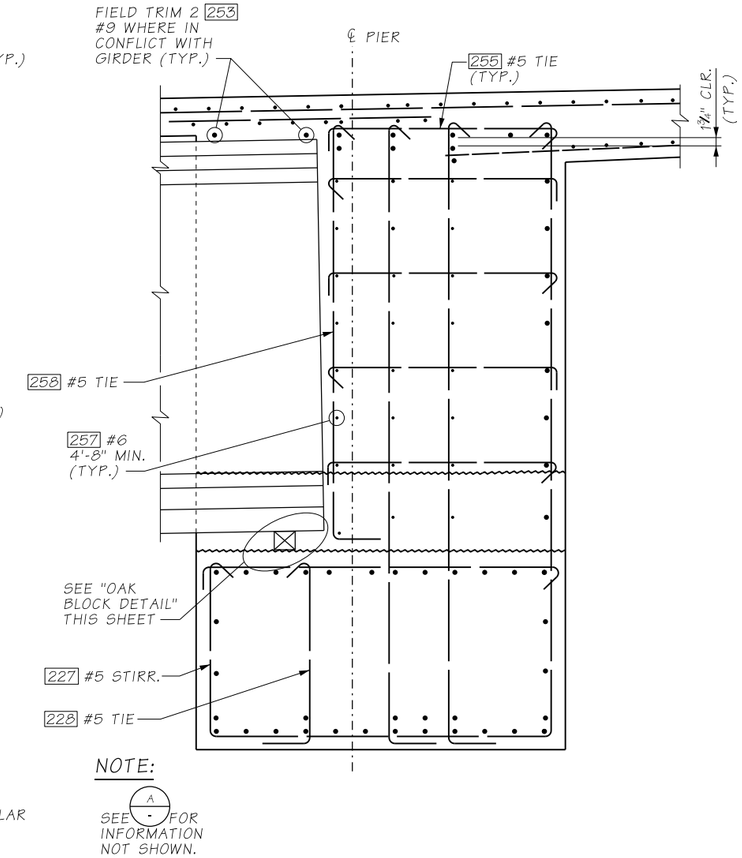

NOTE:

SEE A - FOR INFORMATION NOT SHOWN.

SECTION B / BB111
AT GIRDERS

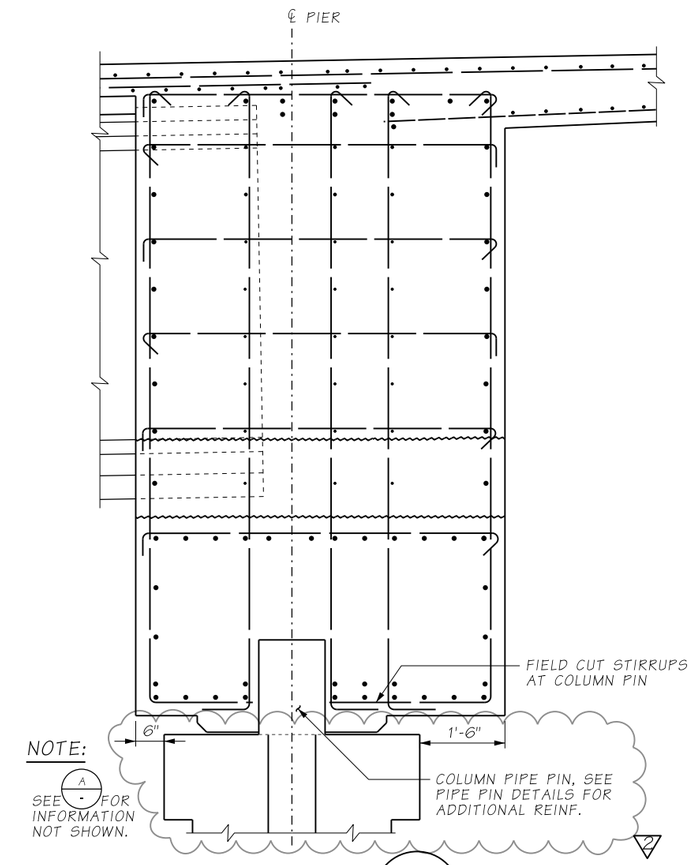

NOTE:

SEE A - FOR INFORMATION NOT SHOWN.

SECTION C / BB111
AT COLUMNS (BETWEEN GIRDERS SHOWN, AT GIRDERS SIMILAR)

AS-BUILT

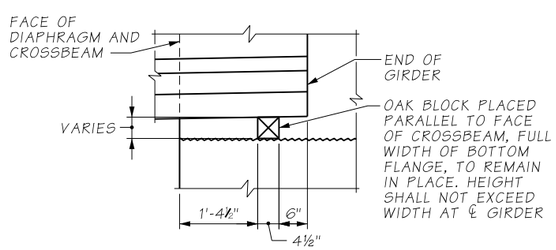

OAK BLOCK DETAIL

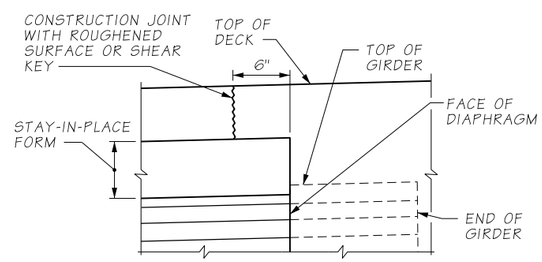

DETAIL 1
REINFORCING NOT SHOWN FOR CLARITY

TOP OF OAK BLOCK ELEVATIONS	
GIRDER	BACK STATION
A	295.53
B	295.25
C	294.97
D	294.69

NOTES:

1. GIRDERS SHALL BE HELD RIGIDLY IN PLACE UNTIL AFTER DIAPHRAGMS ARE PLACED.
2. CUT/RELEASE GIRDER TEMPORARY STRANDS BEFORE CASTING DIAPHRAGM AND BRIDGE DECK. SEE TEMPORARY STRAND CUTTING SEQUENCE.
3. EXTENDED STRANDS AND GIRDER REINFORCING NOT SHOWN FOR CLARITY.
4. FOR CONCRETE PLACEMENT PROCEDURE SEE "SUPERSTRUCTURE CONSTRUCTION SEQUENCE" SHEET.

ATKINSON
JAN 07 2021 KTW
RELEASED FOR CONSTRUCTION

FILE NAME	D:\ICS_workdir\73639\20633_1489\PS_BB112.dgn					
TIME	1:28:27 PM				REGION NO. 10	STATE WASH	FED.AID PROJ.NO.
DATE	1/6/2021					
PLOTTED BY	USLAS0-APP064$				JOB NUMBER	
DESIGNED BY	T. FU	REV 2 - RFI0519	01/07/2021			
ENTERED BY	R. REISER	REV 1 - RFI110	05/29/2019			
CHECKED BY	G. CALLAHAN	REV 0 - RELEASED FOR CONSTRUCTION	02/06/2019		CONTRACT NO. C9133	LOCATION NO.
PROJ. ENGR.	C. MEADE	REV A - FINAL REVIEW	12/18/2018			
REGIONAL ADM.	J. WYNANDS	REVISION	DATE	BY		

CORT J. CAYWOOD — STATE OF WASHINGTON — 38175 — STRUCTURAL ENGINEER — PROFESSIONAL ENGINEER
01/07/21
DATE
P.E. STAMP BOX

DATE
P.E. STAMP BOX

Washington State Department of Transportation

ATKINSON / JACOBS CONSTRUCTION

I-5
STEILACOOM-DUPONT RD TO THORNE LN CORRIDOR IMPROVEMENTS
MP 120.01 TO MP 124.45
BERKELEY SB ON RAMP

PIER 2 CROSS BEAM DETAILS

PLAN REF NO BB112

SHEET 1293 OF 1456 SHEETS

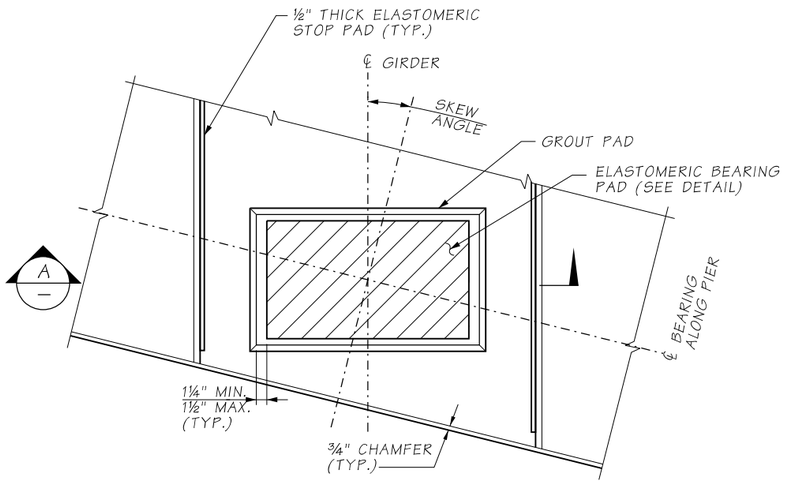

GROUT PAD DETAIL

GIRDER NOT SHOWN FOR CLARITY

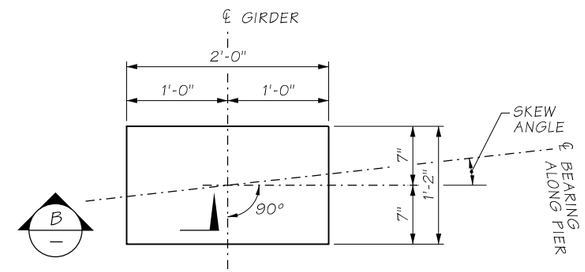

ELASTOMERIC BEARING PAD PIER

LAMINATED ELASTOMERIC BEARING PAD

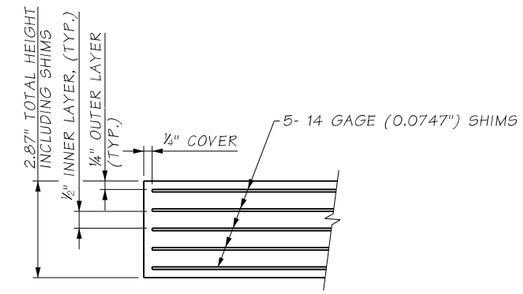

SECTION B

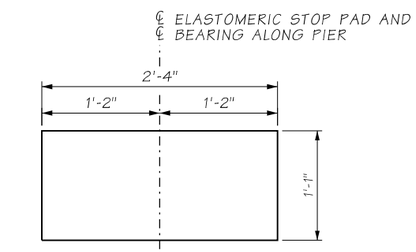

ELASTOMERIC STOP PAD

SHEAR MODULUS= 165 PSI

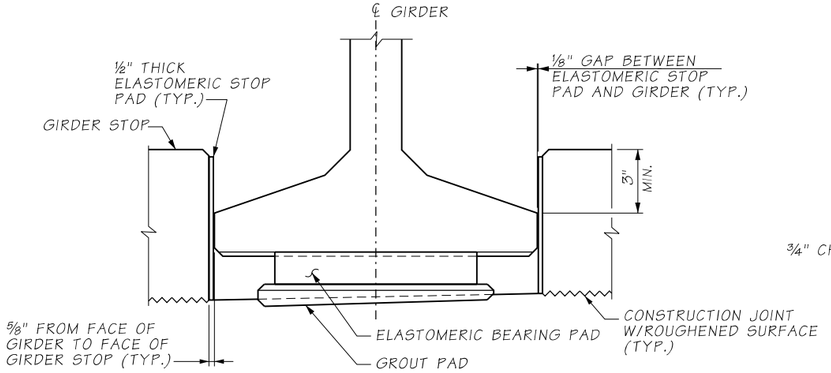

SECTION A

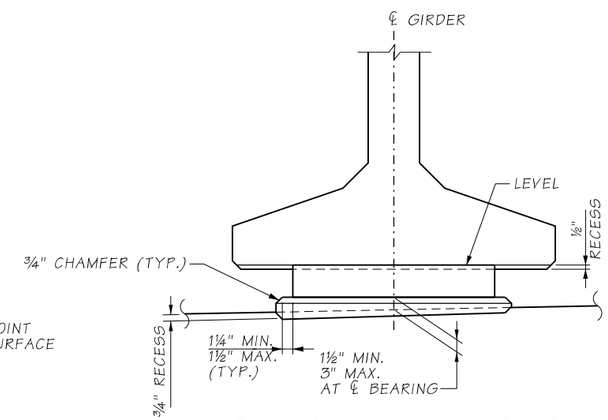

GROUT PAD ELEVATION

NOTES:

1. GIRDER STOPS SHALL BE CONSTRUCTED AFTER GIRDER PLACEMENT.
2. THE ELASTOMERIC STOP PADS SHALL BE BONDED TO GIRDER STOPS WITH APPROVED ADHESIVE.

MKV. ATKINSON

FEB 05 2019

RELEASED FOR CONSTRUCTION

AS-BUILT

BEARING DESIGN TABLE
AASHTO METHOD B DESIGN / SERVICE - I LIMIT STATE

	PIER 1
DEAD LOAD (DL) REACTION	283 KIPS
LIVE LOAD REACTION (W/O IMPACT)	118 KIPS
UNLOADED HEIGHT	2.87 IN
LOADED HEIGHT (DL)	2.84 IN
SHEAR MODULUS	165 PSI

FILE NAME	c:\pwworking\jacobs_b&i\reiserrw\dms20633\PS_BB113.dgn						
TIME	2:55:37 PM				REGION NO.	STATE	FED.AID PROJ.NO.
DATE	1/21/2019				10	WASH	
PLOTTED BY	reiserrw				JOB NUMBER		
DESIGNED BY	G. CALLAHAN						
ENTERED BY	R. REISER						
CHECKED BY	A. FONG	REV 0 - RELEASED FOR CONSTRUCTION	02/06/2019		CONTRACT NO.		LOCATION NO.
PROJ. ENGR.	C. MEADE	REV A - FINAL REVIEW	12/18/2018		C8811		
REGIONAL ADM.	J. WYNANDS	REVISION	DATE	BY			

STATE OF WASHINGTON — GILBERT J. CAYWOOD — 38759 — STRUCTURAL ENGINEER — PROFESSIONAL ENGINEER
2/15/19
DATE
P.E. STAMP BOX

DATE
P.E. STAMP BOX

Washington State Department of Transportation

ATKINSON CONSTRUCTION / JACOBS

I-5
STEILACOOM-DUPONT RD TO THORNE LN
CORRIDOR IMPROVEMENTS
MP 120.01 TO MP 124.45
BERKELEY SB ON RAMP BRIDGE

ELASTOMERIC BEARING DETAILS

PLAN REF NO BB113

SHEET 1294 OF 1456 SHEETS

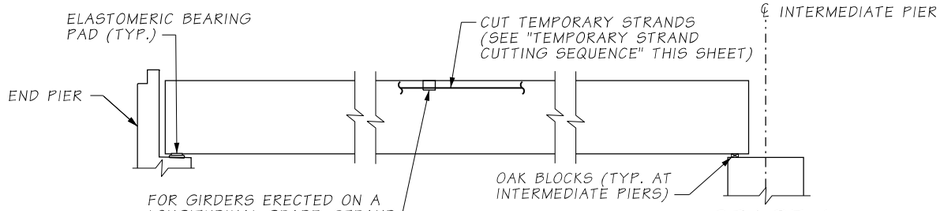

STAGE 1
SET GIRDERS IN PLACE

INSTALL TEMPORARY BRACING FOR ERECTION IN ACCORDANCE WITH STD. SPEC. SECTION 6-02.3(17)F4.

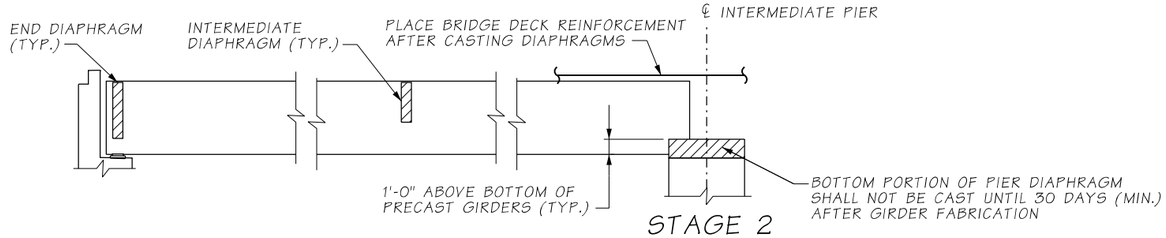

STAGE 2
CAST DIAPHRAGMS AND PLACE BRIDGE DECK REINFORCEMENT

INSTALL TEMPORARY BRACING FOR DIAPHRAGM AND DECK PLACEMENT IN ACCORDANCE WITH STD. SPEC. SECTION 6-02.3(17)F5.

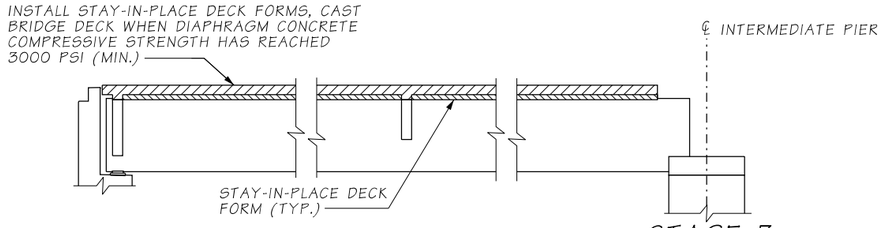

STAGE 3
INSTALL STAY-IN-PLACE DECK FORMS, CAST BRIDGE DECK

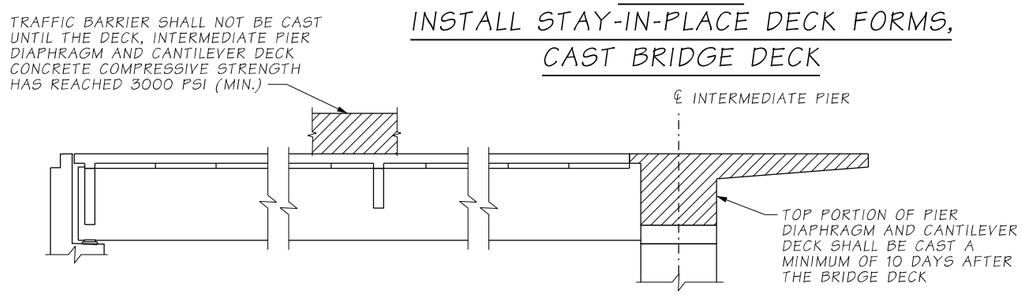

STAGE 4
COMPLETE DIAPHRAGM AND CANTILEVER DECK

CONSTRUCTION SEQUENCE ~ SUPERSTRUCTURE

TEMPORARY STRAND CUTTING SEQUENCE

1. ERECT AND BRACE GIRDERS.
2. JUST PRIOR TO CUTTING THE TEMPORARY STRANDS, REMOVE EXPANDED POLYSTYRENE IN BLOCKOUTS IN TOP FLANGE OF GIRDERS. ONCE THE EXPANDED POLYSTYRENE HAS BEEN REMOVED FROM THE STRAND DETENSIONING BLOCKOUT, PREVENT MOISTURE FROM ENTERING THE BLOCKOUT UNTIL THE TEMPORARY TOP STRAND IS CUT AND THE BLOCKOUT FILLED WITH GROUT.
3. CUT STRANDS IN BLOCKOUTS. STRANDS MAY BE CUT BY USING A CUTTING TORCH AND MOVING THE FLAME BACK AND FORTH OVER THE LENGTH OF EXPOSED STRAND TO LET INDIVIDUAL WIRES BREAK ONE AT A TIME TO LESSEN THE SHOCK TO THE GIRDER. STRANDS SHALL BE RELEASED IN A SYMMETRICAL MANNER ABOUT THE GIRDER CENTERLINE STARTING WITH THOSE FURTHEST FROM THE CENTERLINE AND WORKING INWARDS. FOR POST-TENSIONED TEMPORARY TOP STRANDS, ACTIVELY RESTRAIN THE STRAND CHUCKS AT THE GIRDER ENDS DURING CUTTING.
4. WITHIN 24 HOURS OF CUTTING THE TEMPORARY STRANDS, FILL THE BLOCKOUTS WITH A GROUT CONFORMING TO STD. SPEC. 9-20.3(2). REMOVE ALL MOISTURE IN BLOCKOUTS PRIOR TO FILLING THEM WITH GROUT.

AS-BUILT

ATKINSON
FEB 05 2019
RELEASED FOR CONSTRUCTION

NOTE:
NO LIVE LOAD SHALL BE ALLOWED ON THE SPANS UNTIL THE COMPRESSIVE STRENGTH OF THE TOP PORTION OF THE PIER DIAPHRAGM HAS REACHED 3000 PSI (MIN.).

FILE NAME	c:\pwworking\jacobs_b&i\reiserrw\dms20633\PS_BB114.dgn						
TIME	12:10:45 PM				REGION NO. 10	STATE WASH	FED.AID PROJ.NO.
DATE	1/28/2019						
PLOTTED BY	reiserrw				JOB NUMBER		
DESIGNED BY	T. FU						
ENTERED BY	R. REISER						
CHECKED BY	A. FONG	REV 0 - RELEASED FOR CONSTRUCTION	02/06/2019		CONTRACT NO. C8811		LOCATION NO.
PROJ. ENGR.	C. MEADE	REV A - FINAL REVIEW	12/18/2018				
REGIONAL ADM.	J. WYNANDS	REVISION	DATE	BY			

P.E. STAMP BOX — DATE 2/5/19

P.E. STAMP BOX — DATE

Washington State Department of Transportation

ATKINSON CONSTRUCTION / JACOBS

I-5
STEILACOOM-DUPONT RD TO THORNE LN CORRIDOR IMPROVEMENTS
MP 120.01 TO MP 124.45
BERKELEY SB ON RAMP BRIDGE

SUPERSTRUCTURE CONSTRUCTION SEQUENCE

PLAN REF NO BB114

SHEET 1295 OF 1456 SHEETS

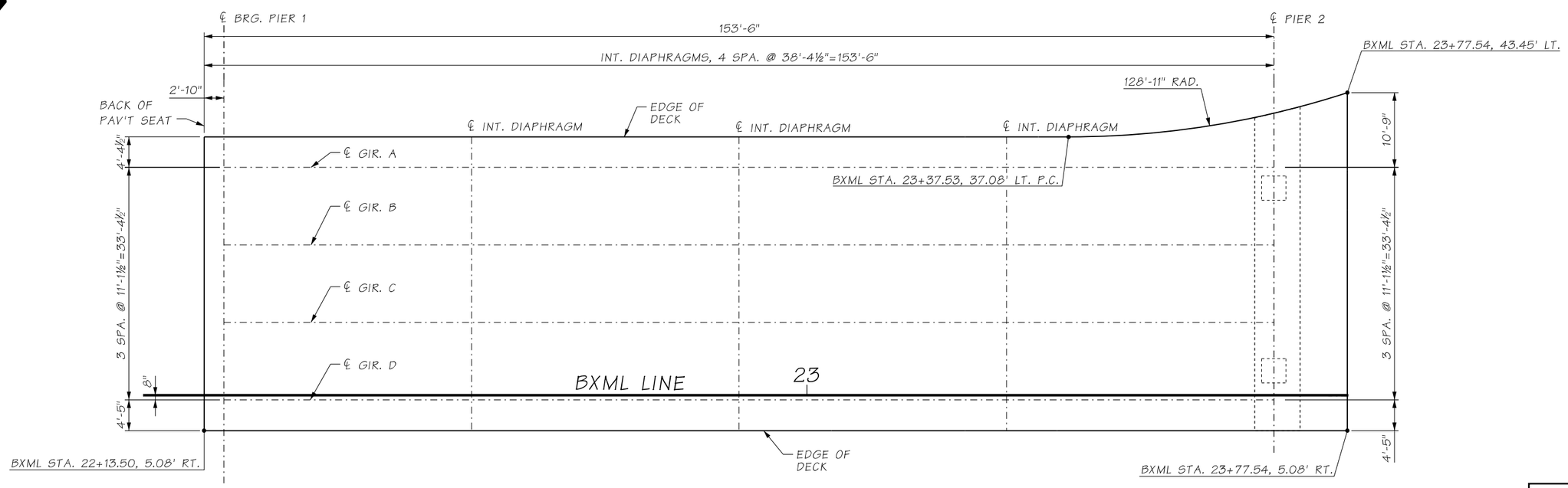

AS-BUILT

FRAMING PLAN

SPAN - 1

BEARING OF ALL PIERS ARE N39°21'17"W

ATKINSON

FEB 05 2019

RELEASED FOR CONSTRUCTION

FILE NAME	c:\pwworking\jacobs_b&i\reiserrw\dms20633\PS_BB115.dgn						
TIME	3:18:50 PM				REGION NO. 10	STATE WASH	FED.AID PROJ.NO.
DATE	1/21/2019						
PLOTTED BY	reiserrw				JOB NUMBER		
DESIGNED BY	T. FU						
ENTERED BY	R. REISER						
CHECKED BY	A. FONG	REV 0 - RELEASED FOR CONSTRUCTION	02/06/2019		CONTRACT NO. C8811		LOCATION NO.
PROJ. ENGR.	C. MEADE	REV A - FINAL REVIEW	12/18/2018				
REGIONAL ADM.	J. WYNANDS	REVISION	DATE	BY			

P.E. STAMP BOX — DATE 2/5/19

P.E. STAMP BOX — DATE

Washington State Department of Transportation

ATKINSON / JACOBS CONSTRUCTION

I-5
STEILACOOM-DUPONT RD TO THORNE LN
CORRIDOR IMPROVEMENTS
MP 120.01 TO MP 124.45
BERKELEY SB ON RAMP BRIDGE

FRAMING PLAN

PLAN REF NO BB115

SHEET 1296 OF 1456 SHEETS

GIRDER SCHEDULE

SPAN	GIRDER	GIRDER SERIES	PLAN LENGTH (ALONG GIRDER GRADE) (SEE GIRDER NOTE 1)	INTERIOR DIAPHRAGM TYPE (FULL OR PARTIAL)	GIRDER END DETAILS							MIN. CONC. COMP. STRENGTH		NUMBER OF STRANDS (SEE GIRDER NOTES 2&3)			LOCATION OF C.G. STRANDS			STRAIGHT STRANDS TO EXTEND				"A" DIMENSION AT ℄ BEARINGS	DECK SCREED CAMBER, C	MIDSPAN VERTICAL DEFLECTION D		REINFORCEMENT DETAILS						SHIPPING AND HANDLING DETAILS					
																				END 1		END 2						ZONE 1		ZONE 2		ZONE 3							
					END 1 TYPE	END 2 TYPE	Ld	θ1	θ2	P1	P2	@ 28-DAYS F'C (KSI)	@ RELEASE F'CI (KSI) 1	STRAIGHT	HARPED	TEMPORARY	E	F℄	Fo	STRANDS	EXTENSION LENGTH	STRANDS	EXTENSION LENGTH			LOWER BOUND @ 40 DAYS	UPPER BOUND @ 120 DAYS 1	SPACING *	LENGTH	SPACING	LENGTH	SPACING	LENGTH	MAX. MIDSPAN VERT. DEFLECTION @ SHIPPING	L 1	L1	L2	K_Θ ($1x10^4$ KIP-IN/RAD)	W_{CC}
1	A	WF83G	151'-3⅜"	PARTIAL	B	D	1'-0"	90°	90°	1'-0"	-	9.0	7.8	46	22	10	4⅛"	7"	1'-2"	-	-	**	3'-6"	9¼"	3⅝"	2⅝"	5¾"	3½"	1'-9"	6"	15'-0"	9"	3'-9"	5⅜"	6'-6"	13'-0"	11'-0"	5.0	6'-0"
1	B	WF83G	151'-3⅜"	PARTIAL	B	D	1'-0"	90°	90°	1'-0"	-	9.0	7.8	46	22	10	4⅛"	7"	1'-2"	-	-	**	3'-6"	9¼"	3⅝"	2½"	5⅝"	3½"	1'-9"	6"	15'-0"	9"	3'-9"	5⅜"	6'-6"	13'-0"	11'-0"	5.0	6'-0"
1	C	WF83G	151'-3⅜"	PARTIAL	B	D	1'-0"	90°	90°	1'-0"	-	9.0	7.8	46	22	10	4⅛"	7"	1'-2"	-	-	**	3'-6"	9¼"	3⅝"	2½"	5⅝"	3½"	1'-9"	6"	15'-0"	9"	3'-9"	5⅜"	6'-6"	13'-0"	11'-0"	5.0	6'-0"
1	D	WF83G	151'-3⅜"	PARTIAL	B	D	1'-0"	90°	90°	1'-0"	-	9.0	7.8	46	22	10	4⅛"	7"	1'-2"	-	-	**	3'-6"	9¼"	3¾"	2⅝"	5¾"	3½"	1'-9"	6"	15'-0"	9"	3'-9"	5⅜"	6'-6"	13'-0"	11'-0"	5.0	6'-0"

AS-BUILT

GIRDER NOTES:

1. PLAN LENGTH SHALL BE INCREASED AS NECESSARY TO COMPENSATE FOR SHORTENING DUE TO PRESTRESS AND SHRINKAGE.
2. ALL PERMANENT AND TEMPORARY STRANDS SHALL BE 0.6"ø AASHTO M203 GRADE 270 LOW RELAXATION STRANDS, JACKED TO 202.5 KSI. 1

M.R.N. ATKINSON

MAR 02 2019

RELEASED FOR CONSTRUCTION

LEGEND	
*	G2 #5 BARS IN ZONE 1 ARE BUNDLED
**	5 6 9 10

FILE NAME	c:\pwworking\jacobs_b&i\fongac\dms20633\PS_BB116.dgn
TIME	5:38:08 PM
DATE	2/25/2019
PLOTTED BY	fongac
DESIGNED BY	T. FU
ENTERED BY	R. REISER
CHECKED BY	A. FONG
PROJ. ENGR.	C. MEADE
REGIONAL ADM.	J. WYNANDS

REVISION	DATE	BY
REV 1 - RFI0050	02/28/2019	
REV 0 - RELEASED FOR CONSTRUCTION	02/06/2019	
REV A - FINAL REVIEW	12/18/2018	

REGION NO. 10 | STATE WASH | FED.AID PROJ.NO.

JOB NUMBER

CONTRACT NO. C8811 | LOCATION NO.

P.E. STAMP BOX — DATE 2/28/19

P.E. STAMP BOX — DATE

Washington State Department of Transportation

ATKINSON / JACOBS CONSTRUCTION

I-5
STEILACOOM-DUPONT RD TO THORNE LN
CORRIDOR IMPROVEMENTS
MP 120.01 TO MP 124.45
BERKELEY SB ON RAMP BRIDGE

GIRDER DETAILS (1 OF 5)

PLAN REF NO BB116

SHEET 1297 OF 1456 SHEETS

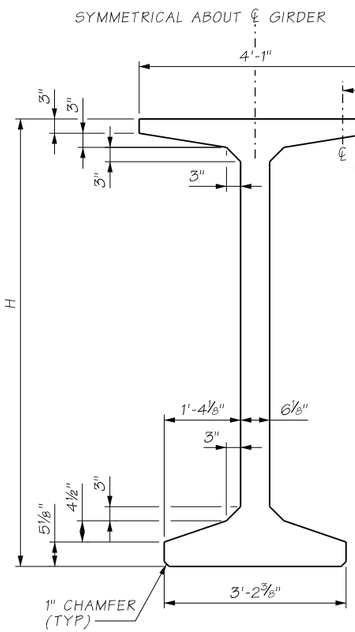

SECTION A

REINFORCEMENT AND STRANDS NOT SHOWN

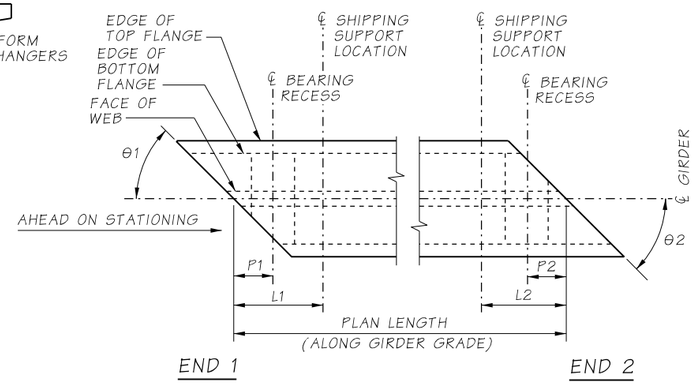

GIRDER PLAN

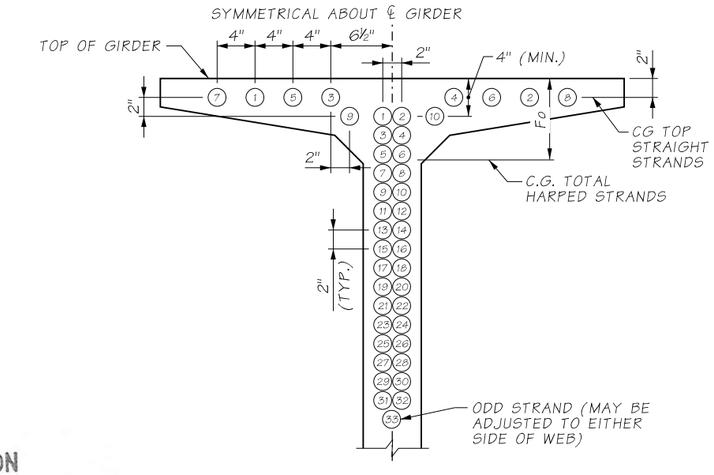

VIEW B

TOP STRAIGHT STRAND AND HARPED STRAND LOCATION SEQUENCE SHALL BE AS SHOWN (1), (2) ETC.

MRV. ATKINSON

FEB 05 2019

RELEASED FOR CONSTRUCTION

AS-BUILT

3"ø OPEN HOLE. ADJUST HOLE LOCATION VERTICALLY TO MISS HARPED STRANDS. OMIT HOLES AND PLACE INSERTS ON THE INTERIOR FACE OF EXTERIOR GIRDERS. PLACE HOLES AND INSERTS PARALLEL TO DIAPHRAGM CENTERLINE. INSERTS SHALL BE 1"ø MEADOWBURKE MX-3 HI-TENSILE, 1"ø x 5½" WILLIAMS F22 OPEN FERRULE INSERT, 1"ø x 4⅝" DAYTON-SUPERIOR F-62 FLARED THIN SLAB FERRULE INSERT OR APPROVED EQUIVALENT

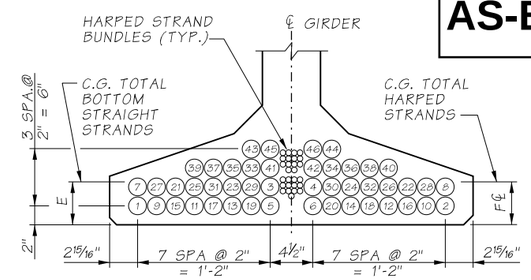

SECTION C

BOTTOM STRAIGHT STRAND LOCATION SEQUENCE SHALL BE AS SHOWN (1), (2) ETC.

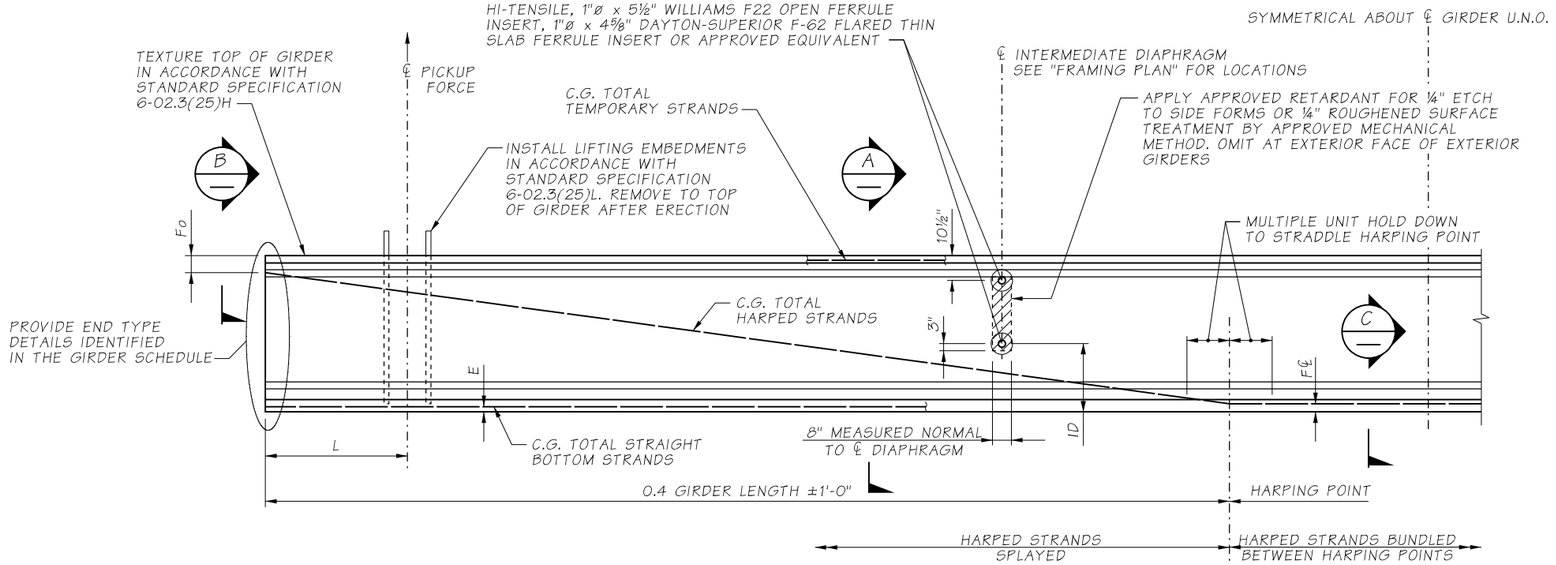

GIRDER ELEVATION

GIRDER SERIES	H GIRDER HEIGHT	ID PARTIAL DEPTH INT. DIAPHRAGM	ID FULL DEPTH INT. DIAPHRAGM
WF36G	3'-0"	1'-2⅛"	1'-2⅛"
WF42G	3'-6"	1'-6"	1'-2⅛"
WF50G	4'-2"	1'-9½"	1'-2⅛"
WF58G	4'-10"	2'-3"	1'-2⅛"
WF66G	5'-6"	2'-4¾"	1'-2⅛"
WF74G	6'-2"	2'-8"	1'-2⅛"
WF83G	6'-10⅝"	2'-1⅝"	1'-2⅛"
WF95G	7'-10½"	3'-1½"	1'-2⅛"
WF100G	8'-4"	2'-8"	1'-2⅛"

FILE NAME	c:\pwworking\jacobs_b&i\reiserrw\dms20633\PS_BB117.dgn				
TIME	3:31:49 PM				
DATE	1/21/2019				
PLOTTED BY	reiserrw				
DESIGNED BY	T. FU				
ENTERED BY	R. REISER				
CHECKED BY	A. FONG	REV 0 - RELEASED FOR CONSTRUCTION	02/06/2019		
PROJ. ENGR.	C. MEADE	REV A - FINAL REVIEW	12/18/2018		
REGIONAL ADM.	J. WYNANDS	REVISION	DATE	BY	

REGION NO.	STATE	FED.AID PROJ.NO.
10	WASH	
JOB NUMBER		
CONTRACT NO.		LOCATION NO.
C8811		

STATE OF WASHINGTON — CHAD J. CAYWOOD — 38759 — STRUCTURAL ENGINEER — PROFESSIONAL ENGINEER

2/5/19

DATE

P.E. STAMP BOX

DATE

P.E. STAMP BOX

Washington State Department of Transportation

ATKINSON / JACOBS CONSTRUCTION

I-5
STEILACOOM-DUPONT RD TO THORNE LN CORRIDOR IMPROVEMENTS
MP 120.01 TO MP 124.45
BERKELEY SB ON RAMP BRIDGE

GIRDER DETAILS (2 OF 5)

PLAN REF NO BB117

SHEET 1298 OF 1456 SHEETS

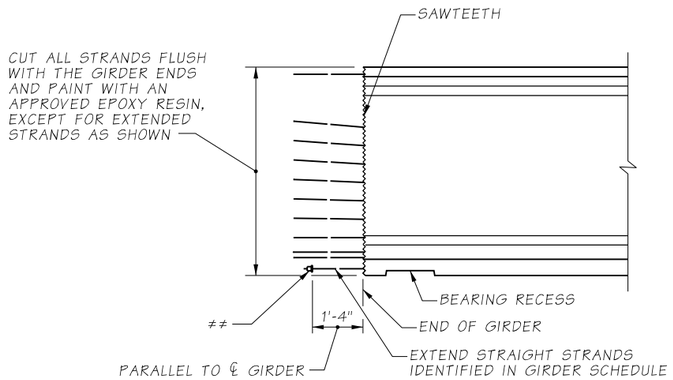

END TYPE A

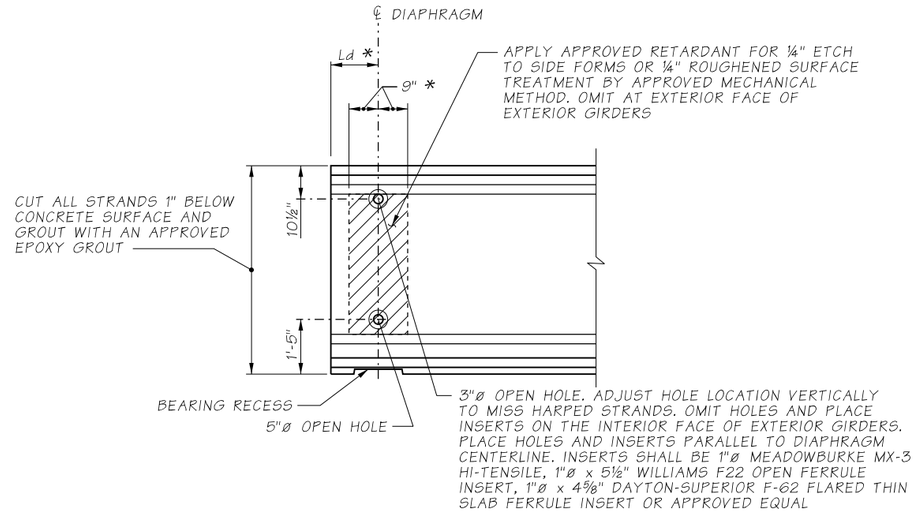

END TYPE B

* MEASURED NORMAL TO ℄ DIAPHRAGM

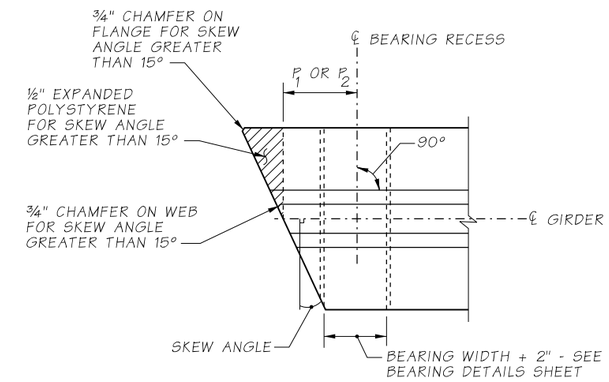

PLAN

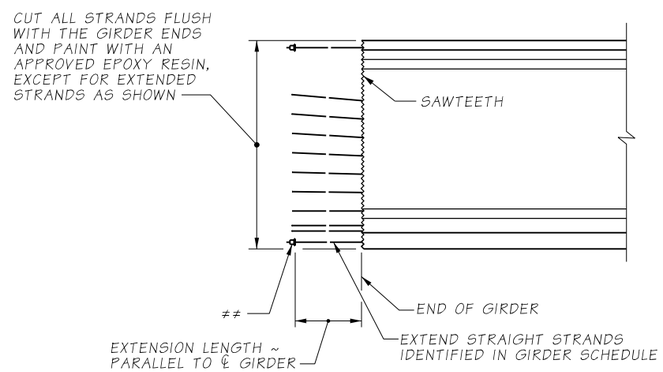

END TYPE D

STRAND CHUCK TACK WELDED TO ASTM A36 PL ½x4x0'-4 WITH ¾"ø HOLE PRIOR TO INSTALLING ON STRAND, ASTM A108 2¾"øx1⅛" STEEL STRAND ANCHOR, OR APPROVED EQUAL (TYP.). VERIFY STRAND GRIPS ARE SEATED TIGHTLY IMMEDIATELY BEFORE PLACING DIAPHRAGM CONCRETE. SECURELY TIE ANCHOR TO THE REBAR CAGE TO PREVENT DISPLACEMENT DURING CONCRETE PLACEMENT.

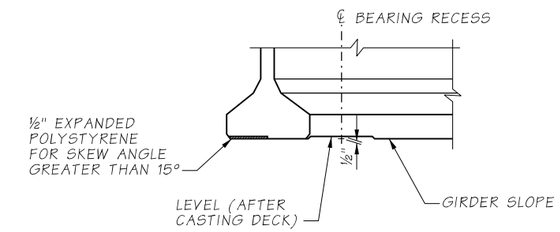

ELEVATION

BEARING RECESS AND BOTTOM FLANGE SPALL PROTECTION DETAIL

BEARING RECESS FORMS SHALL BE CONSTRUCTED AND FASTENED TO AVOID GIRDER DAMAGE DURING STRAND RELEASE.

AS-BUILT

ATKINSON

FEB 05 2019

RELEASED FOR CONSTRUCTION

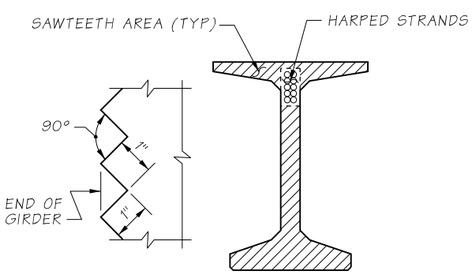

SAWTEETH DETAIL

SAWTEETH SHALL BE FULL WIDTH OVER AREA SHOWN

FILE NAME	c:\pwworking\jacobs_b&i\reiserrw\dms20633\PS_BB118.dgn						
TIME	3:33:35 PM				REGION NO. 10	STATE WASH	FED.AID PROJ.NO.
DATE	1/21/2019						
PLOTTED BY	reiserrw						
DESIGNED BY	T. FU				JOB NUMBER		
ENTERED BY	R. REISER						
CHECKED BY	A. FONG	REV 0 - RELEASED FOR CONSTRUCTION	02/06/2019		CONTRACT NO. C8811		LOCATION NO.
PROJ. ENGR.	C. MEADE	REV A - FINAL REVIEW	12/18/2018				
REGIONAL ADM.	J. WYNANDS	REVISION	DATE	BY			

P.E. STAMP BOX — DATE 2/5/19

P.E. STAMP BOX — DATE

Washington State Department of Transportation

ATKINSON CONSTRUCTION / JACOBS

I-5
STEILACOOM-DUPONT RD TO THORNE LN
CORRIDOR IMPROVEMENTS
MP 120.01 TO MP 124.45
BERKELEY SB ON RAMP BRIDGE

GIRDER DETAILS (3 OF 5)

PLAN REF NO BB118

SHEET 1299 OF 1456 SHEETS

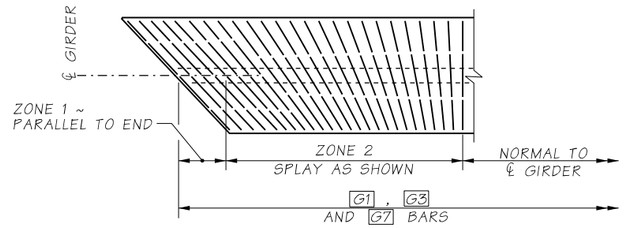

PLAN
TRANSVERSE REINFORCING AT SKEWED ENDS

LENGTHS OF G3 AND G7 VARY WITH SKEW.
ONLY TRANSVERSE REINFORCEMENT SHOWN

GIRDER REINFORCEMENT NOTES

1. DEFORMED WELDED WIRE REINFORCEMENT MAY BE SUBSTITUTED FOR MILD REINFORCEMENT IN ACCORDANCE WITH STANDARD SPECIFICATION 6-02.3(25)A.

GIRDER SERIES	NO. OF G5 BARS
WF36G	3
WF42G	4
WF50G	5
WF58G	6
WF66G	7
WF74G	7
WF83G	8
WF95G	9
WF100G	10

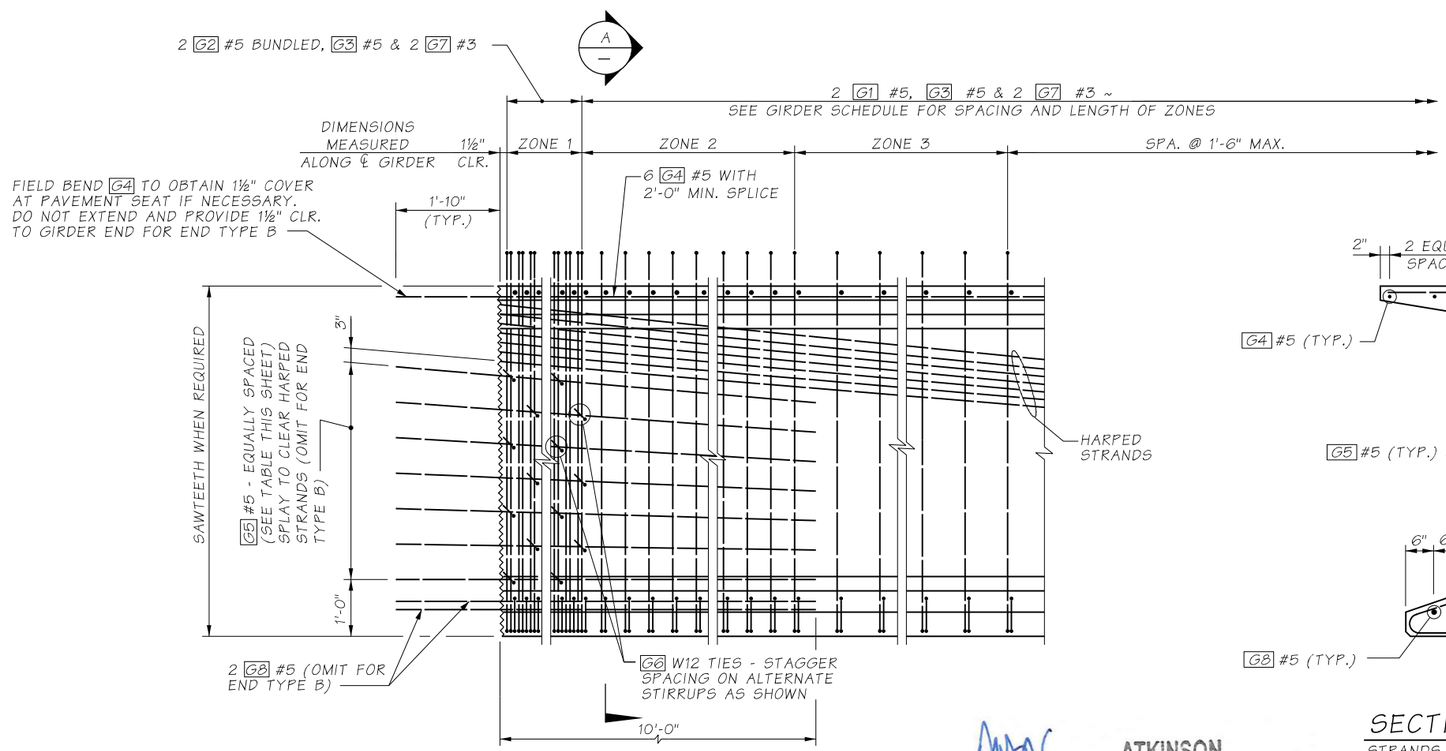

REINFORCEMENT END ELEVATION

STRAIGHT AND TEMPORARY STRANDS NOT SHOWN FOR CLARITY.
WF74G SHOWN, OTHERS SIMILAR.

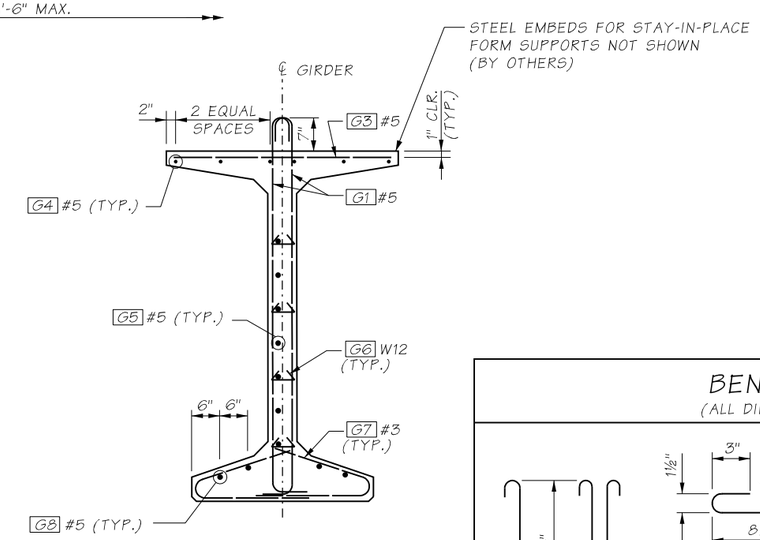

SECTION A
STRANDS NOT SHOWN

AS-BUILT

BENDING DIAGRAM
(ALL DIMENSIONS ARE OUT TO OUT)

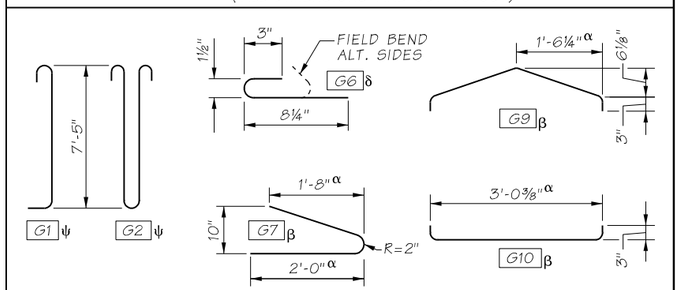

α - VARIES FOR SKEWED ENDS.
δ - #3 OR #4 MAY BE SUBSTITUTED. FIELD BENDING IS OPTIONAL.
β - PAIRS OF G7 BARS, OR G9 AND G10 BARS, MAY BE USED INTERCHANGEABLY AS BOTTOM FLANGE TIES.
ψ - 1 G2 MAY BE SUBSTITUTED FOR 2 G1 WITHIN ZONE 1.

MRV. ATKINSON
FEB 05 2019
RELEASED FOR CONSTRUCTION

FILE NAME	c:\pwworking\jacobs_b&i\reiserrw\dms20633\PS_BB119.dgn						
TIME	11:54:25 AM				REGION NO. 10	STATE WASH	FED.AID PROJ.NO.
DATE	1/24/2019				JOB NUMBER		
PLOTTED BY	reiserrw						
DESIGNED BY	T. FU						
ENTERED BY	R. REISER						
CHECKED BY	A. FONG	REV 0 - RELEASED FOR CONSTRUCTION	02/06/2019		CONTRACT NO. C8811		LOCATION NO.
PROJ. ENGR.	C. MEADE	REV A - FINAL REVIEW	12/18/2018				
REGIONAL ADM.	J. WYNANDS	REVISION	DATE	BY			

CORY J. CAYWOOD, STATE OF WASHINGTON, 38759, STRUCTURAL ENGINEER, PROFESSIONAL ENGINEER
2/15/19
DATE
P.E. STAMP BOX

DATE
P.E. STAMP BOX

Washington State Department of Transportation
ATKINSON CONSTRUCTION / JACOBS

I-5
STEILACOOM-DUPONT RD TO THORNE LN
CORRIDOR IMPROVEMENTS
MP 120.01 TO MP 124.45
BERKELEY SB ON RAMP BRIDGE

GIRDER DETAILS (4 OF 5)

PLAN REF NO BB119

SHEET 1300 OF 1456 SHEETS

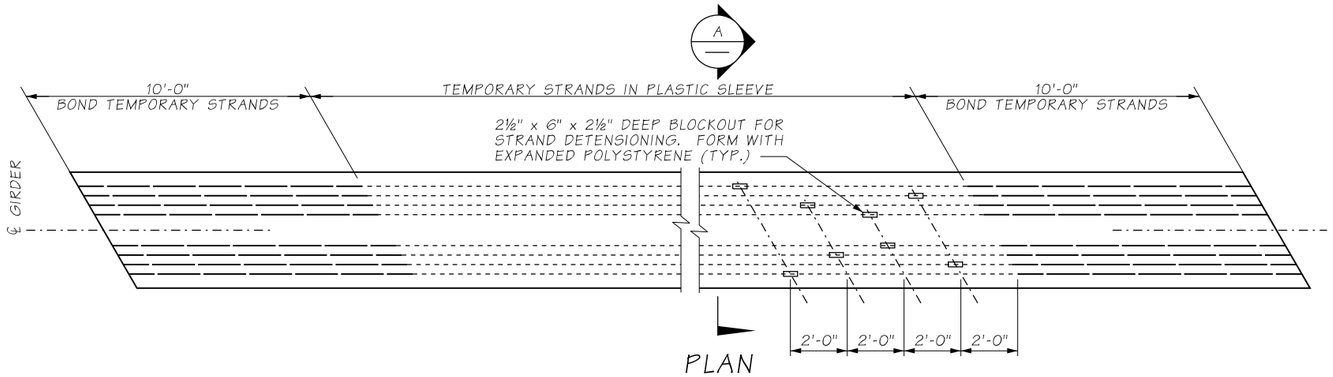

PLAN

PRE-TENSIONED TEMPORARY TOP STRANDS ALTERNATE

SEE GIRDER SCHEDULE FOR NUMBER OF TEMPORARY STRANDS REQUIRED

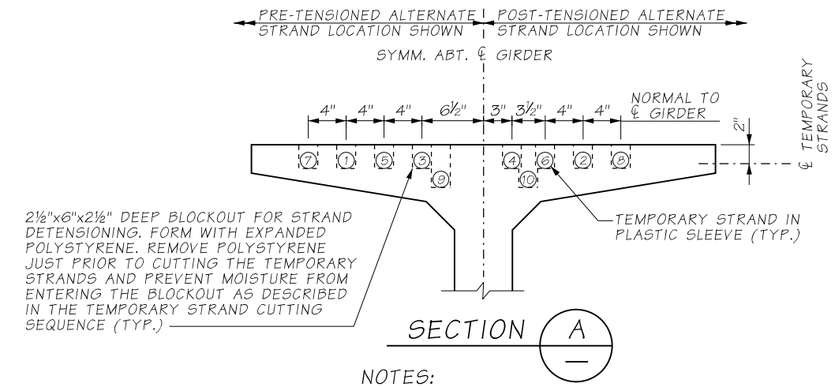

SECTION A

NOTES:

1. TEMPORARY STRAND LOCATION SEQUENCE SHALL BE AS SHOWN 1, 2 ETC.

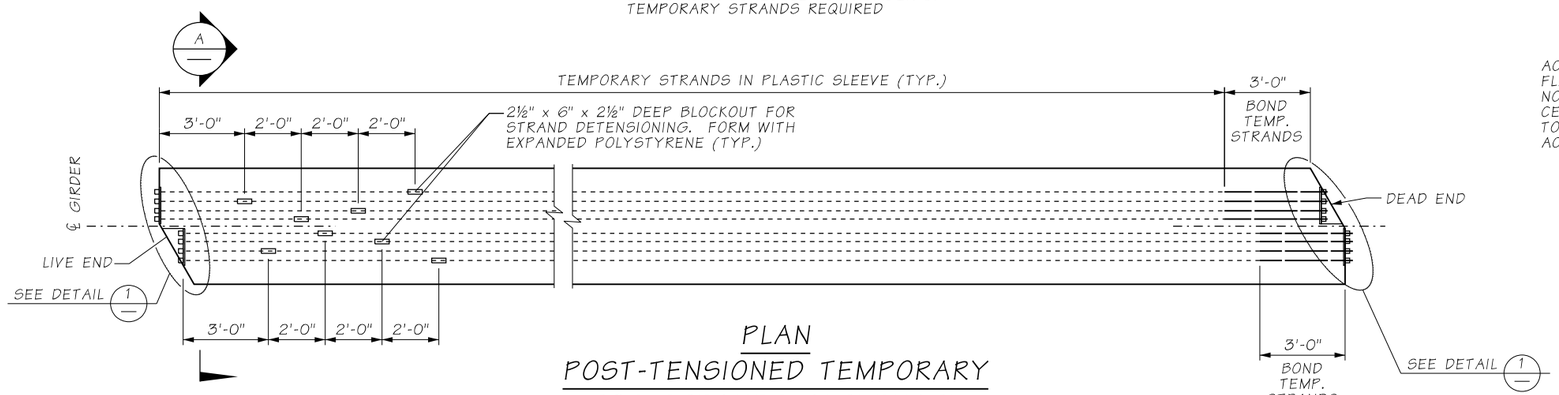

PLAN

POST-TENSIONED TEMPORARY TOP STRANDS ALTERNATE

SEE GIRDER SCHEDULE FOR NUMBER OF TEMPORARY STRANDS REQUIRED

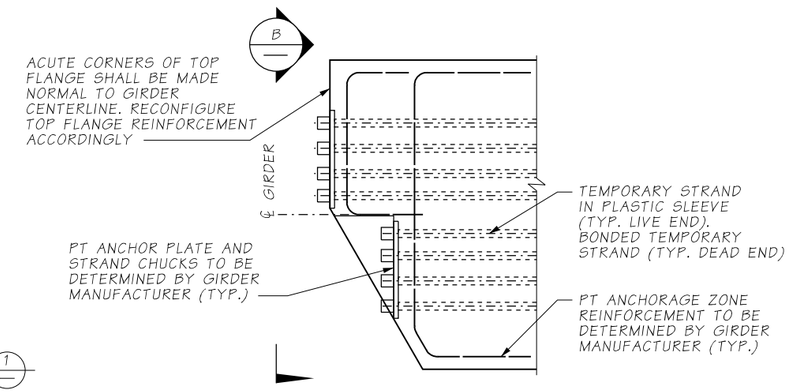

DETAIL 1

AS-BUILT

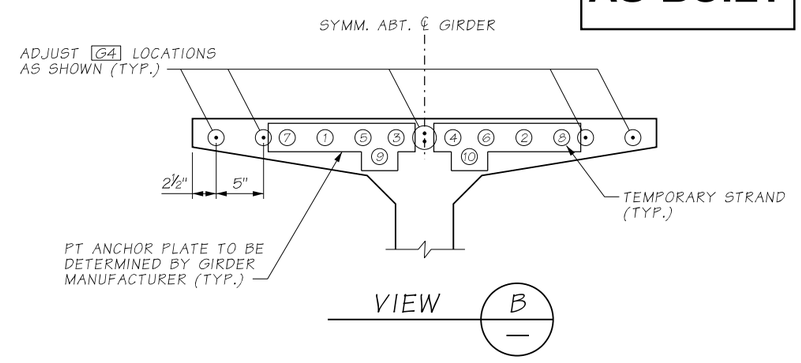

VIEW B

TEMPORARY STRAND NOTES:

1. TEMPORARY TOP STRANDS SHALL BE EITHER PRETENSIONED OR POST-TENSIONED IN ACCORDANCE WITH STANDARD SPECIFICATION SECTION 6-02.3(25)L.
2. FOR GIRDERS ERECTED ON A LONGITUDINAL GRADE, STRAND DETENSIONING BLOCKOUTS SHALL BE PLACED AT THE LOW END OF THE GIRDER.
3. SEE "TEMPORARY STRAND CUTTING SEQUENCE" ON CONSTRUCTION SEQUENCE SHEET FOR TEMPORARY STRAND DETENSIONING PROCEDURE.

REV. ATKINSON

FEB 05 2019

RELEASED FOR CONSTRUCTION

FILE NAME	c:\pwworking\jacobs_b&i\reiserrw\dms20633\PS_BB120.dgn						
TIME	3:47:09 PM				REGION NO. 10	STATE WASH	FED.AID PROJ.NO.
DATE	1/21/2019				JOB NUMBER		
PLOTTED BY	reiserrw						
DESIGNED BY	T. FU						
ENTERED BY	R. REISER						
CHECKED BY	A. FONG	REV 0 - RELEASED FOR CONSTRUCTION	02/06/2019		CONTRACT NO. C8811		LOCATION NO.
PROJ. ENGR.	C. MEADE	REV A - FINAL REVIEW	12/18/2018				
REGIONAL ADM.	J. WYNANDS	REVISION	DATE	BY			

CORY J. CARLSON, STATE OF WASHINGTON, 38755, STRUCTURAL ENGINEER, PROFESSIONAL ENGINEER — 2/5/19 DATE — P.E. STAMP BOX

DATE — P.E. STAMP BOX

Washington State Department of Transportation

ATKINSON CONSTRUCTION / JACOBS

I-5
STEILACOOM-DUPONT RD TO THORNE LN CORRIDOR IMPROVEMENTS
MP 120.01 TO MP 124.45
BERKELEY SB ON RAMP BRIDGE

GIRDER DETAILS (5 OF 5)

PLAN REF NO BB120

SHEET 1301 OF 1456 SHEETS

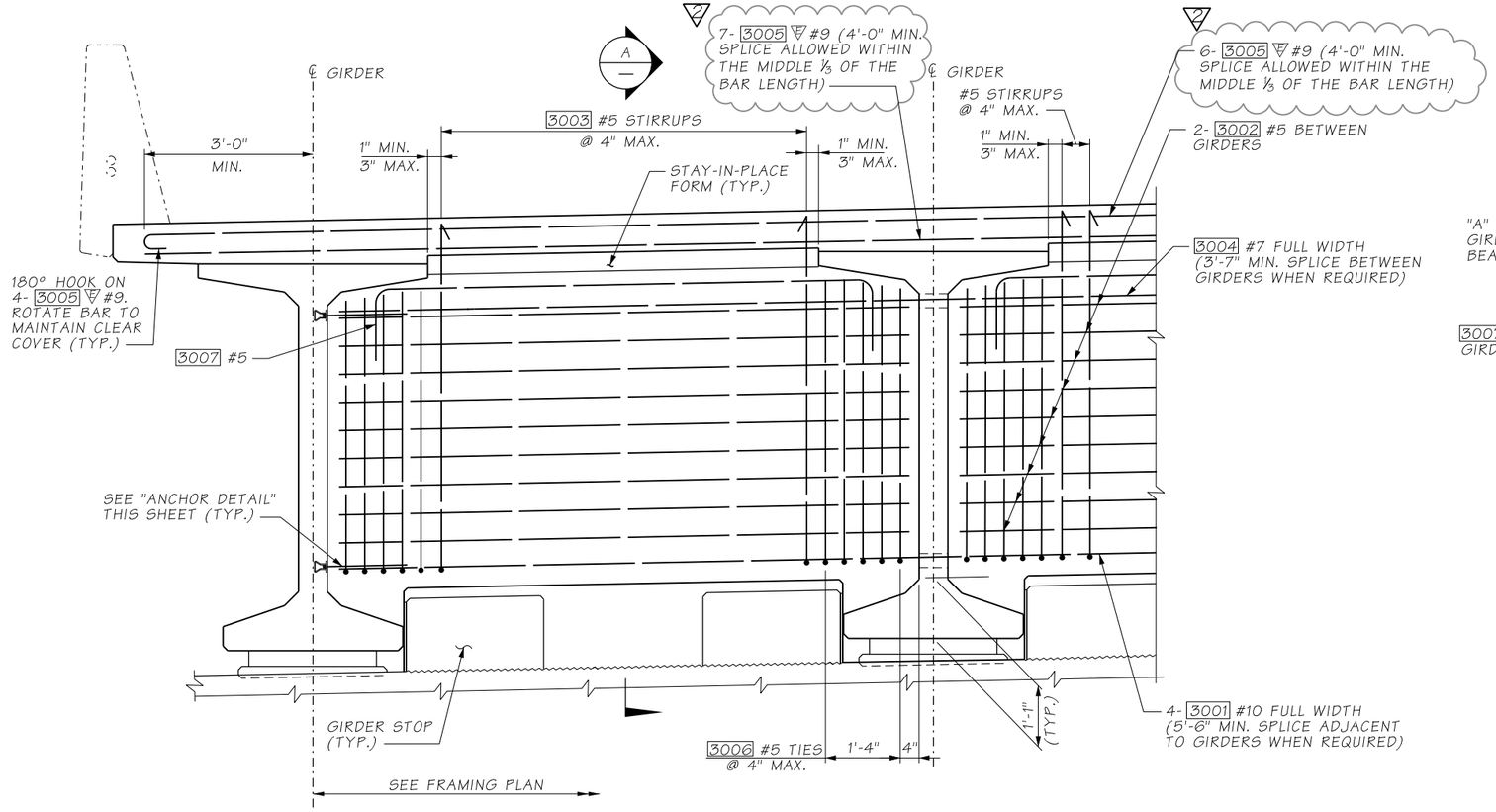

ELEVATION
END DIAPHRAGM

DIMENSIONS ARE ALONG ℄ DIAPHRAGM

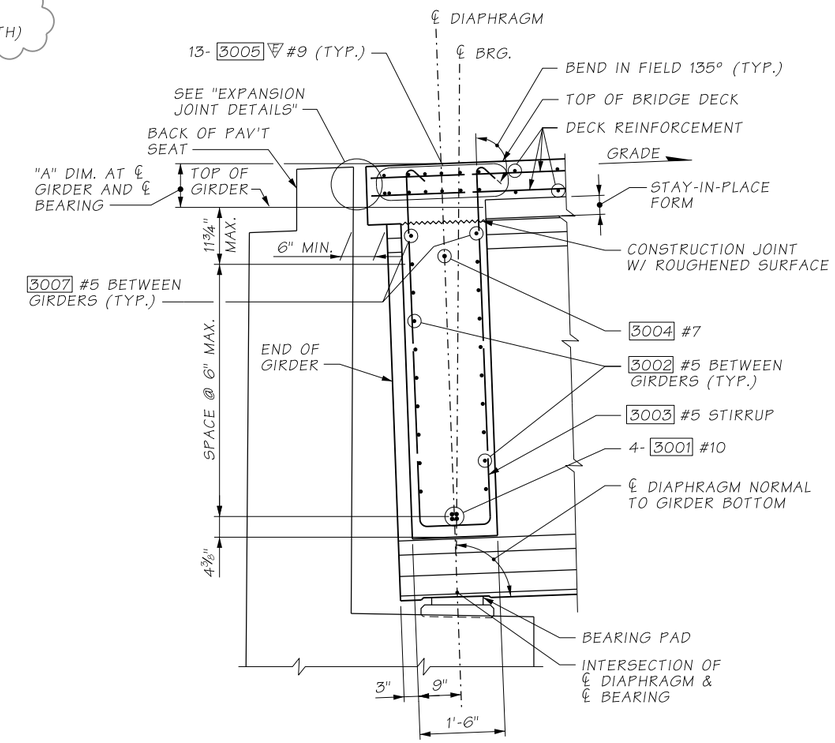

SECTION A

LONGITUDINAL DIMENSIONS ARE NORMAL TO DIAPHRAGM. (GIRDER STOP NOT SHOWN FOR CLARITY)

AS-BUILT

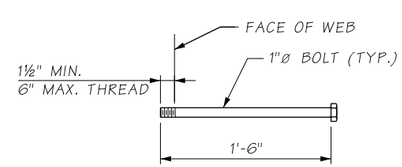

ANCHOR DETAIL

ASTM A-307

ATKINSON
JAN 07 2020 KTN
RELEASED FOR CONSTRUCTION

NOTES:

1. GIRDERS SHALL BE HELD RIGIDLY IN PLACE WHEN DIAPHRAGMS ARE PLACED.
2. IT MAY BE NECESSARY TO THREAD #7 AND #10 REINFORCING BARS THROUGH HOLES IN GIRDERS PRIOR TO PLACING EXTERIOR GIRDERS.
3. CUT/RELEASE GIRDER TEMPORARY STRANDS BEFORE CASTING DIAPHRAGM. SEE TEMPORARY STRAND CUTTING SEQUENCE.
4. FOR CONCRETE PLACEMENT PROCEDURE SEE CONSTRUCTION SEQUENCE SHEETS.

FILE NAME	D:\ICS_workdir\43595\20633_1304\PS_BB121.dgn						
TIME	8:03:04 AM				REGION NO.	STATE	FED.AID PROJ.NO.
DATE	12/30/2019				10	WASH	
PLOTTED BY	USLAS0-APP064$				JOB NUMBER		
DESIGNED BY	T. FU	REV 2 - RFI0244	01/02/2020				
ENTERED BY	R. REISER	REV 1 - RFI0055	03/19/2019				
CHECKED BY	A. FONG	REV 0 - RELEASED FOR CONSTRUCTION	02/06/2019		CONTRACT NO.		LOCATION NO.
PROJ. ENGR.	C. MEADE	REV A - FINAL REVIEW	12/18/2018		C9133		
REGIONAL ADM.	J. WYNANDS	REVISION	DATE	BY			

CORY J. CAYWOOD, STATE OF WASHINGTON, 38759, STRUCTURAL ENGINEER, PROFESSIONAL ENGINEER — 12/30/19
DATE
P.E. STAMP BOX

DATE
P.E. STAMP BOX

Washington State Department of Transportation

ATKINSON CONSTRUCTION / JACOBS

I-5
STEILACOOM-DUPONT RD TO THORNE LN
CORRIDOR IMPROVEMENTS
MP 120.01 TO MP 124.45
BERKELEY SB ON RAMP BRIDGE

PIER 1 END DIAPHRAGM

PLAN REF NO BB121

SHEET 1302 OF 1456 SHEETS

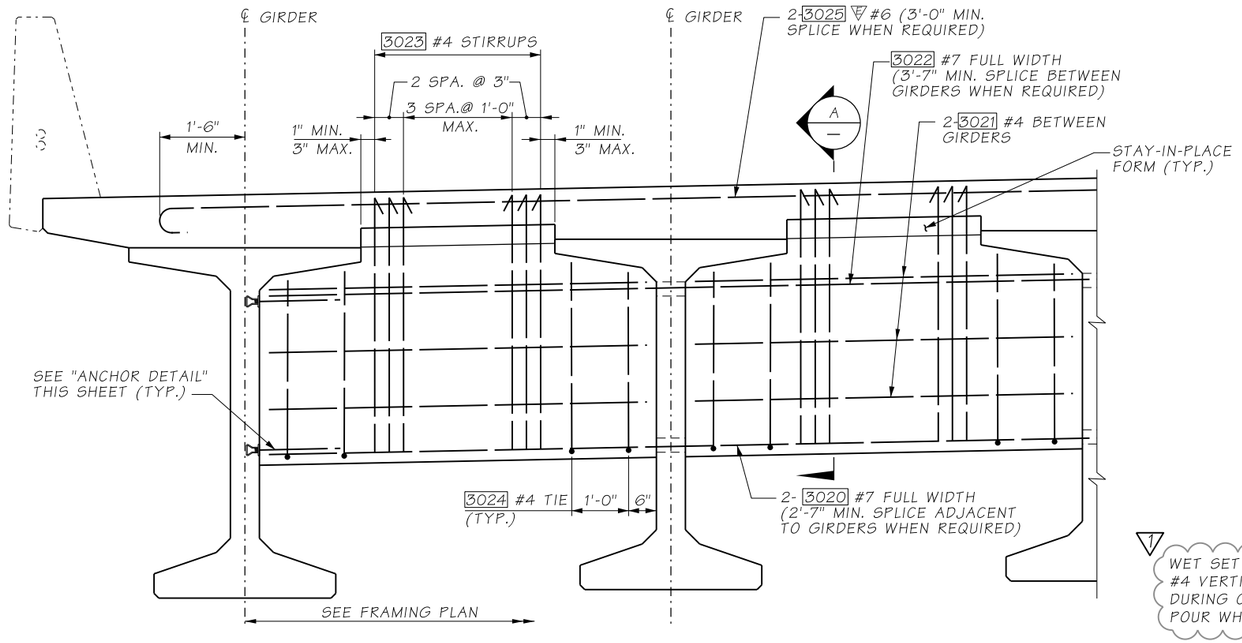

ELEVATION - PARTIAL DEPTH INTERMEDIATE DIAPHRAGM

DIMENSIONS ARE ALONG ℄ DIAPHRAGM

NOTES:

1. GIRDERS SHALL BE HELD RIGIDLY IN PLACE WHEN DIAPHRAGMS ARE PLACED.
2. IT MAY BE NECESSARY TO THREAD #7 REINFORCING BARS THROUGH HOLES IN GIRDERS PRIOR TO PLACING EXTERIOR GIRDERS.
3. CUT/RELEASE GIRDER TEMPORARY STRANDS BEFORE CASTING DIAPHRAGM. SEE TEMPORARY STRAND CUTTING SEQUENCE.
4. FOR CONCRETE PLACEMENT PROCEDURE SEE CONSTRUCTION SEQUENCE SHEETS.

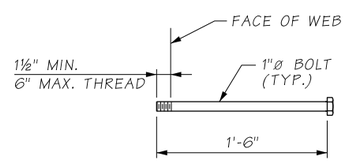

ANCHOR DETAIL

ASTM A-307

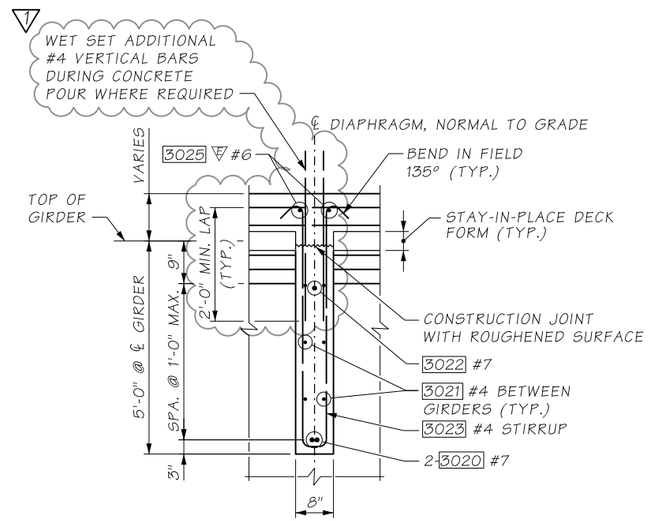

SECTION A

LONGITUDINAL DIMENSIONS ARE NORMAL TO DIAPHRAGM

AS-BUILT

ATKINSON
JAN 07 2020 KTW
RELEASED FOR CONSTRUCTION

FILE NAME	D:\ICS_workdir\43595\20633_1477\PS_BB122.dgn				REGION NO.	STATE	FED.AID PROJ.NO.
TIME	8:03:04 AM				10	WASH	
DATE	12/30/2019						
PLOTTED BY	USLAS0-APP064$				JOB NUMBER		
DESIGNED BY	T. FU						
ENTERED BY	R. REISER	REV 1 - RFI0160	01/02/2020				
CHECKED BY	A. FONG	REV 0 - RELEASED FOR CONSTRUCTION	02/06/2019		CONTRACT NO.		LOCATION NO.
PROJ. ENGR.	C. MEADE	REV A - FINAL REVIEW	12/18/2018		C9133		
REGIONAL ADM.	J. WYNANDS	REVISION	DATE	BY			

CORT J. CAYWOOD — STATE OF WASHINGTON — 38133 — STRUCTURAL ENGINEER — PROFESSIONAL ENGINEER — 12/30/19
P.E. STAMP BOX — DATE

P.E. STAMP BOX — DATE

Washington State Department of Transportation

ATKINSON CONSTRUCTION / JACOBS

I-5
STEILACOOM-DUPONT RD TO THORNE LN CORRIDOR IMPROVEMENTS
MP 120.01 TO MP 124.45
BERKELEY SB ON RAMP BRIDGE

PARTIAL DEPTH INTERMEDIATE DIAPHRAGM DETAILS

PLAN REF NO BB122

SHEET 1303 OF 1456 SHEETS

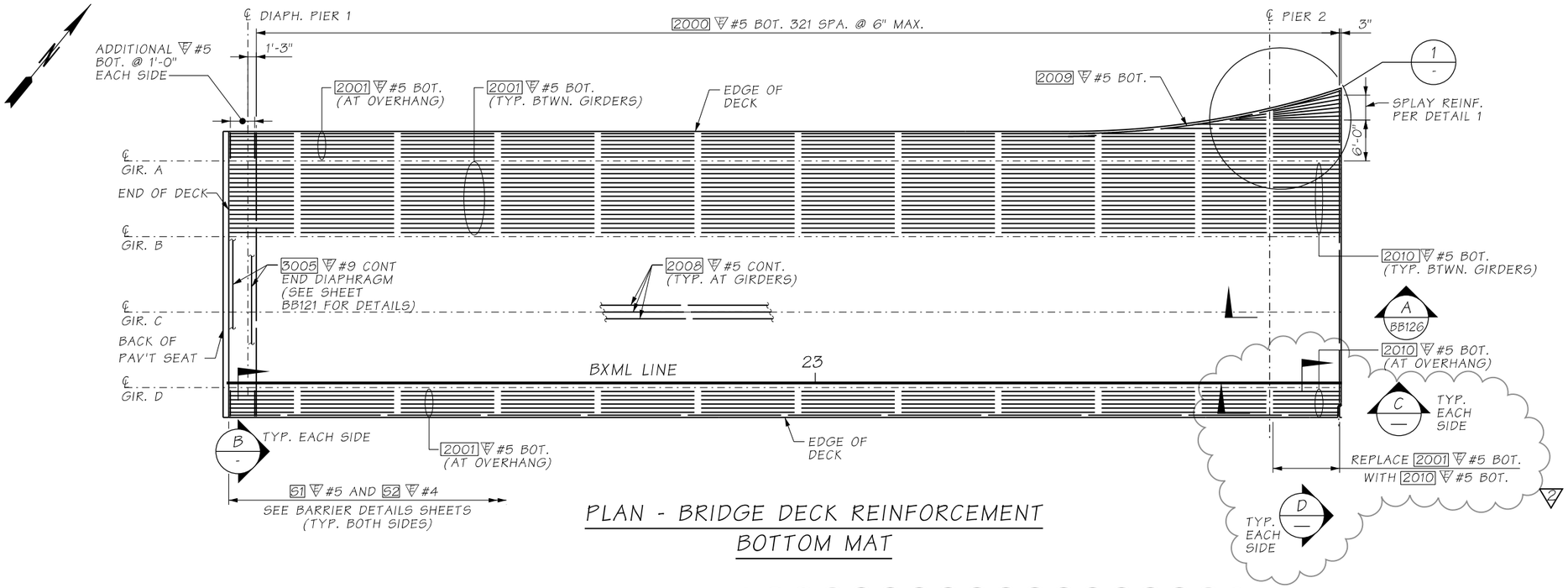

PLAN - BRIDGE DECK REINFORCEMENT BOTTOM MAT

AS-BUILT

ATKINSON
APR 14 2020 KTW
RELEASED FOR CONSTRUCTION

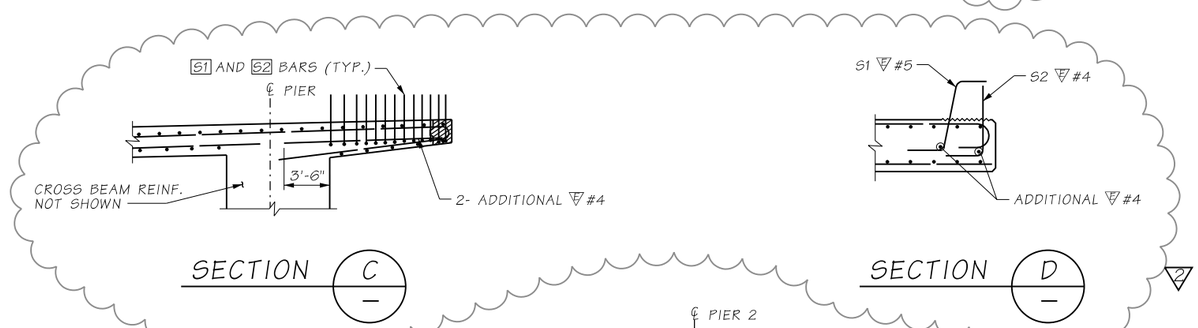

SECTION C

SECTION D

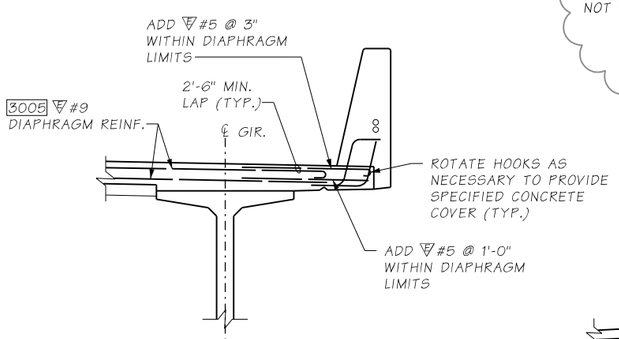

SECTION B
LONGITUDINAL DECK REINF. NOT SHOWN
BB124

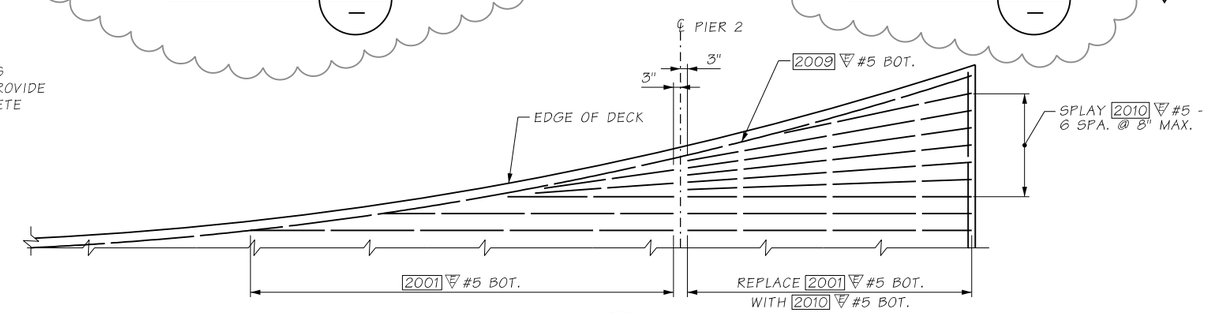

DETAIL 1

NOTES:

1. MINIMUM REBAR SPLICE LENGTH, UNLESS AS NOTED:
   - #4 = 2'-0"
   - #5 = 2'-6"
   - #6 = 3'-0"
2. a) LOCATION OF SPLICES AT CONTRACTORS OPTION, UNLESS OTHERWISE NOTED.
   b) NO SPLICES OF REBAR ARE ALLOWED WITHIN 15'-0" FROM THE CENTERLINE OF THE PIER FOR LONGITUDINAL REINFORCEMENT UNLESS NOTED OTHERWISE.
3. ALL SPLICES SHALL BE STAGGERED SO NOT MORE THAN 50% OF THE REBAR IS SPLICED AT THE SAME LOCATION.

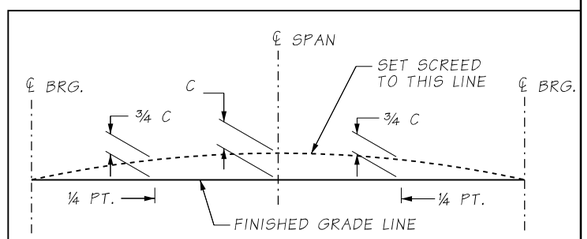

SCREED SETTING DIMENSIONS

FOR DIMENSION "C" SEE GIRDER SCHEDULE

FILE NAME	c:\pwworking\jacobs_b&i\youngkl2\dms20633\PS_BB123.dgn						
TIME	11:28:59 AM				REGION NO. 10	STATE WASH	FED.AID PROJ.NO.
DATE	4/10/2020						
PLOTTED BY	youngkl2						
DESIGNED BY	S.RAY	REV 2 - RFI0216	04/13/2020		JOB NUMBER		
ENTERED BY	R. REISER	REV 1 - RFI0244	01/02/2020				
CHECKED BY	G. CALLAHAN	REV 0 - RELEASED FOR CONSTRUCTION	05/13/2019		CONTRACT NO. C9133		LOCATION NO.
PROJ. ENGR.	C. MEADE	REV A - FINAL REVIEW	04/10/2019				
REGIONAL ADM.	J. WYNANDS	REVISION	DATE	BY			

COREY J. CAYWOOD — STATE OF WASHINGTON — 38759 — STRUCTURAL ENGINEER — PROFESSIONAL ENGINEER
4/14/20
DATE
P.E. STAMP BOX

P.E. STAMP BOX
DATE

Washington State Department of Transportation

ATKINSON / JACOBS CONSTRUCTION

I-5
STEILACOOM-DUPONT RD TO THORNE LN CORRIDOR IMPROVEMENTS
MP 120.01 TO MP 124.45
BERKELEY SB ON RAMP BRIDGE

PLAN - BRIDGE DECK REINFORCING BOTTOM MAT

PLAN REF NO BB123

SHEET 1304 OF 1456 SHEETS

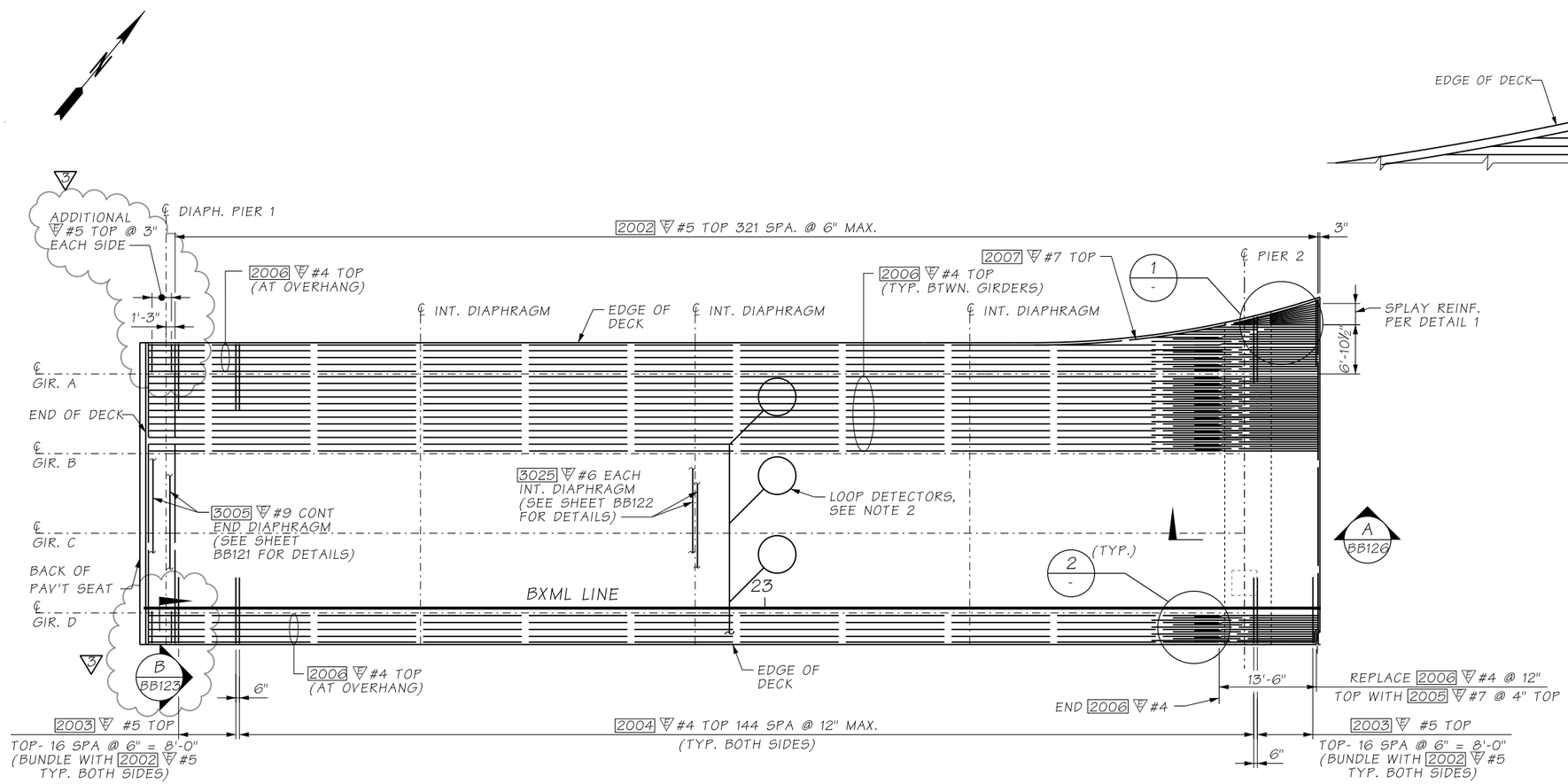

PLAN - BRIDGE DECK REINFORCEMENT
TOP MAT

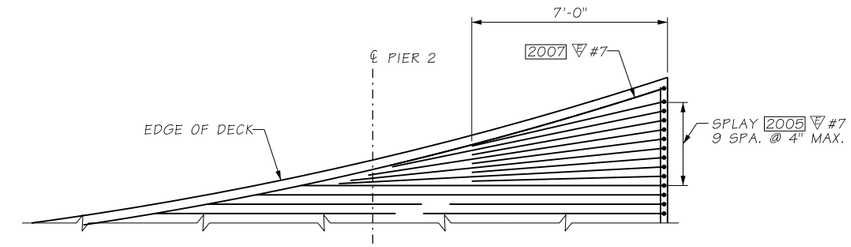

DETAIL 1 / -

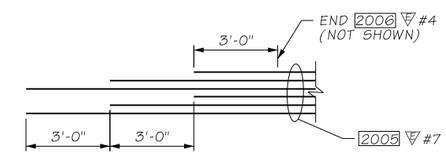

DETAIL 2 / -

AS-BUILT

ATKINSON
JAN 07 2020 KTN
RELEASED FOR CONSTRUCTION

NOTES:

1. SEE SHEET BB123 FOR NOTES.
2. INSTALL LOOP DETECTORS PER STANDARD PLAN J-50.16-01. SEE ITS PLANS FOR ADDITIONAL DETAILS.

FILE NAME	D:\ICS_workdir\43595\20633_2023\PS_BB124.dgn						
TIME	8:03:06 AM				REGION NO.	STATE	FED.AID PROJ.NO.
DATE	12/30/2019				10	WASH	
PLOTTED BY	USLAS0-APP064$	REV 3 - RFI0244	01/02/2020		JOB NUMBER		
DESIGNED BY	S.RAY	REV 2 - RFI0155	07/25/2019				
ENTERED BY	R. REISER	REV 1 - RFI110	05/29/2019				
CHECKED BY	G. CALLAHAN	REV 0 - RELEASED FOR CONSTRUCTION	05/13/2019		CONTRACT NO.		LOCATION NO.
PROJ. ENGR.	C. MEADE	REV A - FINAL REVIEW	04/10/2019		C9133		
REGIONAL ADM.	J. WYNANDS	REVISION	DATE	BY			

CORY J. CAYWOOD — STATE OF WASHINGTON — 38133 — STRUCTURAL ENGINEER — PROFESSIONAL ENGINEER
12/30/19
DATE
P.E. STAMP BOX

DATE
P.E. STAMP BOX

Washington State Department of Transportation

ATKINSON CONSTRUCTION / JACOBS

I-5
STEILACOOM-DUPONT RD TO THORNE LN CORRIDOR IMPROVEMENTS
MP 120.01 TO MP 124.45
BERKELEY SB ON RAMP BRIDGE

PLAN - BRIDGE DECK REINFORCING TOP MAT

PLAN REF NO BB124

SHEET 1305 OF 1456 SHEETS

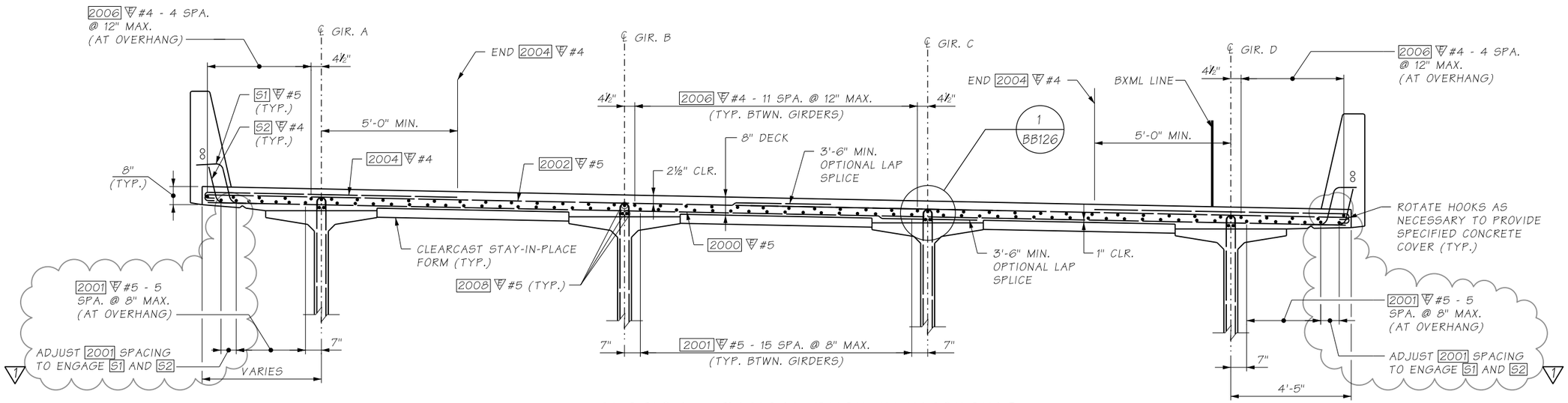

SECTION - TYPICAL DECK REINFORCING

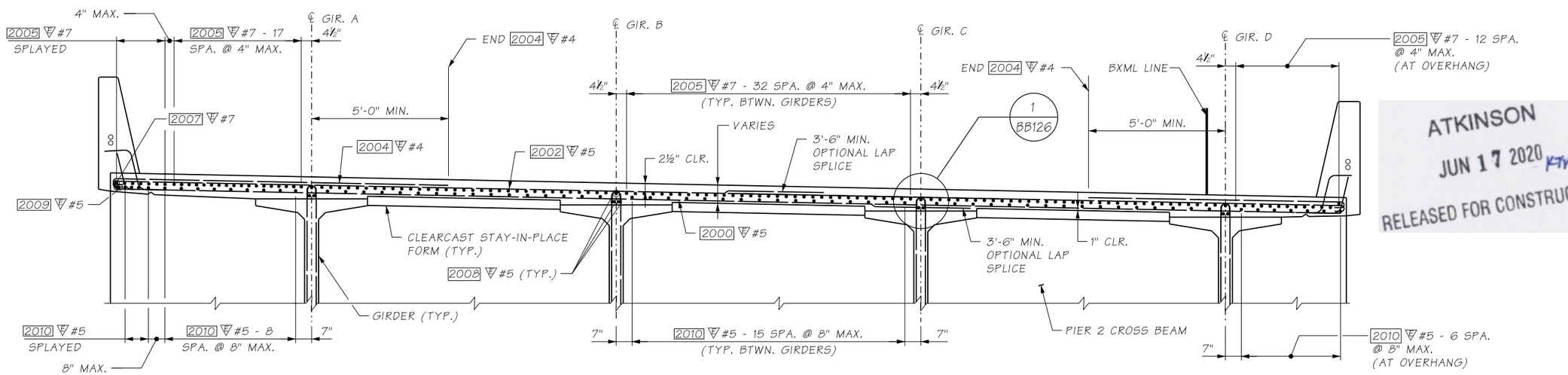

TYPICAL SECTION AT PIER 1 - DECK REINFORCING

ATKINSON
JUN 17 2020 KTW
RELEASED FOR CONSTRUCTION

AS-BUILT

FILE NAME	D:\ICS_workdir\54045\20633_1832\PS_BB125.dgn			
TIME	11:08:16 AM			
DATE	6/12/2020			
PLOTTED BY	USLAS0-APP064$			
DESIGNED BY	S. RAY			
ENTERED BY	R. REISER	REV 1 - RFI0157	06/18/2020	
CHECKED BY	G. CALLAHAN	REV 0 - RELEASED FOR CONSTRUCTION	05/13/2019	
PROJ. ENGR.	C. MEADE	REV A - FINAL REVIEW	04/10/2019	
REGIONAL ADM.	J. WYNANDS	REVISION	DATE	BY

REGION NO.	STATE	FED.AID PROJ.NO.
10	WASH	
JOB NUMBER		
CONTRACT NO.		LOCATION NO.
C9133		

CORT J. CAYWOOD — STATE OF WASHINGTON — 18738 — STRUCTURAL ENGINEER — PROFESSIONAL ENGINEER
6/15/20
DATE
P.E. STAMP BOX

DATE
P.E. STAMP BOX

Washington State Department of Transportation

ATKINSON / JACOBS CONSTRUCTION

I-5
STEILACOOM-DUPONT RD TO THORNE LN
CORRIDOR IMPROVEMENTS
MP 120.01 TO MP 124.45
BERKELEY SB ON RAMP BRIDGE

TYPICAL SECTION - DECK REINFORCING

PLAN REF NO
BB125

SHEET 1306 OF 1456 SHEETS

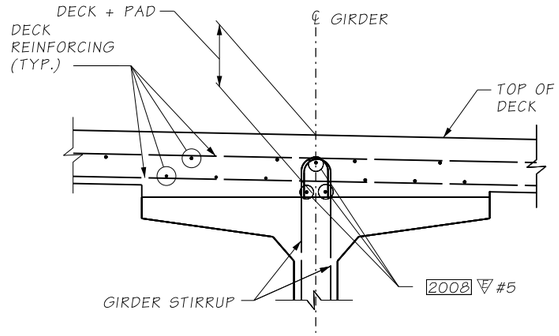

CASE 1

APPLIES FOR LOCATIONS WHERE DECK + PAD <= 11½"

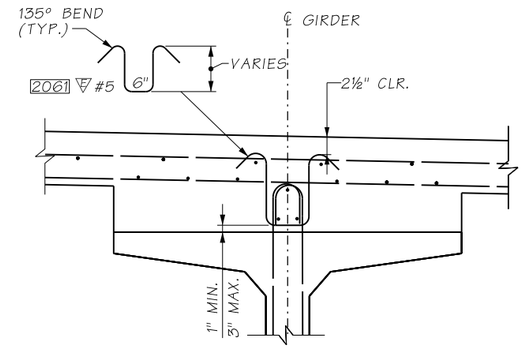

CASE 2

APPLIES FOR LOCATIONS WHERE DECK + PAD > 11½"
(SEE CASE 1 FOR CALLOUTS NOT SHOWN)

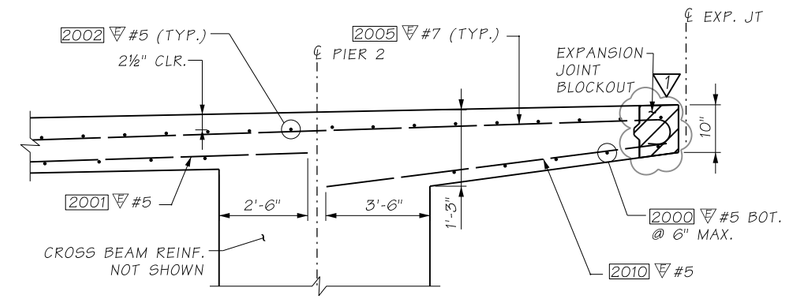

SECTION A
BB123
BB124

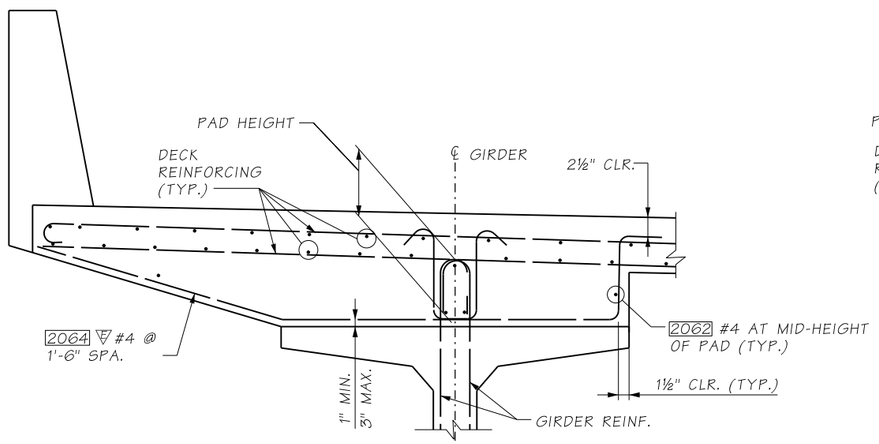

EXTERIOR GIRDER

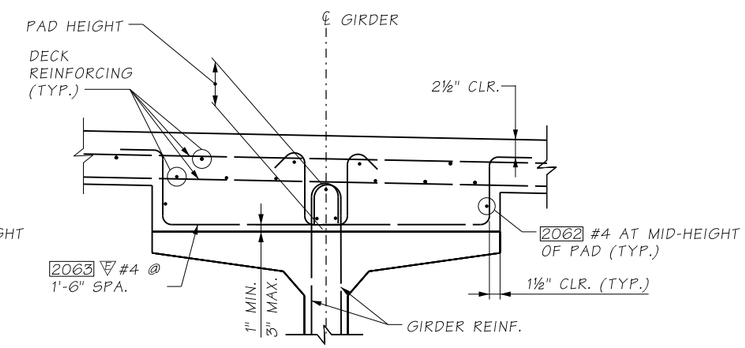

INTERIOR GIRDER

CASE 3

GIRDER PAD REINF.
APPLIES FOR LOCATIONS WHERE PAD HEIGHT > 6"

DETAIL 1

AS-BUILT

ATKINSON
MAY 31 2019 KTW
RELEASED FOR CONSTRUCTION

NOTES:

1. 2061 #5 BARS ARE REQUIRED AT ALL GIRDER STIRRUPS WHERE CASE 2 APPLIES. FOR BUNDLED STIRRUPS AT GIRDER ENDS, ONE 2061 #5 IS REQUIRED PER BUNDLE OF GIRDER STIRRUPS. PROVIDE 2061 #5 WITH VARIABLE HEIGHTS IN SUFFICIENT QUANTITIES TO ACCOMMODATE VARIATIONS IN GIRDER CAMBER. THESE BARS SHALL BE PLACED NORMAL TO THE GIRDER FLANGE.

FILE NAME	D:\ICS_workdir\28910\20633_1984\PS_BB126.dgn			
TIME	3:49:44 PM			
DATE	5/30/2019			
PLOTTED BY	USLAS0-APP064$			
DESIGNED BY	S. RAY			
ENTERED BY	R. REISER	REV 1 - RFI110	05/29/2019	
CHECKED BY	G. CALLAHAN	REV 0 - RELEASED FOR CONSTRUCTION	05/13/2019	
PROJ. ENGR.	C. MEADE	REV A - FINAL REVIEW	04/10/2019	
REGIONAL ADM.	J. WYNANDS	REVISION	DATE	BY

REGION NO.	STATE	FED.AID PROJ.NO.
10	WASH	
JOB NUMBER		
CONTRACT NO.		LOCATION NO.
C9133		

CORT J. CAYWOOD
STATE OF WASHINGTON
28133
STRUCTURAL ENGINEER
PROFESSIONAL ENGINEER
5/30/19
DATE
P.E. STAMP BOX

DATE
P.E. STAMP BOX

Washington State Department of Transportation
ATKINSON CONSTRUCTION / JACOBS

I-5
STEILACOOM-DUPONT RD TO THORNE LN CORRIDOR IMPROVEMENTS
MP 120.01 TO MP 124.45
BERKELEY SB ON RAMP BRIDGE

DECK REINFORCING DETAILS

PLAN REF NO BB126

SHEET 1307 OF 1456 SHEETS

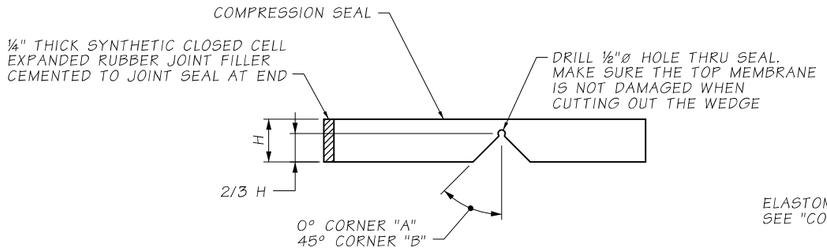

SEAL CUTTING DETAIL

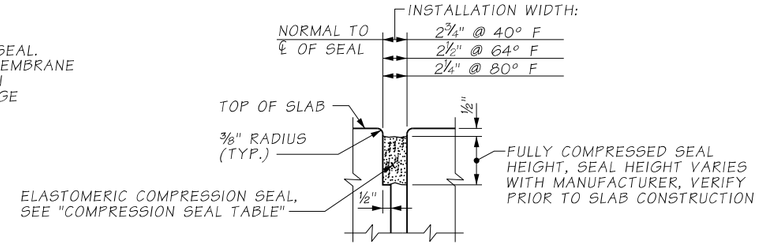

COMPRESSION SEAL

EXPANSION JOINT AT PIER 1

NOTES:

1. FOR STRIP SEAL EXPANSION JOINT AT PIER 2 SEE BERKELEY OVERPASS EXPANSION JOINTS DETAILS, BB056.

COMPRESSION SEAL TABLE

D.S. BROWN		WATSON BOWMAN ACME	
SEAL	WIDTH	SEAL	WIDTH
CV-4000	4"	WA-400	4"

TESTING SHALL BE PER ASTM D2628 PRIOR TO USE.

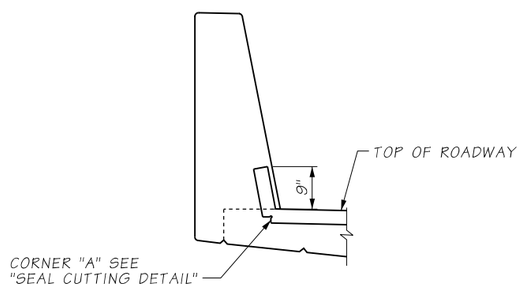

SECTION A

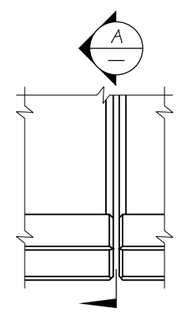

PLAN - EXPANSION JOINT

AS-BUILT

ATKINSON
AUG 12 2019 KTW
RELEASED FOR CONSTRUCTION

FILE NAME	c:\pwworking\jacobs_b&i\reiserrw\dms20633\PS_BB127.dgn						
TIME	8:12:01 AM				REGION NO.	STATE	FED.AID PROJ.NO.
DATE	8/6/2019				10	WASH	
PLOTTED BY	ReiserRW				JOB NUMBER		
DESIGNED BY	G. CALLAHAN						
ENTERED BY	R. REISER						
CHECKED BY	A. GASCA	REV 0 - RELEASED FOR CONSTRUCTION	08/16/2019		CONTRACT NO.		LOCATION NO.
PROJ. ENGR.	C. MEADE	REV A - FINAL REVIEW	07/19/2019		C9133		
REGIONAL ADM.	J. WYNANDS	REVISION	DATE	BY			

CORY J. CALLAHAN, STATE OF WASHINGTON, 38139, PROFESSIONAL ENGINEER
8/12/19
DATE
P.E. STAMP BOX

DATE
P.E. STAMP BOX

Washington State Department of Transportation

ATKINSON CONSTRUCTION / JACOBS

I-5
STEILACOOM-DUPONT RD TO THORNE LN
CORRIDOR IMPROVEMENTS
MP 120.01 TO MP 124.45
BERKELEY SB ON RAMP BRIDGE

EXPANSION JOINT DETAILS
COMPRESSION SEAL

PLAN REF NO
BB127

SHEET 1308 OF 1456 SHEETS

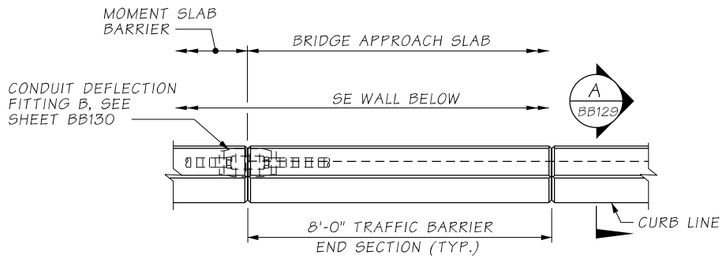

PLAN - LEFT TRAFFIC BARRIER

SEE "PLAN - RIGHT TRAFFIC BARRIER" FOR DETAILS NOT SHOWN

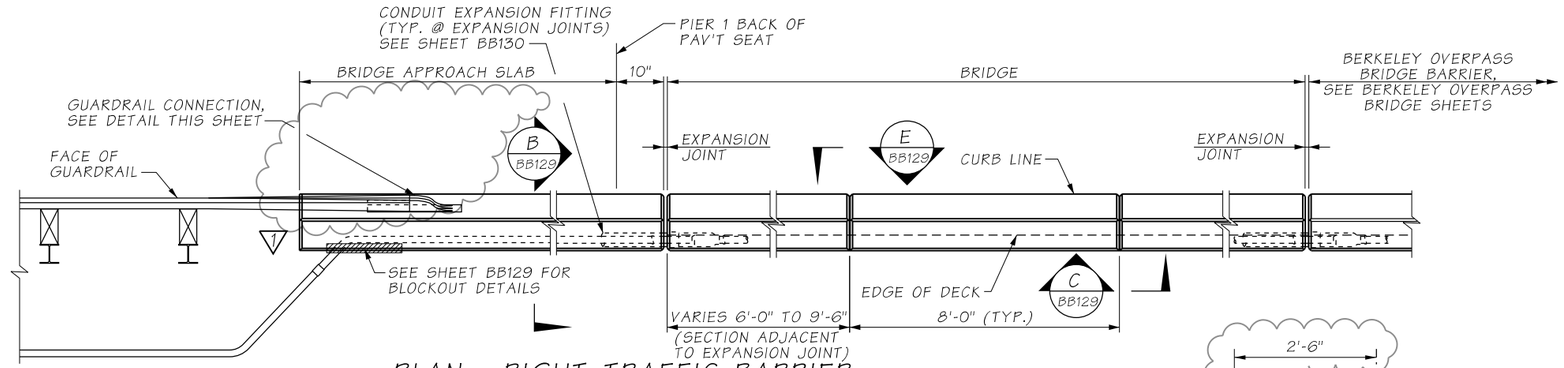

PLAN - RIGHT TRAFFIC BARRIER

BARRIER CONTINUOUS BETWEEN BRIDGE DECK EXPANSION JOINTS.
CONSTRUCTION JOINTS WITH SHEAR KEYS ARE PERMISSIBLE AT DUMMY JOINT LOCATIONS.
FORM JOINTS BETWEEN DUMMY JOINTS SHALL NOT BE PERMITTED.

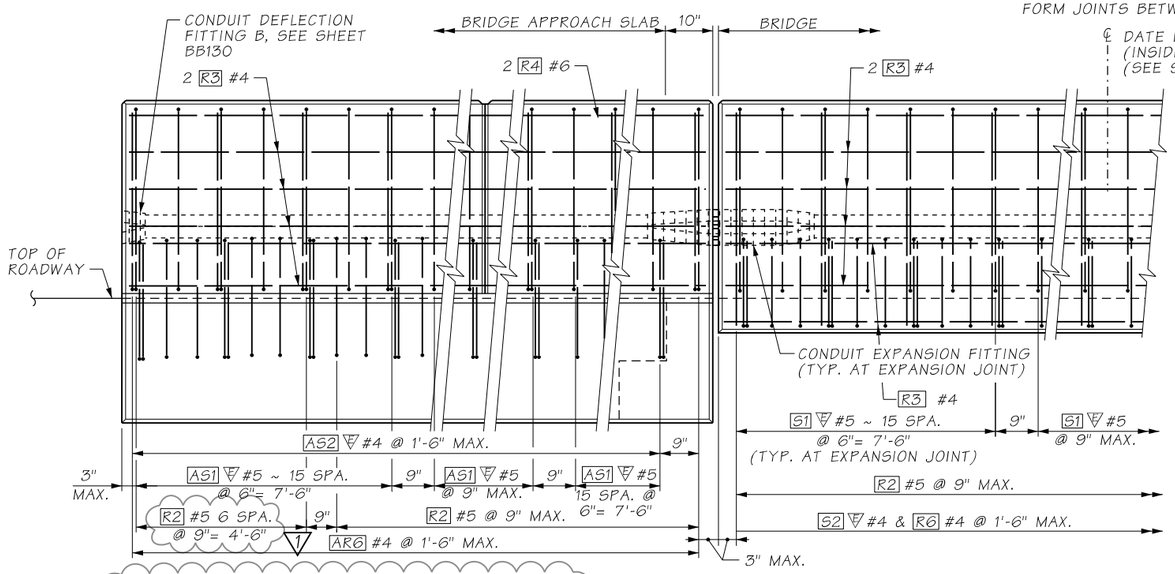

ELEVATION END OF LEFT TRAFFIC BARRIER

AS-BUILT

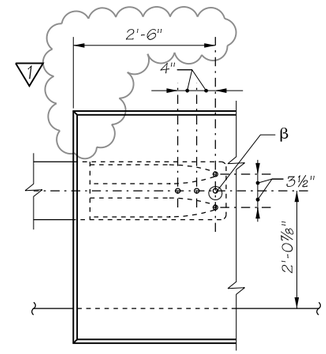

W-BEAM END SECTION DESIGN "F" (SEE STD. PLAN C-7)

OUTSIDE ELEVATION TRAFFIC BARRIER - GUARDRAIL CONNECTION

(WHERE SHOWN ON LAYOUT)

β PROVIDE ⅞"ø ROCKET/KOHLER F-50, LANCASTER MALLEABLE, OR DAYTON/RICHMOND F-62 FLARED THIN SLAB FERRULE INSERTS OR APPROVED EQUAL (TYP.). RESIN-BONDED ANCHORS MAY BE SUBSTITUTED.

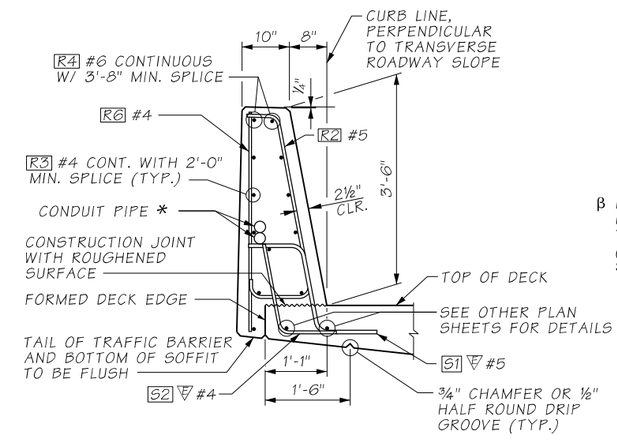

TYPICAL SECTION TRAFFIC BARRIER

SHOWN ON BRIDGE
SEE SHEET BB129 (SECTIONS A&B)
FOR BARRIER ON APPROACH SLAB

* PROVIDE 2- 2"ø CONDUITS IN LEFT BARRIER AND 2- 2"ø CONDUITS PLUS 1- 3"ø CONDUIT IN RIGHT BARRIER. NO JUNCTION BOXES ARE REQUIRED FOR 3"ø CONDUIT.

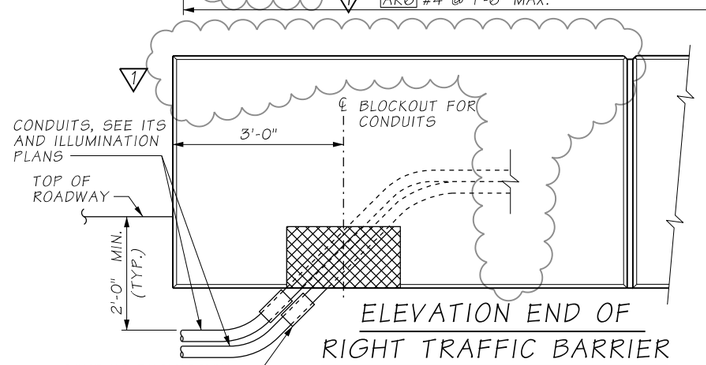

ELEVATION END OF RIGHT TRAFFIC BARRIER

SEE "ELEVATION END OF LEFT TRAFFIC BARRIER" FOR DETAILS NOT SHOWN, 3"ø CONDUIT NOT SHOWN.

ATKINSON
APR 14 2020 KTW
RELEASED FOR CONSTRUCTION

NOTES:

1. TRAFFIC BARRIER HAS BEEN DESIGNED FOR TL-4 LOADING.

FILE NAME	c:\pwworking\jacobs_b&i\youngkl2\dms20633\PS_BB128.dgn						
TIME	8:05:29 AM				REGION NO. 10	STATE WASH	FED.AID PROJ.NO.
DATE	4/14/2020						
PLOTTED BY	youngkl2				JOB NUMBER		
DESIGNED BY	G. CALLAHAN						
ENTERED BY	R. REISER	REV 1 - RFI0388	04/13/2020				
CHECKED BY	C. CAYWOOD	REV 0 - RELEASED FOR CONSTRUCTION	08/16/2019		CONTRACT NO. C9133		LOCATION NO.
PROJ. ENGR.	C. MEADE	REV A - FINAL REVIEW	07/19/2019				
REGIONAL ADM.	J. WYNANDS	REVISION	DATE	BY			

CORY J. CAYWOOD, STATE OF WASHINGTON, 38759, STRUCTURAL ENGINEER, PROFESSIONAL ENGINEER
4/14/20
DATE
P.E. STAMP BOX

P.E. STAMP BOX
DATE

Washington State Department of Transportation

ATKINSON CONSTRUCTION / JACOBS

I-5
STEILACOOM-DUPONT RD TO THORNE LN CORRIDOR IMPROVEMENTS
MP 120.01 TO MP 124.45
BERKELEY SB ON RAMP BRIDGE

TRAFFIC BARRIER - SINGLE SLOPE 42" DETAILS (1 OF 4)

PLAN REF NO BB128

SHEET 1309 OF 1456 SHEETS

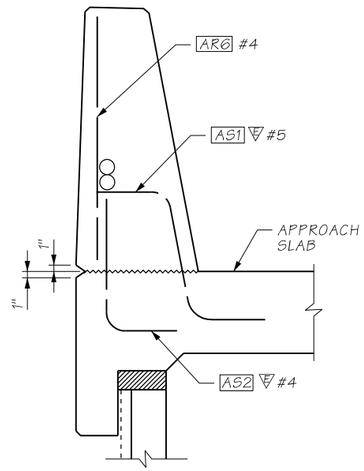

SECTION A / BB128

ON APPROACH SLAB.
FOR LEFT BARRIER DETAILS
NOT SHOWN SEE SHEET BB128
"TYPICAL SECTION - TRAFFIC BARRIER"

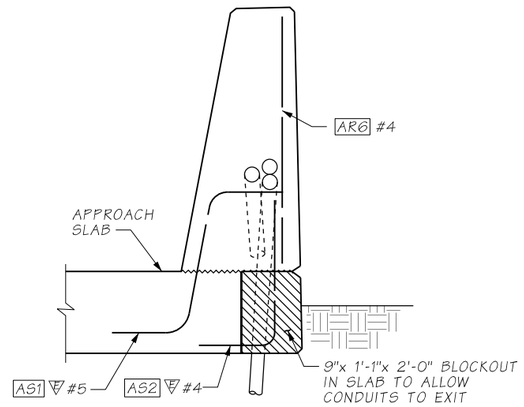

SECTION B / BB128

ON APPROACH SLAB.
FOR RIGHT BARRIER DETAILS
NOT SHOWN SEE SHEET BB128
"TYPICAL SECTION - SINGLE SLOPE BARRIER"

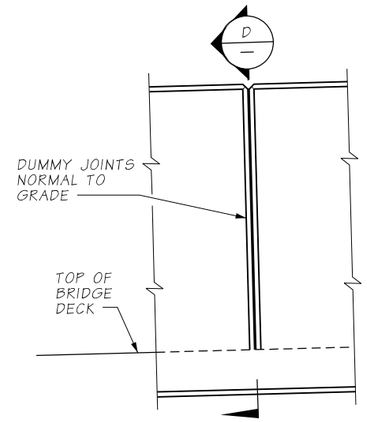

VIEW C / BB128

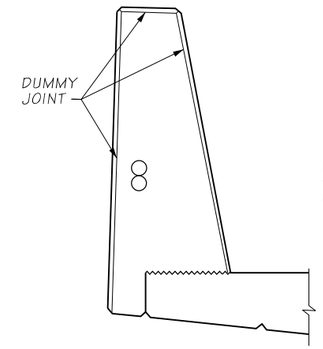

SECTION D / —

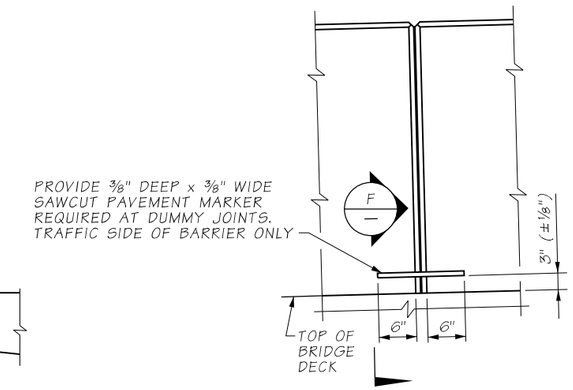

VIEW E / BB128

ATKINSON
APR 14 2020 KTW
RELEASED FOR CONSTRUCTION

AS-BUILT

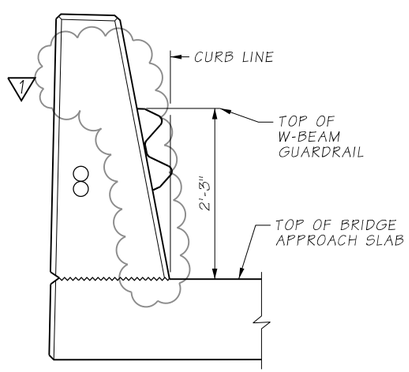

END SECTION W/GUARDRAIL

W-BEAM SHOWN WITH "D" CONNECTION OR "F" CONNECTION (SEE STD. PLAN C-7).

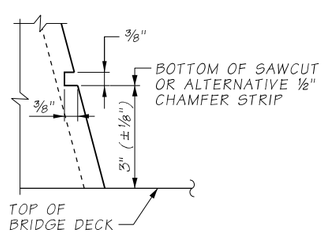

SECTION F / —

PAVEMENT MARKER DETAIL

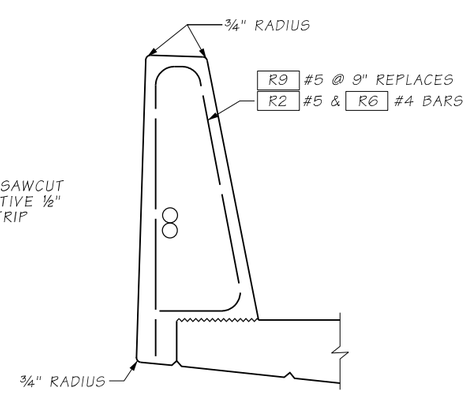

SLIPFORM ALTERNATIVE

SEE SHEET BB128
"TYPICAL SECTION - TRAFFIC BARRIER"
FOR ADDITIONAL DETAILS.

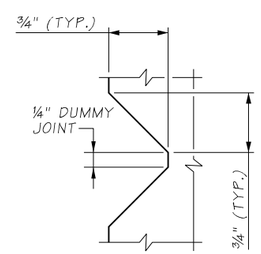

DUMMY JOINT DETAIL

BENDING DIAGRAM

ALL DIMENSIONS ARE OUT TO OUT.
≠ = DIMENSIONS TO POINTS OF INTERSECTION.

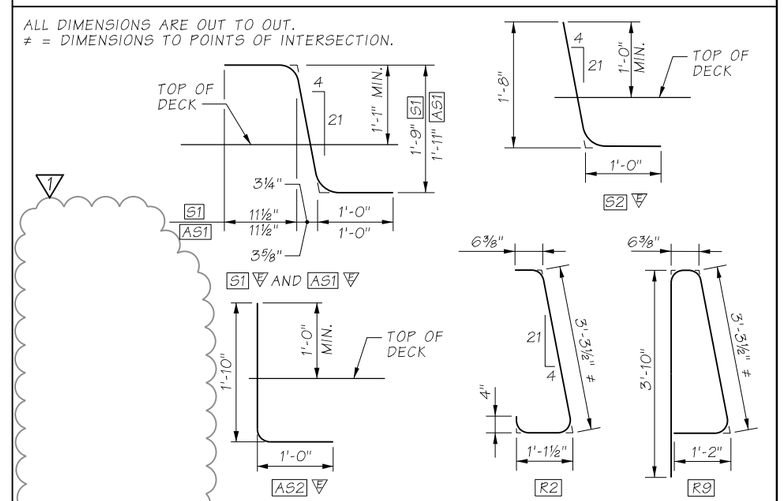

FILE NAME	c:\pwworkng\jacobs_b&l\youngkl2\dms20633\PS_BB129.dgn				REGION NO.	STATE	FED.AID PROJ.NO.
TIME	11:32:48 AM				10	WASH	
DATE	4/10/2020				JOB NUMBER		
PLOTTED BY	youngkl2						
DESIGNED BY	G. CALLAHAN						
ENTERED BY	R. REISER	REV 1 - RFI0388	04/13/2020		CONTRACT NO.		LOCATION NO.
CHECKED BY	C. CAYWOOD	REV 0 - RELEASED FOR CONSTRUCTION	08/16/2019		C9133		
PROJ. ENGR.	C. MEADE	REV A - FINAL REVIEW	07/19/2019				
REGIONAL ADM.	J. WYNANDS	REVISION	DATE	BY			

COREY J. CAYWOOD
STATE OF WASHINGTON
38759
STRUCTURAL ENGINEER
PROFESSIONAL ENGINEER
4/14/20
DATE
P.E. STAMP BOX

DATE
P.E. STAMP BOX

Washington State Department of Transportation

ATKINSON CONSTRUCTION / JACOBS

I-5
STEILACOOM-DUPONT RD TO THORNE LN
CORRIDOR IMPROVEMENTS
MP 120.01 TO MP 124.45
BERKELEY SB ON RAMP BRIDGE

TRAFFIC BARRIER - SINGLE SLOPE 42" DETAILS (2 OF 4)

PLAN REF NO
BB129

SHEET 1310 OF 1456 SHEETS

JUNCTION BOX LOCATIONS

LEFT BARRIER		RIGHT BARRIER	
STATION	"TS" OR "LT"	STATION	"TS" OR "LT"
BXML 22+01	LT	BXML 22+01	LT
BXML 22+09	TS	BXML 22+09	TS
		BXML 22+95	TS

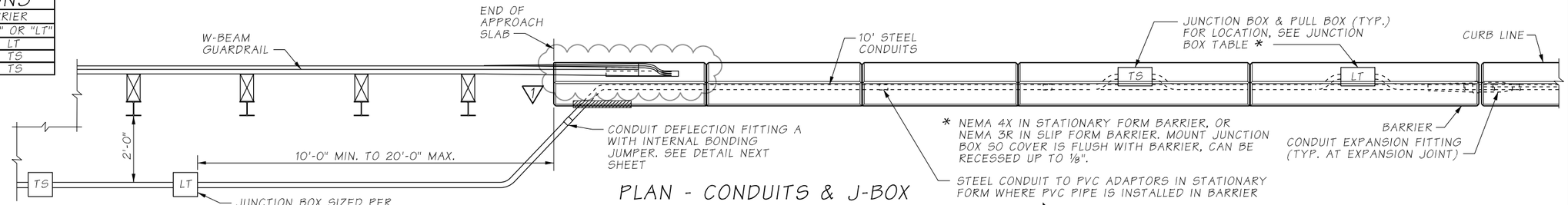

TS = TRAFFIC SYSTEM
LT = LIGHTING SYSTEM

JUNCTION BOX LOCATIONS SHOWN ARE APPROXIMATE. CENTER JUNCTION BOX INSTALLATION BETWEEN BARRIER DUMMY JOINTS.

INSTALL ALL CONDUIT RUNS TO DRAIN TO A BRIDGE END OR PROVIDE DRAIN AT ALL LOW POINTS IN CONDUIT RUN ON BRIDGE.

PLAN - CONDUITS & J-BOX IN RIGHT TRAFFIC BARRIER

A / BB131

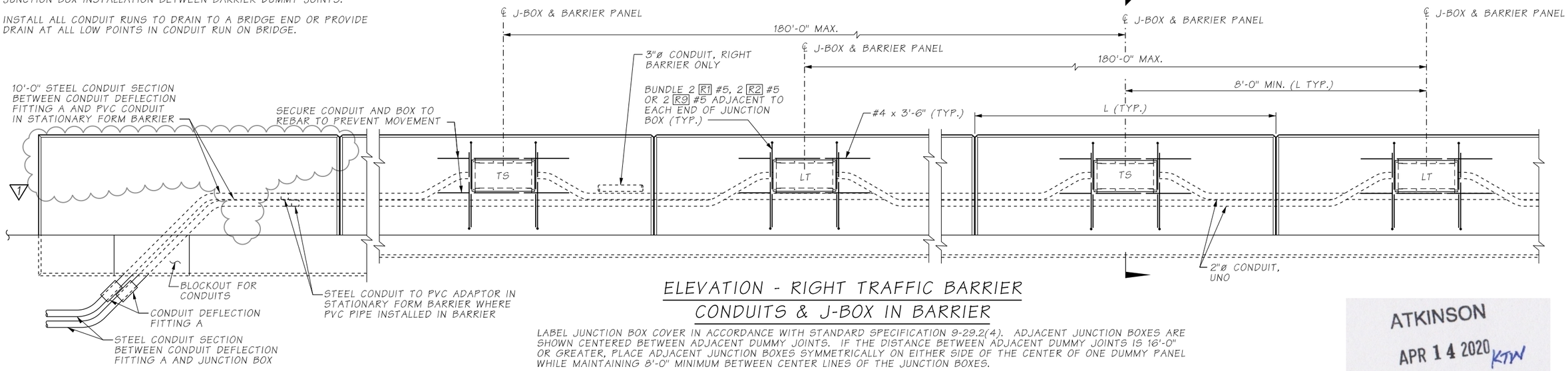

ELEVATION - RIGHT TRAFFIC BARRIER CONDUITS & J-BOX IN BARRIER

LABEL JUNCTION BOX COVER IN ACCORDANCE WITH STANDARD SPECIFICATION 9-29.2(4). ADJACENT JUNCTION BOXES ARE SHOWN CENTERED BETWEEN ADJACENT DUMMY JOINTS. IF THE DISTANCE BETWEEN ADJACENT DUMMY JOINTS IS 16'-0" OR GREATER, PLACE ADJACENT JUNCTION BOXES SYMMETRICALLY ON EITHER SIDE OF THE CENTER OF ONE DUMMY PANEL WHILE MAINTAINING 8'-0" MINIMUM BETWEEN CENTER LINES OF THE JUNCTION BOXES.

ATKINSON
APR 14 2020 KTW
RELEASED FOR CONSTRUCTION

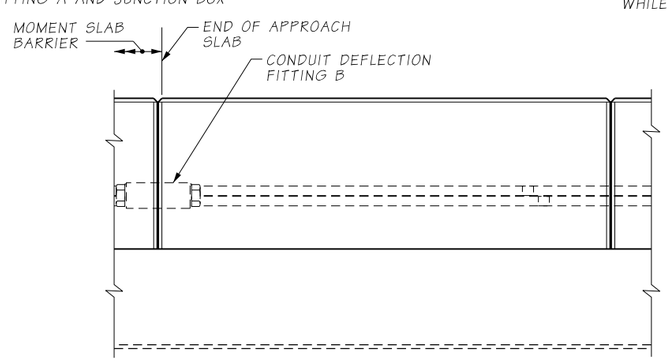

ELEVATION - CONDUITS & J-BOX IN LEFT TRAFFIC BARRIER

SEE "ELEVATION - RIGHT TRAFFIC BARRIER CONDUITS & J-BOX IN BARRIER" FOR ADDITIONAL DETAILS

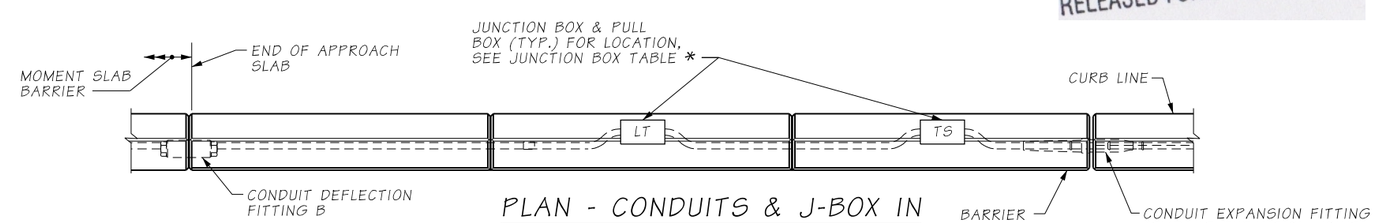

PLAN - CONDUITS & J-BOX IN LEFT TRAFFIC BARRIER

* NEMA 4X IN STATIONARY FORM BARRIER, OR NEMA 3X IN SLIP FORM BARRIER. MOUNT JUNCTION BOX SO COVER IS FLUSH WITH BARRER, CAN BE RECESSED UP TO 1/8".

AS-BUILT

FILE NAME	c:\pwworking\jacobs_b&i\youngkl2\dms20633\PS_BB130.dgn						
TIME	11:34:34 AM				REGION NO. 10	STATE WASH	FED.AID PROJ.NO.
DATE	4/10/2020						
PLOTTED BY	youngkl2				JOB NUMBER		
DESIGNED BY	G. CALLAHAN						
ENTERED BY	R. REISER	REV 1 - RFI0388	04/13/2020				
CHECKED BY	C. CAYWOOD	REV 0 - RELEASED FOR CONSTRUCTION	08/16/2019		CONTRACT NO. C9133		LOCATION NO.
PROJ. ENGR.	C. MEADE	REV A - FINAL REVIEW	07/19/2019				
REGIONAL ADM.	J. WYNANDS	REVISION	DATE	BY			

CORY J. CAYWOOD, STATE OF WASHINGTON, 38759, STRUCTURAL ENGINEER, PROFESSIONAL ENGINEER
4/14/20
DATE
P.E. STAMP BOX

DATE
P.E. STAMP BOX

Washington State Department of Transportation

ATKINSON / JACOBS CONSTRUCTION

I-5
STEILACOOM-DUPONT RD TO THORNE LN CORRIDOR IMPROVEMENTS
MP 120.01 TO MP 124.45
BERKELEY SB ON RAMP BRIDGE

TRAFFIC BARRIER - SINGLE SLOPE 42" DETAILS (3 OF 4)

PLAN REF NO BB130

SHEET 1311 OF 1456 SHEETS

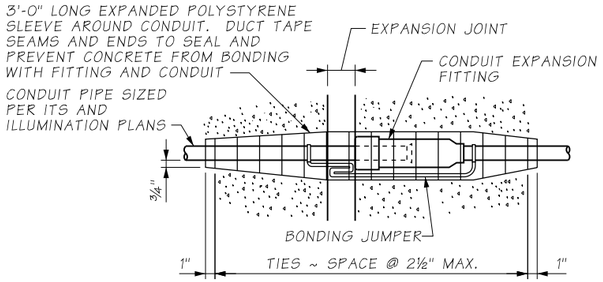

CONDUIT EXPANSION FITTING

CONDUIT FITTING - (TYPE AX FOR MOVEMENT OF ± 2") AT BRIDGE EXPANSION JOINTS

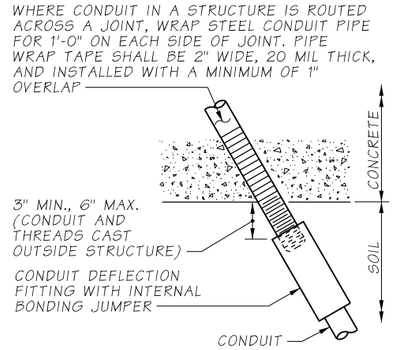

CONDUIT DEFLECTION FITTING A

CONDUIT FITTING - TYPE DX FOR DEFLECTION OF 30° AND ¾" MOVEMENT. PLACE AT CONDUIT EXIT FROM STRUCTURE AND SHALL BE IN NEUTRAL STATE AFTER INSTALLATION.

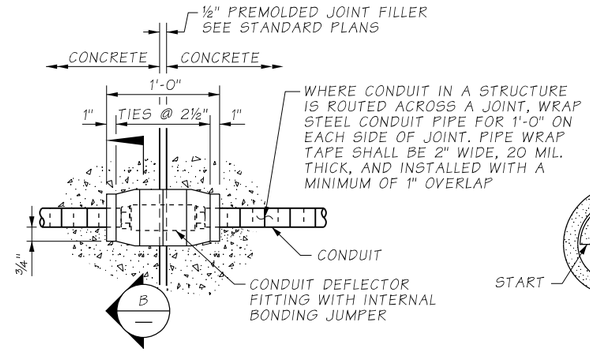

CONDUIT DEFLECTION FITTING B

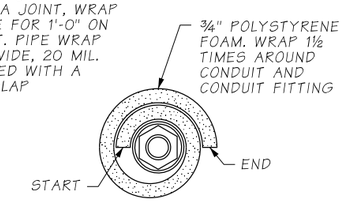

SECTION B —

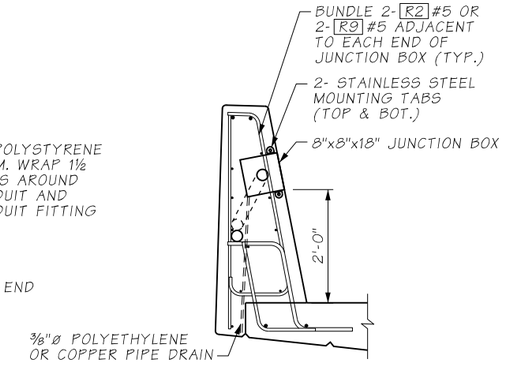

SECTION A

BB130

AS-BUILT

ATKINSON
AUG 12 2019 KTW
RELEASED FOR CONSTRUCTION

FILE NAME	c:\pwworking\jacobs_b&i\reiserrw\dms20633\PS_BB131.dgn						
TIME	8:33:19 AM				REGION NO.	STATE	FED.AID PROJ.NO.
DATE	8/6/2019				10	WASH	
PLOTTED BY	ReiserRW				JOB NUMBER		
DESIGNED BY	G. CALLAHAN						
ENTERED BY	R. REISER						
CHECKED BY	C. CAYWOOD	REV 0 - RELEASED FOR CONSTRUCTION	08/16/2019		CONTRACT NO.		LOCATION NO.
PROJ. ENGR.	C. MEADE	REV A - FINAL REVIEW	07/19/2019		C9133		
REGIONAL ADM.	J. WYNANDS	REVISION	DATE	BY			

CORY J. CAYWOOD — STATE OF WASHINGTON — 38755 — STRUCTURAL ENGINEER — PROFESSIONAL ENGINEER
8/12/19
DATE
P.E. STAMP BOX

DATE
P.E. STAMP BOX

Washington State Department of Transportation

ATKINSON CONSTRUCTION / JACOBS

I-5
STEILACOOM-DUPONT RD TO THORNE LN CORRIDOR IMPROVEMENTS
MP 120.01 TO MP 124.45
BERKELEY SB ON RAMP BRIDGE

TRAFFIC BARRIER - SINGLE SLOPE 42" DETAILS (4 OF 4)

PLAN REF NO BB131

SHEET 1312 OF 1456 SHEETS

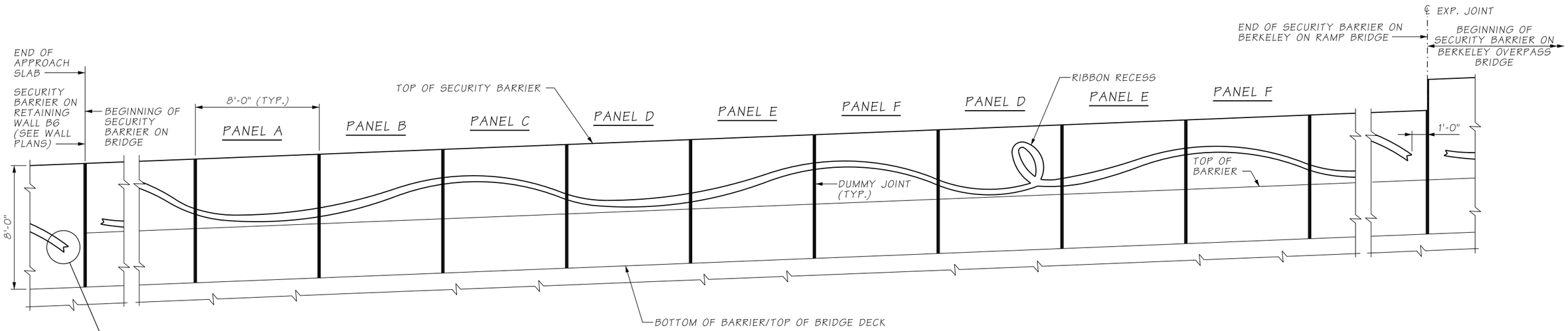

ELEVATION

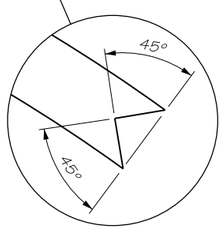

RIBBON END DETAIL

AS-BUILT

NOTES:

1. RIBBON PATTERN SHALL CONSIST OF PANEL A THROUGH F. PANEL SEQUENCE SHALL BE AS FOLLOWS: PANEL A -> PANEL B -> PANEL C -> PANEL D -> PANEL E -> PANEL F -> PANEL D -> PANEL E -> PANEL F. REPEAT SAME PATTERN FOR THE FULL LENGTH OF THE SECURITY BARRIER.
2. DUMMY JOINTS SHALL BE NORMAL TO FINISHED GRADE AND LINED UP WITH DUMMY JOINTS ON THE PEDESTRIAN BARRIER.
3. PRIOR TO CONSTRUCTION OF SECURITY BARRIER, SUBMIT TYPE 2 WORKING DRAWINGS FOR APPROVAL INCLUDING ELEVATION WITH RIBBON LAYOUT ALONG FULL LENGTH OF SECURITY BARRIER ON BRIDGE.
4. MT. BAKER GRAY PIGMENTED SEALER SHALL BE USED FOR RIBBON RECESS.

ATKINSON
APR 21 2020 KW
RELEASED FOR CONSTRUCTION

FILE NAME	D:\ICS_workdir\50655\20633_2186\PS_BB132.dgn						
TIME	1:11:31 PM				REGION NO.	STATE	FED.AID PROJ.NO.
DATE	4/15/2020				10	WASH	
PLOTTED BY	USLAS0-APP064$				JOB NUMBER		
DESIGNED BY	G. CALLAHAN						
ENTERED BY	R. REISER	REV 1 - RFI0258	04/17/2020				
CHECKED BY	C. CAYWOOD	REV 0 - RELEASED FOR CONSTRUCTION	08/16/2019		CONTRACT NO.		LOCATION NO.
PROJ. ENGR.	C. MEADE	REV A - FINAL REVIEW	07/19/2019		C9133		
REGIONAL ADM.	J. WYNANDS	REVISION	DATE	BY			

CORY J. CAYWOOD, STATE OF WASHINGTON, 38139, STRUCTURAL ENGINEER, PROFESSIONAL ENGINEER
4/16/20
DATE
P.E. STAMP BOX

DATE
P.E. STAMP BOX

Washington State Department of Transportation

ATKINSON CONSTRUCTION / JACOBS

I-5
STEILACOOM-DUPONT RD TO THORNE LN
CORRIDOR IMPROVEMENTS
MP 120.01 TO MP 124.45
BERKELEY SB ON RAMP BRIDGE

SECURITY BARRIER DETAILS (1 OF 2)

PLAN REF NO BB132

SHEET 1313 OF 1456 SHEETS

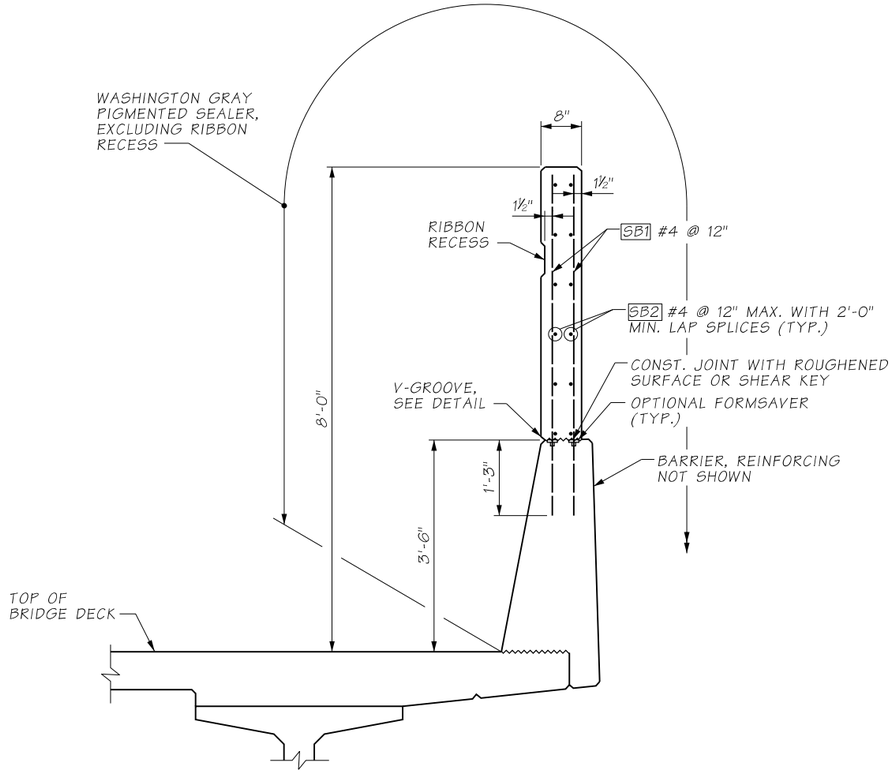

TYPICAL SECTION
SECURITY BARRIER

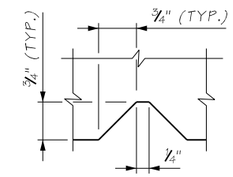

DUMMY JOINT

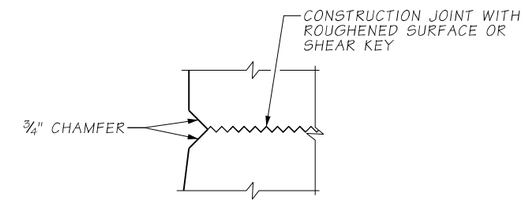

V-GROOVE DETAIL

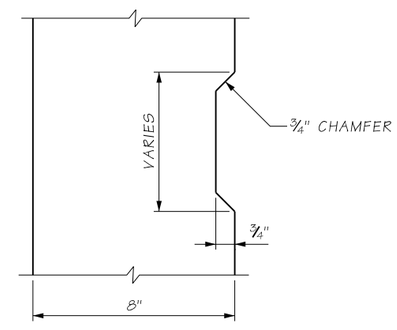

RIBBON RECESS

AS-BUILT

ATKINSON
AUG 12 2019 KTW
RELEASED FOR CONSTRUCTION

FILE NAME	c:\pwworking\jacobs_b&i\reiserrw\dms20633\PS_BB133.dgn						
TIME	9:22:06 AM				REGION NO. 10	STATE WASH	FED.AID PROJ.NO.
DATE	8/6/2019						
PLOTTED BY	ReiserRW						
DESIGNED BY	G. CALLAHAN				JOB NUMBER		
ENTERED BY	R. REISER						
CHECKED BY	A. FONG	REV 0 - RELEASED FOR CONSTRUCTION	08/16/2019		CONTRACT NO. C9133		LOCATION NO.
PROJ. ENGR.	C. MEADE	REV A - FINAL REVIEW	07/19/2019				
REGIONAL ADM.	J. WYNANDS	REVISION	DATE	BY			

P.E. STAMP BOX — DATE 8/12/19

P.E. STAMP BOX — DATE

Washington State Department of Transportation

ATKINSON CONSTRUCTION / JACOBS

I-5
STEILACOOM-DUPONT RD TO THORNE LN CORRIDOR IMPROVEMENTS
MP 120.01 TO MP 124.45
BERKELEY SB ON RAMP BRIDGE

SECURITY BARRIER DETAILS (2 OF 2)

PLAN REF NO BB133

SHEET 1314 OF 1456 SHEETS

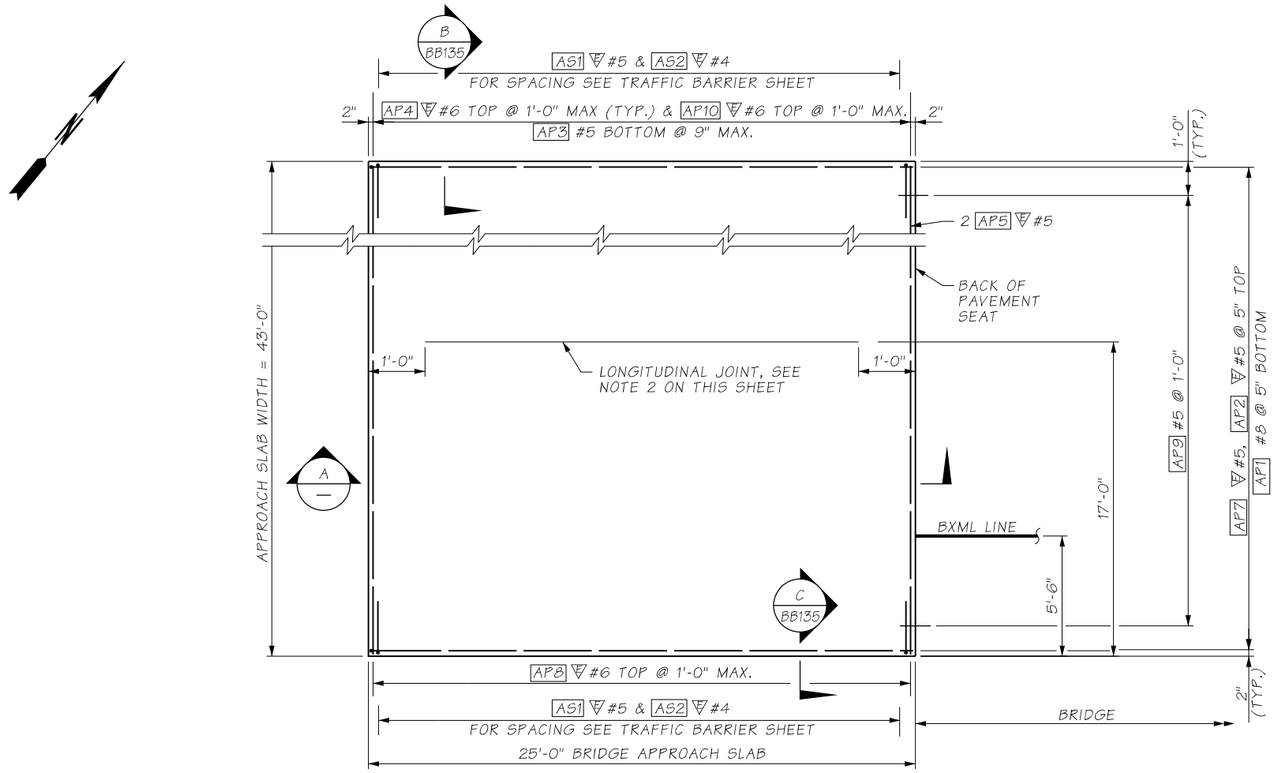

PIER 1 - PLAN

NOTES:

1. ALL EDGES OF BRIDGE APPROACH SLAB SHALL HAVE ½" RADIUS, EXCEPT AT LONGITUDINAL JOINTS AND ADJACENT TO ABUTMENTS.
2. LONGITUDINAL JOINTS SHALL BE CONSTRUCTED AND SEALED IN ACCORDANCE WITH STD. SPEC. SECTION 5-05.3(8). JOINTS MAY BE EITHER A SAWCUT CRACK CONTROL JOINT OR A CONSTRUCTION JOINT. SAWCUT JOINTS SHALL TERMINATE 1'-0" BEFORE REACHING EDGE OF SLAB AND MUST BE SAW CUT AS SOON AS POSSIBLE AFTER PLACEMENT OF CONCRETE. SEE "LONGITUDINAL JOINT DETAIL" ON APPROACH SLAB DETAILS 2 OF 2.
3. THE MINIMUM LAP SPLICE OF #5 IS 2'-0", #5 IS 2'-6", #6 IS 3'-0", AND #8 IS 3'-3". ALL LAP SPLICES SHALL BE STAGGERED SO THAT NO MORE THAN 50% OF REBAR IS SPLICED AT THE SAME LOCATION. LAP SPLICES SHALL BE LOCATED WITHIN THE MIDDLE HALF OF THE BRIDGE APPROACH SLAB. OPTIONAL SPLICES ARE ALLOWED FOR AP4 #6.
4. FOR TRAFFIC BARRIER DETAILS, SEE TRAFFIC BARRIER SHEETS.

AS-BUILT

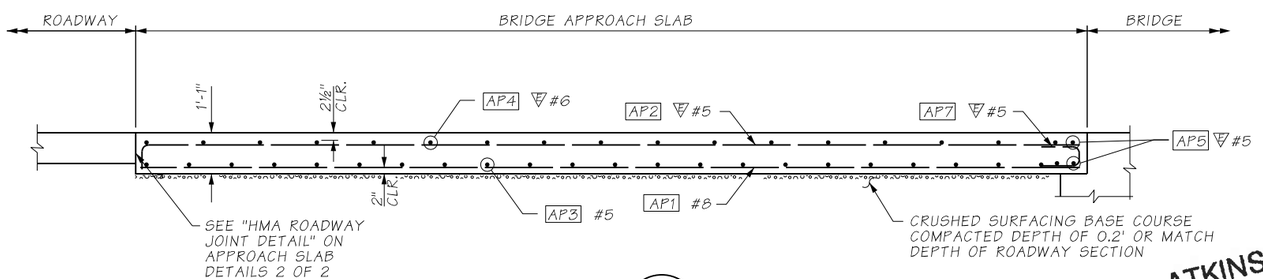

SECTION A

ATKINSON
AUG 12 2019 KTW
RELEASED FOR CONSTRUCTION

BENDING DIAGRAM

NOTE: ALL DIMENSIONS ARE OUT TO OUT

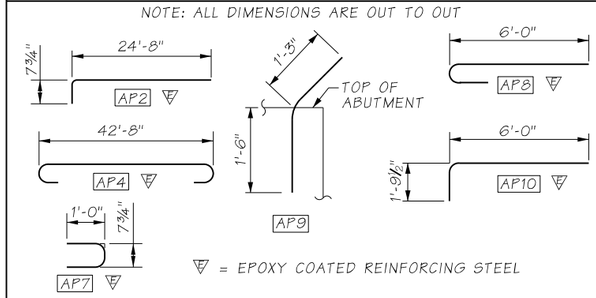

= EPOXY COATED REINFORCING STEEL

FILE NAME	c:\pwworking\jacobs_b&l\reiserrw\dms20633\PS_BB134.dgn			
TIME	9:24:06 AM			
DATE	8/6/2019			
PLOTTED BY	ReiserRW			
DESIGNED BY	G. CALLAHAN			
ENTERED BY	R. REISER			
CHECKED BY	C. CAYWOOD	REV 0 - RELEASED FOR CONSTRUCTION	08/16/2019	
PROJ. ENGR.	C. MEADE	REV A - FINAL REVIEW	07/19/2019	
REGIONAL ADM.	J. WYNANDS	REVISION	DATE	BY

REGION NO.	STATE	FED.AID PROJ.NO.
10	WASH	
JOB NUMBER		
CONTRACT NO. C9133		LOCATION NO.

CORY J. CAYWOOD, STATE OF WASHINGTON, 38759, REGISTERED PROFESSIONAL ENGINEER
8/12/19
DATE
P.E. STAMP BOX

DATE
P.E. STAMP BOX

Washington State Department of Transportation
ATKINSON CONSTRUCTION / JACOBS

I-5
STEILACOOM-DUPONT RD TO THORNE LN
CORRIDOR IMPROVEMENTS
MP 120.01 TO MP 124.45
BERKELEY SB ON RAMP BRIDGE

APPROACH SLAB DETAILS (1 OF 2)

PLAN REF NO BB134
SHEET 1315 OF 1456 SHEETS

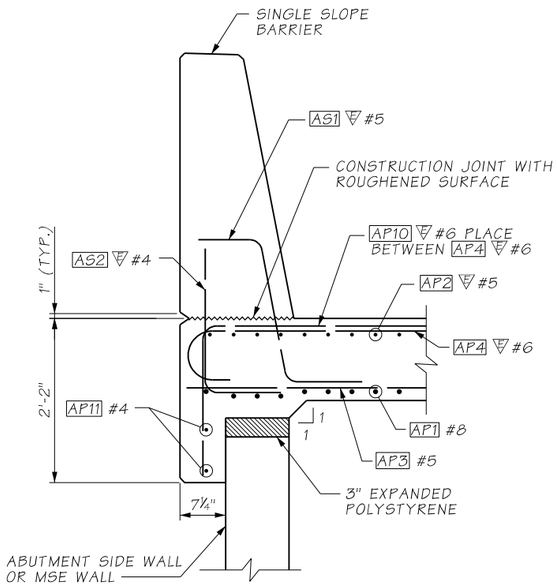

SECTION B
BB134

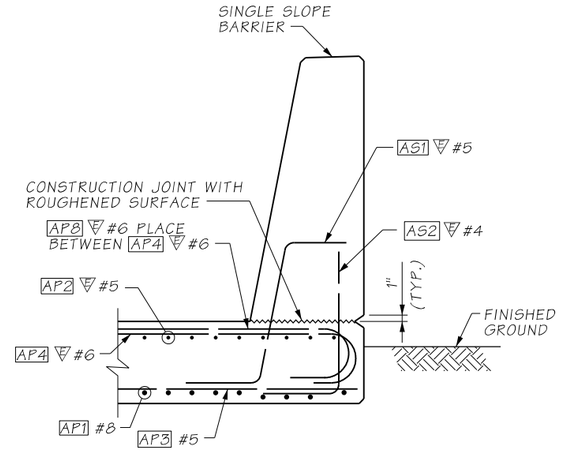

SECTION C
BB134

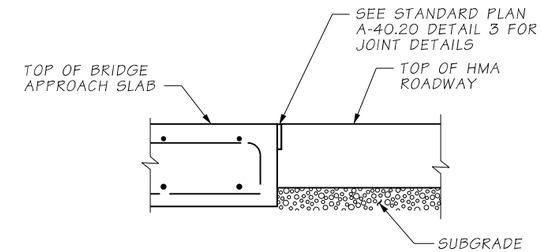

HMA ROADWAY JOINT DETAIL

AS-BUILT

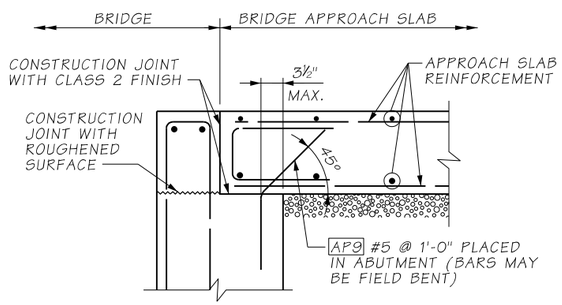

ANCHOR DETAIL

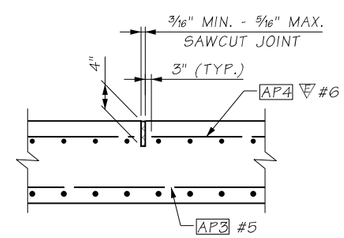

LONGITUDINAL JOINT DETAIL

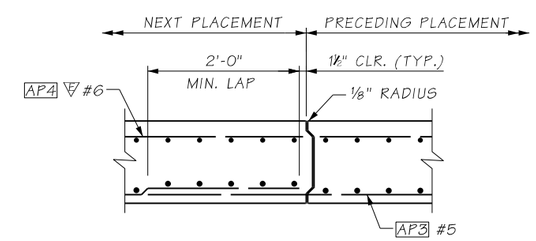

ALTERNATE LONGITUDINAL JOINT DETAIL

EDGE PRECEDING PLACEMENT ONLY WITH ⅛" RADIUS

ATKINSON
AUG 12 2019 KTW
RELEASED FOR CONSTRUCTION

FILE NAME	c:\pwworking\jacobs_b&l\reiserrw\dms20633\PS_BB135.dgn			
TIME	9:26:11 AM			
DATE	8/6/2019			
PLOTTED BY	ReiserRW			
DESIGNED BY	G. CALLAHAN			
ENTERED BY	R. REISER			
CHECKED BY	C. CAYWOOD	REV 0 - RELEASED FOR CONSTRUCTION	08/16/2019	
PROJ. ENGR.	C. MEADE	REV A - FINAL REVIEW	07/19/2019	
REGIONAL ADM.	J. WYNANDS	REVISION	DATE	BY

REGION NO.	STATE	FED.AID PROJ.NO.
10	WASH	
JOB NUMBER		
CONTRACT NO.		LOCATION NO.
C9133		

CORY J. CAYWOOD, STATE OF WASHINGTON, 38759, REGISTERED PROFESSIONAL ENGINEER
8/12/19
DATE
P.E. STAMP BOX

DATE
P.E. STAMP BOX

Washington State Department of Transportation

ATKINSON CONSTRUCTION / JACOBS

I-5
STEILACOOM-DUPONT RD TO THORNE LN
CORRIDOR IMPROVEMENTS
MP 120.01 TO MP 124.45
BERKELEY SB ON RAMP BRIDGE

APPROACH SLAB DETAILS (2 OF 2)

PLAN REF NO
BB135

SHEET
1316
OF
1456
SHEETS

NOTES:

1. SIGN POST SHALL BE INSTALLED PLUMB.
2. FOR SIGN PANEL MOUNTING DETAILS, SEE STANDARD PLAN G-50.10.
3. SIGN POST ASSEMBLY SHALL BE GALVANIZED AFTER FABRICATION PER AASHTO M111.

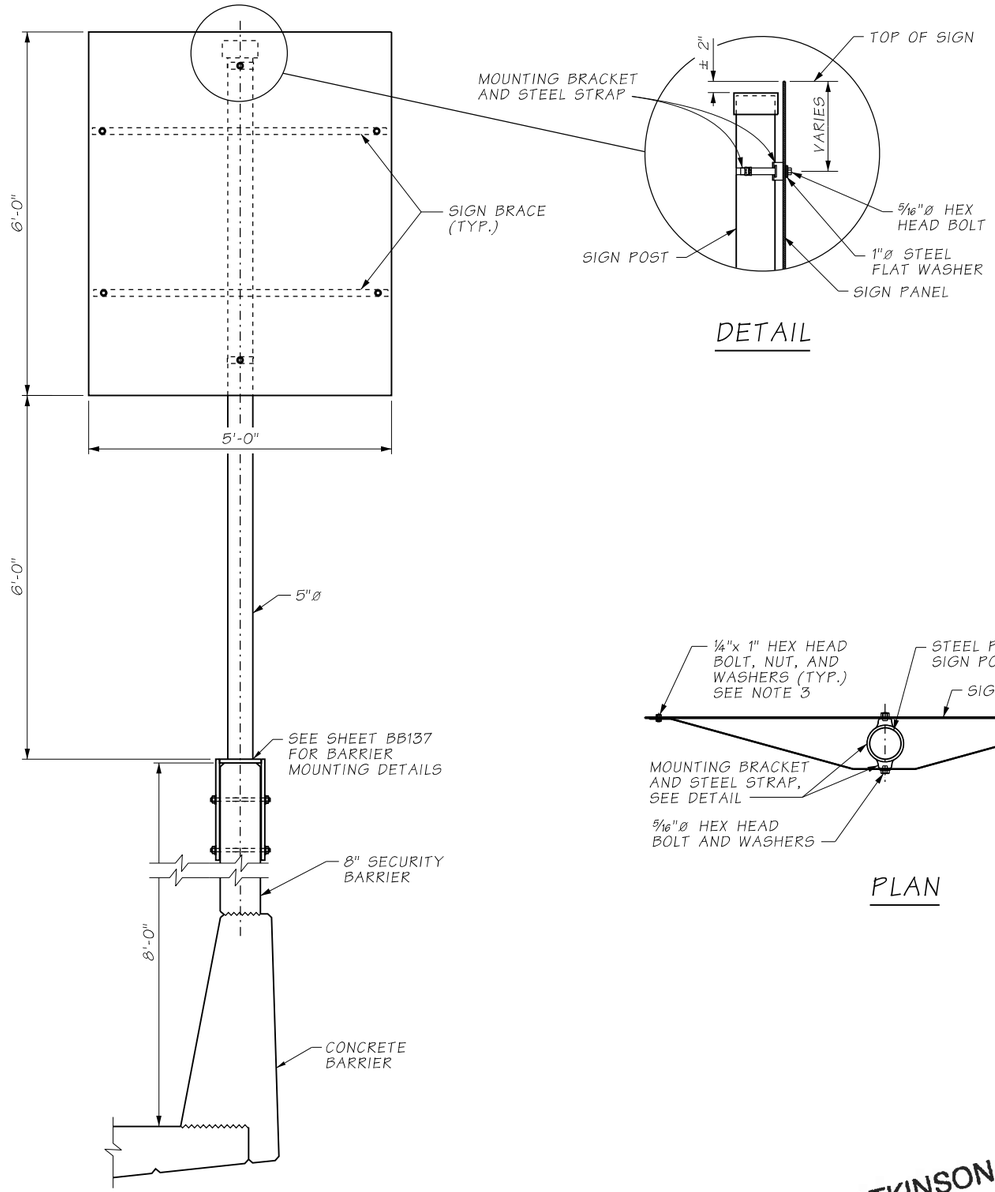

DETAIL

BARRIER MOUNTED SIGN POST

REQUIRED AT 1 LOCATION, SEE SIGNING PLANS FOR LOCATION AND ADDITIONAL SIGN PANEL DETAILS

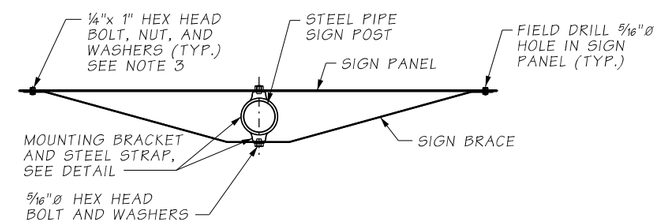

PLAN

AS-BUILT

ATKINSON
AUG 12 2019 KTW
RELEASED FOR CONSTRUCTION

FILE NAME	c:\pwworking\jacobs_b&i\reiserrw\dms20633\PS_BB136.dgn						
TIME	9:29:41 AM				REGION NO. 10	STATE WASH	FED.AID PROJ.NO.
DATE	8/6/2019						
PLOTTED BY	ReiserRW				JOB NUMBER		
DESIGNED BY	G. CALLAHAN						
ENTERED BY	R. REISER						
CHECKED BY	A. FONG	REV 0 - RELEASED FOR CONSTRUCTION	08/16/2019		CONTRACT NO. C9133		LOCATION NO.
PROJ. ENGR.	C. MEADE	REV A - FINAL REVIEW	07/19/2019				
REGIONAL ADM.	J. WYNANDS	REVISION	DATE	BY			

P.E. STAMP BOX — DATE 8/12/19

P.E. STAMP BOX — DATE

Washington State Department of Transportation

ATKINSON CONSTRUCTION / JACOBS

I-5
STEILACOOM-DUPONT RD TO THORNE LN CORRIDOR IMPROVEMENTS
MP 120.01 TO MP 124.45
BERKELEY SB ON RAMP BRIDGE

SIGN MOUNT DETAILS (1 OF 2)

PLAN REF NO BB136

SHEET 1317 OF 1456 SHEETS

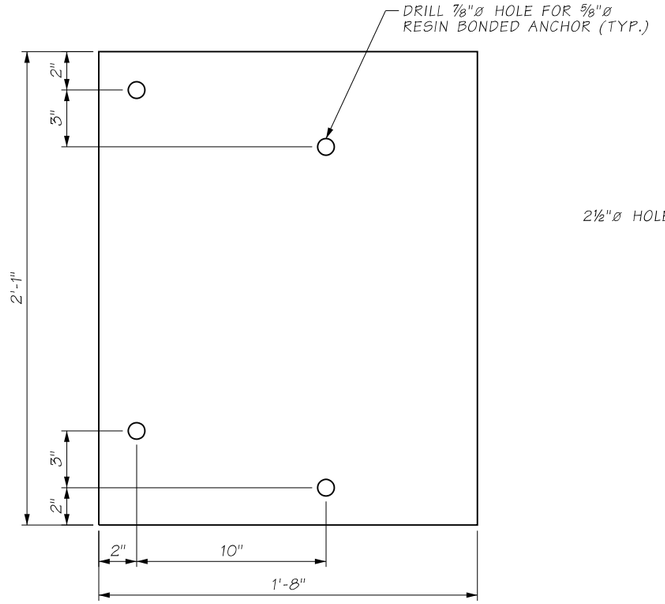

LEFT PANEL

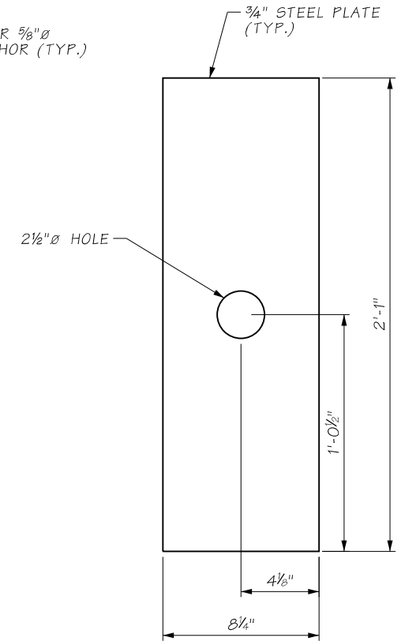

TOP PANEL

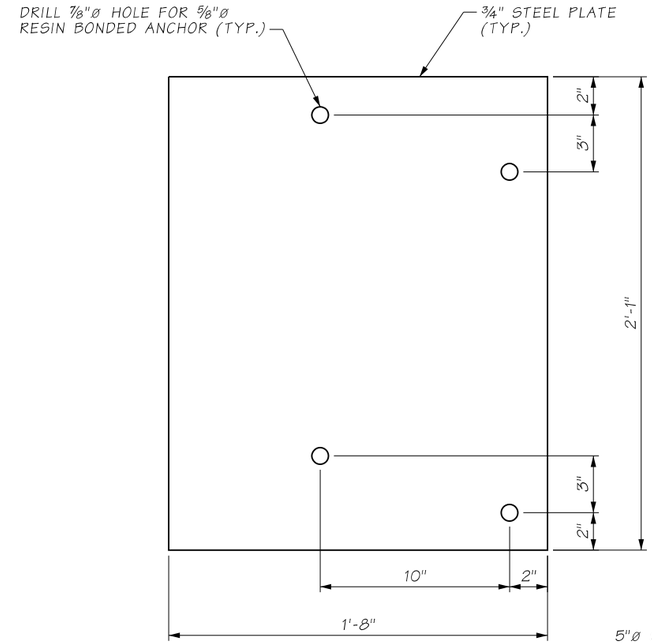

RIGHT PANEL

NOTES:

1. SADDLE MOUNT ANCHOR BOLTS SHALL NOT BE WITHIN 1'-6" OF THE END OF A BARRIER SEGMENT.
2. STEEL PIPES FOR POSTS & LONGITUDINAL MEMBERS SHALL CONFORM TO ASTM SPECIFICATION A53 GRADE B & GALVANIZE IN ACCORDANCE WITH AASHTO M111.
3. STRUCTURAL STEEL SHALL CONFORM TO ASTM A36 AND GALVANIZE IN ACCORDANCE WITH AASHTO M111.
4. ANCHOR BOLTS SHALL CONFORM TO ASTM F1554 GRADE 55 & GALVANIZE PER ASTM F2329.
5. EPOXY RESIN SHALL BE HILTI-HY 200 EPOXY OR APPROVED EQUAL.

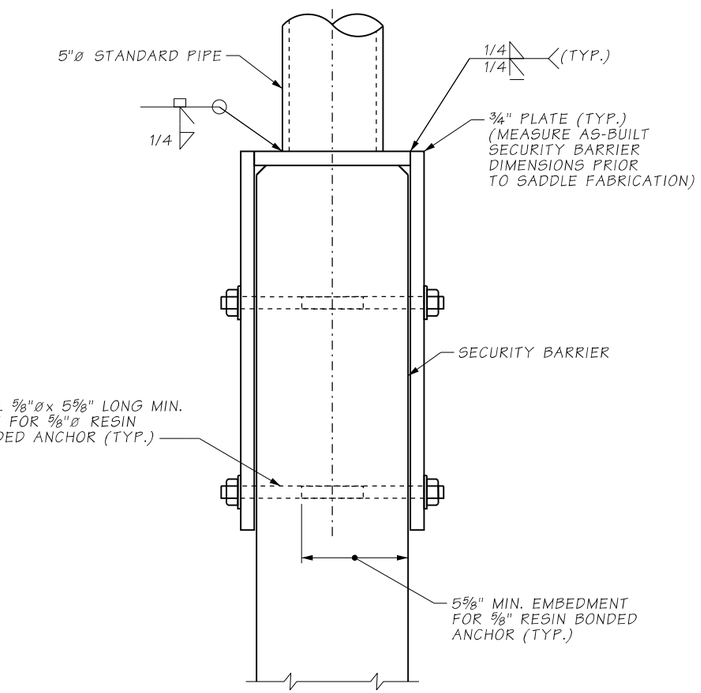

TYPICAL SECTION

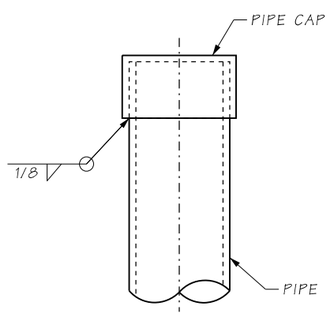

CAP DETAIL

AS-BUILT

ATKINSON
AUG 12 2019 KTW
RELEASED FOR CONSTRUCTION

FILE NAME	c:\pwworking\jacobs_b&i\reiserrw\dms20633\PS_BB137.dgn						
TIME	9:33:28 AM				REGION NO. 10	STATE WASH	FED.AID PROJ.NO.
DATE	8/6/2019				JOB NUMBER		
PLOTTED BY	ReiserRW						
DESIGNED BY	G. CALLAHAN						
ENTERED BY	R. REISER						
CHECKED BY	A. FONG	REV 0 - RELEASED FOR CONSTRUCTION	08/16/2019		CONTRACT NO. C9133		LOCATION NO.
PROJ. ENGR.	C. MEADE	REV A - FINAL REVIEW	07/19/2019				
REGIONAL ADM.	J. WYNANDS	REVISION	DATE	BY			

P.E. STAMP BOX — DATE 8/12/19

P.E. STAMP BOX — DATE

Washington State Department of Transportation

ATKINSON CONSTRUCTION / JACOBS

I-5
STEILACOOM-DUPONT RD TO THORNE LN
CORRIDOR IMPROVEMENTS
MP 120.01 TO MP 124.45
BERKELEY SB ON RAMP BRIDGE

SIGN MOUNT DETAILS (2 OF 2)

PLAN REF NO BB137

SHEET 1318 OF 1456 SHEETS

S = BAR IS INCLUDED IN SUBSTRUCTURE QUANTITIES

E = BAR IS TO BE EPOXY COATED

V = BAR DIMENSIONS VARY BETWEEN DIMENSIONS SHOWN ON THIS LINE AND THE FOLLOWING LINE

T = TRANSVERSE OR S = SEISMIC

MARK NO.	LOCATION	SIZE	NO. REQ'D	BEND TYPE	T OR S	SUBSTR.	EPOXY	VARIES	NO. EACH	DIMENSIONS (OUT TO OUT) U FT	U IN	W FT	W IN	X FT	X IN	Y FT	Y IN	Z FT	Z IN	ANGLE θ_1 DEG.	θ_2 DEG.	LENGTH FT	LENGTH IN	WEIGHT LBS
	PIER 1 FOOTING																							
101	Bot. of Footing	10	65	50		S				17	6.0											17	6.0	4895
102	Top and Bot. of Footing	7	40	50		S				42	6.0											42	6.0	3475
103	Top of Footing	6	65	50		S				17	6.0											17	6.0	1708
104	Bot. of Footing	4	301	58	T	S				3	7.0											4	2.9	853
	PIER 1 WALL																							
111A	Far Face Right Side	8	84	50				V	1	19	5.7											19	5.7	4461
										20	3.8											20	3.8	
111C	Near Face Bend	8	84	54						9	3.0											10	4.5	2327
112A	Near Face Right Side	5	84	50				V	1	19	5.7											19	5.7	1743
										20	3.8											20	3.8	
112C	Near Face Bend	5	84	54						7	3.0											7	11.4	697
113	Horiz.	7	44	56						41	5.5											43	5.1	3906
114	Ties	4	264	58	T					4	8.0											5	3.9	939
115	Top Wall, Long.	7	4	50						41	3.6											41	3.2	338
116	Top Wall, Trans.	7	43	56	T					3	8.0											5	7.6	495
	PIER 1, END TYPE B																							
121A	Vert. Far Face	4	43	50						9	4.6											9	4.6	270
121B	Vert. Near Face	4	43	50						10	11.6											10	11.6	315
122	Horiz. Each Face	4	28	50						23	5.8											23	5.8	439
123	Top, Horiz.	4	6	50						23	5.8											23	5.8	94
124	Top, Stirrup	4	43	56	T					1	4.0											1	10.9	55
125	Pavement Seat, Stirrup	4	43	74	T					0	6.0	2	1.0	2	1.0							4	5.9	129
126	Pavement Seat Top	4	4	50						23	5.8											23	5.8	63
	PIER 1 WINGWALL																							
117A	Right Wingwall	7	5	54						23	2.7											24	2.5	247
117B	Left Wingwall	7	5	54						24	0.8											25	0.6	256
118	Right Wingwall	7	22	56						4	8.0											6	7.6	298
131	Left Wingwall	5	12	54						24	0.8											24	3.2	310
132	Vert., Bot. Wingwall	5	6	54						11	9.0											12	5.4	79
133	Wingwall Near Face, Lower	5	22	54						9	8.0											10	4.4	238
134	Wingwall	4	5	56	T					0	8.0											1	2.9	4
135	Horiz. Far Face	7	22	50						9	0.0											9	0.0	405
141	Upper Vert., Approach	4	12	50				V	2	9	0.9											9	0.9	74
										9	4.6											9	4.6	
142	Upper Vert., Bridge	4	16	50				V	1	9	10.4											9	10.4	106
										10	0.4											10	0.4	
143A	Upper Wingwall Left	5	18	50						9	8.0											9	8.0	181
143B	Upper Wingwall Right 50	5	9	50						4	8.0											4	8.0	44
143C	Upper Wingwall Right 54	5	9	54						4	8.0											5	4.4	50
145	Horiz. Short Stirrup	4	9	56	T					0	8.0											1	2.9	7
148	Horiz. Short Stirrup	4	28	56	T					0	8.0											1	2.9	23
149A	Sidewall, Horiz. Top Left	5	2	50						9	3.6											9	3.6	20
149B	Sidewall, Horiz. Top Right	5	2	50						4	8.0											4	8.0	10
151A	Girder Stop, Max Long.	4	8	50						2	2.9											2	2.9	12
151B	Girder Stop, Min Long.	4	24	50						2	1.9											2	1.9	35
152	Girder Stop	4	68	74						2	1.0	3	0.0	3	0.0							7	10.5	358
	PIER 2 FOOTING																							
201	Top Bot. Footing	8	280	50						17	6.0											17	6.0	13082
202	Each Face Vert.	5	280	54						2	7.0											3	3.4	960
203	Side Footing Horiz. Max	5	32	50						17	6.0											17	6.0	584
204	Footing Ties, 90 degree bend	5	40	59						2	7.0											3	10.3	161
205	Top Bot. Footing, Spliced	5	72	51						2	7.0											3	1.9	237
	PIER 2 COLUMN PINS																							
291	Lower Cage Vert.	10	16	54						5	0.0											6	5.9	447
292	Lower Cage Hoop	6	32	66	T					2	6.0	0	9.0									8	4.9	404
293	Upper Cage Vert.	10	16	54						2	6.0											3	11.6	275
294	Upper Cage Hoop	6	16	66	T					2	6.0	0	9.0									8	4.9	202
295	Upper Cage Horiz. Short	5	8	74						2	10.0	1	0.0	1	0.0							4	7.4	39
	PIER 2 COLUMN																							
211A	Vert. Col A	10	24	54						24	9.2											26	3.1	2712
211B	Vert. Col B	10	26	54						24	1.4											25	7.3	2645
212	Column Hoop	6	132	66						3	2.0	0	0.0									9	9.0	1933
213A	Corner Vert. Col A	5	12	50						22	1.3											22	1.3	277
213B	Corner Vert. Col B	5	12	50						21	5.4											21	5.4	268
214	Corner Stirrup	4	94	74	T					3	2.0	3	2.0	3	2.0							9	3.4	910
215	Corner Stirrup	5	24	54	T					3	2.0											4	3.8	108
	PIER 2 CROSSBEAM																							
221A	Pos Horiz. Bot. South	8	18	50						25	7.9											25	7.9	1233
221B	Pos Horiz. Bot. North	8	18	50						26	5.4											26	5.4	1271
222A	Torsional Steel South	7	4	56						25	1.4											27	1.0	221
222B	Torsional Steel North	7	4	56						25	10.9											27	10.5	228
223	Neg Horiz. Bot.	8	24	50				V	2	25	7.9											25	7.9	1670
										26	5.4											26	5.4	
224	Stirrup Between Girder	5	45	72	T					6	2.0	11	2.4	11	2.4							29	3.3	1374
225	Vert. Tie Between Girder	5	183	58	T					11	2.4											12	0.3	2295
226	Top Tie Between Girder	5	69	58	T					6	2.0											6	11.9	503
227	Beta Region Stirrup	5	24	72	T					6	2.0	3	2.0	11	2.4							21	2.9	532
228	Vert. Tie Beta	5	24	58	T					3	2.0											3	11.9	100
229	Horiz. Tie Bot.	7	6	58	T					8	2.0											7	10.8	97
230	Edge Horiz. Bot.	7	16	56	T					11	2.4											13	2.0	431
251	Upper Inside Long.	6	48	50						25	1.4											25	1.4	1811
252A	Upper Inside Long.	7	48	50						10	3.6											10	3.6	1011
252B	Upper Outside Long. West	7	16	50				V	8	6	9.9											6	9.9	249
										8	4.9											8	4.9	
252C	Upper Outside Long. East	7	16	50						4	2.0											4	2.0	136
253	Upper Top Inside	9	20	50						26	6.2											26	6.2	1803
254	Upper Top Ties	5	220	58	T					6	2.0											6	11.9	1604
255	Upper Center Horiz. Tie	5	120	58	T					3	11.0											4	8.9	593
256	Girder Side Vert.	5	24	50	T			V	1	6	3.6											6	3.6	138
										4	9.0											4	9.0	
257	Girder Side Horiz.	6	32	50						4	8.0											4	8.0	224
258	Girder Face Vert.	5	24	58	T					7	8.4											8	6.3	213

S = BAR IS INCLUDED IN SUBSTRUCTURE QUANTITIES

E = BAR IS TO BE EPOXY COATED

V = BAR DIMENSIONS VARY BETWEEN DIMENSIONS SHOWN ON THIS LINE AND THE FOLLOWING LINE

T = TRANSVERSE OR S = SEISMIC

MARK NO.	LOCATION	SIZE	NO. REQ'D	BEND TYPE	T OR S	SUBSTR.	EPOXY	VARIES	NO. EACH	DIMENSIONS (OUT TO OUT) U FT	U IN	W FT	W IN	X FT	X IN	Y FT	Y IN	Z FT	Z IN	ANGLE θ_1 DEG.	θ_2 DEG.	LENGTH FT	LENGTH IN	WEIGHT LBS
259	Horiz. Tie Top	7	16	58	T					6	2.0											7	10.8	258
260	Horiz. Full Length	7	2	50						25	8.2											25	8.2	105
	DECK REINFORCING																							
2000	Bot. Trans. Main	5	486	51			E			23	7.0											24	1.9	12244
2000	Bot. Trans. Main	5	156	51			E	V	1	23	6.0											24	0.9	4161
										26	6.0											27	0.9	
2001	Bot. Long.	5	62	89			E			153	1.5	2	6.0									153	1.5	10224
2001	Bot. Long. at Overhang	5	3	50			E	V	1	6	6.1											6	6.1	20
										6	6.7											6	6.7	
2002	Top Trans. Main	5	486	51			E			23	5.3											24	0.2	12172
2002	Top Trans. Main	5	156	51			E	V	1	23	6.0											24	0.9	4161
										26	6.0											27	0.9	
2003	Top Trans. End	5	48	51			E			9	3.0											9	9.9	492
2003	Top Trans. End	5	16	51			E	V	1	15	4.8											15	11.7	249
										13	3.0											13	9.9	
2004	Top Trans. Int.	4	260	51			E			9	2.7											9	8.7	1688
2004	Top Trans. Int.	4	28	51			E	V	1	13	4.0											13	10.0	230
										10	2.7											10	8.7	
2005	Top Long. Pier 1	5	64	50			E			23	5.0											23	5.0	1563
2005	Top Long. Pier 1	5	64	50			E			20	4.9											20	4.9	1362
2005	Top Long. OH	5	5	50			E	V	1	23	4.0											23	4.0	95
										13	0.0											13	0.0	
2005	Top Long. OH	5	5	50			E			7	0.0											7	0.0	37
2005	Top Long. OH	5	4	50			E	V	1	12	6.0											12	6.0	51
										12	0.0											12	0.0	
2005	Top. Trans. End Span4 Gir 4H	6	12	51			E			9	11.5											10	7.8	192
2006	Top. Trans. OH Span2 Gir 2A	4	89	51			E	V	1	9	5.2											9	11.2	568
							E			8	8.0											9	2.0	
2006	Top Long.	4	46	89			E			149	7.2	2	0.0									155	7.2	4781
2006	Top Long. OH	4	1	50			E			9	4.1											9	4.1	6
2007	Top Ext. Long.	7	1	50			E			40	6.0											40	6.0	83
2008	Long. at Girder	5	12	89			E			153	1.5	2	6.0									158	1.5	1979
2009	Bot. Ext. Long.	5	1	50			E			40	6.0											40	6.0	42
2010	Bot. Long. OH	5	64	50			E			10	1.9											10	1.9	675
2010	Bot. Long. OH	5	3	50			E	V	1	9	10.8											9	10.8	67
										8	6.0											8	6.0	
	PIER 1 END DIAPHRAGM																							
3001	Bot. of Diaphragm	10	4	50						32	6.4											32	6.4	560
3002	End Diaphragm Horiz.	5	54	50						10	3.4											10	3.4	579
3003	Stirrups	5	63	74	T					1	2.0	6	8.8	6	8.8							14	5.0	847
3004	CL Diaphragm Horiz.	7	1	50						32	6.4											32	6.4	66
3005	Top of Diaphragm Straight	9	9	50			E			39	4.5											39	4.5	1205
3005	Top of Diaphragm Hooked	9	8	51			E			24	8.3											25	11.1	705
3006	Ties Between Girders	5	30	74	T			V	15	1	2.0	5	3.0	5	3.0							11	5.4	350
										1	2.0	5	0.0	5	0.0							10	11.4	
3007	Blockout	5	6	56						9	9.5											11	2.4	70
	PARTIAL DEPTH INTERMEDIATE DIAPHRAGMS SPAN 1																							
3020	Bot. of Diaphragm	7	2	50						32	6.4											32	6.4	133
3021	Between Girders Horiz.	4	30	50						10	3.4											10	3.4	206
3022	Top of Diaphragm	7	1	50						32	6.4											32	6.4	66
3023	Stirrups	4	33	74	T					0	5.0	5	10.0	5	10.0							11	10.9	263
3024	Between Girders Vert.	4	12	74	T			V	1	0	5.0	4	5.0	4	5.0							9	0.9	71
										0	6.0	4	2.0	4	2.0							8	6.9	
3025	Top of Diaphragm Horiz.	6	4	52						21	2.3											22	6.8	136

BENDING DIAGRAMS

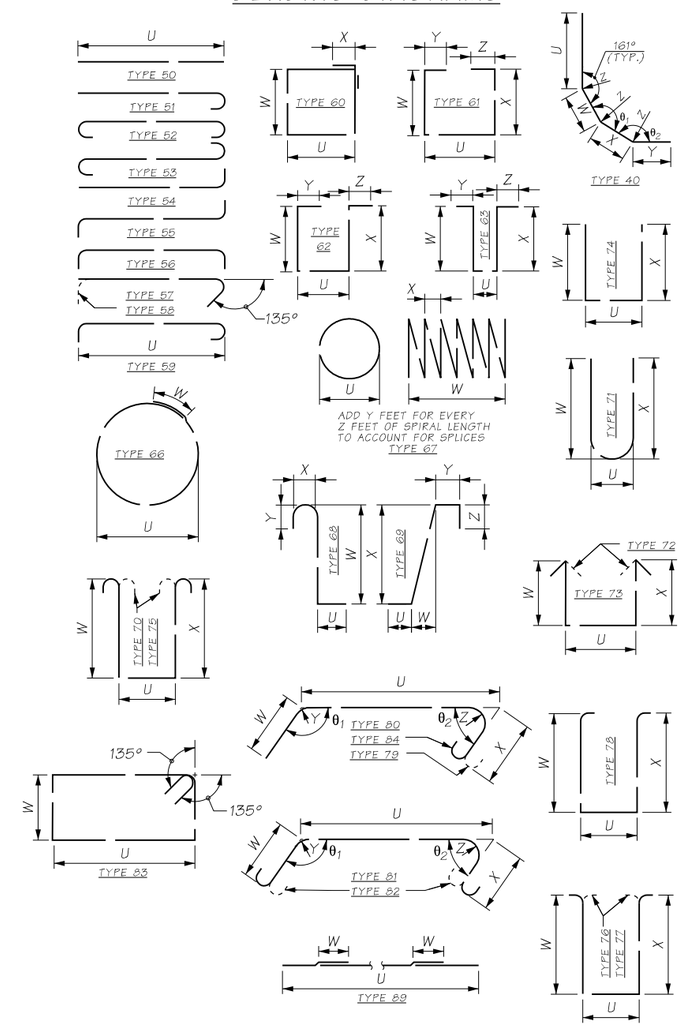

AS-BUILT

ATKINSON
AUG 12 2019 KTW
RELEASED FOR CONSTRUCTION

NOTES:

1. ALL REINFORCING BARS ON THIS SHEET SHALL BE ASTM A 706 UNLESS SHOWN OTHERWISE.
2. REINFORCING FOR TRAFFIC BARRIERS NOT SHOWN IN THE BAR LIST, SEE TRAFFIC BARRIER SHEET.
3. NUMBER AND LENGTH OF BARS TO BE DETERMINED BY THE CONTRACTOR FROM PLANS.

FILE NAME	c:\pwworking\jacobs_b&i\reiserrw\dms20633\PS_BB138.dgn			
TIME	9:35:24 AM			
DATE	8/6/2019			
PLOTTED BY	ReiserRW			
DESIGNED BY	G. CALLAHAN			
ENTERED BY	R. REISER			
CHECKED BY	A. GASCA	REV 0 - RELEASED FOR CONSTRUCTION	08/16/2019	
PROJ. ENGR.	C. MEADE	REV A - FINAL REVIEW	07/19/2019	
REGIONAL ADM.	J. WYNANDS	REVISION	DATE	BY

REGION NO.	STATE	FED.AID PROJ.NO.
10	WASH	
JOB NUMBER		
CONTRACT NO. C9133	LOCATION NO.	

P.E. STAMP BOX DATE

P.E. STAMP BOX DATE

Washington State Department of Transportation

ATKINSON CONSTRUCTION / JACOBS

I-5
STEILACOOM-DUPONT RD TO THORNE LN
CORRIDOR IMPROVEMENTS
MP 120.01 TO MP 124.45
BERKELEY SB ON RAMP BRIDGE

BAR LIST

PLAN REF NO BB138

SHEET 1319 OF 1456 SHEETS

POINT OF MINIMUM VERTICAL CLEARANCE:
MLBX STA. 10+52.75 (38.43 LT)

BRIDGE WITH APPROACH FILLS
WF74G GIRDERS
"A" DIMENSION = 9.5" (PRELIMINARY, NOT FOR DESIGN)
CAST-IN-PLACE CONC. SHALL BE 4000 PSI
DECK PROTECTIVE SYSTEM 1 (EPOXY COATED REBARS)

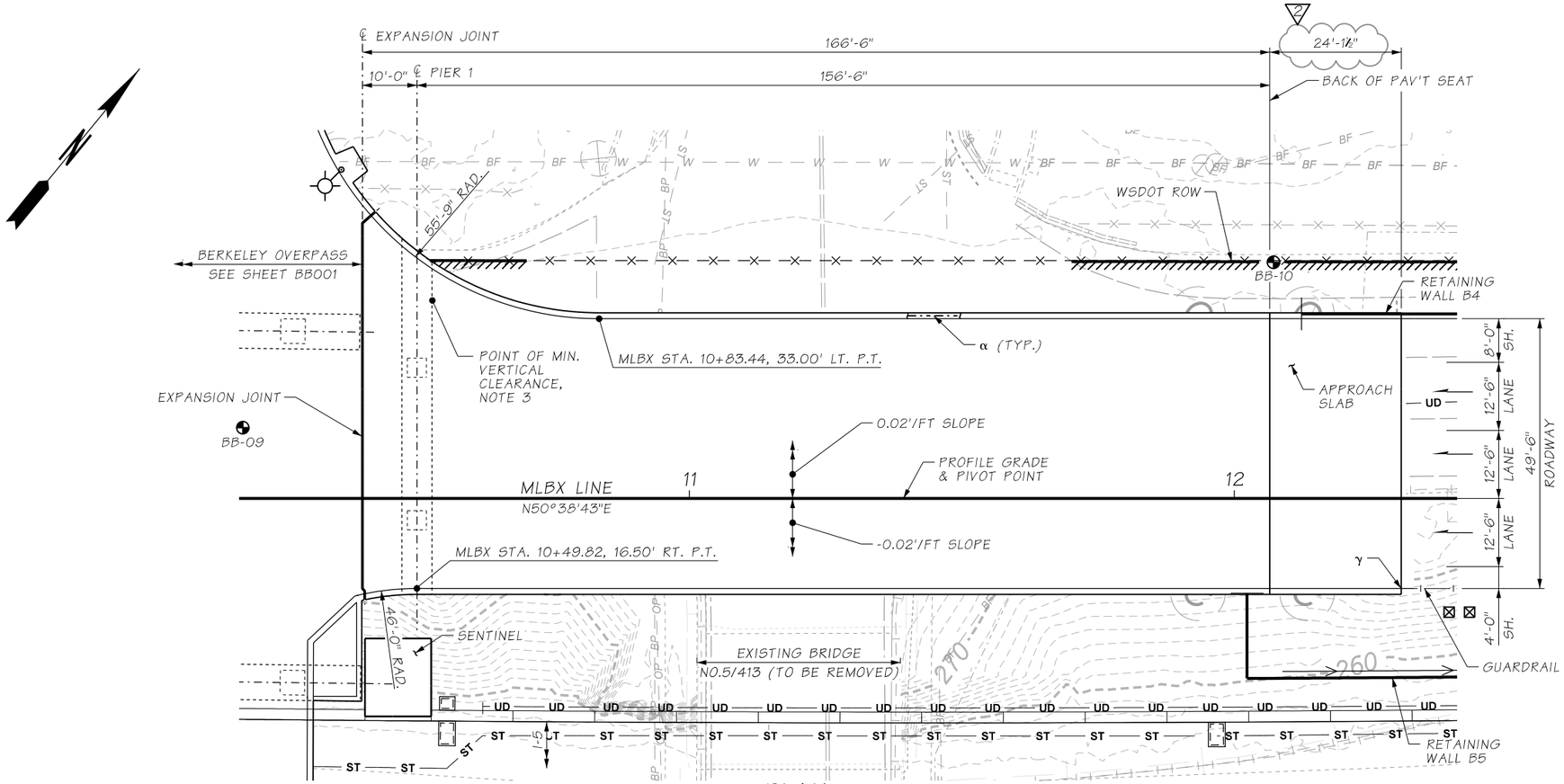

PLAN

BEARING OF BOTH PIERS ARE NORMAL TO MLBX LINE

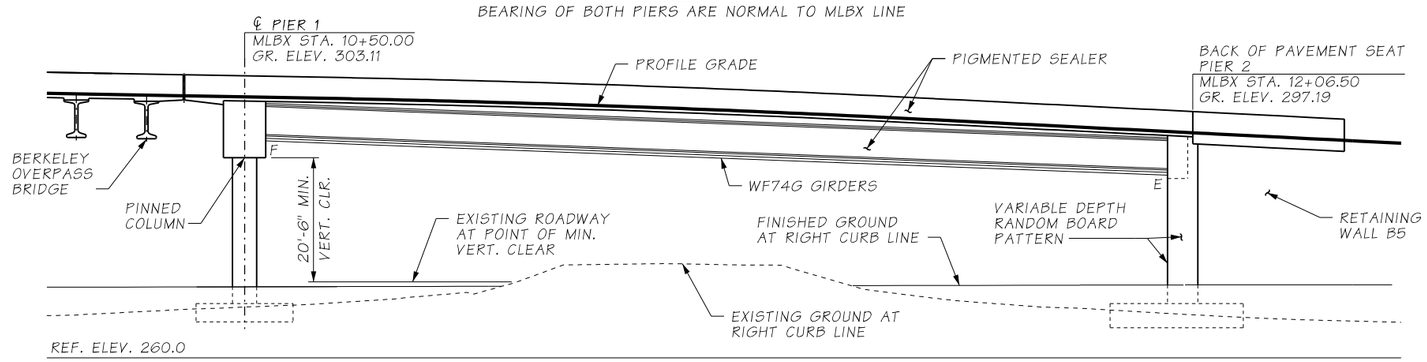

ELEVATION

GRADE ELEVATIONS ARE FINISH GRADES AT TOP OF BRIDGE DECK ON MLBX LINE AND ARE EQUAL TO PROFILE GRADE

DATUM
N.A.V.D. 88

AS-BUILT

SEC. 21, T.19N., R.2E., W.M.
CITY OF LAKEWOOD

I-5

NOTES:

1. FROM EXPANSION JOINT AT MLBX STATION 10+40.00 TO MLBX STATION 10+60.00, PROVIDE LINEAR TRANSITION BETWEEN MLBX AND BXW ROADWAY SURFACE ELEVATIONS.
2. APPLY MT. BAKER GRAY PIGMENTED SEALER TO ALL PERMANENTLY EXPOSED SURFACES OF PIERS 1 AND 2 TO 1'-0" MINIMUM BELOW FINISHED GRADE. APPLY WASHINGTON GRAY PIGMENTED SEALER TO BARRIERS AND GIRDERS, SEE TYPICAL SECTIONS FOR LIMITS.
3. MINIMUM VERTICAL CLEARANCE IS FOR SB OFF RAMP DURING CONSTRUCTION.

LEGEND

- SOIL BORING LOCATION
- α 2-2"ø CONDUIT IN TRAFFIC BARRIER FOR FULL LENGTH OF BRIDGE AND APPROACH SLAB
- γ THRIE BEAM GUARDRAIL CONNECTION TYPE D (STD. PLAN C-24.10.01)
- JUNCTION BOX SEE ITS AND ILLUMINATION PLANS FOR TYPE AND LOCATION
- BF — BURIED FIBER - EXISTING
- BP — BURIED POWER - EXISTING
- FENCE - EXISTING
- FENCE - PROPOSED
- ST — STORM SEWER - EXISTING
- ST — STORM SEWER - PROPOSED
- UD — UNDERDRAIN - PROPOSED
- CATCH BASIN - PROPOSED
- LIGHT STANDARD

ATKINSON
APR 14 2020 KTW
RELEASED FOR CONSTRUCTION

P.C. GIRDERS (WF74G)
LOADING: HL-93

I-5 JOB NO. SHEET BB201

FILE NAME	c:\pwworking\jacobs_b&i\youngkl2\dms20633\PS_BB201.dgn						
TIME	11:39:06 AM				REGION NO.	STATE	FED.AID PROJ.NO.
DATE	4/10/2020				10	WASH	
PLOTTED BY	youngkl2	REV 2 - RFI0365	04/13/2020		JOB NUMBER		
DESIGNED BY	A. FONG	REV 1 - RFI0083	07/03/2019				
ENTERED BY	R. REISER	REV 0 - RELEASED FOR CONSTRUCTION	02/14/2019				
CHECKED BY	C. CAYWOOD	REV B - FINAL REVIEW	01/15/2019		CONTRACT NO.		LOCATION NO.
PROJ. ENGR.	C. MEADE	REV A - PRELIMINARY REVIEW	8/9/2018		C9133		
REGIONAL ADM.	J. WYNANDS	REVISION	DATE	BY			

COREY J. CAYWOOD — STATE OF WASHINGTON — STRUCTURAL ENGINEER — PROFESSIONAL ENGINEER
4/14/20
DATE
P.E. STAMP BOX

P.E. STAMP BOX
DATE

Washington State Department of Transportation

ATKINSON CONSTRUCTION / JACOBS

I-5
STEILACOOM-DUPONT RD TO THORNE LN
CORRIDOR IMPROVEMENTS
MP 120.01 TO MP 124.45
BERKELEY SB OFF RAMP BRIDGE

PLAN AND ELEVATION

PLAN REF NO
BB201

SHEET 1320 OF 1456 SHEETS

GENERAL NOTES:

1. ALL MATERIAL AND WORKMANSHIP SHALL BE IN ACCORDANCE WITH THE REQUIREMENTS OF THE WASHINGTON STATE DEPARTMENT OF TRANSPORTATION STANDARD SPECIFICATIONS FOR ROAD, BRIDGE, AND MUNICIPAL CONSTRUCTION DATED 2016, AND AMENDMENTS.

2. THIS STRUCTURE HAS BEEN DESIGNED IN ACCORDANCE WITH THE REQUIREMENTS OF THE AASHTO LRFD BRIDGE DESIGN SPECIFICATIONS 8TH EDITION 2017. THIS STRUCTURE HAS BEEN DESIGNED FOR A 3" HMA FUTURE WEARING SURFACE.

3. THE SEISMIC DESIGN OF THIS STRUCTURE HAS BEEN COMPLETED IN ACCORDANCE WITH THE REQUIREMENTS OF THE AASHTO GUIDE SPECIFICATIONS FOR LRFD SEISMIC BRIDGE DESIGN 2ND EDITION WITH INTERIM REVISIONS THROUGH 2015, AS MODIFIED BY THE WSDOT BRIDGE DESIGN MANUAL, JUNE 2017. THE SEISMIC DESIGN WAS PERFORMED USING THE FOLLOWING:
   - SEISMIC DESIGN CATEGORY: C
   - SITE CLASS: C
   - PEAK GROUND ACCELERATION: 0.50G (SITE CLASS C)
   - 0.2 SECOND SPECTRAL ACCELERATION: 1.12G (SITE CLASS C)
   - 1.0 SECOND SPECTRAL ACCELERATION: 0.41G (SITE CLASS C)

4. THE CONCRETE IN THE BRIDGE DECK SHALL BE CLASS 4000D. THE CONCRETE IN BRIDGE APPROACH SLABS SHALL BE CLASS 4000A. ALL OTHER CAST-IN-PLACE CONCRETE SHALL BE CLASS 4000.

5. THE BACKFILL BEHIND THE ABUTMENTS MAY BE PLACED BEFORE OR AFTER PLACEMENT OF THE SUPERSTRUCTURE, IN ACCORDANCE WITH SECTION 2-03.3(14)I OF THE STANDARD SPECIFICATIONS.

6. UNLESS OTHERWISE SHOWN IN THE PLANS, CONCRETE COVER MEASURED FROM THE FACE OF CONCRETE TO THE FACE OF ANY REINFORCING STEEL SHALL BE 2½" AT THE TOP OF THE BRIDGE DECK, 1" AT THE BOTTOM OF THE BRIDGE DECK, 3" AT THE BOTTOM OF FOOTINGS, AND 2" AT ALL OTHER LOCATIONS.

7. FALSEWORK SHALL BE CAREFULLY RELEASED TO PREVENT IMPACT OR UNDUE STRESS IN THE STRUCTURE.

8. CONDUITS, JUNCTION BOXES, AND UTILITIES ARE SHOWN FOR REFERENCE ONLY. THE CONTRACTOR SHALL COORDINATE THESE PLANS WITH THE ELECTRICAL, I.T.S. AND OTHER CIVIL PLANS.

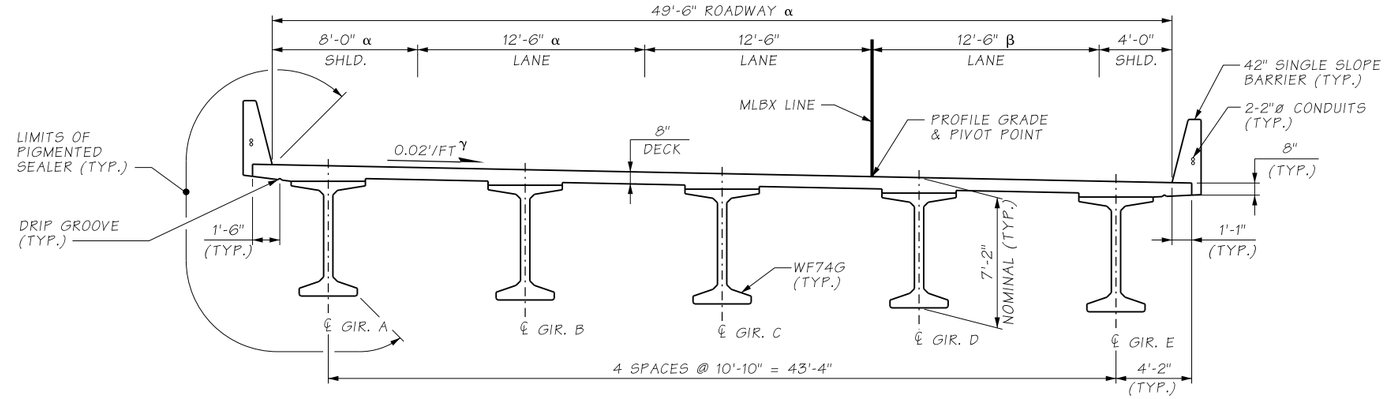

TYPICAL SECTION

α ROADWAY, SHOULDER, AND LANE WIDTH VARIES FOR STATIONS LESS THAN MLBX STA. 10+87.68

β LANE WIDTH VARIES FOR STATIONS LESS THAN MLBX STA. 10+49.82

γ SEE NOTE 1 ON SHEET BB201 FOR INFORMATION ON DECK SURFACE TRANSITION BETWEEN BERKELEY OVERPASS AND SB OFF RAMP BRIDGE

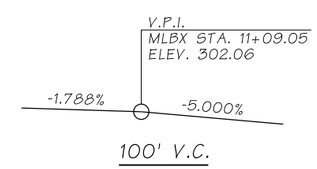

MLBX LINE PROFILE

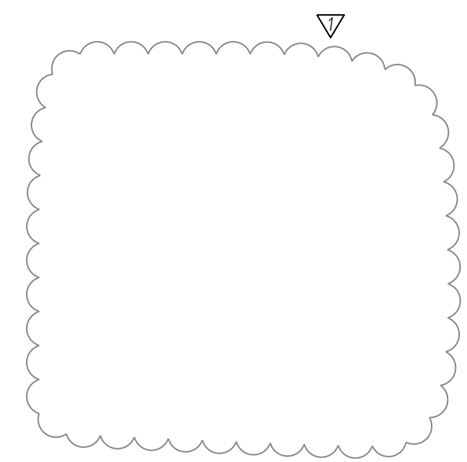

ATKINSON
JUL 09 2019 KJW
RELEASED FOR CONSTRUCTION

AS-BUILT

FILE NAME	D:\ICS_workdir\31621\20633_152\PS_BB202.dgn					
TIME	8:01:19 AM					
DATE	7/1/2019					
PLOTTED BY	USLAS0-APP064$					
DESIGNED BY	A. FONG	REV 1 - RFI0083	07/03/2019			
ENTERED BY	R. REISER	REV 0 - RELEASED FOR CONSTRUCTION	02/14/2019			
CHECKED BY	C. CAYWOOD	REV B - FINAL REVIEW	01/15/2019			
PROJ. ENGR.	C. MEADE	REV A - PRELIMINARY REVIEW	8/9/2018			
REGIONAL ADM.	J. WYNANDS	REVISION	DATE	BY		

REGION NO.	STATE	FED.AID PROJ.NO.
10	WASH	
JOB NUMBER		
CONTRACT NO. C9133		LOCATION NO.

CORY J. CAYWOOD, STATE OF WASHINGTON, 38133, STRUCTURAL ENGINEER, PROFESSIONAL ENGINEER
7/8/19
DATE
P.E. STAMP BOX

DATE
P.E. STAMP BOX

Washington State Department of Transportation

ATKINSON / JACOBS CONSTRUCTION

I-5
STEILACOOM-DUPONT RD TO THORNE LN
CORRIDOR IMPROVEMENTS
MP 120.01 TO MP 124.45
BERKELEY SB OFF RAMP BRIDGE

GENERAL NOTES AND TYPICAL SECTION

PLAN REF NO BB202

SHEET 1321 OF 1456 SHEETS

NOTES:

1. FOR LEGEND SEE SHEET BB201.

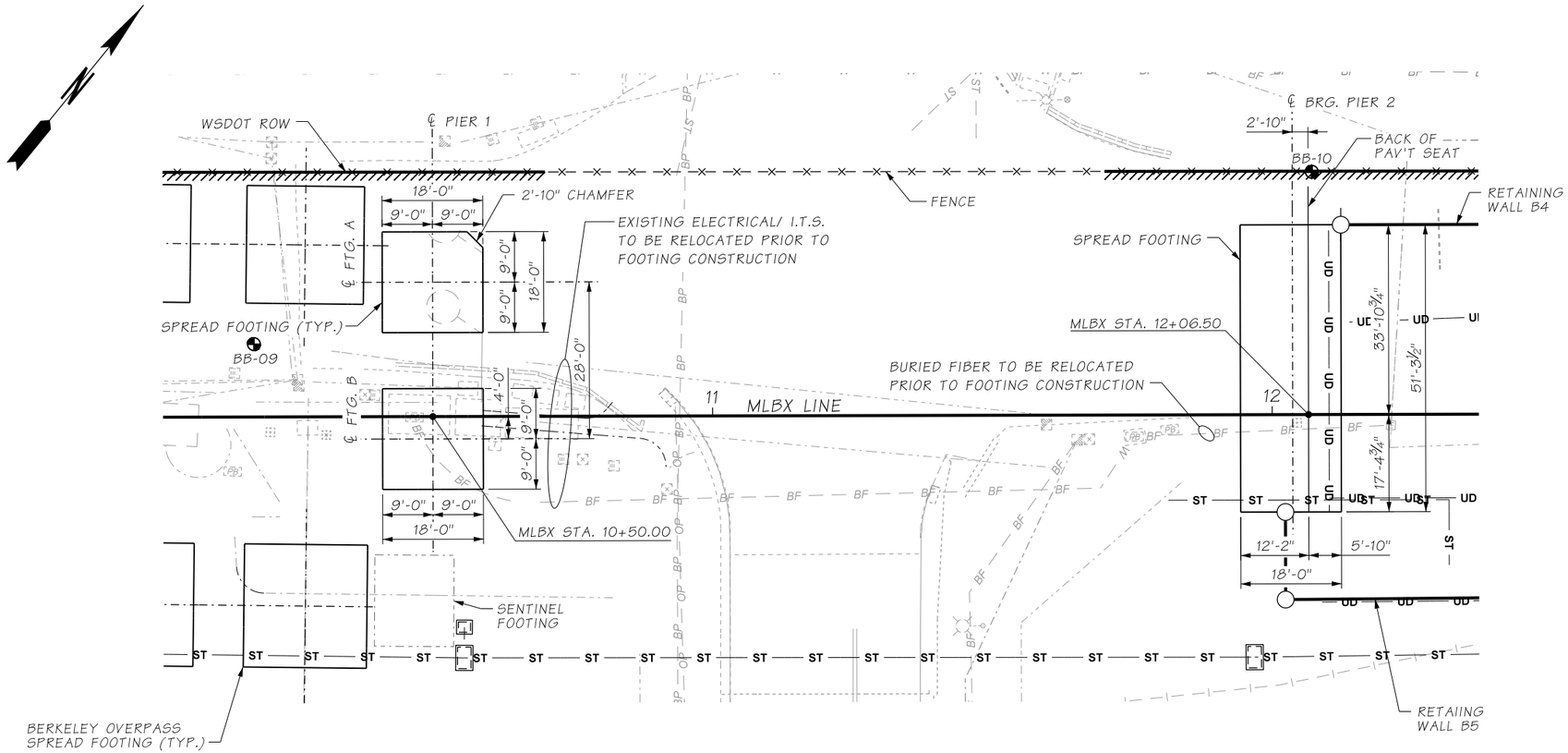

FOOTING PLAN

BEARING OF BOTH PIERS ARE NORMAL TO MLBX LINE

ATKINSON

FEB 11 2019

RELEASED FOR CONSTRUCTION

AS-BUILT

FILE NAME	D:\ICS_workdir\21156\20633_934\PS_BB203.dgn						
TIME	9:00:08 AM				REGION NO. 10	STATE WASH	FED.AID PROJ.NO.
DATE	2/7/2019						
PLOTTED BY	USLAS0-APP064$				JOB NUMBER		
DESIGNED BY	A. FONG						
ENTERED BY	R. REISER	REV 0 - RELEASED FOR CONSTRUCTION	02/14/2019				
CHECKED BY	C. CAYWOOD	REV B - FINAL REVIEW	01/15/2019		CONTRACT NO. C8811		LOCATION NO.
PROJ. ENGR.	C. MEADE	REV A - PRELIMINARY REVIEW	8/9/2018				
REGIONAL ADM.	J. WYNANDS	REVISION	DATE	BY			

CARY J. CAYWOOD, STATE OF WASHINGTON, 38759, STRUCTURAL ENGINEER, PROFESSIONAL ENGINEER — 2/13/19 — DATE — P.E. STAMP BOX

DATE — P.E. STAMP BOX

Washington State Department of Transportation

ATKINSON CONSTRUCTION / JACOBS

I-5
STEILACOOM-DUPONT RD TO THORNE LN
CORRIDOR IMPROVEMENTS
MP 120.01 TO MP 124.45
BERKELEY SB OFF RAMP BRIDGE

FOOTING PLAN

PLAN REF NO BB203

SHEET 1322 OF 1456 SHEETS

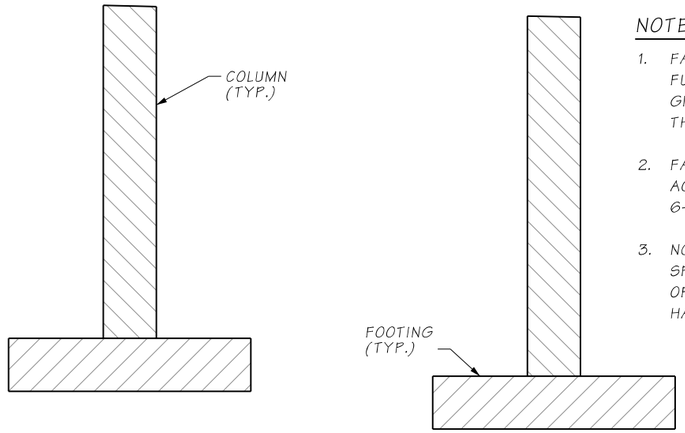

STAGE 1
CONSTRUCT PIER UP TO BOTTOM OF CROSSBEAM LEVEL

NOTES:

1. FALSEWORK BEAMS SHALL SUPPORT THE FULL STRUCTURAL WEIGHT OF CROSS BEAM, GIRDERS, AND DECK UNTIL COMPLETION OF THE PIER DIAPHRAGM.
2. FALSEWORK AND FORMWORK SHALL BE IN ACCORDANCE WITH STD. SPEC. SECTION 6-02.3(17).
3. NO LIVE LOAD SHALL BE ALLOWED ON THE SPAN UNTIL THE COMPRESSIVE STRENGTH OF THE TOP PORTION OF THE PIER DIAPHRAGM HAS REACHED 4000 PSI (MIN.)

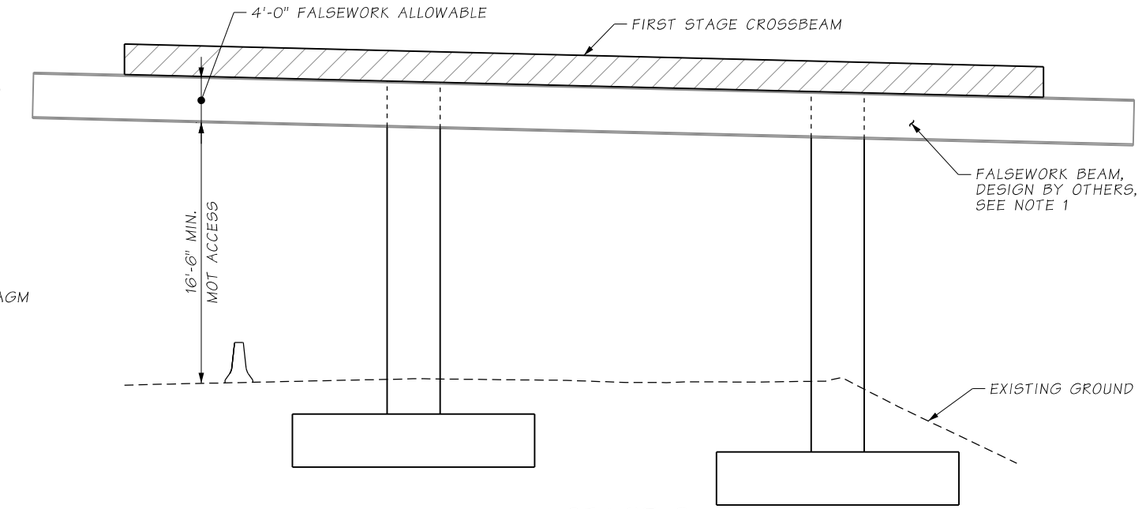

STAGE 2
CAST FIRST STAGE CROSSBEAM

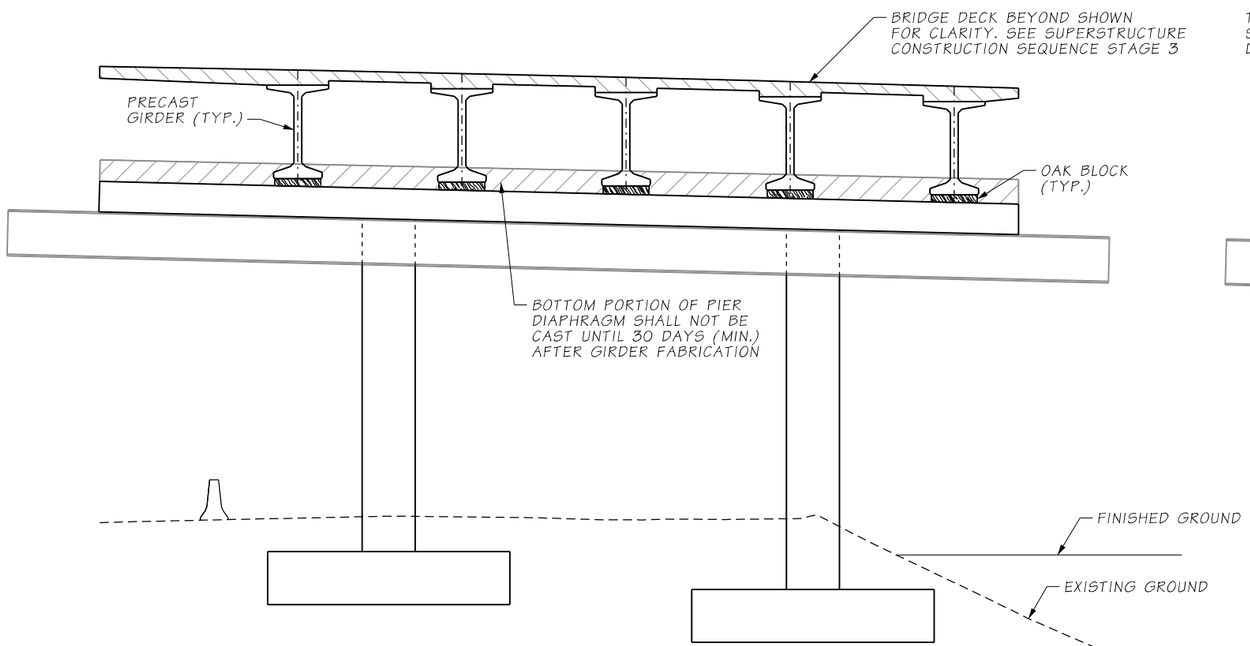

STAGE 3
SET GIRDERS IN PLACE. CAST BRIDGE DECK AND DIAPHRAGMS

SEE SUPERSTRUCTURE CONSTRUCTION SEQUENCE STAGES 1 TO 3

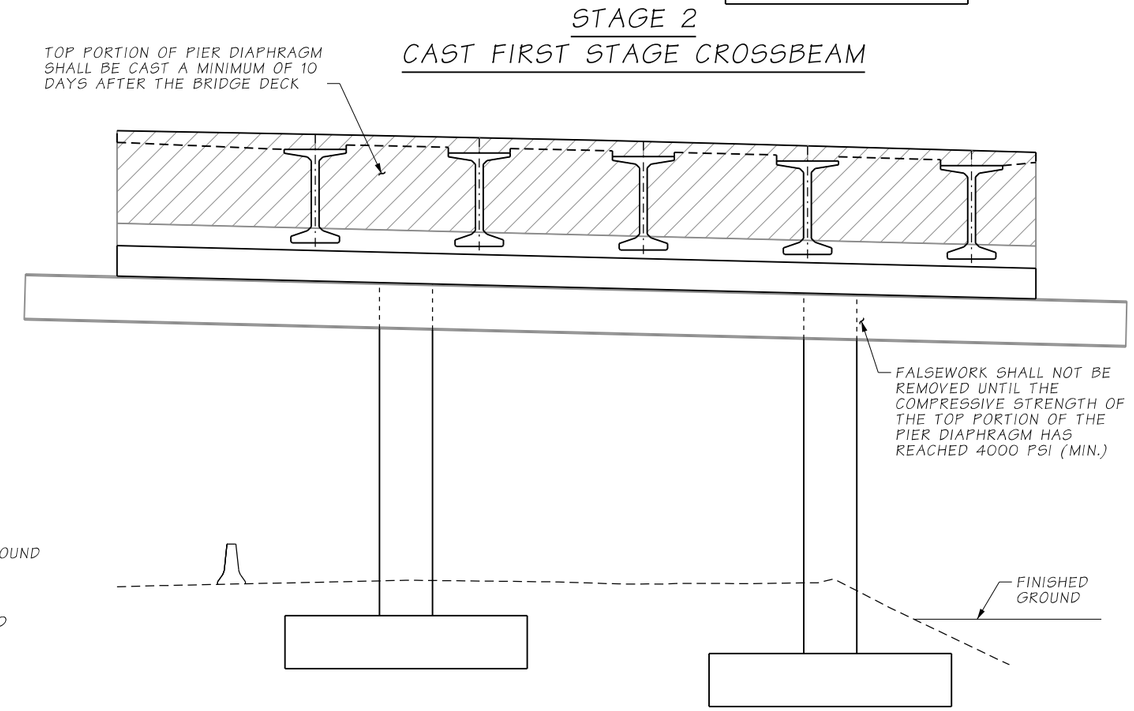

STAGE 4
COMPLETE PIER DIAPHRAGM

SEE SUPERSTRUCTURE CONSTRUCTION SEQUENCE STAGE 4

AS-BUILT

ATKINSON
FEB 11 2019
RELEASED FOR CONSTRUCTION

FILE NAME	c:\pwworking\jacobs_b&i\reiserrw\dms20633\PS_BB204.dgn			
TIME	12:11:16 PM			
DATE	2/5/2019			
PLOTTED BY	reiserrw			
DESIGNED BY	T. FU			
ENTERED BY	R. REISER			
CHECKED BY	A. FONG	REV 0 - RELEASED FOR CONSTRUCTION	02/14/2019	
PROJ. ENGR.	C. MEADE	REV A - FINAL REVIEW	01/15/2019	
REGIONAL ADM.	J. WYNANDS	REVISION	DATE	BY

REGION NO.	STATE	FED.AID PROJ.NO.
10	WASH	
JOB NUMBER		
CONTRACT NO.		LOCATION NO.
C8811		

CORY J. CAYWOOD, STATE OF WASHINGTON, 38759, PROFESSIONAL ENGINEER
2/3/19
DATE
P.E. STAMP BOX

DATE
P.E. STAMP BOX

Washington State Department of Transportation
ATKINSON CONSTRUCTION / JACOBS

I-5
STEILACOOM-DUPONT RD TO THORNE LN
CORRIDOR IMPROVEMENTS
MP 120.01 TO MP 124.45
BERKELEY SB OFF RAMP BRIDGE

PIER 1
CONSTRUCTION SEQUENCE

PLAN REF NO BB204
SHEET 1323 OF 1456 SHEETS

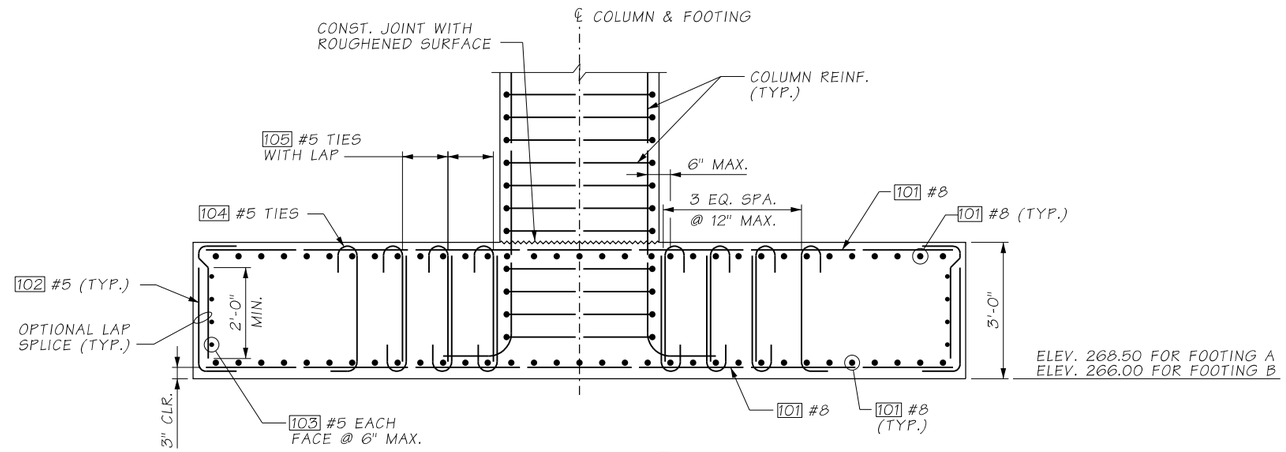

SECTION A

NOTES:

1. MINIMUM LAP SPLICE OF 3'-6" IS PERMISSIBLE FOR 101 #8 BARS.

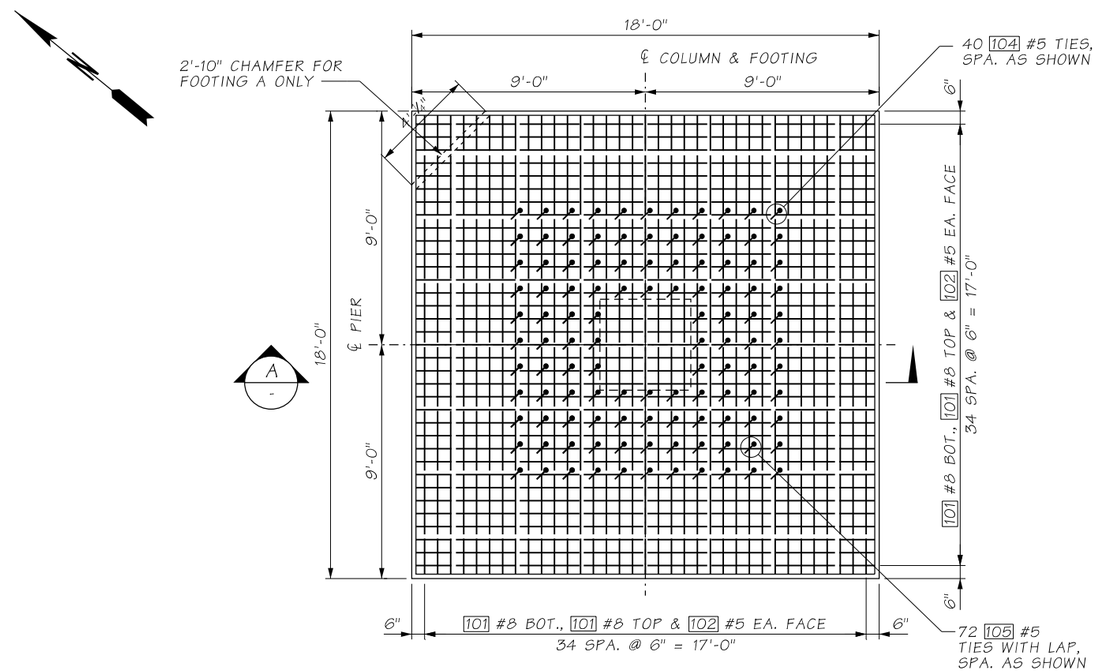

PLAN
FOOTINGS A & B

ATKINSON
APR 14 2020 KTW
RELEASED FOR CONSTRUCTION

AS-BUILT

FILE NAME	c:\pwworking\jacobs_b&i\youngkl2\dms20633\PS_BB205.dgn			
TIME	11:40:46 AM			
DATE	4/10/2020			
PLOTTED BY	youngkl2			
DESIGNED BY	A. FONG			
ENTERED BY	R. REISER	REV 1 - RFI0059	04/13/2020	
CHECKED BY	G. CALLAHAN	REV 0 - RELEASED FOR CONSTRUCTION	02/14/2019	
PROJ. ENGR.	C. MEADE	REV A - FINAL REVIEW	01/15/2019	
REGIONAL ADM.	J. WYNANDS	REVISION	DATE	BY

REGION NO.	STATE	FED.AID PROJ.NO.
10	WASH	
JOB NUMBER		
CONTRACT NO. C9133		LOCATION NO.

CORY J. CAYWOOD, STATE OF WASHINGTON, 38759, STRUCTURAL ENGINEER, PROFESSIONAL ENGINEER
4/14/20
DATE
P.E. STAMP BOX

DATE
P.E. STAMP BOX

Washington State Department of Transportation

ATKINSON CONSTRUCTION / JACOBS

I-5
STEILACOOM-DUPONT RD TO THORNE LN
CORRIDOR IMPROVEMENTS
MP 120.01 TO MP 124.45
BERKELEY SB OFF RAMP BRIDGE

PIER 1 FOOTINGS

PLAN REF NO BB205

SHEET 1324 OF 1456 SHEETS

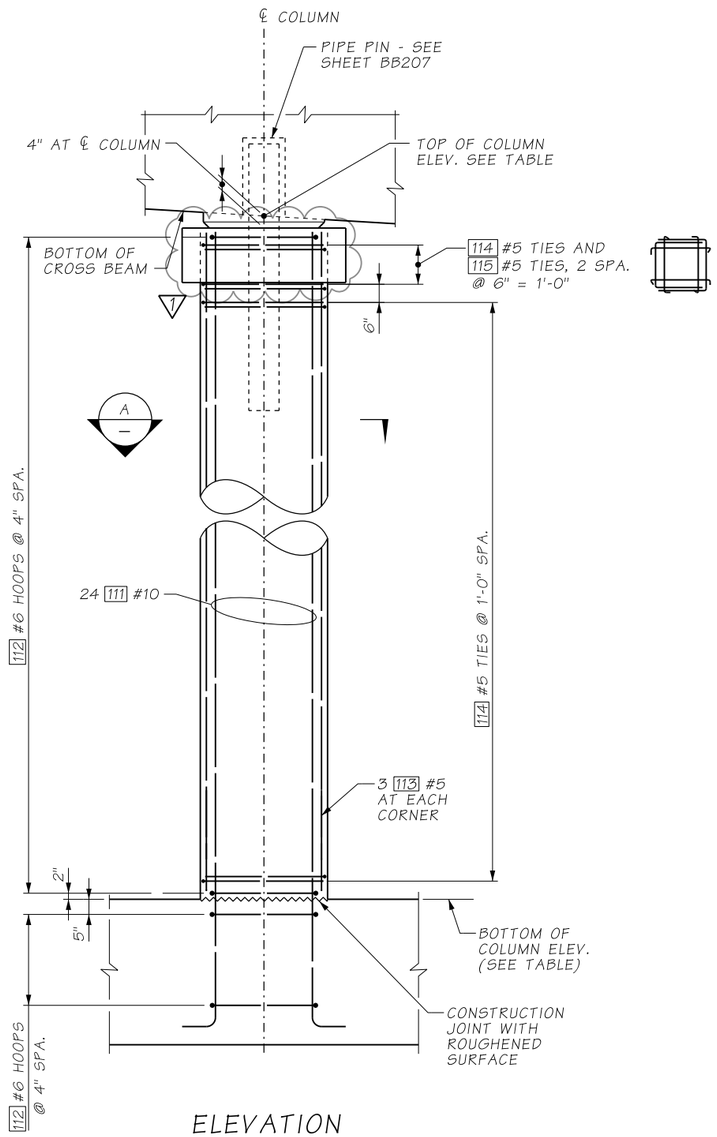

ELEVATION

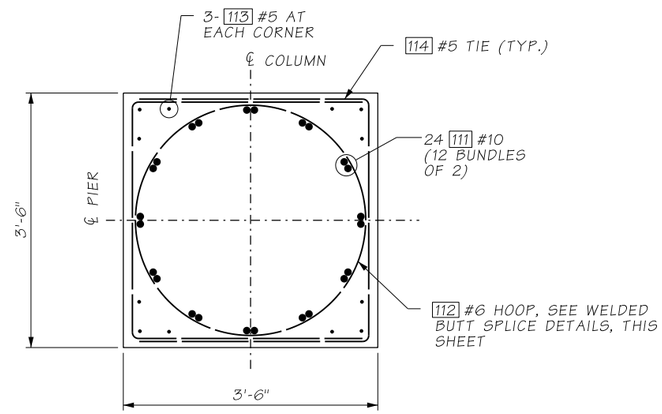

SECTION A

NOTES:

1. NO WELDING OF HOOPS IS PERMITTED AFTER THE COLUMN CAGE IS ASSEMBLED. HOOPS SHALL BE SHOP WELDED AND THEN ASSEMBLED AROUND THE COLUMN LONGITUDINAL STEEL.
2. ALL HOOPS SHALL BE WELDED IN ACCORDANCE WITH THE WELDED BUTT SPLICE DETAILS ON THIS SHEET.
3. STAGGER WELDED BUTT SPLICES AROUND THE COLUMN A MINIMUM DISTANCE OF ⅓ OF THE HOOP CIRCUMFERENCE.

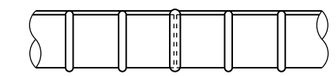

RESISTANCE BUTT JOINT DETAIL

SEE SPECIAL PROVISIONS FOR APPROVAL AND TESTING REQUIREMENTS.

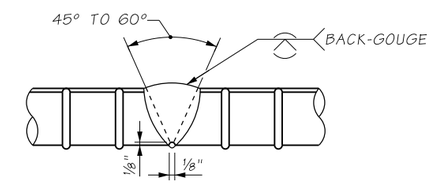

SINGLE V-GROOVE WELD

AWS D1.4 FIGURE 3.2(A)

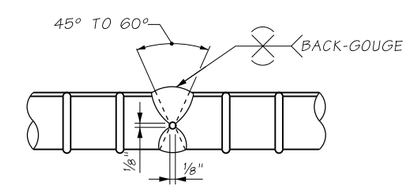

DOUBLE V-GROOVE WELD

AWS D1.4 FIGURE 3.2(B)

MANUAL DIRECT BUTT JOINT DETAILS

ALL BACKING SHALL BE REMOVED. SEE SPECIAL PROVISIONS FOR RT TESTING FREQUENCY.

WELDED BUTT SPLICE DETAILS

ATKINSON
JAN 07 2021 KTW
RELEASED FOR CONSTRUCTION

COLUMN GEOMETRY

PIER NO.	COLUMN	TOP OF COL. ELEV. (FT)	BOT. OF COL. ELEV. (FT)
1	A	294.38	271.50
	B	293.68	269.00

AS-BUILT

FILE NAME	D:\ICS_workdir\73666\20633_1701\PS_BB206.dgn			
TIME	4:33:36 PM			
DATE	1/6/2021			
PLOTTED BY	USLAS0-APP064$			
DESIGNED BY	K. BICHICH			
ENTERED BY	R. REISER	REV 1 - RFI0519	01/07/2021	
CHECKED BY	A. FONG	REV 0 - RELEASED FOR CONSTRUCTION	02/14/2019	
PROJ. ENGR.	C. MEADE	REV A - FINAL REVIEW	01/15/2019	
REGIONAL ADM.	J. WYNANDS	REVISION	DATE	BY

REGION NO.	STATE	FED.AID PROJ.NO.
10	WASH	

JOB NUMBER

CONTRACT NO. C9133

LOCATION NO.

CORY J. CAYWOOD, STATE OF WASHINGTON, 38758, STRUCTURAL ENGINEER, PROFESSIONAL ENGINEER
01/07/21
DATE
P.E. STAMP BOX

DATE
P.E. STAMP BOX

Washington State Department of Transportation

ATKINSON CONSTRUCTION / JACOBS

I-5
STEILACOOM-DUPONT RD TO THORNE LN
CORRIDOR IMPROVEMENTS
MP 120.01 TO MP 124.45
BERKELEY SB OFF RAMP BRIDGE

PIER 1
COLUMN DETAILS

PLAN REF NO BB206

SHEET 1325 OF 1456 SHEETS

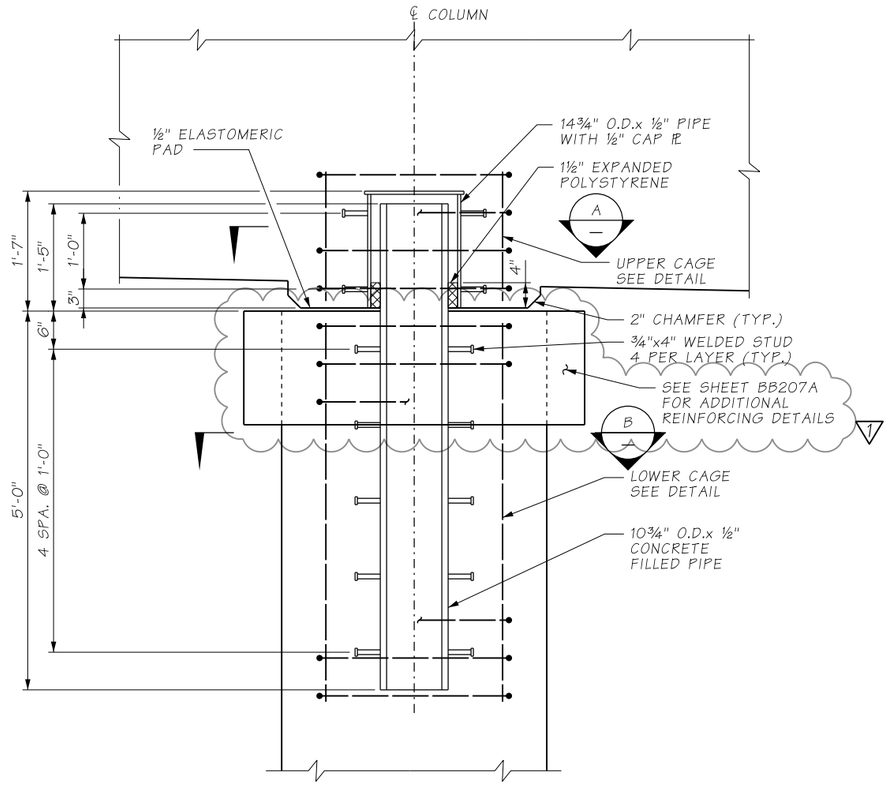

COLUMN PIPE PIN DETAIL

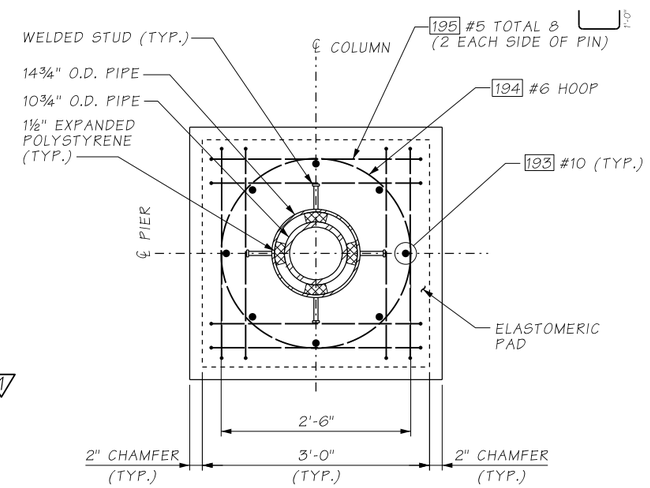

SECTION A

NOTES:

1. 10¾" O.D. STEEL PIPE SHALL BE ASTM A106 GR. C. 14¾" O.D. STEEL PIPE SHALL BE ASTM A36.
2. STEEL PIPES SHALL BE GALVANIZED AFTER FABRICATION IN ACCORDANCE WITH AASHTO M 232.

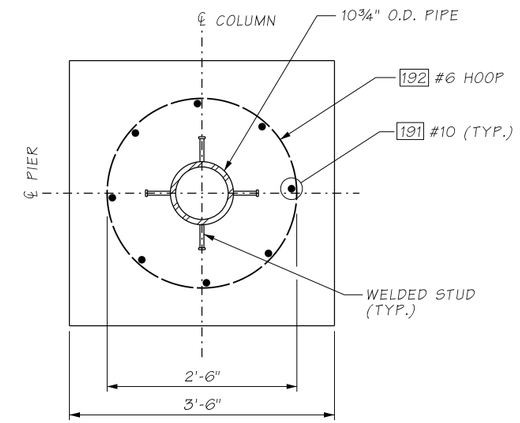

SECTION B

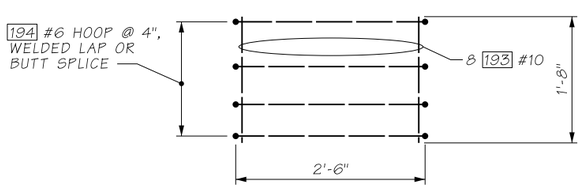

UPPER CAGE

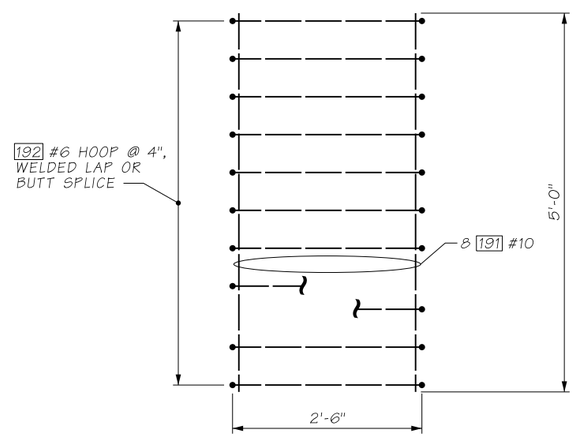

LOWER CAGE

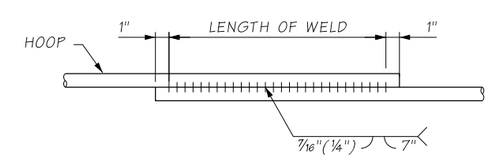

WELDED LAP SPLICE DETAIL

WELDING SHALL MEET THE REQUIREMENTS OF STD. SPEC. 6-02.3(24)E.

ATKINSON
JAN 07 2021 KTW
RELEASED FOR CONSTRUCTION

AS-BUILT

FILE NAME	D:\ICS_workdir\73640\20633_1702\PS_BB207.dgn						
TIME	1:28:57 PM						
DATE	1/6/2021						
PLOTTED BY	USLAS0-APP064$						
DESIGNED BY	K. BICHICH						
ENTERED BY	R. REISER	REV 1 - RFI0519	01/07/2021				
CHECKED BY	A. FONG	REV 0 - RELEASED FOR CONSTRUCTION	02/14/2019				
PROJ. ENGR.	C. MEADE	REV A - FINAL REVIEW	01/15/2019				
REGIONAL ADM.	J. WYNANDS	REVISION	DATE	BY			

REGION NO.	STATE	FED.AID PROJ.NO.
10	WASH	
JOB NUMBER		
CONTRACT NO. C9133		LOCATION NO.

CORY J. CAYWOOD, STATE OF WASHINGTON, 38155, STRUCTURAL ENGINEER, PROFESSIONAL ENGINEER
01/07/21
DATE
P.E. STAMP BOX

P.E. STAMP BOX
DATE

Washington State Department of Transportation

ATKINSON / JACOBS CONSTRUCTION

I-5
STEILACOOM-DUPONT RD TO THORNE LN CORRIDOR IMPROVEMENTS
MP 120.01 TO MP 124.45
BERKELEY SB OFF RAMP BRIDGE

PIER 1 COLUMN PINS (1 OF 2)

PLAN REF NO BB207

SHEET 1326 OF 1456 SHEETS

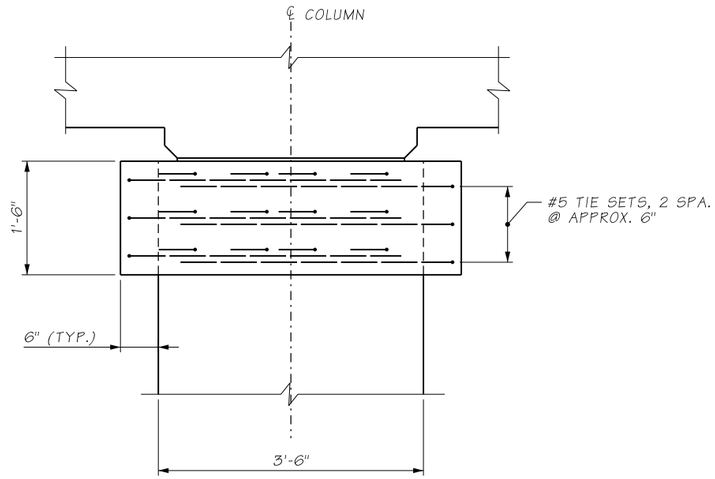

VIEW A

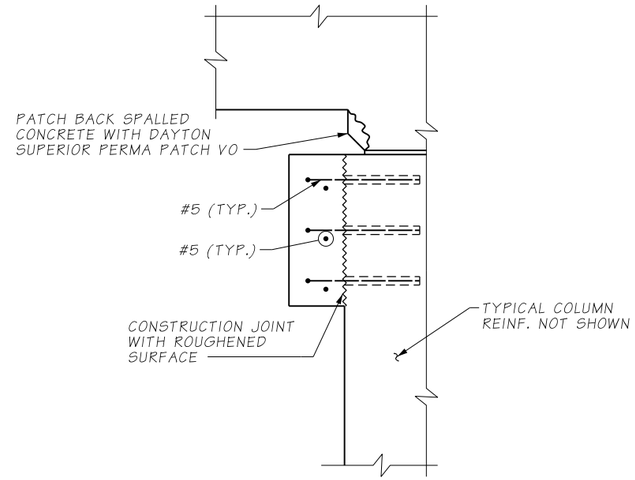

SECTION B

NOTES:

1. REMOVE ANY REMAINING LOOSE OR UNSOUND CONCRETE FROM THE TOP OF COLUMNS OR BOTTOM OF CAP BEAMS ABOVE COLUMNS.
2. REMOVE ANY CONCRETE BETWEEN THE TOP OF COLUMNS AND BOTTOM OF CAP BEAMS TO PREVENT FUTURE SPALLING.
3. ROUGHEN REMAINING PORTIONS OF COLUMN SURFACES WHICH WILL HAVE CONCRETE PLACED AGAINST IT.
4. FOR ANY CAP BEAM SPALLING ABOVE THE COLUMNS LARGER THAN 2 SQUARE INCHES, PATCH BACK WITH DAYTON SUPERIOR PERMA PATCH VO. PATCHING SHALL BE DONE IN ACCORDANCE WITH MANUFACTURER'S INSTRUCTIONS. EDGES MAY BE FEATHERED TO AVOID SAW CUTTING AND ADDITIONAL CONCRETE REMOVAL.
5. INSTALL REINFORCING FOR COLUMN CONCRETE, FORM AND PLACE CONCRETE AROUND TOP OF COLUMNS. DRILLED HOLES FOR REINFORCING SHALL NOT BE CORE DRILLED.

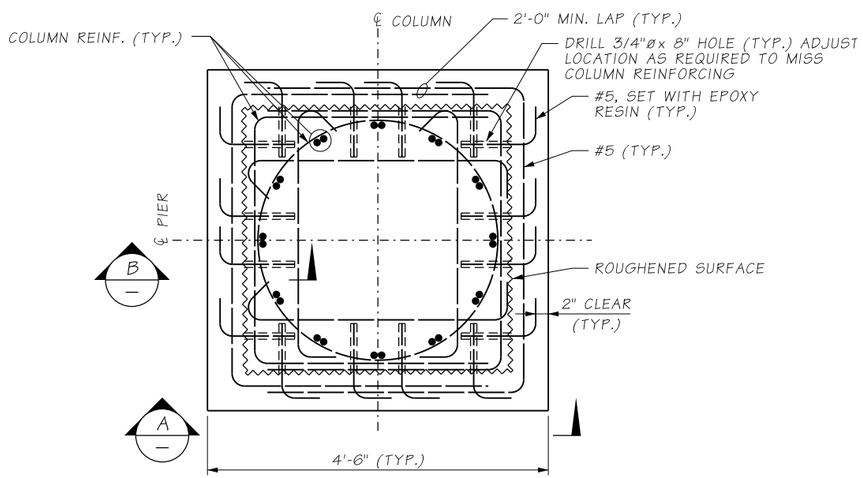

PLAN AT TOP OF COLUMNS - SPALL REPAIR

SEE NOTES FOR ADDITIONAL REQUIREMENTS

ATKINSON
JAN 07 2021 KTW
RELEASED FOR CONSTRUCTION

AS-BUILT

FILE NAME	D:\ICS_workdir\73684\20633_2505\PS_BB207A.dgn						
TIME	9:07:37 AM				REGION NO.	STATE	FED.AID PROJ.NO.
DATE	1/7/2021				10	WASH	
PLOTTED BY	USLAS0-APP064$				JOB NUMBER		
DESIGNED BY	K. YOUNG						
ENTERED BY	R. REISER						
CHECKED BY	C. CAYWOOD				CONTRACT NO.		LOCATION NO.
PROJ. ENGR.	C. MEADE	REV 0 - RFI0519	01/07/2021		C9133		
REGIONAL ADM.	J. WYNANDS	REVISION	DATE	BY			

CORY J. CAYWOOD, STATE OF WASHINGTON, 38159, STRUCTURAL ENGINEER, PROFESSIONAL ENGINEER
01/07/21
DATE
P.E. STAMP BOX

DATE
P.E. STAMP BOX

Washington State Department of Transportation

ATKINSON CONSTRUCTION / JACOBS

I-5
STEILACOOM-DUPONT RD TO THORNE LN
CORRIDOR IMPROVEMENTS
MP 120.01 TO MP 124.45
BERKELEY SB OFF RAMP BRIDGE

PIER 1 COLUMN PINS
(2 OF 2)

PLAN REF NO
BB207A

SHEET 1327 OF 1456 SHEETS

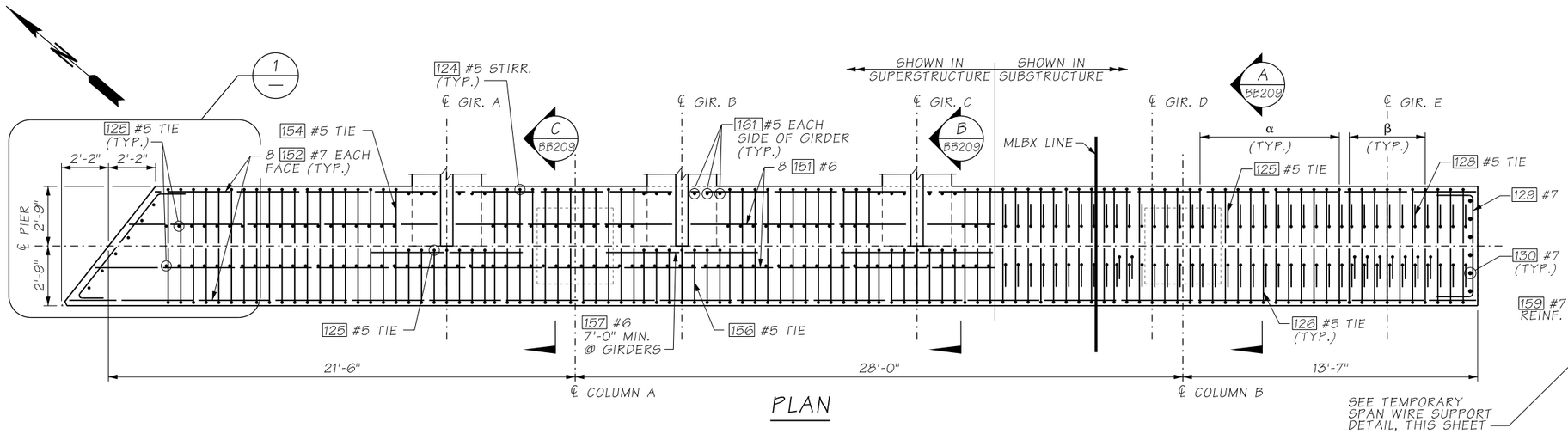

PLAN

NOTES:

1. MINIMUM LAP SPLICE LENGTHS ARE AS FOLLOWS, UNLESS NOTED OTHERWISE:
   #5= 2'-0"
   #6= 2'-6"
   #7= 2'-10"
   #8= 3'-2"
   #9= 3'-8"
   #10= 6'-9"

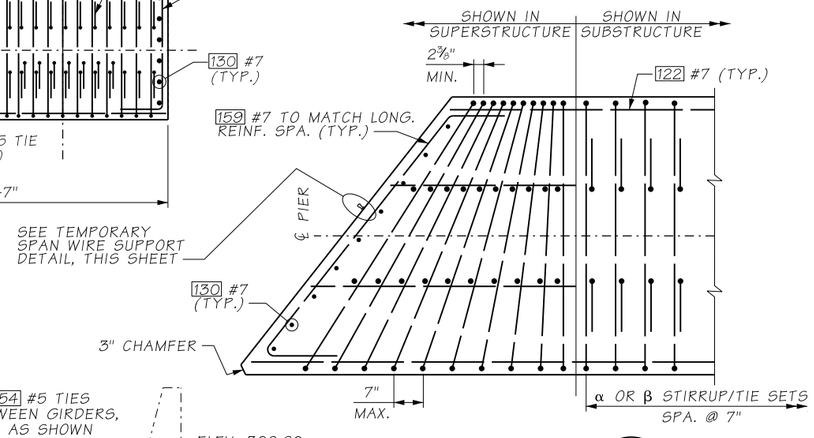

DETAIL 1/—

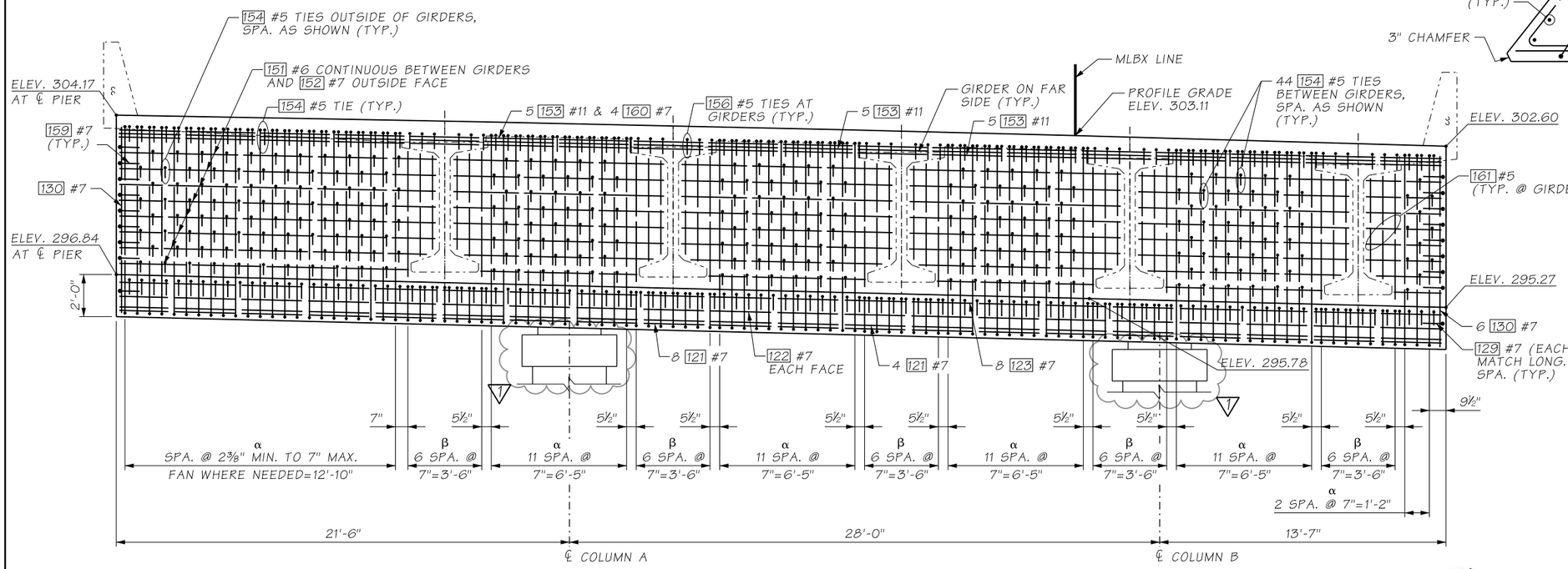

ELEVATION

DECK ELEVATIONS AND DIMENSIONS ARE MEASURED AT ℄ OF PIER. GIRDERS AND REINFORCING SHOWN ARE ON FAR SIDE FOR CLARITY.

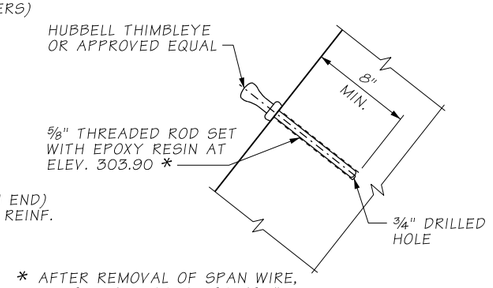

* AFTER REMOVAL OF SPAN WIRE, REMOVE THREADED ROD TO 1" MIN. BEYOND FACE OF CONCRETE AND PATCH WITH GROUT

TEMPORARY SPAN WIRE SUPPORT

STIRRUP / TIE SETS		
SET	STIRRUPS/TIES	NOTE
α	124 #5 STIRRUP 2 125 #5 TIE 126 #5 TIE	BETWEEN/OUTSIDE GIRDERS
β	2 125 #5 TIE 126 #5 TIE 127 #5 STIRRUP 128 #5 TIE	UNDER GIRDERS

ATKINSON
JAN 07 2021 KTW
RELEASED FOR CONSTRUCTION

AS-BUILT

FILE NAME	D:\ICS_workdir\73640\20633_720\PS_BB208.dgn						
TIME	1:28:56 PM				REGION NO. 10	STATE WASH	FED.AID PROJ.NO.
DATE	1/6/2021						
PLOTTED BY	USLAS0-APP064$				JOB NUMBER		
DESIGNED BY	K. BICHICH						
ENTERED BY	R. REISER	REV 1 - RFI0519	01/07/2021				
CHECKED BY	G. CALLAHAN	REV 0 - RELEASED FOR CONSTRUCTION	02/14/2019		CONTRACT NO. C9133		LOCATION NO.
PROJ. ENGR.	C. MEADE	REV A - FINAL REVIEW	01/15/2019				
REGIONAL ADM.	J. WYNANDS	REVISION	DATE	BY			

CORT J. CAYWOOD — STATE OF WASHINGTON — 38133 — STRUCTURAL PROFESSIONAL ENGINEER
01/07/21
DATE
P.E. STAMP BOX

DATE
P.E. STAMP BOX

Washington State Department of Transportation

ATKINSON CONSTRUCTION / JACOBS

I-5
STEILACOOM-DUPONT RD TO THORNE LN
CORRIDOR IMPROVEMENTS
MP 120.01 TO MP 124.45
BERKELEY SB OFF RAMP

PIER 1 CROSS BEAM
PLAN AND ELEVATION

PLAN REF NO BB208

SHEET 1328 OF 1456 SHEETS

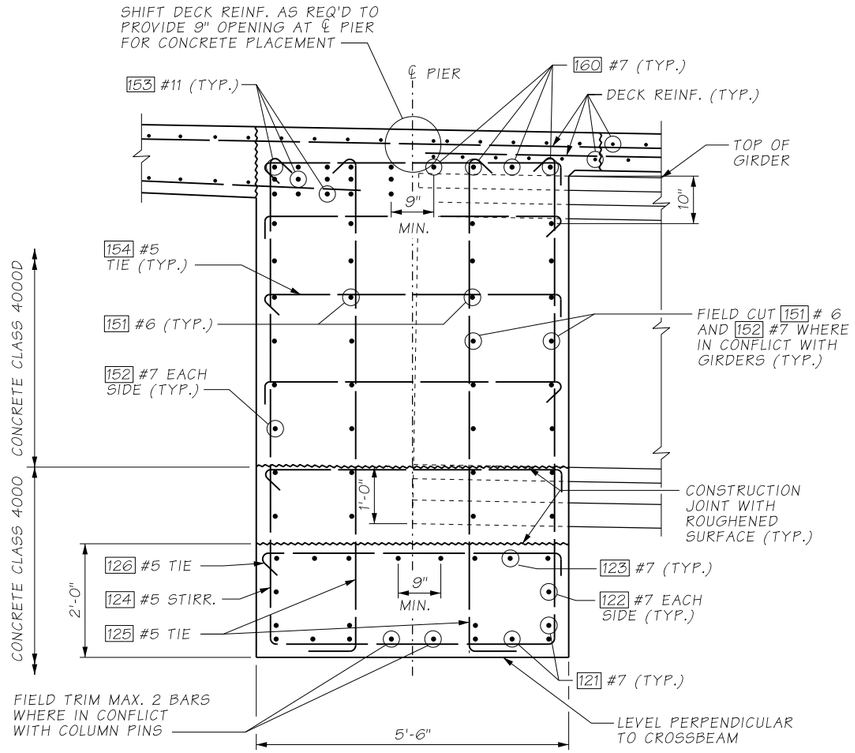

SECTION A / BETWEEN GIRDERS / BB208

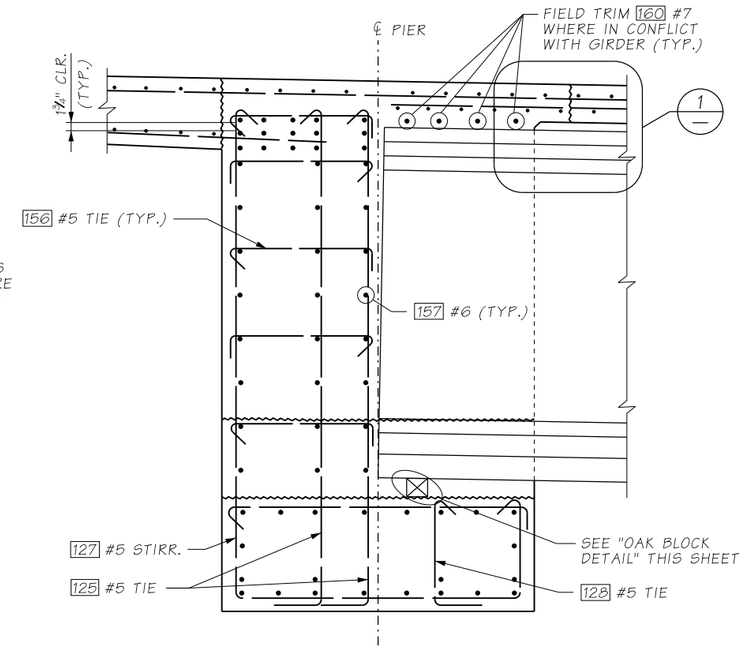

NOTE:
SEE A/— FOR INFORMATION NOT SHOWN.

SECTION B / AT GIRDERS / BB208

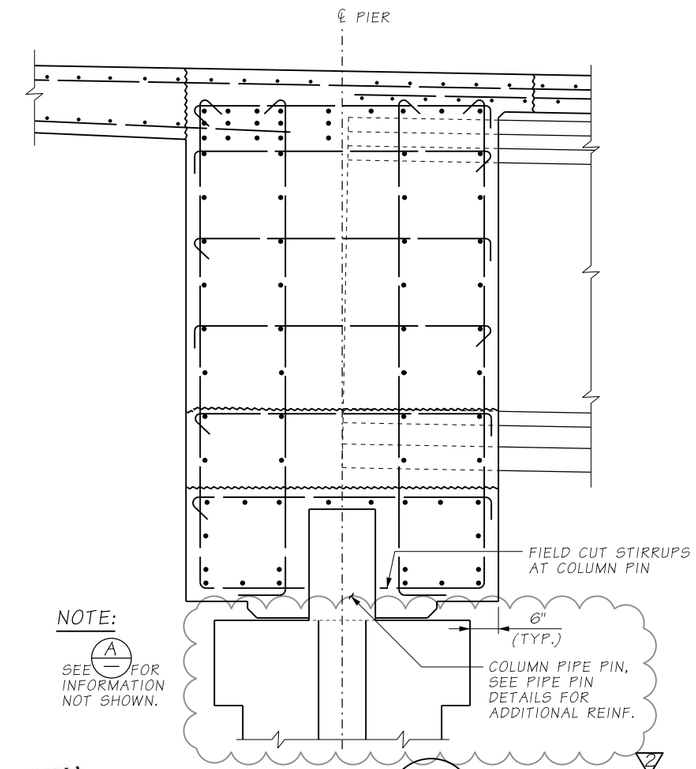

NOTE:
SEE A/— FOR INFORMATION NOT SHOWN.

SECTION C / AT COLUMNS (BETWEEN GIRDERS SHOWN, AT GIRDERS SIMILAR) / BB208

ATKINSON
JAN 07 2021 KTW
RELEASED FOR CONSTRUCTION

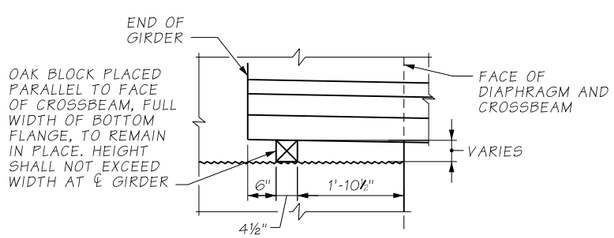

OAK BLOCK DETAIL

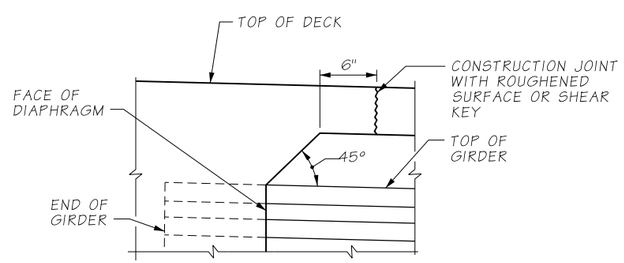

DETAIL 1 / —
REINFORCING NOT SHOWN FOR CLARITY

AS-BUILT

TOP OF OAK BLOCK ELEVATIONS

GIRDER	BACK STATION
A	296.88
B	296.62
C	296.37
D	296.08
E	295.78

NOTES:

1. GIRDERS SHALL BE HELD RIGIDLY IN PLACE UNTIL AFTER DIAPHRAGMS ARE PLACED.
2. CUT/RELEASE GIRDER TEMPORARY STRANDS BEFORE CASTING DIAPHRAGM AND BRIDGE DECK. SEE TEMPORARY STRAND CUTTING SEQUENCE.
3. EXTENDED STRANDS AND GIRDER REINFORCING NOT SHOWN FOR CLARITY.
4. LONGITUDINAL DIMENSIONS ARE NORMAL TO ℄ PIER.
5. FOR CONCRETE PLACEMENT PROCEDURE SEE "SUPERSTRUCTURE CONSTRUCTION SEQUENCE" SHEET.
6. FOR PIER 1 CONSTRUCTION SEQUENCE, SEE SHEET BB204.

FILE NAME	D:\ICS_workdir\73640\20633_722\PS_BB209.dgn				REGION NO. 10	STATE WASH	FED.AID PROJ.NO.
TIME	1:28:55 PM						
DATE	1/6/2021						
PLOTTED BY	USLAS0-APP064$				JOB NUMBER		
DESIGNED BY	K. BICHICH	REV 2 - RFI0519	01/07/2021				
ENTERED BY	R. REISER	REV 1 - RFI110	05/29/2019				
CHECKED BY	G. CALLAHAN	REV 0 - RELEASED FOR CONSTRUCTION	02/14/2019		CONTRACT NO. C9133		LOCATION NO.
PROJ. ENGR.	C. MEADE	REV A - FINAL REVIEW	01/15/2019				
REGIONAL ADM.	J. WYNANDS	REVISION	DATE	BY			

CORY J. CAYWOOD, STATE OF WASHINGTON, 38155, STRUCTURAL ENGINEER, PROFESSIONAL ENGINEER
01/07/21
DATE
P.E. STAMP BOX

P.E. STAMP BOX
DATE

Washington State Department of Transportation

ATKINSON / JACOBS CONSTRUCTION

I-5
STEILACOOM-DUPONT RD TO THORNE LN CORRIDOR IMPROVEMENTS
MP 120.01 TO MP 124.45
BERKELEY SB OFF RAMP

PIER 1 CROSS BEAM DETAILS

PLAN REF NO BB209

SHEET 1329 OF 1456 SHEETS

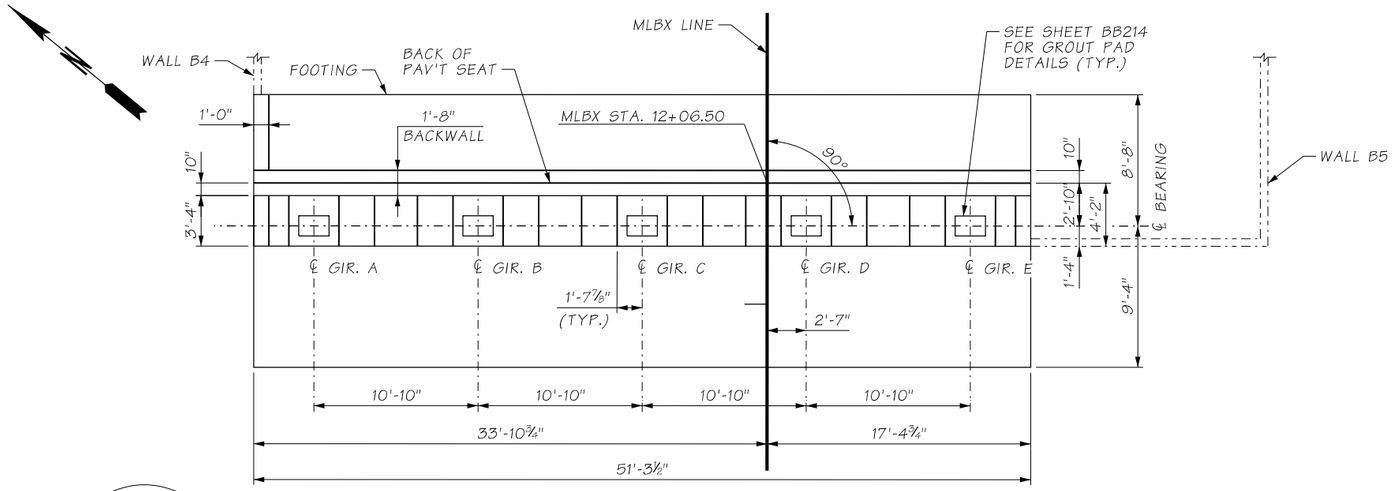

PLAN

TOP OF CURTAIN WALL ELEVATIONS		
LOCATION	LEFT SIDE	RIGHT SIDE
ELEV. A	296.28	-
ELEV. B	296.58	295.51
ELEV. C	297.06	296.00
ELEV. D	297.22	296.20

TOP OF GROUT PAD ELEVATIONS	
GIRDER	ELEVATION
A	290.75
B	290.53
C	290.31
D	290.10
E	289.88

NOTES:

1. APPLY MT. BAKER GRAY PIGMENTED SEALER TO ALL PERMANENTLY EXPOSED CONCRETE SURFACES TO 1'-0" MIN. BELOW FINISHED GROUND.
2. USE VARIABLE DEPTH RANDOM BOARD PATTERN AS INDICATED. ALL DIMENSIONS SHOWN ARE TO STRUCTURAL FACE OF CONCRETE. INCREASE THICKNESS AS REQUIRED FOR VARIABLE DEPTH RANDOM BOARD PATTERN.

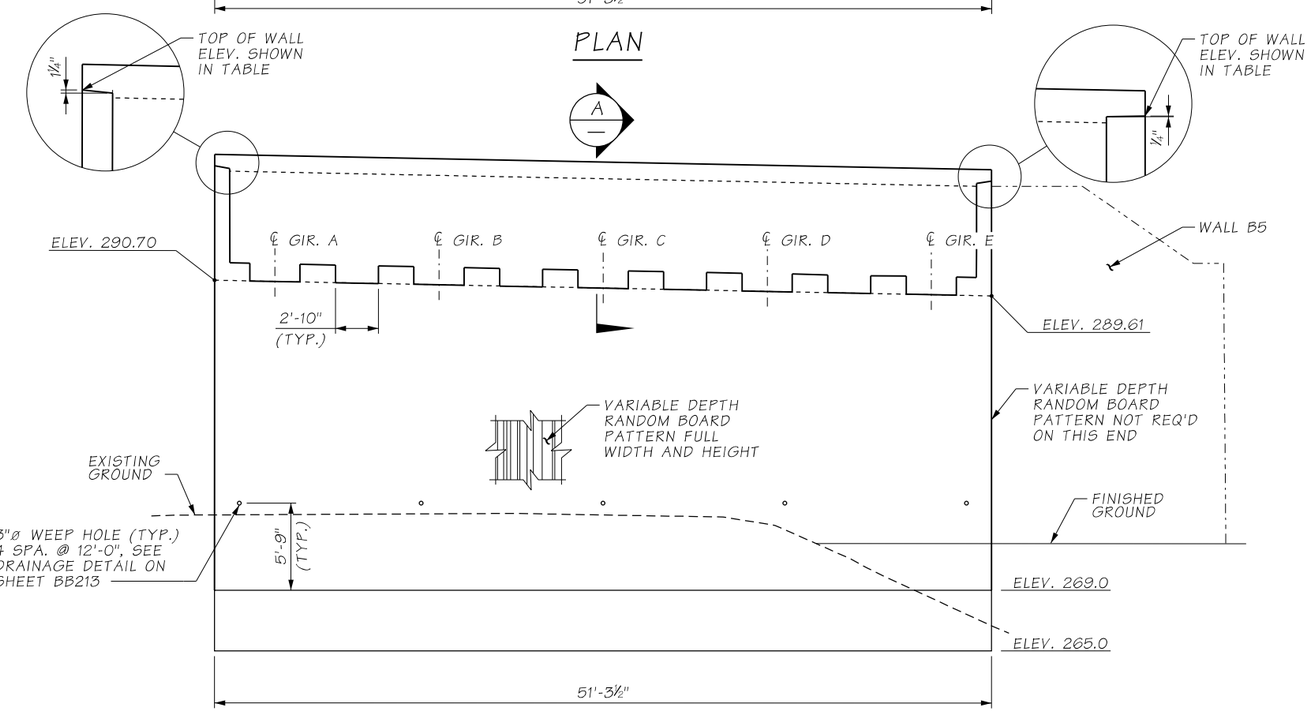

ELEVATION - FRONT

SHOWN LOOKING AHEAD ON STATION

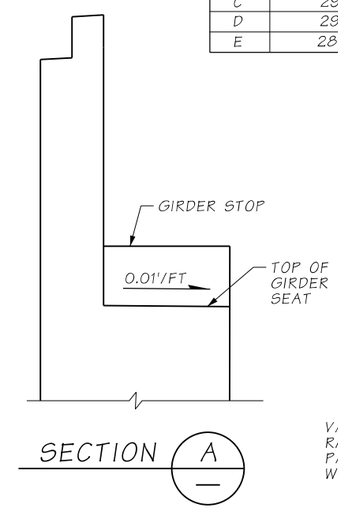

SECTION A

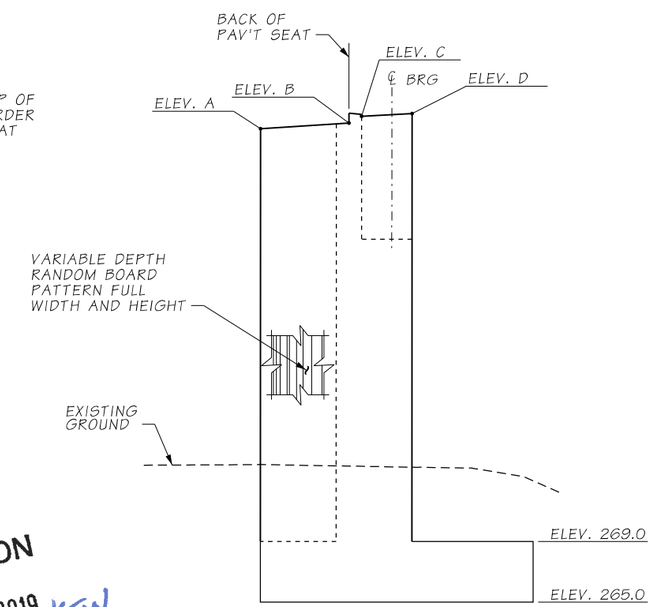

ELEVATION - SIDE

LEFT SIDE SHOWN

ATKINSON
JUL 09 2019 KTW
RELEASED FOR CONSTRUCTION

AS-BUILT

FILE NAME	c:\pwworking\jacobs_b&i\reiserrw\dms20633\PS_BB210.dgn						
TIME	7:34:33 AM				REGION NO. 10	STATE WASH	FED.AID PROJ.NO.
DATE	7/1/2019						
PLOTTED BY	ReiserRW				JOB NUMBER		
DESIGNED BY	G. CALLAHAN						
ENTERED BY	R. REISER	REV 1 - RFI0083	07/03/2019		CONTRACT NO. C9133		LOCATION NO.
CHECKED BY	C. CAYWOOD	REV 0 - RELEASED FOR CONSTRUCTION	02/14/2019				
PROJ. ENGR.	C. MEADE	REV A - FINAL REVIEW	01/15/2019				
REGIONAL ADM.	J. WYNANDS	REVISION	DATE	BY			

COLBY J. CAYWOOD, STATE OF WASHINGTON, 38759, STRUCTURAL ENGINEER, PROFESSIONAL ENGINEER
7/8/19
DATE
P.E. STAMP BOX

DATE
P.E. STAMP BOX

Washington State Department of Transportation

ATKINSON CONSTRUCTION / JACOBS

I-5
STEILACOOM-DUPONT RD TO THORNE LN
CORRIDOR IMPROVEMENTS
MP 120.01 TO MP 124.45
BERKELEY SB OFF RAMP BRIDGE

PIER 2
PLAN AND ELEVATION

PLAN REF NO BB210

SHEET 1330 OF 1456 SHEETS

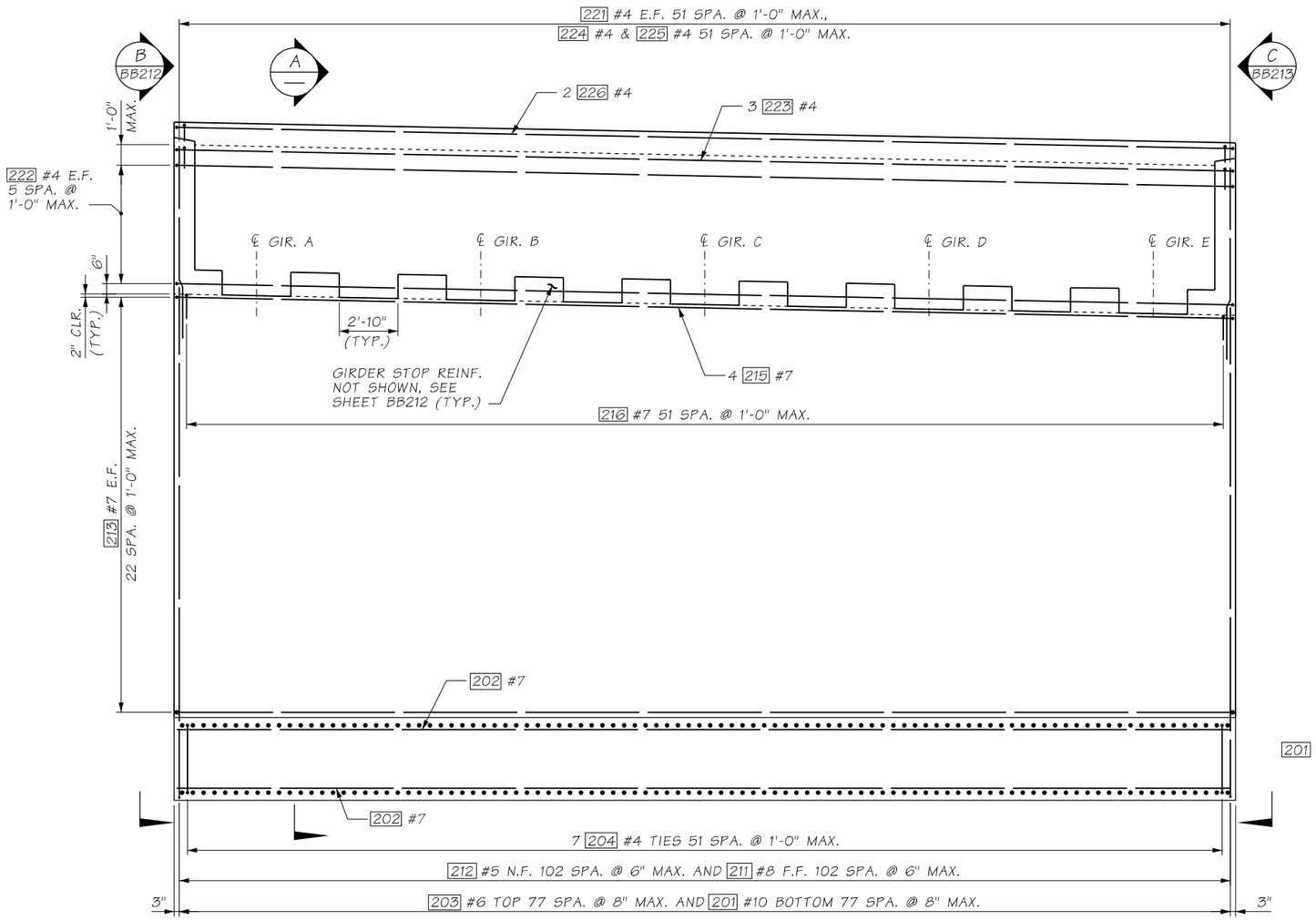

ELEVATION - FRONT

SHOWN LOOKING AHEAD ON STATION

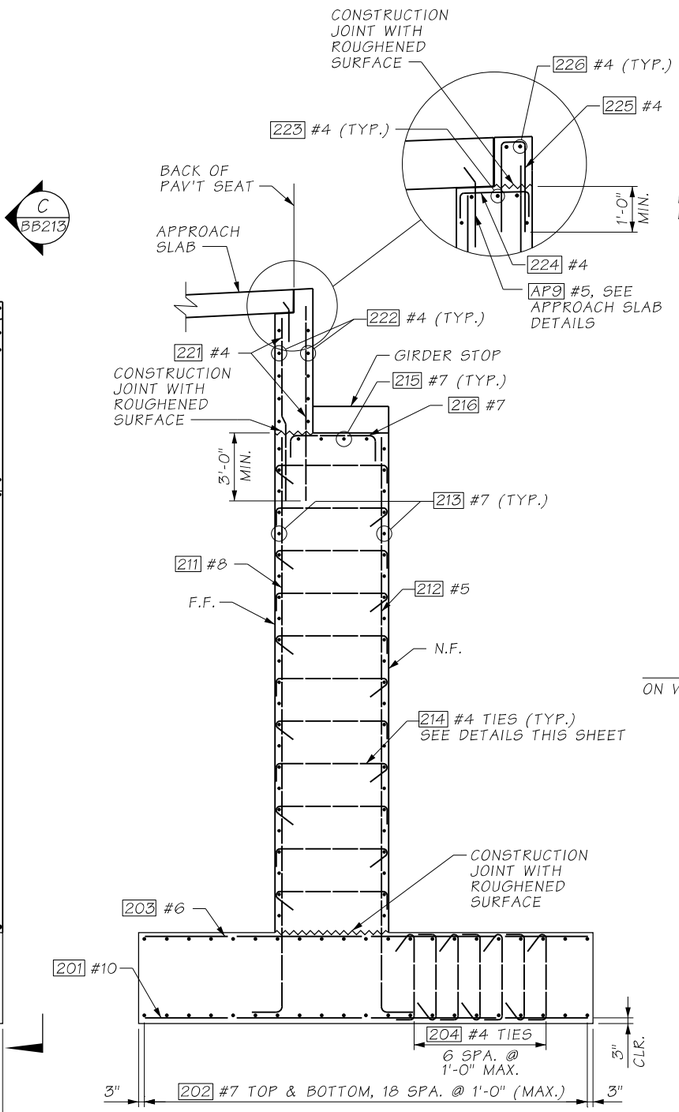

SECTION A

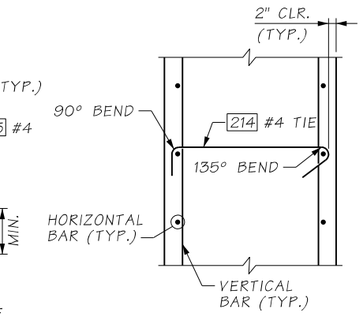

TIE BAR DETAIL

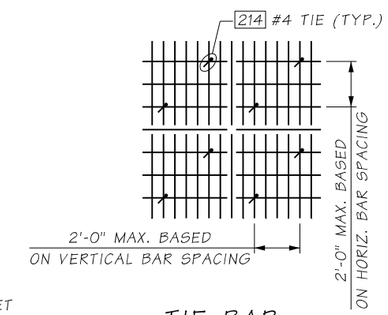

TIE BAR SPACING DETAIL

NOTES:

1. LAP SPLICES MAY BE ADDED AT CONTRACTOR'S OPTION. MINIMUM LAP SPLICE LENGTHS SHALL BE AS FOLLOWS, UNLESS NOTED OTHERWISE:
   #4= 2'-9"
   #5= 3'-6"
   #6= 4'-0"
   #7= 4'-9"
   #8= 5'-6"
   #9= 6'-9"
   #10= 8'-3"

AS-BUILT

ATKINSON

FEB 11 2019

RELEASED FOR CONSTRUCTION

FILE NAME	c:\pwworking\jacobs_b&i\reiserrw\dms20633\PS_BB211.dgn			
TIME	12:30:41 PM			
DATE	2/5/2019			
PLOTTED BY	reiserrw			
DESIGNED BY	G. CALLAHAN			
ENTERED BY	R. REISER			
CHECKED BY	C. CAYWOOD	REV 0 - RELEASED FOR CONSTRUCTION	02/14/2019	
PROJ. ENGR.	C. MEADE	REV A - FINAL REVIEW	01/15/2019	
REGIONAL ADM.	J. WYNANDS	REVISION	DATE	BY

REGION NO.	STATE	FED.AID PROJ.NO.
10	WASH	
JOB NUMBER		
CONTRACT NO. C8811		LOCATION NO.

CORY J. CAYWOOD, STATE OF WASHINGTON, 38759, PROFESSIONAL ENGINEER

2/8/19

DATE

P.E. STAMP BOX

DATE

P.E. STAMP BOX

Washington State Department of Transportation

ATKINSON CONSTRUCTION / JACOBS

I-5
STEILACOOM-DUPONT RD TO THORNE LN
CORRIDOR IMPROVEMENTS
MP 120.01 TO MP 124.45
BERKELEY SB OFF RAMP BRIDGE

PIER 2 SECTIONS AND DETAILS (1 OF 3)

PLAN REF NO BB211

SHEET 1331 OF 1456 SHEETS

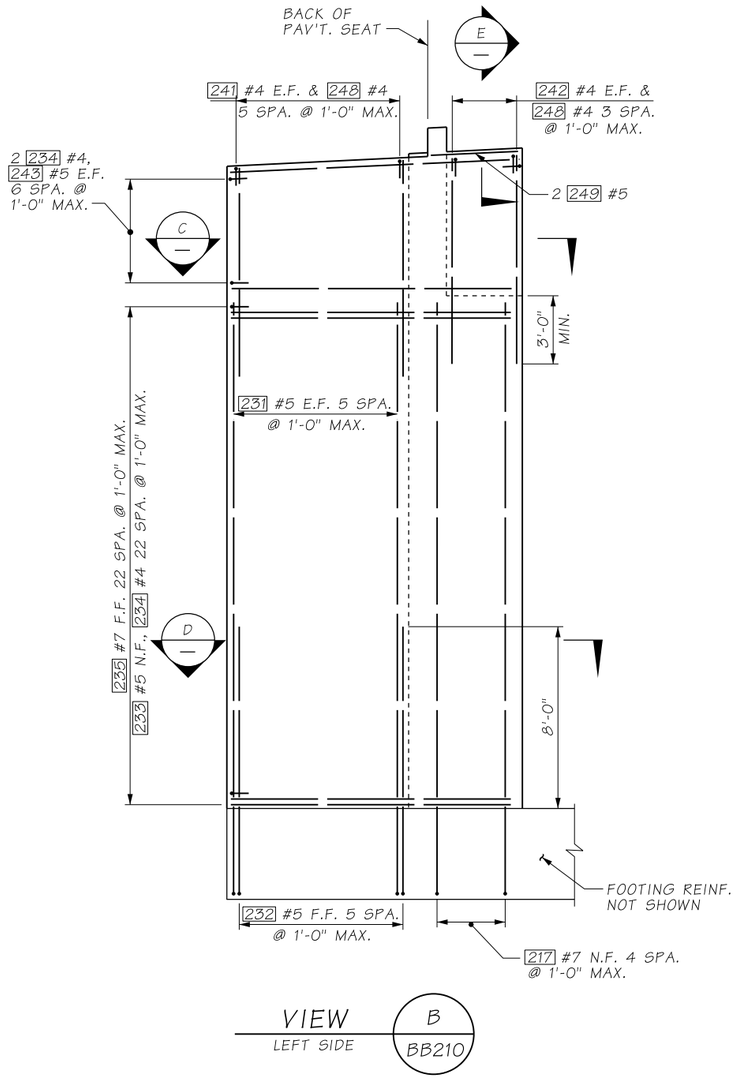

VIEW B / BB210
LEFT SIDE

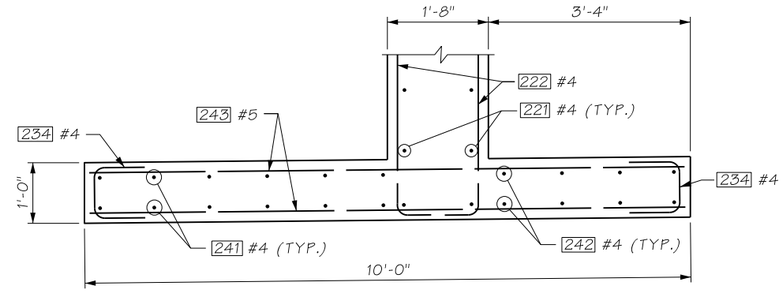

SECTION C

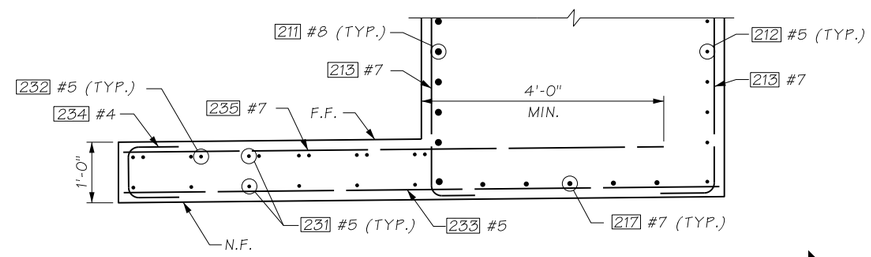

SECTION D

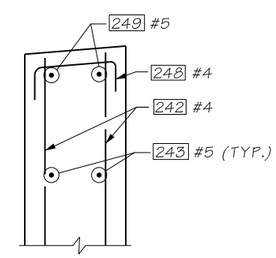

SECTION E

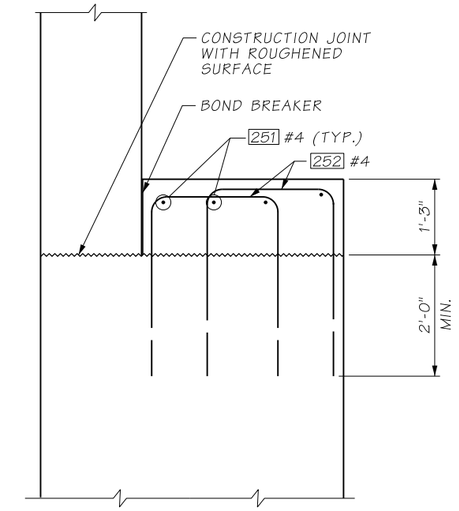

SECTION F

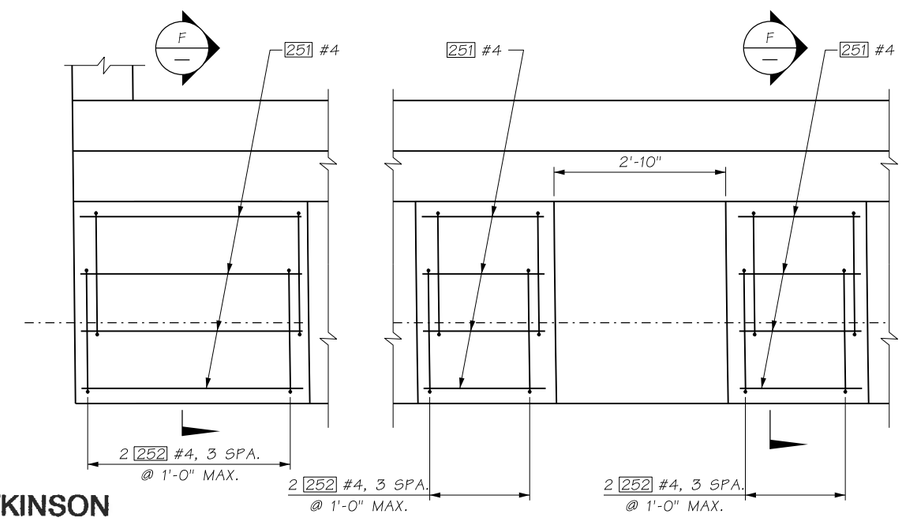

EXTERIOR

INTERIOR

PLAN - GIRDER STOPS

AS-BUILT

ATKINSON

FEB 11 2019

RELEASED FOR CONSTRUCTION

FILE NAME	D:\ICS_workdir\21161\20633_1435\PS_BB212.dgn				REGION NO. 10	STATE WASH	FED.AID PROJ.NO.
TIME	9:12:29 AM						
DATE	2/7/2019						
PLOTTED BY	USLAS0-APP064$				JOB NUMBER		
DESIGNED BY	G. CALLAHAN						
ENTERED BY	R. REISER						
CHECKED BY	C. CAYWOOD	REV 0 - RELEASED FOR CONSTRUCTION	02/14/2019		CONTRACT NO. C8811		LOCATION NO.
PROJ. ENGR.	C. MEADE	REV A - FINAL REVIEW	01/15/2019				
REGIONAL ADM.	J. WYNANDS	REVISION	DATE	BY			

CORY J. CAYWOOD, STATE OF WASHINGTON, 38759, STRUCTURAL ENGINEER, PROFESSIONAL ENGINEER
2/8/19
DATE
P.E. STAMP BOX

DATE
P.E. STAMP BOX

Washington State Department of Transportation

ATKINSON / JACOBS CONSTRUCTION

I-5
STEILACOOM-DUPONT RD TO THORNE LN CORRIDOR IMPROVEMENTS
MP 120.01 TO MP 124.45
BERKELEY SB OFF RAMP BRIDGE

PIER 2 SECTIONS AND DETAILS (2 OF 3)

PLAN REF NO BB212

SHEET 1332 OF 1456 SHEETS

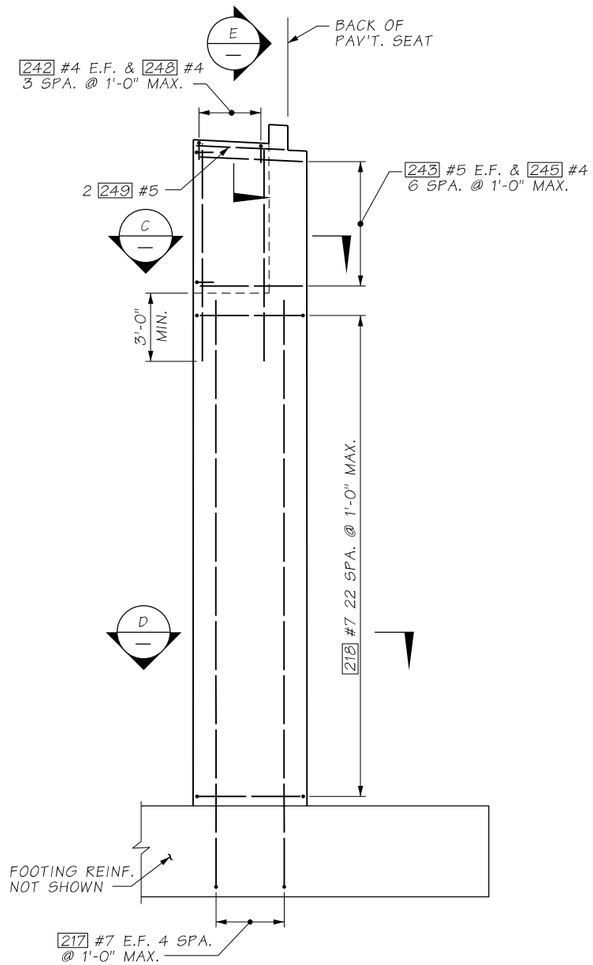

VIEW C / BB210
RIGHT SIDE

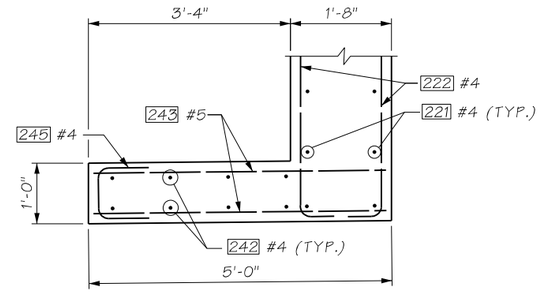

SECTION C

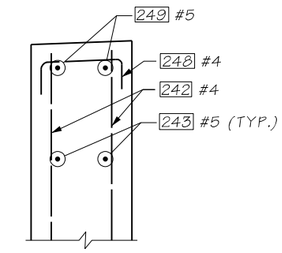

SECTION E

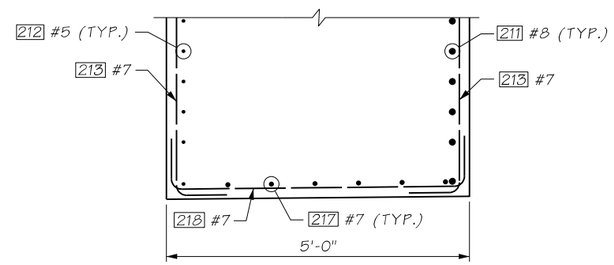

SECTION D

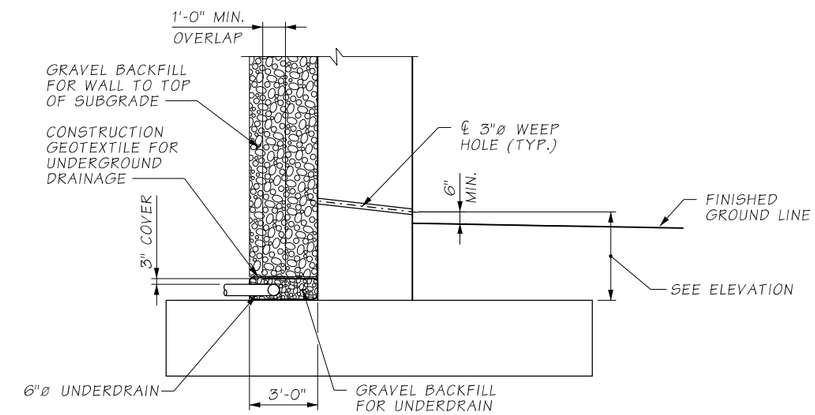

DRAINAGE DETAIL

AS-BUILT

ATKINSON

FEB 11 2019

RELEASED FOR CONSTRUCTION

FILE NAME	c:\pwworking\jacobs_b&i\reiserrw\dms20633\PS_BB213.dgn						
TIME	12:35:08 PM				REGION NO. 10	STATE WASH	FED.AID PROJ.NO.
DATE	2/5/2019						
PLOTTED BY	reiserrw				JOB NUMBER		
DESIGNED BY	G. CALLAHAN						
ENTERED BY	R. REISER						
CHECKED BY	C. CAYWOOD	REV 0 - RELEASED FOR CONSTRUCTION	02/14/2019		CONTRACT NO. C8811		LOCATION NO.
PROJ. ENGR.	C. MEADE	REV A - FINAL REVIEW	01/15/2019				
REGIONAL ADM.	J. WYNANDS	REVISION	DATE	BY			

P.E. STAMP BOX — DATE 2/3/19

P.E. STAMP BOX — DATE

Washington State Department of Transportation

ATKINSON CONSTRUCTION / JACOBS

I-5
STEILACOOM-DUPONT RD TO THORNE LN
CORRIDOR IMPROVEMENTS
MP 120.01 TO MP 124.45
BERKELEY SB OFF RAMP BRIDGE

PIER 2 SECTIONS AND DETAILS (3 OF 3)

PLAN REF NO BB213

SHEET 1333 OF 1456 SHEETS

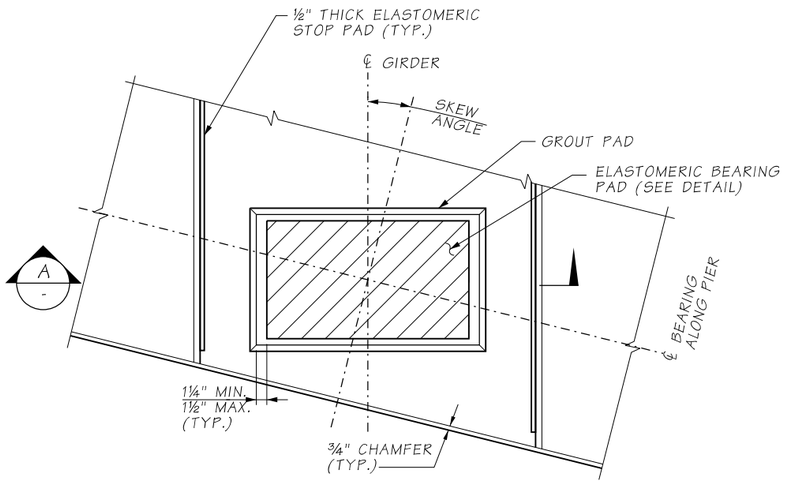

GROUT PAD DETAIL

GIRDER NOT SHOWN FOR CLARITY

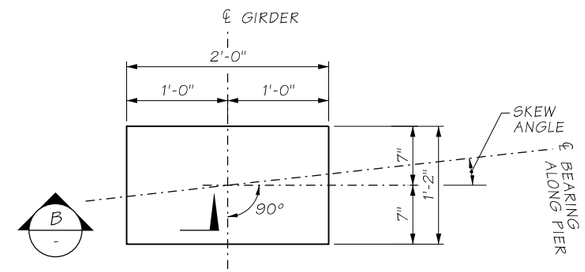

ELASTOMERIC BEARING PAD PIER

LAMINATED ELASTOMERIC BEARING PAD

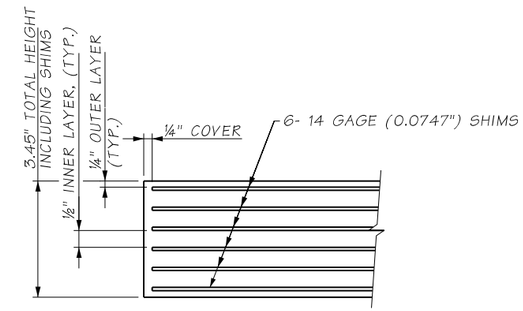

SECTION B

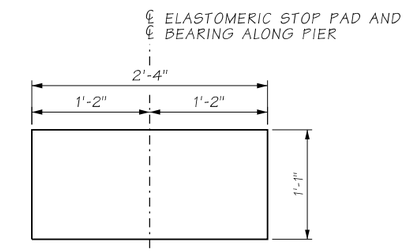

ELASTOMERIC STOP PAD

SHEAR MODULUS= 165 PSI

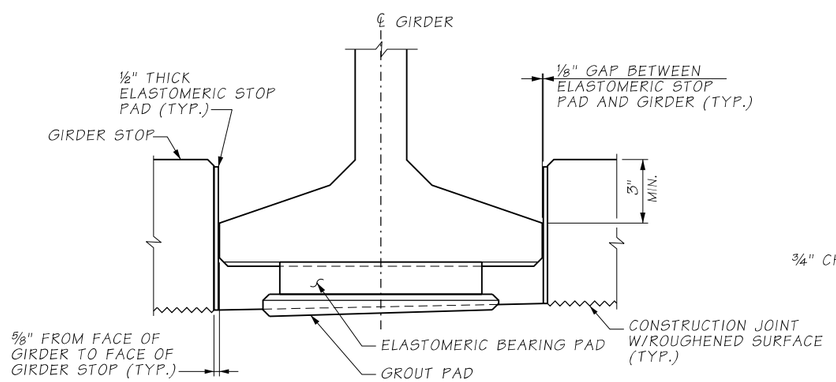

SECTION A

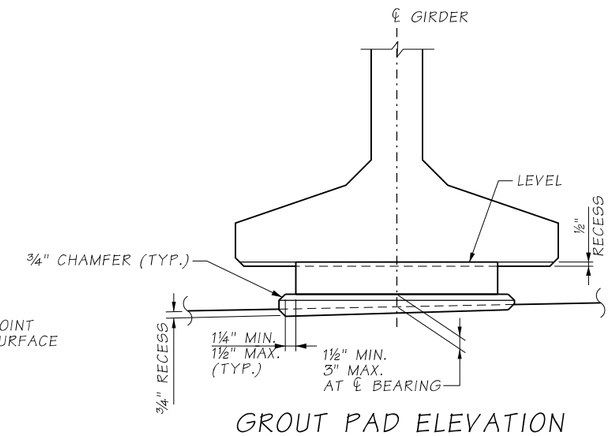

GROUT PAD ELEVATION

NOTES:

1. GIRDER STOPS SHALL BE CONSTRUCTED AFTER GIRDER PLACEMENT.
2. THE ELASTOMERIC STOP PADS SHALL BE BONDED TO GIRDER STOPS WITH APPROVED ADHESIVE.

BEARING DESIGN TABLE AASHTO METHOD B DESIGN / SERVICE - I LIMIT STATE	
	PIER 2
DEAD LOAD (DL) REACTION	265 KIPS
LIVE LOAD REACTION (W/O IMPACT)	118 KIPS
UNLOADED HEIGHT	3.45 IN
LOADED HEIGHT (DL)	3.41 IN
SHEAR MODULUS	165 PSI

AS-BUILT

ATKINSON

FEB 11 2019

RELEASED FOR CONSTRUCTION

FILE NAME	c:\pwworking\jacobs_b&i\reiserrw\dms20633\PS_BB214.dgn						
TIME	12:37:25 PM				REGION NO.	STATE	FED.AID PROJ.NO.
DATE	2/5/2019				10	WASH	
PLOTTED BY	reiserrw				JOB NUMBER		
DESIGNED BY	C. CALLAHAN						
ENTERED BY	R. REISER						
CHECKED BY	C. CAYWOOD	REV 0 - RELEASED FOR CONSTRUCTION	02/14/2019		CONTRACT NO.		LOCATION NO.
PROJ. ENGR.	C. MEADE	REV A - FINAL REVIEW	01/15/2019		C8811		
REGIONAL ADM.	J. WYNANDS	REVISION	DATE	BY			

P.E. STAMP BOX — DATE 2/5/19

P.E. STAMP BOX — DATE

Washington State Department of Transportation

ATKINSON CONSTRUCTION / JACOBS

I-5
STEILACOOM-DUPONT RD TO THORNE LN
CORRIDOR IMPROVEMENTS
MP 120.01 TO MP 124.45
BERKELEY SB OFF RAMP BRIDGE

ELASTOMERIC BEARING DETAILS

PLAN REF NO BB214

SHEET 1334 OF 1456 SHEETS

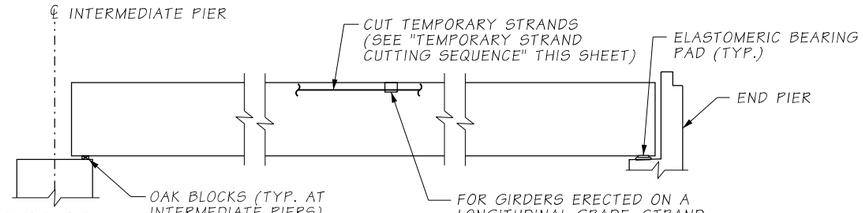

STAGE 1
SET GIRDERS IN PLACE

INSTALL TEMPORARY BRACING FOR ERECTION IN ACCORDANCE WITH STD. SPEC. SECTION 6-02.3(17)F4.

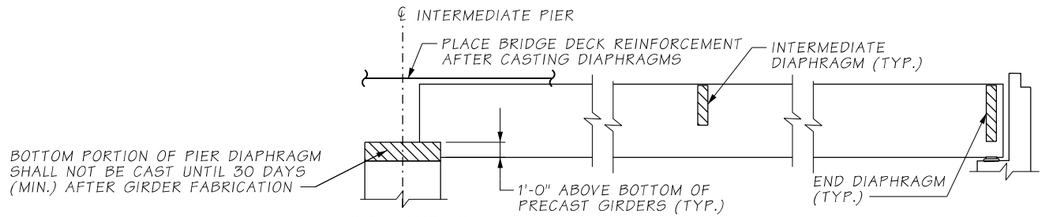

STAGE 2
CAST DIAPHRAGMS AND PLACE BRIDGE DECK REINFORCEMENT

INSTALL TEMPORARY BRACING FOR DIAPHRAGM AND DECK PLACEMENT IN ACCORDANCE WITH STD. SPEC. SECTION 6-02.3(17)F5.

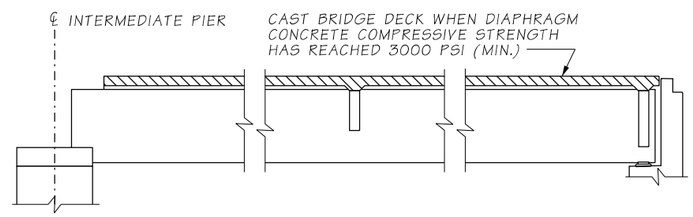

STAGE 3
CAST BRIDGE DECK

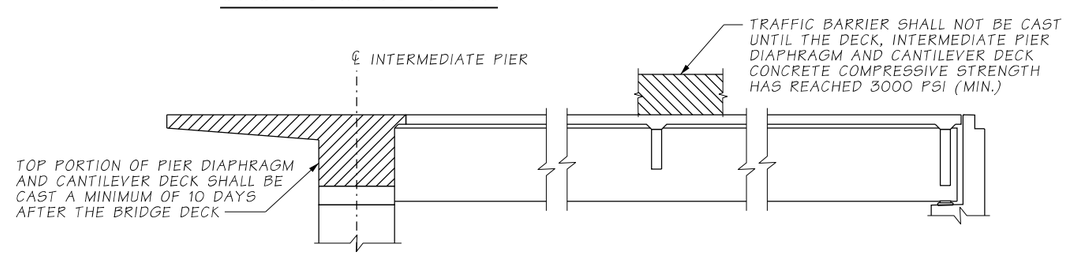

STAGE 4
COMPLETE DIAPHRAGM AND CANTILEVER DECK

CONSTRUCTION SEQUENCE ~ SUPERSTRUCTURE

TEMPORARY STRAND CUTTING SEQUENCE

1. ERECT AND BRACE GIRDERS.
2. JUST PRIOR TO CUTTING THE TEMPORARY STRANDS, REMOVE EXPANDED POLYSTYRENE IN BLOCKOUTS IN TOP FLANGE OF GIRDERS. ONCE THE EXPANDED POLYSTYRENE HAS BEEN REMOVED FROM THE STRAND DETENSIONING BLOCKOUT, PREVENT MOISTURE FROM ENTERING THE BLOCKOUT UNTIL THE TEMPORARY TOP STRAND IS CUT AND THE BLOCKOUT FILLED WITH GROUT.
3. CUT STRANDS IN BLOCKOUTS. STRANDS MAY BE CUT BY USING A CUTTING TORCH AND MOVING THE FLAME BACK AND FORTH OVER THE LENGTH OF EXPOSED STRAND TO LET INDIVIDUAL WIRES BREAK ONE AT A TIME TO LESSEN THE SHOCK TO THE GIRDER. STRANDS SHALL BE RELEASED IN A SYMMETRICAL MANNER ABOUT THE GIRDER CENTERLINE STARTING WITH THOSE FURTHEST FROM THE CENTERLINE AND WORKING INWARDS. FOR POST-TENSIONED TEMPORARY TOP STRANDS, ACTIVELY RESTRAIN THE STRAND CHUCKS AT THE GIRDER ENDS DURING CUTTING.
4. WITHIN 24 HOURS OF CUTTING THE TEMPORARY STRANDS, FILL THE BLOCKOUTS WITH A GROUT CONFORMING TO STD. SPEC. 9-20.3(2). REMOVE ALL MOISTURE IN BLOCKOUTS PRIOR TO FILLING THEM WITH GROUT.

AS-BUILT

ATKINSON

KTW FEB 11 2019

RELEASED FOR CONSTRUCTION

NOTE:

NO LIVE LOAD SHALL BE ALLOWED ON THE SPANS UNTIL THE COMPRESSIVE STRENGTH OF THE TOP PORTION OF THE PIER DIAPHRAGM HAS REACHED 3000 PSI (MIN.).

FILE NAME	c:\pwworking\jacobs_b&i\reiserrw\dms20633\PS_BB215.dgn						
TIME	12:38:55 PM				REGION NO. 10	STATE WASH	FED.AID PROJ.NO.
DATE	2/5/2019						
PLOTTED BY	reiserrw				JOB NUMBER		
DESIGNED BY	T. FU						
ENTERED BY	R. REISER						
CHECKED BY	A. FONG	REV 0 - RELEASED FOR CONSTRUCTION	02/14/2019		CONTRACT NO. C8811		LOCATION NO.
PROJ. ENGR.	C. MEADE	REV A - FINAL REVIEW	01/15/2019				
REGIONAL ADM.	J. WYNANDS	REVISION	DATE	BY			

CORY J. CAMWOOD, STATE OF WASHINGTON, 38955, STRUCTURAL ENGINEER, PROFESSIONAL ENGINEER — 2/8/19 DATE — P.E. STAMP BOX

DATE — P.E. STAMP BOX

Washington State Department of Transportation

ATKINSON CONSTRUCTION / JACOBS

I-5
STEILACOOM-DUPONT RD TO THORNE LN CORRIDOR IMPROVEMENTS
MP 120.01 TO MP 124.45
BERKELEY SB OFF RAMP BRIDGE

SUPERSTRUCTURE CONSTRUCTION SEQUENCE

PLAN REF NO BB215

SHEET 1335 OF 1456 SHEETS

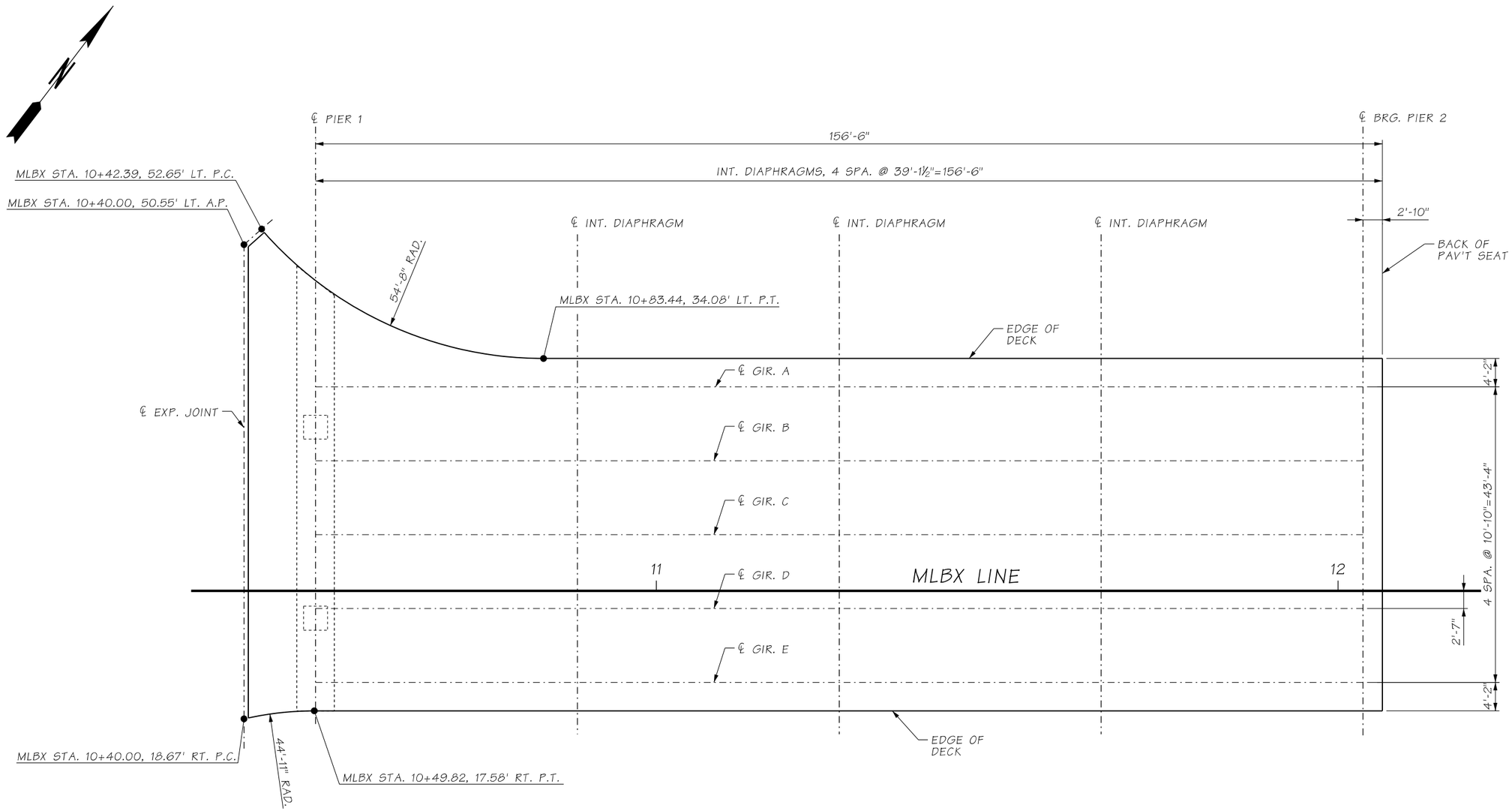

FRAMING PLAN
SPAN - 1 & 2

BEARING OF ALL PIERS ARE N39°21'17"W

ATKINSON

FEB 11 2019

RELEASED FOR CONSTRUCTION

AS-BUILT

FILE NAME	c:\pwworking\jacobs_b&i\reiserrw\dms20633\PS_BB216.dgn						
TIME	12:40:46 PM				REGION NO. 10	STATE WASH	FED.AID PROJ.NO.
DATE	2/5/2019						
PLOTTED BY	reiserrw				JOB NUMBER		
DESIGNED BY	K. BICHICH						
ENTERED BY	R. REISER						
CHECKED BY	A. FONG	REV 0 - RELEASED FOR CONSTRUCTION	02/14/2019		CONTRACT NO. C8811		LOCATION NO.
PROJ. ENGR.	C. MEADE	REV A - FINAL REVIEW	01/15/2019				
REGIONAL ADM.	J. WYNANDS	REVISION	DATE	BY			

P.E. STAMP BOX — DATE 2/5/19

P.E. STAMP BOX — DATE

Washington State Department of Transportation

ATKINSON CONSTRUCTION / JACOBS

I-5
STEILACOOM-DUPONT RD TO THORNE LN
CORRIDOR IMPROVEMENTS
MP 120.01 TO MP 124.45
BERKELEY SB OFF RAMP BRIDGE

FRAMING PLAN

PLAN REF NO BB216

SHEET 1336 OF 1456 SHEETS

GIRDER SCHEDULE

SPAN	GIRDER	GIRDER SERIES	PLAN LENGTH (ALONG GIRDER GRADE) (SEE GIRDER NOTE 1)	INT. DIAPHRAGM TYPE (FULL OR PARTIAL)	GIRDER END DETAILS							MIN. CONC. COMP. STRENGTH		NUMBER OF STRANDS (SEE GIRDER NOTES 2&3)			LOCATION OF C.G. STRANDS			STRAIGHT STRANDS TO EXTEND				"A" DIMENSION AT ℄ BEARINGS	DECK SCREED CAMBER, C	MIDSPAN VERTICAL DEFLECTION D		REINFORCEMENT DETAILS						SHIPPING AND HANDLING DETAILS					
																				END 1		END 2						ZONE 1		ZONE 2		ZONE 3							
					END 1 TYPE	END 2 TYPE	Ld	θ1	θ2	P1	P2	@ 28-DAYS F'C (KSI)	@ RELEASE F'CI (KSI)	STRAIGHT	HARPED	TEMPORARY	E	F℄	Fo	STRANDS	EXTENSION LENGTH	STRANDS	EXTENSION LENGTH			LOWER BOUND @ 40 DAYS	UPPER BOUND @ 120 DAYS	SPACING *	LENGTH	SPACING	LENGTH	SPACING	LENGTH	MAX. MIDSPAN VERT. DEFLECTION @ SHIPPING	L	L1	L2	K_Θ ($1x10^4$ KIP-IN/RAD)	W_{CC}
1	A	WF74G	154'-9⅜"	PARTIAL	D	B	1'-0"	90°	90°	-	1'-0"	10.5	8.6	46	28	8	4⅛"	6¼"	1'-5"	**	1'-8"	-	-	9½"	4½"	3⅛"	7"	3½"	1'-9"	6"	12'-0"	9"	3'-9"	7½"	6'-9"	15'-0"	25'-0"	6.0	6'-0"
1	B	WF74G	154'-9⅜"	PARTIAL	D	B	1'-0"	90°	90°	-	1'-0"	10.5	8.6	46	28	8	4⅛"	6¼"	1'-5"	**	1'-8"	-	-	9½"	4⅝"	3⅛"	6¾"	3½"	1'-9"	6"	12'-0"	9"	3'-9"	7½"	6'-9"	15'-0"	25'-0"	6.0	6'-0"
1	C	WF74G	154'-9⅜"	PARTIAL	D	B	1'-0"	90°	90°	-	1'-0"	10.5	8.6	46	28	8	4⅛"	6¼"	1'-5"	**	1'-8"	-	-	9½"	4⅝"	3⅛"	6¾"	3½"	1'-9"	6"	12'-0"	9"	3'-9"	7½"	6'-9"	15'-0"	25'-0"	6.0	6'-0"
1	D	WF74G	154'-9⅜"	PARTIAL	D	B	1'-0"	90°	90°	-	1'-0"	10.5	8.6	46	28	8	4⅛"	6¼"	1'-5"	**	1'-8"	-	-	9½"	4⅝"	3⅛"	6¾"	3½"	1'-9"	6"	12'-0"	9"	3'-9"	7½"	6'-9"	15'-0"	25'-0"	6.0	6'-0"
1	E	WF74G	154'-9⅜"	PARTIAL	D	B	1'-0"	90°	90°	-	1'-0"	10.5	8.6	46	28	8	4⅛"	6¼"	1'-5"	**	1'-8"	-	-	9½"	4¾"	3⅛"	7"	3½"	1'-9"	6"	12'-0"	9"	3'-9"	7½"	6'-9"	15'-0"	25'-0"	6.0	6'-0"

GIRDER NOTES

1. PLAN LENGTH SHALL BE INCREASED AS NECESSARY TO COMPENSATE FOR SHORTENING DUE TO PRESTRESS AND SHRINKAGE.
2. ALL PERMANENT AND TEMPORARY STRANDS SHALL BE 0.6"ø AASHTO M203 GRADE 270 LOW RELAXATION STRANDS, JACKED TO 202.5 KSI.

ATKINSON

FEB 11 2019

RELEASED FOR CONSTRUCTION

LEGEND	
*	G2 #5 BARS IN ZONE 1 ARE BUNDLED
**	5 6 9 10

AS-BUILT

FILE NAME	c:\pwworking\jacobs_b&i\reiserrw\dms20633\PS_BB217.dgn
TIME	12:43:52 PM
DATE	2/5/2019
PLOTTED BY	reiserrw
DESIGNED BY	K. BICHICH
ENTERED BY	R. REISER
CHECKED BY	A. FONG
PROJ. ENGR.	C. MEADE
REGIONAL ADM.	J. WYNANDS

REVISION	DATE	BY
REV 0 - RELEASED FOR CONSTRUCTION	02/14/2019	
REV A - FINAL REVIEW	01/15/2019	

REGION NO. 10 | STATE WASH | FED.AID PROJ.NO.

JOB NUMBER

CONTRACT NO. C8811 | LOCATION NO.

P.E. STAMP BOX — DATE 2/13/19

P.E. STAMP BOX — DATE

Washington State Department of Transportation

ATKINSON CONSTRUCTION / JACOBS

I-5
STEILACOOM-DUPONT RD TO THORNE LN
CORRIDOR IMPROVEMENTS
MP 120.01 TO MP 124.45
BERKELEY SB OFF RAMP BRIDGE

GIRDER DETAILS (1 OF 5)

PLAN REF NO BB217

SHEET 1337 OF 1456 SHEETS

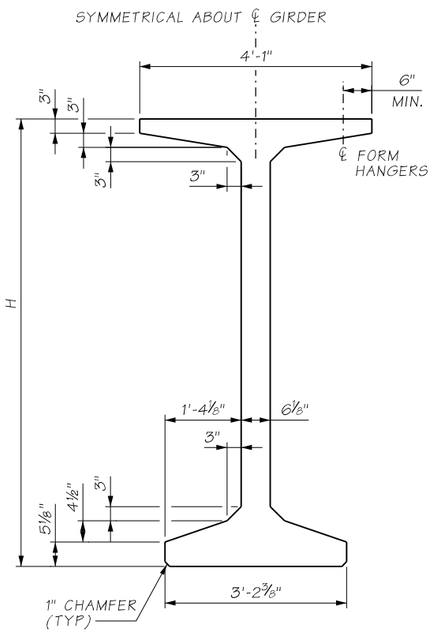

SECTION A

REINFORCEMENT AND STRANDS NOT SHOWN

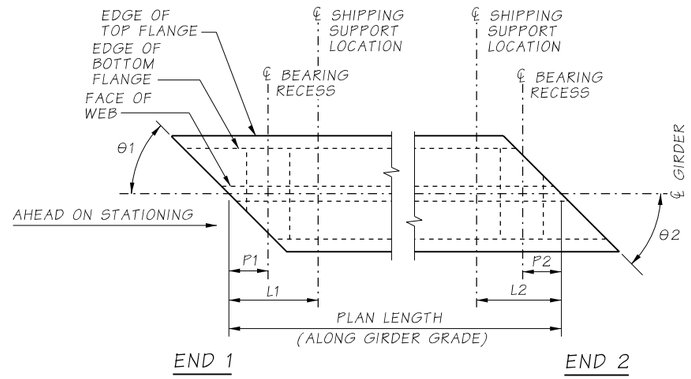

GIRDER PLAN

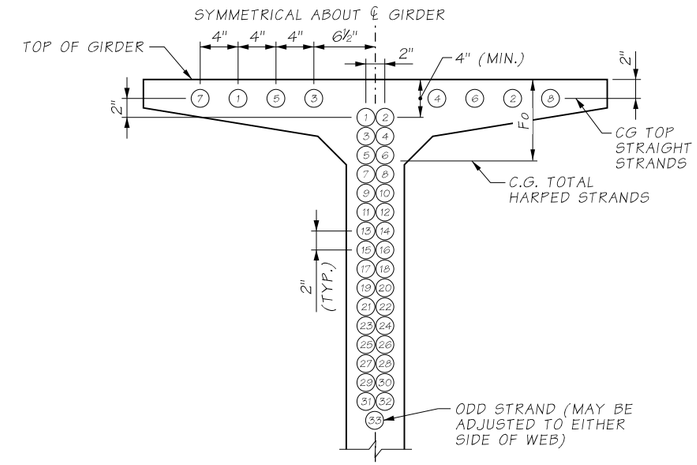

VIEW B

TOP STRAIGHT STRAND AND HARPED STRAND LOCATION SEQUENCE SHALL BE AS SHOWN 1, 2 ETC.

3"ø OPEN HOLE. ADJUST HOLE LOCATION VERTICALLY TO MISS HARPED STRANDS. OMIT HOLES AND PLACE INSERTS ON THE INTERIOR FACE OF EXTERIOR GIRDERS. PLACE HOLES AND INSERTS PARALLEL TO DIAPHRAGM CENTERLINE. INSERTS SHALL BE 1"ø MEADOWBURKE MX-3 HI-TENSILE, 1"ø x 5½" WILLIAMS F22 OPEN FERRULE INSERT, 1"ø x 4⅝" DAYTON-SUPERIOR F-62 FLARED THIN SLAB FERRULE INSERT OR APPROVED EQUIVALENT

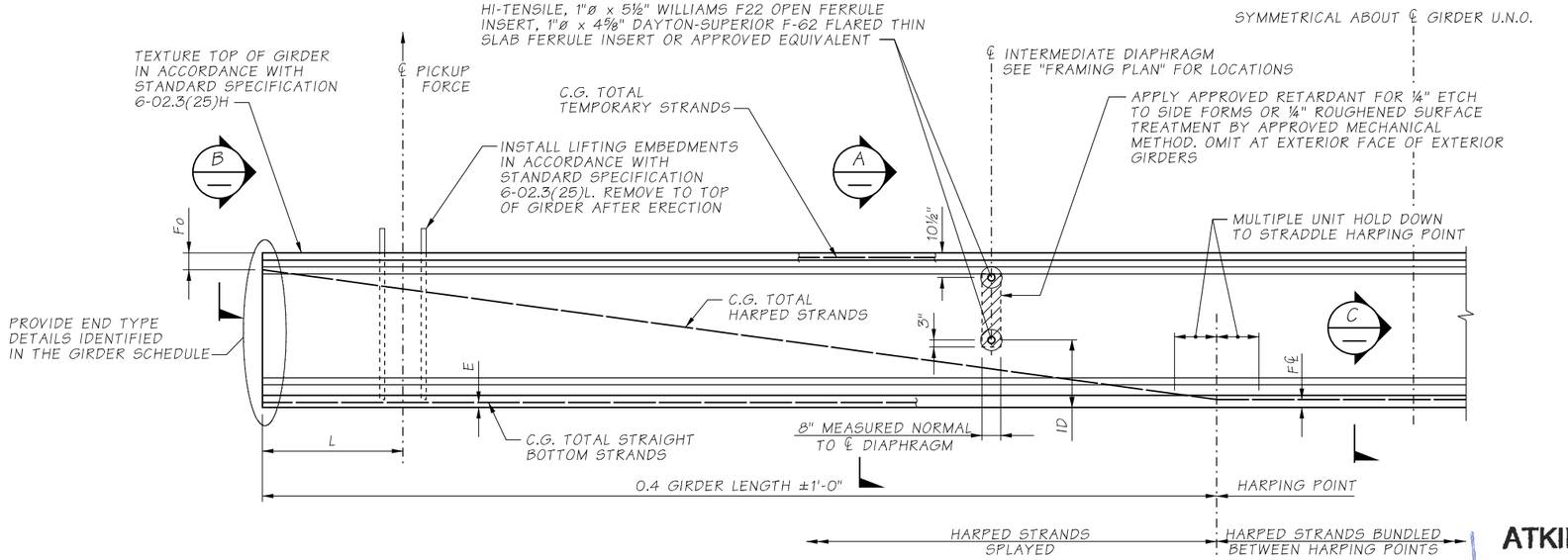

GIRDER ELEVATION

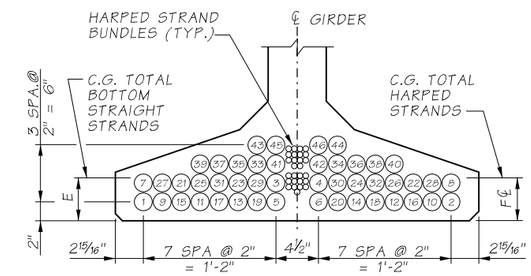

SECTION C

BOTTOM STRAIGHT STRAND LOCATION SEQUENCE SHALL BE AS SHOWN 1, 2 ETC.

GIRDER SERIES	H GIRDER HEIGHT	ID PARTIAL DEPTH INT. DIAPHRAGM	ID FULL DEPTH INT. DIAPHRAGM
WF36G	3'-0"	1'-2⅛"	1'-2⅛"
WF42G	3'-6"	1'-6"	1'-2⅛"
WF50G	4'-2"	1'-9½"	1'-2⅛"
WF58G	4'-10"	2'-3"	1'-2⅛"
WF66G	5'-6"	2'-4¾"	1'-2⅛"
WF74G	6'-2"	2'-8"	1'-2⅛"
WF83G	6'-10⅝"	2'-1⅝"	1'-2⅛"
WF95G	7'-10½"	3'-1½"	1'-2⅛"
WF100G	8'-4"	2'-8"	1'-2⅛"

AS-BUILT

ATKINSON

FEB 11 2019

RELEASED FOR CONSTRUCTION

FILE NAME	c:\pwworking\jacobs_b&i\reiserrw\dms20633\PS_BB218.dgn						
TIME	12:45:58 PM				REGION NO. 10	STATE WASH	FED.AID PROJ.NO.
DATE	2/5/2019				JOB NUMBER		
PLOTTED BY	reiserrw						
DESIGNED BY	K. BICHICH						
ENTERED BY	R. REISER						
CHECKED BY	A. FONG	REV 0 - RELEASED FOR CONSTRUCTION	02/14/2019		CONTRACT NO. C8811		LOCATION NO.
PROJ. ENGR.	C. MEADE	REV A - FINAL REVIEW	01/15/2019				
REGIONAL ADM.	J. WYNANDS	REVISION	DATE	BY			

P.E. STAMP BOX — DATE 2/13/19

P.E. STAMP BOX — DATE

Washington State Department of Transportation

ATKINSON CONSTRUCTION / JACOBS

I-5
STEILACOOM-DUPONT RD TO THORNE LN CORRIDOR IMPROVEMENTS
MP 120.01 TO MP 124.45
BERKELEY SB OFF RAMP BRIDGE

GIRDER DETAILS (2 OF 5)

PLAN REF NO BB218

SHEET 1338 OF 1456 SHEETS

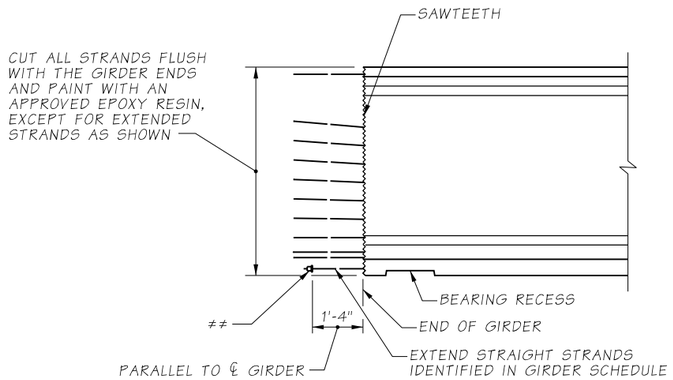

END TYPE A

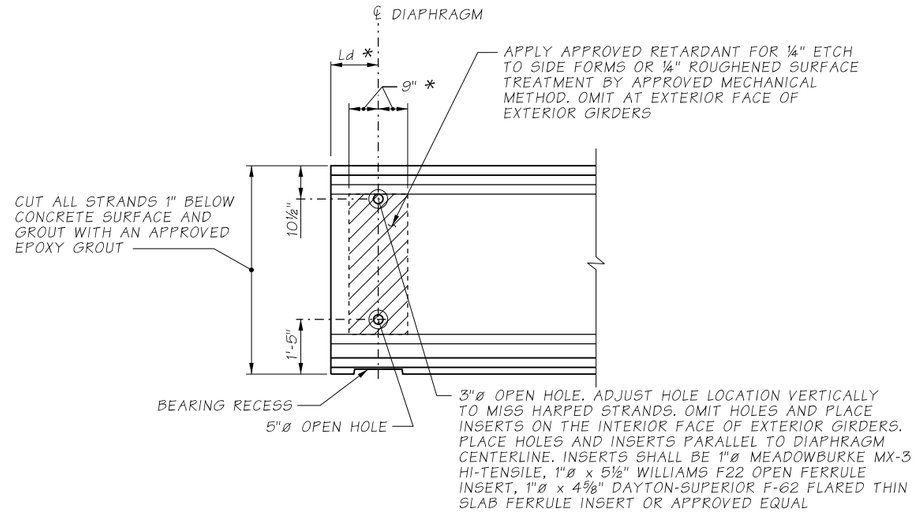

END TYPE B

* MEASURED NORMAL TO ℄ DIAPHRAGM

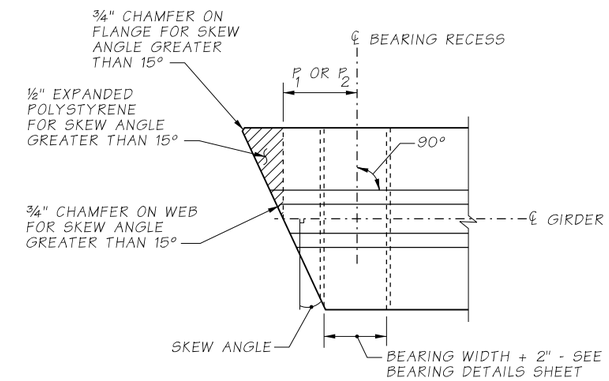

PLAN

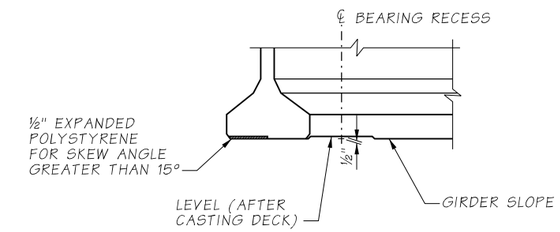

ELEVATION

BEARING RECESS AND BOTTOM FLANGE SPALL PROTECTION DETAIL

BEARING RECESS FORMS SHALL BE CONSTRUCTED AND FASTENED TO AVOID GIRDER DAMAGE DURING STRAND RELEASE.

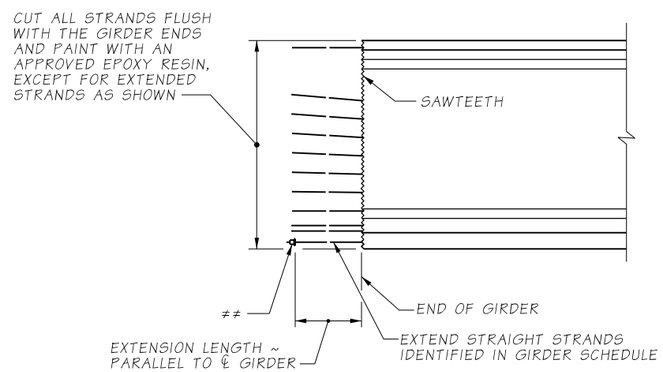

END TYPE D

STRAND CHUCK TACK WELDED TO ASTM A36 PL ½x4x0'-4 WITH ¾"ø HOLE PRIOR TO INSTALLING ON STRAND, ASTM A108 2¾"øx1⅛" STEEL STRAND ANCHOR, OR APPROVED EQUAL (TYP.). VERIFY STRAND GRIPS ARE SEATED TIGHTLY IMMEDIATELY BEFORE PLACING DIAPHRAGM CONCRETE. SECURELY TIE ANCHOR TO THE REBAR CAGE TO PREVENT DISPLACEMENT DURING CONCRETE PLACEMENT.

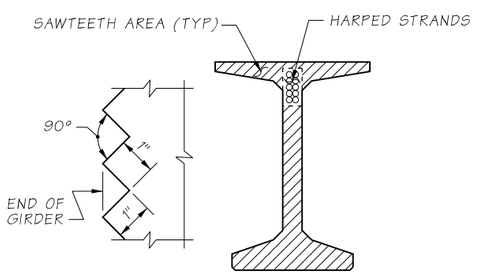

SAWTEETH DETAIL

SAWTEETH SHALL BE FULL WIDTH OVER AREA SHOWN

ATKINSON

FEB 11 2019

RELEASED FOR CONSTRUCTION

AS-BUILT

FILE NAME	c:\pwworking\jacobs_b&i\reiserrw\dms20633\PS_BB219.dgn						
TIME	12:47:25 PM				REGION NO. 10	STATE WASH	FED.AID PROJ.NO.
DATE	2/5/2019						
PLOTTED BY	reiserrw				JOB NUMBER		
DESIGNED BY	K. BICHICH						
ENTERED BY	R. REISER						
CHECKED BY	A. FONG	REV 0 - RELEASED FOR CONSTRUCTION	02/14/2019		CONTRACT NO. C8811		LOCATION NO.
PROJ. ENGR.	C. MEADE	REV A - FINAL REVIEW	01/15/2019				
REGIONAL ADM.	J. WYNANDS	REVISION	DATE	BY			

P.E. STAMP BOX — DATE 2/8/19

P.E. STAMP BOX — DATE

Washington State Department of Transportation

ATKINSON CONSTRUCTION / JACOBS

I-5
STEILACOOM-DUPONT RD TO THORNE LN
CORRIDOR IMPROVEMENTS
MP 120.01 TO MP 124.45
BERKELEY SB OFF RAMP BRIDGE

GIRDER DETAILS (3 OF 5)

PLAN REF NO BB219

SHEET 1339 OF 1456 SHEETS

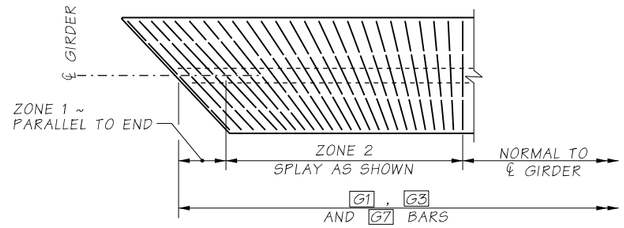

PLAN
TRANSVERSE REINFORCING AT SKEWED ENDS

LENGTHS OF G3 AND G7 VARY WITH SKEW.
ONLY TRANSVERSE REINFORCEMENT SHOWN

GIRDER REINFORCEMENT NOTES

1. DEFORMED WELDED WIRE REINFORCEMENT MAY BE SUBSTITUTED FOR MILD REINFORCEMENT IN ACCORDANCE WITH STANDARD SPECIFICATION 6-02.3(25)A.

GIRDER SERIES	NO. OF G5 BARS
WF36G	3
WF42G	4
WF50G	5
WF58G	6
WF66G	7
WF74G	7
WF83G	8
WF95G	9
WF100G	10

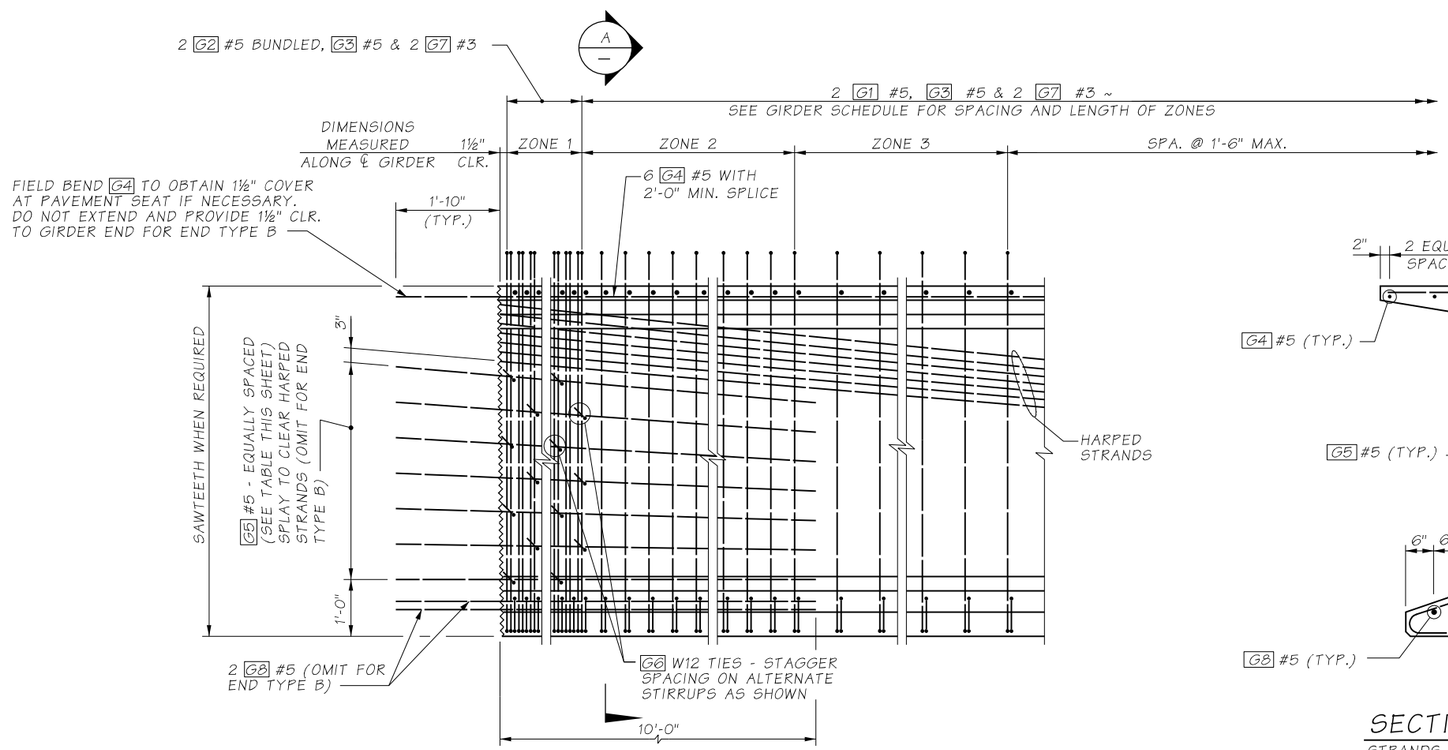

REINFORCEMENT END ELEVATION

STRAIGHT AND TEMPORARY STRANDS NOT SHOWN FOR CLARITY.
WF74G SHOWN, OTHERS SIMILAR.
APPLIES TO TYPICAL GIRDERS.

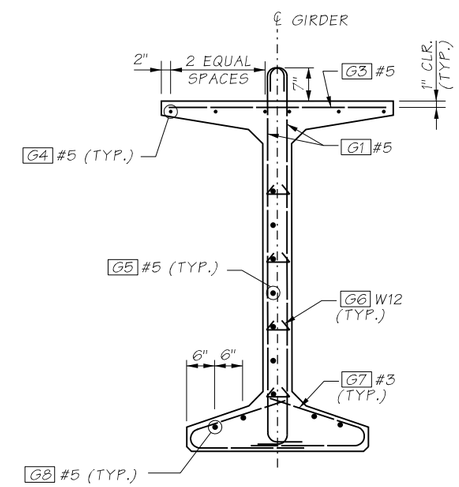

SECTION A
STRANDS NOT SHOWN

BENDING DIAGRAM
(ALL DIMENSIONS ARE OUT TO OUT)

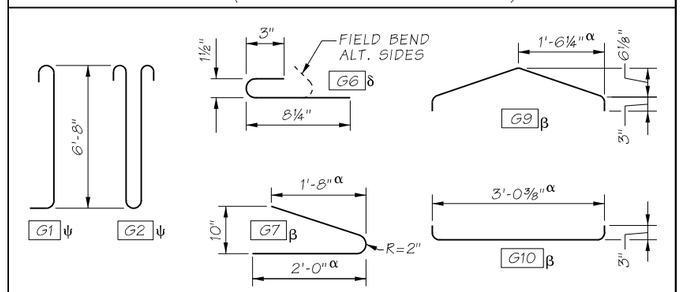

α - VARIES FOR SKEWED ENDS.
δ - #3 OR #4 MAY BE SUBSTITUTED. FIELD BENDING IS OPTIONAL.
β - PAIRS OF G7 BARS, OR G9 AND G10 BARS, MAY BE USED INTERCHANGEABLY AS BOTTOM FLANGE TIES.
ψ - 1 G2 MAY BE SUBSTITUTED FOR 2 G1 WITHIN ZONE 1.

AS-BUILT

ATKINSON
FEB 11 2019
RELEASED FOR CONSTRUCTION

FILE NAME	c:\pwworking\jacobs_b&i\reiserrw\dms20633\PS_BB220.dgn					
TIME	12:48:57 PM				REGION NO. 10	STATE WASH	FED.AID PROJ.NO.
DATE	2/5/2019					
PLOTTED BY	reiserrw				JOB NUMBER	
DESIGNED BY	K. BICHICH					
ENTERED BY	R. REISER					
CHECKED BY	A. FONG	REV 0 - RELEASED FOR CONSTRUCTION	02/14/2019		CONTRACT NO. C8811	LOCATION NO.
PROJ. ENGR.	C. MEADE	REV A - FINAL REVIEW	01/15/2019			
REGIONAL ADM.	J. WYNANDS	REVISION	DATE	BY		

P.E. STAMP BOX — DATE 2/13/19

P.E. STAMP BOX — DATE

Washington State Department of Transportation

ATKINSON CONSTRUCTION / JACOBS

I-5
STEILACOOM-DUPONT RD TO THORNE LN
CORRIDOR IMPROVEMENTS
MP 120.01 TO MP 124.45
BERKELEY SB OFF RAMP BRIDGE

GIRDER DETAILS (4 OF 5)

PLAN REF NO BB220

SHEET 1340 OF 1456 SHEETS

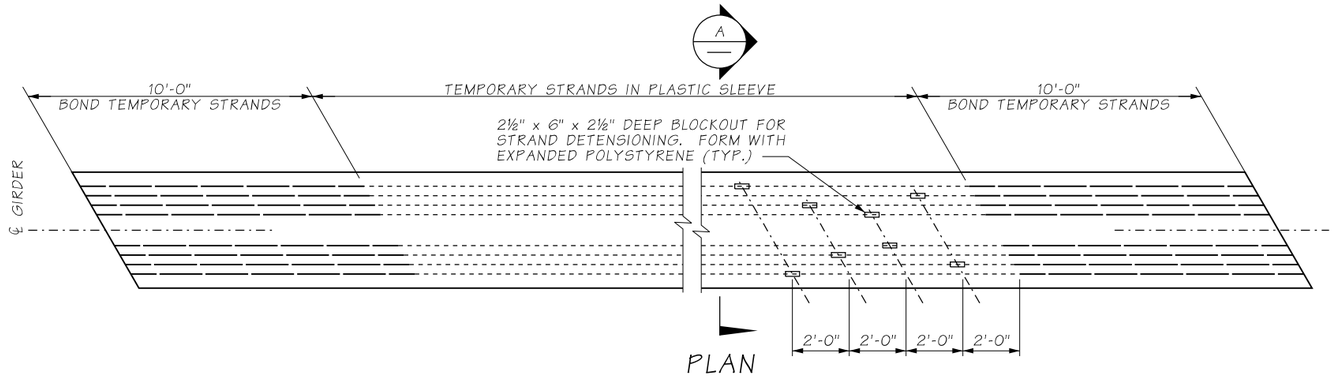

PLAN

PRE-TENSIONED TEMPORARY TOP STRANDS ALTERNATE

SEE GIRDER SCHEDULE FOR NUMBER OF TEMPORARY STRANDS REQUIRED

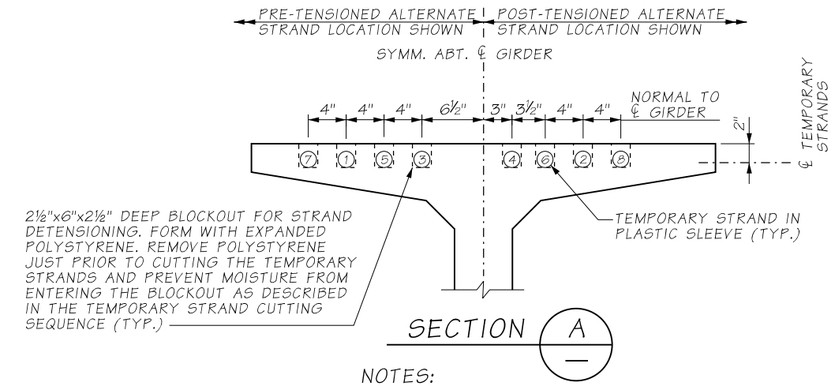

SECTION A

NOTES:

1. TEMPORARY STRAND LOCATION SEQUENCE SHALL BE AS SHOWN 1, 2 ETC.

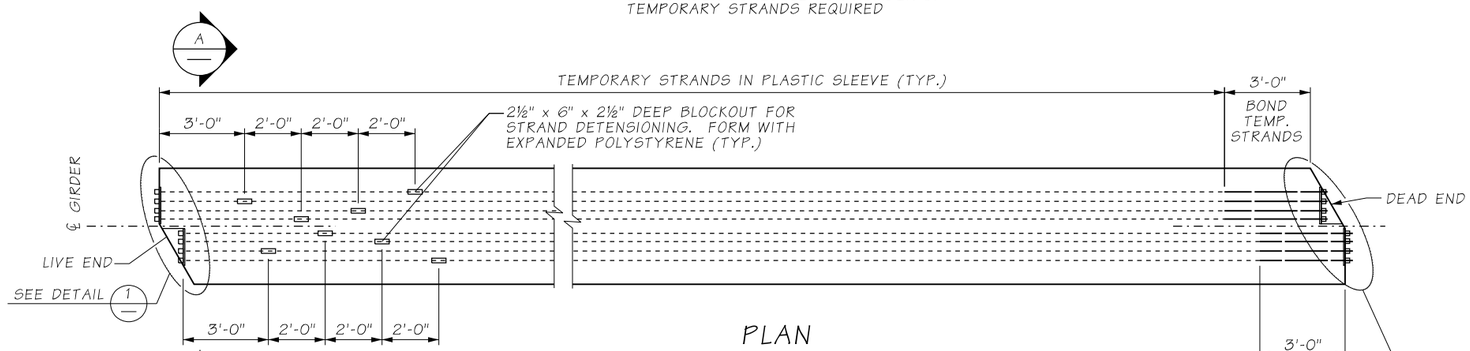

PLAN

POST-TENSIONED TEMPORARY TOP STRANDS ALTERNATE

SEE GIRDER SCHEDULE FOR NUMBER OF TEMPORARY STRANDS REQUIRED

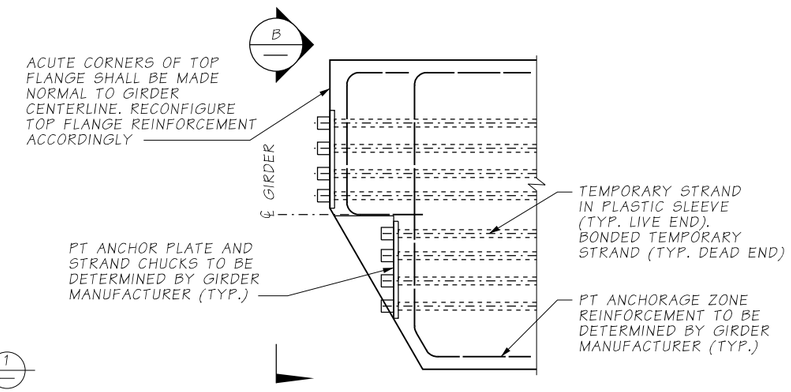

DETAIL 1

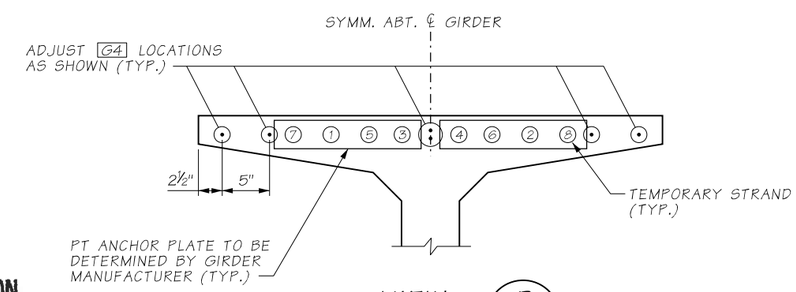

VIEW B

TEMPORARY STRAND NOTES:

1. TEMPORARY TOP STRANDS SHALL BE EITHER PRETENSIONED OR POST-TENSIONED IN ACCORDANCE WITH STANDARD SPECIFICATION SECTION 6-02.3(25)L.
2. FOR GIRDERS ERECTED ON A LONGITUDINAL GRADE, STRAND DETENSIONING BLOCKOUTS SHALL BE PLACED AT THE LOW END OF THE GIRDER.
3. SEE "TEMPORARY STRAND CUTTING SEQUENCE" ON CONSTRUCTION SEQUENCE SHEET FOR TEMPORARY STRAND DETENSIONING PROCEDURE.

ATKINSON

FEB 11 2019

RELEASED FOR CONSTRUCTION

AS-BUILT

FILE NAME	c:\pwworking\jacobs_b&i\reiserrw\dms20633\PS_BB221.dgn					
TIME	12:50:29 PM				REGION NO. 10	STATE WASH	FED.AID PROJ.NO.
DATE	2/5/2019					
PLOTTED BY	reiserrw				JOB NUMBER	
DESIGNED BY	K. BICHICH					
ENTERED BY	R. REISER					
CHECKED BY	A. FONG	REV 0 - RELEASED FOR CONSTRUCTION	02/14/2019		CONTRACT NO. C8811	LOCATION NO.
PROJ. ENGR.	C. MEADE	REV A - FINAL REVIEW	01/15/2019			
REGIONAL ADM.	J. WYNANDS	REVISION	DATE	BY		

P.E. STAMP BOX — DATE 2/3/19

P.E. STAMP BOX — DATE

Washington State Department of Transportation

ATKINSON CONSTRUCTION / JACOBS

I-5
STEILACOOM-DUPONT RD TO THORNE LN CORRIDOR IMPROVEMENTS
MP 120.01 TO MP 124.45
BERKELEY SB OFF RAMP BRIDGE

GIRDER DETAILS (5 OF 5)

PLAN REF NO BB221

SHEET 1341 OF 1456 SHEETS

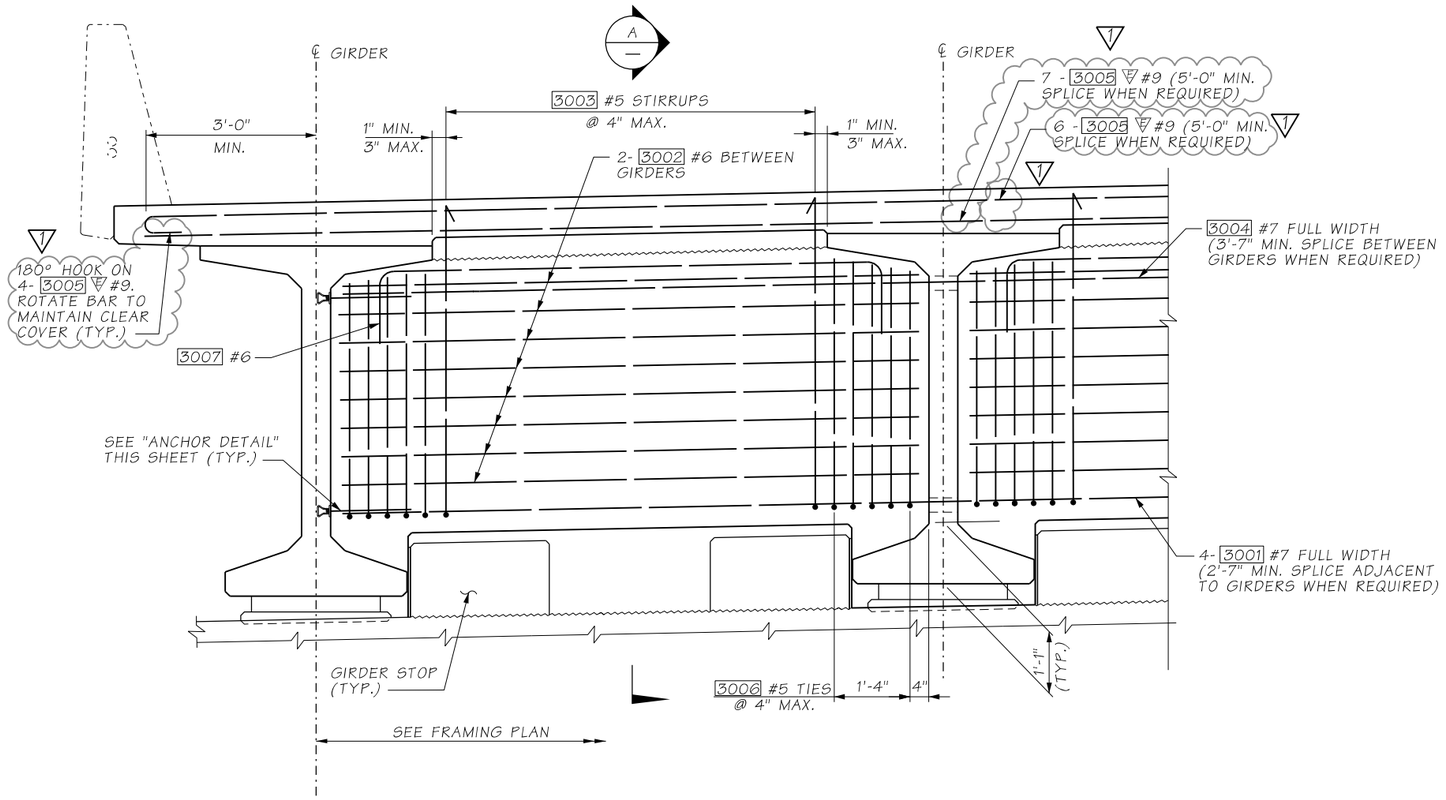

ELEVATION
END DIAPHRAGM
DIMENSIONS ARE ALONG ℄ DIAPHRAGM

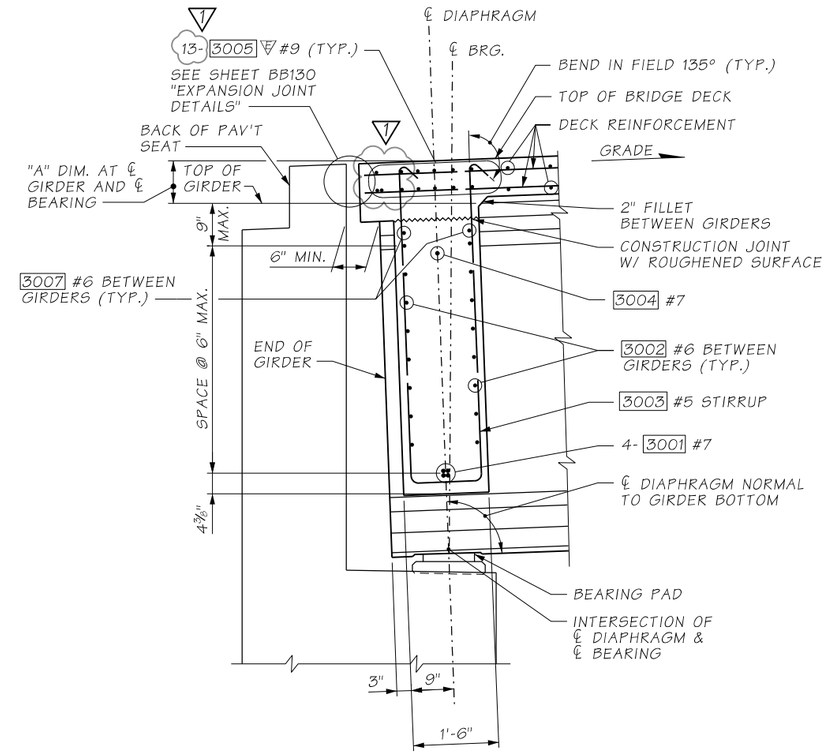

SECTION A

LONGITUDINAL DIMENSIONS ARE NORMAL TO DIAPHRAGM. (GIRDER STOP NOT SHOWN FOR CLARITY)

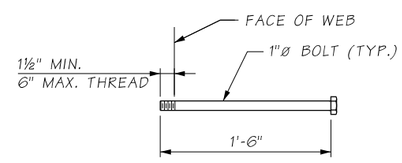

ANCHOR DETAIL
ASTM A-307

ATKINSON
MAR 19 2019 KTW
RELEASED FOR CONSTRUCTION

NOTES:

1. GIRDERS SHALL BE HELD RIGIDLY IN PLACE WHEN DIAPHRAGMS ARE PLACED.
2. IT MAY BE NECESSARY TO THREAD #7 REINFORCING BARS THROUGH HOLES IN GIRDERS PRIOR TO PLACING EXTERIOR GIRDERS.
3. CUT/RELEASE GIRDER TEMPORARY STRANDS BEFORE CASTING DIAPHRAGM. SEE TEMPORARY STRAND CUTTING SEQUENCE.
4. FOR CONCRETE PLACEMENT PROCEDURE SEE CONSTRUCTION SEQUENCE SHEETS.

AS-BUILT

FILE NAME	c:\pwworking\jacobs_b&l\reiserrw\dms20633\PS_BB222.dgn			
TIME	1:45:21 PM			
DATE	3/18/2019			
PLOTTED BY	ReiserRW			
DESIGNED BY	K. BICHICH			
ENTERED BY	R. REISER	REV 1 - RFI0055	03/19/2019	
CHECKED BY	A. FONG	REV 0 - RELEASED FOR CONSTRUCTION	02/14/2019	
PROJ. ENGR.	C. MEADE	REV A - FINAL REVIEW	01/15/2019	
REGIONAL ADM.	J. WYNANDS	REVISION	DATE	BY

REGION NO.	STATE	FED.AID PROJ.NO.
10	WASH	
JOB NUMBER		
CONTRACT NO. C8811		LOCATION NO.

CORY J. CAYWOOD, STATE OF WASHINGTON, 38759, PROFESSIONAL ENGINEER
3/19/19
DATE
P.E. STAMP BOX

DATE
P.E. STAMP BOX

Washington State Department of Transportation
ATKINSON CONSTRUCTION / JACOBS

I-5
STEILACOOM-DUPONT RD TO THORNE LN
CORRIDOR IMPROVEMENTS
MP 120.01 TO MP 124.45
BERKELEY SB OFF RAMP BRIDGE

PIER 2 END DIAPHRAGM

PLAN REF NO BB222
SHEET 1342 OF 1456 SHEETS

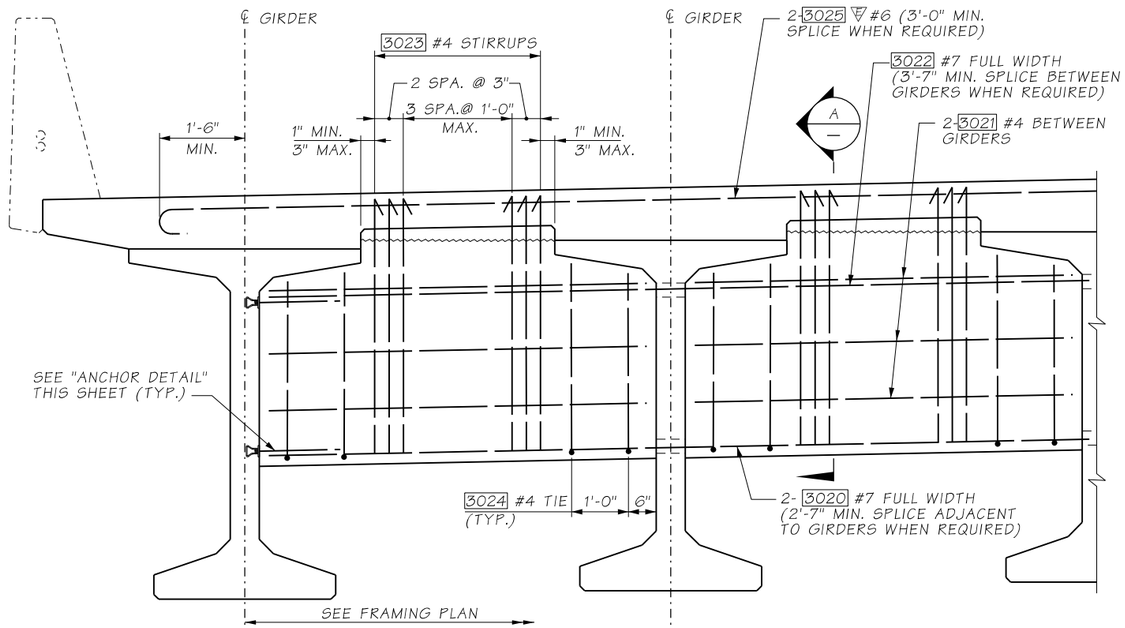

ELEVATION - PARTIAL DEPTH INTERMEDIATE DIAPHRAGM

DIMENSIONS ARE ALONG ℄ DIAPHRAGM

NOTES:

1. GIRDERS SHALL BE HELD RIGIDLY IN PLACE WHEN DIAPHRAGMS ARE PLACED.
2. IT MAY BE NECESSARY TO THREAD #7 REINFORCING BARS THROUGH HOLES IN GIRDERS PRIOR TO PLACING EXTERIOR GIRDERS.
3. CUT/RELEASE GIRDER TEMPORARY STRANDS BEFORE CASTING DIAPHRAGM. SEE TEMPORARY STRAND CUTTING SEQUENCE.
4. FOR CONCRETE PLACEMENT PROCEDURE SEE CONSTRUCTION SEQUENCE SHEETS.

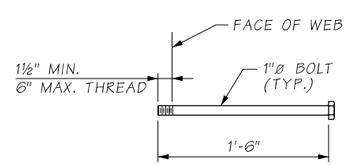

ANCHOR DETAIL

ASTM A-307

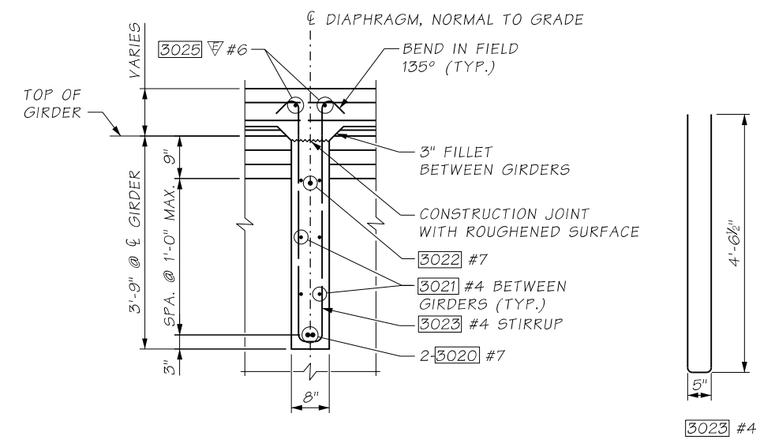

SECTION A

LONGITUDINAL DIMENSIONS ARE NORMAL TO DIAPHRAGM

ATKINSON

FEB 11 2019

RELEASED FOR CONSTRUCTION

AS-BUILT

FILE NAME	c:\pwworking\jacobs_b&i\reiserrw\dms20633\PS_BB223.dgn						
TIME	12:54:01 PM				REGION NO.	STATE	FED.AID PROJ.NO.
DATE	2/5/2019				10	WASH	
PLOTTED BY	reiserrw				JOB NUMBER		
DESIGNED BY	K. BICHICH						
ENTERED BY	R. REISER						
CHECKED BY	A. FONG	REV 0 - RELEASED FOR CONSTRUCTION	02/14/2019		CONTRACT NO.		LOCATION NO.
PROJ. ENGR.	C. MEADE	REV A - FINAL REVIEW	01/15/2019		C8811		
REGIONAL ADM.	J. WYNANDS	REVISION	DATE	BY			

P.E. STAMP BOX — DATE 2/3/19

P.E. STAMP BOX — DATE

Washington State Department of Transportation

ATKINSON CONSTRUCTION / JACOBS

I-5
STEILACOOM-DUPONT RD TO THORNE LN CORRIDOR IMPROVEMENTS
MP 120.01 TO MP 124.45
BERKELEY SB OFF RAMP BRIDGE

PARTIAL DEPTH INTERMEDIATE DIAPHRAGM DETAILS

PLAN REF NO BB223

SHEET 1343 OF 1456 SHEETS

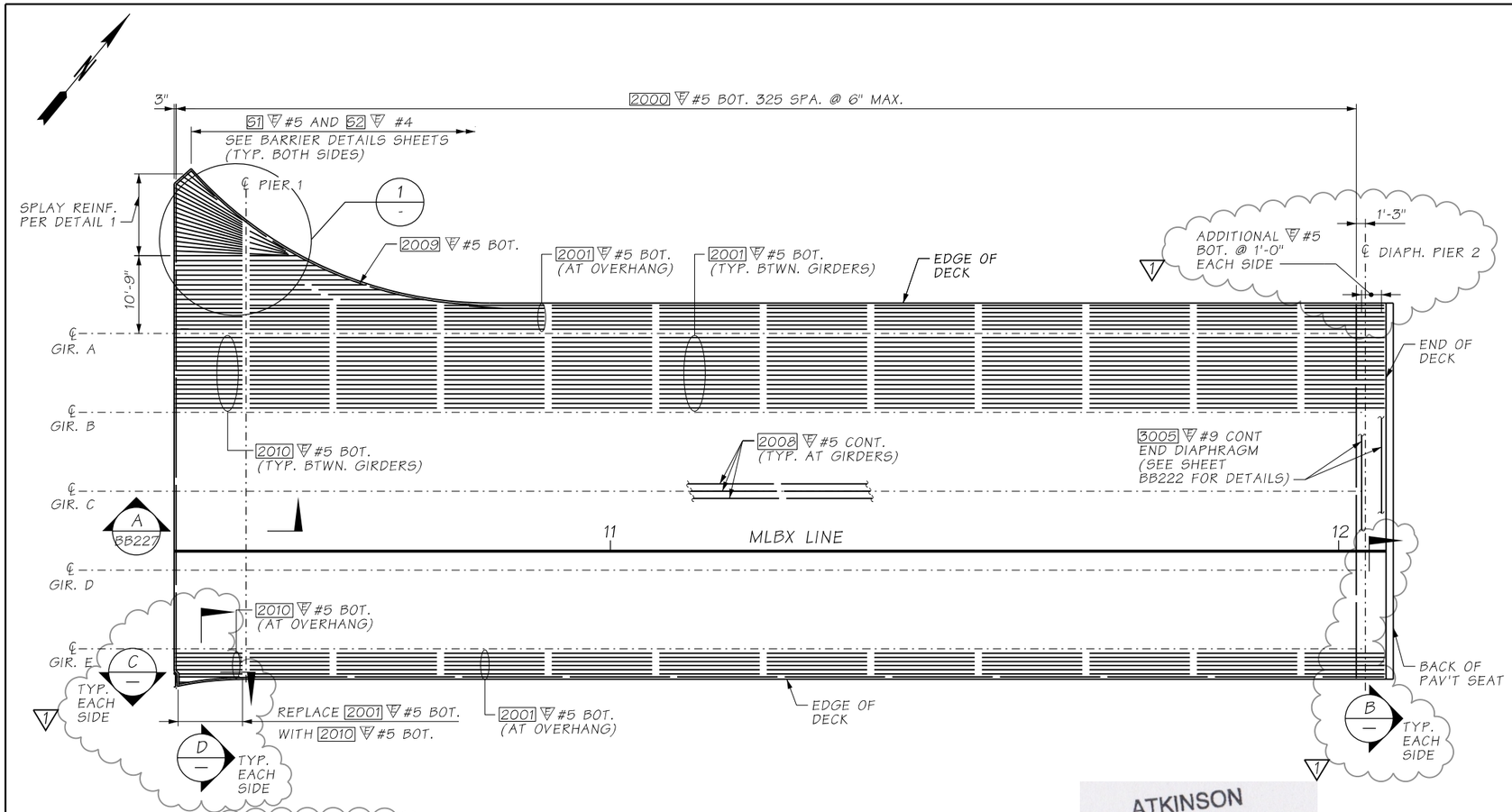

PLAN - BRIDGE DECK REINFORCEMENT BOTTOM MAT

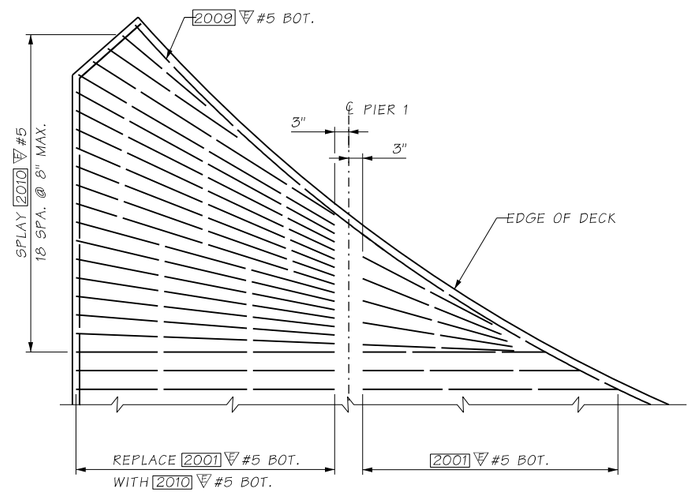

DETAIL 1

NOTES:

1. MINIMUM REBAR SPLICE LENGTH, UNLESS AS NOTED:
   - #4 = 2'-0"
   - #5 = 2'-6"
   - #6 = 3'-0"
2. a) LOCATION OF SPLICES AT CONTRACTORS OPTION, UNLESS OTHERWISE NOTED.
   b) NO SPLICES OF REBAR ARE ALLOWED WITHIN 15'-0" FROM THE CENTERLINE OF THE PIER FOR LONGITUDINAL REINFORCEMENT UNLESS NOTED OTHERWISE.
3. ALL SPLICES SHALL BE STAGGERED SO NOT MORE THAN 50% OF THE REBAR IS SPLICED AT THE SAME LOCATION.

ATKINSON
APR 14 2020 KTW
RELEASED FOR CONSTRUCTION

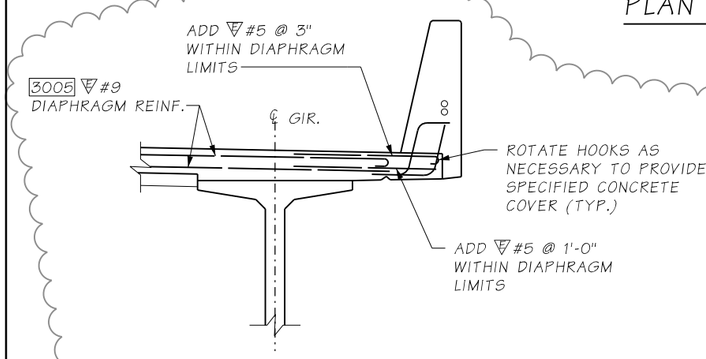

SECTION B
LONGITUDINAL DECK REINF. NOT SHOWN
BB225

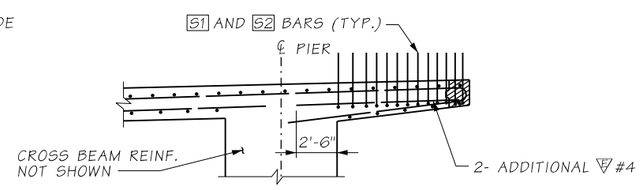

SECTION C

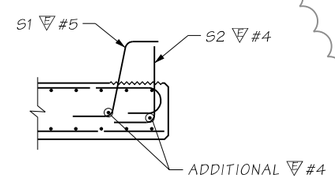

SECTION D

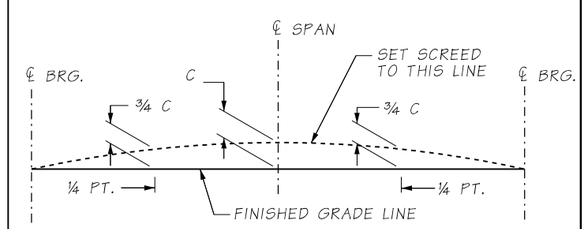

SCREED SETTING DIMENSIONS

FOR DIMENSION "C" SEE GIRDER SCHEDULE

AS-BUILT

FILE NAME	c:\pwworking\jacobs_b&i\youngkl2\dms20633\PS_BB224.dgn				REGION NO.	STATE	FED.AID PROJ.NO.
TIME	11:42:38 AM				10	WASH	
DATE	4/10/2020				JOB NUMBER		
PLOTTED BY	youngkl2						
DESIGNED BY	S.RAY						
ENTERED BY	R. REISER	REV 1 - RFI0216, RFI0242	04/13/2020		CONTRACT NO.		LOCATION NO.
CHECKED BY	G. CALLAHAN	REV 0 - RELEASED FOR CONSTRUCTION	05/13/19		C9133		
PROJ. ENGR.	C. MEADE	REV A - FINAL REVIEW	04/10/19				
REGIONAL ADM.	J. WYNANDS	REVISION	DATE	BY			

COREY J. CAYWOOD — STATE OF WASHINGTON — 38135 — STRUCTURAL ENGINEER — PROFESSIONAL ENGINEER
4/14/20
DATE
P.E. STAMP BOX

DATE
P.E. STAMP BOX

Washington State Department of Transportation

ATKINSON CONSTRUCTION / JACOBS

I-5
STEILACOOM-DUPONT RD TO THORNE LN
CORRIDOR IMPROVEMENTS
MP 120.01 TO MP 124.45
BERKELEY SB OFF RAMP BRIDGE

PLAN - BRIDGE DECK REINFORCING BOTTOM MAT

PLAN REF NO
BB224

SHEET 1344 OF 1456 SHEETS

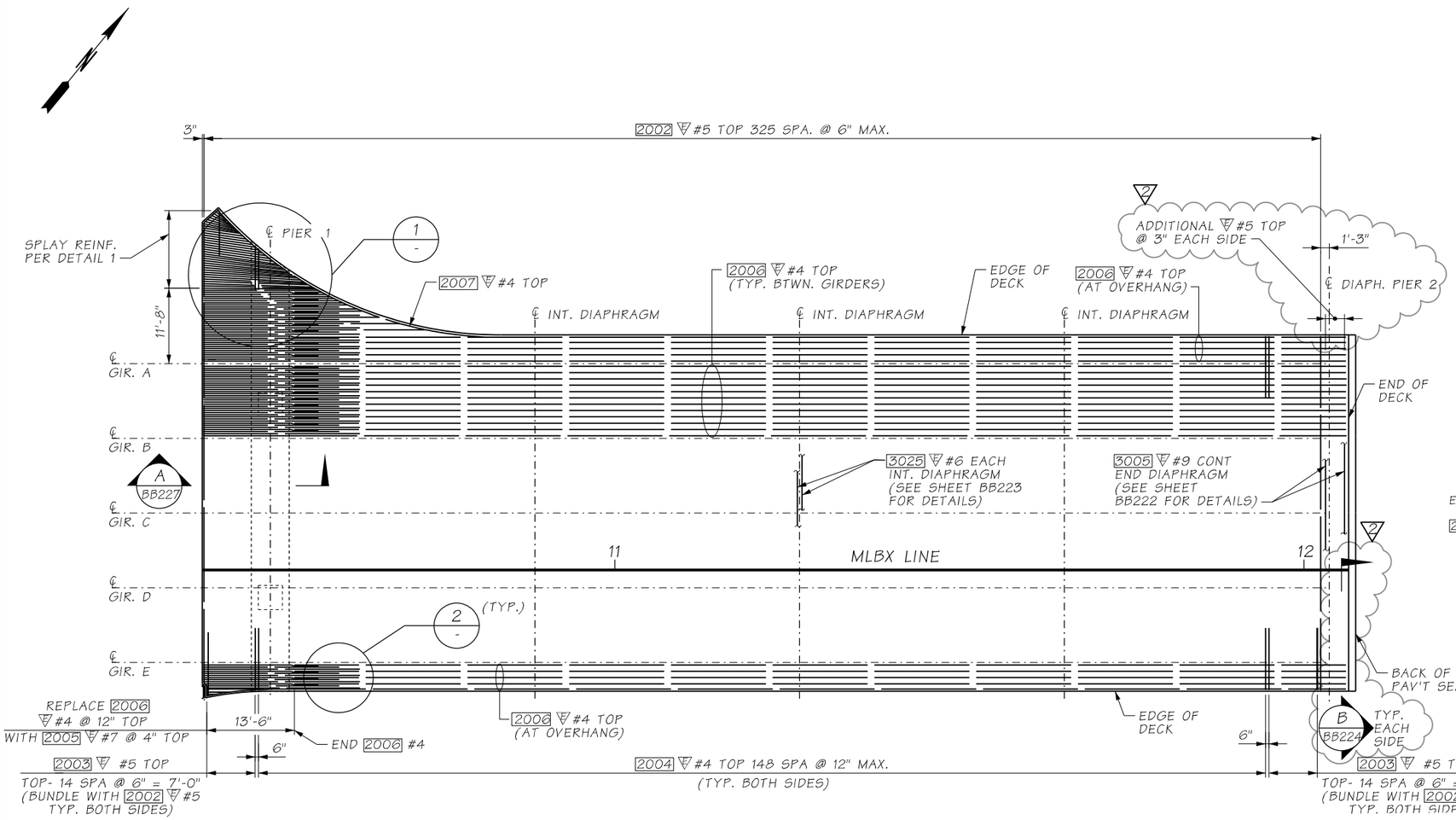

PLAN - BRIDGE DECK REINFORCEMENT
TOP MAT

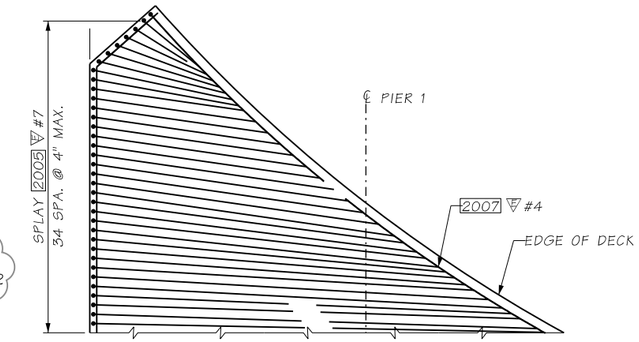

DETAIL 1
-

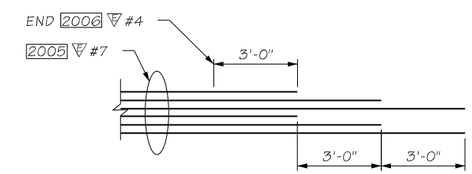

DETAIL 2
-

ATKINSON
APR 14 2020 KTW
RELEASED FOR CONSTRUCTION

AS-BUILT

NOTES:

1. SEE SHEET BB224 FOR NOTES.

FILE NAME	c:\pwworking\jacobs_b&i\youngkl2\dms20633\PS_BB225.dgn						
TIME	11:44:12 AM				REGION NO.	STATE	FED.AID PROJ.NO.
DATE	4/10/2020				10	WASH	
PLOTTED BY	youngkl2				JOB NUMBER		
DESIGNED BY	S.RAY	REV 2 - RFI0242	04/13/2020				
ENTERED BY	R. REISER	REV 1 - RFI110	05/29/2019				
CHECKED BY	G. CALLAHAN	REV 0 - RELEASED FOR CONSTRUCTION	05/13/19		CONTRACT NO.		LOCATION NO.
PROJ. ENGR.	C. MEADE	REV A - FINAL REVIEW	04/10/19		C9133		
REGIONAL ADM.	J. WYNANDS	REVISION	DATE	BY			

COLBY J. CAYWOOD — STATE OF WASHINGTON — 38759 — STRUCTURAL ENGINEER — PROFESSIONAL ENGINEER
4/14/20
DATE
P.E. STAMP BOX

DATE
P.E. STAMP BOX

Washington State Department of Transportation

ATKINSON / JACOBS CONSTRUCTION

I-5
STEILACOOM-DUPONT RD TO THORNE LN CORRIDOR IMPROVEMENTS
MP 120.01 TO MP 124.45
BERKELEY SB OFF RAMP BRIDGE

PLAN - BRIDGE DECK REINFORCING
TOP MAT

PLAN REF NO
BB225

SHEET 1345 OF 1456 SHEETS

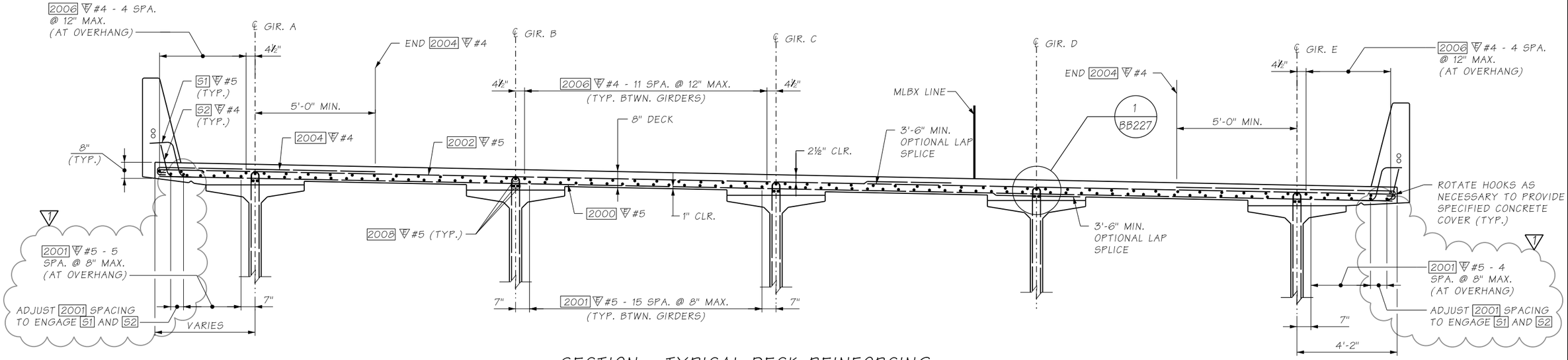

SECTION - TYPICAL DECK REINFORCING

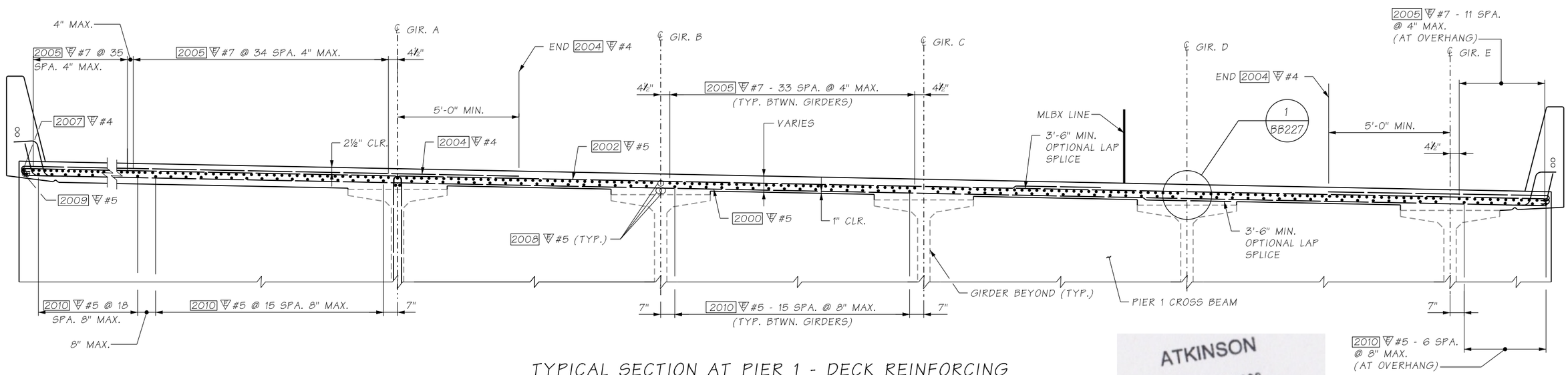

TYPICAL SECTION AT PIER 1 - DECK REINFORCING

AS-BUILT

ATKINSON
JUN 17 2020 KTW
RELEASED FOR CONSTRUCTION

FILE NAME	D:\ICS_workdir\54045\20633_1825\PS_BB226.dgn			
TIME	11:08:18 AM			
DATE	6/12/2020			
PLOTTED BY	USLAS0-APP064$			
DESIGNED BY	S. RAY			
ENTERED BY	R. REISER	REV 1 - RFI0157	06/18/2020	
CHECKED BY	G. CALLAHAN	REV 0 - RELEASED FOR CONSTRUCTION	05/13/19	
PROJ. ENGR.	C. MEADE	REV A - FINAL REVIEW	04/10/19	
REGIONAL ADM.	J. WYNANDS	REVISION	DATE	BY

REGION NO.	STATE	FED.AID PROJ.NO.
10	WASH	
JOB NUMBER		
CONTRACT NO. C9133		LOCATION NO.

CORY J. CAYWOOD — STATE OF WASHINGTON — 38158 — STRUCTURAL ENGINEER — PROFESSIONAL ENGINEER
6/15/20
DATE
P.E. STAMP BOX

DATE
P.E. STAMP BOX

Washington State Department of Transportation

ATKINSON / JACOBS CONSTRUCTION

I-5
STEILACOOM-DUPONT RD TO THORNE LN
CORRIDOR IMPROVEMENTS
MP 120.01 TO MP 124.45
BERKELEY SB OFF RAMP BRIDGE

TYPICAL SECTION - DECK REINFORCING

PLAN REF NO BB226

SHEET 1346 OF 1456 SHEETS

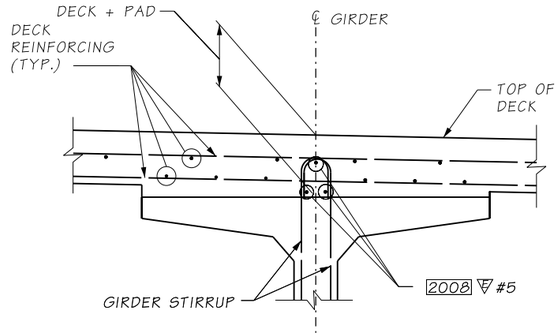

CASE 1

APPLIES FOR LOCATIONS WHERE DECK + PAD <= 11½"

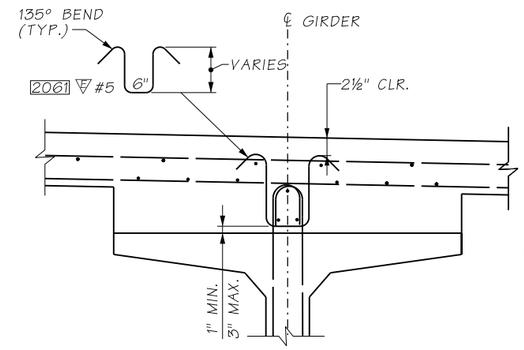

CASE 2

APPLIES FOR LOCATIONS WHERE DECK + PAD > 11½"
(SEE CASE 1 FOR CALLOUTS NOT SHOWN)

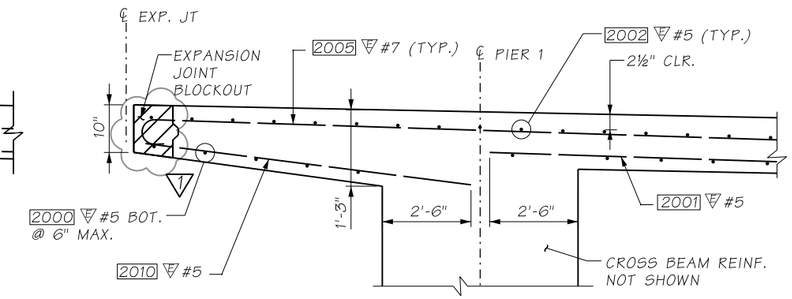

SECTION A
BB224
BB225

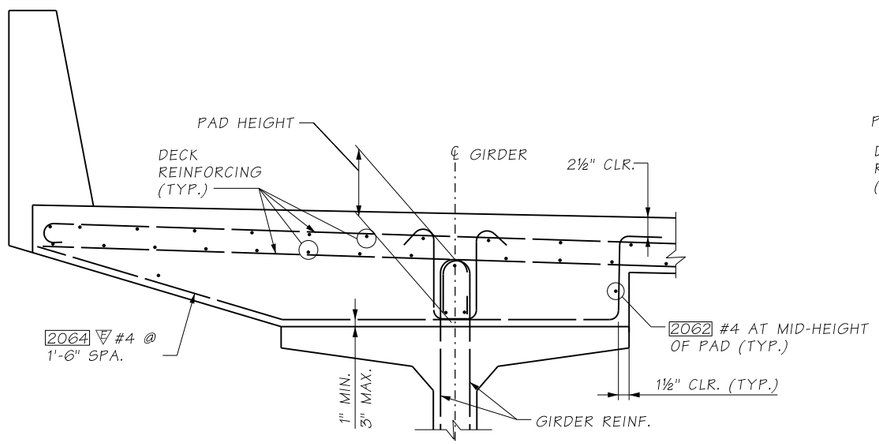

EXTERIOR GIRDER

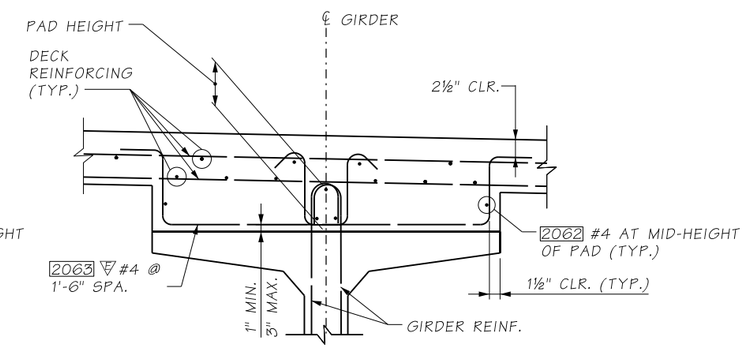

INTERIOR GIRDER

CASE 3

GIRDER PAD REINF.
APPLIES FOR LOCATIONS WHERE PAD HEIGHT > 6"

DETAIL 1

ATKINSON
MAY 31 2019 KTW
RELEASED FOR CONSTRUCTION

NOTES:

1. 2061 #5 BARS ARE REQUIRED AT ALL GIRDER STIRRUPS WHERE CASE 2 APPLIES. FOR BUNDLED STIRRUPS AT GIRDER ENDS, ONE 2061 #5 IS REQUIRED PER BUNDLE OF GIRDER STIRRUPS. PROVIDE 2061 #5 WITH VARIABLE HEIGHTS IN SUFFICIENT QUANTITIES TO ACCOMMODATE VARIATIONS IN GIRDER CAMBER. THESE BARS SHALL BE PLACED NORMAL TO THE GIRDER FLANGE.

AS-BUILT

FILE NAME	D:\ICS_workdir\28911\20633_1986\PS_BB227.dgn			
TIME	3:49:59 PM			
DATE	5/30/2019			
PLOTTED BY	USLAS0-APP064$			
DESIGNED BY	S. RAY			
ENTERED BY	R. REISER	REV 1 - RFI110	05/29/2019	
CHECKED BY	G. CALLAHAN	REV 0 - RELEASED FOR CONSTRUCTION	05/13/19	
PROJ. ENGR.	C. MEADE	REV A - FINAL REVIEW	04/10/19	
REGIONAL ADM.	J. WYNANDS	REVISION	DATE	BY

REGION NO.	STATE	FED.AID PROJ.NO.
10	WASH	
JOB NUMBER		
CONTRACT NO.		LOCATION NO.
C9133		

CORT J. CAYWOOD · STATE OF WASHINGTON · 28133 · STRUCTURAL ENGINEER · PROFESSIONAL ENGINEER
5/13/2019
DATE
P.E. STAMP BOX

DATE
P.E. STAMP BOX

Washington State Department of Transportation
ATKINSON / JACOBS CONSTRUCTION

I-5
STEILACOOM-DUPONT RD TO THORNE LN
CORRIDOR IMPROVEMENTS
MP 120.01 TO MP 124.45
BERKELEY SB OFF RAMP BRIDGE

DECK REINFORCING DETAILS

PLAN REF NO BB227

SHEET 1347 OF 1456 SHEETS

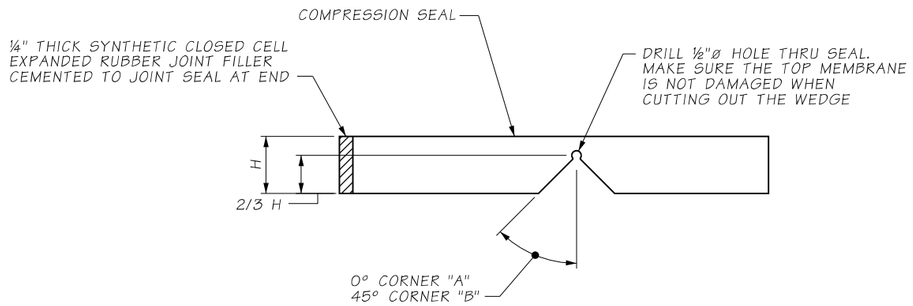

SEAL CUTTING DETAIL

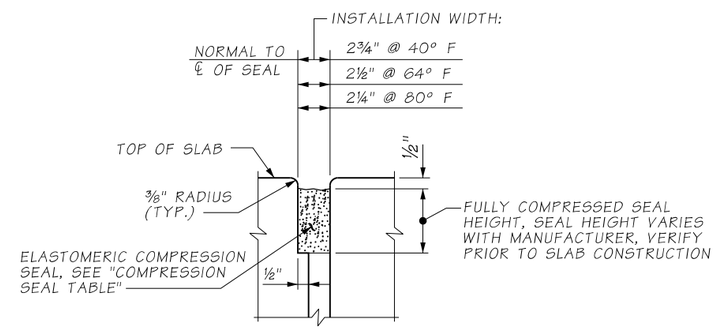

COMPRESSION SEAL

EXPANSION JOINT AT PIER 2

NOTES:

1. FOR STRIP SEAL EXPANSION JOINT AT PIER 1 SEE BERKELEY OVERPASS EXPANSION JOINTS DETAILS, BB056.

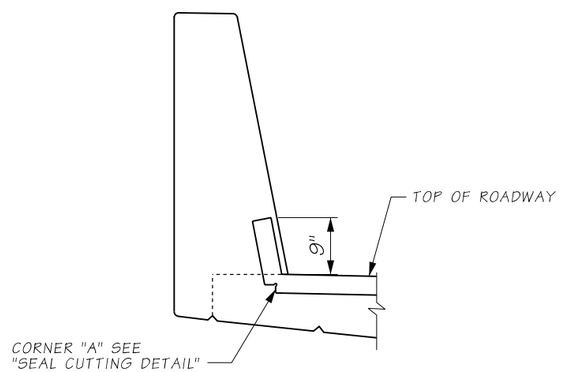

SECTION A

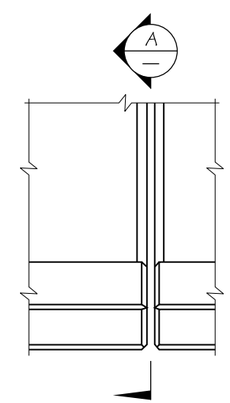

PLAN - EXPANSION JOINT

COMPRESSION SEAL TABLE

D.S. BROWN		WATSON BOWMAN ACME	
SEAL	WIDTH	SEAL	WIDTH
CV-4000	4"	WA-400	4"

TESTING SHALL BE PER ASTM D2628 PRIOR TO USE.

ATKINSON

AUG 20 2019 KTW

RELEASED FOR CONSTRUCTION

AS-BUILT

FILE NAME	c:\pwworking\jacobs_b&i\reiserrw\dms20633\PS_BB228.dgn						
TIME	1:46:11 PM				REGION NO. 10	STATE WASH	FED.AID PROJ.NO.
DATE	8/12/2019						
PLOTTED BY	ReiserRW				JOB NUMBER		
DESIGNED BY	G. CALLAHAN						
ENTERED BY	R. REISER						
CHECKED BY	A. GASCA	REV 0 - RELEASED FOR CONSTRUCTION	08/19/2019		CONTRACT NO. C9133		LOCATION NO.
PROJ. ENGR.	C. MEADE	REV A - FINAL REVIEW	07/22/2019				
REGIONAL ADM.	J. WYNANDS	REVISION	DATE	BY			

P.E. STAMP BOX — DATE 8/19/19

P.E. STAMP BOX — DATE

Washington State Department of Transportation

ATKINSON CONSTRUCTION / JACOBS

I-5
STEILACOOM-DUPONT RD TO THORNE LN CORRIDOR IMPROVEMENTS
MP 120.01 TO MP 124.45
BERKELEY SB OFF RAMP BRIDGE

EXPANSION JOINT DETAILS
COMPRESSION SEAL

PLAN REF NO BB228

SHEET 1348 OF 1456 SHEETS

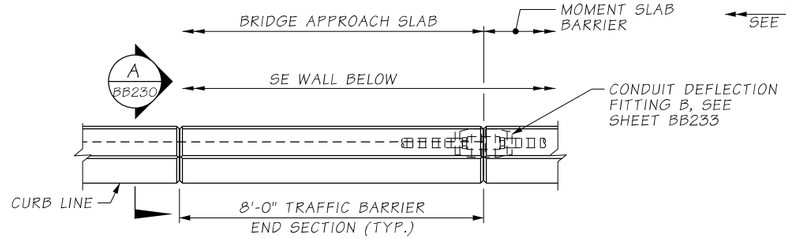

PLAN - LEFT TRAFFIC BARRIER

SEE "PLAN - RIGHT TRAFFIC BARRIER" FOR DETAILS NOT SHOWN

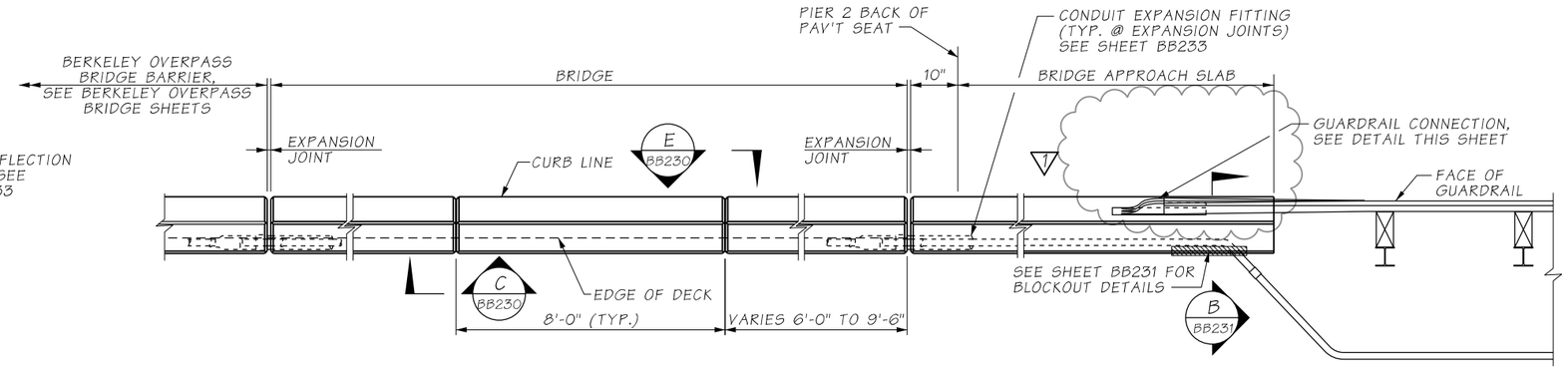

PLAN - RIGHT TRAFFIC BARRIER

BARRIER CONTINUOUS BETWEEN BRIDGE DECK EXPANSION JOINTS.
CONSTRUCTION JOINTS WITH SHEAR KEYS ARE PERMISSIBLE AT DUMMY JOINT LOCATIONS.
FORM JOINTS BETWEEN DUMMY JOINTS SHALL NOT BE PERMITTED.

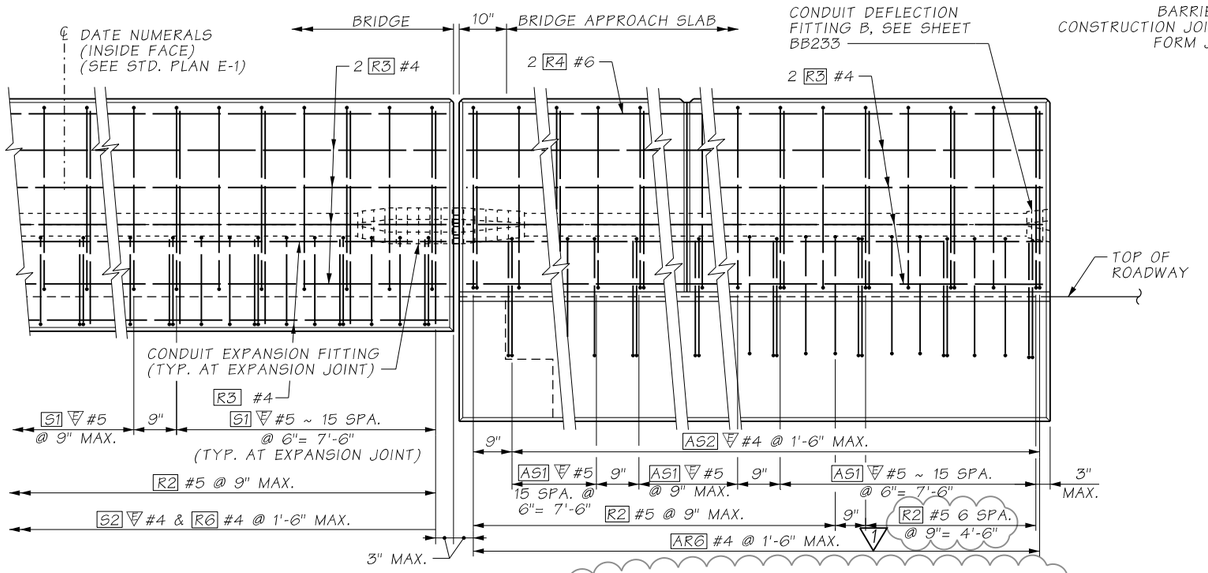

ELEVATION END OF LEFT TRAFFIC BARRIER

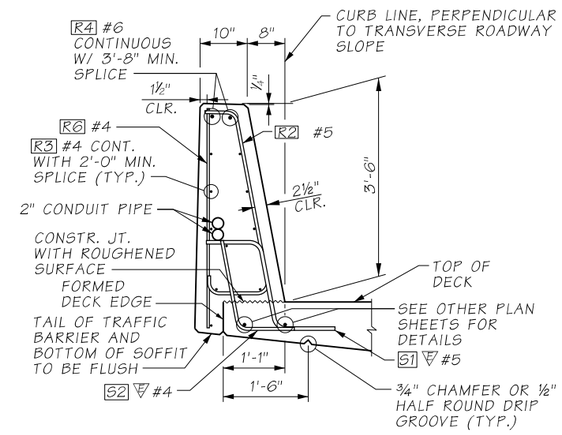

TYPICAL SECTION TRAFFIC BARRIER

SHOWN ON BRIDGE
SEE SHEET BB230 (SECTION A&B)
FOR BARRIER ON APPROACH SLAB

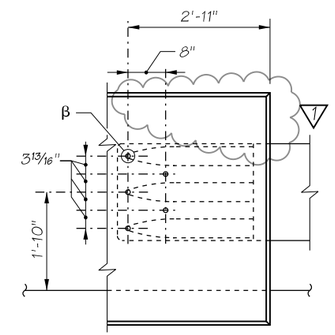

THRIE BEAM END SECTION
DESIGN "F" (SEE STD. PLAN C-7a)

OUTSIDE ELEVATION TRAFFIC BARRIER - GUARDRAIL CONNECTION

(WHERE SHOWN ON LAYOUT)

β PROVIDE ⅞"ø ROCKET/KOHLER F-50, LANCASTER MALLEABLE, OR DAYTON/RICHMOND F-62 FLARED THIN SLAB FERRULE INSERTS OR APPROVED EQUAL (TYP.). RESIN-BONDED ANCHORS MAY BE SUBSTITUTED.

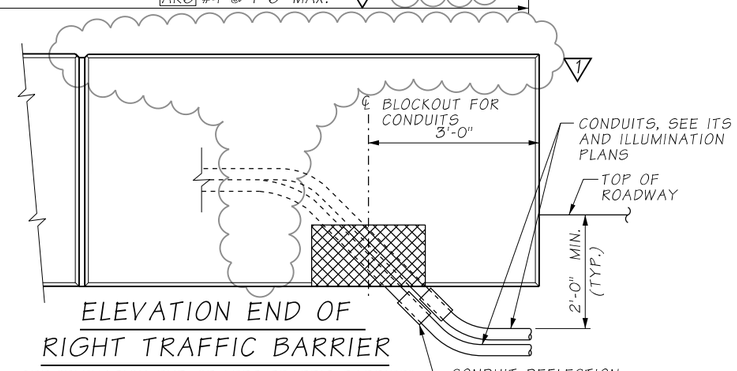

ELEVATION END OF RIGHT TRAFFIC BARRIER

SEE "ELEVATION END OF LEFT TRAFFIC BARRIER" FOR DETAILS NOT SHOWN.

ATKINSON
APR 14 2020 KTW
RELEASED FOR CONSTRUCTION

NOTES:

1. TRAFFIC BARRIER HAS BEEN DESIGNED FOR TL-4 LOADING.

AS-BUILT

FILE NAME	c:\pwworking\jacobs_b&i\caywoocj\dms20633\PS_BB229.dgn			
TIME	8:02:38 AM			
DATE	4/14/2020			
PLOTTED BY	caywoocj			
DESIGNED BY	G. CALLAHAN			
ENTERED BY	R. REISER	REV 1 - RFI0388	04/13/2020	
CHECKED BY	C. CAYWOOD	REV 0 - RELEASED FOR CONSTRUCTION	08/19/2019	
PROJ. ENGR.	C. MEADE	REV A - FINAL REVIEW	07/22/2019	
REGIONAL ADM.	J. WYNANDS	REVISION	DATE	BY

REGION NO.	STATE	FED.AID PROJ.NO.
10	WASH	
JOB NUMBER		
CONTRACT NO. C9133		LOCATION NO.

CORY J. CAYWOOD, STATE OF WASHINGTON, 38799, STRUCTURAL ENGINEER, PROFESSIONAL ENGINEER
4/14/20
DATE
P.E. STAMP BOX

P.E. STAMP BOX
DATE

Washington State Department of Transportation
ATKINSON CONSTRUCTION / JACOBS

I-5
STEILACOOM-DUPONT RD TO THORNE LN CORRIDOR IMPROVEMENTS
MP 120.01 TO MP 124.45
BERKELEY SB OFF RAMP BRIDGE

TRAFFIC BARRIER - SINGLE SLOPE 42" DETAILS (1 OF 4)

PLAN REF NO BB229

SHEET 1349 OF 1456 SHEETS

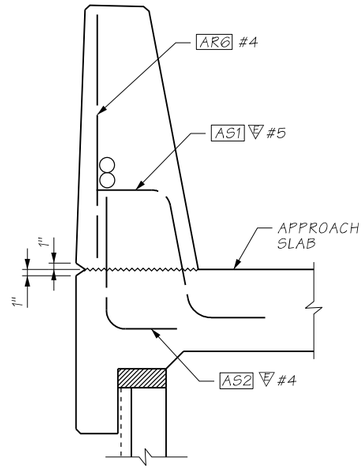

SECTION A / BB229

ON APPROACH SLAB.
FOR LEFT BARRIER DETAILS
NOT SHOWN SEE SHEET BB229
"TYPICAL SECTION - TRAFFIC BARRIER"

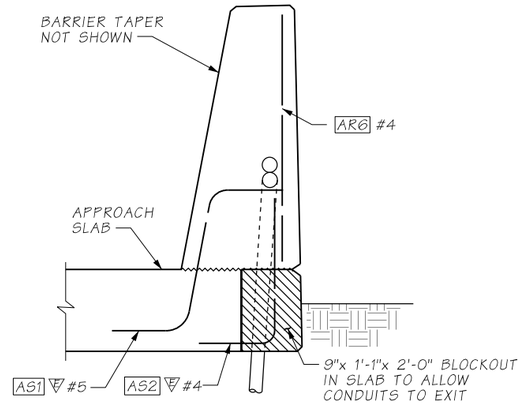

SECTION B / BB229

ON APPROACH SLAB.
FOR RIGHT BARRIER DETAILS
NOT SHOWN SEE SHEET BB229
"TYPICAL SECTION - SINGLE SLOPE BARRIER"

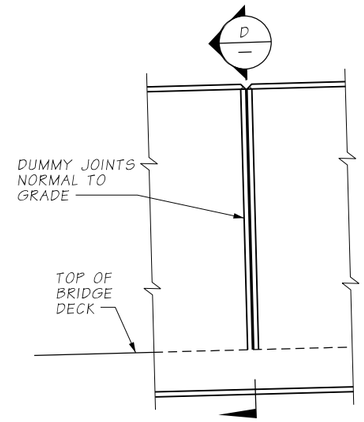

VIEW C / BB229

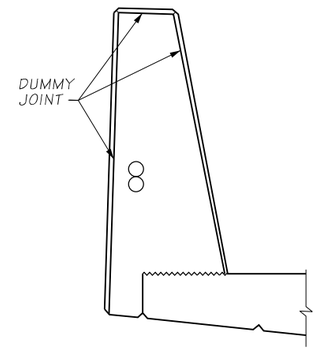

SECTION D / —

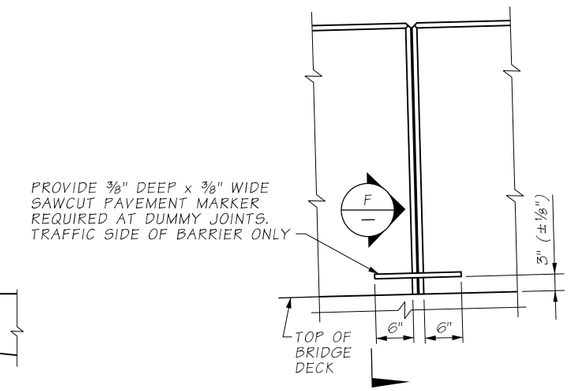

VIEW E / BB230

ATKINSON
APR 14 2020 KTW
RELEASED FOR CONSTRUCTION

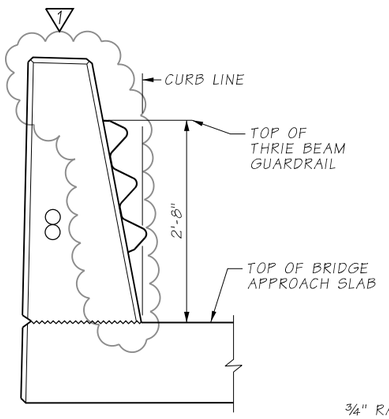

END SECTION W/GUARDRAIL

THRIE BEAM SHOWN
"F" CONNECTION
(SEE STD. PLAN C-7a)

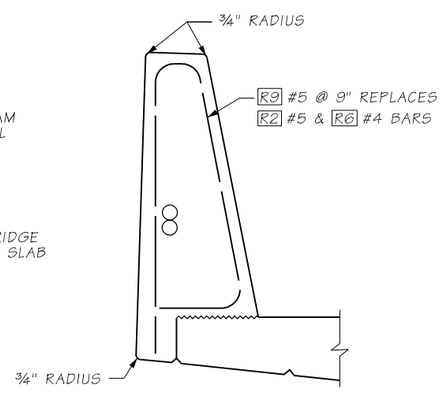

SLIPFORM ALTERNATIVE

SEE SHEET BB229
"TYPICAL SECTION - TRAFFIC BARRIER"
FOR ADDITIONAL DETAILS.

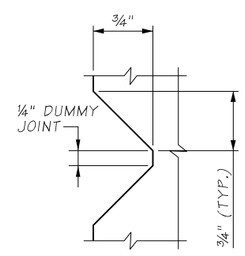

DUMMY JOINT DETAIL

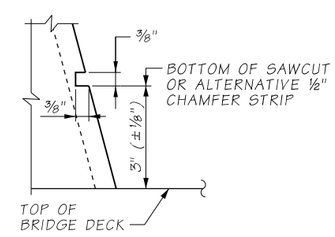

SECTION F / —

PAVEMENT MARKER DETAIL

BENDING DIAGRAM

ALL DIMENSIONS ARE OUT TO OUT.
≠ = DIMENSIONS TO POINTS OF INTERSECTION.

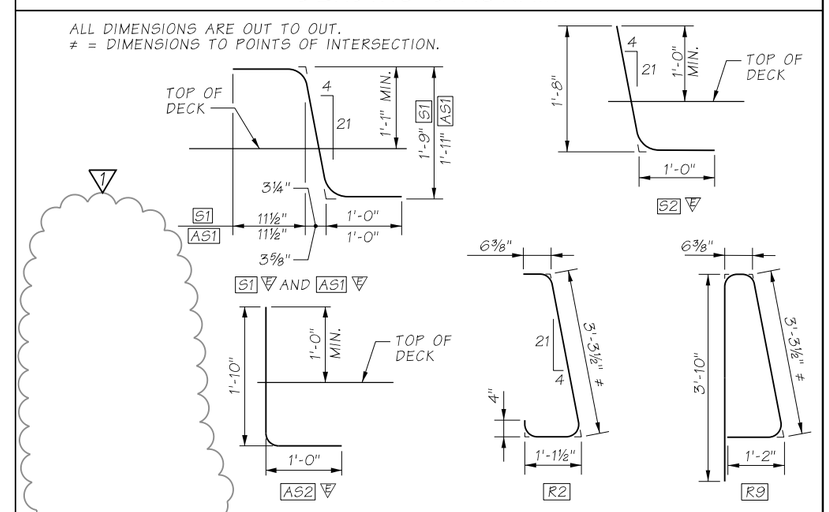

AS-BUILT

FILE NAME	c:\pwworking\jacobs_b&i\youngkl2\dms20633\PS_BB230.dgn					
TIME	11:47:01 AM				REGION NO. 10	STATE WASH	FED.AID PROJ.NO.
DATE	4/10/2020					
PLOTTED BY	youngkl2				JOB NUMBER	
DESIGNED BY	G. CALLAHAN					
ENTERED BY	R. REISER	REV 1 - RFI0388	04/13/2020			
CHECKED BY	C. CAYWOOD	REV 0 - RELEASED FOR CONSTRUCTION	08/19/2019		CONTRACT NO. C9133	LOCATION NO.
PROJ. ENGR.	C. MEADE	REV A - FINAL REVIEW	07/22/2019			
REGIONAL ADM.	J. WYNANDS	REVISION	DATE	BY		

CORY J. CAYWOOD
STATE OF WASHINGTON
38139
STRUCTURAL ENGINEER
PROFESSIONAL ENGINEER
4/14/20
DATE
P.E. STAMP BOX

DATE
P.E. STAMP BOX

Washington State Department of Transportation

ATKINSON / JACOBS CONSTRUCTION

I-5
STEILACOOM-DUPONT RD TO THORNE LN
CORRIDOR IMPROVEMENTS
MP 120.01 TO MP 124.45
BERKELEY SB OFF RAMP BRIDGE

TRAFFIC BARRIER - SINGLE SLOPE 42" DETAILS (2 OF 4)

PLAN REF NO BB230

SHEET 1350 OF 1456 SHEETS

JUNCTION BOX LOCATIONS

LEFT BARRIER		RIGHT BARRIER	
STATION	"TS" OR "LT"	STATION	"TS" OR "LT"
MLBX 12+11	TS	MLBX 12+11	TS
MLBX 12+19	LT	MLBX 12+19	LT

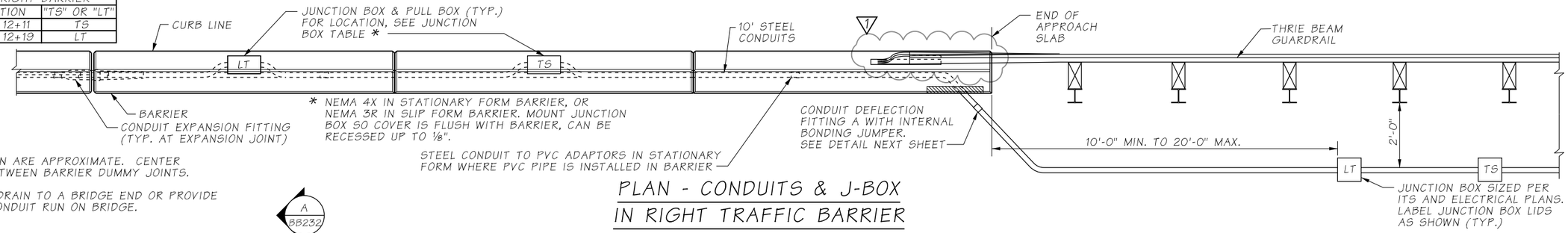

* NEMA 4X IN STATIONARY FORM BARRIER, OR NEMA 3R IN SLIP FORM BARRIER. MOUNT JUNCTION BOX SO COVER IS FLUSH WITH BARRIER, CAN BE RECESSED UP TO ⅛".

TS = TRAFFIC SYSTEM
LT = LIGHTING SYSTEM

JUNCTION BOX LOCATIONS SHOWN ARE APPROXIMATE. CENTER JUNCTION BOX INSTALLATION BETWEEN BARRIER DUMMY JOINTS.

INSTALL ALL CONDUIT RUNS TO DRAIN TO A BRIDGE END OR PROVIDE DRAIN AT ALL LOW POINTS IN CONDUIT RUN ON BRIDGE.

PLAN - CONDUITS & J-BOX IN RIGHT TRAFFIC BARRIER

A
BB232

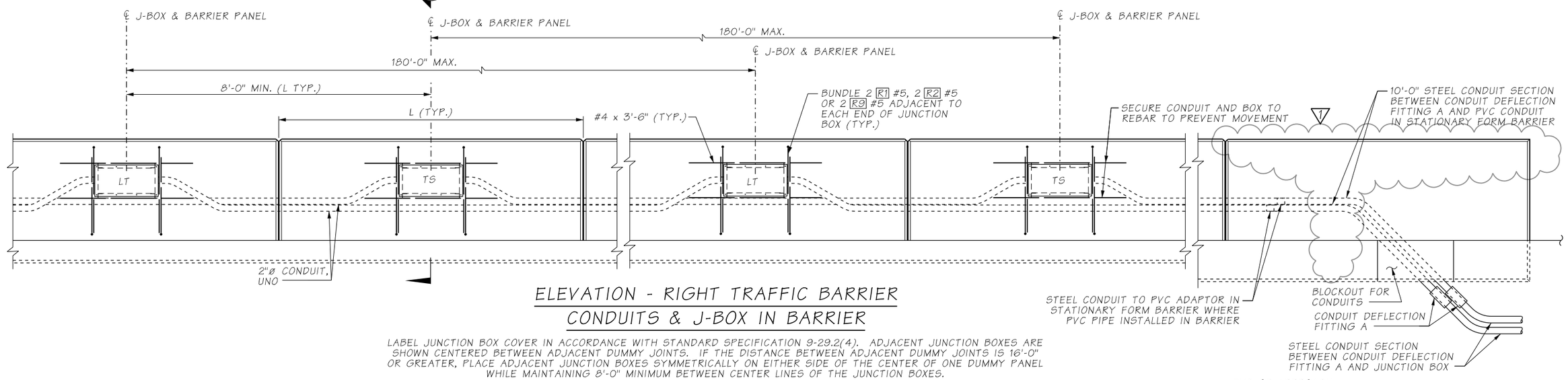

ELEVATION - RIGHT TRAFFIC BARRIER CONDUITS & J-BOX IN BARRIER

LABEL JUNCTION BOX COVER IN ACCORDANCE WITH STANDARD SPECIFICATION 9-29.2(4). ADJACENT JUNCTION BOXES ARE SHOWN CENTERED BETWEEN ADJACENT DUMMY JOINTS. IF THE DISTANCE BETWEEN ADJACENT DUMMY JOINTS IS 16'-0" OR GREATER, PLACE ADJACENT JUNCTION BOXES SYMMETRICALLY ON EITHER SIDE OF THE CENTER OF ONE DUMMY PANEL WHILE MAINTAINING 8'-0" MINIMUM BETWEEN CENTER LINES OF THE JUNCTION BOXES.

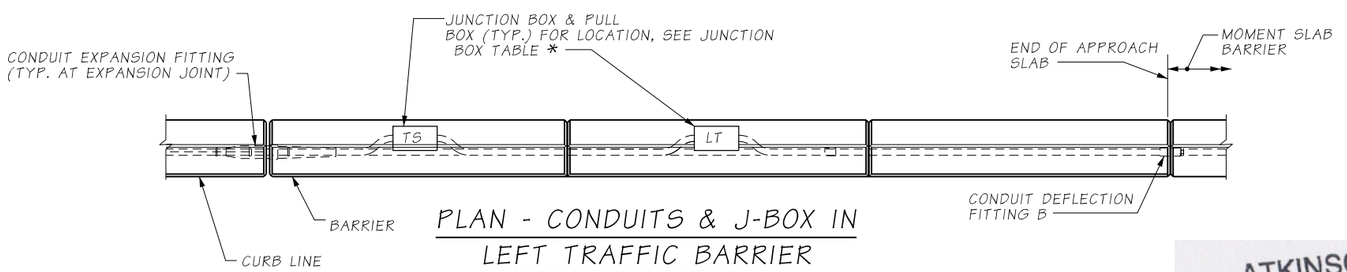

PLAN - CONDUITS & J-BOX IN LEFT TRAFFIC BARRIER

* NEMA 4X IN STATIONARY FORM BARRIER, OR NEMA 3X IN SLIP FORM BARRIER. MOUNT JUNCTION BOX SO COVER IS FLUSH WITH BARRER, CAN BE RECESSED UP TO 1/8".

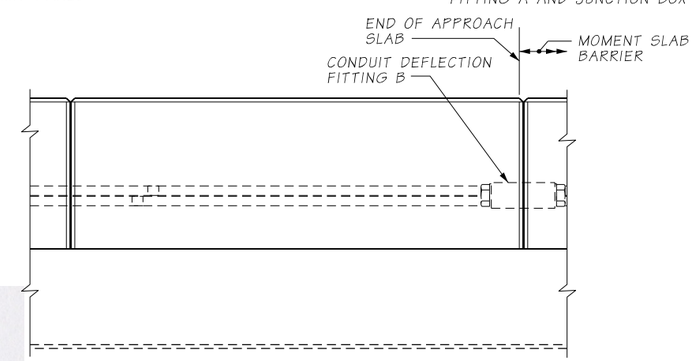

ELEVATION - CONDUITS & J-BOX IN LEFT TRAFFIC BARRIER

SEE "ELEVATION - RIGHT TRAFFIC BARRIER CONDUITS & J-BOX IN BARRIER" FOR ADDITIONAL DETAILS

ATKINSON
APR 14 2020 KTW
RELEASED FOR CONSTRUCTION

AS-BUILT

FILE NAME	c:\pwworking\jacobs_b&l\youngkl2\dms20633\PS_BB231.dgn						
TIME	11:48:10 AM				REGION NO. 10	STATE WASH	FED.AID PROJ.NO.
DATE	4/10/2020						
PLOTTED BY	youngkl2				JOB NUMBER		
DESIGNED BY	G. CALLAHAN						
ENTERED BY	R. REISER	REV 1 - RFI0388	04/13/2020				
CHECKED BY	C. CAYWOOD	REV 0 - RELEASED FOR CONSTRUCTION	08/19/2019		CONTRACT NO. C9133		LOCATION NO.
PROJ. ENGR.	C. MEADE	REV A - FINAL REVIEW	07/22/2019				
REGIONAL ADM.	J. WYNANDS	REVISION	DATE	BY			

COREY J. CAYWOOD — STATE OF WASHINGTON — 38759 — STRUCTURAL ENGINEER — PROFESSIONAL ENGINEER
4/14/20
DATE
P.E. STAMP BOX

P.E. STAMP BOX
DATE

Washington State Department of Transportation

ATKINSON CONSTRUCTION / JACOBS

I-5
STEILACOOM-DUPONT RD TO THORNE LN CORRIDOR IMPROVEMENTS
MP 120.01 TO MP 124.45
BERKELEY SB OFF RAMP BRIDGE

TRAFFIC BARRIER - SINGLE SLOPE 42" DETAILS (3 OF 4)

PLAN REF NO BB231

SHEET 1351 OF 1456 SHEETS

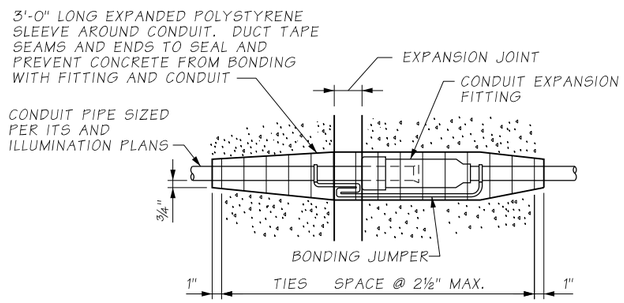

CONDUIT EXPANSION FITTING

CONDUIT FITTING - (TYPE AX FOR MOVEMENT OF ± 2") AT BRIDGE EXPANSION JOINTS

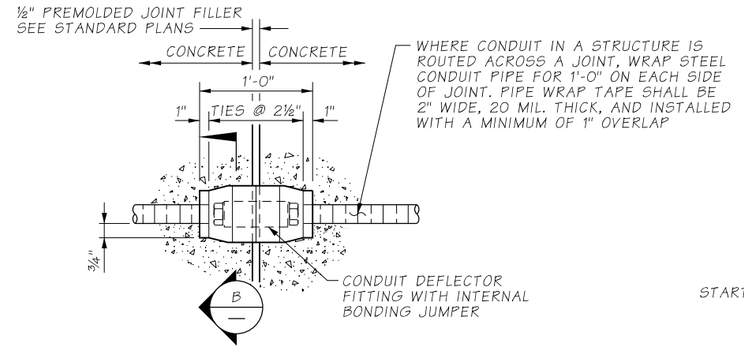

CONDUIT DEFLECTION FITTING B

CONDUIT FITTING - TYPE DX FOR DEFLECTION OF 30 AND ¾" MOVEMENT.

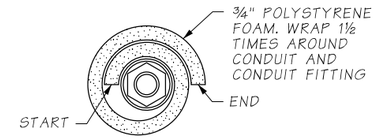

SECTION B

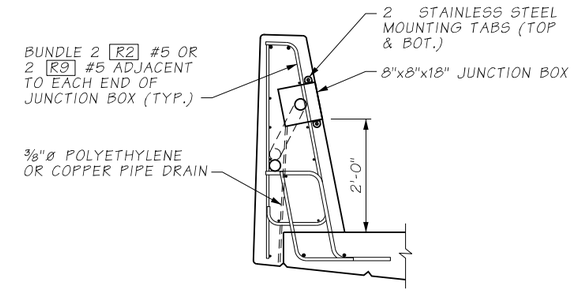

SECTION A

BB231

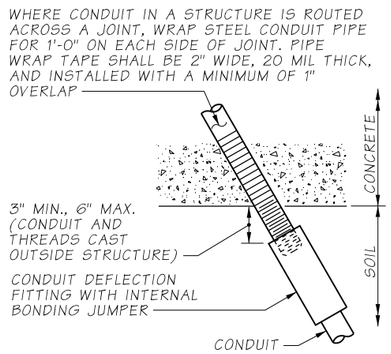

CONDUIT DEFLECTION FITTING A

CONDUIT FITTING - TYPE DX FOR DEFLECTION OF 30 AND ¾" MOVEMENT. PLACE AT CONDUIT EXIT FROM STRUCTURE AND SHALL BE IN NEUTRAL STATE AFTER INSTALLATION.

ATKINSON
AUG 20 2019 KTW
RELEASED FOR CONSTRUCTION

AS-BUILT

FILE NAME	c:\pwworking\jacobs_b&l\reiserrw\dms20633\PS_BB232.dgn			
TIME	2:38:45 PM			
DATE	8/12/2019			
PLOTTED BY	ReiserRW			
DESIGNED BY	G. CALLAHAN			
ENTERED BY	R. REISER			
CHECKED BY	C. CAYWOOD	REV 0 - RELEASED FOR CONSTRUCTION	08/19/2019	
PROJ. ENGR.	C. MEADE	REV A - FINAL REVIEW	07/22/2019	
REGIONAL ADM.	J. WYNANDS	REVISION	DATE	BY

REGION NO.	STATE	FED.AID PROJ.NO.
10	WASH	
JOB NUMBER		
CONTRACT NO.		LOCATION NO.
C9133		

GORY J. CAYWOOD, STATE OF WASHINGTON, 38759, STRUCTURAL ENGINEER, PROFESSIONAL ENGINEER
8/19/19
DATE
P.E. STAMP BOX

DATE
P.E. STAMP BOX

Washington State Department of Transportation

ATKINSON CONSTRUCTION / JACOBS

I-5
STEILACOOM-DUPONT RD TO THORNE LN
CORRIDOR IMPROVEMENTS
MP 120.01 TO MP 124.45
BERKELEY SB OFF RAMP BRIDGE

TRAFFIC BARRIER - SINGLE SLOPE 42" DETAILS (4 OF 4)

PLAN REF NO BB232

SHEET 1352 OF 1456 SHEETS

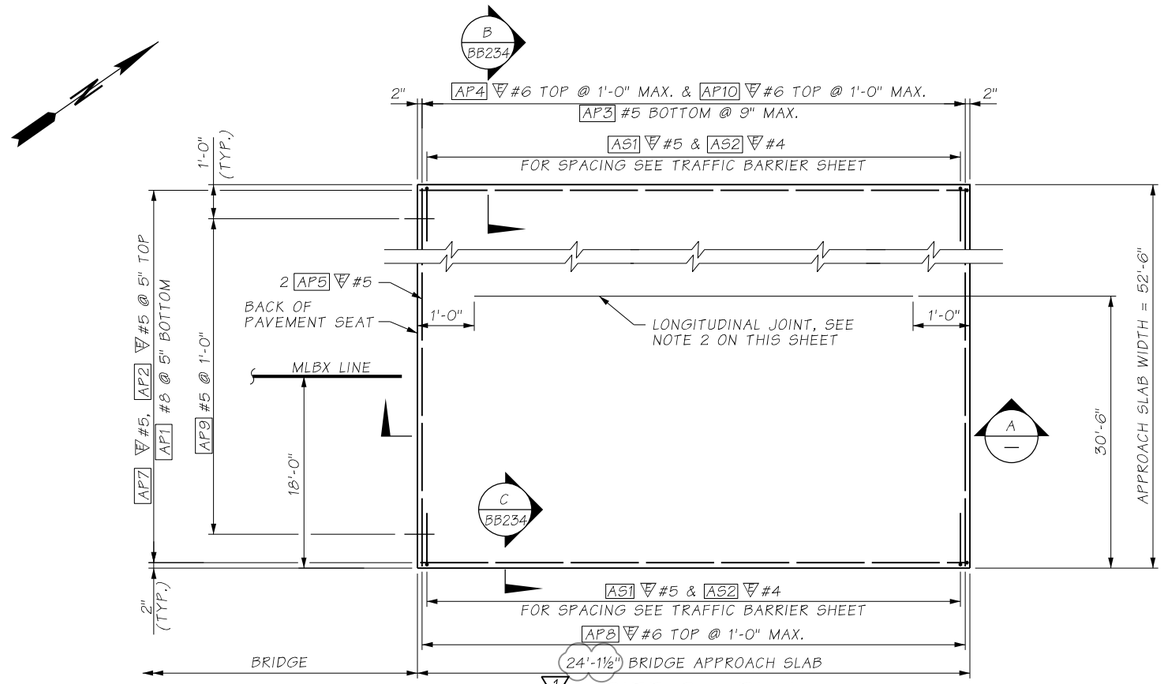

1 PIER 2 - PLAN

NOTES:

1. ALL EDGES OF BRIDGE APPROACH SLAB SHALL HAVE ½" RADIUS, EXCEPT AT LONGITUDINAL JOINTS AND ADJACENT TO ABUTMENTS.
2. LONGITUDINAL JOINTS SHALL BE CONSTRUCTED AND SEALED IN ACCORDANCE WITH STD. SPEC. SECTION 5-05.3(8). JOINTS MAY BE EITHER A SAWCUT CRACK CONTROL JOINT OR A CONSTRUCTION JOINT. SAWCUT JOINTS SHALL TERMINATE 1'-0" BEFORE REACHING EDGE OF SLAB AND MUST BE SAW CUT AS SOON AS POSSIBLE AFTER PLACEMENT OF CONCRETE. SEE "LONGITUDINAL JOINT DETAIL" ON APPROACH SLAB DETAILS 2 OF 2.
3. THE MINIMUM LAP SPLICE OF #5 IS 2'-0", #5 IS 2'-6", #6 IS 3'-0", AND #8 IS 3'-3". ALL LAP SPLICES SHALL BE STAGGERED SO THAT NO MORE THAN 50% OF REBAR IS SPLICED AT THE SAME LOCATION. LAP SPLICES SHALL BE LOCATED WITHIN THE MIDDLE HALF OF THE BRIDGE APPROACH SLAB. OPTIONAL SPLICES ARE ALLOWED FOR AP4 #6.
4. FOR TRAFFIC BARRIER DETAILS, SEE TRAFFIC BARRIER SHEETS.

ATKINSON
APR 14 2020 KTW
RELEASED FOR CONSTRUCTION

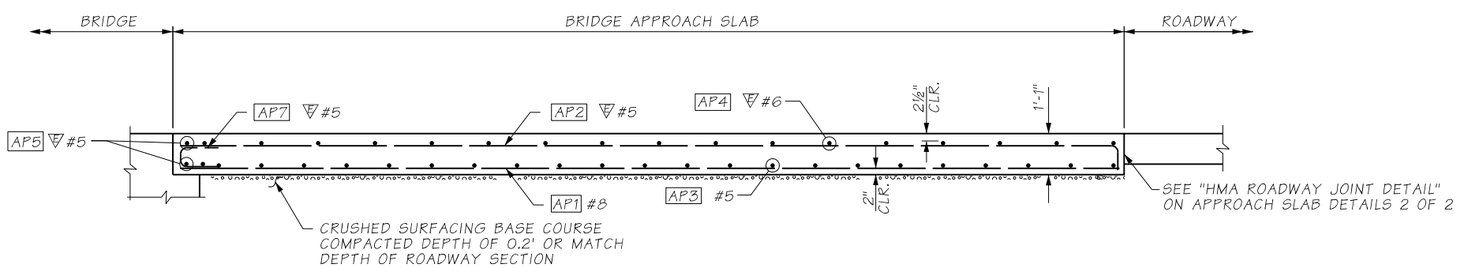

SECTION A/—

BENDING DIAGRAM

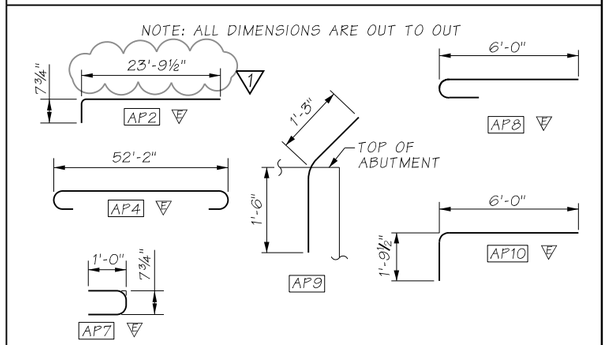

= EPOXY COATED REINFORCING STEEL

AS-BUILT

FILE NAME	c:\pwworking\jacobs_b&l\youngkl2\dms20633\PS_BB233.dgn				REGION NO.	STATE	FED.AID PROJ.NO.
TIME	11:49:58 AM				10	WASH	
DATE	4/10/2020				JOB NUMBER		
PLOTTED BY	youngkl2						
DESIGNED BY	G. CALLAHAN						
ENTERED BY	R. REISER	REV 1 - RFI0365	04/13/2020				
CHECKED BY	C. CAYWOOD	REV 0 - RELEASED FOR CONSTRUCTION	08/19/2019		CONTRACT NO.		LOCATION NO.
PROJ. ENGR.	C. MEADE	REV A - FINAL REVIEW	07/22/2019		C9133		
REGIONAL ADM.	J. WYNANDS	REVISION	DATE	BY			

CORY J. CAYWOOD, STATE OF WASHINGTON, 38193, STRUCTURAL ENGINEER, REGISTERED PROFESSIONAL ENGINEER
4/14/20
DATE
P.E. STAMP BOX

DATE
P.E. STAMP BOX

Washington State Department of Transportation

ATKINSON / JACOBS CONSTRUCTION

I-5
STEILACOOM-DUPONT RD TO THORNE LN
CORRIDOR IMPROVEMENTS
MP 120.01 TO MP 124.45
BERKELEY SB OFF RAMP BRIDGE

APPROACH SLAB DETAILS (1 OF 2)

PLAN REF NO BB233

SHEET 1353 OF 1456 SHEETS

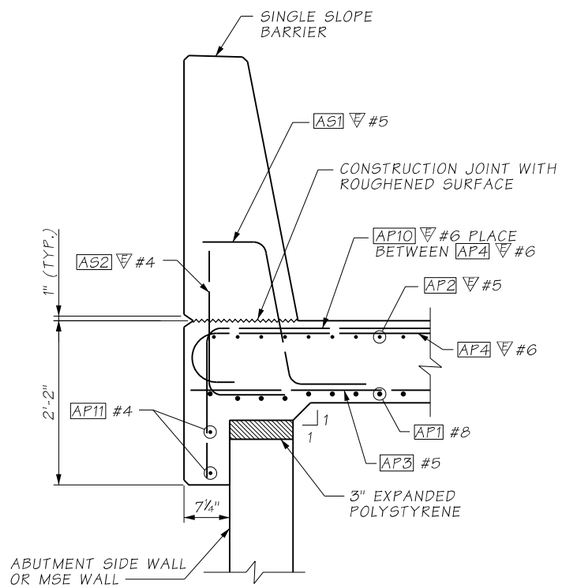

SECTION B
BB233

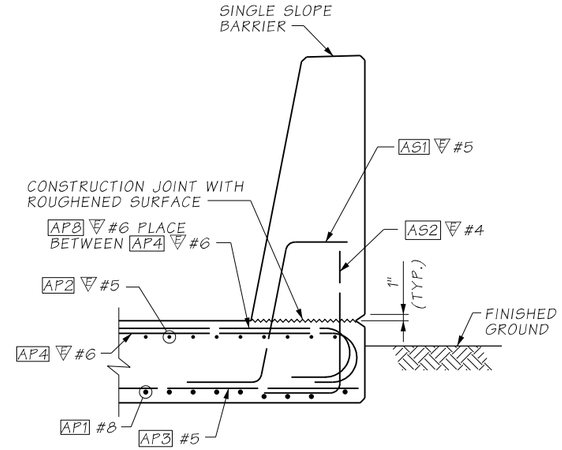

SECTION C
BB233

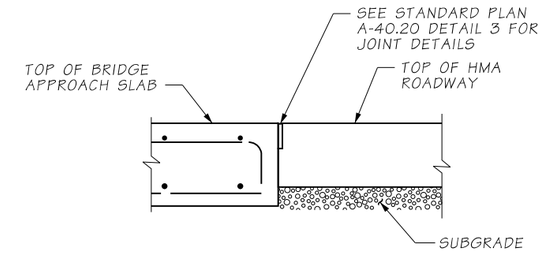

HMA ROADWAY JOINT DETAIL

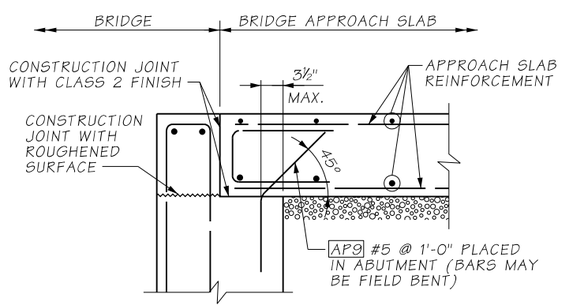

ANCHOR DETAIL

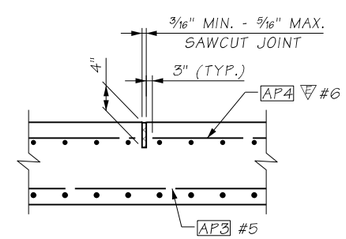

LONGITUDINAL JOINT DETAIL

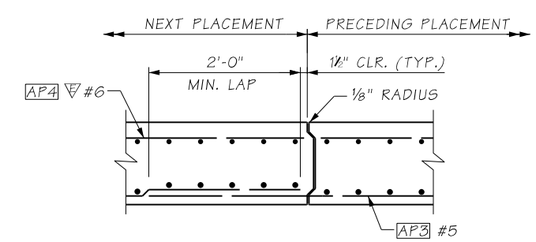

ALTERNATE LONGITUDINAL JOINT DETAIL

EDGE PRECEDING PLACEMENT ONLY WITH ⅛" RADIUS

ATKINSON
AUG 20 2019 KTW
RELEASED FOR CONSTRUCTION

AS-BUILT

FILE NAME	c:\pwworking\jacobs_b&l\reiserrw\dms20633\PS_BB234.dgn			
TIME	2:44:13 PM			
DATE	8/12/2019			
PLOTTED BY	ReiserRW			
DESIGNED BY	G. CALLAHAN			
ENTERED BY	R. REISER			
CHECKED BY	C. CAYWOOD	REV 0 - RELEASED FOR CONSTRUCTION	08/19/2019	
PROJ. ENGR.	C. MEADE	REV A - FINAL REVIEW	07/22/2019	
REGIONAL ADM.	J. WYNANDS	REVISION	DATE	BY

REGION NO.	STATE	FED.AID PROJ.NO.
10	WASH	
JOB NUMBER		
CONTRACT NO.		LOCATION NO.
C9133		

GORY J. CAYWOOD, STATE OF WASHINGTON, 38759, STRUCTURAL ENGINEER, PROFESSIONAL ENGINEER
8/19/19
DATE
P.E. STAMP BOX

DATE
P.E. STAMP BOX

Washington State Department of Transportation

ATKINSON CONSTRUCTION / JACOBS

I-5
STEILACOOM-DUPONT RD TO THORNE LN
CORRIDOR IMPROVEMENTS
MP 120.01 TO MP 124.45
BERKELEY SB OFF RAMP BRIDGE

APPROACH SLAB DETAILS (2 OF 2)

PLAN REF NO BB234

SHEET 1354 OF 1456 SHEETS

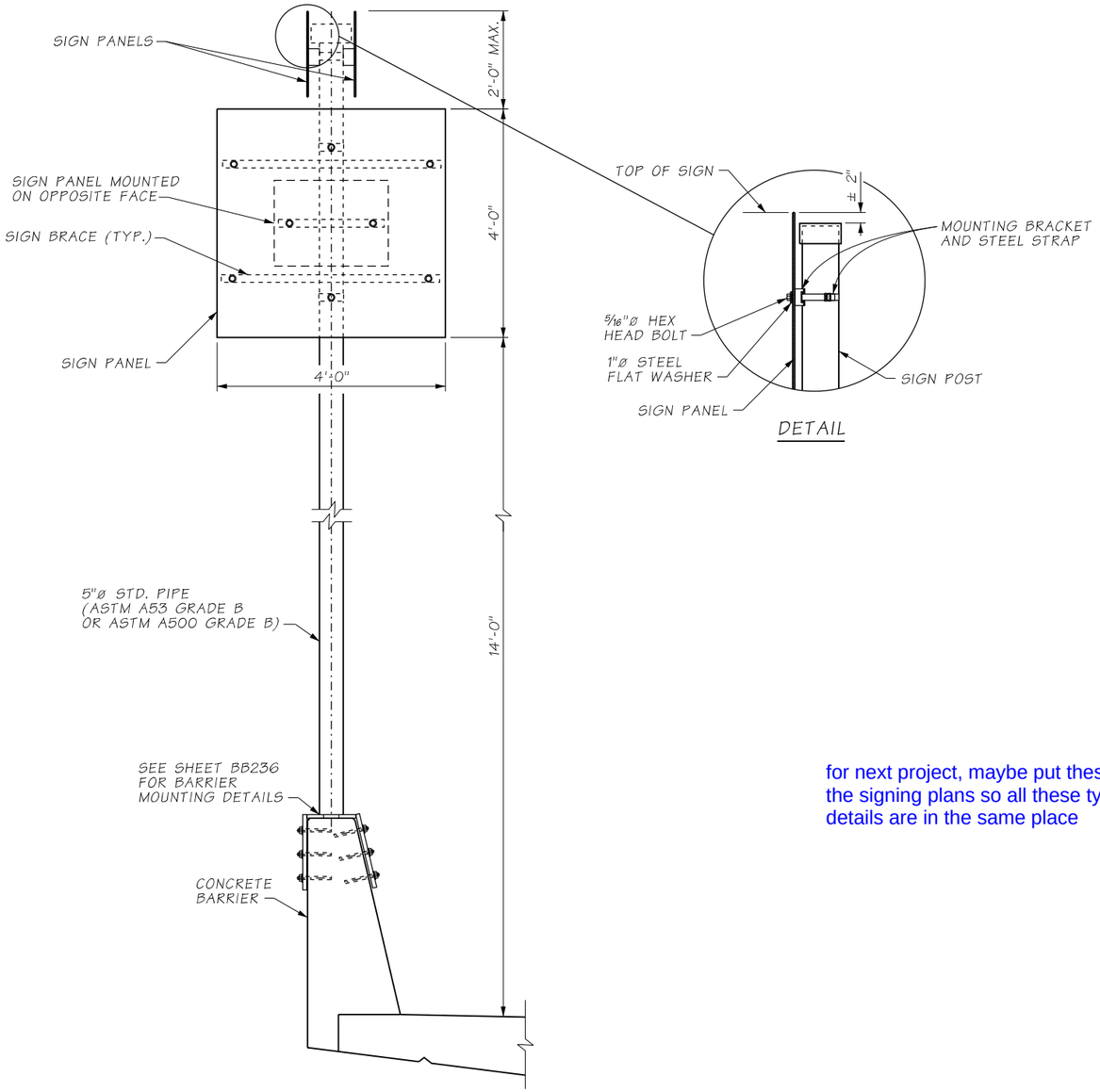

BARRIER MOUNTED SIGN POST

REQUIRED AT 2 LOCATIONS, SEE SIGNING PLANS FOR LOCATIONS AND ADDITIONAL SIGN PANEL DETAILS

NOTES:

1. SIGN POST SHALL BE INSTALLED PLUMB.
2. FOR SIGN PANEL MOUNTING DETAILS, SEE STANDARD PLAN G-50.10.
3. SIGN POST ASSEMBLY SHALL BE GALVANIZED AFTER FABRICATION PER AASHTO M111.

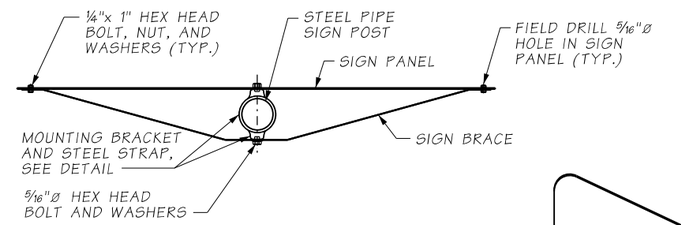

PLAN

for next project, maybe put these in the signing plans so all these type of details are in the same place

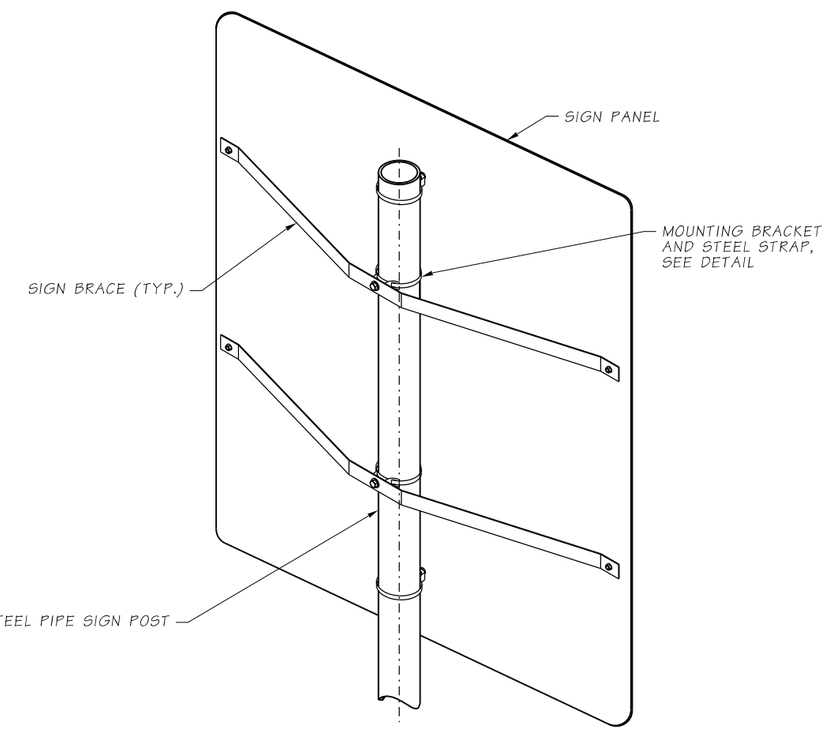

SIGN BRACE ON SIGN POST

ATKINSON
AUG 20 2019 KTW
RELEASED FOR CONSTRUCTION

AS-BUILT

FILE NAME	c:\pwworking\jacobs_b&i\reiserrw\dms20633\PS_BB235.dgn						
TIME	2:45:51 PM				REGION NO.	STATE	FED.AID PROJ.NO.
DATE	8/12/2019				10	WASH	
PLOTTED BY	ReiserRW				JOB NUMBER		
DESIGNED BY	G. CALLAHAN						
ENTERED BY	R. REISER						
CHECKED BY	C. CAYWOOD	REV 0 - RELEASED FOR CONSTRUCTION	08/19/2019		CONTRACT NO.		LOCATION NO.
PROJ. ENGR.	C. MEADE	REV A - FINAL REVIEW	07/22/2019		C9133		
REGIONAL ADM.	J. WYNANDS	REVISION	DATE	BY			

P.E. STAMP BOX — DATE 8/19/19

P.E. STAMP BOX — DATE

Washington State Department of Transportation

ATKINSON CONSTRUCTION / JACOBS

I-5
STEILACOOM-DUPONT RD TO THORNE LN CORRIDOR IMPROVEMENTS
MP 120.01 TO MP 124.45
BERKELEY SB OFF RAMP BRIDGE

SIGN MOUNT DETAILS (1 OF 2)

PLAN REF NO BB235

SHEET 1355 OF 1456 SHEETS

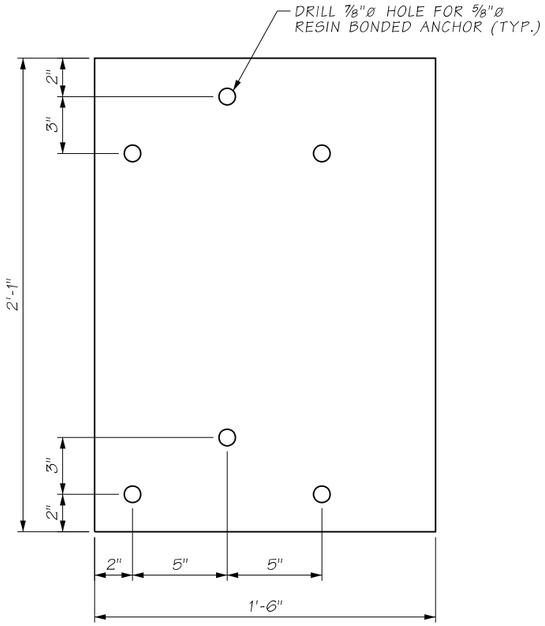

LEFT PANEL

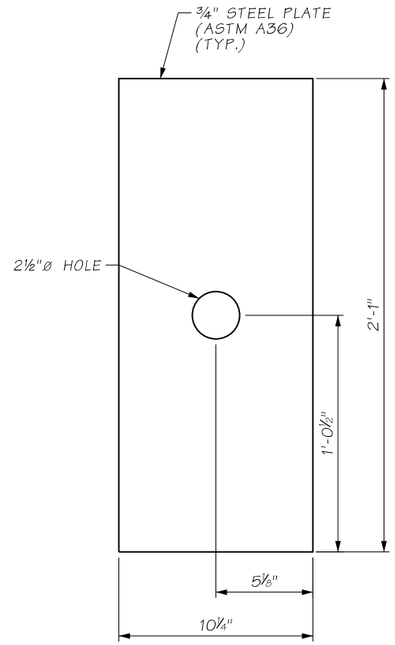

TOP PANEL

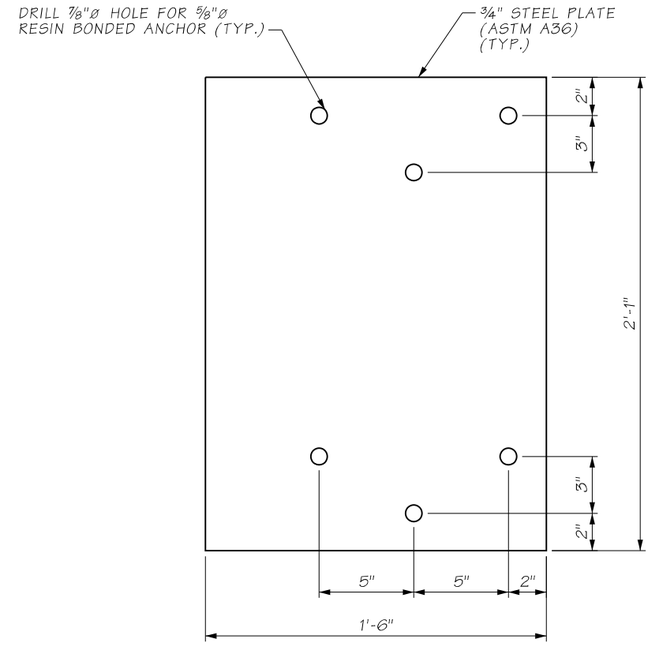

RIGHT PANEL

NOTES:

1. SADDLE MOUNT ANCHOR BOLTS SHALL NOT BE WITHIN 1'-6" OF THE END OF A BARRIER SEGMENT.

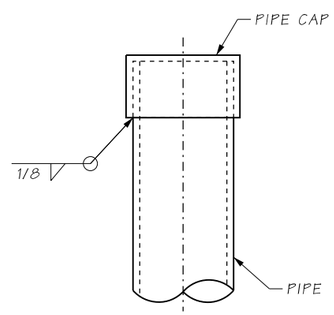

CAP DETAIL

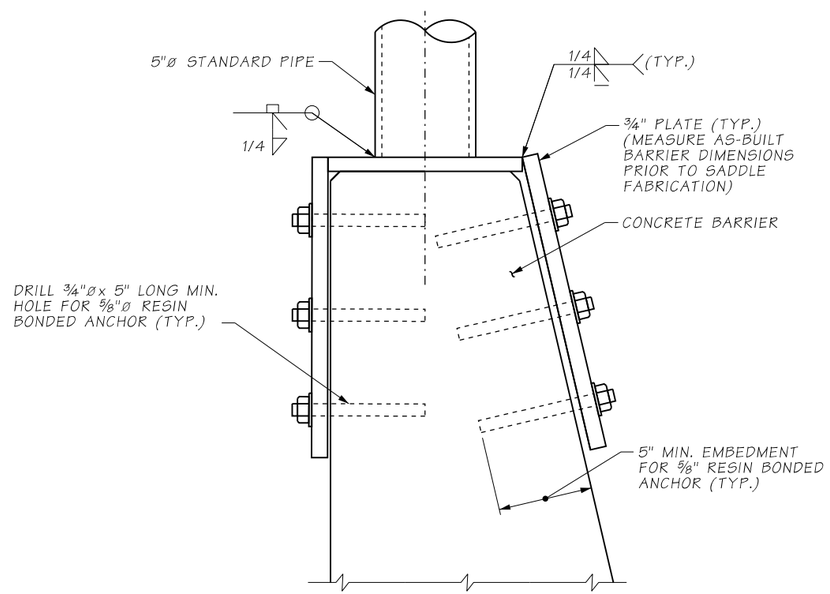

TYPICAL SECTION

ATKINSON
AUG 20 2019 KTW
RELEASED FOR CONSTRUCTION

AS-BUILT

FILE NAME	c:\pwworking\jacobs_b&i\reiserrw\dms20633\PS_BB236.dgn						
TIME	2:49:24 PM				REGION NO. 10	STATE WASH	FED.AID PROJ.NO.
DATE	8/12/2019						
PLOTTED BY	ReiserRW				JOB NUMBER		
DESIGNED BY	G. CALLAHAN						
ENTERED BY	R. REISER						
CHECKED BY	C. CAYWOOD	REV 0 - RELEASED FOR CONSTRUCTION	08/19/2019		CONTRACT NO. C9133		LOCATION NO.
PROJ. ENGR.	C. MEADE	REV A - FINAL REVIEW	07/22/2019				
REGIONAL ADM.	J. WYNANDS	REVISION	DATE	BY			

CARY J. CAYWOOD — STATE OF WASHINGTON — 38759 — PROFESSIONAL ENGINEER
8/19/19
DATE
P.E. STAMP BOX

DATE
P.E. STAMP BOX

Washington State Department of Transportation

ATKINSON CONSTRUCTION / JACOBS

I-5
STEILACOOM-DUPONT RD TO THORNE LN
CORRIDOR IMPROVEMENTS
MP 120.01 TO MP 124.45
BERKELEY SB OFF RAMP BRIDGE

SIGN MOUNT
DETAILS (2 OF 2)

PLAN REF NO
BB236

SHEET 1356 OF 1456 SHEETS

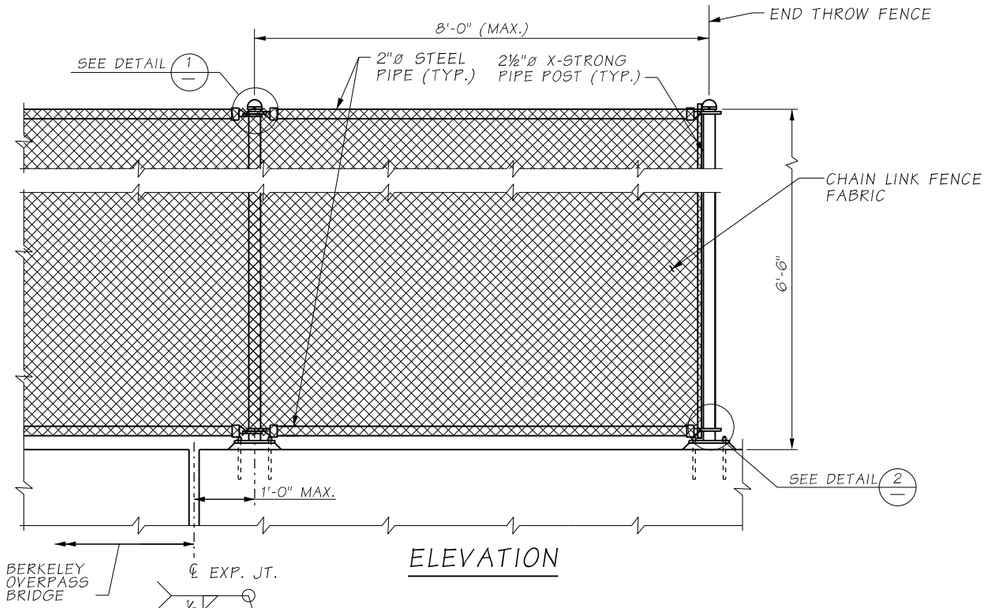

ELEVATION

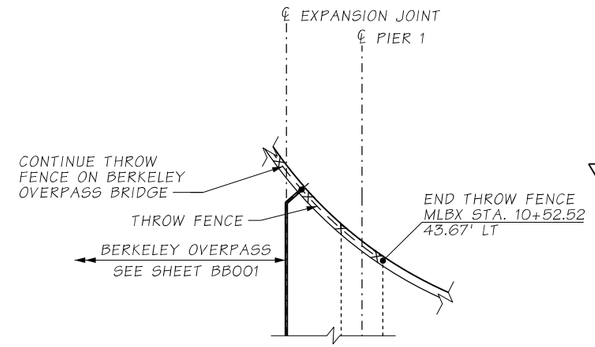

PLAN

THROW FENCE LIMITS

THROW FENCE NOTES:

1. ALL ELEMENTS OF FENCE SHALL BE HOT DIPPED GALVANIZED AFTER FABRICATION.
2. STEEL PIPES FOR POSTS AND LONGITUDINAL MEMBERS SHALL CONFORM TO ASTM SPECIFICATION A53 GRADE B GALVANIZE PER AASHTO M 111.
3. ANCHOR BOLTS SHALL CONFORM TO ASTM SPECIFICATION F1554 GRADE 55 GALVANIZE PER ASTM F2329.
4. ALL HARDWARE SHALL CONFORM TO AASHTO SPECIFICATION M 183 GALVANIZE PER AASHTO M 111 & M232 UNLESS NOTED OTHERWISE.
5. FABRIC SHALL BE STEEL WITH A GALVANIZED FINISH WOVEN IN A 2" CHAIN LINK DIAMOND MESH.
6. FABRIC TIES SHALL BE INSTALLED TO ALL FRAMES IN ACCORDANCE WITH GOOD TRADE PRACTICES AT 1'-0" CENTERS MAXIMUM SPACING.

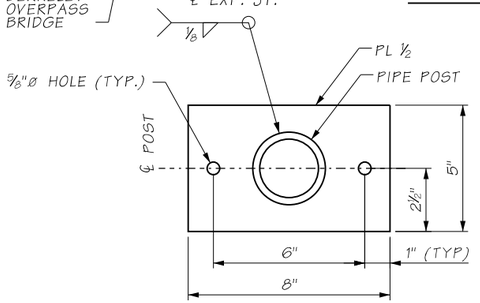

BASE PLATE DETAIL

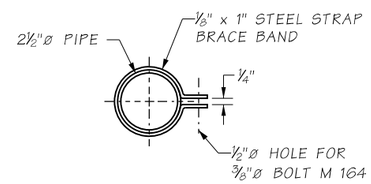

BRACE BAND

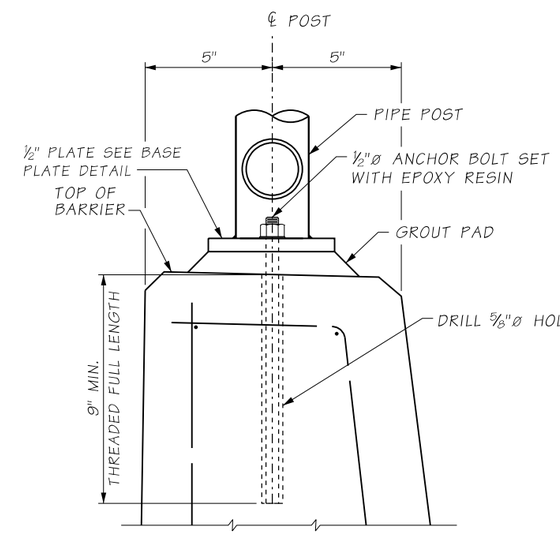

DETAIL 3

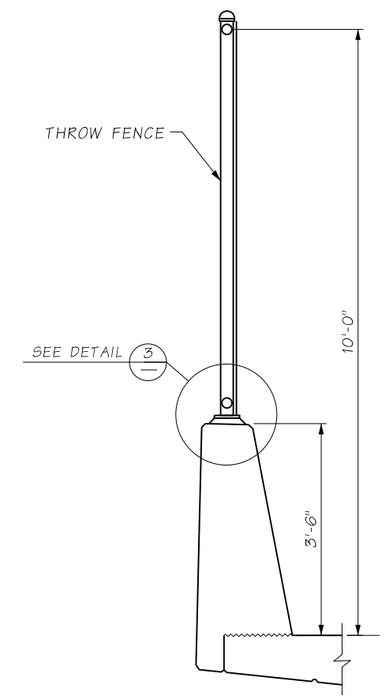

TYPICAL SECTION

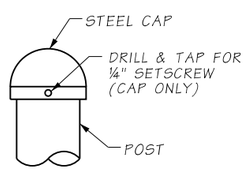

DETAIL 1

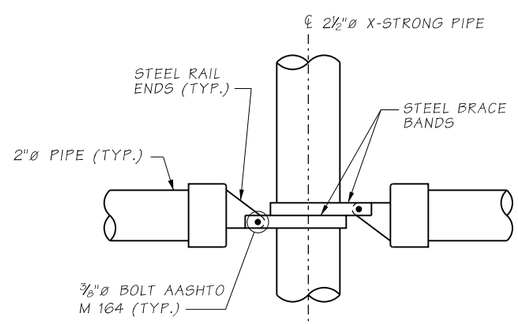

DETAIL 2

AS-BUILT

ATKINSON
APR 22 2020 krw
RELEASED FOR CONSTRUCTION

FILE NAME	c:\pwworking\jacobs_b&i\youngkl2\dms20633\PS_BB237.dgn						
TIME	2:25:50 PM				REGION NO. 10	STATE WASH	FED.AID PROJ.NO.
DATE	4/14/2020						
PLOTTED BY	youngkl2				JOB NUMBER		
DESIGNED BY	G. CALLAHAN						
ENTERED BY	R. REISER	REV 1 - RFI0294	04/17/2020				
CHECKED BY	C. CAYWOOD	REV 0 - RELEASED FOR CONSTRUCTION	08/19/2019		CONTRACT NO. C9133		LOCATION NO.
PROJ. ENGR.	C. MEADE	REV A - FINAL REVIEW	07/22/2019				
REGIONAL ADM.	J. WYNANDS	REVISION	DATE	BY			

CORY J. CAYWOOD, STATE OF WASHINGTON, 38759, STRUCTURAL ENGINEER, PROFESSIONAL ENGINEER
4/16/20
DATE
P.E. STAMP BOX

DATE
P.E. STAMP BOX

Washington State Department of Transportation

ATKINSON CONSTRUCTION / JACOBS

I-5
STEILACOOM-DUPONT RD TO THORNE LN CORRIDOR IMPROVEMENTS
MP 120.01 TO MP 124.45
BERKELEY SB OFF RAMP BRIDGE

THROW FENCE

PLAN REF NO BB237

SHEET 1357 OF 1456 SHEETS

S = BAR IS INCLUDED IN SUBSTRUCTURE QUANTITIES

T = TRANSVERSE OR S = SEISMIC

E = BAR IS TO BE EPOXY COATED

V = BAR DIMENSIONS VARY BETWEEN DIMENSIONS SHOWN ON THIS LINE AND THE FOLLOWING LINE

MARK NO.	LOCATION	SIZE	NO. REQ'D	BEND TYPE	T OR S	SUBSTR.	EPOXY	VARIES	NO. EACH	U FT	U IN	W FT	W IN	X FT	X IN	Y FT	Y IN	Z FT	Z IN	ANGLE θ_1 DEG.	ANGLE θ_2 DEG.	LENGTH FT	LENGTH IN	WEIGHT LBS
	PIER 1 FOOTING																							
101	Top Bot. Footing	8	280	50					17	6.0												17	6.0	13032
102	Each Face Vert.	5	280	54					2	7.0												3	3.4	960
103	Side Footing Horiz. Max	5	32	50					17	6.0												17	6.0	584
104	Footing Ties, 90 degree bend	5	40	53					2	7.0												3	10.3	161
105	Top Bot. Footing, Spliced	5	72	51					2	7.0												3	1.9	237
	PIER 1 COLUMN																							
111A	Vert. Col A	10	24	54					25	0.6												26	6.5	2741
111B	Vert. Col B	10	26	54					26	10.2												28	4.1	2927
112	Column Hoop	6	160	66					3	2.0	0	0.0										9	9.0	2344
113A	Corner Vert. Col A	5	12	50					22	2.6												22	2.6	278
113B	Corner Vert. Col B	5	12	50					24	0.2												24	2.0	301
114	Corner Stirrup	4	104	74	T				3	2.0	3	2.0	3	2.0								9	3.4	1007
115	Corner Stirrup	5	24	58	T				3	2.0												3	11.9	100
	PIER 1 COLUMN PINS																							
191	Lower Cage Vert.	10	16	50					5	0.0												5	0.0	344
192	Lower Cage Hoop	6	32	66	T				2	6.0	0	0.0										7	7.9	368
193	Upper Cage Vert.	10	16	50					1	8.0												1	8.0	115
194	Upper Cage Hoop	6	12	66	T				2	6.0	0	0.0										7	7.9	138
195	Upper Cage Horiz. Short	5	16	74	T				2	10.0	1	0.0	1	0.0								4	7.4	77
	PIER 2 CROSSBEAM																							
121A	Pos Horiz. Bot. South	8	12	50					35	3.5												35	3.5	1131
121B	Pos Horiz. Bot. North	8	12	50					33	1.5												33	1.5	1061
122A	Torsional Steel South	7	2	50					35	3.5												35	3.5	144
122B	Torsional Steel North	7	2	50					33	1.5												33	1.5	135
123	Neg Horiz. Bot.	8	24	50				V	2	35	3.5											35	3.5	2192
										33	1.5											33	1.5	
124	Stirrup Between Girder	5	73	72	T					5	2.0	9	0.0	9	0.0							23	10.5	1818
125	Vert. Tie Between Girder	5	216	58	T					9	0.0											9	9.9	2213
126	Top Tie Between Girder	5	108	58	T					5	2.0											5	11.9	675
127	Beta Region Stirrup	5	35	72	T					5	2.0	9	0.0	9	0.0							16	6.5	604
128	Vert. Tie Beta	5	35	58	T					1	8.0											2	5.9	91
129	Horiz. Tie Bot.	7	2	56	T					5	2.0											7	1.6	29
130	Vert. End	7	12	50						9	0.0											9	0.0	221
151	Upper Inside Long.	6	32	50						33	10.5											33	10.5	1628
152A	Upper Inside Long.	7	64	50						10	0.0											10	0.0	1308
152B	Upper Outside Long. West	7	16	50				V	8	13	1.0											13	1.0	499
										17	5.0											17	5.0	
152C	Upper Outside Long. East	7	16	50						3	10.0											3	10.0	125
153	Upper Top Inside	11	30	50						40	8.0											40	8.0	6482
154	Upper Top Ties	5	345	58	T					5	2.0											5	11.9	2156
156	Upper Center Horiz. Tie	5	175	58	T					2	5.0											3	2.3	592
157	Girder Side Horiz.	6	40	50						7	0.0											7	0.0	421
159	Horiz. Tie Top	7	16	58	T					6	9.0											8	8.6	285
160	Horiz. Full Length	7	8	50						34	9.0											34	9.0	568
161	Girder Face Vert.	7	30	50				V	1	5	11.0											5	11.0	320
										4	6.4											4	6.4	
	PIER 2 FOOTING																							
201	Bot. of Footing	10	78	50		S				17	6.0											17	6.0	5874
202	Top and Bot. of Footing	7	38	50		S				50	9.5											50	9.5	3945
203	Top of Footing	6	78	50		S				17	6.0											17	6.0	2050
204	Bot. of Footing	4	364	58	T	S				3	7.0											4	2.9	1031
	PIER 2 WALL																							
211A	Far Face Right Side	8	103	50				V	1	20	5.3											20	5.3	5771
										21	6.4											21	6.4	
211B	Near Face Bend	8	103	54						9	3.0											10	4.5	2853
212A	Near Face Right Side	5	103	50				V	1	20	5.3											20	5.3	2254
										21	6.4											21	6.4	
212B	Near Face Bend	5	103	54						7	3.0											7	11.4	854
213	Horiz.	7	46	56						50	11.5											52	11.1	4976
214	Ties	4	324	58	T					4	8.0											5	3.9	1153
215	Top Wall, Long.	7	4	50						50	9.6											50	9.6	415
216	Top Wall, Trans.	7	52	56	T					3	8.0											5	7.6	599
221A	Vert. Far Face	4	52	50						8	8.8											8	8.8	303
221B	Vert. Near Face	4	52	50						10	3.7											10	3.7	358
222	Horiz. Each Face	4	24	28						28	2.8											28	2.8	453
223	Top, Horiz.	4	6	50						28	2.8											28	2.8	113
224	Top, Stirrup	4	52	56	T					1	4.0											1	10.9	66
225	Pavement Seat, Stirrup	4	52	74	T					0	6.0	2	1.0	2	1.0							4	5.9	156
226	Pavement Seat Top	4	4	50						28	2.8											28	2.8	75
	PIER 2 WINGWALL																							
217a	Right Wingwall	7	5	54						24	2.3											25	3.2	257
217b	Left Wingwall	7	5	54						25	3.4											26	3.2	268
218	Right Wingwall	7	23	56						4	8.0											6	7.6	312
231	Left Wingwall	5	12	54						25	3.4											25	11.8	325
232	Vert., Bot. Wingwall	5	6	54						11	9.0											12	5.4	78
233	Winawall Near Face, Lower	5	23	50						9	8.0											9	7.0	232
234	Wingwall	4	37	56	T					0	8.0											1	2.9	31
235	Horiz. Far Face	7	23	50						9	0.0											9	0.0	423
241	Upper Vert. Approach	4	12	50				V	2	8	8.6											8	8.6	69
										8	5.0											8	5.0	
242	Upper Vert., Bridge	4	16	50				V	1	9	4.2											9	4.2	99
										9	2.3											9	2.3	
243A	Upper Wingwall Left	5	14	50						9	8.0											9	8.0	141
243B	Upper Wingwall Right	5	7	50						4	8.0											4	8.0	34
243C	Upper Wingwall Right	5	7	54						4	8.0											5	4.4	39
245	Horiz. Short Stirrup	4	7	56	T					0	8.0											1	2.9	6
246	Horiz. Short Stirrup	4	14	56	T					0	8.0											1	2.9	12
249A	Sidewall, Horiz. Top Left	5	2	50						9	8.5											9	8.5	20
249B	Sidewall, Horiz. Top Right	5	2	50						4	8.6											4	8.6	10
251A	Girder Stop, Max Long.	4	8	50						2	0.1											2	0.1	11
251B	Girder Stop, Min Long.	4	32	50						1	11.9											1	11.9	43
252	Girder Stop	4	80	74						2	1.0	3	1.0	3	1.0							8	0.5	430

S = BAR IS INCLUDED IN SUBSTRUCTURE QUANTITIES

T = TRANSVERSE OR S = SEISMIC

E = BAR IS TO BE EPOXY COATED

V = BAR DIMENSIONS VARY BETWEEN DIMENSIONS SHOWN ON THIS LINE AND THE FOLLOWING LINE

MARK NO.	LOCATION	SIZE	NO. REQ'D	BEND TYPE	T OR S	SUBSTR.	EPOXY	VARIES	NO. EACH	U FT	U IN	W FT	W IN	X FT	X IN	Y FT	Y IN	Z FT	Z IN	ANGLE θ_1 DEG.	ANGLE θ_2 DEG.	LENGTH FT	LENGTH IN	WEIGHT LBS
	DECK REINFORCING																							
2000	Bot. Trans. Main	5	243	89			E			51	6.0	3	6.0									51	6.0	13051
2000	Bot. Trans. Main	5	83	89			E	V	1	70	9.0	3	6.0									70	9.0	5442
										51	6.0	3	6.0									51	6.0	
2001	Bot. Long.	5	78	89			E			156	1.5	2	6.0									161	0.0	13097
2001	Bot. Long. at Overhang	5	10	50			E	V	1	24	1.0											24	1.0	160
										6	6.7											6	6.7	
2002	Top Trans. Main	5	486	51			E			29	1.0											29	7.9	15032
2002	Top Trans. Main	5	166	51			E	V	1	38	7.0											39	1.9	5957
										29	1.0											29	7.9	
2003	Top Trans. End	5	28	51			E			9	0.0											9	6.9	280
2003	Top Trans. SW End	5	14	51			E	V	1	9	11.0											10	5.9	147
										9	0.7											9	7.6	
2003	Top Trans. NW End	5	14	51			E	V	1	27	6.2											28	1.1	372
										22	3.0											22	9.9	
2004	Top Trans. S.	4	149	51			E			9	0.5											9	6.5	950
2004	Top Trans. N	4	114	51			E			9	0.0											9	6.0	723
2004	Top Trans. NW	4	35	51			E	V	1	9	0.0											9	6.0	377
										22	3.0											22	9.0	
2005	Top Long. Pier 1	7	57	50			E			19	9.0											19	9.0	2301
2005	Top Long. Pier 1	7	57	50			E			22	9.0											22	9.0	2651
2005	Top Long. Pier 1	7	58	50			E			16	9.0											16	9.0	1986
2005	Top Long. Pier 1 OH	7	43	50			E	V	1	16	10.8											16	10.8	860
										2	8.0											2	8.0	
2006	Top Long.	4	58	89			E			159	1.0	2	0.0									165	1.0	6395
2006	Top Long. OH	4	7	50			E	V	1	7	1.0											7	1.0	52
										15	2.0											15	2.0	
2007	Top Ext. Long.	4	1	89			E			43	2.5	2										45	2.5	30
2008	Long. at Girder	5	15	89			E			156	0.0	2	6.0									161	0.0	2519
2008	Bot. Ext. Long.	5	1	50			E			43	8.0											43	8.0	46
2010	Bot. Long. OH	5	87	50			E			9	6.1											9	6.1	863
2010	Bot. Long. OH	5	19	50			E	V	1	16	8.0											16	8.0	219
										5	4.8											5	4.8	
	PIER 2 END DIAPHRAGM																							
3001	Bot. of Diaphragm	7	8	50						23	9.9											23	9.9	390
3002	End Diaphragm Horiz.	6	64	50						9	11.9											9	11.9	960
3003	Stirrups	5	80	74	T					1	2.0	6	0.4	6	0.4							13	0.1	1086
3004	CL Diaphragm Horiz.	7	2	50						24	9.9											24	9.9	102
3005	Top of Diaphragm Straight	9	18	50			E			29	8.0											29	8.0	1816
3005	Top of Diaphragm Hooked	9	8	51			E			29	8.0											30	10.5	841
3006	Ties Between Girders	5	40	74	T			V	8	1	2.0	4	6.4	4	6.4							10	0.1	407
										9	6.0	4	3.4	4	3.4							9	6.1	
3007	Blockout	6	8	56						9	6.0											11	2.1	134
	PARTIAL DEPTH INTERMEDIATE DIAPHRAGMS SPAN 1																							
3020	Bot. of Diaphragm	7	2	89						42	6.0	2	7.0									42	6.0	174
3021	Between Girders Horiz.	4	24	50						9	11.9											9	11.9	160
3022	Top of Diaphragm	7	1	89						42	6.0	3	7.0									42	6.0	87
3023	Stirrups	4	40	74	T					0	5.0	4	6.5	4	6.5							9	3.9	249
3024	Between Girders Vert.	4	16	74	T			V	1	0	5.0	3	2.0	3	2.0							6	6.9	68
										0	6.0	4	2.0	4	2.0							6	0.9	
3025	Top of Diaphragm Horiz.	6	2	51						23	2.0											23	10.3	72
3025	Top of Diaphragm Horiz.	6	2	51						26	2.0											26	10.3	81

AS-BUILT

ATKINSON

AUG 20 2019 KTW

RELEASED FOR CONSTRUCTION

BENDING DIAGRAMS

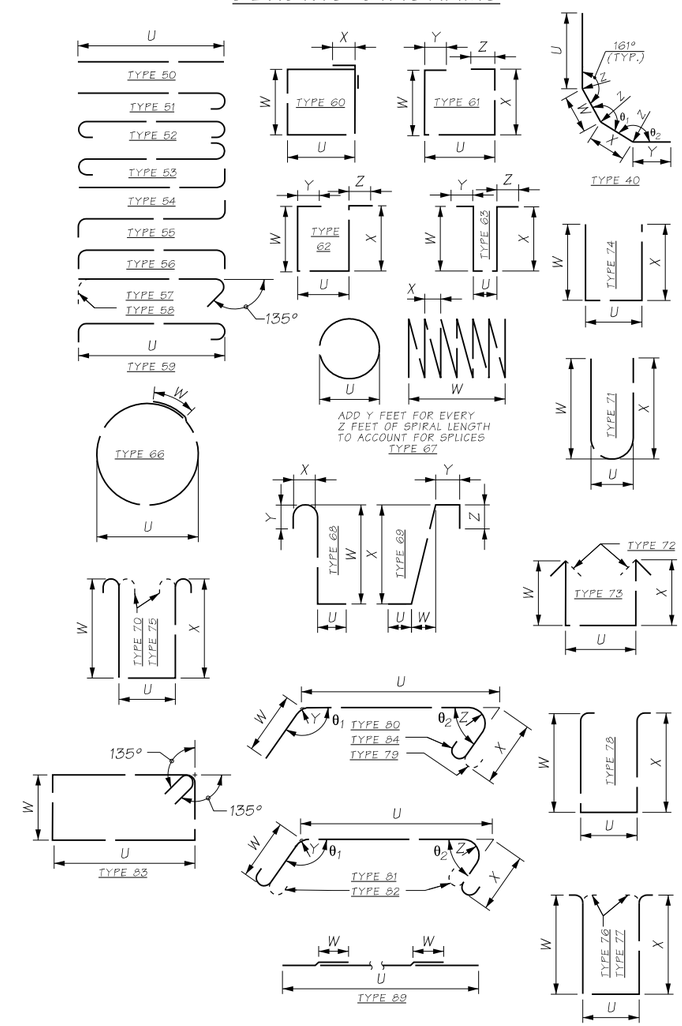

NOTES:

1. ALL REINFORCING BARS ON THIS SHEET SHALL BE ASTM A 706 UNLESS SHOWN OTHERWISE.
2. REINFORCING FOR TRAFFIC BARRIERS NOT SHOWN IN THE BAR LIST, SEE TRAFFIC BARRIER SHEET.
3. NUMBER AND LENGTH OF BARS TO BE DETERMINED BY THE CONTRACTOR FROM PLANS.

FILE NAME	c:\pwworking\jacobs_b&i\reiserrw\dms20633\PS_BB238.dgn			
TIME	3:12:55 PM			
DATE	8/12/2019			
PLOTTED BY	ReiserRW			
DESIGNED BY	G. CALLAHAN			
ENTERED BY	R. REISER			
CHECKED BY	A. GASCA	REV 0 - RELEASED FOR CONSTRUCTION	08/19/2019	
PROJ. ENGR.	C. MEADE	REV A - FINAL REVIEW	07/22/2019	
REGIONAL ADM.	J. WYNANDS	REVISION	DATE	BY

REGION NO.	STATE	FED.AID PROJ.NO.
10	WASH	
JOB NUMBER		
CONTRACT NO.		LOCATION NO.
C9133		

P.E. STAMP BOX — DATE

P.E. STAMP BOX — DATE

Washington State Department of Transportation

ATKINSON CONSTRUCTION / JACOBS

I-5
STEILACOOM-DUPONT RD TO THORNE LN
CORRIDOR IMPROVEMENTS
MP 120.01 TO MP 124.45
BERKELEY SB OFF RAMP BRIDGE

BAR LIST

PLAN REF NO BB238

SHEET 1358 OF 1456 SHEETS