ABBREVIATIONS:

@	AT
DIA, Φ	DIAMETER
℄	CENTERLINE
'	FEET
"	INCHES
ℙ	PLATE (STRUCTURAL STEEL)
+/-	PLUS OR MINUS
#	NUMBER
(A)	ABANDON
XC	(SIZE) CONDUCTOR
(R)	REMOVE
A	AMPS
AC	ALTERNATING CURRENT
ALUM	ALUMINUM
ALT	ALTERNATING
A / AMP	AMPERAGE
ASTM	AMERICAN SOCIETY FOR TESTING AND MATERIALS
BT	BURIED TELEPHONE
C	CONDUIT
CAT	CATEGORY
CCW	COUNTER CLOCKWISE
CLR	CLEAR
CKT	CIRCUIT
ENV	ENVIRONMENTAL
ES	DATA STATION / RAMP METER
(E) EX / EXIST	EXISTING
FDN	FOUNDATION
FT	FEET
FTC	FIBER TERMINAL CABINET
FTP	FIBER TERMINAL PANEL
GB	GROUND BUS
GFCI	GROUND FAULT CIRCUIT INTERUPPTER
GR	GROUND (CONDUCTOR)
HP	HORSEPOWER
HPS	HIGH PRESSURE SODIUM
HSS	HOLLOW STRUCTURAL SECTION
IN	INCH
ITS	INTELLIGENT TRANSPORTATION SYSTEM
JB	JUNCTION BOX
KVA	KILOVOLT-AMPS
LED	LIGHT EMITTING DIODE
LT	LEFT
MH	MANHOLE OR MOUNTING HEIGHT
MIN	MINIMUM
MP	MILE POST
MTG	MOUNTING
MUTCD	MANUAL ON UNIFORM TRAFFIC CONTROL DEVICES
N	NEUTRAL
N/A	NOT APPLICABLE
NB	NORTHBOUND
NEC	NATIONAL ELECTRICAL CODE
NOM	NOMINAL

ABBREVIATIONS CONTINUED:

OD	OUTSIDE DIAMETER
PB	PULL BOX
PR	PAIR
PVC	POLYVINYL CHLORIDE
R	RADIUS
RD	ROAD
RFP	REQUEST FOR PROPOSAL
RGS	RIGID GALVANIZED STEEL
RMC	RIGID METAL CONDUIT
RS	RATE SIGN
RT	RIGHT
ROW	RIGHT OF WAY
SB	SOUTHBOUND
SCH	SCHEDULE
SD	SIDE DMS/SPECIAL DESIGN
SQ	SQUARE
SR	STATE ROUTE
STA	STATION
STD	STANDARD
SS	SIGN STRUCTURE
TBS	TERMINAL BLOCK
TC	TERMINAL CABINET
TR	TOLL RATE
TYP	TYPICAL
V	VOLTS
VC	VIDEO CAMERA
VM	VARIABLE MESSAGE
W	WATT
W/	WITH
WSDOT	WASHINGTON STATE DEPARTMENT OF TRANSPORTATION
XF	TRANSFORMER

LEGEND:

EXISTING	NEW/RELOCATED	
		CONDUIT
		TYPE 1 JUNCTION BOX
		TYPE 2 JUNCTION BOX
		TYPE 3 JUNCTION BOX
		TYPE 4 JUNCTION BOX
		TYPE 5 JUNCTION BOX
		TYPE 8 JUNCTION BOX
		NEMA 4X JUNCTION BOX
		NEMA 4X JUNCTION BOX IN SIDEWALK
	PB	PULL BOX (1)
EV		ELECTRICAL VAULT
		ELECTRICAL SERVICE CABINET
T	T	TRANSFORMER CABINET
		CONTROL CABINET
		TYPE III SIGNAL STANDARD
		LUMINAIRE STANDARD
		EXISTING POLE WITH NEW LUMINAIRE FIXTURE
		LUMINAIRE STANDARD DOUBLE
	?	CONSTRUCTION NOTE
	?	WIRE NOTE
	R	REMOVE CONDUIT
	XX	LUMINAIRE LABEL
		CANTILEVER SIGN STRUCTURE
		MONOTUBE SIGN BRIDGE
		OVERHEAD SIGN
		UNDERDECK LUMINAIRE / SIGN LIGHT

GENERAL NOTES:

1. NEW ITS ITEMS ARE SHOWN IN A SOLID GRAY LINETYPE ON IL PLANS. SEE ITS SHEET TN01 AND TS PLAN SHEETS FOR ADDITIONAL ITS SYMBOLS.
2. REMOVED EQUIPMENT SHALL BE SALVAGED PER THE RFP REQUIREMENTS.
3. ALL UNDERGROUND ELECTRICAL CONDUIT SHALL BE PVC SCHEDULE 80, UNLESS OTHERWISE NOTED. ALL ELECTRICAL CONDUIT IN BARRIER SHALL BE GALVANIZED RIGID STEEL UNLESS OTHERWISE NOTED.
4. ALL SPARE ELECTRICAL CONDUITS SHALL INCLUDE A #8 GROUND WIRE UNLESS OTHERWISE NOTED.

AS-BUILT

ATKINSON
JUL 09 2019 KTN
RELEASED FOR CONSTRUCTION

FILE NAME	c:\pwworking\jacobs_b&i\jeg_ch2m-kpourbah\dms20633\PS_ILN01.dgn
TIME	11:05:37 AM
DATE	7/8/2019
PLOTTED BY	KPOURBAH
DESIGNED BY	K. POURBAHRI
ENTERED BY	K. POURBAHRI
CHECKED BY	B. BARTON
PROJ. ENGR.	C. MEADE
REGIONAL ADM.	J. WYNANDS

REVISION	DATE	BY
REV 1 - RFC, ADDED SW BOX	07/08/19	
REV 0 - RELEASED FOR CONSTRUCTION	04/02/19	
REV B - FINAL REVIEW	02/11/19	
REV A - PRELIMINARY REVIEW	11/15/18	

REGION NO. 10 | STATE WASH | FED.AID PROJ.NO.
JOB NUMBER
CONTRACT NO. C9133 | LOCATION NO.

DANIEL M. BARTON, STATE OF WASHINGTON, 46523, REGISTERED PROFESSIONAL ENGINEER — DATE 7-8-19 — P.E. STAMP BOX

DATE — P.E. STAMP BOX

Washington State Department of Transportation

ATKINSON CONSTRUCTION / JACOBS

I-5
STEILACOOM-DUPONT RD TO THORNE LN CORRIDOR IMPROVEMENTS
MP 120.01 TO MP 124.45

ILLUMINATION NOTES AND LEGEND

PLAN REF NO. ILN01

SHEET 902 OF 1456 SHEETS

LUMINAIRE SCHEDULE — SERVICE NO. SCA 005-XF-12006

LUMINAIRE NUMBER	CIRCUIT	LOCATION STATION	LOCATION OFFSET	TYPE - DISTRIBUTION	WATTAGE CLASS	MAST ARM	H1	BASE TYPE	*FOUNDATION TYPE	**ADDITIONAL EMBEDMENT	COMMENTS
D6	A	SR5 197+35.00	75.50' LT	III - MED CUTOFF	250	12 FT	40 FT	SLIP	A	-	POWER FROM 005-XF-12006, INSTALL PHOTOCELL
D7	A	SR5 198+51.50	77.50' LT	III - MED CUTOFF	250	12 FT	40 FT	SLIP	A	-	POWER FROM 005-XF-12006, INSTALL PHOTOCELL

LUMINAIRE SCHEDULE — SERVICE NO. SCA 827

LUMINAIRE NUMBER	CIRCUIT	LOCATION STATION	LOCATION OFFSET	TYPE - DISTRIBUTION	WATTAGE CLASS	MAST ARM	H1	BASE TYPE	*FOUNDATION TYPE	**ADDITIONAL EMBEDMENT	COMMENTS
D8	B	NBCD 29+14.05	45.00' RT	III - MED CUTOFF	400	16 FT	40 FT	BARRIER	-	-	INSTALL PER ST07 DETAILS
D9	B	NBCD 30+64.16	62.65' RT	III - MED CUTOFF	400	16 FT	40 FT	BARRIER	-	-	INSTALL PER ST07 DETAILS
D10	C	SBCD 461+51.96	38.63' LT	III - MED CUTOFF	400	16 FT	40 FT	SLIP	A	-	

1

NOTES:
*SEE WSDOT STANDARD PLANS J-28.30-03 FOR TYPE A AND B FOUNDATION DEPTH.

EXISTING LUMINAIRE SCHEDULE — SERVICE NO. SCA 827

LUMINAIRE NUMBER	CIRCUIT	LOCATION STATION	LOCATION OFFSET	TYPE - DISTRIBUTION	WATTAGE CLASS	MAST ARM	H1
D1	A	SR5 232+41.45	268.75'LT	III - MED CUTOFF	400	16'	40'
D2	A	SR5 230+85.98	179.85'LT	III - MED CUTOFF	400	16'	40'
D3	A	SR5 234+28.55	116.15'LT	III - MED CUTOFF	400	14'	40'
47	A	SR5 236+90.21	386.78'LT	III - MED CUTOFF	400	10'	40'
48	A	SR5 234+11.98	336.31'LT	III - MED CUTOFF	400	-	40'
49	A	SR5 234+19.11	192.67'LT	III - MED CUTOFF	400	8'	40'
50	A	SR5 235+92.76	138.10'LT	III - MED CUTOFF	400	12'	40'
51	A	SR5 238+01.12	123.44'LT	III - MED CUTOFF	400	12'	40'
52	A	SR5 221+76.92	100.58'LT	III - MED CUTOFF	400	16'	40'
52A	A	SR5 216+79.57	88.22'LT	III - MED CUTOFF	400	16'	40'
52B	A	SR5 214+71.38	82.68'LT	III - MED CUTOFF	400	16'	40'
53	A	SR5 224+14.38	107.92'LT	III - MED CUTOFF	400	16'	40'
54	A	SR5 226+60.00	128.45'LT	III - MED CUTOFF	400	16'	40'
55	A	SR5 229+12.18	143.30'LT	III - MED CUTOFF	400	16'	40'
56	A	SR5 231+31.87	116.93'LT	III - MED CUTOFF	400	16'	40'
57	A	SR5 232+75.94	113.30'LT	III - MED CUTOFF	400	16'	40'
36	A	SR5 238+58.25	503.74'LT	III - MED CUTOFF	400	16'	40'
1	B	SR5 220+21.76	76.78'LT	III - MED CUTOFF	400	16'	40'
2	B	SR5 222+65.40	94.39'RT	III - MED CUTOFF	400	16'	40'
7	B	SR5 238+90.90	634.24'RT	III - MED CUTOFF	400	12'	40'
8	B	SR5 238+84.87	256.91'RT	III - MED CUTOFF	400	10'	40'
9	B	SR5 238+04.40	398.57'RT	III - MED CUTOFF	400	10'	40'
10	B	SR5 237+04.31	435.74'RT	III - MED CUTOFF	400	8'	40'
11	B	SR5 236+23.37	402.60'RT	III - MED CUTOFF	400	8'	40'
12	B	SR5 235+72.03	320.45'RT	III - MED CUTOFF	400	8'	40'
13	B	SR5 235+65.56	236.19'RT	III - MED CUTOFF	400	8'	40'
14	B	SR5 236+55.35	138.00'RT	III - MED CUTOFF	400	8'	40'
15	B	SR5 238+55.78	113.00'RT	III - MED CUTOFF	400	10'	40'
45	B	SR5 238+96.96	249.37'LT	III - MED CUTOFF	400	10'	40'
46	B	SR5 238+54.92	351.36'LT	III - MED CUTOFF	400	10'	40'
61	B	SR5 234+11.42	103.64'RT	III - MED CUTOFF	400	16'	40'

1

EXISTING LUMINAIRE SCHEDULE — SERVICE NO. SCA 827

LUMINAIRE NUMBER	CIRCUIT	LOCATION STATION	LOCATION OFFSET	TYPE - DISTRIBUTION	WATTAGE CLASS	MAST ARM	H1
31	C	SR5 261+27.40	95.04'LT	III - MED CUTOFF	400	16'	40'
32	C	SR5 259+32.35	109.14'LT	III - MED CUTOFF	400	16'	40'
33	C	SR5 253+64.85	127.76'LT	III - MED CUTOFF	400	16'	40'
34	C	SR5 251+09.74	142.11'LT	III - MED CUTOFF	400	16'	40'
35	C	SR5 240+43.84	494.49'LT	III - MED CUTOFF	400	10'	40'
37	C	SR5 242+44.71	117.53'LT	III - MED CUTOFF	400	8'	40'
38	C	SR5 244+73.25	152.74'LT	III - MED CUTOFF	400	8'	40'
39	C	SR5 245+14.96	219.22'LT	III - MED CUTOFF	400	8'	40'
40	C	SR5 245+04.46	313.49'LT	III - MED CUTOFF	400	8'	40'
41	C	SR5 243+89.62	398.69'LT	III - MED CUTOFF	400	10'	40'
42	C	SR5 240+69.54	374.55'LT	III - MED CUTOFF	400	10'	40'
43	C	SR5 240+01.12	272.97 LT	III - MED CUTOFF	400	10'	40'
44	C	SR5 240+59.41	128.54'LT	III - MED CUTOFF	400	12'	40'
58	C	SR5 246+78.64	108.42'LT	III - MED CUTOFF	400	16'	40'
59	C	SR5 248+89.05	114.03'LT	III - MED CUTOFF	400	16'	40'
16	D	SR5 241+10.95	117.06'RT	III - MED CUTOFF	400	-	40'
17	D	SR5 242+38.50	132.74'RT	III - MED CUTOFF	400	8'	40'
18	D	SR5 243+42.17	191.16'RT	III - MED CUTOFF	400	8'	40'
19	D	SR5 243+81.21	301.93'RT	III - MED CUTOFF	400	8'	40'
20	D	SR5 243+20.03	408.91 RT	III - MED CUTOFF	400	8'	40'
21	D	SR5 242+39.29	464.74'RT	III - MED CUTOFF	400	8'	40'
22	D	SR5 241+15.41	456.91'RT	III - MED CUTOFF	400	8'	40'
23	D	SR5 240+33.56	369.99'RT	III - MED CUTOFF	400	8'	40'
24	D	SR5 244+44.00	102.63'RT	III - MED CUTOFF	400	16'	40'
25	D	SR5 246+48.40	106.51'RT	III - MED CUTOFF	400	16'	40'
26	D	SR5 248+63.46	135.22'RT	III - MED CUTOFF	400	16'	40'
27	D	SR5 250+68.29	121.75'RT	III - MED CUTOFF	400	16'	40'
28	D	SR5 252+92.41	101.96'RT	III - MED CUTOFF	400	16'	40'
29	D	SR5 255+22.60	86.59'RT	III - MED CUTOFF	400	16'	40'
30	D	SR5 257+57.87	79.18'RT	III - MED CUTOFF	400	16'	40'
30A	D	SR5 260+05.17	73.14'RT	III - MED CUTOFF	400	16'	40'
30B	D	SR5 262+49.96	65.08'RT	III - MED CUTOFF	400	16'	40'
D4	D	SR5 245+25.28	320.56'RT	III - MED CUTOFF	400	16'	40'
D5	D	SR5 246+95.16	180.60'RT	III - MED CUTOFF	400	16'	40'
-	D	SR5 239+85.80	749.46'RT	III - MED CUTOFF	400	16'	40'

AS-BUILT

ATKINSON
DEC 09 2019 KTW
RELEASED FOR CONSTRUCTION

FILE NAME	c:\pwworking\jacobs_b&i\jeg_stevenj\dms20633\PS_ILN02.dgn
TIME	2:45:46 PM
DATE	12/2/2019
PLOTTED BY	STEVENJ
DESIGNED BY	K. POURBAHRI
ENTERED BY	G. TANG
CHECKED BY	B. BARTON
PROJ. ENGR.	C. MEADE
REGIONAL ADM.	J. WYNANDS

REVISION	DATE	BY
REV 1 - RFC, C.O. 4TH LANE SB	12/06/19	
REV D - FINAL REVIEW - C.O. 4TH LANE SB	11/08/19	
REV 0 - RELEASED FOR CONSTRUCTION	04/02/19	
REV C - FINAL REVIEW - BERKELEY	03/13/19	
REV B - FINAL REVIEW	02/11/19	
REV A - PRELIMINARY REVIEW	11/15/18	

REGION NO. 10 | STATE WASH | FED.AID PROJ.NO.
JOB NUMBER
CONTRACT NO. C9133 | LOCATION NO.

P.E. STAMP BOX — DATE 12-9-19
P.E. STAMP BOX — DATE

Washington State Department of Transportation
ATKINSON CONSTRUCTION / JACOBS

I-5
STEILACOOM-DUPONT RD TO THORNE LN
CORRIDOR IMPROVEMENTS
MP 120.01 TO MP 124.45

ILLUMINATION SCHEDULES

PLAN REF NO ILN02
SHEET 903 OF 1456 SHEETS

LUMINAIRE SCHEDULE — SERVICE NO. SCA 188

LUMINAIRE NUMBER	CIRCUIT	LOCATION STATION		LOCATION OFFSET	TYPE - DISTRIBUTION	WATTAGE CLASS	MAST ARM	H1	BASE TYPE	*FOUNDATION TYPE	**ADDITIONAL EMBEDMENT	COMMENTS
E1	C	SR5	315+06.0	75.5' LT	III - MED CUTOFF	400	16 FT	40 FT	SLIP	A	-	
E2	C	SR5	316+56.0	75.0' LT	III - MED CUTOFF	400	16 FT	40 FT	SLIP	A	-	
E3	C	BXML	12+59.0	25.5' LT	III - MED CUTOFF	400	12 FT	40 FT	FIXED	B	4FT	
E4	C	BXML	14+20.5	26.0' LT	III - MED CUTOFF	400	12 FT	40 FT	FIXED	B	-	
E5	C	BXML	15+85.0	32.0' LT	III - MED CUTOFF	400	12 FT	30 FT	BARRIER	-	-	INSTALL PER RETAINING WALL PLANS
E6	C	BXML	17+29.5	37.0' RT	III - MED CUTOFF	400	12 FT	30 FT	BARRIER	-	-	INSTALL PER RETAINING WALL PLANS
E7	C	BXML	18+80.5	37.0' LT	III - MED CUTOFF	400	12 FT	30 FT	BARRIER	-	-	INSTALL PER RETAINING WALL PLANS
E8	A	MRBX	12+08.0	34.0' RT	III - MED CUTOFF	400	16 FT	40 FT	FIXED	A	-	
E9	A	MRBX	13+58.0	25.5' RT	III - MED CUTOFF	400	16 FT	40 FT	FIXED	B	-	
E10	J	SR5	332+63.0	74.0' LT	III - MED CUTOFF	400	12 FT	40 FT	BARRIER	-	-	ON TRAFFIC SIGNAL POLE
E11	J	SR5	333+55.5	171.0' LT	III - MED CUTOFF	400	8 FT	40 FT	BARRIER	-	-	ON TRAFFIC SIGNAL POLE
E12	A	MRBXE	10+81.5	14.5' LT	III - MED CUTOFF	400	16 FT	40 FT	FIXED	A	-	
E13	J	BXW	299+74.0	31.0' LT	III - MED CUTOFF	400	16 FT	40 FT	BARRIER	-	-	ON TRAFFIC SIGNAL POLE
E14	J	BXWMR	11+15.5	36.0' LT	III - MED CUTOFF	400	16 FT	40 FT	SLIP	A	-	
E15	B	BXMR	12+62.5	44.5' RT	III - MED CUTOFF	400	12 FT	40 FT	SLIP	B	-	
E16	B	BXMR	14+67.0	44.5' RT	III - MED CUTOFF	400	12 FT	40 FT	FIXED	B	-	
E17	B	BXMR	16+74.5	53.0' RT	III - MED CUTOFF	400	12 FT	40 FT	SLIP	B	-	
E18	B	BXMR	18+46.0	40.0' RT	III - MED CUTOFF	400	12 FT	40 FT	SLIP	B	-	
E19	B	BXMR	20+18.5	30.0' RT	III - MED CUTOFF	400	12 FT	40 FT	SLIP	B	-	
E20	B	BXMR	23+89.0	30.5' RT	III - MED CUTOFF	400	16 FT	40 FT	SLIP	A	-	
E21	B	SR5	348+51.0	83.0' RT	III - MED CUTOFF	400	16 FT	40 FT	SLIP	A	-	

NOTES:
*SEE WSDOT STANDARD PLANS J-28.30-03 FOR TYPE A AND B FOUNDATION DEPTH.
**ADDITIONAL EMBEDMENT DEPTH SHALL BE ADDED TO STANDARD PLAN FOUNDATION DEPTH.

LUMINAIRE SCHEDULE — SERVICE NO. CITY OF LAKEWOOD

LUMINAIRE NUMBER	CIRCUIT	LOCATION STATION		LOCATION OFFSET	TYPE - DISTRIBUTION	LED WATTAGE	MAST ARM	H1	BASE TYPE	*FOUNDATION TYPE	**ADDITIONAL EMBEDMENT	COMMENTS
LS1	A	BXW	295+61.5	24.0' LT	III - MED CUTOFF	176	8 FT	35 FT	BARRIER	-	-	INSTALL PER BRIDGE PLANS
LS2	A	BXW	294+14.5	18.5' LT	III - MED CUTOFF	176	8 FT	35 FT	BARRIER	-	-	INSTALL PER BRIDGE PLANS
LS3	A	BXW	292+70.5	18.5' LT	III - MED CUTOFF	176	8 FT	35 FT	BARRIER	-	-	INSTALL PER RETAINING WALL PLANS
LS4	A	BXW	291+45.5	20.0' LT	III - MED CUTOFF	176	8 FT	35 FT	BARRIER	-	-	INSTALL PER ST08 DETAILS
LS5	A	BXW	290+03.0	29.0' LT	III - MED CUTOFF	176	8 FT	35 FT	FIXED	-	-	CITY OF LAKEWOOD STANDARD IS-11
LS6	A	BXW	288+66.0	29.0' LT	III - MED CUTOFF	176	8 FT	35 FT	FIXED	-	-	CITY OF LAKEWOOD STANDARD IS-11
LS7	A	BXW	287+22.0	21.5' LT	III - MED CUTOFF	176	6 FT	35 FT	FIXED	-	-	CITY OF LAKEWOOD STANDARD IS-11
LS8	A	BXB	11+08.5	17.5' LT 5	III - MED CUTOFF	176	8 FT	35 FT	FIXED	-	-	CITY OF LAKEWOOD STANDARD IS-11
LS9	B	BK	95+67.0	26.5' LT	III - MED CUTOFF	176	6 FT	35 FT	FIXED	-	-	CITY OF LAKEWOOD STANDARD IS-11
LS10	B	UA	201+24.5	30.6' LT	III - MED CUTOFF	176	8 FT	35 FT	FIXED	-	-	CITY OF LAKEWOOD STANDARD IS-11
LS11	B	BK	99+48.0	54.0' RT	III - MED CUTOFF	159	8 FT	35 FT	FIXED	-	-	CITY OF LAKEWOOD STANDARD IS-11
LS12	B	BK	99+62.0	55.0' LT	III - MED CUTOFF	159	8 FT	35 FT	FIXED	-	-	CITY OF LAKEWOOD STANDARD IS-11
LS13	B	UA	200+03.5	68.0' RT	III - MED CUTOFF	159	8 FT	35 FT	FIXED	-	-	CITY OF LAKEWOOD STANDARD IS-11

LUMINAIRE SCHEDULE — SERVICE NO. SCA 355

LUMINAIRE NUMBER	CIRCUIT	LOCATION STATION		LOCATION OFFSET	TYPE - DISTRIBUTION	WATTAGE CLASS	MAST ARM	H1	BASE TYPE	*FOUNDATION TYPE	**ADDITIONAL EMBEDMENT	COMMENTS
G9	A	SR5	422+50.5	75.50 LT	III - MED CUTOFF	400	12 FT	40 FT	SLIP	A	-	
G10	A	SR5	424+25.0	81.50 LT	III - MED CUTOFF	400	12 FT	40 FT	FIXED	A	-	
G11	B	SR5	424+11.0	92.00 RT	III - MED CUTOFF	400	12 FT	40 FT	SLIP	A	-	
G12	B	SR5	425+61.0	102.00 RT	III - MED CUTOFF	400	12 FT	40 FT	SLIP	A	-	

NOTES:
*SEE WSDOT STANDARD PLANS J-28.30-03 FOR TYPE A AND B FOUNDATION DEPTH.

AS-BUILT

ATKINSON
JUN 10 2020 RSA
RELEASED FOR CONSTRUCTION

FILE NAME	c:\pwworking\jacobs_b&i\jeg_stevenj\dms20633\PS_ILN03.dgn			
TIME	6:38:28 AM	REV 6 - RFC, RFI0474	06/10/20	
DATE	6/9/2020	REV 5 - RFC, RFI0432	03/25/20	
PLOTTED BY	STEVENJ	REV 4 - RFC, RFI0379	02/19/20	
DESIGNED BY	K. POURBAHRI	REV 3 - RFC, RFI0307 AND RFI0315	12/13/19	
ENTERED BY	G. TANG	REV 2 - RELEASE OF NFC, THORNE	09/27/19	
CHECKED BY	B. BARTON	REV 1 - RFC, RFI0172	08/16/19	
PROJ. ENGR.	C. MEADE	REV B - FINAL REVIEW - THORNE	07/17/19	
REGIONAL ADM.	J. WYNANDS	REVISION	DATE	BY

REGION NO. 10 — STATE WASH — FED.AID PROJ.NO.
JOB NUMBER
CONTRACT NO. C9133 — LOCATION NO.

BRIDGETTE M. BARTON — STATE OF WASHINGTON — 45623 — REGISTERED PROFESSIONAL ENGINEER
6-10-20
DATE
P.E. STAMP BOX

DATE
P.E. STAMP BOX

Washington State Department of Transportation
ATKINSON CONSTRUCTION / JACOBS

I-5
STEILACOOM-DUPONT RD TO THORNE LN
CORRIDOR IMPROVEMENTS
MP 120.01 TO MP 124.45

ILLUMINATION SCHEDULES

PLAN REF NO ILN03
SHEET 904 OF 1456 SHEETS

CONSTRUCTION NOTES:

1. CONSTRUCT SLIP BASE FOUNDATION AND INSTALL LIGHT STANDARD PER WSDOT STANDARD PLAN J-28.22-00. INSTALL NEW LED FIXTURE. SEE LUMINAIRE SCHEDULE.
2. CONSTRUCT FOUNDATION AND INSTALL LIGHT STANDARD ON BARRIER PER DETAIL SHEET ST07. INSTALL NEW LED FIXTURE. SEE LUMINAIRE SCHEDULE.
3. REMOVE EXISTING LIGHT STANDARD, LUMINAIRE, AND FOUNDATION IN ITS ENTIRETY. BACKFILL VOID.
4. LUMINAIRE POLE TO REMAIN. REPLACE HPS FIXTURE WITH NEW 400W CLASS LED FIXTURE. INSTALL NEW FUSE PER SPECIAL PROVISIONS. REMOVE AND REPLACE POLE AND BRACKET CABLE.
5. SEE ITS PLANS FOR TRANSFORMER LOAD SIDE CONDUIT AND WIRING.
6. REMOVE EXISTING JUNCTION BOX, CONDUIT SWEEPS AND UNUSED WIRING. ABANDON UNUSED CONDUIT. BACKFILL VOID.
7. EXTEND NEW CONDUIT TO EXISTING JUNCTION BOX. SPLICE NEW CIRCUIT A ILLUMINATION CONDUCTORS TO EXISTING CIRCUIT A CONDUCTORS PER WSDOT STD SPECIFICATION 9-29.12(1).
8. EXTEND NEW CONDUIT TO EXISTING JUNCTION BOX. SPLICE NEW CIRCUIT B ILLUMINATION CONDUCTORS TO EXISTING CIRCUIT B CONDUCTORS PER WSDOT STD SPECIFICATION 9-29.12(1).
9. REMOVE EXISTING JUNCTION BOX, CONDUIT SWEEPS, CONDUIT AND UNUSED WIRING.
10. EXTEND NEW CONDUIT TO EXISTING JUNCTION BOX.
11. REPLACE EXISTING TYPE 1 JUNCTION BOX WITH PULL BOX.
12. EXTEND NEW CONDUIT TO EXISTING JUNCTION BOX. SPLICE NEW CIRCUIT H ITS CONDUCTORS TO EXISTING H ITS ILLUMINATION CONDUCTORS PER WSDOT STD SPECIFICATION 9-29.12(1).
13. UTILIZE EXISTING SPARE CONDUIT FOR NEW CONDUCTORS. SEE WIRING SCHEDULE.
14. EXTEND NEW CONDUIT TO EXISTING JUNCTION BOX. SPLICE EXISTING CIRCUIT I ITS CONDUCTORS TO NEW CIRCUIT I ITS CONDUCTORS IN EXISTING JUNCTION BOX PER WSDOT STD SPECIFICATION 9-29.12(1).
15. EXTEND CONDUIT TO EXISTING JUNCTION BOX. SPLICE EXISTING CIRCUIT F ITS CONDUCTORS TO NEW CIRCUIT F CONDUCTORS PER WSDOT STD SPECIFICATION 9-29.12(1).
16. PROVIDE ONE (1) 2" PVC SCHEDULE 80 CONDUIT IN SIGN STRUCTURE FOUNDATION PER FOUNDATION DETAILS (SB SHEETS). TERMINATE CONDUIT IN TYPE 1 JUNCTION BOX LOCATED A MAXIMUM OF FIVE (5) FEET FROM THE SIGN STRUCTURE FOUNDATION. CAP EACH CONDUIT END.
17. INSTALL CONDUIT UNDER ROADWAY USING APPROVED DIRECTIONAL BORING METHODS.
18. ROUTE CONDUIT BETWEEN FIRE HYDRANT AND WATER VALVE. SEE DETAIL SHEET UT27 FOR UTILITY OFFSETS.
19. REMOVE EXISTING CONDUIT SWEEPS AND FOUNDATION IN ITS ENTIRETY. BACKFILL VOID.
20. REPLACE EXISTING TYPE 1 JUNCTION BOX WITH TYPE 2 JUNCTION BOX.
21. REPLACE EXISTING TYPE 2 JUNCTION BOX WITH TYPE 8 JUNCTION BOX.
22. DISCONNECT AND PULL EXISTING SERVICE CONDUCTORS BACK TO JUNCTION BOX. RE-PULL CONDUCTORS THROUGH CONDUIT AS INDICATED IN WIRING SCHEDULE. TERMINATE PER BREAKER SCHEDULE IN SERVICE CABINET. TERMINATE NEW ITS TRANSFORMER CONDUCTORS TO EXISTING SPARE BREAKER SPACES.
23. DISCONNECT TRANSFORMER POWER CONDUCTORS FROM EXISTING TRANSFORMER. COIL AND PROTECT DURING TRANSFORMER REPLACEMENT ON EXISTING PAD. RETERMINATE IN NEW TRANSFORMER.

CONSTRUCTION NOTES:

24. REMOVE EXISTING SERVICE CABINET AFTER NEW SERVICE CABINET IS INSTALLED AND OPERATIONAL. SALVAGE PER RFP REQUIREMENTS. REMOVE PAD IN ITS ENTIRETY. REMOVE CONDUIT SWEEPS, ABANDON EXISTING CONDUIT AND CAP CONDUIT ENDS.
25. CONSTRUCT PAD PER WSDOT STANDARD PLAN J-10.10-03 AND INSTALL TYPE E SERVICE CABINET, 240/480V. SEE BREAKER SCHEDULE. SEE SHEET TSD37 FOR SHARED PAD AND GRADING DETAILS.
26. INSTALL LED FIXTURE ON SIGNAL POLE. SEE SIGNAL PLANS. SEE LUMINAIRE SCHEDULE.
27. LOCATE JUNCTION BOX WITHIN RIGHT-OF-WAY.
28. CONSTRUCT FIXED BASED FOUNDATION AND INSTALL LIGHT STANDARD PER WSDOT STANDARD PLAN J-28.24-01. INSTALL NEW LED FIXTURE. SEE LUMINAIRE SCHEDULE.
29. CONSTRUCT FOUNDATION AND INSTALL LIGHT STANDARD PER DETAIL SHEET ST41. INSTALL NEW LED FIXTURE. SEE LUMINAIRE SCHEDULE.
30. REMOVE EXISTING LUMINAIRE FROM TRAFFIC SIGNAL POLE. SEE SIGNAL PLANS.
31. CONSTRUCT FOUNDATION AND INSTALL CITY OF LAKEWOOD LIGHT STANDARD ON BARRIER PER BRIDGE PLANS DETAILS. INSTALL NEW LED FIXTURE. SEE LUMINAIRE SCHEDULE.
32. CONDUIT ROUTING THROUGH TOPPING SLAB PER DETAIL SHEET TS14C.
33. LUMINAIRE POLE TO REMAIN. PROTECT IN PLACE.
34. CONSTRUCT FOUNDATION AND INSTALL LIGHT STANDARD PER CITY OF LAKEWOOD STANDARD PLANS IS-09. INSTALL LED FIXTURE. SEE LUMINAIRE SCHEDULE.
35. CONSTRUCT FOUNDATION PER CITY OF LAKEWOOD STANDARD PLAN IS-07 AND INSTALL TYPE TESCO 27-000 SERVICE PEDESTAL PER CITY OF LAKEWOOD STANDARDS. SEE BREAKER SCHEDULE.
36. REMOVE EXISTING TRANSFORMER. REMOVE PAD IN ITS ENTIRETY. REMOVE CONDUIT SWEEPS, ABANDON EXISTING CONDUIT AND CAP CONDUIT ENDS.
37. CONSTRUCT FOUNDATION AND INSTALL LIGHT STANDARD ON BARRIER PER DETAIL ON RETAINING WALL PLANS. INSTALL NEW LED FIXTURE. SEE LUMINAIRE SCHEDULE.
38. CONSTRUCT PAD AND INSTALL TYPE B MODIFIED SERVICE CABINET, 120/240V, PER WSDOT STANDARD PLAN J-10.20-02. SEE BREAKER SCHEDULE.
39. CONSTRUCT FOUNDATION AND INSTALL LIGHT STANDARD ON BARRIER PER DETAIL SHEET ST08. INSTALL NEW LED FIXTURE. SEE LUMINAIRE SCHEDULE.
40. CONSTRUCT FOUNDATION AND INSTALL LIGHT STANDARD ON BARRIER PER DETAIL ON BRIDGE PLANS. INSTALL NEW LED FIXTURE. SEE LUMINAIRE SCHEDULE.
41. TERMINATE SPARE CONDUIT AT LOAD SIDE OF TRANSFORMER.
42. CONSTRUCT FOUNDATION AND INSTALL CITY OF LAKEWOOD LIGHT STANDARD ON BARRIER PER WALL DETAILS. INSTALL NEW LED FIXTURE. SEE LUMINAIRE SCHEDULE.
43. EXISTING LIGHT FIXTURE AND MAST ARM TO BE REMOVED FROM UTILITY POLE BY OTHERS.
44. FROM NEMA JUNCTION BOX, ROUTE CONDUIT DOWN AT 45 DEGREES THROUGH BRIDGE DECK. MOUNT CONDUIT TO BOTTOM OF BRIDGE DECK PER BERKELEY OVERPASS BRIDGE PLANS.
45. CONSTRUCT FOUNDATION AND INSTALL CITY OF LAKEWOOD LIGHT STANDARD PER DETAIL SHEET ST08. INSTALL LED FIXTURE. SEE LUMINAIRE SCHEDULE.
46. EXISTING LIGHT FIXTURE AND MAST ARM ON UTILITY POLE TO REMAIN. PROTECT IN PLACE.
47. LIGHT FIXTURE AND MAST ARM ON UTILITY POLE TO BE INSTALLED BY OTHERS.
48. REMOVE EXISTING SIGN LIGHTER FIXTURES FROM EXISTING OVERHEAD SIGNS AND ALL ASSOCIATED CONDUCTORS.
49. COIL SERVICE FEEDER CONDUCTORS AT METER BASE. UTILITY COMPANY TO COMPLETE CONDUIT AND CONDUCTOR TERMINATION AT SERVICE POINT. COORDINATE INSTALLATION OF NEW SERVICE WITH UTILITY COMPANY, THROUGH THE ENGINEER.

CONSTRUCTION NOTES:

50. LUMINAIRE POWERED FROM 005-XF-12362, INSTALL PHOTOCELL ON LUMINAIRE IN PLACE OF SHORTING CAP.
51. CONSTRUCT FOUNDATION AND INSTALL LIGHT STANDARD ON BARRIER PER DETAIL SHEET NW35B. INSTALL NEW LED FIXTURE. SEE LUMINAIRE SCHEDULE.
52. CONSTRUCT FIXED BASE FOUNDATION PER WSDOT STANDARD PLAN J-28.24-01. INSTALL CITY OF LAKEWOOD POLE AND ANCHOR BOLTS PER CITY OF LAKEWOOD STANDARD PLAN IS-09. INSTALL NEW LED FIXTURE. SEE LUMINAIRE SCHEDULE.
53. INSTALL CONDUIT(S) 10 FEET UP UTILITY POLE. COIL SERVICE FEEDER CONDUCTORS AT TOP OF CONDUIT. UTILITY COMPANY TO COMPLETE CONDUIT AND CONDUCTOR TERMINATION AT SERVICE POINT. PROVIDE REQUIRED CONDUIT, STANDOFFS, STRAPS AND WEATHERHEAD TO UTILITY. COORDINATE INSTALLATION OF NEW SERVICE WITH UTILITY COMPANY THROUGH THE ENGINEER.
54. LOCATE JUNCTION BOX AT LEAST 50 FEET FROM THE LOW POINT OF THE INFIELD.
55. TERMINATE POWER CONDUCTORS AT RRFB CONTROL CABINET. SEE SG SHEETS FOR DETAILS.
56. LUMINAIRE POWERED FROM 005-XF-12006. INSTALL PHOTOCELL ON LUMINAIRE IN PLACE OF SHORTING CAP.
57. REMOVE EXISTING LIGHT STANDARD FROM FOUNDATION. RELOCATE LIGHT STANDARD TO LOCATION SHOWN, PER LUMINAIRE SCHEDULE. CONSTRUCT FOUNDATION PER CITY OF LAKEWOOD STANDARD PLAN IS-09.
58. LOCATE CONDUIT AND JUNCTION BOX IN PLANTER STRIP.
59. EXTEND NEW CONDUIT TO EXISTING JUNCTION BOX SPLICE NEW CIRCUIT D ILLUMINATION CONDUCTORS TO EXISTING ILLUMINATION CONDUCTORS PER WSDOT STANDARD SPECIFICATION 9-29.12(1).
60. EXISTING JUNCTION BOX AND CONDUIT ROUTING TO REMAIN. PROTECT IN PLACE.
61. PROVIDE ONE (1) 2" PVC SCHEDULE 80 CONDUIT IN SIGN STRUCTURE FOUNDATION PER FOUNDATION DETAILS (BB SHEETS). TERMINATE CONDUIT IN THE ADJACENT ITS NEMA BOX (NB21). CAP EACH CONDUIT END.
62. CONDUITS IN THIS RUN THAT HAVE CONDUCTORS IN THEM MUST BE INSTALLED BY DIRECTIONAL BORE BENEATH THE EXISTING ROAD BEFORE FILL IS INSTALLED FOR NEW RAMP. THOSE CONDUITS WILL BE APPROX. 20 FEET DEEP UNDER THE FILL. SPARE CONDUITS IN THIS RUN SHALL BE INSTALLED IN THE FILL AT SIX FEET DEEP UNDER THE NEW RAMP.
63. INSTALL TYPE EUSERC 308 METER PEDESTAL AND METER PER PSE COMMERCIAL HANDBOOK REQUIREMENTS. INSTALL SINGLE MAIN BREAKER IN PLACE OF LOAD CENTER IN BOTTOM OF PEDESTAL. BREAKER SIZE SHALL MATCH THE MAIN BREAKER SIZE IN SERVICE CABINET SCA 187. METER PEDESTAL SHALL BE PLACED A MINIMUM OF 10 FEET FROM UTILITY POLE PER PSE REQUIREMENTS.
64. CONSTRUCT A 4 FEET WIDE ITS/ILLUMINATION ACCESS PATH WITH 0.5 FOOT DEEP CRUSHED SURFACING BASE COURSE (CSBC). PATH SHALL EXTEND FROM MAINTENANCE PULLOUT TO METER PEDESTAL AND PSE POLE.
65. INTERCEPT EXISTING CONDUIT. SPLICE EXISTING CIRCUIT B ILLUMINATION CONDUCTORS TO NEW CIRCUIT B ILLUMINATION CONDUCTORS PER WSDOT STD SPECIFICATION 9-29.12(1).

11

66. RELOCATE EXISTING JUNCTION BOX TO LOCATION OUTSIDE OF NEW GUARDRAIL INSTALLATION.

ATKINSON
AUG 28 2020 KTW
RELEASED FOR CONSTRUCTION

AS-BUILT

FILE NAME	c:\pwworking\jacobs_b&i\bartonbm\dms20633\PS_ILN04.dgn						
TIME	4:56:15 PM	REV 11 - RFC, RFI0507	08/28/20		REGION NO. 10	STATE WASH	FED.AID PROJ.NO.
DATE	8/27/2020	REV 10 - RFC, RFI0456	05/22/20				
PLOTTED BY	bartonbm	REV 9 - RFC, RFI0438 AND RFI0448	04/14/20		JOB NUMBER		
DESIGNED BY	K. POURBAHRI	REV 8 - RFC, RFI0328	01/24/20				
ENTERED BY	K. POURBAHRI	REV 7 - RFC, RFI0265, RFI0307 AND RFI0315	12/13/19				
CHECKED BY	B. BARTON	REV 6 - RFC, C.O. 4TH LANE SB	12/06/19		CONTRACT NO. C9133		LOCATION NO.
PROJ. ENGR.	C. MEADE	REV E - FINAL REVIEW - C.O. 4TH LANE SB	11/08/19				
REGIONAL ADM.	J. WYNANDS	REVISION	DATE	BY			

REGOASIE M. BARTON, STATE OF WASHINGTON, 46929, REGISTERED PROFESSIONAL ENGINEER
8-28-20
DATE
P.E. STAMP BOX

DATE
P.E. STAMP BOX

Washington State Department of Transportation

ATKINSON CONSTRUCTION / JACOBS

I-5
STEILACOOM-DUPONT RD TO THORNE LN
CORRIDOR IMPROVEMENTS
MP 120.01 TO MP 124.45

ILLUMINATION CONSTRUCTION NOTES

PLAN REF NO
ILN04

SHEET 905 OF 1456 SHEETS

WIRING SCHEDULE — SERVICE NO. SCA 827

NO.	CONDUIT SIZE	CONDUCTORS EXISTING	CONDUCTORS NEW	CIRCUIT	COMMENTS
D1	2" SCH 80		2-#8	TA	IL, XF-12006
D2	EX 2"	2-#6 (R)	2-#4	E	ITS
D3	2" SCH 80		2-#8	A	ILLUMINATION
			2-#4	E	ITS
D4	EX 2"	2-#6 (R)	2-#4	F	ITS
D5	2" SCH 80		2-#6	K	ITS
			2-#4	E	ITS
D6	EX 1 1/4"	2-#8		A	ILLUMINATION
		2-#6 (R)		E	ITS
D7	EX 2 1/ 2 "	2-#4		M	SIGNAL
			2-#2/0	J	ITS
			2-#6	K	ITS
			2-#2	L	ITS
D8	EX 2"	2-#6		G	ITS
D10	EX 1 1/4"	2-#8		A	ILLUMINATION
		2-#6 (R)		E	ITS
		2-#6		G	ITS
D11	2" SCH 80		2-#2/0	J	ITS
D12	1" SCH 80		2-#8	B	ILLUMINATION
D13	3" SCH 80		2-#6	B	ILLUMINATION
			2-#2/0	J	ITS
D14	EX 1 1/4"	2-#6		B	ILLUMINATION
D15	2" SCH 80		2-#6	B	ILLUMINATION
D16	EX 2"	2-#6		H	ITS
D17	EX 2"	2-#6		B	ILLUMINATION
		2-#6		H	ITS
			2-#2/0	J	ITS
D18	NOT USED				
D19	1" SCH 80		2-#8	C	ILLUMINATION
D20	2" SCH 80		2-#8	C	ILLUMINATION
D21	EX 1 1/4"	2-#8		C	ILLUMINATION
		2-#6 (R)	2-#4	F	ITS
D22	EX 2"	2-#6 (R)	2-#4	F	ITS
D23	2" SCH 80				SPARE
D24	EX 2"	2-#8		C	ILLUMINATION
		2-#8 (R)	2-#4	F	ITS
D25	2" SCH 80		2-#2	L	ITS
D26	EX 2"		2-#2/0	J	ITS
			2-#2	L	ITS
D27	EX 2"		2-#4	I	ITS
D28	EX 2"	2-#4		I	ITS
			2-#2	L	ITS
D29	EX 2"	2-#6		B	ILLUMINATION
		2-#6		D	ILLUMINATION
		2-#6		H	ITS
		2-#4		I	ITS
			2-#2	L	ITS
D30	EX 1 1/2"	2-#8		A	ILLUMINATION
		2-#6		B	ILLUMINATION
		2-#8		C	ILLUMINATION
		2-#6		D	ILLUMINATION
D31	EX 1 1/4"		2-#4	E	ITS
			2-#4	F	ITS
D32	1" SCH 80		2-#8	TA	IL, XF-12006
D33	EX 2"	2-#6		G	ITS
		2-#6		H	ITS
		2-#4		I	ITS
D34	EX 2"				SPARE
D35	EX 2"		2-#2	L	ITS
D36	3" SCH 80		2-#2/0	J	ITS
			2-#6	K	ITS
			2-#2	L	ITS
D37	EX 2"	2-#6		D	ILLUMINATION
		2-#4		I	ITS
			2-#2	L	ITS

(R) = REMOVE

WIRING SCHEDULE — SERVICE NO. SCA 188

NO.	CONDUIT SIZE	CONDUCTORS EXISTING	CONDUCTORS NEW	CIRCUIT	COMMENTS
E1	2" SCH 80		2-#8	C	ILLUMINATION
E2	2" SCH 80		2-#8	F	ITS
E3	2" SCH 80		2-#8	C	ILLUMINATION
			2-#8	F	ITS
E4	2" SCH 80		2-#2	D	ITS
E5	1" SCH 80		2-#8	A	ILLUMINATION
E6	2" SCH 80		2-#2	D	ITS
			2-#8	A	ILLUMINATION
E7	2" SCH 80		2-#8	E	ITS
E8	2" SCH 80		2-#2	D	ITS
			2-#8	A	ILLUMINATION
			2-#8	E	ITS
E9	3" SCH 80		2-#8	C	ILLUMINATION
			2-#8	F	ITS
			2-#2	D	ITS
			2-#8	A	ILLUMINATION
			2-#8	E	ITS
E10	2" SCH 80		2-#8	G	ITS
E11	3" SCH 80		2-#8	C	ILLUMINATION
			2-#8	F	ITS
			2-#2	D	ITS
			2-#8	A	ILLUMINATION
			2-#8	E	ITS
			2-#8	J	ILLUMINATION
E12	1" SCH 80		2-#8	B	ILLUMINATION
E13	3" SCH 80		2-#2	D	ITS
			2-#8	E	ITS
			2-#8	F	ITS
			2-#8	G	ITS
			2-#6	H	ITS
E14	2" SCH 80		2-#6	H	ITS
E15	2" SCH 80		2-#8	B	ILLUMINATION
			2-#6	H	ITS
E16	2" RGS				SPARE
E17	2" SCH 80		2-#8	A	ILLUMINATION
			2-#8	B	ILLUMINATION
			2-#8	C	ILLUMINATION
			2-#8	J	ILLUMINATION
E18	1" SCH 80		2-#8	C	ILLUMINATION
E19	2" SCH 80				SPARE
E20	2" RGS		2-#8	J	ILLUMINATION
E21	2" SCH 80		2-#8	B	ILLUMINATION
E22	2" SCH 80		2-#8	J	ILLUMINATION
E23	1" SCH 80		2-#8	J	ILLUMINATION
E24	2" RGS		2-#8	C	ILLUMINATION
E25	1" RGS		2-#8	C	ILLUMINATION
E26	2" RGS		2-#8	C	ILLUMINATION
			2-#8	F	ITS
			2-#8	J	ILLUMINATION
E27	1" RGS		2-#8	J	ILLUMINATION
E28	3" SCH 80		3-#3/0		SERVICE FEED

NOTES:

1. ALL CONDUITS, INCLUDING SPARES, SHALL HAVE AN EQUIPMENT GROUNDING CONDUCTOR SIZED IN ACCORDANCE WITH THE NEC, MINIMUM #8 AWG.

2. IF CONDUCTORS ARE TOO LARGE FOR LUGS, IT IS ACCEPTABLE TO SPLICE #8 CONDUCTORS TO THE END IN ACCORDANCE WITH SPLICING REQUIREMENTS IN THE STANDARD SPECIFICATIONS

3. INSTALL 200 POUND MINIMUM TENSILE STRENGTH PULL TAPE IN ALL INSTALLED CONDUITS.

WIRING SCHEDULE — SERVICE NO. SCA 187

NO.	CONDUIT SIZE	CONDUCTORS EXISTING	CONDUCTORS NEW	CIRCUIT	COMMENTS
F1	1" SCH 80		2-#8	A	ILLUMINATION
F2	2" SCH 80		2-#8	A	ILLUMINATION
F3	2" SCH 80		2-#4	C	ITS
F4	2" SCH 80		2-#8	A	ILLUMINATION
			2-#4	C	ITS
F5	1" SCH 80		2-#8	B	ILLUMINATION
F6	2" SCH 80		2-#8	B	ILLUMINATION
F7	2" SCH 80		2-#8	D	ITS
F8	2" SCH 80		2-#8	A	ILLUMINATION
			2-#8	B	ILLUMINATION
			2-#4	C	ITS
F9	2" RGS				SPARE
F10	2" SCH 80				SPARE
F11	3" SCH 80		3-#4/0		SERVICE FEED

WIRING SCHEDULE — EX SERVICE NO. SCA 355

NO.	CONDUIT SIZE	CONDUCTORS EXISTING	CONDUCTORS NEW	CIRCUIT	COMMENTS
G1	1" SCH 80		2-#8	A	ILLUMINATION
G2	2" SCH 80		2-#8	A	ILLUMINATION
G3	1" SCH 80		2-#8	B	ILLUMINATION
G4	2" SCH 80		2-#8	B	ILLUMINATION

WIRING SCHEDULE

LAKEWOOD - N THORNE SERVICE
LAKEWOOD - MURRAY SERVICE

NO.	CONDUIT SIZE	CONDUCTORS EXISTING	CONDUCTORS NEW	CIRCUIT	COMMENTS
L20	1" SCH 80		2-#8	A	ILLUMINATION
L21	2" SCH 80		2-#8	A	ILLUMINATION
L22	2" RGS		2-#8	A	ILLUMINATION
L23	1" RGS		2-#8	A	ILLUMINATION
L24	2" SCH 80				SPARE
L25	2" RGS				SPARE
L26	3" SCH 80		3-#4		SERVICE FEED
L27	2" SCH 80		2-#8	C	RRFB
L28	2" SCH 80		2-#8	C	RRFB
	2" SCH 80	SEE RRFB PLAN SHEET SG13			

11

WIRING SCHEDULE

SERVICE NO.
LAKEWOOD-BERKELEY

NO.	CONDUIT SIZE	CONDUCTORS EXISTING	CONDUCTORS NEW	CIRCUIT	COMMENTS
L1	2" RGS		2-#8	A	ILLUMINATION
L2	2" SCH 80		2-#8	B	ILLUMINATION
L3	2" SCH 80		2-#8	A	ILLUMINATION
			2-#8	B	ILLUMINATION
			2-#8	C	RRFB
			2-#8	D	ILLUMINATION
L4	2" SCH 80				SPARE
L5	2" SCH 80		2-#8	A	ILLUMINATION
L6	2" SCH 80		2-#8	C	RRFB
L7	2" SCH 80		2-#8	B	ILLUMINATION
			2-#8	C	RRFB
L8	2" RGS		3-#4		SERVICE FEED
L9	2" SCH 80		2-#8	B	ILLUMINATION
			2-#8	C	RRFB
			2-#8	D	ILLUMINATION
L10	2" SCH 80		2-#8	B	ILLUMINATION
			2-#8	D	ILLUMINATION
L11	2" SCH 80		2-#8	D	ILLUMINATION

WIRING SCHEDULE — SERVICE NO. SCA 3263

NO.	CONDUIT SIZE	CONDUCTORS EXISTING	CONDUCTORS NEW	CIRCUIT	COMMENTS
H1	1" SCH 80		2-#8	A	ILLUMINATION
H2	2" SCH 80		2-#4	A	ILLUMINATION
H3	1" SCH 80		2-#8	B	ILLUMINATION
H4	2" SCH 80		2-#4	A	ILLUMINATION
			2-#1/0	D	ITS
H5	2" SCH 80		2-#1/0	D	ITS
H6	3" SCH 80		2-#4	A	ILLUMINATION
			2-#6	B	ILLUMINATION
			2-#1/0	D	ITS
H7	2" SCH 80		2-#6	B	ILLUMINATION
H8	2" SCH 80		2-#4	E	SIGNAL
			2-#8	TA	IL, XF-12362
H9	3" RGS		2-#4	A	ILLUMINATION
			2-#6	B	ILLUMINATION
			2-#1/0	D	ITS
			2-#4	E	SIGNAL
H10	3" SCH 80		2-#4	A	ILLUMINATION
			2-#6	B	ILLUMINATION
			2-#1/0	D	ITS
			2-#4	E	SIGNAL
H11	2" RGS		2-#4	A	ILLUMINATION
H12	1" RGS		2-#8	A	ILLUMINATION
H13	2" RGS				SPARE
H14	2" SCH 80				SPARE
H15	2" SCH 80		2-#8	F	ITS
H16	2" SCH 80		2-#4	G	ITS
H17	2" SCH 80		2-#6	C	ILLUMINATION
			2-#4	G	ITS
			2-#4	H1	ITS
H18	1" SCH 80		2-#8	C	ILLUMINATION
H19	2" SCH 80		2-#6	C	ILLUMINATION
			2-#4	H1	ITS
H20	1" RGS		2-#8	C	ILLUMINATION
H21	2" RGS		2-#6	C	ILLUMINATION
			2-#4	H1	ITS
H22	2" SCH 80		2-#4	H1	ITS
H23	2" SCH 80		2-#4	A	ILLUMINATION
			2-#6	B	ILLUMINATION
			2-#6	C	ILLUMINATION
			2-#4	E	SIGNAL
H24	3" SCH 80		2-#4	A	ILLUMINATION
			2-#6	B	ILLUMINATION
			2-#6	C	ILLUMINATION
			2-#1/0	D	ITS
			2-#4	E	SIGNAL
			2-#4	G	ITS
H25	2" SCH 80		2-#1/0	D	ITS
			2-#4	G	ITS
H26	2" SCH 80		2-#8	H	ITS
H27	3" RGS		2-#4	A	ILLUMINATION
			2-#6	B	ILLUMINATION
			2-#1/0	D	ITS
			2-#4	E	SIGNAL
			2-#8	TA	IL, XF-12362
H28	1" RGS		2-#8	TA	IL, XF-12362
H29	3" SCH 80		3-#3/0		SERVICE FEED
H30	2" RGS		2-#4	H1	ITS

AS-BUILT

ATKINSON
SEP 24 2020 KTW
RELEASED FOR CONSTRUCTION

FILE NAME	c:\pwworking\jacobs_b&i\bartonbm\dms20633\PS_ILN05.dgn					
TIME	12:48:15 PM	REV 11 - RFC, RFI0503	09/18/20		REGION NO. 10	STATE WASH
DATE	9/14/2020	REV 10 - RFC, RFI0507 & RFI0508	08/28/20		JOB NUMBER	FED.AID PROJ.NO.
PLOTTED BY	bartonbm	REV 9 - RFC, RFI0456	05/22/20			
DESIGNED BY	K. POURBAHRI	REV 8 - RFC, RFI0315	12/13/19			
ENTERED BY	K. POURBAHRI	REV 7 - RFC, C.O. 4TH LANE SB	12/06/19			
CHECKED BY	B. BARTON	REV D - FINAL REVIEW - C.O. 4TH LANE SB	11/08/19		CONTRACT NO. C9133	LOCATION NO.
PROJ. ENGR.	C. MEADE	REV 6 - RFC, RFI0254 AND RFI0274	10/25/19			
REGIONAL ADM.	J. WYNANDS	REVISION	DATE	BY		

AUGUSTE M. BARTON — STATE OF WASHINGTON — 46623 — REGISTERED PROFESSIONAL ENGINEER
9-23-20
DATE
P.E. STAMP BOX

DATE
P.E. STAMP BOX

Washington State Department of Transportation

ATKINSON CONSTRUCTION / JACOBS

I-5
STEILACOOM-DUPONT RD TO THORNE LN
CORRIDOR IMPROVEMENTS
MP 120.01 TO MP 124.45

ILLUMINATION WIRE NOTES

PLAN REF NO ILN05

SHEET 906 OF 1456 SHEETS

LUMINAIRE SCHEDULE — SERVICE NO. SCA 187

LUMINAIRE NUMBER	CIRCUIT	LOCATION STATION	LOCATION OFFSET	TYPE - DISTRIBUTION	WATTAGE CLASS	MAST ARM	H1	BASE TYPE	*FOUNDATION TYPE	**ADDITIONAL EMBEDMENT	COMMENTS
F1	A	MRTX 300+31.0	38.50' RT	III - MED CUTOFF	400	12 FT	40 FT	SLIP	A	-	
F2	A	MRTX 301+79.0	34.00' RT	III - MED CUTOFF	400	12 FT	40 FT	SLIP	A	-	
F3	A	MRTX 311+08.0	40.00' RT	III - MED CUTOFF	400	12 FT	40 FT	SLIP	A	-	
F4	A	TX 26+52.0	64.50' RT	III - MED CUTOFF	400	12 FT	40 FT	SLIP	A	-	
F5	B	TX 27+82.0	95.00' RT	III - MED CUTOFF	400	12 FT	40 FT	SLIP	A	-	
F6	B	TX 28+29.0	52.00' LT	III - MED CUTOFF	400	12 FT	40 FT	SLIP	B	-	
F7	B	TX 27+41.0	72.50' RT	III - MED CUTOFF	400	12 FT	40 FT	SLIP	B	-	
F8	B	MXTX 35+50.0	43.00' LT	III - MED CUTOFF	400	12 FT	40 FT	SLIP	A	-	
F9	A	MXTX 36+33.0	48.00' RT	III - MED CUTOFF	400	12 FT	40 FT	FIXED	B	-	
F10	A	TX 25+48.0	29.50' RT	III - MED CUTOFF	400	12 FT	40 FT	SLIP	B	-	
F11	B	TX 29+06.0	55.50' RT	III - MED CUTOFF	400	12 FT	40 FT	SLIP	B	-	
F12	B	TX 29+33.0	40.00' LT	III - MED CUTOFF	400	12 FT	40 FT	SLIP	B	-	

LUMINAIRE SCHEDULE — SERVICE NO. SCA 3263

LUMINAIRE NUMBER	CIRCUIT	LOCATION STATION	LOCATION OFFSET	TYPE - DISTRIBUTION	WATTAGE CLASS	MAST ARM	H1	BASE TYPE	*FOUNDATION TYPE	**ADDITIONAL EMBEDMENT	COMMENTS
H1	A	MLMX1 399+40.00	13.50' LT	III - MED CUTOFF	400	12 FT	40 FT	BARRIER	-	-	
H2	A	MLMX1 400+90.00	11.50' LT	III - MED CUTOFF	400	12 FT	40 FT	BARRIER	-	-	
H3	A	MLMX1 402+89.00	10.50' LT	III - MED CUTOFF	400	12 FT	40 FT	BARRIER	-	-	
H4	A	MLMX1 404+39.50	12.50' LT	III - MED CUTOFF	400	12 FT	40 FT	BARRIER	-	-	
H5	A	MLMX2 505+94.00	21.00' RT	III - MED CUTOFF	400	12 FT	40 FT	BARRIER	-	-	
H7	B	MLMX1 417+14.00	12.00' LT	III - MED CUTOFF	400	12 FT	40 FT	FIXED	B	-	
H8	B	MLMX1 419+63.00	12.00' LT	III - MED CUTOFF	400	12 FT	40 FT	FIXED	A	-	
H9	B	MLMX1 425+85.00	12.00' LT	III - MED CUTOFF	400	12 FT	40 FT	FIXED	B	-	
H10	B	MLMX1 427+65.00	12.00' LT	III - MED CUTOFF	400	12 FT	40 FT	FIXED	B	-	
H11	B	MLMX1 429+31.00	12.50' LT	III - MED CUTOFF	400	12 FT	40 FT	FIXED	B	-	
H12	C	TXMR 604+89.0	9.00' RT	III - MED CUTOFF	400	12 FT	40 FT	FIXED	A	-	
H13	C	TXMR 606+40.0	9.00' RT	III - MED CUTOFF	400	12 FT	40 FT	FIXED	A	-	
H14	C	TXMR 608+08.0	15.00' RT	III - MED CUTOFF	400	12 FT	40 FT	BARRIER	-	-	
H15	C	TXMR 609+65.0	10.00' RT	III - MED CUTOFF	400	12 FT	40 FT	BARRIER	-	-	
H16	C	TXMR 611+27.0	8.00' RT	III - MED CUTOFF	400	12 FT	40 FT	BARRIER	-	-	
H17	C	TXMR 613+63.0	11.00' RT	III - MED CUTOFF	400	12 FT	40 FT	BARRIER	-	-	
H18	C	SR5 397+34.0	80.00' RT	III - MED CUTOFF	400	12 FT	40 FT	BARRIER	-	-	

LUMINAIRE SCHEDULE — SERVICE NO. CITY OF LAKEWOOD-THORNE

LUMINAIRE NUMBER	CIRCUIT	LOCATION STATION	LOCATION OFFSET	TYPE - DISTRIBUTION	WATTAGE CLASS	MAST ARM	H1	BASE TYPE	*FOUNDATION TYPE	**ADDITIONAL EMBEDMENT	COMMENTS
LS20	A	TL 12+24.00	15.00' LT	III - MED CUTOFF	176	D8	35 FT	BARRIER	-	-	
LS21	A	TL 13+69.00	15.00' LT	III - MED CUTOFF	176	D8	35 FT	BARRIER	-	-	
LS22	A	TX 21+37.00	33.00' RT	III - MED CUTOFF	159	12 FT	35 FT	BARRIER	-	-	
LS23	A	TL 15+39.00	20.50' LT	III - MED CUTOFF	176	D8	35 FT	FIXED	B	-	CITY OF LAKEWOOD STANDARD, WSDOT FDN
LS24	A	TL 16+75.00	19.00' LT	III - MED CUTOFF	176	D8	35 FT	FIXED	B	-	CITY OF LAKEWOOD STANDARD, WSDOT FDN
LS25	A	TL 18+41.00	23.00' LT	III - MED CUTOFF	159	12 FT	35 FT	FIXED	-	-	CITY OF LAKEWOOD STANDARD IS-09
LS26	A	TL 20+01.00	23.00' LT	III - MED CUTOFF	159	12 FT	35 FT	FIXED	-	-	CITY OF LAKEWOOD STANDARD IS-09
LS27	A	TL 21+71.00	23.00' LT	III - MED CUTOFF	159	12 FT	35 FT	FIXED	-	-	CITY OF LAKEWOOD STANDARD IS-09
LS28	A	TL 23+40.00	23.50' LT	III - MED CUTOFF	159	12 FT	35 FT	FIXED	-	-	CITY OF LAKEWOOD STANDARD IS-09

4

LUMINAIRE SCHEDULE — SERVICE NO. 005-XF-12362

LUMINAIRE NUMBER	CIRCUIT	LOCATION STATION	LOCATION OFFSET	TYPE - DISTRIBUTION	WATTAGE CLASS	MAST ARM	H1	BASE TYPE	*FOUNDATION TYPE	**ADDITIONAL EMBEDMENT	COMMENTS
H6	A	MXTX 30+11.00	17.00' LT	III - MED CUTOFF	400	12 FT	40 FT	BARRIER	-	-	POWER FROM 005-XF-12362, INSTALL PHOTOCELL

AS-BUILT

ATKINSON
AUG 26 2021 KTW
RELEASED FOR CONSTRUCTION

NOTES:
*SEE WSDOT STANDARD PLANS J-28.30-03 FOR TYPE A AND B FOUNDATION DEPTH.

FILE NAME	c:\pwworking\jacobs_b&i\jeg_stevenj\dms20633\PS_ILN06.dgn				
TIME	3:04:44 PM	REV 4 - RFC, RFI0648	08/20/21		
DATE	8/16/2021	REV 3 - RFC, RFI0456	05/22/20		
PLOTTED BY	STEVENJ	REV 2 - RFC, RFI0429	03/20/20		
DESIGNED BY	K. POURBAHRI	REV 1 - RFC, RFI0274	10/25/19		
ENTERED BY	K. POURBAHRI	REV 0 - RELEASED FOR CONSTRUCTION	09/27/19		
CHECKED BY	B. BARTON	REV B - FINAL REVIEW	07/17/19		
PROJ. ENGR.	C. MEADE	REV A - PRELIMINARY REVIEW	04/12/19		
REGIONAL ADM.	J. WYNANDS	REVISION	DATE	BY	

REGION NO. 10 | STATE WASH | FED.AID PROJ.NO.
JOB NUMBER
CONTRACT NO. C9133 | LOCATION NO.

P.E. STAMP BOX — 8-26-21 DATE

P.E. STAMP BOX — DATE

Washington State Department of Transportation

ATKINSON CONSTRUCTION / JACOBS

I-5
STEILACOOM-DUPONT RD TO THORNE LN
CORRIDOR IMPROVEMENTS
MP 120.01 TO MP 124.45

ILLUMINATION SCHEDULES

PLAN REF NO ILN06

SHEET 907 OF 1456 SHEETS

NOTES:

1. SEE SHEET ILN01 FOR ABBREVIATIONS, LEGEND AND GENERAL NOTES.
2. SEE SHEETS ILN02 AND ILN03 FOR LUMINAIRE SCHEDULES.
3. SEE SHEET ILN04 FOR ILLUMINATION CONSTRUCTION NOTES AND ILN05 FOR ILLUMINATION WIRE NOTES.
4. ALL EXISTING LIGHT STANDARDS TO REMAIN, UNLESS OTHERWISE NOTED.

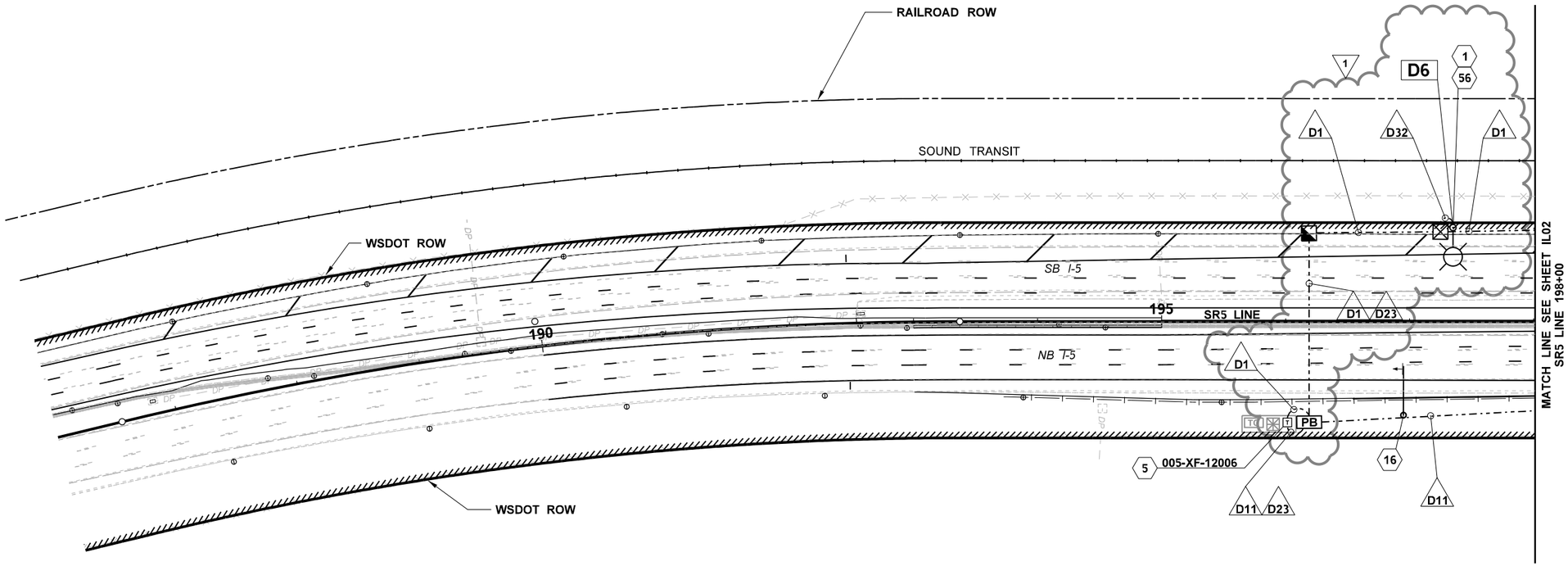

AS-BUILT

ATKINSON

DEC 09 2019 KTW

RELEASED FOR CONSTRUCTION

0 50 100
SCALE IN FEET

FILE NAME	c:\pwworking\jacobs_b&i\jeg_stevenj\dms20633\PS_IL_01.dgn						
TIME	2:35:24 PM				REGION NO. 10	STATE WASH	FED.AID PROJ.NO.
DATE	12/2/2019						
PLOTTED BY	STEVENJ	REV 1 - RFC, C.O. 4TH LANE SB	12/06/19		JOB NUMBER		
DESIGNED BY	K. POURBAHRI	REV C - FINAL REVIEW C.O. 4TH LANE SB	11/08/19				
ENTERED BY	K. POURBAHRI	REV 0 - RELEASED FOR CONSTRUCTION	04/02/19				
CHECKED BY	B. BARTON	REV B - FINAL REVIEW	02/11/19		CONTRACT NO. C9133		LOCATION NO.
PROJ. ENGR.	C. MEADE	REV A - PRELIMINARY REVIEW	11/15/18				
REGIONAL ADM.	J. WYNANDS	REVISION	DATE	BY			

BROOKSTE M. BARTON STATE OF WASHINGTON 46629 REGISTERED PROFESSIONAL ENGINEER
12-9-19
DATE
P.E. STAMP BOX

P.E. STAMP BOX
DATE

Washington State Department of Transportation

ATKINSON CONSTRUCTION / JACOBS

I-5
STEILACOOM-DUPONT RD TO THORNE LN
CORRIDOR IMPROVEMENTS
MP 120.01 TO MP 124.45

ILLUMINATION PLAN

PLAN REF NO IL01

SHEET 908 OF 1456 SHEETS

NOTES:

1. SEE SHEET ILN01 FOR ABBREVIATIONS, LEGEND AND GENERAL NOTES.
2. SEE SHEETS ILN02 AND ILN03 FOR LUMINAIRE SCHEDULES.
3. SEE SHEET ILN04 FOR ILLUMINATION CONSTRUCTION NOTES AND ILN05 FOR ILLUMINATION WIRE NOTES.
4. ALL EXISTING LIGHT STANDARDS TO REMAIN, UNLESS OTHERWISE NOTED.

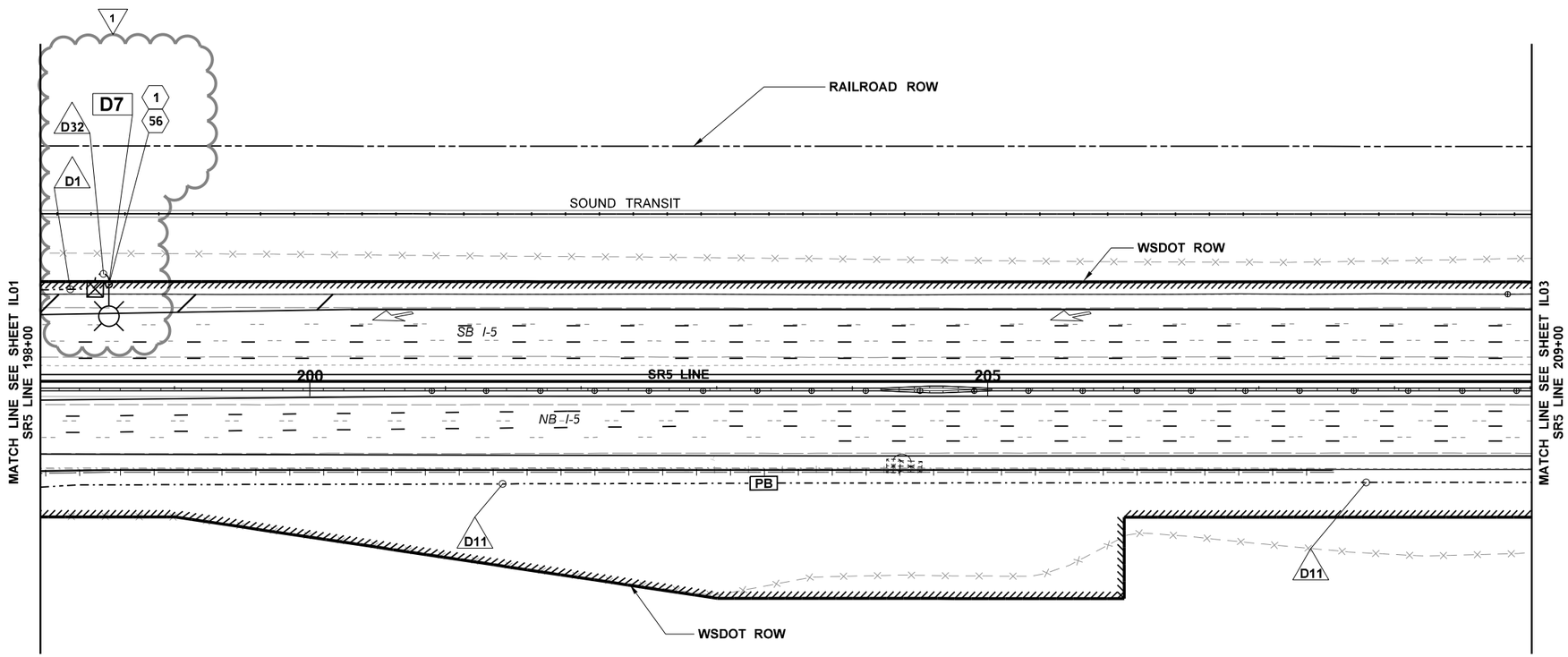

AS-BUILT

ATKINSON

DEC 09 2019 KTW

RELEASED FOR CONSTRUCTION

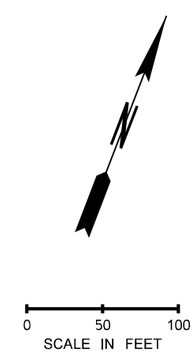

FILE NAME	c:\pwworking\jacobs_b&l\jeg_stevenj\dms20633\PS_IL_02.dgn			
TIME	2:38:10 PM			
DATE	12/2/2019			
PLOTTED BY	STEVENJ	REV 1 - RFC, C.O. 4TH LANE SB	12/06/19	
DESIGNED BY	K. POURBAHRI	REV C - FINAL REVIEW - C.O. 4TH LANE SB	11/08/19	
ENTERED BY	K. POURBAHRI	REV 0 - RELEASED FOR CONSTRUCTION	04/02/19	
CHECKED BY	B. BARTON	REV B - FINAL REVIEW	02/11/19	
PROJ. ENGR.	C. MEADE	REV A - PRELIMINARY REVIEW	11/15/18	
REGIONAL ADM.	J. WYNANDS	REVISION	DATE	BY

REGION NO.	STATE	FED.AID PROJ.NO.
10	WASH	
JOB NUMBER		
CONTRACT NO.		LOCATION NO.
C9133		

P.E. STAMP BOX — DATE 3-9-19

P.E. STAMP BOX — DATE

Washington State Department of Transportation

ATKINSON CONSTRUCTION / JACOBS

I-5
STEILACOOM-DUPONT RD TO THORNE LN
CORRIDOR IMPROVEMENTS
MP 120.01 TO MP 124.45

ILLUMINATION PLAN

PLAN REF NO IL02

SHEET 909 OF 1456 SHEETS

NOTES:

1. SEE SHEET ILN01 FOR ABBREVIATIONS, LEGEND AND GENERAL NOTES.
2. SEE SHEETS ILN02 AND ILN03 FOR LUMINAIRE SCHEDULES.
3. SEE SHEET ILN04 FOR ILLUMINATION CONSTRUCTION NOTES AND ILN05 FOR ILLUMINATION WIRE NOTES.
4. ALL EXISTING LIGHT STANDARDS TO REMAIN, UNLESS OTHERWISE NOTED.
5. GRADING IN VICINITY OF LIGHT STANDARDS WITH SLIP BASES SHALL BE IN ACCORDANCE WITH WSDOT STANDARD PLAN J-28.22-00.

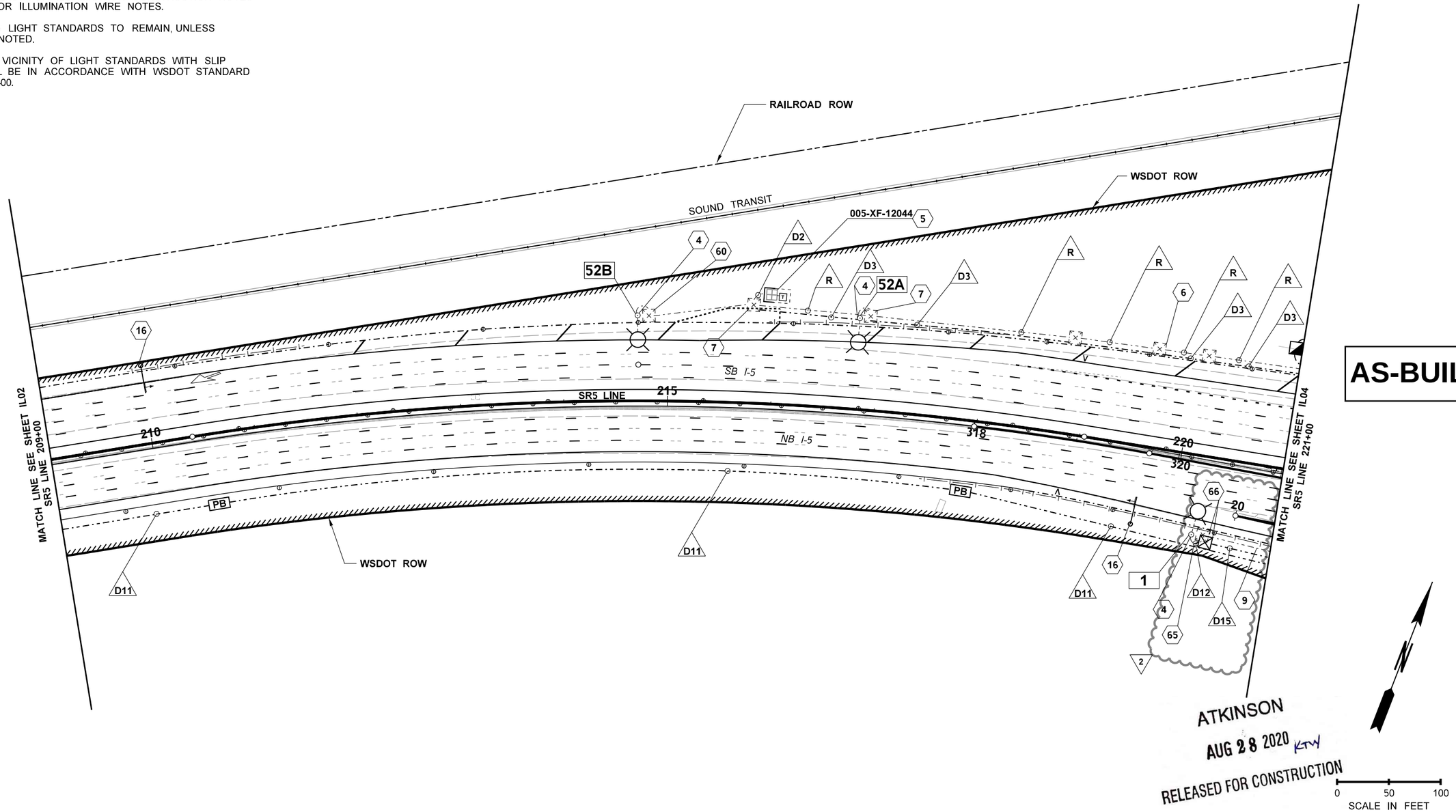

AS-BUILT

ATKINSON
AUG 28 2020 KTW
RELEASED FOR CONSTRUCTION

0 50 100
SCALE IN FEET

FILE NAME	c:\pwworking\jacobs_b&i\bartonbm\dms20633\PS_IL_03.dgn			
TIME	4:59:14 PM			
DATE	8/27/2020	REV 2 - RFC, RFI0507	08/28/20	
PLOTTED BY	bartonbm	REV 1 - RFC, CO. 4TH LANE SB	12/06/19	
DESIGNED BY	K. POURBAHRI	REV C - FINAL REVIEW - CO. 4TH LANE SB	11/08/19	
ENTERED BY	K. POURBAHRI	REV 0 - RELEASED FOR CONSTRUCTION	04/02/19	
CHECKED BY	B. BARTON	REV B - FINAL REVIEW	02/11/19	
PROJ. ENGR.	C. MEADE	REV A - PRELIMINARY REVIEW	11/15/18	
REGIONAL ADM.	J. WYNANDS	REVISION	DATE	BY

REGION NO.	STATE	FED.AID PROJ.NO.
10	WASH	
JOB NUMBER		
CONTRACT NO.		LOCATION NO.
C9133		

BROOKSIE M. BARTON, STATE OF WASHINGTON, 46629, REGISTERED PROFESSIONAL ENGINEER
8-28-20
DATE
P.E. STAMP BOX

DATE
P.E. STAMP BOX

Washington State Department of Transportation

ATKINSON CONSTRUCTION / JACOBS

I-5
STEILACOOM-DUPONT RD TO THORNE LN
CORRIDOR IMPROVEMENTS
MP 120.01 TO MP 124.45

ILLUMINATION PLAN

PLAN REF NO IL03

SHEET 910 OF 1456 SHEETS

NOTES:

1. SEE SHEET ILN01 FOR ABBREVIATIONS, LEGEND AND GENERAL NOTES.
2. SEE SHEETS ILN02 AND ILN03 FOR LUMINAIRE SCHEDULES.
3. SEE SHEET ILN04 FOR ILLUMINATION CONSTRUCTION NOTES AND ILN05 FOR ILLUMINATION WIRE NOTES.
4. ALL EXISTING LIGHT STANDARDS TO REMAIN, UNLESS OTHERWISE NOTED.

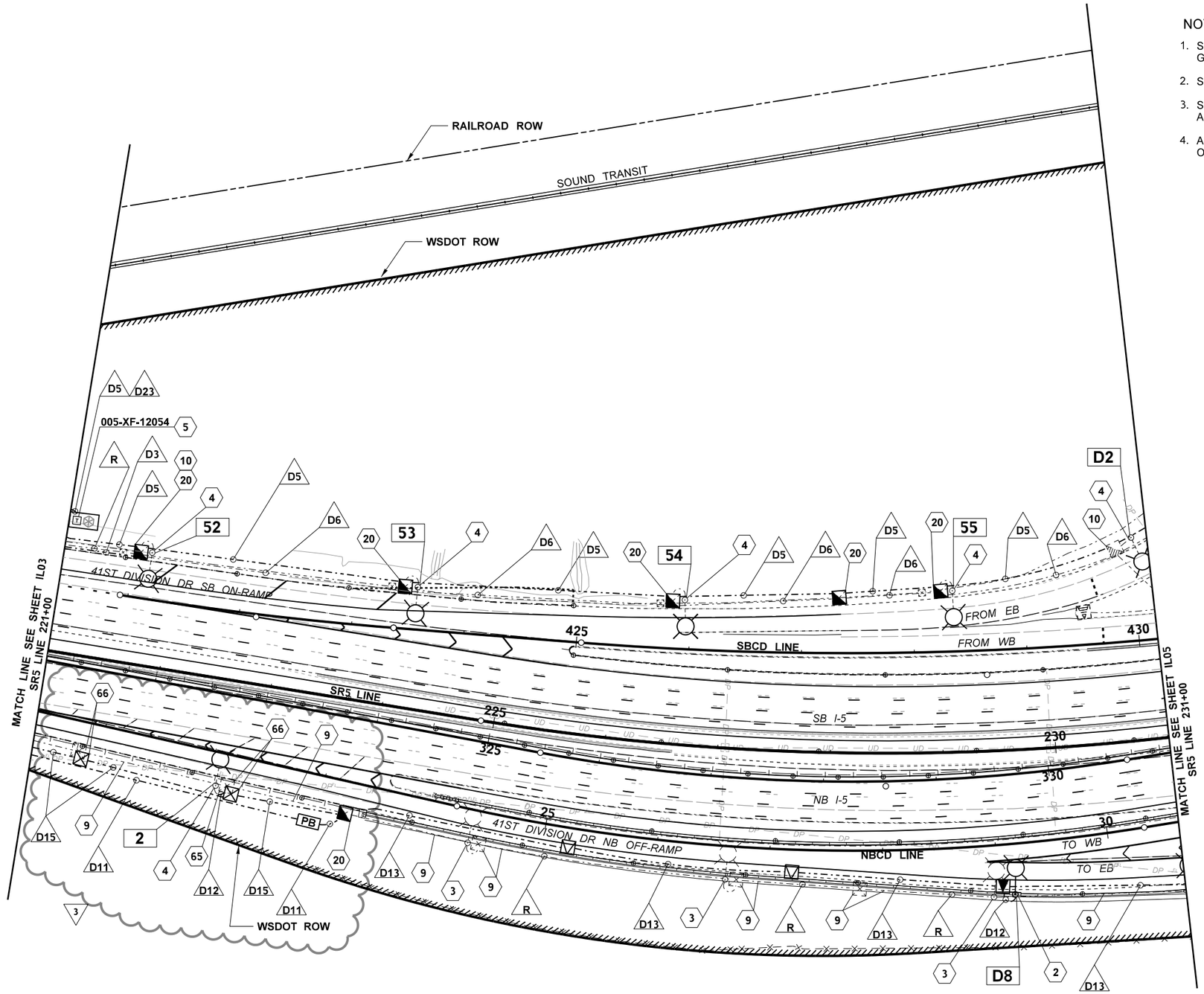

AS-BUILT

ATKINSON
AUG 28 2020 KTW
RELEASED FOR CONSTRUCTION

0 50 100
SCALE IN FEET

FILE NAME	c:\pwworking\jacobs_b&i\bartonbm\dms20633\PS_IL_04.dgn					
TIME	5:01:54 PM					
DATE	8/27/2020	REV 3 - RFC, RFI0507	08/28/20			
PLOTTED BY	bartonbm	REV 2 - RFC, C.O. 4TH LANE SB	12/06/19			
DESIGNED BY	K. POURBAHRI	REV 1 - RFC, RFI0106, NEW CONDUIT	05/31/19			
ENTERED BY	K. POURBAHRI	REV 0 - RELEASED FOR CONSTRUCTION	04/02/19			
CHECKED BY	B. BARTON	REV B - FINAL REVIEW	02/11/19			
PROJ. ENGR.	C. MEADE	REV A - PRELIMINARY REVIEW	11/15/18			
REGIONAL ADM.	J. WYNANDS	REVISION	DATE	BY		

REGION NO.	STATE	FED.AID PROJ.NO.
10	WASH	
JOB NUMBER		
CONTRACT NO.		LOCATION NO.
C9133		

BRODERICK M. BARTON
STATE OF WASHINGTON
46629
REGISTERED PROFESSIONAL ENGINEER
8-28-20
DATE
P.E. STAMP BOX

DATE
P.E. STAMP BOX

Washington State Department of Transportation

ATKINSON / JACOBS CONSTRUCTION

I-5
STEILACOOM-DUPONT RD TO THORNE LN
CORRIDOR IMPROVEMENTS
MP 120.01 TO MP 124.45

ILLUMINATION PLAN

PLAN REF NO
IL04

SHEET 911 OF 1456 SHEETS

NOTES:

1. SEE SHEET ILN01 FOR ABBREVIATIONS, LEGEND AND GENERAL NOTES.
2. SEE SHEETS ILN02 AND ILN03 FOR LUMINAIRE SCHEDULES.
3. SEE SHEET ILN04 FOR ILLUMINATION CONSTRUCTION NOTES AND ILN05 FOR ILLUMINATION WIRE NOTES.
4. ALL EXISTING LIGHT STANDARDS TO REMAIN, UNLESS OTHERWISE NOTED.

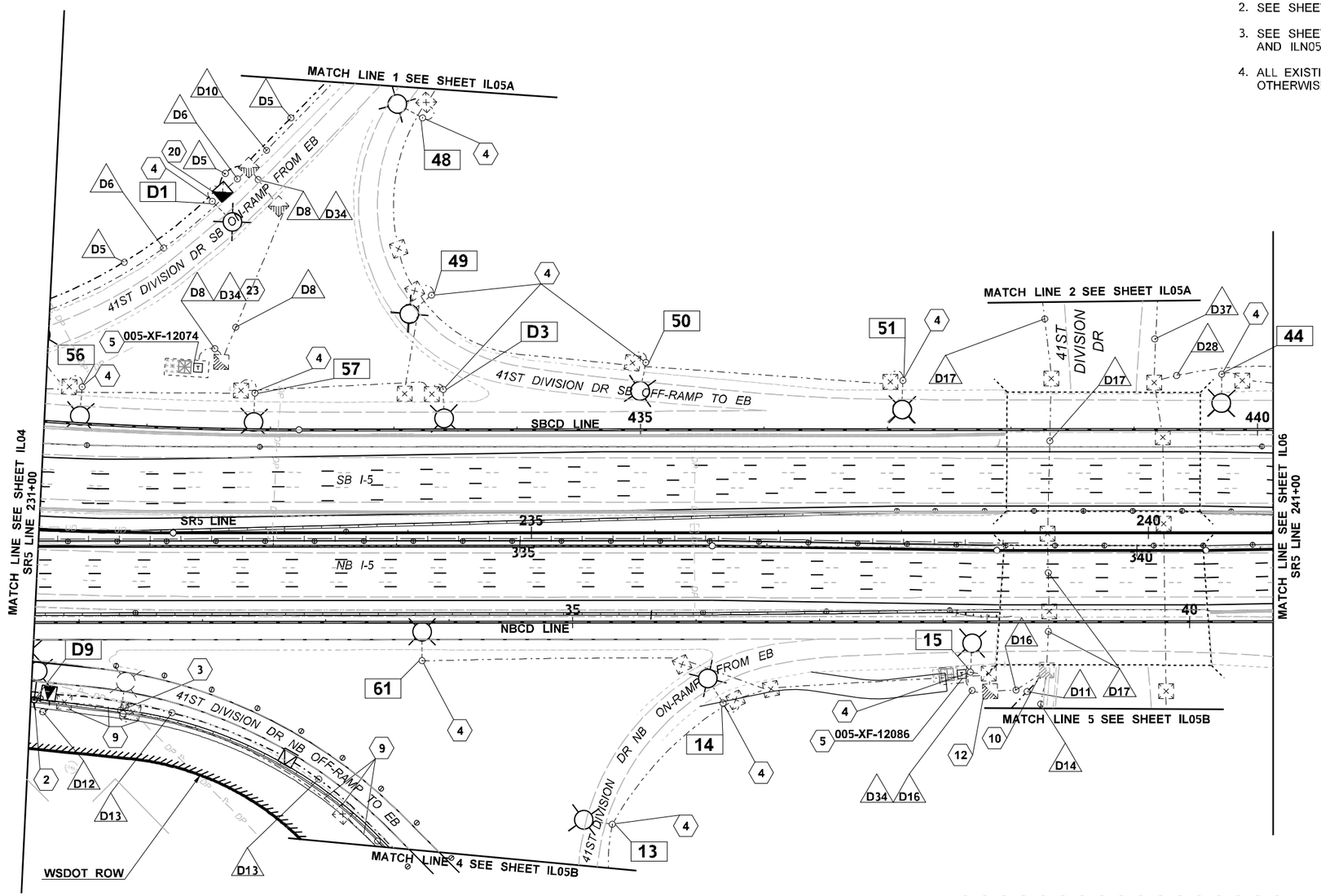

UPDATED ROADWAY LANES AND STRIPING. NO CHANGE TO ILLUMINATION.

3

AS-BUILT

ATKINSON

DEC 09 2019 KTW

RELEASED FOR CONSTRUCTION

0 50 100

SCALE IN FEET

FILE NAME	c:\pwworking\jacobs_b&i\jeg_ch2m-kpourbah\dms20633\PS_IL_05.dgn			
TIME	10:34:27 AM			
DATE	12/6/2019	REV 3 - RFC, C.O. 4TH LANE SB	12/06/19	
PLOTTED BY	KPOURBAH	REV 2 - RFC, RFI0169, ADJUST CONDUIT	10/18/19	
DESIGNED BY	K. POURBAHRI	REV 1 - RFC, RFI0106, NEW CONDUIT	05/31/19	
ENTERED BY	K. POURBAHRI	REV 0 - RELEASED FOR CONSTRUCTION	04/02/19	
CHECKED BY	B. BARTON	REV B - FINAL REVIEW	02/11/19	
PROJ. ENGR.	C. MEADE	REV A - PRELIMINARY REVIEW	11/15/18	
REGIONAL ADM.	J. WYNANDS	REVISION	DATE	BY

REGION NO.	STATE	FED.AID PROJ.NO.
10	WASH	
JOB NUMBER		
CONTRACT NO.		LOCATION NO.
C9133		

STATE OF WASHINGTON 46629 REGISTERED PROFESSIONAL ENGINEER

2-9-19

DATE

P.E. STAMP BOX

DATE

P.E. STAMP BOX

Washington State Department of Transportation

ATKINSON CONSTRUCTION / JACOBS

I-5
STEILACOOM-DUPONT RD TO THORNE LN
CORRIDOR IMPROVEMENTS
MP 120.01 TO MP 124.45

ILLUMINATION PLAN

PLAN REF NO IL05

SHEET 912 OF 1456 SHEETS

NOTES:

1. SEE SHEET ILN01 FOR ABBREVIATIONS, LEGEND AND GENERAL NOTES.
2. SEE SHEETS ILN02 AND ILN03 FOR LUMINAIRE SCHEDULES.
3. SEE SHEET ILN04 FOR ILLUMINATION CONSTRUCTION NOTES AND ILN05 FOR ILLUMINATION WIRE NOTES.
4. ALL EXISTING LIGHT STANDARDS TO REMAIN, UNLESS OTHERWISE NOTED.

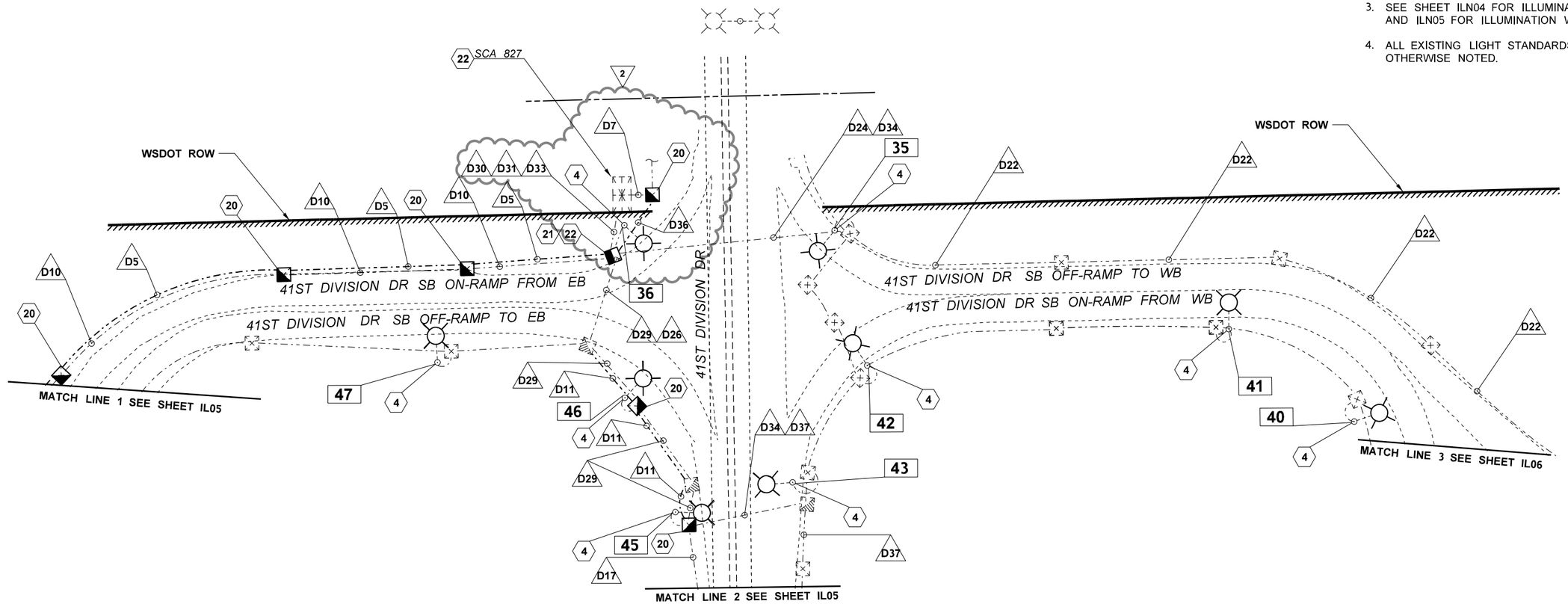

AS-BUILT

ATKINSON
AUG 28 2020 KTM
RELEASED FOR CONSTRUCTION

0 50 100
SCALE IN FEET

FILE NAME	c:\pwworking\jacobs_b&i\jeg_stevenj\dms20633\PS_IL_05A.dgn						
TIME	1:47:23 PM				REGION NO. 10	STATE WASH	FED.AID PROJ.NO.
DATE	8/25/2020						
PLOTTED BY	STEVENJ	REV 2 - RFC, RFI0508	08/28/20		JOB NUMBER		
DESIGNED BY	K. POURBAHRI	REV 1 - RFC, RFI0106, NEW CONDUIT	05/31/19				
ENTERED BY	K. POURBAHRI	REV 0 - RELEASED FOR CONSTRUCTION	04/02/19				
CHECKED BY	B. BARTON	REV B - FINAL REVIEW	02/11/19		CONTRACT NO.		LOCATION NO.
PROJ. ENGR.	C. MEADE	REV A - PRELIMINARY REVIEW	11/15/18		C9133		
REGIONAL ADM.	J. WYNANDS	REVISION	DATE	BY			

BROOKE M. BARTON, STATE OF WASHINGTON, 46629, REGISTERED PROFESSIONAL ENGINEER
8-28-20
DATE
P.E. STAMP BOX

DATE
P.E. STAMP BOX

Washington State Department of Transportation

ATKINSON CONSTRUCTION / JACOBS

I-5
STEILACOOM-DUPONT RD TO THORNE LN
CORRIDOR IMPROVEMENTS
MP 120.01 TO MP 124.45

ILLUMINATION PLAN

PLAN REF NO
IL05A

SHEET 913 OF 1456 SHEETS

NOTES:

1. SEE SHEET ILN01 FOR ABBREVIATIONS, LEGEND AND GENERAL NOTES.
2. SEE SHEETS ILN02 AND ILN03 FOR LUMINAIRE SCHEDULES.
3. SEE SHEET ILN04 FOR ILLUMINATION CONSTRUCTION NOTES AND ILN05 FOR ILLUMINATION WIRE NOTES.
4. ALL EXISTING LIGHT STANDARDS TO REMAIN, UNLESS OTHERWISE NOTED.

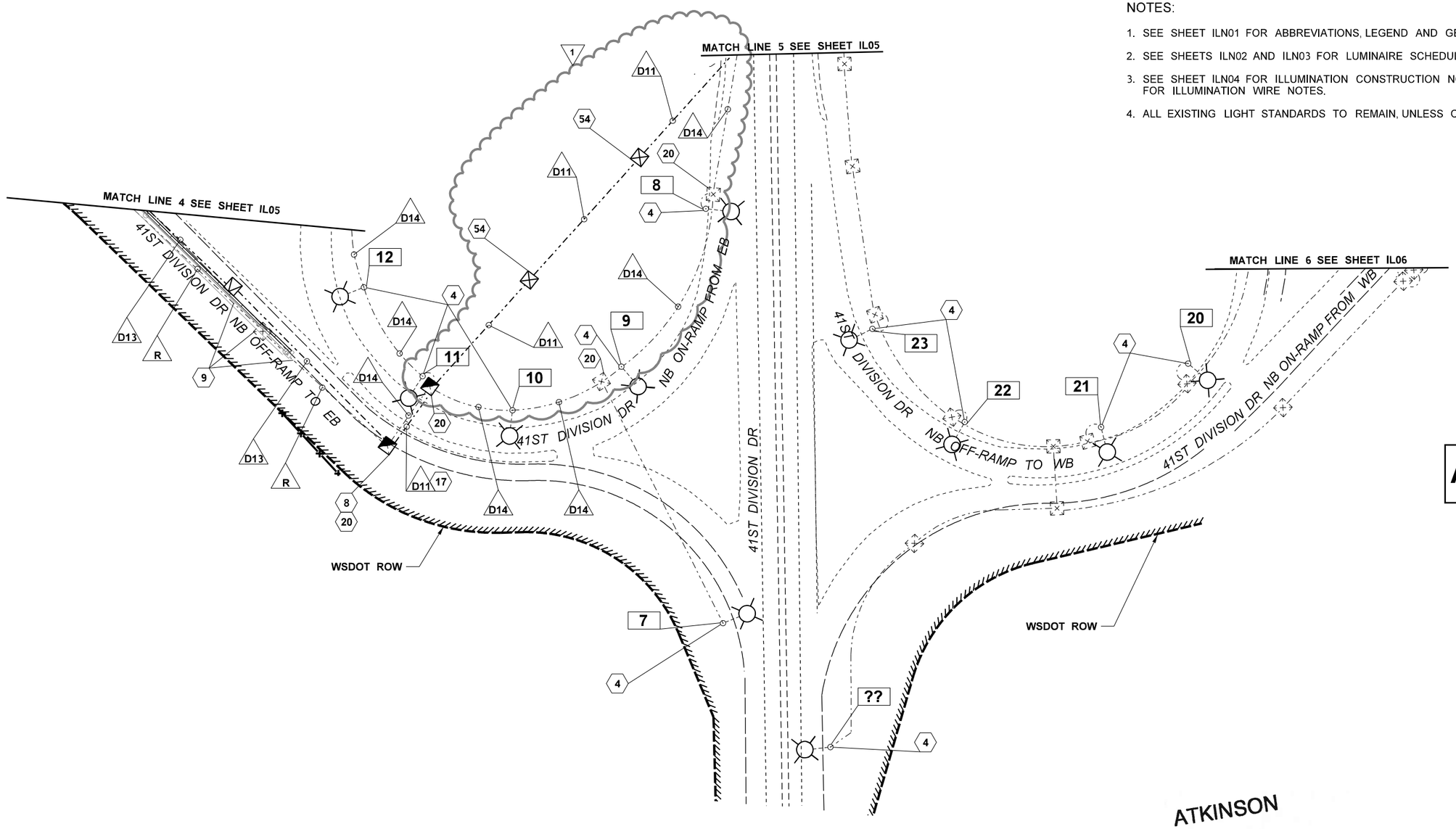

AS-BUILT

ATKINSON
OCT 21 2019 KTW
RELEASED FOR CONSTRUCTION

0 50 100
SCALE IN FEET

FILE NAME	c:\pwworking\jacobs_b&i\jeg_gt011740\dms20633\PS_IL_05B.dgn						
TIME	3:53:15 PM				REGION NO. 10	STATE WASH	FED.AID PROJ.NO.
DATE	10/17/2019						
PLOTTED BY	GT011740				JOB NUMBER		
DESIGNED BY	K. POURBAHRI	REV 1 - RFC, RFI0169, ADJUST CONDUIT	10/18/19				
ENTERED BY	K. POURBAHRI	REV 0 - RELEASED FOR CONSTRUCTION	04/02/19				
CHECKED BY	B. BARTON	REV B - FINAL REVIEW	02/11/19		CONTRACT NO. C9133		LOCATION NO.
PROJ. ENGR.	C. MEADE	REV A - PRELIMINARY REVIEW	11/15/18				
REGIONAL ADM.	J. WYNANDS	REVISION	DATE	BY			

P.E. STAMP BOX — DATE 10-21-19

P.E. STAMP BOX — DATE

Washington State Department of Transportation

ATKINSON CONSTRUCTION / JACOBS

I-5
STEILACOOM-DUPONT RD TO THORNE LN CORRIDOR IMPROVEMENTS
MP 120.01 TO MP 124.45

ILLUMINATION PLAN

PLAN REF NO IL05B

SHEET 914 OF 1456 SHEETS

NOTES:

1. SEE SHEET ILN01 FOR ABBREVIATIONS, LEGEND AND GENERAL NOTES.
2. SEE SHEETS ILN02 AND ILN03 FOR LUMINAIRE SCHEDULES.
3. SEE SHEET ILN04 FOR ILLUMINATION CONSTRUCTION NOTES AND ILN05 FOR ILLUMINATION WIRE NOTES.
4. ALL EXISTING LIGHT STANDARDS TO REMAIN, UNLESS OTHERWISE NOTED.

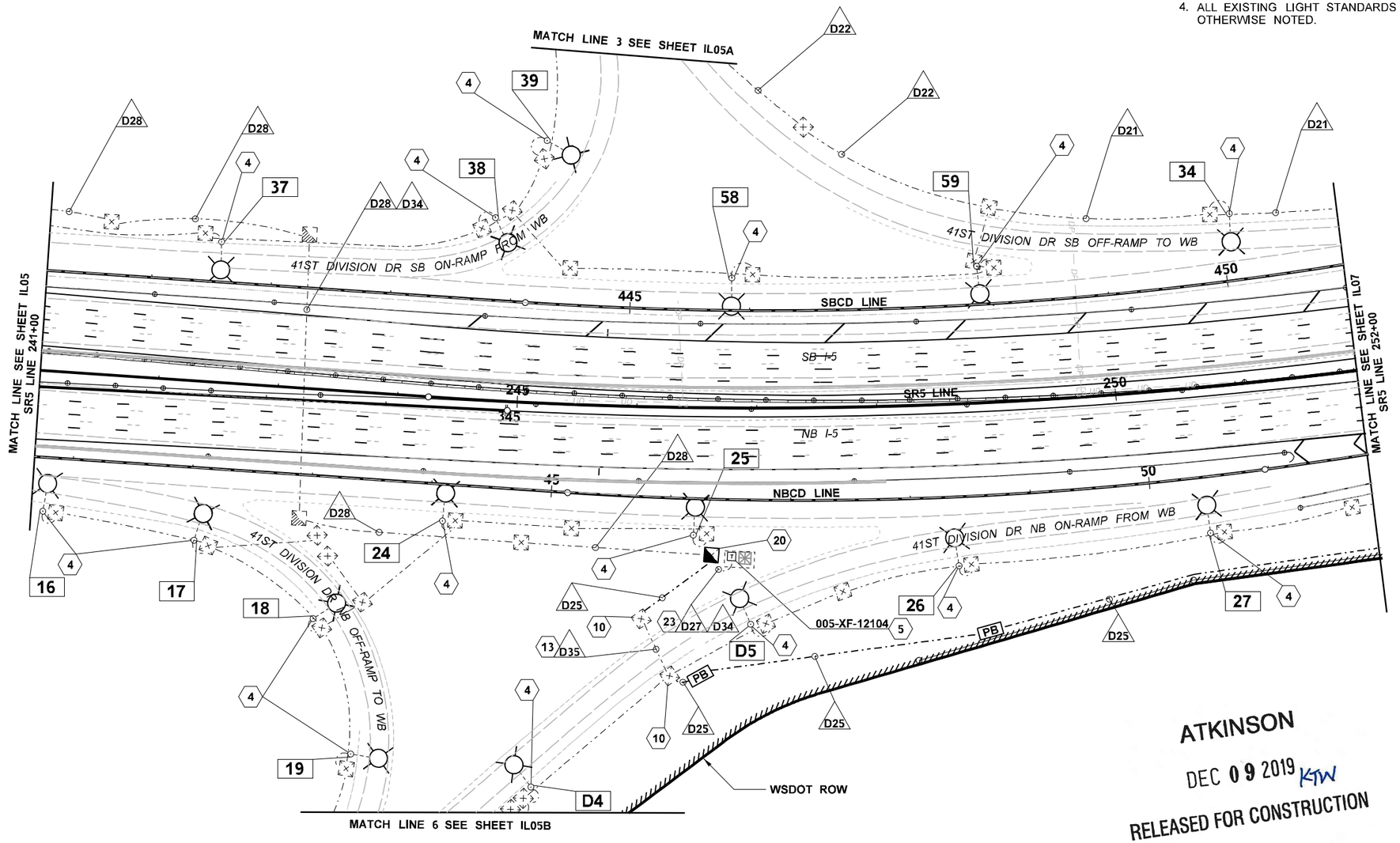

AS-BUILT

ATKINSON

DEC 09 2019 KTW

RELEASED FOR CONSTRUCTION

0 50 100
SCALE IN FEET

UPDATED ROADWAY LANES AND STRIPING. NO CHANGE TO ILLUMINATION.

2

FILE NAME	c:\pwworking\jacobs_b&i\jeg_ch2m-kpourbah\dms20633\PS_IL_06.dgn			
TIME	10:40:20 AM			
DATE	12/6/2019			
PLOTTED BY	KPOURBAH	REV 2 - RFC, C.O. 4TH LANE SB	12/06/19	
DESIGNED BY	K. POURBAHRI	REV 1 - RFC, RFI0164	08/28/19	
ENTERED BY	K. POURBAHRI	REV 0 - RELEASED FOR CONSTRUCTION	04/02/19	
CHECKED BY	B. BARTON	REV B - FINAL REVIEW	02/11/19	
PROJ. ENGR.	C. MEADE	REV A - PRELIMINARY REVIEW	11/15/18	
REGIONAL ADM.	J. WYNANDS	REVISION	DATE	BY

REGION NO.	STATE	FED.AID PROJ.NO.
10	WASH	
JOB NUMBER		
CONTRACT NO.		LOCATION NO.
C9133		

BRADLEY M. BARTON, STATE OF WASHINGTON, 45629, REGISTERED PROFESSIONAL ENGINEER

12-9-19
DATE
P.E. STAMP BOX

DATE
P.E. STAMP BOX

Washington State Department of Transportation

ATKINSON CONSTRUCTION / JACOBS

I-5
STEILACOOM-DUPONT RD TO THORNE LN
CORRIDOR IMPROVEMENTS
MP 120.01 TO MP 124.45

ILLUMINATION PLAN

PLAN REF NO
IL06

SHEET 915 OF 1456 SHEETS

NOTES:

1. SEE SHEET ILN01 FOR ABBREVIATIONS, LEGEND AND GENERAL NOTES.
2. SEE SHEETS ILN02 AND ILN03 FOR LUMINAIRE SCHEDULES.
3. SEE SHEET ILN04 FOR ILLUMINATION CONSTRUCTION NOTES AND ILN05 FOR ILLUMINATION WIRE NOTES.
4. ALL EXISTING LIGHT STANDARDS TO REMAIN, UNLESS OTHERWISE NOTED.

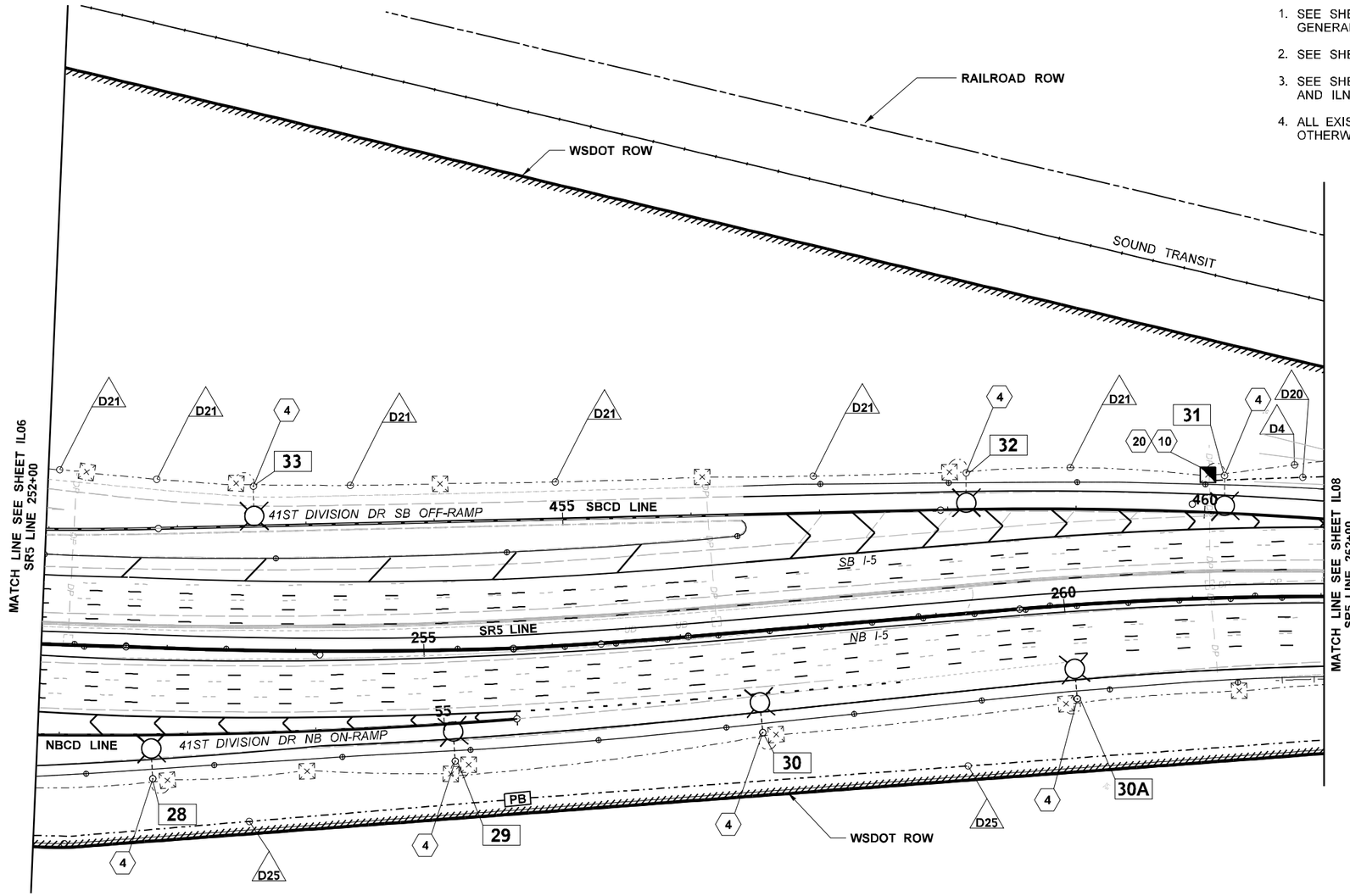

AS-BUILT

ATKINSON
DEC 09 2019 KTW
RELEASED FOR CONSTRUCTION

UPDATED ROADWAY LANES AND STRIPING. NO CHANGE TO ILLUMINATION.

2

0 50 100
SCALE IN FEET

FILE NAME	c:\pwworking\jacobs_b&i\jeg_ch2m-kpourbah\dms20633\PS_IL_07.dgn			
TIME	10:43:11 AM			
DATE	12/6/2019			
PLOTTED BY	KPOURBAH	REV 2 - RFC, C.O. 4TH LANE SB	12/06/19	
DESIGNED BY	K. POURBAHRI	REV 1 - RFC, RFI0164	08/28/19	
ENTERED BY	K. POURBAHRI	REV 0 - RELEASED FOR CONSTRUCTION	04/02/19	
CHECKED BY	B. BARTON	REV B - FINAL REVIEW	02/11/19	
PROJ. ENGR.	C. MEADE	REV A - PRELIMINARY REVIEW	11/15/18	
REGIONAL ADM.	J. WYNANDS	REVISION	DATE	BY

REGION NO.	STATE	FED.AID PROJ.NO.
10	WASH	
JOB NUMBER		
CONTRACT NO.		LOCATION NO.
C9133		

P.E. STAMP BOX — DATE 12-9-19

P.E. STAMP BOX — DATE

Washington State Department of Transportation

ATKINSON CONSTRUCTION / JACOBS

I-5
STEILACOOM-DUPONT RD TO THORNE LN
CORRIDOR IMPROVEMENTS
MP 120.01 TO MP 124.45

ILLUMINATION PLAN

PLAN REF NO IL07

SHEET 916 OF 1456 SHEETS

NOTES:

1. SEE SHEET ILN01 FOR ABBREVIATIONS, LEGEND AND GENERAL NOTES.
2. SEE SHEETS ILN02 AND ILN03 FOR LUMINAIRE SCHEDULES.
3. SEE SHEET ILN04 FOR ILLUMINATION CONSTRUCTION NOTES AND ILN05 FOR ILLUMINATION WIRE NOTES.
4. ALL EXISTING LIGHT STANDARDS TO REMAIN, UNLESS OTHERWISE NOTED.
5. GRADING IN VICINITY OF LIGHT STANDARDS WITH SLIP BASES SHALL BE IN ACCORDANCE WITH WSDOT STANDARD PLAN J-28.22-00.

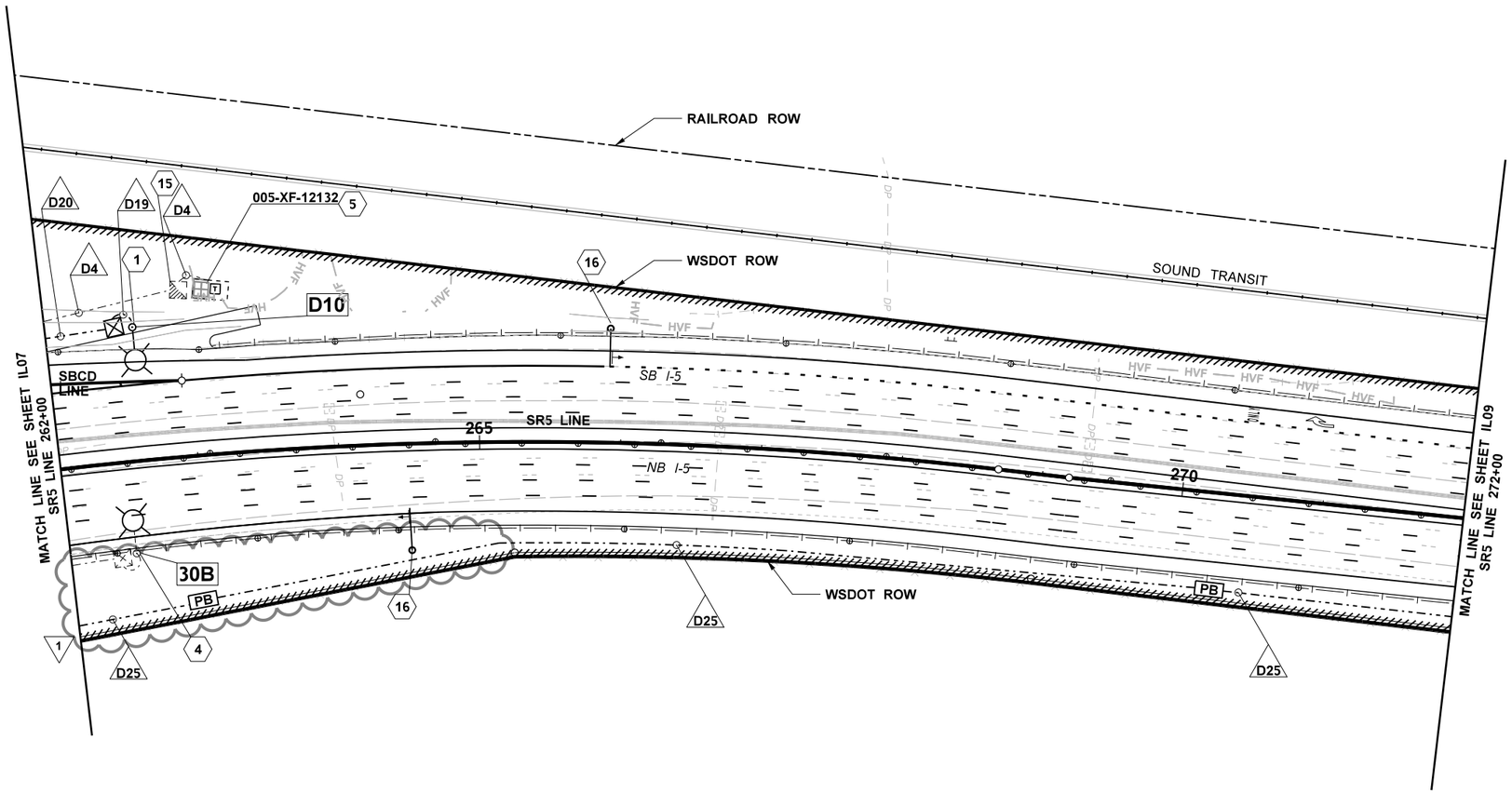

AS-BUILT

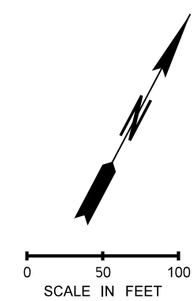

FILE NAME	c:\pwworking\jacobs_b&i\bartonbm\dms20633\PS_IL_08.dgn						
TIME	1:27:26 PM				REGION NO.	STATE	FED.AID PROJ.NO.
DATE	8/28/2019				10	WASH	
PLOTTED BY	bartonbm				JOB NUMBER		
DESIGNED BY	K. POURBAHRI	REV 1 - RFC, RFI0164	08/28/19				
ENTERED BY	K. POURBAHRI	REV 0 - RELEASED FOR CONSTRUCTION	04/02/19				
CHECKED BY	B. BARTON	REV B - FINAL REVIEW	02/11/19		CONTRACT NO.		LOCATION NO.
PROJ. ENGR.	C. MEADE	REV A - PRELIMINARY REVIEW	11/15/18		C9133		
REGIONAL ADM.	J. WYNANDS	REVISION	DATE	BY			

BROOKSIE M. BARTON — STATE OF WASHINGTON — 46629 — REGISTERED PROFESSIONAL ENGINEER

P.E. STAMP BOX — DATE

P.E. STAMP BOX — DATE

Washington State Department of Transportation

ATKINSON CONSTRUCTION / JACOBS

I-5
STEILACOOM-DUPONT RD TO THORNE LN
CORRIDOR IMPROVEMENTS
MP 120.01 TO MP 124.45

ILLUMINATION PLAN

PLAN REF NO IL08

SHEET 917 OF 1456 SHEETS

NOTES:

1. SEE SHEET ILN01 FOR ABBREVIATIONS, LEGEND AND GENERAL NOTES.
2. SEE SHEETS ILN02 AND ILN03 FOR LUMINAIRE SCHEDULES.
3. SEE SHEET ILN04 FOR ILLUMINATION CONSTRUCTION NOTES AND ILN05 FOR ILLUMINATION WIRE NOTES.
4. ALL EXISTING LIGHT STANDARDS TO REMAIN, UNLESS OTHERWISE NOTED.

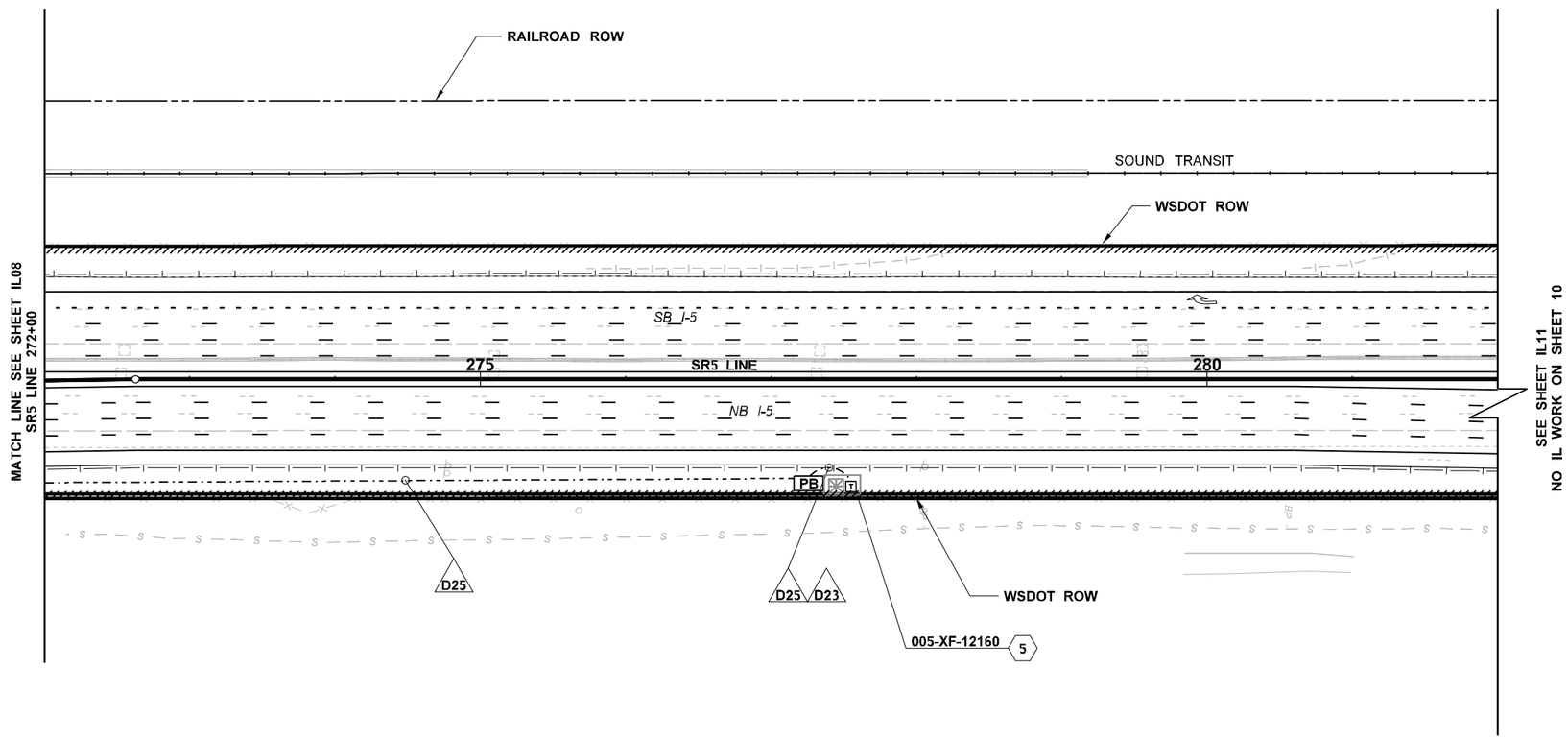

AS-BUILT

ATKINSON
APR 09 2019 KTW
RELEASED FOR CONSTRUCTION

N

0 50 100
SCALE IN FEET

FILE NAME	c:\pwworking\jacobs_b&i\jeg_ch2m-kpourbah\dms20633\PS_IL_09.dgn						
TIME	10:15:37 AM				REGION NO. 10	STATE WASH	FED.AID PROJ.NO.
DATE	3/29/2019						
PLOTTED BY	KPOURBAH				JOB NUMBER		
DESIGNED BY	K. POURBAHRI						
ENTERED BY	K. POURBAHRI	REV 0 - RELEASED FOR CONSTRUCTION	04/02/19		CONTRACT NO.		
CHECKED BY	B. BARTON	REV B - FINAL REVIEW	02/11/19		C9133		LOCATION NO.
PROJ. ENGR.	C. MEADE	REV A - PRELIMINARY REVIEW	11/15/18				
REGIONAL ADM.	J. WYNANDS	REVISION	DATE	BY			

P.E. STAMP BOX — DATE 4-8-19

P.E. STAMP BOX — DATE

Washington State Department of Transportation

ATKINSON CONSTRUCTION / JACOBS

I-5
STEILACOOM-DUPONT RD TO THORNE LN
CORRIDOR IMPROVEMENTS
MP 120.01 TO MP 124.45

ILLUMINATION PLAN

PLAN REF NO IL09

SHEET 918 OF 1456 SHEETS

NOTES:

1. SEE SHEET ILN01 FOR ABBREVIATIONS, LEGEND AND GENERAL NOTES.
2. SEE SHEETS ILN02 AND ILN03 FOR LUMINAIRE SCHEDULES.
3. SEE SHEET ILN04 FOR ILLUMINATION CONSTRUCTION NOTES AND ILN05 FOR ILLUMINATION WIRE NOTES.
4. ALL EXISTING LIGHT STANDARDS TO REMAIN, UNLESS OTHERWISE NOTED.

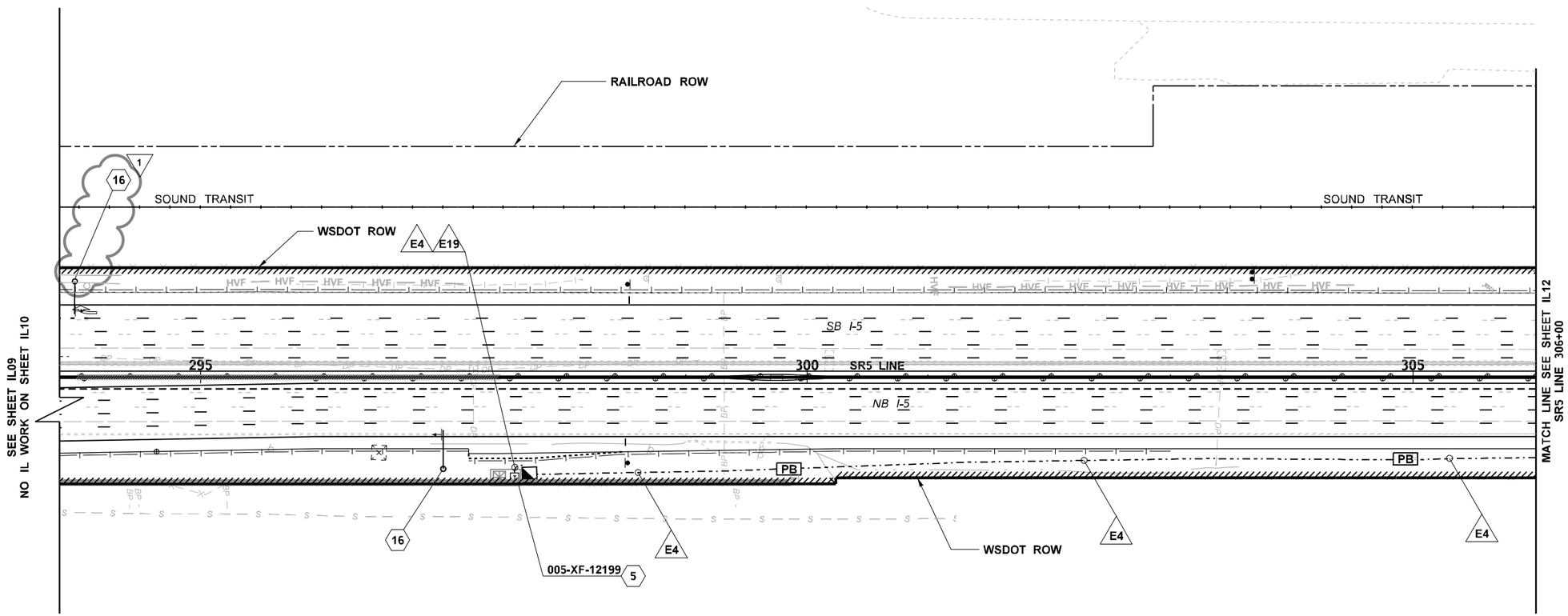

AS-BUILT

ATKINSON
JAN 30 2020 KTW
RELEASED FOR CONSTRUCTION

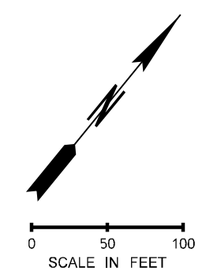

FILE NAME	c:\pwworking\jacobs_b&i\jeg_ch2m-kpourbah\dms20633\PS_IL_11.dgn						
TIME	2:43:28 PM				REGION NO. 10	STATE WASH	FED.AID PROJ.NO.
DATE	1/28/2020						
PLOTTED BY	KPOURBAH				JOB NUMBER		
DESIGNED BY	K. POURBAHRI	REV 1 - RFC, RFI0328	01/24/20				
ENTERED BY	K. POURBAHRI	REV 0 - RELEASED FOR CONSTRUCTION	07/08/19				
CHECKED BY	B. BARTON	REV B - FINAL REVIEW	03/13/19		CONTRACT NO.		LOCATION NO.
PROJ. ENGR.	C. MEADE	REV A - PRELIMINARY REVIEW	11/15/18		C9133		
REGIONAL ADM.	J. WYNANDS	REVISION	DATE	BY			

P.E. STAMP BOX — DATE 1-28-20

P.E. STAMP BOX — DATE

Washington State Department of Transportation

ATKINSON CONSTRUCTION / JACOBS

I-5
STEILACOOM-DUPONT RD TO THORNE LN
CORRIDOR IMPROVEMENTS
MP 120.01 TO MP 124.45

ILLUMINATION PLAN

PLAN REF NO IL11

SHEET 919 OF 1456 SHEETS

NOTES:

1. SEE SHEET ILN01 FOR ABBREVIATIONS, LEGEND AND GENERAL NOTES.
2. SEE SHEETS ILN02 AND ILN03 FOR LUMINAIRE SCHEDULES.
3. SEE SHEET ILN04 FOR ILLUMINATION CONSTRUCTION NOTES AND ILN05 FOR ILLUMINATION WIRE NOTES.
4. ALL EXISTING LIGHT STANDARDS TO REMAIN, UNLESS OTHERWISE NOTED.

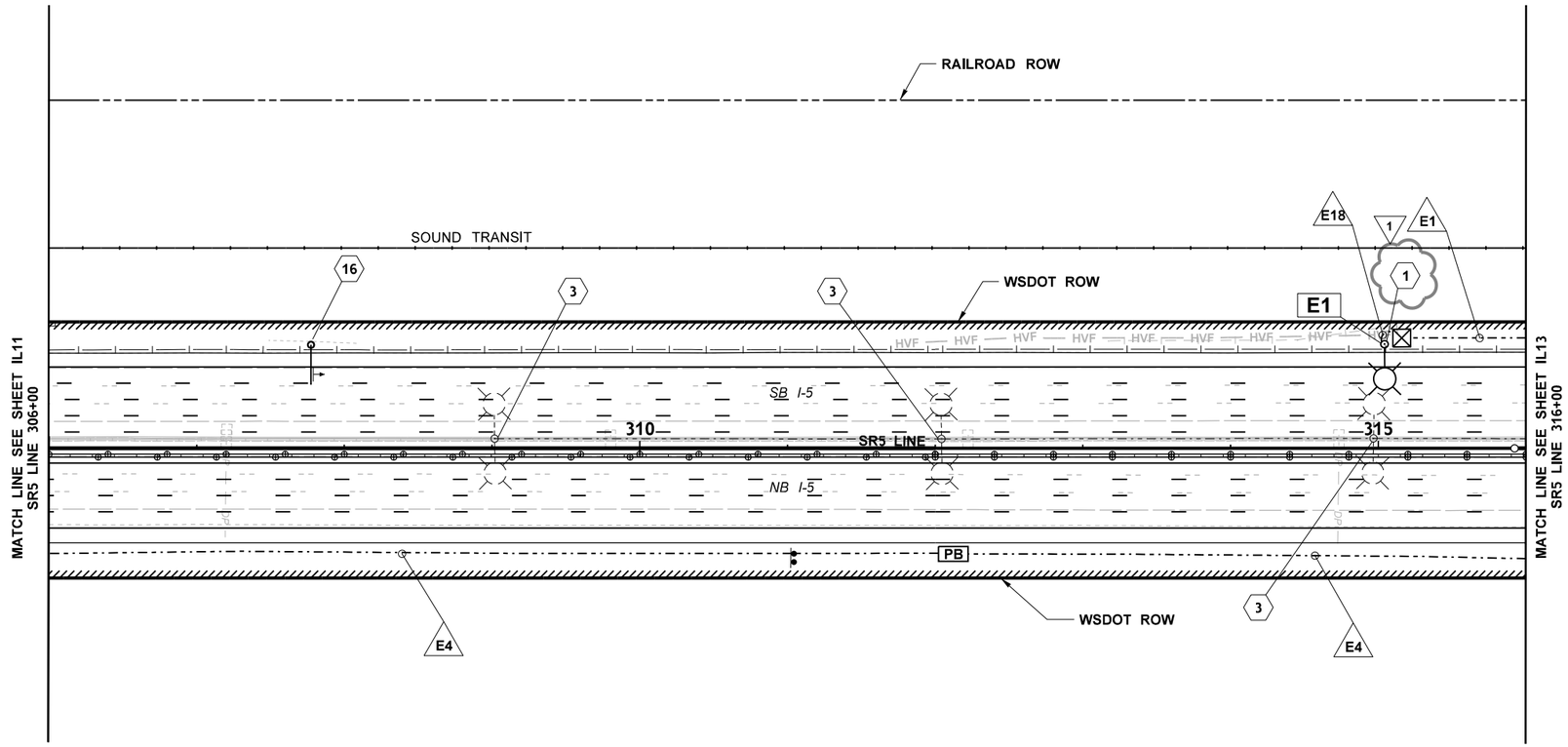

AS-BUILT

ATKINSON
MAR 26 2020 KTW
RELEASED FOR CONSTRUCTION

0 50 100
SCALE IN FEET

FILE NAME	c:\pwworking\jacobs_b&i\jeg_tt056327\dms20633\PS_IL_12.dgn						
TIME	3:54:16 PM				REGION NO. 10	STATE WASH	FED.AID PROJ.NO.
DATE	3/24/2020						
PLOTTED BY	TT056327				JOB NUMBER		
DESIGNED BY	K. POURBAHRI	REV 1 - RFC, RFI0432	03/25/20				
ENTERED BY	K. POURBAHRI	REV 0 - RELEASED FOR CONSTRUCTION	07/08/19				
CHECKED BY	B. BARTON	REV B - FINAL REVIEW	03/13/19		CONTRACT NO. C9133		LOCATION NO.
PROJ. ENGR.	C. MEADE	REV A - PRELIMINARY REVIEW	11/15/18				
REGIONAL ADM.	J. WYNANDS	REVISION	DATE	BY			

BROOKSIE M. BARTON, STATE OF WASHINGTON, 46825, REGISTERED PROFESSIONAL ENGINEER
3-25-20
DATE
P.E. STAMP BOX

DATE
P.E. STAMP BOX

Washington State Department of Transportation

ATKINSON CONSTRUCTION / JACOBS

I-5
STEILACOOM-DUPONT RD TO THORNE LN
CORRIDOR IMPROVEMENTS
MP 120.01 TO MP 124.45

ILLUMINATION PLAN

PLAN REF NO IL12

SHEET 920 OF 1456 SHEETS

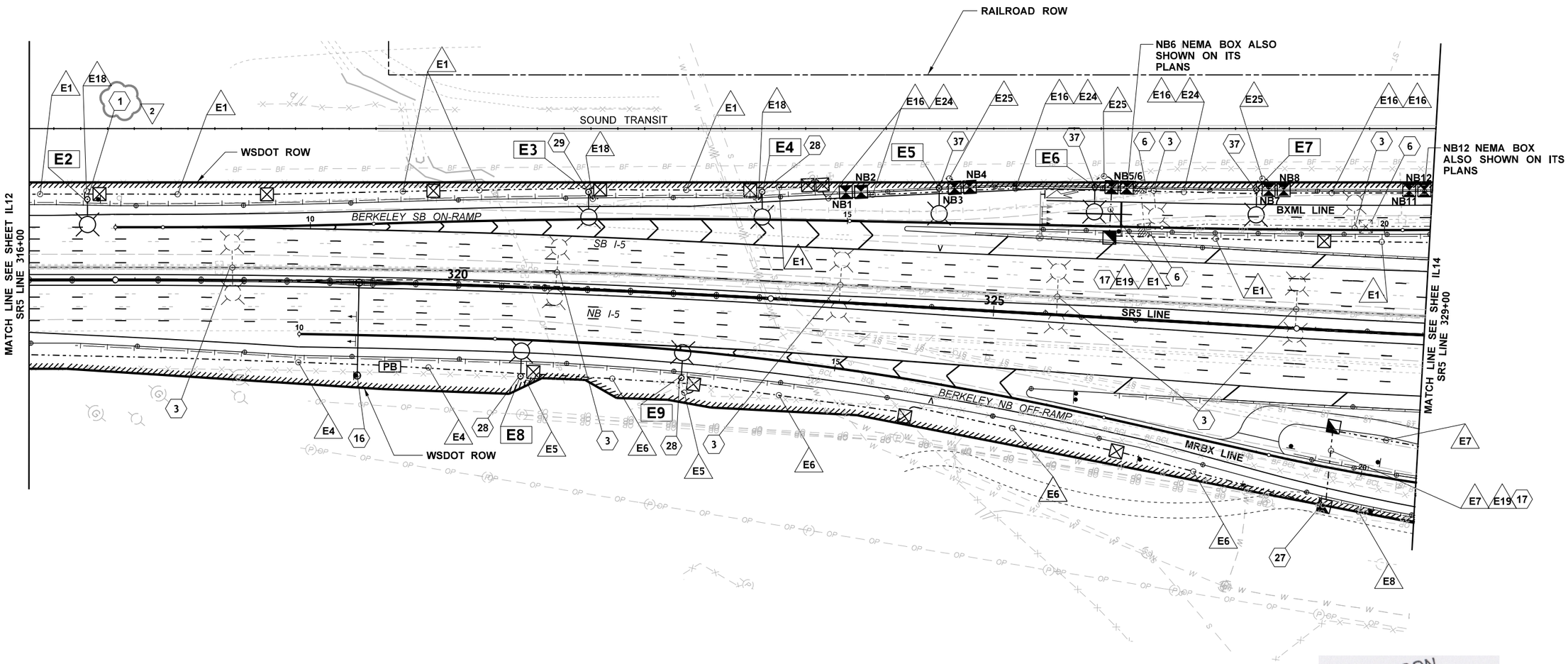

ATKINSON
MAR 26 2020 KW
RELEASED FOR CONSTRUCTION

AS-BUILT

NOTES:

1. SEE SHEET ILN01 FOR ABBREVIATIONS, LEGEND AND GENERAL NOTES.
2. SEE SHEETS ILN02 AND ILN03 FOR LUMINAIRE SCHEDULES.
3. SEE SHEET ILN04 FOR ILLUMINATION CONSTRUCTION NOTES AND ILN05 FOR ILLUMINATION WIRE NOTES.
4. ALL EXISTING LIGHT STANDARDS TO REMAIN, UNLESS OTHERWISE NOTED.

0 50 100
SCALE IN FEET

FILE NAME	c:\pwworking\jacobs_b&i\jeg_tt056327\dms20633\PS_IL_13.dgn						
TIME	4:04:49 PM				REGION NO. 10	STATE WASH	FED.AID PROJ.NO.
DATE	3/24/2020				JOB NUMBER		
PLOTTED BY	TT056327	REV 2 - RFC, RFI0432	03/25/20				
DESIGNED BY	K. POURBAHRI	REV 1 - RFC, RFI0318	12/13/19				
ENTERED BY	K. POURBAHRI	REV 0 - RELEASED FOR CONSTRUCTION	07/08/19				
CHECKED BY	B. BARTON	REV B - FINAL REVIEW	03/13/19		CONTRACT NO. C9133		LOCATION NO.
PROJ. ENGR.	C. MEADE	REV A - PRELIMINARY REVIEW	11/15/18				
REGIONAL ADM.	J. WYNANDS	REVISION	DATE	BY			

BROOKSIE M. BARTON STATE OF WASHINGTON 46629 REGISTERED PROFESSIONAL ENGINEER
3-25-20
DATE
P.E. STAMP BOX

P.E. STAMP BOX
DATE

Washington State Department of Transportation

ATKINSON / JACOBS CONSTRUCTION

I-5
STEILACOOM-DUPONT RD TO THORNE LN CORRIDOR IMPROVEMENTS
MP 120.01 TO MP 124.45

ILLUMINATION PLAN

PLAN REF NO IL13

SHEET 921 OF 1456 SHEETS

1. SEE SHEET ILN01 FOR ABBREVIATIONS, LEGEND AND GENERAL NOTES.
2. SEE SHEETS ILN02 AND ILN03 FOR LUMINAIRE SCHEDULES.
3. SEE SHEET ILN04 FOR ILLUMINATION CONSTRUCTION NOTES AND ILN05 FOR ILLUMINATION WIRE NOTES.
4. ALL EXISTING LIGHT STANDARDS TO REMAIN, UNLESS OTHERWISE NOTED.
5. REMOVE ALL EXISTING ILLIMINATION JUNCTION BOXES, CONDUIT SWEEPS AND UNUSED WIRING FOR EXISTING BERKELEY NB AND SB INTERSECTIONS.

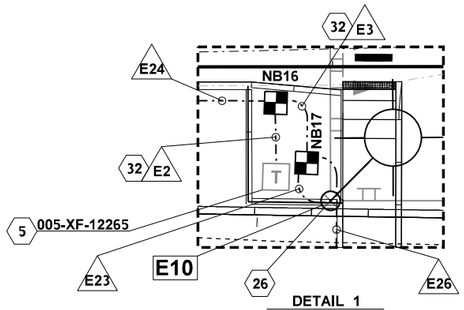

DETAIL 1
NOT TO SCALE

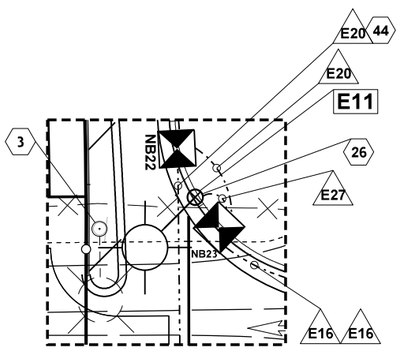

DETAIL 2
NOT TO SCALE

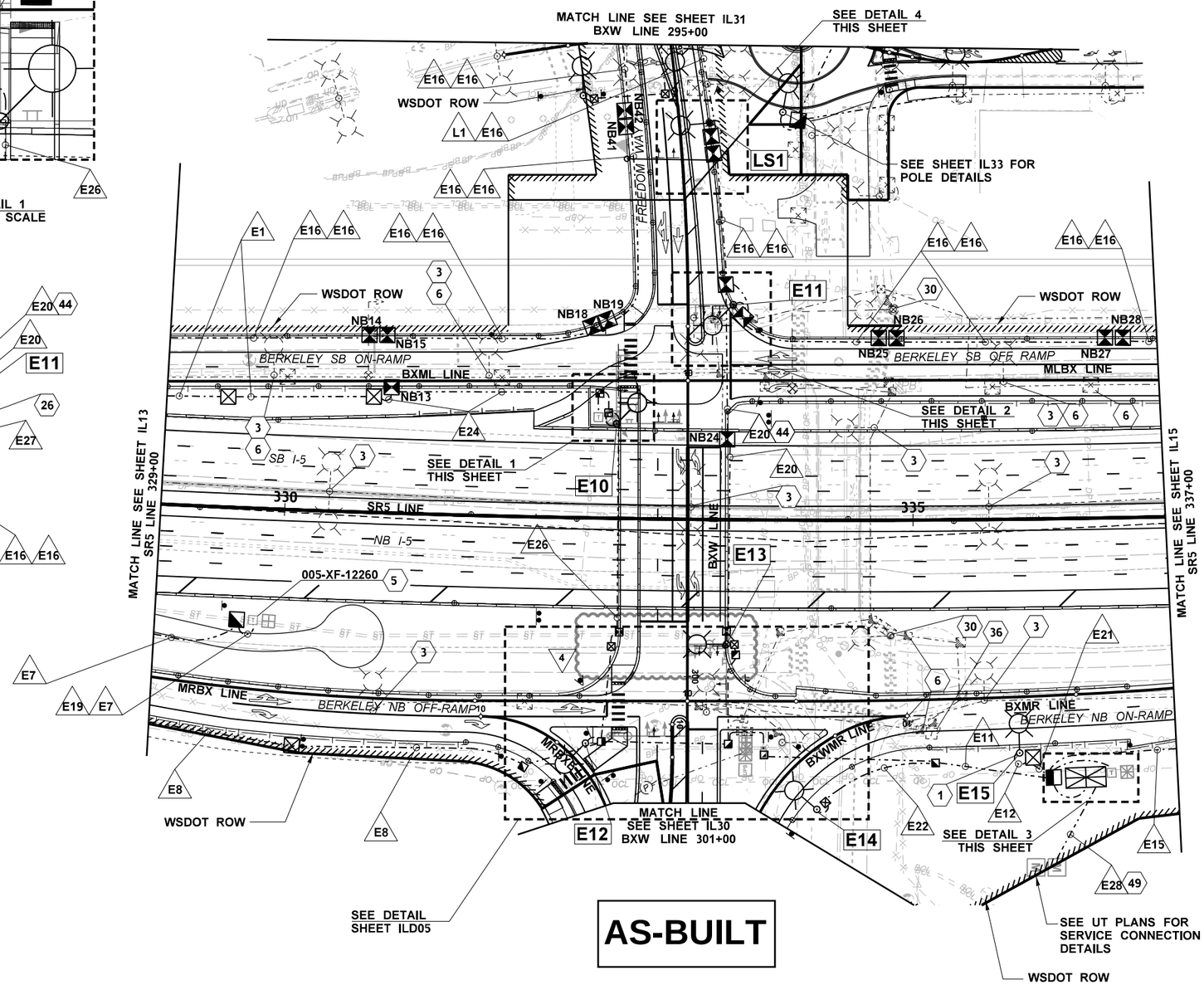

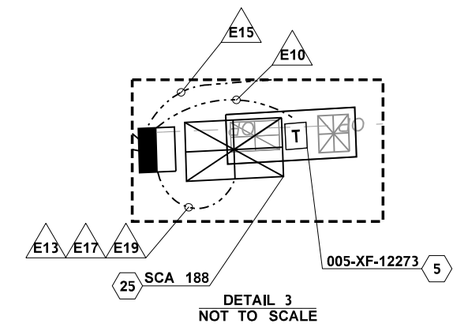

DETAIL 3
NOT TO SCALE

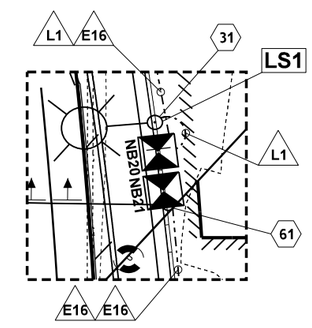

DETAIL 4
NOT TO SCALE

AS-BUILT

ATKINSON
APR 15 2020 KTN
RELEASED FOR CONSTRUCTION

0 50 100
SCALE IN FEET

FILE NAME	c:\pwworking\jacobs_b&i\jeg_stevenj\dms20633\PS_IL_14.dgn						
TIME	11:14:27 AM	REV 4 - RFC, RFI0448	04/14/20		REGION NO. 10	STATE WASH	FED.AID PROJ.NO.
DATE	4/14/2020	REV 3 - RFC, RFI0328	01/24/20				
PLOTTED BY	STEVENJ	REV 2 - RFC, RFI0318	12/13/19		JOB NUMBER		
DESIGNED BY	K. POURBAHRI	REV 1 - RFC, RFI0172 SHIFT E12	08/16/19				
ENTERED BY	K. POURBAHRI	REV 0 - RELEASED FOR CONSTRUCTION	07/08/19				
CHECKED BY	B. BARTON	REV B - FINAL REVIEW	03/13/19		CONTRACT NO. C9133		LOCATION NO.
PROJ. ENGR.	C. MEADE	REV A - PRELIMINARY REVIEW	11/15/18				
REGIONAL ADM.	J. WYNANDS	REVISION	DATE	BY			

JACQUELYNE M. BARTON, STATE OF WASHINGTON, 46629, REGISTERED PROFESSIONAL ENGINEER
4-14-20
DATE
P.E. STAMP BOX

P.E. STAMP BOX
DATE

Washington State
Department of Transportation

ATKINSON CONSTRUCTION / JACOBS

I-5
STEILACOOM-DUPONT RD TO THORNE LN
CORRIDOR IMPROVEMENTS
MP 120.01 TO MP 124.45

ILLUMINATION PLAN

PLAN REF NO
IL14

SHEET 922 OF 1456 SHEETS

NOTES:

1. SEE SHEET ILN01 FOR ABBREVIATIONS, LEGEND AND GENERAL NOTES.
2. SEE SHEETS ILN02 AND ILN03 FOR LUMINAIRE SCHEDULES.
3. SEE SHEET ILN04 FOR ILLUMINATION CONSTRUCTION NOTES AND ILN05 FOR ILLUMINATION WIRE NOTES.
4. ALL EXISTING LIGHT STANDARDS TO REMAIN, UNLESS OTHERWISE NOTED.

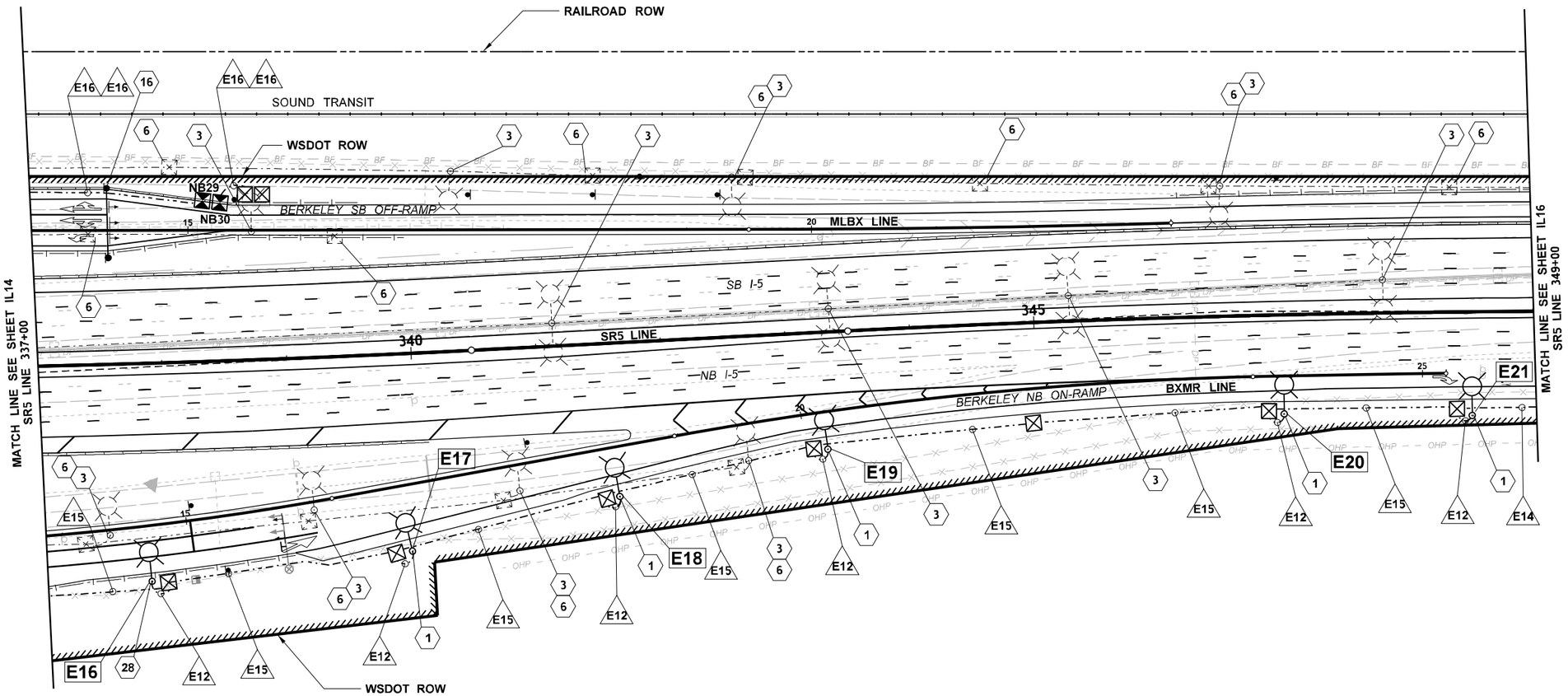

AS-BUILT

ATKINSON
JUL 09 2019 KTW
RELEASED FOR CONSTRUCTION

0 50 100
SCALE IN FEET

FILE NAME	c:\pwworking\jacobs_b&i\jeg_ch2m-kpourbah\dms20633\PS_IL_15.dgn			
TIME	9:00:52 AM			
DATE	7/3/2019			
PLOTTED BY	KPOURBAH			
DESIGNED BY	K. POURBAHRI			
ENTERED BY	K. POURBAHRI	REV 0 - RELEASED FOR CONSTRUCTION	07/08/19	
CHECKED BY	B. BARTON	REV B - FINAL REVIEW	03/13/19	
PROJ. ENGR.	C. MEADE	REV A - PRELIMINARY REVIEW	11/15/18	
REGIONAL ADM.	J. WYNANDS	REVISION	DATE	BY

REGION NO.	STATE	FED.AID PROJ.NO.
10	WASH	
JOB NUMBER		
CONTRACT NO.		LOCATION NO.
C9133		

P.E. STAMP BOX — DATE 7-8-19

P.E. STAMP BOX — DATE

Washington State Department of Transportation

ATKINSON CONSTRUCTION / JACOBS

I-5
STEILACOOM-DUPONT RD TO THORNE LN
CORRIDOR IMPROVEMENTS
MP 120.01 TO MP 124.45

ILLUMINATION PLAN

PLAN REF NO IL15

SHEET 923 OF 1456 SHEETS

NOTES:

1. SEE SHEET ILN01 FOR ABBREVIATIONS, LEGEND AND GENERAL NOTES.
2. SEE SHEETS ILN02 AND ILN03 FOR LUMINAIRE SCHEDULES.
3. SEE SHEET ILN04 FOR ILLUMINATION CONSTRUCTION NOTES AND ILN05 FOR ILLUMINATION WIRE NOTES.
4. ALL EXISTING LIGHT STANDARDS TO REMAIN, UNLESS OTHERWISE NOTED.

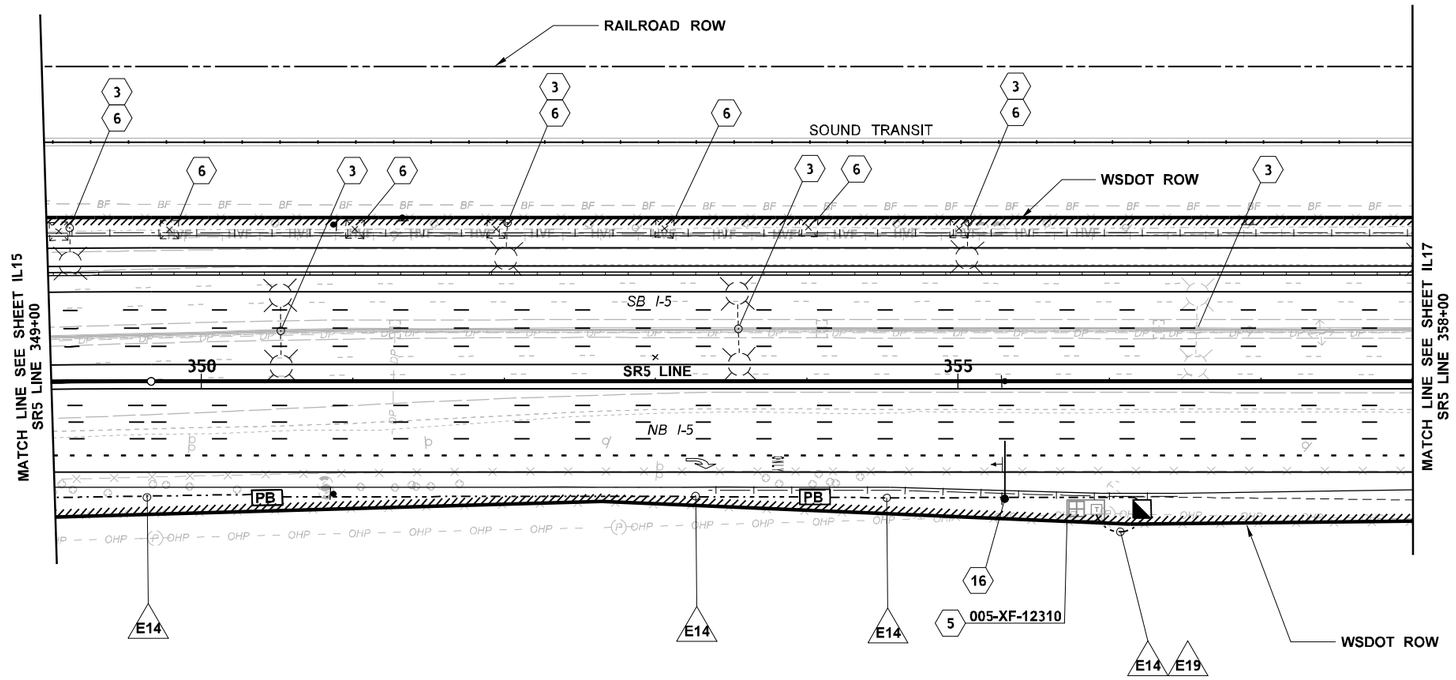

AS-BUILT

ATKINSON
JUL 09 2019 KTW
RELEASED FOR CONSTRUCTION

0 50 100
SCALE IN FEET

FILE NAME	c:\pwworking\jacobs_b&i\jeg_ch2m-kpourbah\dms20633\PS_IL_16.dgn					
TIME	9:16:25 AM					
DATE	7/3/2019					
PLOTTED BY	KPOURBAH					
DESIGNED BY	K. POURBAHRI					
ENTERED BY	K. POURBAHRI	REV 0 - RELEASED FOR CONSTRUCTION	07/08/19			
CHECKED BY	B. BARTON	REV B - FINAL REVIEW	03/13/19			
PROJ. ENGR.	C. MEADE	REV A - PRELIMINARY REVIEW	11/15/18			
REGIONAL ADM.	J. WYNANDS	REVISION	DATE	BY		

REGION NO.	STATE	FED.AID PROJ.NO.
10	WASH	
JOB NUMBER		
CONTRACT NO.		LOCATION NO.
C9133		

KATIE M. BARTON STATE OF WASHINGTON 46629 REGISTERED PROFESSIONAL ENGINEER
7-8-19
DATE
P.E. STAMP BOX

DATE
P.E. STAMP BOX

Washington State Department of Transportation

ATKINSON / JACOBS CONSTRUCTION

I-5
STEILACOOM-DUPONT RD TO THORNE LN
CORRIDOR IMPROVEMENTS
MP 120.01 TO MP 124.45

ILLUMINATION PLAN

PLAN REF NO
IL16

SHEET 924 OF 1456 SHEETS

NOTES:

1. SEE SHEET ILN01 FOR ABBREVIATIONS, LEGEND AND GENERAL NOTES.
2. SEE SHEET ILN04 FOR CONSTRUCTION NOTES.
3. ALL EXISTING LIGHT STANDARDS TO REMAIN, UNLESS OTHERWISE NOTED.

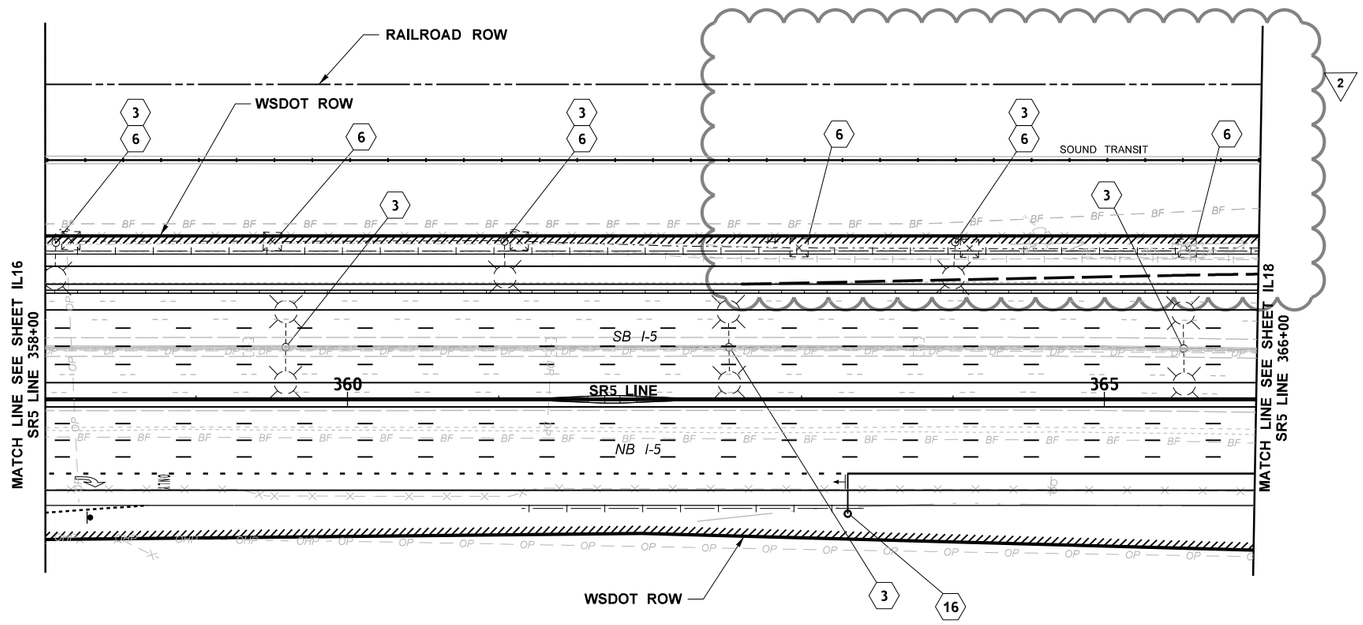

AS-BUILT

ATKINSON
MAR 24 2020 KTW
RELEASED FOR CONSTRUCTION

0 50 100
SCALE IN FEET

FILE NAME	c:\pwworking\jacobs_b&i\jeg_stevenj\dms20633\PS_IL_17.dgn						
TIME	7:43:33 AM				REGION NO. 10	STATE WASH	FED.AID PROJ.NO.
DATE	3/18/2020						
PLOTTED BY	STEVENJ	REV 2 - RFC, RFI0429	03/20/20		JOB NUMBER		
DESIGNED BY	C. STONE	REV 1 - RFC, RFI0328	01/24/20				
ENTERED BY	M. ALEXANDER	REV 0 - RELEASED FOR CONSTRUCTION	09/27/19				
CHECKED BY	B. BARTON	REV B - FINAL REVIEW	07/17/19		CONTRACT NO.		LOCATION NO.
PROJ. ENGR.	C. MEADE	REV A - PRELIMINARY REVIEW	11/15/18		C9133		
REGIONAL ADM.	J. WYNANDS	REVISION	DATE	BY			

AUGUSTE M. BARTON
STATE OF WASHINGTON
46629
REGISTERED PROFESSIONAL ENGINEER
3-23-20
DATE
P.E. STAMP BOX

P.E. STAMP BOX
DATE

Washington State Department of Transportation

ATKINSON CONSTRUCTION / JACOBS

I-5
STEILACOOM-DUPONT RD TO THORNE LN
CORRIDOR IMPROVEMENTS
MP 120.01 TO MP 124.45

ILLUMINATION PLAN

PLAN REF NO
IL17

SHEET 925 OF 1456 SHEETS

NOTES:

1. SEE SHEET ILN01 FOR ABBREVIATIONS, LEGEND AND GENERAL NOTES.
2. SEE SHEETS ILN03 AND ILN06 FOR LUMINAIRE SCHEDULES.
3. SEE SHEET ILN04 FOR CONSTRUCTION NOTES.
4. SEE SHEET ILN05 FOR ILLUMINATION WIRE NOTES.
5. ALL EXISTING LIGHT STANDARDS TO REMAIN, UNLESS OTHERWISE NOTED.

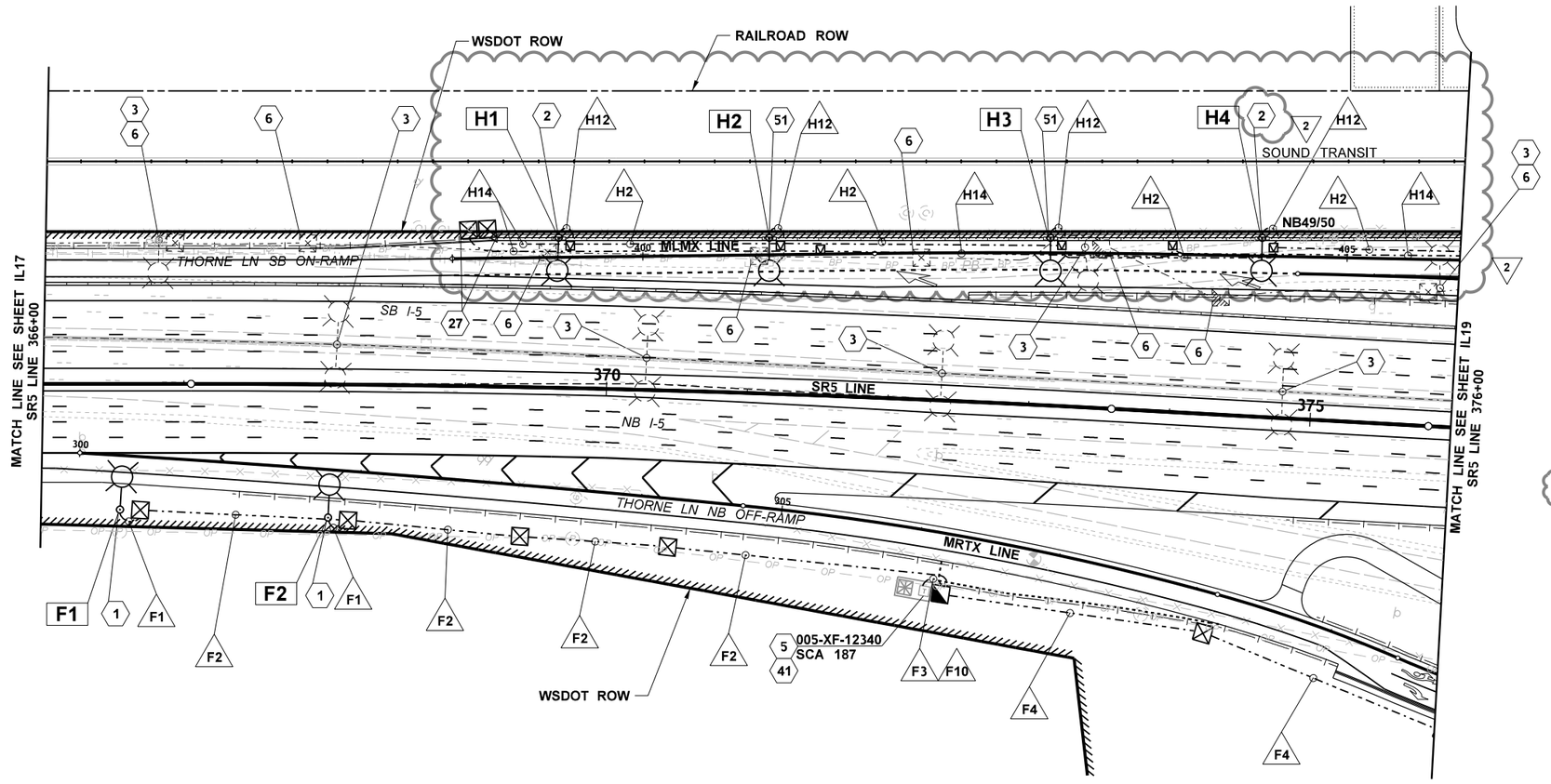

AS-BUILT

UPDATED CENTERLINE STATIONING.

ATKINSON
MAY 27 2020
RELEASED FOR CONSTRUCTION

0 50 100
SCALE IN FEET

FILE NAME	c:\pwworking\jacobs_b&i\jeg_stevenj\dms20633\PS_IL_18.dgn						
TIME	7:08:19 AM				REGION NO. 10	STATE WASH	FED.AID PROJ.NO.
DATE	5/21/2020						
PLOTTED BY	STEVENJ	REV 2 - RFC, RFI0456 AND RFI0465	05/22/20		JOB NUMBER		
DESIGNED BY	K. POURBAHRI	REV 1 - RFC, RFI0429	03/20/20				
ENTERED BY	K. POURBAHRI	REV 0 - RELEASED FOR CONSTRUCTION	09/27/19				
CHECKED BY	B. BARTON	REV B - FINAL REVIEW	07/17/19		CONTRACT NO. C9133		LOCATION NO.
PROJ. ENGR.	C. MEADE	REV A - PRELIMINARY REVIEW	11/15/18				
REGIONAL ADM.	J. WYNANDS	REVISION	DATE	BY			

BRIDGETTE M. BARTON
STATE OF WASHINGTON
46629
REGISTERED PROFESSIONAL ENGINEER
5-26-20
DATE
P.E. STAMP BOX

P.E. STAMP BOX
DATE

Washington State Department of Transportation

ATKINSON / JACOBS CONSTRUCTION

I-5
STEILACOOM-DUPONT RD TO THORNE LN
CORRIDOR IMPROVEMENTS
MP 120.01 TO MP 124.45

ILLUMINATION PLAN

PLAN REF NO IL18

SHEET 926 OF 1456 SHEETS

NOTES:

1. SEE SHEET ILN01 FOR ABBREVIATIONS, LEGEND AND GENERAL NOTES.
2. SEE SHEETS ILN03 AND ILN06 FOR LUMINAIRE SCHEDULES.
3. SEE SHEET ILN04 FOR ILLUMINATION CONSTRUCTION NOTES.
4. SEE SHEETS ILN05 FOR ILLUMINATION WIRE NOTES.
5. ALL EXISTING LIGHT STANDARDS TO REMAIN, UNLESS OTHERWISE NOTED.

AS-BUILT

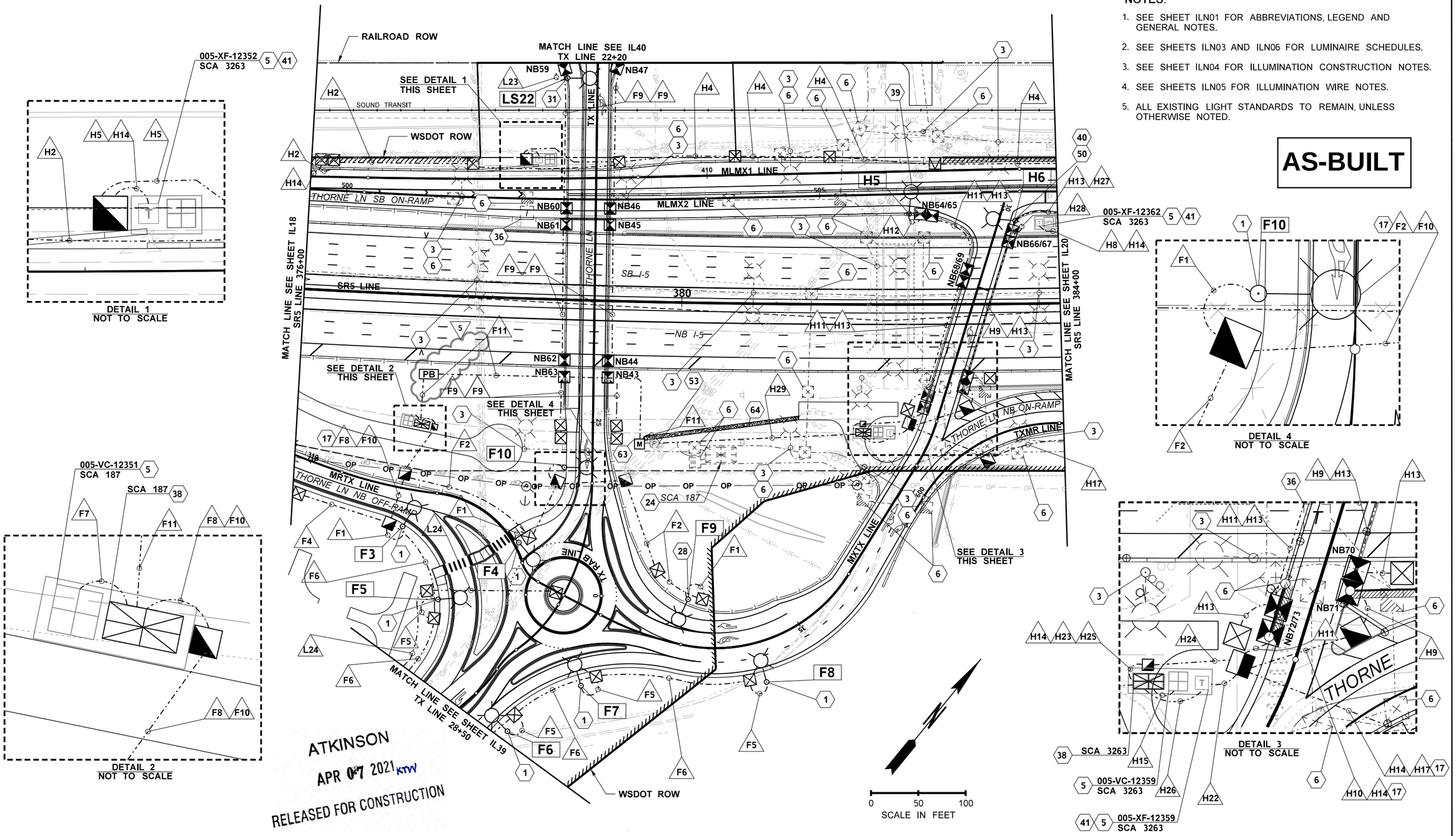

ATKINSON
APR 07 2021 KTW
RELEASED FOR CONSTRUCTION

FILE NAME	c:\pwworking\jacobs_b&i\bartonbm\dms20633\PS_IL_19.dgn			
TIME	3:46:45 PM	REV 5 - RFC, RFI0622	04/02/21	
DATE	3/31/2021	REV 4 - RFC, RFI0509	07/24/20	
PLOTTED BY	bartonbm	REV 3 - RFC, RFI0456 AND RFI0465	05/22/20	
DESIGNED BY	K. POURBAHRI	REV 2 - RFC, RFI0429	03/20/20	
ENTERED BY	K. POURBAHRI	REV 1 - RFC, RFI0274	10/25/19	
CHECKED BY	B. BARTON	REV 0 - RELEASED FOR CONSTRUCTION	09/27/19	
PROJ. ENGR.	C. MEADE	REV C - FINAL REVIEW	07/17/19	
REGIONAL ADM.	J. WYNANDS	REVISION	DATE	BY

REGION NO.	STATE	FED.AID PROJ.NO.
10	WASH	
JOB NUMBER		
CONTRACT NO.		LOCATION NO.
C9133		

BROOKSIE M. BARTON, STATE OF WASHINGTON, 46629, REGISTERED PROFESSIONAL ENGINEER
4-2-21
DATE
P.E. STAMP BOX

DATE
P.E. STAMP BOX

Washington State Department of Transportation

ATKINSON CONSTRUCTION / JACOBS

I-5
STEILACOOM-DUPONT RD TO THORNE LN
CORRIDOR IMPROVEMENTS
MP 120.01 TO MP 124.45

ILLUMINATION PLAN

PLAN REF NO IL19

SHEET 927 OF 1456 SHEETS

NOTES:

1. SEE SHEET ILN01 FOR ABBREVIATIONS, LEGEND AND GENERAL NOTES.
2. SEE SHEETS ILN03 AND ILN06 FOR LUMINAIRE SCHEDULES.
3. SEE SHEET ILN04 FOR ILLUMINATION CONSTRUCTION NOTES.
4. SEE SHEET ILN05 FOR ILLUMINATION WIRE NOTES.
5. ALL EXISTING LIGHT STANDARDS TO REMAIN, UNLESS OTHERWISE NOTED.

AS-BUILT

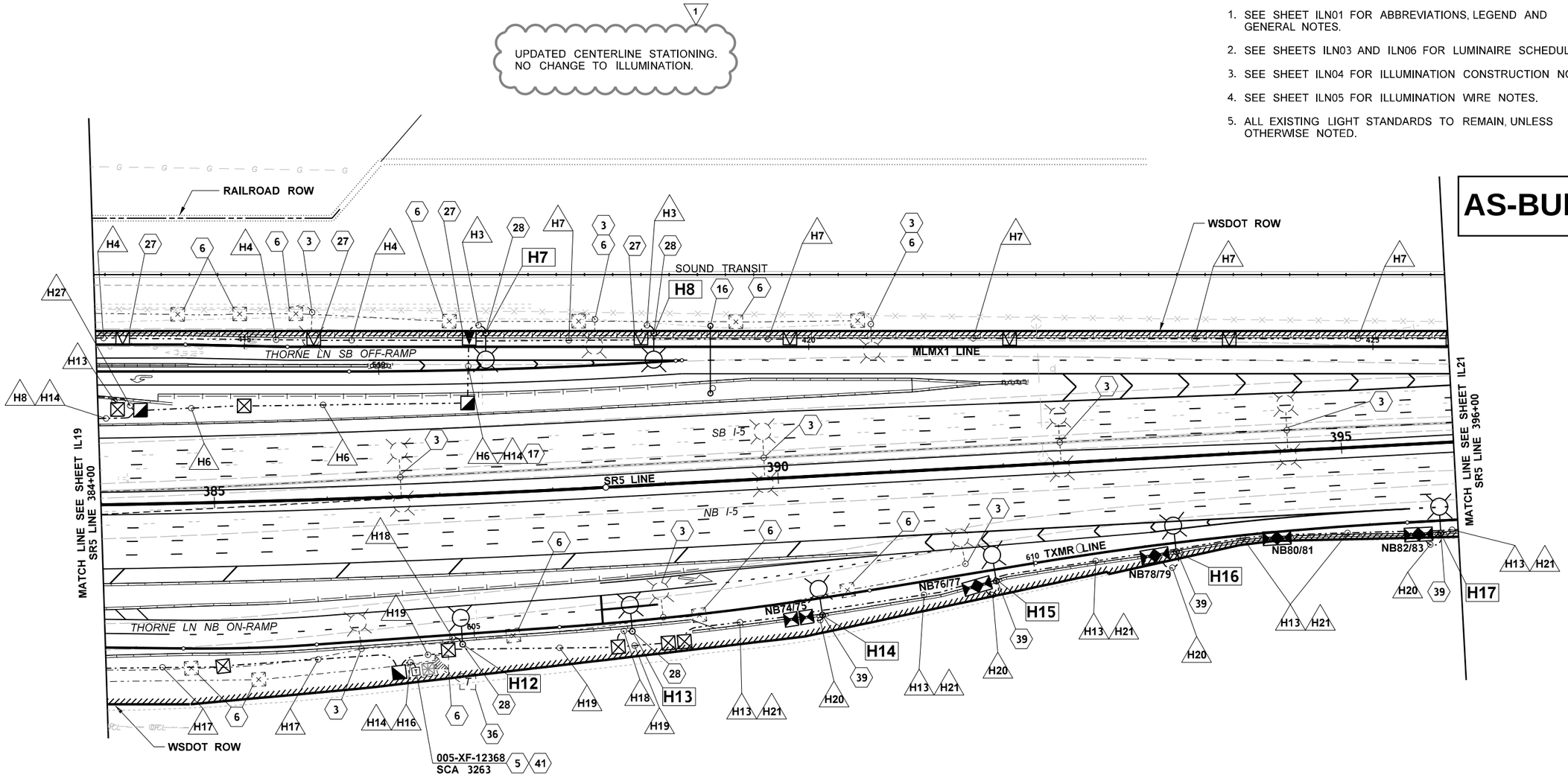

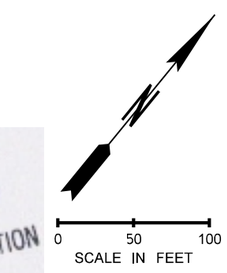

ATKINSON
MAY 27 2020 KTW
RELEASED FOR CONSTRUCTION

FILE NAME	c:\pwworking\jacobs_b&i\jeg_stevenj\dms20633\PS_IL_20.dgn			
TIME	7:25:24 AM			
DATE	5/21/2020			
PLOTTED BY	STEVENJ			
DESIGNED BY	K. POURBAHRI	REV 1 - RFC, RFI0456	05/22/20	
ENTERED BY	K. POURBAHRI	REV 0 - RELEASED FOR CONSTRUCTION	09/27/19	
CHECKED BY	B. BARTON	REV B - FINAL REVIEW	07/17/19	
PROJ. ENGR.	C. MEADE	REV A - PRELIMINARY REVIEW	11/15/18	
REGIONAL ADM.	J. WYNANDS	REVISION	DATE	BY

REGION NO.	STATE	FED.AID PROJ.NO.
10	WASH	
JOB NUMBER		
CONTRACT NO.		LOCATION NO.
C9133		

BROOKSIE M. BARTON, STATE OF WASHINGTON, 46629, REGISTERED PROFESSIONAL ENGINEER

5-26-20
DATE
P.E. STAMP BOX

DATE
P.E. STAMP BOX

Washington State Department of Transportation

ATKINSON CONSTRUCTION / JACOBS

I-5
STEILACOOM-DUPONT RD TO THORNE LN
CORRIDOR IMPROVEMENTS
MP 120.01 TO MP 124.45

ILLUMINATION PLAN

PLAN REF NO
IL20

SHEET 928 OF 1456 SHEETS

NOTES:

1. SEE SHEET ILN01 FOR ABBREVIATIONS, LEGEND AND GENERAL NOTES.
2. SEE SHEETS ILN03 AND ILN06 FOR LUMINAIRE SCHEDULES.
3. SEE SHEET ILN04 FOR ILLUMINATION CONSTRUCTION NOTES.
4. SEE SHEET ILN05 FOR ILLUMINATION WIRE NOTES.
5. ALL EXISTING LIGHT STANDARDS TO REMAIN, UNLESS OTHERWISE NOTED.

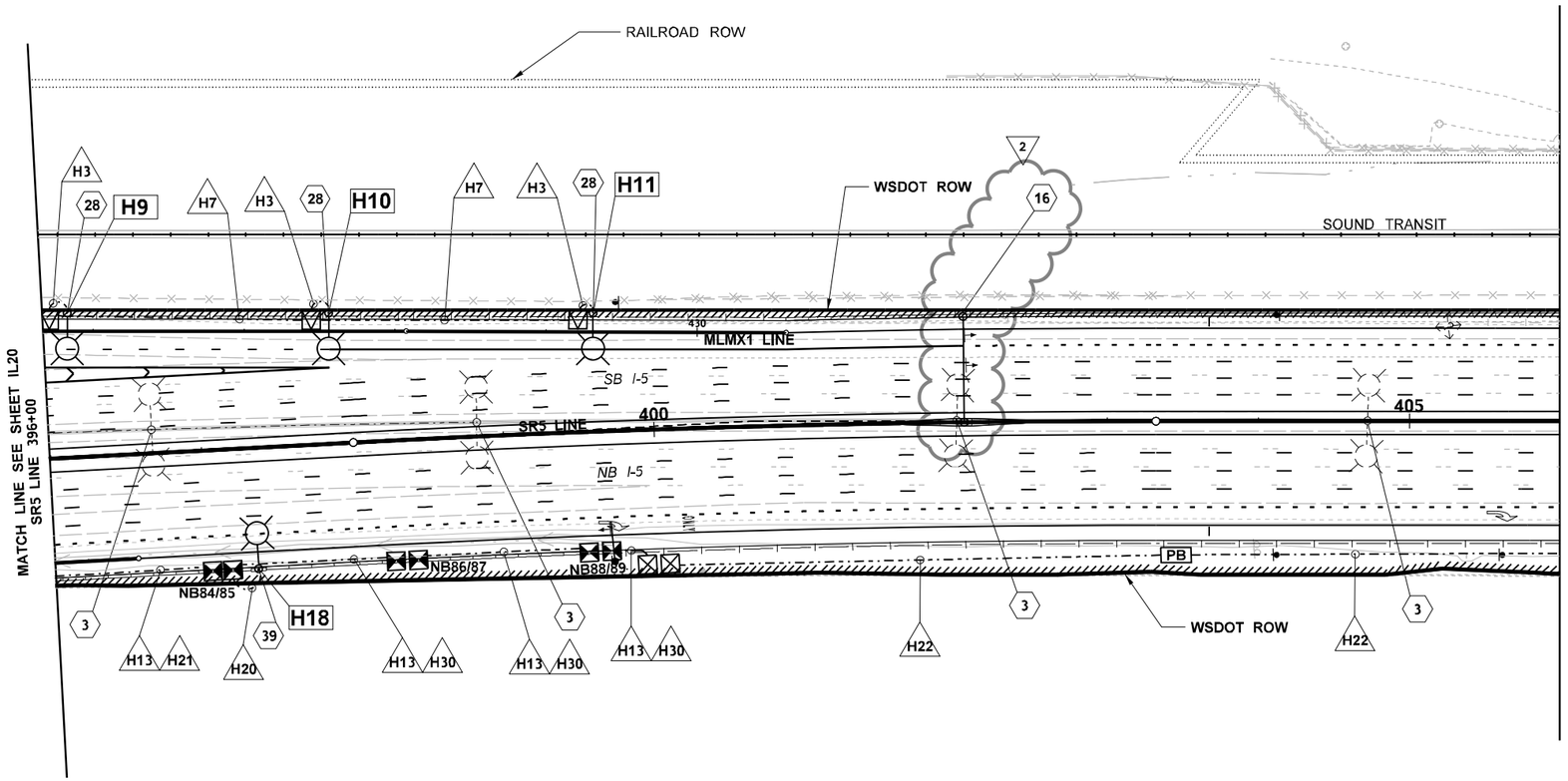

AS-BUILT

ATKINSON

JAN 30 2020 KTW

RELEASED FOR CONSTRUCTION

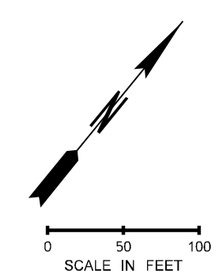

FILE NAME	c:\pwworking\jacobs_b&i\jeg_ch2m-kpourbah\dms20633\PS_IL_21.dgn						
TIME	9:27:53 AM				REGION NO.	STATE	FED.AID PROJ.NO.
DATE	1/20/2020				10	WASH	
PLOTTED BY	KPOURBAH	REV 2 - RFC, RFI0328	01/24/20		JOB NUMBER		
DESIGNED BY	K. POURBAHRI	REV 1 - RFC, RFI0254	10/25/19				
ENTERED BY	K. POURBAHRI	REV 0 - RELEASED FOR CONSTRUCTION	09/27/19				
CHECKED BY	B. BARTON	REV B - FINAL REVIEW	07/17/19		CONTRACT NO.		LOCATION NO.
PROJ. ENGR.	C. MEADE	REV A - PRELIMINARY REVIEW	11/15/18		C9133		
REGIONAL ADM.	J. WYNANDS	REVISION	DATE	BY			

AUGUSTE M. BARTON STATE OF WASHINGTON 46625 REGISTERED PROFESSIONAL ENGINEER

Barton 1-28-20

DATE

P.E. STAMP BOX

DATE

P.E. STAMP BOX

Washington State Department of Transportation

ATKINSON CONSTRUCTION / JACOBS

I-5
STEILACOOM-DUPONT RD TO THORNE LN
CORRIDOR IMPROVEMENTS
MP 120.01 TO MP 124.45

ILLUMINATION PLAN

PLAN REF NO IL21

SHEET 929 OF 1456 SHEETS

NOTES:

1. SEE SHEET ILN01 FOR ABBREVIATIONS, LEGEND AND GENERAL NOTES.
2. SEE SHEETS ILN03 AND ILN06 FOR LUMINAIRE SCHEDULES.
3. SEE SHEET ILN04 FOR ILLUMINATION CONSTRUCTION NOTES.
4. SEE SHEET ILN05 FOR ILLUMINATION WIRE NOTES.
5. ALL EXISTING LIGHT STANDARDS TO REMAIN, UNLESS OTHERWISE NOTED.

AS-BUILT

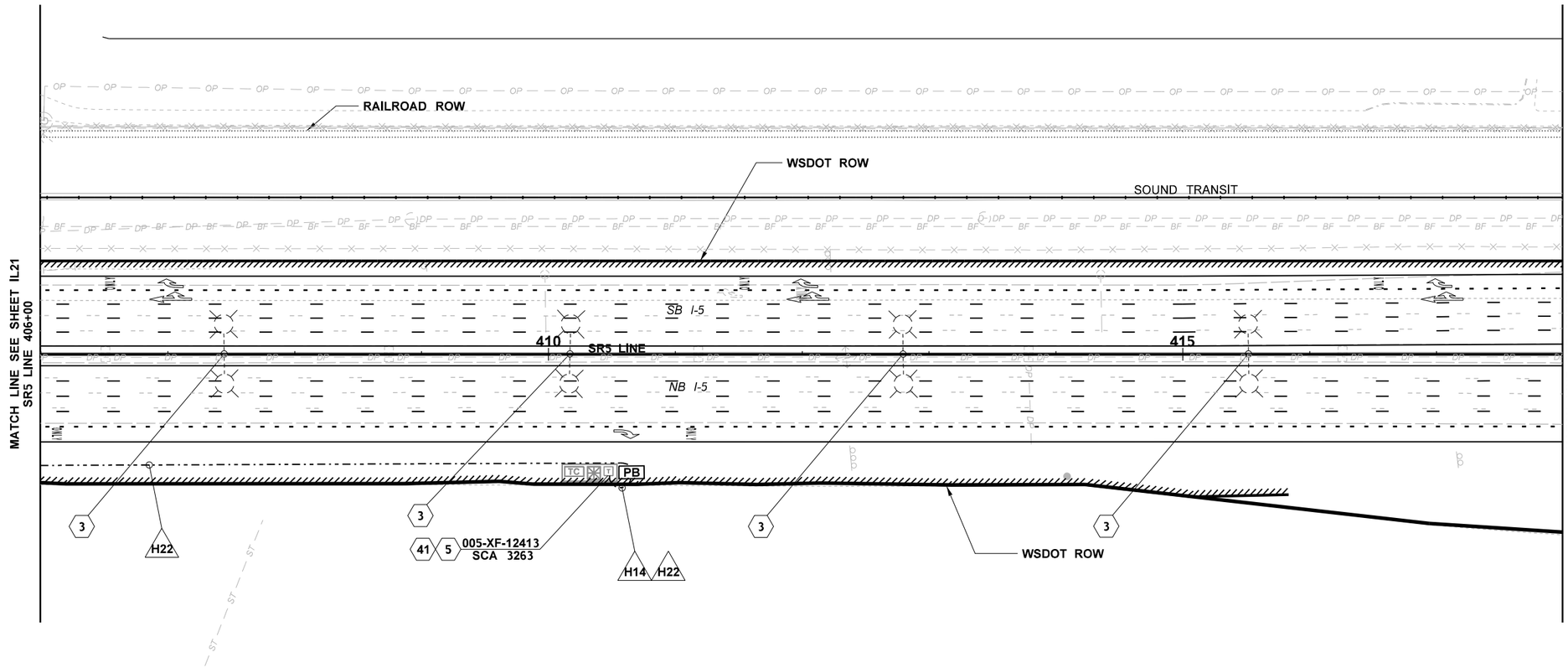

ATKINSON
OCT 02 2019 KTN
RELEASED FOR CONSTRUCTION

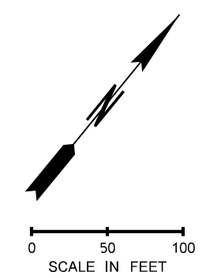

FILE NAME	c:\pwworking\jacobs_b&i\jeg_gt011740\dms20633\PS_IL_22.dgn						
TIME	3:51:45 PM				REGION NO. 10	STATE WASH	FED.AID PROJ.NO.
DATE	9/26/2019						
PLOTTED BY	GT011740				JOB NUMBER		
DESIGNED BY	K. POURBAHRI						
ENTERED BY	K. POURBAHRI	REV 0 - RELEASED FOR CONSTRUCTION	09/27/19				
CHECKED BY	B. BARTON	REV B - FINAL REVIEW	07/17/19		CONTRACT NO. C9133		LOCATION NO.
PROJ. ENGR.	C. MEADE	REV A - PRELIMINARY REVIEW	11/15/18				
REGIONAL ADM.	J. WYNANDS	REVISION	DATE	BY			

BROOKSIE M. BARTON, STATE OF WASHINGTON, 46629, REGISTERED PROFESSIONAL ENGINEER
9-27-19
DATE
P.E. STAMP BOX

DATE
P.E. STAMP BOX

Washington State Department of Transportation

ATKINSON / JACOBS CONSTRUCTION

I-5
STEILACOOM-DUPONT RD TO THORNE LN
CORRIDOR IMPROVEMENTS
MP 120.01 TO MP 124.45

ILLUMINATION PLAN

PLAN REF NO IL22

SHEET 930 OF 1456 SHEETS

NOTES:

1. SEE SHEET ILN01 FOR ABBREVIATIONS, LEGEND AND GENERAL NOTES.
2. SEE SHEETS ILN03 AND ILN06 FOR LUMINAIRE SCHEDULES.
3. SEE SHEET ILN04 FOR ILLUMINATION CONSTRUCTION NOTES.
4. SEE SHEET ILN05 FOR ILLUMINATION WIRE NOTES.
5. ALL EXISTING LIGHT STANDARDS TO REMAIN, UNLESS OTHERWISE NOTED.

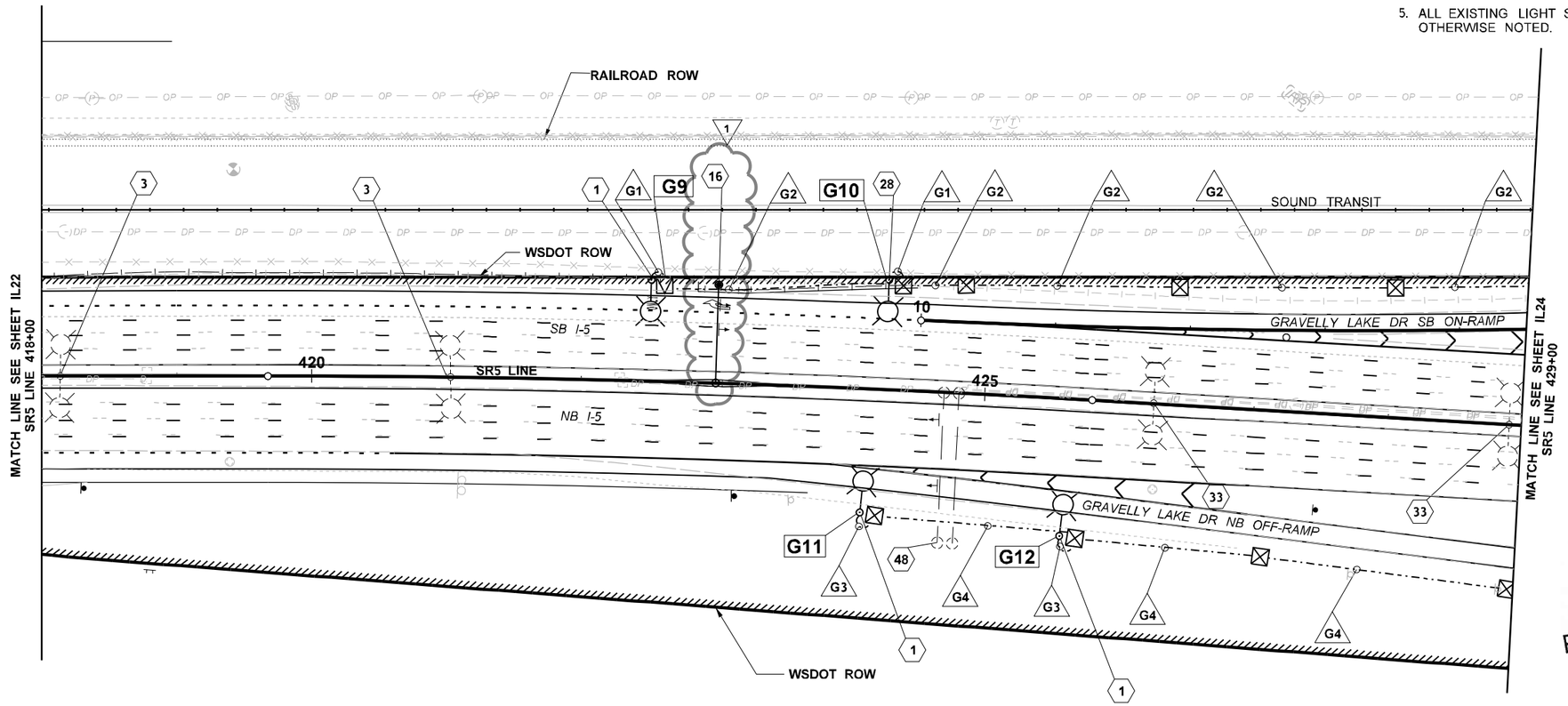

AS-BUILT

ATKINSON

JAN 30 2020 KTW

RELEASED FOR CONSTRUCTION

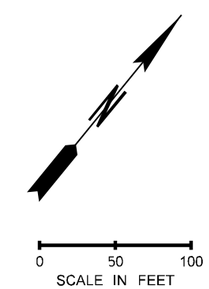

FILE NAME	c:\pwworking\jacobs_b&i\jeg_ch2m-kpourbah\dms20633\PS_IL_23.dgn						
TIME	7:26:45 AM				REGION NO. 10	STATE WASH	FED.AID PROJ.NO.
DATE	1/21/2020						
PLOTTED BY	KPOURBAH						
DESIGNED BY	K. POURBAHRI	REV 1 - RFC, RFI0328	01/24/20		JOB NUMBER		
ENTERED BY	K. POURBAHRI	REV 0 - RELEASED FOR CONSTRUCTION	09/27/19				
CHECKED BY	B. BARTON	REV B - FINAL REVIEW	07/17/19		CONTRACT NO. C9133		LOCATION NO.
PROJ. ENGR.	C. MEADE	REV A - PRELIMINARY REVIEW	11/15/18				
REGIONAL ADM.	J. WYNANDS	REVISION	DATE	BY			

BRADLEY M. BARTON — STATE OF WASHINGTON — 46629 — REGISTERED PROFESSIONAL ENGINEER

1-28-20

DATE

P.E. STAMP BOX

P.E. STAMP BOX

DATE

Washington State Department of Transportation

ATKINSON CONSTRUCTION / JACOBS

I-5
STEILACOOM-DUPONT RD TO THORNE LN
CORRIDOR IMPROVEMENTS
MP 120.01 TO MP 124.45

ILLUMINATION PLAN

PLAN REF NO IL23

SHEET 931 OF 1456 SHEETS

NOTES:

1. SEE SHEET ILN01 FOR ABBREVIATIONS, LEGEND AND GENERAL NOTES.
2. SEE SHEETS ILN03 AND ILN06 FOR LUMINAIRE SCHEDULES.
3. SEE SHEET ILN04 FOR ILLUMINATION CONSTRUCTION NOTES.
4. SEE SHEET ILN05 FOR ILLUMINATION WIRE NOTES.
5. ALL EXISTING LIGHT STANDARDS TO REMAIN, UNLESS OTHERWISE NOTED.

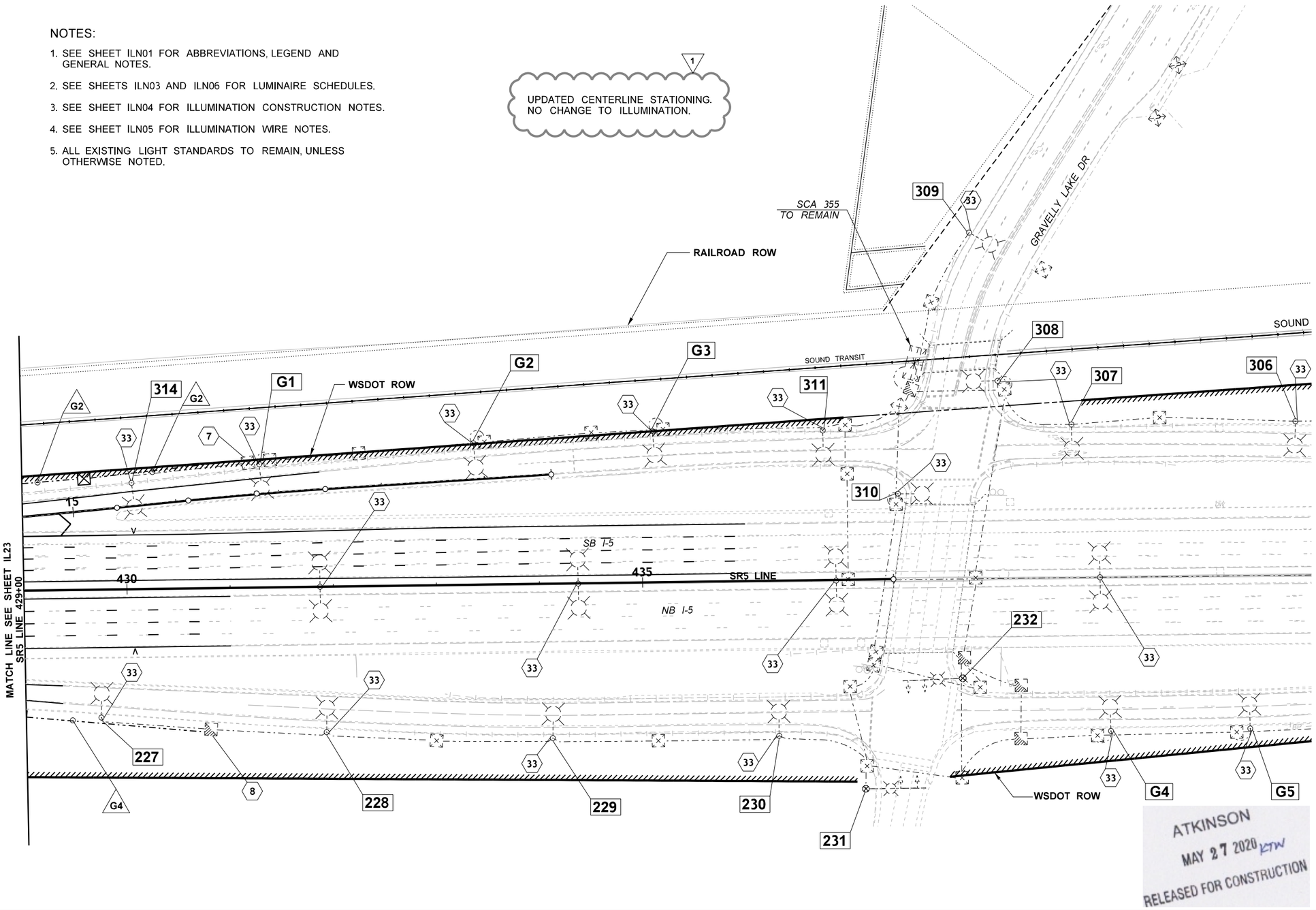

AS-BUILT

ATKINSON
MAY 27 2020 KTW
RELEASED FOR CONSTRUCTION

FILE NAME	c:\pwworking\jacobs_b&i\jeg_stevenj\dms20633\PS_IL_24.dgn						
TIME	7:33:01 AM				REGION NO. 10	STATE WASH	FED.AID PROJ.NO.
DATE	5/21/2020						
PLOTTED BY	STEVENJ						
DESIGNED BY	K. POURBAHRI	REV 1 - RFC, RFI0456	05/22/20		JOB NUMBER		
ENTERED BY	K. POURBAHRI	REV 0 - RELEASED FOR CONSTRUCTION	09/27/19				
CHECKED BY	B. BARTON	REV B - FINAL REVIEW	07/17/19		CONTRACT NO. C9133		LOCATION NO.
PROJ. ENGR.	C. MEADE	REV A - PRELIMINARY REVIEW	11/15/18				
REGIONAL ADM.	J. WYNANDS	REVISION	DATE	BY			

AUGUSTE M. BARTON, STATE OF WASHINGTON, 46629, REGISTERED PROFESSIONAL ENGINEER
5-26-20
DATE
P.E. STAMP BOX

P.E. STAMP BOX
DATE

Washington State Department of Transportation

ATKINSON / JACOBS CONSTRUCTION

I-5
STEILACOOM-DUPONT RD TO THORNE LN
CORRIDOR IMPROVEMENTS
MP 120.01 TO MP 124.45

ILLUMINATION PLAN

PLAN REF NO
IL24

SHEET 932 OF 1456 SHEETS

CONSTRUCTION NOTES:

1. CONSTRUCT FIXED BASE FOUNDATION AND INSTALL LIGHT STANDARD PER WSDOT STANDARD PLAN J-28.24-01 AND J-28.30-03. INSTALL ALUMINUM LUMINAIRE POLE, ARM AND FOUNDATION PER UFGS STANDARDS. INSTALL NEW LED FIXTURE. SEE LUMINAIRE SCHEDULE.
2. CONSTRUCT SLIP BASE FOUNDATION AND INSTALL LIGHT STANDARD PER WSDOT STANDARD PLANS J-28.22-00 AND J-28.30-03. INSTALL ALUMINUM LUMINAIRE POLE, ARM AND FOUNDATION PER UFGS STANDARDS. INSTALL NEW LED FIXTURE. SEE LUMINAIRE SCHEDULE.
3. EXISTING POLE REMOVED IN TEMPORARY CONSTRUCTION STAGE.
4. EXISTING POLE TO REMAIN. PROTECT AND MAINTAIN JUNCTION BOX AND EXISTING CONDUIT ROUTING.
5. PROVIDE ONE (1) 2" PVC SCHEDULE 80 CONDUIT IN SIGN STRUCTURE FOUNDATION PER FOUNDATION DETAILS (SB SHEETS). TERMINATE CONDUIT IN TYPE 1 JUNCTION BOX LOCATED A MAXIMUM OF FIVE (5) FEET FROM THE SIGN STRUCTURE FUNDATION. CAP EACH CONDUIT END.
6. EXTEND NEW CONDUIT TO EXISTING JUNCTION BOX. SPLICE NEW CIRCUIT 39 /41 ILLUMINATION CONDUITS TO EXISTING CIRCUIT 39 /41 CONDUCTORS PER JBLM STANDARDS.
7. ROUTE NEW ILLUMINATION CIRCUIT 34 /36 CONDUCTORS TO SERVICE PANEL IN GATE HOUSE. SEE BREAKER SCHEDULE FOR TERMINATION.
8. REPLACE EXISTING JUNCTION BOX WITH TYPE 8 JUNCTION BOX. BOX SHALL BE LABELED "LT".
9. INSTALL FOUR RECTANGULAR LOOP DETECTORS IN CENTER OF LANES. LOOPS SHALL BE 8 FEET WIDE AND 4 FEET LONG AND SHALL BE INSTALLED PER SECURITY SYSTEM MANUFACTURER REQUIREMENTS. CONTRACTOR SHALL COORDINATE WITH JBLM STAFF TO DETERMINE HOW TO SPLICE THE LOOPS TO THE EXISTING LEAD-IN CABLES INSIDE THE JUNCTION BOX.

LEGEND:

EXISTING	NEW	
		CONDUIT
		TYPE 1 JUNCTION BOX
		TYPE 2 JUNCTION BOX
		LUMINAIRE STANDARD
		LUMINAIRE STANDARD DOUBLE MAST ARM
		CONSTRUCTION NOTE
		WIRE NOTE

GENERAL NOTES:

1. ALL WORK SHALL BE DONE IN ACCORDANCE WITH WSDOT STANDARD PLANS AND SPECIFICATIONS AND UFGS SPECIFICATIONS.
2. LIGHT POLE LOCATIONS SHALL BE STAKED AND APPROVED BY THE ENGINEER PRIOR TO CONSTRUCTION.
3. UTILITY LOCATIONS SHOWN ARE APPROXIMATE AND SHALL BE VERIFIED IN THE FIELD BY CONTRACTOR PRIOR TO EXCAVATION.
4. THIS DESIGN WAS DONE USING LEOTEK LED GREEN COBRA HEAD GC2-100F-MV-NW-3-XX-700 AND GC2-120F-MV-NW-3-XX-700, WHICH HAS A COLOR RENDERING INDEX OF 70. IF DIFFERENT FIXTURE IS USED IT MUST MEET ALL LIGHT LEVEL AND COLOR RENDERING INDEX STANDARDS AS DEFINED IN THE UFGS SPECIFICATIONS.
5. THIS DESIGN UTILIZES EXISTING CIRCUITRY WHICH IS ROUTED THROUGH AN EXISTING BACK-UP GENERATOR.
6. TYPE 1 AND 2 JUNCTION BOXES SHALL BE INSTALLED PER WSDOT STANDARD PLAN J-40.10-04.
7. SEE SHEET ILD30 FOR SCHEDULES AND DETAILS.

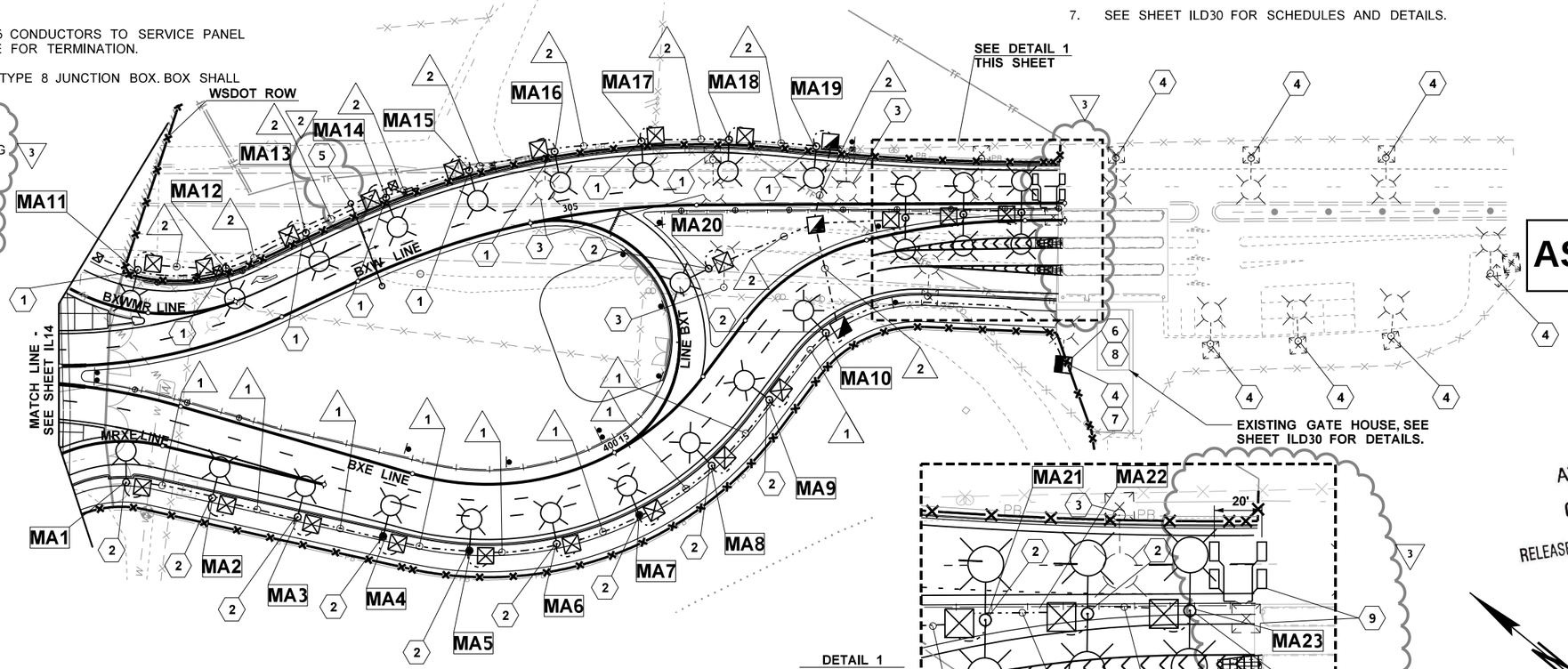

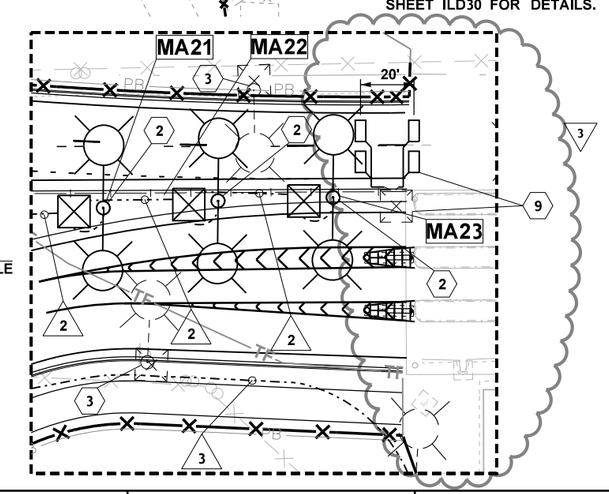

DETAIL 1
NOT TO SCALE

AS-BUILT

ATKINSON
OCT 08 2020 KTW
RELEASED FOR CONSTRUCTION

0 50 100
SCALE IN FEET

CALCULATION AREA	TARGET AVG	CALCULATED AVG	TARGET AVG/MIN	CALCULATED AVG/MIN
JACKSON AVE SIDEWALK	* 1.0	1.66	* 4:1	3.32
JACKSON AVE APPROACH ZONE	** 3.0	3.08	** 4:1	2.05
JACKSON AVE ACCESS CONTROL ZONE	** 5.0	5.66	** 3:1	3.33

* BASED ON ANSI / IES RP-8-14 HIGH PEDESTRIAN CONFLICT AREA, TABLE 4.
** BASED ON UFC 4-022-01 ACCESS CONTROL POINTS, TABLE 6-4.

FILE NAME	c:\pwworking\jacobs_b&i\wegenemf\dms20633\PS_IL_30.dgn
TIME	12:07:57 PM
DATE	10/6/2020
PLOTTED BY	WEGENEMF
DESIGNED BY	K. POURBAHRI
ENTERED BY	K. POURBAHRI
CHECKED BY	B. BARTON
PROJ. ENGR.	C. MEADE
REGIONAL ADM.	J. WYNANDS

REVISION	DATE	BY
REV 3 - RFC, RFI0449, ADD LOOP DET.	10/06/20	
REV 2 - RFC, RFI0328	01/24/20	
REV 1 - RFC, RFI0322	01/10/20	
REV 0 - RELEASED FOR CONSTRUCTION	06/11/19	
REV A - FINAL REVIEW	04/26/19	

REGION NO.	STATE	FED.AID PROJ.NO.
10	WASH	
JOB NUMBER		
CONTRACT NO.		LOCATION NO.
C9133		

BROOKSIE M. BARTON, STATE OF WASHINGTON, 45529, REGISTERED PROFESSIONAL ENGINEER
10-7-20
DATE
P.E. STAMP BOX

DATE
P.E. STAMP BOX

Washington State Department of Transportation
ATKINSON / JACOBS CONSTRUCTION

I-5
STEILACOOM-DUPONT RD TO THORNE LN
CORRIDOR IMPROVEMENTS
MP 120.01 TO MP 124.45

MADIGAN ACP
ILLUMINATION PLAN

PLAN REF NO
IL30

SHEET 933 OF 1456 SHEETS

NOTES:

1. SEE SHEET ILN01 FOR ABBREVIATIONS, LEGEND AND GENERAL NOTES.
2. SEE SHEETS ILN02 AND ILN03 FOR LUMINAIRE SCHEDULES.
3. SEE SHEET ILN04 FOR ILLUMINATION CONSTRUCTION NOTES AND ILN05 FOR ILLUMINATION WIRE NOTES.
4. ALL EXISTING LIGHT STANDARDS TO REMAIN, UNLESS OTHERWISE NOTED.

AS-BUILT

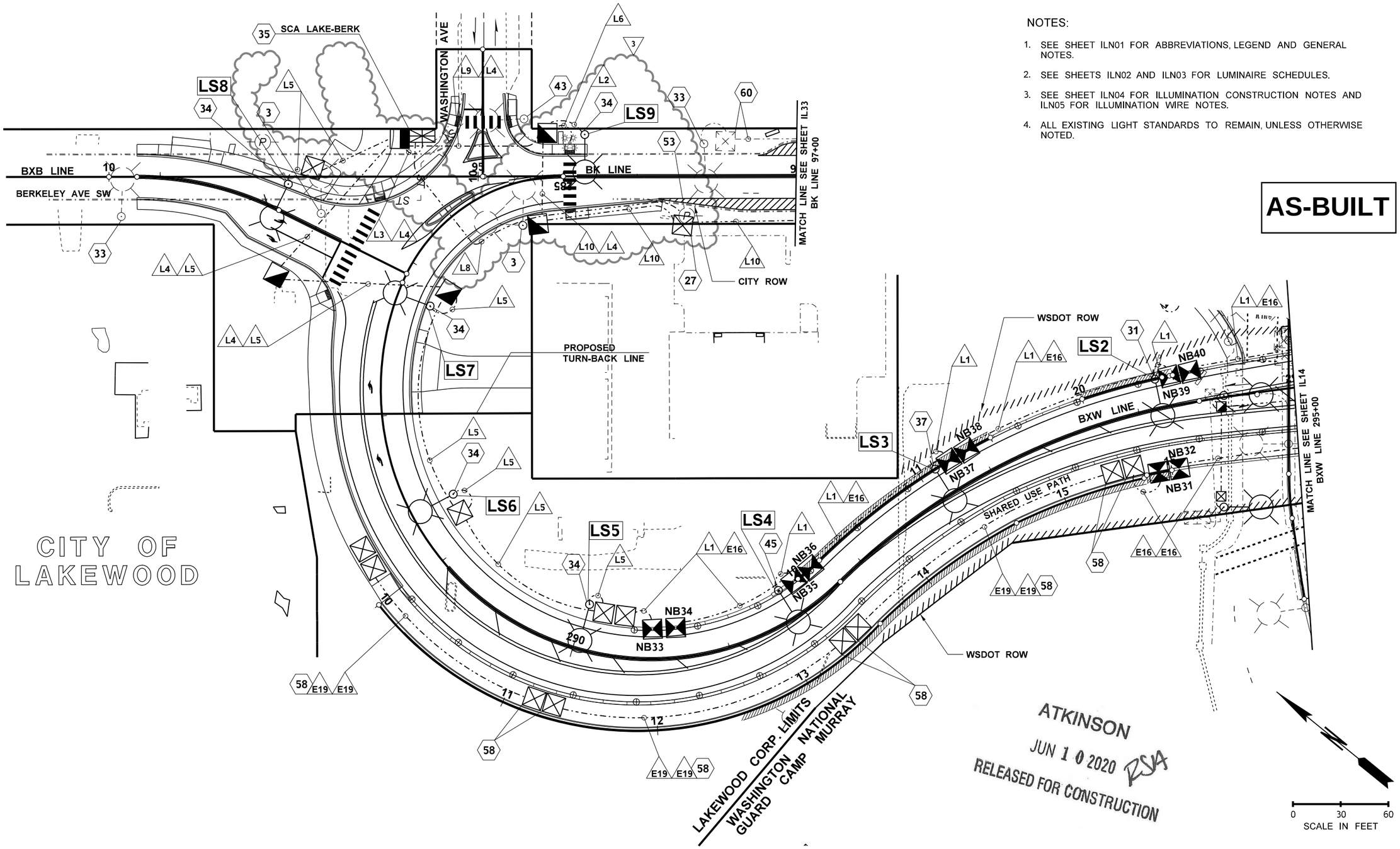

BERKELEY ST SW INTERCHANGE

FILE NAME	c:\pwworking\jacobs_b&l\jeg_stevenj\dms20633\PS_IL_31.dgn			
TIME	6:44:54 AM			
DATE	6/9/2020	REV 3 - RFC, RFI0469 AND RFI0474	06/10/20	
PLOTTED BY	STEVENJ	REV 2 - RFC, RFI0379	02/19/20	
DESIGNED BY	K. POURBAHRI	REV 1 - RFC, RFI0265 AND RFI0315	12/13/19	
ENTERED BY	K. POURBAHRI	REV 0 - RELEASED FOR CONSTRUCTION	07/08/19	
CHECKED BY	B. BARTON	REV B - FINAL REVIEW	03/13/19	
PROJ. ENGR.	C. MEADE	REV A - PRELIMINARY REVIEW	11/15/18	
REGIONAL ADM.	J. WYNANDS	REVISION	DATE	BY

REGION NO.	STATE	FED.AID PROJ.NO.
10	WASH	
JOB NUMBER		
CONTRACT NO.		LOCATION NO.
C9133		

P.E. STAMP BOX — DATE 6-10-20

P.E. STAMP BOX — DATE

Washington State Department of Transportation

ATKINSON CONSTRUCTION / JACOBS

I-5
STEILACOOM-DUPONT RD TO THORNE LN
CORRIDOR IMPROVEMENTS
MP 120.01 TO MP 124.45

ILLUMINATION PLAN

PLAN REF NO IL31

SHEET 934 OF 1456 SHEETS

NOTES:

1. SEE SHEET ILN01 FOR ABBREVIATIONS, LEGEND AND GENERAL NOTES.
2. SEE SHEETS ILN02 AND ILN03 FOR LUMINAIRE SCHEDULES.
3. SEE SHEET ILN04 FOR ILLUMINATION CONSTRUCTION NOTES AND ILN05 FOR ILLUMINATION WIRE NOTES.
4. ALL EXISTING LIGHT STANDARDS TO REMAIN, UNLESS OTHERWISE NOTED.

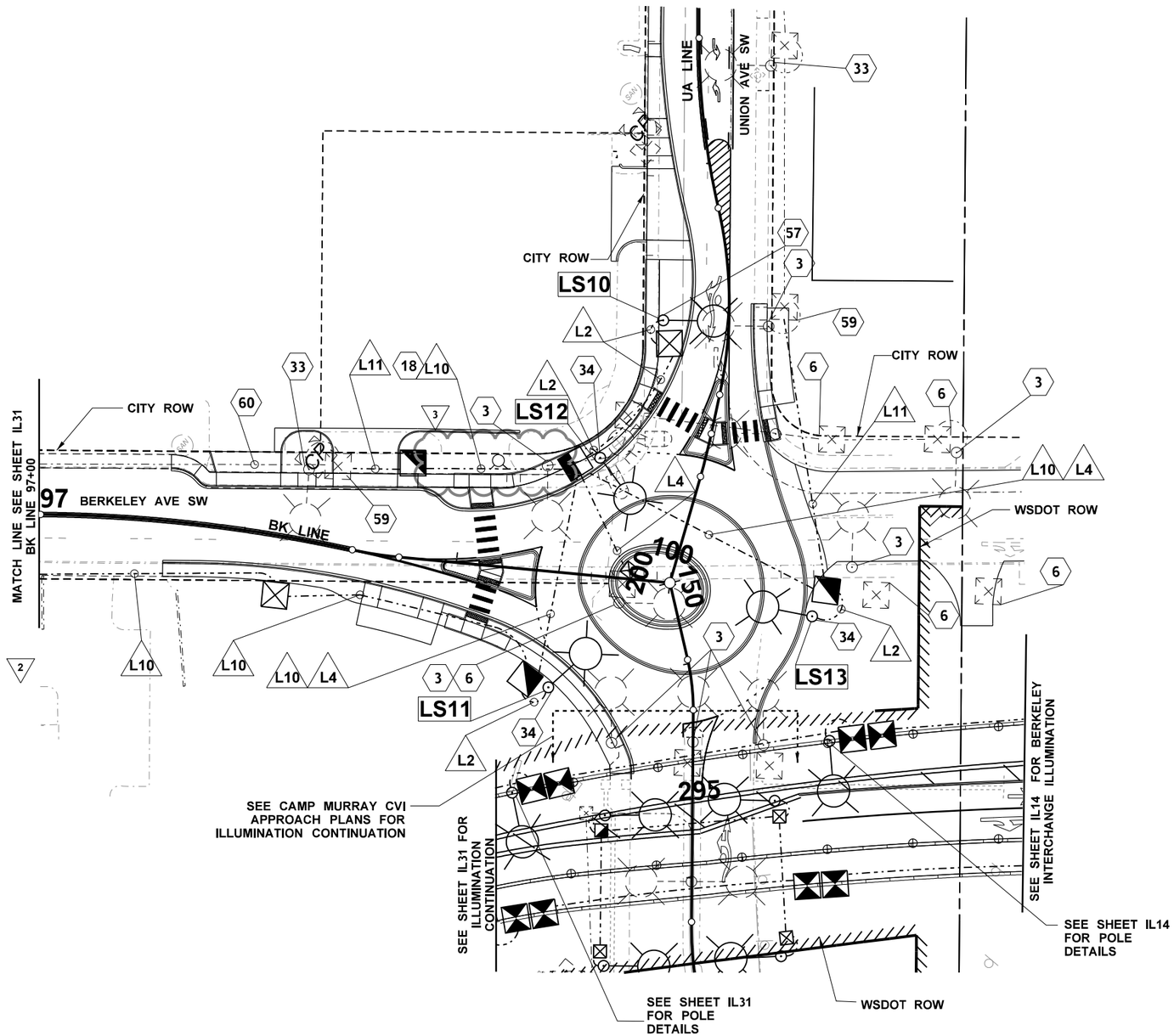

AS-BUILT

ATKINSON
APR 15 2020 KTW
RELEASED FOR CONSTRUCTION

0 30 60
SCALE IN FEET

BERKELEY STREET SW/
UNION AVENUE SW/
MILITIA DRIVE

FILE NAME	c:\pwworking\jacobs_b&i\jeg_stevenj\dms20633\PS_IL_33.dgn			
TIME	11:17:40 AM			
DATE	4/14/2020	REV 3 - RFC, RFI0438	04/14/20	
PLOTTED BY	STEVENJ	REV 2 - RFC, RFI0379	02/19/20	
DESIGNED BY	K. POURBAHRI	REV 1 - RFC, RFI0307 AND RFI0315	12/13/19	
ENTERED BY	K. POURBAHRI	REV 0 - RELEASED FOR CONSTRUCTION	07/08/19	
CHECKED BY	B. BARTON	REV B - FINAL REVIEW	03/13/19	
PROJ. ENGR.	C. MEADE	REV A - PRELIMINARY REVIEW	11/15/18	
REGIONAL ADM.	J. WYNANDS	REVISION	DATE	BY

REGION NO.	STATE	FED.AID PROJ.NO.
10	WASH	
JOB NUMBER		
CONTRACT NO.		LOCATION NO.
C9133		

BROOKSIE M. BARTON, STATE OF WASHINGTON, 46629, REGISTERED PROFESSIONAL ENGINEER
4-14-20
DATE
P.E. STAMP BOX

DATE
P.E. STAMP BOX

Washington State Department of Transportation

ATKINSON CONSTRUCTION / JACOBS

I-5
STEILACOOM-DUPONT RD TO THORNE LN
CORRIDOR IMPROVEMENTS
MP 120.01 TO MP 124.45

ILLUMINATION PLAN

PLAN REF NO IL33

SHEET 935 OF 1456 SHEETS

CONSTRUCTION NOTES:

1. CONSTRUCT FIXED BASE FOUNDATION AND INSTALL LIGHT STANDARD PER WSDOT STANDARD PLANS J-28.22-00 AND J-28.30-03. INSTALL ALUMINUM LUMINAIRE POLE, ARM AND FOUNDATION PER UFGS STANDARDS. MATCH EXISTING POLE TYPE AND COLOR AT ENTRANCE. INSTALL NEW LED FIXTURE. SEE LUMINAIRE SCHEDULE.
2. EXISTING POLE REMOVED IN TEMPORARY CONSTRUCTION STAGE.
3. EXISTING POLE TO REMAIN. PROTECT AND MAINTAIN CONDUIT AND EXISTING POWER ROUTING.
4. TERMINATE NEW CONDUIT IN EXISTING JUNCTION BOX. SPLICE NEW CIRCUIT 5 ILLUMINATION CONDUCTORS TO EXISTING CIRCUIT 5 CONDUCTORS PER JBLM STANDARDS.

LEGEND:

EXISTING	NEW	
		CONDUIT
		TYPE 1 JUNCTION BOX
		TYPE 2 JUNCTION BOX
		LUMINAIRE STANDARD
		LUMINAIRE STANDARD DOUBLE MAST ARM
		CONSTRUCTION NOTE
		WIRE NOTE

GENERAL NOTES:

1. ALL WORK SHALL BE DONE IN ACCORDANCE WITH WSDOT STANDARD PLANS AND SPECIFICATIONS AND UFGS SPECIFICATIONS.
2. LIGHT POLE LOCATIONS SHALL BE STAKED AND APPROVED BY THE ENGINEER PRIOR TO CONSTRUCTION.
3. UTILITY LOCATIONS SHOWN ARE APPROXIMATE AND SHALL BE VERIFIED IN THE FIELD BY CONTRACTOR PRIOR TO EXCAVATION.
4. THIS DESIGN WAS DONE USING EATON LED GLEON-AF-04-LED-E1-5MQ, WHICH HAS A COLOR RENDERING INDEX OF 70. IF DIFFERENT FIXTURE IS USED IT MUST MEET ALL LIGHT LEVEL AND COLOR RENDERING INDEX STANDARDS AS DEFINED IN THE UFGS SPECIFICATIONS.
5. THIS DESIGN UTILIZES EXISTING CIRCUITRY WHICH IS ROUTED THROUGH AN EXISTING BACK-UP GENERATOR.
6. TYPE 1 AND 2 JUNCTION BOXES SHALL BE INSTALLED PER WSDOT STANDARD PLAN J-40.10-04.

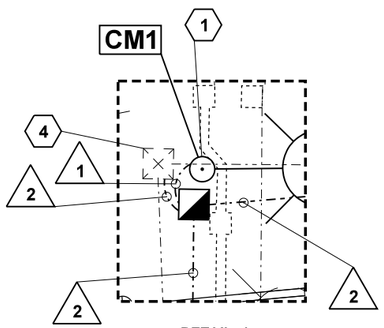

DETAIL 1
NOT TO SCALE

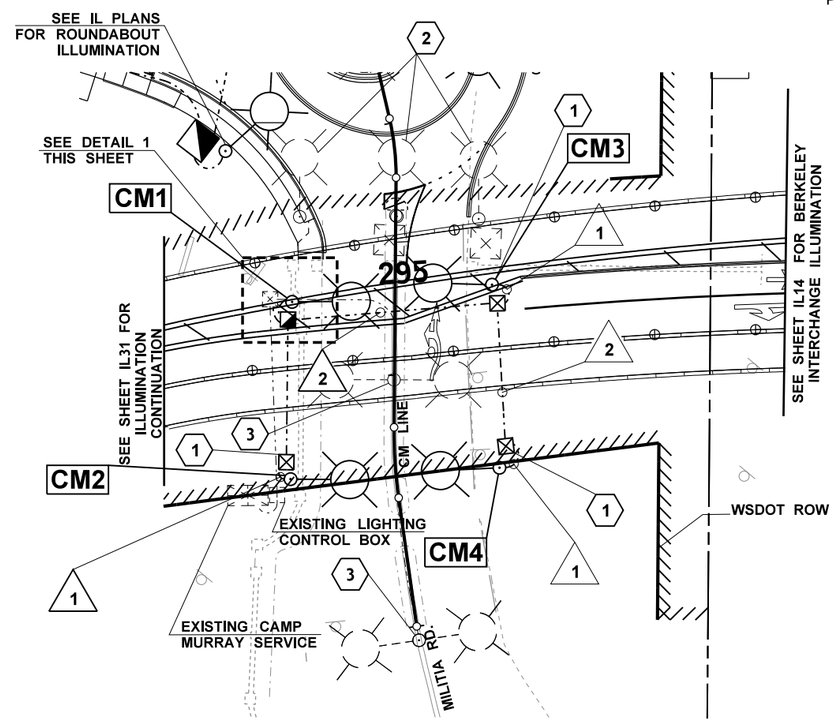

AS-BUILT

WIRING SCHEDULE				SERVICE CAMP MURRAY	
NO.	CONDUIT SIZE	CONDUCTORS EXISTING	CONDUCTORS NEW	CIRCUIT	COMMENTS
1	1" SCH 80		2-#8	5	ILLUMINATION
2	2" SCH 80		2-#8	5	ILLUMINATION

LUMINAIRE SCHEDULE											SERVICE CAMP MURRAY
LUMINAIRE NUMBER	CIRCUIT	LOCATION STATION		LOCATION OFFSET	TYPE - DISTRIBUTION	LED WATTAGE	MAST ARM	H1	BASE TYPE	*FOUNDATION TYPE	**ADDITIONAL EMBEDMENT	COMMENTS
CM1	5	CM	148+90.08	40.75' LT	V - VS CUTOFF	225	4 FT	15 FT	FIXED	A	-	ANCHORAGE PER MANUFACTURER RECOMMENDATIONS
CM2	5	CM	148+23.64	41.76' LT	V - VS CUTOFF	225	4 FT	30 FT	FIXED	A	-	ANCHORAGE PER MANUFACTURER RECOMMENDATIONS
CM3	5	CM	148+97.69	38.37' RT	V - VS CUTOFF	225	4 FT	15 FT	FIXED	A	-	ANCHORAGE PER MANUFACTURER RECOMMENDATIONS
CM4	5	CM	148+20.72	40.99' RT	V - VS CUTOFF	225	4 FT	30 FT	FIXED	A	-	ANCHORAGE PER MANUFACTURER RECOMMENDATIONS

CALCULATION AREA	*TARGET AVG	CALCULATED AVG	*TARGET AVG/MIN	CALCULATED AVG/MIN
MILITIA DR. APPROACH ZONE	3.0	4.09	4:1	1.86

* BASED ON UFC 4-022-01 ACCESS CONTROL POINTS, TABLE 6-4.

0 30 60
SCALE IN FEET

ATKINSON
MAR 24 2020 KTW
RELEASED FOR CONSTRUCTION

UNION AVENUE SW/
MILITIA DRIVE

FILE NAME	c:\pwworking\jacobs_b&i\bartonbm\dms20633\PS_IL_33A.dgn
TIME	3:29:56 PM
DATE	3/23/2020
PLOTTED BY	bartonbm
DESIGNED BY	K. POURBAHRI
ENTERED BY	K. POURBAHRI
CHECKED BY	B. BARTON
PROJ. ENGR.	C. MEADE
REGIONAL ADM.	J. WYNANDS

REVISION	DATE	BY
REV 0 - RELEASED FOR CONSTRUCTION	03/23/20	
REV B - FINAL REVIEW	02/21/20	
REV A - PRELIMINARY REVIEW	12/20/19	

REGION NO.	STATE	FED.AID PROJ.NO.
10	WASH	
JOB NUMBER		
CONTRACT NO. C9133		LOCATION NO.

BRIANNE M. CLAYTON, STATE OF WASHINGTON, 46623, REGISTERED PROFESSIONAL ENGINEER
3-24-20
DATE
P.E. STAMP BOX

DATE
P.E. STAMP BOX

Washington State Department of Transportation

ATKINSON / JACOBS CONSTRUCTION

I-5
STEILACOOM-DUPONT RD TO THORNE LN
CORRIDOR IMPROVEMENTS
MP 120.01 TO MP 124.45

CAMP MURRAY CVI APPROACH
ILLUMINATION PLAN

PLAN REF NO
IL33A

SHEET 936 OF 1456 SHEETS

NOTES:

1. SEE SHEET ILN01 FOR ABBREVIATIONS, LEGEND AND GENERAL NOTES.
2. SEE SHEETS ILN03 AND ILN06 FOR LUMINAIRE SCHEDULES.
3. SEE SHEET ILN04 FOR ILLUMINATION CONSTRUCTION NOTES.
4. SEE SHEET ILN05 FOR ILLUMINATION WIRE NOTES.
5. ALL EXISTING LIGHT STANDARDS TO REMAIN, UNLESS OTHERWISE NOTED.

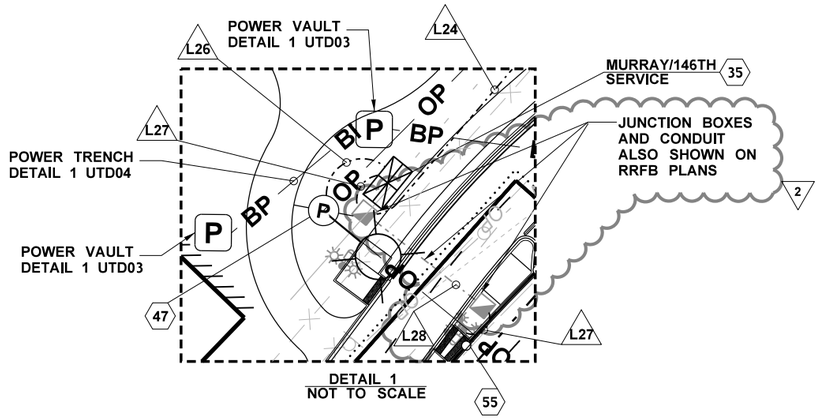

DETAIL 1
NOT TO SCALE

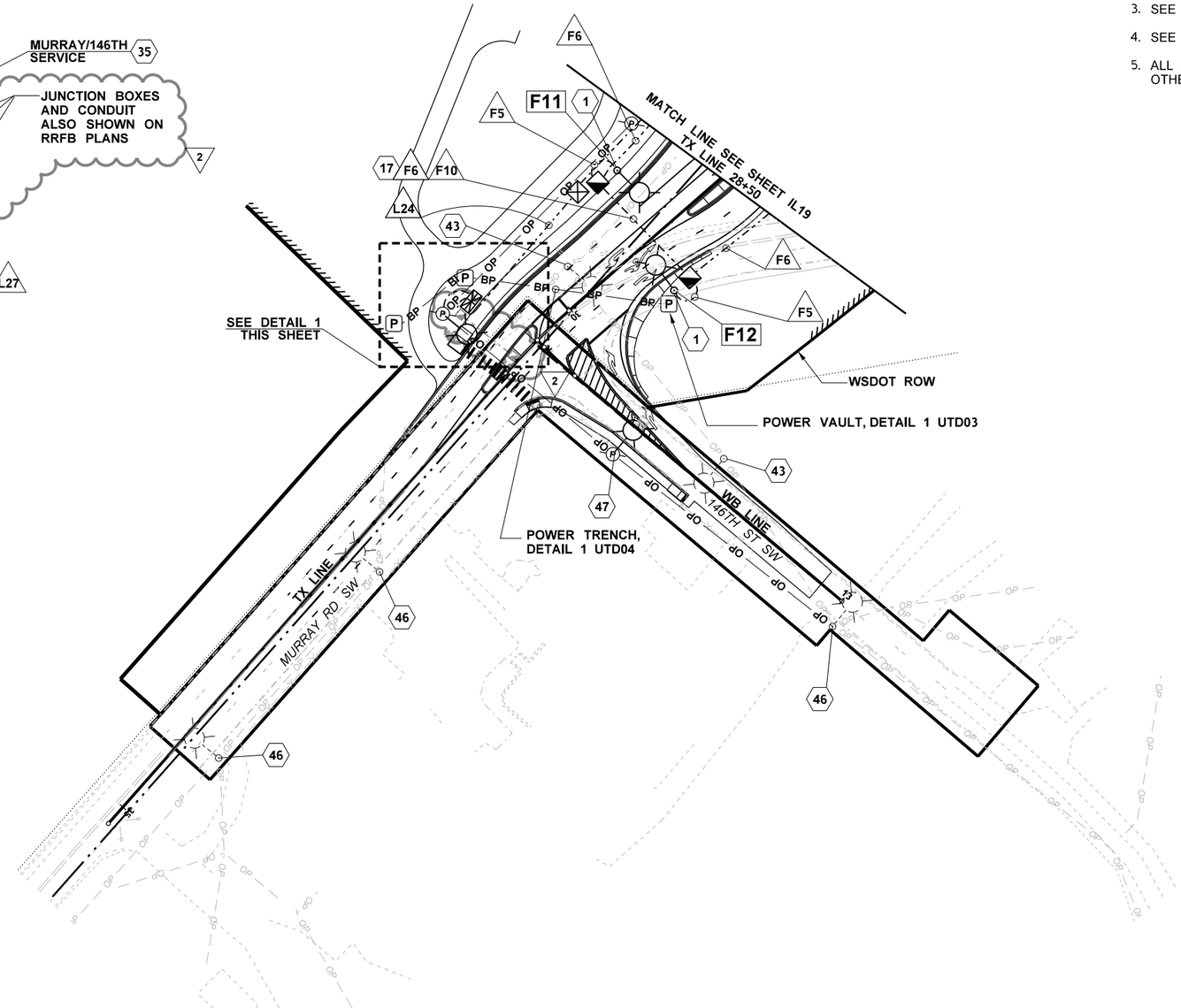

AS-BUILT

ATKINSON
SEP 24 2020 KTW
RELEASED FOR CONSTRUCTION

0 50 100
SCALE IN FEET

FILE NAME	c:\pwworking\jacobs_b&i\bartonbm\dms20633\PS_IL_39.dgn					
TIME	12:59:00 PM					
DATE	9/14/2020					
PLOTTED BY	bartonbm	REV 2 - RFC, RFI0503	09/18/20			
DESIGNED BY	K. POURBAHRI	REV 1 - RFC, RFI0274	10/25/19			
ENTERED BY	K. POURBAHRI	REV 0 - RELEASED FOR CONSTRUCTION	09/27/19			
CHECKED BY	B. BARTON	REV B - FINAL REVIEW	07/17/19			
PROJ. ENGR.	C. MEADE	REV A - PRELIMINARY REVIEW	04/12/19			
REGIONAL ADM.	J. WYNANDS	REVISION	DATE	BY		

REGION NO.	STATE	FED.AID PROJ.NO.
10	WASH	
JOB NUMBER		
CONTRACT NO.		LOCATION NO.
C9133		

BROOKSTE M. BARTON
STATE OF WASHINGTON
46629
REGISTERED PROFESSIONAL ENGINEER
9-23-20
DATE
P.E. STAMP BOX

DATE
P.E. STAMP BOX

Washington State Department of Transportation

ATKINSON / JACOBS CONSTRUCTION

I-5
STEILACOOM-DUPONT RD TO THORNE LN
CORRIDOR IMPROVEMENTS
MP 120.01 TO MP 124.45

ILLUMINATION PLAN

PLAN REF NO
IL39

SHEET 937 OF 1456 SHEETS

NOTES:

1. SEE SHEET ILN01 FOR ABBREVIATIONS, LEGEND AND GENERAL NOTES.
2. SEE SHEETS ILN03 AND ILN06 FOR LUMINAIRE SCHEDULES.
3. SEE SHEET ILN04 FOR ILLUMINATION CONSTRUCTION NOTES.
4. SEE SHEET ILN05 FOR ILLUMINATION WIRE NOTES.
5. ALL EXISTING LIGHT STANDARDS TO REMAIN, UNLESS OTHERWISE NOTED.

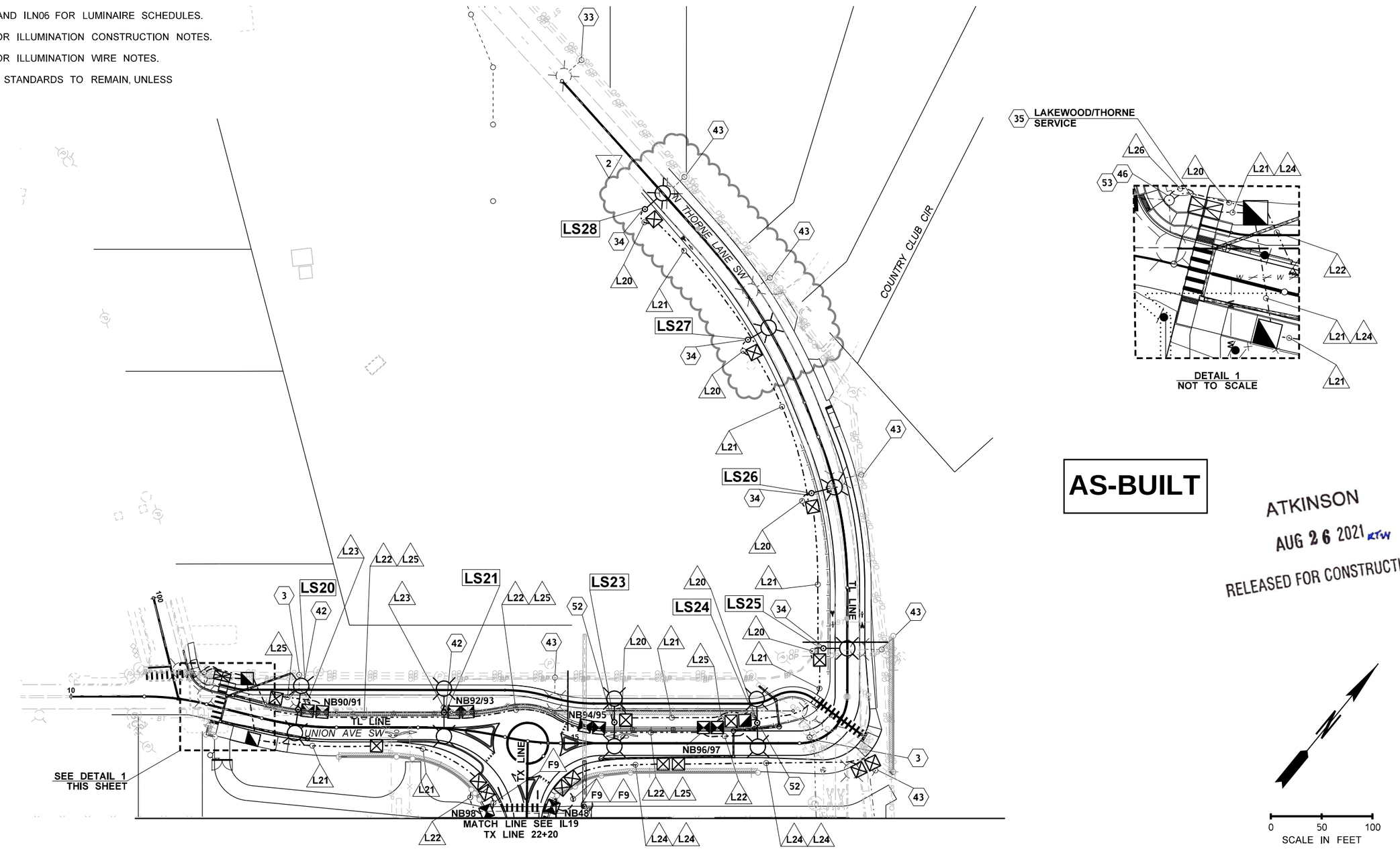

AS-BUILT

ATKINSON
AUG 26 2021 KTW
RELEASED FOR CONSTRUCTION

FILE NAME	c:\pwworking\jacobs_b&l\jeg_stevenj\dms20633\PS_IL_40.dgn			
TIME	2:54:03 PM			
DATE	8/16/2021			
PLOTTED BY	STEVENJ	REV 2 - RFC, RFI0648	08/20/21	
DESIGNED BY	K. POURBAHRI	REV 1 - RFC, RFI0509	07/24/20	
ENTERED BY	K. POURBAHRI	REV 0 - RELEASED FOR CONSTRUCTION	09/27/19	
CHECKED BY	B. BARTON	REV B - FINAL REVIEW	07/17/19	
PROJ. ENGR.	C. MEADE	REV A - PRELIMINARY REVIEW	04/12/19	
REGIONAL ADM.	J. WYNANDS	REVISION	DATE	BY

REGION NO.	STATE	FED.AID PROJ.NO.
10	WASH	
JOB NUMBER		
CONTRACT NO.		LOCATION NO.
C9133		

8-26-21
DATE
P.E. STAMP BOX

DATE
P.E. STAMP BOX

Washington State Department of Transportation

ATKINSON CONSTRUCTION / JACOBS

I-5
STEILACOOM-DUPONT RD TO THORNE LN
CORRIDOR IMPROVEMENTS
MP 120.01 TO MP 124.45

ILLUMINATION PLAN

PLAN REF NO IL40

SHEET 938 OF 1456 SHEETS

SCA 827 WIRING DIAGRAM

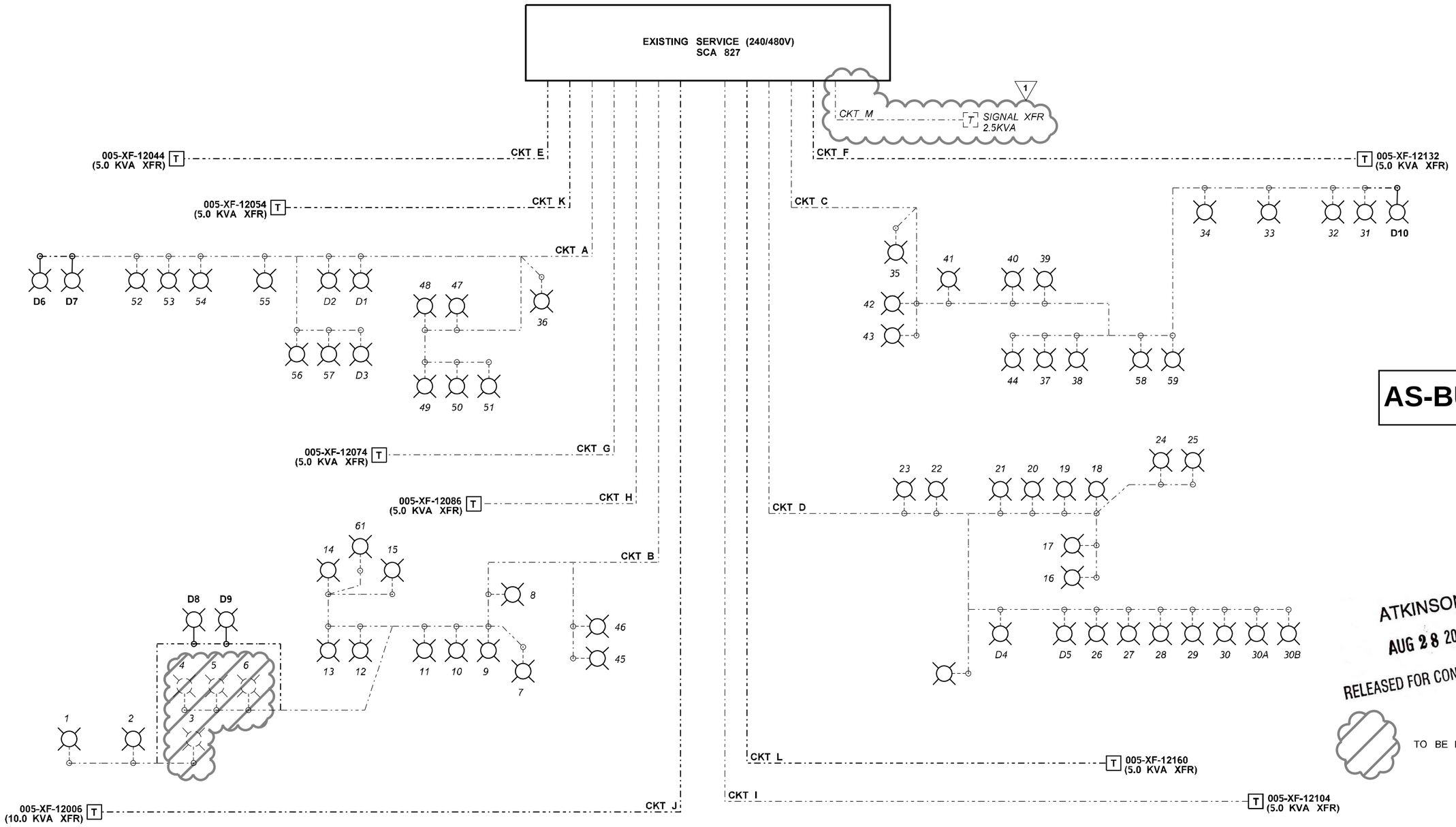

AS-BUILT

ATKINSON
AUG 28 2020 KTW
RELEASED FOR CONSTRUCTION

FILE NAME	c:\pwworking\jacobs_b&i\jeg_tt056327\dms20633\DE_ILD01.dgn			
TIME	10:56:29 AM			
DATE	8/21/2020			
PLOTTED BY	TT056327			
DESIGNED BY	K. POURBAHRI			
ENTERED BY	K. POURBAHRI	REV 1 - RFC, RFI0508	08/28/20	
CHECKED BY	B. BARTON	REV 0 - RELEASED FOR CONSTRUCTION	04/02/19	
PROJ. ENGR.	C. MEADE	REV A - FINAL REVIEW	02/11/19	
REGIONAL ADM.	J. WYNANDS	REVISION	DATE	BY

REGION NO.	STATE	FED.AID PROJ.NO.
10	WASH	
JOB NUMBER		
CONTRACT NO. C9133		LOCATION NO. ILD03

BROOKSIE M. BARTON
STATE OF WASHINGTON
46629
REGISTERED PROFESSIONAL ENGINEER
8-28-20
DATE
P.E. STAMP BOX

DATE
P.E. STAMP BOX

Washington State Department of Transportation

ATKINSON CONSTRUCTION / JACOBS

I-5
STEILACOOM-DUPONT RD TO THORNE LN
CORRIDOR IMPROVEMENTS
MP 120.01 TO MP 124.45

SERVICE WIRING DIAGRAM

PLAN REF NO ILD01

SHEET 939 OF 1456 SHEETS

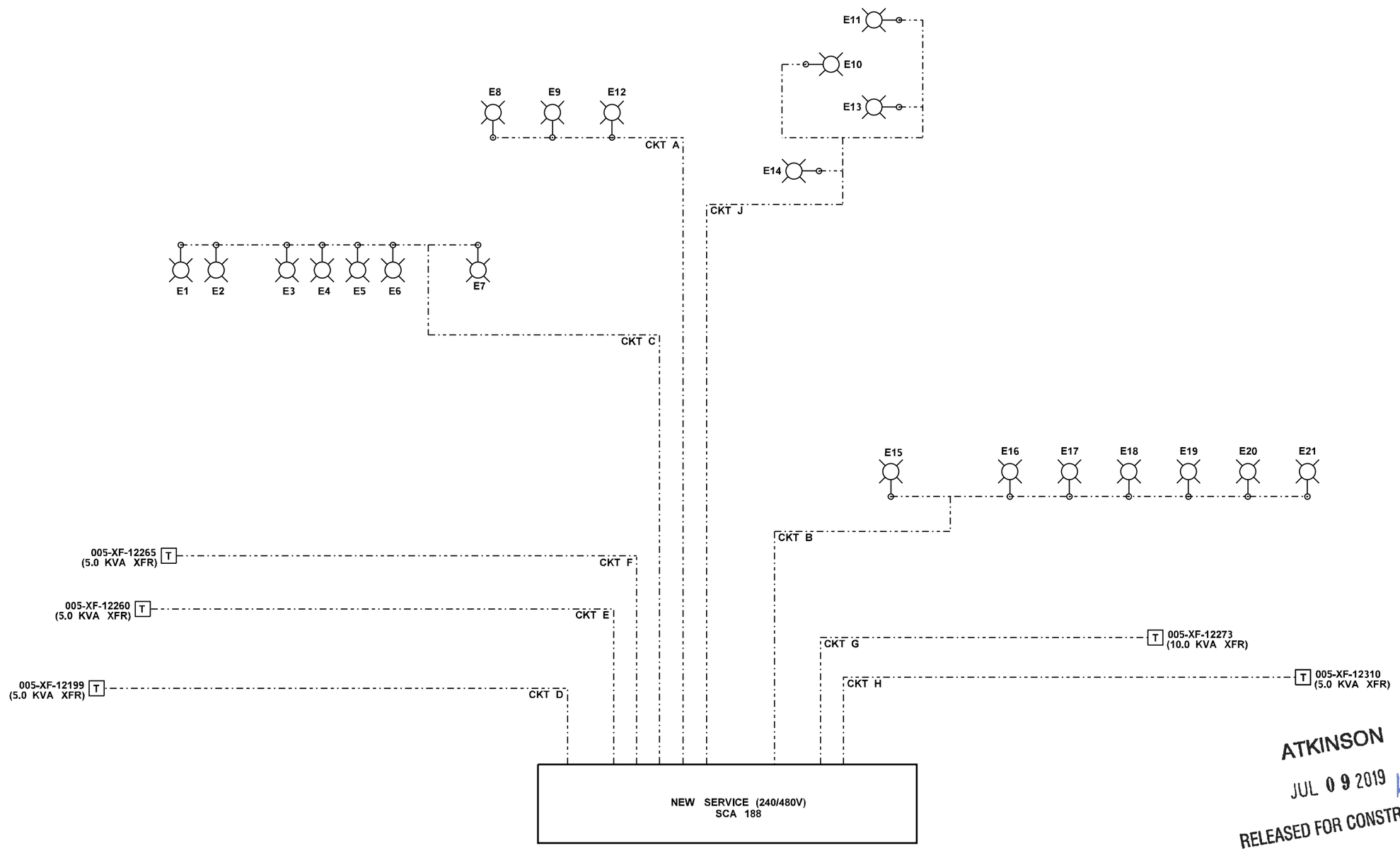

AS-BUILT

ATKINSON
JUL 09 2019 KTW
RELEASED FOR CONSTRUCTION

SCA 188 WIRING DIAGRAM

FILE NAME	c:\pwworking\jacobs_b&i\jeg_ch2m-kpourbah\dms20633\DE_ILD02.dgn						
TIME	9:26:17 AM				REGION NO. 10	STATE WASH	FED.AID PROJ.NO.
DATE	7/3/2019						
PLOTTED BY	KPOURBAH				JOB NUMBER		
DESIGNED BY	K. POURBAHRI						
ENTERED BY	K. POURBAHRI						
CHECKED BY	B. BARTON	REV 0 - RELEASED FOR CONSTRUCTION	07/08/19		CONTRACT NO. C9133		LOCATION NO. ILD03
PROJ. ENGR.	C. MEADE	REV A - FINAL REVIEW	03/13/19				
REGIONAL ADM.	J. WYNANDS	REVISION	DATE	BY			

P.E. STAMP BOX — DATE 7-8-19

P.E. STAMP BOX — DATE

Washington State Department of Transportation

ATKINSON CONSTRUCTION / JACOBS

I-5
STEILACOOM-DUPONT RD TO THORNE LN
CORRIDOR IMPROVEMENTS
MP 120.01 TO MP 124.45

SERVICE WIRING DIAGRAM

PLAN REF NO ILD02

SHEET 940 OF 1456 SHEETS

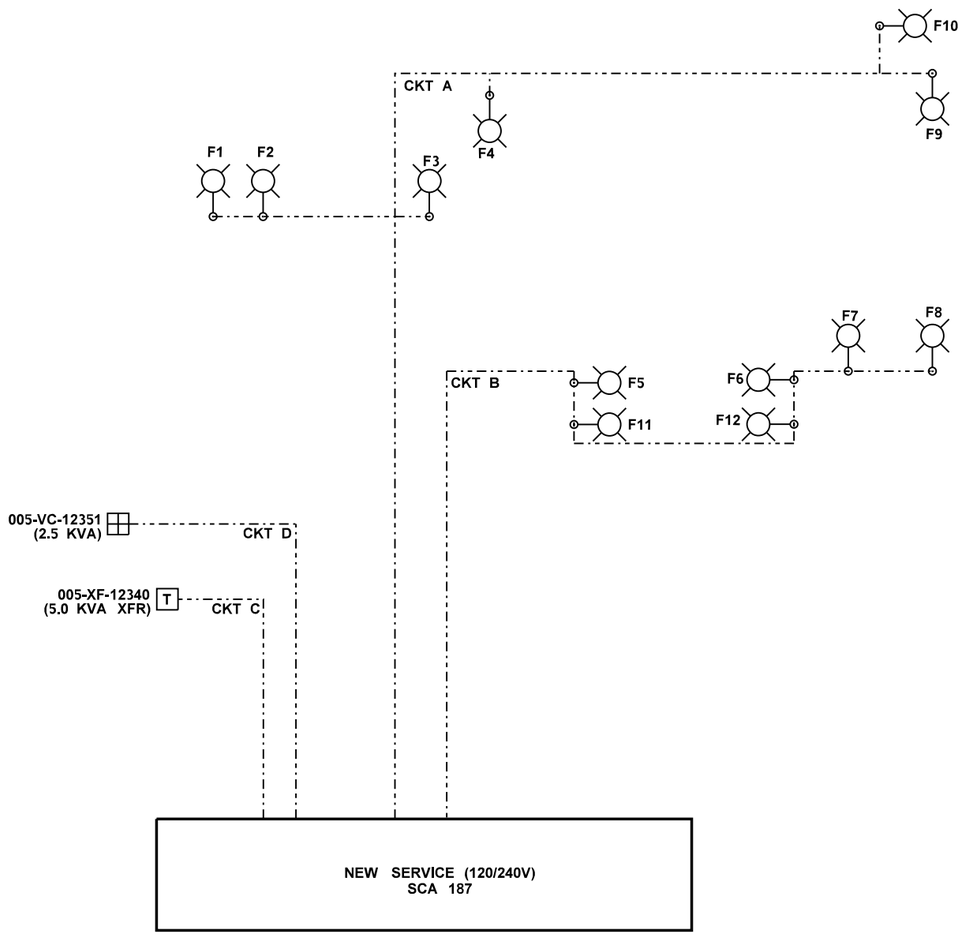

SCA 187 WIRING DIAGRAM

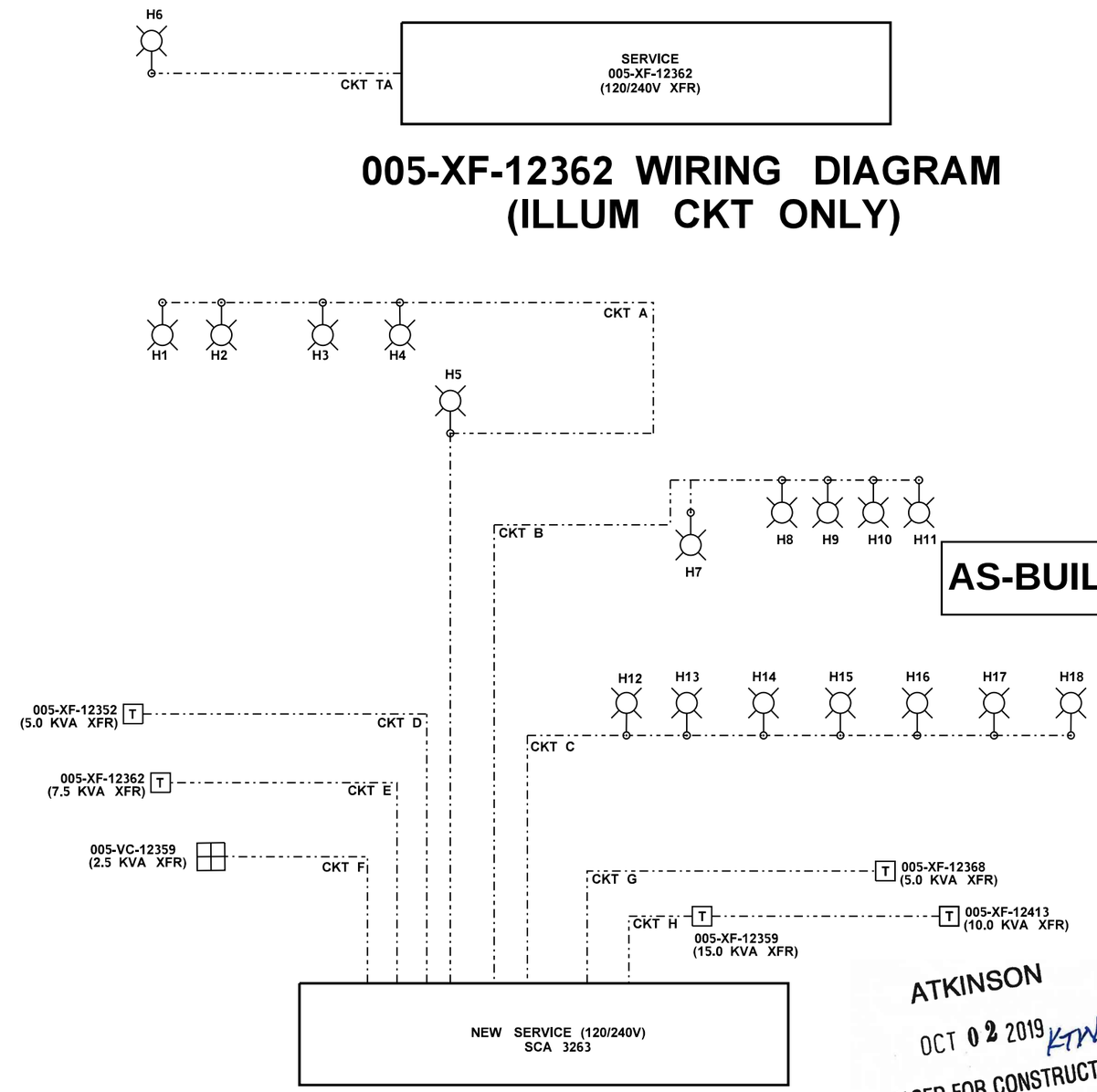

005-XF-12362 WIRING DIAGRAM (ILLUM CKT ONLY)

AS-BUILT

ATKINSON
OCT 02 2019 KTW
RELEASED FOR CONSTRUCTION

SCA 3263 WIRING DIAGRAM

FILE NAME	c:\pwworking\jacobs_b&i\jeg_gt011740\dms20633\DE_ILD03.dgn						
TIME	2:37:28 PM				REGION NO. 10	STATE WASH	FED.AID PROJ.NO.
DATE	9/26/2019				JOB NUMBER		
PLOTTED BY	GT011740						
DESIGNED BY	J. STEVENS						
ENTERED BY	J. STEVENS						
CHECKED BY	B. BARTON	REV 0 - RELEASED FOR CONSTRUCTION	09/27/19		CONTRACT NO. C9133	LOCATION NO. ILD03	
PROJ. ENGR.	C. MEADE	REV A - FINAL REVIEW	07/17/19				
REGIONAL ADM.	J. WYNANDS	REVISION	DATE	BY			

P.E. STAMP BOX — DATE 9-27-19

P.E. STAMP BOX — DATE

Washington State Department of Transportation

ATKINSON CONSTRUCTION / JACOBS

I-5
STEILACOOM-DUPONT RD TO THORNE LN
CORRIDOR IMPROVEMENTS
MP 120.01 TO MP 124.45

SERVICE WIRING DIAGRAM

PLAN REF NO ILD03

SHEET 941 OF 1456 SHEETS

BREAKER SCHEDULE				SCA 827	
EXISTING TYPE E SERVICE				240/480V	
CIRCUIT	DESCRIPTION	BREAKER RATING	CONTACTOR RATING	VOLTAGE	LOAD (KVA)
	MAIN	2P-200A			
A	ILLUMINATION A	2P-30A	30A	480	4.8
B	ILLUMINATION B	2P-30A	30A	480	3.8
C	ILLUMINATION C	2P-20A	30A	480	4.3
D	ILLUMINATION D 5	2P-30A	30A	480	5.4
E	005-XF-12044	2P-20A	-	480	5.0
F	005-XF-12132	2P-20A	-	480	5.0
G	005-XF-12074	2P-20A	-	480	5.0
H	005-XF-12086	2P-20A	-	480	5.0
I	005-XF-12104	2P-20A	-	480	5.0
J	005-XF-12006	2P-30A	-	480	10.0
K	005-XF-12054	2P-20A	-	480	5.0
L	005-XF-12160	2P-20A	-	480	5.0
M	SIGNAL XFMR	2P-50A	-	480	2.5
5 N	INTERNAL XFMR	2P-15A		480	3.0
	PHOTOCELL	1P-15A		120	0.001 *
	GFCI	1P-20A		120	1.8 *
	STRIP HEATER	1P-15A		120	0.1 *
BUSSWORK SHALL BE RATED			PEAK		68.8
AT 200 AMP MINIMUM			CONTINUOUS		44.8 5

* THESE LOADS ARE DRAWN OFF INTERNAL TRANSFORMER.

BREAKER SCHEDULE				SCA 188	
TYPE E SERVICE				240/480V	
CIRCUIT	DESCRIPTION	BREAKER RATING	CONTACTOR RATING	VOLTAGE	LOAD (KVA)
	MAIN	2P-200A			
A	ILLUMINATION A	2P-20A	30A	480	0.8
B	ILLUMINATION B	2P-20A	30A	480	1.9
C	ILLUMINATION C	2P-20A	30A	480	1.9
D	005-XF-12199	2P-20A	-	480	5.0
E	005-XF-12260	2P-20A	-	480	5.0
F	005-XF-12265	2P-20A	-	480	5.0
G	005-XF-12273	2P-30A	-	480	10.0
H	005-XF-12310	2P-20A	-	480	5.0
J	ILLUMINATION J	2P-20A	30A	480	1.1
K	INTERNAL XFMR	2P-15A		480	3.0
	PHOTOCELL	1P-15A		120	0.001 *
	GFCI	1P-20A		120	1.8 *
	STRIP HEATER	1P-15A		120	0.1 *
BUSSWORK SHALL BE RATED			PEAK		38.7
AT 200 AMP MINIMUM			CONTINUOUS		25.7

* THESE LOADS ARE DRAWN OFF INTERNAL TRANSFORMER.

NOTE: CIRCUIT "I" WILL NOT BE USED FOR SCA 188.

AS-BUILT

BREAKER SCHEDULE				CITY OF LAKEWOOD - BERK	
NEW TYPE TESCO 27-000 SERVICE				120/240V	
CIRCUIT	DESCRIPTION	BREAKER RATING	CONTACTOR RATING	VOLTAGE	LOAD (KVA)
	MAIN	2P-60A			
A	ILLUMINATION	2P-20A	30A	240	1.4
B	ILLUMINATION	2P-20A	30A	240	0.9
C	RRFB	1P-20A		120	0.024
D	ILLUMINATION	2P-20A	30A	240	1.1
E	ROUNDABOUT ILLUMINATION	1P-20A	30A	120	* -
F	PHOTOCELL	1P-15A		120	0.001
G	GFCI	1P-20A		120	1.8
H	STRIP HEATER	1P-15A		120	0.1
I	THERMOSTAT	1P-30A		120	2.6
BUSSWORK SHALL BE RATED			PEAK		7.9
AT 100 AMP MINIMUM			CONTINUOUS		6.1

*UNKNOWN, FUTURE LOAD

NOTES:

1. REFER TO DRAWING TSD29 AND TSD30 FOR ITS TRANSFORMER BREAKER SCHEDULES.

ATKINSON
AUG 28 2020 KTY
RELEASED FOR CONSTRUCTION

FILE NAME	c:\pwworking\jacobs_b&i\jeg_tt056327\dms20633\DE_ILD04.dgn					
TIME	11:22:08 AM	REV 5 - RFC, RFI0508	08/28/20		REGION NO. 10	STATE WASH	FED.AID PROJ.NO.
DATE	8/21/2020	REV 4 - RFC, RFI0474	06/10/20				
PLOTTED BY	TT056327	REV 3 - RFC, RFI0379	02/19/20				
DESIGNED BY	K. POURBAHRI	REV 2 - RFC, RFI00315	12/13/19		JOB NUMBER		
ENTERED BY	K. POURBAHRI	REV 1 - RFC, BERKELEY SCHEDULES	07/08/19				
CHECKED BY	B. BARTON	REV 0 - RELEASED FOR CONSTRUCTION	04/02/19		CONTRACT NO. C9133		LOCATION NO.
PROJ. ENGR.	C. MEADE	REV B - FINAL REVIEW - BERKELEY	03/13/19				
REGIONAL ADM.	J. WYNANDS	REVISION	DATE	BY			

P.E. STAMP BOX — DATE 8-28-20

P.E. STAMP BOX — DATE

Washington State Department of Transportation

ATKINSON CONSTRUCTION / JACOBS

I-5
STEILACOOM-DUPONT RD TO THORNE LN CORRIDOR IMPROVEMENTS
MP 120.01 TO MP 124.45

SERVICE PANEL SCHEDULES

PLAN REF NO ILD04

SHEET 942 OF 1456 SHEETS

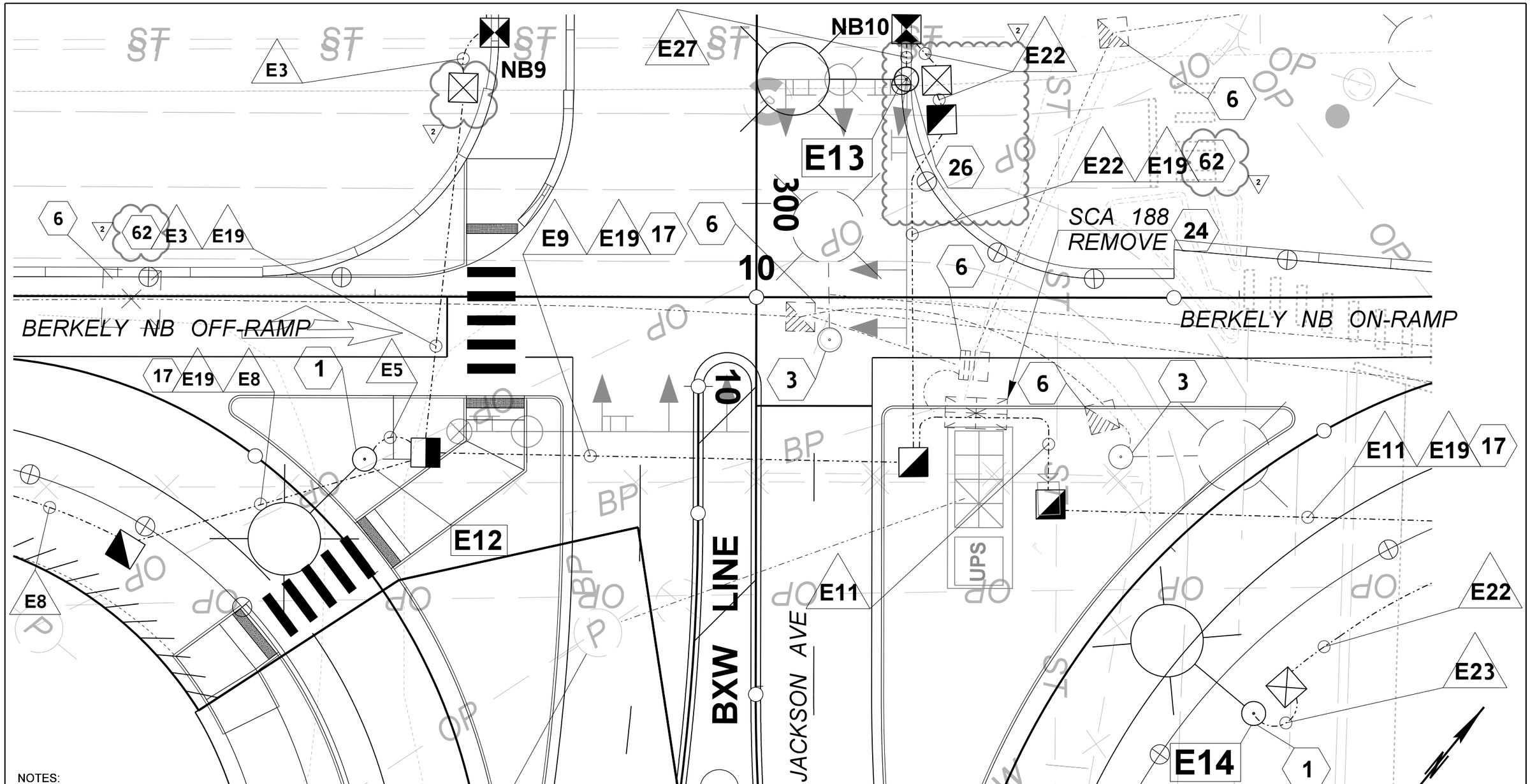

NOTES:

1. SEE SHEET ILN01 FOR ABBREVIATIONS, LEGEND AND GENERAL NOTES.
2. SEE SHEETS ILN02 AND ILN03 FOR LUMINAIRE SCHEDULES.
3. SEE SHEET ILN04 FOR ILLUMINATION CONSTRUCTION NOTES AND ILN05 FOR ILLUMINATION WIRE NOTES.
4. ALL EXISTING LIGHT STANDARDS TO REMAIN, UNLESS OTHERWISE NOTED.

AS-BUILT

ATKINSON
APR 15 2020 KTN
RELEASED FOR CONSTRUCTION

FILE NAME	c:\pwworking\jacobs_b&l\jeg_stevenj\dms20633\DE_ILD05.dgn					
TIME	11:03:21 AM					
DATE	4/14/2020					
PLOTTED BY	STEVENJ					
DESIGNED BY	K. POURBAHRI	REV 2 - RFC, RFI0448	04/14/20			
ENTERED BY	J. STEVENS	REV 1 - RFC, RFI0172, SHIFT E12	08/16/19			
CHECKED BY	B. BARTON	REV 0 - RELEASED FOR CONSTRUCTION	07/08/19			
PROJ. ENGR.	C. MEADE	REV A - FINAL REVIEW	03/13/19			
REGIONAL ADM.	J. WYNANDS	REVISION	DATE	BY		

REGION NO.	STATE	FED.AID PROJ.NO.
10	WASH	
JOB NUMBER		
CONTRACT NO.		LOCATION NO.
C9133		

BROOKSIE M. BARTON, STATE OF WASHINGTON, 46529, REGISTERED PROFESSIONAL ENGINEER
4-14-20
DATE
P.E. STAMP BOX

DATE
P.E. STAMP BOX

Washington State Department of Transportation

ATKINSON CONSTRUCTION / JACOBS

I-5
STEILACOOM-DUPONT RD TO THORNE LN
CORRIDOR IMPROVEMENTS
MP 120.01 TO MP 124.45

ILLUMINATION DETAIL

PLAN REF NO
ILD05

SHEET 943 OF 1456 SHEETS

NEMA JUNCTION BOX SCHEDULE - BERKELEY / THORNE

CALL OUT	DRAWING NUMBER	TYPE	COVER TAG	SIZE	STANDARD PLAN REFERENCE	COMMENTS
NB1	IL13	NEMA 3R	LT	21X11X8	J-40.37-02	ILLUMINATION
NB2	IL13	NEMA 3R	ITS	21X11X8	J-40.37-02	SPARE
NB3	IL13	NEMA 3R	LT	21X11X8	J-40.37-02	FEED TO LUMINAIRE E5
NB4	IL13	NEMA 3R	ITS	21X11X8	J-40.37-02	SPARE
NB5	IL13	NEMA 3R	LT	19X19X6	J-40.37-02	FEED TO LUMINAIRE E6
NB6	IL13	NEMA 3R	ITS	21X11X8	J-40.37-02	SPARE
NB7	IL13	NEMA 3R	LT	21X11X8	J-40.37-02	FEED TO LUMINAIRE E7
NB8	IL13	NEMA 3R	ITS	21X11X8	J-40.37-02	SPARE
NB9	ILD05	NEMA 3R	LT	21X11X8	J-40.37-02	POWER
NB10	ILD05	NEMA 3R	LT	21X11X8	J-40.37-02	ILLUMINATION
NB11	IL13	NEMA 3R	LT	21X11X8	J-40.37-02	SPARE
NB12	IL13	NEMA 3R	(BLANK)	21X11X8	J-40.37-02	SPARE
NB13	IL14	NEMA 3R	LT	21X11X8	J-40.37-02	ILLUMINATION
NB14	IL14	NEMA 3R	LT	21X11X8	J-40.37-02	SPARE
NB15	IL14	NEMA 3R	(BLANK)	21X11X8	J-40.37-02	SPARE
NB16	IL14	NEMA 4X	LT	12X12X8	J-40.40-01	ILLUMINATION
NB17	IL14	NEMA 4X	LT	16X12X8	J-40.40-01	FEED TO LUMINAIRE E10
NB18	IL14	NEMA 3R	LT	21X11X8	J-40.37-02	SPARE
NB19	IL14	NEMA 3R	(BLANK)	21X11X8	J-40.37-02	SPARE
NB20	IL14	NEMA 3R	COL-LT	21X11X8	J-40.37-02	FEED TO LUMINAIRE LS1 (COL)
NB21	IL14	NEMA 3R	ITS	21X11X8	J-40.37-02	SPARE (WSDOT)
NB22	IL14	NEMA 3R	LT	21X11X8	J-40.37-02	ILLUMINATION
NB23	IL14	NEMA 3R	LT	21X11X8	J-40.37-02	FEED TO LUMINAIRE E11
NB24	IL14	NEMA 3R	LT	21X11X8	J-40.37-02	ILLUMINATION
NB25	IL14	NEMA 3R	LT	21X11X8	J-40.37-02	SPARE
NB26	IL14	NEMA 3R	(BLANK)	21X11X8	J-40.37-02	SPARE
NB27	IL14	NEMA 3R	LT	21X11X8	J-40.37-02	SPARE
NB28	IL14	NEMA 3R	(BLANK)	21X11X8	J-40.37-02	SPARE
NB29	IL15	NEMA 3R	LT	21X11X8	J-40.37-02	SPARE
NB30	IL15	NEMA 3R	(BLANK)	21X11X8	J-40.37-02	SPARE
NB31	IL31	NEMA 3R	LT	21X11X8	J-40.37-02	SPARE
NB32	IL31	NEMA 3R	(BLANK)	21X11X8	J-40.37-02	SPARE
NB33	IL31	NEMA 3R	COL-LT	21X11X8	J-40.37-02	ILLUMINATION (COL)
NB34	IL31	NEMA 3R	(BLANK)	21X11X8	J-40.37-02	SPARE (WSDOT)
NB35	IL31	NEMA 3R	COL-LT	21X11X8	J-40.37-02	FEED TO LUMINAIRE LS4 (COL)
NB36	IL31	NEMA 3R	(BLANK)	21X11X8	J-40.37-02	SPARE (WSDOT)
NB37	IL31	NEMA 3R	COL-LT	21X11X8	J-40.37-02	FEED TO LUMINAIRE LS3 (COL)
NB38	IL31	NEMA 3R	(BLANK)	21X11X8	J-40.37-02	SPARE (WSDOT)
NB39	IL31	NEMA 3R	COL-LT	21X11X8	J-40.37-02	FEED TO LUMINAIRE LS2 (COL)
NB40	IL31	NEMA 3R	(BLANK)	21X11X8	J-40.37-02	SPARE (WSDOT)
NB41	IL14	NEMA 3R	LT	21X11X8	J-40.37-02	SPARE
NB42	IL14	NEMA 3R	(BLANK)	21X11X8	J-40.37-02	SPARE
NB43	IL19	NEMA 3R	LT	21X11X8	J-40.37-02	SPARE
NB44	IL19	NEMA 3R	ITS	21X11X8	J-40.37-02	SPARE
NB45	IL19	NEMA 3R	LT	21X11X8	J-40.37-02	SPARE
NB46	IL19	NEMA 3R	ITS	21X11X8	J-40.37-02	SPARE
NB47	IL19	NEMA 3R	LT	21X11X8	J-40.37-02	SPARE
NB48	IL40	NEMA 3R	ITS	21X11X8	J-40.37-02	SPARE
NB49	NOT USED					

6

(BLANK) = NO TAG COL = CITY OF LAKEWOOD WSDOT = WASHINGTON STATE DEPARTMENT OF TRANSPORTATION

NEMA JUNCTION BOX SCHEDULE - BERKELEY / THORNE

CALL OUT	DRAWING NUMBER	TYPE	COVER TAG	SIZE	STANDARD PLAN REFERENCE	COMMENTS
NB50	NOT USED					
NB51	NOT USED					
NB52	NOT USED					
NB53	NOT USED					
NB54	NOT USED					
NB55	NOT USED					
NB56	NOT USED					
NB57	NOT USED					
NB58	NOT USED					
NB59	IL19	NEMA 3R	COL-LT	21X11X8	J-40.37-02	FEED TO LUMINAIRE LS22 (COL)
NB60	IL19	NEMA 3R	ITS	21X11X8	J-40.37-02	SPARE
NB61	IL19	NEMA 3R	LT	21X11X8	J-40.37-02	SPARE
NB62	IL19	NEMA 3R	ITS	21X11X8	J-40.37-02	SPARE
NB63	IL19	NEMA 3R	LT	21X11X8	J-40.37-02	SPARE
NB64	IL19	NEMA 3R	LT	21X11X8	J-40.37-02	FEED TO LUMINAIRE H5
NB65	IL19	NEMA 3R	ITS	21X11X8	J-40.37-02	SPARE
NB66	IL19	NEMA 3R	LT	21X11X8	J-40.37-02	FEED TO LUMINAIRE H6
NB67	IL19	NEMA 3R	ITS	21X11X8	J-40.37-02	SPARE
NB68	IL19	NEMA 3R	LT	21X11X8	J-40.37-02	SPARE
NB69	IL19	NEMA 3R	ITS	21X11X8	J-40.37-02	SPARE
NB70	IL19	NEMA 3R	ITS	21X11X8	J-40.37-02	SPARE
NB71	IL19	NEMA 3R	LT	21X11X8	J-40.37-02	ILLUMINATION
NB72	IL19	NEMA 3R	LT	21X11X8	J-40.37-02	ILLUMINATION
NB73	IL19	NEMA 3R	ITS	21X11X8	J-40.37-02	SPARE
NB74	IL20	NEMA 3R	ITS	21X11X8	J-40.37-02	SPARE
NB75	IL20	NEMA 3R	LT	21X11X8	J-40.37-02	FEED TO LUMINAIRE H14
NB76	IL20	NEMA 3R	ITS	21X11X8	J-40.37-02	SPARE
NB77	IL20	NEMA 3R	LT	21X11X8	J-40.37-02	FEED TO LUMINAIRE H15
NB78	IL20	NEMA 3R	ITS	21X11X8	J-40.37-02	SPARE
NB79	IL20	NEMA 3R	LT	21X11X8	J-40.37-02	FEED TO LUMINAIRE H16
NB80	IL20	NEMA 3R	ITS	21X11X8	J-40.37-02	SPARE
NB81	IL20	NEMA 3R	LT	21X11X8	J-40.37-02	ILLUMINATION
NB82	IL20	NEMA 3R	ITS	21X11X8	J-40.37-02	SPARE
NB83	IL20	NEMA 3R	LT	21X11X8	J-40.37-02	FEED TO LUMINAIRE H17
NB84	IL21	NEMA 3R	ITS	21X11X8	J-40.37-02	SPARE
NB85	IL21	NEMA 3R	LT	21X11X8	J-40.37-02	FEED TO LUMINAIRE H18
NB86	IL21	NEMA 3R	ITS	21X11X8	J-40.37-02	SPARE
NB87	IL21	NEMA 3R	LT	21X11X8	J-40.37-02	ILLUMINATION
NB88	IL21	NEMA 3R	ITS	21X11X8	J-40.37-02	SPARE
NB89	IL21	NEMA 3R	LT	21X11X8	J-40.37-02	ILLUMINATION
NB90	IL40	NEMA 3R	COL-LT	21X11X8	J-40.37-02	FEED TO LUMINAIRE LS20 (COL)
NB91	IL40	NEMA 3R	(BLANK)	21X11X8	J-40.37-02	SPARE
NB92	IL40	NEMA 3R	COL-LT	21X11X8	J-40.37-02	FEED TO LUMINAIRE LS21 (COL)
NB93	IL40	NEMA 3R	(BLANK)	21X11X8	J-40.37-02	SPARE
NB94	IL40	NEMA 3R	COL-LT	21X11X8	J-40.37-02	ILLUMINATION
NB95	IL40	NEMA 3R	(BLANK)	21X11X8	J-40.37-02	SPARE
NB96	IL40	NEMA 3R	COL-LT	21X11X8	J-40.37-02	ILLUMINATION
NB97	IL40	NEMA 3R	(BLANK)	21X11X8	J-40.37-02	SPARE
NB98	IL40	NEMA 3R	(BLANK)	21X11X8	J-40.37-02	SPARE

AS-BUILT

ATKINSON
JUL 30 2020
RELEASED FOR CONSTRUCTION

FILE NAME	c:\pwworking\jacobs_b&i\jeg_stevenj\dms20633\DE_ILD06.dgn
TIME	8:33:24 AM
DATE	7/22/2020
PLOTTED BY	STEVENJ
DESIGNED BY	G. TANG
ENTERED BY	G. TANG
CHECKED BY	B. BARTON
PROJ. ENGR.	C. MEADE
REGIONAL ADM.	J. WYNANDS

REVISION	DATE	BY
REV 6 - RFC, RFI0509	07/24/20	
REV 5 - RFC, RFI0465	05/22/20	
REV 4 - RFC, RFI0429	03/20/20	
REV 3 - RFI0253	10/25/19	
REV 2 - RELEASE OF NFC, THORNE	09/27/19	
REV 1 - RFC, RFI0172	08/16/19	
REV B - FINAL REVIEW - THORNE	07/17/19	

REGION NO. 10 | STATE WASH | FED.AID PROJ.NO.
JOB NUMBER
CONTRACT NO. C9133 | LOCATION NO.

BROOKSTE M. BARTON STATE OF WASHINGTON 46629 REGISTERED PROFESSIONAL ENGINEER
7-29-20
DATE
P.E. STAMP BOX

DATE
P.E. STAMP BOX

Washington State Department of Transportation

ATKINSON / JACOBS CONSTRUCTION

I-5
STEILACOOM-DUPONT RD TO THORNE LN
CORRIDOR IMPROVEMENTS
MP 120.01 TO MP 124.45

JUNCTION BOX SCHEDULE

PLAN REF NO ILD06

SHEET 944 OF 1456 SHEETS

BREAKER SCHEDULE MODIFIED TYPE B SERVICE			SCA 187 120/240V		
CIRCUIT	DESCRIPTION	BREAKER RATING	CONTACTOR RATING	VOLTAGE	LOAD (KVA)
	MAIN	2P-80A			
A	ILLUMINATION A	2P-20A	30A	240	1.6
B	ILLUMINATION B	2P-20A	30A	240	1.6
C	005-XF-12340	2P-30A	-	240	5.0
D	005-VC-12351	1P-30A	-	120	2.5
E	SPARE	2P-30A	-	240	-
F	SPARE	2P-30A	-	240	-
	PHOTOCELL	1P-15A		120	0.001
	GFCI	1P-20A		120	1.8
BUSSWORK SHALL BE RATED			PEAK		12.5
AT 200 AMP MINIMUM			CONTINUOUS		8.2

BREAKER SCHEDULE MODIFIED TYPE B SERVICE			SCA 3263 120/240V		
CIRCUIT	DESCRIPTION	BREAKER RATING	CONTACTOR RATING	VOLTAGE	LOAD (KVA)
	MAIN	2P-200A			
A	ILLUMINATION A	2P-20A	30A	240	1.3
B	ILLUMINATION B	2P-20A	30A	240	1.3
C	ILLUMINATION C	2P-20A	30A	240	1.9
D	005-XF-12352	2P-30A	-	240	5.0
E	005-XF-12362	2P-40A	-	240	7.5
F	005-VC-12359	1P-30A	-	240	2.5
G	005-XF-12368	2P-30A	-	240	5.0
H	005-XF-12359	2P-80A	-	240	15.0
	PHOTOCELL	1P-15A		120	0.001
	GFCI	1P-20A		120	1.8
BUSSWORK SHALL BE RATED			PEAK		41.3
AT 200 AMP MINIMUM			CONTINUOUS		26.5

BREAKER SCHEDULE TYPE TESCO 27-000 SERVICE			CITY OF LAKEWOOD - MURRAY/146TH 120/240V		
CIRCUIT	DESCRIPTION	BREAKER RATING	CONTACTOR RATING	VOLTAGE	LOAD (KVA)
	MAIN	2P-60A			
A	ROUNDABOUT ILLUMINATION	2P-20A	30A	240	* -
B	IRRIGATION	1P-20A		120	* -
C	RRFB	1P-20A		120	0.024
D	SPARE	1P-20A		120	-
E	SPARE	1P-20A		120	-
F	SPARE	1P-20A		120	-
G	PHOTOCELL	1P-15A		120	0.001
H	GFCI	1P-20A		120	1.8
I	STRIP HEATER	1P-15A		120	0.1
J	THERMOSTAT	1P-30A		120	2.6
BUSSWORK SHALL BE RATED			PEAK		4.5
AT 100 AMP MINIMUM			CONTINUOUS		2.7

* UNKNOWN, FUTURE LOAD

BREAKER SCHEDULE EXISTING TYPE E SERVICE			SCA 355 240/480V		
CIRCUIT	DESCRIPTION	BREAKER RATING	CONTACTOR RATING	VOLTAGE	LOAD (KVA)
	MAIN	2P-200A			
A	ILLUMINATION A	2P-20A	30A	480	2.0
B	ILLUMINATION B	2P-20A	30A	480	2.4
C	ILLUMINATION C	2P-20A	30A	480	9.2
D	ILLUMINATION D	2P-20A	30A	480	5.4
E	SIGNAL CABINET	2P-70A	-	480	5.0
F	ITS 005-TR-12461	2P-20A	-	480	5.0
G	ITS 005-TR-12469	2P-20A	-	480	5.0
H	INTERNAL XFMR	2P-15A		480	3.0
	PHOTOCELL	1P-15A		120	0.001 *
	GFCI	1P-20A		120	1.8 *
	STRIP HEATER	1P-15A		120	0.1 *
BUSSWORK SHALL BE RATED			PEAK		37.0
AT 200 AMP MINIMUM			CONTINUOUS		30.2

* THESE LOADS ARE DRAWN OFF INTERNAL TRANSFORMER.

BREAKER SCHEDULE TYPE TESCO 27-000 SERVICE			CITY OF LAKEWOOD - THORNE 120/240V		
CIRCUIT	DESCRIPTION	BREAKER RATING	CONTACTOR RATING	VOLTAGE	LOAD (KVA)
	MAIN	2P-60A			
A	ILLUMINATION	2P-20A	30A	240	2.2
B	SPARE	1P-20A		120	-
C	SPARE	1P-20A		120	-
D	SPARE	1P-20A		120	-
E	SPARE	1P-20A		120	-
F	SPARE	1P-20A		120	-
G	PHOTOCELL	1P-15A		120	0.001
H	GFCI	1P-20A		120	1.8
I	STRIP HEATER	1P-15A		120	0.1
J	THERMOSTAT	1P-30A		120	2.6
BUSSWORK SHALL BE RATED			PEAK		6.7
AT 100 AMP MINIMUM			CONTINUOUS		4.9

2

2

AS-BUILT

ATKINSON
MAY 27 2020 KTW
RELEASED FOR CONSTRUCTION

FILE NAME	c:\pwworking\jacobs_b&i\jeg_stevenj\dms20633\DE_ILD07.dgn					
TIME	6:37:22 AM				REGION NO. 10	STATE WASH
DATE	5/21/2020					FED.AID PROJ.NO.
PLOTTED BY	STEVENJ				JOB NUMBER	
DESIGNED BY	J. STEVENS	REV 2 - RFC, RFI0456	05/22/20			
ENTERED BY	J. STEVENS	REV 1 - RFC, RFI0274	10/25/19			
CHECKED BY	B. BARTON	REV 0 - RELEASED FOR CONSTRUCTION	09/27/19		CONTRACT NO. C9133	LOCATION NO.
PROJ. ENGR.	C. MEADE	REV A - FINAL REVIEW	07/17/19			
REGIONAL ADM.	J. WYNANDS	REVISION	DATE	BY		

BRADLEY M. BARTON, STATE OF WASHINGTON, 46629, REGISTERED PROFESSIONAL ENGINEER
5-26-20
DATE
P.E. STAMP BOX

DATE
P.E. STAMP BOX

Washington State Department of Transportation

ATKINSON CONSTRUCTION / JACOBS

I-5
STEILACOOM-DUPONT RD TO THORNE LN
CORRIDOR IMPROVEMENTS
MP 120.01 TO MP 124.45

SERVICE PANEL SCHEDULES

PLAN REF NO ILD07

SHEET 945 OF 1456 SHEETS

SCA 355 WIRING DIAGRAM

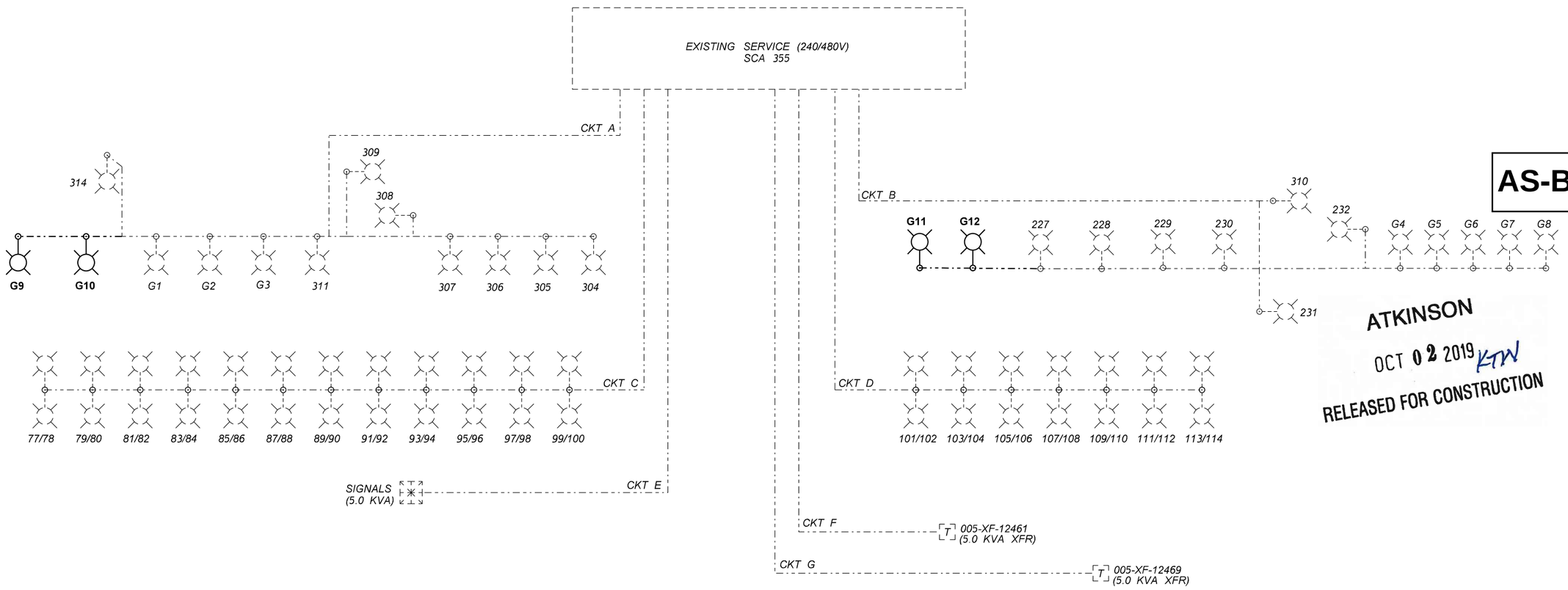

AS-BUILT

ATKINSON
OCT 02 2019 KTW
RELEASED FOR CONSTRUCTION

FILE NAME	c:\pwworking\jacobs_b&i\jeg_gt011740\dms20633\DE_ILD08.dgn			
TIME	2:42:00 PM			
DATE	9/26/2019			
PLOTTED BY	GT011740			
DESIGNED BY	C.STONE			
ENTERED BY	M. ALEXANDER			
CHECKED BY	B. BARTON	REV 0 - RELEASED FOR CONSTRUCTION	09/27/19	
PROJ. ENGR.	C. MEADE	REV A - FINAL REVIEW	07/17/19	
REGIONAL ADM.	J. WYNANDS	REVISION	DATE	BY

REGION NO.	STATE	FED.AID PROJ.NO.
10	WASH	
JOB NUMBER		
CONTRACT NO.		LOCATION NO.
C9133		ILD03

BROOKSTE M. BARTON
STATE OF WASHINGTON
46629
REGISTERED PROFESSIONAL ENGINEER
9-27-19
DATE
P.E. STAMP BOX

DATE
P.E. STAMP BOX

Washington State
Department of Transportation

ATKINSON CONSTRUCTION / JACOBS

I-5
STEILACOOM-DUPONT RD TO THORNE LN
CORRIDOR IMPROVEMENTS
MP 120.01 TO MP 124.45

SERVICE WIRING DIAGRAM

PLAN REF NO
ILD08

SHEET
946
OF
1456
SHEETS

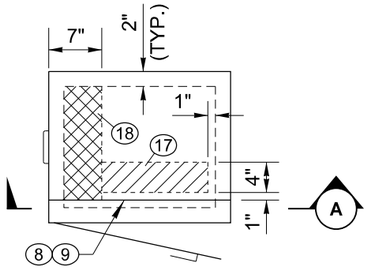

PLAN VIEW

TRANSFORMER SIZE (KVA)	CABINET DIMENSIONS			
	H	W	D	X*
UP TO 3	18"	18"	12"	9"
3.1 TO 12.5	48"	24"	20"	24"
12.6 TO 35.0	60"	32"	30"	24"

* X DIMENSION IS A MINIMUM

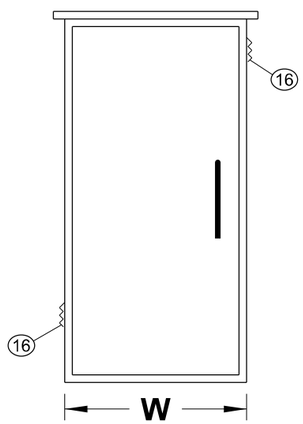

ELEVATION VIEW

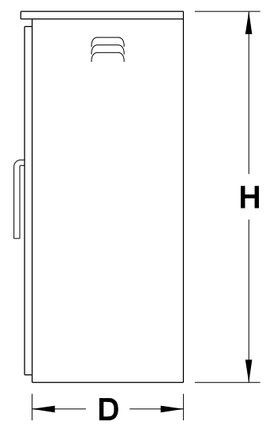

SIDE VIEW

TRANSFORMER CABINET HOUSING

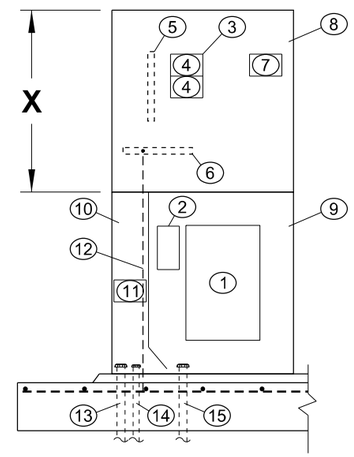

SECTION A

TRANSFORMER CABINET DETAILS

GENERAL NOTES:

1. CABINET CONSTRUCTION SHALL MEET THE REQUIREMENTS OF STANDARD SPECIFICATION 9-29.25. ALUMINUM CABINETS SHALL HAVE MILL FINISH.
2. BUSSWORK SHALL BE RATED FOR 100 AMPS MINIMUM.
3. INPUT VOLTAGE SHALL BE 240VAC AND OUTPUT VOLTAGE SHALL BE 480VAC. TRANSFORMER SIZE SHALL BE AS SHOWN IN THE CONTRACT PLANS. THE TRANSFORMER SHALL BE SPECIFICALLY RATED FOR STEP UP OPERATION.
4. THERE SHALL BE ONE AND ONLY ONE DOUBLE POLE SECONDARY BRANCH BREAKER. THE SECONDARY BREAKER PANEL MAY INCLUDE ADDITIONAL BREAKER POSITIONS, BUT THE DEAD FRONT SHALL NOT PROVIDE SPACES FOR ADDITIONAL BREAKERS. SEE CONTRACT PLANS FOR SECONDARY BRANCH BREAKER INFORMATION.
5. CABINET ANCHOR BOLT PATTERN IS DETERMINED BY THE CABINET MANUFACTURER. ALL ANCHOR BOLTS SHALL EITHER BE HOT DIP GALVANIZED OR STAINLESS STEEL CINCH BOLTS. BOLTS SHALL EXTEND A MINIMUM OF 1.5 INCHES ABOVE THE CONCRETE PAD.
6. ENGRAVED PHENOLIC NAMEPLATE SHALL BE RED WITH WHITE TEXT, AND SHALL READ "SUPPLIED FROM SERVICE CABINET SCA 3263". SEE CONTRACT PLANS FOR SERVICE CABINET SCA 3263 NUMBER. NAMEPLATE SHALL BE ATTACHED WITH SCREWS OR RIVETS.
7. HIGH VOLTAGE WIREWAY ENGRAVED PHENOLIC PLATE SHALL BE RED WITH WHITE TEXT. THIS TAG SHALL READ "HIGH VOLTAGE WIREWAY - 480V OUTPUT".
8. CABINET SHALL BE ORIENTED SUCH THAT IT OPENS AWAY FROM TRAFFIC.
9. EXTERNAL CABINET LABEL (STENCIL) SHALL BE RED INSTEAD OF BLACK.

AS-BUILT

KEY

1. TRANSFORMER
2. MAIN INPUT BREAKER ~ DPST
3. SECONDARY BREAKER PANEL - TWO POSITION MINIMUM
4. DPST SECONDARY BREAKER (USES TWO SLOTS)
5. ISOLATED NEUTRAL BUSS ~ 12 LUG TINNED COPPER
6. GROUND BUSS ~ 12 LUG TINNED COPPER
7. ENGRAVED PHENOLIC LABEL PLATE (SEE NOTE 6)
8. UPPER SECTION HINGED DEAD FRONT ~ ONLY ONE SECONDARY BREAKER ACCESSIBLE WHEN CLOSED
9. LOWER SECTION HINGED DEAD FRONT ~ ONLY MAIN BREAKER ACCESSIBLE WHEN CLOSED
10. ENCLOSED HIGH VOLTAGE WIREWAY
11. HIGH VOLTAGE WIREWAY ENGRAVED PHENOLIC LABEL PLATE (SEE NOTE 7)
12. SUPPLEMENTAL GROUND ~ CONNECT GROUND BUSS TO PAD FOUNDATION REBAR
13. HIGH VOLTAGE POWER CONDUIT TO LOAD
14. GROUND ELECTRODE CONDUIT ~ SEE STANDARD PLAN J-60.05-01, SHEET 3 (SUPPLEMENTAL GROUND)
15. LOW VOLTAGE INPUT POWER CONDUIT
16. SCREENED VENT LOUVERS ~ 2 REQUIRED (1 EACH SIDE)
17. LOW VOLTAGE INPUT CONDUIT RESERVE AREA
18. HIGH VOLTAGE AND GROUND CONDUIT RESERVE AREA
19. CABINET BONDING JUMPER AND LUG
20. GROUND ELECTRODE ~ SEE STANDARD PLAN J-60.05-01, SHEET 3

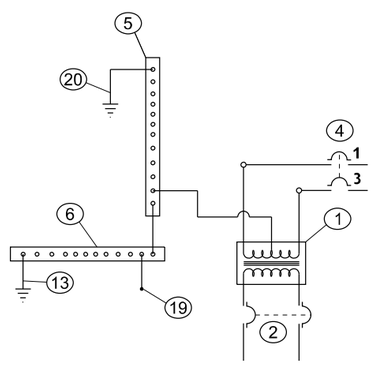

240V INPUT - 480V OUTPUT

WIRING SCHEMATIC

ATKINSON
OCT 02 2019 KTW
RELEASED FOR CONSTRUCTION

FILE NAME	c:\pwworking\jacobs_b&i\jeg_stevenj\dms20633\DE_ILD09.dgn						
TIME	2:05:50 PM				REGION NO. 10	STATE WASH	FED.AID PROJ.NO.
DATE	9/24/2019						
PLOTTED BY	STEVENJ						
DESIGNED BY	K. POURBAHRI				JOB NUMBER		
ENTERED BY	K. POURBAHRI						
CHECKED BY	B. BARTON	REV 0 - RELEASED FOR CONSTRUCTION	09/27/19		CONTRACT NO. C9133	LOCATION NO. ILD03	
PROJ. ENGR.	C. MEADE	REV A - FINAL REVIEW	09/10/19				
REGIONAL ADM.	J. WYNANDS	REVISION	DATE	BY			

P.E. STAMP BOX — DATE 9-27-19

P.E. STAMP BOX — DATE

Washington State Department of Transportation

ATKINSON CONSTRUCTION / JACOBS

I-5
STEILACOOM-DUPONT RD TO THORNE LN CORRIDOR IMPROVEMENTS
MP 120.01 TO MP 124.45

240V-480V STEP UP TRANSFORMER DETAIL

PLAN REF NO ILD09

SHEET 947 OF 1456 SHEETS

LUMINAIRE SCHEDULE — EXISTING GATE HOUSE SERVICE

LUMINAIRE NUMBER	CIRCUIT	LOCATION STATION		LOCATION OFFSET	TYPE - DISTRIBUTION	WATTAGE CLASS	MAST ARM	H1	BASE TYPE	*FOUNDATION TYPE	COMMENTS
MA1	39/41	MRBXE	11+79.0	30.5' RT	III - MED CUTOFF	222	16	30	SLIP	A	
MA2	39/41	MRBXE	12+50.5	29.0' RT	III - MED CUTOFF	222	16	30	SLIP	A	
MA3	39/41	MRBXE	13+15.5	28.0' RT	III - MED CUTOFF	222	16	30	SLIP	A	
MA4	39/41	BXE	13+26.0	50.5' RT	III - MED CUTOFF	222	16	30	SLIP	A	
MA5	39/41	BXE	13+79.5	49.5' RT	III - MED CUTOFF	222	16	30	SLIP	A	
MA6	39/41	BXE	14+31.5	49.5' RT	III - MED CUTOFF	222	16	30	SLIP	A	
MA7	39/41	BXE	14+84.0	49.5' RT	III - MED CUTOFF	222	16	30	SLIP	A	
MA8	39/41	BXE	15+36.0	49.5' RT	III - MED CUTOFF	222	16	30	SLIP	A	
MA9	39/41	BXE	15+91.5	49.5' RT	III - MED CUTOFF	222	16	30	SLIP	A	
MA10	39/41	BXE	16+69.5	49.5' RT	III - MED CUTOFF	222	16	30	SLIP	A	
MA11	34/36	BXWMR	11+95.0	30.5' LT	III - MED CUTOFF	222	16	30	FIXED	A	
MA12	34/36	BXW	302+45.5	50.0' LT	III - MED CUTOFF	222	16	30	FIXED	A	
MA13	34/36	BXW	303+14.0	49.5' LT	III - MED CUTOFF	222	16	30	FIXED	A	
MA14	34/36	BXW	303+75.5	49.0' LT	III - MED CUTOFF	222	16	30	FIXED	A	
MA15	34/36	BXW	304+35.5	49.0' LT	III - MED CUTOFF	222	16	30	FIXED	A	
MA16	34/36	BXW	304+95.5	49.0' LT	III - MED CUTOFF	222	16	30	FIXED	A	
MA17	34/36	BXW	305+55.5	49.0' LT	III - MED CUTOFF	222	16	30	FIXED	A	
MA18	34/36	BXW	306+17.5	48.5' LT	III - MED CUTOFF	222	16	30	FIXED	A	
MA19	34/36	BXW	306+82.0	43.0' LT	III - MED CUTOFF	222	16	30	FIXED	A	
MA20	34/36	BXT	401+41.0	34.5' RT	III - MED CUTOFF	222	16	30	SLIP	A	
MA21	34/36	BXW	307+48.0	10.5' RT	III - MED CUTOFF	264	D8	30	SLIP	A	
MA22	34/36	BXW	307+91.0	8.0' RT	III - MED CUTOFF	264	D8	30	SLIP	A	
MA23	34/36	BXW	308+34.0	7.0' RT	III - MED CUTOFF	264	D8	30	SLIP	A	

* SEE WSDOT STANDARD PLAN J-28.30-03 FOR TYPE A AND B FOUNDATION DEPTH.

WIRING SCHEDULE — EXISTING GATE HOUSE SERVICE

NO.	CONDUIT SIZE	CONDUCTORS EXISTING	CONDUCTORS NEW	CIRCUIT	COMMENTS
1	2" SCH 80		2-#6	39/41	ILLUMINATION
2	2" SCH 80		2-#4	34/36	ILLUMINATION
3	2" SCH 80		2-#6	39/41	ILLUMINATION
			2-#4	34/36	ILLUMINATION
4	EX 2"		2-#6	39/41	ILLUMINATION
			2-#4	34/36	ILLUMINATION

SERVICE BREAKER SCHEDULE — SERVICE NO: EXISTING GATE HOUSE SERVICE 208V, 400A

CIRCUIT #	DISCRIPTION	BREAKER RATING (AMP)	CONTACTOR SIZE	LOAD (A)	CIRCUIT #	DISCRIPTION	BREAKER RATING (AMP)	CONTACTOR SIZE	LOAD (A)
	MAIN	400A, 3P			2, 4	CANOPY LIGHTS	20A,2P		
1, 3	CANOPY LIGHTS	20A, 2P			6, 8	CANOPY LIGHTS	20A,2P		
5, 7	CANOPY LIGHTS	20A, 2P			10	BATHROOM GFCI	20A,1P		
9, 11	HEAT PUMP	60A, 2P			12	INSTA HOT	20A,1P		
13	SPARE	20A,1P			14	LIGHTS BACK ROOM	20A,1P		
15	SPARE	20A,1P			16	OS BUILDING LIGHTS	20A,1P		
17	SPARE	20A,1P			18	SPARE	20A,1P		
19, 21, 23	BARRIERS 1-3	20A, 3P			20	MAIN ROOM LIGHTS	20A,1P		
25, 27	GUARD BOOTH	100A, 2P			22	ELEC. ROOM RECEP.	20A,1P		
29, 31, 33	UPS	60A, 3P			24	GENERATOR PLUG	20A,1P		
35, 37	AIR CONDITIONER	30A, 2P			26, 28	GUARD BOOTH	100A,2P		
39, 41	STREET LIGHTS	50A, 2P		13.6	30, 32	GUARD BOOTH	100A,2P		
					34, 36	STREET LIGHTS	50A,2P		18.3
					38, 40	STREET LIGHTS	50A,2P		
					42	SPARE	20A,1P		

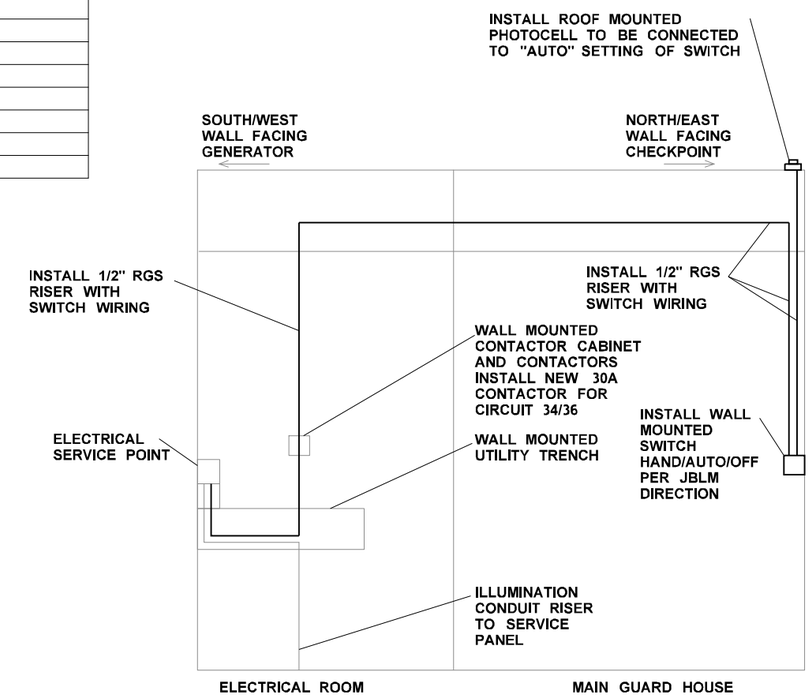

GUARD HOUSE SWITCH AND POWER CONNECTION DETAIL PROFILE VIEW

ATKINSON

JUN 18 2019 KTN

RELEASED FOR CONSTRUCTION

AS-BUILT

FILE NAME	c:\pwworking\jacobs_b&i\jeg_ch2m-kpourbah\dms20633\PS_ILD30.dgn				
TIME	1:57:18 PM				
DATE	6/13/2019				
PLOTTED BY	KPOURBAH				
DESIGNED BY	K. POURBAHRI				
ENTERED BY	K. POURBAHRI				
CHECKED BY	B. BARTON	REV 0 - RELEASED FOR CONSTRUCTION	06/11/19		
PROJ. ENGR.	C. MEADE	REV A - FINAL REVIEW	04/26/19		
REGIONAL ADM.	J. WYNANDS	REVISION	DATE	BY	

REGION NO. 10 | STATE WASH | FED.AID PROJ.NO.

JOB NUMBER

CONTRACT NO. C9133 | LOCATION NO.

P.E. STAMP BOX — DATE 6-13-19

P.E. STAMP BOX — DATE

Washington State Department of Transportation

ATKINSON / JACOBS CONSTRUCTION

I-5
STEILACOOM-DUPONT RD TO THORNE LN
CORRIDOR IMPROVEMENTS
MP 120.01 TO MP 124.45

MADIGAN ACP
ILLUMINATION SCHEDULES AND DETAILS

PLAN REF NO ILD30

SHEET 948 OF 1456 SHEETS

LEGEND:

- CONDUIT
- NEMA JUNCTION BOX IN BARRIER
- TYPE 1 JUNCTION BOX
- TYPE 2 JUNCTION BOX
- TYPE 8 JUNCTION BOX
- NEMA STRUCTURE SIDEWALK JUNCTION BOX
- CONTROL CABINET
- UPS — UPS
- SIGNAL STANDARD TYPE II
- SIGNAL STANDARD TYPE III
- TYPE PS, TYPE 1 STANDARD OR PPB POST
- PEDESTRIAN SIGNAL HEAD
- VEHICLE SIGNAL HEAD
- MAST ARM SIGN
- PEDESTRIAN PUSHBUTTON
- RADAR VEHICLE DETECTION STOP BAR
- RADAR VEHICLE DETECTION ADVANCE
- EMERGENCY VEHICLE PREEMPTION DETECTOR
- POLE NUMBER
- WIRE NOTE FLAG
- CONSTRUCTION NOTE FLAG

DETECTION ZONE PLACEMENT

APPROACH	SPEED (MPH)	LENGTH OF STOP BAR ZONE IN FEET*	UPSTREAM EDGE OF ADVANCE ZONE IN FEET*
SB THORNE-BERKELEY CONNECTOR	55	40 (R1)	575 (R1A)
EB FREEDOM WAY	25	40 (R6)	105 (R6A)
WB FREEDOM WAY	25	40 (RB)	105 (RBA)

* MEASURED FROM UPSTREAM EDGE OF STOP BAR

PREEMPTION SCHEDULE

CIRCUIT	PHASE(S)
A	7
B1	6
C	1
D1	8

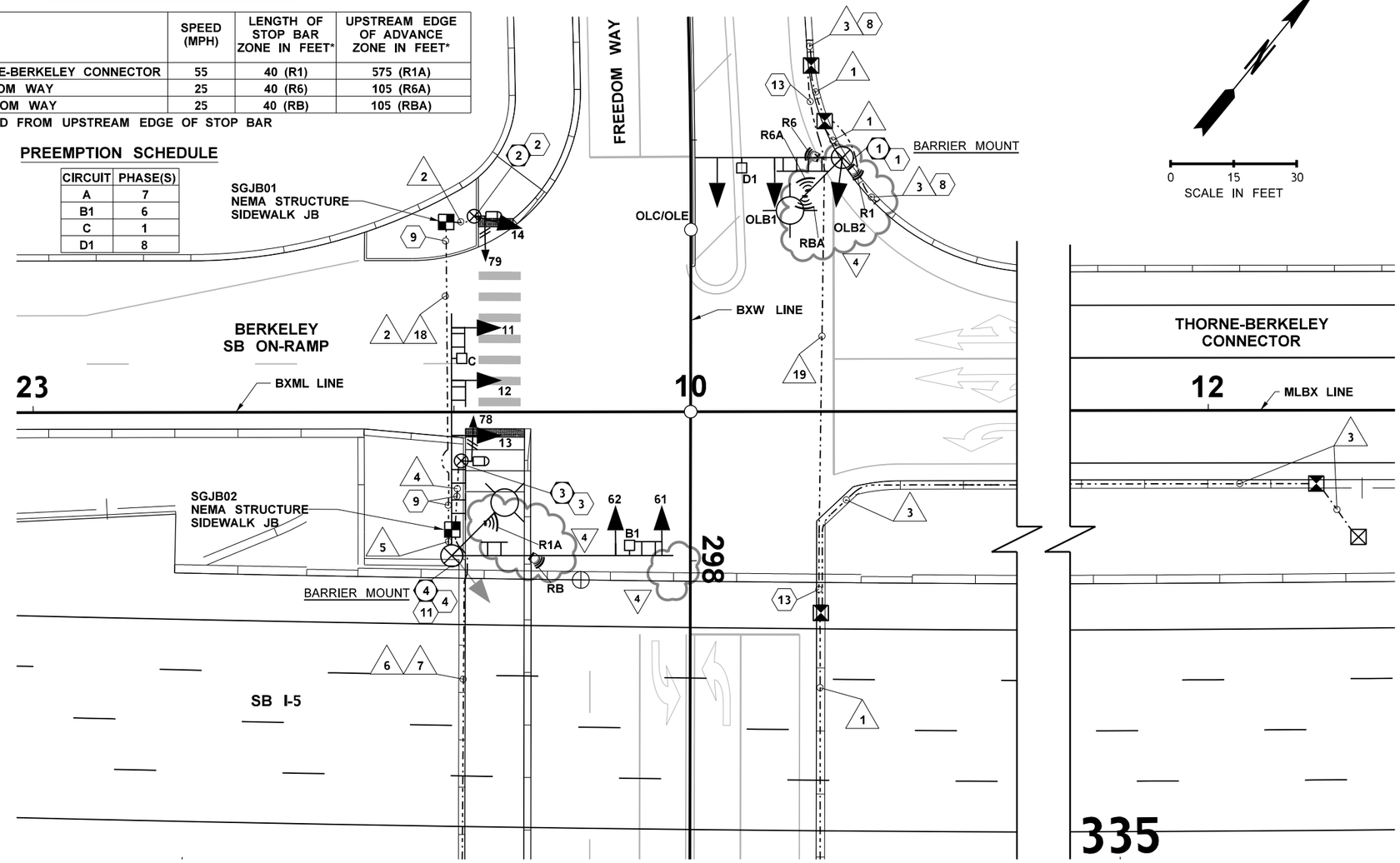

SIGNAL DISPLAY MOUNTINGS

STANDARD PLAN	J-75.10-02			J-75.20-01
MOUNT TYPE	D	E	K	M
DISPLAY NUMBERS	14	78,79	OLB2	11,12,13,OLB1,OLC/OLE,61,62

PHASE DIAGRAM

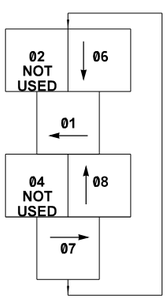

OVERLAPS
OLA = PHASES 1,6,8
OLB = PHASES 6,7,8
OLC = PHASES 8
OLD = PHASE 1,6
OLE = PHASE 6,7
OLF = PHASE 8

RADAR DETECTION

DETECTOR	ARM OFFSET(FT)	ZONE(S) COVERED
R1	SHAFT	01 STOP BAR
R1A	14	01 ADVANCED
R6	6	06 STOP BAR
R6A	12	06 ADVANCED
RB	18	08 STOP BAR
RBA	12	08 ADVANCED

SIGNAL STATE DIAGRAM

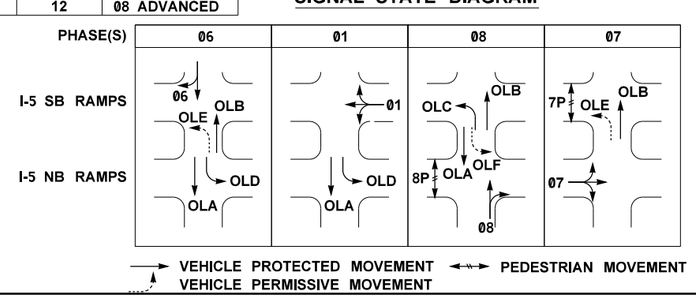

SIGNAL HEAD DISPLAY NOTES

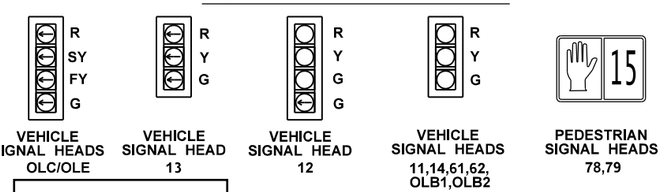

IN-DECK JUNCTION BOX SCHEDULE

JB#	SIZE (INCHES)
SGJB01	8x12x8
SGJB02	24x12x8

AS-BUILT

ATKINSON
JUN 08 2020 KTW
RELEASED FOR CONSTRUCTION

FILE NAME	c:\pwworking\jacobs_b&i\wegenemf\dms20633\PS_SG_01.dgn			
TIME	12:34:26 PM	REV 4 - RFC, RFI0458	05/20/20	
DATE	5/29/2020	REV 3 - RFC, RFI0385	01/20/20	
PLOTTED BY	WEGENEMF	REV 2 - RFC, RFI0146	07/10/19	
DESIGNED BY	V. GOSWAMI	REV 1 - RFC, RFI0078	04/17/19	
ENTERED BY	V. GOSWAMI	REV 0 - RELEASED FOR CONSTRUCTION	03/29/19	
CHECKED BY	C. STONE	REV B - FINAL REVIEW	02/18/19	
PROJ. ENGR.	C. MEADE	REV A - PRELIMINARY REVIEW	11/02/18	
REGIONAL ADM.	J. WYNANDS	REVISION	DATE	BY

REGION NO. 10 | STATE WASH | FED.AID PROJ.NO.
JOB NUMBER
CONTRACT NO. C9133
LOCATION NO.

MARK F. WEGENER — STATE OF WASHINGTON — 41141 — REGISTERED PROFESSIONAL ENGINEER
6/4/20
DATE
P.E. STAMP BOX

P.E. STAMP BOX — DATE

Washington State Department of Transportation
ATKINSON CONSTRUCTION / JACOBS

I-5
STEILACOOM-DUPONT RD TO THORNE LN
CORRIDOR IMPROVEMENTS
MP 120.01 TO MP 124.45

TRAFFIC SIGNAL PLAN

PLAN REF NO SG01
SHEET 949 OF 1456 SHEETS

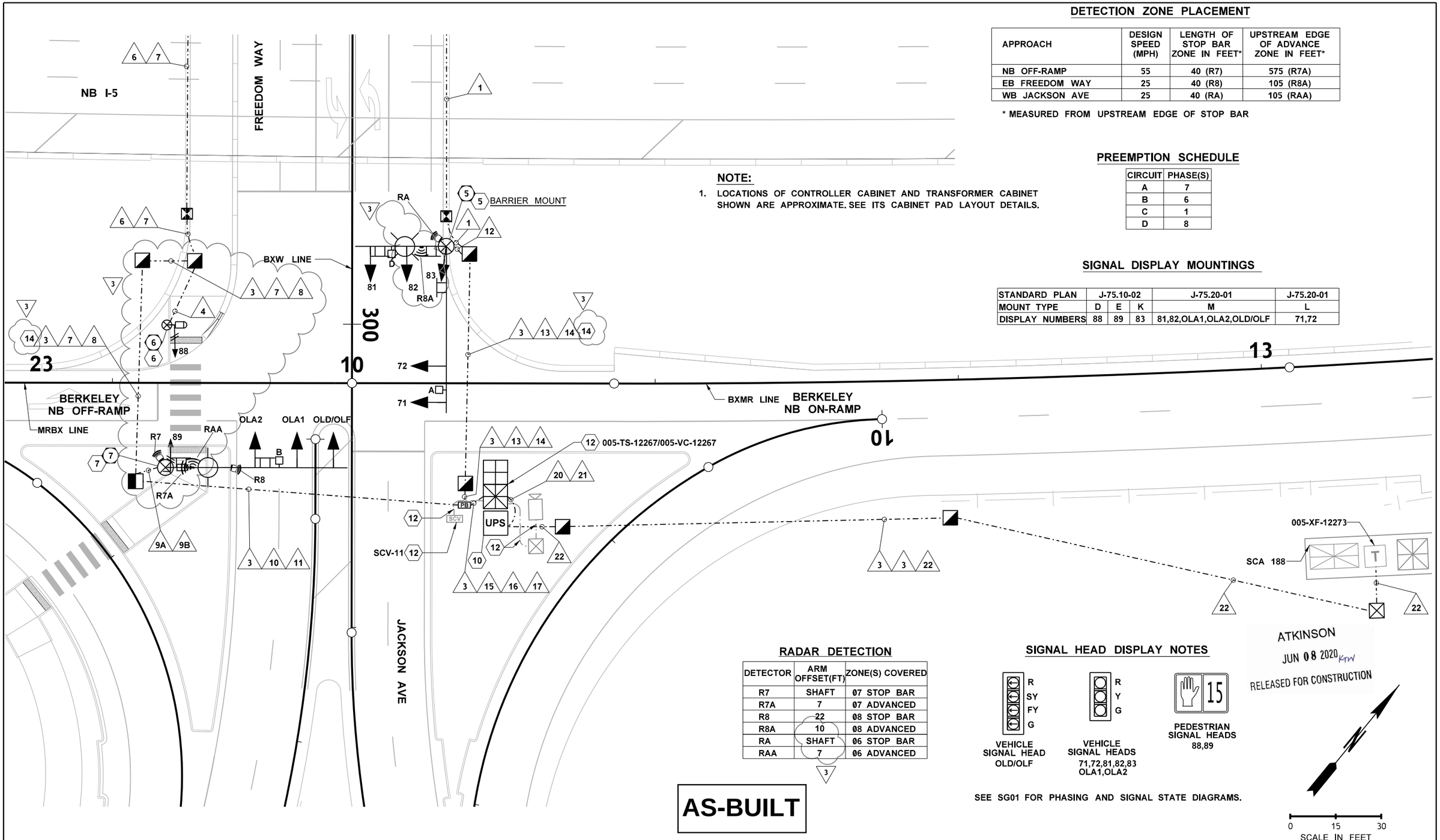

DETECTION ZONE PLACEMENT

APPROACH	DESIGN SPEED (MPH)	LENGTH OF STOP BAR ZONE IN FEET*	UPSTREAM EDGE OF ADVANCE ZONE IN FEET*
NB OFF-RAMP	55	40 (R7)	575 (R7A)
EB FREEDOM WAY	25	40 (R8)	105 (R8A)
WB JACKSON AVE	25	40 (RA)	105 (RAA)

* MEASURED FROM UPSTREAM EDGE OF STOP BAR

NOTE:

1. LOCATIONS OF CONTROLLER CABINET AND TRANSFORMER CABINET SHOWN ARE APPROXIMATE. SEE ITS CABINET PAD LAYOUT DETAILS.

PREEMPTION SCHEDULE

CIRCUIT	PHASE(S)
A	7
B	6
C	1
D	8

SIGNAL DISPLAY MOUNTINGS

STANDARD PLAN	J-75.10-02			J-75.20-01	J-75.20-01
MOUNT TYPE	D	E	K	M	L
DISPLAY NUMBERS	88	89	83	81,82,OLA1,OLA2,OLD/OLF	71,72

RADAR DETECTION

DETECTOR	ARM OFFSET(FT)	ZONE(S) COVERED
R7	SHAFT	07 STOP BAR
R7A	7	07 ADVANCED
R8	22	08 STOP BAR
R8A	10	08 ADVANCED
RA	SHAFT	06 STOP BAR
RAA	7	06 ADVANCED

3

SIGNAL HEAD DISPLAY NOTES

R
SY
FY
G

VEHICLE SIGNAL HEAD
OLD/OLF

R
Y
G

VEHICLE SIGNAL HEADS
71,72,81,82,83
OLA1,OLA2

15

PEDESTRIAN SIGNAL HEADS
88,89

SEE SG01 FOR PHASING AND SIGNAL STATE DIAGRAMS.

ATKINSON
JUN 08 2020 KTW
RELEASED FOR CONSTRUCTION

0 15 30
SCALE IN FEET

AS-BUILT

FILE NAME	c:\pwworking\jacobs_b&i\wegenemf\dms20633\PS_SG_02.dgn					
TIME	4:19:24 PM					
DATE	5/29/2020	REV 3 - RFC, RFI0448, RFI0458	05/20/20			
PLOTTED BY	WEGENEMF	REV 2 - RFC, RFI0146	07/10/19			
DESIGNED BY	V. GOSWAMI	REV 1 - RFC, RFI0078	04/17/19			
ENTERED BY	V. GOSWAMI	REV 0 - RELEASED FOR CONSTRUCTION	03/29/19			
CHECKED BY	C. STONE	REV B - FINAL REVIEW	02/18/19			
PROJ. ENGR.	C. MEADE	REV A - PRELIMINARY REVIEW	11/02/18			
REGIONAL ADM.	J. WYNANDS	REVISION	DATE	BY		

REGION NO. 10 | STATE WASH | FED.AID PROJ.NO.
JOB NUMBER
CONTRACT NO. C9133 | LOCATION NO.

MARK E. WEGENER — STATE OF WASHINGTON — 41741 — REGISTERED PROFESSIONAL ENGINEER
6/4/20
DATE
P.E. STAMP BOX

DATE
P.E. STAMP BOX

Washington State Department of Transportation

ATKINSON CONSTRUCTION / JACOBS

I-5
STEILACOOM-DUPONT RD TO THORNE LN
CORRIDOR IMPROVEMENTS
MP 120.01 TO MP 124.45

TRAFFIC SIGNAL PLAN

PLAN REF NO
SG02

SHEET 950 OF 1456 SHEETS

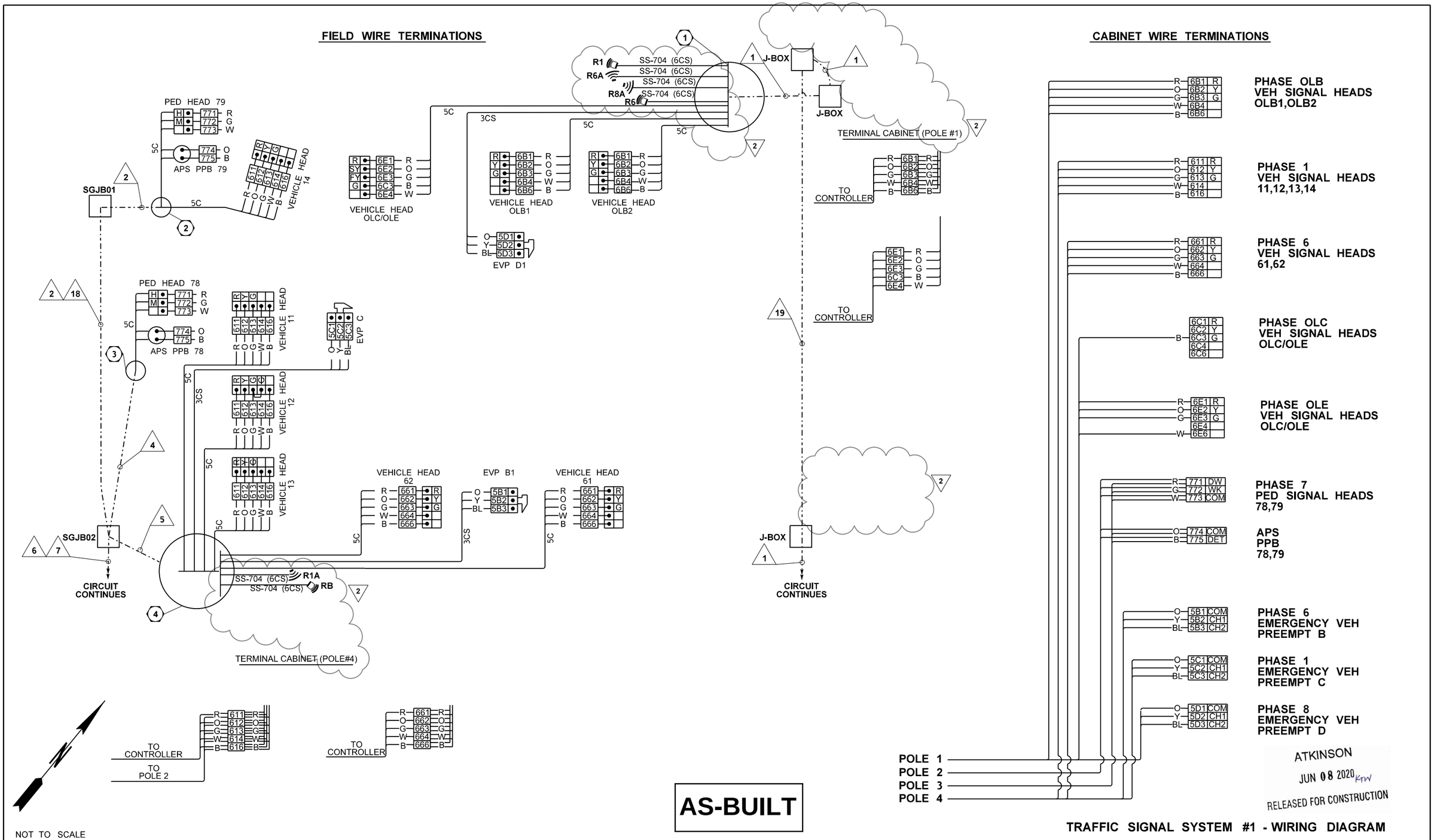

FILE NAME	c:\pwworking\jacobs_b&l\wegenemf\dms20633\PS_SG_03.dgn			
TIME	5:53:32 PM			
DATE	5/29/2020			
PLOTTED BY	WEGENEMF	REV 2 - RFC, RFI 0458	05/15/20	
DESIGNED BY	V. GOSWAMI	REV 1 - RFC, RFI0146	07/10/19	
ENTERED BY	V. GOSWAMI	REV 0 - RELEASED FOR CONSTRUCTION	03/29/19	
CHECKED BY	C. STONE	REV B - FINAL REVIEW	02/18/19	
PROJ. ENGR.	C. MEADE	REV A - PRELIMINARY REVIEW	11/02/18	
REGIONAL ADM.	J. WYNANDS	REVISION	DATE	BY

REGION NO. 10 | STATE WASH | FED.AID PROJ.NO.

JOB NUMBER

CONTRACT NO. C9133 | LOCATION NO.

MARK F. WEGENER, STATE OF WASHINGTON, 41141, REGISTERED PROFESSIONAL ENGINEER

6/4/20 DATE

P.E. STAMP BOX

DATE

P.E. STAMP BOX

Washington State Department of Transportation

ATKINSON / JACOBS CONSTRUCTION

I-5
STEILACOOM-DUPONT RD TO THORNE LN
CORRIDOR IMPROVEMENTS
MP 120.01 TO MP 124.45

TRAFFIC SIGNAL PLAN

PLAN REF NO SG03

SHEET 951 OF 1456 SHEETS

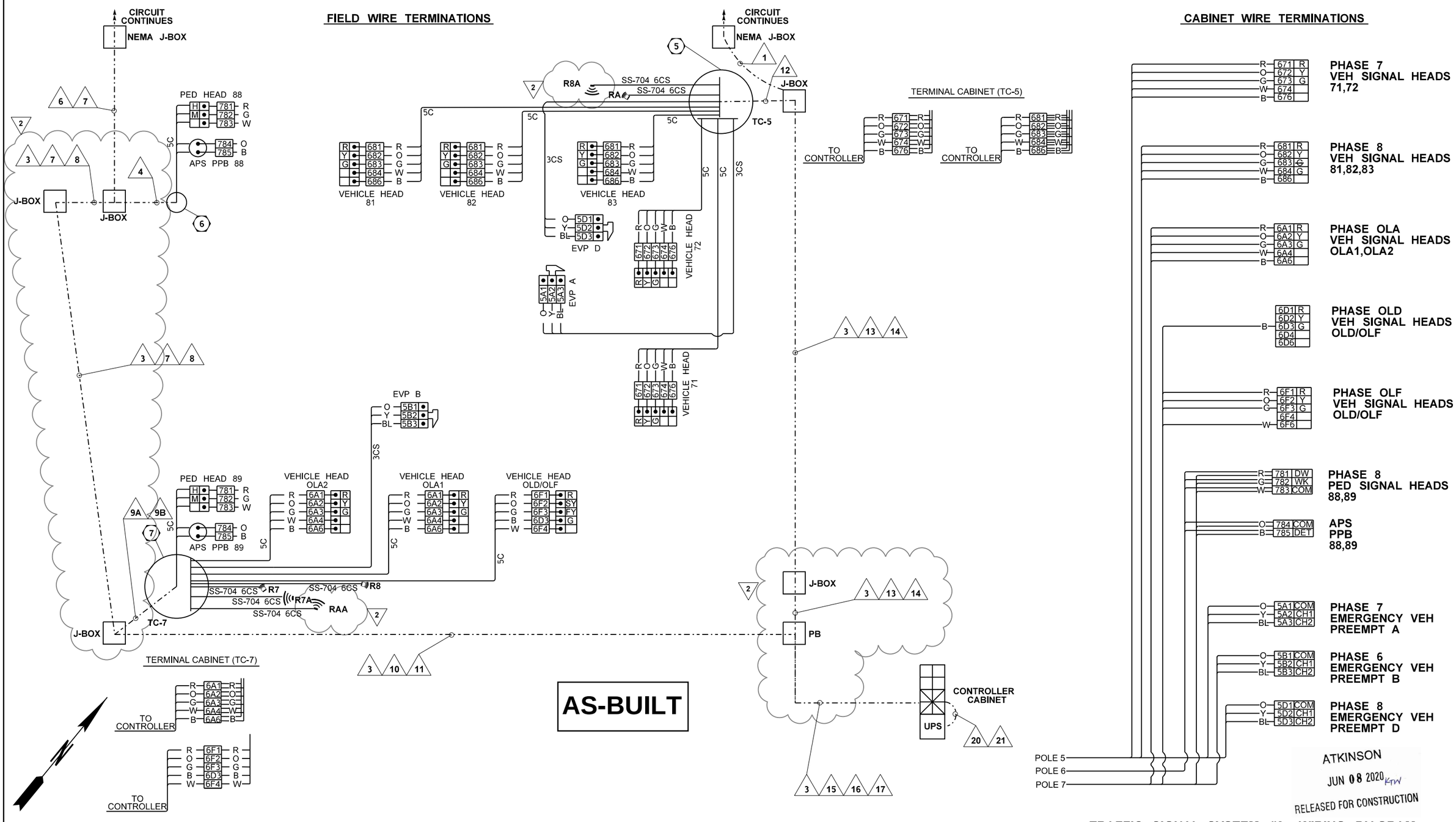

TRAFFIC SIGNAL SYSTEM #2 - WIRING DIAGRAM

FILE NAME	c:\pwworking\jacobs_b&i\wegenemf\dms20633\PS_SG_04.dgn			
TIME	5:15:16 PM			
DATE	5/29/2020			
PLOTTED BY	WEGENEMF	REV 2 - RFC, RFI0448, RFI0458	05/20/20	
DESIGNED BY	V. GOSWAMI	REV 1 - RFC, RFI0146	07/10/19	
ENTERED BY	V. GOSWAMI	REV 0 - RELEASED FOR CONSTRUCTION	03/29/19	
CHECKED BY	C. STONE	REV B - FINAL REVIEW	02/18/19	
PROJ. ENGR.	C. MEADE	REV A - PRELIMINARY REVIEW	11/02/18	
REGIONAL ADM.	J. WYNANDS	REVISION	DATE	BY

REGION NO. 10 | STATE WASH | FED.AID PROJ.NO.

JOB NUMBER

CONTRACT NO. C9133 | LOCATION NO.

P.E. STAMP BOX — 6/4/20 DATE

P.E. STAMP BOX — DATE

Washington State Department of Transportation

ATKINSON / JACOBS CONSTRUCTION

I-5
STEILACOOM-DUPONT RD TO THORNE LN
CORRIDOR IMPROVEMENTS
MP 120.01 TO MP 124.45

TRAFFIC SIGNAL PLAN

PLAN REF NO SG04

SHEET 952 OF 1456 SHEETS

CABINET INPUT WIRE TERMINATIONS

	TB 8			
		1		
		2		
		3		
PPB 78,79 = B>	774	4	I12D	ϕ7P
	744	5	I12J	ϕ4P
PPB 78,79 ≡ W>	725 745	6	I12K	COM
	764	7	I13D	ϕ6P
PPB 88,89 = B>	784	8	I13J	ϕ8P
PPB 88,89 ≡ W>	765 785	9	I13K	COM
		10		
		11		
		12		

TB 9					
		1			
DC-	J13K	2	5AC3	< BL =	A&C
		3	5BD3	< BL =	B&D
EVA	J12D	4	5A2	– Y –	A
EVC	J12J	5	5C2	– Y –	C
DC+	J12E	6	5AC1	< O =	A&C
EVB	J13D	7	5B2	– Y –	B
EVD	J13J	8	5D2	– Y –	D
DC+	J13E	9	5BD1	< O =	B&D
RR1	J14D	10	516		
RR2	J14J	11	517		
COM	J14E	12	518		

TYPE 342 LX SIGNAL CABINET EQUIPMENT RACK CONFIGURATION

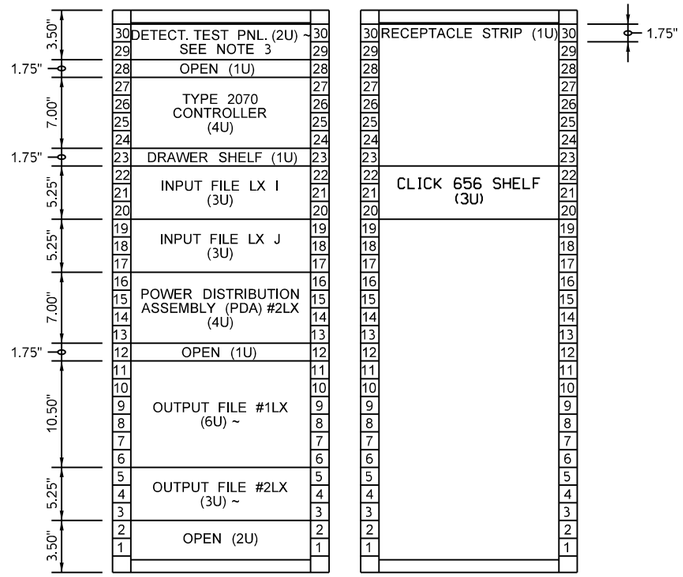

FRONT VIEW REAR VIEW

NOTE: TWO CLICK 656 UNITS SHALL BE INSTALLED TO SUPPORT TOTAL OF 12 RADAR DETECTORS.

INPUT FILE LAYOUT AND MARKING DETAIL

1	2	3	4	5	6	7	8	9	10	11	12	13	14
											PED6	PED7	FLSH
												Ø7 242	
												Ø8 242	
											PED4	PED8	ST
											EVPA	EVPC	RR1
											Ø7 752	Ø1 752	
											Ø6 752	Ø8 752	
											EVPB/ EVPB1	EVPD/ EVPD1	RR2

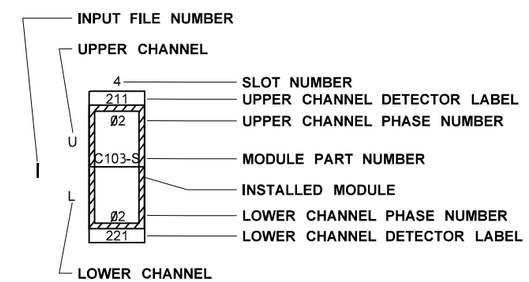

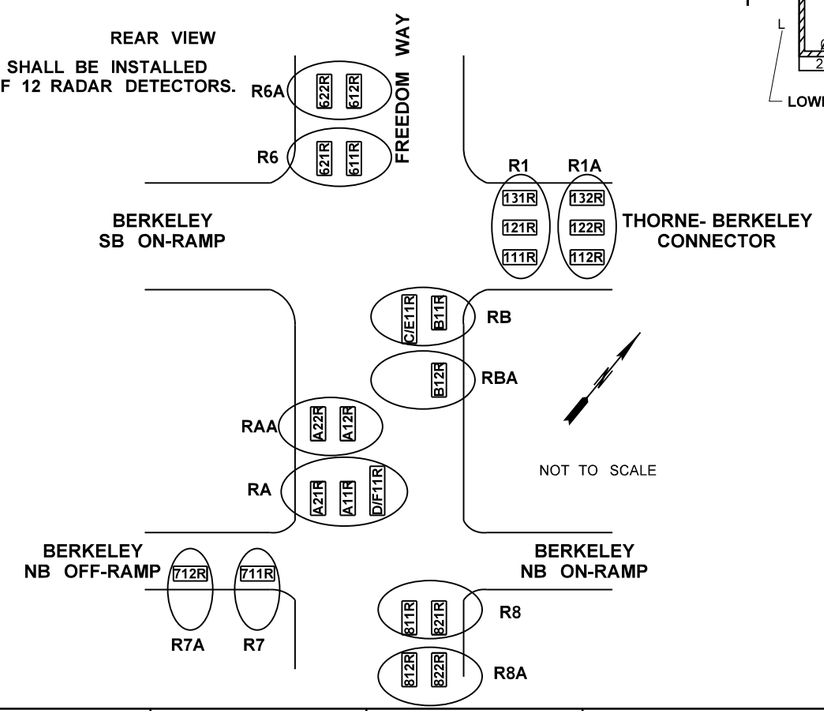

AS-BUILT

ATKINSON
RSA
APR 03 2019
RELEASED FOR CONSTRUCTION

TRAFFIC SIGNAL SYSTEM #1 and #2 - CABINET INPUT

FILE NAME	c:\pwworking\jacobs_b&i\goswamiv\dms20633\PS_SG_05.dgn						
TIME	2:20:03 PM				REGION NO. 10	STATE WASH	FED.AID PROJ.NO.
DATE	4/1/2019						
PLOTTED BY	GoswamiV						
DESIGNED BY	V. GOSWAMI				JOB NUMBER		
ENTERED BY	V. GOSWAMI	REV 0 - RELEASED FOR CONSTRUCTION	03/29/19				
CHECKED BY	C. STONE	REV B - FINAL REVIEW	02/18/19		CONTRACT NO. C9133		LOCATION NO.
PROJ. ENGR.	C. MEADE	REV A - PRELIMINARY REVIEW	11/02/18				
REGIONAL ADM.	J. WYNANDS	REVISION	DATE	BY			

MARK F. WEGENER, STATE OF WASHINGTON, 41141, REGISTERED PROFESSIONAL ENGINEER
4/3/19
DATE
P.E. STAMP BOX

DATE
P.E. STAMP BOX

Washington State Department of Transportation

ATKINSON / JACOBS CONSTRUCTION

I-5
STEILACOOM-DUPONT RD TO THORNE LN
CORRIDOR IMPROVEMENTS
MP 120.01 TO MP 124.45

TRAFFIC SIGNAL PLAN

PLAN REF NO SG05

SHEET 953 OF 1456 SHEETS

LEGEND

a. VEHICLE DISPLAY
b. MAST ARM MTD. SIGN
c. STREET NAME SIGN
d. PRE-EMPT DETECTOR
e. POST MTD. SIGN
f. LUMINAIRE
g. PEDESTRIAN DISPLAY
h. TERMINAL CABINET
i. APS PPB-M
j. HANDHOLE

SIGNAL STANDARD IDENTIFICATION TAG DETAIL

STD. NO. XX	SIGNAL STANDARD NO.	STD. NO. 02
SRXXX, MP XXX.XX	STATE ROUTE AND MILE POST NO.	SR97, MP 069.09
MANUFACTURER APPROVED DWG. XXXXXX	APPROVED DRAWING NO.	MANUFACTURER APPROVED DWG. AB12345
FAB. X/XX/XXXX	FABRICATION DATE	FAB. 6/14/2002

EXAMPLE

TAG NOTES:
CORROSION RESISTANT METAL TAG SECURED WITH (2) 0.125" RIVETS AS FOLLOWS:
- POLE SHAFT - LOCATED WITHIN 6" ABOVE HAND HOLE (TYPE II & III).
- SIGNAL AND LUMINAIRE MAST ARM (TYPE II & III) - LOCATED WITHIN 6" OF THE LUMINAIRE ARM AND THE POLE SHAFT CONNECTION POINT (TYPE III).

TEXT SHALL BE A MINIMUM OF 3/16" HIGH, STAMPED OR EMBOSSED.

MEASURE ATTACHMENT POINT ANGLES CLOCKWISE FROM POLE ORIENTATION LINE (E1 ATTACHMENT POINT) TO THE ATTACHMENT POINT LOCATION

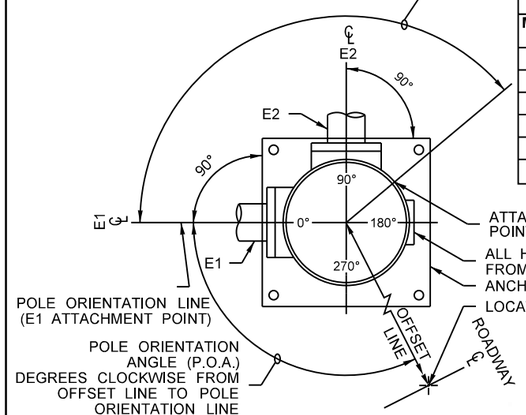

POLE ORIENTATION AND ATTACHMENT POINT DETAIL

LUMINAIRE MAST ARM X Y Z (ft³)	
MAST ARM LENGTH	X Y Z (ft³)
6'	19.8
8'	26.4
10'	33.0
12'	39.6
14'	46.2
16'	52.8

STANDARD TYPE		STANDARD PLAN REFERENCES			
		POLE	FOUNDATION		ELECTRICAL
			STANDARD	CURB	
PPB	FIXED	J-20.10	J-20.10	J-20.11	J-20.10
	BREAKAWAY	J-20.15	J-20.15		J-20.15
PS		J-20.16	J-21.10		J-20.20
I		J-21.15	J-21.10		J-21.20
II, III, SD		N/A	J-26.10, J-26.15	N/A	N/A

AS-BUILT

ATKINSON
FEB 24 2020 KW
RELEASED FOR CONSTRUCTION

NOTE:
TYPE E MOUNTS SHALL BE USED FOR PEDESTRIAN DISPLAYS ON TYPE II OR III SIGNAL STANDARDS, WITH THE FOLLOWING EXCEPTION: PEDESTRIAN DISPLAYS MOUNTED ON OCTAGONAL (8 SIDED) SIGNAL STANDARDS AT AN ANGLE OTHER THAN A 45 DEGREE INCREMENT SHALL USE A TYPE A MOUNT FOR TWO PEDESTRIAN DISPLAYS, OR A TYPE B MOUNT FOR A SINGLE PEDESTRIAN DISPLAY.

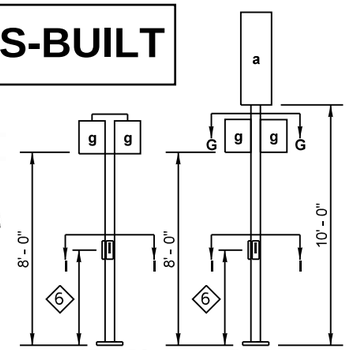

6 3' - 6" MEASURED FROM SIDEWALK SURFACE TO CENTER OF PEDESTRIAN PUSH BUTTON

TYPE PS PED. HEAD STANDARD

TYPE I VEHICLE HEAD STANDARD

NOTES

1. MOUNTING COUPLING INSTALLED AT OFFSET DISTANCE INDICATED IN CHART. FOR TYPE N MOUNTS ONLY, DRILL 1" DIA. HOLE IN MAST ARM AND INSTALL PLASTIC SPLIT BUSHING FOR CABLE ENTRANCE.
2. FIELD INSTALLED. SIGN SIZES SHALL NOT EXCEED THE MAXIMUM VALUES LISTED HERE:

SIGN	HEIGHT	WIDTH	AREA
b	3.0 FT	N/A	7.5 SQ. FT.
c	3.0 FT	N/A	36.0 SQ. FT.
e	N/A	3.0 FT	15.0 SQ. FT.

3. 1' - 0" MIN. TO 2' - 6" MAX. FROM POLE CENTERLINE TO SIGN EDGE
4. FOR POST MOUNTED SIGNS THERE SHALL BE 2' - 0" MIN. FROM THE FACE OF THE CURB OR THE EDGE OF THE SHOULDER TO THE EDGE OF THE SIGN

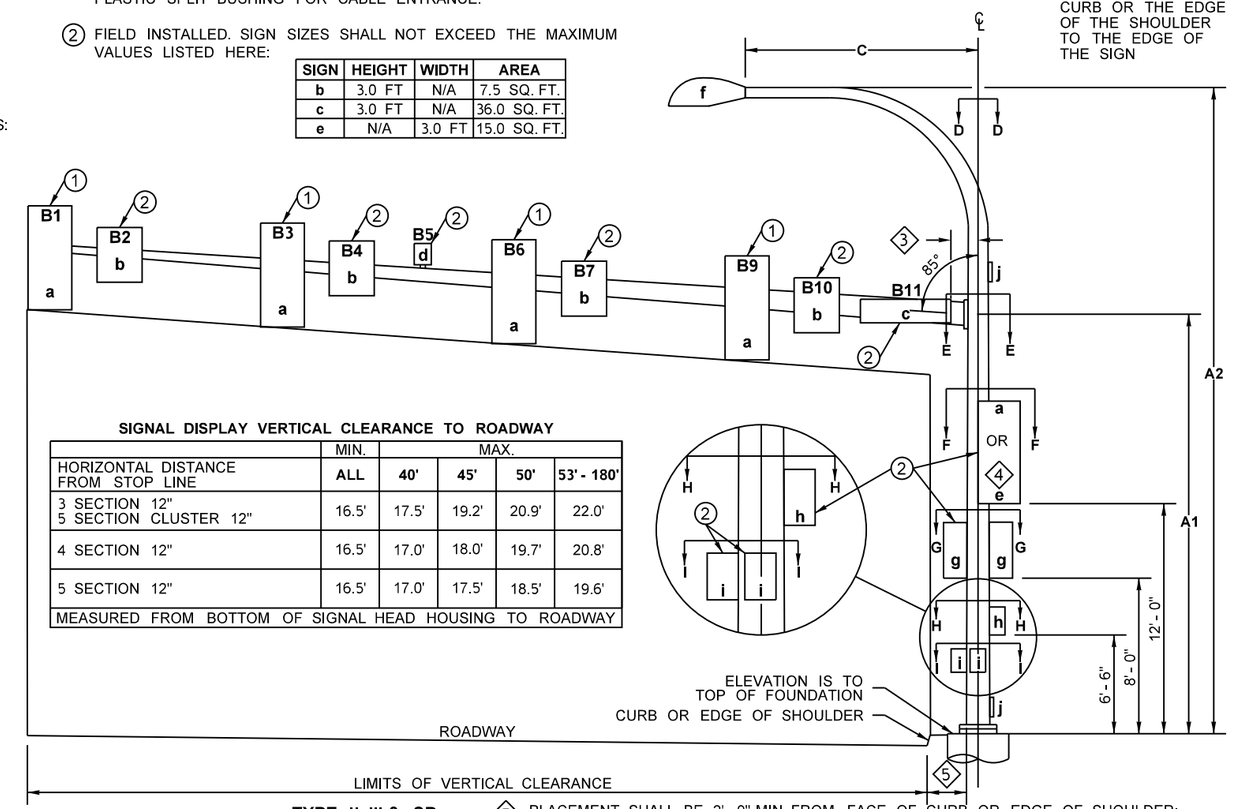

SIGNAL DISPLAY VERTICAL CLEARANCE TO ROADWAY

	MIN.	MAX.			
HORIZONTAL DISTANCE FROM STOP LINE	ALL	40'	45'	50'	53' - 180'
3 SECTION 12" 5 SECTION CLUSTER 12"	16.5'	17.5'	19.2'	20.9'	22.0'
4 SECTION 12"	16.5'	17.0'	18.0'	19.7'	20.8'
5 SECTION 12"	16.5'	17.0'	17.5'	18.5'	19.6'
MEASURED FROM BOTTOM OF SIGNAL HEAD HOUSING TO ROADWAY					

TYPE II, III & SD SIGNAL STANDARD

7 DMS OR VMS IS NOT ALLOWED ON THESE POLES.

5 PLACEMENT SHALL BE 2' - 0" MIN. FROM FACE OF CURB OR EDGE OF SHOULDER; 3' - 0" MIN. FROM FACE OF GUARDRAIL; 4' - 0" MIN. FROM CONC. BARRIER TYPE 2 (MEASURED FROM A POINT WHERE THE BARRIER BASE MEETS THE SHOULDER SURFACE (TOE). MEASUREMENT TAKEN FROM TRAFFIC SIDE OF BARRIER; TO FACE OF POLE)

SIGNAL STANDARD DETAIL CHART

STD. No.	FIELD LOCATION STATION (BXW LINE)	OFFSET	LT.	RT.	ELEV.*	P.O.A.	POLE TYPE	MOUNTING HEIGHT (FT) A1	A2	SIGNAL MAST ARM DATA OFFSETS (FT) (Z) (POLE ℄ TO ATTACHMENT POINT) B1	B2	B3	B4	B5	B6	B7	B8	B9	B10	B11	WINDLOAD AREAS (FT²) (X)(Y) B1	B2	B3	B4	B5	B6	B7	B8	B9	B10	B11	LUMINAIRE ARM (FT) C	CALCULATED POLE XYZ (FT³) **	POLE ATTACHMENT POINT ANGLES (deg.) D	E1	E2	F	G1	G2	H	I1	I2	FOUNDATION DESIGN XYZ (FT³)	SOIL BEARING PRESSURE (PSF)	FOUNDATION DEPTH (FT) ALTERNATE 1 3' RD.	3' SQ.	4' RD.	ALTERNATE 2 3' RD.	4' RD.	REMARKS
1	297+04.0	36.0	X			0	III	16	40	28		16		22					13	6	11.6		9.2						6.25	14.0	8.0	664	45	0		270			0								BARRIER MOUNT. SEE STRUCTURE PLANS FOR DETAILS.
2	297+18.1	51.5		X			I																																										
3	297+76.4	54.5		X			PS																																										
4	297+99.0	56.7		X		0	SD	15	40	50	47	39		44						6	9.2	6.25	9.2							14.0	8.0	1353	315	0		55			225								BARRIER MOUNT. SEE STRUCTURE PLANS FOR DETAILS. SEE CN 11 FOR MOUNTING HEIGHT OF BEACON AND SIGN ON SHAFT.
										54	51	42	39	48	30	27				5	9.2	7.5	11.6	7.5		9.2	7.5			9.75		2223			270												
5	299+74.0	31.0	X			0	SD	16	40	25	21	13		19						6	9.2	6.25	9.2							14.0	16.0	618	0	0					180								BARRIER MOUNT. SEE STRUCTURE PLANS FOR DETAILS.
										51	45	39		48						5	9.2	6.25	9.2							9.75		1211			270												
6	300+00.0	61.1		X			PS																									3																	3
7	300+47.3	61.5		X		0	III	19	40	55	37	43		37	31					6	11.6	6.25	9.2			9.2				14.0	16.0	1687	0	0			0		180	0		2,600	1,500	18'-0"	10'-0"	N/A	25' - 0"	16'-0"	NO LUMINAIRE. ONLY LUM. ARM. SEE ST41 FOR 4' RD FNDN. DET.

* ELEVATION IS TO TOP OF FOUNDATION. FIELD VERIFY ELEVATION PRIOR TO ORDERING SIGNAL STANDARDS.

** CALCULATED POLE XYZ (FT³) IS THE SUM OF THE TOTAL XYZ (FT³) FOR THE SIGNAL ARM AND THE XYZ (FT³) FOR THE LUMINAIRE ARM (IF PRESENT).

SEE SIGNING PLANS FOR TRAFFIC SIGNAL MAST ARM SIGN DETAILS.

TRAFFIC SIGNAL SYSTEM #1 and #2 - POLE DETAILS

FILE NAME	c:\pwworking\jacobs_b&i\goswamiv\dms20633\PS_SG_06.dgn			
TIME	3:48:24 PM			
DATE	2/21/2020	REV 3 - RFC, RFI0281	02/21/20	
PLOTTED BY	GoswamiV	REV 2 - RFC, RFI0146	07/10/19	
DESIGNED BY	V. GOSWAMI	REV 1 - RFC, RFI0078	04/17/19	
ENTERED BY	V. GOSWAMI	REV 0 - RELEASED FOR CONSTRUCTION	03/29/19	
CHECKED BY	C. STONE	REV B - FINAL REVIEW	02/18/19	
PROJ. ENGR.	C. MEADE	REV A - PRELIMINARY REVIEW	11/02/18	
REGIONAL ADM.	J. WYNANDS	REVISION	DATE	BY

REGION NO. 10 | STATE WASH | FED.AID PROJ.NO.
JOB NUMBER
CONTRACT NO. C9133 | LOCATION NO.

MARK F. WEGENER, STATE OF WASHINGTON, 41141, REGISTERED PROFESSIONAL ENGINEER
2/24/20
DATE
P.E. STAMP BOX

DATE
P.E. STAMP BOX

Washington State Department of Transportation

ATKINSON / JACOBS CONSTRUCTION

I-5
STEILACOOM-DUPONT RD TO THORNE LN CORRIDOR IMPROVEMENTS
MP 120.01 TO MP 124.45

TRAFFIC SIGNAL PLAN

PLAN REF NO SG06

SHEET 954 OF 1456 SHEETS

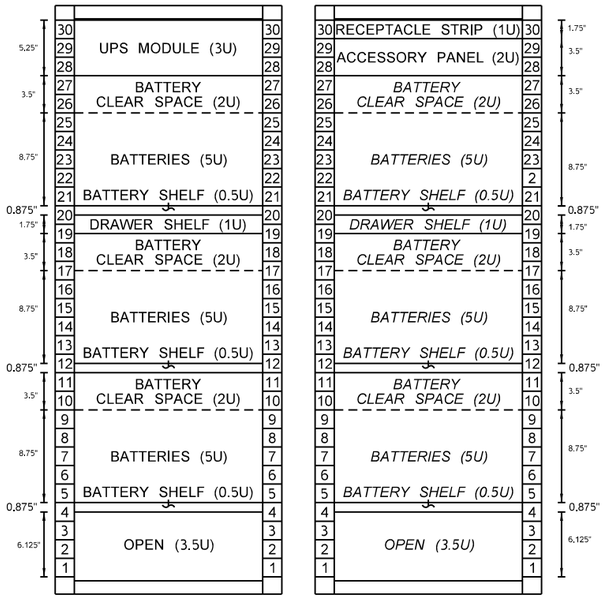

FRONT VIEW REAR VIEW

CABINET RACK LAYOUT

NOTE:
Items in *ITALICS* are the back of the same item shown in the rack FRONT VIEW.

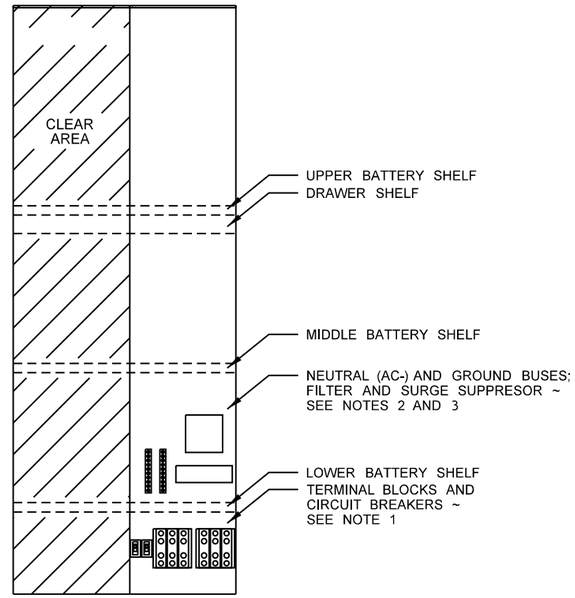

SERVICE PANEL LAYOUT

NOTES

1. Terminal Blocks and Circuit Breakers shall be mounted such that they are accessible from beneath the bottom battery shelf. Terminal Blocks and Circuit Breakers shall be covered to prevent unintentional contact or operation. Circuit Breaker cover(s) shall be removable without tools.
2. Neutral (AC-) and Equipment Ground Buses shall be mounted such that they are accessible from between the lowest battery shelf and the middle battery shelf. If filter and surge suppressor will not also fit here, they may be mounted such that they are accessible between the middle battery shelf and the drawer shelf.
3. LED lighting power supplies may either be mounted in the same location as the filter and surge suppressor (preferred), or at the top of the service panel, as allowed by the power supply wiring.
4. Batteries shall be spaced as far apart as shelf space will allow. Where four batteries are installed, only the upper and middle shelves may be used. Where eight batteries are installed, only the upper and middle shelves may contain three batteries.
5. UPS Duplex Receptacle Plate is to be plugged into the NEMA 5-15 receptacle on the UPS Automatic Transfer Switch (UATS) Panel.
6. Battery Heater Mats are to be plugged into the NEMA 5-15 receptacles on the UPS Duplex Receptacle Plate.
7. Service Panel to be installed on the left side of the cabinet, as viewed from the front.
8. Batteries shall be labeled as shown for String 1 (A1 through A4) and String 2 (B1 through B4; when present).

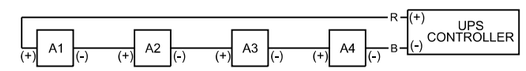

STANDARD BATTERY LABELING
(STRING 1 SHOWN; STRING 2 USES "B" PREFIX)

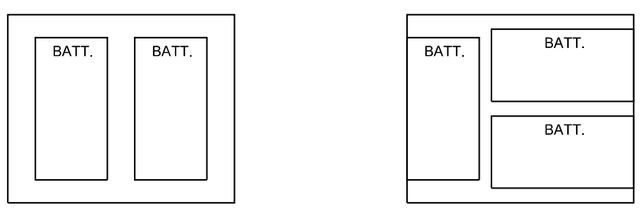

TWO BATTERIES THREE BATTERIES

BATTERY SHELF LAYOUT OPTIONS (PLAN VIEWS) ~ SEE NOTE 4

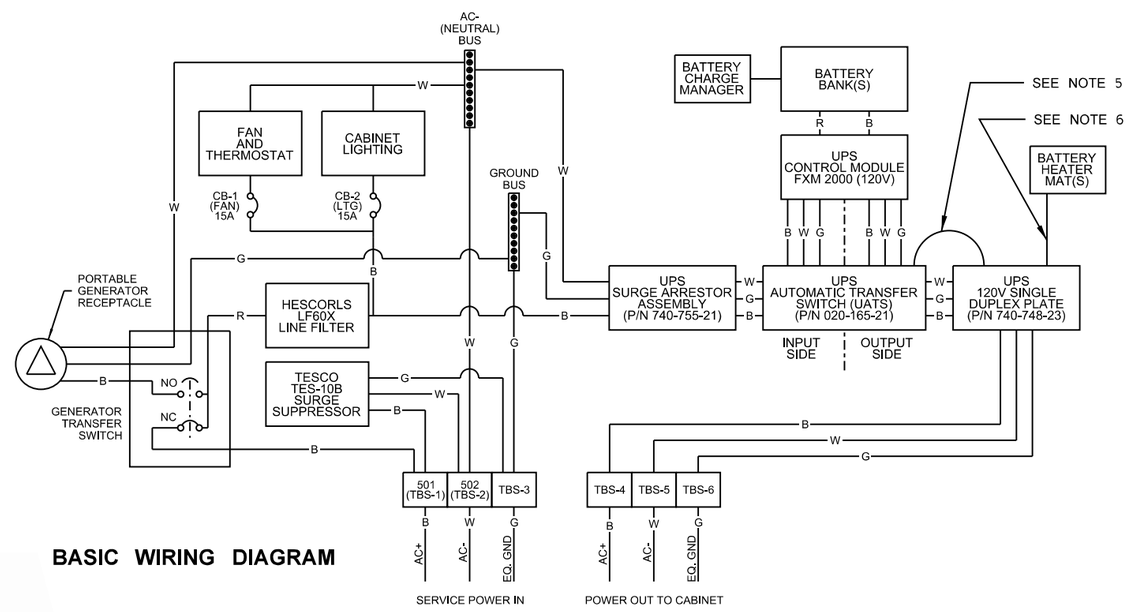

BASIC WIRING DIAGRAM

ATKINSON
APR 03 2019
RELEASED FOR CONSTRUCTION

AS-BUILT

(NOT TO SCALE)
TRAFFIC SIGNAL SYSTEM #1 AND #2 - UPS 331L CABINET EQUIPMENT DETAIL

FILE NAME	c:\pwworking\jacobs_b&i\goswamiv\dms20633\PS_SG_07.dgn			
TIME	9:54:05 AM			
DATE	4/3/2019			
PLOTTED BY	GoswamiV			
DESIGNED BY	V. GOSWAMI			
ENTERED BY	V. GOSWAMI			
CHECKED BY	M. WEGENER			
PROJ. ENGR.	C. MEADE	REV 0 - RELEASED FOR CONSTRUCTION	03/29/19	
REGIONAL ADM.	J. WYNANDS	REVISION	DATE	BY

REGION NO.	STATE	FED.AID PROJ.NO.
10	WASH	
JOB NUMBER		
CONTRACT NO. C9133		LOCATION NO.

P.E. STAMP BOX — DATE 4/3/19

P.E. STAMP BOX — DATE

Washington State Department of Transportation

ATKINSON / JACOBS CONSTRUCTION

I-5
STEILACOOM-DUPONT RD TO THORNE LN CORRIDOR IMPROVEMENTS
MP 120.01 TO MP 124.45

TRAFFIC SIGNAL PLAN

PLAN REF NO SG07

SHEET 955 OF 1456 SHEETS

LEGEND:

- CONDUIT
- NEMA JUNCTION BOX IN BARRIER
- TYPE 2 JUNCTION BOX
- CONTROL CABINET
- UPS — UPS
- T — TRANSFORMER
- SCV — SMALL CABINET VAULT
- PB — PULL BOX
- SIGNAL STANDARD TYPE I
- SIGNAL STANDARD TYPE III
- VEHICLE SIGNAL HEAD
- MAST ARM SIGN
- RADAR VEHICLE DETECTION STOP BAR
- RADAR VEHICLE DETECTION ADVANCE
- EMERGENCY VEHICLE PREEMPTION DETECTOR
- ? — POLE NUMBER
- ? — WIRE NOTE FLAG
- ? — CONSTRUCTION NOTE FLAG
- LUMINAIRE POLE

DETECTION ZONE PLACEMENT

APPROACH	DESIGN SPEED (MPH)	LENGTH OF STOP BAR ZONE IN FEET*	UPSTREAM EDGE OF ADVANCE ZONE IN FEET*
THORNE LN SB OFF-RAMP	35	40 (R5)	275 (R5A)
MURRAY RD	25	40 (R7)	105 (R7A)

* MEASURED FROM UPSTREAM EDGE OF STOP BAR

RADAR DETECTION

DETECTOR	ARM OFFSET(FT)	ZONE(S) COVERED
R5	N/A	05 STOP BAR
R5A	23	05 ADVANCED
R7	N/A	07 STOP BAR
R7A	7	07 ADVANCED

SIGNAL DISPLAY MOUNTINGS

STANDARD PLAN	J-75.10-02		J-75.20-01
MOUNT TYPE	D	K	M
DISPLAY NUMBERS	71,72	73	51,52

PHASE DIAGRAM

01 NOT USED	05
02 NOT USED	06 NOT USED
03 NOT USED	07
04 NOT USED	08 NOT USED

SIGNAL HEAD DISPLAY

R
Y
G

VEHICLE SIGNAL HEADS 51,52,71,72,73

0 15 30
SCALE IN FEET

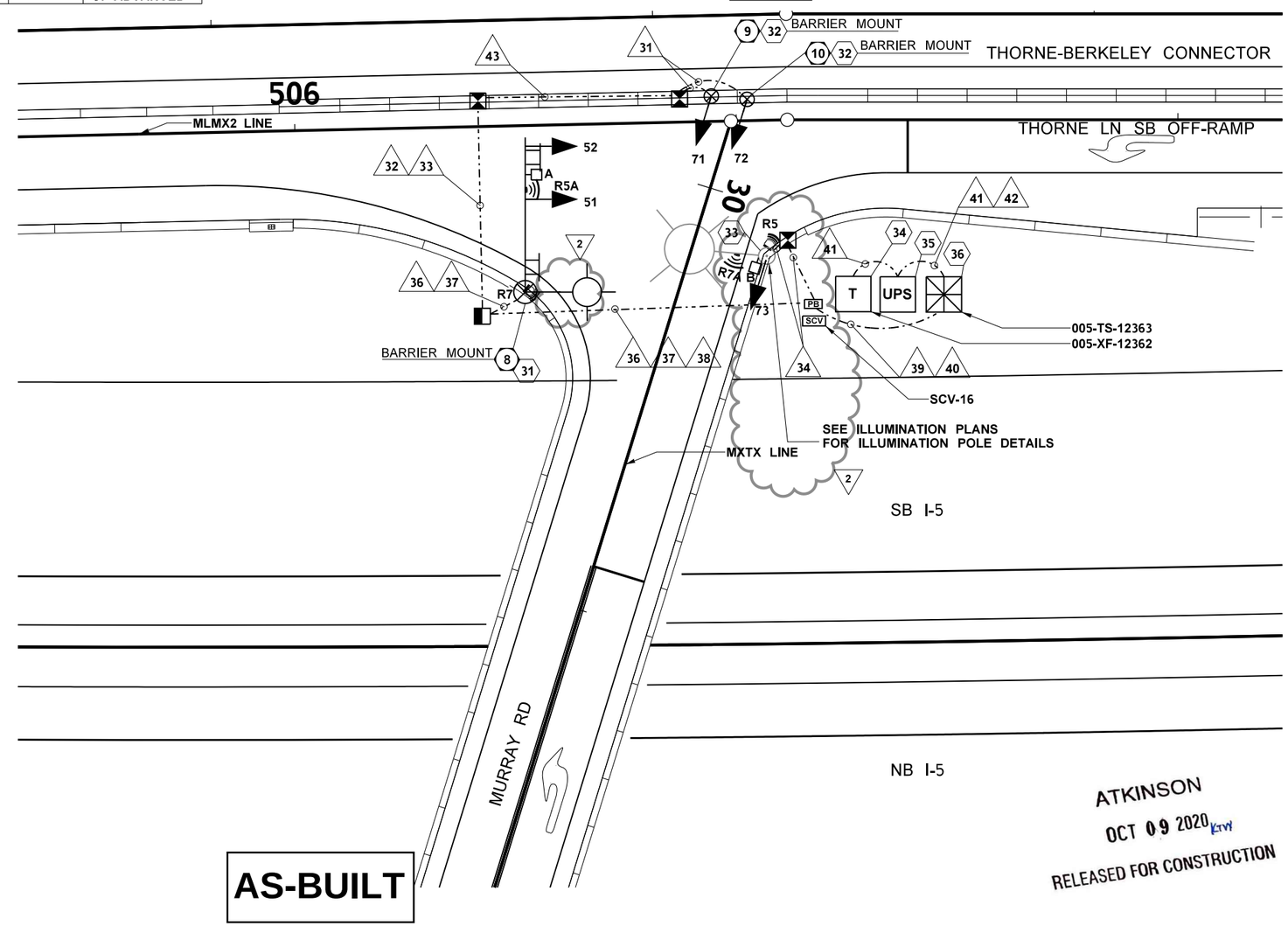

NOTES:

1. SEE SHEET SGN01 FOR GENERAL NOTES, SHEET SG09 FOR WIRE TERMINATION DIAGRAMS, WIRING SCHEDULE AND CONSTRUCTION NOTES, AND SHEET SG11 FOR POLE DETAILS.

ATKINSON
OCT 09 2020
RELEASED FOR CONSTRUCTION

AS-BUILT

FILE NAME	c:\pwworking\jacobs_b&i\stephelm1\dms20633\PS_SG_08.dgn			
TIME	10:48:07 PM			
DATE	10/7/2020			
PLOTTED BY	StepheLM1	REV 2 - RFC, RFI0559, 0560	10/02/20	
DESIGNED BY	V. GOSWAMI	REV 1 - RFC, RFI0544, REV WIRE PATH	09/02/20	
ENTERED BY	V. GOSWAMI	REV 0 - RELEASED FOR CONSTRUCTION	08/12/19	
CHECKED BY	C. STONE	REV B - FINAL REVIEW	06/07/19	
PROJ. ENGR.	C. MEADE	REV A - PRELIMINARY REVIEW	04/15/19	
REGIONAL ADM.	J. WYNANDS	REVISION	DATE	BY

REGION NO. 10 | STATE WASH | FED.AID PROJ.NO.
JOB NUMBER
CONTRACT NO. C9133 | LOCATION NO.

MARK F. WEGENER, STATE OF WASHINGTON, 41141, REGISTERED PROFESSIONAL ENGINEER
10/9/20
DATE
P.E. STAMP BOX

DATE
P.E. STAMP BOX

Washington State Department of Transportation
ATKINSON CONSTRUCTION / JACOBS

I-5
STEILACOOM-DUPONT RD TO THORNE LN
CORRIDOR IMPROVEMENTS
MP 120.01 TO MP 124.45

TRAFFIC SIGNAL PLAN

PLAN REF NO SG08
SHEET 956 OF 1456 SHEETS

WIRING SCHEDULE THORNE SIGNAL

No.	CONDUIT	PRE-EMPT 3CS #20	VEH DISPL. 5C#14	WAVETRONIX LONG 8CS	POWER #6	COMM CAT 6
31	2" GRS		1			
32	2"	2	2			
33	2" SPARE					
34	2" GRS	1	1	2	2	
35	NOT USED					
36	2" GRS		3			
37	2" GRS	1		2	2	
38	2" GRS SPARE					
39	2"		4			
40	2"	2		4		
41	2"				2	
42	2"					1
43	2" GRS		2			

NOTES:

1. WIRE NOTE NUMBERS 23 TO 30 AND CONSTRUCTION NOTE NUMBERS 14 TO 30 NOT USED.

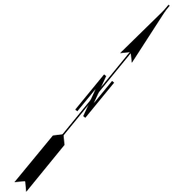

NOT TO SCALE

FIELD WIRE TERMINATIONS

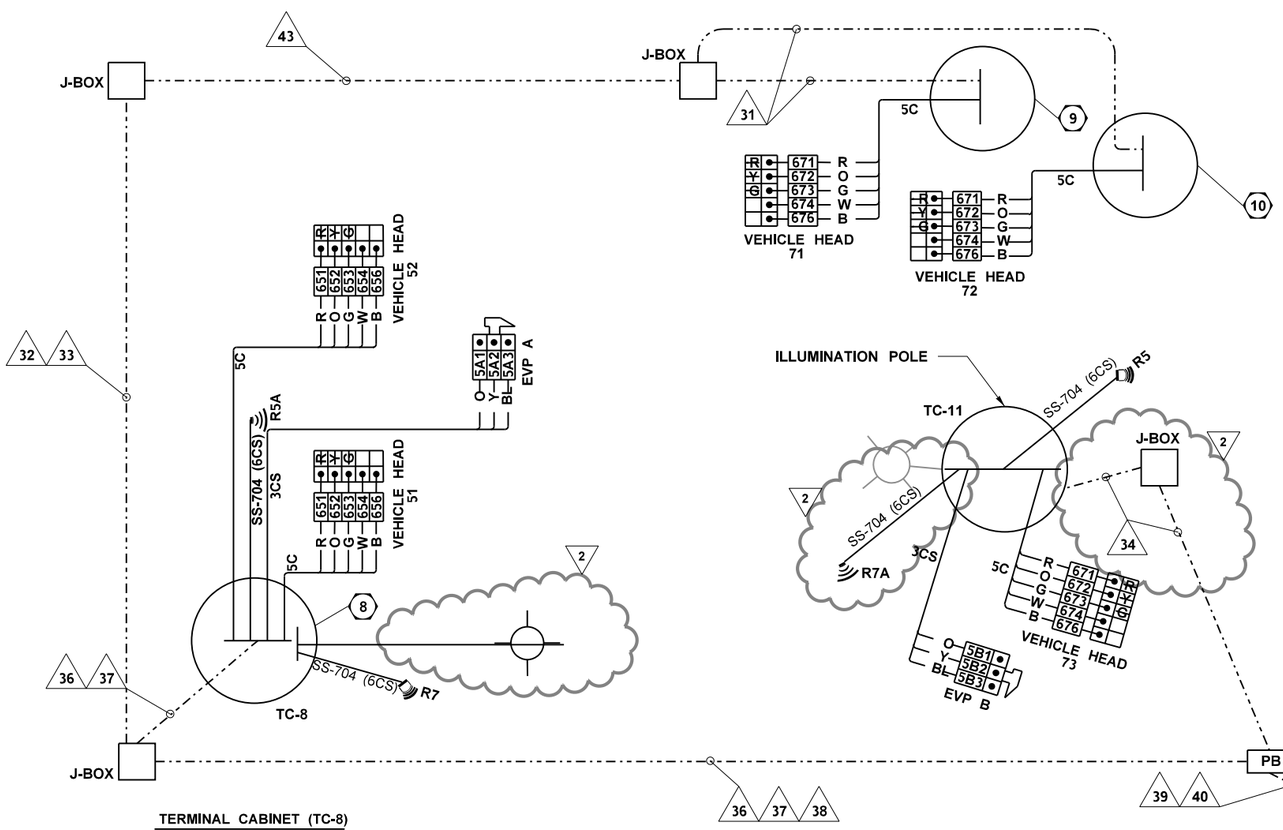

TERMINAL CABINET (TC-8)

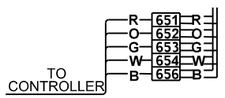

CABINET WIRE TERMINATIONS

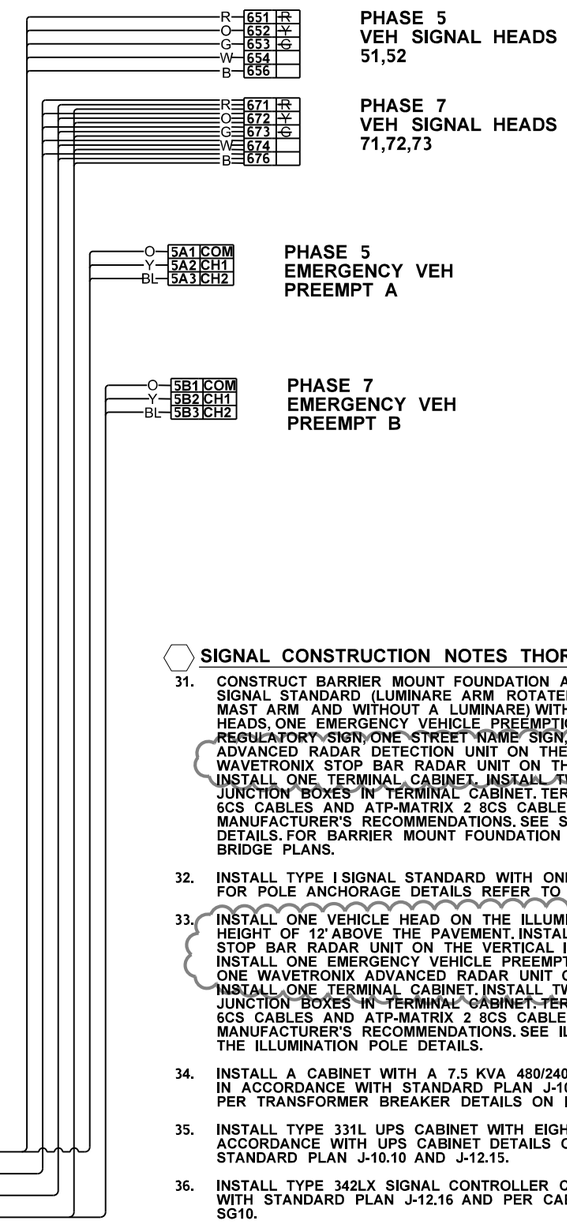

ATKINSON
OCT 09 2020
RELEASED FOR CONSTRUCTION

SIGNAL CONSTRUCTION NOTES THORNE SIGNALS

31. CONSTRUCT BARRIER MOUNT FOUNDATION AND INSTALL TYPE III SIGNAL STANDARD (LUMINARE ARM ROTATED AT 90 DEGREES TO MAST ARM AND WITHOUT A LUMINARE) WITH TWO VEHICLE SIGNAL HEADS, ONE EMERGENCY VEHICLE PREEMPTION DETECTOR, ONE REGULATORY SIGN, ONE STREET NAME SIGN, ONE WAVETRONIX ADVANCED RADAR DETECTION UNIT ON THE MAST ARM, AND ONE WAVETRONIX STOP BAR RADAR UNIT ON THE VERTICAL POLE. INSTALL ONE TERMINAL CABINET. INSTALL TWO WAVETRONIX SS-710 JUNCTION BOXES IN TERMINAL CABINET. TERMINATE WAVETRONIX 6CS CABLES AND ATP-MATRIX 2 8CS CABLE IN ACCORDANCE WITH MANUFACTURER'S RECOMMENDATIONS. SEE SHEET SG11 FOR POLE DETAILS. FOR BARRIER MOUNT FOUNDATION REFER TO THORNE BRIDGE PLANS. 2

32. INSTALL TYPE I SIGNAL STANDARD WITH ONE VEHICLE SIGNAL HEAD. FOR POLE ANCHORAGE DETAILS REFER TO THORNE BRIDGE PLANS.

33. INSTALL ONE VEHICLE HEAD ON THE ILLUMINATION POLE AT A HEIGHT OF 12' ABOVE THE PAVEMENT. INSTALL ONE WAVETRONIX STOP BAR RADAR UNIT ON THE VERTICAL ILLUMINATION POLE. INSTALL ONE EMERGENCY VEHICLE PREEMPTION DETECTOR AND ONE WAVETRONIX ADVANCED RADAR UNIT ON THE LUMINAIRE ARM. INSTALL ONE TERMINAL CABINET. INSTALL TWO WAVETRONIX SS-710 JUNCTION BOXES IN TERMINAL CABINET. TERMINATE WAVETRONIX 6CS CABLES AND ATP-MATRIX 2 8CS CABLE IN ACCORDANCE WITH MANUFACTURER'S RECOMMENDATIONS. SEE ILLUMINATION PLANS FOR THE ILLUMINATION POLE DETAILS. 2

34. INSTALL A CABINET WITH A 7.5 KVA 480/240/120 VAC TRANSFORMER IN ACCORDANCE WITH STANDARD PLAN J-10.10 AND J-10.25 AND PER TRANSFORMER BREAKER DETAILS ON ITS SHEETS TSD29-TSD31.

35. INSTALL TYPE 331L UPS CABINET WITH EIGHT (8) BATTERIES IN ACCORDANCE WITH UPS CABINET DETAILS ON SHEET SG07 AND STANDARD PLAN J-10.10 AND J-12.15.

36. INSTALL TYPE 342LX SIGNAL CONTROLLER CABINET IN ACCORDANCE WITH STANDARD PLAN J-12.16 AND PER CABINET LAYOUT IN SHEET SG10.

AS-BUILT

TRAFFIC SIGNAL SYSTEM #3 - WIRING DIAGRAM AND WIRING SCHEDULE

FILE NAME	c:\pwworking\jacobs_b&i\wegenemf\dms20633\PS_SG_09.dgn			
TIME	1:52:22 PM			
DATE	10/8/2020			
PLOTTED BY	WEGENEMF	REV 2 - RFC, RFI0559, 0560	10/02/20	
DESIGNED BY	V. GOSWAMI	REV 1 - RFC, RFI0544, REV WIRE PATH	09/02/20	
ENTERED BY	V. GOSWAMI	REV 0 - RELEASED FOR CONSTRUCTION	08/12/19	
CHECKED BY	C. STONE	REV B - FINAL REVIEW	06/07/19	
PROJ. ENGR.	C. MEADE	REV A - PRELIMINARY REVIEW	11/02/18	
REGIONAL ADM.	J. WYNANDS	REVISION	DATE	BY

REGION NO. 10 | STATE WASH | FED.AID PROJ.NO.

JOB NUMBER

CONTRACT NO. C9133

LOCATION NO.

MARK F. WEGENER — STATE OF WASHINGTON — 41141 — REGISTERED PROFESSIONAL ENGINEER

10/9/20
DATE

P.E. STAMP BOX

P.E. STAMP BOX DATE

Washington State Department of Transportation

ATKINSON CONSTRUCTION / JACOBS

I-5
STEILACOOM-DUPONT RD TO THORNE LN
CORRIDOR IMPROVEMENTS
MP 120.01 TO MP 124.45

TRAFFIC SIGNAL PLAN

PLAN REF NO SG09

SHEET 957 OF 1456 SHEETS

CABINET INPUT WIRE TERMINATIONS

TB 9

		1			
DC-		2	5AC3	BL	A
	J13K	3	5BD3	BL	B
EVA	J12D	4	5A2	Y	A
	J12J	5	5C2		
DC+	J12E	6	5AC1	O	A
EVB	J13D	7	5B2	Y	B
	J13J	8	5D2		
DC+	J13E	9	5BD1	O	B
RR1	J14D	10	516		
RR2	J14J	11	517		
COM	J14E	12	518		

TYPE 342 LX SIGNAL CABINET EQUIPMENT RACK CONFIGURATION

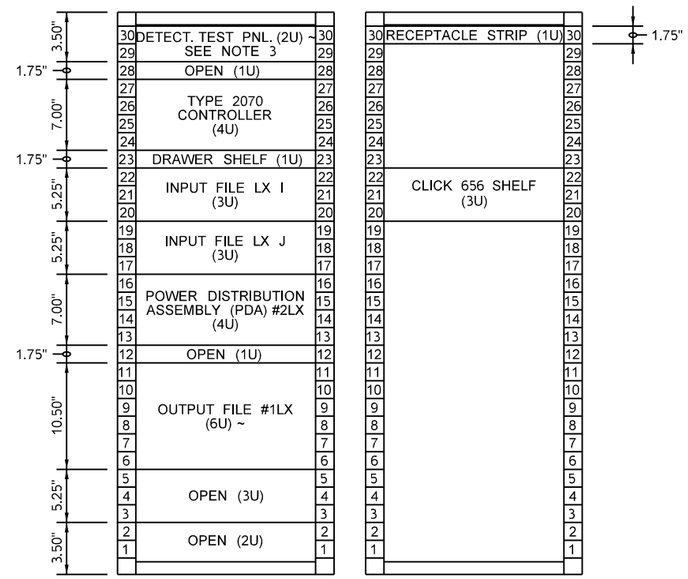

FRONT VIEW REAR VIEW

INPUT FILE LAYOUT AND MARKING DETAIL

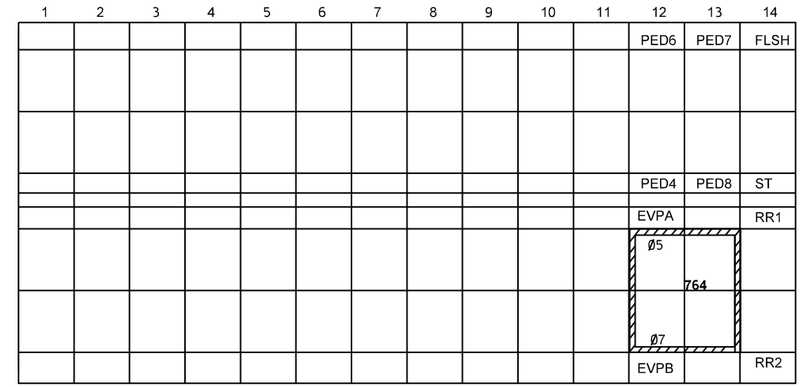

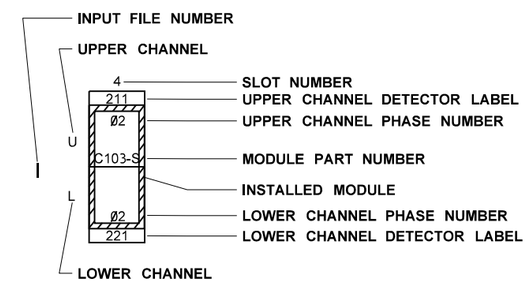

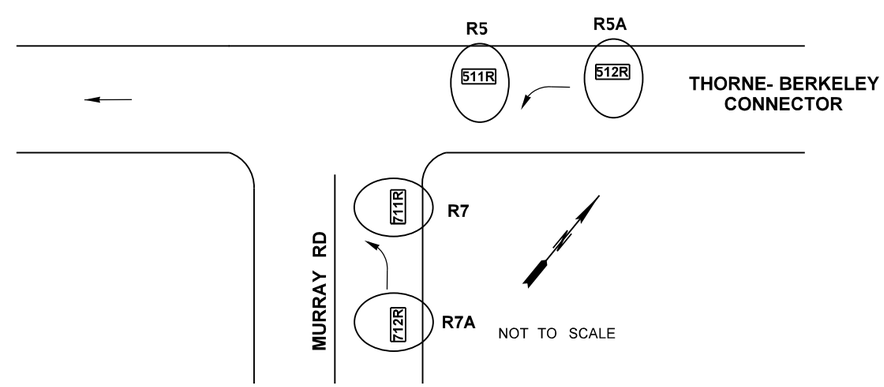

ATKINSON
SEP 16 2019
RELEASED FOR CONSTRUCTION

AS-BUILT

TRAFFIC SIGNAL SYSTEM #3 - CABINET INPUT

FILE NAME	c:\pwworking\jacobs_b&i\goswamiv\dms20633\PS_SG_10.dgn				REGION NO. 10	STATE WASH	FED.AID PROJ.NO.
TIME	12:50:51 PM						
DATE	8/15/2019						
PLOTTED BY	GoswamiV				JOB NUMBER		
DESIGNED BY	V. GOSWAMI						
ENTERED BY	V. GOSWAMI	REV 0 - RELEASED FOR CONSTRUCTION	08/12/19				
CHECKED BY	C. STONE	REV B - FINAL REVIEW	06/07/19		CONTRACT NO. C9133		LOCATION NO.
PROJ. ENGR.	C. MEADE	REV A - PRELIMINARY REVIEW	11/02/18				
REGIONAL ADM.	J. WYNANDS	REVISION	DATE	BY			

STATE OF WASHINGTON REGISTERED PROFESSIONAL ENGINEER 41141 — 9/13/19 DATE — P.E. STAMP BOX

P.E. STAMP BOX — DATE

Washington State Department of Transportation

ATKINSON / JACOBS CONSTRUCTION

I-5
STEILACOOM-DUPONT RD TO THORNE LN
CORRIDOR IMPROVEMENTS
MP 120.01 TO MP 124.45

TRAFFIC SIGNAL PLAN

PLAN REF NO SG10

SHEET 958 OF 1456 SHEETS

LEGEND

a. VEHICLE DISPLAY
b. MAST ARM MTD. SIGN
c. STREET NAME SIGN
d. PRE-EMPT DETECTOR
e. POST MTD. SIGN
f. LUMINAIRE
g. PEDESTRIAN DISPLAY
h. TERMINAL CABINET
i. APS PPB-M
j. HANDHOLE

SIGNAL STANDARD IDENTIFICATION TAG DETAIL

STD. NO. XX	SIGNAL STANDARD NO.	STD. NO. 02
SRXXX, MP XXX.XX	STATE ROUTE AND MILE POST NO.	SR97, MP 069.09
MANUFACTURER APPROVED DWG. XXXXXX	APPROVED DRAWING NO.	MANUFACTURER APPROVED DWG. AB12345
FAB. X/XX/XXXX	FABRICATION DATE	FAB. 6/14/2002

EXAMPLE

TAG NOTES:
CORROSION RESISTANT METAL TAG SECURED WITH (2) 0.125" RIVETS AS FOLLOWS:
- POLE SHAFT - LOCATED WITHIN 6" ABOVE HAND HOLE (TYPE II & III).
- SIGNAL AND LUMINAIRE MAST ARM (TYPE II & III) - LOCATED WITHIN 6" OF THE LUMINAIRE ARM AND THE POLE SHAFT CONNECTION POINT (TYPE III).

TEXT SHALL BE A MINIMUM OF 3/16" HIGH, STAMPED OR EMBOSSED.

MEASURE ATTACHMENT POINT ANGLES CLOCKWISE FROM POLE ORIENTATION LINE (E1 ATTACHMENT POINT) TO THE ATTACHMENT POINT LOCATION

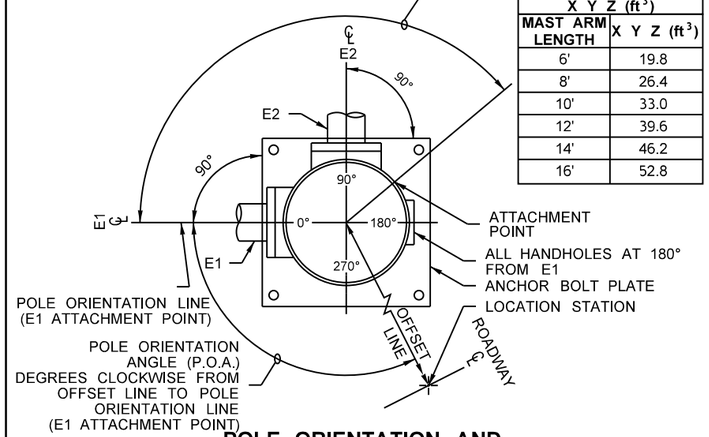

LUMINAIRE MAST ARM X Y Z (ft³)	
MAST ARM LENGTH	X Y Z (ft³)
6'	19.8
8'	26.4
10'	33.0
12'	39.6
14'	46.2
16'	52.8

STANDARD TYPE		STANDARD PLAN REFERENCES			
		POLE	FOUNDATION		ELECTRICAL
			STANDARD	CURB	
PPB	FIXED	J-20.10	J-20.10	J-20.11	J-20.10
	BREAKAWAY	J-20.15	J-20.15		J-20.15
PS		J-20.16	J-21.10		J-20.20
I		J-21.15	J-21.10		J-21.20
II, III, SD		N/A	J-26.10, J-26.15	N/A	N/A

POLE ORIENTATION AND ATTACHMENT POINT DETAIL

NOTE:
TYPE E MOUNTS SHALL BE USED FOR PEDESTRIAN DISPLAYS ON TYPE II OR III SIGNAL STANDARDS, WITH THE FOLLOWING EXCEPTION: PEDESTRIAN DISPLAYS MOUNTED ON OCTAGONAL (8 SIDED) SIGNAL STANDARDS AT AN ANGLE OTHER THAN A 45 DEGREE INCREMENT SHALL USE A TYPE A MOUNT FOR TWO PEDESTRIAN DISPLAYS, OR A TYPE B MOUNT FOR A SINGLE PEDESTRIAN DISPLAY.

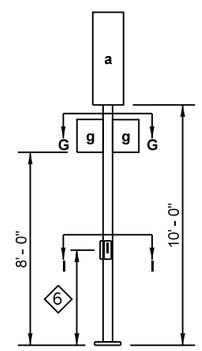

6 3' - 6" MEASURED FROM SIDEWALK SURFACE TO CENTER OF PEDESTRIAN PUSH BUTTON

TYPE I VEHICLE HEAD STANDARD

NOTES

1. MOUNTING COUPLING INSTALLED AT OFFSET DISTANCE INDICATED IN CHART. FOR TYPE N MOUNTS ONLY, DRILL 1" DIA. HOLE IN MAST ARM AND INSTALL PLASTIC SPLIT BUSHING FOR CABLE ENTRANCE.
2. FIELD INSTALLED. SIGN SIZES SHALL NOT EXCEED THE MAXIMUM VALUES LISTED HERE:

SIGN	HEIGHT	WIDTH	AREA
b	3.0 FT	N/A	7.5 SQ. FT.
c	3.0 FT	N/A	36.0 SQ. FT.
e	N/A	3.0 FT	15.0 SQ. FT.

3 1' - 0" MIN. TO 2' - 6" MAX. FROM POLE CENTERLINE TO SIGN EDGE

4 FOR POST MOUNTED SIGNS THERE SHALL BE 2' - 0" MIN. FROM THE FACE OF THE CURB OR THE EDGE OF THE SHOULDER TO THE EDGE OF THE SIGN

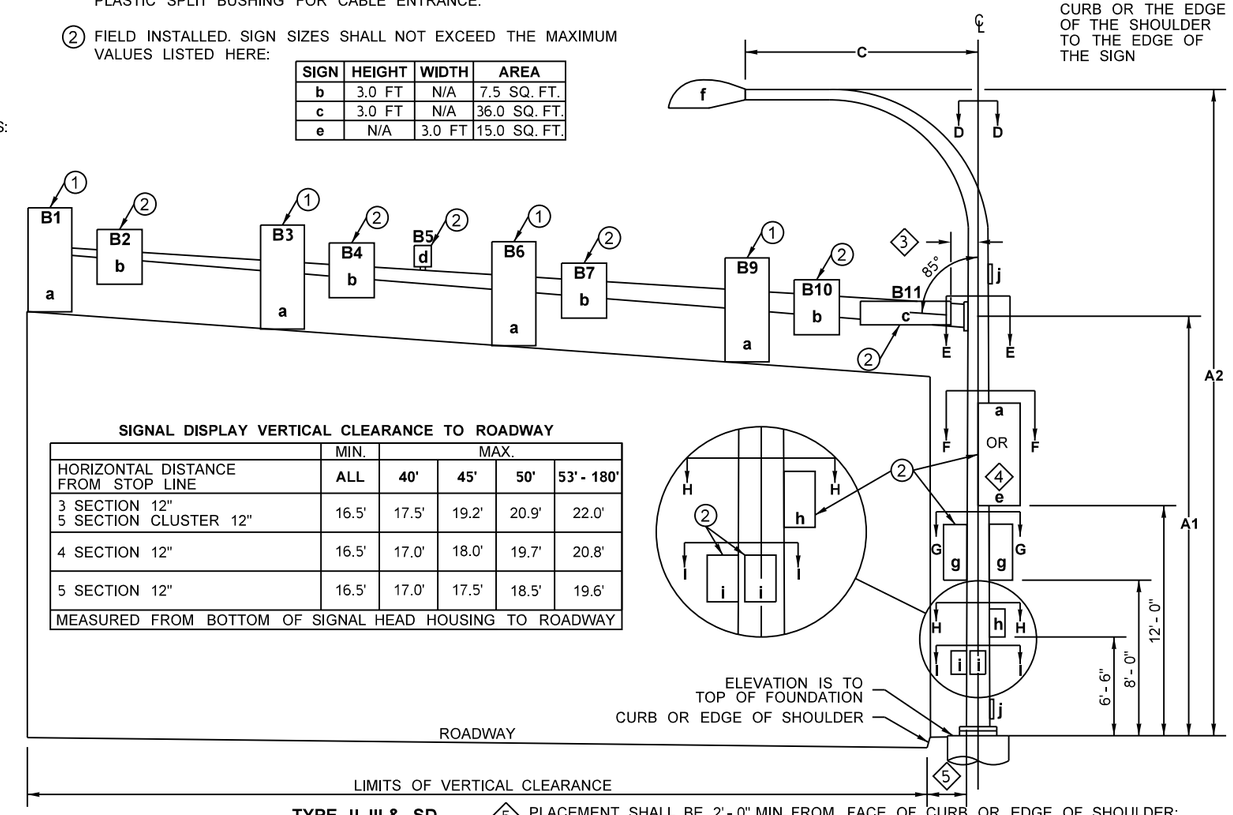

SIGNAL DISPLAY VERTICAL CLEARANCE TO ROADWAY

	MIN.	MAX.			
HORIZONTAL DISTANCE FROM STOP LINE	ALL	40'	45'	50'	53' - 180'
3 SECTION 12" 5 SECTION CLUSTER 12"	16.5'	17.5'	19.2'	20.9'	22.0'
4 SECTION 12"	16.5'	17.0'	18.0'	19.7'	20.8'
5 SECTION 12"	16.5'	17.0'	17.5'	18.5'	19.6'
MEASURED FROM BOTTOM OF SIGNAL HEAD HOUSING TO ROADWAY					

TYPE II, III & SD SIGNAL STANDARD

7 DMS OR VMS IS NOT ALLOWED ON THESE POLES.

5 PLACEMENT SHALL BE 2' - 0" MIN. FROM FACE OF CURB OR EDGE OF SHOULDER; 3' - 0" MIN. FROM FACE OF GUARDRAIL; 4' - 0" MIN. FROM CONC. BARRIER TYPE 2 (MEASURED FROM A POINT WHERE THE BARRIER BASE MEETS THE SHOULDER SURFACE (TOE). MEASUREMENT TAKEN FROM TRAFFIC SIDE OF BARRIER; TO FACE OF POLE)

SIGNAL STANDARD DETAIL CHART

STD. No.	1 FIELD LOCATION STATION (MLMX2 LINE)	OFFSET	LT.	RT.	ELEV.*	P.O.A.	POLE TYPE	MOUNTING HEIGHT (FT) A1	A2	OFFSETS (FT) (Z) (POLE ℄ TO ATTACHMENT POINT) B1	B2	B3	B4	B5	B6	B7	B8	B9	B10	B11	WINDLOAD AREAS (FT²) (X)(Y) B1	B2	B3	B4	B5	B6	B7	B8	B9	B10	B11	LUMINAIRE ARM (FT) C	CALCULATED POLE XYZ (FT³) **	POLE ATTACHMENT POINT ANGLES (deg.) D	E1	E2	F	G1	G2	H	I1	I2	FOUNDATION DESIGN XYZ (FT³)	SOIL BEARING PRESSURE (PSF)	FOUNDATION DEPTH (FT) ALTERNATE 1 3' RD.	3' SQ.	4' RD.	ALTERNATE 2 3' RD.	4' RD.	REMARKS
8	506+50.1	39.2		X		0	III	14	36	33	29	21		26						4	9.2	7.5	9.2								4.5	8.0	760	90	0					315									BARRIER MOUNT. SEE STRUCTURE PLANS FOR DETAILS. NO LUMINAIRE FIXTURE. ONLY LUMINAIRE ARM.
9	506+94.5	5.7	X				I																																											BARRIER MOUNT. SEE STRUCTURE PLANS FOR DETAILS.
10	507+02.5	5.7	X				I																																											BARRIER MOUNT. SEE STRUCTURE PLANS FOR DETAILS.

AS-BUILT

ATKINSON
JUN 08 2020 KTW
RELEASED FOR CONSTRUCTION

* ELEVATION IS TO TOP OF FOUNDATION. FIELD VERIFY ELEVATION PRIOR TO ORDERING SIGNAL STANDARDS.

** CALCULATED POLE XYZ (FT³) IS THE SUM OF THE TOTAL XYZ (FT³) FOR THE SIGNAL ARM AND THE XYZ (FT³) FOR THE LUMINAIRE ARM (IF PRESENT).

SEE SIGNING PLANS FOR TRAFFIC SIGNAL MAST ARM SIGN DETAILS.

TRAFFIC SIGNAL SYSTEM #3 - POLE DETAILS

FILE NAME	c:\pwworking\jacobs_b&i\goswamiv\dms20633\PS_SG_11.dgn			
TIME	10:41:28 AM			
DATE	4/8/2020			
PLOTTED BY	GoswamiV			
DESIGNED BY	V. GOSWAMI	REV 1 - RFC,RFI0457, REV POLE 8 LOCATION	04/03/20	
ENTERED BY	V. GOSWAMI	REV 0 - RELEASED FOR CONSTRUCTION	08/12/19	
CHECKED BY	C. STONE	REV B - FINAL REVIEW	06/07/19	
PROJ. ENGR.	C. MEADE	REV A - PRELIMINARY REVIEW	11/02/18	
REGIONAL ADM.	J. WYNANDS	REVISION	DATE	BY

REGION NO.	STATE	FED.AID PROJ.NO.
10	WASH	
JOB NUMBER		
CONTRACT NO. C9133		LOCATION NO.

MARK F. WEGENER STATE OF WASHINGTON 41141 REGISTERED PROFESSIONAL ENGINEER
6/4/20
DATE
P.E. STAMP BOX

DATE
P.E. STAMP BOX

Washington State Department of Transportation

ATKINSON / JACOBS CONSTRUCTION

I-5
STEILACOOM-DUPONT RD TO THORNE LN
CORRIDOR IMPROVEMENTS
MP 120.01 TO MP 124.45

TRAFFIC SIGNAL PLAN

PLAN REF NO SG11

SHEET 959 OF 1456 SHEETS

LEGEND:

- CONDUIT
- TYPE 8 JUNCTION BOX
- SINGULAR CIRCULAR FLASHING BEACON, SIGNS AND TYPE FB POLE
- BI-DIRECTIONAL CONFIGURATION RECTANGULAR RAPID FLASHING BEACON (RRFB), SIGNS AND TYPE FB POLE
- PEDESTRIAN PUSHBUTTON
- POLE NUMBER
- WIRE NOTE
- CONSTRUCTION NOTE

WIRING SCHEDULE

NO.	CONDUIT SIZE	SERVICE #8	NOTES
1	2"	9	
2	2"	3	
3	3"	6	
	2-3"		FOR FUTURE SIGNAL
4	3-3"		FOR FUTURE SIGNAL
5	3-3"		FOR FUTURE SIGNAL

CONSTRUCTION NOTES:

1. INSTALL TYPE FB SIGNAL STANDARD, CONTROLLER CABINET WITH RADIO, BI-DIRECTIONAL RRFB HEAD, PEDESTRIAN PUSH BUTTON, WIRING AND SIGNS, SEE SG14 FOR DETAILS. INSTALL FOUNDATION IN ACCORDANCE WITH STANDARD PLAN J-20.11.
2. INSTALL TYPE FB SIGNAL STANDARD, CONTROLLER CABINET WITH RADIO, BI-DIRECTIONAL RRFB HEAD, PEDESTRIAN PUSH BUTTON, WIRING AND SIGNS, SEE SG14 FOR DETAILS. INSTALL FOUNDATION IN ACCORDANCE WITH STANDARD PLAN J-20.11.
3. INSTALL TYPE FB SIGNAL STANDARD, CONTROLLER CABINET WITH RADIO, SINGLE FLASHING CIRCULAR BEACON AND SIGNS IN ACCORDANCE WITH STANDARD PLAN J-21.16. INSTALL SLIP BASE AND FOUNDATION IN ACCORDANCE WITH STANDARD PLAN J-21.10. INSTALL CONTROLLER CABINET BEHIND SIGN PANEL. INSTALL SIGNAL STANDARD FOUR (4) FEET FROM FACE OF CURB.
4. SEE ILLUMINATION PLAN IL31 FOR CONTINUATION OF SERVICE BACK TO THE NEW LAKEWOOD-BERKELEY SERVICE CABINET.

GENERAL NOTES:

1. SEE SG14 AND SIGNING PLANS FOR SIGN DETAILS.
2. SYSTEM USES RADIO COMMUNICATION BETWEEN CONTROLLERS.

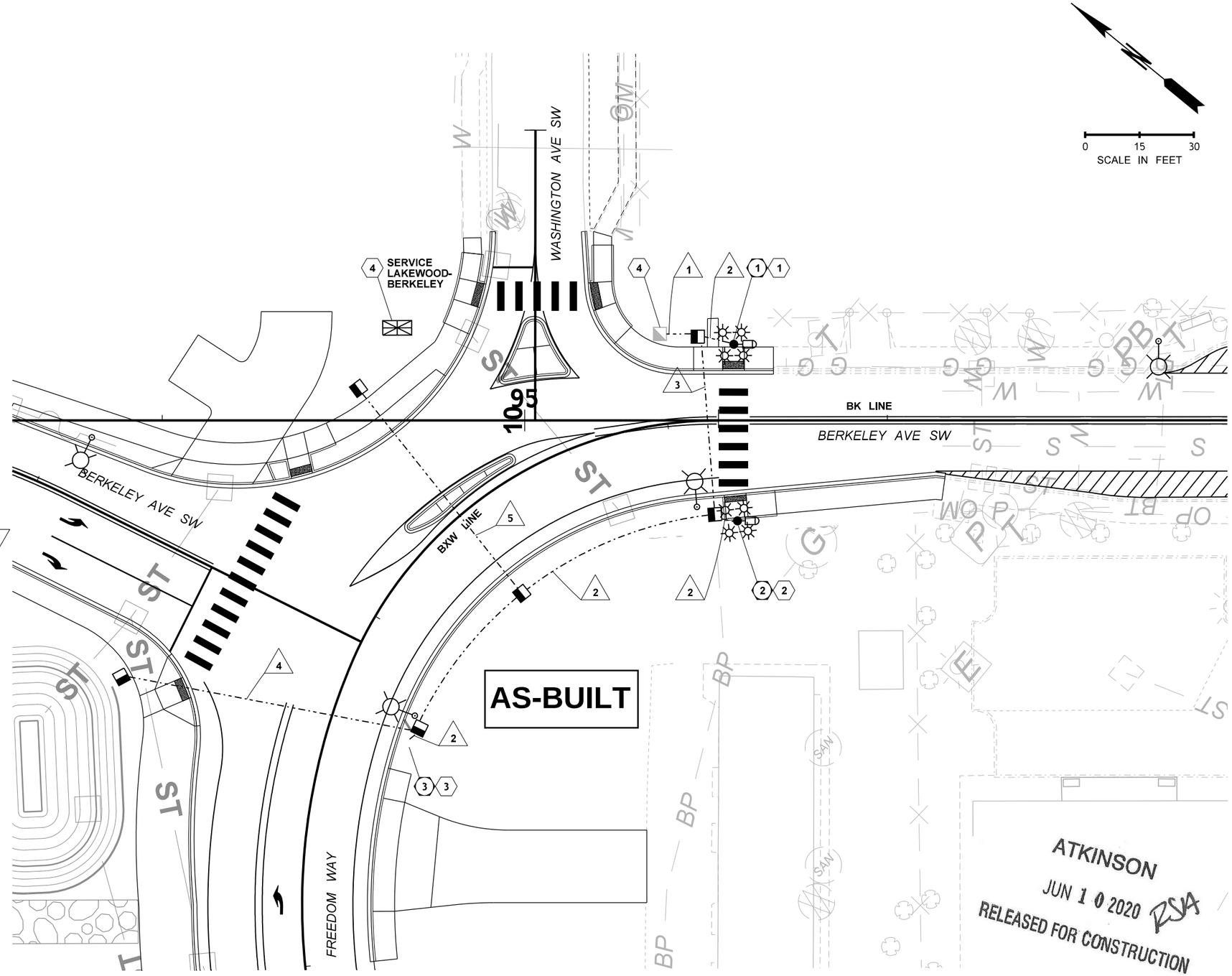

FILE NAME	c:\pwworking\jacobs_b&i\wegenemf\dms20633\PS_SG_12.dgn						
TIME	5:28:42 PM						
DATE	5/26/2020	REV 3 - RFI0469	05/26/20		REGION NO. 10	STATE WASH	FED.AID PROJ.NO.
PLOTTED BY	WEGENEMF	REV 2 - RFI0410	02/21/20		JOB NUMBER		
DESIGNED BY	V. GOSWAMI	REV 1 - RFI0395 / RELEASE OF NFC	01/31/20				
ENTERED BY	V. GOSWAMI	REV 0 - RELEASED FOR CONSTRUCTION	08/19/19				
CHECKED BY	R. JAHNS	REV B - FINAL REVIEW	07/23/19		CONTRACT NO. C9133		LOCATION NO.
PROJ. ENGR.	C. MEADE	REV A - PRELIMINARY REVIEW	06/20/19				
REGIONAL ADM.	J. WYNANDS	REVISION	DATE	BY			

MARK F. WEGENER — STATE OF WASHINGTON — 41141 — REGISTERED PROFESSIONAL ENGINEER
6/9/20
DATE
P.E. STAMP BOX

P.E. STAMP BOX DATE

Washington State Department of Transportation

ATKINSON CONSTRUCTION / JACOBS

I-5
STEILACOOM-DUPONT RD TO THORNE LN
CORRIDOR IMPROVEMENTS
MP 120.01 TO MP 124.45

RRFB PLAN - BERKELEY AVENUE

PLAN REF NO SG12

SHEET 960 OF 1456 SHEETS

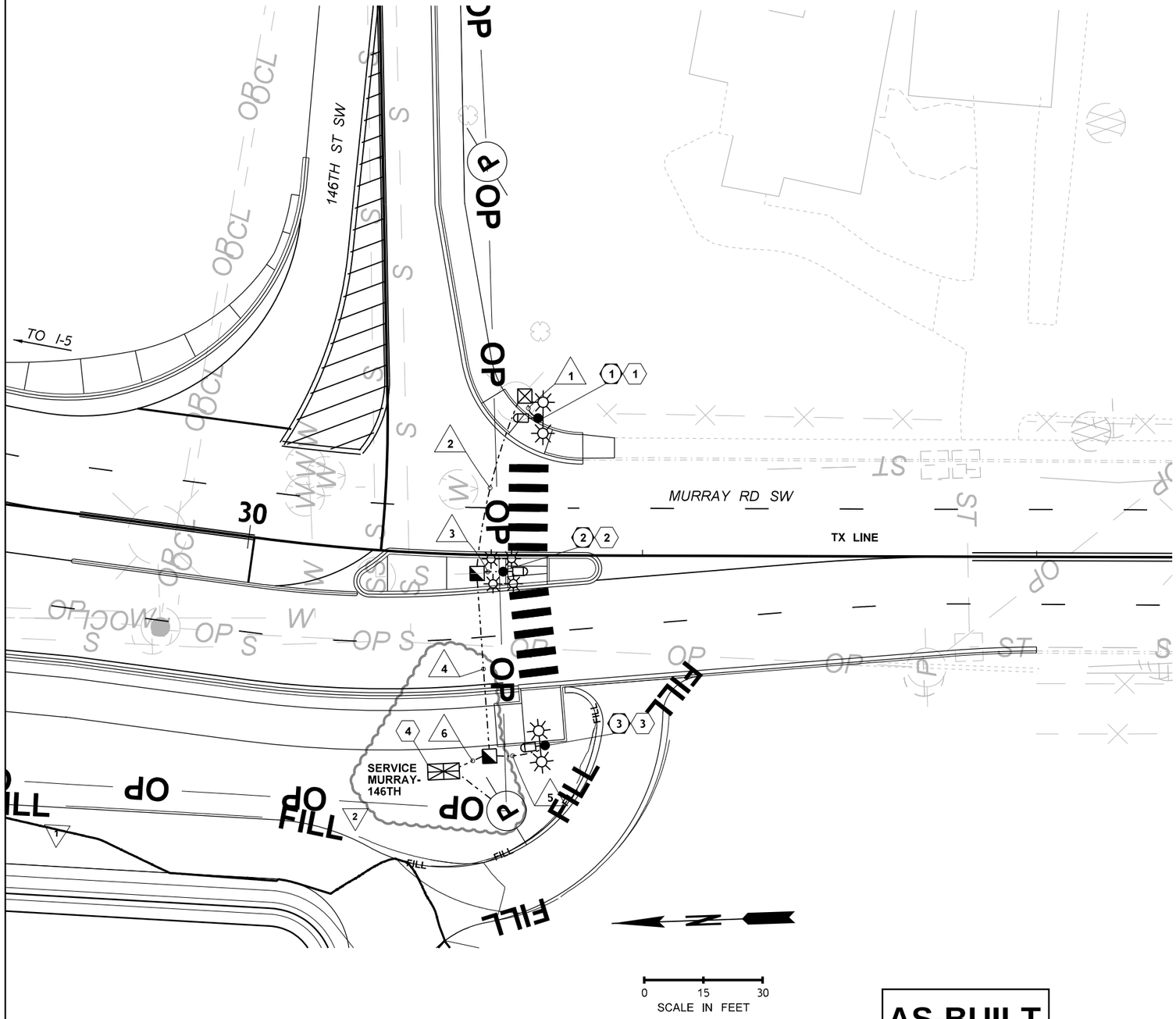

LEGEND:

- CONDUIT
- TYPE 1 JUNCTION BOX
- TYPE 2 JUNCTION BOX
- UNI-DIRECTIONAL CONFIGURATION RECTANGULAR RAPID FLASHING BEACON (RRFB), SIGNS AND TYPE FB POLE
- BI-DIRECTIONAL CONFIGURATION RECTANGULAR RAPID FLASHING BEACON (RRFB), SIGNS AND TYPE FB POLE
- PEDESTRIAN PUSHBUTTON
- POLE NUMBER
- WIRE NOTE
- CONSTRUCTION NOTE

WIRING SCHEDULE

NO.	CONDUIT SIZE	RRFB HEAD & PED PUSH BUTTON 5C	NOTES
1	2"	1	
2	2"	1	
	2"		SPARE
3	2"	2	
	2"		SEE IL39 FOR POWER
4	2"	1	
	2"		SEE IL39 FOR POWER
5	2"	1	
6	2"		SEE IL39 FOR POWER

2

CONSTRUCTION NOTES:

1. INSTALL TYPE FB SIGNAL STANDARD, UNI-DIRECTIONAL RRFB HEAD, PEDESTRIAN PUSH BUTTON, WIRING AND SIGNS, SEE SG14 FOR DETAILS. INSTALL FOUNDATION IN ACCORDANCE WITH STANDARD PLAN J-20.11.
2. INSTALL TYPE FB SIGNAL STANDARD, CONTROLLER CABINET, BI-DIRECTIONAL RRFB HEAD, PEDESTRIAN PUSH BUTTON , WIRING AND SIGNS, SEE SG14 FOR DETAILS. INSTALL FOUNDATION IN ACCORDANCE WITH STANDARD PLAN J-20.11.
3. INSTALL TYPE FB SIGNAL STANDARD, UNI-DIRECTIONAL RRFB HEAD, PEDESTRIAN PUSH BUTTON, WIRING AND SIGNS, SEE SG14 FOR DETAILS. INSTALL FOUNDATION IN ACCORDANCE WITH STANDARD PLAN J-20.11.
4. POWER FROM NEW MURRAY-146TH SERVICE CABINET, SEE ILLUMINATION PLAN IL39.

GENERAL NOTES:

1. SEE SG14 AND SIGNING PLANS FOR SIGN DETAILS.

ATKINSON
SEP 24 2020 KTW
RELEASED FOR CONSTRUCTION

AS-BUILT

FILE NAME	c:\pwworking\jacobs_b&i\ex-jahnsr\dms20633\PS_SG_13.dgn					
TIME	11:13:36 AM					
DATE	9/23/2020					
PLOTTED BY	RJ044602	REV 2 - RFI0503	09/14/20			
DESIGNED BY	V. GOSWAMI	REV 1 - RFI0395 / RELEASE OF NFC	01/31/20			
ENTERED BY	V. GOSWAMI	REV 0 - RELEASED FOR CONSTRUCTION	08/19/19			
CHECKED BY	R. JAHNS	REV B - FINAL REVIEW	07/23/19			
PROJ. ENGR.	C. MEADE	REV A - PRELIMINARY REVIEW	06/20/19			
REGIONAL ADM.	J. WYNANDS	REVISION	DATE	BY		

REGION NO.	STATE	FED.AID PROJ.NO.
10	WASH	
JOB NUMBER		
CONTRACT NO. C9133		LOCATION NO.

MARK F. WEGENER · STATE OF WASHINGTON · 41141 · REGISTERED PROFESSIONAL ENGINEER
9/23/20
DATE
P.E. STAMP BOX

DATE
P.E. STAMP BOX

Washington State Department of Transportation

ATKINSON CONSTRUCTION / JACOBS

I-5
STEILACOOM-DUPONT RD TO THORNE LN CORRIDOR IMPROVEMENTS
MP 120.01 TO MP 124.45

RRFB PLAN - MURRAY ROAD

PLAN REF NO SG13

SHEET 961 OF 1456 SHEETS

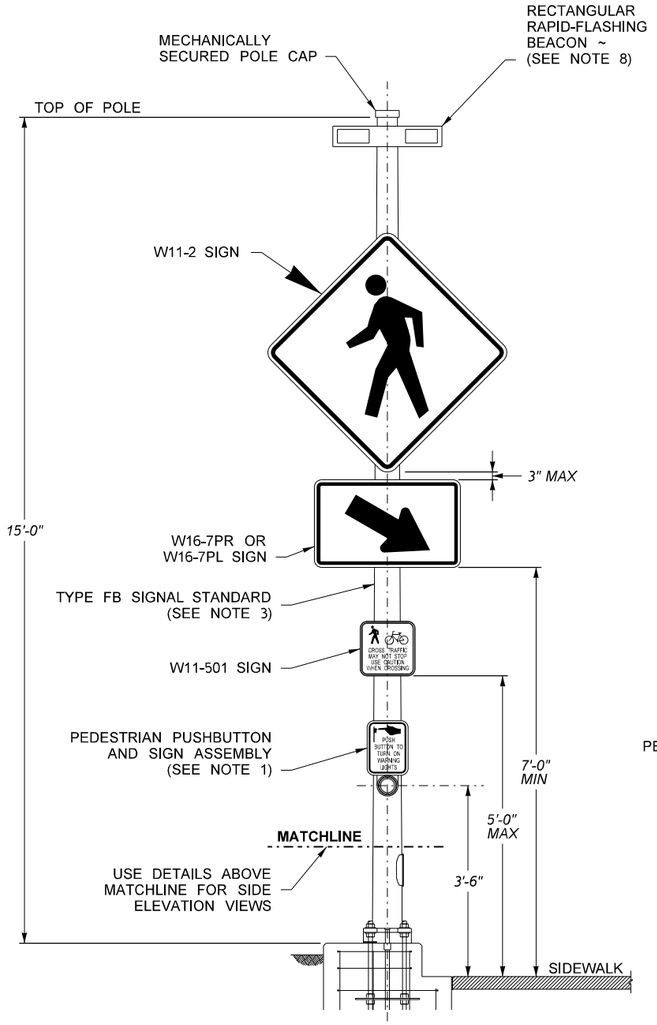

FRONT ELEVATION VIEW

RECTANGULAR RAPID-FLASHING BEACON (RRFB)

PEDESTRIAN PUSH BUTTON WITH CURB BASE SHOWN (SEE STANDARD PLAN J-20.11)

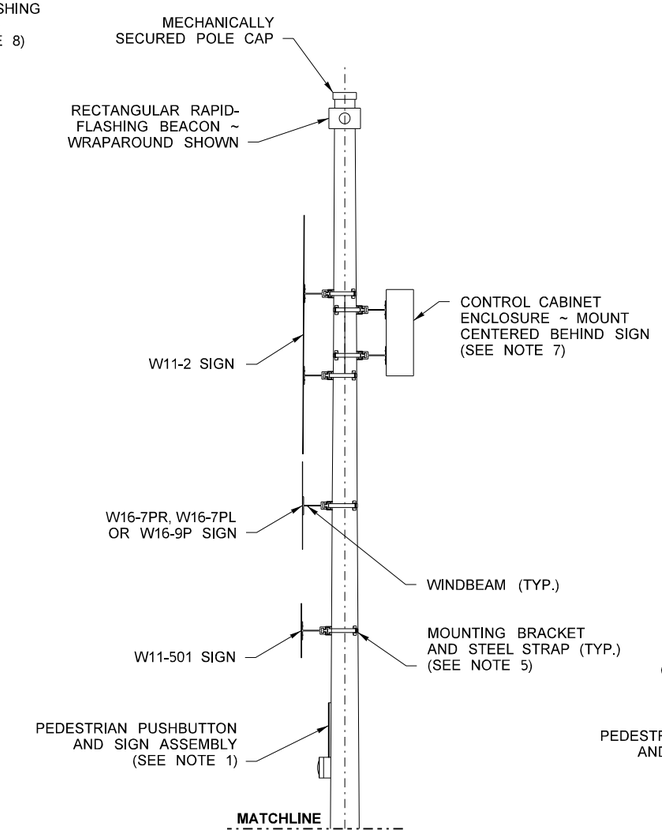

SIDE ELEVATION VIEW

UNI-DIRECTIONAL CONFIGURATION DETAILS

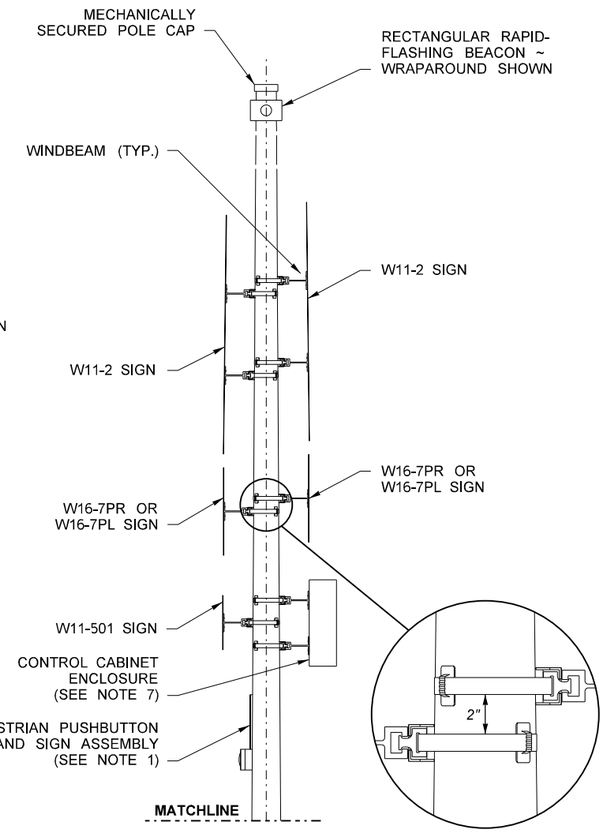

SIDE ELEVATION VIEW

BI-DIRECTIONAL CONFIGURATION DETAILS

NOTES:

1. PEDESTRIAN PUSHBUTTON AND SIGN ASSEMBLY - MAY BE SEPARATE PARTS. USE 9" (IN) X 12" (IN) R10-25 SIGN IN ACCORDANCE WITH 2009 MUTCD. SIGN MAY INCLUDE INTEGRATED WARNING LIGHTS.
2. NOT USED 1
3. SEE **STANDARD PLAN J-21.16** FOR SIGNAL STANDARD DETAILS NOT SHOWN.
4. SEE **STANDARD PLAN J-21.17, DETAIL C** FOR WIRING DETAILS NOT SHOWN.
5. SEE **STANDARD PLAN G-30.10** FOR SIGN INSTALLATION ON SIGNAL STANDARD DETAILS.
6. TERMINATE RFB CONNECTIONS PER MANUFACTURER'S RECOMMENDATION.
7. CONTROL CABINET ENCLOSURE SHALL BE SIZED BY THE RFB MANUFACTURER. THE CONTROL CABINET SHALL BE MANUFACTURED PER TERMINAL CABINET REQUIREMENTS OF **STANDARD SPECIFICATION SECTION 9-29.25.**
8. BEACON ASSEMBLY MAY BE MOUNTED ON THE TOP OF THE POLE OR ON THE SIDE OF THE POLE.
9. RRFB DISPLAYS SHALL BE LED TYPE MEETING THE INTENSITY REQUIREMENTS OF SAE J595 FOR CLASS 1 YELLOW, BUT SHALL NOT EXCEED 1000 CANDELAS DURING DAYLIGHT AND 500 CANDELAS AFTER DARK.
10. ALL PUSHBUTTONS SHALL HAVE MAXIMUM 9" OF REACH FROM FACE OF PUSHBUTTON TO EDGE OF LEVEL CLEAR SPACE.
11. SEE SIGNING PLANS FOR ADDITIONAL INFORMATION.

ATKINSON
FEB 03 2020 KTW
RELEASED FOR CONSTRUCTION

AS-BUILT

FILE NAME	c:\pwworking\jacobs_b&f\ex-jahnsr\dms20633\PS_SG_14.dgn			
TIME	2:56:58 PM			
DATE	2/3/2020			
PLOTTED BY	RJ044602			
DESIGNED BY	V. GOSWAMI	REV 1 - RFI0395 / RELEASE OF NFC	01/31/20	
ENTERED BY	V. GOSWAMI	REV 0 - RELEASED FOR CONSTRUCTION	08/19/19	
CHECKED BY	R. JAHNS	REV B - FINAL REVIEW	07/23/19	
PROJ. ENGR.	C. MEADE	REV A - PRELIMINARY REVIEW	06/20/19	
REGIONAL ADM.	J. WYNANDS	REVISION	DATE	BY

REGION NO.	STATE	FED.AID PROJ.NO.
10	WASH	
JOB NUMBER		
CONTRACT NO.		LOCATION NO.
C9133		

MARK E. WEGENER STATE OF WASHINGTON 41141 REGISTERED PROFESSIONAL ENGINEER
2/3/20
DATE
P.E. STAMP BOX

DATE
P.E. STAMP BOX

Washington State Department of Transportation

ATKINSON / JACOBS CONSTRUCTION

I-5
STEILACOOM-DUPONT RD TO THORNE LN
CORRIDOR IMPROVEMENTS
MP 120.01 TO MP 124.45

RRFB DETAILS

PLAN REF NO
SG14

SHEET 962 OF 1456 SHEETS

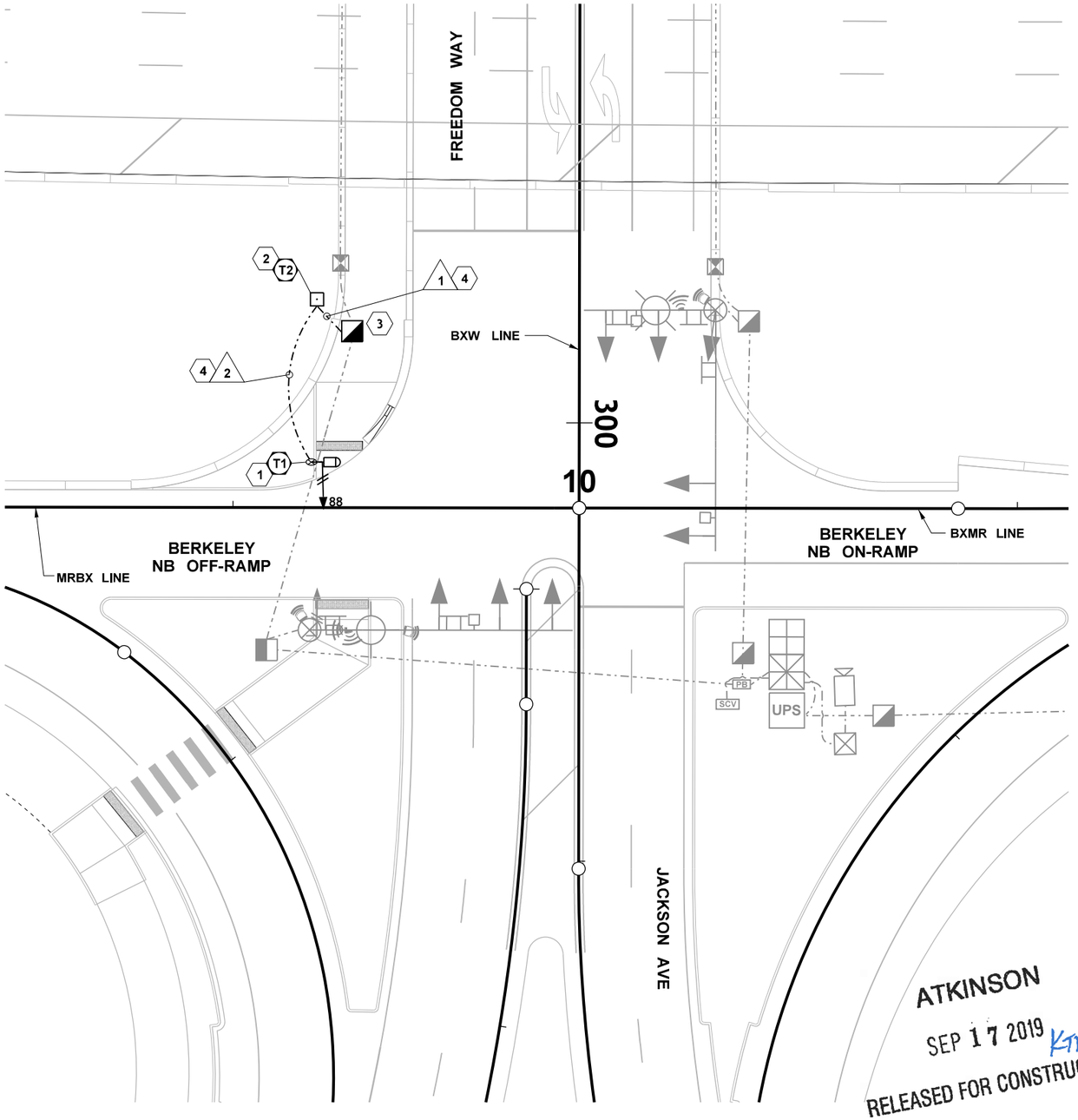

LEGEND:

- CONDUIT
- PORTABLE TEMPORARY PEDESTRIAN ASSEMBLY
- TYPE 2 JUNCTION BOX
- TEMPORARY TIMBER POST
- PEDESTRIAN SIGNAL HEAD
- PEDESTRIAN PUSHBUTTON
- POST NUMBER
- WIRE NOTE FLAG
- CONSTRUCTION NOTE FLAG

TEMPRARY SIGNAL FIELD WIRE TERMINATIONS

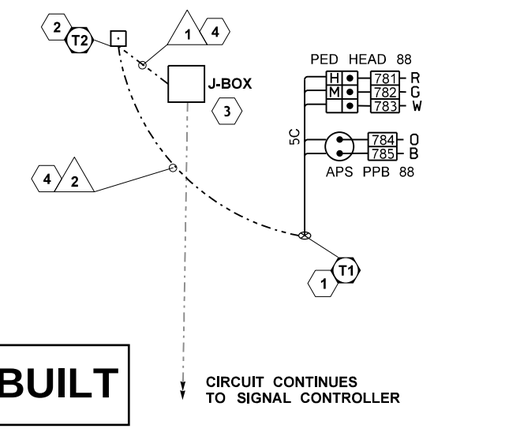

TEMPORARY SIGNAL WIRING SCHEDULE

No.	CONDUIT	PED DISP./PPB 5C#14
1	2" HDPE	1
2	SPAN WIRE	1

AS-BUILT

GENERAL NOTES

1. USE TEMPORARY POST T1 IN PLACE OF PERMANENT PED POLE 6 DURING PHASED CONSTRUCTION OF SIDEWALK. REMOVE TEMPORARY POSTS T1 AND T2 AFTER POLE 6 IS INSTALLED.
2. SEE TRAFFIC SIGNAL SHEET SG01 FOR PHASING DIAGRAM.
3. PERMANENT SIGNAL FEATURES ARE SHOWN IN GRAY. SEE TRAFFIC SIGNAL SHEET SG02 FOR COMPLETE PERMANENT SIGNAL DESIGN.

TEMPORARY SIGNAL CONSTRUCTION NOTES

1. INSTALL PORTABLE TEMPORARY PEDESTRAIN ASSEMBLY ON TIMBER POST T1 WITH ONE PEDESTRIAN HEAD AND ONE APS PEDESTRIAN PUSHBUTTON ASSEMBLY. APS PUSHBUTTON SHALL BE INSTALLED WITH SIGN FACE PARALLEL TO CROSSWALK SERVED. SEE SHEET SG16 FOR DETAILS.
2. INSTALL TEMPORARY TIMBER POST T2 IN GROUND. POST SHALL BE 6"X6"X19', AND 4' OF POST SHALL BE EMBEDDED. INSTALL TEMPORARY CONDUIT FROM JUNCTION BOX UP TIMBER POST TO A HEIGHT OF 15 FEET. ATTACH CONDUIT TO POST AND INSTALL A WEATHERHEAD IN ACCORDANCE WITH STANDARD PLAN J-15.10-01, DETAIL "TIMBER LUMINAIRE SUPPORT."
3. LEAVE 50 FEET OF SLACK IN JUNCTION BOX TO ACCOMMODATE FUTURE PERMANENT INSTALLATION.
4. USE THE NEW PERMANENT 5C#14 CABLE SHOWN ON SG02 FOR THE TEMPORARY PEDESTRIAN ASSEMBLY, BUT MAKE IT 50 FEET LONGER.

SIGNAL HEAD DISPLAY NOTES

PEDESTRIAN
SIGNAL HEAD
88

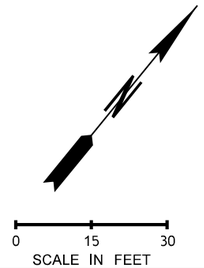

FILE NAME	c:\pwworking\jacobs_b&i\wegenemf\dms20633\PS_SG_15.dgn						
TIME	6:29:20 PM						
DATE	9/16/2019						
PLOTTED BY	wegenemf						
DESIGNED BY	V. GOSWAMI						
ENTERED BY	V. GOSWAMI						
CHECKED BY	C. STONE	REV 0 - RELEASED FOR CONSTRUCTION	9/11/19				
PROJ. ENGR.	C. MEADE	REV A - FINAL REVIEW	7/22/19				
REGIONAL ADM.	J. WYNANDS	REVISION	DATE	BY			

REGION NO.	STATE	FED.AID PROJ.NO.
10	WASH	
JOB NUMBER		
CONTRACT NO.		LOCATION NO.
C9133		

MARK F. WEGENER — STATE OF WASHINGTON — 41141 — REGISTERED PROFESSIONAL ENGINEER
9/18/19
DATE
P.E. STAMP BOX

DATE
P.E. STAMP BOX

Washington State Department of Transportation

ATKINSON CONSTRUCTION / JACOBS

I-5
STEILACOOM-DUPONT RD TO THORNE LN
CORRIDOR IMPROVEMENTS
MP 120.01 TO MP 124.45

TEMPORARY PEDESTRIAN CROSSING
TRAFFIC SIGNAL PLAN

PLAN REF NO
SG15

SHEET 963 OF 1456 SHEETS

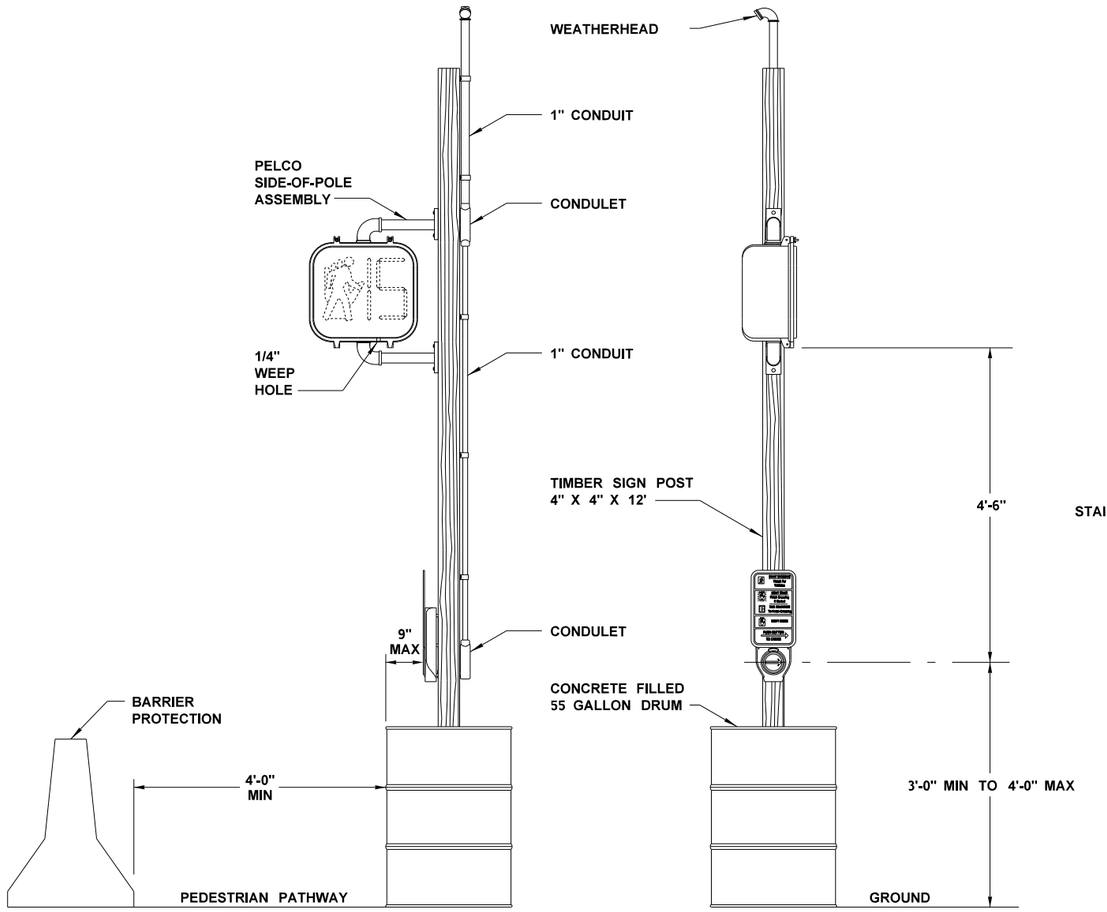

PORTABLE TEMPORARY PEDESTRIAN ASSEMBLY

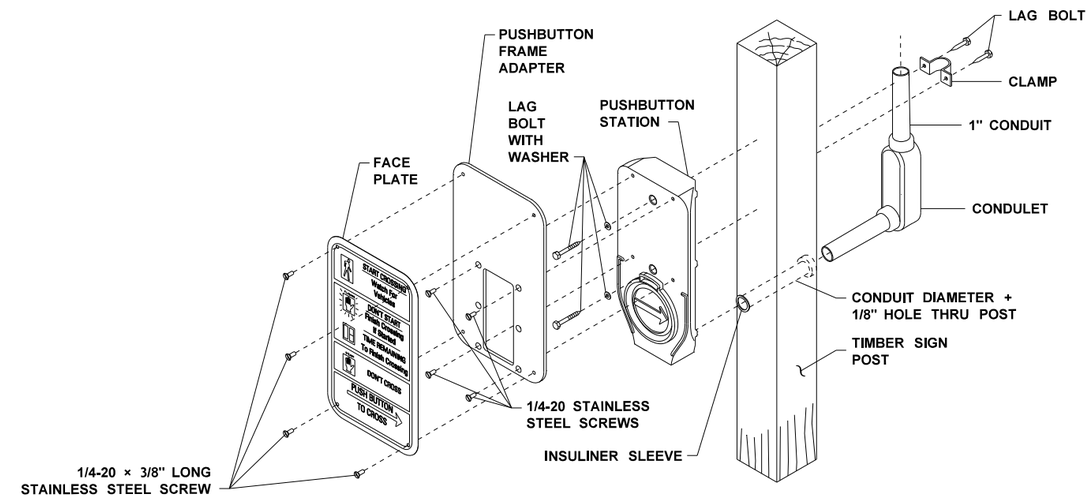

APS MOUNTING DETAIL

NOTES:

1. FOR ACCESSIBLE PEDESTRIAN SIGNAL STANDARD ELECTRICAL DETAILS SEE STANDARD PLANJ-20.20.
2. PORTABLE TEMPORARY PEDESTRIAN ASSEMBLY SHALL BE PROTECTED FROM TRAFFIC.

NOT TO SCALE

AS-BUILT

ATKINSON
SEP 17 2019 KTW
RELEASED FOR CONSTRUCTION

FILE NAME	c:\pwworking\jacobs_b&i\goswamiv\dms20633\PS_SG_16.dgn			
TIME	2:08:01 PM			
DATE	9/16/2019			
PLOTTED BY	GoswamiV			
DESIGNED BY	V. GOSWAMI			
ENTERED BY	V. GOSWAMI			
CHECKED BY	C. STONE	REV 0 - RELEASED FOR CONSTRUCTION	9/11/19	
PROJ. ENGR.	C. MEADE	REV A - FINAL REVIEW	7/22/19	
REGIONAL ADM.	J. WYNANDS	REVISION	DATE	BY

REGION NO.	STATE	FED.AID PROJ.NO.
10	WASH	
JOB NUMBER		
CONTRACT NO.		LOCATION NO.
C9133		

MARK F. WEGENER, STATE OF WASHINGTON, 41141, REGISTERED PROFESSIONAL ENGINEER
9/18/19
DATE
P.E. STAMP BOX

DATE
P.E. STAMP BOX

Washington State
Department of Transportation

ATKINSON CONSTRUCTION / JACOBS

I-5
STEILACOOM-DUPONT RD TO THORNE LN
CORRIDOR IMPROVEMENTS
MP 120.01 TO MP 124.45

TEMPORARY PEDESTRIAN CROSSING
TRAFFIC SIGNAL PLAN

PLAN REF NO
SG16

SHEET
964
OF
1456
SHEETS

GENERAL NOTES

1. EXISTING SIGNAL SYSTEM SHALL BE MAINTAINED AND OPERATIONAL UNTIL NEW SIGNAL SYSTEM IS OPERATIONAL IN ACCORDANCE WITH SECTION 2.29, MAINTENANCE DURING CONSTRUCTION.

2. FOR ILLUMINATION WIRING DETAILS, SERVICE BREAKER SCHEDULE AND SIGNAL POWER DETAILS SEE ILLUMINATION PLANS.

3. FOR SIGNAL MAST ARM MOUNTED SIGN DETAILS SEE SIGINING PLANS. FOR SIGNAL MAST ARM MOUNTED SIGN LOCATIONS SEE POLE DETAILS SHEET SG06 FOR BERKELEY SIGNALS AND SHEET SG11 FOR THORNE SIGNAL.

4. ALL APS PUSHBUTTON SHALL HAVE MAXIMUM 9" OF REACH FROM FACE OF PUSH BUTTON TO FACE OF CURB OR EDGE OF LANDING.

5. LOCATION OF CONDUIT, JUNCTION BOX, AND CABINETS ARE APPROXIMATE AND SHOULD BE VERIFIED IN THE FIELD.

6. JUNCTION BOXES SHALL BE LOCATED OUTSIDE OF PAVEMENT SURFACE AND WHEELCHAIR RAMPS UNLESS OTHERWISE NOTED IN THE PLANS.

7. ALL SIGNAL CONDUCTORS SHALL BE LABELED IN ALL THE JUNCTION BOXES AS PER STANDARD SPECIFICATION 8-20.3(8).

8. JUNCTION BOXES AND PULL BOXES SHALL CONFORM TO WSDOT STANDARDS J-40.05-00, J-40.10-04, J-40.20-03, J-40.30-04, J-40.40-01, AND J-90.10-02.

9. TYPE 342LX SIGNAL CONTROLLER CABINET SHALL BE INSTALLED WITH ONE PULL BOX AND ONE SMALL CABLE VAULT ADJACENT TO AND WITHIN 5 FEET OF THE CABINET.

10. SIGNAL CONTROLLER CABINET SHALL BE INSTALLED WITH THE FRONT DOORS OPENING AWAY FROM THE INTERSECTION SO THAT AN ENGINEER FACING THE FRONT OF THE CABINET WILL ALSO BE FACING THE INTERSECTION. SIGNAL CABINET AND UPS CABINET INSTALLED WITH OTHER CABINET SHALL BE ORIENTED SO THAT THE POLICE PANEL AND GENERATOR TRANSFER SWITCHES ARE FULLY ACCESSIBLE.

11. TRAFFIC SIGNAL CONTROLLER SHALL BE ECONOLITE 2070 ATC CONTROLLER.

12. SEE SHEET SG06 FOR POLE SCHEDULE FOR BERKELEY SIGNALS AND SHEET SG11 FOR THORNE SIGNAL.

13. BARRIER CONDUITS AND BOXES SHOWN ARE FOR SIGNAL ONLY, COORDINATE INSTALLATION WITH ITS AND ILLUMINATION. SEE APPROPRIATE PLANS. INSTALL PER WSDOT DETAILS J-90.11-00 AND J-60.12-00.

14. PROVIDE GROUND WIRES IN ALL INSTALLED CONDUITS INCLUDING SPARES FOR FUTURE USE. GROUND WIRES SHALL BE IN ACCORDANCE WITH NEC TABLE 250.102.

15. ALL CONDUITS SHALL BE SCH. 80 PVC/HDPE UNLESS OTHERWISE NOTED.

16. THE FOLLOWING TRAFFIC SIGNAL EQUIPMENT SHALL BE SALVAGED FROM THE TRAFFIC SIGNAL SYSTEMS AT THE BERKELEY STREET AND THORNE LANE RAMP TERMINALS, INCLUDING THE EQUIPMENT AT THE INTERSECTION OF THORNE LANE AND UNION AVENUE, AND DELIVERED TO WSDOT:

    TRAFFIC SIGNAL STANDARDS, INCLUDING MAST ARMS.
    TRAFFIC SIGNAL DISPLAYS, HOUSINGS BACKPLATES, AND MOUNTS. THIS DOES NOT INCLUDE ANY DISPLAYS AT THE NB THORNE LANE RAMP TERMINAL OR DISPLAYS SERVING THE SB OFF-RAMP AT THORNE LANE.
    CONTROLLER CABINETS AND ALL EQUIPMENT CONTAINED THEREIN.
    VIDEO DETECTION EQUIPMENT, INCLUDING MOUNTS.
    BLANKOUT SIGNS.
    ACCESSIBLE PEDESTRIAN SIGNAL (APS) PUSHBUTTONS, INCLUDING PEDESTRIAN DISPLAY MODULES.
    MAST ARM SIGNS.

    SALVAGED WSDOT SIGNAL STANDARDS SHALL BE DELIVERED TO THE FOLLOWING ADDRESS:
    WSDOT MOTTMAN MAINTENANCE FACILITY
    39 2680 RW JOHNSON RD SW
    OLYMPIA, WA 98512
    PHONE: (360) 357-2616

    ALL OTHER SALVAGED WSDOT TRAFFIC SIGNAL EQUIPMENT SHALL BE DELIVERED TO THE FOLLOWING ADDRESS:
    WSDOT OR SIGNAL SHOP
    5720 CAPITOL BLVD SW
    TUMWATER, WA 98512
    PHONE: (360) 357-2616

ATKINSON
JUN 08 2020 KTW
RELEASED FOR CONSTRUCTION

THE FOLLOWING TRAFFIC SIGNAL EQUIPMENT SHALL BE SALVAGED FROM THE TRAFFIC SIGNAL SYSTEM AT THE INTERSECTION OF BERKELEY STREET AND UNION AVENUE, AND DELIVERED TO THE CITY OF LAKEWOOD:
TRAFFIC SIGNAL STANDARDS, INCLUDING MAST ARMS.
TRAFFIC SIGNAL DISPLAYS, HOUSINGS BACKPLATES, AND MOUNTS. THIS DOES NOT INCLUDE ANY DISPLAYS AT THE NB THORNE LANE RAMP TERMINAL OR DISPLAYS SERVING THE SB OFF-RAMP AT THORNE LANE.
CONTROLLER/PUNCHDOWN CABINETS AND ALL EQUIPMENT CONTAINED THEREIN.
SERVICE CABINETS.
VIDEO DETECTION EQUIPMENT, INCLUDING MOUNTS.
ACCESSIBLE PEDESTRIAN SIGNAL (APS) PUSHBUTTONS, INCLUDING PEDESTRIAN DISPLAY MODULES.
BLANKOUT SIGNS.
MAST ARM SIGNS.

SALVAGED CITY OF LAKEWOOD ILLUMINATION EQUIPMENT SHALL BE DELIVERED TO THE FOLLOWING ADDRESS:
CITY OF LAKEWOOD FACILITY
9420 FRONT ST S
LAKEWOOD, WA 98499

FOURTEEN CALENDAR DAYS PRIOR TO DELIVERY OF SALVAGED ITEMS, THE DESIGN-BUILDER SHALL PROVIDE A LIST OF SALVAGE ITEMS, THEIR QUANTITY, AND THEIR CURRENT CONDITION TO THE WSDOT REGION SIGNAL MAINTENANCE SUPERINTENDENT. THE DESIGN-BUILDER SHALL GIVE A MINIMUM OF 7 CALENDAR DAYS NOTICE TO THE WSDOT REGION SIGNAL MAINTENANCE SUPERINTENDENT PRIOR TO DELIVERY OF SALVAGED EQUIPMENT. THE DESIGN-BUILDER SHALL PROVIDE ALL LABOR AND EQUIPMENT TO TRANSPORT, LOAD, AND UNLOAD THE SALVAGED EQUIPMENT.

17. SEE SHEET SG09 FOR SIGNAL CONSTRUCTION NOTES AND WIRING SCHEDULE FOR THORNE SIGNAL.

AS-BUILT

SIGNAL CONSTRUCTION NOTES BERKELEY SIGNALS

1. CONSTRUCT BARRIER MOUNT FOUNDATION AND INSTALL TYPE III SIGNAL STANDARD (LUMINARE ROTATED TOWARDS INTERSECTION AT 45 DEGREE) WITH TWO VEHICLE SIGNAL HEADS, ONE EMERGENCY VEHICLE PREEMPTION DETECTOR, ONE REGULATORY SIGN, ONE STREET NAME SIGN, ONE WAVETRONIX STOP BAR RADAR DETECTION UNIT ON 35 FT MAST ARM. INSTALL ONE TERMINAL CABINET AND ONE VEHICLE SIGNAL HEAD ON POLE. INSTALL TWO WAVETRONIX ADVANCED RADAR DETECTION UNITS ON LUMINARE ARM. INSTALL THREE WAVETRONIX SS-710 JUNCTION BOXES IN TERMINAL CABINET. TERMINATE WAVETRONIX 6CS CABLES AND ATP-MATRIX 2 8CS CABLE IN ACCORDANCE WITH MANUFACTURER'S RECOMMENDATIONS. SEE SHEET SG05 FOR POLE DETAILS. FOR BARRIER MOUNT FOUNDATION REFER TO BERKELEY OVERPASS BRIDGE PLANS.

2. INSTALL TYPE I SIGNAL STANDARD WITH ONE VEHICLE SIGNAL HEAD, ONE PEDESTRAIN HEAD AND ONE APS PEDESTRAIN PUSHBUTTON ASSEMBLY. APS PUSHBUTTONS SHALL BE INSTALLED WITH SIGN FACE PARALLEL TO CROSSWALK SERVED. SEE SHEET SG05 FOR POLE DETAILS. FOR POLE ANCHORAGE DETAILS REFER TO BERKELEY OVERPASS BRIDGE PLANS.

WIRING SCHEDULE BERKELEY SIGNALS

No.	CONDUIT	PRE-EMPT 3CS #20	PED DISP./PPB 5C#14	VEH DISPL. 5C#14	WAVETRONIX LONG 8CS 3	POWER #6	POWER #2	COMM CAT 6
1	2"	1		2	4			
2	2" GRS		1	1				
3	2" SPARE							
4	1"		1					
5	3"	2		3	2			
6	2"		2	2				
7	2"	2			2			
8	2"		3	2				
9A	2"		1	2				
9B	2"	1			4			
10	2"	3		4				
11	3"		4		6			
12	2"	2		2	2			
13	2"	3		4				
14	2"				6			
15	2"	6						
16	3"				12			
17	3"		4	8				
18	2" GRS SPARE							
19	2" GRS	1		2	4			
20	2"					2		
21	2"							1
22	2"						2	

3. INSTALL TYPE PS SIGNAL STANDARD WITH ONE PEDESTRAIN HEAD AND ONE APS PEDESTRIAN PUSHBUTTON ASSEMBLY. APS PUSHBUTTONS SHALL BE INSTALLED WITH SIGN FACE PARALLEL TO CROSSWALK SERVED. SEE SHEET SG05 FOR POLE DETAILS. FOR POLE ANCHORAGE DETAILS REFER TO BERKELEY OVERPASS BRIDGE PLANS.

4. CONSTRUCT BARRIER MOUNT FOUNDATION AND INSTALL TYPE SD SIGNAL STANDARD (LUMINARE ROTATED TOWARDS INTERSECTION AT 45 DEGREE) WITH TWO VEHICLE SIGNAL HEADS, ONE EMERGENCY VEHICLE PREEMPTION DETECTOR, ONE REGULATORY SIGN, ONE STREET NAME SIGN AND TWO WAVETRONIX STOP BAR RADAR DETECTION UNITS ON THE 50 FT MAST ARM. INSTALL THREE VEHICLE SIGNAL HEADS, ONE EMERGENCY VEHICLE PREEMPTION DETECTOR, ONE REGULATORY SIGN AND ONE STREET NAME SIGN ON THE 55 FT MAST ARM. INSTALL ONE TERMINAL CABINET ON THE POLE. INSTALL ONE WAVETRONIX ADVANCED RADAR DETECTION UNIT ON LUMINARE ARM. INSTALL THREE WAVETRONIX SS-710 JUNCTION BOXES IN TERMINAL CABINET. TERMINATE WAVETRONIX 6CS CABLES AND ATP-MATRIX 2 8CS CABLE IN ACCORDANCE WITH MANUFACTURER'S RECOMMENDATIONS. SEE SHEET SG05 FOR POLE DETAILS. FOR BARRIER MOUNT FOUNDATION REFER TO BERKELEY OVERPASS BRIDGE PLANS.

5. CONSTRUCT BARRIER MOUNT FOUNDATION AND INSTALL TYPE SD SIGNAL STANDARD WITH TWO VEHICLE SIGNAL HEADS, ONE EMERGENCY VEHICLE PREEMPTION DETECTOR, ONE REGULATORY SIGN, ONE STREET NAME SIGN AND ONE WAVETRONIX STOP BAR RADAR DETECTION UNIT ON THE 30 FT MAST ARM. INSTALL ONE WAVETRONIX ADVANCED RADAR DETECTION ON LUMINARE ARM. INSTALL TWO VEHICLE SIGNAL HEADS, ONE EMERGENCY VEHICLE PREEMPTION DETECTOR, ONE REGULATORY SIGN AND ONE STREET NAME SIGN ON THE 55 FT MAST ARM. INSTALL ONE TERMINAL CABINET ON THE POLE. INSTALL TWO WAVETRONIX SS-710 JUNCTION BOXES IN TERMINAL CABINET. TERMINATE WAVETRONIX 6CS CABLES AND ATP-MATRIX 2 8CS CABLE IN ACCORDANCE WITH MANUFACTURER'S RECOMMENDATIONS. SEE SHEET SG05 FOR POLE DETAILS. FOR BARRIER MOUNT FOUNDATION REFER TO BERKELEY OVERPASS BRIDGE PLANS.

6. CONSTRUCT FOUNDATION AND INSTALL TYPE PS SIGNAL STANDARD WITH ONE PEDESTRIAN HEAD AND ONE APS PEDESTRAIN PUSHBUTTON ASSEMBLY. APS PUSHBUTTONS SHALL BE INSTALLED WITH SIGN FACE PARALLEL TO CROSSWALK SERVED. SEE SHEET SG5 FOR POLE DETAILS. SEE WSDOT STANDARD PLAN J-21.10-04 FOR FOUNDATION DETAILS.

7. CONSTRUCT FOUNDATION AND INSTALL TYPE III SIGNAL STANDARD WITH THREE VEHICLE SIGNAL HEADS, ONE EMERGENCY VEHICLE PREEMPTION DETECTOR, ONE REGULATORY SIGN, ONE STREET NAME SIGN AND ONE WAVETRONIX STOP BAR RADAR DETECTION UNIT ON MAST ARM. INSTALL ONE PEDESTRIAN HEAD AND ONE APS PEDESTRIAN PUSHBUTTON ASSEMBLY ON THE POLE. APS PUSHBUTTONS SHALL BE INSTALLED WITH SIGN FACE PARALLEL TO CROSSWALK SERVED. INSTALL ONE WAVETRONIX ADVANCED RADAR DETECTION ON LUMINARE ARM. SEE SHEET SG06 FOR POLE DETAILS AND FOUNDATION DETAILS.

8. SPARE CONDUIT, SEE ILLUMINATION PLANS FOR CONTINUATION.

9. FROM JUNCTION BOX, ROUTE CONDUIT STRAIGHT DOWN THROUGH BLOCKOUT IN BRIDGE DECK. SEE BRIDGE DETAIL BB082 FOR DECK BLOCKOUT. TURN CONDUIT 90 DEGREES TO HORIZONTAL AND MOUNT CONDUIT UNDER BRIDGE DECK PER DETAIL "ITS CONDUIT SUPPORT" ON SHEET BB079.

10. INSTALL TYPE 331L UPS CABINET WITH EIGHT (8) BATTERIES IN ACCORDANCE WITH UPS CABINET DETAILS ON SHEET SG07 AND STANDARD PLAN J-10.10-02.

11. INSTALL ONE SINGLE-SECTION SIGNAL HOUSING WITH 8" FLASHING BEACON AS PART OF ITS. USE TYPE K MOUNT. SEE SG06 FOR HEAD ORIENTATION ANGLE ON POLE 4. SEE ITS PLANS FOR WIRING. SEE SIGNING PLANS FOR ADVANCE WARNING SIGN TO BE MOUNTED ON SHAFT UNDER FLASHING BEACON. THE BOTTOM OF THE SIGN SHALL BE AT 8' ABOVE THE SIDEWALK, AND THE BOTTOM OF THE BEACON SHALL BE AT 13'-3" ABOVE THE SIDEWALK.

12. SEE ITS PLANS FOR ITS COMMUNICATION LINK AND CAMERA DETAILS. INSTALL ITS CAMERA CONTROL EQUIPMENT INSIDE SIGNAL CABINET. SEE ITS PLANS FOR DETAILS.

13. FROM JUNCTION BOX, ROUTE CONDUIT DOWN AT 45 DEGREES, THROUGH BRIDGE DECK. MOUNT CONDUIT TO BOTTOM OF BRIDGE DECK PER BERKELEY OVERPASS BRIDGE PLANS.

14. CONDUITS IN THIS RUN THAT HAVE CONDUCTORS IN THEM MUST BE INSTALLED BY DIRECTIONAL BORE BENEATH THE EXISTING ROAD BEFORE FILL IS INSTALLED FOR NEW RAMP. THOSE CONDUITS WILL BE APPROX. 20 FEET DEEP UNDER THE FILL. SPARE CONDUITS IN THIS RUN SHALL BE INSTALLED IN THE FILL AT SIX FEET DEEP UNDER THE NEW RAMP. 3

TRAFFIC SIGNAL SYSTEM #1, #2, AND #3 - GENERAL NOTES, CONSTRUCTION NOTES, AND WIRING SCHEDULE

FILE NAME	c:\pwworking\jacobs_b&l\wegenemf\dms20633\PS_SGN_01.dgn			
TIME	3:55:09 PM	REV 3 - RFC, RFI0448, RFI0458	05/15/20	
DATE	5/29/2020	REV 2 - RFC, RFI0146	06/10/19	
PLOTTED BY	WEGENEMF	REV C - FINAL REVIEW OF THORNE SIGNAL	06/11/19	
DESIGNED BY	V. GOSWAMI	REV 1 - RFC, RFI0078	04/17/19	
ENTERED BY	V. GOSWAMI	REV 0 - RELEASED FOR CONSTRUCTION	03/29/19	
CHECKED BY	C. STONE	REV B - FINAL REVIEW	02/18/19	
PROJ. ENGR.	C. MEADE	REV A - PRELIMINARY REVIEW	11/02/18	
REGIONAL ADM.	J. WYNANDS	REVISION	DATE	BY

REGION NO.	STATE	FED.AID PROJ.NO.
10	WASH	
JOB NUMBER		
CONTRACT NO. C9133		LOCATION NO.

MARK F. WEGENER, STATE OF WASHINGTON, 41141, REGISTERED PROFESSIONAL ENGINEER
6/4/20
DATE
P.E. STAMP BOX

DATE
P.E. STAMP BOX

Washington State Department of Transportation

ATKINSON / JACOBS CONSTRUCTION

I-5
STEILACOOM-DUPONT RD TO THORNE LN
CORRIDOR IMPROVEMENTS
MP 120.01 TO MP 124.45

TRAFFIC SIGNAL PLAN

PLAN REF NO SGN01

SHEET 965 OF 1456 SHEETS

ABBREVIATIONS

@	AT
Φ, DIA	DIAMETER
℄	CENTERLINE
'	FEET
"	INCHES
±	PLUS OR MINUS
#	NUMBER
(#) C	(SIZE) CONDUCTOR
(#) C(SH)	(SIZE) CONDUCTOR SHIELDED
(R)	REMOVE
AC	ALTERNATING CURRENT
ALUM	ALUMINUM
ALT	ALTERNATING
AMP	AMPERAGE
ASTM	AMERICAN SOCIETY FOR TESTING AND MATERIALS
ATM	ACTIVE TRAFFIC MANAGEMENT
C	CONDUCTOR
CAT	CATEGORY
CCTV	CLOSED CIRCUIT TELEVISION
COM	COMMON
COMM	COMMUNICATION
CV	CABLE VAULT
DC	DIRECT CURRENT
DIA	DIAMETER
DMS	DYNAMIC MESSAGE SIGN
DS	DATA STATION
EB	EASTBOUND
ENV	ENVIRONMENTAL
ESS	ENVIRONMENTAL SENSOR STATION
EX/EXIST	EXISTING
FB	FLASHING BEACON
FO	FIBER OPTIC
FT	FEET
FTC	FIBER OPTIC TERMINAL CABINET
GFCI	GROUND FAULT CIRCUIT INTERRUPTER
GP	GENERAL PURPOSE
HAR	HIGHWAY ADVISORY RADIO
HARS	HIGHWAY ADVISORY RADIO SIGN
HART	HIGHWAY ADVISORY RADIO TRANSMITTER
HD	HEAVY DUTY
HOT	HIGH OCCUPANCY TOLL
HOV	HIGH OCCUPANCY VEHICLE
I/O	INPUT / OUTPUT
IN	INCH
IP	INTERNET PROTOCOL
ITS	INTELLIGENT TRANSPORTATION SYSTEM
JB/J-BOX	JUNCTION BOX
KVA	KILOVOLT-AMPS
LED	LIGHT EMITTING DIODE
LFMC	LIQUIDTIGHT FLEXIBLE METALLIC CONDUIT
LT	LEFT
MAX	MAXIMUM
MC	METAL CLAD
MH	MANHOLE
MIN	MINIMUM
MMFO	MULTI-MODE FIBER OPTIC
MUTCD	MANUAL ON UNIFORM TRAFFIC CONTROL DEVICES
N	NORTH
NB	NORTHBOUND
OSP	OUTSIDE PLANT (CABLE)
PB	PULL BOX
PLCS	PLACES
PMU	POWER MANAGEMENT UNIT
PR	PAIR
PTR	PERMANENT TRAFFIC RECORDER
PVC	POLYVINYL CHLORIDE
R	RADIUS
RGS	RIGID GALVANIZED STEEL
RM	RAMP METER
RT	RIGHT
RU	RACK UNIT: 1U = 1.75"
RWS	ROAD WEATHER STATION
R/W	RIGHT OF WAY
S	SEWER
SB	SOUTHBOUND
SCV	SMALL CABLE VAULT
SCH	SCHEDULE
SH	SHIELDED
SMFO	SINGLE-MODE FIBER OPTIC
SR	STATE ROUTE
STD	STANDARD
TBS	TERMINAL BLOCK
TCP/IP	TRANSMISSION CONTROL PROTOCOL/INTERNET PROTOCOL
TR	TRANSFORMER
TRS	TOLL RATE SIGN
TWP	TWISTED PAIR
TYP	TYPICAL
UPS	UNINTERRUPTIBLE POWER SUPPLY
V	VOLTS
VMS	VARIABLE MESSAGE SIGN
W	WATER
WB	WESTBOUND
WS	WEATHER STATION
WSDOT	WASHINGTON STATE DEPARTMENT OF TRANSPORTATION
W/	WITH

LEGEND

EXISTING	NEW	
		CONDUIT AND WIRING
		TYPE 1 JUNCTION BOX
		TYPE 2 JUNCTION BOX
		TYPE 3 JUNCTION BOX
		TYPE 4 JUNCTION BOX
		TYPE 5 JUNCTION BOX
		TYPE 6 JUNCTION BOX
		TYPE 8 JUNCTION BOX
		NEMA 4X JUNCTION BOX
CV	CV	CABLE VAULT
	SCV	SMALL CABLE VAULT
PB	PB	PULL BOX
FTC	TC	FIBER OPTIC TERMINAL CABINET
TC		TERMINAL CABINET
		ELECTRICAL SERVICE CABINET/SOLAR PANEL
T	T	TRANSFORMER CABINET
		CCTV CAMERA CABINET
		CCTV CAMERA
		DATA STATION/RAMP METER CABINET
		SIGNAL CONTROLLER
		TYPE R1 INDUCTION LOOP VEHICLE DETECTOR
		TYPE R2 INDUCTION LOOP VEHICLE DETECTOR
		TYPE WR INDUCTION LOOP VEHICLE DETECTOR
		TYPE 2 INDUCTION LOOP VEHICLE DETECTOR
		RAMP METER ADVANCED WARNING SIGN
		TYPE 1 SIGNAL STANDARD
		TYPE 2 SIGNAL STANDARD
		VMS SIGN CONTROLLER CABINET
		HAR CONTROLLER CABINET
HAR	HAR	HAR SIGN
VMS		SIGN BRIDGE VMS
		WAVETRONIX DETECTOR
		WAVETRONIX DETECTION ZONE
		PIEZO AXLE SENSOR

LEGEND

NEW	
#	CONSTRUCTION NOTE
#	WIRE NOTE
PB-##	PULL BOX NUMBER
CV-##	CABLE VAULT NUMBER
SCV-##	SMALL CABLE VAULT NUMBER
?	POLE NUMBER
	WAVETRONIX DETECTION ZONE

AS-BUILT

GENERAL NOTES

1. PROVIDE GROUND WIRES IN ALL INSTALLED CONDUITS INCLUDING SPARES FOR FUTURE USE. GROUND WIRES SHALL BE IN ACCORDANCE WITH NEC TABLE 250.102.
2. INSTALL 200 POUND MINIMUM TENSILE STRENGTH PULLING TAPE IN ALL INSTALLED CONDUITS.

ATKINSON

DEC 13 2019 KTW

RELEASED FOR CONSTRUCTION

FILE NAME	c:\pwworking\jacobs_b&i\wegenemf\dms20633\PS_TN_01.dgn					
TIME	9:08:40 AM				REGION NO. 10	STATE WASH	FED.AID PROJ.NO.
DATE	11/15/2019					
PLOTTED BY	wegenemf					
DESIGNED BY	I. AGRON	REV 2 - RFC, RFI0301	11/14/19		JOB NUMBER	
ENTERED BY	I. AGRON	REV 1 - RFC, RFI0065	03/29/19			
CHECKED BY	M. WEGENER	REV 0 - RELEASED FOR CONSTRUCTION	12/24/18		CONTRACT NO. C9133	LOCATION NO.
PROJ. ENGR.	C. MEADE	REV A - FINAL REVIEW	11/20/18			
REGIONAL ADM.	J. WYNANDS	REVISION	DATE	BY		

MARK F. WEGENER — STATE OF WASHINGTON — 41141 — REGISTERED PROFESSIONAL ENGINEER

12/12/19

DATE

P.E. STAMP BOX

DATE

P.E. STAMP BOX

Washington State Department of Transportation

ATKINSON / JACOBS CONSTRUCTION

I-5
STEILACOOM-DUPONT RD TO THORNE LN
CORRIDOR IMPROVEMENTS
MP 120.01 TO MP 124.45

MAINLINE ITS PLAN

PLAN REF NO TN01

SHEET 966 OF 1456 SHEETS

CONSTRUCTION NOTES

NO.	DESCRIPTION
1	SEE SHEET TSD02-04 FOR PULL BOX, CABLE VAULT/SMALL CABLE VAULT PLACEMENT DETAILS AND LOCATIONS.
3	INSTALL CONDUIT UNDER ROADWAY USING APPROVED DIRECTIONAL BORING METHOD.
5	REPLACE EXISTING PULLBOX WITH SPLIT BOTTOM CABLE VAULT.
10	REMOVE EXISTING COMMUNICATION CABLES, CUT OFF UPSWEEPS AND ABANDON UNDERGROUND CONDUIT.
21	CONSTRUCT A THREE CABINET FOUNDATION IN ACCORDANCE WITH STANDARD PLAN J-10.10.
22	AFTER TEMPORARY ITS CABLES ARE REMOVED, REMOVE TEMPORARY CONDUIT END FROM PB/CV. PATCH OPENING WITH WATERTIGHT SEAL.
24	INSTALL A CONTROLLER CABINET ON TOP OF AN 8" ALUMINUM CABINET RISER. INSTALL ASSOCIATED CABINET EQUIPMENT PER EQUIPMENT SCHEDULE ON DETAIL SHEET TSD07.
26	INSTALL A CABINET WITH A 10 KVA 480/240/120 VAC TRANSFORMER IN ACCORDANCE WITH STANDARD PLAN J-10.10 AND J-10.25 AND PER TRANSFORMER BREAKER DETAILS ON SHEETS TSD29-TSD31.
50	FUSION SPLICE 12 CT DISTRIBUTION FIBER OPTIC CABLE TO 72 CT PRE-TERMINATED FIBER OPTIC CABLE PER DETAILS ON SHEETS TSFO01-TSFO10.
51	FUSION SPLICE 144 CT MAINLINE FIBER OPTIC CABLE TO 72 CT PRE-TERMINATED FIBER OPTIC CABLE PER DETAILS ON SHEETS TSFO01-TSFO10.
52	FUSION SPLICE EXISTING 144 CT FIBER OPTIC CABLE TO 144 CT MAINLINE FIBER OPTIC CABLE PER DETAILS ON SHEETS TSFO01-TSFO10.
58	REMOVE EXISTING SPLICE AND SPLICE ENCLOSURE.
65	INSTALL WAVETRONIX SENSOR ON CAMERA POLE, AND ASSOCIATED EQUIPMENT PER DETAILS ON SHEET TSD27.
71	INSTALL CAMERA, CABLE, 50 FT CAMERA POLE AND FOUNDATION IN ACCORDANCE WITH STANDARD PLANS J-29.10, AND J-29.15, AND PER DETAILS ON SHEET TSD13.
88	SEE ILLUMINATION PLANS FOR POWER SOURCE INFORMATION.
95	FUSION SPLICE EXISTING 144 CT FIBER OPTIC CABLE TO 72 CT PRE-TERMINATED FIBER OPTIC CABLE PER DETAILS ON SHEETS TSFO01-TSFO10.
97	FUSION SPLICE 144 CT MAINLINE FIBER OPTIC CABLE TO EXISTING 144 CT FIBER OPTIC CABLE PER DETAILS ON SHEETS TSFO01-TSFO10.

WIRE NOTES

NO.	CONDUIT	MATERIAL	EXISTING CABLE	NEW CABLE	REMARK
1	2"	SCHEDULE 80		1-144 SMFO	MAINLINE CABLE
	2"	SCHEDULE 80		1-12 SMFO	DISTRIBUTION CABLE
3	2"	SCHEDULE 80		1-144 SMFO	MAINLINE CABLE
	2"	SCHEDULE 80		1-12 SMFO	DISTRIBUTION CABLE
	2"	SCHEDULE 80		EMPTY	FUTURE
4	4" INNERDUCT	SCHEDULE 80		1-144 SMFO	MAINLINE CABLE
				1-72 SMFO	PRE-TERMINATED CABLE
	4" INNERDUCT	SCHEDULE 80		EMPTY	FUTURE
5	4" INNERDUCT	SCHEDULE 80		1-144 SMFO	MAINLINE CABLE
	4" INNERDUCT	SCHEDULE 80		1-12 SMFO	DISTRIBUTION CABLE
6	2"	SCHEDULE 80		2-72 SMFO	PRE-TERMINATED CABLE
	2"	SCHEDULE 80		EMPTY	FUTURE
	2"	SCHEDULE 80		EMPTY	FUTURE
7	2"	SCHEDULE 80		8-SMFO PATCH CORDS	
8	2"	SCHEDULE 80		2-#8AWG	TRANSFORMER CONDUCTOR
9	2"	SCHEDULE 80		MULTICONDUCTOR	VIDEO CAMERA CONTROL CABLE
				MULTICONDUCTOR	WAVETRONIX SENSOR CABLE
46	*Ex. 2"*	*EXISTING*	*1-144 SMFO (R)*		REMOVE EXISTING MAINLINE CABLE
47	*Ex. 2"*	*EXISTING*	*1-24 SMFO (R)*		REMOVE EXISTING LATERAL CABLE
52	2"	SCHEDULE 80		MULTICONDUCTOR	VIDEO CAMERA CONTROL CABLE
				MULTICONDUCTOR	WAVETRONIX SENSOR CABLE
	2"	SCHEDULE 80		EMPTY	FUTURE
	2"	SCHEDULE 80		EMPTY	FUTURE

AS-BUILT

ATKINSON
DEC 22 2020
RELEASED FOR CONSTRUCTION

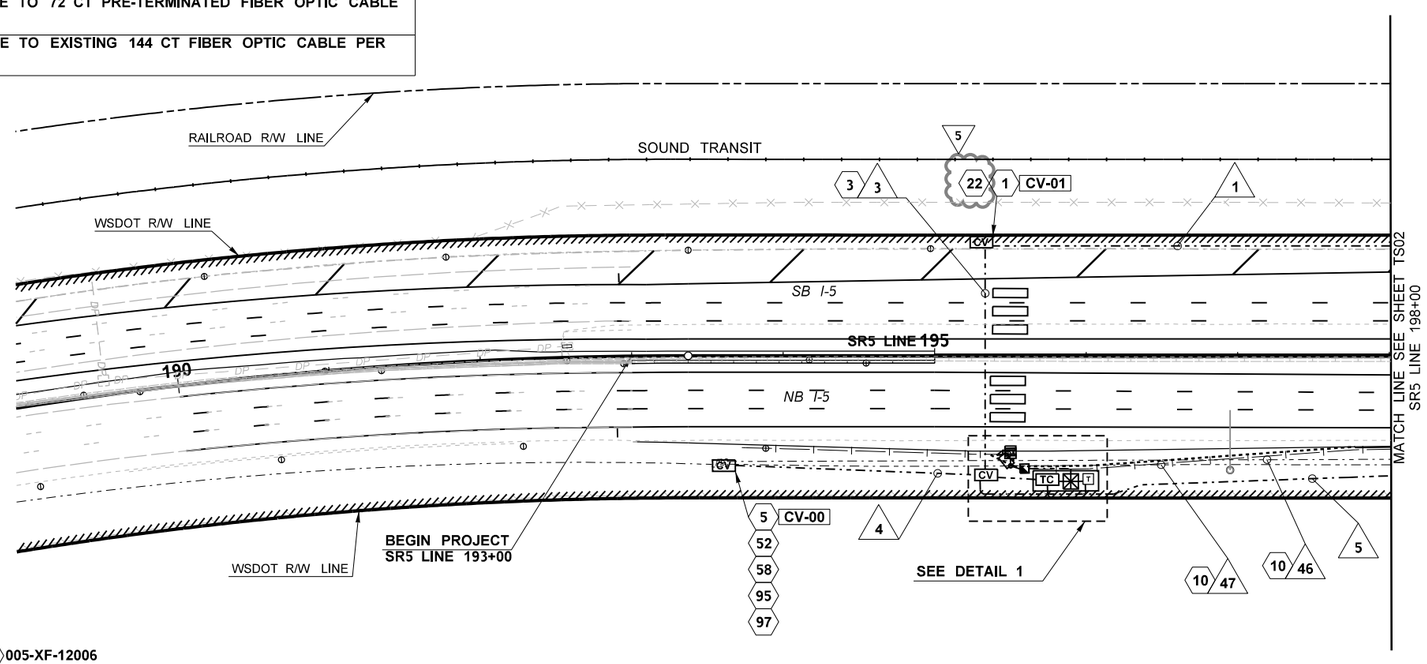

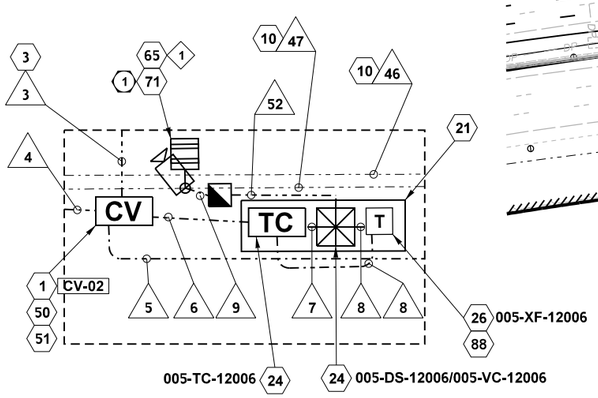

DETAIL 1

0 50 100
SCALE IN FEET

FILE NAME	c:\pwworking\jacobs_b&i\agronmi\dms20633\PS_TS_01.dgn						
TIME	10:30:03 AM	REV 5 - RFC, RFI0595	12/09/20		REGION NO. 10	STATE WASH	FED.AID PROJ.NO.
DATE	12/14/2020	REV 4 - RFC, RFI0300, RFI0306	11/14/19				
PLOTTED BY	agronmi	REV 3 - RFC, RFI0271	10/22/19		JOB NUMBER		
DESIGNED BY	I. AGRON/ D. HORGAN	REV 2 - RFC, RFI0065	03/29/19				
ENTERED BY	I. AGRON/ D. HORGAN	REV C - FINAL REVIEW	02/12/19				
CHECKED BY	M. WEGENER	REV 1 - RFC, RFI0032	01/23/19		CONTRACT NO. C9133		LOCATION NO.
PROJ. ENGR.	C. MEADE	REV 0 - RELEASED FOR CONSTRUCTION	12/24/18				
REGIONAL ADM.	J. WYNANDS	REVISION	DATE	BY			

MARK F. WEGENER · STATE OF WASHINGTON · 41141 · REGISTERED PROFESSIONAL ENGINEER
12/21/20
DATE
P.E. STAMP BOX

P.E. STAMP BOX
DATE

Washington State Department of Transportation

ATKINSON CONSTRUCTION / JACOBS

I-5
STEILACOOM-DUPONT RD TO THORNE LN
CORRIDOR IMPROVEMENTS
MP 120.01 TO MP 124.45

MAINLINE ITS PLAN

PLAN REF NO TS01

SHEET 967 OF 1456 SHEETS

CONSTRUCTION NOTES

NO.	DESCRIPTION
1	SEE SHEET TSD02-04 FOR PULL BOX, CABLE VAULT/SMALL CABLE VAULT PLACEMENT DETAILS AND LOCATIONS.
6	REMOVE EXISTING CONDUCTORS AND/OR COMMUNICATION CABLES, CONDUIT UPSWEEPS, AND PULLBOX, CABLE VAULT OR SMALL CABLE VAULT. BACKFILL VOID.
8	REMOVE EXISTING CONDUCTORS AND/OR COMMUNICATION CABLES, CONDUIT UPSWEEPS, AND JUNCTION BOX. BACKFILL VOID.
9	REMOVE EXISTING CONDUCTORS, CUT OFF UPSWEEPS AND ABANDON UNDERGROUND CONDUIT.
10	REMOVE EXISTING COMMUNICATION CABLES, CUT OFF UPSWEEPS AND ABANDON UNDERGROUND CONDUIT.
22	AFTER TEMPORARY ITS CABLES ARE REMOVED, REMOVE TEMPORARY CONDUIT END FROM PB/CV. PATCH OPENING WITH WATERTIGHT SEAL.
28	REMOVE EXISTING ITS AND/OR TRANSFORMER CABINET(S) AND FOUNDATION. RETURN CABINET AND INTERNAL COMPONENTS TO THE OLYMPIC REGION SIGNAL SHOP.
61	REMOVE EXISTING WAVETRONIX DETECTORS, POLE, FOUNDATION AND ASSOCIATED EQUIPMENT. DELIVER REMOVED WAVETRONIX MOUNTING HARDWARE, DETECTORS, DETECTOR CABLES TO OLYMPIC REGION SIGNAL SHOP. SAVE POLE FOR POTENTIAL RE-USE ON THIS PROJECT. THE CONTRACTOR SHALL PROVIDE AN INSPECTION REPORT DOCUMENTING THE CONDITION OF THE POLE TO WSDOT AND OBTAIN WSDOT APPROVAL TO USE THE POLE BEFORE INSTALLING THIS POLE IN A NEW LOCATION.
63	REMOVE EXISTING TIMBER POLE AND SOLAR PANELS. DELIVER REMOVED SOLAR PANELS TO OLYMPIC REGION SIGNAL SHOP.

WIRE NOTES

NO.	CONDUIT	MATERIAL	EXISTING CABLE	NEW CABLE	REMARK
1	2"	SCHEDULE 80		1-144 SMFO	MAINLINE CABLE
	2"	SCHEDULE 80		1-12 SMFO	DISTRIBUTION CABLE
5	4" INNERDUCT	SCHEDULE 80		1-144 SMFO	MAINLINE CABLE
	4" INNERDUCT	SCHEDULE 80		1-12 SMFO	DISTRIBUTION CABLE
46	*Ex. 2"*	*EXISTING*	*1-144 SMFO (R)*		REMOVE EXISTING MAINLINE CABLE
47	*Ex. 2"*	*EXISTING*	*1-24 SMFO (R)*		REMOVE EXISTING LATERAL CABLE
48	*Ex. 2"*	*EXISTING*	*1-6 SMFO (R)*		REMOVE EXISTING PRE-TERMINATED CABLE
49	*Ex. 2"*	*EXISTING*	*MULTICONDUCTOR (R)*		REMOVE EXISTING WAVETRONIX SENSOR CABLE
50	*Ex. 1.5"*	*EXISTING*	*3-#12 AWG (R)*		REMOVE EXISTING SOLAR POWER CABLES
56	*Ex. 2"*	*EXISTING*	*4-#8AWG (R)*		REMOVE EXISTING WAVETRONIX ELECTRICAL CABLES

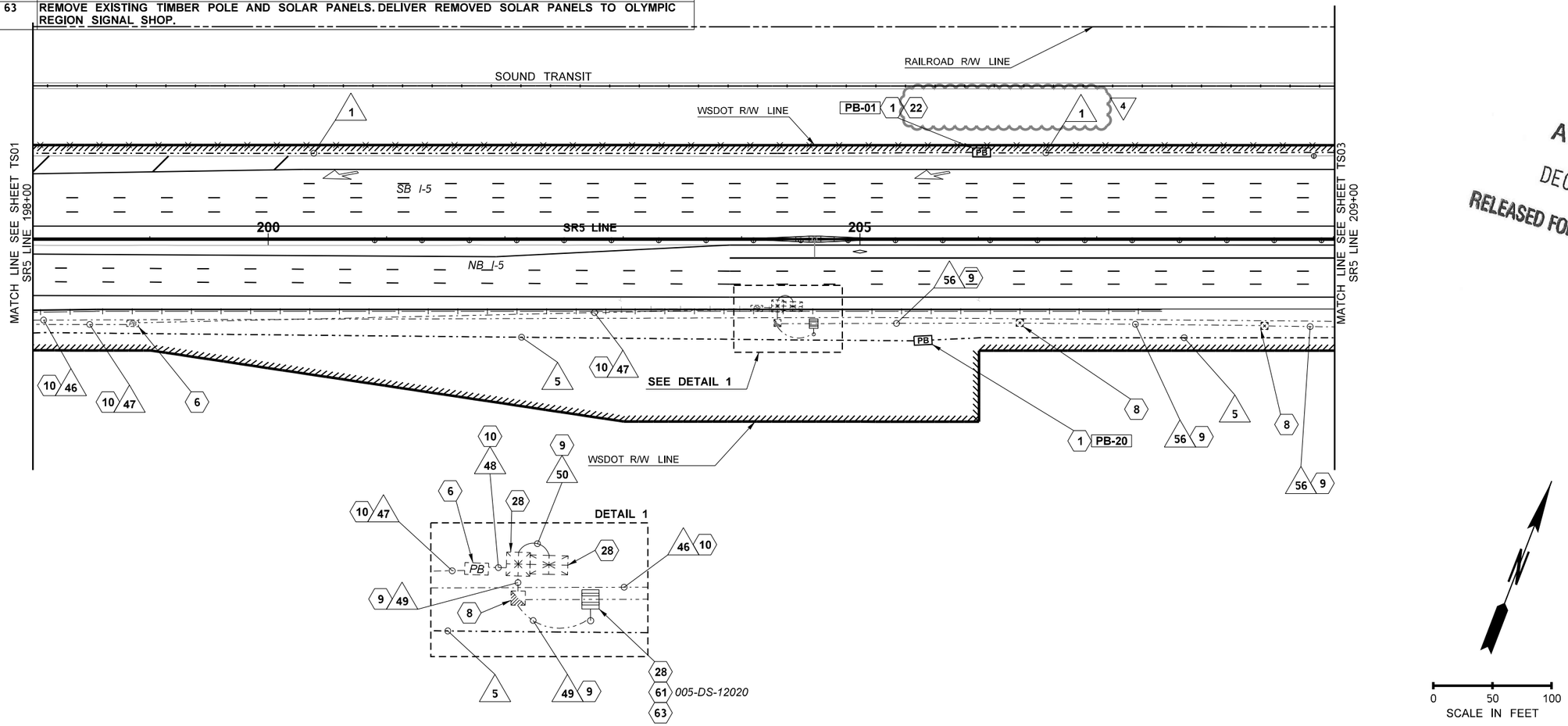

AS-BUILT

ATKINSON
DEC 22 2020
RELEASED FOR CONSTRUCTION

FILE NAME	c:\pwworking\jacobs_b&i\agronmi\dms20633\PS_TS_02.dgn					
TIME	10:28:15 AM	REV 4 - RFC, RFI0595	12/09/20		REGION NO. 10	STATE WASH	FED.AID PROJ.NO.
DATE	12/14/2020	REV 3 - RFC, RFI0306	11/14/19				
PLOTTED BY	agronmi	REV 2 - RFC, RFI0065	03/29/19		JOB NUMBER		
DESIGNED BY	I. AGRON/ D. HORGAN	REV C - FINAL REVIEW	02/12/19				
ENTERED BY	I. AGRON/ D. HORGAN	REV 1 - RFC, RFI0032	01/23/19				
CHECKED BY	M. WEGENER	REV 0 - RELEASED FOR CONSTRUCTION	12/24/18		CONTRACT NO. C9133		LOCATION NO.
PROJ. ENGR.	C. MEADE	REV B - FINAL REVIEW	11/20/18				
REGIONAL ADM.	J. WYNANDS	REVISION	DATE	BY			

MARK E. WEGENER — STATE OF WASHINGTON — 41141 — REGISTERED PROFESSIONAL ENGINEER
12/21/20
DATE
P.E. STAMP BOX

P.E. STAMP BOX
DATE

Washington State Department of Transportation

ATKINSON CONSTRUCTION / JACOBS

I-5
STEILACOOM-DUPONT RD TO THORNE LN
CORRIDOR IMPROVEMENTS
MP 120.01 TO MP 124.45

MAINLINE ITS PLAN

PLAN REF NO
TS02

SHEET 968 OF 1456 SHEETS

CONSTRUCTION NOTES

NO.	DESCRIPTION
1	SEE SHEET TSD02-04 FOR PULL BOX, CABLE VAULT/SMALL CABLE VAULT PLACEMENT DETAILS AND LOCATIONS.
2	INSTALL SMALL CABLE VAULT NEXT TO EXISTING PULL BOX.
8	REMOVE EXISTING CONDUCTORS AND/OR COMMUNICATION CABLES, CONDUIT UPSWEEPS, AND JUNCTION BOX. BACKFILL VOID.
9	REMOVE EXISTING CONDUCTORS, CUT OFF UPSWEEPS AND ABANDON UNDERGROUND CONDUIT.
10	REMOVE EXISTING COMMUNICATION CABLES, CUT OFF UPSWEEPS AND ABANDON UNDERGROUND CONDUIT.
11	REMOVE EXISTING COMMUNICATION CABLES, CONDUIT TO REMAIN IN PLACE FOR FUTURE USE.
13	REMOVE EXISTING CONDUCTORS, CONDUIT TO REMAIN IN PLACE FOR FUTURE USE.
19	INSTALL A CABINET WITH A 5 KVA 480/240/120 VAC TRANSFORMER IN ACCORDANCE WITH STANDARD PLAN J-10.10 AND J-10.25 AND PER TRANSFORMER BREAKER DETAILS ON SHEETS TSD29-TSD31.
22	AFTER TEMPORARY ITS CABLES ARE REMOVED, REMOVE TEMPORARY CONDUIT END FROM PB/CV. PATCH OPENING WITH WATERTIGHT SEAL.
23	MODIFY EXISTING FOUNDATION UTILIZING THE EXISTING TWO CABINET FOUNDATION PER DETAILS ON SHEET TSD34.
24	INSTALL A CONTROLLER CABINET ON TOP OF AN 8" ALUMINUM CABINET RISER. INSTALL ASSOCIATED CABINET EQUIPMENT PER EQUIPMENT SCHEDULE ON DETAIL SHEET TSD07.
29	REMOVE EXISTING ITS AND/OR TRANSFORMER CABINET(S). FOUNDATION TO REMAIN. RETURN CABINET AND INTERNAL COMPONENTS TO THE OLYMPIC REGION SIGNAL SHOP.
30	INSTALL CABLES IN EXISTING CONDUIT(S).
31	INSTALL THE CONDUITS FROM PB55 TO PB56 BETWEEN THE SIGN FOUNDATION AND THE ROW LINE. STACK THE CONDUITS VERTICALLY IN THE TRENCH AND POSITION THEM ADJACENT TO THE SIGN FOUNDATION. THE DETAIL ON SHEET TSD01 CALLED "SIGN FOUNDATION/POST FIBER OPTIC CONDUIT DETAIL" DOES NOT APPLY TO THIS LOCATION ONLY.
32	TERMINATE CONDUIT IN EXISTING JUNCTION BOX, PULL BOX, CABLE VAULT OR SMALL CABLE VAULT. SEE WIRE NOTES.
45	FUSION SPLICE 12 CT DISTRIBUTION FIBER OPTIC CABLE TO 24 CT PRE-TERMINATED FIBER OPTIC CABLE PER DETAILS ON SHEETS TSFO01-TSFO10.
59	REMOVE EXISTING HAR SIGN AFTER NEW SIGN IS OPERATIONAL. DELIVER REMOVED HAR SIGN FLASHER TO OLYMPIC REGION SIGNAL SHOP.
60	INSTALL NEW HAR SIGN PER SIGNING PLANS. INSTALL NEW BEACONS, CONDUITS, JUNCTION BOX, AND ASSOCIATED EQUIPMENT PER STANDARD PLAN J-40.35-01. INSTALL NEW INDICATOR LIGHT PER DETAIL SHEET TSD15.
62	REMOVE EXISTING WAVETRONIX DETECTORS AND ASSOCIATED EQUIPMENT FROM EXISTING POLE. DELIVER REMOVED WAVETRONIX MOUNTING HARDWARE, DETECTORS, DETECTOR CABLES TO OLYMPIC REGION SIGNAL SHOP. EXISTING POLE AND FOUNDATION TO REMAIN. PLUG HOLE IN POLE.
68	REMOVE EXISTING CCTV AND ASSOCIATED EQUIPMENT. REPLACE WITH SIDEWINDER CCTV MODEL H.264 HD 30X ON EXISTING CAMERA POLE. DELIVER REMOVED CAMERA, CAMERA MOUNTING HARDWARE AND CAMERA CABLES TO OLYMPIC REGION SIGNAL SHOP. ALL CAMERA CABLES AND CONNECTORS SHALL NOT BE DAMAGED OR CUT DURING REMOVAL.
88	SEE ILLUMINATION PLANS FOR POWER SOURCE INFORMATION.
94	PRESERVE EXISTING PULL BOXES FOR FUTURE USE.

WIRE NOTES

NO.	CONDUIT	MATERIAL	EXISTING CABLE	NEW CABLE	REMARK
1	2"	SCHEDULE 80		1-144 SMFO	MAINLINE CABLE
	2"	SCHEDULE 80		1-12 SMFO	DISTRIBUTION CABLE
7					
5	4" INNERDUCT	SCHEDULE 80		1-144 SMFO	MAINLINE CABLE
	4" INNERDUCT	SCHEDULE 80		1-12 SMFO	DISTRIBUTION CABLE
10	2"	SCHEDULE 80		2-2C	FLASHING BEACON CABLE
11	2"	SCHEDULE 80		1-24 SMFO	PRE-TERMINATED CABLE
				2-12 SMFO	DISTRIBUTION CABLE
12	*Ex. 2"*	*EXISTING*	*1-24 SMFO(R)*	1-24 SMFO	PRE-TERMINATED CABLE
	Ex. 2"	*EXISTING*	*EMPTY*	EMPTY	FUTURE
15	*Ex. 2"*	*EXISTING*	*2-#8AWG (R)*	2-#8AWG	REPLACE TRANSFORMER CONDUCTOR
16	2"	SCHEDULE 80		1-24 SMFO	PRE-TERMINATED CABLE
46	*Ex. 2"*	*EXISTING*	*1-144 SMFO (R)*		REMOVE EXISTING MAINLINE CABLE
47	*Ex. 2"*	*EXISTING*	*1-24 SMFO (R)*		REMOVE EXISTING LATERAL CABLE
51	*Ex. 2"*	*EXISTING*	*1-24 SMFO (R)*		REMOVE EXISTING LATERAL CABLE
	Ex. 2"	*EXISTING*	*EMPTY*		FUTURE
55	*Ex. 2"*	*EXISTING*	*CONTROL CABLE (R)*	SIDEWINDER VCCC	REPLACE VIDEO CAMERA CONTROL CABLE WITH WTI SIDEWINDER VIDEO CAMERA CONTROL CABLE
	Ex. 2"	*EXISTING*	*EMPTY*	EMPTY	FUTURE
56	*Ex. 2"*	*EXISTING*	*4-#8AWG (R)*		REMOVE EXISTING WAVETRONIX ELECTRICAL CABLES

AS-BUILT

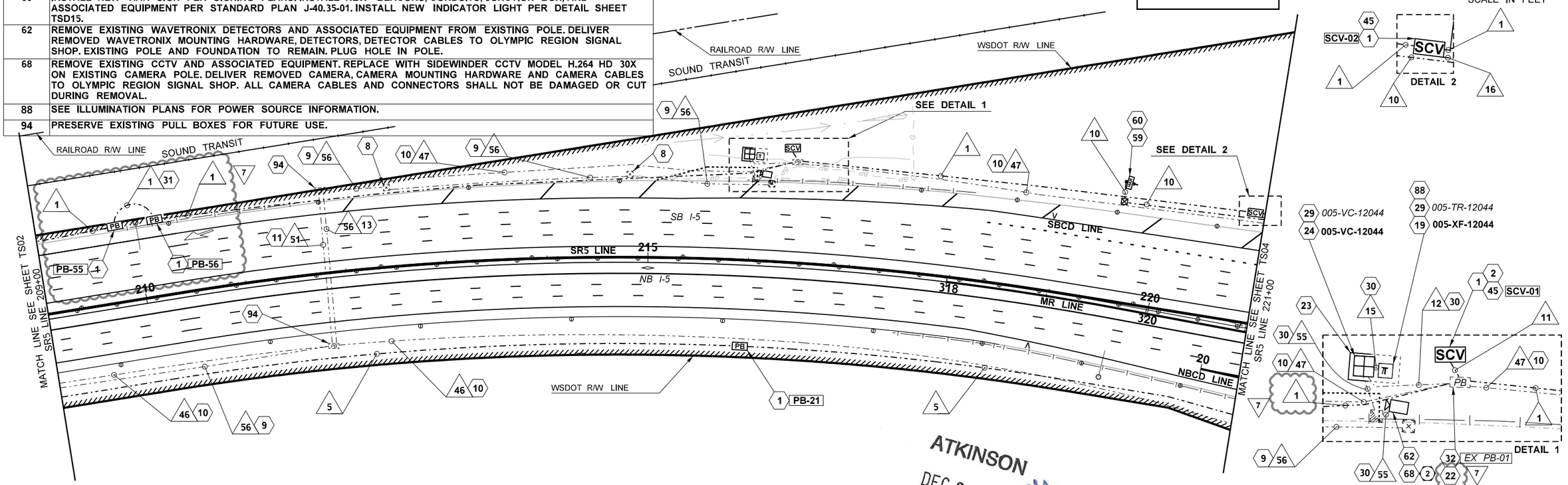

ATKINSON
DEC 22 2020
RELEASED FOR CONSTRUCTION

FILE NAME	c:\pwworking\jacobs_b&i\agronml\dms20633\PS_TS_03.dgn					
TIME	11:17:15 AM	REV 7 - RFC, RFI0595	12/09/20		REGION NO. 10	STATE WASH
DATE	12/14/2020	REV 6 - RFC, RFI0367	02/14/20			FED.AID PROJ.NO.
PLOTTED BY	agronmi	REV 5 - RFC, RFI0306	11/14/19		JOB NUMBER	
DESIGNED BY	I. AGRON/ D. HORGAN	REV 4 - RFC, RFI0271	10/22/19			
ENTERED BY	I. AGRON/ D. HORGAN	REV 3 - RFC, RFI0150, REV CAB LAYOUT	07/10/19			
CHECKED BY	M. WEGENER	REV 2 - RFC, RFI0065	03/29/19		CONTRACT NO. C9133	LOCATION NO.
PROJ. ENGR.	C. MEADE	REV C - FINAL REVIEW	02/12/19			
REGIONAL ADM.	J. WYNANDS	REVISION	DATE	BY		

MARK F. WEGENER, STATE OF WASHINGTON, 41141, REGISTERED PROFESSIONAL ENGINEER
12/21/20
DATE
P.E. STAMP BOX

DATE
P.E. STAMP BOX

Washington State Department of Transportation

ATKINSON / JACOBS CONSTRUCTION

I-5
STEILACOOM-DUPONT RD TO THORNE LN
CORRIDOR IMPROVEMENTS
MP 120.01 TO MP 124.45

MAINLINE ITS PLAN

PLAN REF NO TS03

SHEET 969 OF 1456 SHEETS

AS-BUILT

FOR CONSTRUCTION AND WIRE NOTES SEE SHEET TS04A

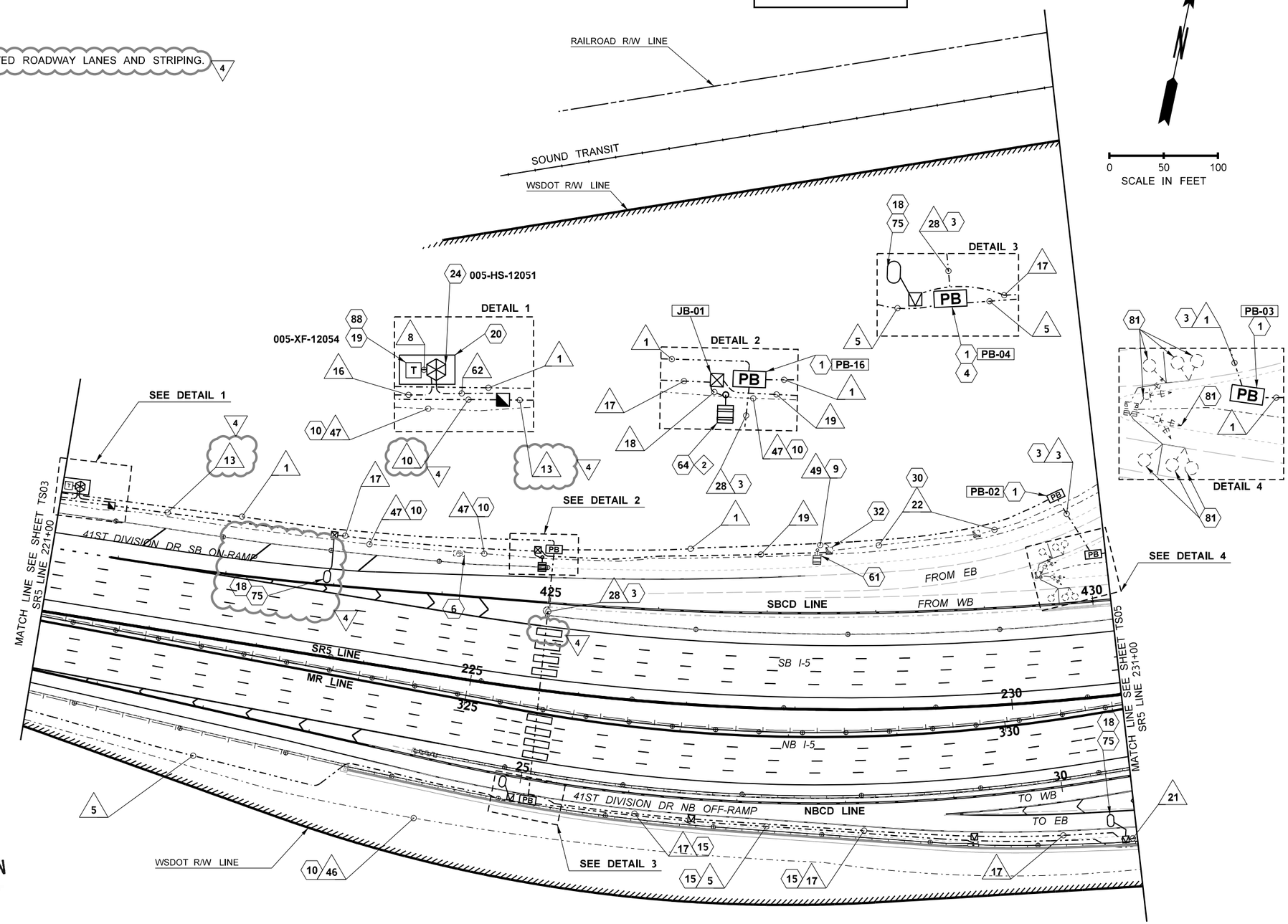

ATKINSON

DEC 13 2019 KW

RELEASED FOR CONSTRUCTION

FILE NAME	c:\pwworking\jacobs_b&i\wegenemf\dms20633\PS_TS_04.dgn						
TIME	10:42:52 AM	REV 4 - RFC, RFI0306	11/14/19		REGION NO. 10	STATE WASH	FED.AID PROJ.NO.
DATE	11/26/2019	REV 3 - RFC, RFI0137	10/22/19				
PLOTTED BY	WEGENEMF	REV 2 - RFC, RFI0065	03/29/19		JOB NUMBER		
DESIGNED BY	I. AGRON/ D. HORGAN	REV C - FINAL REVIEW	02/12/19				
ENTERED BY	I. AGRON/ D. HORGAN	REV 1 - RFC, RFI0032	01/23/19				
CHECKED BY	M. WEGENER	REV 0 - RELEASED FOR CONSTRUCTION	12/24/18		CONTRACT NO. C9133		LOCATION NO.
PROJ. ENGR.	C. MEADE	REV B - FINAL REVIEW	11/20/18				
REGIONAL ADM.	J. WYNANDS	REVISION	DATE	BY			

MARK F. WEGENER STATE OF WASHINGTON REGISTERED PROFESSIONAL ENGINEER 41141

12/12/19

DATE

P.E. STAMP BOX

P.E. STAMP BOX

DATE

Washington State Department of Transportation

ATKINSON / JACOBS CONSTRUCTION

I-5
STEILACOOM-DUPONT RD TO THORNE LN
CORRIDOR IMPROVEMENTS
MP 120.01 TO MP 124.45

MAINLINE ITS PLAN

PLAN REF NO TS04

SHEET 970 OF 1456 SHEETS

WIRE NOTES

NO.	CONDUIT	MATERIAL	EXISTING CABLE	NEW CABLE	REMARK
1	2"	SCHEDULE 80		1-144 SMFO	MAINLINE CABLE
	2"	SCHEDULE 80		1-12 SMFO	DISTRIBUTION CABLE
2	2"	SCHEDULE 80		1-2C(SH)	LOOP LEAD IN CABLE
				2-2C	FLASHING BEACON CABLE
3	2"	SCHEDULE 80		1-144 SMFO	MAINLINE CABLE
	2"	SCHEDULE 80		1-12 SMFO	DISTRIBUTION CABLE
	2"	SCHEDULE 80		EMPTY	FUTURE
5	4" INNERDUCT	SCHEDULE 80		1-144 SMFO	MAINLINE CABLE
	4" INNERDUCT	SCHEDULE 80		1-12 SMFO	DISTRIBUTION CABLE
8	2"	SCHEDULE 80		2-#8AWG	TRANSFORMER CONDUCTOR
10	2"	SCHEDULE 80		2-2C	FLASHING BEACON CABLE
13	2"	SCHEDULE 80		EMPTY	FUTURE
16	2"	SCHEDULE 80		1-24 SMFO	PRE-TERMINATED CABLE
17	2"	SCHEDULE 80		1-2C(SH)	LOOP LEAD IN CABLE
18	2"	SCHEDULE 80		MULTICONDUCTOR	WAVETRONIX HOMERUN CABLE
19	2"	SCHEDULE 80		MULTICONDUCTOR	WAVETRONIX HOMERUN CABLE
				1-2C(SH)	LOOP LEAD IN CABLE
21	2"	SCHEDULE 80		2-2C(SH)	LOOP LEAD IN CABLE
22	*Ex. 2"*	*EXISTING*	*MULTICONDUCTOR (R)*	MULTICONDUCTOR	REPLACE WAVETRONIX HOMERUN CABLE
	Ex. 3"	*EXISTING*	*EMPTY*	1-2C(SH)	LOOP LEAD IN CABLE
28	2"	SCHEDULE 80		EMPTY	FUTURE
	2"	SCHEDULE 80		EMPTY	FUTURE
	2"	SCHEDULE 80		EMPTY	FUTURE
	2"	SCHEDULE 80		EMPTY	FUTURE
46	*Ex. 2"*	*EXISTING*	*1-144 SMFO (R)*		REMOVE EXISTING MAINLINE CABLE
47	*Ex. 2"*	*EXISTING*	*1-24 SMFO (R)*		REMOVE EXISTING LATERAL CABLE
49	*Ex. 2"*	*EXISTING*	*MULTICONDUCTOR (R)*		REMOVE EXISTING WAVETRONIX SENSOR
62	2"	SCHEDULE 80		2-2C	FLASHING BEACON CABLE
	2"	SCHEDULE 80		EMPTY	FUTURE

CONSTRUCTION NOTES

NO.	DESCRIPTION
1	SEE SHEET TSD02-04 FOR PULL BOX, CABLE VAULT/SMALL CABLE VAULT PLACEMENT DETAILS AND LOCATIONS.
3	INSTALL CONDUIT UNDER ROADWAY USING APPROVED DIRECTIONAL BORING METHOD.
4	INSTALL HEAVY DUTY PULL BOX.
6	REMOVE EXISTING CONDUCTORS AND/OR COMMUNICATION CABLES, CONDUIT UPSWEEPS, AND PULLBOX, CABLE VAULT OR SMALL CABLE VAULT. BACKFILL VOID.
9	REMOVE EXISTING CONDUCTORS, CUT OFF UPSWEEPS AND ABANDON UNDERGROUND CONDUIT.
10	REMOVE EXISTING COMMUNICATION CABLES, CUT OFF UPSWEEPS AND ABANDON UNDERGROUND CONDUIT.
15	INSTALL CONDUIT OUTSIDE OF SHOULDER, OR UNDER SHOULDER BEFORE FULL-DEPTH PAVING OF SHOULDER. IF UNDER SHOULDER, SAWCUT A STRIP IN PAVEMENT THAT IS 6" WIDER THAN THE TRENCH ON EACH SIDE. DIG TRENCH, INSTALL CONDUIT, AND BACKFILL TRENCH WITH CONTROL DENSITY FILL. INSTALL PAVEMENT PATCH TO MATCH EXISTING PAVEMENT DEPTH AND MATERIAL.
18	LOOP CABLE SHALL BE INSTALLED WITH SIX (6) TURNS.
19	INSTALL A CABINET WITH A 5 KVA 480/240/120 VAC TRANSFORMER IN ACCORDANCE WITH STANDARD PLAN J-10.10 AND J-10.25 AND PER TRANSFORMER BREAKER DETAILS ON SHEETS TSD29-TSD31.
20	CONSTRUCT A TWO CABINET FOUNDATION IN ACCORDANCE WITH STANDARD PLAN J-10.10.
24	INSTALL A CONTROLLER CABINET ON TOP OF AN 8" ALUMINUM CABINET RISER. INSTALL ASSOCIATED CABINET EQUIPMENT PER EQUIPMENT SCHEDULE ON DETAIL SHEET TSD07.
30	INSTALL CABLES IN EXISTING CONDUIT(S).
32	TERMINATE CONDUIT IN EXISTING JUNCTION BOX, PULL BOX, CABLE VAULT OR SMALL CABLE VAULT. SEE WIRE NOTES.
61	REMOVE EXISTING WAVETRONIX DETECTORS, POLE, FOUNDATION AND ASSOCIATED EQUIPMENT. DELIVER REMOVED WAVETRONIX MOUNTING HARDWARE, DETECTORS, DETECTOR CABLES TO OLYMPIC REGION SIGNAL SHOP. SAVE POLE FOR POTENTIAL RE-USE ON THIS PROJECT. THE CONTRACTOR SHALL PROVIDE AN INSPECTION REPORT DOCUMENTING THE CONDITION OF THE POLE TO WSDOT AND OBTAIN WSDOT APPROVAL TO USE THE POLE BEFORE INSTALLING THIS POLE IN A NEW LOCATION.
64	INSTALL STEEL LIGHT STANDARD POLE, FOUNDATION, WAVETRONIX SENSOR AND ASSOCIATED EQUIPMENT PER DETAILS ON SHEET TSD27. 3
75	INSTALL TYPE WR INDUCTION LOOP VEHICLE DETECTORS IN CENTER OF THE LANE IN ACCORDANCE WITH STANDARD PLAN J-50.12, AND PER DETAILS ON SHEET TSD25.
81	EXISTING RAMP METER SIGNAL(S) AND/OR LOOPS AND ASSOCIATED CABLING TO REMAIN.
88	SEE ILLUMINATION PLANS FOR POWER SOURCE INFORMATION.

AS-BUILT

ATKINSON
MAY 27 2020 KTW
RELEASED FOR CONSTRUCTION

FILE NAME	c:\pwworking\jacobs_b&i\agronmi\dms20633\PS_TS_04A.dgn					
TIME	8:42:38 AM				REGION NO. 10	STATE WASH	FED.AID PROJ.NO.
DATE	5/21/2020					
PLOTTED BY	agronmi					
DESIGNED BY	I. AGRON/ D. HORGAN	REV 3 - RFC, RFI0473, REV CN 64	05/21/20		JOB NUMBER	
ENTERED BY	I. AGRON/ D. HORGAN	REV 2 - RFC, RFI0306	11/14/19			
CHECKED BY	M. WEGENER	REV 1 - RFC, RFI0271	10/22/19		CONTRACT NO. C9133	LOCATION NO.
PROJ. ENGR.	C. MEADE	REV 0 - RELEASED FOR CONSTRUCTION	03/29/19			
REGIONAL ADM.	J. WYNANDS	REVISION	DATE	BY		

MARK F. WEGENER, STATE OF WASHINGTON, 41141, REGISTERED PROFESSIONAL ENGINEER
5/26/20
DATE
P.E. STAMP BOX

DATE
P.E. STAMP BOX

Washington State Department of Transportation

ATKINSON CONSTRUCTION / JACOBS

I-5
STEILACOOM-DUPONT RD TO THORNE LN CORRIDOR IMPROVEMENTS
MP 120.01 TO MP 124.45

MAINLINE ITS PLAN

PLAN REF NO TS04A

SHEET 971 OF 1456 SHEETS

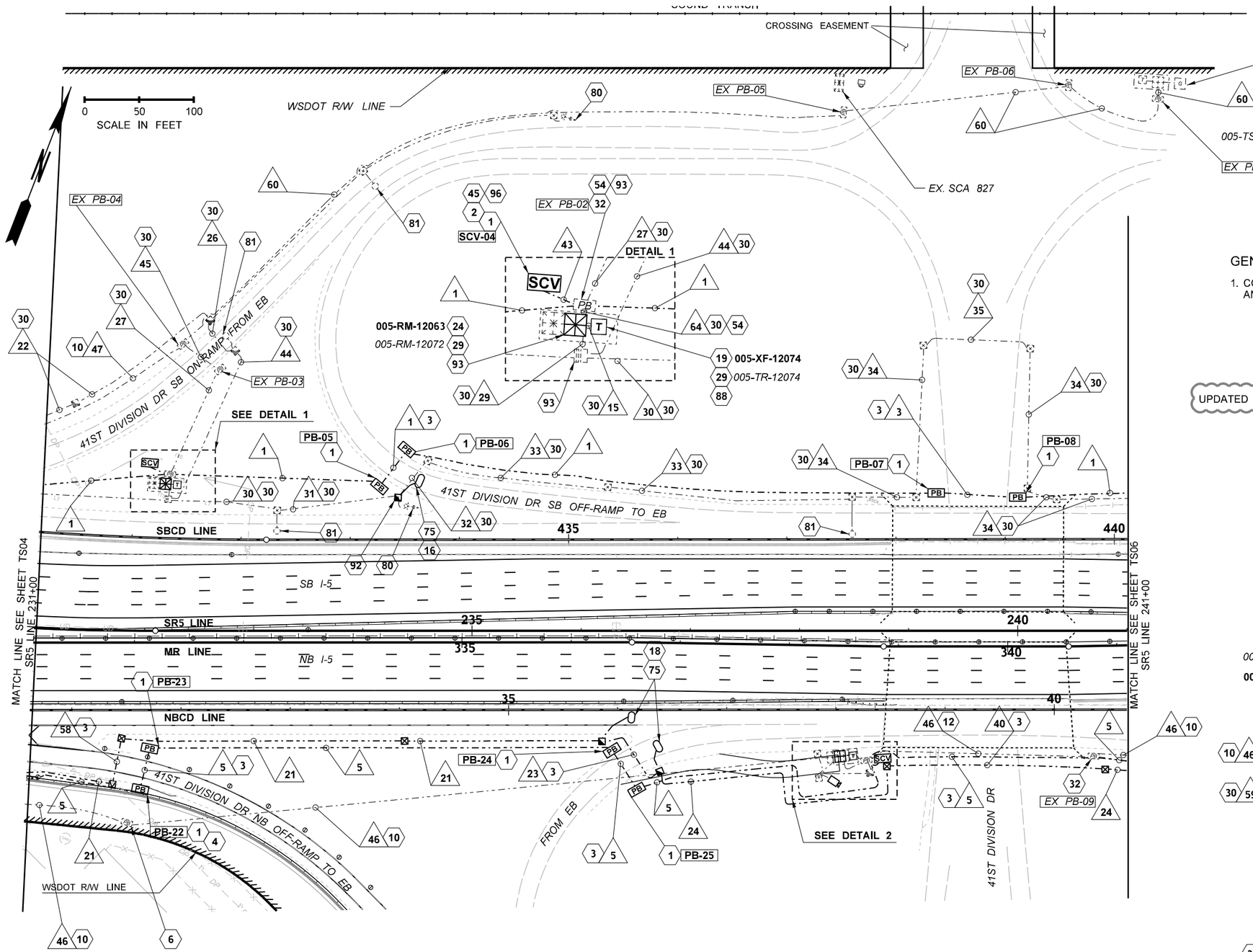

FOR CONSTRUCTION AND WIRE NOTES SEE SHEET TS05A

GENERAL NOTES:

1. COMMUNICATION EQUIPMENT IN EXISTING GENERATOR AND SIGNAL CABINET TO REMAIN.

UPDATED ROADWAY LANES AND STRIPING. NO CHANGE TO ITS 3

AS-BUILT

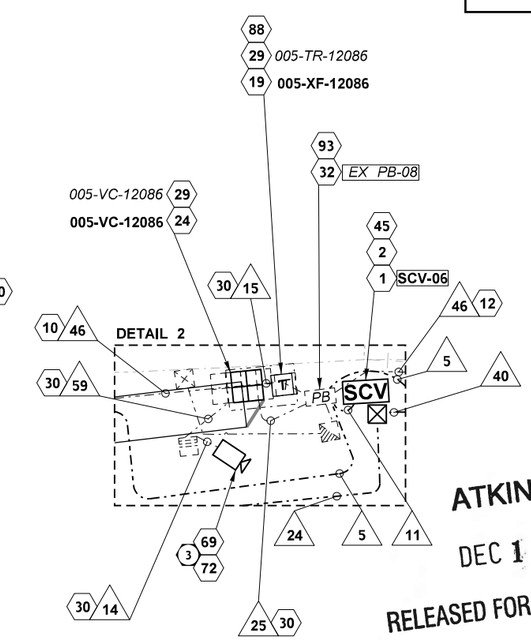

ATKINSON

DEC 13 2019 KTW

RELEASED FOR CONSTRUCTION

FILE NAME	c:\pwworking\jacobs_b&i\jeg_gt011740\dms20633\PS_TS_05.dgn						
TIME	11:21:42 AM	REV 3 - RFC, RFI0306	11/14/19		REGION NO. 10	STATE WASH	FED.AID PROJ.NO.
DATE	11/14/2019	REV 2 - RFC, RFI0137	10/22/19				
PLOTTED BY	GT011740	REV 1 - RFC, RFI0065	03/29/19		JOB NUMBER		
DESIGNED BY	I. AGRON/ D. HORGAN	REV C - FINAL REVIEW	02/12/19				
ENTERED BY	I. AGRON/ D. HORGAN	REV 0 - RELEASED FOR CONSTRUCTION	12/24/18				
CHECKED BY	M. WEGENER	REV B - FINAL REVIEW	11/20/18		CONTRACT NO. C9133		LOCATION NO.
PROJ. ENGR.	C. MEADE	REV A - PRELIMINARY REVIEW	10/15/18				
REGIONAL ADM.	J. WYNANDS	REVISION	DATE	BY			

MARK F. WEGENER STATE OF WASHINGTON 41141 REGISTERED PROFESSIONAL ENGINEER
12/12/19
DATE
P.E. STAMP BOX

DATE
P.E. STAMP BOX

Washington State Department of Transportation

ATKINSON CONSTRUCTION / JACOBS

I-5
STEILACOOM-DUPONT RD TO THORNE LN
CORRIDOR IMPROVEMENTS
MP 120.01 TO MP 124.45

MAINLINE ITS PLAN

PLAN REF NO TS05

SHEET 972 OF 1456 SHEETS

WIRE NOTES

NO.	CONDUIT	MATERIAL	EXISTING CABLE	NEW CABLE	REMARK
1	2"	SCHEDULE 80		1-144 SMFO	MAINLINE CABLE
	2"	SCHEDULE 80		1-12 SMFO	DISTRIBUTION CABLE
3	2"	SCHEDULE 80		1-144 SMFO	MAINLINE CABLE
	2"	SCHEDULE 80		1-12 SMFO	DISTRIBUTION CABLE
	2"	SCHEDULE 80		EMPTY	FUTURE
5	4" INNERDUCT	SCHEDULE 80		1-144 SMFO	MAINLINE CABLE
	4" INNERDUCT	SCHEDULE 80		1-12 SMFO	DISTRIBUTION CABLE
11	2"	SCHEDULE 80		1-24 SMFO	PRE-TERMINATED CABLE
				2-12 SMFO	DISTRIBUTION CABLE
14	*Ex. 2"*	*EXISTING*	*CONTROL CABLE (R)*	MULTICONDUCTOR	REPLACE VIDEO CAMERA CONTROL CABLE
	Ex. 2"	*EXISTING*	*EMPTY*	EMPTY	FUTURE
15	*Ex. 2"*	*EXISTING*	*2-#8AWG (R)*	2-#8AWG	REPLACE TRANSFORMER CONDUCTOR
21	2"	SCHEDULE 80		2-2C(SH)	LOOP LEAD IN CABLE
22	*Ex. 2"*	*EXISTING*	*MULTICONDUCTOR (R)*	MULTICONDUCTOR	REPLACE WAVETRONIX HOMERUN CABLE
	Ex. 3"	*EXISTING*	*EMPTY*	1-2C(SH)	LOOP LEAD IN CABLE
23	2"	SCHEDULE 80		3-2C(SH)	LOOP LEAD IN CABLE
	2"	SCHEDULE 80		EMPTY	FUTURE
24	2"	SCHEDULE 80		4-2C(SH)	LOOP LEAD IN CABLE
25	*Ex. 2"*	*EXISTING*	*1-24 SMFO(R)*	1-24 SMFO	REPLACE PRE-TERMINATED CABLE
	Ex. 2"	*EXISTING*	*EMPTY*	EMPTY	FUTURE
26	*Ex. 3"*	*EXISTING*	*1-2C(SH)*		EXISTING LOOP LEAD IN CABLE
			1-2C		EXISTING FLASHING BEACON CABLE
			MULTICONDUCTOR (R)	MULTICONDUCTOR	REPLACE WAVETRONIX HOMERUN CABLE
				1-2C(SH)	LOOP LEAD IN CABLE
	Ex. 3"	*EXISTING*	*EMPTY*	EMPTY	FUTURE
27	*Ex. 2"*	*EXISTING*	*1-24 SMFO(R)*		REMOVE EXISTING LATERAL
			2-24 SMFO		EXISTING LATERAL TO GENERATOR
29	*Ex. 3"*	*EXISTING*	*3-2C*		EXISTING FLASHING BEACON CABLE
			10-2C(SH)		EXISTING LOOP LEAD IN CABLE
			2-5C		EXISTING IMSA SIGNAL DISPLAY CABLE
	Ex. 2"	*EXISTING*	*MULTICONDUCTOR (R)*	MULTICONDUCTOR	REPLACE WAVETRONIX HOMERUN CABLE
				6-2C(SH)	LOOP LEAD IN CABLE
	Ex. 3"	*EXISTING*	*EMPTY*		FUTURE
30	*Ex. 2"*	*EXISTING*	*2-2C(SH)*		EXISTING LOOP LEAD IN CABLE
			2-2C		EX FLASHING BEACON CABLE
				5-2C(SH)	LOOP LEAD IN CABLE
31	*Ex. 2"*	*EXISTING*	*1-2C(SH)*		EXISTING LOOP LEAD IN CABLE
			2-2C		EX FLASHING BEACON CABLE
				5-2C(SH)	LOOP LEAD IN CABLE
32	*Ex. 2.5"*	*EXISTING*	*1-2C(SH)*		EXISTING LOOP LEAD IN CABLE
			1-2C		EX FLASHING BEACON CABLE
				4-2C(SH)	LOOP LEAD IN CABLE
	Ex. 2.5"	*EXISTING*	*EMPTY*	EMPTY	FUTURE
33	*Ex. 2"*	*EXISTING*	*1-2C(SH)*		EXISTING LOOP LEAD IN CABLE
			2-2C		EX FLASHING BEACON CABLE
				4-2C(SH)	LOOP LEAD IN CABLE
34	*Ex. 2"*	*EXISTING*	*1-2C*		EXISTING FLASHING BEACON CABLE
				4-2C(SH)	LOOP LEAD IN CABLE
35	*Ex. 2.5"*	*EXISTING*	*1-2C*		EXISTING FLASHING BEACON CABLE
				4-2C(SH)	LOOP LEAD IN CABLE
40	2"	SCHEDULE 80		4-2C(SH)	LOOP LEAD IN CABLE
	2"	SCHEDULE 80		EMPTY	FUTURE
43	2"	SCHEDULE 80		2-12 SMFO	DISTRIBUTION CABLES
	2"	SCHEDULE 80		4-24 SMFO	PRE-TERMINATED AND LATERAL CABLES
44	*Ex.3"*	*EXISTING*	*2-2C(SH)*	1-2C(SH)	LOOP LEAD IN CABLE
			1-2C		EXISTING FLASHING BEACON CABLE
			MULTICONDUCTOR (R)	MULTICONDUCTOR	REPLACE WAVETRONIX HOMERUN CABLE
	Ex.3"	*EXISTING*	*EMPTY*	EMPTY	FUTURE
45	*Ex. 2.5"*	*EXISTING*	*1-24 SMFO(R)*		REMOVE EXISTING LATERAL
			2-24 SMFO		EXISTING LATERAL TO GENERATOR

AS-BUILT

WIRE NOTES

NO.	CONDUIT	MATERIAL	EXISTING CABLE	NEW CABLE	REMARK
46	*Ex. 2"*	*EXISTING*	*1-144 SMFO (R)*		REMOVE EXISTING MAINLINE CABLE
47	*Ex. 2"*	*EXISTING*	*1-24 SMFO (R)*		REMOVE EXISTING LATERAL CABLE
58	2"	SCHEDULE 80		2-2C(SH)	LOOP LEAD IN CABLE
	2"	SCHEDULE 80		EMPTY	FUTURE
59	*Ex. 2"*	*EXISTING*	*CONTROL CABLE (R)*	MULTICONDUCTOR	REPLACE VIDEO CAMERA CONTROL CABLE
	Ex. 3"	*EXISTING*	*EMPTY*	EMPTY	FUTURE
	Ex. 3"	*EXISTING*	*EMPTY*	EMPTY	FUTURE
60	*Ex. 3"*	*EXISTING*	*2-24 SMFO*		EXISTING LATERAL TO GENERATOR
	Ex. 3"	*EXISTING*	*EMPTY*	EMPTY	FUTURE
64	*Ex. 2"*	*EXISTING*	*1-24 SMFO(R)*	1-24 SMFO	REPLACE PRE-TERMINATED CABLE
			1-24 SMFO(R)	1-24 SMFO	REPLACE EXISTING PRE-TERMINATED CABLE FOR THE LATERAL TO GENERATOR
	Ex. 2"	*EXISTING*	*EMPTY*	EMPTY	FUTURE

ATKINSON
OCT 29 2019
RELEASED FOR CONSTRUCTION

CONSTRUCTION NOTES

NO.	DESCRIPTION	
1	SEE SHEET TSD02-04 FOR PULL BOX, CABLE VAULT/SMALL CABLE VAULT PLACEMENT DETAILS AND LOCATIONS.	
2	INSTALL SMALL CABLE VAULT NEXT TO EXISTING PULL BOX.	
3	INSTALL CONDUIT UNDER ROADWAY USING APPROVED DIRECTIONAL BORING METHOD.	
4	INSTALL HEAVY DUTY PULL BOX.	1
6	REMOVE EXISTING CONDUCTORS AND/OR COMMUNICATION CABLES, CONDUIT UPSWEEPS, AND PULLBOX, CABLE VAULT OR SMALL CABLE VAULT. BACKFILL VOID.	
10	REMOVE EXISTING COMMUNICATION CABLES, CUT OFF UPSWEEPS AND ABANDON UNDERGROUND CONDUIT.	
12	REMOVE EXISTING FIBER OPTIC CABLES, OTHER CABLES AND CONDUIT TO REMAIN IN USE.	
16	LOOP CABLE SHALL BE INSTALLED WITH FOUR (4) TURNS.	
18	LOOP CABLE SHALL BE INSTALLED WITH SIX (6) TURNS.	
19	INSTALL A CABINET WITH A 5 KVA 480/240/120 VAC TRANSFORMER IN ACCORDANCE WITH STANDARD PLAN J-10.10 AND J-10.25 AND PER TRANSFORMER BREAKER DETAILS ON SHEETS TSD29-TSD31.	
24	INSTALL A CONTROLLER CABINET ON TOP OF AN 8" ALUMINUM CABINET RISER. INSTALL ASSOCIATED CABINET EQUIPMENT PER EQUIPMENT SCHEDULE ON DETAIL SHEET TSD07.	1
29	REMOVE EXISTING ITS AND/OR TRANSFORMER CABINET(S). FOUNDATION TO REMAIN. RETURN CABINET AND INTERNAL COMPONENTS TO THE OLYMPIC REGION SIGNAL SHOP.	
30	INSTALL CABLES IN EXISTING CONDUIT(S).	
32	TERMINATE CONDUIT IN EXISTING JUNCTION BOX, PULL BOX, CABLE VAULT OR SMALL CABLE VAULT. SEE WIRE NOTES.	
45	FUSION SPLICE 12 CT DISTRIBUTION FIBER OPTIC CABLE TO 24 CT PRE-TERMINATED FIBER OPTIC CABLE PER DETAILS ON SHEETS TSFO01-TSFO10.	
54	REMOVE EXISTING SPLICE. PULL EXISTING 2-24 CT FIBER OPTIC CABLE BACK TO EX PB-02. REROUTE EXISTING FIBER OPTIC CABLE TO NEW SCV04.	
69	REMOVE EXISTING CCTV AND ASSOCIATED EQUIPMENT. EXISTING CAMERA POLE AND FOUNDATION TO REMAIN. DELIVER REMOVED CAMERA, CAMERA MOUNTING HARDWARE AND CAMERA CABLES TO OLYMPIC REGION SIGNAL SHOP. ALL CAMERA CABLES AND CONNECTORS SHALL NOT BE DAMAGED OR CUT DURING REMOVAL.	
72	INSTALL CAMERA, CABLE ON EXISTING CAMERA POLE PER DETAILS ON SHEET TSD13.	
75	INSTALL TYPE WR INDUCTION LOOP VEHICLE DETECTORS IN CENTER OF THE LANE IN ACCORDANCE WITH STANDARD PLAN J-50.12, AND PER DETAILS ON SHEET TSD25.	
80	EXISTING FLASHING BEACON SIGN AND ASSOCIATED CABLING TO REMAIN.	
81	EXISTING RAMP METER SIGNAL(S) AND/OR LOOPS AND ASSOCIATED CABLING TO REMAIN.	
88	SEE ILLUMINATION PLANS FOR POWER SOURCE INFORMATION.	
92	REPLACE EXISTING JUNCTION BOX.	
93	REMOVE LOOP TERMINATIONS AND CABLING FOR EXISTING RAMP METER FLASHING BEACON SIGNS. PULL EXISTING CABLES THROUGH THE EXISTING CONDUIT TO THE CLOSEST PULLBOX, CABLE VAULT OR SMALL CABLE VAULT. REINSTALL AND TERMINATE CABLES IN NEW CABINET.	1
96	FUSION SPLICE EXISTING 24 CT FIBER OPTIC CABLE TO 24 CT PRE-TERMINATED FIBER OPTIC CABLE PER DETAILS ON SHEETS TSFO01-TSFO10.	

FILE NAME	c:\pwworking\jacobs_b&i\agronmi\dms20633\PS_TS_05A.dgn
TIME	10:35:08 AM
DATE	10/28/2019
PLOTTED BY	agronmi
DESIGNED BY	I. AGRON/ D. HORGAN
ENTERED BY	I. AGRON/ D. HORGAN
CHECKED BY	M. WEGENER
PROJ. ENGR.	C. MEADE
REGIONAL ADM.	J. WYNANDS

REVISION	DATE	BY
REV 1 - RFC, RFI0137, RFI0271	10/22/19	
REV 0 - RELEASED FOR CONSTRUCTION	03/29/19	
REV A - FINAL REVIEW	02/12/19	

REGION NO.	STATE	FED.AID PROJ.NO.
10	WASH	
JOB NUMBER		
CONTRACT NO.		LOCATION NO.
C9133		

MARK E. WEGENER, STATE OF WASHINGTON, 41141, REGISTERED PROFESSIONAL ENGINEER
Mark E Wegener
10/28/19
DATE
P.E. STAMP BOX

DATE
P.E. STAMP BOX

Washington State Department of Transportation

ATKINSON / JACOBS CONSTRUCTION

I-5
STEILACOOM-DUPONT RD TO THORNE LN
CORRIDOR IMPROVEMENTS
MP 120.01 TO MP 124.45

MAINLINE ITS PLAN

PLAN REF NO
TS05A

SHEET 973 OF 1456 SHEETS

FOR CONSTRUCTION AND WIRE NOTES SEE SHEET TS06A

41ST DIVISION DR SB OFF-RAMP TO WB

41ST DIVISION DR SB ON-RAMP FROM WB

SBCD LINE

SB I-5

SR5 LINE

MR LINE

NB I-5

NBCD LINE

41ST DIVISION DR NB ON-RAMP FROM WB

41ST DIVISION DR NB OFF-RAMP TO WB

MATCH LINE SEE SHEET TS05 SR5 LINE 241+00

MATCH LINE SEE SHEET TS07 SR5 LINE 252+00

SEE DETAIL 1

SEE DETAIL 2

WSDOT R/W LINE

PB-09 PB-10 PB-11 PB-12 PB-27 PB-26 PB-28 CV-03 CV-04 JB-02 SCV-07 EX PB-10

005-XF-12104 005-TR-12104 005-RM-12110 005-RM-12104

DETAIL 2

DETAIL 1

0 50 100
SCALE IN FEET

AS-BUILT

ATKINSON
FEB 14 2020 KTW
RELEASED FOR CONSTRUCTION

FILE NAME	c:\pwworking\jacobs_b&i\jeg_gt011740\dms20633\PS_TS_06.dgn						
TIME	10:35:44 AM	REV 5 - RFC, RFI0367	02/14/20		REGION NO. 10	STATE WASH	FED.AID PROJ.NO.
DATE	2/14/2020	REV 4 - RFC, RFI0306	11/14/19				
PLOTTED BY	GT011740	REV 3 - RFC, RFI0164	08/20/19		JOB NUMBER		
DESIGNED BY	I. AGRON/ D. HORGAN	REV 2 - RFC, RFI0065	03/29/19				
ENTERED BY	I. AGRON/ D. HORGAN	REV C - FINAL REVIEW	02/12/19				
CHECKED BY	M. WEGENER	REV 1 - RFC, RFI0032	01/23/19		CONTRACT NO. C9133		LOCATION NO.
PROJ. ENGR.	C. MEADE	REV 0 - RELEASED FOR CONSTRUCTION	12/24/18				
REGIONAL ADM.	J. WYNANDS	REVISION	DATE	BY			

MARK F. WEGENER STATE OF WASHINGTON 41141 REGISTERED PROFESSIONAL ENGINEER
2/14/20
DATE
P.E. STAMP BOX

P.E. STAMP BOX
DATE

Washington State Department of Transportation

ATKINSON CONSTRUCTION / JACOBS

I-5
STEILACOOM-DUPONT RD TO THORNE LN
CORRIDOR IMPROVEMENTS
MP 120.01 TO MP 124.45

MAINLINE ITS PLAN

PLAN REF NO TS06

SHEET 974 OF 1456 SHEETS

WIRE NOTES

NO.	CONDUIT	MATERIAL	EXISTING CABLE	NEW CABLE	REMARK
1	2"	SCHEDULE 80		1-144 SMFO	MAINLINE CABLE
	2"	SCHEDULE 80		1-12 SMFO	DISTRIBUTION CABLE
3	2"	SCHEDULE 80		1-144 SMFO	MAINLINE CABLE
	2"	SCHEDULE 80		1-12 SMFO	DISTRIBUTION CABLE
	2"	SCHEDULE 80		EMPTY	FUTURE
5	4" INNERDUCT	SCHEDULE 80		1-144 SMFO	MAINLINE CABLE
	4" INNERDUCT	SCHEDULE 80		1-12 SMFO	DISTRIBUTION CABLE
11	2"	SCHEDULE 80		1-24 SMFO	PRE-TERMINATED CABLE
				2-12 SMFO	DISTRIBUTION CABLE
15	*Ex. 2"*	*EXISTING*	*2-#8AWG (R)*	2-#8AWG	REPLACE TRANSFORMER CONDUCTOR
17	2"	SCHEDULE 80		1-2C(SH)	LOOP LEAD IN CABLE
18	2"	SCHEDULE 80		MULTICONDUCTOR	WAVETRONIX HOMERUN CABLE
19	2"	SCHEDULE 80		MULTICONDUCTOR	WAVETRONIX HOMERUN CABLE
				1-2C(SH)	LOOP LEAD IN CABLE
20	2"	SCHEDULE 80		EMPTY	FUTURE
	2"	SCHEDULE 80		EMPTY	FUTURE
21	2"	SCHEDULE 80		2-2C(SH)	LOOP LEAD IN CABLE
24	2"	SCHEDULE 80		4-2C(SH)	LOOP LEAD IN CABLE
25	*Ex. 2"*	*EXISTING*	*1-24 SMFO(R)*	1-24 SMFO	REPLACE PRE-TERMINATED CABLE
	Ex. 2"	*EXISTING*	*EMPTY*	EMPTY	FUTURE
34	*Ex. 2"*	*EXISTING*	*1-2C*		EXISTING FLASHING BEACON CABLE
				4-2C(SH)	LOOP LEAD IN CABLE
36	*Ex. 2"*	*EXISTING*	*1-2C(SH)*		EXISTING LOOP LEAD IN CABLE
				5-2C(SH)	LOOP LEAD IN CABLE
37	*Ex. 2"*	*EXISTING*	*1-2C(SH)*		EXISTING LOOP LEAD IN CABLE
			2-2C		EX FLASHING BEACON CABLE
				5-2C(SH)	LOOP LEAD IN CABLE
38	*Ex. 2"*	*EXISTING*	*2-2C(SH)*		EXISTING LOOP LEAD IN CABLE
			2-2C		EX FLASHING BEACON CABLE
				5-2C(SH)	LOOP LEAD IN CABLE
39	*Ex. 3"*	*EXISTING*	*3-2C*		EXISTING FLASHING BEACON CABLE
			10-2C(SH)		EXISTING LOOP LEAD IN
			2-5C		EXISTING IMSA SIGNAL CABLE
	Ex. 2"	*EXISTING*	*MULTICONDUCTOR (R)*	MULTICONDUCTOR	REPLACE WAVETRONIX HOMERUN CABLE
				6-2C(SH)	LOOP LEAD IN CABLE
	Ex. 3"	*EXISTING*	*EMPTY*		FUTURE
40	2"	SCHEDULE 80		4-2C(SH)	LOOP LEAD IN CABLE
	2"	SCHEDULE 80		EMPTY	FUTURE
41	*Ex. 3"*	*EXISTING*	*2-2C(SH)*		EXISTING LOOP LEAD IN CABLE
			1-2C		EXISTING FLASHING BEACON CABLE
			MULTICONDUCTOR (R)	MULTICONDUCTOR	REPLACE WAVETRONIX HOMERUN CABLE
				1-2C(SH)	LOOP LEAD IN CABLE
	Ex.3"	*EXISTING*	*EMPTY*	EMPTY	FUTURE
42	*Ex.2"*	*EXISTING*	*MULTICONDUCTOR (R)*	MULTICONDUCTOR	REPLACE WAVETRONIX HOMERUN CABLE
				1-2C(SH)	LOOP LEAD IN CABLE
	Ex.3"	*EXISTING*	*EMPTY*	EMPTY	FUTURE
46	*Ex. 2"*	*EXISTING*	*1-144 SMFO (R)*		REMOVE EXISTING MAINLINE CABLE
49	*Ex. 2"*	*EXISTING*	*MULTICONDUCTOR (R)*		REMOVE EXISTING WAVETRONIX SENSOR CABLE
54	*Ex. 2.5"*	*EXISTING*	*1-24 SMFO (R)*		REMOVE EXISTING LATERAL CABLE

CONSTRUCTION NOTES

NO.	DESCRIPTION
1	SEE SHEET TSD02-04 FOR PULL BOX, CABLE VAULT/SMALL CABLE VAULT PLACEMENT DETAILS AND LOCATIONS.
2	INSTALL SMALL CABLE VAULT NEXT TO EXISTING PULL BOX.
3	INSTALL CONDUIT UNDER ROADWAY USING APPROVED DIRECTIONAL BORING METHOD.
6	REMOVE EXISTING CONDUCTORS AND/OR COMMUNICATION CABLES, CONDUIT UPSWEEPS, AND PULLBOX, CABLE VAULT OR SMALL CABLE VAULT. BACKFILL VOID.
9	REMOVE EXISTING CONDUCTORS, CUT OFF UPSWEEPS AND ABANDON UNDERGROUND CONDUIT.
10	REMOVE EXISTING COMMUNICATION CABLES, CUT OFF UPSWEEPS AND ABANDON UNDERGROUND CONDUIT.
17	LOOP CABLE SHALL BE INSTALLED WITH FIVE (5) TURNS.
18	LOOP CABLE SHALL BE INSTALLED WITH SIX (6) TURNS.
19	INSTALL A CABINET WITH A 5 KVA 480/240/120 VAC TRANSFORMER IN ACCORDANCE WITH STANDARD PLAN J-10.10 AND J-10.25 AND PER TRANSFORMER BREAKER DETAILS ON SHEETS TSD29-TSD31.
24	INSTALL A CONTROLLER CABINET ON TOP OF AN 8" ALUMINUM CABINET RISER. INSTALL ASSOCIATED CABINET EQUIPMENT PER EQUIPMENT SCHEDULE ON DETAIL SHEET TSD07.
29	REMOVE EXISTING ITS AND/OR TRANSFORMER CABINET(S). FOUNDATION TO REMAIN. RETURN CABINET AND INTERNAL COMPONENTS TO THE OLYMPIC REGION SIGNAL SHOP.
30	INSTALL CABLES IN EXISTING CONDUIT(S).
32	TERMINATE CONDUIT IN EXISTING JUNCTION BOX, PULL BOX, CABLE VAULT OR SMALL CABLE VAULT. SEE WIRE NOTES.
45	FUSION SPLICE 12 CT DISTRIBUTION FIBER OPTIC CABLE TO 24 CT PRE-TERMINATED FIBER OPTIC CABLE PER DETAILS ON SHEETS TSFO01-TSFO10.
61	REMOVE EXISTING WAVETRONIX DETECTORS, POLE, FOUNDATION AND ASSOCIATED EQUIPMENT. DELIVER REMOVED WAVETRONIX MOUNTING HARDWARE, DETECTORS, DETECTOR CABLES TO OLYMPIC REGION SIGNAL SHOP. SAVE POLE FOR POTENTIAL RE-USE ON THIS PROJECT. THE CONTRACTOR SHALL PROVIDE AN INSPECTION REPORT DOCUMENTING THE CONDITION OF THE POLE TO WSDOT AND OBTAIN WSDOT APPROVAL TO USE THE POLE BEFORE INSTALLING THIS POLE IN A NEW LOCATION.
64	INSTALL STEEL LIGHT STANDARD POLE, FOUNDATION, WAVETRONIX SENSOR AND ASSOCIATED EQUIPMENT PER DETAILS ON SHEET TSD27.
75	INSTALL TYPE WR INDUCTION LOOP VEHICLE DETECTORS IN CENTER OF THE LANE IN ACCORDANCE WITH STANDARD PLAN J-50.12, AND PER DETAILS ON SHEET TSD25.
80	EXISTING FLASHING BEACON SIGN AND ASSOCIATED CABLING TO REMAIN.
81	EXISTING RAMP METER SIGNAL(S) AND/OR LOOPS AND ASSOCIATED CABLING TO REMAIN.
88	SEE ILLUMINATION PLANS FOR POWER SOURCE INFORMATION.
92	REPLACE EXISTING JUNCTION BOX.
93	REMOVE LOOP TERMINATIONS AND CABLING FOR EXISTING RAMP METER FLASHING BEACON SIGNS. PULL EXISTING CABLES THROUGH THE EXISTING CONDUIT TO THE CLOSEST PULLBOX, CABLE VAULT OR SMALL CABLE VAULT. REINSTALL AND TERMINATE CABLES IN NEW CABINET.

2

AS-BUILT

ATKINSON
MAY 27 2020 KTW
RELEASED FOR CONSTRUCTION

FILE NAME	c:\pwworking\jacobs_b&i\agronmi\dms20633\PS_TS_06A.dgn					
TIME	8:47:33 AM				REGION NO. 10	STATE WASH	FED.AID PROJ.NO.
DATE	5/21/2020					
PLOTTED BY	agronmi					
DESIGNED BY	I. AGRON/ D. HORGAN	REV 2 - RFC, RFI0473, REV CN64	05/21/20		JOB NUMBER	
ENTERED BY	I. AGRON/ D. HORGAN	REV 1 - RFC, RFI0271	10/22/19			
CHECKED BY	M. WEGENER	REV 0 - RELEASED FOR CONSTRUCTION	03/29/19		CONTRACT NO. C9133	LOCATION NO.
PROJ. ENGR.	C. MEADE	REV A - FINAL REVIEW	02/12/19			
REGIONAL ADM.	J. WYNANDS	REVISION	DATE	BY		

MARK F. WEGENER · STATE OF WASHINGTON · 41141 · REGISTERED PROFESSIONAL ENGINEER
5/26/20
DATE
P.E. STAMP BOX

DATE
P.E. STAMP BOX

Washington State Department of Transportation

ATKINSON / JACOBS CONSTRUCTION

I-5
STEILACOOM-DUPONT RD TO THORNE LN
CORRIDOR IMPROVEMENTS
MP 120.01 TO MP 124.45

MAINLINE ITS PLAN

PLAN REF NO TS06A

SHEET 975 OF 1456 SHEETS

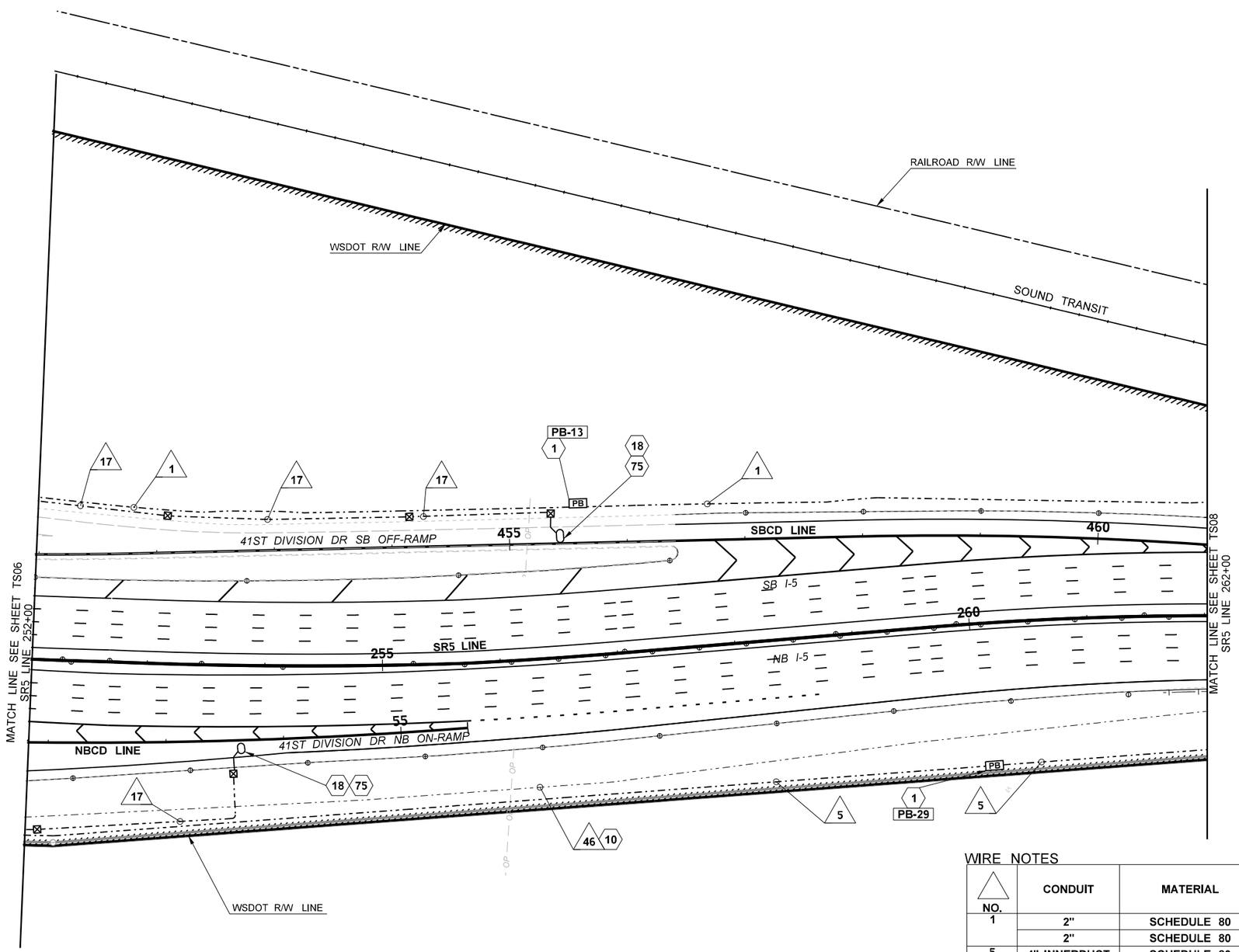

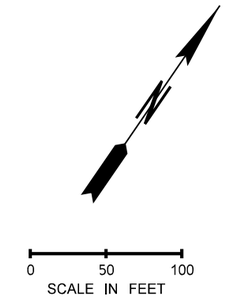

UPDATED ROADWAY LANES AND STRIPING. NO CHANGE TO ITS. 3

AS-BUILT

ATKINSON

DEC 13 2019 KTW

RELEASED FOR CONSTRUCTION

CONSTRUCTION NOTES

NO.	DESCRIPTION
1	SEE SHEET TSD02-04 FOR PULL BOX, CABLE VAULT/SMALL CABLE VAULT PLACEMENT DETAILS AND LOCATIONS.
10	REMOVE EXISTING COMMUNICATION CABLES, CUT OFF UPSWEEPS AND ABANDON UNDERGROUND CONDUIT.
18	LOOP CABLE SHALL BE INSTALLED WITH SIX (6) TURNS.
75	INSTALL TYPE WR INDUCTION LOOP VEHICLE DETECTORS IN CENTER OF THE LANE IN ACCORDANCE WITH STANDARD PLAN J-50.12, AND PER DETAILS ON SHEET TSD25.

WIRE NOTES

NO.	CONDUIT	MATERIAL	EXISTING CABLE	NEW CABLE	REMARK
1	2"	SCHEDULE 80		1-144 SMFO	MAINLINE CABLE
	2"	SCHEDULE 80		1-12 SMFO	DISTRIBUTION CABLE
5	4" INNERDUCT	SCHEDULE 80		1-144 SMFO	MAINLINE CABLE
	4" INNERDUCT	SCHEDULE 80		1-12 SMFO	DISTRIBUTION CABLE
17	2"	SCHEDULE 80		1-2C(SH)	LOOP LEAD IN CABLE
46	*Ex. 2"*	*EXISTING*	*1-144 SMFO (R)*		REMOVE EXISTING MAINLINE CABLE

FILE NAME	c:\pwworking\jacobs_b&i\wegenemf\dms20633\PS_TS_07.dgn					
TIME	9:11:57 AM	REV 3 - RFC, RFI0306	11/14/19		REGION NO. 10	STATE WASH	FED.AID PROJ.NO.
DATE	12/2/2019	REV 2 - RFC, RFI0164	08/20/19			
PLOTTED BY	WEGENEMF	REV 1 - RFC, RFI0065	03/29/19			
DESIGNED BY	I. AGRON/ D. HORGAN	REV C - FINAL REVIEW	02/12/19		JOB NUMBER	
ENTERED BY	I. AGRON/ D. HORGAN	REV 0 - RELEASED FOR CONSTRUCTION	12/24/18			
CHECKED BY	M. WEGENER	REV B - FINAL REVIEW	11/20/18		CONTRACT NO. C9133	LOCATION NO.
PROJ. ENGR.	C. MEADE	REV A - PRELIMINARY REVIEW	10/15/18			
REGIONAL ADM.	J. WYNANDS	REVISION	DATE	BY		

MARK F. WEGENER STATE OF WASHINGTON 41141 REGISTERED PROFESSIONAL ENGINEER

12/12/19

DATE

P.E. STAMP BOX

DATE

P.E. STAMP BOX

Washington State Department of Transportation

ATKINSON CONSTRUCTION / JACOBS

I-5
STEILACOOM-DUPONT RD TO THORNE LN
CORRIDOR IMPROVEMENTS
MP 120.01 TO MP 124.45

MAINLINE ITS PLAN

PLAN REF NO TS07

SHEET 976 OF 1456 SHEETS

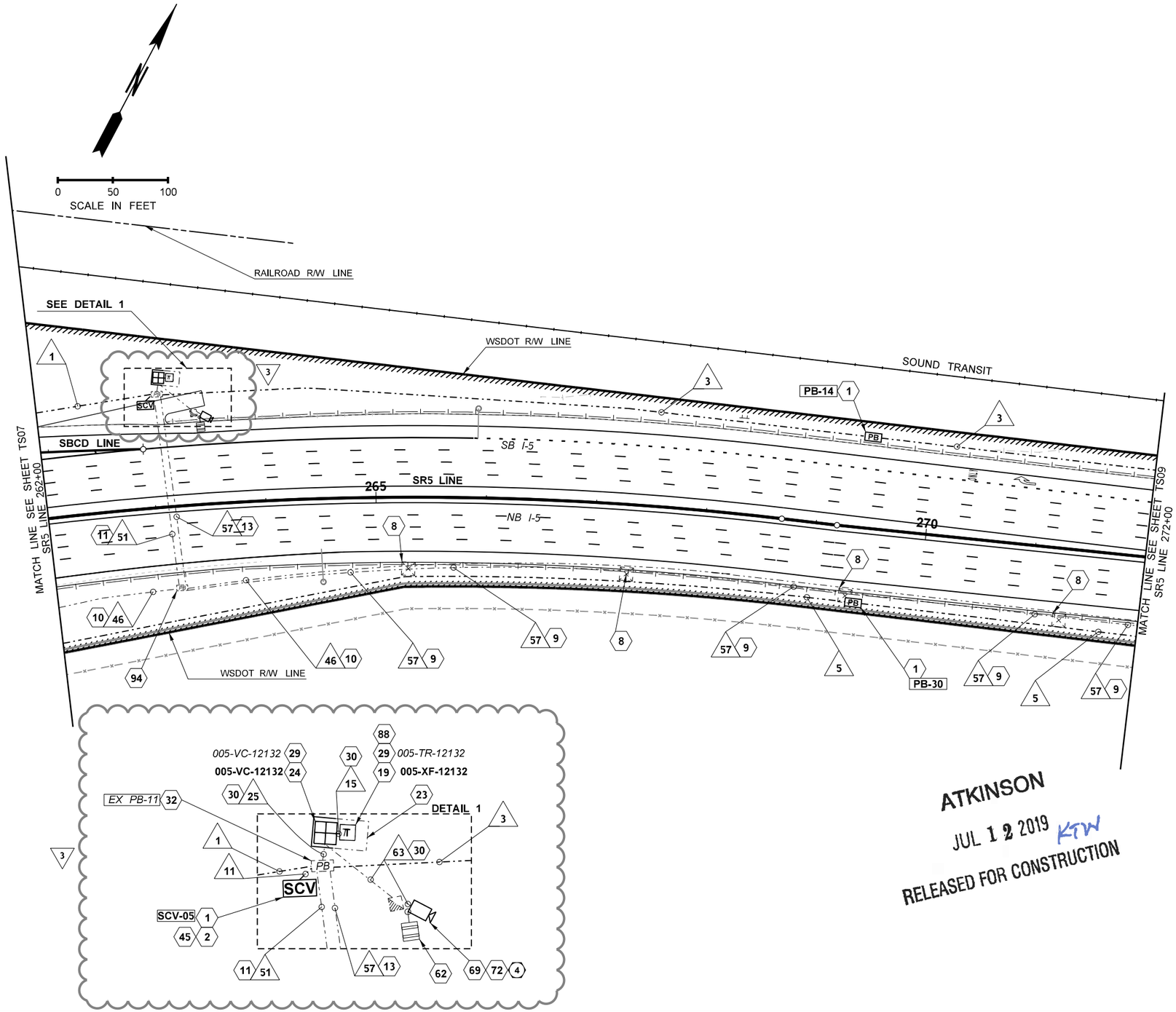

FOR CONSTRUCTION AND WIRE NOTES SEE SHEET TS08A

AS-BUILT

ATKINSON
JUL 12 2019 KTW
RELEASED FOR CONSTRUCTION

FILE NAME	c:\pwworking\jacobs_b&l\agronmi\dms20633\PS_TS_08.dgn					
TIME	2:17:25 PM	REV 3 - RFC, RFI0150, REV CAB LAYOUT	07/10/19		REGION NO. 10	STATE WASH	FED.AID PROJ.NO.
DATE	7/11/2019	REV 2 - RFC, RFI0065	03/29/19			
PLOTTED BY	agronmi	REV C - FINAL REVIEW	02/12/19		JOB NUMBER	
DESIGNED BY	I. AGRON/ D. HORGAN	REV 1 - RFC, RFI0032	01/23/19			
ENTERED BY	I. AGRON/ D. HORGAN	REV 0 - RELEASED FOR CONSTRUCTION	12/24/18		CONTRACT NO. C9133	LOCATION NO.
CHECKED BY	M. WEGENER	REV B - FINAL REVIEW	11/20/18			
PROJ. ENGR.	C. MEADE	REV A - PRELIMINARY REVIEW	10/15/18			
REGIONAL ADM.	J. WYNANDS	REVISION	DATE	BY		

MARK E. WEGENER — STATE OF WASHINGTON — 41141 — REGISTERED PROFESSIONAL ENGINEER
7/12/19
DATE
P.E. STAMP BOX

DATE
P.E. STAMP BOX

Washington State Department of Transportation

ATKINSON CONSTRUCTION / JACOBS

I-5
STEILACOOM-DUPONT RD TO THORNE LN
CORRIDOR IMPROVEMENTS
MP 120.01 TO MP 124.45

MAINLINE ITS PLAN

PLAN REF NO TS08

SHEET 977 OF 1456 SHEETS

WIRE NOTES

NO.	CONDUIT	MATERIAL	EXISTING CABLE	NEW CABLE	REMARK
1	2"	SCHEDULE 80		1-144 SMFO	MAINLINE CABLE
	2"	SCHEDULE 80		1-12 SMFO	DISTRIBUTION CABLE
3	2"	SCHEDULE 80		1-144 SMFO	MAINLINE CABLE
	2"	SCHEDULE 80		1-12 SMFO	DISTRIBUTION CABLE
	2"	SCHEDULE 80		EMPTY	FUTURE
5	4" INNERDUCT	SCHEDULE 80		1-144 SMFO	MAINLINE CABLE
	4" INNERDUCT	SCHEDULE 80		1-12 SMFO	DISTRIBUTION CABLE
11	2"	SCHEDULE 80		1-24 SMFO	PRE-TERMINATED CABLE
				2-12 SMFO	DISTRIBUTION CABLE
15	*Ex. 2"*	*EXISTING*	*2-#8AWG (R)*	2-#8AWG	REPLACE TRANSFORMER CONDUCTOR
25	*Ex. 2"*	*EXISTING*	*1-24 SMFO(R)*	1-24 SMFO	REPLACE PRE-TERMINATED CABLE
	Ex. 2"	*EXISTING*	*EMPTY*	EMPTY	FUTURE
46	*Ex. 2"*	*EXISTING*	*1-144 SMFO (R)*		REMOVE EXISTING MAINLINE CABLE
51	*Ex. 2"*	*EXISTING*	*1-24 SMFO (R)*		REMOVE EXISTING LATERAL CABLE
	Ex. 2"	*EXISTING*	*EMPTY*		FUTURE
57	*Ex. 2"*	*EXISTING*	*2-#4AWG (R)*		REMOVE EXISTING WAVETRONIX ELECTRICAL
			1-#6AWG (R)		REMOVE EXISTING WAVETRONIX ELECTRICAL
63	*Ex. 2"*	*EXISTING*	*CONTROL CABLE (R)*	MULTICONDUCTOR	REPLACE VIDEO CAMERA CONTROL CABLE
			MULTICONDUCTOR (R)		REMOVE EXISTING WAVETRONIX SENSOR CABLE
	Ex. 2"	*EXISTING*	*EMPTY*	EMPTY	FUTURE

CONSTRUCTION NOTES

NO.	DESCRIPTION
1	SEE SHEET TSD02-04 FOR PULL BOX, CABLE VAULT/SMALL CABLE VAULT PLACEMENT DETAILS AND LOCATIONS.
2	INSTALL SMALL CABLE VAULT NEXT TO EXISTING PULL BOX.
8	REMOVE EXISTING CONDUCTORS AND/OR COMMUNICATION CABLES, CONDUIT UPSWEEPS, AND JUNCTION BOX. BACKFILL VOID.
9	REMOVE EXISTING CONDUCTORS, CUT OFF UPSWEEPS AND ABANDON UNDERGROUND CONDUIT.
10	REMOVE EXISTING COMMUNICATION CABLES, CUT OFF UPSWEEPS AND ABANDON UNDERGROUND CONDUIT.
11	REMOVE EXISTING COMMUNICATION CABLES, CONDUIT TO REMAIN IN PLACE FOR FUTURE USE.
13	REMOVE EXISTING CONDUCTORS, CONDUIT TO REMAIN IN PLACE FOR FUTURE USE.
19	INSTALL A CABINET WITH A 5 KVA 480/240/120 VAC TRANSFORMER IN ACCORDANCE WITH STANDARD PLAN J-10.10 AND J-10.25 AND PER TRANSFORMER BREAKER DETAILS ON SHEETS TSD29-TSD31.
23	MODIFY EXISTING FOUNDATION UTILIZING THE EXISTING TWO CABINET FOUNDATION PER DETAILS ON SHEET TSD34.
24	INSTALL A CONTROLLER CABINET ON TOP OF AN 8" ALUMINUM CABINET RISER. INSTALL ASSOCIATED CABINET EQUIPMENT PER EQUIPMENT SCHEDULE ON DETAIL SHEET TSD07. 1
29	REMOVE EXISTING ITS AND/OR TRANSFORMER CABINET(S). FOUNDATION TO REMAIN. RETURN CABINET AND INTERNAL COMPONENTS TO THE OLYMPIC REGION SIGNAL SHOP.
30	INSTALL CABLES IN EXISTING CONDUIT(S).
32	TERMINATE CONDUIT IN EXISTING JUNCTION BOX, PULL BOX, CABLE VAULT OR SMALL CABLE VAULT. SEE WIRE NOTES.
45	FUSION SPLICE 12 CT DISTRIBUTION FIBER OPTIC CABLE TO 24 CT PRE-TERMINATED FIBER OPTIC CABLE PER DETAILS ON SHEETS TSFO01-TSFO10.
62	REMOVE EXISTING WAVETRONIX DETECTORS AND ASSOCIATED EQUIPMENT FROM EXISTING POLE. DELIVER REMOVED WAVETRONIX MOUNTING HARDWARE, DETECTORS, DETECTOR CABLES TO OLYMPIC REGION SIGNAL SHOP. EXISTING POLE AND FOUNDATION TO REMAIN. PLUG HOLE IN POLE.
69	REMOVE EXISTING CCTV AND ASSOCIATED EQUIPMENT. EXISTING CAMERA POLE AND FOUNDATION TO REMAIN. DELIVER REMOVED CAMERA, CAMERA MOUNTING HARDWARE AND CAMERA CABLES TO OLYMPIC REGION SIGNAL SHOP. ALL CAMERA CABLES AND CONNECTORS SHALL NOT BE DAMAGED OR CUT DURING REMOVAL.
72	INSTALL CAMERA, CABLE ON EXISTING CAMERA POLE PER DETAILS ON SHEET TSD13.
88	SEE ILLUMINATION PLANS FOR POWER SOURCE INFORMATION.
94	PRESERVE EXISTING PULL BOXES FOR FUTURE USE.

ATKINSON
OCT 29 2019
RSA
RELEASED FOR CONSTRUCTION

AS-BUILT

FILE NAME	c:\pwworking\jacobs_b&i\agronmi\dms20633\PS_TS_08A.dgn					
TIME	10:55:16 AM				REGION NO. 10	STATE WASH
DATE	10/28/2019					FED.AID PROJ.NO.
PLOTTED BY	agronmi				JOB NUMBER	
DESIGNED BY	I. AGRON/ D. HORGAN					
ENTERED BY	I. AGRON/ D. HORGAN					
CHECKED BY	M. WEGENER	REV 1 - RFC, RFI0271	10/22/19		CONTRACT NO. C9133	LOCATION NO.
PROJ. ENGR.	C. MEADE	REV 0 - RELEASED FOR CONSTRUCTION	03/29/19			
REGIONAL ADM.	J. WYNANDS	REVISION	DATE	BY		

MARK F. WEGENER — STATE OF WASHINGTON — 47141 — REGISTERED PROFESSIONAL ENGINEER
10/28/19
DATE
P.E. STAMP BOX

DATE
P.E. STAMP BOX

Washington State Department of Transportation

ATKINSON CONSTRUCTION / JACOBS

I-5
STEILACOOM-DUPONT RD TO THORNE LN
CORRIDOR IMPROVEMENTS
MP 120.01 TO MP 124.45

MAINLINE ITS PLAN

PLAN REF NO TS08A

SHEET 978 OF 1456 SHEETS

WIRE NOTES

NO.	CONDUIT	MATERIAL	EXISTING CABLE	NEW CABLE	REMARK
3	2"	SCHEDULE 80		1-144 SMFO	MAINLINE CABLE
	2"	SCHEDULE 80		1-12 SMFO	DISTRIBUTION CABLE
	2"	SCHEDULE 80		EMPTY	FUTURE
5	4" INNERDUCT	SCHEDULE 80		1-144 SMFO	MAINLINE CABLE
	4" INNERDUCT	SCHEDULE 80		1-12 SMFO	DISTRIBUTION CABLE
8	2"	SCHEDULE 80		2-#8AWG	TRANSFORMER CONDUCTOR
16	2"	SCHEDULE 80		1-24 SMFO	PRE-TERMINATED CABLE
18	2"	SCHEDULE 80		MULTICONDUCTOR	WAVETRONIX HOMERUN CABLE
20	2"	SCHEDULE 80		EMPTY	FUTURE
	2"	SCHEDULE 80		EMPTY	FUTURE
46	*Ex. 2"*	*EXISTING*	*1-144 SMFO (R)*		REMOVE EXISTING MAINLINE CABLE
47	*Ex. 2"*	*EXISTING*	*1-24 SMFO (R)*		REMOVE EXISTING LATERAL CABLE
48	*Ex. 2"*	*EXISTING*	*1-6 SMFO (R)*		REMOVE EXISTING PRE-TERMINATED CABLE
49	*Ex. 2"*	*EXISTING*	*MULTICONDUCTOR (R)*		REMOVE EXISTING WAVETRONIX SENSOR CABLE
50	*Ex. 1.5"*	*EXISTING*	*3-#12 AWG (R)*		REMOVE EXISTING SOLAR POWER CABLES
57	*Ex. 2"*	*EXISTING*	*2-#4AWG (R)*		REMOVE EXISTING WAVETRONIX ELECTRICAL CABLES
			1-#6AWG (R)		REMOVE EXISTING WAVETRONIX ELECTRICAL CABLES
61	2"	SCHEDULE 80		MULTICONDUCTOR	WAVETRONIX HOMERUN CABLE
	2"	SCHEDULE 80		EMPTY	FUTURE
	2"	SCHEDULE 80		EMPTY	FUTURE

CONSTRUCTION NOTES

NO.	DESCRIPTION
1	SEE SHEET TSD02-04 FOR PULL BOX, CABLE VAULT/SMALL CABLE VAULT PLACEMENT DETAILS AND LOCATIONS.
3	INSTALL CONDUIT UNDER ROADWAY USING APPROVED DIRECTIONAL BORING METHOD.
6	REMOVE EXISTING CONDUCTORS AND/OR COMMUNICATION CABLES, CONDUIT UPSWEEPS, AND PULLBOX, CABLE VAULT OR SMALL CABLE VAULT. BACKFILL VOID.
8	REMOVE EXISTING CONDUCTORS AND/OR COMMUNICATION CABLES, CONDUIT UPSWEEPS, AND JUNCTION BOX. BACKFILL VOID.
9	REMOVE EXISTING CONDUCTORS, CUT OFF UPSWEEPS AND ABANDON UNDERGROUND CONDUIT.
10	REMOVE EXISTING COMMUNICATION CABLES, CUT OFF UPSWEEPS AND ABANDON UNDERGROUND CONDUIT.
19	INSTALL A CABINET WITH A 5 KVA 480/240/120 VAC TRANSFORMER IN ACCORDANCE WITH STANDARD PLAN J-10.10 AND J-10.25 AND PER TRANSFORMER BREAKER DETAILS ON SHEETS TSD29-TSD31.
20	CONSTRUCT A TWO CABINET FOUNDATION IN ACCORDANCE WITH STANDARD PLAN J-10.10.
24	INSTALL A CONTROLLER CABINET ON TOP OF AN 8" ALUMINUM CABINET RISER. INSTALL ASSOCIATED CABINET EQUIPMENT PER EQUIPMENT SCHEDULE ON DETAIL SHEET TSD07.
28	REMOVE EXISTING ITS AND/OR TRANSFORMER CABINET(S) AND FOUNDATION. RETURN CABINET AND INTERNAL COMPONENTS TO THE OLYMPIC REGION SIGNAL SHOP.
45	FUSION SPLICE 12 CT DISTRIBUTION FIBER OPTIC CABLE TO 24 CT PRE-TERMINATED FIBER OPTIC CABLE PER DETAILS ON SHEETS TSFO01-TSFO10.
61	REMOVE EXISTING WAVETRONIX DETECTORS, POLE, FOUNDATION AND ASSOCIATED EQUIPMENT. DELIVER REMOVED WAVETRONIX MOUNTING HARDWARE, DETECTORS, DETECTOR CABLES TO OLYMPIC REGION SIGNAL SHOP. SAVE POLE FOR POTENTIAL RE-USE ON THIS PROJECT. THE CONTRACTOR SHALL PROVIDE AN INSPECTION REPORT DOCUMENTING THE CONDITION OF THE POLE TO WSDOT AND OBTAIN WSDOT APPROVAL TO USE THE POLE BEFORE INSTALLING THIS POLE IN A NEW LOCATION.
63	REMOVE EXISTING TIMBER POLE AND SOLAR PANELS. DELIVER REMOVED SOLAR PANELS TO OLYMPIC REGION SIGNAL SHOP.
64	INSTALL STEEL LIGHT STANDARD POLE, FOUNDATION, WAVETRONIX SENSOR AND ASSOCIATED EQUIPMENT PER DETAILS ON SHEET TSD27.
88	SEE ILLUMINATION PLANS FOR POWER SOURCE INFORMATION.

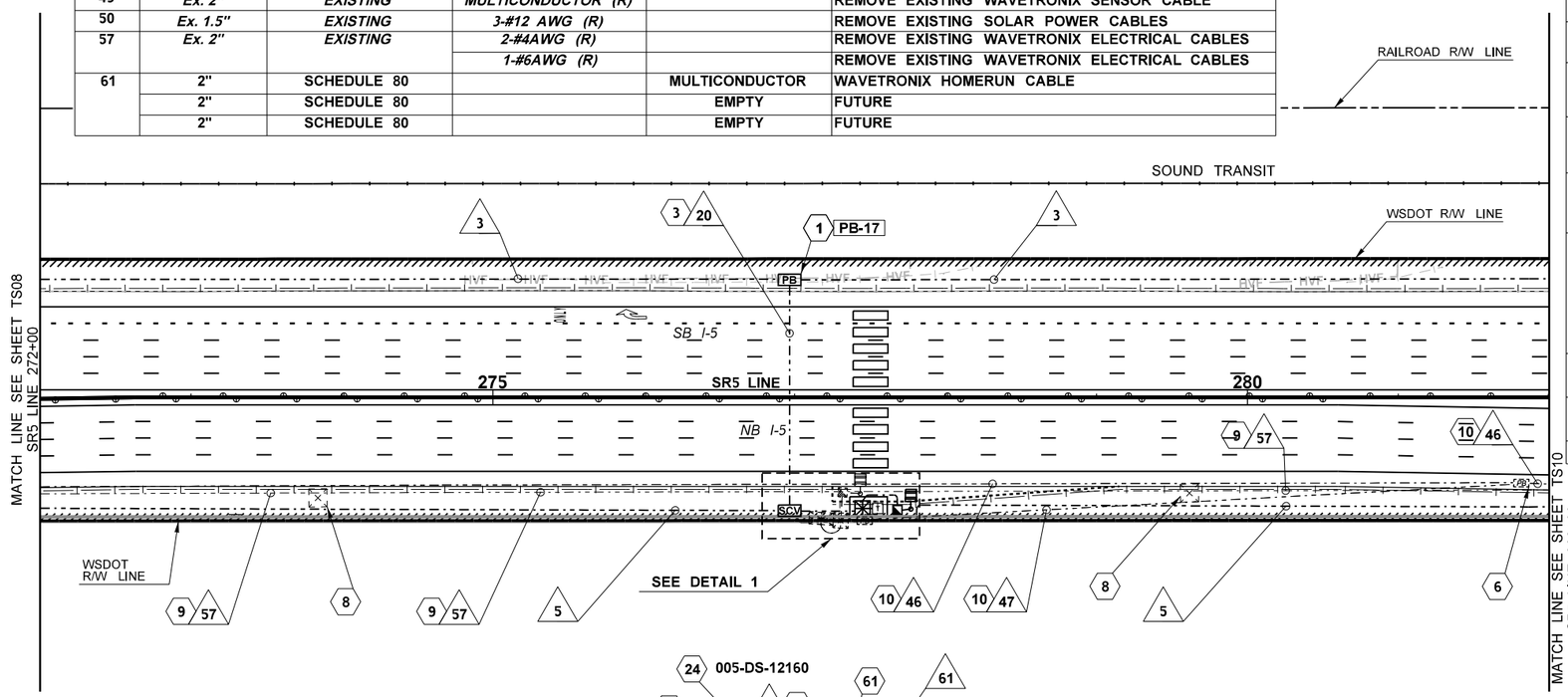

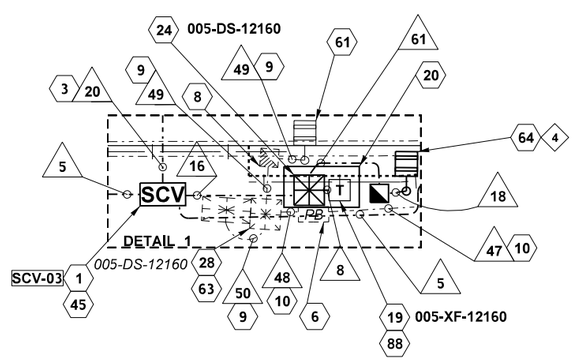

AS-BUILT

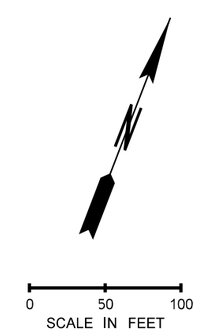

ATKINSON
MAY 27 2020 KTW
RELEASED FOR CONSTRUCTION

FILE NAME	c:\pwworking\jacobs_b&i\agronmi\dms20633\PS_TS_09.dgn					
TIME	8:54:08 AM	REV 5 - RFC, RFI0473, REV CN64	05/21/20		REGION NO. 10	STATE WASH
DATE	5/21/2020	REV 4 - RFC, RFI0346	12/20/19		JOB NUMBER	
PLOTTED BY	agronmi	REV 3 - RFC, RFI0271	10/22/19			
DESIGNED BY	I. AGRON/ D. HORGAN	REV 2 - RFC, RFI0065	03/29/19		CONTRACT NO. C9133	
ENTERED BY	I. AGRON/ D. HORGAN	REV C - FINAL REVIEW	02/12/19			
CHECKED BY	M. WEGENER	REV 1 - RFC, RFI0032	01/23/19			
PROJ. ENGR.	C. MEADE	REV 0 - RELEASED FOR CONSTRUCTION	12/24/18			
REGIONAL ADM.	J. WYNANDS	REVISION	DATE	BY		

FED.AID PROJ.NO.

LOCATION NO.

MARK F. WEGENER, STATE OF WASHINGTON, 41141, REGISTERED PROFESSIONAL ENGINEER
5/26/20
DATE
P.E. STAMP BOX

P.E. STAMP BOX DATE

Washington State Department of Transportation

ATKINSON / JACOBS CONSTRUCTION

I-5
STEILACOOM-DUPONT RD TO THORNE LN
CORRIDOR IMPROVEMENTS
MP 120.01 TO MP 124.45

MAINLINE ITS PLAN

PLAN REF NO TS09

SHEET 979 OF 1456 SHEETS

CONSTRUCTION NOTES

NO.	DESCRIPTION
1	SEE SHEET TSD02-04 FOR PULL BOX, CABLE VAULT/SMALL CABLE VAULT PLACEMENT DETAILS AND LOCATIONS.
8	REMOVE EXISTING CONDUCTORS AND/OR COMMUNICATION CABLES, CONDUIT UPSWEEPS, AND JUNCTION BOX. BACKFILL VOID.
9	REMOVE EXISTING CONDUCTORS, CUT OFF UPSWEEPS AND ABANDON UNDERGROUND CONDUIT.
10	REMOVE EXISTING COMMUNICATION CABLES, CUT OFF UPSWEEPS AND ABANDON UNDERGROUND CONDUIT.

WIRE NOTES

NO.	CONDUIT	MATERIAL	EXISTING CABLE	NEW CABLE	REMARK
3	2"	SCHEDULE 80		1-144 SMFO	MAINLINE CABLE
	2"	SCHEDULE 80		1-12 SMFO	DISTRIBUTION CABLE
	2"	SCHEDULE 80		EMPTY	FUTURE
5	4" INNERDUCT	SCHEDULE 80		1-144 SMFO	MAINLINE CABLE
	4" INNERDUCT	SCHEDULE 80		1-12 SMFO	DISTRIBUTION CABLE
46	*Ex. 2"*	*EXISTING*	*1-144 SMFO (R)*		REMOVE EXISTING MAINLINE CABLE
57	*Ex. 2"*	*EXISTING*	*2-#4AWG (R)*		REMOVE EXISTING WAVETRONIX ELECTRICAL CABLES
			1-#6AWG (R)		REMOVE EXISTING WAVETRONIX ELECTRICAL CABLES

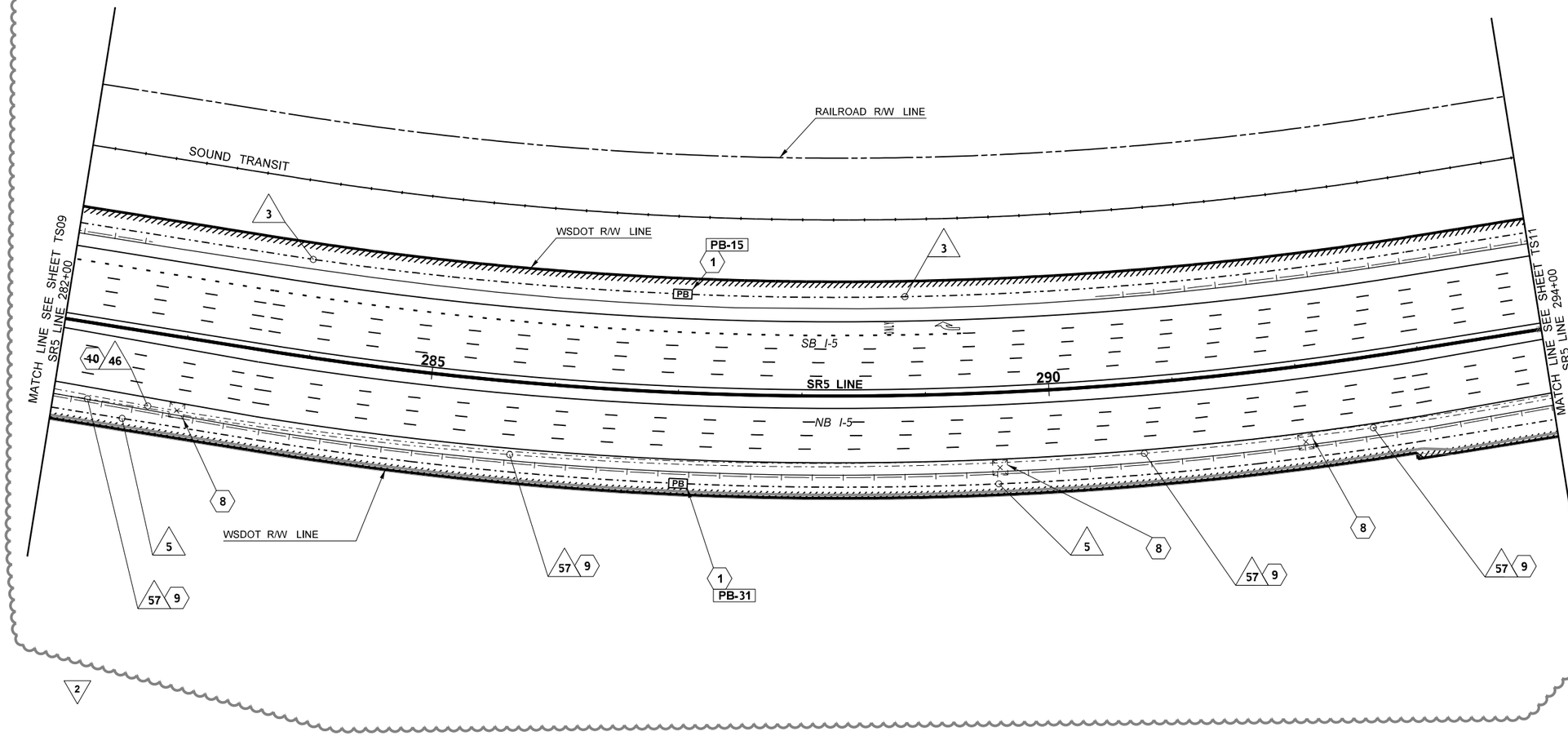

AS-BUILT

ATKINSON

JUL 12 2019 KTW

RELEASED FOR CONSTRUCTION

0 50 100
SCALE IN FEET

FILE NAME	c:\pwworking\jacobs_b&i\agronmi\dms20633\PS_TS_10.dgn					
TIME	12:59:19 PM					
DATE	7/11/2019	REV 2 - RFC, RFI0151	07/11/19			
PLOTTED BY	agronmi	REV C - FINAL REVIEW	05/10/19			
DESIGNED BY	A. HORGAN	REV 1 - RFC, RFI0032	01/23/19			
ENTERED BY	A. HORGAN	REV 0 - RELEASED FOR CONSTRUCTION	12/24/18			
CHECKED BY	M. WEGENER	REV B - FINAL REVIEW	11/20/18			
PROJ. ENGR.	C. MEADE	REV A - PRELIMINARY REVIEW	10/15/18			
REGIONAL ADM.	J. WYNANDS	REVISION	DATE	BY		

REGION NO.	STATE	FED.AID PROJ.NO.
10	WASH	
JOB NUMBER		
CONTRACT NO.		LOCATION NO.
C9133		

MARK F. WEGENER · STATE OF WASHINGTON · 41141 · REGISTERED PROFESSIONAL ENGINEER

7/12/19
DATE
P.E. STAMP BOX

DATE
P.E. STAMP BOX

Washington State Department of Transportation

ATKINSON CONSTRUCTION / JACOBS

I-5
STEILACOOM-DUPONT RD TO THORNE LN
CORRIDOR IMPROVEMENTS
MP 120.01 TO MP 124.45

MAINLINE ITS PLAN

PLAN REF NO
TS10

SHEET 980 OF 1456 SHEETS

2

FOR CONSTRUCTION AND WIRE NOTES SEE SHEET TS11A

AS-BUILT

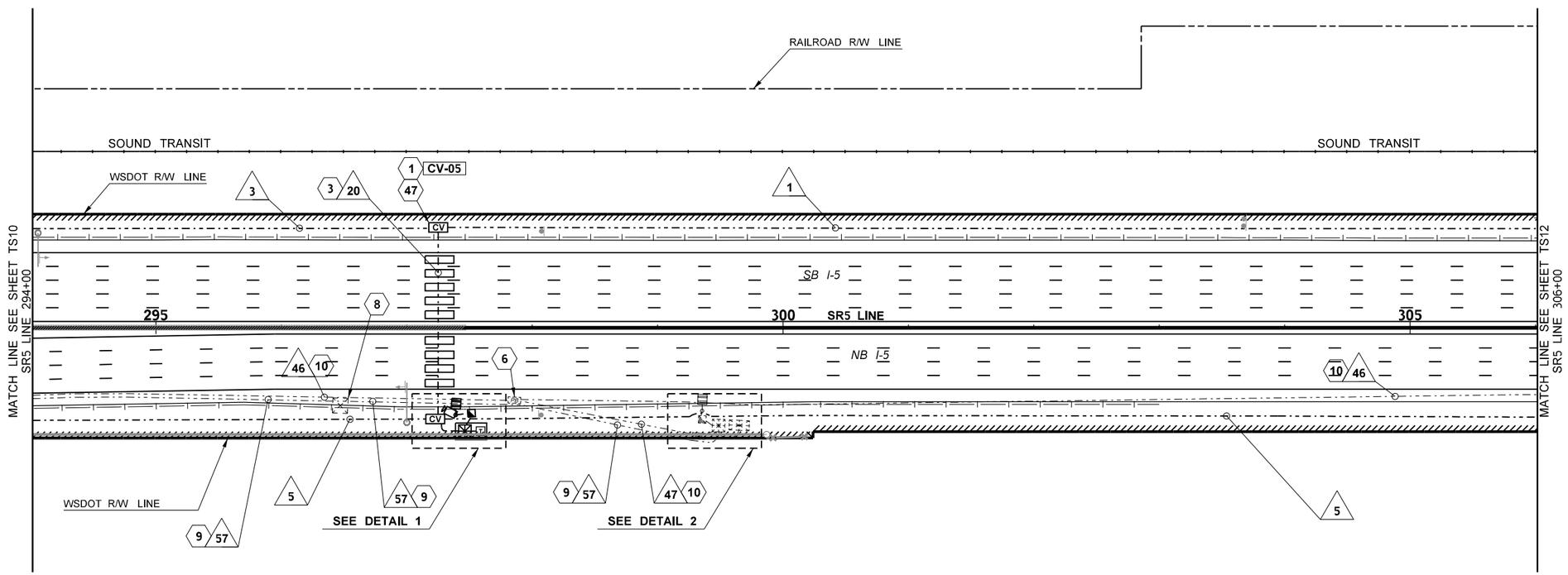

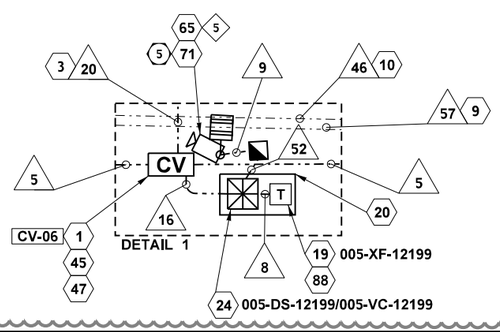

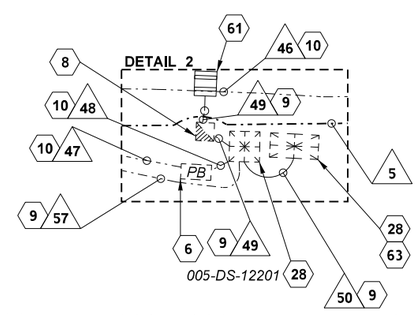

ATKINSON

JUL 12 2019 KTW

RELEASED FOR CONSTRUCTION

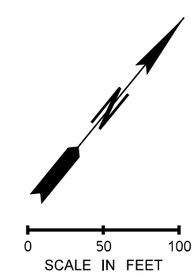

FILE NAME	c:\pwworking\jacobs_b&i\agronmi\dms20633\PS_TS_11.dgn				REGION NO.	STATE	FED.AID PROJ.NO.
TIME	1:01:08 PM				10	WASH	
DATE	7/11/2019	REV 2 - RFC, RFI0151	07/11/19		JOB NUMBER		
PLOTTED BY	agronmi	REV C - FINAL REVIEW	05/10/19				
DESIGNED BY	A. HORGAN	REV 1 - RFC, RFI0032	01/23/19				
ENTERED BY	A. HORGAN	REV 0 - RELEASED FOR CONSTRUCTION	12/24/18				
CHECKED BY	M. WEGENER	REV B - FINAL REVIEW	11/20/18		CONTRACT NO.		LOCATION NO.
PROJ. ENGR.	C. MEADE	REV A - PRELIMINARY REVIEW	10/15/18		C9133		
REGIONAL ADM.	J. WYNANDS	REVISION	DATE	BY			

MARK F. WEGENER — STATE OF WASHINGTON — 41141 — REGISTERED PROFESSIONAL ENGINEER

7/12/19

DATE

P.E. STAMP BOX

DATE

P.E. STAMP BOX

Washington State Department of Transportation

ATKINSON CONSTRUCTION / JACOBS

I-5
STEILACOOM-DUPONT RD TO THORNE LN
CORRIDOR IMPROVEMENTS
MP 120.01 TO MP 124.45

MAINLINE ITS PLAN

PLAN REF NO TS11

SHEET 981 OF 1456 SHEETS

CONSTRUCTION NOTES

NO.	DESCRIPTION
1	SEE SHEET TSD02-04 FOR PULL BOX, CABLE VAULT/SMALL CABLE VAULT PLACEMENT DETAILS AND LOCATIONS.
3	INSTALL CONDUIT UNDER ROADWAY USING APPROVED DIRECTIONAL BORING METHOD.
6	REMOVE EXISTING CONDUCTORS AND/OR COMMUNICATION CABLES, CONDUIT UPSWEEPS, AND PULLBOX, CABLE VAULT OR SMALL CABLE VAULT. BACKFILL VOID.
8	REMOVE EXISTING CONDUCTORS AND/OR COMMUNICATION CABLES, CONDUIT UPSWEEPS, AND JUNCTION BOX. BACKFILL VOID.
9	REMOVE EXISTING CONDUCTORS, CUT OFF UPSWEEPS AND ABANDON UNDERGROUND CONDUIT.
10	REMOVE EXISTING COMMUNICATION CABLES, CUT OFF UPSWEEPS AND ABANDON UNDERGROUND CONDUIT.
19	INSTALL A CABINET WITH A 5 KVA 480/240/120 VAC TRANSFORMER IN ACCORDANCE WITH STANDARD PLAN J-10.10 AND J-10.25 AND PER TRANSFORMER BREAKER DETAILS ON SHEETS TSD29-TSD31.
20	CONSTRUCT A TWO CABINET FOUNDATION IN ACCORDANCE WITH STANDARD PLAN J-10.10.
24	INSTALL A CONTROLLER CABINET ON TOP OF AN 8" ALUMINUM CABINET RISER. INSTALL ASSOCIATED CABINET EQUIPMENT PER EQUIPMENT SCHEDULE ON DETAIL SHEET TSD07.
28	REMOVE EXISTING ITS AND/OR TRANSFORMER CABINET(S) AND FOUNDATION. RETURN CABINET AND INTERNAL COMPONENTS TO THE OLYMPIC REGION SIGNAL SHOP.
45	FUSION SPLICE 12 CT DISTRIBUTION FIBER OPTIC CABLE TO 24 CT PRE-TERMINATED FIBER OPTIC CABLE PER DETAILS ON SHEETS TSFO01-TSFO10.
47	FUSION SPLICE 144 CT MAINLINE FIBER OPTIC CABLE TO 144 CT MAINLINE FIBER OPTIC CABLE. BUTT SPLICE STRANDS 1-144 TO STRANDS 1-144 AND PER DETAILS ON SHEETS TSFO01-TSFO10.
61	REMOVE EXISTING WAVETRONIX DETECTORS, POLE, FOUNDATION AND ASSOCIATED EQUIPMENT. DELIVER REMOVED WAVETRONIX MOUNTING HARDWARE, DETECTORS, DETECTOR CABLES TO OLYMPIC REGION SIGNAL SHOP. SAVE POLE FOR POTENTIAL RE-USE ON THIS PROJECT. THE CONTRACTOR SHALL PROVIDE AN INSPECTION REPORT DOCUMENTING THE CONDITION OF THE POLE TO WSDOT AND OBTAIN WSDOT APPROVAL TO USE THE POLE BEFORE INSTALLING THIS POLE IN A NEW LOCATION.
63	REMOVE EXISTING TIMBER POLE AND SOLAR PANELS. DELIVER REMOVED SOLAR PANELS TO OLYMPIC REGION SIGNAL SHOP.
65	INSTALL WAVETRONIX SENSOR ON CAMERA POLE, AND ASSOCIATED EQUIPMENT PER DETAILS ON SHEET TSD27.
71	INSTALL CAMERA, CABLE, 50 FT CAMERA POLE AND FOUNDATION IN ACCORDANCE WITH STANDARD PLANS J-29.10, AND J-29.15, AND PER DETAILS ON SHEET TSD13.
88	SEE ILLUMINATION PLANS FOR POWER SOURCE INFORMATION.

WIRE NOTES

NO.	CONDUIT	MATERIAL	EXISTING CABLE	NEW CABLE	REMARK
1	2"	SCHEDULE 80		1-144 SMFO	MAINLINE CABLE
	2"	SCHEDULE 80		1-12 SMFO	DISTRIBUTION CABLE
3	2"	SCHEDULE 80		1-144 SMFO	MAINLINE CABLE
	2"	SCHEDULE 80		1-12 SMFO	DISTRIBUTION CABLE
	2"	SCHEDULE 80		EMPTY	FUTURE
5	4" INNERDUCT	SCHEDULE 80		1-144 SMFO	MAINLINE CABLE
	4" INNERDUCT	SCHEDULE 80		1-12 SMFO	DISTRIBUTION CABLE
8	2"	SCHEDULE 80		2-#8AWG	TRANSFORMER CONDUCTOR
9	2"	SCHEDULE 80		MULTICONDUCTOR	VIDEO CAMERA CONTROL CABLE
				MULTICONDUCTOR	WAVETRONIX SENSOR CABLE
16	2"	SCHEDULE 80		1-24 SMFO	PRE-TERMINATED CABLE
20	2"	SCHEDULE 80		EMPTY	FUTURE
	2"	SCHEDULE 80		EMPTY	FUTURE
46	*Ex. 2"*	*EXISTING*	*1-144 SMFO (R)*		REMOVE EXISTING MAINLINE CABLE
47	*Ex. 2"*	*EXISTING*	*1-24 SMFO (R)*		REMOVE EXISTING LATERAL CABLE
48	*Ex. 2"*	*EXISTING*	*1-6 SMFO (R)*		REMOVE EXISTING PRE-TERMINATED CABLE
49	*Ex. 2"*	*EXISTING*	*MULTICONDUCTOR (R)*		REMOVE EXISTING WAVETRONIX SENSOR CABLE
50	*Ex. 1.5"*	*EXISTING*	*3-#12 AWG (R)*		REMOVE EXISTING SOLAR POWER CABLES
52	2"	SCHEDULE 80		MULTICONDUCTOR	VIDEO CAMERA CONTROL CABLE
				MULTICONDUCTOR	WAVETRONIX SENSOR CABLE
	2"	SCHEDULE 80		EMPTY	FUTURE
	2"	SCHEDULE 80		EMPTY	FUTURE
57	*Ex. 2"*	*EXISTING*	*2-#4AWG (R)*		REMOVE EXISTING WAVETRONIX ELECTRICAL CABLES
			1-#6AWG (R)		REMOVE EXISTING WAVETRONIX ELECTRICAL CABLES

AS-BUILT

ATKINSON
OCT 29 2019
RELEASED FOR CONSTRUCTION

FILE NAME	c:\pwworking\jacobs_b&i\agronmi\dms20633\PS_TS_11A.dgn				
TIME	12:39:39 PM				
DATE	10/28/2019				
PLOTTED BY	agronmi				
DESIGNED BY	A. HORGAN				
ENTERED BY	A. HORGAN	REV 1 - RFC, RFI0271	10/22/19		
CHECKED BY	M. WEGENER	REV 0 - RELEASE FOR CONSTRUCTION	07/11/19		
PROJ. ENGR.	C. MEADE	REV A - FINAL REVIEW	05/10/19		
REGIONAL ADM.	J. WYNANDS	REVISION	DATE	BY	

REGION NO.	STATE	FED.AID PROJ.NO.
10	WASH	
JOB NUMBER		
CONTRACT NO.		LOCATION NO.
C9133		

MARK E. WEGENER, STATE OF WASHINGTON, 41141, REGISTERED PROFESSIONAL ENGINEER
10/28/19
DATE
P.E. STAMP BOX

DATE
P.E. STAMP BOX

Washington State Department of Transportation

ATKINSON CONSTRUCTION / JACOBS

I-5
STEILACOOM-DUPONT RD TO THORNE LN
CORRIDOR IMPROVEMENTS
MP 120.01 TO MP 124.45

MAINLINE ITS PLAN

PLAN REF NO
TS11A

SHEET 982 OF 1456 SHEETS

CONSTRUCTION NOTES

NO.	DESCRIPTION
1	SEE SHEET TSD02-04 FOR PULL BOX, CABLE VAULT/SMALL CABLE VAULT PLACEMENT DETAILS AND LOCATIONS.
10	REMOVE EXISTING COMMUNICATION CABLES, CUT OFF UPSWEEPS AND ABANDON UNDERGROUND CONDUIT.

WIRE NOTES

NO.	CONDUIT	MATERIAL	EXISTING CABLE	NEW CABLE	REMARK
1	2"	SCHEDULE 80		1-144 SMFO	MAINLINE CABLE
	2"	SCHEDULE 80		1-12 SMFO	DISTRIBUTION CABLE
5	4" INNERDUCT	SCHEDULE 80		1-144 SMFO	MAINLINE CABLE
	4" INNERDUCT	SCHEDULE 80		1-12 SMFO	DISTRIBUTION CABLE
46	*Ex. 2"*	*EXISTING*	*1-144 SMFO (R)*		REMOVE EXISTING MAINLINE CABLE

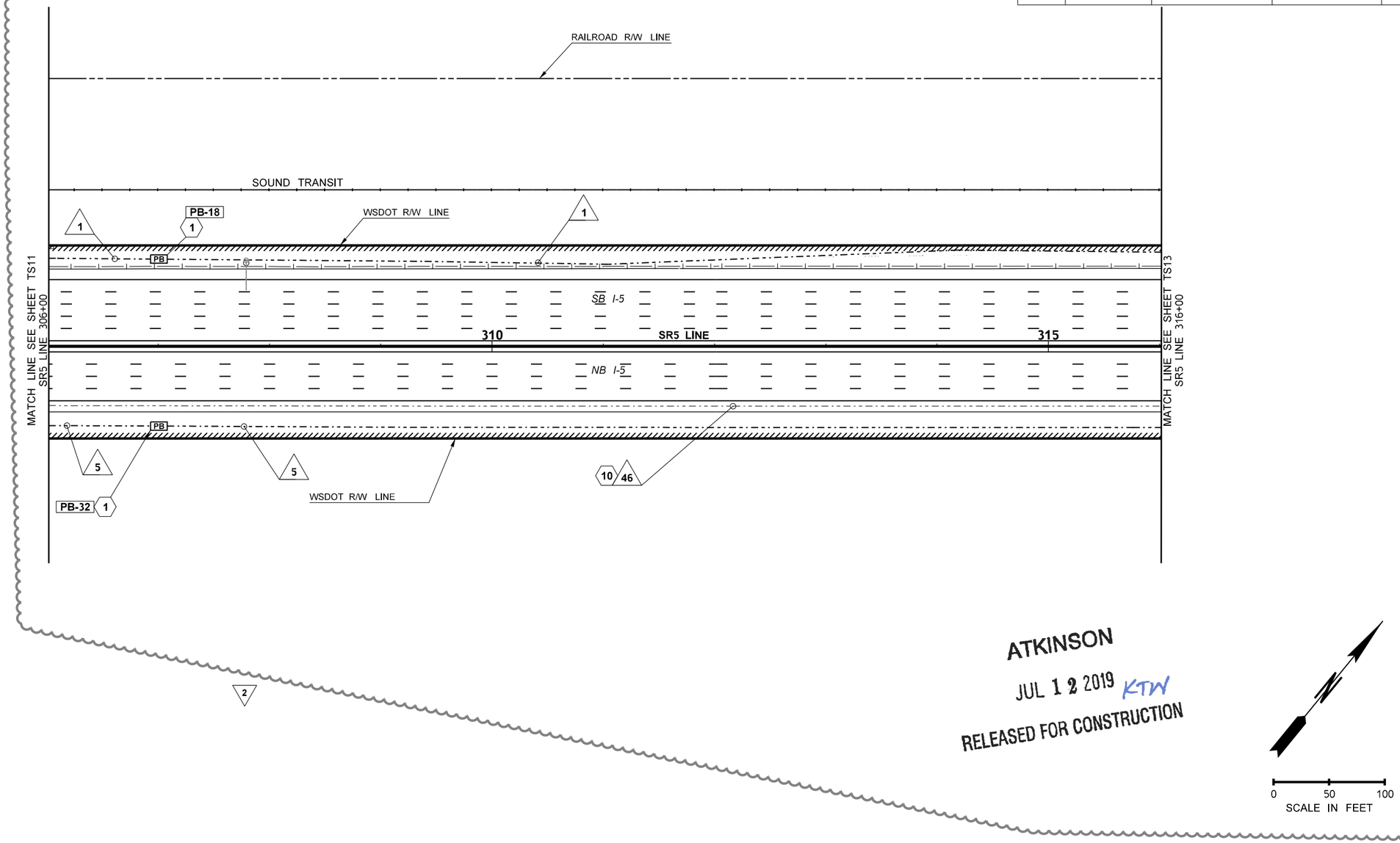

AS-BUILT

ATKINSON
JUL 12 2019 KTW
RELEASED FOR CONSTRUCTION

FILE NAME	c:\pwworking\jacobs_b&i\agronmi\dms20633\PS_TS_12.dgn					
TIME	2:25:11 PM					
DATE	7/11/2019	REV 2 - RFC, RFI0151	07/11/19			
PLOTTED BY	agronmi	REV C - FINAL REVIEW	05/10/19			
DESIGNED BY	A. HORGAN	REV 1 - RFC, RFI0032	01/23/19			
ENTERED BY	A. HORGAN	REV 0 - RELEASED FOR CONSTRUCTION	12/24/18			
CHECKED BY	M. WEGENER	REV B - FINAL REVIEW	11/20/18			
PROJ. ENGR.	C. MEADE	REV A - PRELIMINARY REVIEW	10/15/18			
REGIONAL ADM.	J. WYNANDS	REVISION	DATE	BY		

REGION NO.	STATE	FED.AID PROJ.NO.
10	WASH	
JOB NUMBER		
CONTRACT NO.		LOCATION NO.
C9133		

MARK F. WEGENER, STATE OF WASHINGTON, 41141, REGISTERED PROFESSIONAL ENGINEER
7/12/19
DATE
P.E. STAMP BOX

DATE
P.E. STAMP BOX

Washington State Department of Transportation

ATKINSON CONSTRUCTION / JACOBS

I-5
STEILACOOM-DUPONT RD TO THORNE LN
CORRIDOR IMPROVEMENTS
MP 120.01 TO MP 124.45

MAINLINE ITS PLAN

PLAN REF NO
TS12

SHEET 983 OF 1456 SHEETS

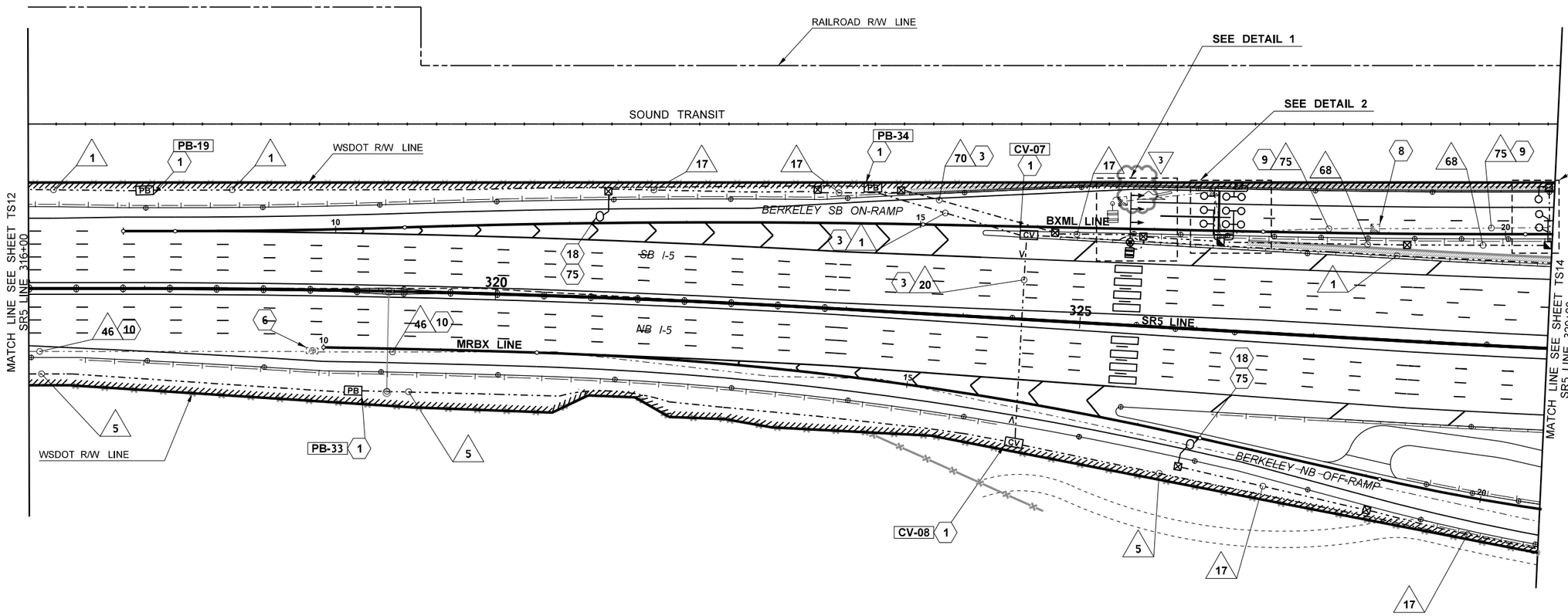

AS-BUILT

FOR CONSTRUCTION AND WIRE NOTES SEE SHEET TS13A

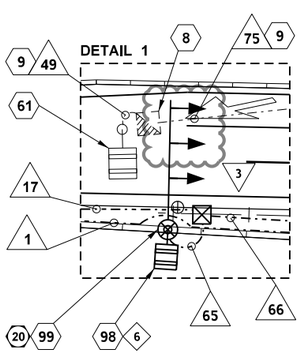

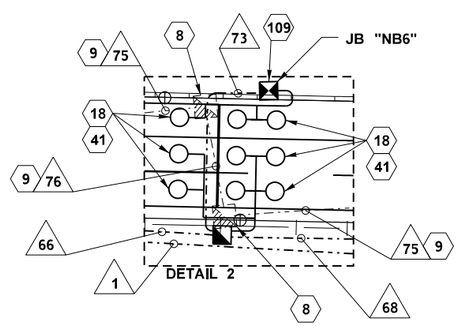

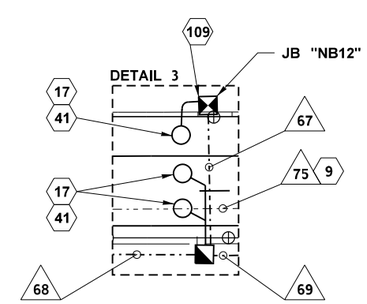

ATKINSON
AUG 19 2020
RELEASED FOR CONSTRUCTION

0 50 100
SCALE IN FEET

FILE NAME	c:\pwworking\jacobs_b&i\wegenemf\dms20633\PS_TS_13.dgn						
TIME	12:27:15 PM	REV 3 - RFI0526, ADD SIGNAL HEAD TO RM	08/12/20		REGION NO. 10	STATE WASH	FED.AID PROJ.NO.
DATE	8/12/2020	REV 2 - RFC, RFI0151	07/11/19				
PLOTTED BY	WEGENEMF	REV C - FINAL REVIEW	05/10/19		JOB NUMBER		
DESIGNED BY	A. HORGAN	REV 1 - RFC, RFI0032	01/23/19				
ENTERED BY	A. HORGAN	REV 0 - RELEASED FOR CONSTRUCTION	12/24/18				
CHECKED BY	M. WEGENER	REV B - FINAL REVIEW	11/20/18		CONTRACT NO. C9133		LOCATION NO.
PROJ. ENGR.	C. MEADE	REV A - PRELIMINARY REVIEW	10/15/18				
REGIONAL ADM.	J. WYNANDS	REVISION	DATE	BY			

MARK F. WEGENER · STATE OF WASHINGTON · 41141 · REGISTERED PROFESSIONAL ENGINEER
8/19/20
DATE
P.E. STAMP BOX

P.E. STAMP BOX
DATE

Washington State Department of Transportation

ATKINSON CONSTRUCTION / JACOBS

I-5
STEILACOOM-DUPONT RD TO THORNE LN
CORRIDOR IMPROVEMENTS
MP 120.01 TO MP 124.45

MAINLINE ITS PLAN

PLAN REF NO TS13

SHEET 984 OF 1456 SHEETS

CONSTRUCTION NOTES

NO.	DESCRIPTION
1	SEE SHEET TSD02-04 FOR PULL BOX, CABLE VAULT/SMALL CABLE VAULT PLACEMENT DETAILS AND LOCATIONS.
3	INSTALL CONDUIT UNDER ROADWAY USING APPROVED DIRECTIONAL BORING METHOD.
6	REMOVE EXISTING CONDUCTORS AND/OR COMMUNICATION CABLES, CONDUIT UPSWEEPS, AND PULLBOX, CABLE VAULT OR SMALL CABLE VAULT. BACKFILL VOID.
8	REMOVE EXISTING CONDUCTORS AND/OR COMMUNICATION CABLES, CONDUIT UPSWEEPS, AND JUNCTION BOX. BACKFILL VOID.
9	REMOVE EXISTING CONDUCTORS, CUT OFF UPSWEEPS AND ABANDON UNDERGROUND CONDUIT.
10	REMOVE EXISTING COMMUNICATION CABLES, CUT OFF UPSWEEPS AND ABANDON UNDERGROUND CONDUIT.
17	LOOP CABLE SHALL BE INSTALLED WITH FIVE (5) TURNS.
18	LOOP CABLE SHALL BE INSTALLED WITH SIX (6) TURNS.
41	INSTALL TYPE 3 INDUCTION LOOP VEHICLE DETECTORS IN CENTER OF THE LANE IN ACCORDANCE WITH STANDARD PLAN J-50.12, AND PER DETAILS ON SHEET TSD25.
61	REMOVE EXISTING WAVETRONIX DETECTORS, POLE, FOUNDATION AND ASSOCIATED EQUIPMENT. DELIVER REMOVED WAVETRONIX MOUNTING HARDWARE, DETECTORS, DETECTOR CABLES TO OLYMPIC REGION SIGNAL SHOP. SAVE POLE FOR POTENTIAL RE-USE ON THIS PROJECT. THE CONTRACTOR SHALL PROVIDE AN INSPECTION REPORT DOCUMENTING THE CONDITION OF THE POLE TO WSDOT AND OBTAIN WSDOT APPROVAL TO USE THE POLE BEFORE INSTALLING THIS POLE IN A NEW LOCATION.
75	INSTALL TYPE WR INDUCTION LOOP VEHICLE DETECTORS IN CENTER OF THE LANE IN ACCORDANCE WITH STANDARD PLAN J-50.12, AND PER DETAILS ON SHEET TSD25.
98	INSTALL WAVETRONIX SENSOR AND ASSOCIATED EQUIPMENT ON TYPE II RAMP METER SIGNAL POLE, PER DETAILS ON SHEET TSD25.
99	INSTALL TYPE II RAMP METER SIGNAL STANDARD ON CONCRETE BARRIER PER STRUCTURE DETAIL SHEET ST10 AND RAMP METER DETAIL SHEET TSD26. LOCATE SIGNS ON MAST ARM PER SHEET TSD26, AND INSTALL SIGNS ON MAST ARM PER SIGNING PLANS.
109	THIS JUNCTION BOX IS ALSO SHOWN ON THE ILLUMINATION PLANS. SEE ILLUMINATION PLANS FOR OTHER CONDUITS THAT ENTER THE JUNCTION BOX.

WIRE NOTES

NO.	CONDUIT	MATERIAL	EXISTING CABLE	NEW CABLE	REMARK
1	2"	SCHEDULE 80		1-144 SMFO	MAINLINE CABLE
	2"	SCHEDULE 80		1-12 SMFO	DISTRIBUTION CABLE
5	4" INNERDUCT	SCHEDULE 80		1-144 SMFO	MAINLINE CABLE
	4" INNERDUCT	SCHEDULE 80		1-12 SMFO	DISTRIBUTION CABLE
17	2"	SCHEDULE 80		1-2C(SH)	LOOP LEAD IN CABLE
20	2"	SCHEDULE 80		EMPTY	FUTURE
	2"	SCHEDULE 80		EMPTY	FUTURE
46	*Ex. 2"*	*EXISTING*	*1-144 SMFO (R)*		REMOVE EXISTING MAINLINE CABLE
49	*Ex. 2"*	*EXISTING*	*MULTICONDUCTOR (R)*		REMOVE EXISTING WAVETRONIX SENSOR CABLE
65	2"	SCHEDULE 80		3-5C	IMSA SIGNAL DISPLAY CABLE
				MULTICONDUCTOR	WAVETRONIX SENSOR CABLE
66	2"	SCHEDULE 80		3-5C	IMSA SIGNAL DISPLAY CABLE
				MULTICONDUCTOR	WAVETRONIX HOMERUN CABLE
				1-2C(SH)	LOOP LEAD IN CABLE
67	2"	GRS		1-2C(SH)	LOOP LEAD IN CABLE
68	3"	SCHEDULE 80		3-5C	IMSA SIGNAL DISPLAY CABLE
				MULTICONDUCTOR	WAVETRONIX HOMERUN CABLE
				10-2C(SH)	LOOP LEAD IN CABLE
69	3"	SCHEDULE 80		3-5C	IMSA SIGNAL DISPLAY CABLE
				MULTICONDUCTOR	WAVETRONIX HOMERUN CABLE
				10-2C(SH)	LOOP LEAD IN CABLE
	2"	SCHEDULE 80		3-2C(SH)	LOOP LEAD IN CABLE
70	2"	SCHEDULE 80		1-2C(SH)	LOOP LEAD IN CABLE
	2"	SCHEDULE 80		EMPTY	FUTURE
73	2"	GRS		3-2C(SH)	LOOP LEAD IN CABLE
75	*Ex. 2"*	*EXISTING*	*MULTICONDUCTOR (R)*		REMOVE EXISTING WAVETRONIX HOMERUN
	Ex. 3"	*EXISTING*	*EMPTY*	EMPTY	FUTURE
76	*Ex. 2.5"*	*EXISTING*	*MULTICONDUCTOR (R)*		REMOVE EXISTING WAVETRONIX HOMERUN CABLE
	Ex. 3"	*EXISTING*	*EMPTY*	EMPTY	FUTURE

ATKINSON
JUL 12 2019 KTW
RELEASED FOR CONSTRUCTION

AS-BUILT

FILE NAME	c:\pwworking\jacobs_b&i\agronmi\dms20633\PS_TS_13A.dgn				
TIME	2:27:49 PM				
DATE	7/11/2019				
PLOTTED BY	agronmi				
DESIGNED BY	A. HORGAN				
ENTERED BY	A. HORGAN				
CHECKED BY	M. WEGENER	REV 0 - RELEASE FOR CONSTRUCTION	07/11/19		
PROJ. ENGR.	C. MEADE	REV A - FINAL REVIEW	05/10/19		
REGIONAL ADM.	J. WYNANDS	REVISION	DATE	BY	

REGION NO.	STATE	FED.AID PROJ.NO.
10	WASH	
JOB NUMBER		
CONTRACT NO.		LOCATION NO.
C9133		

MARK F. WEGENER, STATE OF WASHINGTON, 41141, REGISTERED PROFESSIONAL ENGINEER
7/12/19
DATE
P.E. STAMP BOX

DATE
P.E. STAMP BOX

Washington State Department of Transportation
ATKINSON / JACOBS CONSTRUCTION

I-5
STEILACOOM-DUPONT RD TO THORNE LN
CORRIDOR IMPROVEMENTS
MP 120.01 TO MP 124.45

MAINLINE ITS PLAN

PLAN REF NO TS13A

SHEET 985 OF 1456 SHEETS

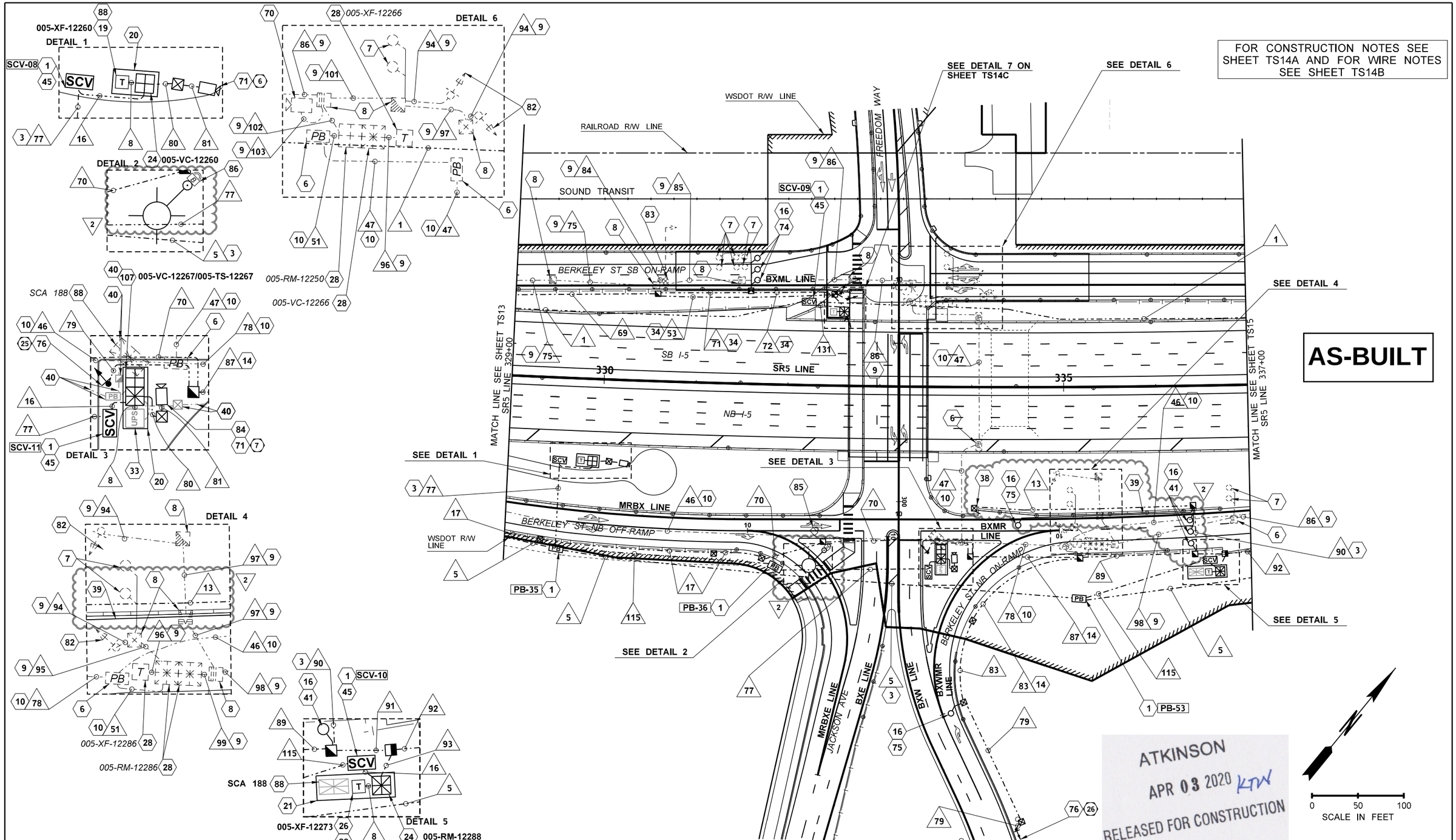

FILE NAME	c:\pwworking\jacobs_b&i\agronmi\dms20633\PS_TS_14.dgn			
TIME	11:23:00 AM			
DATE	4/3/2020			
PLOTTED BY	agronmi	REV 2 - RFC, RFI0428, RFI0435	03/26/20	
DESIGNED BY	A. HORGAN	REV 1 - RFC, RFI0301	11/14/19	
ENTERED BY	A. HORGAN	REV 0 - RELEASED FOR CONSTRUCTION	07/11/19	
CHECKED BY	M. WEGENER	REV B - FINAL REVIEW	05/10/19	
PROJ. ENGR.	C. MEADE	REV A - PRELIMINARY REVIEW	10/15/18	
REGIONAL ADM.	J. WYNANDS	REVISION	DATE	BY

REGION NO.	STATE	FED.AID PROJ.NO.
10	WASH	
JOB NUMBER		
CONTRACT NO.		LOCATION NO.
C9133		

STATE OF WASHINGTON REGISTERED PROFESSIONAL ENGINEER MARK F. WEGENER 41141

4/3/20

DATE

P.E. STAMP BOX

P.E. STAMP BOX

DATE

Washington State Department of Transportation

ATKINSON / JACOBS CONSTRUCTION

I-5
STEILACOOM-DUPONT RD TO THORNE LN
CORRIDOR IMPROVEMENTS
MP 120.01 TO MP 124.45

MAINLINE ITS PLAN

PLAN REF NO TS14

SHEET 986 OF 1456 SHEETS

CONSTRUCTION NOTES

NO.	DESCRIPTION
1	SEE SHEET TSD02-04 FOR PULL BOX, CABLE VAULT/SMALL CABLE VAULT PLACEMENT DETAILS AND LOCATIONS.
3	INSTALL CONDUIT UNDER ROADWAY USING APPROVED DIRECTIONAL BORING METHOD.
6	REMOVE EXISTING CONDUCTORS AND/OR COMMUNICATION CABLES, CONDUIT UPSWEEPS, AND PULLBOX, CABLE VAULT OR SMALL CABLE VAULT. BACKFILL VOID.
7	ABANDON EXISTING INDUCTION VEHICLE DETECTION LOOP IN PAVEMENT.
8	REMOVE EXISTING CONDUCTORS AND/OR COMMUNICATION CABLES, CONDUIT UPSWEEPS, AND JUNCTION BOX. BACKFILL VOID.
9	REMOVE EXISTING CONDUCTORS, CUT OFF UPSWEEPS AND ABANDON UNDERGROUND CONDUIT.
10	REMOVE EXISTING COMMUNICATION CABLES, CUT OFF UPSWEEPS AND ABANDON UNDERGROUND CONDUIT.
14	INSTALL THIS CONDUIT DURING MOT STAGE 1B USING APPROVED DIRECTIONAL BORING METHOD UNDER EXISTING ROAD. INSTALL CONDUIT VERTICALLY BEHIND TEMPORARY RETAINING WALL AS IT IS BUILT, AND INTO NEW JUNCTION BOX AT TOP OF TEMPORARY WALL. AFTER FINAL FILL AND GRADING, CONDUIT WILL BE BURIED APPROXIMATELY 20 FEET DEEP.
16	LOOP CABLE SHALL BE INSTALLED WITH FOUR (4) TURNS.
19	INSTALL A CABINET WITH A 5 KVA 480/240/120 VAC TRANSFORMER IN ACCORDANCE WITH STANDARD PLAN J-10.10 AND J-10.25 AND PER TRANSFORMER BREAKER DETAILS ON SHEETS TSD29-TSD31.
20	CONSTRUCT A TWO CABINET FOUNDATION IN ACCORDANCE WITH STANDARD PLAN J-10.10.
21	CONSTRUCT A THREE CABINET FOUNDATION IN ACCORDANCE WITH STANDARD PLAN J-10.10.
24	INSTALL A CONTROLLER CABINET ON TOP OF AN 8" ALUMINUM CABINET RISER. INSTALL ASSOCIATED CABINET EQUIPMENT PER EQUIPMENT SCHEDULE ON DETAIL SHEET TSD07.
26	INSTALL A CABINET WITH A 10 KVA 480/240/120 VAC TRANSFORMER IN ACCORDANCE WITH STANDARD PLAN J-10.10 AND J-10.25 AND PER TRANSFORMER BREAKER DETAILS ON SHEETS TSD29-TSD31.
28	REMOVE EXISTING ITS AND/OR TRANSFORMER CABINET(S) AND FOUNDATION. RETURN CABINET AND INTERNAL COMPONENTS TO THE OLYMPIC REGION SIGNAL SHOP.
33	SEE TRAFFIC SIGNAL PLANS FOR UPS CABINET.
34	INSTALL CONDUIT IN BARRIER IN ACCORDANCE WITH STANDARD PLAN J-60.12.
38	INSTALL JUNCTION BOX WITH EMPTY STUB OUT FOR FUTURE USE. ROUTE STUB OUT THRU GAP IN BARRIER. 2
39	INSTALL LOOP WIRE IN LONG SAWCUT IN SHOULDER.
40	SEE SHEET SG02 FOR TRAFFIC SIGNAL DESIGN.
41	INSTALL TYPE 3 INDUCTION LOOP VEHICLE DETECTORS IN CENTER OF THE LANE IN ACCORDANCE WITH STANDARD PLAN J-50.12, AND PER DETAILS ON SHEET TSD25.
45	FUSION SPLICE 12 CT DISTRIBUTION FIBER OPTIC CABLE TO 24 CT PRE-TERMINATED FIBER OPTIC CABLE PER DETAILS ON SHEETS TSFO01-TSFO10.
70	REMOVE EXISTING CCTV, POLE, FOUNDATION AND ASSOCIATED EQUIPMENT. DELIVER REMOVED CAMERA, CAMERA MOUNTING HARDWARE AND CAMERA CABLES TO OLYMPIC REGION SIGNAL SHOP. ALL CAMERA CABLES AND CONNECTORS SHALL NOT BE DAMAGED OR CUT DURING REMOVAL. SAVE POLE FOR POTENTIAL RE-USE ON THIS PROJECT. THE CONTRACTOR SHALL PROVIDE AN INSPECTION REPORT DOCUMENTING THE CONDITION OF THE POLE TO WSDOT AND OBTAIN WSDOT APPROVAL TO USE THE POLE BEFORE INSTALLING THIS POLE IN A NEW LOCATION.
71	INSTALL CAMERA, CABLE, 50 FT CAMERA POLE AND FOUNDATION IN ACCORDANCE WITH STANDARD PLANS J-29.10, AND J-29.15, AND PER DETAILS ON SHEET TSD13.
74	INSTALL PRE-FORMED TYPE 3 INDUCTION LOOP VEHICLE DETECTORS IN CENTER OF THE LANE. INSTALL THEM IN ACCORDANCE WITH STANDARD PLAN J-50.16-01, EXCEPT USE ONE 2" STUB OUT CONDUIT FOR ALL THREE LOOP LEAD-INS.
75	INSTALL TYPE WR INDUCTION LOOP VEHICLE DETECTORS IN CENTER OF THE LANE IN ACCORDANCE WITH STANDARD PLAN J-50.12, AND PER DETAILS ON SHEET TSD25.
76	INSTALL TYPE 1 FLASHING BEACON SIGNAL STANDARD IN ACCORDANCE WITH STANDARD PLAN J-21.16 AND PER RAMP METER DETAIL SHEET TSD26. INSTALL ADVANCE WARNING SIGN PER SIGNING PLANS.

CONSTRUCTION NOTES

NO.	DESCRIPTION
82	REMOVE EXISTING RAMP METER ADVANCED WARNING SIGN, FLASHING BEACON, POLE AND FOUNDATION. COORDINATE WITH OLYMPIC REGION SIGN SHOP FOR THE DELIVERY OF ITS EQUIPMENT.
83	REMOVE EXISTING RAMP METER SIGNAL, POLE, FOUNDATION AND ASSOCIATED EQUIPMENT. COORDINATE WITH OLYMPIC REGION SIGN SHOP FOR THE DELIVERY OF ITS EQUIPMENT.
84	POLE IS CLOSE TO TPU OVERHEAD POWER LINES.
85	REMOVE EXISTING BLUETOOTH READER, SOLAR PANEL(S), ENCLOSURE AND ASSOCIATED HARDWARE. THE CONTRACTOR SHALL COORDINATE WITH WSDOT AND DOCUMENT THE CONDITION OF THE EXISTING EQUIPMENT BEFORE INSTALLING IN A NEW LOCATION.
86	INSTALL BLUETOOTH READER, SOLAR PANEL(S), ENCLOSURE AND ASSOCIATED HARDWARE ON LIGHT POLE PER DETAIL SHEET TSD28. UTILIZE STAINLESS STEEL BANDING TO MOUNT EQUIPMENT AT THE PROPOSED LOCATION.
88	SEE ILLUMINATION PLANS FOR POWER SOURCE INFORMATION.
100	INSTALL TYPE 1 FLASHING BEACON SIGNAL STANDARD IN ACCORDANCE WITH STANDARD PLAN J-21.16 AND PER RAMP METER DETAIL SHEET TSD26. INSTALL POLE ON ANCHOR BOLTS IN TOPPING SLAB PER BERKELEY OVERPASS BRIDGE PLANS. INSTALL ADVANCE WARNING SIGN PER SIGNING PLANS. AIM THE BEACON AND SIGN TOWARD CENTER OF LANE THAT IS ENTERING THE ON-RAMP.
101	INSTALL FLASHING BEACON AND ADVANCE WARNING SIGN ON SIGNAL POLE 4 AT LOCATIONS SHOWN IN DETAIL 1 ON SHEET TSD28. SEE SIGNAL PLANS SG01 AND SG06 AND SIGNING PLAN SN27. WIRE THE BEACON PER STANDARD PLAN J-21.17-01.
102	INSTALL CONDUIT WITHIN THE TOPPING SLAB.
103	FROM CABINET, ROUTE CONDUIT DOWN THROUGH BRIDGE DECK TO COLUMN. MOUNT CONDUIT TO COLUMN PER STANDARD PLAN J-60.13-00 AND DETAIL SHEET BB078.
104	INSTALL CABINETS AND CONDUITS PER STANDARD PLAN J-10.10-03, WITH THE FOLLOWING EXCEPTIONS: 1. PLACE CABINETS 2" IN FROM EDGE OF RAISED SLAB WITH MIN. 6" SPACE BETWEEN CABINETS. 2. CONDUITS ENTERING RM CABINET SHALL ENTER THROUGH SIDE OR BOTTOM OF OPENING UNDER CABINET WITH NO CONDUIT ELBOWS. 3. DRAIN TUBE FOR RM CABINET SHALL DRAIN DOWN THROUGH BOTTOM OF BRIDGE DECK. 4. CONCRETE CLASS AND REINFORCING SHALL BE PER THE BERKELEY OVERPASS BRIDGE PLANS.
105	GROUND TRANSFORMER CABINET PER STANDARD PLAN J-60.05-01. ROUTE GROUND WIRE DOWN COLUMN TO TWO GROUND RODS IN EARTH BENEATH BRIDGE.
106	INSTALL GENERATOR ANTI-THEFT TIE-DOWN UNIT PER STRUCTURAL DETAIL SHEET BB081 AND STANDARD PLAN J-10.10-03. DRAIN TUBE FOR TIE-DOWN UNIT SHALL DRAIN DOWN THROUGH BOTTOM OF BRIDGE DECK.
107	INSTALL PRETERMINATED PATCH PANEL AND DIN RAIL PANEL WITH COMMUNICATION EQUIPMENT IN "ITS" SIDE OF SIGNAL CABINET. SEE TRAFFIC SIGNAL PLANS FOR CABINET DETAILS. SEE SHEET TSD07 FOR CABINET EQUIPMENT SCHEDULE. SEE SHEET TSD11 FOR DIN RAIL PANEL DETAILS. CONNECT VIDEO CAMERA CONTROL CABLE PER DETAILS ON SHEET TSD13.

AS-BUILT

ATKINSON
APR 03 2020 KTW
RELEASED FOR CONSTRUCTION

FILE NAME	c:\pwworking\jacobs_b&i\agronmi\dms20633\PS_TS_14A.dgn						
TIME	1:47:26 PM				REGION NO. 10	STATE WASH	FED.AID PROJ.NO.
DATE	3/31/2020						
PLOTTED BY	agronmi						
DESIGNED BY	A. HORGAN	REV 2 - RFC, RFI0428, ADD CN38, 39	03/26/20		JOB NUMBER		
ENTERED BY	A. HORGAN	REV 1 - RFC, RFI0248, RFI0271	10/22/19				
CHECKED BY	M. WEGENER	REV 0 - RELEASED FOR CONSTRUCTION	07/11/19		CONTRACT NO. C9133		LOCATION NO.
PROJ. ENGR.	C. MEADE	REV A - FINAL REVIEW	05/10/19				
REGIONAL ADM.	J. WYNANDS	REVISION	DATE	BY			

MARK F. WEGENER — STATE OF WASHINGTON — 41141 — REGISTERED PROFESSIONAL ENGINEER
4/3/20
DATE
P.E. STAMP BOX

DATE
P.E. STAMP BOX

Washington State Department of Transportation

ATKINSON CONSTRUCTION / JACOBS

I-5
STEILACOOM-DUPONT RD TO THORNE LN
CORRIDOR IMPROVEMENTS
MP 120.01 TO MP 124.45

MAINLINE ITS PLAN

PLAN REF NO TS14A

SHEET 987 OF 1456 SHEETS

WIRE NOTES

NO.	CONDUIT	MATERIAL	EXISTING CABLE	NEW CABLE	REMARK
1	2"	SCHEDULE 80		1-144 SMFO	MAINLINE CABLE
	2"	SCHEDULE 80		1-12 SMFO	DISTRIBUTION CABLE
5	4" INNERDUCT	SCHEDULE 80		1-144 SMFO	MAINLINE CABLE
	4" INNERDUCT	SCHEDULE 80		1-12 SMFO	DISTRIBUTION CABLE 1
8	2"	SCHEDULE 80		2-#8AWG	TRANSFORMER CONDUCTOR
13	2"	SCHEDULE 80		EMPTY	FUTURE
16	2"	SCHEDULE 80		1-24 SMFO	PRE-TERMINATED CABLE
17	2"	SCHEDULE 80		1-2C(SH)	LOOP LEAD IN CABLE
46	*Ex. 2"*	*EXISTING*	*1-144 SMFO (R)*		REMOVE EXISTING MAINLINE CABLE
47	*Ex. 2"*	*EXISTING*	*1-24 SMFO (R)*		REMOVE EXISTING LATERAL CABLE
51	*Ex. 2"*	*EXISTING*	*1-24 SMFO (R)*		REMOVE EXISTING LATERAL CABLE
	Ex. 2"	*EXISTING*	*EMPTY*		FUTURE
53	3"	GRS		3-5C	IMSA SIGNAL DISPLAY CABLE
				MULTICONDUCTOR	WAVETRONIX HOMERUN CABLE
				10-2C(SH)	LOOP LEAD IN CABLE
69	3"	SCHEDULE 80		3-5C	IMSA SIGNAL DISPLAY CABLE
				MULTICONDUCTOR	WAVETRONIX HOMERUN CABLE
				10-2C(SH)	LOOP LEAD IN CABLE
	2"	SCHEDULE 80		3-2C(SH)	LOOP LEAD IN CABLE
70	2"	SCHEDULE 80		1-2C(SH)	LOOP LEAD IN CABLE
	2"	SCHEDULE 80		EMPTY	FUTURE
71	2"	GRS		3-2C(SH)	LOOP LEAD IN CABLE
72	2"	GRS		6-2C(SH)	LOOP LEAD IN CABLE
75	*Ex. 2"*	*EXISTING*	*MULTICONDUCTOR (R)*		REMOVE EXISTING WAVETRONIX HOMERUN CABLE
	Ex. 3"	*EXISTING*	*EMPTY*	EMPTY	FUTURE
77	2"	SCHEDULE 80		2-12 SMFO	DISTRIBUTION CABLE
	2"	SCHEDULE 80		EMPTY	FUTURE
78	*Ex. 2"*	*EXISTING*	*1-144 SMFO (R)*		REMOVE EXISTING MAINLINE CABLE
	Ex. 2"	*EXISTING*	*1-24 SMFO (R)*		REMOVE LATERAL CABLE
79	2"	SCHEDULE 80		1-2C	FLASHING BEACON CABLE
80	2"	SCHEDULE 80		MULTICONDUCTOR	VIDEO CAMERA CONTROL CABLE
	2"	SCHEDULE 80		EMPTY	FUTURE
81	2"	SCHEDULE 80		MULTICONDUCTOR	VIDEO CAMERA CONTROL CABLE
83	2"	SCHEDULE 80		1-2C	FLASHING BEACON CABLE
				1-2C(SH)	LOOP LEAD IN CABLE
84	*Ex. 2"*	*EXISTING*	*2-5C (R)*		REMOVE EXISTING IMSA SIGNAL DISPLAY CABLE
	Ex. 2"	*EXISTING*	*EMPTY*		FUTURE
85	*Ex. 3"*	*EXISTING*	*2-5C (R)*		REMOVE EXISTING IMSA SIGNAL DISPLAY CABLE
			MULTICONDUCTOR (R)		REMOVE EXISTING WAVETRONIX HOMERUN CABLE
	Ex. 3"	*EXISTING*	*EMPTY*		FUTURE
86	*Ex. 3"*	*EXISTING*	*2-5C (R)*		REMOVE EXISTING IMSA SIGNAL DISPLAY CABLE
			MULTICONDUCTOR (R)		REMOVE EXISTING WAVETRONIX HOMERUN CABLE
			6-2C(SH) (R)		REMOVE EXISTING LOOP LEAD IN CABLE
	Ex. 3"	*EXISTING*	*EMPTY*		FUTURE
87	2"	SCHEDULE 80		1-2C	FLASHING BEACON CABLE
				1-2C(SH)	LOOP LEAD IN CABLE
	2"	SCHEDULE 80		EMPTY	FUTURE
89	2"	SCHEDULE 80		2-2C	FLASHING BEACON CABLE
			1	2-2C(SH)	LOOP LEAD IN CABLE
90	2"	SCHEDULE 80		3-2C(SH)	LOOP LEAD IN CABLE
	2"	SCHEDULE 80		EMPTY	FUTURE
91	2"	SCHEDULE 80		2-2C	FLASHING BEACON CABLE
				6-2C(SH)	LOOP LEAD IN CABLE
92	2"	SCHEDULE 80		3-5C	IMSA SIGNAL DISPLAY CABLE
				2-2C(SH)	LOOP LEAD IN CABLE
				MULTICONDUCTOR	WAVETRONIX HOMERUN CABLE
	2"	SCHEDULE 80		8-2C(SH)	LOOP LEAD IN CABLE

WIRE NOTES

NO.	CONDUIT	MATERIAL	EXISTING CABLE	NEW CABLE	REMARK
93	2"	SCHEDULE 80		3-5C	IMSA SIGNAL DISPLAY CABLE
				2-2C(SH)	LOOP LEAD IN CABLE
				MULTICONDUCTOR	WAVETRONIX HOMERUN CABLE
	2"	SCHEDULE 80		8-2C(SH)	LOOP LEAD IN CABLE
	2"	SCHEDULE 80		2-2C	FLASHING BEACON CABLE
				6-2C(SH)	LOOP LEAD IN CABLE
	2"	SCHEDULE 80		EMPTY	FUTURE
	2"	SCHEDULE 80		EMPTY	FUTURE
94	*Ex. 1"*	*EXISTING*	*1-2C (R)*		REMOVE EXISTING FLASHING BEACON CABLE
95	*Ex. 2"*	*EXISTING*	*1-2C (R)*		REMOVE EXISTING FLASHING BEACON CABLE
			2-2C(SH) (R)		REMOVE EXISTING LOOP LEAD IN CABLE
96	*Ex. 2"*	*EXISTING*	*2-#8AWG (R)*		REMOVE EXISTING TRANSFORMER CONDUCTOR
97	*Ex. 2"*	*EXISTING*	*1-2C (R)*		REMOVE EXISTING FLASHING BEACON CABLE
98	*Ex. 3"*	*EXISTING*	*8-2C(SH) (R)*		REMOVE EXISTING LOOP LEAD IN CABLE
			2-5C (R)		REMOVE EXISTING IMSA SIGNAL DISPLAY CABLE
			MULTICONDUCTOR (R)		REMOVE EXISTING WAVETRONIX HOMERUN CABLE
	Ex. 3"	*EXISTING*	*EMPTY*		FUTURE
99	*Ex. 3"*	*EXISTING*	*8-2C(SH) (R)*		REMOVE EXISTING LOOP LEAD IN CABLE
			2-5C (R)		REMOVE EXISTING IMSA SIGNAL DISPLAY CABLE
			1-2C (R)		REMOVE EXISTING FLASHING BEACON CABLE
	Ex. 2"	*EXISTING*	*MULTICONDUCTOR (R)*		REMOVE EXISTING WAVETRONIX HOMERUN CABLE
	Ex. 3"	*EXISTING*	*EMPTY*		FUTURE
101	*Ex. 2"*	*EXISTING*	*2-2C (R)*		REMOVE EXISTING FLASHING BEACON CABLE
			2-2C(SH) (R)		REMOVE EXISTING LOOP LEAD IN CABLE
102	*Ex. 3"*	*EXISTING*	*2-2C (R)*		REMOVE EXISTING FLASHING BEACON CABLE
			8-2C(SH) (R)		REMOVE EXISTING LOOP LEAD IN CABLE
			2-5C (R)		REMOVE EXISTING IMSA SIGNAL DISPLAY CABLE
	Ex. 2"	*EXISTING*	*MULTICONDUCTOR (R)*		REMOVE EXISTING WAVETRONIX HOMERUN CABLE
			MULTICONDUCTOR (R)		REMOVE VIDEO CAMERA CONTROL CABLE
	Ex. 3"	*EXISTING*	*EMPTY*		FUTURE
103	*Ex. 2"*	*EXISTING*	*MULTICONDUCTOR (R)*		REMOVE VIDEO CAMERA CONTROL CABLE
	Ex. 2"	*EXISTING*	*EMPTY*		FUTURE
115	2"	SCHEDULE 80		2-12 SMFO	DISTRIBUTION CABLE
131	2"	GRS		1-24 SMFO	PRE-TERMINATED CABLE
	2"	GRS		EMPTY	FUTURE

AS-BUILT

ATKINSON
APR 03 2020 KTW
RELEASED FOR CONSTRUCTION

FILE NAME	c:\pwworking\jacobs_b&i\agronmi\dms20633\PS_TS_14B.dgn				
TIME	11:06:40 AM				
DATE	3/26/2020				
PLOTTED BY	agronmi				
DESIGNED BY	A. HORGAN				
ENTERED BY	A. HORGAN	REV 1 - RFC, RFI0428, REV WN90, ADD WN13	03/26/20		
CHECKED BY	M. WEGENER	REV 0 - RELEASED FOR CONSTRUCTION	07/11/19		
PROJ. ENGR.	C. MEADE	REV A - FINAL REVIEW	05/10/19		
REGIONAL ADM.	J. WYNANDS	REVISION	DATE	BY	

REGION NO.	STATE	FED.AID PROJ.NO.
10	WASH	
JOB NUMBER		
CONTRACT NO.		LOCATION NO.
C9133		

MARK F. WEGENER, STATE OF WASHINGTON, 41141, REGISTERED PROFESSIONAL ENGINEER
4/3/20
DATE
P.E. STAMP BOX

DATE
P.E. STAMP BOX

Washington State Department of Transportation

ATKINSON / JACOBS CONSTRUCTION

I-5
STEILACOOM-DUPONT RD TO THORNE LN
CORRIDOR IMPROVEMENTS
MP 120.01 TO MP 124.45

MAINLINE ITS PLAN

PLAN REF NO TS14B

SHEET 988 OF 1456 SHEETS

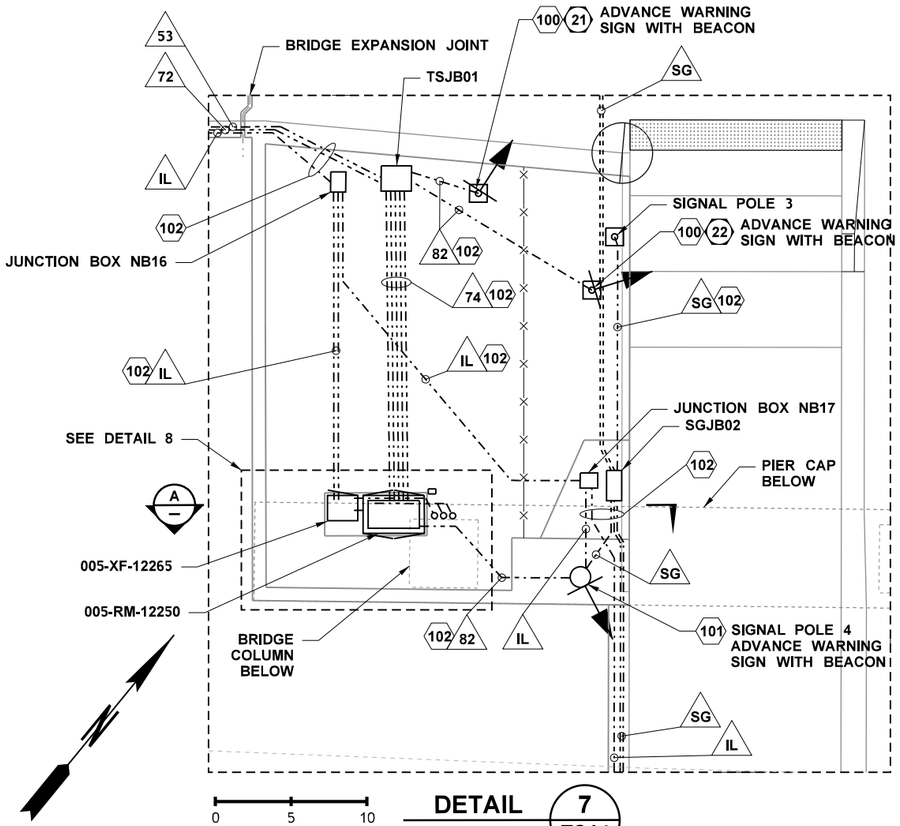

DETAIL 7 / TS14

FOR CONSTRUCTION NOTES SEE SHEET TS14A

NOTES:

1. SEE ILLUMINATION PLANS FOR LIGHTING AND POWER DESIGN, INCLUDING WIRE NOTES MARKED "IL".
2. SEE SIGNAL PLANS FOR TRAFFIC SIGNAL DESIGN, INCLUDING WIRE NOTES MARKED "SG".
3. SEE SIGNING PLANS FOR SIGNING DESIGN, INCLUDING SIGNS ON ITS AND SIGNAL POLES.
4. SEE BERKELEY OVERPASS BRIDGE PLANS FOR STRUCTURAL DESIGN, INCLUDING ITS TOPPING SLAB, POLE ANCHOR BOLTS, AND FENCE.

JUNCTION BOX SCHEDULE

JB NO.	SIZE (IN.)
SGJB02	SEE SIGNAL PLANS
TSJB01	24x20x8
NB16	SEE IL PLANS
NB17	SEE IL PLANS

ATKINSON
RJH OCT 17 2019
RELEASED FOR CONSTRUCTION

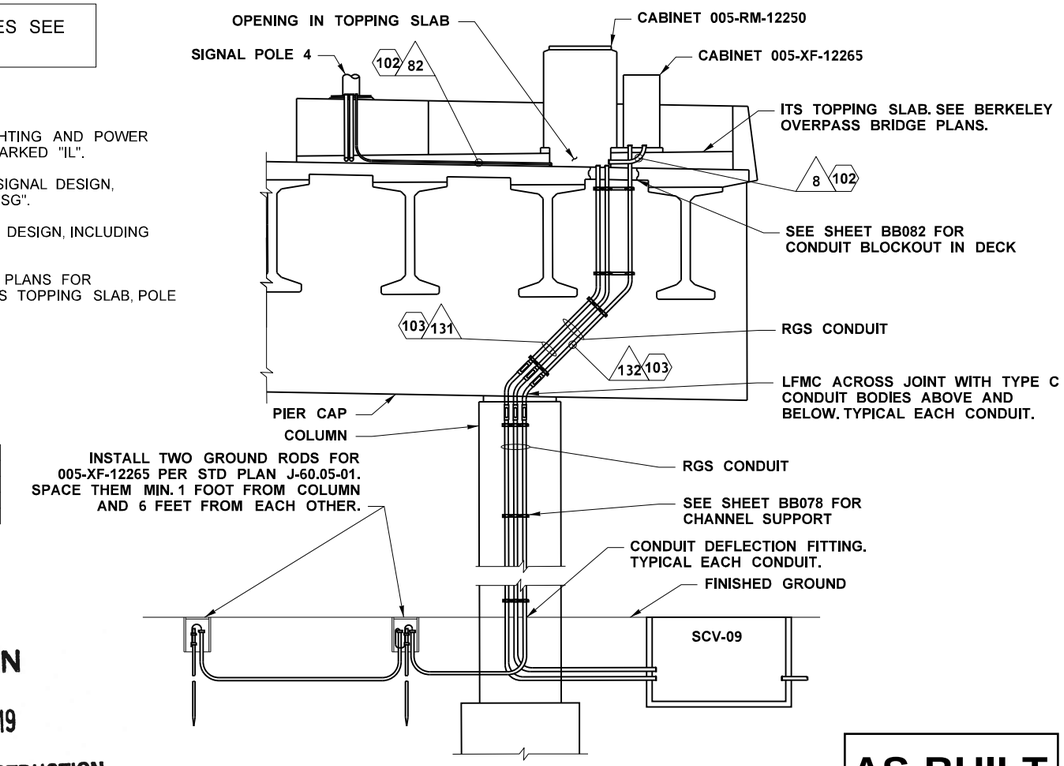

SECTION A / NOT TO SCALE

AS-BUILT

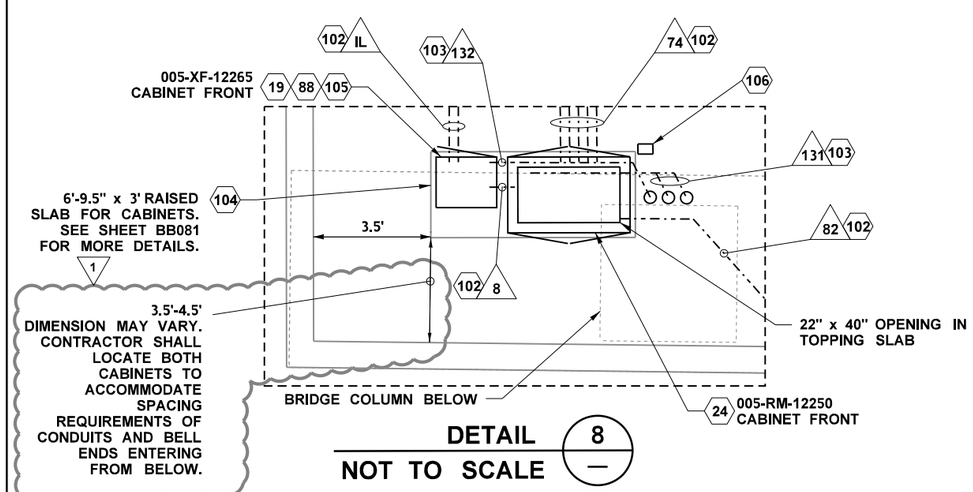

DETAIL 8 / NOT TO SCALE

WIRE NOTES

NO.	CONDUIT	MATERIAL	EXISTING CABLE	NEW CABLE	REMARK
8	2"	SCHEDULE 80		2-#8AWG	TRANSFORMER CONDUCTOR
53	3"	GRS		3-5C	IMSA SIGNAL DISPLAY CABLE
				MULTICONDUCTOR	WAVETRONIX HOMERUN CABLE
				10-2C(SH)	LOOP LEAD IN CABLE
72	2"	GRS		6-2C(SH)	LOOP LEAD IN CABLE
74	2"	SCHEDULE 80		3-5C	IMSA SIGNAL DISPLAY CABLE
				2-2C	FLASHING BEACON CABLE
				MULTICONDUCTOR	WAVETRONIX HOMERUN CABLE
	2"	SCHEDULE 80		8-2C(SH)	LOOP LEAD IN CABLE
	2"	SCHEDULE 80		8-2C(SH)	LOOP LEAD IN CABLE
	2"	SCHEDULE 80		EMPTY	FUTURE
	2"	SCHEDULE 80		EMPTY	FUTURE
82	1"	SCHEDULE 80		1-2C	FLASHING BEACON CABLE
131	2"	GRS		1-24 SMFO	PRE-TERMINATED CABLE
	2"	GRS		EMPTY	FUTURE
132	2"	GRS		1-#8 G	EQUIPMENT GROUNDING CONDUCTOR

FILE NAME	c:\pwworking\jacobs_b&i\jeg_gt011740\dms20633\PS_TS_14C.dgn				
TIME	3:31:48 PM				
DATE	10/15/2019				
PLOTTED BY	GT011740				
DESIGNED BY	M. WEGENER				
ENTERED BY	M. WEGENER	REV 1 - RFC, RFI0264, REVISE PAD DIMENSION	10/15/19		
CHECKED BY	A. HORGAN	REV 0 - RELEASED FOR CONSTRUCTION	07/11/19		
PROJ. ENGR.	C. MEADE	REV A - FINAL REVIEW	05/10/19		
REGIONAL ADM.	J. WYNANDS	REVISION	DATE	BY	

REGION NO. 10 | STATE WASH | FED.AID PROJ.NO.
JOB NUMBER
CONTRACT NO. C9133 | LOCATION NO.

ALICA F. WEGENER, STATE OF WASHINGTON, 41141, REGISTERED PROFESSIONAL ENGINEER
10/15/19
DATE
P.E. STAMP BOX

DATE
P.E. STAMP BOX

Washington State Department of Transportation
ATKINSON / JACOBS CONSTRUCTION

I-5
STEILACOOM-DUPONT RD TO THORNE LN
CORRIDOR IMPROVEMENTS
MP 120.01 TO MP 124.45

MAINLINE ITS PLAN

PLAN REF NO TS14C
SHEET 989 OF 1456 SHEETS

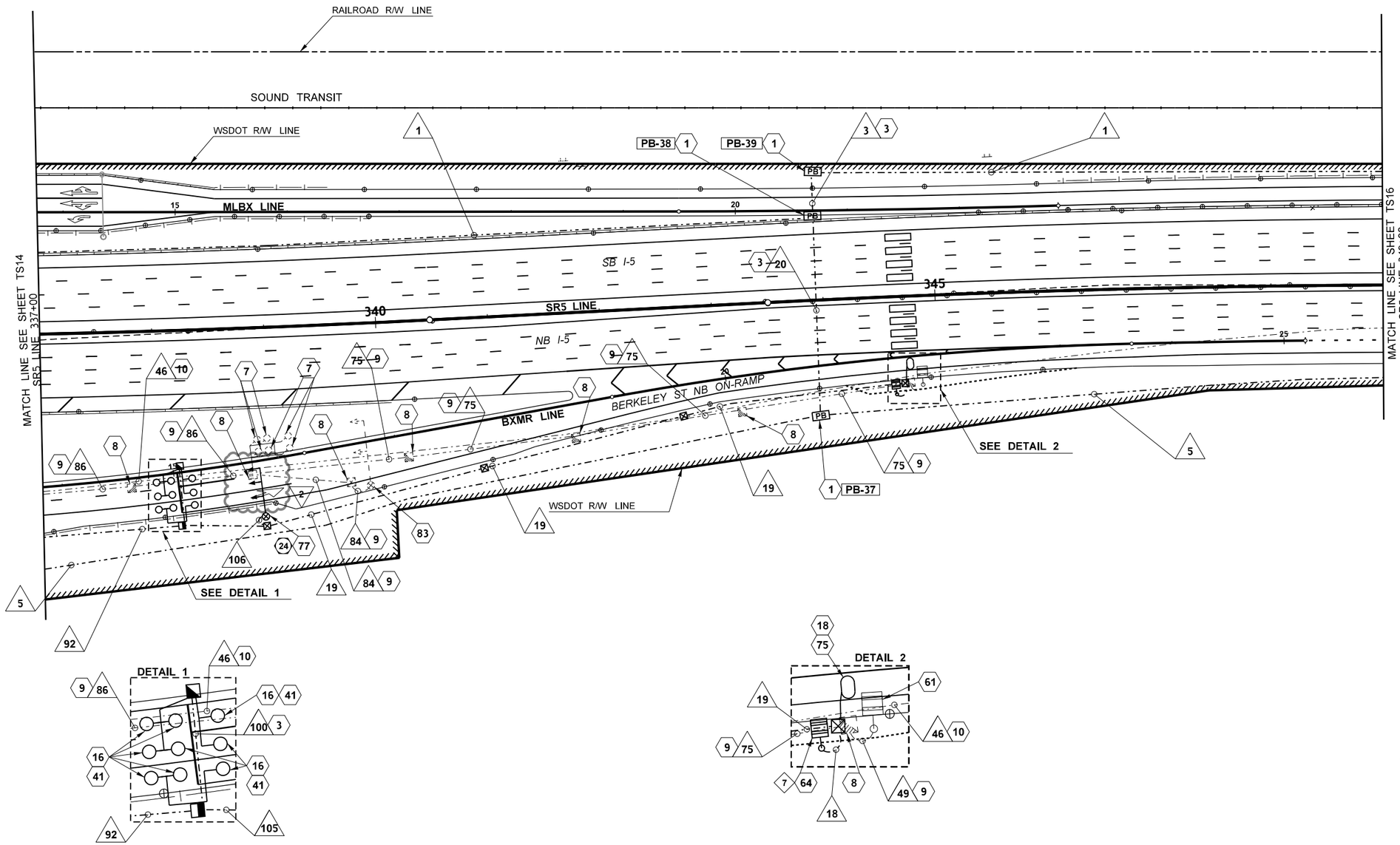

FOR CONSTRUCTION AND WIRE NOTES SEE SHEET TS15A

AS-BUILT

ATKINSON
AUG 19 2020
RELEASED FOR CONSTRUCTION

0 50 100
SCALE IN FEET

FILE NAME	c:\pwworking\jacobs_b&i\wegenemf\dms20633\PS_TS_15.dgn						
TIME	12:31:09 PM				REGION NO. 10	STATE WASH	FED.AID PROJ.NO.
DATE	8/12/2020						
PLOTTED BY	WEGENEMF	REV 2 - RFI0526, ADD SIGNAL HEAD TO RM	08/12/20				
DESIGNED BY	A. HORGAN	REV 1 - RFC, RFI0428, CHANGE LOOP DET.	03/26/20		JOB NUMBER		
ENTERED BY	A. HORGAN	REV 0 - RELEASED FOR CONSTRUCTION	07/11/19				
CHECKED BY	M. WEGENER	REV B - FINAL REVIEW	05/10/19		CONTRACT NO. C9133		LOCATION NO.
PROJ. ENGR.	C. MEADE	REV A - PRELIMINARY REVIEW	10/15/18				
REGIONAL ADM.	J. WYNANDS	REVISION	DATE	BY			

MARK F. WEGENER — STATE OF WASHINGTON — 41141 — REGISTERED PROFESSIONAL ENGINEER
8/19/20
DATE
P.E. STAMP BOX

DATE
P.E. STAMP BOX

Washington State Department of Transportation

ATKINSON CONSTRUCTION / JACOBS

I-5
STEILACOOM-DUPONT RD TO THORNE LN
CORRIDOR IMPROVEMENTS
MP 120.01 TO MP 124.45

MAINLINE ITS PLAN

PLAN REF NO TS15

SHEET 990 OF 1456 SHEETS

CONSTRUCTION NOTE

NO.	DESCRIPTION
1	SEE SHEET TSD02-04 FOR PULL BOX, CABLE VAULT/SMALL CABLE VAULT PLACEMENT DETAILS AND LOCATIONS.
3	INSTALL CONDUIT UNDER ROADWAY USING APPROVED DIRECTIONAL BORING METHOD.
7	ABANDON EXISTING INDUCTION VEHICLE DETECTION LOOP IN PAVEMENT.
8	REMOVE EXISTING CONDUCTORS AND/OR COMMUNICATION CABLES, CONDUIT UPSWEEPS, AND JUNCTION BOX. BACKFILL VOID.
9	REMOVE EXISTING CONDUCTORS, CUT OFF UPSWEEPS AND ABANDON UNDERGROUND CONDUIT.
10	REMOVE EXISTING COMMUNICATION CABLES, CUT OFF UPSWEEPS AND ABANDON UNDERGROUND CONDUIT.
16	LOOP CABLE SHALL BE INSTALLED WITH FOUR (4) TURNS.
18	LOOP CABLE SHALL BE INSTALLED WITH SIX (6) TURNS.
41	INSTALL TYPE 3 INDUCTION LOOP VEHICLE DETECTORS IN CENTER OF THE LANE IN ACCORDANCE WITH STANDARD PLAN J-50.12, AND PER DETAILS ON SHEET TSD25.
61	REMOVE EXISTING WAVETRONIX DETECTORS, POLE, FOUNDATION AND ASSOCIATED EQUIPMENT. DELIVER REMOVED WAVETRONIX MOUNTING HARDWARE, DETECTORS, DETECTOR CABLES TO OLYMPIC REGION SIGNAL SHOP. SAVE POLE FOR POTENTIAL RE-USE ON THIS PROJECT. THE CONTRACTOR SHALL PROVIDE AN INSPECTION REPORT DOCUMENTING THE CONDITION OF THE POLE TO WSDOT AND OBTAIN WSDOT APPROVAL TO USE THE POLE BEFORE INSTALLING THIS POLE IN A NEW LOCATION.
64	INSTALL STEEL LIGHT STANDARD POLE, FOUNDATION, WAVETRONIX SENSOR AND ASSOCIATED EQUIPMENT PER DETAILS ON SHEET TSD27.
75	INSTALL TYPE WR INDUCTION LOOP VEHICLE DETECTORS IN CENTER OF THE LANE IN ACCORDANCE WITH STANDARD PLAN J-50.12, AND PER DETAILS ON SHEET TSD25.
77	INSTALL TYPE II RAMP METER SIGNAL STANDARD PER RAMP METER DETAIL SHEET TSD26. LOCATE SIGNS ON MAST ARM PER SHEET TSD26, AND INSTALL SIGNS ON MAST ARM PER SIGNING PLANS.
83	REMOVE EXISTING RAMP METER SIGNAL, POLE, FOUNDATION AND ASSOCIATED EQUIPMENT. COORDINATE WITH OLYMPIC REGION SIGN SHOP FOR THE DELIVERY OF ITS EQUIPMENT.

2

WIRE NOTE

NO.	CONDUIT	MATERIAL	EXISTING CABLE	NEW CABLE	REMARK
1	2"	SCHEDULE 80		1-144 SMFO	MAINLINE CABLE
	2"	SCHEDULE 80		1-12 SMFO	DISTRIBUTION CABLE
3	2"	SCHEDULE 80		1-144 SMFO	MAINLINE CABLE
	2"	SCHEDULE 80		1-12 SMFO	DISTRIBUTION CABLE
	2"	SCHEDULE 80		EMPTY	FUTURE
5	4" INNERDUCT	SCHEDULE 80		1-144 SMFO	MAINLINE CABLE
	4" INNERDUCT	SCHEDULE 80		1-12 SMFO	DISTRIBUTION CABLE
18	2"	SCHEDULE 80		MULTICONDUCTOR	WAVETRONIX HOMERUN CABLE
19	2"	SCHEDULE 80		MULTICONDUCTOR	WAVETRONIX HOMERUN CABLE
				1-2C(SH)	LOOP LEAD IN CABLE
20	2"	SCHEDULE 80		EMPTY	FUTURE
	2"	SCHEDULE 80		EMPTY	FUTURE
46	*Ex. 2"*	*EXISTING*	*1-144 SMFO (R)*		REMOVE EXISTING MAINLINE CABLE
49	*Ex. 2"*	*EXISTING*	*MULTICONDUCTOR (R)*		REMOVE EXISTING WAVETRONIX SENSOR CABLE
75	*Ex. 2"*	*EXISTING*	*MULTICONDUCTOR (R)*		REMOVE EXISTING WAVETRONIX HOMERUN CABLE
	Ex. 3"	*EXISTING*	*EMPTY*	EMPTY	FUTURE
84	*Ex. 2"*	*EXISTING*	*2-5C (R)*		REMOVE EXISTING IMSA SIGNAL DISPLAY CABLE
	Ex. 2"	*EXISTING*	*EMPTY*		FUTURE
86	*Ex. 3"*	*EXISTING*	*2-5C (R)*		REMOVE EXISTING IMSA SIGNAL DISPLAY CABLE
			MULTICONDUCTOR (R)		REMOVE EXISTING WAVETRONIX HOMERUN CABLE
			6-2C(SH) (R)		REMOVE EXISTING LOOP LEAD IN CABLE
	Ex. 3"	*EXISTING*	*EMPTY*		FUTURE
92	2"	SCHEDULE 80		3-5C	IMSA SIGNAL DISPLAY CABLE
				2-2C(SH)	LOOP LEAD IN CABLE
				MULTICONDUCTOR	WAVETRONIX HOMERUN CABLE
	2"	SCHEDULE 80		8-2C(SH)	LOOP LEAD IN CABLE
100	2"	SCHEDULE 80		6-2C(SH)	LOOP LEAD IN CABLE
	2"	SCHEDULE 80		EMPTY	FUTURE
105	2"	SCHEDULE 80		3-5C	IMSA SIGNAL DISPLAY CABLE
				1-2C(SH)	LOOP LEAD IN CABLE
				MULTICONDUCTOR	WAVETRONIX HOMERUN CABLE
106	2"	SCHEDULE 80		3-5C	IMSA SIGNAL DISPLAY CABLE

AS-BUILT

ATKINSON
MAY 27 2020 KTW
RELEASED FOR CONSTRUCTION

FILE NAME	c:\pwworking\jacobs_b&i\agronmi\dms20633\PS_TS_15A.dgn			
TIME	8:58:29 AM			
DATE	5/21/2020			
PLOTTED BY	agronmi			
DESIGNED BY	A. HORGAN	REV 2 - RFC, RFI0473, REV CN64	05/21/20	
ENTERED BY	A. HORGAN	REV 1 - RFC, RFI0428, ADD WN100	03/26/20	
CHECKED BY	M. WEGENER	REV 0 - RELEASED FOR CONSTRUCTION	07/11/19	
PROJ. ENGR.	C. MEADE	REV A - FINAL REVIEW	05/10/19	
REGIONAL ADM.	J. WYNANDS	REVISION	DATE	BY

REGION NO. 10 | STATE WASH | FED.AID PROJ.NO.
JOB NUMBER
CONTRACT NO. C9133 | LOCATION NO.

MARK F. WEGENER, STATE OF WASHINGTON, 41141, REGISTERED PROFESSIONAL ENGINEER
5/26/20 DATE
P.E. STAMP BOX

DATE
P.E. STAMP BOX

Washington State Department of Transportation
ATKINSON CONSTRUCTION / JACOBS

I-5
STEILACOOM-DUPONT RD TO THORNE LN CORRIDOR IMPROVEMENTS
MP 120.01 TO MP 124.45

MAINLINE ITS PLAN

PLAN REF NO TS15A
SHEET 991 OF 1456 SHEETS

CONSTRUCTION NOTES

NO.	DESCRIPTION
1	SEE SHEET TSD02-04 FOR PULL BOX, CABLE VAULT/SMALL CABLE VAULT PLACEMENT DETAILS AND LOCATIONS.
6	REMOVE EXISTING CONDUCTORS AND/OR COMMUNICATION CABLES, CONDUIT UPSWEEPS, AND PULLBOX, CABLE VAULT OR SMALL CABLE VAULT. BACKFILL VOID.
10	REMOVE EXISTING COMMUNICATION CABLES, CUT OFF UPSWEEPS AND ABANDON UNDERGROUND CONDUIT.
19	INSTALL A CABINET WITH A 5 KVA 480/240/120 VAC TRANSFORMER IN ACCORDANCE WITH STANDARD PLAN J-10.10 AND J-10.25 AND PER TRANSFORMER BREAKER DETAILS ON SHEETS TSD29-TSD31.
20	CONSTRUCT A TWO CABINET FOUNDATION IN ACCORDANCE WITH STANDARD PLAN J-10.10.
24	INSTALL A CONTROLLER CABINET ON TOP OF AN 8" ALUMINUM CABINET RISER. INSTALL ASSOCIATED CABINET EQUIPMENT PER EQUIPMENT SCHEDULE ON DETAIL SHEET TSD07.
45	FUSION SPLICE 12 CT DISTRIBUTION FIBER OPTIC CABLE TO 24 CT PRE-TERMINATED FIBER OPTIC CABLE PER DETAILS ON SHEETS TSFO01-TSFO10.
71	INSTALL CAMERA, CABLE, 50 FT CAMERA POLE AND FOUNDATION IN ACCORDANCE WITH STANDARD PLANS J-29.10, AND J-29.15, AND PER DETAILS ON SHEET TSD13.
84	POLE IS CLOSE TO TPU OVERHEAD POWER LINES.
88	SEE ILLUMINATION PLANS FOR POWER SOURCE INFORMATION.

WIRE NOTES

NO.	CONDUIT	MATERIAL	EXISTING CABLE	NEW CABLE	REMARK
1	2"	SCHEDULE 80		1-144 SMFO	MAINLINE CABLE
	2"	SCHEDULE 80		1-12 SMFO	DISTRIBUTION CABLE
5	4" INNERDUCT	SCHEDULE 80		1-144 SMFO	MAINLINE CABLE
	4" INNERDUCT	SCHEDULE 80		1-12 SMFO	DISTRIBUTION CABLE
8	2"	SCHEDULE 80		2-#8AWG	TRANSFORMER CONDUCTOR
16	2"	SCHEDULE 80		1-24 SMFO	PRE-TERMINATED CABLE
46	*Ex. 2"*	*EXISTING*	*1-144 SMFO (R)*		REMOVE EXISTING MAINLINE CABLE
80	2"	SCHEDULE 80		MULTICONDUCTOR	VIDEO CAMERA CONTROL CABLE
	2"	SCHEDULE 80		EMPTY	FUTURE
81	2"	SCHEDULE 80		MULTICONDUCTOR	VIDEO CAMERA CONTROL CABLE

AS-BUILT

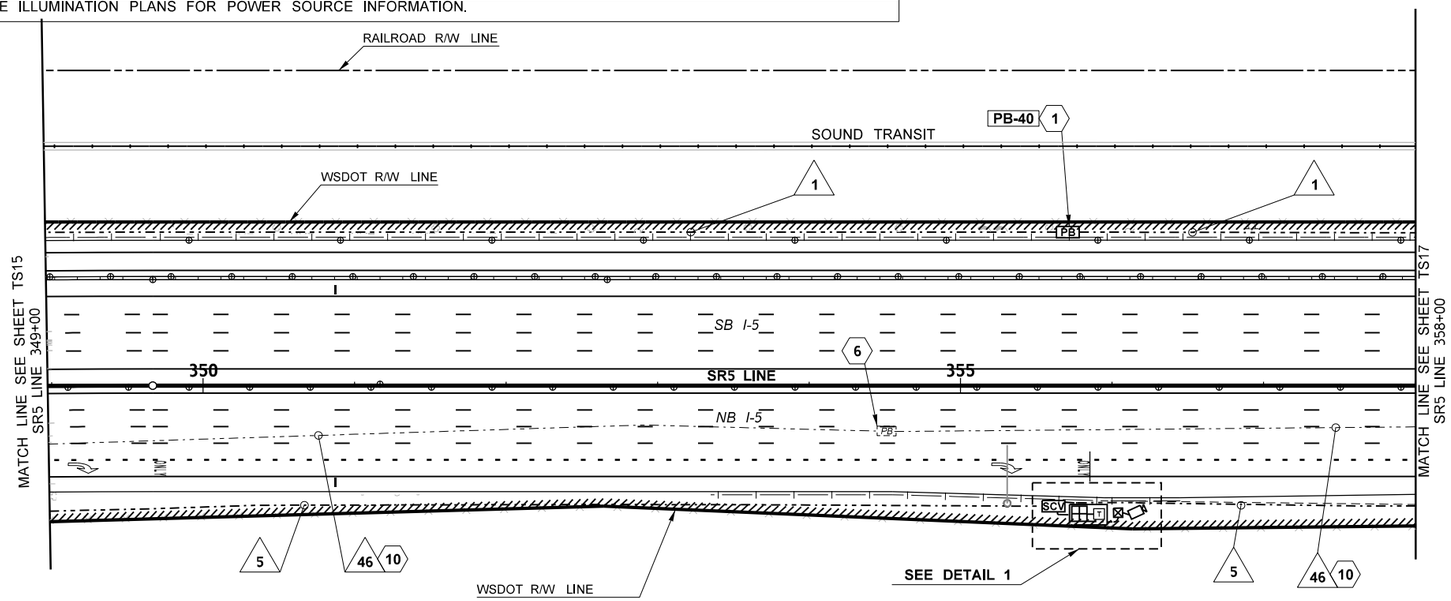

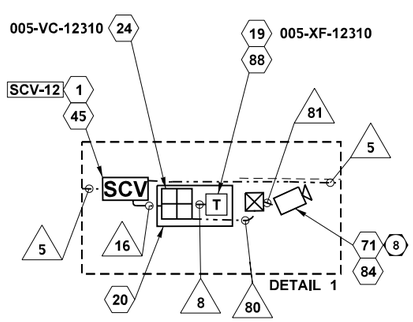

ATKINSON
OCT 29 2019
RELEASED FOR CONSTRUCTION

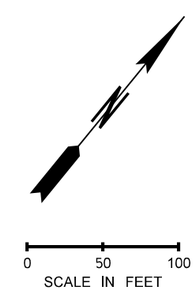

FILE NAME	c:\pwworking\jacobs_b&i\agronmi\dms20633\PS_TS_16.dgn			
TIME	11:13:33 AM			
DATE	10/28/2019			
PLOTTED BY	agronmi			
DESIGNED BY	A. HORGAN	REV 1 - RFC, RFI0271	10/22/19	
ENTERED BY	A. HORGAN	REV 0 - RELEASED FOR CONSTRUCTION	07/11/19	
CHECKED BY	M. WEGENER	REV B - FINAL REVIEW	05/10/19	
PROJ. ENGR.	C. MEADE	REV A - PRELIMINARY REVIEW	10/15/18	
REGIONAL ADM.	J. WYNANDS	REVISION	DATE	BY

REGION NO.	STATE	FED.AID PROJ.NO.
10	WASH	
JOB NUMBER		
CONTRACT NO.		LOCATION NO.
C9133		

MARK F. WEGENER, STATE OF WASHINGTON, 41141, REGISTERED PROFESSIONAL ENGINEER
10/28/19
DATE
P.E. STAMP BOX

P.E. STAMP BOX DATE

Washington State Department of Transportation

ATKINSON CONSTRUCTION / JACOBS

I-5
STEILACOOM-DUPONT RD TO THORNE LN
CORRIDOR IMPROVEMENTS
MP 120.01 TO MP 124.45

MAINLINE ITS PLAN

PLAN REF NO TS16

SHEET 992 OF 1456 SHEETS

CONSTRUCTION NOTES

NO.	DESCRIPTION
1	SEE SHEET TSD02-04 FOR PULL BOX, CABLE VAULT/SMALL CABLE VAULT PLACEMENT DETAILS AND LOCATIONS.
10	REMOVE EXISTING COMMUNICATION CABLES, CUT OFF UPSWEEPS AND ABANDON UNDERGROUND CONDUIT.
44	INSTALL CONDUIT UNDER NEW SHOULDER BEFORE CONSTRUCTION OF SHOULDER.

WIRE NOTES

NO.	CONDUIT	MATERIAL	EXISTING CABLE	NEW CABLE	REMARK
1	2"	SCHEDULE 80		1-144 SMFO	MAINLINE CABLE
	2"	SCHEDULE 80		1-12 SMFO	DISTRIBUTION CABLE
5	4" INNERDUCT	SCHEDULE 80		1-144 SMFO	MAINLINE CABLE
	4" INNERDUCT	SCHEDULE 80		1-12 SMFO	DISTRIBUTION CABLE
46	*Ex. 2"*	*EXISTING*	*1-144 SMFO (R)*		REMOVE EXISTING MAINLINE CABLE

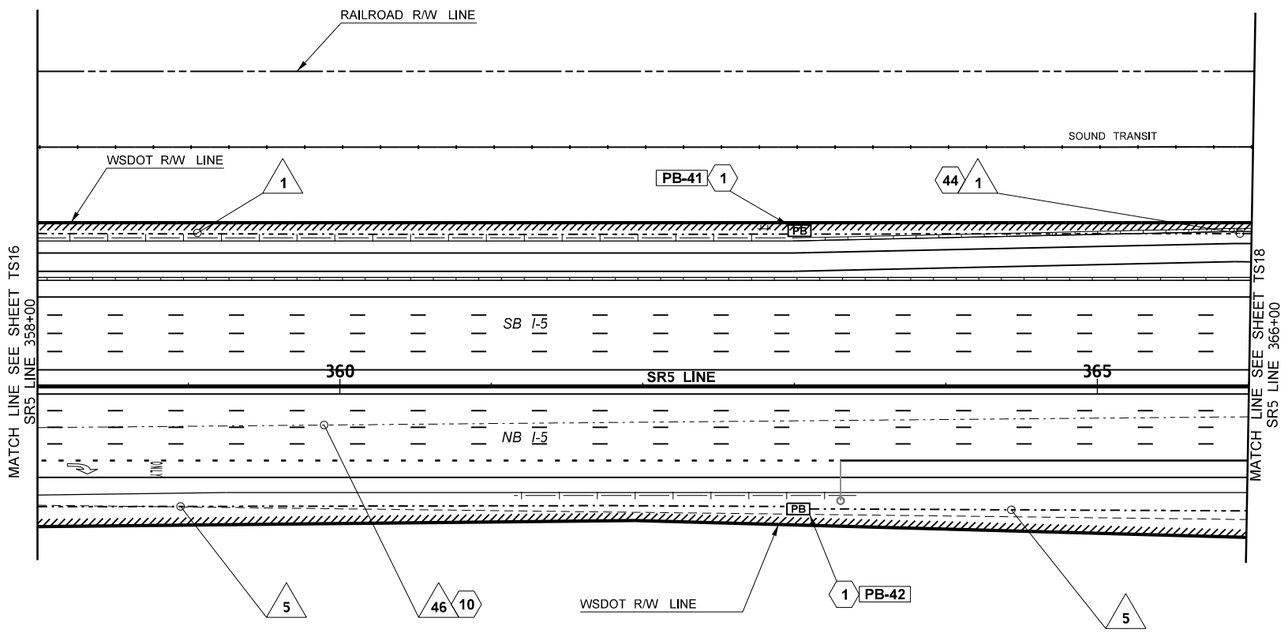

AS-BUILT

ATKINSON
JUL 12 2019 KTW
RELEASED FOR CONSTRUCTION

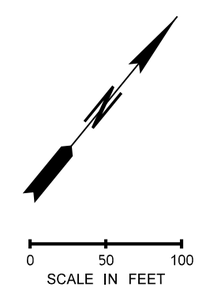

FILE NAME	c:\pwworking\jacobs_b&i\jeg_horgand\dms20633\PS_TS_17.dgn					
TIME	3:59:11 PM					
DATE	7/3/2019					
PLOTTED BY	HorganD					
DESIGNED BY	A. HORGAN					
ENTERED BY	A. HORGAN	REV 0 - RELEASED FOR CONSTRUCTION	07/11/19			
CHECKED BY	M. WEGENER	REV B - FINAL REVIEW	05/10/19			
PROJ. ENGR.	C. MEADE	REV A - PRELIMINARY REVIEW	10/15/18			
REGIONAL ADM.	J. WYNANDS	REVISION	DATE	BY		

REGION NO.	STATE	FED.AID PROJ.NO.
10	WASH	
JOB NUMBER		
CONTRACT NO. C9133		LOCATION NO.

MARK F. WEGENER · STATE OF WASHINGTON · 41141 · REGISTERED PROFESSIONAL ENGINEER
7/12/19
DATE
P.E. STAMP BOX

DATE
P.E. STAMP BOX

Washington State Department of Transportation

ATKINSON CONSTRUCTION / JACOBS

I-5
STEILACOOM-DUPONT RD TO THORNE LN
CORRIDOR IMPROVEMENTS
MP 120.01 TO MP 124.45

MAINLINE ITS PLAN

PLAN REF NO
TS17

SHEET 993 OF 1456 SHEETS

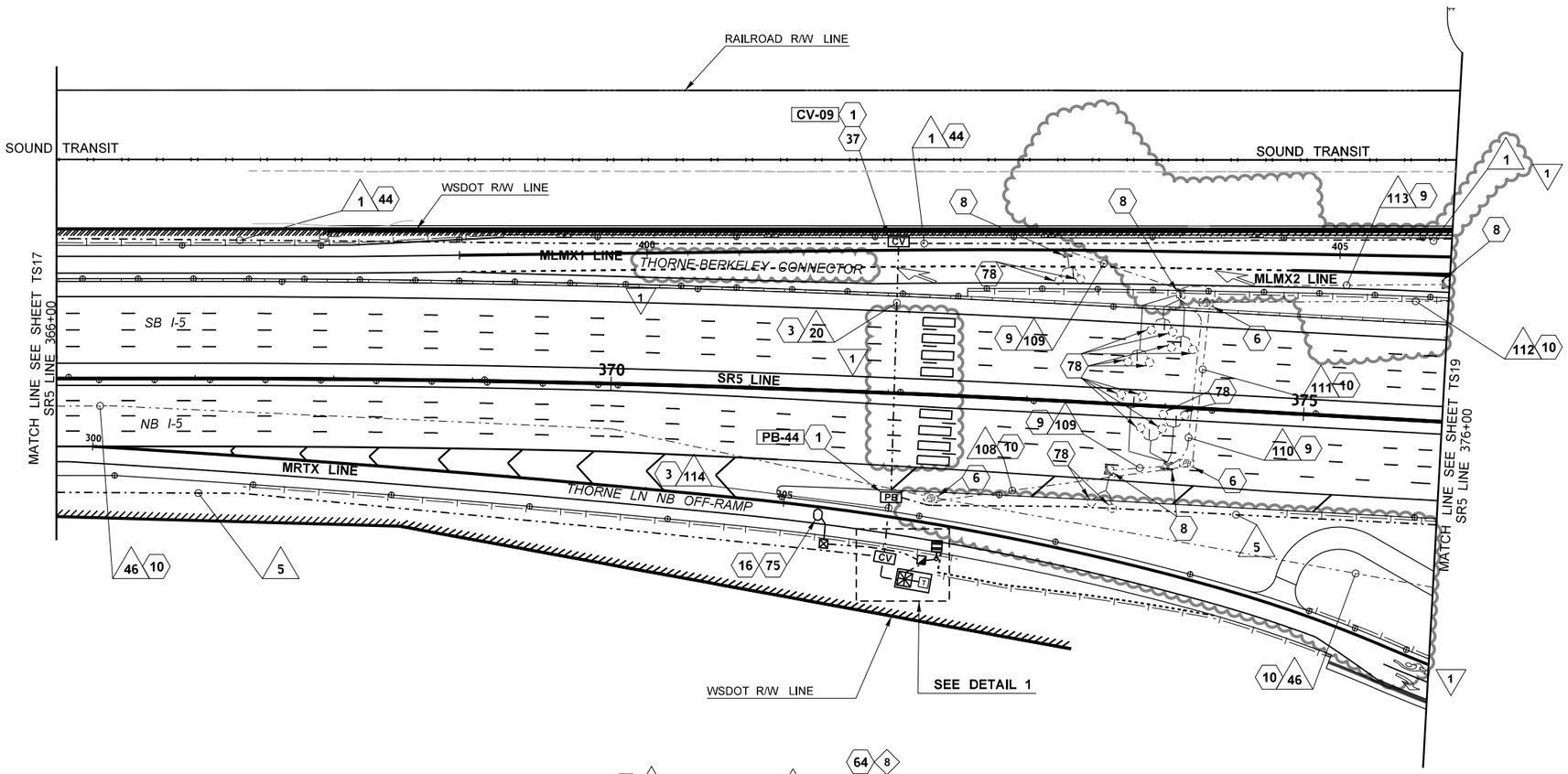

FOR CONSTRUCTION AND WIRE NOTES SEE SHEET TS18A

AS-BUILT

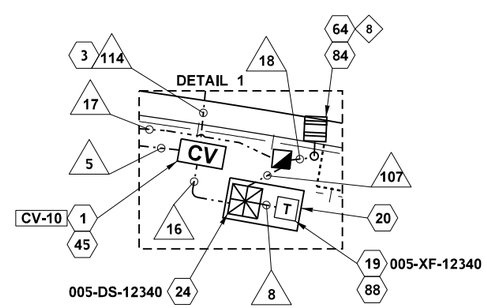

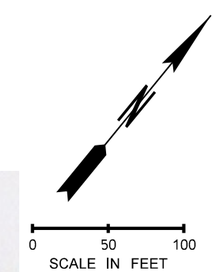

ATKINSON
MAY 19 2020
RELEASED FOR CONSTRUCTION

FILE NAME	c:\pwworking\jacobs_b&i\agronmi\dms20633\PS_TS_18.dgn			
TIME	2:19:53 PM			
DATE	5/18/2020			
PLOTTED BY	agronmi			
DESIGNED BY	A. HORGAN	REV 1 - RFC, RFI0465, RFI0479	05/18/20	
ENTERED BY	A. HORGAN	REV 0 - RELEASED FOR CONSTRUCTION	07/11/19	
CHECKED BY	M. WEGENER	REV B - FINAL REVIEW	05/10/19	
PROJ. ENGR.	C. MEADE	REV A - PRELIMINARY REVIEW	04/05/19	
REGIONAL ADM.	J. WYNANDS	REVISION	DATE	BY

REGION NO.	STATE	FED.AID PROJ.NO.
10	WASH	
JOB NUMBER		
CONTRACT NO.		LOCATION NO.
C9133		

MARK F. WEGENER, STATE OF WASHINGTON, 41141, REGISTERED PROFESSIONAL ENGINEER

5/19/20
DATE
P.E. STAMP BOX

DATE
P.E. STAMP BOX

Washington State Department of Transportation

ATKINSON CONSTRUCTION / JACOBS

I-5
STEILACOOM-DUPONT RD TO THORNE LN
CORRIDOR IMPROVEMENTS
MP 120.01 TO MP 124.45

MAINLINE ITS PLAN

PLAN REF NO TS18

SHEET 994 OF 1456 SHEETS

CONSTRUCTION NOTES

NO.	DESCRIPTION
1	SEE SHEET TSD02-04 FOR PULL BOX, CABLE VAULT/SMALL CABLE VAULT PLACEMENT DETAILS AND LOCATIONS.
3	INSTALL CONDUIT UNDER ROADWAY USING APPROVED DIRECTIONAL BORING METHOD.
6	REMOVE EXISTING CONDUCTORS AND/OR COMMUNICATION CABLES, CONDUIT UPSWEEPS, AND PULLBOX, CABLE VAULT OR SMALL CABLE VAULT. BACKFILL VOID.
8	REMOVE EXISTING CONDUCTORS AND/OR COMMUNICATION CABLES, CONDUIT UPSWEEPS, AND JUNCTION BOX. BACKFILL
9	REMOVE EXISTING CONDUCTORS, CUT OFF UPSWEEPS AND ABANDON UNDERGROUND CONDUIT.
10	REMOVE EXISTING COMMUNICATION CABLES, CUT OFF UPSWEEPS AND ABANDON UNDERGROUND CONDUIT.
16	LOOP CABLE SHALL BE INSTALLED WITH FOUR (4) TURNS.
19	INSTALL A CABINET WITH A 5 KVA 480/240/120 VAC TRANSFORMER IN ACCORDANCE WITH STANDARD PLAN J-10.10 AND J-10.25 AND PER TRANSFORMER BREAKER DETAILS ON SHEETS TSD29-TSD31.
20	CONSTRUCT A TWO CABINET FOUNDATION IN ACCORDANCE WITH STANDARD PLAN J-10.10.
24	INSTALL A CONTROLLER CABINET ON TOP OF AN 8" ALUMINUM CABINET RISER. INSTALL ASSOCIATED CABINET EQUIPMENT PER EQUIPMENT SCHEDULE ON DETAIL SHEET TSD07.
37	INSTALL HEAVY DUTY CABLE VAULT.
44	INSTALL CONDUIT UNDER NEW SHOULDER BEFORE CONSTRUCTION OF SHOULDER.
45	FUSION SPLICE 12 CT DISTRIBUTION FIBER OPTIC CABLE TO 24 CT PRE-TERMINATED FIBER OPTIC CABLE PER DETAILS ON SHEETS TSFO01-TSFO10.
64	INSTALL STEEL LIGHT STANDARD POLE, FOUNDATION, WAVETRONIX SENSOR AND ASSOCIATED EQUIPMENT PER DETAILS ON SHEET TSD27.
75	INSTALL TYPE WR INDUCTION LOOP VEHICLE DETECTORS IN CENTER OF THE LANE IN ACCORDANCE WITH STANDARD PLAN J-50.12, AND PER DETAILS ON SHEET TSD25.
78	ABANDON EXISTING PIEZO AXLE SENSOR AND INDUCTION VEHICLE DETECTION LOOP IN PAVEMENT.
84	POLE IS CLOSE TO TPU OVERHEAD POWER LINES.
88	SEE ILLUMINATION PLANS FOR POWER SOURCE INFORMATION.

3

WIRE NOTES

NO.	CONDUIT	MATERIAL	EXISTING CABLE	NEW CABLE	REMARK
1	2"	SCHEDULE 80		1-144 SMFO	MAINLINE CABLE
	2"	SCHEDULE 80		1-12 SMFO	DISTRIBUTION CABLE
5	4" INNERDUCT	SCHEDULE 80		1-144 SMFO	MAINLINE CABLE
	4" INNERDUCT	SCHEDULE 80		1-12 SMFO	DISTRIBUTION CABLE
8	2"	SCHEDULE 80		2-#8AWG	TRANSFORMER CONDUCTOR
16	2"	SCHEDULE 80		1-24 SMFO	PRE-TERMINATED CABLE
17	2"	SCHEDULE 80		1-2C(SH)	LOOP LEAD IN CABLE
18	2"	SCHEDULE 80		MULTICONDUCTOR	WAVETRONIX HOMERUN CABLE
20	2"	SCHEDULE 80		EMPTY	FUTURE
	2"	SCHEDULE 80		EMPTY	FUTURE
46	*Ex. 2"*	*EXISTING*	*1-144 SMFO (R)*		REMOVE EXISTING MAINLINE CABLE
107	2"	SCHEDULE 80		1-2C(SH)	LOOP LEAD IN CABLE
				MULTICONDUCTOR	WAVETRONIX SENSOR CABLE
	2"	SCHEDULE 80		EMPTY	FUTURE
	2"	SCHEDULE 80		EMPTY	FUTURE
108	*Ex. 2.5"*	*EXISTING*	*1-48 SMFO (R)*		REMOVE EXISTING LATERAL FIBER OPTIC CABLE
	Ex. 2.5"	*EXISTING*	*EMPTY*		FUTURE
109	*Ex. 2"*	*EXISTING*	*2-2C(SH) (R)*		REMOVE EXISTING LOOP LEAD IN CABLE
			1-COAX		REMOVE EXISTING PIEZO AXLE SENSOR CABLE
110	*Ex. 3"*	*EXISTING*	*8-2C(SH) (R)*		REMOVE EXISTING LOOP LEAD IN CABLE
			4-COAX		REMOVE EXISTING PIEZO AXLE SENSOR CABLE
111	*Ex. 3"*	*EXISTING*	*1-48 SMFO (R)*		REMOVE EXISTING LATERAL FIBER OPTIC CABLE
112	*Ex. 2"*	*EXISTING*	*1-48 SMFO (R)*		REMOVE EXISTING LATERAL FIBER OPTIC CABLE
113	*Ex. 3"*	*EXISTING*	*8-2C(SH) (R)*		REMOVE EXISTING LOOP LEAD IN CABLE
			4-COAX		REMOVE EXISTING PIEZO AXLE SENSOR CABLE
	Ex. 3"	*EXISTING*	*8-2C(SH) (R)*		REMOVE EXISTING LOOP LEAD IN CABLE
			4-COAX		REMOVE EXISTING PIEZO AXLE SENSOR CABLE
114	4" INNERDUCT	SCHEDULE 80		1-144 SMFO	MAINLINE CABLE
	4" INNERDUCT	SCHEDULE 80		1-12 SMFO	DISTRIBUTION CABLE
	2"	SCHEDULE 80		EMPTY	FUTURE

AS-BUILT

ATKINSON
MAY 27 2020 KTW
RELEASED FOR CONSTRUCTION

FILE NAME	c:\pwworking\jacobs_b&i\agronmi\dms20633\PS_TS_18A.dgn
TIME	9:06:19 AM
DATE	5/21/2020
PLOTTED BY	agronmi
DESIGNED BY	A. HORGAN
ENTERED BY	A. HORGAN
CHECKED BY	M. WEGENER
PROJ. ENGR.	C. MEADE
REGIONAL ADM.	J. WYNANDS

REVISION	DATE	BY
REV 3 - RFC, RFI0473, REV CN64	05/21/20	
REV 2 - RFC, RFI0465, DELETE WN3, WN115	05/15/20	
REV 1 - RFC, RFI0271	10/22/19	
REV 0 - RELEASED FOR CONSTRUCTION	07/11/19	
REV A - FINAL REVIEW	05/10/19	

REGION NO. 10 | STATE WASH | FED.AID PROJ.NO.
JOB NUMBER
CONTRACT NO. C9133 | LOCATION NO.

MARK F. WEGENER, STATE OF WASHINGTON, 41141, REGISTERED PROFESSIONAL ENGINEER
5/26/20
DATE
P.E. STAMP BOX

DATE
P.E. STAMP BOX

Washington State Department of Transportation
ATKINSON CONSTRUCTION / JACOBS

I-5
STEILACOOM-DUPONT RD TO THORNE LN
CORRIDOR IMPROVEMENTS
MP 120.01 TO MP 124.45

MAINLINE ITS PLAN

PLAN REF NO TS18A
SHEET 995 OF 1456 SHEETS

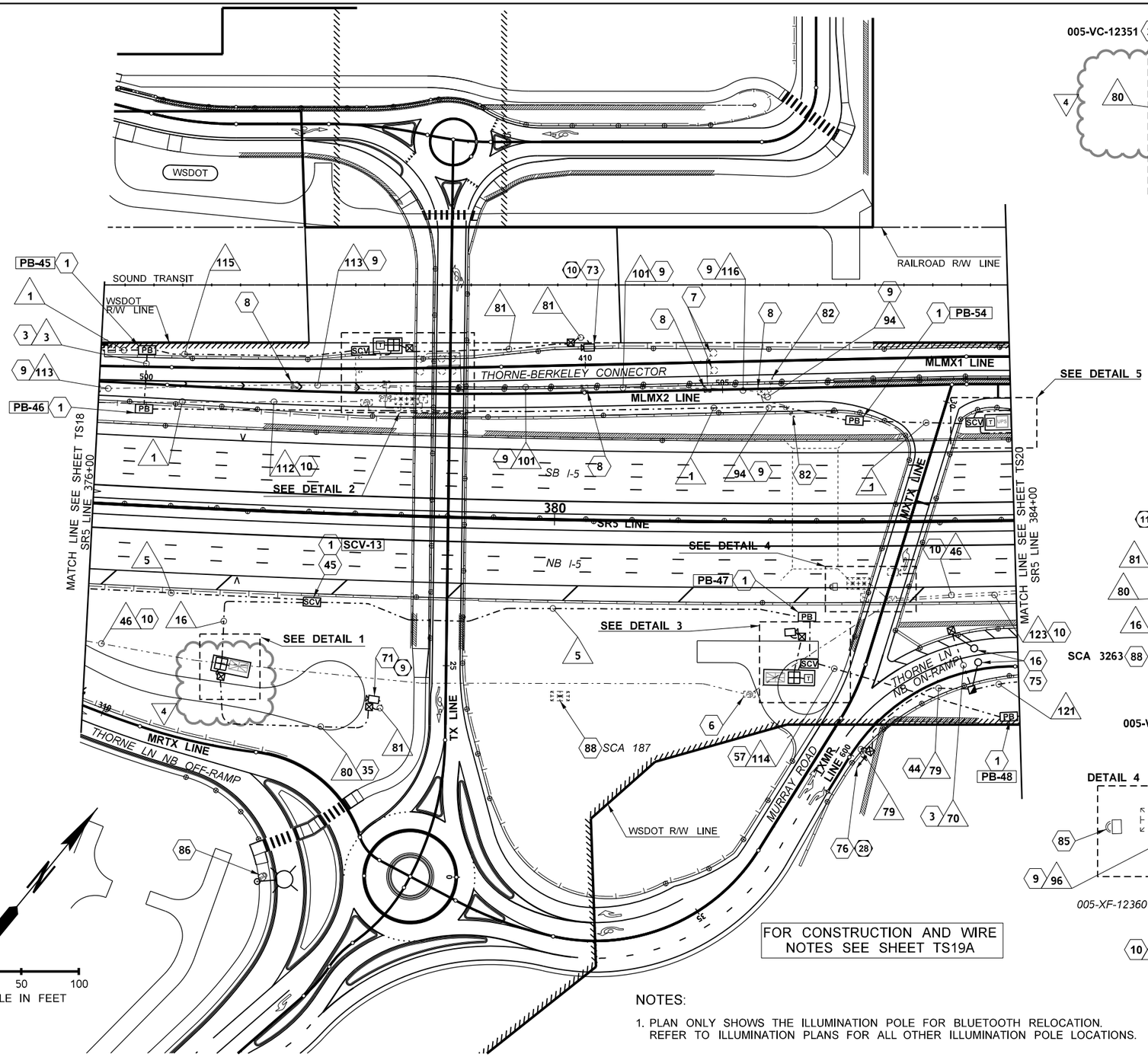

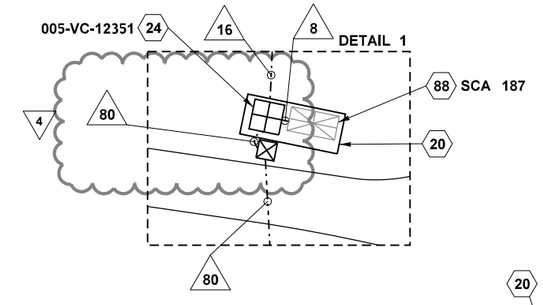

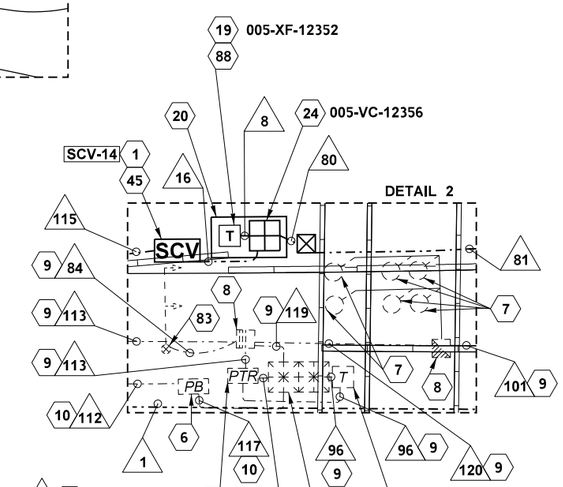

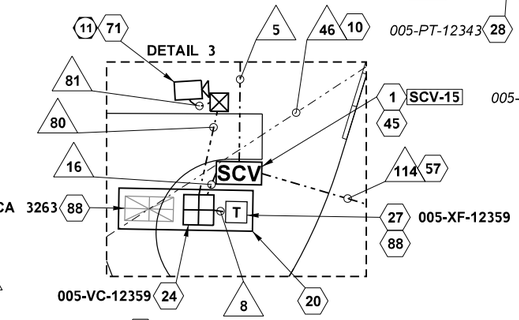

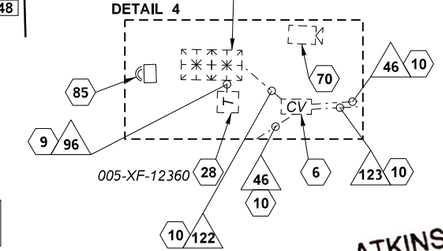

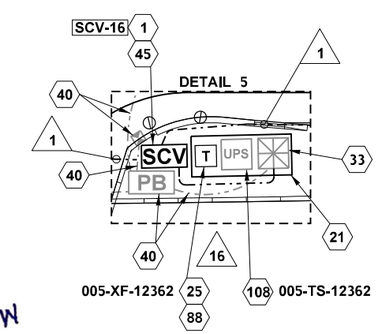

AS-BUILT

ATKINSON
NOV 09 2021 KTW
RELEASED FOR CONSTRUCTION

NOTES:

1. PLAN ONLY SHOWS THE ILLUMINATION POLE FOR BLUETOOTH RELOCATION. REFER TO ILLUMINATION PLANS FOR ALL OTHER ILLUMINATION POLE LOCATIONS.

FILE NAME	c:\pwworking\jacobs_b&i\agronmi\dms20633\PS_TS_19.dgn			
TIME	10:58:11 AM	REV 4 - RFC, RFI0663, ADD JB	11/05/21	
DATE	11/5/2021	REV 3 - RFC, RFI0511,REV PB-47,PB-55,SCV-15	08/10/20	
PLOTTED BY	agronmi	REV 2 - RFC, RFI0464, RFI0465, RFI0479	05/18/20	
DESIGNED BY	A. HORGAN	REV 1 - RFC, RFI0249, RFI0276	10/22/19	
ENTERED BY	A. HORGAN	REV 0 - RELEASED FOR CONSTRUCTION	07/11/19	
CHECKED BY	M. WEGENER	REV B - FINAL REVIEW	05/10/19	
PROJ. ENGR.	C. MEADE	REV A - PRELIMINARY REVIEW	04/05/19	
REGIONAL ADM.	J. WYNANDS	REVISION	DATE	BY

REGION NO.	STATE	FED.AID PROJ.NO.
10	WASH	
JOB NUMBER		
CONTRACT NO.		LOCATION NO.
C9133		

MARK F. WEGENER — STATE OF WASHINGTON — 41141 — REGISTERED PROFESSIONAL ENGINEER
11/09/21
DATE
P.E. STAMP BOX

DATE
P.E. STAMP BOX

Washington State Department of Transportation

ATKINSON / JACOBS CONSTRUCTION

I-5
STEILACOOM-DUPONT RD TO THORNE LN
CORRIDOR IMPROVEMENTS
MP 120.01 TO MP 124.45

MAINLINE ITS PLAN

PLAN REF NO
TS19

SHEET 996 OF 1456 SHEETS

CONSTRUCTION NOTES

NO.	DESCRIPTION
1	SEE SHEET TSD02-04 FOR PULL BOX, CABLE VAULT/SMALL CABLE VAULT PLACEMENT DETAILS AND LOCATIONS.
3	INSTALL CONDUIT UNDER ROADWAY USING APPROVED DIRECTIONAL BORING METHOD.
6	REMOVE EXISTING CONDUCTORS AND/OR COMMUNICATION CABLES, CONDUIT UPSWEEPS, AND PULLBOX, CABLE VAULT OR SMALL CABLE VAULT. BACKFILL VOID.
7	ABANDON EXISTING INDUCTION VEHICLE DETECTION LOOP IN PAVEMENT.
8	REMOVE EXISTING CONDUCTORS AND/OR COMMUNICATION CABLES, CONDUIT UPSWEEPS, AND JUNCTION BOX.
9	REMOVE EXISTING CONDUCTORS, CUT OFF UPSWEEPS AND ABANDON UNDERGROUND CONDUIT.
10	REMOVE EXISTING COMMUNICATION CABLES, CUT OFF UPSWEEPS AND ABANDON UNDERGROUND CONDUIT.
16	LOOP CABLE SHALL BE INSTALLED WITH FOUR (4) TURNS.
19	INSTALL A CABINET WITH A 5 KVA 480/240/120 VAC TRANSFORMER IN ACCORDANCE WITH STANDARD PLAN J-10.10 AND J-10.25 AND PER TRANSFORMER BREAKER DETAILS ON SHEETS TSD29-TSD31.
20	CONSTRUCT A TWO CABINET FOUNDATION IN ACCORDANCE WITH STANDARD PLAN J-10.10.
21	CONSTRUCT A THREE CABINET FOUNDATION IN ACCORDANCE WITH STANDARD PLAN J-10.10.
24	INSTALL A CONTROLLER CABINET ON TOP OF AN 8" ALUMINUM CABINET RISER. INSTALL ASSOCIATED CABINET EQUIPMENT PER EQUIPMENT SCHEDULE ON DETAIL SHEET TSD07.
25	INSTALL A CABINET WITH A 7.5 KVA 480/240/120 VAC TRANSFORMER IN ACCORDANCE WITH STANDARD PLAN J-10.10 AND J-10.25 AND PER TRANSFORMER BREAKER DETAILS ON SHEETS TSD29-TSD31.
27	INSTALL A CABINET WITH A 15 KVA 240/480 VAC STEP-UP TRANSFORMER IN ACCORDANCE WITH SHEET ILD09, STANDARD PLAN J-10.10, AND PER TRANSFORMER BREAKER DETAILS ON SHEET TSD31.
28	REMOVE EXISTING ITS AND/OR TRANSFORMER CABINET(S) AND FOUNDATION. RETURN CABINET AND INTERNAL COMPONENTS TO THE OLYMPIC REGION SIGNAL SHOP.
33	SEE TRAFFIC SIGNAL PLANS FOR UPS CABINET.
35	ROUTE CONDUIT TO AVOID AREA OF FUTURE EXCAVATION FOR UTILITY ACCESS. ROUTE CONDUIT AS FAR FROM I-5 AS POSSIBLE, BUT CONDUIT PATH BETWEEN CABINET AND POLE SHALL NOT EXCEED 220 FEET. 2
40	SEE SHEET SG02 FOR TRAFFIC SIGNAL DESIGN.
44	INSTALL CONDUIT UNDER NEW SHOULDER BEFORE CONSTRUCTION OF SHOULDER.
45	FUSION SPLICE 12 CT DISTRIBUTION FIBER OPTIC CABLE TO 24 CT PRE-TERMINATED FIBER OPTIC CABLE PER DETAILS ON SHEETS TSFO01-TSFO10.
57	INSTALL CONDUIT IN FILL UNDER MURRAY ROAD BEFORE PAVING. OR IF IT IS INSTALLED AFTER PAVING, IT SHALL BE INSTALLED USING APPROVED DIRECTIONAL BORING METHOD. 2
70	REMOVE EXISTING CCTV, POLE, FOUNDATION AND ASSOCIATED EQUIPMENT. DELIVER REMOVED CAMERA, CAMERA MOUNTING HARDWARE AND CAMERA CABLES TO OLYMPIC REGION SIGNAL SHOP. ALL CAMERA CABLES AND CONNECTORS SHALL NOT BE DAMAGED OR CUT DURING REMOVAL. SAVE POLE FOR POTENTIAL RE-USE ON THIS PROJECT. THE CONTRACTOR SHALL PROVIDE AN INSPECTION REPORT DOCUMENTING THE CONDITION OF THE POLE TO WSDOT AND OBTAIN WSDOT APPROVAL TO USE THE POLE BEFORE INSTALLING THIS POLE IN A NEW LOCATION.
71	INSTALL CAMERA, CABLE, 50 FT CAMERA POLE AND FOUNDATION IN ACCORDANCE WITH STANDARD PLANS J-29.10, AND J-29.15, AND PER DETAILS ON SHEET TSD13.
73	INSTALL CAMERA, CABLE AND 50 FT CAMERA POLE ON CONCRETE BARRIER IN ACCORDANCE WITH STANDARD PLAN J-29.15, AND PER STRUCTURE DETAIL SHEET ST09.
75	INSTALL TYPE WR INDUCTION LOOP VEHICLE DETECTORS IN CENTER OF THE LANE IN ACCORDANCE WITH STANDARD PLAN J-50.12, AND PER DETAILS ON SHEET TSD25.
76	INSTALL TYPE 1 FLASHING BEACON SIGNAL STANDARD IN ACCORDANCE WITH STANDARD PLAN J-21.16 AND PER RAMP METER DETAIL SHEET TSD26. INSTALL ADVANCE WARNING SIGN PER SIGNING PLANS.
82	REMOVE EXISTING RAMP METER ADVANCED WARNING SIGN, FLASHING BEACON, POLE AND FOUNDATION. COORDINATE WITH OLYMPIC REGION SIGN SHOP FOR THE DELIVERY OF ITS EQUIPMENT.
83	REMOVE EXISTING RAMP METER SIGNAL, POLE, FOUNDATION AND ASSOCIATED EQUIPMENT. COORDINATE WITH OLYMPIC REGION SIGN SHOP FOR THE DELIVERY OF ITS EQUIPMENT.
85	REMOVE EXISTING BLUETOOTH READER, SOLAR PANEL(S), ENCLOSURE AND ASSOCIATED HARDWARE. THE CONTRACTOR SHALL COORDINATE WITH WSDOT AND DOCUMENT THE CONDITION OF THE EXISTING EQUIPMENT BEFORE INSTALLING IN A NEW LOCATION.
86	INSTALL BLUETOOTH READER, SOLAR PANEL(S), ENCLOSURE AND ASSOCIATED HARDWARE ON LIGHT POLE PER DETAIL SHEET TSD28. UTILIZE STAINLESS STEEL BANDING TO MOUNT EQUIPMENT AT THE PROPOSED LOCATION.
88	SEE ILLUMINATION PLANS FOR POWER SOURCE INFORMATION.
108	INSTALL PRETERMINATED PATCH PANEL AND DIN RAIL PANEL WITH COMMUNICATION EQUIPMENT IN "ITS" SIDE OF SIGNAL CABINET. SEE TRAFFIC SIGNAL PLANS FOR CABINET DETAILS. SEE SHEET TSD07 FOR CABINET EQUIPMENT SCHEDULE. SEE SHEET TSD11 FOR DIN RAIL PANEL DETAILS.

WIRE NOTES

NO.	CONDUIT	MATERIAL	EXISTING CABLE	NEW CABLE	REMARK
1	2"	SCHEDULE 80		1-144 SMFO	MAINLINE CABLE
	2"	SCHEDULE 80		1-12 SMFO	DISTRIBUTION CABLE
2 3	2"	SCHEDULE 80		1-144 SMFO	MAINLINE CABLE
	2"	SCHEDULE 80		1-12 SMFO	DISTRIBUTION CABLE
	2"	SCHEDULE 80		EMPTY	FUTURE
5	4" INNERDUCT	SCHEDULE 80		1-144 SMFO	MAINLINE CABLE
	4" INNERDUCT	SCHEDULE 80		1-12 SMFO	DISTRIBUTION CABLE
8	2"	SCHEDULE 80		2-#8AWG	TRANSFORMER CONDUCTOR
16	2"	SCHEDULE 80		1-24 SMFO	PRE-TERMINATED CABLE
46	*Ex. 2"*	*EXISTING*	*1-144 SMFO (R)*		REMOVE EXISTING MAINLINE CABLE
70	2"	SCHEDULE 80		1-2C(SH)	LOOP LEAD IN CABLE
	2"	SCHEDULE 80		EMPTY	FUTURE
79	2"	SCHEDULE 80		1-2C	FLASHING BEACON CABLE
80	2"	SCHEDULE 80		MULTICONDUCTOR	VIDEO CAMERA CONTROL CABLE
	2"	SCHEDULE 80		EMPTY	FUTURE
81	2"	SCHEDULE 80		MULTICONDUCTOR	VIDEO CAMERA CONTROL CABLE
84	*Ex. 2"*	*EXISTING*	*2-5C (R)*		REMOVE EXISTING IMSA SIGNAL DISPLAY CABLE
	Ex. 2"	*EXISTING*	*EMPTY*		FUTURE
94	*Ex. 1"*	*EXISTING*	*1-2C (R)*		REMOVE EXISTING FLASHING BEACON CABLE
96	*Ex. 2"*	*EXISTING*	*2-#8AWG (R)*		REMOVE EXISTING TRANSFORMER CONDUCTOR
101	*Ex. 2"*	*EXISTING*	*2-2C (R)*		REMOVE EXISTING FLASHING BEACON CABLE
			2-2C(SH) (R)		REMOVE EXISTING LOOP LEAD IN CABLE
112	*Ex. 2"*	*EXISTING*	*1-48 SMFO (R)*		REMOVE EXISTING LATERAL FIBER OPTIC CABLE
113	*Ex. 3"*	*EXISTING*	*8-2C(SH) (R)*		REMOVE EXISTING LOOP LEAD IN CABLE
			4-COAX		REMOVE EXISTING PIEZO AXLE SENSOR CABLE
	Ex. 3"	*EXISTING*	*8-2C(SH) (R)*		REMOVE EXISTING LOOP LEAD IN CABLE
			4-COAX		REMOVE EXISTING PIEZO AXLE SENSOR CABLE
114	4" INNERDUCT	SCHEDULE 80		1-144 SMFO	MAINLINE CABLE
	4" INNERDUCT	SCHEDULE 80		1-12 SMFO	DISTRIBUTION CABLE
	2"	SCHEDULE 80		EMPTY	FUTURE
115	2"	SCHEDULE 80		2-12 SMFO	DISTRIBUTION CABLE
116	*Ex. 1"*	*EXISTING*	*2-2C (R)*		REMOVE EXISTING FLASHING BEACON CABLE
117	*Ex. 2"*	*EXISTING*	*1-48 SMFO (R)*		REMOVE EXISTING LATERAL FIBER OPTIC CABLE
	Ex. 2"	*EXISTING*	*EMPTY*		FUTURE
118	*Ex. 2"*	*EXISTING*	*16 TWPR (R)*		REMOVE EXISTING DATA CABLE
	Ex. 2"	*EXISTING*	*EMPTY*		FUTURE
119	*Ex. 3"*	*EXISTING*	*2-2C (R)*		REMOVE EXISTING FLASHING BEACON CABLE
			8-2C(SH) (R)		REMOVE EXISTING LOOP LEAD IN CABLE
			2-5C (R)		REMOVE EXISTING IMSA SIGNAL DISPLAY CABLE
	Ex. 3"	*EXISTING*	*EMPTY*		FUTURE
	Ex. 2"	*EXISTING*	*EMPTY*		FUTURE
120	*Ex. 3"*	*EXISTING*	*8-2C(SH) (R)*		REMOVE EXISTING LOOP LEAD IN CABLE
			2-2C (R)		REMOVE EXISTING FLASHING BEACON CABLE
	Ex. 2"	*EXISTING*	*EMPTY*		FUTURE
121	2"	SCHEDULE 80		2-2C(SH)	LOOP LEAD IN CABLE
				1-2C	FLASHING BEACON CABLE
122	*Ex. 2"*	*EXISTING*	*1-24 SMFO (R)*		REMOVE EXISTING PRE-TERMINATED FIBER OPTIC CABLE
			2-12 SMFO (R)		REMOVE EXISTING FIBER OPTIC CABLE
	Ex. 2"	*EXISTING*	*EMPTY*		FUTURE
123	*Ex. 2"*	*EXISTING*	*2-12 SMFO (R)*		REMOVE EXISTING FIBER OPTIC CABLE

AS-BUILT

ATKINSON
MAY 19 2020 KSW
RELEASED FOR CONSTRUCTION

FILE NAME	c:\pwworking\jacobs_b&i\agronmi\dms20633\PS_TS_19A.dgn					
TIME	2:30:26 PM				REGION NO. 10	STATE WASH	FED.AID PROJ.NO.
DATE	5/18/2020					
PLOTTED BY	agronmi				JOB NUMBER	
DESIGNED BY	A. HORGAN	REV 2 - RFC, RFI0464, RFI0465, RFI0479	05/18/19			
ENTERED BY	A. HORGAN	REV 1 - RFC, RFI0249, RFI0271, RFI0276	10/22/19			
CHECKED BY	M. WEGENER	REV 0 - RELEASED FOR CONSTRUCTION	07/11/19		CONTRACT NO. C9133	LOCATION NO.
PROJ. ENGR.	C. MEADE	REV A - FINAL REVIEW	05/10/19			
REGIONAL ADM.	J. WYNANDS	REVISION	DATE	BY		

MARK F. WEGENER — STATE OF WASHINGTON — 41141 — REGISTERED PROFESSIONAL ENGINEER
5/19/20
DATE
P.E. STAMP BOX

DATE
P.E. STAMP BOX

Washington State Department of Transportation

ATKINSON CONSTRUCTION / JACOBS

I-5
STEILACOOM-DUPONT RD TO THORNE LN CORRIDOR IMPROVEMENTS
MP 120.01 TO MP 124.45

MAINLINE ITS PLAN

PLAN REF NO TS19A

SHEET 997 OF 1456 SHEETS

FOR CONSTRUCTION AND WIRE NOTES SEE SHEET TS20A

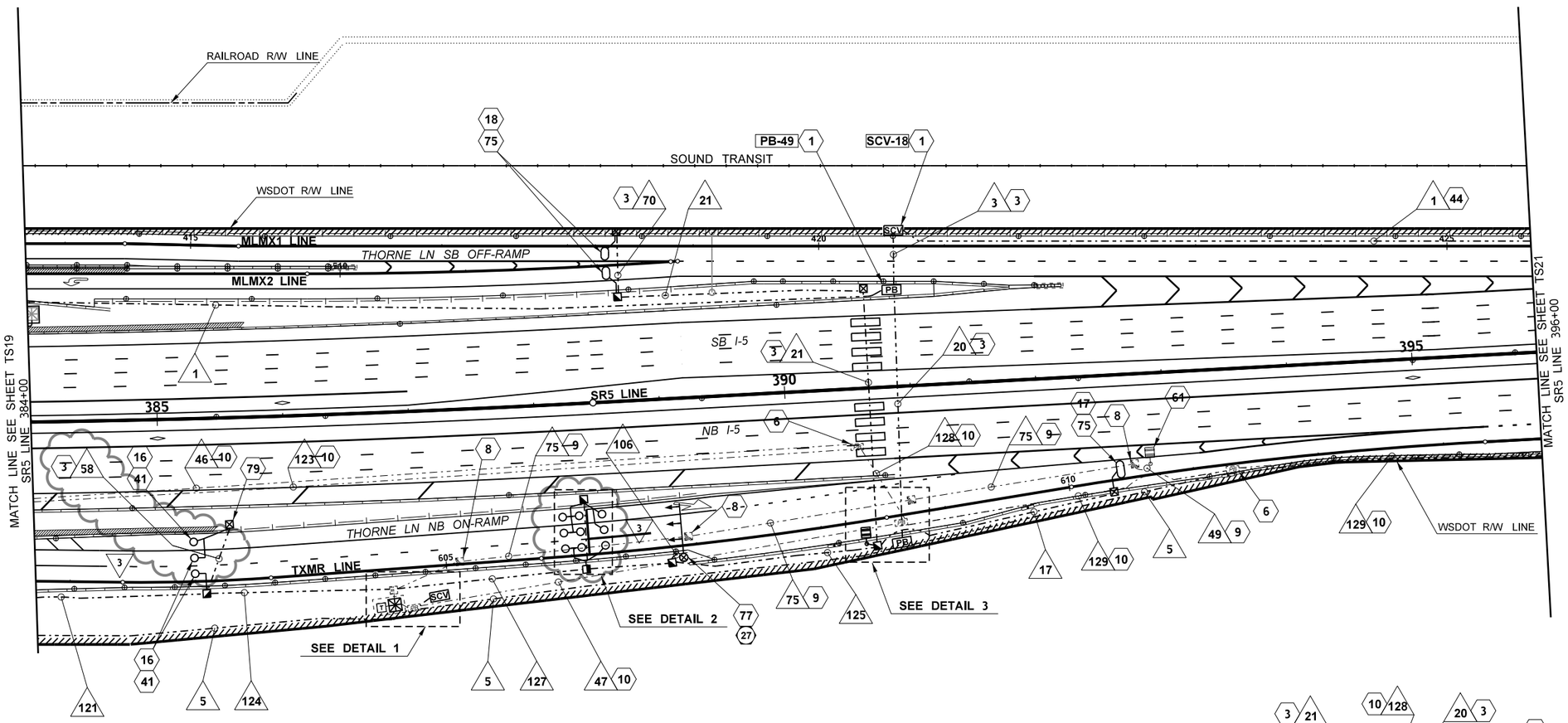

AS-BUILT

ATKINSON
OCT 15 2020
RELEASED FOR CONSTRUCTION

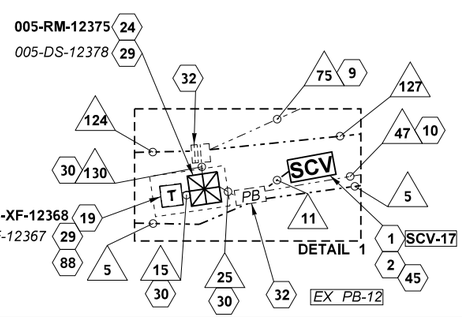

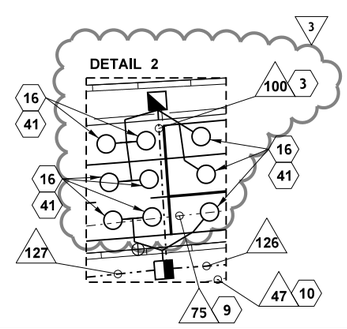

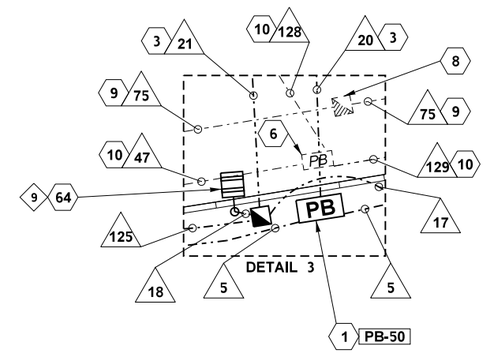

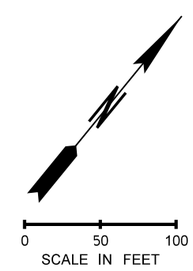

FILE NAME	c:\pwworking\jacobs_b&i\stephelm1\dms20633\PS_TS_20.dgn						
TIME	11:58:17 AM						
DATE	10/12/2020	REV 3 - RFI0566, REV LOOPS	10/12/20		REGION NO. 10	STATE WASH	FED.AID PROJ.NO.
PLOTTED BY	StepheLM1	REV 2 - RFI0526, ADD SIGNAL HEAD TO RM	08/12/20		JOB NUMBER		
DESIGNED BY	A. HORGAN	REV 1 - RFC, RFI0460, REV CROSSING	04/10/20				
ENTERED BY	A. HORGAN	REV 0 - RELEASED FOR CONSTRUCTION	07/11/19				
CHECKED BY	M. WEGENER	REV B - FINAL REVIEW	05/10/19		CONTRACT NO. C9133		LOCATION NO.
PROJ. ENGR.	C. MEADE	REV A - PRELIMINARY REVIEW	04/05/19				
REGIONAL ADM.	J. WYNANDS	REVISION	DATE	BY			

MARK F. WEGENER — STATE OF WASHINGTON — 41141 — REGISTERED PROFESSIONAL ENGINEER
10/13/20
DATE
P.E. STAMP BOX

DATE
P.E. STAMP BOX

Washington State Department of Transportation

ATKINSON CONSTRUCTION / JACOBS

I-5
STEILACOOM-DUPONT RD TO THORNE LN CORRIDOR IMPROVEMENTS
MP 120.01 TO MP 124.45

MAINLINE ITS PLAN

PLAN REF NO TS20

SHEET 998 OF 1456 SHEETS

CONSTRUCTION NOTES

NO.	DESCRIPTION
1	SEE SHEET TSD02-04 FOR PULL BOX, CABLE VAULT/SMALL CABLE VAULT PLACEMENT DETAILS AND LOCATIONS.
2	INSTALL SMALL CABLE VAULT NEXT TO EXISTING PULL BOX.
3	INSTALL CONDUIT UNDER ROADWAY USING APPROVED DIRECTIONAL BORING METHOD.
6	REMOVE EXISTING CONDUCTORS AND/OR COMMUNICATION CABLES, CONDUIT UPSWEEPS, AND PULLBOX, CABLE VAULT OR SMALL CABLE VAULT. BACKFILL VOID.
8	REMOVE EXISTING CONDUCTORS AND/OR COMMUNICATION CABLES, CONDUIT UPSWEEPS, AND JUNCTION BOX. BACKFILL VOID.
9	REMOVE EXISTING CONDUCTORS, CUT OFF UPSWEEPS AND ABANDON UNDERGROUND CONDUIT.
10	REMOVE EXISTING COMMUNICATION CABLES, CUT OFF UPSWEEPS AND ABANDON UNDERGROUND CONDUIT.
16	LOOP CABLE SHALL BE INSTALLED WITH FOUR (4) TURNS.
17	LOOP CABLE SHALL BE INSTALLED WITH FIVE (5) TURNS.
18	LOOP CABLE SHALL BE INSTALLED WITH SIX (6) TURNS.
19	INSTALL A CABINET WITH A 5 KVA 480/240/120 VAC TRANSFORMER IN ACCORDANCE WITH STANDARD PLAN J-10.10 AND J-10.25 AND PER TRANSFORMER BREAKER DETAILS ON SHEETS TSD29-TSD31.
24	INSTALL A CONTROLLER CABINET ON TOP OF AN 8" ALUMINUM CABINET RISER. INSTALL ASSOCIATED CABINET EQUIPMENT PER EQUIPMENT SCHEDULE ON DETAIL SHEET TSD07.
29	REMOVE EXISTING ITS AND/OR TRANSFORMER CABINET(S). FOUNDATION TO REMAIN. RETURN CABINET AND INTERNAL COMPONENTS TO THE OLYMPIC REGION SIGNAL SHOP.
30	INSTALL CABLES IN EXISTING CONDUIT(S).
32	TERMINATE CONDUIT IN EXISTING JUNCTION BOX, PULL BOX, CABLE VAULT OR SMALL CABLE VAULT. SEE WIRE NOTES.
41	INSTALL TYPE 3 INDUCTION LOOP VEHICLE DETECTORS IN CENTER OF THE LANE IN ACCORDANCE WITH STANDARD PLAN J-50.12, AND PER DETAILS ON SHEET TSD25.
44	INSTALL CONDUIT UNDER NEW SHOULDER BEFORE CONSTRUCTION OF SHOULDER.
45	FUSION SPLICE 12 CT DISTRIBUTION FIBER OPTIC CABLE TO 24 CT PRE-TERMINATED FIBER OPTIC CABLE PER DETAILS ON SHEETS TSFO01-TSFO10.
61	REMOVE EXISTING WAVETRONIX DETECTORS, POLE, FOUNDATION AND ASSOCIATED EQUIPMENT. DELIVER REMOVED WAVETRONIX MOUNTING HARDWARE, DETECTORS, DETECTOR CABLES TO OLYMPIC REGION SIGNAL SHOP. SAVE POLE FOR POTENTIAL RE-USE ON THIS PROJECT. THE CONTRACTOR SHALL PROVIDE AN INSPECTION REPORT DOCUMENTING THE CONDITION OF THE POLE TO WSDOT AND OBTAIN WSDOT APPROVAL TO USE THE POLE BEFORE INSTALLING THIS POLE IN A NEW LOCATION.
64	INSTALL STEEL LIGHT STANDARD POLE, FOUNDATION, WAVETRONIX SENSOR AND ASSOCIATED EQUIPMENT PER DETAILS ON SHEET TSD27.
75	INSTALL TYPE WR INDUCTION LOOP VEHICLE DETECTORS IN CENTER OF THE LANE IN ACCORDANCE WITH STANDARD PLAN J-50.12, AND PER DETAILS ON SHEET TSD25.
77	INSTALL TYPE II RAMP METER SIGNAL STANDARD PER RAMP METER DETAIL SHEET TSD26, LOCATE SIGNS ON MAST ARM PER SHEET TSD26, AND INSTALL SIGNS ON MAST ARM PER SIGNING PLANS.
79	INSTALL JUNCTION BOX AND CONDUIT IN ACCORDANCE WITH STD PLAN J-10, EXCEPT THAT JUNCTION BOX SHALL BE MINIMUM 2 FEET BEHIND GUARDRAIL POSTS.
88	SEE ILLUMINATION PLANS FOR POWER SOURCE INFORMATION.

WIRE NOTES

NO.	CONDUIT	MATERIAL	EXISTING CABLE	NEW CABLE	REMARK
1	2"	SCHEDULE 80		1-144 SMFO	MAINLINE CABLE
	2"	SCHEDULE 80		1-12 SMFO	DISTRIBUTION CABLE
3	2"	SCHEDULE 80		1-144 SMFO	MAINLINE CABLE
	2"	SCHEDULE 80		1-12 SMFO	DISTRIBUTION CABLE
	2"	SCHEDULE 80		EMPTY	FUTURE
5	4" INNERDUCT	SCHEDULE 80		1-144 SMFO	MAINLINE CABLE
	4" INNERDUCT	SCHEDULE 80		1-12 SMFO	DISTRIBUTION CABLE
11	2"	SCHEDULE 80		1-24 SMFO	PRE-TERMINATED CABLE
				2-12 SMFO	DISTRIBUTION CABLE
15	*Ex. 2"*	*EXISTING*	*2-#8AWG (R)*	2-#8AWG	REPLACE TRANSFORMER CONDUCTOR
17	2"	SCHEDULE 80		1-2C(SH)	LOOP LEAD IN CABLE
18	2"	SCHEDULE 80		MULTICONDUCTOR	WAVETRONIX HOMERUN CABLE
20	2"	SCHEDULE 80		EMPTY	FUTURE
	2"	SCHEDULE 80		EMPTY	FUTURE
21	2"	SCHEDULE 80		2-2C(SH)	LOOP LEAD IN CABLE
25	*Ex. 2"*	*EXISTING*	*1-24 SMFO(R)*	1-24 SMFO	REPLACE PRE-TERMINATED CABLE
	Ex. 2"	*EXISTING*	*EMPTY*	EMPTY	FUTURE
46	*Ex. 2"*	*EXISTING*	*1-144 SMFO (R)*		REMOVE EXISTING MAINLINE CABLE
47	*Ex. 2"*	*EXISTING*	*1-24 SMFO (R)*		REMOVE EXISTING LATERAL CABLE
49	*Ex. 2"*	*EXISTING*	*MULTICONDUCTOR (R)*		REMOVE EXISTING WAVETRONIX SENSOR CABLE
58	2"	SCHEDULE 80		2-2C(SH)	LOOP LEAD IN CABLE
4	2"	SCHEDULE 80		EMPTY	FUTURE
70	2"	SCHEDULE 80		1-2C(SH)	LOOP LEAD IN CABLE
	2"	SCHEDULE 80		EMPTY	FUTURE
75	*Ex. 2"*	*EXISTING*	*MULTICONDUCTOR (R)*		REMOVE EXISTING WAVETRONIX HOMERUN CABLE
	Ex. 3"	*EXISTING*	*EMPTY*	EMPTY	FUTURE
100	2"	SCHEDULE 80		6-2C(SH)	LOOP LEAD IN CABLE
4	2"	SCHEDULE 80		EMPTY	FUTURE
106	2"	SCHEDULE 80		3-5C	IMSA SIGNAL DISPLAY CABLE
121	2"	SCHEDULE 80		2-2C(SH)	LOOP LEAD IN CABLE
				1-2C	FLASHING BEACON CABLE
123	*Ex. 2"*	*EXISTING*	*2-12 SMFO (R)*		REMOVE EXISTING FIBER OPTIC CABLE
124	2"	SCHEDULE 80		5-2C(SH)	LOOP LEAD IN CABLE
				1-2C	FLASHING BEACON CABLE
125	2"	SCHEDULE 80		3-2C(SH)	LOOP LEAD IN CABLE
				MULTICONDUCTOR	WAVETRONIX HOMERUN CABLE
126	2"	SCHEDULE 80		3-2C(SH)	LOOP LEAD IN CABLE
				MULTICONDUCTOR	WAVETRONIX HOMERUN CABLE
	2"	SCHEDULE 80		3-5C	IMSA SIGNAL DISPLAY CABLE
127	2"	SCHEDULE 80		8-2C(SH)	LOOP LEAD IN CABLE
	2"	SCHEDULE 80		4-2C(SH)	LOOP LEAD IN CABLE
				3-5C	IMSA SIGNAL DISPLAY CABLE
				MULTICONDUCTOR	WAVETRONIX HOMERUN CABLE
128	*Ex. 2"*	*EXISTING*	*1-144 SMFO (R)*		REMOVE EXISTING MAINLINE CABLE
			2-12 SMFO (R)		REMOVE EXISTING FIBER OPTIC CABLE
129	*Ex. 2"*	*EXISTING*	*1-144 SMFO (R)*		REMOVE EXISTING MAINLINE CABLE
	Ex. 2"	*EXISTING*	*2-12 SMFO (R)*		REMOVE EXISTING FIBER OPTIC CABLE
130	*Ex. 2"*	*EXISTING*	*MULTICONDUCTOR (R)*	MULTICONDUCTOR	REPLACE WAVETRONIX HOMERUN CABLE
				1-2C	FLASHING BEACON CABLE
				3-5C	IMSA SIGNAL DISPLAY CABLE
	Ex. 3"	*EXISTING*	*EMPTY*	17-2C(SH)	LOOP LEAD IN CABLE
	Ex. 3"	*EXISTING*	*EMPTY*	EMPTY	FUTURE

AS-BUILT

ATKINSON
OCT 15 2020 JRW
RELEASED FOR CONSTRUCTION

FILE NAME	c:\pwworking\jacobs_b&i\agronmi\dms20633\PS_TS_20A.dgn				
TIME	2:29:58 PM				
DATE	10/12/2020	REV 4 - RFI0566, ADD WN58 AND 100	10/12/20		
PLOTTED BY	agronmi	REV 3 - RFC, RFI0473, REV CN64	05/21/20		
DESIGNED BY	A. HORGAN	REV 2 - RFC, RFI0460 ADD CN79	04/10/20		
ENTERED BY	A. HORGAN	REV 1 - RFC, RFI0271	10/22/19		
CHECKED BY	M. WEGENER	REV 0 - RELEASED FOR CONSTRUCTION	07/11/19		
PROJ. ENGR.	C. MEADE	REV A - FINAL REVIEW	05/10/19		
REGIONAL ADM.	J. WYNANDS	REVISION	DATE	BY	

REGION NO.	STATE	FED.AID PROJ.NO.
10	WASH	
JOB NUMBER		
CONTRACT NO.		LOCATION NO.
C9133		

MARK F. WEGENER, STATE OF WASHINGTON, 41141, REGISTERED PROFESSIONAL ENGINEER
10/13/20
DATE
P.E. STAMP BOX

P.E. STAMP BOX
DATE

Washington State Department of Transportation

ATKINSON / JACOBS CONSTRUCTION

I-5
STEILACOOM-DUPONT RD TO THORNE LN
CORRIDOR IMPROVEMENTS
MP 120.01 TO MP 124.45

MAINLINE ITS PLAN

PLAN REF NO
TS20A

SHEET 999 OF 1456 SHEETS

WIRE NOTES

NO.	CONDUIT	MATERIAL	EXISTING CABLE	NEW CABLE	REMARK
1	2"	SCHEDULE 80		1-144 SMFO	MAINLINE CABLE
	2"	SCHEDULE 80		1-12 SMFO	DISTRIBUTION CABLE
5	4" INNERDUCT	SCHEDULE 80		1-144 SMFO	MAINLINE CABLE
	4" INNERDUCT	SCHEDULE 80		1-12 SMFO	DISTRIBUTION CABLE
129	*Ex. 2"*	*EXISTING*	*1-144 SMFO (R)*		REMOVE EXISTING MAINLINE CABLE
	Ex. 2"	*EXISTING*	*2-12 SMFO (R)*		REMOVE EXISTING FIBER OPTIC CABLE

CONSTRUCTION NOTES

NO.	DESCRIPTION
1	SEE SHEET TSD02-04 FOR PULL BOX, CABLE VAULT/SMALL CABLE VAULT PLACEMENT DETAILS AND LOCATIONS.
6	REMOVE EXISTING CONDUCTORS AND/OR COMMUNICATION CABLES, CONDUIT UPSWEEPS, AND PULLBOX, CABLE VAULT OR SMALL CABLE VAULT. BACKFILL VOID.
10	REMOVE EXISTING COMMUNICATION CABLES, CUT OFF UPSWEEPS AND ABANDON UNDERGROUND CONDUIT.
44	INSTALL CONDUIT UNDER NEW SHOULDER BEFORE CONSTRUCTION OF SHOULDER.

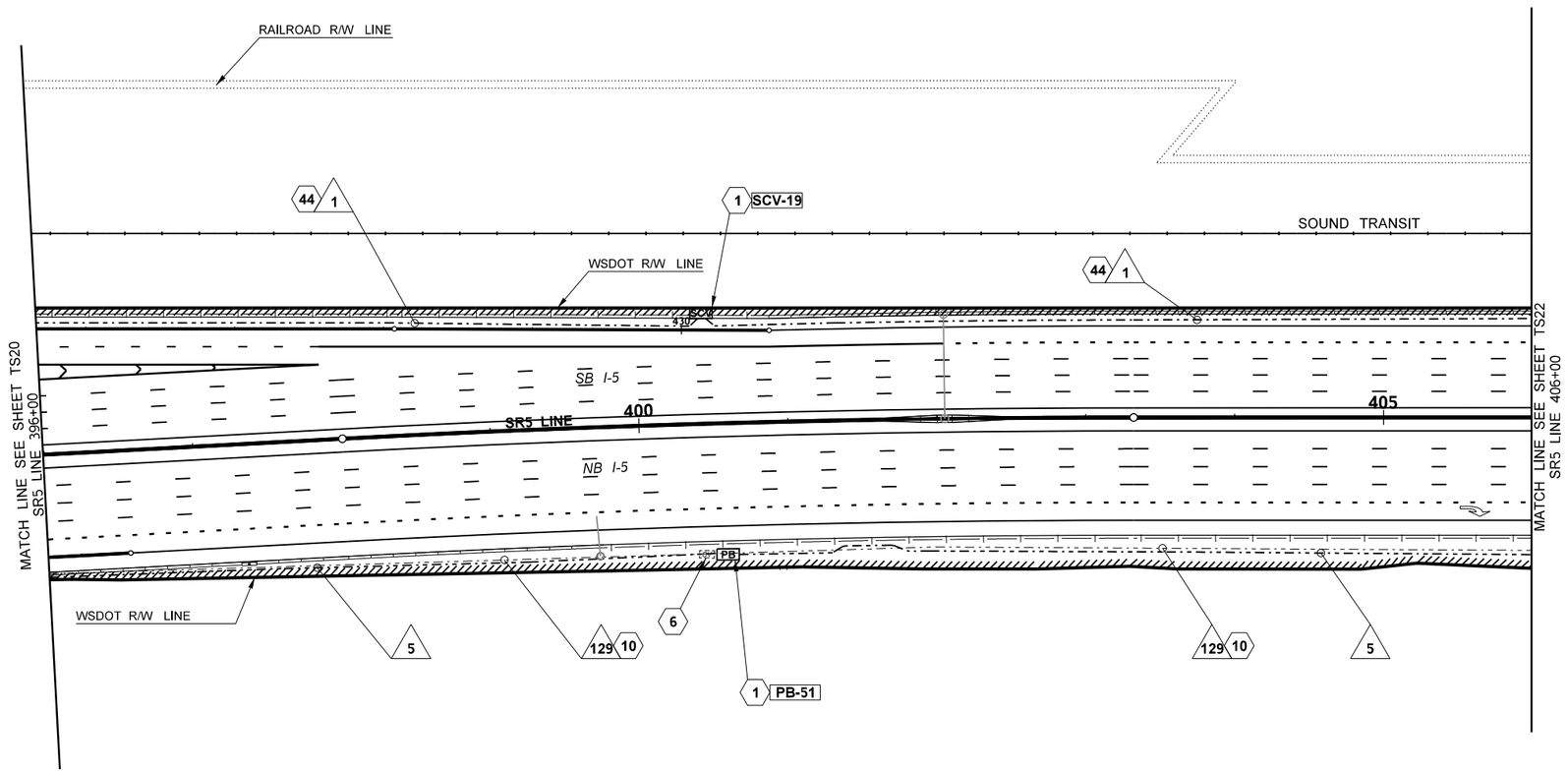

AS-BUILT

ATKINSON
JUL 12 2019 KTW
RELEASED FOR CONSTRUCTION

0 50 100
SCALE IN FEET

FILE NAME	c:\pwworking\jacobs_b&i\jeg_horgand\dms20633\PS_TS_21.dgn					
TIME	4:13:47 PM					
DATE	7/3/2019					
PLOTTED BY	HorganD					
DESIGNED BY	A. HORGAN					
ENTERED BY	A. HORGAN	REV 0 - RELEASED FOR CONSTRUCTION	07/11/19			
CHECKED BY	M. WEGENER	REV B - FINAL REVIEW	05/10/19			
PROJ. ENGR.	C. MEADE	REV A - PRELIMINARY REVIEW	04/05/19			
REGIONAL ADM.	J. WYNANDS	REVISION	DATE	BY		

REGION NO.	STATE	FED.AID PROJ.NO.
10	WASH	
JOB NUMBER		
CONTRACT NO.		LOCATION NO.
C9133		

MARK F. WEGENER — STATE OF WASHINGTON — 41142 — REGISTERED PROFESSIONAL ENGINEER
7/12/19
DATE
P.E. STAMP BOX

DATE
P.E. STAMP BOX

Washington State Department of Transportation

ATKINSON CONSTRUCTION / JACOBS

I-5
STEILACOOM-DUPONT RD TO THORNE LN
CORRIDOR IMPROVEMENTS
MP 120.01 TO MP 124.45

MAINLINE ITS PLAN

PLAN REF NO
TS21

SHEET 1000 OF 1456 SHEETS

FOR CONSTRUCTION AND WIRE NOTES SEE SHEET TS22A

AS-BUILT

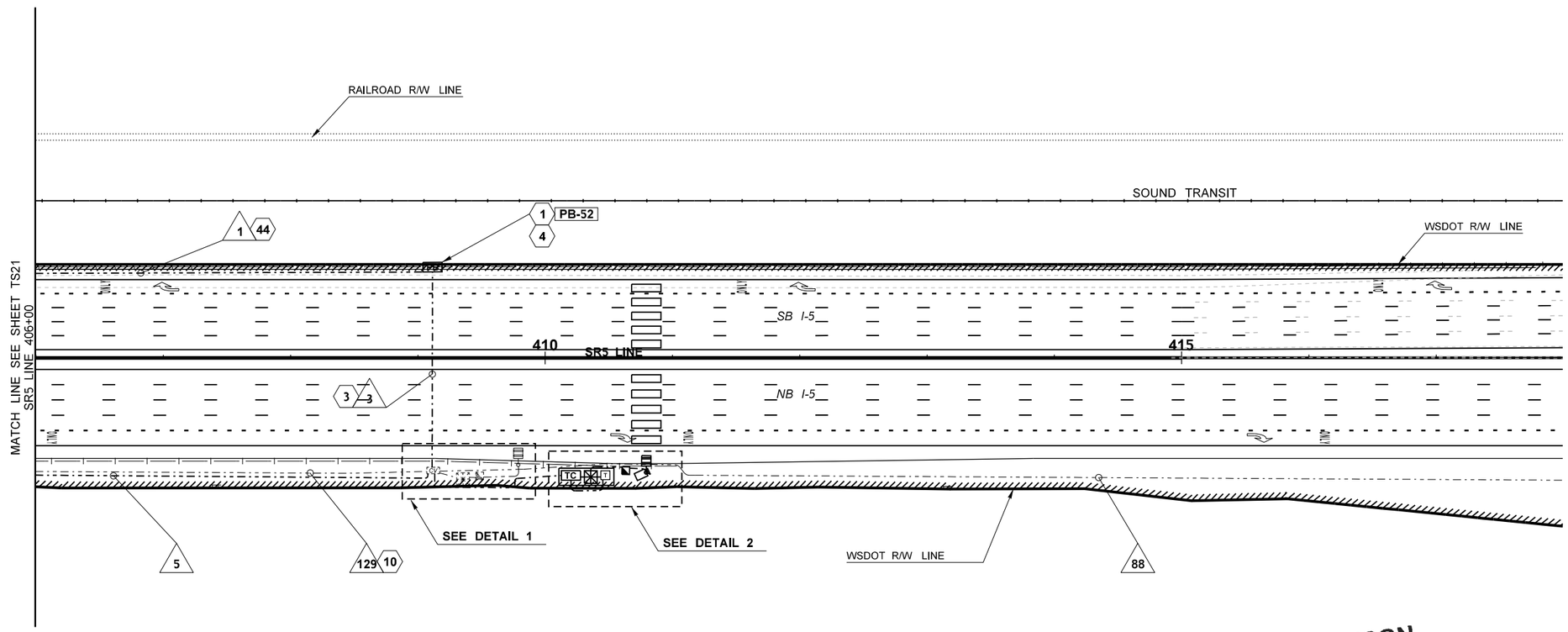

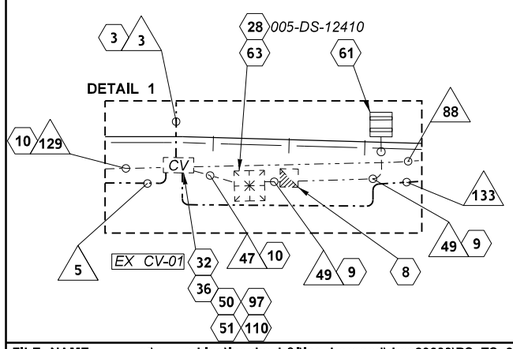

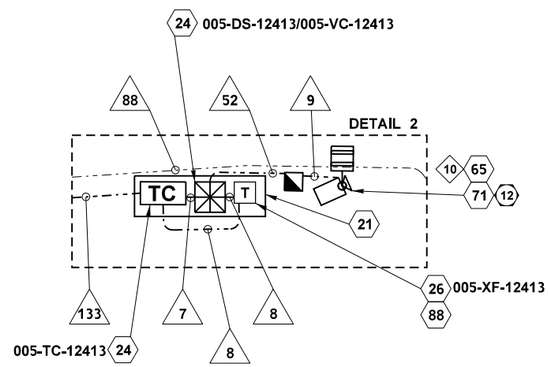

ATKINSON
JUL 12 2019 KTW
RELEASED FOR CONSTRUCTION

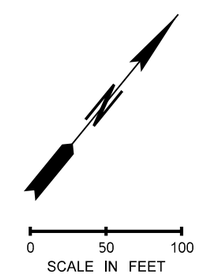

FILE NAME	c:\pwworking\jacobs_b&i\jeg_horgand\dms20633\PS_TS_22.dgn						
TIME	4:21:00 PM				REGION NO. 10	STATE WASH	FED.AID PROJ.NO.
DATE	7/3/2019						
PLOTTED BY	HorganD				JOB NUMBER		
DESIGNED BY	A. HORGAN						
ENTERED BY	A. HORGAN	REV 0 - RELEASED FOR CONSTRUCTION	07/11/19				
CHECKED BY	M. WEGENER	REV B - FINAL REVIEW	05/10/19		CONTRACT NO. C9133		LOCATION NO.
PROJ. ENGR.	C. MEADE	REV A - PRELIMINARY REVIEW	04/05/19				
REGIONAL ADM.	J. WYNANDS	REVISION	DATE	BY			

MARK F. WEGENER — STATE OF WASHINGTON — 41141 — REGISTERED PROFESSIONAL ENGINEER
7/12/19
DATE
P.E. STAMP BOX

DATE
P.E. STAMP BOX

Washington State Department of Transportation

ATKINSON CONSTRUCTION / JACOBS

I-5
STEILACOOM-DUPONT RD TO THORNE LN
CORRIDOR IMPROVEMENTS
MP 120.01 TO MP 124.45

MAINLINE ITS PLAN

PLAN REF NO TS22

SHEET 1001 OF 1456 SHEETS

CONSTRUCTION NOTES

NO.	DESCRIPTION
1	SEE SHEET TSD02-04 FOR PULL BOX, CABLE VAULT/SMALL CABLE VAULT PLACEMENT DETAILS AND LOCATIONS.
3	INSTALL CONDUIT UNDER ROADWAY USING APPROVED DIRECTIONAL BORING METHOD.
4	INSTALL HEAVY DUTY PULL BOX.
8	REMOVE EXISTING CONDUCTORS AND/OR COMMUNICATION CABLES, CONDUIT UPSWEEPS, AND JUNCTION BOX. BACKFILL VOID.
9	REMOVE EXISTING CONDUCTORS, CUT OFF UPSWEEPS AND ABANDON UNDERGROUND CONDUIT.
10	REMOVE EXISTING COMMUNICATION CABLES, CUT OFF UPSWEEPS AND ABANDON UNDERGROUND CONDUIT.
21	CONSTRUCT A THREE CABINET FOUNDATION IN ACCORDANCE WITH STANDARD PLAN J-10.10.
24	INSTALL A CONTROLLER CABINET ON TOP OF AN 8" ALUMINUM CABINET RISER. INSTALL ASSOCIATED CABINET EQUIPMENT PER EQUIPMENT SCHEDULE ON DETAIL SHEET TSD07.
26	INSTALL A CABINET WITH A 10 KVA 480/240/120 VAC TRANSFORMER IN ACCORDANCE WITH STANDARD PLAN J-10.10 AND J-10.25 AND PER TRANSFORMER BREAKER DETAILS ON SHEETS TSD29-TSD31.
28	REMOVE EXISTING ITS AND/OR TRANSFORMER CABINET(S) AND FOUNDATION. RETURN CABINET AND INTERNAL COMPONENTS TO THE OLYMPIC REGION SIGNAL SHOP.
32	TERMINATE CONDUIT IN EXISTING JUNCTION BOX, PULL BOX, CABLE VAULT OR SMALL CABLE VAULT. SEE WIRE NOTES.
36	CUT EXISTING FIBER OPTIC CABLE(S) AND STORE ENOUGH CABLE SLACK FROM THE EXISTING CABLE IN ORDER TO SPLICE THE EXISTING CABLE TO THE PROPOSED PRE-TERMINATED CABLE(S).
44	INSTALL CONDUIT UNDER NEW SHOULDER BEFORE CONSTRUCTION OF SHOULDER.
50	FUSION SPLICE 12 CT DISTRIBUTION FIBER OPTIC CABLE TO 72 CT PRE-TERMINATED FIBER OPTIC CABLE PER DETAILS ON SHEETS TSFO01-TSFO10.
51	FUSION SPLICE 144 CT MAINLINE FIBER OPTIC CABLE TO 72 CT PRE-TERMINATED FIBER OPTIC CABLE PER DETAILS ON SHEETS TSFO01-TSFO10.
61	REMOVE EXISTING WAVETRONIX DETECTORS, POLE, FOUNDATION AND ASSOCIATED EQUIPMENT. DELIVER REMOVED WAVETRONIX MOUNTING HARDWARE, DETECTORS, DETECTOR CABLES TO OLYMPIC REGION SIGNAL SHOP. SAVE POLE FOR POTENTIAL RE-USE ON THIS PROJECT. THE CONTRACTOR SHALL PROVIDE AN INSPECTION REPORT DOCUMENTING THE CONDITION OF THE POLE TO WSDOT AND OBTAIN WSDOT APPROVAL TO USE THE POLE BEFORE INSTALLING THIS POLE IN A NEW LOCATION.
63	REMOVE EXISTING TIMBER POLE AND SOLAR PANELS. DELIVER REMOVED SOLAR PANELS TO OLYMPIC REGION SIGNAL SHOP.
65	INSTALL WAVETRONIX SENSOR ON CAMERA POLE, AND ASSOCIATED EQUIPMENT PER DETAILS ON SHEET TSD27.
71	INSTALL CAMERA, CABLE, 50 FT CAMERA POLE AND FOUNDATION IN ACCORDANCE WITH STANDARD PLANS J-29.10, AND J-29.15, AND PER DETAILS ON SHEET TSD13.
88	SEE ILLUMINATION PLANS FOR POWER SOURCE INFORMATION.
97	FUSION SPLICE 144 CT MAINLINE FIBER OPTIC CABLE TO EXISTING 144 CT FIBER OPTIC CABLE PER DETAILS ON SHEETS TSFO01-TSFO10.
110	FUSION SPLICE EXISTING 12 CT FIBER OPTIC CABLE TO 72 CT PRE-TERMINATED FIBER OPTIC CABLE PER DETAILS ON SHEETS TSFO01-TSFO10.

WIRE NOTES

NO.	CONDUIT	MATERIAL	EXISTING CABLE	NEW CABLE	REMARK
1	2"	SCHEDULE 80		1-144 SMFO	MAINLINE CABLE
	2"	SCHEDULE 80		1-12 SMFO	DISTRIBUTION CABLE
3	2"	SCHEDULE 80		1-144 SMFO	MAINLINE CABLE
	2"	SCHEDULE 80		1-12 SMFO	DISTRIBUTION CABLE
	2"	SCHEDULE 80		EMPTY	FUTURE
5	4" INNERDUCT	SCHEDULE 80		1-144 SMFO	MAINLINE CABLE
	4" INNERDUCT	SCHEDULE 80		1-12 SMFO	DISTRIBUTION CABLE
7	2"	SCHEDULE 80	2	8-SMFO PATCH CORDS	
8	2"	SCHEDULE 80		2-#8AWG	TRANSFORMER CONDUCTOR
9	2"	SCHEDULE 80		MULTICONDUCTOR	VIDEO CAMERA CONTROL CABLE
				MULTICONDUCTOR	WAVETRONIX SENSOR CABLE
47	*Ex. 2"*	*EXISTING*	*1-24 SMFO (R)*		REMOVE EXISTING LATERAL CABLE
49	*Ex. 2"*	*EXISTING*	*MULTICONDUCTOR (R)*		REMOVE EXISTING WAVETRONIX SENSOR CABLE
52	2"	SCHEDULE 80		MULTICONDUCTOR	VIDEO CAMERA CONTROL CABLE
				MULTICONDUCTOR	WAVETRONIX SENSOR CABLE
	2"	SCHEDULE 80		EMPTY	FUTURE
	2"	SCHEDULE 80		EMPTY	FUTURE
88	*Ex. 2"*	*EXISTING*	*1-144 SMFO*		EXISTING MAINLINE CABLE
	Ex. 2"	*EXISTING*	*2-12 SMFO*		EXISTING FIBER OPTIC CABLE
129	*Ex. 2"*	*EXISTING*	*1-144 SMFO (R)*		REMOVE EXISTING MAINLINE CABLE
	Ex. 2"	*EXISTING*	*2-12 SMFO (R)*		REMOVE EXISTING FIBER OPTIC CABLE
133	2"	SCHEDULE 80		1-72 SMFO	PRE-TERMINATED CABLE

AS-BUILT

ATKINSON
DEC 13 2019 KTW
RELEASED FOR CONSTRUCTION

FILE NAME	c:\pwworking\jacobs_b&i\jeg_gt011740\dms20633\PS_TS_22A.dgn					
TIME	12:26:06 PM					
DATE	11/14/2019					
PLOTTED BY	GT011740					
DESIGNED BY	A. HORGAN	REV 2 - RFC, RFI0300	11/14/19			
ENTERED BY	A. HORGAN	REV 1 - RFC, RFI0271	10/22/19			
CHECKED BY	M. WEGENER	REV 0 - RELEASED FOR CONSTRUCTION	07/11/19			
PROJ. ENGR.	C. MEADE	REV A - FINAL REVIEW	05/10/19			
REGIONAL ADM.	J. WYNANDS	REVISION	DATE	BY		

REGION NO.	STATE	FED.AID PROJ.NO.
10	WASH	
JOB NUMBER		
CONTRACT NO.		LOCATION NO.
C9133		

MARK F. WEGENER, STATE OF WASHINGTON, 41141, REGISTERED PROFESSIONAL ENGINEER
12/12/19
DATE
P.E. STAMP BOX

DATE
P.E. STAMP BOX

Washington State Department of Transportation

ATKINSON CONSTRUCTION / JACOBS

I-5
STEILACOOM-DUPONT RD TO THORNE LN
CORRIDOR IMPROVEMENTS
MP 120.01 TO MP 124.45

MAINLINE ITS PLAN

PLAN REF NO TS22A

SHEET 1002 OF 1456 SHEETS

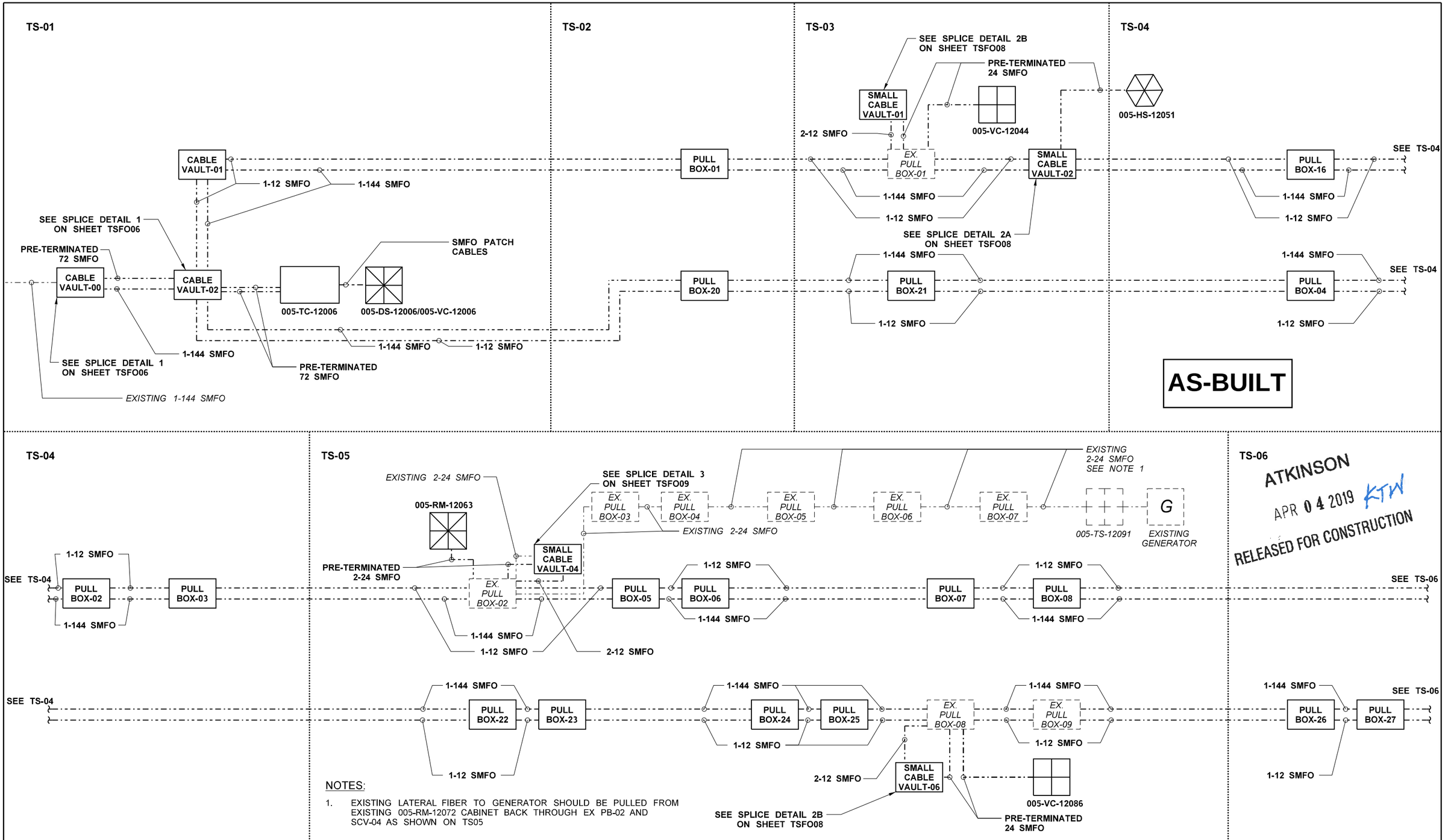

NOTES:

1. EXISTING LATERAL FIBER TO GENERATOR SHOULD BE PULLED FROM EXISTING 005-RM-12072 CABINET BACK THROUGH EX PB-02 AND SCV-04 AS SHOWN ON TS05

FILE NAME	c:\pwworking\jacobs_b&i\wegenemf\dms20633\PS_TSFO01.dgn			
TIME	7:06:59 PM			
DATE	3/29/2019			
PLOTTED BY	wegenemf			
DESIGNED BY	D. HORGAN			
ENTERED BY	D. HORGAN			
CHECKED BY	M. WEGENER	REV 0 - RELEASED FOR CONSTRUCTION	03/29/19	
PROJ. ENGR.	C. MEADE	REV A - FINAL REVIEW	02/12/19	
REGIONAL ADM.	J. WYNANDS	REVISION	DATE	BY

REGION NO.	STATE	FED.AID PROJ.NO.
10	WASH	
JOB NUMBER		
CONTRACT NO. C9133		LOCATION NO.

MARK F. WEGENER — STATE OF WASHINGTON — 41141 — REGISTERED PROFESSIONAL ENGINEER
4/3/19
DATE
P.E. STAMP BOX

DATE
P.E. STAMP BOX

Washington State Department of Transportation

ATKINSON CONSTRUCTION / JACOBS

I-5
STEILACOOM-DUPONT RD TO THORNE LN CORRIDOR IMPROVEMENTS
MP 120.01 TO MP 124.45

FIBER OPTIC DETAILS

PLAN REF NO TSFO01

SHEET 1003 OF 1456 SHEETS

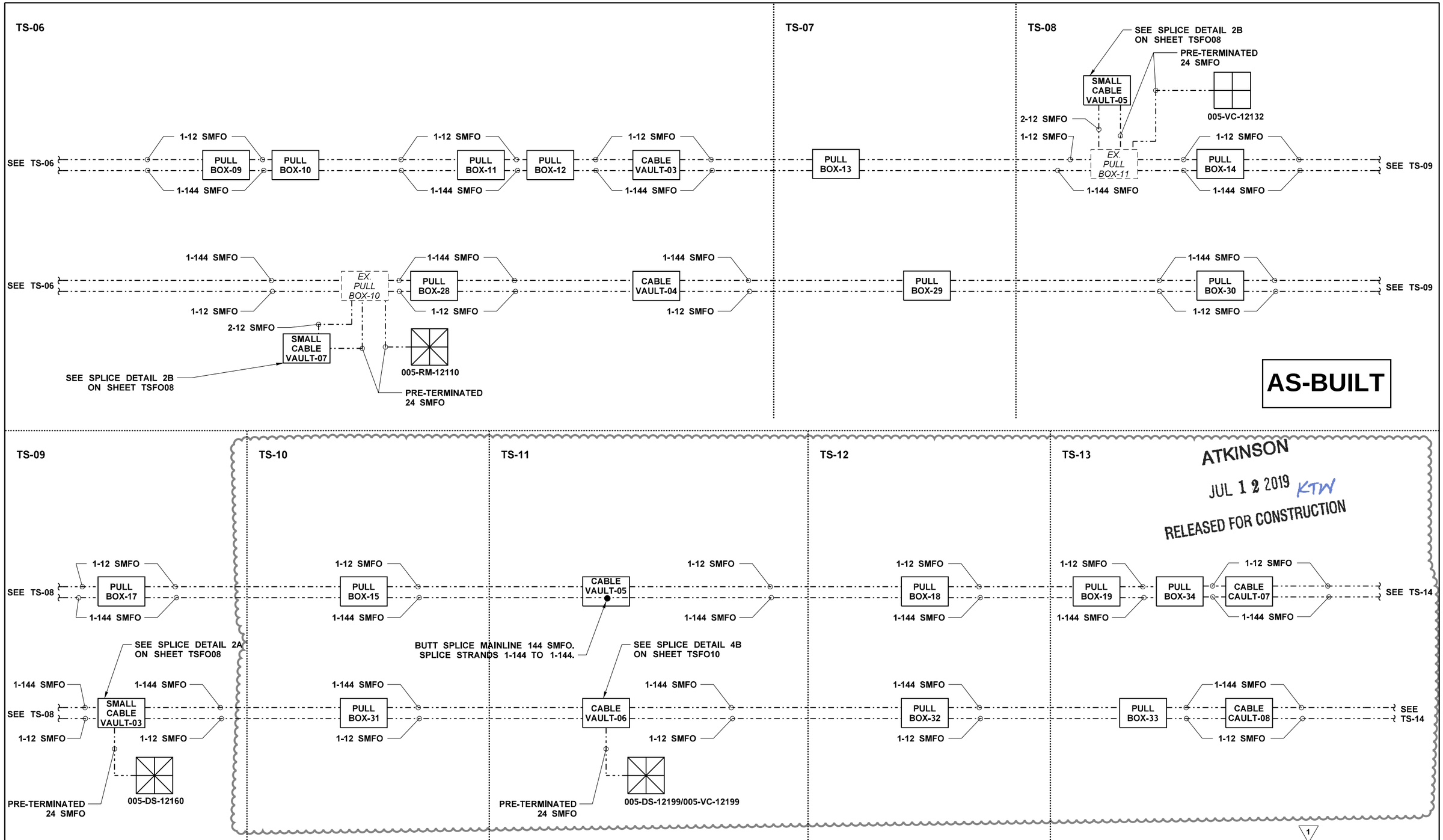

FILE NAME	c:\pwworking\jacobs_b&i\agronmi\dms20633\PS_TSFO02.dgn					
TIME	1:05:21 PM					
DATE	7/11/2019					
PLOTTED BY	agronmi					
DESIGNED BY	D. HORGAN	REV 1 - RFC, RFI0151	07/11/19			
ENTERED BY	D. HORGAN	REV B - FINAL REVIEW	05/10/19			
CHECKED BY	M. WEGENER	REV 0 - RELEASED FOR CONSTRUCTION	03/29/19			
PROJ. ENGR.	C. MEADE	REV A - FINAL REVIEW	02/12/19			
REGIONAL ADM.	J. WYNANDS	REVISION	DATE	BY		

REGION NO.	STATE	FED.AID PROJ.NO.
10	WASH	
JOB NUMBER		
CONTRACT NO.		LOCATION NO.
C9133		

STATE OF WASHINGTON MARK F. WEGENER 41141 REGISTERED PROFESSIONAL ENGINEER
7/12/19
DATE
P.E. STAMP BOX

DATE
P.E. STAMP BOX

Washington State Department of Transportation

ATKINSON / JACOBS CONSTRUCTION

I-5
STEILACOOM-DUPONT RD TO THORNE LN CORRIDOR IMPROVEMENTS
MP 120.01 TO MP 124.45

FIBER OPTIC DETAILS

PLAN REF NO
TSFO02

SHEET 1004 OF 1456 SHEETS

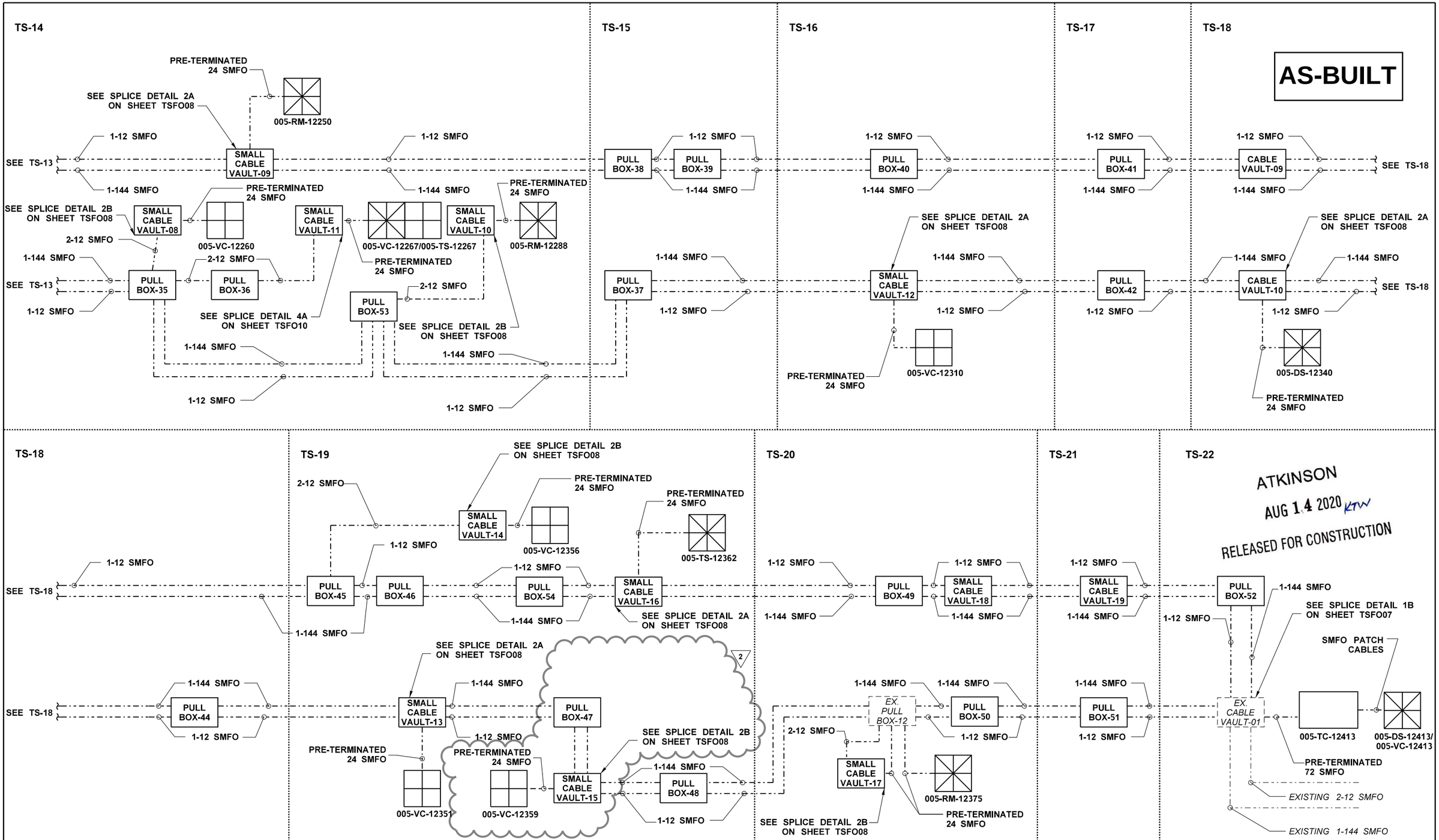

FILE NAME	c:\pwworking\jacobs_b&i\wegenemf\dms20633\PS_TSFO03.dgn			
TIME	1:49:41 PM			
DATE	8/10/2020			
PLOTTED BY	WEGENEMF			
DESIGNED BY	D. HORGAN	REV 2 - RFC, RFI0511,REV PB-47,PB-55,SCV-15	08/10/20	
ENTERED BY	D. HORGAN	REV 1 - RFC, RFI0465, RFI0479	05/18/20	
CHECKED BY	M. WEGENER	REV 0 - RELEASED FOR CONSTRUCTION	07/11/19	
PROJ. ENGR.	C. MEADE	REV A - FINAL REVIEW	05/10/19	
REGIONAL ADM.	J. WYNANDS	REVISION	DATE	BY

REGION NO.	STATE	FED.AID PROJ.NO.
10	WASH	
JOB NUMBER		
CONTRACT NO.		LOCATION NO.
C9133		

MARK F. WEGENER — STATE OF WASHINGTON — REGISTERED PROFESSIONAL ENGINEER — 41141

8/13/20
DATE
P.E. STAMP BOX

DATE
P.E. STAMP BOX

Washington State Department of Transportation

ATKINSON CONSTRUCTION / JACOBS

I-5
STEILACOOM-DUPONT RD TO THORNE LN CORRIDOR IMPROVEMENTS
MP 120.01 TO MP 124.45

FIBER OPTIC DETAILS

PLAN REF NO
TSFO03

SHEET 1005 OF 1456 SHEETS

AS-BUILT

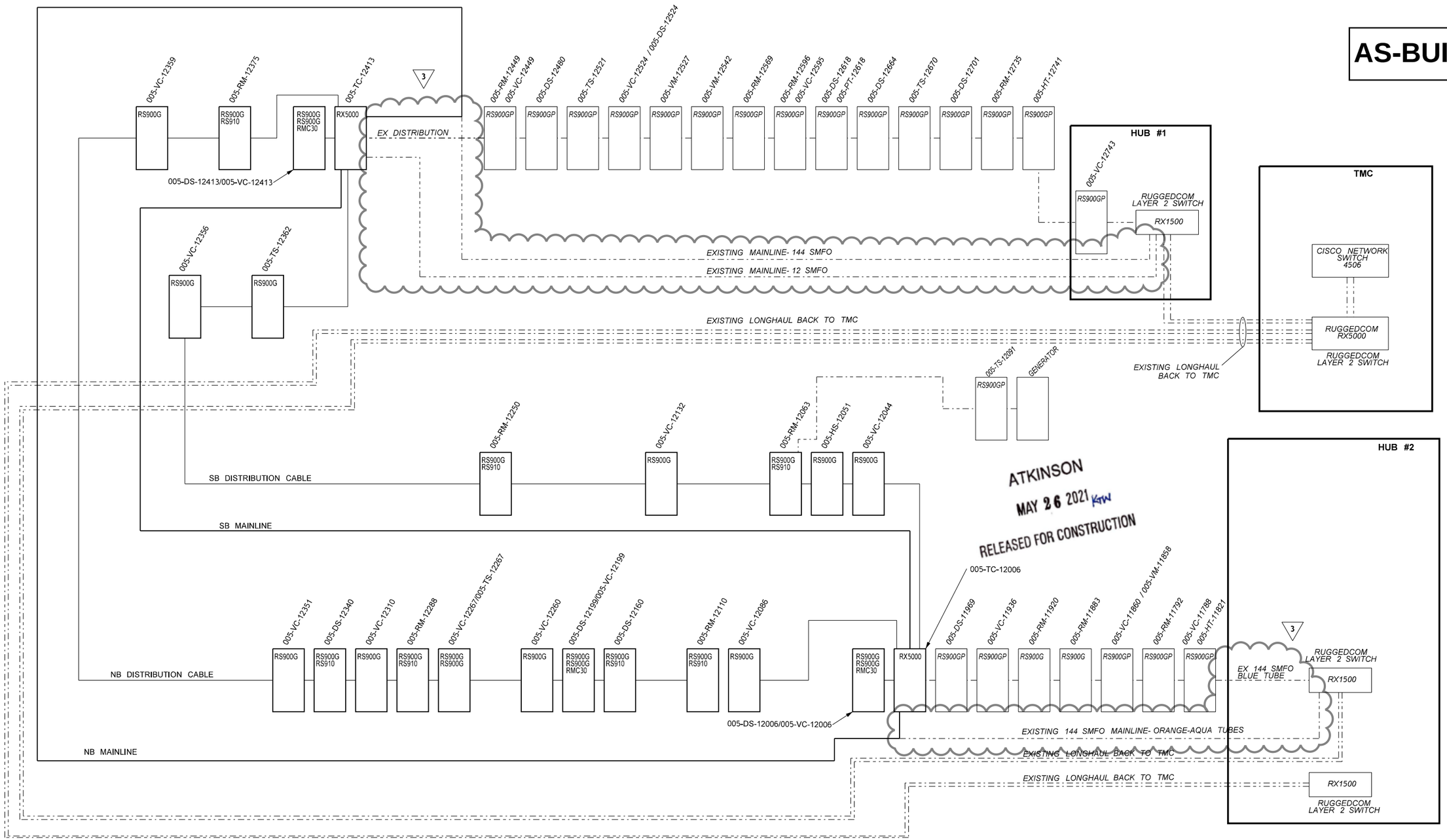

ATKINSON
MAY 26 2021 KTW
RELEASED FOR CONSTRUCTION

NETWORK DIAGRAM

FILE NAME	c:\pwworking\jacobs_b&i\agronmi\dms20633\PS_TSFO05.dgn						
TIME	2:33:33 PM						
DATE	5/24/2021	REV 3 - RFC, RFI0629	05/24/21				
PLOTTED BY	agronmi	REV 2 - RFC, RFI0300	12/06/19				
DESIGNED BY	D. HORGAN	REV 1 - RFC, RFI0151	07/11/19				
ENTERED BY	D. HORGAN	REV B - FINAL REVIEW	05/10/19				
CHECKED BY	M. WEGENER	REV 0 - RELEASED FOR CONSTRUCTION	03/29/19				
PROJ. ENGR.	C. MEADE	REV A - FINAL REVIEW	02/12/19				
REGIONAL ADM.	J. WYNANDS	REVISION	DATE	BY			

REGION NO.	STATE	FED.AID PROJ.NO.
10	WASH	
JOB NUMBER		
CONTRACT NO.		LOCATION NO.
C9133		

MARK F. WEGENER — STATE OF WASHINGTON — 41141 — REGISTERED PROFESSIONAL ENGINEER
5/26/21
DATE
P.E. STAMP BOX

P.E. STAMP BOX
DATE

Washington State
Department of Transportation

ATKINSON / JACOBS CONSTRUCTION

I-5
STEILACOOM-DUPONT RD TO THORNE LN
CORRIDOR IMPROVEMENTS
MP 120.01 TO MP 124.45

FIBER OPTIC DETAILS

PLAN REF NO
TSFO05

SHEET 1006 OF 1456 SHEETS

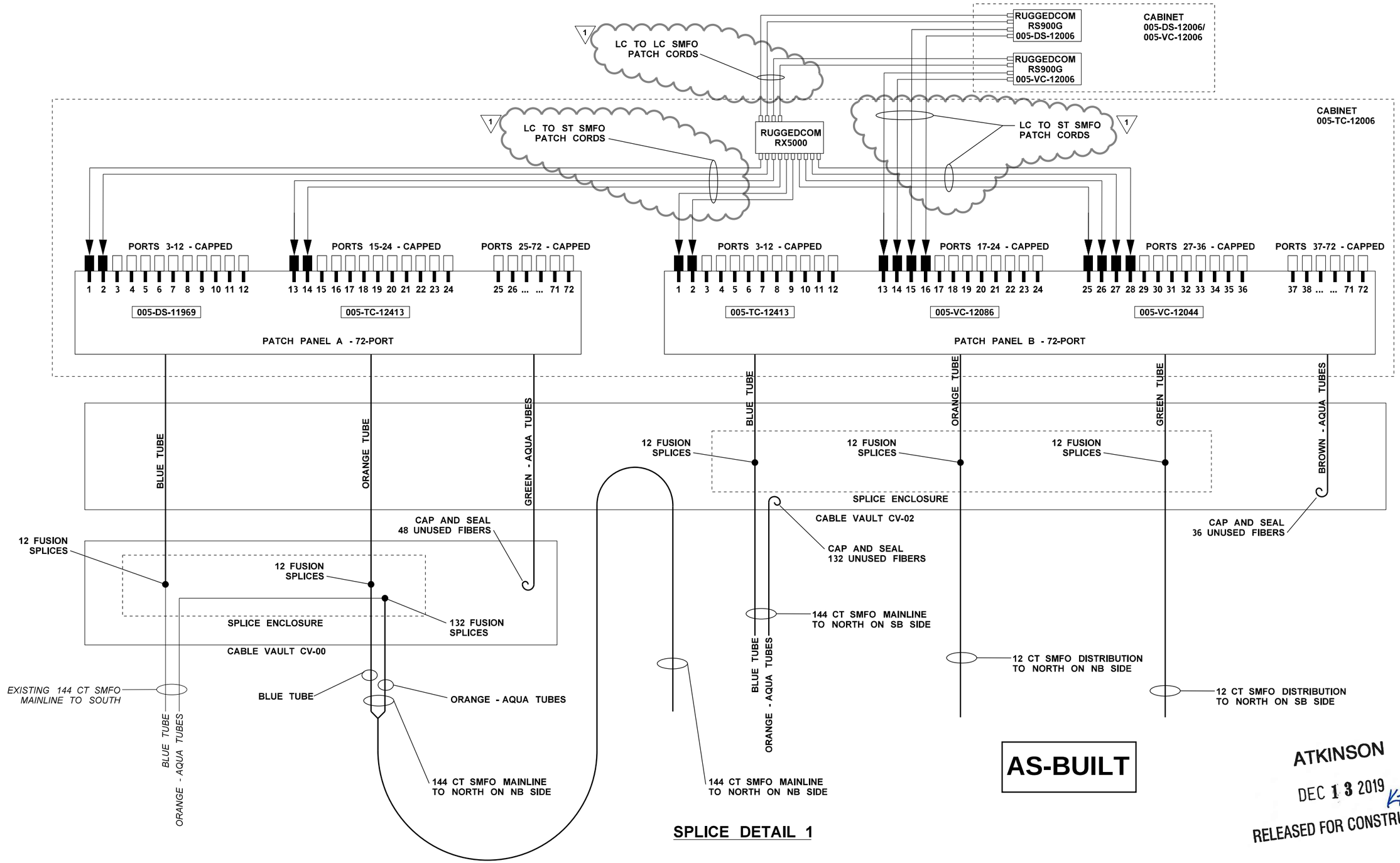

SPLICE DETAIL 1

AS-BUILT

ATKINSON
DEC 13 2019 KTW
RELEASED FOR CONSTRUCTION

FILE NAME	c:\pwworking\jacobs_b&i\wegenemf\dms20633\PS_TSFO06.dgn						
TIME	10:49:56 AM						
DATE	11/15/2019						
PLOTTED BY	wegenemf						
DESIGNED BY	M. WEGENER						
ENTERED BY	M. WEGENER	REV 1 - RFC, RFI0300	11/14/19				
CHECKED BY	D. HORGAN	REV 0 - RELEASED FOR CONSTRUCTION	03/29/19				
PROJ. ENGR.	C. MEADE	REV A - FINAL REVIEW	02/12/19				
REGIONAL ADM.	J. WYNANDS	REVISION	DATE	BY			

REGION NO.	STATE	FED.AID PROJ.NO.
10	WASH	
JOB NUMBER		
CONTRACT NO.		LOCATION NO.
C9133		

MARK F. WEGENER — STATE OF WASHINGTON — 41141 — REGISTERED PROFESSIONAL ENGINEER
12/12/19
DATE
P.E. STAMP BOX

DATE
P.E. STAMP BOX

Washington State
Department of Transportation

ATKINSON / JACOBS
CONSTRUCTION

I-5
STEILACOOM-DUPONT RD TO THORNE LN
CORRIDOR IMPROVEMENTS
MP 120.01 TO MP 124.45

FIBER OPTIC DETAILS

PLAN REF NO
TSFO06

SHEET 1007 OF 1456 SHEETS

AS-BUILT

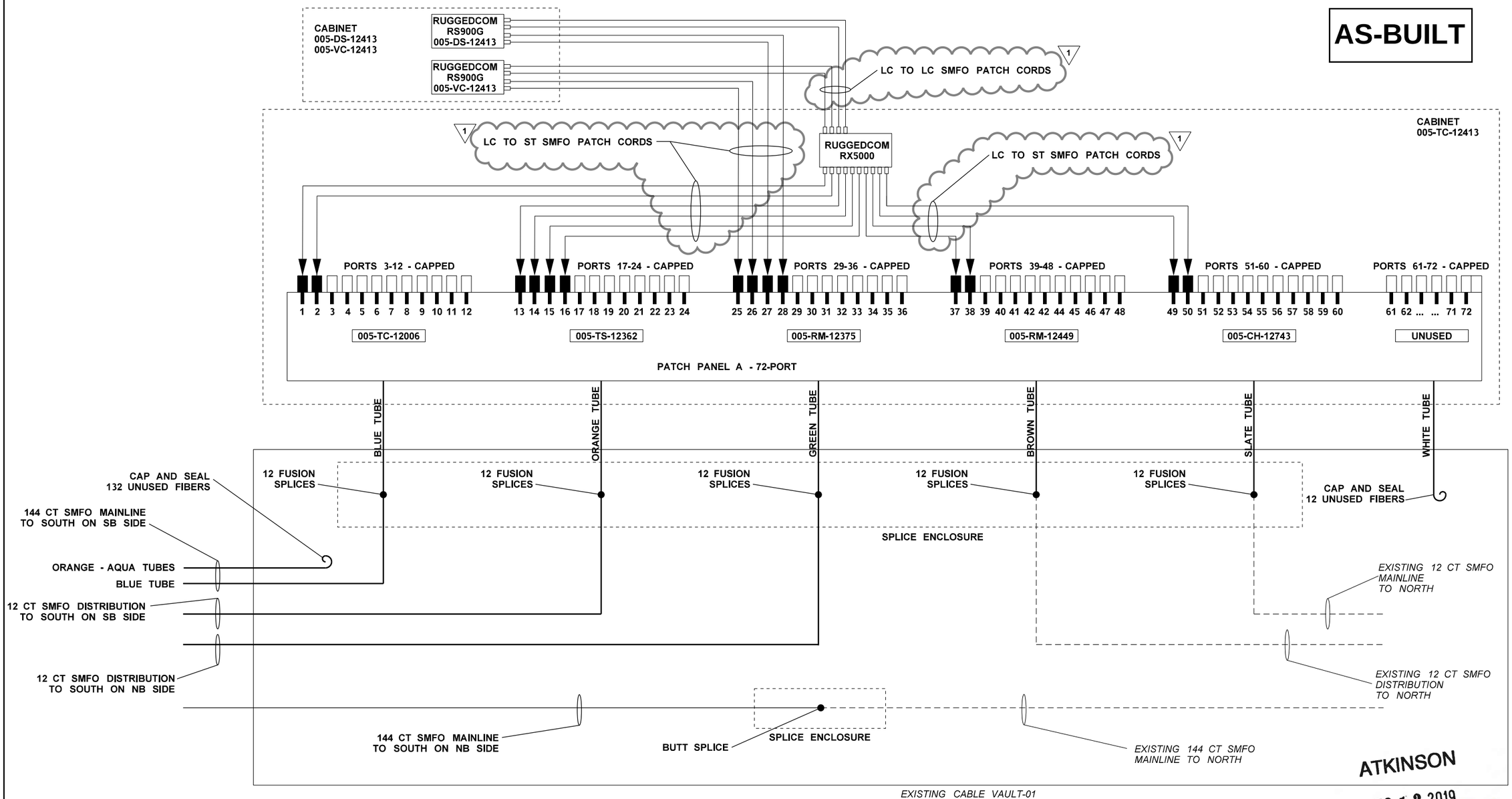

DEC 13 2019 KTW

RELEASED FOR CONSTRUCTION

SPLICE DETAIL 1B

FILE NAME	c:\pwworking\jacobs_b&i\wegenemf\dms20633\PS_TSFO07.dgn			
TIME	11:00:08 AM			
DATE	11/15/2019			
PLOTTED BY	wegenemf			
DESIGNED BY	M. WEGENER			
ENTERED BY	M. WEGENER	REV 1 - RFC, RFI0300	11/14/19	
CHECKED BY	D. HORGAN	REV 0 - RELEASED FOR CONSTRUCTION	07/11/19	
PROJ. ENGR.	C. MEADE	REV A - FINAL REVIEW	05/10/19	
REGIONAL ADM.	J. WYNANDS	REVISION	DATE	BY

REGION NO.	STATE	FED.AID PROJ.NO.
10	WASH	
JOB NUMBER		
CONTRACT NO.		LOCATION NO.
C9133		

MARK E. WEGENER STATE OF WASHINGTON REGISTERED PROFESSIONAL ENGINEER 41141

12/12/19

DATE

P.E. STAMP BOX

DATE

P.E. STAMP BOX

Washington State Department of Transportation

ATKINSON / JACOBS CONSTRUCTION

I-5
STEILACOOM-DUPONT RD TO THORNE LN
CORRIDOR IMPROVEMENTS
MP 120.01 TO MP 124.45

FIBER OPTIC DETAILS

PLAN REF NO TSFO07

SHEET 1008 OF 1456 SHEETS

NOTES:

1. FOR CCTV SWITCHES, USE PRETERMINATED PORTS 3 AND 4 INSTEAD OF 1 AND 2.

CABINET	CABLE VAULT/ SMALL CABLE VAULT	LABEL A	LABEL B	SHEET NO.
005-HS-12051	SCV-02	005-VC-12044	005-RM-12063	TS-03
005-DS-12160	SCV-03	005-RM-12110	005-DS-12199/005-VC-12199	TS-09
005-RM-12250	SCV-09	005-VC-12132	005-VC-12356	TS-14
005-VC-12310	SCV-12	005-RM-12288	005-DS-12340	TS-16
005-DS-12340	CV-10	005-VC-12310	005-VC-12351	TS-18
005-VC-12351	SCV-13	005-DS-12340	005-VC-12359	TS-19
005-TS-12362	SCV-16	005-VC-12356	005-TC-12413	TS-19

AS-BUILT

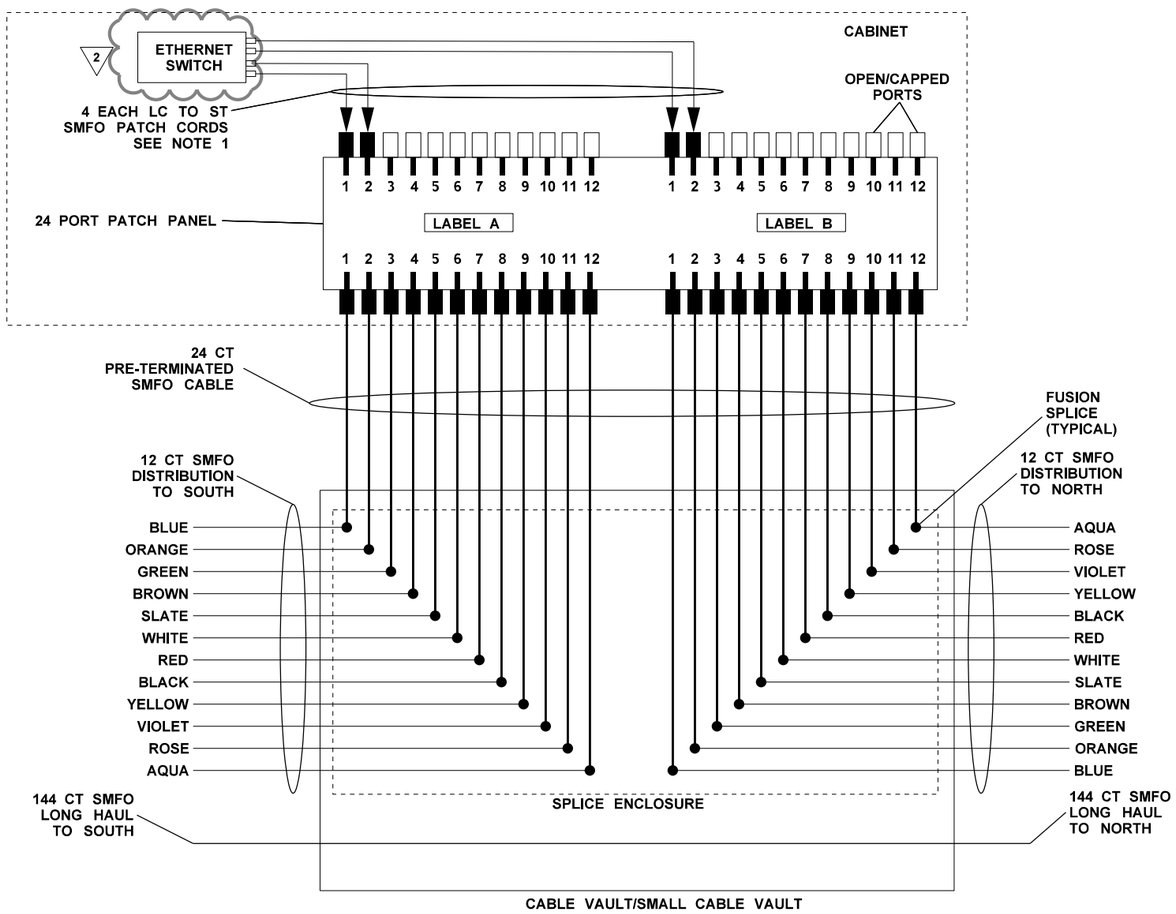

SPLICE DETAIL 2A

NOTES:

1. FOR CCTV SWITCHES, USE PRETERMINATED PORTS 3 AND 4 INSTEAD OF 1 AND 2.
2. NOT ALL DEVICE CABINETS UTILIZING SPLICE DETAIL 2B HAVE FIBER PASSING THROUGH AN EXISTING PULL BOX BETWEEN THE CABINET AND THE SMALL CABLE VAULT. REFER TO MAINLINE ITS PLANS AND FIBER DETAIL SHEETS TSFO01-03 FOR THE INSTANCES WHEN EXISTING PULL BOXES ARE REQUIRED.

CABINET	CABLE VAULT/ SMALL CABLE VAULT	LABEL A	LABEL B	SHEET NO.
005-VC-12044	SCV-01	005-TC-12006	005-HS-12051	TS-03
005-VC-12086	SCV-06	005-TC-12006	005-RM-12110	TS-05
005-RM-12110	SCV-07	005-VC-12086	005-DS-12160	TS-06
005-VC-12132	SCV-05	005-RM-12063	005-RM-12250	TS-08
005-VC-12260	SCV-08	005-DS-12199/005-VC-12199	005-VC-12267/005-TS-12267	TS-14
005-RM-12288	SCV-10	005-VC-12267/005-TS-12267	005-VC-12310	TS-14
005-VC-12356	SCV-14	005-RM-12250	005-TS-12362	TS-19
005-VC-12359	SCV-15	005-VC-12351	005-RM-12375	TS-19
005-RM-12375	SCV-17	005-VC-12359	005-TC-12413	TS-20

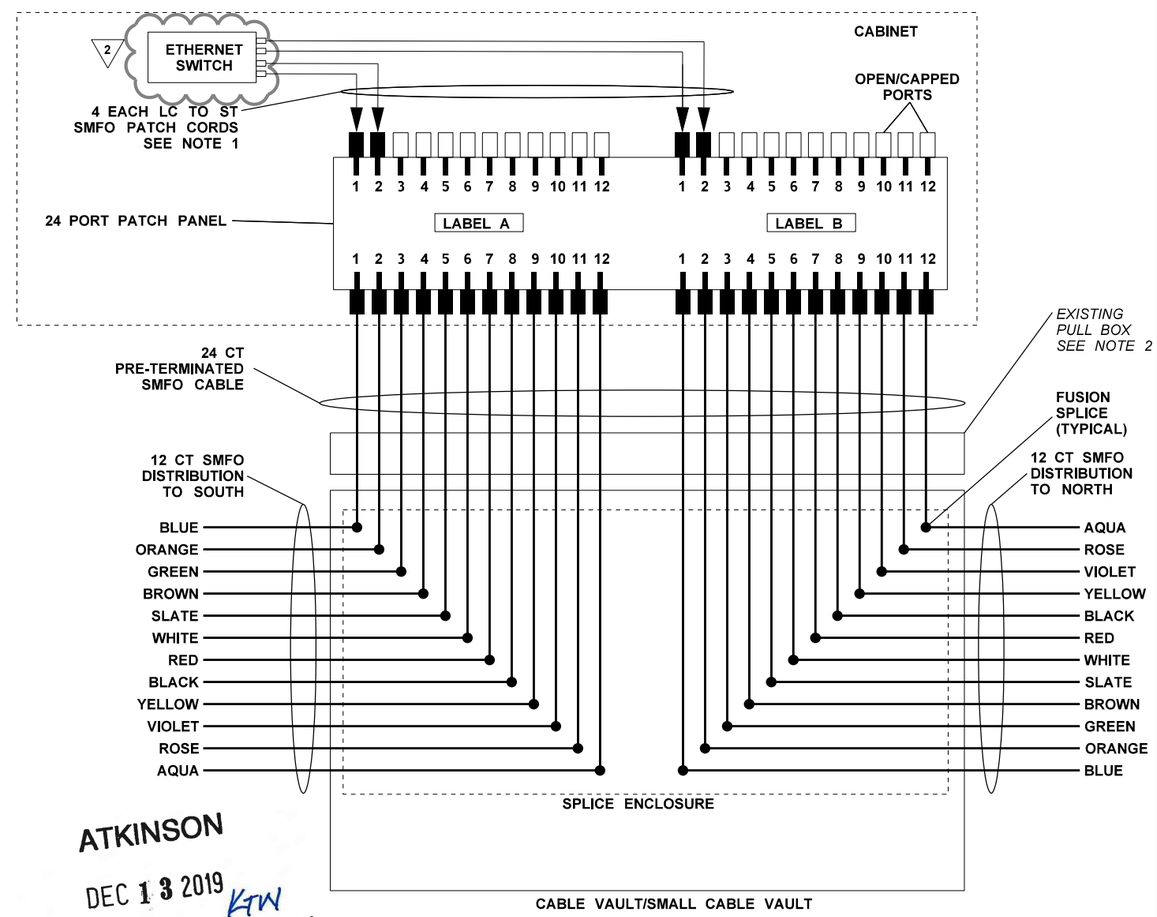

ATKINSON
DEC 13 2019 KTW
RELEASED FOR CONSTRUCTION

SPLICE DETAIL 2B

FILE NAME	c:\pwworking\jacobs_b&i\wegenemf\dms20633\PS_TSFO08.dgn			
TIME	11:07:58 AM			
DATE	11/15/2019			
PLOTTED BY	wegenemf	REV 2 - RFC, RFI0300	11/14/19	
DESIGNED BY	D. HORGAN	REV 1 - RFC, RFI0151	07/11/19	
ENTERED BY	D. HORGAN	REV B - FINAL REVIEW	05/10/19	
CHECKED BY	M. WEGENER	REV 0 - RELEASED FOR CONSTRUCTION	03/29/19	
PROJ. ENGR.	C. MEADE	REV A - FINAL REVIEW	02/12/19	
REGIONAL ADM.	J. WYNANDS	REVISION	DATE	BY

REGION NO. 10 | STATE WASH | FED.AID PROJ.NO.
JOB NUMBER
CONTRACT NO. C9133 | LOCATION NO.

MARK F. WEGENER, STATE OF WASHINGTON, 41141, REGISTERED PROFESSIONAL ENGINEER
12/12/19
DATE
P.E. STAMP BOX

DATE
P.E. STAMP BOX

Washington State Department of Transportation

ATKINSON CONSTRUCTION / JACOBS

I-5
STEILACOOM-DUPONT RD TO THORNE LN CORRIDOR IMPROVEMENTS
MP 120.01 TO MP 124.45

FIBER OPTIC DETAILS

PLAN REF NO TSFO08

SHEET 1009 OF 1456 SHEETS

CABINET	CABLE VAULT/ SMALL CABLE VAULT	LABEL A	LABEL B	LABEL C	LABEL D	SHEET NO.
005-RM-12063	SCV-04	005-HS-12051	005-VC-12132	005-TS-12091	005-TS-12091	TS-05

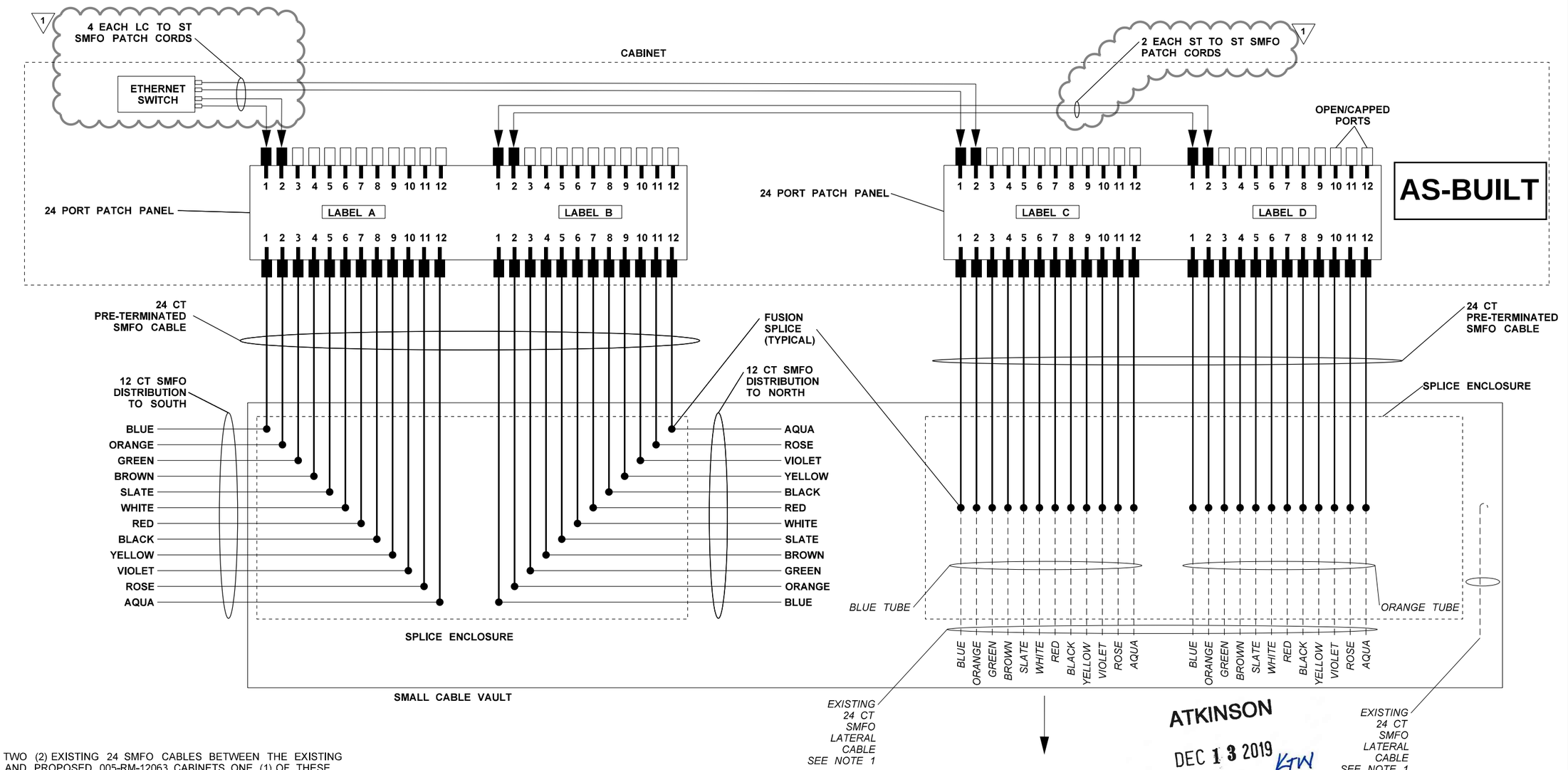

ATKINSON
DEC 13 2019 KW
RELEASED FOR CONSTRUCTION

NOTES:

1. THERE ARE TWO (2) EXISTING 24 SMFO CABLES BETWEEN THE EXISTING 005-TS-12091 AND PROPOSED 005-RM-12063 CABINETS. ONE (1) OF THESE EXISTING 24 SMFO CABLES IS NOT USED. CONTRACTOR SHALL VERIFY WHICH CABLE IS IN USE AND SPLICE THAT ONE TO THE NEW PRETERM PATCH PANEL. DO NOT SPLICE THE CABLE THAT IS NOT IN USE.

SPLICE DETAIL 3

FILE NAME	c:\pwworking\jacobs_b&i\wegenemf\dms20633\PS_TSFO09.dgn			
TIME	11:21:31 AM			
DATE	11/15/2019			
PLOTTED BY	wegenemf			
DESIGNED BY	D. HORGAN			
ENTERED BY	D. HORGAN	REV 1 - RFC, RFI0300	11/14/19	
CHECKED BY	M. WEGENER	REV 0 - RELEASED FOR CONSTRUCTION	03/29/19	
PROJ. ENGR.	C. MEADE	REV A - FINAL REVIEW	02/12/19	
REGIONAL ADM.	J. WYNANDS	REVISION	DATE	BY

REGION NO. 10 | STATE WASH | FED.AID PROJ.NO.
JOB NUMBER
CONTRACT NO. C9133 | LOCATION NO.

MARK F. WEGENER STATE OF WASHINGTON 41141 REGISTERED PROFESSIONAL ENGINEER
12/12/19
DATE
P.E. STAMP BOX

P.E. STAMP BOX DATE

Washington State Department of Transportation

ATKINSON CONSTRUCTION / JACOBS

I-5
STEILACOOM-DUPONT RD TO THORNE LN CORRIDOR IMPROVEMENTS
MP 120.01 TO MP 124.45

FIBER OPTIC DETAILS

PLAN REF NO TSFO09

SHEET 1010 OF 1456 SHEETS

CABINET	CABLE VAULT/ SMALL CABLE VAULT	LABEL A	LABEL B	SHEET NO.
005-VC-12267/005-TS-12267	SCV-11	005-VC-12260	005-RM-12288	TS-14

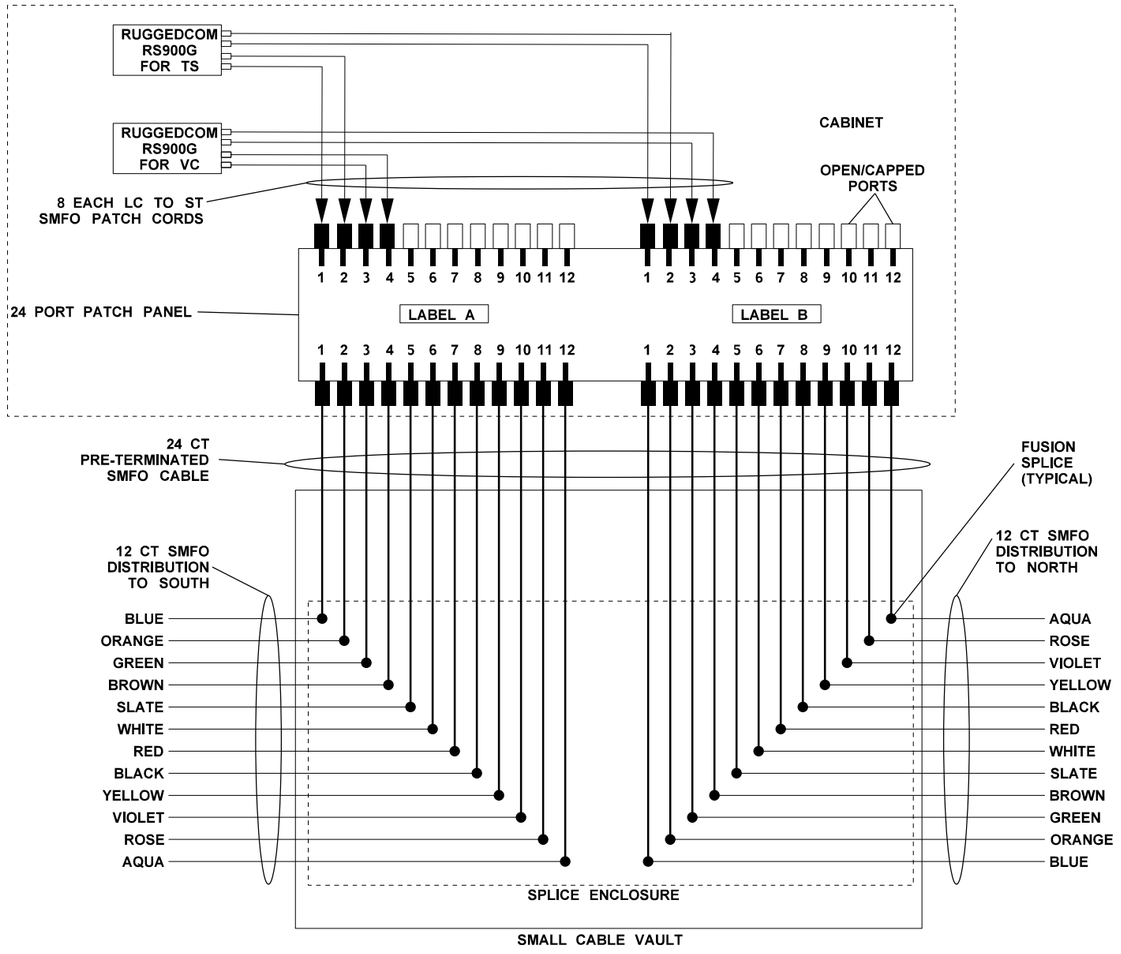

SPLICE DETAIL 4A

CABINET	CABLE VAULT/ SMALL CABLE VAULT	LABEL A	LABEL B	SHEET NO.
005-DS-12199/005-VC-12199	CV-06	005-DS-12160	005-VC-12260	TS-11

AS-BUILT

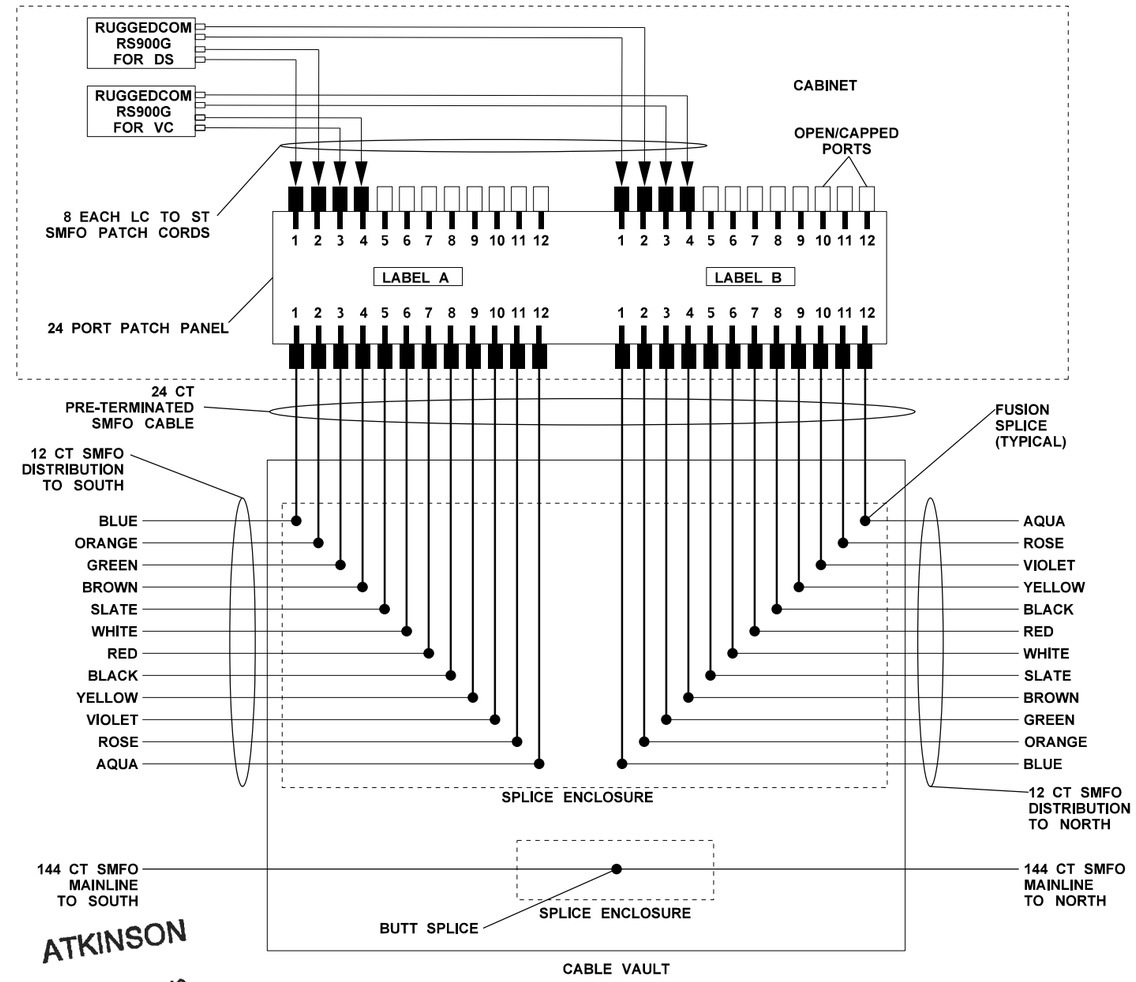

ATKINSON

JUL 12 2019 KTW

RELEASED FOR CONSTRUCTION

SPLICE DETAIL 4B

FILE NAME	c:\pwworking\jacobs_b&i\wegenemf\dms20633\PS_TSFO10.dgn					
TIME	1:06:08 PM				REGION NO. 10	STATE WASH	FED.AID PROJ.NO.
DATE	7/5/2019					
PLOTTED BY	wegenemf					
DESIGNED BY	D. HORGAN				JOB NUMBER	
ENTERED BY	D. HORGAN					
CHECKED BY	M. WEGENER	REV 0 - RELEASED FOR CONSTRUCTION	07/11/19		CONTRACT NO. C9133	LOCATION NO.
PROJ. ENGR.	C. MEADE	REV A - FINAL REVIEW	05/10/19			
REGIONAL ADM.	J. WYNANDS	REVISION	DATE	BY		

MARK F. WEGENER — STATE OF WASHINGTON — 41141 — REGISTERED PROFESSIONAL ENGINEER

7/12/19 DATE

P.E. STAMP BOX

DATE

P.E. STAMP BOX

Washington State Department of Transportation

ATKINSON / JACOBS CONSTRUCTION

I-5
STEILACOOM-DUPONT RD TO THORNE LN
CORRIDOR IMPROVEMENTS
MP 120.01 TO MP 124.45

FIBER OPTIC DETAILS

PLAN REF NO TSFO10

SHEET 1011 OF 1456 SHEETS

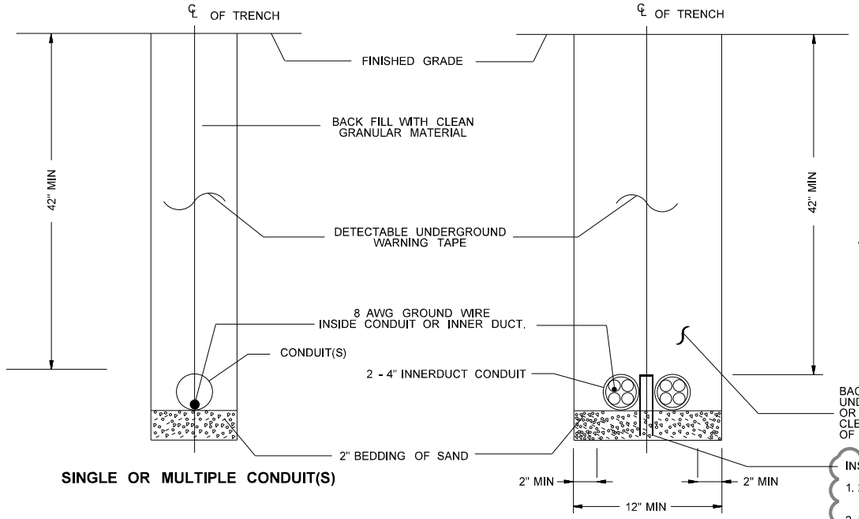

FIBER OPTIC CONDUIT TRENCH DETAIL

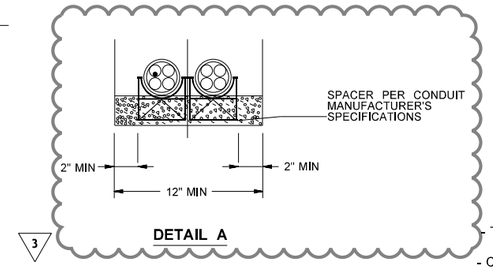

DETAIL A

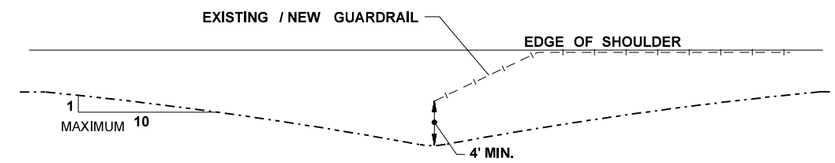

GUARDRAIL
FIBER OPTIC CONDUIT DETAIL

- THE MAXIMUM DEFLECTION ANGLE SHALL BE 10:1.
- CONDUIT SHALL BE INSTALLED A MINIMUM OF FOUR (4) FT. FROM THE GUARDRAIL.
- WHERE LATERAL CONDUIT CROSSES UNDER GUARDRAIL, CONDUIT SHALL BE INSTALLED AT A MINIMUM DEPTH OF FIVE (5) FT WITHIN FOUR (4) FT OF GUARDRAIL.

AS-BUILT

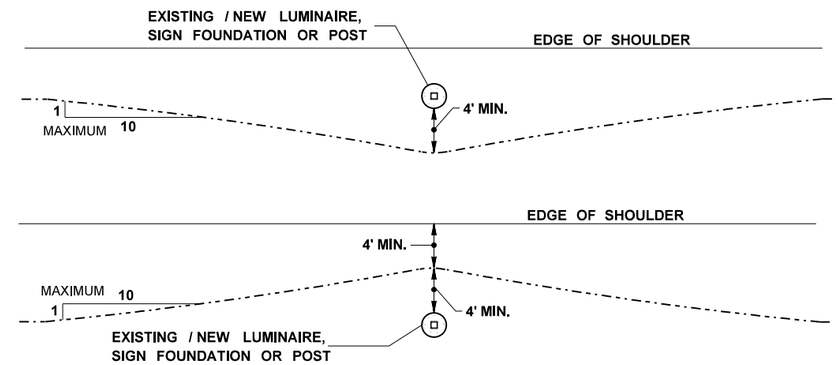

SIGN FOUNDATION/ POST
FIBER OPTIC CONDUIT DETAIL

NOTES:

1. UNLESS OTHERWISE SPECIFIED, LINEAR DIMENSIONS ARE BASED ON ROADWAY STATIONING.
2. DETECTABLE UNDERGROUND WARNING TAPE SHALL BE ORANGE AND SHALL BE LABELED IN ACCORDANCE WITH STANDARD SPECIFICATIONS.
3. SECURE CONDUIT IN TRENCH BEFORE BACKFILLING TO PREVENT FLOATING.
4. BACKFILL SHALL CONFORM WITH STANDARD SPEC. SECTION 2-09.3(1) E. SAND SHALL CONFORM WITH STANDARD SPEC. SECTION 9-03.1(2) CLASS 2 OR AS APPROVED BY THE ENGINEER.

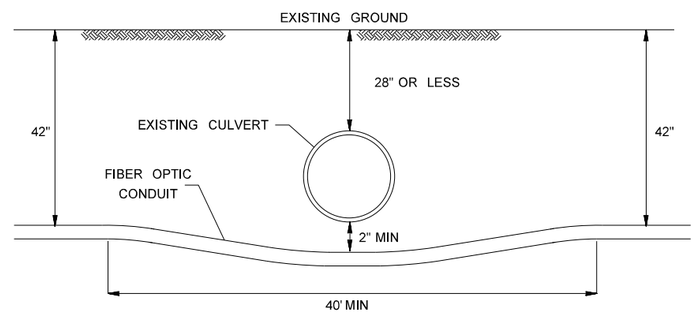

FIBER OPTIC CONDUIT UNDER CULVERT

- THE MAXIMUM DEFLECTION ANGLE SHALL BE 10:1.

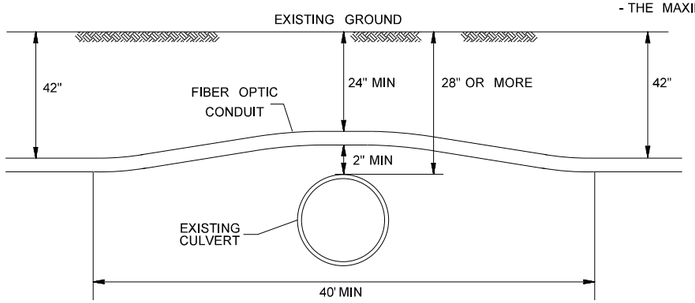

FIBER OPTIC CONDUIT OVER CULVERT

- THE MAXIMUM DEFLECTION ANGLE SHALL BE 10:1.
- CONDUIT SHALL NOT BE PLACED BETWEEN SIGN POSTS

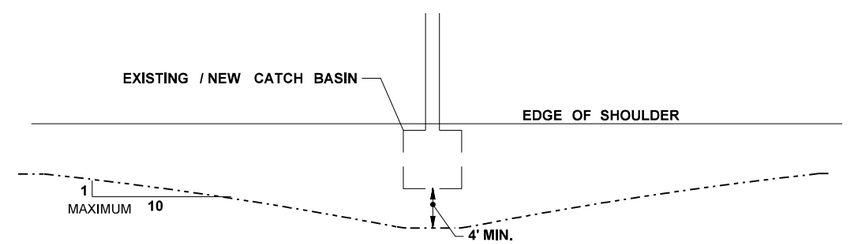

CATCH BASIN
FIBER OPTIC CONDUIT DETAIL

- THE MAXIMUM DEFLECTION ANGLE SHALL BE 10:1.
- CONDUIT SHALL MAINTAIN A FOUR (4) FT. MINIMUM CLEARANCE FROM ALL DRAINAGE STRUCTURES.

FIBER CONDUIT PLACEMENT DETAIL

ATKINSON
DEC 13 2019 KTW
RELEASED FOR CONSTRUCTION

NOT TO SCALE

FILE NAME	c:\pwworking\jacobs_b&i\jeg_gt011740\dms20633\DE_TSD01.dgn						
TIME	5:01:43 PM				REGION NO. 10	STATE WASH	FED.AID PROJ.NO.
DATE	11/14/2019						
PLOTTED BY	GT011740	REV 3 - RFC, RFI0095, RFI0309	11/14/19		JOB NUMBER		
DESIGNED BY	M. WEGENER	REV 2 - RFC, RFI0065	03/29/19				
ENTERED BY	M. WEGENER	REV 1 - RFC, RFI0032	01/23/19				
CHECKED BY	I. AGRON	REV 0 - RELEASED FOR CONSTRUCTION	12/24/18		CONTRACT NO. C9133		LOCATION NO.
PROJ. ENGR.	C. MEADE	REV A - FINAL REVIEW	11/20/18				
REGIONAL ADM.	J. WYNANDS	REVISION	DATE	BY			

MARK E. WEGENER — STATE OF WASHINGTON — 41141 — REGISTERED PROFESSIONAL ENGINEER
12/12/19
DATE
P.E. STAMP BOX

DATE
P.E. STAMP BOX

Washington State Department of Transportation

ATKINSON CONSTRUCTION / JACOBS

I-5
STEILACOOM-DUPONT RD TO THORNE LN
CORRIDOR IMPROVEMENTS
MP 120.01 TO MP 124.45

CONDUIT DETAILS

PLAN REF NO TSD01

SHEET 1012 OF 1456 SHEETS

EMBANKMENTS
CASE 2

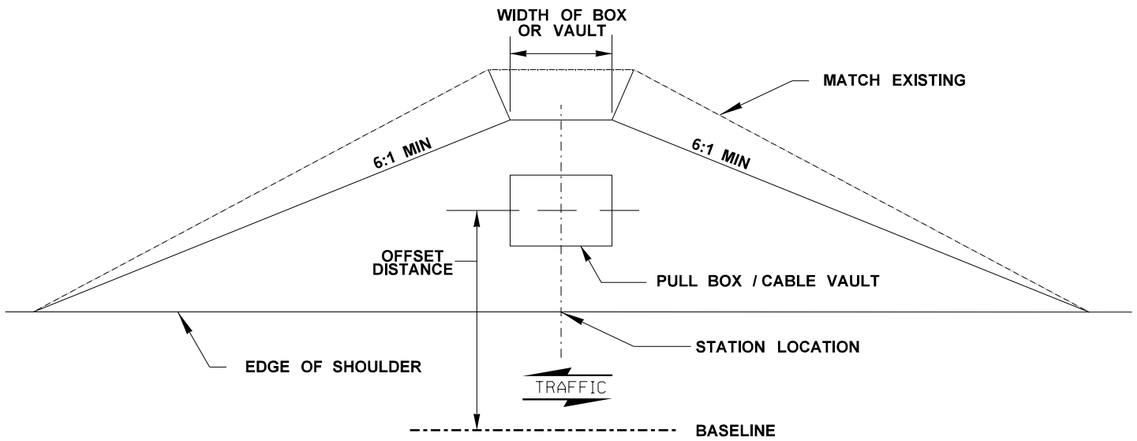

PLAN VIEW

EMBANKMENTS BEHIND GUARDRAIL
CASE 3

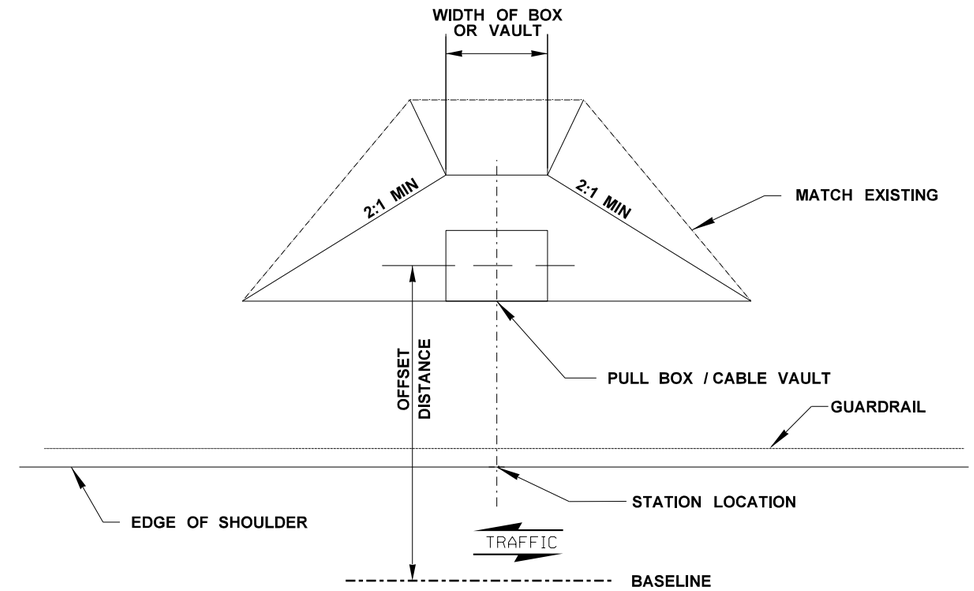

PLAN VIEW

AS-BUILT

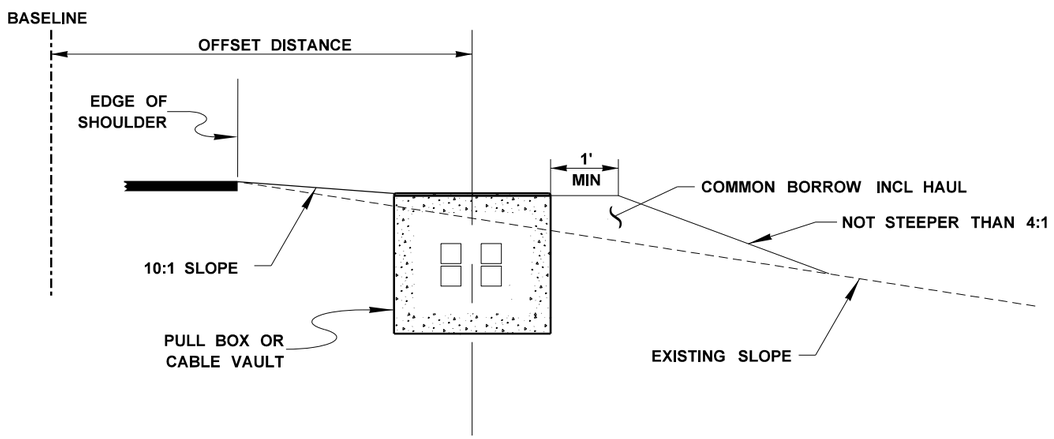

SECTION VIEW

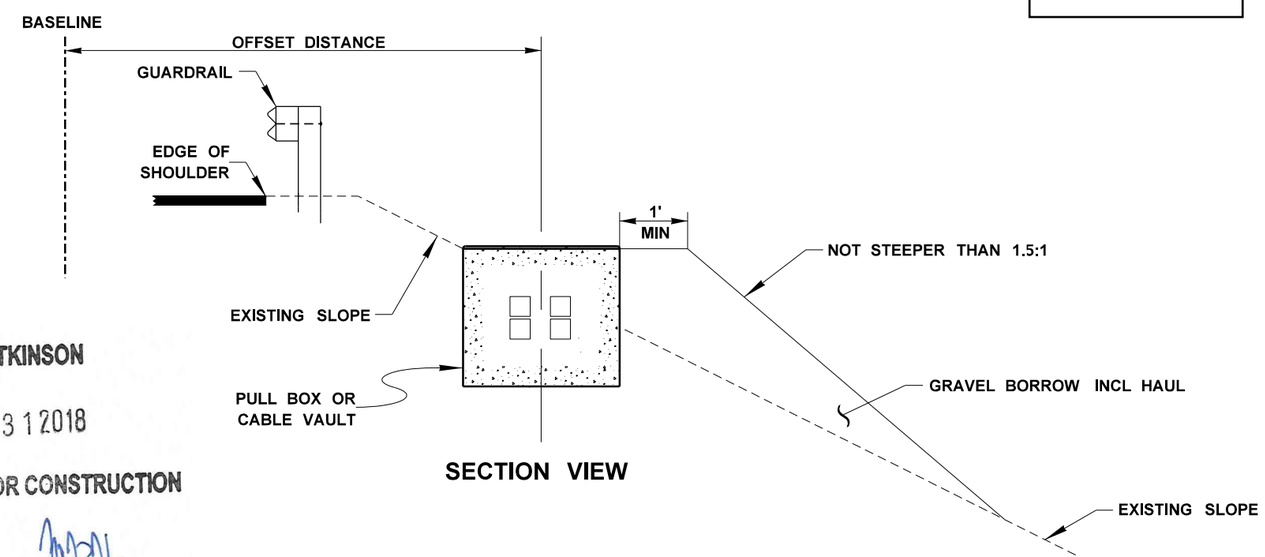

SECTION VIEW

ATKINSON
DEC 3 1 2018
RELEASED FOR CONSTRUCTION

NOTES

1. SEE STANDARD PLAN J-90.10 FOR PULL BOX INSTALLATION DETAILS, CONSTRUCTION METHODS, AND CABLE RACKING SCHEME.
2. SEE STANDARD PLAN J-90.20 FOR CABLE VAULT INSTALLATION DETAILS, CONSTRUCTION METHODS, AND CABLE RACKING SCHEME.
3. SEE SHEET TSD03 FOR VAULT LOCATION SCHEDULE.

PULL BOX/CABLE VAULT PLACEMENT DETAIL

NOT TO SCALE

FILE NAME	c:\pwworking\jacobs_b&i\wegenemf\dms20633\DE_TSD_02.dgn						
TIME	2:31:29 PM				REGION NO. 10	STATE WASH	FED.AID PROJ.NO.
DATE	12/24/2018						
PLOTTED BY	wegenemf				JOB NUMBER		
DESIGNED BY	M. WEGENER						
ENTERED BY	M. WEGENER						
CHECKED BY	I. AGRON	REV 0 - RELEASED FOR CONSTRUCTION	12/24/18		CONTRACT NO. C9133		LOCATION NO.
PROJ. ENGR.	C. MEADE	REV A - FINAL REVIEW	12/20/18				
REGIONAL ADM.	J. WYNANDS	REVISION	DATE	BY			

NAME F. WEGENER · STATE OF WASHINGTON · 41141 · REGISTERED PROFESSIONAL ENGINEER
12/31/18
DATE
P.E. STAMP BOX

P.E. STAMP BOX
DATE

Washington State Department of Transportation

ATKINSON CONSTRUCTION / JACOBS

I-5
STEILACOOM-DUPONT RD TO THORNE LN
CORRIDOR IMPROVEMENTS
MP 120.01 TO MP 124.45

PULL BOX AND CABLE VAULT DETAIL

PLAN REF NO TSD02

SHEET 1013 OF 1456 SHEETS

ITS BOX SCHEDULE

BOX NO.	BASE LINE	STATION	OFFSET	NOTES	SHEET NO.
CV-01	SR5 LINE	195+61	76' LT		TS01
CV-00	SR5 LINE	193+58	71' RT		TS01
CV-02	SR5 LINE	195+59	71' RT		TS01
PB-01	SR5 LINE	205+95	76' LT		TS02
PB-20	SR5 LINE	205+50	66' RT		TS02
PB-55	SR5 LINE	209+80	76' LT		TS03
7 PB-56	SR5 LINE	210+20	76' LT		TS03
SCV-01				NEXT TO EXPB	TS03
PB-21	SR5 LINE	216+00	66' RT		TS03
EX-PB-01	SR5 LINE	216+43	100' LT		TS03
SCV-02	SBCD LINE	420+40	30' LT		TS04
PB-16	SBCD LINE	425+02	43' LT		TS04
JB-01	SBCD LINE	424+96	44' LT		TS04
PB-02	SBCD LINE	429+86	83' LT		TS04
PB-03	SBCD LINE	430+00	43' LT		TS04
PB-04	NBCD LINE	25+07	22' RT		TS04
SCV-04				NEXT TO EXPB	TS05
EX-PB-02	SBCD LINE	431+33	59' LT		TS05
PB-05	SBCD LINE	433+36	45' LT		TS05
PB-06	SBCD LINE	433+59	81' LT		TS05
PB-07	SBCD LINE	437+90	39' LT		TS05
PB-08	SBCD LINE	439+60	38' LT		TS05
PB-22	NBCD LINE	31+64	76' RT		TS05
PB-23	NBCD LINE	31+83	35' RT		TS05
PB-24	NBCD LINE	35+92	31' RT		TS05
PB-25	NBCD LINE	36+19	73' RT		TS05
EX-PB-08	NBCD LINE	38+28	46.0' RT		TS05
SCV-06				NEXT TO EXPB	TS05
EX-PB-09	NBCD LINE	40+36	43' RT		TS05
PB-09	SBCD LINE	443+70	57' LT		TS06
PB-10	SBCD LINE	444+09	32' LT		TS06
PB-11	SBCD LINE	447+79	34' LT		TS06
PB-12	SBCD LINE	448+19	72' LT		TS06
CV-03	SBCD LINE	449+44	57' LT		TS06
PB-26	NBCD LINE	42+61	80' RT		TS06
PB-27	NBCD LINE	42+85	40' RT		TS06
EX-PB-10	NBCD LINE	46+68	36' RT		TS06
SCV-07				NEXT TO EXPB	TS06
PB-28	NBCD LINE	47+09	89' RT		TS06
JB-02	NBCD LINE	50+27	48' RT		TS06
CV-04	NBCD LINE	50+21	48' RT		TS06
PB-13	SBCD LINE	455+50	28' LT		TS07
PB-29	SR5 LINE	260+20	78' RT		TS07

BOX NO.	BASE LINE	STATION	OFFSET	NOTES	SHEET NO.
EX-PB-11	SR5 LINE	263+09	103' LT		TS08
SCV-05				NEXT TO EXPB	TS08
PB-14	SR5 LINE	269+51	86' LT		TS08
PB-30	SR5 LINE	269+50	66' RT		TS08
PB-17	SR5 LINE	277+00	86' LT		TS09
SCV-03	SR5 LINE	277+00	70' RT		TS09
PB-15	SR5 LINE	287+00	80' LT		TS10
PB-31	SR5 LINE	286+97	74' RT		TS10
CV-05	SR5 LINE	297+28	83' LT		TS11
CV-06	SR5 LINE	297+30	80' RT		TS11
PB-18	SR5 LINE	307+00	78' LT		TS12
PB-32	SR5 LINE	306+95	79' RT		TS12
PB-19	SR5 LINE	317+00	84' LT		TS13
PB-33	SR5 LINE	318+74	94' RT		TS13
PB-34	BXML LINE	14+71	29' LT		TS13
CV-07	BXML LINE	16+01	7' RT		TS13
CV-08	MRBX LINE	15+98	31' RT		TS13
SCV-08	MRBX LINE	21+24	51' LT		TS14
PB-35	MRBX LINE	21+11	38' RT		TS14
PB-36	MRBX LINE	23+42	53' RT		TS14
SCV-09	BXML LINE	23+85	19' RT		TS14
SCV-11	BXMR LINE	10+40	42' RT		TS14
PB-53	BXMR LINE	11+94	87' RT		TS14
SCV-10	BXMR LINE	13+13	49' RT		TS14
PB-37	BXMR LINE	20+81	56' RT		TS15
PB-38	MLBX LINE	20+69	7' RT		TS15
PB-39	MLBX LINE	20+68	34' LT		TS15
PB-40	SR5 LINE	355+69	102' LT		TS16
SCV-12	SR5 LINE	355+90	83' RT		TS16
PB-41	SR5 LINE	363+00	103' LT		TS17
PB-42	SR5 LINE	363+03	90' RT		TS17
CV-09	MLMX1 LINE	401+82	7' LT		TS18
CV-10	MRTX LINE	305+86	30' RT		TS18
PB-43				NOT USED	
PB-44	MRTX LINE	305+75	22' LT		TS18

BOX NO.	BASE LINE	STATION	OFFSET		SHEET NO.
PB-45	MLMX1 LINE	405+20	15' LT		TS19
PB-46	SR5 LINE	376+40	84' LT		TS19
SCV-13	SR5 LINE	377+93	75' LT		TS19
SCV-14	MLMX1 LINE	408+20	16' LT		TS19
PB-47	SR5 LINE	382+19	87' RT		TS19
SCV-15	MXTX LINE	32+56	49' RT		TS19
PB-54	MLMX2 LINE	506+13	27' RT		TS19
SCV-16	MLMX2 LINE	507+23	31' RT		TS19
PB-48	TXMR LINE	601+61	43' RT		TS19
SCV-17				NEXT TO EXPB	TS20
PB-49	SR5 LINE	390+91	77' LT		TS20
PB-50	TXMR LINE	608+63	21' RT		TS20
SCV-18	MLMX1 LINE	420+59	12' LT		TS20
SCV-19	MLMX1 LINE	430+13	13' LT		TS21
PB-51	SR5 LINE	400+58	94' RT		TS21
PB-52	SR5 LINE	409+11	71' LT		TS22
EX-CV-01	SR5 LINE	409+12	88' RT		TS22

AS-BUILT

ATKINSON
DEC 22 2020
RELEASED FOR CONSTRUCTION

STATION AND OFFSET VALUES ARE APPROXIMATE. CONTRACTOR MAY MOVE A PB, CV, OR SCV UP TO 10 FEET IN ANY DIRECTION TO IMPROVE CONSTRUCTABILITY, PROVIDED THAT THE NEW VAULT LOCATION IS MINIMUM 3 FEET FROM THE EDGE LINE AND IS NOT IN CONFLICT WITH ANOTHER ITEM

FILE NAME	c:\pwworking\jacobs_b&i\agronml\dms20633\DE_TSD03.dgn
TIME	2:51:00 PM
DATE	12/14/2020
PLOTTED BY	agronmi
DESIGNED BY	I. AGRON
ENTERED BY	I. AGRON
CHECKED BY	M. WEGENER
PROJ. ENGR.	C. MEADE
REGIONAL ADM.	J. WYNANDS

REVISION	DATE	BY
REV 7 - RFC, RFI0595	12/09/20	
REV 6 - RFC, RFI0511, REV PB-47,PB-55,SCV-15	08/10/20	
REV 5 - RFC, RFI0465, RFI0479	05/18/20	
REV 4 - RFC, RFI0223	09/19/19	
REV 3 - RFC, RFI0151	07/11/19	
REV C - FINAL REVIEW	05/10/19	
REV 2 - RFC, RFI0047,RFI0065	03/29/19	

REGION NO. 10 | STATE WASH | FED.AID PROJ.NO.
JOB NUMBER
CONTRACT NO. C9133 | LOCATION NO.

WILLIAM F. WEGENER, STATE OF WASHINGTON, 41141, REGISTERED PROFESSIONAL ENGINEER
12/21/20
DATE
P.E. STAMP BOX

DATE
P.E. STAMP BOX

Washington State Department of Transportation
ATKINSON CONSTRUCTION / JACOBS

I-5
STEILACOOM-DUPONT RD TO THORNE LN
CORRIDOR IMPROVEMENTS
MP 120.01 TO MP 124.45

BOX SCHEDULE

PLAN REF NO TSD03
SHEET 1014 OF 1456 SHEETS

KEY NOTES

1. INSTALL 2" (IN) RIGID PVC CONDUIT SCHEDULE 40.
2. INSTALL A 2.375" (IN) STAINLESS STEEL DRAIN SCREEN IN THE SUMP.
3. GROUT HOLE PER **STANDARD SPECIFICATION, SECTION 8-20.3(6).** CONTRACTOR SHALL BORE EXISTING HOLE LARGER WHEN REQUIRED.
4. FIELD BORE 3" (IN) DIAM. HOLE. GROUT HOLE PER **STANDARD SPECIFICATION, SECTION 8-20.3(6).**
5. SMALL CABLE VAULT DETAILED IN THIS DRAWING. CABLE VAULT AND PULL BOX ARE SIMILAR.

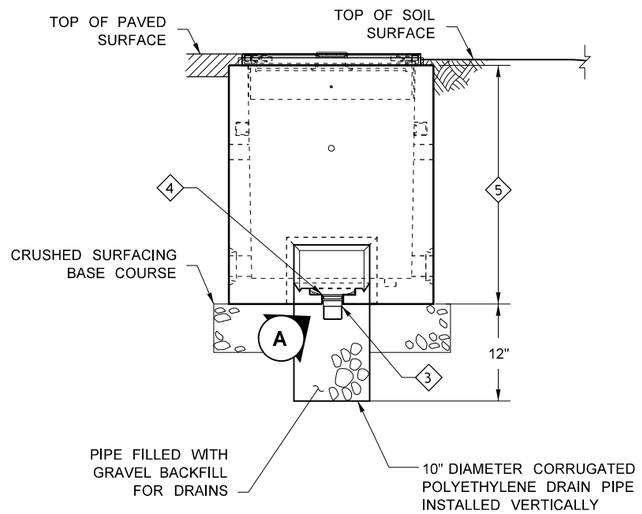

ELEVATION VIEW

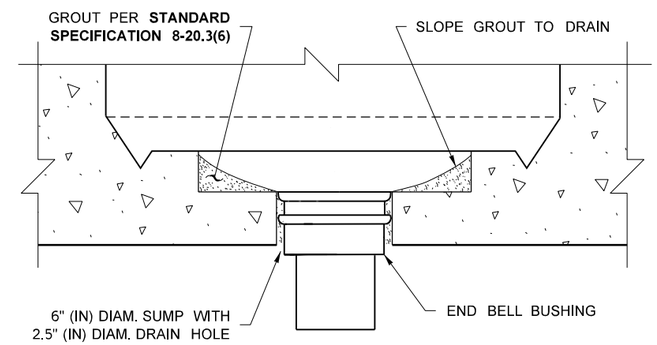

DRAIN DETAIL

AS-BUILT

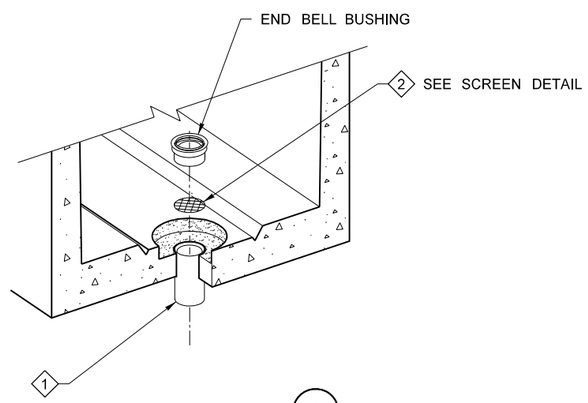

DETAIL (A)

ISOMETRIC VIEW

PIPE OUTLET DETAIL

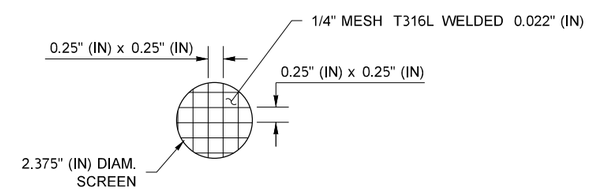

SCREEN DETAIL

ATKINSON

DEC 3 1 2018

RELEASED FOR CONSTRUCTION

M.R.W.

NOT TO SCALE

FILE NAME	c:\pwworking\jacobs_b&i\wegenemf\dms20633\DE_TSD_05.dgn						
TIME	2:34:58 PM				REGION NO.	STATE	FED.AID PROJ.NO.
DATE	12/24/2018				10	WASH	
PLOTTED BY	wegenemf				JOB NUMBER		
DESIGNED BY	I. AGRON						
ENTERED BY	I. AGRON						
CHECKED BY	M. WEGENER	REV 0 - RELEASED FOR CONSTRUCTION	12/24/18		CONTRACT NO.		LOCATION NO.
PROJ. ENGR.	C. MEADE	REV A - FINAL REVIEW	11/20/18		C9133		
REGIONAL ADM.	J. WYNANDS	REVISION	DATE	BY			

MARK F. WEGENER — STATE OF WASHINGTON — 41141 — REGISTERED PROFESSIONAL ENGINEER

12/31/18

DATE

P.E. STAMP BOX

P.E. STAMP BOX

DATE

Washington State Department of Transportation

ATKINSON CONSTRUCTION / JACOBS

I-5
STEILACOOM-DUPONT RD TO THORNE LN
CORRIDOR IMPROVEMENTS
MP 120.01 TO MP 124.45

PB, CV, AND SCV
DRAIN PIPE DETAILS

PLAN REF NO
TSD05

SHEET 1015 OF 1456 SHEETS

AS-BUILT

NOTE: BEGIN / END OF CABLE RUN

CAUTION

FIBER OPTIC CABLE

FIBER COUNT:____ FIBER TYPE:____

SR/DIRECTION:____ CABLE FOOTAGE:____

EQUIPMENT ID:____

APPROX. 4" X 2"

BLACK ON YELLOW

FIBER COUNT - NUMBER OF FIBERS IN A CABLE (EXAMPLE: 144 CT = 144 FIBERS)
SR/DIRECTION - STATE ROUTE LOCATION AND DIRECTION (EXAMPLE: I-5 NB = SR 5 NORTHBOUND)
FIBER TYPE - MAINLINE OR DISTRIBUTION.
CABLE FOOTAGE - SEQUENTIAL NUMBER FOOTAGE OF CABLE (EXAMPLE: 3085 FT)
EQUIPMENT ID - ITS DEVICE IDENTIFICATION FOR CABLE TERMINATION (EXAMPLE : 005-VC-12345)✱

F/O CABLE LABELING DETAILS

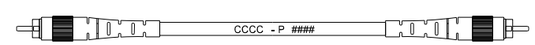

CCCC CONTRACT NUMBER
P LETTER P FOR PATCH CORD
SEQUENTIAL NUMBER BEGINNING AT 001 PER EIA-359-A-1
LABEL BOTH ENDS OF THE PATCH PANEL CORD.

PATCH CORD LABEL

WSDOT

BURIED FIBER CABLE

APPROX. 3" X 8"
BLACK ON WHITE

FLEXIBLE GUIDEPOST DECAL
CONTRACTOR TO PROVIDE AND INSTALL DECALS ON GUIDEPOSTS

ATKINSON
APR 04 2019 KTW
RELEASED FOR CONSTRUCTION

NOT TO SCALE

FILE NAME	c:\pwworking\jacobs_b&i\agronmi\dms20633\DE_TSD06.dgn						
TIME	2:50:43 PM				REGION NO. 10	STATE WASH	FED.AID PROJ.NO.
DATE	3/29/2019						
PLOTTED BY	agronmi				JOB NUMBER		
DESIGNED BY	I. AGRON						
ENTERED BY	I. AGRON						
CHECKED BY	M. WEGENER	REV 0 - RELEASED FOR CONSTRUCTION	03/29/19		CONTRACT NO. C9133		LOCATION NO.
PROJ. ENGR.	C. MEADE	REV A - FINAL REVIEW	02/12/19				
REGIONAL ADM.	J. WYNANDS	REVISION	DATE	BY			

MARK F. WEGENER · STATE OF WASHINGTON · 41141 · REGISTERED PROFESSIONAL ENGINEER
4/3/19
DATE
P.E. STAMP BOX

DATE
P.E. STAMP BOX

Washington State Department of Transportation

ATKINSON CONSTRUCTION / JACOBS

I-5
STEILACOOM-DUPONT RD TO THORNE LN
CORRIDOR IMPROVEMENTS
MP 120.01 TO MP 124.45

FIBER OPTIC MARKER DETAIL

PLAN REF NO TSD06

SHEET 1016 OF 1456 SHEETS

CABINET EQUIPMENT SCHEDULE

EQUIPMENT		BASE LINE	STATION	OFFSET	CABINET HOUSING STD PLAN*	CABINET TYPE	CABINET RACK DETAIL	RUGGEDCOM RS900G	RUGGEDCOM RS910	RUGGEDCOM RMC30 TERMINAL SERVER	RX5000	CLICK112	CLICK200	CLICK201	PoE INJECTOR AND SURGE PROTECTOR	GENERATOR TRANSFER SWITCH	170 CONTROLLER	2070 CONTROLLER	LC 20KM SFP MODULES***
SHEET	CABINET IDENTIFICATION																		
TS01	005-DS-12006/005-VC-12006	SR5	195+75	81' RT	J-12.16-00	334D	TSD16	2		1		6	1	1			1		
TS01	005-TC-12006	SR5	195+75	81' RT	J-12.16-00	334D	TSD12				1					1			16
TS03	005-VC-12044	SR5	216+25	88' LT	J-12.16-00	331D	TSD13	1							1				
TS04	005-HS-12051	SBCD	420+75	47' LT	J-12.16-00	334D	TSD15	1								1			
TS05	005-RM-12063	SBCD	431+00	50' LT	J-12.16-00	334D	TSD16	1	1			7	2	1			1		
TS05	005-VC-12086	NBCD	38+25	50' RT	J-12.16-00	331D	TSD13	1											
TS06	005-RM-12110	NBCD	46+75	42' RT	J-12.16-00	334D	TSD16	1	1			8	2	1			1		
TS08	005-VC-12132	SR5	263+30	110' LT	J-12.16-00	331D	TSD13	1											
TS09	005-DS-12160	SR5	277+20	70' RT	J-12.16-00	334D	TSD16	1	1			9	1	1			1		
TS11	005-DS-12199/005-VC-12199	SR5	297+55	80' RT	J-12.16-00	334D	TSD16	2		1		9	1	1			1		
TS14	005-VC-12260	MRBX	21+31	53' LT	J-12.16-00	331D	TSD13	1											
TS14	005-RM-12250	BXML	23+87	30' RT	J-12.16-00	334D	TSD16	1	1			8	2	1			1		
TS14	005-VC-12267/005-TS-12267	BXMR	10+47	40' RT	**	342LX	**	2										1	
TS14	005-RM-12288	BXMR	13+29	45' RT	J-12.16-00	334D	TSD16	1	1			8	2	1			1		
TS16	005-VC-12310	SR5	355+98	84' RT	J-12.16-00	331D	TSD13	1											
TS18	005-DS-12340	MRTX	305+95	28' RT	J-12.16-00	334D	TSD16	1	1			8	1	1			1		
TS19	005-VC-12351	MRTX	311+84	44' LT	J-12.16-00	331D	TSD13	1											
TS19	005-VC-12356	MLMX1	408+28	18' LT	J-12.16-00	331D	TSD13	1											
TS19	005-VC-12359	MXTX	32+72	53' RT	J-12.16-00	331D	TSD13	1											
TS19	005-TS-12362	MLMX2	507+21	40' RT	**	342LX	**	1										1	
TS20	005-RM-12375	TXMR	604+60	28' RT	J-12.16-00	334D	TSD16	1	1			8	2	1			1		
TS22	005-DS-12413/005-VC-12413	SR5	410+37	93' RT	J-12.16-00	334D	TSD16	2		1		10	1	1			1		
TS22	005-TC-12413	SR5	410+32	93' RT	J-12.16-00	334D	TSD12				1					1			16
N/A	OLYMPIC REGION TMC	-	-	-	-	-	-				1								16

* ON STANDARD PLAN J-12.16-00, USE "CABINET HOUSING #1X"

** SEE TRAFFIC SIGNAL PLANS

***REFER TO SPECIAL PROVISION 8-20.3(1).ITS.OPT3.DT3 FOR SPECIFIC ORDER CODES FOR EQUIPMENT.

NOTES:

1. ALL STATIONS AND OFFSETS ON THIS SHEET ARE APPROXIMATE.
2. ALL CABINETS SHALL BE LABELED PER "CABINET IDENTIFICATION LABELING DETAIL" ON SHEET TSD12.

AS-BUILT

ATKINSON
DEC 13 2019 KTW
RELEASED FOR CONSTRUCTION

FILE NAME	c:\pwworking\jacobs_b&i\agronmi\dms20633\DE_TSD07.dgn			
TIME	9:51:31 AM			
DATE	12/6/2019			
PLOTTED BY	agronmi	REV 2 - RFC, RFI0300	12/06/19	
DESIGNED BY	D. HORGAN	REV 1 - RFC, RFI0151	07/11/19	
ENTERED BY	I. AGRON	REV B - FINAL REVIEW NORTH AREA	05/10/19	
CHECKED BY	M. WEGENER	REV 0 - RELEASED FOR CONSTRUCTION	03/29/19	
PROJ. ENGR.	C. MEADE	REV A - FINAL REVIEW	02/12/19	
REGIONAL ADM.	J. WYNANDS	REVISION	DATE	BY

REGION NO. 10 | STATE WASH | FED.AID PROJ.NO.

JOB NUMBER

CONTRACT NO. C9133 | LOCATION NO.

MARK F. WEGENER STATE OF WASHINGTON 41141 REGISTERED PROFESSIONAL ENGINEER
12/12/19
DATE
P.E. STAMP BOX

DATE
P.E. STAMP BOX

Washington State Department of Transportation

ATKINSON / JACOBS CONSTRUCTION

I-5
STEILACOOM-DUPONT RD TO THORNE LN
CORRIDOR IMPROVEMENTS
MP 120.01 TO MP 124.45

ITS EQUIPMENT SCHEDULE

PLAN REF NO TSD07

SHEET 1017 OF 1456 SHEETS

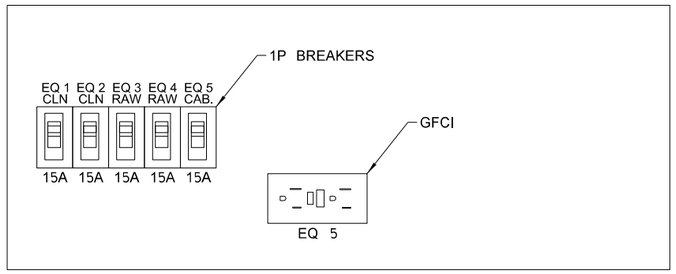

FRONT VIEW

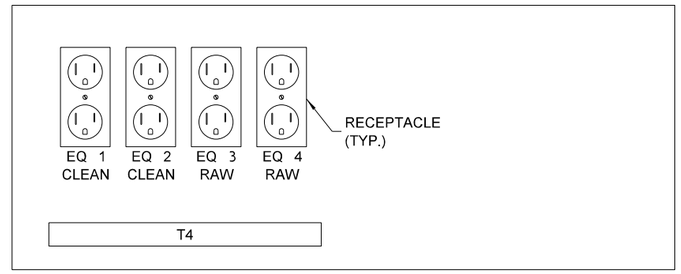

REAR VIEW

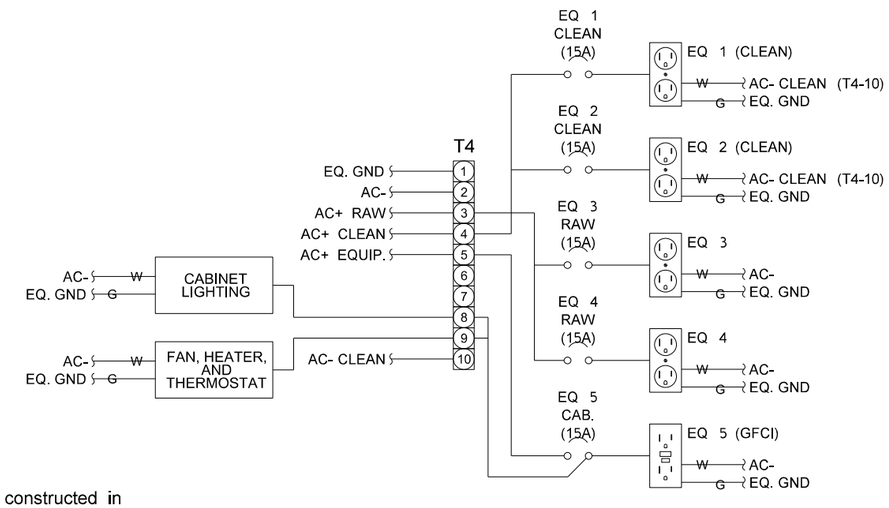

WIRING DIAGRAM

NOTES

1. General equipment shall meet the requirements of and be constructed in accordance with the California Department of Transportation (CalTrans) Transportation Electrical Equipment Specifications (TEES) as currently published, including all errata, with modifications as shown here and described in **Standard Specification Section 9-29.13(10)**. Exterior dimensions shall be the same as described for PDA #2LX/PDA #3LX.
2. The Service Panel Assembly (SPA) shall be wired as shown here. Include a generator transfer switch only when specified for a particular cabinet.
3. Circuit Breakers shall include covers to prevent accidental tripping.
4. Terminal Block T4 shall be protected from accidental contact with a clear plastic cover.
5. Bus Bars shall be capable of being used without installing lugs on field wires.

ATKINSON
APR 04 2019 KTW
RELEASED FOR CONSTRUCTION

NOT TO SCALE

POWER DISTRIBUTION ASSEMBLY ITS (PDA-ITS) DETAIL AND WIRING DIAGRAM

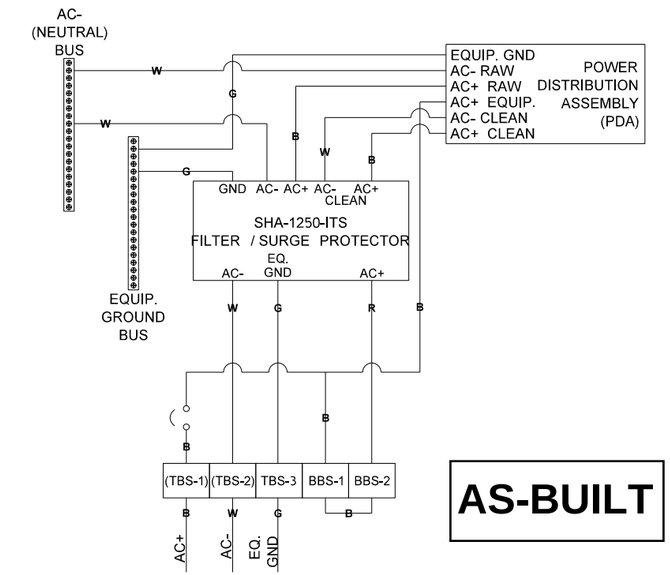

AS-BUILT

WITHOUT GENERATOR TRANSFER SWITCH

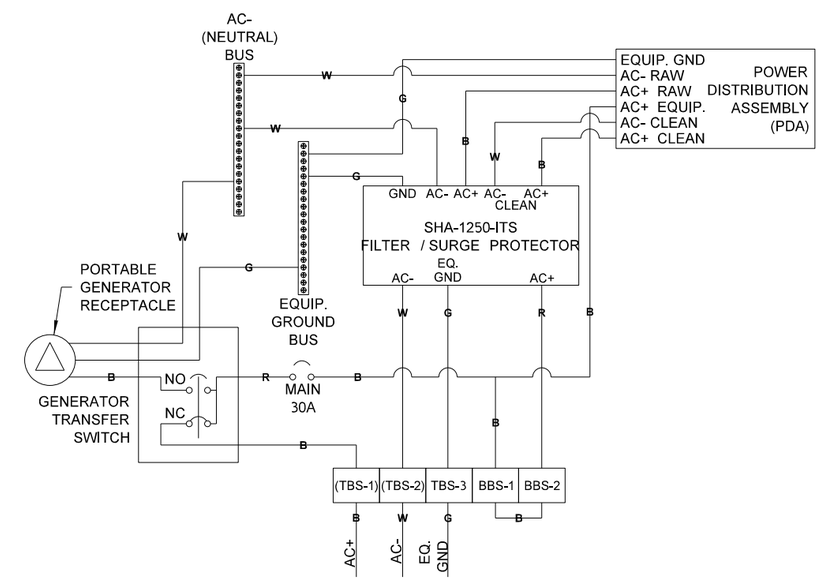

WITH GENERATOR TRANSFER SWITCH

SERVICE POWER ASSEMBLY (SPA) WIRING DIAGRAM

FILE NAME	c:\pwworking\jacobs_b&i\wegenemf\dms20633\DE_TSD10.dgn					
TIME	1:20:50 PM				REGION NO. 10	STATE WASH
DATE	3/30/2019				JOB NUMBER	FED.AID PROJ.NO.
PLOTTED BY	wegenemf					
DESIGNED BY	I. AGRON					
ENTERED BY	I. AGRON					
CHECKED BY	W. WEGENER	REV 0 - RELEASED FOR CONSTRUCTION	03/29/19		CONTRACT NO. C9133	LOCATION NO.
PROJ. ENGR.	C. MEADE	REV A - FINAL REVIEW	2/12/19			
REGIONAL ADM.	J. WYNANDS	REVISION	DATE	BY		

P.E. STAMP BOX — DATE 4/3/19

P.E. STAMP BOX — DATE

Washington State Department of Transportation

ATKINSON / JACOBS CONSTRUCTION

I-5
STEILACOOM-DUPONT RD TO THORNE LN CORRIDOR IMPROVEMENTS
MP 120.01 TO MP 124.45

PDA-ITS DETAILS

PLAN REF NO TSD10

SHEET 1018 OF 1456 SHEETS

NOTES:

1. ALL DEVICES ARE NOT NEEDED IN EACH CABINET. SEE "CABINET EQUIPMENT SCHEDULE" ON TSD07 FOR EQUIPMENT NEEDED IN EACH CABINET.

2. SEE SHEET TSD15 FOR DIN RAIL PANEL IN HARS CABINET.

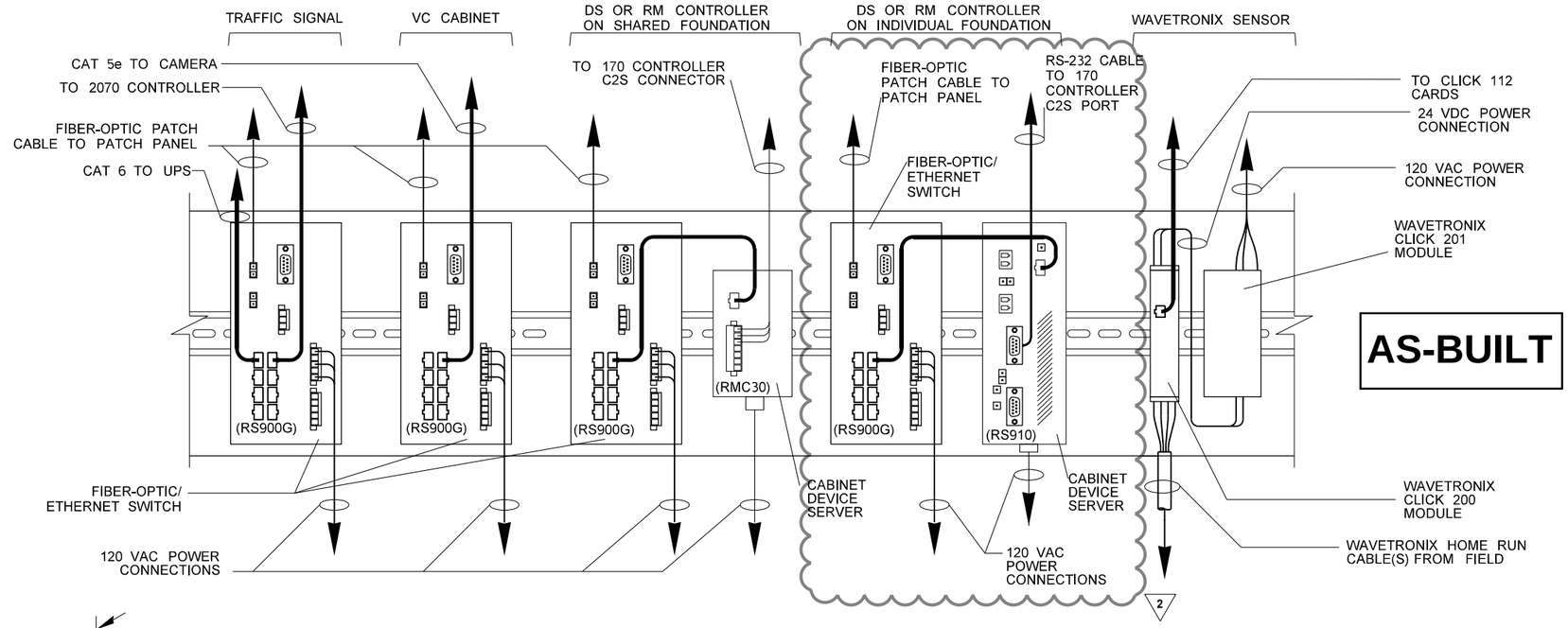

AS-BUILT

DIN RAIL MOUNTED EQUIPMENT

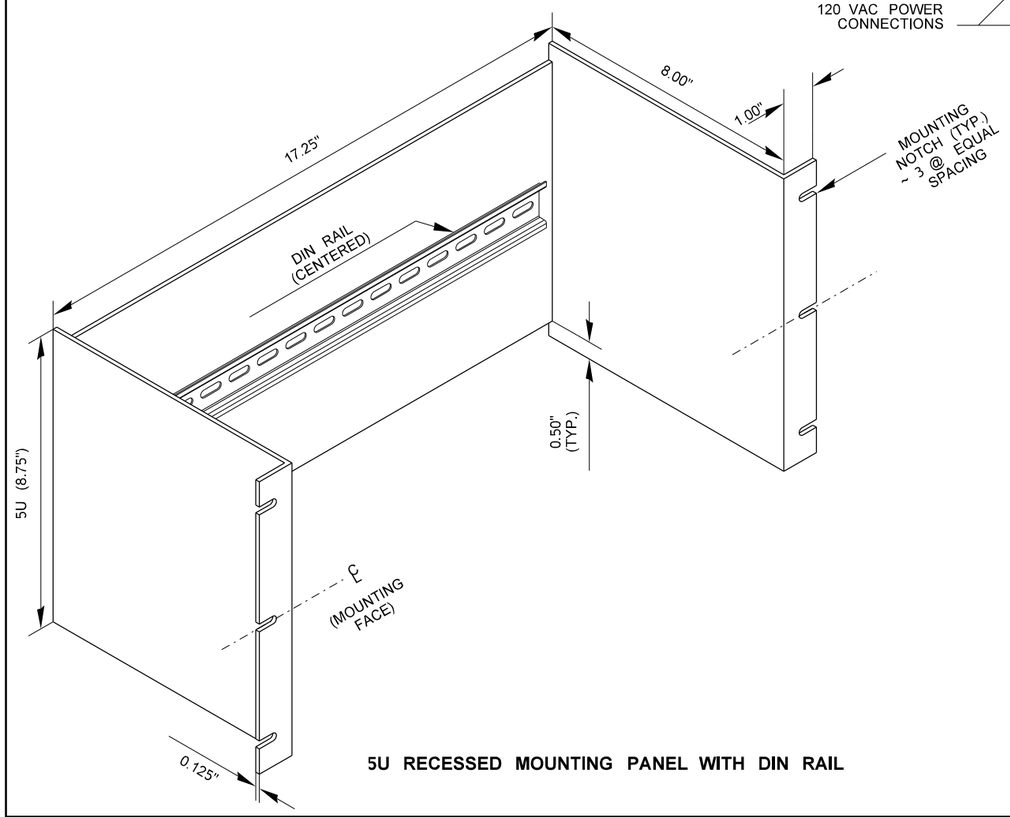

5U RECESSED MOUNTING PANEL WITH DIN RAIL

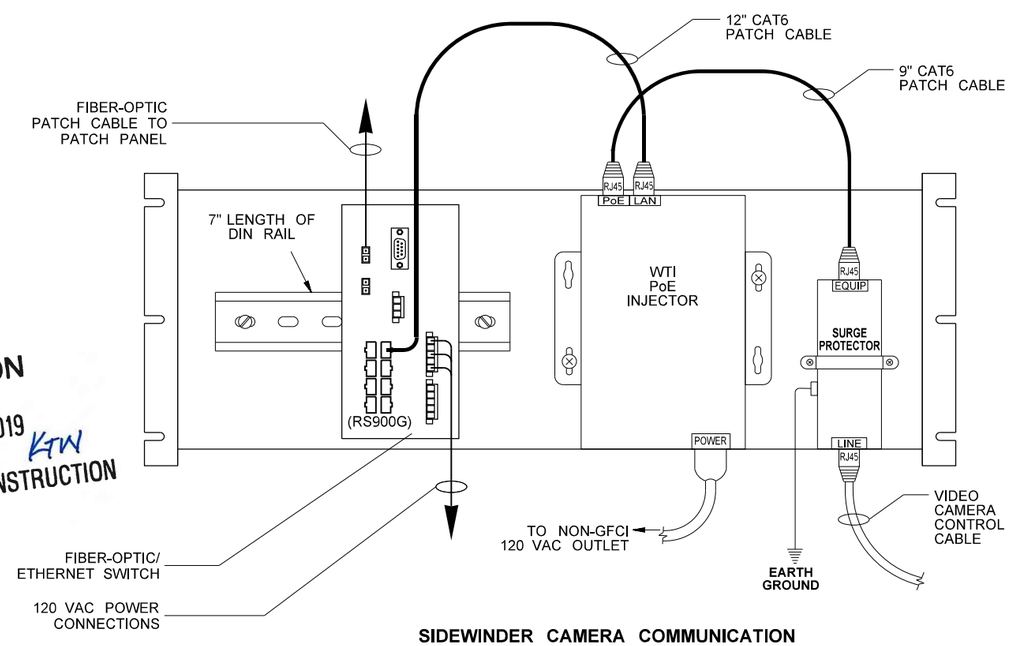

SIDEWINDER CAMERA COMMUNICATION PANEL FOR CABINET 005-VC-12044 ONLY

NOT TO SCALE

ATKINSON
DEC 13 2019 KTW
RELEASED FOR CONSTRUCTION

FILE NAME	c:\pwworking\jacobs_b&i\wegenemf\dms20633\DE_TSD11.dgn						
TIME	2:09:51 PM				REGION NO.	STATE	FED.AID PROJ.NO.
DATE	12/10/2019				10	WASH	
PLOTTED BY	WEGENEMF	REV 2 - RFC, RFI0300	12/06/19		JOB NUMBER		
DESIGNED BY	I. AGRON	REV 1 - RFC, RFI0151	07/11/19				
ENTERED BY	I. AGRON	REV B - FINAL REVIEW NORTH AREA	05/10/19				
CHECKED BY	M. WEGENER	REV 0 - RELEASED FOR CONSTRUCTION	03/29/19		CONTRACT NO.		LOCATION NO.
PROJ. ENGR.	C. MEADE	REV A - FINAL REVIEW	2/12/19		C9133		
REGIONAL ADM.	J. WYNANDS	REVISION	DATE	BY			

MARK F. WEGENER, STATE OF WASHINGTON, 41141, REGISTERED PROFESSIONAL ENGINEER
12/12/19
DATE
P.E. STAMP BOX

P.E. STAMP BOX
DATE

Washington State Department of Transportation

ATKINSON / JACOBS CONSTRUCTION

I-5
STEILACOOM-DUPONT RD TO THORNE LN
CORRIDOR IMPROVEMENTS
MP 120.01 TO MP 124.45

DIN RAIL PANEL DETAIL

PLAN REF NO TSD11

SHEET 1019 OF 1456 SHEETS

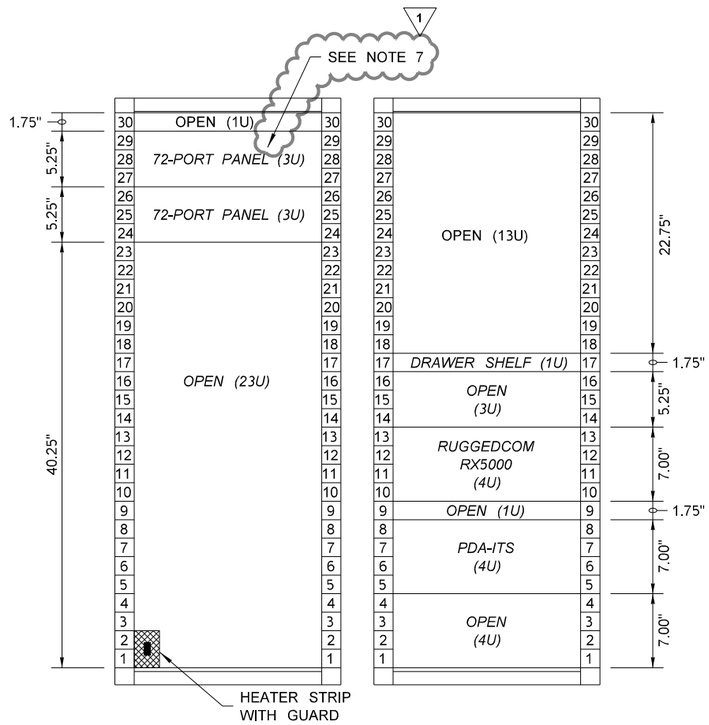

LEFT RACK

RIGHT RACK

FRONT VIEW

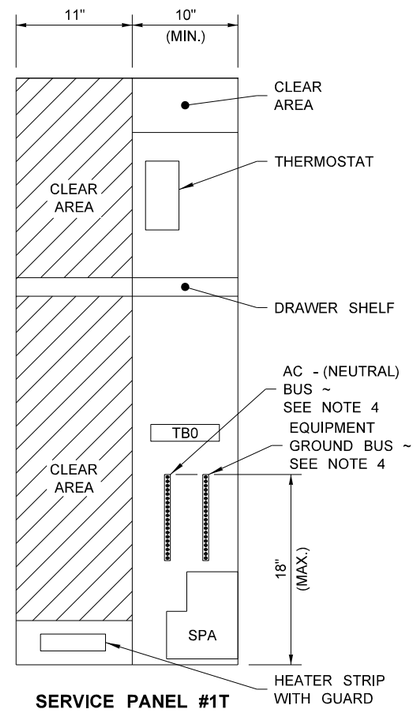

SERVICE PANEL #1T
LAYOUT
(SEE NOTE 4)

NOTES

1. Fiber optic terminal cabinet housing shall be type 334D as shown on detail SHEET TSD09.
2. Install Pre-Terminated Fiber-Optic Patch Panels in the locations shown. See Special Provisions for part numbers.
3. A receptacle strip shall be installed at the top rear of each rack. The receptacle strips shall be plugged into the Power Distribution Assembly (PDA) EQ. 4 receptacle.
4. See SHEET TSD10 for PDA-ITS details.
5. Bus Bars shall be capable of being used without installing lugs on field wires.
6. See SHEET TSD07 for network equipment required in each cabinet.
7. Number of pre-terminated patch panels varies at each Fiber Termination Cabinet. Refer to sheets TSFO01-10 for the correct number of patch panels to be installed at each location. (1)

AS-BUILT

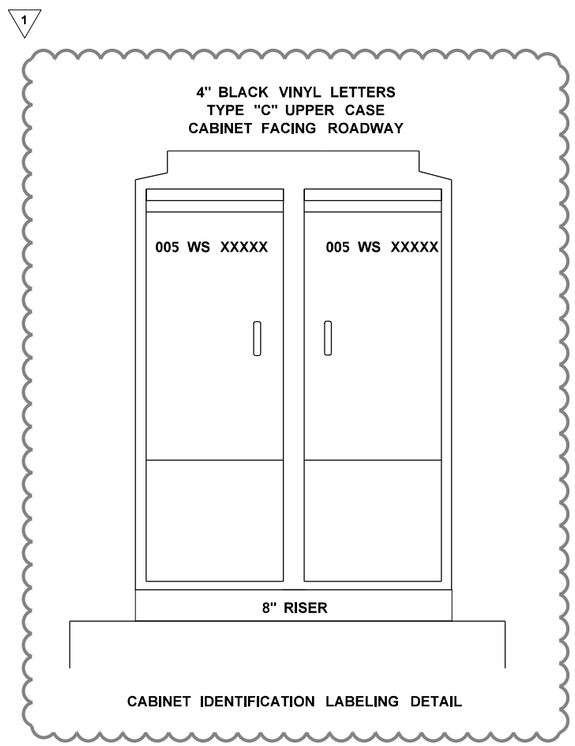

CABINET IDENTIFICATION LABELING DETAIL

ATKINSON
JUL 12 2019 KTW
RELEASED FOR CONSTRUCTION

NOT TO SCALE

FILE NAME	c:\pwworking\jacobs_b&i\agronmi\dms20633\DE_TSD12.dgn						
TIME	1:53:54 PM				REGION NO. 10	STATE WASH	FED.AID PROJ.NO.
DATE	7/11/2019				JOB NUMBER		
PLOTTED BY	agronmi						
DESIGNED BY	I. AGRON						
ENTERED BY	I. AGRON	REV 1 - RFC, RFI0151	07/11/19				
CHECKED BY	W. WEGENER	REV 0 - RELEASED FOR CONSTRUCTION	3/29/19		CONTRACT NO. C9133		LOCATION NO.
PROJ. ENGR.	C. MEADE	REV A - FINAL REVIEW	2/12/19				
REGIONAL ADM.	J. WYNANDS	REVISION	DATE	BY			

P.E. STAMP BOX — DATE 7/12/19

P.E. STAMP BOX — DATE

Washington State
Department of Transportation

ATKINSON / JACOBS CONSTRUCTION

I-5
STEILACOOM-DUPONT RD TO THORNE LN
CORRIDOR IMPROVEMENTS
MP 120.01 TO MP 124.45

FIBER TERMINAL RACKS
AND SIDE PANEL EQ

PLAN REF NO TSD12

SHEET 1020 OF 1456 SHEETS

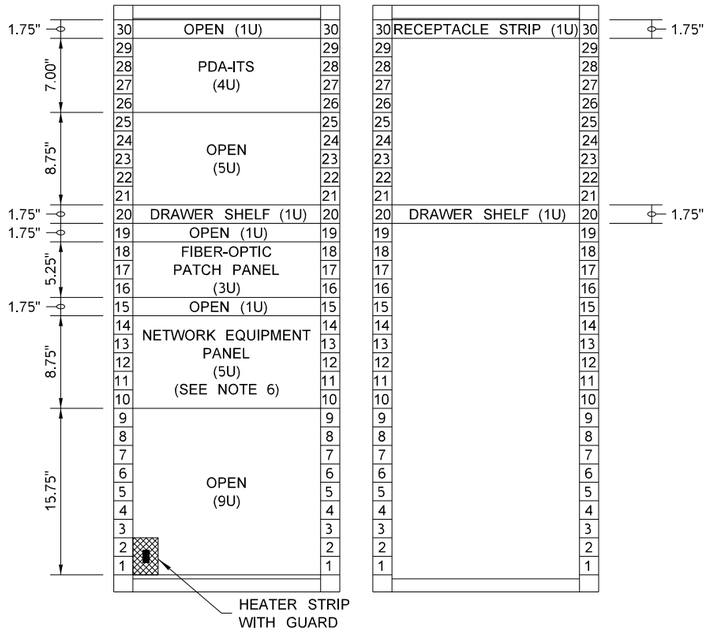

RACK #1 (LEFT) RACK #2 (RIGHT)

RACK LAYOUTS - FRONT VIEW

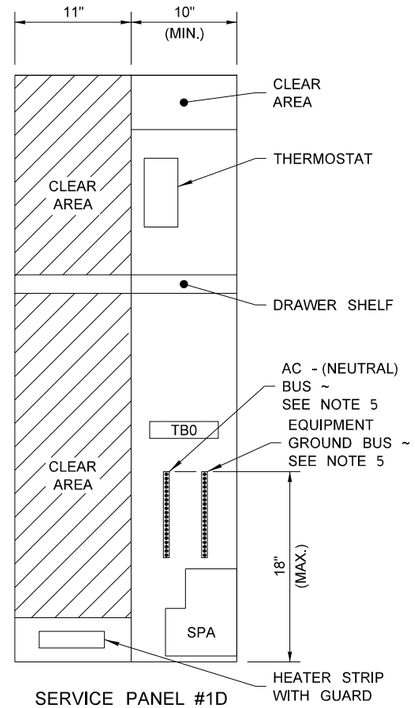

SERVICE PANEL #1D LAYOUT
(SEE NOTE 4)

CAMERA POLE SCHEDULE

POLE NO.	CCTV NAME	LINE	STATION	OFFSET	LT/RT	MOUNTING HEIGHT	FOUNDATION DEPTH	SHEET NO.	CAMERA MOUNT	NOTE
1	005-VC-12006	SR5	195+50	73'	RT	50'	7'-0"	TS01	UPRIGHT	SEE SHEET TSD27 FOR WAVETRONIX SENSOR INSTALLATION ON SAME POLE.
2	005-VC-12044	SR5	216+08	87'	LT	50'	-	TS03	UPRIGHT	EXISTING POLE
3	005-VC-12086	NBCD	38+00	68'	RT	50'	-	TS05	UPRIGHT	EXISTING POLE
4	005-VC-12132	SR5	263+35	85'	LT	50'	-	TS08	UPRIGHT	EXISTING POLE
5	005-VC-12199	SR5	297+15	65'	RT	50'	9'-0"	TS11	UPRIGHT	SEE SHEET TSD27 FOR WAVETRONIX SENSOR INSTALLATION ON SAME POLE.
6	005-VC-12260	SR5	330+29	91'	RT	50'	7'-0"	TS14	UPRIGHT	
7	005-VC-12267	SR5	333+82	182'	RT	50'	7'-0"	TS14	UPRIGHT	
8	005-VC-12310	SR5	356+20	77'	RT	50'	7'-0"	TS16	UPRIGHT	
9	005-VC-12351	SR5 4	378+44	159'	RT	50'	7'-0"	TS19	UPRIGHT	
10	005-VC-12356	SR5	380+23	149'	LT	BARRIER MOUNT		TS19	UPRIGHT	
11	005-VC-12359	SR5	382+09	95'	RT	50'	7'-0"	TS19	UPRIGHT	
12	005-VC-12413	SR5	410+79	90'	RT	50'	7'-0"	TS22	UPRIGHT	SEE SHEET TSD27 FOR WAVETRONIX SENSOR INSTALLATION ON SAME POLE.

AS-BUILT

ATKINSON
MAY 19 2020 KRW
RELEASED FOR CONSTRUCTION

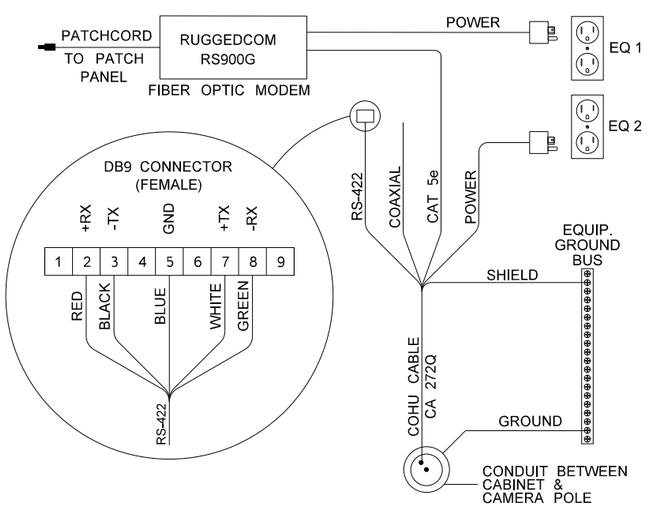

CCTV WIRING DIAGRAM *

*DOES NOT APPLY TO 005-VC-12044. SEE COMUNICATION PANEL ON TSD11.

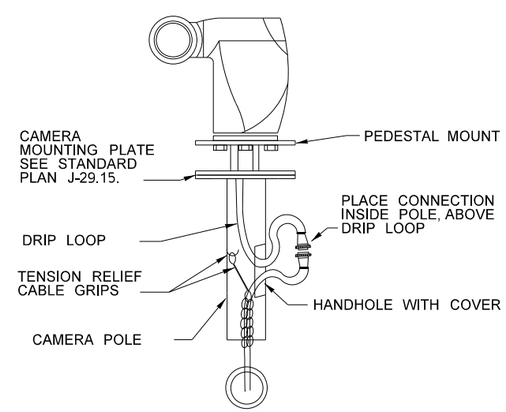

TYPICAL DIGITAL CAMERA MOUNTING DETAIL

NOTES

1. Cabinet housing shall be a Type 334D, double-width cabinet, as shown in standard plan J-12.16-00.
2. General cabinet equipment shall meet the requirements of and be constructed in accordance with the California Department of Transportation (CalTrans) Transportation Electrical Equipment Specifications (TEES) as currently published, including all errata, with modifications as shown here and described in Standard Specification Section 9-29.13(10). Pre-Terminated Fiber-Optic Patch Panel field installed separately.
3. See SHEET TSD10 for Power Distribution Assembly (PDA) ITS details.
4. Service Panel #1D shall meet the requirements of Service Panel #1 in the TEES, with the modifications shown here.
5. Bus Bars shall be capable of being used without installing lugs on field wires.
6. See SHEET TSD11 for Network Equipment Panel Details.
7. Cabinet shall be oriented such that the front side is facing away from the roadway.
8. See SHEET TSD07 for network equipment required in each cabinet.

NOT TO SCALE

FILE NAME	c:\pwworking\jacobs_b&l\agronmi\dms20633\DE_TSD13.dgn				
TIME	2:36:56 PM	REV 4 - RFC, RFI0479	05/18/20		
DATE	5/18/2020	REV 3 - RFC, RFI0346	12/20/19		
PLOTTED BY	agronmi	REV 2 - RELEASE OF NFC	08/09/19		
DESIGNED BY	I. AGRON	REV 1 - RFC, RFI0151	07/11/19		
ENTERED BY	I. AGRON	REV B - FINAL REVIEW NORTH AREA	05/10/19		
CHECKED BY	W. WEGENER	REV 0 - RELEASED FOR CONSTRUCTION	03/29/19		
PROJ. ENGR.	C. MEADE	REV A - FINAL REVIEW	2/12/19		
REGIONAL ADM.	J. WYNANDS	REVISION	DATE	BY	

REGION NO. 10 | STATE WASH | FED.AID PROJ.NO.
JOB NUMBER
CONTRACT NO. C9133 | LOCATION NO.

P.E. STAMP BOX — 5/19/20 DATE

P.E. STAMP BOX — DATE

Washington State Department of Transportation

ATKINSON CONSTRUCTION / JACOBS

I-5
STEILACOOM-DUPONT RD TO THORNE LN
CORRIDOR IMPROVEMENTS
MP 120.01 TO MP 124.45

CCTV RACK AND SIDE PANEL EQ

PLAN REF NO TSD13

SHEET 1021 OF 1456 SHEETS

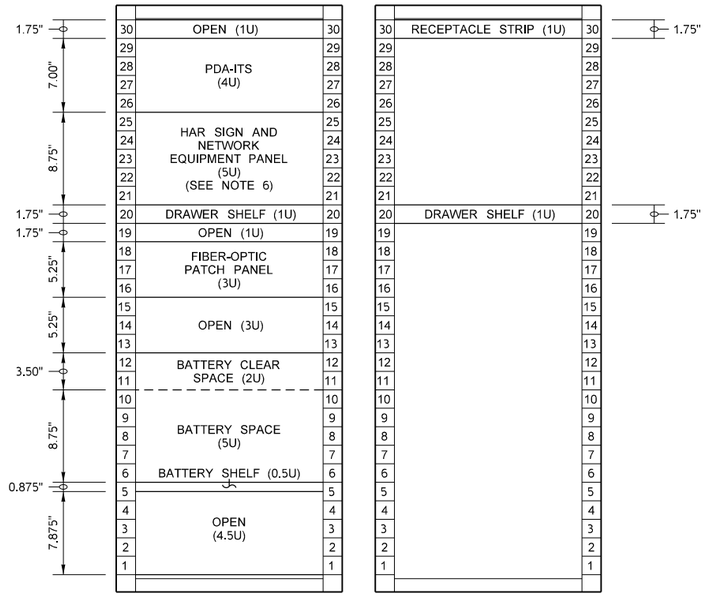

RACK #1 (LEFT) RACK #2 (RIGHT)

RACK LAYOUTS - FRONT VIEW

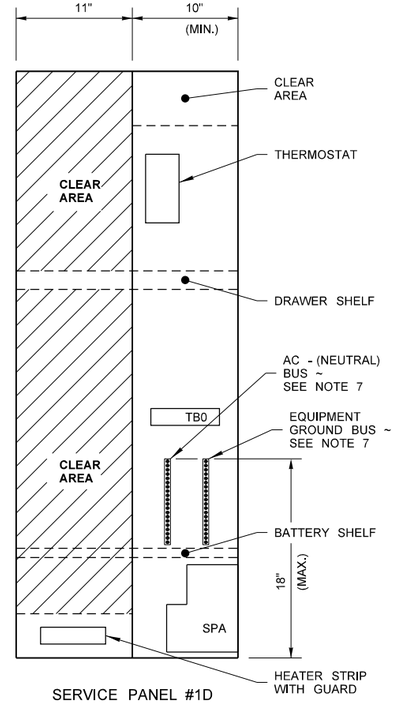

SERVICE PANEL #1D LAYOUT
(SEE NOTE 5)

NOTES

1. Cabinet housing shall be a Type 334D, double-width cabinet, as shown in STANDARD PLAN J-12.16-00

2. General cabinet equipment shall meet the requirements of and be constructed In accordance with the California Department of Transportation (CalTrans) Transportation Electrical Equipment Specifications (TEES) as currently published, including all errata, with modifications as shown here and described in **Standard Specification Section 9-29.13(10)**. Pre-Terminated Fiber-Optic Patch Panel field installed separately.

3. See **SHEET TSD10** for Power Distribution Assembly (PDA)-ITS details.

4. Service Panel #1D shall meet the requirements of Service Panel #1 in the TEES, with the modifications shown here.

5. See **5U RECESSED MOUNTING PANEL WITH DIN RAIL DETAIL, SHEET TSD11**, for Network Equipment Panel dimensions.

6. Battery shelf shall be vented and positioned vertically between the Service Panel Assembly (SPA) and the service panel bus bars.

7. Batteries and 12 VDC battery charger shall be installed on the battery shelf. Secure the battery charger to the battery shelf.

8. Bus Bars shall be capable of being used without installing lugs on field wires.

9. Cabinet shall be oriented such that the front side is facing away from the roadway.

10. See SHEET TSD07 for network equipment required in each cabinet.

11. Indicator light shall be TATTLE TALE LIGHT, Option 3, manufactured by Electrotech of Corona, CA. Light shall be rated for 12VDC and shall be blue in color. Install light in the top port of the beacon housing per manufacturer recommendations and adjust the light so that it points to camera 005-VC-12044. Wire indicator light in parallel with the beacon using the same size wires as the beacon cable, splicing the wires inside the beacon housing.

AS-BUILT

ATKINSON
APR 04 2019 KTW
RELEASED FOR CONSTRUCTION

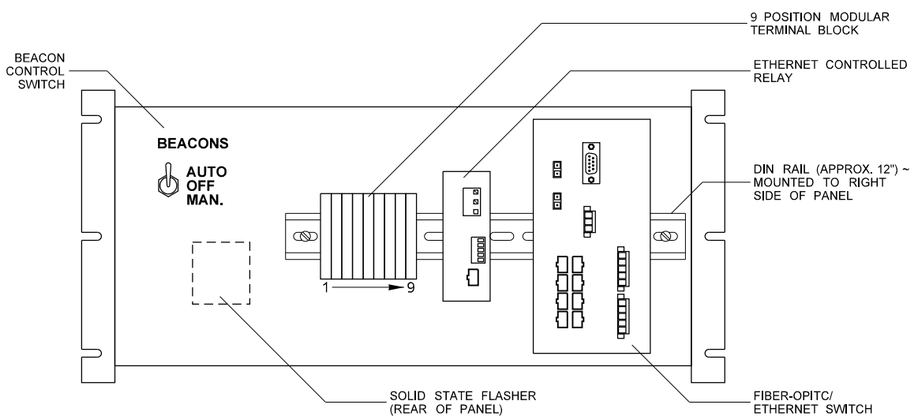

HAR SIGN AND NETWORK EQUIPMENT PANEL
FRONT VIEW
(WIRING NOT SHOWN FOR CLARITY)

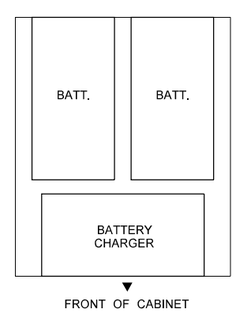

BATTERY SHELF
LAYOUT

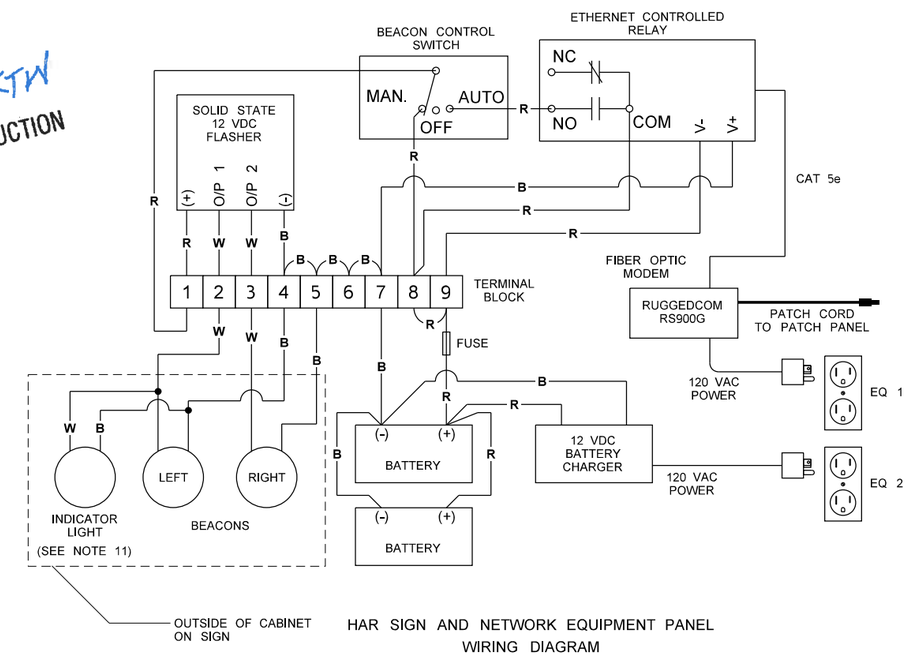

HAR SIGN AND NETWORK EQUIPMENT PANEL
WIRING DIAGRAM

FILE NAME	c:\pwworking\jacobs_b&i\wegenemf\dms20633\DE_TSD15.dgn						
TIME	6:38:58 PM				REGION NO. 10	STATE WASH	FED.AID PROJ.NO.
DATE	4/2/2019				JOB NUMBER		
PLOTTED BY	wegenemf						
DESIGNED BY	I. AGRON						
ENTERED BY	I. AGRON						
CHECKED BY	W. WEGENER	REV 0 - RELEASED FOR CONSTRUCTION	02/29/19		CONTRACT NO. C9133		LOCATION NO.
PROJ. ENGR.	C. MEADE	REV A - FINAL REVIEW	02/12/19				
REGIONAL ADM.	J. WYNANDS	REVISION	DATE	BY			

MARK F. WEGENER, STATE OF WASHINGTON, 41141, REGISTERED PROFESSIONAL ENGINEER
4/3/19
DATE
P.E. STAMP BOX

DATE
P.E. STAMP BOX

Washington State Department of Transportation

ATKINSON CONSTRUCTION / JACOBS

I-5
STEILACOOM-DUPONT RD TO THORNE LN
CORRIDOR IMPROVEMENTS
MP 120.01 TO MP 124.45

DC HAR SIGN RACK AND SIDE PANEL EQ.

PLAN REF NO TSD15

SHEET 1022 OF 1456 SHEETS

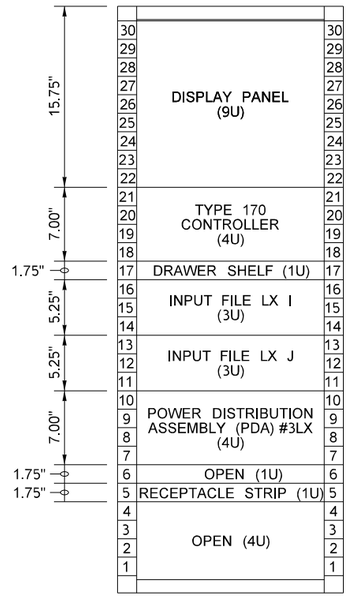

FRONT VIEW

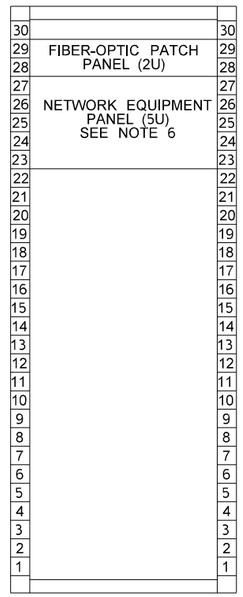

REAR VIEW

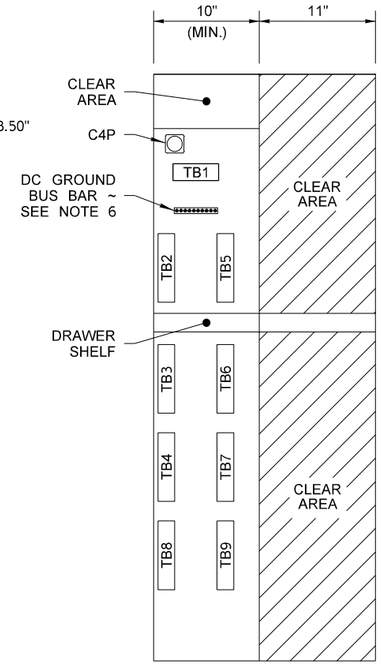

INPUT PANEL #1D LAYOUT
(SEE NOTE 4)

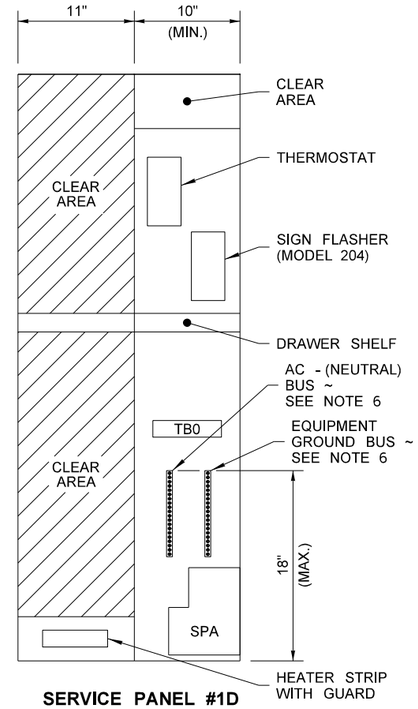

SERVICE PANEL #1D LAYOUT
(SEE NOTE 5)

NOTE: DIMENSIONS NOT SHOWN SHALL BE IN ACCORDANCE WITH THE TEES

NOTES

1. Equipment shall meet the requirements of and be constructed in accordance with the California Department of Transportation (CalTrans) Transportation Electrical Equipment Specifications (TEES) as currently published, including all errata, with modifications as shown here and described in Standard Specification Section 9-29.13(10).Pre-Terminated Fiber-optic Patch Panel field installed separately.
2. The following Input File Terminal Blocks shall be wired in parallel:
   - I15 to J15
   - I16 to J16
3. Power Distribution Assembly (PDA) #3LX shall be modified as follows:
   a.) The C6P connector shall be included and wired as referenced in TEES Drawing A6-15, Note 9.
   b.) A second Model 430 Transfer Relay (TR2) shall be installed on the rear of the PDA and wired as shown.
   c.) The following terminals shall be wired together as follows:

From	To	Function
T2-8	T4-6	TR1 Output to Field Green 2
T2-6	MU-3	Energizes TR1 and TR2 when MU is normal
T1-1, T1-2	SR-3	Field Output - Sign On
T1-3, T1-4	SR-4	Field Output - Sign Off

4. Input Panel #1D shall meet the requirements of Input Panel #1 in the TEES, with the modifications shown here. Do Not include ground bus bars between terminal blocks TB2 through TB9. Relabel the C5 connector as C4P. The C4 connector cable shall be 4 feet in length.
5. Service Panel #1D shall meet the requirements of Service Panel #1 in the TEES, with the modifications shown here. The model 204 flasher shall include a socket and retaining strap, providing a snug fit and allowing the flasher to be removed, without tools, by pulling upwards.
6. Bus Bars shall be capable of being used without installing lugs on field wires.
7. The Sign Switch shall be a 3-position, stationary type toggle switch with a 10 amp contact rating.
8. The Police Control Switch shall be a 2-position, stationary type toggle switch with a 10 amp contact rating.
9. See SHEET TSD11 for Network Equipment Panel Details.
10. See SHEET TSD07 for network equipment required in each cabinet.

POWER DISTRIBUTION BLOCK DIAGRAM

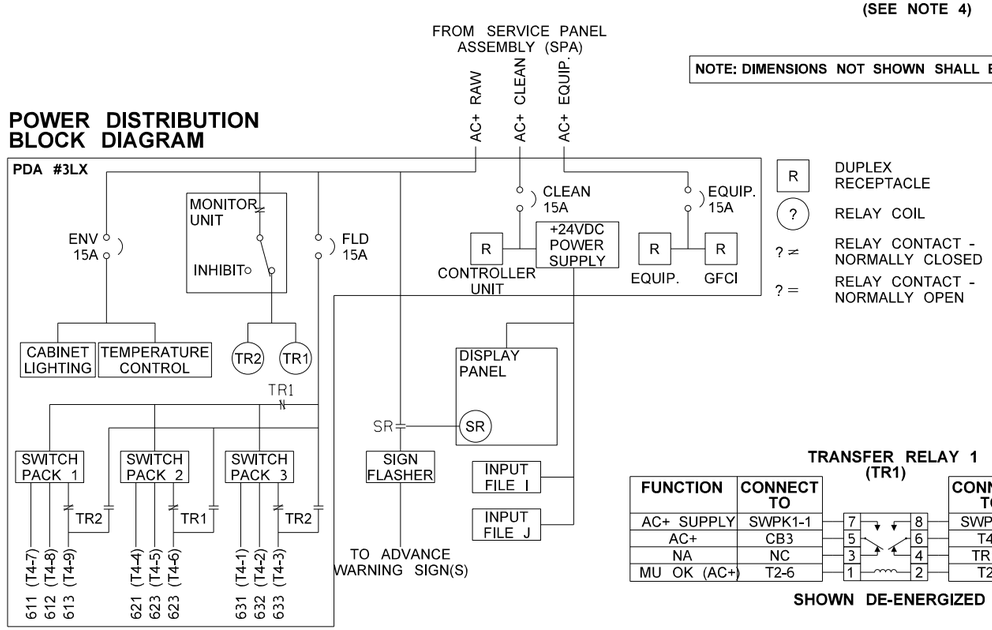

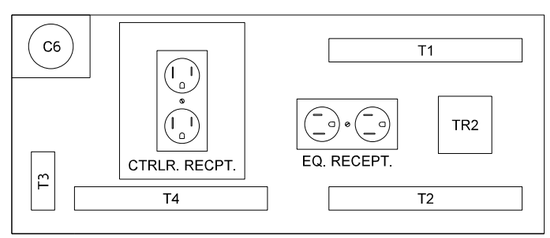

PDA #3LX REAR VIEW
(SEE NOTE 3)

TRANSFER RELAY 1 (TR1)

FUNCTION	CONNECT TO		CONNECT TO	FUNCTION
AC+ SUPPLY	SWPK1-1	7 – 8	SWPK2-7	GRN-2
AC+	CB3	5 – 6	T4-6	GRN2 O/P
NA	NC	3 – 4	TR1-5	AC+
MU OK (AC+)	T2-6	1 – 2	T2-2	AC-

SHOWN DE-ENERGIZED

TRANSFER RELAY 2 (TR2)

FUNCTION	CONNECT TO		CONNECT TO	FUNCTION
GRN-3	SWPK3-7	7 – 8	SWPK1-7	GRN-1
GRN3 O/P	T4-3	5 – 6	T4-9	GRN1 O/P
AC+	CB3	3 – 4	TR2-3	AC+
MU OK (AC+)	T2-6	1 – 2	T2-2	AC-

SHOWN DE-ENERGIZED

TRANSFER RELAY DETAILS

ATKINSON
APR 04 2019 KTW
RELEASED FOR CONSTRUCTION

AS-BUILT

NOT TO SCALE

FILE NAME	c:\pwworking\jacobs_b&i\agronml\dms20633\DE_TSD16.dgn
TIME	2:54:01 PM
DATE	3/29/2019
PLOTTED BY	agronmi
DESIGNED BY	I. AGRON
ENTERED BY	I. AGRON
CHECKED BY	W. WEGENER
PROJ. ENGR.	C. MEADE
REGIONAL ADM.	J. WYNANDS

REVISION	DATE	BY
REV 0 - RELEASED FOR CONSTRUCTION	03/29/19	
REV A - FINAL REVIEW	2/12/19	

REGION NO. 10 | STATE WASH | FED.AID PROJ.NO.
JOB NUMBER
CONTRACT NO. C9133 | LOCATION NO.

P.E. STAMP BOX — DATE 4/3/19

Washington State Department of Transportation

ATKINSON / JACOBS CONSTRUCTION

I-5
STEILACOOM-DUPONT RD TO THORNE LN
CORRIDOR IMPROVEMENTS
MP 120.01 TO MP 124.45

TYPE 334L/334D RM/DS EQ

PLAN REF NO TSD16

SHEET 1023 OF 1456 SHEETS

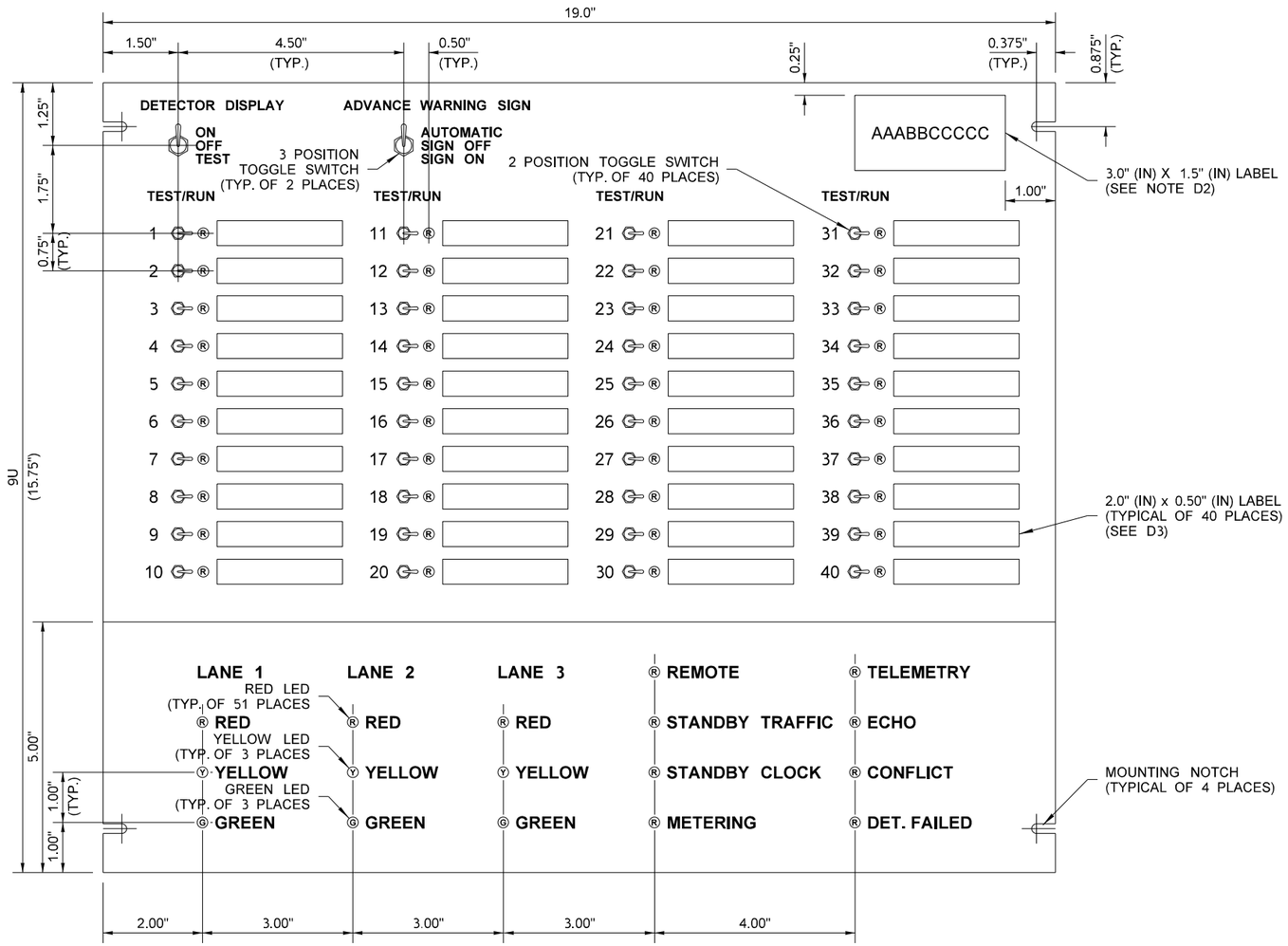

DISPLAY PANEL DETAIL

DISPLAY PANEL NOTES

D1. The Display Panel shall be 0.125" (in) thick aluminum with a brushed finish. All text on the Display Panel shall be a minimum of 0.25" (in).

D2. The Cabinet Name Plate shall be a phenolic label, with white minimum 0.375" (in) text on a black background, permanently affixed to the panel. See Contract Plans for cabinet identification number.

D3. The Detector Labels shall have 0.5" (in) black text on a white background. The labels may either be phenolic or industrial grade outdoor vinyl, and shall be permanently affixed to the panel.

D4. All other text shall be black and screened directly onto the panel.

D5. The Sign Relay socket and connectors P1P, P2S, and C5P shall be installed on the back of the panel. Connectors P1P/S and P2P/S are Type DD50 D-Sub connectors with pin assignments as shown on sheet 3. The suffix "S" indicates a socket (female connector) and the suffix "P" indicates a plug (male connector).

D6. The Sign Relay shall be DPDT, wired as shown, with a contact rating not less than 10 amps continuous duty. The relay shall operate on ground output from the controller, and draw less than 75 milliamps when energized. AC wiring between the relay and the PDA shall be #14 AWG.

D7. See Standard Specification Section 9-29.13(11) for additional requirements.

SIGN RELAY (SR)

FUNCTION	CONNECT TO			CONNECT TO	FUNCTION
SIGN CTRL	SS-2	7	6	NC	NA
NA	NC	8	5	NC	NA
AC+	T2-7	1	4	T1-3	SIGN OFF
+24 VDC	C5 - 24	2	3	T1-1	SIGN ON

SHOWN DE-ENERGIZED (NOT METERING)

SIGN RELAY DETAIL
(SEE NOTE D6)

AS-BUILT

ATKINSON
APR 04 2019 KTW
RELEASED FOR CONSTRUCTION

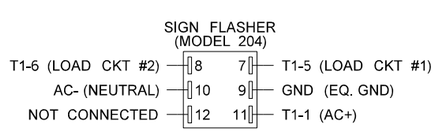

SIGN FLASHER DETAIL
(SEE NOTE 5)

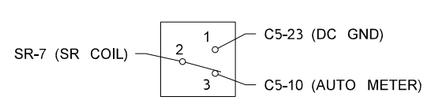

SHOWN IN AUTOMATIC MODE

SIGN SWITCH (SS) DETAIL
(SEE NOTE 7)

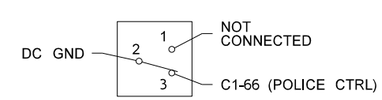

SHOWN IN POLICE CONTROL MODE (ON)

POLICE CONTROL (PC) SWITCH DETAIL
(SEE NOTE 8)

NOT TO SCALE

FILE NAME	c:\pwworking\jacobs_b&i\agronmi\dms20633\DE_TSD17.dgn						
TIME	2:55:20 PM				REGION NO. 10	STATE WASH	FED.AID PROJ.NO.
DATE	3/29/2019						
PLOTTED BY	agronmi				JOB NUMBER		
DESIGNED BY	I. AGRON						
ENTERED BY	I. AGRON						
CHECKED BY	W. WEGENER	REV 0 - RELEASED FOR CONSTRUCTION	03/29/19		CONTRACT NO. C9133		LOCATION NO.
PROJ. ENGR.	C. MEADE	REV A - FINAL REVIEW	2/12/19				
REGIONAL ADM.	J. WYNANDS	REVISION	DATE	BY			

MARK F. WEGENER, STATE OF WASHINGTON, 41141, REGISTERED PROFESSIONAL ENGINEER
4/3/19
DATE
P.E. STAMP BOX

DATE
P.E. STAMP BOX

Washington State Department of Transportation

ATKINSON CONSTRUCTION / JACOBS

I-5
STEILACOOM-DUPONT RD TO THORNE LN
CORRIDOR IMPROVEMENTS
MP 120.01 TO MP 124.45

RM/DS DISPLAY PANEL AND RELAYS

PLAN REF NO TSD17

SHEET 1024 OF 1456 SHEETS

C1 CONNECTOR PIN ASSIGNMENTS

PIN	CONNECT TO	FUNCTION	PIN	CONNECT TO	FUNCTION	PIN	CONNECT TO	FUNCTION	PIN	CONNECT TO	FUNCTION
1	DC GND	DC GND	27	NC	NA	53	P2-15	DET. 15	79	P2-37/C4-6	DET. 37/CM1-G
2	C6-1	SWPK 1 RED	28	NC	NA	54	P2-16	DET. 16	80	P2-38/C4-7	DET. 38/CM3-R
3	C6-2	SWPK 1 GRN	29	NC	NA	55	P2-17	DET. 17	81	P2-39/C4-8	DET. 39/CM3-Y
4	C6-3	SWPK 2 RED	30	NC	NA	56	P2-18	DET. 18	82	P2-40/C4-9	DET. 40/CM3-G
5	C6-4	SWPK 2 YEL	31	NC	NA	57	P2-19	DET. 19	83	C5-1	DP REMOTE
6	C6-5	SWPK 2 GRN	32	NC	NA	58	P2-20	DET. 20	84	C5-2	NA
7	C6-6	SWPK 3 RED	33	NC	NA	59	P2-21	DET. 21	85	C5-3	DP TRAFFIC
8	C6-7	SWPK 3 YEL	34	NC	NA	60	P2-22	DET. 22	86	C5-4	DP CLOCK
9	C6-8	SWPK 3 GRN	35	NC	NA	61	P2-23	DET. 23	87	C5-5	DP TELEMETRY
10	NC	NA	36	NC	NA	62	P2-24	DET. 24	88	C5-6	DP ECHO
11	NC	NA	37	C6-9	SWPK 1 YEL	63	C4-1	CM2-RED	89	C5-7	DP CONFLICT
12	NC	NA	38	NC	NA	64	C4-2	CM2-YEL	90	C5-8	DP DET FAILED
13	NC	NA	39	P2-1	DET. 1	65	C4-3	CM2-GRN	91	C5-9	DP RED L1
14	IFI-15-4	INPUT GND	40	P2-2	DET. 2	66	PC-3	POLICE CTRL	92	DC GND	OUTPUT GND
15	NC	NA	41	P2-3	DET. 3	67	P2-25	DET. 25	93	C5-10	SIGN-AUTO/DP METER
16	NC	NA	42	P2-4	DET. 4	68	P2-26	DET. 26	94	C5-11	DP RED L2
17	NC	NA	43	P2-5	DET. 5	69	P2-27	DET. 27	95	C5-12	DP YEL L2
18	NC	NA	44	P2-6	DET. 6	70	P2-28	DET. 28	96	C5-13	DP GRN L2
19	NC	NA	45	P2-7	DET. 7	71	P2-29	DET. 29	97	C5-14	DP YEL L1
20	NC	NA	46	P2-8	DET. 8	72	P2-30	DET. 30	98	C5-15	DP GRN L1
21	NC	NA	47	P2-9	DET. 9	73	P2-31	DET. 31	99	C5-16	DP RED L3
22	NC	NA	48	P2-10	DET. 10	74	P2-32	DET. 32	100	C5-17	DP YEL L3
23	NC	NA	49	P2-11	DET. 11	75	P2-33	DET. 33	101	C5-18	DP GRN L3
24	NC	NA	50	P2-12	DET. 12	76	P2-34	DET. 34	102	IFI-15-3	DET RESET
25	NC	NA	51	P2-13	DET. 13	77	P2-35/C4-4	DET. 35/CM1-R	103	C6-10	WATCHDOG
26	NC	NA	52	P2-14	DET. 14	78	P2-36/C4-5	DET. 36/CM1-Y	104	DC GND	INPUT GND

C4, C5, AND C6 CONNECTOR PIN ASSIGNMENTS

C4 CONNECTOR PINS (TO CURRENT MONITOR)

PIN	CONNECT TO	FUNCTION
1	C1-63	CM2-RED
2	C1-64	CM2-YEL
3	C1-65	CM2-GRN
4	C1-77	CM1-RED
5	C1-78	CM1-YEL
6	C1-79	CM1-GRN
7	C1-80	CM3-RED
8	C1-81	CM3-YEL
9	C1-82	CM3-GRN
10	C1-36	NA
11	NC	NA
12	NC	NA
13	NC	NA
14	NC	NA
15	NC	NA
16	NC	NA
17	C1-70	NA
18	C1-71	NA
19	C1-72	NA
20	NC	NA
21	C5-19	NA
22	C5-20	NA
23	DC GND	DC GND
24	TB1-1B	+24 VDC

C5 CONNECTOR PINS (TO DISPLAY PANEL)

PIN	CONNECT TO	FUNCTION
1	C1-83	DP-REMOTE
2	C1-84	DP-NA
3	C1-85	DP-STANDBY TRAFFIC
4	C1-86	DP-STANDBY CLOCK
5	C1-87	DP-TELEMETRY
6	C1-88	DP-ECHO
7	C1-89	DP-CONFLICT
8	C1-90	DP-DET. FAILED
9	C1-91	DP-RED LANE 1
10	C1-93	DP-METERING, SS-3
11	C1-94	DP-RED LANE 2
12	C1-95	DP-YELLOW LANE 2
13	C1-96	DP-GREEN LANE 2
14	C1-97	DP-YELLOW LANE 1
15	C1-98	DP-GREEN LANE 1
16	C1-99	DP-RED LANE 3
17	C1-100	DP-YELLOW LANE 3
18	C1-101	DP-GREEN LANE 3
19	NC	NA
20	NC	NA
21	NC	NA
22	NC	NA
23	DC GND	DC GND TO SS-1
24	TB1-2B	+24 VDC

C6 CONNECTOR PINS (TO PDA #3LX)

PIN	CONNECT TO	FUNCTION
1	C1-2	SWPK1-RED
2	C1-3	SWPK1-GRN
3	C1-4	SWPK2-RED
4	C1-5	SWPK2-YEL
5	C1-6	SWPK2-GRN
6	C1-7	SWPK3-RED
7	C1-8	SWPK3-YEL
8	C1-9	SWPK3-GRN
9	C1-37	SWPK1-YEL
10	C1-103	WATCHDOG MU
11	NC	
12	NC	
13	NC	
14	NC	
15	NC	
16	NC	
17	NC	
18	NC	
19	NC	
20	NC	
21	NC	
22	NC	
23	DC GND	DC GND
24	TB1-3B	+24 VDC

LEGEND

C1 : C1 Connector
C4 : C4 Connector
C5 : C5 Connector
C6 : C6 Connector
CM : Current Monitor
DET : Detector
DP : Display Panel
IFI : Input File I
IFJ : Input File J
L# : Lane (#)
MU : Monitor Unit
NA : Not Assigned
NC : Not Connected
P2 : P2 Connector
PC : Police Control Switch
SS : Sign Switch
SWPK : Switch Pack
TR : Transfer Relay

AS-BUILT

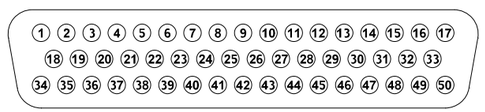

DD50 D-SUB CONNECTOR PINS

PLUG (MALE) CONNECTOR SHOWN ~
MIRROR FOR SOCKET (FEMALE) CONNECTOR ~

DISPLAY PANEL INPUTS FUNCTIONAL BLOCK DIAGRAM

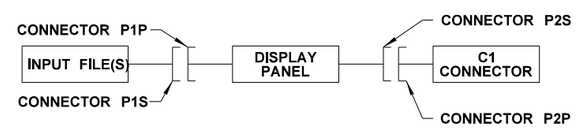

NOTE: CONNECTORS P1P AND P2S SHALL BE MOUNTED TO THE BACK OF THE DISPLAY PANEL, AND SHALL BE SECURED USING A SPRING LATCH (BAIL) TYPE CONNECTION.

P1 AND P2 CONNECTOR PIN ASSIGNMENTS

CONNECTOR P1S

PIN	CONNECT TO	FUNCTION	PIN	CONNECT TO	FUNCTION
1	I-1F	DET. 1	26	I-13W	DET. 26
2	I-1W	DET. 2	27	I-14F	DET. 27
3	I-2F	DET. 3	28	I-14W	DET. 28
4	I-2W	DET. 4	29	J-1F	DET. 29
5	I-3F	DET. 5	30	J-1W	DET. 30
6	I-3W	DET. 6	31	J-2F	DET. 31
7	I-4F	DET. 7	32	J-2W	DET. 32
8	I-4W	DET. 8	33	J-3F	DET. 33
9	I-5F	DET. 9	34	J-3W	DET. 34
10	I-5W	DET. 10	35	J-4F	DET. 35
11	I-6F	DET. 11	36	J-4W	DET. 36
12	I-6W	DET. 12	37	J-5F	DET. 37
13	I-7F	DET. 13	38	J-5W	DET. 38
14	I-7W	DET. 14	39	J-6F	DET. 39
15	I-8F	DET. 15	40	J-6W	DET. 40
16	I-8W	DET. 16	41	NC	NA
17	I-9F	DET. 17	42	NC	NA
18	I-9W	DET. 18	43	NC	NA
19	I-10F	DET. 19	44	NC	NA
20	I-10W	DET. 20	45	NC	NA
21	I-11F	DET. 21	46	NC	NA
22	I-11W	DET. 22	47	NC	NA
23	I-12F	DET. 23	48	NC	NA
24	I-12W	DET. 24	49	I-15-1	POWER
25	I-13F	DET. 25	50	I-15-2	GROUND

CONNECTOR P1P

PIN	CONNECT TO	FUNCTION	PIN	CONNECT TO	FUNCTION
1	DP1	DET. 1-IN	26	DP26	DET. 26-IN
2	DP2	DET. 2-IN	27	DP27	DET. 27-IN
3	DP3	DET. 3-IN	28	DP28	DET. 28-IN
4	DP4	DET. 4-IN	29	DP29	DET. 29-IN
5	DP5	DET. 5-IN	30	DP30	DET. 30-IN
6	DP6	DET. 6-IN	31	DP31	DET. 31-IN
7	DP7	DET. 7-IN	32	DP32	DET. 32-IN
8	DP8	DET. 8-IN	33	DP33	DET. 33-IN
9	DP9	DET. 9-IN	34	DP34	DET. 34-IN
10	DP10	DET. 10-IN	35	DP35	DET. 35-IN
11	DP11	DET. 11-IN	36	DP36	DET. 36-IN
12	DP12	DET. 12-IN	37	DP37	DET. 37-IN
13	DP13	DET. 13-IN	38	DP38	DET. 38-IN
14	DP14	DET. 14-IN	39	DP39	DET. 39-IN
15	DP15	DET. 15-IN	40	DP40	DET. 40-IN
16	DP16	DET. 16-IN	41	NC	NA
17	DP17	DET. 17-IN	42	NC	NA
18	DP18	DET. 18-IN	43	NC	NA
19	DP19	DET. 19-IN	44	NC	NA
20	DP20	DET. 20-IN	45	NC	NA
21	DP21	DET. 21-IN	46	NC	NA
22	DP22	DET. 22-IN	47	NC	NA
23	DP23	DET. 23-IN	48	NC	NA
24	DP24	DET. 24-IN	49	+24 VDC	POWER
25	DP25	DET. 25-IN	50	LOGIC GND	GROUND

CONNECTOR P2S

PIN	CONNECT TO	FUNCTION	PIN	CONNECT TO	FUNCTION
1	DP41	DET. 1-OUT	26	DP66	DET. 26-OUT
2	DP42	DET. 2-OUT	27	DP67	DET. 27-OUT
3	DP43	DET. 3-OUT	28	DP68	DET. 28-OUT
4	DP44	DET. 4-OUT	29	DP69	DET. 29-OUT
5	DP45	DET. 5-OUT	30	DP70	DET. 30-OUT
6	DP46	DET. 6-OUT	31	DP71	DET. 31-OUT
7	DP47	DET. 7-OUT	32	DP72	DET. 32-OUT
8	DP48	DET. 8-OUT	33	DP73	DET. 33-OUT
9	DP49	DET. 9-OUT	34	DP74	DET. 34-OUT
10	DP50	DET. 10-OUT	35	DP75	DET. 35-OUT
11	DP51	DET. 11-OUT	36	DP76	DET. 36-OUT
12	DP52	DET. 12-OUT	37	DP77	DET. 37-OUT
13	DP53	DET. 13-OUT	38	DP78	DET. 38-OUT
14	DP54	DET. 14-OUT	39	DP79	DET. 39-OUT
15	DP55	DET. 15-OUT	40	DP80	DET. 40-OUT
16	DP56	DET. 16-OUT	41	NC	NA
17	DP57	DET. 17-OUT	42	NC	NA
18	DP58	DET. 18-OUT	43	NC	NA
19	DP59	DET. 19-OUT	44	NC	NA
20	DP60	DET. 20-OUT	45	NC	NA
21	DP61	DET. 21-OUT	46	NC	NA
22	DP62	DET. 22-OUT	47	NC	NA
23	DP63	DET. 23-OUT	48	NC	NA
24	DP64	DET. 24-OUT	49	NC	NA
25	DP65	DET. 25-OUT	50	NC	NA

CONNECTOR P2P

PIN	CONNECT TO	FUNCTION	PIN	CONNECT TO	FUNCTION
1	C1 - 39	DET. 1	26	C1 - 68	DET. 26
2	C1 - 40	DET. 2	27	C1 - 69	DET. 27
3	C1 - 41	DET. 3	28	C1 - 70	DET. 28
4	C1 - 42	DET. 4	29	C1 - 71	DET. 29
5	C1 - 43	DET. 5	30	C1 - 72	DET. 30
6	C1 - 44	DET. 6	31	C1 - 73	DET. 31
7	C1 - 45	DET. 7	32	C1 - 74	DET. 32
8	C1 - 46	DET. 8	33	C1 - 75	DET. 33
9	C1 - 47	DET. 9	34	C1 - 76	DET. 34
10	C1 - 48	DET. 10	35	C1 - 77	DET. 35
11	C1 - 49	DET. 11	36	C1 - 78	DET. 36
12	C1 - 50	DET. 12	37	C1 - 79	DET. 37
13	C1 - 51	DET. 13	38	C1 - 80	DET. 38
14	C1 - 52	DET. 14	39	C1 - 81	DET. 39
15	C1 - 53	DET. 15	40	C1 - 82	DET. 40
16	C1 - 54	DET. 16	41	NC	NA
17	C1 - 55	DET. 17	42	NC	NA
18	C1 - 56	DET. 18	43	NC	NA
19	C1 - 57	DET. 19	44	NC	NA
20	C1 - 58	DET. 20	45	NC	NA
21	C1 - 59	DET. 21	46	NC	NA
22	C1 - 60	DET. 22	47	NC	NA
23	C1 - 61	DET. 23	48	NC	NA
24	C1 - 62	DET. 24	49	NC	NA
25	C1 - 67	DET. 25	50	NC	NA

PIN TABLE EXAMPLES:

J-1F: Input File J, Slot 1, Terminal F

DP: Display Panel

DET. 7-IN: Display Panel, Detector 7 Position Input Terminal

C1 - 58: C1 Connector, PIn 58

ATKINSON
APR 04 2019 KTW
RELEASED FOR CONSTRUCTION

C2 CONNECTOR (RS-232) PIN ASSIGNMENTS

PIN	CONNECT TO	PIN	CONNECT TO	PIN	CONNECT TO
A	NC	F	NC	L	Tx
B	NC	G	NC	M	NOTE 1
C	NC	H	NOTE 1	N	COM
D	NOTE 1	J	NC	P	NC
E	NC	K	Rx	R	NC

C2 CONNECTOR NOTES

1. Pins C2-D, C2-H, and C2-M shall be wired together.
2. Rx, Tx, and COM wires shall be connected to the terminal server by either:
   a. Wiring directly to the terminal server, when the terminal server only has a terminal block.
   b. Wiring to the appropriate pins of the connector type required for the terminal server.

NOT TO SCALE

FILE NAME	c:\pwworking\jacobs_b&l\agronmi\dms20633\DE_TSD18.dgn				
TIME	2:52:34 PM				
DATE	3/29/2019				
PLOTTED BY	agronmi				
DESIGNED BY	I. AGRON				
ENTERED BY	I. AGRON				
CHECKED BY	W. WEGENER	REV 0 - RELEASED FOR CONSTRUCTION	03/29/19		
PROJ. ENGR.	C. MEADE	REV A - FINAL REVIEW	2/12/19		
REGIONAL ADM.	J. WYNANDS	REVISION	DATE	BY	

REGION NO. 10 | STATE WASH | FED.AID PROJ.NO.
JOB NUMBER
CONTRACT NO. C9133 | LOCATION NO.

P.E. STAMP BOX — DATE 4/3/19

P.E. STAMP BOX — DATE

Washington State Department of Transportation

ATKINSON / JACOBS CONSTRUCTION

I-5
STEILACOOM-DUPONT RD TO THORNE LN
CORRIDOR IMPROVEMENTS
MP 120.01 TO MP 124.45

RM/DS WIRING HARNESSES

PLAN REF NO TSD18

SHEET 1025 OF 1456 SHEETS

CABINET INPUT WIRE TERMINATIONS

INPUT FILE		TB2		DETECTOR ID	DETECTOR ID		TB5	INPUT FILE	
DET. 1	I1-D	TB2-1	WTX	_MN_ _ _1	DMS_D_1	B	TB5-1	I10-D	DET. 19
I1-U	I1-E	TB2-2				W	TB5-2	I10-E	I10-U
DET. 2	I1-J	TB2-3	WTX	_MN_ _ S1	_MS_P_1	B	TB5-3	I10-J	DET. 20
I1-L	I1-K	TB2-4				W	TB5-4	I10-K	I10-L
DET. 3	I2-D	TB2-5	WTX	_MN_ _ _2	_MS_M_1	B	TB5-5	I11-D	DET. 21
I2-U	I2-E	TB2-6				W	TB5-6	I11-E	I11-U
DET. 4	I2-J	TB2-7	WTX	_MN_ _ S2	_MS_A_2	B	TB5-7	I11-J	DET. 22
I2-L	I2-K	TB2-8				W	TB5-8	I11-K	I11-L
DET. 5	I3-D	TB2-9	WTX	_MN_ _ _3	_MS_Q_2	B	TB5-9	I12-D	DET. 23
I3-U	I3-E	TB2-10				W	TB5-10	I12-E	I12-U
DET. 6	I3-J	TB2-11	WTX	_MN_ _ S3	_MS_D_2	B	TB5-11	I12-J	DET. 24
I3-L	I3-K	TB2-12				W	TB5-12	I12-K	I12-L

WTX = INPUT FROM WAVETRONIX SENSOR; NOT LANDED AT TERMINAL BLOCK

INPUT FILE		TB3					TB6	INPUT FILE	
DET. 7	I4-D	TB3-1	WTX	_MN_ _ _4	DMS_D_2	B	TB6-1	I13-D	DET. 25
I4-U	I4-E	TB3-2				W	TB6-2	I13-E	I13-U
DET. 8	I4-J	TB3-3	WTX	_MN_ _ S4	_MS_P_2	B	TB6-3	I13-J	DET. 26
I4-L	I4-K	TB3-4				W	TB6-4	I13-K	I13-L
DET. 9	I5-D	TB3-5	WTX	MMS_ _ _1	_CS_O_1	B	TB6-5	I14-D	DET. 27
I5-U	I5-E	TB3-6				W	TB6-6	I14-E	I14-U
DET. 10	I5-J	TB3-7	WTX	_MS_ _S1	_MS_X_1	B	TB6-7	I14-J	DET. 28
I5-L	I5-K	TB3-8				W	TB6-8	I14-K	I14-L
DET. 11	I6-D	TB3-9	WTX	MMS_ _ _2	_CS_X_1	B	TB6-9	J1-D	DET. 29
I6-U	I6-E	TB3-10				W	TB6-10	J1-E	J1-U
DET. 12	I6-J	TB3-11	WTX	_MS_ _S2	_CS_X_2	B	TB6-11	J1-J	DET. 30
I6-L	I6-K	TB3-12				W	TB6-12	J1-K	J1-L

INPUT FILE		TB4					TB7	INPUT FILE	
DET. 13	I7-D	TB4-1	WTX	MMS_ _ _3		B	TB7-1	J2-D	DET. 31
I7-U	I7-E	TB4-2				W	TB7-2	J2-E	J2-U
DET. 14	I7-J	TB4-3	WTX	_MS_ _S3		B	TB7-3	J2-J	DET. 32
I7-L	I7-K	TB4-4				W	TB7-4	J2-K	J2-L
DET. 15	I8-D	TB4-5	B	_MS_A_1		B	TB7-5	J3-D	DET. 33
I8-U	I8-E	TB4-6	W			W	TB7-6	J3-E	J3-U
DET. 16	I8-J	TB4-7	B	_MS_I_1		B	TB7-7	J3-J	DET. 34
I8-L	I8-K	TB4-8	W			W	TB7-8	J3-K	J3-L
DET. 17	I9-D	TB4-9	B	_MS_Q_1		B	TB7-9	J4-D	DET. 35
I9-U	I9-E	TB4-10	W			W	TB7-10	J4-E	J4-U
DET. 18	I9-J	TB4-11	B	_MS_D_1		B	TB7-11	J4-J	DET. 36
I9-L	I9-K	TB4-12	W			W	TB7-12	J4-K	J4-L

INPUT FILE		TB8	
DET. 37	J5-D	TB8-1	B
J5-U	J5-E	TB8-2	W
DET. 38	J5-J	TB8-3	B
J5-L	J5-K	TB8-4	W
DET. 39	J6-D	TB8-5	B
J6-U	J6-E	TB8-6	W
DET. 40	J6-J	TB8-7	B
J6-L	J6-K	TB8-8	W
NOT USED		TB8-9	
		TB8-10	
		TB8-11	
		TB8-12	

TB9	INPUT FILE
TB9-1	NOT USED
TB9-2	
TB9-3	
TB9-4	
TB9-5	
TB9-6	
TB9-7	
TB9-8	
TB9-9	
TB9-10	
TB9-11	
TB9-12	

INPUT FILE LAYOUT AND MARKING DETAIL: 005 - RM - 12063

	1	2	3	4	5	6	7	8	9	10	11	12	13	14
	DET. 1	DET. 3	DET. 5	DET. 7	DET. 9	DET. 11	DET. 13	DET. 15	DET. 17	DET. 19	DET. 21	DET. 23	DET. 25	DET. 27
I U	CLICK 112	CLICK 112	CLICK 112	CLICK 112	CLICK 112	CLICK 112	CLICK 112	C1103-SS	C1103-SS	C1103-SS	C1103-SS	C1103-SS	C1103-SS	C1103-SS
I L														
	DET. 2	DET. 4	DET. 6	DET. 8	DET. 10	DET. 12	DET. 14	DET. 16	DET. 18	DET. 20	DET. 22	DET. 24	DET. 26	DET. 28
	DET. 29	DET. 31	DET. 33	DET. 35	DET. 37	DET. 39								
J U	C1103-SS													
J L														
	DET. 30	DET. 32	DET. 34	DET. 36	DET. 38	DET. 40								

SLOTS J7 THROUGH J14 NOT USED

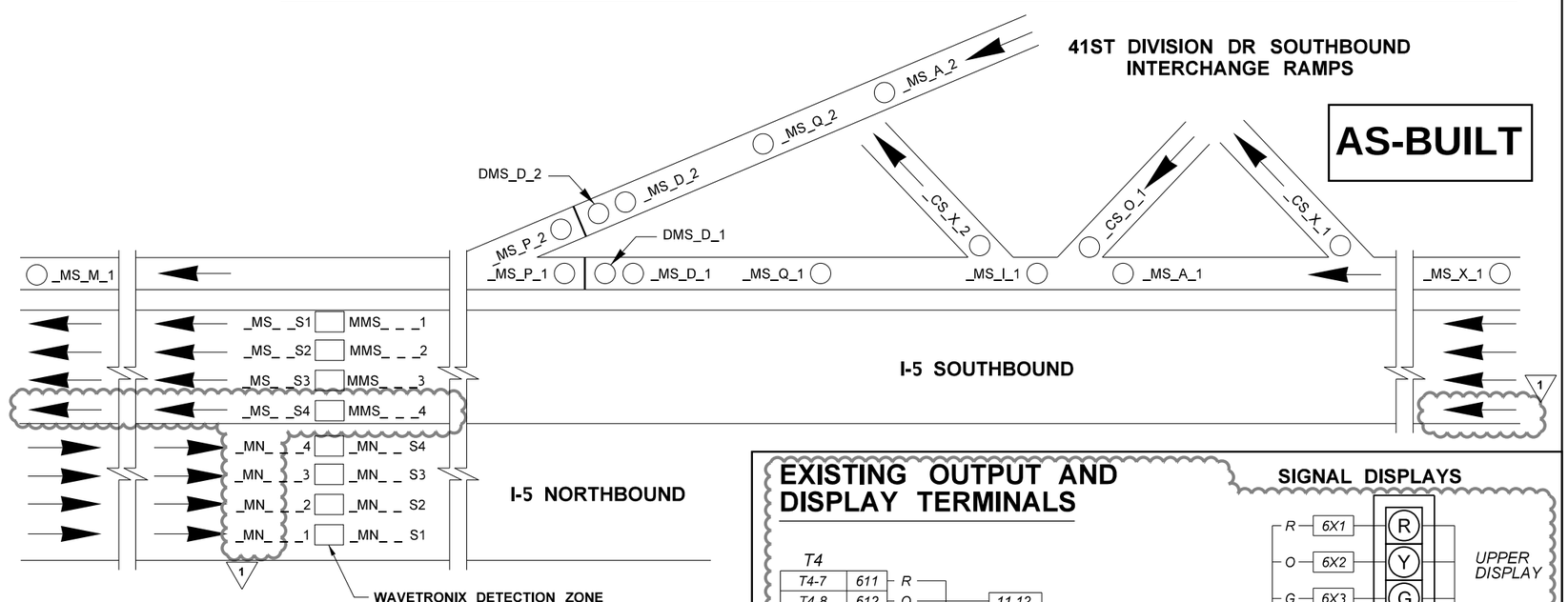

ATKINSON

DEC 13 2019 KW

RELEASED FOR CONSTRUCTION

NOTE: CONTRACTOR SHALL USE THE LOOP NAMES FOR WAVETRONIX DETECTION ZONES FOR THE LABELS ON THE DISPLAY PANEL IN THE CONTROLLER CABINET

EXISTING OUTPUT AND DISPLAY TERMINALS

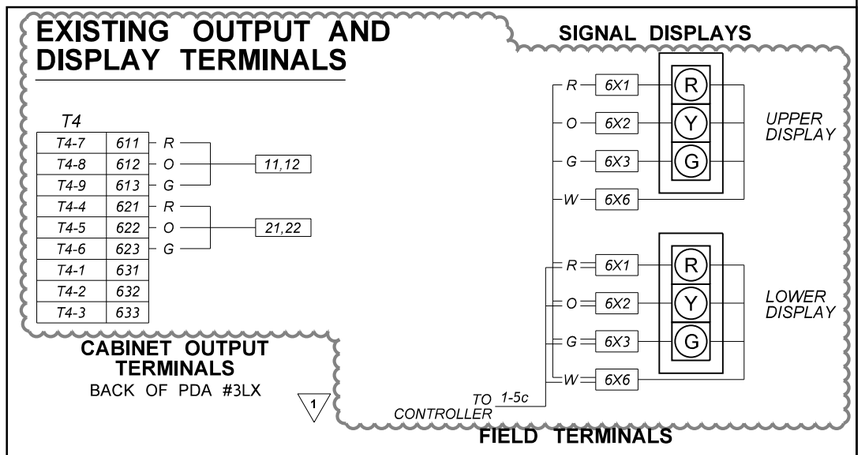

FILE NAME	c:\pwworking\jacobs_b&i\wegenemf\dms20633\DE_TSD19.dgn			
TIME	11:49:40 AM			
DATE	11/15/2019			
PLOTTED BY	wegenemf			
DESIGNED BY	D. BLACK			
ENTERED BY	D. BLACK	REV 1 - RFC, RFI0301, RFI0306	11/14/19	
CHECKED BY	V. GOSWAMI	REV 0 - RELEASED FOR CONSTRUCTION	03/29/19	
PROJ. ENGR.	C. MEADE	REV A - FINAL REVIEW	02/12/19	
REGIONAL ADM.	J. WYNANDS	REVISION	DATE	BY

REGION NO.	STATE	FED.AID PROJ.NO.
10	WASH	
JOB NUMBER		
CONTRACT NO. C9133		LOCATION NO.

MARK F. WEGENER, STATE OF WASHINGTON, 41141, REGISTERED PROFESSIONAL ENGINEER — 12/12/19 — DATE — P.E. STAMP BOX

DATE — P.E. STAMP BOX

Washington State Department of Transportation

ATKINSON CONSTRUCTION / JACOBS

I-5
STEILACOOM-DUPONT RD TO THORNE LN
CORRIDOR IMPROVEMENTS
MP 120.01 TO MP 124.45

RAMP METER INPUT FILES

PLAN REF NO TSD19

SHEET 1026 OF 1456 SHEETS

CABINET INPUT WIRE TERMINATIONS

INPUT FILE		TB2		DETECTOR ID	DETECTOR ID		TB5	INPUT FILE	
DET. 1	I1-D	TB2-1	WTX	MMN_ _ _1	_MN_Q_1	B	TB5-1	I10-D	DET. 19
I1-U	I1-E	TB2-2				W	TB5-2	I10-E	I10-U
DET. 2	I1-J	TB2-3	WTX	_MN_ _S1	_MN_D_1	B	TB5-3	I10-J	DET. 20
I1-L	I1-K	TB2-4			DMN_D_1	W	TB5-4	I10-K	I10-L
DET. 3	I2-D	TB2-5	WTX	MMN_ _ _2	_MN_P_1	B	TB5-5	I11-D	DET. 21
I2-U	I2-E	TB2-6				W	TB5-6	I11-E	I11-U
DET. 4	I2-J	TB2-7	WTX	_MN_ _S2	_MN_M_1	B	TB5-7	I11-J	DET. 22
I2-L	I2-K	TB2-8				W	TB5-8	I11-K	I11-L
DET. 5	I3-D	TB2-9	WTX	MMN_ _ _3	_MN_A_2	B	TB5-9	I12-D	DET. 23
I3-U	I3-E	TB2-10				W	TB5-10	I12-E	I12-U
DET. 6	I3-J	TB2-11	WTX	_MN_ _S3	_MN_Q_2	B	TB5-11	I12-J	DET. 24
I3-L	I3-K	TB2-12				W	TB5-12	I12-K	I12-L

WTX = INPUT FROM WAVETRONIX SENSOR; NOT LANDED AT TERMINAL BLOCK

INPUT FILE		TB3					TB6	INPUT FILE	
DET. 7	I4-D	TB3-1	WTX	MMN_ _ _4	_MN_D_2	B	TB6-1	I13-D	DET. 25
I4-U	I4-E	TB3-2			DMN_D_2	W	TB6-2	I13-E	I13-U
DET. 8	I4-J	TB3-3	WTX	_MN_ _S4	_MN_P_2	B	TB6-3	I13-J	DET. 26
I4-L	I4-K	TB3-4				W	TB6-4	I13-K	I13-L
DET. 9	I5-D	TB3-5	WTX	_MS_ _ _1	_CN_O_1	B	TB6-5	I14-D	DET. 27
I5-U	I5-E	TB3-6				W	TB6-6	I14-E	I14-U
DET. 10	I5-J	TB3-7	WTX	_MS_ _ S1	_MN_X_1	B	TB6-7	I14-J	DET. 28
I5-L	I5-K	TB3-8				W	TB6-8	I14-K	I14-L
DET. 11	I6-D	TB3-9	WTX	_MS_ _ _2	_CN_X_1	B	TB6-9	J1-D	DET. 29
I6-U	I6-E	TB3-10				W	TB6-10	J1-E	J1-U
DET. 12	I6-J	TB3-11	WTX	_MS_ _ S2	_CN_X_2	B	TB6-11	J1-J	DET. 30
I6-L	I6-K	TB3-12				W	TB6-12	J1-K	J1-L

INPUT FILE		TB4					TB7	INPUT FILE	
DET. 13	I7-D	TB4-1	WTX	_MS_ _ _3	_ _ _ _ _ _ _	B	TB7-1	J2-D	DET. 31
I7-U	I7-E	TB4-2				W	TB7-2	J2-E	J2-U
DET. 14	I7-J	TB4-3	WTX	_MS_ _ S3	_ _ _ _ _ _ _	B	TB7-3	J2-J	DET. 32
I7-L	I7-K	TB4-4				W	TB7-4	J2-K	J2-L
DET. 15	I8-D	TB4-5	WTX	_MS_ _ _4	_ _ _ _ _ _ _	B	TB7-5	J3-D	DET. 33
I8-U	I8-E	TB4-6				W	TB7-6	J3-E	J3-U
DET. 16	I8-J	TB4-7	WTX	_MS_ _ S4	_ _ _ _ _ _ _	B	TB7-7	J3-J	DET. 34
I8-L	I8-K	TB4-8				W	TB7-8	J3-K	J3-L
DET. 17	I9-D	TB4-9	B	_MN_A_1	_ _ _ _ _ _ _	B	TB7-9	J4-D	DET. 35
I9-U	I9-E	TB4-10	W			W	TB7-10	J4-E	J4-U
DET. 18	I9-J	TB4-11	B	_MN_I_1	_ _ _ _ _ _ _	B	TB7-11	J4-J	DET. 36
I9-L	I9-K	TB4-12	W			W	TB7-12	J4-K	J4-L

INPUT FILE		TB8		
DET. 37	J5-D	TB8-1	B	_ _ _ _ _ _ _
J5-U	J5-E	TB8-2	W	
DET. 38	J5-J	TB8-3	B	_ _ _ _ _ _ _
J5-L	J5-K	TB8-4	W	
DET. 39	J6-D	TB8-5	B	_ _ _ _ _ _ _
J6-U	J6-E	TB8-6	W	
DET. 40	J6-J	TB8-7	B	_ _ _ _ _ _ _
J6-L	J6-K	TB8-8	W	
NOT USED		TB8-9		
		TB8-10		
		TB8-11		
		TB8-12		

TB9	INPUT FILE	
TB9-1		
TB9-2		
TB9-3		
TB9-4		
TB9-5		
TB9-6		
TB9-7	NOT USED	
TB9-8		
TB9-9		
TB9-10		
TB9-11		
TB9-12		

INPUT FILE LAYOUT AND MARKING DETAIL: 005 - RM - 12110

	1	2	3	4	5	6	7	8	9	10	11	12	13	14
	DET. 1	DET. 3	DET. 5	DET. 7	DET. 9	DET. 11	DET. 13	DET. 15	DET. 17	DET. 19	DET. 21	DET. 23	DET. 25	DET. 27
I U	CLICK 112	CLICK 112	CLICK 112	CLICK 112	CLICK 112	CLICK 112	CLICK 112	CLICK 112	C1103-SS	C1103-SS	C1103-SS	C1103-SS	C1103-SS	C1103-SS
I L														
	DET. 2	DET. 4	DET. 6	DET. 8	DET. 10	DET. 12	DET. 14	DET. 16	DET. 18	DET. 20	DET. 22	DET. 24	DET. 26	DET. 28
	DET. 29	DET. 31	DET. 33	DET. 35	DET. 37	DET. 39								
J U	C1103-SS													
J L														
	DET. 30	DET. 32	DET. 34	DET. 36	DET. 38	DET. 40								

SLOTS J7 THROUGH J14 NOT USED

AS-BUILT

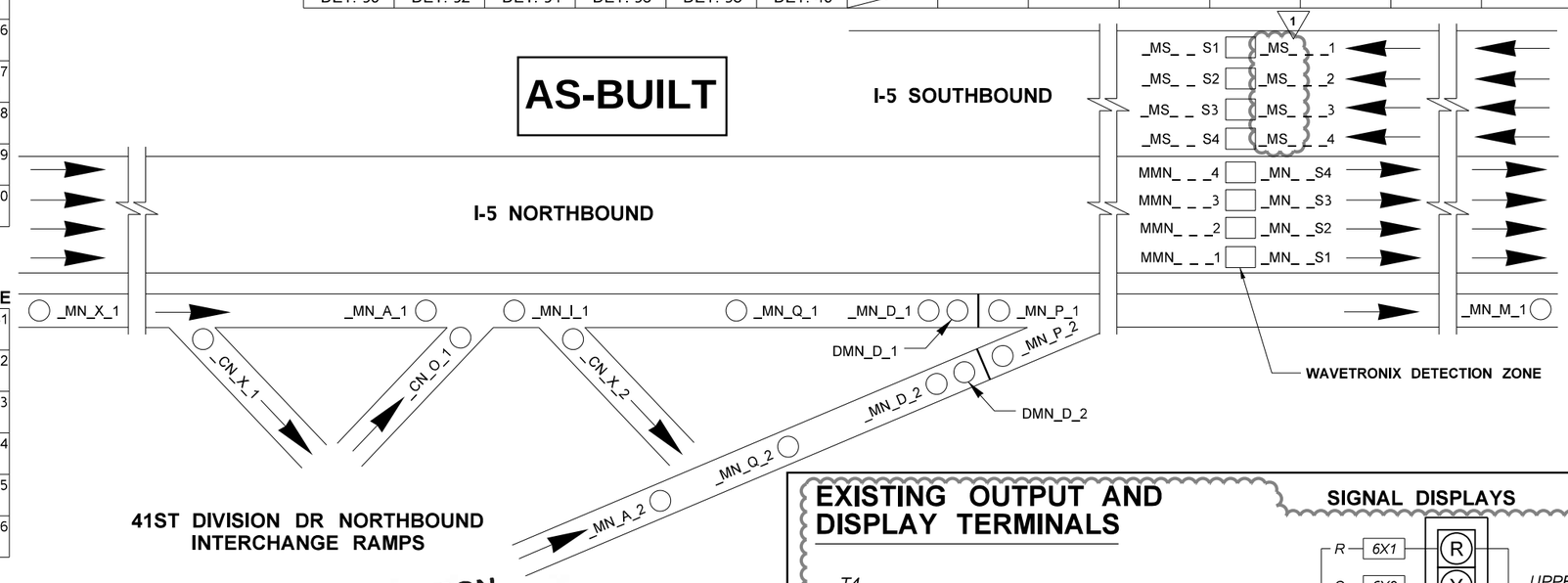

41ST DIVISION DR NORTHBOUND INTERCHANGE RAMPS

ATKINSON

DEC 13 2019 KTW

RELEASED FOR CONSTRUCTION

NOTE: CONTRACTOR SHALL USE THE LOOP NAMES FOR WAVETRONIX DETECTION ZONES FOR THE LABELS ON THE DISPLAY PANEL IN THE CONTROLLER CABINET

EXISTING OUTPUT AND DISPLAY TERMINALS

T4

T4-7	611	R	11,12
T4-8	612	O	
T4-9	613	G	
T4-4	621	R	21,22
T4-5	622	O	
T4-6	623	G	
T4-1	631		
T4-2	632		
T4-3	633		

CABINET OUTPUT TERMINALS
BACK OF PDA #3LX

SIGNAL DISPLAYS

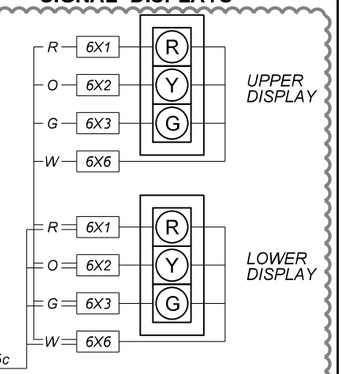

FIELD TERMINALS

FILE NAME	c:\pwworking\jacobs_b&i\wegenemf\dms20633\DE_TSD20.dgn						
TIME	12:00:42 PM						
DATE	11/15/2019						
PLOTTED BY	wegenemf						
DESIGNED BY	D. BLACK						
ENTERED BY	D. BLACK	REV 1 - RFC, RFI0301	11/14/19				
CHECKED BY	M. WEGENER	REV 0 - RELEASED FOR CONSTRUCTION	03/29/19				
PROJ. ENGR.	C. MEADE	REV A - FINAL REVIEW	02/12/19				
REGIONAL ADM.	J. WYNANDS	REVISION	DATE	BY			

REGION NO.	STATE	FED.AID PROJ.NO.
10	WASH	
JOB NUMBER		
CONTRACT NO.		LOCATION NO.
C9133		

MARK F. WEGENER STATE OF WASHINGTON 41141 REGISTERED PROFESSIONAL ENGINEER
12/12/19
DATE
P.E. STAMP BOX

DATE
P.E. STAMP BOX

Washington State Department of Transportation

ATKINSON / JACOBS CONSTRUCTION

I-5
STEILACOOM-DUPONT RD TO THORNE LN
CORRIDOR IMPROVEMENTS
MP 120.01 TO MP 124.45

RAMP METER INPUT FILES

PLAN REF NO TSD20

SHEET 1027 OF 1456 SHEETS

CABINET INPUT WIRE TERMINATIONS

INPUT FILE		TB2		DETECTOR ID
DET. 1	I1-D	TB2-1	WTX	_MN_ _ _1
I1-U	I1-E	TB2-2		
DET. 2	I1-J	TB2-3	WTX	_MN_ _ S1
I1-L	I1-K	TB2-4		
DET. 3	I2-D	TB2-5	WTX	_MN_ _ _2
I2-U	I2-E	TB2-6		
DET. 4	I2-J	TB2-7	WTX	_MN_ _ S2
I2-L	I2-K	TB2-8		
DET. 5	I3-D	TB2-9	WTX	_MN_ _ _3
I3-U	I3-E	TB2-10		
DET. 6	I3-J	TB2-11	WTX	_MN_ _ S3
I3-L	I3-K	TB2-12		

DETECTOR ID		TB5	INPUT FILE	
_MS_D_1	B	TB5-1	I10-D	DET. 19
DMS_D_1	W	TB5-2	I10-E	I10-U
_MS_P_1	B	TB5-3	I10-J	DET. 20
	W	TB5-4	I10-K	I10-L
_MS_M_1	B	TB5-5	I11-D	DET. 21
	W	TB5-6	I11-E	I11-U
_MS_A_2	B	TB5-7	I11-J	DET. 22
	W	TB5-8	I11-K	I11-L
_MS_Q_2	B	TB5-9	I12-D	DET. 23
	W	TB5-10	I12-E	I12-U
_MS_D_2	B	TB5-11	I12-J	DET. 24
DMS_D_2	W	TB5-12	I12-K	I12-L

WTX = INPUT FROM WAVETRONIX SENSOR; NOT LANDED AT TERMINAL BLOCK

INPUT FILE		TB3		
DET. 7	I4-D	TB3-1	WTX	_MN_ _ _4
I4-U	I4-E	TB3-2		
DET. 8	I4-J	TB3-3	WTX	_MN_ _ S4
I4-L	I4-K	TB3-4		
DET. 9	I5-D	TB3-5	WTX	MMS_ _ _1
I5-U	I5-E	TB3-6		
DET. 10	I5-J	TB3-7	WTX	_MS_ _ S1
I5-L	I5-K	TB3-8		
DET. 11	I6-D	TB3-9	WTX	MMS_ _ _2
I6-U	I6-E	TB3-10		
DET. 12	I6-J	TB3-11	WTX	_MS_ _ S2
I6-L	I6-K	TB3-12		

		TB6	INPUT FILE	
_MS_P_2	B	TB6-1	I13-D	DET. 25
	W	TB6-2	I13-E	I13-U
_MSHA_1	B	TB6-3	I13-J	DET. 26
	W	TB6-4	I13-K	I13-L
_MSHQ_1	B	TB6-5	I14-D	DET. 27
	W	TB6-6	I14-E	I14-U
_MSHD_1	B	TB6-7	I14-J	DET. 28
DMSHD_1	W	TB6-8	I14-K	I14-L
_MSHP_1	B	TB6-9	J1-D	DET. 29
	W	TB6-10	J1-E	J1-U
_ _ _ _ _ _ _	B	TB6-11	J1-J	DET. 30
	W	TB6-12	J1-K	J1-L

INPUT FILE		TB4		
DET. 13	I7-D	TB4-1	WTX	MMS_ _ _3
I7-U	I7-E	TB4-2		
DET. 14	I7-J	TB4-3	WTX	_MS_ _ S3
I7-L	I7-K	TB4-4		
DET. 15	I8-D	TB4-5	WTX	MMS_ _ _4
I8-U	I8-E	TB4-6		
DET. 16	I8-J	TB4-7	WTX	_MS_ _ S4
I8-L	I8-K	TB4-8		
DET. 17	I9-D	TB4-9	B	_MS_A_1
I9-U	I9-E	TB4-10	W	
DET. 18	I9-J	TB4-11	B	_MS_Q_1
I9-L	I9-K	TB4-12	W	

		TB7	INPUT FILE	
_ _ _ _ _ _ _	B	TB7-1	J2-D	DET. 31
	W	TB7-2	J2-E	J2-U
_ _ _ _ _ _ _	B	TB7-3	J2-J	DET. 32
	W	TB7-4	J2-K	J2-L
_ _ _ _ _ _ _	B	TB7-5	J3-D	DET. 33
	W	TB7-6	J3-E	J3-U
_ _ _ _ _ _ _	B	TB7-7	J3-J	DET. 34
	W	TB7-8	J3-K	J3-L
_ _ _ _ _ _ _	B	TB7-9	J4-D	DET. 35
	W	TB7-10	J4-E	J4-U
_ _ _ _ _ _ _	B	TB7-11	J4-J	DET. 36
	W	TB7-12	J4-K	J4-L

INPUT FILE		TB8		
DET. 37	J5-D	TB8-1	B	_ _ _ _ _ _ _
J5-U	J5-E	TB8-2	W	
DET. 38	J5-J	TB8-3	B	_ _ _ _ _ _ _
J5-L	J5-K	TB8-4	W	
DET. 39	J6-D	TB8-5	B	_ _ _ _ _ _ _
J6-U	J6-E	TB8-6	W	
DET. 40	J6-J	TB8-7	B	_ _ _ _ _ _ _
J6-L	J6-K	TB8-8	W	
NOT USED		TB8-9		
		TB8-10		
		TB8-11		
		TB8-12		

TB9	INPUT FILE	
TB9-1		
TB9-2		
TB9-3		
TB9-4		
TB9-5		
TB9-6		
TB9-7	NOT USED	
TB9-8		
TB9-9		
TB9-10		
TB9-11		
TB9-12		

INPUT FILE LAYOUT AND MARKING DETAIL: 005 - RM - 12250

		1	2	3	4	5	6	7	8	9	10	11	12	13	14
I		DET. 1	DET. 3	DET. 5	DET. 7	DET. 9	DET. 11	DET. 13	DET. 15	DET. 17	DET. 19	DET. 21	DET. 23	DET. 25	DET. 27
	U	CLICK 112	CLICK 112	CLICK 112	CLICK 112	CLICK 112	CLICK 112	CLICK 112	CLICK 112	C1103-SS	C1103-SS	C1103-SS	C1103-SS	C1103-SS	C1103-SS
	L														
		DET. 2	DET. 4	DET. 6	DET. 8	DET. 10	DET. 12	DET. 14	DET. 16	DET. 18	DET. 20	DET. 22	DET. 24	DET. 26	DET. 28
J		DET. 29	DET. 31	DET. 33	DET. 35	DET. 37	DET. 39								
	U	C1103-SS													
	L														
		DET. 30	DET. 32	DET. 34	DET. 36	DET. 38	DET. 40								

SLOTS J7 THROUGH J14 NOT USED

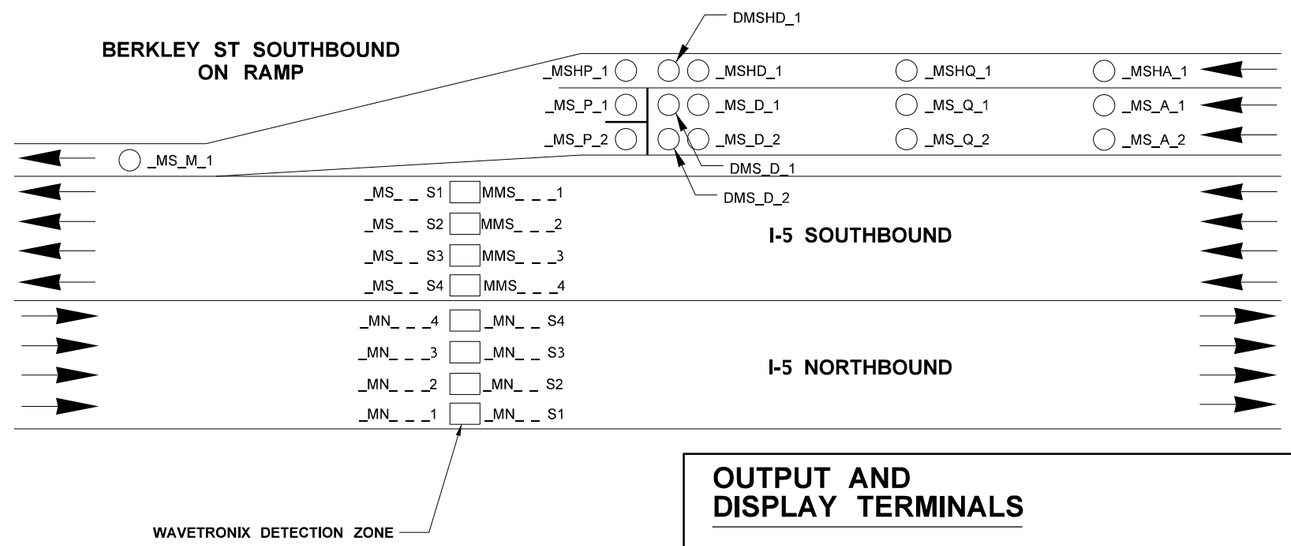

AS-BUILT

ATKINSON
DEC 13 2019 KTW
RELEASED FOR CONSTRUCTION

NOTE: CONTRACTOR SHALL USE THE LOOP NAMES FOR WAVETRONIX DETECTION ZONES FOR THE LABELS ON THE DISPLAY PANEL IN THE CONTROLLER CABINET

OUTPUT AND DISPLAY TERMINALS

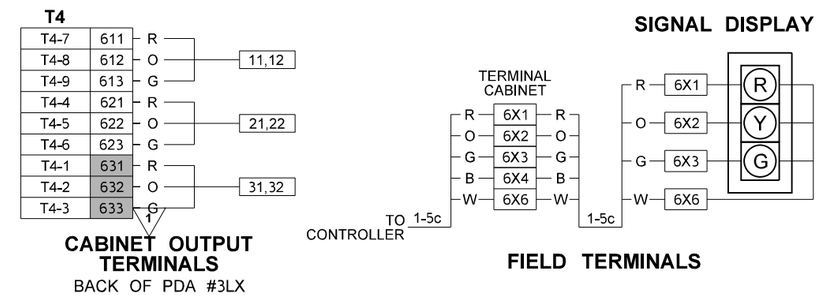

FILE NAME	c:\pwworking\jacobs_b&i\jeg_gt011740\dms20633\DE_TSD21.dgn			
TIME	2:41:27 PM			
DATE	11/14/2019			
PLOTTED BY	GT011740			
DESIGNED BY	D. BLACK			
ENTERED BY	D. BLACK	REV 1 - RFC, RFI0301	11/14/19	
CHECKED BY	M. WEGENER	REV 0 - RELEASED FOR CONSTRUCTION	07/11/19	
PROJ. ENGR.	C. MEADE	REV A - FINAL REVIEW	05/10/19	
REGIONAL ADM.	J. WYNANDS	REVISION	DATE	BY

REGION NO.	STATE	FED.AID PROJ.NO.
10	WASH	
JOB NUMBER		
CONTRACT NO.		LOCATION NO.
C9133		

MARK E. WEGENER, STATE OF WASHINGTON, 41141, REGISTERED PROFESSIONAL ENGINEER
12/12/19
DATE
P.E. STAMP BOX

DATE
P.E. STAMP BOX

Washington State Department of Transportation

ATKINSON CONSTRUCTION / JACOBS

I-5
STEILACOOM-DUPONT RD TO THORNE LN
CORRIDOR IMPROVEMENTS
MP 120.01 TO MP 124.45

RAMP METER INPUT FILES

PLAN REF NO TSD21

SHEET 1028 OF 1456 SHEETS

CABINET INPUT WIRE TERMINATIONS

INPUT FILE		TB2		DETECTOR ID
DET. 1	I1-D	TB2-1	WTX	MMN_ _ _1
I1-U	I1-E	TB2-2		
DET. 2	I1-J	TB2-3	WTX	_MN_ _ S1
I1-L	I1-K	TB2-4		
DET. 3	I2-D	TB2-5	WTX	MMN_ _ _2
I2-U	I2-E	TB2-6		
DET. 4	I2-J	TB2-7	WTX	_MN_ _ S2
I2-L	I2-K	TB2-8		
DET. 5	I3-D	TB2-9	WTX	MMN_ _ _3
I3-U	I3-E	TB2-10		
DET. 6	I3-J	TB2-11	WTX	_MN_ _ S3
I3-L	I3-K	TB2-12		

DETECTOR ID		TB5	INPUT FILE	
_MN_D_1	B	TB5-1	I10-D	DET. 19
DMN_D_1	W	TB5-2	I10-E	I10-U
_MN_P_1	B	TB5-3	I10-J	DET. 20
	W	TB5-4	I10-K	I10-L
_MN_M_1	B	TB5-5	I11-D	DET. 21
	W	TB5-6	I11-E	I11-U
_MN_A_2	B	TB5-7	I11-J	DET. 22
	W	TB5-8	I11-K	I11-L
_MN_Q_2	B	TB5-9	I12-D	DET. 23
	W	TB5-10	I12-E	I12-U
_MN_D_2	B	TB5-11	I12-J	DET. 24
DMN_D_2	W	TB5-12	I12-K	I12-L

WTX = INPUT FROM WAVETRONIX SENSOR; NOT LANDED AT TERMINAL BLOCK

INPUT FILE		TB3		
DET. 7	I4-D	TB3-1	WTX	MMN_ _ _4
I4-U	I4-E	TB3-2		
DET. 8	I4-J	TB3-3	WTX	_MN_ _ S4
I4-L	I4-K	TB3-4		
DET. 9	I5-D	TB3-5	WTX	_MS_ _ _1
I5-U	I5-E	TB3-6		
DET. 10	I5-J	TB3-7	WTX	_MS_ _ S1
I5-L	I5-K	TB3-8		
DET. 11	I6-D	TB3-9	WTX	_MS_ _ _2
I6-U	I6-E	TB3-10		
DET. 12	I6-J	TB3-11	WTX	_MS_ _ S2
I6-L	I6-K	TB3-12		

		TB6	INPUT FILE	
_MN_P_2	B	TB6-1	I13-D	DET. 25
	W	TB6-2	I13-E	I13-U
_MNHQ_1	B	TB6-3	I13-J	DET. 26
	W	TB6-4	I13-K	I13-L
_MNHD_1	B	TB6-5	I14-D	DET. 27
DMNHD_1	W	TB6-6	I14-E	I14-U
_MNHP_1	B	TB6-7	I14-J	DET. 28
	W	TB6-8	I14-K	I14-L
_MN_X_1	B	TB6-9	J1-D	DET. 29
	W	TB6-10	J1-E	J1-U
_ _ _ _ _ _ _	B	TB6-11	J1-J	DET. 30
	W	TB6-12	J1-K	J1-L

INPUT FILE		TB4		
DET. 13	I7-D	TB4-1	WTX	_MS_ _ _3
I7-U	I7-E	TB4-2		
DET. 14	I7-J	TB4-3	WTX	_MS_ _ S3
I7-L	I7-K	TB4-4		
DET. 15	I8-D	TB4-5	WTX	_MS_ _ _4
I8-U	I8-E	TB4-6		
DET. 16	I8-J	TB4-7	WTX	_MS_ _ S4
I8-L	I8-K	TB4-8		
DET. 17	I9-D	TB4-9	B	_MN_A_1
I9-U	I9-E	TB4-10	W	
DET. 18	I9-J	TB4-11	B	_MN_Q_1
I9-L	I9-K	TB4-12	W	

		TB7	INPUT FILE	
_ _ _ _ _ _ _	B	TB7-1	J2-D	DET. 31
	W	TB7-2	J2-E	J2-U
_ _ _ _ _ _ _	B	TB7-3	J2-J	DET. 32
	W	TB7-4	J2-K	J2-L
_ _ _ _ _ _ _	B	TB7-5	J3-D	DET. 33
	W	TB7-6	J3-E	J3-U
_ _ _ _ _ _ _	B	TB7-7	J3-J	DET. 34
	W	TB7-8	J3-K	J3-L
_ _ _ _ _ _ _	B	TB7-9	J4-D	DET. 35
	W	TB7-10	J4-E	J4-U
_ _ _ _ _ _ _	B	TB7-11	J4-J	DET. 36
	W	TB7-12	J4-K	J4-L

INPUT FILE		TB8		
DET. 37	J5-D	TB8-1	B	_ _ _ _ _ _ _
J5-U	J5-E	TB8-2	W	
DET. 38	J5-J	TB8-3	B	_ _ _ _ _ _ _
J5-L	J5-K	TB8-4	W	
DET. 39	J6-D	TB8-5	B	_ _ _ _ _ _ _
J6-U	J6-E	TB8-6	W	
DET. 40	J6-J	TB8-7	B	_ _ _ _ _ _ _
J6-L	J6-K	TB8-8	W	
NOT USED		TB8-9		
		TB8-10		
		TB8-11		
		TB8-12		

TB9	INPUT FILE	
TB9-1		NOT USED
TB9-2		
TB9-3		
TB9-4		
TB9-5		
TB9-6		
TB9-7		
TB9-8		
TB9-9		
TB9-10		
TB9-11		
TB9-12		

INPUT FILE LAYOUT AND MARKING DETAIL: 005 - RM - 12288

		1	2	3	4	5	6	7	8	9	10	11	12	13	14
I		DET. 1	DET. 3	DET. 5	DET. 7	DET. 9	DET. 11	DET. 13	DET. 15	DET. 17	DET. 19	DET. 21	DET. 23	DET. 25	DET. 27
	U	CLICK 112	CLICK 112	CLICK 112	CLICK 112	CLICK 112	CLICK 112	CLICK 112	CLICK 112	C1103-SS	C1103-SS	C1103-SS	C1103-SS	C1103-SS	C1103-SS
	L														
		DET. 2	DET. 4	DET. 6	DET. 8	DET. 10	DET. 12	DET. 14	DET. 16	DET. 18	DET. 20	DET. 22	DET. 24	DET. 26	DET. 28
J		DET. 29	DET. 31	DET. 33	DET. 35	DET. 37	DET. 39								
	U	C1103-SS													
	L														
		DET. 30	DET. 32	DET. 34	DET. 36	DET. 38	DET. 40								

SLOTS J7 THROUGH J14 NOT USED

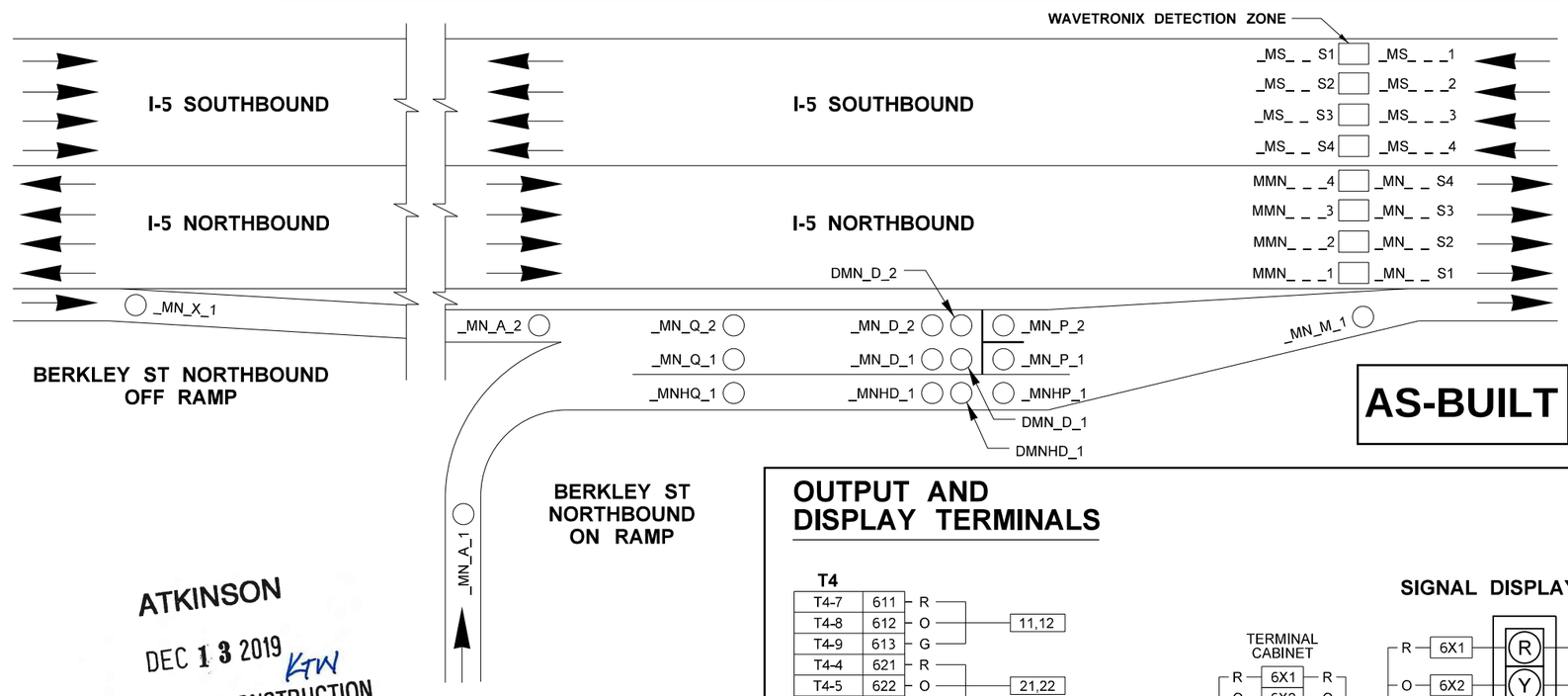

AS-BUILT

ATKINSON
DEC 13 2019 KTW
RELEASED FOR CONSTRUCTION

NOTE: CONTRACTOR SHALL USE THE LOOP NAMES FOR WAVETRONIX DETECTION ZONES FOR THE LABELS ON THE DISPLAY PANEL IN THE CONTROLLER CABINET

OUTPUT AND DISPLAY TERMINALS

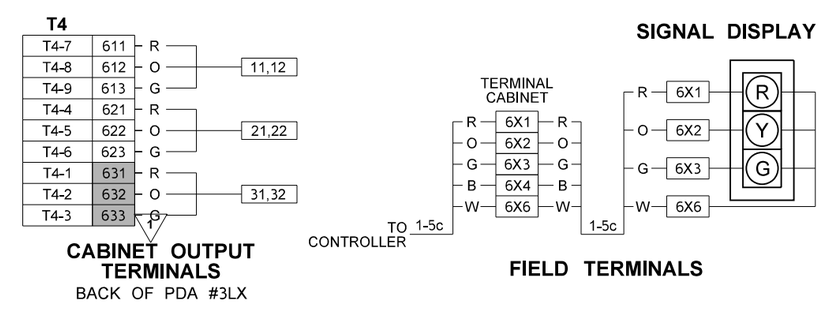

FILE NAME	c:\pwworking\jacobs_b&i\wegenemf\dms20633\DE_TSD22.dgn						
TIME	12:05:13 PM				REGION NO. 10	STATE WASH	FED.AID PROJ.NO.
DATE	11/15/2019				JOB NUMBER		
PLOTTED BY	wegenemf						
DESIGNED BY	D. BLACK						
ENTERED BY	D. BLACK	REV 1 - RFC, RFI0301	11/14/19		CONTRACT NO. C9133		LOCATION NO.
CHECKED BY	M. WEGENER	REV 0 - RELEASED FOR CONSTRUCTION	07/11/19				
PROJ. ENGR.	C. MEADE	REV A - FINAL REVIEW	05/10/19				
REGIONAL ADM.	J. WYNANDS	REVISION	DATE	BY			

MARK F. WEGENER, STATE OF WASHINGTON, 41141, REGISTERED PROFESSIONAL ENGINEER
12/12/19
DATE
P.E. STAMP BOX

P.E. STAMP BOX DATE

Washington State Department of Transportation

ATKINSON CONSTRUCTION / JACOBS

I-5
STEILACOOM-DUPONT RD TO THORNE LN
CORRIDOR IMPROVEMENTS
MP 120.01 TO MP 124.45

RAMP METER INPUT FILES

PLAN REF NO TSD22

SHEET 1029 OF 1456 SHEETS

CABINET INPUT WIRE TERMINATIONS

INPUT FILE		TB2		DETECTOR ID
DET. 1	I1-D	TB2-1	WTX	MMN_ _ _1
I1-U	I1-E	TB2-2		
DET. 2	I1-J	TB2-3	WTX	_MN_ _S1
I1-L	I1-K	TB2-4		
DET. 3	I2-D	TB2-5	WTX	MMN_ _ _2
I2-U	I2-E	TB2-6		
DET. 4	I2-J	TB2-7	WTX	_MN_ _S2
I2-L	I2-K	TB2-8		
DET. 5	I3-D	TB2-9	WTX	MMN_ _ _3
I3-U	I3-E	TB2-10		
DET. 6	I3-J	TB2-11	WTX	_MN_ _S3
I3-L	I3-K	TB2-12		

DETECTOR ID		TB5	INPUT FILE	
_MN_D_1	B	TB5-1	I10-D	DET. 19
DMN_D_1	W	TB5-2	I10-E	I10-U
_MN_P_1	B	TB5-3	I10-J	DET. 20
	W	TB5-4	I10-K	I10-L
_MN_M_1	B	TB5-5	I11-D	DET. 21
	W	TB5-6	I11-E	I11-U
_MN_A_2	B	TB5-7	I11-J	DET. 22
	W	TB5-8	I11-K	I11-L
_MN_Q_2	B	TB5-9	I12-D	DET. 23
	W	TB5-10	I12-E	I12-U
_MN_D_2	B	TB5-11	I12-J	DET. 24
DMN_D_2	W	TB5-12	I12-K	I12-L

WTX = INPUT FROM WAVETRONIX SENSOR; NOT LANDED AT TERMINAL BLOCK

INPUT FILE		TB3		
DET. 7	I4-D	TB3-1	WTX	MMN_ _ _4
I4-U	I4-E	TB3-2		
DET. 8	I4-J	TB3-3	WTX	_MN_ _S4
I4-L	I4-K	TB3-4		
DET. 9	I5-D	TB3-5	WTX	_MS_ _ _1
I5-U	I5-E	TB3-6		
DET. 10	I5-J	TB3-7	WTX	_MS_ _S1
I5-L	I5-K	TB3-8		
DET. 11	I6-D	TB3-9	WTX	_MS_ _ _2
I6-U	I6-E	TB3-10		
DET. 12	I6-J	TB3-11	WTX	_MS_ _S2
I6-L	I6-K	TB3-12		

		TB6	INPUT FILE	
_MN_P_2	B	TB6-1	I13-D	DET. 25
	W	TB6-2	I13-E	I13-U
_MNHQ_1	B	TB6-3	I13-J	DET. 26
	W	TB6-4	I13-K	I13-L
_MNHD_1	B	TB6-5	I14-D	DET. 27
DMNHD_1	W	TB6-6	I14-E	I14-U
_MNHP_1	B	TB6-7	I14-J	DET. 28
	W	TB6-8	I14-K	I14-L
_MS_X_1	B	TB6-9	J1-D	DET. 29
	W	TB6-10	J1-E	J1-U
_MS_X_2	B	TB6-11	J1-J	DET. 30
	W	TB6-12	J1-K	J1-L

INPUT FILE		TB4		
DET. 13	I7-D	TB4-1	WTX	_MS_ _ _3
I7-U	I7-E	TB4-2		
DET. 14	I7-J	TB4-3	WTX	_MS_ _S3
I7-L	I7-K	TB4-4		
DET. 15	I8-D	TB4-5	WTX	_MS_ _ _4
I8-U	I8-E	TB4-6		
DET. 16	I8-J	TB4-7	WTX	_MS_ _S4
I8-L	I8-K	TB4-8		
DET. 17	I9-D	TB4-9	B	_MN_A_1
I9-U	I9-E	TB4-10	W	
DET. 18	I9-J	TB4-11	B	_MN_Q_1
I9-L	I9-K	TB4-12	W	

		TB7	INPUT FILE	
_ _ _ _ _ _ _	B	TB7-1	J2-D	DET. 31
	W	TB7-2	J2-E	J2-U
_ _ _ _ _ _ _	B	TB7-3	J2-J	DET. 32
	W	TB7-4	J2-K	J2-L
_ _ _ _ _ _ _	B	TB7-5	J3-D	DET. 33
	W	TB7-6	J3-E	J3-U
_ _ _ _ _ _ _	B	TB7-7	J3-J	DET. 34
	W	TB7-8	J3-K	J3-L
_ _ _ _ _ _ _	B	TB7-9	J4-D	DET. 35
	W	TB7-10	J4-E	J4-U
_ _ _ _ _ _ _	B	TB7-11	J4-J	DET. 36
	W	TB7-12	J4-K	J4-L

INPUT FILE		TB8		
DET. 37	J5-D	TB8-1	B	_ _ _ _ _ _ _
J5-U	J5-E	TB8-2	W	
DET. 38	J5-J	TB8-3	B	_ _ _ _ _ _ _
J5-L	J5-K	TB8-4	W	
DET. 39	J6-D	TB8-5	B	_ _ _ _ _ _ _
J6-U	J6-E	TB8-6	W	
DET. 40	J6-J	TB8-7	B	_ _ _ _ _ _ _
J6-L	J6-K	TB8-8	W	
NOT USED		TB8-9		
		TB8-10		
		TB8-11		
		TB8-12		

TB9	INPUT FILE	
TB9-1		
TB9-2		
TB9-3		
TB9-4		
TB9-5		
TB9-6		
TB9-7	NOT USED	
TB9-8		
TB9-9		
TB9-10		
TB9-11		
TB9-12		

INPUT FILE LAYOUT AND MARKING DETAIL: 005 - RM - 12375

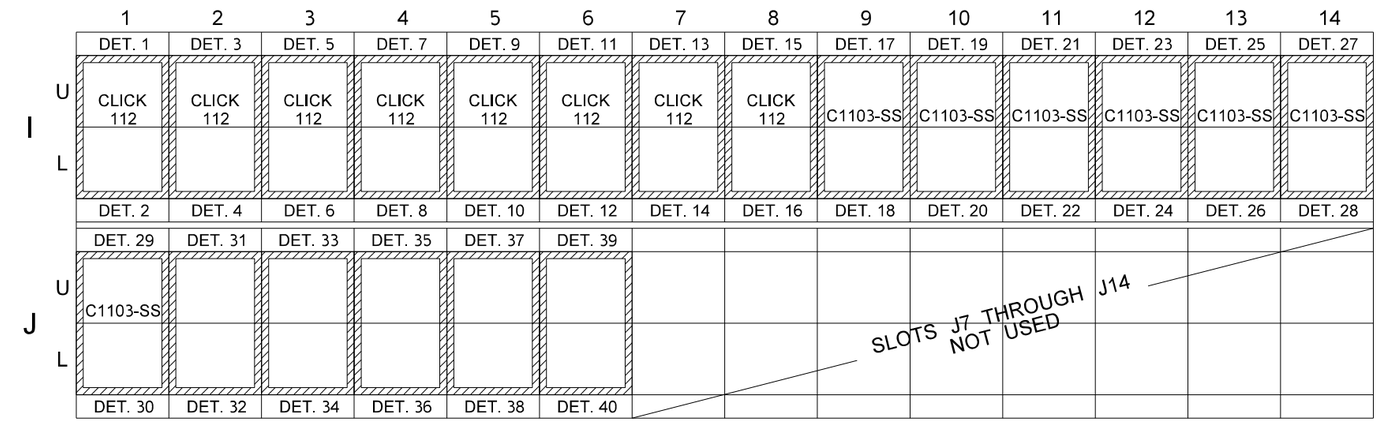

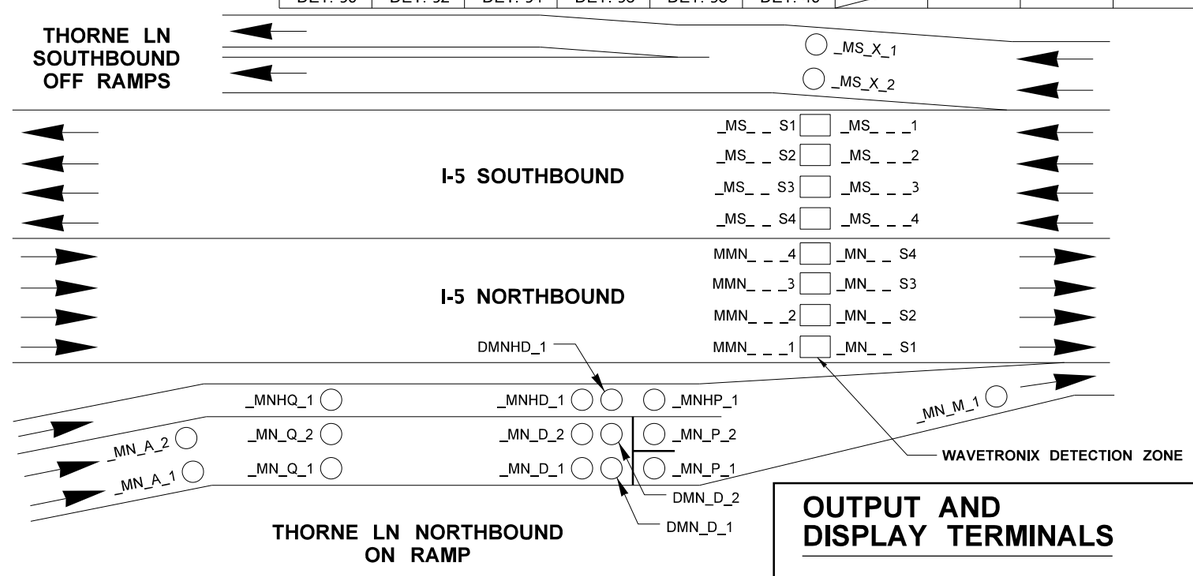

AS-BUILT

ATKINSON

DEC 13 2019 KW

RELEASED FOR CONSTRUCTION

NOTE: CONTRACTOR SHALL USE THE LOOP NAMES FOR WAVETRONIX DETECTION ZONES FOR THE LABELS ON THE DISPLAY PANEL IN THE CONTROLLER CABINET

OUTPUT AND DISPLAY TERMINALS

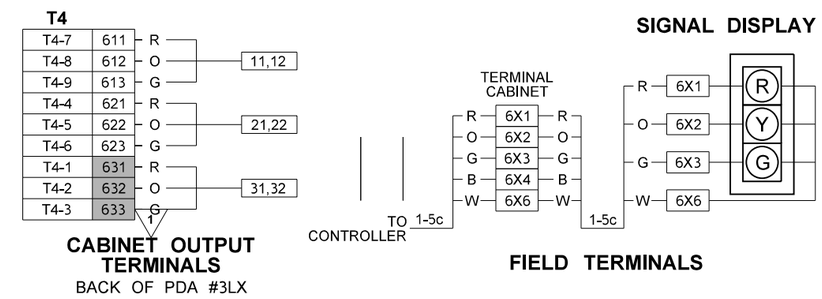

FILE NAME	c:\pwworking\jacobs_b&i\wegenemf\dms20633\DE_TSD23.dgn				
TIME	12:08:26 PM				
DATE	11/15/2019				
PLOTTED BY	wegenemf				
DESIGNED BY	D. BLACK				
ENTERED BY	D. BLACK	REV 1 - RFC, RFI0301	11/14/19		
CHECKED BY	M. WEGENER	REV 0 - RELEASED FOR CONSTRUCTION	07/11/19		
PROJ. ENGR.	C. MEADE	REV A - FINAL REVIEW	05/10/19		
REGIONAL ADM.	J. WYNANDS	REVISION	DATE	BY	

REGION NO.	STATE	FED.AID PROJ.NO.
10	WASH	
JOB NUMBER		
CONTRACT NO. C9133		LOCATION NO.

MARK F. WEGENER STATE OF WASHINGTON 41141 REGISTERED PROFESSIONAL ENGINEER

12/12/19

DATE

P.E. STAMP BOX

DATE

P.E. STAMP BOX

Washington State Department of Transportation

ATKINSON CONSTRUCTION / JACOBS

I-5
STEILACOOM-DUPONT RD TO THORNE LN
CORRIDOR IMPROVEMENTS
MP 120.01 TO MP 124.45

RAMP METER INPUT FILES

PLAN REF NO TSD23

SHEET 1030 OF 1456 SHEETS

005 - DS - 12006
WTX DETECTION ZONES

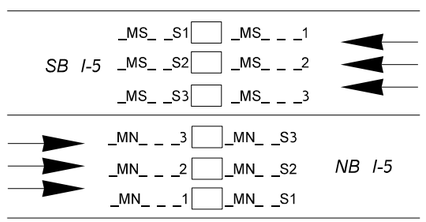

INSTALL CLICK 112 UNITS IN INPUT FILE SLOTS FOR DETECTORS 01-12

005 - DS - 12199
WTX DETECTION ZONES

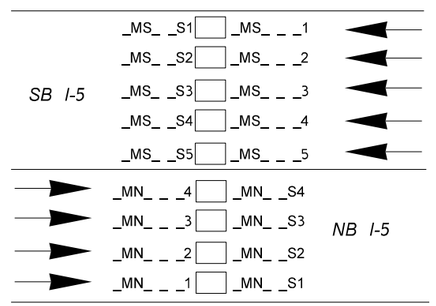

INSTALL CLICK 112 UNITS IN INPUT FILE SLOTS FOR DETECTORS 01-18

005 - DS - 12160
WTX DETECTION ZONES

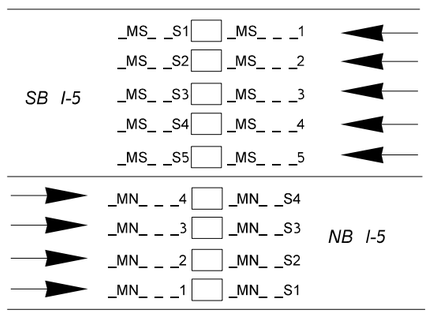

INSTALL CLICK 112 UNITS IN INPUT FILE SLOTS FOR DETECTORS 01-18

005 - DS - 12413
WTX DETECTION ZONES

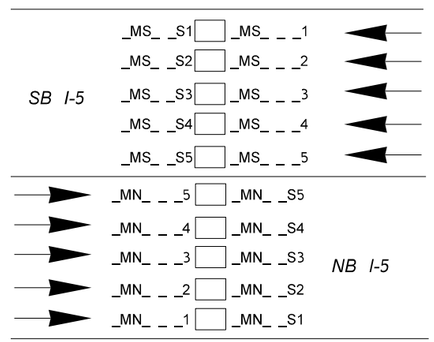

INSTALL CLICK 112 UNITS IN INPUT FILE SLOTS FOR DETECTORS 01-20

AS-BUILT

ATKINSON
JUL 12 2019 KTW
RELEASED FOR CONSTRUCTION

INPUT FILE LAYOUT AND MARKING DETAIL: 005 - DS - 12340

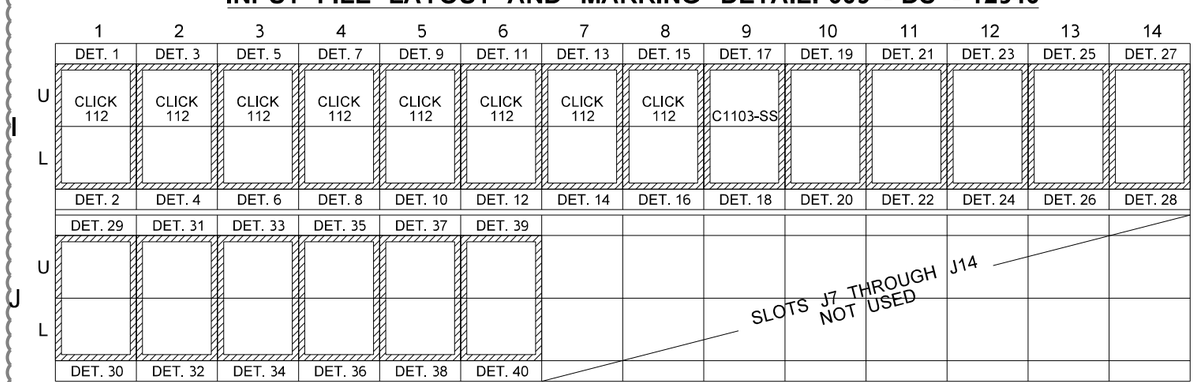

005 - DS - 12340
WTX DETECTION ZONES

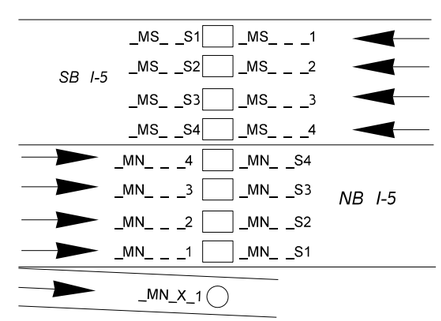

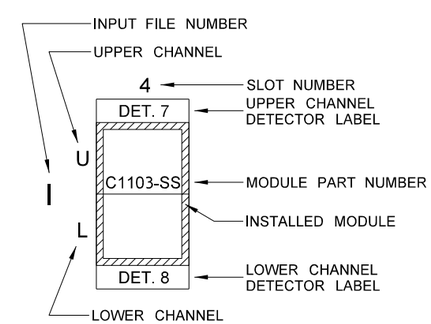

INPUT FILE SLOT LEGEND

NOTE:
SLOTS LABELED WITH "000" SHALL REMAIN UNLABELED.

FILE NAME	c:\pwworking\jacobs_b&h\agronml\dms20633\DE_TSD24.dgn						
TIME	1:47:34 PM				REGION NO. 10	STATE WASH	FED.AID PROJ.NO.
DATE	7/11/2019						
PLOTTED BY	agronmi				JOB NUMBER		
DESIGNED BY	D. BLACK	REV 1 - RFC, RFI0151	07/11/19				
ENTERED BY	D. BLACK	REV B - FINAL REVIEW NORTH AREA	05/10/19				
CHECKED BY	M. WEGENER	REV 0 - RELEASED FOR CONSTRUCTION	03/29/19		CONTRACT NO. C9133		LOCATION NO.
PROJ. ENGR.	C. MEADE	REV A - FINAL REVIEW	02/12/19				
REGIONAL ADM.	J. WYNANDS	REVISION	DATE	BY			

MARK F. WEGENER — STATE OF WASHINGTON — 41141 — REGISTERED PROFESSIONAL ENGINEER
7/12/19
DATE
P.E. STAMP BOX

DATE
P.E. STAMP BOX

Washington State Department of Transportation

ATKINSON / JACOBS CONSTRUCTION

I-5
STEILACOOM-DUPONT RD TO THORNE LN CORRIDOR IMPROVEMENTS
MP 120.01 TO MP 124.45

DATA STATION INPUT FILES

PLAN REF NO TSD24

SHEET 1031 OF 1456 SHEETS

NOTES:

1. SEE TSD26 FOR OTHER SIGNAL POLE DETAILS AND POLE LOCATION

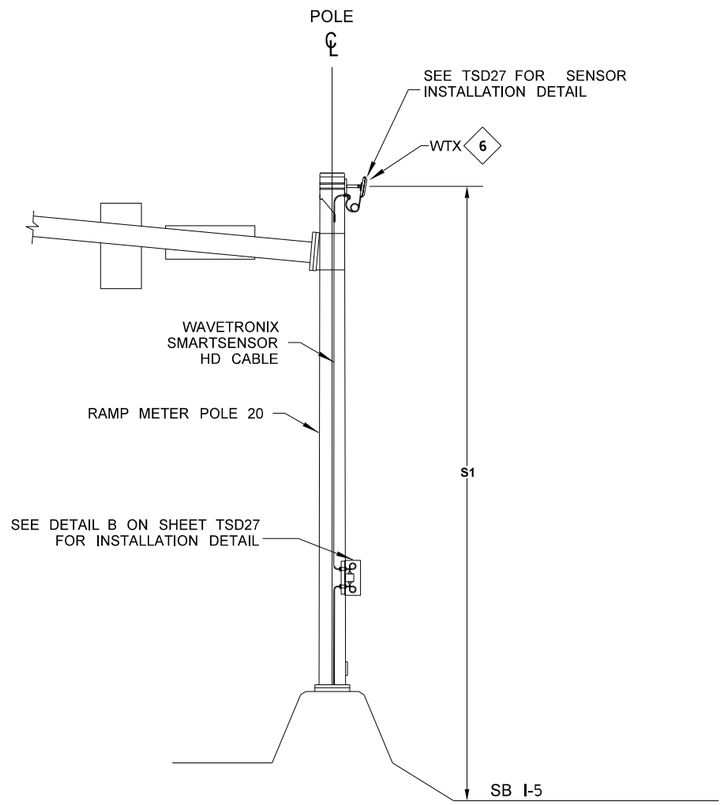

TYPE II
SIGNAL STANDARD

NOTES:

1. SEE STANDARD PLAN J-50.15 FOR ADDITIONAL LOOP DETAILS.
2. CENTER INDUCTION LOOP VEHICLE DETECTOR BETWEEN LANE LINES

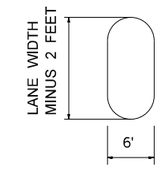

WR LOOP
FOR LANES WIDER THAN 12 FEET

AS-BUILT

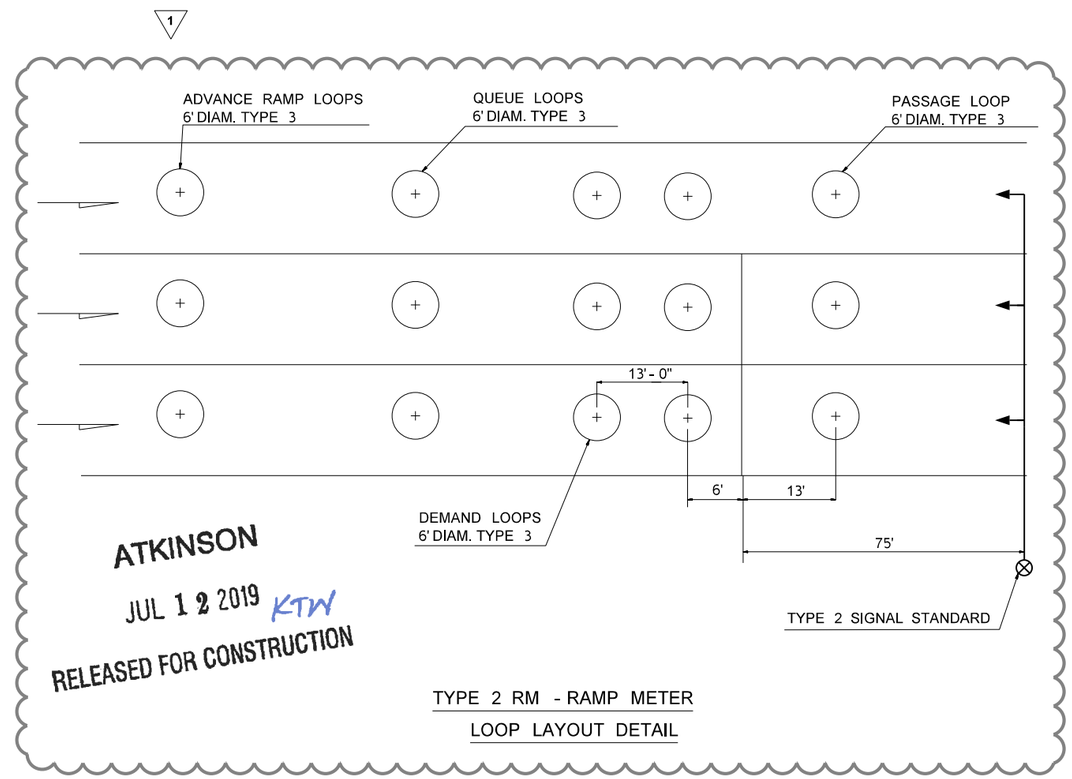

ATKINSON
JUL 12 2019 KTW
RELEASED FOR CONSTRUCTION

TYPE 2 RM - RAMP METER
LOOP LAYOUT DETAIL

NOT TO SCALE

FILE NAME	c:\pwworking\jacobs_b&i\agronmi\dms20633\DE_TSD25.dgn					
TIME	1:56:15 PM			REGION NO. 10	STATE WASH	FED.AID PROJ.NO.
DATE	7/11/2019					
PLOTTED BY	agronmi			JOB NUMBER		
DESIGNED BY	I. AGRON	REV 1 - RFC, RFI0151	07/11/19			
ENTERED BY	I. AGRON	REV B - FINAL REVIEW NORTH AREA	05/10/19			
CHECKED BY	M. WEGENER	REV 0 - RELEASED FOR CONSTRUCTION	03/29/19	CONTRACT NO. C9133		LOCATION NO.
PROJ. ENGR.	C. MEADE	REV A - FINAL REVIEW	02/12/19			
REGIONAL ADM.	J. WYNANDS	REVISION	DATE	BY		

MARK E. WEGENER — STATE OF WASHINGTON — 41141 — REGISTERED PROFESSIONAL ENGINEER
7/12/19
DATE
P.E. STAMP BOX

DATE
P.E. STAMP BOX

Washington State Department of Transportation

ATKINSON CONSTRUCTION / JACOBS

I-5
STEILACOOM-DUPONT RD TO THORNE LN
CORRIDOR IMPROVEMENTS
MP 120.01 TO MP 124.45

LOOP DETAILS

PLAN REF NO
TSD25

SHEET 1032 OF 1456 SHEETS

SIGNAL STANDARD IDENTIFICATION TAG DETAIL

STD. NO. XX	SIGNAL STANDARD NO.
SRXXX, MP XXX.XX	STATE ROUTE AND MILE POST NO.
MANUFACTURER APPROVED DWG. XXXXXX	APPROVED DRAWING NO.
FAB. X/XX/XXXX	FABRICATION DATE

EXAMPLE

STD. NO. 02
SR97, MP 069.09
MANUFACTURER
APPROVED DWG. AB12345
FAB. 6/14/2002

NOTE:
CORROSION RESISTANT METAL TAG SECURED WITH (2) 0.125" RIVETS AS FOLLOWS:
- POLE SHAFT - LOCATED WITHIN 6" ABOVE HAND HOLE (TYPE II & III).
- SIGNAL AND LUMINAIRE MAST ARM (TYPE II & III) - LOCATED WITHIN 6" OF THE LUMINAIRE ARM AND THE POLE SHAFT CONNECTION POINT (TYPE III).
TEXT SHALL BE A MINIMUM OF 3/16" HIGH, STAMPED OR EMBOSSED.

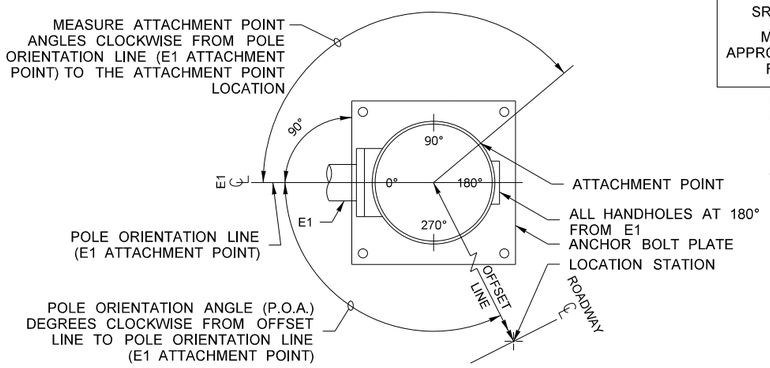

POLE ORIENTATION AND ATTACHMENT POINT DETAIL

ATKINSON
AUG 19 2020
RELEASED FOR CONSTRUCTION

ALUMINUM SIGNAL HEAD WITH 8" LED TYPE LENS AND 8" ALUMINUM VISOR

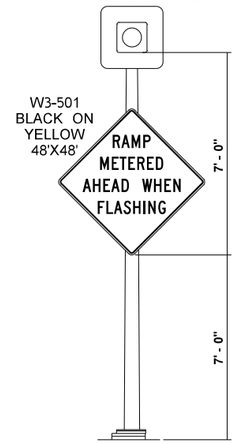

TYPE FB
SIGNAL STANDARD

MOUNTING NOTES:

1. MOUNTING COUPLING INSTALLED AT OFFSET INDICATED IN CHART. USE TYPE M HEAD MOUNTS PER STANDARD PLAN J-75.20-01, UNLESS OTHERWISE NOTED IN THE "SIGNAL MAST ARM DATA" TABLE BELOW.
2. FIELD INSTALLED. SEE STANDARD PLAN G-30.10 FOR MOUNTING DETAILS.

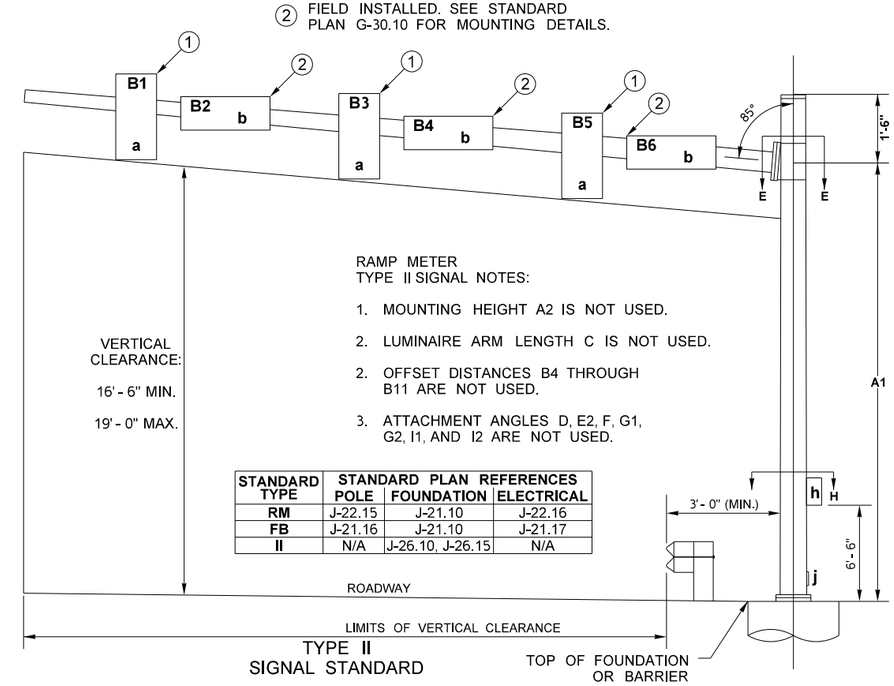

RAMP METER
TYPE II SIGNAL NOTES:

1. MOUNTING HEIGHT A2 IS NOT USED.
2. LUMINAIRE ARM LENGTH C IS NOT USED.
2. OFFSET DISTANCES B4 THROUGH B11 ARE NOT USED.
3. ATTACHMENT ANGLES D, E2, F, G1, G2, I1, AND I2 ARE NOT USED.

STANDARD TYPE	STANDARD PLAN REFERENCES		
	POLE	FOUNDATION	ELECTRICAL
RM	J-22.15	J-21.10	J-22.16
FB	J-21.16	J-21.10	J-21.17
II	N/A	J-26.10, J-26.15	N/A

TYPE II
SIGNAL STANDARD

LEGEND

a.	VEHICLE DISPLAY	f.	NOT USED
b.	SIGN	g.	NOT USED
c.	NOT USED	h.	TERMINAL CABINET
d.	NOT USED	i.	NOT USED
e.	NOT USED	j.	HANDHOLE

AS-BUILT

SIGNAL DISPLAY NOTES

1. ALL VEHICLE HEADS SHALL BE ALUMINUM.
2. ALL LENSES SHALL BE 12" LED TYPE, WITH THE EXCEPTION OF THE LOWER SIGNAL HEAD ON THE TYPE RM SIGNAL, WHICH SHALL BE 8" LED TYPE.
3. ALL VISORS SHALL BE 12" ALUMINUM TUNNEL TYPE, WITH THE EXCEPTION OF THE LOWER SIGNAL HEAD ON THE TYPE RM SIGNAL, WHICH SHALL BE 8" ALUMINUM TYPE.
4. ALL DISPLAYS SHALL INCLUDE BACKPLATES. DO NOT INSTALL RETROREFLECTIVE TAPE ON RAMP METERS.

SIGNAL STANDARD DETAIL CHART

STD NO.	SR NO.	FIELD LOCATION STATION	OFFSET	LT	RT	P.O.A.	POLE TYPE	MOUNTING HEIGHT(FT) A1	OFFSET(FT) (Z) (POLE ℄ TO ATTACHMENT POINT) B1	B2	B3	B4	B5	B6	WINDLOAD AREAS (FT)² (X)(Y) B1	B2	B3	B4	B5	B6	(X)(Y)(Z) TOTAL(FT)³	DESIGN WIND LOAD (FT)³	LUMINAIRE ARM (FT) C	POLE ATTACHMENT POINT ANGLES (deg) E	F	ALLOWABLE LATERAL BEARING PRESSURE (PSF)	FOUNDATION DEPTH (FT) 3' RD	3' SQ	4' RD	REMARKS
20	BXML	16+79	10.25'		X	0	II	17'-6" ▽3	40 USE 12" L MOUNT	38	29 USE 6" L MOUNT	25	17	13		7.5	9.2	6	9.2	6	936	1235							▽3	SEE TSD25 FOR WTX INSTALLATION. VERTICAL SHAFT IS ON THE LEFT. SEE BARRIER DET ST10.
21	BXML	23+93	9'		X		FB																							
22	BXML	24+00	15'		X		FB																							
23																														NOT USED
24	BXMR	15+75	50'		X	0	II	20'	43 USE 12" L MOUNT	39	30 USE 6" L MOUNT	26	17	15	9.2	6	9.2	6		7.5	1174	1296				1500	ALT 1 12 ALT 2 14	ALT 1 10 ALT 2 N/A	ALT 1 10 ALT 2 10 ▽3	ELEVATION AT TOP OF FOUNDATION SHALL BE 271.40FT. EMBEDDED LENGTH SHALL BE MINIMUM "FOUNDATION DEPTH" MINUS 1.5FT. "ALT 1" AND "ALT 2" FOUNDATION DEPTHS REFER TO STD PLAN J-26.10-03
25	BXMR	10+32	36'		X		FB																							
26	BXW	303+88	47'	X			FB																						▽3	
27	TXMR	606+89	10'		X	0	II	17'-6" ▽3	40 USE 12" L MOUNT	38	27 USE 6" L MOUNT	23	15	11		7.5	9.2	6	9.2	6	875	1174				1500	ALT 1 12 ALT 2 14	ALT 1 10 ALT 2 N/A	ALT 1 10 ALT 2 10	ELEVATION AT TOP OF FOUNDATION SHALL BE 270.50FT. "ALT 1" AND "ALT 2" FOUNDATION DEPTHS REFER TO STD PLAN J-26.10-03
28	TXMR	600+05	11'		X		FB																							

*** IF NO ELEVATION GIVEN, FOUNDATION TOP ELEVATION SHALL BE LEVEL WITH EXISTING GROUND.**
IF ADJACENT TO SIDEWALK OR ROADWAY, FOUNDATION TOP SHALL BE LEVEL WITH THE ADJACENT SIDEWALK OR ROADWAY.

NOT TO SCALE

FILE NAME	c:\pworking\jacobs_b&i\wegenemf\dms20633\DE_TSD26.dgn
TIME	12:37:14 PM
DATE	8/12/2020
PLOTTED BY	WEGENEMF
DESIGNED BY	I. AGRON
ENTERED BY	I. AGRON
CHECKED BY	M. WEGENER
PROJ. ENGR.	C. MEADE
REGIONAL ADM.	J. WYNANDS

REVISION	DATE	BY
REV 3 - RFI0526, ADD THIRD SIGNAL HEADS	08/12/20	
REV 2 - RFC, RFI0273	10/22/19	
REV 1 - RELEASE OF NFC	08/09/19	
REV 0 - RELEASED FOR CONSTRUCTION	07/11/19	
REV A - FINAL REVIEW	5/10/19	

REGION NO.	STATE	FED.AID PROJ.NO.
10	WASH	
JOB NUMBER		
CONTRACT NO. C9133		LOCATION NO.

MARK F. WEGENER · STATE OF WASHINGTON · 41141 · REGISTERED PROFESSIONAL ENGINEER
8/19/20
DATE
P.E. STAMP BOX

P.E. STAMP BOX
DATE

Washington State Department of Transportation
ATKINSON CONSTRUCTION / JACOBS

I-5
STEILACOOM-DUPONT RD TO THORNE LN CORRIDOR IMPROVEMENTS
MP 120.01 TO MP 124.45

RAMP METER SIGNAL DETAIL

PLAN REF NO TSD26

SHEET 1033 OF 1456 SHEETS

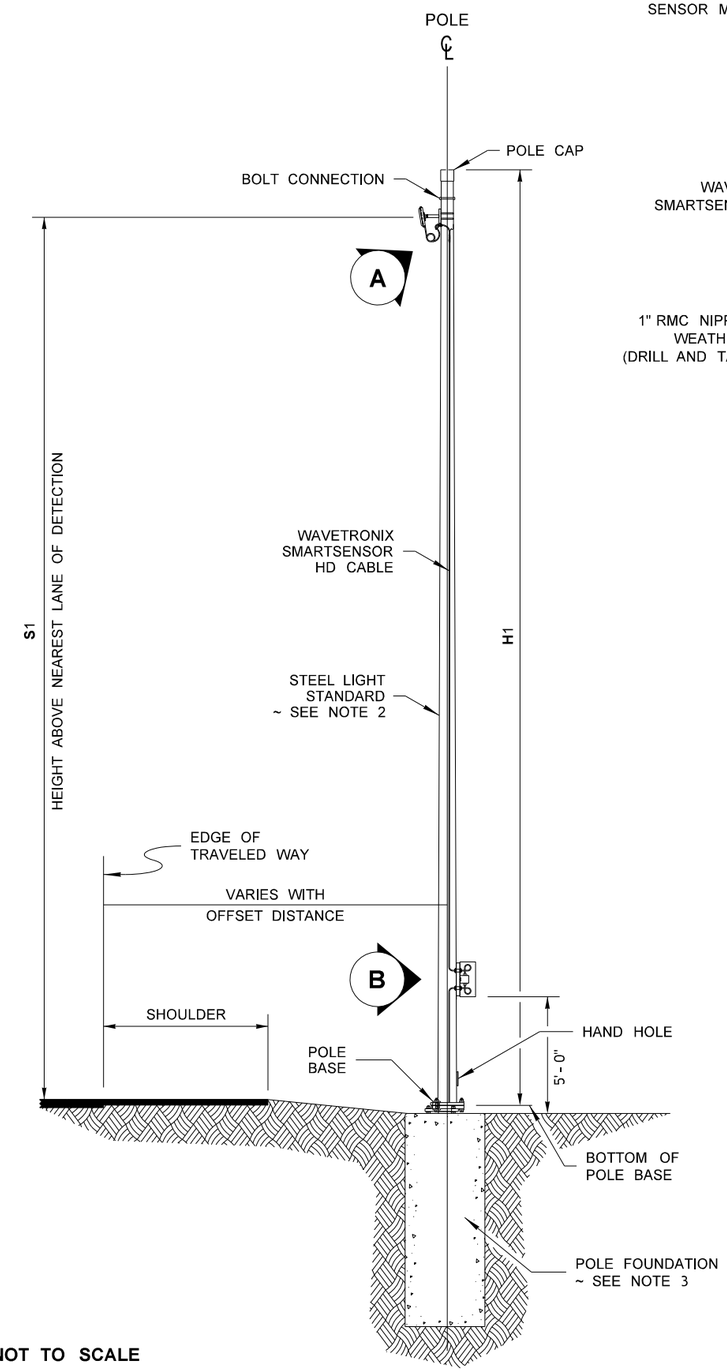

NOT TO SCALE

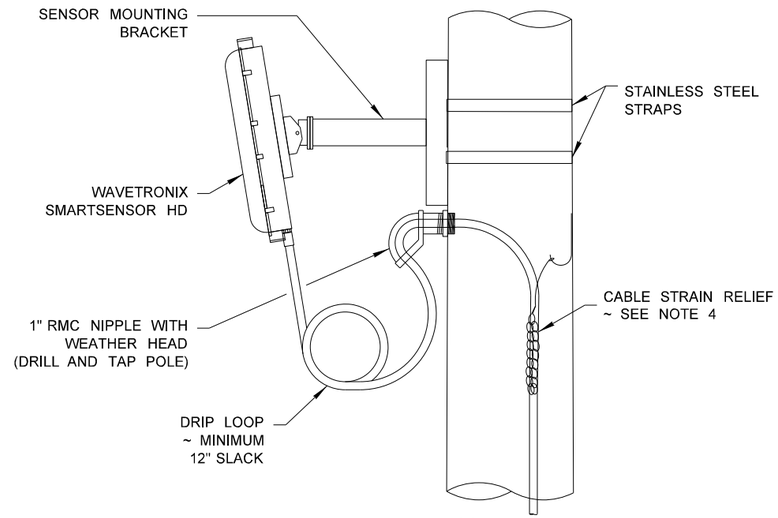

DETAIL A

SENSOR MOUNTING

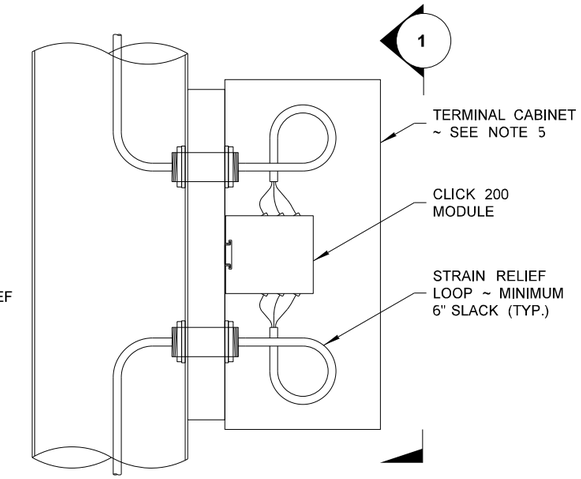

DETAIL B

TERMINAL CABINET

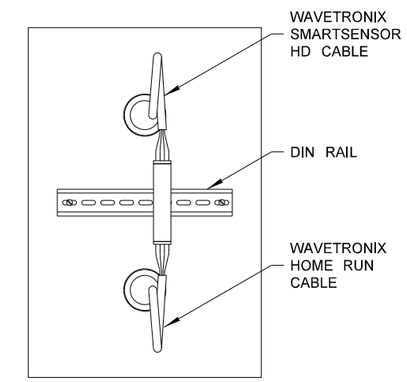

VIEW 1

TERMINAL CABINET FRONT VIEW

WAVETRONIX POLE SCHEDULE

POLE NUMBER	CONTROLLER NAME	LOCATION			HEIGHTS		BASE TYPE	FOUNDATION STANDARD PLANS & CASE	FOUNDATION TYPE J-28.30	SHEET NO.	COMMENTS
		LINE	STATION	OFFSET	H1*	S1					
1	005-DS-12006	SR5	195+50	73' RT	NA	29'	NA	SEE CAMERA POLE #1. TSD13	NA	TS01	OMIT TERMINAL CABINET, CLICK200, AND HOME RUN CABLE. MOUNT SENSOR ON CCTV POLE 1
2	005-RM-12063	SR5	225+28	126' LT	45'	39'	FIXED	J-28.22 CASE B EXCEPT USE FIXED BASE	TYPE A	TS04	
3	005-RM-12110	NBCD	50+04	58' RT	43'	39'	FIXED	J-28.26 CASE K EXCEPT USE FIXED BASE	TYPE B	TS06	
4	005-DS-12160	SR5	277+43	74' RT	20'	15'	FIXED	J-28.24 CASE E	TYPE B	TS09	OMIT TERMINAL CABINET, CLICK200, AND HOME RUN CABLE.
5	005-DS-12199	SR5	297+15	65' RT	NA	18'	SEE CAMERA POLE #5. TSD13	SEE CAMERA POLE #5. TSD13	NA	TS11	OMIT TERMINAL CABINET, CLICK200, AND HOME RUN CABLE. MOUNT SENSOR ON CCTV POLE 5.
6	005-RM-12250	BXML	16+79	11' RT	NA	17'	SEE RAMP METER POLE #20	SEE RAMP METER POLE #20	NA	TS13	MOUNT SENSOR ON RAMP METER POLE 20.
7	005-RM-12288	SR5	344+62	97' RT	34'	31'	FIXED	J-28.22 CABE B EXCEPT USE FIXED BASE	TYPE A	TS15	
8	005-DS-12340	SR5	372+35	118' RT	41'	39'	FIXED	J-28.24 CASE E	TYPE B	TS18	OMIT TERMINAL CABINET, CLICK200, AND HOME RUN CABLE.
9	005-RM-12375	SR5	390+59	124' RT	40'	39'	FIXED	J-28.24 CASE E	TYPE A	TS20	
10	005-DS-12413	SR5	410+79	90' RT	NA	19'	SEE CAMERA POLE #12. TSD13	SEE CAMERA POLE #12. TSD13	NA	TS22	OMIT TERMINAL CABINET, CLICK200, AND HOME RUN CABLE. MOUNT SENSOR ON CCTV POLE 12.

*H1 HEIGHTS ARE MINIMUMS

AS-BUILT

ATKINSON
FEB 14 2020 KTW
RELEASED FOR CONSTRUCTION

NOTES:

1. FOUNDATION CONDUITS AND WIRING NOT SHOWN FOR CLARITY.
2. SEE **STANDARD PLAN J-28.10** FOR STEEL LIGHT STANDARD DETAILS.
3. SEE **STANDARD PLAN J-28.30** FOR FOUNDATION DETAILS.
4. CABLE STRAIN RELIEF IS ALWAYS REQUIRED, REGARDLESS OF MOUNTING HEIGHT.
5. TERMINAL CABINET SHALL BE 12" W x 16" H x 8" D, AND MEET THE REQUIREMENTS OF **STANDARD SPECIFICATION 9-29.25**. TERMINAL CABINET SHALL BE MOUNTED AS SHOWN IN **STANDARD PLAN J-75.30**, USING 1.5" DIAMETER CONDUIT NIPPLES.

FILE NAME	c:\pwworking\jacobs_b&i\jeg_gt011740\dms20633\DE_TSD27.dgn					
TIME	10:37:17 AM	REV 7 - RFC, RFI0367	02/14/20		REGION NO. 10	STATE WASH
DATE	2/14/2020	REV 6 - RFC, RFI0346	12/20/19		JOB NUMBER	FED.AID PROJ.NO.
PLOTTED BY	GT011740	REV 5 - RFC, RFI0301	11/14/19			
DESIGNED BY	I.AGRON	REV 4 - RFC, RFI0232	09/23/19			
ENTERED BY	I.AGRON	REV 3 - RFC, RFI0211	09/09/19			
CHECKED BY	M.WEGENER	REV 2 - RELEASE OF NFC	08/09/19		CONTRACT NO. C9133	LOCATION NO.
PROJ. ENGR.	C. MEADE	REV 1 - RFC, RFI0151	07/11/19			
REGIONAL ADM.	J. WYNANDS	REVISION	DATE	BY		

MARK F. WEGENER, STATE OF WASHINGTON, 41141, REGISTERED PROFESSIONAL ENGINEER
2/14/20
DATE
P.E. STAMP BOX

DATE
P.E. STAMP BOX

Washington State Department of Transportation

ATKINSON / JACOBS CONSTRUCTION

I-5
STEILACOOM-DUPONT RD TO THORNE LN
CORRIDOR IMPROVEMENTS
MP 120.01 TO MP 124.45

WAVETRONIX DETAIL

PLAN REF NO TSD27

SHEET 1034 OF 1456 SHEETS

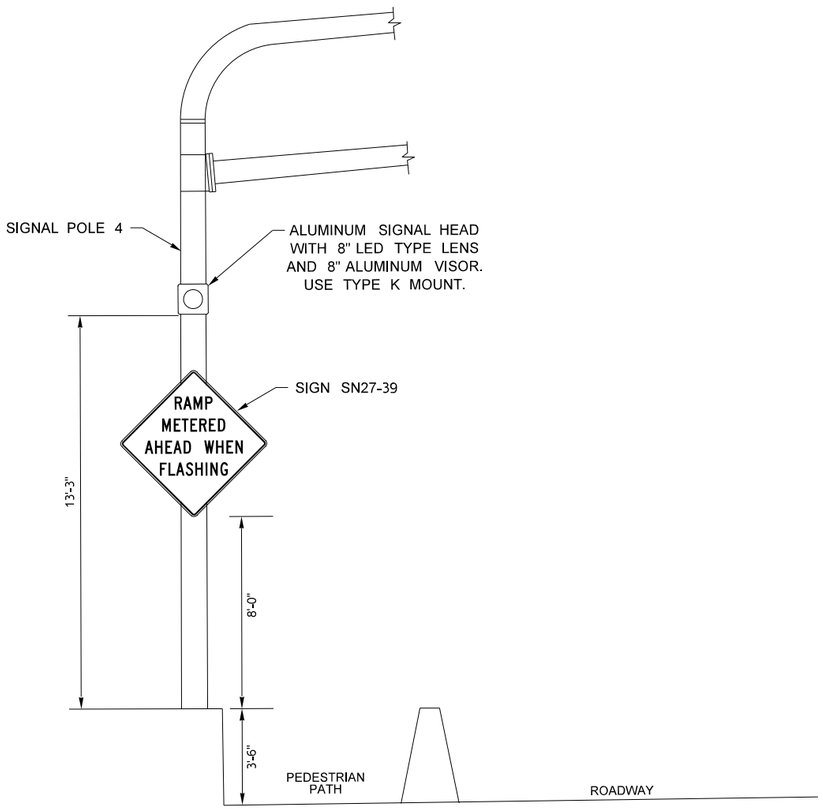

SEE ALSO SIGNAL PLAN SG01, ITS PLAN TS14C, AND SIGNING PLAN SN27.

DETAIL 1: SIGN AND BEACON HEIGHTS ON SIGNAL POLE 4

BLUETOOTH POLE SCHEDULE

LUMINAIRE POLE NUMBER	LOCATION		
	LINE	STATION	OFFSET
E12	MRBXE	10+81.5	14.5' LT
F11	TX RAB	01+28.00	93.65' RT

1

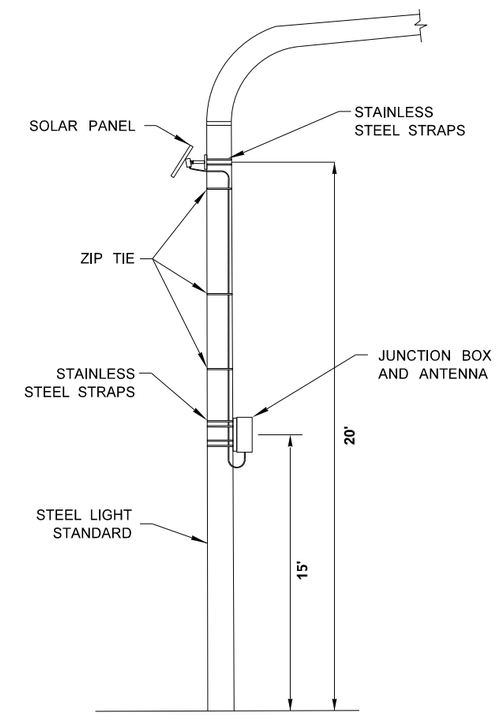

RELOCATE EXISTING SOLAR PANEL AND JUNCTION BOX ONTO NEW LUMINAIRE POLE. ORIENT SOLAR PANEL TOWARD THE SOUTH.

DETAIL 2: BLUETOOTH SENSOR MOUNTING

AS-BUILT

ATKINSON
APR 03 2020 KTW
RELEASED FOR CONSTRUCTION

FILE NAME	c:\pwworking\jacobs_b&i\wegenemf\dms20633\DE_TSD28.dgn			
TIME	4:43:13 PM			
DATE	3/31/2020			
PLOTTED BY	WEGENEMF			
DESIGNED BY	I.AGRON			
ENTERED BY	I.AGRON	REV 1 - RFC, RFI0435, REV POLE E12 LOC	03/26/20	
CHECKED BY	M. WEGENER	REV 0 - RFC, RFI0151	07/11/19	
PROJ. ENGR.	C. MEADE	REV A - FINAL REVIEW	05/10/19	
REGIONAL ADM.	J. WYNANDS	REVISION	DATE	BY

REGION NO.	STATE	FED.AID PROJ.NO.
10	WASH	
JOB NUMBER		
CONTRACT NO.		LOCATION NO.
C9133		

FRANK F. WEGENER, STATE OF WASHINGTON, 41141, REGISTERED PROFESSIONAL ENGINEER
4/3/20
DATE
P.E. STAMP BOX

DATE
P.E. STAMP BOX

Washington State Department of Transportation

ATKINSON CONSTRUCTION / JACOBS

I-5
STEILACOOM-DUPONT RD TO THORNE LN CORRIDOR IMPROVEMENTS
MP 120.01 TO MP 124.45

POLE MOUNTING DETAILS

PLAN REF NO
TSD28

SHEET 1035 OF 1456 SHEETS

005-XF-12006			POWER FROM		SCA 827	
BREAKER NO.	CIRCUIT VOLTAGE	BREAKER RATING	BREAKER TYPE	KVA LOAD	AMP LOAD	CIRCUIT NAME
PRIMARY						
A	480	30	DPST			MAIN BREAKER
SECONDARY						
B	240	60	DPST			SEC. MAIN BREAKER
1	120	30	SPST	2.5	20.9	005-TC-12006
2	120	30	SPST	3	25	005-DS-12006/VC-12006
3	240	30	DPST	0.6	2.2	LUM D6 AND D7
4	120	20	SPST	0	0	SPARE
5	120	--	--	--	--	SPACE
6	120	20	SPST	1.8	15	GFCI RECEPT
TRANSFORMER RATED LOAD				10.0	KVA	
TRANSFORMER ACTUAL LOAD*				6.1	KVA	

1

1

005-XF-12074			POWER FROM		SCA 827	
BREAKER NO.	CIRCUIT VOLTAGE	BREAKER RATING	BREAKER TYPE	KVA LOAD	AMP LOAD	CIRCUIT NAME
PRIMARY						
A	480	20	DPST			MAIN BREAKER
SECONDARY						
B	240	30	DPST			SEC. MAIN BREAKER
1	120	30	SPST	3	25	005-RM-12063
3	120	30	SPST	0	0	SPARE
2	120	20	SPST	0	0	SPARE
4	120	--	--	--	--	SPACE
5	120	--	--	--	--	SPACE
6	120	20	SPST	1.8	15	GFCI RECEPT
TRANSFORMER RATED LOAD				5.0	KVA	
TRANSFORMER ACTUAL LOAD*				3.0	KVA	

005-XF-12132			POWER FROM		SCA 827	
BREAKER NO.	CIRCUIT VOLTAGE	BREAKER RATING	BREAKER TYPE	KVA LOAD	AMP LOAD	CIRCUIT NAME
PRIMARY						
A	480	20	DPST			MAIN BREAKER
SECONDARY						
B	240	30	DPST			SEC. MAIN BREAKER
1	120	30	SPST	2.5	20.9	005-VC-12132
3	120	30	SPST	0	0	SPARE
2	120	20	SPST	0	0	SPARE
4	120	--	--	--	--	SPACE
5	120	--	--	--	--	SPACE
6	120	20	SPST	1.8	15	GFCI RECEPT
TRANSFORMER RATED LOAD				5.0	KVA	
TRANSFORMER ACTUAL LOAD*				2.5	KVA	

005-XF-12044			POWER FROM		SCA 827	
BREAKER NO.	CIRCUIT VOLTAGE	BREAKER RATING	BREAKER TYPE	KVA LOAD	AMP LOAD	CIRCUIT NAME
PRIMARY						
A	480	20	DPST			MAIN BREAKER
SECONDARY						
B	240	30	DPST			SEC. MAIN BREAKER
1	120	30	SPST	2.5	20.9	005-VC-12044
2	120	30	SPST	0	0	SPARE
3	120	20	SPST	0	0	SPARE
4	120	--	--	--	--	SPACE
5	120	--	--	--	--	SPACE
6	120	20	SPST	1.8	15	GFCI RECEPT
TRANSFORMER RATED LOAD				5.0	KVA	
TRANSFORMER ACTUAL LOAD*				2.5	KVA	

005-XF-12086			POWER FROM		SCA 827	
BREAKER NO.	CIRCUIT VOLTAGE	BREAKER RATING	BREAKER TYPE	KVA LOAD	AMP LOAD	CIRCUIT NAME
PRIMARY						
A	480	20	DPST			MAIN BREAKER
SECONDARY						
B	240	30	DPST			SEC. MAIN BREAKER
1	120	30	SPST	2.5	20.9	005-VC-12086
2	120	30	SPST	0	0	SPARE
3	120	20	SPST	0	0	SPARE
4	120	--	--	--	--	SPACE
5	120	--	--	--	--	SPACE
6	120	20	SPST	1.8	15	GFCI RECEPT
TRANSFORMER RATED LOAD				5.0	KVA	
TRANSFORMER ACTUAL LOAD*				2.5	KVA	

005-XF-12160			POWER FROM		SCA 827	
BREAKER NO.	CIRCUIT VOLTAGE	BREAKER RATING	BREAKER TYPE	KVA LOAD	AMP LOAD	CIRCUIT NAME
PRIMARY						
A	480	20	DPST			MAIN BREAKER
SECONDARY						
B	240	30	DPST			SEC. MAIN BREAKER
1	120	30	SPST	2.5	20.9	005-DS-12160
2	120	30	SPST	0	0	SPARE
3	120	20	SPST	0	0	SPARE
4	120	--	--	--	--	SPACE
5	120	--	--	--	--	SPACE
6	120	20	SPST	1.8	15	GFCI RECEPT
TRANSFORMER RATED LOAD				5.0	KVA	
TRANSFORMER ACTUAL LOAD*				2.5	KVA	

005-XF-12054			POWER FROM		SCA 827	
BREAKER NO.	CIRCUIT VOLTAGE	BREAKER RATING	BREAKER TYPE	KVA LOAD	AMP LOAD	CIRCUIT NAME
PRIMARY						
A	480	20	DPST			MAIN BREAKER
SECONDARY						
B	240	30	DPST			SEC. MAIN BREAKER
1	120	30	SPST	2.5	20.9	005-HS-12051
2	120	30	SPST	0	0	SPARE
3	120	20	SPST	0	0	SPARE
4	120	--	--	--	--	SPACE
5	120	--	--	--	--	SPACE
6	120	20	SPST	1.8	15	GFCI RECEPT
TRANSFORMER RATED LOAD				5.0	KVA	
TRANSFORMER ACTUAL LOAD*				2.5	KVA	

005-XF-12104			POWER FROM		SCA 827	
BREAKER NO.	CIRCUIT VOLTAGE	BREAKER RATING	BREAKER TYPE	KVA LOAD	AMP LOAD	CIRCUIT NAME
PRIMARY						
A	480	20	DPST			MAIN BREAKER
SECONDARY						
B	240	30	DPST			SEC. MAIN BREAKER
1	120	30	SPST	3	25	005-RM-12110
2	120	30	SPST	0	0	SPARE
3	120	20	SPST	0	0	SPARE
4	120	--	--	--	--	SPACE
5	120	--	--	--	--	SPACE
6	120	20	SPST	1.8	15	GFCI RECEPT
TRANSFORMER RATED LOAD				5.0	KVA	
TRANSFORMER ACTUAL LOAD*				3.0	KVA	

* ACTUAL LOAD DOES NOT INCLUDE GFCI.

LEGEND-ABBREVIATION

DPST	DOUBLE POLE SINGLE THROW
DS	DATA STATION CABINET
GFCI	GROUND FAULT CIRCUIT INTERRUPTER
HS	HIGHWAY ADVISORY RADIO SIGN
RM	RAMP METER
SPST	SINGLE POLE SINGLE THROW
VC	CLOSED CIRCUIT TV CAMERA CABINET

AS-BUILT

ATKINSON
DEC 09 2019 KTW
RELEASED FOR CONSTRUCTION

FILE NAME	c:\pwworking\jacobs_b&i\jeg_stevenj\dms20633\DE_TSD29.dgn
TIME	2:30:24 PM
DATE	12/2/2019
PLOTTED BY	STEVENJ
DESIGNED BY	K. POURBAHRI
ENTERED BY	K. POURBAHRI
CHECKED BY	B. BARTON
PROJ. ENGR.	C. MEADE
REGIONAL ADM.	J. WYNANDS

REVISION	DATE	BY
REV 1 - RFC, C.O. 4TH LANE SB	12/06/19	
REV B - FINAL REVIEW - C.O. 4TH LANE SB	11/08/19	
REV 0 - RELEASED FOR CONSTRUCTION	03/29/19	
REV A - FINAL REVIEW	02/11/19	

REGION NO. 10 | STATE WASH | FED.AID PROJ.NO.
JOB NUMBER
CONTRACT NO. C9133 | LOCATION NO.

BRODERICK M. BARTON, STATE OF WASHINGTON, 46625, REGISTERED PROFESSIONAL ENGINEER
12-9-19
DATE
P.E. STAMP BOX

P.E. STAMP BOX
DATE

Washington State Department of Transportation
ATKINSON CONSTRUCTION / JACOBS

I-5
STEILACOOM-DUPONT RD TO THORNE LN
CORRIDOR IMPROVEMENTS
MP 120.01 TO MP 124.45

ITS BREAKER SCHEDULES

PLAN REF NO TSD29
SHEET 1036 OF 1456 SHEETS

005-XF-12199		POWER FROM		SCA 188		
BREAKER NO.	CIRCUIT VOLTAGE	BREAKER RATING	BREAKER TYPE	KVA LOAD	AMP LOAD	CIRCUIT NAME
PRIMARY						
A	480	20	DPST			MAIN BREAKER
SECONDARY						
B	240	30	DPST			SEC. MAIN BREAKER
1	120	30	SPST	3	25	005-DS-12199/005-VC-12199
2	120	30	SPST	0	0	SPARE
3	120	20	SPST	0	0	SPARE
4	120	--	SPST	-	-	SPACE
5	120	–	SPST	-	-	SPACE
6	120	20	SPST	1.8	15	GFCI RECEPT
TRANSFORMER RATED LOAD				5.0	KVA	
TRANSFORMER ACTUAL LOAD*				3.0	KVA	

005-XF-12273		POWER FROM		SCA 188		
BREAKER NO.	CIRCUIT VOLTAGE	BREAKER RATING	BREAKER TYPE	KVA LOAD	AMP LOAD	CIRCUIT NAME
PRIMARY						
A	480	30	DPST			MAIN BREAKER
SECONDARY						
B	240	60	DPST			SEC. MAIN BREAKER
1	120	30	SPST	3.0	25	005-VC-12267/005-TS-12267
2	120	30	SPST	3.0	25	005-RM-12288
3	120	30	SPST	0	0	SPARE
4	120	20	SPST	0	0	SPARE
5	120	–	SPST	-	-	SPACE
6	120	20	SPST	1.8	15	GFCI RECEPT
TRANSFORMER RATED LOAD				10.0	KVA	
TRANSFORMER ACTUAL LOAD*				6.0	KVA	

AS-BUILT

005-XF-12260		POWER FROM		SCA 188		
BREAKER NO.	CIRCUIT VOLTAGE	BREAKER RATING	BREAKER TYPE	KVA LOAD	AMP LOAD	CIRCUIT NAME
PRIMARY						
A	480	20	DPST			MAIN BREAKER
SECONDARY						
B	240	30	DPST			SEC. MAIN BREAKER
1	120	30	SPST	2.5	20.9	005-VC-12260
3	120	30	SPST	0	0	SPARE
2	120	20	SPST	0	0	SPARE
4	120	--	SPST	-	-	SPACE
5	120	–	SPST	-	-	SPACE
6	120	20	SPST	1.8	15	GFCI RECEPT
TRANSFORMER RATED LOAD				5.0	KVA	
TRANSFORMER ACTUAL LOAD*				2.5	KVA	

005-XF-12310		POWER FROM		SCA 188		
BREAKER NO.	CIRCUIT VOLTAGE	BREAKER RATING	BREAKER TYPE	KVA LOAD	AMP LOAD	CIRCUIT NAME
PRIMARY						
A	480	20	DPST			MAIN BREAKER
SECONDARY						
B	240	30	DPST			SEC. MAIN BREAKER
1	120	30	SPST	2.5	20.9	005-VC-12310
2	120	30	SPST	0	0	SPARE
3	120	20	SPST	0	0	SPARE
4	120	–	SPST	-	-	SPACE
5	120	–	SPST	-	-	SPACE
6	120	20	SPST	1.8	15	GFCI RECEPT
TRANSFORMER RATED LOAD				5.0	KVA	
TRANSFORMER ACTUAL LOAD*				2.5	KVA	

005-XF-12265		POWER FROM		SCA 188		
BREAKER NO.	CIRCUIT VOLTAGE	BREAKER RATING	BREAKER TYPE	KVA LOAD	AMP LOAD	CIRCUIT NAME
PRIMARY						
A	480	20	DPST			MAIN BREAKER
SECONDARY						
B	240	30	DPST			SEC. MAIN BREAKER
1	120	30	SPST	3	25	005-RM-12250
2	120	30	SPST	0	0	SPARE
3	120	20	SPST	0	0	SPARE
4	120	--	SPST	-	-	SPACE
5	120	–	SPST	-	-	SPACE
6	120	20	SPST	1.8	15	GFCI RECEPT
TRANSFORMER RATED LOAD				5.0	KVA	
TRANSFORMER ACTUAL LOAD*				3.0	KVA	

*ACTUAL LOAD DOES NOT INCLUDE GFCI.

LEGEND-ABBREVIATION

DPST	DOUBLE POLE SINGLE THROW
DS	DATA STATION CABINET
GFCI	GROUND FAULT CIRCUIT INTERRUPTER
RM	RAMP METER
SPST	SINGLE POLE SINGLE THROW
TS	TRAFFIC SIGNAL
VC	CLOSED CIRCUIT TV CAMERA CABINET

ATKINSON

MC AUG 06 2019

RELEASED FOR CONSTRUCTION

FILE NAME	c:\pwworking\jacobs_b&l\jeg_gt011740\dms20633\DE_TSD30.dgn
TIME	9:10:32 AM
DATE	8/2/2019
PLOTTED BY	GT011740
DESIGNED BY	K. POURBAHRI
ENTERED BY	K. POURBAHRI
CHECKED BY	B. BARTON
PROJ. ENGR.	C. MEADE
REGIONAL ADM.	J. WYNANDS

REVISION	DATE	BY
REV 0 - RELEASED FOR CONSTRUCTION	08/05/19	
REV A - FINAL REVIEW	05/10/19	

REGION NO. 10 | STATE WASH | FED.AID PROJ.NO.

JOB NUMBER

CONTRACT NO. C9133 | LOCATION NO.

P.E. STAMP BOX — DATE 8-5-19

P.E. STAMP BOX — DATE

Washington State Department of Transportation

ATKINSON / JACOBS CONSTRUCTION

I-5
STEILACOOM-DUPONT RD TO THORNE LN
CORRIDOR IMPROVEMENTS
MP 120.01 TO MP 124.45

ITS BREAKER SCHEDULES

PLAN REF NO TSD30

SHEET 1037 OF 1456 SHEETS

005-XF-12340	POWER FROM		SCA 187			
BREAKER NO.	CIRCUIT VOLTAGE	BREAKER RATING	BREAKER TYPE	KVA LOAD	AMP LOAD	CIRCUIT NAME
PRIMARY						
A	240	30	DPST			MAIN BREAKER
SECONDARY						
B	120	60	DPST			SEC. MAIN BREAKER
1	120	30	SPST	2.5	20.9	005-DS-12340
2	120	30	SPST	0	0	SPARE
3	120	20	SPST	0	0	SPARE
4	120	–	SPST	-	-	SPACE
5	120	--	SPST	-	-	SPACE
6	120	20	SPST	1.8	15	GFCI RECEPT
TRANSFORMER RATED LOAD				5.0	KVA	
TRANSFORMER ACTUAL LOAD*				2.5	KVA	

005-XF-12362	POWER FROM		SCA 3263			
BREAKER NO.	CIRCUIT VOLTAGE	BREAKER RATING	BREAKER TYPE	KVA LOAD	AMP LOAD	CIRCUIT NAME
PRIMARY						
A	240	40	DPST			MAIN BREAKER
SECONDARY						
B	120	80	DPST			SEC. MAIN BREAKER
1	120	30	SPST	4.0	33.4	005-TS-12362
3	240	30	DPST	0.3	1.1	LUM H6
2	120	20	SPST	0	0	SPARE
4	120	--	SPST	-	-	SPACE
5	120	--	SPST	-	-	SPACE
6	120	20	SPST	1.8	15	GFCI RECEPT
TRANSFORMER RATED LOAD				7.5	KVA	
TRANSFORMER ACTUAL LOAD*				4.3	KVA	

005-XF-12352	POWER FROM		SCA 3263			
BREAKER NO.	CIRCUIT VOLTAGE	BREAKER RATING	BREAKER TYPE	KVA LOAD	AMP LOAD	CIRCUIT NAME
PRIMARY						
A	240	30	DPST			MAIN BREAKER
SECONDARY						
B	120	60	DPST			SEC. MAIN BREAKER
1	120	30	SPST	2.5	20.9	005-VC-12356
2	120	30	SPST	0	0	SPARE
3	120	20	SPST	0	0	SPARE
4	120	--	SPST	-	-	SPACE
5	120	–	SPST	-	-	SPACE
6	120	20	SPST	1.8	15	GFCI RECEPT
TRANSFORMER RATED LOAD				5.0	KVA	
TRANSFORMER ACTUAL LOAD*				2.5	KVA	

005-XF-12368	POWER FROM		SCA 3263			
BREAKER NO.	CIRCUIT VOLTAGE	BREAKER RATING	BREAKER TYPE	KVA LOAD	AMP LOAD	CIRCUIT NAME
PRIMARY						
A	240	30	DPST			MAIN BREAKER
SECONDARY						
B	120	60	DPST			SEC. MAIN BREAKER
1	120	30	SPST	3.0	25	005-RM-12375
2	120	30	SPST	0	0	SPARE
3	120	20	SPST	0	0	SPARE
4	120	--	SPST	-	-	SPACE
5	120	–	SPST	-	-	SPACE
6	120	20	SPST	1.8	15	GFCI RECEPT
TRANSFORMER RATED LOAD				5.0	KVA	
TRANSFORMER ACTUAL LOAD*				3.0	KVA	

AS-BUILT

005-XF-12359	POWER FROM		SCA 3263			
BREAKER NO.	CIRCUIT VOLTAGE	BREAKER RATING	BREAKER TYPE	KVA LOAD	AMP LOAD	CIRCUIT NAME
PRIMARY						
A	240	80	DPST			MAIN BREAKER
SECONDARY						
B	480	40	DPST			SEC. MAIN BREAKER
1	480	30	DPST	10.0	20.9	005-XF-12413 (TA)
TRANSFORMER RATED LOAD				15.0	KVA	
TRANSFORMER ACTUAL LOAD*				10.0	KVA	

NOTE: 005-XF-12359 IS A STEP-UP TRANSFORMER. SEE DETAIL SHEET ILD09.

005-XF-12413	POWER FROM		SCA 3263			
BREAKER NO.	CIRCUIT VOLTAGE	BREAKER RATING	BREAKER TYPE	KVA LOAD	AMP LOAD	CIRCUIT NAME
PRIMARY						
A	480	30	DPST			MAIN BREAKER
SECONDARY						
B	240	60	DPST			SEC. MAIN BREAKER
1	120	30	SPST	2.5	20.9	005-TC-12413
2	120	30	SPST	3.0	25	005-DS-12413/ VC-12413
3	120	30	SPST	0	0	SPARE
4	120	20	SPST	-	-	SPARE
5	120	–	SPST	-	-	SPACE
6	120	20	SPST	1.8	15	GFCI RECEPT
TRANSFORMER RATED LOAD				10.0	KVA	
TRANSFORMER ACTUAL LOAD*				5.5	KVA	

LEGEND-ABBREVIATION

DPST	DOUBLE POLE SINGLE THROW
DS	DATA STATION CABINET
GFCI	GROUND FAULT CIRCUIT INTERRUPTER
RM	RAMP METER
SPST	SINGLE POLE SINGLE THROW
TC	TERMINAL CABINET
TS	TRAFFIC SIGNAL
VC	CLOSED CIRCUIT TV CAMERA CABINET

ATKINSON
OCT 02 2019 KTN
RELEASED FOR CONSTRUCTION

*ACTUAL LOAD DOES NOT INCLUDE GFCI.

FILE NAME	c:\pwworking\jacobs_b&i\jeg_gt011740\dms20633\DE_TSD31.dgn
TIME	12:04:33 PM
DATE	9/27/2019
PLOTTED BY	GT011740
DESIGNED BY	K. POURBAHRI
ENTERED BY	K. POURBAHRI
CHECKED BY	B. BARTON
PROJ. ENGR.	C. MEADE
REGIONAL ADM.	J. WYNANDS

REVISION	DATE	BY
REV 0 - RELEASED FOR CONSTRUCTION	09/27/19	
REV A - FINAL REVIEW	09/10/19	

REGION NO. 10 | STATE WASH | FED.AID PROJ.NO.
JOB NUMBER
CONTRACT NO. C9133 | LOCATION NO.

PRELIMINARY
NOT FOR CONSTRUCTION

P.E. STAMP BOX — DATE 9-27-19
P.E. STAMP BOX — DATE

Washington State Department of Transportation
ATKINSON / JACOBS CONSTRUCTION

I-5
STEILACOOM-DUPONT RD TO THORNE LN
CORRIDOR IMPROVEMENTS
MP 120.01 TO MP 124.45

ITS BREAKER SCHEDULES

PLAN REF NO TSD31
SHEET 1038 OF 1456 SHEETS

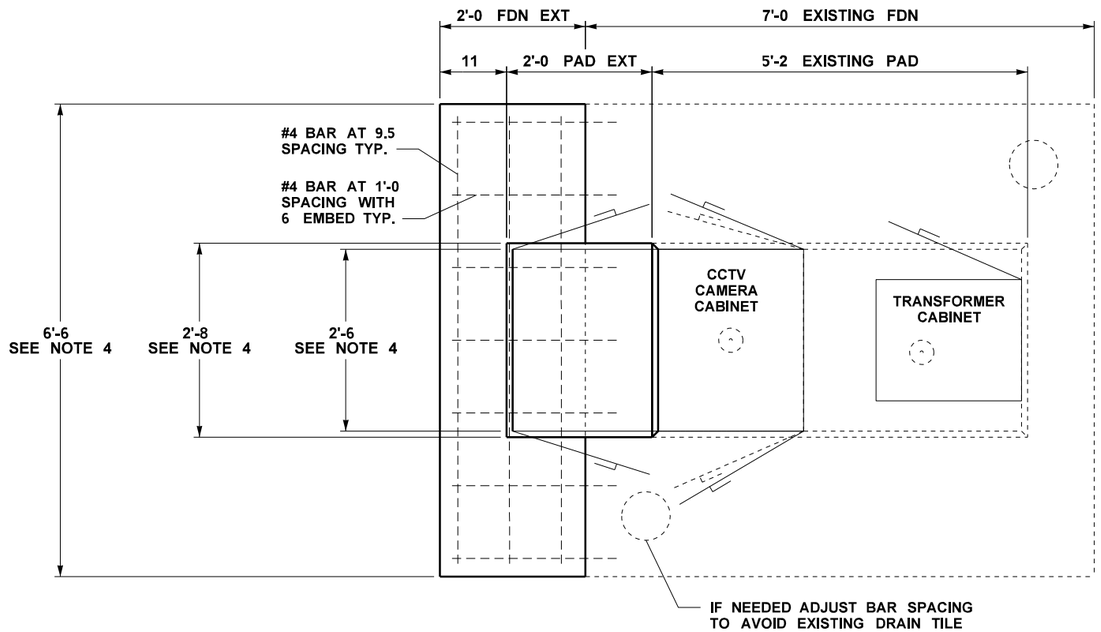

PLAN VIEW

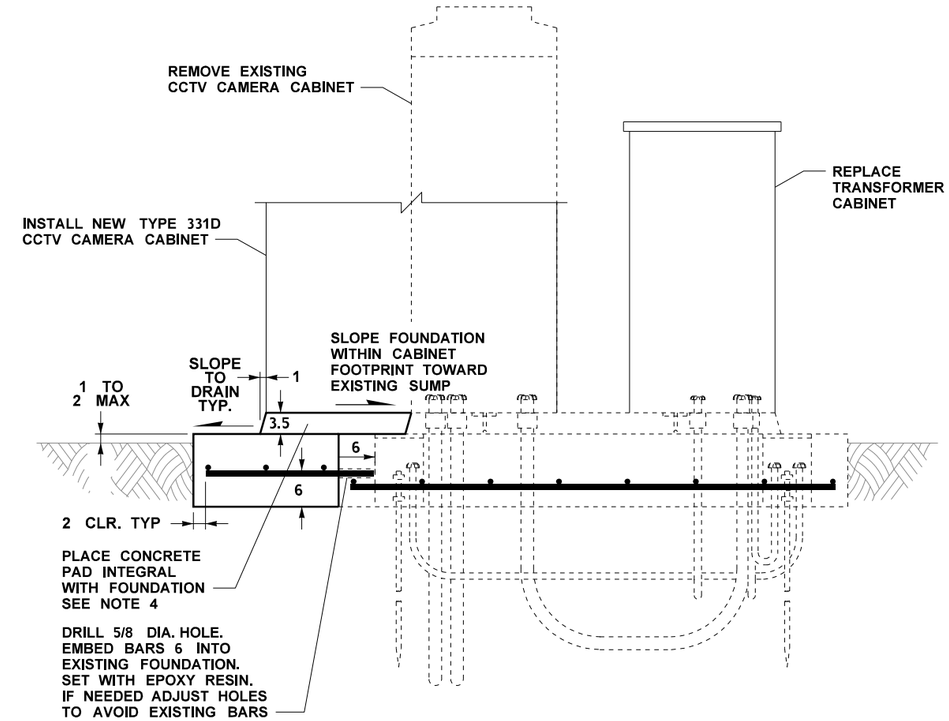

ELEVATION VIEW

AS-BUILT

GENERAL NOTES:

1. THIS DETAIL TO BE USED FOR CABINETS 005-VC-12044 ON TS03 AND 005-VC-12132 ON TS08.
2. ROUGHEN, CLEAN, AND SATURATE EXISTING CONCRETE SURFACES HORI ONTAL AND VERTICAL PER WSDOT STANDARD SPECIFICATIONS SECTION 6-02.3 12 PRIOR TO CASTING EXTENDED PAD AND FOUNDATION.
3. FIELD VERIFY EXISTING DIMENSIONS.
4. AD UST DISTANCE, AS NEEDED, TO MATCH EXISTING.

ATKINSON
JUL 12 2019 KTW
RELEASED FOR CONSTRUCTION

EXISTING ITS CABINET FOUNDATION EXTENSION DETAIL

FILE NAME	c pwworkIng acobs_b I stephelm1 dms20633 DE_TSD34.dgn						
TIME	12 53 25 PM				REGION NO. 10	STATE WASH	FED.AID PROJ.NO.
DATE	7/3/2019						
PLOTTED BY	StepheLM1				JOB NUMBER		
DESIGNED BY	R. JAHNS						
ENTERED BY	R. JAHNS						
CHECKED BY	M. WEGENER	REV 0 - RELEASED FOR CONSTRUCTION	07/02/19		CONTRACT NO. C9133		LOCATION NO.
PROJ. ENGR.	C. MEADE	REV A - FINAL REVIEW	05/24/19				
REGIONAL ADM.	J. WYNANDS	REVISION	DATE	BY			

MARK F. WEGENER, STATE OF WASHINGTON, 41141, REGISTERED PROFESSIONAL ENGINEER
7/12/19
DATE
P.E. STAMP BOX

DATE
P.E. STAMP BOX

Washington State Department of Transportation

ATKINSON / JACOBS CONSTRUCTION

I-5
STEILACOOM-DUPONT RD TO THORNE LN CORRIDOR IMPROVEMENTS
MP 120.01 TO MP 124.45

ITS CABINET FOUNDATION DETAIL

PLAN REF NO TSD34

SHEET 1039 OF 1456 SHEETS

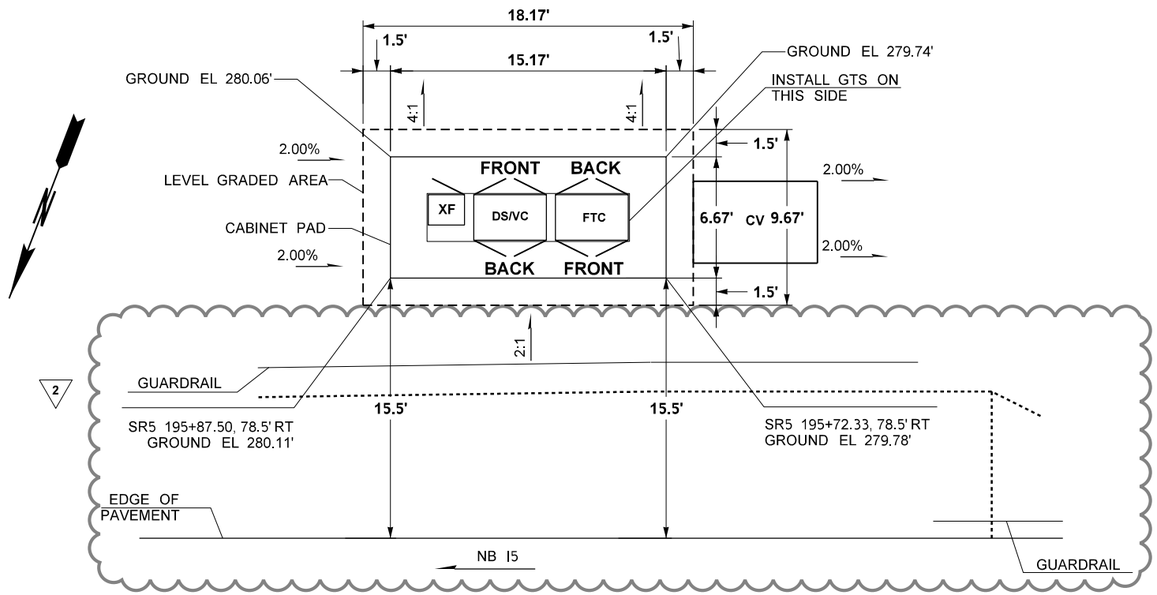

CABINETS 005-XF-12006, 005-DS-12006/005-VC-12006, 005-TC-12006

NOT TO SCALE

2 SEE ADDITIONAL PAVING AND GRADING ON SHEET PVD92

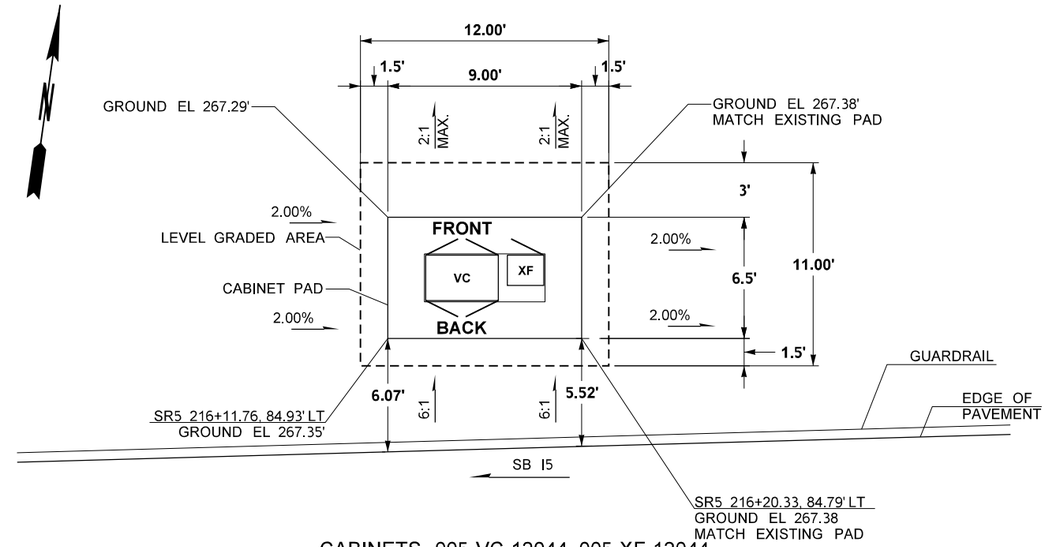

CABINETS 005-VC-12044, 005-XF-12044

NOT TO SCALE

2 SEE ADDITIONAL PAVING AND GRADING ON SHEET PVD94

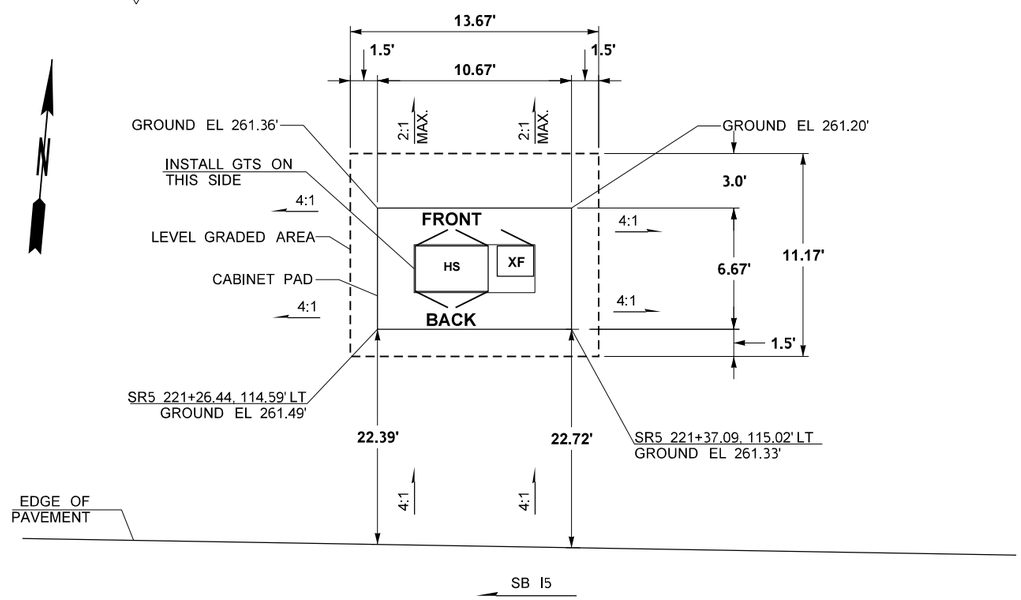

CABINETS 005-HS-12051, 005-XF-12054

NOT TO SCALE

AS-BUILT

ATKINSON

FEB 14 2020 KTW

RELEASED FOR CONSTRUCTION

FILE NAME	c:\pwworking\jacobs_b&l\wegenemf\dms20633\DE_TSD35.dgn						
TIME	2:31:40 PM				REGION NO. 10	STATE WASH	FED.AID PROJ.NO.
DATE	2/14/2020						
PLOTTED BY	WEGENEMF				JOB NUMBER		
DESIGNED BY	M. WEGENER	REV 2 - RFC, RFI0367	02/14/20				
ENTERED BY	M. PANICK	REV 1 - RFC, RFI0271	10/22/19				
CHECKED BY	L. ITTYCHERIAH	REV 0 - RELEASED FOR CONSTRUCTION	07/02/19		CONTRACT NO. C9133		LOCATION NO.
PROJ. ENGR.	C. MEADE	REV A - FINAL REVIEW	6/7/19				
REGIONAL ADM.	J. WYNANDS	REVISION	DATE	BY			

MARK F. WEGENER, STATE OF WASHINGTON, 41141, REGISTERED PROFESSIONAL ENGINEER — 2/14/20 DATE — P.E. STAMP BOX

P.E. STAMP BOX — DATE

Washington State Department of Transportation

ATKINSON / JACOBS CONSTRUCTION

I-5
STEILACOOM-DUPONT RD TO THORNE LN
CORRIDOR IMPROVEMENTS
MP 120.01 TO MP 124.45

ITS CABINET PAD DETAIL

PLAN REF NO TSD35

SHEET 1040 OF 1456 SHEETS

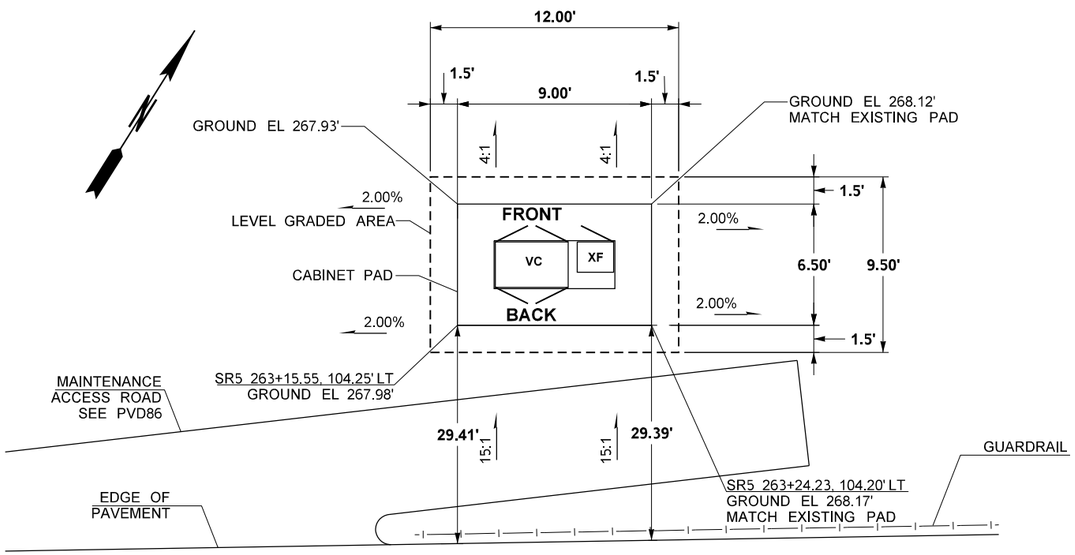

CABINETS 005-VC-12132, 005-XF-12132

NOT TO SCALE

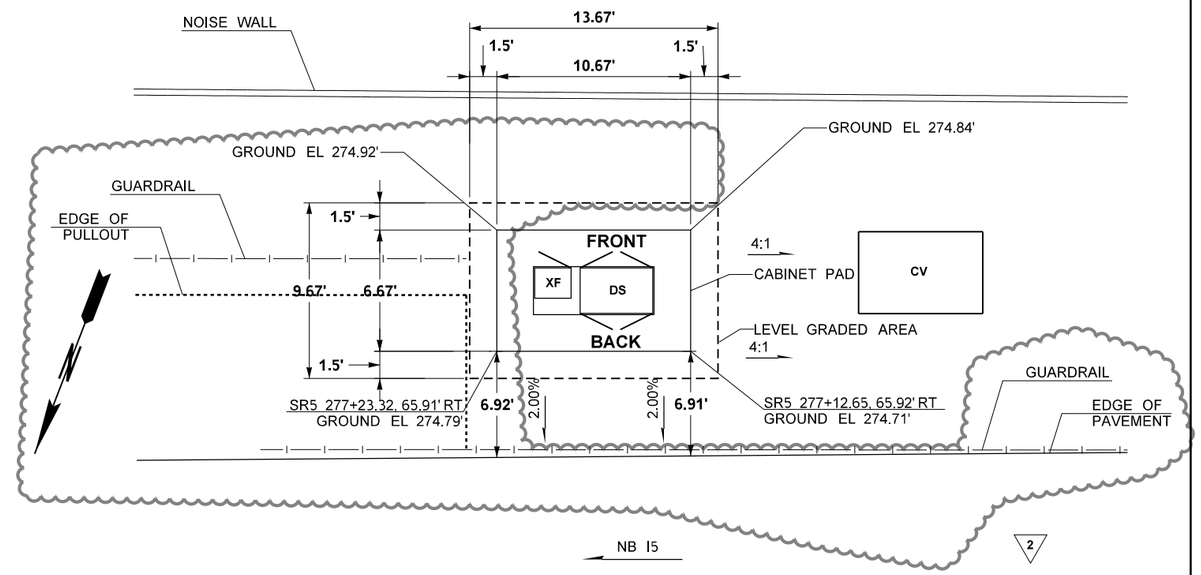

CABINETS 005-XF-12160, 005-DS-12160

NOT TO SCALE

2

SEE ADDITIONAL PAVING AND GRADING DETAILS ON SHEET PVD96

ATKINSON
DEC 24 2019
RELEASED FOR CONSTRUCTION

AS-BUILT

FILE NAME	c:\pwworking\jacobs_b&i\agronmi\dms20633\DE_TSD36.dgn						
TIME	2:25:07 PM				REGION NO. 10	STATE WASH	FED.AID PROJ.NO.
DATE	12/18/2019						
PLOTTED BY	agronmi						
DESIGNED BY	M. WEGENER	REV 2 - RFC, RFI0346	12/20/19		JOB NUMBER		
ENTERED BY	M. PANICK	REV 1 - RFC, RFI0271	10/22/19				
CHECKED BY	L. ITTYCHERIAH	REV 0 - RELEASED FOR CONSTRUCTION	07/02/19		CONTRACT NO. C9133		LOCATION NO.
PROJ. ENGR.	C. MEADE	REV A - FINAL REVIEW	05/30/19				
REGIONAL ADM.	J. WYNANDS	REVISION	DATE	BY			

MARK F. WEGENER, STATE OF WASHINGTON, 41141, REGISTERED PROFESSIONAL ENGINEER
12/23/19
DATE
P.E. STAMP BOX

P.E. STAMP BOX
DATE

Washington State
Department of Transportation

ATKINSON / JACOBS CONSTRUCTION

I-5
STEILACOOM-DUPONT RD TO THORNE LN
CORRIDOR IMPROVEMENTS
MP 120.01 TO MP 124.45

ITS CABINET PAD DETAILS

PLAN REF NO
TSD36

SHEET 1041 OF 1456 SHEETS

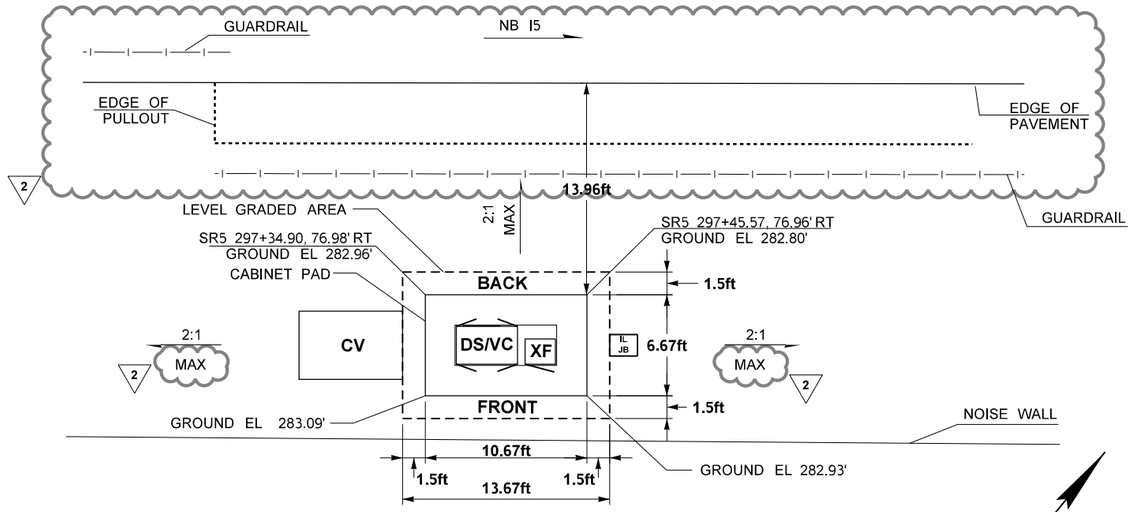

CABINETS 005-DS-12199/005-VC12199, 005-XF-12199

NOT TO SCALE

SEE ADDITIONAL PAVING AND GRADING DETAILS ON SHEET PVD97

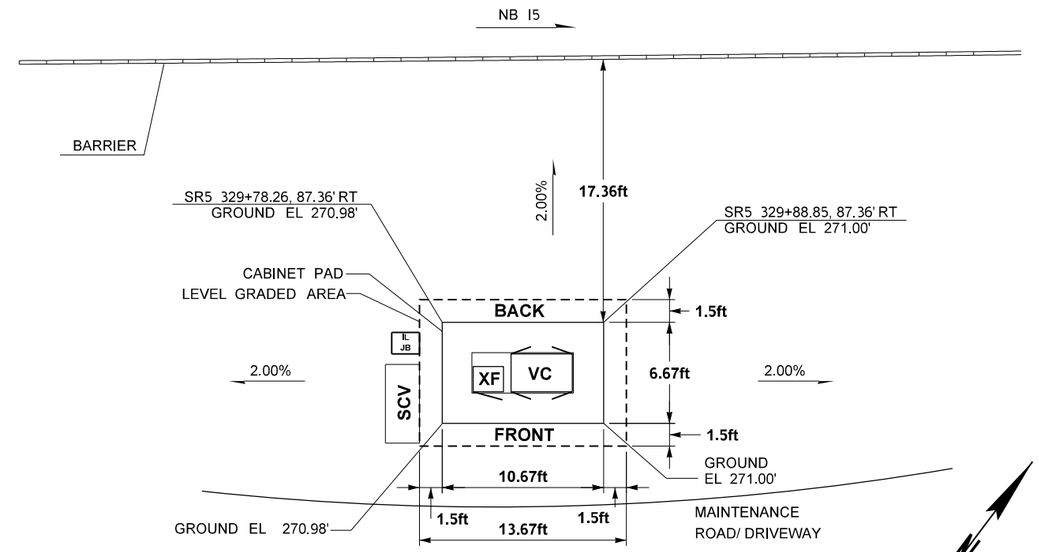

CABINETS 005-XF-12260, 005-VC-12260

NOT TO SCALE

AS-BUILT

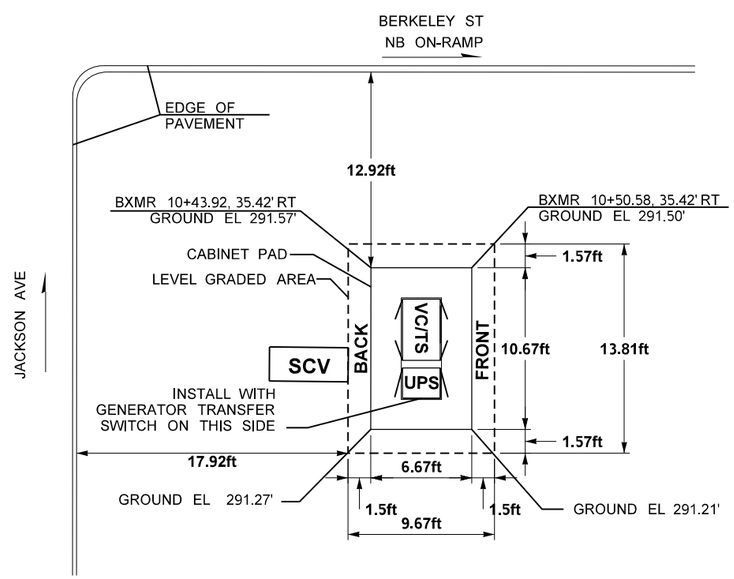

CABINETS 005-VC-12267/005-TS-12267

NOT TO SCALE

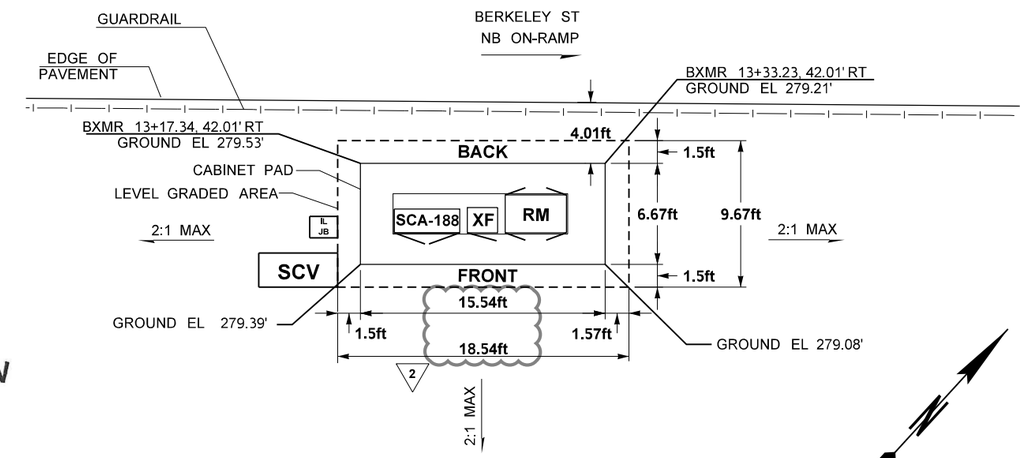

CABINETS SCA-188, 005-XF-12273, 005-RM-12288

NOT TO SCALE

ATKINSON
DEC 24 2019
RELEASED FOR CONSTRUCTION

NOTE: CONSTRUCT FOUNDATIONS AND POSITION CABINETS PER STANDARD PLAN J-10.10.

FILE NAME	c:\pwworking\jacobs_b&i\agronmi\dms20633\DE_TSD37.dgn						
TIME	11:42:21 AM				REGION NO. 10	STATE WASH	FED.AID PROJ.NO.
DATE	12/19/2019						
PLOTTED BY	agronmi				JOB NUMBER		
DESIGNED BY	M. WEGENER	REV 2 - RFC, RFI0339, RFI0346	12/20/19				
ENTERED BY	I. AGRON	REV 1 - RFC, RFI0271	10/22/19				
CHECKED BY	M. PANICK	REV 0 - RELEASED FOR CONSTRUCTION	09/19/19		CONTRACT NO. C9133		LOCATION NO.
PROJ. ENGR.	C. MEADE	REV A - FINAL REVIEW	08/06/19				
REGIONAL ADM.	J. WYNANDS	REVISION	DATE	BY			

MARK F. WEGENER, STATE OF WASHINGTON, 41141, REGISTERED PROFESSIONAL ENGINEER
12/23/19
DATE
P.E. STAMP BOX

DATE
P.E. STAMP BOX

Washington State Department of Transportation

ATKINSON CONSTRUCTION / JACOBS

I-5
STEILACOOM-DUPONT RD TO THORNE LN
CORRIDOR IMPROVEMENTS
MP 120.01 TO MP 124.45

ITS PAD DETAILS

PLAN REF NO TSD37

SHEET 1042 OF 1456 SHEETS

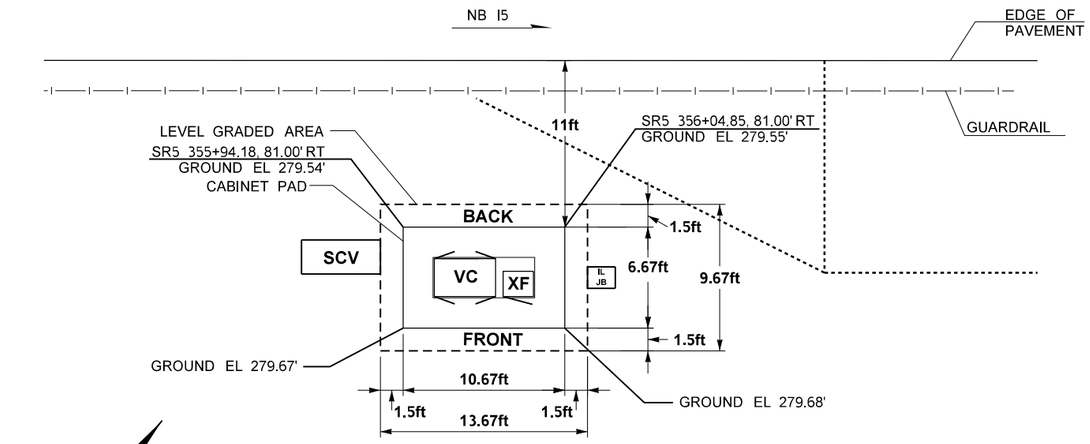

CABINETS 005-VC-12310, 005-XF-12310

NOT TO SCALE

SEE ADDITIONAL PAVING AND GRADING DETAILS ON SHEET PVD99

AS-BUILT

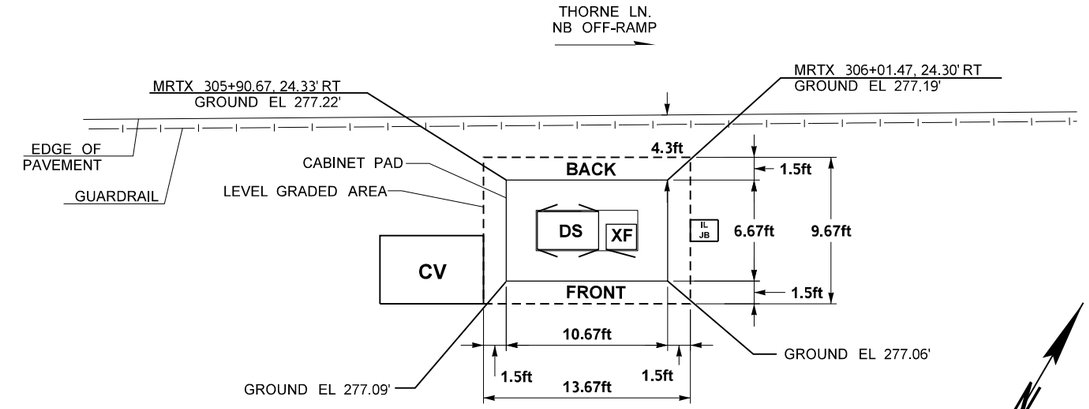

CABINETS 005-DS-12340, 005-XF-12340

NOT TO SCALE

SEE ADDITIONAL PAVING AND GRADING DETAILS ON SHEET PVD100

ATKINSON
OCT 15 2021
RELEASED FOR CONSTRUCTION
KTW

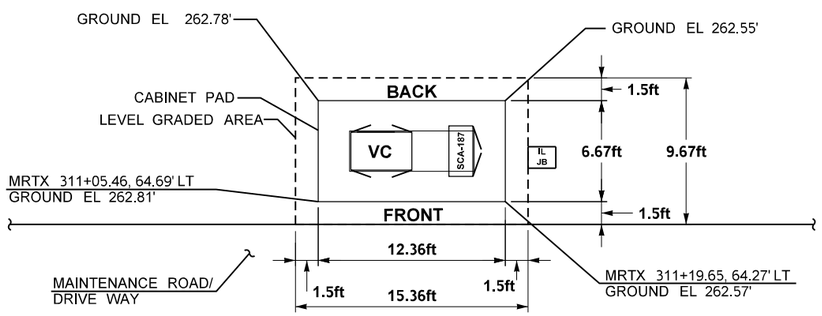

CABINETS 005-VC-12351, SCA 187

NOT TO SCALE

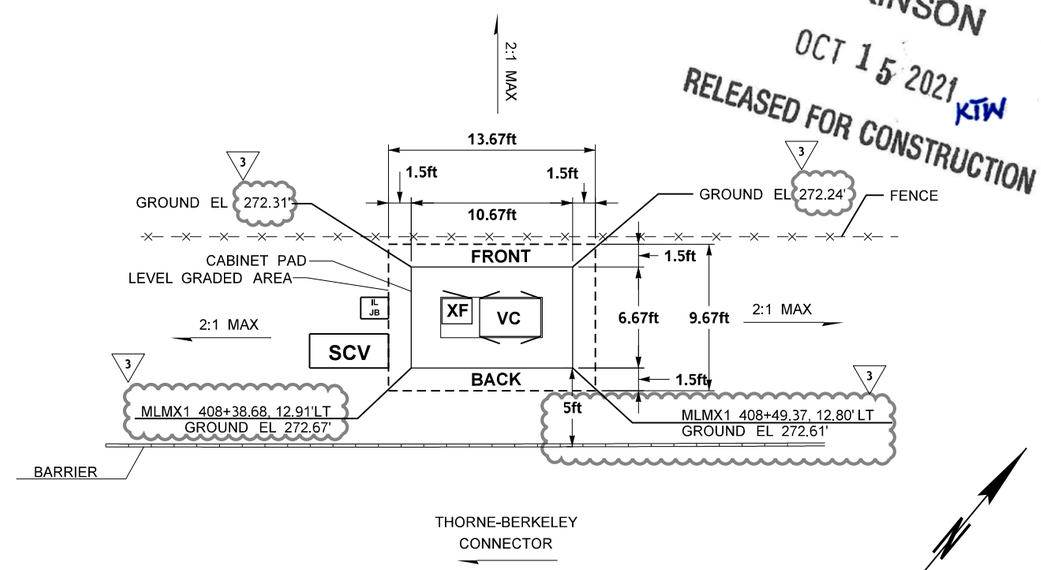

CABINETS 005-XF-12352, 005-VC-12356

NOT TO SCALE

NOTE: CONSTRUCT FOUNDATIONS AND POSITION CABINETS PER STANDARD PLAN J-10.10.

FILE NAME	c:\pwworking\jacobs_b&i\agronmi\dms20633\DE_TSD38.dgn			
TIME	12:40:14 PM			
DATE	10/7/2021			
PLOTTED BY	agronmi	REV 3 - RFC, RFI0641	10/05/21	
DESIGNED BY	M. WEGENER	REV 2 - RFC, RFI0479	04/20/20	
ENTERED BY	I. AGRON	REV 1 - RFC, RFI0367	02/14/20	
CHECKED BY	M. PANICK	REV 0 - RELEASED FOR CONSTRUCTION	09/19/19	
PROJ. ENGR.	C. MEADE	REV A - FINAL REVIEW	08/06/19	
REGIONAL ADM.	J. WYNANDS	REVISION	DATE	BY

REGION NO.	STATE	FED.AID PROJ.NO.
10	WASH	
JOB NUMBER		
CONTRACT NO.		LOCATION NO.
C9133		

MARK F. WEGENER, STATE OF WASHINGTON, 41141, REGISTERED PROFESSIONAL ENGINEER

10/08/21
DATE

P.E. STAMP BOX

P.E. STAMP BOX

DATE

Washington State Department of Transportation

ATKINSON CONSTRUCTION / JACOBS

I-5
STEILACOOM-DUPONT RD TO THORNE LN
CORRIDOR IMPROVEMENTS
MP 120.01 TO MP 124.45

ITS PAD DETAILS

PLAN REF NO
TSD38

SHEET 1043 OF 1456 SHEETS

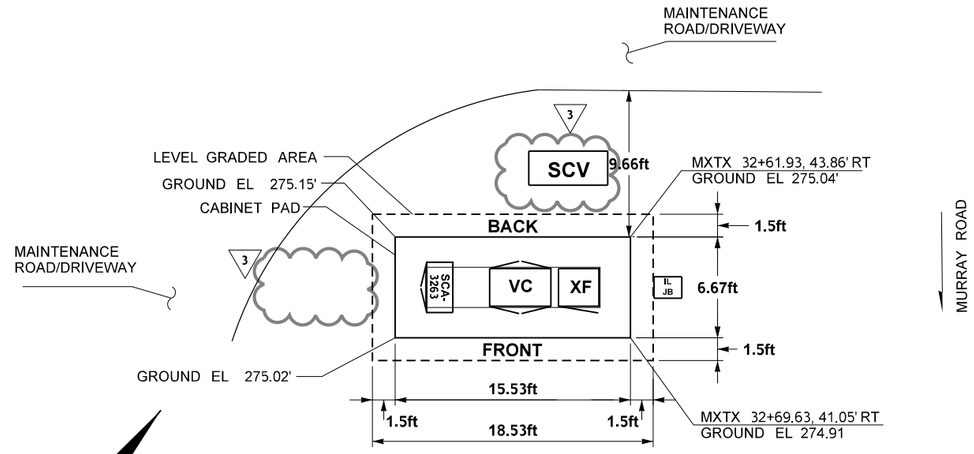

CABINETS SCA-3263, 005-VC-12359, 005-XF-12359

NOT TO SCALE

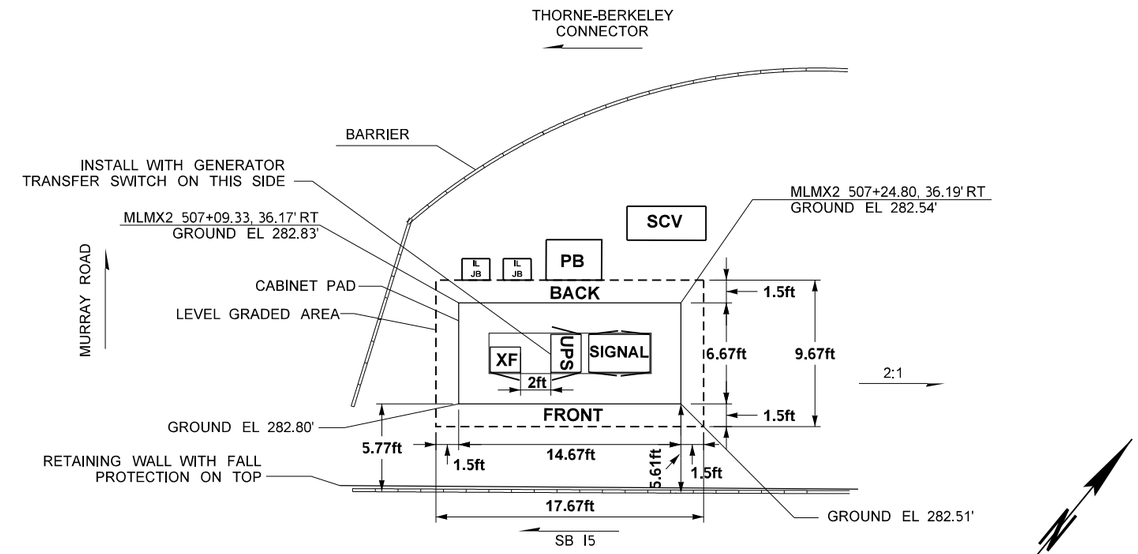

CABINETS 005-XF-12362, 005-TS-12362

NOT TO SCALE

AS-BUILT

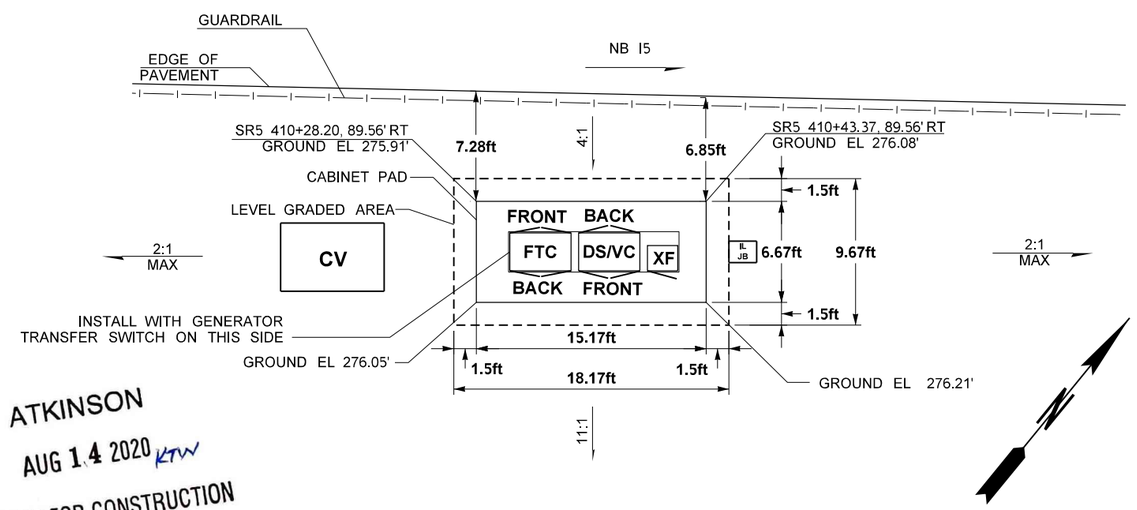

ATKINSON
AUG 14 2020 KTW
RELEASED FOR CONSTRUCTION

CABINETS 005-TC-12413, 005-DS-12413/005-VC-12413, 005-XF-12413

NOT TO SCALE

NOTE: CONSTRUCT FOUNDATIONS AND POSITION CABINETS PER STANDARD PLAN J-10.10.

SEE ADDITIONAL PAVING AND GRADING DETAILS ON SHEETS PVD101

FILE NAME	c:\pwworking\jacobs_b&i\wegenemf\dms20633\DE_TSD39.dgn			
TIME	2:04:37 PM			
DATE	8/10/2020			
PLOTTED BY	WEGENEMF	REV 3 - RFC, RFI0511, MOVE SCV	08/10/20	
DESIGNED BY	M. WEGENER	REV 2 - RFC, RFI0367	02/14/20	
ENTERED BY	I. AGRON	REV 1 - RFC, RFI0271	10/22/19	
CHECKED BY	M. PANICK	REV 0 - RELEASED FOR CONSTRUCTION	09/19/19	
PROJ. ENGR.	C. MEADE	REV A - FINAL REVIEW	08/06/19	
REGIONAL ADM.	J. WYNANDS	REVISION	DATE	BY

REGION NO.	STATE	FED.AID PROJ.NO.
10	WASH	
JOB NUMBER		
CONTRACT NO. C9133		LOCATION NO.

MARK F. WEGENER · STATE OF WASHINGTON · 41141 · REGISTERED PROFESSIONAL ENGINEER

8/13/20
DATE
P.E. STAMP BOX

DATE
P.E. STAMP BOX

Washington State Department of Transportation

ATKINSON / JACOBS CONSTRUCTION

I-5
STEILACOOM-DUPONT RD TO THORNE LN
CORRIDOR IMPROVEMENTS
MP 120.01 TO MP 124.45

ITS PAD DETAILS

PLAN REF NO TSD39

SHEET 1044 OF 1456 SHEETS