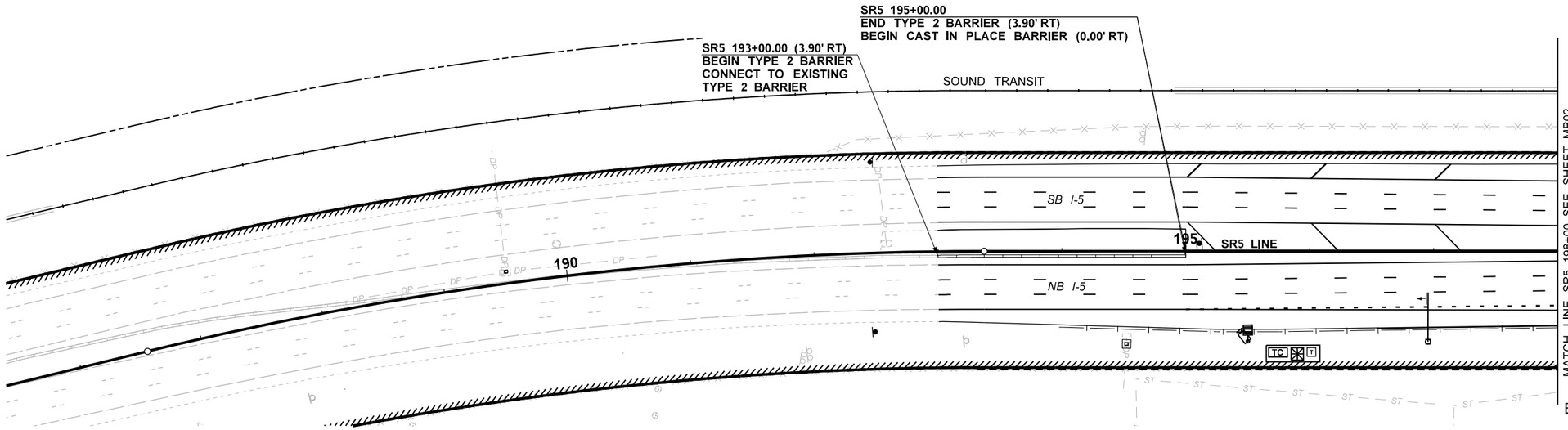

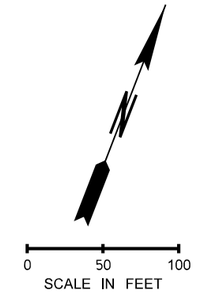

AS-BUILT

GENERAL NOTES:

1. CALLOUTS ARE TO CENTER OF BARRIER UNLESS OTHERWISE NOTED.

BARRIER CONSTRUCTION NOTES:

B2 HIGH-PERFORMANCE SINGLE-SLOPE CONCRETE (4'-0") BARRIER PER WSDOT STD. PLAN C-70.10-01 OR C-80.10-01.

B3 HIGH-PERFORMANCE SINGLE-SLOPE CONCRETE (4'-6") BARRIER PER WSDOT STD. PLAN C-70.10-01 OR C-80.10-01.

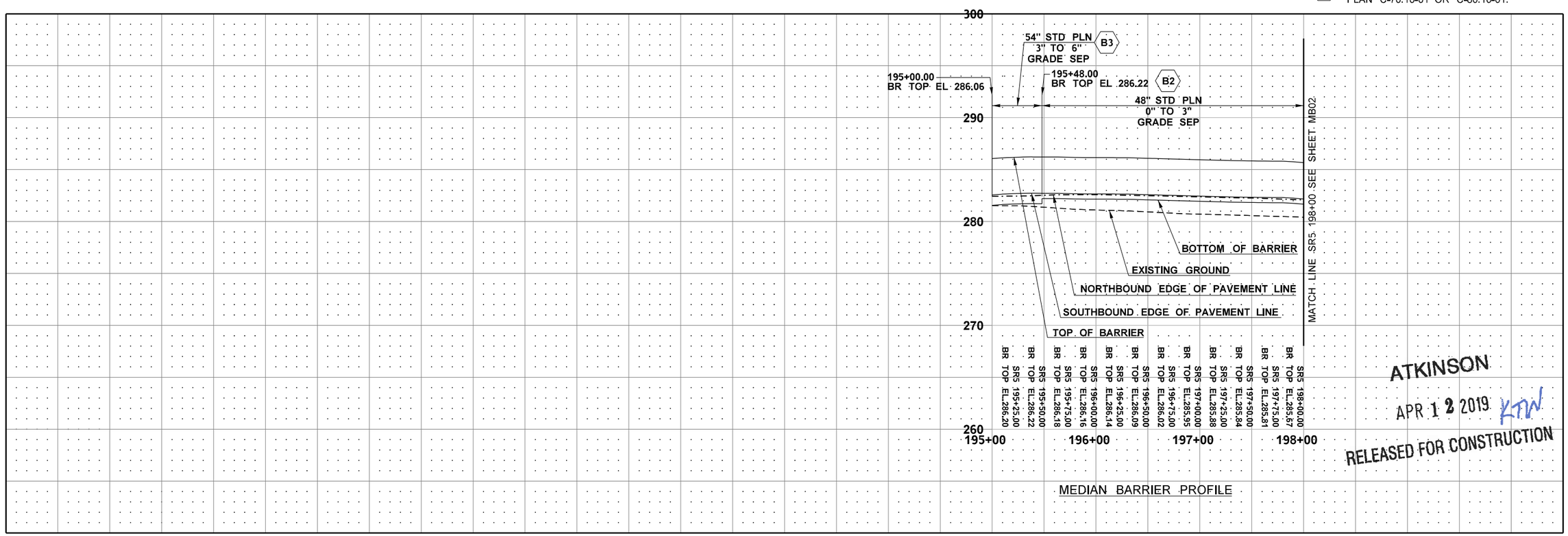

MEDIAN BARRIER PROFILE

ATKINSON
APR 12 2019 KTW
RELEASED FOR CONSTRUCTION

FILE NAME	c:\pwworking\jacobs_b&i\conradcs\dms20633\PS_MB_01.dgn						
TIME	1:34:50 PM				REGION NO. 10	STATE WASH	FED.AID PROJ.NO.
DATE	4/11/2019						
PLOTTED BY	ConradCS						
DESIGNED BY	A. SCHMIDTMAN				JOB NUMBER		
ENTERED BY	C. CONRAD	REV 0 - RELEASED FOR CONSTRUCTION	04/11/19				
CHECKED BY	N. SCHRADER	REV B - FINAL REVIEW	04/01/19		CONTRACT NO. C9133		LOCATION NO.
PROJ. ENGR.	C. MEADE	REV A - PRELIMINARY REVIEW	03/11/19				
REGIONAL ADM.	J. WYNANDS	REVISION	DATE	BY			

P.E. STAMP BOX — DATE 4/11/19

P.E. STAMP BOX — DATE

Washington State Department of Transportation

I-5
STEILACOOM-DUPONT RD TO THORNE LN
CORRIDOR IMPROVEMENTS
MP 120.01 TO MP 124.45

MEDIAN BARRIER PLAN & PROFILE

PLAN REF NO MB01

SHEET 711 OF 1456 SHEETS

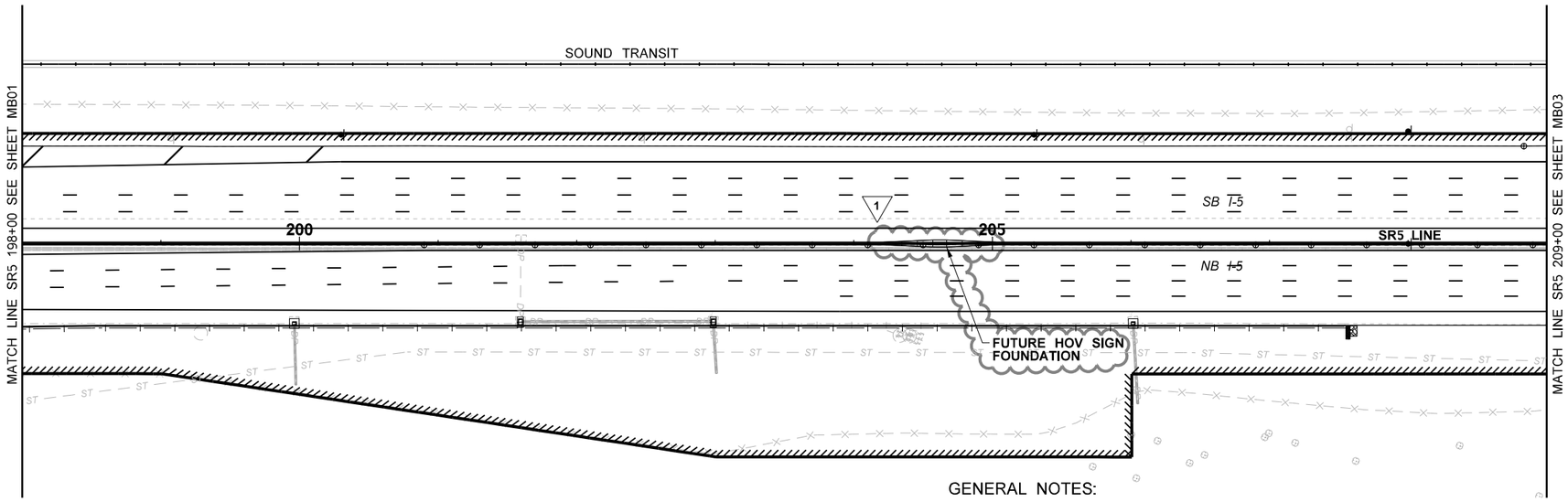

BARRIER CONSTRUCTION NOTES:

- B2 — HIGH-PERFORMANCE SINGLE-SLOPE CONCRETE (4'-0") BARRIER PER WSDOT STD. PLAN C-70.10-01 OR C-80.10-01.
- B3 — HIGH-PERFORMANCE SINGLE-SLOPE CONCRETE (4'-6") BARRIER PER WSDOT STD. PLAN C-70.10-01 OR C-80.10-01.
- B4 — CAST-IN-PLACE GRADE SEPARATED CONCRETE BARRIER TYPE SA (6"-18" GRADE SEPARATION) PER DETAIL ON SHEET ST02.
- B12 — SINGLE-SLOPE CONCRETE BARRIER FOR MONOTUBE SIGN SUPPORT AND BARRIER TRANSITIONS PER DETAILS ON SIGN BRIDGE SHEETS. (1)

AS-BUILT

0 50 100
SCALE IN FEET

GENERAL NOTES:

1. CALLOUTS ARE TO CENTER OF BARRIER UNLESS OTHERWISE NOTED.

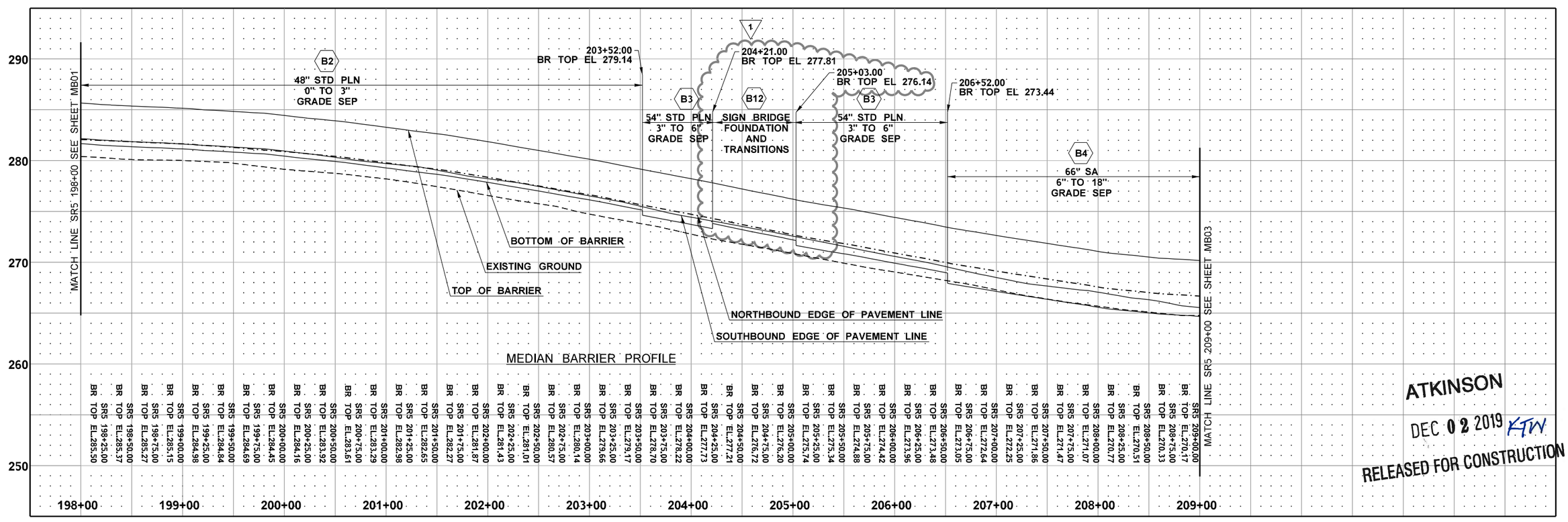

ATKINSON
DEC 02 2019 KTW
RELEASED FOR CONSTRUCTION

FILE NAME	c:\pwworking\jacobs_b&h\conradcs\dms20633\PS_MB_02.dgn				REGION NO. 10	STATE WASH	FED.AID PROJ.NO.
TIME	3:36:34 PM						
DATE	11/18/2019				JOB NUMBER		
PLOTTED BY	ConradCS	REV 1 - RFI0306	11/11/19				
DESIGNED BY	A. SCHMIDTMAN	REV C - FINAL REVIEW	10/14/19		CONTRACT NO. C9133		LOCATION NO.
ENTERED BY	C. CONRAD	REV 0 - RELEASED FOR CONSTRUCTION	04/11/19				
CHECKED BY	N. SCHRADER	REV B - FINAL REVIEW	04/01/19				
PROJ. ENGR.	C. MEADE	REV A - PRELIMINARY REVIEW	03/11/19				
REGIONAL ADM.	J. WYNANDS	REVISION	DATE	BY			

STATE OF WASHINGTON — JOHN LEE SCHMIDTMAN — 47018 — REGISTERED PROFESSIONAL ENGINEER
11/26/19
DATE
P.E. STAMP BOX

DATE
P.E. STAMP BOX

Washington State Department of Transportation

I-5
STEILACOOM-DUPONT RD TO THORNE LN
CORRIDOR IMPROVEMENTS
MP 120.01 TO MP 124.45

MEDIAN BARRIER PLAN & PROFILE

PLAN REF NO MB02

SHEET 712 OF 1456 SHEETS

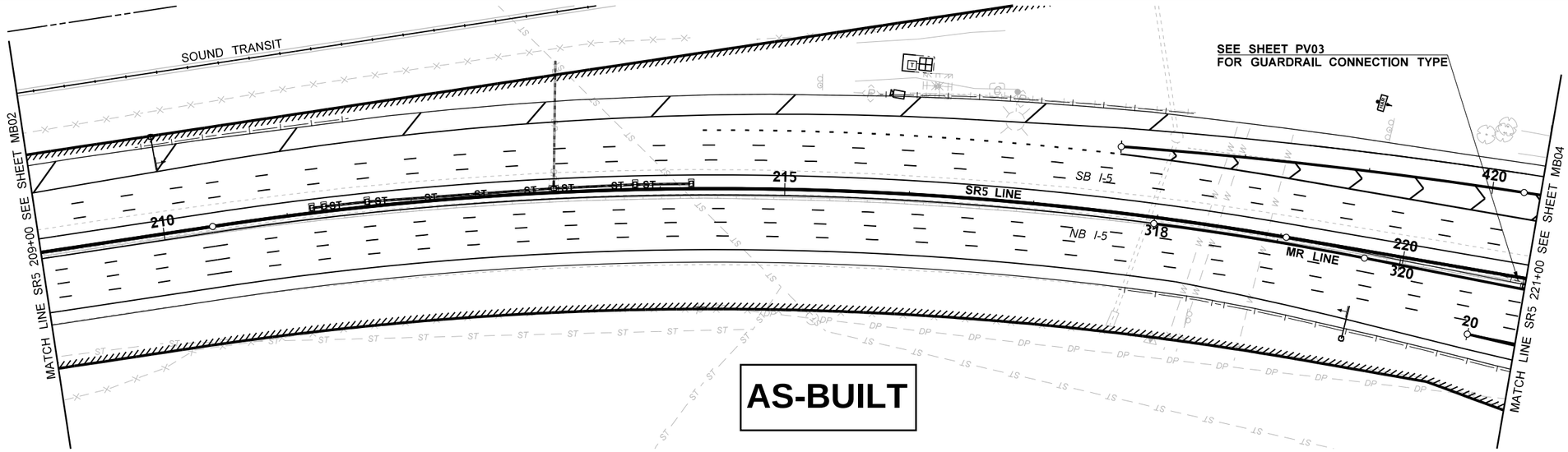

AS-BUILT

BARRIER CONSTRUCTION NOTES:

- B2 HIGH-PERFORMANCE SINGLE-SLOPE CONCRETE (4'-0") BARRIER PER WSDOT STD. PLAN C-70.10-01 OR C-80.10-01.
- B3 HIGH-PERFORMANCE SINGLE-SLOPE CONCRETE (4'-6") BARRIER PER WSDOT STD. PLAN C-70.10-01 OR C-80.10-01.
- B4 CAST-IN-PLACE GRADE SEPARATED CONCRETE BARRIER TYPE SA (6"-18" GRADE SEPARATION) PER DETAIL ON SHEET ST02.
- B5 CAST-IN-PLACE GRADE SEPARATED CONCRETE BARRIER TYPE SB (18"-27" GRADE SEPARATION) PER DETAIL ON SHEET ST02.
- B6 CAST-IN-PLACE GRADE SEPARATED CONCRETE BARRIER TYPE SC (27"-36" GRADE SEPARATION) PER DETAIL ON SHEET ST02.

N

0 50 100
SCALE IN FEET

GENERAL NOTES:

1. CALLOUTS ARE TO CENTER OF BARRIER UNLESS OTHERWISE NOTED.

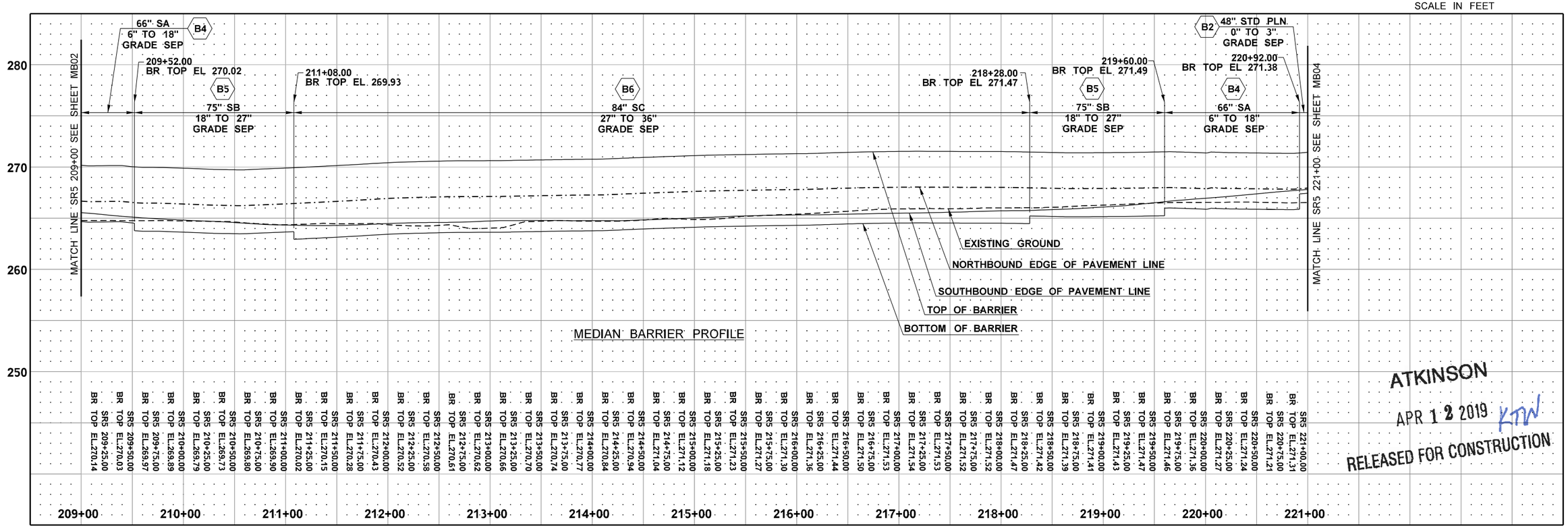

ATKINSON
APR 12 2019 KTW
RELEASED FOR CONSTRUCTION

FILE NAME	c:\pwworking\jacobs_b&i\conradcs\dms20633\PS_MB_03.dgn
TIME	1:39:15 PM
DATE	4/11/2019
PLOTTED BY	ConradCS
DESIGNED BY	A. SCHMIDTMAN
ENTERED BY	C. CONRAD
CHECKED BY	N. SCHRADER
PROJ. ENGR.	C. MEADE
REGIONAL ADM.	J. WYNANDS

REVISION	DATE	BY
REV 0 - RELEASED FOR CONSTRUCTION	04/11/19	
REV B - FINAL REVIEW	04/01/19	
REV A - PRELIMINARY REVIEW	03/11/19	

REGION NO.	STATE	FED.AID PROJ.NO.
10	WASH	
JOB NUMBER		
CONTRACT NO.		LOCATION NO.
C9133		

P.E. STAMP BOX — DATE 4/11/19

P.E. STAMP BOX — DATE

Washington State Department of Transportation

I-5
STEILACOOM-DUPONT RD TO THORNE LN
CORRIDOR IMPROVEMENTS
MP 120.01 TO MP 124.45

MEDIAN BARRIER PLAN & PROFILE

PLAN REF NO MB03

SHEET 713 OF 1456 SHEETS

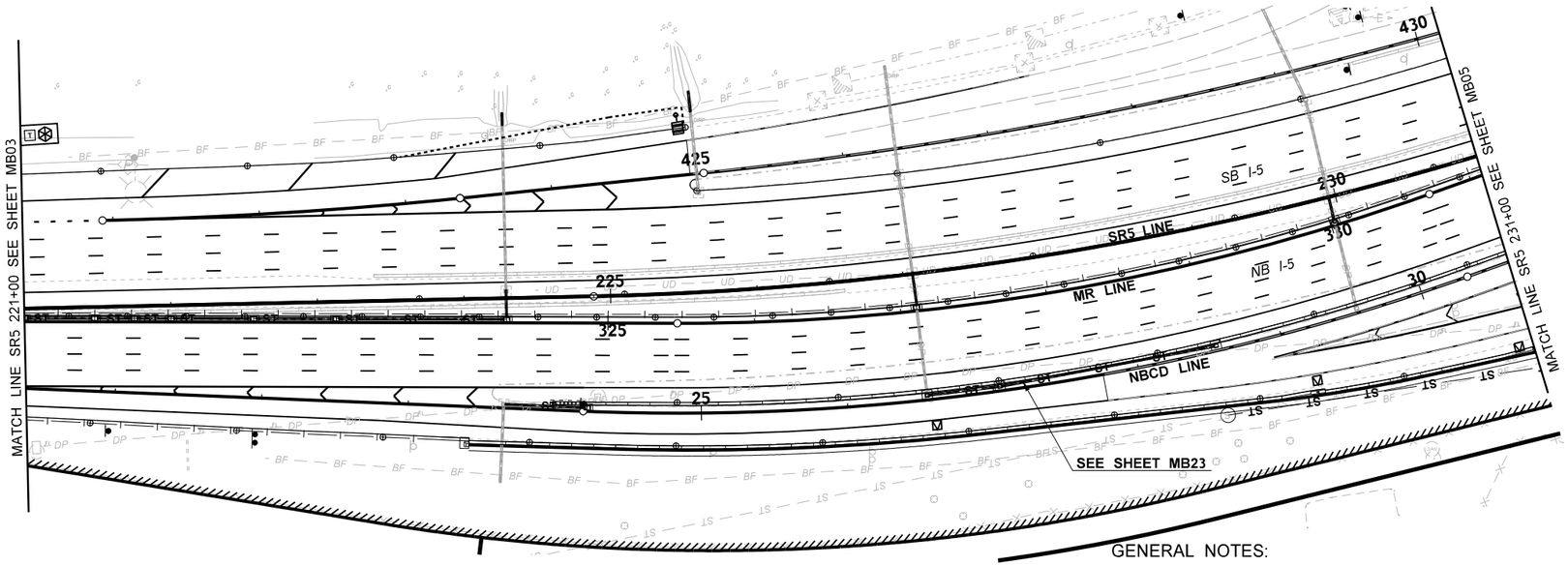

BARRIER CONSTRUCTION NOTES:

B2 HIGH-PERFORMANCE SINGLE-SLOPE CONCRETE (4'-0") BARRIER PER WSDOT STD. PLAN C-70.10-01 OR C-80.10-01.

B4 CAST-IN-PLACE GRADE SEPARATED CONCRETE BARRIER TYPE SA (6"-18" GRADE SEPARATION) PER DETAIL ON SHEET ST02.

B6 CAST-IN-PLACE GRADE SEPARATED CONCRETE BARRIER TYPE SC (27"-36" GRADE SEPARATION) PER DETAIL ON SHEET ST02.

N

0 50 100
SCALE IN FEET

AS-BUILT

GENERAL NOTES:

1. CALLOUTS ARE TO CENTER OF BARRIER UNLESS OTHERWISE NOTED.

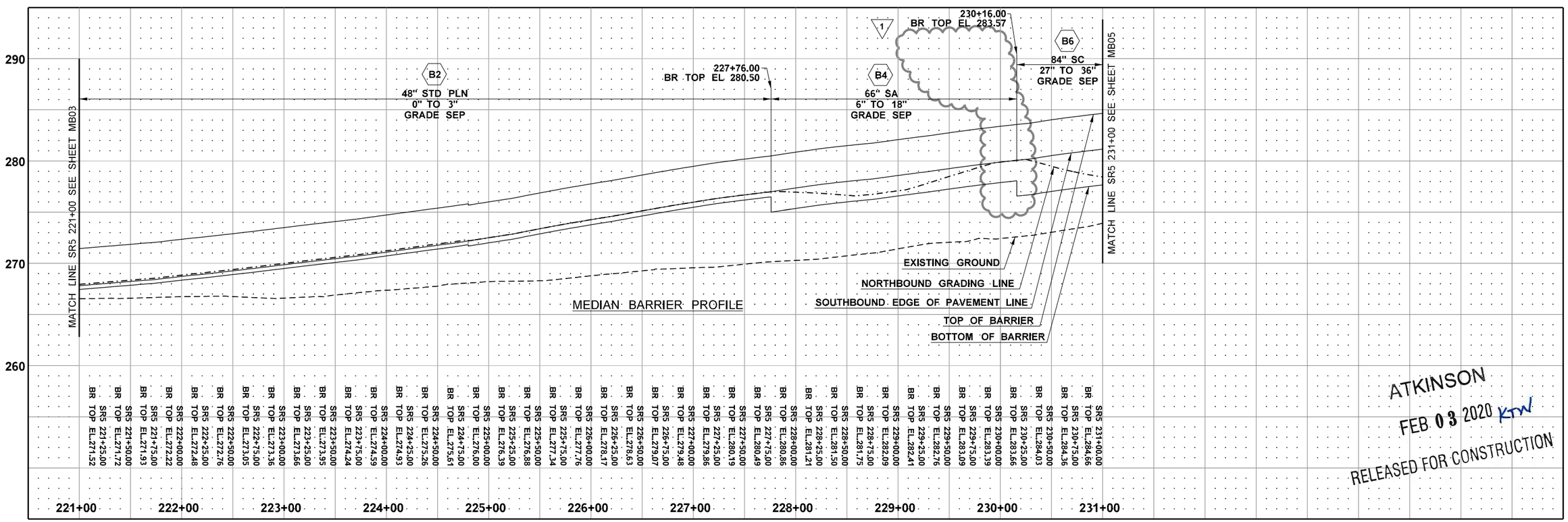

ATKINSON
FEB 03 2020 KTW
RELEASED FOR CONSTRUCTION

FILE NAME	c:\pwworking\jacobs_b&i\schmidal\dms20633\PS_MB_04.dgn			
TIME	8:44:39 AM			
DATE	2/3/2020			
PLOTTED BY	SchmidAL			
DESIGNED BY	A. SCHMIDTMAN	REV 1 - RFI0393	02/03/20	
ENTERED BY	C. CONRAD	REV 0 - RELEASED FOR CONSTRUCTION	04/11/19	
CHECKED BY	N. SCHRADER	REV B - FINAL REVIEW	04/01/19	
PROJ. ENGR.	C. MEADE	REV A - PRELIMINARY REVIEW	03/11/19	
REGIONAL ADM.	J. WYNANDS	REVISION	DATE	BY

REGION NO.	STATE	FED.AID PROJ.NO.
10	WASH	
JOB NUMBER		
CONTRACT NO.		LOCATION NO.
C9133		

P.E. STAMP BOX — DATE 02/03/20

P.E. STAMP BOX — DATE

Washington State Department of Transportation

I-5
STEILACOOM-DUPONT RD TO THORNE LN
CORRIDOR IMPROVEMENTS
MP 120.01 TO MP 124.45

MEDIAN BARRIER PLAN & PROFILE

PLAN REF NO MB04

SHEET 714 OF 1456 SHEETS

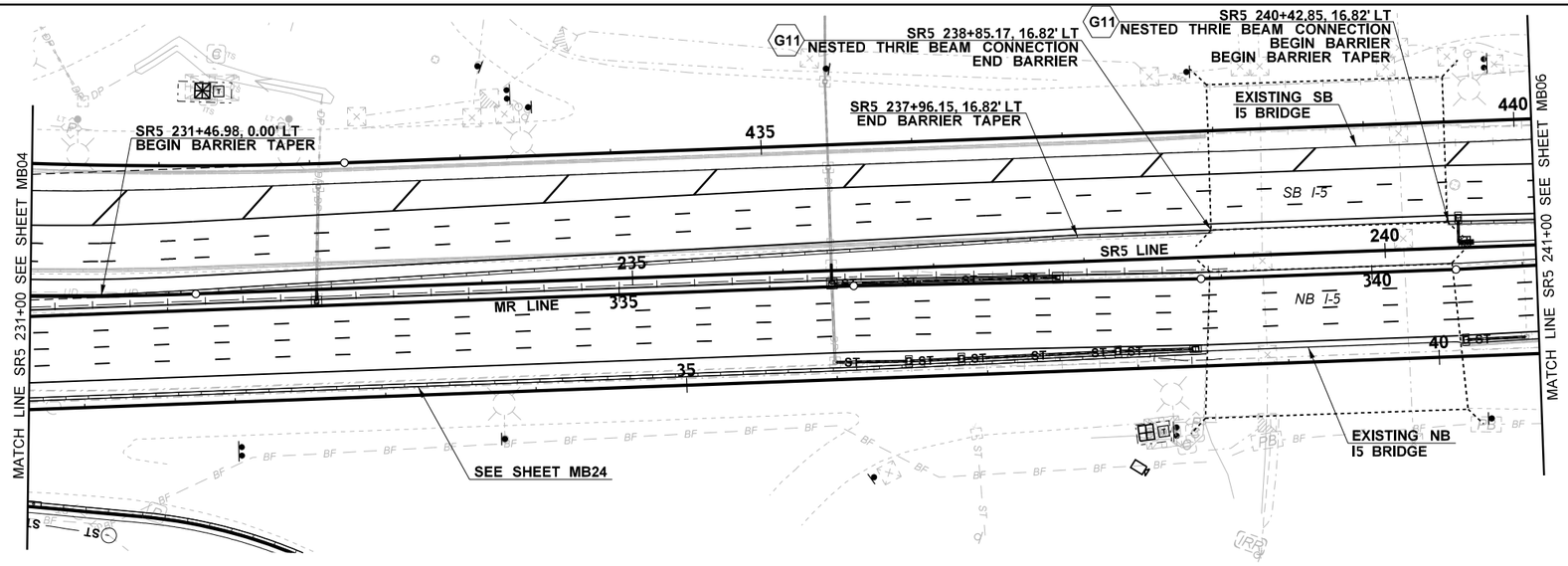

BARRIER CONSTRUCTION NOTES:

- **B2** HIGH-PERFORMANCE SINGLE-SLOPE CONCRETE (4'-0") BARRIER PER WSDOT STD. PLAN C-70.10-01 OR C-80.10-01.
- **B4** CAST-IN-PLACE GRADE SEPARATED CONCRETE BARRIER TYPE SA (6"-18" GRADE SEPARATION) PER DETAIL ON SHEET ST02.
- **B6** CAST-IN-PLACE GRADE SEPARATED CONCRETE BARRIER TYPE SC (27"-36" GRADE SEPARATION) PER DETAIL ON SHEET ST02.
- **B8** CAST-IN-PLACE GRADE SEPARATED CONCRETE BARRIER TYPE SE (39"-42") GRADE SEPARATION) PER DETAIL ON SHEET ST02.
- **G11** CONNECT BARRIER TO EXISTING BRIDGE BARRIER WITH NESTED THRIE BEAM GUARDRAIL (WSDOT STD. PLAN C-1a) AND END SECTION DESIGN F BARRIER CONNECTION PER WSDOT STD PLAN C-7a. SEE DETAIL ON SHEET ST06.

N

0 50 100
SCALE IN FEET

AS-BUILT

GENERAL NOTES:

1. CALLOUTS ARE TO CENTER OF BARRIER UNLESS OTHERWISE NOTED.

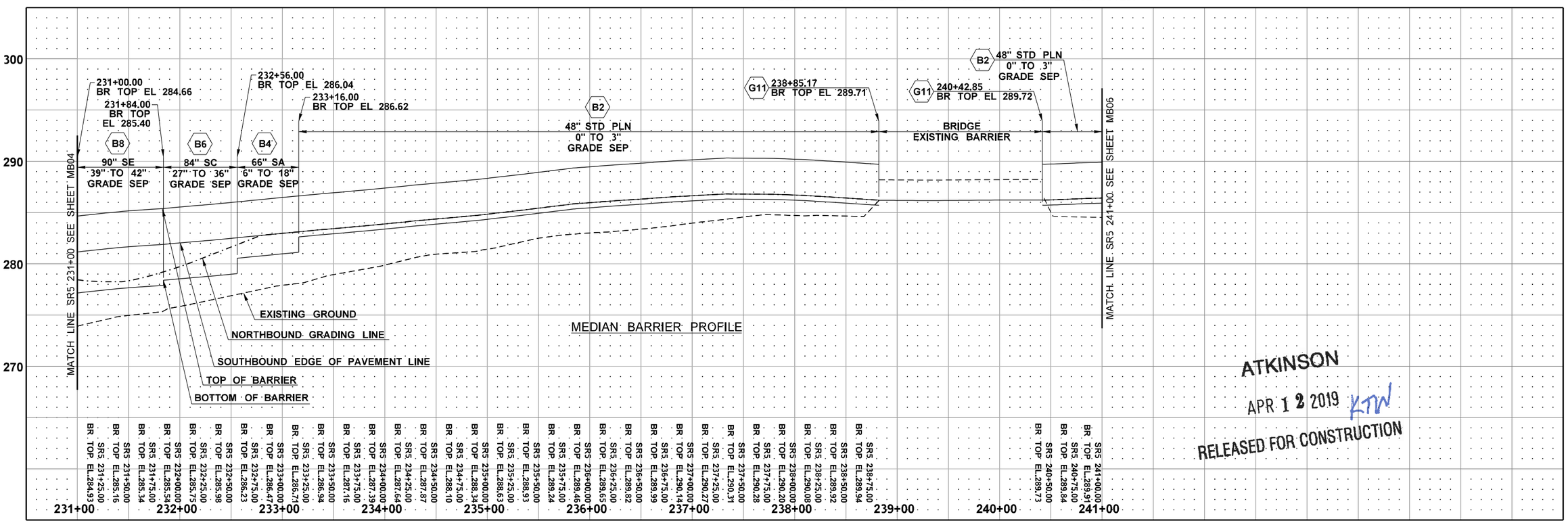

ATKINSON
APR 12 2019 KTW
RELEASED FOR CONSTRUCTION

FILE NAME	c:\pwworking\jacobs_b&l\conradcs\dms20633\PS_MB_05.dgn			
TIME	1:43:41 PM			
DATE	4/11/2019			
PLOTTED BY	ConradCS			
DESIGNED BY	A. SCHMIDTMAN			
ENTERED BY	C. CONRAD	REV 0 - RELEASED FOR CONSTRUCTION	04/11/19	
CHECKED BY	N. SCHRADER	REV B - FINAL REVIEW	04/01/19	
PROJ. ENGR.	C. MEADE	REV A - PRELIMINARY REVIEW	03/11/19	
REGIONAL ADM.	J. WYNANDS	REVISION	DATE	BY

REGION NO.	STATE	FED.AID PROJ.NO.
10	WASH	
JOB NUMBER		
CONTRACT NO. C9133		LOCATION NO.

STEVE LEE SCHMIDT, STATE OF WASHINGTON, 41018, REGISTERED PROFESSIONAL ENGINEER
4/11/19
DATE
P.E. STAMP BOX

DATE
P.E. STAMP BOX

Washington State
Department of Transportation

I-5
STEILACOOM-DUPONT RD TO THORNE LN
CORRIDOR IMPROVEMENTS
MP 120.01 TO MP 124.45

MEDIAN BARRIER PLAN & PROFILE

PLAN REF NO
MB05

SHEET 715 OF 1456 SHEETS

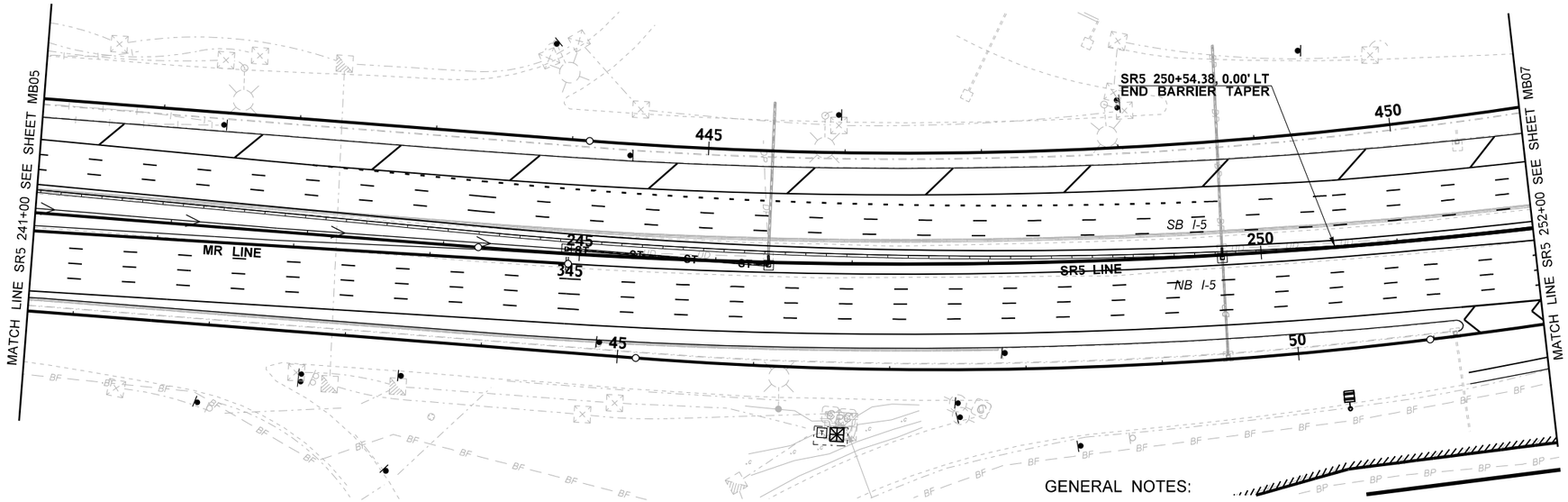

BARRIER CONSTRUCTION NOTES:

- B2 HIGH-PERFORMANCE SINGLE-SLOPE CONCRETE (4'-0") BARRIER PER WSDOT STD. PLAN C-70.10-01 OR C-80.10-01.
- B4 CAST-IN-PLACE GRADE SEPARATED CONCRETE BARRIER TYPE SA (6"-18" GRADE SEPARATION) PER DETAIL ON SHEET ST02.
- B5 CAST-IN-PLACE GRADE SEPARATED CONCRETE BARRIER TYPE SB (18"-27" GRADE SEPARATION) PER DETAIL ON SHEET ST02.
- B6 CAST-IN-PLACE GRADE SEPARATED CONCRETE BARRIER TYPE SC (27"-36" GRADE SEPARATION) PER DETAIL ON SHEET ST02.
- B7 CAST-IN-PLACE GRADE SEPARATED CONCRETE BARRIER TYPE SD (36"-39" GRADE SEPARATION) PER DETAIL ON SHEET ST02.

AS-BUILT

GENERAL NOTES:

1. CALLOUTS ARE TO CENTER OF BARRIER UNLESS OTHERWISE NOTED.

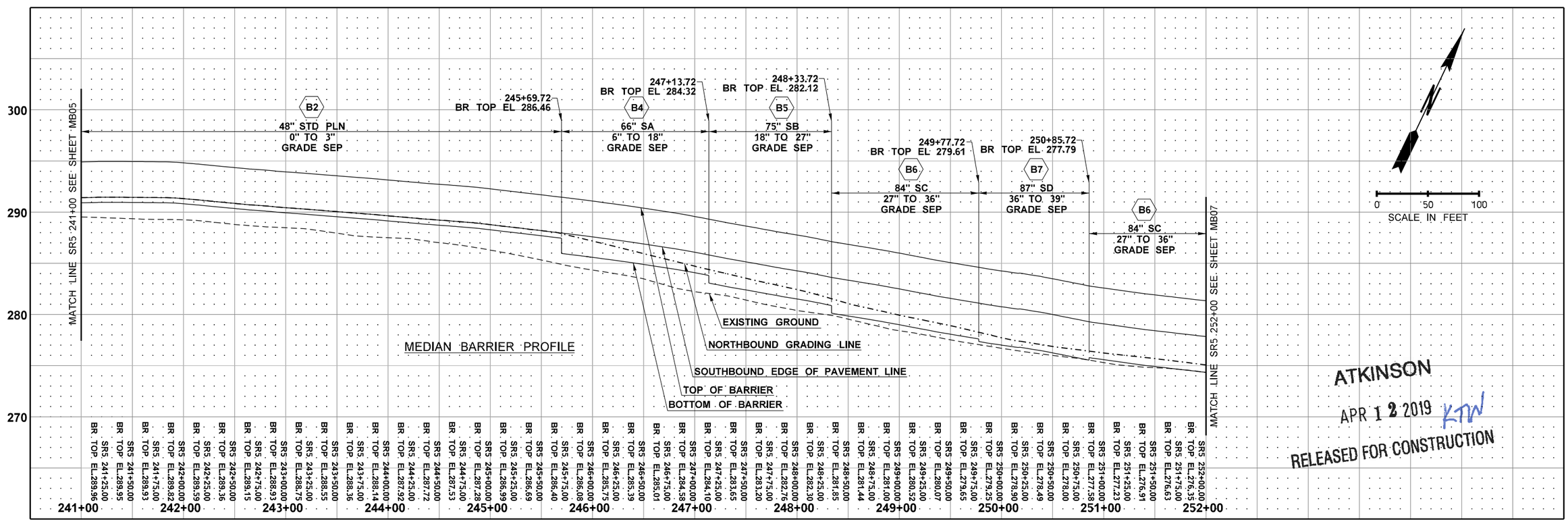

ATKINSON
APR 12 2019 KTW
RELEASED FOR CONSTRUCTION

FILE NAME	c:\pwworking\jacobs_b&l\conradcs\dms20633\PS_MB_06.dgn			
TIME	1:45:28 PM			
DATE	4/11/2019			
PLOTTED BY	ConradCS			
DESIGNED BY	A. SCHMIDTMAN			
ENTERED BY	C. CONRAD	REV 0 - RELEASED FOR CONSTRUCTION	04/11/19	
CHECKED BY	N. SCHRADER	REV B - FINAL REVIEW	04/01/19	
PROJ. ENGR.	C. MEADE	REV A - PRELIMINARY REVIEW	03/11/19	
REGIONAL ADM.	J. WYNANDS	REVISION	DATE	BY

REGION NO.	STATE	FED.AID PROJ.NO.
10	WASH	
JOB NUMBER		
CONTRACT NO.		LOCATION NO.
C9133		

STATE OF WASHINGTON 47018 REGISTERED PROFESSIONAL ENGINEER
4/11/19
DATE
P.E. STAMP BOX

DATE
P.E. STAMP BOX

Washington State Department of Transportation

I-5
STEILACOOM-DUPONT RD TO THORNE LN
CORRIDOR IMPROVEMENTS
MP 120.01 TO MP 124.45

MEDIAN BARRIER PLAN & PROFILE

PLAN REF NO MB06

SHEET 716 OF 1456 SHEETS

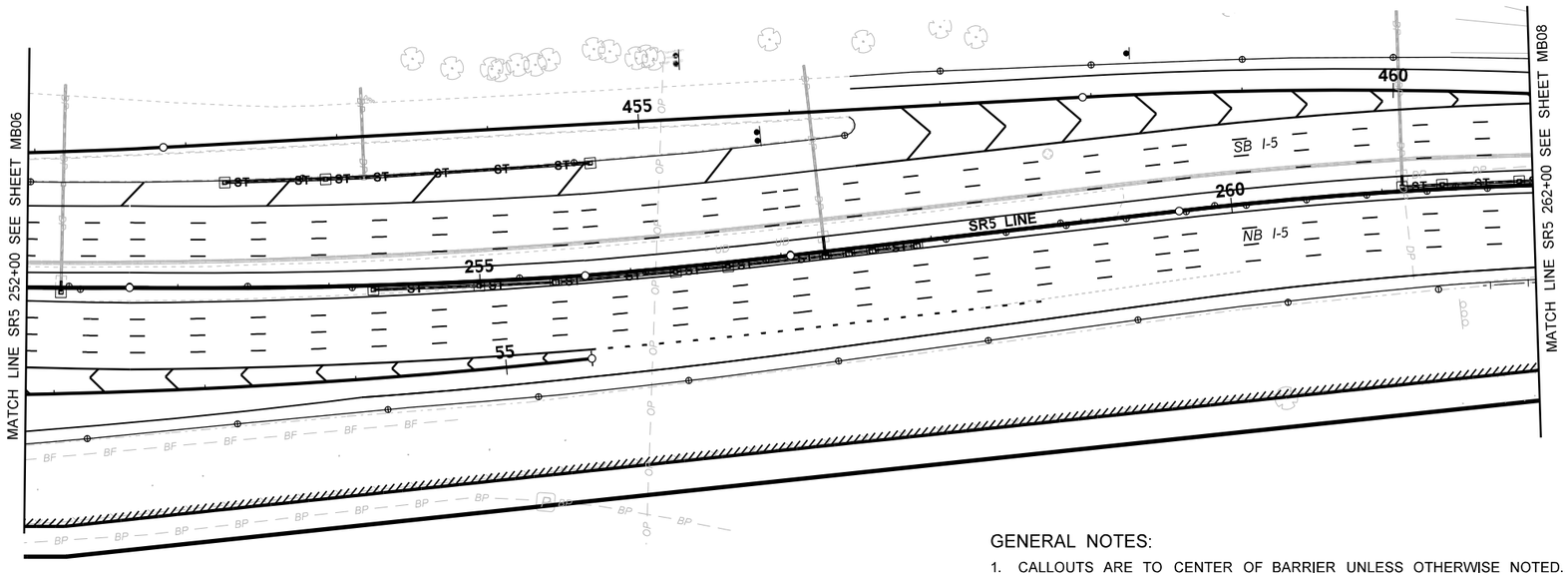

BARRIER CONSTRUCTION NOTES:

1

- B4 CAST-IN-PLACE GRADE SEPARATED CONCRETE BARRIER TYPE SA (6"-18" GRADE SEPARATION) PER DETAIL ON SHEET ST02.
- B5 CAST-IN-PLACE GRADE SEPARATED CONCRETE BARRIER TYPE SB (18"-27" GRADE SEPARATION) PER DETAIL ON SHEET ST02.
- B6 CAST-IN-PLACE GRADE SEPARATED CONCRETE BARRIER TYPE SC (27"-36" GRADE SEPARATION) PER DETAIL ON SHEET ST02.

N

0 50 100
SCALE IN FEET

AS-BUILT

GENERAL NOTES:

1. CALLOUTS ARE TO CENTER OF BARRIER UNLESS OTHERWISE NOTED.

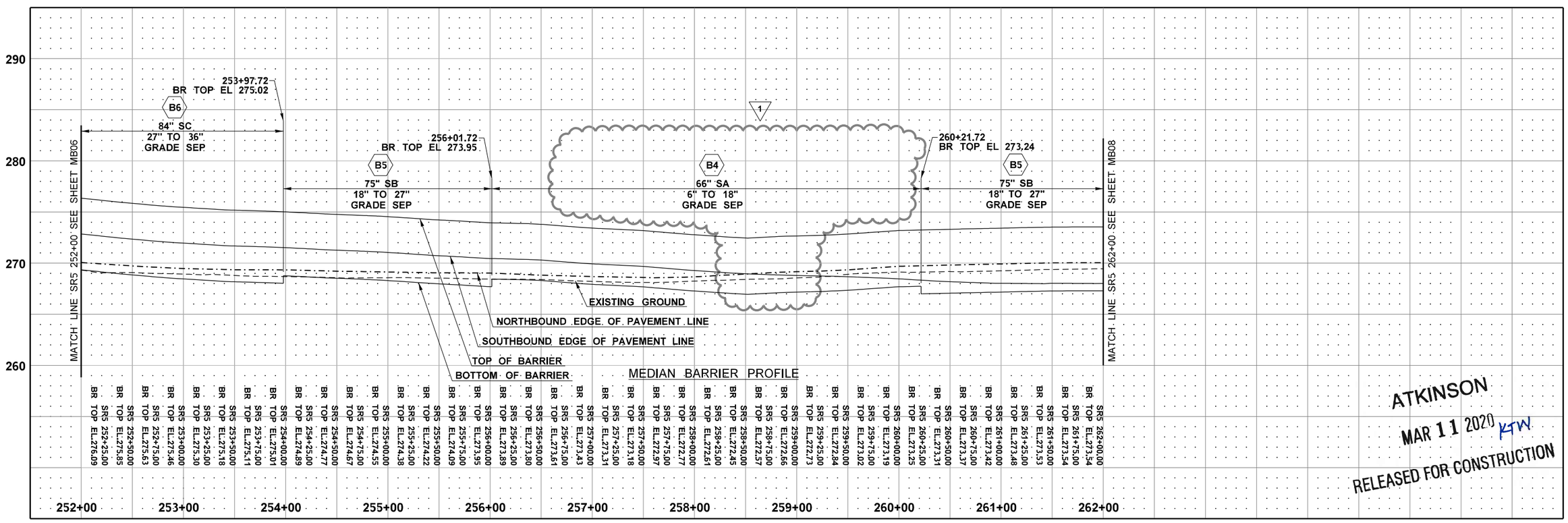

ATKINSON
MAR 11 2020 KTW
RELEASED FOR CONSTRUCTION

FILE NAME	c:\pwworking\jacobs_b&i\schmidal\dms20633\PS_MB_07.dgn			
TIME	10:01:42 AM			
DATE	3/6/2020			
PLOTTED BY	SchmidAL			
DESIGNED BY	A. SCHMIDTMAN	REV 1 - RFI0421	03/06/20	
ENTERED BY	C. CONRAD	REV 0 - RELEASED FOR CONSTRUCTION	04/11/19	
CHECKED BY	N. SCHRADER	REV B - FINAL REVIEW	04/01/19	
PROJ. ENGR.	C. MEADE	REV A - PRELIMINARY REVIEW	03/11/19	
REGIONAL ADM.	J. WYNANDS	REVISION	DATE	BY

REGION NO.	STATE	FED.AID PROJ.NO.
10	WASH	
JOB NUMBER		
CONTRACT NO.		LOCATION NO.
C9133		

ADAM LEE SCHMIDT
STATE OF WASHINGTON
47018
REGISTERED PROFESSIONAL ENGINEER
03/11/20
DATE
P.E. STAMP BOX

DATE
P.E. STAMP BOX

Washington State
Department of Transportation

I-5
STEILACOOM-DUPONT RD TO THORNE LN
CORRIDOR IMPROVEMENTS
MP 120.01 TO MP 124.45

MEDIAN BARRIER PLAN & PROFILE

PLAN REF NO
MB07

SHEET 717 OF 1456 SHEETS

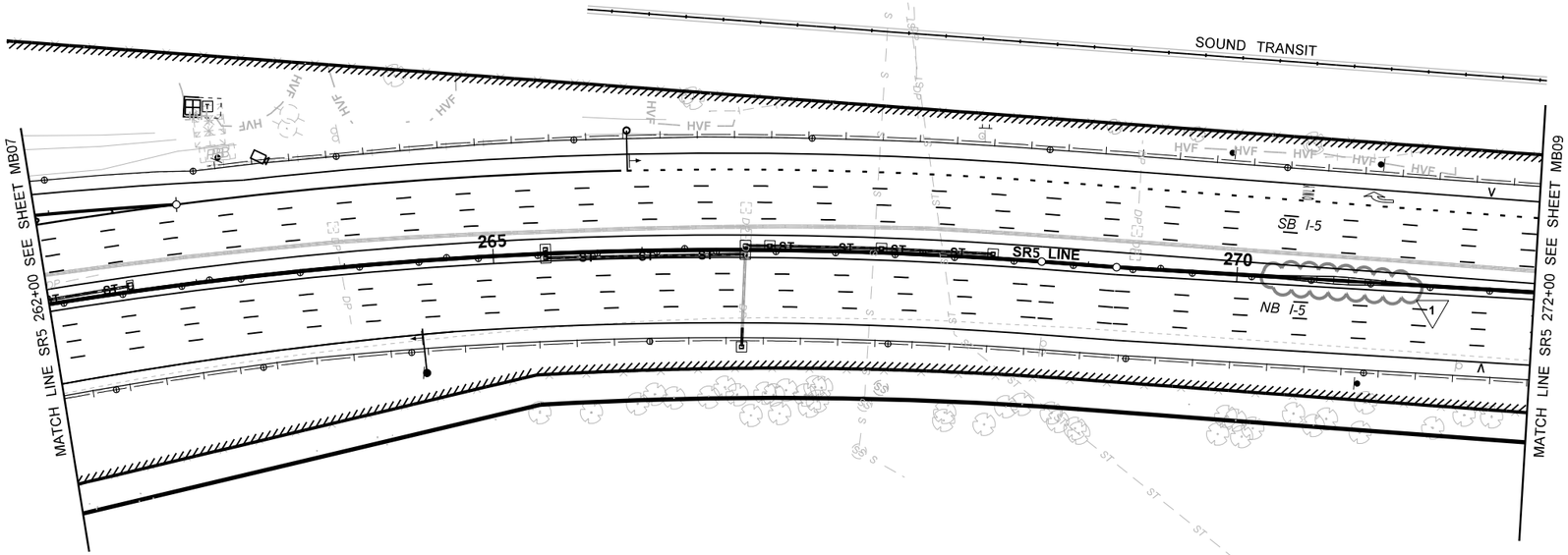

BARRIER CONSTRUCTION NOTES:

- **B4** CAST-IN-PLACE GRADE SEPARATED CONCRETE BARRIER TYPE SA (6"-18" GRADE SEPARATION) PER DETAIL ON SHEET ST02.
- **B5** CAST-IN-PLACE GRADE SEPARATED CONCRETE BARRIER TYPE SB (18"-27" GRADE SEPARATION) PER DETAIL ON SHEET ST02.
- **B12** SINGLE-SLOPE CONCRETE BARRIER FOR MONOTUBE SIGN SUPPORT AND BARRIER TRANSITIONS PER DETAILS ON SIGN BRIDGE SHEETS. (1)

AS-BUILT

ATKINSON

OCT 28 2019 KJW

RELEASED FOR CONSTRUCTION

0 50 100
SCALE IN FEET

GENERAL NOTES:

1. CALLOUTS ARE TO CENTER OF BARRIER UNLESS OTHERWISE NOTED.

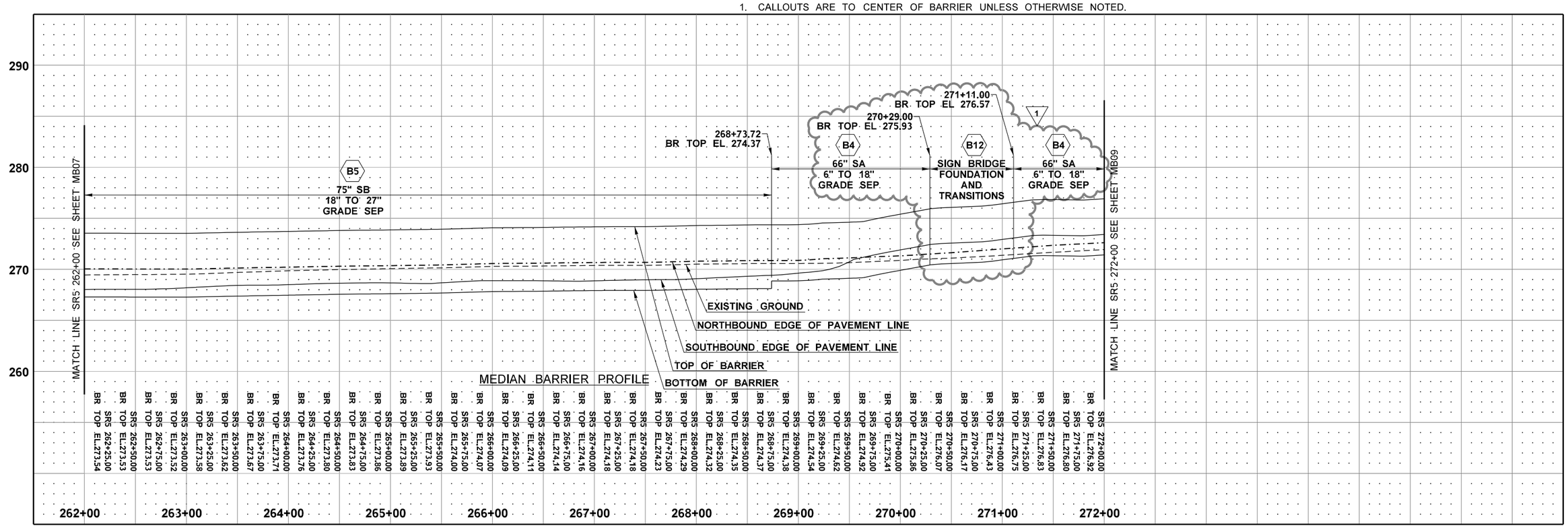

FILE NAME	c:\pwworking\jacobs_b&i\conradcs\dms20633\PS_MB_08.dgn				REGION NO. 10	STATE WASH	FED.AID PROJ.NO.
TIME	11:04:06 AM						
DATE	10/21/2019						
PLOTTED BY	ConradCS				JOB NUMBER		
DESIGNED BY	A. SCHMIDTMAN	REV 1 - RFI0269	10/17/19				
ENTERED BY	C. CONRAD	REV 0 - RELEASED FOR CONSTRUCTION	04/11/19		CONTRACT NO. C9133		LOCATION NO.
CHECKED BY	N. SCHRADER	REV B - FINAL REVIEW	04/01/19				
PROJ. ENGR.	C. MEADE	REV A - PRELIMINARY REVIEW	03/11/19				
REGIONAL ADM.	J. WYNANDS	REVISION	DATE	BY			

STATE OF WASHINGTON 47018 REGISTERED PROFESSIONAL ENGINEER — DATE 10/28/19 — P.E. STAMP BOX

DATE — P.E. STAMP BOX

Washington State Department of Transportation

I-5
STEILACOOM-DUPONT RD TO THORNE LN
CORRIDOR IMPROVEMENTS
MP 120.01 TO MP 124.45

MEDIAN BARRIER PLAN & PROFILE

PLAN REF NO MB08

SHEET 718 OF 1456 SHEETS

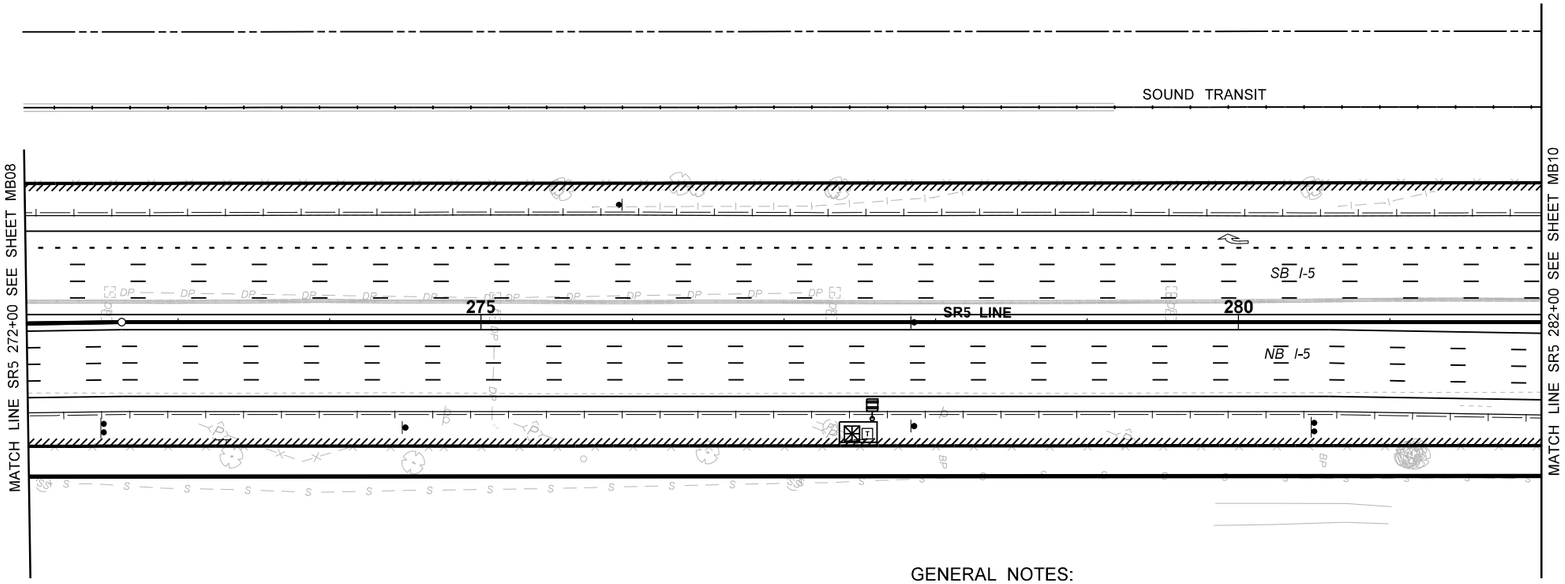

BARRIER CONSTRUCTION NOTES:

- B3 HIGH-PERFORMANCE SINGLE-SLOPE CONCRETE (4'-6") BARRIER PER WSDOT STD. PLAN C-70.10-01 OR C-80.10-01.
- B4 CAST-IN-PLACE GRADE SEPARATED CONCRETE BARRIER TYPE SA (6"-18" GRADE SEPARATION) PER DETAIL ON SHEET ST02.
- B5 CAST-IN-PLACE GRADE SEPARATED CONCRETE BARRIER TYPE SB (18"-27" GRADE SEPARATION) PER DETAIL ON SHEET ST02.
- B6 CAST-IN-PLACE GRADE SEPARATED CONCRETE BARRIER TYPE SC (27"-36" GRADE SEPARATION) PER DETAIL ON SHEET ST02.

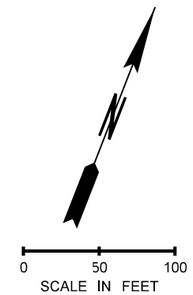

AS-BUILT

GENERAL NOTES:

1. CALLOUTS ARE TO CENTER OF BARRIER UNLESS OTHERWISE NOTED.

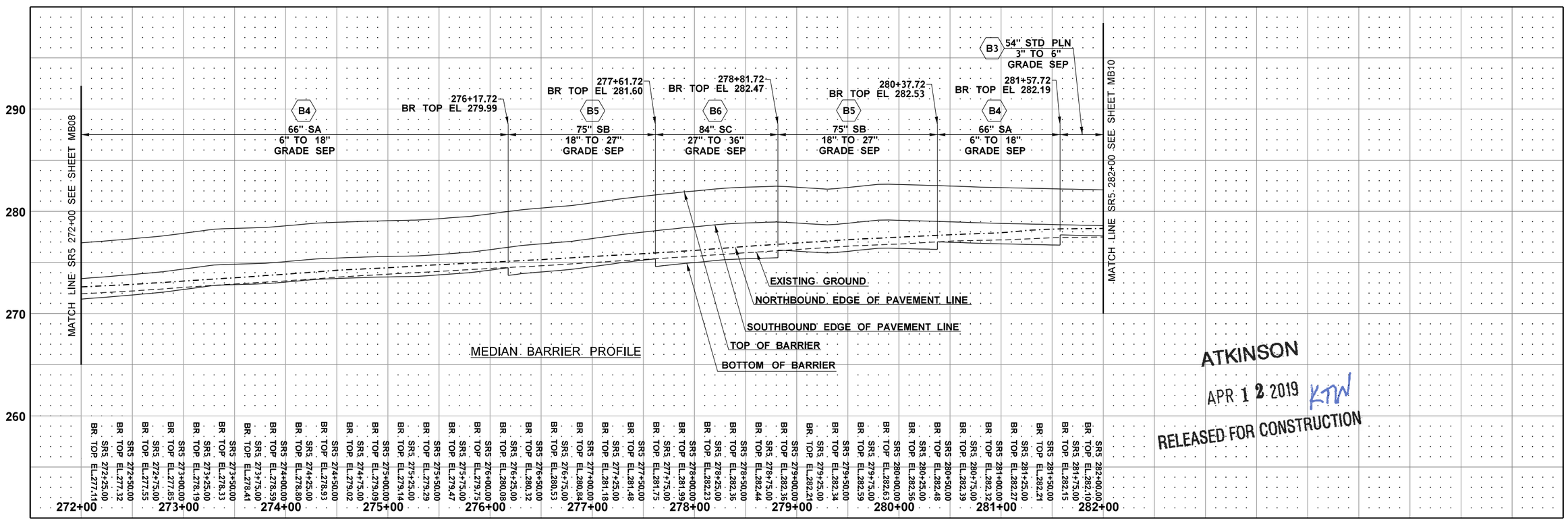

ATKINSON
APR 12 2019 KTW
RELEASED FOR CONSTRUCTION

FILE NAME	c:\pwworking\jacobs_b&l\conradcs\dms20633\PS_MB_09.dgn				REGION NO. 10	STATE WASH	FED.AID PROJ.NO.
TIME	1:50:37 PM				JOB NUMBER		
DATE	4/11/2019				CONTRACT NO. C9133		LOCATION NO.
PLOTTED BY	ConradCS						
DESIGNED BY	A. SCHMIDTMAN						
ENTERED BY	C. CONRAD	REV 0 - RELEASED FOR CONSTRUCTION	04/11/19				
CHECKED BY	N. SCHRADER	REV B - FINAL REVIEW	04/01/19				
PROJ. ENGR.	C. MEADE	REV A - PRELIMINARY REVIEW	03/11/19				
REGIONAL ADM.	J. WYNANDS	REVISION	DATE	BY			

STATE OF WASHINGTON 47018 REGISTERED PROFESSIONAL ENGINEER — 4/11/19 DATE — P.E. STAMP BOX

DATE — P.E. STAMP BOX

Washington State Department of Transportation

I-5
STEILACOOM-DUPONT RD TO THORNE LN
CORRIDOR IMPROVEMENTS
MP 120.01 TO MP 124.45

MEDIAN BARRIER PLAN & PROFILE

PLAN REF NO MB09

SHEET 719 OF 1456 SHEETS

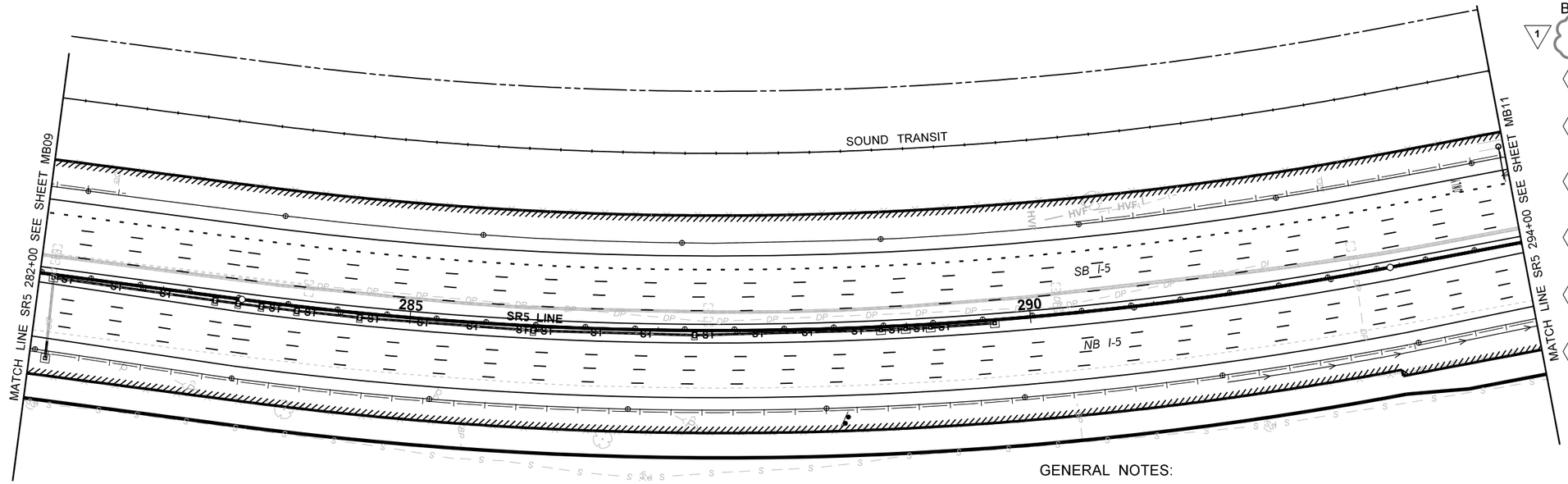

BARRIER CONSTRUCTION NOTES:

1

- B3 HIGH-PERFORMANCE SINGLE-SLOPE CONCRETE (4'-6") BARRIER PER WSDOT STD. PLAN C-70.10-01 OR C-80.10-01.
- B4 CAST-IN-PLACE GRADE SEPARATED CONCRETE BARRIER TYPE SA (6"-18" GRADE SEPARATION) PER DETAIL ON SHEET ST02.
- B5 CAST-IN-PLACE GRADE SEPARATED CONCRETE BARRIER TYPE SB (18"-27" GRADE SEPARATION) PER DETAIL ON SHEET ST02.
- B6 CAST-IN-PLACE GRADE SEPARATED CONCRETE BARRIER TYPE SC (27"-36" GRADE SEPARATION) PER DETAIL ON SHEET ST02.
- B7 CAST-IN-PLACE GRADE SEPARATED CONCRETE BARRIER TYPE SD (36"-39" GRADE SEPARATION) PER DETAIL ON SHEET ST02.
- B8 CAST-IN-PLACE GRADE SEPARATED CONCRETE BARRIER TYPE SE (39"-42") GRADE SEPARATION) PER DETAIL ON SHEET ST02.

AS-BUILT

GENERAL NOTES:

1. CALLOUTS ARE TO CENTER OF BARRIER UNLESS OTHERWISE NOTED.

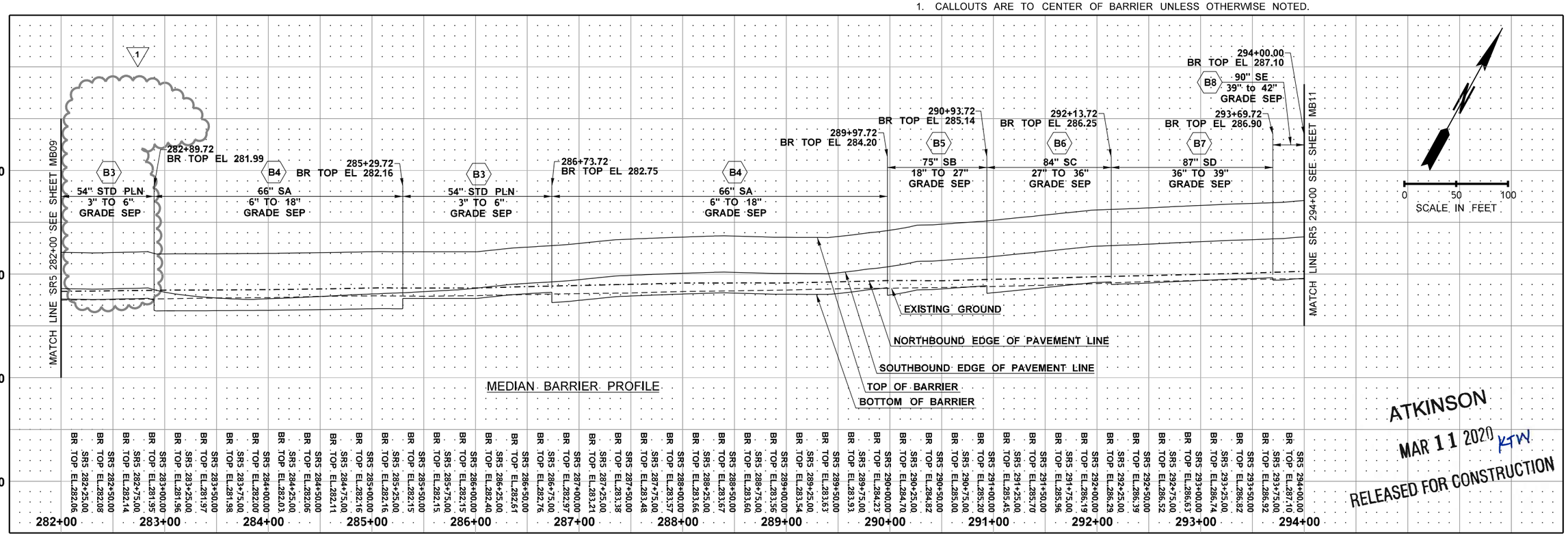

ATKINSON
MAR 11 2020 KTW
RELEASED FOR CONSTRUCTION

FILE NAME	c:\pwworking\jacobs_b&i\schmidal\dms20633\PS_MB_10.dgn						
TIME	10:13:42 AM						
DATE	3/6/2020						
PLOTTED BY	SchmidAL						
DESIGNED BY	N. SCHRADER	REV 1 - RFI0421	03/06/20				
ENTERED BY	C. CONRAD	REV 0 - RELEASED FOR CONSTRUCTION	04/11/19				
CHECKED BY	A. SCHMIDTMAN	REV B - FINAL REVIEW	04/01/19				
PROJ. ENGR.	C. MEADE	REV A - PRELIMINARY REVIEW	03/11/19				
REGIONAL ADM.	J. WYNANDS	REVISION	DATE	BY			

REGION NO.	STATE	FED.AID PROJ.NO.
10	WASH	
JOB NUMBER		
CONTRACT NO.		LOCATION NO.
C9133		

DIAN LEE SCHMIDTMAN, STATE OF WASHINGTON, 47018, REGISTERED PROFESSIONAL ENGINEER
03/11/20
DATE
P.E. STAMP BOX

DATE
P.E. STAMP BOX

Washington State
Department of Transportation

I-5
STEILACOOM-DUPONT RD TO THORNE LN
CORRIDOR IMPROVEMENTS
MP 120.01 TO MP 124.45

MEDIAN BARRIER PLAN & PROFILE

PLAN REF NO
MB10

SHEET 720 OF 1456 SHEETS

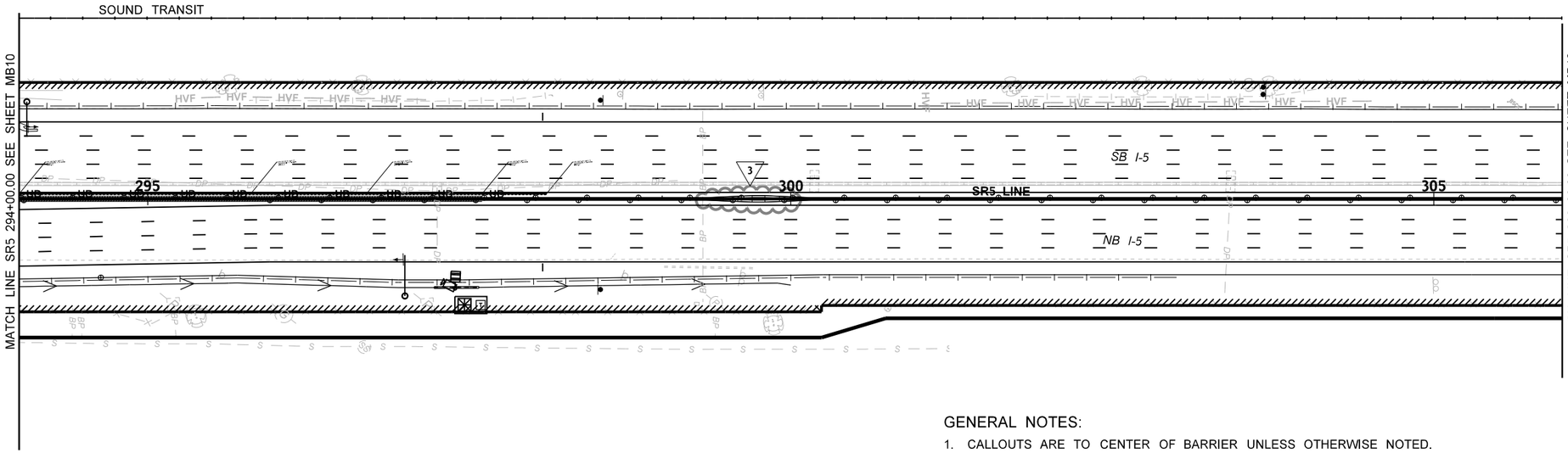

BARRIER CONSTRUCTION NOTES:

- **B4** CAST-IN-PLACE GRADE SEPARATED CONCRETE BARRIER TYPE SA (6"-18" GRADE SEPARATION) PER DETAIL ON SHEET ST02.
- **B5** CAST-IN-PLACE GRADE SEPARATED CONCRETE BARRIER TYPE SB (18"-27" GRADE SEPARATION) PER DETAIL ON SHEET ST02.
- **B6** CAST-IN-PLACE GRADE SEPARATED CONCRETE BARRIER TYPE SC (27"-36" GRADE SEPARATION) PER DETAIL ON SHEET ST02.
- **B8** CAST-IN-PLACE GRADE SEPARATED CONCRETE BARRIER TYPE SE (39"-42") GRADE SEPARATION) PER DETAIL ON SHEET ST02.
- **B9** MEDIAN WALL WITH HIGH PERFORMANCE SINGLE SLOPE BARRIER PER WALL PLANS.
- **B12** SINGLE-SLOPE CONCRETE BARRIER FOR MONOTUBE SIGN SUPPORT AND BARRIER TRANSITIONS PER DETAILS ON SIGN BRIDGE SHEETS. (3)
- **B26** CAST-IN-PLACE VERTICAL BACK TRANSITION BARRIER. SEE SHEET ST13.

AS-BUILT

GENERAL NOTES:

1. CALLOUTS ARE TO CENTER OF BARRIER UNLESS OTHERWISE NOTED.

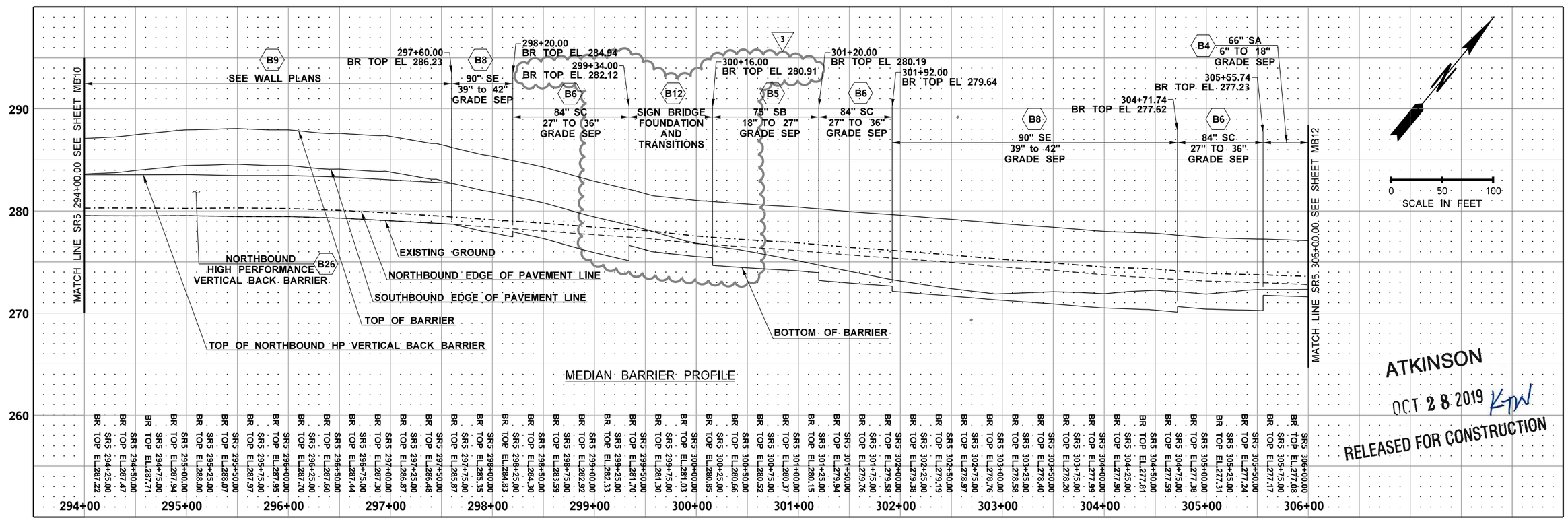

ATKINSON
OCT 28 2019
RELEASED FOR CONSTRUCTION

FILE NAME	c:\pwworking\jacobs_b&l\conradcs\dms20633\PS_MB_11.dgn
TIME	1:17:59 PM
DATE	10/21/2019
PLOTTED BY	ConradCS
DESIGNED BY	A. SCHMIDTMAN
ENTERED BY	C. CONRAD
CHECKED BY	N. SCHRADER
PROJ. ENGR.	C. MEADE
REGIONAL ADM.	J. WYNANDS

REVISION	DATE	BY
REV 3 - RFI0269	10/17/19	
REV 2 - RFI0193	08/28/19	
REV 1 - RELEASE OF NFC	06/25/19	
REV 0 - RELEASED FOR CONSTRUCTION	04/11/19	
REV B - FINAL REVIEW	04/01/19	
REV A - PRELIMINARY REVIEW	03/11/19	

REGION NO.	STATE	FED.AID PROJ.NO.
10	WASH	
JOB NUMBER		
CONTRACT NO.		LOCATION NO.
C9133		

P.E. STAMP BOX — DATE 10/28/19

P.E. STAMP BOX — DATE

Washington State Department of Transportation

I-5
STEILACOOM-DUPONT RD TO THORNE LN
CORRIDOR IMPROVEMENTS
MP 120.01 TO MP 124.45

MEDIAN BARRIER PLAN & PROFILE

PLAN REF NO MB11

SHEET 721 OF 1456 SHEETS

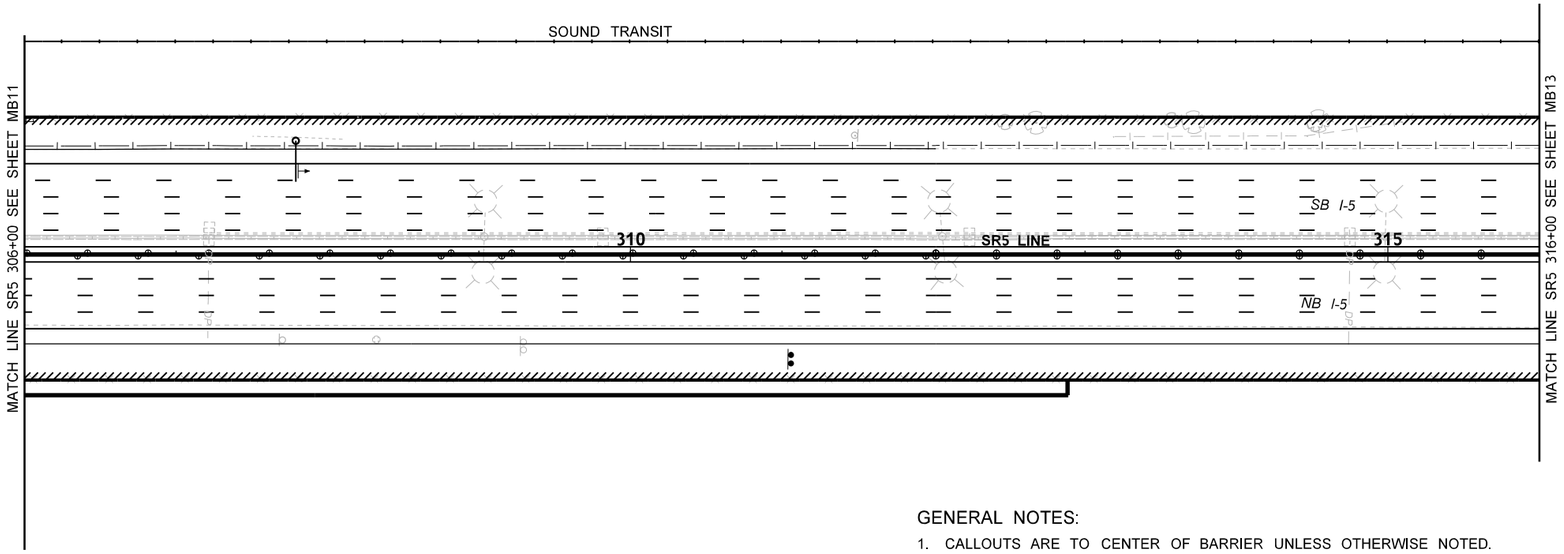

BARRIER CONSTRUCTION NOTES:

- B2 — HIGH-PERFORMANCE SINGLE-SLOPE CONCRETE (4'-0") BARRIER PER WSDOT STD. PLAN C-70.10-01 OR C-80.10-01.
- B3 — HIGH-PERFORMANCE SINGLE-SLOPE CONCRETE (4'-6") BARRIER PER WSDOT STD. PLAN C-70.10-01 OR C-80.10-01.
- B4 — CAST-IN-PLACE GRADE SEPARATED CONCRETE BARRIER TYPE SA (6"-18" GRADE SEPARATION) PER DETAIL ON SHEET ST02.

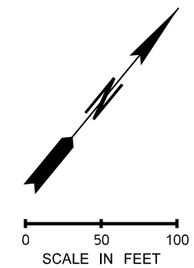

AS-BUILT

GENERAL NOTES:

1. CALLOUTS ARE TO CENTER OF BARRIER UNLESS OTHERWISE NOTED.

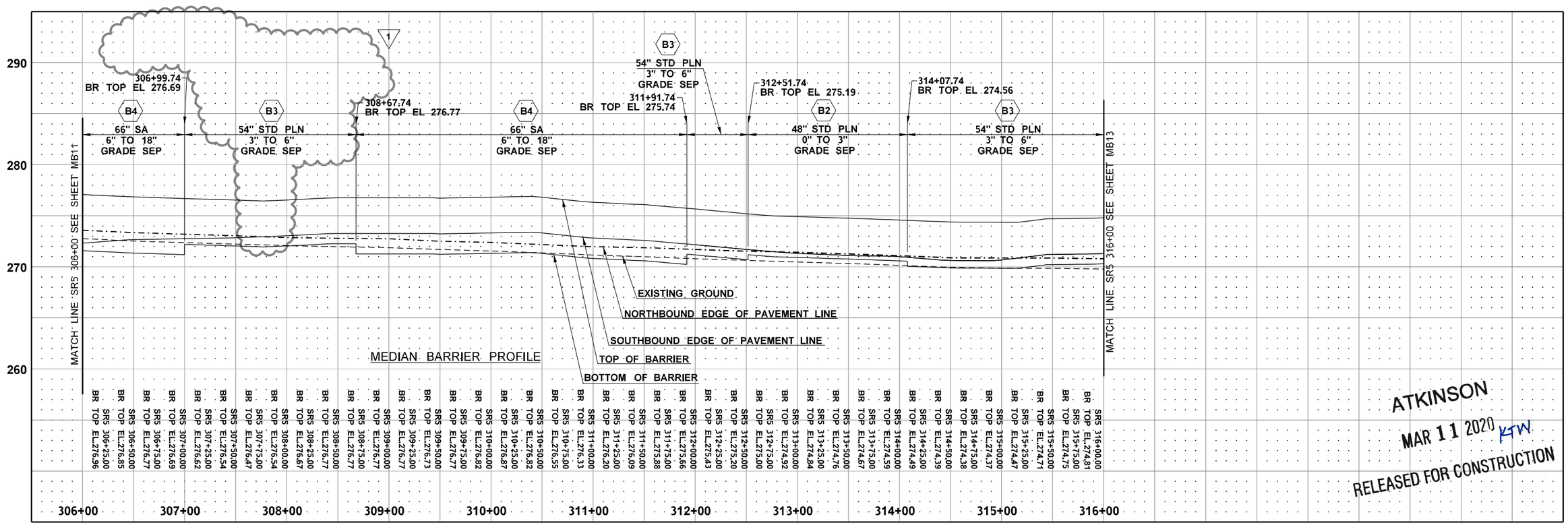

ATKINSON
MAR 11 2020 KTW
RELEASED FOR CONSTRUCTION

FILE NAME	c:\pwworking\jacobs_b&i\schmidal\dms20633\PS_MB_12.dgn						
TIME	10:25:14 AM				REGION NO. 10	STATE WASH	FED.AID PROJ.NO.
DATE	3/6/2020				JOB NUMBER		
PLOTTED BY	SchmidAL						
DESIGNED BY	A. SCHMIDTMAN	REV 1 - RFI0421	03/06/20		CONTRACT NO. C9133		LOCATION NO.
ENTERED BY	C. CONRAD	REV 0 - RELEASED FOR CONSTRUCTION	04/11/19				
CHECKED BY	N. SCHRADER	REV B - FINAL REVIEW	04/01/19				
PROJ. ENGR.	C. MEADE	REV A - PRELIMINARY REVIEW	03/11/19				
REGIONAL ADM.	J. WYNANDS	REVISION	DATE	BY			

DAN LEE SCHMIDTMAN — STATE OF WASHINGTON — 47018 — REGISTERED PROFESSIONAL ENGINEER
03/11/20
DATE
P.E. STAMP BOX

DATE
P.E. STAMP BOX

Washington State Department of Transportation

I-5
STEILACOOM-DUPONT RD TO THORNE LN
CORRIDOR IMPROVEMENTS
MP 120.01 TO MP 124.45

MEDIAN BARRIER PLAN & PROFILE

PLAN REF NO MB12

SHEET 722 OF 1456 SHEETS

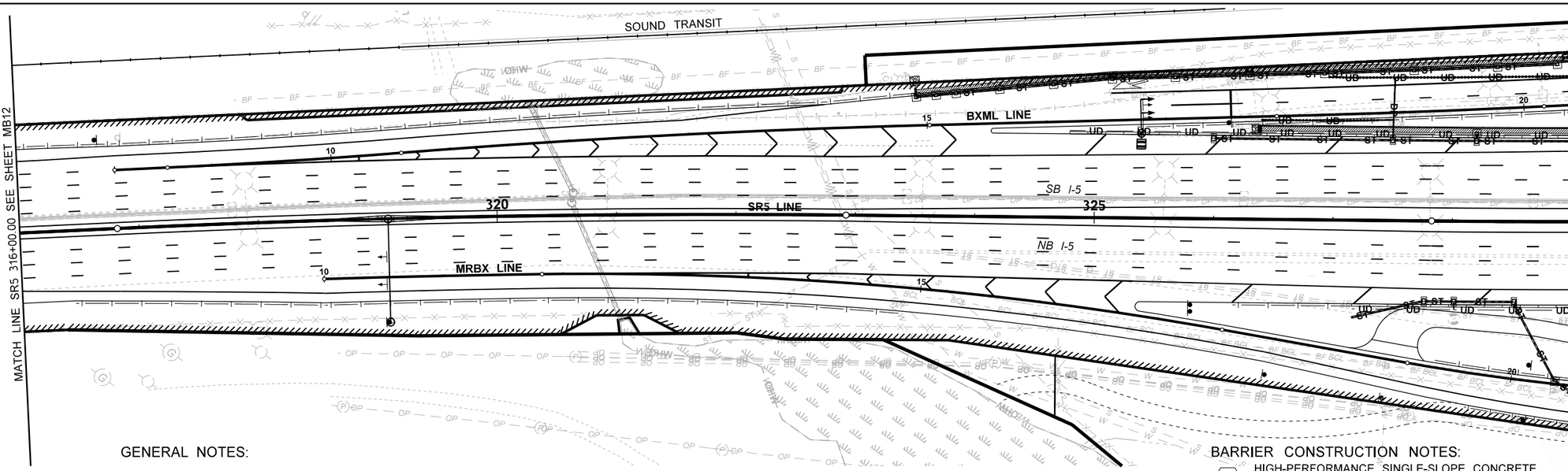

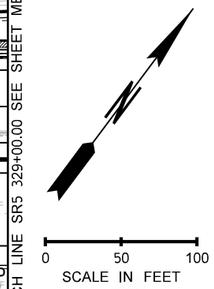

GENERAL NOTES:

1. CALLOUTS ARE TO CENTER OF BARRIER UNLESS OTHERWISE NOTED.

BARRIER CONSTRUCTION NOTES:

- B2 — HIGH-PERFORMANCE SINGLE-SLOPE CONCRETE (4'-0") BARRIER PER WSDOT STD. PLAN C-70.10-01 OR C-80.10-01.
- B3 — HIGH-PERFORMANCE SINGLE-SLOPE CONCRETE (4'-6") BARRIER PER WSDOT STD. PLAN. C-70.10-01 OR. C-80.10-01.
- B4 — CAST-IN-PLACE GRADE SEPARATED CONCRETE BARRIER TYPE SA (6"-18" GRADE SEPARATION) PER DETAIL ON SHEET ST02.
- B12 — SINGLE-SLOPE CONCRETE BARRIER FOR MONOTUBE SIGN SUPPORT AND BARRIER TRANSITIONS PER DETAILS ON SIGN BRIDGE SHEETS.

RSA JUN 04 2019 RELEASED FOR CONSTRUCTION

ATKINSON

AS-BUILT

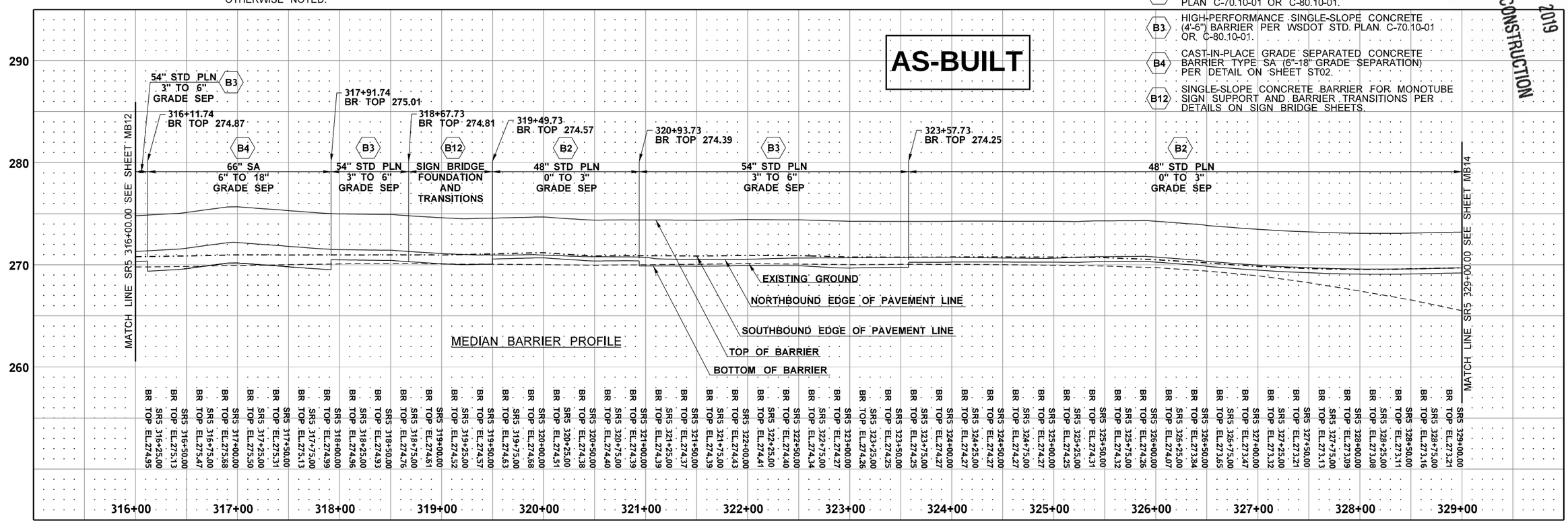

FILE NAME	c:\pwworking\jacobs_b&h\conradcs\dms20633\PS_MB_13.dgn						
TIME	9:57:56 AM				REGION NO. 10	STATE WASH	FED.AID PROJ.NO.
DATE	6/3/2019						
PLOTTED BY	ConradCS				JOB NUMBER		
DESIGNED BY	A. SCHMIDTMAN						
ENTERED BY	C. CONRAD	REV 0 - RELEASED FOR CONSTRUCTION	05/31/19		CONTRACT NO. C9133		LOCATION NO.
CHECKED BY	N. SCHRADER	REV B - FINAL REVIEW	05/07/19				
PROJ. ENGR.	C. MEADE	REV A - PRELIMINARY REVIEW	04/19/19				
REGIONAL ADM.	J. WYNANDS	REVISION	DATE	BY			

ADAM LEE SCHMIDTMAN — STATE OF WASHINGTON — 47018 — REGISTERED PROFESSIONAL ENGINEER

6/3/19 DATE

P.E. STAMP BOX

DATE

P.E. STAMP BOX

Washington State Department of Transportation

I-5
STEILACOOM-DUPONT RD TO THORNE LN
CORRIDOR IMPROVEMENTS
MP 120.01 TO MP 124.45

MEDIAN BARRIER PLAN & PROFILE

PLAN REF NO MB13

SHEET 723 OF 1456 SHEETS

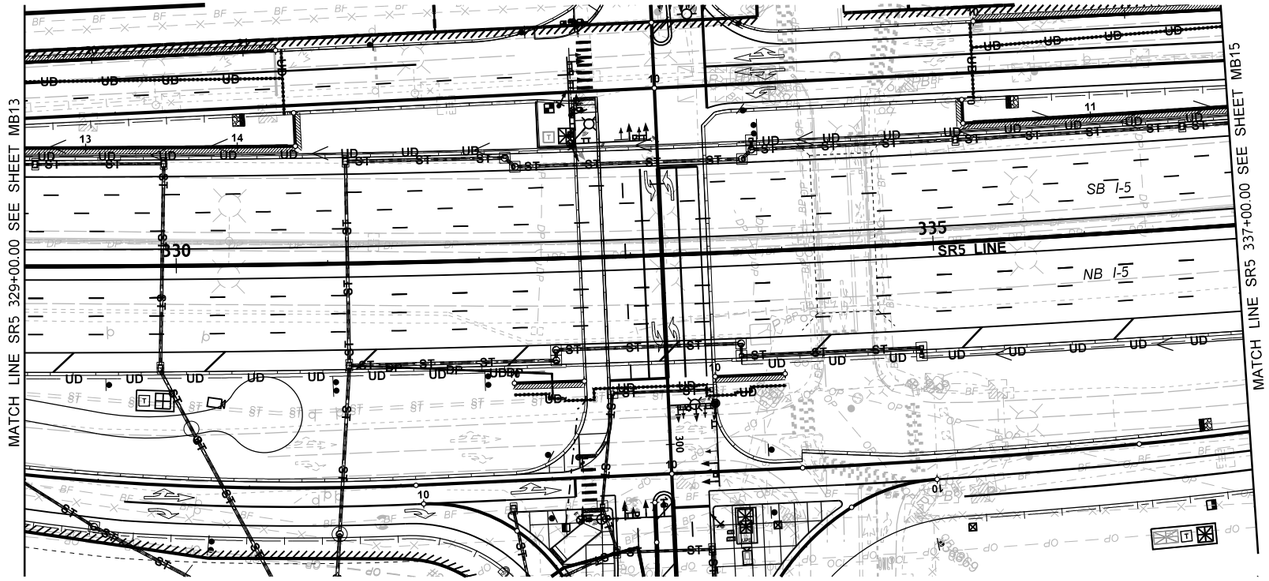

GENERAL NOTES:

1. CALLOUTS ARE TO CENTER OF BARRIER UNLESS OTHERWISE NOTED.

BARRIER CONSTRUCTION NOTES:

B2 HIGH-PERFORMANCE SINGLE-SLOPE CONCRETE (4'-0") BARRIER PER WSDOT STD. PLAN C-70.10-01 OR C-80.10-01.

RSA ATKINSON
JUN 04 2019
RELEASED FOR CONSTRUCTION

AS-BUILT

0 50 100
SCALE IN FEET

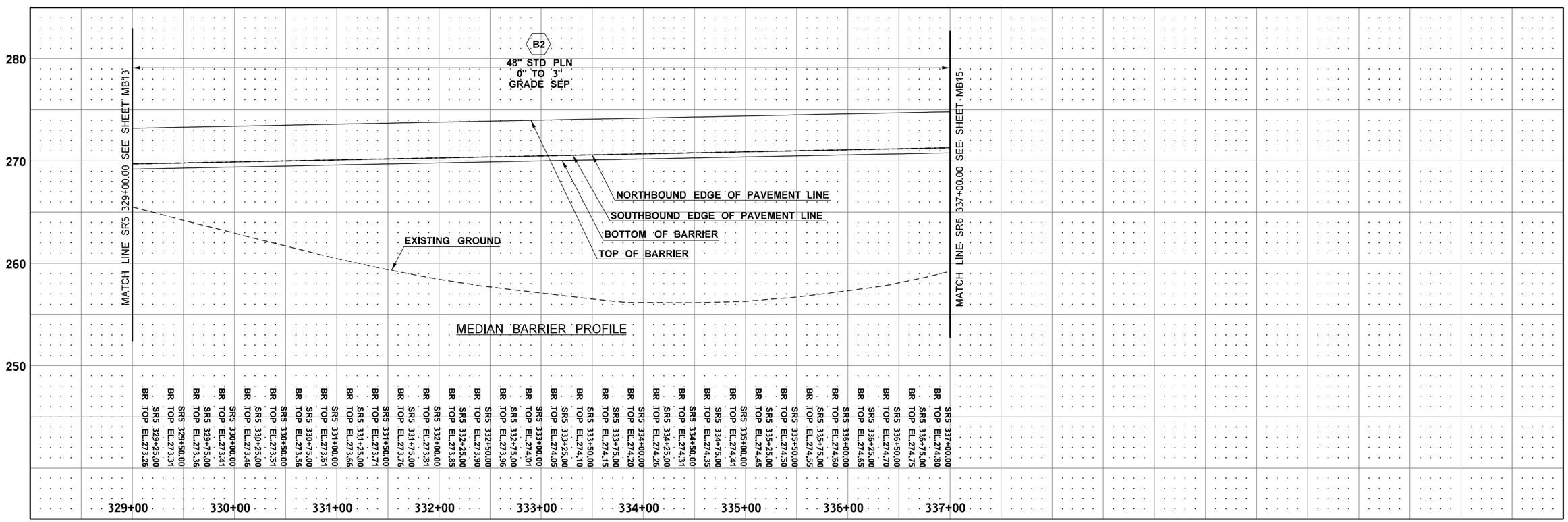

FILE NAME	c:\pwworking\jacobs_b&i\conradcs\dms20633\PS_MB_14.dgn			
TIME	10:00:18 AM			
DATE	6/3/2019			
PLOTTED BY	ConradCS			
DESIGNED BY	A. SCHMIDTMAN			
ENTERED BY	C. CONRAD	REV 0 - RELEASED FOR CONSTRUCTION	05/31/19	
CHECKED BY	N. SCHRADER	REV B - FINAL REVIEW	05/07/19	
PROJ. ENGR.	C. MEADE	REV A - PRELIMINARY REVIEW	04/19/19	
REGIONAL ADM.	J. WYNANDS	REVISION	DATE	BY

REGION NO.	STATE	FED.AID PROJ.NO.
10	WASH	
JOB NUMBER		
CONTRACT NO.		LOCATION NO.
C9133		

ADAM LEE SCHMIDTMAN
STATE OF WASHINGTON
47018
REGISTERED PROFESSIONAL ENGINEER
6/3/19
DATE
P.E. STAMP BOX

DATE
P.E. STAMP BOX

Washington State Department of Transportation

I-5
STEILACOOM-DUPONT RD TO THORNE LN
CORRIDOR IMPROVEMENTS
MP 120.01 TO MP 124.45

MEDIAN BARRIER PLAN & PROFILE

PLAN REF NO
MB14

SHEET 724 OF 1456 SHEETS

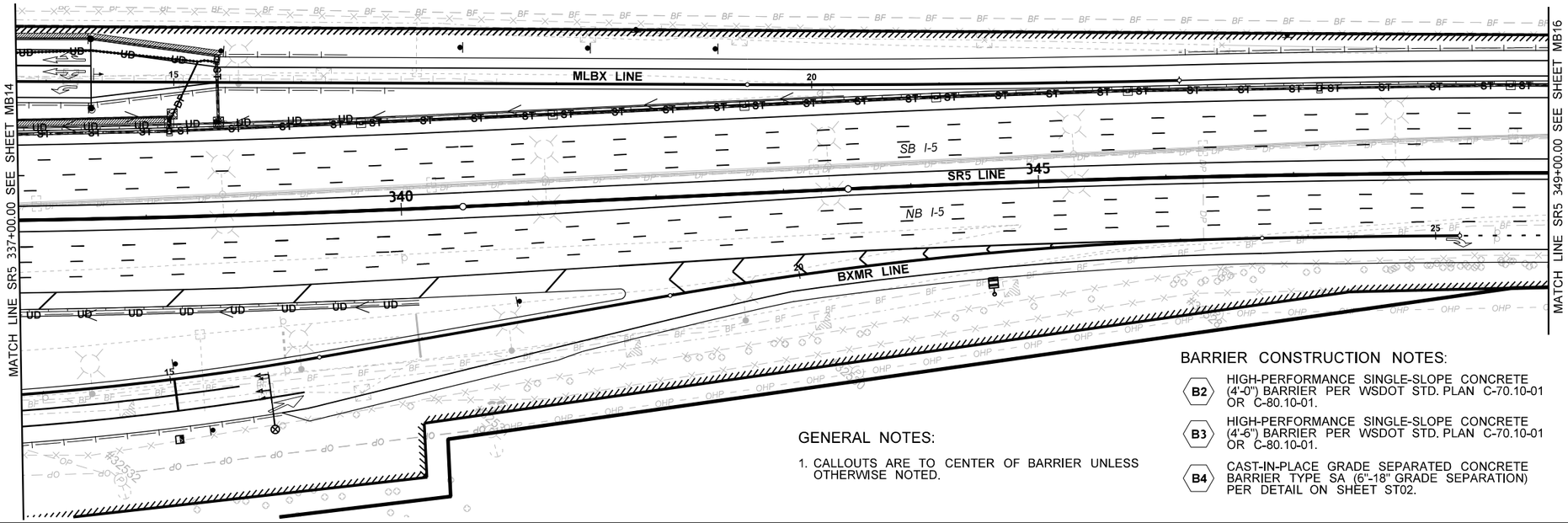

AS-BUILT

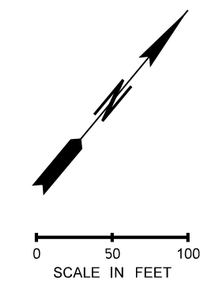

RSA ATKINSON
JUN 04 2019
RELEASED FOR CONSTRUCTION

BARRIER CONSTRUCTION NOTES:

- **B2** HIGH-PERFORMANCE SINGLE-SLOPE CONCRETE (4'-0") BARRIER PER WSDOT STD. PLAN C-70.10-01 OR C-80.10-01.
- **B3** HIGH-PERFORMANCE SINGLE-SLOPE CONCRETE (4'-6") BARRIER PER WSDOT STD. PLAN C-70.10-01 OR C-80.10-01.
- **B4** CAST-IN-PLACE GRADE SEPARATED CONCRETE BARRIER TYPE SA (6"-18" GRADE SEPARATION) PER DETAIL ON SHEET ST02.

GENERAL NOTES:

1. CALLOUTS ARE TO CENTER OF BARRIER UNLESS OTHERWISE NOTED.

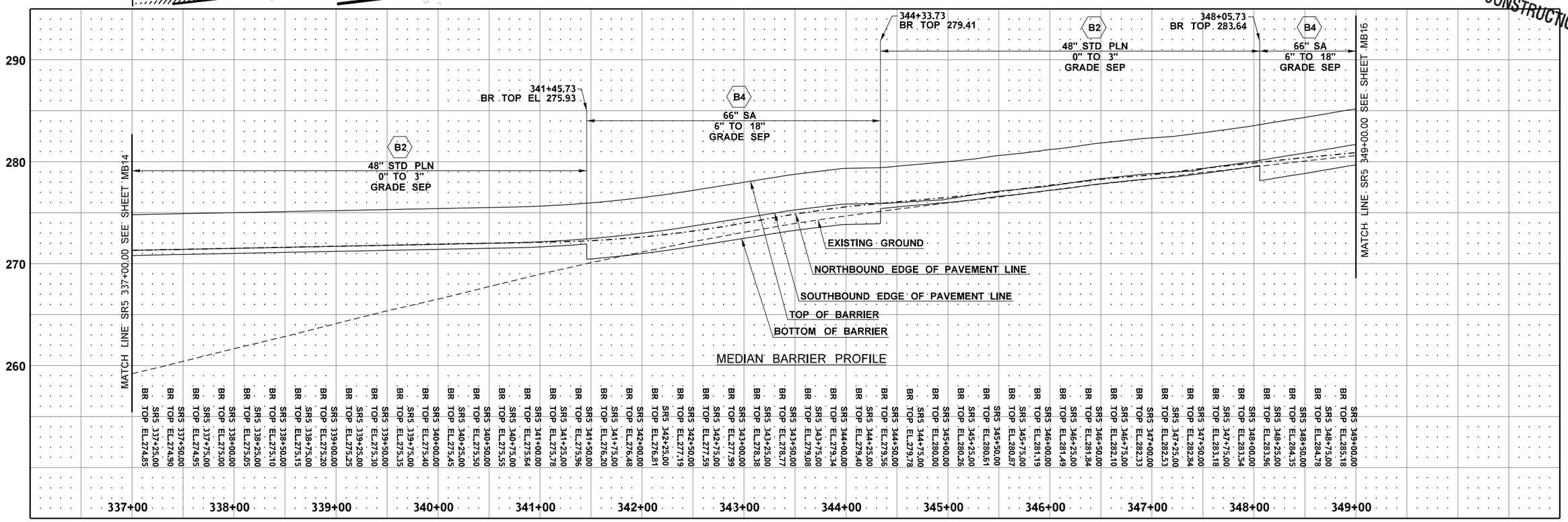

FILE NAME	c:\pwworking\jacobs_b&h\conradcs\dms20633\PS_MB_15.dgn						
TIME	10:02:40 AM						
DATE	6/3/2019						
PLOTTED BY	ConradCS						
DESIGNED BY	A. SCHMIDTMAN						
ENTERED BY	C. CONRAD	REV 0 - RELEASE FOR CONSTRUCTION	05/31/19				
CHECKED BY	N. SCHRADER	REV B - FINAL REVIEW	05/07/19				
PROJ. ENGR.	C. MEADE	REV A - PRELIMINARY REVIEW	04/19/19				
REGIONAL ADM.	J. WYNANDS	REVISION	DATE	BY			

REGION NO.	STATE	FED.AID PROJ.NO.
10	WASH	
JOB NUMBER		
CONTRACT NO.		LOCATION NO.
C9133		

ADAM LEE SCHMIDTMAN
STATE OF WASHINGTON
47018
REGISTERED PROFESSIONAL ENGINEER
6/3/19
DATE
P.E. STAMP BOX

DATE
P.E. STAMP BOX

Washington State Department of Transportation

I-5
STEILACOOM-DUPONT RD TO THORNE LN
CORRIDOR IMPROVEMENTS
MP 120.01 TO MP 124.45

MEDIAN BARRIER PLAN & PROFILE

PLAN REF NO MB15

SHEET 725 OF 1456 SHEETS

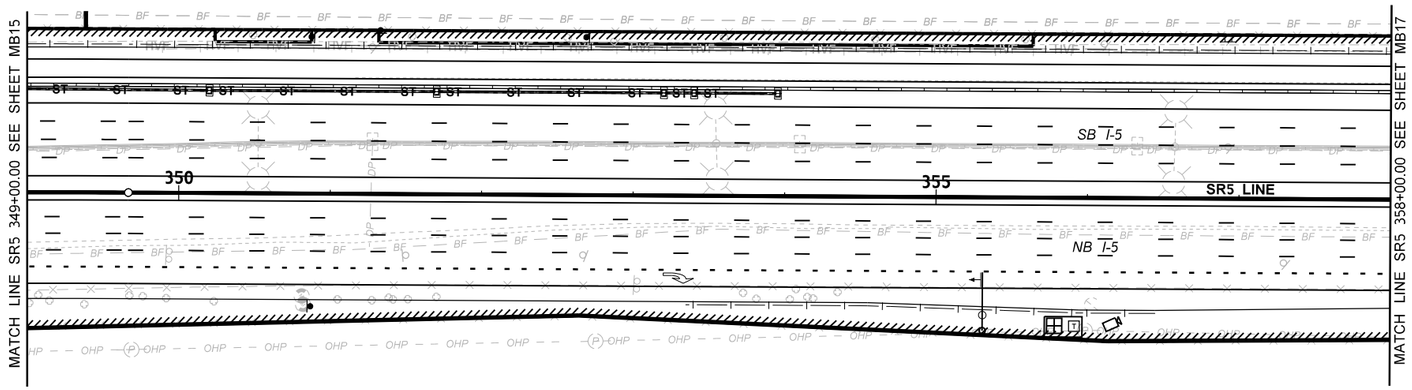

GENERAL NOTES:

1. CALLOUTS ARE TO CENTER OF BARRIER UNLESS OTHERWISE NOTED.

BARRIER CONSTRUCTION NOTES:

B4 CAST-IN-PLACE GRADE SEPARATED CONCRETE BARRIER TYPE SA (6"-18" GRADE SEPARATION) PER DETAIL ON SHEET ST02.

B5 CAST-IN-PLACE GRADE SEPARATED CONCRETE BARRIER TYPE SB (18"-27" GRADE SEPARATION) PER DETAIL ON SHEET ST02.

RSA ATKINSON
JUN 04 2019
RELEASED FOR CONSTRUCTION

AS-BUILT

0 50 100
SCALE IN FEET

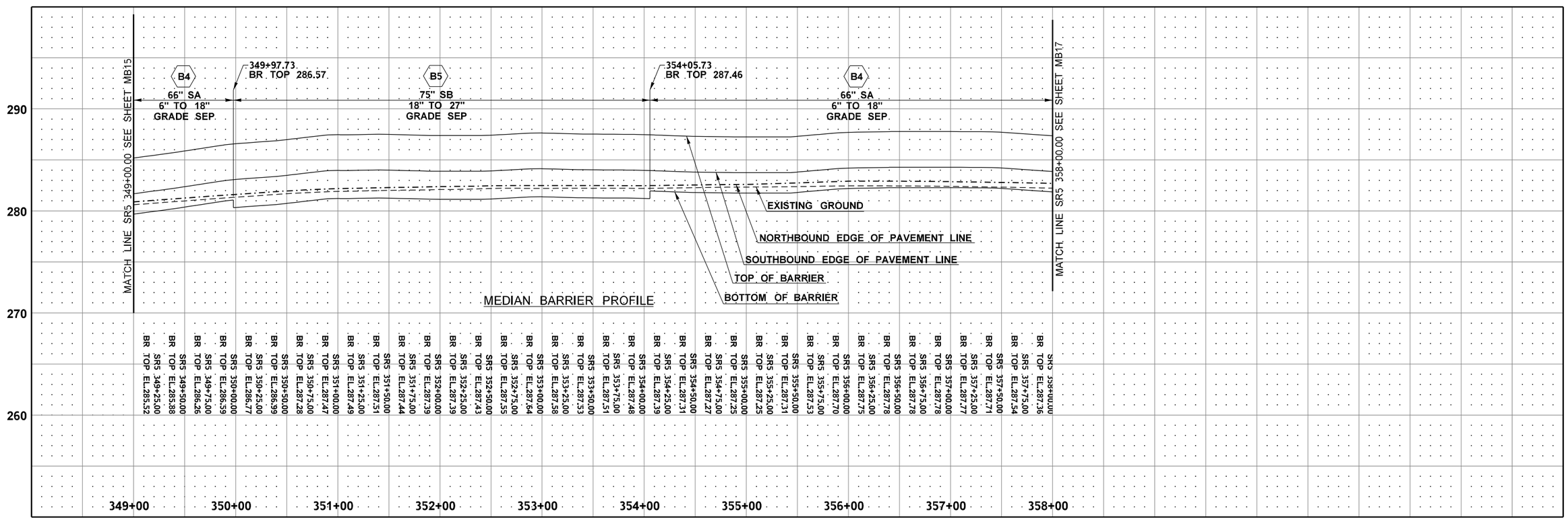

FILE NAME	c:\pwworking\jacobs_b&i\conradcs\dms20633\PS_MB_16.dgn						
TIME	10:04:46 AM						
DATE	6/3/2019						
PLOTTED BY	ConradCS						
DESIGNED BY	A. SCHMIDTMAN						
ENTERED BY	C. CONRAD	REV 0 - RELEASED FOR CONSTRUCTION	05/31/19				
CHECKED BY	N. SCHRADER	REV B - FINAL REVIEW	05/07/19				
PROJ. ENGR.	C. MEADE	REV A - PRELIMINARY REVIEW	04/19/19				
REGIONAL ADM.	J. WYNANDS	REVISION	DATE	BY			

REGION NO.	STATE	FED.AID PROJ.NO.
10	WASH	
JOB NUMBER		
CONTRACT NO.		LOCATION NO.
C9133		

ADAM LEE SCHMIDTMAN
STATE OF WASHINGTON
47018
REGISTERED PROFESSIONAL ENGINEER
6/3/19
DATE
P.E. STAMP BOX

DATE
P.E. STAMP BOX

Washington State Department of Transportation

I-5
STEILACOOM-DUPONT RD TO THORNE LN CORRIDOR IMPROVEMENTS
MP 120.01 TO MP 124.45

MEDIAN BARRIER PLAN & PROFILE

PLAN REF NO
MB16

SHEET 726 OF 1456 SHEETS

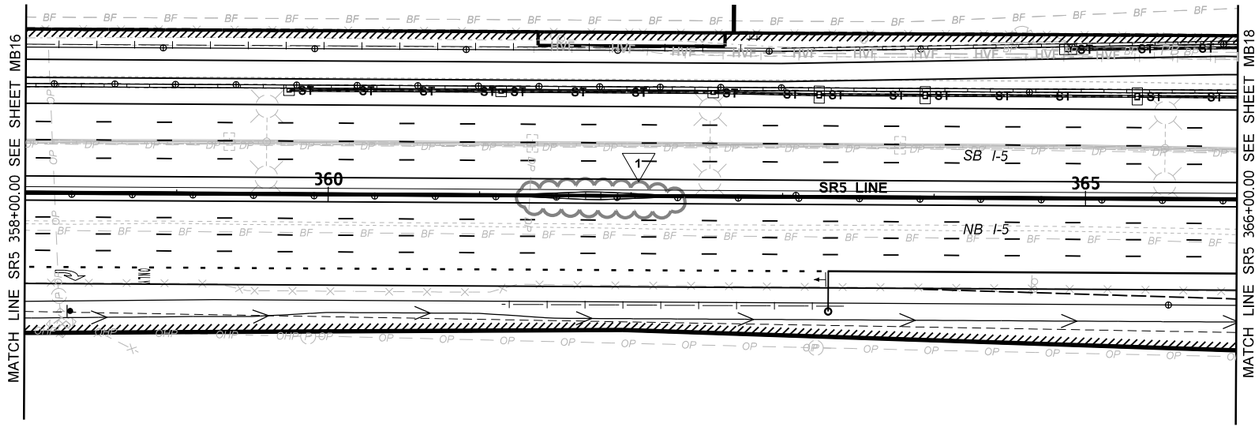

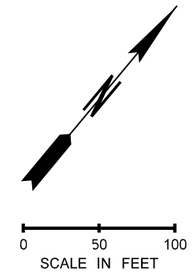

GENERAL NOTES:

1. CALLOUTS ARE TO CENTER OF BARRIER UNLESS OTHERWISE NOTED.

BARRIER CONSTRUCTION NOTES:

- B3 — HIGH-PERFORMANCE SINGLE-SLOPE CONCRETE (4'-6") BARRIER PER WSDOT STD. PLAN C-70.10-01 OR C-80.10-01.
- B4 — CAST-IN-PLACE GRADE SEPARATED CONCRETE BARRIER TYPE SA (6"-18" GRADE SEPARATION) PER DETAIL ON SHEET ST02.
- 1 B12 — SINGLE-SLOPE CONCRETE BARRIER FOR MONOTUBE SIGN SUPPORT AND BARRIER TRANSITIONS PER DETAILS ON SIGN BRIDGE SHEETS.

AS-BUILT

ATKINSON
OCT 28 2019 KTW
RELEASED FOR CONSTRUCTION

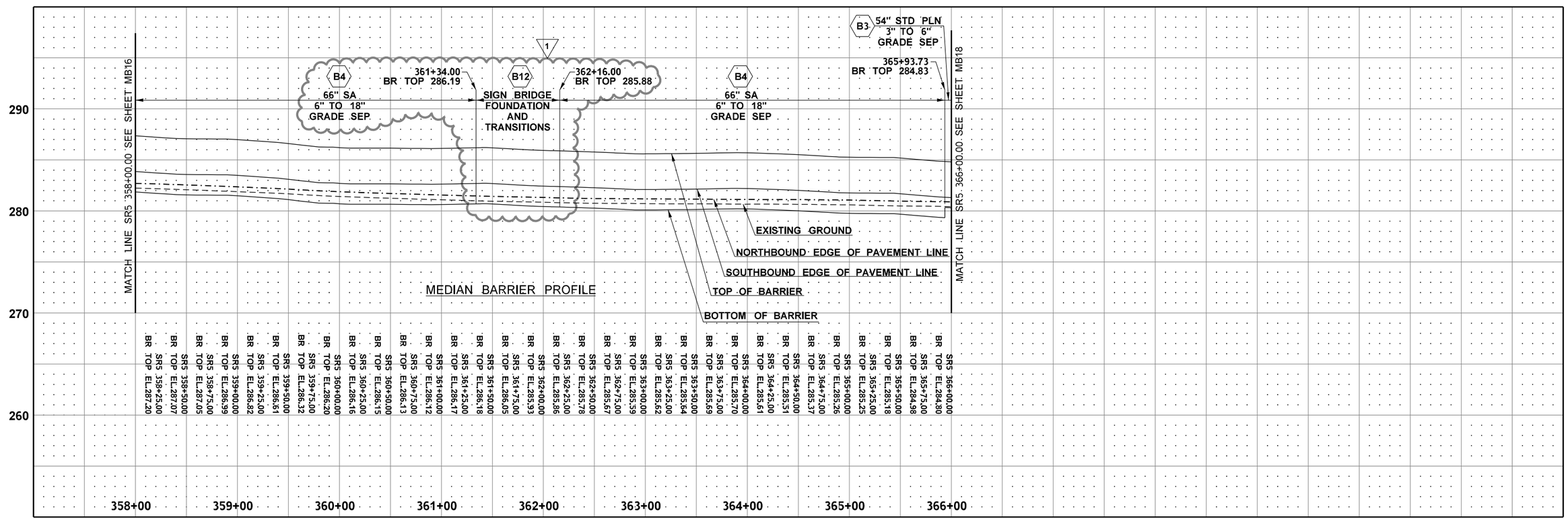

FILE NAME	c:\pwworking\jacobs_b&i\conradcs\dms20633\PS_MB_17.dgn				REGION NO. 10	STATE WASH	FED.AID PROJ.NO.
TIME	2:23:30 PM						
DATE	10/21/2019						
PLOTTED BY	ConradCS				JOB NUMBER		
DESIGNED BY	A. SCHMIDTMAN	REV 1 - RFI0269	10/17/19				
ENTERED BY	C. CONRAD	REV 0 - RELEASED FOR CONSTRUCTION	05/31/19				
CHECKED BY	N. SCHRADER	REV B - FINAL REVIEW	05/07/19		CONTRACT NO. C9133		LOCATION NO.
PROJ. ENGR.	C. MEADE	REV A - PRELIMINARY REVIEW	04/19/19				
REGIONAL ADM.	J. WYNANDS	REVISION	DATE	BY			

STEVEN R. SCHMIDTMAN 47018 REGISTERED PROFESSIONAL ENGINEER — 10/28/19 DATE — P.E. STAMP BOX

DATE — P.E. STAMP BOX

Washington State Department of Transportation

I-5
STEILACOOM-DUPONT RD TO THORNE LN
CORRIDOR IMPROVEMENTS
MP 120.01 TO MP 124.45

MEDIAN BARRIER PLAN & PROFILE

PLAN REF NO MB17

SHEET 727 OF 1456 SHEETS

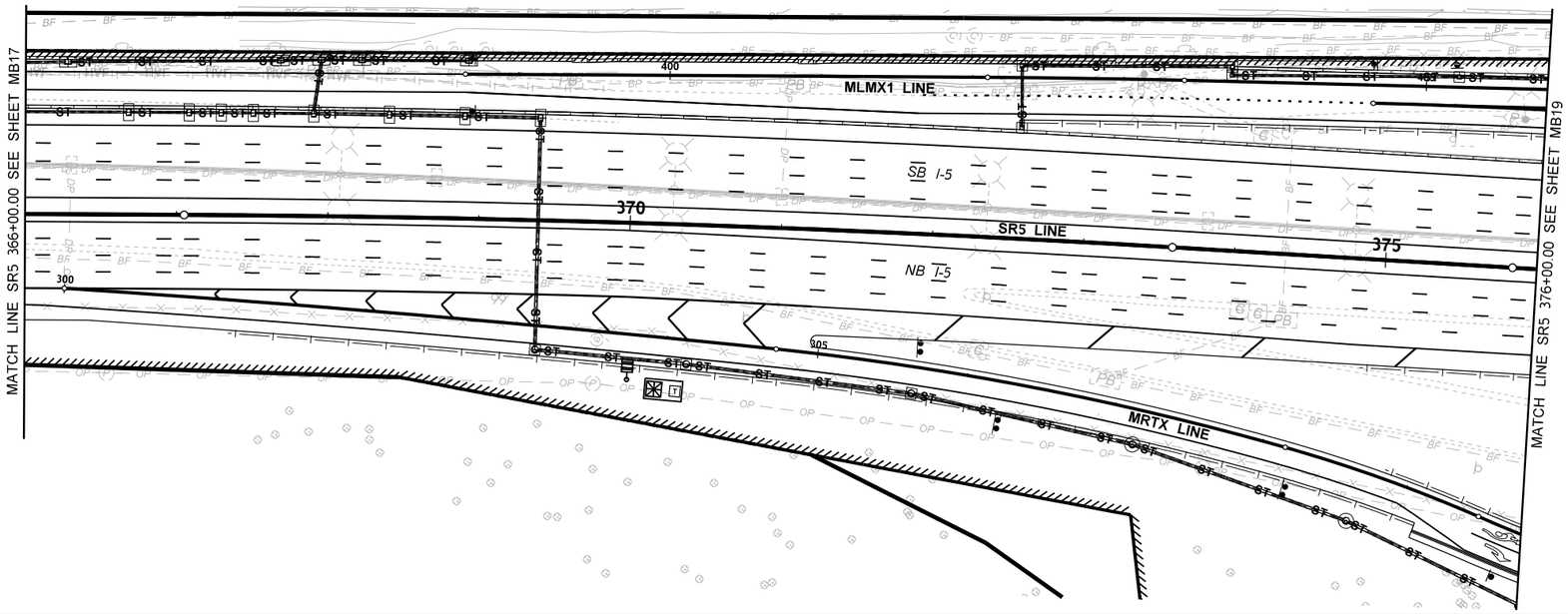

GENERAL NOTES:

1. CALLOUTS ARE TO CENTER OF BARRIER UNLESS OTHERWISE NOTED.

BARRIER CONSTRUCTION NOTES:

- **B2** HIGH-PERFORMANCE SINGLE-SLOPE CONCRETE (4'-0") BARRIER PER WSDOT STD. PLAN C-70.10-01 OR C-80.10-01.
- **B3** HIGH-PERFORMANCE SINGLE-SLOPE CONCRETE (4'-6") BARRIER PER WSDOT STD. PLAN C-70.10-01 OR C-80.10-01.
- **B4** CAST-IN-PLACE GRADE SEPARATED CONCRETE BARRIER TYPE SA (6"-18" GRADE SEPARATION) PER DETAIL ON SHEET ST02.

AS-BUILT

RSA

ATKINSON

JUN 04 2019

RELEASED FOR CONSTRUCTION

0 50 100
SCALE IN FEET

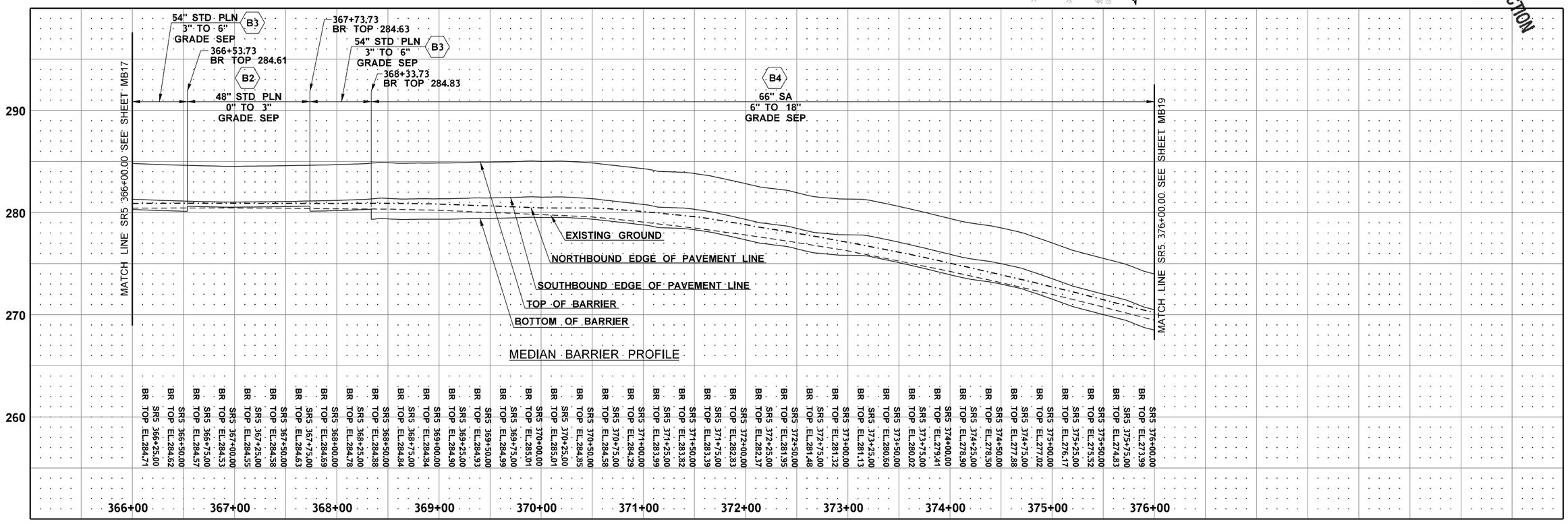

FILE NAME	c:\pwworking\jacobs_b&h\conradcs\dms20633\PS_MB_18.dgn			
TIME	10:09:11 AM			
DATE	6/3/2019			
PLOTTED BY	ConradCS			
DESIGNED BY	A. SCHMIDTMAN			
ENTERED BY	C. CONRAD	REV 0 - RELEASED FOR CONSTRUCTION	05/31/19	
CHECKED BY	N. SCHRADER	REV B - FINAL REVIEW	05/07/19	
PROJ. ENGR.	C. MEADE	REV A - PRELIMINARY REVIEW	04/19/19	
REGIONAL ADM.	J. WYNANDS	REVISION	DATE	BY

REGION NO.	STATE	FED.AID PROJ.NO.
10	WASH	
JOB NUMBER		
CONTRACT NO.		LOCATION NO.
C9133		

ADAM LEE SCHMIDTMAN
STATE OF WASHINGTON
47018
REGISTERED PROFESSIONAL ENGINEER
6/3/19
DATE
P.E. STAMP BOX

DATE
P.E. STAMP BOX

Washington State Department of Transportation

I-5
STEILACOOM-DUPONT RD TO THORNE LN CORRIDOR IMPROVEMENTS
MP 120.01 TO MP 124.45

MEDIAN BARRIER PLAN & PROFILE

PLAN REF NO MB18

SHEET 728 OF 1456 SHEETS

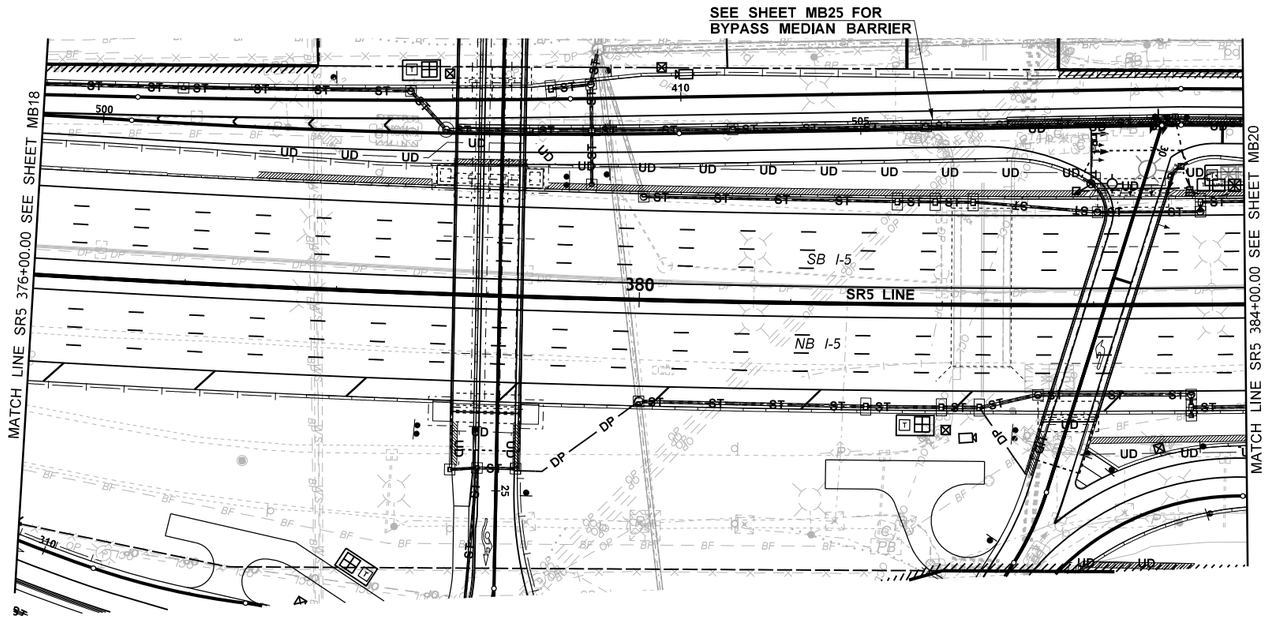

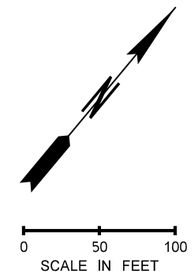

GENERAL NOTES:

1. CALLOUTS ARE TO CENTER OF BARRIER UNLESS OTHERWISE NOTED.

BARRIER CONSTRUCTION NOTES:

B3 HIGH-PERFORMANCE SINGLE-SLOPE CONCRETE (4'-6") BARRIER PER WSDOT STD. PLAN C-70.10-01.

B4 CAST-IN-PLACE GRADE SEPARATED CONCRETE BARRIER TYPE SA (6"-18" GRADE SEPARATION) PER DETAIL ON SHEET ST02.

RSA ATKINSON
JUN 04 2019
RELEASED FOR CONSTRUCTION

AS-BUILT

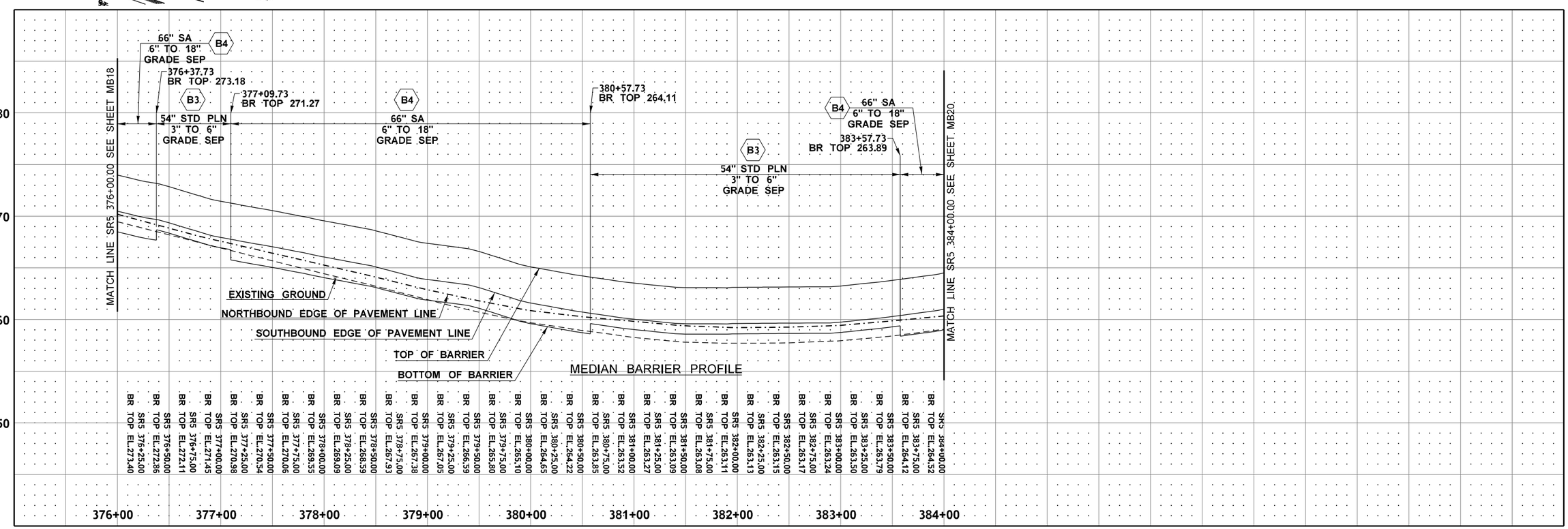

FILE NAME	c:\pwworking\jacobs_b&i\conradcs\dms20633\PS_MB_19.dgn				REGION NO. 10	STATE WASH	FED.AID PROJ.NO.
TIME	10:11:17 AM				JOB NUMBER		
DATE	6/3/2019						
PLOTTED BY	ConradCS						
DESIGNED BY	A. SCHMIDTMAN				CONTRACT NO. C9133		LOCATION NO.
ENTERED BY	C. CONRAD	REV 0 - RELEASED FOR CONSTRUCTION	05/31/19				
CHECKED BY	N. SCHRADER	REV B - FINAL REVIEW	05/07/19				
PROJ. ENGR.	C. MEADE	REV A - PRELIMINARY REVIEW	04/19/19				
REGIONAL ADM.	J. WYNANDS	REVISION	DATE	BY			

ADAM JEFF SCHMIDTMAN
STATE OF WASHINGTON
47018
REGISTERED PROFESSIONAL ENGINEER
6/3/19
DATE
P.E. STAMP BOX

DATE
P.E. STAMP BOX

Washington State Department of Transportation

I-5
STEILACOOM-DUPONT RD TO THORNE LN
CORRIDOR IMPROVEMENTS
MP 120.01 TO MP 124.45

MEDIAN BARRIER PLAN & PROFILE

PLAN REF NO MB19

SHEET 729 OF 1456 SHEETS

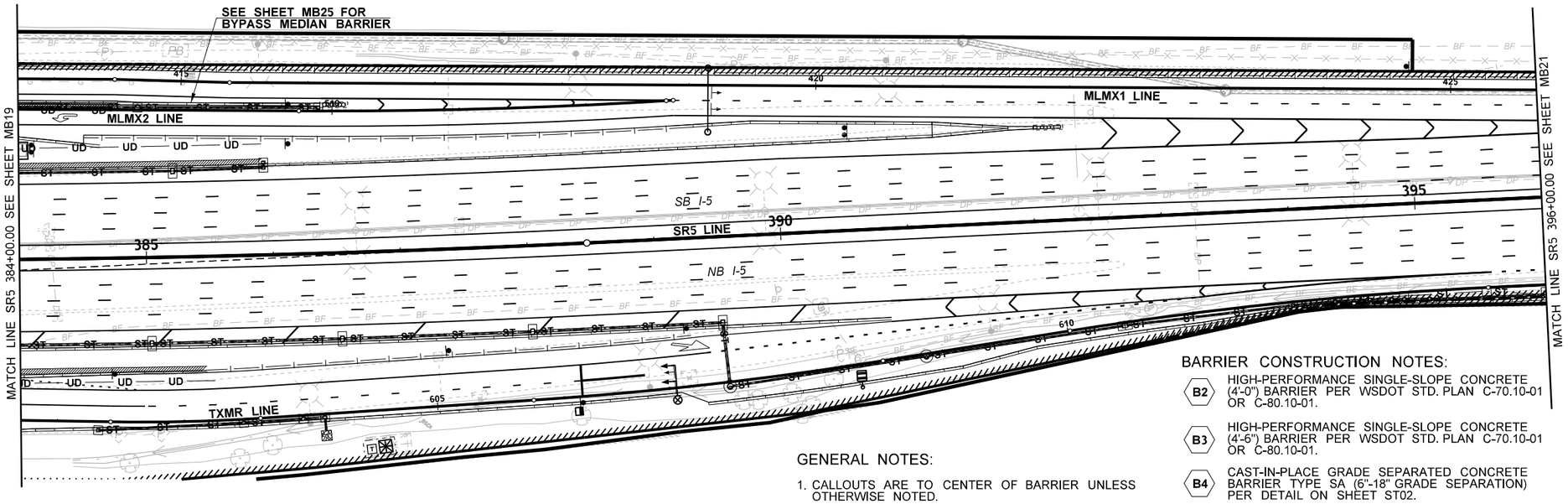

AS-BUILT

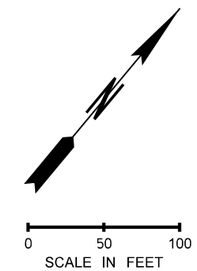

RSA ATKINSON
JUN 04 2019
RELEASED FOR CONSTRUCTION

BARRIER CONSTRUCTION NOTES:

- B2 — HIGH-PERFORMANCE SINGLE-SLOPE CONCRETE (4'-0") BARRIER PER WSDOT STD. PLAN C-70.10-01 OR C-80.10-01.
- B3 — HIGH-PERFORMANCE SINGLE-SLOPE CONCRETE (4'-6") BARRIER PER WSDOT STD. PLAN C-70.10-01 OR C-80.10-01.
- B4 — CAST-IN-PLACE GRADE SEPARATED CONCRETE BARRIER TYPE SA (6"-18" GRADE SEPARATION) PER DETAIL ON SHEET ST02.

GENERAL NOTES:

1. CALLOUTS ARE TO CENTER OF BARRIER UNLESS OTHERWISE NOTED.

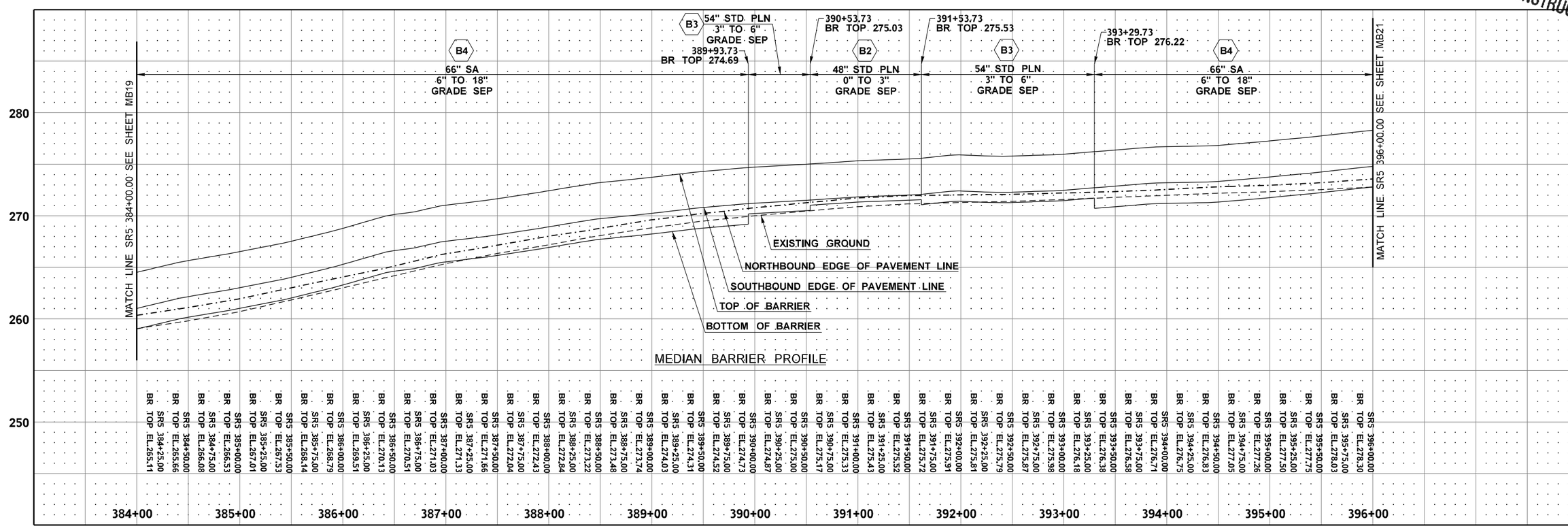

FILE NAME	c:\pwworking\jacobs_b&i\conradcs\dms20633\PS_MB_20.dgn			
TIME	10:13:49 AM			
DATE	6/3/2019			
PLOTTED BY	ConradCS			
DESIGNED BY	A. SCHMIDTMAN			
ENTERED BY	C. CONRAD	REV 0 - RELEASED FOR CONSTRUCTION	05/31/19	
CHECKED BY	N. SCHRADER	REV B - FINAL REVIEW	05/07/19	
PROJ. ENGR.	C. MEADE	REV A - PRELIMINARY REVIEW	04/19/19	
REGIONAL ADM.	J. WYNANDS	REVISION	DATE	BY

REGION NO.	STATE	FED.AID PROJ.NO.
10	WASH	
JOB NUMBER		
CONTRACT NO.		LOCATION NO.
C9133		

ADAM JEFF SCHMIDTMAN — STATE OF WASHINGTON — 47018 — REGISTERED PROFESSIONAL ENGINEER
6/3/19
DATE
P.E. STAMP BOX

DATE
P.E. STAMP BOX

Washington State Department of Transportation

I-5
STEILACOOM-DUPONT RD TO THORNE LN
CORRIDOR IMPROVEMENTS
MP 120.01 TO MP 124.45

MEDIAN BARRIER PLAN & PROFILE

PLAN REF NO MB20

SHEET 730 OF 1456 SHEETS

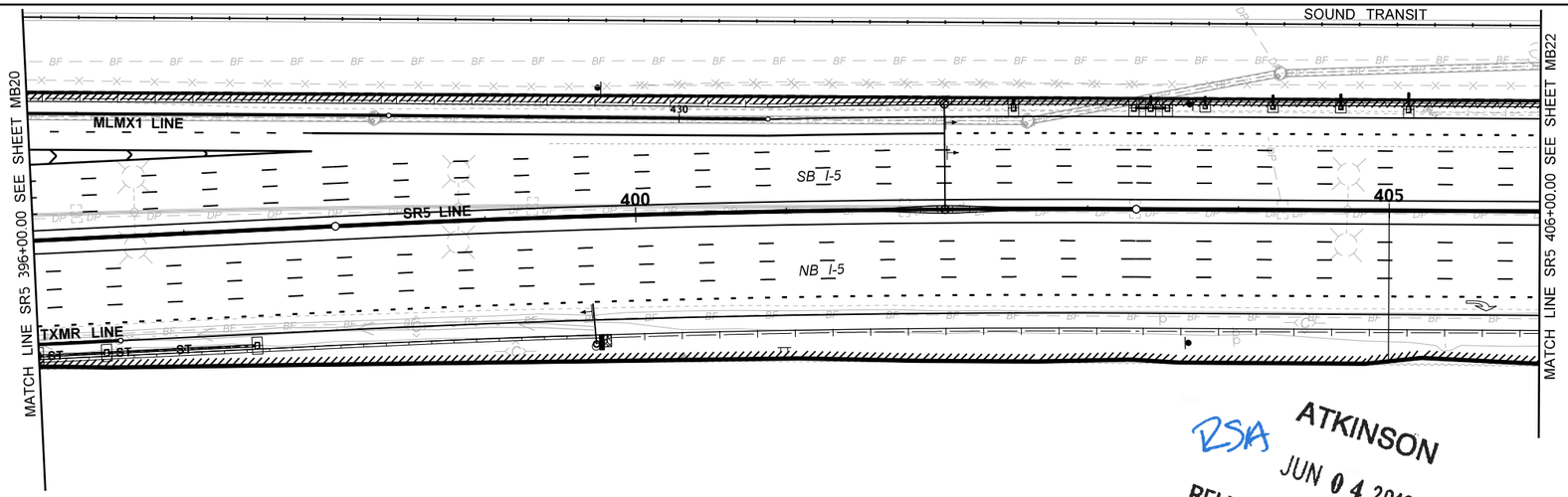

RSA ATKINSON
JUN 04 2019
RELEASED FOR CONSTRUCTION

GENERAL NOTES:

1. CALLOUTS ARE TO CENTER OF BARRIER UNLESS OTHERWISE NOTED.

BARRIER CONSTRUCTION NOTES:

- **B3** HIGH-PERFORMANCE SINGLE-SLOPE CONCRETE (4'-6") BARRIER PER WSDOT STD. PLAN C-70.10-01 OR C-80.10-01.
- **B4** CAST-IN-PLACE GRADE SEPARATED CONCRETE BARRIER TYPE SA (6"-18" GRADE SEPARATION) PER DETAIL ON SHEET ST02.
- **B5** CAST-IN-PLACE GRADE SEPARATED CONCRETE BARRIER TYPE SB (18"-27" GRADE SEPARATION) PER DETAIL ON SHEET ST02.
- **B12** SINGLE-SLOPE CONCRETE BARRIER FOR MONOTUBE SIGN SUPPORT AND BARRIER TRANSITIONS PER DETAILS ON SIGN BRIDGE SHEETS.

AS-BUILT

N

0 50 100
SCALE IN FEET

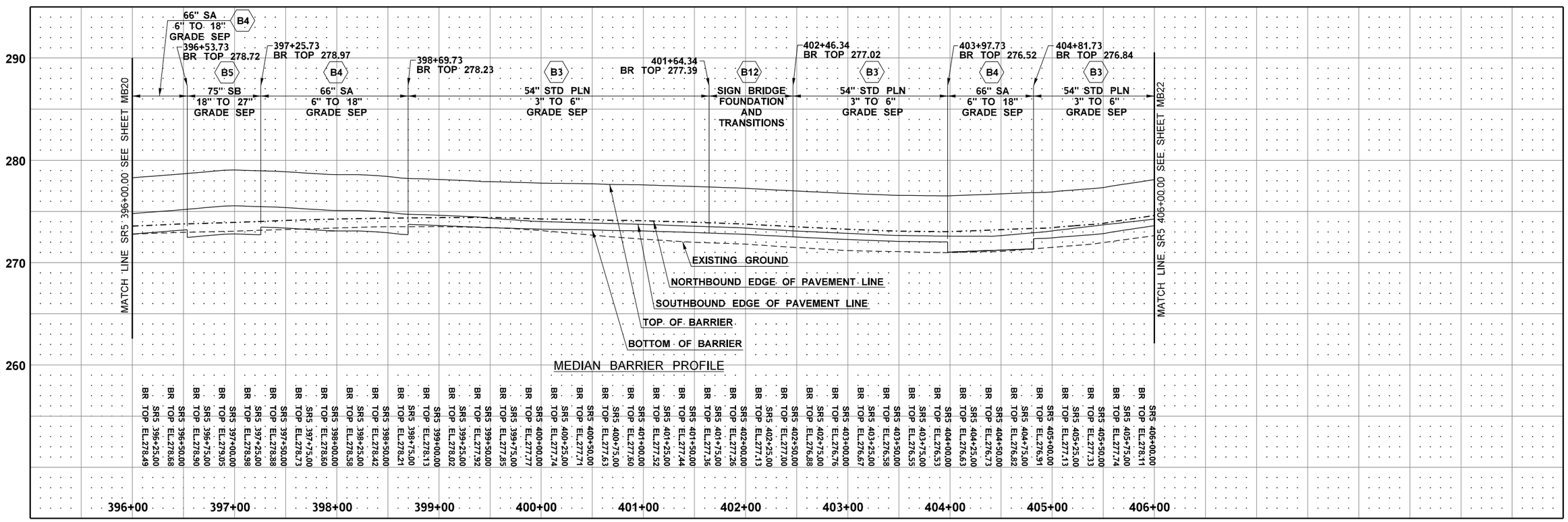

FILE NAME	c:\pwworking\jacobs_b&i\conradcs\dms20633\PS_MB_21.dgn						
TIME	10:17:22 AM						
DATE	6/3/2019						
PLOTTED BY	ConradCS						
DESIGNED BY	A. SCHMIDTMAN						
ENTERED BY	C. CONRAD	REV 0 - RELEASED FOR CONSTRUCTION	05/31/19				
CHECKED BY	N. SCHRADER	REV B - FINAL REVIEW	05/07/19				
PROJ. ENGR.	C. MEADE	REV A - PRELIMINARY REVIEW	04/19/19				
REGIONAL ADM.	J. WYNANDS	REVISION	DATE	BY			

REGION NO.	STATE	FED.AID PROJ.NO.
10	WASH	
JOB NUMBER		
CONTRACT NO.		LOCATION NO.
C9133		

ADAM LEE SCHMIDTMAN, STATE OF WASHINGTON, 47018, REGISTERED PROFESSIONAL ENGINEER
6/3/19
DATE
P.E. STAMP BOX

DATE
P.E. STAMP BOX

Washington State Department of Transportation

I-5
STEILACOOM-DUPONT RD TO THORNE LN
CORRIDOR IMPROVEMENTS
MP 120.01 TO MP 124.45

MEDIAN BARRIER PLAN & PROFILE

PLAN REF NO MB21

SHEET 731 OF 1456 SHEETS

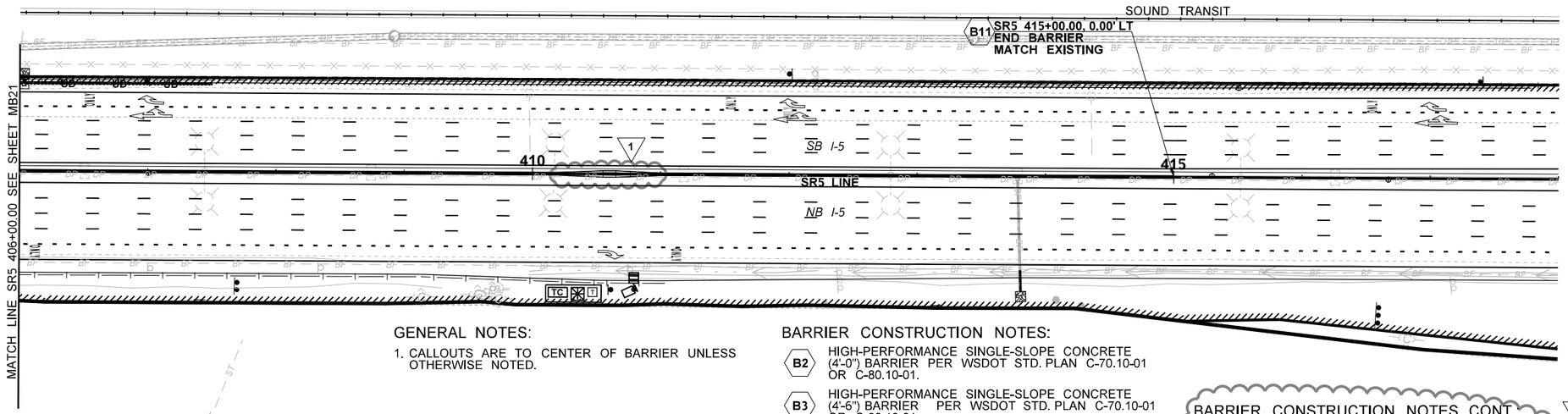

AS-BUILT

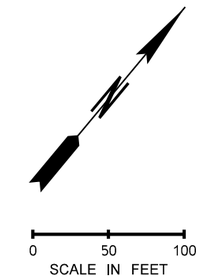

GENERAL NOTES:

1. CALLOUTS ARE TO CENTER OF BARRIER UNLESS OTHERWISE NOTED.

BARRIER CONSTRUCTION NOTES:

- B2 HIGH-PERFORMANCE SINGLE-SLOPE CONCRETE (4'-0") BARRIER PER WSDOT STD. PLAN C-70.10-01 OR C-80.10-01.
- B3 HIGH-PERFORMANCE SINGLE-SLOPE CONCRETE (4'-6") BARRIER PER WSDOT STD. PLAN C-70.10-01 OR C-80.10-01.
- B4 CAST-IN-PLACE GRADE SEPARATED CONCRETE BARRIER TYPE SA (6"-18" GRADE SEPARATION) PER DETAIL ON SHEET ST02.
- B11 CONCRETE BARRIER TRANSITION TYPE 2 TO HIGH-PERFORMANCE SINGLE-SLOPE BARRIER PER DETAIL ON SHEET ST05.

BARRIER CONSTRUCTION NOTES CONT.:

- B12 SINGLE-SLOPE CONCRETE BARRIER FOR MONOTUBE SIGN SUPPORT AND BARRIER TRANSITIONS PER DETAILS ON SIGN BRIDGE SHEETS.

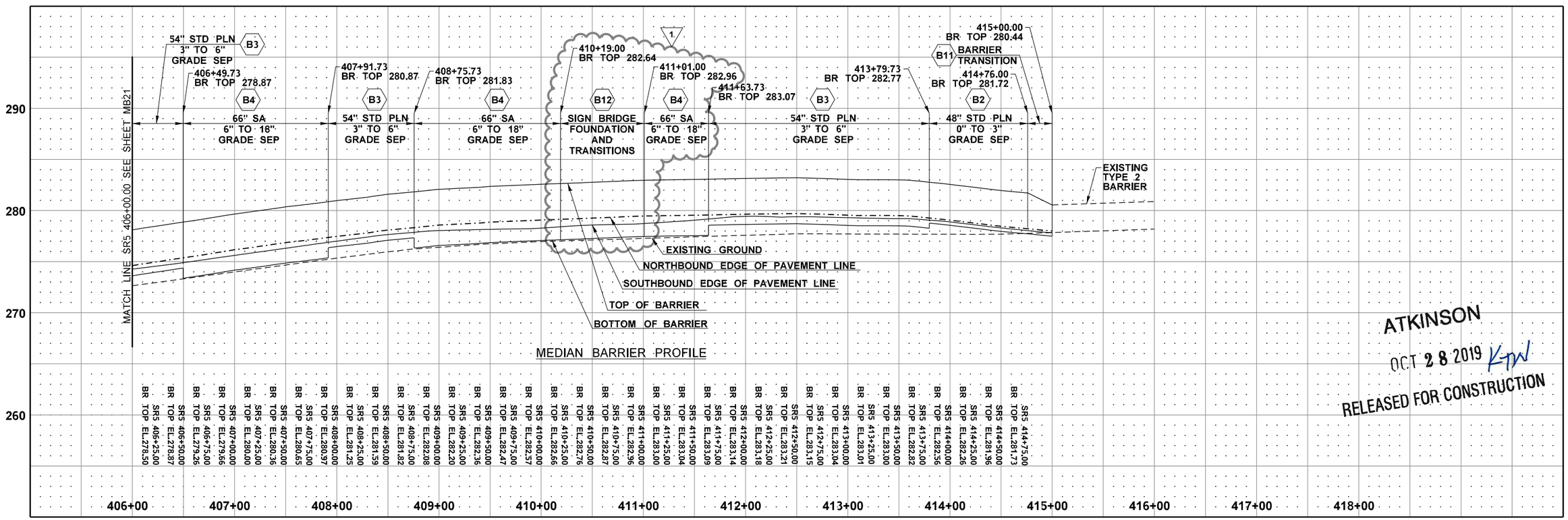

ATKINSON
OCT 28 2019 KTW
RELEASED FOR CONSTRUCTION

FILE NAME	c:\pwworking\jacobs_b&l\schmidal\dms20633\PS_MB_22.dgn			
TIME	12:49:38 PM			
DATE	10/28/2019			
PLOTTED BY	SchmidAL			
DESIGNED BY	A. SCHMIDTMAN	REV 1 - RFI0269	10/17/19	
ENTERED BY	C. CONRAD	REV 0 - RELEASED FOR CONSTRUCTION	05/31/19	
CHECKED BY	N. SCHRADER	REV B - FINAL REVIEW	05/07/19	
PROJ. ENGR.	C. MEADE	REV A - PRELIMINARY REVIEW	04/19/19	
REGIONAL ADM.	J. WYNANDS	REVISION	DATE	BY

REGION NO.	STATE	FED.AID PROJ.NO.
10	WASH	
JOB NUMBER		
CONTRACT NO.		LOCATION NO.
C9133		

P.E. STAMP BOX — DATE 10/28/19

P.E. STAMP BOX — DATE

Washington State Department of Transportation

I-5
STEILACOOM-DUPONT RD TO THORNE LN
CORRIDOR IMPROVEMENTS
MP 120.01 TO MP 124.45

MEDIAN BARRIER PLAN & PROFILE

PLAN REF NO MB22

SHEET 732 OF 1456 SHEETS

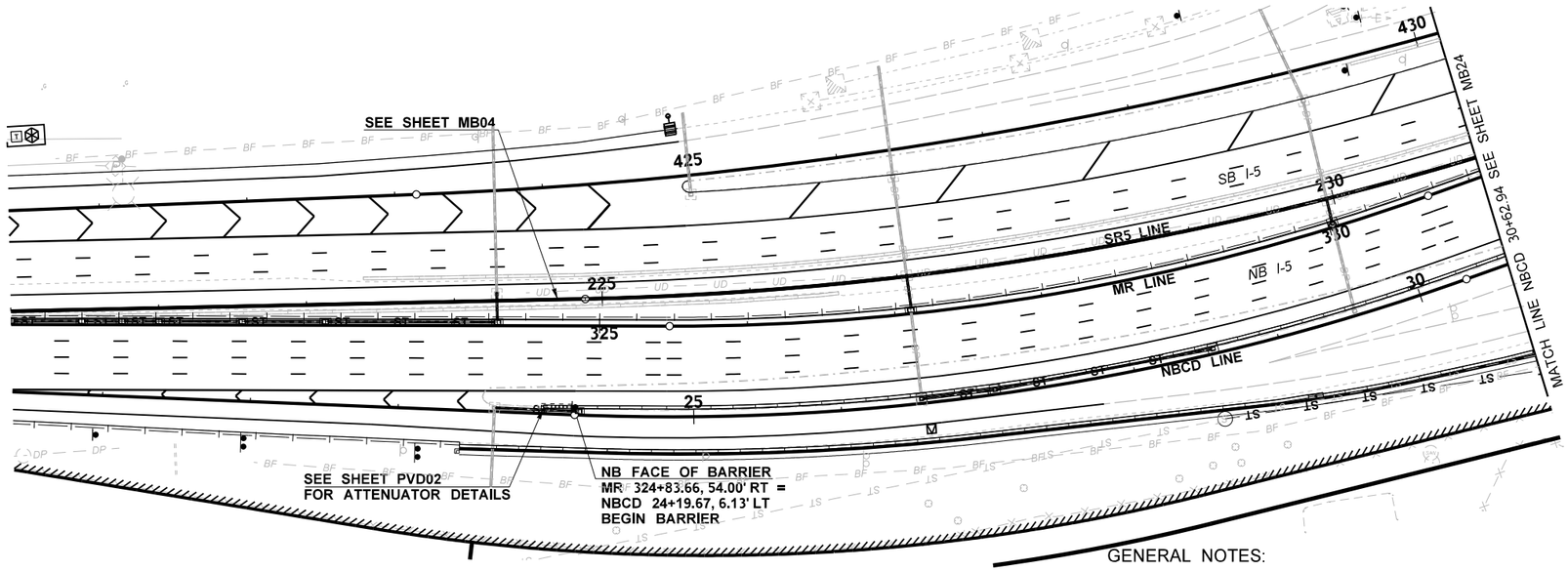

BARRIER CONSTRUCTION NOTES:

- **B3** HIGH-PERFORMANCE SINGLE-SLOPE CONCRETE (4'-6") BARRIER PER WSDOT STD. PLAN C-70.10-01 OR C-80.10-01.
- **B4** CAST-IN-PLACE GRADE SEPARATED CONCRETE BARRIER TYPE SA (6"-18" GRADE SEPARATION) PER DETAIL ON SHEET ST02.
- **B5** CAST-IN-PLACE GRADE SEPARATED CONCRETE BARRIER TYPE SB (18"-27" GRADE SEPARATION) PER DETAIL ON SHEET ST02.
- **B6** CAST-IN-PLACE GRADE SEPARATED CONCRETE BARRIER TYPE SC (27"-36" GRADE SEPARATION) PER DETAIL ON SHEET ST02.

N

0 50 100
SCALE IN FEET

AS-BUILT

GENERAL NOTES:

1. CALLOUTS ARE TO CENTER OF BARRIER UNLESS OTHERWISE NOTED.

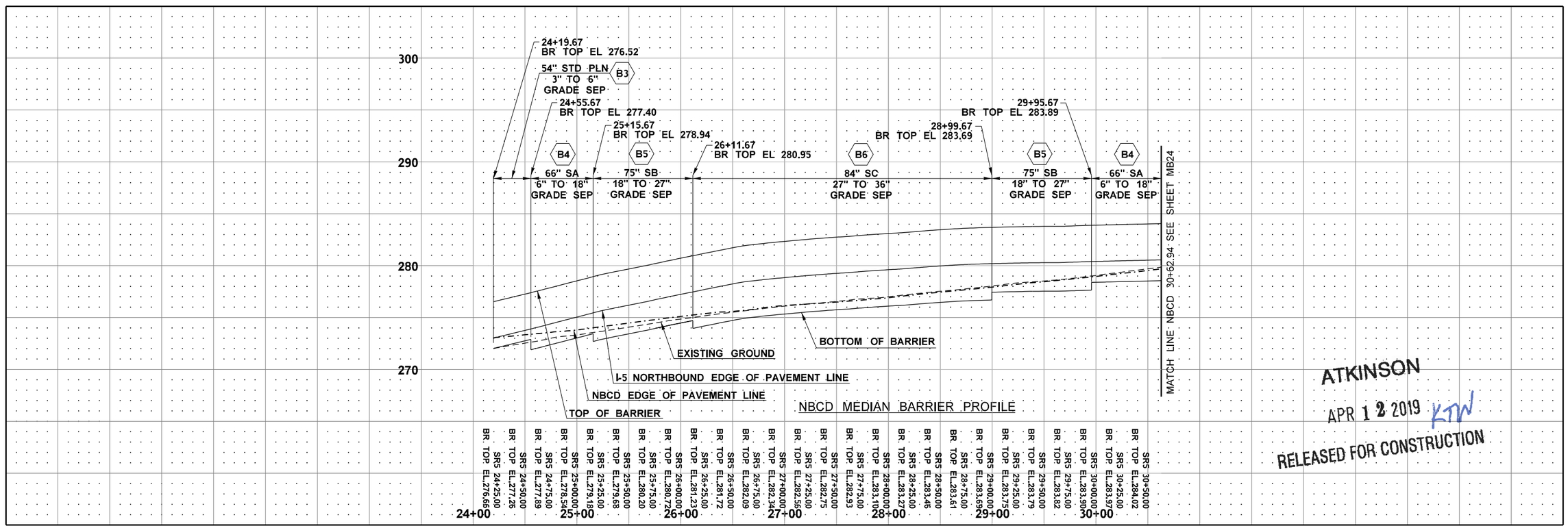

NBCD MEDIAN BARRIER PROFILE

ATKINSON
APR 12 2019 KTW
RELEASED FOR CONSTRUCTION

FILE NAME	c:\pwworking\jacobs_b&h\conradcs\dms20633\PS_MB_23.dgn				REGION NO. 10	STATE WASH	FED.AID PROJ.NO.
TIME	2:13:02 PM				JOB NUMBER		
DATE	4/11/2019						
PLOTTED BY	ConradCS						
DESIGNED BY	A. SCHMIDTMAN				CONTRACT NO. C9133		LOCATION NO.
ENTERED BY	C. CONRAD	REV 0 - RELEASED FOR CONSTRUCTION	04/11/19				
CHECKED BY	N. SCHRADER	REV B - FINAL REVIEW	04/01/19				
PROJ. ENGR.	C. MEADE	REV A - PRELIMINARY REVIEW	03/11/19				
REGIONAL ADM.	J. WYNANDS	REVISION	DATE	BY			

STATE OF WASHINGTON 47018 REGISTERED PROFESSIONAL ENGINEER
4/11/19
DATE
P.E. STAMP BOX

DATE
P.E. STAMP BOX

Washington State
Department of Transportation

I-5
STEILACOOM-DUPONT RD TO THORNE LN
CORRIDOR IMPROVEMENTS
MP 120.01 TO MP 124.45

MEDIAN BARRIER PLAN & PROFILE

PLAN REF NO
MB23

SHEET 733 OF 1456 SHEETS

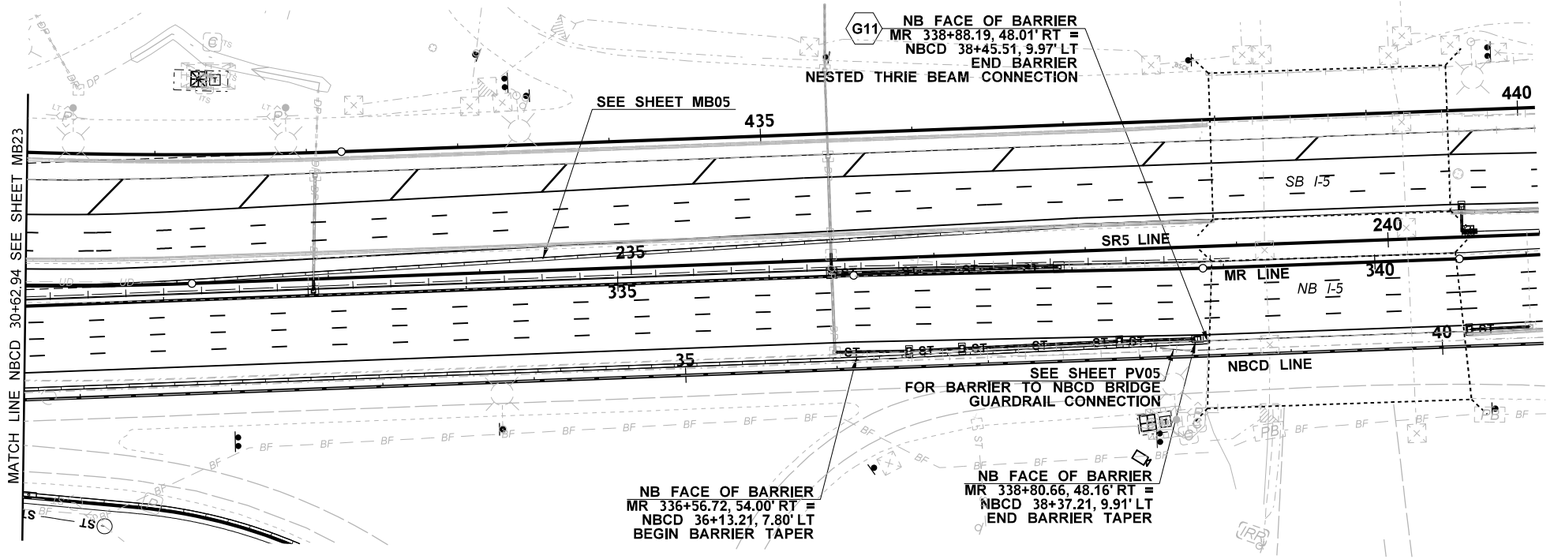

BARRIER CONSTRUCTION NOTES:

1

B3 HIGH-PERFORMANCE SINGLE-SLOPE CONCRETE (4'-6") BARRIER PER WSDOT STD. PLAN C-70.10-01 OR C-80.10-01.

B4 CAST-IN-PLACE GRADE SEPARATED CONCRETE BARRIER TYPE SA (6"-18" GRADE SEPARATION) PER DETAIL ON SHEET ST02.

G11 CONNECT BARRIER TO EXISTING BRIDGE BARRIER WITH NESTED THRIE BEAM GUARDRAIL (WSDOT STD. PLAN C-1a) AND END SECTION DESIGN F BARRIER CONNECTION PER WSDOT STD PLAN C-7a. SEE DETAIL ON SHEET ST06.

AS-BUILT

ATKINSON
APR 26 2019 KTW
RELEASED FOR CONSTRUCTION

0 50 100
SCALE IN FEET

GENERAL NOTES:

1. CALLOUTS ARE TO CENTER OF BARRIER UNLESS OTHERWISE NOTED.

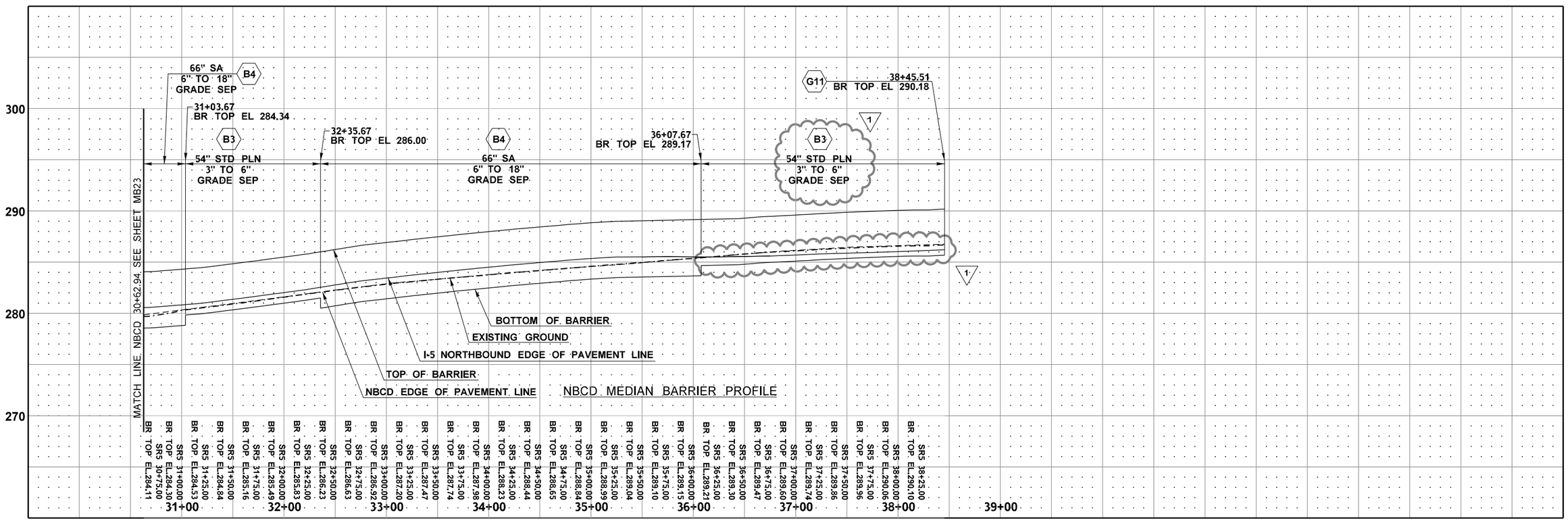

FILE NAME	c:\pwworking\jacobs_b&i\schmidal\dms20633\PS_MB_24.dgn				REGION NO.	STATE	FED.AID PROJ.NO.
TIME	9:48:28 AM				10	WASH	
DATE	4/25/2019				JOB NUMBER		
PLOTTED BY	SchmidAL						
DESIGNED BY	A. SCHMIDTMAN	REV 1 - RFI0085	04/25/19		CONTRACT NO.		LOCATION NO.
ENTERED BY	C. CONRAD	REV 0 - RELEASED FOR CONSTRUCTION	04/11/19		C9133		
CHECKED BY	N. SCHRADER	REV B - FINAL REVIEW	04/01/19				
PROJ. ENGR.	C. MEADE	REV A - PRELIMINARY REVIEW	03/11/19				
REGIONAL ADM.	J. WYNANDS	REVISION	DATE	BY			

WILLIAM LEE SCHMIDTMAN 47018 REGISTERED PROFESSIONAL ENGINEER
4/25/19
DATE
P.E. STAMP BOX

DATE
P.E. STAMP BOX

Washington State
Department of Transportation

I-5
STEILACOOM-DUPONT RD TO THORNE LN
CORRIDOR IMPROVEMENTS
MP 120.01 TO MP 124.45

MEDIAN BARRIER PLAN & PROFILE

PLAN REF NO
MB24

SHEET 734 OF 1456 SHEETS

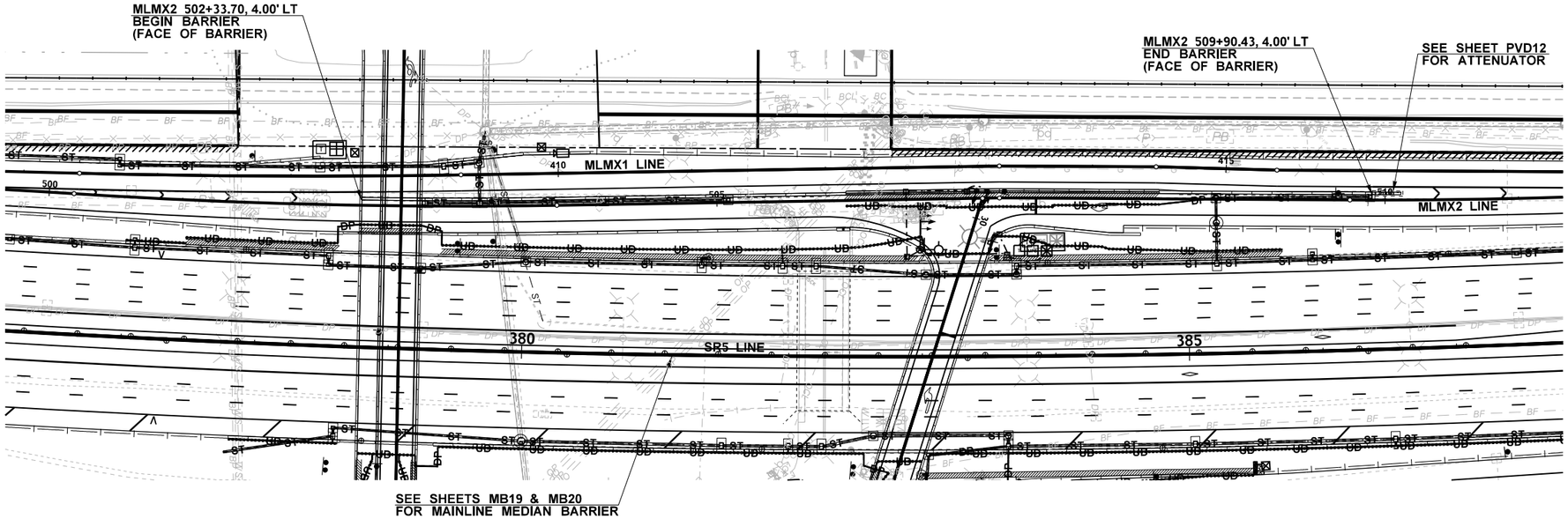

GENERAL NOTES:

1. CALLOUTS ARE TO CENTER OF BARRIER UNLESS OTHERWISE NOTED.

BARRIER CONSTRUCTION NOTES:

- B2 — HIGH-PERFORMANCE SINGLE-SLOPE CONCRETE (4'-0") BARRIER PER WSDOT STD. PLAN C-70.10-01 OR C-80.10-01.
- B3 — HIGH-PERFORMANCE SINGLE-SLOPE CONCRETE (4'-6") BARRIER PER WSDOT STD. PLAN C-70.10-01 OR C-80.10-01.
- B6 — CAST-IN-PLACE GRADE SEPARATED CONCRETE BARRIER TYPE SC (27"-36" GRADE SEPARATION) PER DETAIL ON SHEET ST02.
- B9 — MEDIAN WALL WITH HIGH PERFORMANCE SINGLE SLOPE BARRIER PER WALL PLANS.
- B10 — HIGH-PERFORMANCE SINGLE-SLOPE CONCRETE BARRIER (PRECAST) VERTICAL BACK PER WSDOT STD. PLAN C-75.20-01.
- B26 — CAST-IN-PLACE VERTICAL BACK TRANSITION BARRIER. SEE SHEET ST13.

AS-BUILT

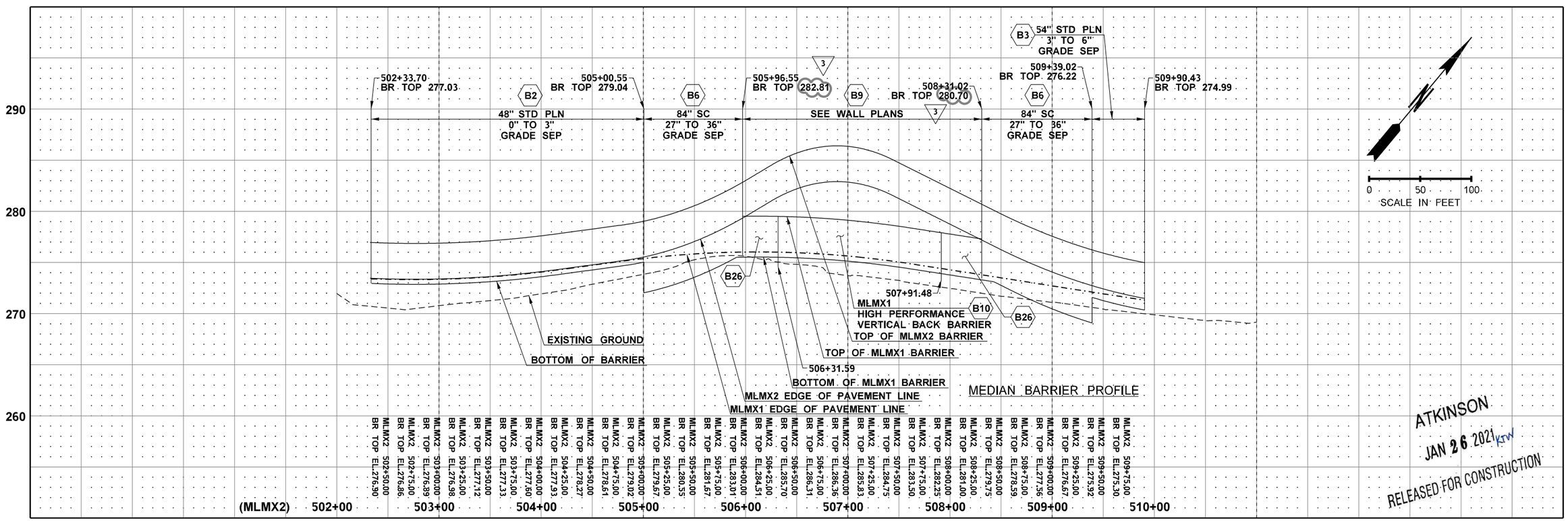

ATKINSON
JAN 26 2021
RELEASED FOR CONSTRUCTION

FILE NAME	c:\pwworking\jacobs_b&i\schradnj\dms20633\PS_MB_25.dgn						
TIME	3:28:31 PM						
DATE	1/20/2021	REV 3 - RFI0604	01/20/21				
PLOTTED BY	SchradNJ	REV 2 - RFI0245	10/01/19				
DESIGNED BY	A. SCHMIDTMAN	REV 1 - RFI0193	08/28/19				
ENTERED BY	C. CONRAD	REV 0 - RELEASED FOR CONSTRUCTION	05/31/19				
CHECKED BY	N. SCHRADER	REV B - FINAL REVIEW	05/07/19				
PROJ. ENGR.	C. MEADE	REV A - PRELIMINARY REVIEW	04/19/19				
REGIONAL ADM.	J. WYNANDS	REVISION	DATE	BY			

REGION NO.	STATE	FED.AID PROJ.NO.
10	WASH	
JOB NUMBER		
CONTRACT NO.		LOCATION NO.
C9133		

P.E. STAMP BOX — 01/26/21 DATE

P.E. STAMP BOX — DATE

Washington State Department of Transportation

I-5
STEILACOOM-DUPONT RD TO THORNE LN
CORRIDOR IMPROVEMENTS
MP 120.01 TO MP 124.45

MEDIAN BARRIER PLAN & PROFILE

PLAN REF NO MB25

SHEET 735 OF 1456 SHEETS

NOTES:

1. SEE STANDARD PLAN C-70.10-01 FOR CONNECTION OF PRECAST BARRIER TO PRECAST BARRIER.
2. SEE STANDARD PLAN C-80.10-01 FOR CONNECTION OF CIP BARRIER TO CIP BARRIER.

AS-BUILT

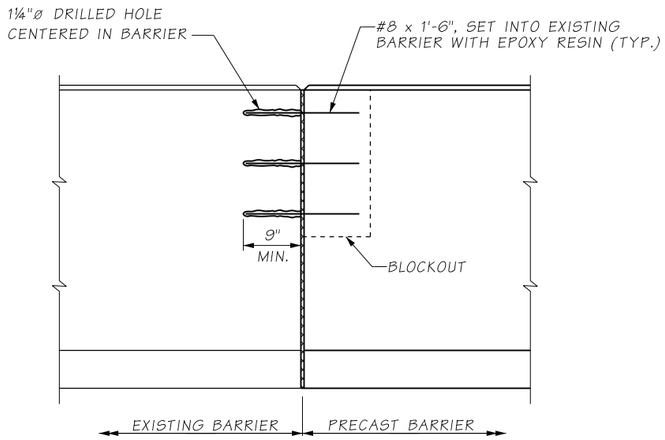

FOR CONNECTION OF PRECAST BARRIER TO EXISTING BARRIER

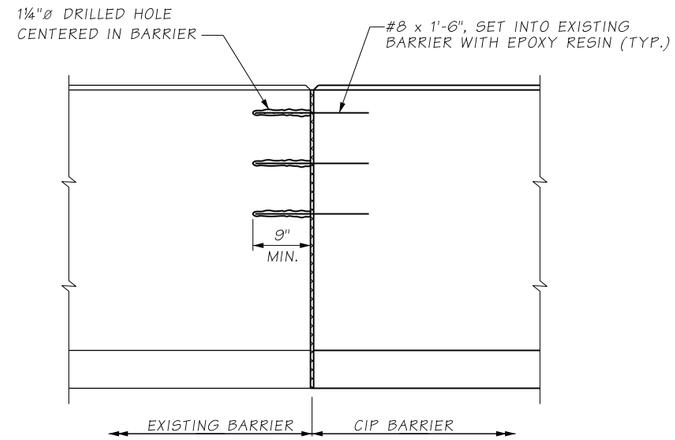

FOR CONNECTION OF CIP BARRIER TO EXISTING BARRIER

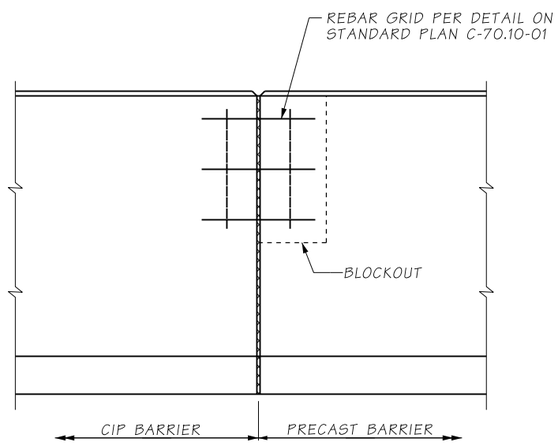

FOR CONNECTION OF PRECAST BARRIER TO CIP BARRIER

ATKINSON
APR 16 2019 KTW
RELEASED FOR CONSTRUCTION

FILE NAME	D:\ICS_workdir\25317\20633_1146\PS_ST01.dgn						
TIME	10:12:15 AM				REGION NO. 10	STATE WASH	FED.AID PROJ.NO.
DATE	4/13/2019						
PLOTTED BY	USLAS0-APP064$				JOB NUMBER		
DESIGNED BY	A. FONG						
ENTERED BY	R. REISER						
CHECKED BY	C. CAYWOOD	REV 0 - RELEASED FOR CONSTRUCTION	04/17/2019		CONTRACT NO. C9133		LOCATION NO.
PROJ. ENGR.	C. MEADE	REV A - FINAL REVIEW	04/01/2019				
REGIONAL ADM.	J. WYNANDS	REVISION	DATE	BY			

CORY J. CAYWOOD, STATE OF WASHINGTON, 38759, STRUCTURAL ENGINEER, PROFESSIONAL ENGINEER — 4/15/19 — DATE — P.E. STAMP BOX

DATE — P.E. STAMP BOX

Washington State Department of Transportation

ATKINSON / JACOBS CONSTRUCTION

I-5
STEILACOOM-DUPONT RD TO THORNE LN
CORRIDOR IMPROVEMENTS
MP 120.01 TO MP 124.45

BARRIER DETAILS
TYPICAL CONNECTION DETAILS

PLAN REF NO ST01

SHEET 736 OF 1456 SHEETS

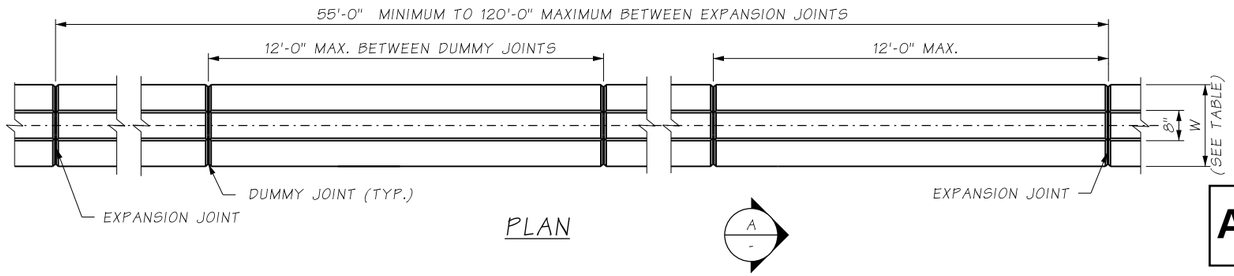

PLAN

AS-BUILT

GRADE SEPARATED BARRIER TABLE						
BARRIER TYPE	MAX. GRADE SEPARATION Δ	BARRIER HEIGHT, H	MIN. EMBED., X	BOTTOM WIDTH, W	MIN. BARRIER LENGTH	"D" SPACES
SA	6" TO 18"	5'-6"	6"	2'-9¼"	55'-0"	7
SB	>18" TO 27"	6'-3"	6"	3'-0½"	55'-0"	9
SC	>27" TO 36"	7'-0"	6"	3'-4"	55'-0"	10*
SD	>36" TO 39"	7'-3"	6"	3'-5¼"	55'-0"	11
SE	>39" TO 42"	7'-6"	6"	3'-6¼"	55'-0"	11

* 9 SPACES CONSTRUCTED AT THORNE CD MEDIAN BARRIER, MLMX2 508+31.02 TO 509+39.02.

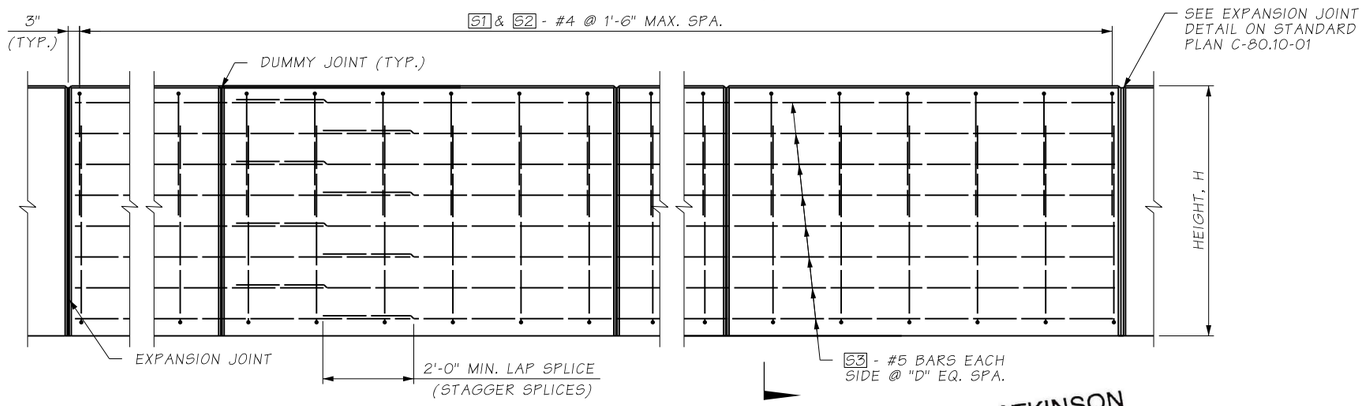

ELEVATION

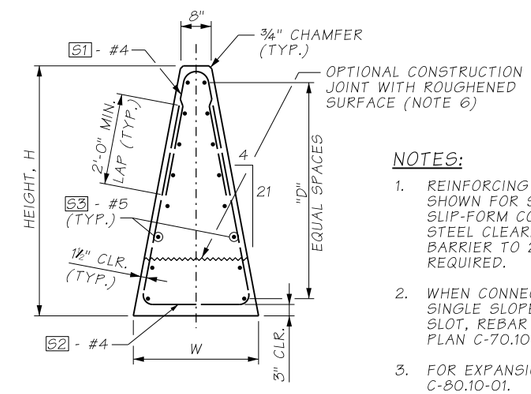

SECTION A

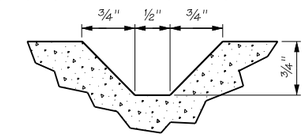

DUMMY JOINT

ATKINSON
JAN 07 2021 KTW
RELEASED FOR CONSTRUCTION

NOTES:

1. REINFORCING STEEL DIMENSIONS AND CLEARANCES ARE SHOWN FOR STATIONARY FORM CONSTRUCTION. WHEN SLIP-FORM CONSTRUCTION IS USED, INCREASE REINFORCING STEEL CLEARANCES TO THE OUTSIDE SURFACES OF THE BARRIER TO 2½" AND ADJUST THE REBAR DIMENSIONS AS REQUIRED.
2. WHEN CONNECTING BETWEEN CAST-IN-PLACE AND PRECAST SINGLE SLOPE BARRIER, SEE SHEET ST01 OR PROVIDE A SLOT, REBAR GRID AND REINFORCEMENT AS SHOWN ON STD. PLAN C-70.10-01.
3. FOR EXPANSION JOINTS, SEE WSDOT STANDARD PLAN C-80.10-01.
4. WHERE SHOWN IN THE DRAINAGE PLAN, UNDERDRAIN SHALL HAVE 6"ø UNDERDRAIN PIPE PER WSDOT STANDARD SPEC. 9-05.2(6) OR 9-05.2(7) WITH GRAVEL BACKFILL FOR DRAINS PER WSDOT STANDARD SPEC. 9-03.12(4) WRAP ALL AROUND WITH CONSTRUCTION GEOTEXTILE FOR UNDERGROUND DRAINAGE. MODERATE SURVIVABILITY AND CLASS C FILTRATION PER WSDOT STANDARD SPEC. 9-33.2(1) TABLES 1 AND 2, OVERLAP ON TOP.
5. FOR BARRIER LOCATION AND LIMIT OF BARRIER TYPE, SEE PAVING PLANS.
6. FOR BARRIER TYPES SA AND SB, OPTIONAL CONSTRUCTION JOINT SHALL BE CONSTRUCTED BELOW TOP OF FINISHED ROADWAY. FOR BARRIER TYPES SC, SD, AND SE, OPTIONAL CONSTRUCTION JOINT MAY BE CONSTRUCTED ABOVE TOP OF ROADWAY. FOR ANY CONTRUCTION JOINTS CONSTRUCTED ABOVE TOP OF ROADWAY, SPECIAL CARE SHALL BE TAKEN TO ENSURE THE APPEARANCE OF CONSTRUCTION JOINT IS MINIMIZED. ANY UNEVEN SURFACES BETWEEN THE TWO POURS SHALL BE GROUND FLUSH. PIGMENTED SEALER SHALL BE APPLIED TO THE BARRIER SURFACE FOR THE FULL EXPOSED HEIGHT OF BARRIER AND EXTENDED TO A MINIMUM OF THE NEAREST ADJACENT DUMMY JOINTS.
7. THE MAXIMUM SIZE OF BARRIER BLOBS SHALL BE 2 CUBIC FEET FOR BARRIER HEIGHTS UP TO 4'-0'' TALL AND INCREASE PROPORTIONALLY TO A MAXIMUM OF APPROX. 12 CUBIC FEET FOR BARRIER HEIGHTS UP TO 7'-6''. BARRIER BLOBS SHALL BE SPACED AT A MINIMUM OF 10-FOOT INTERVALS WITHIN THE STEEL REINFORCEMENT CAGE PER STANDARD SPEC. 6-10.3(2). INSTALLING DIAGONAL REBARS TO SET IN THE BLOBS ARE ACCEPTABLE. BLOBS SHALL BE ROUGHLY CENTERED ON 1 SET OF VERTICAL REINFORCING. LIMITS OF BLOB CONCRETE MAY EXTEND OUT TO EXTERIOR OF HORIZONTAL BARS WITHIN DISTANCE BETWEEN ADJACENT VERTICAL REINFORCING SETS. VERTICALLY, BLOBS MAY EXTEND OUT EXTERIOR OF HORIZONTAL BARS FOR UP TO TWO HORIZONTAL BARS ABOVE FINISHED ROADWAY. BLOBS SHALL BE CONSOLIDATED BY HAND TO REMOVE AIR VOIDS IN CONCRETE. VIBRATION AND CONTINUOUS WET CURE OF BLOB CONCRETE ARE NOT REQUIRED.

REINFORCING STEEL BENDING DIAGRAM

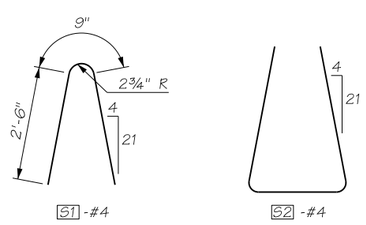

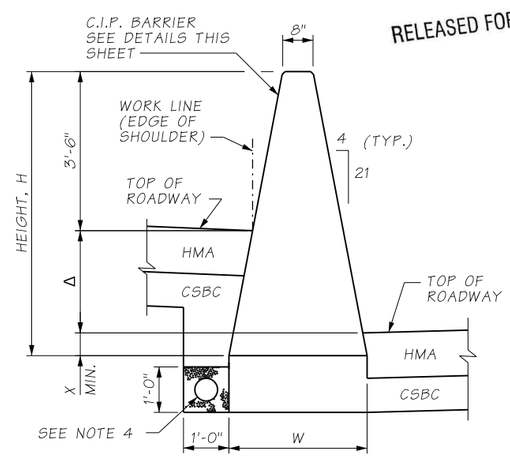

TYPICAL SECTION

APPLIES FOR CASES WITH HMA ON BOTH SIDES OF BARRIER

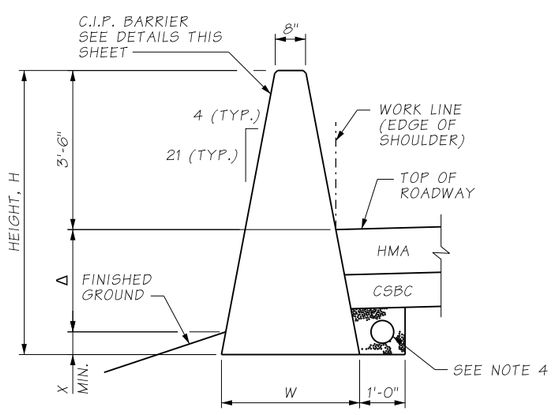

TYPICAL SECTION

APPLIES TO WEST SIDE OF I-5 FROM SR5 STA. 400+88.91 TO SR5 STA. 402+00.34 AND SR5 STA. 402+10.34 TO SR5 STA. 407+50.00

FILE NAME	D:\ICS_workdir\73669\20633_1148\PS_ST02.dgn						
TIME	5:06:49 PM						
DATE	1/6/2021						
PLOTTED BY	USLAS0-APP064$	REV 3 - RFI0536, RFI0563	01/07/2021				
DESIGNED BY	A. FONG	REV 2 - RFI0097	03/16/2020				
ENTERED BY	R. REISER	REV 1 - RFI0173	10/03/2019				
CHECKED BY	C. CAYWOOD	REV 0 - RELEASED FOR CONSTRUCTION	04/17/2019				
PROJ. ENGR.	C. MEADE	REV A - FINAL REVIEW	04/01/2019				
REGIONAL ADM.	J. WYNANDS	REVISION	DATE	BY			

REGION NO. 10 | STATE WASH | FED.AID PROJ.NO.

JOB NUMBER

CONTRACT NO. C9133 | LOCATION NO.

CORY J. CAYWOOD, STATE OF WASHINGTON, 38135, STRUCTURAL ENGINEER, PROFESSIONAL ENGINEER — 01/06/21 — DATE — P.E. STAMP BOX

P.E. STAMP BOX — DATE

Washington State Department of Transportation

ATKINSON / JACOBS CONSTRUCTION

I-5
STEILACOOM-DUPONT RD TO THORNE LN
CORRIDOR IMPROVEMENTS
MP 120.01 TO MP 124.45

BARRIER DETAILS -TYPICAL GRADE SEPARATED BARRIER (CIP) (1 OF 2)

PLAN REF NO ST02

SHEET 737 OF 1456 SHEETS

AS-BUILT

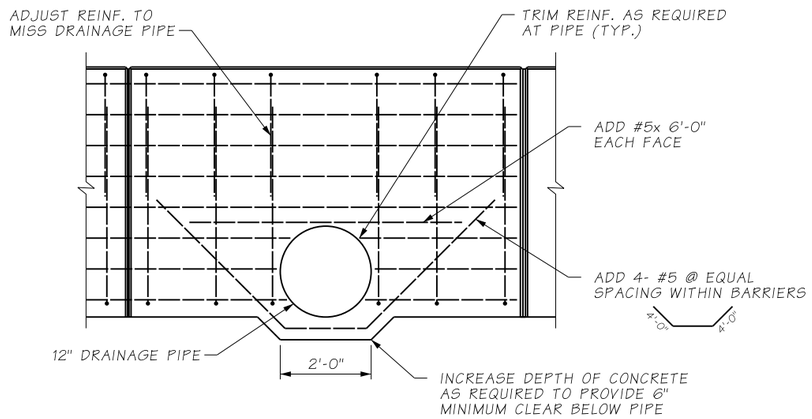

ELEVATION - AT DRAINAGE PIPES THROUGH BARRIER

APPLIES AT DRAINAGE STRUCTURES DR21-1 TO DR21-4, DR21-6, DR21-8 AND DR22-2. SEE SHEETS DR21 AND DR22 FOR LOCATIONS

ATKINSON
JAN 07 2021 KTW
RELEASED FOR CONSTRUCTION

FILE NAME	D:\ICS_workdir\73669\20633_2508\PS_ST02A.dgn						
TIME	5:06:51 PM				REGION NO.	STATE	FED.AID PROJ.NO.
DATE	1/6/2021				10	WASH	
PLOTTED BY	USLAS0-APP064$				JOB NUMBER		
DESIGNED BY	C. CAYWOOD						
ENTERED BY	R. REISER						
CHECKED BY	K. YOUNG				CONTRACT NO.		LOCATION NO.
PROJ. ENGR.	C. MEADE	REV 0 - RFI0514	01/07/2021		C9133		
REGIONAL ADM.	J. WYNANDS	REVISION	DATE	BY			

CORY J. CAYWOOD, STATE OF WASHINGTON, 43193, STRUCTURAL ENGINEER, PROFESSIONAL ENGINEER
01/06/21
DATE
P.E. STAMP BOX

DATE
P.E. STAMP BOX

Washington State Department of Transportation

ATKINSON / JACOBS CONSTRUCTION

I-5
STEILACOOM-DUPONT RD TO THORNE LN
CORRIDOR IMPROVEMENTS
MP 120.01 TO MP 124.45

BARRIER DETAILS - TYPICAL GRADE SEPARATED BARRIER (CIP) (2 OF 2)

PLAN REF NO ST02A

SHEET 738 OF 1456 SHEETS

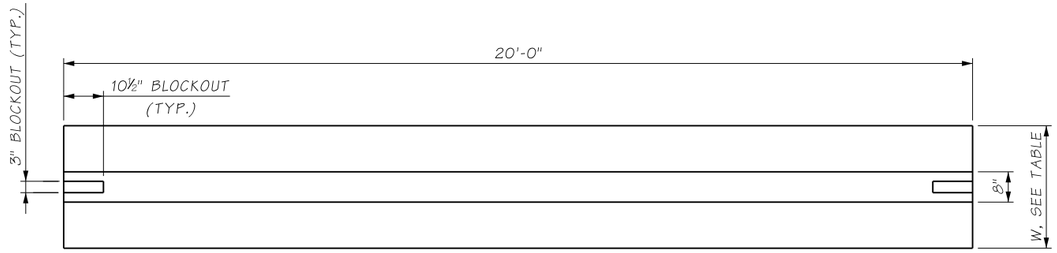

PLAN

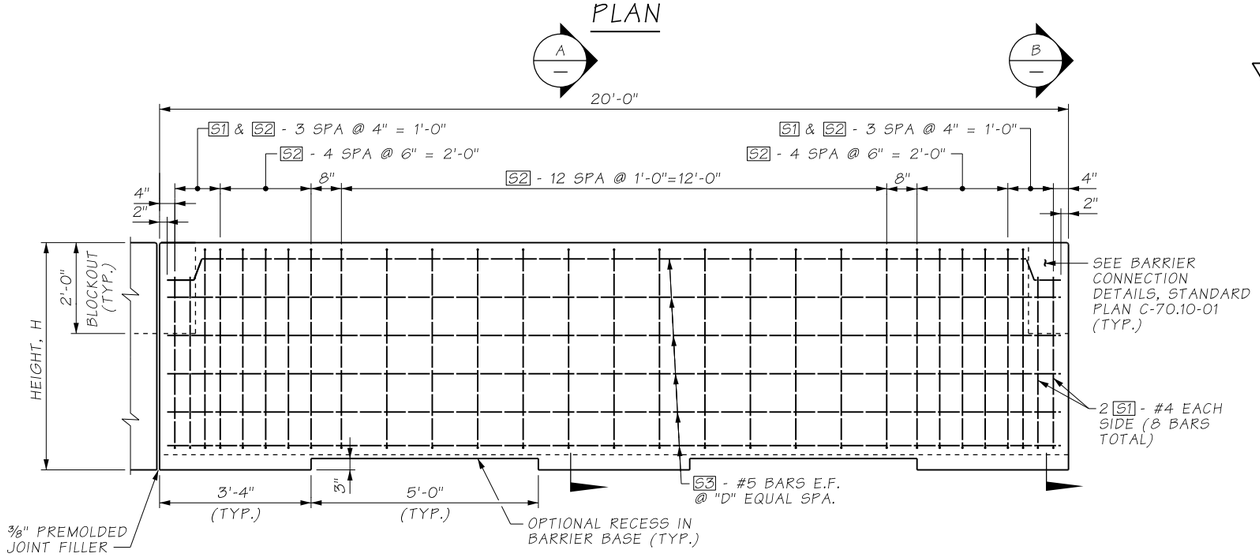

ELEVATION

RETAINING BARRIER TABLE

BARRIER TYPE	BARRIER HEIGHT, H	BOTTOM WIDTH, W	"D" SPACES	EMBED., X	2H:1V OR FLATTER GROUND SLOPE / COMMON BORROW BACKFILL	
					RETAINED HEIGHT, Y	EXPOSED HEIGHT, B
C	48"	2'-2¼"	4	6"	25"	17"
D	54"	2'-4½"	5	12"	30"	12"*
E	60"	2'-6¾"	6	18"	32"	10"

* TRANSITION THE EXPOSED HEIGHT, B, FROM 12" AT SR5 STA. 384+04 TO 6" AT SR5 STA. 383+04 TO PROVIDE ADEQUATE SPACE FOR DRAIN BEHIND BARRIER AT SR5 STA. 383+04. AT THE DRAINAGE STRUCTURE, FLATTEN SLOPE TO MINIMIZE WIDTH OF FLAT AREA AROUND DRAINAGE STRUCTURE.

AS-BUILT

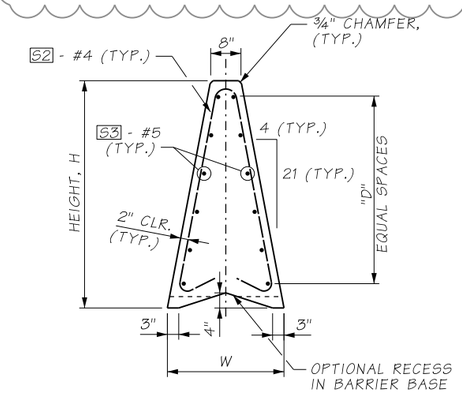

SECTION A

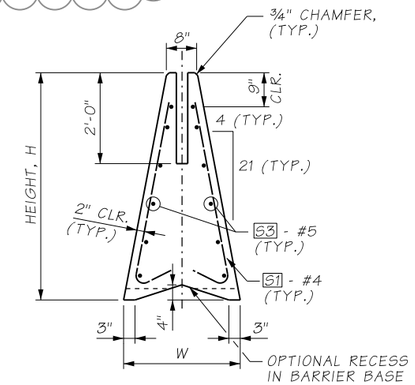

SECTION B

ATKINSON
NOV 15 2021 KTW
RELEASED FOR CONSTRUCTION

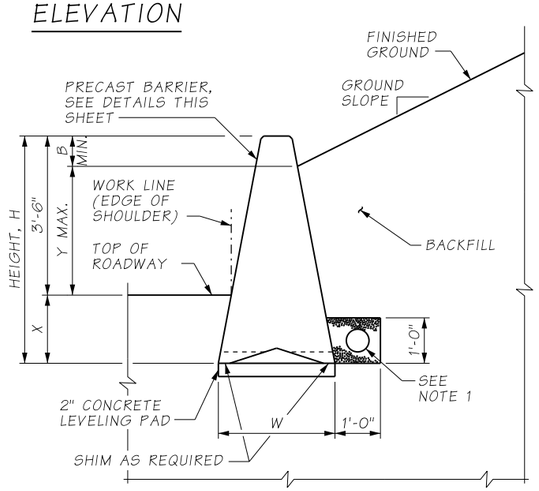

TYPICAL SECTION WITHOUT GUTTER

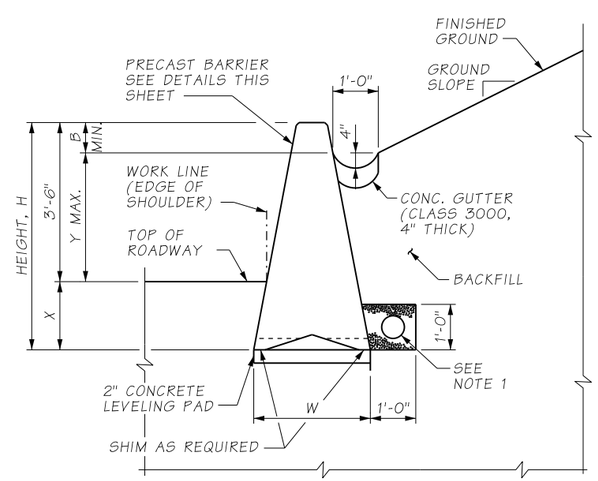

RETAINING BARRIER WITH GUTTER

REINFORCING STEEL BENDING DIAGRAM

SEE STD. SPEC. 9-07.1(2) FOR BENDING DIAMETERS

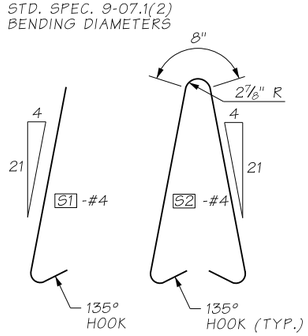

NOTES:

1. UNDERDRAIN SHALL HAVE 6"ø UNDERDRAIN PIPE PER WSDOT STANDARD SPEC. 9-05.2(6) OR 9-05.2(7) WITH GRAVEL BACKFILL FOR DRAINS PER WSDOT STANDARD SPEC. 9-03.12(4) WRAP ALL AROUND WITH CONSTRUCTION GEOTEXTILE FOR UNDERGROUND DRAINAGE. MODERATE SURVIVABILITY AND CLASS C FILTRATION PER WSDOT STANDARD SPEC. 9-33.2(1) TABLES 1 AND 2, OVERLAP ON TOP.
2. FOR BARRIER LOCATIONS AND TYPE, SEE PAVING PLANS.

FILE NAME	D:\ICS_workdir\91773\20633_1149\PS_ST03.dgn						
TIME	12:35:14 PM						
DATE	11/9/2021						
PLOTTED BY	USLAS0-APP064$						
DESIGNED BY	A. FONG						
ENTERED BY	R. REISER	REV 1 - RFI0596	11/17/2021				
CHECKED BY	A. GASCA	REV 0 - RELEASED FOR CONSTRUCTION	09/25/2019				
PROJ. ENGR.	C. MEADE	REV A - FINAL REVIEW	09/09/2019				
REGIONAL ADM.	J. WYNANDS	REVISION	DATE	BY			

REGION NO.	STATE	FED.AID PROJ.NO.
10	WASH	
JOB NUMBER		
CONTRACT NO. C9133		LOCATION NO.

CORY J. CAYWOOD, STATE OF WASHINGTON, 38795, STRUCTURAL ENGINEER, PROFESSIONAL ENGINEER
11/15/21
DATE
P.E. STAMP BOX

P.E. STAMP BOX
DATE

Washington State Department of Transportation

ATKINSON / JACOBS CONSTRUCTION

I-5
STEILACOOM-DUPONT RD TO THORNE LN
CORRIDOR IMPROVEMENTS
MP 120.01 TO MP 124.45

BARRIER DETAILS
TYPICAL RETAINING BARRIER - PRECAST

PLAN REF NO ST03

SHEET 739 OF 1456 SHEETS

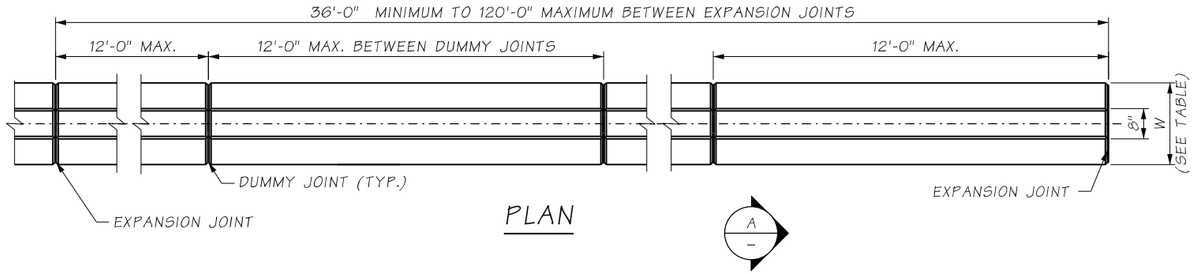

PLAN

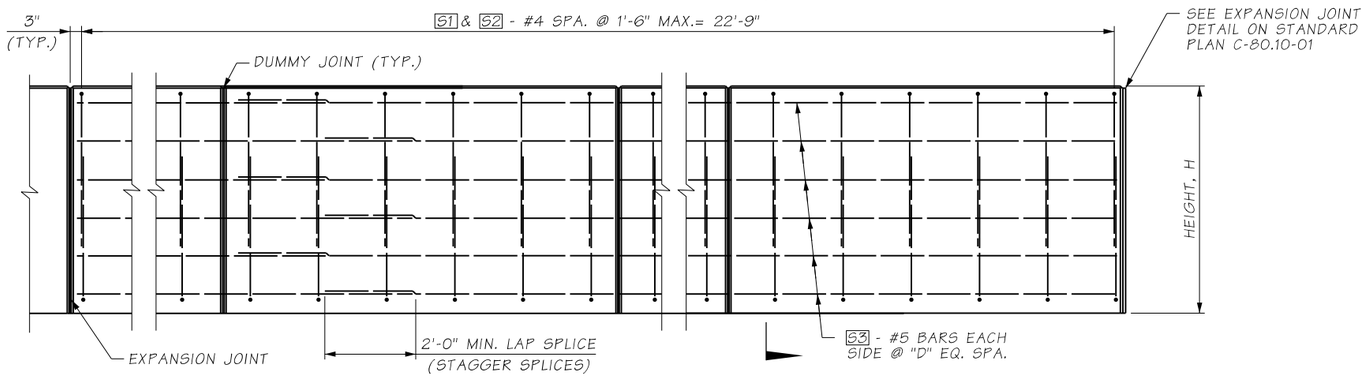

ELEVATION

RETAINING BARRIER TABLE						
BARRIER TYPE	BARRIER HEIGHT, H	BOTTOM WIDTH, W	"D" SPACES	EMBED., X	2H:1V OR FLATTER GROUND SLOPE	
					COMMON BORROW BACKFILL	
					RETAINED HEIGHT, Y	EXPOSED HEIGHT, B
C	48"	2'-2¼"	4	6"	25"	17"
D	54"	2'-4½"	5	12"	30"	12"
E	60"	2'-6¾"	6	18"	32"	10"

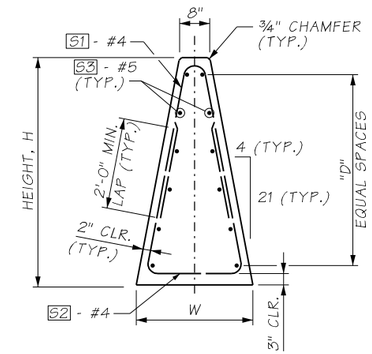

SECTION A

AS-BUILT

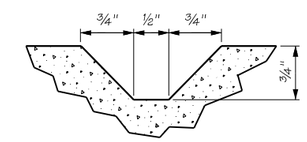

DUMMY JOINT

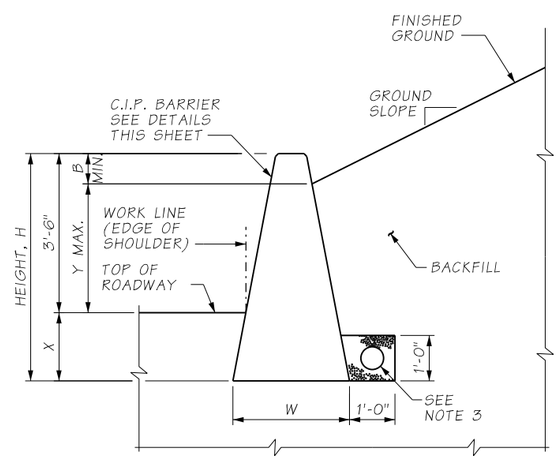

TYPICAL SECTION WITHOUT GUTTER

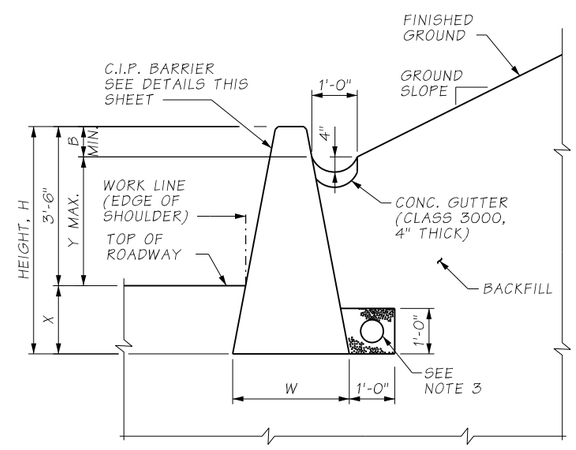

RETAINING BARRIER WITH GUTTER

NOTES:

1. REINFORCING STEEL DIMENSIONS AND CLEARANCES ARE SHOWN FOR STATIONARY FORM CONSTRUCTION. WHEN SLIP-FORM CONSTRUCTION IS USED, INCREASE REINFORCING STEEL CLEARANCES TO THE OUTSIDE SURFACES OF THE BARRIER TO 2½" AND ADJUST THE REBAR DIMENSIONS AS REQUIRED.
2. WHEN CONNECTING BETWEEN CAST-IN-PLACE AND PRECAST SINGLE SLOPE BARRIER, PROVIDE A SLOT, REBAR GRID AND REINFORCEMENT AS SHOWN ON STD. PLAN C-70.10-01.
3. UNDERDRAIN SHALL HAVE 6"ø UNDERDRAIN PIPE PER WSDOT STANDARD SPEC. 9-05.2(6) OR 9-05.2(7) WITH GRAVEL BACKFILL FOR DRAINS PER WSDOT STANDARD SPEC. 9-03.12(4) WRAP ALL AROUND WITH CONSTRUCTION GEOTEXTILE FOR UNDERGROUND DRAINAGE. MODERATE SURVIVABILITY AND CLASS C FILTRATION PER WSDOT STANDARD SPEC. 9-33.2(1) TABLES 1 AND 2, OVERLAP ON TOP.
4. FOR EXPANSION JOINTS, SEE WSDOT STANDARD PLAN C-80.10-01.
5. FOR BARRIER LOCATIONS AND TYPE, SEE PAVING PLANS.

REINFORCING STEEL BENDING DIAGRAM

SEE STD. SPEC. 9-07.1(2) FOR BENDING DIAMETERS

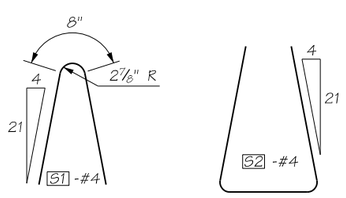

ATKINSON

SEP 25 2019

RELEASED FOR CONSTRUCTION

FILE NAME	c:\pwworking\jacobs_b&i\jeg_huangy1\dms20633\PS_ST04.dgn						
TIME	3:48:59 PM				REGION NO. 10	STATE WASH	FED.AID PROJ.NO.
DATE	9/19/2019				JOB NUMBER		
PLOTTED BY	HUANGY1						
DESIGNED BY	A. FONG						
ENTERED BY	R. REISER						
CHECKED BY	A. GASCA	REV 0 - RELEASED FOR CONSTRUCTION	09/25/2019		CONTRACT NO. C9133		LOCATION NO.
PROJ. ENGR.	C. MEADE	REV A - FINAL REVIEW	09/09/2019				
REGIONAL ADM.	J. WYNANDS	REVISION	DATE	BY			

STATE OF WASHINGTON — DUAN J. CATWOOD — 38759 — STRUCTURAL ENGINEER — PROFESSIONAL ENGINEER

9/24/19

DATE

P.E. STAMP BOX

DATE

P.E. STAMP BOX

Washington State Department of Transportation

ATKINSON CONSTRUCTION / JACOBS

I-5
STEILACOOM-DUPONT RD TO THORNE LN
CORRIDOR IMPROVEMENTS
MP 120.01 TO MP 124.45

BARRIER DETAILS
TYPICAL RETAINING BARRIER (CIP)

PLAN REF NO ST04

SHEET 740 OF 1456 SHEETS

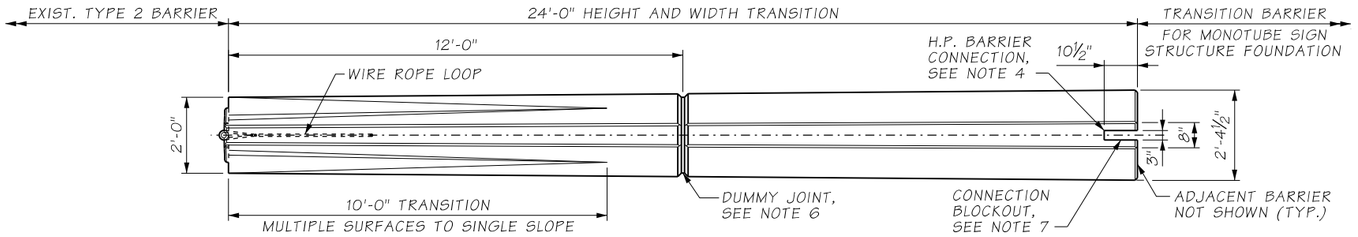

PLAN

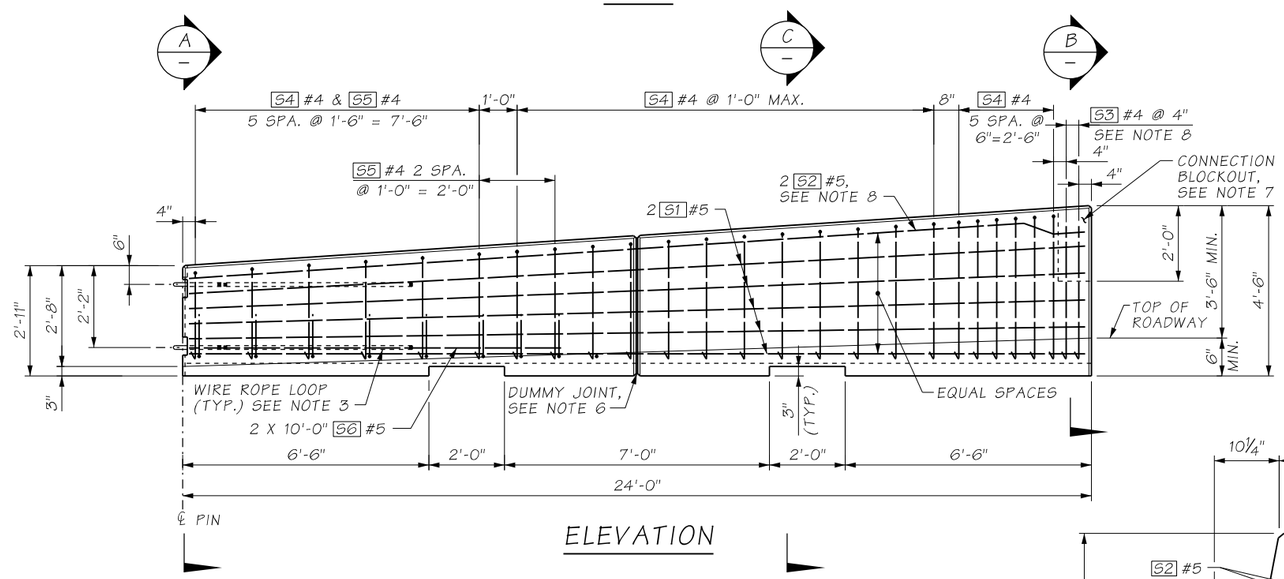

ELEVATION

NOTES:

1. FOR LOCATIONS OF BARRIER TRANSITION, SEE PAVING AND BARRIER PLANS.
2. CONCRETE SHALL BE CLASS 4000.
3. FOR CONNECTION TO TYPE 2 BARRIER PROVIDE WIRE LOOPS, NOTCHES AND OTHER DETAILS TO MATCH THE BARRIER CONNECTION SHOWN IN STANDARD PLAN C-8.
4. SEE SHEET ST01 FOR BARRIER CONNECTION DETAILS.
5. BARRIER SHOWN ON THIS SHEET CAN BE PRECAST OR CAST-IN-PLACE.
6. DUMMY JOINT TO BE SPACED AT 12'-0" O.C. FOR CAST-IN-PLACE BARRIER.
7. OMIT CONNECTION BLOCKOUT FOR CAST-IN-PLACE BARRIER.
8. FOR CAST-IN-PLACE BARRIER, SUBSTITUTE S3 #4 WITH S4 #4 AND RUN S2 #5 STRAIGHT TO END OF BARRIER.

AS-BUILT

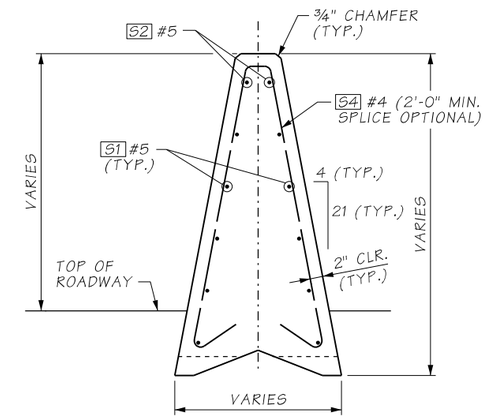

SECTION C

NOTE: B SEE FOR INFORMATION NOT SHOWN

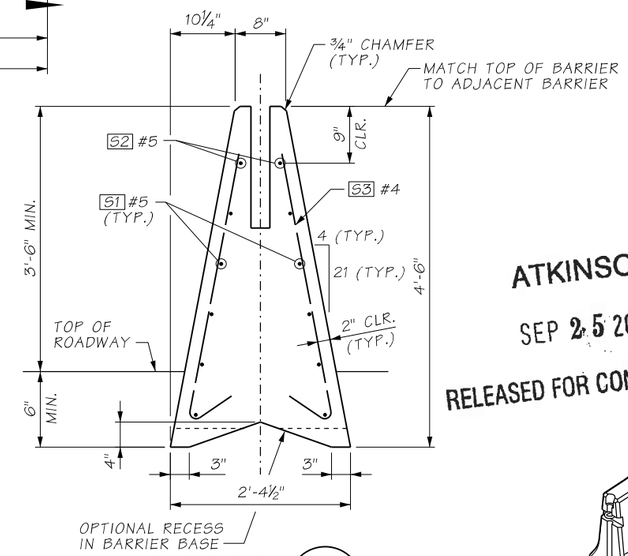

SECTION B

PRECAST BARRIER SHOWN, CAST-IN-PLACE SIMILAR

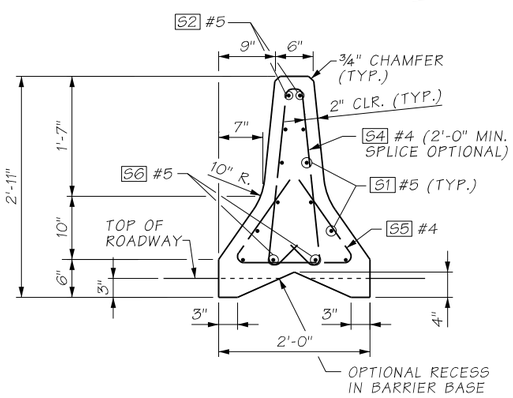

SECTION A

REBAR BENDING DIAGRAM

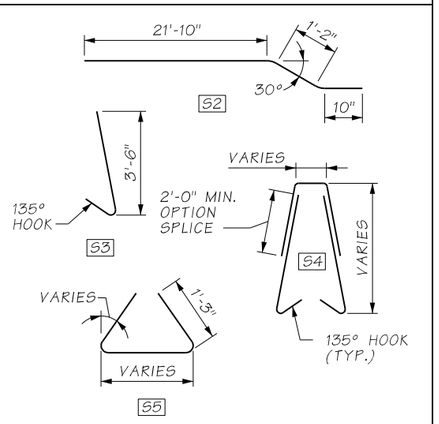

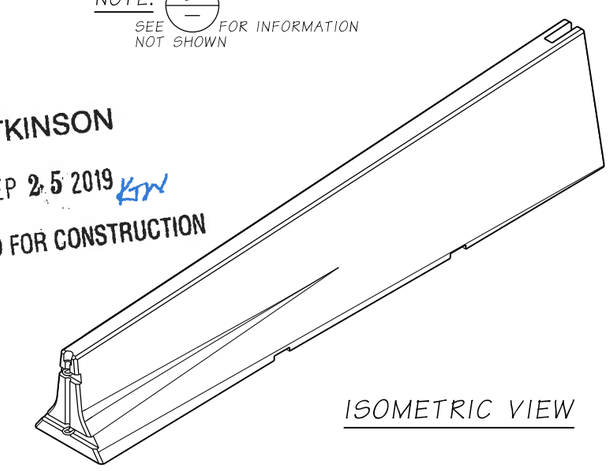

ISOMETRIC VIEW

ATKINSON
SEP 25 2019
RELEASED FOR CONSTRUCTION

FILE NAME	c:\pwworking\jacobs_b&i\jeg_huangy1\dms20633\PS_ST05.dgn				REGION NO.	STATE	FED.AID PROJ.NO.
TIME	3:47:00 PM				10	WASH	
DATE	9/19/2019				JOB NUMBER		
PLOTTED BY	HUANGY1						
DESIGNED BY	A. FONG						
ENTERED BY	R. REISER						
CHECKED BY	A. GASCA	REV 0 - RELEASED FOR CONSTRUCTION	09/25/2019		CONTRACT NO.		LOCATION NO.
PROJ. ENGR.	C. MEADE	REV A - FINAL REVIEW	09/09/2019		C9133		
REGIONAL ADM.	J. WYNANDS	REVISION	DATE	BY			

P.E. STAMP BOX — DATE 9/24/19

P.E. STAMP BOX — DATE

Washington State Department of Transportation

ATKINSON CONSTRUCTION / JACOBS

I-5
STEILACOOM-DUPONT RD TO THORNE LN
CORRIDOR IMPROVEMENTS
MP 120.01 TO MP 124.45

BARRIER DETAILS
TYPE 2 TO H.P. SINGLE SLOPE

PLAN REF NO ST05

SHEET 741 OF 1456 SHEETS

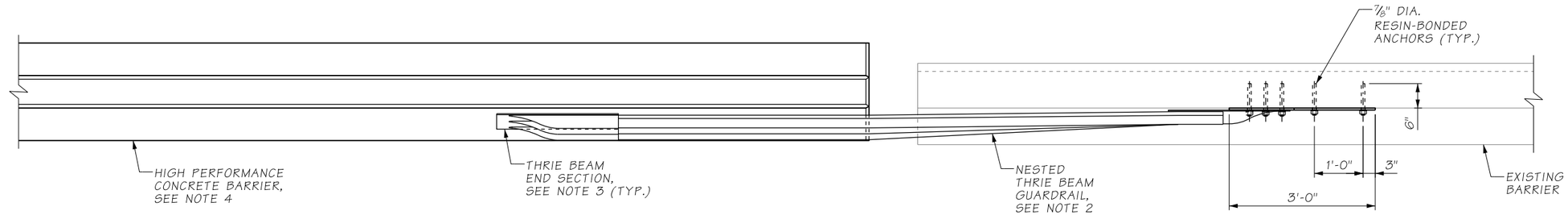

PLAN

AS-BUILT

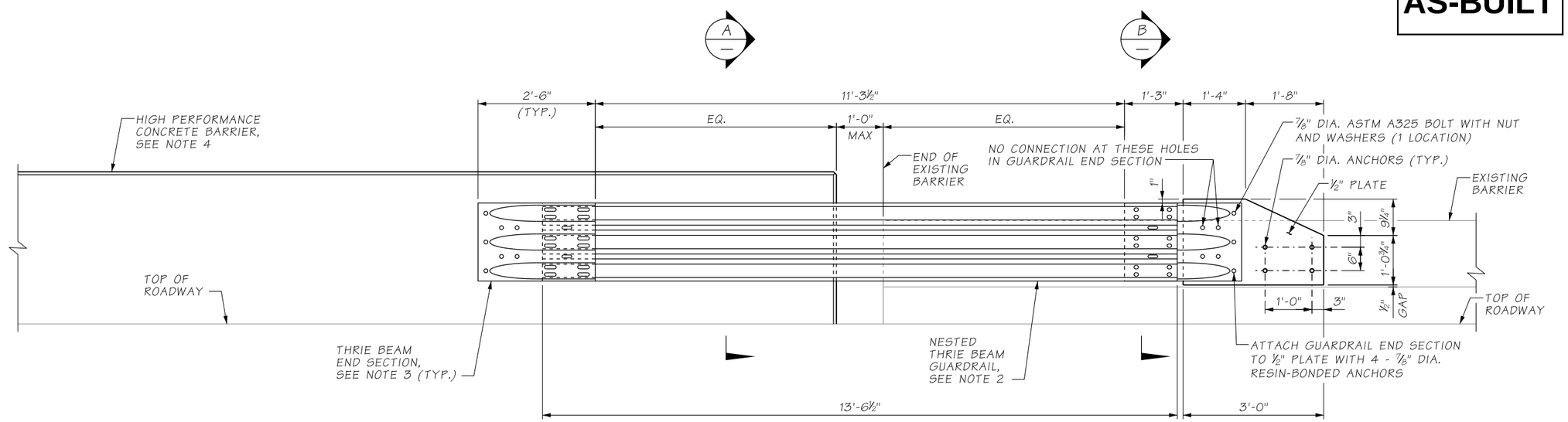

ELEVATION

NOTES:

1. THESE DETAILS ARE FOR CONNECTION OF HIGH-PERFORMANCE BARRIER TO EXISTING 41ST DIVISION BRIDGE BARRIERS. SEE PAVING PLANS FOR ADDITIONAL DETAILS.
2. FOR THRIE BEAM GUARDRAIL, SEE STD. PLANS C-1a.
3. FOR THRIE BEAM END SECTION, SEE STD. PLANS C-7a, DESIGN F.
4. FOR 42" SINGLE-SLOPED HIGH PERFORMANCE CONCRETE BARRIER, SEE STD. PLANS C-70.10-01.

ATKINSON
APR 16 2019 KTW
RELEASED FOR CONSTRUCTION

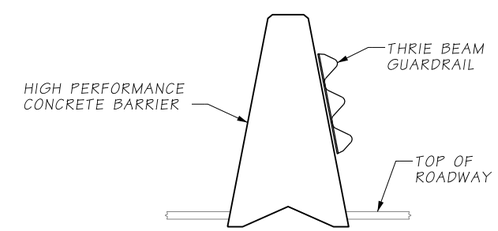

SECTION A

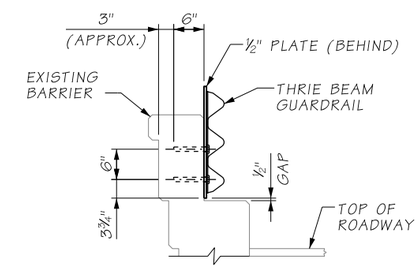

SECTION B

BOLTS AND ANCHORS FOR CONNECTION TO GUARDRAIL END SECTION NOT SHOWN

FILE NAME	D:\ICS_workdir\25347\20633_1991\PS_ST06.dgn						
TIME	10:35:54 AM				REGION NO. 10	STATE WASH	FED.AID PROJ.NO.
DATE	4/15/2019						
PLOTTED BY	USLAS0-APP064$				JOB NUMBER		
DESIGNED BY	G.C. DE GRELLE						
ENTERED BY	G.C. DE GRELLE						
CHECKED BY	C. CAYWOOD	REV 0 - RELEASED FOR CONSTRUCTION	04/17/2019		CONTRACT NO. C9133		LOCATION NO.
PROJ. ENGR.	C. MEADE	REV A - FINAL REVIEW	04/01/2019				
REGIONAL ADM.	J. WYNANDS	REVISION	DATE	BY			

CORY J. CAYWOOD, STATE OF WASHINGTON, 38193, STRUCTURAL ENGINEER, PROFESSIONAL ENGINEER
4/15/19
DATE
P.E. STAMP BOX

DATE
P.E. STAMP BOX

Washington State
Department of Transportation

ATKINSON CONSTRUCTION / JACOBS

I-5
STEILACOOM-DUPONT RD TO THORNE LN
CORRIDOR IMPROVEMENTS
MP 120.01 TO MP 124.45

BARRIER DETAILS
EXISTING 41ST DIV. BARRIER CONNECTION

PLAN REF NO
ST06

SHEET 742 OF 1456 SHEETS

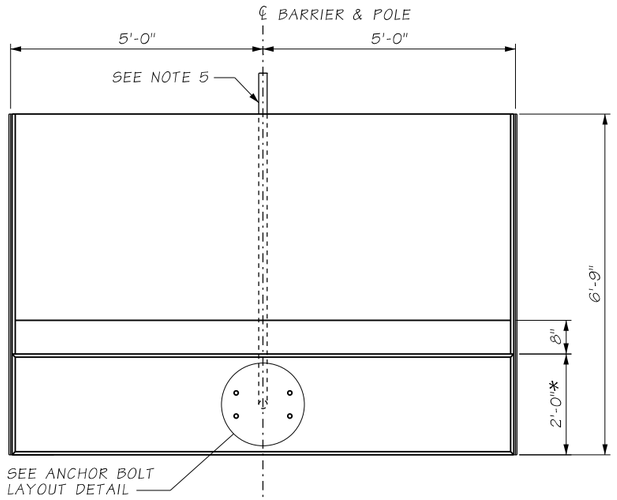

PLAN

*1'-7" FOR LUMINAIRE H1 IN FRONT OF NOISE WALL 6

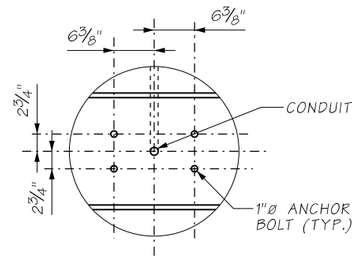

PLAN VIEW

ANCHOR BOLT LAYOUT DETAIL

NOTES:

1. THIS BARRIER/FOUNDATION COMBINATION HAS BEEN DESIGNED IN ACCORDANCE WITH AASHTO LRFD TEST LEVEL 4 REQUIREMENTS.
2. WHEN CONNECTING TO PRECAST SINGLE-SLOPE BARRIER, PROVIDE A CONNECTION BLOCKOUT, REBAR GRID AND ADDED REBAR AS SHOWN ON STANDARD PLAN C-70.10.
3. WHEN CONNECTING TO CAST-IN-PLACE SINGLE-SLOPE BARRIER, PROVIDE EXPANSION JOINT DETAIL AS SHOWN ON STANDARD PLAN C-80.10.
4. GROUNDING CONDUCTOR SHALL BE NON-INSULATED #4 AWG STRANDED COPPER; PROVIDE 3' - 0" MIN. SLACK. CLAMP STEEL REINFORCING BAR WITH CONNECTOR SUITABLE FOR USE EMBEDDED IN CONCRETE.
5. SEE ILLUMINATION PLANS FOR CONDUIT PLACEMENT.
6. CONCRETE SHALL BE CLASS 4000.
7. PEA GRAVEL GRADING SHALL BE IN ACCORDANCE WITH AASHTO GRADING NO. 8 PER STANDARD SPECIFICATION 9-03.1(4)C. PLACE PEA GRAVEL SUCH THAT NO VOIDS ARE CREATED. NO FURTHER COMPACTION IS REQUIRED.
8. FOR BARRIER LOCATIONS, SEE PAVING PLANS.

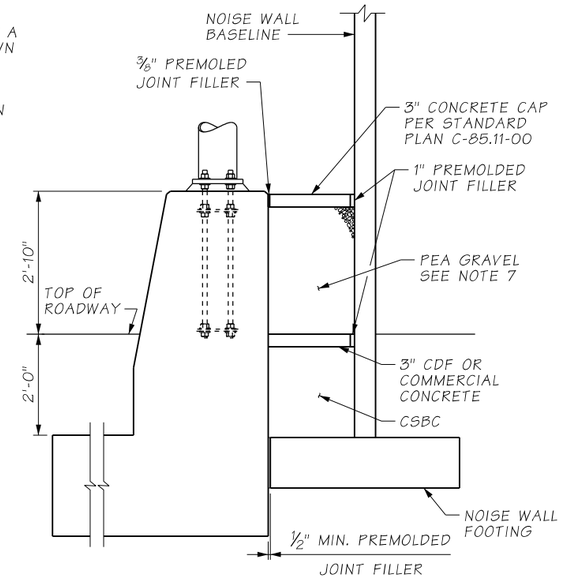

LIGHT FOUNDATION IN FRONT OF NOISE WALL

AS-BUILT

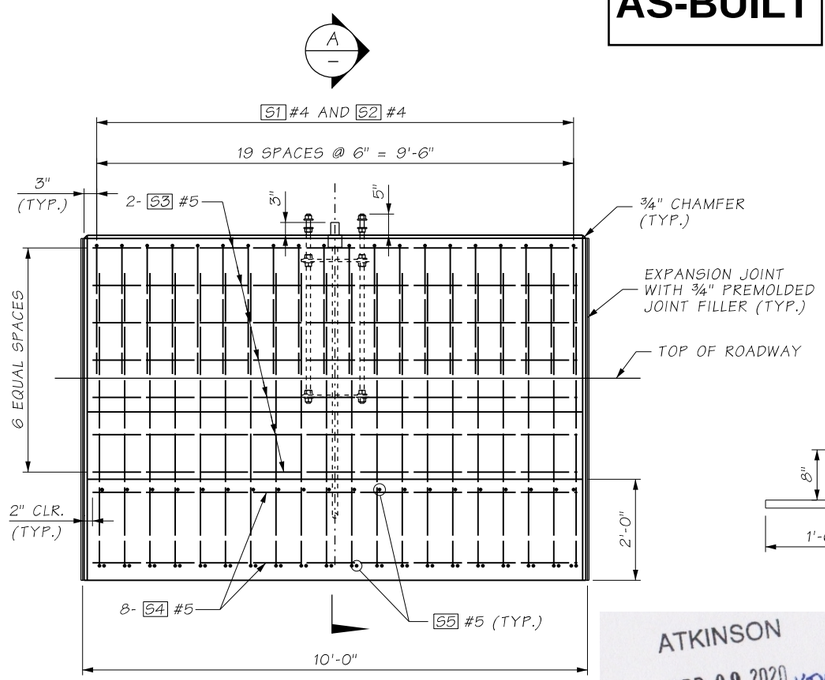

ELEVATION

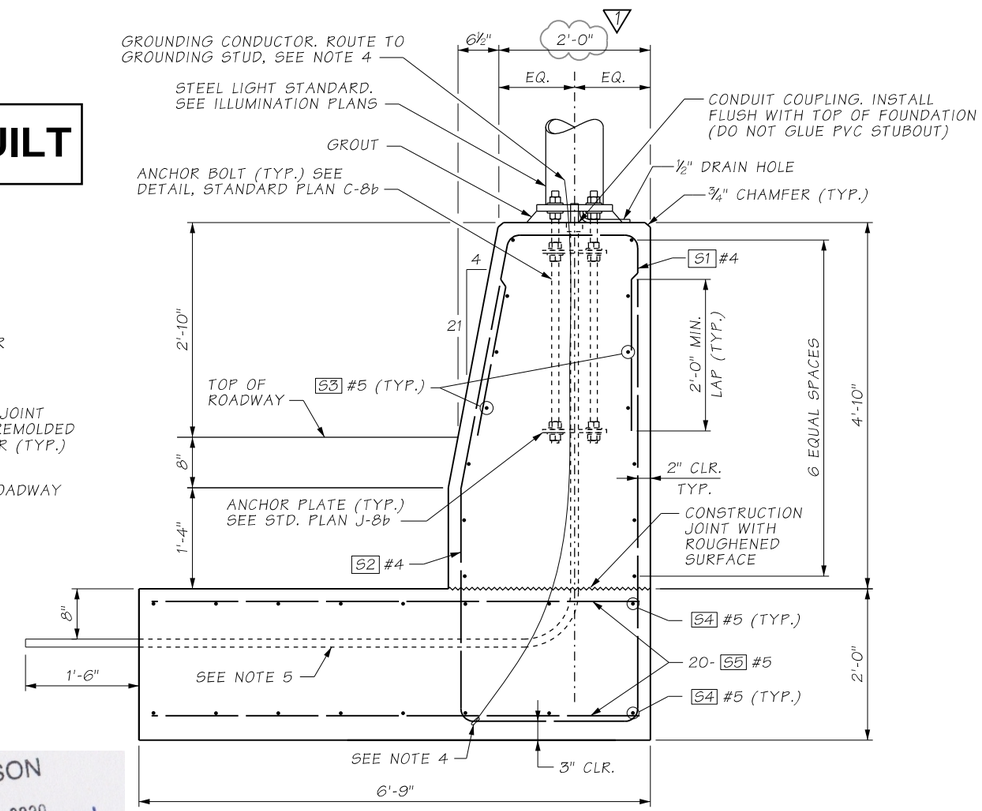

SECTION A

ALL DIMENSIONS ARE OUT TO OUT
ALL BENDS ARE 2" RADIUS

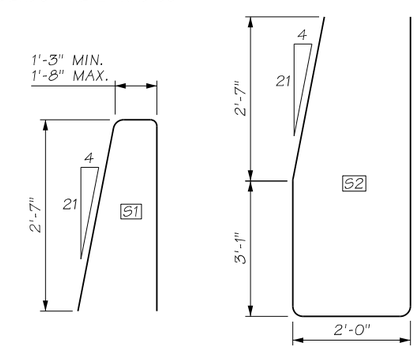

BAR LIST - PER FOUNDATION

MARK NO.	LOCATION	SIZE	QUANTITY
S1	BARRIER ~ TOP VERTICAL	#4	20
S2	FND. & BARRIER ~ VERTICAL	#4	20
S3	BARRIER ~ HORIZONTAL	#5	14
S4	FOUNDATION	#5	16
S5	FOUNDATION	#5	40

ATKINSON
APR 09 2020 KTW
RELEASED FOR CONSTRUCTION

FILE NAME	c:\pwworking\jacobs_b&i\caywoocj\dms20633\PS_ST07.dgn			
TIME	1:16:19 PM			
DATE	4/9/2020			
PLOTTED BY	caywoocj			
DESIGNED BY	A. FONG			
ENTERED BY	A. FONG	REV 1 - RFI0429	04/13/2020	
CHECKED BY	A. GASCA	REV 0 - RELEASED FOR CONSTRUCTION	09/25/2019	
PROJ. ENGR.	C. MEADE	REV A - FINAL REVIEW	09/09/2019	
REGIONAL ADM.	J. WYNANDS	REVISION	DATE	BY

REGION NO.	STATE	FED.AID PROJ.NO.
10	WASH	
JOB NUMBER		
CONTRACT NO. C9133		LOCATION NO.

CORY J. CAYWOOD, STATE OF WASHINGTON, 38755, SUPERVISORY ENGINEER, PROFESSIONAL ENGINEER
4/9/20
DATE
P.E. STAMP BOX

DATE
P.E. STAMP BOX

Washington State Department of Transportation

ATKINSON CONSTRUCTION / JACOBS

I-5
STEILACOOM-DUPONT RD TO THORNE LN CORRIDOR IMPROVEMENTS
MP 120.01 TO MP 124.45

BARRIER DETAILS - 2'-10" EXP. HEIGHT LIGHT FOUNDATION BARRIER

PLAN REF NO ST07

SHEET 743 OF 1456 SHEETS

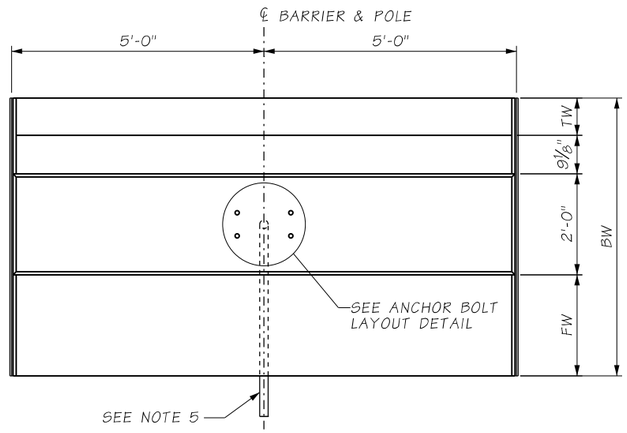

PLAN

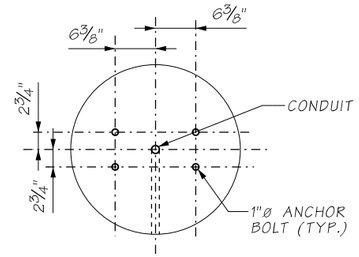

PLAN VIEW

ANCHOR BOLT LAYOUT DETAIL

NOTES:

1. THIS BARRIER/FOUNDATION COMBINATION HAS BEEN DESIGNED IN ACCORDANCE WITH AASHTO LRFD TEST LEVEL 4 REQUIREMENTS.
2. WHEN CONNECTING TO PRECAST SINGLE-SLOPE BARRIER, PROVIDE A CONNECTION BLOCKOUT, REBAR GRID AND ADDED REBAR AS SHOWN ON STANDARD PLAN C-70.10.
3. WHEN CONNECTING TO CAST-IN-PLACE SINGLE-SLOPE BARRIER, PROVIDE EXPANSION JOINT DETAIL AS SHOWN ON STANDARD PLAN C-80.10.
4. GROUNDING CONDUCTOR SHALL BE NON-INSULATED #4 AWG STRANDED COPPER; PROVIDE 3'-0" MIN. SLACK. CLAMP STEEL REINFORCING BAR WITH CONNECTOR SUITABLE FOR USE EMBEDDED IN CONCRETE.
5. SEE ILLUMINATION PLANS FOR CONDUIT PLACEMENT.
6. CONCRETE SHALL BE CLASS 4000.
7. FOR BARRIER LOCATIONS, SEE PAVING PLANS.

AS-BUILT

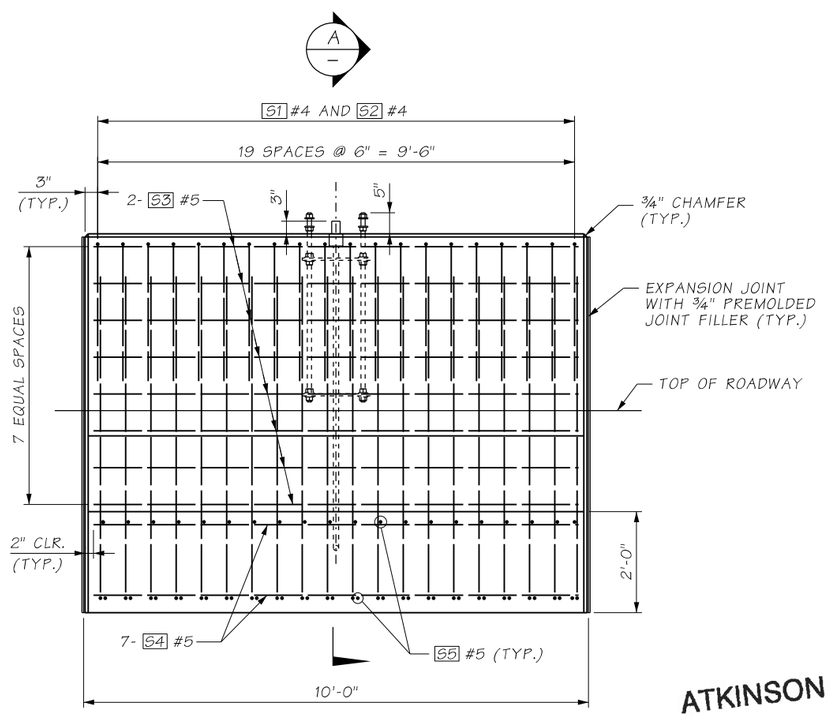

ELEVATION

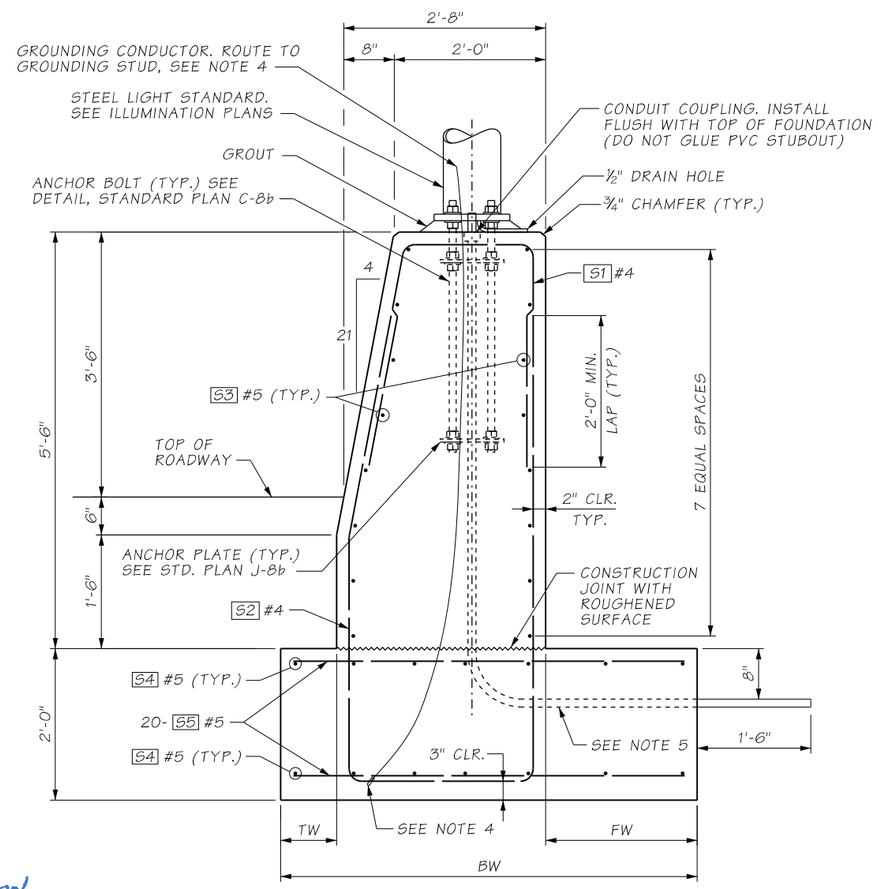

SECTION A

FOOTING DIMENSION			
LUMINAIRE NO.	TW	FW	BW
H14 TO H16, H18	8⅞"	2'-2"	5'-8"
H5 & H17	2'-9"	8⅞"	6'-3"

ALL DIMENSIONS ARE OUT TO OUT
ALL BENDS ARE 2" RADIUS

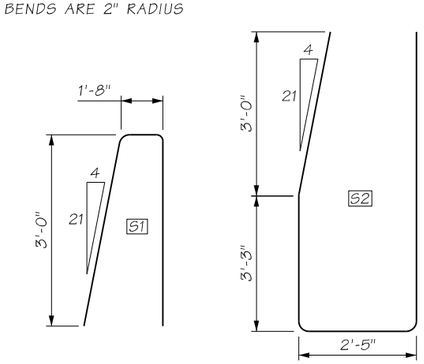

BAR LIST - PER FOUNDATION

MARK NO.	LOCATION	SIZE	QUANTITY
S1	BARRIER ~ TOP VERTICAL	#4	20
S2	FND. & BARRIER ~ VERTICAL	#4	20
S3	BARRIER ~ HORIZONTAL	#5	16
S4	FOUNDATION	#5	14
S5	FOUNDATION	#5	40

ATKINSON
SEP 25 2019
RELEASED FOR CONSTRUCTION

FILE NAME	c:\pwworking\jacobs_b&i\jeg_huangy1\dms20633\PS_ST08.dgn				REGION NO.	STATE	FED.AID PROJ.NO.
TIME	3:43:50 PM				10	WASH	
DATE	9/19/2019				JOB NUMBER		
PLOTTED BY	HUANGY1						
DESIGNED BY	A. FONG						
ENTERED BY	R. REISER						
CHECKED BY	A. GASCA	REV 0 - RELEASED FOR CONSTRUCTION	09/25/2019		CONTRACT NO.		LOCATION NO.
PROJ. ENGR.	C. MEADE	REV A - FINAL REVIEW	09/09/2019		C9133		
REGIONAL ADM.	J. WYNANDS	REVISION	DATE	BY			

P.E. STAMP BOX — DATE 9/24/19

P.E. STAMP BOX — DATE

Washington State Department of Transportation

ATKINSON CONSTRUCTION / JACOBS

I-5
STEILACOOM-DUPONT RD TO THORNE LN
CORRIDOR IMPROVEMENTS
MP 120.01 TO MP 124.45

BARRIER DETAILS - 3'-6" EXP. HEIGHT
LIGHT FOUNDATION BARRIER

PLAN REF NO ST08

SHEET 744 OF 1456 SHEETS

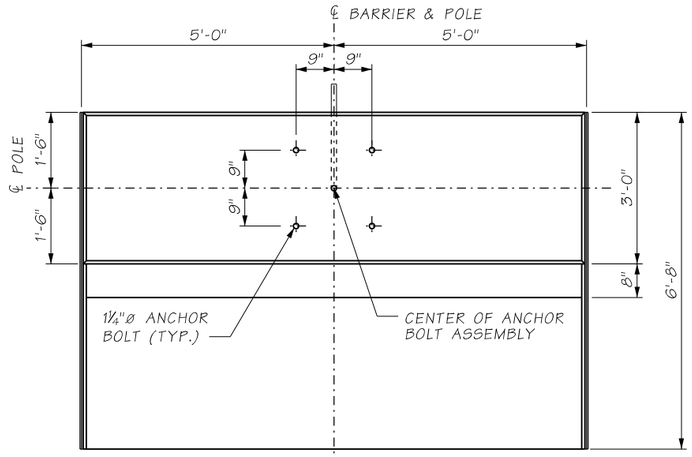

PLAN

A

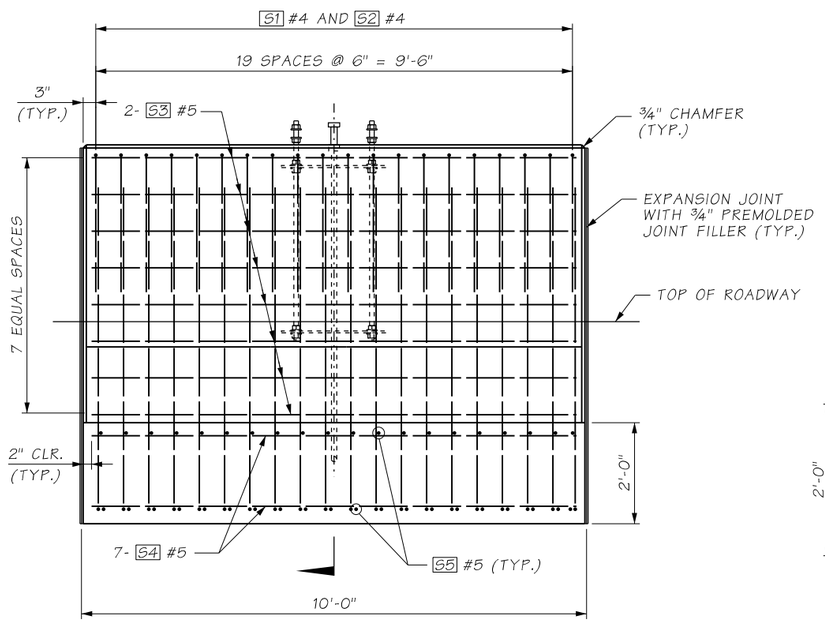

ELEVATION

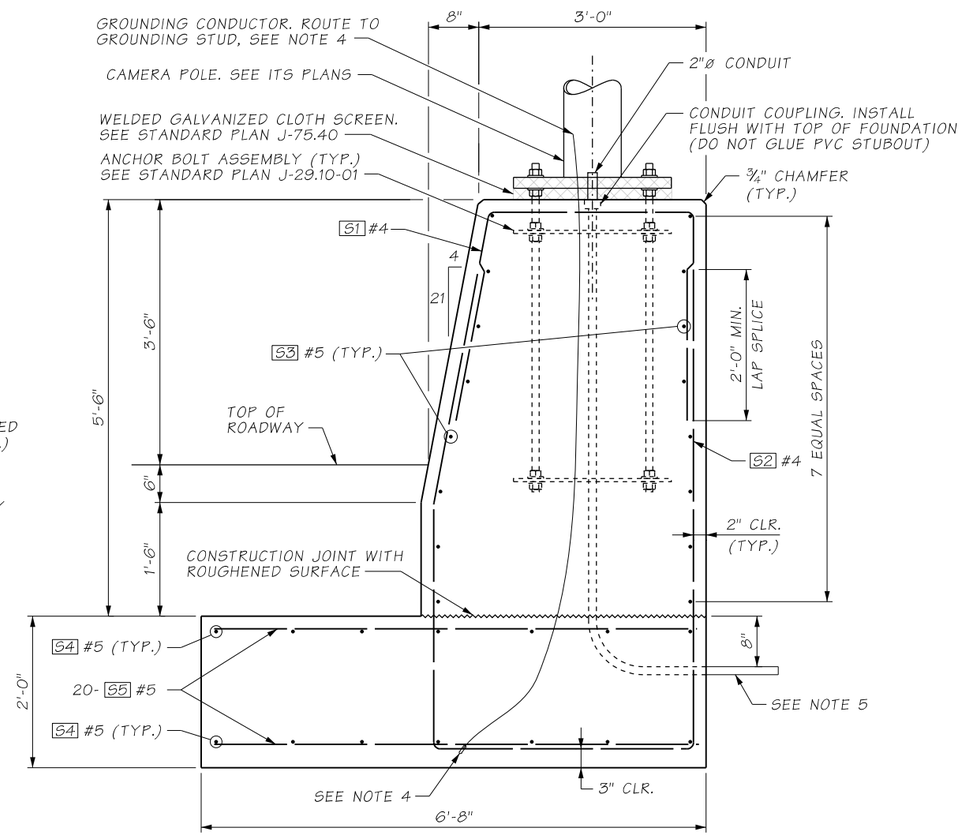

SECTION A

NOTES:

1. THIS BARRIER/FOUNDATION COMBINATION HAS BEEN DESIGNED IN ACCORDANCE WITH AASHTO LRFD TEST LEVEL 4 REQUIREMENTS.
2. WHEN CONNECTING TO PRECAST SINGLE-SLOPE BARRIER, PROVIDE A CONNECTION BLOCKOUT, REBAR GRID AND ADDED REBAR AS SHOWN ON STANDARD PLAN C-70.10.
3. WHEN CONNECTING TO CAST-IN-PLACE SINGLE-SLOPE BARRIER, PROVIDE EXPANSION JOINT DETAIL AS SHOWN ON STANDARD PLAN C-80.10.
4. GROUNDING CONDUCTOR SHALL BE NON-INSULATED #4 AWG STRANDED COPPER; PROVIDE 3'-0" MIN. SLACK. CLAMP STEEL REINFORCING BAR WITH CONNECTOR SUITABLE FOR USE EMBEDDED IN CONCRETE.
5. SEE ITS PLANS FOR CONDUIT PLACEMENT.
6. CONCRETE SHALL BE CLASS 4000.
7. FOR BARRIER LOCATIONS, SEE PAVING PLANS.

AS-BUILT

ATKINSON
SEP 25 2019 KM
RELEASED FOR CONSTRUCTION

ALL DIMENSIONS ARE OUT TO OUT
ALL BENDS ARE 2" RADIUS

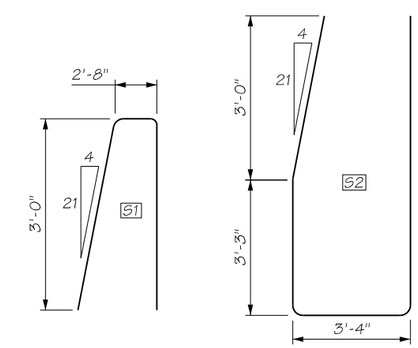

BAR LIST - PER FOUNDATION

MARK NO.	LOCATION	SIZE	QUANTITY
S1	BARRIER ~ TOP VERTICAL	#4	20
S2	FND. & BARRIER ~ VERTICAL	#4	20
S3	BARRIER ~ HORIZONTAL	#5	16
S4	FOUNDATION	#5	14
S5	FOUNDATION	#5	40

FILE NAME	c:\pwworking\jacobs_b&i\jeg_huangy1\dms20633\PS_ST09.dgn			
TIME	3:42:11 PM			
DATE	9/19/2019			
PLOTTED BY	HUANGY1			
DESIGNED BY	A. FONG			
ENTERED BY	R. REISER			
CHECKED BY	A. GASCA	REV 0 - RELEASED FOR CONSTRUCTION	09/25/2019	
PROJ. ENGR.	C. MEADE	REV A - FINAL REVIEW	09/09/2019	
REGIONAL ADM.	J. WYNANDS	REVISION	DATE	BY

REGION NO.	STATE	FED.AID PROJ.NO.
10	WASH	
JOB NUMBER		
CONTRACT NO. C9133		LOCATION NO.

STATE OF WASHINGTON · DIETT J. CAYWOOD · 38133 · STRUCTURAL ENGINEER · PROFESSIONAL ENGINEER
9/24/19
DATE
P.E. STAMP BOX

DATE
P.E. STAMP BOX

Washington State Department of Transportation

ATKINSON CONSTRUCTION / JACOBS

I-5
STEILACOOM-DUPONT RD TO THORNE LN
CORRIDOR IMPROVEMENTS
MP 120.01 TO MP 124.45

BARRIER DETAILS
CCTV CAMERA POLE FOUNDATION

PLAN REF NO ST09

SHEET 745 OF 1456 SHEETS

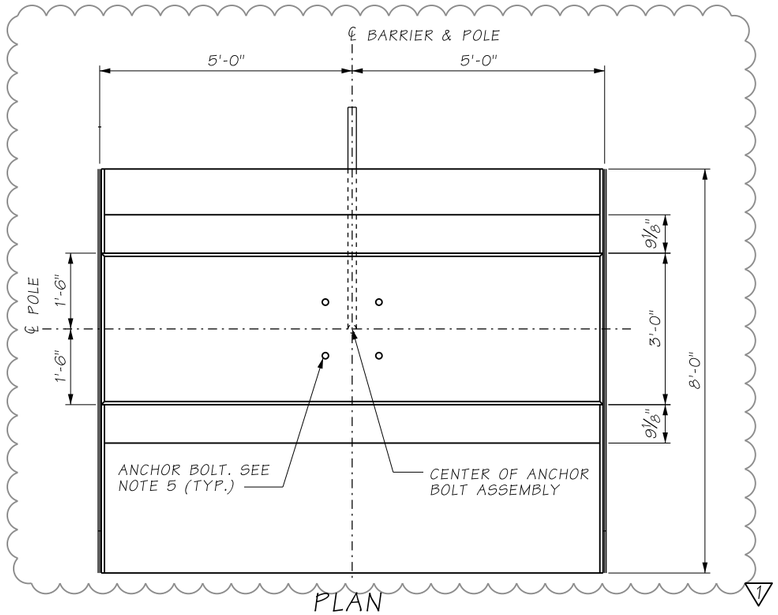

PLAN

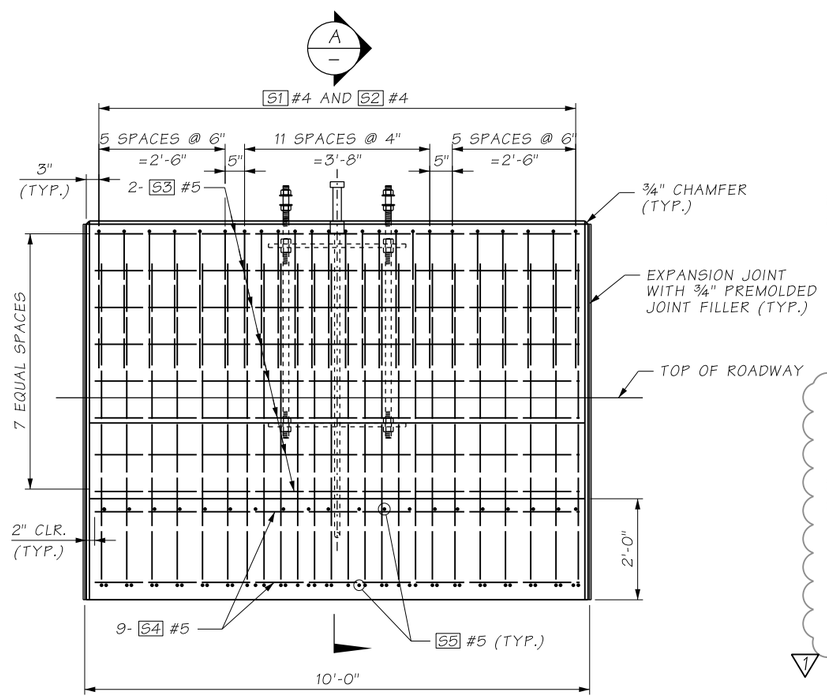

ELEVATION

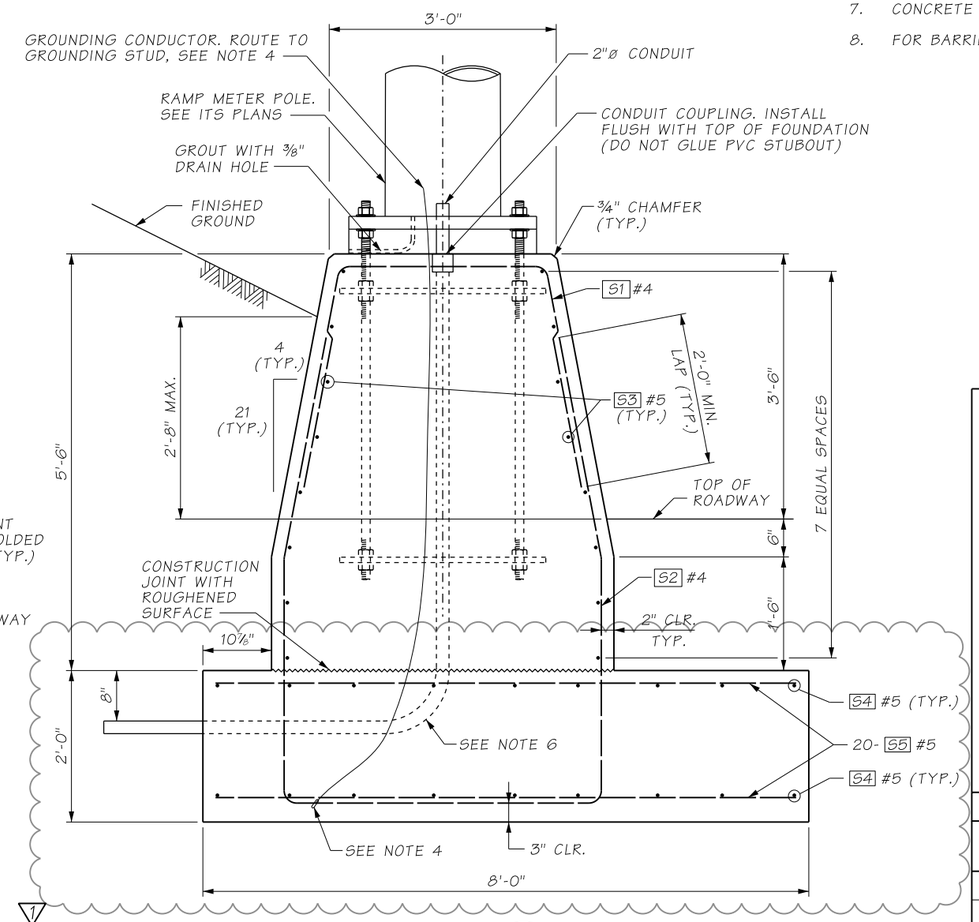

SECTION A

NOTES:

1. THIS BARRIER/FOUNDATION COMBINATION HAS BEEN DESIGNED IN ACCORDANCE WITH AASHTO LRFD TEST LEVEL 4 REQUIREMENTS.
2. WHEN CONNECTING TO PRECAST SINGLE-SLOPE BARRIER, PROVIDE A CONNECTION BLOCKOUT, REBAR GRID AND ADDED REBAR AS SHOWN ON STANDARD PLAN C-70.10.
3. WHEN CONNECTING TO CAST-IN-PLACE SINGLE-SLOPE BARRIER, PROVIDE EXPANSION JOINT DETAIL AS SHOWN ON STANDARD PLAN C-80.10.
4. GROUNDING CONDUCTOR SHALL BE NON-INSULATED #4 AWG STRANDED COPPER; PROVIDE 3'-0" MIN. SLACK. CLAMP STEEL REINFORCING BAR WITH CONNECTOR SUITABLE FOR USE EMBEDDED IN CONCRETE.
5. ANCHOR BOLTS AND ANCHOR PLATE TO BE SUPPLIED BY SIGNAL POLE MANUFACTURER.
6. SEE ITS PLANS FOR CONDUIT PLACEMENT.
7. CONCRETE SHALL BE CLASS 4000.
8. FOR BARRIER LOCATIONS, SEE PAVING PLANS.

AS-BUILT

ATKINSON
JAN 07 2021 KTW
RELEASED FOR CONSTRUCTION

ALL DIMENSIONS ARE OUT TO OUT
ALL BENDS ARE 2" RADIUS

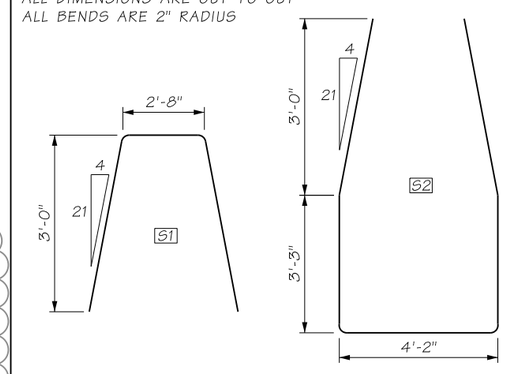

BAR LIST - PER FOUNDATION

MARK NO.	LOCATION	SIZE	QUANTITY
S1	BARRIER ~ TOP VERTICAL	#4	24
S2	FND. & BARRIER ~ VERTICAL	#4	24
S3	BARRIER ~ HORIZONTAL	#5	16
S4	FOUNDATION	#5	18
S5	FOUNDATION	#5	40

FILE NAME	D:\ICS_workdir\73669\20633_2274\PS_ST10.dgn
TIME	5:06:50 PM
DATE	1/6/2021
PLOTTED BY	USLAS0-APP064$
DESIGNED BY	A. FONG
ENTERED BY	R. REISER
CHECKED BY	A. GASCA
PROJ. ENGR.	C. MEADE
REGIONAL ADM.	J. WYNANDS

REVISION	DATE	BY
REV 1 - RFI0564	01/07/2021	
REV 0 - RELEASED FOR CONSTRUCTION	09/25/2019	
REV A - FINAL REVIEW	09/09/2019	

REGION NO.	STATE	FED.AID PROJ.NO.
10	WASH	
JOB NUMBER		
CONTRACT NO. C9133		LOCATION NO.

CORY J. CAYWOOD, STATE OF WASHINGTON, 38135, STRUCTURAL ENGINEER, PROFESSIONAL ENGINEER
01/06/21
DATE
P.E. STAMP BOX

DATE
P.E. STAMP BOX

Washington State Department of Transportation

ATKINSON / JACOBS CONSTRUCTION

I-5
STEILACOOM-DUPONT RD TO THORNE LN
CORRIDOR IMPROVEMENTS
MP 120.01 TO MP 124.45

BARRIER DETAILS
RAMP METER POLE FOUNDATION

PLAN REF NO ST10

SHEET 746 OF 1456 SHEETS

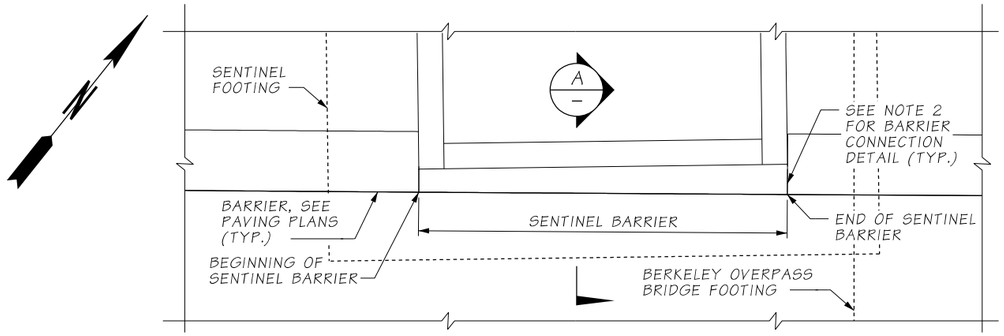

PLAN - B1 & B2 SENTINEL BARRIER

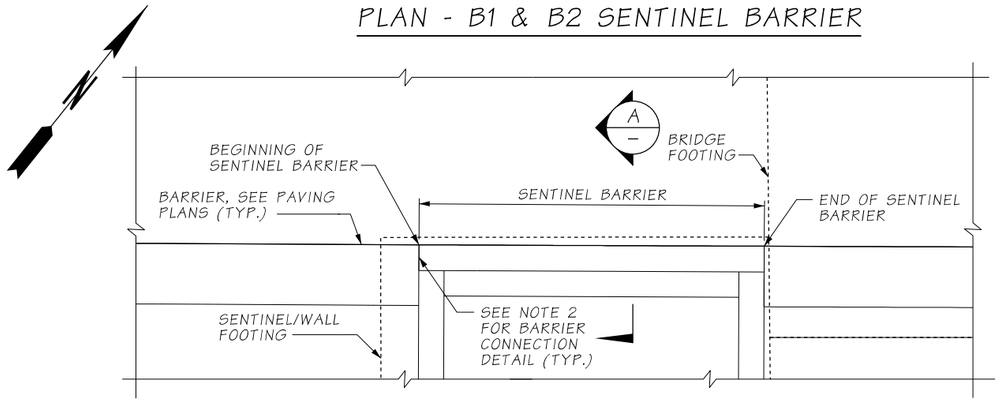

PLAN - B3 & T3 SENTINEL BARRIER

B4 & T4 SENTINEL BARRIER SIMILAR

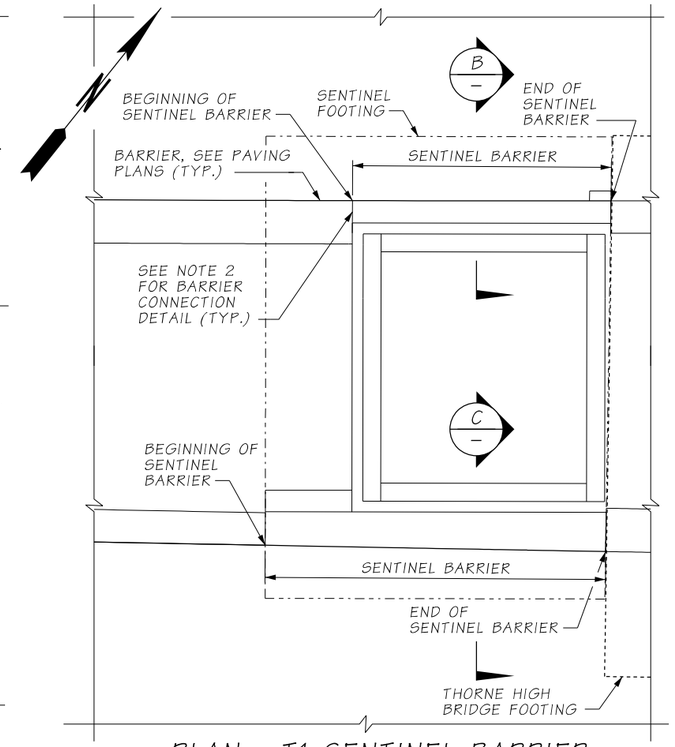

PLAN - T1 SENTINEL BARRIER

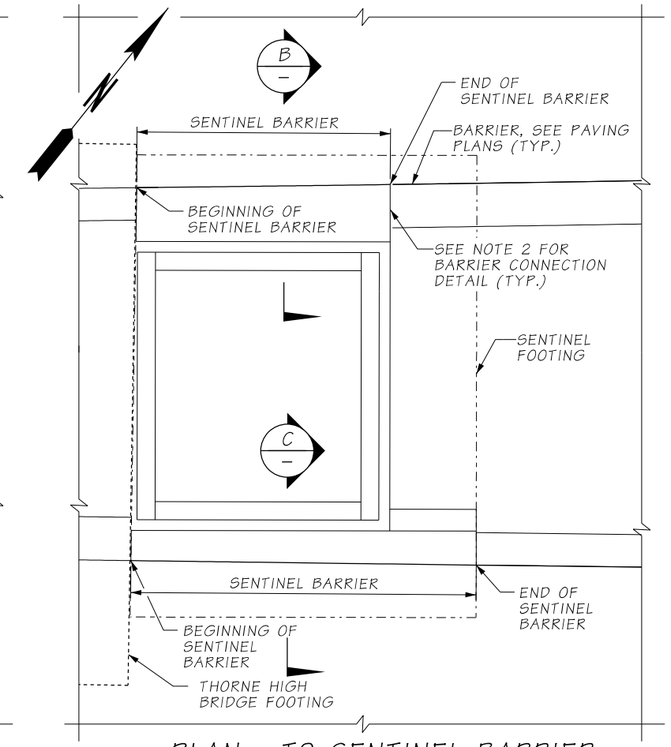

PLAN - T2 SENTINEL BARRIER

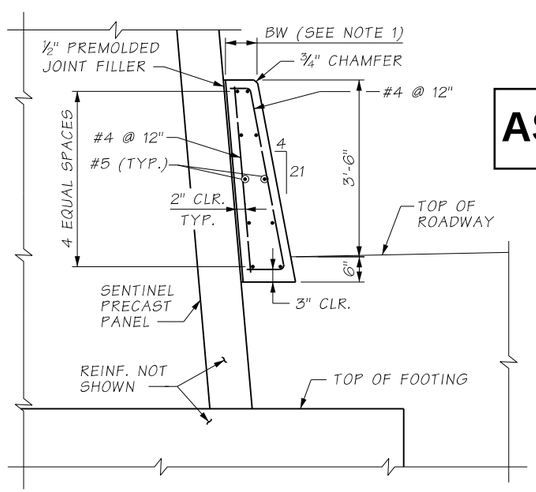

SECTION A

AS-BUILT

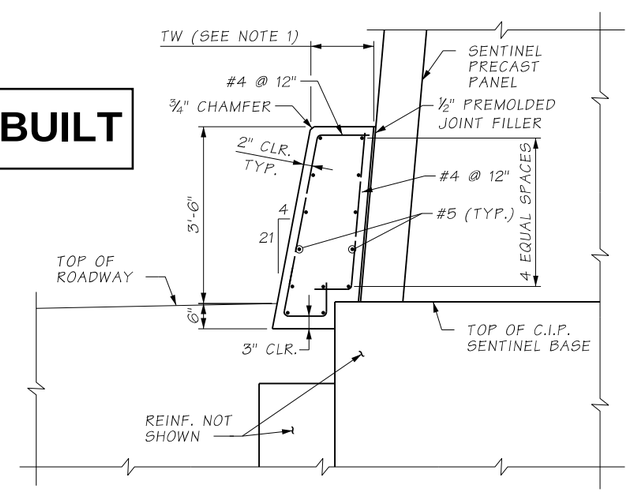

SECTION B

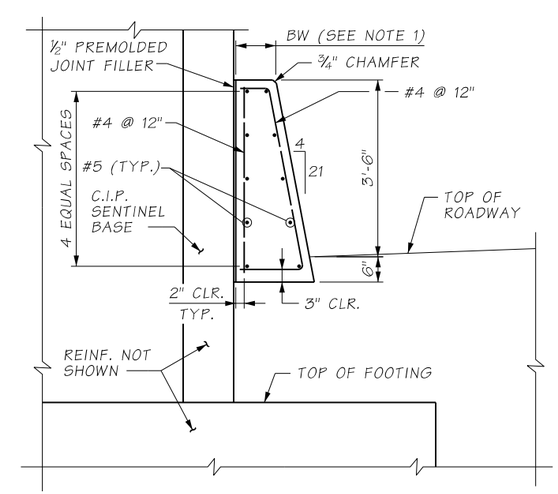

SECTION C

NOTES:

1. FOR TOP OF BARRIER WIDTH, SEE SHEET ST11A.
2. FOR CONNECTION TO ADJACENT BARRIER, SEE SHEET ST11A.
3. FOR BARRIER LOCATION AND LIMIT OF BARRIER TYPE, SEE PAVING PLANS.
4. FIELD BENDING OF REINFORCEMENT IS PERMITTED.

ATKINSON
SEP 25 2019 KM
RELEASED FOR CONSTRUCTION

FILE NAME	c:\pwworking\jacobs_b&i\jeg_huangy1\dms20633\PS_ST11.dgn			
TIME	3:37:47 PM			
DATE	9/19/2019			
PLOTTED BY	HUANGY1			
DESIGNED BY	A. FONG			
ENTERED BY	A. FONG			
CHECKED BY	A. GASCA	REV 0 - RELEASED FOR CONSTRUCTION	09/25/2019	
PROJ. ENGR.	C. MEADE	REV A - FINAL REVIEW	09/09/2019	
REGIONAL ADM.	J. WYNANDS	REVISION	DATE	BY

REGION NO.	STATE	FED.AID PROJ.NO.
10	WASH	
JOB NUMBER		
CONTRACT NO. C9133		LOCATION NO.

P.E. STAMP BOX — DATE 9/24/19

P.E. STAMP BOX — DATE

Washington State Department of Transportation

ATKINSON CONSTRUCTION / JACOBS

I-5
STEILACOOM-DUPONT RD TO THORNE LN
CORRIDOR IMPROVEMENTS
MP 120.01 TO MP 124.45

BARRIER DETAILS
SENTINEL BARRIERS (1 OF 2)

PLAN REF NO ST11

SHEET 747 OF 1456 SHEETS

AS-BUILT

SENTINEL BARRIER WIDTH			
SENTINEL	BEGINNING/END	BW	TW
B1	BEGINNING	7½"	-
	END	10⅜"	-
B2	BEGINNING	7½"	-
	END	8¾"	-
B3	BEGINNING	7½"	-
	END	7½"	-
B4	BEGINNING	7½"	-
	END	7½"	-
T1	BEGINNING	10¼"	1'-1½"
	END	1'-1½"	1'-1⅝"
T2	BEGINNING	8¼"	2'-6¾"
	END	10¼"	2'-8⅞"
T3	BEGINNING	9⅞"	-
	END	7¼"	-
T4	BEGINNING	9"	-
	END	7¼"	-

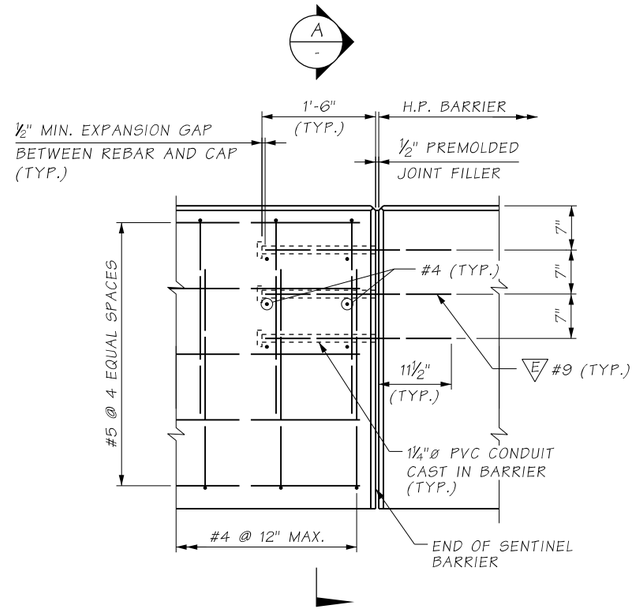

ELEVATION - SENTINEL BARRIER CONNECTION

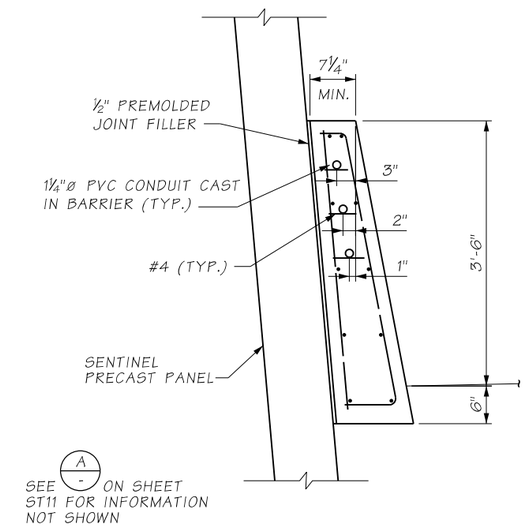

SECTION A
B1 SENTINEL BARRIER SHOWN. OTHERS SIMILAR

ATKINSON
SEP 25 2019
RELEASED FOR CONSTRUCTION

NOTES:

1. SEE SHEET ST11 FOR LOCATION OF SENTINEL BARRIER.

FILE NAME	c:\pwworking\jacobs_b&i\jeg_huangy1\dms20633\PS_ST11A.dgn						
TIME	3:34:50 PM				REGION NO. 10	STATE WASH	FED.AID PROJ.NO.
DATE	9/19/2019						
PLOTTED BY	HUANGY1						
DESIGNED BY	A. FONG				JOB NUMBER		
ENTERED BY	A. FONG						
CHECKED BY	A. GASCA	REV 0 - RELEASED FOR CONSTRUCTION	09/25/2019		CONTRACT NO. C9133		LOCATION NO.
PROJ. ENGR.	C. MEADE	REV A - FINAL REVIEW	09/09/2019				
REGIONAL ADM.	J. WYNANDS	REVISION	DATE	BY			

P.E. STAMP BOX — DATE

P.E. STAMP BOX — DATE

Washington State Department of Transportation

ATKINSON CONSTRUCTION / JACOBS

I-5
STEILACOOM-DUPONT RD TO THORNE LN
CORRIDOR IMPROVEMENTS
MP 120.01 TO MP 124.45

BARRIER DETAILS
SENTINEL BARRIERS (2 OF 2)

PLAN REF NO ST11A

SHEET 748 OF 1456 SHEETS

NOTES:

1. FOR BARRIER LOCATION AND LIMIT OF BARRIER TYPE, SEE PAVING PLANS.

AS-BUILT

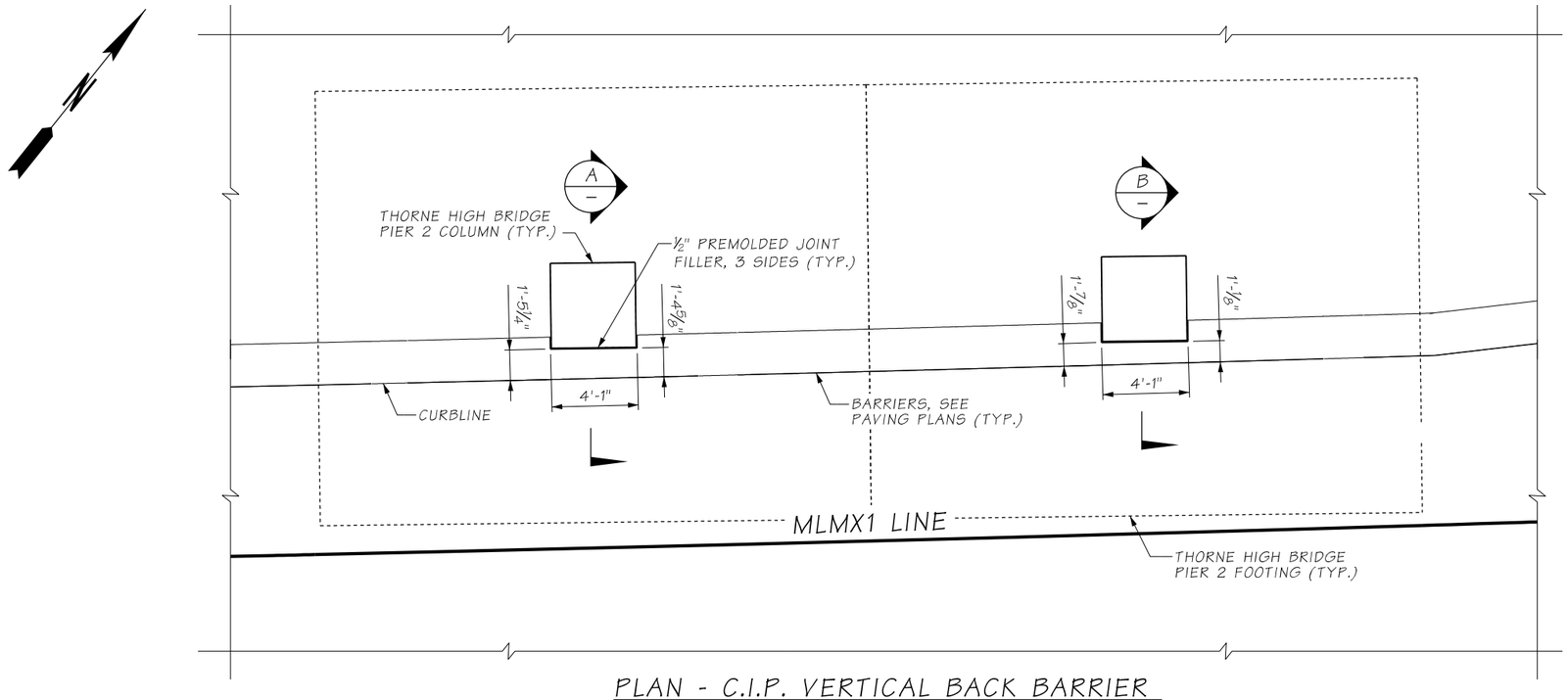

PLAN - C.I.P. VERTICAL BACK BARRIER AT THORNE HIGH BRIDGE

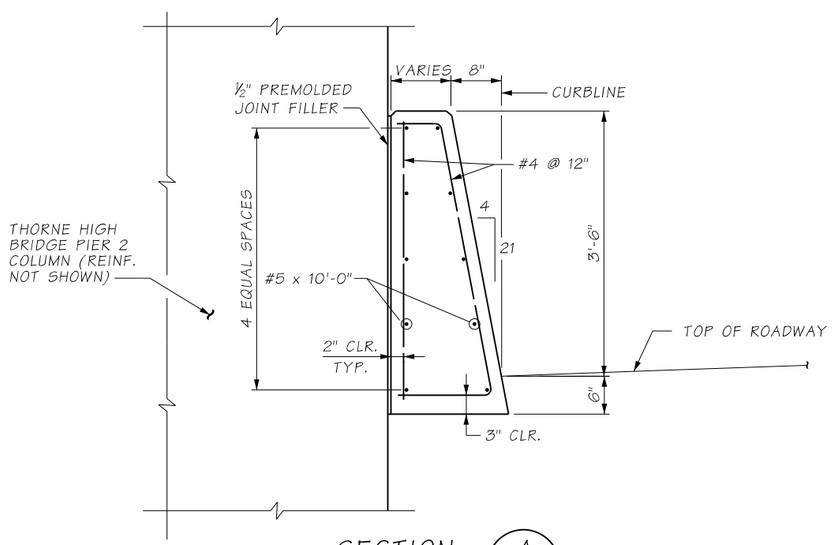

SECTION A
–

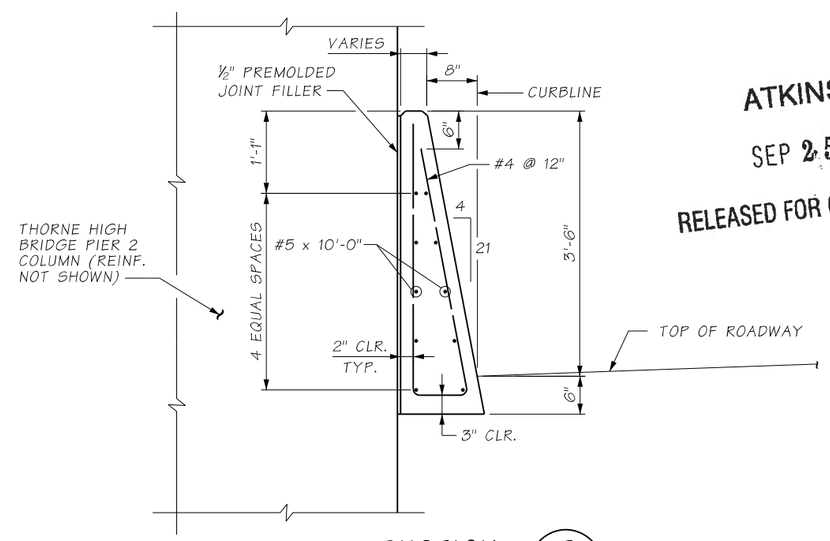

SECTION B
–

ATKINSON

SEP 25 2019 KM

RELEASED FOR CONSTRUCTION

FILE NAME	c:\pwworking\jacobs_b&l\jeg_huangy1\dms20633\PS_ST12.dgn					
TIME	3:32:23 PM					
DATE	9/19/2019					
PLOTTED BY	HUANGY1					
DESIGNED BY	A. FONG					
ENTERED BY	R. REISER					
CHECKED BY	A. GASCA	REV 0 - RELEASED FOR CONSTRUCTION	09/25/2019			
PROJ. ENGR.	C. MEADE	REV A - FINAL REVIEW	09/09/2019			
REGIONAL ADM.	J. WYNANDS	REVISION	DATE	BY		

REGION NO.	STATE	FED.AID PROJ.NO.
10	WASH	
JOB NUMBER		
CONTRACT NO.		LOCATION NO.
C9133		

P.E. STAMP BOX — DATE 9/24/19

P.E. STAMP BOX — DATE

Washington State Department of Transportation

ATKINSON / JACOBS CONSTRUCTION

I-5
STEILACOOM-DUPONT RD TO THORNE LN
CORRIDOR IMPROVEMENTS
MP 120.01 TO MP 124.45

BARRIER DETAILS - THORNE HIGH BRIDGE PIER 2 COLUMN BARRIERS

PLAN REF NO ST12

SHEET 749 OF 1456 SHEETS

AS-BUILT

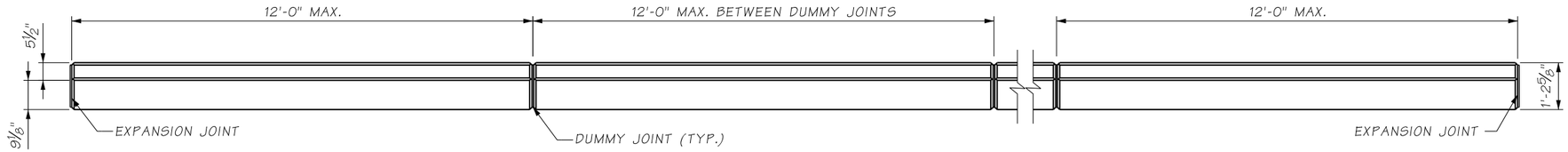

PLAN

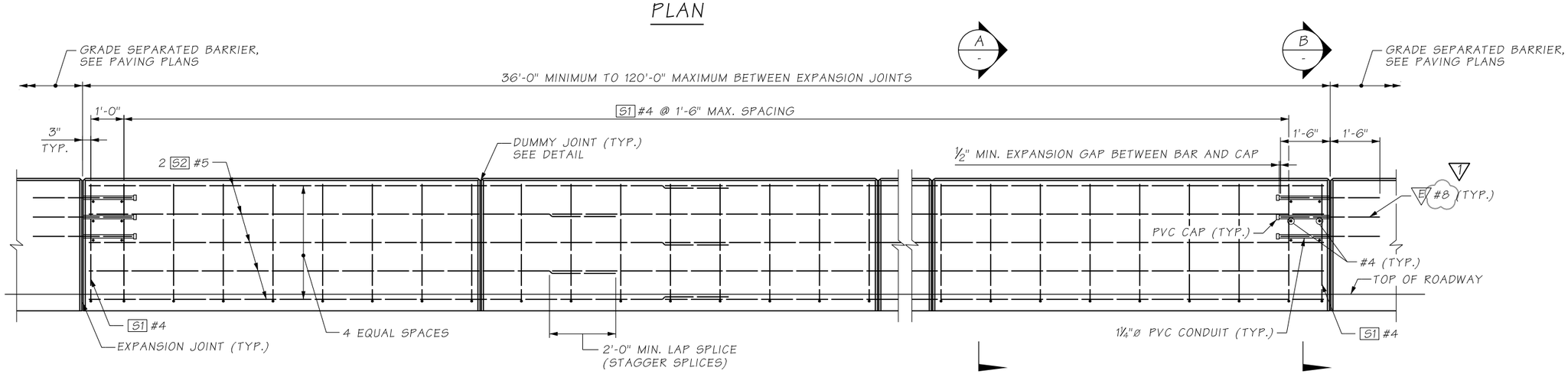

ELEVATION

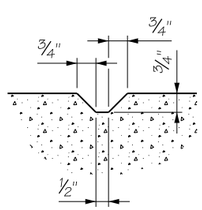

DUMMY JOINT DETAIL

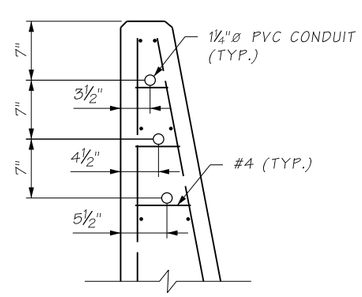

SECTION B / -

AT EXPANSION JOINT (TYP.)

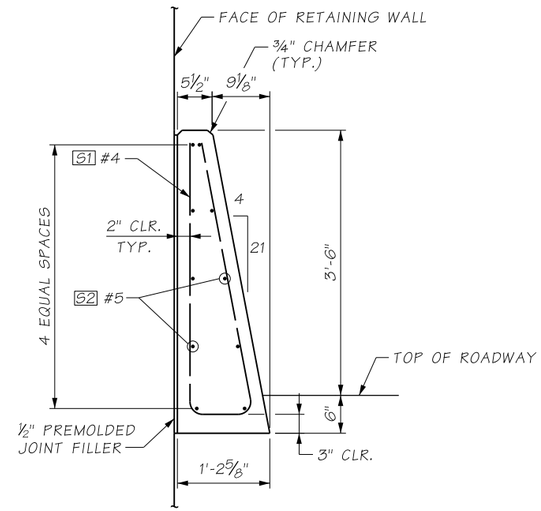

SECTION A / -

NOTES:

1. FOR BARRIER LOCATION AND LIMIT OF BARRIER, SEE PAVING PLANS.
2. CONCRETE SHALL BE CLASS 4000.

ATKINSON
JUN 04 2020 KTW
RELEASED FOR CONSTRUCTION

FILE NAME	D:\ICS_workdir\53505\20633_2357\PS_ST13.dgn						
TIME	1:36:00 PM				REGION NO. 10	STATE WASH	FED.AID PROJ.NO.
DATE	6/1/2020						
PLOTTED BY	USLAS0-APP064$				JOB NUMBER		
DESIGNED BY	A. FONG						
ENTERED BY	R. REISER	REV 1 - RFI0424	06/02/2020				
CHECKED BY	A. GASCA	REV 0 - RELEASED FOR CONSTRUCTION	09/25/2019		CONTRACT NO. C9133		LOCATION NO.
PROJ. ENGR.	C. MEADE	REV A - FINAL REVIEW	09/09/2019				
REGIONAL ADM.	J. WYNANDS	REVISION	DATE	BY			

CORY J. CAYWOOD — STATE OF WASHINGTON — 38139 — STRUCTURAL ENGINEER — PROFESSIONAL ENGINEER
6/1/20
DATE
P.E. STAMP BOX

DATE
P.E. STAMP BOX

Washington State Department of Transportation

ATKINSON CONSTRUCTION / JACOBS

I-5
STEILACOOM-DUPONT RD TO THORNE LN
CORRIDOR IMPROVEMENTS
MP 120.01 TO MP 124.45

BARRIER DETAILS
C.I.P. VERTICAL BACK BARRIER

PLAN REF NO ST13

SHEET 750 OF 1456 SHEETS

AS-BUILT

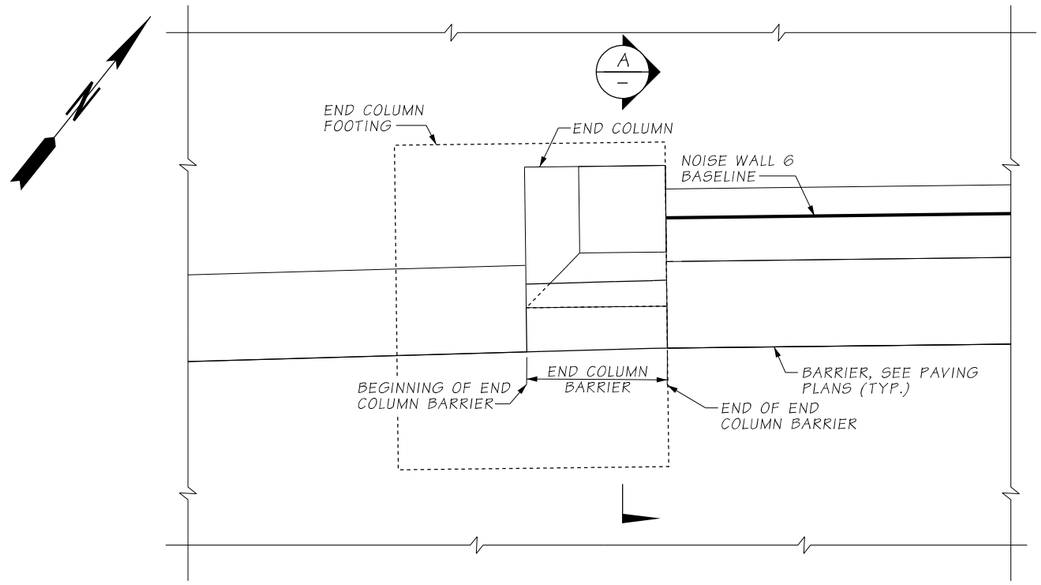

PLAN - NOISE WALL 6 END COLUMN BARRIER

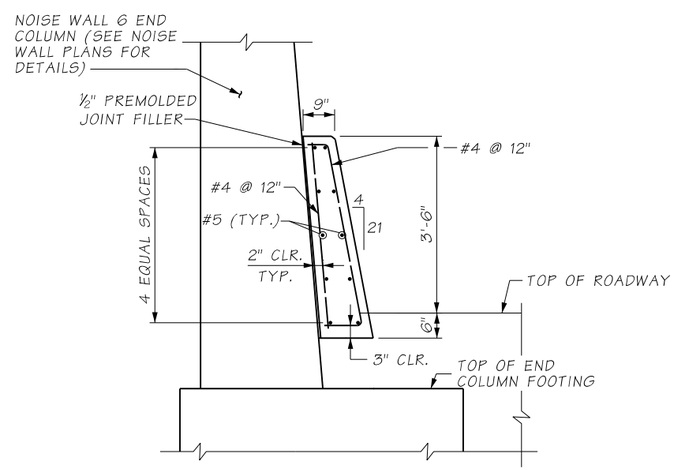

SECTION A

ATKINSON

SEP 25 2019

RELEASED FOR CONSTRUCTION

NOTES:

1. FOR BARRIER LOCATION AND LIMIT OF BARRIER, SEE PAVING PLANS.

FILE NAME	c:\pwworking\jacobs_b&i\jeg_huangy1\dms20633\PS_ST13A.dgn						
TIME	1:08:51 PM				REGION NO. 10	STATE WASH	FED.AID PROJ.NO.
DATE	9/20/2019						
PLOTTED BY	HUANGY1				JOB NUMBER		
DESIGNED BY	Y. HUANG						
ENTERED BY	Y. HUANG						
CHECKED BY	C. CAYWOOD				CONTRACT NO. C9133		LOCATION NO.
PROJ. ENGR.	C. MEADE	REV 0 - RELEASED FOR CONSTRUCTION	09/25/2019				
REGIONAL ADM.	J. WYNANDS	REVISION	DATE	BY			

PORT J. CAYWOOD — STATE OF WASHINGTON — 38795 — STRUCTURAL ENGINEER — PROFESSIONAL ENGINEER

9/24/19

P.E. STAMP BOX — DATE

P.E. STAMP BOX — DATE

Washington State Department of Transportation

ATKINSON CONSTRUCTION / JACOBS

I-5
STEILACOOM-DUPONT RD TO THORNE LN
CORRIDOR IMPROVEMENTS
MP 120.01 TO MP 124.45

BARRIER DETAILS
NOISE WALL 6 END COLUMN BARRIER

PLAN REF NO ST13A

SHEET 751 OF 1456 SHEETS

SECTION 21, T.19N. R.2E. W.M.
CITY OF LAKEWOOD

CURVE DATA					
P.I. STA.	Δ	RADIUS	TANGENT	LENGTH	BACK TANGENT BRG.
WALL B1 12+44.84	99°45'44"LT.	206.31'	244.84'	359.23'	S12°49'39"W

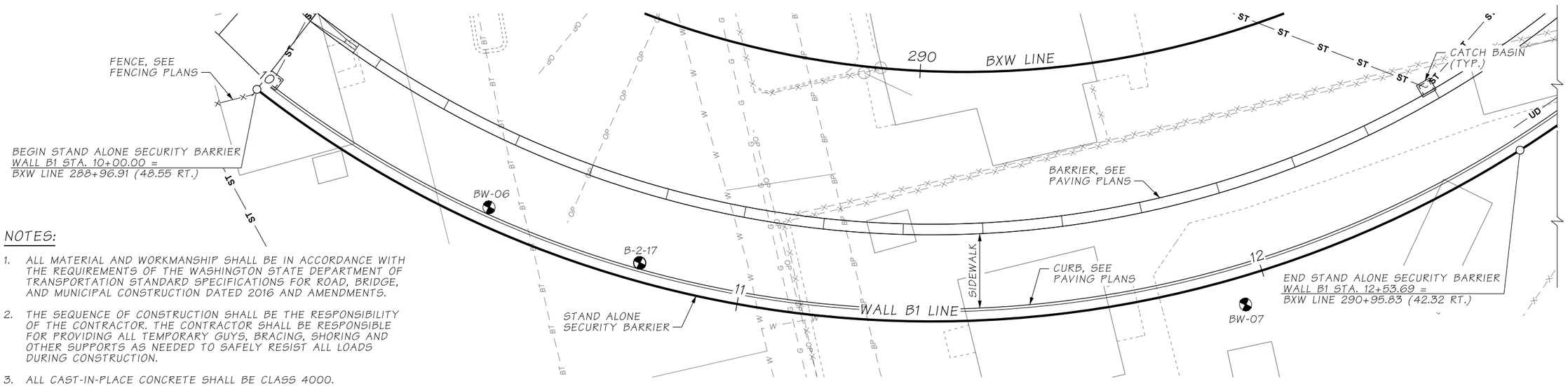

NOTES:

1. ALL MATERIAL AND WORKMANSHIP SHALL BE IN ACCORDANCE WITH THE REQUIREMENTS OF THE WASHINGTON STATE DEPARTMENT OF TRANSPORTATION STANDARD SPECIFICATIONS FOR ROAD, BRIDGE, AND MUNICIPAL CONSTRUCTION DATED 2016 AND AMENDMENTS.
2. THE SEQUENCE OF CONSTRUCTION SHALL BE THE RESPONSIBILITY OF THE CONTRACTOR. THE CONTRACTOR SHALL BE RESPONSIBLE FOR PROVIDING ALL TEMPORARY GUYS, BRACING, SHORING AND OTHER SUPPORTS AS NEEDED TO SAFELY RESIST ALL LOADS DURING CONSTRUCTION.
3. ALL CAST-IN-PLACE CONCRETE SHALL BE CLASS 4000.
4. EXISTING UTILITY LOCATIONS ARE APPROXIMATE. CONTRACTOR SHALL VERIFY LOCATIONS AND ELEVATIONS OF THE EXISTING UTILITIES PRIOR TO CONSTRUCTION.
5. SEE SHEET ST15 FOR TYPICAL SECTION.

STAND ALONE SECURTY BARRIER - PLAN

AS-BUILT

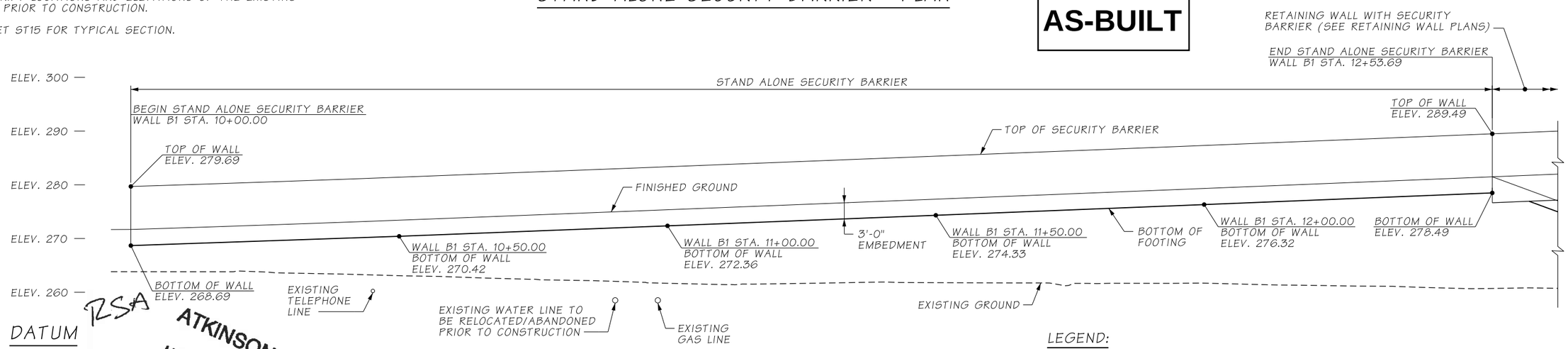

DATUM
N.A.V.D. 88

RSA
ATKINSON
MAR 27 2019
RELEASED FOR CONSTRUCTION

STAND ALONE SECURITY BARRIER - ELEVATION

LEGEND:

- SOIL BORING LOCATION
- BURIED TELEPHONE - EXISTING
- FENCE - EXISTING
- FENCE - PROPOSED
- GAS - EXISTING
- OVERHEAD POWER - EXISTING
- STORM SEWER - PROPOSED
- WATER - EXISTING

FILE NAME	D:\ICS_workdir\24325\20633_1414\PS_ST14.dgn				REGION NO. 10	STATE WASH	FED.AID PROJ.NO.
TIME	10:49:02 AM						
DATE	3/26/2019						
PLOTTED BY	USLAS0-APP064$				JOB NUMBER		
DESIGNED BY	A. FONG						
ENTERED BY	R. REISER	REV 0 - RELEASED FOR CONSTRUCTION	03/29/2019				
CHECKED BY	C. CAYWOOD	REV B - FINAL REVIEW	03/14/2019		CONTRACT NO. C8811		LOCATION NO.
PROJ. ENGR.	C. MEADE	REV A - PRELIMINARY REVIEW	02/13/2019				
REGIONAL ADM.	J. WYNANDS	REVISION	DATE	BY			

CORY J. CAYWOOD, STATE OF WASHINGTON, 38733, STRUCTURAL, PROFESSIONAL ENGINEER
3/26/19
DATE
P.E. STAMP BOX

DATE
P.E. STAMP BOX

Washington State Department of Transportation

ATKINSON / JACOBS CONSTRUCTION

I-5
STEILACOOM-DUPONT RD TO THORNE LN
CORRIDOR IMPROVEMENTS
MP 120.01 TO MP 124.45

STAND ALONE SECURITY BARRIER
PLAN & ELEVATION

PLAN REF NO ST14

SHEET 752 OF 1456 SHEETS

AS-BUILT

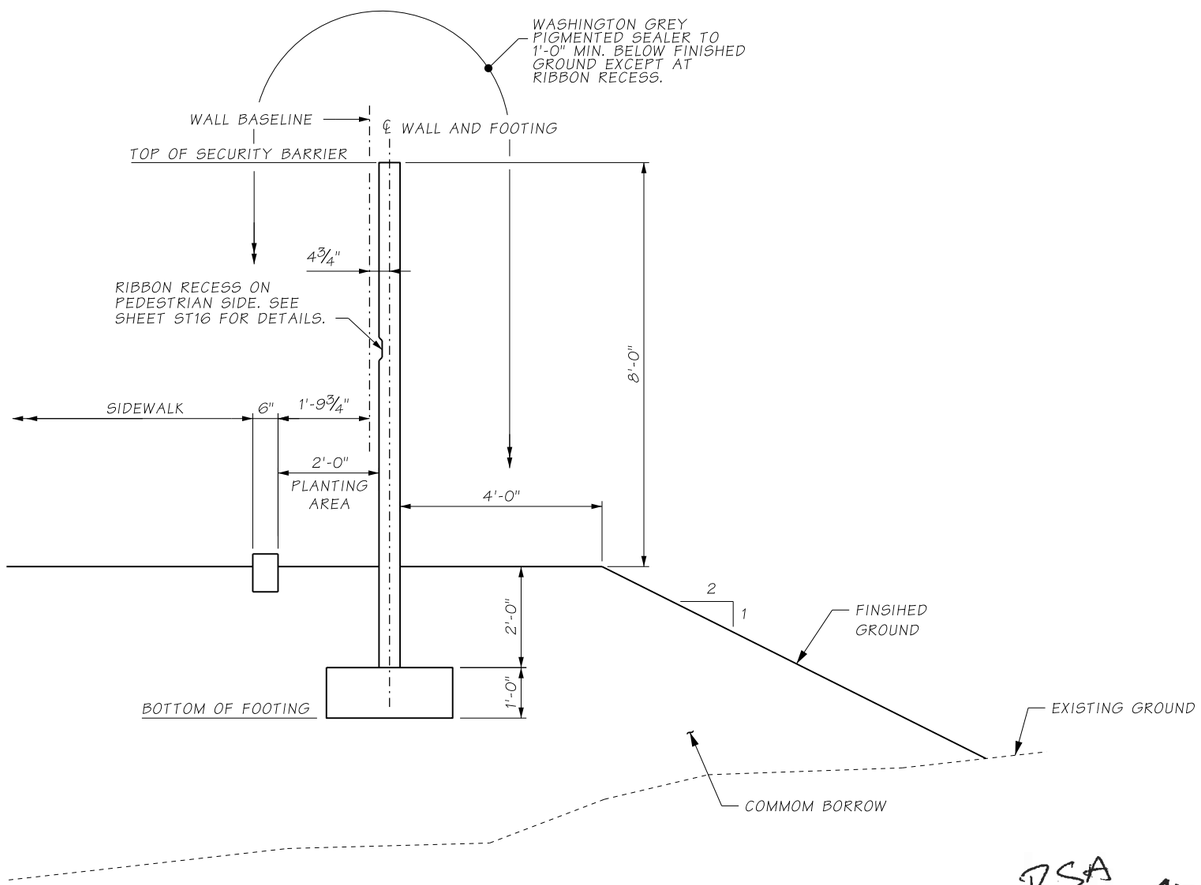

TYPICAL SECTION

RSA ATKINSON
MAR 27 2019
RELEASED FOR CONSTRUCTION

NOTES:

1. SEE SHEET ST14 FOR WALL PLAN AND ELEVATION.
2. SEE STANDARD PLAN D-2.04-00 TYPE 2A FOR ADDITIONAL DETAILS.
3. SEE SHEET ST16 FOR ARCHITECTURAL DETAILS.

FILE NAME	D:\ICS_workdir\24325\20633_1670\PS_ST15.dgn						
TIME	10:48:42 AM				REGION NO. 10	STATE WASH	FED.AID PROJ.NO.
DATE	3/26/2019						
PLOTTED BY	USLAS0-APP064$						
DESIGNED BY	A. FONG				JOB NUMBER		
ENTERED BY	R. REISER	REV 0 - RELEASED FOR CONSTRUCTION	03/29/2019				
CHECKED BY	C. CAYWOOD	REV B - FINAL REVIEW	03/14/2019		CONTRACT NO. C8811		LOCATION NO.
PROJ. ENGR.	C. MEADE	REV A - PRELIMINARY	02/13/2019				
REGIONAL ADM.	J. WYNANDS	REVISION	DATE	BY			

CORY J. CAYWOOD STATE OF WASHINGTON 38133 STRUCTURAL ENGINEER PROFESSIONAL ENGINEER
3/26/19
DATE
P.E. STAMP BOX

DATE
P.E. STAMP BOX

Washington State Department of Transportation

ATKINSON CONSTRUCTION / JACOBS

I-5
STEILACOOM-DUPONT RD TO THORNE LN
CORRIDOR IMPROVEMENTS
MP 120.01 TO MP 124.45

STAND ALONE SECURITY BARRIER
TYPICAL SECTION

PLAN REF NO ST15

SHEET 753 OF 1456 SHEETS

AS-BUILT

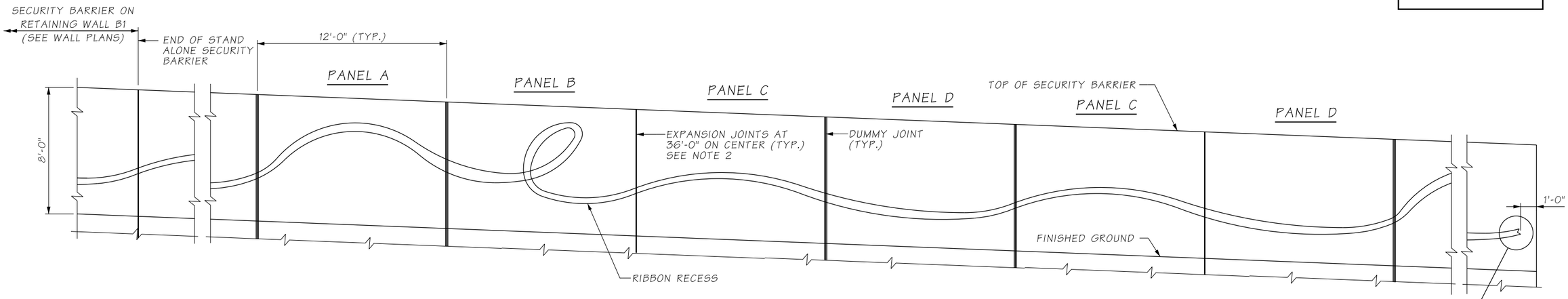

ELEVATION - PEDESTRIAN SIDE

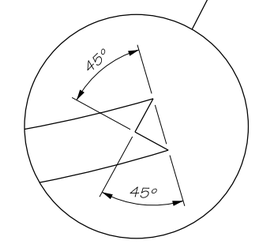

RIBBON END DETAIL

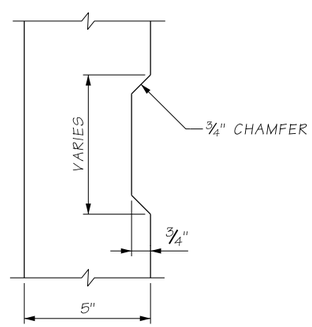

RIBBON RECESS

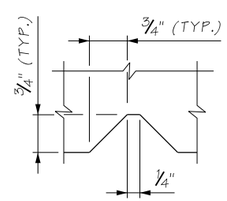

DUMMY JOINT

RSA
ATKINSON
MAR 27 2019
RELEASED FOR CONSTRUCTION

NOTES:

1. RIBBON PATTERN ON PEDESTRIAN SIDE SHALL CONSIST OF PANEL A THROUGH D. PANEL SEQUENCE SHALL BE AS FOLLOWS: PANEL A -> PANEL B -> PANEL C -> PANEL D -> PANEL C -> PANEL D. REPEAT SAME PATTERN FOR THE FULL LENGTH OF THE SECURITY BARRIER.
2. 24'-0" BETWEEN EXPANSION JOINT IS SHOWN ON STANDARD PLAN. FOR STAND ALONE SECURITY BARRIER, 36'-0" SHALL BE USED.
3. PRIOR TO CONSTRUCTION OF SECURITY BARRIER, SUBMIT TYPE 2 WORKING DRAWINGS FOR APPROVAL INCLUDING ELEVATION OF WALL WITH RIBBON LAYOUT ALONG FULL LENGTH OF WALL.
4. MT. BAKER GRAY PIGMENTED SEALER SHALL BE USED FOR RIBBON RECESS.

FILE NAME	D:\ICS_workdir\24325\20633_1960\PS_ST16.dgn				REGION NO.	STATE	FED.AID PROJ.NO.
TIME	10:49:00 AM				10	WASH	
DATE	3/26/2019				JOB NUMBER		
PLOTTED BY	USLAS0-APP064$						
DESIGNED BY	A. FONG						
ENTERED BY	R. REISER						
CHECKED BY	C. CAYWOOD	REV 0 - RELEASED FOR CONSTRUCTION	03/29/2019		CONTRACT NO.		LOCATION NO.
PROJ. ENGR.	C. MEADE	REV A - FINAL REVIEW	03/14/2019		C8811		
REGIONAL ADM.	J. WYNANDS	REVISION	DATE	BY			

CORY J. CAYWOOD, STATE OF WASHINGTON, 38733, STRUCTURAL ENGINEER, PROFESSIONAL ENGINEER
3/26/19
DATE
P.E. STAMP BOX

DATE
P.E. STAMP BOX

Washington State Department of Transportation

ATKINSON / JACOBS CONSTRUCTION

I-5
STEILACOOM-DUPONT RD TO THORNE LN
CORRIDOR IMPROVEMENTS
MP 120.01 TO MP 124.45

STAND ALONE SECURITY BARRIER DETAILS

PLAN REF NO ST16

SHEET 754 OF 1456 SHEETS

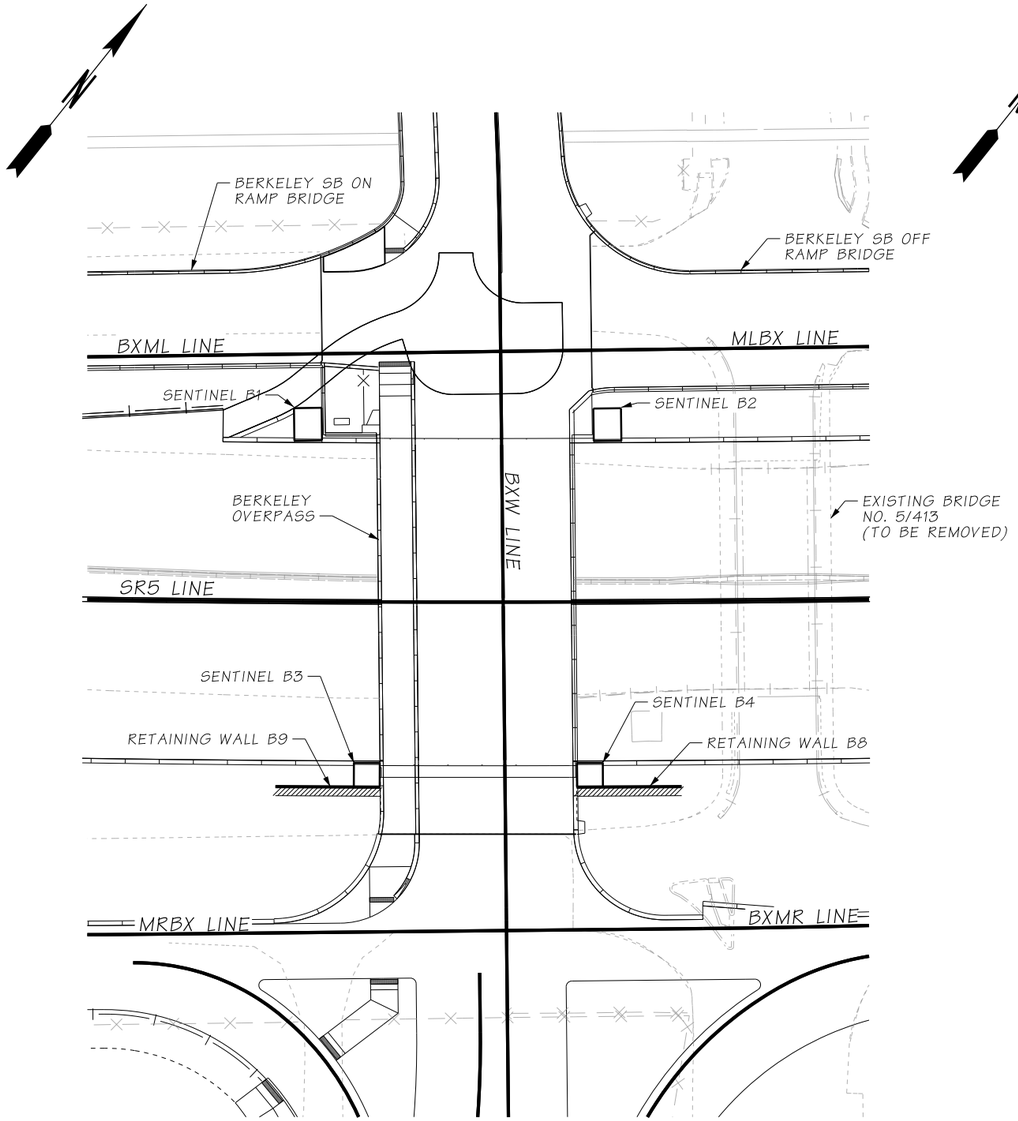

KEY PLAN - BERKELEY SENTINELS

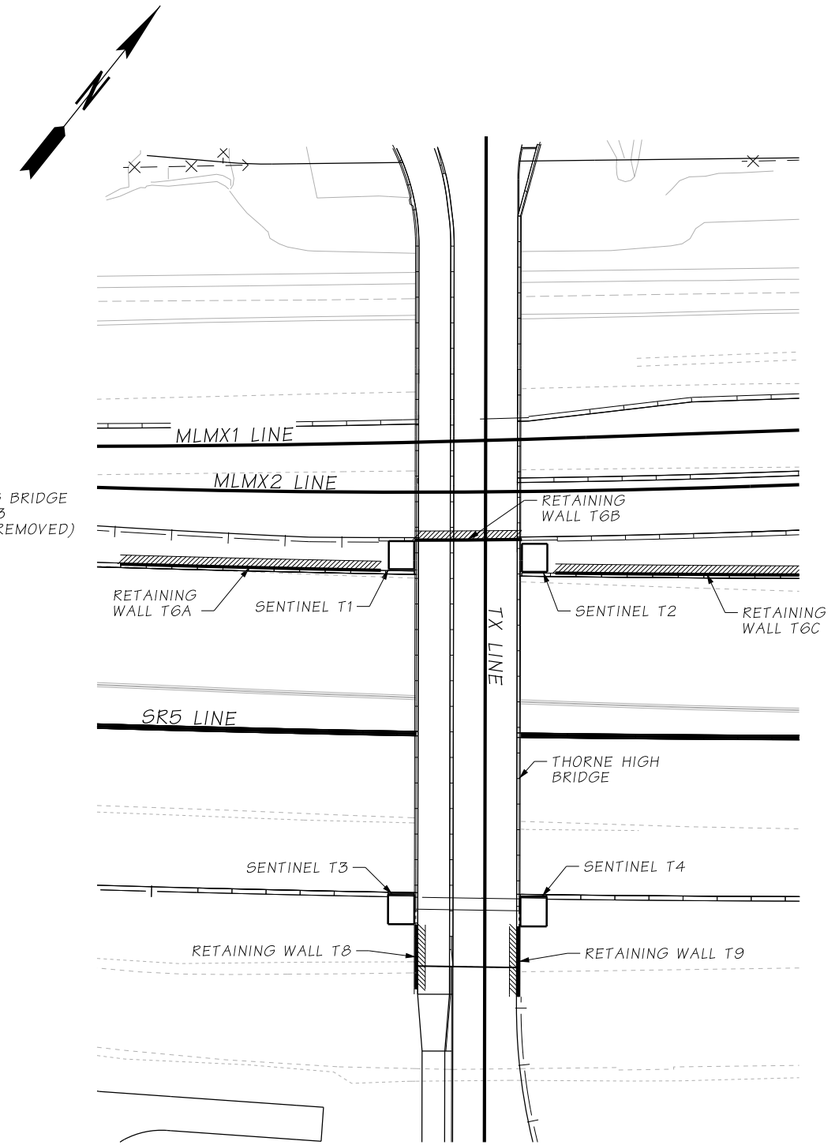

KEY PLAN - THORNE SENTINELS

GENERAL NOTES:

1. ALL MATERIAL AND WORKMANSHIP SHALL BE IN ACCORDANCE WITH THE REQUIREMENTS OF THE WASHINGTON STATE DEPARTMENT OF TRANSPORTATION STANDARD SPECIFICATIONS FOR ROAD, BRIDGE, AND MUNICIPAL CONSTRUCTION DATED 2016 AND AMENDMENTS.
2. ALL CAST-IN-PLACE CONCRETE SHALL BE CLASS 4000.

AS-BUILT

ATKINSON
JUL 12 2019 KTW
RELEASED FOR CONSTRUCTION

FILE NAME	D:\ICS_workdir\32163\20633_1466\PS_ST21.dgn						
TIME	12:52:55 PM				REGION NO.	STATE	FED.AID PROJ.NO.
DATE	7/12/2019				10	WASH	
PLOTTED BY	USLAS0-APP064$						
DESIGNED BY	C. CAYWOOD				JOB NUMBER		
ENTERED BY	R. REISER						
CHECKED BY	A. GASCA	REV 0 - RELEASED FOR CONSTRUCTION	07/15/2019		CONTRACT NO.		LOCATION NO.
PROJ. ENGR.	C. MEADE	REV A - PRELIMINARY REVIEW	06/20/2019		C9133		
REGIONAL ADM.	J. WYNANDS	REVISION	DATE	BY			

CORY J. CAYWOOD, STATE OF WASHINGTON, 38133, STRUCTURAL ENGINEER, PROFESSIONAL ENGINEER
7/12/19
DATE
P.E. STAMP BOX

DATE
P.E. STAMP BOX

Washington State Department of Transportation

ATKINSON CONSTRUCTION / JACOBS

I-5
STEILACOOM-DUPONT RD TO THORNE LN
CORRIDOR IMPROVEMENTS
MP 120.01 TO MP 124.45

SENTINELS
KEY PLAN AND GENERAL NOTES

PLAN REF NO ST21

SHEET 755 OF 1456 SHEETS

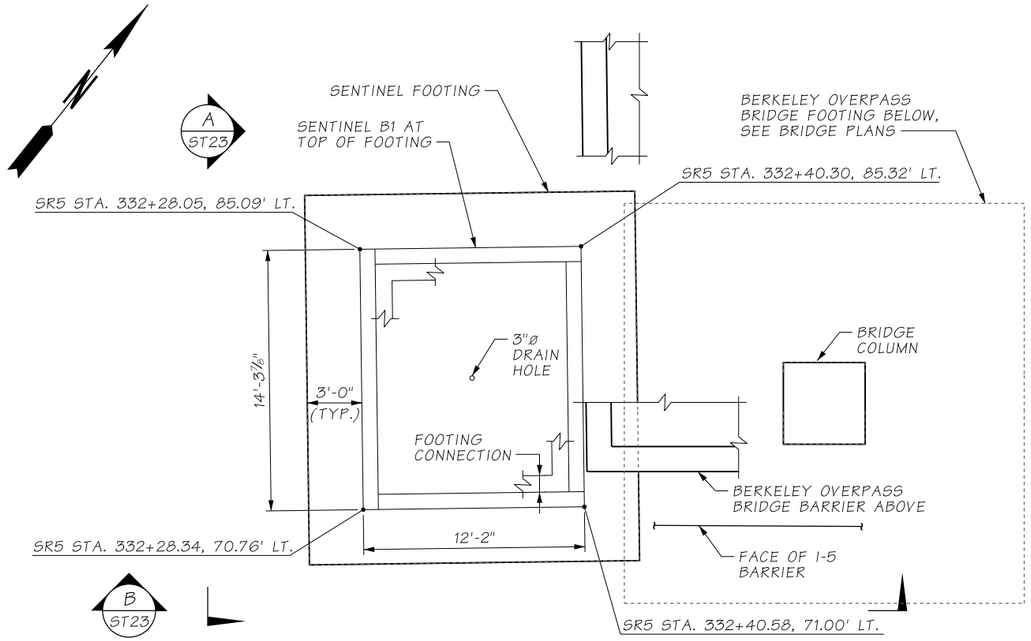

PLAN - SENTINEL B1

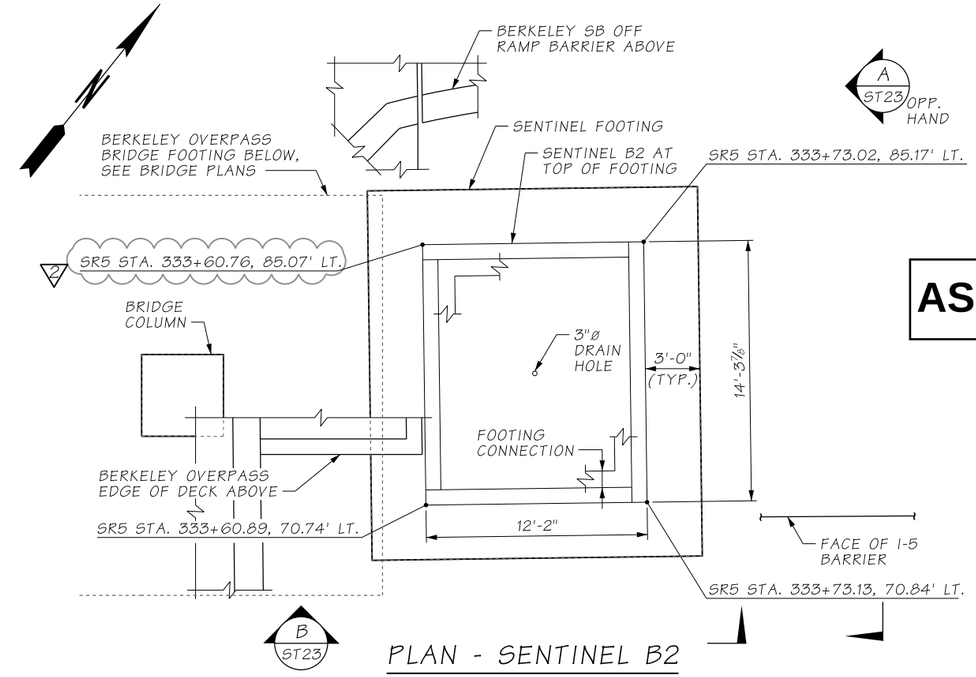

PLAN - SENTINEL B2

AS-BUILT

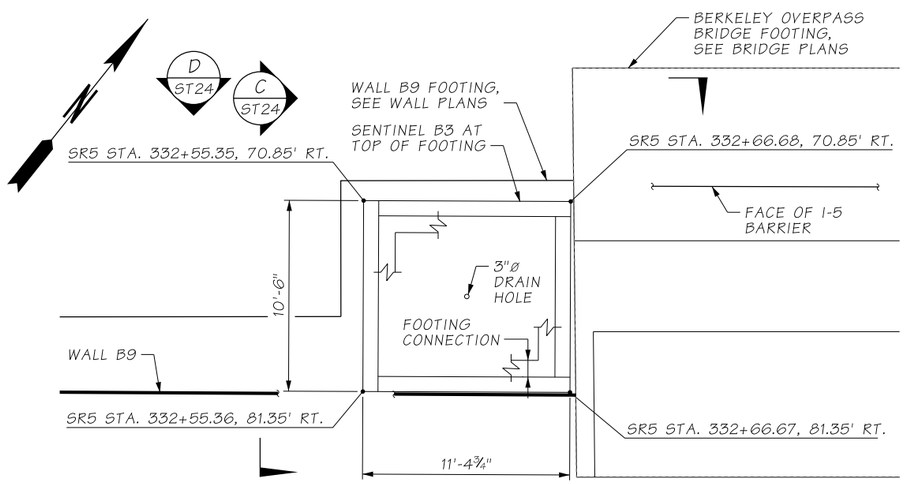

PLAN - SENTINEL B3

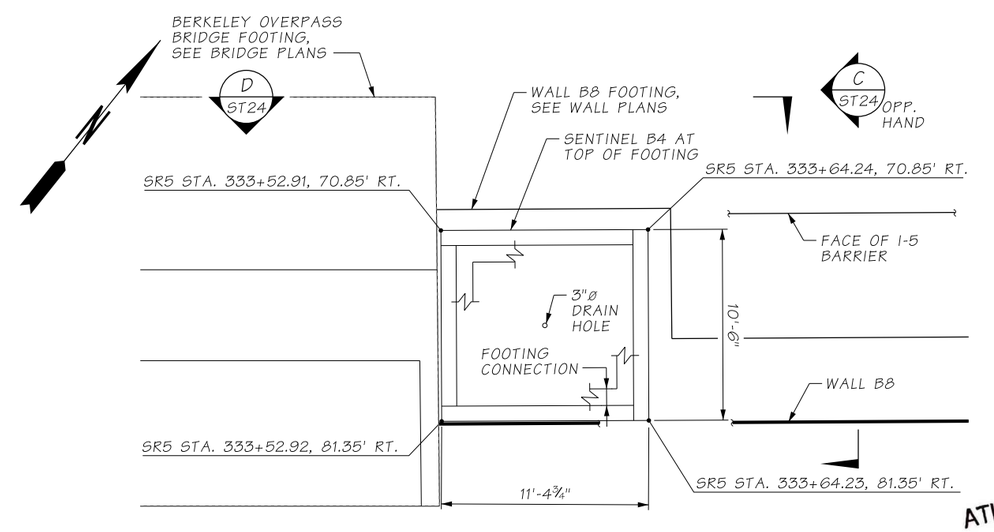

PLAN - SENTINEL B4

ATKINSON
NOV 03 2020 KTW
RELEASED FOR CONSTRUCTION

FILE NAME	D:\ICS_workdir\67128\20633_1506\PS_ST22.dgn				REGION NO.	STATE	FED.AID PROJ.NO.
TIME	11:21:58 AM				10	WASH	
DATE	11/3/2020						
PLOTTED BY	USLAS0-APP064$				JOB NUMBER		
DESIGNED BY	A. GASCA	REV 2 - RFI0506	11/04/2020				
ENTERED BY	R. REISER	REV 1 - RFI0353	03/16/2020				
CHECKED BY	C. CAYWOOD	REV 0 - RELEASED FOR CONSTRUCTION	07/15/2019		CONTRACT NO.		LOCATION NO.
PROJ. ENGR.	C. MEADE	REV A - PRELIMINARY REVIEW	06/20/2019		C9133		
REGIONAL ADM.	J. WYNANDS	REVISION	DATE	BY			

CORT J. CAYWOOD
STATE OF WASHINGTON
38133
STRUCTURAL
PROFESSIONAL ENGINEER
11/3/20
DATE
P.E. STAMP BOX

DATE
P.E. STAMP BOX

Washington State
Department of Transportation

ATKINSON / JACOBS
CONSTRUCTION

I-5
STEILACOOM-DUPONT RD TO THORNE LN
CORRIDOR IMPROVEMENTS
MP 120.01 TO MP 124.45

SENTINELS B1 TO B4
PLANS

PLAN REF NO
ST22

SHEET
756
OF
1456
SHEETS

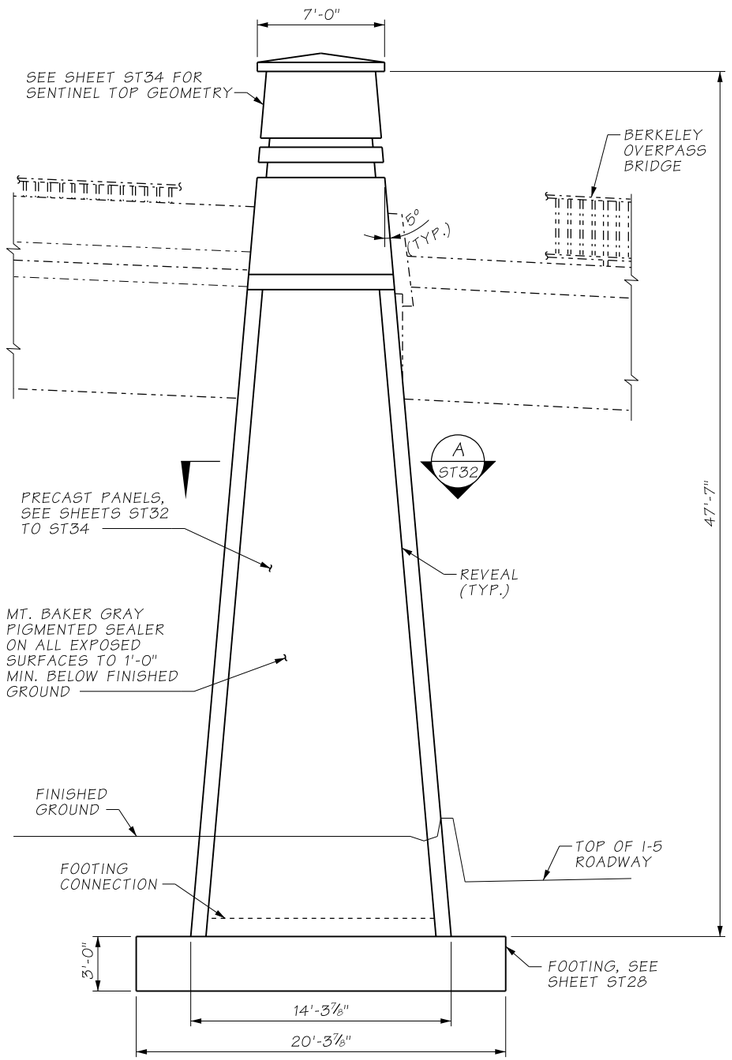

SENTINEL B1

FRONT VIEW A / ST22
SENTINEL B1 SHOWN, SENTINEL B2 SIMILAR

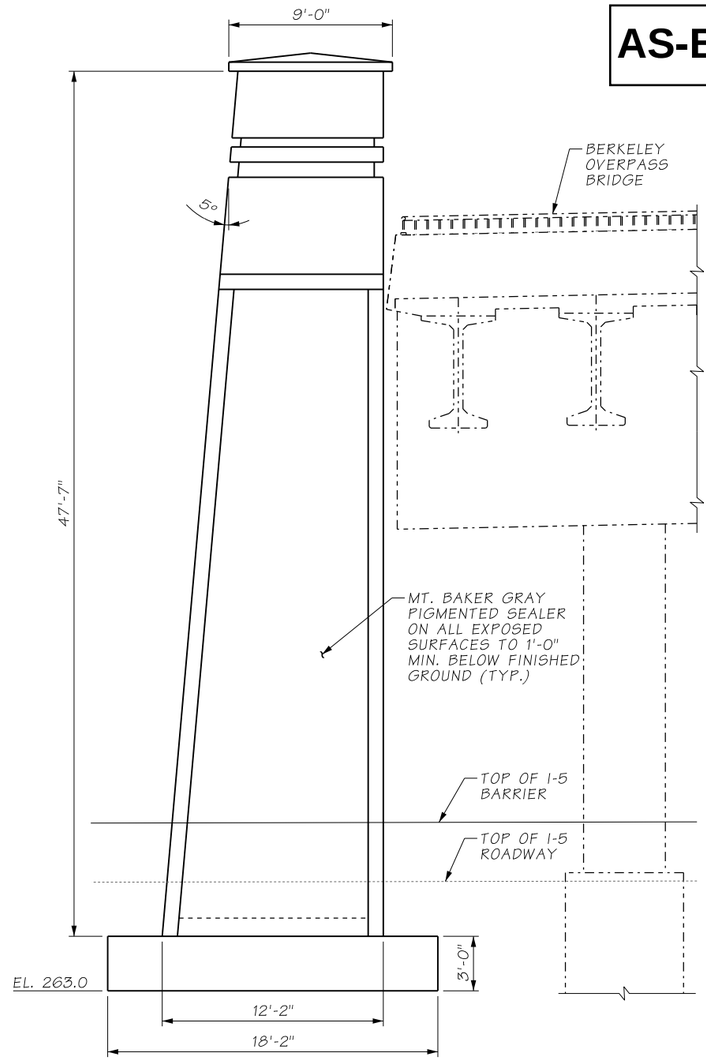

SENTINEL B1

SIDE VIEW B / ST22

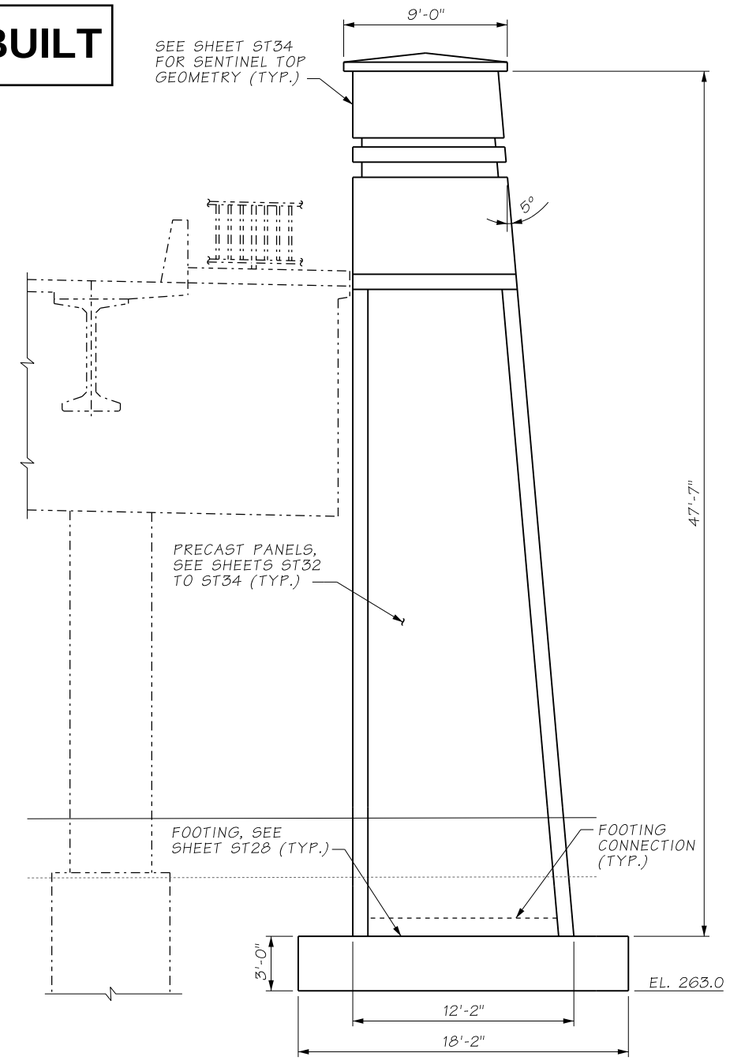

SENTINEL B2

AS-BUILT

ATKINSON
JUL 12 2019 KTW
RELEASED FOR CONSTRUCTION

FILE NAME	D:\ICS_workdir\32163\20633_1476\PS_ST23.dgn						
TIME	12:50:59 PM				REGION NO. 10	STATE WASH	FED.AID PROJ.NO.
DATE	7/12/2019						
PLOTTED BY	USLAS0-APP064$				JOB NUMBER		
DESIGNED BY	C. CAYWOOD						
ENTERED BY	R. REISER						
CHECKED BY	A. GASCA	REV 0 - RELEASED FOR CONSTRUCTION	07/15/2019		CONTRACT NO. C9133		LOCATION NO.
PROJ. ENGR.	C. MEADE	REV A - PRELIMINARY REVIEW	06/20/2019				
REGIONAL ADM.	J. WYNANDS	REVISION	DATE	BY			

CORY J. CAYWOOD, STATE OF WASHINGTON, 38759, STRUCTURAL ENGINEER, PROFESSIONAL ENGINEER
7/12/19
DATE
P.E. STAMP BOX

P.E. STAMP BOX
DATE

Washington State Department of Transportation

ATKINSON / JACOBS CONSTRUCTION

I-5
STEILACOOM-DUPONT RD TO THORNE LN
CORRIDOR IMPROVEMENTS
MP 120.01 TO MP 124.45

SENTINELS B1 AND B2
FRONT AND SIDE VIEWS

PLAN REF NO ST23

SHEET 757 OF 1456 SHEETS

AS-BUILT

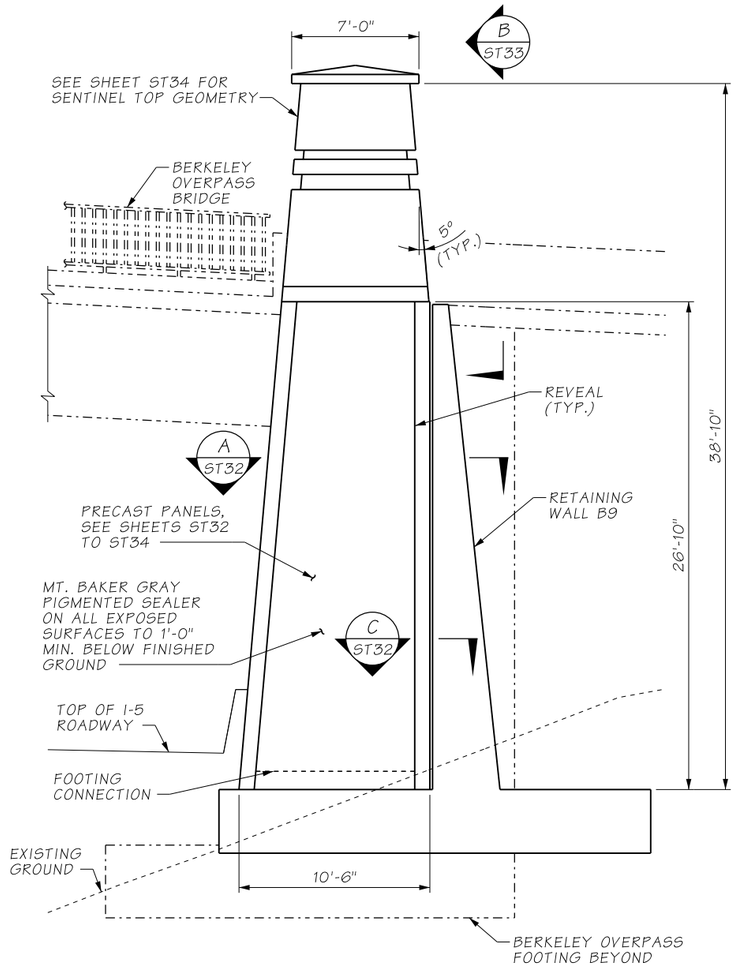

SENTINEL B3

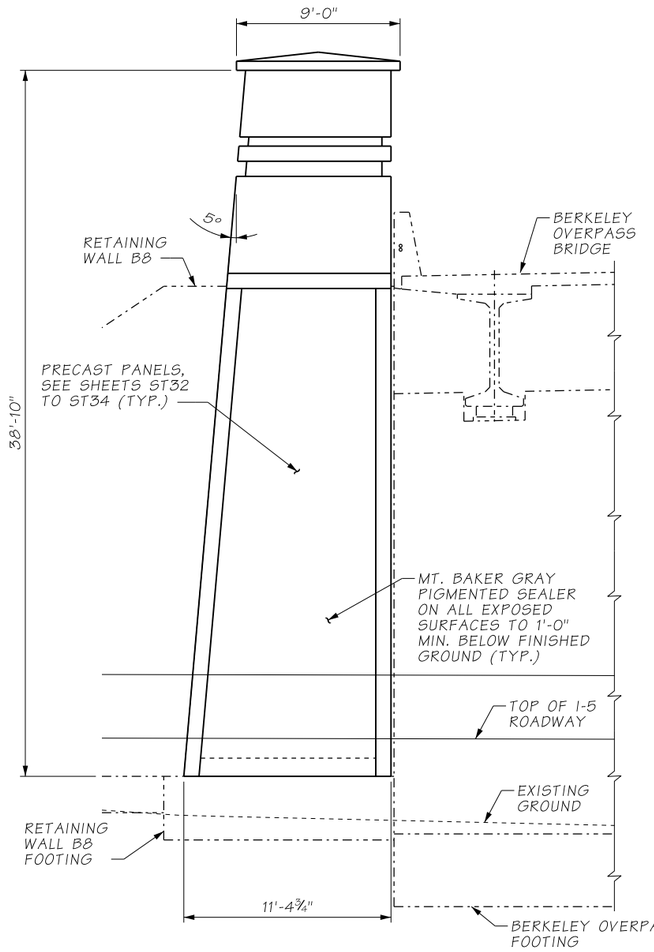

SENTINEL B4

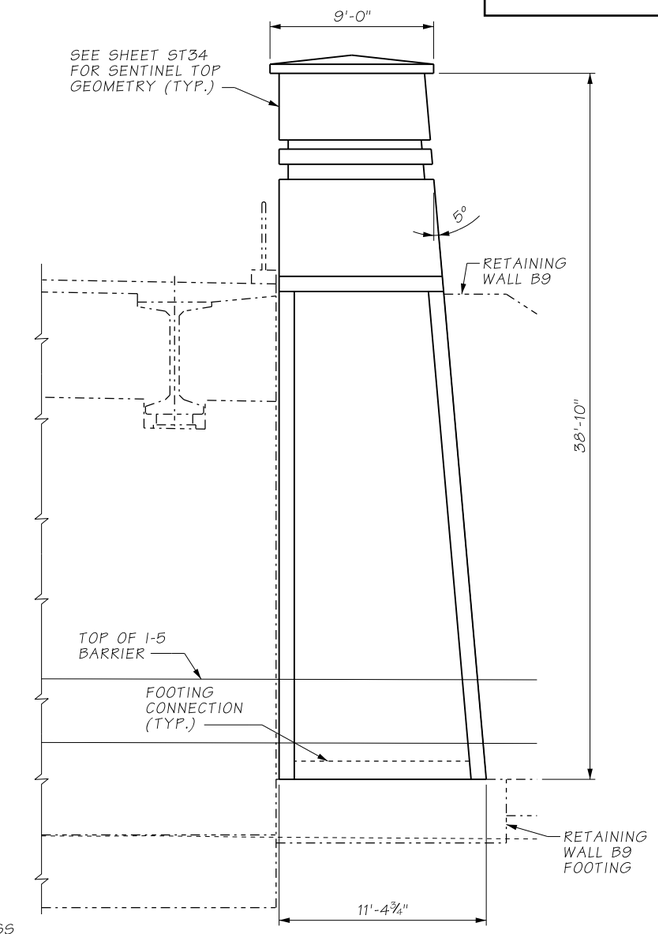

SENTINEL B3

FRONT VIEW (C / ST22)
SENTINEL B3 SHOWN, SENTINEL B4 SIMILAR

SIDE VIEW (D / ST22)

ATKINSON
JUL 12 2019 KTW
RELEASED FOR CONSTRUCTION

FILE NAME	D:\ICS_workdir\32163\20633_1526\PS_ST24.dgn						
TIME	12:51:05 PM				REGION NO.	STATE	FED.AID PROJ.NO.
DATE	7/12/2019				10	WASH	
PLOTTED BY	USLAS0-APP064$				JOB NUMBER		
DESIGNED BY	C. CAYWOOD						
ENTERED BY	R. REISER						
CHECKED BY	A. GASCA	REV 0 - RELEASED FOR CONSTRUCTION	07/15/2019		CONTRACT NO.		LOCATION NO.
PROJ. ENGR.	C. MEADE	REV A - PRELIMINARY REVIEW	06/20/2019		C9133		
REGIONAL ADM.	J. WYNANDS	REVISION	DATE	BY			

CORY J. CAYWOOD, STATE OF WASHINGTON, 38733, STRUCTURAL ENGINEER, PROFESSIONAL ENGINEER
7/12/19
DATE
P.E. STAMP BOX

DATE
P.E. STAMP BOX

Washington State Department of Transportation

ATKINSON / JACOBS CONSTRUCTION

I-5
STEILACOOM-DUPONT RD TO THORNE LN
CORRIDOR IMPROVEMENTS
MP 120.01 TO MP 124.45

SENTINELS B3 AND B4
FRONT AND SIDE VIEWS

PLAN REF NO ST24

SHEET 758 OF 1456 SHEETS

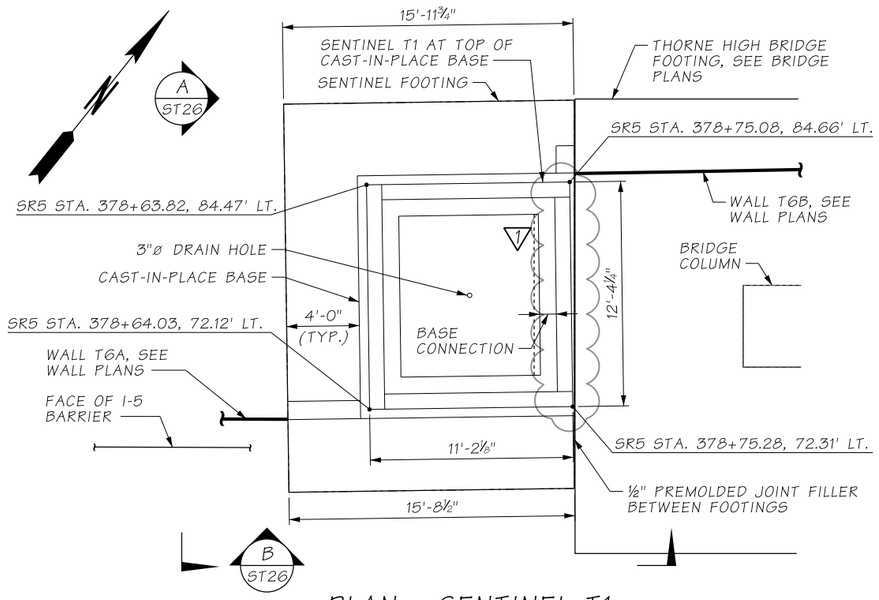

PLAN - SENTINEL T1

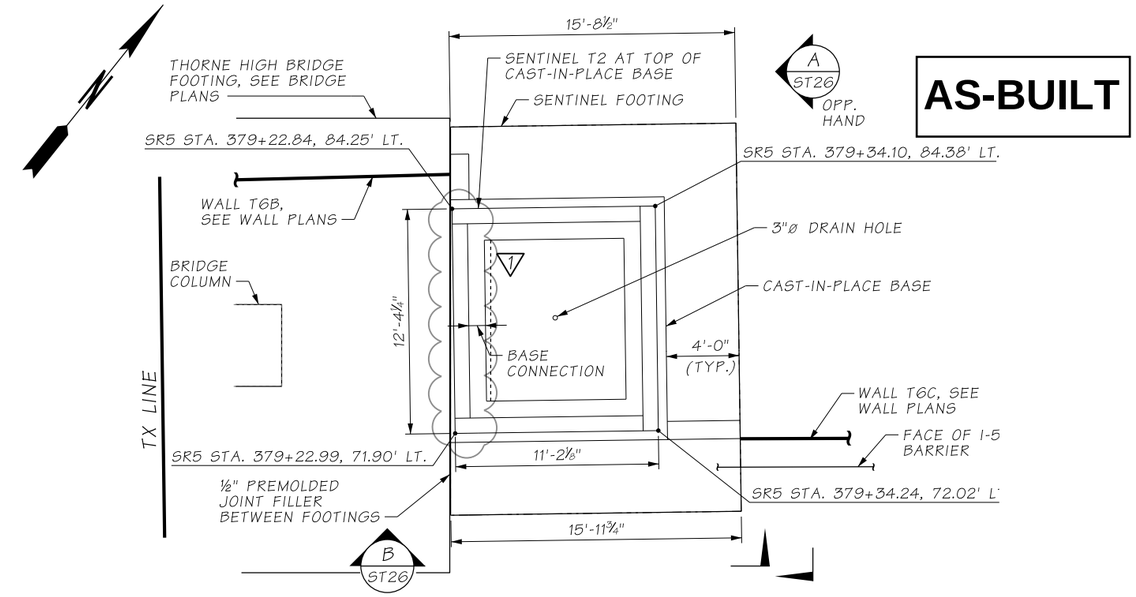

PLAN - SENTINEL T2

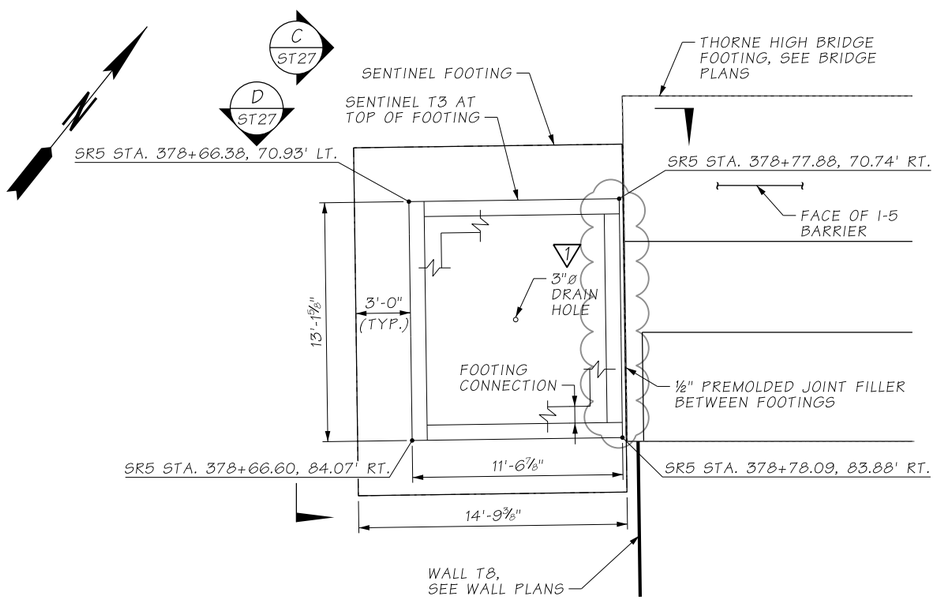

PLAN - SENTINEL T3

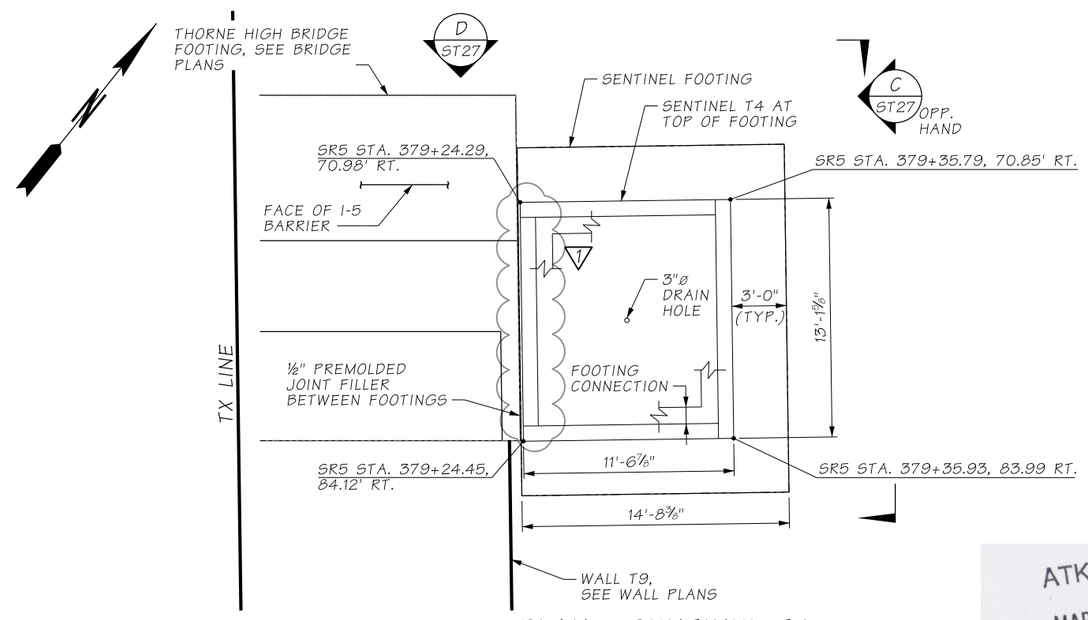

PLAN - SENTINEL T4

ATKINSON
MAR 16 2020 KTW
RELEASED FOR CONSTRUCTION

FILE NAME	D:\ICS_workdir\48364\20633_1573\PS_ST25.dgn						
TIME	1:25:23 PM				REGION NO. 10	STATE WASH	FED.AID PROJ.NO.
DATE	3/13/2020						
PLOTTED BY	USLAS0-APP064$				JOB NUMBER		
DESIGNED BY	A. GASCA						
ENTERED BY	R. REISER	REV 1 - RFI0353	03/16/2020				
CHECKED BY	C. CAYWOOD	REV 0 - RELEASED FOR CONSTRUCTION	07/15/2019		CONTRACT NO. C9133		LOCATION NO.
PROJ. ENGR.	C. MEADE	REV A - PRELIMINARY REVIEW	06/20/2019				
REGIONAL ADM.	J. WYNANDS	REVISION	DATE	BY			

CORT J. CAYWOOD, STATE OF WASHINGTON, 38133, STRUCTURAL, PROFESSIONAL ENGINEER
3/13/20
DATE
P.E. STAMP BOX

DATE
P.E. STAMP BOX

Washington State Department of Transportation

ATKINSON CONSTRUCTION / JACOBS

I-5
STEILACOOM-DUPONT RD TO THORNE LN
CORRIDOR IMPROVEMENTS
MP 120.01 TO MP 124.45

SENTINELS T1 TO T4
PLANS

PLAN REF NO ST25

SHEET 759 OF 1456 SHEETS

AS-BUILT

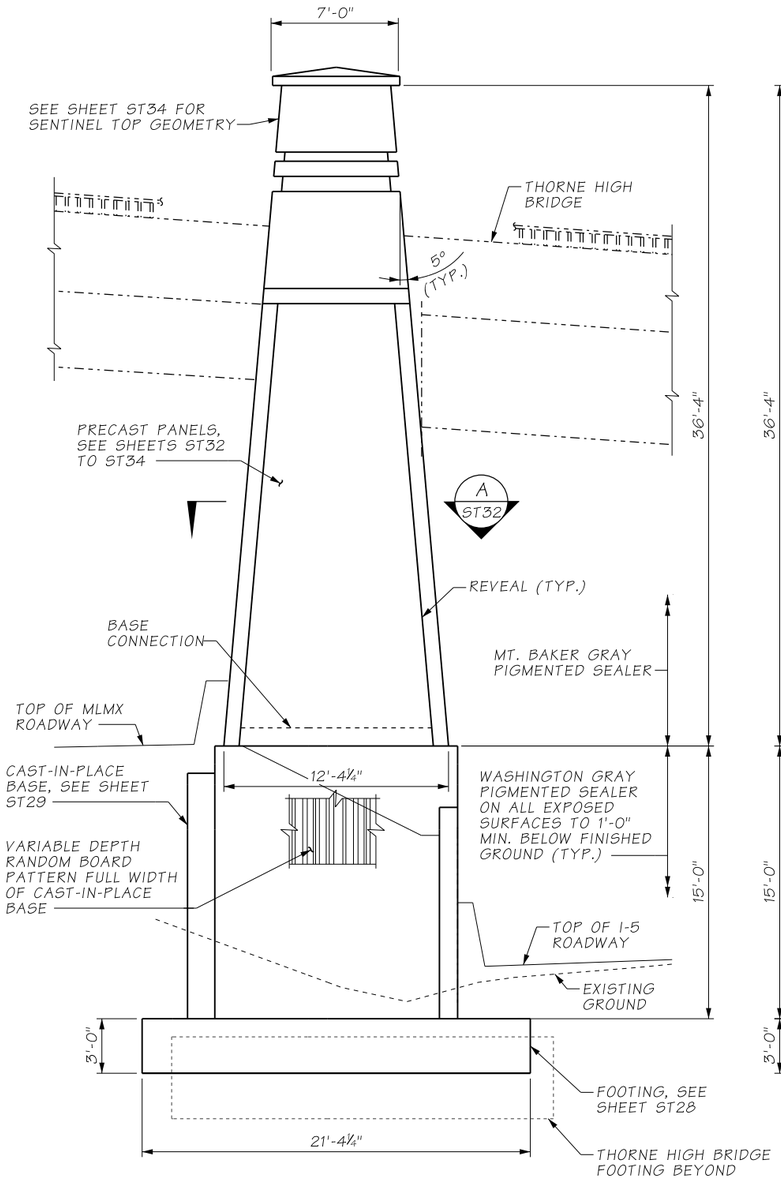

SENTINEL T1

FRONT VIEW (A / ST25)

SENTINEL T1 SHOWN, SENTINEL T2 SIMILAR

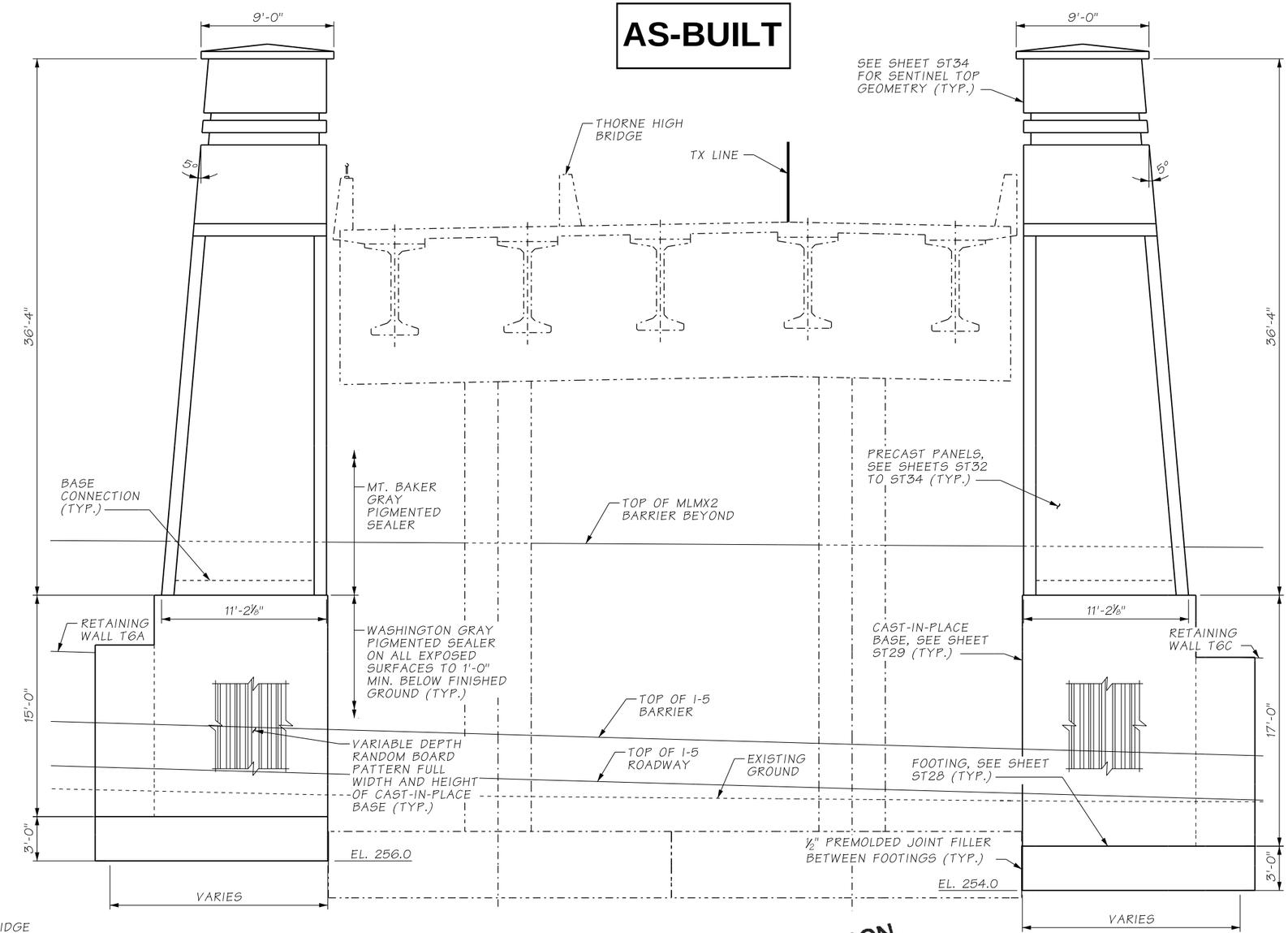

SENTINEL T1

SIDE VIEW (B / ST25)

SENTINEL T2

ATKINSON
JUL 12 2019 KTW
RELEASED FOR CONSTRUCTION

FILE NAME	D:\ICS_workdir\32163\20633_1574\PS_ST26.dgn						
TIME	12:53:11 PM				REGION NO. 10	STATE WASH	FED.AID PROJ.NO.
DATE	7/12/2019						
PLOTTED BY	USLAS0-APP064$				JOB NUMBER		
DESIGNED BY	C. CAYWOOD						
ENTERED BY	R. REISER						
CHECKED BY	A. GASCA	REV 0 - RELEASED FOR CONSTRUCTION	07/15/2019		CONTRACT NO. C9133		LOCATION NO.
PROJ. ENGR.	C. MEADE	REV A - PRELIMINARY REVIEW	06/20/2019				
REGIONAL ADM.	J. WYNANDS	REVISION	DATE	BY			

CORY J. CAYWOOD, STATE OF WASHINGTON, 38755, STRUCTURAL ENGINEER, PROFESSIONAL ENGINEER
7/12/19
DATE
P.E. STAMP BOX

P.E. STAMP BOX
DATE

Washington State Department of Transportation

ATKINSON / JACOBS CONSTRUCTION

I-5
STEILACOOM-DUPONT RD TO THORNE LN
CORRIDOR IMPROVEMENTS
MP 120.01 TO MP 124.45

SENTINELS T1 AND T2
FRONT AND SIDE VIEWS

PLAN REF NO ST26

SHEET 760 OF 1456 SHEETS

AS-BUILT

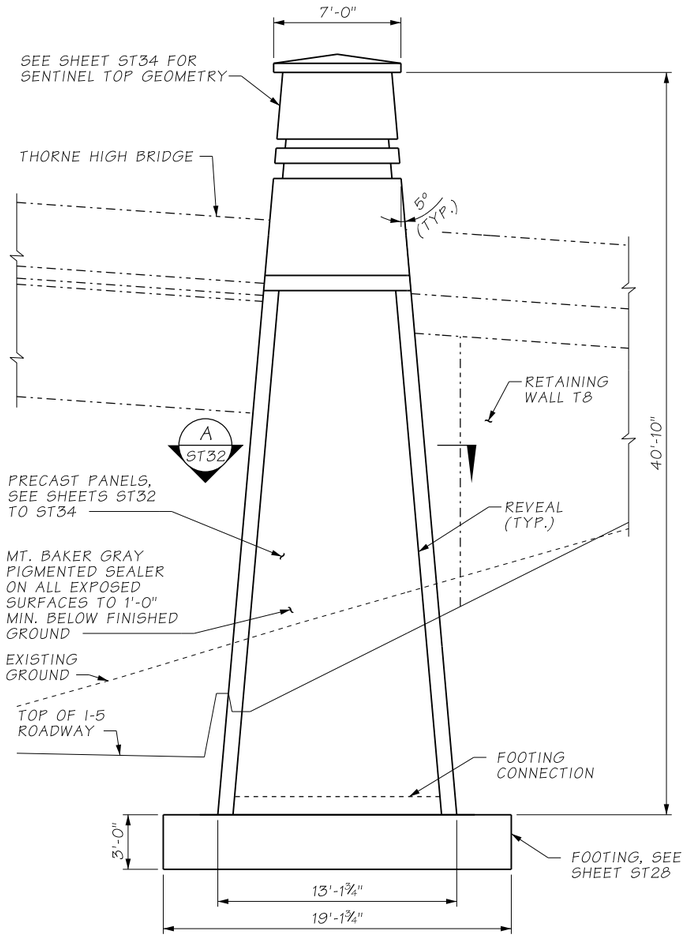

SENTINEL T3

FRONT VIEW (C / ST25)

SENTINEL T3 SHOWN, SENTINEL T4 SIMILAR

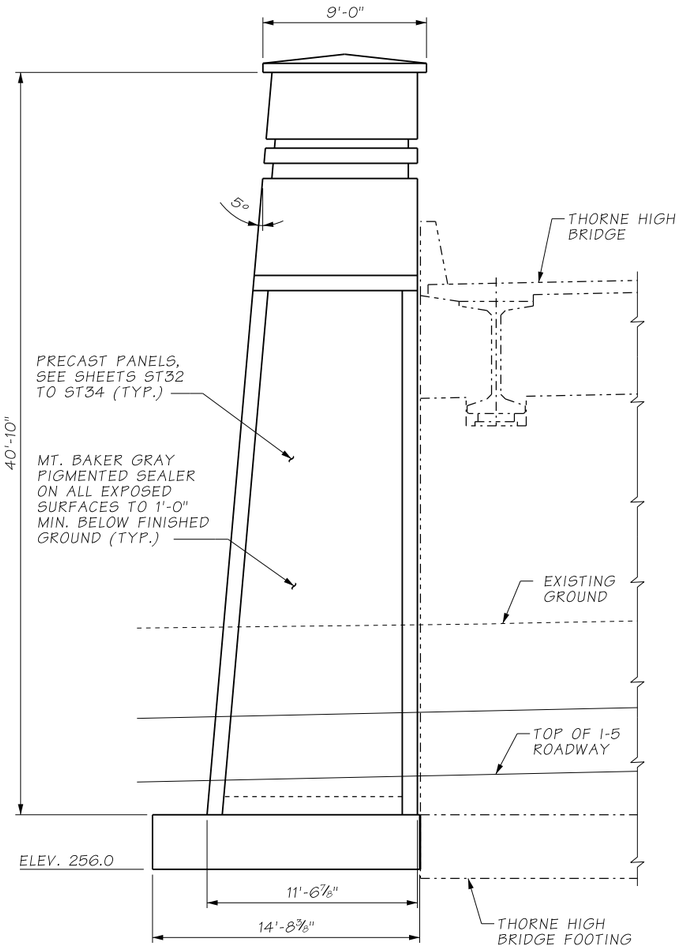

SENTINEL T4

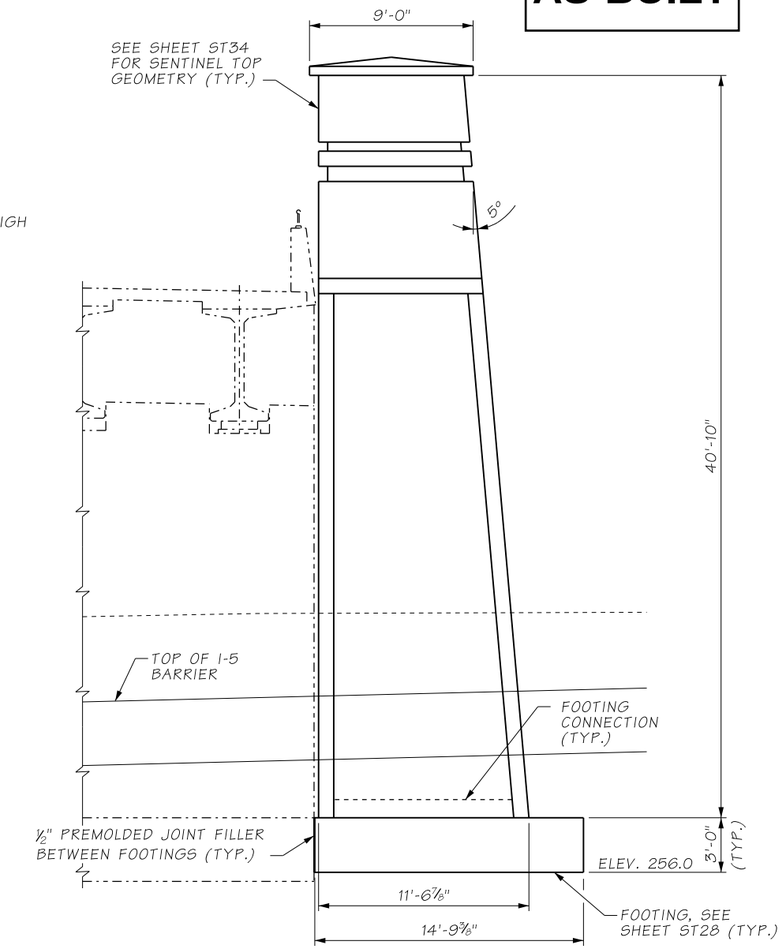

SENTINEL T3

SIDE VIEW (D / ST25)

ATKINSON
JUL 12 2019 KTW
RELEASED FOR CONSTRUCTION

FILE NAME	D:\ICS_workdir\32163\20633_1575\PS_ST27.dgn						
TIME	12:51:11 PM				REGION NO. 10	STATE WASH	FED.AID PROJ.NO.
DATE	7/12/2019				JOB NUMBER		
PLOTTED BY	USLAS0-APP064$						
DESIGNED BY	C. CAYWOOD						
ENTERED BY	R. REISER						
CHECKED BY	A. GASCA	REV 0 - RELEASED FOR CONSTRUCTION	07/15/2019		CONTRACT NO. C9133		LOCATION NO.
PROJ. ENGR.	C. MEADE	REV A - PRELIMINARY REVIEW	06/20/2019				
REGIONAL ADM.	J. WYNANDS	REVISION	DATE	BY			

CORY J. CAYWOOD, STATE OF WASHINGTON, 38193, STRUCTURAL ENGINEER, PROFESSIONAL ENGINEER — 7/12/19 DATE — P.E. STAMP BOX

P.E. STAMP BOX — DATE

Washington State Department of Transportation

ATKINSON / JACOBS CONSTRUCTION

I-5
STEILACOOM-DUPONT RD TO THORNE LN
CORRIDOR IMPROVEMENTS
MP 120.01 TO MP 124.45

SENTINELS T3 AND T4
FRONT AND SIDE VIEWS

PLAN REF NO ST27

SHEET 761 OF 1456 SHEETS

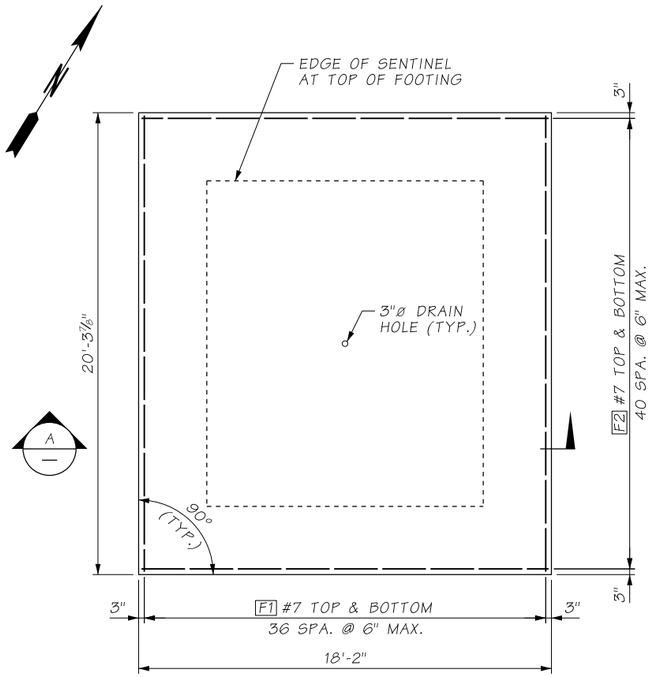

PLAN - SENTINELS B1 & B2 FOOTINGS

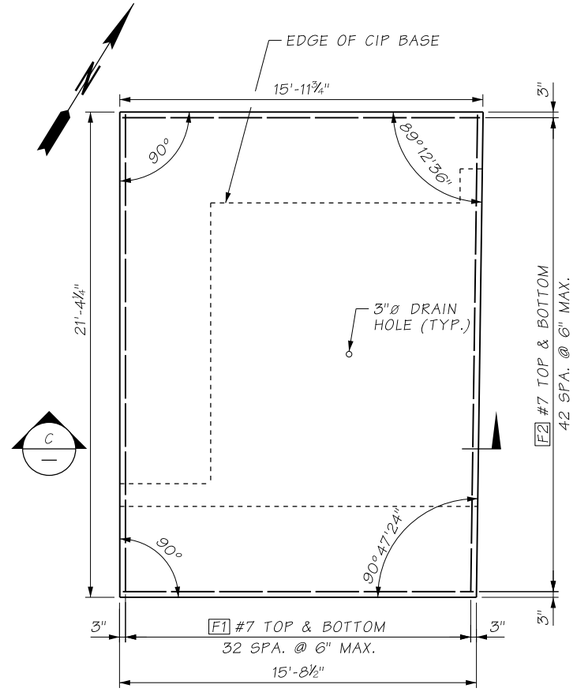

PLAN - SENTINEL T1 FOOTING

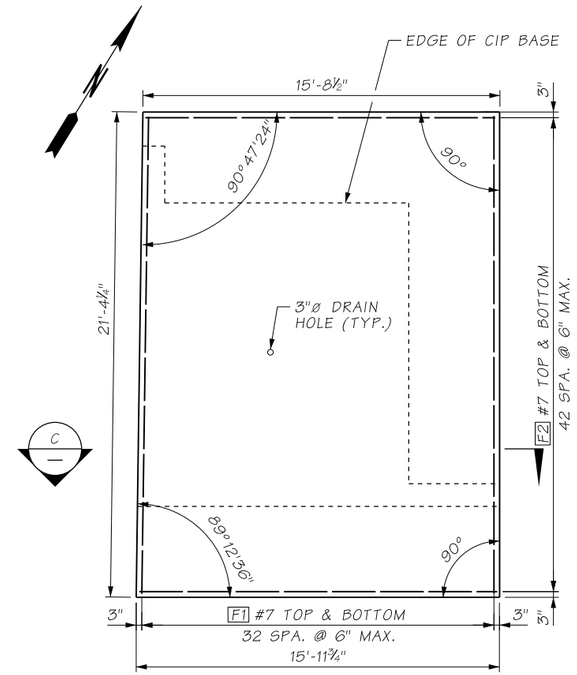

PLAN - SENTINEL T2 FOOTING

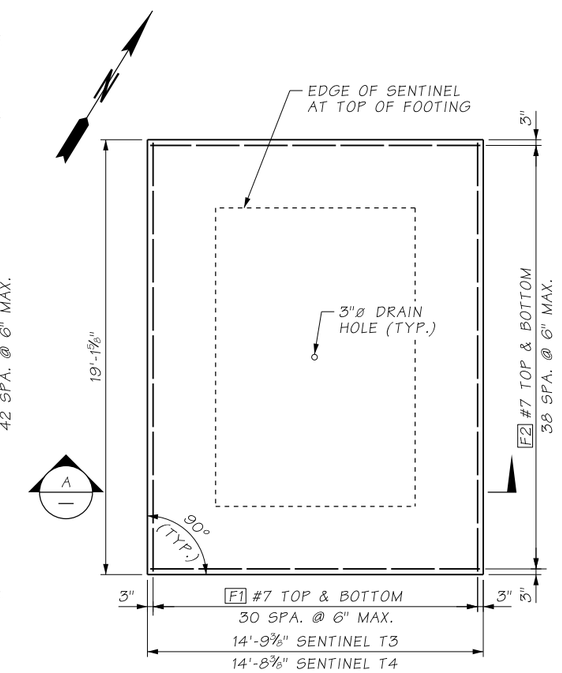

PLAN - SENTINELS T3 & T4 FOOTINGS

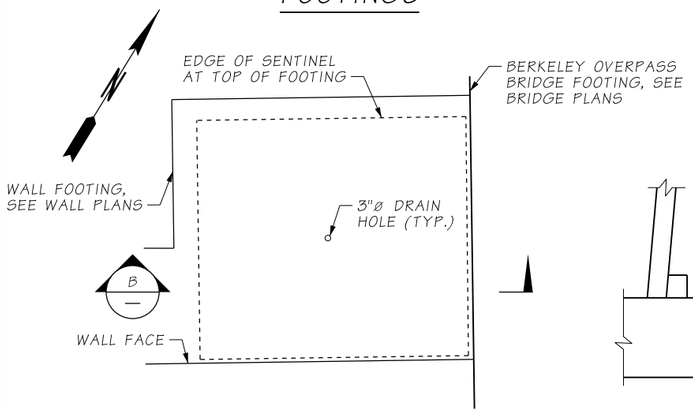

PLAN - SENTINEL B3 & B4 FOOTING

SENTINEL B3 SHOWN, SENTINEL B4 OPPOSITE HAND

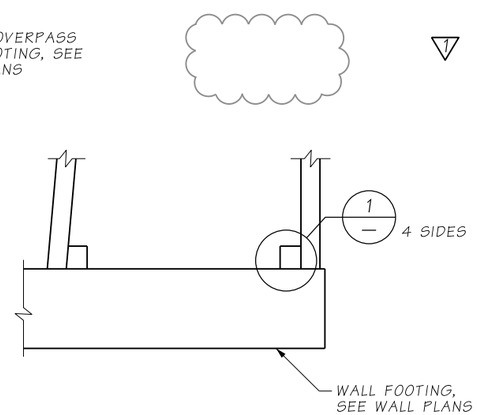

SECTION B

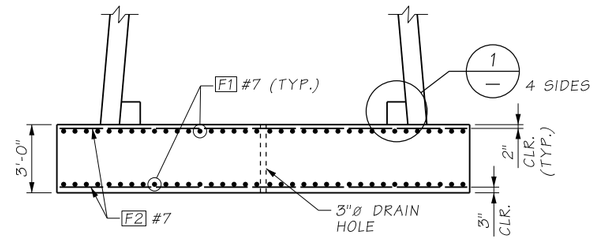

SECTION A

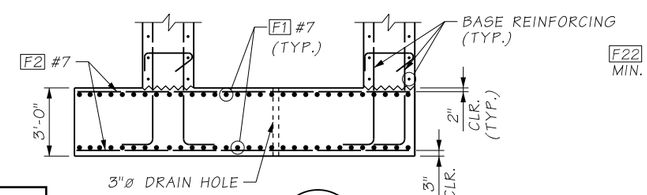

SECTION C

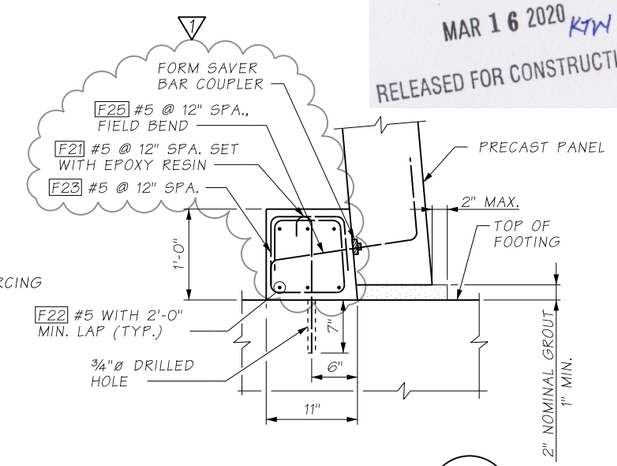

DETAIL 1

SLOPED PRECAST PANEL SHOWN, VERTICAL PRECAST PANEL SIMILAR

ATKINSON
MAR 16 2020 KTW
RELEASED FOR CONSTRUCTION

AS-BUILT

FILE NAME	D:\ICS_workdir\48364\20633_1494\PS_ST28.dgn				REGION NO.	STATE	FED.AID PROJ.NO.
TIME	1:25:17 PM				10	WASH	
DATE	3/13/2020				JOB NUMBER		
PLOTTED BY	USLAS0-APP064$						
DESIGNED BY	A. GASCA						
ENTERED BY	R. REISER	REV 1 - RFI0214	03/16/2020				
CHECKED BY	C. CAYWOOD	REV 0 - RELEASED FOR CONSTRUCTION	07/15/2019		CONTRACT NO.		LOCATION NO.
PROJ. ENGR.	C. MEADE	REV A - PRELIMINARY REVIEW	06/20/2019		C9133		
REGIONAL ADM.	J. WYNANDS	REVISION	DATE	BY			

CORY J. CAYWOOD, STATE OF WASHINGTON, 38753, STRUCTURAL, PROFESSIONAL ENGINEER
3/13/20
DATE
P.E. STAMP BOX

DATE
P.E. STAMP BOX

Washington State Department of Transportation

ATKINSON CONSTRUCTION / JACOBS

I-5
STEILACOOM-DUPONT RD TO THORNE LN CORRIDOR IMPROVEMENTS
MP 120.01 TO MP 124.45

SENTINELS
FOOTING & BASE DETAILS (1 OF 4)

PLAN REF NO
ST28

SHEET 762 OF 1456 SHEETS

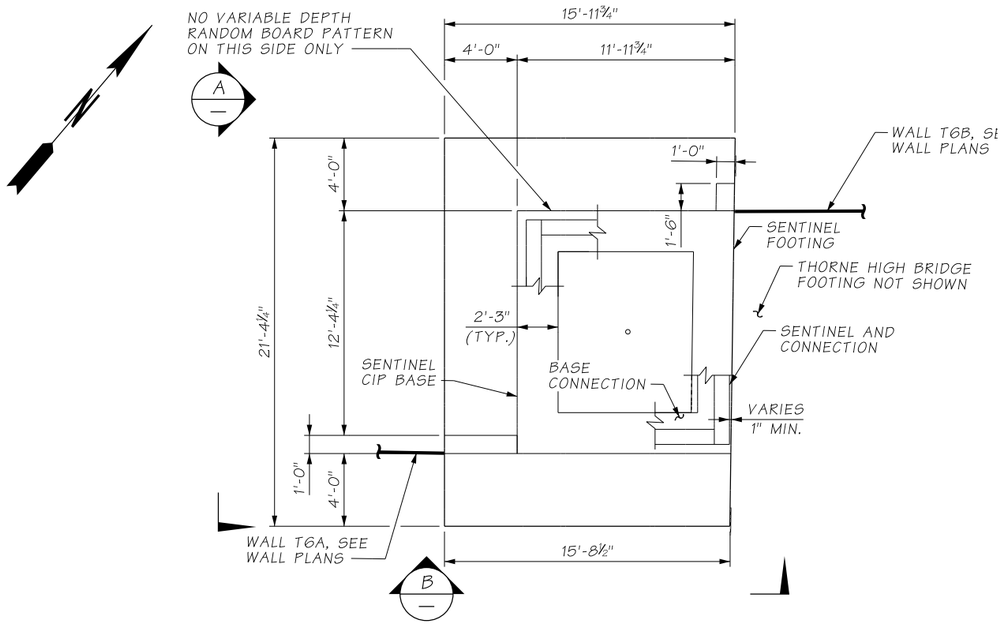

PLAN - SENTINEL T1 BASE

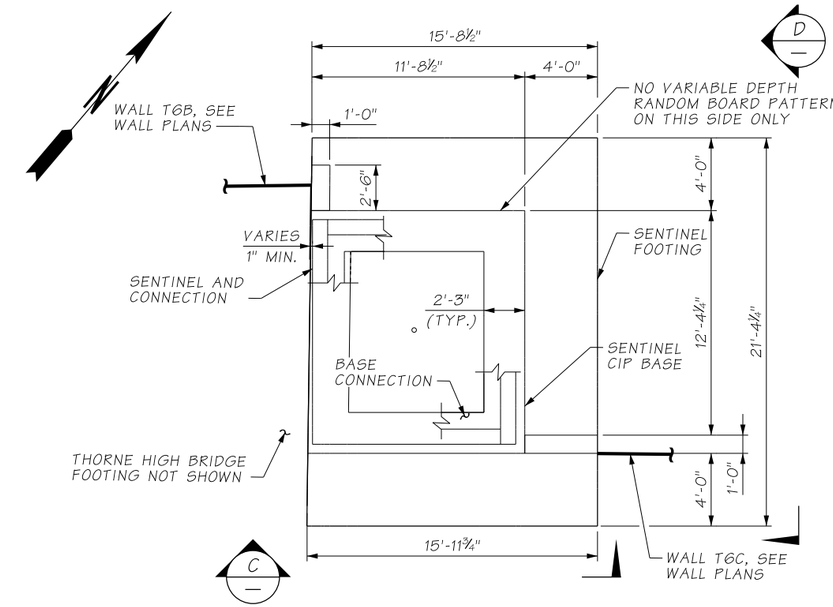

PLAN - SENTINEL T2 BASE

D

NOTES:

1. ALL DIMENSIONS SHOWN ARE TO STRUCTURAL FACE OF CONCRETE. INCREASE THICKNESS AS REQUIRED FOR VARIABLE DEPTH RANDOM BOARD PATTERN.

AS-BUILT

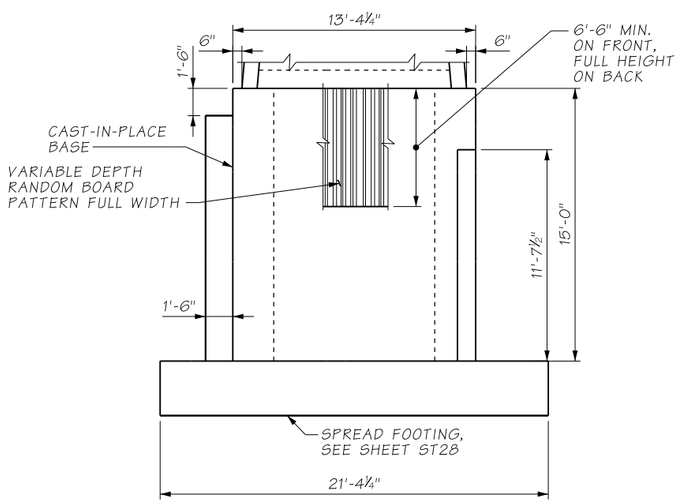

SENTINEL T1

FRONT VIEW A

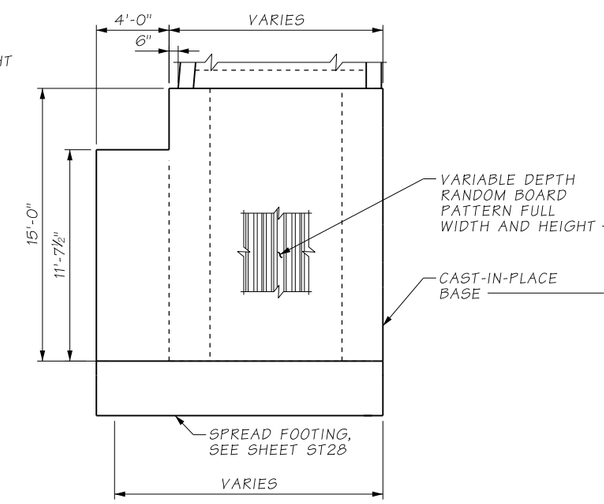

SENTINEL T1

SIDE VIEW B

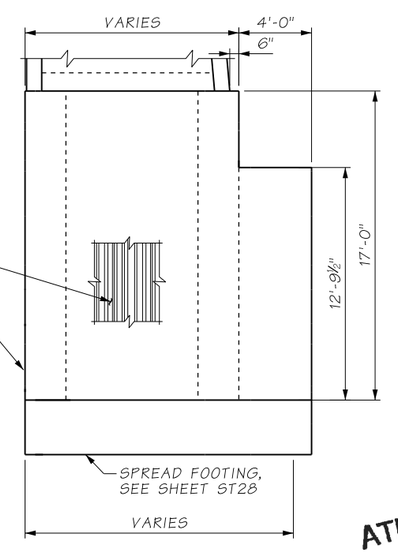

SENTINEL T2

SIDE VIEW C

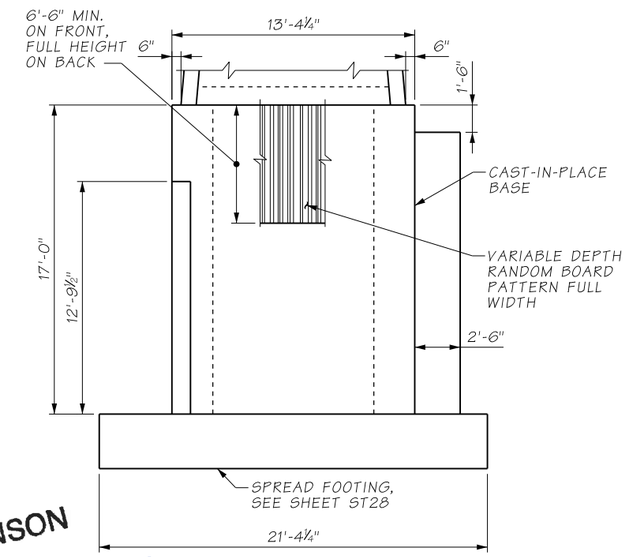

SENTINEL T2

FRONT VIEW D

ATKINSON
JUL 12 2019 KTW
RELEASED FOR CONSTRUCTION

FILE NAME	D:\ICS_workdir\32163\20633_2211\PS_ST29.dgn						
TIME	12:55:37 PM				REGION NO. 10	STATE WASH	FED.AID PROJ.NO.
DATE	7/12/2019						
PLOTTED BY	USLAS0-APP064$				JOB NUMBER		
DESIGNED BY	A. GASCA						
ENTERED BY	R. REISER						
CHECKED BY	C. CAYWOOD	REV 0 - RELEASED FOR CONSTRUCTION	07/15/2019		CONTRACT NO. C9133		LOCATION NO.
PROJ. ENGR.	C. MEADE	REV A - PRELIMINARY REVIEW	06/20/2019				
REGIONAL ADM.	J. WYNANDS	REVISION	DATE	BY			

CORY J. CAYWOOD, STATE OF WASHINGTON, 38955, STRUCTURAL ENGINEER, PROFESSIONAL ENGINEER
7/12/19
DATE
P.E. STAMP BOX

DATE
P.E. STAMP BOX

Washington State Department of Transportation

ATKINSON / JACOBS CONSTRUCTION

I-5
STEILACOOM-DUPONT RD TO THORNE LN
CORRIDOR IMPROVEMENTS
MP 120.01 TO MP 124.45

SENTINELS
FOOTING & BASE DETAILS (2 OF 4)

PLAN REF NO ST29

SHEET 763 OF 1456 SHEETS

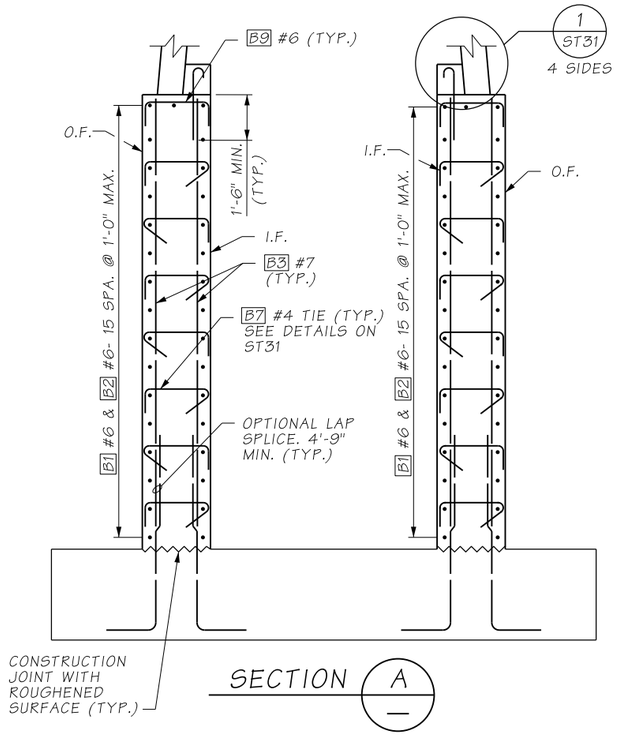

SECTION A

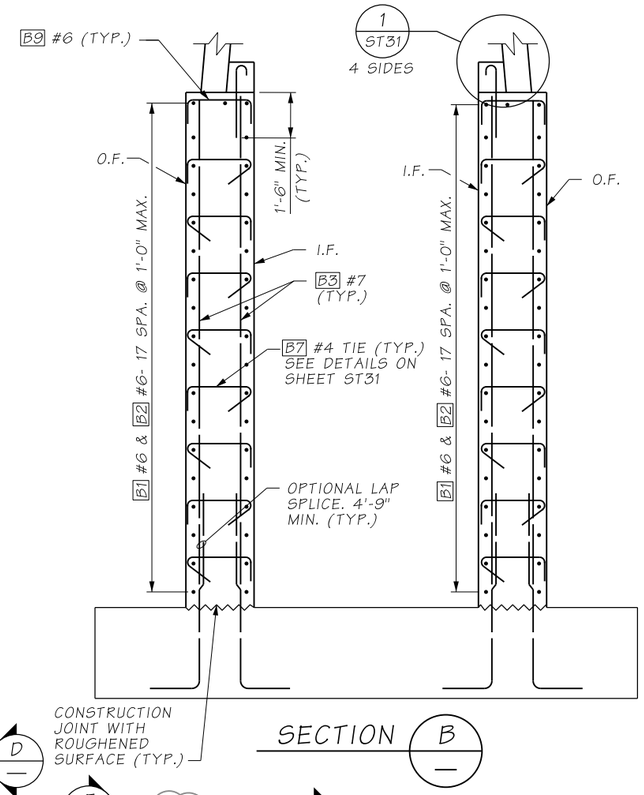

SECTION B

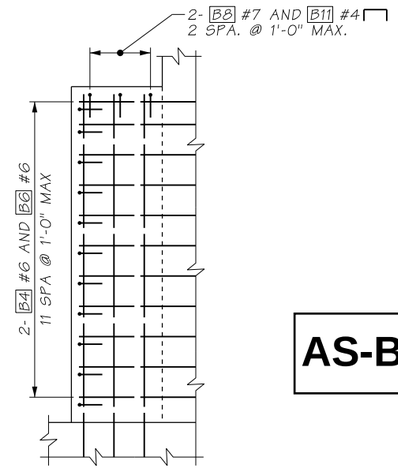

DETAIL C

AS-BUILT

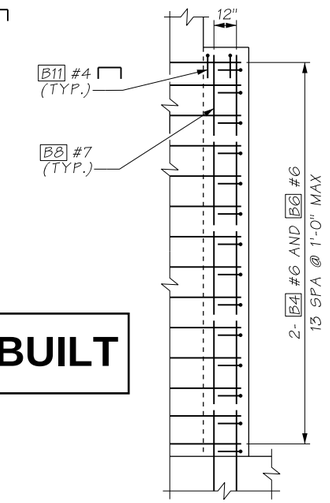

DETAIL D

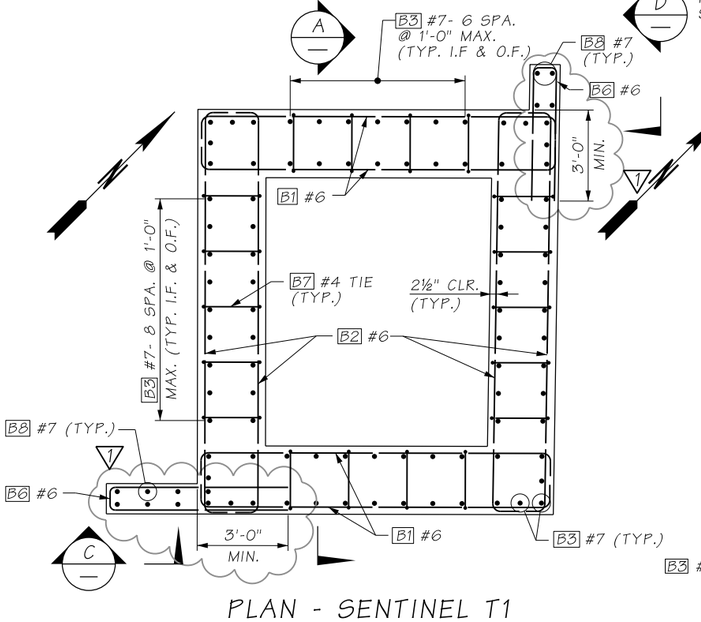

PLAN - SENTINEL T1

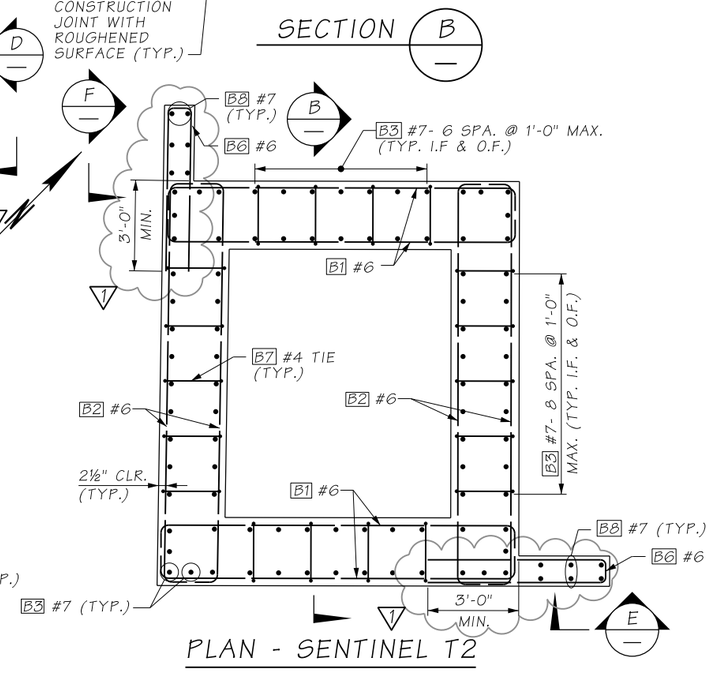

PLAN - SENTINEL T2

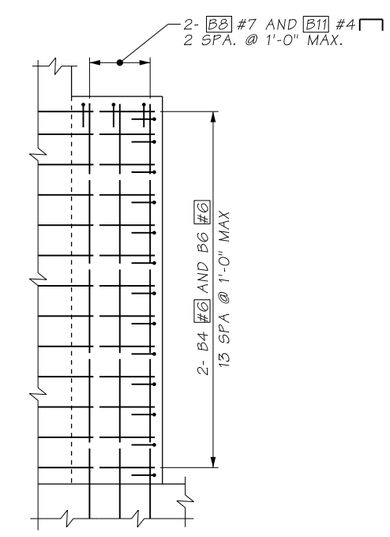

DETAIL E

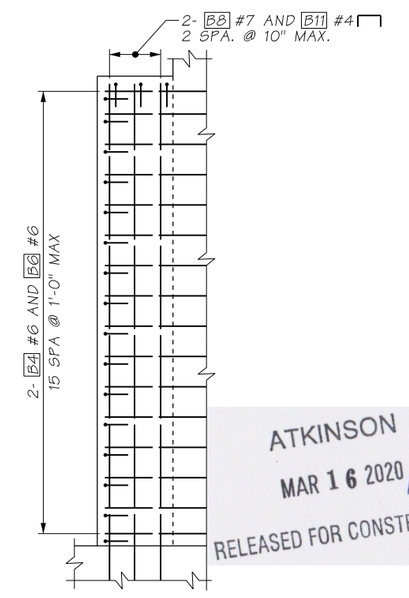

DETAIL F

ATKINSON
MAR 16 2020 KTW
RELEASED FOR CONSTRUCTION

FILE NAME	D:\ICS_workdir\48364\20633_2214\PS_ST30.dgn			
TIME	1:25:21 PM			
DATE	3/13/2020			
PLOTTED BY	USLAS0-APP064$			
DESIGNED BY	A. GASCA			
ENTERED BY	R. REISER	REV 1 - RFI0268	03/16/2020	
CHECKED BY	C. CAYWOOD	REV 0 - RELEASED FOR CONSTRUCTION	07/15/2019	
PROJ. ENGR.	C. MEADE	REV A - PRELIMINARY REVIEW	06/20/2019	
REGIONAL ADM.	J. WYNANDS	REVISION	DATE	BY

REGION NO.	STATE	FED.AID PROJ.NO.
10	WASH	
JOB NUMBER		
CONTRACT NO. C9133		LOCATION NO.

CORY J. CAYWOOD, STATE OF WASHINGTON, 38135, STRUCTURAL ENGINEER, PROFESSIONAL ENGINEER
3/13/20
DATE
P.E. STAMP BOX

DATE
P.E. STAMP BOX

Washington State Department of Transportation

ATKINSON / JACOBS CONSTRUCTION

I-5
STEILACOOM-DUPONT RD TO THORNE LN
CORRIDOR IMPROVEMENTS
MP 120.01 TO MP 124.45

SENTINELS
FOOTING & BASE DETAILS (3 OF 4)

PLAN REF NO ST30

SHEET 764 OF 1456 SHEETS

AS-BUILT

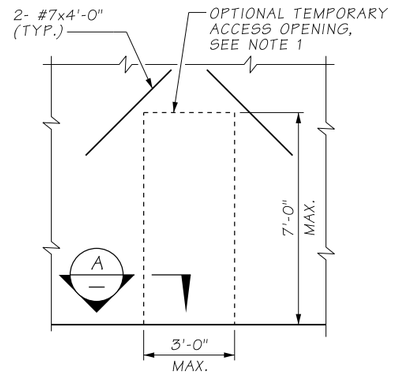

OPTIONAL TEMPORARY ACCESS OPENING

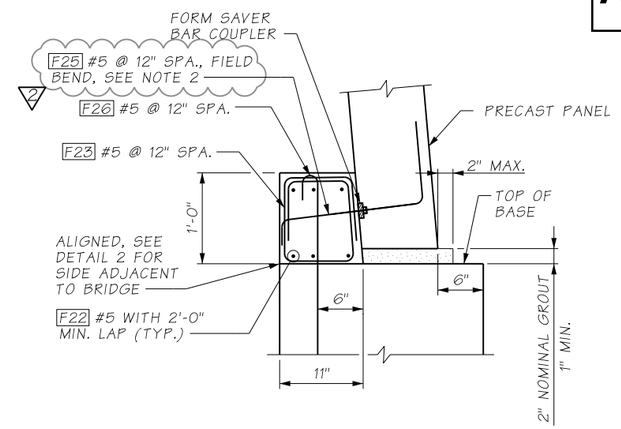

DETAIL 1 / ST30

APPLIES ON 3 SIDES NOT ADJACENT TO BRIDGE

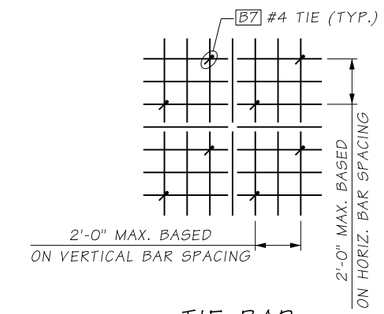

TIE BAR SPACING DETAIL

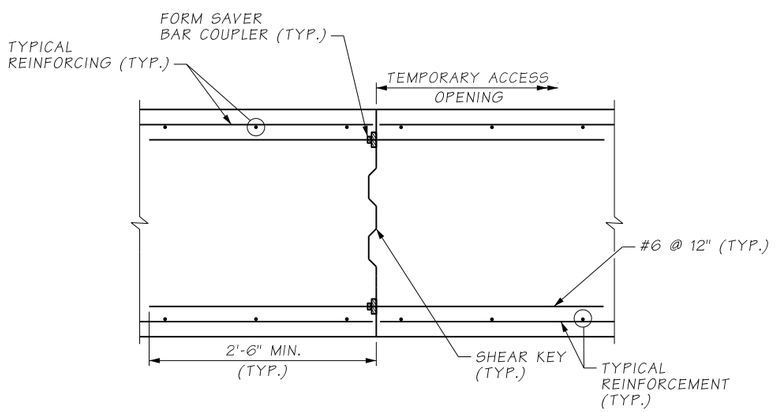

SECTION A / —

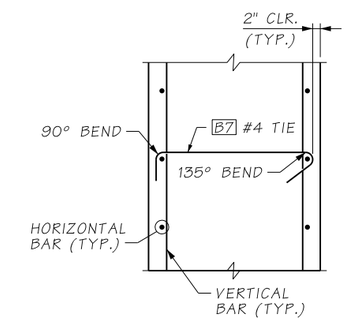

TIE BAR DETAIL

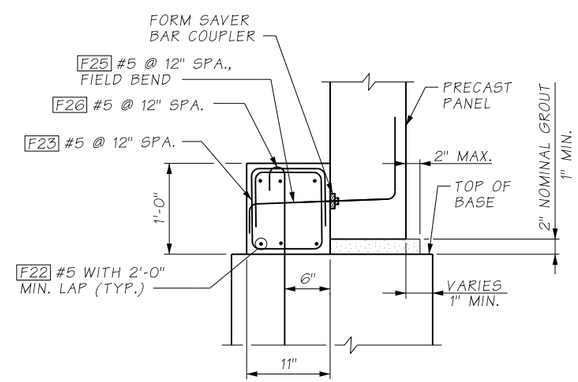

DETAIL 2 / —

APPLIES ON SIDE ADJACENT TO BRIDGE

NOTES:

1. OPTIONAL TEMPORARY ACCESS OPENING MAY BE INCLUDED, AT BOTTOM OF SENTINEL BASES, TO ACCESS INSIDE OF SENTINELS DURING CONSTRUCTION. A MAXIMUM OF ONE TEMPORARY ACCESS OPENING PER BASE SHALL BE USED. LOCATE TEMPORARY ACCESS OPENINGS ON SIDE OF SENTINEL BASE ADJACENT TO BRIDGE.
2. F25 #5 BARS AT OPTIONAL TEMPORARY ACCESS OPENING MAY BE DRILLED AND EPOXIED INTO THE CURB CONNECTION PRIOR TO PLACING CONCRETE IN THE ACCESS OPENING. PROVIDE 8 1/2" MINIMUM EMBEDMENT.

ATKINSON
NOV 03 2020 KTW
RELEASED FOR CONSTRUCTION

FILE NAME	D:\ICS_workdir\67128\20633_2232\PS_ST31.dgn				REGION NO. 10	STATE WASH	FED.AID PROJ.NO.
TIME	11:21:52 AM						
DATE	11/3/2020						
PLOTTED BY	USLAS0-APP064$				JOB NUMBER		
DESIGNED BY	A. GASCA	REV 2 - RFI0552	11/04/2020				
ENTERED BY	R. REISER	REV 1 - RFI0214	03/16/2020				
CHECKED BY	C. CAYWOOD	REV 0 - RELEASED FOR CONSTRUCTION	07/15/2019		CONTRACT NO. C9133		LOCATION NO.
PROJ. ENGR.	C. MEADE	REV A - PRELIMINARY REVIEW	06/20/2019				
REGIONAL ADM.	J. WYNANDS	REVISION	DATE	BY			

CORY J. CAYWOOD, STATE OF WASHINGTON, 38185, STRUCTURAL ENGINEER, PROFESSIONAL ENGINEER
11/3/20
DATE
P.E. STAMP BOX

DATE
P.E. STAMP BOX

Washington State Department of Transportation

ATKINSON / JACOBS CONSTRUCTION

I-5
STEILACOOM-DUPONT RD TO THORNE LN CORRIDOR IMPROVEMENTS
MP 120.01 TO MP 124.45

SENTINELS
FOOTING & BASE DETAILS (4 OF 4)

PLAN REF NO ST31

SHEET 765 OF 1456 SHEETS

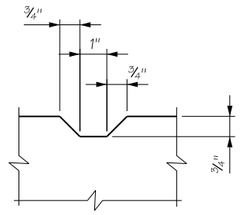

REVEAL DETAIL

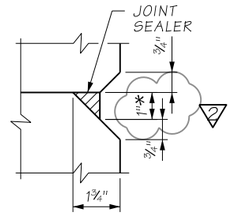

JOINT DETAIL

2

* USE A 2" JOINT FILLER AT THE SOUTHWEST CORNER OF SENTINEL B3 AND NORTHWEST CORNER OF SENTINEL B4

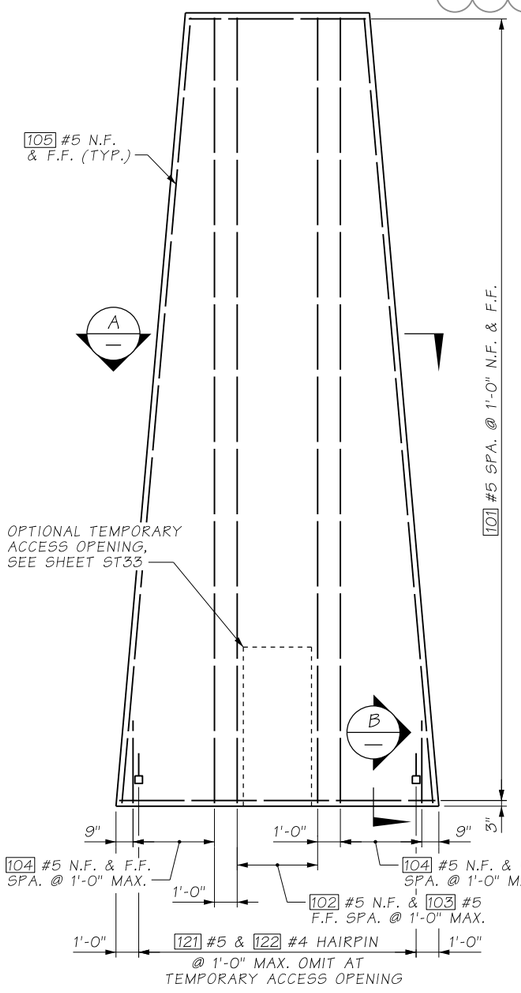

ELEVATION - FRONT/BACK PANEL REINFORCEMENT

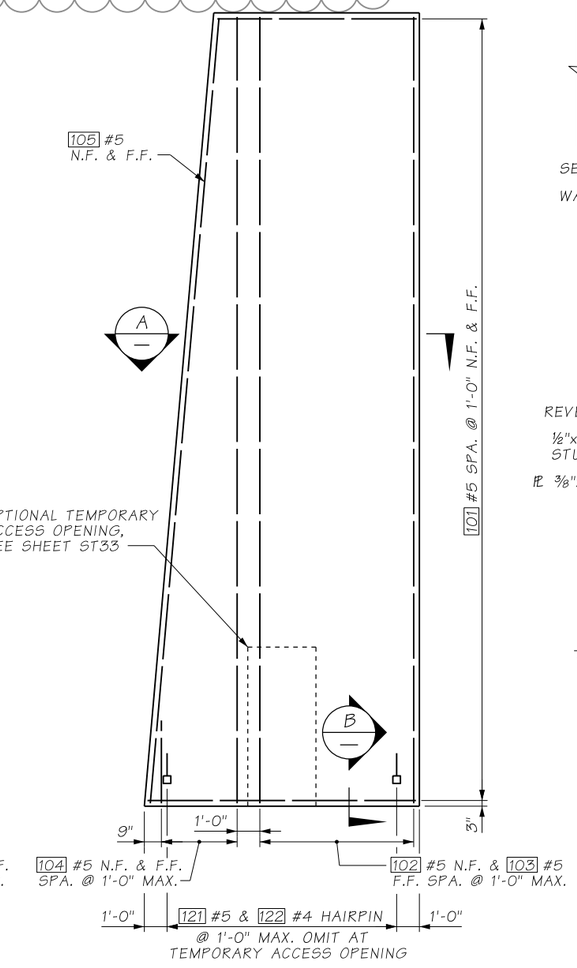

ELEVATION - SIDE PANEL REINFORCEMENT

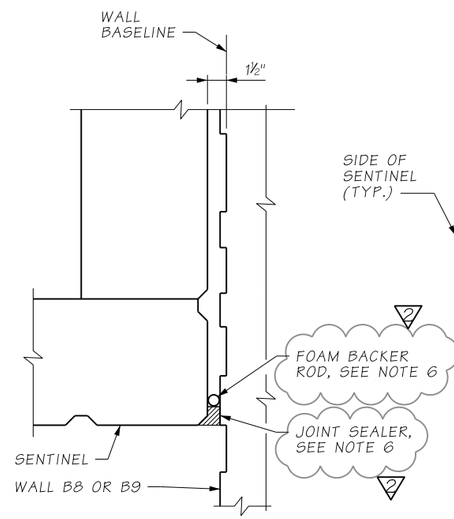

SECTION C ST24

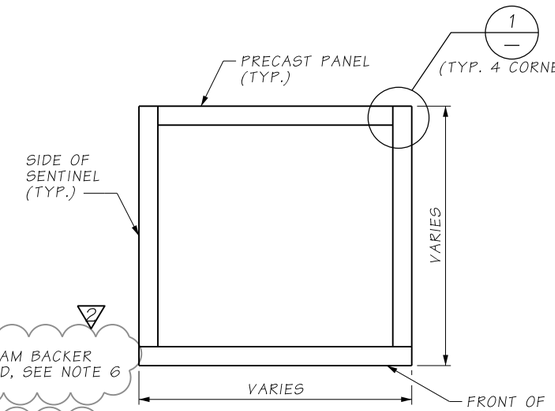

SECTION A ST23 ST24 ST26 ST27

PRECAST PANEL NOTES:

1. MATERIALS:
   CONCRETE CLASS 4000
   STEEL PLATE- ASTM A36
   STEEL ANGLES- ASTM A36
2. ALL STEEL PLATES, ANGLES AND WELDED STUDS SHALL BE GALVANIZED AFTER FABRICATION IN ACCORDANCE WITH AASHTO M111.
3. UNLESS OTHERWISE NOTED, CONCRETE COVER SHALL BE 1½".
4. SENTINEL PANELS HAVE NOT BEEN DESIGNED FOR SHIPPING OR ERECTION LOADS. PROVIDE BRACING AS REQUIRED FOR SHIPPING AND ERECTION LOADS.
5. LAP SPLICES MAY BE ADDED AT CONTRACTOR'S OPTION. MINIMUM LAP SPLICE LENGTHS ARE AS FOLLOWS:
   #4= 2'-9"
   #5= 3'-6"
6. RUN THE FOAM BACKER ROD AND JOINT SEALER 10' UP THE WALL BEHIND SENTINEL B3.

2

ATKINSON
NOV 15 2021 KTW
RELEASED FOR CONSTRUCTION

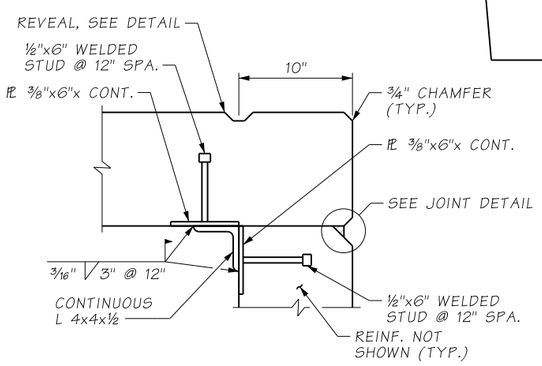

TYPICAL PANEL CONNECTION

DETAIL 1

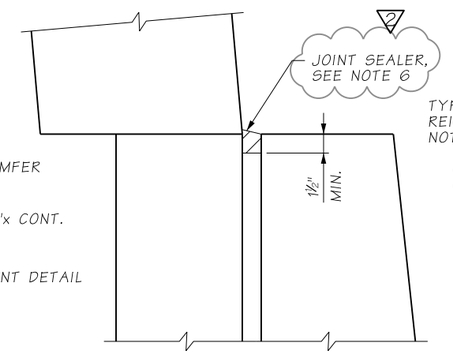

DETAIL 3 ST24

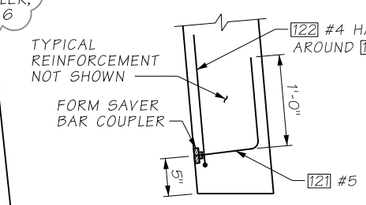

FOOTING/ BASE CONNECTION

SECTION B

AS-BUILT

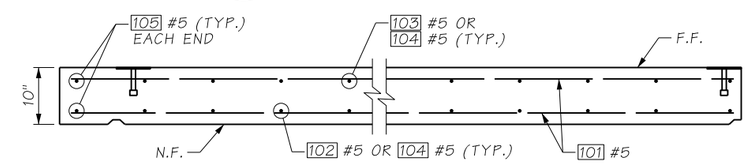

FRONT AND BACK PANELS

SIDE PANELS

SECTION A

FILE NAME	D:\ICS_workdir\91773\20633_1518\PS_ST32.dgn						
TIME	12:35:18 PM				REGION NO. 10	STATE WASH	FED.AID PROJ.NO.
DATE	11/9/2021						
PLOTTED BY	USLAS0-APP064$						
DESIGNED BY	A. GASCA	REV 2 - RFI0621, RFI0628	11/17/2021		JOB NUMBER		
ENTERED BY	R. REISER	REV 1 - RFI0353	03/16/2020				
CHECKED BY	C. CAYWOOD	REV 0 - RELEASED FOR CONSTRUCTION	07/15/2019		CONTRACT NO. C9133		LOCATION NO.
PROJ. ENGR.	C. MEADE	REV A - PRELIMINARY REVIEW	06/20/2019				
REGIONAL ADM.	J. WYNANDS	REVISION	DATE	BY			

CORY J. CAYWOOD, STATE OF WASHINGTON, 38733, STRUCTURAL ENGINEER, PROFESSIONAL ENGINEER
11/15/21
DATE
P.E. STAMP BOX

P.E. STAMP BOX
DATE

Washington State Department of Transportation

ATKINSON / JACOBS CONSTRUCTION

I-5
STEILACOOM-DUPONT RD TO THORNE LN
CORRIDOR IMPROVEMENTS
MP 120.01 TO MP 124.45

SENTINELS
PRECAST PANEL/TOP DETAILS (1 OF 3)

PLAN REF NO ST32

SHEET 766 OF 1456 SHEETS

TEMPORARY ACCESS OPENING NOTES:

1. OPTIONAL TEMPORARY ACCESS OPENING MAY BE INCLUDED AT BOTTOM OF SENTINELS TO ACCESS INSIDE OF SENTINELS DURING CONSTRUCTION. A MAXIMUM OF ONE TEMPORARY ACCESS OPENING PER SENTINEL SHALL BE USED. LOCATE TEMPORARY ACCESS OPENINGS ON LEAST VISIBLE SIDE OF SENTINELS AS VIEWED FROM I-5.

AS-BUILT

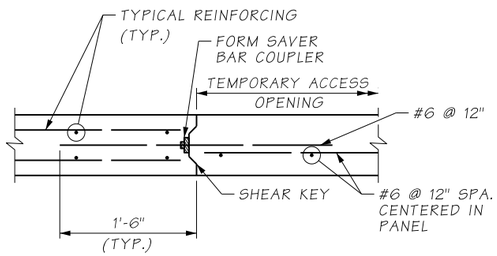

SECTION D

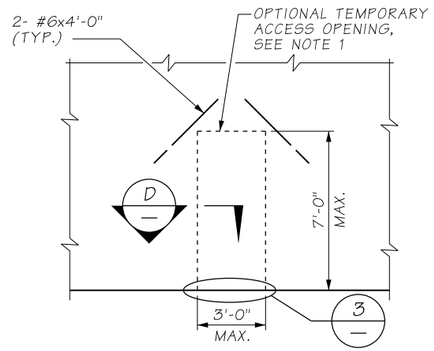

OPTIONAL TEMPORARY ACCESS OPENING

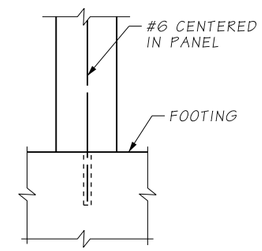

SECTION E

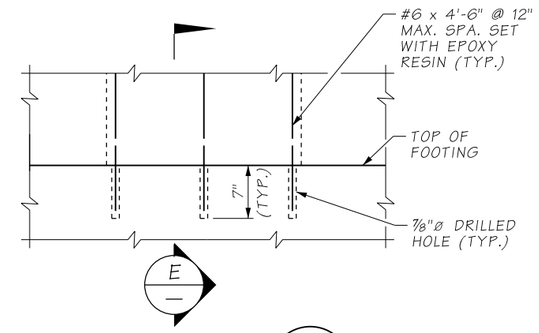

DETAIL 3

ATKINSON
JUL 12 2019 KTW
RELEASED FOR CONSTRUCTION

FILE NAME	D:\ICS_workdir\32163\20633_1561\PS_ST33.dgn						
TIME	12:53:05 PM				REGION NO.	STATE	FED.AID PROJ.NO.
DATE	7/12/2019				10	WASH	
PLOTTED BY	USLAS0-APP064$				JOB NUMBER		
DESIGNED BY	A. GASCA						
ENTERED BY	R. REISER						
CHECKED BY	C. CAYWOOD	REV 0 - RELEASED FOR CONSTRUCTION	07/15/2019		CONTRACT NO.		LOCATION NO.
PROJ. ENGR.	C. MEADE	REV A - PRELIMINARY REVIEW	06/20/2019		C9133		
REGIONAL ADM.	J. WYNANDS	REVISION	DATE	BY			

CORY J. CAYWOOD, STATE OF WASHINGTON, 38793, STRUCTURAL ENGINEER, PROFESSIONAL ENGINEER
7/12/19
DATE
P.E. STAMP BOX

DATE
P.E. STAMP BOX

Washington State Department of Transportation

ATKINSON CONSTRUCTION / JACOBS

I-5
STEILACOOM-DUPONT RD TO THORNE LN
CORRIDOR IMPROVEMENTS
MP 120.01 TO MP 124.45

SENTINELS
PRECAST PANEL/TOP DETAILS (2 OF 3)

PLAN REF NO ST33

SHEET 767 OF 1456 SHEETS

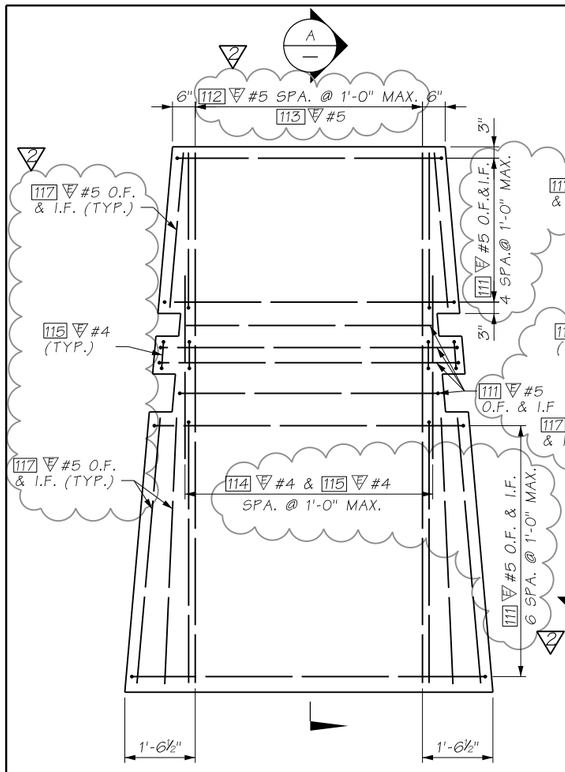

DETAIL 1

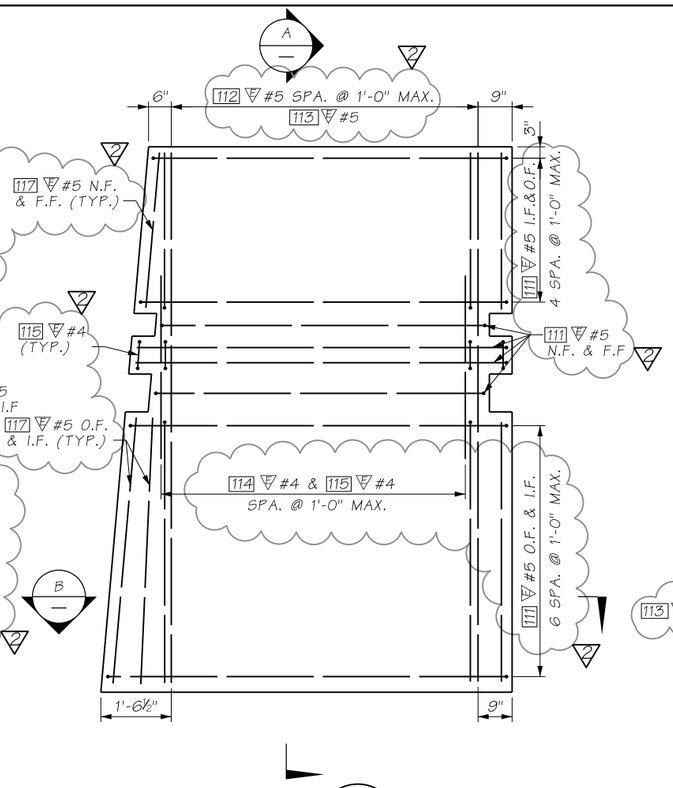

DETAIL 2

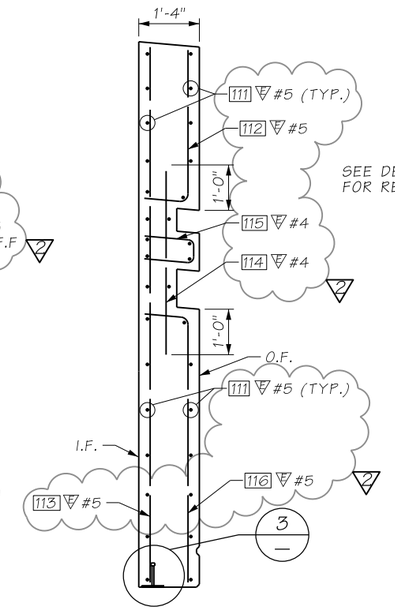

SECTION A

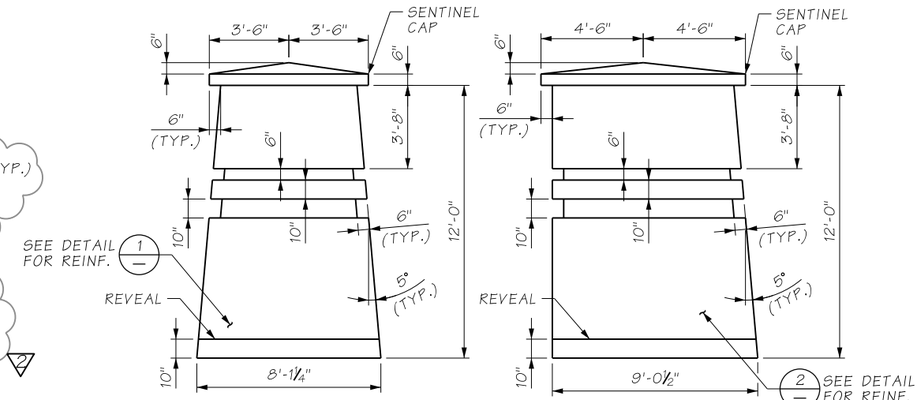

SENTINEL TOP GEOMETRY 1 (ST23 ST24) 1 (ST26 ST27)

AS-BUILT

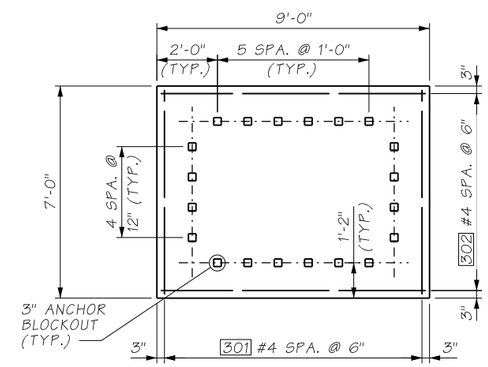

PLAN

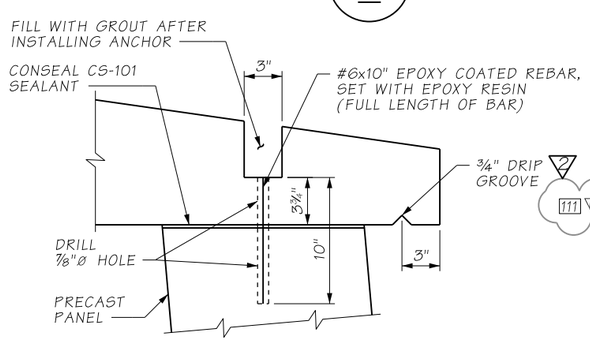

CAP CONNECTION

DETAIL 4

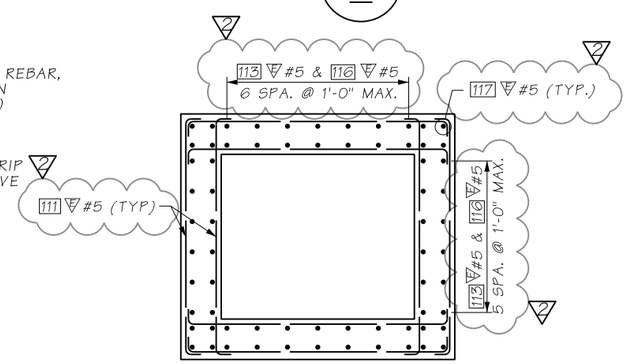

SECTION B

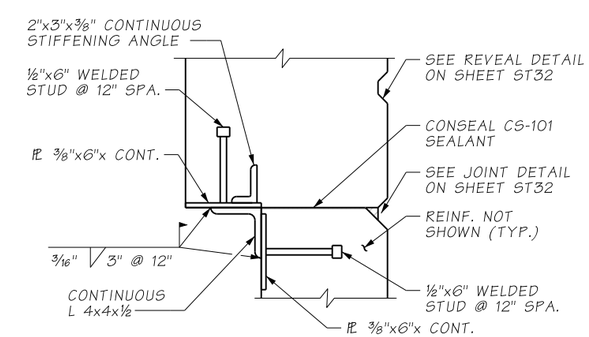

DETAIL 3

SENTINEL TOP TO PANEL CONNECTION

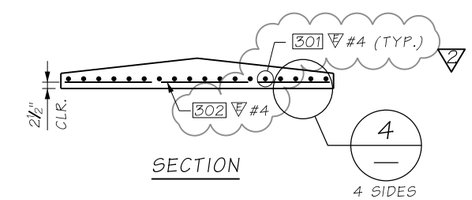

SECTION

SENTINEL CAP

ATKINSON
SEP 18 2020
RELEASED FOR CONSTRUCTION

FILE NAME	D:\ICS_workdir\61767\20633_1598\PS_ST34.dgn						
TIME	2:51:05 PM				REGION NO.	STATE	FED.AID PROJ.NO.
DATE	9/17/2020				10	WASH	
PLOTTED BY	USLAS0-APP064$				JOB NUMBER		
DESIGNED BY	A. GASCA	REV 2 - RFI0459	09/18/2020				
ENTERED BY	R. REISER	REV 1 - RFI0402, RFI0409	03/16/2020				
CHECKED BY	C. CAYWOOD	REV 0 - RELEASED FOR CONSTRUCTION	07/15/2019		CONTRACT NO.		LOCATION NO.
PROJ. ENGR.	C. MEADE	REV A - PRELIMINARY REVIEW	06/20/2019		C9133		
REGIONAL ADM.	J. WYNANDS	REVISION	DATE	BY			

CORY J. CAYWOOD — STATE OF WASHINGTON — 38153 — STRUCTURAL ENGINEER — PROFESSIONAL ENGINEER
9/17/20
DATE
P.E. STAMP BOX

DATE
P.E. STAMP BOX

Washington State Department of Transportation

ATKINSON CONSTRUCTION / JACOBS

I-5
STEILACOOM-DUPONT RD TO THORNE LN
CORRIDOR IMPROVEMENTS
MP 120.01 TO MP 124.45

SENTINELS
PRECAST PANEL/TOP DETAILS (3 OF 3)

PLAN REF NO ST34

SHEET 768 OF 1456 SHEETS

AS-BUILT

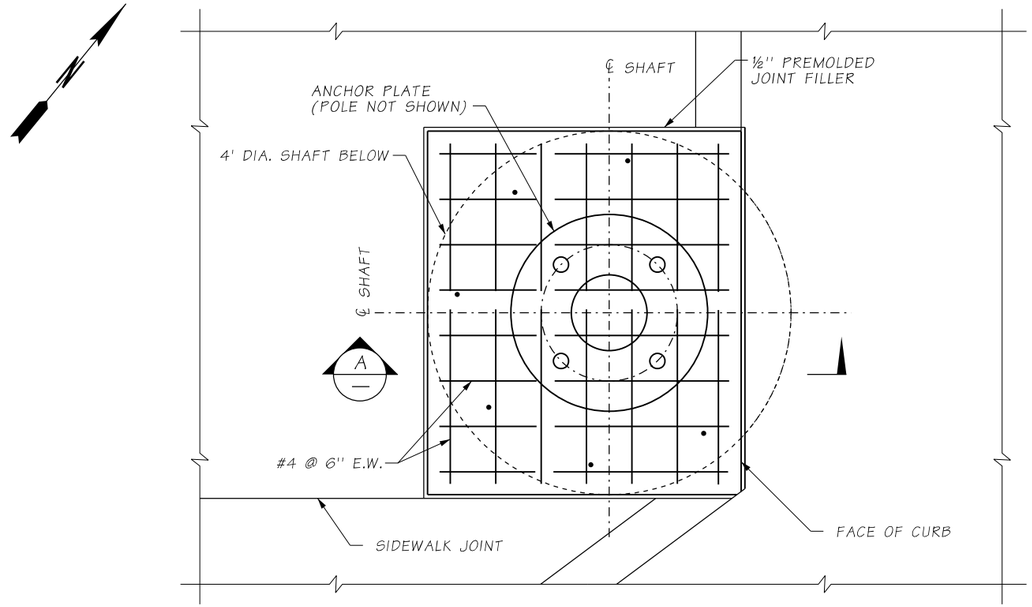

PLAN - AT SIGNAL POLE 7

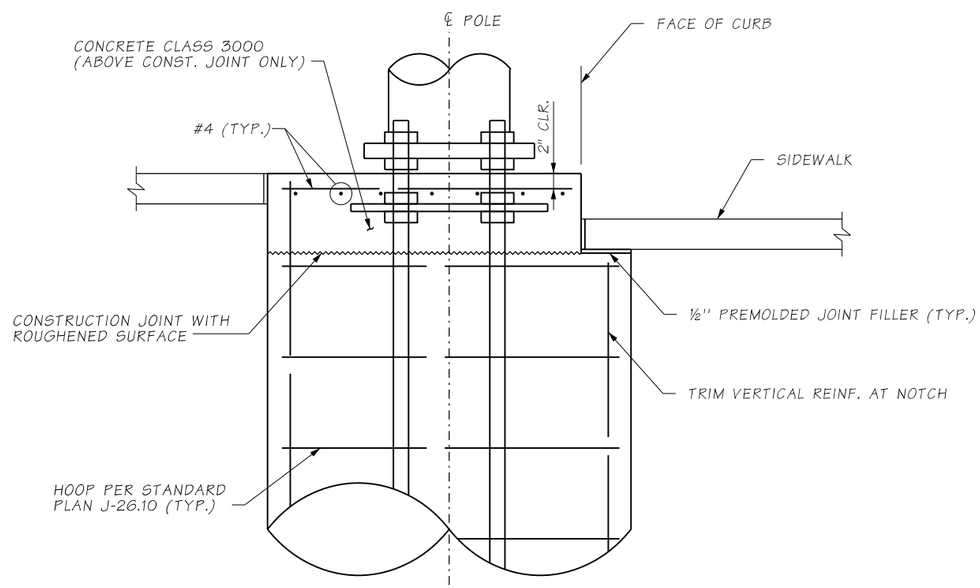

SECTION A

ATKINSON
FEB 24 2020 KTW
RELEASED FOR CONSTRUCTION

NOTES:

1. FOUNDATION PROPERTIES NOT SHOWN ON THIS DETAIL SHALL BE PER SHEET SG06 AND STANDARD PLAN J-26.10.

FILE NAME	c:\pwworking\jacobs_b&i\caywoocj\dms20633\PS_ST41.dgn						
TIME	12:20:23 PM				REGION NO. 10	STATE WASH	FED.AID PROJ.NO.
DATE	2/24/2020						
PLOTTED BY	caywoocj				JOB NUMBER		
DESIGNED BY	T.BUI						
ENTERED BY	T.BUI						
CHECKED BY	K. YOUNG				CONTRACT NO. C9133		LOCATION NO.
PROJ. ENGR.	C. MEADE	REV 0 - RFI0281	02/24/2020				
REGIONAL ADM.	J. WYNANDS	REVISION	DATE	BY			

P.E. STAMP BOX — DATE 2/24/20

P.E. STAMP BOX — DATE

Washington State Department of Transportation

ATKINSON CONSTRUCTION / JACOBS

I-5
STEILACOOM-DUPONT RD TO THORNE LN
CORRIDOR IMPROVEMENTS
MP 120.01 TO MP 124.45

SIGNAL POLE 7 FOUNDATION

PLAN REF NO ST41

SHEET 769 OF 1456 SHEETS

SECTION 21, T.19N. R.2E. W.M.

CAMP MURRAY

AS-BUILT

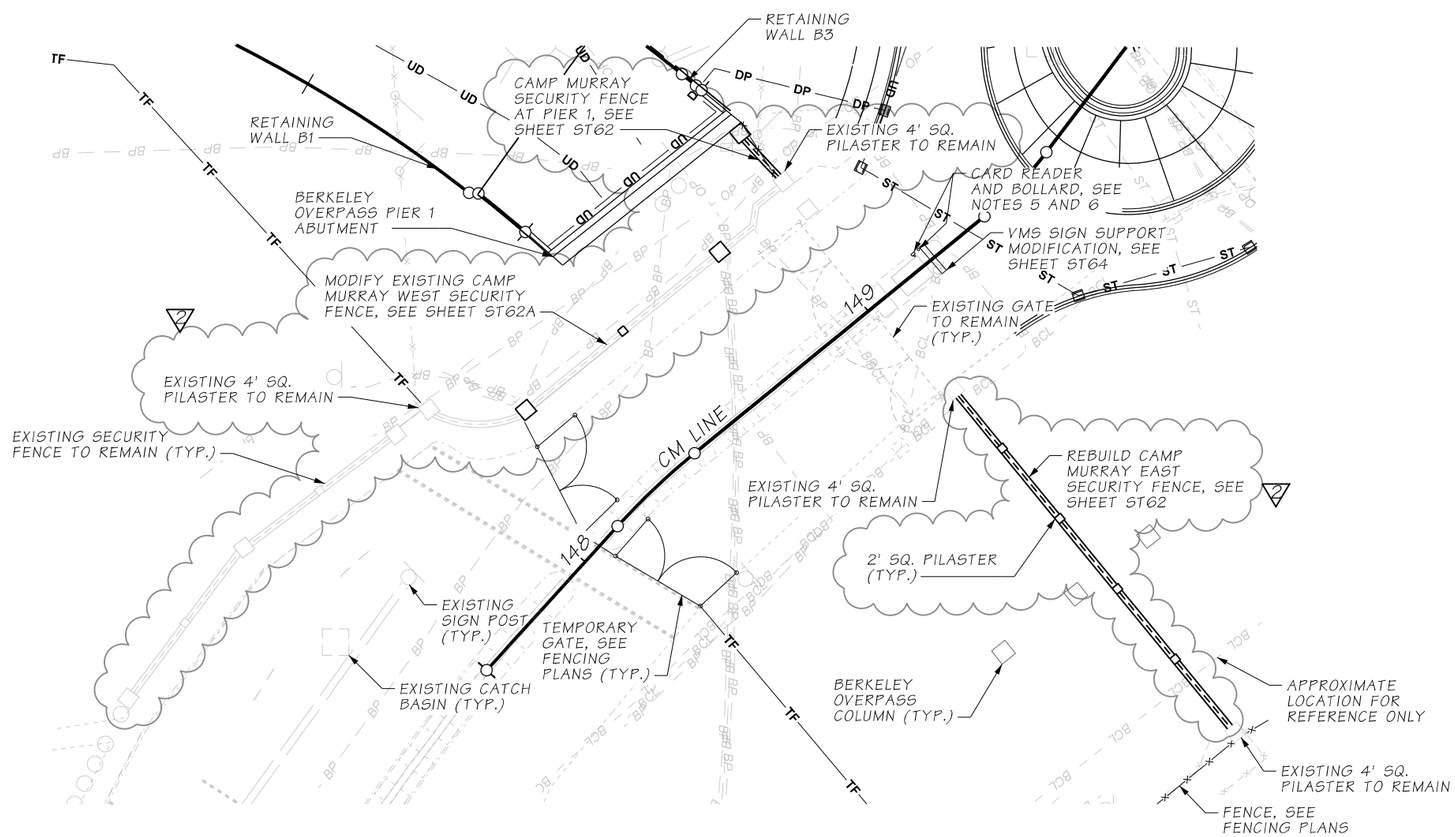

CAMP MURRAY SECURITY FENCE - PLAN

ATKINSON
AUG 19 2020
RELEASED FOR CONSTRUCTION

NOTES:

1. ALL MATERIAL AND WORKMANSHIP SHALL BE IN ACCORDANCE WITH THE REQUIREMENTS OF THE WASHINGTON STATE DEPARTMENT OF TRANSPORTATION STANDARD SPECIFICATIONS FOR ROAD, BRIDGE, AND MUNICIPAL CONSTRUCTION DATED 2016 AND AMENDMENTS.
2. THE SEQUENCE OF CONSTRUCTION SHALL BE THE RESPONSIBILITY OF THE CONTRACTOR.
3. EXISTING UTILITY LOCATIONS ARE APPROXIMATE. CONTRACTOR SHALL VERIFY LOCATIONS AND ELEVATIONS OF THE EXISTING UTILITIES PRIOR TO CONSTRUCTION.
4. ALL CAST-IN-PLACE CONCRETE SHALL BE CLASS 4000.
5. INSTALL CARD READER ON EXISTING STRUCTURE, LOCATION AND SUPPORT DETAILS TO BE COORDINATED WITH CAMP MURRAY.
6. INSTALL BOLLARD PER STANDARD PLAN H-60.20-01, LOCATION TO BE COORDINATED WITH CAMP MURRAY. NOTCH CONCRETE FOUNDATION AS REQUIRED TO MATCH EXISTING CURB.

LEGEND:

BCL	BURIED COMM. LINE - EXISTING	OP	OVERHEAD POWER - EXISTING
BP	BURIED POWER LINE - EXISTING	ST	STORM SEWER - EXISTING
—×—	FENCE - EXISTING	ST	STORM SEWER - PROPOSED
—×—	FENCE - PROPOSED	TF	TEMPORARY FENCE - PROPOSED
UD	BURIED DRAIN LINE - PROPOSED	DP	DRAIN PIPE - PROPOSED

FILE NAME	c:\pwworking\jacobs_b&i\reiserrw\dms20633\PS_ST61.dgn				REGION NO.	STATE	FED.AID PROJ.NO.
TIME	6:51:41 AM				10	WASH	
DATE	8/17/2020				JOB NUMBER		
PLOTTED BY	ReiserRW	REV 2 - RELEASED FOR CONSTRUCTION	08/17/2020				
DESIGNED BY	Y. HUANG	REV B - FINAL REVIEW	07/30/2020		CONTRACT NO.		LOCATION NO.
ENTERED BY	R. REISER	REV 1 - RFI0510	07/22/2020		C9133		
CHECKED BY	C. CAYWOOD	REV 0 - RELEASED FOR CONSTRUCTION	10/01/2019				
PROJ. ENGR.	C. MEADE	REV A - PRELIMINARY REVIEW	09/05/2019				
REGIONAL ADM.	J. WYNANDS	REVISION	DATE	BY			

CORY J. CAYWOOD, STATE OF WASHINGTON, 38759, STRUCTURAL ENGINEER, PROFESSIONAL ENGINEER
8/19/20
DATE
P.E. STAMP BOX

DATE
P.E. STAMP BOX

Washington State Department of Transportation

ATKINSON CONSTRUCTION / JACOBS

I-5
STEILACOOM-DUPONT RD TO THORNE LN
CORRIDOR IMPROVEMENTS
MP 120.01 TO MP 124.45

CAMP MURRAY SECURITY FENCE PLAN

PLAN REF NO ST61

SHEET 770 OF 1456 SHEETS

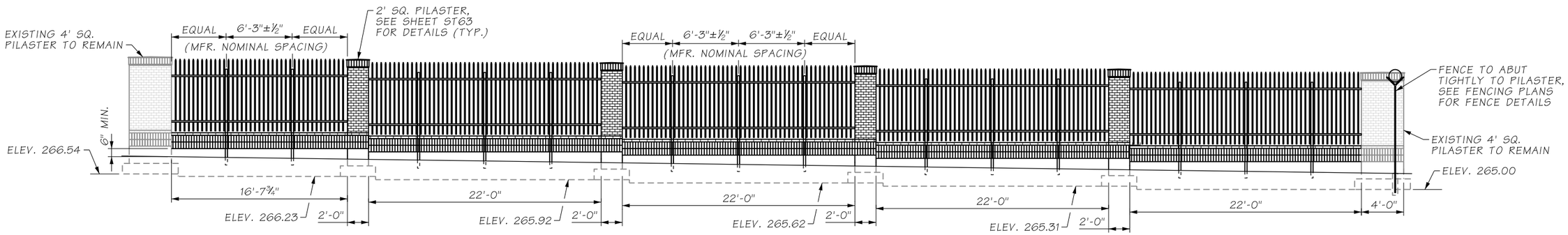

CAMP MURRAY EAST SECURITY FENCE - ELEVATION

(LOOKING FROM CAMP MURRAY)

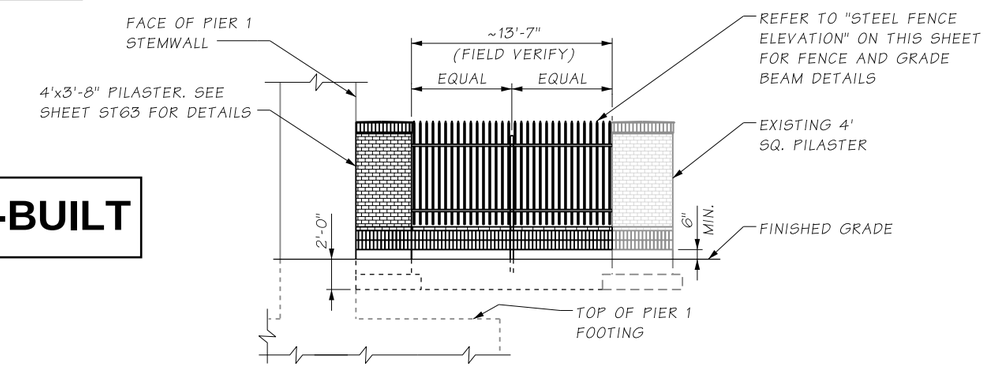

AS-BUILT

CAMP MURRAY SECURITY FENCE AT PIER 1 - ELEVATION

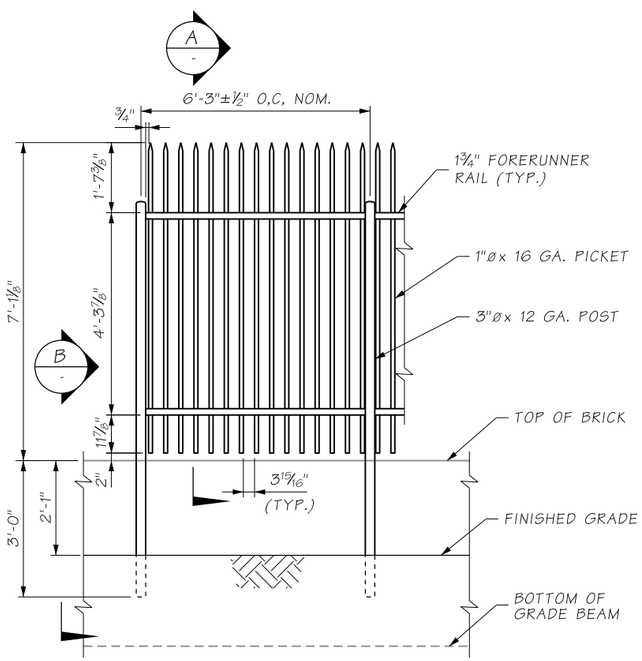

STEEL FENCE ELEVATION

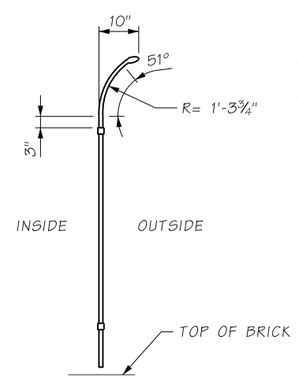

METAL FENCING

SECTION A

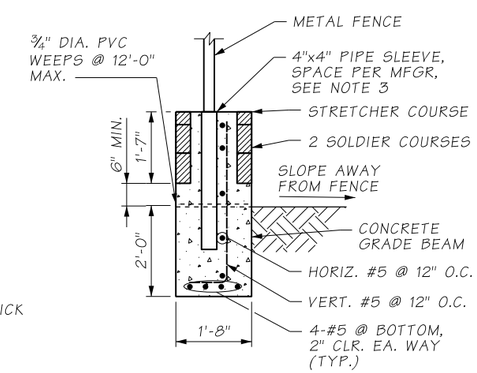

GRADE BEAM

SECTION B

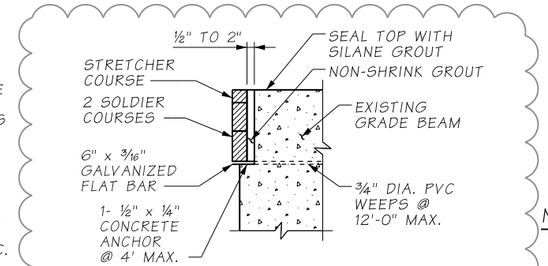

INCREASED GRADE BEAM

WHERE NEEDED, INCREASE THE WIDTH OF THE GRADE BEAM AND PILASTER UP TO 2" TO CREATE A STRAIGHT ALIGNMENT. FOR DETAILS NOT SHOWN, SEE GRADE BEAM.

3

ATKINSON
NOV 15 2021 KTW
RELEASED FOR CONSTRUCTION

NOTES:

1. FENCING SHALL BE PAINTED BLACK.
2. DISTANCE BETWEEN EXISTING 4' PILASTERS IS APPROXIMATE. FIELD VERIFY DISTANCE AND ADJUST NEW PILASTER SPACING AS REQUIRED.
3. PIPE SLEEVES SHALL BE ADJUSTED IF REQUIRED TO FIT THE POSTS. PIPE SLEEVES SHALL PROVIDE 2" MINIMUM CLEAR TO FACE OF CONCRETE AND 1½" MINIMUM CLEAR TO FACE OF REBAR. FILL PIPE SLEEVES WITH NON-SHRINK GROUT AFTER POST PLACEMENT.

FILE NAME	D:\ICS_workdir\91773\20633_2360\PS_ST62.dgn			
TIME	12:35:21 PM			
DATE	11/9/2021	REV 3 - RFI0618	11/17/2021	
PLOTTED BY	USLAS0-APP064$	REV 2 - RFI0558, RFI0568	01/06/2021	
DESIGNED BY	Y. HUANG	REV 1 - RELEASED FOR CONSTRUCTION	08/17/2020	
ENTERED BY	R. REISER	REV B - FINAL REVIEW	07/30/2020	
CHECKED BY	C. CAYWOOD	REV 0 - RELEASED FOR CONSTRUCTION	10/01/2019	
PROJ. ENGR.	C. MEADE	REV A - PRELIMINARY REVIEW	09/05/2019	
REGIONAL ADM.	J. WYNANDS	REVISION	DATE	BY

REGION NO.	STATE	FED.AID PROJ.NO.
10	WASH	
JOB NUMBER		
CONTRACT NO. C9133		LOCATION NO.

CORY J. CAYWOOD, STATE OF WASHINGTON, 38133, STRUCTURAL ENGINEER, PROFESSIONAL ENGINEER
11/15/21
DATE
P.E. STAMP BOX

DATE
P.E. STAMP BOX

Washington State Department of Transportation

ATKINSON CONSTRUCTION / JACOBS

I-5
STEILACOOM-DUPONT RD TO THORNE LN CORRIDOR IMPROVEMENTS
MP 120.01 TO MP 124.45

CAMP MURRAY SECURITY FENCE ELEVATION & STEEL FENCE DETAILS

PLAN REF NO ST62

SHEET 771 OF 1456 SHEETS

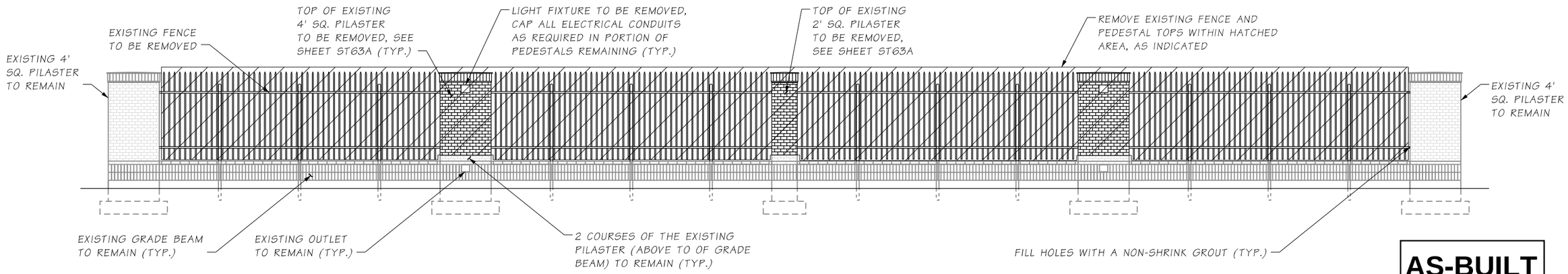

AS-BUILT

CAMP MURRAY WEST SECURITY FENCE - ELEVATION

DEMOLITION DETAILS

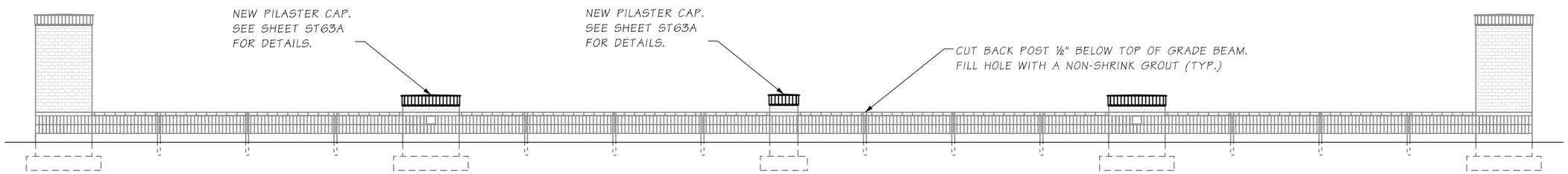

MODIFIED CAMP MURRAY WEST SECURITY FENCE - ELEVATION

ATKINSON
AUG 19 2020
RELEASED FOR CONSTRUCTION

FILE NAME	c:\pwworking\jacobs_b&i\reiserrw\dms20633\PS_ST62A.dgn						
TIME	7:07:14 AM				REGION NO. 10	STATE WASH	FED.AID PROJ.NO.
DATE	8/17/2020						
PLOTTED BY	ReiserRW						
DESIGNED BY	T. TAYLOR				JOB NUMBER		
ENTERED BY	T. TAYLOR						
CHECKED BY	C. CAYWOOD	REV 0 - RELEASED FOR CONSTRUCTION	08/17/2020		CONTRACT NO. C9133		LOCATION NO.
PROJ. ENGR.	C. MEADE	REV A - FINAL REVIEW	07/30/2020				
REGIONAL ADM.	J. WYNANDS	REVISION	DATE	BY			

CORY J. CAYWOOD, STATE OF WASHINGTON, 38755, STRUCTURAL ENGINEER, PROFESSIONAL ENGINEER
8/19/20
DATE
P.E. STAMP BOX

DATE
P.E. STAMP BOX

Washington State Department of Transportation

ATKINSON CONSTRUCTION / JACOBS

I-5
STEILACOOM-DUPONT RD TO THORNE LN
CORRIDOR IMPROVEMENTS
MP 120.01 TO MP 124.45

CAMP MURRAY SECURITY FENCE
FENCE AND PILASTER DEMO PLAN

PLAN REF NO ST62A

SHEET 772 OF 1456 SHEETS

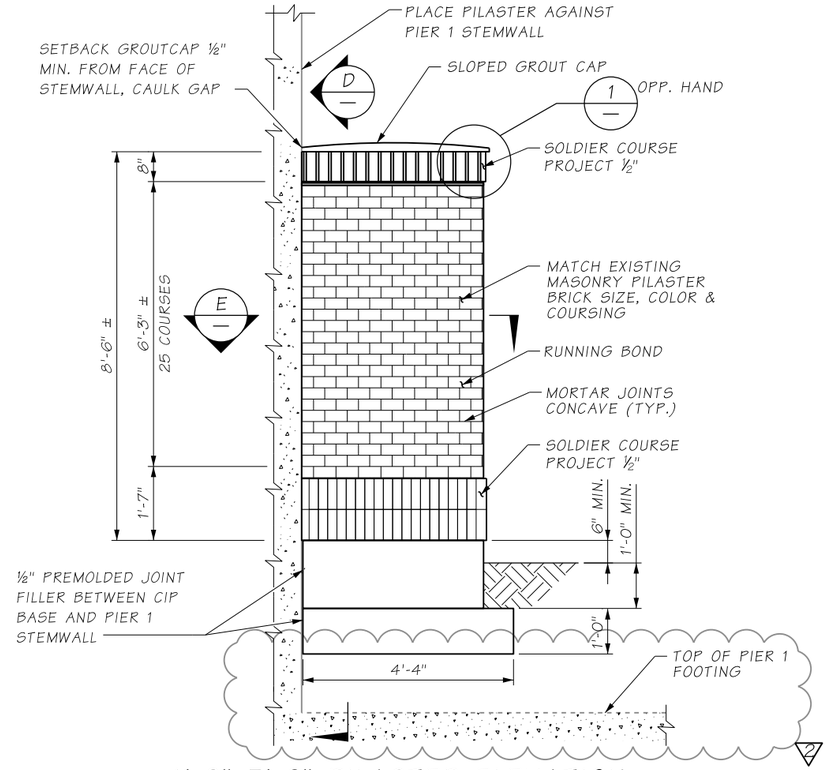

4'-0"x3'-8" PILASTER ELEVATION

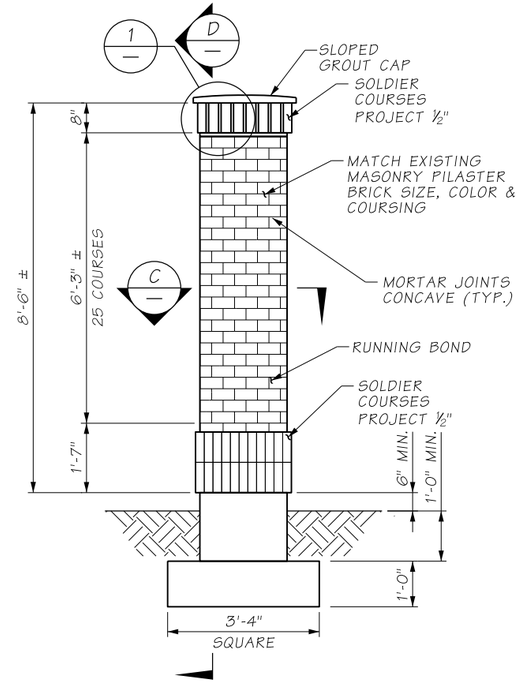

2' SQ. PILASTER ELEVATION

AS-BUILT

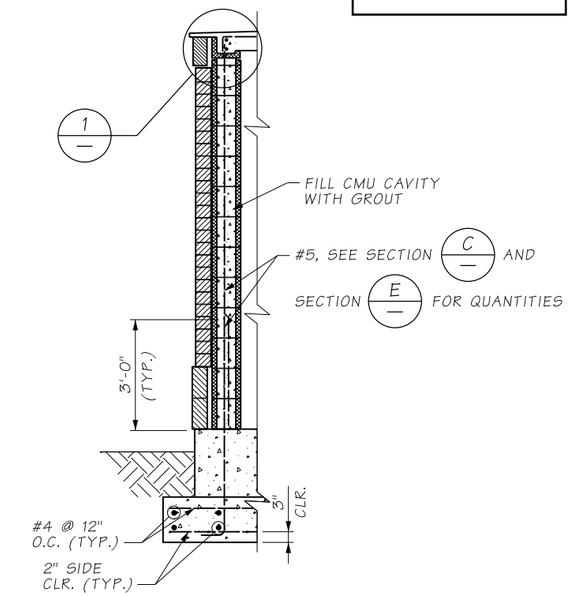

SECTION D

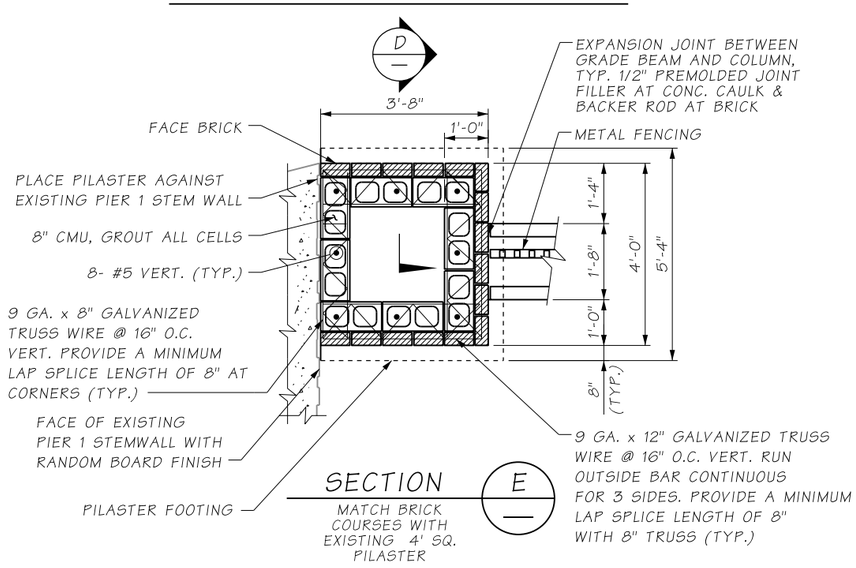

SECTION E

MATCH BRICK COURSES WITH EXISTING 4' SQ. PILASTER

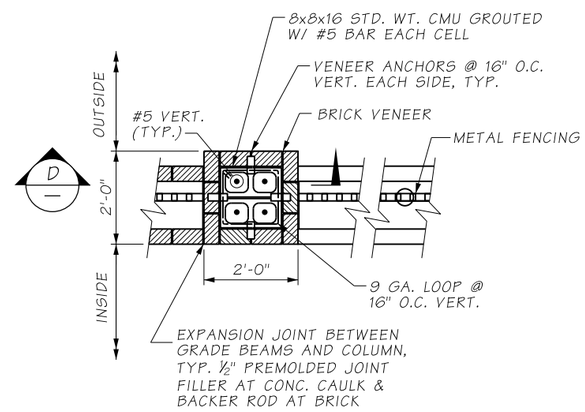

SECTION C

MATCH BRICK COURSES WITH EXISTING 4' SQ. PILASTER

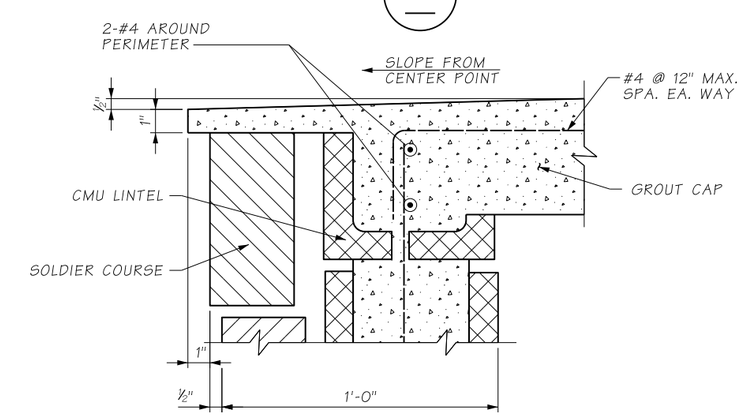

PILASTER CAP

DETAIL 1

ATKINSON
JAN 06 2021 KTW
RELEASED FOR CONSTRUCTION

FILE NAME	D:\ICS_workdir\73612\20633_2358\PS_ST63.dgn						
TIME	9:42:20 AM				REGION NO. 10	STATE WASH	FED.AID PROJ.NO.
DATE	1/6/2021						
PLOTTED BY	USLAS0-APP064$	REV 2 - RFI0558	01/06/2021		JOB NUMBER		
DESIGNED BY	Y. HUANG	REV 1 - RELEASED FOR CONSTRUCTION	08/17/2020				
ENTERED BY	R. REISER	REV B - FINAL REVIEW	07/30/2020				
CHECKED BY	C. CAYWOOD	REV 0 - RELEASED FOR CONSTRUCTION	10/01/2019		CONTRACT NO. C9133		LOCATION NO.
PROJ. ENGR.	C. MEADE	REV A - PRELIMINARY REVIEW	09/05/2019				
REGIONAL ADM.	J. WYNANDS	REVISION	DATE	BY			

CORY J. CAYWOOD, STATE OF WASHINGTON, 38155, STRUCTURAL ENGINEER, PROFESSIONAL ENGINEER
01/06/21
DATE
P.E. STAMP BOX

DATE
P.E. STAMP BOX

Washington State Department of Transportation

ATKINSON / JACOBS CONSTRUCTION

I-5
STEILACOOM-DUPONT RD TO THORNE LN CORRIDOR IMPROVEMENTS
MP 120.01 TO MP 124.45

CAMP MURRAY SECURITY FENCE PILASTER DETAILS

PLAN REF NO ST63

SHEET 773 OF 1456 SHEETS

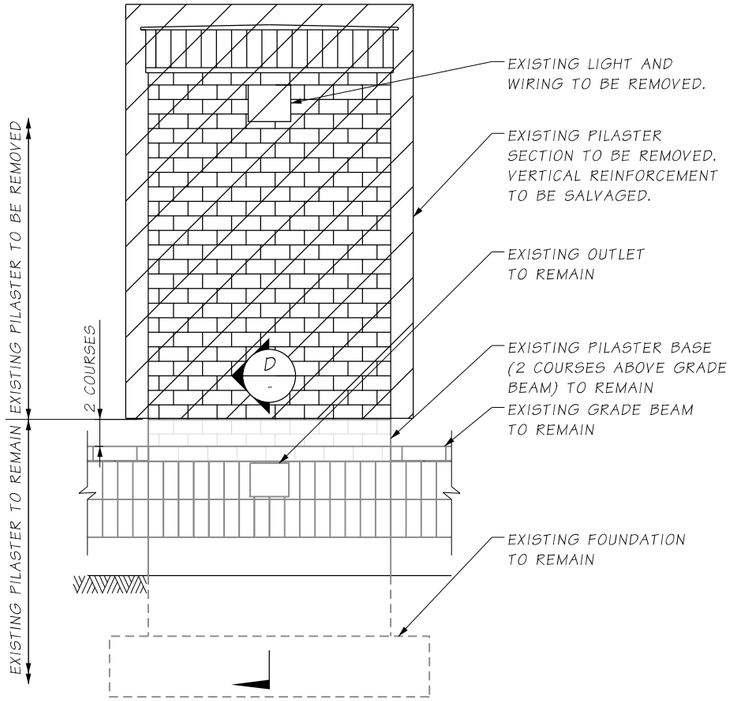

EXISTING 4' SQ. PILASTER

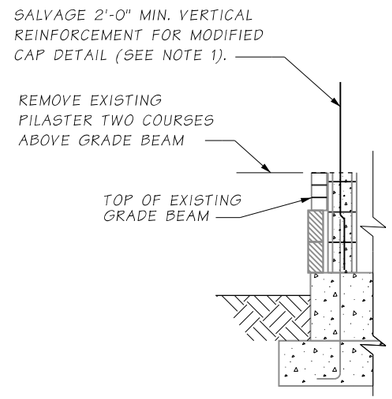

SECTION D / AFTER DEMO

NOTES:

1. AS PER AS-BUILTS, EXISTING VERTICAL #5 BAR QUANTITIES FOR THE 2' SQ AND 4' SQ. PILASTERS ARE 4 BARS AND 8 BARS, RESPECTIVELY. BARS ARE EVENLY DISTRIBUTED.
2. IF EXISTING BARS CANNOT BE SALVAGED, DRILL AND EPOXY SUBSTITUTE BARS INTO THE CMU BASE WITH A MINIMUM EMBEDMENT DEPTH OF 8"

AS-BUILT

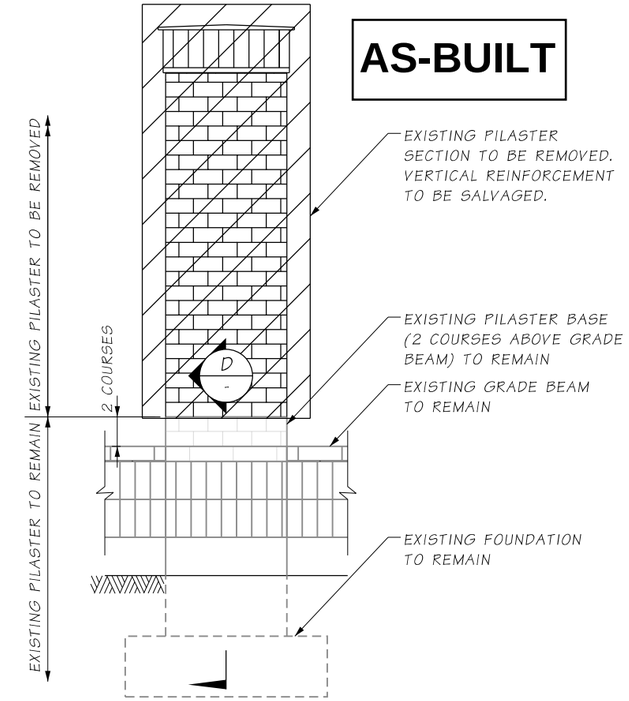

EXISTING 2' SQ. PILASTER

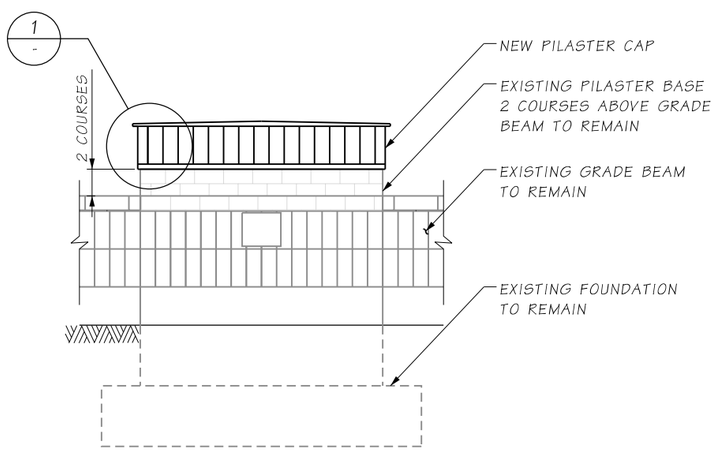

MODIFIED 4' SQ. PILASTER

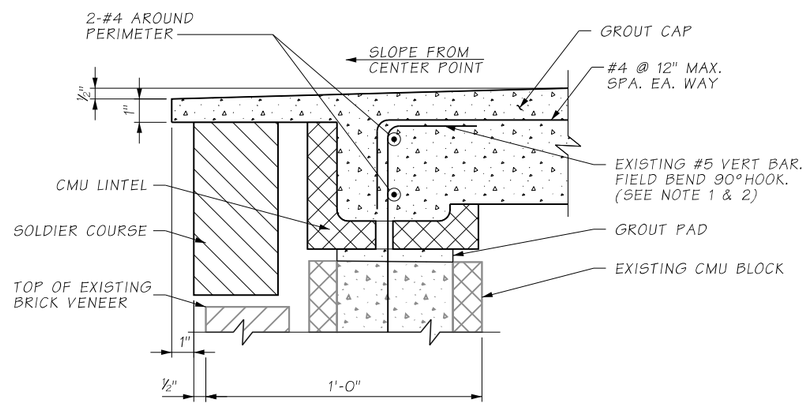

PILASTER CAP DETAIL 1

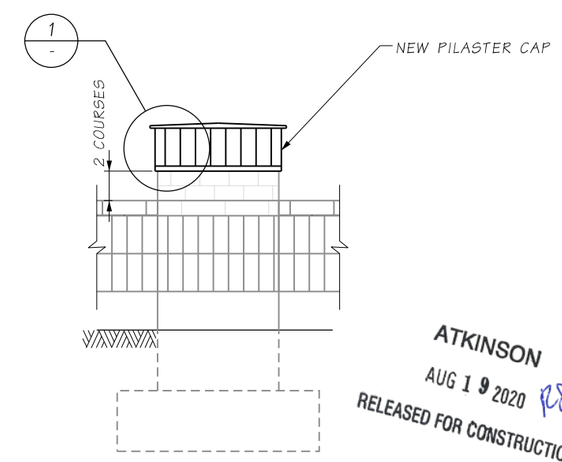

MODIFIED 2' SQ. PILASTER

ATKINSON
AUG 19 2020
RELEASED FOR CONSTRUCTION

FILE NAME	c:\pwworking\jacobs_b&i\reiserrw\dms20633\PS_ST63A.dgn						
TIME	7:30:43 AM				REGION NO. 10	STATE WASH	FED.AID PROJ.NO.
DATE	8/17/2020						
PLOTTED BY	ReiserRW						
DESIGNED BY	T. TAYLOR				JOB NUMBER		
ENTERED BY	T. TAYLOR						
CHECKED BY	C. CAYWOOD	REV 0 - RELEASED FOR CONSTRUCTION	08/17/2020		CONTRACT NO. C9133		LOCATION NO.
PROJ. ENGR.	C. MEADE	REV A - FINAL REVIEW	07/30/2020				
REGIONAL ADM.	J. WYNANDS	REVISION	DATE	BY			

CORY J. CAYWOOD, STATE OF WASHINGTON, 38763, STRUCTURAL ENGINEER, PROFESSIONAL ENGINEER
8/19/20
DATE
P.E. STAMP BOX

DATE
P.E. STAMP BOX

Washington State Department of Transportation

ATKINSON / JACOBS CONSTRUCTION

I-5
STEILACOOM-DUPONT RD TO THORNE LN
CORRIDOR IMPROVEMENTS
MP 120.01 TO MP 124.45

CAMP MURRAY SECURITY FENCE
PILASTER DEMO AND MODIFICATION DETAIL

PLAN REF NO ST63A

SHEET 774 OF 1456 SHEETS

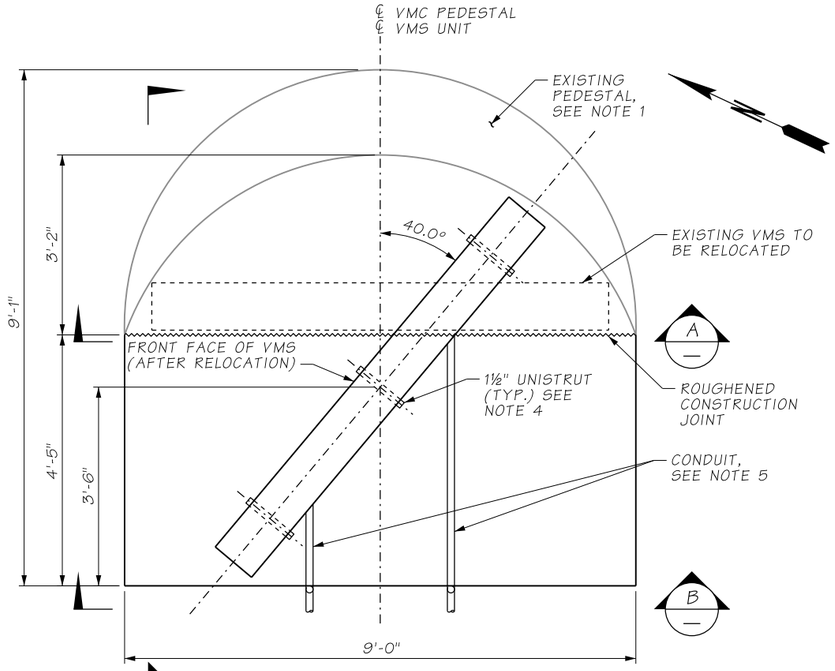

PLAN

SEE SHEET ST61 FOR LOCATION OF VMS

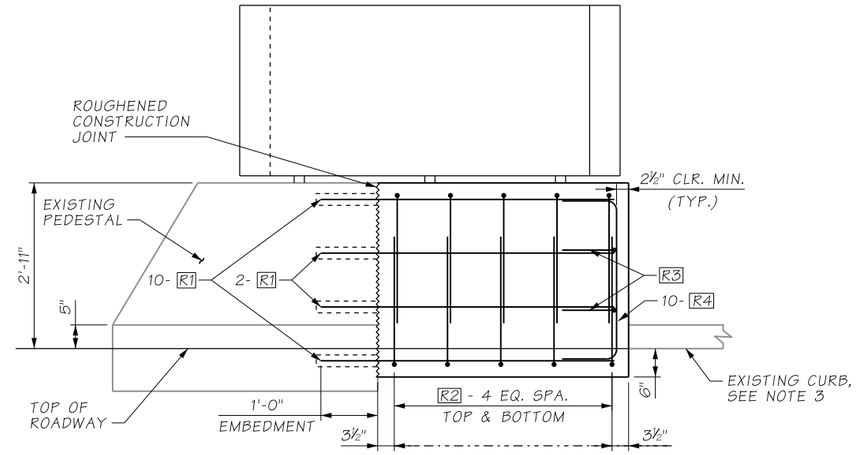

SECTION C

REINFORCING STEEL BENDING DIAGRAM

SEE STD. SPEC. 9-07.1(2) FOR BENDING DIAMETERS

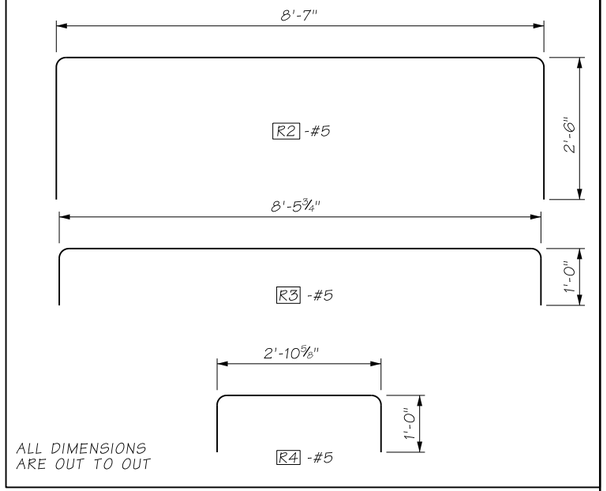

ALL DIMENSIONS ARE OUT TO OUT

NOTES:

1. EXISTING CALLBOX, LUMINAIRE CONCRETE BASE, AND BOLLARD TO BE REMOVED PRIOR TO PEDESTAL EXTENSION. MOVE EXISITING JUNCTION BOX IN GROUND AS REQUIRED TO AVOID PEDESTAL EXTENSION.
2. MATCH HEIGHT TO EXISTING PEDESTAL. SPACING OF REINFORCEMENT SHALL NOT EXCEED 12".
3. MODIFY EXISTING CURBS TO END AT REAR OF PEDESTAL EXTENSION.
4. REATTACH EACH 1½" UNISTRUT SUPPORT TO PEDESTAL WITH 2- ⅜" STAINLESS STEEL CONCRETE ANCHORS. ANCHOR BOLT EMBEDMENT SHALL BE 4½" MIN. AND SET WITH EXPOXY RESIN. EXISITING ANCHOR BOLTS SHALL BE REMOVED TO 1" MIN. BELOW CONCRETE SURFACE. PATCH BACK HOLES WITH GROUT.
5. MODIFY EXISTING ITS CONDUITS FOR VMS SIGN AS REQUIRED TO ACCOMODATE PEDESTAL WIDENING. CONDUIT DETAILS SHALL BE MATCHED IN-KIND WITH EXISTING CONDUITS.

AS-BUILT

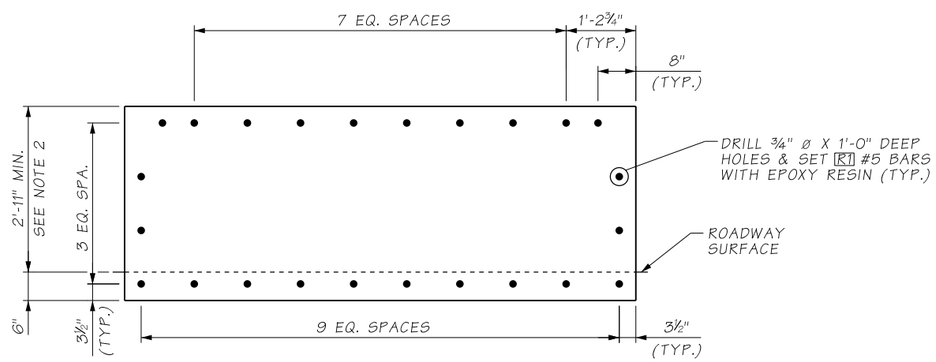

SECTION A

REINFORCEMENT NOT SHOWN. ADJUST DOWEL LOCATIONS AS REQUIRED TO MISS REINFORCEMENT IN EXISTING PEDESTAL.

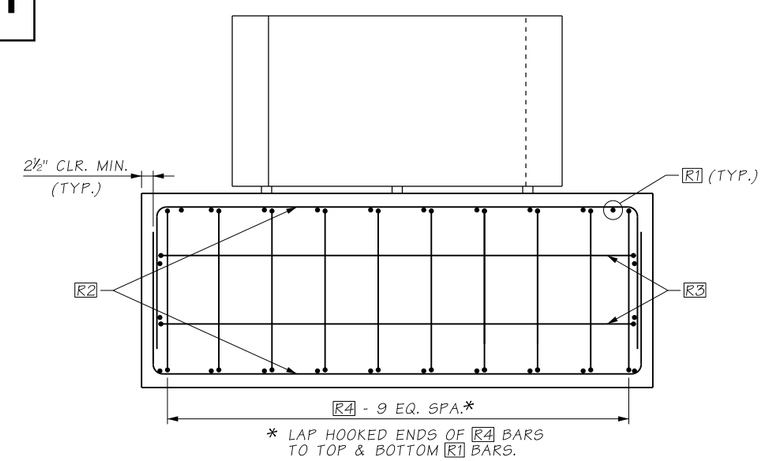

* LAP HOOKED ENDS OF R4 BARS TO TOP & BOTTOM R1 BARS.

VIEW B

STEEL CONDUIT NOT SHOWN

ATKINSON
NOV 12 2019
RELEASED FOR CONSTRUCTION

FILE NAME	D:\ICS_workdir\39611\20633_2406\PS_ST64.dgn						
TIME	3:31:45 PM				REGION NO. 10	STATE WASH	FED.AID PROJ.NO.
DATE	11/7/2019						
PLOTTED BY	USLAS0-APP064$				JOB NUMBER		
DESIGNED BY	T. TAYLOR						
ENTERED BY	R. REISER						
CHECKED BY	C. CAYWOOD	REV 0 - RELEASED FOR CONSTRUCTION	11/11/2019		CONTRACT NO. C9133		LOCATION NO.
PROJ. ENGR.	C. MEADE	REV A - PRELIMINARY REVIEW	10/24/2019				
REGIONAL ADM.	J. WYNANDS	REVISION	DATE	BY			

CARY J. CAYWOOD — STATE OF WASHINGTON — 38159 — STRUCTURAL ENGINEER — PROFESSIONAL ENGINEER
11/12/19
DATE
P.E. STAMP BOX

DATE
P.E. STAMP BOX

Washington State Department of Transportation

ATKINSON CONSTRUCTION / JACOBS

I-5
STEILACOOM-DUPONT RD TO THORNE LN CORRIDOR IMPROVEMENTS
MP 120.01 TO MP 124.45

CAMP MURRAY
VMS SUPPORT MODIFICATION

PLAN REF NO ST64

SHEET 775 OF 1456 SHEETS

ATKINSON

JAN 21 2019

RELEASED FOR CONSTRUCTION

AS-BUILT

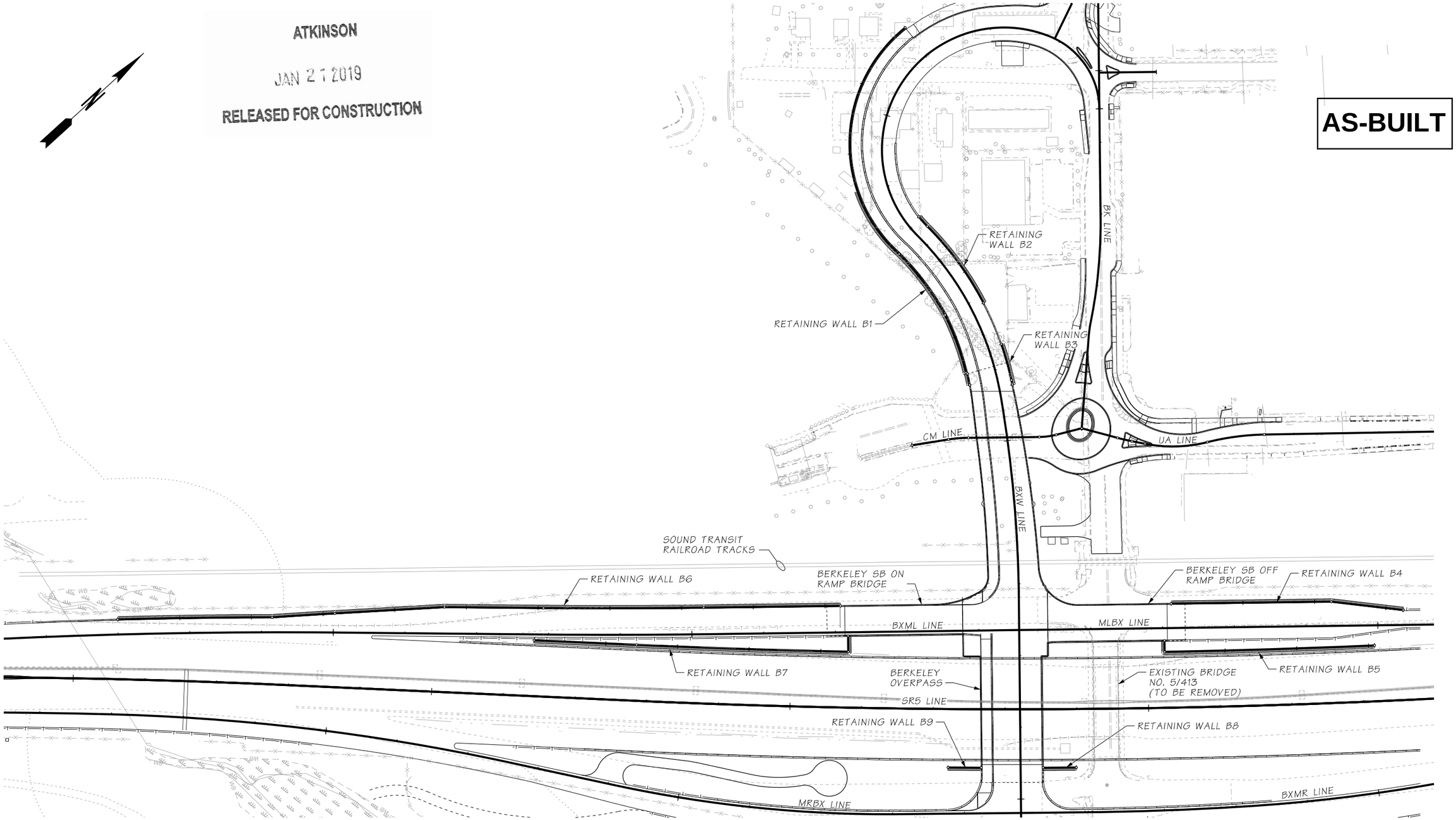

PLAN

FILE NAME	c:\pwworking\jacobs_b&i\reiserrw\dms20633\PS_RW01.dgn						
TIME	10:39:33 AM				REGION NO. 10	STATE WASH	FED.AID PROJ.NO.
DATE	1/17/2019						
PLOTTED BY	reiserrw				JOB NUMBER		
DESIGNED BY	C. CAYWOOD						
ENTERED BY	R. REISER	REV 0 - RELEASED FOR CONSTRUCTION	01/22/2019		CONTRACT NO. C8811		LOCATION NO.
CHECKED BY	A. FONG	REV B - FINAL REVIEW	11/29/2018				
PROJ. ENGR.	C. MEADE	REV A - PRELIMINARY REVIEW	10/26/2018				
REGIONAL ADM.	J. WYNANDS	REVISION	DATE	BY			

COLBY J. CAYWOOD, STATE OF WASHINGTON, 38759, STRUCTURAL ENGINEER, PROFESSIONAL ENGINEER

1/21/19

DATE

P.E. STAMP BOX

DATE

P.E. STAMP BOX

Washington State Department of Transportation

ATKINSON CONSTRUCTION / JACOBS

I-5
STEILACOOM-DUPONT RD TO THORNE LN
CORRIDOR IMPROVEMENTS
MP 120.01 TO MP 124.45

BERKELEY RETAINING WALLS
KEY PLAN

PLAN REF NO RW01

SHEET 776 OF 1456 SHEETS

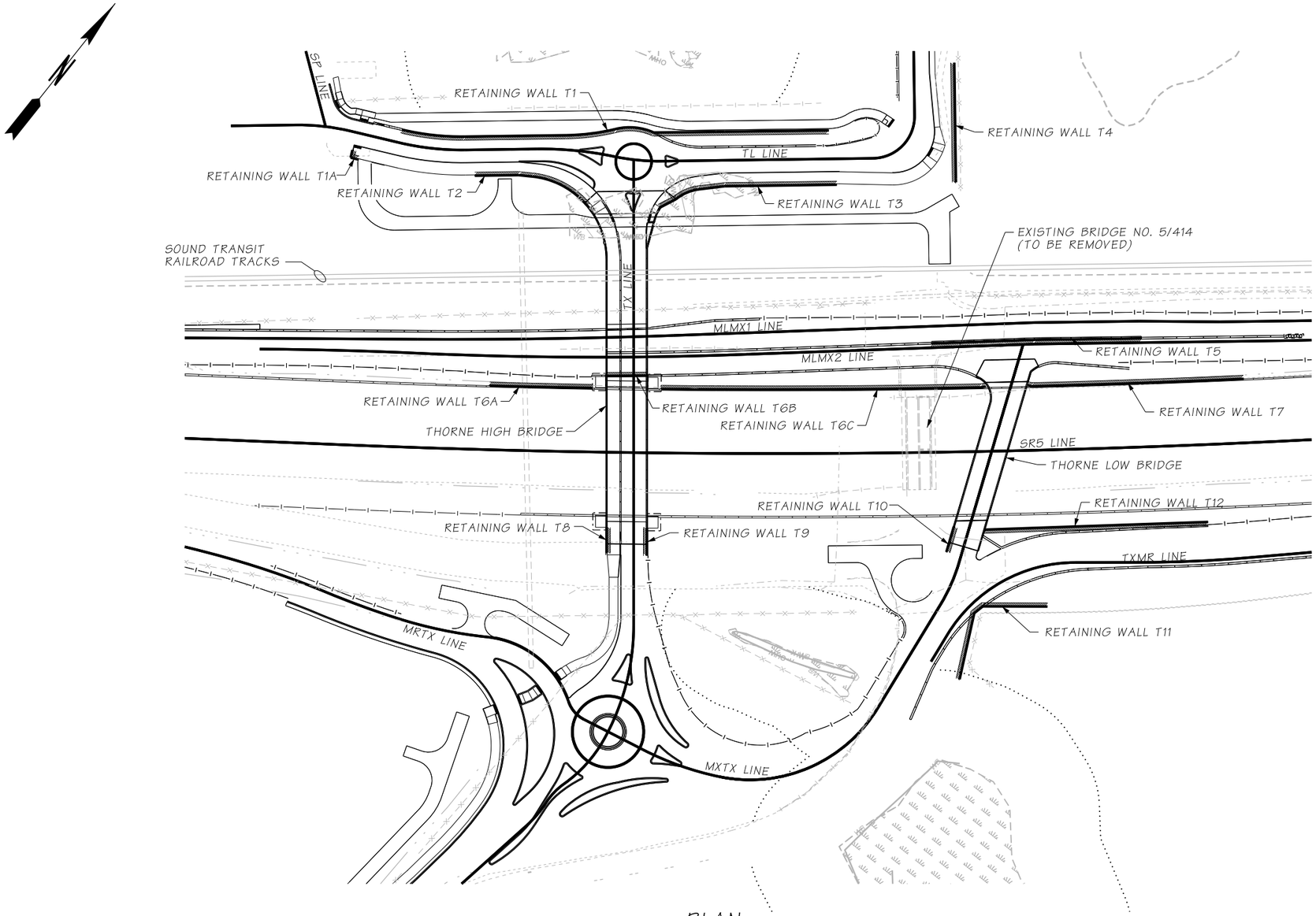

PLAN

AS-BUILT

ATKINSON
JUN 18 2019 KTW
RELEASED FOR CONSTRUCTION

FILE NAME	D:\ICS_workdir\30431\20633_1118\PS_RW02.dgn			
TIME	11:44:49 AM			
DATE	6/14/2019			
PLOTTED BY	USLAS0-APP064$			
DESIGNED BY	K. YOUNG			
ENTERED BY	R. REISER	REV 0 - RELEASED FOR CONSTRUCTION	06/17/2019	
CHECKED BY	A. FONG	REV B - FINAL REVIEW	05/17/2019	
PROJ. ENGR.	C. MEADE	REV A - PRELIMINARY REVIEW	02/01/2019	
REGIONAL ADM.	J. WYNANDS	REVISION	DATE	BY

REGION NO.	STATE	FED.AID PROJ.NO.
10	WASH	
JOB NUMBER		
CONTRACT NO. C9133		LOCATION NO.

CORY J. CAYWOOD
STATE OF WASHINGTON
38759
STRUCTURAL ENGINEER
PROFESSIONAL ENGINEER
6/17/19
DATE
P.E. STAMP BOX

P.E. STAMP BOX
DATE

Washington State
Department of Transportation
ATKINSON CONSTRUCTION / JACOBS

I-5
STEILACOOM-DUPONT RD TO THORNE LN
CORRIDOR IMPROVEMENTS
MP 120.01 TO MP 124.45

THORNE RETAINING WALLS
KEY PLAN

PLAN REF NO
RW02

SHEET
777
OF
1456
SHEETS

GENERAL NOTES:

1. ALL MATERIAL AND WORKMANSHIP SHALL BE IN ACCORDANCE WITH THE REQUIREMENTS OF THE WASHINGTON STATE DEPARTMENT OF TRANSPORTATION STANDARD SPECIFICATIONS FOR ROAD, BRIDGE, AND MUNICIPAL CONSTRUCTION DATED 2016 AND AMENDMENTS.
2. STRUCTURAL EARTH WALLS (SE WALLS) HAVE BEEN DESIGNED FOR GLOBAL STABILITY IN ACCORDANCE WITH THE FOLLOWING REQUIREMENT:

   AASHTO LRFD BRIDGE DESIGN SPECIFICATIONS 8TH EDITION, 2017 AND WSDOT GEOTECHNICAL DESIGN MANUAL.
3. SE WALLS SHALL BE DESIGNED BY THE MANUFACTURER IN ACCORDANCE WITH THE SE WALL SOIL PARAMETER RECOMMENDATIONS AND THE EXTERNAL GLOBAL STABILITY REQUIREMENTS PROVIDED IN THE GEOTECHNICAL MEMO.
4. THE SEQUENCE OF CONSTRUCTION SHALL BE THE RESPONSIBILITY OF THE CONTRACTOR. THE CONTRACTOR SHALL BE RESPONSIBLE FOR PROVIDING ALL TEMPORARY GUYS, BRACING, SHORING AND OTHER SUPPORTS AS NEEDED TO SAFELY RESIST ALL LOADS DURING CONSTRUCTION.
5. ALL CAST-IN-PLACE CONCRETE SHALL BE CLASS 4000, EXCEPT AS NOTED.

LEGEND

- SOIL BORING LOCATION
- LUMINAIRE - PROPOSED
- LUMINAIRE - EXISTING
- BF — BURIED FIBER - EXISTING
- BP — BURIED POWER - EXISTING
- BT — BURIED TELEPHONE - EXISTING
- DP — DRAIN PIPE - EXISTING
- FENCE - EXISTING
- G — GAS - EXISTING
- JUNCTION BOX
- OP — OVERHEAD POWER - EXISTING
- S — SEWER - EXISTING
- ST — STORM SEWER - EXISTING
- **ST** — STORM SEWER - PROPOSED
- UD — UNDERDRAIN - EXISTING
- **UD** — UNDERDRAIN - PROPOSED
- W — WATER - EXISTING
- **W** — WATER - PROPOSED
- WB — WETLAND BOUNDARY - EXISTING

AS-BUILT

ATKINSON

JAN 21 2019

RELEASED FOR CONSTRUCTION

FILE NAME	c:\pwworking\jacobs_b&i\reiserrw\dms20633\PS_RW03.dgn						
TIME	10:24:33 AM				REGION NO. 10	STATE WASH	FED.AID PROJ.NO.
DATE	1/17/2019						
PLOTTED BY	reiserrw						
DESIGNED BY	C. CAYWOOD				JOB NUMBER		
ENTERED BY	R. REISER	REV 0 - RELEASED FOR CONSTRUCTION	01/22/2019				
CHECKED BY	A. FONG	REV B - FINAL REVIEW	11/29/2018		CONTRACT NO. C8811		LOCATION NO.
PROJ. ENGR.	C. MEADE	REV A - PRELIMINARY REVIEW	10/26/2018				
REGIONAL ADM.	J. WYNANDS	REVISION	DATE	BY			

P.E. STAMP BOX — DATE 1/21/19

P.E. STAMP BOX — DATE

Washington State Department of Transportation

ATKINSON CONSTRUCTION / JACOBS

I-5
STEILACOOM-DUPONT RD TO THORNE LN
CORRIDOR IMPROVEMENTS
MP 120.01 TO MP 124.45

RETAINING WALLS
GENERAL NOTES AND LEGEND

PLAN REF NO RW03

SHEET 778 OF 1456 SHEETS

SECTION 21, T.19N. R.2E. W.M.
CITY OF LAKEWOOD

CURVE DATA					
P.I. STA.	Δ	RADIUS	TANGENT	LENGTH	BACK TANGENT BRG.
WALL B1 12+44.84	99° 45'44"LT.	206.31'	244.84'	359.23'	S12° 49'39"W
WALL B1 14+13.02	16° 10'07"RT.	378.69'	53.79'	106.86'	S83° 42'47"E

AS-BUILT

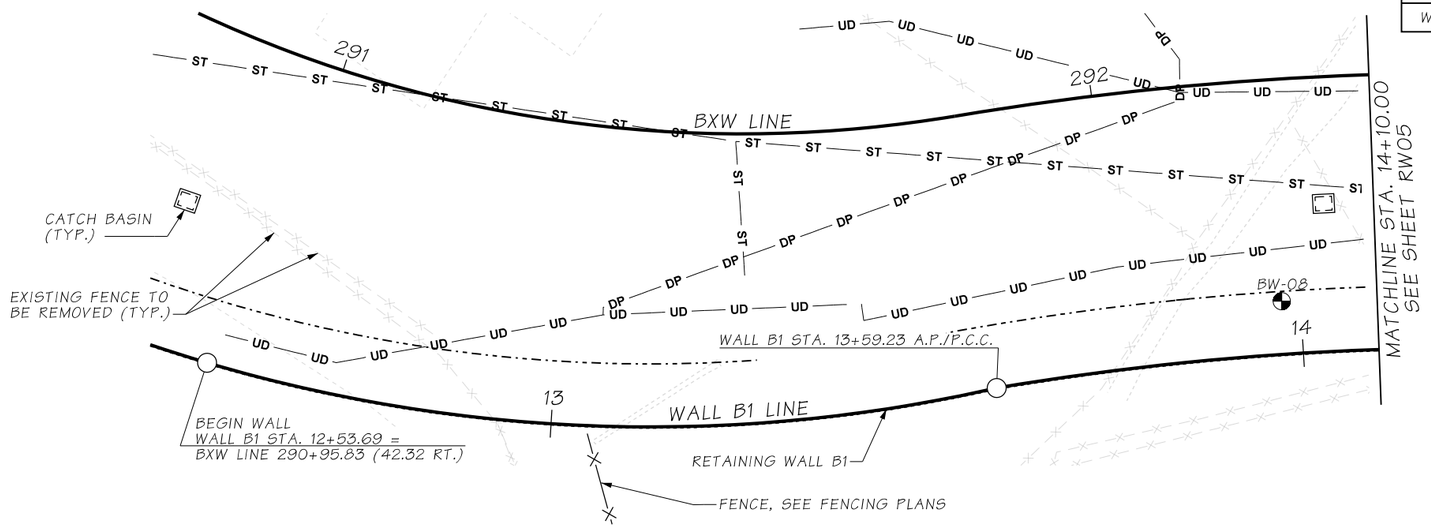

RETAINING WALL B1 - PLAN

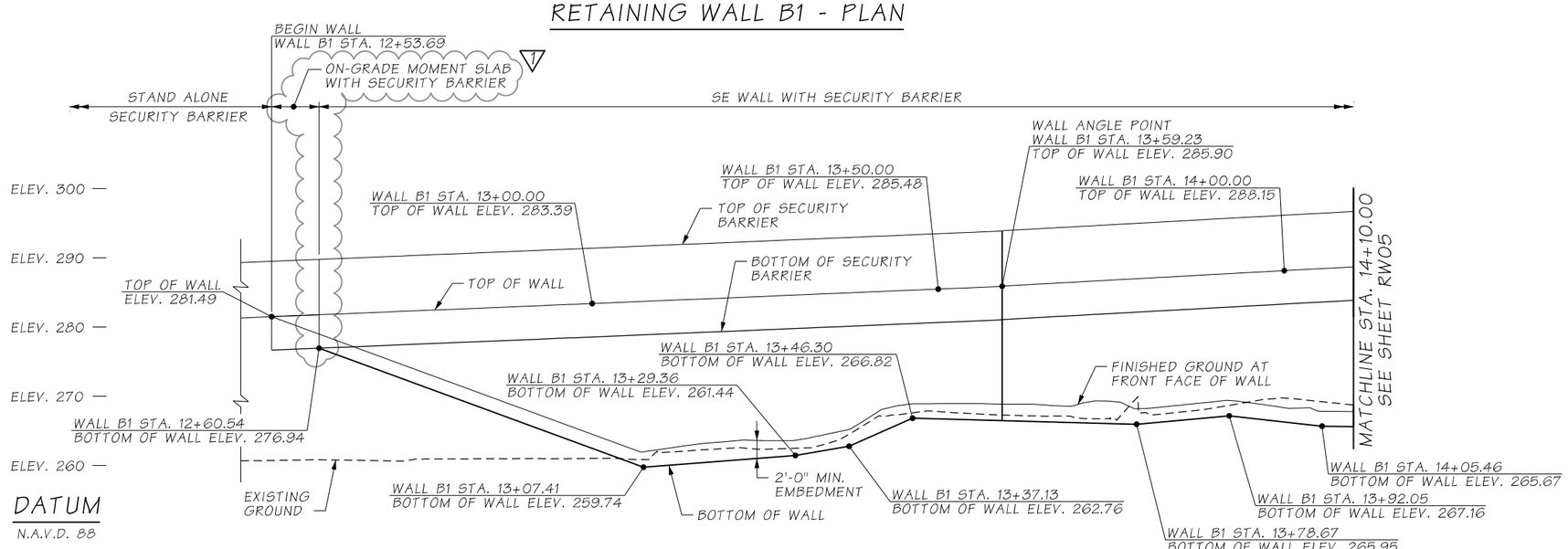

RETAINING WALL B1 - ELEVATION

LOOKING AT FRONT FACE OF WALL

ATKINSON
DEC 04 2019 KTW
RELEASED FOR CONSTRUCTION

NOTES:

1. EXISTING UTILITY LOCATIONS ARE APPROXIMATE. CONTRACTOR SHALL VERIFY LOCATIONS AND ELEVATIONS OF THE EXISTING UTILITIES PRIOR TO CONSTRUCTION.
2. SEE SHEET RW03 FOR GENERAL NOTES AND LEGEND.
3. SEE SHEET RW06 FOR TYPICAL SECTIONS.
4. FOR CATCH BASIN LOCATIONS, SEE DRAINAGE PLANS.

FILE NAME	c:\pwworking\jacobs_b&i\caywoocj\dms20633\PS_RW04.dgn			
TIME	9:44:23 AM			
DATE	12/3/2019			
PLOTTED BY	caywoocj			
DESIGNED BY	G. CALLAHAN	REV 1 - RFI0250	12/03/2019	
ENTERED BY	R. REISER	REV 0 - RELEASED FOR CONSTRUCTION	04/01/2019	
CHECKED BY	C. CAYWOOD	REV B - FINAL REVIEW	01/18/2019	
PROJ. ENGR.	C. MEADE	REV A - PRELIMINARY REVIEW	10/26/2018	
REGIONAL ADM.	J. WYNANDS	REVISION	DATE	BY

REGION NO.	STATE	FED.AID PROJ.NO.
10	WASH	
JOB NUMBER		
CONTRACT NO. C9133		LOCATION NO.

P.E. STAMP BOX — DATE 12/3/19

P.E. STAMP BOX — DATE

Washington State Department of Transportation

ATKINSON CONSTRUCTION / JACOBS

I-5
STEILACOOM-DUPONT RD TO THORNE LN
CORRIDOR IMPROVEMENTS
MP 120.01 TO MP 124.45

RETAINING WALL B1
PLAN & ELEVATION (1 OF 2)

PLAN REF NO RW04

SHEET 779 OF 1456 SHEETS

SECTION 21, T.19N. R.2E. W.M.
CITY OF LAKEWOOD

CURVE DATA					
P.I. STA.	Δ	RADIUS	TANGENT	LENGTH	BACK TANGENT BRG.
WALL B1 15+08.93	12°56'36"RT.	377.61'	42.83'	85.30'	S65°00'06"E
WALL B1 15+61.91	2°25'20"RT.	379.03'	8.01'	16.02'	S51°44'47"E

AS-BUILT

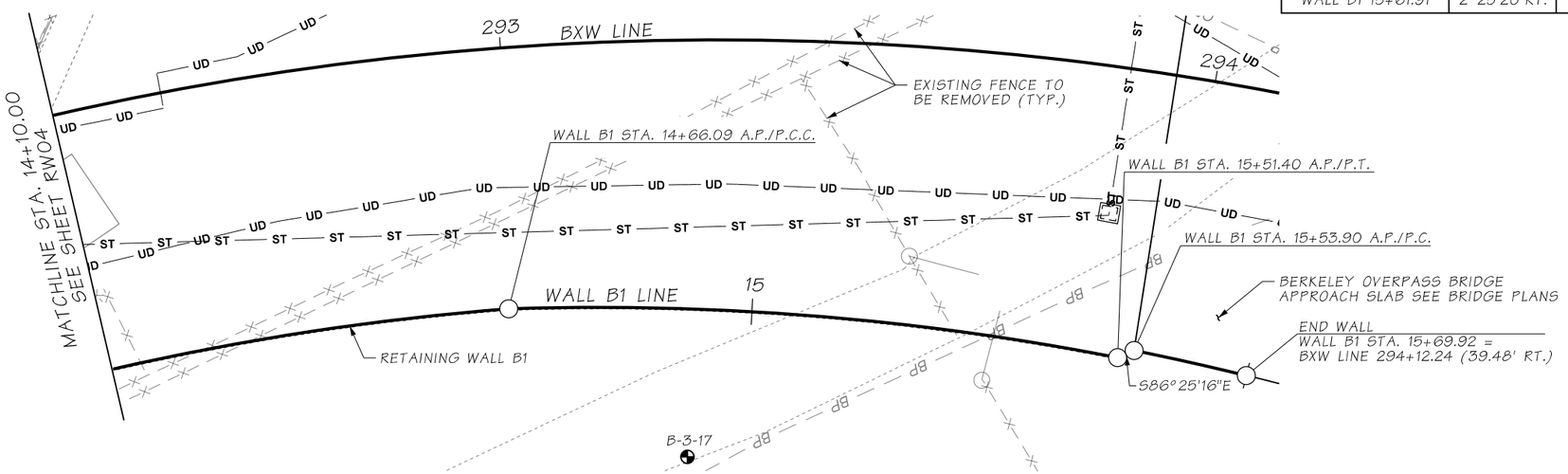

RETAINING WALL B1 - PLAN

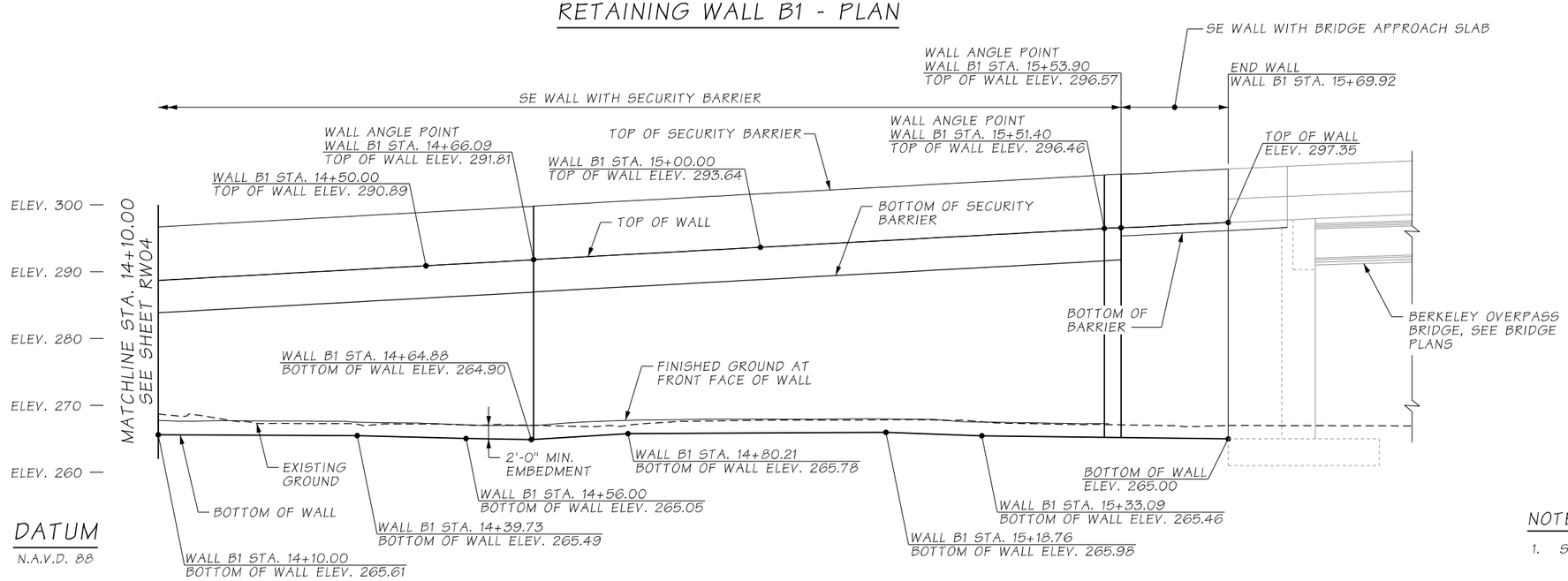

RETAINING WALL B1 - ELEVATION

LOOKING AT FRONT FACE OF WALL

ATKINSON
APR 11 2019 KTW
RELEASED FOR CONSTRUCTION

NOTES:

1. SEE NOTES ON SHEET RW04.

FILE NAME	c:\pwworking\jacobs_b&i\youngkl2\dms20633\PS_RW05.dgn						
TIME	5:14:48 PM				REGION NO. 10	STATE WASH	FED.AID PROJ.NO.
DATE	3/20/2019						
PLOTTED BY	youngkl2						
DESIGNED BY	G. CALLAHAN				JOB NUMBER		
ENTERED BY	R. REISER	REV 0 - RELEASED FOR CONSTRUCTION	04/01/2019				
CHECKED BY	C. CAYWOOD	REV B - FINAL REVIEW	01/18/2019		CONTRACT NO. C8811		LOCATION NO.
PROJ. ENGR.	C. MEADE	REV A - PRELIMINARY REVIEW	10/26/2018				
REGIONAL ADM.	J. WYNANDS	REVISION	DATE	BY			

CORY J. CAYWOOD, STATE OF WASHINGTON, 38759, PROFESSIONAL ENGINEER — 4/11/19 — DATE — P.E. STAMP BOX

DATE — P.E. STAMP BOX

Washington State Department of Transportation

ATKINSON CONSTRUCTION / JACOBS

I-5
STEILACOOM-DUPONT RD TO THORNE LN
CORRIDOR IMPROVEMENTS
MP 120.01 TO MP 124.45

RETAINING WALL B1
PLAN & ELEVATION (2 OF 2)

PLAN REF NO RW05

SHEET 780 OF 1456 SHEETS

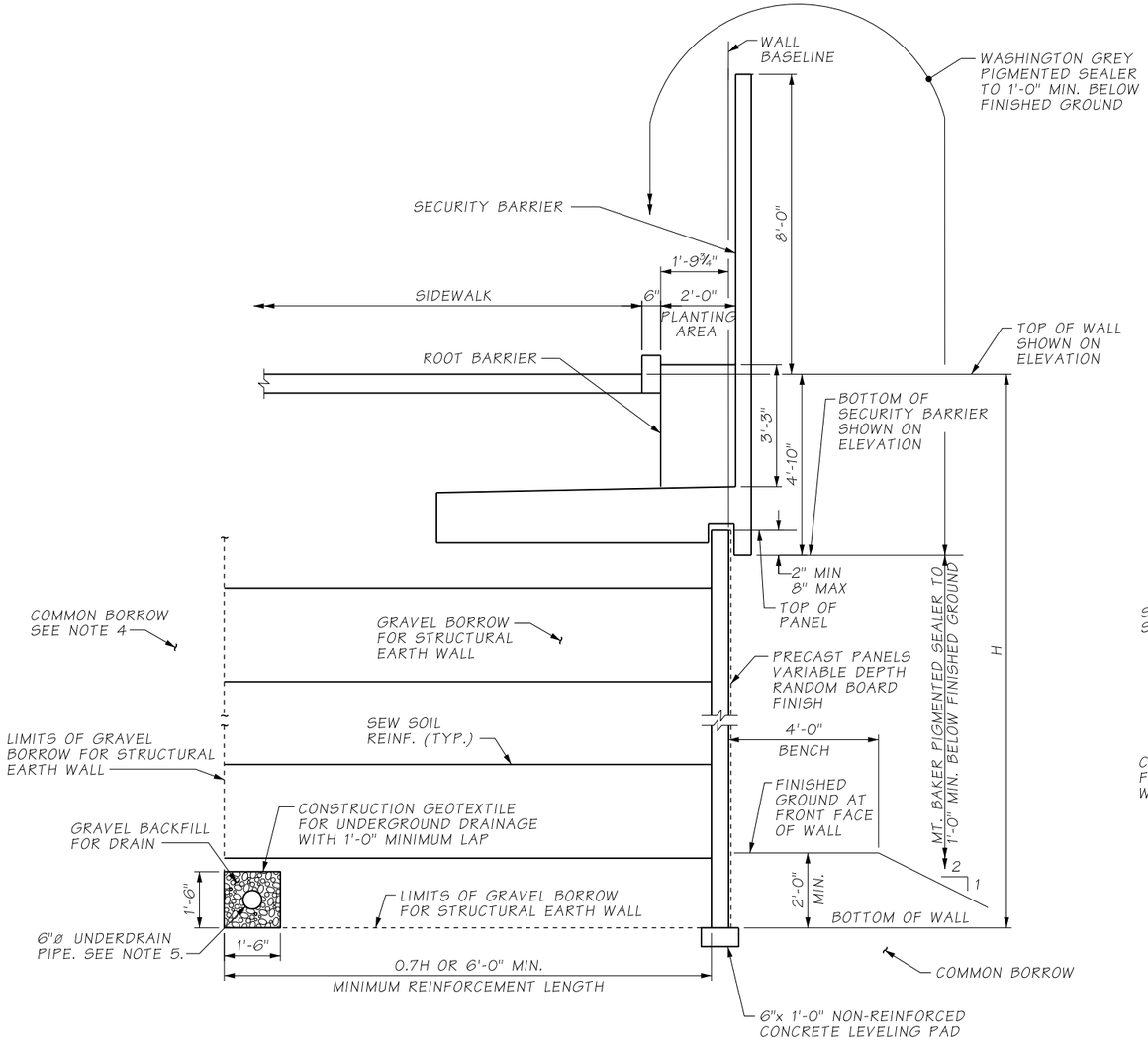

SE WALL WITH SECURITY BARRIER

TYPICAL SECTION - RETAINING WALL B1

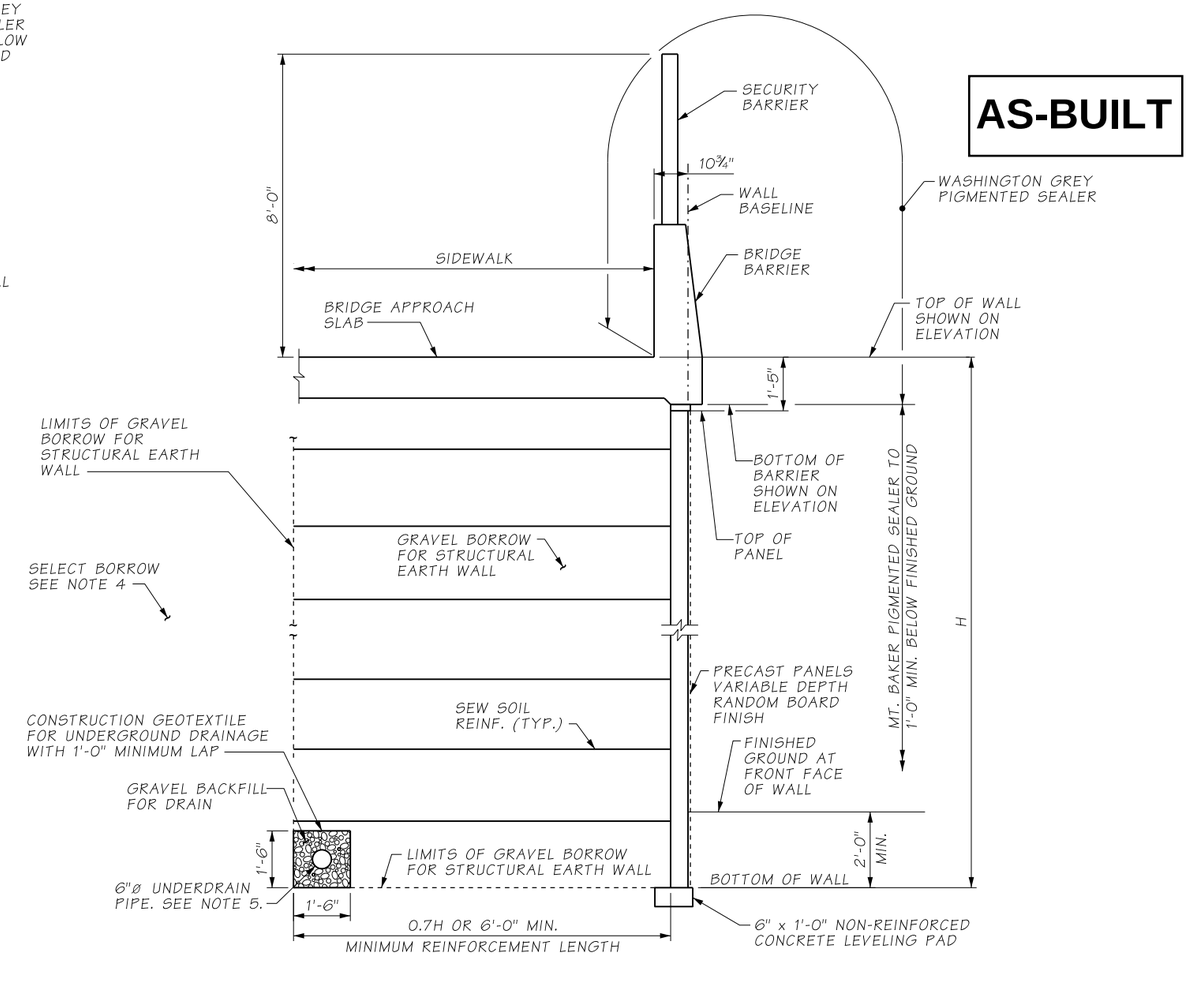

SE WALL WITH APPROACH SLAB

TYPICAL SECTION - RETAINING WALL B1

NOTES:

1. SEE SHEETS RW04 AND RW05 FOR WALL PLAN AND ELEVATION.
2. SEE SHEET RW113 FOR SECURITY BARRIER & MOMENT SLAB DETAILS.
3. SEE DRAINAGE PLANS FOR UNDERDRAIN LOCATIONS AND CONNECTIONS TO DRAINAGE STRUCTURES.
4. ROADWAY EMBANKMENT SHALL BE SELECT BORROW WITHIN LIMITS OF BRIDGE APPROACH EMBANKMENTS. SEE STANDARD SPECIFICATIONS SECTION 1-01.3 FOR ADDITIONAL INFORMATION.
5. UNDERDRAIN CAN BE LOCATED OUTSIDE OF THE REINFORCEMENT ZONE AT CONTRACTOR'S OPTION.

ATKINSON
APR 11 2019 KJW
RELEASED FOR CONSTRUCTION

FILE NAME	D:\ICS_workdir\24022\20633_1413\PS_RW06.dgn			
TIME	5:08:47 PM			
DATE	3/20/2019			
PLOTTED BY	USLAS0-APP064$			
DESIGNED BY	G. CALLAHAN			
ENTERED BY	R. REISER	REV 0 - RELEASED FOR CONSTRUCTION	04/01/2019	
CHECKED BY	C. CAYWOOD	REV B - FINAL REVIEW	01/18/2019	
PROJ. ENGR.	C. MEADE	REV A - PRELIMINARY REVIEW	10/26/2018	
REGIONAL ADM.	J. WYNANDS	REVISION	DATE	BY

REGION NO.	STATE	FED.AID PROJ.NO.
10	WASH	
JOB NUMBER		
CONTRACT NO.		LOCATION NO.
C8811		

CORT J. CAYWOOD, STATE OF WASHINGTON, 36733, STRUCTURAL, PROFESSIONAL ENGINEER
1/11/19
DATE
P.E. STAMP BOX

DATE
P.E. STAMP BOX

Washington State Department of Transportation

ATKINSON / JACOBS CONSTRUCTION

I-5
STEILACOOM-DUPONT RD TO THORNE LN
CORRIDOR IMPROVEMENTS
MP 120.01 TO MP 124.45

RETAINING WALL B1
TYPICAL SECTIONS

PLAN REF NO RW06

SHEET 781 OF 1456 SHEETS

SECTION 21, T.19N. R.2E. W.M.
CITY OF LAKEWOOD

CURVE DATA					
P.I. STA.	Δ	RADIUS	TANGENT	LENGTH	BACK TANGENT BRG.
WALL B2 10+08.91	06°45'07"LT.	151.10'	8.91'	17.81'	S76°53'15"E
WALL B2 10+84.81	17°33'25"RT.	433.90'	67.00'	132.96'	S83°38'22"E
WALL B3 20+26.10	06°53'07"RT.	433.90'	26.10'	52.14'	S57°48'58"E
WALL B3 20+57.89	00°03'37"RT.	1833.93'	0.97'	1.93'	S50°54'59"E

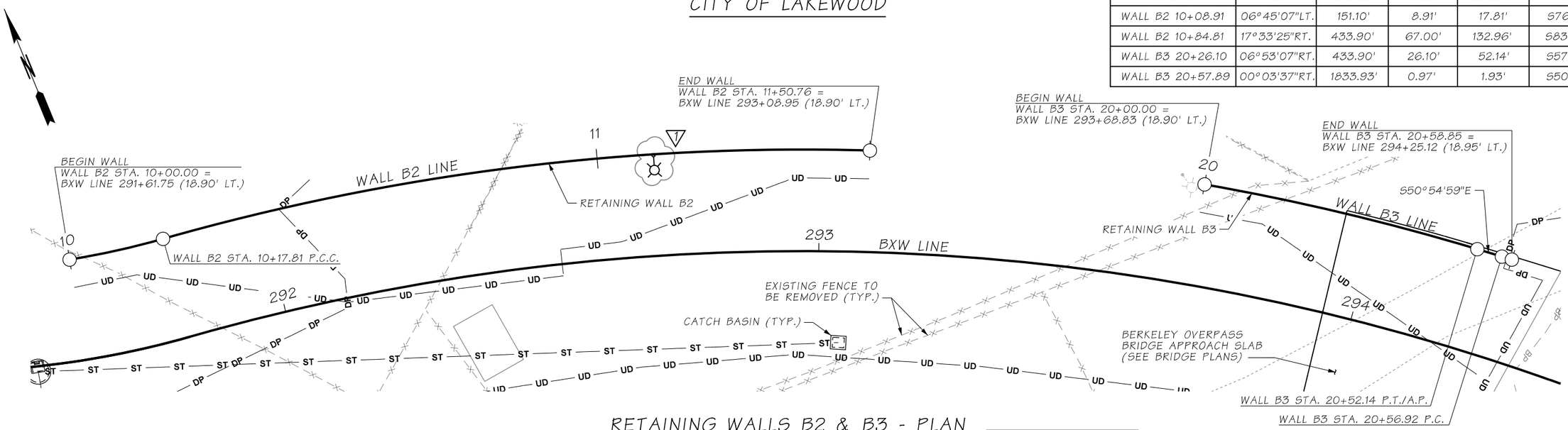

RETAINING WALLS B2 & B3 - PLAN

AS-BUILT

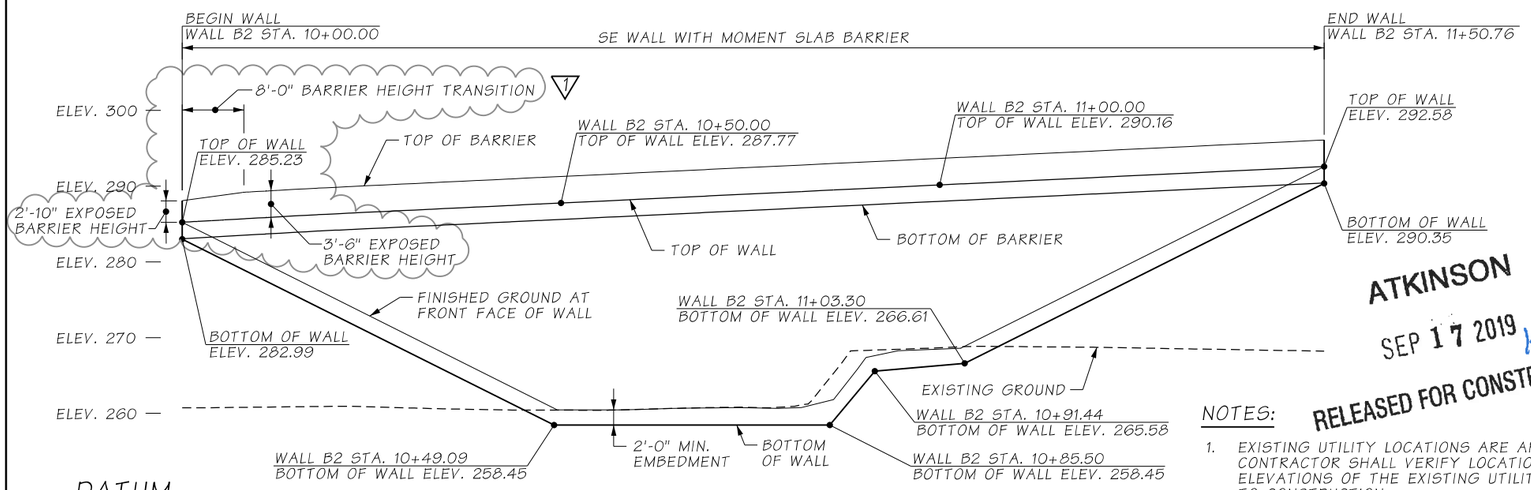

DATUM
N.A.V.D. 88

RETAINING WALL B2 - ELEVATION
LOOKING AT BACK FACE OF WALL

ATKINSON
SEP 17 2019 KDW
RELEASED FOR CONSTRUCTION

NOTES:

1. EXISTING UTILITY LOCATIONS ARE APPROXIMATE. CONTRACTOR SHALL VERIFY LOCATIONS AND ELEVATIONS OF THE EXISTING UTILITIES PRIOR TO CONSTRUCTION.
2. SEE SHEET RW03 FOR GENERAL NOTES AND LEGEND.
3. SEE SHEET RW08 FOR TYPICAL SECTIONS.
4. FOR CATCH BASIN LOCATIONS SEE DRAINAGE PLANS.

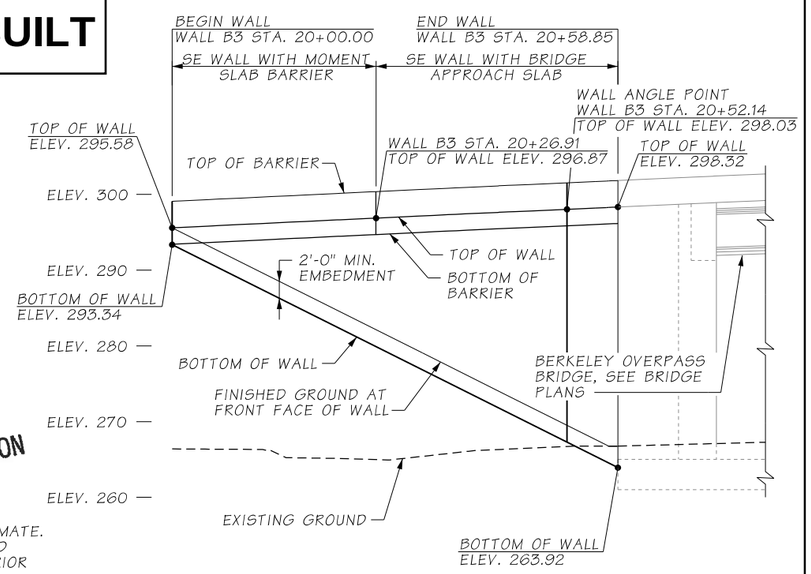

RETAINING WALL B3 - ELEVATION
LOOKING AT BACK FACE OF WALL

FILE NAME	c:\pwworking\jacobs_b&i\jeg_huangy1\dms20633\PS_RW07.dgn						
TIME	3:21:23 PM				REGION NO. 10	STATE WASH	FED.AID PROJ.NO.
DATE	9/16/2019						
PLOTTED BY	HUANGY1				JOB NUMBER		
DESIGNED BY	G. CALLAHAN	REV 1 - RFI0202	09/19/2019				
ENTERED BY	R. REISER	REV 0 - RELEASED FOR CONSTRUCTION	04/01/2019				
CHECKED BY	C. CAYWOOD	REV B - FINAL REVIEW	01/18/2019		CONTRACT NO. C9133		LOCATION NO.
PROJ. ENGR.	C. MEADE	REV A - PRELIMINARY REVIEW	10/26/2018				
REGIONAL ADM.	J. WYNANDS	REVISION	DATE	BY			

P.E. STAMP BOX — DATE 7/19

P.E. STAMP BOX — DATE

Washington State Department of Transportation

ATKINSON / JACOBS CONSTRUCTION

I-5
STEILACOOM-DUPONT RD TO THORNE LN
CORRIDOR IMPROVEMENTS
MP 120.01 TO MP 124.45

RETAINING WALLS B2 & B3
PLAN & ELEVATION

PLAN REF NO RW07

SHEET 782 OF 1456 SHEETS

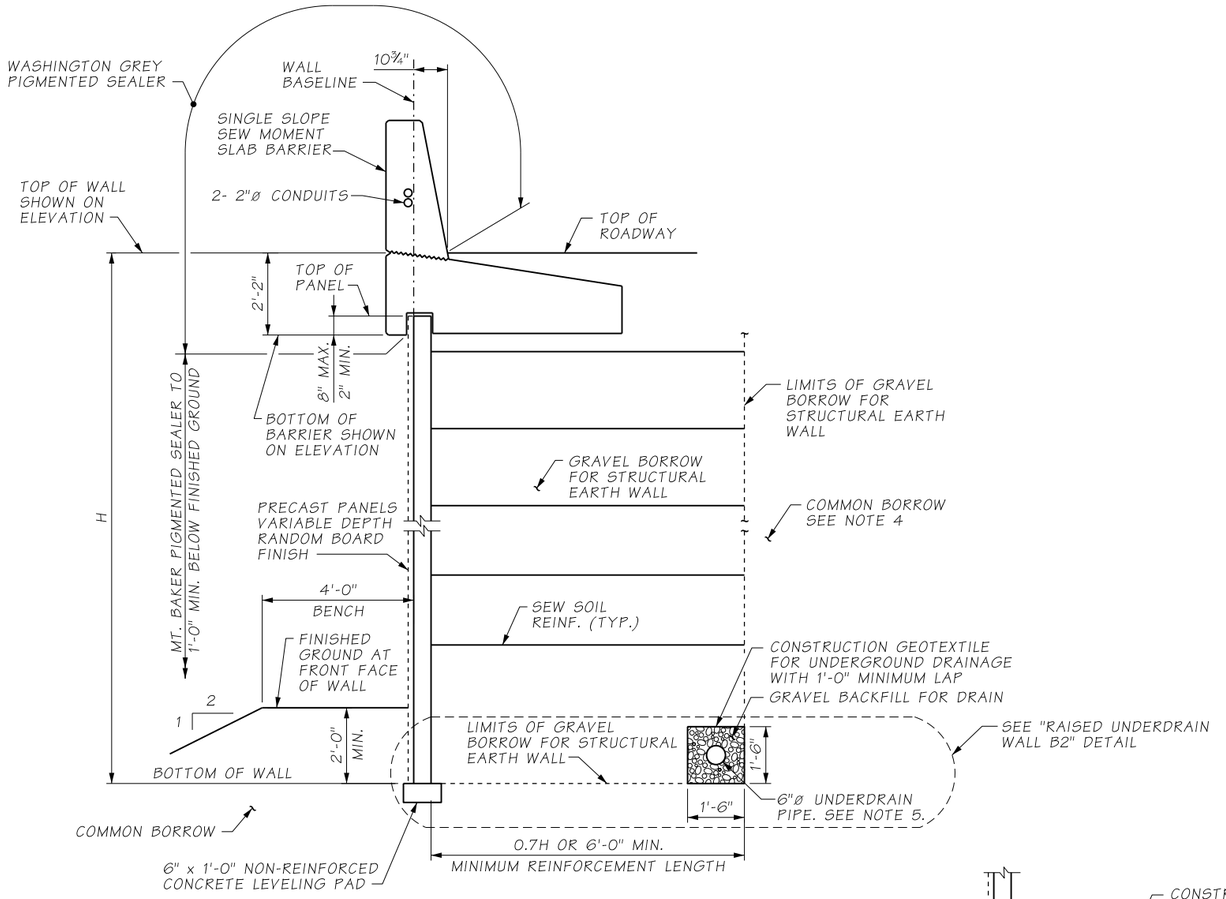

SE WALL WITH MOMENT SLAB BARRIER

TYPICAL SECTION - RETAINING WALLS B2 & B3

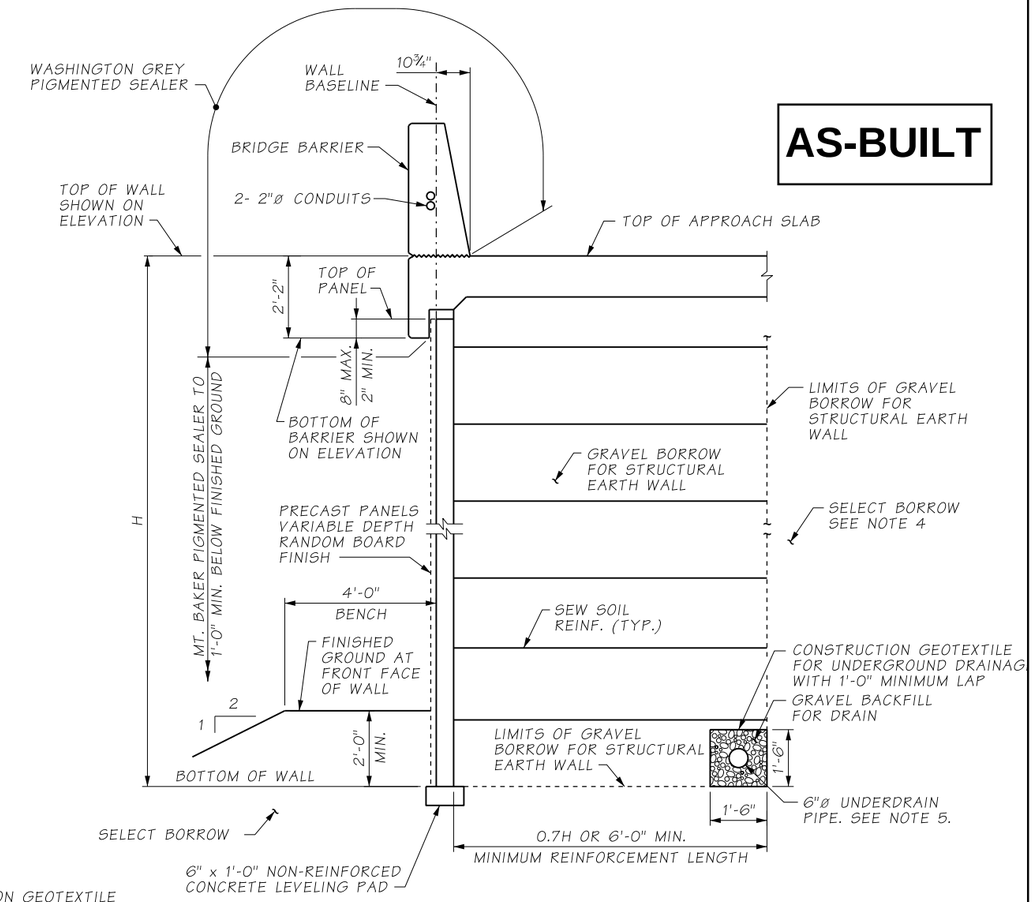

SE WALL WITH APPROACH SLAB

TYPICAL SECTION - RETAINING WALL B3

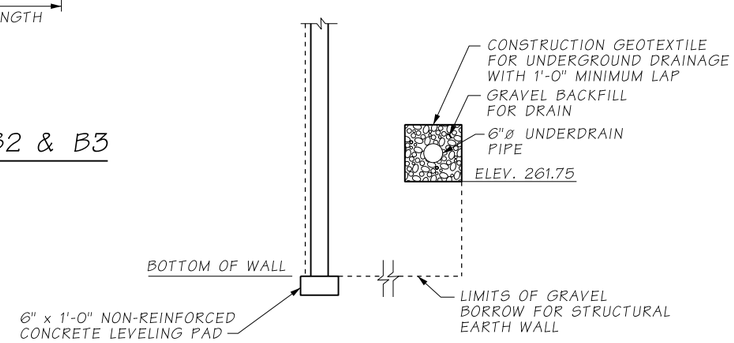

RAISED UNDERDRAIN WALL B2

WALL B2 STA. 10+45.00 TO 10+95.00

AS-BUILT

ATKINSON

APR 11 2019 KJW

RELEASED FOR CONSTRUCTION

NOTES:

1. SEE SHEET RW07 FOR WALL PLAN AND ELEVATION.
2. SEE SHEET RW103 FOR SINGLE SLOPE SEW MOMENT SLAB BARRIER DETAILS.
3. SEE DRAINAGE PLANS FOR UNDERDRAIN LOCATIONS AND CONNECTIONS TO DRAINAGE STRUCTURES.
4. ROADWAY EMBANKMENT SHALL BE SELECT BORROW WITHIN LIMITS OF BRIDGE APPROACH EMBANKMENTS. SEE STANDARD SPECIFICATIONS SECTION 1-01.3 FOR ADDITIONAL INFORMATION.
5. UNDERDRAIN CAN BE LOCATED OUTSIDE OF REINFORCEMENT ZONE AT CONTRACTOR'S OPTION.

FILE NAME	D:\ICS_workdir\24022\20633_1431\PS_RW08.dgn						
TIME	5:08:48 PM				REGION NO. 10	STATE WASH	FED.AID PROJ.NO.
DATE	3/20/2019						
PLOTTED BY	USLAS0-APP064$				JOB NUMBER		
DESIGNED BY	G. CALLAHAN						
ENTERED BY	R. REISER	REV 0 - RELEASED FOR CONSTRUCTION	04/01/2019				
CHECKED BY	C. CAYWOOD	REV B - FINAL REVIEW	01/18/2019		CONTRACT NO. C8811		LOCATION NO.
PROJ. ENGR.	C. MEADE	REV A - PRELIMINARY REVIEW	10/26/2018				
REGIONAL ADM.	J. WYNANDS	REVISION	DATE	BY			

CORY J. CAYWOOD, STATE OF WASHINGTON, 38139, STRUCTURAL ENGINEER, PROFESSIONAL ENGINEER — 4/11/19 — DATE — P.E. STAMP BOX

DATE — P.E. STAMP BOX

Washington State Department of Transportation

ATKINSON CONSTRUCTION / JACOBS

I-5
STEILACOOM-DUPONT RD TO THORNE LN
CORRIDOR IMPROVEMENTS
MP 120.01 TO MP 124.45

RETAINING WALLS B2 AND B3
TYPICAL SECTION

PLAN REF NO RW08

SHEET 783 OF 1456 SHEETS

SECTION 21, T.19N. R.2E. W.M.
CITY OF LAKEWOOD

AS-BUILT

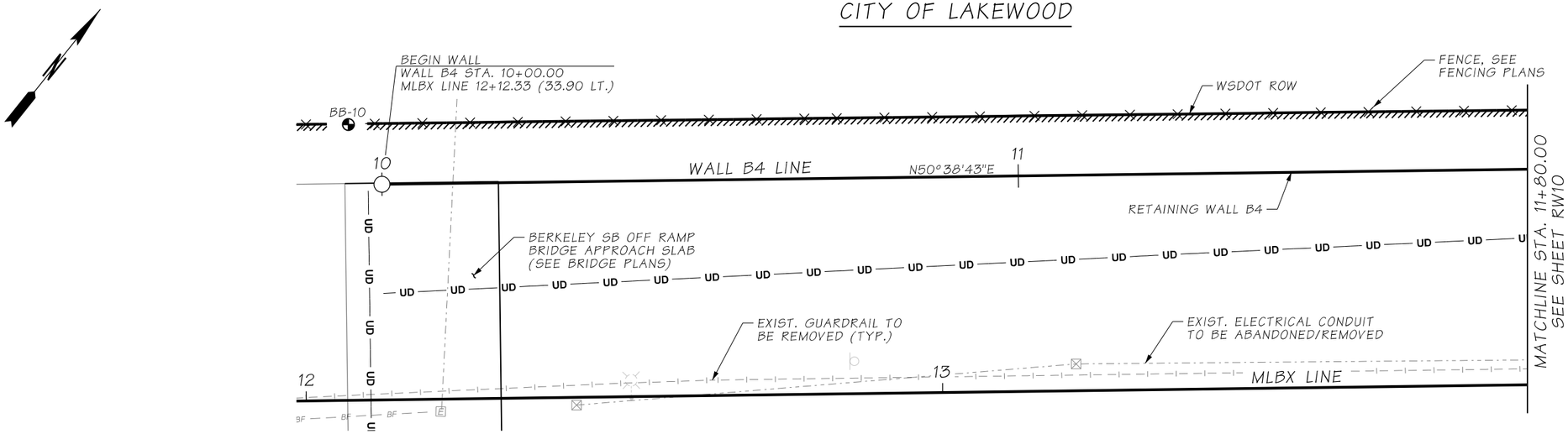

RETAINING WALL B4 - PLAN

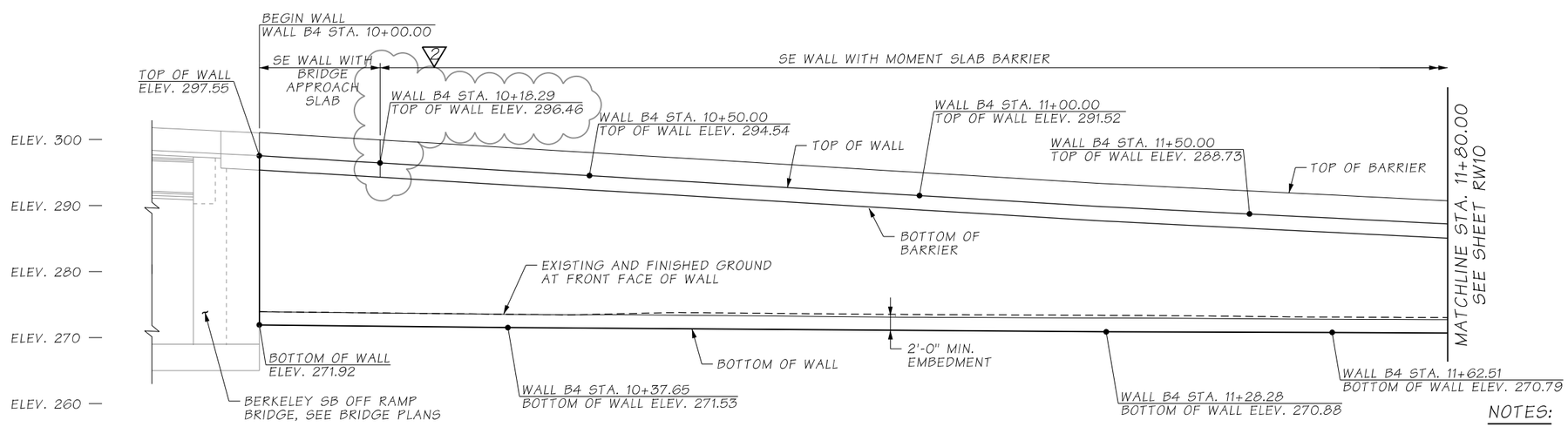

DATUM
N.A.V.D. 88

RETAINING WALL B4 - ELEVATION
LOOKING AT BACK FACE OF WALL

ATKINSON
APR 14 2020 KTW
RELEASED FOR CONSTRUCTION

NOTES:

1. EXISTING UTILITY LOCATIONS ARE APPROXIMATE. CONTRACTOR SHALL VERIFY LOCATIONS AND ELEVATIONS OF THE EXISTING UTILITIES PRIOR TO CONSTRUCTION.
2. SEE SHEET RW03 FOR GENERAL NOTES AND LEGEND.
3. SEE SHEET RW11 FOR TYPICAL SECTION.
4. FOR CATCH BASIN LOCATION, SEE DRAINAGE PLANS.

FILE NAME	c:\pwworking\jacobs_b&i\youngkl2\dms20633\PS_RW09.dgn			
TIME	11:52:29 AM			
DATE	4/10/2020			
PLOTTED BY	youngkl2	REV 2 - RFI0365	04/13/2020	
DESIGNED BY	A. FONG	REV 1 - RFI0083	07/03/2019	
ENTERED BY	R. REISER	REV 0 - RELEASED FOR CONSTRUCTION	04/01/2019	
CHECKED BY	C. CAYWOOD	REV B - FINAL REVIEW	01/18/2019	
PROJ. ENGR.	C. MEADE	REV A - PRELIMINARY REVIEW	10/26/2018	
REGIONAL ADM.	J. WYNANDS	REVISION	DATE	BY

REGION NO.	STATE	FED.AID PROJ.NO.
10	WASH	
JOB NUMBER		
CONTRACT NO. C9133		LOCATION NO.

CORY J. CAYWOOD STATE OF WASHINGTON 38759 STRUCTURAL ENGINEER PROFESSIONAL ENGINEER
4/14/20
DATE
P.E. STAMP BOX

P.E. STAMP BOX
DATE

Washington State Department of Transportation
ATKINSON CONSTRUCTION / JACOBS

I-5
STEILACOOM-DUPONT RD TO THORNE LN
CORRIDOR IMPROVEMENTS
MP 120.01 TO MP 124.45

RETAINING WALL B4
PLAN & ELEVATION (1 OF 2)

PLAN REF NO RW09
SHEET 784 OF 1456 SHEETS

SECTION 21, T.19N. R.2E. W.M.
CITY OF LAKEWOOD

AS-BUILT

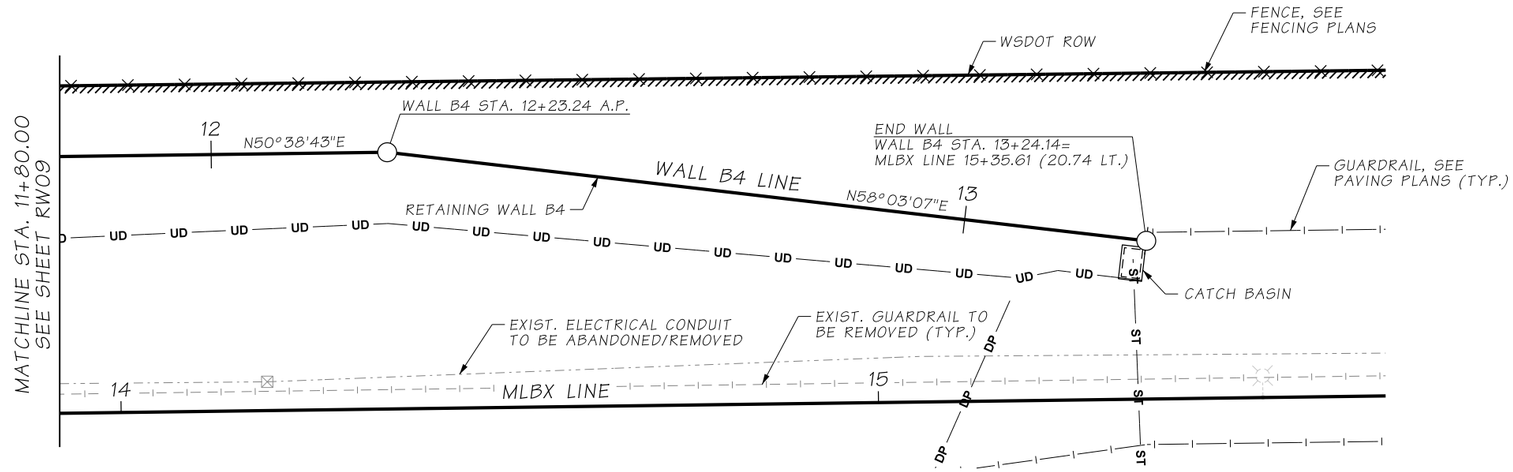

RETAINING WALL B4 - PLAN

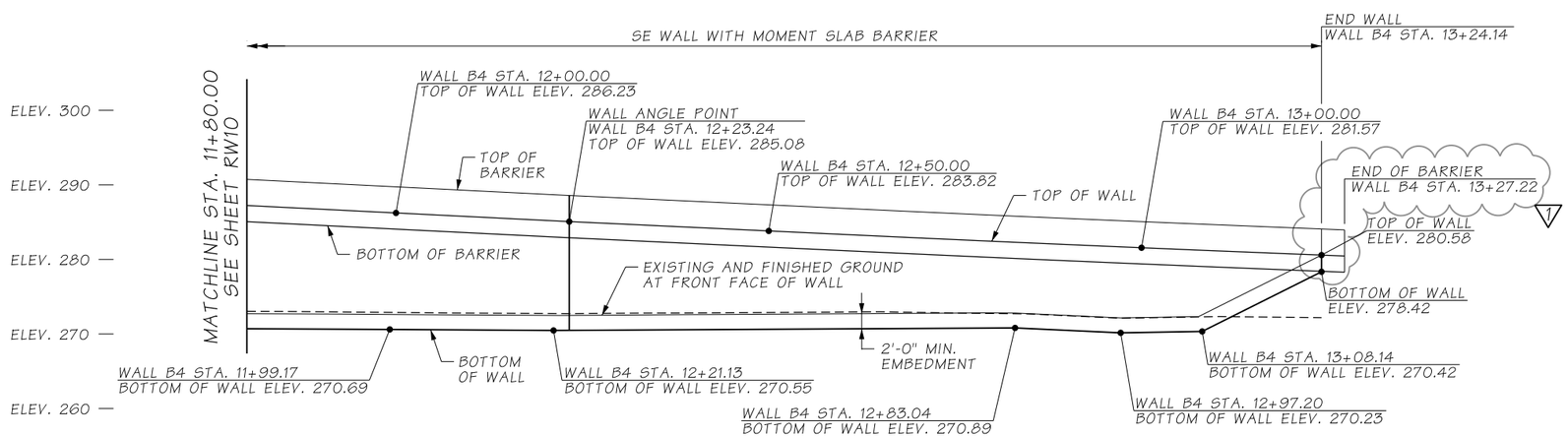

DATUM
N.A.V.D. 88

RETAINING WALL B4 - ELEVATION
LOOKING AT BACK FACE OF WALL

NOTES:

1. SEE SHEET RW09 FOR NOTES.

ATKINSON
JUN 08 2020 KTW
RELEASED FOR CONSTRUCTION

FILE NAME	D:\ICS_workdir\53503\20633_1722\PS_RW10.dgn						
TIME	12:41:31 PM				REGION NO. 10	STATE WASH	FED.AID PROJ.NO.
DATE	6/1/2020						
PLOTTED BY	USLAS0-APP064$						
DESIGNED BY	A. FONG	REV 1 - RFI0377	06/02/2020		JOB NUMBER		
ENTERED BY	R. REISER	REV 0 - RELEASED FOR CONSTRUCTION	04/01/2019				
CHECKED BY	C. CAYWOOD	REV B - FINAL REVIEW	01/18/2019		CONTRACT NO. C9133		LOCATION NO.
PROJ. ENGR.	C. MEADE	REV A - PRELIMINARY REVEIW	10/26/2018				
REGIONAL ADM.	J. WYNANDS	REVISION	DATE	BY			

CORY J. CAYWOOD, STATE OF WASHINGTON, 38759, STRUCTURAL ENGINEER, PROFESSIONAL ENGINEER
6/2/20
DATE
P.E. STAMP BOX

P.E. STAMP BOX
DATE

Washington State Department of Transportation

ATKINSON / JACOBS CONSTRUCTION

I-5
STEILACOOM-DUPONT RD TO THORNE LN
CORRIDOR IMPROVEMENTS
MP 120.01 TO MP 124.45

RETAINING WALL B4
PLAN & ELEVATION (2 OF 2)

PLAN REF NO RW10

SHEET 785 OF 1456 SHEETS

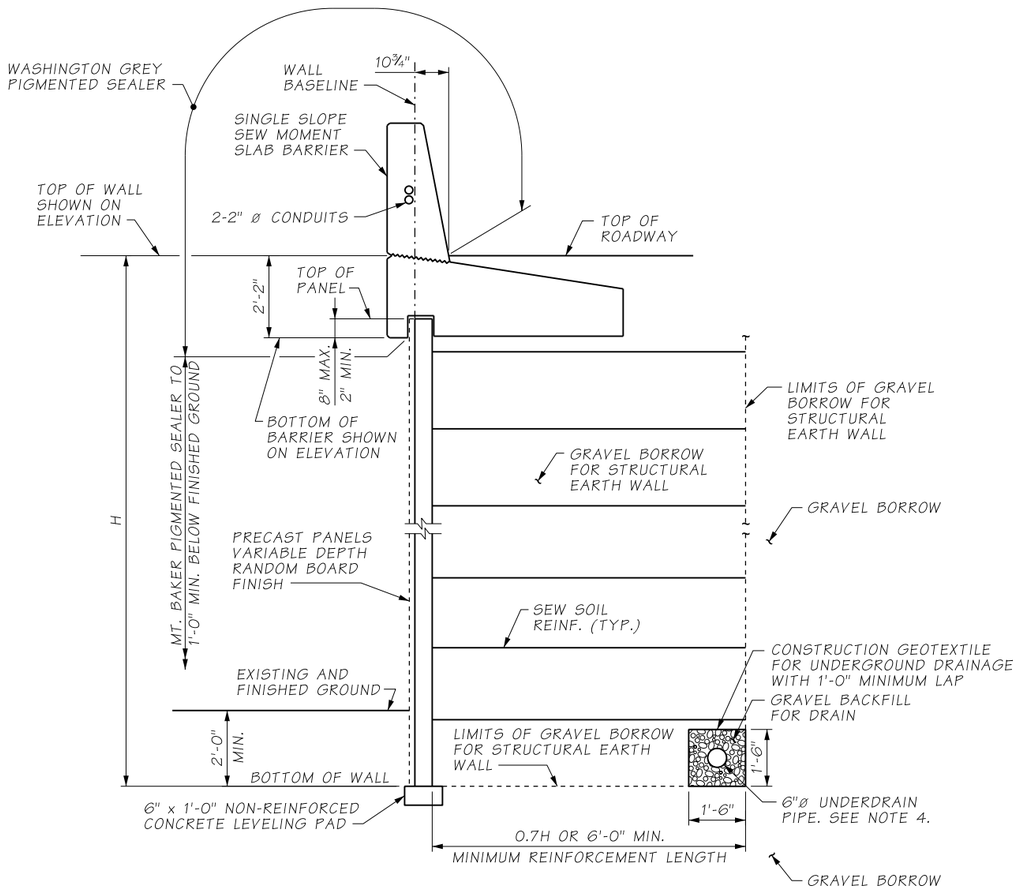

SE WALL WITH MOMENT SLAB BARRIER

TYPICAL SECTION - RETAINING WALL B4

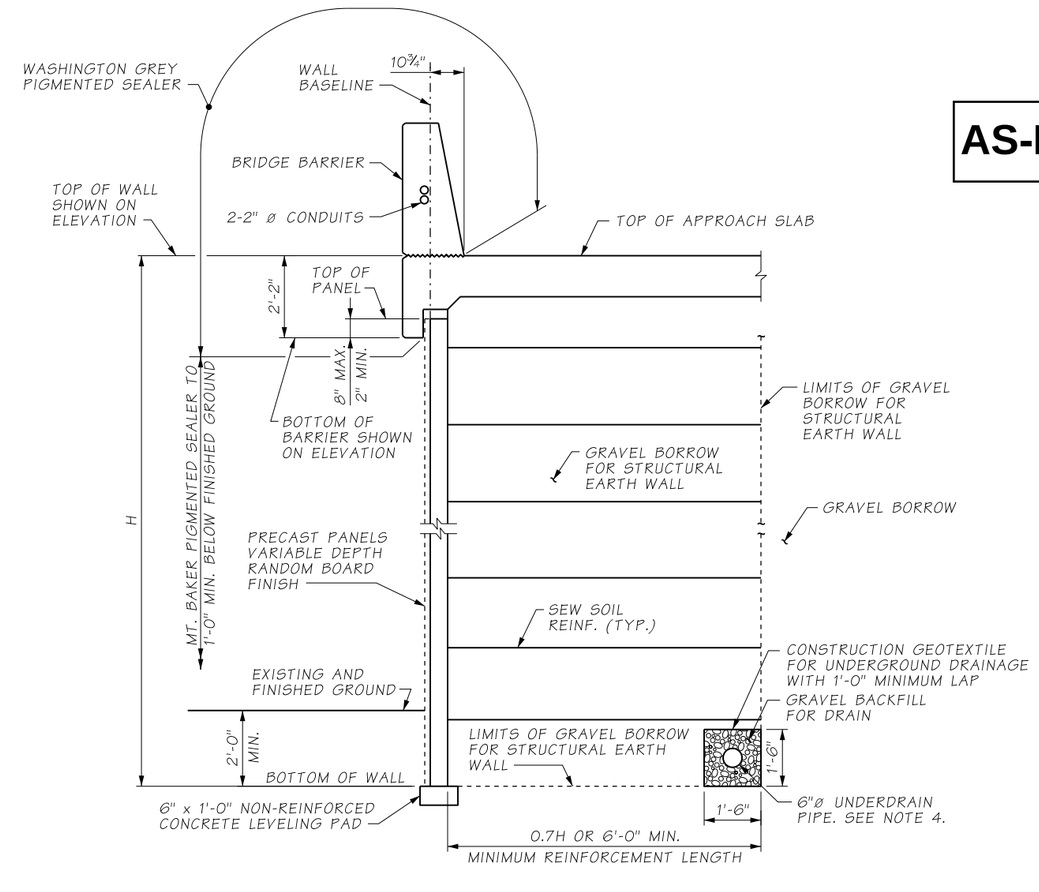

SE WALL WITH APPROACH SLAB

TYPICAL SECTION - RETAINING WALL B4

AS-BUILT

NOTES:

1. SEE SHEET RW09 AND RW10 FOR WALL PLAN AND ELEVATION.
2. SEE SHEET RW103 FOR SINGLE SLOPE SEW MOMENT SLAB BARRIER DETAILS.
3. SEE DRAINAGE PLANS FOR UNDERDRAIN LOCATIONS AND CONNECTIONS TO DRAINAGE STRUCTURES.
4. UNDERDRAIN CAN BE LOCATED OUTSIDE OF REINFORCEMENT ZONE AT CONTRACTOR'S OPTION.

ATKINSON
APR 11 2019 KAW
RELEASED FOR CONSTRUCTION

FILE NAME	D:\ICS_workdir\24023\20633_1386\PS_RW11.dgn						
TIME	5:09:01 PM				REGION NO. 10	STATE WASH	FED.AID PROJ.NO.
DATE	3/20/2019				JOB NUMBER		
PLOTTED BY	USLAS0-APP064$						
DESIGNED BY	A. FONG						
ENTERED BY	R. REISER	REV 0 - RELEASED FOR CONSTRUCTION	04/01/2019		CONTRACT NO. C8811		LOCATION NO.
CHECKED BY	C. CAYWOOD	REV B - FINAL REVIEW	01/18/2019				
PROJ. ENGR.	C. MEADE	REV A - PRELIMINARY REVIEW	10/26/2018				
REGIONAL ADM.	J. WYNANDS	REVISION	DATE	BY			

CORY J. CAYWOOD, STATE OF WASHINGTON, 38733, STRUCTURAL ENGINEER, PROFESSIONAL ENGINEER
4/11/19
DATE
P.E. STAMP BOX

P.E. STAMP BOX
DATE

Washington State Department of Transportation

ATKINSON / JACOBS CONSTRUCTION

I-5
STEILACOOM-DUPONT RD TO THORNE LN
CORRIDOR IMPROVEMENTS
MP 120.01 TO MP 124.45

RETAINING WALL B4
TYPICAL SECTION

PLAN REF NO RW11

SHEET 786 OF 1456 SHEETS

SECTION 21, T.19N. R.2E. W.M.

CITY OF LAKEWOOD

CURVE DATA					
P.I. STA.	Δ	RADIUS	TANGENT	LENGTH	BACK TANGENT BRG.
WALL B5 11+62.00	1°26'35"LT.	11623.00'	146.37'	292.72'	N50°20'50"E

AS-BUILT

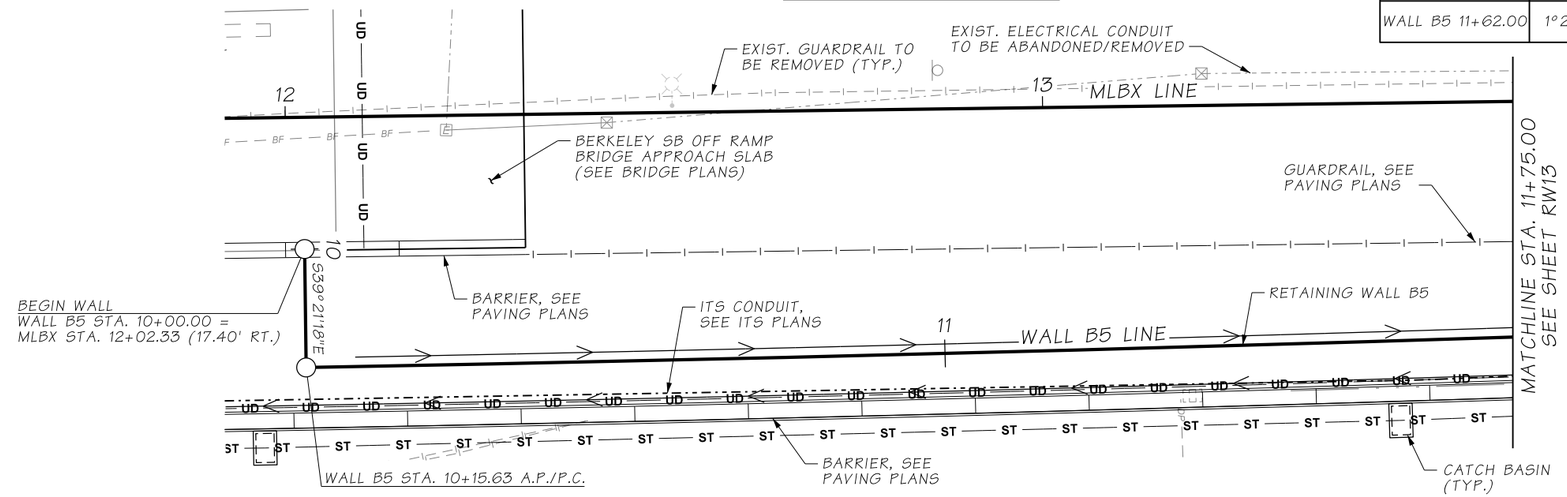

RETAINING WALL B5 - PLAN

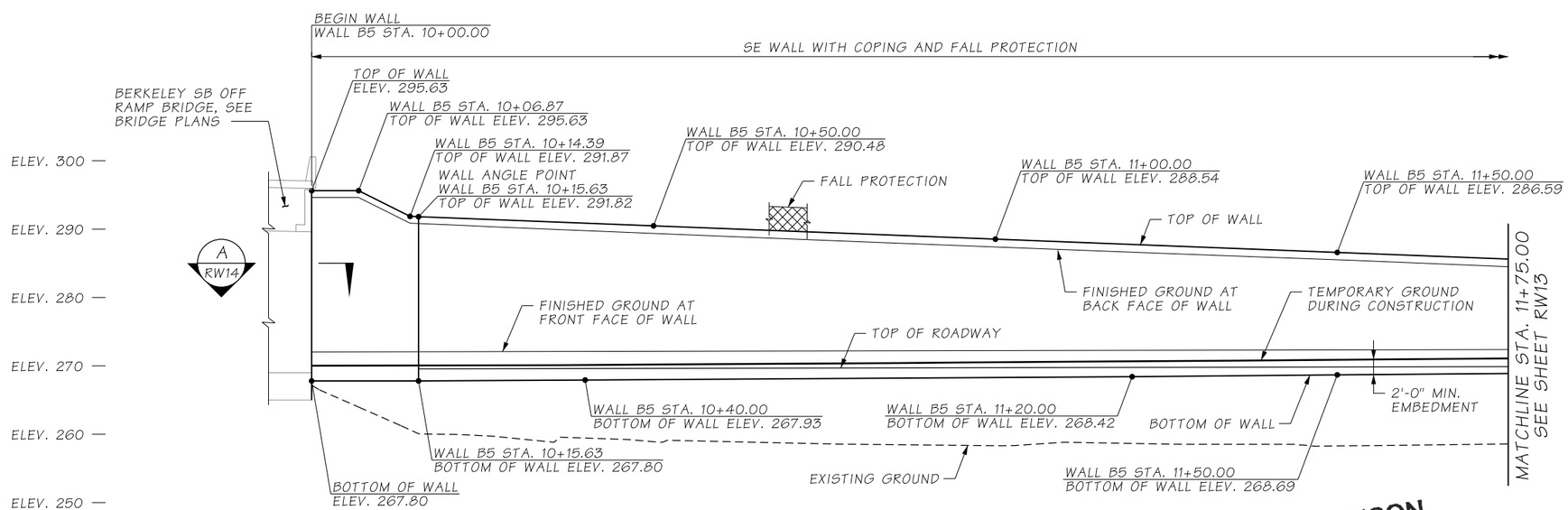

DATUM

N.A.V.D. 88

RETAINING WALL B5 - ELEVATION

LOOKING AT FRONT FACE OF WALL

ATKINSON

APR 11 2019 KAW

RELEASED FOR CONSTRUCTION

NOTES:

1. EXISTING UTILITY LOCATIONS ARE APPROXIMATE. CONTRACTOR SHALL VERIFY LOCATIONS AND ELEVATIONS OF THE EXISTING UTILITIES PRIOR TO CONSTRUCTION.
2. SEE SHEET RW03 FOR GENERAL NOTES AND LEGEND.
3. SEE SHEET RW14 FOR TYPICAL SECTION.

FILE NAME	D:\ICS_workdir\25137\20633_1387\PS_RW12.dgn						
TIME	5:08:43 PM						
DATE	4/10/2019						
PLOTTED BY	USLAS0-APP064$						
DESIGNED BY	K. YOUNG						
ENTERED BY	R. REISER	REV 0 - RELEASED FOR CONSTRUCTION	04/01/2019				
CHECKED BY	A. FONG	REV B - FINAL REVIEW	01/18/2019				
PROJ. ENGR.	C. MEADE	REV A - PRELIMINARY REVIEW	10/26/2018				
REGIONAL ADM.	J. WYNANDS	REVISION	DATE	BY			

REGION NO.	STATE	FED.AID PROJ.NO.
10	WASH	
JOB NUMBER		
CONTRACT NO.		LOCATION NO.
C9133		

CORY J. CAYWOOD, STATE OF WASHINGTON, 38759, STRUCTURAL ENGINEER, PROFESSIONAL ENGINEER — 4/11/19 — DATE — P.E. STAMP BOX

P.E. STAMP BOX — DATE

Washington State Department of Transportation

ATKINSON CONSTRUCTION / JACOBS

I-5
STEILACOOM-DUPONT RD TO THORNE LN
CORRIDOR IMPROVEMENTS
MP 120.01 TO MP 124.45

RETAINING WALL B5
PLAN & ELEVATION (1 OF 2)

PLAN REF NO RW12

SHEET 787 OF 1456 SHEETS

SECTION 21, T.19N. R.2E. W.M.
CITY OF LAKEWOOD

AS-BUILT

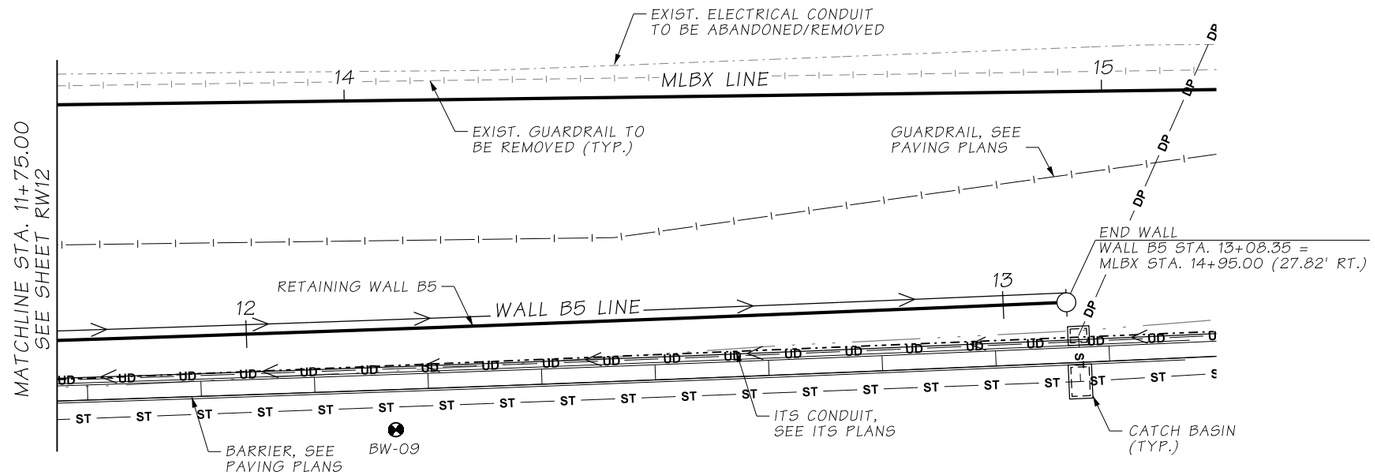

RETAINING WALL B5 - PLAN

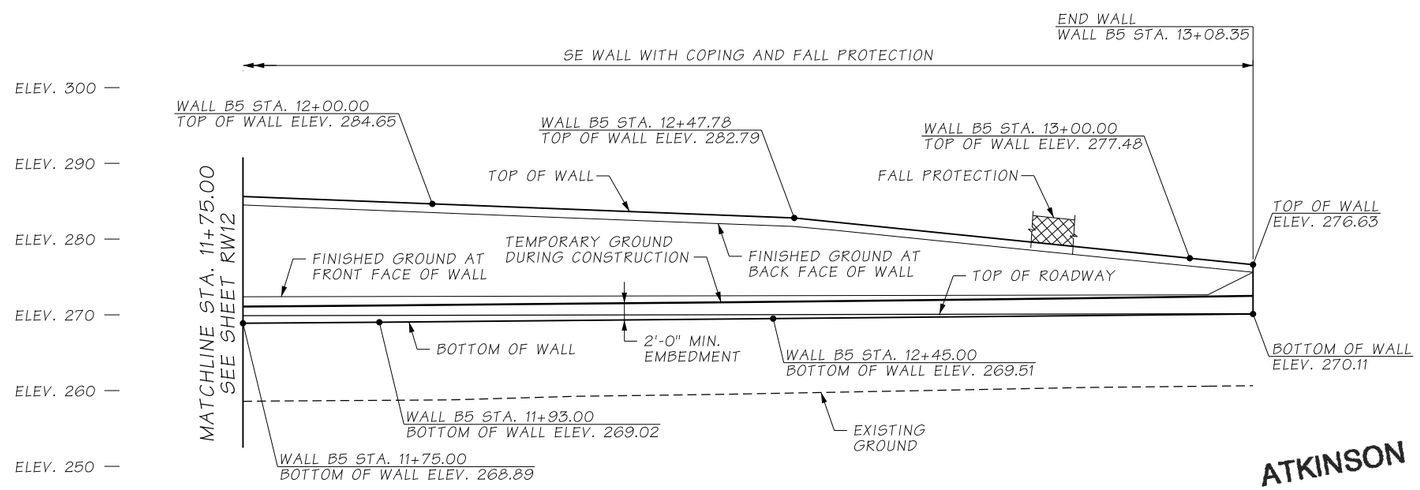

DATUM
N.A.V.D. 88

RETAINING WALL B5 - ELEVATION
LOOKING AT FRONT FACE OF WALL

ATKINSON
APR 11 2019 KAW
RELEASED FOR CONSTRUCTION

NOTES:
1. SEE SHEET RW12 FOR NOTES.

FILE NAME	D:\ICS_workdir\25137\20633_1735\PS_RW13.dgn				REGION NO. 10	STATE WASH	FED.AID PROJ.NO.
TIME	5:08:43 PM				JOB NUMBER		
DATE	4/10/2019						
PLOTTED BY	USLAS0-APP064$						
DESIGNED BY	K. YOUNG						
ENTERED BY	R. REISER	REV 0 - RELEASED FOR CONSTRUCTION	04/01/2019		CONTRACT NO. C9133		LOCATION NO.
CHECKED BY	A. FONG	REV B - FINAL REVIEW	01/18/2019				
PROJ. ENGR.	C. MEADE	REV A - PRELIMINARY REVIEW	10/26/2018				
REGIONAL ADM.	J. WYNANDS	REVISION	DATE	BY			

CORY J. CAYWOOD, STATE OF WASHINGTON, 38759, STRUCTURAL ENGINEER, PROFESSIONAL ENGINEER — 4/11/19 — DATE — P.E. STAMP BOX

P.E. STAMP BOX — DATE

Washington State Department of Transportation

ATKINSON / JACOBS CONSTRUCTION

I-5
STEILACOOM-DUPONT RD TO THORNE LN CORRIDOR IMPROVEMENTS
MP 120.01 TO MP 124.45

RETAINING WALL B5
PLAN & ELEVATION (2 OF 2)

PLAN REF NO RW13

SHEET 788 OF 1456 SHEETS

AS-BUILT

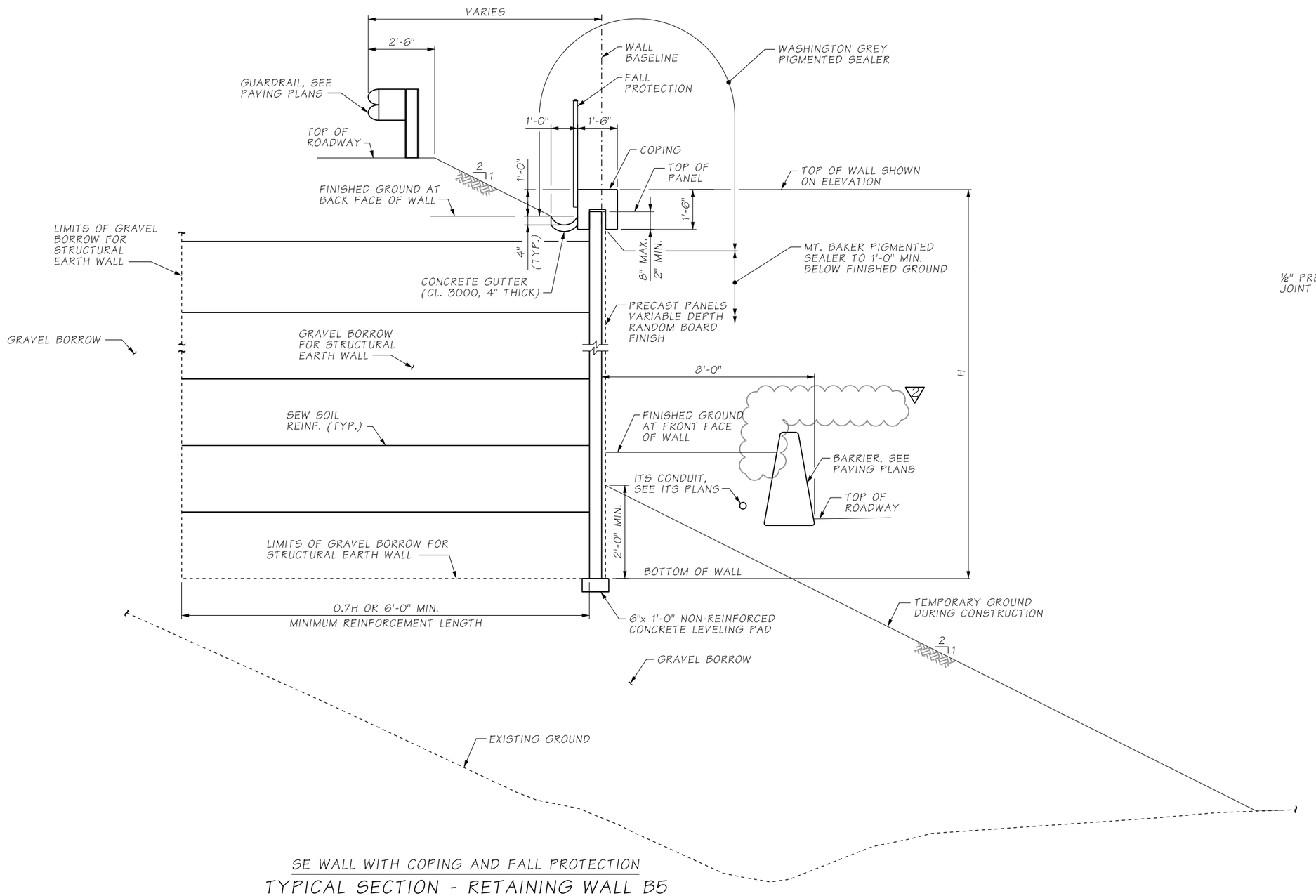

SE WALL WITH COPING AND FALL PROTECTION

TYPICAL SECTION - RETAINING WALL B5

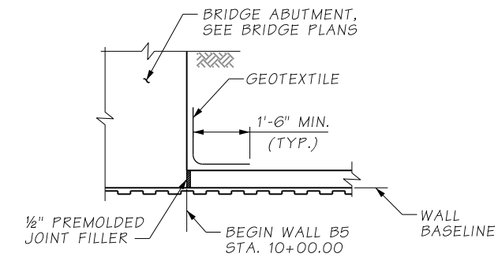

SECTION A RW12

NOTES:

1. SEE SHEET RW12 AND RW13 FOR WALL PLAN AND ELEVATION.
2. SEE SHEET RW101 FOR COPING DETAILS.
3. SEE SHEET RW102 FOR FALL PROTECTION DETAILS.

ATKINSON
NOV 10 2020 KTW
RELEASED FOR CONSTRUCTION

FILE NAME	D:\ICS_workdir\67545\20633_1385\PS_RW14.dgn			
TIME	7:52:19 AM			
DATE	11/9/2020			
PLOTTED BY	USLAS0-APP064$	REV 2 - RFI0516	11/09/2020	
DESIGNED BY	K. YOUNG	REV 1 - RFI0131	06/24/2019	
ENTERED BY	R. REISER	REV 0 - RELEASED FOR CONSTRUCTION	04/01/2019	
CHECKED BY	A. FONG	REV B - FINAL REVIEW	01/18/2019	
PROJ. ENGR.	C. MEADE	REV A - PRELIMINARY REVIEW	10/26/2018	
REGIONAL ADM.	J. WYNANDS	REVISION	DATE	BY

REGION NO.	STATE	FED.AID PROJ.NO.
10	WASH	
JOB NUMBER		
CONTRACT NO. C9133		LOCATION NO.

CORY J. CAYWOOD, STATE OF WASHINGTON, 38759, STRUCTURAL ENGINEER, PROFESSIONAL ENGINEER
11/9/20
DATE
P.E. STAMP BOX

P.E. STAMP BOX
DATE

Washington State Department of Transportation

ATKINSON CONSTRUCTION / JACOBS

I-5
STEILACOOM-DUPONT RD TO THORNE LN
CORRIDOR IMPROVEMENTS
MP 120.01 TO MP 124.45

RETAINING WALL B5
TYPICAL SECTION

PLAN REF NO RW14

SHEET 789 OF 1456 SHEETS

AS-BUILT

THIS SHEET NOT USED

ATKINSON
APR 11 2019 KAW
RELEASED FOR CONSTRUCTION

FILE NAME	D:\ICS_workdir\24024\20633_1410\PS_RW15.dgn						
TIME	5:09:18 PM				REGION NO.	STATE	FED.AID PROJ.NO.
DATE	3/20/2019				10	WASH	
PLOTTED BY	USLAS0-APP064$				JOB NUMBER		
DESIGNED BY	K. YOUNG						
ENTERED BY	C. GRACE	REV 0 - RELEASED FOR CONSTRUCTION	04/01/2019				
CHECKED BY	A. FONG	REV B - FINAL REVIEW	01/18/2019		CONTRACT NO.		LOCATION NO.
PROJ. ENGR.	C. MEADE	REV A - PRELIMINARY REVIEW	10/26/2018		C8811		
REGIONAL ADM.	J. WYNANDS	REVISION	DATE	BY			

CORY J. CAYWOOD
STATE OF WASHINGTON
38139
STRUCTURAL ENGINEER
PROFESSIONAL ENGINEER
4/11/19
DATE
P.E. STAMP BOX

DATE
P.E. STAMP BOX

Washington State
Department of Transportation

ATKINSON CONSTRUCTION / JACOBS

I-5
STEILACOOM-DUPONT RD TO THORNE LN
CORRIDOR IMPROVEMENTS
MP 120.01 TO MP 124.45

- NOT USED -

PLAN REF NO
RW15

SHEET
790
OF
1456
SHEETS

SECTION 21, T.19N. R.2E. W.M.
CITY OF LAKEWOOD

CURVE DATA					
P.I. STA.	Δ	RADIUS	TANGENT	LENGTH	BACK TANGENT BRG.
WALL B6 14+10.36	0°05'00"RT.	8314.27'	6.05'	12.11'	N48°01'53"E

AS-BUILT

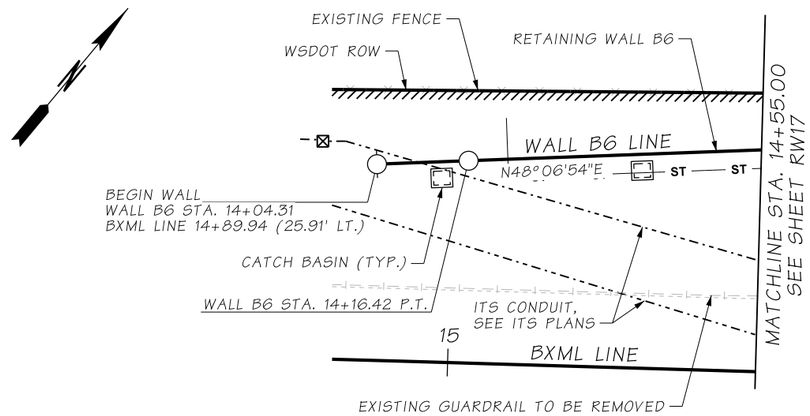

RETAINING WALL B6 - PLAN

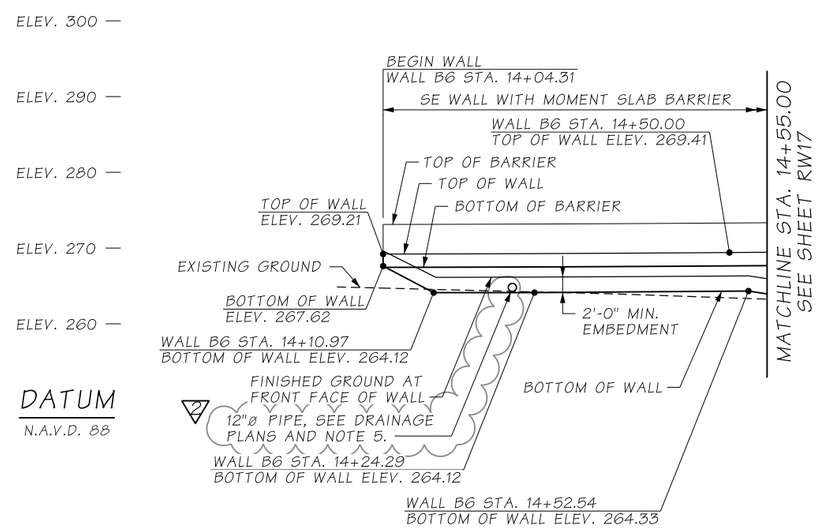

RETAINING WALL B6 - ELEVATION

LOOKING AT BACK FACE OF WALL

ATKINSON
NOV 10 2020
RELEASED FOR CONSTRUCTION

NOTES:

1. EXISTING UTILITY LOCATIONS ARE APPROXIMATE. CONTRACTOR SHALL VERIFY LOCATIONS AND ELEVATIONS OF THE EXISTING UTILITIES PRIOR TO CONSTRUCTION.
2. SEE SHEET RW03 FOR GENERAL NOTES AND LEGEND.
3. SHEE SHEET RW20 FOR TYPICAL SECTION.
4. FOR CATCH BASIN LOCATION, SEE DRAINAGE PLANS.
5. THE CONTRACTOR MAY CORE DRILL A 14"ø HOLE IN THE WALL PANEL PROVIDED THAT THE PANEL CONNECTORS ARE NOT DAMAGED. FOR ANY CUT REINFORCEMENT, THE BARS SHALL BE CUT A MINIMUM OF 1 INCH BEHIND THE FINAL SURFACE AND THE VOID FILLED WITH MORTAR PER STANDARD SPECS 2-02.3(2)A2.

FILE NAME	D:\ICS_workdir\67545\20633_1425\PS_RW16.dgn						
TIME	7:54:04 AM				REGION NO.	STATE	FED.AID PROJ.NO.
DATE	11/9/2020				10	WASH	
PLOTTED BY	USLAS0-APP064$	REV 2 - RFI0494	11/09/2020		JOB NUMBER		
DESIGNED BY	K. YOUNG	REV 1 - RFI0134	06/24/2019				
ENTERED BY	C. GRACE	REV 0 - RELEASED FOR CONSTRUCTION	04/01/2019				
CHECKED BY	A. FONG	REV B - FINAL REVIEW	01/18/2019		CONTRACT NO.		LOCATION NO.
PROJ. ENGR.	C. MEADE	REV A - PRELIMINARY REVIEW	10/26/2018		C9133		
REGIONAL ADM.	J. WYNANDS	REVISION	DATE	BY			

CORY J. CAYWOOD, STATE OF WASHINGTON, 38133, STRUCTURAL ENGINEER, PROFESSIONAL ENGINEER
11/9/20
DATE
P.E. STAMP BOX

DATE
P.E. STAMP BOX

Washington State Department of Transportation

ATKINSON CONSTRUCTION / JACOBS

I-5
STEILACOOM-DUPONT RD TO THORNE LN
CORRIDOR IMPROVEMENTS
MP 120.01 TO MP 124.45

RETAINING WALL B6
PLAN & ELEVATION (1 OF 4)

PLAN REF NO
RW16

SHEET 791 OF 1456 SHEETS

SECTION 21, T.19N. R.2E. W.M.
CITY OF LAKEWOOD

AS-BUILT

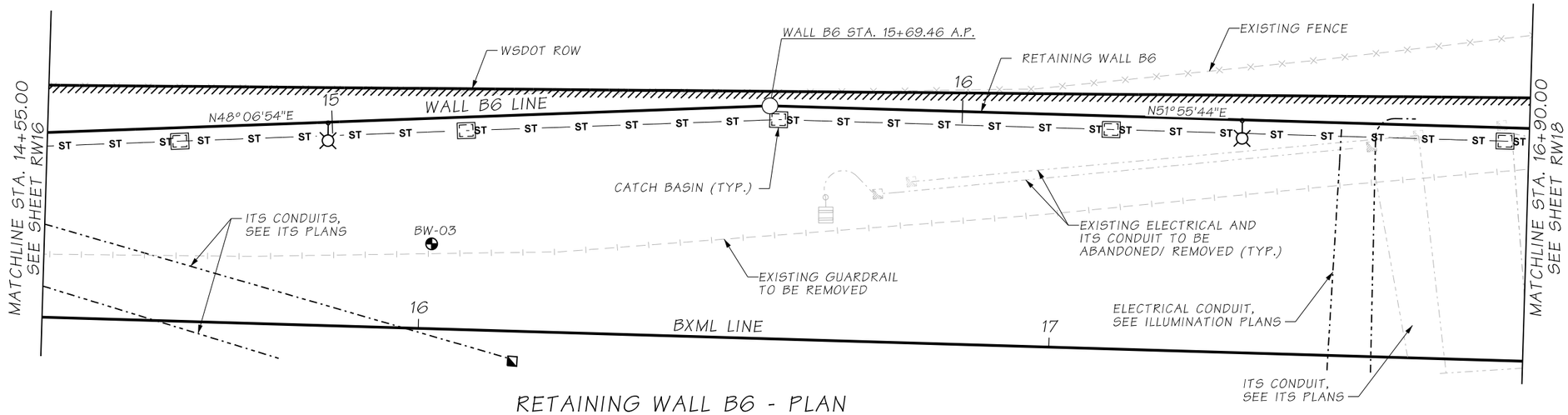

RETAINING WALL B6 - PLAN

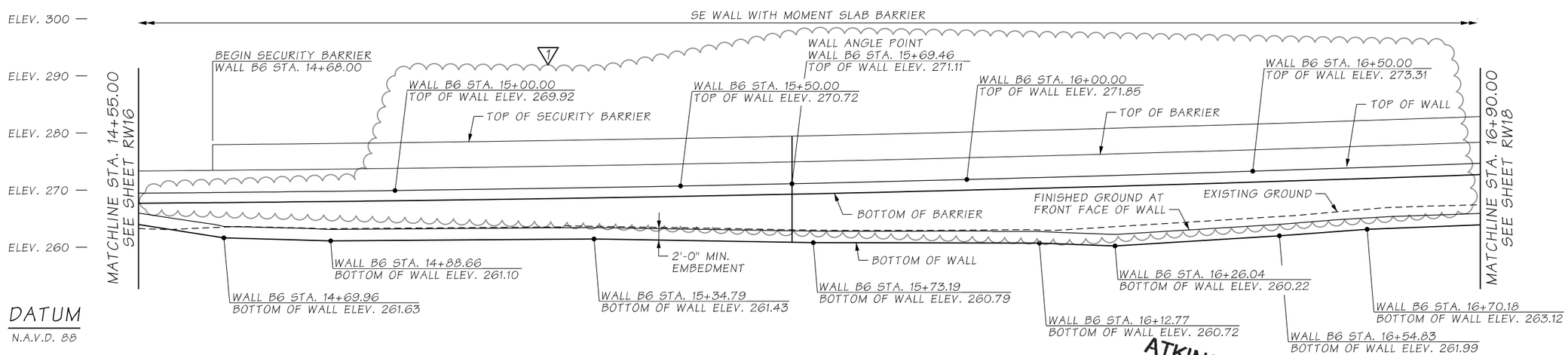

DATUM
N.A.V.D. 88

RETAINING WALL B6 - ELEVATION
LOOKING AT BACK FACE OF WALL

ATKINSON
JUN 25 2019 KTW
RELEASED FOR CONSTRUCTION

NOTES:

1. SEE SHEET RW16 FOR NOTES.

FILE NAME	c:\pwworking\jacobs_b&i\reiserrw\dms20633\PS_RW17.dgn						
TIME	1:38:26 PM				REGION NO. 10	STATE WASH	FED.AID PROJ.NO.
DATE	6/20/2019						
PLOTTED BY	ReiserRW						
DESIGNED BY	K. YOUNG	REV 1 - RFI0134	06/24/2019		JOB NUMBER		
ENTERED BY	C. GRACE	REV 0 - RELEASED FOR CONSTRUCTION	04/01/2019				
CHECKED BY	A. FONG	REV B - FINAL REVIEW	01/18/2019		CONTRACT NO. C9133		LOCATION NO.
PROJ. ENGR.	C. MEADE	REV A - PRELIMINARY REVIEW	10/26/2018				
REGIONAL ADM.	J. WYNANDS	REVISION	DATE	BY			

JEFFREY J. CAYWOOD, STATE OF WASHINGTON, 38759, STRUCTURAL ENGINEER, PROFESSIONAL ENGINEER
6/24/19
DATE
P.E. STAMP BOX

P.E. STAMP BOX
DATE

Washington State Department of Transportation

ATKINSON CONSTRUCTION / JACOBS

I-5
STEILACOOM-DUPONT RD TO THORNE LN
CORRIDOR IMPROVEMENTS
MP 120.01 TO MP 124.45

RETAINING WALL B6
PLAN & ELEVATION (2 OF 4)

PLAN REF NO RW17

SHEET 792 OF 1456 SHEETS

SECTION 21, T.19N. R.2E. W.M.
CITY OF LAKEWOOD

CURVE DATA					
P.I. STA.	Δ	RADIUS	TANGENT	LENGTH	BACK TANGENT BRG.
WALL B6 18+19.20	1°17'02"LT.	9963.10'	111.62'	223.23'	N51°55'44"E

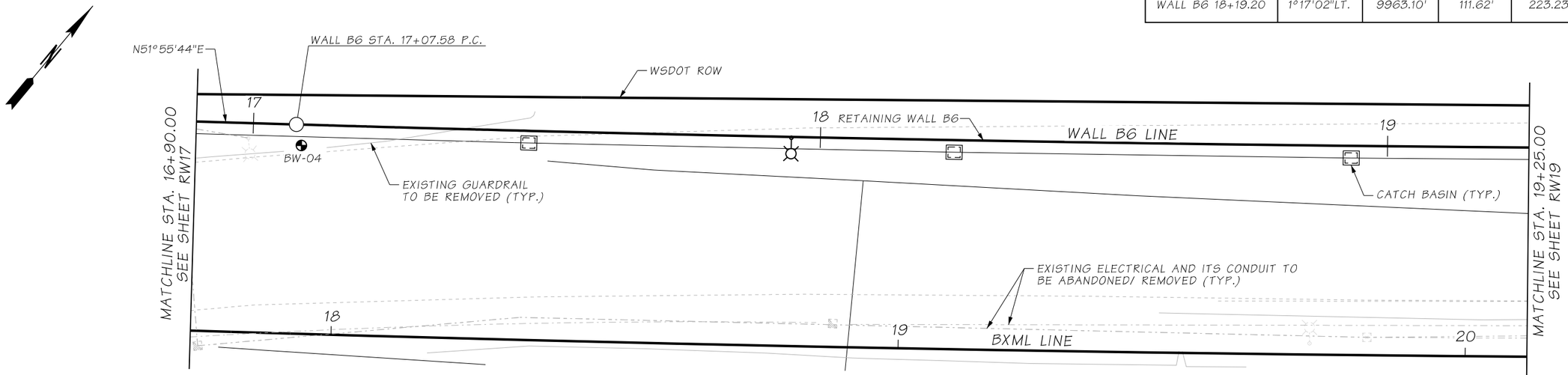

RETAINING WALL B6 - PLAN

AS-BUILT

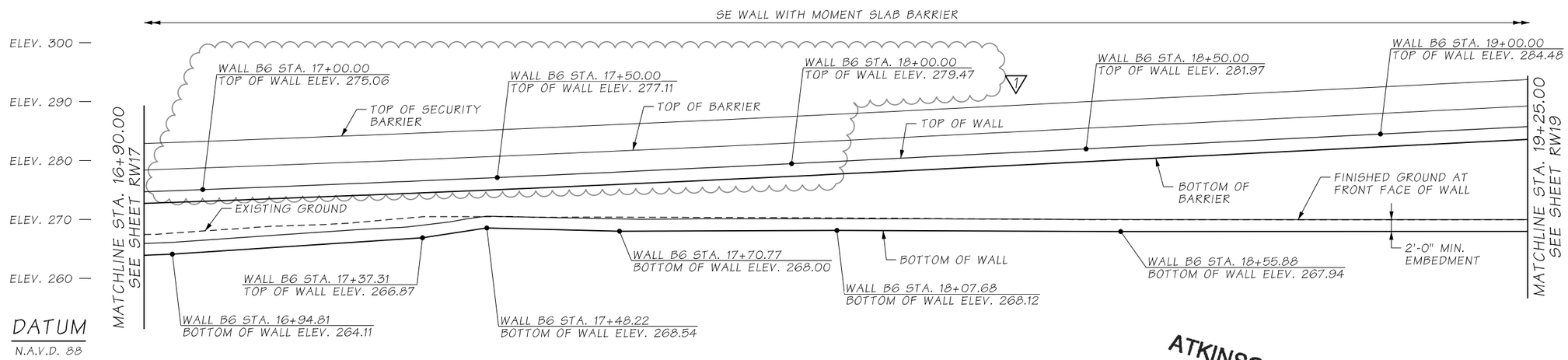

RETAINING WALL B6 - ELEVATION

LOOKING AT BACK FACE OF WALL

ATKINSON
JUN 25 2019 KTW
RELEASED FOR CONSTRUCTION

NOTES:

1. SEE SHEET RW16 FOR NOTES.

FILE NAME	c:\pwworking\jacobs_b&i\reiserrw\dms20633\PS_RW18.dgn						
TIME	2:36:08 PM				REGION NO.	STATE	FED.AID PROJ.NO.
DATE	6/20/2019				10	WASH	
PLOTTED BY	ReiserRW				JOB NUMBER		
DESIGNED BY	K. YOUNG	REV 1 - RFI0134	06/24/2019				
ENTERED BY	C. GRACE	REV 0 - RELEASED FOR CONSTRUCTION	04/01/2019				
CHECKED BY	A. FONG	REV B - FINAL REVIEW	01/18/2019		CONTRACT NO.		LOCATION NO.
PROJ. ENGR.	C. MEADE	REV A - PRELIMINARY REVIEW	10/26/2018		C9133		
REGIONAL ADM.	J. WYNANDS	REVISION	DATE	BY			

P.E. STAMP BOX — DATE 6/24/19

P.E. STAMP BOX — DATE

Washington State Department of Transportation

ATKINSON CONSTRUCTION / JACOBS

I-5
STEILACOOM-DUPONT RD TO THORNE LN
CORRIDOR IMPROVEMENTS
MP 120.01 TO MP 124.45

RETAINING WALL B6
PLAN & ELEVATION (3 OF 4)

PLAN REF NO RW18

SHEET 793 OF 1456 SHEETS

SECTION 21, T.19N. R.2E. W.M.
CITY OF LAKEWOOD

AS-BUILT

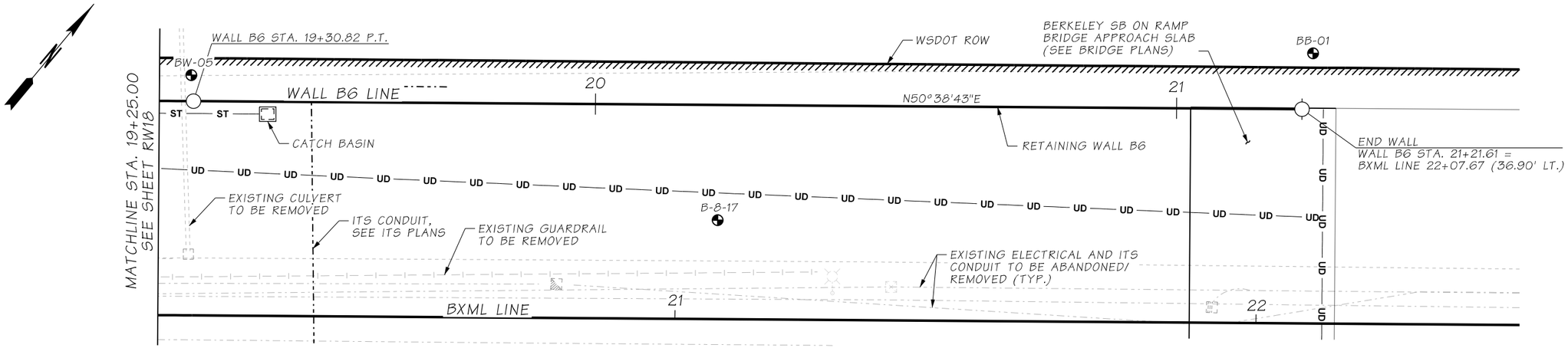

RETAINING WALL B6 - PLAN

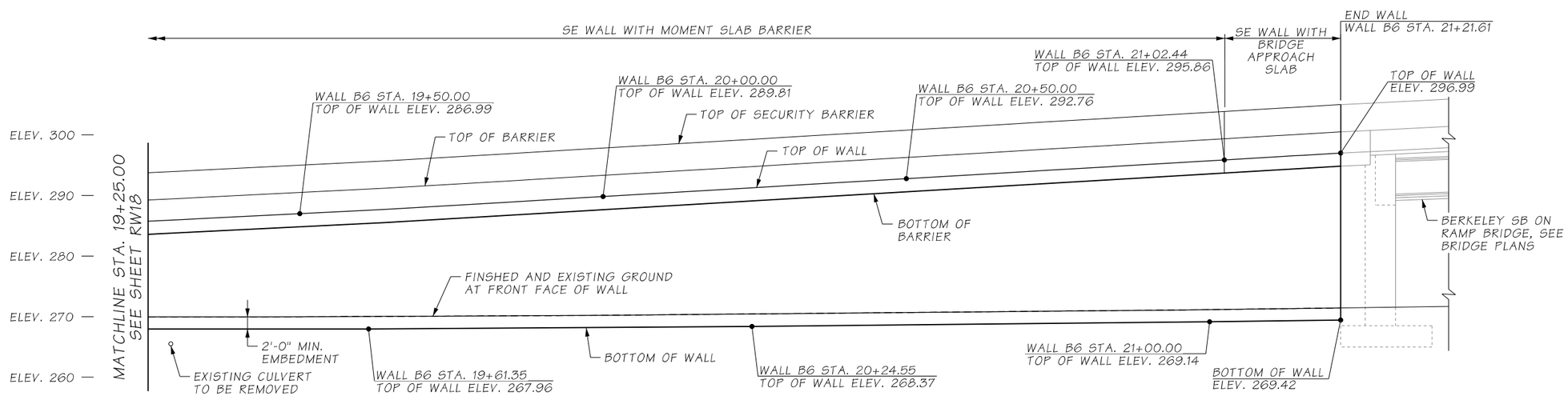

DATUM
N.A.V.D. 88

RETAINING WALL B6 - ELEVATION
LOOKING AT BACK FACE OF WALL

ATKINSON
APR 11 2019 KTW
RELEASED FOR CONSTRUCTION

NOTES:

1. SEE SHEET RW16 FOR NOTES.

FILE NAME	c:\pwworking\jacobs_b&i\caywoocj\dms20633\PS_RW19.dgn						
TIME	8:41:18 AM				REGION NO. 10	STATE WASH	FED.AID PROJ.NO.
DATE	4/1/2019						
PLOTTED BY	caywoocj						
DESIGNED BY	K. YOUNG				JOB NUMBER		
ENTERED BY	C. GRACE	REV 0 - RELEASED FOR CONSTRUCTION	04/01/2019				
CHECKED BY	A. FONG	REV B - FINAL REVIEW	01/18/2019		CONTRACT NO. C8811		LOCATION NO.
PROJ. ENGR.	C. MEADE	REV A - PRELIMINARY REVIEW	10/26/2018				
REGIONAL ADM.	J. WYNANDS	REVISION	DATE	BY			

CORY J. CAYWOOD, STATE OF WASHINGTON, 38159, STRUCTURAL ENGINEER, PROFESSIONAL ENGINEER
4/11/19
DATE
P.E. STAMP BOX

DATE
P.E. STAMP BOX

Washington State Department of Transportation
ATKINSON CONSTRUCTION / JACOBS

I-5
STEILACOOM-DUPONT RD TO THORNE LN
CORRIDOR IMPROVEMENTS
MP 120.01 TO MP 124.45

RETAINING WALL B6
PLAN & ELEVATION (4 OF 4)

PLAN REF NO RW19

SHEET 794 OF 1456 SHEETS

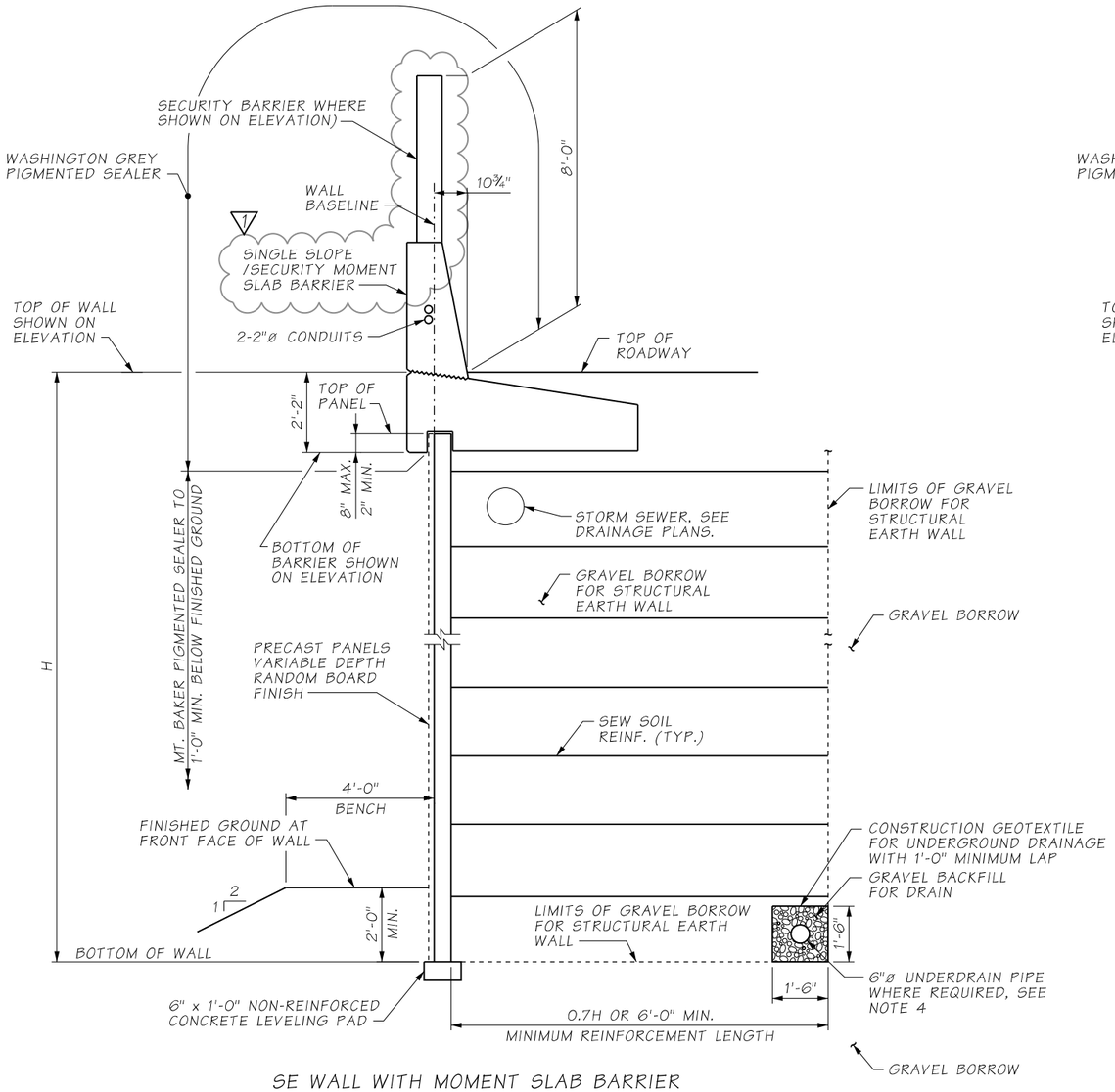

SE WALL WITH MOMENT SLAB BARRIER

TYPICAL SECTION - RETAINING WALL B6

NOTES:

1. SEE SHEET RW16 TO RW19 FOR WALL PLAN AND ELEVATION.
2. SEE SHEET RW115 FOR SINGLE SLOPE /SECURITY MOMENT SLAB BARRIER DETAILS.
3. SEE DRAINAGE PLANS FOR UNDERDRAIN LOCATIONS AND CONNECTIONS TO DRAINAGE STRUCTURES.
4. UNDERDRAIN CAN BE LOCATED OUTSIDE OF REINFORCEMENT ZONE AT CONTRACTOR'S OPTION.

AS-BUILT

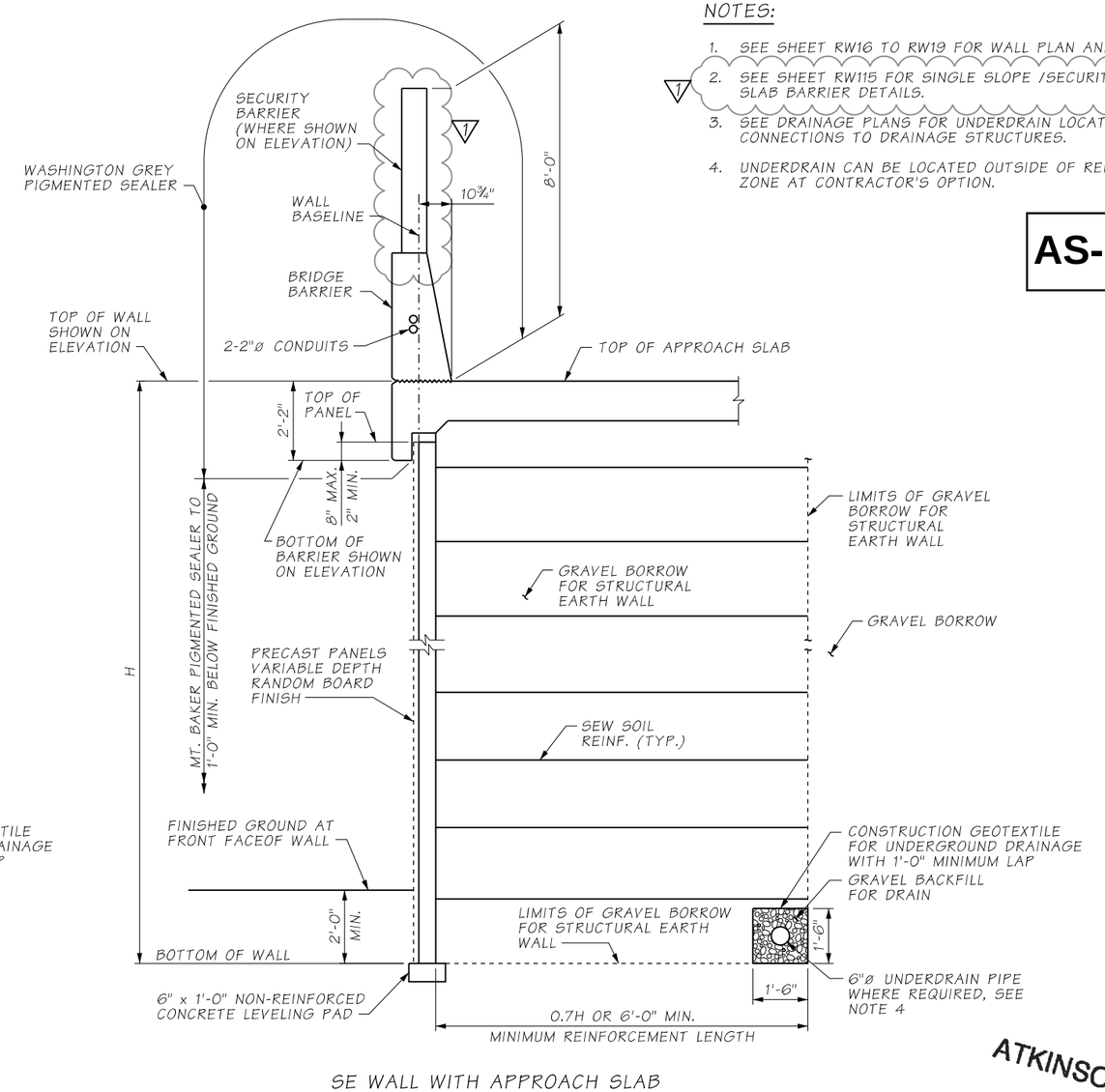

SE WALL WITH APPROACH SLAB

TYPICAL SECTION - RETAINING WALL B6

ATKINSON
JUN 25 2019 KTW
RELEASED FOR CONSTRUCTION

FILE NAME	c:\pwworking\jacobs_b&i\reiserrw\dms20633\PS_RW20.dgn						
TIME	2:44:52 PM				REGION NO.	STATE	FED.AID PROJ.NO.
DATE	6/20/2019				10	WASH	
PLOTTED BY	ReiserRW						
DESIGNED BY	K. YOUNG	REV 1 - RFI0131	06/24/2019		JOB NUMBER		
ENTERED BY	R. REISER	REV 0 - RELEASED FOR CONSTRUCTION	04/01/2019				
CHECKED BY	A. FONG	REV B - FINAL REVIEW	01/18/2019		CONTRACT NO.		LOCATION NO.
PROJ. ENGR.	C. MEADE	REV A - PRELIMINARY REVIEW	10/26/2018		C9133		
REGIONAL ADM.	J. WYNANDS	REVISION	DATE	BY			

STATE OF WASHINGTON — COREY J. CAYWOOD — 38759 — STRUCTURAL ENGINEER — PROFESSIONAL ENGINEER
6/24/19
DATE
P.E. STAMP BOX

DATE
P.E. STAMP BOX

Washington State Department of Transportation

ATKINSON CONSTRUCTION / JACOBS

I-5
STEILACOOM-DUPONT RD TO THORNE LN CORRIDOR IMPROVEMENTS
MP 120.01 TO MP 124.45

RETAINING WALL B6
TYPICAL SECTION

PLAN REF NO RW20

SHEET 795 OF 1456 SHEETS

SECTION 21, T.19N. R.2E. W.M.
CITY OF LAKEWOOD

CURVE DATA					
P.I. STA.	Δ	RADIUS	TANGENT	LENGTH	BACK TANGENT BRG.
WALL B7 12+90.74	1°27'20"LT.	11623.00'	147.66'	295.30'	N53°58'37"E

AS-BUILT

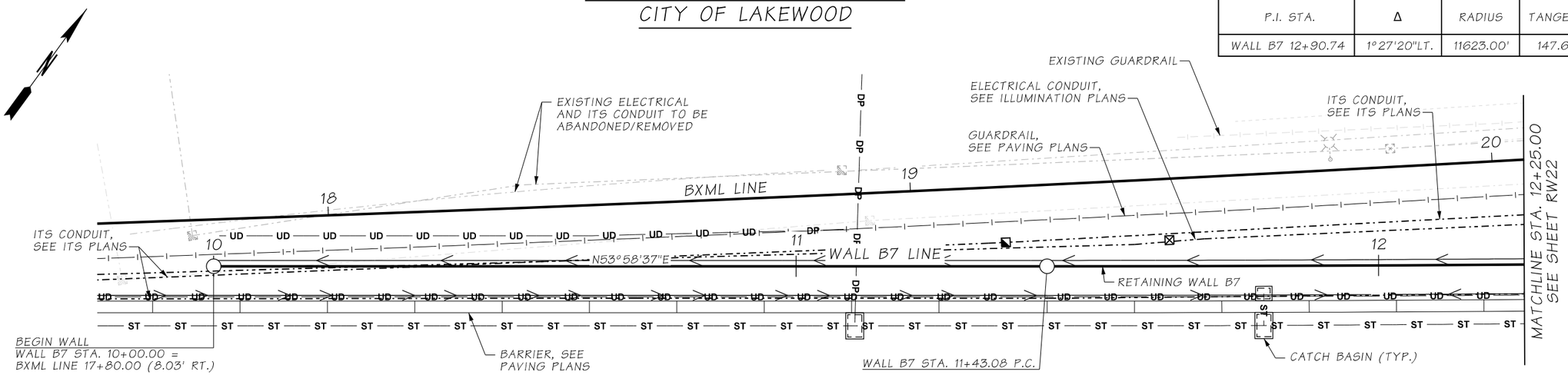

RETAINING WALL B7 - PLAN

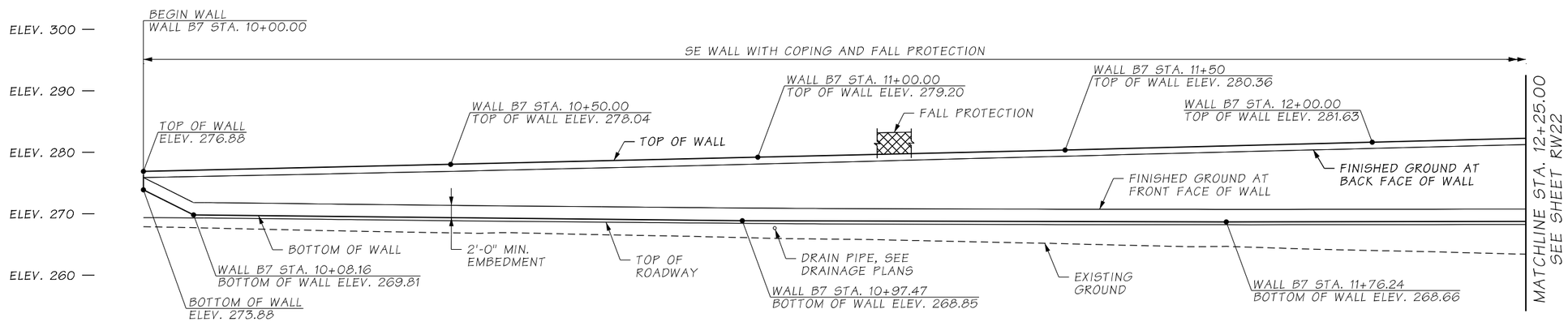

DATUM
N.A.V.D. 88

RETAINING WALL B7 - ELEVATION
LOOKING AT FRONT FACE OF WALL

ATKINSON
APR 11 2019
RELEASED FOR CONSTRUCTION

NOTES:

1. EXISTING UTILITY LOCATIONS ARE APPROXIMATE. CONTRACTOR SHALL VERIFY LOCATIONS AND ELEVATIONS OF THE EXISTING UTILITIES PRIOR TO CONSTRUCTION.
2. SEE SHEET RW03 FOR GENERAL NOTES AND LEGEND.
3. SEE SHEET RW23 FOR TYPICAL SECTION.

FILE NAME	c:\pwworking\jacobs_b&i\caywoocj\dms20633\PS_RW21.dgn					
TIME	9:04:13 AM				REGION NO. 10	STATE WASH
DATE	4/1/2019					FED.AID PROJ.NO.
PLOTTED BY	caywoocj				JOB NUMBER	
DESIGNED BY	K. YOUNG					
ENTERED BY	C. GRACE	REV 0 - RELEASED FOR CONSTRUCTION	04/01/2019			
CHECKED BY	A. FONG	REV B - FINAL REVIEW	01/18/2019		CONTRACT NO. C8811	LOCATION NO.
PROJ. ENGR.	C. MEADE	REV A - PRELIMINARY REVIEW	10/26/2018			
REGIONAL ADM.	J. WYNANDS	REVISION	DATE	BY		

CORY J. CAYWOOD, STATE OF WASHINGTON, 38759, STRUCTURAL ENGINEER, PROFESSIONAL ENGINEER
4/11/19
DATE
P.E. STAMP BOX

P.E. STAMP BOX
DATE

Washington State Department of Transportation
ATKINSON CONSTRUCTION / JACOBS

I-5
STEILACOOM-DUPONT RD TO THORNE LN
CORRIDOR IMPROVEMENTS
MP 120.01 TO MP 124.45

RETAINING WALL B7
PLAN & ELEVATION (1 OF 2)

PLAN REF NO RW21
SHEET 796 OF 1456 SHEETS

SECTION 21, T.19N. R.2E. W.M.
CITY OF LAKEWOOD

AS-BUILT

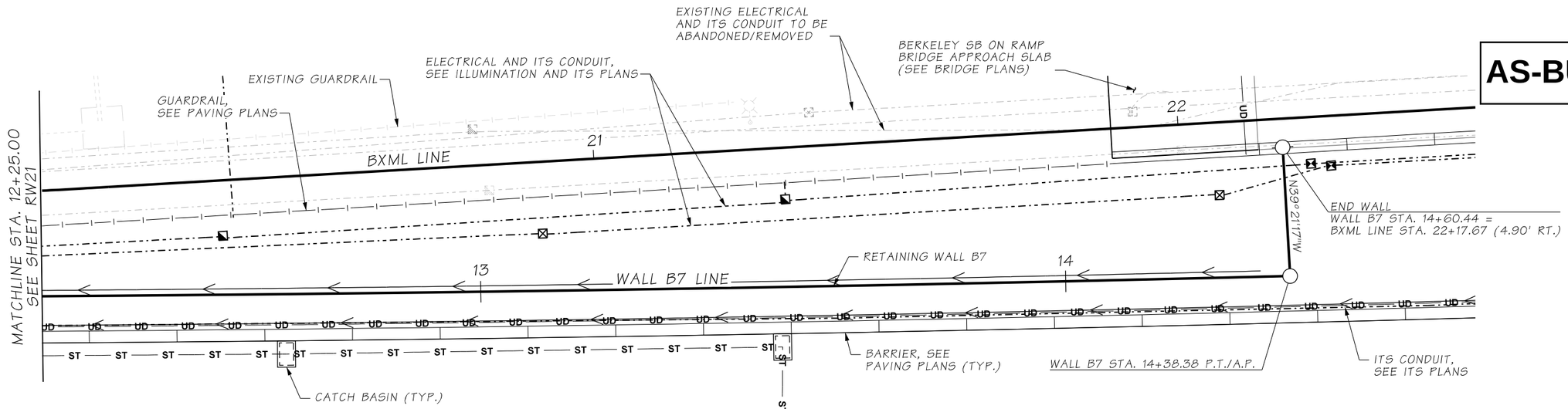

RETAINING WALL B7 - PLAN

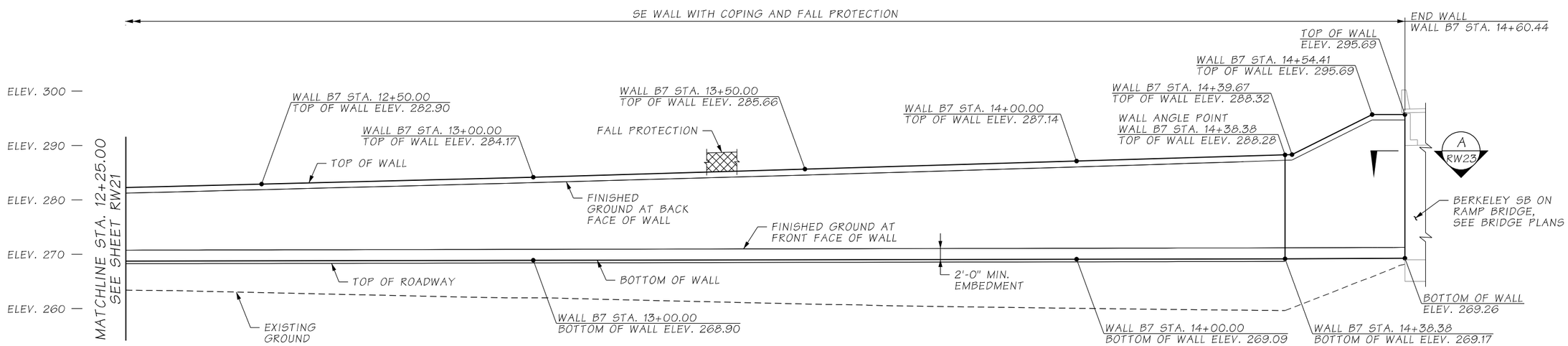

DATUM
N.A.V.D. 88

RETAINING WALL B7 - ELEVATION

LOOKING AT FRONT FACE OF WALL

ATKINSON
APR 11 2019 KJW
RELEASED FOR CONSTRUCTION

NOTES:

1. SEE SHEET RW21 FOR NOTES.

FILE NAME	c:\pwworking\jacobs_b&i\caywoocj\dms20633\PS_RW22.dgn						
TIME	9:06:03 AM				REGION NO. 10	STATE WASH	FED.AID PROJ.NO.
DATE	4/1/2019						
PLOTTED BY	caywoocj				JOB NUMBER		
DESIGNED BY	K. YOUNG						
ENTERED BY	C. GRACE	REV 0 - RELEASED FOR CONSTRUCTION	04/01/2019		CONTRACT NO. C8811		LOCATION NO.
CHECKED BY	A. FONG	REV B - FINAL REVIEW	01/18/2019				
PROJ. ENGR.	C. MEADE	REV A - PRELIMINARY REVIEW	10/26/2018				
REGIONAL ADM.	J. WYNANDS	REVISION	DATE	BY			

CORY J. CAYWOOD, STATE OF WASHINGTON, 38759, STRUCTURAL & CIVIL, PROFESSIONAL ENGINEER
9/11/19
DATE
P.E. STAMP BOX

DATE
P.E. STAMP BOX

Washington State Department of Transportation

ATKINSON CONSTRUCTION / JACOBS

I-5
STEILACOOM-DUPONT RD TO THORNE LN
CORRIDOR IMPROVEMENTS
MP 120.01 TO MP 124.45

RETAINING WALL B7
PLAN & ELEVATION (2 OF 2)

PLAN REF NO
RW22

SHEET 797 OF 1456 SHEETS

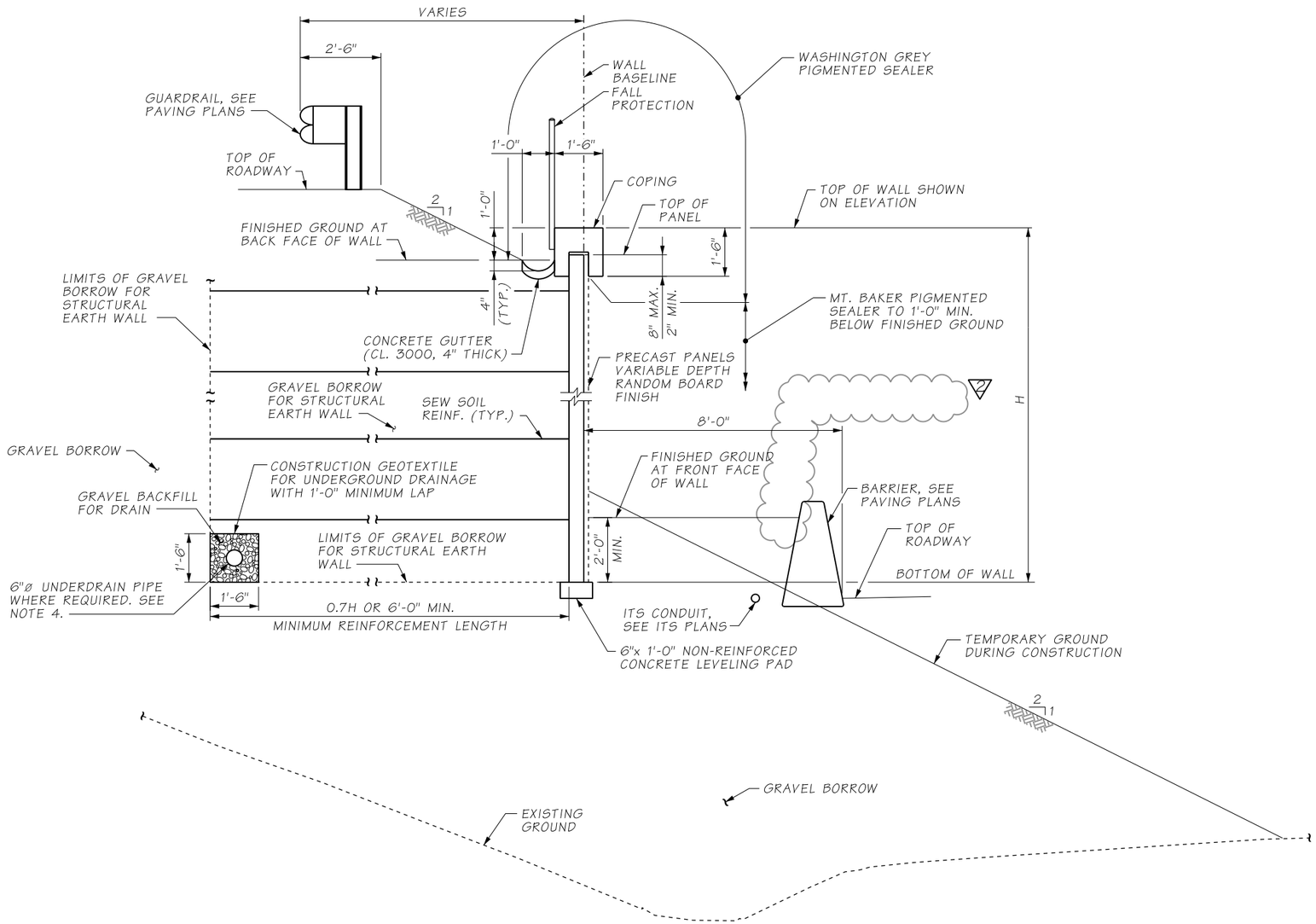

SE WALL WITH COPING AND FALL PROTECTION

TYPICAL SECTION - RETAINING WALL B7

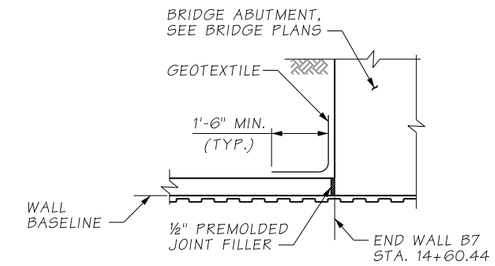

SECTION A RW22

AS-BUILT

NOTES:

1. SEE SHEET RW21 AND RW22 FOR WALL PLAN AND ELEVATION.
2. SEE SHEET RW101 FOR COPING DETAILS.
3. SEE SHEET RW102 FOR FALL PROTECTION DETAILS.
4. SEE DRAINAGE PLANS FOR UNDERDRAIN LOCATIONS AND CONNECTIONS TO DRAINAGE STRUCTURES.

ATKINSON
NOV 10 2020 KTW
RELEASED FOR CONSTRUCTION

FILE NAME	D:\ICS_workdir\67545\20633_1430\PS_RW23.dgn						
TIME	7:52:19 AM				REGION NO. 10	STATE WASH	FED.AID PROJ.NO.
DATE	11/9/2020						
PLOTTED BY	USLAS0-APP064$	REV 2 - RFI0516	11/09/2020				
DESIGNED BY	K. YOUNG	REV 1 - RFI0131	06/24/2019		JOB NUMBER		
ENTERED BY	R. REISER	REV 0 - RELEASED FOR CONSTRUCTION	04/01/2019				
CHECKED BY	A. FONG	REV B - FINAL REVIEW	01/18/2019		CONTRACT NO. C9133		LOCATION NO.
PROJ. ENGR.	C. MEADE	REV A - PRELIMINARY REVIEW	10/26/2018				
REGIONAL ADM.	J. WYNANDS	REVISION	DATE	BY			

CORY J. CAYWOOD, STATE OF WASHINGTON, 38139, STRUCTURAL ENGINEER, PROFESSIONAL ENGINEER
11/9/20
DATE
P.E. STAMP BOX

DATE
P.E. STAMP BOX

Washington State Department of Transportation

ATKINSON CONSTRUCTION / JACOBS

I-5
STEILACOOM-DUPONT RD TO THORNE LN
CORRIDOR IMPROVEMENTS
MP 120.01 TO MP 124.45

RETAINING WALL B7
TYPICAL SECTION

PLAN REF NO RW23

SHEET 798 OF 1456 SHEETS

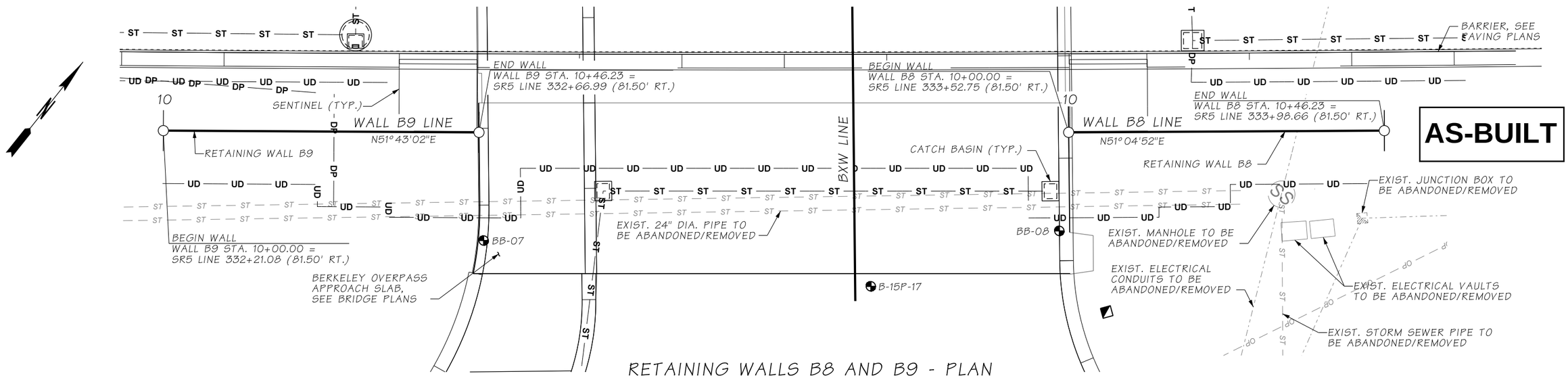

RETAINING WALLS B8 AND B9 - PLAN

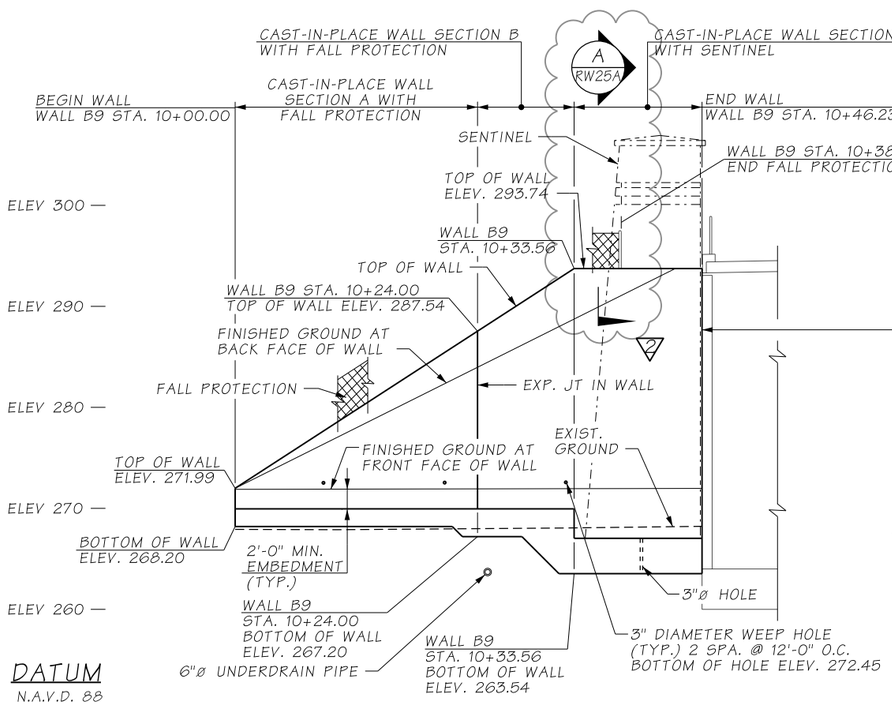

RETAINING WALL B9 - ELEVATION

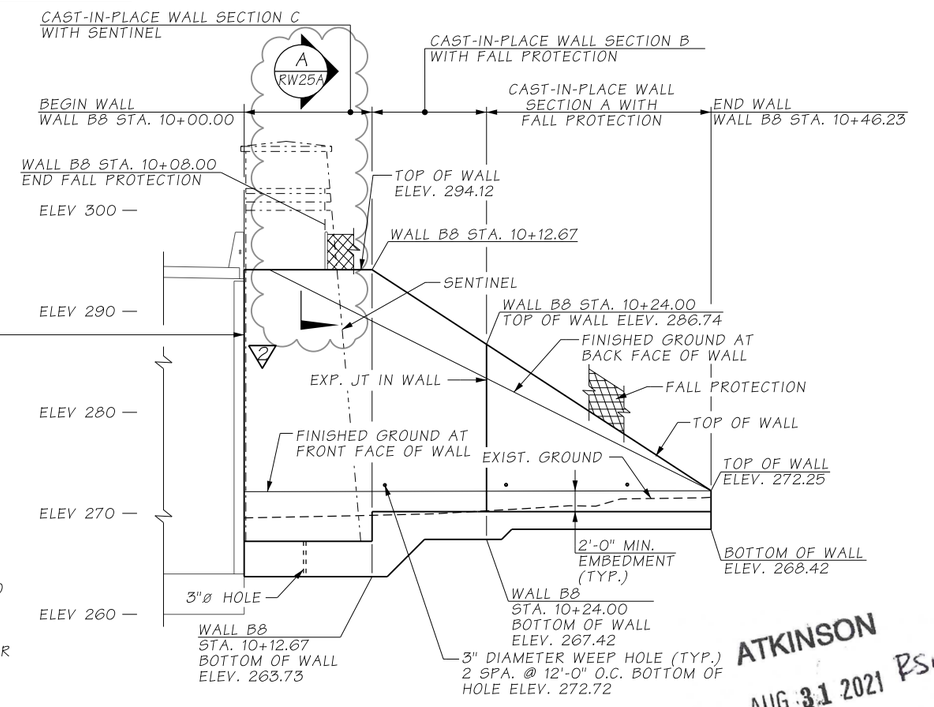

RETAINING WALL B8 - ELEVATION

BERKELEY OVERPASS

NOTES:

1. EXISTING UTILITY LOCATIONS ARE APPROXIMATE. CONTRACTOR SHALL VERIFY LOCATIONS AND ELEVATIONS OF THE EXISTING UTILITIES PRIOR TO CONSTRUCTION.
2. OVER EXCAVATION BELOW FOOTING MAY BE REQUIRED UNTIL ESU2 IS ENCOUNTERED. THE OVER EXCAVATION MAY BE FILLED WITH LEAN MIX CONCRETE OR COMPACTED GRAVEL BORROW IN ACCORDANCE WITH THE GEOTECHNICAL MEMO.
3. SEE SHEET RW03 FOR GENERAL NOTES AND LEGEND.
4. SEE SHEET RW25 FOR TYPICAL SECTIONS.

ATKINSON
AUG 31 2021 PSA
RELEASED FOR CONSTRUCTION

FILE NAME	D:\ICS_workdir\87128\20633_1351\PS_RW24.dgn				REGION NO.	STATE	FED.AID PROJ.NO.
TIME	9:07:29 AM				10	WASH	
DATE	8/25/2021						
PLOTTED BY	USLAS0-APP064$	REV 2 - RFI0636	08/31/2021		JOB NUMBER		
DESIGNED BY	A. FONG	REV 1 - RFI0038, RFI0043	12/03/2019				
ENTERED BY	R. REISER	REV 0 - RELEASED FOR CONSTRUCTION	01/22/2019				
CHECKED BY	C. CAYWOOD	REV B - FINAL REVIEW	11/29/2018		CONTRACT NO.		LOCATION NO.
PROJ. ENGR.	C. MEADE	REV A - PRELIMINARY REVIEW	10/26/2018		C9133		
REGIONAL ADM.	J. WYNANDS	REVISION	DATE	BY			

CORT J. CAYWOOD — STATE OF WASHINGTON — 38733 — STRUCTURAL — PROFESSIONAL ENGINEER
08/31/21
DATE
P.E. STAMP BOX

DATE
P.E. STAMP BOX

Washington State
Department of Transportation

ATKINSON / JACOBS CONSTRUCTION

I-5
STEILACOOM-DUPONT RD TO THORNE LN
CORRIDOR IMPROVEMENTS
MP 120.01 TO MP 124.45

RETAINING WALLS B8 & B9
PLAN & ELEVATION

PLAN REF NO
RW24

SHEET 799 OF 1456 SHEETS

AS-BUILT

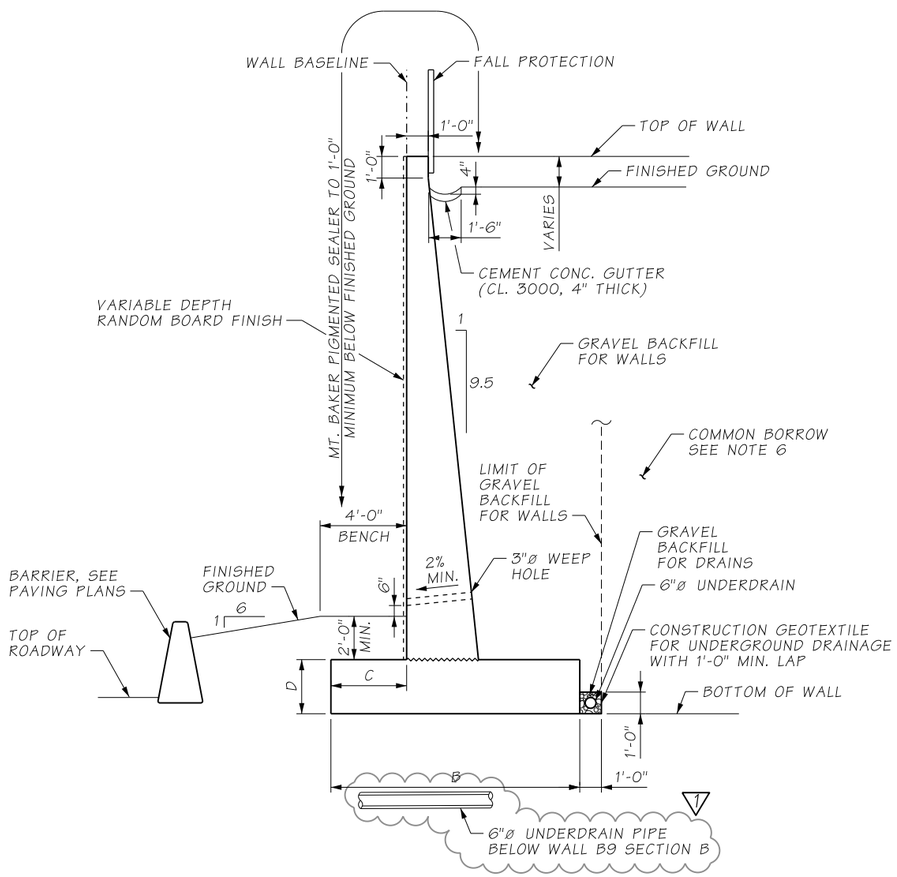

SECTION A & B

CAST-IN-PLACE WALL
WITH FALL PROTECTION

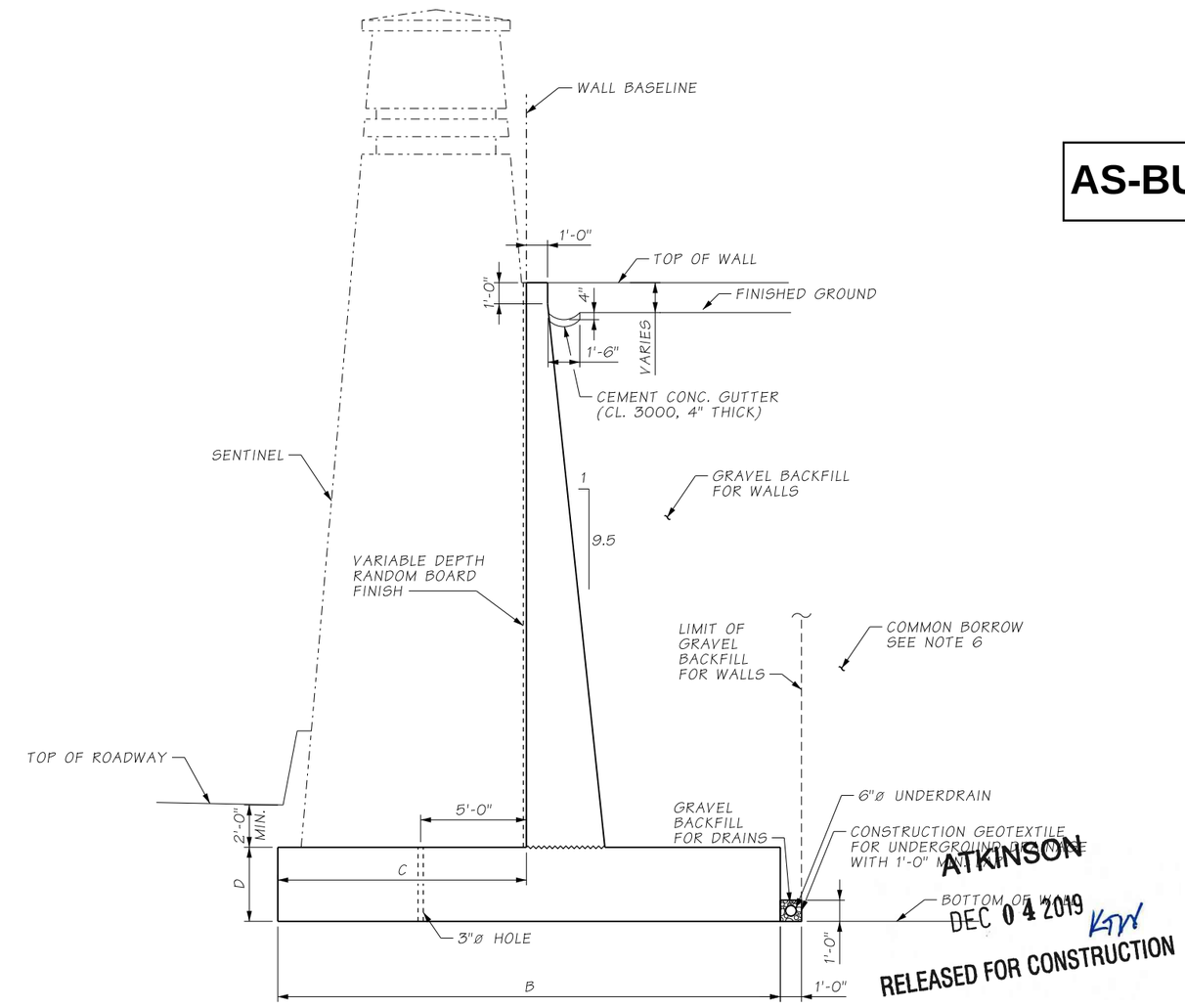

SECTION C

CAST-IN-PLACE WALL
WITH SENTINEL

ATKINSON
DEC 04 2019
KTW
RELEASED FOR CONSTRUCTION

NOTES:

1. SEE SHEET RW24 FOR WALL PLAN AND ELEVATION.
2. SEE SHEET RW26 FOR FOOTING DIMENSION AND REINFORCEMENT DETAIL.
3. SEE SHEET ST21 FOR SENTINEL DETAILS.
4. SEE DRAINAGE PLAN FOR UNDERDRAIN LOCATIONS AND CONNECTIONS TO DRAINAGE STRUCTURES.
5. SEE SHEET RW102 FOR FALL PROTECTION DETAILS.
6. ROADWAY EMBANKMENT SHALL BE SELECT BORROW WITHIN LIMITS OF BRIDGE APPROACH EMBANKMENT. SEE STANDARD SPECIFICATIONS FOR ADDITIONAL INFORMATION.

TYPICAL SECTIONS - RETAINING WALLS B8 & B9

FILE NAME	D:\ICS_workdir\41283\20633_1368\PS_RW25.dgn			
TIME	11:14:31 AM			
DATE	12/2/2019			
PLOTTED BY	USLAS0-APP064$			
DESIGNED BY	A. FONG	REV 1 - RFI0043	12/03/2019	
ENTERED BY	R. REISER	REV 0 - RELEASED FOR CONSTRUCTION	01/22/2019	
CHECKED BY	C. CAYWOOD	REV B - FINAL REVIEW	11/29/2018	
PROJ. ENGR.	C. MEADE	REV A - PRELIMINARY REVIEW	10/26/2018	
REGIONAL ADM.	J. WYNANDS	REVISION	DATE	BY

REGION NO.	STATE	FED.AID PROJ.NO.
10	WASH	
JOB NUMBER		
CONTRACT NO. C9133		LOCATION NO.

CORY J. CAYWOOD, STATE OF WASHINGTON, 38759, STRUCTURAL ENGINEER, PROFESSIONAL ENGINEER
12/3/19
DATE
P.E. STAMP BOX

DATE
P.E. STAMP BOX

Washington State
Department of Transportation

ATKINSON / JACOBS
CONSTRUCTION

I-5
STEILACOOM-DUPONT RD TO THORNE LN
CORRIDOR IMPROVEMENTS
MP 120.01 TO MP 124.45

RETAINING WALLS B8 & B9
TYPICAL SECTIONS

PLAN REF NO
RW25

SHEET
800
OF
1456
SHEETS

NOTES:

1. STEEL PIPES FOR POSTS AND LONGITUDINAL MEMBERS SHALL CONFORM TO ASTM A53 GRADE B AND GALVANIZE PER AASHTO M111.
2. ALL STRUCTURAL STEEL PLATES SHALL CONFORM TO ASTM A36 AND SHALL BE GALVANIZED IN ACCORDANCE WITH AASHTO M111.
3. EPOXY RESIN SHALL BE HILTI-HY 200 EPOXY ADHESIVE OR APPROVED EQUAL.
4. ANCHOR BOLTS SHALL CONFORM TO ASTM F1554 GRADE 55 AND GALVANIZE PER ASTM F2329.

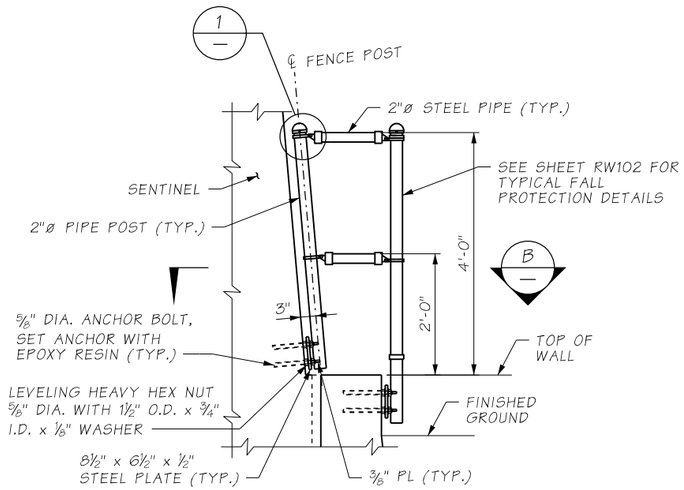

SECTION A RW24

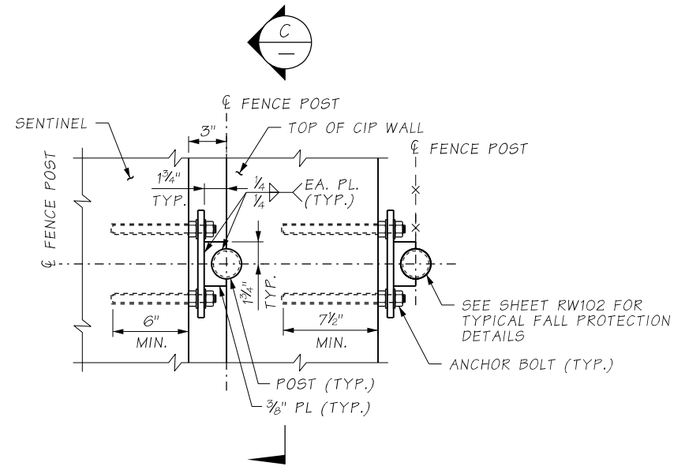

SECTION B

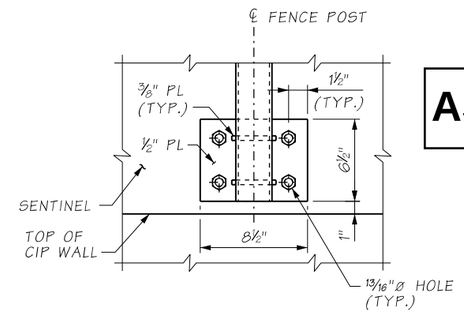

SECTION C

AS-BUILT

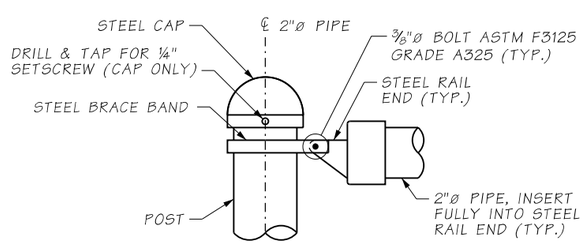

DETAIL 1

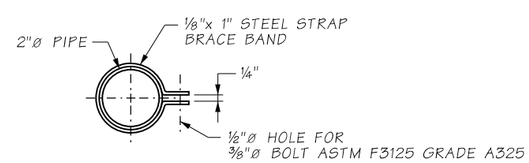

BRACE BAND

ATKINSON
AUG 31 2021 PSA
RELEASED FOR CONSTRUCTION

FILE NAME	c:\pwworking\jacobs_b&i\youngkl2\dms20633\PS_RW25A.dgn						
TIME	11:08:30 AM				REGION NO.	STATE	FED.AID PROJ.NO.
DATE	8/25/2021				10	WASH	
PLOTTED BY	youngkl2				JOB NUMBER		
DESIGNED BY	K. YOUNG						
ENTERED BY	K. YOUNG						
CHECKED BY	C. CAYWOOD				CONTRACT NO.		LOCATION NO.
PROJ. ENGR.	C. MEADE	REV 0 - RFI0636	08/31/2021		C9133		
REGIONAL ADM.	J. WYNANDS	REVISION	DATE	BY			

CORY J. CAYWOOD, STATE OF WASHINGTON, 38795, STRUCTURAL ENGINEER, PROFESSIONAL ENGINEER
08/31/21
DATE
P.E. STAMP BOX

DATE
P.E. STAMP BOX

Washington State Department of Transportation

ATKINSON CONSTRUCTION / JACOBS

I-5
STEILACOOM-DUPONT RD TO THORNE LN CORRIDOR IMPROVEMENTS
MP 120.01 TO MP 124.45

RETAINING WALLS B8 & B9 DETAILS

PLAN REF NO RW25A

SHEET 801 OF 1456 SHEETS

FOOTING DIMENSION			
SECTION	B	C	D
A	10'-9"	3'-6"	1'-9"
B	15'-6"	5'-0"	2'-9"
C	23'-9"	11'-9"	3'-6"

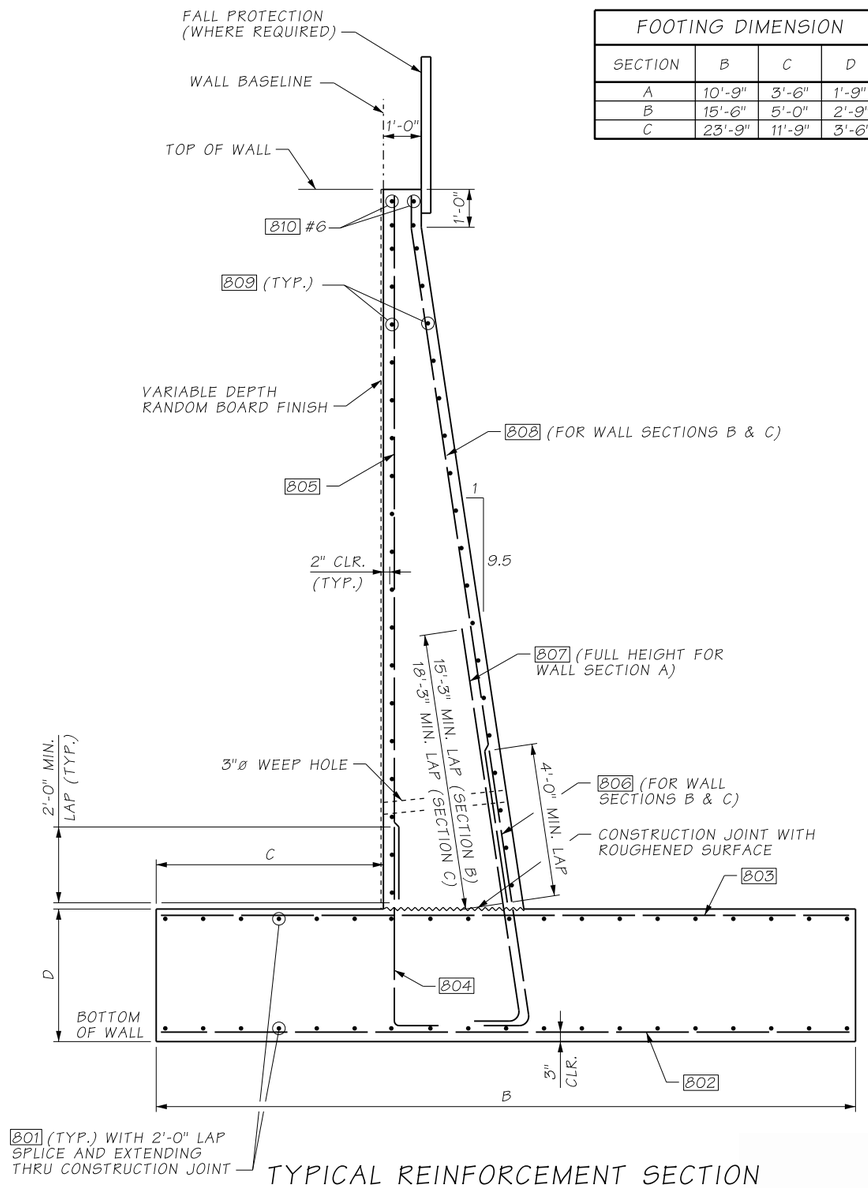

TYPICAL REINFORCEMENT SECTION

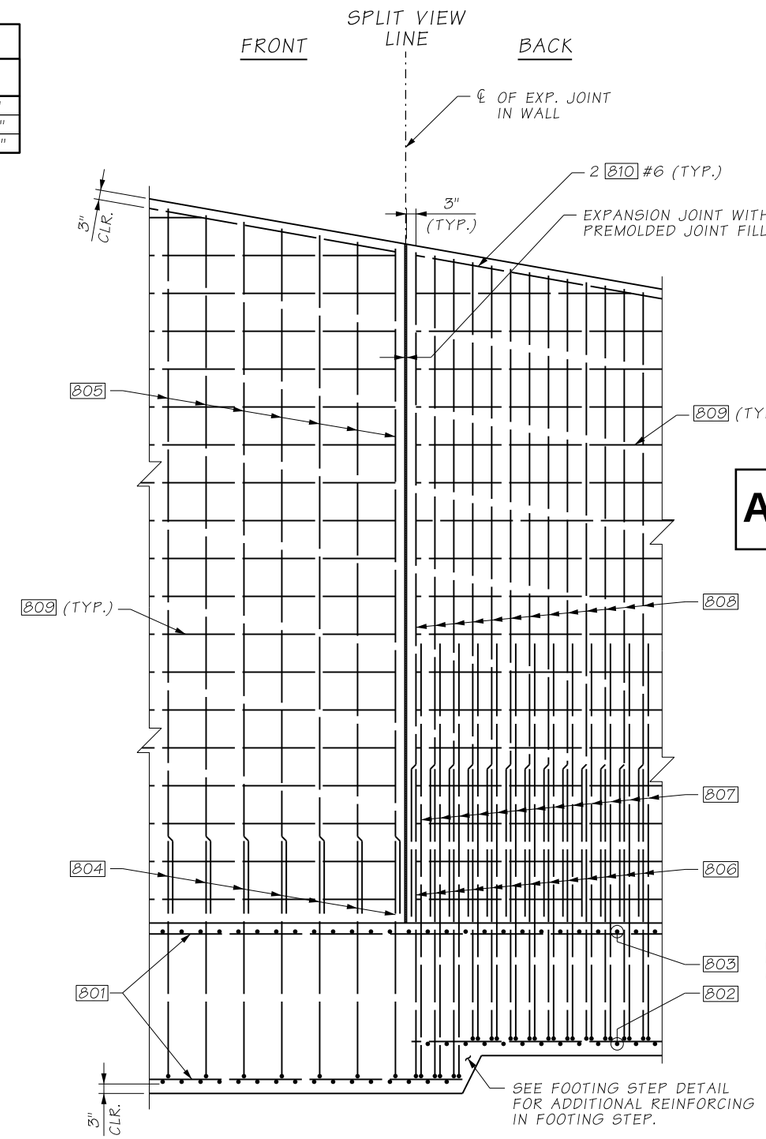

SPLIT ELEVATION VIEW

(SHOWING SEPARATE REBAR LAYERS)

ATKINSON

JAN 27 2019

RELEASED FOR CONSTRUCTION

NOTES:

1. CONCRETE IN WALL SECTIONS SHALL BE PLACED SEPARATELY BETWEEN EXPANSION JOINTS WITH A MINIMUM 24 HOUR PERIOD BEFORE PLACING CONCRETE IN THE ADJACENT SECTION.
2. LAP SPLICES MAY BE ADDED AT CONTRACTORS OPTION. MINIMUM LAP SPLICES ARE AS FOLLOWS, UNLESS NOTED OTHERWISE:
   #4 = 2'-0"
   #5 = 2'-0"
   #6 = 2'-6"
   #7 = 3'-0"

AS-BUILT

REINFORCING			
SECTION	BAR MARK	BAR NO.	SPACING (IN.)
A	801	#4	12
	802	#5	6
	803	#5	6
	804	#5	12
	805	#5	12
	806	-	-
	807	#5	6
	808	-	-
	809	#5	12
B	801	#5	12
	802	#7	6
	803	#7	6
	804	#6	12
	805	#6	12
	806	#6	6
	807	#6	6
	808	#6	6
	809	#6	12
C	801	#6	12
	802	#7	6
	803	#7	6
	804	#7	12
	805	#7	12
	806	#7	6
	807	#7	6
	808	#7	6
	809	#6	12

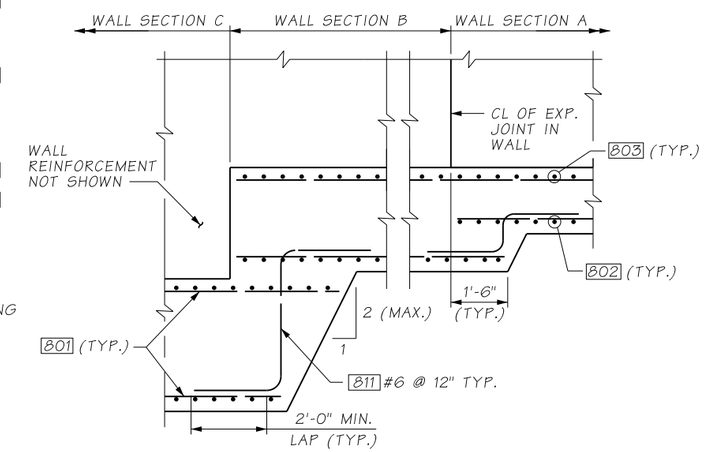

FOOTING STEP DETAIL

FILE NAME	D:\ICS_workdir\19704\20633_1352\PS_RW26.dgn						
TIME	2:41:54 PM				REGION NO. 10	STATE WASH	FED.AID PROJ.NO.
DATE	1/17/2019				JOB NUMBER		
PLOTTED BY	USLAS0-APP064$						
DESIGNED BY	K. YOUNG						
ENTERED BY	R. REISER						
CHECKED BY	A. FONG	REV 0 - RELEASED FOR CONSTRUCTION	01/22/2019		CONTRACT NO. C8811		LOCATION NO.
PROJ. ENGR.	C. MEADE	REV A - FINAL REVIEW	11/29/2018				
REGIONAL ADM.	J. WYNANDS	REVISION	DATE	BY			

CORY J. CATWOOD, STATE OF WASHINGTON, 38135, STRUCTURAL ENGINEER, PROFESSIONAL ENGINEER — 1/21/19 — DATE — P.E. STAMP BOX

DATE — P.E. STAMP BOX

Washington State Department of Transportation

ATKINSON / JACOBS CONSTRUCTION

I-5
STEILACOOM-DUPONT RD TO THORNE LN
CORRIDOR IMPROVEMENTS
MP 120.01 TO MP 124.45

RETAINING WALLS B8 & B9
REINFORCEMENT DETAILS

PLAN REF NO RW26

SHEET 802 OF 1456 SHEETS

SECTION 15, T.19N. R.2E. W.M.
CITY OF LAKEWOOD

CURVE DATA					
P.I. STA.	Δ	RADIUS	TANGENT	LENGTH	BACK TANGENT BRG.
WALL T1 10+35.42	14°09'50"LT.	285.10'	35.42'	70.48'	N64°53'03"E
WALL T1 12+11.80	12°51'36" LT.	249.10'	28.07'	55.91'	N50°43'13"E

AS-BUILT

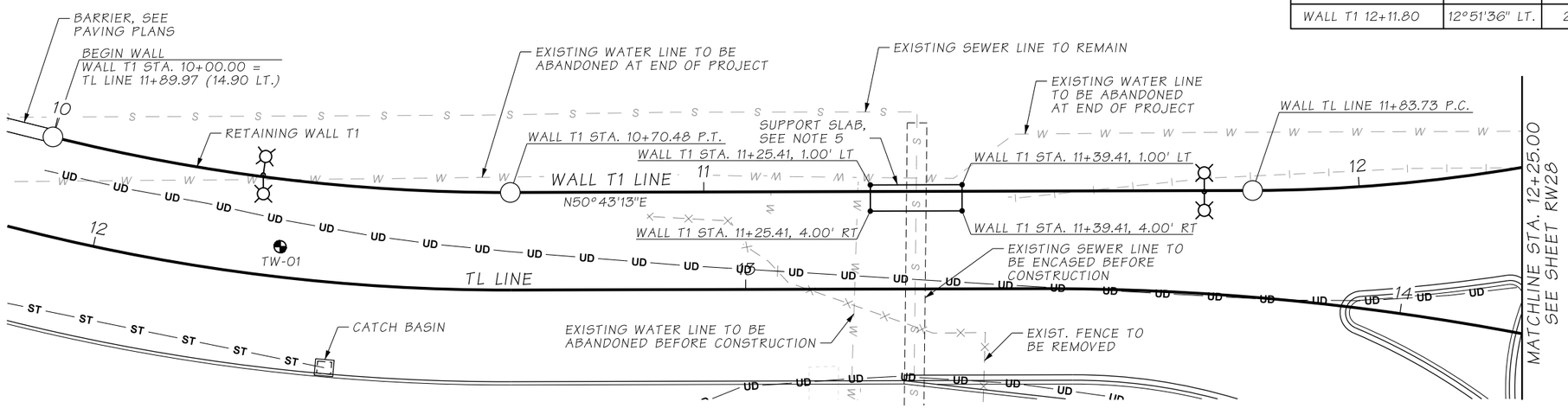

RETAINING WALL T1 - PLAN

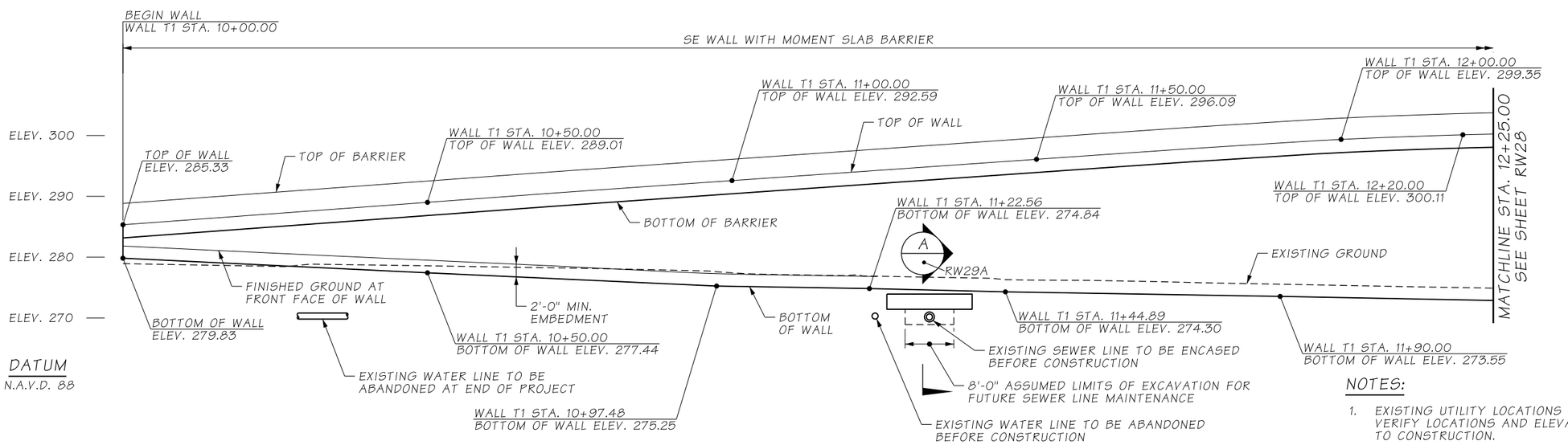

RETAINING WALL T1 - ELEVATION

LOOKING AT BACK FACE OF WALL

ATKINSON
AUG 21 2019 KTW
RELEASED FOR CONSTRUCTION

NOTES:

1. EXISTING UTILITY LOCATIONS ARE APPROXIMATE. CONTRACTOR SHALL VERIFY LOCATIONS AND ELEVATIONS OF THE EXISTING UTILITIES PRIOR TO CONSTRUCTION.
2. SEE SHEET RW03 FOR GENERAL NOTES AND LEGEND.
3. SEE SHEET RW29 FOR TYPICAL SECTIONS.
4. FOR CATCH BASIN LOCATIONS, SEE DRAINAGE PLANS.
5. CONSTRUCT SUPPORT SLAB FOR FUTURE SANITARY SEWER LINE MAINTENANCE. SUPPORT SLAB IS DESIGNED TO SUPPORT WALL AND MINIMIZE WALL SETTLEMENT DURING FUTURE TEMPORARY EXCAVATION NEXT TO WALL. DESIGN OF SUPPORT SLAB ASSUMES 8' WIDE TRENCH BOX IS USED FOR EXCAVATION OUTSIDE OF WALL LIMITS.

FILE NAME	D:\ICS_workdir\34154\20633_2045\PS_RW27.dgn						
TIME	2:21:59 PM				REGION NO. 10	STATE WASH	FED.AID PROJ.NO.
DATE	8/19/2019						
PLOTTED BY	USLAS0-APP064$				JOB NUMBER		
DESIGNED BY	K. YOUNG						
ENTERED BY	R. REISER	REV 0 - RELEASED FOR CONSTRUCTION	08/21/2019				
CHECKED BY	A. FONG	REV B - FINAL REVIEW	07/25/2019		CONTRACT NO. C9133		LOCATION NO.
PROJ. ENGR.	C. MEADE	REV A - PRELIMINARY REVIEW	05/17/2019				
REGIONAL ADM.	J. WYNANDS	REVISION	DATE	BY			

CORY J. CAYWOOD, STATE OF WASHINGTON, 38759, STRUCTURAL ENGINEER, PROFESSIONAL ENGINEER — 8/20/19 DATE — P.E. STAMP BOX

DATE — P.E. STAMP BOX

Washington State Department of Transportation

ATKINSON / JACOBS CONSTRUCTION

I-5
STEILACOOM-DUPONT RD TO THORNE LN
CORRIDOR IMPROVEMENTS
MP 120.01 TO MP 124.45

RETAINING WALL T1
PLAN & ELEVATION (1 OF 2)

PLAN REF NO RW27

SHEET 803 OF 1456 SHEETS

SECTION 15, T.19N. R.2E. W.M.
CITY OF LAKEWOOD

CURVE DATA					
P.I. STA.	Δ	RADIUS	TANGENT	LENGTH	BACK TANGENT BRG.
WALL T1 12+62.20	38°00'22"RT.	65.51'	22.56'	43.45'	N37°51'37"E

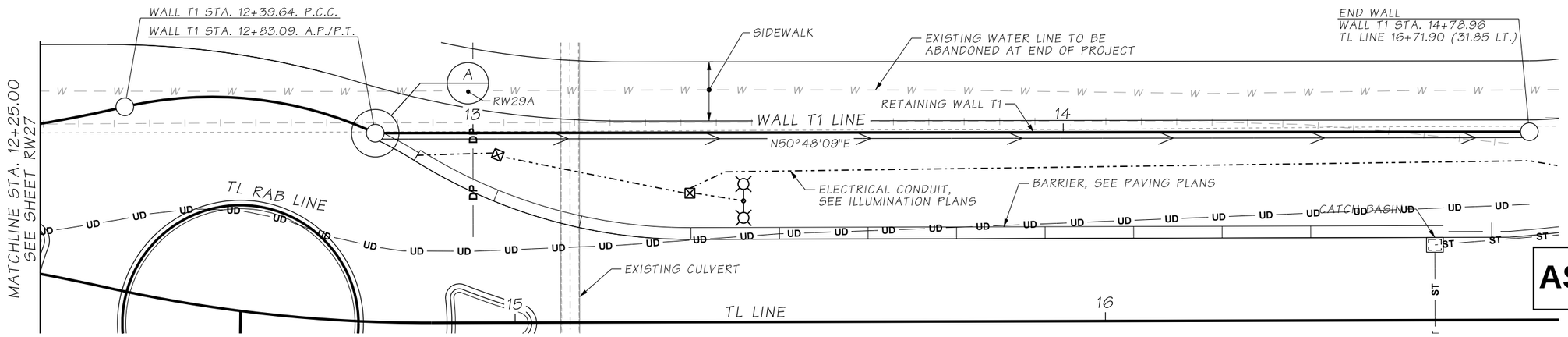

AS-BUILT

RETAINING WALL T1 - PLAN

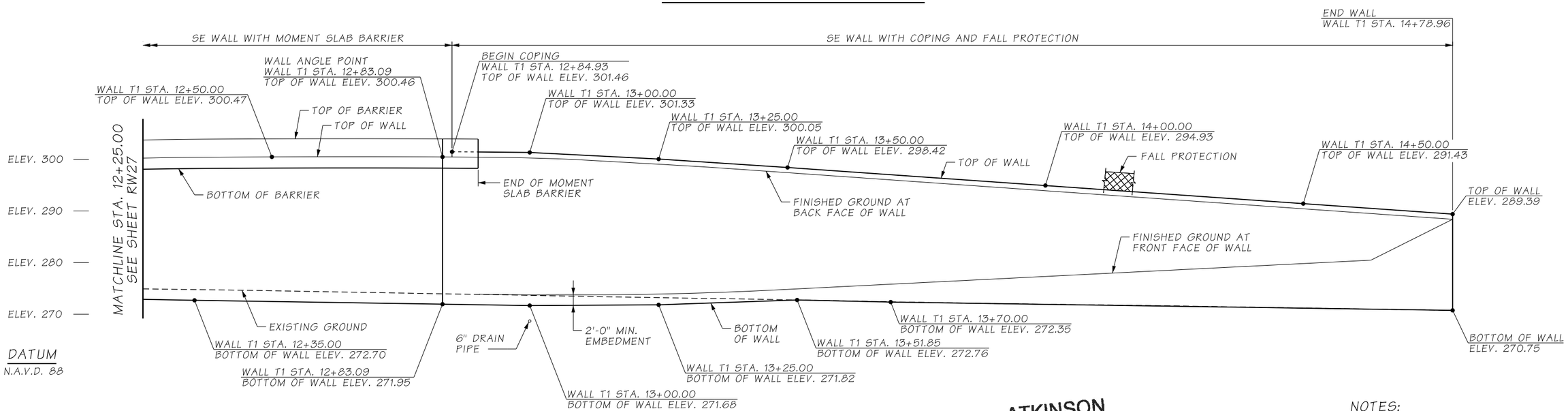

RETAINING WALL T1 - ELEVATION

LOOKING AT BACK FACE OF WALL

ATKINSON
AUG 21 2019 KTN
RELEASED FOR CONSTRUCTION

NOTES:

1. SEE SHEET RW27 FOR NOTES.

FILE NAME	D:\ICS_workdir\34154\20633_2050\PS_RW28.dgn						
TIME	2:22:16 PM				REGION NO. 10	STATE WASH	FED.AID PROJ.NO.
DATE	8/19/2019						
PLOTTED BY	USLAS0-APP064$				JOB NUMBER		
DESIGNED BY	K. YOUNG						
ENTERED BY	R. REISER	REV 0 - RELEASED FOR CONSTRUCTION	08/21/2019				
CHECKED BY	A. FONG	REV B - FINAL REVIEW	07/25/2019		CONTRACT NO. C9133		LOCATION NO.
PROJ. ENGR.	C. MEADE	REV A - PRELIMINARY REVIEW	05/17/2019				
REGIONAL ADM.	J. WYNANDS	REVISION	DATE	BY			

CORY J. CAYWOOD, STATE OF WASHINGTON, 38759, STRUCTURAL ENGINEER, PROFESSIONAL ENGINEER
8/20/19
DATE
P.E. STAMP BOX

DATE
P.E. STAMP BOX

Washington State Department of Transportation

ATKINSON CONSTRUCTION / JACOBS

I-5
STEILACOOM-DUPONT RD TO THORNE LN
CORRIDOR IMPROVEMENTS
MP 120.01 TO MP 124.45

RETAINING WALL T1
PLAN & ELEVATION (2 OF 2)

PLAN REF NO RW28

SHEET 804 OF 1456 SHEETS

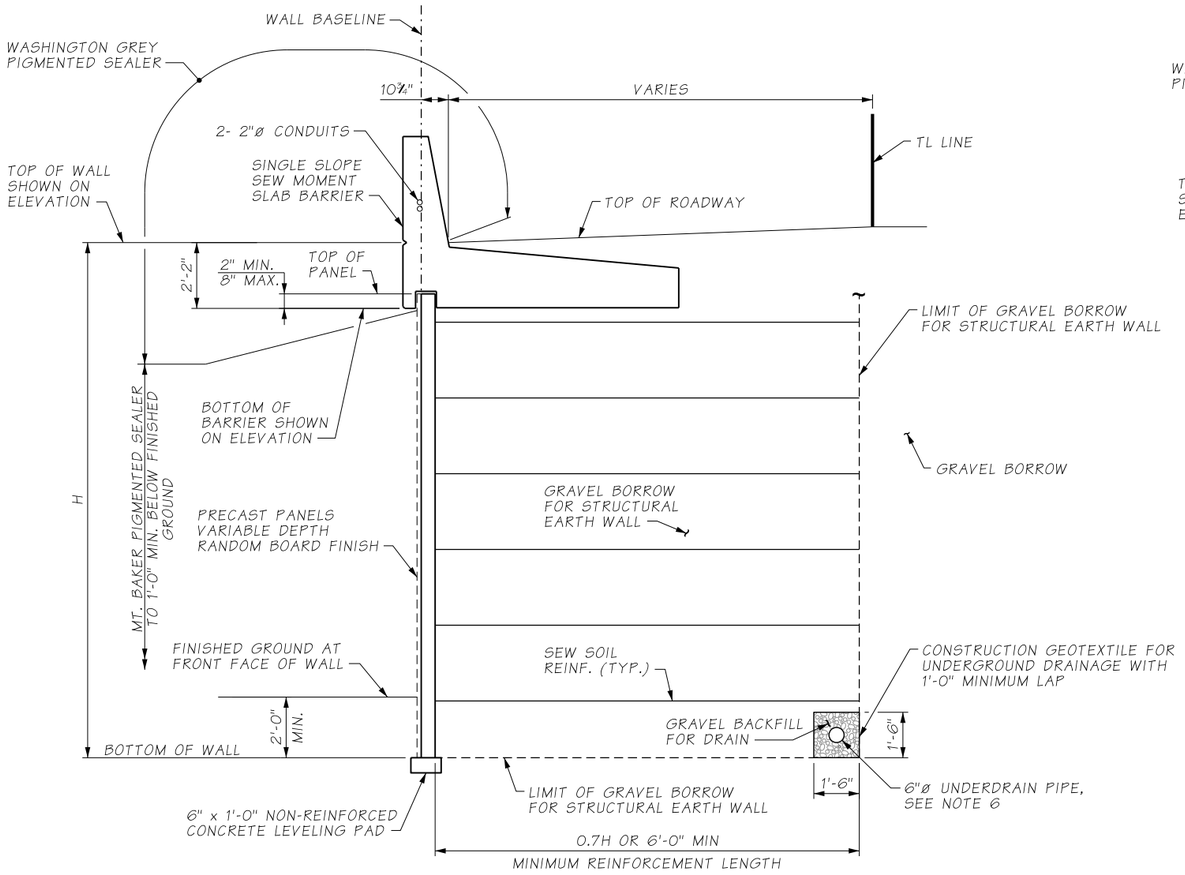

SE WALL WITH MOMENT SLAB BARRIER

TYPICAL SECTION - RETAINING WALL T1

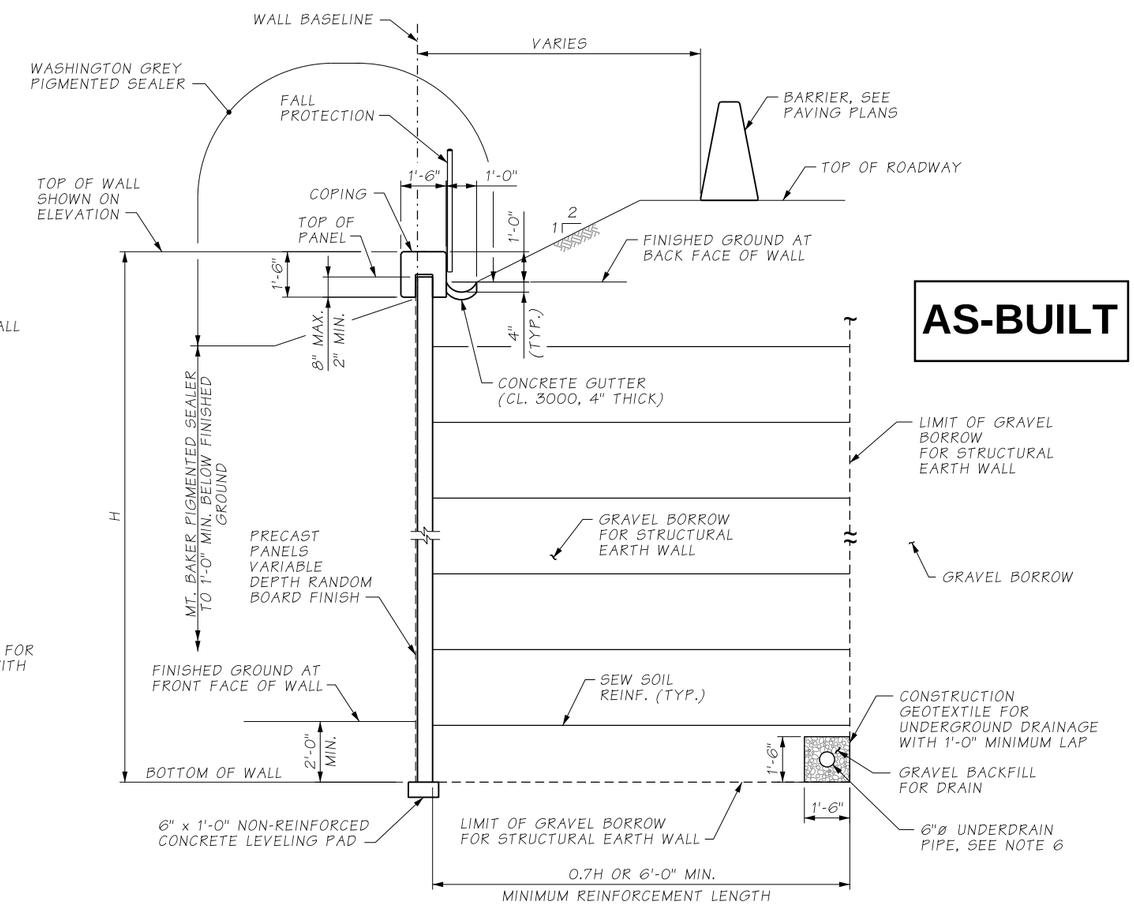

AS-BUILT

SE WALL WITH COPING AND FALL PROTECTION

TYPICAL SECTION - RETAINING WALL T1

NOTES:

1. SEE SHEETS RW27 AND RW28 FOR WALL PLAN AND ELEVATION.
2. SEE SHEET RW101 FOR COPING DETAILS.
3. SEE SHEET RW102 FOR FALL PROTECTION DETAILS.
4. SEE SHEET RW103 FOR SINGLE SLOPE SEW MOMENT SLAB BARRIER DETAILS.
5. SEE DRAINAGE PLANS FOR UNDERDRAIN LOCATIONS AND CONNECTIONS TO DRAINAGE STRUCTURES.
6. UNDERDRAIN CAN BE LOCATED OUTSIDE OF REINFORCEMENT ZONE AT CONTRACTOR'S OPTION.

ATKINSON
AUG 21 2019 KTW
RELEASED FOR CONSTRUCTION

FILE NAME	D:\ICS_workdir\34154\20633_2051\PS_RW29.dgn						
TIME	2:21:50 PM				REGION NO. 10	STATE WASH	FED.AID PROJ.NO.
DATE	8/19/2019						
PLOTTED BY	USLAS0-APP064$				JOB NUMBER		
DESIGNED BY	K. YOUNG						
ENTERED BY	R. REISER	REV 0 - RELEASED FOR CONSTRUCTION	08/21/2019				
CHECKED BY	A. FONG	REV B - FINAL REVIEW	07/25/2019		CONTRACT NO. C9133		LOCATION NO.
PROJ. ENGR.	C. MEADE	REV A - PRELIMINARY REVIEW	05/17/2019				
REGIONAL ADM.	J. WYNANDS	REVISION	DATE	BY			

CORY J. CAYWOOD, STATE OF WASHINGTON, 38139, STRUCTURAL ENGINEER, PROFESSIONAL ENGINEER
8/20/19
DATE
P.E. STAMP BOX

DATE
P.E. STAMP BOX

Washington State Department of Transportation

ATKINSON CONSTRUCTION / JACOBS

I-5
STEILACOOM-DUPONT RD TO THORNE LN
CORRIDOR IMPROVEMENTS
MP 120.01 TO MP 124.45

RETAINING WALL T1
TYPICAL SECTIONS

PLAN REF NO RW29

SHEET 805 OF 1456 SHEETS

AS-BUILT

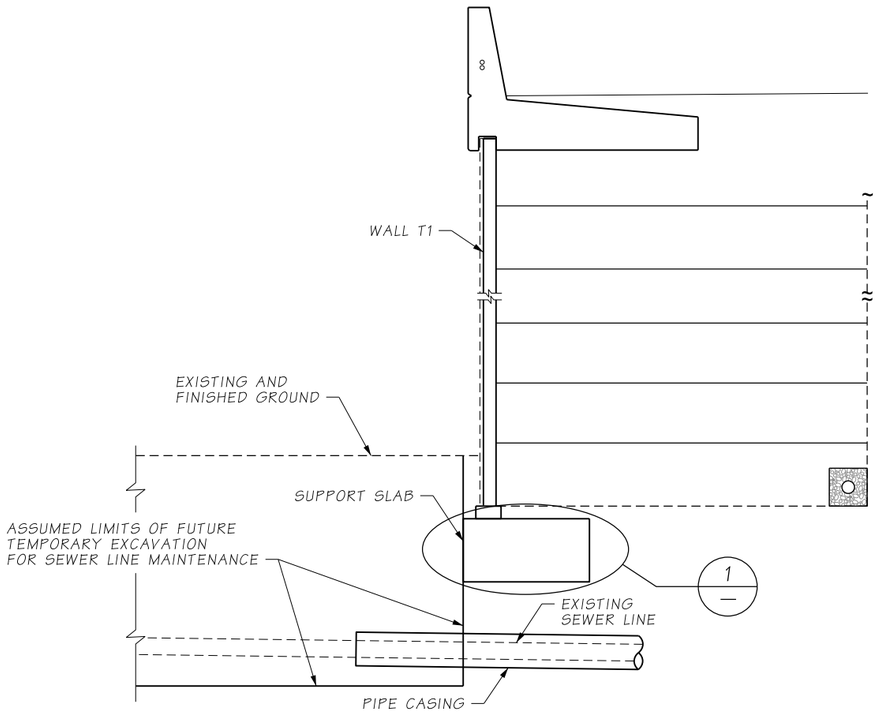

SECTION A / RW27

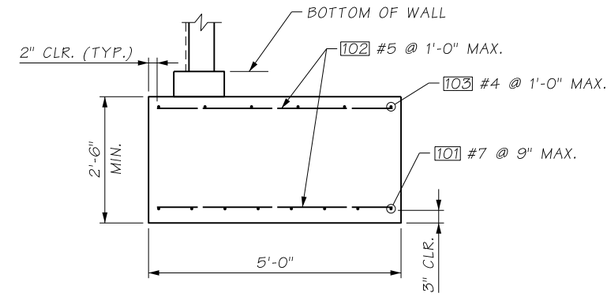

DETAIL 1 / SUPPORT SLAB

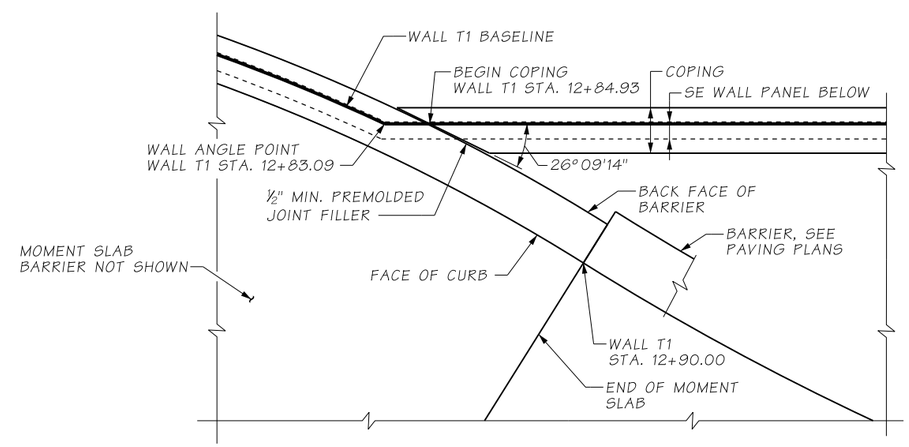

DETAIL A / RW28

ATKINSON
AUG 21 2019 KTW
RELEASED FOR CONSTRUCTION

FILE NAME	D:\ICS_workdir\34154\20633_2317\PS_RW29A.dgn						
TIME	2:22:42 PM				REGION NO.	STATE	FED.AID PROJ.NO.
DATE	8/19/2019				10	WASH	
PLOTTED BY	USLAS0-APP064$				JOB NUMBER		
DESIGNED BY	K. YOUNG						
ENTERED BY	R. REISER						
CHECKED BY	A. FONG	REV 0 - RELEASED FOR CONSTRUCTION	08/21/2019		CONTRACT NO.		LOCATION NO.
PROJ. ENGR.	C. MEADE	REV A - FINAL REVIEW	07/25/2019		C9133		
REGIONAL ADM.	J. WYNANDS	REVISION	DATE	BY			

CORY J. CAYWOOD, STATE OF WASHINGTON, 38155, STRUCTURAL ENGINEER, PROFESSIONAL ENGINEER
8/20/19
DATE
P.E. STAMP BOX

DATE
P.E. STAMP BOX

Washington State Department of Transportation

ATKINSON / JACOBS CONSTRUCTION

I-5
STEILACOOM-DUPONT RD TO THORNE LN
CORRIDOR IMPROVEMENTS
MP 120.01 TO MP 124.45

RETAINING WALL T1
DETAILS

PLAN REF NO
RW29A

SHEET 806 OF 1456 SHEETS

SECTION 15, T.19N. R.2E. W.M.
CITY OF LAKEWOOD

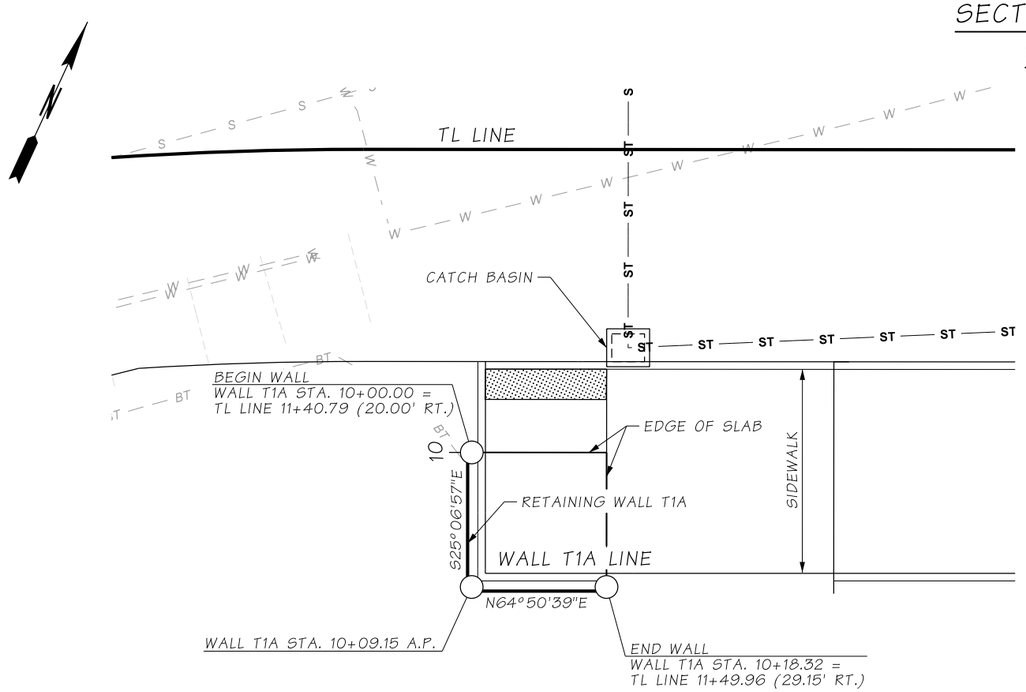

RETAINING WALL T1A - PLAN

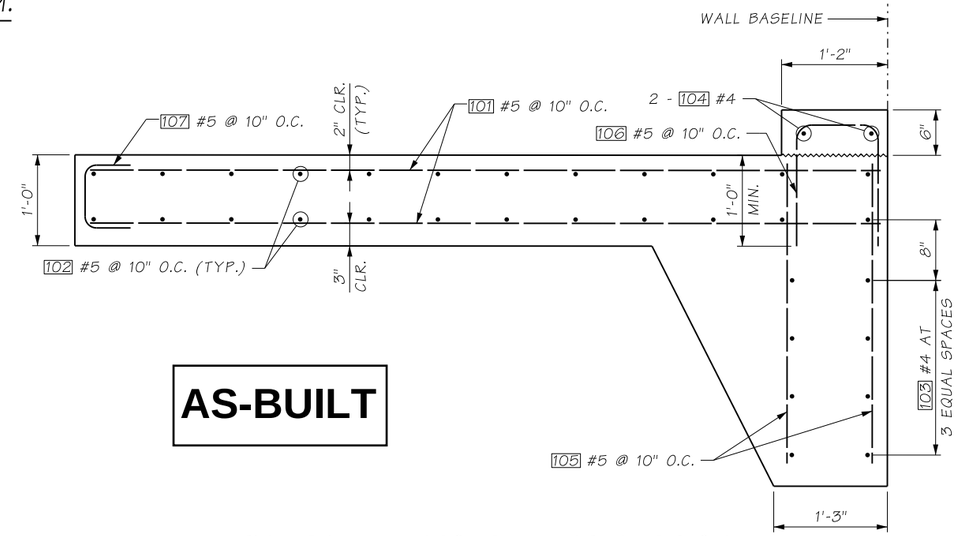

AS-BUILT

TYPICAL REINFORCEMENT SECTION

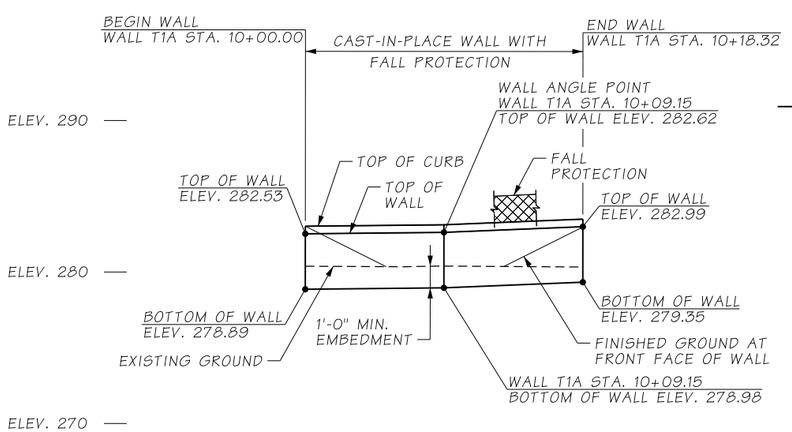

DATUM
N.A.V.D. 88

RETAINING WALL T1A - ELEVATION

LOOKING AT FRONT FACE OF WALL

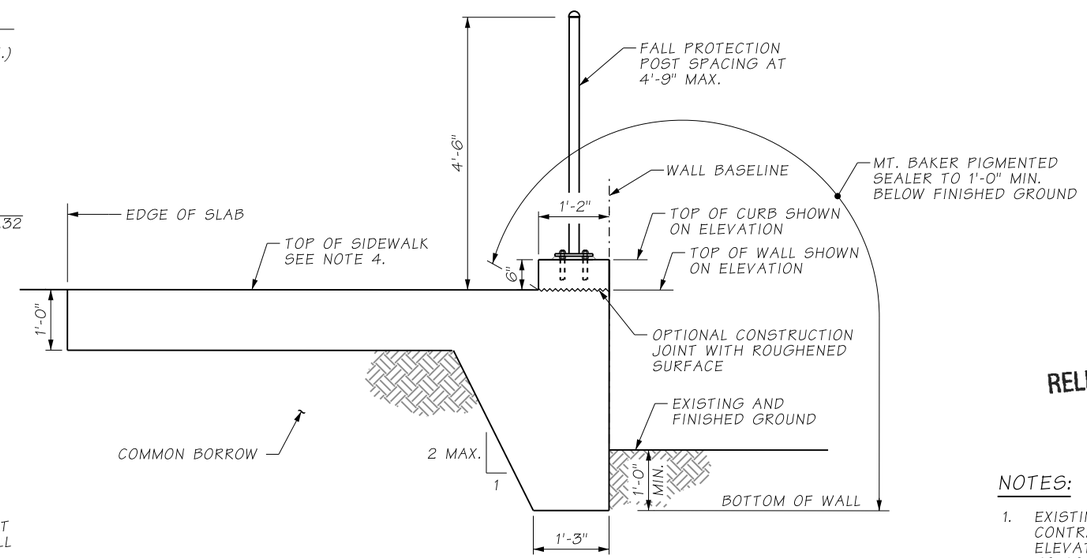

CAST-IN-PLACE WALL WITH FALL PROTECTION

TYPICAL SECTION - RETAINING WALL T1A

ATKINSON
AUG 21 2019 KTW
RELEASED FOR CONSTRUCTION

NOTES:

1. EXISTING UTILITY LOCATIONS ARE APPROXIMATE. CONTRACTOR SHALL VERIFY LOCATIONS AND ELEVATIONS OF THE EXISTING UTILITIES PRIOR TO CONSTRUCTION.
2. SEE SHEET RW03 FOR GENERAL NOTES AND LEGEND.
3. SEE SHEET RW102A FOR FALL PROTECTION DETAILS.
4. SEE PAVING DETAILS FOR SIDEWALK ELEVATIONS.
5. FOR CATCH BASIN LOCATION, SEE DRAINAGE PLANS.

FILE NAME	D:\ICS_workdir\34154\20633_2155\PS_RW30.dgn			
TIME	2:22:48 PM			
DATE	8/19/2019			
PLOTTED BY	USLAS0-APP064$			
DESIGNED BY	A. FONG			
ENTERED BY	R. REISER	REV 0 - RELEASED FOR CONSTRUCTION	08/21/2019	
CHECKED BY	K. YOUNG	REV B - FINAL REVIEW	07/25/2019	
PROJ. ENGR.	C. MEADE	REV A - PRELIMINARY REVIEW	05/17/2019	
REGIONAL ADM.	J. WYNANDS	REVISION	DATE	BY

REGION NO.	STATE	FED.AID PROJ.NO.
10	WASH	
JOB NUMBER		
CONTRACT NO.		LOCATION NO.
C9133		

CORY J. CAYWOOD
STATE OF WASHINGTON
38759
STRUCTURAL ENGINEER
PROFESSIONAL ENGINEER
8/20/19
DATE
P.E. STAMP BOX

DATE
P.E. STAMP BOX

Washington State
Department of Transportation

ATKINSON / JACOBS
CONSTRUCTION

I-5
STEILACOOM-DUPONT RD TO THORNE LN
CORRIDOR IMPROVEMENTS
MP 120.01 TO MP 124.45

RETAINING WALL T1A
PLAN, ELEVATION & TYPICAL SECTION

PLAN REF NO
RW30

SHEET
807
OF
1456
SHEETS

SECTION 15, T.19N. R.2E. W.M.
CITY OF LAKEWOOD

CURVE DATA					
P.I. STA.	Δ	RADIUS	TANGENT	LENGTH	BACK TANGENT BRG.
WALL T2 11+07.61	42°07'13"RT.	91.05'	35.06'	66.94'	N57°18'26"E
WALL T2 11+48.37	4°51'04"RT.	91.33'	3.87'	7.73'	S77°25'35"E

AS-BUILT

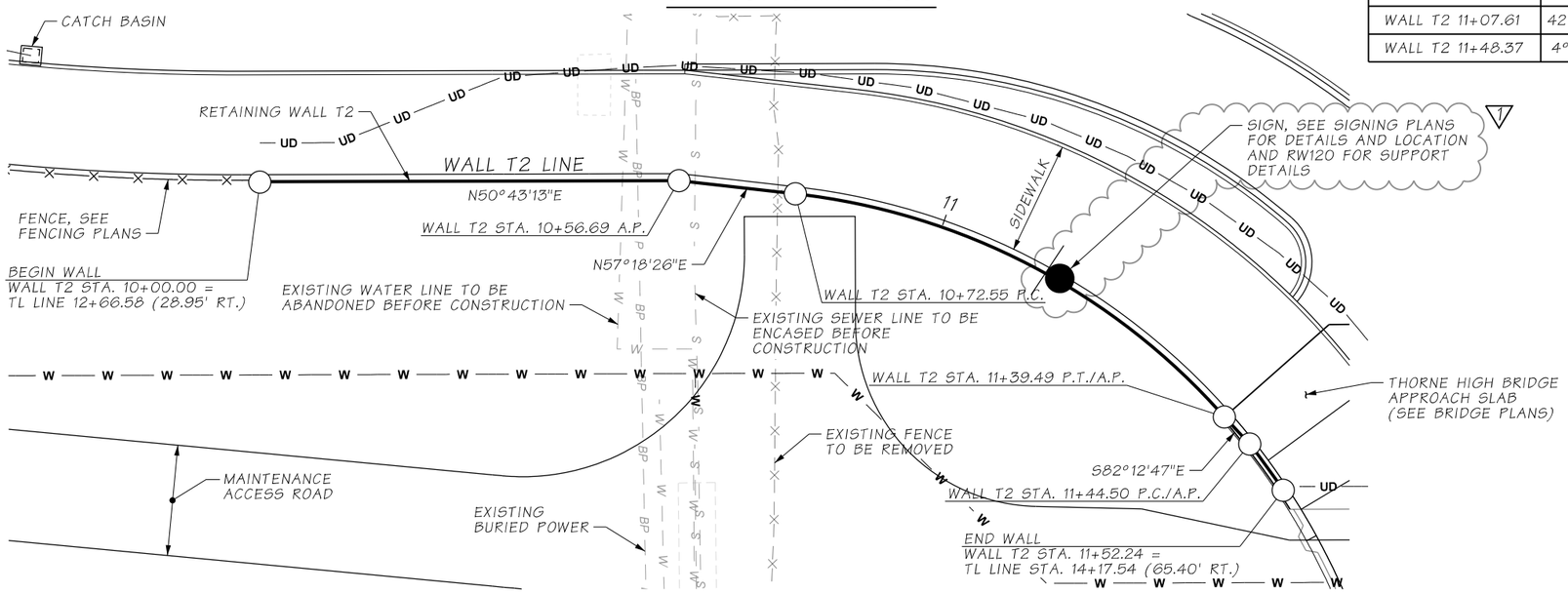

RETAINING WALL T2 - PLAN

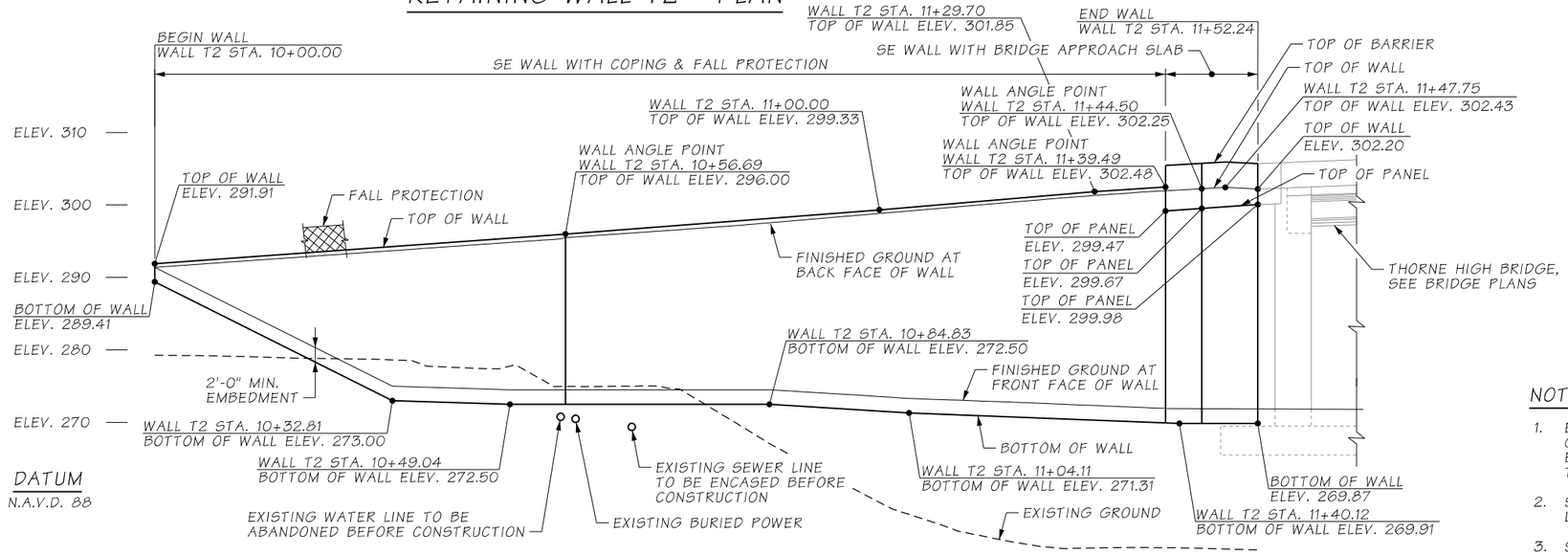

RETAINING WALL T2 - ELEVATION

LOOKING AT FRONT FACE OF WALL

ATKINSON
JAN 21 2020 KTW
RELEASED FOR CONSTRUCTION

NOTES:

1. EXISTING UTILITY LOCATIONS ARE APPROXIMATE. CONTRACTOR SHALL VERIFY LOCATIONS AND ELEVATIONS OF THE EXISTING UTILITIES PRIOR TO CONSTRUCTION.
2. SEE SHEET RW03 FOR GENERAL NOTES AND LEGEND.
3. SEE SHEET RW32 FOR TYPICAL SECTIONS.
4. FOR CATCH BASIN LOCATIONS, SEE DRAINAGE PLANS.

FILE NAME	c:\pwworking\jacobs_b&i\jeg_huangy1\dms20633\PS_RW31.dgn						
TIME	9:09:48 AM				REGION NO. 10	STATE WASH	FED.AID PROJ.NO.
DATE	1/20/2020						
PLOTTED BY	HUANGY1	REV 1 - RELEASED FOR CONSTRUCTION	01/20/2020		JOB NUMBER		
DESIGNED BY	K. YOUNG	REV C - FINAL REVIEW	01/08/2020				
ENTERED BY	R. REISER	REV 0 - RELEASED FOR CONSTRUCTION	08/21/2019		CONTRACT NO. C9133		LOCATION NO.
CHECKED BY	A. FONG	REV B - FINAL REVIEW	07/25/2019				
PROJ. ENGR.	C. MEADE	REV A - PRELIMINARY REVIEW	05/17/2019				
REGIONAL ADM.	J. WYNANDS	REVISION	DATE	BY			

STATE OF WASHINGTON — COREY J. CAYWOOD — 38759 — STRUCTURAL ENGINEER — PROFESSIONAL ENGINEER
1/21/20
DATE
P.E. STAMP BOX

DATE
P.E. STAMP BOX

Washington State Department of Transportation

ATKINSON CONSTRUCTION / JACOBS

I-5
STEILACOOM-DUPONT RD TO THORNE LN
CORRIDOR IMPROVEMENTS
MP 120.01 TO MP 124.45

RETAINING WALL T2
PLAN & ELEVATION

PLAN REF NO RW31

SHEET 808 OF 1456 SHEETS

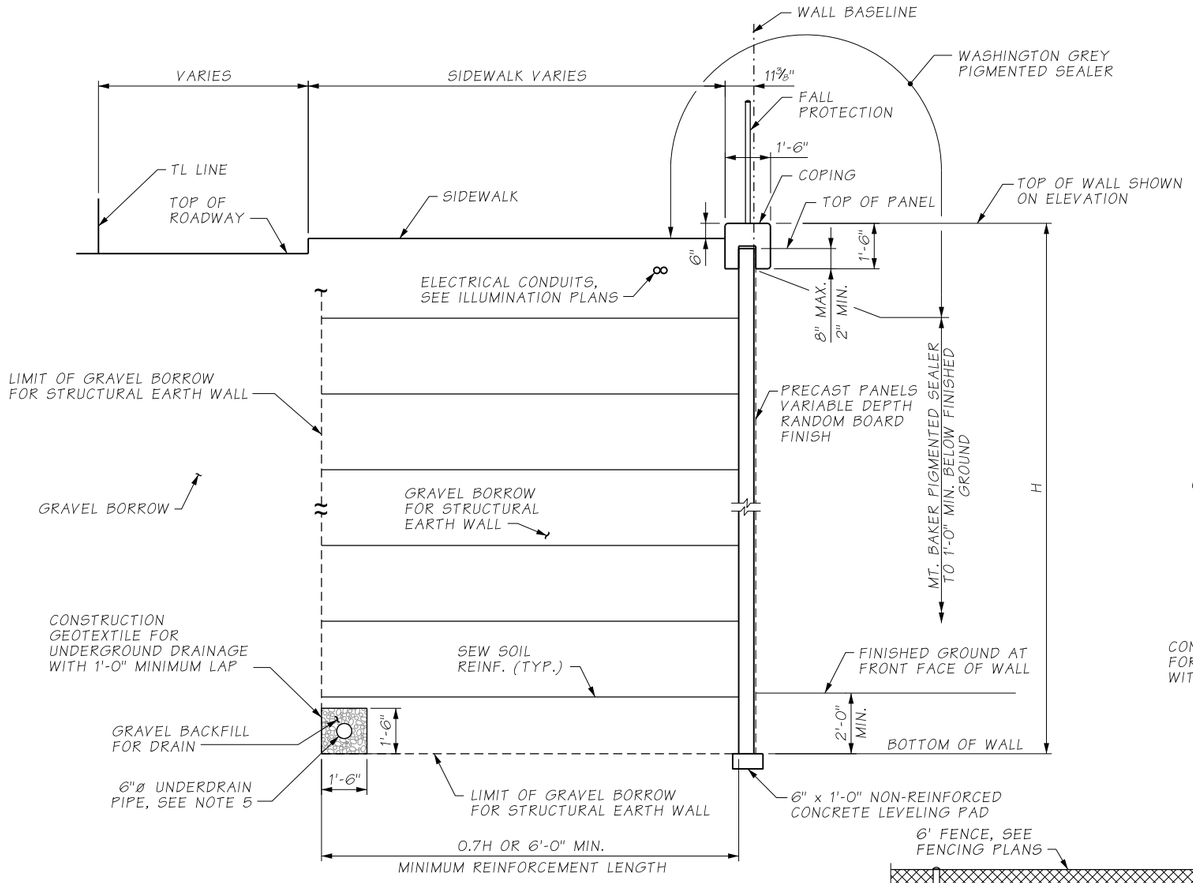

SE WALL WITH COPING AND FALL PROTECTION

TYPICAL SECTION - RETAINING WALL T2

AS-BUILT

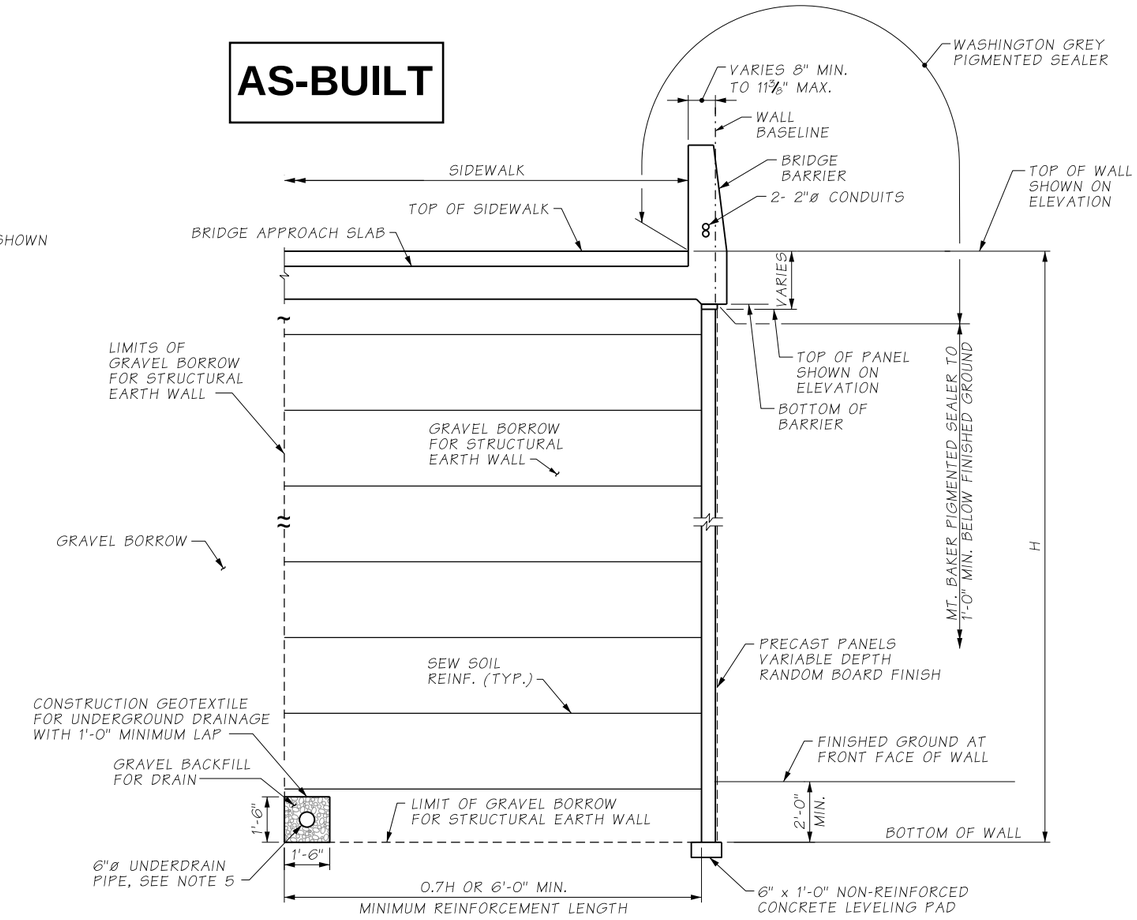

SE WALL WITH APPROACH SLAB

TYPICAL SECTION - RETAINING WALL T2

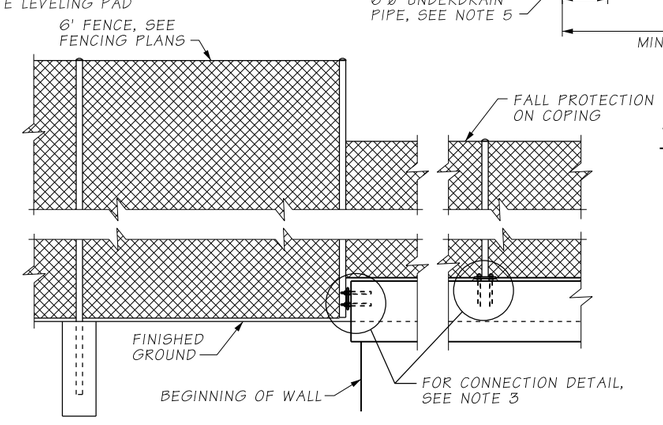

FALL PROTECTION TRANSITION SECTION

LOOKING AT FRONT FACE OF WALL

NOTES:

1. SEE SHEETS RW31 FOR WALL PLAN AND ELEVATION.
2. SEE SHEET RW101 FOR COPING DETAILS.
3. SEE SHEET RW102 AND RW102A FOR FALL PROTECTION DETAILS.
4. SEE DRAINAGE PLANS FOR UNDERDRAIN LOCATIONS AND CONNECTIONS TO DRAINAGE STRUCTURES.
5. UNDERDRAIN CAN BE LOCATED OUTSIDE OF REINFORCEMENT ZONE AT CONTRACTOR'S OPTION.

ATKINSON
AUG 21 2019 KTW
RELEASED FOR CONSTRUCTION

FILE NAME	D:\ICS_workdir\34154\20633_2086\PS_RW32.dgn			
TIME	2:22:30 PM			
DATE	8/19/2019			
PLOTTED BY	USLAS0-APP064$			
DESIGNED BY	K. YOUNG			
ENTERED BY	L. BROWN	REV 0 - RELEASED FOR CONSTRUCTION	08/21/2019	
CHECKED BY	A. FONG	REV B - FINAL REVIEW	07/25/2019	
PROJ. ENGR.	C. MEADE	REV A - PRELIMINARY REVIEW	05/17/2019	
REGIONAL ADM.	J. WYNANDS	REVISION	DATE	BY

REGION NO.	STATE	FED.AID PROJ.NO.
10	WASH	
JOB NUMBER		
CONTRACT NO. C9133		LOCATION NO.

CORY J. CAYWOOD, STATE OF WASHINGTON, 38753, STRUCTURAL ENGINEER, PROFESSIONAL ENGINEER
8/20/19
DATE
P.E. STAMP BOX

DATE
P.E. STAMP BOX

Washington State Department of Transportation

ATKINSON / JACOBS CONSTRUCTION

I-5
STEILACOOM-DUPONT RD TO THORNE LN
CORRIDOR IMPROVEMENTS
MP 120.01 TO MP 124.45

RETAINING WALL T2
TYPICAL SECTIONS & DETAIL

PLAN REF NO RW32

SHEET 809 OF 1456 SHEETS

SECTION 15, T.19N. R.2E. W.M.
CITY OF LAKEWOOD

CURVE DATA					
P.I. STA.	Δ	RADIUS	TANGENT	LENGTH	BACK TANGENT BRG.
WALL T3 10+02.09	4°09'53" RT.	57.55'	2.09'	4.18'	N11°50'35"W
WALL T3 10+38.64	32°30'14" RT.	50.05'	14.59'	28.39'	N12°03'45"E

AS-BUILT

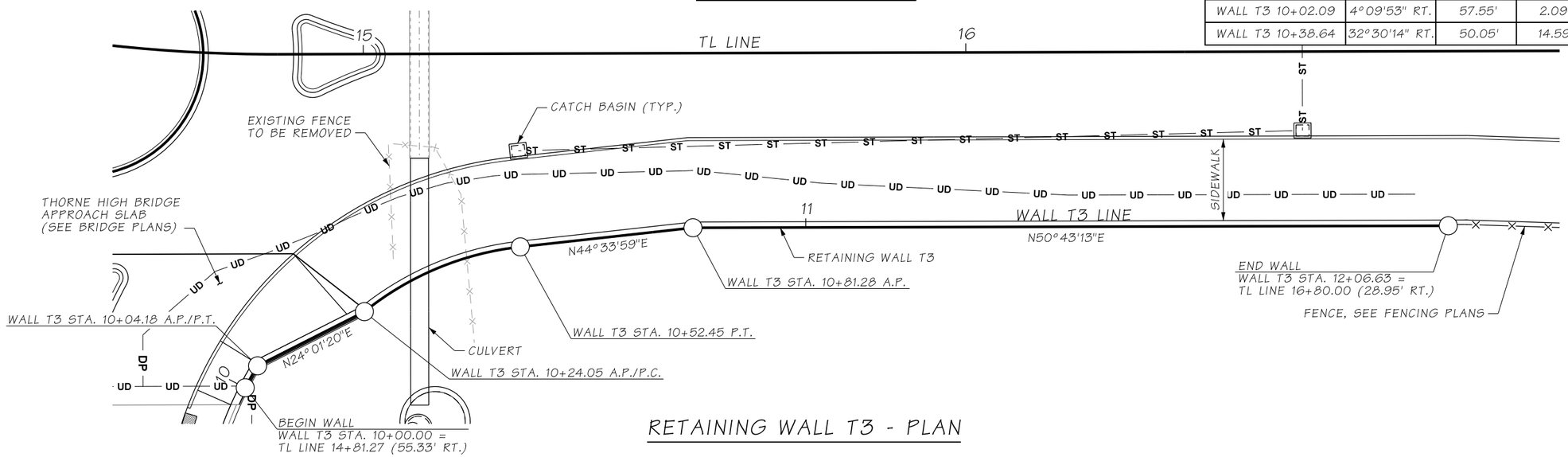

RETAINING WALL T3 - PLAN

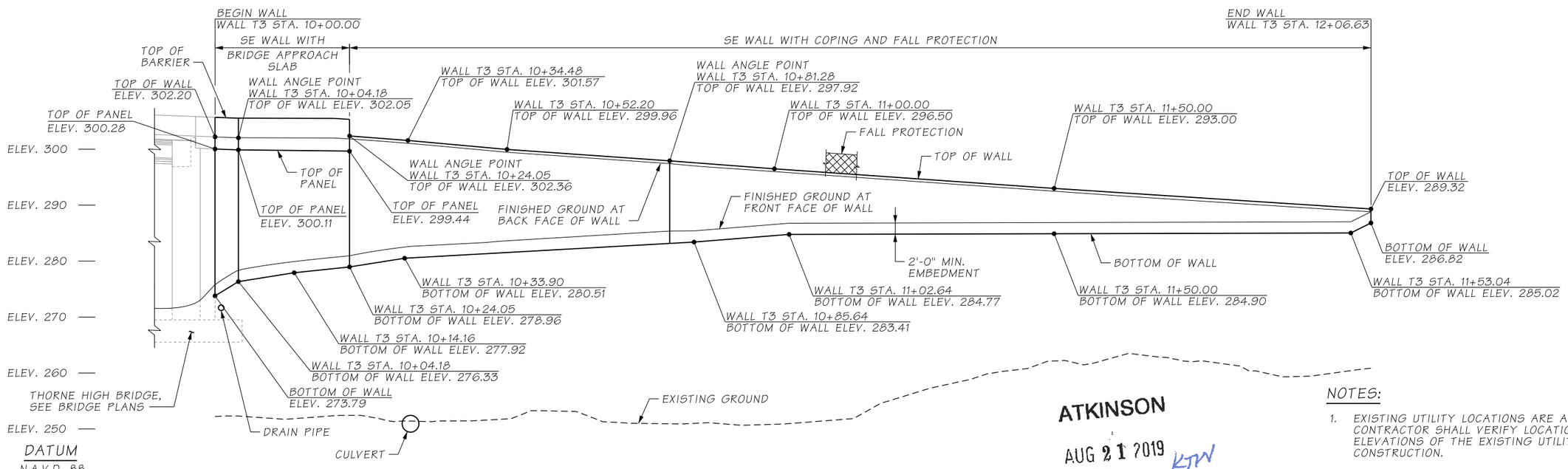

RETAINING WALL T3 - ELEVATION

LOOKING AT FRONT FACE OF WALL

ATKINSON
AUG 21 2019 KTW
RELEASED FOR CONSTRUCTION

NOTES:

1. EXISTING UTILITY LOCATIONS ARE APPROXIMATE. CONTRACTOR SHALL VERIFY LOCATIONS AND ELEVATIONS OF THE EXISTING UTILITIES PRIOR TO CONSTRUCTION.
2. SEE SHEET RW03 FOR GENERAL NOTES AND LEGEND.
3. SEE SHEET RW34 FOR TYPICAL SECTIONS.
4. FOR CATCH BASIN LOCATIONS, SEE DRAINAGE PLANS.

FILE NAME	D:\ICS_workdir\34154\20633_2055\PS_RW33.dgn						
TIME	2:22:22 PM				REGION NO. 10	STATE WASH	FED.AID PROJ.NO.
DATE	8/19/2019						
PLOTTED BY	USLAS0-APP064$				JOB NUMBER		
DESIGNED BY	K. YOUNG						
ENTERED BY	R. REISER	REV 0 - RELEASED FOR CONSTRUCTION	08/21/2019				
CHECKED BY	A. FONG	REV B - FINAL REVIEW	07/25/2019		CONTRACT NO. C9133		LOCATION NO.
PROJ. ENGR.	C. MEADE	REV A - PRELIMINARY REVIEW	05/17/2019				
REGIONAL ADM.	J. WYNANDS	REVISION	DATE	BY			

CORY J. CAYWOOD, STATE OF WASHINGTON, 38759, STRUCTURAL ENGINEER, PROFESSIONAL ENGINEER
8/20/19
DATE
P.E. STAMP BOX

DATE
P.E. STAMP BOX

Washington State Department of Transportation

ATKINSON / JACOBS CONSTRUCTION

I-5
STEILACOOM-DUPONT RD TO THORNE LN
CORRIDOR IMPROVEMENTS
MP 120.01 TO MP 124.45

RETAINING WALL T3
PLAN & ELEVATION

PLAN REF NO RW33

SHEET 810 OF 1456 SHEETS

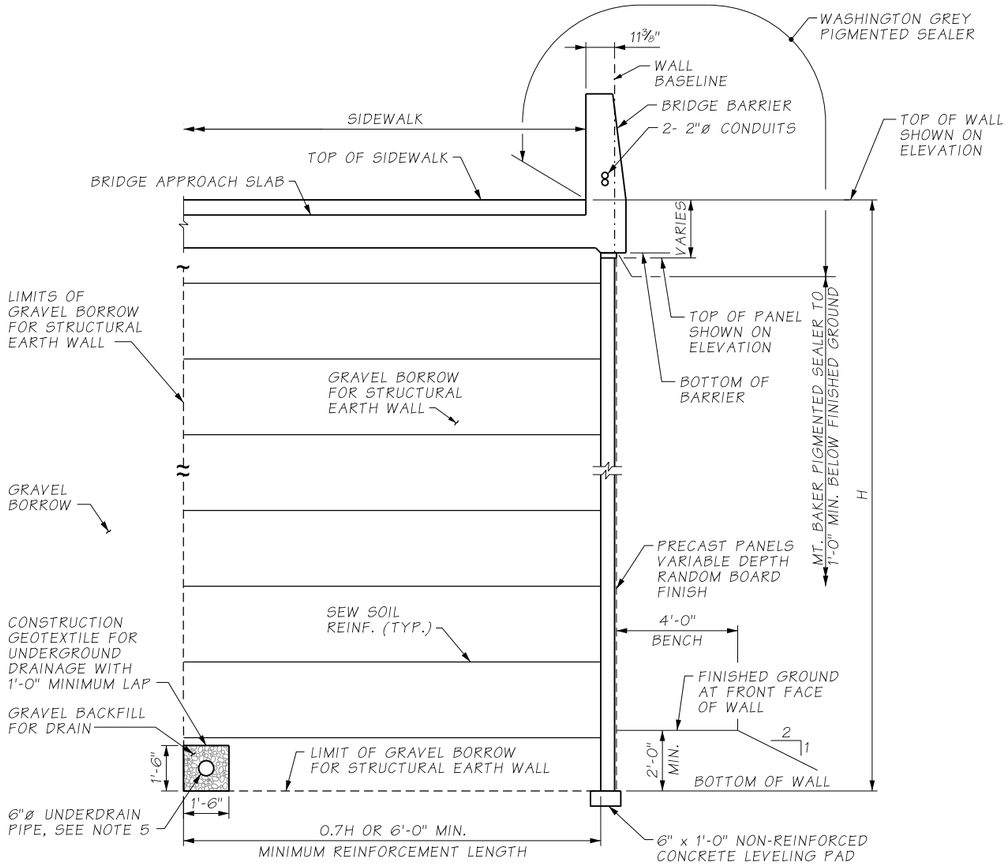

SE WALL WITH APPROACH SLAB

TYPICAL SECTION - RETAINING WALL T3

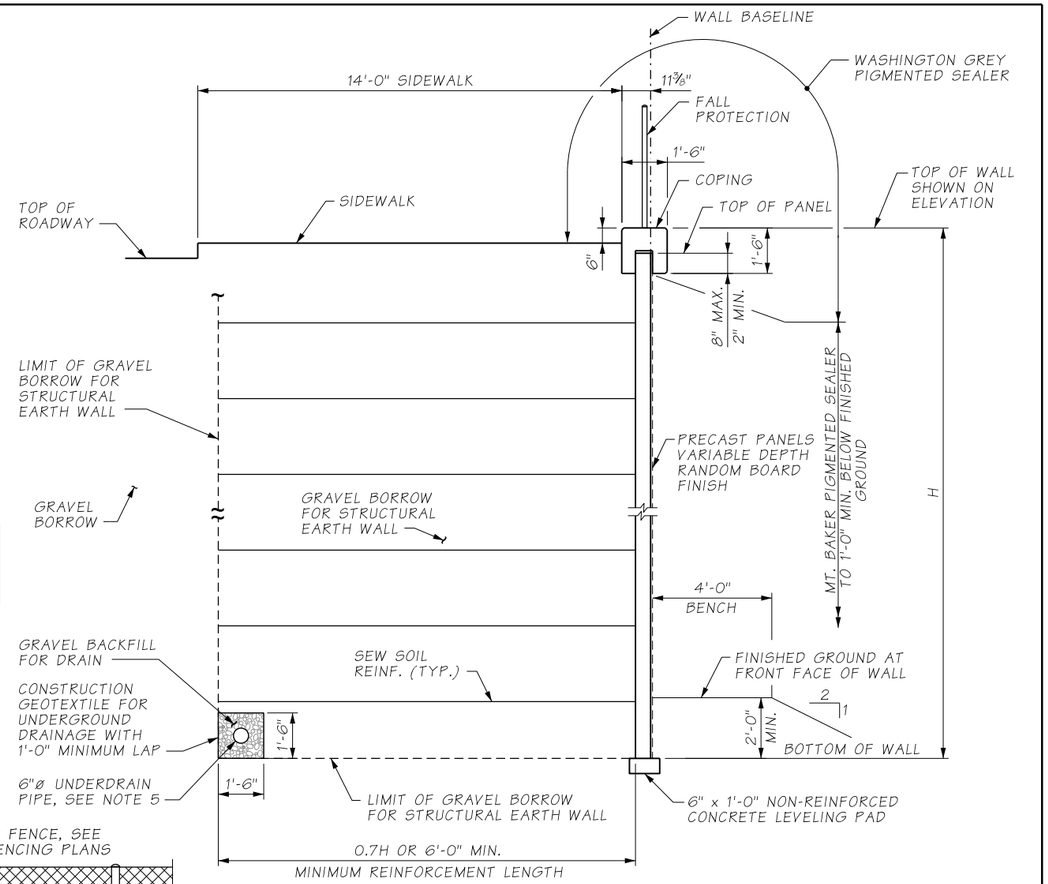

SE WALL WITH COPING AND FALL PROTECTION

TYPICAL SECTION - RETAINING WALL T3

AS-BUILT

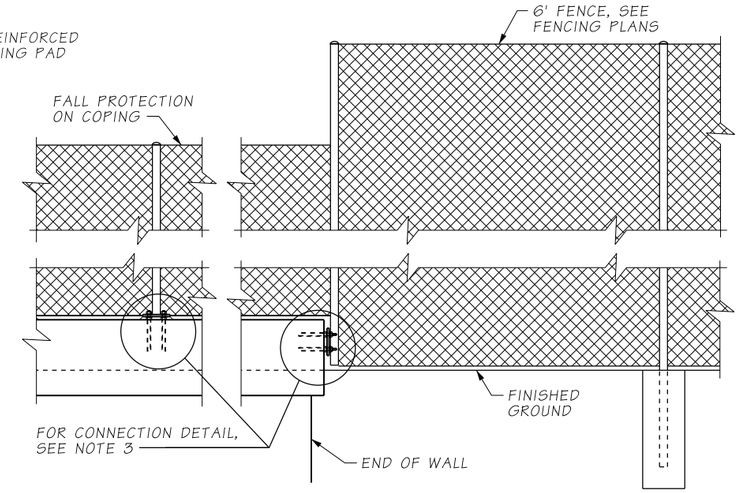

FALL PROTECTION TRANSITION SECTION

LOOKING AT FRONT FACE OF WALL

ATKINSON

AUG 21 2019 KTW

RELEASED FOR CONSTRUCTION

NOTES:

1. SEE SHEET RW33 FOR WALL PLAN AND ELEVATION.
2. SEE SHEET RW101 FOR COPING DETAILS.
3. SEE SHEETS RW102 AND RW102A FOR FALL PROTECTION DETAILS.
4. SEE DRAINAGE PLANS FOR UNDERDRAIN LOCATIONS AND CONNECTIONS TO DRAINAGE STRUCTURES.
5. UNDERDRAIN CAN BE LOCATED OUTSIDE OF REINFORCEMENT ZONE AT CONTRACTOR'S OPTION.

FILE NAME	D:\ICS_workdir\34154\20633_2087\PS_RW34.dgn						
TIME	2:22:04 PM				REGION NO. 10	STATE WASH	FED.AID PROJ.NO.
DATE	8/19/2019						
PLOTTED BY	USLAS0-APP064$				JOB NUMBER		
DESIGNED BY	K. YOUNG						
ENTERED BY	L. BROWN	REV 0 - RELEASED FOR CONSTRUCTION	08/21/2019				
CHECKED BY	A. FONG	REV B - FINAL REVIEW	07/25/2019		CONTRACT NO. C9133		LOCATION NO.
PROJ. ENGR.	C. MEADE	REV A - PRELIMINARY REVIEW	05/17/2019				
REGIONAL ADM.	J. WYNANDS	REVISION	DATE	BY			

CORY J. CAYWOOD, STATE OF WASHINGTON, 38759, STRUCTURAL ENGINEER, PROFESSIONAL ENGINEER — 8/20/19 DATE — P.E. STAMP BOX

DATE — P.E. STAMP BOX

Washington State Department of Transportation

ATKINSON / JACOBS CONSTRUCTION

I-5
STEILACOOM-DUPONT RD TO THORNE LN
CORRIDOR IMPROVEMENTS
MP 120.01 TO MP 124.45

RETAINING WALL T3
TYPICAL SECTIONS & DETAIL

PLAN REF NO RW34

SHEET 811 OF 1456 SHEETS

SECTION 15, T.19N. R.2E. W.M.
CITY OF LAKEWOOD

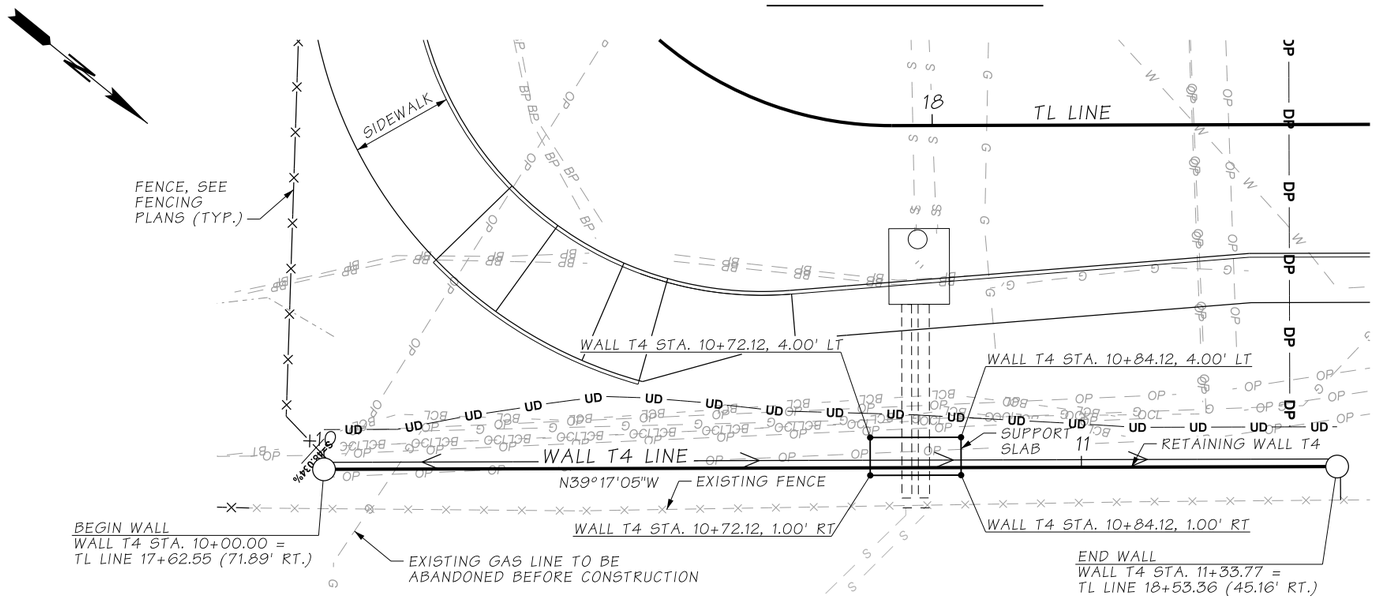

RETAINING WALL T4 - PLAN

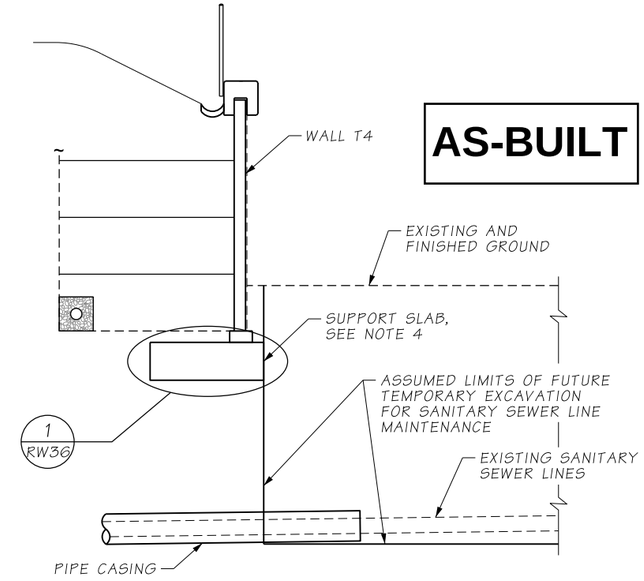

SECTION A

AS-BUILT

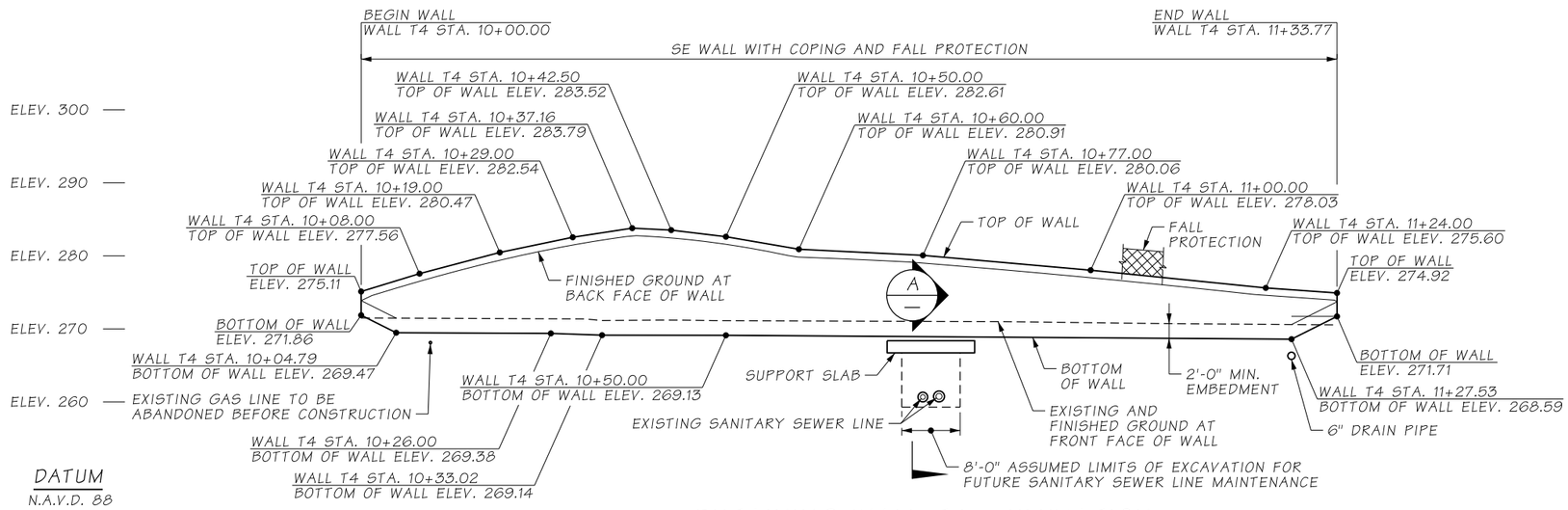

RETAINING WALL T4 - ELEVATION

LOOKING AT FRONT FACE OF WALL

ATKINSON
AUG 21 2019 KTW
RELEASED FOR CONSTRUCTION

NOTES:

1. EXISTING UTILITY LOCATIONS ARE APPROXIMATE. CONTRACTOR SHALL VERIFY LOCATIONS AND ELEVATIONS OF THE EXISTING UTILITIES PRIOR TO CONSTRUCTION.
2. SEE SHEET RW03 FOR GENERAL NOTES AND LEGEND.
3. SEE SHEET RW36 FOR TYPICAL SECTION.
4. CONSTRUCT SUPPORT SLAB FOR FUTURE SANITARY SEWER LINE MAINTENANCE. SUPPORT SLAB IS DESIGNED TO SUPPORT WALL AND MINIMIZE WALL SETTLEMENT DURING FUTURE TEMPORARY EXCAVATION NEXT TO WALL. DESIGN OF SUPPORT SLAB ASSUMES 8' WIDE TRENCH BOX IS USED FOR EXCAVATION OUTSIDE OF WALL LIMITS.

FILE NAME	D:\ICS_workdir\34154\20633_2061\PS_RW35.dgn				REGION NO. 10	STATE WASH	FED.AID PROJ.NO.
TIME	2:22:24 PM						
DATE	8/19/2019						
PLOTTED BY	USLAS0-APP064$				JOB NUMBER		
DESIGNED BY	K. YOUNG						
ENTERED BY	R. REISER	REV 0 - RELEASED FOR CONSTRUCTION	08/21/2019				
CHECKED BY	A. FONG	REV B - FINAL REVIEW	07/25/2019		CONTRACT NO. C9133		LOCATION NO.
PROJ. ENGR.	C. MEADE	REV A - PRELIMINARY REVIEW	05/17/2019				
REGIONAL ADM.	J. WYNANDS	REVISION	DATE	BY			

CORT J. CAYWOOD — STATE OF WASHINGTON — 38133 — STRUCTURAL — PROFESSIONAL ENGINEER
8/20/19
DATE
P.E. STAMP BOX

DATE
P.E. STAMP BOX

Washington State Department of Transportation

ATKINSON CONSTRUCTION / JACOBS

I-5
STEILACOOM-DUPONT RD TO THORNE LN
CORRIDOR IMPROVEMENTS
MP 120.01 TO MP 124.45

RETAINING WALL T4
PLAN & ELEVATION

PLAN REF NO RW35

SHEET 812 OF 1456 SHEETS

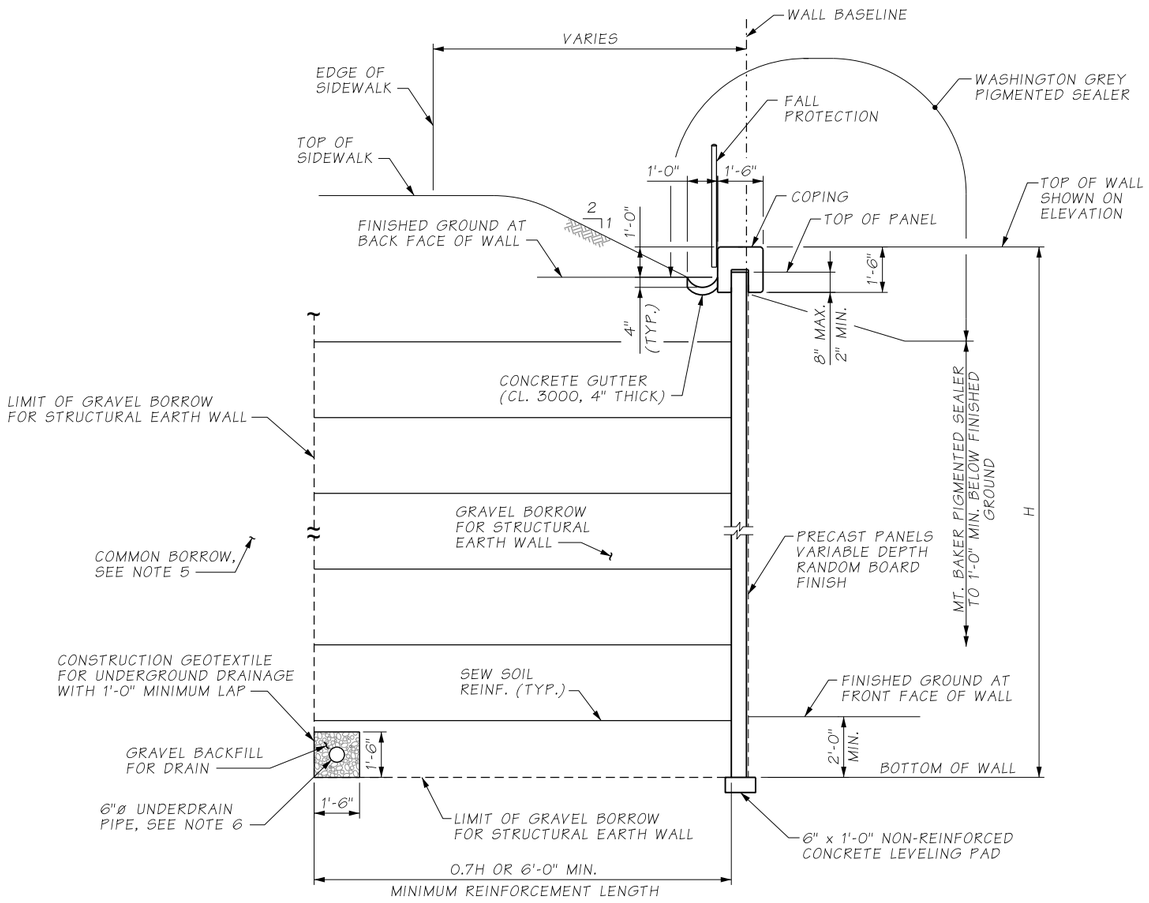

SE WALL WITH COPING AND FALL PROTECTION

TYPICAL SECTION - RETAINING WALL T4

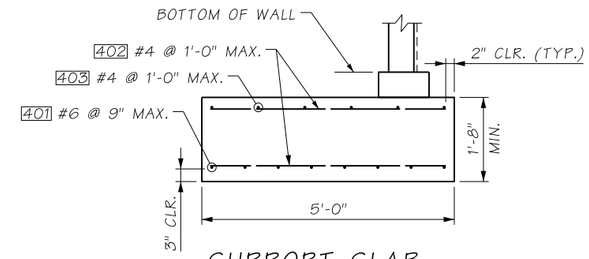

SUPPORT SLAB DETAIL

1
RW35

AS-BUILT

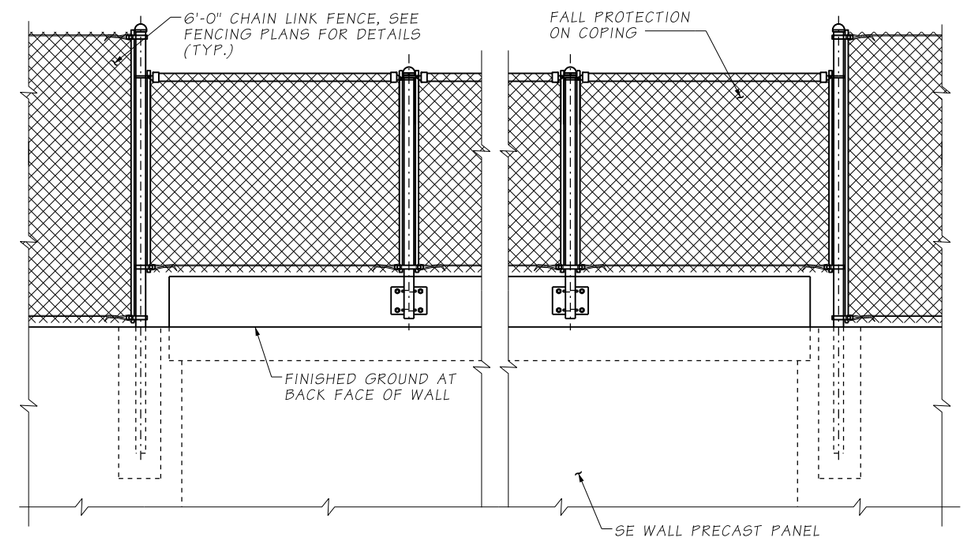

FALL PROTECTION TRANSITION DETAIL

LOOKING AT BACK FACE OF WALL

NOTES:

1. SEE SHEET RW35 FOR WALL PLAN AND ELEVATION.
2. SEE SHEET RW101 FOR COPING DETAILS.
3. SEE SHEET RW102 FOR FALL PROTECTION DETAILS.
4. SEE DRAINAGE PLANS FOR UNDERDRAIN LOCATIONS AND CONNECTIONS TO DRAINAGE STRUCTURES.
5. ROADWAY EMBANKMENT SHALL BE SELECT BORROW WITHIN LIMITS OF BRIDGE APPROACH EMBANKMENTS. SEE STANDARD SPECIFICATIONS SECTION 1-01.3 FOR ADDITIONAL INFORMATION.
6. UNDERDRAIN CAN BE LOCATED OUTSIDE OF REINFORCEMENT ZONE AT CONTRACTOR'S OPTION.

ATKINSON
AUG 21 2019 KTN
RELEASED FOR CONSTRUCTION

FILE NAME	D:\ICS_workdir\34154\20633_2088\PS_RW36.dgn						
TIME	2:22:32 PM				REGION NO. 10	STATE WASH	FED.AID PROJ.NO.
DATE	8/19/2019						
PLOTTED BY	USLAS0-APP064$				JOB NUMBER		
DESIGNED BY	K. YOUNG						
ENTERED BY	L. BROWN	REV 0 - RELEASED FOR CONSTRUCTION	08/21/2019				
CHECKED BY	A. FONG	REV B - FINAL REVIEW	07/25/2019		CONTRACT NO. C9133		LOCATION NO.
PROJ. ENGR.	C. MEADE	REV A - PRELIMINARY REVIEW	05/17/2019				
REGIONAL ADM.	J. WYNANDS	REVISION	DATE	BY			

CORY J. CAYWOOD, STATE OF WASHINGTON, 38139, STRUCTURAL ENGINEER, PROFESSIONAL ENGINEER
8/20/19
DATE
P.E. STAMP BOX

DATE
P.E. STAMP BOX

Washington State Department of Transportation

ATKINSON CONSTRUCTION / JACOBS

I-5
STEILACOOM-DUPONT RD TO THORNE LN
CORRIDOR IMPROVEMENTS
MP 120.01 TO MP 124.45

RETAINING WALL T4
TYPICAL SECTION & DETAILS

PLAN REF NO RW36

SHEET 813 OF 1456 SHEETS

SECTION 15, T.19N. R.2E. W.M.
CITY OF LAKEWOOD

AS-BUILT

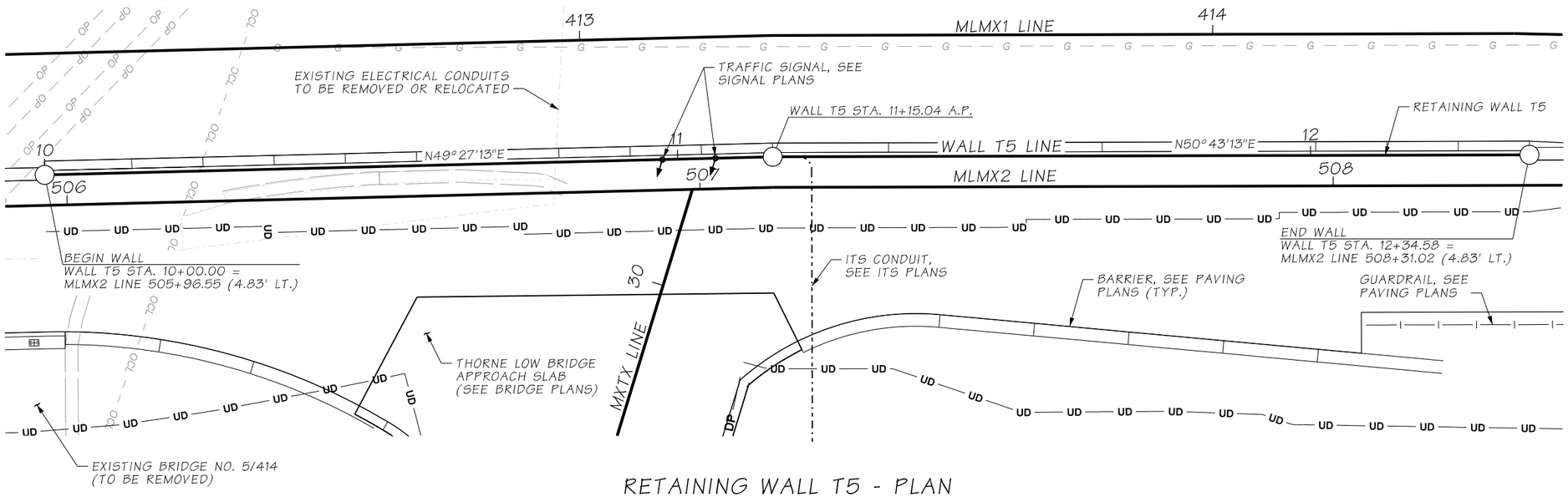

RETAINING WALL T5 - PLAN

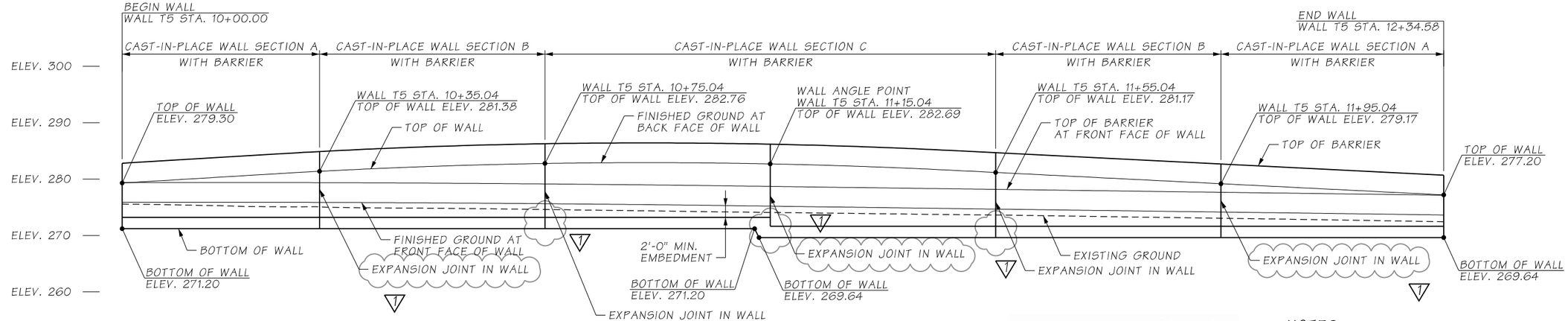

DATUM
N.A.V.D. 88

RETAINING WALL T5 - ELEVATION
LOOKING AT BACK FACE OF WALL

ATKINSON
OCT 01 2019 KTW
RELEASED FOR CONSTRUCTION

NOTES:

1. EXISTING UTILITY LOCATIONS ARE APPROXIMATE. CONTRACTOR SHALL VERIFY LOCATIONS AND ELEVATIONS OF THE EXISTING UTILITIES PRIOR TO CONSTRUCTION.
2. SEE SHEET RW03 FOR GENERAL NOTES AND LEGEND.
3. SEE SHEET RW38 FOR TYPICAL SECTION.

FILE NAME	c:\pwworking\jacobs_b&l\youngkl2\dms20633\PS_RW37.dgn			
TIME	8:23:05 AM			
DATE	9/26/2019			
PLOTTED BY	youngkl2			
DESIGNED BY	K. YOUNG	REV 1 - RFI0238	10/01/2019	
ENTERED BY	L. BROWN	REV 0 - RELEASED FOR CONSTRUCTION	08/21/2019	
CHECKED BY	A. FONG	REV B - FINAL REVIEW	07/25/2019	
PROJ. ENGR.	C. MEADE	REV A - PRELIMINARY REVIEW	05/17/2019	
REGIONAL ADM.	J. WYNANDS	REVISION	DATE	BY

REGION NO.	STATE	FED.AID PROJ.NO.
10	WASH	
JOB NUMBER		
CONTRACT NO. C9133		LOCATION NO.

P.E. STAMP BOX — DATE 9/26/19

P.E. STAMP BOX — DATE

Washington State Department of Transportation

ATKINSON / JACOBS CONSTRUCTION

I-5
STEILACOOM-DUPONT RD TO THORNE LN
CORRIDOR IMPROVEMENTS
MP 120.01 TO MP 124.45

RETAINING WALL T5
PLAN & ELEVATION

PLAN REF NO RW37

SHEET 814 OF 1456 SHEETS

NOTES:

1. SEE SHEET RW37 FOR WALL PLAN AND ELEVATION.
2. SEE DRAINAGE PLANS FOR UNDERDRAIN LOCATIONS AND CONNECTIONS TO DRAINAGE STRUCTURES.
3. ROADWAY EMBANKMENT SHALL BE SELECT BORROW WITHIN LIMITS OF BRIDGE APPROACH EMBANKMENTS. SEE STANDARD SPECIFICATIONS SECTION 1-01.3 FOR ADDITIONAL INFORMATION.
4. UNDERDRAIN CAN BE LOCATED OUTSIDE OF THE LIMIT OF GRAVEL BACKFILL AT CONTRACTOR'S OPTION.

AS-BUILT

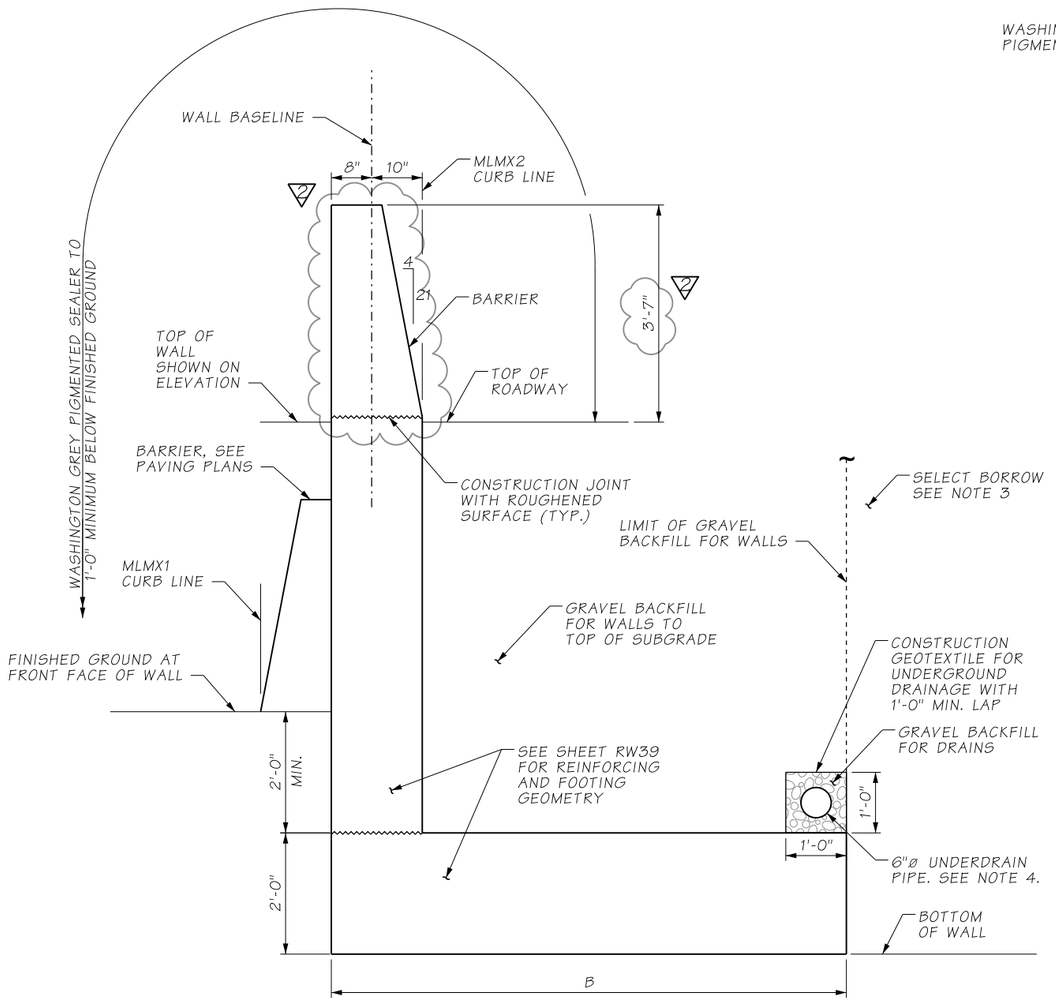

SECTION A

CAST-IN-PLACE WALL WITH BARRIER

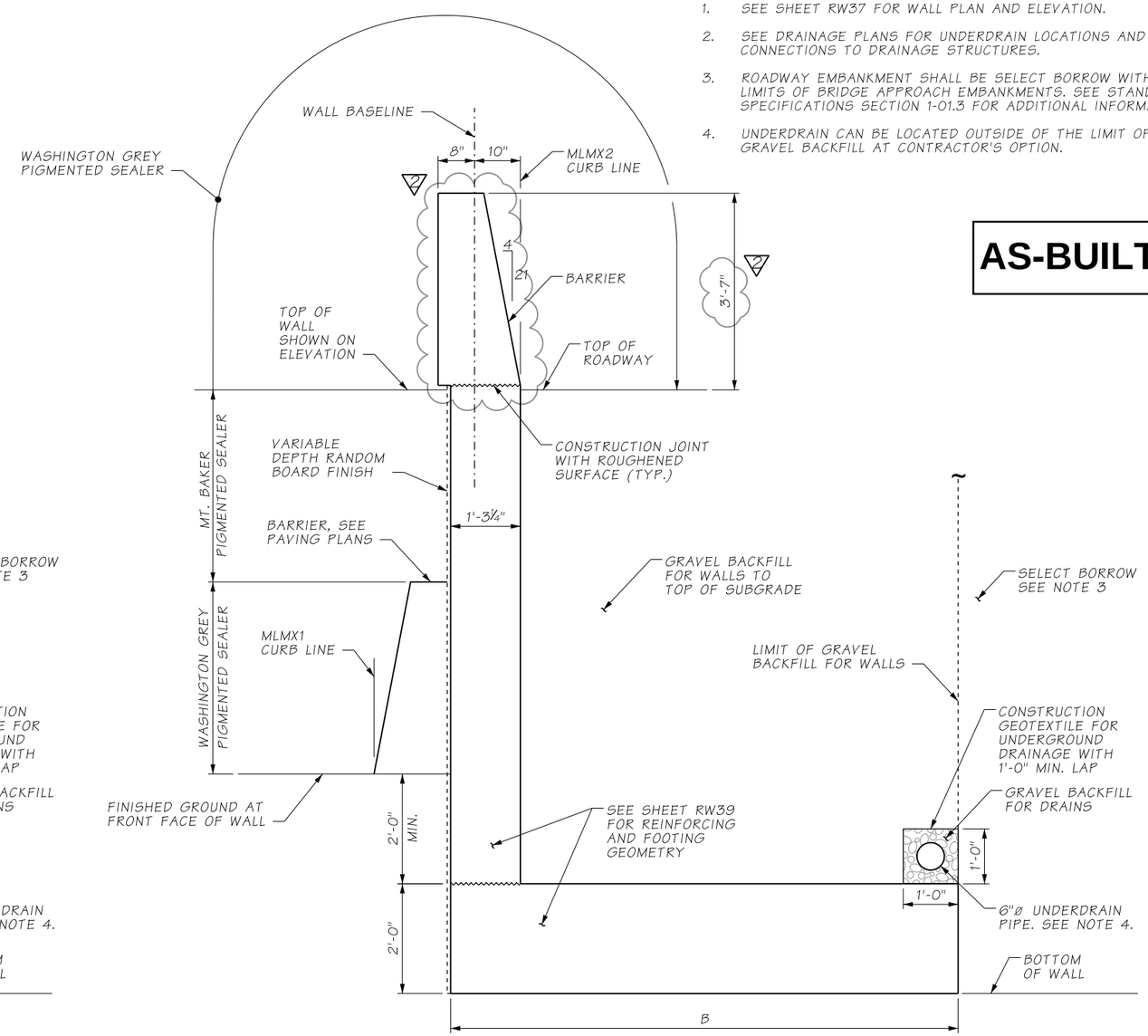

SECTION B & C

CAST-IN-PLACE WALL WITH BARRIER

ATKINSON
NOV 10 2020 KRW
RELEASED FOR CONSTRUCTION

TYPICAL SECTIONS - RETAINING WALL T5

FILE NAME	D:\ICS_workdir\67545\20633_2184\PS_RW38.dgn			
TIME	7:52:21 AM			
DATE	11/9/2020			
PLOTTED BY	USLAS0-APP064$	REV 2 - RFI0547	11/09/2020	
DESIGNED BY	K. YOUNG	REV 1 - RFI0463	06/02/2020	
ENTERED BY	R. REISER	REV 0 - RELEASED FOR CONSTRUCTION	08/21/2019	
CHECKED BY	A. FONG	REV B - FINAL REVIEW	07/25/2019	
PROJ. ENGR.	C. MEADE	REV A - PRELIMINARY REVIEW	05/17/2019	
REGIONAL ADM.	J. WYNANDS	REVISION	DATE	BY

REGION NO.	STATE	FED.AID PROJ.NO.
10	WASH	
JOB NUMBER		
CONTRACT NO. C9133		LOCATION NO.

CORY J. CAYWOOD, STATE OF WASHINGTON, 38733, STRUCTURAL ENGINEER, PROFESSIONAL ENGINEER
11/9/20
DATE
P.E. STAMP BOX

DATE
P.E. STAMP BOX

Washington State Department of Transportation

ATKINSON CONSTRUCTION / JACOBS

I-5
STEILACOOM-DUPONT RD TO THORNE LN
CORRIDOR IMPROVEMENTS
MP 120.01 TO MP 124.45

RETAINING WALL T5
TYPICAL SECTION

PLAN REF NO RW38

SHEET 815 OF 1456 SHEETS

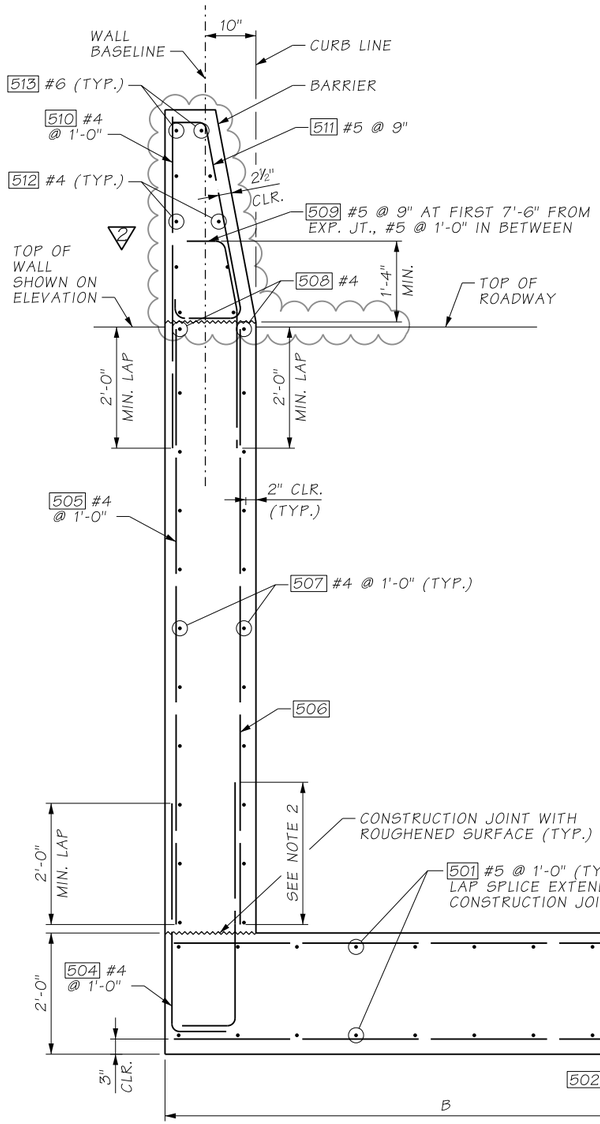

REINFORCEMENT SECTION A

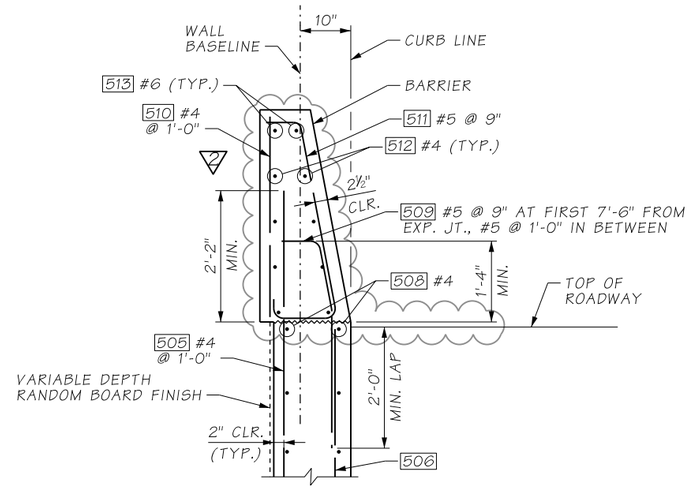

REINFORCEMENT SECTION B & C

FOOTING DIMENSION	
SECTION	B
A	8'-6"
B	9'-3"
C	10'-3"

REINFORCING			
SECTION	BAR MARK	BAR NO.	SPACING (IN.)
A	502	#5	6
	503	#5	6
	506	#5	6
B	502	#6	6
	503	#6	6
	506	#6	6
C	502	#7	6
	503	#7	6
	506	#7	6

NOTES:

1. CONCRETE IN WALL SECTIONS SHALL BE PLACED SEPARATELY BETWEEN EXPANSION JOINTS WITH A MINIMUM 24 HOUR PERIOD BEFORE PLACING CONCRETE IN THE ADJACENT SECTION.
2. LAP SPLICES MAY BE ADDED AT CONTRACTORS OPTION. MINIMUM LAP SPLICES ARE AS FOLLOWS UNLESS NOTED OTHERWISE:
   #4 = 2'-0"
   #5 = 2'-0"
   #6 = 2'-6"
   #7 = 3'-0"
   #8 = 3'-6"
   #9 = 4'-0"
3. CONSTRUCTION JOINTS IN THE FOOTING SHALL BE SPACED AT 120 FT MAXIMUM. REINFORCEMENT SHALL BE CONTINUOUS THROUGH THE CONSTRUCTION JOINT.

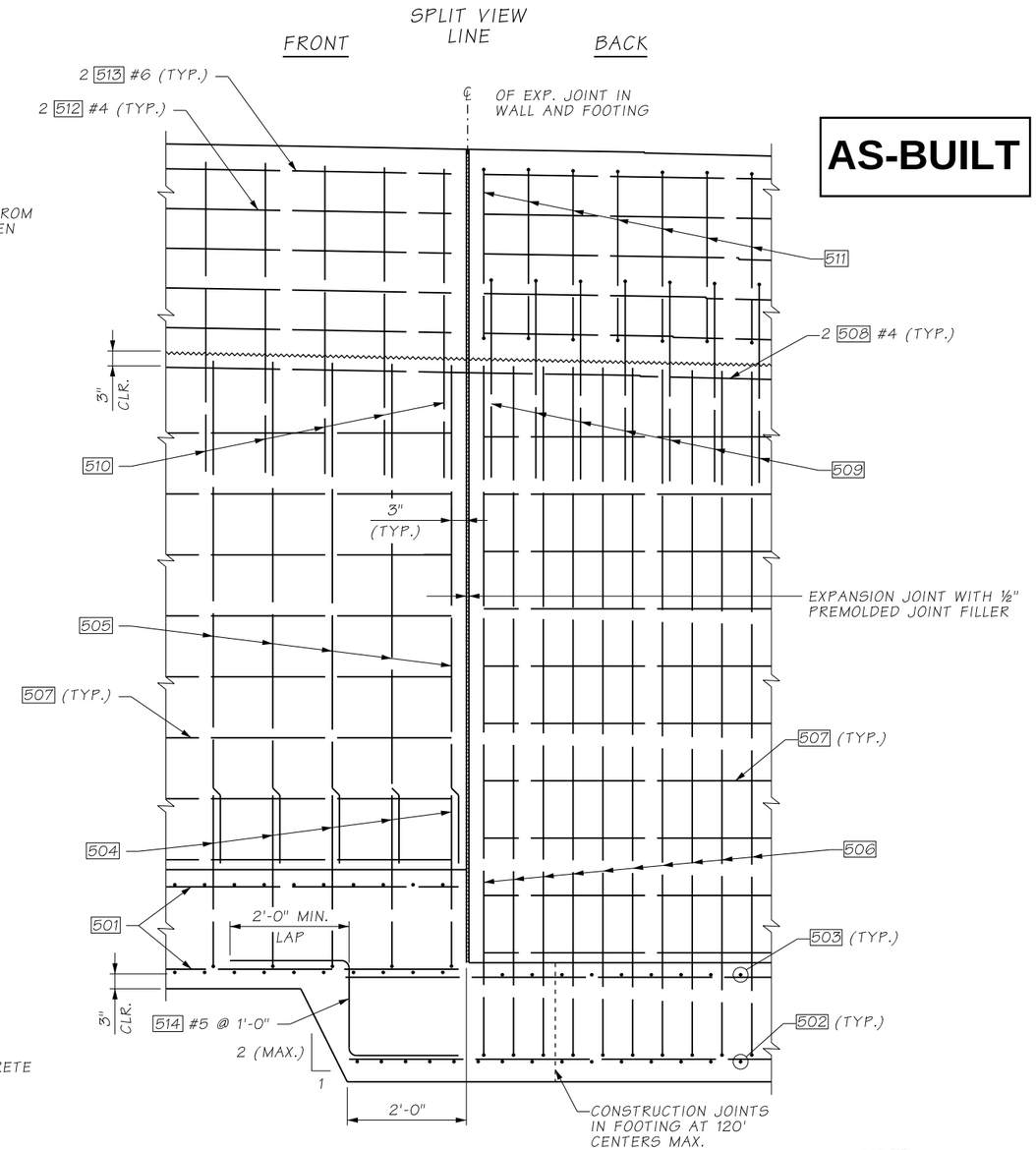

SPLIT ELEVATION VIEW

(SHOWING SEPARATE REBAR LAYERS)

ATKINSON
NOV 10 2020 KTW
RELEASED FOR CONSTRUCTION

FILE NAME	D:\ICS_workdir\67545\20633_2089\PS_RW39.dgn				REGION NO. 10	STATE WASH	FED.AID PROJ.NO.
TIME	7:54:02 AM						
DATE	11/9/2020						
PLOTTED BY	USLAS0-APP064$						
DESIGNED BY	K. YOUNG	REV 2 - RFI0547	11/09/2020		JOB NUMBER		
ENTERED BY	R. REISER	REV 1 - RFI0238	10/01/2019				
CHECKED BY	A. FONG	REV 0 - RELEASED FOR CONSTRUCTION	08/21/2019		CONTRACT NO. C9133		LOCATION NO.
PROJ. ENGR.	C. MEADE	REV A - FINAL REVIEW	07/25/2019				
REGIONAL ADM.	J. WYNANDS	REVISION	DATE	BY			

CORY J. CAYWOOD, STATE OF WASHINGTON, 36753, STRUCTURAL ENGINEER, PROFESSIONAL ENGINEER
11/9/20
DATE
P.E. STAMP BOX

P.E. STAMP BOX
DATE

Washington State Department of Transportation

ATKINSON / JACOBS CONSTRUCTION

I-5
STEILACOOM-DUPONT RD TO THORNE LN
CORRIDOR IMPROVEMENTS
MP 120.01 TO MP 124.45

RETAINING WALL T5
REINFORCEMENT DETAILS

PLAN REF NO RW39

SHEET 816 OF 1456 SHEETS

NOTES:

1. FOR DETAILS OF SIGNALS REFER TO SIGNAL PLANS.
2. VERIFY SIGNAL POLE ANCHOR BOLT SIZES AND SPACING WITH POLE MANUFACTURER.
3. ALL ANCHOR RODS SHALL BE GALVANIZED AFTER FABRICATION IN ACCORDANCE WITH ASTM F 2329.
4. SEE ITS AND SIGNAL PLANS FOR CONDUIT DETAILS AND JUNCTION BOX LOCATIONS.
5. SEE ITS PLANS TO DETERMINE CONDUIT EXIT LOCATIONS AT BARRIER.
6. GROUNDING CONDUCTOR SHALL BE NON-INSULATED #4 AWG STRANDED COPPER, PROVIDE 3'-0" MIN. SLACK. CLAMP TO STEEL REINFORCING BAR WITH CONNECTOR SUITABLE FOR USE EMBEDDED IN CONCRETE.

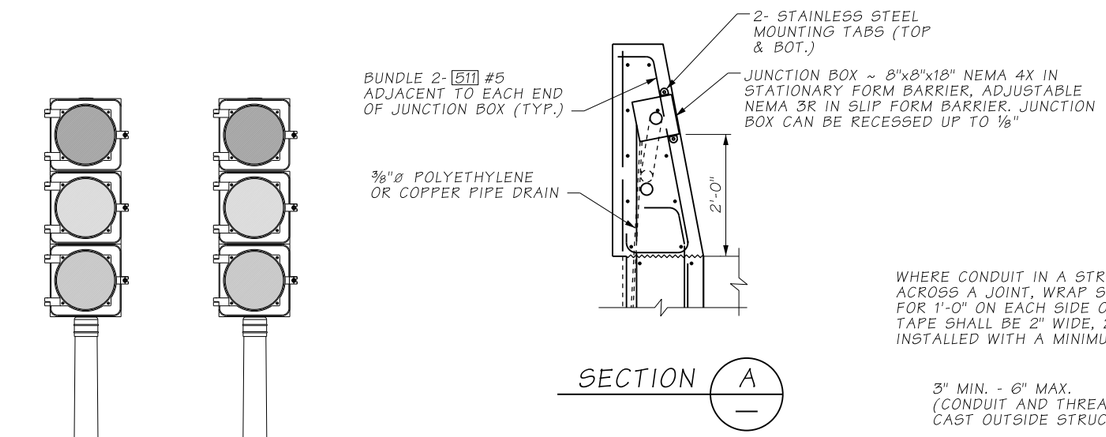

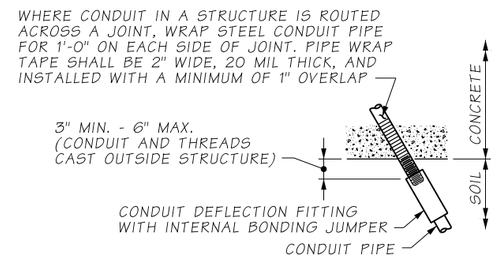

CONDUIT DEFLECTION FITTING A

CONDUIT FITTING - TYPE DX FOR DEFLECTION OF 30° AND ¾" MOVEMENT. PLACE AT CONDUIT PIPE EXIT FROM STRUCTURE AND SHALL BE IN NEUTRAL STATE AFTER INSTALLATION.

AS-BUILT

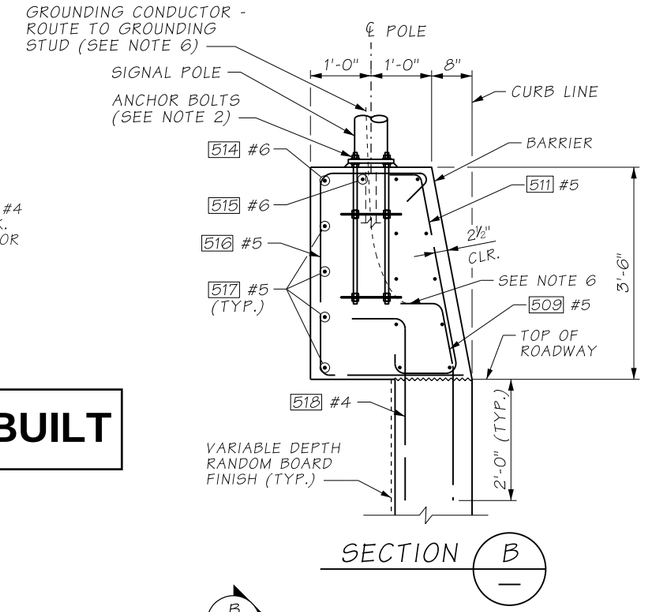

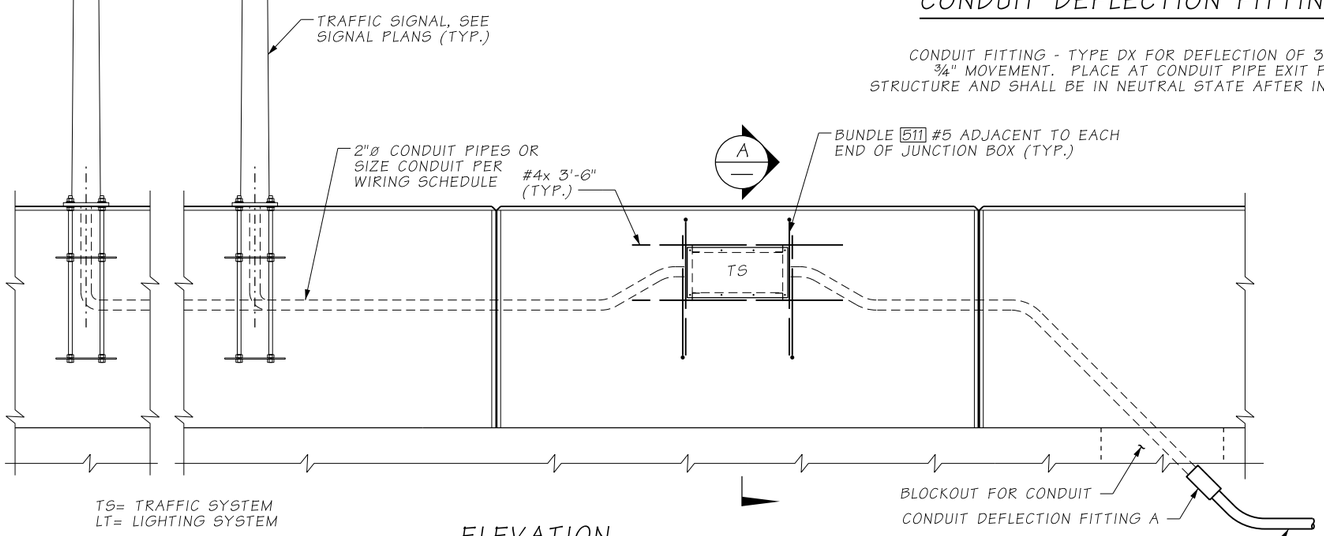

ELEVATION

CONDUITS & J-BOX IN TRAFFIC BARRIER

LABEL JUNCTION BOX COVER IN ACCORDANCE WITH STANDARD SPECIFICATION 9-29.2(4) AND SPECIAL PROVISIONS.
LOCATE JUNCTION BOX BETWEEN BARRIER DUMMY JOINT.

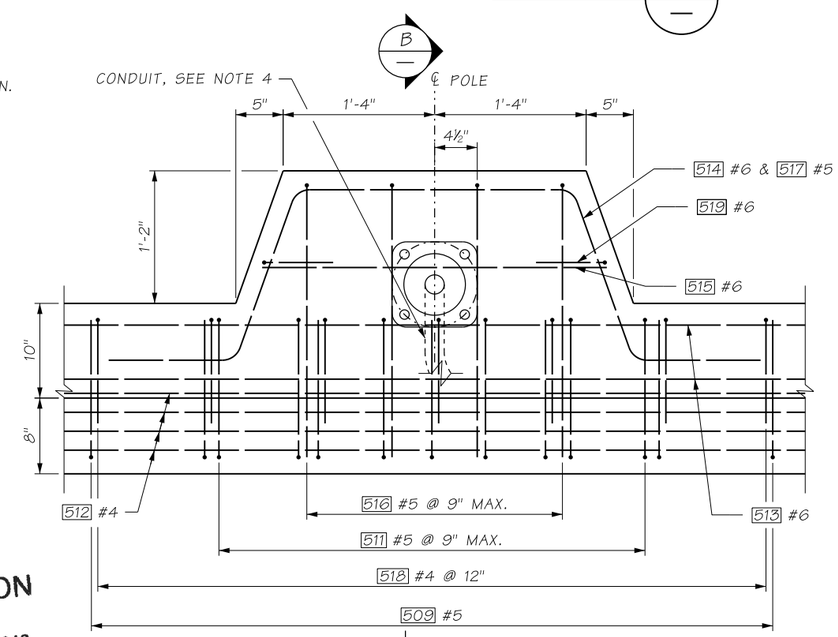

PLAN - AT SIGNAL POLE

ATKINSON
AUG 21 2019
KTW
RELEASED FOR CONSTRUCTION

FILE NAME	D:\ICS_workdir\34154\20633_2318\PS_RW39A.dgn						
TIME	2:22:16 PM				REGION NO.	STATE	FED.AID PROJ.NO.
DATE	8/19/2019				10	WASH	
PLOTTED BY	USLAS0-APP064$				JOB NUMBER		
DESIGNED BY	K. YOUNG						
ENTERED BY	R. REISER						
CHECKED BY	A. FONG	REV 0 - RELEASED FOR CONSTRUCTION	08/21/2019		CONTRACT NO.		LOCATION NO.
PROJ. ENGR.	C. MEADE	REV A - FINAL REVIEW	07/25/2019		C9133		
REGIONAL ADM.	J. WYNANDS	REVISION	DATE	BY			

CORY J. CAYWOOD — STATE OF WASHINGTON — 38133 — STRUCTURAL ENGINEER — PROFESSIONAL ENGINEER
8/20/19
DATE
P.E. STAMP BOX

DATE
P.E. STAMP BOX

Washington State Department of Transportation

ATKINSON / JACOBS CONSTRUCTION

I-5
STEILACOOM-DUPONT RD TO THORNE LN
CORRIDOR IMPROVEMENTS
MP 120.01 TO MP 124.45

RETAINING WALL T5
BARRIER DETAILS

PLAN REF NO
RW39A

SHEET 817 OF 1456 SHEETS

SECTION 15/22, T.19N. R.2E. W.M.
CITY OF LAKEWOOD

CURVE DATA					
P.I. STA.	Δ	RADIUS	TANGENT	LENGTH	BACK TANGENT BRG.
WALL T6A 10+56.91	0°33'39" LT.	11628.44'	56.91'	113.81'	N53°03'11"E
WALL T6B 10+23.55	0°36'13" LT.	4471.08'	23.55'	47.09'	N51°21'19"E

AS-BUILT

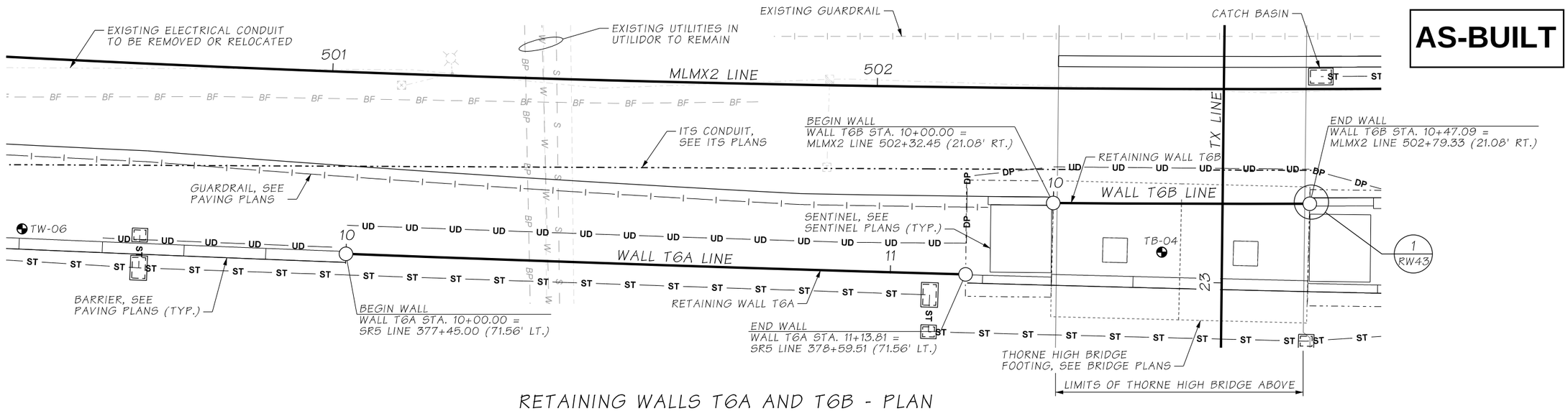

RETAINING WALLS T6A AND T6B - PLAN

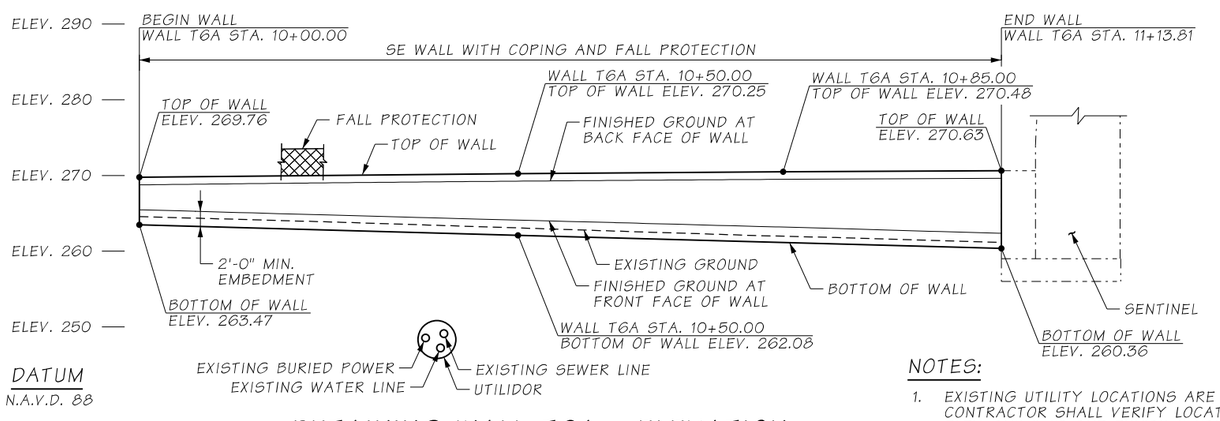

RETAINING WALL T6A - ELEVATION

LOOKING AT FRONT FACE OF WALL

NOTES:

1. EXISTING UTILITY LOCATIONS ARE APPROXIMATE. CONTRACTOR SHALL VERIFY LOCATIONS AND ELEVATIONS OF THE EXISTING UTILITIES PRIOR TO CONSTRUCTION.
2. SEE SHEET RW03 FOR GENERAL NOTES AND LEGEND.
3. SEE SHEET RW43 FOR TYPICAL SECTION.
4. FOR CATCH BASIN LOCATIONS, SEE DRAINAGE PLANS.

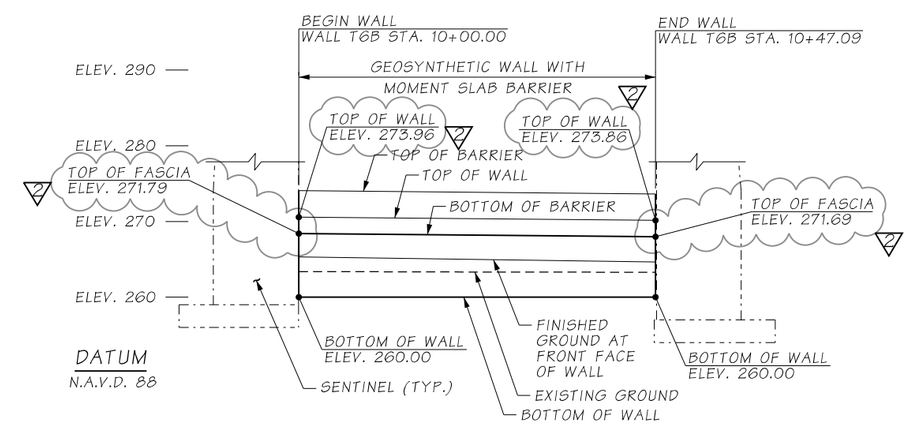

RETAINING WALL T6B - ELEVATION

LOOKING AT FRONT FACE OF WALL

ATKINSON
JUN 08 2020 KTW
RELEASED FOR CONSTRUCTION

FILE NAME	c:\pwworking\jacobs_b&l\reiserrw\dms20633\PS_RW40.dgn				REGION NO. 10	STATE WASH	FED.AID PROJ.NO.
TIME	6:48:12 AM						
DATE	6/2/2020						
PLOTTED BY	ReiserRW	REV 2 - RFI0399	06/02/2020		JOB NUMBER		
DESIGNED BY	K. YOUNG	REV 1 - RFI0243	10/31/2019				
ENTERED BY	L. BROWN	REV 0 - RELEASED FOR CONSTRUCTION	07/03/2019				
CHECKED BY	C. CAYWOOD	REV B - FINAL REVIEW	06/14/2019		CONTRACT NO. C9133		LOCATION NO.
PROJ. ENGR.	C. MEADE	REV A - PRELIMINARY REVIEW	05/17/2019				
REGIONAL ADM.	J. WYNANDS	REVISION	DATE	BY			

CORY J. CAYWOOD · STATE OF WASHINGTON · 38793 · STRUCTURAL · PROFESSIONAL ENGINEER
6/2/20
DATE
P.E. STAMP BOX

DATE
P.E. STAMP BOX

Washington State Department of Transportation

ATKINSON CONSTRUCTION / JACOBS

I-5
STEILACOOM-DUPONT RD TO THORNE LN
CORRIDOR IMPROVEMENTS
MP 120.01 TO MP 124.45

RETAINING WALLS T6A & T6B
PLAN & ELEVATION

PLAN REF NO RW40

SHEET 818 OF 1456 SHEETS

SECTION 15, T.19N. R.2E. W.M.
CITY OF LAKEWOOD

CURVE DATA					
P.I. STA.	Δ	RADIUS	TANGENT	LENGTH	BACK TANGENT BRG.
WALL T6C 11+78.91	1°45'47" LT.	11628.44'	178.91'	357.79'	N52°06'33"E

AS-BUILT

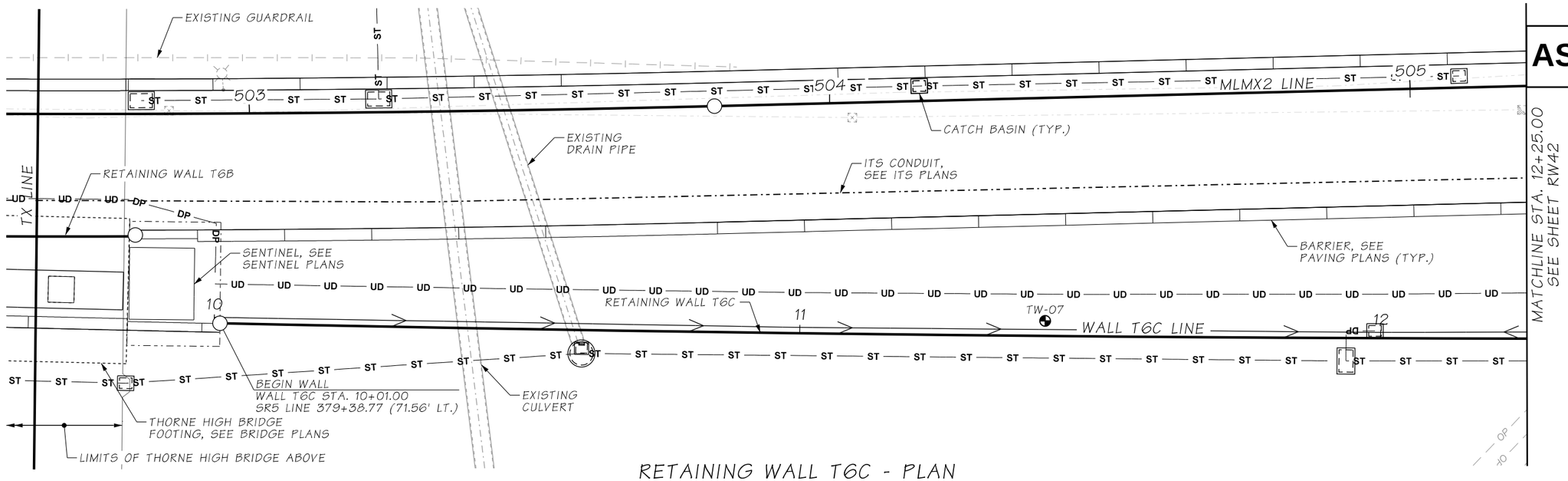

RETAINING WALL T6C - PLAN

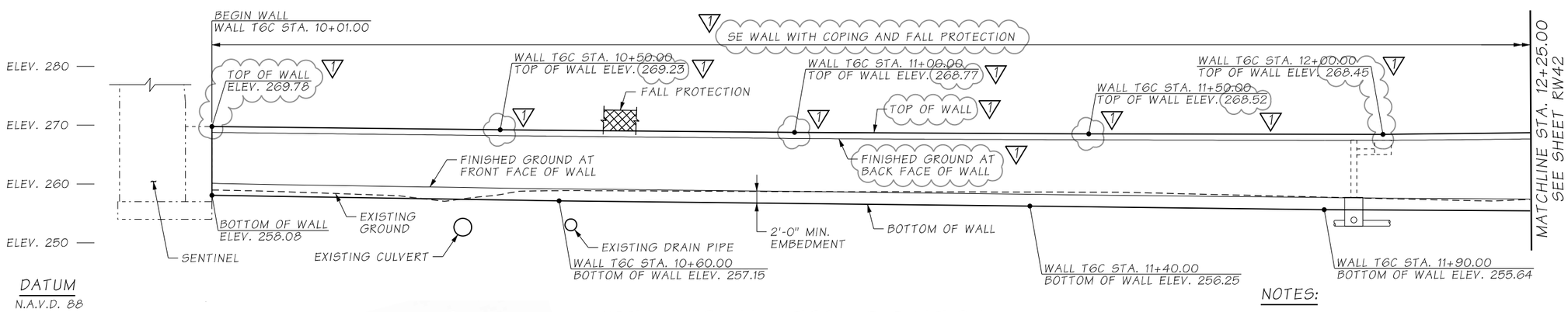

RETAINING WALL T6C - ELEVATION

LOOKING AT FRONT FACE OF WALL

ATKINSON
NOV 01 2019 KTW
RELEASED FOR CONSTRUCTION

NOTES:

1. EXISTING UTILITY LOCATIONS ARE APPROXIMATE. CONTRACTOR SHALL VERIFY LOCATIONS AND ELEVATIONS OF THE EXISTING UTILITIES PRIOR TO CONSTRUCTION.
2. SEE SHEET RW03 FOR GENERAL NOTES AND LEGEND.
3. SEE SHEET RW43 FOR TYPICAL SECTION.
4. FOR CATCH BASIN LOCATIONS, SEE DRAINAGE PLANS.

FILE NAME	c:\pwworking\jacobs_b&l\youngkl2\dms20633\PS_RW41.dgn			
TIME	12:11:45 PM			
DATE	10/31/2019			
PLOTTED BY	youngkl2			
DESIGNED BY	K. YOUNG	REV 1 - RFI0243	10/31/2019	
ENTERED BY	L. BROWN	REV 0 - RELEASED FOR CONSTRUCTION	07/03/2019	
CHECKED BY	C. CAYWOOD	REV B - FINAL REVIEW	06/14/2019	
PROJ. ENGR.	C. MEADE	REV A - PRELIMINARY REVIEW	05/17/2019	
REGIONAL ADM.	J. WYNANDS	REVISION	DATE	BY

REGION NO.	STATE	FED.AID PROJ.NO.
10	WASH	
JOB NUMBER		
CONTRACT NO. C9133		LOCATION NO.

CORY J. CAYWOOD, STATE OF WASHINGTON, 38795, STRUCTURAL, PROFESSIONAL ENGINEER
11/1/19
DATE
P.E. STAMP BOX

DATE
P.E. STAMP BOX

Washington State Department of Transportation

ATKINSON / JACOBS CONSTRUCTION

I-5
STEILACOOM-DUPONT RD TO THORNE LN
CORRIDOR IMPROVEMENTS
MP 120.01 TO MP 124.45

RETAINING WALL T6C
PLAN & ELEVATION (1 OF 2)

PLAN REF NO RW41

SHEET 819 OF 1456 SHEETS

SECTION 15, T.19N. R.2E. W.M.
CITY OF LAKEWOOD

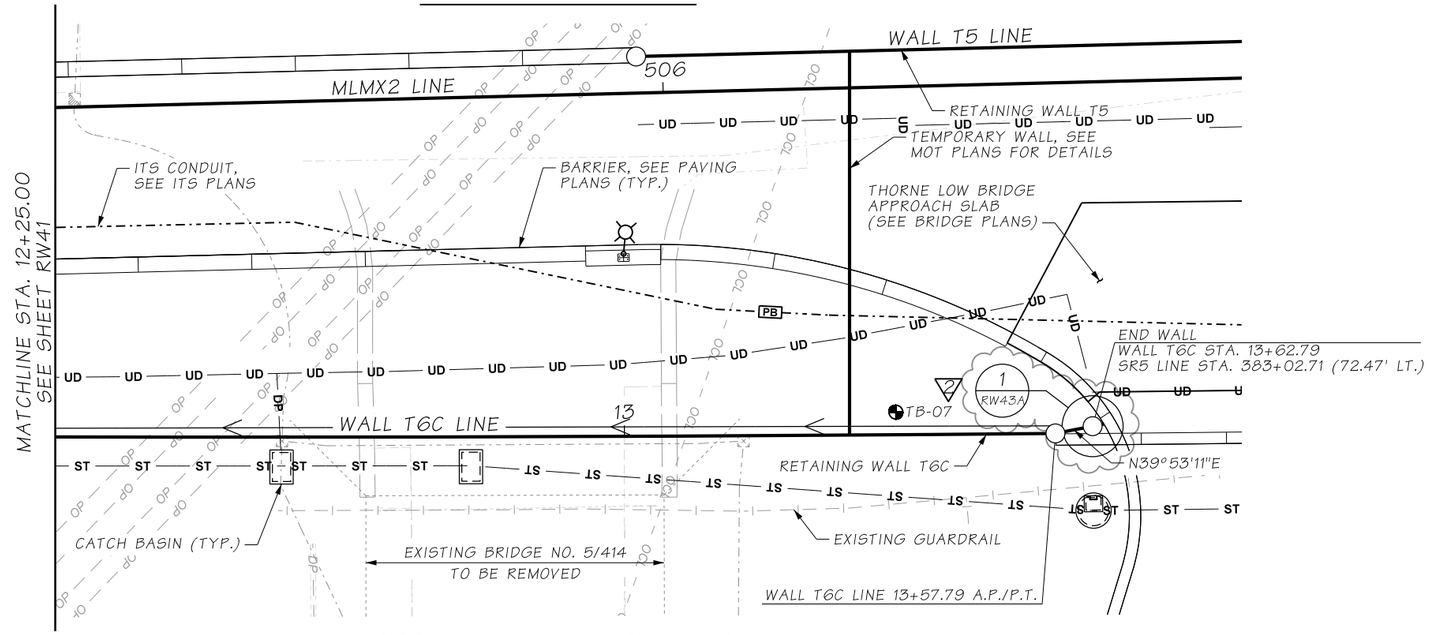

RETAINING WALL T6C - PLAN

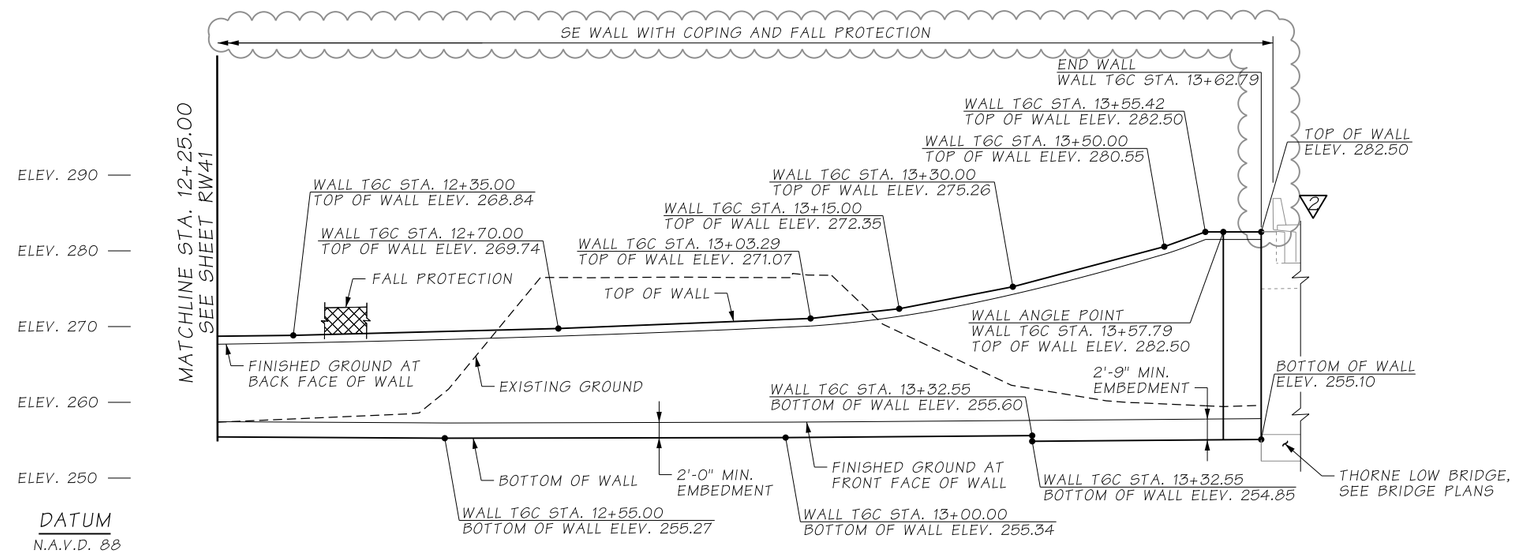

RETAINING WALL T6C - ELEVATION

LOOKING AT FRONT FACE OF WALL

AS-BUILT

ATKINSON
AUG 31 2021 RSA
RELEASED FOR CONSTRUCTION

NOTES:

1. SEE SHEET RW41 FOR NOTES.

FILE NAME	D:\ICS_workdir\87130\20633_2092\PS_RW42.dgn				REGION NO. 10	STATE WASH	FED.AID PROJ.NO.
TIME	9:07:16 AM						
DATE	8/25/2021						
PLOTTED BY	USLAS0-APP064$	REV 2 - RFI0636	08/31/2021		JOB NUMBER		
DESIGNED BY	K. YOUNG	REV 1 - RFI0243	10/31/2019				
ENTERED BY	L. BROWN	REV 0 - RELEASED FOR CONSTRUCTION	07/03/2019				
CHECKED BY	C. CAYWOOD	REV B - FINAL REVIEW	06/14/2019		CONTRACT NO. C9133		LOCATION NO.
PROJ. ENGR.	C. MEADE	REV A - PRELIMINARY REVIEW	05/17/2019				
REGIONAL ADM.	J. WYNANDS	REVISION	DATE	BY			

CORY J. CAYWOOD, STATE OF WASHINGTON, 38759, STRUCTURAL ENGINEER, PROFESSIONAL ENGINEER
08/31/21
DATE
P.E. STAMP BOX

DATE
P.E. STAMP BOX

Washington State Department of Transportation

ATKINSON / JACOBS CONSTRUCTION

I-5
STEILACOOM-DUPONT RD TO THORNE LN
CORRIDOR IMPROVEMENTS
MP 120.01 TO MP 124.45

RETAINING WALL T6C
PLAN & ELEVATION (2 OF 2)

PLAN REF NO RW42

SHEET 820 OF 1456 SHEETS

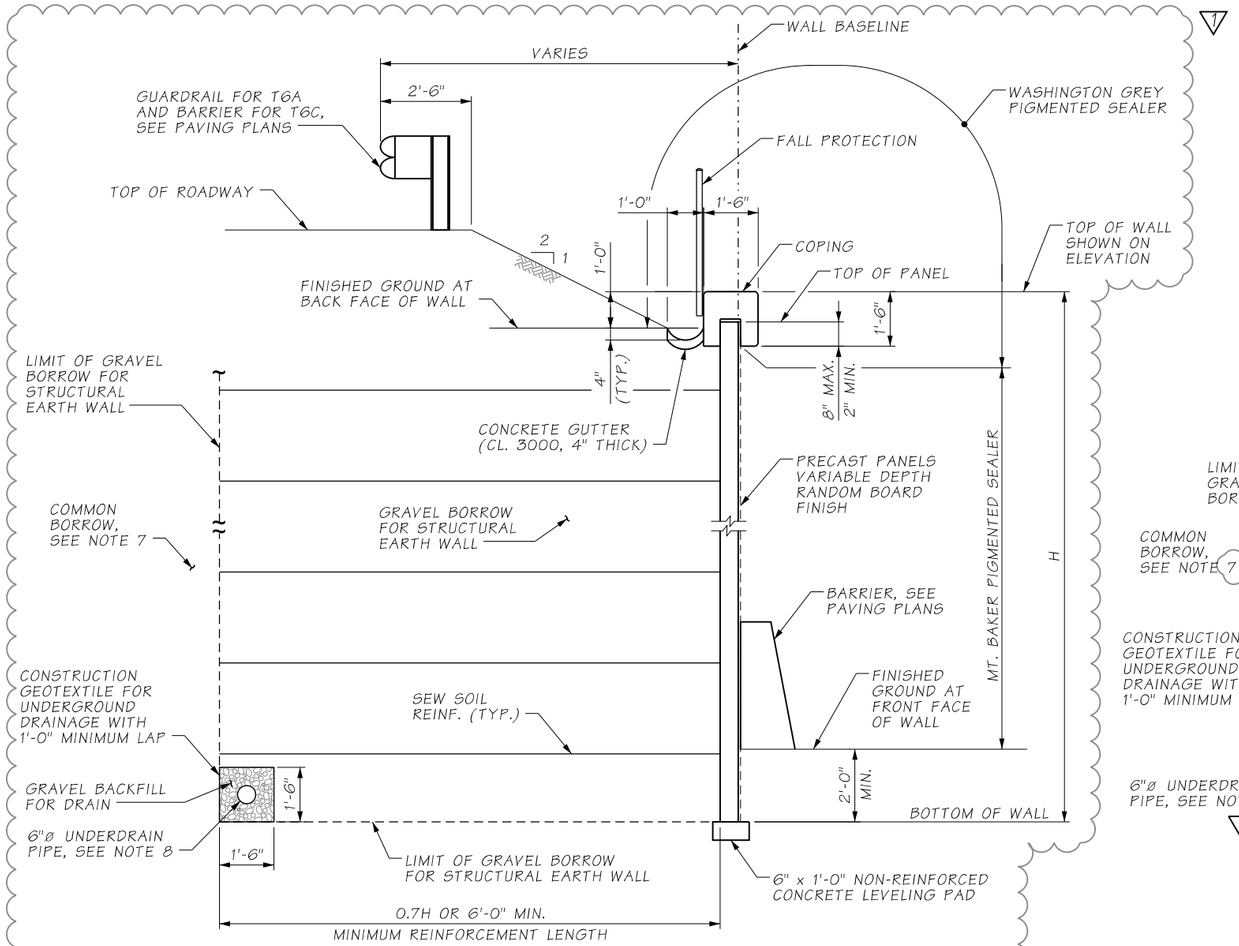

SE WALL WITH COPING AND FALL PROTECTION

TYPICAL SECTION - RETAINING WALL T6A AND T6C

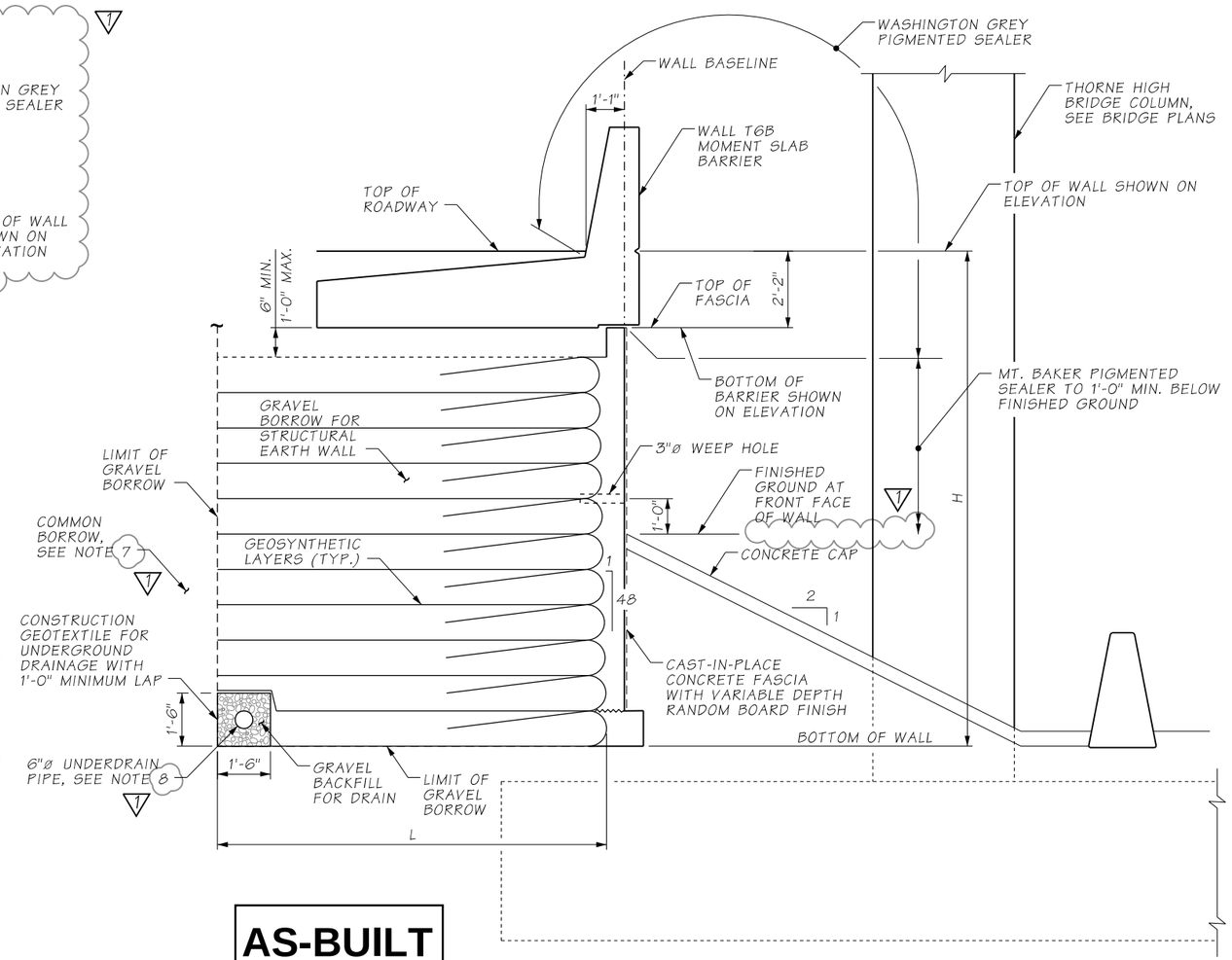

GEOSYNTHETIC WALL WITH MOMENT SLAB BARRIER

TYPICAL SECTION - RETAINING WALL T6B

AS-BUILT

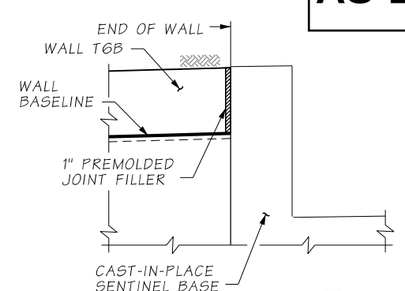

DETAIL 1 / RW40

END OF WALL SHOWN, BEGINNING OF WALL SIMILAR

NOTES:

1. SEE SHEETS RW40, RW41 AND RW42 FOR WALL PLAN AND ELEVATION.
2. CONSTRUCT WALL T6B PER STANDARD PLANS D-3.09 AND D-3.10. RETAINING WALL T6B SHALL BE TYPE 1 PER STANDARD PLAN D-3.09.
3. SEE SHEET RW101 FOR COPING DETAILS.
4. SEE SHEET RW102 FOR FALL PROTECTION DETAILS.
5. SEE SHEET RW118 FOR WALL T6B MOMENT SLAB BARRIER DETAILS.
6. SEE DRAINAGE PLANS FOR UNDERDRAIN LOCATIONS AND CONNECTIONS TO DRAINAGE STRUCTURES.
7. ROADWAY EMBANKMENT SHALL BE SELECT BORROW WITHIN LIMITS OF BRIDGE APPROACH EMBANKMENTS. SEE STANDARD SPECIFICATIONS SECTION 1-01.3 FOR ADDITIONAL INFORMATION.
8. UNDERDRAIN CAN BE LOCATED OUTSIDE OF REINFORCEMENT ZONE AT CONTRACTOR'S OPTION.

ATKINSON
NOV 01 2019 KTW
RELEASED FOR CONSTRUCTION

FILE NAME	c:\pwworking\jacobs_b&l\youngkl2\dms20633\PS_RW43.dgn						
TIME	10:48:04 AM				REGION NO.	STATE	FED.AID PROJ.NO.
DATE	10/31/2019				10	WASH	
PLOTTED BY	youngkl2				JOB NUMBER		
DESIGNED BY	K. YOUNG	REV 1 - RFI0243	10/31/2019				
ENTERED BY	L. BROWN	REV 0 - RELEASED FOR CONSTRUCTION	07/03/2019				
CHECKED BY	C. CAYWOOD	REV B - FINAL REVIEW	06/14/2019		CONTRACT NO.		LOCATION NO.
PROJ. ENGR.	C. MEADE	REV A - PRELIMINARY REVIEW	05/17/2019		C9133		
REGIONAL ADM.	J. WYNANDS	REVISION	DATE	BY			

P.E. STAMP BOX — DATE 11/1/19

P.E. STAMP BOX — DATE

Washington State Department of Transportation

ATKINSON CONSTRUCTION / JACOBS

I-5
STEILACOOM-DUPONT RD TO THORNE LN
CORRIDOR IMPROVEMENTS
MP 120.01 TO MP 124.45

RETAINING WALLS T6A, T6B, AND T6C TYPICAL SECTIONS

PLAN REF NO RW43

SHEET 821 OF 1456 SHEETS

NOTES:

1. STEEL PIPES FOR POSTS AND LONGITUDINAL MEMBERS SHALL CONFORM TO ASTM A53 GRADE B AND GALVANIZE PER AASHTO M111.
2. ALL STRUCTURAL STEEL SHALL CONFORM TO ASTM A36 AND SHALL BE GALVANIZED IN ACCORDANCE WITH AASHTO M111.
3. POST TO BE INSTALLED PLUMB.
4. EPOXY RESIN SHALL BE HILTI-HY 200 EPOXY ADHESIVE OR APPROVED EQUAL.
5. ANCHOR BOLTS SHALL CONFORM TO ASTM F1554 GRADE 55 AND GALVANIZE PER ASTM F2329.

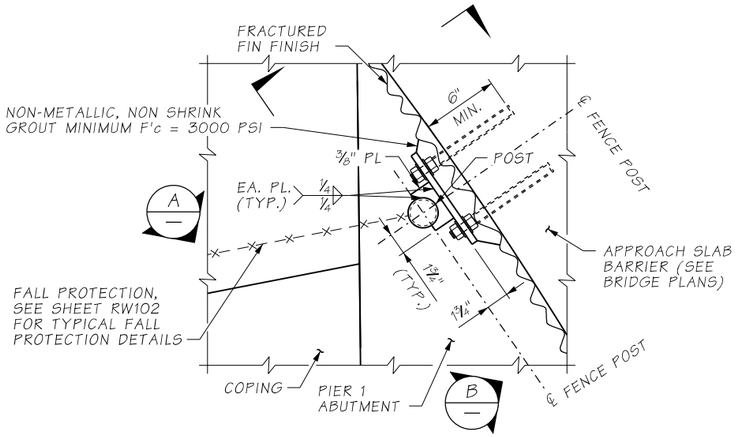

DETAIL 1 / RW42

FENCE POST CONNECTION TO APPROACH SLAB BARRIER

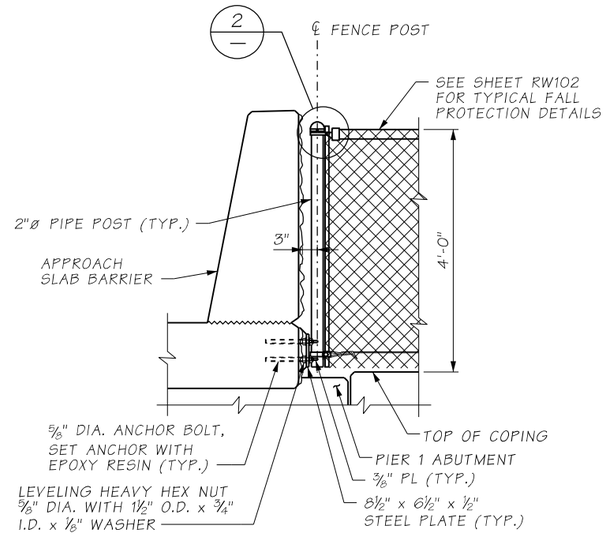

SECTION A

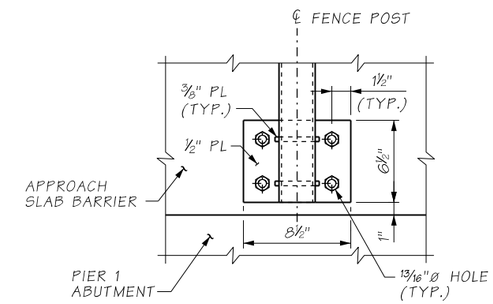

SECTION B

AS-BUILT

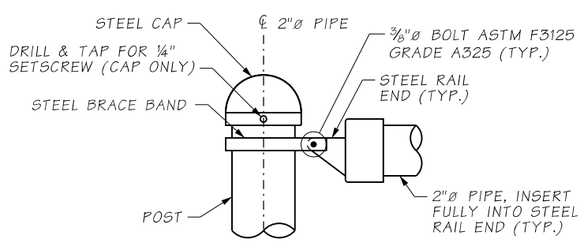

DETAIL 2

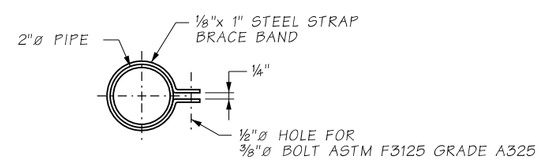

BRACE BAND

ATKINSON
AUG 31 2021 PSA
RELEASED FOR CONSTRUCTION

FILE NAME	c:\pwworking\jacobs_b&l\youngkl2\dms20633\PS_RW43A.dgn						
TIME	11:09:48 AM				REGION NO. 10	STATE WASH	FED.AID PROJ.NO.
DATE	8/25/2021						
PLOTTED BY	youngkl2				JOB NUMBER		
DESIGNED BY	K. YOUNG						
ENTERED BY	K. YOUNG						
CHECKED BY	C. CAYWOOD				CONTRACT NO. C9133		LOCATION NO.
PROJ. ENGR.	C. MEADE	REV 0 - RFI0636	08/31/2021				
REGIONAL ADM.	J. WYNANDS	REVISION	DATE	BY			

COREY J. CAYWOOD, STATE OF WASHINGTON, 38755, STRUCTURAL ENGINEER, PROFESSIONAL ENGINEER
08/31/21
DATE
P.E. STAMP BOX

DATE
P.E. STAMP BOX

Washington State Department of Transportation

ATKINSON / JACOBS CONSTRUCTION

I-5
STEILACOOM-DUPONT RD TO THORNE LN
CORRIDOR IMPROVEMENTS
MP 120.01 TO MP 124.45

RETAINING WALL T6C DETAILS

PLAN REF NO RW43A

SHEET 822 OF 1456 SHEETS

SECTION 15, T.19N. R.2E. W.M.
CITY OF LAKEWOOD

CURVE DATA					
P.I. STA.	Δ	RADIUS	TANGENT	LENGTH	BACK TANGENT BRG.
WALL T7 11+23.06	1°09'48" LT.	11628.44'	118.06'	236.11'	N 50°03'58" E

AS-BUILT

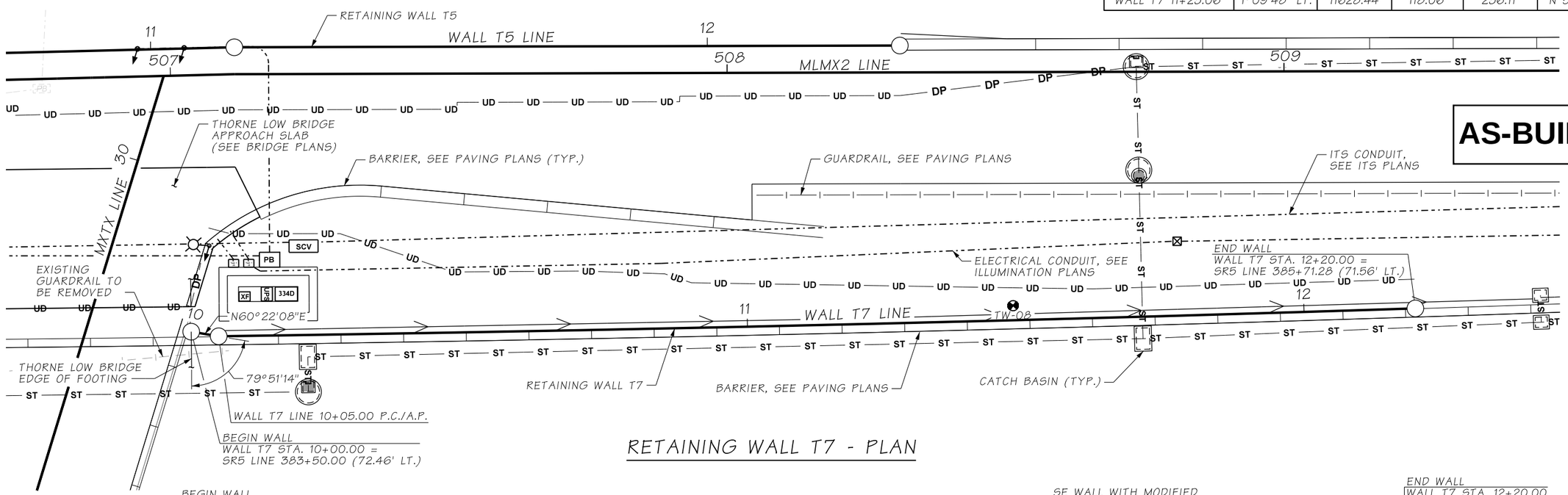

RETAINING WALL T7 - PLAN

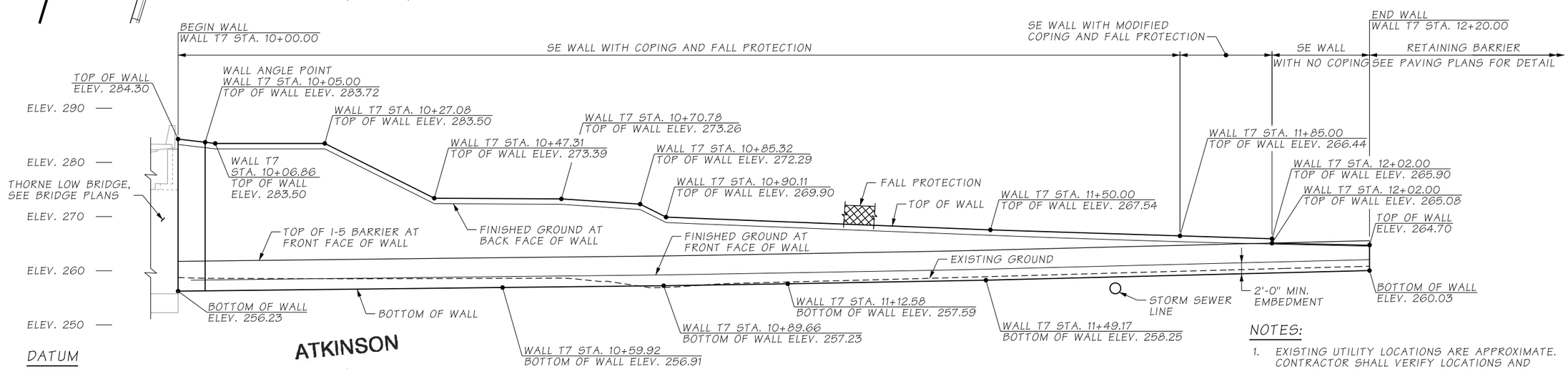

RETAINING WALL T7 - ELEVATION

LOOKING AT FRONT FACE OF WALL

ATKINSON
AUG 21 2019 KTN
RELEASED FOR CONSTRUCTION

NOTES:

1. EXISTING UTILITY LOCATIONS ARE APPROXIMATE. CONTRACTOR SHALL VERIFY LOCATIONS AND ELEVATIONS OF THE EXISTING UTILITIES PRIOR TO CONSTRUCTION.
2. SEE SHEET RW03 FOR GENERAL NOTES AND LEGEND.
3. SEE SHEET RW45 FOR TYPICAL SECTIONS.
4. FOR CATCH BASIN LOCATIONS, SEE DRAINAGE PLANS.

FILE NAME	D:\ICS_workdir\34154\20633_2090\PS_RW44.dgn			
TIME	2:22:42 PM			
DATE	8/19/2019			
PLOTTED BY	USLAS0-APP064$			
DESIGNED BY	A. FONG			
ENTERED BY	L. BROWN	REV 0 - RELEASED FOR CONSTRUCTION	08/21/2019	
CHECKED BY	K. YOUNG	REV B - FINAL REVIEW	07/25/2019	
PROJ. ENGR.	C. MEADE	REV A - PRELIMINARY REVIEW	05/17/2019	
REGIONAL ADM.	J. WYNANDS	REVISION	DATE	BY

REGION NO.	STATE	FED.AID PROJ.NO.
10	WASH	
JOB NUMBER		
CONTRACT NO. C9133		LOCATION NO.

CORY J. CAYWOOD, STATE OF WASHINGTON, 28133, STRUCTURAL ENGINEER, PROFESSIONAL ENGINEER
8/20/19
DATE
P.E. STAMP BOX

DATE
P.E. STAMP BOX

Washington State Department of Transportation

ATKINSON / JACOBS CONSTRUCTION

I-5
STEILACOOM-DUPONT RD TO THORNE LN
CORRIDOR IMPROVEMENTS
MP 120.01 TO MP 124.45

RETAINING WALL T7
PLAN & ELEVATION

PLAN REF NO RW44

SHEET 823 OF 1456 SHEETS

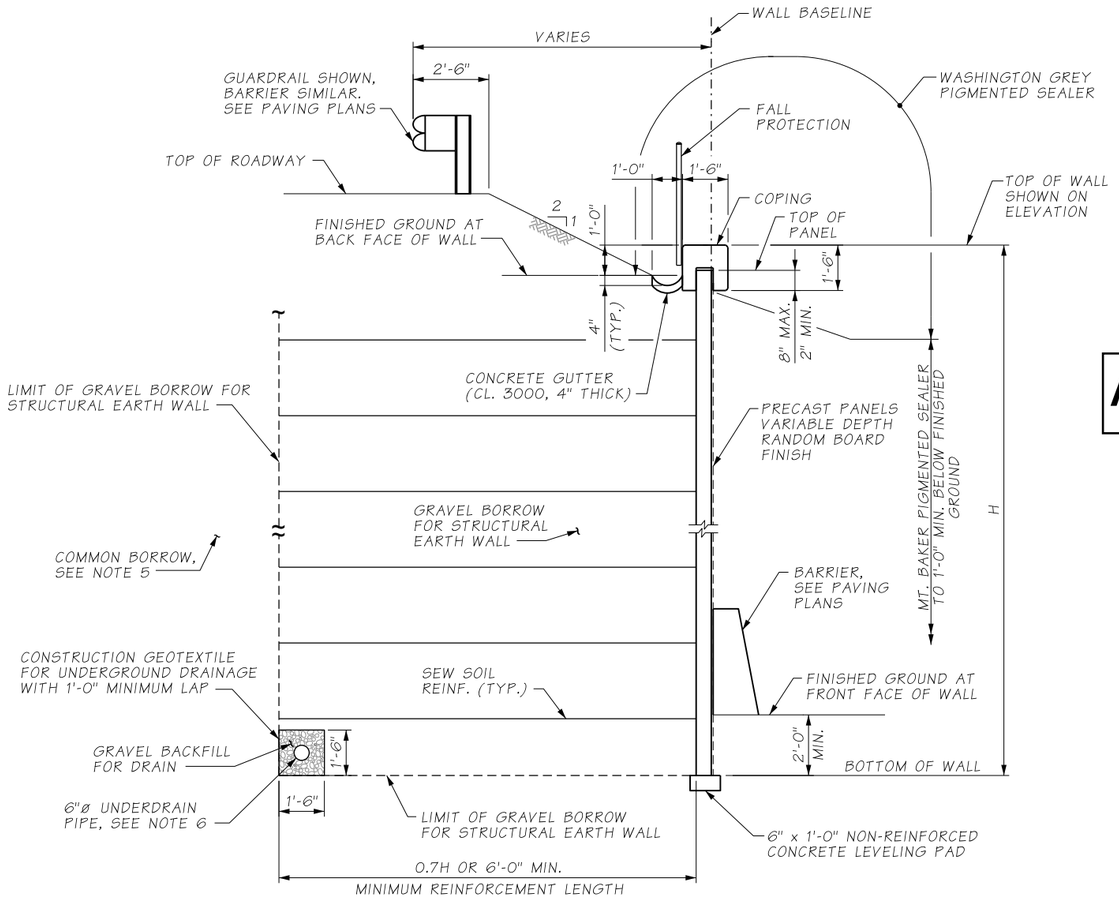

SE WALL WITH COPING AND FALL PROTECTION

TYPICAL SECTION - RETAINING WALL T7

AS-BUILT

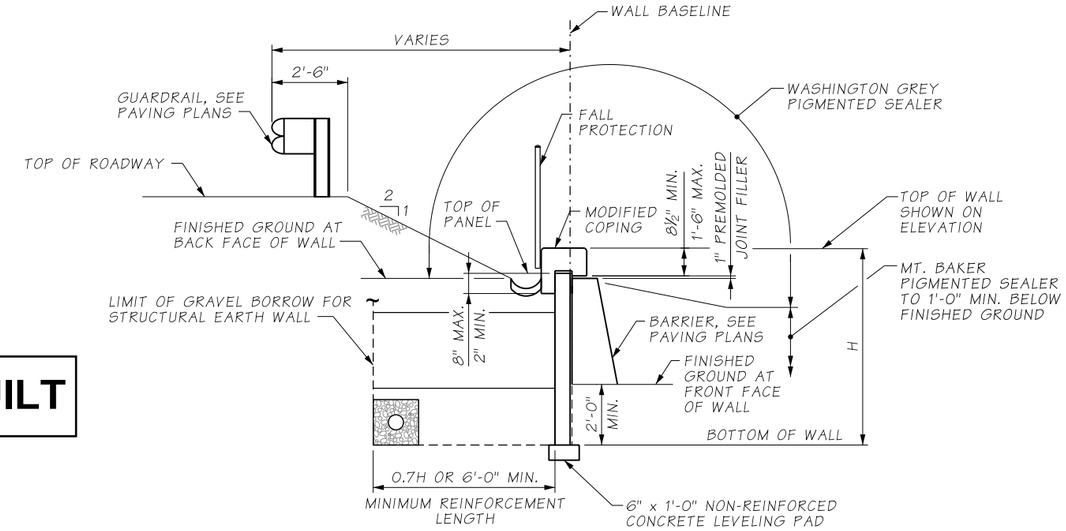

SE WALL WITH MODIFIED COPING AND FALL PROTECTION

TYPICAL SECTION - RETAINING WALL T7

SEE SE WALL WITH COPING AND FALL PROTECTION FOR INFORMATION NOT SHOWN

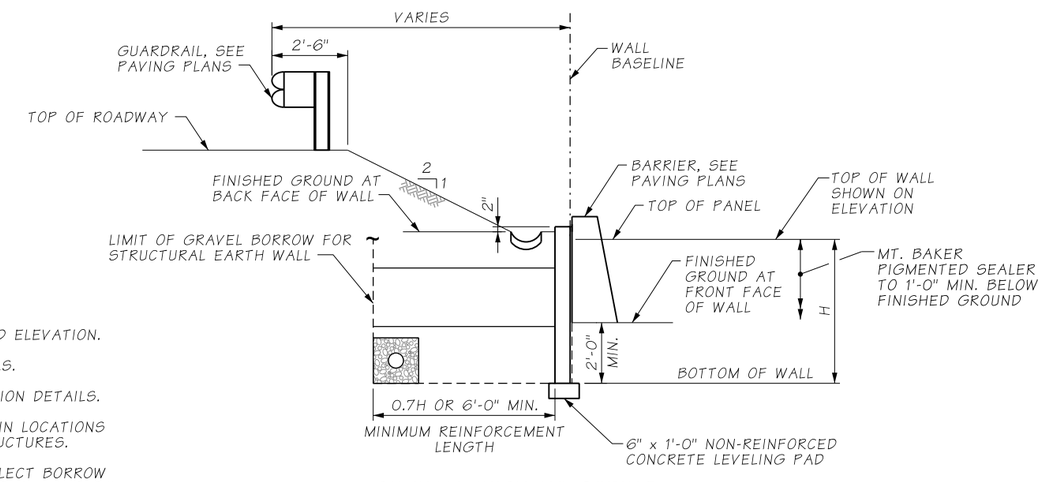

SE WALL WITH NO COPING

TYPICAL SECTION - RETAINING WALL T7

SEE SE WALL WITH COPING AND FALL PROTECTION FOR INFORMATION NOT SHOWN

NOTES:

1. SEE SHEET RW44 FOR WALL PLAN AND ELEVATION.
2. SEE SHEET RW101 FOR COPING DETAILS.
3. SEE SHEET RW102 FOR FALL PROTECTION DETAILS.
4. SEE DRAINAGE PLANS FOR UNDERDRAIN LOCATIONS AND CONNECTIONS TO DRAINAGE STRUCTURES.
5. ROADWAY EMBANKMENT SHALL BE SELECT BORROW WITHIN LIMITS OF BRIDGE APPROACH EMBANKMENTS. SEE STANDARD SPECIFICATIONS SECTION 1-01.3 FOR ADDITIONAL INFORMATION.
6. UNDERDRAIN CAN BE LOCATED OUTSIDE OF REINFORCEMENT ZONE AT CONTRACTOR'S OPTION.

ATKINSON
AUG 21 2019 KTW
RELEASED FOR CONSTRUCTION

FILE NAME	D:\ICS_workdir\34154\20633_2093\PS_RW45.dgn						
TIME	2:22:33 PM				REGION NO. 10	STATE WASH	FED.AID PROJ.NO.
DATE	8/19/2019						
PLOTTED BY	USLAS0-APP064$				JOB NUMBER		
DESIGNED BY	A. FONG						
ENTERED BY	L. BROWN	REV 0 - RELEASED FOR CONSTRUCTION	08/21/2019				
CHECKED BY	K. YOUNG	REV B - FINAL REVIEW	07/25/2019		CONTRACT NO. C9133		LOCATION NO.
PROJ. ENGR.	C. MEADE	REV A - PRELIMINARY REVIEW	05/17/2019				
REGIONAL ADM.	J. WYNANDS	REVISION	DATE	BY			

CORY J. CAYWOOD, STATE OF WASHINGTON, 38759, STRUCTURAL ENGINEER, PROFESSIONAL ENGINEER
8/20/19
DATE
P.E. STAMP BOX

DATE
P.E. STAMP BOX

Washington State Department of Transportation

ATKINSON CONSTRUCTION / JACOBS

I-5
STEILACOOM-DUPONT RD TO THORNE LN
CORRIDOR IMPROVEMENTS
MP 120.01 TO MP 124.45

RETAINING WALL T7
TYPICAL SECTION

PLAN REF NO RW45

SHEET 824 OF 1456 SHEETS

SECTION 22, T.19N. R.2E. W.M.
CITY OF LAKEWOOD

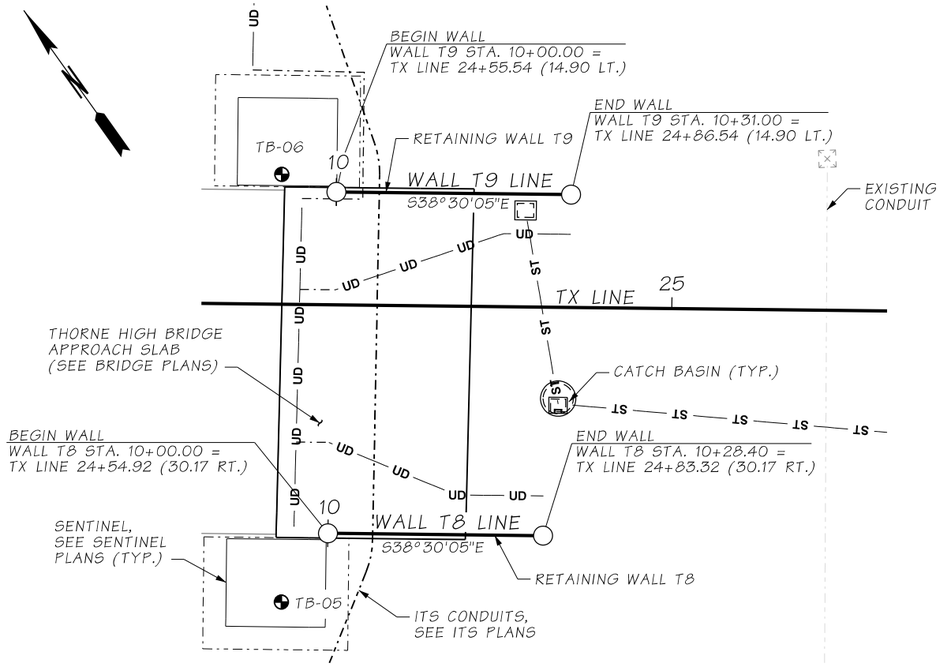

RETAINING WALLS T8 & T9 - PLAN

NOTES:

1. EXISTING UTILITY LOCATIONS ARE APPROXIMATE. CONTRACTOR SHALL VERIFY LOCATIONS AND ELEVATIONS OF THE EXISTING UTILITIES PRIOR TO CONSTRUCTION.
2. SEE SHEET RW03 FOR GENERAL NOTES AND LEGEND.
3. SEE SHEET RW47 AND RW48 FOR TYPICAL SECTIONS.

AS-BUILT

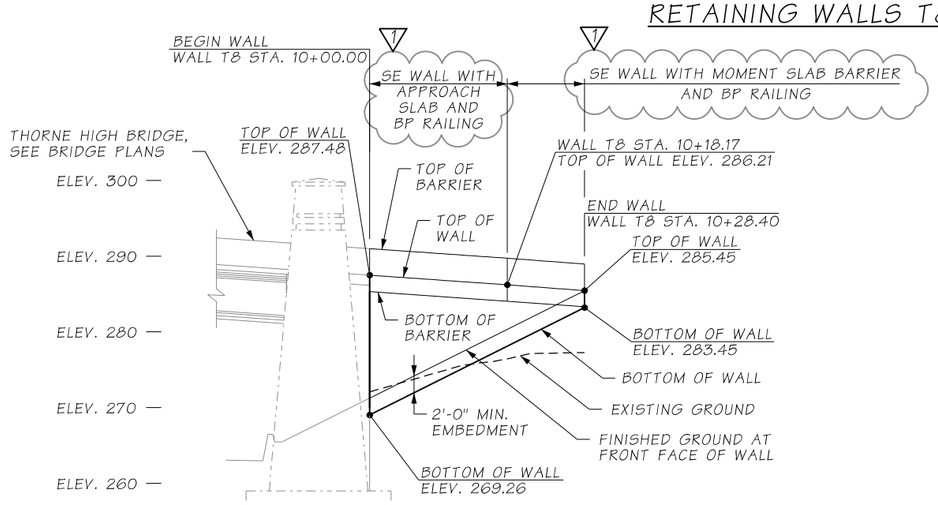

DATUM
N.A.V.D. 88

RETAINING WALL T8 - ELEVATION
LOOKING AT FRONT FACE OF WALL

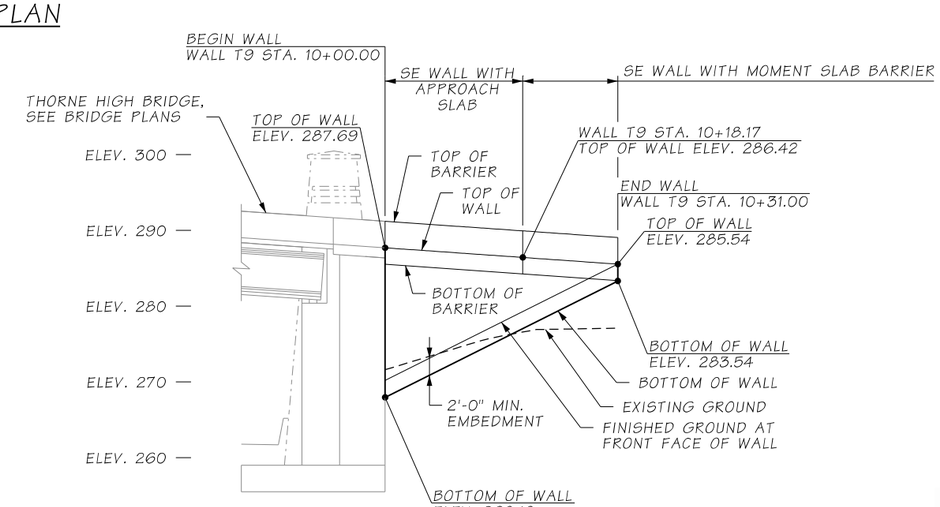

RETAINING WALL T9 - ELEVATION
LOOKING AT BACK FACE OF WALL

ATKINSON
JUN 08 2020 KTW
RELEASED FOR CONSTRUCTION

FILE NAME	c:\pwworking\jacobs_b&i\reiserrw\dms20633\PS_RW46.dgn						
TIME	7:44:04 AM				REGION NO.	STATE	FED.AID PROJ.NO.
DATE	6/2/2020				10	WASH	
PLOTTED BY	ReiserRW						
DESIGNED BY	K. YOUNG	REV 1 - RFI0430	06/02/2020		JOB NUMBER		
ENTERED BY	R. REISER	REV 0 - RELEASED FOR CONSTRUCTION	06/17/2019				
CHECKED BY	A. FONG	REV B - FINAL REVIEW	05/17/2019		CONTRACT NO.		LOCATION NO.
PROJ. ENGR.	C. MEADE	REV A - PRELIMINARY REVIEW	02/01/2019		C9133		
REGIONAL ADM.	J. WYNANDS	REVISION	DATE	BY			

CORY J. CAYWOOD, STATE OF WASHINGTON, 38759, STRUCTURAL ENGINEER, PROFESSIONAL ENGINEER
6/2/20
DATE
P.E. STAMP BOX

DATE
P.E. STAMP BOX

Washington State Department of Transportation

ATKINSON CONSTRUCTION / JACOBS

I-5
STEILACOOM-DUPONT RD TO THORNE LN
CORRIDOR IMPROVEMENTS
MP 120.01 TO MP 124.45

RETAINING WALLS T8 & T9
PLAN & ELEVATION

PLAN REF NO
RW46

SHEET 825 OF 1456 SHEETS

AS-BUILT

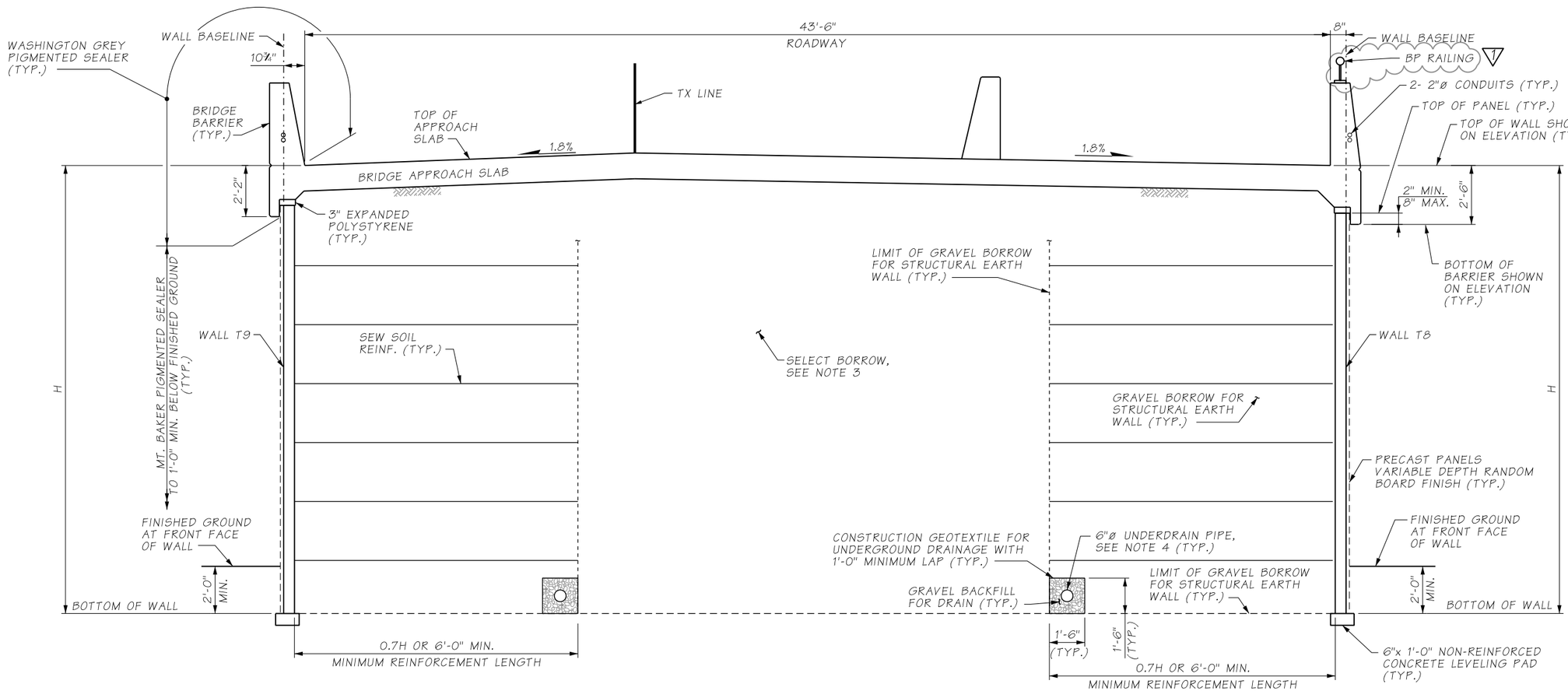

ATKINSON
JUN 08 2020 KTW
RELEASED FOR CONSTRUCTION

SE WALLS WITH APPROACH SLAB

TYPICAL SECTION - RETAINING WALLS T8 AND T9

NOTES:

1. SEE SHEET RW46 FOR WALL PLAN AND ELEVATION.
2. SEE DRAINAGE PLANS FOR UNDERDRAIN LOCATIONS AND CONNECTIONS TO DRAINAGE STRUCTURES.
3. ROADWAY EMBANKMENT SHALL BE SELECT BORROW WITHIN LIMITS OF BRIDGE APPROACH EMBANKMENTS. SEE STANDARD SPECIFICATIONS SECTION 1-01.3 FOR ADDITIONAL INFORMATION.
4. UNDERDRAIN CAN BE LOCATED OUTSIDE OF REINFORCEMENT ZONE AT CONTRACTOR'S OPTION.
5. SEE SHEET RW111 AND RW112 FOR BP RAILING DETAILS. (1)

FILE NAME	D:\ICS_workdir\53503\20633_1767\PS_RW47.dgn						
TIME	12:41:16 PM				REGION NO.	STATE	FED.AID PROJ.NO.
DATE	6/1/2020				10	WASH	
PLOTTED BY	USLAS0-APP064$						
DESIGNED BY	K. YOUNG	REV 1 - RFI0430	06/02/2020		JOB NUMBER		
ENTERED BY	R. REISER	REV 0 - RELEASED FOR CONSTRUCTION	06/17/2019				
CHECKED BY	A. FONG	REV B - FINAL REVIEW	05/17/2019		CONTRACT NO.		LOCATION NO.
PROJ. ENGR.	C. MEADE	REV A - PRELIMINARY REVIEW	02/01/2019		C9133		
REGIONAL ADM.	J. WYNANDS	REVISION	DATE	BY			

CORY J. CAYWOOD, STATE OF WASHINGTON, 38193, STRUCTURAL, PROFESSIONAL ENGINEER
6/2/20
DATE
P.E. STAMP BOX

DATE
P.E. STAMP BOX

Washington State Department of Transportation

ATKINSON / JACOBS CONSTRUCTION

I-5
STEILACOOM-DUPONT RD TO THORNE LN
CORRIDOR IMPROVEMENTS
MP 120.01 TO MP 124.45

RETAINING WALLS T8 & T9
TYPICAL SECTIONS (1 OF 2)

PLAN REF NO
RW47

SHEET 826 OF 1456 SHEETS

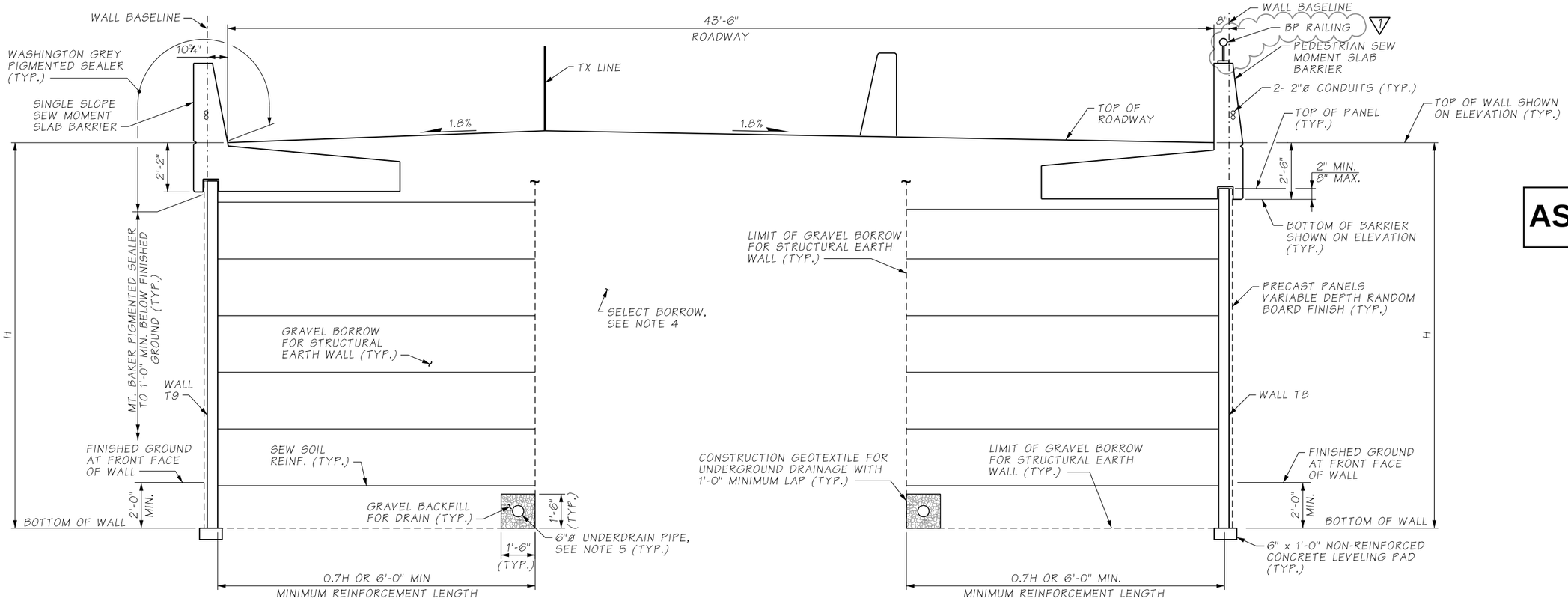

AS-BUILT

ATKINSON
JUN 08 2020 KTW
RELEASED FOR CONSTRUCTION

SE WALLS WITH MOMENT SLAB BARRIER

TYPICAL SECTION - RETAINING WALLS T8 AND T9

NOTES:

1. SEE SHEET RW46 FOR WALL PLAN AND ELEVATION.
2. SEE SHEET RW103 FOR SINGLE SLOPE SEW MOMENT SLAB BARRIER DETAILS. SEE SHEET RW108 FOR PEDESTRIAN SEW MOMENT SLAB BARRIER.
3. SEE DRAINAGE PLANS FOR UNDERDRAIN LOCATIONS AND CONNECTIONS TO DRAINAGE STRUCTURES.
4. ROADWAY EMBANKMENT SHALL BE SELECT BORROW WITHIN LIMITS OF BRIDGE APPROACH EMBANKMENTS. SEE STANDARD SPECIFICATIONS SECTION 1-01.3 FOR ADDITIONAL INFORMATION.
5. UNDERDRAIN CAN BE LOCATED OUTSIDE OF REINFORCEMENT ZONE AT CONTRACTOR'S OPTION.
6. SEE SHEET RW111 AND RW112 FOR BP RAILING DETAILS.

FILE NAME	D:\ICS_workdir\53503\20633_1766\PS_RW48.dgn						
TIME	12:39:56 PM				REGION NO. 10	STATE WASH	FED.AID PROJ.NO.
DATE	6/1/2020						
PLOTTED BY	USLAS0-APP064$						
DESIGNED BY	K. YOUNG	REV 1 - RFI0430	06/02/2020		JOB NUMBER		
ENTERED BY	R. REISER	REV 0 - RELEASED FOR CONSTRUCTION	06/17/2019				
CHECKED BY	A. FONG	REV B - FINAL REVIEW	05/17/2019		CONTRACT NO. C9133		LOCATION NO.
PROJ. ENGR.	C. MEADE	REV A - PRELIMINARY REVIEW	02/01/2019				
REGIONAL ADM.	J. WYNANDS	REVISION	DATE	BY			

CORY J. CAYWOOD, STATE OF WASHINGTON, 38139, STRUCTURAL ENGINEER, PROFESSIONAL ENGINEER
6/2/20
DATE
P.E. STAMP BOX

DATE
P.E. STAMP BOX

Washington State Department of Transportation

ATKINSON CONSTRUCTION / JACOBS

I-5
STEILACOOM-DUPONT RD TO THORNE LN
CORRIDOR IMPROVEMENTS
MP 120.01 TO MP 124.45

RETAINING WALLS T8 & T9
TYPICAL SECTIONS (2 OF 2)

PLAN REF NO RW48

SHEET 827 OF 1456 SHEETS

SECTION 15, T.19N. R.2E. W.M.
CITY OF LAKEWOOD

AS-BUILT

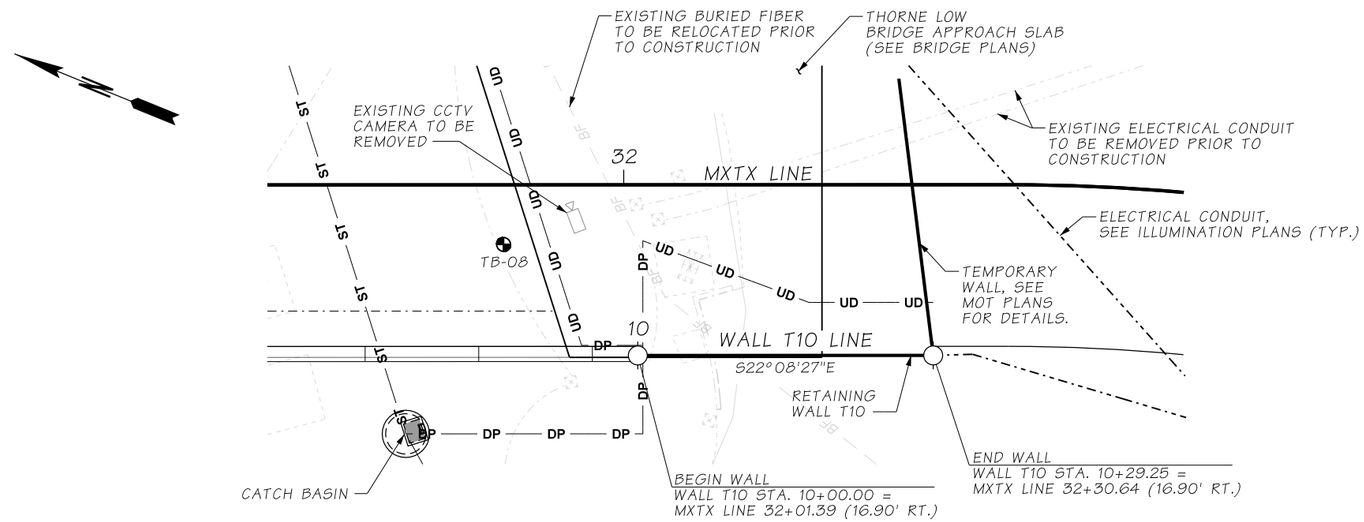

RETAINING WALL T10 - PLAN

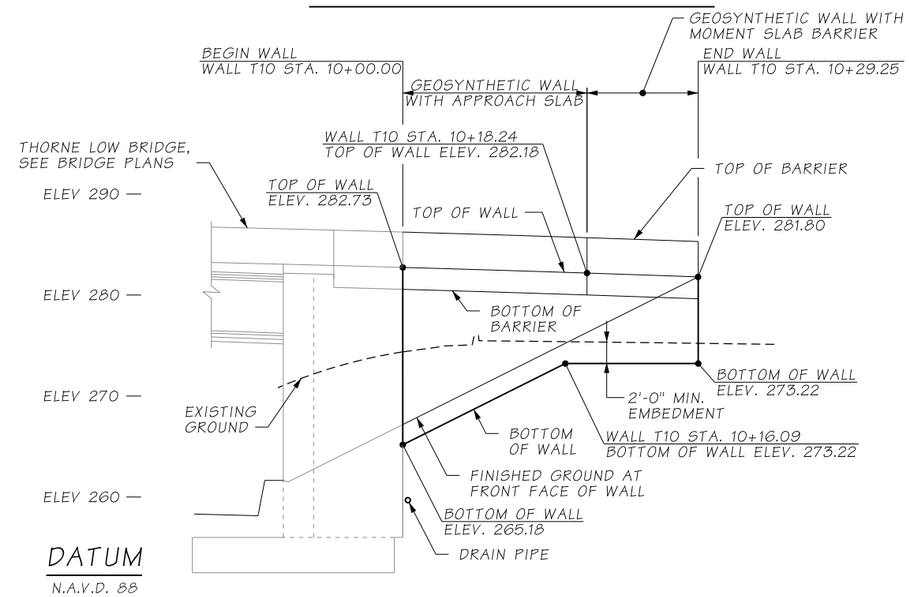

RETAINING WALL T10 - ELEVATION
LOOKING AT FRONT FACE OF WALL

ATKINSON
JUL 01 2019
RELEASED FOR CONSTRUCTION

NOTES:

1. EXISTING UTILITY LOCATIONS ARE APPROXIMATE. CONTRACTOR SHALL VERIFY LOCATIONS AND ELEVATIONS OF THE EXISTING UTILITIES PRIOR TO CONSTRUCTION.
2. SEE SHEET RW03 FOR GENERAL NOTES AND LEGEND.
3. SEE SHEET RW50 FOR TYPICAL SECTIONS.

FILE NAME	D:\ICS_workdir\31355\20633_1751\PS_RW49.dgn						
TIME	8:21:06 AM				REGION NO. 10	STATE WASH	FED.AID PROJ.NO.
DATE	6/26/2019						
PLOTTED BY	USLAS0-APP064$				JOB NUMBER		
DESIGNED BY	K. YOUNG						
ENTERED BY	R. REISER	REV 0 - RELEASED FOR CONSTRUCTION	07/02/2019				
CHECKED BY	A. FONG	REV B - FINAL REVIEW	05/17/2019		CONTRACT NO. C9133		LOCATION NO.
PROJ. ENGR.	C. MEADE	REV A - PRELIMINARY REVIEW	02/01/2019				
REGIONAL ADM.	J. WYNANDS	REVISION	DATE	BY			

CORY J. CAYWOOD, STATE OF WASHINGTON, 38139, STRUCTURAL ENGINEER, PROFESSIONAL ENGINEER
7/1/19
DATE
P.E. STAMP BOX

DATE
P.E. STAMP BOX

Washington State Department of Transportation

ATKINSON CONSTRUCTION / JACOBS

I-5
STEILACOOM-DUPONT RD TO THORNE LN
CORRIDOR IMPROVEMENTS
MP 120.01 TO MP 124.45

RETAINING WALL T10
PLAN & ELEVATION

PLAN REF NO RW49

SHEET 828 OF 1456 SHEETS

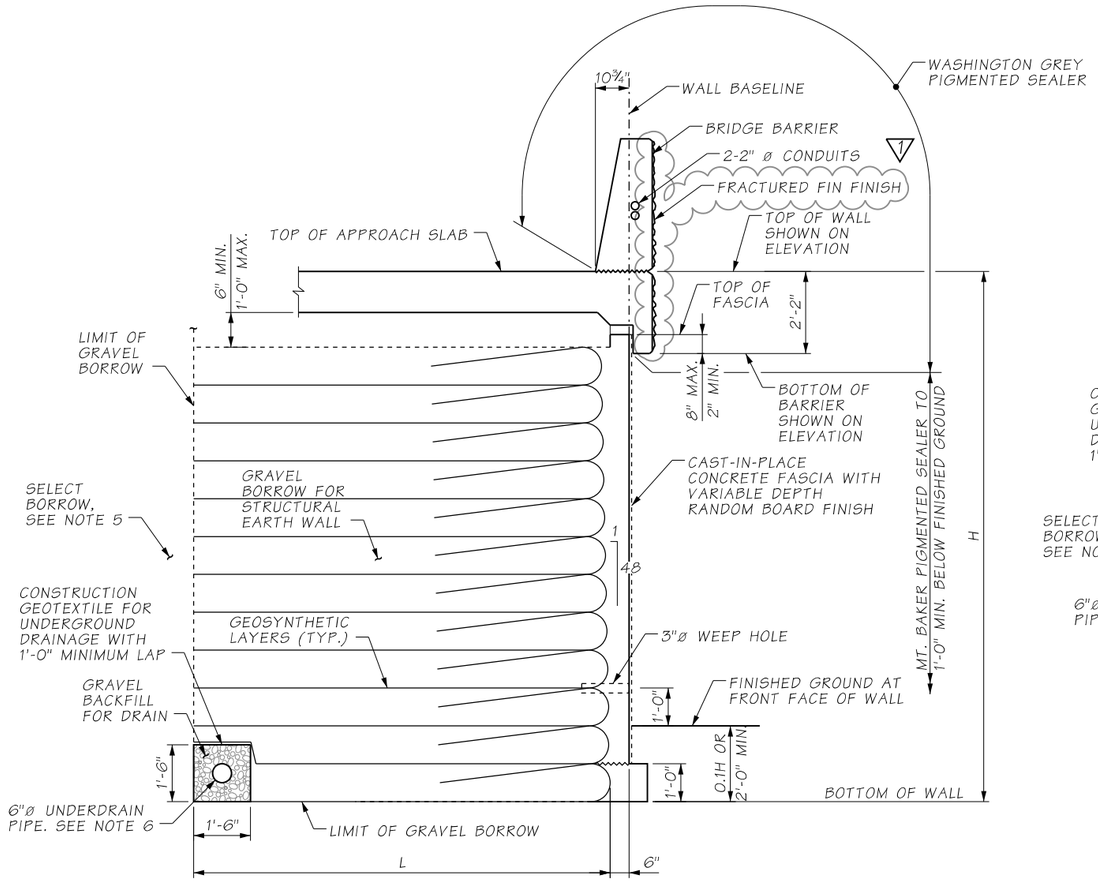

GEOSYNTHETIC WALL WITH APPROACH SLAB

TYPICAL SECTION - RETAINING WALL T10

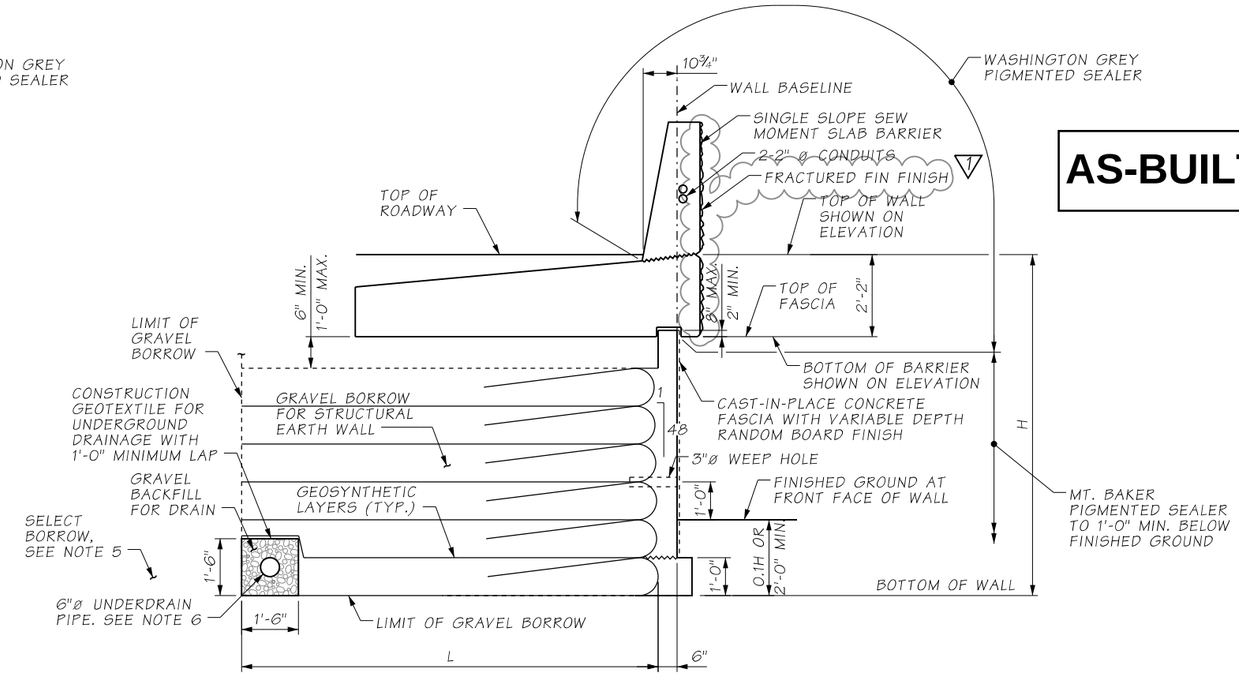

AS-BUILT

GEOSYNTHETIC WALL WITH MOMENT SLAB BARRIER

TYPICAL SECTION - RETAINING WALL T10

NOTES:

1. SEE SHEET RW49 FOR WALL PLAN AND ELEVATION.
2. CONSTRUCT WALLS PER STANDARD PLANS D-3.09 AND D-3.10. RETAINING WALL T10 SHALL BE TYPE 1 PER STANDARD PLAN D-3.09.
3. SEE SHEET RW103 FOR SINGLE SLOPE SEW MOMENT SLAB BARRIER DETAILS.
4. SEE DRAINAGE PLANS FOR UNDERDRAIN LOCATIONS AND CONNECTIONS TO DRAINAGE STRUCTURES.
5. ROADWAY EMBANKMENT SHALL BE SELECT BORROW WITHIN LIMITS OF BRIDGE APPROACH EMBANKMENTS. SEE STANDARD SPECIFICATIONS SECTION 1-01.3 FOR ADDITIONAL INFORMATION.
6. UNDERDRAIN CAN BE LOCATED OUTSIDE OF REINFORCEMENT ZONE AT CONTRACTOR'S OPTION.
7. FOR FRACTURED FIN FINISH ON BARRIER DETAILS, SEE SHEET BT125.

ATKINSON
APR 24 2020 KTM
RELEASED FOR CONSTRUCTION

FILE NAME	c:\pwworking\jacobs_b&i\youngkl2\dms20633\PS_RW50.dgn						
TIME	6:13:24 PM				REGION NO. 10	STATE WASH	FED.AID PROJ.NO.
DATE	4/23/2020						
PLOTTED BY	youngkl2						
DESIGNED BY	K. YOUNG	REV 1 - RFI0467	04/27/2020		JOB NUMBER		
ENTERED BY	R. REISER	REV 0 - RELEASED FOR CONSTRUCTION	07/02/2019				
CHECKED BY	A, FONG	REV B - FINAL REVIEW	05/17/2019		CONTRACT NO. C9133		LOCATION NO.
PROJ. ENGR.	C. MEADE	REV A - PRELIMINARY REVIEW	02/01/2019				
REGIONAL ADM.	J. WYNANDS	REVISION	DATE	BY			

CORY J. CAYWOOD, STATE OF WASHINGTON, 38953, STRUCTURAL ENGINEER, PROFESSIONAL ENGINEER
4/24/20
DATE
P.E. STAMP BOX

DATE
P.E. STAMP BOX

Washington State Department of Transportation

ATKINSON CONSTRUCTION / JACOBS

I-5
STEILACOOM-DUPONT RD TO THORNE LN
CORRIDOR IMPROVEMENTS
MP 120.01 TO MP 124.45

RETAINING WALL T10
TYPICAL SECTIONS

PLAN REF NO RW50

SHEET 829 OF 1456 SHEETS

SECTION 15/22, T.19N. R.2E. W.M.
JOINT BASE LEWIS-MCCHORD/CITY OF LAKEWOOD

AS-BUILT

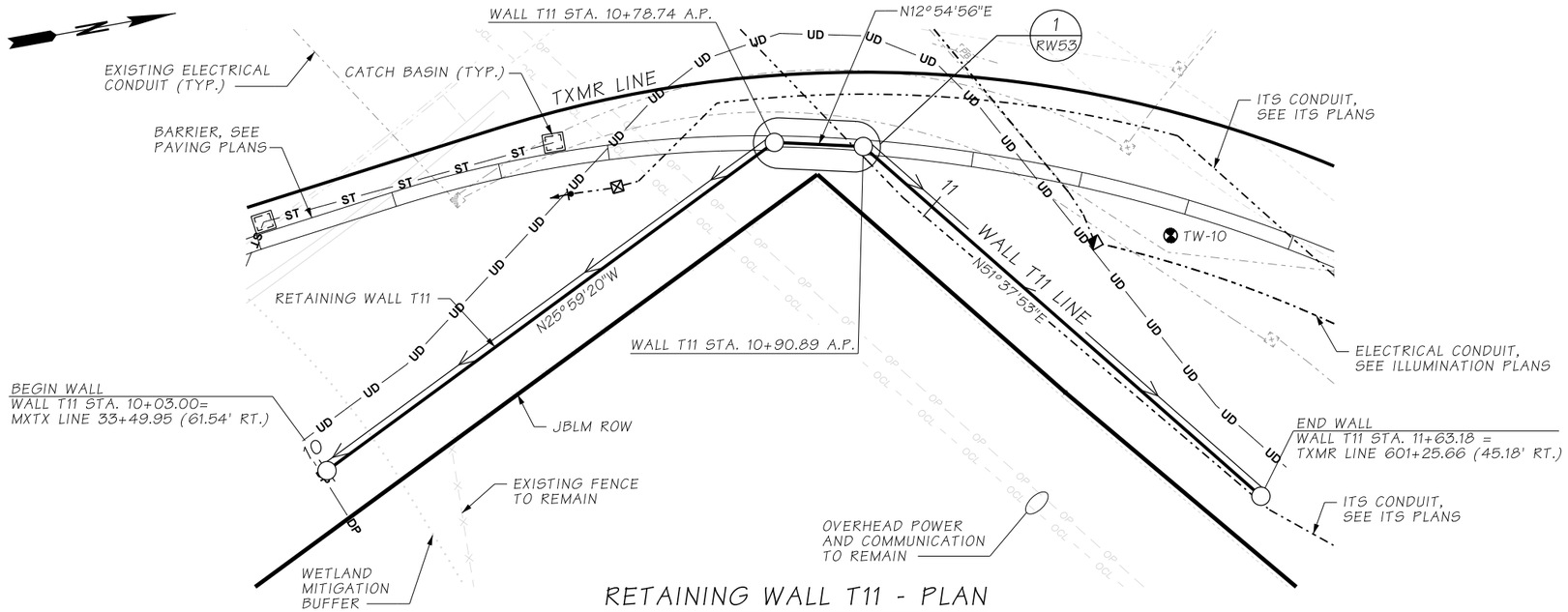

RETAINING WALL T11 - PLAN

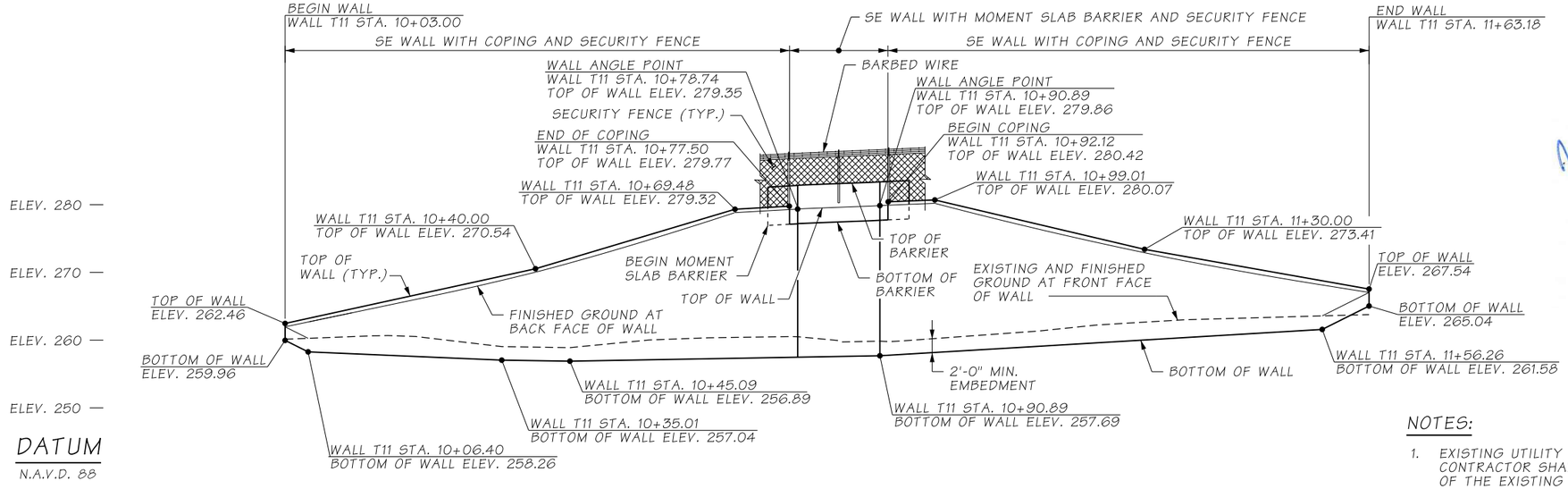

RETAINING WALL T11 - ELEVATION

LOOKING AT FRONT FACE OF WALL

ATKINSON
JUL 02 2019
RELEASED FOR CONSTRUCTION

NOTES:

1. EXISTING UTILITY LOCATIONS ARE APPROXIMATE. CONTRACTOR SHALL VERIFY LOCATIONS AND ELEVATIONS OF THE EXISTING UTILITIES PRIOR TO CONSTRUCTION.
2. SEE SHEET RW03 FOR GENERAL NOTES AND LEGEND.
3. SEE SHEET RW52 FOR TYPICAL SECTIONS.

FILE NAME	D:\ICS_workdir\31671\20633_1752\PS_RW51.dgn			
TIME	5:47:16 PM			
DATE	7/1/2019			
PLOTTED BY	USLAS0-APP064$			
DESIGNED BY	K. YOUNG			
ENTERED BY	R. REISER	REV 0 - RELEASED FOR CONSTRUCTION	07/01/2019	
CHECKED BY	A. FONG	REV B - FINAL REVIEW	05/17/2019	
PROJ. ENGR.	C. MEADE	REV A - PRELIMINARY REVIEW	02/01/2019	
REGIONAL ADM.	J. WYNANDS	REVISION	DATE	BY

REGION NO.	STATE	FED.AID PROJ.NO.
10	WASH	
JOB NUMBER		
CONTRACT NO. C9133		LOCATION NO.

CORY J. CAYWOOD, STATE OF WASHINGTON, 38755, STRUCTURAL ENGINEER, PROFESSIONAL ENGINEER
7/2/19
DATE
P.E. STAMP BOX

DATE
P.E. STAMP BOX

Washington State Department of Transportation

ATKINSON / JACOBS CONSTRUCTION

I-5
STEILACOOM-DUPONT RD TO THORNE LN
CORRIDOR IMPROVEMENTS
MP 120.01 TO MP 124.45

RETAINING WALL T11
PLAN & ELEVATION

PLAN REF NO RW51

SHEET 830 OF 1456 SHEETS

AS-BUILT

NOTES:

1. SEE SHEET RW51 FOR WALL PLAN AND ELEVATION.
2. SEE SHEET RW101 FOR COPING DETAILS.
3. SEE SHEET RW120 FOR SINGLE SLOPE SEW MOMENT SLAB BARRIER DETAILS.
4. SEE SHEET FD01 AND FD02 FOR SECURITY FENCE DETAILS. 5'-0" SECURITY FENCE WITH BARBED WIRE IS SIMILAR. FOR CONNECTION DETAILS, SEE SHEET RW53.
5. SEE DRAINAGE PLANS FOR UNDERDRAIN LOCATIONS AND CONNECTIONS TO DRAINAGE STRUCTURES.
6. ROADWAY EMBANKMENT SHALL BE SELECT BORROW WITHIN LIMITS OF BRIDGE APPROACH EMBANKMENT. SEE STANDARD SPECIFICATIONS SECTION 1-01.3 FOR ADDITIONAL INFORMATION.
7. UNDERDRAIN CAN BE LOCATED OUTSIDE OF REINFORCEMENT ZONE AT CONTRACTOR'S OPTION.

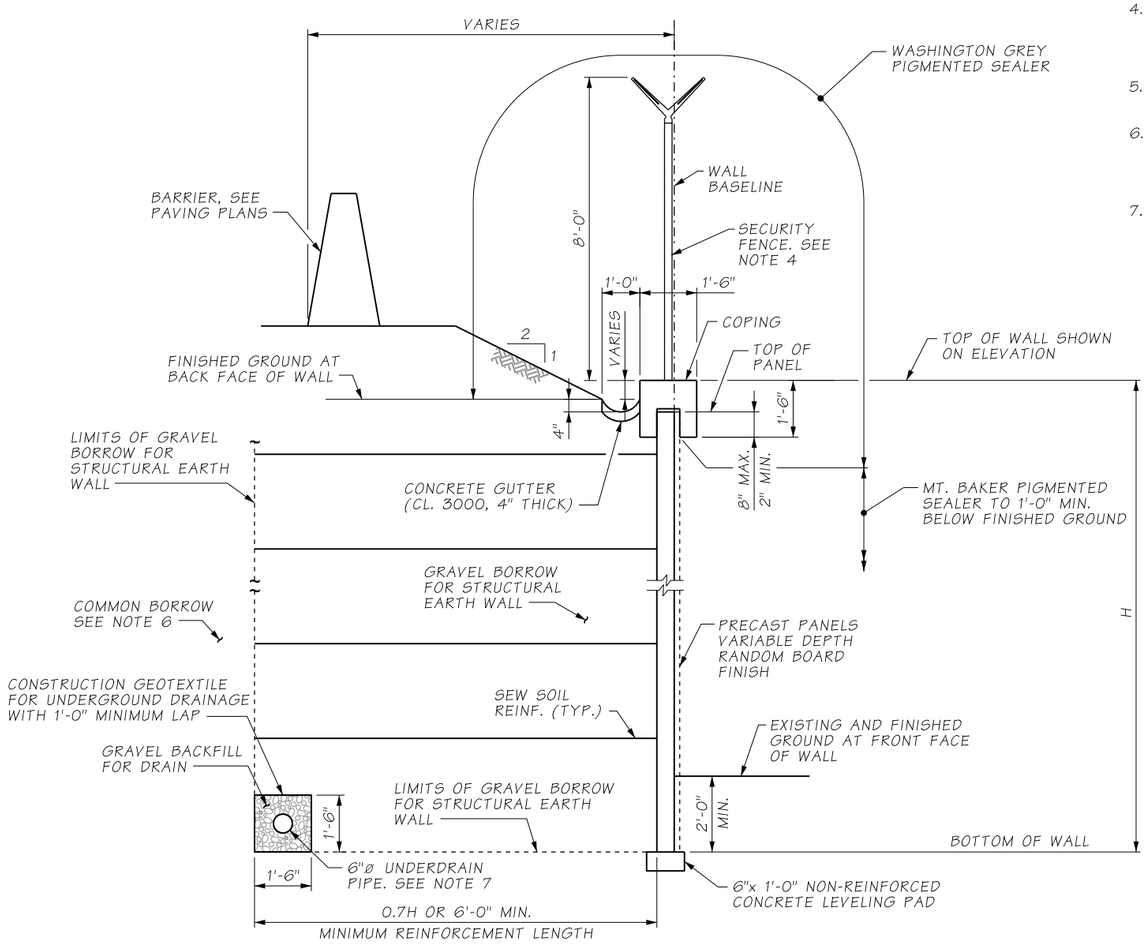

SE WALL WITH COPING AND SECURITY FENCE

TYPICAL SECTION - RETAINING WALL T11

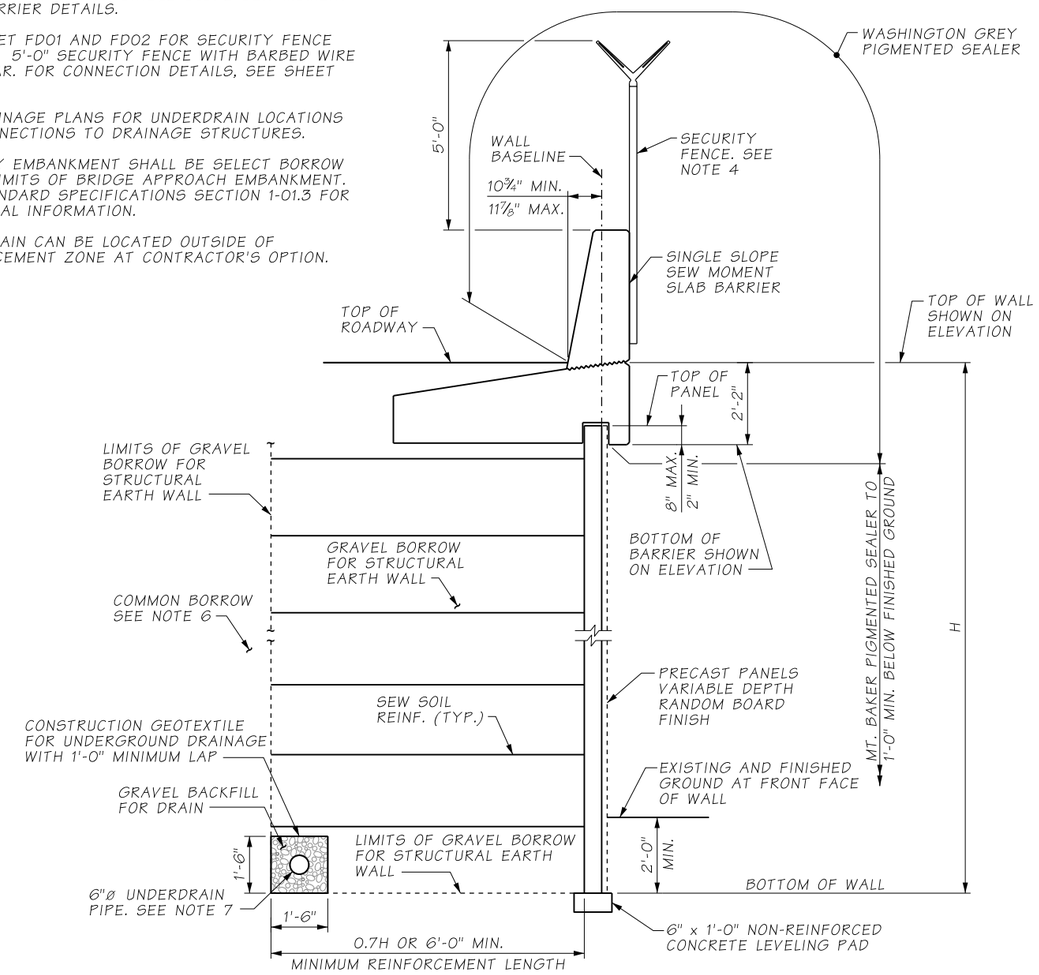

SE WALL WITH MOMENT SLAB BARRIER AND SECURITY FENCE

TYPICAL SECTION - RETAINING WALL T11

ATKINSON

JUL 02 2019

RELEASED FOR CONSTRUCTION

FILE NAME	D:\ICS_workdir\31668\20633_1763\PS_RW52.dgn				REGION NO. 10	STATE WASH	FED.AID PROJ.NO.
TIME	5:26:23 PM						
DATE	7/1/2019						
PLOTTED BY	USLAS0-APP064$				JOB NUMBER		
DESIGNED BY	K. YOUNG						
ENTERED BY	R. REISER	REV 0 - RELEASED FOR CONSTRUCTION	07/01/2019				
CHECKED BY	A. FONG	REV B - FINAL REVIEW	05/17/2019		CONTRACT NO. C9133		LOCATION NO.
PROJ. ENGR.	C. MEADE	REV A - PRELIMINARY REVIEW	02/01/2019				
REGIONAL ADM.	J. WYNANDS	REVISION	DATE	BY			

CORY J. CATWOOD, STATE OF WASHINGTON, 38135, STRUCTURAL ENGINEER, PROFESSIONAL ENGINEER — 7/2/19 — DATE — P.E. STAMP BOX

DATE — P.E. STAMP BOX

Washington State Department of Transportation

ATKINSON / JACOBS CONSTRUCTION

I-5
STEILACOOM-DUPONT RD TO THORNE LN
CORRIDOR IMPROVEMENTS
MP 120.01 TO MP 124.45

RETAINING WALL T11
TYPICAL SECTIONS

PLAN REF NO RW52

SHEET 831 OF 1456 SHEETS

NOTES:

1. ALL STRUCTURAL STEEL SHALL CONFORM TO ASTM A36 AND SHALL BE GALVANIZED IN ACCORDANCE WITH AASHTO M111.
2. ALL POSTS TO BE INSTALLED PLUMB.
3. EPOXY RESIN SHALL BE HILTI-HY 200 EPOXY ADHESIVE OR APPROVED EQUAL.

AS-BUILT

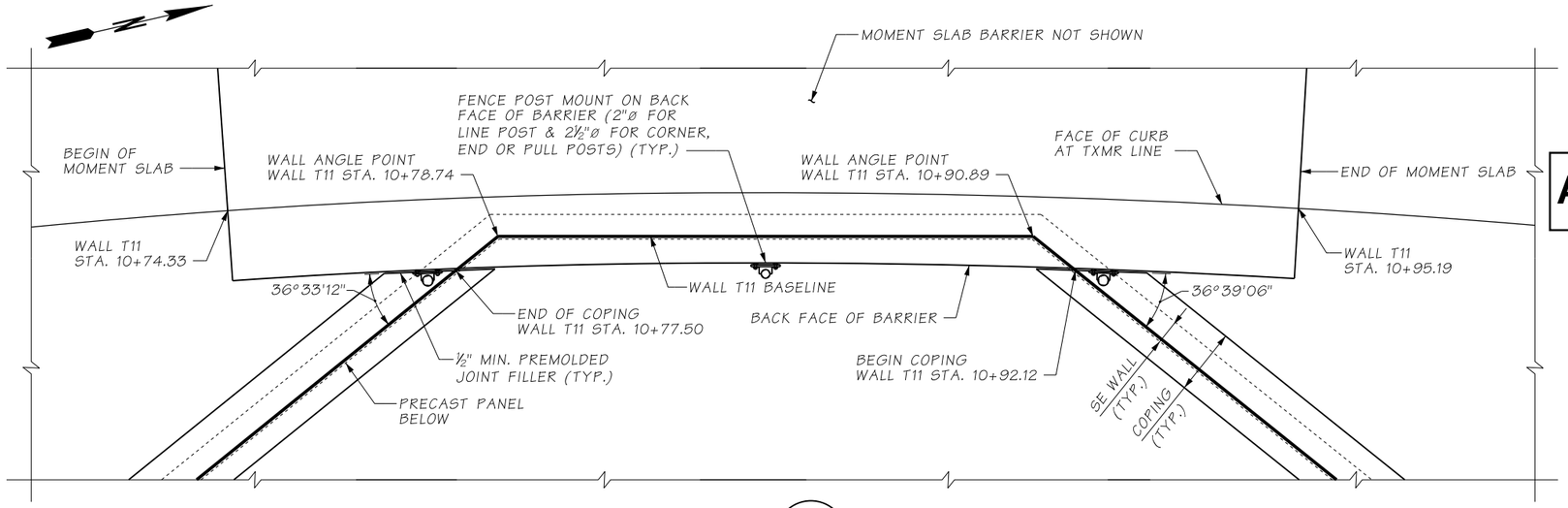

DETAIL 1 / RW51

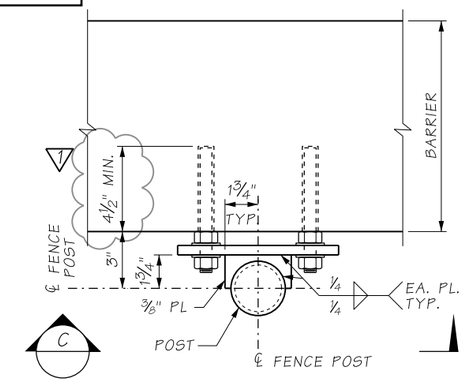

SECTION B / -

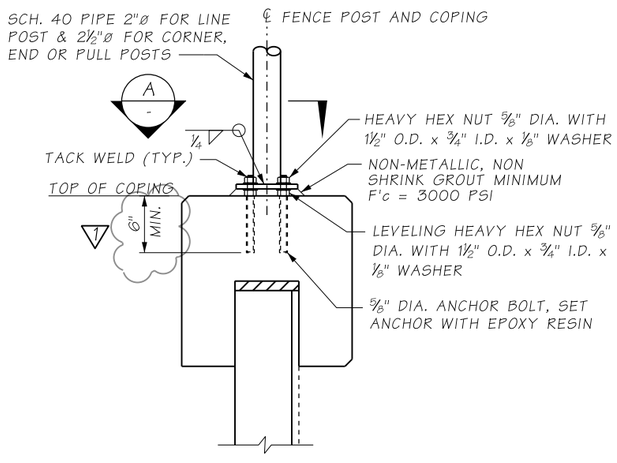

SECURITY FENCE POST CONNECTION TO COPING

ATKINSON
NOV 15 2021 KTW
RELEASED FOR CONSTRUCTION

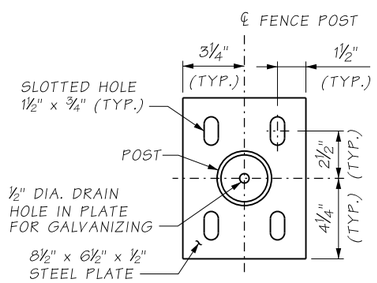

SECTION A / -

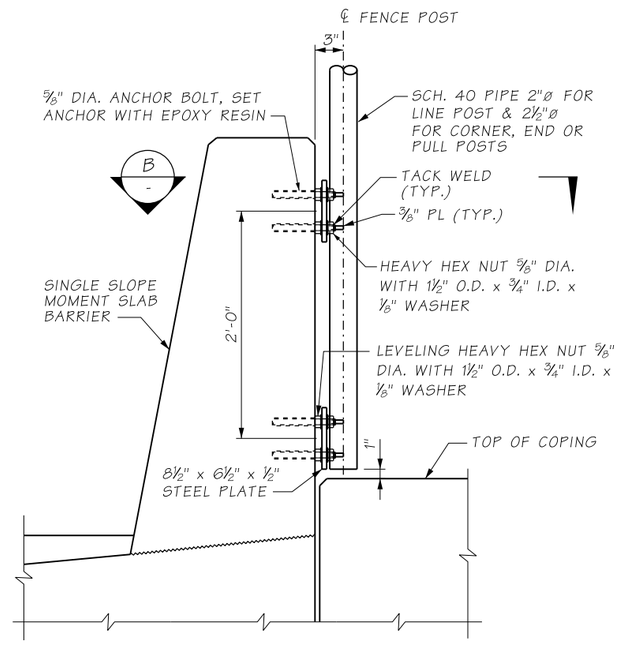

SECURITY FENCE POST CONNECTION TO BACK SIDE OF BARRIER

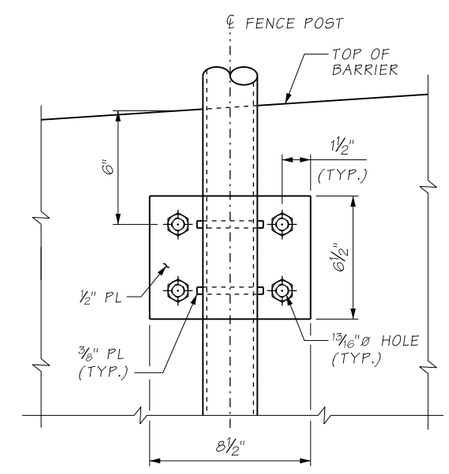

SECTION C / -

FILE NAME	D:\ICS_workdir\91774\20633_2149\PS_RW53.dgn			
TIME	12:36:08 PM			
DATE	11/9/2021			
PLOTTED BY	USLAS0-APP064$			
DESIGNED BY	A. FONG			
ENTERED BY	A. FONG	REV 1 - RFI0611	11/17/2021	
CHECKED BY	G. CALLAHAN	REV 0 - RELEASED FOR CONSTRUCTION	07/01/2019	
PROJ. ENGR.	C. MEADE	REV A - FINAL REVIEW	05/17/2019	
REGIONAL ADM.	J. WYNANDS	REVISION	DATE	BY

REGION NO.	STATE	FED.AID PROJ.NO.
10	WASH	
JOB NUMBER		
CONTRACT NO.		LOCATION NO.
C9133		

CORY J. CAYWOOD, STATE OF WASHINGTON, 38795, STRUCTURAL ENGINEER, PROFESSIONAL ENGINEER
11/15/21
DATE
P.E. STAMP BOX

DATE
P.E. STAMP BOX

Washington State Department of Transportation

ATKINSON / JACOBS CONSTRUCTION

I-5
STEILACOOM-DUPONT RD TO THORNE LN
CORRIDOR IMPROVEMENTS
MP 120.01 TO MP 124.45

RETAINING WALL T11
DETAILS

PLAN REF NO RW53

SHEET 832 OF 1456 SHEETS

SECTION 15, T.19N. R.2E. W.M.
JOINT BASE LEWIS-MCCHORD/CITY OF LAKEWOOD

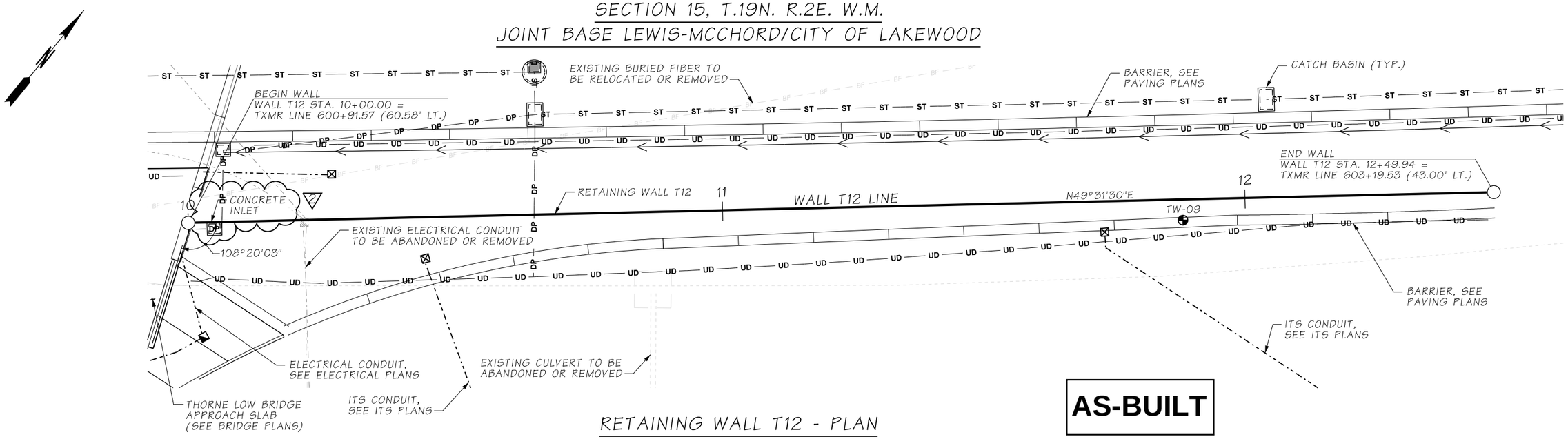

RETAINING WALL T12 - PLAN

AS-BUILT

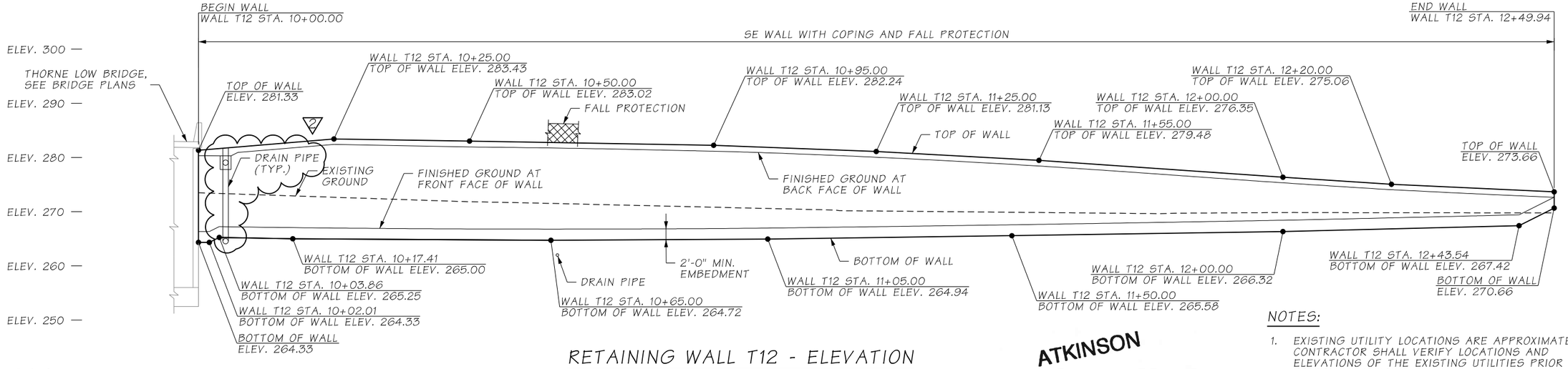

RETAINING WALL T12 - ELEVATION

LOOKING AT BACK FACE OF WALL

DATUM

N.A.V.D. 88

ATKINSON

JAN 08 2020 KTW

RELEASED FOR CONSTRUCTION

NOTES:

1. EXISTING UTILITY LOCATIONS ARE APPROXIMATE. CONTRACTOR SHALL VERIFY LOCATIONS AND ELEVATIONS OF THE EXISTING UTILITIES PRIOR TO CONSTRUCTION.
2. SEE SHEET RW03 FOR GENERAL NOTES AND LEGEND.
3. SEE SHEET RW55 FOR TYPICAL SECTION.
4. FOR CATCH BASIN LOCATIONS SEE DRAINAGE PLANS.

FILE NAME	c:\pwworking\jacobs_b&l\youngkl2\dms20633\PS_RW54.dgn			
TIME	1:42:52 PM			
DATE	9/23/2019			
PLOTTED BY	youngkl2	REV 2 - RFI0221	09/23/2019	
DESIGNED BY	K. YOUNG	REV 1 - RFI0163	07/31/2019	
ENTERED BY	R. REISER	REV 0 - RELEASED FOR CONSTRUCTION	06/17/2019	
CHECKED BY	A. FONG	REV B - FINAL REVIEW	05/17/2019	
PROJ. ENGR.	C. MEADE	REV A - PRELIMINARY REVIEW	02/01/2019	
REGIONAL ADM.	J. WYNANDS	REVISION	DATE	BY

REGION NO.	STATE	FED.AID PROJ.NO.
10	WASH	
JOB NUMBER		
CONTRACT NO. C9133		LOCATION NO.

COREY J. CAYWOOD, STATE OF WASHINGTON, 38759, PROFESSIONAL ENGINEER — 9/23/19 DATE — P.E. STAMP BOX

P.E. STAMP BOX — DATE

Washington State Department of Transportation

ATKINSON CONSTRUCTION / JACOBS

I-5
STEILACOOM-DUPONT RD TO THORNE LN CORRIDOR IMPROVEMENTS
MP 120.01 TO MP 124.45

RETAINING WALL T12
PLAN & ELEVATION

PLAN REF NO RW54

SHEET 833 OF 1456 SHEETS

NOTES:

1. SEE SHEET RW54 FOR WALL PLAN AND ELEVATION.
2. SEE SHEET RW101 FOR COPING DETAILS.
3. SEE SHEET RW102 FOR FALL PROTECTION DETAILS.
4. SEE DRAINAGE PLANS FOR UNDERDRAIN LOCATIONS AND CONNECTIONS TO DRAINAGE STRUCTURES.
5. ROADWAY EMBANKMENT SHALL BE SELECT BORROW WITHIN LIMITS OF BRIDGE APPROACH EMBANKMENTS. SEE STANDARD SPECIFICATIONS SECTION 1-01.3 FOR ADDITIONAL INFORMATION.
6. UNDERDRAIN CAN BE LOCATED OUTSIDE OF REINFORCEMENT ZONE AT CONTRACTOR'S OPTION.

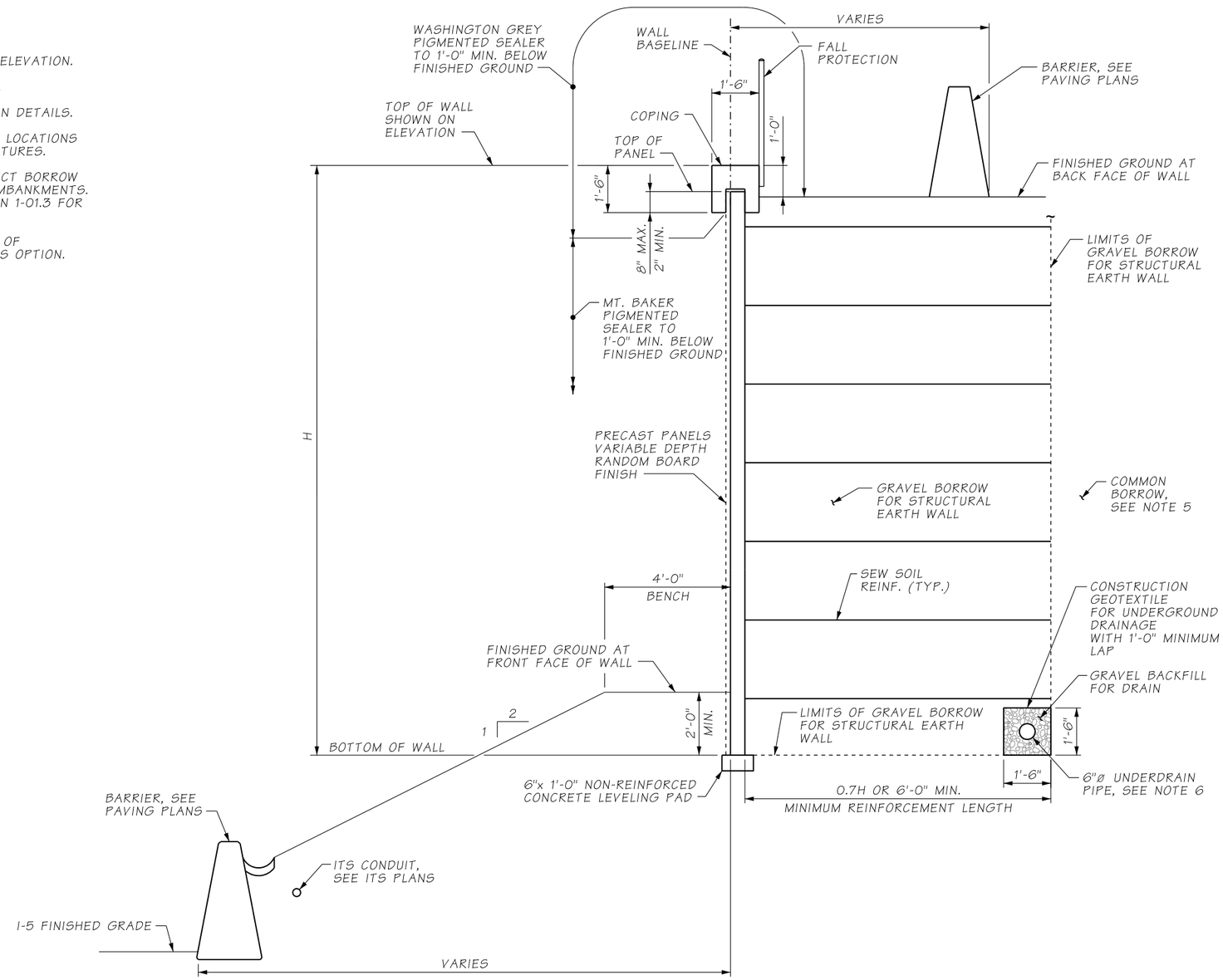

SE WALL WITH COPING AND FALL PROTECTION

TYPICAL SECTION - RETAINING WALL T12

AS-BUILT

ATKINSON

JUN 18 2019 KTW

RELEASED FOR CONSTRUCTION

FILE NAME	D:\ICS_workdir\30431\20633_1764\PS_RW55.dgn						
TIME	11:46:21 AM				REGION NO. 10	STATE WASH	FED.AID PROJ.NO.
DATE	6/14/2019						
PLOTTED BY	USLAS0-APP064$				JOB NUMBER		
DESIGNED BY	K. YOUNG						
ENTERED BY	R. REISER	REV 0 - RELEASED FOR CONSTRUCTION	06/17/2019				
CHECKED BY	A. FONG	REV B - FINAL REVIEW	05/17/2019		CONTRACT NO. C9133		LOCATION NO.
PROJ. ENGR.	C. MEADE	REV A - PRELIMINARY REVIEW	02/01/2019				
REGIONAL ADM.	J. WYNANDS	REVISION	DATE	BY			

CORY J. CAYWOOD, STATE OF WASHINGTON, 38193, STRUCTURAL ENGINEER, PROFESSIONAL ENGINEER — 06/17/19 — DATE — P.E. STAMP BOX

DATE — P.E. STAMP BOX

Washington State Department of Transportation

ATKINSON / JACOBS CONSTRUCTION

I-5
STEILACOOM-DUPONT RD TO THORNE LN
CORRIDOR IMPROVEMENTS
MP 120.01 TO MP 124.45

RETAINING WALL T12
TYPICAL SECTIONS

PLAN REF NO RW55

SHEET 834 OF 1456 SHEETS

SECTION 21/28/29, T.19N. R.2E. W.M.
CITY OF LAKEWOOD

AS-BUILT

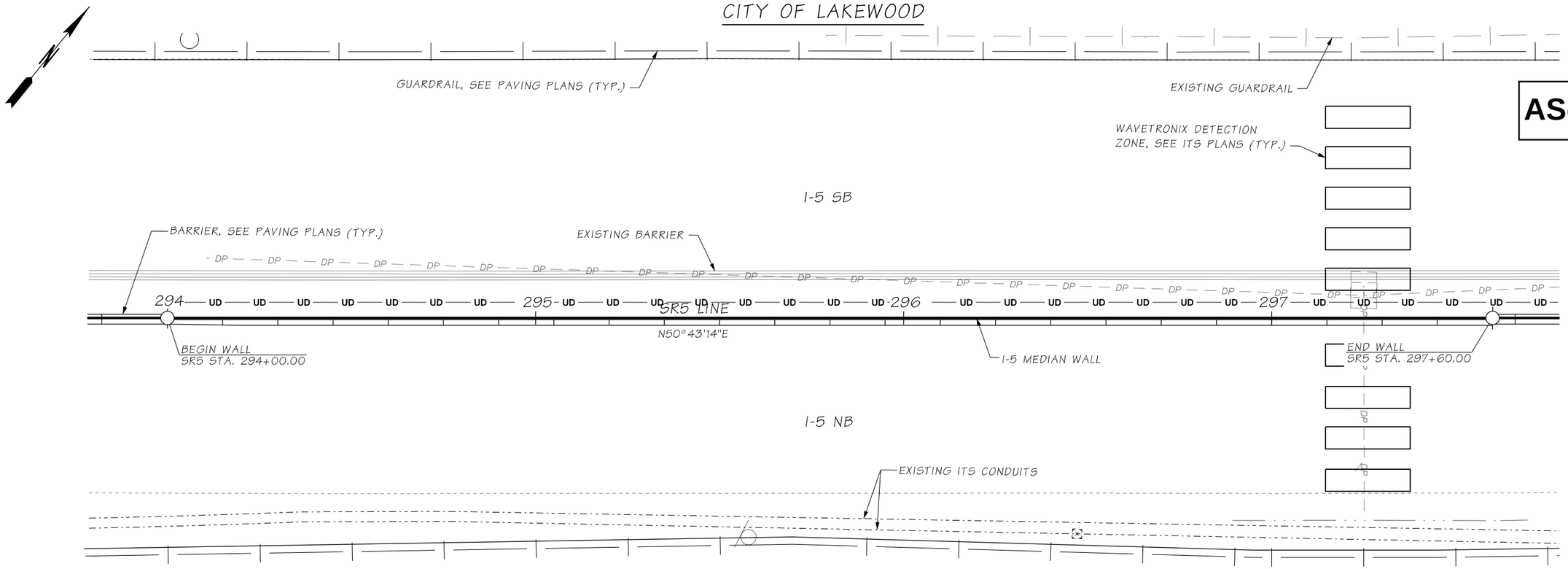

I-5 MEDIAN WALL - PLAN

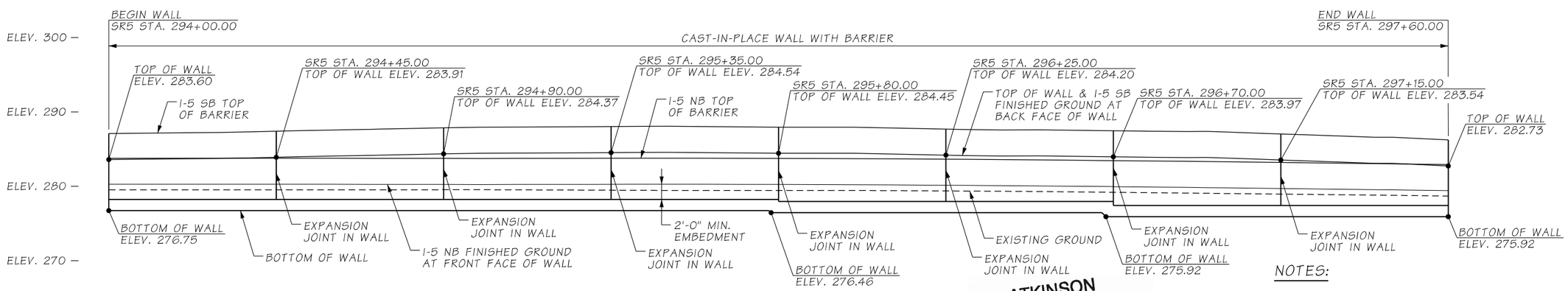

DATUM
N.A.V.D. 88

I-5 MEDIAN WALL - ELEVATION

LOOKING AT FRONT FACE OF WALL

ATKINSON
OCT 01 2019 KTN
RELEASED FOR CONSTRUCTION

NOTES:

1. EXISTING UTILITY LOCATION ARE APPROXIMATE. CONTRACTOR SHALL VERIFY LOCATIONS AND ELEVATIONS OF THE EXISTING UTILITIES PRIOR TO CONSTRUCTION.
2. SEE SHEET RW03 FOR GENERAL NOTES AND LEGEND.
3. SEE SHEET RW57 FOR TYPICAL SECTION.

FILE NAME	c:\pwworking\jacobs_b&i\youngkl2\dms20633\PS_RW56.dgn						
TIME	7:43:08 AM				REGION NO. 10	STATE WASH	FED.AID PROJ.NO.
DATE	9/26/2019						
PLOTTED BY	youngkl2				JOB NUMBER		
DESIGNED BY	K. YOUNG						
ENTERED BY	A. FONG	REV 0 - RELEASED FOR CONSTRUCTION	10/01/2019				
CHECKED BY	R. BAGHAEI	REV B - FINAL REVIEW	09/16/2019		CONTRACT NO. C9133		LOCATION NO.
PROJ. ENGR.	C. MEADE	REV A - PRELIMINARY REVIEW	08/09/2019				
REGIONAL ADM.	J. WYNANDS	REVISION	DATE	BY			

P.E. STAMP BOX — DATE 9/26/19

P.E. STAMP BOX — DATE

Washington State Department of Transportation

ATKINSON CONSTRUCTION / JACOBS

I-5
STEILACOOM-DUPONT RD TO THORNE LN CORRIDOR IMPROVEMENTS
MP 120.01 TO MP 124.45

I-5 MEDIAN WALL
PLAN & ELEVATION

PLAN REF NO RW56

SHEET 835 OF 1456 SHEETS

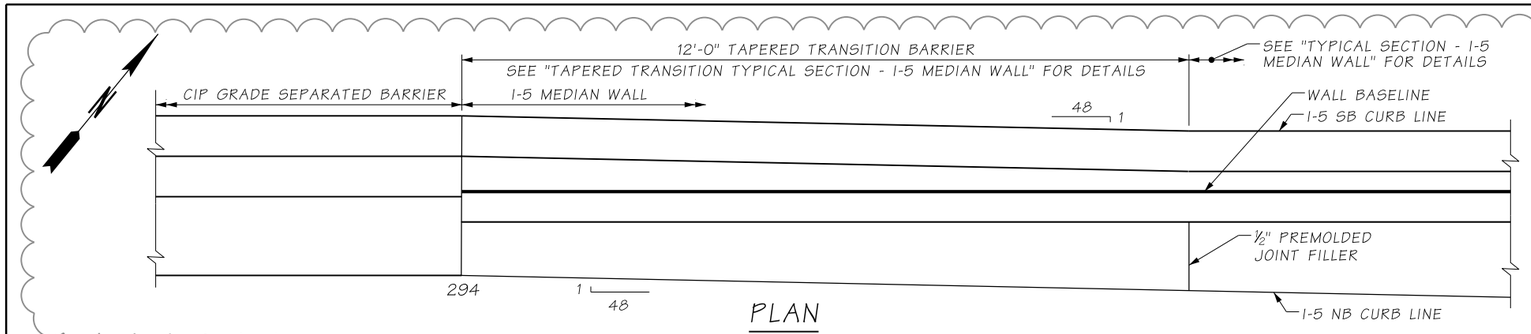

PLAN

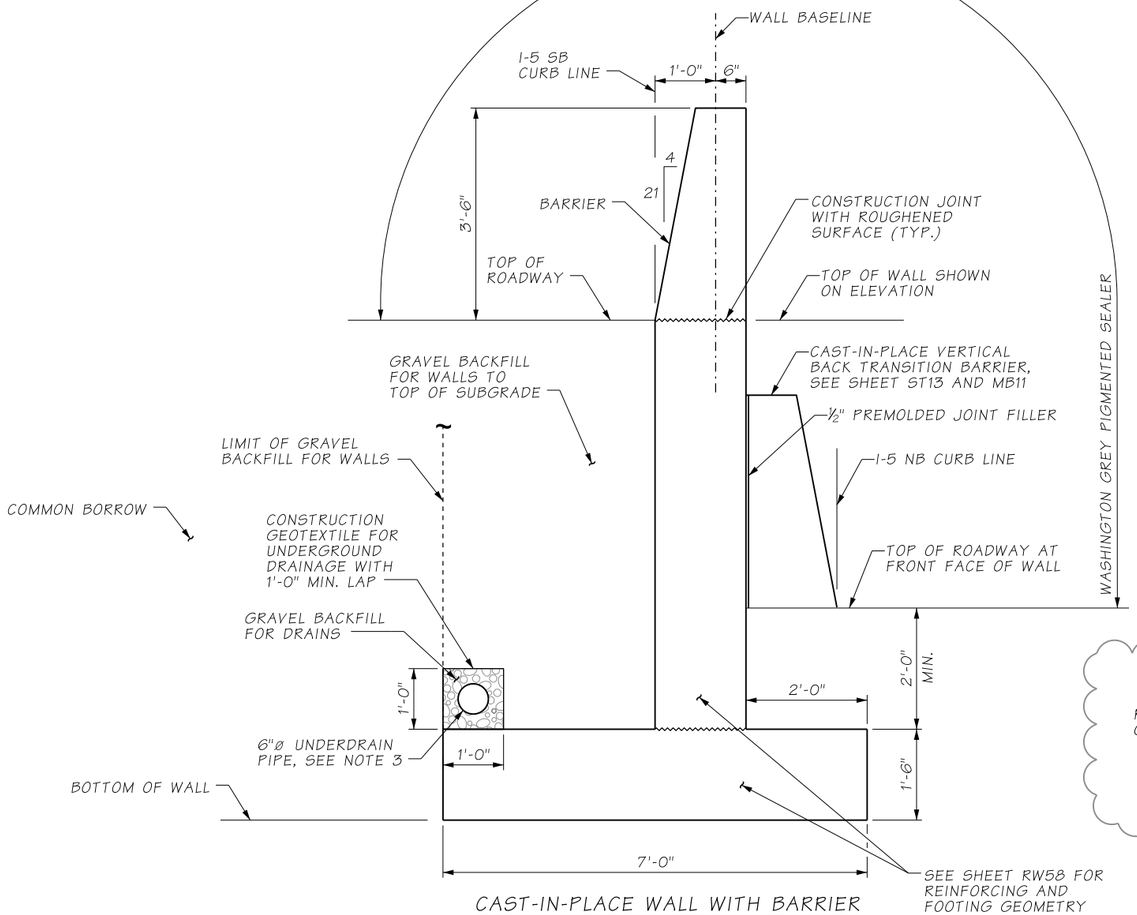

CAST-IN-PLACE WALL WITH BARRIER

TYPICAL SECTION - I-5 MEDIAN WALL

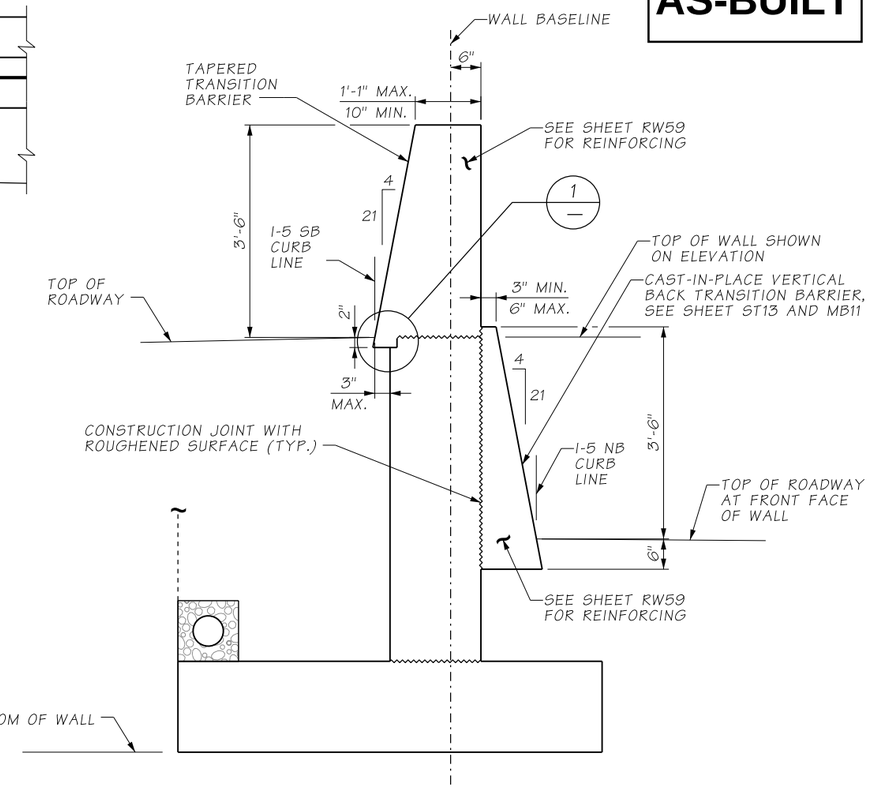

CAST-IN-PLACE WALL WITH BARRIER

TAPERED TRANSITION TYPICAL SECTION - I-5 MEDIAN WALL

SEE TYPICAL SECTION - I-5 MEDIAN WALL FOR DETAILS NOT SHOWN

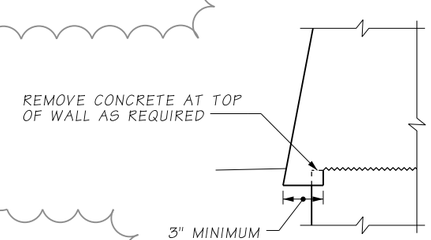

DETAIL 1

ATKINSON

JAN 06 2021 KTW

RELEASED FOR CONSTRUCTION

NOTES:

1. SEE SHEET RW56 FOR WALL PLAN AND ELEVATION.
2. SEE DRAINAGE PLANS FOR UNDERDRAIN LOCATIONS AND CONNECTIONS TO DRAINAGE STRUCTURES.
3. UNDERDRAIN CAN BE LOCATED OUTSIDE OF THE LIMIT OF GRAVEL BACKFILL AT CONTRACTOR'S OPTION.

FILE NAME	D:\ICS_workdir\73630\20633_2337\PS_RW57.dgn			
TIME	12:32:36 PM			
DATE	1/6/2021			
PLOTTED BY	USLAS0-APP064$	REV 2 - RFI0554	01/06/2021	
DESIGNED BY	K. YOUNG	REV 1 - RFI0463	06/02/2020	
ENTERED BY	A. FONG	REV 0 - RELEASED FOR CONSTRUCTION	10/01/2019	
CHECKED BY	R. BAGHAEI	REV B - FINAL REVIEW	09/16/2019	
PROJ. ENGR.	C. MEADE	REV A - PRELIMINARY REVIEW	08/09/2019	
REGIONAL ADM.	J. WYNANDS	REVISION	DATE	BY

REGION NO.	STATE	FED.AID PROJ.NO.
10	WASH	
JOB NUMBER		
CONTRACT NO. C9133		LOCATION NO.

CORY J. CAYWOOD, STATE OF WASHINGTON, 38195, STRUCTURAL, PROFESSIONAL ENGINEER

01/06/21

DATE

P.E. STAMP BOX

P.E. STAMP BOX DATE

Washington State Department of Transportation

ATKINSON / JACOBS CONSTRUCTION

I-5
STEILACOOM-DUPONT RD TO THORNE LN
CORRIDOR IMPROVEMENTS
MP 120.01 TO MP 124.45

I-5 MEDIAN WALL
TYPICAL SECTION

PLAN REF NO RW57

SHEET 836 OF 1456 SHEETS

AS-BUILT

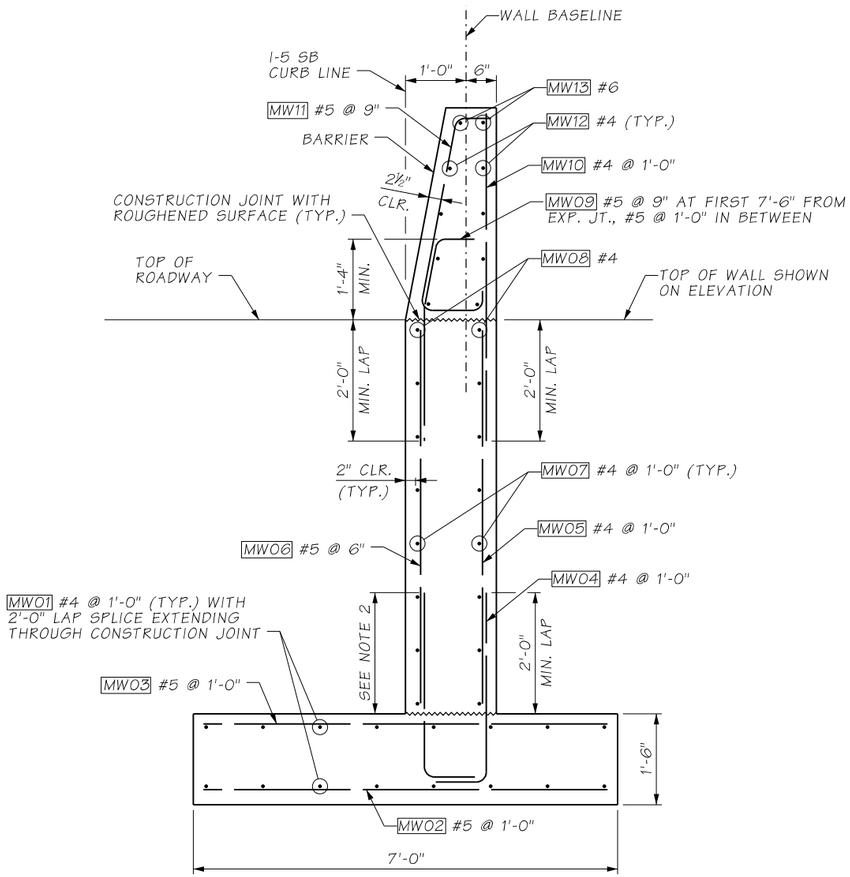

TYPICAL REINFORCEMENT SECTION

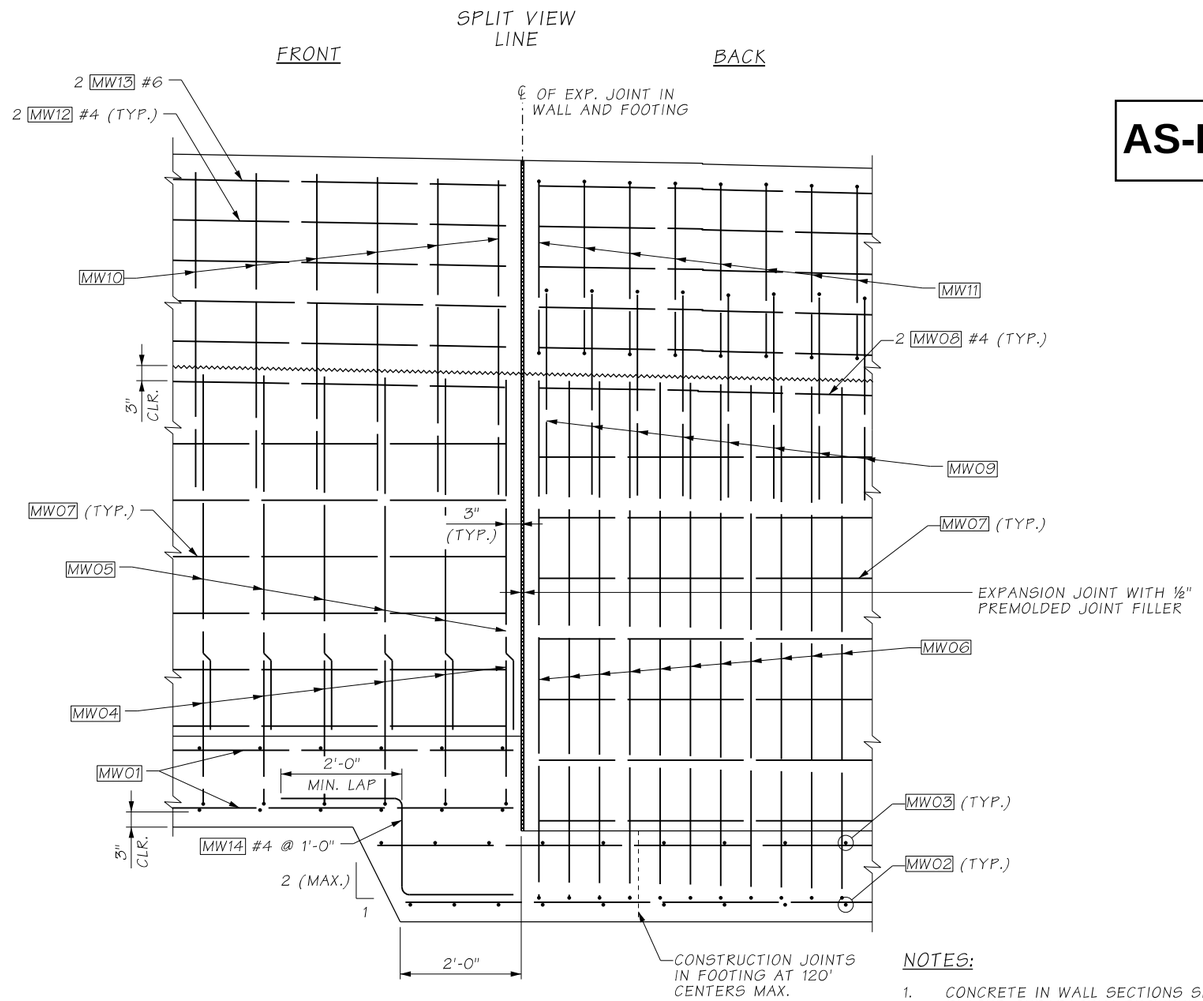

SPLIT ELEVATION VIEW

(SHOWING SEPARATE REBAR LAYERS)

NOTES:

1. CONCRETE IN WALL SECTIONS SHALL BE PLACED SEPARATELY BETWEEN EXPANSION JOINTS WITH A MINIMUM 24 HOUR PERIOD BEFORE PLACING CONCRETE IN THE ADJACENT SECTION.
2. LAP SPLICES MAY BE ADDED AT CONTRACTORS OPTION. MINIMUM LAP SPLICES ARE AS FOLLOWS UNLESS NOTED OTHERWISE:
   #4 = 2'-0"
   #5 = 2'-0"
   #6 = 2'-6"
   #7 = 3'-0"
   #8 = 3'-6"
   #9 = 4'-0"
3. CONSTRUCTION JOINTS IN THE FOOTING SHALL BE SPACED AT 120 FT MAXIMUM. REINFORCEMENT SHALL BE CONTINUOUS THROUGH THE CONSTRUCTION JOINT.

ATKINSON
OCT 01 2019 KTW
RELEASED FOR CONSTRUCTION

FILE NAME	c:\pwworking\jacobs_b&i\youngkl2\dms20633\PS_RW58.dgn						
TIME	7:46:06 AM				REGION NO. 10	STATE WASH	FED.AID PROJ.NO.
DATE	9/26/2019						
PLOTTED BY	youngkl2				JOB NUMBER		
DESIGNED BY	K. YOUNG						
ENTERED BY	R. REISER						
CHECKED BY	R. BAGHAEI	REV 0 - RELEASED FOR CONSTRUCTION	10/01/2019		CONTRACT NO. C9133		LOCATION NO.
PROJ. ENGR.	C. MEADE	REV A - FINAL REVIEW	09/16/2019				
REGIONAL ADM.	J. WYNANDS	REVISION	DATE	BY			

P.E. STAMP BOX — DATE 9/26/19

P.E. STAMP BOX — DATE

Washington State Department of Transportation

ATKINSON CONSTRUCTION / JACOBS

I-5
STEILACOOM-DUPONT RD TO THORNE LN
CORRIDOR IMPROVEMENTS
MP 120.01 TO MP 124.45

I-5 MEDIAN WALL REINFORCEMENT DETAILS

PLAN REF NO RW58

SHEET 837 OF 1456 SHEETS

AS-BUILT

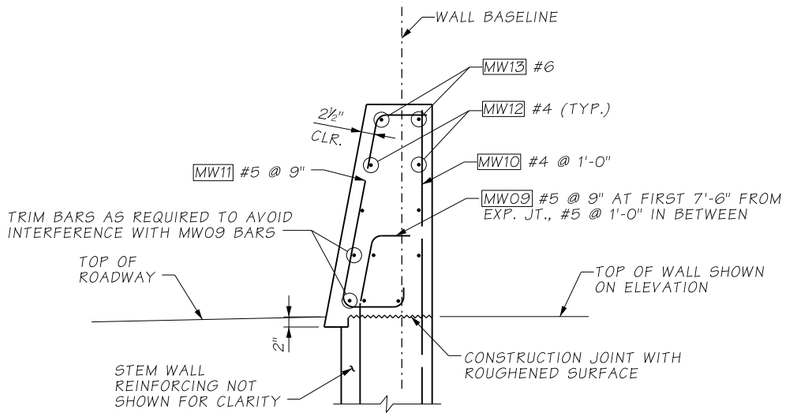

TYPICAL REINFORCEMENT AT TAPERED TRANSITION BARRIER

SEE SHEET RW58 FOR ADDITIONAL DETAILS

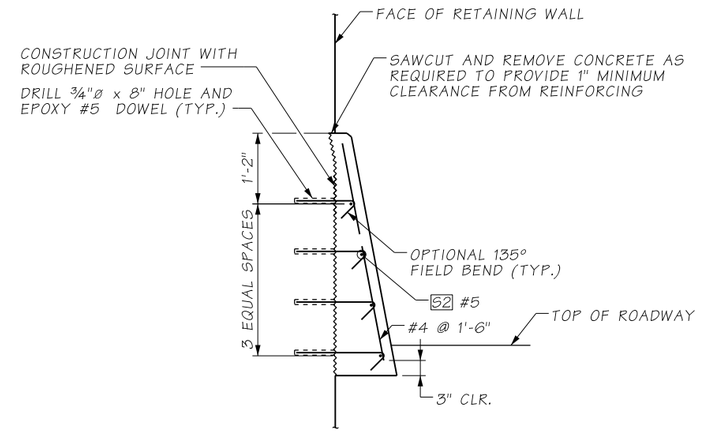

TYPICAL REINFORCEMENT AT CAST-IN-PLACE VERTICAL BACK TRANSITION BARRIER

ATKINSON
JAN 06 2021 KTW
RELEASED FOR CONSTRUCTION

FILE NAME	D:\ICS_workdir\73630\20633_2524\PS_RW59.dgn			
TIME	12:32:36 PM			
DATE	1/6/2021			
PLOTTED BY	USLAS0-APP064$			
DESIGNED BY	K. YOUNG			
ENTERED BY	R. REISER			
CHECKED BY	C. CAYWOOD			
PROJ. ENGR.	C. MEADE	REV 0 - RFI0554	01/06/2021	
REGIONAL ADM.	J. WYNANDS	REVISION	DATE	BY

REGION NO.	STATE	FED.AID PROJ.NO.
10	WASH	
JOB NUMBER		
CONTRACT NO.		LOCATION NO.
C9133		

CORY J. CAYWOOD, STATE OF WASHINGTON, 38759, STRUCTURAL ENGINEER, PROFESSIONAL ENGINEER
01/06/21
DATE
P.E. STAMP BOX

DATE
P.E. STAMP BOX

Washington State Department of Transportation

ATKINSON CONSTRUCTION / JACOBS

I-5
STEILACOOM-DUPONT RD TO THORNE LN
CORRIDOR IMPROVEMENTS
MP 120.01 TO MP 124.45

I-5 MEDIAN WALL REINFORCEMENT DETAILS AT TAPERED TRANSITION

PLAN REF NO RW59

SHEET 838 OF 1456 SHEETS

NOTES:

1. SEE RETAINING WALL PLANS FOR LOCATIONS OF COPING.
2. COPING SHALL BE PRECAST OR CAST-IN-PLACE CONCRETE.
3. COPING REINFORCING AND CONNECTION TO WALL PANELS TO BE DETERMINED BY WALL MANUFACTURER.

AS-BUILT

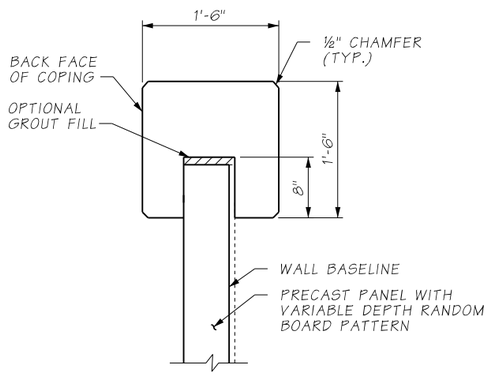

COPING DETAIL

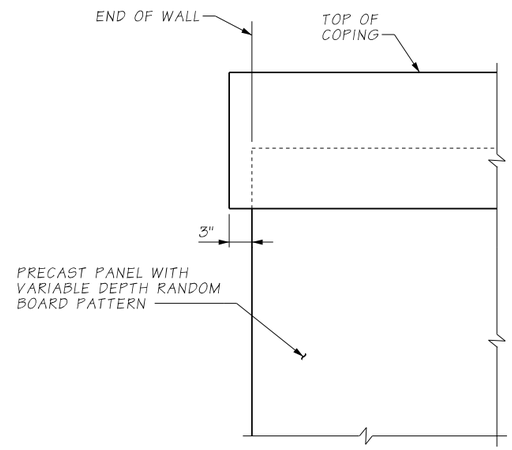

TYPICAL COPING AT END OF WALL

ATKINSON
JUL 22 2019 KTW
RELEASED FOR CONSTRUCTION

FILE NAME	c:\pwworking\jacobs_b&i\reiserrw\dms20633\PS_RW101.dgn						
TIME	3:26:49 PM				REGION NO. 10	STATE WASH	FED.AID PROJ.NO.
DATE	7/16/2019						
PLOTTED BY	ReiserRW						
DESIGNED BY	G. CALLAHAN				JOB NUMBER		
ENTERED BY	R. REISER						
CHECKED BY	A. FONG	REV 0 - RELEASED FOR CONSTRUCTION	07/19/2019		CONTRACT NO. C9133		LOCATION NO.
PROJ. ENGR.	C. MEADE	REV A - FINAL REVIEW	06/13/2019				
REGIONAL ADM.	J. WYNANDS	REVISION	DATE	BY			

P.E. STAMP BOX — DATE 7/19/19

P.E. STAMP BOX — DATE

Washington State Department of Transportation

ATKINSON CONSTRUCTION / JACOBS

I-5
STEILACOOM-DUPONT RD TO THORNE LN
CORRIDOR IMPROVEMENTS
MP 120.01 TO MP 124.45

RETAINING WALLS
COPING

PLAN REF NO RW101

SHEET 839 OF 1456 SHEETS

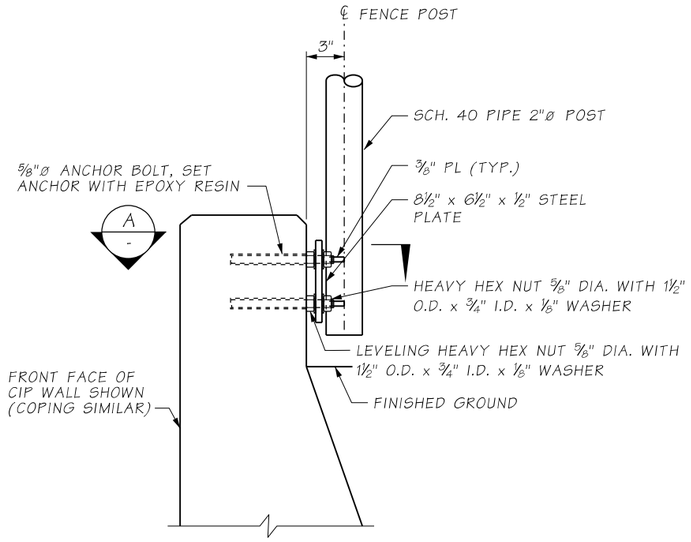

FENCE POST CONNECTION TO BACK SIDE OF COPING OR CIP WALL

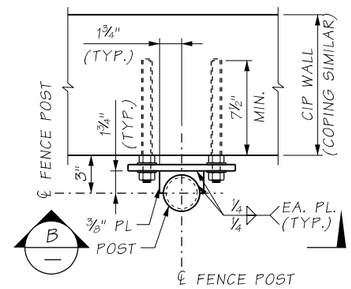

SECTION A

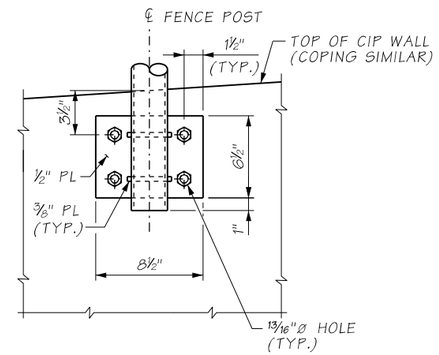

SECTION B

NOTES:

1. SEE RETAINING WALL PLANS FOR LOCATIONS OF FALL PROTECTION.
2. ALL ELEMENTS OF FENCE SHALL BE HOT DIPPED GALVANIZED AFTER FABRICATION.
3. STEEL PIPES FOR POSTS AND LONGITUDINAL MEMBERS SHALL CONFORM TO ASTM SPECIFICATION A53 GRADE B AND GALVANIZE PER AASHTO M111.
4. ALL STRUCTURAL STEEL SHALL CONFORM TO ASTM A36 AND GALVANIZE IN ACCORDANCE WITH AASHTO M111.
5. ANCHOR BOLTS SHALL CONFORM TO ASTM F1554 GRADE 55 AND GALVANIZE PER ASTM F2329.
6. ALL HARDWARE SHALL CONFORM TO ASTM A36 AND GALVANIZE PER AASHTO M111 & M232 UNLESS NOTED OTHERWISE.
7. ALL POSTS TO BE INSTALLED PLUMB.
8. FABRIC SHALL BE #9 GAGE WIRE WOVEN IN A 2" CHAIN LINK DIAMOND MESH.
9. FABRIC TIES SHALL BE INSTALLED TO ALL FRAMES IN ACCORDANCE WITH GOOD TRADE PRACTICES AT 1'-0" CENTERS MAXIMUM SPACING.
10. UNLESS OTHERWISE NOTED, GENERAL CONNECTION HARDWARE FOR CHAIIN LINK FENCE SHALL CONFORM TO WSDOT STD. PLAN L-20.10-03 TYPE 4.
11. EPOXY RESIN SHALL BE HILTI-HY 200 EPOXY OR APPROVED EQUAL.
12. TENSION WIRE SHALL BE INSTALLED AND TENSIONED IN ACCORDANCE WITH GOOD TRADE PRACTICES. ATTACH TENSION WIRE TO POSTS WITH TIE WIRE AT EACH POST.

AS-BUILT

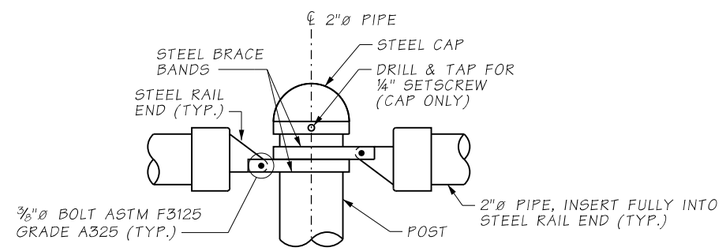

DETAIL 1

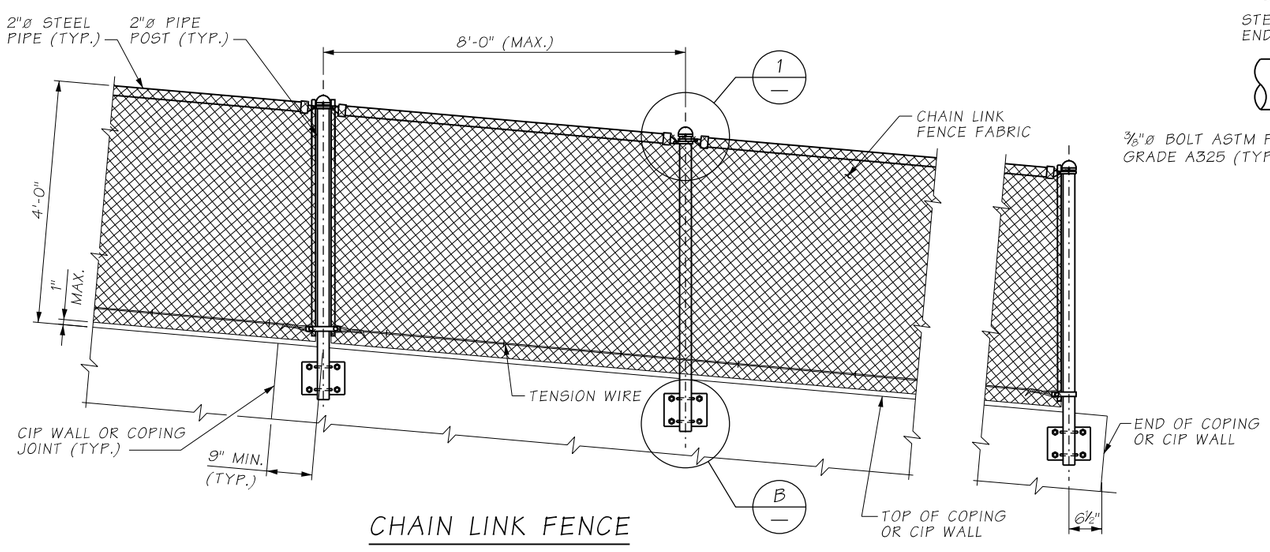

CHAIN LINK FENCE

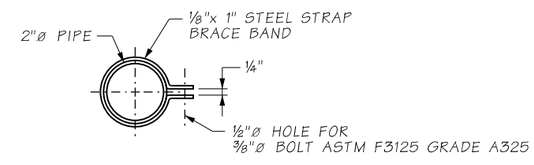

BRACE BAND

ATKINSON
DEC 17 2019 KTW
RELEASED FOR CONSTRUCTION

FILE NAME	c:\pwworking\jacobs_b&i\youngkl2\dms20633\PS_RW102.dgn						
TIME	8:06:15 AM				REGION NO.	STATE	FED.AID PROJ.NO.
DATE	12/16/2019				10	WASH	
PLOTTED BY	youngkl2				JOB NUMBER		
DESIGNED BY	G. CALLAHAN						
ENTERED BY	R. REISER						
CHECKED BY	A. FONG	REV 0 - RELEASED FOR CONSTRUCTION	12/16/2019		CONTRACT NO.		LOCATION NO.
PROJ. ENGR.	C. MEADE	REV A - FINAL REVIEW	6/13/2019		C9133		
REGIONAL ADM.	J. WYNANDS	REVISION	DATE	BY			

P.E. STAMP BOX — DATE 12/16/19

P.E. STAMP BOX — DATE

Washington State Department of Transportation

ATKINSON CONSTRUCTION / JACOBS

I-5
STEILACOOM-DUPONT RD TO THORNE LN CORRIDOR IMPROVEMENTS
MP 120.01 TO MP 124.45

RETAINING WALLS
FALL PROTECTION - SIDE MOUNTED

PLAN REF NO RW102

SHEET 840 OF 1456 SHEETS

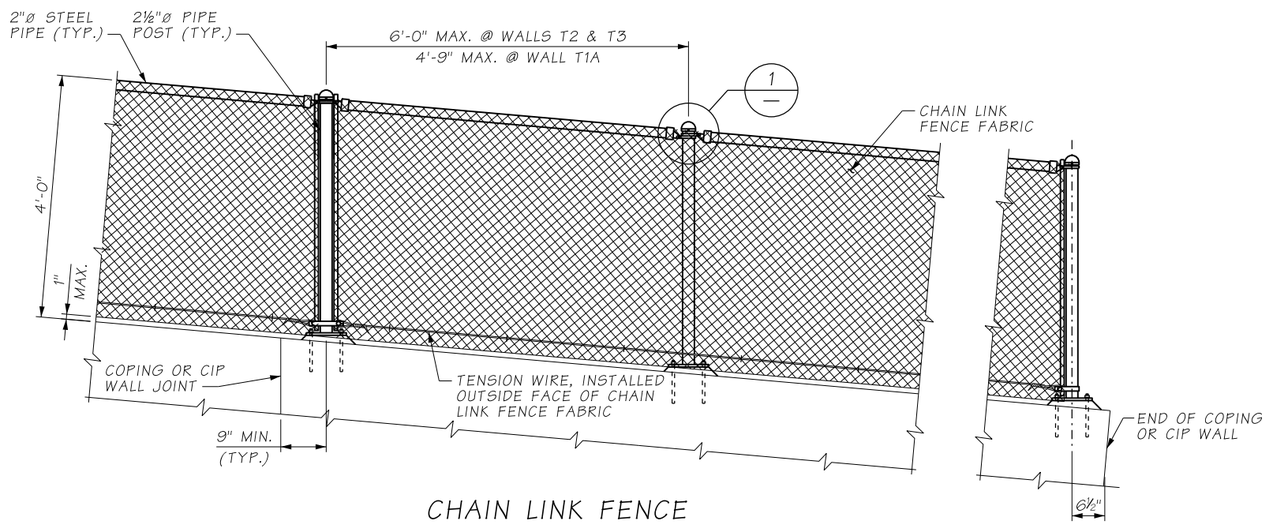

CHAIN LINK FENCE

AS-BUILT

NOTES:

1. SEE RETAINING WALL PLANS FOR LOCATIONS OF FALL PROTECTION.
2. ALL ELEMENTS OF FENCE SHALL BE HOT DIPPED GALVANIZED AFTER FABRICATION.
3. STEEL PIPES FOR POSTS AND LONGITUDINAL MEMBERS SHALL CONFORM TO ASTM SPECIFICATION A53 GRADE B AND GALVANIZE PER AASHTO M111.
4. ALL STRUCTURAL STEEL SHALL CONFORM TO ASTM A36 AND GALVANIZE IN ACCORDANCE WITH AASHTO M111.
5. ANCHOR BOLTS SHALL CONFORM TO ASTM SPECIFICATION F1554 GRADE 55 AND GALVANIZE PER ASTM F2329.
6. ALL HARDWARE SHALL CONFORM TO ASTM A36 AND GALVANIZE PER AASHTO M111 & M232 UNLESS NOTED OTHERWISE.
7. ALL POSTS TO BE INSTALLED PLUMB.
8. FABRIC SHALL BE #9 GAGE WIRE WOVEN IN A 2" CHAIN LINK DIAMOND MESH.
9. FABRIC TIES SHALL BE INSTALLED TO ALL FRAMES IN ACCORDANCE WITH GOOD TRADE PRACTICES AT 1'-0" CENTERS MAXIMUM SPACING.
10. UNLESS OTHERWISE NOTED, GENERAL CONNECTION HARDWARE FOR CHAIIN LINK FENCE SHALL CONFORM TO WSDOT STD. PLAN L-20.10-03 TYPE 4.
11. EPOXY RESIN SHALL BE HILTI-HY 200 EPOXY OR APPROVED EQUAL.
12. TENSION WIRE SHALL BE INSTALLED AND TENSIONED IN ACCORDANCE WITH GOOD TRADE PRACTICES. ATTACH TENSION WIRE TO POSTS WITH TIE WIRE AT EACH POST.

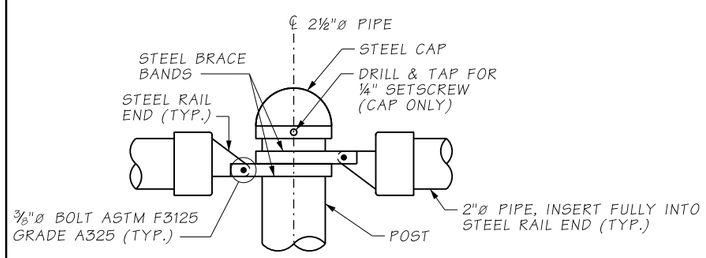

DETAIL 1

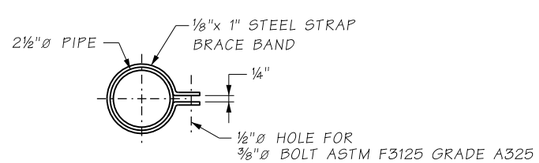

BRACE BAND

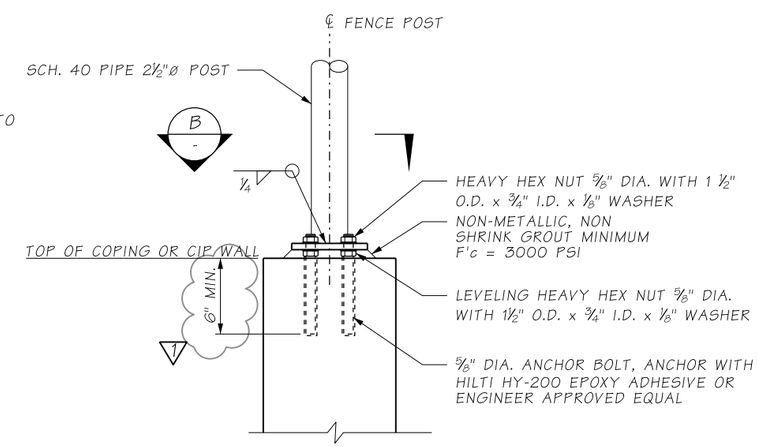

FENCE POST CONNECTION TO CENTER OF COPING OR CIP WALL

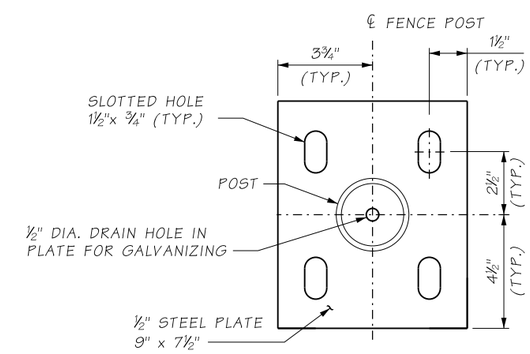

SECTION B

ATKINSON
NOV 15 2021 KTW
RELEASED FOR CONSTRUCTION

FILE NAME	D:\ICS_workdir\91774\20633_2199\PS_RW102A.dgn						
TIME	12:36:04 PM				REGION NO. 10	STATE WASH	FED.AID PROJ.NO.
DATE	11/9/2021						
PLOTTED BY	USLAS0-APP064$				JOB NUMBER		
DESIGNED BY	G. CALLAHAN						
ENTERED BY	R. REISER	REV 1 - RFI0611	11/17/2021				
CHECKED BY	A. FONG	REV 0 - RELEASED FOR CONSTRUCTION	12/16/2019		CONTRACT NO. C9133		LOCATION NO.
PROJ. ENGR.	C. MEADE	REV A - FINAL REVIEW	6/13/2019				
REGIONAL ADM.	J. WYNANDS	REVISION	DATE	BY			

CORY J. CAYWOOD — STATE OF WASHINGTON — 38795 — STRUCTURAL ENGINEER — PROFESSIONAL ENGINEER
11/15/21
DATE
P.E. STAMP BOX

P.E. STAMP BOX
DATE

Washington State Department of Transportation

ATKINSON / JACOBS CONSTRUCTION

I-5
STEILACOOM-DUPONT RD TO THORNE LN
CORRIDOR IMPROVEMENTS
MP 120.01 TO MP 124.45

RETAINING WALLS
FALL PROTECTION - CENTER MOUNTED

PLAN REF NO RW102A

SHEET 841 OF 1456 SHEETS

MOMENT SLAB TABLE	
SLAB LENGTH	SLAB BASE "B"
10'-0" TO 20'-0"	8'-6"
20'-0" TO 60'-0"	6'-6"
GREATER THAN 60'-0"	5'-0"

MOMENT SLAB BAR LIST			
MARK	SIZE	LENGTH	BENDING DIAGRAM (ALL DIMENSIONS ARE OUT TO OUT)
S1	6	8'-6½" TO 11'-11½"	VARIES
S2	4	8'-0" TO 11'-6"	VARIES
S3	4	4'-11"	EPOXY COATED
S4	5	6'-2" TO 6'-8"	EPOXY COATED
S5	4	(A)	STRAIGHT
S6	4	(A)	STRAIGHT

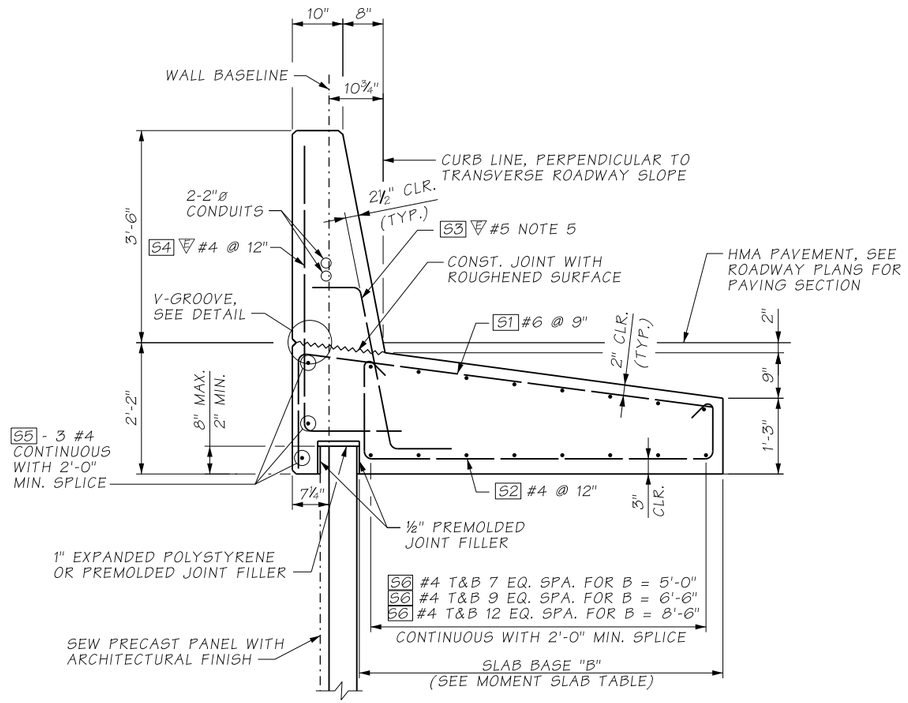

SINGLE SLOPE SEW MOMENT SLAB TYPICAL SECTION

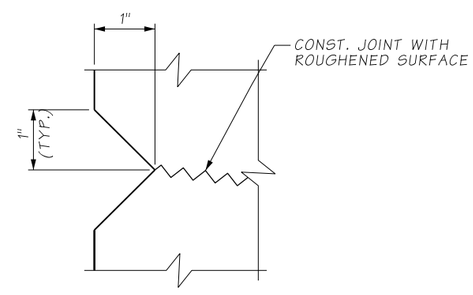

V-GROOVE DETAIL

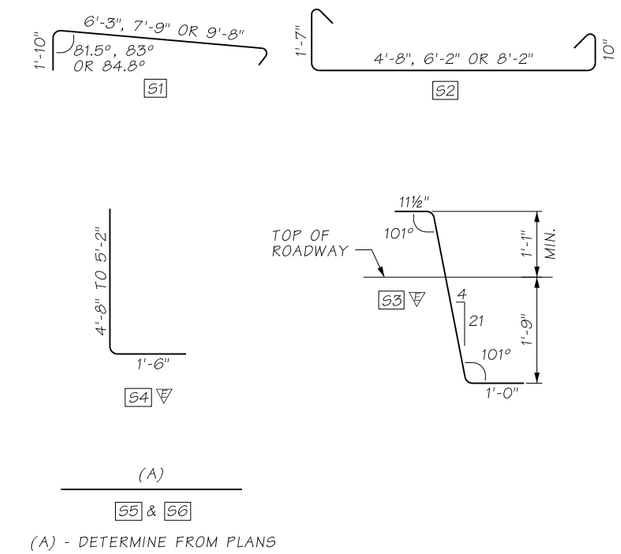

AS-BUILT

ATKINSON
JUL 22 2019 KTW
RELEASED FOR CONSTRUCTION

NOTES:

1. FOR BARRIER MOMENT SLAB LIMITS, RETAINING WALL PLANS AND PAVING AND BARRIER PLANS.
2. SEW MOMENT SLAB BARRIER HAS BEEN DESIGNED FOR TL-4 LOADING.
3. FOR CONCRETE BARRIER DETAILS NOT SHOWN, SEE SHEETS RW104 THROUGH RW107.
4. ALL LONGITUDINAL REINFORCING BARS IN THE MOMENT SLAB AND BARRIER SHALL BE CUT AT EXPANSION JOINTS AND ½" PREMOLDED JOINT FILLER SHALL BE USED TO FORM THE EXPANSION JOINT. DISTANCE BETWEEN EXPANSION JOINTS SHALL BE NO LONGER THAN 120'-0".
5. SEE SHEET RW104 FOR SPACING OF S3 #5 BARS.

FILE NAME	D:\ICS_workdir\32513\20633_1643\PS_RW103.dgn						
TIME	5:55:44 PM				REGION NO. 10	STATE WASH	FED.AID PROJ.NO.
DATE	7/17/2019						
PLOTTED BY	USLAS0-APP064$				JOB NUMBER		
DESIGNED BY	G. CALLAHAN						
ENTERED BY	R. REISER						
CHECKED BY	A. FONG	REV 0 - RELEASED FOR CONSTRUCTION	07/19/2019		CONTRACT NO. C9133		LOCATION NO.
PROJ. ENGR.	C. MEADE	REV A - FINAL REVIEW	06/13/2019				
REGIONAL ADM.	J. WYNANDS	REVISION	DATE	BY			

CORY J. CAYWOOD, STATE OF WASHINGTON, 38759, STRUCTURAL ENGINEER, PROFESSIONAL ENGINEER
7/19/19
DATE
P.E. STAMP BOX

DATE
P.E. STAMP BOX

Washington State Department of Transportation

ATKINSON CONSTRUCTION / JACOBS

I-5
STEILACOOM-DUPONT RD TO THORNE LN CORRIDOR IMPROVEMENTS
MP 120.01 TO MP 124.45

RETAINING WALLS - SINGLE SLOPE SEW MOMENT SLAB BARRIER (1 OF 5)

PLAN REF NO RW103

SHEET 842 OF 1456 SHEETS

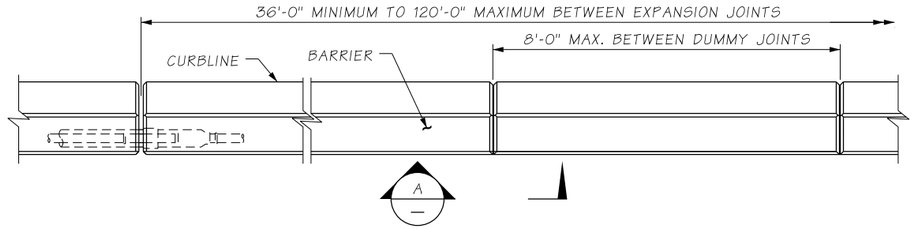

PLAN - TRAFFIC BARRIER

AS-BUILT

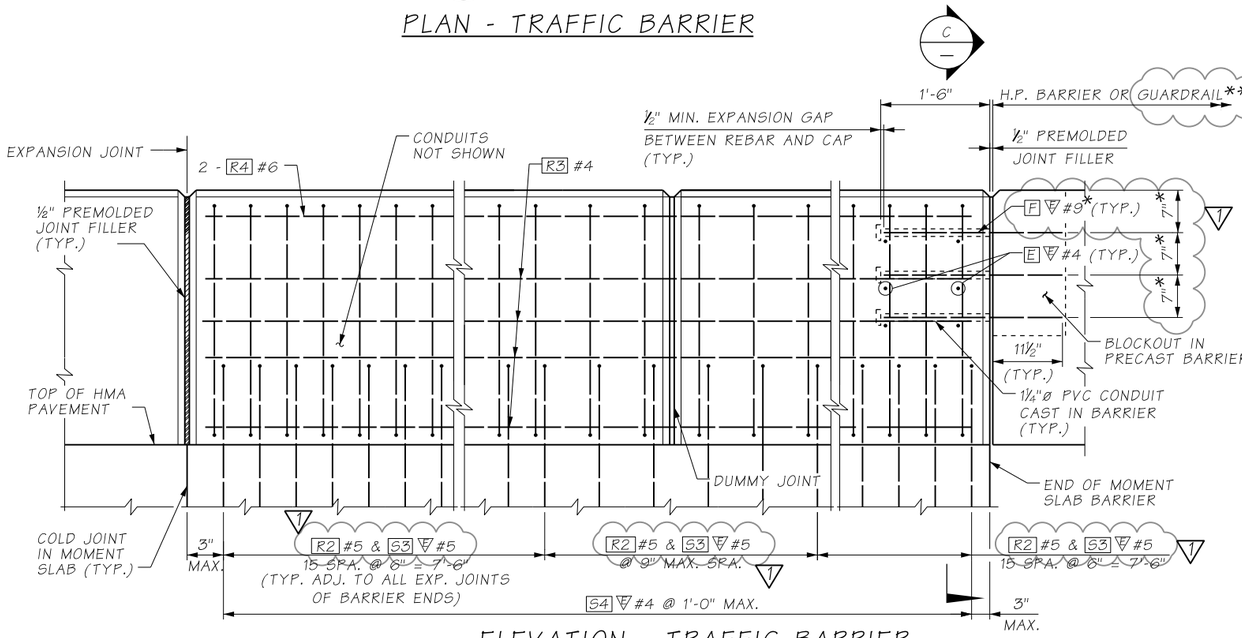

ELEVATION - TRAFFIC BARRIER

S4 BARS NOT SHOWN FOR CLARITY

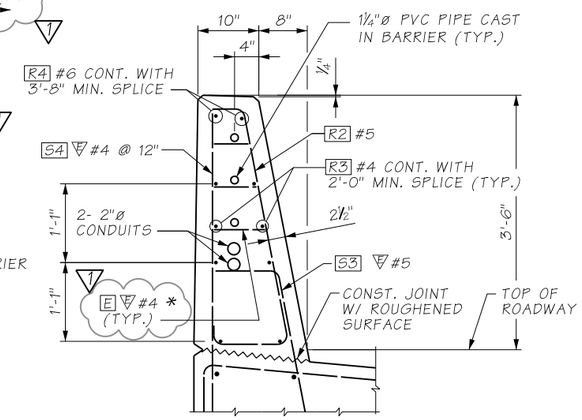

SECTION C

BARRIER BAR LIST			
MARK	SIZE	LENGTH	
R2	5	(A)	
R3	4	(A)	STRAIGHT
R4	6	(A)	STRAIGHT
R9	5	(A)	
E	4	6¼" TO 9"	STRAIGHT
F	9	2'-2½"	STRAIGHT

(A) - DETERMINE FROM PLANS

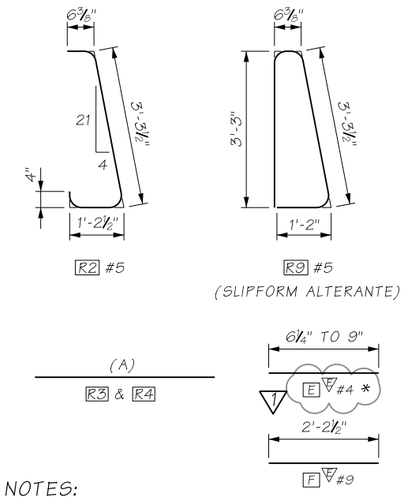

NOTES:

1. DIMENSIONS TO POINTS OF INTERSECTION.
2. BARS R1, R5, R6, R7 AND R8 ARE NOT USED.
3. BARS VARY LINEARLY OVER LENGTH OF BARRIER TRANSITION.
4. ALL DIMENSIONS ARE OUT TO OUT.

* STANDARD PLAN C-80.10-01 EXPANSION JOINT DETAILS MAY BE USED AS AN ALTERNATIVE TO CONNECTION DETAILS PROVIDED ON THIS SHEET, PROVIDED THERE ARE NO CONFLICTS WITH THE 2" CONDUITS IN THE BARRIER.

** DOWELS E AND F ARE NOT REQUIRED FOR THE GUARDRAIL CONNECTION.

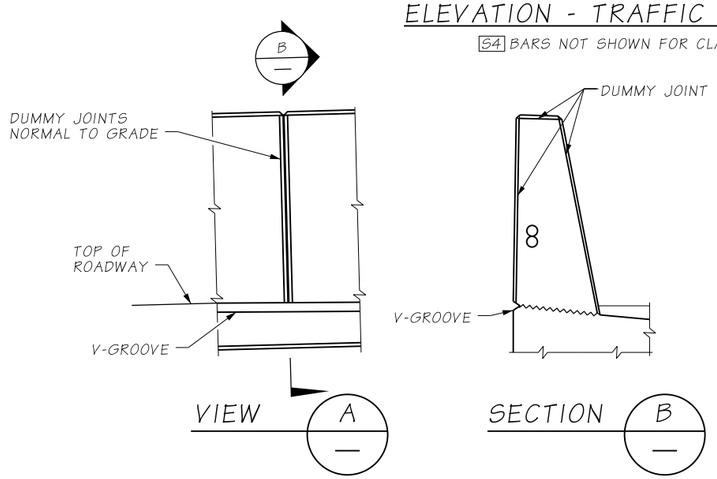

VIEW A

SECTION B

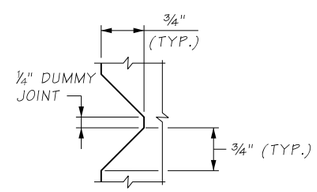

DUMMY JOINT DETAIL

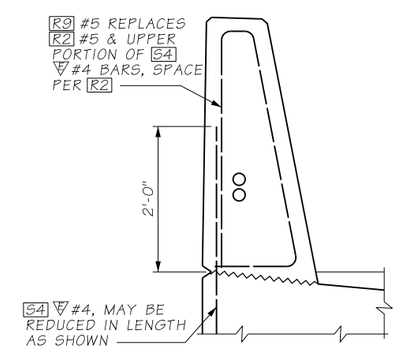

SLIPFORM ALTERNATIVE

ATKINSON
JUN 08 2020 KTW
RELEASED FOR CONSTRUCTION

FILE NAME	D:\ICS_workdir\53503\20633_1645\PS_RW104.dgn						
TIME	12:39:40 PM				REGION NO. 10	STATE WASH	FED.AID PROJ.NO.
DATE	6/1/2020						
PLOTTED BY	USLAS0-APP064$						
DESIGNED BY	G. CALLAHAN				JOB NUMBER		
ENTERED BY	R. REISER	REV 1 - RFI0358	06/02/2020				
CHECKED BY	A. FONG	REV 0 - RELEASED FOR CONSTRUCTION	07/19/2019		CONTRACT NO. C9133		LOCATION NO.
PROJ. ENGR.	C. MEADE	REV A - FINAL REVIEW	06/13/2019				
REGIONAL ADM.	J. WYNANDS	REVISION	DATE	BY			

CORT J. CAYWOOD — STATE OF WASHINGTON — 38139 — STRUCTURAL ENGINEER — PROFESSIONAL ENGINEER
6/2/20
DATE
P.E. STAMP BOX

DATE
P.E. STAMP BOX

Washington State Department of Transportation

ATKINSON CONSTRUCTION / JACOBS

I-5
STEILACOOM-DUPONT RD TO THORNE LN CORRIDOR IMPROVEMENTS
MP 120.01 TO MP 124.45

RETAINING WALLS - SINGLE SLOPE SEW MOMENT SLAB BARRIER (2 OF 5)

PLAN REF NO RW104

SHEET 843 OF 1456 SHEETS

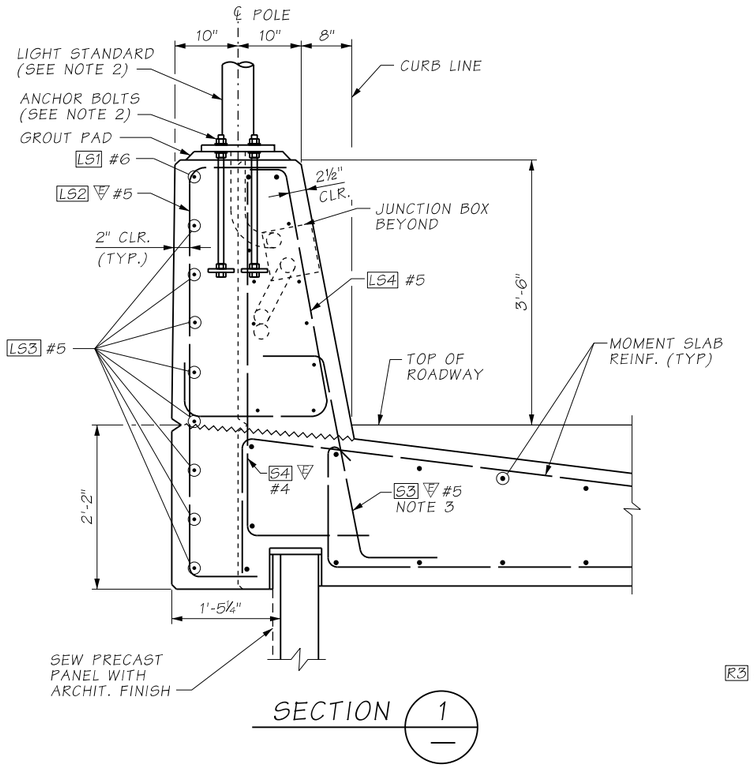

SECTION 1

NOTES:

1. FOR LOCATION AND DETAILS OF LUMINAIRES REFER TO ILLUMINATION PLANS.
2. SEE ILLUMINATION PLANS FOR LIGHT STANDARD TYPES. ANCHOR BOLTS FOR WSDOT LIGHT STANDARDS SHALL BE PER WSDOT STANDARD PLAN C-8b. ANCHOR BOLTS FOR CITY OF LAKEWOOD LIGHT STANDARDS SHALL BE AS SPECIFIED BY MANUFACTURER'S DETAILS.
3. SEE SHEETS RW103 AND RW104 FOR MOMENT SLAB AND SINGLE SLOPE BARRIER REINFORCEMENT DETAILS.
4. SEE SHEET RW104 "SECTION C" FOR BARRIER REINFORCING. ADJUST FOR BARRIER TRANSITION AS NEEDED.

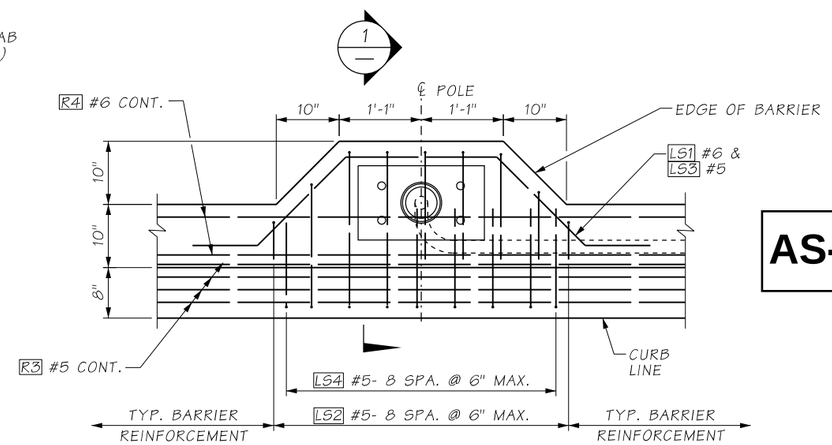

PLAN - AT LIGHT STANDARD

AS-BUILT

LIGHT STANDARD ANCHORAGE BAR LIST (PER LOCATION)

MARK	SIZE	LENGTH	BENDING DIAGRAM (ALL DIMENSIONS OUT TO OUT)
LS1	6	7'-2"	EPOXY COATED
LS2	5	5'-10⅜" TO 7'-6"	EPOXY COATED
LS3	5	7'-2"	EPOXY COATED
LS4	5	5'-9⅜" TO 6'-6⅞"	EPOXY COATED

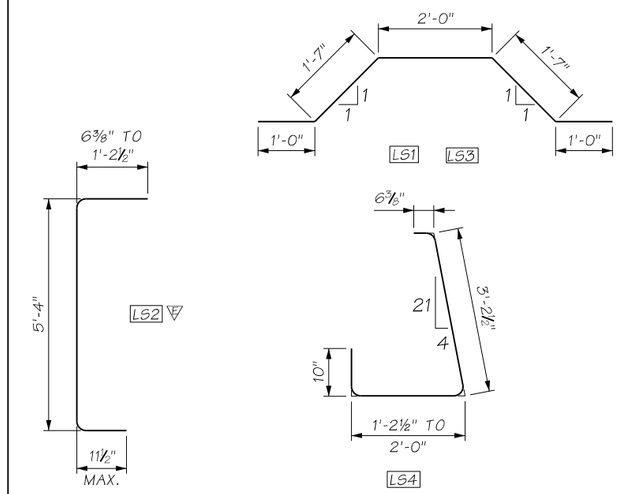

ATKINSON
JUL 22 2019 KTW
RELEASED FOR CONSTRUCTION

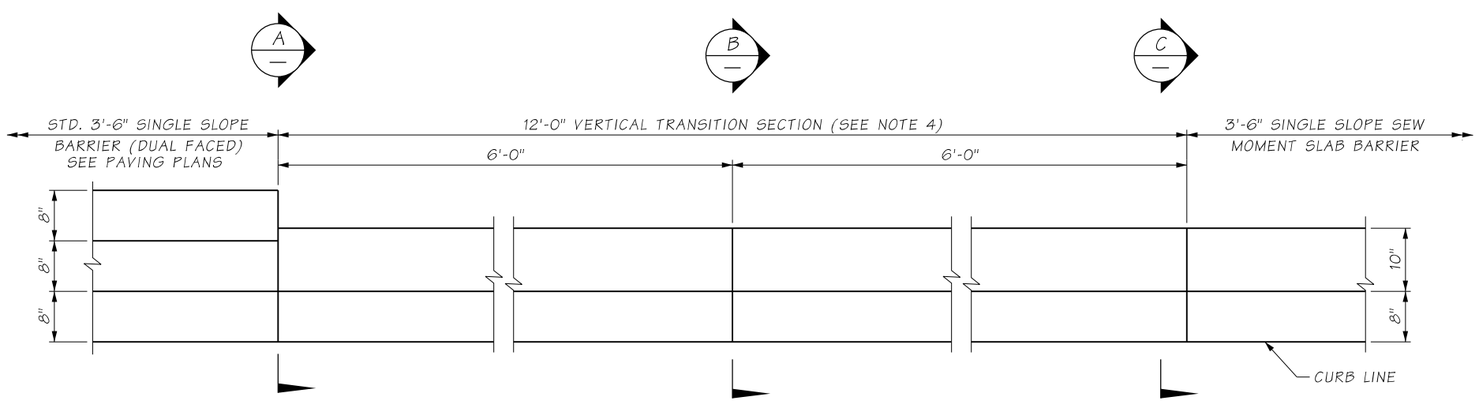

WALL B2 BARRIER TRANSITION

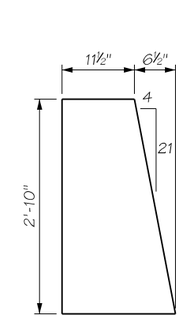

SECTION A

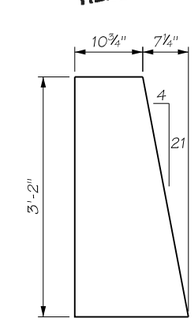

SECTION B

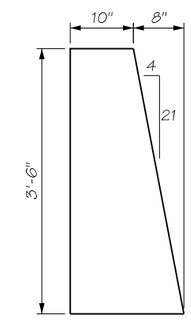

SECTION C

FILE NAME	c:\pwworking\jacobs_b&i\reiserrw\dms20633\PS_RW105.dgn			
TIME	8:17:27 AM			
DATE	7/17/2019			
PLOTTED BY	ReiserRW			
DESIGNED BY	G. CALLAHAN			
ENTERED BY	R. REISER			
CHECKED BY	A. FONG	REV 0 - RELEASED FOR CONSTRUCTION	07/19/2019	
PROJ. ENGR.	C. MEADE	REV A - FINAL REVIEW	06/13/2019	
REGIONAL ADM.	J. WYNANDS	REVISION	DATE	BY

REGION NO.	STATE	FED.AID PROJ.NO.
10	WASH	
JOB NUMBER		
CONTRACT NO. C9133		LOCATION NO.

CORY J. CAYWOOD, STATE OF WASHINGTON, 38759, PROFESSIONAL ENGINEER
7/19/19
DATE
P.E. STAMP BOX

P.E. STAMP BOX
DATE

Washington State Department of Transportation
ATKINSON CONSTRUCTION / JACOBS

I-5
STEILACOOM-DUPONT RD TO THORNE LN
CORRIDOR IMPROVEMENTS
MP 120.01 TO MP 124.45

RETAINING WALLS - SINGLE SLOPE SEW MOMENT SLAB BARRIER (3 OF 5)

PLAN REF NO RW105
SHEET 844 OF 1456 SHEETS

NOTES:

TS = TRAFFIC SYSTEM
LT = LIGHTING SYSTEM

1. SEE ITS, LIGHTING, AND SIGNAL PLANS FOR ADDITIONAL INFORMATION ON CONDUIT ROUTING.
2. JUNCTION BOX LOCATIONS SHOWN ARE APPROXIMATE. CENTER JUNCTION BOX INSTALLATION BETWEEN BARRIER DUMMY JOINTS.
3. INSTALL ALL CONDUIT RUNS TO DRAIN TO A BRIDGE END OR PROVIDE DRAIN AT ALL LOW POINTS IN CONDUIT RUN ON BRIDGE.
4. CONDUIT EXIT LOCATIONS AT BARRIER ENDS VARY DEPENDING ON LOCATION (WHETHER THROUGH END OR BOTTOM). SEE ITS, LIGHTING, AND SIGNAL PLANS TO DETERMINE EXIT LOCATIONS.

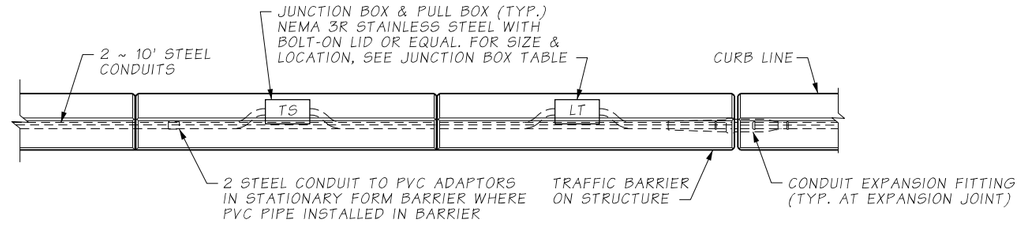

PLAN
CONDUITS AND J-BOX IN TRAFFIC BARRIER

AS-BUILT

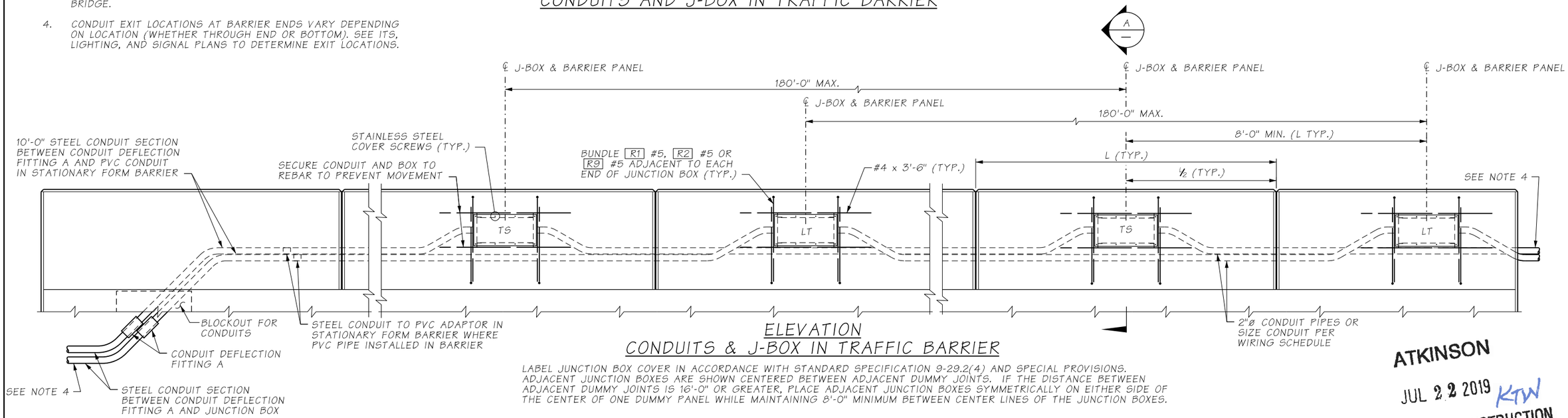

ELEVATION
CONDUITS & J-BOX IN TRAFFIC BARRIER

LABEL JUNCTION BOX COVER IN ACCORDANCE WITH STANDARD SPECIFICATION 9-29.2(4) AND SPECIAL PROVISIONS. ADJACENT JUNCTION BOXES ARE SHOWN CENTERED BETWEEN ADJACENT DUMMY JOINTS. IF THE DISTANCE BETWEEN ADJACENT DUMMY JOINTS IS 16'-0" OR GREATER, PLACE ADJACENT JUNCTION BOXES SYMMETRICALLY ON EITHER SIDE OF THE CENTER OF ONE DUMMY PANEL WHILE MAINTAINING 8'-0" MINIMUM BETWEEN CENTER LINES OF THE JUNCTION BOXES.

ATKINSON
JUL 22 2019 KTW
RELEASED FOR CONSTRUCTION

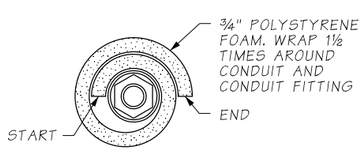

SECTION B

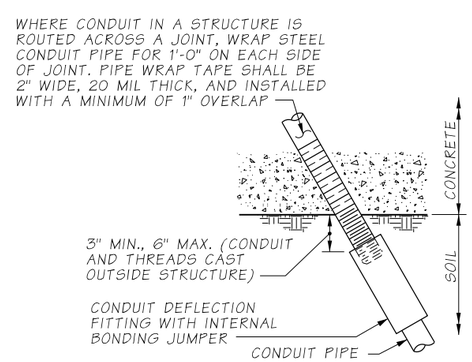

CONDUIT DEFLECTION FITTING A

CONDUIT FITTING - TYPE DX FOR DEFLECTION OF 30° AND ¾" MOVEMENT. PLACE AT CONDUIT PIPE EXIT FROM STRUCTURE

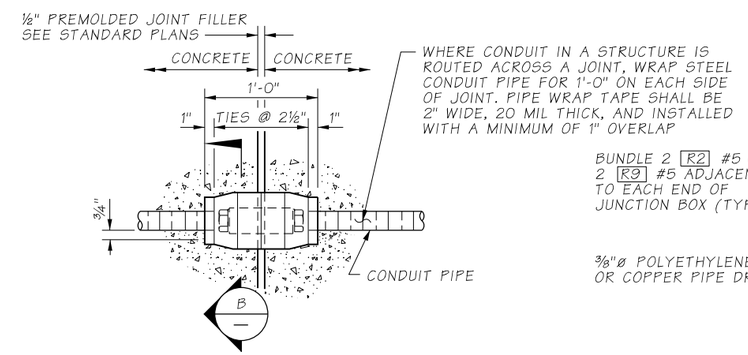

CONDUIT DEFLECTION FITTING B

CONDUIT FITTING - TYPE DX FOR DEFLECTION OF 30° AND ¾" MOVEMENT. CONDUIT PIPES PLACED THROUGH RETAINING WALL TRAFFIC BARRIER SHALL BE FITTED WITH DEFLECTION FITTINGS AT A MAXIMUM SPACING OF 120'. THE DEFLECTION FITTINGS SHALL BE PLACED AT THE TRAFFIC BARRIER OPEN JOINT THAT COINCIDES WITH THE RETAINING WALL STEM EXPANSION JOINT NEAREST TO THE TRANSVERSE CONSTRUCTION JOINT IN THE WALL FOOTING.

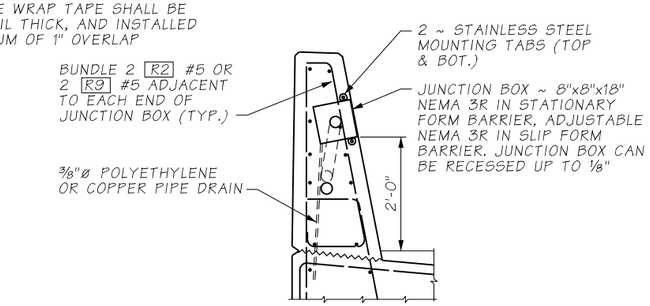

SECTION A

FILE NAME	c:\pwworking\jacobs_b&i\reiserrw\dms20633\PS_RW106.dgn						
TIME	8:19:47 AM				REGION NO.	STATE	FED.AID PROJ.NO.
DATE	7/17/2019				10	WASH	
PLOTTED BY	ReiserRW				JOB NUMBER		
DESIGNED BY	G. CALLAHAN						
ENTERED BY	R. REISER						
CHECKED BY	A. FONG	REV 0 - RELEASED FOR CONSTRUCTION	07/19/2019		CONTRACT NO.		LOCATION NO.
PROJ. ENGR.	C. MEADE	REV A - FINAL REVIEW	06/13/2019		C9133		
REGIONAL ADM.	J. WYNANDS	REVISION	DATE	BY			

CORY J. CALLAHAN STATE OF WASHINGTON 38759 STRUCTURAL ENGINEER PROFESSIONAL ENGINEER
7/19/19
DATE
P.E. STAMP BOX

DATE
P.E. STAMP BOX

Washington State Department of Transportation

ATKINSON CONSTRUCTION / JACOBS

I-5
STEILACOOM-DUPONT RD TO THORNE LN CORRIDOR IMPROVEMENTS
MP 120.01 TO MP 124.45

RETAINING WALLS - SINGLE SLOPE SEW MOMENT SLAB BARRIER (4 OF 5)

PLAN REF NO RW106

SHEET 845 OF 1456 SHEETS

NOTES:

1. FOR CATCH BASIN AND GRATE INLET LOCATIONS, SEE DRAINAGE PLANS.
2. FOR TYPICAL MOMENT SLAB DETAILS NOT SHOWN, SEE SHEET RW103.
3. FOR CONCRETE BARRIER DETAILS NOT SHOWN, SEE SHEET RW104.

AS-BUILT

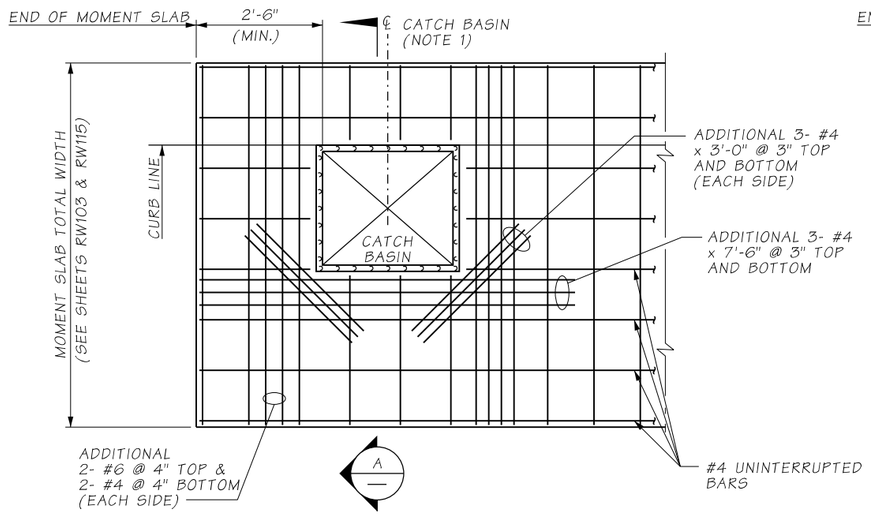

PLAN - AT CATCH BASIN

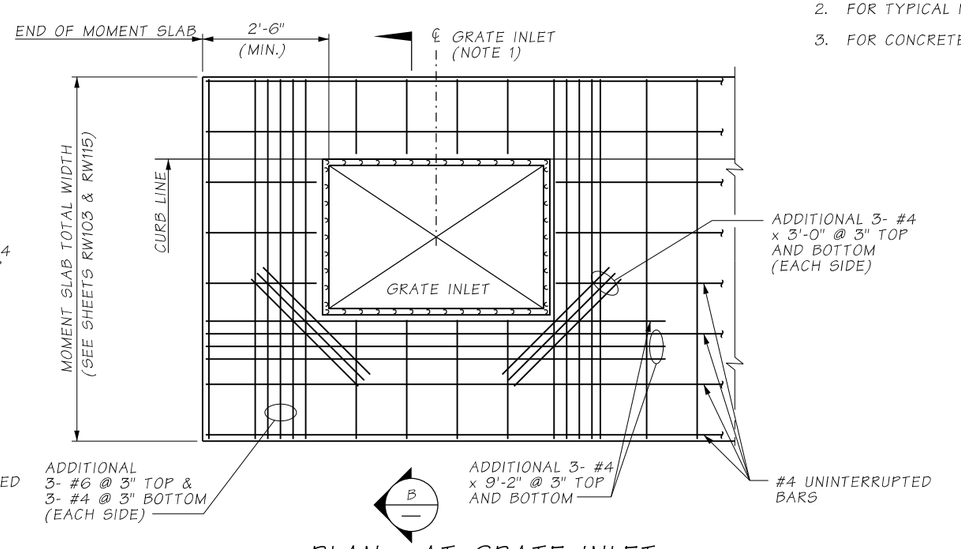

PLAN - AT GRATE INLET

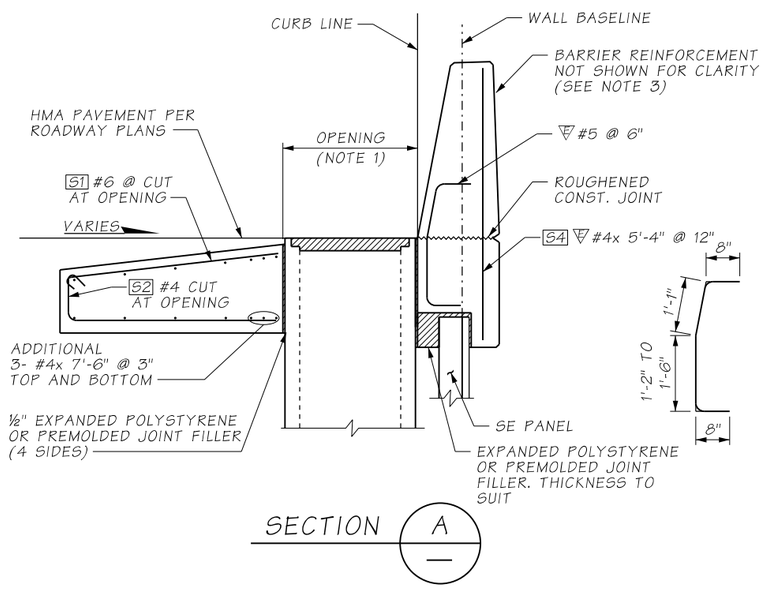

SECTION A

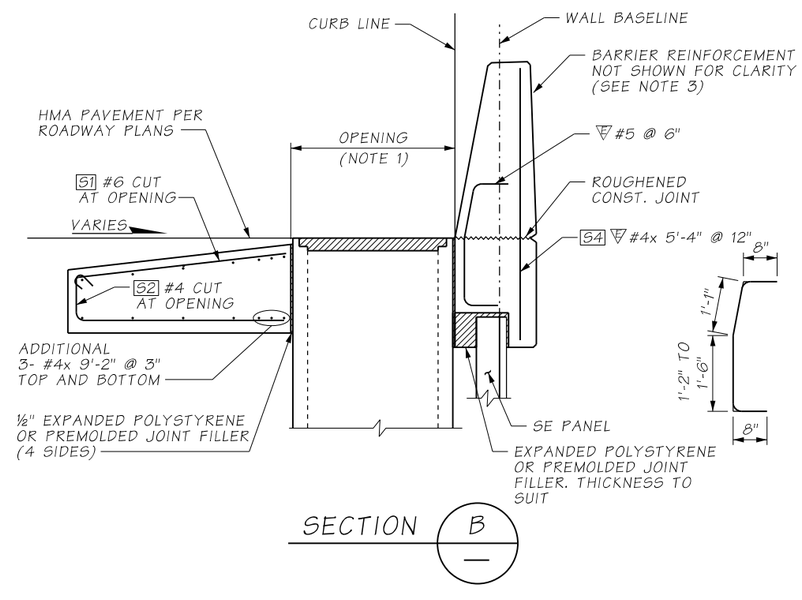

SECTION B

ATKINSON
JUL 22 2019 KTW
RELEASED FOR CONSTRUCTION

FILE NAME	c:\pwworking\jacobs_b&i\reiserrw\dms20633\PS_RW107.dgn						
TIME	8:21:48 AM				REGION NO. 10	STATE WASH	FED.AID PROJ.NO.
DATE	7/17/2019						
PLOTTED BY	ReiserRW				JOB NUMBER		
DESIGNED BY	G. CALLAHAN						
ENTERED BY	R. REISER						
CHECKED BY	A. FONG	REV 0 - RELEASED FOR CONSTRUCTION	07/19/2019		CONTRACT NO. C9133		LOCATION NO.
PROJ. ENGR.	C. MEADE	REV A - FINAL REVIEW	06/13/2019				
REGIONAL ADM.	J. WYNANDS	REVISION	DATE	BY			

P.E. STAMP BOX — DATE 7/19/19

P.E. STAMP BOX — DATE

Washington State Department of Transportation

ATKINSON CONSTRUCTION / JACOBS

I-5
STEILACOOM-DUPONT RD TO THORNE LN
CORRIDOR IMPROVEMENTS
MP 120.01 TO MP 124.45

RETAINING WALLS - SINGLE SLOPE SEW MOMENT SLAB BARRIER (5 OF 5)

PLAN REF NO RW107

SHEET 846 OF 1456 SHEETS

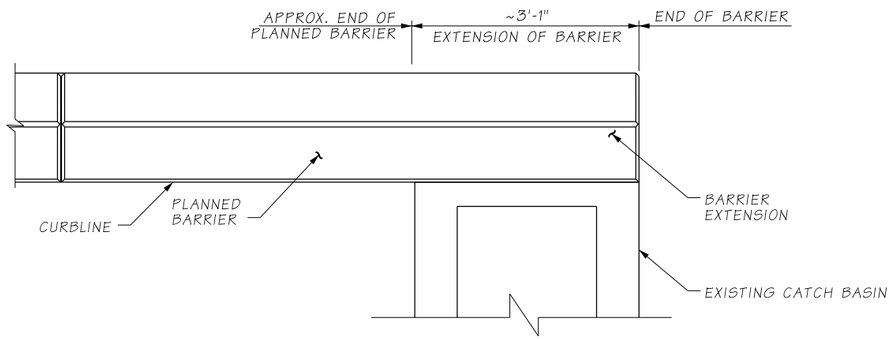

PLAN - TRAFFIC BARRIER

NOTES:

1. FOR BARRIER DETAILS NOT SHOWN, REFER TO SHEETS RW103 AND RW104.

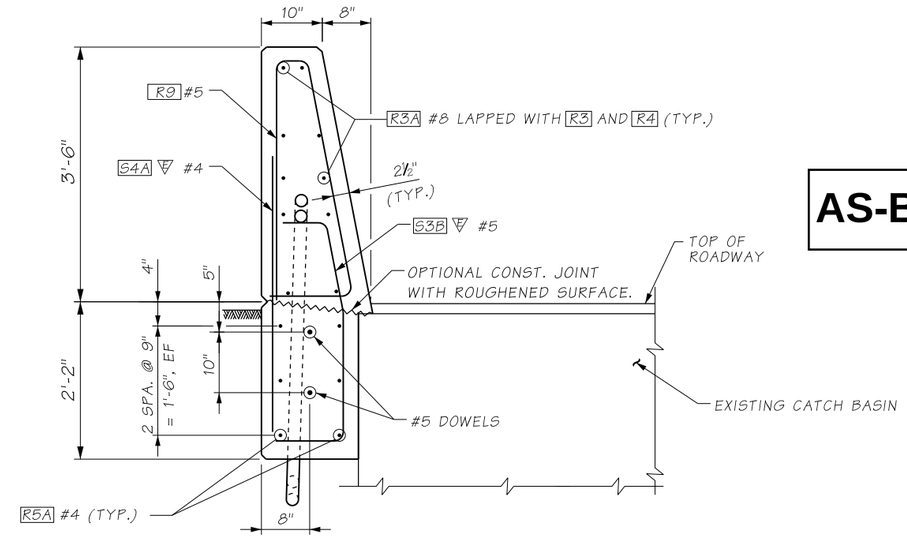

AS-BUILT

SECTION A

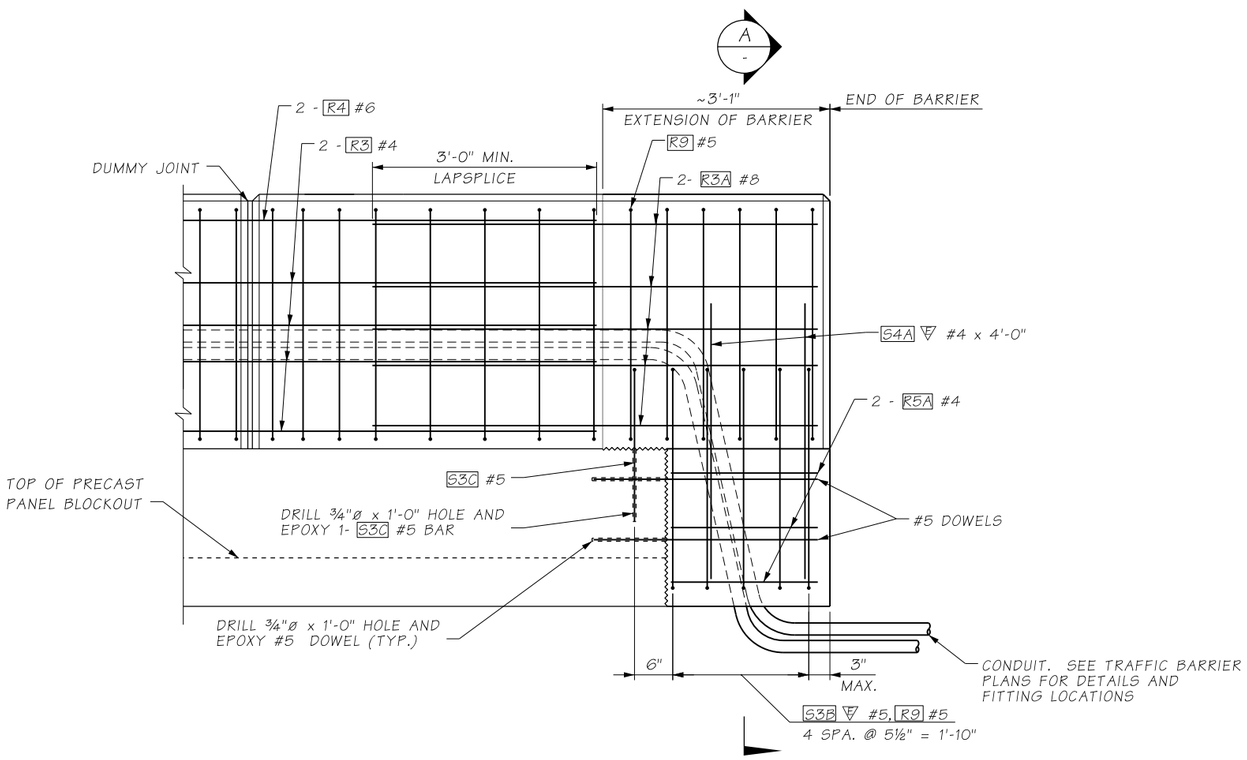

ELEVATION - TRAFFIC BARRIER REINFORCEMENT

S4 BARS NOT SHOWN FOR CLARITY

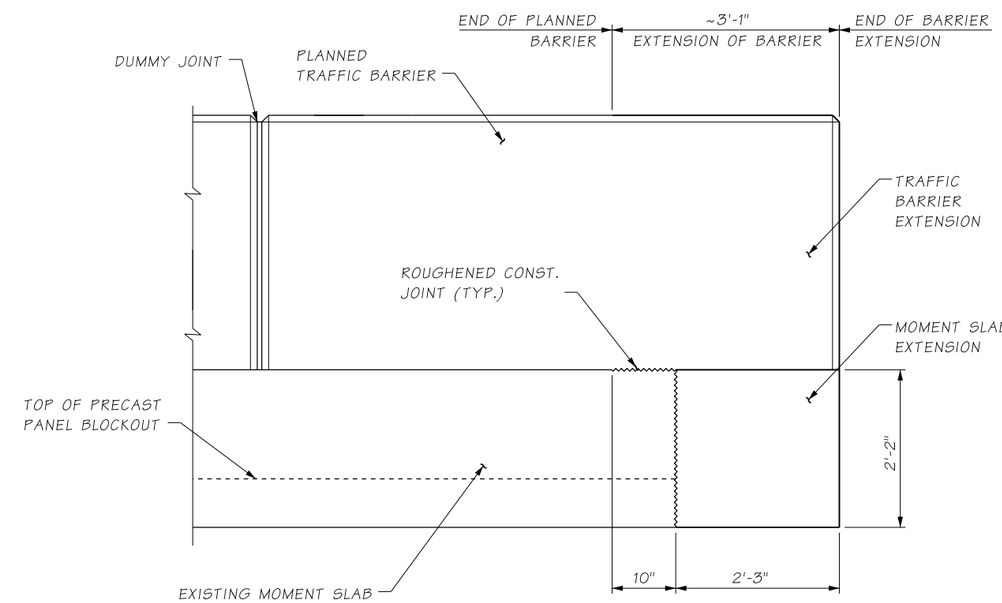

ELEVATION - TRAFFIC BARRIER GEOMETRY

ATKINSON
JUN 08 2020 KTW
RELEASED FOR CONSTRUCTION

FILE NAME	D:\ICS_workdir\53503\20633_2502\PS_RW107A.dgn						
TIME	12:41:19 PM				REGION NO. 10	STATE WASH	FED.AID PROJ.NO.
DATE	6/1/2020						
PLOTTED BY	USLAS0-APP064$				JOB NUMBER		
DESIGNED BY	T. TAYLOR						
ENTERED BY	R. REISER						
CHECKED BY	C. CAYWOOD				CONTRACT NO. C9133		LOCATION NO.
PROJ. ENGR.	C. MEADE	REV 0 - RFI0377	06/02/2020				
REGIONAL ADM.	J. WYNANDS	REVISION	DATE	BY			

CORT J. CAYWOOD, STATE OF WASHINGTON, 38759, STRUCTURAL ENGINEER, PROFESSIONAL ENGINEER
6/2/20
DATE
P.E. STAMP BOX

DATE
P.E. STAMP BOX

Washington State Department of Transportation

ATKINSON CONSTRUCTION / JACOBS

I-5
STEILACOOM-DUPONT RD TO THORNE LN
CORRIDOR IMPROVEMENTS
MP 120.01 TO MP 124.45

RETAINING WALL B4 - MOMENT SLAB BARRIER EXTENSION

PLAN REF NO RW107A

SHEET 847 OF 1456 SHEETS

MOMENT SLAB TABLE	
SLAB LENGTH	SLAB BASE "B"
10'-0" TO 20'-0"	8'-6"

AS-BUILT

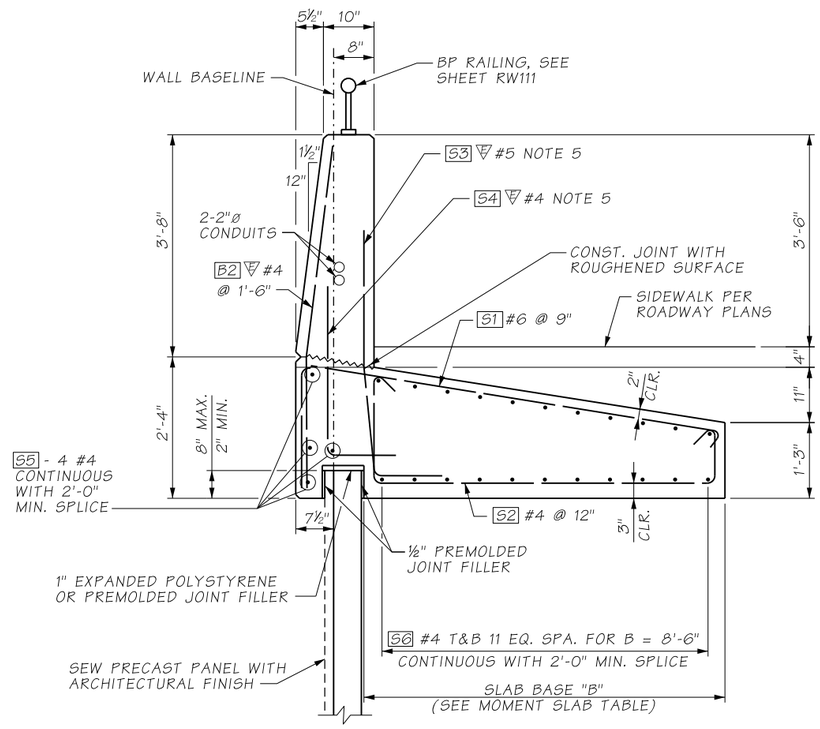

PEDESTRIAN SEW MOMENT SLAB TYPICAL SECTION

MOMENT SLAB BAR LIST			
MARK	SIZE	LENGTH	BENDING DIAGRAM (ALL DIMENSIONS ARE OUT TO OUT)
S1	6	12'-1"	
S2	4	11'-4"	
S3	5	4'-11½"	EPOXY COATED
S4	4	4'-1"	EPOXY COATED
S5	4	(A)	STRAIGHT
S6	4	(A)	STRAIGHT
B2	4	5'-9"	EPOXY COATED

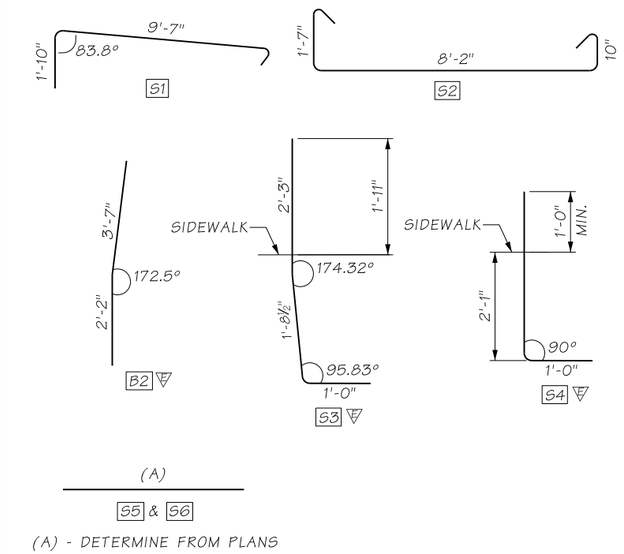

(A) - DETERMINE FROM PLANS

NOTES:

1. FOR PEDESTRIAN BARRIER MOMENT SLAB LIMITS, SEE RETAINING WALL PLANS AND PAVING AND BARRIER PLANS.
2. PEDESTRIAN SEW MOMENT SLAB BARRIER HAS BEEN DESIGNED FOR TL-4 LOADING.
3. FOR CONCRETE BARRIER DETAILS NOT SHOWN, SEE SHEETS RW109 THROUGH RW112.
4. ALL LONGITUDINAL REINFORCING BARS IN THE MOMENT SLAB AND BARRIER SHALL BE CUT AT EXPANSION JOINTS AND ½" PREMOLDED JOINT FILLER SHALL BE USED TO FORM THE EXPANSION JOINT. DISTANCE BETWEEN EXPANSION JOINTS SHALL BE NO LONGER THAN 120'-0".
5. SEE SHEET RW109 FOR SPACING OF S3 #5 AND S4 #4 BARS.

ATKINSON
JUL 22 2019 KTW
RELEASED FOR CONSTRUCTION

FILE NAME	D:\ICS_workdir\32513\20633_1740\PS_RW108.dgn						
TIME	5:55:44 PM				REGION NO. 10	STATE WASH	FED.AID PROJ.NO.
DATE	7/17/2019						
PLOTTED BY	USLAS0-APP064$				JOB NUMBER		
DESIGNED BY	G. CALLAHAN						
ENTERED BY	R. REISER						
CHECKED BY	A. FONG	REV 0 - RELEASED FOR CONSTRUCTION	07/19/2019		CONTRACT NO. C9133		LOCATION NO.
PROJ. ENGR.	C. MEADE	REV A - FINAL REVIEW	06/13/2019				
REGIONAL ADM.	J. WYNANDS	REVISION	DATE	BY			

CORY J. CAYWOOD, STATE OF WASHINGTON, 38193, STRUCTURAL ENGINEER, PROFESSIONAL ENGINEER
7/19/19
DATE
P.E. STAMP BOX

DATE
P.E. STAMP BOX

Washington State Department of Transportation

ATKINSON / JACOBS CONSTRUCTION

I-5
STEILACOOM-DUPONT RD TO THORNE LN
CORRIDOR IMPROVEMENTS
MP 120.01 TO MP 124.45

RETAINING WALLS - PEDESTRIAN SEW MOMENT SLAB BARRIER (1 OF 3)

PLAN REF NO RW108

SHEET 848 OF 1456 SHEETS

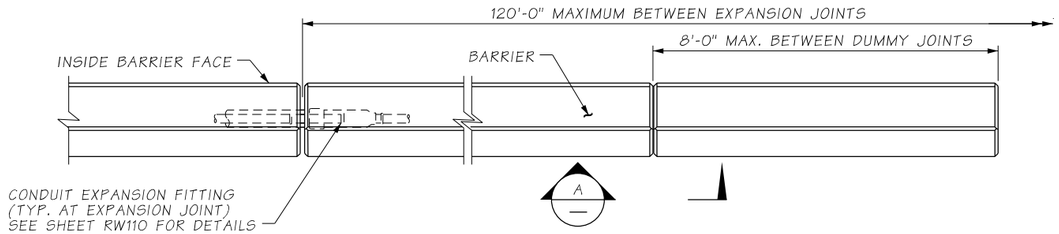

PLAN - PEDESTRIAN BARRIER

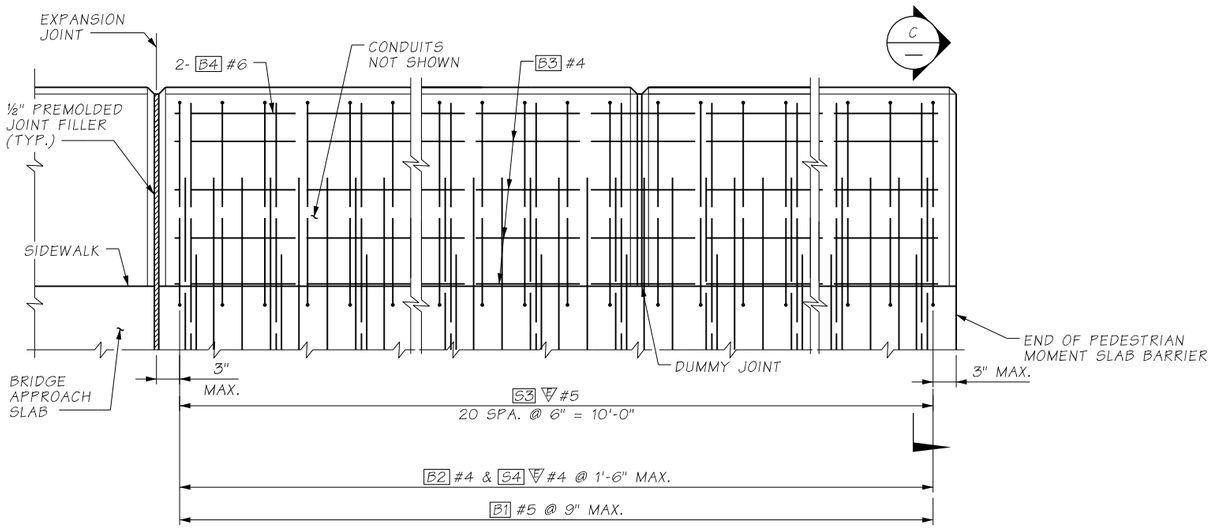

ELEVATION - TRAFFIC BARRIER

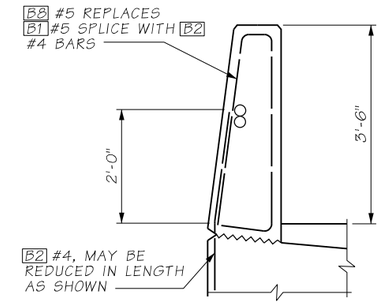

SLIPFORM ALTERNATIVE

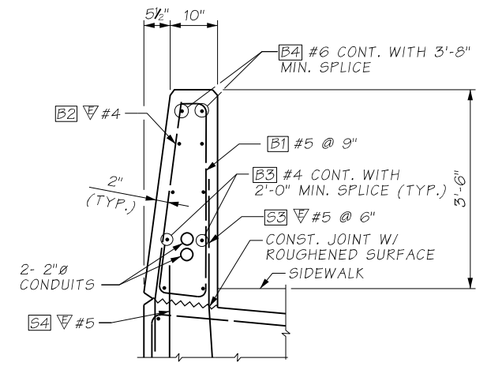

SECTION C

BARRIER BAR LIST			
MARK	SIZE	LENGTH	
B1	5	6'-1"	
B3	4	(A)	STRAIGHT
B4	6	(A)	STRAIGHT
B8	5	8'-4"	

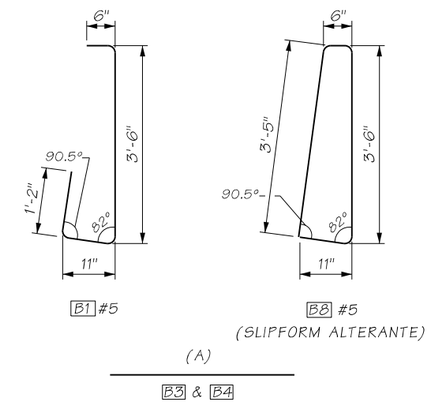

(A) - DETERMINE FROM PLANS

NOTES:

1. DIMENSIONS TO POINTS OF INTERSECTION.
2. BARS B5, B6, AND B7 ARE NOT USED.
3. BARS VARY LINEARLY OVER LENGTH OF BARRIER TRANSITION.
4. ALL DIMENSIONS ARE OUT TO OUT.

AS-BUILT

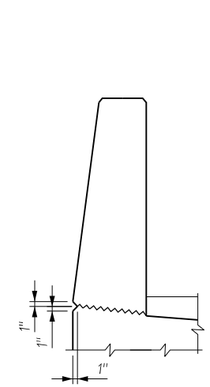

BARRIER FINISH DETAIL

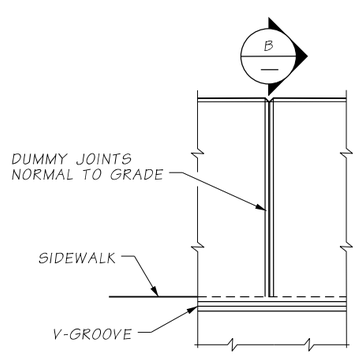

VIEW A

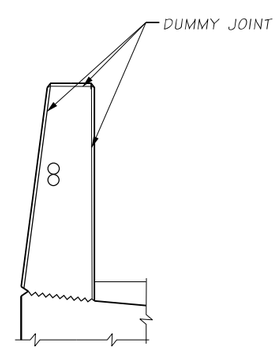

SECTION B

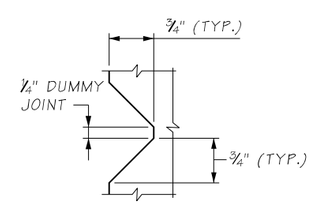

DUMMY JOINT DETAIL

ATKINSON
JUL 22 2019 KTW
RELEASED FOR CONSTRUCTION

FILE NAME	c:\pwworking\jacobs_b&i\reiserrw\dms20633\PS_RW109.dgn						
TIME	8:27:15 AM				REGION NO. 10	STATE WASH	FED.AID PROJ.NO.
DATE	7/17/2019				JOB NUMBER		
PLOTTED BY	ReiserRW						
DESIGNED BY	G. CALLAHAN						
ENTERED BY	R. REISER						
CHECKED BY	A. FONG	REV 0 - RELEASED FOR CONSTRUCTION	07/19/2019		CONTRACT NO. C9133		LOCATION NO.
PROJ. ENGR.	C. MEADE	REV A - FINAL REVIEW	06/13/2019				
REGIONAL ADM.	J. WYNANDS	REVISION	DATE	BY			

P.E. STAMP BOX — DATE 7/19/19

P.E. STAMP BOX — DATE

Washington State Department of Transportation

ATKINSON CONSTRUCTION / JACOBS

I-5
STEILACOOM-DUPONT RD TO THORNE LN
CORRIDOR IMPROVEMENTS
MP 120.01 TO MP 124.45

RETAINING WALLS - PEDESTRIAN
SEW MOMENT SLAB BARRIER (2 OF 3)

PLAN REF NO RW109

SHEET 849 OF 1456 SHEETS

NOTES:

TS = TRAFFIC SYSTEM
LT = LIGHTING SYSTEM

1. SEE ITS, LIGHTING, AND SIGNAL PLANS FOR ADDITIONAL INFORMATION ON CONDUIT ROUTING.
2. JUNCTION BOX LOCATIONS SHOWN ARE APPROXIMATE. CENTER JUNCTION BOX INSTALLATION BETWEEN BARRIER DUMMY JOINTS.
3. INSTALL ALL CONDUIT RUNS TO DRAIN TO A BRIDGE END OR PROVIDE DRAIN AT ALL LOW POINTS IN CONDUIT RUN ON BRIDGE.
4. CONDUIT EXIT LOCATIONS AT BARRIER ENDS VARY DEPENDING ON LOCATION (WHETHER THROUGH END OR BOTTOM). SEE ITS, LIGHTING, AND SIGNAL PLANS TO DETERMINE EXIT LOCATIONS.

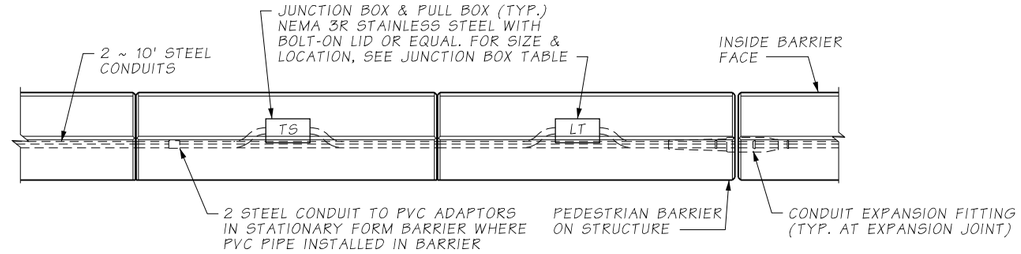

PLAN
CONDUITS AND J-BOX IN PEDESTRIAN BARRIER

AS-BUILT

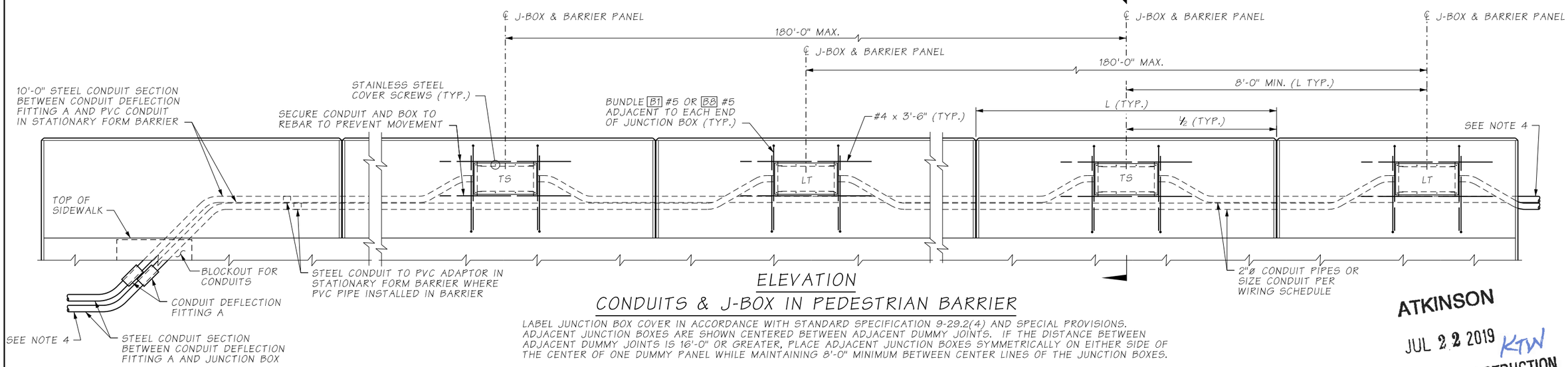

ELEVATION
CONDUITS & J-BOX IN PEDESTRIAN BARRIER

LABEL JUNCTION BOX COVER IN ACCORDANCE WITH STANDARD SPECIFICATION 9-29.2(4) AND SPECIAL PROVISIONS. ADJACENT JUNCTION BOXES ARE SHOWN CENTERED BETWEEN ADJACENT DUMMY JOINTS. IF THE DISTANCE BETWEEN ADJACENT DUMMY JOINTS IS 16'-0" OR GREATER, PLACE ADJACENT JUNCTION BOXES SYMMETRICALLY ON EITHER SIDE OF THE CENTER OF ONE DUMMY PANEL WHILE MAINTAINING 8'-0" MINIMUM BETWEEN CENTER LINES OF THE JUNCTION BOXES.

ATKINSON
JUL 22 2019 KTW
RELEASED FOR CONSTRUCTION

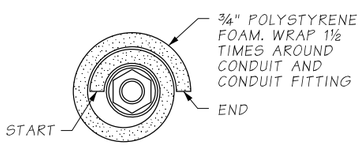

SECTION B

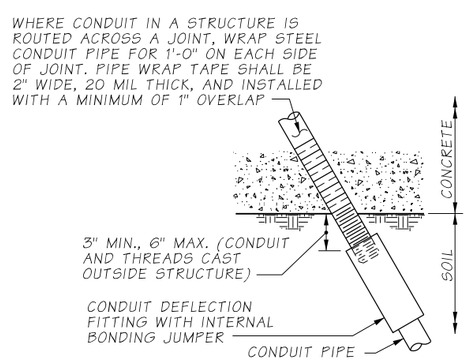

CONDUIT DEFLECTION FITTING A

CONDUIT FITTING - TYPE DX FOR DEFLECTION OF 30° AND ¾" MOVEMENT. PLACE AT CONDUIT PIPE EXIT FROM STRUCTURE

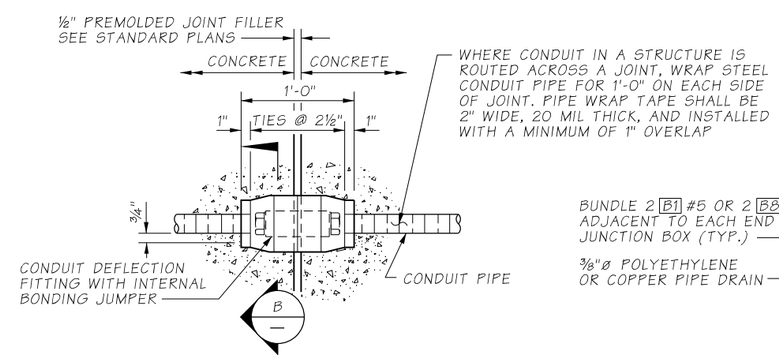

CONDUIT DEFLECTION FITTING B

CONDUIT FITTING - TYPE DX FOR DEFLECTION OF 30° AND ¾" MOVEMENT. CONDUIT PIPES PLACED THROUGH RETAINING WALL PEDESTRIAN BARRIER SHALL BE FITTED WITH DEFLECTION FITTINGS AT A MAXIMUM SPACING OF 120'. THE DEFLECTION FITTINGS SHALL BE PLACED AT THE PEDESTRIAN BARRIER OPEN JOINT THAT COINCIDES WITH THE RETAINING WALL STEM EXPANSION JOINT.

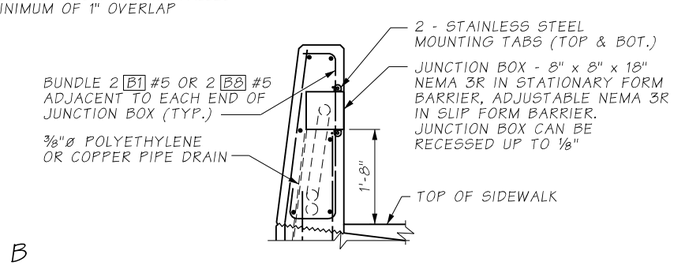

SECTION A

FILE NAME	c:\pwworking\jacobs_b&i\reiserrw\dms20633\PS_RW110.dgn						
TIME	8:29:17 AM				REGION NO.	STATE	FED.AID PROJ.NO.
DATE	7/17/2019				10	WASH	
PLOTTED BY	ReiserRW				JOB NUMBER		
DESIGNED BY	G. CALLAHAN						
ENTERED BY	R. REISER						
CHECKED BY	A. FONG	REV 0 - RELEASED FOR CONSTRUCTION	07/19/2019		CONTRACT NO.		LOCATION NO.
PROJ. ENGR.	C. MEADE	REV A - FINAL REVIEW	06/13/2019		C9133		
REGIONAL ADM.	J. WYNANDS	REVISION	DATE	BY			

COREY J. CALLAHAN — STATE OF WASHINGTON — 38733 — PROFESSIONAL ENGINEER
7/19/19
DATE
P.E. STAMP BOX

DATE
P.E. STAMP BOX

Washington State Department of Transportation

ATKINSON CONSTRUCTION / JACOBS

I-5
STEILACOOM-DUPONT RD TO THORNE LN
CORRIDOR IMPROVEMENTS
MP 120.01 TO MP 124.45

RETAINING WALLS - PEDESTRIAN
SEW MOMENT SLAB BARRIER (3 OF 3)

PLAN REF NO
RW110

SHEET 850 OF 1456 SHEETS

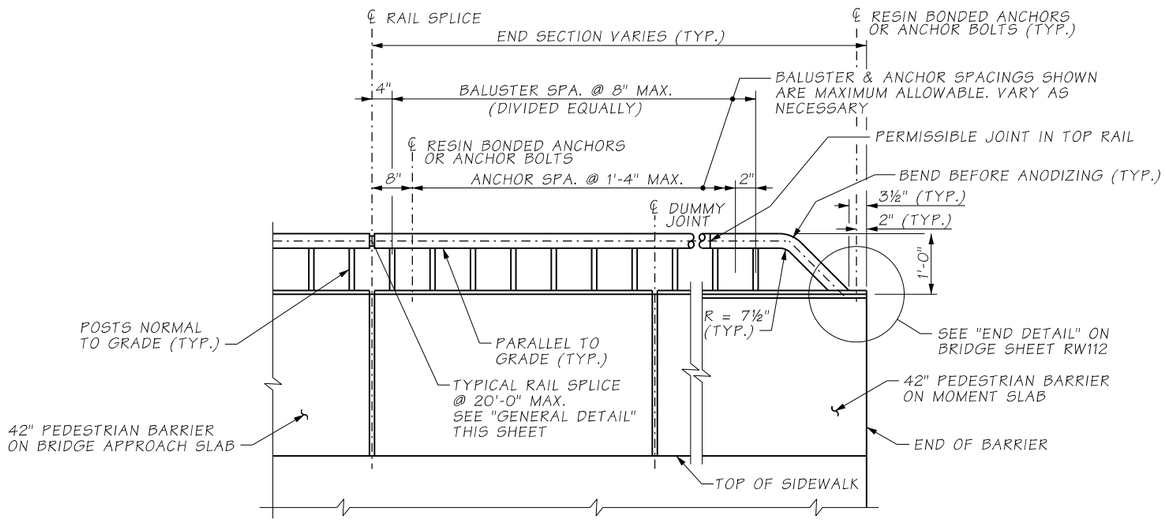

ELEVATION

BALUSTER AND GUARDRAIL SECTION
ATTACHMENT DETAILS NOT SHOWN

β LOCATE ON OPPOSITE SIDE OF TRAFFIC. DRIVE PINS SHALL BE DRIVEN FLUSH WITH THE OUTSIDE FACE OF THE RAILING.

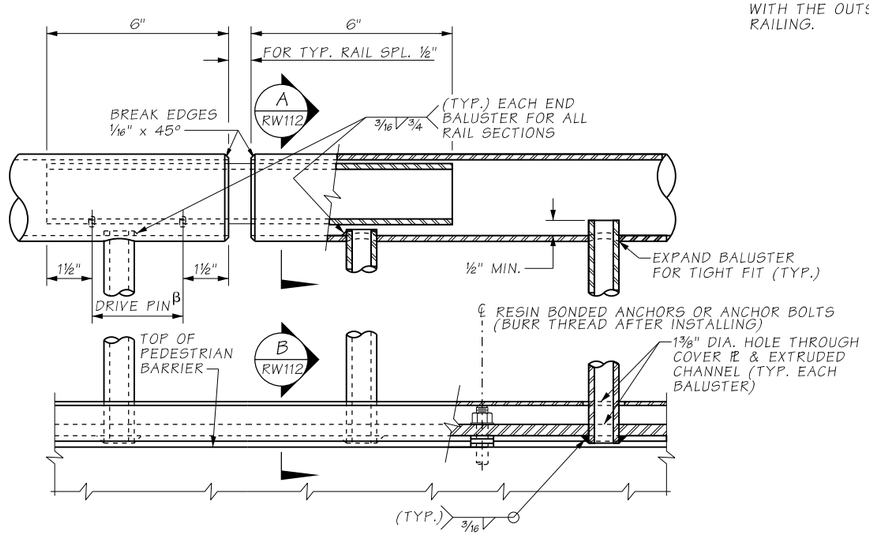

GENERAL DETAIL

NOTES:

1. PIPE RAILING AND PIPE RAILING SPLICES SHALL BE BENT TO THE HORIZONTAL CURVE WHERE THE RADIUS OF CURVATURE IS LESS THAN 200'. THESE ITEMS MAY BE HEATED TO NOT MORE THAN 400°F FOR A PERIOD NOT TO EXCEED 30 MINUTES TO FACILITATE FORMING OR BENDING TO HORIZONTAL CURVATURE.
2. SHOP DRAWINGS OF RAILING SHALL BE SUBMITTED FOR APPROVAL SHOWING COMPLETE DIMENSIONS AND DETAILS OF FABRICATION AND INCLUDING AN ERECTION DIAGRAM. MATERIAL SPECIFICATIONS SHALL BE PROVIDED IN THE SHOP DRAWINGS FOR ALL COMPONENTS.
3. CUTTING SHALL BE DONE BY SAWING OR MILLING AND ALL CUTS SHALL BE TRUE AND SMOOTH. FLAME CUTTING WILL NOT BE PERMITTED.
4. WELDING OF ALUMINUM SHALL CONFORM TO STD. SPEC. SECTION 9-28.14(3).
5. ALL ALUMINUM PARTS SHALL BE POWDER COATED WSDOT CASCADE GREEN.
6. PIPE RAILING, PIPE BALUSTERS AND PIPE RAILING SPLICES SHALL BE ADEQUATELY WRAPPED TO INSURE SURFACE PROTECTION DURING HANDLING AND TRANSPORTATION TO THE JOB SITE.

AS-BUILT

ATKINSON
JUL 22 2019 KTW
RELEASED FOR CONSTRUCTION

FILE NAME	c:\pwworking\jacobs_b&i\reiserrw\dms20633\PS_RW111.dgn						
TIME	8:32:03 AM				REGION NO. 10	STATE WASH	FED.AID PROJ.NO.
DATE	7/17/2019						
PLOTTED BY	ReiserRW				JOB NUMBER		
DESIGNED BY	G. CALLAHAN						
ENTERED BY	R. REISER						
CHECKED BY	A. FONG	REV 0 - RELEASED FOR CONSTRUCTION	07/19/2019		CONTRACT NO. C9133		LOCATION NO.
PROJ. ENGR.	C. MEADE	REV A - FINAL REVIEW	06/13/2019				
REGIONAL ADM.	J. WYNANDS	REVISION	DATE	BY			

COREY J. CALWOOD — STATE OF WASHINGTON — 38133 — STRUCTURAL ENGINEER — PROFESSIONAL ENGINEER
7/19/19
DATE
P.E. STAMP BOX

DATE
P.E. STAMP BOX

Washington State Department of Transportation

ATKINSON CONSTRUCTION / JACOBS

I-5
STEILACOOM-DUPONT RD TO THORNE LN
CORRIDOR IMPROVEMENTS
MP 120.01 TO MP 124.45

RETAINING WALLS
BP RAILING (1 OF 2)

PLAN REF NO RW111

SHEET 851 OF 1456 SHEETS

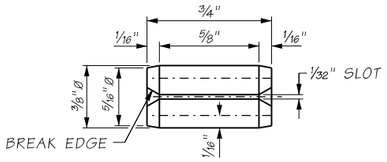

DRIVE PIN DETAIL

SLOTTED TYPE SPRING PIN (ANSI B18.8.2)

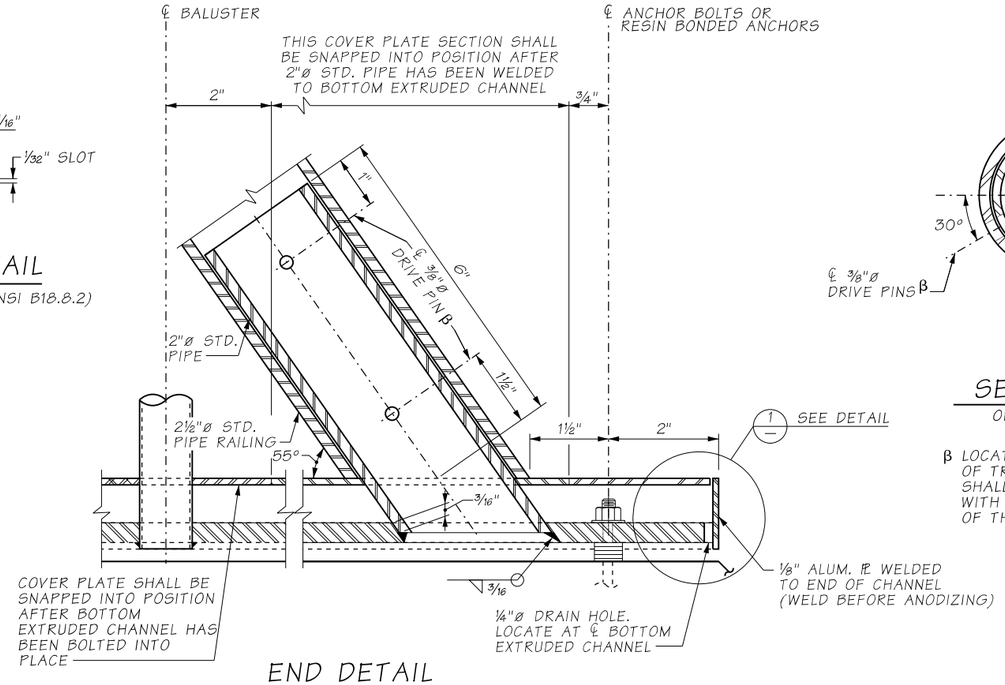

END DETAIL

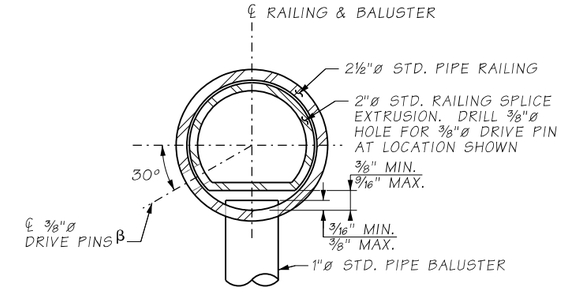

SECTION A / RW111

OPTION 1

β LOCATE ON OPPOSITE SIDE OF TRAFFIC. DRIVE PINS SHALL BE DRIVEN FLUSH WITH THE OUTSIDE FACE OF THE RAILING.

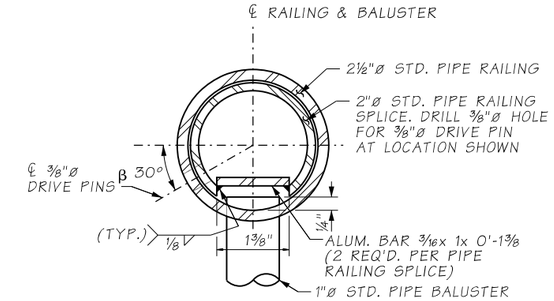

SECTION A / RW111

OPTION 2

β LOCATE ON OPPOSITE SIDE OF TRAFFIC. DRIVE PINS SHALL BE DRIVEN FLUSH WITH THE OUTSIDE FACE OF THE RAILING.

AS-BUILT

MAT'L	PART	MATERIAL SPECIFICATION
ALUMINUM	PIPES	ASTM B221-6005-T5 OR 6005A-T5 ASTM B241-6061-T6 OR B429
ALUMINUM	EXTRUDED CHANNELS, COVER PLATES & BAR	ASTM B221-6005-T5 OR 6005A-T5
STEEL	ANCHOR BOLTS, NUTS & WASHERS	STANDARD SPECIFICATION SECTION 9-06.5(4) (GALVANIZE IN ACCORDANCE WITH AASHTO SPECIFICATION M 232)
STEEL	STRIP	ASTM A36
STEEL	DRIVE PINS	ASTM A276 OR A240 TYPE 302 STAINLESS STEEL

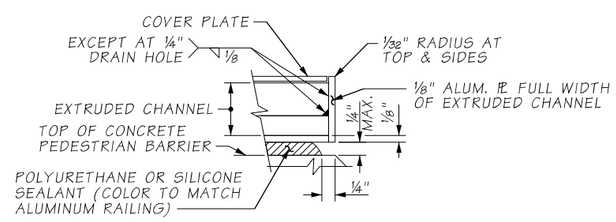

DETAIL 1 / —

DRAIN HOLES NOT SHOWN

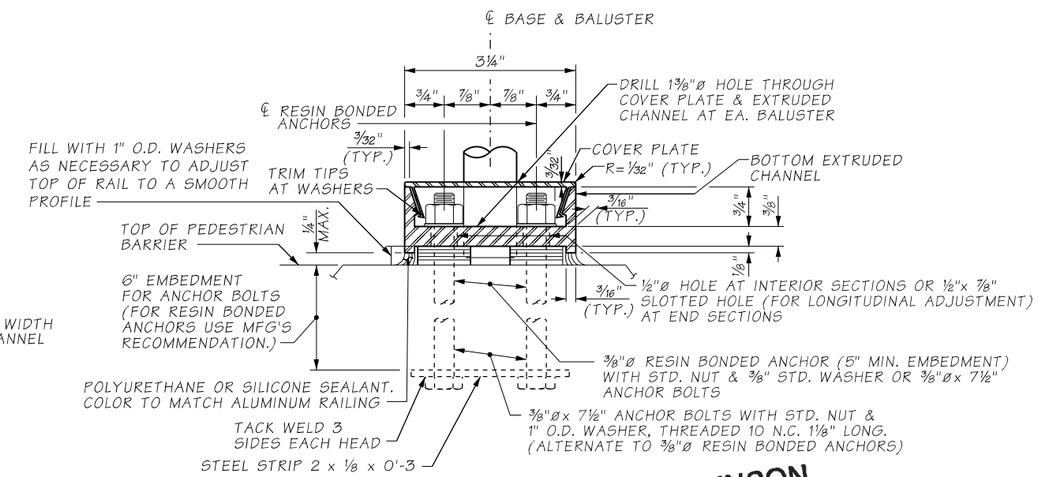

SECTION B / RW111

ANCHOR BOLTS SHALL BE POSITIONED IN A JIG DURING WELDING

ATKINSON

JUL 22 2019 KTW

RELEASED FOR CONSTRUCTION

FILE NAME	c:\pwworking\jacobs_b&i\reiserrw\dms20633\PS_RW112.dgn						
TIME	8:34:19 AM				REGION NO. 10	STATE WASH	FED.AID PROJ.NO.
DATE	7/17/2019						
PLOTTED BY	ReiserRW				JOB NUMBER		
DESIGNED BY	G. CALLAHAN						
ENTERED BY	R. REISER						
CHECKED BY	A. FONG	REV 0 - RELEASED FOR CONSTRUCTION	07/19/2019		CONTRACT NO. C9133		LOCATION NO.
PROJ. ENGR.	C. MEADE	REV A - FINAL REVIEW	06/13/2019				
REGIONAL ADM.	J. WYNANDS	REVISION	DATE	BY			

STATE OF WASHINGTON — LARRY J. CATWOOD — 38759 — PROFESSIONAL ENGINEER — 7/19/19

P.E. STAMP BOX — DATE

P.E. STAMP BOX — DATE

Washington State Department of Transportation

ATKINSON CONSTRUCTION / JACOBS

I-5
STEILACOOM-DUPONT RD TO THORNE LN
CORRIDOR IMPROVEMENTS
MP 120.01 TO MP 124.45

RETAINING WALLS
BP RAILING (2 OF 2)

PLAN REF NO RW112

SHEET 852 OF 1456 SHEETS

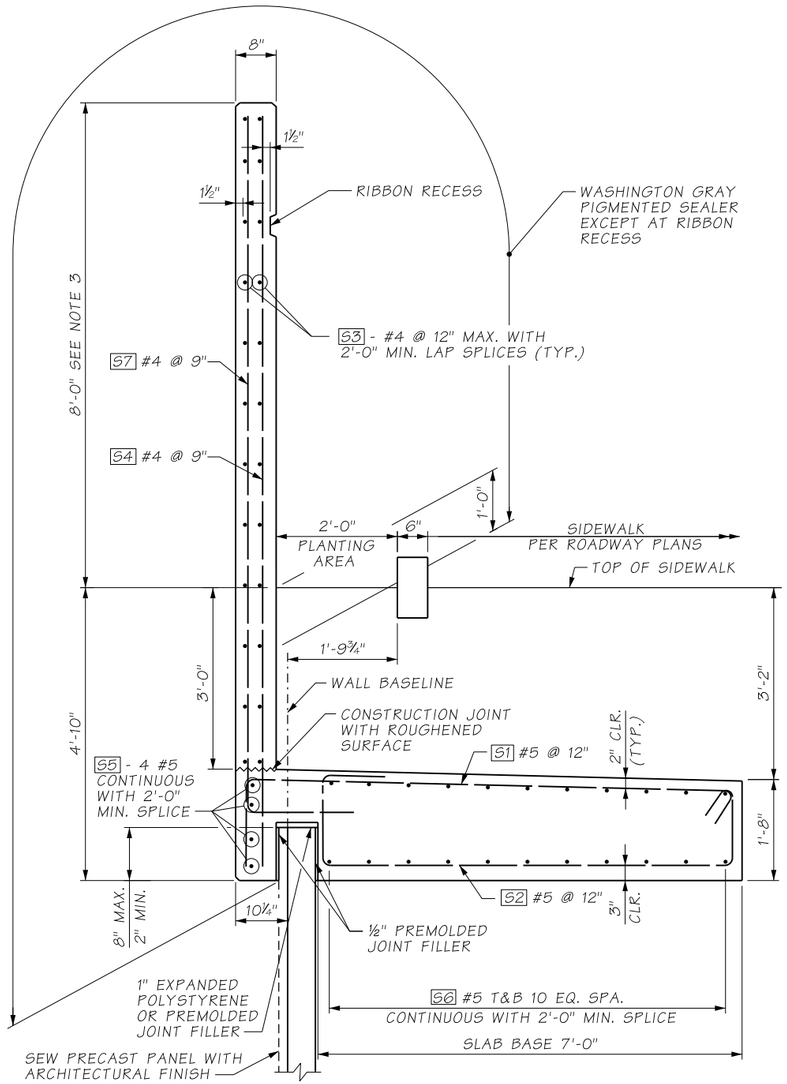

SECURITY BARRIER MOMENT SLAB
TYPICAL SECTION

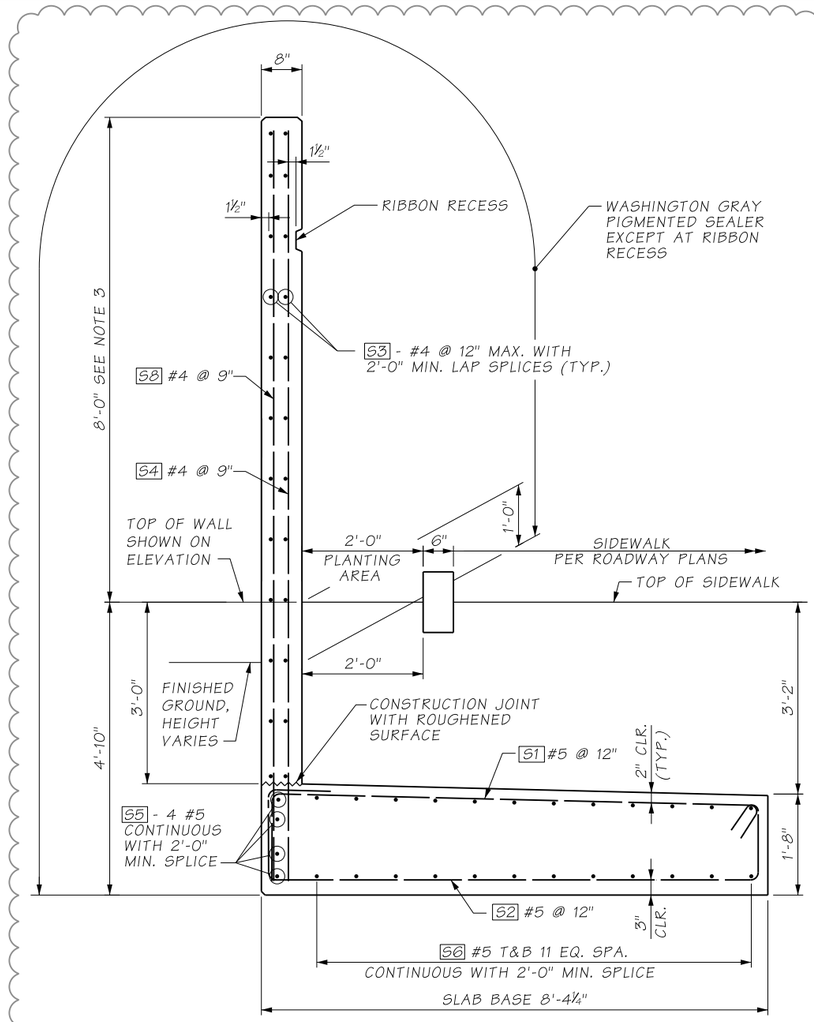

ON-GRADE MOMENT SLAB WITH SECURITY BARRIER
TYPICAL SECTION

SECURITY BARRIER MOMENT SLAB BAR LIST

MARK	SIZE	LENGTH	BENDING DIAGRAM (ALL DIMENSIONS ARE OUT TO OUT)
S1	5	9'-10½"	
S2	5	10'-10½"	
S3	4	(A)	STRAIGHT
S4	4	(A)	STRAIGHT
S5	5	(A)	STRAIGHT
S6	5	(A)	STRAIGHT
S7	4	13'-9"	
S8	4	(A)	STRAIGHT

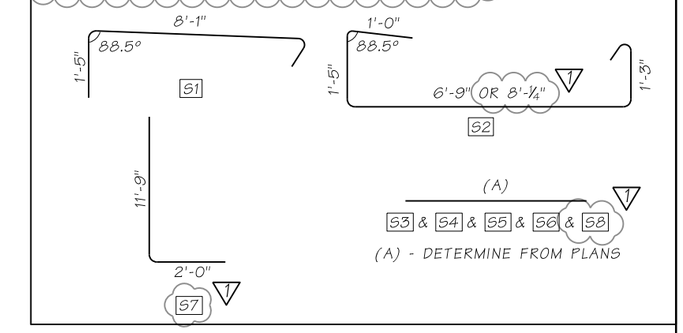

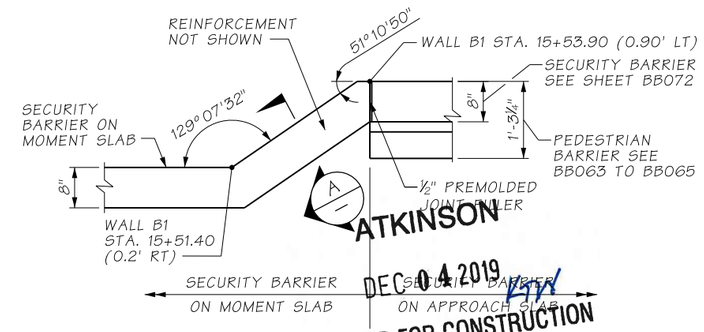

CORNER PLAN

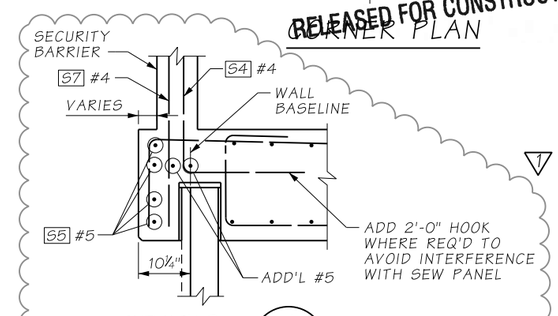

SECTION A

NOTES:

1. FOR SECURITY BARRIER MOMENT SLAB LIMITS, SEE RETAINING WALL B1 PLANS AND PAVING AND BARRIER PLANS.
2. ALL LONGITUDINAL REINFORCING BARS IN THE MOMENT SLAB AND BARRIER SHALL BE CUT AT EXPANSION JOINTS AND ½" PREMOLDED JOINT FILLER SHALL BE USED TO FORM THE EXPANSION JOINT. DISTANCE BETWEEN EXPANSION JOINTS SHALL BE NO LONGER THAN 120'-0".
3. SEE SHEET RW114 FOR SECURITY BARRIER RIBBON RECCESS DETAILS.
4. EXPANSION JOINT SPACING IN FOOTING SHALL BE 36'-0" MIN. AND 120'-0" MAX.

AS-BUILT

ATKINSON
DEC 04 2019
RELEASED FOR CONSTRUCTION

FILE NAME	D:\ICS_workdir\41284\20633_1890\PS_RW113.dgn				REGION NO. 10	STATE WASH	FED.AID PROJ.NO.
TIME	11:16:19 AM				JOB NUMBER		
DATE	12/2/2019						
PLOTTED BY	USLAS0-APP064$						
DESIGNED BY	G. CALLAHAN						
ENTERED BY	K. BICHICH	REV 1 - RFI0250, RFI0275	12/03/2019		CONTRACT NO. C9133		LOCATION NO.
CHECKED BY	A. FONG	REV 0 - RELEASED FOR CONSTRUCTION	07/19/2019				
PROJ. ENGR.	C. MEADE	REV A - FINAL REVIEW	06/13/2019				
REGIONAL ADM.	J. WYNANDS	REVISION	DATE	BY			

CORT J. CAYWOOD — STATE OF WASHINGTON — 38133 — STRUCTURAL ENGINEER — PROFESSIONAL ENGINEER
12/3/19
P.E. STAMP BOX — DATE

P.E. STAMP BOX — DATE

Washington State Department of Transportation

ATKINSON CONSTRUCTION / JACOBS

I-5
STEILACOOM-DUPONT RD TO THORNE LN CORRIDOR IMPROVEMENTS
MP 120.01 TO MP 124.45

RETAINING WALLS - WALL B1
SECURITY BARRIER MOMENT SLAB (1 OF 2)

PLAN REF NO RW113

SHEET 853 OF 1456 SHEETS

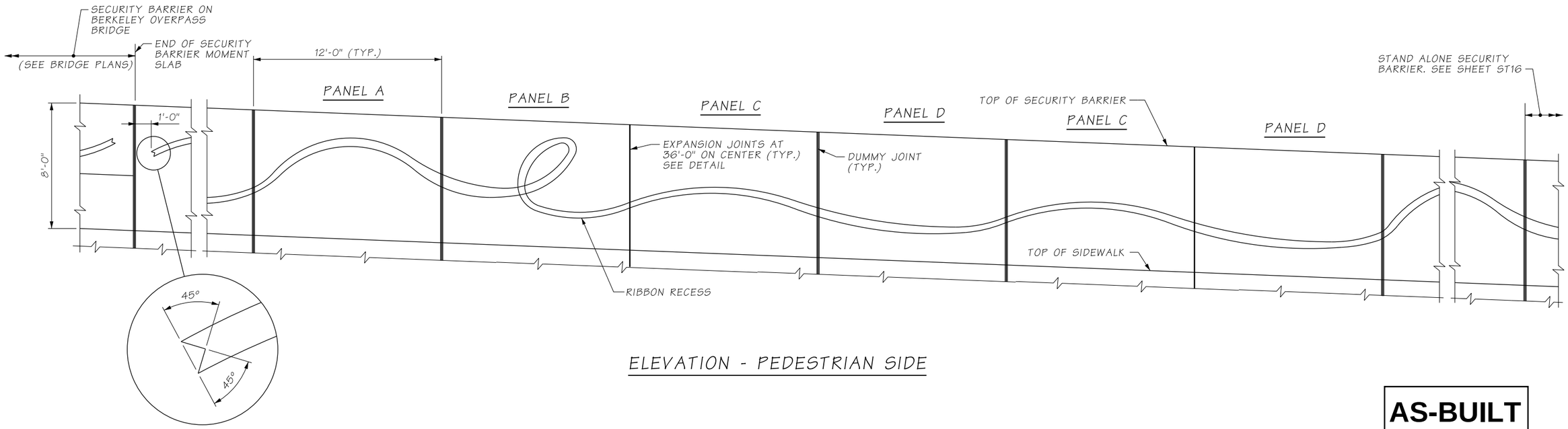

ELEVATION - PEDESTRIAN SIDE

RIBBON END DETAIL

AS-BUILT

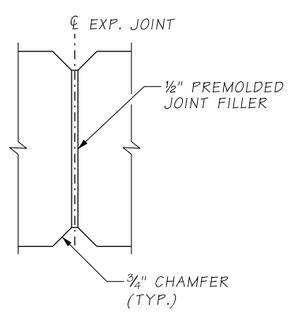

EXPANSION JOINT

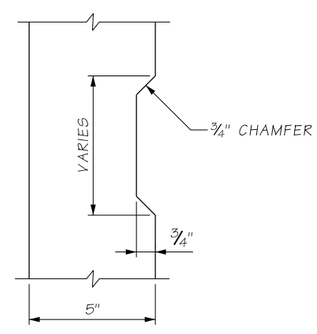

RIBBON RECESS

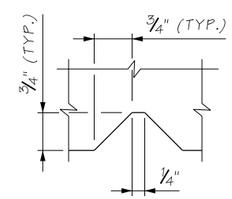

DUMMY JOINT

ATKINSON
APR 21 2020 KMW
RELEASED FOR CONSTRUCTION

NOTES:

1. RIBBON PATTERN ON PEDESTRIAN SIDE SHALL CONSIST OF PANEL A THROUGH D. PANEL SEQUENCE SHALL BE AS FOLLOWS: PANEL A -> PANEL B -> PANEL C -> PANEL D -> PANEL C -> PANEL D. REPEAT SAME PATTERN FOR THE FULL LENGTH OF THE SECURITY BARRIER.
2. DUMMY JOINTS SHALL BE NORMAL TO FINISHED GRADE AND LINED UP WITH DUMMY JOINTS ON THE PEDESTRIAN BARRIER. (1)
3. PRIOR TO CONSTRUCTION OF SECURITY BARRIER, SUBMIT TYPE 2 WORKING DRAWINGS FOR APPROVAL INCLUDING ELEVATION OF WALL WITH RIBBON LAYOUT ALONG FULL LENGTH OF WALL.
4. MT. BAKER GRAY PIGMENTED SEALER SHALL BE USED FOR RIBBON RECESS.

FILE NAME	D:\ICS_workdir\50656\20633_2201\PS_RW114.dgn			
TIME	1:12:52 PM			
DATE	4/15/2020			
PLOTTED BY	USLAS0-APP064$			
DESIGNED BY	G. CALLAHAN			
ENTERED BY	R. REISER	REV 1 - RFI0258	04/17/2020	
CHECKED BY	A. FONG	REV 0 - RELEASED FOR CONSTRUCTION	07/19/2019	
PROJ. ENGR.	C. MEADE	REV A - FINAL REVIEW	06/13/2019	
REGIONAL ADM.	J. WYNANDS	REVISION	DATE	BY

REGION NO.	STATE	FED.AID PROJ.NO.
10	WASH	
JOB NUMBER		
CONTRACT NO. C9133		LOCATION NO.

CORY J. CAYWOOD, STATE OF WASHINGTON, 38759, STRUCTURAL ENGINEER, PROFESSIONAL ENGINEER
4/16/20
DATE
P.E. STAMP BOX

P.E. STAMP BOX
DATE

Washington State Department of Transportation

ATKINSON CONSTRUCTION / JACOBS

I-5
STEILACOOM-DUPONT RD TO THORNE LN
CORRIDOR IMPROVEMENTS
MP 120.01 TO MP 124.45

RETAINING WALLS - WALL B1
SECURITY BARRIER MOMENT SLAB (2 OF 2)

PLAN REF NO RW114

SHEET 854 OF 1456 SHEETS

MOMENT SLAB TABLE	
SLAB LENGTH	SLAB BASE "B"
GREATER THAN 35'-0"	5'-6"

AS-BUILT

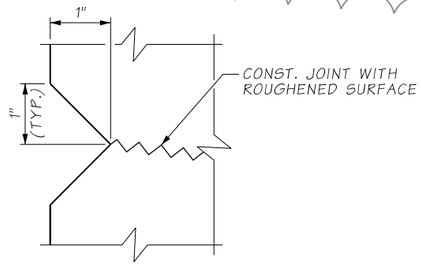

V-GROOVE DETAIL

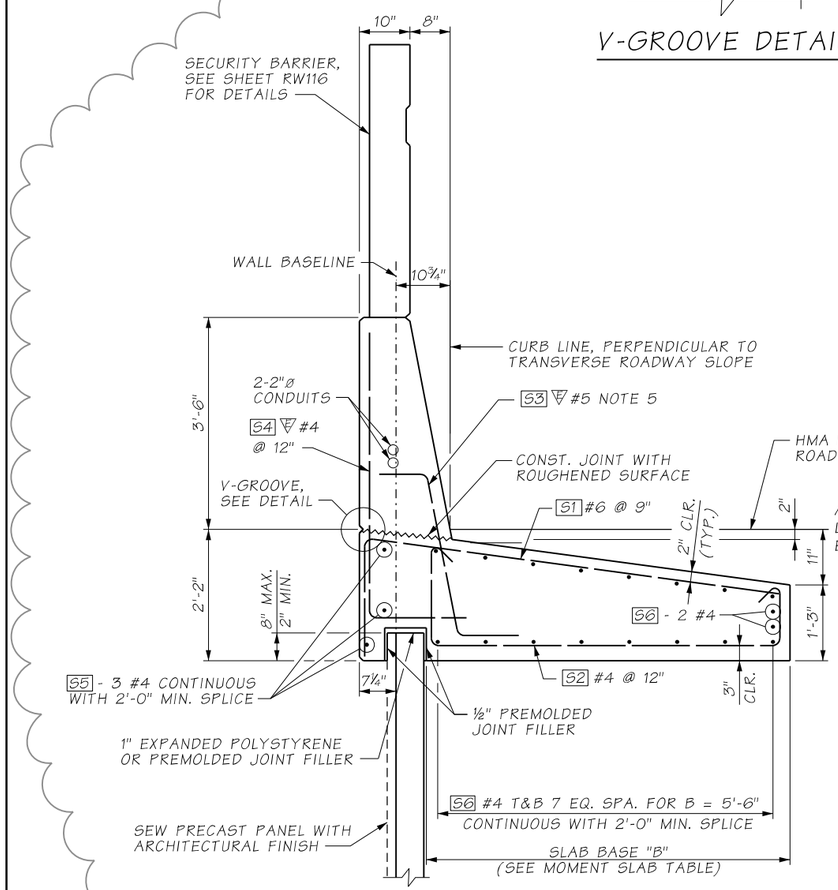

BEGINNING OF WALL TO WALL B6 STA. 20+92.44

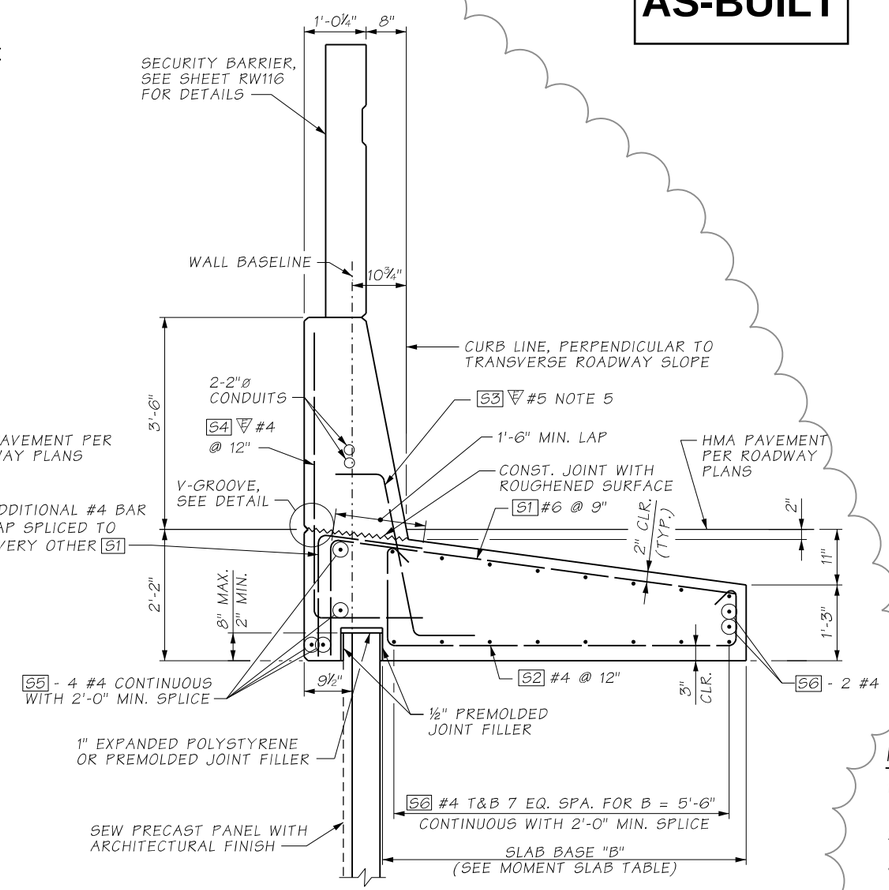

WALL B6 STA. 20+92.44 TO STA. 21+02.44

SINGLE SLOPE SECURITY BARRIER
SEW MOMENT SLAB TYPICAL SECTION

PROVIDE SMOOTH TRANSITION BETWEEN TYPICAL SECTIONS

MOMENT SLAB BAR LIST			
MARK	SIZE	LENGTH	BENDING DIAGRAM (ALL DIMENSIONS ARE OUT TO OUT)
S1	6	(A)	VARIES
S2	4	2 (A)	VARIES
S3	4	4'-11"	EPOXY COATED
S4	5	2 (A)	EPOXY COATED
S5	4	(A)	STRAIGHT
S6	4	(A)	STRAIGHT

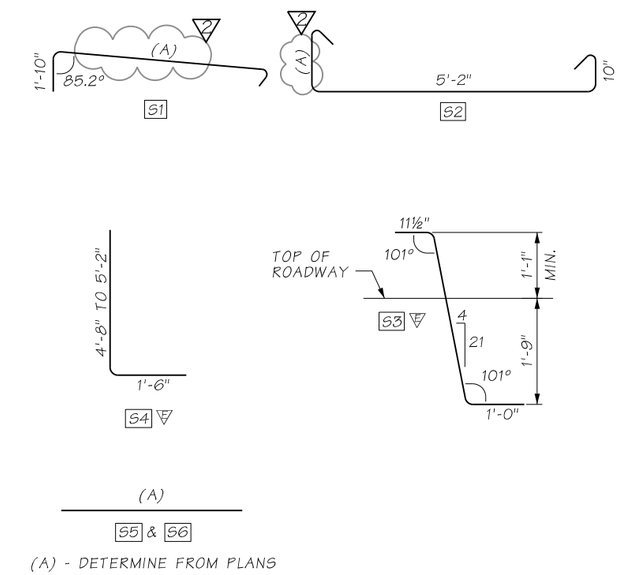

ATKINSON
JUL 22 2020
RELEASED FOR CONSTRUCTION

NOTES:

1. FOR BARRIER MOMENT SLAB LIMITS, RETAINING WALL PLANS AND PAVING AND BARRIER PLANS.
2. SEW MOMENT SLAB BARRIER HAS BEEN DESIGNED FOR TL-4 LOADING.
3. FOR CONCRETE BARRIER DETAILS NOT SHOWN, SEE SHEETS RW104 THROUGH RW107.
4. ALL LONGITUDINAL REINFORCING BARS IN THE MOMENT SLAB AND BARRIER SHALL BE CUT AT EXPANSION JOINTS AND ½" PREMOLDED JOINT FILLER SHALL BE USED TO FORM THE EXPANSION JOINT. DISTANCE BETWEEN EXPANSION JOINTS SHALL BE NO LONGER THAN 120'-0".
5. SEE SHEET RW104 FOR SPACING OF S3 #5 BARS.
6. SEE SHEET RW104 FOR SINGLE SLOPE BARRIER REINFORCEMENT DETAILS.

FILE NAME	c:\pwworking\jacobs_b&i\reiserrw\dms20633\PS_RW115.dgn				REGION NO. 10	STATE WASH	FED.AID PROJ.NO.
TIME	9:26:27 AM						
DATE	7/21/2020						
PLOTTED BY	ReiserRW				JOB NUMBER		
DESIGNED BY	G. CALLAHAN	REV 2 - RFI0515	07/23/2020				
ENTERED BY	R. REISER	REV 1 - RFI0376	06/02/2020				
CHECKED BY	A. FONG	REV 0 - RELEASED FOR CONSTRUCTION	07/19/2019		CONTRACT NO. C9133		LOCATION NO.
PROJ. ENGR.	C. MEADE	REV A - FINAL REVIEW	06/13/2019				
REGIONAL ADM.	J. WYNANDS	REVISION	DATE	BY			

CORY J. CAYWOOD — STATE OF WASHINGTON — 38759 — STRUCTURAL ENGINEER — PROFESSIONAL ENGINEER
7/21/20
DATE
P.E. STAMP BOX

P.E. STAMP BOX
DATE

Washington State Department of Transportation

ATKINSON CONSTRUCTION / JACOBS

I-5
STEILACOOM-DUPONT RD TO THORNE LN
CORRIDOR IMPROVEMENTS
MP 120.01 TO MP 124.45

RETAINING WALLS - WALL B6 - SINGLE SLOPE SECURITY BARRIER (1 OF 3)

PLAN REF NO RW115

SHEET 855 OF 1456 SHEETS

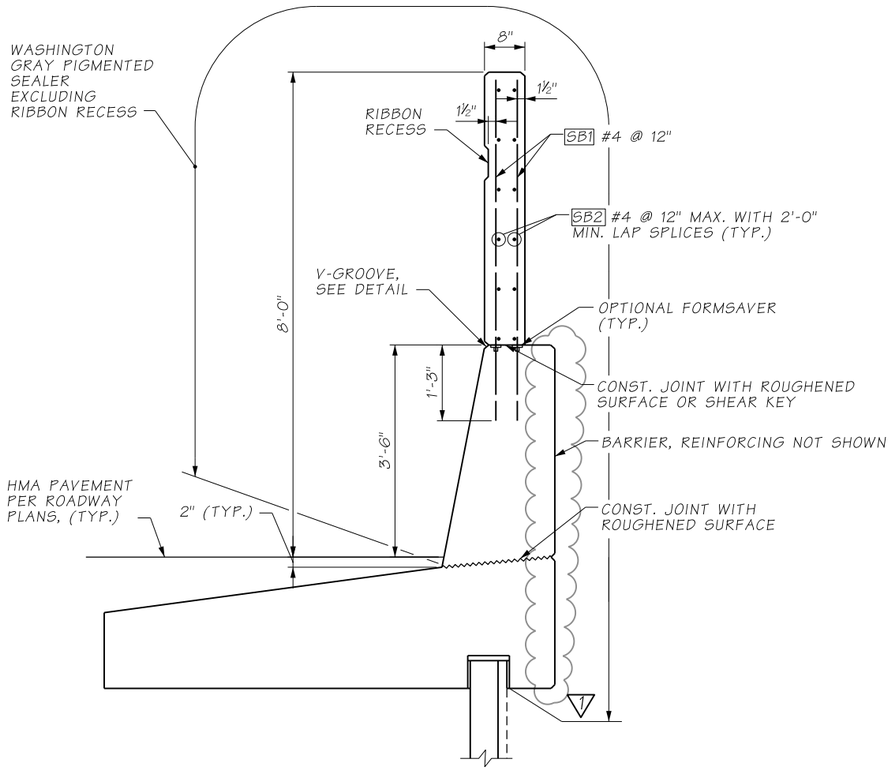

SINGLE SLOPE SECURITY BARRIER
TYPICAL SECTION

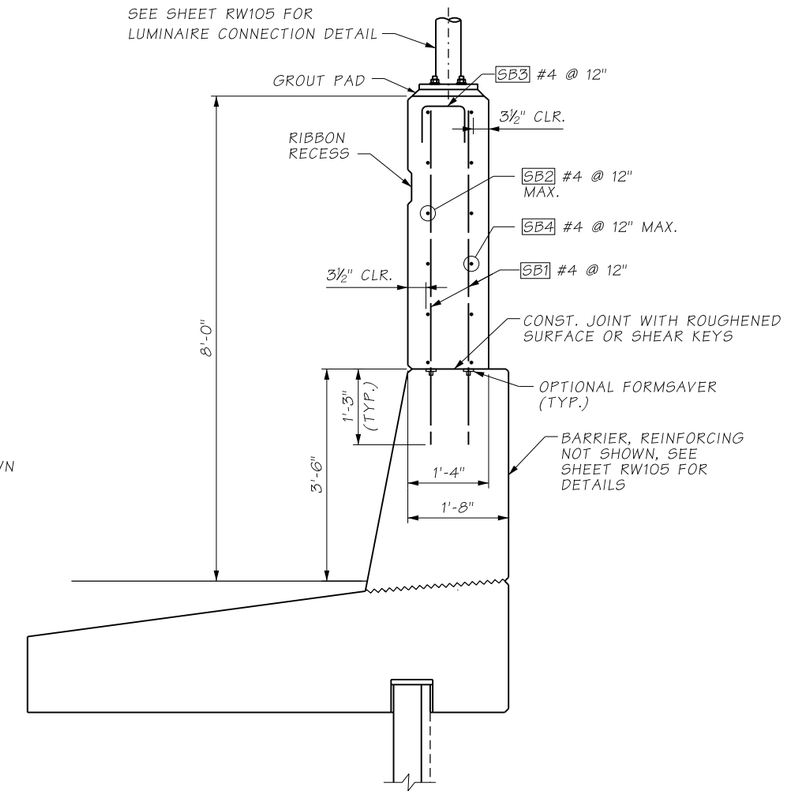

SECTION A
APPLIES FOR 1'-1" ON EITHER SIDE OF LUMINATION POLE

AS-BUILT

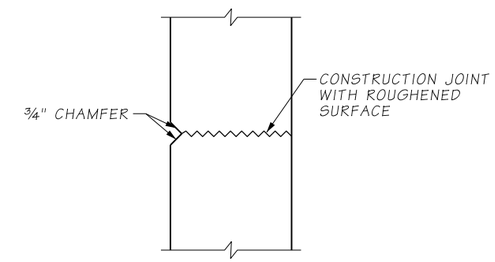

V-GROOVE DETAIL

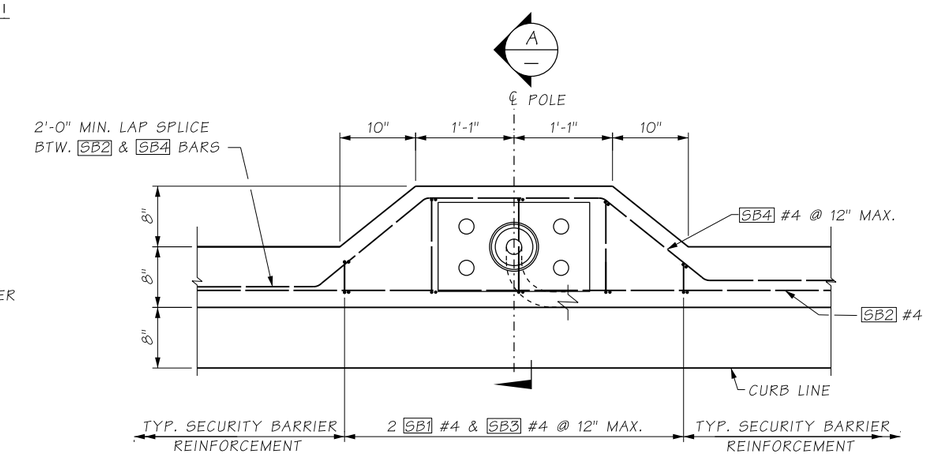

SINGLE SLOPE SECURITY BARRIER
W/ LUMINAIRE - PLAN

SINGLE SLOPE BARRIER REINFORCEMENT NOT SHOWN FOR CLARITY

ATKINSON
JUN 08 2020 KTW
RELEASED FOR CONSTRUCTION

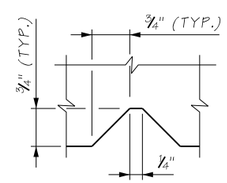

DUMMY JOINT

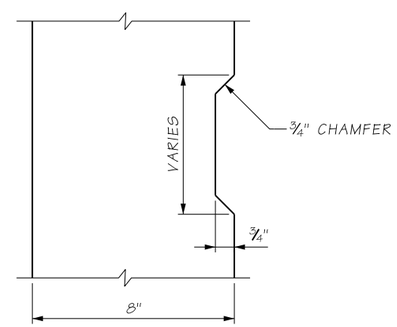

RIBBON RECESS

FILE NAME	D:\ICS_workdir\53503\20633_2231\PS_RW116.dgn						
TIME	12:41:19 PM				REGION NO. 10	STATE WASH	FED.AID PROJ.NO.
DATE	6/1/2020						
PLOTTED BY	USLAS0-APP064$				JOB NUMBER		
DESIGNED BY	G. CALLAHAN						
ENTERED BY	R. REISER	REV 1 - RFI0376	06/02/2020				
CHECKED BY	A. FONG	REV 0 - RELEASED FOR CONSTRUCTION	07/19/2019		CONTRACT NO. C9133		LOCATION NO.
PROJ. ENGR.	C. MEADE	REV A - FINAL REVIEW	06/13/2019				
REGIONAL ADM.	J. WYNANDS	REVISION	DATE	BY			

CORY J. CAYWOOD, STATE OF WASHINGTON, 38155, STRUCTURAL ENGINEER, PROFESSIONAL ENGINEER
6/2/20
DATE
P.E. STAMP BOX

DATE
P.E. STAMP BOX

Washington State Department of Transportation

ATKINSON / JACOBS CONSTRUCTION

I-5
STEILACOOM-DUPONT RD TO THORNE LN
CORRIDOR IMPROVEMENTS
MP 120.01 TO MP 124.45

RETAINING WALLS - WALL B6 - SINGLE SLOPE SECURITY BARRIER (2 OF 3)

PLAN REF NO RW116

SHEET 856 OF 1456 SHEETS

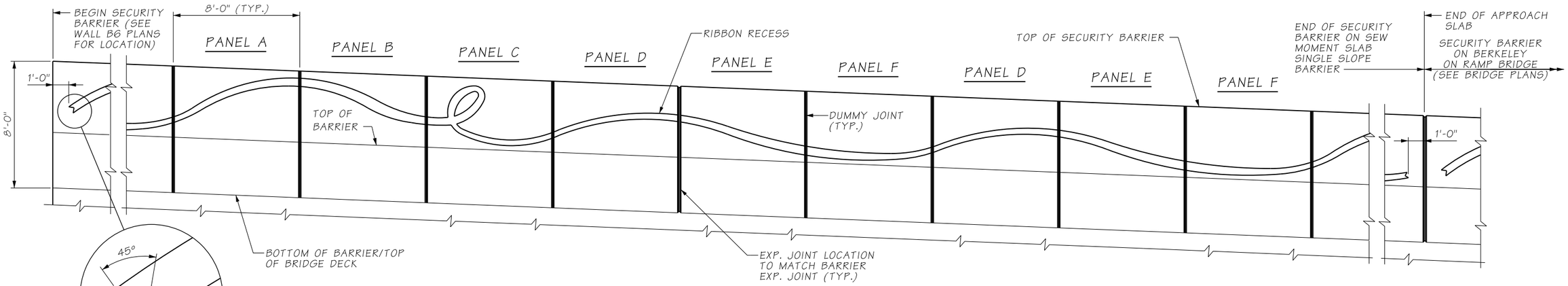

RIBBON END DETAIL

ELEVATION - PEDESTRIAN SIDE

AS-BUILT

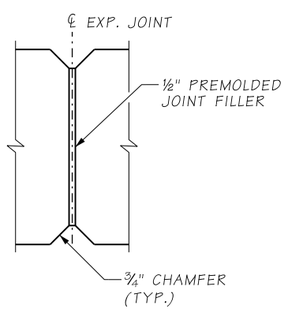

EXPANSION JOINT

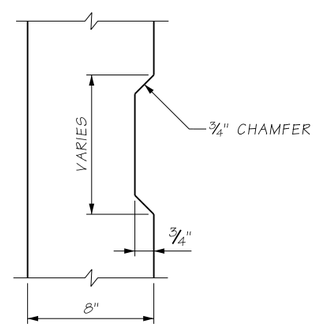

RIBBON RECESS

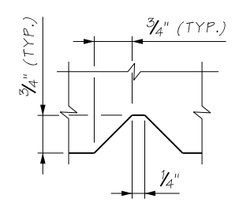

DUMMY JOINT

ATKINSON
APR 21 2020 KW
RELEASED FOR CONSTRUCTION

NOTES:

1. RIBBON PATTERN ON PEDESTRIAN SIDE SHALL CONSIST OF PANEL A THROUGH F. PANEL SEQUENCE SHALL BE AS FOLLOWS: PANEL A -> PANEL B -> PANEL C -> PANEL D -> PANEL E -> PANEL F -> PANEL D -> PANEL E -> PANEL F. REPEAT SAME PATTERN FOR THE FULL LENGTH OF THE SECURITY BARRIER.
2. (1) DUMMY JOINTS SHALL BE NORMAL TO FINISHED GRADE AND LINED UP WITH DUMMY JOINTS ON THE PEDESTRIAN BARRIER.
3. PRIOR TO CONSTRUCTION OF SECURITY BARRIER, SUBMIT TYPE 2 WORKING DRAWINGS FOR APPROVAL INCLUDING ELEVATION OF WALL WITH RIBBON LAYOUT ALONG FULL LENGTH OF WALL.
4. MT. BAKER GRAY PIGMENTED SEALER SHALL BE USED FOR RIBBON RECESS.

FILE NAME	D:\ICS_workdir\50657\20633_2251\PS_RW117.dgn			
TIME	1:12:51 PM			
DATE	4/15/2020			
PLOTTED BY	USLAS0-APP064$			
DESIGNED BY	G. CALLAHAN			
ENTERED BY	R. REISER	REV 1 - RFI0258	04/17/2020	
CHECKED BY	A. FONG	REV 0 - RELEASED FOR CONSTRUCTION	07/19/2019	
PROJ. ENGR.	C. MEADE	REV A - FINAL REVIEW	06/13/2019	
REGIONAL ADM.	J. WYNANDS	REVISION	DATE	BY

REGION NO.	STATE	FED.AID PROJ.NO.
10	WASH	
JOB NUMBER		
CONTRACT NO. C9133		LOCATION NO.

CORY J. CAYWOOD, STATE OF WASHINGTON, 38759, STRUCTURAL ENGINEER, PROFESSIONAL ENGINEER
4/16/20
DATE
P.E. STAMP BOX

DATE
P.E. STAMP BOX

Washington State Department of Transportation

ATKINSON CONSTRUCTION / JACOBS

I-5
STEILACOOM-DUPONT RD TO THORNE LN
CORRIDOR IMPROVEMENTS
MP 120.01 TO MP 124.45

RETAINING WALLS - WALL B6 - SINGLE SLOPE SECURITY BARRIER (3 OF 3)

PLAN REF NO RW117

SHEET 857 OF 1456 SHEETS

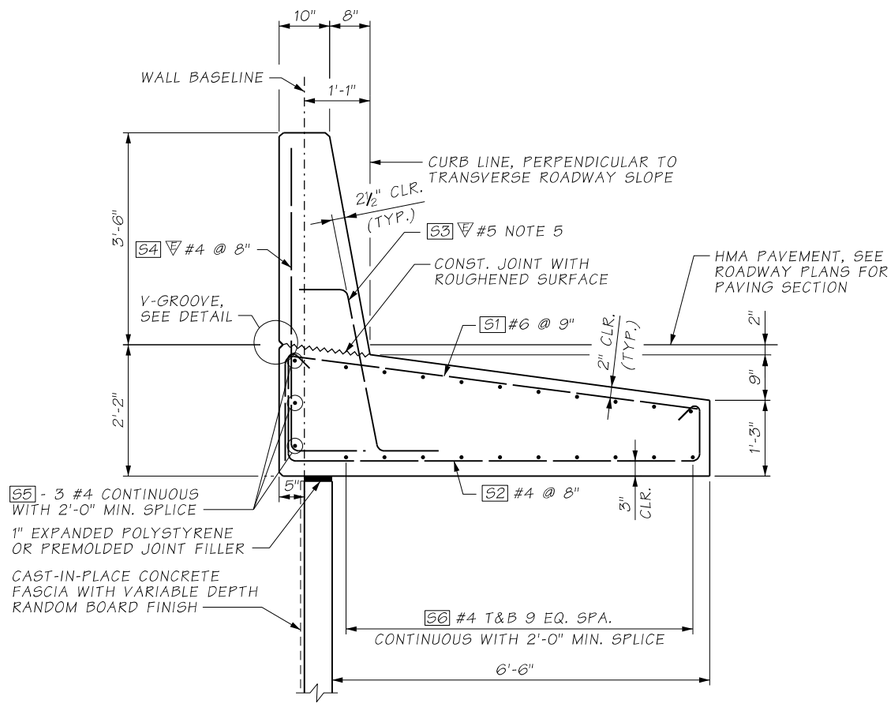

WALL T6B SINGLE SLOPE
GEOSYNTHETIC WALL MOMENT SLAB
TYPICAL SECTION

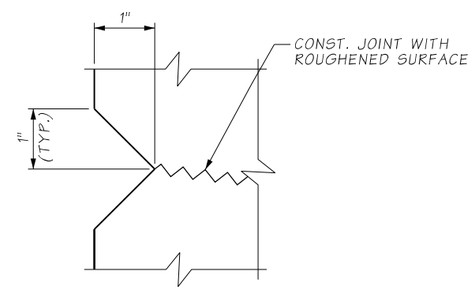

V-GROOVE DETAIL

AS-BUILT

MOMENT SLAB BAR LIST			
MARK	SIZE	LENGTH	BENDING DIAGRAM (ALL DIMENSIONS ARE OUT TO OUT)
S1	6	9'-8"	VARIES
S2	4	10'-5"	VARIES
S3	5	4'-11"	EPOXY COATED
S4	4	6'-10"	EPOXY COATED
S5	4	(A)	STRAIGHT
S6	4	(A)	STRAIGHT

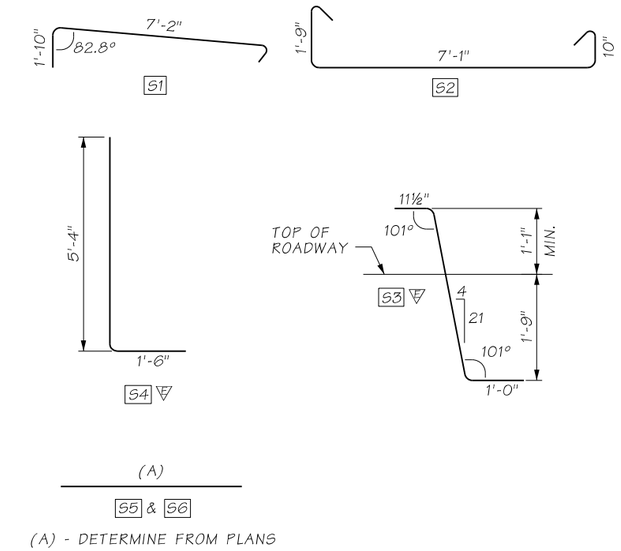

NOTES:

1. FOR BARRIER MOMENT SLAB LIMITS, SEE RETAINING WALL PLANS AND PAVING AND BARRIER PLANS.
2. SEW MOMENT SLAB BARRIER HAS BEEN DESIGNED FOR TL-4 LOADING.
3. FOR CONCRETE BARRIER DETAILS NOT SHOWN, SEE SHEETS RW104 THROUGH RW107.
4. NO EXPANSION JOINTS IN RETAINING WALL T6B MOMENT SLAB ARE PERMITTED.
5. SEE SHEET RW104 FOR SPACING OF S3 #5 BARS.

ATKINSON
OCT 31 2019 KTW
RELEASED FOR CONSTRUCTION

FILE NAME	c:\pwworking\jacobs_b&l\youngkl2\dms20633\PS_RW118.dgn						
TIME	3:11:15 PM				REGION NO. 10	STATE WASH	FED.AID PROJ.NO.
DATE	10/29/2019						
PLOTTED BY	youngkl2				JOB NUMBER		
DESIGNED BY	G. CALLAHAN						
ENTERED BY	R. REISER						
CHECKED BY	R. BAGHAEI	REV 0 - RELEASED FOR CONSTRUCTION	11/04/2019		CONTRACT NO. C9133		LOCATION NO.
PROJ. ENGR.	C. MEADE	REV A - FINAL REVIEW	09/24/2019				
REGIONAL ADM.	J. WYNANDS	REVISION	DATE	BY			

P.E. STAMP BOX — DATE 10/30/19

P.E. STAMP BOX — DATE

Washington State Department of Transportation

ATKINSON CONSTRUCTION / JACOBS

I-5
STEILACOOM-DUPONT RD TO THORNE LN
CORRIDOR IMPROVEMENTS
MP 120.01 TO MP 124.45

RETAINING WALLS
WALL T6B MOMENT SLAB BARRIER

PLAN REF NO RW118

SHEET 858 OF 1456 SHEETS

AS-BUILT

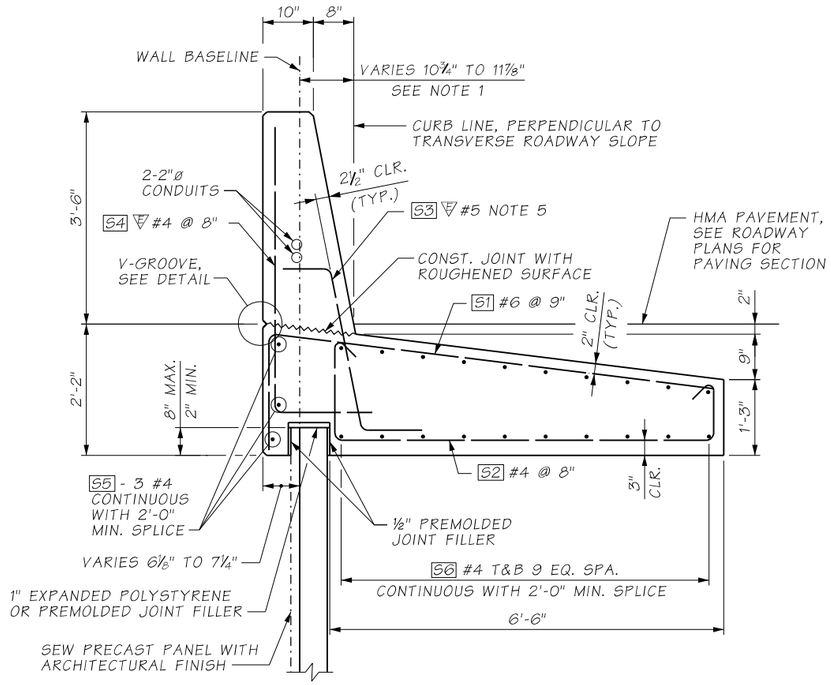

SECTION A

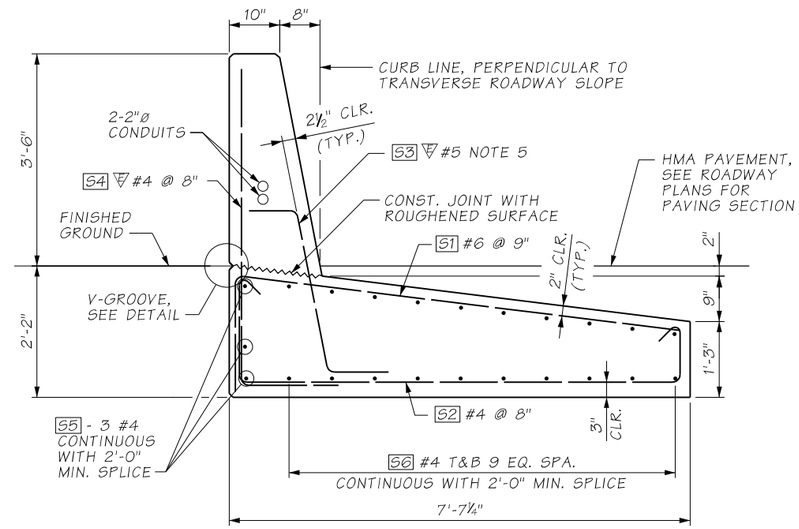

SECTION B

MOMENT SLAB BAR LIST

MARK	SIZE	LENGTH	BENDING DIAGRAM (ALL DIMENSIONS ARE OUT TO OUT)
S1	6	11'-11½"	
S2	4	11'-6"	
S3	4	4'-11"	EPOXY COATED
S4	5	6'-2" TO 6'-9"	EPOXY COATED
S5	4	(A)	STRAIGHT
S6	4	(A)	STRAIGHT

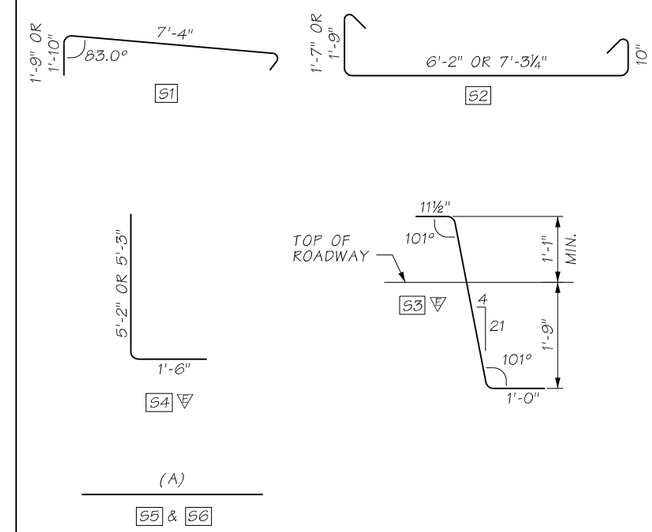

(A) - DETERMINE FROM PLANS

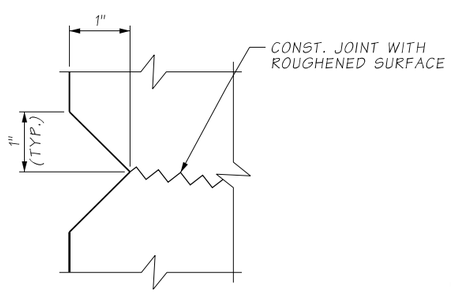

V-GROOVE DETAIL

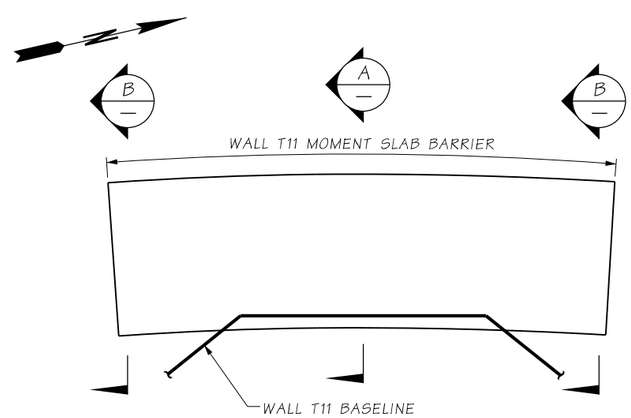

PLAN

SEE SHEET RW53 FOR ADDITIONAL DETAILS

ATKINSON
OCT 31 2019 KAW
RELEASED FOR CONSTRUCTION

NOTES:

1. FOR BARRIER MOMENT SLAB LIMITS, SEE RETAINING WALL PLANS AND PAVING AND BARRIER PLANS.
2. SEW MOMENT SLAB BARRIER HAS BEEN DESIGNED FOR TL-4 LOADING.
3. FOR CONCRETE BARRIER DETAILS NOT SHOWN, SEE SHEETS RW104 THROUGH RW107.
4. NO EXPANSION JOINTS IN RETAINING WALL T11 MOMENT SLAB ARE PERMITTED.
5. SEE SHEET RW104 FOR SPACING OF S3 #5 BARS.

FILE NAME	c:\pwworking\jacobs_b&l\youngkl2\dms20633\PS_RW119.dgn			
TIME	3:40:44 PM			
DATE	10/29/2019			
PLOTTED BY	youngkl2			
DESIGNED BY	G. CALLAHAN			
ENTERED BY	R. REISER			
CHECKED BY	R. BAGHAEI	REV 0 - RELEASED FOR CONSTRUCTION	11/04/2019	
PROJ. ENGR.	C. MEADE	REV A - FINAL REVIEW	09/24/2019	
REGIONAL ADM.	J. WYNANDS	REVISION	DATE	BY

REGION NO.	STATE	FED.AID PROJ.NO.
10	WASH	
JOB NUMBER		
CONTRACT NO. C9133		LOCATION NO.

P.E. STAMP BOX — DATE 10/30/19

P.E. STAMP BOX — DATE

Washington State Department of Transportation

ATKINSON / JACOBS CONSTRUCTION

I-5
STEILACOOM-DUPONT RD TO THORNE LN CORRIDOR IMPROVEMENTS
MP 120.01 TO MP 124.45

RETAINING WALLS
WALL T11 MOMENT SLAB BARRIER

PLAN REF NO RW119

SHEET 859 OF 1456 SHEETS

NOTES:

1. SIGN POST SHALL BE INSTALLED PLUMB.
2. FOR SIGN PANEL MOUNTING DETAILS, SEE STANDARD PLAN G-50.10.
3. SIGN POST ASSEMBLY SHALL BE GALVANIZED AFTER FABRICATION PER AASHTO M111.

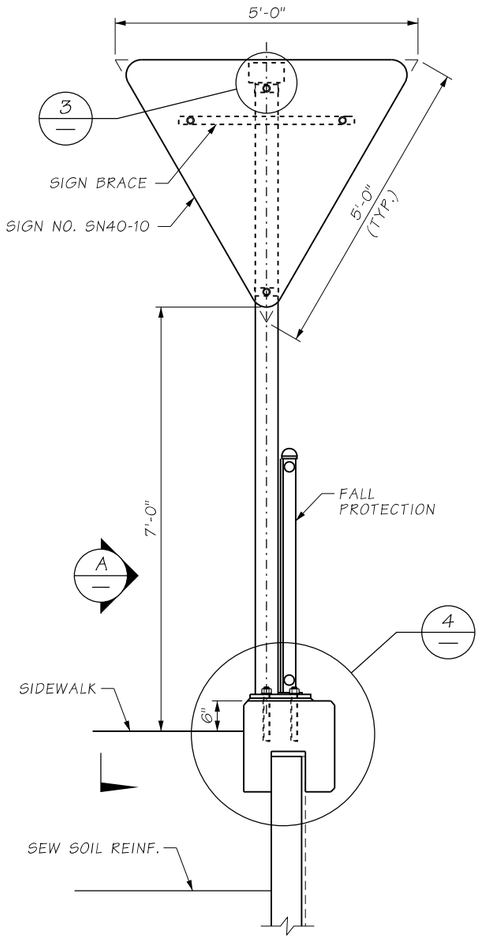

COPING MOUNTED SIGN POST (1)

REQUIRED AT 1 LOCATION, SEE SIGNING PLANS FOR LOCATION AND ADDITIONAL SIGN PANEL DETAILS

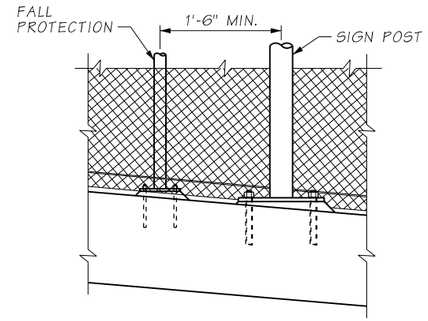

SECTION A

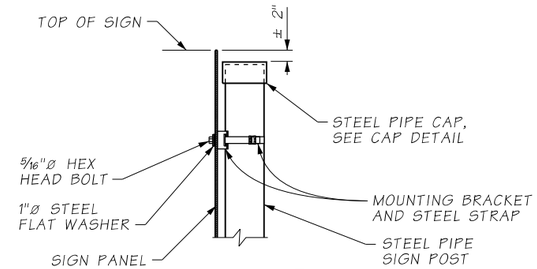

DETAIL 3

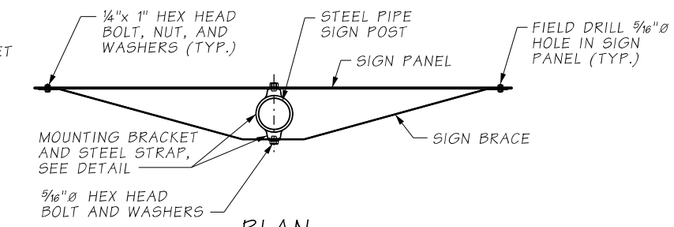

PLAN

AS-BUILT

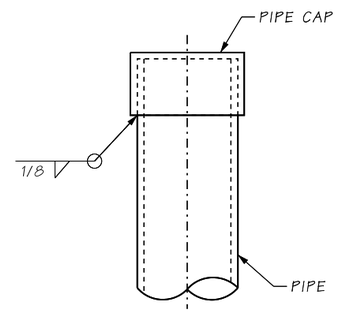

CAP DETAIL

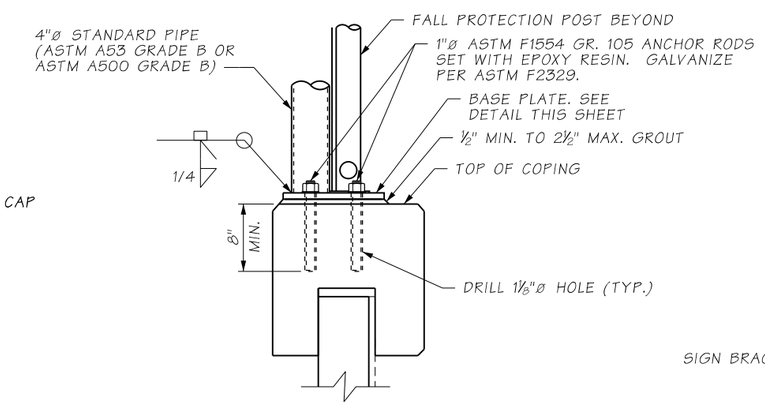

DETAIL 4

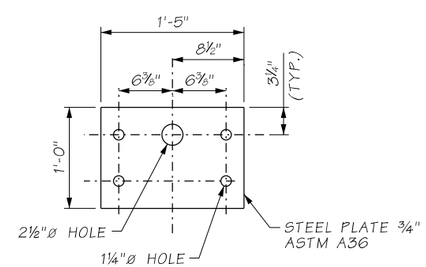

BASE PLATE DETAIL

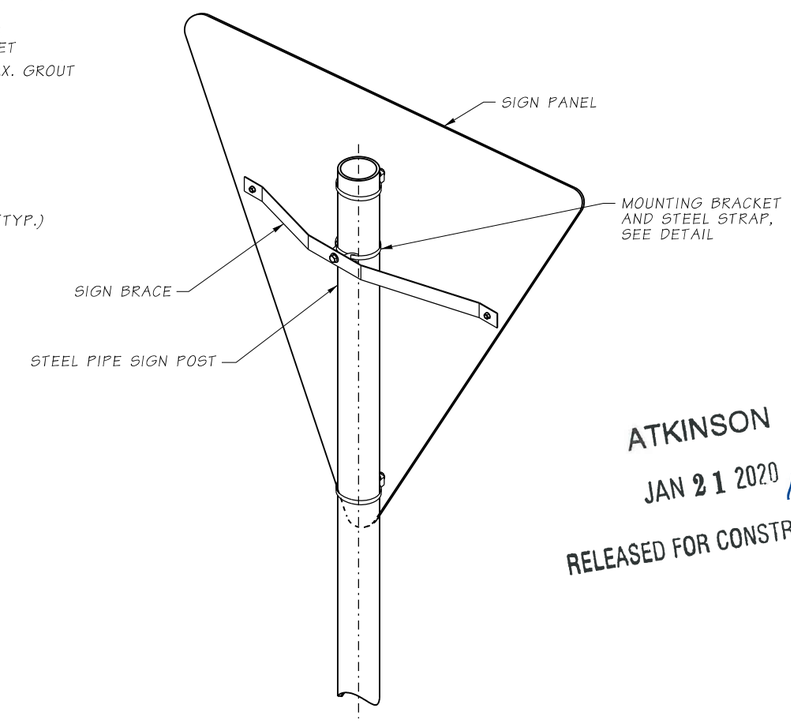

SIGN BRACE ON SIGN POST

ATKINSON
JAN 21 2020 KTW
RELEASED FOR CONSTRUCTION

FILE NAME	c:\pwworking\jacobs_b&l\jeg_huangy1\dms20633\PS_RW120.dgn						
TIME	3:42:09 PM				REGION NO. 10	STATE WASH	FED.AID PROJ.NO.
DATE	1/16/2020						
PLOTTED BY	HUANGY1				JOB NUMBER		
DESIGNED BY	K. YOUNG						
ENTERED BY	R. REISER						
CHECKED BY	C. CAYWOOD	REV 0 - RELEASED FOR CONSTRUCTION	01/20/2020		CONTRACT NO. C9133		LOCATION NO.
PROJ. ENGR.	C. MEADE	REV A - FINAL REVIEW	01/08/2020				
REGIONAL ADM.	J. WYNANDS	REVISION	DATE	BY			

P.E. STAMP BOX — DATE 1/21/20

P.E. STAMP BOX — DATE

Washington State Department of Transportation

ATKINSON CONSTRUCTION / JACOBS

I-5
STEILACOOM-DUPONT RD TO THORNE LN CORRIDOR IMPROVEMENTS
MP 120.01 TO MP 124.45

RETAINING WALLS
RETAINING WALL T2 SIGN POST SUPPORT

PLAN REF NO RW120

SHEET 860 OF 1456 SHEETS

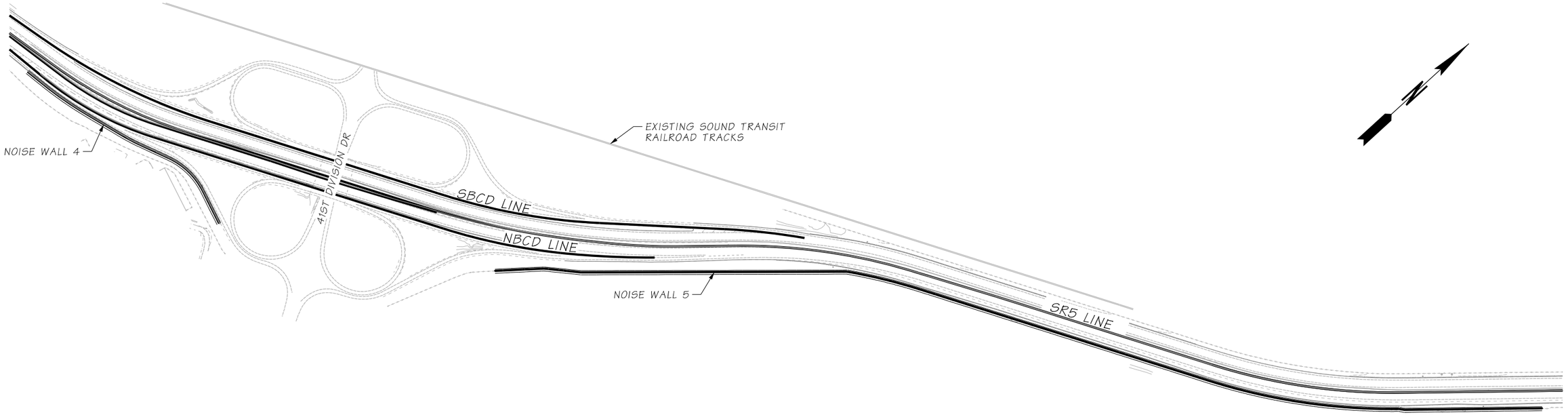

PLAN - NOISE WALLS 4 & 5

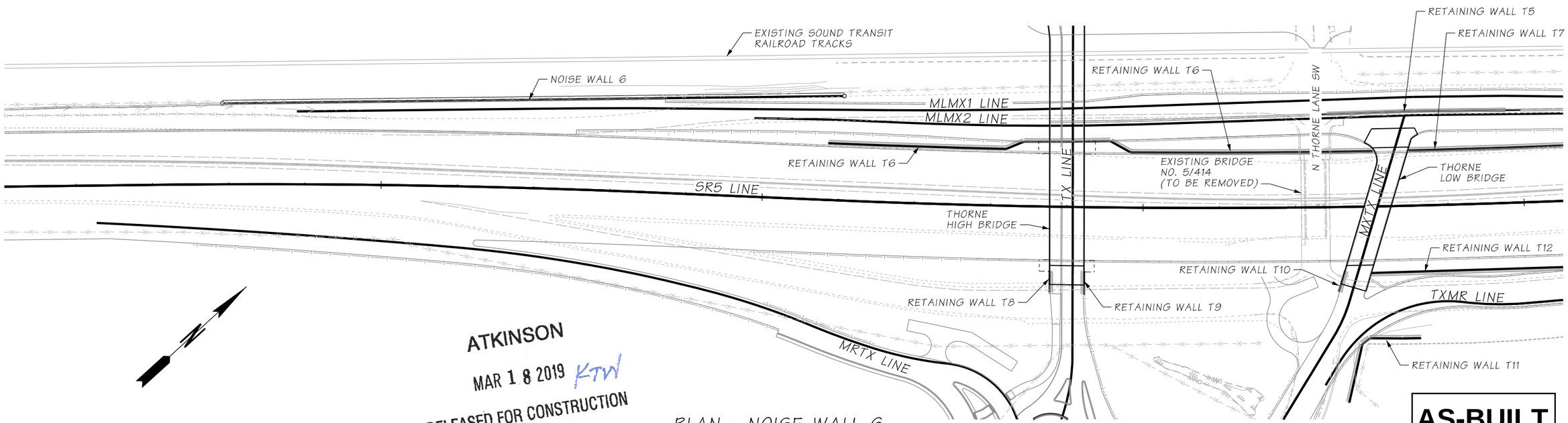

ATKINSON
MAR 1 8 2019 KTW
RELEASED FOR CONSTRUCTION

PLAN - NOISE WALL 6

AS-BUILT

FILE NAME	c:\pwworking\jacobs_b&i\caywoocj\dms20633\PS_NW01.dgn				REGION NO. 10	STATE WASH	FED.AID PROJ.NO.
TIME	6:00:13 AM				JOB NUMBER		
DATE	3/18/2019						
PLOTTED BY	caywoocj						
DESIGNED BY	K. YOUNG						
ENTERED BY	R. REISER	REV 0 - RELEASED FOR CONSTRUCTION	03/12/2019		CONTRACT NO. C8811		LOCATION NO.
CHECKED BY	A. FONG	REV B - FINAL REVIEW	02/15/2019				
PROJ. ENGR.	C. MEADE	REV A - PRELIMINARY REVIEW	12/20/2018				
REGIONAL ADM.	J. WYNANDS	REVISION	DATE	BY			

COREY J. CAYWOOD — STATE OF WASHINGTON — 38759 — REGISTERED PROFESSIONAL ENGINEER
3/19/19
DATE
P.E. STAMP BOX

DATE
P.E. STAMP BOX

Washington State Department of Transportation

ATKINSON CONSTRUCTION / JACOBS

I-5
STEILACOOM-DUPONT RD TO THORNE LN
CORRIDOR IMPROVEMENTS
MP 120.01 TO MP 124.45

NOISE WALLS
KEY PLAN

PLAN REF NO
NW01

SHEET 861 OF 1456 SHEETS

GENERAL NOTES:

1. ALL MATERIAL AND WORKMANSHIP SHALL BE IN ACCORDANCE WITH THE REQUIREMENTS OF THE WASHINGTON STATE DEPARTMENT OF TRANSPORTATION STANDARD SPECIFICATIONS FOR ROAD, BRIDGE, AND MUNICIPAL CONSTRUCTION DATED 2016 AND AMENDMENTS.
2. ALL CONCRETE SHALL BE CLASS 4000 UNLESS OTHERWISE NOTED.

LEGEND

	SOIL BORING LOCATION
	LUMINAIRE - PROPOSED
	LUMINAIRE - EXISTING
- BF –	BURIED FIBER - EXISTING
- BP –	BURIED POWER - EXISTING
- BT –	BURIED TELEPHONE - EXISTING
- DP –	DRAIN PIPE - EXISTING
—X—	FENCE - EXISTING
- G –	GAS - EXISTING
	JUNCTION BOX
- OP –	OVERHEAD POWER - EXISTING
- S –	SEWER - EXISTING
- ST –	STORM SEWER - EXISTING
- ST –	STORM SEWER - PROPOSED
— UD -	UNDERDRAIN - EXISTING
— UD -	UNDERDRAIN - PROPOSED
- W —	WATER - EXISTING
– W –	WATER - PROPOSED
– WB –	WETLAND BOUNDARY - EXISTING

ATKINSON
MAR 1 8 2019 KTW
RELEASED FOR CONSTRUCTION

AS-BUILT

FILE NAME	D:\ICS_workdir\23325\20633_1672\PS_NW02.dgn					
TIME	11:52:54 AM				REGION NO. 10	STATE WASH	FED.AID PROJ.NO.
DATE	3/12/2019					
PLOTTED BY	USLAS0-APP064$				JOB NUMBER	
DESIGNED BY	K. YOUNG					
ENTERED BY	R. REISER	REV 0 - RELEASED FOR CONSTRUCTION	03/12/2019			
CHECKED BY	A. FONG	REV B - FINAL REVIEW	02/15/2019		CONTRACT NO. C8811	LOCATION NO.
PROJ. ENGR.	C. MEADE	REV A - PRELIMINARY REVIEW	12/20/2018			
REGIONAL ADM.	J. WYNANDS	REVISION	DATE	BY		

CORY J. CAYWOOD STATE OF WASHINGTON 38193 PROFESSIONAL ENGINEER
3/19/19
DATE
P.E. STAMP BOX

DATE
P.E. STAMP BOX

Washington State Department of Transportation
ATKINSON / JACOBS CONSTRUCTION

I-5
STEILACOOM-DUPONT RD TO THORNE LN
CORRIDOR IMPROVEMENTS
MP 120.01 TO MP 124.45

NOISE WALLS
GENERAL NOTES AND LEGEND

PLAN REF NO NW02

SHEET 862 OF 1456 SHEETS

SECTION 30, T.19N. R.2E. W.M.
JOINT BASE LEWIS-MCCHORD

CURVE DATA					
P.I. STA.	Δ	RADIUS	TANGENT	LENGTH	BACK TANGENT BRG.
NW4 12+26.74	8°03'18"LT.	1800.00'	126.74'	253.05'	S89°50'15"E

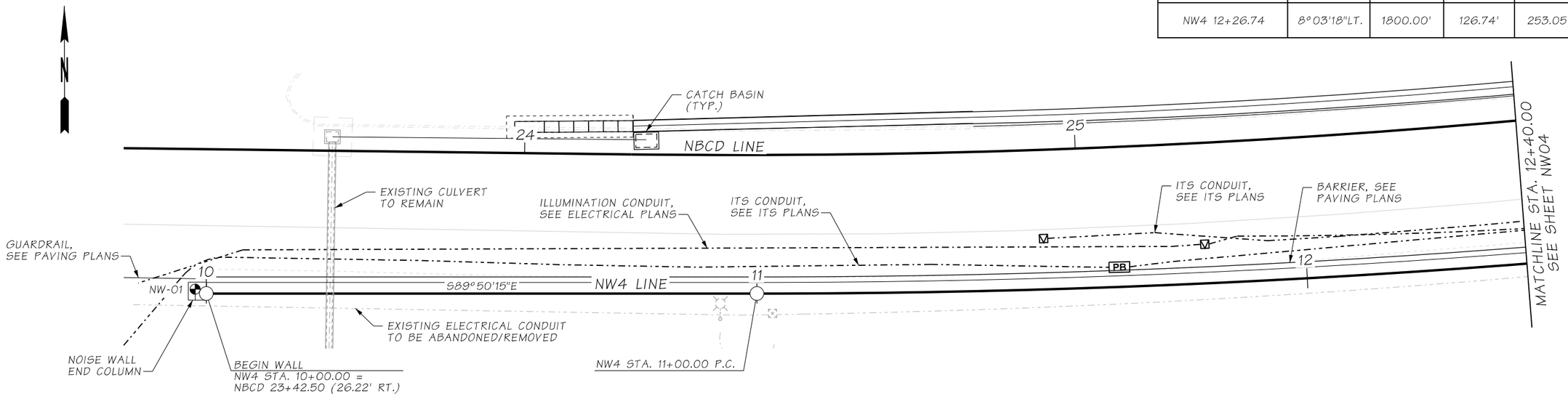

NOISE WALL 4 - PLAN

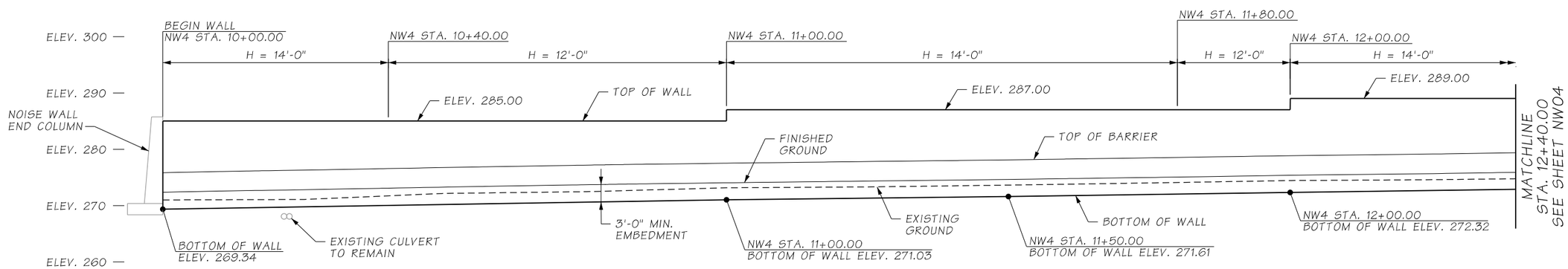

DATUM
N.A.V.D. 88

NOISE WALL 4 - ELEVATION

AS-BUILT

ATKINSON
MAY 06 2019 KTW
RELEASED FOR CONSTRUCTION

NOTES:

1. EXISTING UTILITY LOCATIONS ARE APPROXIMATE. CONTRACTOR SHALL VERIFY LOCATIONS AND ELEVATIONS OF THE EXISTING UTILITIES PRIOR TO CONSTRUCTION.
2. SEE SHEET NW02 FOR GENERAL NOTES AND LEGEND.
3. NOISE WALL 4 IS TYPE 9A PER STANDARD PLAN D-2.32-00 FOR FULL LENGTH OF WALL.
4. SEE SHEET NW08 FOR TYPICAL SECTION.
5. SEE SHEET NW38 FOR NOISE WALL END COLUMN DETAILS.
6. DIMENSION "H" DOES NOT REPRESENT THE ACTUAL HEIGHT OF THE NOISE WALL PANEL. "H" SHALL BE A MINIMUM DIMENSION TO BE USED WITH STANDARD PLAN TO DEFINE FOOTING SIZE, PANEL THICKNESS AND REINFORCEMENT.
7. BOTTOM OF WALL ELEVATIONS SHOWN IN ELEVATION ARE MAXIMUM PERMISSIBLE ELEVATIONS TO PROVIDE 3' MINIMUM EMBEDMENT BELOW FINISHED GROUND.

FILE NAME	c:\pwworking\jacobs_b&i\reiserrw\dms20633\PS_NW03.dgn						
TIME	8:14:55 AM				REGION NO. 10	STATE WASH	FED.AID PROJ.NO.
DATE	5/2/2019				JOB NUMBER		
PLOTTED BY	ReiserRW						
DESIGNED BY	K. YOUNG						
ENTERED BY	C. GRACE	REV 0 - RELEASED FOR CONSTRUCTION	05/06/2019		CONTRACT NO. C9133		LOCATION NO.
CHECKED BY	C. CAYWOOD	REV B - FINAL REVIEW	03/26/2019				
PROJ. ENGR.	C. MEADE	REV A - PRELIMINARY REVIEW	01/30/2019				
REGIONAL ADM.	J. WYNANDS	REVISION	DATE	BY			

CHRIS J. CAYWOOD, STATE OF WASHINGTON, 38759, STRUCTURAL ENGINEER, PROFESSIONAL ENGINEER
5/6/19
DATE
P.E. STAMP BOX

DATE
P.E. STAMP BOX

Washington State Department of Transportation
ATKINSON CONSTRUCTION / JACOBS

I-5
STEILACOOM-DUPONT RD TO THORNE LN
CORRIDOR IMPROVEMENTS
MP 120.01 TO MP 124.45

NOISE WALL 4
PLAN & ELEVATION (1 OF 5)

PLAN REF NO NW03

SHEET 863 OF 1456 SHEETS

SECTION 30, T.19N. R.2E. W.M.
JOINT BASE LEWIS-MCCHORD

CURVE DATA					
P.I. STA.	Δ	RADIUS	TANGENT	LENGTH	BACK TANGENT BRG.
NW4 12+26.74	8°03'18"LT.	1800.00'	126.74'	253.05'	S89°50'15"E

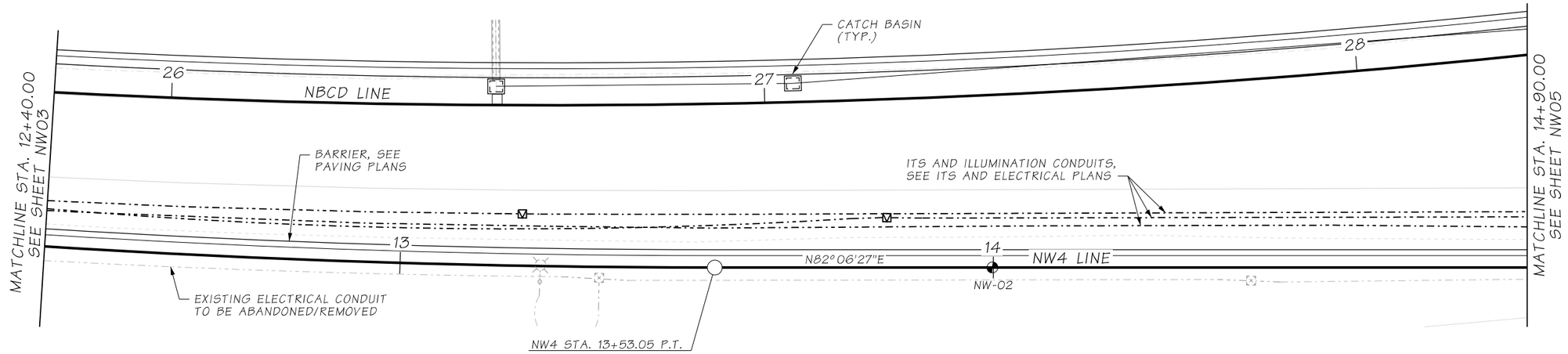

NOISE WALL 4 - PLAN

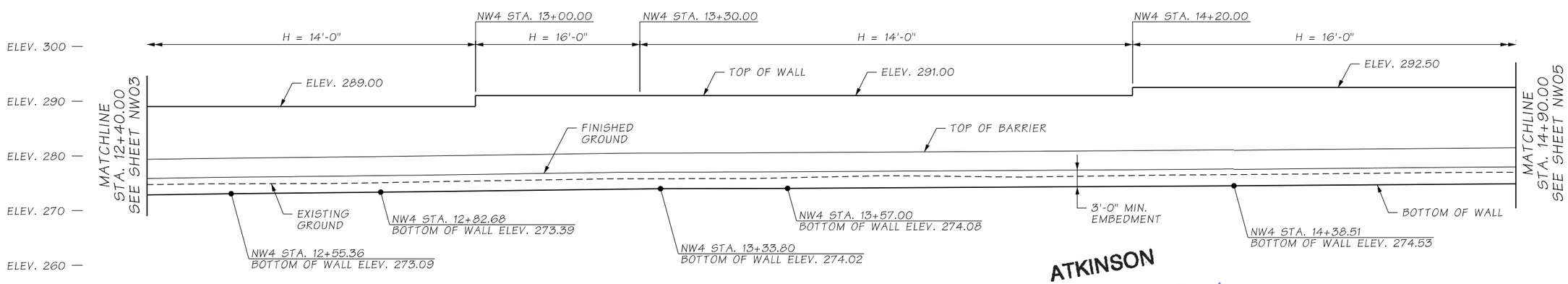

DATUM
N.A.V.D. 88

NOISE WALL 4 - ELEVATION

ATKINSON
MAY 06 2019 KTW
RELEASED FOR CONSTRUCTION

NOTES:

1. SEE SHEET NW03 FOR NOTES.

AS-BUILT

FILE NAME	c:\pwworking\jacobs_b&i\reiserrw\dms20633\PS_NW04.dgn				
TIME	8:19:52 AM				
DATE	5/2/2019				
PLOTTED BY	ReiserRW				
DESIGNED BY	K. YOUNG				
ENTERED BY	C. GRACE	REV 0 - RELEASED FOR CONSTRUCTION	05/06/2019		
CHECKED BY	C. CAYWOOD	REV B - FINAL REVIEW	03/26/2019		
PROJ. ENGR.	C. MEADE	REV A - PRELIMINARY REVIEW	01/30/2019		
REGIONAL ADM.	J. WYNANDS	REVISION	DATE	BY	

REGION NO.	STATE	FED.AID PROJ.NO.
10	WASH	
JOB NUMBER		
CONTRACT NO. C9133		LOCATION NO.

P.E. STAMP BOX — DATE 5/6/19

P.E. STAMP BOX — DATE

Washington State Department of Transportation

ATKINSON CONSTRUCTION / JACOBS

I-5
STEILACOOM-DUPONT RD TO THORNE LN CORRIDOR IMPROVEMENTS
MP 120.01 TO MP 124.45

NOISE WALL 4
PLAN & ELEVATION (2 OF 5)

PLAN REF NO NW04

SHEET 864 OF 1456 SHEETS

SECTION 30, T.19N. R.2E. W.M.
JOINT BASE LEWIS-MCCHORD

CURVE DATA					
P.I. STA.	Δ	RADIUS	TANGENT	LENGTH	BACK TANGENT BRG.
NW4 16+01.32	5°51'59"LT.	1000.00'	51.24'	102.39'	N82°06'27"E

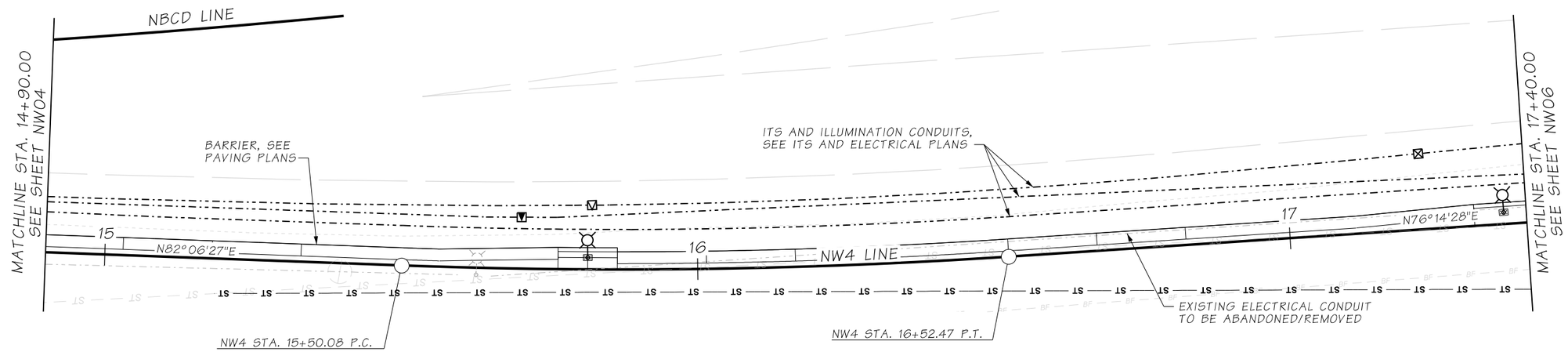

NOISE WALL 4 - PLAN

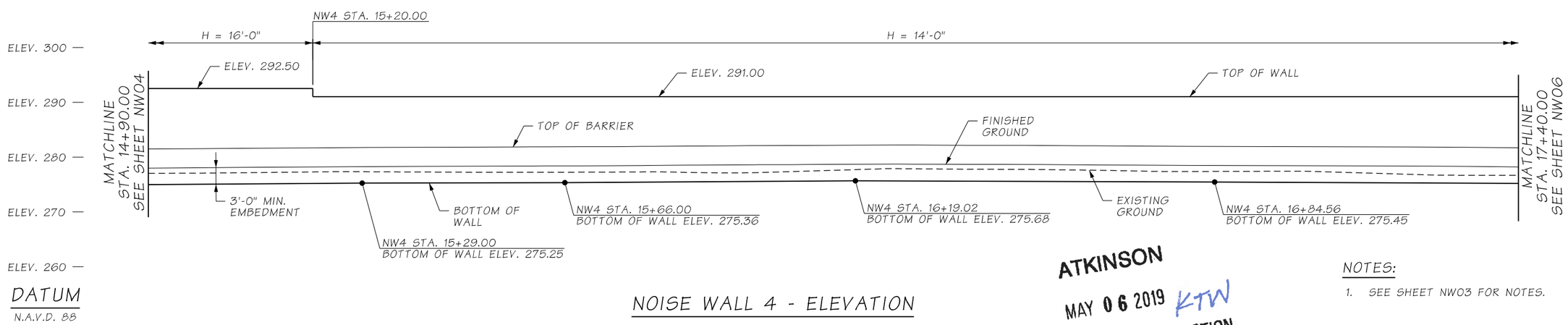

DATUM
N.A.V.D. 88

NOISE WALL 4 - ELEVATION

ATKINSON
MAY 06 2019 KTW
RELEASED FOR CONSTRUCTION

NOTES:

1. SEE SHEET NW03 FOR NOTES.

AS-BUILT

FILE NAME	c:\pwworking\jacobs_b&i\reiserrw\dms20633\PS_NW05.dgn				
TIME	8:25:55 AM				
DATE	5/2/2019				
PLOTTED BY	ReiserRW				
DESIGNED BY	K. YOUNG				
ENTERED BY	C. GRACE	REV 0 - RELEASED FOR CONSTRUCTION	05/06/2019		
CHECKED BY	C. CAYWOOD	REV B - FINAL REVIEW	03/26/2019		
PROJ. ENGR.	C. MEADE	REV A - PRELIMINARY REVIEW	01/30/2019		
REGIONAL ADM.	J. WYNANDS	REVISION	DATE	BY	

REGION NO.	STATE	FED.AID PROJ.NO.
10	WASH	
JOB NUMBER		
CONTRACT NO. C9133		LOCATION NO.

P.E. STAMP BOX — DATE 5/6/19

P.E. STAMP BOX — DATE

Washington State Department of Transportation

ATKINSON / JACOBS CONSTRUCTION

I-5
STEILACOOM-DUPONT RD TO THORNE LN
CORRIDOR IMPROVEMENTS
MP 120.01 TO MP 124.45

NOISE WALL 4
PLAN & ELEVATION (3 OF 5)

PLAN REF NO NW05

SHEET 865 OF 1456 SHEETS

SECTION 30, T.19N. R.2E. W.M.
JOINT BASE LEWIS-MCCHORD

CURVE DATA					
P.I. STA.	Δ	RADIUS	TANGENT	LENGTH	BACK TANGENT BRG.
NW4 19+31.23	38°28'05"RT.	350.00'	122.12'	234.99'	N76°14'28"E

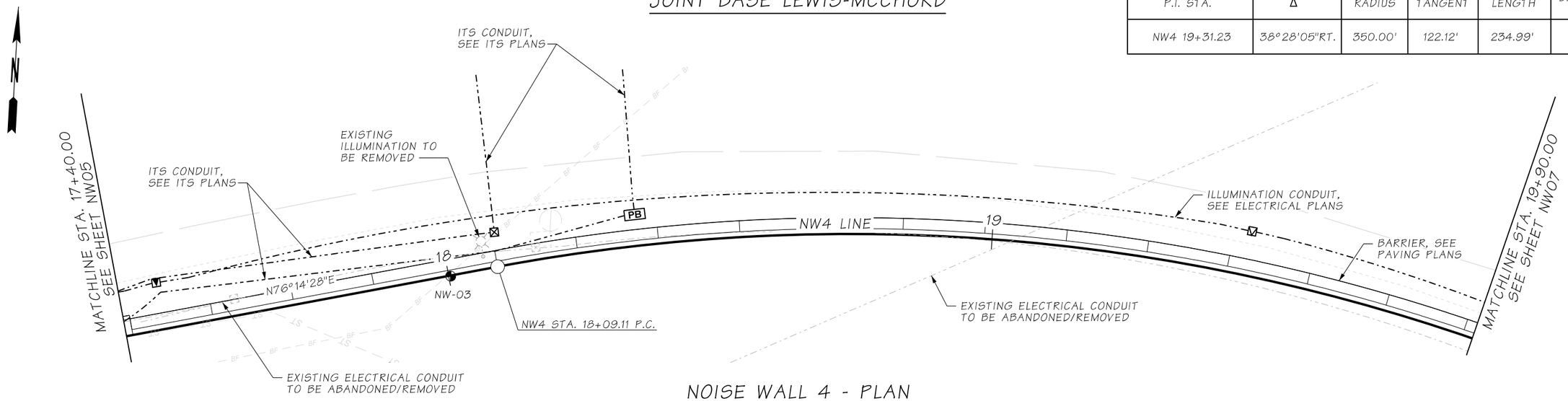

NOISE WALL 4 - PLAN

ATKINSON
MAY 06 2019 KTW
RELEASED FOR CONSTRUCTION

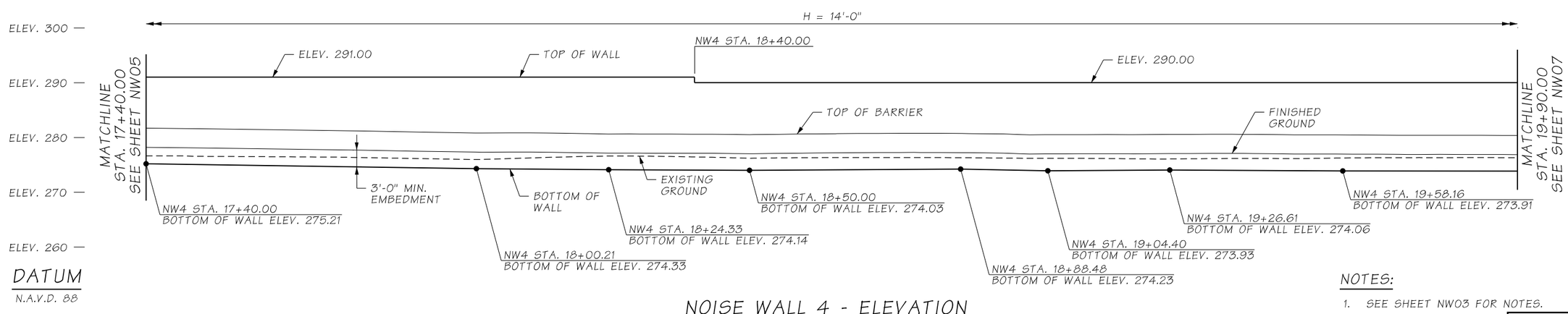

DATUM
N.A.V.D. 88

NOISE WALL 4 - ELEVATION

NOTES:

1. SEE SHEET NW03 FOR NOTES.

AS-BUILT

FILE NAME	c:\pwworking\jacobs_b&i\reiserrw\dms20633\PS_NW06.dgn						
TIME	8:28:23 AM				REGION NO. 10	STATE WASH	FED.AID PROJ.NO.
DATE	5/2/2019						
PLOTTED BY	ReiserRW						
DESIGNED BY	K. YOUNG				JOB NUMBER		
ENTERED BY	C. GRACE	REV 0 - RELEASED FOR CONSTRUCTION	05/06/2019				
CHECKED BY	C. CAYWOOD	REV B - FINAL REVIEW	03/26/2019		CONTRACT NO. C9133		LOCATION NO.
PROJ. ENGR.	C. MEADE	REV A - PRELIMINARY REVIEW	01/30/2019				
REGIONAL ADM.	J. WYNANDS	REVISION	DATE	BY			

P.E. STAMP BOX — DATE 5/6/19

P.E. STAMP BOX — DATE

Washington State Department of Transportation

ATKINSON CONSTRUCTION / JACOBS

I-5
STEILACOOM-DUPONT RD TO THORNE LN
CORRIDOR IMPROVEMENTS
MP 120.01 TO MP 124.45

NOISE WALL 4
PLAN & ELEVATION (4 OF 5)

PLAN REF NO NW06

SHEET 866 OF 1456 SHEETS

SECTION 29 & 30, T.19N. R.2E. W.M.
JOINT BASE LEWIS-MCCHORD

CURVE DATA					
P.I. STA.	Δ	RADIUS	TANGENT	LENGTH	BACK TANGENT BRG.
NW4 19+31.23	38°28'05"RT.	350.00'	122.12'	234.99'	N76°14'28"E

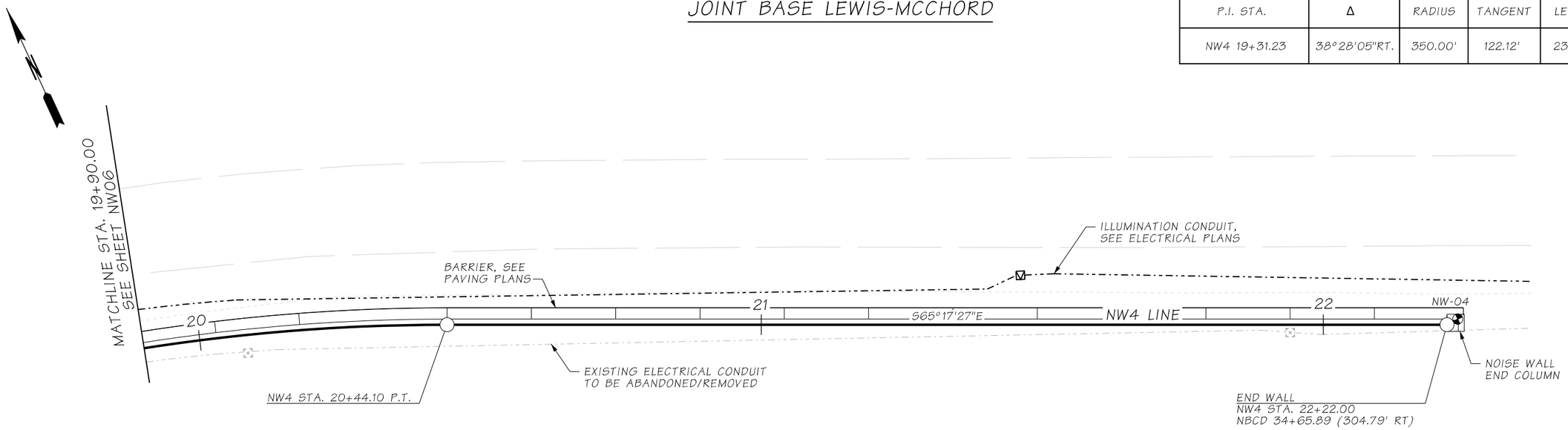

NOISE WALL 4 - PLAN

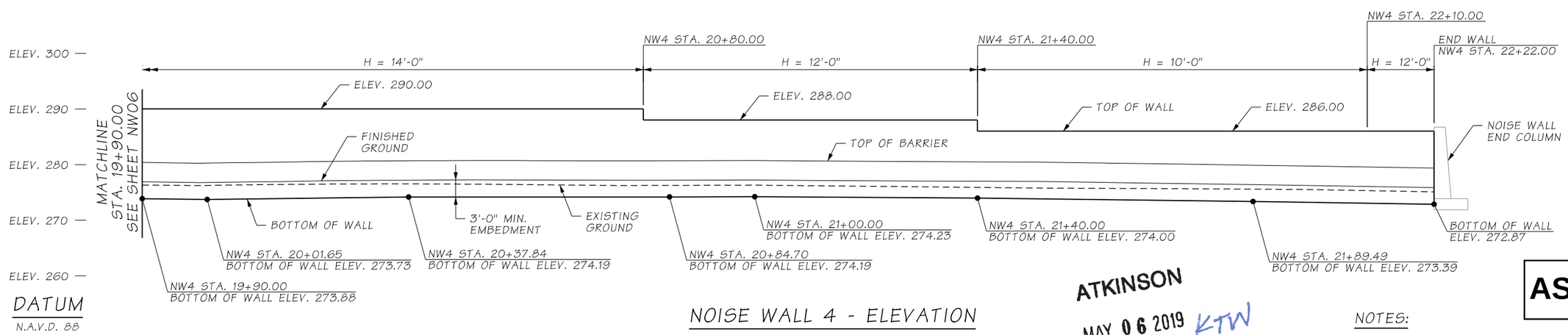

DATUM
N.A.V.D. 88

NOISE WALL 4 - ELEVATION

ATKINSON
MAY 06 2019 KTW
RELEASED FOR CONSTRUCTION

AS-BUILT

NOTES:

1. SEE SHEET NW03 FOR NOTES.

FILE NAME	c:\pwworking\jacobs_b&i\reiserrw\dms20633\PS_NW07.dgn				
TIME	8:30:40 AM				
DATE	5/2/2019				
PLOTTED BY	ReiserRW				
DESIGNED BY	K. YOUNG				
ENTERED BY	C. GRACE	REV 0 - RELEASED FOR CONSTRUCTION	05/06/2019		
CHECKED BY	C. CAYWOOD	REV B - FINAL REVIEW	03/26/2019		
PROJ. ENGR.	C. MEADE	REV A - PRELIMINARY REVIEW	01/30/2019		
REGIONAL ADM.	J. WYNANDS	REVISION	DATE	BY	

REGION NO.	STATE	FED.AID PROJ.NO.
10	WASH	
JOB NUMBER		
CONTRACT NO. C9133		LOCATION NO.

P.E. STAMP BOX — DATE 5/6/19

P.E. STAMP BOX — DATE

Washington State Department of Transportation

ATKINSON / JACOBS CONSTRUCTION

I-5
STEILACOOM-DUPONT RD TO THORNE LN
CORRIDOR IMPROVEMENTS
MP 120.01 TO MP 124.45

NOISE WALL 4
PLAN & ELEVATION (5 OF 5)

PLAN REF NO NW07

SHEET 867 OF 1456 SHEETS

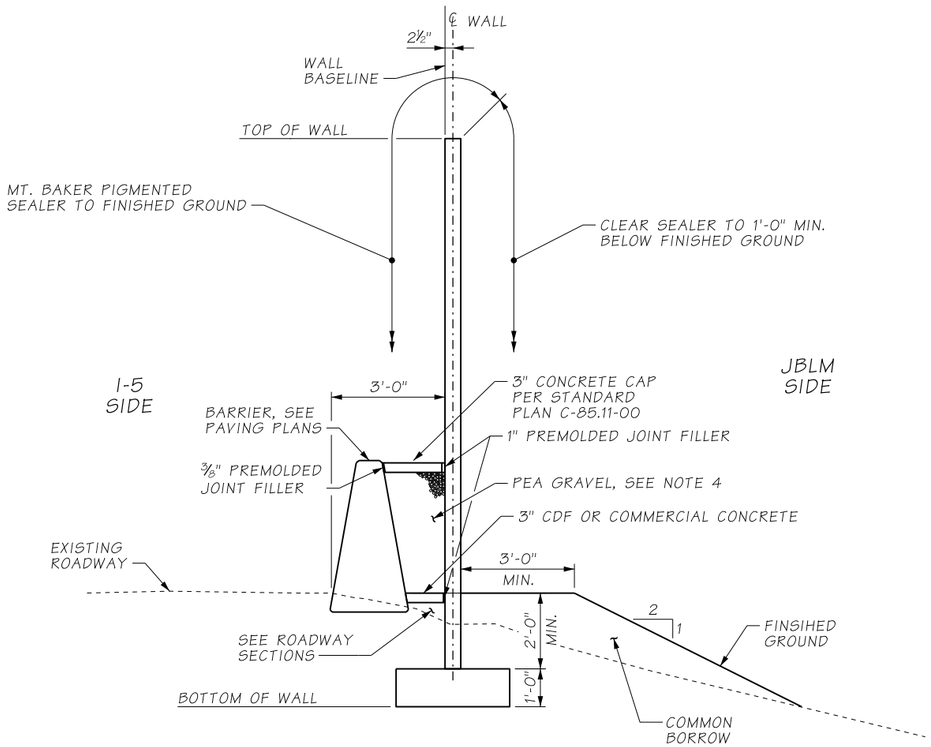

TYPICAL SECTION

AS-BUILT

NOTES:

1. SEE SHEETS NW03 TO NW07 FOR WALL PLAN AND ELEVATION.
2. SEE STANDARD PLAN D-2.32-00 TYPE 9A FOR ADDITIONAL DETAILS.
3. SEE SHEET NW36 FOR ARCHITECTURAL DETAILS.
4. PEA GRAVEL GRADING SHALL BE IN ACCORDANCE WITH AASHTO GRADING NO. 8 PER STANDARD SPECIFICATION 9-03.1(4)C. PLACE PEA GRAVEL SUCH THAT NO VOIDS ARE CREATED. NO FURTHER COMPACTION IS REQUIRED.
5. EXPANSION JOINTS IN THE FOOTINGS MAY BE USED IN PLACE OF CONSTRUCTION JOINTS AT CONTRACTOR'S OPTION. EXPANSION JOINTS IN THE FOOTINGS SHALL ALIGN WITH JOINTS IN THE WALL PANELS AND SHALL BE SPACED AT A MAXIMUM OF 96 FEET ON CENTERS. EXPANSION JOINTS IN THE FOOTINGS SHALL HAVE SHEAR KEYS PER STANDARD SPECIFICATION 6-11.3(3) AND NO REINFORCING EXTENDING THROUGH THE JOINT OR PREMOLDED JOINT FILLER.

ATKINSON
DEC 04 2019 KTW
RELEASED FOR CONSTRUCTION

FILE NAME	D:\ICS_workdir\41276\20633_1756\PS_NW08.dgn						
TIME	11:13:56 AM				REGION NO.	STATE	FED.AID PROJ.NO.
DATE	12/2/2019				10	WASH	
PLOTTED BY	USLAS0-APP064$	REV 2 - RFI0102	12/02/2019		JOB NUMBER		
DESIGNED BY	K. YOUNG	REV 1 - RFI0116	06/06/2019				
ENTERED BY	C. GRACE	REV 0 - RELEASED FOR CONSTRUCTION	05/06/2019				
CHECKED BY	C. CAYWOOD	REV B - FINAL REVIEW	03/26/2019		CONTRACT NO.		LOCATION NO.
PROJ. ENGR.	C. MEADE	REV A - PRELIMINARY REVIEW	01/30/2019		C9133		
REGIONAL ADM.	J. WYNANDS	REVISION	DATE	BY			

CORY J. CAYWOOD STATE OF WASHINGTON 38139 STRUCTURAL ENGINEER PROFESSIONAL ENGINEER
12/3/19
DATE
P.E. STAMP BOX

DATE
P.E. STAMP BOX

Washington State Department of Transportation

ATKINSON CONSTRUCTION / JACOBS

I-5
STEILACOOM-DUPONT RD TO THORNE LN CORRIDOR IMPROVEMENTS
MP 120.01 TO MP 124.45

NOISE WALL 4
TYPICAL SECTION

PLAN REF NO NW08

SHEET 868 OF 1456 SHEETS

SECTION 29, T.19N. R.2E. W.M.
JOINT BASE LEWIS-MCCHORD

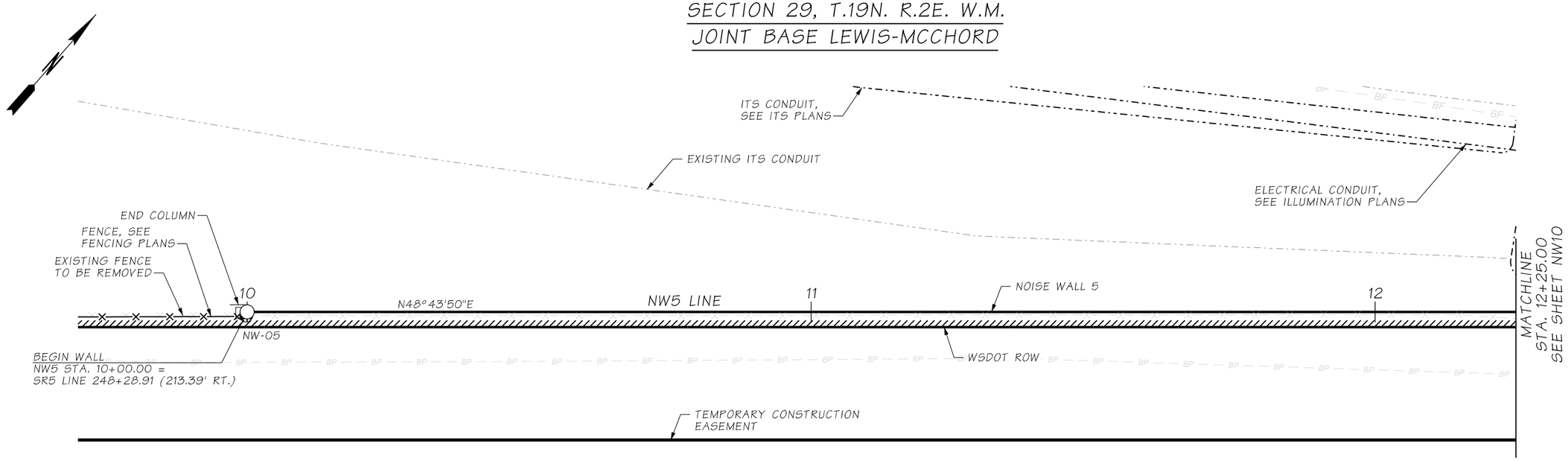

NOISE WALL 5 - PLAN

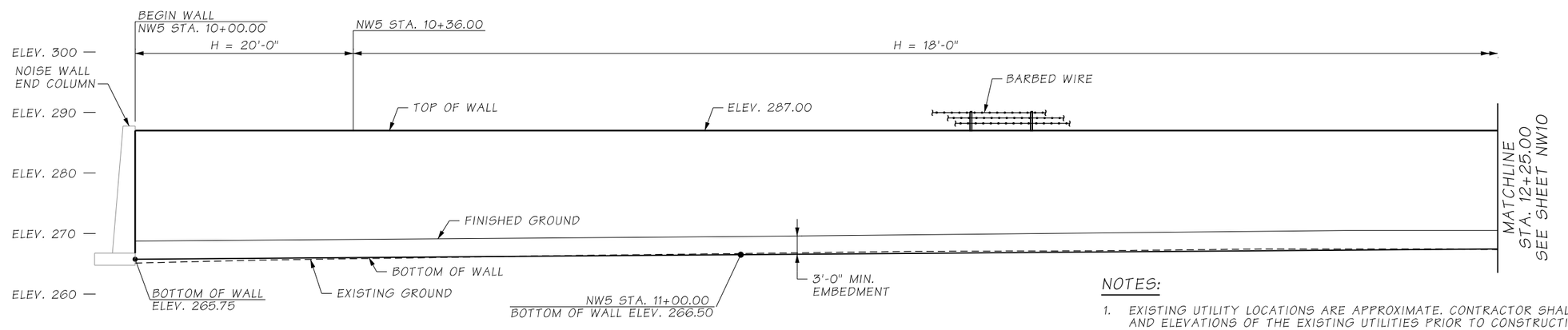

DATUM
N.A.V.D. 88

NOISE WALL 5 - ELEVATION

NOTES:

1. EXISTING UTILITY LOCATIONS ARE APPROXIMATE. CONTRACTOR SHALL VERIFY LOCATIONS AND ELEVATIONS OF THE EXISTING UTILITIES PRIOR TO CONSTRUCTION.
2. SEE SHEET NW02 FOR GENERAL NOTES AND LEGEND.
3. NOISE WALL 5 IS TYPE 9A PER STANDARD PLAN D-2.32-00 FOR FULL LENGTH OF WALL.
4. SEE SHEET NW30 FOR TYPICAL SECTION.
5. SEE SHEET NW38 FOR NOISE WALL END COLUMN DETAILS.
6. DIMENSION "H" DOES NOT REPRESENT THE ACTUAL HEIGHT OF THE NOISE WALL PANEL. "H" SHALL BE A MINIMUM DIMENSION TO BE USED WITH STANDARD PLAN TO DEFINE FOOTING SIZE, PANEL THICKNESS AND REINFORCEMENT.
7. BOTTOM OF WALL ELEVATIONS SHOWN IN ELEVATION ARE MAXIMUM PERMISSIBLE ELEVATIONS TO PROVIDE 3' MINIMUM EMBEDMENT BELOW FINISHED GROUND.

AS-BUILT

ATKINSON
MAR 18 2019 KTW
RELEASED FOR CONSTRUCTION

FILE NAME	c:\pwworking\jacobs_b&i\caywoocj\dms20633\PS_NW09.dgn			
TIME	6:03:36 AM			
DATE	3/18/2019			
PLOTTED BY	caywoocj			
DESIGNED BY	K. YOUNG			
ENTERED BY	C. GRACE	REV 0 - RELEASED FOR CONSTRUCTION	03/12/2019	
CHECKED BY	A. FONG	REV B - FINAL REVIEW	02/15/2019	
PROJ. ENGR.	C. MEADE	REV A - PRELIMINARY REVIEW	12/20/2018	
REGIONAL ADM.	J. WYNANDS	REVISION	DATE	BY

REGION NO.	STATE	FED.AID PROJ.NO.
10	WASH	
JOB NUMBER		
CONTRACT NO.		LOCATION NO.
C8811		

SCOTT J. CAYWOOD, STATE OF WASHINGTON, 38759, REGISTERED PROFESSIONAL ENGINEER
3/19/19
DATE
P.E. STAMP BOX

DATE
P.E. STAMP BOX

Washington State Department of Transportation
ATKINSON CONSTRUCTION / JACOBS

I-5
STEILACOOM-DUPONT RD TO THORNE LN CORRIDOR IMPROVEMENTS
MP 120.01 TO MP 124.45

NOISE WALL 5
PLAN & ELEVATION (1 OF 21)

PLAN REF NO NW09
SHEET 869 OF 1456 SHEETS

SECTION 29, T.19N. R.2E. W.M.
JOINT BASE LEWIS-MCCHORD

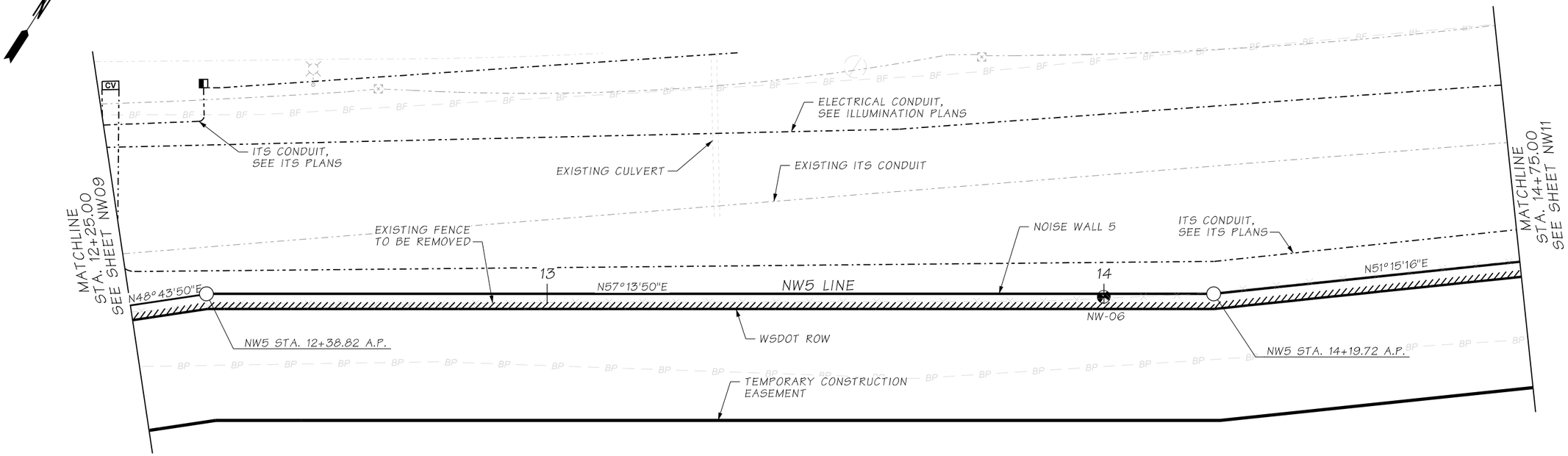

NOISE WALL 5 - PLAN

AS-BUILT

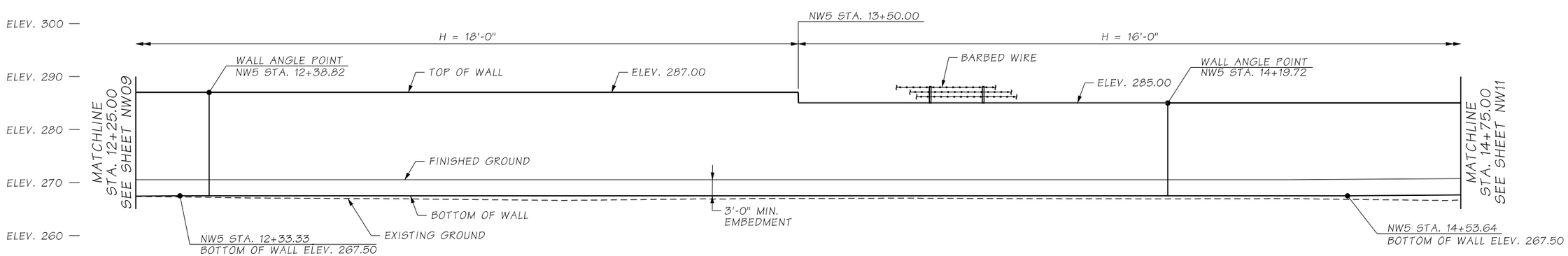

DATUM
N.A.V.D. 88

NOISE WALL 5 - ELEVATION

ATKINSON
MAR 18 2019 KTW
RELEASED FOR CONSTRUCTION

NOTES:

1. SEE SHEET NW09 FOR NOTES.

FILE NAME	c:\pwworking\jacobs_b&i\youngkl2\dms20633\PS_NW10.dgn				REGION NO. 10	STATE WASH	FED.AID PROJ.NO.
TIME	11:47:06 AM				JOB NUMBER		
DATE	3/12/2019						
PLOTTED BY	youngkl2						
DESIGNED BY	K. YOUNG						
ENTERED BY	C. GRACE	REV 0 - RELEASED FOR CONSTRUCTION	03/12/2019		CONTRACT NO. C8811		LOCATION NO.
CHECKED BY	A. FONG	REV B - FINAL REVIEW	02/15/2019				
PROJ. ENGR.	C. MEADE	REV A - PRELIMINARY REVIEW	12/20/2018				
REGIONAL ADM.	J. WYNANDS	REVISION	DATE	BY			

COURT J. CAYWOOD STATE OF WASHINGTON 38759 PROFESSIONAL ENGINEER
3/19/19
DATE
P.E. STAMP BOX

DATE
P.E. STAMP BOX

Washington State Department of Transportation

ATKINSON CONSTRUCTION / JACOBS

I-5
STEILACOOM-DUPONT RD TO THORNE LN
CORRIDOR IMPROVEMENTS
MP 120.01 TO MP 124.45

NOISE WALL 5
PLAN & ELEVATION (2 OF 21)

PLAN REF NO NW10

SHEET 870 OF 1456 SHEETS

SECTION 29, T.19N. R.2E. W.M.
JOINT BASE LEWIS-MCCHORD

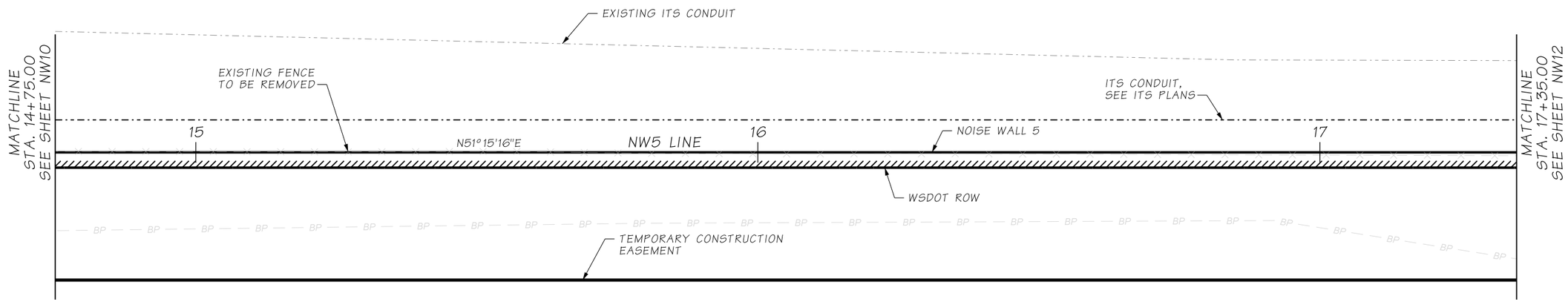

NOISE WALL 5 - PLAN

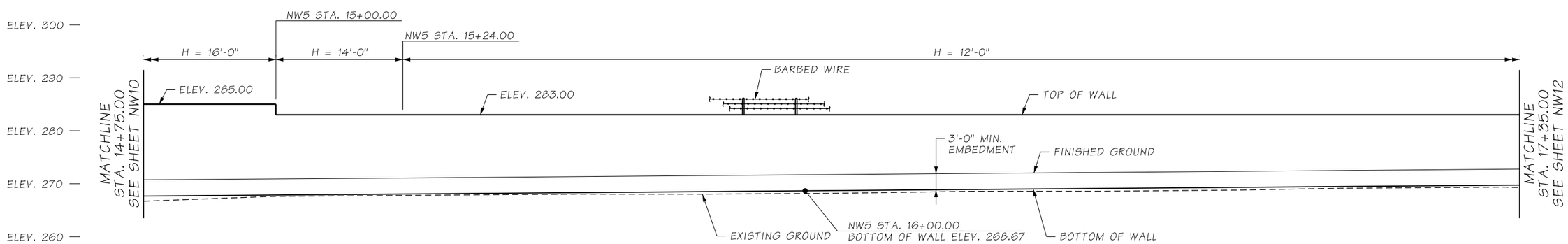

DATUM
N.A.V.D. 88

NOISE WALL 5 - ELEVATION

ATKINSON
MAR 1 8 2019 KTW
RELEASED FOR CONSTRUCTION

NOTES:

1. SEE SHEET NW09 FOR NOTES.

AS-BUILT

FILE NAME	D:\ICS_workdir\23338\20633_1610\PS_NW11.dgn						
TIME	12:55:49 PM				REGION NO. 10	STATE WASH	FED.AID PROJ.NO.
DATE	3/12/2019						
PLOTTED BY	USLAS0-APP064$				JOB NUMBER		
DESIGNED BY	K. YOUNG						
ENTERED BY	C. GRACE	REV 0 - RELEASED FOR CONSTRUCTION	03/12/2019				
CHECKED BY	A. FONG	REV B - FINAL REVIEW	02/15/2019		CONTRACT NO. C8811		LOCATION NO.
PROJ. ENGR.	C. MEADE	REV A - PRELIMINARY REVIEW	12/20/2018				
REGIONAL ADM.	J. WYNANDS	REVISION	DATE	BY			

CORY J. CAYWOOD, STATE OF WASHINGTON, 38193, PROFESSIONAL ENGINEER
3/12/19
DATE
P.E. STAMP BOX

DATE
P.E. STAMP BOX

Washington State Department of Transportation

ATKINSON / JACOBS CONSTRUCTION

I-5
STEILACOOM-DUPONT RD TO THORNE LN
CORRIDOR IMPROVEMENTS
MP 120.01 TO MP 124.45

NOISE WALL 5
PLAN & ELEVATION (3 OF 21)

PLAN REF NO NW11

SHEET 871 OF 1456 SHEETS

SECTION 29, T.19N. R.2E. W.M.
JOINT BASE LEWIS-MCCHORD

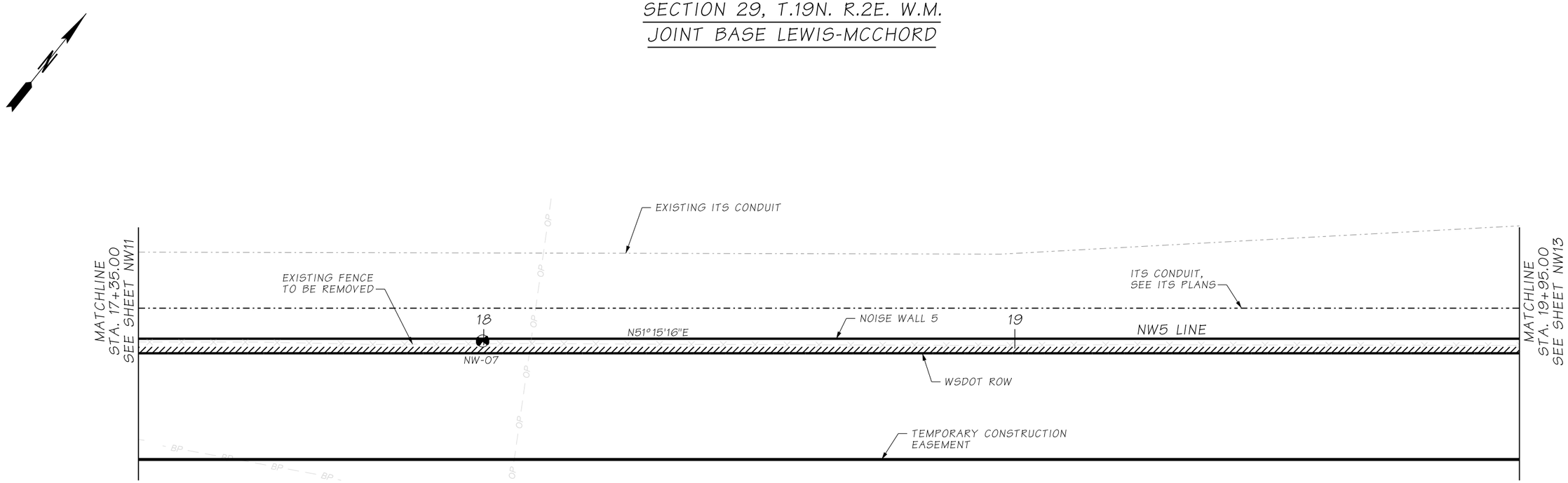

NOISE WALL 5 - PLAN

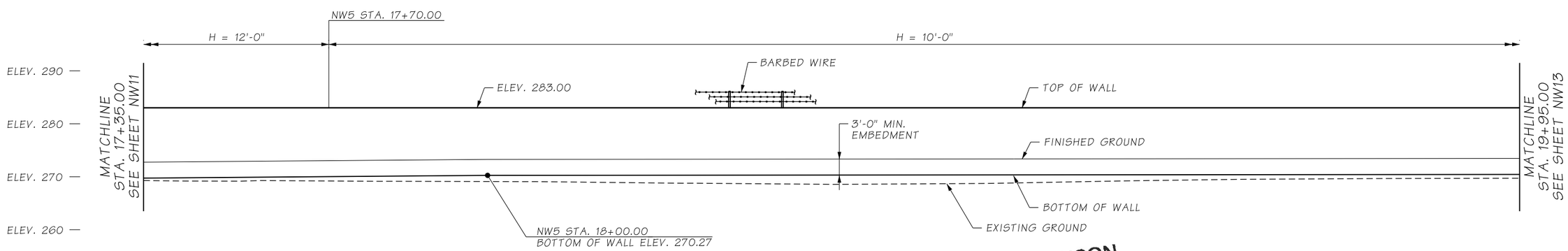

DATUM
N.A.V.D. 88

NOISE WALL 5 - ELEVATION

ATKINSON
MAR 18 2019 KTW
RELEASED FOR CONSTRUCTION

NOTES:
1. SEE SHEET NW09 FOR NOTES.

AS-BUILT

FILE NAME	D:\ICS_workdir\23338\20633_1614\PS_NW12.dgn			
TIME	12:55:01 PM			
DATE	3/12/2019			
PLOTTED BY	USLAS0-APP064$			
DESIGNED BY	K. YOUNG			
ENTERED BY	C. GRACE	REV 0 - RELEASED FOR CONSTRUCTION	03/12/2019	
CHECKED BY	A. FONG	REV B - FINAL REVIEW	02/15/2019	
PROJ. ENGR.	C. MEADE	REV A - PRELIMINARY REVIEW	12/20/2018	
REGIONAL ADM.	J. WYNANDS	REVISION	DATE	BY

REGION NO.	STATE	FED.AID PROJ.NO.
10	WASH	
JOB NUMBER		
CONTRACT NO. C8811		LOCATION NO.

CORY J. CAYWOOD, STATE OF WASHINGTON, 38759, STRUCTURAL ENGINEER, PROFESSIONAL ENGINEER
3/18/19
DATE
P.E. STAMP BOX

P.E. STAMP BOX
DATE

Washington State Department of Transportation
ATKINSON CONSTRUCTION / JACOBS

I-5
STEILACOOM-DUPONT RD TO THORNE LN
CORRIDOR IMPROVEMENTS
MP 120.01 TO MP 124.45

NOISE WALL 5
PLAN & ELEVATION (4 OF 21)

PLAN REF NO NW12
SHEET 872 OF 1456 SHEETS

SECTION 29, T.19N. R.2E. W.M.
JOINT BASE LEWIS-MCCHORD

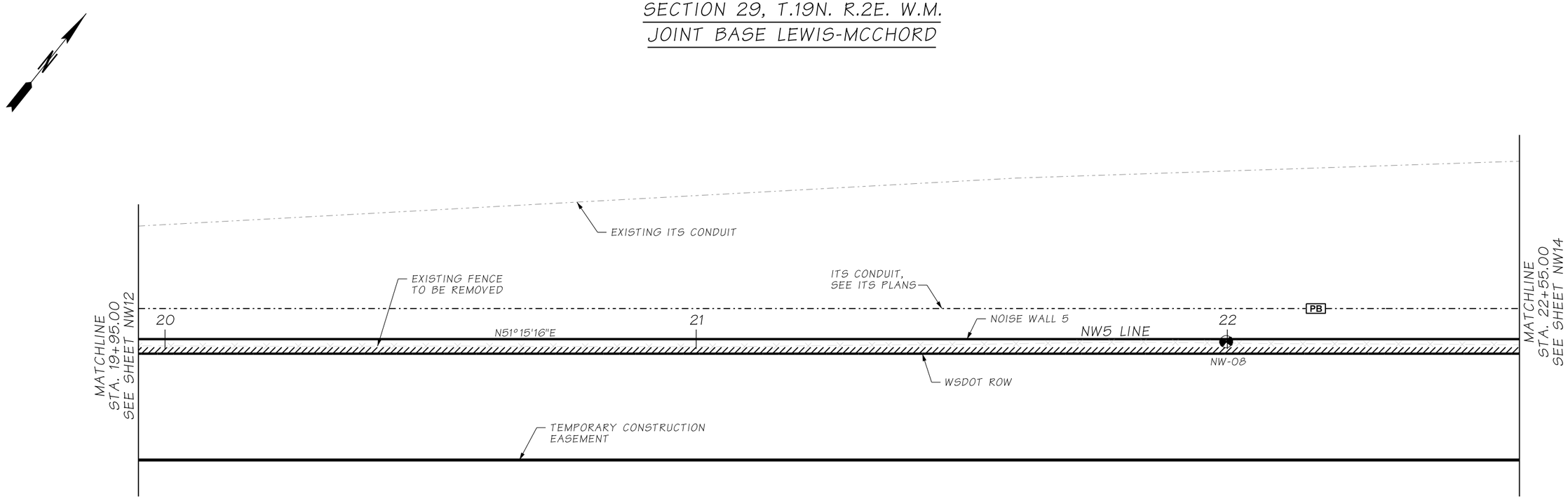

NOISE WALL 5 - PLAN

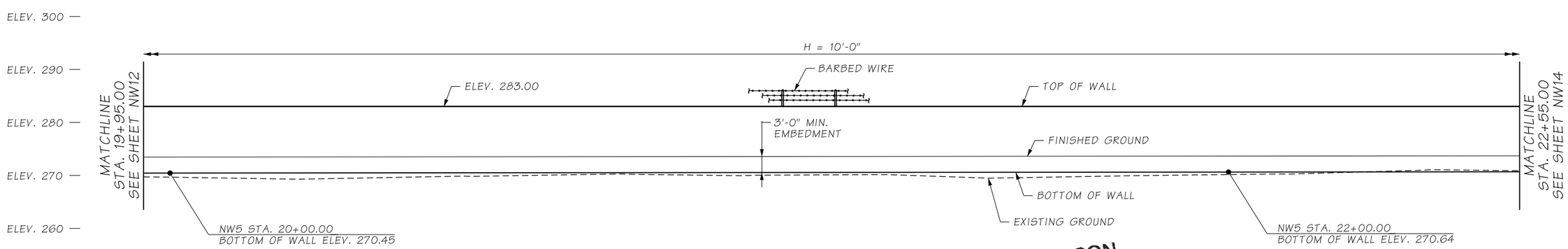

DATUM
N.A.V.D. 88

NOISE WALL 5 - ELEVATION

ATKINSON
MAR 18 2019 KTW
RELEASED FOR CONSTRUCTION

NOTES:
1. SEE SHEET NW09 FOR NOTES.

AS-BUILT

FILE NAME	D:\ICS_workdir\23338\20633_1615\PS_NW13.dgn			
TIME	12:54:59 PM			
DATE	3/12/2019			
PLOTTED BY	USLAS0-APP064$			
DESIGNED BY	K. YOUNG			
ENTERED BY	C. GRACE	REV 0 - RELEASED FOR CONSTRUCTION	03/12/2019	
CHECKED BY	A. FONG	REV B - FINAL REVIEW	02/15/2019	
PROJ. ENGR.	C. MEADE	REV A - PRELIMINARY REVIEW	12/20/2018	
REGIONAL ADM.	J. WYNANDS	REVISION	DATE	BY

REGION NO.	STATE	FED.AID PROJ.NO.
10	WASH	
JOB NUMBER		
CONTRACT NO. C8811		LOCATION NO.

CORY J. CAYWOOD, STATE OF WASHINGTON, 38759, STRUCTURAL ENGINEER, PROFESSIONAL ENGINEER
3/10/19
DATE
P.E. STAMP BOX

DATE
P.E. STAMP BOX

Washington State Department of Transportation
ATKINSON CONSTRUCTION / JACOBS

I-5
STEILACOOM-DUPONT RD TO THORNE LN
CORRIDOR IMPROVEMENTS
MP 120.01 TO MP 124.45

NOISE WALL 5
PLAN & ELEVATION (5 OF 21)

PLAN REF NO NW13
SHEET 873 OF 1456 SHEETS

SECTION 29, T.19N. R.2E. W.M.
JOINT BASE LEWIS-MCCHORD

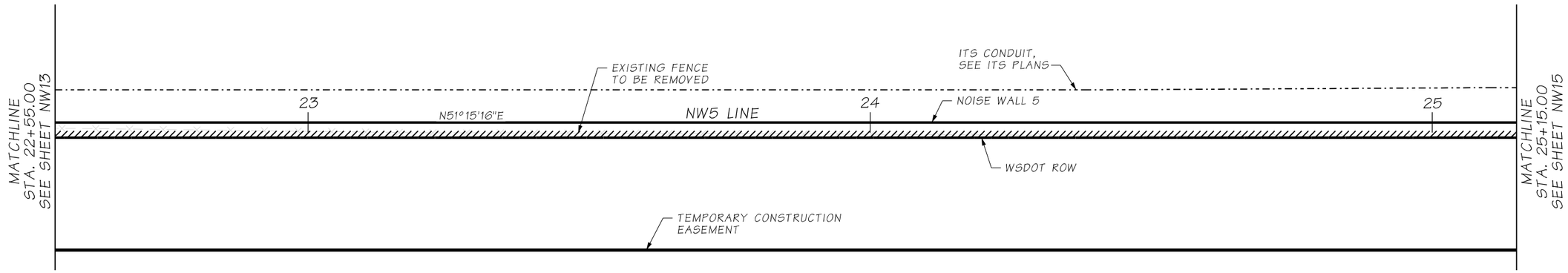

NOISE WALL 5 - PLAN

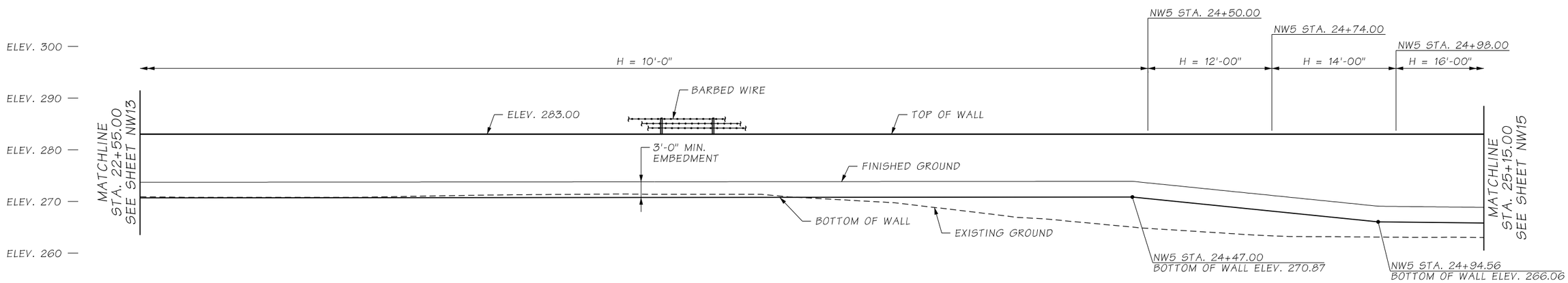

DATUM
N.A.V.D. 88

NOISE WALL 5 - ELEVATION

ATKINSON
MAR 18 2019 KTW
RELEASED FOR CONSTRUCTION

NOTES:

1. SEE SHEET NW09 FOR NOTES.

AS-BUILT

FILE NAME	c:\pwworking\jacobs_b&i\youngkl2\dms20633\PS_NW14.dgn				REGION NO. 10	STATE WASH	FED.AID PROJ.NO.
TIME	12:12:49 PM				JOB NUMBER		
DATE	3/12/2019						
PLOTTED BY	youngkl2						
DESIGNED BY	K. YOUNG						
ENTERED BY	C. GRACE	REV 0 - RELEASED FOR CONSTRUCTION	03/12/2019		CONTRACT NO. C8811		LOCATION NO.
CHECKED BY	A. FONG	REV B - FINAL REVIEW	02/15/2019				
PROJ. ENGR.	C. MEADE	REV A - PRELIMINARY REVIEW	12/20/2018				
REGIONAL ADM.	J. WYNANDS	REVISION	DATE	BY			

P.E. STAMP BOX — DATE 3/19/19

P.E. STAMP BOX — DATE

Washington State Department of Transportation

ATKINSON CONSTRUCTION / JACOBS

I-5
STEILACOOM-DUPONT RD TO THORNE LN
CORRIDOR IMPROVEMENTS
MP 120.01 TO MP 124.45

NOISE WALL 5
PLAN & ELEVATION (6 OF 21)

PLAN REF NO NW14

SHEET 874 OF 1456 SHEETS

SECTION 29, T.19N. R.2E. W.M.
JOINT BASE LEWIS-MCCHORD

CURVE DATA					
P.I. STA.	Δ	RADIUS	TANGENT	LENGTH	BACK TANGENT BRG.
NW5 29+00.55	7°35'14"RT.	2769.25'	183.62'	366.71'	N61°20'20"E

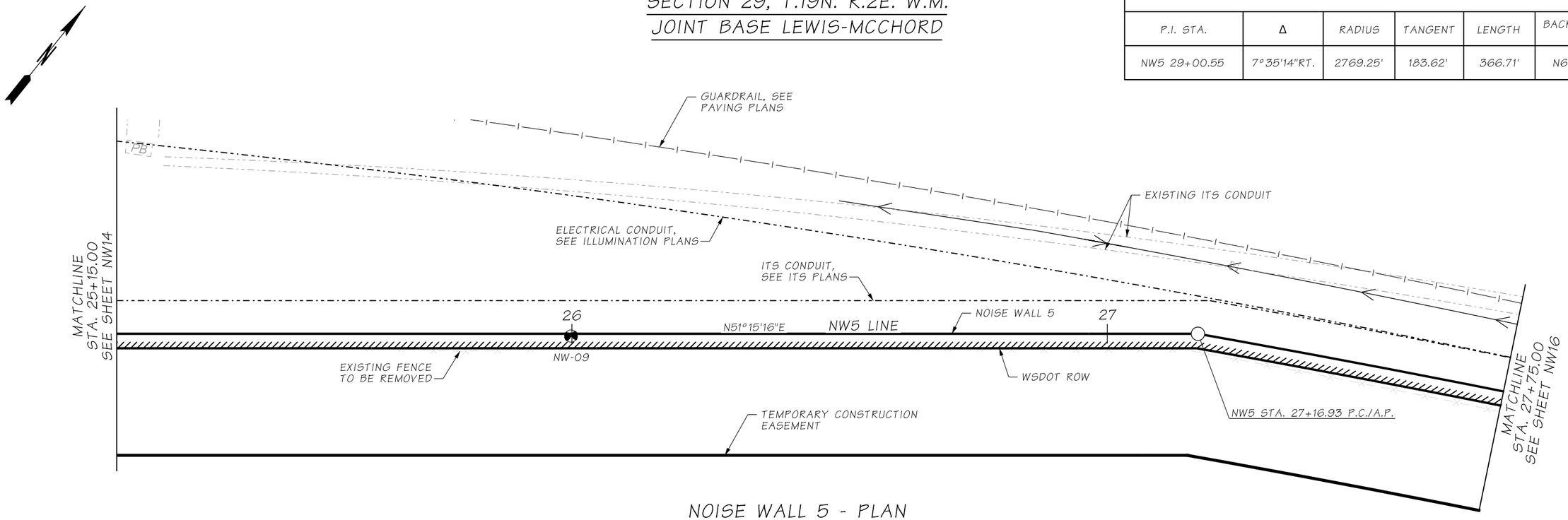

NOISE WALL 5 - PLAN

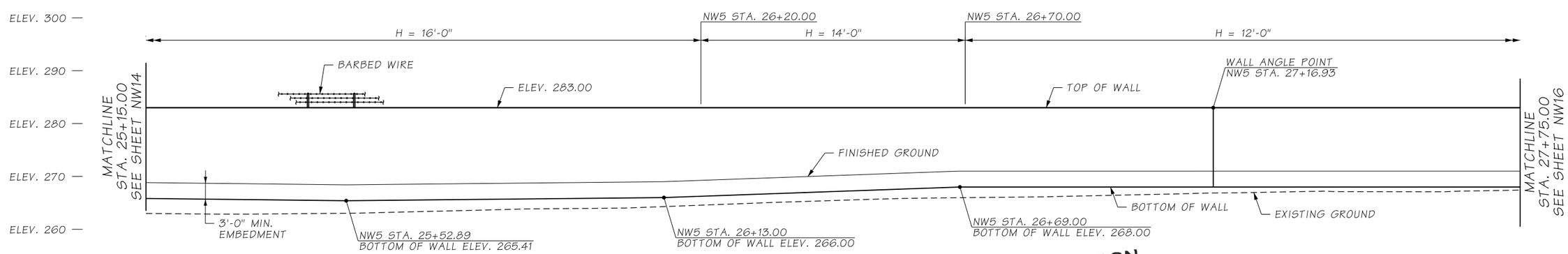

DATUM
N.A.V.D. 88

NOISE WALL 5 - ELEVATION

ATKINSON
MAR 1 8 2019 KTW
RELEASED FOR CONSTRUCTION

NOTES:
1. SEE SHEET NW09 FOR NOTES.

AS-BUILT

FILE NAME	D:\ICS_workdir\23349\20633_1617\PS_NW15.dgn				
TIME	1:05:43 PM				
DATE	3/12/2019				
PLOTTED BY	USLAS0-APP064$				
DESIGNED BY	K. YOUNG				
ENTERED BY	C. GRACE	REV 0 - RELEASED FOR CONSTRUCTION	03/12/2019		
CHECKED BY	A. FONG	REV B - FINAL REVIEW	02/15/2019		
PROJ. ENGR.	C. MEADE	REV A - PRELIMINARY REVIEW	12/20/2018		
REGIONAL ADM.	J. WYNANDS	REVISION	DATE	BY	

REGION NO.	STATE	FED.AID PROJ.NO.
10	WASH	
JOB NUMBER		
CONTRACT NO. C8811		LOCATION NO.

CORY J. CAYWOOD, STATE OF WASHINGTON, 38195, PROFESSIONAL ENGINEER
3/19/19
DATE
P.E. STAMP BOX

DATE
P.E. STAMP BOX

Washington State Department of Transportation
ATKINSON / JACOBS CONSTRUCTION

I-5
STEILACOOM-DUPONT RD TO THORNE LN
CORRIDOR IMPROVEMENTS
MP 120.01 TO MP 124.45

NOISE WALL 5
PLAN & ELEVATION (7 OF 21)

PLAN REF NO NW15

SHEET 875 OF 1456 SHEETS

SECTION 29, T.19N. R.2E. W.M.
JOINT BASE LEWIS-MCCHORD

CURVE DATA					
P.I. STA.	Δ	RADIUS	TANGENT	LENGTH	BACK TANGENT BRG.
NW5 29+00.55	7°35'14"RT.	2769.25'	183.62'	366.71'	N61°20'20"E

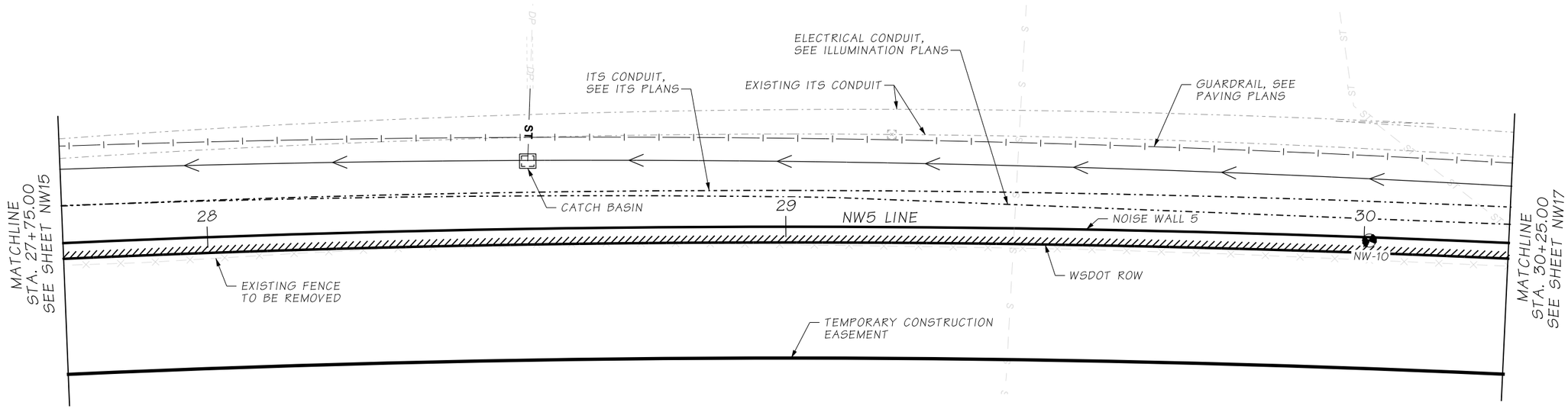

NOISE WALL 5 - PLAN

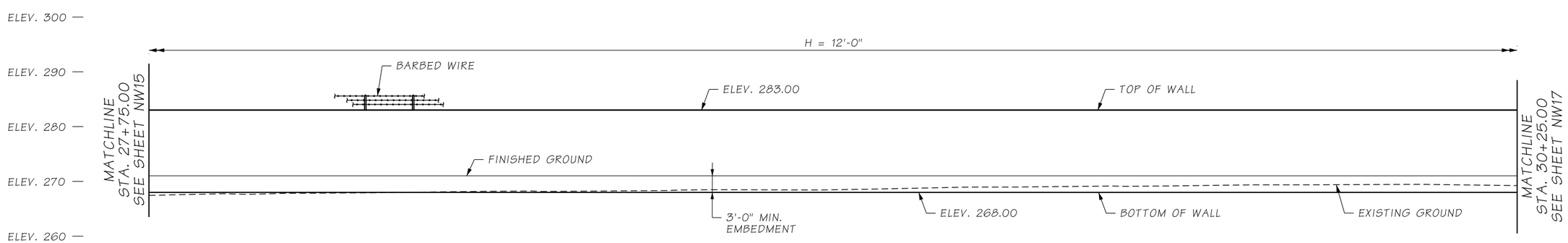

NOISE WALL 5 - ELEVATION

DATUM
N.A.V.D. 88

ATKINSON
MAR 18 2019 KTW
RELEASED FOR CONSTRUCTION

NOTES:
1. SEE SHEET NW09 FOR NOTES.

AS-BUILT

FILE NAME	D:\ICS_workdir\23349\20633_1618\PS_NW16.dgn					
TIME	1:05:42 PM					
DATE	3/12/2019					
PLOTTED BY	USLAS0-APP064$					
DESIGNED BY	K. YOUNG					
ENTERED BY	C. GRACE	REV 0 - RELEASED FOR CONSTRUCTION	03/12/2019			
CHECKED BY	A. FONG	REV B - FINAL REVIEW	02/15/2019			
PROJ. ENGR.	C. MEADE	REV A - PRELIMINARY REVIEW	12/20/2018			
REGIONAL ADM.	J. WYNANDS	REVISION	DATE	BY		

REGION NO.	STATE	FED.AID PROJ.NO.
10	WASH	
JOB NUMBER		
CONTRACT NO. C8811		LOCATION NO.

CORY J. CAYWOOD, STATE OF WASHINGTON, 38193, PROFESSIONAL ENGINEER
3/11/19
P.E. STAMP BOX — DATE

P.E. STAMP BOX — DATE

Washington State Department of Transportation
ATKINSON / JACOBS CONSTRUCTION

I-5
STEILACOOM-DUPONT RD TO THORNE LN
CORRIDOR IMPROVEMENTS
MP 120.01 TO MP 124.45

NOISE WALL 5
PLAN & ELEVATION (8 OF 21)

PLAN REF NO NW16

SHEET 876 OF 1456 SHEETS

SECTION 29, T.19N. R.2E. W.M.
JOINT BASE LEWIS-MCCHORD

CURVE DATA					
P.I. STA.	Δ	RADIUS	TANGENT	LENGTH	BACK TANGENT BRG.
NW5 29+00.55	7°35'14"RT.	2769.25'	183.62'	366.71'	N61°20'20"E

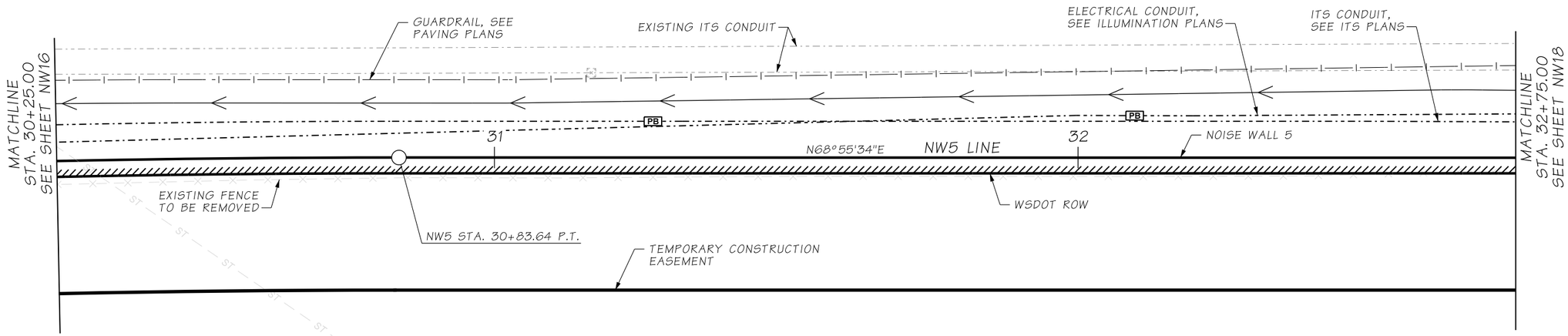

NOISE WALL 5 - PLAN

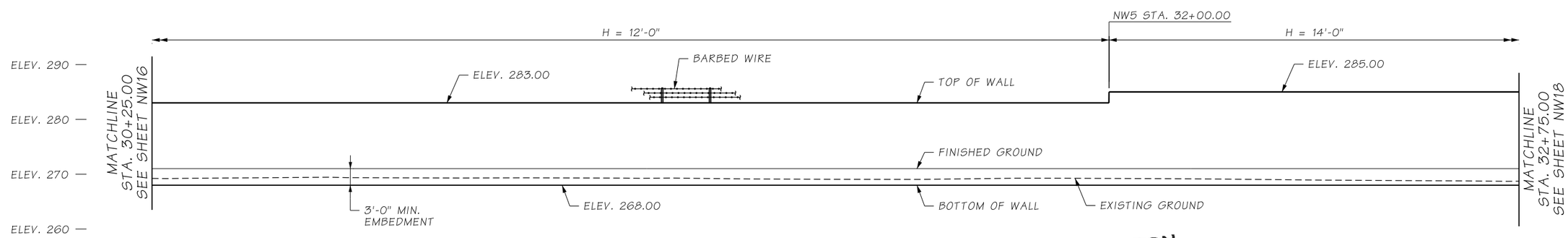

DATUM
N.A.V.D. 88

NOISE WALL 5 - ELEVATION

ATKINSON
MAR 1 8 2019 KTW
RELEASED FOR CONSTRUCTION

NOTES:
1. SEE SHEET NW09 FOR NOTES.

AS-BUILT

FILE NAME	D:\ICS_workdir\23349\20633_1619\PS_NW17.dgn				
TIME	1:05:42 PM				
DATE	3/12/2019				
PLOTTED BY	USLAS0-APP064$				
DESIGNED BY	K. YOUNG				
ENTERED BY	C. GRACE	REV 0 - RELEASED FOR CONSTRUCTION	03/12/2019		
CHECKED BY	A. FONG	REV B - FINAL REVIEW	02/15/2019		
PROJ. ENGR.	C. MEADE	REV A - PRELIMINARY REVIEW	12/20/2018		
REGIONAL ADM.	J. WYNANDS	REVISION	DATE	BY	

REGION NO.	STATE	FED.AID PROJ.NO.
10	WASH	
JOB NUMBER		
CONTRACT NO. C8811		LOCATION NO.

CORY J. CAYWOOD, STATE OF WASHINGTON, 38193, PROFESSIONAL ENGINEER
3/12/19
P.E. STAMP BOX DATE

P.E. STAMP BOX DATE

Washington State Department of Transportation
ATKINSON / JACOBS CONSTRUCTION

I-5
STEILACOOM-DUPONT RD TO THORNE LN
CORRIDOR IMPROVEMENTS
MP 120.01 TO MP 124.45

NOISE WALL 5
PLAN & ELEVATION (9 OF 21)

PLAN REF NO NW17
SHEET 877 OF 1456 SHEETS

SECTION 29, T.19N. R.2E. W.M.
JOINT BASE LEWIS-MCCHORD

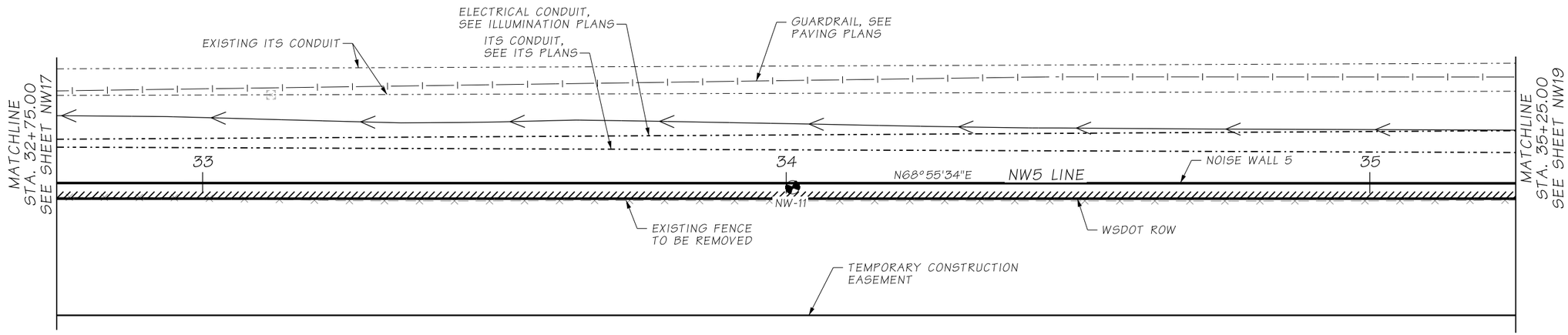

NOISE WALL 5 - PLAN

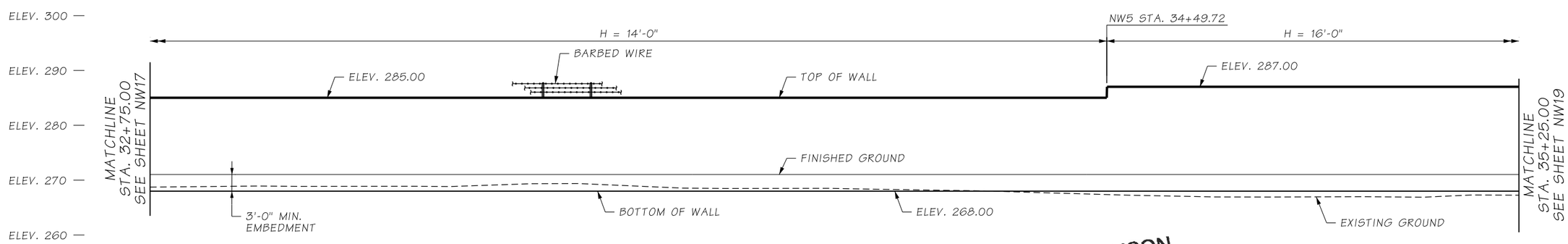

DATUM
N.A.V.D. 88

NOISE WALL 5 - ELEVATION

ATKINSON
MAR 1 8 2019 KTW
RELEASED FOR CONSTRUCTION

NOTES:

1. SEE SHEET NW09 FOR NOTES.

AS-BUILT

FILE NAME	D:\ICS_workdir\23349\20633_1630\PS_NW18.dgn			
TIME	1:05:41 PM			
DATE	3/12/2019			
PLOTTED BY	USLAS0-APP064$			
DESIGNED BY	K. YOUNG			
ENTERED BY	C. GRACE	REV 0 - RELEASED FOR CONSTRUCTION	03/12/2019	
CHECKED BY	A. FONG	REV B - FINAL REVIEW	02/15/2019	
PROJ. ENGR.	C. MEADE	REV A - PRELIMINARY REVIEW	12/20/2018	
REGIONAL ADM.	J. WYNANDS	REVISION	DATE	BY

REGION NO.	STATE	FED.AID PROJ.NO.
10	WASH	
JOB NUMBER		
CONTRACT NO. C8811		LOCATION NO.

CORY J. CAYWOOD, STATE OF WASHINGTON, 38193, PROFESSIONAL ENGINEER
3/11/19
DATE
P.E. STAMP BOX

DATE
P.E. STAMP BOX

Washington State Department of Transportation
ATKINSON / JACOBS CONSTRUCTION

I-5
STEILACOOM-DUPONT RD TO THORNE LN
CORRIDOR IMPROVEMENTS
MP 120.01 TO MP 124.45

NOISE WALL 5
PLAN & ELEVATION (10 OF 21)

PLAN REF NO NW18

SHEET 878 OF 1456 SHEETS

SECTION 29, T.19N. R.2E. W.M.
JOINT BASE LEWIS-MCCHORD

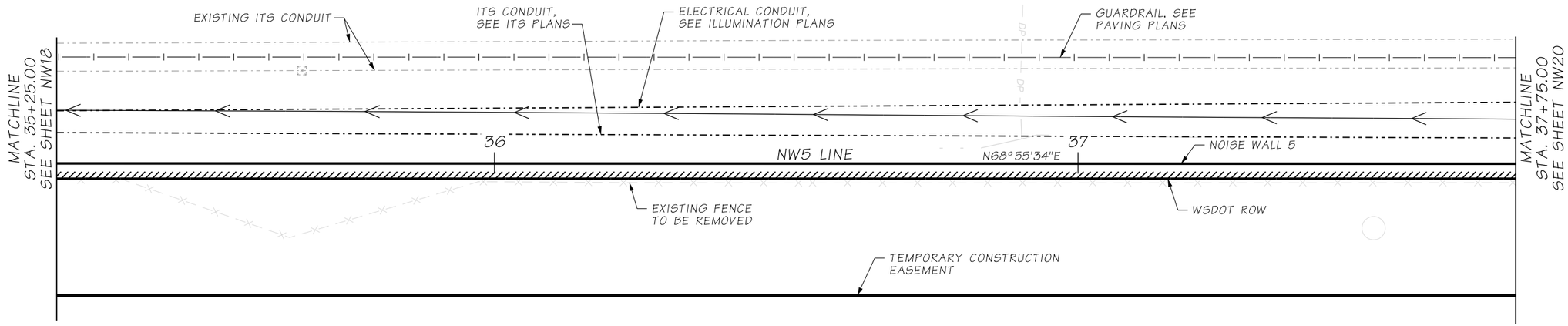

NOISE WALL 5 - PLAN

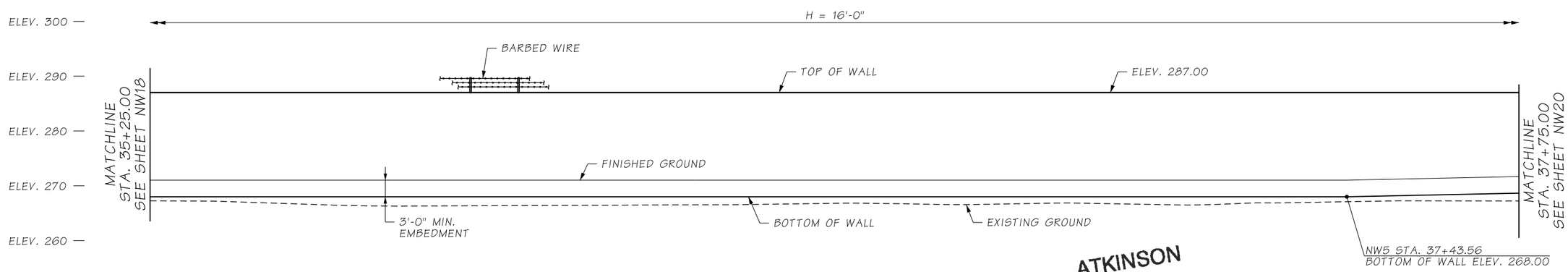

DATUM
N.A.V.D. 88

NOISE WALL 5 - ELEVATION

ATKINSON
MAR 18 2019 KTW
RELEASED FOR CONSTRUCTION

NOTES:

1. SEE SHEET NW09 FOR NOTES.

AS-BUILT

FILE NAME	D:\ICS_workdir\23351\20633_1632\PS_NW19.dgn					
TIME	1:16:59 PM					
DATE	3/12/2019					
PLOTTED BY	USLAS0-APP064$					
DESIGNED BY	K. YOUNG					
ENTERED BY	C. GRACE	REV 0 - RELEASED FOR CONSTRUCTION	03/12/2019			
CHECKED BY	C. CAYWOOD	REV B - FINAL REVIEW	02/15/2019			
PROJ. ENGR.	C. MEADE	REV A - PRELIMINARY REVIEW	12/20/2018			
REGIONAL ADM.	J. WYNANDS	REVISION	DATE	BY		

REGION NO.	STATE	FED.AID PROJ.NO.
10	WASH	
JOB NUMBER		
CONTRACT NO. C8811		LOCATION NO.

CORY J. CAYWOOD, STATE OF WASHINGTON, 38193, PROFESSIONAL ENGINEER
3/12/19
DATE
P.E. STAMP BOX

DATE
P.E. STAMP BOX

Washington State Department of Transportation

ATKINSON / JACOBS CONSTRUCTION

I-5
STEILACOOM-DUPONT RD TO THORNE LN
CORRIDOR IMPROVEMENTS
MP 120.01 TO MP 124.45

NOISE WALL 5
PLAN & ELEVATION (11 OF 21)

PLAN REF NO NW19

SHEET 879 OF 1456 SHEETS

SECTION 29, T.19N. R.2E. W.M.
JOINT BASE LEWIS-MCCHORD

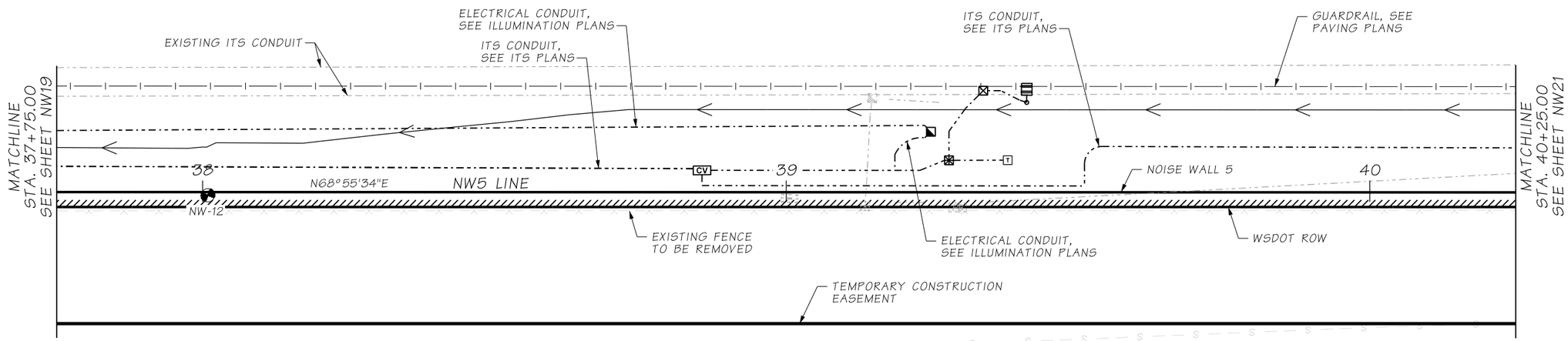

NOISE WALL 5 - PLAN

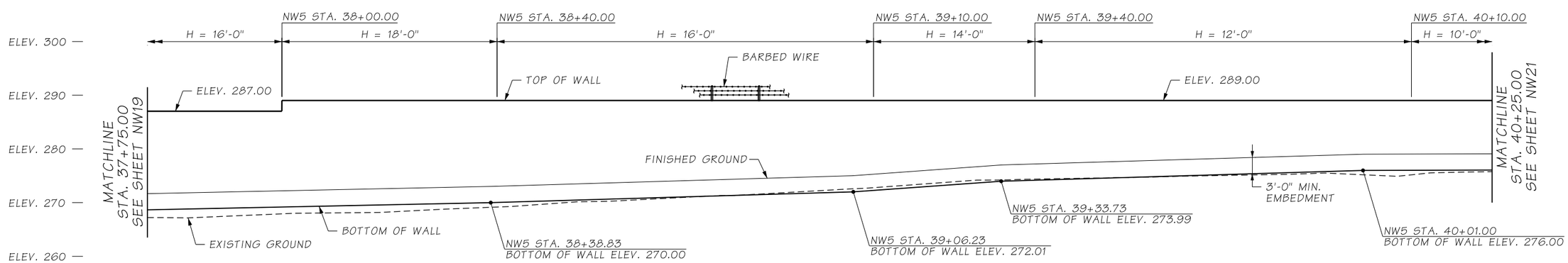

DATUM
N.A.V.D. 88

NOISE WALL 5 - ELEVATION

ATKINSON
MAR 1 8 2019 KTW
RELEASED FOR CONSTRUCTION

NOTES:

1. SEE SHEET NW09 FOR NOTES.

AS-BUILT

FILE NAME	D:\ICS_workdir\23351\20633_1633\PS_NW20.dgn					
TIME	1:16:57 PM					
DATE	3/12/2019					
PLOTTED BY	USLAS0-APP064$					
DESIGNED BY	K. YOUNG					
ENTERED BY	C. GRACE	REV 0 - RELEASED FOR CONSTRUCTION	03/12/2019			
CHECKED BY	C. CAYWOOD	REV B - FINAL REVIEW	02/15/2019			
PROJ. ENGR.	C. MEADE	REV A - PRELIMINARY REVIEW	12/20/2018			
REGIONAL ADM.	J. WYNANDS	REVISION	DATE	BY		

REGION NO.	STATE	FED.AID PROJ.NO.
10	WASH	
JOB NUMBER		
CONTRACT NO.		LOCATION NO.
C8811		

CORY J. CAYWOOD, STATE OF WASHINGTON, 38193, PROFESSIONAL ENGINEER
3/11/19
DATE
P.E. STAMP BOX

DATE
P.E. STAMP BOX

Washington State Department of Transportation

ATKINSON / JACOBS CONSTRUCTION

I-5
STEILACOOM-DUPONT RD TO THORNE LN
CORRIDOR IMPROVEMENTS
MP 120.01 TO MP 124.45

NOISE WALL 5
PLAN & ELEVATION (12 OF 21)

PLAN REF NO NW20

SHEET 880 OF 1456 SHEETS

SECTION 29, T.19N. R.2E. W.M.
JOINT BASE LEWIS-MCCHORD

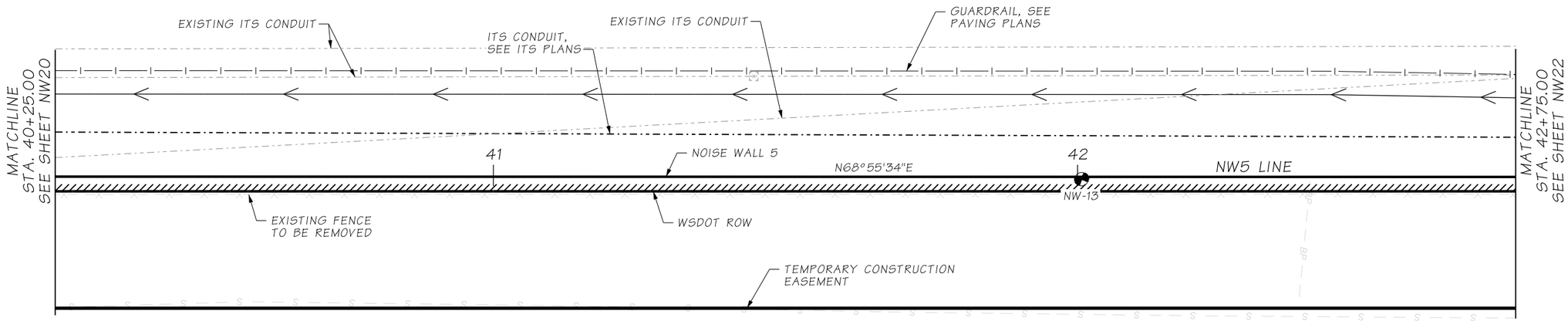

NOISE WALL 5 - PLAN

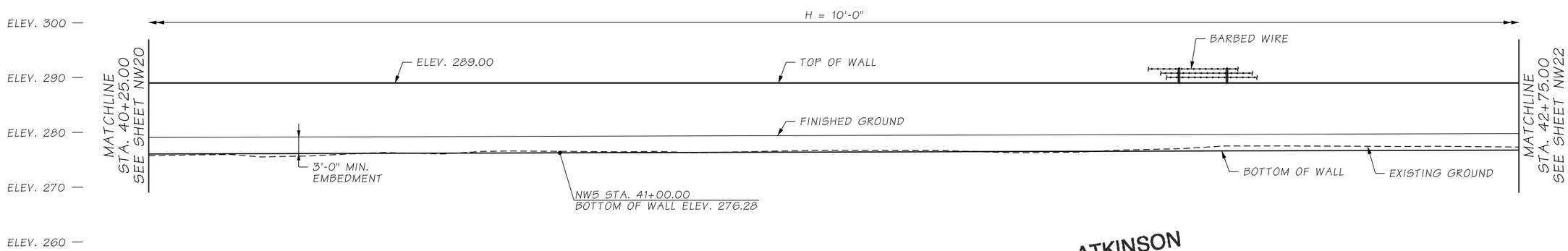

DATUM
N.A.V.D. 88

NOISE WALL 5 - ELEVATION

ATKINSON
MAR 18 2019 KTW
RELEASED FOR CONSTRUCTION

NOTES:

1. SEE SHEET NW09 FOR NOTES.

AS-BUILT

FILE NAME	D:\ICS_workdir\23351\20633_1634\PS_NW21.dgn					
TIME	1:16:59 PM					
DATE	3/12/2019					
PLOTTED BY	USLAS0-APP064$					
DESIGNED BY	K. YOUNG					
ENTERED BY	C. GRACE	REV 0 - RELEASED FOR CONSTRUCTION	03/12/2019			
CHECKED BY	C. CAYWOOD	REV B - FINAL REVIEW	02/15/2019			
PROJ. ENGR.	C. MEADE	REV A - PRELIMINARY REVIEW	12/20/2018			
REGIONAL ADM.	J. WYNANDS	REVISION	DATE	BY		

REGION NO.	STATE	FED.AID PROJ.NO.
10	WASH	
JOB NUMBER		
CONTRACT NO.		LOCATION NO.
C8811		

CORY J. CAYWOOD, STATE OF WASHINGTON, 38193, PROFESSIONAL ENGINEER
3/12/19
DATE
P.E. STAMP BOX

DATE
P.E. STAMP BOX

Washington State Department of Transportation

ATKINSON / JACOBS CONSTRUCTION

I-5
STEILACOOM-DUPONT RD TO THORNE LN
CORRIDOR IMPROVEMENTS
MP 120.01 TO MP 124.45

NOISE WALL 5
PLAN & ELEVATION (13 OF 21)

PLAN REF NO NW21

SHEET 881 OF 1456 SHEETS

SECTION 29, T.19N. R.2E. W.M.
JOINT BASE LEWIS-MCCHORD

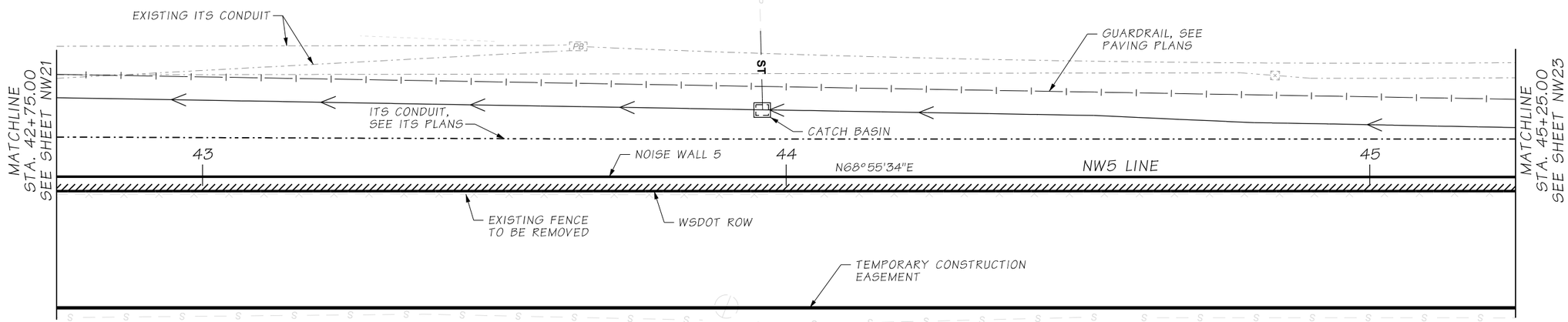

NOISE WALL 5 - PLAN

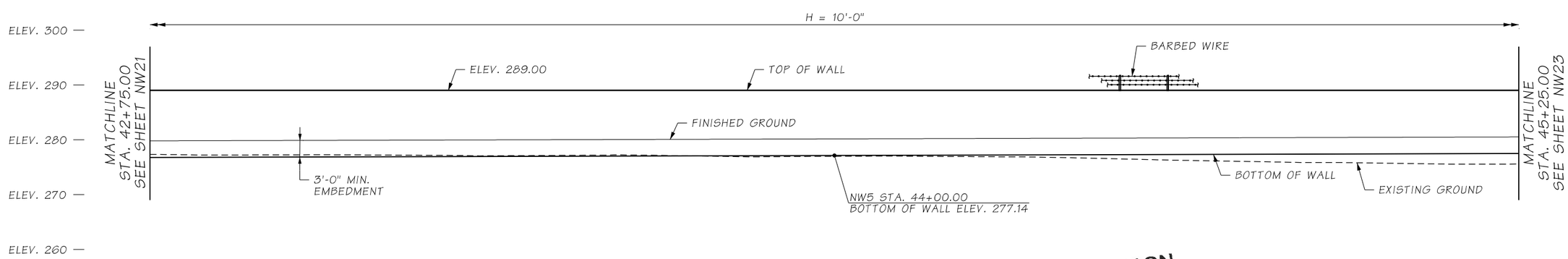

DATUM
N.A.V.D. 88

NOISE WALL 5 - ELEVATION

ATKINSON
MAR 18 2019 KTW
RELEASED FOR CONSTRUCTION

NOTES:

1. SEE SHEET NW09 FOR NOTES.

AS-BUILT

FILE NAME	c:\pwworking\jacobs_b&i\fongac\dms20633\PS_NW22.dgn						
TIME	11:32:34 AM				REGION NO. 10	STATE WASH	FED.AID PROJ.NO.
DATE	3/12/2019						
PLOTTED BY	fongac				JOB NUMBER		
DESIGNED BY	K. YOUNG						
ENTERED BY	C. GRACE	REV 0 - RELEASED FOR CONSTRUCTION	03/12/2019				
CHECKED BY	C. CAYWOOD	REV B - FINAL REVIEW	02/15/2019		CONTRACT NO. C8811		LOCATION NO.
PROJ. ENGR.	C. MEADE	REV A - PRELIMINARY REVIEW	12/20/2018				
REGIONAL ADM.	J. WYNANDS	REVISION	DATE	BY			

P.E. STAMP BOX — DATE 3/12/19

P.E. STAMP BOX — DATE

Washington State Department of Transportation

ATKINSON CONSTRUCTION / JACOBS

I-5
STEILACOOM-DUPONT RD TO THORNE LN
CORRIDOR IMPROVEMENTS
MP 120.01 TO MP 124.45

NOISE WALL 5
PLAN & ELEVATION (14 OF 21)

PLAN REF NO NW22

SHEET 882 OF 1456 SHEETS

SECTION 29, T.19N. R.2E. W.M.
JOINT BASE LEWIS-MCCHORD

CURVE DATA					
P.I. STA.	Δ	RADIUS	TANGENT	LENGTH	BACK TANGENT BRG.
NW5 50+30.58	18°08'44"LT.	2963.31'	473.20'	938.49'	N68°55'34"E

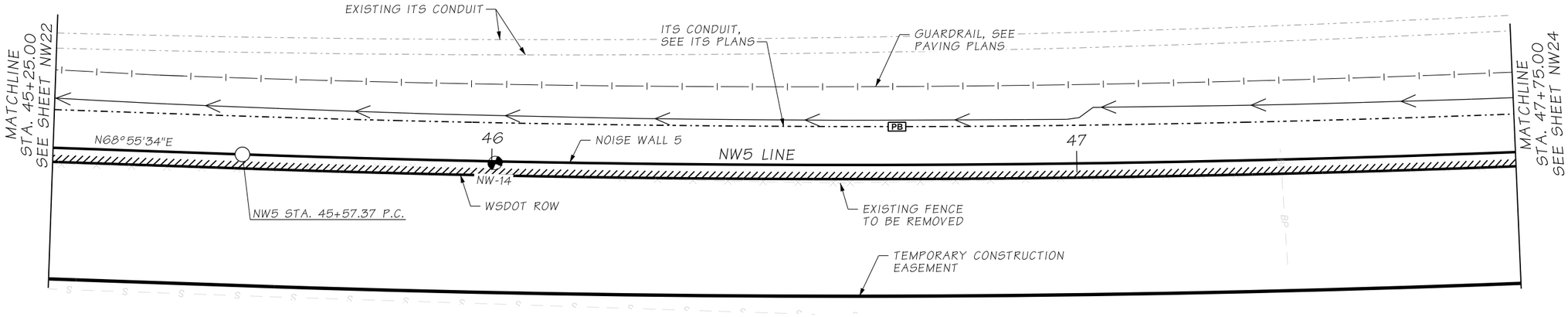

NOISE WALL 5 - PLAN

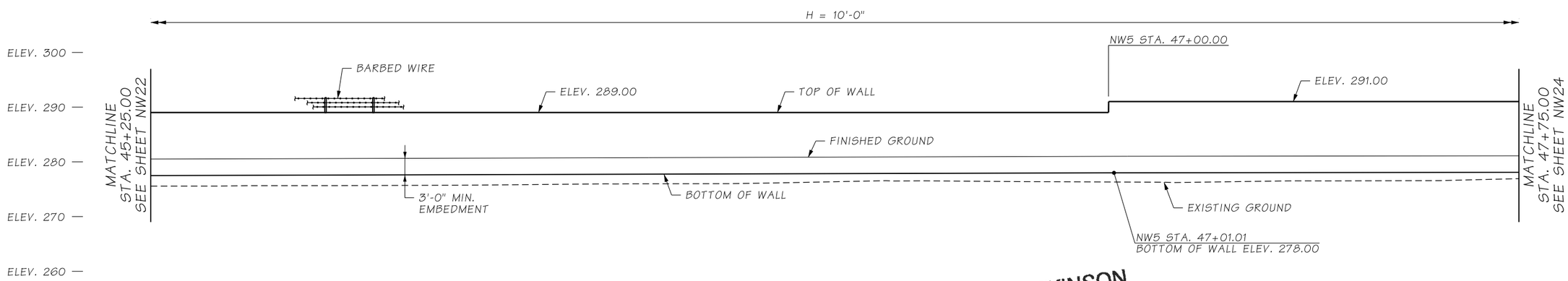

DATUM
N.A.V.D. 88

NOISE WALL 5 - ELEVATION

ATKINSON
MAR 18 2019 KTW
RELEASED FOR CONSTRUCTION

NOTES:
1. SEE SHEET NW09 FOR NOTES.

AS-BUILT

FILE NAME	D:\ICS_workdir\23359\20633_1636\PS_NW23.dgn					
TIME	2:47:52 PM				REGION NO. 10	STATE WASH	FED.AID PROJ.NO.
DATE	3/12/2019					
PLOTTED BY	USLAS0-APP064$				JOB NUMBER	
DESIGNED BY	K. YOUNG					
ENTERED BY	C. GRACE	REV 0 - RELEASED FOR CONSTRUCTION	03/12/2019			
CHECKED BY	C. CAYWOOD	REV B - FINAL REVIEW	02/15/2019		CONTRACT NO. C8811	LOCATION NO.
PROJ. ENGR.	C. MEADE	REV A - PRELIMINARY REVIEW	12/20/2018			
REGIONAL ADM.	J. WYNANDS	REVISION	DATE	BY		

CORY J. CAYWOOD, STATE OF WASHINGTON, 38193, PROFESSIONAL ENGINEER
P.E. STAMP BOX — DATE 3/11/19

P.E. STAMP BOX — DATE

Washington State Department of Transportation

ATKINSON / JACOBS CONSTRUCTION

I-5
STEILACOOM-DUPONT RD TO THORNE LN
CORRIDOR IMPROVEMENTS
MP 120.01 TO MP 124.45

NOISE WALL 5
PLAN & ELEVATION (15 OF 21)

PLAN REF NO NW23

SHEET 883 OF 1456 SHEETS

SECTION 29, T.19N. R.2E. W.M.
JOINT BASE LEWIS-MCCHORD

CURVE DATA					
P.I. STA.	Δ	RADIUS	TANGENT	LENGTH	BACK TANGENT BRG.
NW5 50+30.58	18° 08'44"LT.	2963.31'	473.20'	938.49'	N68° 55'34"E

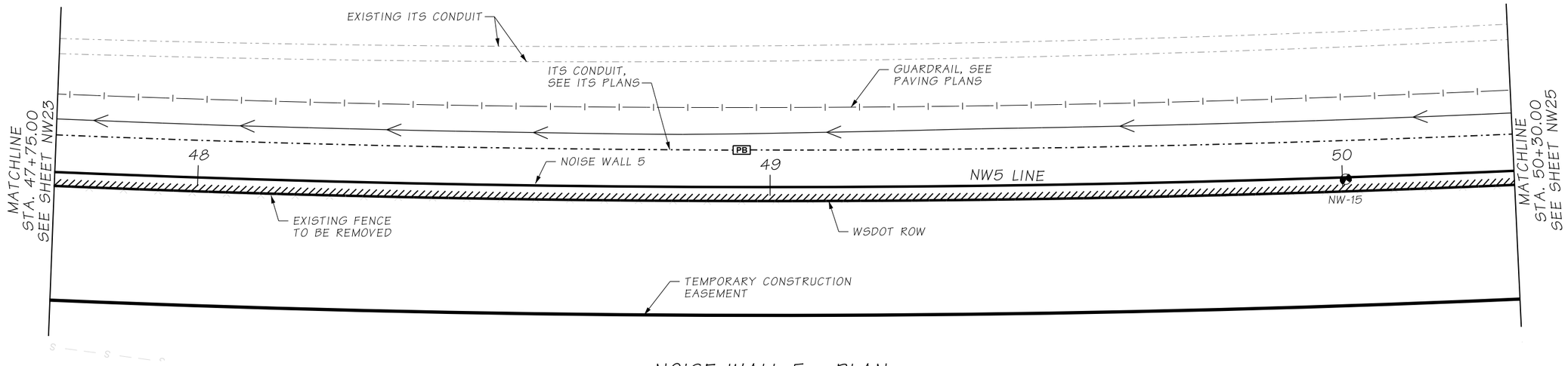

NOISE WALL 5 - PLAN

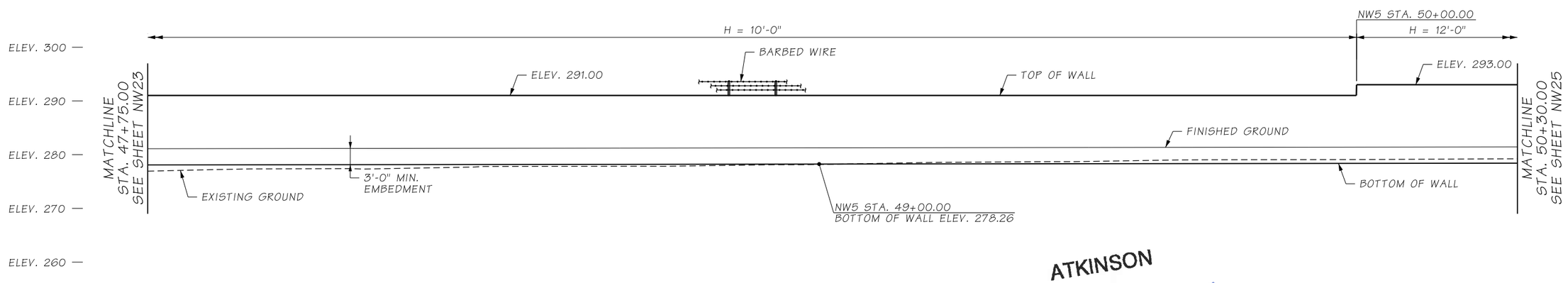

DATUM
N.A.V.D. 88

NOISE WALL 5 - ELEVATION

ATKINSON
MAR 18 2019 KTW
RELEASED FOR CONSTRUCTION

NOTES:

1. SEE SHEET NW09 FOR NOTES.

AS-BUILT

FILE NAME	D:\ICS_workdir\23359\20633_1637\PS_NW24.dgn					
TIME	2:48:28 PM					
DATE	3/12/2019					
PLOTTED BY	USLAS0-APP064$					
DESIGNED BY	K. YOUNG					
ENTERED BY	C. GRACE	REV 0 - RELEASED FOR CONSTRUCTION	03/12/2019			
CHECKED BY	C. CAYWOOD	REV B - FINAL REVIEW	02/15/2019			
PROJ. ENGR.	C. MEADE	REV A - PRELIMINARY REVIEW	12/20/2018			
REGIONAL ADM.	J. WYNANDS	REVISION	DATE	BY		

REGION NO.	STATE	FED.AID PROJ.NO.
10	WASH	
JOB NUMBER		
CONTRACT NO. C8811		LOCATION NO.

CORY J. CAYWOOD, STATE OF WASHINGTON, 38193, PROFESSIONAL ENGINEER
3/12/19
DATE
P.E. STAMP BOX

DATE
P.E. STAMP BOX

Washington State Department of Transportation

ATKINSON / JACOBS CONSTRUCTION

I-5
STEILACOOM-DUPONT RD TO THORNE LN
CORRIDOR IMPROVEMENTS
MP 120.01 TO MP 124.45

NOISE WALL 5
PLAN & ELEVATION (16 OF 21)

PLAN REF NO NW24

SHEET 884 OF 1456 SHEETS

SECTION 29, T.19N. R.2E. W.M.
JOINT BASE LEWIS-MCCHORD

CURVE DATA					
P.I. STA.	Δ	RADIUS	TANGENT	LENGTH	BACK TANGENT BRG.
NW5 50+30.58	18° 08'44"LT.	2963.31'	473.20'	938.49'	N68° 55'34"E

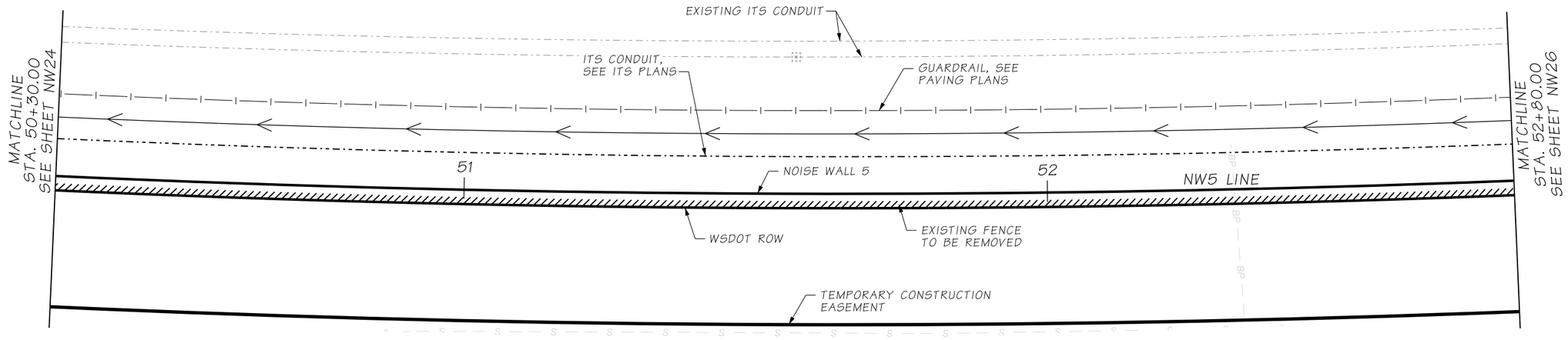

NOISE WALL 5 - PLAN

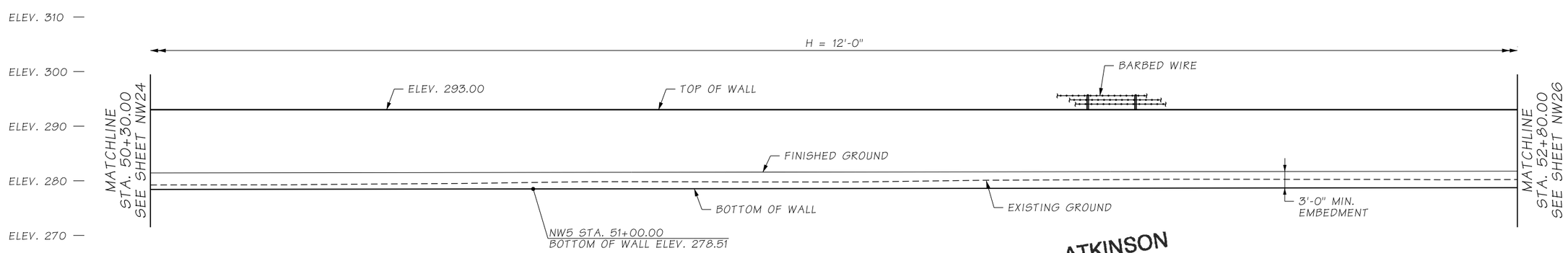

NOISE WALL 5 - ELEVATION

DATUM
N.A.V.D. 88

ATKINSON
MAR 1 8 2019 KTW
RELEASED FOR CONSTRUCTION

NOTES:
1. SEE SHEET NW09 FOR NOTES.

AS-BUILT

FILE NAME	D:\ICS_workdir\23359\20633_1638\PS_NW25.dgn					
TIME	2:46:31 PM					
DATE	3/12/2019					
PLOTTED BY	USLAS0-APP064$					
DESIGNED BY	K. YOUNG					
ENTERED BY	C. GRACE	REV 0 - RELEASED FOR CONSTRUCTION	03/12/2019			
CHECKED BY	C. CAYWOOD	REV B - FINAL REVIEW	02/15/2019			
PROJ. ENGR.	C. MEADE	REV A - PRELIMINARY REVIEW	12/20/2018			
REGIONAL ADM.	J. WYNANDS	REVISION	DATE	BY		

REGION NO.	STATE	FED.AID PROJ.NO.
10	WASH	
JOB NUMBER		
CONTRACT NO.		LOCATION NO.
C8811		

CORY J. CAYWOOD, STATE OF WASHINGTON, 38195, PROFESSIONAL ENGINEER
3/12/19
DATE
P.E. STAMP BOX

DATE
P.E. STAMP BOX

Washington State Department of Transportation
ATKINSON / JACOBS CONSTRUCTION

I-5
STEILACOOM-DUPONT RD TO THORNE LN
CORRIDOR IMPROVEMENTS
MP 120.01 TO MP 124.45

NOISE WALL 5
PLAN & ELEVATION (17 OF 21)

PLAN REF NO NW25
SHEET 885 OF 1456 SHEETS

SECTION 29, T.19N. R.2E. W.M.
JOINT BASE LEWIS-MCCHORD

CURVE DATA					
P.I. STA.	Δ	RADIUS	TANGENT	LENGTH	BACK TANGENT BRG.
NW5 50+30.58	18°08'44"LT.	2963.31'	473.20'	938.49'	N68°55'34"E

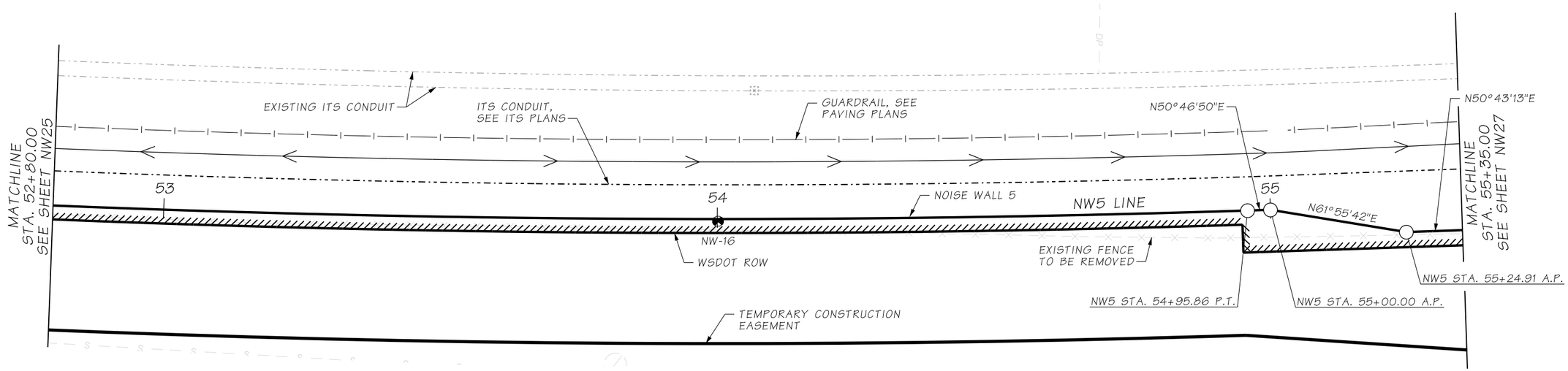

NOISE WALL 5 - PLAN

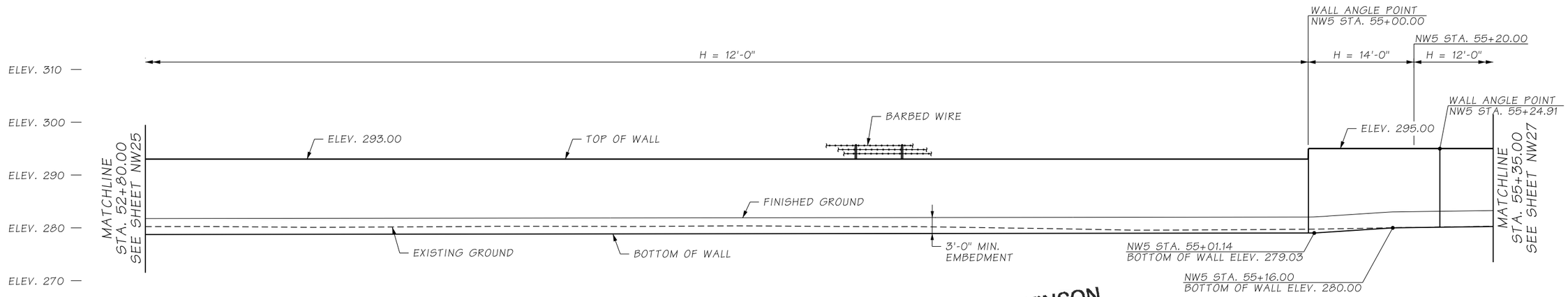

DATUM
N.A.V.D. 88

NOISE WALL 5 - ELEVATION

ATKINSON
MAR 18 2019 KTW
RELEASED FOR CONSTRUCTION

NOTES:
1. SEE SHEET NW09 FOR NOTES.

AS-BUILT

FILE NAME	D:\ICS_workdir\23359\20633_1639\PS_NW26.dgn				
TIME	2:47:27 PM				
DATE	3/12/2019				
PLOTTED BY	USLAS0-APP064$				
DESIGNED BY	K. YOUNG				
ENTERED BY	C. GRACE	REV 0 - RELEASED FOR CONSTRUCTION	03/12/2019		
CHECKED BY	C. CAYWOOD	REV B - FINAL REVIEW	02/15/2019		
PROJ. ENGR.	C. MEADE	REV A - PRELIMINARY REVIEW	12/20/2018		
REGIONAL ADM.	J. WYNANDS	REVISION	DATE	BY	

REGION NO. 10 | STATE WASH | FED.AID PROJ.NO.
JOB NUMBER
CONTRACT NO. C8811 | LOCATION NO.

CORY J. CAYWOOD, STATE OF WASHINGTON, 38193, PROFESSIONAL ENGINEER
P.E. STAMP BOX — DATE 3/11/19
P.E. STAMP BOX — DATE

Washington State Department of Transportation
ATKINSON / JACOBS CONSTRUCTION

I-5
STEILACOOM-DUPONT RD TO THORNE LN
CORRIDOR IMPROVEMENTS
MP 120.01 TO MP 124.45

NOISE WALL 5
PLAN & ELEVATION (18 OF 21)

PLAN REF NO NW26
SHEET 886 OF 1456 SHEETS

SECTION 29, T.19N. R.2E. W.M.
JOINT BASE LEWIS-MCCHORD

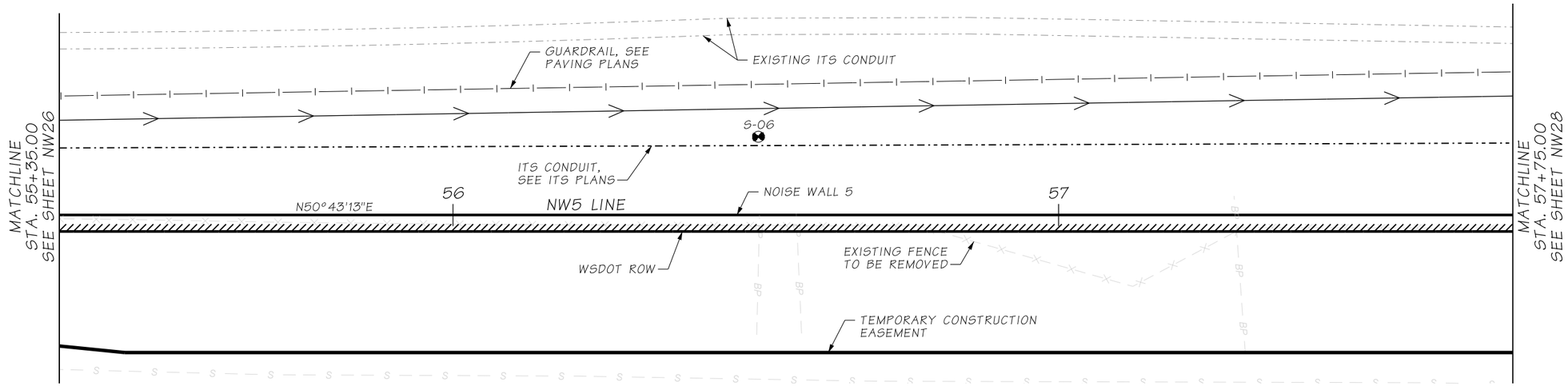

NOISE WALL 5 - PLAN

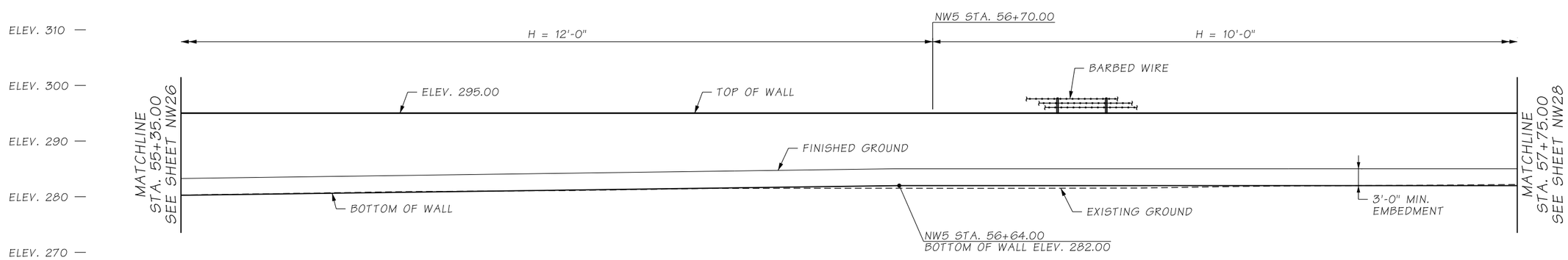

DATUM
N.A.V.D. 88

NOISE WALL 5 - ELEVATION

ATKINSON
MAR 1 8 2019 KTW
RELEASED FOR CONSTRUCTION

NOTES:

1. SEE SHEET NW09 FOR NOTES.

AS-BUILT

FILE NAME	D:\ICS_workdir\23359\20633_1640\PS_NW27.dgn					
TIME	2:47:52 PM					
DATE	3/12/2019					
PLOTTED BY	USLAS0-APP064$					
DESIGNED BY	K. YOUNG					
ENTERED BY	C. GRACE	REV 0 - RELEASED FOR CONSTRUCTION	03/12/2019			
CHECKED BY	C. CAYWOOD	REV B - FINAL REVIEW	02/15/2019			
PROJ. ENGR.	C. MEADE	REV A - PRELIMINARY REVIEW	12/20/2018			
REGIONAL ADM.	J. WYNANDS	REVISION	DATE	BY		

REGION NO.	STATE	FED.AID PROJ.NO.
10	WASH	
JOB NUMBER		
CONTRACT NO. C8811		LOCATION NO.

CORY J. CAYWOOD, STATE OF WASHINGTON, 38193, PROFESSIONAL ENGINEER
3/19/19
DATE
P.E. STAMP BOX

DATE
P.E. STAMP BOX

Washington State Department of Transportation

ATKINSON / JACOBS CONSTRUCTION

I-5
STEILACOOM-DUPONT RD TO THORNE LN
CORRIDOR IMPROVEMENTS
MP 120.01 TO MP 124.45

NOISE WALL 5
PLAN & ELEVATION (19 OF 21)

PLAN REF NO NW27

SHEET 887 OF 1456 SHEETS

SECTION 28, T.19N. R.2E. W.M.
JOINT BASE LEWIS-MCCHORD

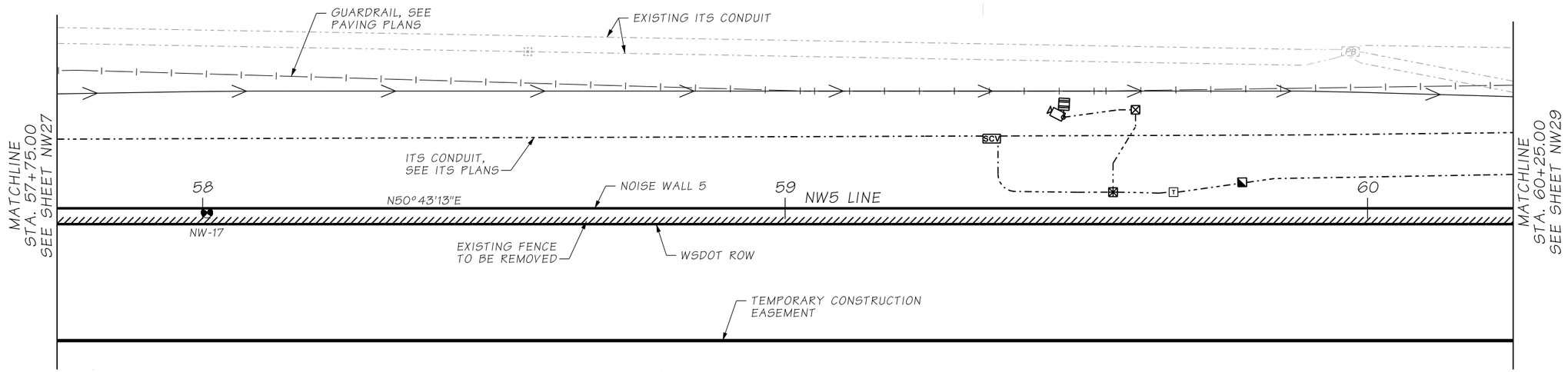

NOISE WALL 5 - PLAN

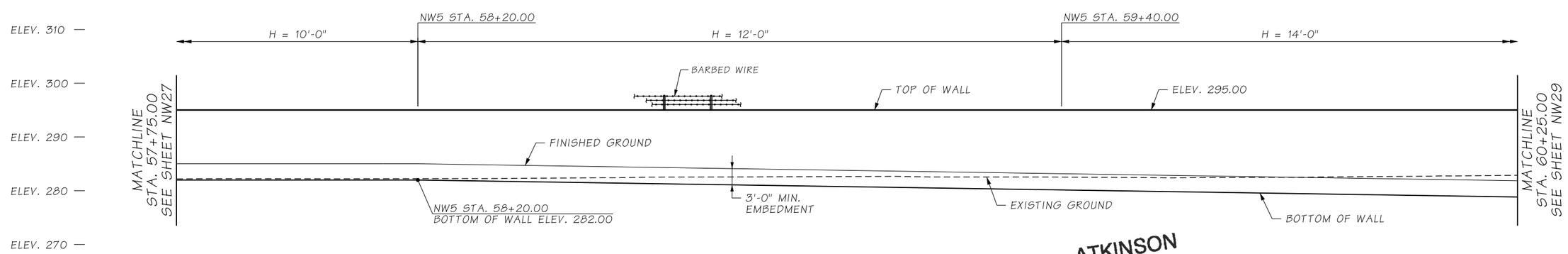

DATUM
N.A.V.D. 88

NOISE WALL 5 - ELEVATION

ATKINSON
MAR 18 2019 KTW
RELEASED FOR CONSTRUCTION

NOTES:

1. SEE SHEET NW09 FOR NOTES.

AS-BUILT

FILE NAME	D:\ICS_workdir\23360\20633_1641\PS_NW28.dgn				REGION NO. 10	STATE WASH	FED.AID PROJ.NO.
TIME	2:47:47 PM				JOB NUMBER		
DATE	3/12/2019						
PLOTTED BY	USLAS0-APP064$						
DESIGNED BY	K. YOUNG						
ENTERED BY	C. GRACE	REV 0 - RELEASED FOR CONSTRUCTION	03/12/2019				
CHECKED BY	C. CAYWOOD	REV B - FINAL REVIEW	02/15/2019		CONTRACT NO. C8811		LOCATION NO.
PROJ. ENGR.	C. MEADE	REV A - PRELIMINARY REVIEW	12/20/2018				
REGIONAL ADM.	J. WYNANDS	REVISION	DATE	BY			

CORY J. CAYWOOD, STATE OF WASHINGTON, 38193, PROFESSIONAL ENGINEER
3/12/19
P.E. STAMP BOX DATE

P.E. STAMP BOX DATE

Washington State Department of Transportation

ATKINSON / JACOBS CONSTRUCTION

I-5
STEILACOOM-DUPONT RD TO THORNE LN
CORRIDOR IMPROVEMENTS
MP 120.01 TO MP 124.45

NOISE WALL 5
PLAN & ELEVATION (20 OF 21)

PLAN REF NO NW28

SHEET 888 OF 1456 SHEETS

SECTION 28, T.19N. R.2E. W.M.
JOINT BASE LEWIS-MCCHORD

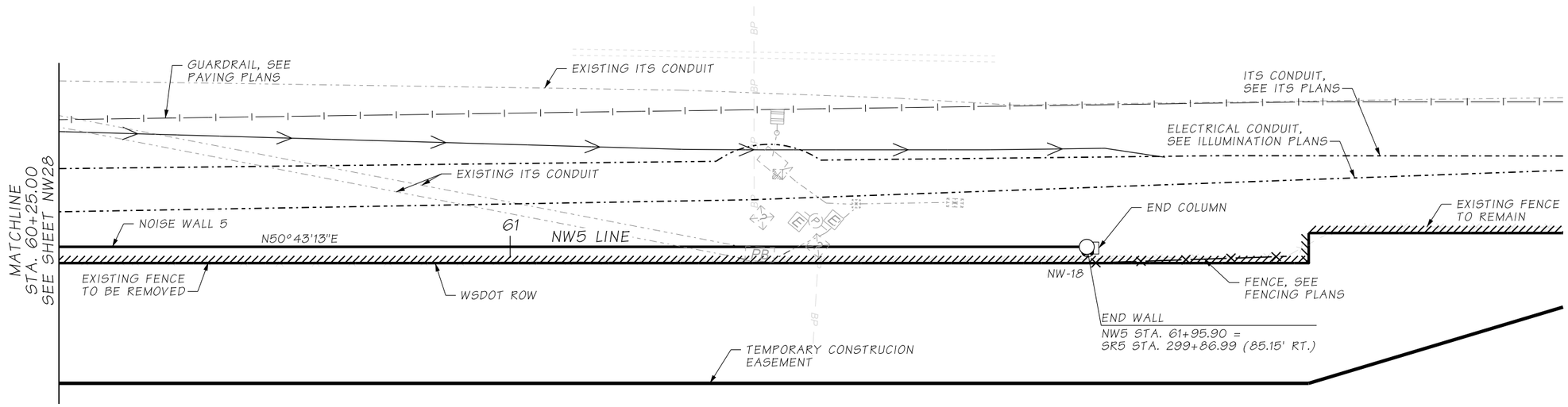

NOISE WALL 5 - PLAN

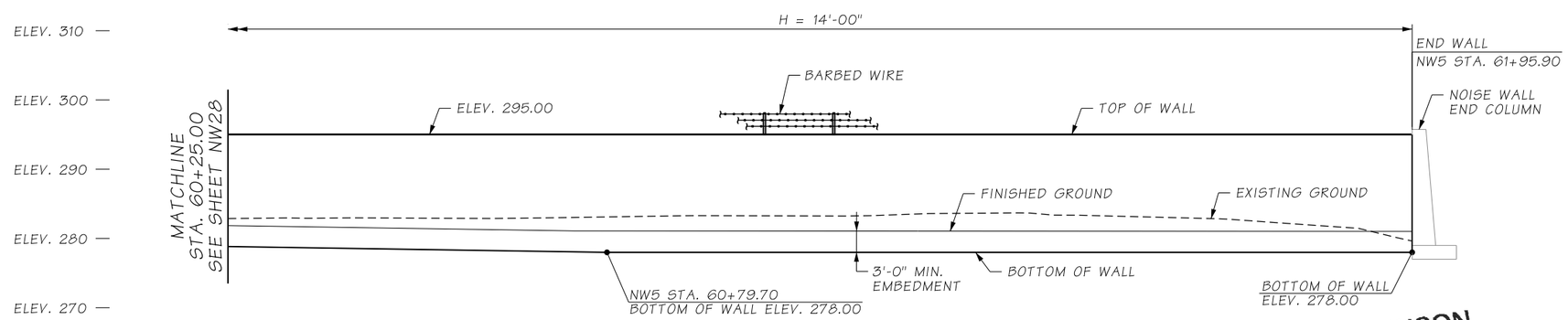

DATUM
N.A.V.D. 88

NOISE WALL 5 - ELEVATION

ATKINSON
MAR 18 2019 KTW
RELEASED FOR CONSTRUCTION

NOTES:

1. SEE SHEET NW09 FOR NOTES.

AS-BUILT

FILE NAME	D:\ICS_workdir\23360\20633_1642\PS_NW29.dgn			
TIME	2:49:05 PM			
DATE	3/12/2019			
PLOTTED BY	USLAS0-APP064$			
DESIGNED BY	K. YOUNG			
ENTERED BY	C. GRACE	REV 0 - RELEASED FOR CONSTRUCTION	03/12/2019	
CHECKED BY	C. CAYWOOD	REV B - FINAL REVIEW	02/15/2019	
PROJ. ENGR.	C. MEADE	REV A - PRELIMINARY REVIEW	12/20/2018	
REGIONAL ADM.	J. WYNANDS	REVISION	DATE	BY

REGION NO.	STATE	FED.AID PROJ.NO.
10	WASH	
JOB NUMBER		
CONTRACT NO. C8811		LOCATION NO.

CORY J. CAYWOOD, STATE OF WASHINGTON, 38193, PROFESSIONAL ENGINEER
3/19/19
DATE
P.E. STAMP BOX

DATE
P.E. STAMP BOX

Washington State Department of Transportation
ATKINSON / JACOBS CONSTRUCTION

I-5
STEILACOOM-DUPONT RD TO THORNE LN
CORRIDOR IMPROVEMENTS
MP 120.01 TO MP 124.45

NOISE WALL 5
PLAN & ELEVATION (21 OF 21)

PLAN REF NO NW29

SHEET 889 OF 1456 SHEETS

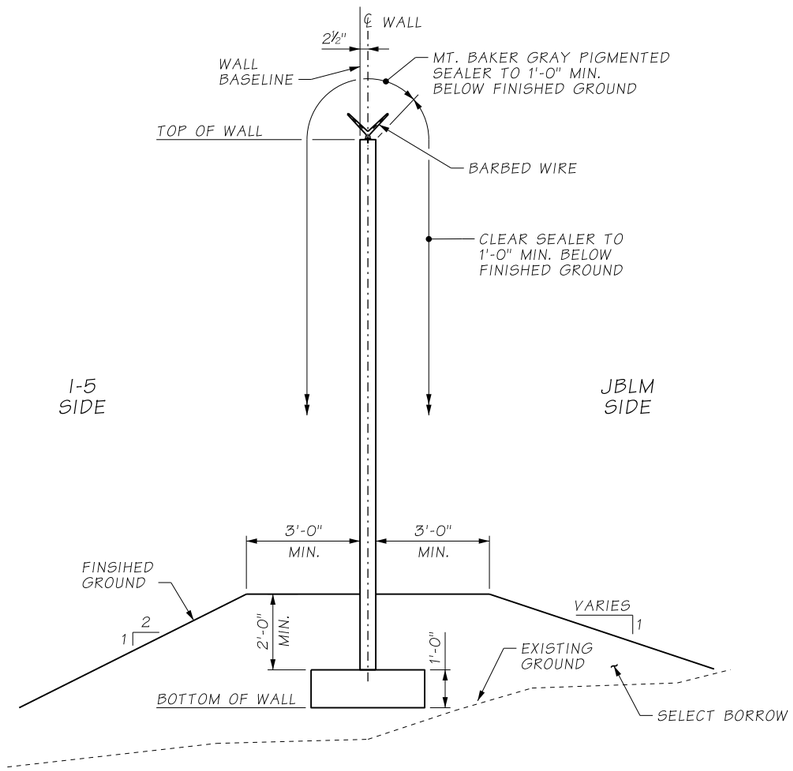

TYPICAL SECTION

AS-BUILT

ATKINSON
DEC 04 2019 KTW
RELEASED FOR CONSTRUCTION

NOTES:

1. SEE SHEET NW09 - NW29 FOR WALL PLAN AND ELEVATION.
2. SEE STANDARD PLAN D-2.32-00 TYPE 9A FOR ADDITIONAL DETAILS.
3. SEE SHEET NW37 FOR BARBED WIRE AND ARCHITECTURAL DETAILS.
4. EXPANSION JOINTS IN THE FOOTINGS MAY BE USED IN PLACE OF CONSTRUCTION JOINTS AT CONTRACTOR'S OPTION. EXPANSION JOINTS IN THE FOOTINGS SHALL ALIGN WITH JOINTS IN THE WALL PANELS AND SHALL BE SPACED AT A MAXIMUM OF 96 FEET ON CENTERS. EXPANSION JOINTS IN THE FOOTINGS SHALL HAVE SHEAR KEYS PER STANDARD SPECIFICATION 6-11.3(3) AND NO REINFORCING EXTENDING THROUGH THE JOINT OR PREMOLDED JOINT FILLER.

FILE NAME	D:\ICS_workdir\41277\20633_1649\PS_NW30.dgn						
TIME	11:13:56 AM				REGION NO.	STATE	FED.AID PROJ.NO.
DATE	12/2/2019				10	WASH	
PLOTTED BY	USLAS0-APP064$	REV 2 - RFI0102	12/02/2019		JOB NUMBER		
DESIGNED BY	K. YOUNG	REV 1 - RFI0116	06/06/2019				
ENTERED BY	C. GRACE	REV 0 - RELEASED FOR CONSTRUCTION	03/12/2019				
CHECKED BY	A. FONG	REV B - FINAL REVIEW	02/15/2019		CONTRACT NO.		LOCATION NO.
PROJ. ENGR.	C. MEADE	REV A - PRELIMINARY REVIEW	12/20/2018		C9133		
REGIONAL ADM.	J. WYNANDS	REVISION	DATE	BY			

ADRY J. CAYWOOD, STATE OF WASHINGTON, 38739, STRUCTURAL ENGINEER, PROFESSIONAL ENGINEER
12/3/19
DATE
P.E. STAMP BOX

DATE
P.E. STAMP BOX

Washington State Department of Transportation

ATKINSON CONSTRUCTION / JACOBS

I-5
STEILACOOM-DUPONT RD TO THORNE LN
CORRIDOR IMPROVEMENTS
MP 120.01 TO MP 124.45

NOISE WALL 5
TYPICAL SECTION

PLAN REF NO NW30

SHEET 890 OF 1456 SHEETS

SECTION 22, T.19N. R.2E. W.M.
CITY OF LAKEWOOD

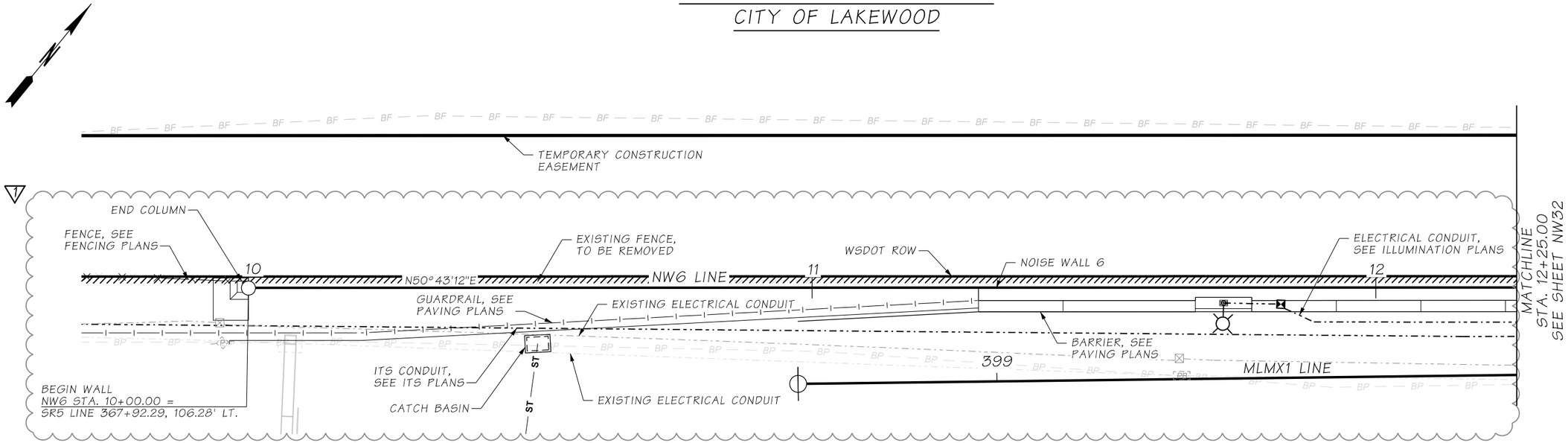

NOISE WALL 6 - PLAN

AS-BUILT

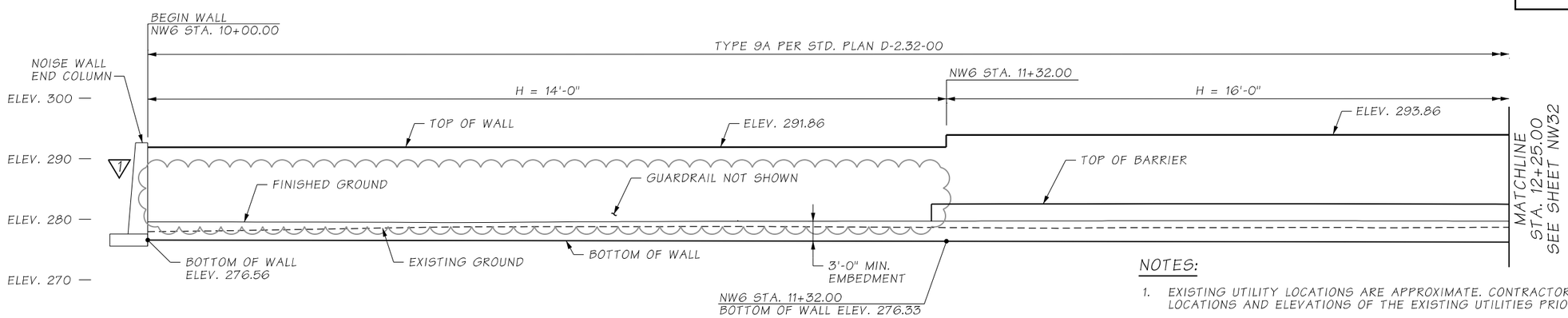

DATUM
N.A.V.D. 88

NOISE WALL 6 - ELEVATION

NOTES:

1. EXISTING UTILITY LOCATIONS ARE APPROXIMATE. CONTRACTOR SHALL VERIFY LOCATIONS AND ELEVATIONS OF THE EXISTING UTILITIES PRIOR TO CONSTRUCTION.
2. SEE SHEET NW02 FOR GENERAL NOTES AND LEGEND.
3. NOISE WALL 6 CONSISTS OF TYPE 9A PER STANDARD PLAN D-2.32-00 AND A SPECIAL DESIGN WALL AS SHOWN ON WALL ELEVATIONS.
4. SEE SHEET NW35 FOR TYPICAL SECTIONS.
5. SEE SHEET NW39 FOR NOISE WALL END COLUMN DETAILS.
6. DIMENSION "H" DOES NOT REPRESENT THE ACTUAL HEIGHT OF THE NOISE WALL PANEL. "H" SHALL BE A MINIMUM DIMENSION TO BE USED WITH STANDARD PLAN TO DEFINE FOOTING SIZE, PANEL THICKNESS AND REINFORCEMENT.
7. BOTTOM OF WALL ELEVATIONS SHOWN IN ELEVATION ARE MAXIMUM PERMISSIBLE ELEVATIONS TO PROVIDE MINIMUM SPECIFIED EMBEDMENT BELOW FINISHED GROUND.

ATKINSON
APR 09 2020 KTW
RELEASED FOR CONSTRUCTION

FILE NAME	c:\pwworking\jacobs_b&i\caywoocj\dms20633\PS_NW31.dgn			
TIME	3:53:25 PM			
DATE	4/8/2020			
PLOTTED BY	caywoocj			
DESIGNED BY	N. BEKIT	REV 1 - RFI0429	04/13/2020	
ENTERED BY	R. REISER	REV 0 - RELEASED FOR CONSTRUCTION	09/25/2019	
CHECKED BY	C. CAYWOOD	REV B - FINAL REVIEW	09/06/2019	
PROJ. ENGR.	C. MEADE	REV A - PRELIMINARY REVIEW	07/17/2019	
REGIONAL ADM.	J. WYNANDS	REVISION	DATE	BY

REGION NO.	STATE	FED.AID PROJ.NO.
10	WASH	
JOB NUMBER		
CONTRACT NO. C9133		LOCATION NO.

CORY J. CAYWOOD, STATE OF WASHINGTON, 38193, STRUCTURAL ENGINEER, PROFESSIONAL ENGINEER
4/9/20
DATE
P.E. STAMP BOX

P.E. STAMP BOX
DATE

Washington State Department of Transportation

ATKINSON / JACOBS CONSTRUCTION

I-5
STEILACOOM-DUPONT RD TO THORNE LN
CORRIDOR IMPROVEMENTS
MP 120.01 TO MP 124.45

NOISE WALL 6
PLAN & ELEVATION (1 OF 4)

PLAN REF NO NW31

SHEET 891 OF 1456 SHEETS

SECTION 22, T.19N. R.2E. W.M.
CITY OF LAKEWOOD

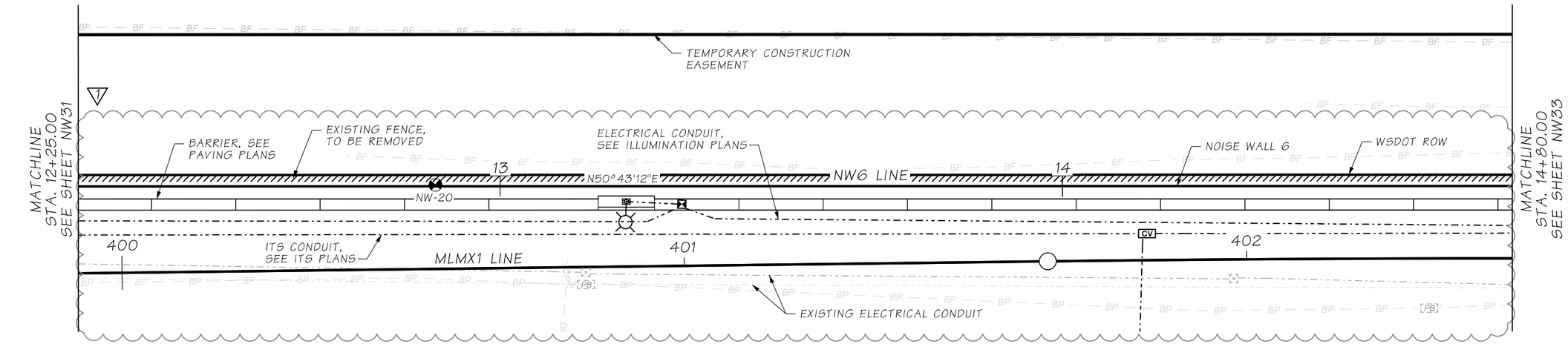

NOISE WALL 6 - PLAN

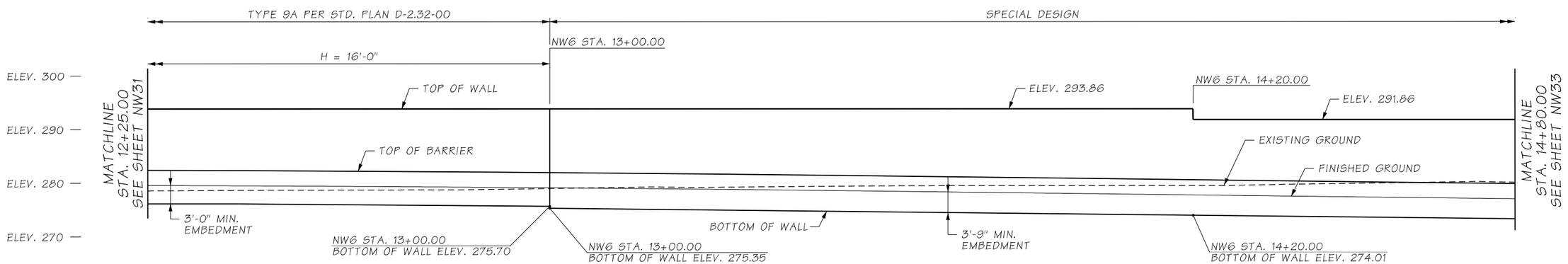

DATUM
N.A.V.D. 88

NOISE WALL 6 - ELEVATION

ATKINSON
APR 09 2020 KTW
RELEASED FOR CONSTRUCTION

NOTES:

1. SEE SHEET NW31 FOR NOTES.

AS-BUILT

FILE NAME	c:\pwworking\jacobs_b&i\caywoocj\dms20633\PS_NW32.dgn						
TIME	3:51:33 PM				REGION NO. 10	STATE WASH	FED.AID PROJ.NO.
DATE	4/8/2020						
PLOTTED BY	caywoocj						
DESIGNED BY	N. BEKIT	REV 1 - RFI0429	04/13/2020		JOB NUMBER		
ENTERED BY	R. REISER	REV 0 - RELEASED FOR CONSTRUCTION	09/25/2019				
CHECKED BY	C. CAYWOOD	REV B - FINAL REVIEW	09/06/2019		CONTRACT NO. C9133		LOCATION NO.
PROJ. ENGR.	C. MEADE	REV A - PRELIMINARY REVIEW	07/17/2019				
REGIONAL ADM.	J. WYNANDS	REVISION	DATE	BY			

CORY J. CAYWOOD, STATE OF WASHINGTON, 38759, SUPERVISORY ENGINEER, PROFESSIONAL ENGINEER
4/9/20
DATE
P.E. STAMP BOX

P.E. STAMP BOX
DATE

Washington State Department of Transportation

ATKINSON / JACOBS CONSTRUCTION

I-5
STEILACOOM-DUPONT RD TO THORNE LN
CORRIDOR IMPROVEMENTS
MP 120.01 TO MP 124.45

NOISE WALL 6
PLAN & ELEVATION (2 OF 4)

PLAN REF NO NW32

SHEET 892 OF 1456 SHEETS

SECTION 22, T.19N. R.2E. W.M.
CITY OF LAKEWOOD

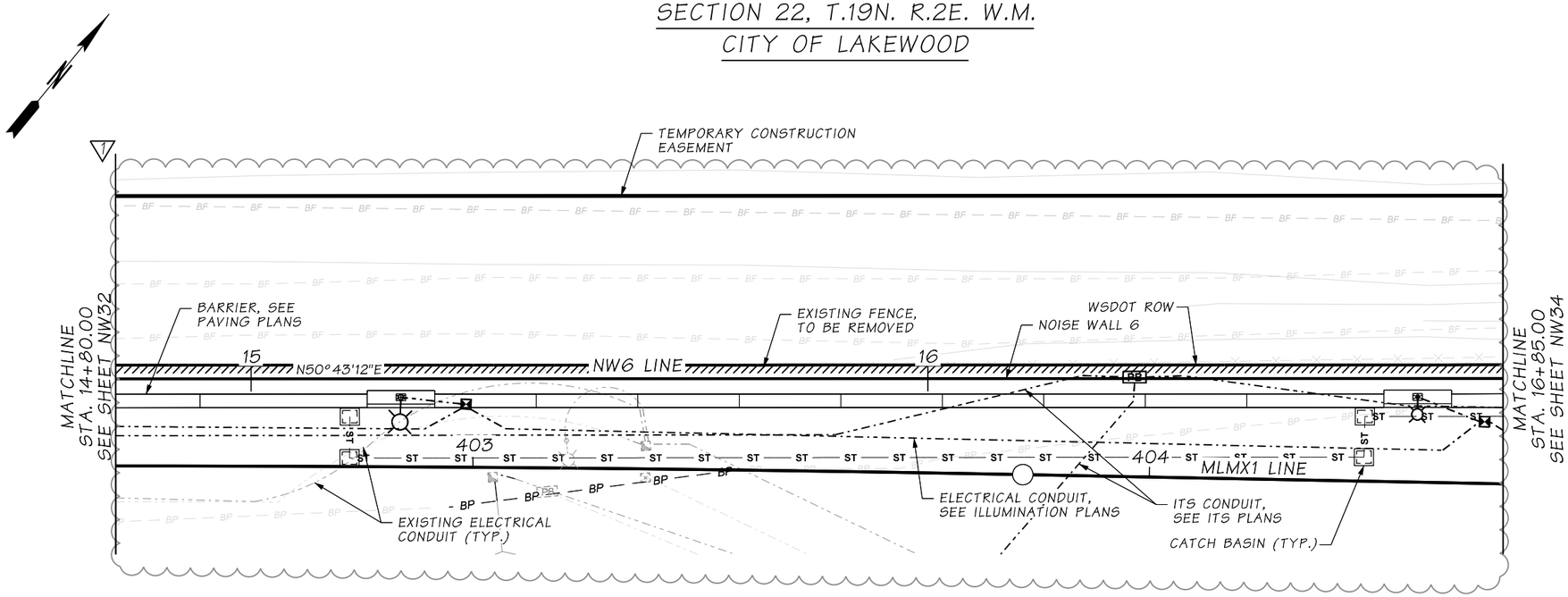

NOISE WALL 6 - PLAN

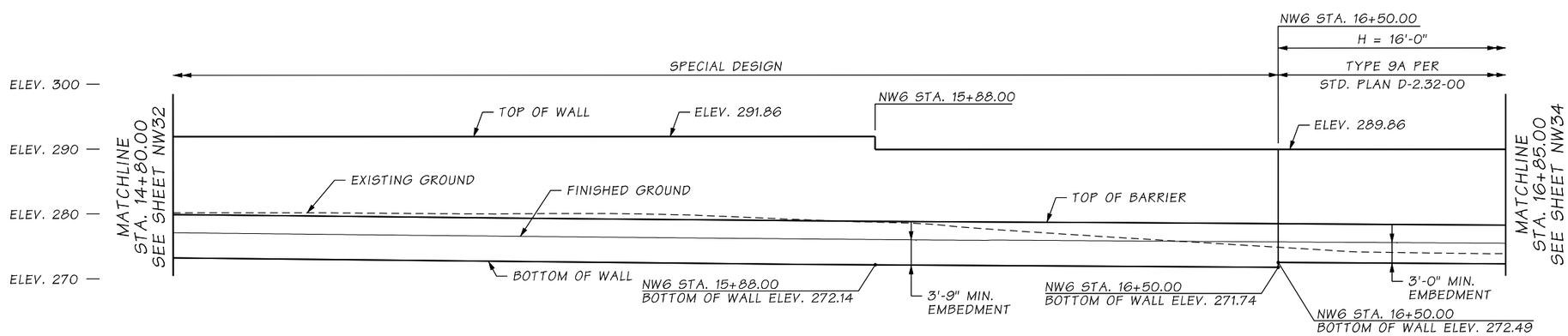

DATUM
N.A.V.D. 88

NOISE WALL 6 - ELEVATION

AS-BUILT

ATKINSON
APR 09 2020 KTW
RELEASED FOR CONSTRUCTION

NOTES:

1. SEE SHEET NW31 FOR NOTES.

FILE NAME	c:\pwworking\jacobs_b&i\caywoocj\dms20633\PS_NW33.dgn			
TIME	3:45:09 PM			
DATE	4/8/2020			
PLOTTED BY	caywoocj			
DESIGNED BY	N. BEKIT	REV 1 - RFI0429	04/13/2020	
ENTERED BY	R. REISER	REV 0 - RELEASED FOR CONSTRUCTION	09/25/2019	
CHECKED BY	C. CAYWOOD	REV B - FINAL REVIEW	09/06/2019	
PROJ. ENGR.	C. MEADE	REV A - PRELIMINARY REVIEW	07/17/2019	
REGIONAL ADM.	J. WYNANDS	REVISION	DATE	BY

REGION NO.	STATE	FED.AID PROJ.NO.
10	WASH	
JOB NUMBER		
CONTRACT NO. C9133		LOCATION NO.

CORY J. CAYWOOD, STATE OF WASHINGTON, 38759, STRUCTURAL ENGINEER, PROFESSIONAL ENGINEER
4/9/20
DATE
P.E. STAMP BOX

P.E. STAMP BOX
DATE

Washington State Department of Transportation
ATKINSON CONSTRUCTION / JACOBS

I-5
STEILACOOM-DUPONT RD TO THORNE LN
CORRIDOR IMPROVEMENTS
MP 120.01 TO MP 124.45

NOISE WALL 6
PLAN & ELEVATION (3 OF 4)

PLAN REF NO NW33
SHEET 893 OF 1456 SHEETS

SECTION 22, T.19N. R.2E. W.M.
CITY OF LAKEWOOD

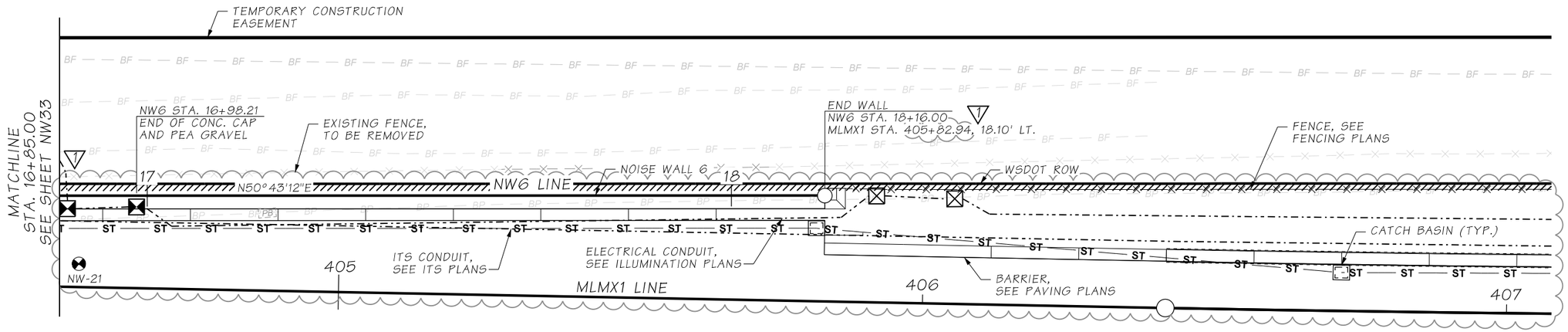

NOISE WALL 6 - PLAN

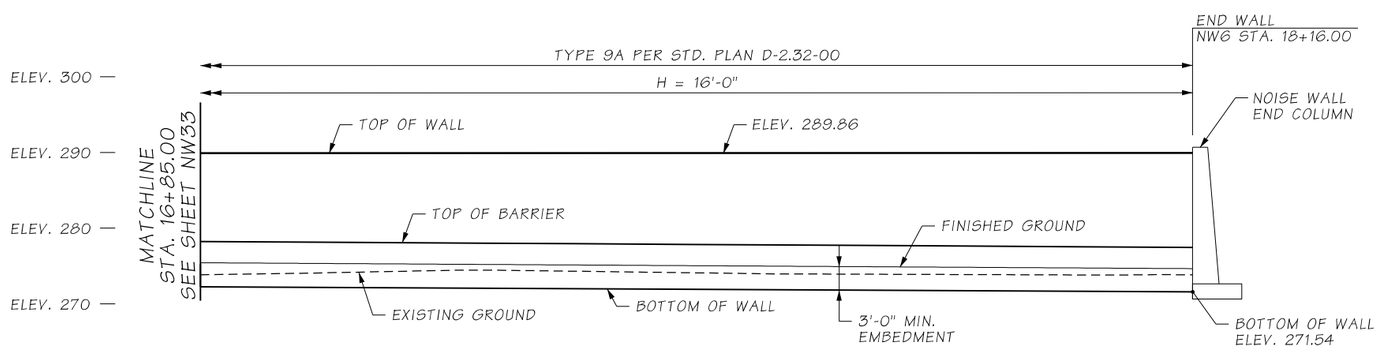

DATUM
N.A.V.D. 88

NOISE WALL 6 - ELEVATION

ATKINSON
APR 09 2020 KTW
RELEASED FOR CONSTRUCTION

NOTES:

1. SEE SHEET NW31 FOR NOTES

AS-BUILT

FILE NAME	c:\pwworking\jacobs_b&i\caywoocj\dms20633\PS_NW34.dgn						
TIME	3:34:03 PM				REGION NO. 10	STATE WASH	FED.AID PROJ.NO.
DATE	4/8/2020						
PLOTTED BY	caywoocj						
DESIGNED BY	N. BEKIT	REV 1 - RFI0429	04/13/2020		JOB NUMBER		
ENTERED BY	R. REISER	REV 0 - RELEASED FOR CONSTRUCTION	09/25/2019				
CHECKED BY	C. CAYWOOD	REV B - FINAL REVIEW	09/06/2019		CONTRACT NO. C9133		LOCATION NO.
PROJ. ENGR.	C. MEADE	REV A - PRELIMINARY REVIEW	07/17/2019				
REGIONAL ADM.	J. WYNANDS	REVISION	DATE	BY			

CORY J. CAYWOOD, STATE OF WASHINGTON, 38193, STRUCTURAL ENGINEER, PROFESSIONAL ENGINEER
4/9/20
DATE
P.E. STAMP BOX

DATE
P.E. STAMP BOX

Washington State Department of Transportation

ATKINSON / JACOBS CONSTRUCTION

I-5
STEILACOOM-DUPONT RD TO THORNE LN
CORRIDOR IMPROVEMENTS
MP 120.01 TO MP 124.45

NOISE WALL 6
PLAN & ELEVATION (4 OF 4)

PLAN REF NO NW34

SHEET 894 OF 1456 SHEETS

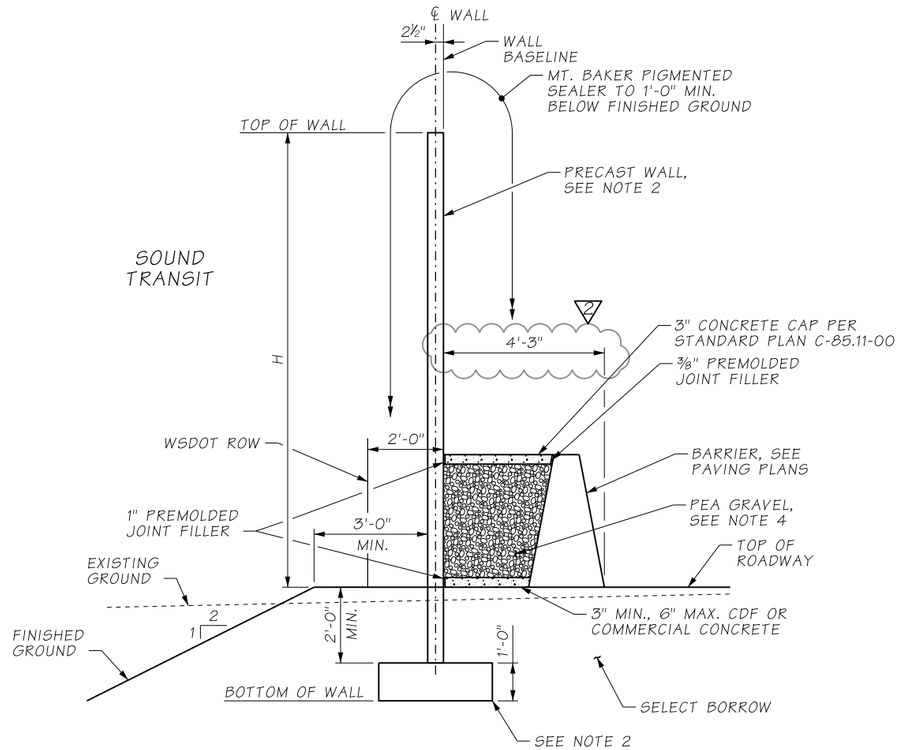

TYPE 9A STD. PLAN WALL
TYPICAL SECTION

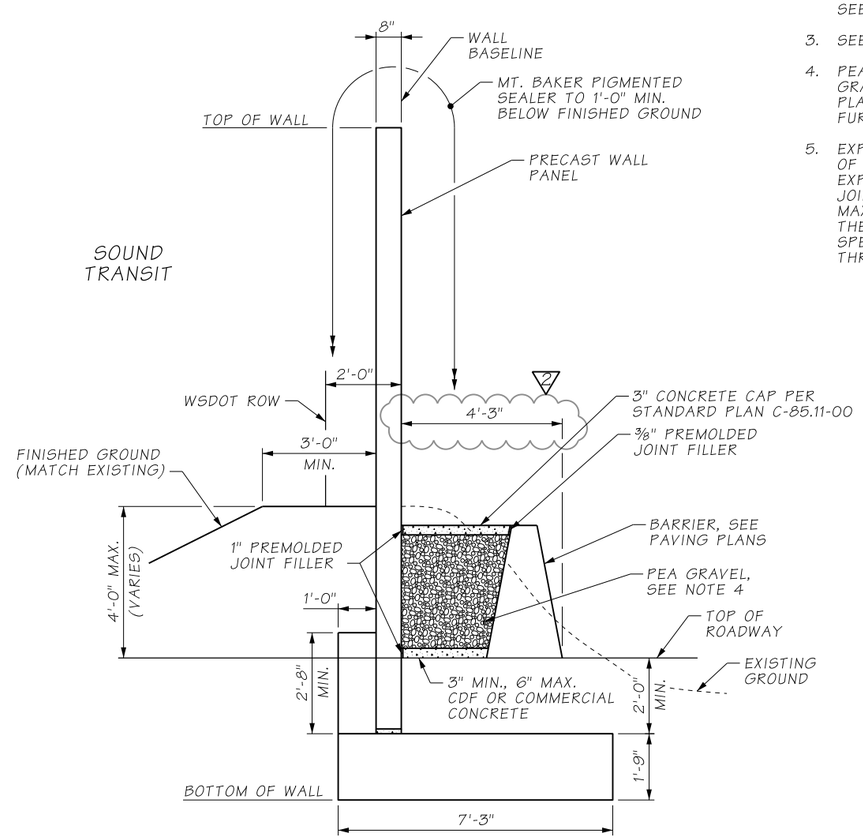

SPECIAL DESIGN
TYPICAL SECTION

NOTES:

1. SEE SHEET NW31 TO NW34 FOR WALL PLAN AND ELEVATION.
2. FOR TYPE 9A WALL, SEE STANDARD PLAN D-2.32-00 TYPE 9A FOR ADDITIONAL DETAILS. FOR SPECIAL DESIGN WALL, SEE SHEETS NW35A AND NW36B FOR ADDITIONAL DETAILS.
3. SEE SHEET NW36 FOR ARCHITECTURAL DETAILS.
4. PEA GRAVEL GRADING SHALL BE IN ACCORDANCE WITH AASHTO GRADING NO. 8 PER STANDARD SPECIFICATION 9-03.1(4)C. PLACE PEA GRAVEL SUCH THAT NO VOIDS ARE CREATED. NO FURTHER COMPACTION IS REQUIRED.
5. EXPANSION JOINTS IN THE FOOTINGS MAY BE USED IN PLACE OF CONSTRUCTION JOINTS AT CONTRACTOR'S OPTION. EXPANSION JOINTS IN THE FOOTINGS SHALL ALIGN WITH JOINTS IN THE WALL PANELS AND SHALL BE SPACED AT A MAXIMUM OF 96 FEET ON CENTERS. EXPANSION JOINTS IN THE FOOTINGS SHALL HAVE SHEAR KEYS PER STANDARD SPECIFICATION 6-11.3(3) AND NO REINFORCING EXTENDING THROUGH THE JOINT OR PREMOLDED JOINT FILLER.

ATKINSON
APR 09 2020 KTW
RELEASED FOR CONSTRUCTION

AS-BUILT

FILE NAME	D:\ICS_workdir\50154\20633_1901\PS_NW35.dgn			
TIME	3:28:55 PM			
DATE	4/8/2020			
PLOTTED BY	USLAS0-APP064$	REV 2 - RFI0429	04/13/2020	
DESIGNED BY	N. BEKIT	REV 1 - RFI0102	12/02/2019	
ENTERED BY	R. REISER	REV 0 - RELEASED FOR CONSTRUCTION	09/25/2019	
CHECKED BY	C. CAYWOOD	REV B - FINAL REVIEW	09/06/2019	
PROJ. ENGR.	C. MEADE	REV A - PRELIMINARY REVIEW	07/17/2019	
REGIONAL ADM.	J. WYNANDS	REVISION	DATE	BY

REGION NO.	STATE	FED.AID PROJ.NO.
10	WASH	
JOB NUMBER		
CONTRACT NO.		LOCATION NO.
C9133		

CORY J. CAYWOOD, STATE OF WASHINGTON, 38139, STRUCTURAL ENGINEER, PROFESSIONAL ENGINEER
4/9/20
DATE
P.E. STAMP BOX

DATE
P.E. STAMP BOX

Washington State Department of Transportation
ATKINSON CONSTRUCTION / JACOBS

I-5
STEILACOOM-DUPONT RD TO THORNE LN CORRIDOR IMPROVEMENTS
MP 120.01 TO MP 124.45

NOISE WALL 6
TYPICAL SECTIONS (1 OF 2)

PLAN REF NO NW35

SHEET 895 OF 1456 SHEETS

NOTES:

1. CONSTRUCTION JOINTS IN FOOTING SHALL BE SPACED 120 FEET MAXIMUM.
2. ALL JOINTS SHALL BE FULL CONTACT AND SEALED.
3. THE #6 BOTTOM TRANSVERSE BARS IN THE FOOTING MAY BE PLACED ON TOP OF THE #5 BOTTOM LONGITUDINAL BARS AT CONTRACTOR'S OPTION.

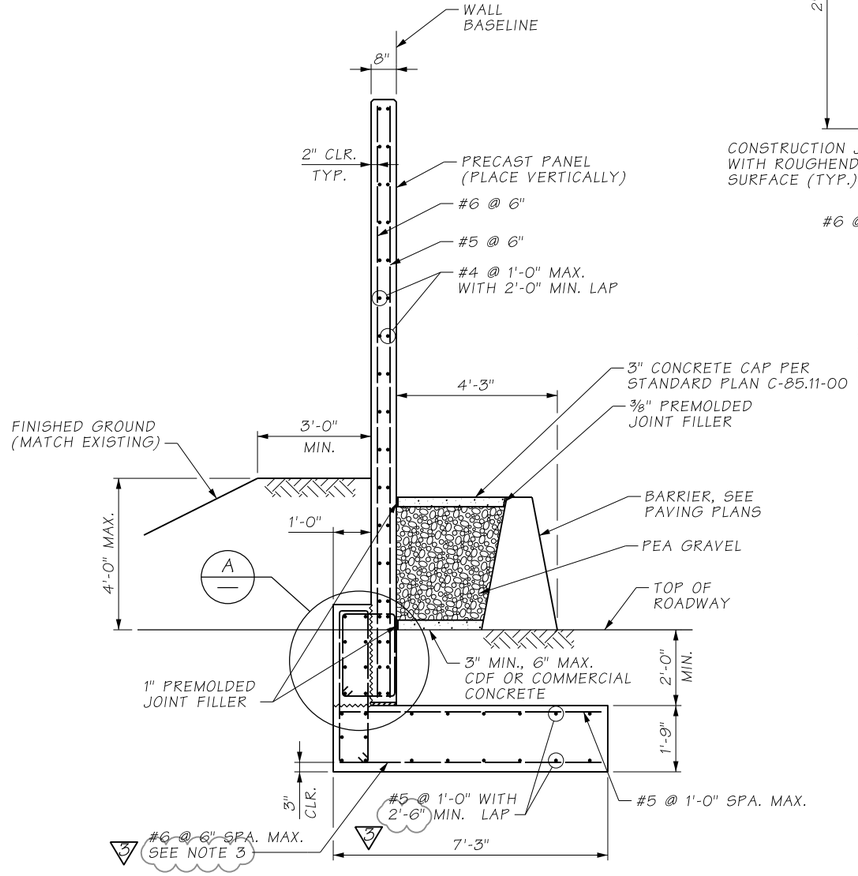

SPECIAL DESIGN

TYPICAL SECTION

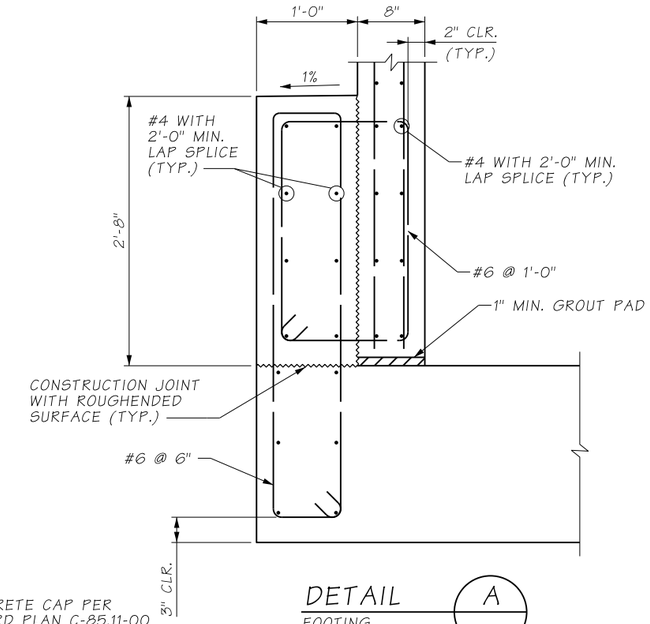

DETAIL A

FOOTING REINFORCEMENT NOT SHOWN

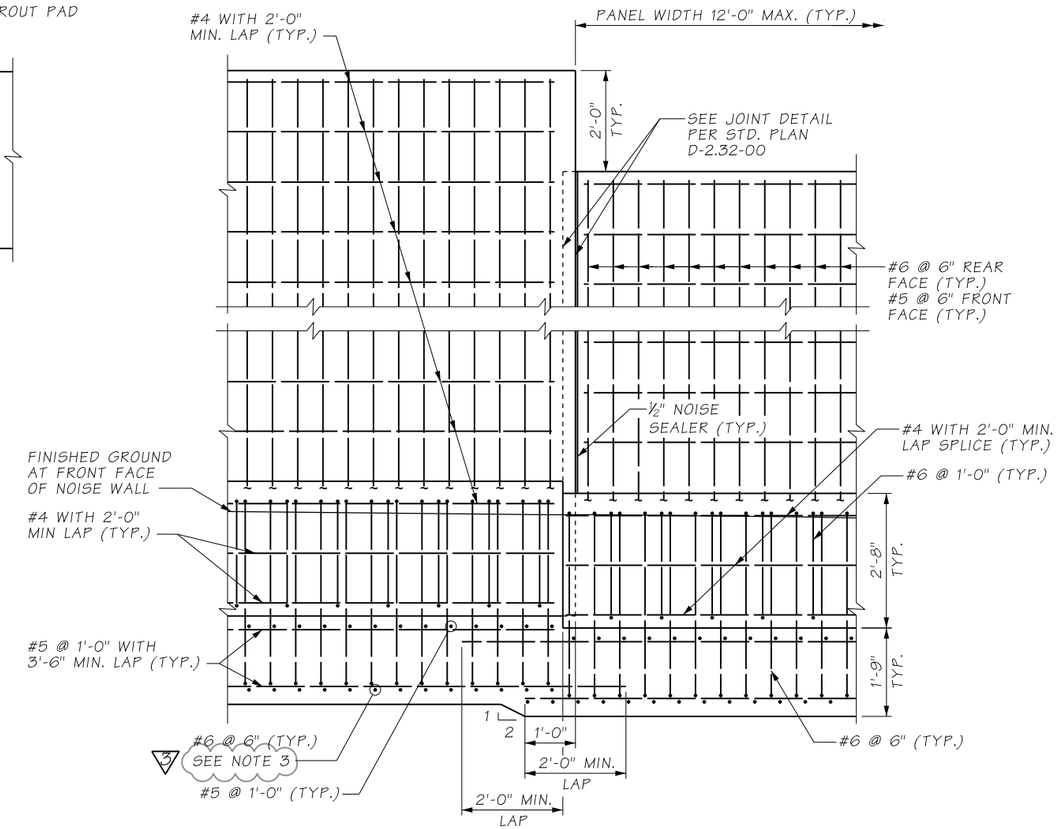

SPECIAL DESIGN

ELEVATION

(LOOKING AT FRONT FACE OF NOISE WALL, BARRIER NOT SHOWN)

AS-BUILT

ATKINSON
NOV 03 2020
RELEASED FOR CONSTRUCTION

FILE NAME	D:\ICS_workdir\67124\20633_2353\PS_NW35A.dgn				REGION NO. 10	STATE WASH	FED.AID PROJ.NO.
TIME	11:05:43 AM						
DATE	11/3/2020						
PLOTTED BY	USLAS0-APP064$	REV 3 - RFI0540	11/04/2020		JOB NUMBER		
DESIGNED BY	N. BEKIT	REV 2 - RFI0429	04/13/2020				
ENTERED BY	R. REISER	REV 1 - RFI0279	12/02/2019				
CHECKED BY	C. CAYWOOD	REV 0 - RELEASED FOR CONSTRUCTION	09/25/2019		CONTRACT NO. C9133		LOCATION NO.
PROJ. ENGR.	C. MEADE	REV A - FINAL REVIEW	09/06/2019				
REGIONAL ADM.	J. WYNANDS	REVISION	DATE	BY			

CORY J. CAYWOOD, STATE OF WASHINGTON, 38139, STRUCTURAL ENGINEER, PROFESSIONAL ENGINEER
11/3/20
DATE
P.E. STAMP BOX

DATE
P.E. STAMP BOX

Washington State Department of Transportation

ATKINSON CONSTRUCTION / JACOBS

I-5
STEILACOOM-DUPONT RD TO THORNE LN
CORRIDOR IMPROVEMENTS
MP 120.01 TO MP 124.45

NOISE WALL 6
TYPICAL SECTIONS (2 OF 2)

PLAN REF NO NW35A

SHEET 896 OF 1456 SHEETS

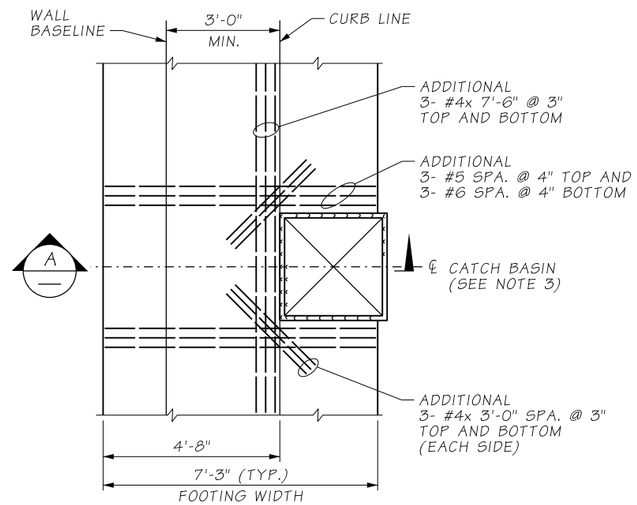

PLAN - AT CATCH BASIN

TYPICAL FOOTING REBAR NOT SHOWN FOR CLARITY

NOTES:

1. CONSTRUCTION JOINTS IN FOOTING SHALL BE SPACED 120 FEET MAXIMUM.
2. ALL JOINTS SHALL BE FULL CONTACT AND SEALED.
3. FOR CATCH BASIN LOCATIONS, SEE DRAINAGE PLANS.
4. FOR BARRIER AND FOOTING DETAILS NOT SHOWN, SEE SHEETS NW35 AND NW35A.
5. FOR LUMINAIRE LOCATIONS, SEE ILLUMINATION PLANS.
6. IF THE PRECAST PANEL IS PLACED BEFORE THE BARRIER AT THE LUMINAIRES, THE PEA GRAVEL AND CONCRETE CAP MAY BE OMITTED AND THE BARRIER MAY BE CAST DIRECTLY AGAINST THE PRECAST PANEL. NO CHANGES TO THE REINFORCING ARE REQUIRED. SLOPE TOP OF BARRIER TO DRAIN AWAY FROM NOISE WALL.
7. THE #6 BOTTOM TRANSVERSE BARS IN THE FOOTING MAY BE PLACED ON TOP OF THE #5 BOTTOM LONGITUDINAL BARS AT CONTRACTOR'S OPTION. (2)

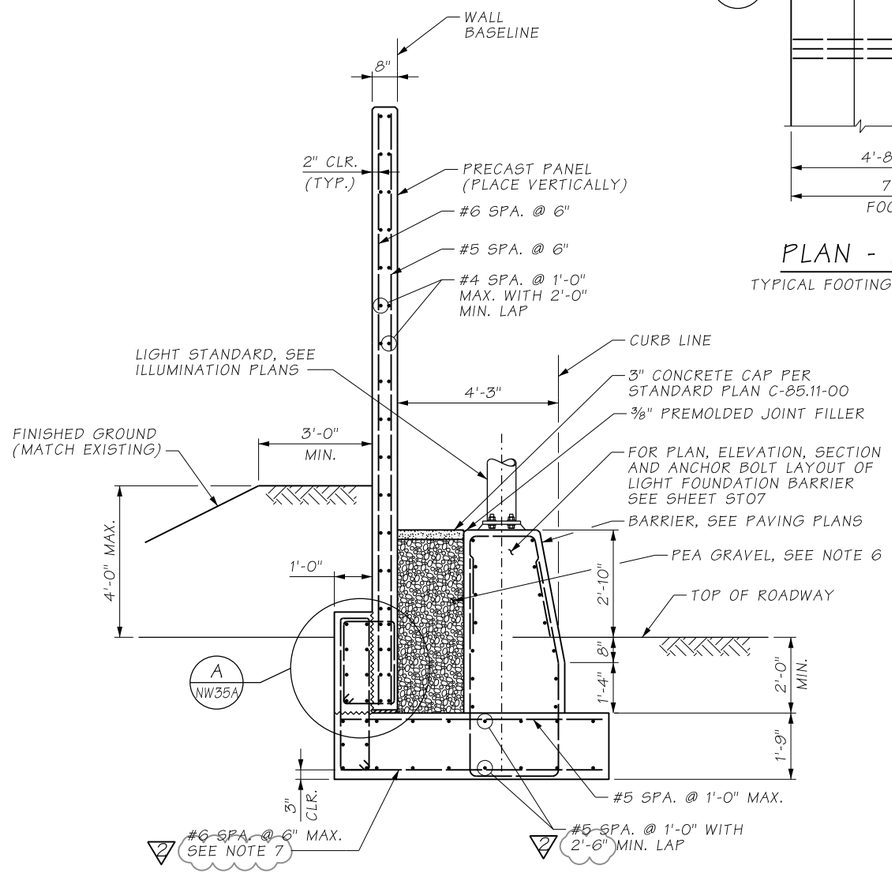

SPECIAL DESIGN

TYPICAL SECTION AT LUMINAIRE LOCATIONS

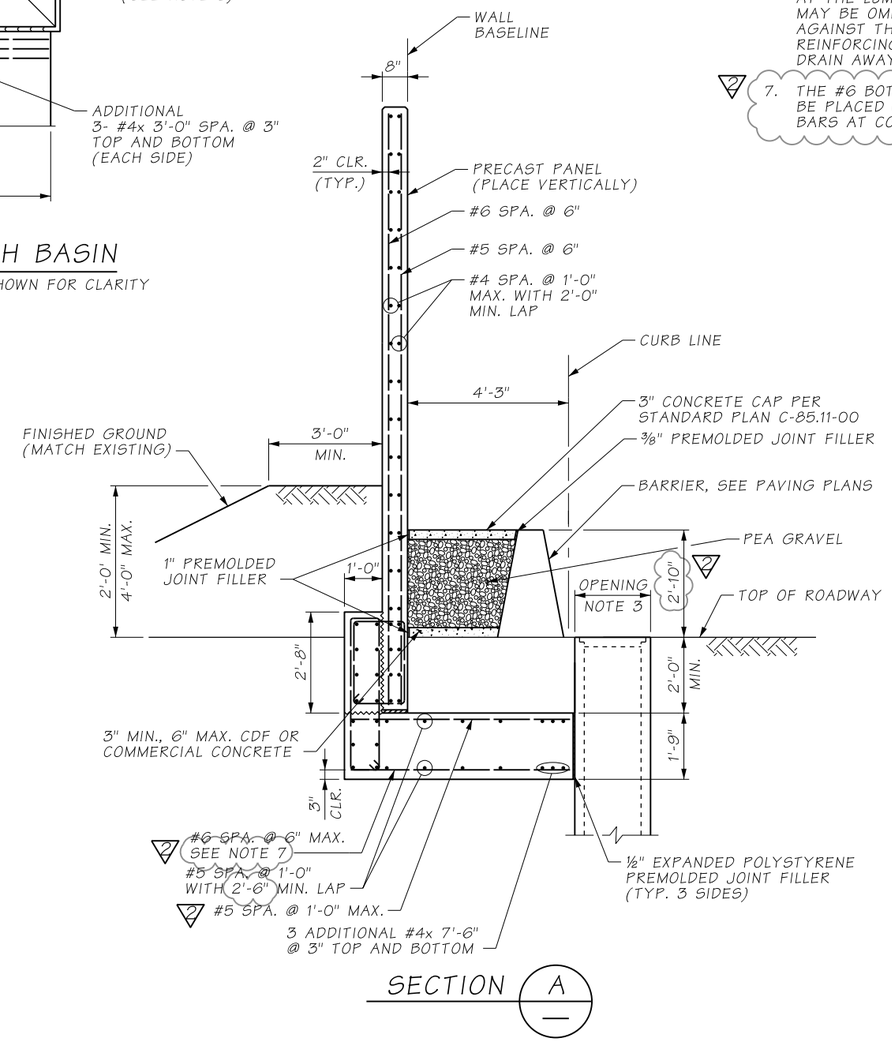

SECTION A

AS-BUILT

ATKINSON
NOV 03 2020 KFW
RELEASED FOR CONSTRUCTION

FILE NAME	D:\ICS_workdir\67124\20633_2393\PS_NW35B.dgn				REGION NO. 10	STATE WASH	FED.AID PROJ.NO.
TIME	11:05:42 AM						
DATE	11/3/2020						
PLOTTED BY	USLAS0-APP064$						
DESIGNED BY	N. BEKIT	REV 2 - RFI0538, RFI0540	11/04/2020		JOB NUMBER		
ENTERED BY	R. REISER	REV 1 - RFI0429	04/13/2020				
CHECKED BY	C. CAYWOOD	REV 0 - RELEASED FOR CONSTRUCTION	09/25/2019		CONTRACT NO. C9133		LOCATION NO.
PROJ. ENGR.	C. MEADE	REV A - FINAL REVIEW	09/06/2019				
REGIONAL ADM.	J. WYNANDS	REVISION	DATE	BY			

CORY J. CAYWOOD, STATE OF WASHINGTON, 38159, STRUCTURAL ENGINEER, PROFESSIONAL ENGINEER
11/3/20
DATE
P.E. STAMP BOX

DATE
P.E. STAMP BOX

Washington State Department of Transportation

ATKINSON CONSTRUCTION / JACOBS

I-5
STEILACOOM-DUPONT RD TO THORNE LN
CORRIDOR IMPROVEMENTS
MP 120.01 TO MP 124.45

NOISE WALL 6
TYPICAL SECTION - LIGHT FOUNDATION

PLAN REF NO NW35B

SHEET 897 OF 1456 SHEETS

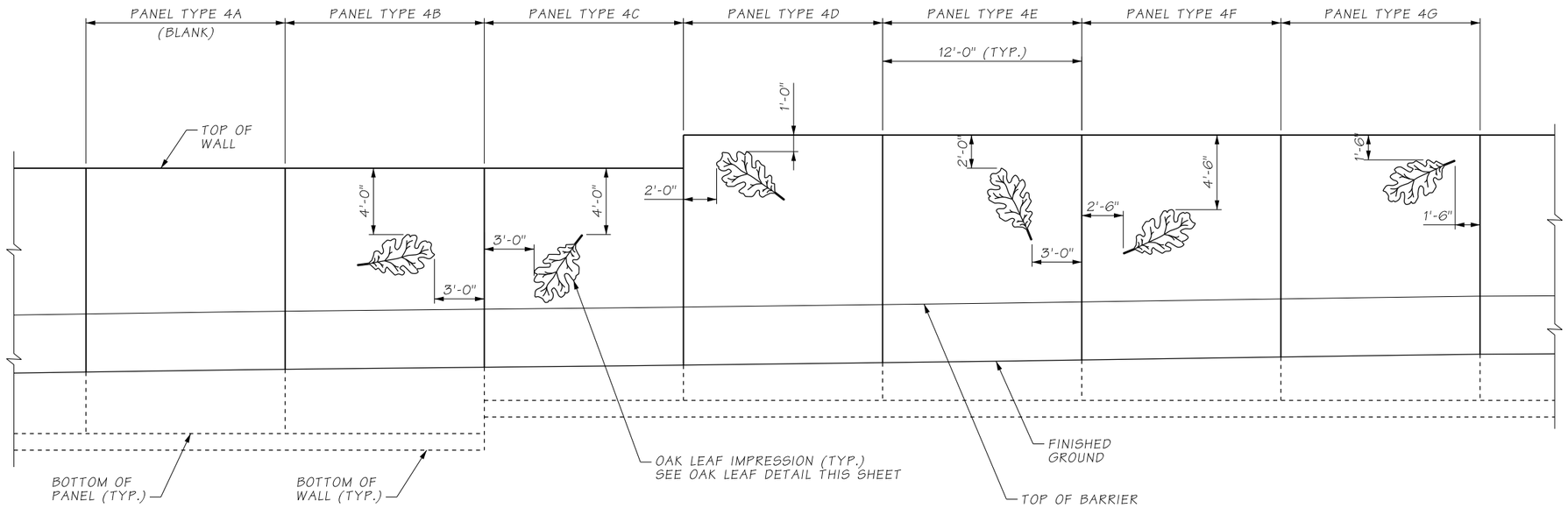

NOISE WALL 4 AND 6

ELEVATION - I-5 CORRIDOR SIDE

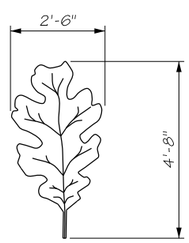

OAK LEAF DETAIL

AS-BUILT

NOTES:

1. OAK LEAF PATTERN ON I-5 SIDE SHALL CONSIST OF PANEL TYPES 4A THROUGH 4G IN RANDOM ORDER. NO TYPE 4A PANELS (BLANK) SHALL BE IMMEDIATELY NEXT TO EACH OTHER. OMIT TYPE 4C PANELS FOR EXPOSED WALL HEIGHTS OF 12'-0" OR LESS. OMIT TYPES 4E AND 4F PANELS FOR EXPOSED WALL HEIGHTS OF 10'-0" OR LESS.
2. PRIOR TO PANEL FABRICATION, SUBMIT SHOP DRAWINGS FOR APPROVAL INCLUDING ELEVATION OF WALL WITH PANEL TYPES, PANEL HEIGHTS, AND FOOTING ELEVATIONS.
3. WALL PANELS MAY HAVE AN ANGLED BUTT JOINT PROVIDED THAT BACKER RODS ARE INSTALLED AND JOINTS ARE SEALED.
4. FINISH ON COMMUNITY SIDE SHALL BE EXPOSED AGGREGATE FOR NOISE WALL 4 AND BROOM FINISH FOR NOISE WALL 6.
5. PREPARE SAMPLE PANEL WITH OAK LEAF IMPRESSION AND EXPOSED AGGREGATE FOR REVIEW PRIOR TO CASTING ANY PRODUCTION PANELS.

ATKINSON
DEC 04 2019 KTW
RELEASED FOR CONSTRUCTION

FILE NAME	D:\ICS_workdir\41278\20633_1944\PS_NW36.dgn						
TIME	11:13:43 AM				REGION NO.	STATE	FED.AID PROJ.NO.
DATE	12/2/2019	REV 3 - RFI0112, RFI0279	12/02/2019		10	WASH	
PLOTTED BY	USLAS0-APP064$	REV 2 - RELEASED FOR CONSTRUCTION	09/25/2019		JOB NUMBER		
DESIGNED BY	K. YOUNG	REV B - RFI0180	09/06/2019				
ENTERED BY	R. REISER	REV 1 - RFI0116	06/06/2019				
CHECKED BY	C. CAYWOOD	REV 0 - RELEASED FOR CONSTRUCTION	05/06/2019		CONTRACT NO.		LOCATION NO.
PROJ. ENGR.	C. MEADE	REV A - FINAL REVIEW	03/26/2019		C9133		
REGIONAL ADM.	J. WYNANDS	REVISION	DATE	BY			

CORY J. CAYWOOD
STATE OF WASHINGTON
38155
STRUCTURAL ENGINEER
PROFESSIONAL ENGINEER
12/3/19
DATE
P.E. STAMP BOX

DATE
P.E. STAMP BOX

Washington State Department of Transportation

ATKINSON / JACOBS CONSTRUCTION

I-5
STEILACOOM-DUPONT RD TO THORNE LN
CORRIDOR IMPROVEMENTS
MP 120.01 TO MP 124.45

NOISE WALL 4 AND 6
ARCHITECTURAL DETAILS

PLAN REF NO NW36

SHEET 898 OF 1456 SHEETS

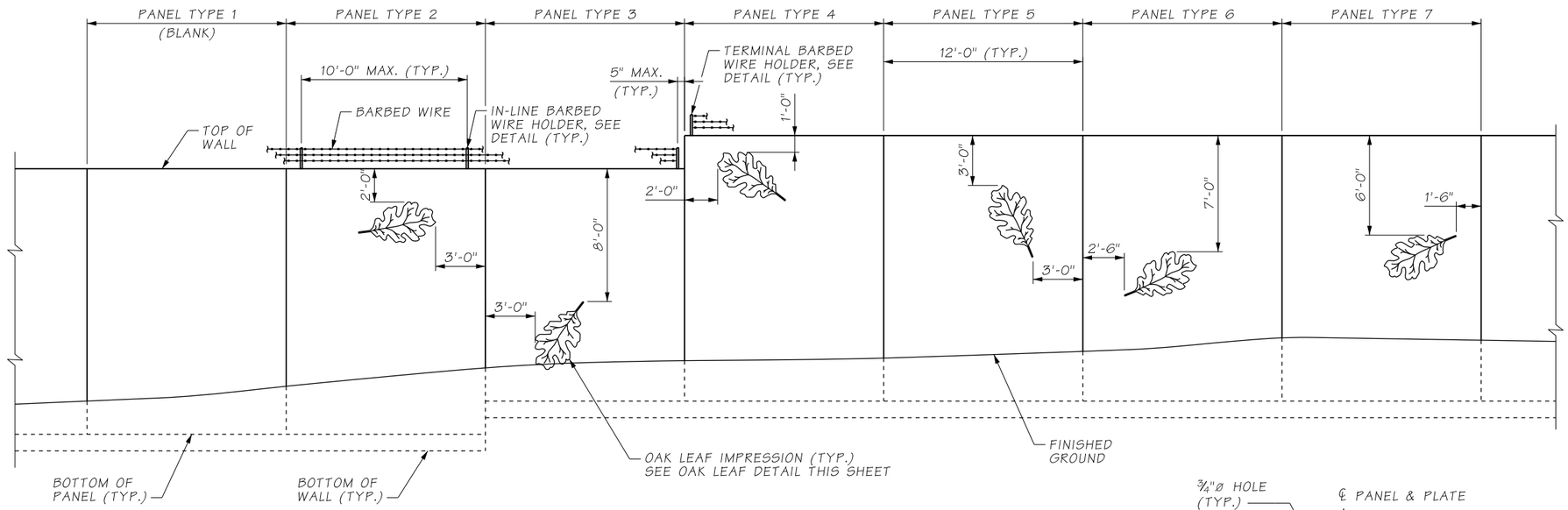

ELEVATION - I-5 CORRIDOR SIDE

FOR NOISE WALL 5

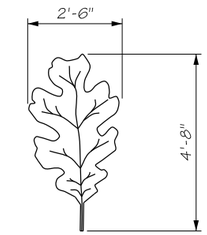

OAK LEAF DETAIL

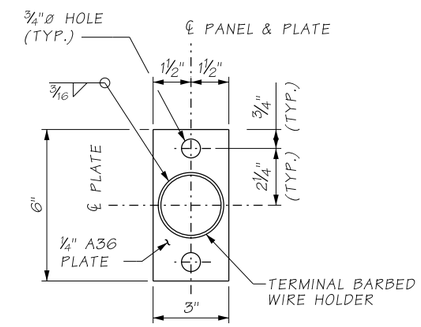

SECTION A

GALVANIZE AFTER FABRICATION IN ACCORDANCE WITH AASHTO M232

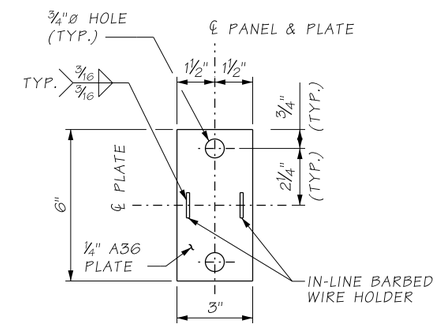

SECTION B

GALVANIZE AFTER FABRICATION IN ACCORDANCE WITH AASHTO M232

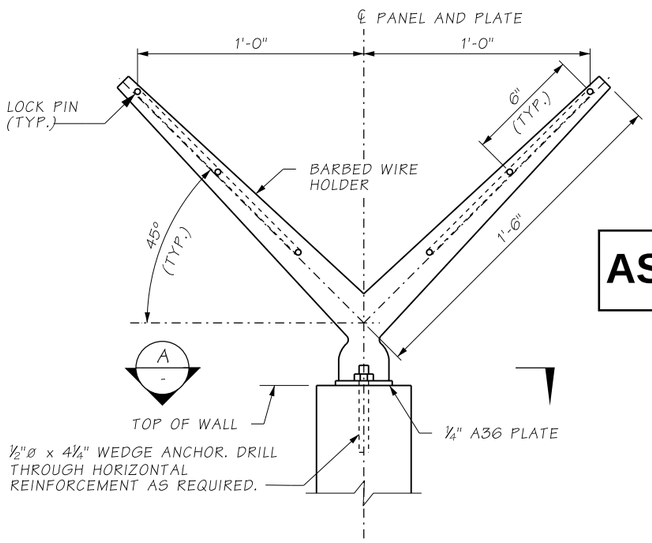

TERMINAL BARBED WIRE HOLDER DETAIL

AS-BUILT

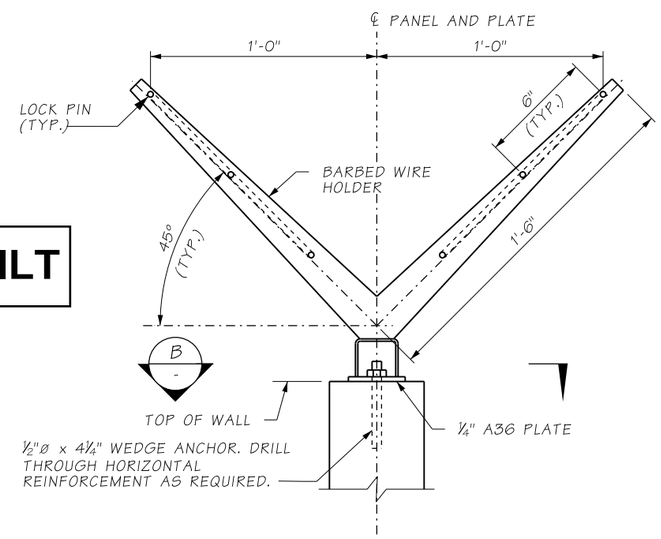

IN-LINE BARBED WIRE HOLDER DETAIL

ATKINSON

DEC 04 2019 KTW

RELEASED FOR CONSTRUCTION

NOTES:

1. OAK LEAF PATTERN ON I-5 SIDE SHALL CONSIST OF PANEL TYPES 1 THROUGH 7 IN RANDOM ORDER. NO TYPE 1 PANELS (BLANK) SHALL BE IMMEDIATELY NEXT TO EACH OTHER. OMIT TYPE 3 PANELS FOR EXPOSED WALL HEIGHTS OF 12'-0" OR LESS.
2. PRIOR TO PANEL FABRICATION, SUBMIT SHOP DRAWINGS FOR APPROVAL INCLUDING ELEVATION OF WALL WITH PANEL TYPES, PANEL HEIGHTS, AND FOOTING ELEVATIONS.
3. WALL PANELS MAY HAVE AN ANGLED BUTT JOINT PROVIDED THAT BACKER RODS ARE INSTALLED AND JOINTS ARE SEALED. (3)
4. FINISH ON COMMUNITY SIDE OF NOISE WALLS SHALL BE EXPOSED AGGREGATE.
5. PREPARE SAMPLE PANEL WITH OAK LEAF IMPRESSION AND EXPOSED AGGREGATE FOR REVIEW PRIOR TO CASTING ANY PRODUCTION PANELS.

FILE NAME	D:\ICS_workdir\41278\20633_1693\PS_NW37.dgn			
TIME	11:16:20 AM			
DATE	12/2/2019			
PLOTTED BY	USLAS0-APP064$	REV 3 - RFI0112	12/02/2019	
DESIGNED BY	K. YOUNG	REV 2 - RFI0205	09/13/2019	
ENTERED BY	R. REISER	REV 1 - RFI0116	06/06/2019	
CHECKED BY	A. FONG	REV 0 - RELEASED FOR CONSTRUCTION	03/12/2019	
PROJ. ENGR.	C. MEADE	REV A - FINAL REVIEW	02/15/2019	
REGIONAL ADM.	J. WYNANDS	REVISION	DATE	BY

REGION NO.	STATE	FED.AID PROJ.NO.
10	WASH	
JOB NUMBER		
CONTRACT NO. C9133		LOCATION NO.

ABRY J. CAYWOOD — STATE OF WASHINGTON — 38133 — STRUCTURAL ENGINEER — PROFESSIONAL ENGINEER

12/3/19

DATE

P.E. STAMP BOX

DATE

P.E. STAMP BOX

Washington State Department of Transportation

ATKINSON CONSTRUCTION / JACOBS

I-5
STEILACOOM-DUPONT RD TO THORNE LN CORRIDOR IMPROVEMENTS
MP 120.01 TO MP 124.45

NOISE WALL 5
ARCHITECTURAL DETAILS

PLAN REF NO NW37

SHEET 899 OF 1456 SHEETS

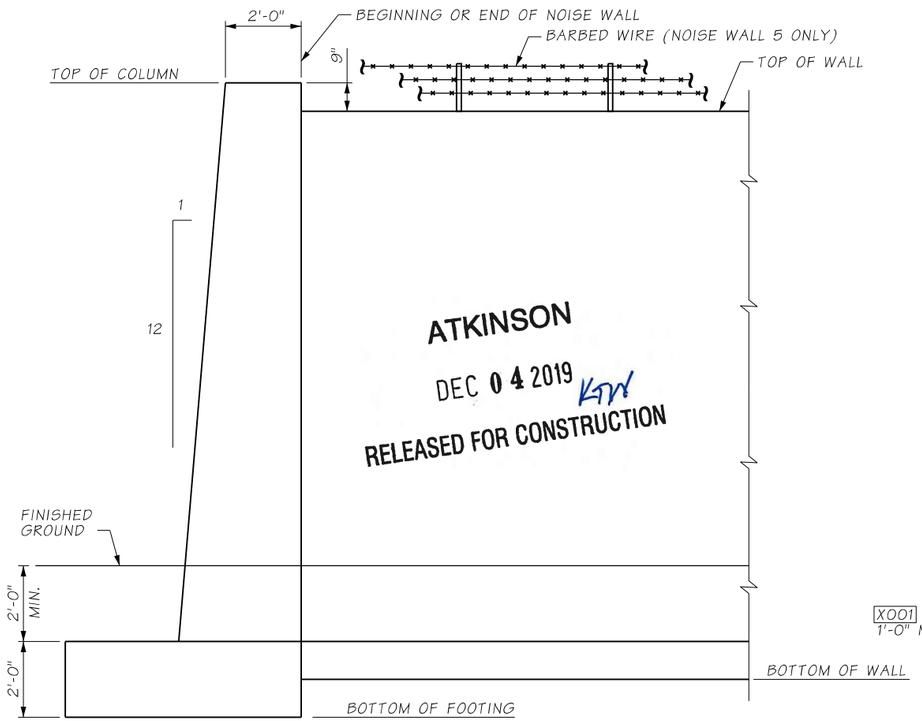

ELEVATION - NOISE WALL END COLUMN

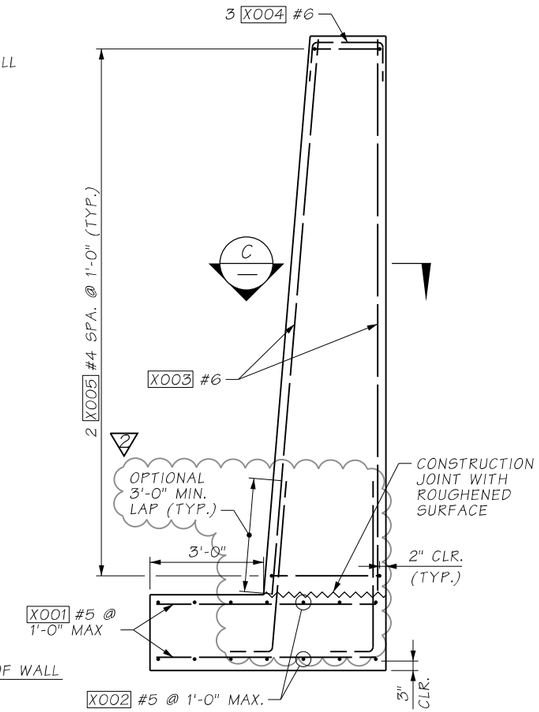

SECTION A

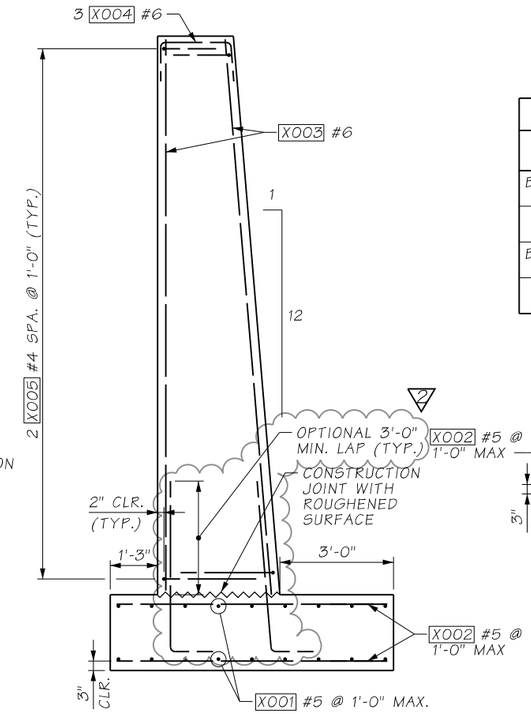

SECTION B

NOTES:

1. BAR MARKS ARE DESIGNATED AS FOLLOWS: X001, WHERE "X"= NOISE WALL NUMBER

NOISE WALL END COLUMN ELEVATION

	TOP OF COLUMN	BOTTOM OF FOOTING	L (FT)	W (FT)
BEGINNING OF NW4	285.75'	268.34'	6.28'	7.53'
END OF NW4	286.75'	271.87'	6.07'	7.32'
BEGINNING OF NW5	287.75'	264.75'	6.75'	8.00'
END OF NW5	295.75'	277.00'	6.40'	7.65'

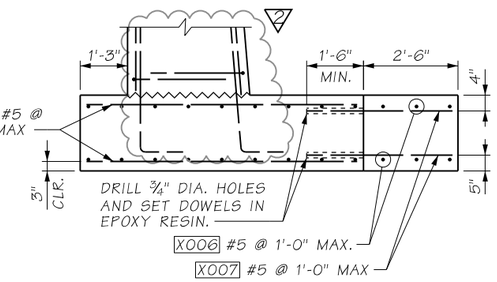

SECTION B

BEGINNING OF NW5 ONLY
SECTION A SIMILAR

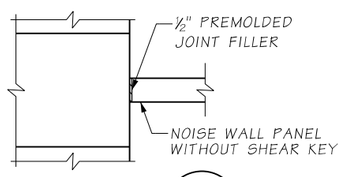

DETAIL 1

AS-BUILT

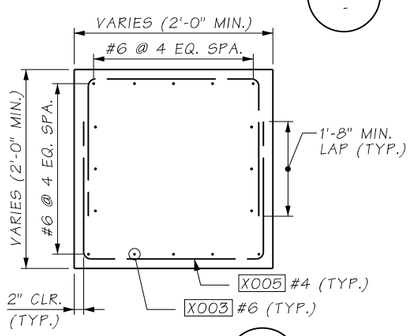

SECTION C

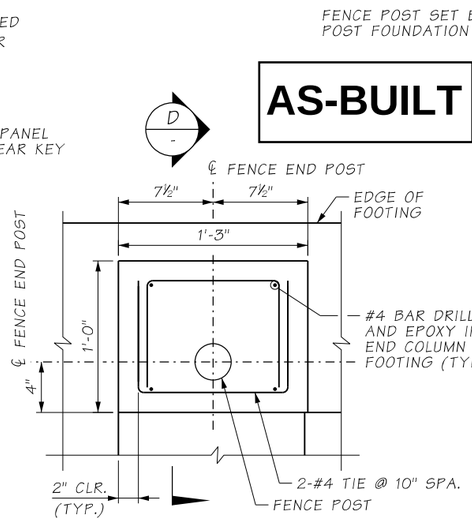

CHAIN LINK FENCE POST FOUNDATION PLAN

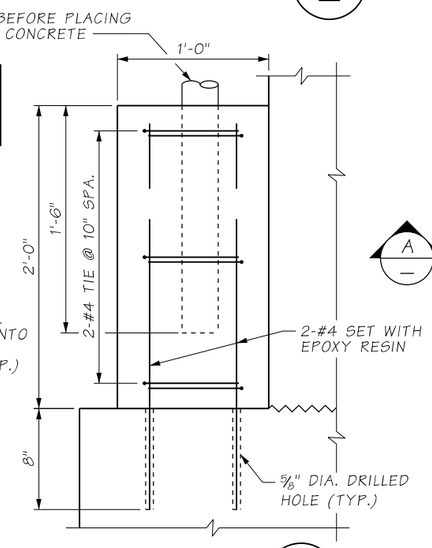

SECTION D

FOOTING REINFORCEMENT NOT SHOWN FOR CLARITY

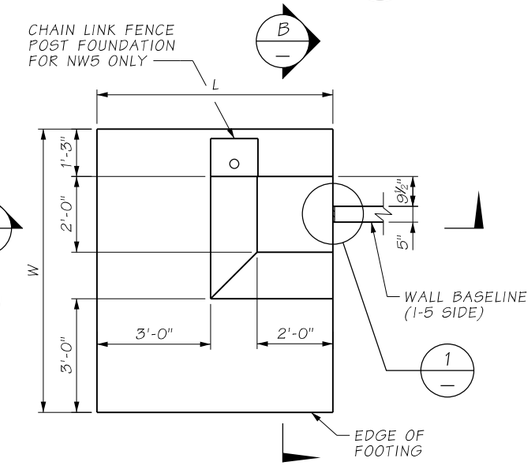

PLAN - NOISE WALL END COLUMN

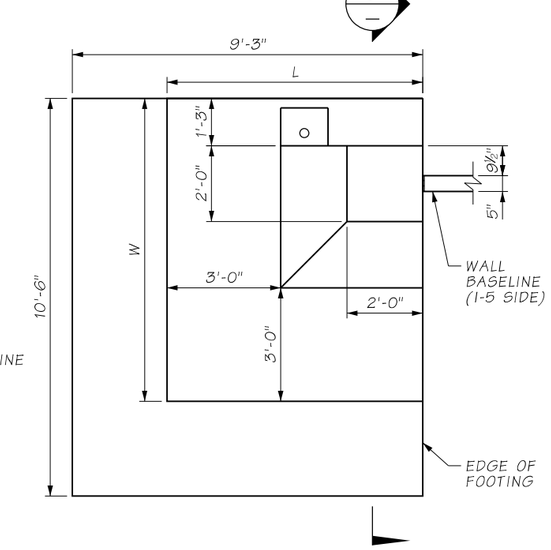

PLAN - BEGINNING OF NOISE WALL 5 END COLUMN

FILE NAME	c:\pwworkIng\jacobs_b&I\youngkI2\dms20633\PS_NW38.dgn			
TIME	10:33:58 AM			
DATE	12/3/2019			
PLOTTED BY	youngkI2			
DESIGNED BY	K. YOUNG	REV 2 - RFI0101	12/02/2019	
ENTERED BY	R. REISER	REV 1 - RFI0205	09/13/2019	
CHECKED BY	A. FONG	REV 0 - RELEASED FOR CONSTRUCTION	03/12/2019	
PROJ. ENGR.	C. MEADE	REV A - FINAL REVIEW	02/15/2019	
REGIONAL ADM.	J. WYNANDS	REVISION	DATE	BY

REGION NO.	STATE	FED.AID PROJ.NO.
10	WASH	
JOB NUMBER		
CONTRACT NO. C9133		LOCATION NO.

P.E. STAMP BOX — DATE 12/3/19

P.E. STAMP BOX — DATE

Washington State Department of Transportation

ATKINSON / JACOBS CONSTRUCTION

I-5
STEILACOOM-DUPONT RD TO THORNE LN CORRIDOR IMPROVEMENTS
MP 120.01 TO MP 124.45

NOISE WALL 4 AND 5 END COLUMN DETAILS

PLAN REF NO NW38

SHEET 900 OF 1456 SHEETS

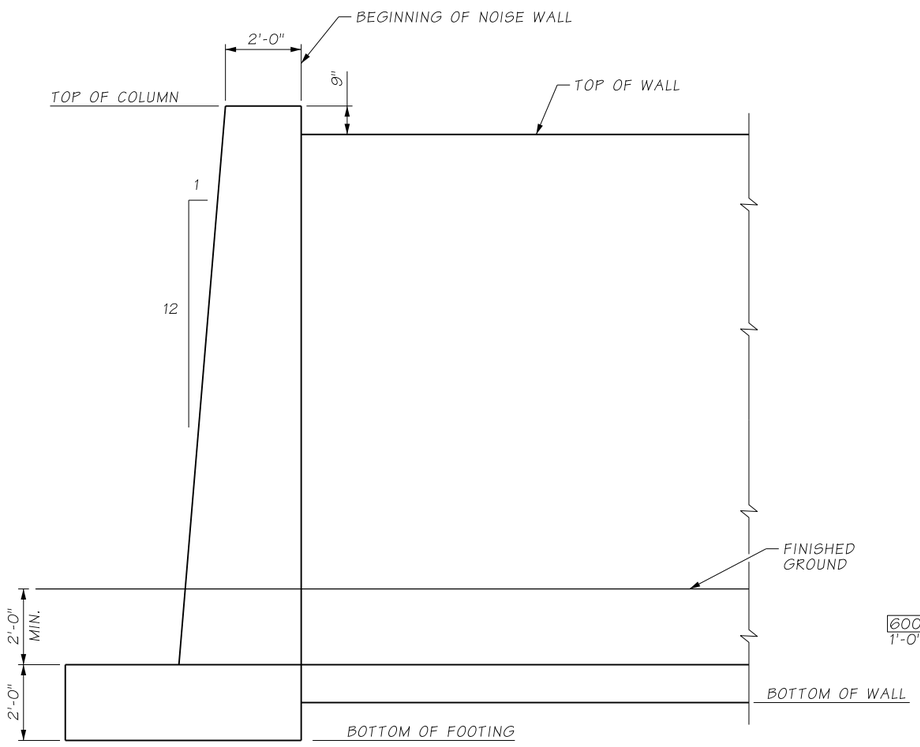

ELEVATION - NOISE WALL END COLUMN

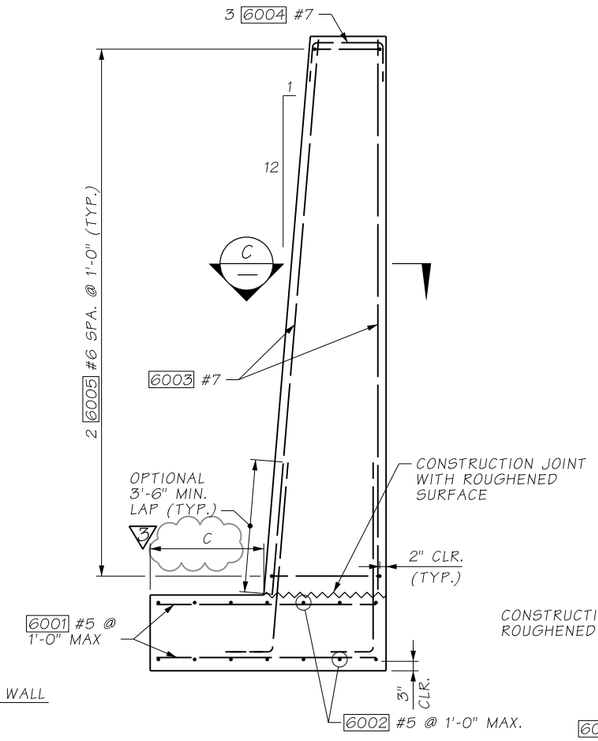

SECTION A

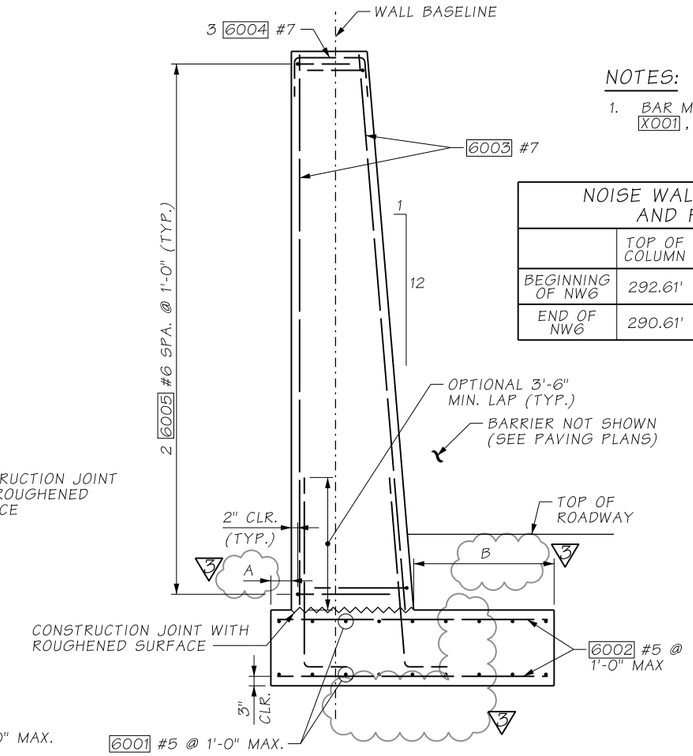

SECTION B

NOTES:

1. BAR MARKS ARE DESIGNATED AS FOLLOWS: X001, WHERE "X"= NOISE WALL NUMBER

NOISE WALL END COLUMN ELEVATION AND FOOTING DIMENSIONS

	TOP OF COLUMN	BOTTOM OF FOOTING	A (FT)	B (FT)	C (FT)	L (FT)	W (FT)
BEGINNING OF NW6	292.61'	275.55'	0.54'	3.71'	3.00'	6.25'	7.50'
END OF NW6	290.61'	270.59'	0.88'	2.50'	5.50'	9.00'	6.88'

ATKINSON
NOV 15 2021 KTW
RELEASED FOR CONSTRUCTION

AS-BUILT

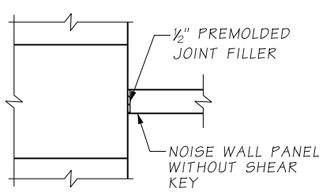

DETAIL 1

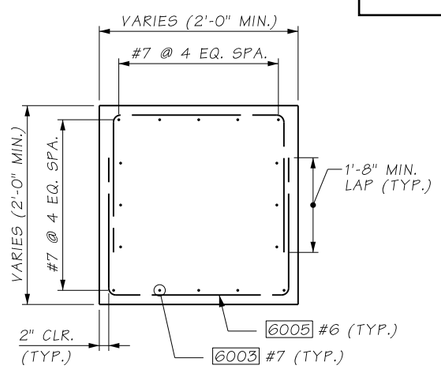

SECTION C

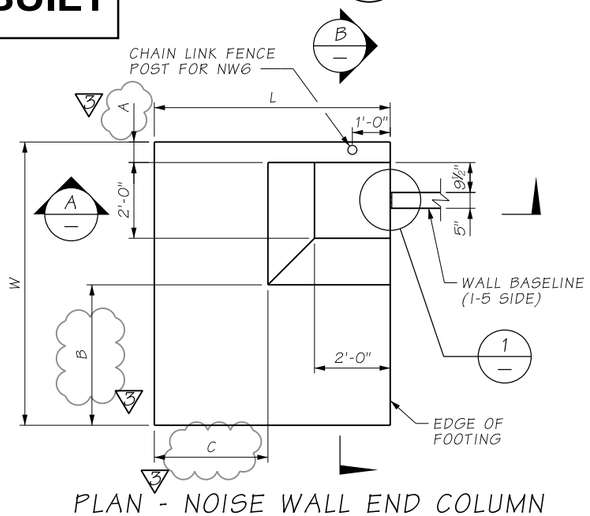

PLAN - NOISE WALL END COLUMN

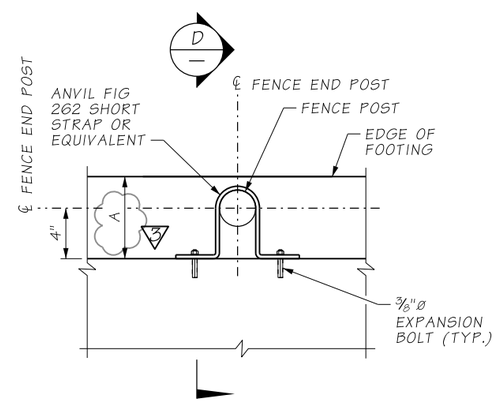

CHAIN LINK FENCE POST CONNECTION PLAN

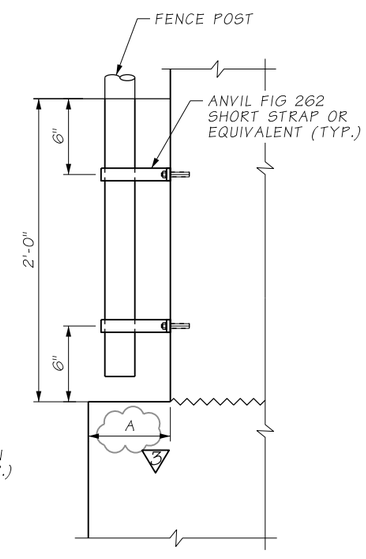

SECTION D

FOOTING REINFORCEMENT NOT SHOWN FOR CLARITY

FILE NAME	D:\ICS_workdir\91775\20633_2355\PS_NW39.dgn				REGION NO. 10	STATE WASH	FED.AID PROJ.NO.
TIME	12:36:48 PM						
DATE	11/9/2021						
PLOTTED BY	USLAS0-APP064$	REV 3 - RFI0580	11/17/2021		JOB NUMBER		
DESIGNED BY	N. BEKIT	REV 2 - RFI0429	04/13/2020				
ENTERED BY	R. REISER	REV 1 - RFI0101	12/02/2019				
CHECKED BY	K. YOUNG	REV 0 - RELEASED FOR CONSTRUCTION	09/25/2019		CONTRACT NO. C9133		LOCATION NO.
PROJ. ENGR.	C. MEADE	REV A - FINAL REVIEW	09/06/2019				
REGIONAL ADM.	J. WYNANDS	REVISION	DATE	BY			

CORY J. CAYWOOD, STATE OF WASHINGTON, 38759, STRUCTURAL ENGINEER, PROFESSIONAL ENGINEER
11/15/21
DATE
P.E. STAMP BOX

P.E. STAMP BOX
DATE

Washington State Department of Transportation

ATKINSON / JACOBS CONSTRUCTION

I-5
STEILACOOM-DUPONT RD TO THORNE LN CORRIDOR IMPROVEMENTS
MP 120.01 TO MP 124.45

NOISE WALL 6
END COLUMN DETAILS

PLAN REF NO NW39

SHEET 901 OF 1456 SHEETS