FOR AS-BUILT PLAN ONLY

SEATTLE TUNNEL PARTNERS
AS-BUILT PACKAGE

SR 99 BORED TUNNEL ALTERNATIVE DESIGN-BUILD PROJECT

SOUTH OPERATIONS BUILDING MECHANICAL

DAVID B. PARKER
STATE OF WASHINGTON
36243
REGISTERED
PROFESSIONAL ENGINEER

05-14-19

AS-BUILT PLANS ACCURATELY AND COMPLETELY REFLECT CHANGES AND CORRECTIONS MADE DURING CONSTRUCTION AS DOCUMENTED IN THE RFI AND NDC QA/QC PROCEDURES DEVELOPED FOR THIS PROJECT AND AS BASED ON AS-BUILT INFORMATION PROVIDED BY SEATTLE TUNNEL PARTNERS.

H-D-PAK-SOB-TR2.34-00362-08-ASB-1905-14

INDEX

PLAN REFERENCE NO.	TITLE
	BUILDING PLUMBING
DS002	SOUTH OPS BUILDING MECH GENERAL NOTES
DS003-DS011	SEC CODE COMPIANCE FORM
DS012-DS013	SEQUENCE OF OPERATION FOR HVAC CONTROLS
DS101	SOUTH OPS BUILDING MECH PLUMBING SCHEDULES
DS110	SOUTH OPS BUILDING MECH LEVEL - 4 UNDERSLAB PLAN
DS111	SOUTH OPS BUILDING MECH LEVEL - 4 PLUMBING PLANS
DS121	SOUTH OPS BUILDING MECH LEVEL - 3 PLUMBING PLANS
DS131	SOUTH OPS BUILDING MECH LEVEL - 2 PLUMBING PLANS
DS141	SOUTH OPS BUILDING MECH LEVEL - 1 PLUMBING FLOOR PLAN
DS142	SOUTH OPS BUILDING MECH LEVEL - 1 PLUMBING PLAN
DS151	SOUTH OPS BUILDING MECH LEVEL 1 PLUMBING FLOOR PLAN
DS152	SOUTH OPS BUILDING MECH LEVEL 1 PLUMBING PLAN
DS161	SOUTH OPS BUILDING MECH LEVEL 2 PLUMBING FLOOR PLAN
DS162	SOUTH OPS BUILDING MECH LEVEL 2 PLUMBING PLAN
DS171	SOUTH OPS BUILDING MECH LEVEL 3 PLUMBING PLAN
DS181	SOUTH OPS BUILDING MECH PLUMBING ROOF PLAN
DS501-DS505	SOUTH OPS BUILDING MECH PLUMBING DETAILS
DS801	SOUTH OPS BUILDING MECH ENLARGED PLUMBING PLANS
DS802	SOUTH OPS BUILDING MECH ENLARGED MECH ROOM PLAN
DS803	SOUTH OPS BUILDING MECH WASTE AND VENT RISER DIAGRAM
DS804	SOUTH OPS BUILDING MECH DOMESTIC PIPING DIAGRAM
DS805	SOUTH OPS BUILDING MECH GAS PIPING DIAGRAM
DS806	SOUTH OPS BUILDING MECH COMPRESSED AIR PIPING DIAGRAM
	BUILDING MECHANICAL
HS101-HS103	SOUTH OPS BUILDING MECH SCHEDULES
HS111	SOUTH OPS BUILDING MECH LEVEL - 4 FLOOR PLAN
HS112	SOUTH OPS BUILDING MECH LEVEL - 4 HVAC PLANS
HS121	SOUTH OPS BUILDING MECH LEVEL - 3 FLOOR PLANS
HS122	SOUTH OPS BUILDING MECH LEVEL - 3 HVAC PLANS
HS131	SOUTH OPS BUILDING MECH LEVEL - 2 FLOOR PLANS
HS132	SOUTH OPS BUILDING MECH LEVEL - 2 HVAC PLANS
HS141	SOUTH OPS BUILDING MECH LEVEL - 1 FLOOR PLANS
HS142	SOUTH OPS BUILDING MECH LEVEL - 1 HAVC PLANS
HS151	SOUTH OPS BUILDING MECH LEVEL 1 HVAC FLOOR
HS152	SOUTH OPS BUILDING MECH LEVEL 1 HVAC PIPING PLAN
HS153	SOUTH OPS BUILDING MECH LEVEL 1 DIFFUSER PLAN
HS154	SOUTH OPS BUILDING MECH LEVEL 1 HVAC PLAN
HS161	SOUTH OPS BUILDING MECH LEVEL 2 HVAC FLOOR PLAN
HS162	SOUTH OPS BUILDING MECH LEVEL 2 HVAC PIPING PLAN
HS163	SOUTH OPS BUILDING MECH LEVEL 2 DIFFUSER PLAN
HS164	SOUTH OPS BUILDING MECH LEVEL 2 HVAC PLAN
HS171	SOUTH OPS BUILDING MECH LEVEL 3 FLOOR PLANS
HS172	SOUTH OPS BUILDING MECH LEVEL 3 HVAC PLANS
HS181	SOUTH OPS BUILDING MECH ROOF PLAN

FOR AS-BUILT PLAN ONLY

SEATTLE TUNNEL PARTNERS
AS-BUILT PACKAGE

SR 99 BORED TUNNEL ALTERNATIVE DESIGN-BUILD PROJECT

SOUTH OPERATIONS BUILDING MECHANICAL

INDEX

PLAN REFERENCE NO.	TITLE
HS311-HS314	SOUTH OPS BUILDING MECHANICAL SECTIONS
HS501-HS503	SOUTH OPS BUILDING MECH DETAILS
HS801	SOUTH OPS BUILDING MECH ENLARGED PLAN
HS802	SOUTH OPS BUILDING SCADA ROOM ENLARGED PLAN
HS803	SOUTH OPS BUILDING MECH CONTROL DIAGRAM
HS804	SOUTH OPS BUILDING MECH CHILLED WATER PIPING DIAGRAM
HS805	SOUTH OPS BUILDING MECH HEATING PIPING DIAGRAM
HS806	SOUTH OPS BUILDING MECH HYDRONIC PIPING DIAGRAM
	BUILDING FIRE SUPPRESSION
MS111	SOUTH OPS BUILDING MECH LEVEL - 4 FIRE SPRINKLER PLAN
MS121	SOUTH OPS BUILDING MECH LEVEL - 3 FIRE SPRINKLER PLAN
MS131	SOUTH OPS BUILDING MECH LEVEL - 2 FIRE SPRINKLER PLAN
MS141	SOUTH OPS BUILDING MECH LEVEL - 1 FIRE SPRINKLER PLAN
MS151	SOUTH OPS BUILDING MECH LEVEL 1 FIRE SPRINKLER PLAN
MS161	SOUTH OPS BUILDING MECH LEVEL 2 FIRE SPRINKLER PLAN
MS171	SOUTH OPS BUILDING MECH LEVEL 3 FIRE SPRINKLER PLAN
MS501	SOUTH OPS BUILDING MECH FIRE SPRINKLER DETAILS
	TUNNEL MECHANICAL
HS221	SOUTH OPS BUILDING - LEVEL - 3 MECH HVAC PLAN
HS231	SOUTH OPS BUILDING - LEVEL - 2 MECH HVAC PLAN
HS241	SOUTH OPS BUILDING - LEVEL - 1 MECH HVAC PLAN
HS251	SOUTH OPS BUILDING - LEVEL 1 MECH HVAC PLAN
HS261	SOUTH OPS BUILDING - LEVEL 2 MECH HVAC PLAN
HS271	SOUTH OPS BLDG - LEVEL 3 MECH HAVC ROOF PLAN
HS451	SOUTH OPS BLDG - LEVEL 1 MECH VENT FAN ROOF SECTION
HS452	SOUTH OPS BLDG - LEVEL 1 VENTILATION FAN SECTIONS
HS453	SOUTH OPS BLDG - MAINTENANCE AIR SYSTEM SECTIONS
HS551-HS553	SOUTH OPS BUILDING - VENTILATION FAN DETAILS
HS851	SOUTH OPS BLDG - LEVEL 1 ENLARGED MECH HVAC PLAN
HS852	SOUTH OPS BLDG - LEVEL - 3 ENLARGED MECH HVAC PLAN
HS853	SOUTH OPS BLDG - ENLARGED MECH HVAC PLAN
HS854	SOUTH OPS BLDG - LEVEL 3 MECH ENLARGED HVAC ROOF PLAN
HG952	MECH HVAC SCHEDULES
	TUNNEL FIRE SUPRESSION
MS211	SOUTH OPS BUILDING - LEVEL - 4 PLAN
MS221	SOUTH OPS BUILDING - LEVEL - 3 PLAN
MS231	SOUTH OPS BUILDING - LEVEL - 2 PLAN
MS241	SOUTH OPS BUILDING - LEVEL - 1 PLAN
MS251	SOUTH OPS BUILDING - LEVEL 1 PLAN
MS451	LEVEL - 4 ENLARGED MECH FIRE SECTION
MS551-MS552	SOUTH OPS BUILDING MECH LEVEL - 1 FIRE PROTECTION DETAIL

H-D-PAK-SOB-TR2.34-00362-08-ASB-1905-14

FOR AS-BUILT PLAN ONLY

H-D-PAK-SOB-TR2.34-00362-08-ASB-1905-14

GENERAL NOTES

1. PROVIDE COORDINATION DRAWINGS. SEE SPECIFICATIONS FOR DETAILED REQUIREMENTS.
2. MAINTAIN MAINTENANCE & SERVICE ACCESS TO ALL MECHANICAL EQUIPMENT. GENERALLY RUN PIPING & DUCTWORK AS HIGH AS POSSIBLE UNLESS NOTED. AVOID MAJOR WALKWAYS & ACCESS ROUTES.
3. SHEET METAL: ALL PRODUCTS SHALL COMPLY W/ SMACNA DUCT CONSTRUCTION STANDARDS, SECOND EDITION.
4. SEAL AND TEST ALL DUCT WORK AS REQUIRED BY THE SEATTLE ENERGY CODE. ALL DUCT SHALL BE 3" PRESSURE CLASS, UNLESS NOTED OTHERWISE.
5. RATING OF ACCESS DOORS AND/OR ACCESS PANELS THROUGH FIRE-RATED WALLS, SHAFTS, CEILINGS, ETC., MUST EQUAL THE MATERIAL PENETRATED.
6. ALL EQUIPMENT SHALL BE LABELED PER PLAN DESIGNATIONS.
7. ALL RECTANGULAR & ROUND DUCTWORK SIZES SHOWN ARE SHEET METAL. PROVIDE TURNING VANES IN ALL RECTANGULAR 90-DEGREE ELBOWS, & WHERE SHOWN ON ROUND DUCT.
8. PROVIDE NEC CODE MINIMUM WORKING CLEARANCE IN FRONT OF & OVER ALL ELECTRICAL PANELS. OFFSET PIPING & DUCTWORK AS REQUIRED.
9. ALL DUCTWORK SHALL BE INSULATED IN ACCORDANCE WITH THE SEATTLE ENERGY CODE. TABLE 14-5
10. ALL PIPING SHALL BE INSULATED IN ACCORDANCE W/ THE SEATTLE ENERGY CODE. TABLE 14-5
11. DIFFUSERS & GRILLES SHALL BE COORDINATED W/ PLACEMENT OF LIGHT FIXTURES.
12. MECHANICAL CONTRACTOR SHALL VERIFY HEIGHT, DEPTH, & LOCATION OF LIGHT FIXTURES TO AVOID ALL CONFLICTS WITH DUCTS, EQUIPMENT & MOUNTING BRACKETS. ALLOW A MINIMUM OF 3" CLEARANCE ABOVE LIGHTING FIXTURES FOR INSTALLATION OF WIRING CONNECTIONS.
13. COORDINATE LOCATIONS OF ALL EQUIPMENT AND APPURTENANCES W/ OTHER TRADES.
14. CONTRACTOR SHALL PROVIDE COMPLETE OPERATING SYSTEMS.
15. WHERE FLEXIBLE DUCTWORK IS SHOWN TO CONNECT TO CEILING DIFFUSERS, PROVIDE A MAXIMUM OF 6' FLEXIBLE DUCT
16. PROVIDE VOLUME DAMPERS AT ALL GRILLES, REGISTERS & DIFFUSERS.
17. PROVIDE FLEXIBLE CONNECTORS AT SUPPLY AIR & RETURN AIR CONNECTIONS TO EQUIPMENT
18. MECHANICAL SYSTEMS SHALL COMPLY W/ CHAPTER 14 OF THE SEATTLE ENERGY CODE.
19. CONTROLS SHALL ALLOW FOR AIR SYSTEM TEMPERATURE RESET, MINIMUM 5-DEGREE DEAD BAND, OPTIMUM START, & NIGHT SETBACK
20. PROVIDE O&M MANUALS, OWNER TRAINING, & RECORD DRAWINGS PER SPEC SECTION 01 86 05, GENERAL FACILITY PERFORMANCE REQUIREMENTS. BALANCE AIR & WATER SYSTEMS PROVIDE TESTING PER SECTION 23 05 93. COMMISSION SYSTEMS PER SEATTLE ENERGY CODE 1416.3.5 AND COMPLIANCE FORMS PER SEATTLE ENERGY CODE 1416.4 AND TR 2.60
21. ALL UNITS SHALL BE EQUIPPED WITH FULL 100% OSA ECONOMIZER.
22. DOMESTIC HOT WATER CIRCULATORS SHALL BE CONTROLLED BY AN AQUASTAT AND SHALL SHUT DOWN WHEN WATER TEMPERATURE IS AT SETPOINT.
23. MOTORIZED DAMPER SHALL BE LOW LEAKAGE TYPE WITH LESS THAN 10 CFM/SQFT AT 1.0" W.G. OR AS SPECIFIED USE MOST STRINGENT REQUIREMENT.
24. SEE SHEET HS103 FOR AIR TERMINAL SCHEDULE AND ABBREVIATIONS.
25. ROUTE ALL WASTE PIPING AS TIGHT TO STRUCTURE AND AS HIGH AS POSSIBLE WHILE STILL MAINTAINING PROPER SLOPE. PIPING SHALL BE ROUTED TO MAINTAIN MAXIMUM CLEARANCE UNDERNEATH.

RFI #03050

AS-BUILT PLANS ACCURATLEY AND COMPLETELY REFLECT CHANGES AND CORRECTIONS MADE DURING CONSTRUCTION AS DOCUMENTED IN THE RFI AND NDC QA/QC PROCEDURES DEVELOPED FOR THIS PROJECT AND AS BASED ON AS-BUILT INFORMATION PROVIDED BY SEATTLE TUNNEL PARTNERS.

FILE NAME	C:\Users\trtran\Documents\South Building Mech-TWE-Central-HNTB_2018_trtran.rvt
DATE	5/7/2019 3:23:08
TIME	PM
PLOTTED BY	H. TANG
DESIGNED BY	D. MOORE
ENTERED BY	H. TANG
CHECKED BY	W. LI
PROJ. ENGR.	R. JOHNSON
REGIONAL ADM.	L. LAIRD

REVISION | DATE | BY

REGION NO. 10 | STATE WASH | JOB NUMBER 10A065 | CONTRACT NO. 007999

FED.AID PROJ.NO. BR-0099(111)

LOCATION NO.

EOR

CERTIFYING ENGINEER

Washington State Department of Transportation

U.S. Department of Transportation Federal Highway Administration

City of Seattle

SR 99 TUNNEL PROJECT

SOUTH OPS BUILDING MECH GENERAL NOTES

DS002

SHEET OF SHEETS

FOR AS-BUILT PLAN ONLY

H-D-PAK-SOB-TR2.34-00362-08-ASB-1905-14

2009 Seattle Energy Code Compliance Forms for Nonresidential and Multifamily

Envelope Summary — Seattle Nonresidential — ENV-SUM

2009 Seattle Energy Code Compliance Forms for Nonresidential and Multifamily Residential

Revised September 2011

Project Info			
Project Address	SR99 BUILDING - SOUTH OPERATIONS BUILDING	Date	11/5/2012
	90 S. DEARBORN ST.	For Building Department Use	
	SEATTLE, WA 98014		
Applicant Name:	TRES WEST ENGINEERS		
Applicant Address:	2702 SOUTH 42ND STREET #301 TACOMA, WA 98409		
Applicant Phone:	(253) 472-3300		

Project Description: ☑ New Building ☐ Addition ☐ Alteration ☐ Change of Use

Compliance Option: ☐ Prescriptive ☑ Component Performance ☐ Seattle EnvStd ☐ Systems Analysis
(See Decision Flowchart (over) for qualifications)

Occupancy Group: ◉ Nonresidential ○ Multifamily Residential

Fenestration Area Calculation
These fenestration and wall values are calculated per inputs provided in the ENV-UA form. In the electronic form these cells auto-fill and cannot be edited.

Total Fenestration (rough opening) (vertical & overhd)	divided by	Gross Exterior Wall Area	times 100 equals	% Fenestration
3387.6	÷	20130.7	X 100 =	16.8%

Semi-Heated Path: ○ yes ◉ no — Allowable if project meets all requirements as defined in section 1310.2. Only allowed as prescriptive path and must be calculated separately from other conditioned spaces. Limited to reduced wall insulation levels. Requires other fuel heating and qualifying thermostat.

Envelope Requirements (enter values as applicable)	
	Minimum Insulation R-values
Roofs - Insulation Above Deck	R-38
Roofs - Metal Building	
Roofs - Single Rafter	
Roofs - Attic and All Others	
Walls - Mass w/ Ext./Integral Insulation	
Walls - Mass w/ Interior Insulation	R-23
Walls - Metal Building	R-13 + R-13
Walls - Steel Framed	
Walls - Wood Framed and Other	
Below Grade Walls	
Floors - Mass	
Floors - Steel Joist	
Floors - Wood Framed and Other	
	Maximum F-factors
Slabs-on-Grade - Unheated	
Slabs-on-Grade - Heated	

Notes:

Envelope Requirements (continued)	
	Maximum U-factors
Vertical Fenestration	
Non-Metal Frame	
Metal Frame	U-0.38
Entrance Door	U-0.60
Skylights - Without Curb	
Skylights - With Curb	
Opaque Doors - Swinging	U-0.47
Opaque Doors - Non-Swinging	U-0.39
	Maximum SHGC (or SC)
Vertical Fenestration	
Non-North	
North	
Skylights	
	Minimum Visible Transmittance (VT)
Vertical Fenstration	

2009 Seattle Energy Code Compliance Forms for Nonresidential and Multifamily

Envelope Summary (back) — Seattle Nonresidential — ENV-SUM

2009 Seattle Energy Code Compliance Forms for Nonresidential and Multifamily Residential

Revised September 2011

Minimum Requirements for Prescriptive Option

Use table to determine if project qualifies for the optional Prescriptive Option. All components must meet the stated

Opaque Elements	Nonresidential Assembly Max. U-factor	Nonresidential Insulation Min. R-Value	Residential, Other than Single-Family Assembly Max. U-factor	Residential, Other than Single-Family Insulation Min. R-Value
Roofs				
Insulation entirely above deck	U-0.026	R-38 c.i.	U-0.031	R-38 c.i.
Metal building	U-0.027	R-25 + R-11 + R-11 Ls	U-0.031	R-25 + R-11 Ls
Single-rafter	U-0.027	R-38	U-0.027	R-38
Attic and other	U-0.027	R-38 adv or R-49	U-0.027	R-38 adv or R-49
Walls, Above Grade				
Mass w/ exterior & integral insulation (includes peripheral edges of intermediate floor slabs and columns)	U-0.057	a. R-16 c.i. b. R-20 insulation with < 0.04% Mp c. R-24 insulation with > 0.04% and < 0.08% Mp	U-0.090	R-11.4 c.i.
Mass w/ interior insulation (includes peripheral edges of intermediate floor slabs and columns)	U-0.056	d. R-13 cavity insulation + R-6 c.i. wood studs; or e. R-13 cavity insulation + R-10 c.i. metal studs; or f. R-22.4 insulation held solely by 1-in metal clips.	U-0.090	R-11.4 c.i.
Metal building	U-0.052	R-13 + R-13 c.i	U-0.057	R-19 + R-8.5 c.i.
Steel framed	U-0.055	a. R-13 cavity + R-10 c.i. b. R-13 cavity + R-12.5 insulation with < 0.04% Mp. c. R-13 cavity + R-15 insulation with > 0.04% and < 0.08% Mp.	U-0.057	R-19 + R-8.5 c.i.
Wood framed and other	U-0.051	a. R-13 cavity + R-7.5 c.i. b. R-13 cavity + R-9.4 insulation with < 0.04% Mp. c. R-13 cavity + R-11.3 insulation with > 0.04% and < 0.08% Mp.	U-0.057	R-13 + R-6 c.i.
Walls, Below Grade				
Below grade wall	U-0.070	a. Exterior R-10 c.i b. R-19 cavity insulation wood studs; or c. R-13 cavity insulation + R-6 c.i. metal studs; or d. R-16.8 insulation held solely by 1-in metal clips.		Same as above grade
Floors				
Mass	U-0.029	R-30 c.i.	U-0.029	R-30 c.i.
Steel joist	U-0.029	R-38 cavity + R-4 c.i.	U-0.029	R-38 + R-4 c.i.
Wood framed and other	U-0.025	R-38 cavity	U-0.029	R-30
Slab-on-Grade Floors				
Unheated	F-0.520	R-15 for 24 in. (with thermal break)	F-0.540	R-10 for 24 in. (with thermal break)
Heated	F-0.360	R-10 c.i. (with thermal break)	F-0.360	R-10 c.i. (with thermal break)
Opaque Doors				
Swinging	U-0.470		U-0.400	
Nonswinging	U-0.390		U-0.400	
Fenestration 0-30.0% of wall – (Total fenestration area, vertical and overhead, relative to the gross exterior wall area)				
	Assembly Maximum - NFRC-certified or U-Factor per 1006 & SHGC per 1312.1			
	U-Factor	**SHGC**	**U-Factor**	**SHGC**
Vertical Fenestration				
Nonmetal framing: All	U-0.30	For all frame types:	U-0.32	
Metal framing: Fixed/operable	U-0.38 [2]	SHGC-0.35 all OR	U-0.40	
Entrance doors (revolving doors & vestibules)	U-0.60 (U-0.65)	SHGC-0.45 all PLUS permanent PF>0.50 on west, south and east	U-0.60	
Skylights				
Without curb (i.e., sloped glazing)	U-0.45	SHGC-0.32 all[1]	U-0.50	SHGC-0.35 all
With curb (i.e.,individual unit skylights)	U-0.55		U-0.60	
Fenestration 30.0%-40.0% of wall – (Total fenestration area, vertical and overhead, relative to the gross exterior wall area)				
Vertical Fenestration				
Nonmetal framing: All	U-0.28	For all frame types:	U-0.32	
Metal framing: Fixed/operable	U-0.38 [2]	SHGC-0.33 all AND minimum VT-0.51 all OR	U-0.40	
Entrance doors (revolving doors & vestibules)	U-0.60 (U-0.65)	SHGC-0.45 all PLUS permanent PF>0.50 on west, south and east AND minimum VT-0.51 all	U-0.60	
Skylights				
Without curb (i.e., sloped glazing)	U-0.40	SHGC-0.30 all[1]	U-0.50	SHGC-0.35 all
With curb (i.e.,individual unit skylights)	U-0.50		U-0.60	

[1] The following definitions apply: c.i. = continuous insulation, Ls = liner system (see definitions), Mp= cross-sectional area of metal penetrations per Section 1322.

AS-BUILT PLANS ACCURATLEY AND COMPLETELY REFLECT CHANGES AND CORRECTIONS MADE DURING CONSTRUCTION AS DOCUMENTED IN THE RFI AND NDC QA/QC PROCEDURES DEVELOPED FOR THIS PROJECT AND AS BASED ON AS-BUILT INFORMATION PROVIDED BY SEATTLE TUNNEL PARTNERS.

FILE NAME	C:\Users\trtran\Documents\South Building Mech-TWE-Central-HNTB_2018_trtran.rvt
DATE	5/7/2019 3:23:09
TIME	PM
PLOTTED BY	H. TANG
DESIGNED BY	D. MOORE
ENTERED BY	H. TANG
CHECKED BY	W. LI
PROJ. ENGR.	R. JOHNSON
REGIONAL ADM.	L. LAIRD

REVISION | DATE | BY

REGION NO. 10 | STATE WASH | FED.AID PROJ.NO. BR-0099(111)

JOB NUMBER 10A065

CONTRACT NO. 007999 | LOCATION NO.

EOR — CERTIFYING ENGINEER

Washington State Department of Transportation
U.S. Department of Transportation Federal Highway Administration
City of Seattle

SR 99 TUNNEL PROJECT

SEC CODE COMPLIANCE FORM

DS003

SHEET OF SHEETS

FOR AS-BUILT PLAN ONLY

H-D-PAK-SOB-TR2.34-00362-08-ASB-1905-14

A B C D E F G H

Envelope UA Calculations — Seattle Nonresidential — ENV-UA

2009 Seattle Energy Code Compliance Forms for Nonresidential and Multifamily Residential

Revised September 2011

Project Address: SR99 BUILDING - SOUTH OPERATIONS BUILDING

Date: 11/13/2012

Occupancy Group ◉ Nonresidential ○ Multifamily residential Clear

For Building Department Use

Fenestration Area as % gross exterior wall area 16.8% Max. Target: 40.0%

Notes: 1: If fenestration area exceeds maximum allowed, then calculate adjusted areas on Target Area Adjustment sheet on the backside of the ENV-SHGC form.
2: U-factors shall come from chapter 10 or calculated per 1332.

See the ENV-CHK worksheet for example of how to complete the rows on this form.

Building Component		Provide assembly ID & page/plan # for each bldg. element	Proposed UA U-factor	x Area (A)	= UA (U x A)	Target UA U-factor	x Area (A) =	UA (U x A)
Roofs	Deck	R= 30 ID: 1/AS403, See attached Calc. sheet	0.033	16720	551.8	0.026	16720	434.7
		R= ID:				Above Deck Insulation		U-0.026
		R= ID:						
	Mtl Bld	R= ID:				0.027		
		R= ID:				Metal Building		U-0.027
		R= ID:						
	Sng. Rafter	R= ID:				0.027		
		R= ID:				Single rafter		U-0.027
		R= ID:						
	Attic	R= ID:				0.027		
		R= ID:				Attic, other		U-0.027
		R= ID:						
AG Opaque Walls	Mtl Bld	R= 24.32 ID: P4/AS006, See attached Calc. sheet	0.041	8907	366.1	0.052	8907	463.2
		R= ID:				Metal bldg		U-0.052
		R= ID:						
	Steel	R= ID:				0.055		
		R= ID:				Steel frame		U-0.055
		R= ID:						
	Wood/Oth	R= ID:				0.051		
		R= ID:				Wood Frame, other		U-0.051
		R= ID:						
AG Walls*	Ext Ins	R= 1.72 ID: M1/AS006, See attached Calc. sheet	0.580	615	356.9	0.057	615	35.1
		R= ID:				Mass w/ ext. ins		U-0.057
		R= ID:						
	Int Ins	R= 20 ID: P1/AS006, See attached Calc. sheet	0.047	3573	167.9	0.056	3573	200.1
		R= ID:				Mass w/ int. ins		U-0.056
		Proposed assembly U-factor from Tables 10-5 thru 10-5B						
BG Walls+	0-10 ft	R= 20 ID: P1/AS006	0.047	1218	57.3	0.070	1218	85.3
		R= ID:				Assumed to be Mass Wall		U-0.070
		Proposed assembly U-factor from Tables 10-5 thru 10-5B. Do NOT use Table 10-1.						
	10+ ft	R= 20 ID: P1/AS006, See attached Calc. sheet	0.047	24290	1141.6	0.070	24290	1700.3
		R= ID:				Assumed to be Mass Wall		U-0.070
		Proposed assembly U-factor from Tables 10-5 thru 10-5B. Do NOT use Table 10-1.						
Floors	Mass	R= 19 ID: 1/AS711, See attached Calc. sheet	0.049	2600	127.1	0.029	3800	110.2
		R= 38 ID: 1/AS711, See attached Calc. sheet	0.025	1200	30.5	Mass		U-0.029
		R= ID:						
	Steel	R= ID:				0.029		
		R= ID:				Steel Joist		U-0.029
		R= ID:						
	Wd/Other	R= ID:				0.025		
		R= ID:				Wood Frame / other		U-0.025
		R= ID:						
			F-factor	x Perimeter	= UA(U x A)	F-factor	Perimeter	UA (U x A)
Slab-on-grade	Unheated	R= 15 ID: 3/AS501, See attached Calc. sheet	0.520	945	491.4	0.520	945	491.4
		R= ID:				Slab-On-Grade		U-0.520
		R= ID:						
	Heated	R= ID:				0.360		
		R= ID:				Heated Slab-On-Grade		U-0.360
		Proposed assembly F-factors can use the unheated values in Table 10-2						
				Area	UA		Area	UA
			Page 1 Subtotal	60070	3291		60070	3520

* Walls with integral insulation systems shall be entered in exterior insulation section.
\+ Gross wall area to calculate % Fenestration includes ONLY the below grade wall entries in the "0-10 ft" rows; the overall Target UA includes ALL the below grade wall entries in both sections.

Continue on to back of form

2009 Seattle Energy Code Compliance Forms for Nonresidential and Multifamily

Envelope UA, continued. — Seattle Nonresidential — ENV-UA

Project Address: SR99 BUILDING - SOUTH OPERATIONS BUILDING

Date: 11/13/2012

For Building Department Use

Fenestration Area as % gross exterior wall area 16.8% Max. Target: 40.0%

Notes: 1: If fenestration area exceeds maximum allowed, then calculate adjusted areas on Target Area Adjustment sheet on the backside of the ENV-SHGC form.
2: Provide NFRC or Table 10-6 U-factor (See Section 1312.1) for fenestration assemby (combined frame and glazing performance).

See the ENV-CHK worksheet for example of how to complete the rows on this form.

Building Component		Provide assembly ID & page/plan # for each bldg. element	Proposed UA U-factor	x Area (A)	= UA (U x A)	Target UA U-factor	x Area (A) =	UA (U x A)
Opaque Doors		U= 0.39 ID: Door Schedule/AS901-902, T.10-6C	0.39	1861	725.7	0.39	1861	725.7
		U= ID:				Non-swing Doors		U-0.39
		U= ID:						
		U= 0.47 ID: Door Schedule/AS901-902, T.10-6C	0.60	568	340.8	0.47	568	266.9
		U= ID:				Swing Doors		U-0.47
		U= ID:						
Vertical Fenestration	Metal Frame	U= 0.39 ID: 2/AS904	0.39	1279	498.8	0.38	3388	1287.3
		U= 0.44 ID: Curtain wall schedule/AS905	0.44	1286	565.7	Metal Frame		U-0.38
		U= 0.45 ID: 2/AS904	0.45	823	370.2			
		U= ID:						
	Non-Metal	U= ID:				0.30		
		U= ID:				Non-Metal Frame		
		U= ID:				0%-30%		U-0.30
		U= ID:				30%-40%		U-0.28
	Mtl entrance	U= ID:				0.60		
		U= ID:				Metal Entance Door		U-0.60
		U= ID:						
		U= ID:						
Skylights	No Curb	U= ID:				0.45		
		U= ID:				Without Curb		
		U= ID:				0%-30%		U-0.45
		U= ID:				30%-40%		U-0.40
	With Curb	U= ID:				0.55		
		U= ID:				Including Curb		
		U= ID:				0%-30%		U-0.55
		U= ID:				30%-40%		U-0.50
				Area	UA		Area	UA
		Page 2 Subtotal		5816	2501		5816	2280
		Page 1 Subtotal		60070	3291		60070	3520
		Total		65886	5792		65886	5800

To comply:

1) Proposed Total UA shall not exceed Target Total UA.

2) Proposed Total Area shall equal Target Total Area.

Table 13-1 Footnote 2 Operable Vertical Fenestration		Provide assembly ID & page/plan # for each bldg. element	Proposed UA U-factor	x Area (A)	= UA (U x A)	Target UA U-factor	x Area (A) =	UA (U x A)
Metal Frame		U= ID:						
		U= ID:				Operable Metal Frame		U-0.45
		U= ID:						
		U= ID:						
				Area	UA		Area	UA
		Operable Fenestration Total						

AS-BUILT PLANS ACCURATLEY AND COMPLETELY REFLECT CHANGES AND CORRECTIONS MADE DURING CONSTRUCTION AS DOCUMENTED IN THE RFI AND NDC QA/QC PROCEDURES DEVELOPED FOR THIS PROJECT AND AS BASED ON AS-BUILT INFORMATION PROVIDED BY SEATTLE TUNNEL PARTNERS.

FILE NAME	C:\Users\trtran\Documents\South Building Mech-TWE-Central-HNTB_2018_trtran.rvt
DATE	5/7/2019 3:23:09
TIME	PM
PLOTTED BY	H. TANG
DESIGNED BY	D. MOORE
ENTERED BY	H. TANG
CHECKED BY	W. LI
PROJ. ENGR.	R. JOHNSON
REGIONAL ADM.	L. LAIRD

REVISION | DATE | BY

REGION NO. 10 | STATE WASH | FED.AID PROJ.NO. BR-0099(111)

JOB NUMBER 10A065

CONTRACT NO. 007999 | LOCATION NO.

EOR — CERTIFYING ENGINEER

Washington State Department of Transportation
Federal Highway Administration
City of Seattle

SR 99 TUNNEL PROJECT

SEC CODE COMPLIANCE FORM

DS004

SHEET OF SHEETS

FOR AS-BUILT PLAN ONLY

H-D-PAK-SOB-TR2.34-00362-08-ASB-1905-14

2009 Seattle Energy Code Compliance Forms for Nonresidential and Multifamily

SHGC Calculation — Seattle Nonresidential — ENV-SHGC

2009 Seattle Energy Code Compliance Forms for Nonresidential and Multifamily Residential — Revised September 2011

Project Address	SR99 BUILDING - SOUTH OPERATIONS BUILDING		Date 11/02/2012
Fenestration Area as % gross exterior wall area	16.8% Prop	40% Max.Target	For Building Department Use
Prescriptive PF Credit	○ Yes	◉ No	
Vertical North Facing Credit (1323.3 Exp. 2)	○ Yes	◉ No	

Notes: To comply the Proposed total SHGC x A shall not exceed Target total SHGC x A. Residential compliance is based upon skylight only. Nonresidential compliance is based upon combined skylight and vertical fenestration performance. If the north facing credit is used then the north and non-north must comply separately with skylights being included with the non-north vertical fenestration.

Skylights	Proposed SHGC			Target SHGC		
List ID & page #, NFRC or glass only	SHGC*	x Area (A)	= SHGC x A	SHGC	x Area (A) =	SHGC x A
ID:				0.320		
ID:				Criteria		SHGC
ID:				All		0.32
ID:						
ID:						
	Totals			Totals		

* Note: Manufacturer's SC may be used in lieu of SHGC.

All Non-North Vertical Fenestration++					Proposed SHGC		Target SHGC		
List ID & page #, NFRC or glass only	SHGC+	PF	PF Mult*	Adjusted SHGC	x Area (A)	= SHGC x A	SHGC	x Area (A) =	SHGC x A
ID: Glass Schedule/AP907	0.36		1.00	0.36	1178	424	0.350	2859	1000.5
ID: Storefront-Glass Schedule/AP907	0.36		1.00	0.36	178	64	Criteria		SHGC
ID: CURTAIN WALL-Glass Schedule/AP907	0.36		1.00	0.36	1248	449	All		0.35
ID: Storefront-Glass Schedule/AP907	0.36	0.62	0.56	0.20	254	51	Prescriptive PF		0.45
ID:									
ID:									
				Totals	2858.7	988.9	Totals	2858.7	1000.5
				Non-North Total		988.9			1000.5

++Note: If projection factors or north vertical glazing credit are used then vertical fenestration must be entered according to orientation. If neither are used then ventical fenestration can be entered in either section.
+ Note: Manufacturer's SC may be used in lieu of SHGC.
* Note: Multipliers only apply if prescriptive PF credit not used.

North Vertical Fenestration++					Proposed SHGC		Target SHGC		
List ID & page #, NFRC or glass only	SHGC+	PF	PF Mult*	Adjusted SHGC	x Area (A)	= SHGC x A	SHGC	x Area (A) =	SHGC x A
ID: Glass Schedule/AP907	0.36		1.00	0.36	101	36	0.350	529	185.1
ID: Storefront-Glass Schedule/AP907	0.36		1.00	0.36	391	141	Criteria	Mixed Orientation	North Separate
ID: CURTAIN WALL-Glass Schedule/AP907	0.36		1.00	0.36	37	13	All	0.35	0.45
ID:							Prescrpt PF	0.45	0.55
ID:									
ID:									
				North Total	528.8	190.4		528.8	185.1

For compliance: Proposed total SHGC x A shall not exceed Target total SHGC x A. If north glazing credit is used then north facing vertical fenestration must comply separately from non-north vertical fenestration and skylights.

	Area	SHGC x A		Area	SHGC x A
Grand Total	3387.5	1179.3	Grand Total	3387.5	1185.6

Total Overhead Daylight Zone Area (ODA): ____ Footnote 1 Skylight Area % of ODA: ____ Must be <=6.00%

Footnote 1 Skylights - SEPARATE COMPLIANCE	Proposed SHGC			Target SHGC		
List ID & page #, NFRC or glass only	SHGC*	x Area (A)	= SHGC x A	SHGC	x Area (A) =	SHGC x A
ID:						
ID:				All		SHGC-0.65
ID:						
	Totals			Totals		

Footnote 1, the skylights must comply with all of the following:
(a) the visible transmittance (VT) is greater than the SHGC;
(b) the skylight area is no greater than 6% of the overhead daylight zone; and
(c) the skylights must be plastic with SHGC-0.65 maximum.

2009 Seattle Energy Code Compliance Forms for Nonresidential and Multifamily

Target Area Adjustment Calculations

2009 Seattle Energy Code Compliance Forms for Nonresidential and Multifamily Residential — Revised September 2011

Project Address	SR99 BUILDING - SOUTH OPERATIONS BUILDING	Date 11/02/2012

If the total fenestration area as a % of gross exterior wall area (calculated on ENV-SUM) exceeds the maximum allowed in Table 13-1, then this calculation must be submitted. Use the resulting areas in the Target UA and SHGC calculations above.

SKY= Skylight. Refered to as overhead glazing in WSEC 1333 & 1334 and equations 13-1 & 13-2.
VF = vertical fenestration. Refered to as vertical glazing in WSEC 1333 & 1334 and equations 13-1 & 13-2.
NW = net wall (excludes fenestration, BG, and doors.) **DBG** = Doors and below grade wall less than 10 ft deep.
Total Fenestration = SKY + VF **Gross Exterior Wall Area**= VF + NW + DBG

	Proposed Areas		Above Grade Walls		Doors & BG Walls
Fenestration ->	SKY=	VF=	3387.6		0
Opaque ->		NW=	13096.0	DBG=	3647.1

Gross Exterior Wall Area		Max Fenestration % (Table 13-1)			Maximum Target Fenestration Area
20130.7	X	40.0%	÷	100.0	= 8052.3

Total Fenestration		Maximum Target		Excess Fenestration				Excess Fenestration
3387.6	–	8052.3	=	-4664.7	–	0 ⇕ lesser -4664.7	=	

Total Fenestration		Excess Fenestration		Target Fenestration		Total Fenestration		Target Fen. Multiplier	
3387.6	–		=	3387.6	÷	3387.6	=	1.00	Apply to all Proposed Fenestration Areas to get Target Fenestration Area
Net AG Wall Area		Excess Fenestration		Target Net Wall Area		Net Wall		Target Net Wall Mult.	
13096.0	+		=	13096.0	÷	13096.0	=	1.00	Apply to all Proposed Opaque AG Wall Areas to get Target Area

	Proposed Area		Target Fen. Mult.		Target Area
Vertical Fenestration					
metal frame	3387.6	X	1.00	=	3387.6
non-metal frame		X		=	
metal entrance		X		=	
operable-footnote 2		X		=	
Skylight	Proposed Area		Target Fen. Mult.		Target Area
without curb		X		=	
with curb		X		=	
AG Wall	Proposed Area		Target Net Wall Mult.		Target Area
Metal Building	8907.3	X	1.00	=	8907.3
Steel Frame		X		=	
Wood/Other frame		X		=	
Mass w/ Exterior Ins.	615.4	X	1.00	=	615.4
Mass w/ Interior Ins.	3573.3	X	1.00	=	3573.3
Sum of Proposed	16483.5		**Sum of Target**		16483.5

Target values in shaded boxes are used in the applicable Target UA calculations on ENV-UA.

Sum of Proposed must equal Sum of Target.

SHGC Target Area Calculation

Total Fenestration		Footnote 1 Skylight		Total SHGC Fen.
3387.6	–		=	3387.6

Target Fenestration		Footnote 1 Skylight		Target SHGC Fen.		Total SHGC Fen.		Target SHGC Multiplier	
3387.6	–		=	3387.6	÷	3387.6	=	1.00	Apply to all non-footnote 1 Proposed Fenestration Areas to get Target Fenestration Area for SHGC

SHGC Calculation	Proposed Area		Target SHGC Mult.		Target Area
Skylights (all)		X		=	
Non-North Vertical Fenestration	2858.7	X	1.00	=	2858.7
North Vertical Fenestration	528.8	X	1.00	=	528.8

SHGC target values in shaded boxes are used in the applicable Target SHGC calculations on ENV-SHGC.

VLT Target Area is same as Target Fenestration

VLT Calculation	Proposed Area		Target Fen. Mult.		Target Area
All Vertical Fenestration		X		=	

VLT target value in shaded box is used in the applicable Target VLT area field on ENV-VLT.

AS-BUILT PLANS ACCURATLEY AND COMPLETELY REFLECT CHANGES AND CORRECTIONS MADE DURING CONSTRUCTION AS DOCUMENTED IN THE RFI AND NDC QA/QC PROCEDURES DEVELOPED FOR THIS PROJECT AND AS BASED ON AS-BUILT INFORMATION PROVIDED BY SEATTLE TUNNEL PARTNERS.

FILE NAME	C:\Users\trtran\Documents\South Building Mech-TWE-Central-HNTB_2018_trtran.rvt
DATE	5/7/2019 3:23:10
TIME	PM
PLOTTED BY	H. TANG
DESIGNED BY	D. MOORE
ENTERED BY	H. TANG
CHECKED BY	W. LI
PROJ. ENGR.	R. JOHNSON
REGIONAL ADM.	L. LAIRD

REVISION | DATE | BY

REGION NO.	STATE	FED.AID PROJ.NO.
10	WASH	BR-0099(111)
JOB NUMBER 10A065		
CONTRACT NO. 007999		LOCATION NO.

EOR — CERTIFYING ENGINEER

Washington State Department of Transportation
U.S. Department of Transportation Federal Highway Administration
City of Seattle

SR 99 TUNNEL PROJECT

SEC CODE COMPLIANCE FORM

DS005 — SHEET OF SHEETS

FOR AS-BUILT PLAN ONLY

H-D-PAK-SOB-TR2.34-00362-08-ASB-1905-14

2009 Seattle Energy Code Compliance Forms for Nonresidential and Multifamily

VT Calculation — Seattle Nonresidential — ENV-VT

2009 Seattle Energy Code Compliance Forms for Nonresidential and Multifamily Residential

Revised September 2011

Project Address: SR99 BUILDING - SOUTH OPERATIONS BUILDING	Date: 11/02/2012
Fenestration Area as % gross exterior wall area: 16.8% Prop. / 40% Max.Target	For Building Department Use
Notes: To comply the Proposed total VT x A for all vertical fenestration must be equal to or greater than Target total VT x A.	

All Vertical Fenestration	Proposed VT			Target VT		
List ID & page #, NFRC or glass only	VT	x Area (A)	= VT x A	VT	x Area (A) =	VT x A
ID:						
ID:				Criteria		VT
ID:				All		No Requirements
ID:						
ID:						
ID:						
ID:						
ID:						
ID:						
ID:						
Totals				Totals		

NO VT REQUIREMENT FOR GLAZING FRACTIONS <= 30%

AS-BUILT PLANS ACCURATLEY AND COMPLETELY REFLECT CHANGES AND CORRECTIONS MADE DURING CONSTRUCTION AS DOCUMENTED IN THE RFI AND NDC QA/QC PROCEDURES DEVELOPED FOR THIS PROJECT AND AS BASED ON AS-BUILT INFORMATION PROVIDED BY SEATTLE TUNNEL PARTNERS.

FILE NAME	C:\Users\trtran\Documents\South Building Mech-TWE-Central-HNTB_2018_trtran.rvt
DATE	5/7/2019 3:23:11
TIME	PM
PLOTTED BY	H. TANG
DESIGNED BY	D. MOORE
ENTERED BY	H. TANG
CHECKED BY	W. LI
PROJ. ENGR.	R. JOHNSON
REGIONAL ADM.	L. LAIRD

REVISION | DATE | BY

REGION NO. 10 | STATE WASH | FED.AID PROJ.NO. BR-0099(111)

JOB NUMBER 10A065

CONTRACT NO. 007999 | LOCATION NO.

EOR — CERTIFYING ENGINEER

Washington State Department of Transportation

U.S. Department of Transportation Federal Highway Administration

City of Seattle

SR 99 TUNNEL PROJECT

SEC CODE COMPLIANCE FORM

DS006

SHEET OF SHEETS

FOR AS-BUILT PLAN ONLY

H-D-PAK-SOB-TR2.34-00362-08-ASB-1905-14

Building Permit Plans Checklist — ENV-CHK

2009 Seattle Energy Code Compliance Forms for Nonresidential and Multifamily Residential — Revised September 2011

Project Address: SR99 BUILDING - SOUTH OPERATIONS BUILDING — Date: 11/2/2012

The following information is necessary to check a building permit application for compliance with the Seattle Energy Code envelope requirements .

Applicability (yes,no,na)	Code Section	Component	Information Required	Location on Plans	Building Department Notes
GENERAL REQUIREMENTS (Sections 1301-1314)					
	1301	Scope	Unconditioned spaces identified on plans if allowed		
N.A.	1310.2	Semi-heated spaces	Semi-heated spaces identified on plans if allowed		
N.A.	1310.3	Cold Storage / refrigerated	All refrigerated spaces identified on plans. ENV-RFG completed.		
	1311	**Insulation**			
Yes	1311.1	General installation	Indicate installation method, densities and clearances to achieve intended R-value of all insulation materials	AP401 AP402	
Yes	1311.2	Roof /ceiling insul.	Indicate R-value on roof sections for attics and other roofs; Indicate clearances for attic insulation; Indicate baffles if eave vents installed; Indicate face stapling of faced batts	AP252 AP007 AP201 AP401	
Yes	1311.3	Wall insulation	Indicate R-value and framing material on wall sections; Indicate face stapling of faced batts; Indicate above grade exterior insulation is protected; Indicate mass of masonry walls if mass wall claimed Indicate loose-fill core insulation for masonry walls as necessary Indicate frequency of grouted cores and bond beams as necessary	AP401 AP402 AP006 AP301-AP303	
N.A.	1311.4	Floor insulation	Indicate R-value on floor sections; Indicate substantial contact with surface; Indicate supports not more than 24" o.c.; Indicate that insulation does not block airflow through foundation vents.		
Yes	1311.5	Slab-on-grade floor	Indicate R-value on wall section or foundation detail; Indicate slab insulation extends down vertically 24" from top; Indicate above grade exterior insulation is protected	AP251 AP401 AP501	
N.A.	1311.6	Radiant floor	Indicate R-value on wall section or foundation detail; Indicate slab insulation extends down vertically 36" from the top; Indicate above grade exterior insulation is protected; Indicate insulation also under entire slab where req'd. by Official		
Yes	1312	Glazing and doors	Provide calculation of vertical and overhead glazing area as percent of gross wall area	AP901	
Yes	1312.1	U-factors	Indicate glazing and door U-factors on glazing and door schedule (provide area-weighted calculations as necessary); Indicate if values are NFRC or default, if default then specify frame type, glazing layers, gapwidth, low-e coatings, gas filling	AP902 AP907	
Yes	1312.2	SHGC, SC, & VT	Indicate glazing solar heat gain coefficient or shading coefficient on glazing schedule (provide area-weighted calculations by orientation as necessary); Indicate visible transmittance (VT) on fenestration schedule	AP907	
	1313	**Moisture control**			
Yes	1313.1	Vapor retarders	Indicate vapor retarders applied to warm side of insulation	AP006	
Yes	1313.2	Roof/ceiling vap.ret.	Indicate vapor retarder on roof section; or list exception Indicate vap. retard. with sealed seams for non-wood structure	AS516	
Yes	1313.3	Wall vapor retarder	Indicate vapor retarder on wall section	AP006	
Yes	1313.4	Floor vapor retarder	Indicate vapor retarder on floor section	AP006	
N.A.	1313.5	Crawl space vap. ret.	Indicate required grade ground cover with required overlapping.		
	1314	**Air leakage**			
Yes	1314.1	Bldg. envel. sealing	Indicate sealing, caulking, gasketing, and weatherstripping	AS002	
Yes	1314.2	Glazing/door sealing	Specify maximum air leakage rates for fenestration and door products	AS002	
Yes	1314.3	Assemb. as ducts	Indicate sealing, caulking and gasketing	AS002	
Yes	1314.4	Recessed Lighting Fixtures	Indicate IC rating, ASTM E283 cert., and gasketing or caulking to ceiling	AS002	
Yes	1314.5	Loading Dock Seal	Indicate weatherseal at cargo and loading dock doors	AP913	
Yes	1314.6	Continuous Air Barrier	Indicate air barrier sealing on all roof, wall & floor details Indicate leakage testing method. Provide testing results to building official. Max. leakage of: 0.40 cfm/ft2 at 0.3 inch w.g.	AS002	
Yes	1314.7	Vestibules	Indicate Vestibules on drawings.	AS002	
PRESCRIPTIVE PERFORMANCE (Sections 1320-1323)					
Yes		ENV-SUM Form	Completed and attached.		
Yes	1323	Glazing	Indicate number of glazing panes and location of emissivity coating or exception taken	AP901 AP907	
COMPONENT PERFORMANCE (Sections 1330-1338)					
Yes		ENV-SUM, ENV-UA, ENV-SHGC & ENV-VT Forms	Completed and attached.		

If "no" is shown for any question, provide explanation:

2009 Seattle Energy Code Compliance Forms for Nonresidential and Multifamily

ENV-UA INSTRUCTIONS & EXAMPLES — ENV-CHK

2009 Seattle Energy Code Compliance Forms for Nonresidential and Multifamily Residential — Revised September 2011

FENESTRATION, SKYLIGHTS, & DOORS: Per Energy Code Section 1312.1,

- ***U-factors shall be "determined, certified, and labeled in accordance with RS-31 by a certified independent agency licensed by the National Fenestration Rating Council (NFRC)." If using this approach, provide manufacturer, model number and NFRC rating on the drawings.***
- ***"Unlabeled glazing and doors shall be assigned the default U-factor in Table 10-6.". If using this approach, provide all glazing characteristics on the drawings: list number of glazing layers, gap width, low-e coating, gas fill, frame material, thermal break details per footnote 2 to Table 10-6B.***

OPAQUE ASSEMBLIES: Per Energy Code Section 1332,

- ***"The U-factors for typical construction assemblies are included in Chapter 10. These values shall be used for all calculations." For example: see Table 10-5A for metal stud walls and metal building walls/roofs, see Table 10-7A to E for steel truss ceilings, etc.***

FURTHER INFORMATION: Refer to the Northwest Energy Efficiency Council website at: www.neec.net

Below are examples of how the Component Information on ENV-UA-1 are to be completed

Building Component		List ID & page #, code table # or calculation page #	U-factor	x Area (A)	Typical Example
Roofs					
Other	R=38	ID: R1/A1.5, T.10-7 default	0.031	532	R-38 blown-in attic insulation per default
Deck	R=40	ID: R2/A1.5, T.10-7G default	0.025	9885	R-40 uniform thickness rigid insulation per default
Walls					
Opaque	R=13+7.5	ID: W1/A1.6, T.10-5A(1) default	0.064	7587	R-13 cavity + R-7.5 rigid ins. over metal studs per default
	R=5	ID: W2/A1.6, T.10-5B(2) default	0.157	923	R-5 rigid ins. at edge of intermediate concrete floors per def
	R=	ID:			
	R=	ID:			
BG	R=11	ID: W4/A1.6, T.10-5(1) default	0.094	512	R-11 cavity ins. between wood studs on conc. wall per def.
	R=	ID:			
Doors					
	U= 0.6	ID: D1/A1.3, T.10-6 default	0.60	120	Non-NFRC fire-rated exit door per default
	U= 1.2	ID: D2/A1.3, T.10-6 default	1.20	40	Non-NFRC warehouse door per default
Floors and Slabs					
Floor	R=30	ID: F1/A1.7, T.10-4A default	0.031	10417	R-30 continuous ins. under concrete floor slab per default
	R=	ID:			
Slab	R=10	ID: F2/A1.7, T.10-2 default	0.700	612	R-10 slab edge ins. for 2 feet without thermal break per def.
Fenestration and Skylights					
Vertical		ID: W1/A1.3, NFRC certified	0.36	12307	Curtainwall rated, certified, and labeled per NFRC
		ID: W2/A1.3, T.10-6 default	0.50	5240	Non-NFRC curtainwall, 2 layer, 0.05emis, argon, TB, fixed
		ID: W3/A1.3, T.10-6 default	0.65	282	Non-NFRC curtainwall, 2 layer, 0.05emis fixed
		ID: W3/A1.3, T.10-6 default	0.78	282	Non-NFRC curtainwall, 2 layer, 0.05emis operable
Sky Light		ID: S1/A1.3, NFRC certified	0.50	453	Sloped glazing rated, certified, and labeled per NFRC
		ID: S2/A1.3, T.10-6 default	0.78	118	Non-NFRC atrium sloped glazing, 2 layer, 0.05 emis., fixed

AS-BUILT PLANS ACCURATLEY AND COMPLETELY REFLECT CHANGES AND CORRECTIONS MADE DURING CONSTRUCTION AS DOCUMENTED IN THE RFI AND NDC QA/QC PROCEDURES DEVELOPED FOR THIS PROJECT AND AS BASED ON AS-BUILT INFORMATION PROVIDED BY SEATTLE TUNNEL PARTNERS.

FILE NAME	C:\Users\trtran\Documents\South Building Mech-TWE-Central-HNTB_2018_trtran.rvt
DATE	5/7/2019 3:23:11
TIME	PM
PLOTTED BY	H. TANG
DESIGNED BY	D. MOORE
ENTERED BY	H. TANG
CHECKED BY	W. LI
PROJ. ENGR.	R. JOHNSON
REGIONAL ADM.	L. LAIRD

REVISION | DATE | BY

REGION NO. 10 | STATE WASH | FED.AID PROJ.NO. BR-0099(111)

JOB NUMBER 10A065

CONTRACT NO. 007999 | LOCATION NO.

EOR — CERTIFYING ENGINEER — 05-14-19

Washington State Department of Transportation

U.S. Department of Transportation Federal Highway Administration

City of Seattle

SR 99 TUNNEL PROJECT

SEC CODE COMPLIANCE FORM

DS007

SHEET OF SHEETS

FOR AS-BUILT PLAN ONLY

H-D-PAK-SOB-TR2.34-00362-08-ASB-1905-14

2009 Seattle Energy Code Compliance Forms for Nonresidential and Multifamily Residential

Mechanical Summary — MECH-SUM

2009 Seattle Energy Code Compliance Forms for Nonresidential and Multifamily Residential — Revised July 2011

Project Info

Project Address	SR99 BUILDING - SOUTH OPERATIONS BUILDING
	90 S. DEARBORN ST.
	SEATTLE, WA. 98014
Applicant Name:	TRES WEST ENGINEERS INC.
Applicant Address:	2702 SOUTH 42ND STREET #301 TACOMA, WA 98409
Applicant Phone:	(253) 472-3300
Date	8/21/2012
For Building Dept. Use	

Project Description

Briefly describe mechanical system type and features.

☑ Includes Plans

Rooftop DOAS system with VFD's and energy recovery serving indoor fan coil units with 100% OSA economizers. Fan coils served from gas fired condensing boiler, and air cooled chiller. All water pumped via VFD's. DDC controls

Drawings must contain notes requireing compliance with commissioning requirements - Section 1416

Compliance Option

◯ Simple System ◯ Complex System ◯ Systems Analysis

(See Decision Flowchart (over) for qualifications. Use separate MECH-SUM for simple & complex

Equipment Schedules

The following information is required to be incorporated with the mechanical equipment schedules on the plans. For projects without plans, fill in the required information below.

Cooling Equipment Schedule

Equip. ID	Equip Type	Brand Name[1]	Model No.[1]	Capacity[2] Btu/h	OSA CFM or Econo?	SEER or EER	IPLV[3]	Econmizer Option or Exception[6]	Heat Recovery Y/N
		See Sheet HS101							
		See Sheet HS102							
		See Sheet HS103							

Heating Equipment Schedule

Equip. ID	Equip Type	Brand Name[1]	Model No.[1]	Capacity[2] Btu/h	OSA cfm or Econo?	Input Btuh	Output Btuh	Efficiency[4]	Heat Recovery Y/N
		See Sheet HS101							
		See Sheet HS102							
		See Sheet HS103							

Fan Equipment Schedule

Equip. ID	Equip Type	Brand Name[1]	Model No.[1]	CFM	SP[1]	HP/BHP	Flow Control[5]	Location of Service
		See Sheet HS102						

[1] If available. [2] As tested according to Table 14-1A through 14-1G. [3] If required. [4] COP, HSPF, Combustion Efficiency, or AFUE, as applicable. [5] Flow control types: variable air volume(VAV), constant volume (CV), or variable speed (VS). [6] Exception number from Section 1433.

2009 Seattle Energy Code Compliance Forms for Nonresidential and Multifamily Residential

Mechanical Summary (back) — MECH-SUM

2009 Seattle Energy Code Compliance Forms for Nonresidential and Multifamily Residential — Revised July 2011

System Description

See Section 1421 for full description of Simple System qualifications.

All Systems:	☐ No humidification?		☑ No Reheat?	
If Heating/Cooling or Cooling Only:	☐ Constant vol?	☑ Split system?	☐ <=84,000 Btuh?	☑ Economizer
	☑ Air cooled?	☐ Packaged sys?	☐ <=135,000 Btuh?	
	☐ Cooling Cap <=15 Btuh/ft²?		☐ Heating Cap. > 0 & <=10 Btuh/ft²?	
If Heating Only:	☐ <1000 cfm?	☐ <30% outside air?	☐ Heating Cap. <=10 Btuh/ft²?	

Decision Flowchart

Use this flowchart to determine if project qualifies for Simple System Option. If not, either the Complex System or Systems Analysis Options must be used.

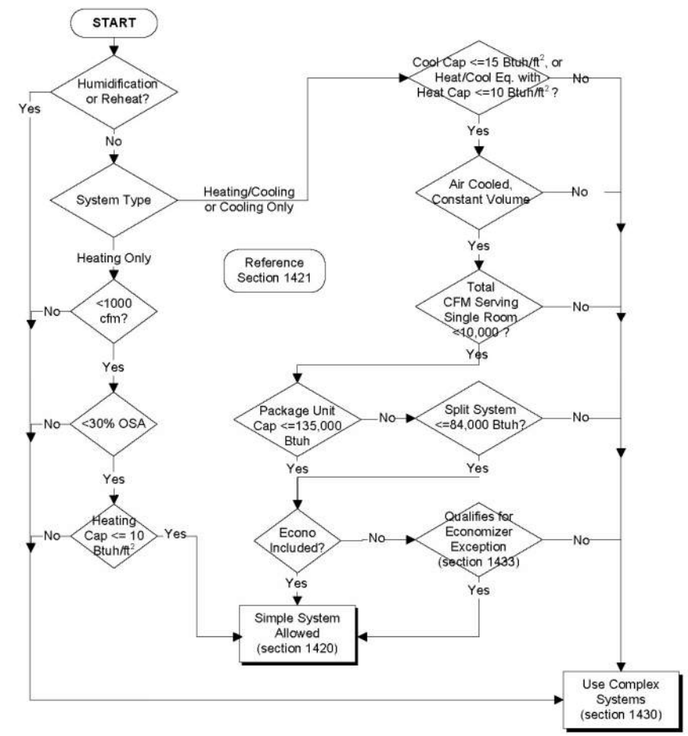

Complex Systems

Refer to MECH-COMP Mechanical Complex Systems for assistance in determining which Complex Systems requirements are applicable to this project.

AS-BUILT PLANS ACCURATLEY AND COMPLETELY REFLECT CHANGES AND CORRECTIONS MADE DURING CONSTRUCTION AS DOCUMENTED IN THE RFI AND NDC QA/QC PROCEDURES DEVELOPED FOR THIS PROJECT AND AS BASED ON AS-BUILT INFORMATION PROVIDED BY SEATTLE TUNNEL PARTNERS.

FILE NAME	C:\Users\trtran\Documents\South Building Mech-TWE-Central-HNTB_2018_trtran.rvt
DATE	5/7/2019 3:23:12
TIME	PM
PLOTTED BY	H. TANG
DESIGNED BY	D. MOORE
ENTERED BY	H. TANG
CHECKED BY	W. LI
PROJ. ENGR.	R. JOHNSON
REGIONAL ADM.	L. LAIRD

REVISION | DATE | BY

REGION NO. 10 | STATE WASH | FED.AID PROJ.NO. BR-0099(111)

JOB NUMBER 10A065

CONTRACT NO. 007999 | LOCATION NO.

EOR — CERTIFYING ENGINEER

Washington State Department of Transportation

U.S. Department of Transportation Federal Highway Administration

City of Seattle

SR 99 TUNNEL PROJECT

SEC CODE COMPLIANCE FORM

DS008

SHEET OF SHEETS

FOR AS-BUILT PLAN ONLY

H-D-PAK-SOB-TR2.34-00362-08-ASB-1905-14

Mechanical - Complex Systems Checklist — MECH-COMP

2009 Seattle Energy Code Compliance Forms for Nonresidential and Multifamily Residential — Revised July 2011

Project Address: SR99 BUILDING - SOUTH OPERATIONS BUILDING

Date: 8/20/2012

The following additional information is necessary to check a mechanical permit application for a complex mechanical system for compliance with the mechanical requirements in the Washington State Nonresidential Energy Code. Use the checklist as a reference for notes added to the mechanical drawings (see the MECH-CHK checklist for additional requirements). This information must be on the plans since this is the official record of the permit. Having this information in separate specifications alone is NOT an acceptable alternative.

For Building Department Use

Applicability (yes, no, na)	Code Section	Component	Information Required	Location on Plans	Building Department Notes
ADDITIONAL CHECKLIST ITEMS FOR COMPLEX SYSTEMS ONLY					
N.A.	1431.1	Field assem. sys.	Provide calculations for total onsite energy input/output to equip.		
Yes	1431.2	System Sizing	Indicate equipment & system sizing complies with 1431.2	Calcs	
Yes	1431.3	Hydr. Sys. Design	Indicate design flow rate in accordance with Table 14-3	HS806	
Yes	1432.1	Setback & shut-off	Indicate separate systems or show isolation devices on plans	HS803	
Yes	1432.2.1	Air system reset	Indicate automatic temperature reset & operation sequence	DS012	
Yes	1432.2.2	Hydr. Sys. reset	Indicate automatic temperature reset & operation sequence	DS012	
Yes	1432.3.1	Hydr. Var. Flow	Indicate variable flow method for all applicable systems	DS012/013	
Yes	1432.3.X	Hydronic Isolation	Indicate method of isolation for all applicable systems	DS012	
Yes	1432.4	DDC Capabilities	Indicate control capabilities including demand response setpoind adj.	DS012	
Yes	1432.4	DDC data mgmt	Indicate metering and trending capabilities.	DS012	
Yes	1432.5	Pressure Reset	Indicate static pressure reset for VAV systems	DS012	
Yes	1433	Air Economizer	Indicate economizer on equipment schedule or provide calculations to justify exemption. Demonstrate higher efficiency equipment if required.	DS012/HS102	
N.A.	1433	Water Economizer	Indicate water economizer and provide calculations showing compliance with 1413 if 1433 Exception 3 is utilized		
Yes	1434	Separate air sys.	Indicate special requirement zones and indicate systems	HS802	
N.A.	1435	Simul. htg. & clg.	Indicate method of prohibiting simultaneous heating and cooling, or state excpetion and show supporting calculations		
Yes	1436	Heat recovery	Indicate heat recovery of all applicable systems on plans; complete and attach heat recovery calculations	HS102	
Yes	1437	Elec. motor effic.	MECH-MOT or Equip. Schedule with hp, rpm, efficiency	HS101	
Yes	1438	Variable speed drives	Indicate VS control or equivalent on schedules for all applicable equip.	HS101,102,103	
N.A.	1438.1	Heat Rejection	Indicate heat rejection equipment types and fan types		
N.A.	1438.2	Hot Gas Bypass	Indicate cooling equipment staging and capacity modulation abilities		
Yes	1438.3	Large Volume sys	Indicate multiple system rooms & indicate ventilation control	DS012	
N.A.	1439.1	Kitchen Hoods	Indicate source and conditioning of make-up air		
N.A.	1439.2	Laboratory Exhaust	Indicate HR, VAV, semi-conditioned makeup, or CERM calc		

If "no" is circled for any question, provide explanation:

Decision Flowchart

Use flowchart to determine how the requirements of the Complex Systems Option apply to the project.

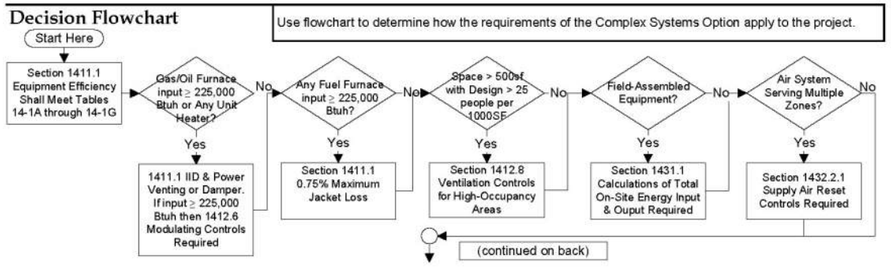

Mechanical - Complex Systems (back) — MECH-COMP

2009 Seattle Energy Code Compliance Forms for Nonresidential and Multifamily Residential — Revised July 2011

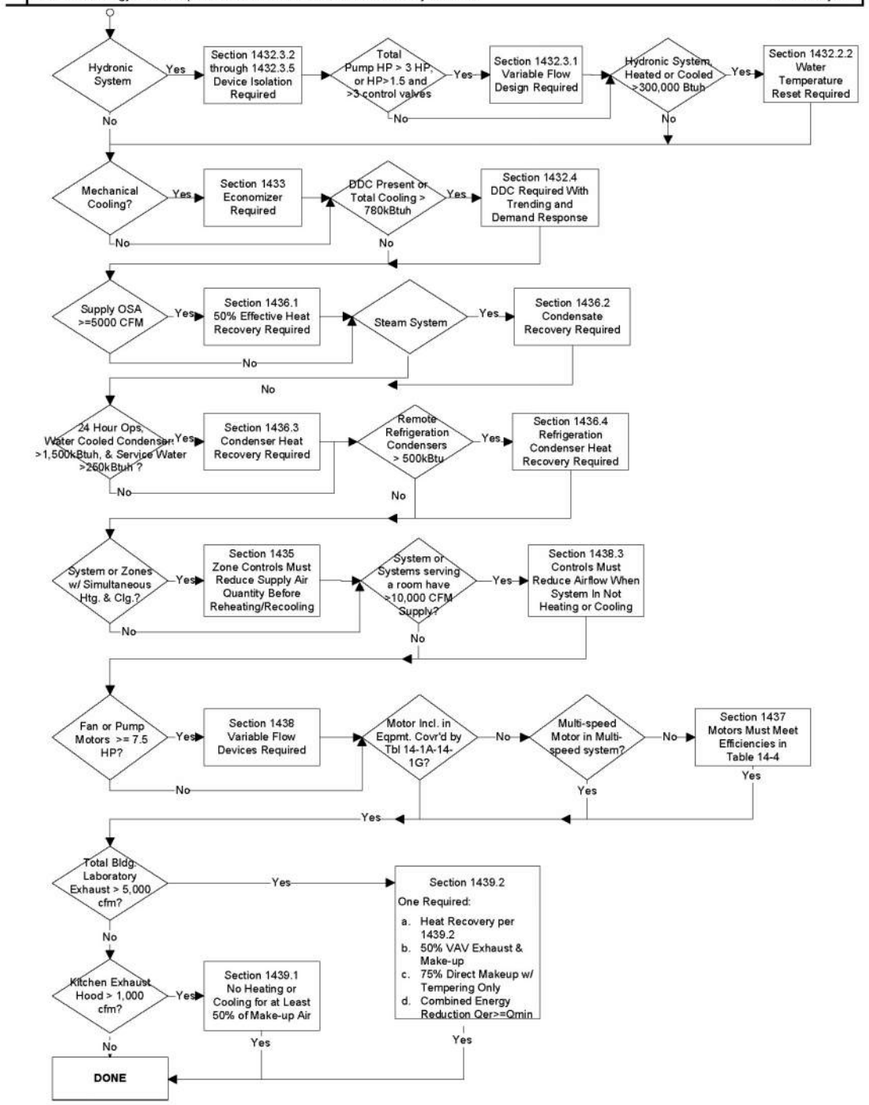

AS-BUILT PLANS ACCURATLEY AND COMPLETELY REFLECT CHANGES AND CORRECTIONS MADE DURING CONSTRUCTION AS DOCUMENTED IN THE RFI AND NDC QA/QC PROCEDURES DEVELOPED FOR THIS PROJECT AND AS BASED ON AS-BUILT INFORMATION PROVIDED BY SEATTLE TUNNEL PARTNERS.

FILE NAME	C:\Users\trtran\Documents\South Building Mech-TWE-Central-HNTB_2018_trtran.rvt
DATE	5/7/2019 3:23:12
TIME	PM
PLOTTED BY	H. TANG
DESIGNED BY	D. MOORE
ENTERED BY	H. TANG
CHECKED BY	W. LI
PROJ. ENGR.	R. JOHNSON
REGIONAL ADM.	L. LAIRD

REVISION | DATE | BY

REGION NO. 10 | STATE WASH | FED.AID PROJ.NO. BR-0099(111)

JOB NUMBER 10A065

CONTRACT NO. 007999 | LOCATION NO.

EOR — CERTIFYING ENGINEER — 05-14-19

Washington State Department of Transportation
U.S. Department of Transportation Federal Highway Administration
City of Seattle

SR 99 TUNNEL PROJECT

SEC CODE COMPLIANCE FORM

DS009

SHEET OF SHEETS

FOR AS-BUILT PLAN ONLY

H-D-PAK-SOB-TR2.34-00362-08-ASB-1905-14

2009 Seattle Energy Code Compliance Forms for Nonresidential and Multifamily Residential

Economizer — MECH-ECO

2009 Seattle Energy Code Compliance Forms for Nonresidential and Multifamily Residential — Revised July 2011

Economizer Summary

Check box(es) for exceptions being claimed. List the system/equipment that qualifies for each exception. See Section 1433 for full description of Economizer requirements.

- [x] Full Air Econo: All units except for T99-BS04-CU-01
- [ ] Ex 1a:
- [ ] Ex 1b:
- [ ] Ex 2:
- [ ] Ex 3:
- [ ] Ex 4:
- [ ] Ex 5:
- [ ] Ex 6:
- [ ] Ex 7:
- [ ] Ex 8:
- [x] Ex 9a: T99-BS04-CU-01
- [ ] Ex 9b:
- [ ] Ex 9c:
- [ ] Ex 9d:
- [ ] Ex 9e:
- [ ] Ex 10:
- [ ] Ex 11:

Decision Flowchart

Use this flowchart to determine if project complies with Economizer requirements. If not, the Systems Analysis Option must be used.

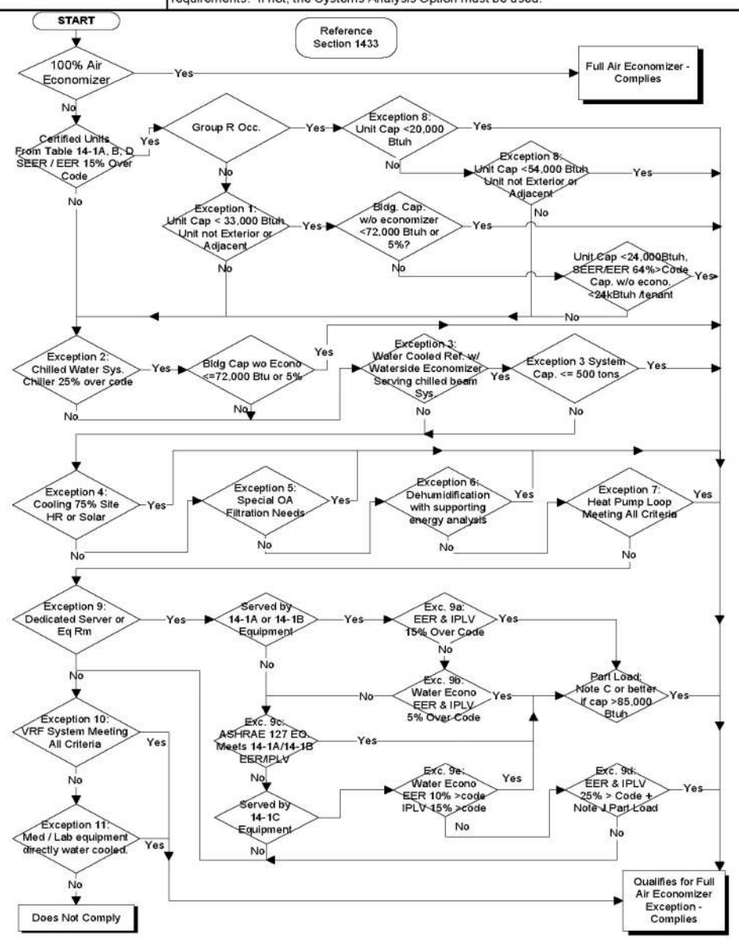

2009 Seattle Energy Code Compliance Forms for Nonresidential and Multifamily Residential

Electric Motors — MECH-MOT

2009 Seattle Energy Code Compliance Forms for Nonresidential and Multifamily Residential — Revised July 2011

Project Address: SR99 BUILDING - SOUTH OPERATIONS BUILDING

Date: 8/20/2012

For Building Department Use

Complete the following for all design A & B squirrel-cage, T-frame induction permanently wired polyphase motors of 1 hp or more having synchronous speeds of 3600, 1800 or 1200 rpm (unless one of the exceptions below applies).

Motor No. or Location	HP	Type (open/closed)	Description of Application or Use	Synch. Speed	Min.Nom. Full load Efficiency
BS-1-FCU2	1- 1/2	open	Fan coil unit	1800	86.5%
BS-3-FCU2	1- 1/2	open	Fan coil unit	1800	86.5%

Minimum Nominal Full-Load Efficiencies (%) As of 12/19/2010

	Open Motors			Enclosed Motors		
Synchronous Speed (RPM) / Motor HP	3,600	1,800	1,200	3,600	1,800	1,200
1.0	77.0	85.5	82.5	77.0	85.5	82.5
1.5	84.0	86.5	86.5	84.0	86.5	87.5
2.0	85.5	86.5	87.5	85.5	86.5	88.5
3.0	85.5	89.5	88.5	86.5	89.5	89.5
5.0	86.5	89.5	89.5	88.5	89.5	89.5
7.5	88.5	91.0	90.2	89.5	91.7	91.0
10.0	89.5	91.7	91.7	90.2	91.7	91.0
15.0	90.2	93.0	91.7	91.0	92.4	91.7
20.0	91.0	93.0	92.4	91.0	93.0	91.7
25.0	91.7	93.6	93.0	91.7	93.6	93.0
30.0	91.7	94.1	93.6	91.7	93.6	93.0
40.0	92.4	94.1	94.1	92.4	94.1	94.1
50.0	93.0	94.5	94.1	93.0	94.5	94.1
60.0	93.6	95.0	94.5	93.6	95.0	94.5
75.0	93.6	95.0	94.5	93.6	95.4	95.4
100.0	93.6	95.4	95.0	94.1	95.4	95.0
125.0	94.1	95.4	95.0	95.0	95.4	95.0
150.0	94.1	95.8	95.4	95.0	95.8	95.8
200.0	95.0	95.8	95.4	95.4	96.2	95.8
250.0	95.0	95.8	95.4	95.8	96.2	95.8
300.0	95.4	95.8	95.4	95.8	96.2	95.8
350.0	95.4	95.8	95.4	95.8	96.2	95.8
400.0	95.8	95.8	95.8	95.8	96.2	95.8
450.0	95.8	96.2	96.2	95.8	96.2	95.8
500.0	95.8	96.2	96.2	95.8	96.2	95.8

Exceptions:
1. Motors in systems designed to use more than one speed of a multi-speed motor.
2. Motors already included in the efficiency requirements for HVAC equipment (Tables 14-1A or 14-1B) .
3. Motors that are an integral part (i.e. not easily removed and replaced) of specialized process equipment (i.e. equipment which requires a special motor, such as an explosion-proof motor).
4. Motors integral to a listed piece of equipment for which no qualifying motor has been approved (i.e. if the only U.L. listing for the equipment is with a less-efficient motor and there is no energy-efficient motor option).

For motors claiming an exception, list motor and note which exception applies.

AS-BUILT PLANS ACCURATLEY AND COMPLETELY REFLECT CHANGES AND CORRECTIONS MADE DURING CONSTRUCTION AS DOCUMENTED IN THE RFI AND NDC QA/QC PROCEDURES DEVELOPED FOR THIS PROJECT AND AS BASED ON AS-BUILT INFORMATION PROVIDED BY SEATTLE TUNNEL PARTNERS.

FILE NAME	C:\Users\trtran\Documents\South Building Mech-TWE-Central-HNTB_2018_trtran.rvt
DATE	5/7/2019 3:23:13
TIME	PM
PLOTTED BY	H. TANG
DESIGNED BY	D. MOORE
ENTERED BY	H. TANG
CHECKED BY	W. LI
PROJ. ENGR.	R. JOHNSON
REGIONAL ADM.	L. LAIRD

REVISION | DATE | BY

REGION NO. 10 | STATE WASH | FED.AID PROJ.NO. BR-0099(111)

JOB NUMBER 10A065

CONTRACT NO. 007999 | LOCATION NO.

EOR — CERTIFYING ENGINEER

Washington State Department of Transportation

U.S. Department of Transportation Federal Highway Administration

City of Seattle

SR 99 TUNNEL PROJECT

SEC CODE COMPIANCE FORM

DS010

SHEET OF SHEETS

FOR AS-BUILT PLAN ONLY

H-D-PAK-SOB-TR2.34-00362-08-ASB-1905-14

2009 Seattle Energy Code Compliance Forms for Nonresidential and Multifamily Residential

Mechanical Permit Plans Checklist — MECH-CHK

2009 Seattle Energy Code Compliance Forms for Nonresidential and Multifamily Residential — Revised July 2011

Project Address: SR99 BUILDING - SOUTH OPERATIONS BUILDING — Date: 8/20/2012

The following information is necessary to check a mechanical permit application for compliance with the mechanical requirements in the 2009 Seattle Energy Code.

Applicability (yes, no, na)	Code Section	Component	Information Required	Location on Plans	Building Department Notes
HVAC REQUIREMENTS (Sections 1401-1424)					
	1411	**Equipment Performance**			
Yes	1411.1	Minimum efficiency	Equipment schedule with type, capacity, efficiency	HS101,1	
Yes	1411.1	Combustion htg.	Indicate intermittent ignition, flue/draft damper & jacket loss	HS103	
Yes	1411.1	Air-cooled chiller	Provide total air and water chiller capacity	HS103	
N.A.	1411.2.1	Water-cooled chiller	Full-load and NPLV values adjusted for any non-standard conditions		
Yes	1411.4	Pkg. elec. htg.& clg.	List heat pumps on schedule	HS102	
N.A.	1411.5	Unenclosed Heat	Indicate radiant heat system and occupancy controls		
	1412	**HVAC Controls**			
Yes	1412.1	Temperature zones	Indicate locations on plans	HS151	
Yes	1412.2	Deadband control	Indicate 5 degree deadband minimum	DS012	
Yes	1412.3	Humidity control	Indicate humidistat	HS103	
Yes	1412.4	Setback and Shutoff	Indicate thermostat with 7 day program capability & required setback	DS012,0	
Yes	1412.4.1	Dampers	Indicate damper location, leakage rate, control type, & max. leakage	DS002	
Yes	1412.4.2	Optimum Start	Indicate optimum start controls	DS013	
N.A.	1412.5	Heat pump control	Indicate heat pump thermostant & outdoor lockout on schedule	NO elec	
N.A.	1412.6	Combustion heating	Indicate modulating or staged control		
Yes	1412.7	Balancing	Indicate balancing features on plans	DS002	
N.A.	1412.8	Ventilation Control	Indicate demand control ventilation for high-occupancy areas and labs		
N.A.	1412.9	Loading Dock & Garage Ventilation	Indicate enclosed loading dock & parking garage ventilation system activation and control method.		
Yes	1412.10	Sgl Zone VAV Ctrls	Indicate VAV controls for single-zone systems	DS012	
Yes	1416.3.2	System Balancing	Indicate air and water system balancing requirements	DS002	
N.A.	1422	Thermostat interlock	Indicate thermostat interlock on plans		
Yes	1432.2.1	Temperature Reset	Indicate temperature reset method	DS012	
	1413	**Air / Water Economizers**			
Yes	1412.1	Single zone systems	Indicate multiple cooling stage control capability.	DS012	
Yes	1413.1	Air Econo Operation	Indicate 100% capability on schedule	HS101,1	
N.A.	1413.1	Wtr Econo Operation	Indicate 100% capacity at 45 degF db & 40 deg F wb		
N.A.	1413.2	Wtr Econo Document	Indicate max. OSA condition for design clg load & equipment performance data.		
Yes	1413.3	Integrated operation	Indicate capability for partial cooling	DS012	
	1413.4	Humidification	Indicate direct evap or fog atomization w/ air economizer	HS103	
N.A.	1413.5	Htg. Sys. Impact	Indicate that system does not increase heating energy use during economizer operation		
	1414	**Ducting Systems**			
Yes	1414.1	Duct sealing	Indicate duct design pressures and sealing requirements	DS002	
Yes	1414.1.2	Low press. duct test	Indicate that low-pressure duct systems to be leak tested	DS002	
N.A.	1414.1.3	HP & ext. duct test	Indicate that high-pressure & exterior duct systems to be leak tested		
Yes	1414.2	Duct insulation	Indicate R-value of insulation on duct	DS002	
	1415	**Piping Systems**			
Yes	1415.1	Piping insulation	Indicate R-value of insulation on piping	DS002	
N.A.	1415.2	Radiant Systems	Indicate R-value of insulation on radiant panels		
Yes	**Mechanical Summary Form**		Completed and attached. Equipment schedule with types, input/output, efficiency, cfm, hp, economizer		

2009 Seattle Energy Code Compliance Forms for Nonresidential and Multifamily Residential

Mechanical Permit Plans Checklist Continued — MECH-CHK

2009 Seattle Energy Code Compliance Forms for Nonresidential and Multifamily Residential — Revised July 2011

Project Address: SR99 BUILDING - SOUTH OPERATIONS BUILDING — Date: 8/20/2012

The following information is necessary to check a mechanical permit application for compliance with the mechanical requirements in the 2009 Seattle Energy Code.

Applicability (yes, no, na)	Code Section	Component	Information Required	Location on Plans	Building Department Notes
HVAC REQUIREMENTS (Section 1416), continued					
	1416	**Completion Requirements**			
Yes	1416.3.2	System Balancing	Indicate air and water system balancing requirements	DS00	
Yes	1416.3.3	Functional Testing	Provide sequence of operations and test procedures.	DS00	
Yes	1416.3.4	Documentation	Indicate O&M manuals, record drawings, staff training	DS00	
Yes	1416.3.5	Comm. Report	Indicate requirements for final commissioning report	DS00	
Yes	1416.4	Compliance Chklist	Submit to building official upon substantial completion.	DS00	
SERVICE WATER HEATING AND HEATED POOLS (Sections 1440-1454)					
	1440	**Service water htg.**			
N.A.	1441	Elec. water heater	Indicate R-10 insulation under tank		
N.A.	1442	Shut-off controls	Indicate automatic shut-off of circulators or heat trace		
Yes	1443	Pipe Insulation	Indicate R-value of insulation on piping	DS002	
Yes	1444	Pump Energy	Indicate method of pump energy management (Sec 1438)	DS002	
	1445	Heat Recovery	Indicate preheat capacity as % of peak service water demand.		
	1450	**Heated Pools**			
N.A.	1452	Heat Pump COP	Indicate minimum COP of 4.0		
N.A.	1452	Heater Efficiency	Indicate pool heater efficiency		
N.A.	1453	Pool heater controls	Indicate switch and 65 degree control		
N.A.	1454	Pool covers	Indicate vapor retardant cover		
N.A.	1454	Pools 90+ degrees	Indicate R-12 pool cover		
N.A.	1455	Heat Recovery	Indicate method and capacity of exhaust air temperature reduction		
COLD STORAGE (Sections 1460-1465)					
	1460	**Cold Storage**			
N.A.	1463	Evaporators	Indicate motor type and speed control		
N.A.	1464	Condensors	Indicate condenser cooling type, design wb temp and control		
N.A.	1465	Compressors	Indicate design minimum condensing temp and control.		
COMPRESSED AIR AND VACUUM PUMPS (Section 1470)					
	1470	**Compressed Air and Vacuum**			
N.A.	1470.1	Air compressor gnl.	Indicate "no loss" water drains		
N.A.	1470.2	Rotary screw comp	Indicate variable speed drive or other acceptable control		
COMMERCIAL FOOD SERVICE (Sections 1475)					
	1475	**Commercial Food Service**			
N.A.	1475	Food service equip.	Indicate that equipment complies with energy and water efficiency criteria in Energy Star		

If "no" is indicated for any item in Sections 1401-1424 or 1440-1465 , provide explanation:

AS-BUILT PLANS ACCURATLEY AND COMPLETELY REFLECT CHANGES AND CORRECTIONS MADE DURING CONSTRUCTION AS DOCUMENTED IN THE RFI AND NDC QA/QC PROCEDURES DEVELOPED FOR THIS PROJECT AND AS BASED ON AS-BUILT INFORMATION PROVIDED BY SEATTLE TUNNEL PARTNERS.

FILE NAME	C:\Users\trtran\Documents\South Building Mech-TWE-Central-HNTB_2018_trtran.rvt
DATE	5/7/2019 3:23:14
TIME	PM
PLOTTED BY	H. TANG
DESIGNED BY	D. MOORE
ENTERED BY	H. TANG
CHECKED BY	W. LI
PROJ. ENGR.	R. JOHNSON
REGIONAL ADM.	L. LAIRD

REVISION | DATE | BY

REGION NO. 10 | STATE WASH | FED.AID PROJ.NO. BR-0099(111)

JOB NUMBER 10A065

CONTRACT NO. 007999 | LOCATION NO.

EOR — CERTIFYING ENGINEER

Washington State Department of Transportation
U.S. Department of Transportation Federal Highway Administration
City of Seattle

SR 99 TUNNEL PROJECT

SEC CODE COMPLIANCE FORM

DS011

SHEET OF SHEETS

FOR AS-BUILT PLAN ONLY

H-D-PAK-SOB-TR2.34-00362-08-ASB-1905-14

SEE SECTION 230993.17 FOR MORE INFORMATION

3.01 GENERAL

A. Provide 5-degree adjustable deadband to meet requirements of Seattle Energy Code.

B. Increase cooling zone setpoints by 2°F and reduce heating zone setpoints when actuated by a demand response signal.

C. Provide trending capabilities for all control points. trending shall be able to be viewed in graphic format.

3.02 AIR COOLED LIQUID CHILLER (T99-BS02-CH-01)

A. Chillers shall be enabled to operate by the EMCS whenever the outside air temperature is above 60 degree F (adjustable).

B. The chiller shall sequence cooling stages with integral internal controls to maintain a leaving water temperature as determined by a reset signal from EMCS. The loop temperature is reset between 44 and 50 degrees F based upon outside air temperature between 60 and 80 degrees F.

C. The chiller shall be interlocked to the chilled water pumps through a local flow switch and shall be locked out of operation by its internal controls until proof of flow is provided.

D. System shall monitor chilled water supply/return and compressor failure. Provide Current Transformers (Hawkeye or approved equal) to monitor motor/compressor status.

E. DDC system shall monitor chiller control valve position.

3.03 ALARM REPORTING

A. Report alarm conditions indicated on the Input/Output Summary to the Host.

3.04 BOILER CONTROLS (T99-BS02-B-01, T99-BS02-B-02)

A. Boiler shall be directly controlled by a factory provided compatible dedicated stand-alone programmable logic unitary direct digital controller (DDC controller). Packaged controls shall modulate burners, control boiler pumps, control boilers etc. Boiler pumps shall turn off to isolate boiler when corresponding boiler is off. See boiler specification for more information.

B. Provide monitoring of all available control points from the packaged controller.

C. Boiler shall be enabled when the outdoor air temperature is below 68 degrees (adjustable) and the system heating water pumps are running. Boiler shall be disabled when the system water pumps are disabled.

D. High and low temperature alarms shall be generated when operator's terminal alarm setpoints are not met.

E. Provide for boiler the following commands/displays at operator's terminal at a minimum:

1. Manual/auto (scheduled enable).
2. Number of boiler heating stages active (or % on indication).
3. Heating supply water temperature setpoint.
4. Boiler inlet water temperature indication.
5. Boiler outlet water temperature indication.
6. Alarm status (high or low temperature setpoints).
7. Boiler runtime totalization.
8. Boiler trend logs.
9. Alarm history.
10. Boiler run status (one per boiler).
11. Boiler failure signal (one per boiler).
12. Boiler circulation pump failure signal (one per boiler).
13. General system alarm.
14. Lead boiler indicator.
15. HW supply and return temperatures.
16. Outside air temperature.

F. Points shall be taken from the burner control panel. The EMCS Contractor shall include all necessary relay contact points for the status of the items aforementioned.

G. EMCS shall monitor outside air temperature and signal boiler control panel. Boiler shall be equipped with outside air temperature reset per Seattle Energy Code Requirements. Boiler water temperature shall be reset based on outside air temperature and shall be adjustable. As outside air temperature rises boiler leaving water temperature shall be reduced, as outside air temperature lowers the boiler leaving water temperature shall be increased.

H. Control heating water at maximum 180 degrees F at outdoor temperature of 18 degrees F, and minimum 120 degrees F at outdoor temperature of 75 degrees F, with straight line relationship between. Temperature shall be reset up if more than 2 heating water control valves are at 100% for more than 15 minutes.

3.05 NOT USED

3.06 CENTRAL FAN SYSTEMS - ROOFTOP HEAT RECOVERY UNITS (T99-BS03-AHU-01)

A. Time Schedule: Start and stop supply and exhaust fans. Determine fan status through auxiliary contactors in motor starter. If fan fails to start as commanded, signal alarm. Units shall be enabled during occupied mode.

B. Safety Devices:

1. High Temperature Protection: Stop fans and close outside dampers if temperature in exhaust air is above 130 degrees F (adjustable), signal alarm.
2. Smoke Detector: Stop fans, close outside air dampers, and close smoke dampers if smoke is detected; signal alarm.

C. Outside and Exhaust air Dampers:

1. When supply fan is not running, outside air and exhaust air dampers are closed.
2. When supply fan is running, dampers are controlled and operate with outside air and exhaust air dampers open.

D. Face and Bypass dampers for Energy Recovery core:

1. Modulate face and bypass dampers to maintain a supply air temperature of 55 to 70 degrees F. Supply air temperature shall be reset based on the amount of fan coil airflow (CFM) calling for heating/cooling. The amount of airflow and temperature shall be calculated based on the airflow for each individual Fan coil unit and the supply air temperature requested by the majority of the fan coil units.

E. Supply Fan: (T99-BS02-SFN-01, T99-BS03-SFN-01, T99-BS04-SFN-01)

1. Maintain constant supply static pressure of 1" wg (adjustable, final figure shall be determined during balancing) by modulating supply fan VFD. Locate sensor minimum 2/3rds downstream of supply fan in supply air duct.

F. Exhaust Fan: (T99-BS02-EFN-01,-02, T99-BS03-EFN-01,-02,-03, T99-BS04-EFN-01)

1. Exhaust fan VFD shall track with supply fan VFD based on airflow. The exhaust fan shall track behind the supply fan in order to maintain a minimum +0.02" building static pressure.

G. Display:

1. System graphic.
2. System on/off indication.
3. System day/night mode.
4. Supply fan on/off indication.
5. Exhaust fan on/off indication.
6. Outside air temperature (before and after the energy recovery core) indication.
7. Exhaust air temperature (before and after the energy recovery core) indication.
8. Fan discharge air temperature indication.
9. Fan discharge air temperature setpoint indication.
10. Fan discharge temperature control point adjustment.
11. Supply static pressure indication.
12. Supply static pressure control point adjustment.
13. Building static pressure indication.
14. Building static pressure control point adjustment.

3.07 CHILLED WATER DISTRIBUTION SYSTEM

A. In multiple pump systems, one of the pumps shall be enabled whenever outside air temperature is above 60 degrees F and there is a call for cooling. Call for cooling shall be via polling of all cooling coil control valves by the EMCS. Initial polling set point shall be set to call for cooling coil is commanded open. EMCS shall activate the chilled water pumps and chiller when cooling coil control valves are commanded open.

B. The EMCS shall monitor each pump for proof of flow. In the event that the lead pump fails during normal operation, the EMCS shall automatically start the lag pump and send an alarm to the EMCS workstation.

C. DDC system shall monitor differential pressure across pumps and pump motor failure. Provide current transformers (Hawkeye or approved equal) to monitor motor status.

D. The EMCS shall alternate the pumps in a lead/lag manner every week (user adjustable). Coordinate with the variable speed pump package supplier prior to shipment.

E. VFD's shall modulate pump sped & end of loop control valve to maintain differential pressure set point.

F. Minimum flow through chiller is 100 gpm or per manufacturer's recommendation. Set VFD minimum chiller flow.

3.08 COMBINATION FIRE / SMOKE DAMPERS

A. Controlled by fire alarm system and wired by Electrical Contractor. Provide monitoring; through EMCS; low voltage wiring and contactors shall be provided by Controls Contractor.

3.09 DUCT SMOKE DETECTORS

A. Controlled by fire alarm systems and wired by Electrical Contractor. Provide monitoring through EMCS. Low voltage wiring and contactors shall be provide by Controls Contractor.

3.10 ECONOMIZER CONTROL - INDOOR AIR HANDLING UNITS, FAN COIL UNITS, CRAC UNITS

A. Mixing dampers shall be modulated to provide cooling when the outside air dry bulb temperature is lower than the room or return air dry bulb temperature. If the outside air temperature is greater than the return or room air temperature, then the outside air damper shall be at their minimum positions.

3.11 ELEVATOR MACHINE ROOM (T99-BS03-ACU-01, T99-BS04-CU-01)

A. Ductless split system heat pump shall be controlled by its own factory provided stand-alone controls to maintain space temperature setpoint. DDC to monitor space temperature and provide alarm if temperature exceeds 100 degrees F.

3.12 EMERGENCY GENERATORS

A. When the engine is not running, outside and exhaust dampers are closed and recirculation damper is open.

B. When generator is running, dampers are controlled and operate with outside and exhaust dampers opening fully, and recirculating dampers modulating, to maintain room temperature of 95 degrees F.

C. On room temperatures above 95 degrees F open intake damper, close recirculating dampers and start exhaust fan.

3.13 EXCESS PRESSURE CONTROLS

A. Maintain constant pressure differential between supply and return heating/cooling piping by modulating end of loop bypass valves.

3.14 EXHAUST FAN CONTROL (T99-BS02-EFN-01,02, T99-BS03-EFN-01,02,03, T99-BS04-EFN-01)

A. Provide control for each fan as scheduled on the drawings. ALL exhaust fans provided on this project shall be interlocked with the EMCS. EMCS shall monitor status of each fan. Fans not listed to be interlocked or controlled via thermostat or switch shall be controlled directly from the EMCS (schedule shall be adjustable). Provide adjustable reverse-acting thermostats for all fans as scheduled. Refer to Schedule on Plans for additional control requirements.

B. 3.15 FIRE ALARM MONITORING

A. Monitor fire alarm system for alarm and trouble conditions such that either of these conditions will be communicated to the EMCS host computer equipment.

3.16 FIRE ALARM SHUTDOWN

A. Upon signal from the fire alarm panel, stop all air-handling units, fan coil units, and exhaust fans through software, except a signal from the fire alarm panel shall not shut down the following fans: T99-BS03-EFN-01, T99-BS03-EFN-02, T99-BS02-EFN-01

3.17 FREEZE PROTECTION

A. Units shall have freezestats on entering side of the heating water coil, which shall stop unit operation if an air temperature of 38 degrees F or less is sensed. The unit's outside air damper shall close, and the unit shall cease operation until the freezestat resets automatically for three cycles; then normal operation shall commence. After three automatic resets of the freezestats, manual reset shall be required.

3.18 HEAT TRACE

A. Thermostats shall be provided with heat trace to respond to pipe temperature. EMCS shall monitor the status of the system. Set heat trace thermostat to activate at 38 degrees F and below.

3.19 INDOOR AIR HANDLING UNIT AND FAN COIL UNIT SEQUENCE CONTROL (T99-BS-3-IAHU-01, T99-BS-4-FCU-01, T99-BS-3-FCU-01,-02,-03, T99-BS-2-FCU-01,-02, T99-BS-1-FCU-01,-02, T99-BS01-FCU-01,-02,-03,-04, T99-BS02-FCU-01,-02)

A. Each unit shall operate via DDC controller. The occupied/unoccupied signal shall be received from the central control system optimal start program. Each unit shall have room sensor with a push button for after hours (adjustable). When any zone is placed in the occupied mode, the unit serving that zone shall operate. This function shall be enabled or disabled through the central operator station. The after-hours time and zone set points shall be set at the computer terminal. Push button override will also enable the boiler and heating water circulating pumps sequence of operation.

B. Occupied Mode: On an optimized signal to change from the unoccupied to the occupied mode, the supply fan shall be enabled, the outside air dampers remain closed, return air damper open, and the heating valve at each coil shall modulate open to maintain warm-up discharge air setpoint until the occupied start time. Upon reaching the occupied start time each coil shall maintain room setpoint temperature and dampers shall modulate to minimum outside air position. The unit shall be placed into economizer mode or heating mode, whichever is required to maintain room set point. Upon being placed in the economizer mode the unit shall modulate the outside air dampers toward the open position or remain at minimum if the outside air temperature is above 70 degrees F.

1. Stage 1 Cooling: Cooling shall be the economizer cycle with the outside air damper modulating open, supply fan operating and the heating coil control valve closed.
2. Stage 2 Cooling: Cooling for units equipped with mechanical cooling, position the outside air damper to the minimum position. Supply fan shall operate, cooling coil control valve shall modulate, and the heating coil control valve shall remain closed. Cooling shall also be provided with integrated operation so that the outside air damper can be modulated open when outside air temperature will benefit mechanical cooling.
3. Heating: Unit shall monitor outside air supplied from the rooftop unit and return air temperature, outside air and return air dampers shall modulate in conjunction with the heating coil control valve to maintain supply air temperature setpoint.

C. Stand-By Mode: When occupancy sensor turns off the lights, the outside air damper closes and the return air damper opens.

D. For Variable Occupancy Areas With CO2 Sensors: The occupied cycle shall be the same as noted above except that the units shall have a 10% minimum outside air. When the CO2 level rises above 1,000 part per million (ppm), the outside air damper shall modulate to keep the ppm below 1,000. Provide a high CO2 alarm set point that will indicate economizer failure. The alarm point shall be adjustable and initially set at 1500 ppm. Read and adjust the CO2 level at the EMCS. The average range of the CO2 monitor and percentage of outside air override shall be adjustable.

E. Unoccupied Mode: During the unoccupied mode, the unit fan shall be off with the outside air damper closed and return air damper open. Fan and heating control valve shall cycle as required to maintain room night set back temperatures

F. Indoor ahu # T99-BS-3-IAHU-1 shall modulate fan speed vfd down to 50% based on space heating and cooling demand.

RFI #02573
RFI #03089
RFI #03857
RFI #04030
RFI #04104
RFI #04107
RFI #04237

AS-BUILT PLANS ACCURATLEY AND COMPLETELY REFLECT CHANGES AND CORRECTIONS MADE DURING CONSTRUCTION AS DOCUMENTED IN THE RFI AND NDC QA/QC PROCEDURES DEVELOPED FOR THIS PROJECT AND AS BASED ON AS-BUILT INFORMATION PROVIDED BY SEATTLE TUNNEL PARTNERS.

FILE NAME	C:\Users\trtran\Documents\South Building Mech-TWE-Central-HNTB_2018_trtran.rvt				REGION NO.	STATE	FED.AID PROJ.NO.
DATE	5/7/2019 3:23:15				10	WASH	BR-0099(111)
TIME	PM						
PLOTTED BY	H. TANG				JOB NUMBER		
DESIGNED BY	D. MOORE				10A065		
ENTERED BY	H. TANG						
CHECKED BY	W. LI				CONTRACT NO.		LOCATION NO.
PROJ. ENGR.	R. JOHNSON				007999		
REGIONAL ADM.	L. LAIRD	REVISION	DATE	BY			

EOR

CERTIFYING ENGINEER

Washington State Department of Transportation

U.S. Department of Transportation Federal Highway Administration

City of Seattle

SR 99 TUNNEL PROJECT

SEQUENCES OF OPERATION FOR HVAC CONTROLS

DS012

SHEET OF SHEETS

FOR AS-BUILT PLAN ONLY

H-D-PAK-SOB-TR2.34-00362-08-ASB-1905-14

3.20 HEATING WATER DISTRIBUTION SYSTEM

A. One of the pumps shall be enabled whenever outside air temperature is below 68 degrees F and there is a call for heating.

B. The EMCS shall monitor each pump for proof of flow. In the event that the lead pump fails during normal operation, the EMCS shall automatically start the lag pump and send an alarm to the EMCS workstation.

C. The pump VFD shall modulate to maintain loop pressure setpoint.

D. DDC system shall monitor differential pressure across pumps and pump motor failure. Provide Current Transformers (Hawkeye or approved equal) to monitor motor status.

E. The EMCS shall monitor the pumps that are operating. The pumps shall alternate in a lead/lag manner every week (user adjustable).

3.21 EXHAUST FAN BASED COOLING (T99-BS02-EFN-01,-02, T99-BS03-EFN-01,-02,-03)

A. On rise in temperature to above 80 degree F, associated exhaust fan shall be energized, associated outside air and exhaust air damper shall open. On drop in temperature, fans shall be de-energized, and associated outside air and exhaust air dampers shall close. Fans shall not shut-down for night cycle.

3.22 SCADA ROOM COOLING (T99-BS02-CRACU-01, -02, T99-BS02-CU-01,-02)

A. Each unit shall operate via DDC controller. The system shall always be in provide automatic switchover in occupied mode. The units shall operate in a lead/lag fashion and shall switch weekly event of unit failure.

B. Occupied Mode: The supply fan shall be enabled, the outside air, return, and relief air dampers shall operate in economizer to maintain space temperature setpoint.

1. Stage 1 Cooling: Cooling shall be the economizer cycle with supply fan operating.
2. Stage 2 Cooling: Position the outside air damper to the minimum position. Supply fan shall operate, cooling coil control valve shall modulate. Cooling shall also be provided with integrated operation so that the outside air damper can be modulated open when outside air temperature will benefit mechanical cooling.
3. Humidification: (T99-BS02-HUM-01) Humidifier shall operate to maintain space humidity setpoint.

C. Provide alarm is space temperature exceeds 95 degrees F.

D. Provide temperature sensor in raised floor to monitor actual leaving air temperature.

E. Provide leak detection in overflow drain pan; if leakage occurs, send alarm to EMCS.

3.23 NIGHT CYCLE - INDOOR MECHANICAL EQUIPMENT

A. Fan cycles to maintain space temperature heating setpoint. Provide fan shutdowns similar to day cycle. Outside air damper closed. Provide minimum fan runtime.

B. Revert to daytime temperature control if thermostat night override button is pushed for a set period to time, initially set at 2 hours.

3.24 OCCUPANCY SENSOR

A. Where indicated on Electrical Plans, motion sensors will be furnished under Division 26. Alternatively, occupancy sensors meeting the requirements Division 26 may be furnished and installed by the Control Subcontractor. The sensors will be provided with auxiliary contacts. On indication that the zone is unoccupied for a set time interval (initially set at 5 minutes adjustable), set minimum outside air damper position to zero and increase the deadband width for heating and cooling to 2 degrees below and above setpoint. When the zone becomes occupied, revert to normal control.

3.25 OCCUPIED MODE - MECHANICAL EQUIPMENT

A. Fan runs continuously.

B. Provide minimum outside damper position as required for minimum outside air flow as scheduled on the drawings and in conjunction with the Testing and Balancing Agency.

C. Shut down fans on receipt of fire alarm condition.

3.26 OPTIMUM START/STOP AND NIGHT SETBACK

A. Apply the Optimized Start/Stop and Night Setback (NS) program to each heating and ventilation zone. Optimized Start/Stop shall be fully configurable, provide all required hardware, sensors and programming to enable Optimum Start/Stop. Optimized Start/Stop shall enable each individual unit to automatically adjust its start time to achieve setpoint temperature immediately prior to occupancy. Night Setback shall be configured and interlocked with the building schedule. Night Setback temperature shall be adjustable. Building schedule shall be fully configurable allowing for each day and hour per year.

3.27 PRESSURE RELIEF CONTROL

A. Provide pressure/relief control for rooms to have a maximum pressure of 0.08" WC. This is to be achieved by modulating the motorized relief damper in relation to the respective outside air damper with respect to exhaust. Coordinate this feature with the balancing contractor.

3.28 PRESSURIZATION FANS (T99-BS02-SFN-01, T99-BS03-SFN-01, T99-BS04-SFN-01)

A. Elevator and stairwell pressurization fans:

1. Pressurization fans shall activate upon signal from FACP. Corresponding outside air dampers shall open.

3.29 RELIEF AIR DUCTS

Motorized dampers shall be provided on all relief ducts (see drawings for locations). Relief air damper actuators shall be coordinated and track with the O.A. damper actuators serving the same area.

3.30 RUSKIN VALIDATOR SYSTEM

A. Validator System allows the Owner to test and maintain "Combination Fire Smoke Dampers". See Section 23 33 00.

B. Ruskin components to be provided by the MC; "Smart" Damper Controller in enclosure, one for each fire damper, stand-alone router with transformers in enclosure, interface for router, points list and software. The basic system is good for up to 99 units, if the project exceeds that number, supply multiple systems and divide the facility into a logical sequence or areas to be covered.

C. Ruskin router to interface with BMS, for communications with Owner.

D. Control Subcontractor, shall wire and connect the Ruskin components, provide material as needed, for connecting the components and connecting to the BMS. The MC shall coordinate between the supplier and Control Subcontractor, to provide a complete and functioning system.

3.31 START-UP MECHANICAL EQUIPMENT

A. All mechanical equipment shall energize in a staged fashion. Loss of electricity due to power failure, holiday/weekend scheduling and morning warm-up shall require the following sequence. Mechanical equipment shall be staged "on" in a staggered fashion to prevent a large initial electrical load.

3.32 UTILITY CONSUMPTION

A. Monitor and totalize building gas consumption (BTU) using utility company meter modification; cost by Control Contractor.

B. Provide gas meter with an electronic pulse counter and totalizer. Pulse counter shall be furnished by the Control Contractor and mounted by the Mechanical Contractor.

3.33 UNIT HEATERS (T99-BS01-UH-01,-02,-03, T99-BS-3-UH-01, T99-BS-4-UH-01, T99-BS01-EHU-01,-02)

A. Hydronic: Maintain space temperature by cycling unit fan motor and modulating heating water control valve.

B. Electric: Maintain space temperature by cycling unit fan motor and energizing electric heating elements. Integral thermostat continues fan operation until element temperature falls below 100 degrees F.

3.34 UNOCCUPIED MODE

A. Supply and return fans shall be off.

B. Outside air and exhaust air dampers shall be closed.

C. If a zone requires heating to maintain the minimum night setback temperature, the supply and return fans shall be energized. The DX cooling system shall remain off. The heating system shall operate in the "occupied" mode bring the zone up to the night setback minimum temperature. The outside air and relief air dampers shall remain closed.

D. If a zone requires cooling to maintain the maximum night setback temperature, the supply and return fans shall be energized. The heating system shall remain off. The DX cooling system shall operate in the "occupied" mode to maintain night setback maximum temperature in the zone. The outside air and relief air dampers shall operate in the "occupied" mode, except that the minimum outside air damper setting shall be zero.

3.35 WARM-UP MODE - MECHANICAL EQUIPMENT

A. Control system optimum-start controls shall provide warm-up switching for all items indicated as having a warm-up cycle. The outside air dampers shall remain fully closed during the warm-up cycle until the space temperature heating setpoint is reached or occupied period begins, whichever occurs first. After warm-up and 30 minutes prior to room occupancy, the outside air damper shall be opened to minimum outside air volume damper position as listed on Plans and as set by the Test and Balance subcontractor.

3.36 WATER HEATERS, DOMESTIC WATER SYSTEM (T99-BS02-GWHR-01)

A. Occupied: Water heater operates at service temperature programmed into setback controller. Start hot water circulator at start of occupancy. Monitor Hot Water Circulation Temperature at the EMCS. Provide aquastat that will monitor the return water temperature and cycle the pump. Aquastat shall be capable of being overridden through the EMCS if the user decides to activate the pump continuously and bypass the aquastat.

B. Unoccupied: Water heater operates at 85 deg. F or lowest allowed temperature at setback controller.

3.37 BUILDING INTERIOR ENVIRONMENTAL TEMPERATURE SETPOINTS

A. See Technical Requirements Paragraph 2.47.4.3.2 for interior zone temperature settings.

3.38 SEWAGE PUMPS (T99-BS-4-SSP-01)

A. Pumps shall operate lead/lag based on runtime and cycle weekly, or alternative after every 5 pump cycles. pumps shall engage via level sensors in sump. When sewage level meets emergency level, both pumps shall engage. When sewage level falls below emergency low level, all pumps shall be unconditionally shut off . EMCS shall signal alarms for high level, low level, and motor overload for each pump.

3.39 DUCTLESS SPLIT SYSTEMS (T99-BS03-ACU-01)

A. Factory controls shall operate heating/cooling cycle to maintain setpoint.

B. DDC shall provide high and low temperature alarms

RFI #03977
RFI #04136
RFI #03895
RFI #03917
RFI #03917R01
RFI #03801
RFI #04237

AS-BUILT PLANS ACCURATLEY AND COMPLETELY REFLECT CHANGES AND CORRECTIONS MADE DURING CONSTRUCTION AS DOCUMENTED IN THE RFI AND NDC QA/QC PROCEDURES DEVELOPED FOR THIS PROJECT AND AS BASED ON AS-BUILT INFORMATION PROVIDED BY SEATTLE TUNNEL PARTNERS.

FILE NAME	C:\Users\trtran\Documents\South Building Mech-TWE-Central-HNTB_2018_trtran.rvt						
DATE	5/7/2019 3:23:16						
TIME	PM						
PLOTTED BY	H. TANG						
DESIGNED BY	D. MOORE						
ENTERED BY	H. TANG						
CHECKED BY	W. LI						
PROJ. ENGR.	R. JOHNSON						
REGIONAL ADM.	L. LAIRD	REVISION	DATE	BY			

REGION NO. 10 | STATE WASH | JOB NUMBER 10A065 | CONTRACT NO. 007999

FED.AID PROJ.NO. BR-0099(111)

LOCATION NO.

EOR

CERTIFYING ENGINEER

Washington State Department of Transportation

U.S. Department of Transportation Federal Highway Administration

City of Seattle

SR 99 TUNNEL PROJECT

SEQUENCES OF OPERATION FOR HVAC CONTROLS

DS013

SHEET OF SHEETS

FOR AS-BUILT PLAN ONLY

H-D-PAK-SOB-TR2.34-00362-08-ASB-1905-14

PLUMBING FIXTURE SCHEDULE

MARK	FIXTURE	MANUFACTURER/MODEL	PLUMBING CONNECTIONS WASTE	VENT	CW	HW	NOTES
T99-BS-WCL	WATER CLOSET ADA	WALL HUNG, FLUSH VALVE; AMERICAN STANDARD "AFWALL" NO. 2257.103 VITREOUS CHINA FLUSH VALVE: AUTOMATIC - HARDWIRED SLOAN "ECOS" HET 111-1.6/1.1, DUAL FLUSH 1.1, 1.6-GALLON FLUSH VALVE. SEAT: OPEN FRONT, LESS COVER; BENEKE NO. 525CH.	4"	2"	1"		FIXTURE SHALL BE ADA COMPLIANT AND MOUNTED AT ADA HEIGHTS. PROVIDE HARD WIRED LOW VOLTAGE TRANSFORMER.
T99-BS-UR	URINAL ADA	AUTOMATIC HEU FLUSHOMETER AND URINAL; WALL HUNG VITREOUS CHINA, SLOAN MODEL WEUS 1000.1301-0.125 ES-S, HARDWIRED	2"	1-1/2"	3/4"		FIXTURE SHALL BE ADA COMPLIANT AND MOUNTED AT ADA HEIGHTS. PROVIDE HARD WIRED LOW VOLTAGE TRANSFORMER
T99-BS-LAV	LAVATORY ADA	WALL HUNG, CENTER HOLE, VITREOUS CHINA; AMERICAN STANDARD "LUCERNE" NO. 0355.012 FOR CONCEALED ARM SUPPORT. FAUCET: CHICAGO FAUCETS MODEL NO 116.101.AB.1, AUTOMATIC INFRARED SENSOR SINGLE HOLE, 0.5 GPM VANDAL RESISTANT; ADA COMPLIANT. POWERS E480 THERMOSTATIC MIXING VALVE SEE DETAIL.	2"	1-1/2"	1/2"	1/2"	PROVIDE OFFSET TRAP AND ADA INSULATION KIT. PROVIDE HARD WIRED LOW VOLTAGE TRANSFORMER.
T99-BS-SINK	SINK ADA	WALL HUNG, 4" CENTERS, VITREOUS CHINA; AMERICAN STANDARD "LUCERNE" NO. 0355.012 FOR CONCEALED ARM SUPPORT. FAUCET: CHICAGO FAUCETS MODEL NO 802-665CP, SLOW SELF-CLOSING METERING WITH INTEGRAL SPRAY FACE, 4 INCH CENTERS, 0.5 GPM VANDAL RESISTANT; ADA COMPLIANT.	2"	1-1/2"	1/2"	1/2"	PROVIDE OFFSET TRAP AND ADA INSULATION KIT
T99-BS-SSINK	SERVICE SINK	FLOOR MOUNTED KOHLER K-6710 CAST IRON ENAMEL FINISH SERVICE SINK WITH COATED WIRE RIM GUARD 3" GRID DRAIN. PROVIDE WITH MOP HANGER. FAUCET; CHICAGO FAUCETS MODEL 897-RCF FAUCET WITH 7-5/8-83/8" ADJUSTABLE CENTERS, VACUUM BREAKER SPOUT INTEGRAL CHECK STOP ARMS WITH WALL FLANGE, SPOUT WITH PAIL HOOK, THREADED HOSE END OUTLET AND TOP WALL BRACE MODEL 369 LEVER HANDLES, MOUNT FAUCET A MINIMUM OF 36" AFF. PROVIDE WITH 36" HOSE	3"	2"	3/4"	3/4"	
T99-BS-DF	DRINKING FOUNTAIN	WALL MOUNTED, HI-LO DRINKING FOUNTAIN. ALL STAINLESS STEEL (HANDICAPPED); ELKAY EDFP-217-C, WITH FLEXI-GUARD SAFETY BUBBLER, LEAD FREE, VANDAL RESISTANT COVERPLATE. PROVIDE WITH STAINLESS STEEL ADA APRON MODEL #97258-C PROVIDE WITH MP-42 MOUNTING PLATES, LK-464 DRAIN AND TRAP ASSEMBLIES. MOUNT 34" ABOVE FINISHED FLOOR TO CENTERLINE OF BUBBLER UNLESS OTHERWISE NOTED.	2"	1-1/2"	1/2"		
T99-BS-EW	EMERGENCY EYEWASH	HAWS EYE WASH WALL MOUNTED WITH STAINLESS STEEL RECEPTOR, STAY-OPEN INSTANT ACTION VALVE, WALL BRACKET, P-TRAP, TWIN FEATHER-FLO HEADS WITH DUST COVERS AND DUAL AUTOMATIC PRESSURE 7360B COMPENSATION DEVICES, HAWS NO 7360BT.	2"	1-1/2"	1/2"	1/2"	3/4" TEMPERED WATER SUPPLY FROM MIXING VALVE
T99-BS-SH/EW	EMERGENCY SHOWER/EYEWASH	HAWS COMBINATION DRENCH SHOWER AND EYEWASH, FLOOR-MOUNTED WITH STAINLESS STEEL SHOWERHEAD AND STAINLESS STEEL EYEWASH RECEPTOR, STAY-OPEN INSTANT ACTION VALVES, STAINLESS STEEL PIPE ON 7" DIAMETER FLOOR FLANGE, ALL STAINLESS STEEL CONSTRUCTION NO. 8330. SUPPLY: 1-1/2" GATE VALVE SHUTOFF. PROVIDE WITH PHENOLIC LABEL "DO NOT SHUT OFF"			1"	1"	1-1/4" TEMPERED WATER SUPPLY FROM MIXING VALVE

MIXING VALVE SCHEDULE

SYMBOL	MANUFACTURER	MODEL	SERVICE	WATER CONNECTIONS CW INLET	HW INLET	OUTLET	CABINET MOUNTING	FINISH	NOTES
T99-BS01-MV-01	LEONARD	TA-800	T99-BS01-SH/EW	1"	1"	1-1/4"	SURFACE	STAINLESS STEEL	TEMPERED WATER. PROVIDE WITH SURFACE MOUNTED CABINET
T99-BS01-MV-02	LEONARD	TA-300	T99-BS01-EW	1/2"	1/2"	3/4"	SURFACE	STAINLESS STEEL	TEMPERED WATER. PROVIDE WITH SURFACE MOUNTED CABINET
T99-BS02-MV-01	LEONARD	TA-300	T99-BS02-EW	1/2"	1/2"	3/4"	SURFACE	STAINLESS STEEL	TEMPERED WATER. PROVIDE WITH SURFACE MOUNTED CABINET
T99-BS02-MV-02	LEONARD	TM-820	T99-BS02-GWHR-1	3/4"	3/4"	1-1/4"	EXPOSED	CHROME PLATED	BUILDING DOMESTIC HOT WATER

GAS WATER HEATER SCHEDULE

SYMBOL	MANUFACTURER	MODEL	SERVICE	TYPE	SERVICE TEMPERATURE	RECOVERY RATE @ 100 F DELTA T	GAS INPUT (BTUH)	OUTPUT (BTUH)	EFFICIENCY (%)	PHYSICAL TANK SIZE (GAL)	FLUE SIZE (IN)	HEIGHT/DIA.	ELECTRICAL 120V/1PH BLOWER	IGNITER	APPROX. SHIP WEIGHT (LBS)	APPROX. OPERATING WEIGHT (LBS)	NOTES
T99-BS02-GWHR-01	A. O. Smith	CYCLONE BTH-150	POTABLE HW	GAS	140	173	150,000	142500	95	100	4"	74-1/2"x27-3/4"x30"	2.2 AMPS	4.0 AMPS	1338	1375	ASME RATED. PROVIDE WITH CONCENTRIC VENT KIT

ELECTRIC WATER HEATER SCHEDULE

SYMBOL	MANUFACTURER	MODEL	AREA SERVED	ELECTRICAL KW	VOLT/PH	PHYSICAL TANK SIZE (GAL)	DIMENSION (IN)	TEMP RISE/GPM	WEIGHT LBS	NOTES
T99-BS-4-EWHR-01	Eemax	EDO32480T2TML	UNISEX RESTROOM S-BC79	32	480/3	N/A	15.25x12.25x4.25	55 DEG/4.0	15	ELECTRIC INSTANTANEOUS WATER HEATER BUILT IN TSTAT, 0.3 GPM TURN ON

EXPANSION TANK SCHEDULE

SYMBOL	MANUFACTURER	SERVICE	MODEL	SERVICE TEMPERATURE	VOLUME (GALLONS) TANK	ACCEPTANCE	DIMENSIONS (IN) DIAMETER	HEIGHT	INITIAL CHARGE (PSI)	OPERATING WEIGHT (LBS)	NOTES
T99-BS02-ET-01	AMTROL	DOMESTIC HOT WATER	ST-12C	140	6.4	3.2	12	14		60	ASME

RFI #03784
RFI #03165
RFI #01874

DOMESTIC HOT WATER CIRC. PUMP SCHEDULE

MARK	MANUFACTURER/ MODEL	SERVICE	GPM	TDH FT. H20	RPM	ELECTRICAL HP	VOLT	PHASE	REMARKS
T99-BS02-DP-01	BELL & GOSSETT PL-36	DOM. HW PUMP FOR T99-BS02-GWHR-1	6	20	3300	0.17	120	1	

SUMP PUMP SCHEDULE

MARK	MANUFACTURER/ MODEL	SERVICE	GPM	TDH FT. H20	ELECTRICAL HP	VOLT	PHASE	REMARKS
T99-BS-4-SSP-01	1 PEERLESS PUMP/VCSLL3B	BLDG. WASTE	95.54	110	1 (2) 15	460	1 3	EXPLOSION PROOF/VERTICAL COLUMN DUPLEX. COLUMN LENGTH TO SUIT BASIN DEPTH OF 6'-6". DUPLEX 46" SQUARE STEEL COVER PLATE, MIN. 7/16" THICK WITH (2) 3" DISCHARGE CONNECTIONS ABOVE FLOOR PLATE, (1) 4" VENT CONNECTION, (2) FLOAT CONTROL MOUNTING HOLES, 14"X20" MANHOLE AND COVER, AND CURB FRAME

AS-BUILT PLANS ACCURATLEY AND COMPLETELY REFLECT CHANGES AND CORRECTIONS MADE DURING CONSTRUCTION AS DOCUMENTED IN THE RFI AND NDC QA/QC PROCEDURES DEVELOPED FOR THIS PROJECT AND AS BASED ON AS-BUILT INFORMATION PROVIDED BY SEATTLE TUNNEL PARTNERS.

FILE NAME	C:\Users\trtran\Documents\South Building Mech-TWE-Central-HNTB_2018_trtran.rvt
DATE	5/7/2019 3:23:17
TIME	PM
PLOTTED BY	H. TANG
DESIGNED BY	D. MOORE
ENTERED BY	H. TANG
CHECKED BY	W. LI
PROJ. ENGR.	R. JOHNSON
REGIONAL ADM.	L. LAIRD

REVISION		DATE	BY
1	CONSOLIDATED CONSTRUCTION PACKAGE	07/14/2014	DBP

REGION NO. 10 | STATE WASH | JOB NUMBER 10A065 | CONTRACT NO. 007999 | FED.AID PROJ.NO. BR-0099(111) | LOCATION NO.

EOR — CERTIFYING ENGINEER 05-14-19

Washington State Department of Transportation
U.S. Department of Transportation Federal Highway Administration
City of Seattle

SR 99 TUNNEL PROJECT

SOUTH OPS BUILDING MECH PLUMBING SCHEDULES

DS101

SHEET OF SHEETS

FOR AS-BUILT PLAN ONLY

H-D-PAK-SOB-TR2.34-00362-08-ASB-1905-14

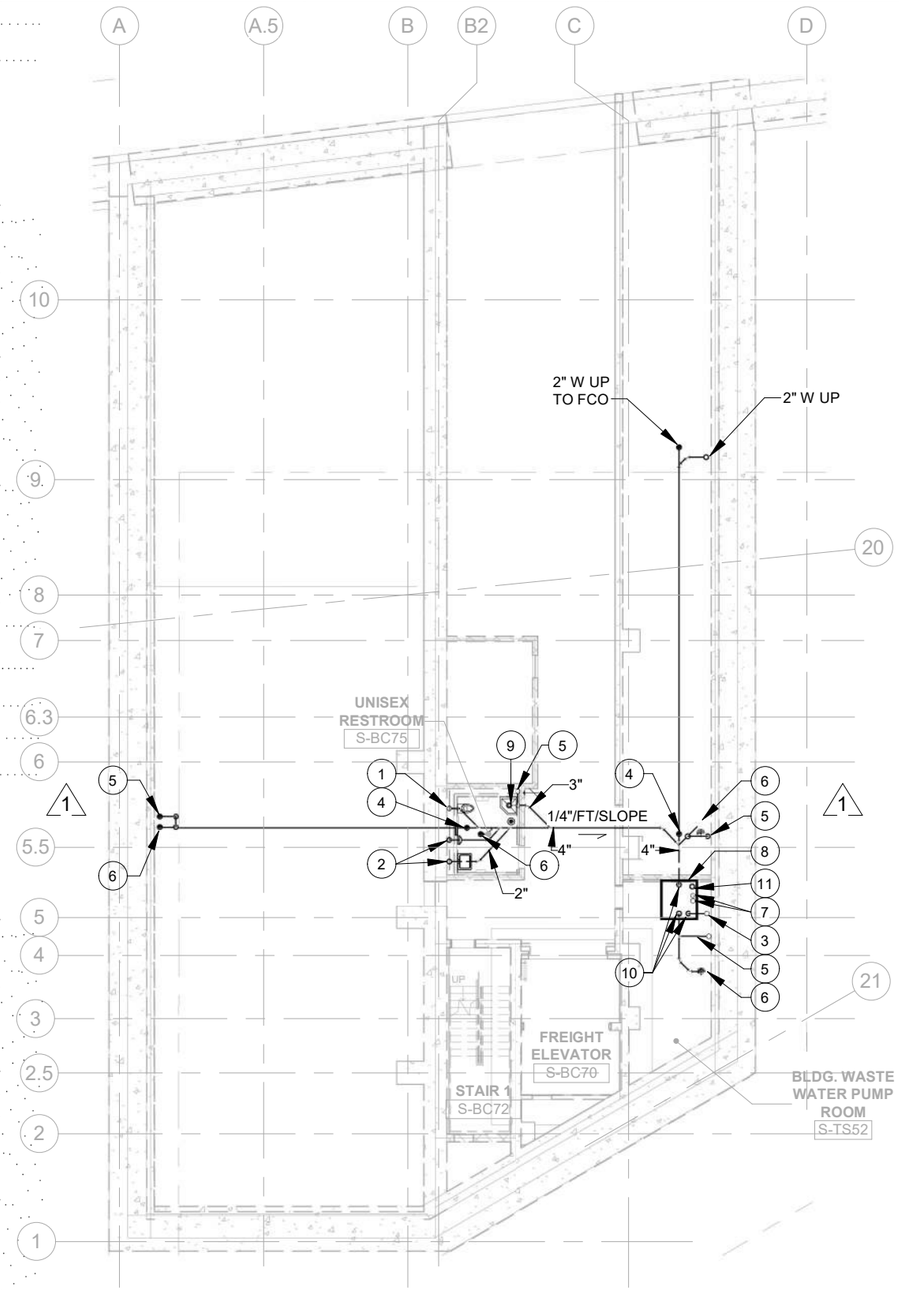

PLAN NOTES:

1. 4"W UP.
2. 2" W UP.
3. 4" GRAVITY SANITARY UP AND DN. TO SUMP PUMP.
4. 4"W UP TO FCO.
5. 2" V UP.
6. 2"W UP TO 2"FLD.
7. 3" PUMPED SANITARY MAIN UP. SEE SHEET DS111 FOR CONTINUATION.
8. 4.5'x5'x6.5' DEEP DUPLEX SUMP PUMP. T99-BS-4-SSP-01.
9. 3"W UP.
10. 4" GRAVITY SANITARY SEWER DN. TO SUMP PUMP.
11. 4" V UP.

RFI #01874
RFI #01846
RFI #01808
RFI #01808R01
RFI #01653
RFI #03648

SO OPS BLDG. LEVEL -4 UNDERSLAB PLAN (1 / DS110)

1" = 20'-0"

AS-BUILT PLANS ACCURATLEY AND COMPLETELY REFLECT CHANGES AND CORRECTIONS MADE DURING CONSTRUCTION AS DOCUMENTED IN THE RFI AND NDC QA/QC PROCEDURES DEVELOPED FOR THIS PROJECT AND AS BASED ON AS-BUILT INFORMATION PROVIDED BY SEATTLE TUNNEL PARTNERS.

FILE NAME	C:\Users\trtran\Documents\South Building Mech-TWE-Central-HNTB_2018_trtran.rvt
DATE	5/7/2019 3:23:21
TIME	PM
PLOTTED BY	H. TANG
DESIGNED BY	D. MOORE
ENTERED BY	H. TANG
CHECKED BY	W. LI
PROJ. ENGR.	R. JOHNSON
REGIONAL ADM.	L. LAIRD

REVISION		DATE	BY
1	CONSOLIDATED CONSTRUCTION PACKAGE	07/14/2014	DBP

REGION NO.	STATE	FED.AID PROJ.NO.
10	WASH	BR-0099(111)
JOB NUMBER 10A065		
CONTRACT NO. 007999		LOCATION NO.

EOR — CERTIFYING ENGINEER — 05-14-19

Washington State Department of Transportation
U.S. Department of Transportation Federal Highway Administration
City of Seattle

SR 99 TUNNEL PROJECT

SOUTH OPS BUILDING MECH LEVEL -4 UNDERSLAB PLAN

DS110

SHEET OF SHEETS

FOR AS-BUILT PLAN ONLY

H-D-PAK-SOB-TR2.34-00362-08-ASB-1905-14

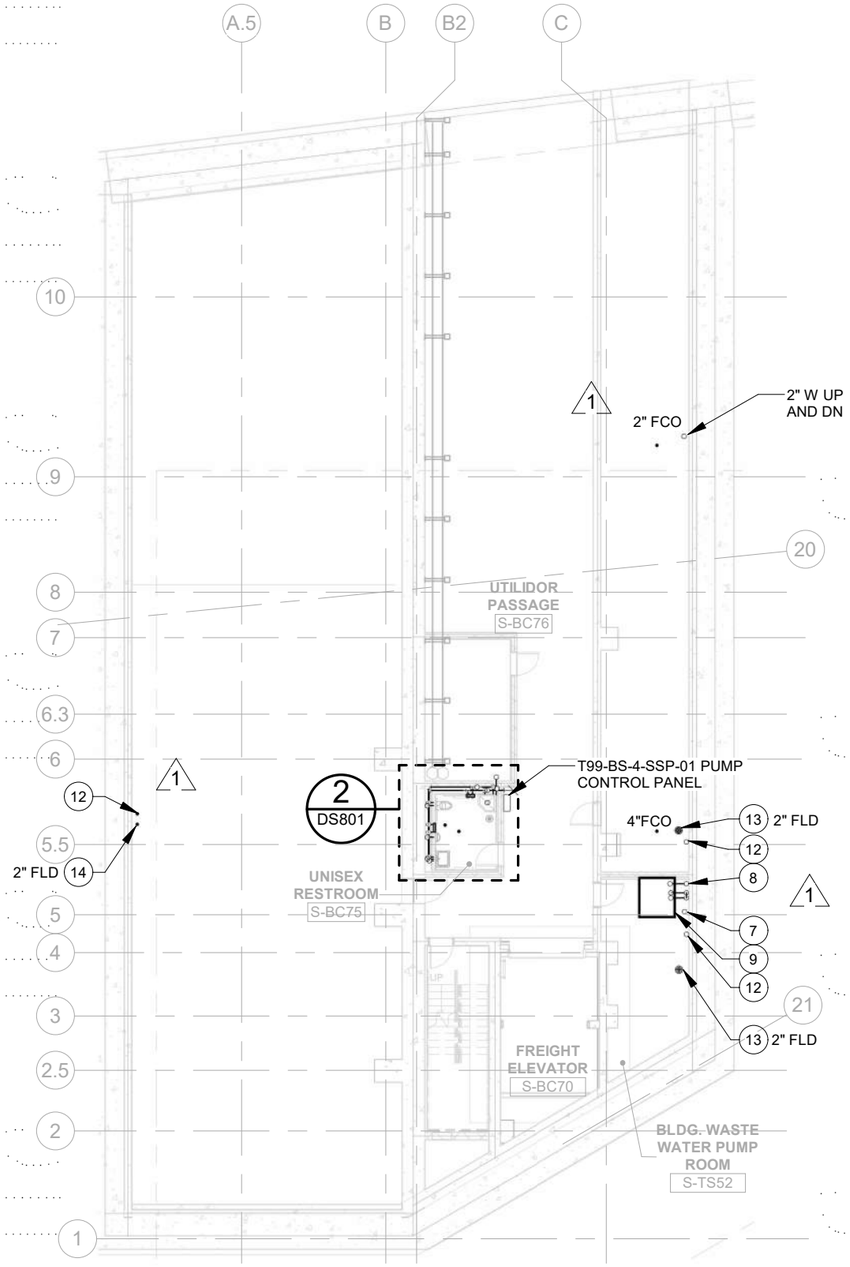

SO OPS BLDG. LEVEL -4 PLUMBING FLOOR PLAN (1 / DS111)

1" = 20'-0"

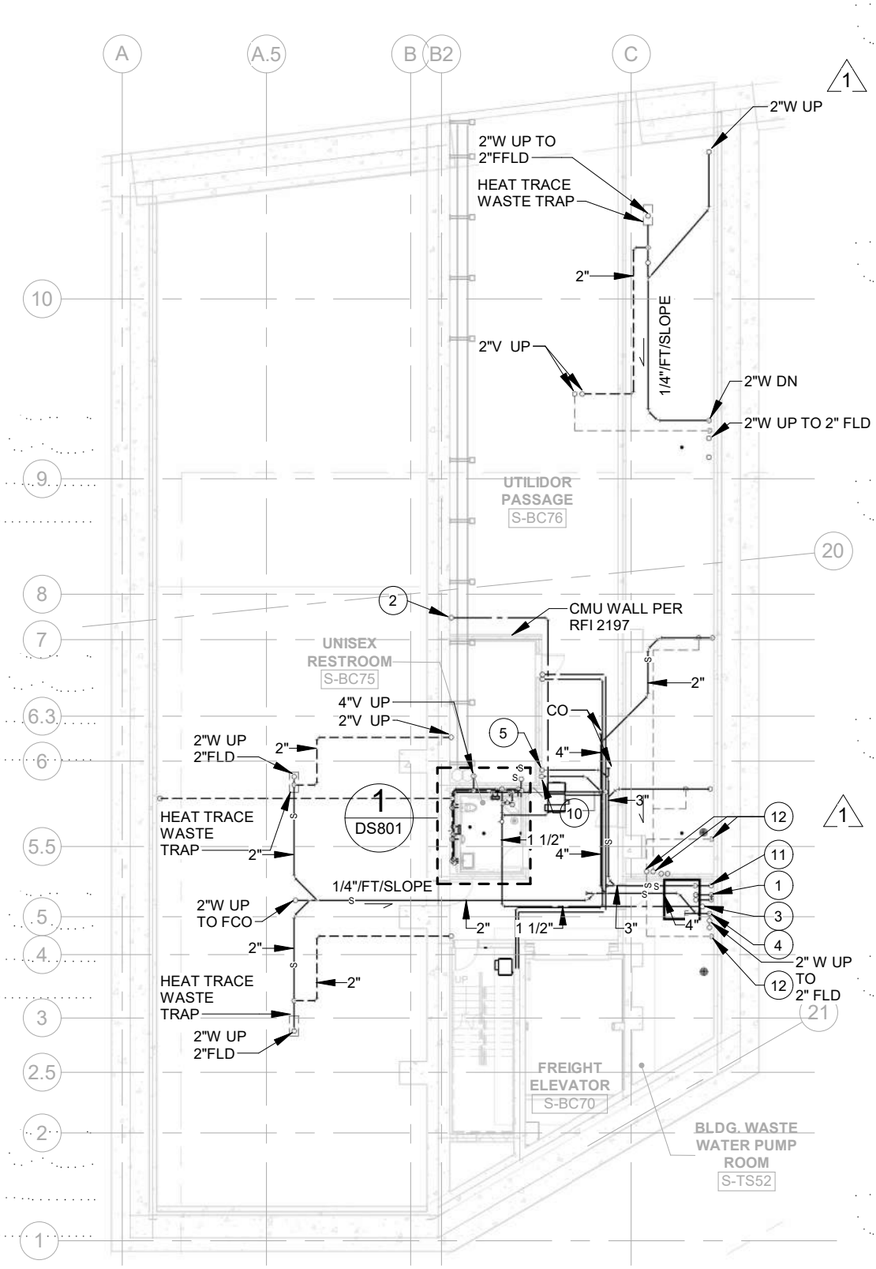

SO OPS BLDG. LEVEL -4 PLUMBING PLAN (2 / DS111)

1" = 20'-0"

PLAN NOTES:

1. 3" PUMPED SANITARY MAIN DN. TO SUMP PUMP.
2. 3/4" CW UP.
3. 1-1/2" COLD WATER UP TO HEADER.
4. 4" GRAVITY SANITARY SEWER UP AND DN.
5. 3" PUMPED SANITARY MAIN UP. SEE SHEET DS142 FOR CONTINUATION.
6. NOT USED
7. 4" GRAVITY SANITARY SEWER UP.
8. 3" PUMPED SANITARY MAIN UP.
9. 4.5'x5'x6.5' DEEP SUMP PUMP. T99-BS-4-SSP-01 (1 / DS504)
10. 4" GRAVITY SANITARY SEWER UP. SEE SHEET DS142 FOR CONTINUATION.
11. 4" V UP AND DN.
12. 2" V UP AND DN.
13. LOCATE CENTER OF DRAIN 12"-15" FROM WALL TO INTERCEPT SEEPAGE TROUGH. SET FLOOR DRAIN STRAINER 1/4" BELOW FINISHED FLOOR LEVEL.
14. LOCATE CENTER OF DRAIN ALONG GRID B. TO INTERCEPT SEEPAGE TROUGH. SET FLOOR DRAIN STRAINER 1/4" BELOW FINISHED FLOOR LEVEL.

RFI #01587
RFI #01686
RFI #01808
RFI #01808R01
RFI #01846
RFI #01874
RFI #02012
RFI #02033
RFI #02044
RFI #02215
RFI #03648
RFI #04226

AS-BUILT PLANS ACCURATLEY AND COMPLETELY REFLECT CHANGES AND CORRECTIONS MADE DURING CONSTRUCTION AS DOCUMENTED IN THE RFI AND NDC QA/QC PROCEDURES DEVELOPED FOR THIS PROJECT AND AS BASED ON AS-BUILT INFORMATION PROVIDED BY SEATTLE TUNNEL PARTNERS.

FILE NAME	C:\Users\trtran\Documents\South Building Mech-TWE-Central-HNTB_2018_trtran.rvt
DATE	5/7/2019 3:23:28 PM
TIME	
PLOTTED BY	H. TANG
DESIGNED BY	D. MOORE
ENTERED BY	H. TANG
CHECKED BY	W. LI
PROJ. ENGR.	R. JOHNSON
REGIONAL ADM.	L. LAIRD

REVISION	DATE	BY
1 CONSOLIDATED CONSTRUCTION PACKAGE	07/14/14	DBP

REGION NO.	STATE	FED.AID PROJ.NO.
10	WASH	BR-0099(111)

JOB NUMBER 10A065

CONTRACT NO. 007999

LOCATION NO.

EOR — CERTIFYING ENGINEER — 05-14-19

Washington State Department of Transportation
U.S. Department of Transportation Federal Highway Administration
City of Seattle

SR 99 TUNNEL PROJECT

SOUTH OPS BUILDING MECH LEVEL -4 PLUMBING PLANS

DS111

SHEET OF SHEETS

FOR AS-BUILT PLAN ONLY

H-D-PAK-SOB-TR2.34-00362-08-ASB-1905-14

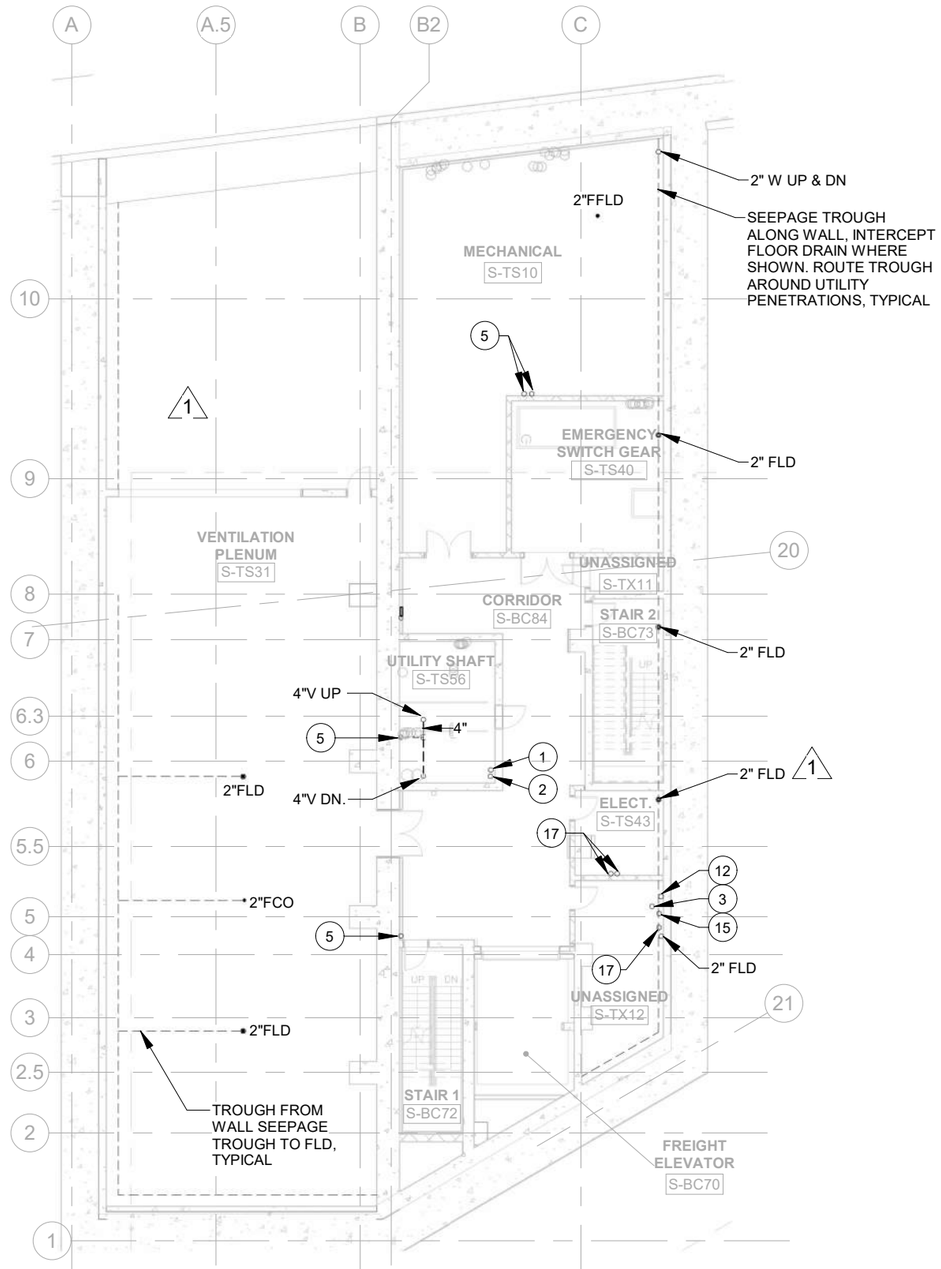

SO OPS BLDG. LEVEL -3 PLUMBING FLOOR PLAN (1)

1" = 20'-0" DS121

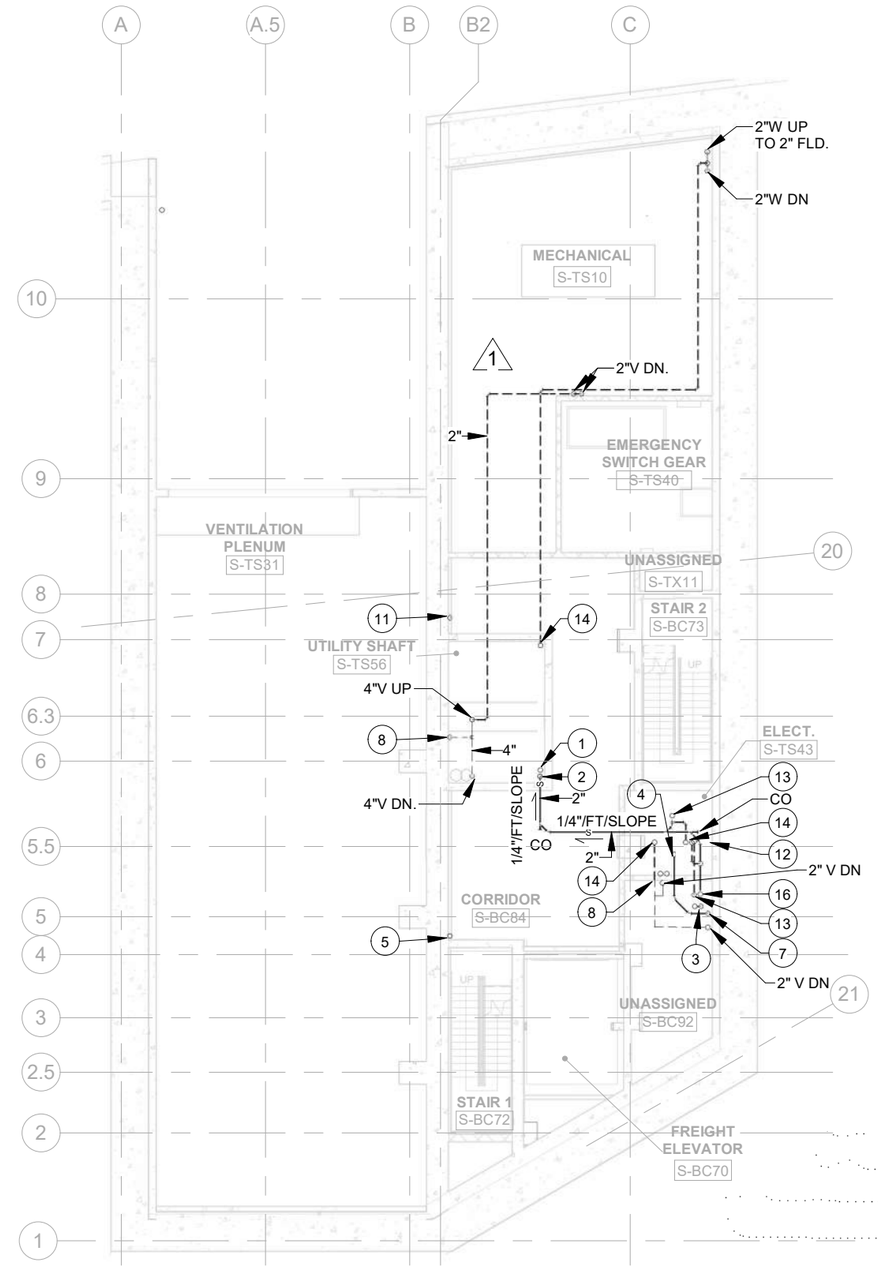

SO OPS BLDG. LEVEL -3 PLUMBING PLAN (2)

1" = 20'-0" DS121

PLAN NOTES:

1. 3" PUMPED SANITARY SEWER MAIN UP AND DN.
2. 4" GRAVITY SANITARY SEWER UP AND DN.
3. 1-1/2" CW UP TO COLD WATER HEADER AND DOWN TO LEVEL -4.
4. 4" GRAVITY SANITARY SEWER UP.
5. 2"V UP AND DN.
6. OFFSET PIPE TO MISS DUCTWORK IN THIS AREA.
7. 4" GRAVITY SANITARY SEWER DN.
8. 2"V DN.
9. NOT USED.
10. NOT USED.
11. 3/4"CW UP AND DN.
12. 4" V UP.
13. 2" W UP TO 2" FLD.
14. 2" V UP.
15. 4" GRAVITY SANITARY SEWER UP AND DN.
16. 4" V DN.
17. 2" V UP AND DN.

RFI #02342
RFI #02012
RFI #01737
RFI #01587

AS-BUILT PLANS ACCURATLEY AND COMPLETELY REFLECT CHANGES AND CORRECTIONS MADE DURING CONSTRUCTION AS DOCUMENTED IN THE RFI AND NDC QA/QC PROCEDURES DEVELOPED FOR THIS PROJECT AND AS BASED ON AS-BUILT INFORMATION PROVIDED BY SEATTLE TUNNEL PARTNERS.

FILE NAME	C:\Users\trtran\Documents\South Building Mech-TWE-Central-HNTB_2018_trtran.rvt
DATE	5/7/2019 3:23:36
TIME	PM
PLOTTED BY	H. TANG
DESIGNED BY	D. MOORE
ENTERED BY	H. TANG
CHECKED BY	W. LI
PROJ. ENGR.	R. JOHNSON
REGIONAL ADM.	L. LAIRD

	REVISION	DATE	BY
1	CONSOLIDATED CONSTRUCTION PACKAGE	07/14/14	DBP

REGION NO.	STATE	FED.AID PROJ.NO.
10	WASH	BR-0099(111)
JOB NUMBER 10A065		
CONTRACT NO. 007999		LOCATION NO.

EOR — CERTIFYING ENGINEER

Washington State Department of Transportation
U.S. Department of Transportation Federal Highway Administration
City of Seattle

SR 99 TUNNEL PROJECT

SOUTH OPS BUILDING MECH LEVEL -3 PLUMBING PLANS

DS121

SHEET OF SHEETS

FOR AS-BUILT PLAN ONLY

H-D-PAK-SOB-TR2.34-00362-08-ASB-1905-14

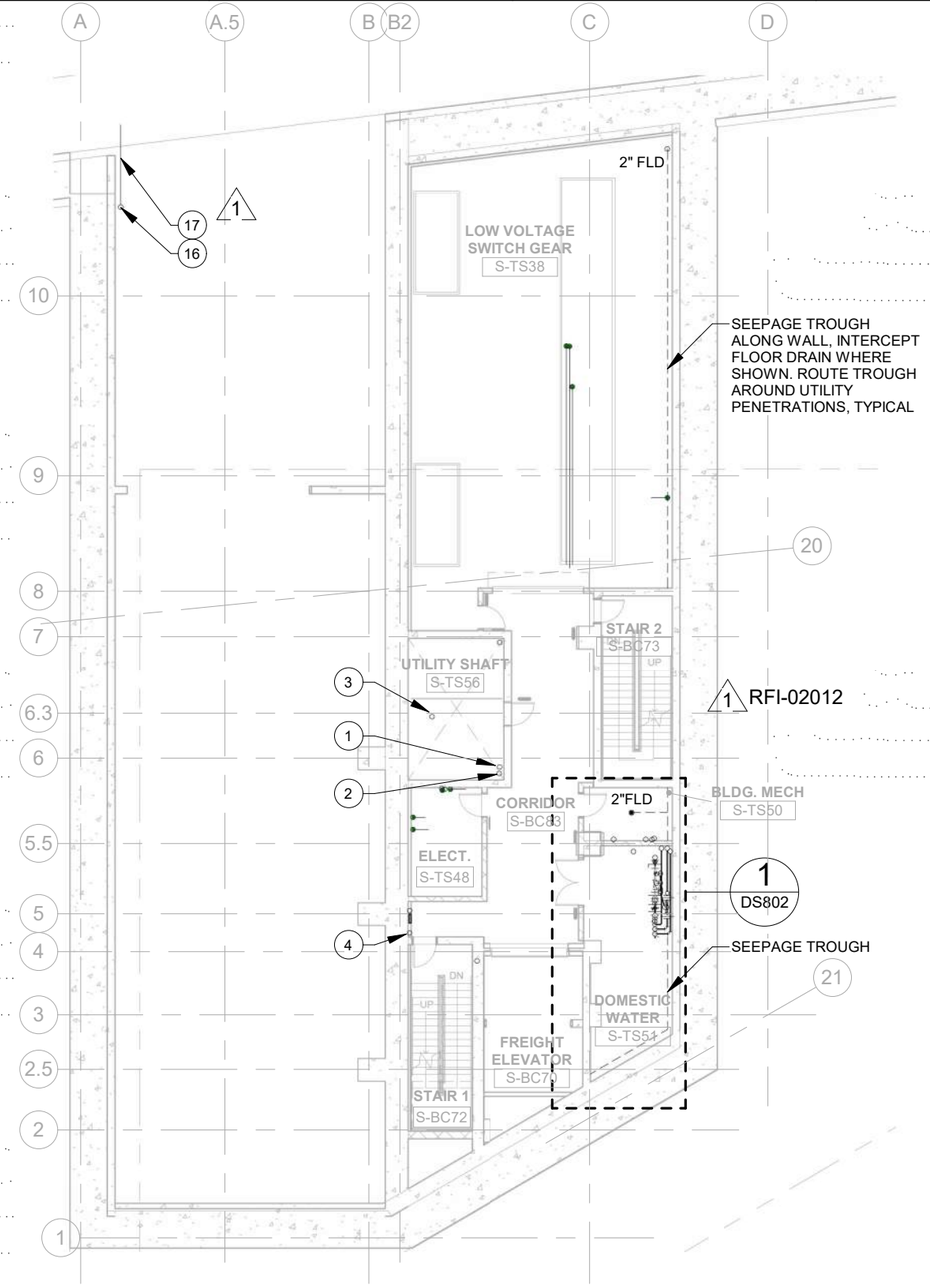

SO OPS BLDG. LEVEL -2 PLUMBING FLOOR PLAN (1 / DS131)

1" = 20'-0"

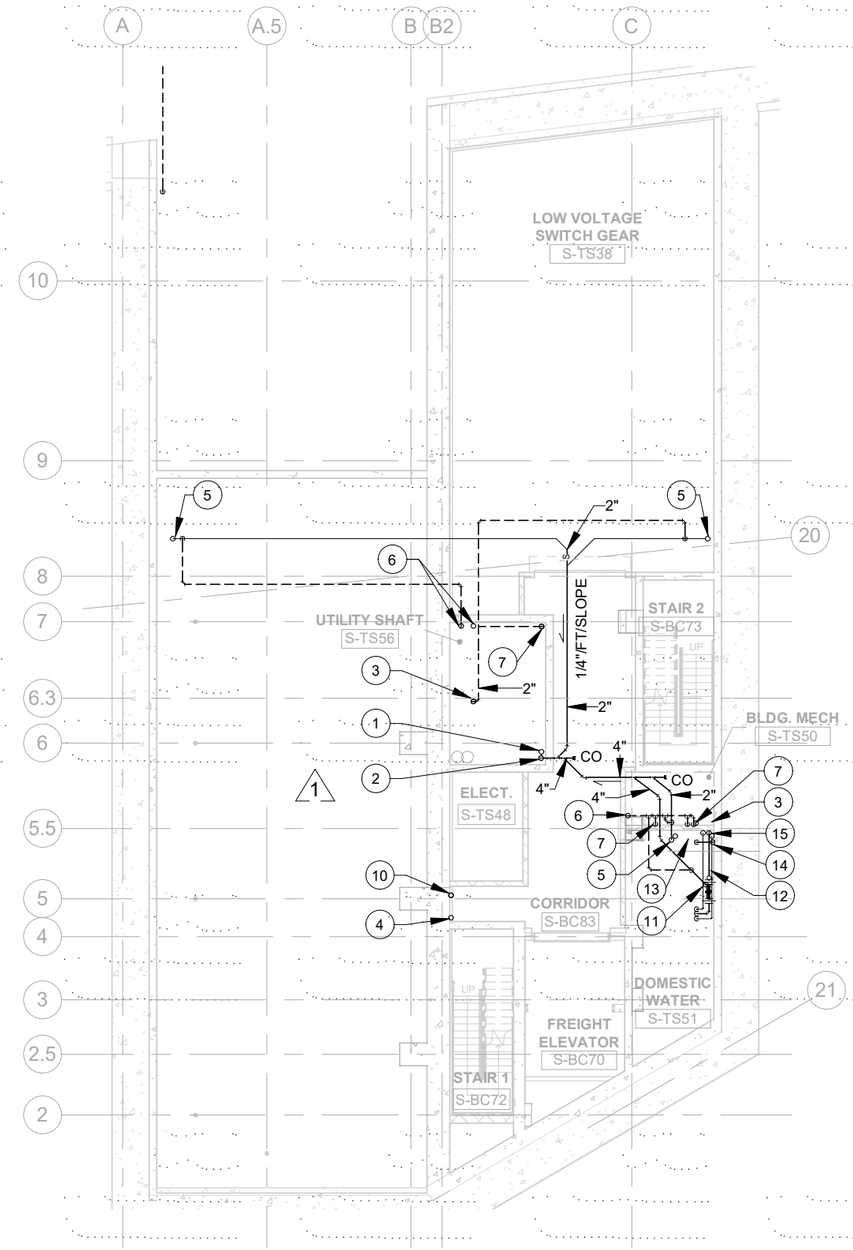

SO OPS BLDG. LEVEL -2 PLUMBING PLAN (2 / DS131)

1" = 20'-0"

PLAN NOTES:

1. 3" PUMPED SANITARY SEWER MAIN UP AND DN.
2. 4" GRAVITY SANITARY SEWER UP AND DN.
3. 4"V UP AND DN.
4. 2"V UP AND DN.
5. 2" W UP TO 2" FLD.
6. 2"V UP.
7. 2"V DN.
8. NOT USED
9. NOT USED.
10. 3/4"CW UP AND DN.
11. 4" STANDPIPE DRAIN FOR FIRE SPRINKLER SYSTEM. (2 / MS501)
12. COLD WATER HEADER. SEE ENLARGED PLAN ON SHEET DS802.
13. 4" GRAVITY SANITARY SEWER UP AND DN.
14. 3" CW UP.
15. 2" CW, 1-1/2" MAKE-UP CW UP.
16. 8" STORM DRAIN UP.
17. 8" STORM DRAIN THROUGH THE TUNNEL VENTILATION OPENING. SEE MPSN110.

RFI #02342
RFI #02103
RFI #02012
RFI #01737

AS-BUILT PLANS ACCURATLEY AND COMPLETELY REFLECT CHANGES AND CORRECTIONS MADE DURING CONSTRUCTION AS DOCUMENTED IN THE RFI AND NDC QA/QC PROCEDURES DEVELOPED FOR THIS PROJECT AND AS BASED ON AS-BUILT INFORMATION PROVIDED BY SEATTLE TUNNEL PARTNERS.

FILE NAME	C:\Users\trtran\Documents\South Building Mech-TWE-Central-HNTB_2018_trtran.rvt
DATE	5/7/2019 3:23:43
TIME	PM
PLOTTED BY	H. TANG
DESIGNED BY	D. MOORE
ENTERED BY	H. TANG
CHECKED BY	W. LI
PROJ. ENGR.	R. JOHNSON
REGIONAL ADM.	L. LAIRD

REVISION	DATE	BY
1 CONSOLIDATED CONSTRUCTION PACKAGE	07/14/14	DBP

REGION NO.	STATE	FED.AID PROJ.NO.
10	WASH	BR-0099(111)
JOB NUMBER 10A065		
CONTRACT NO. 007999		LOCATION NO.

EOR — CERTIFYING ENGINEER — 05-14-19

Washington State Department of Transportation
U.S. Department of Transportation Federal Highway Administration
City of Seattle

SR 99 TUNNEL PROJECT

SOUTH OPS BUILDING MECH LEVEL -2 PLUMBING PLANS

DS131

SHEET OF SHEETS

FOR AS-BUILT PLAN ONLY

H-D-PAK-SOB-TR2.34-00362-08-ASB-1905-14

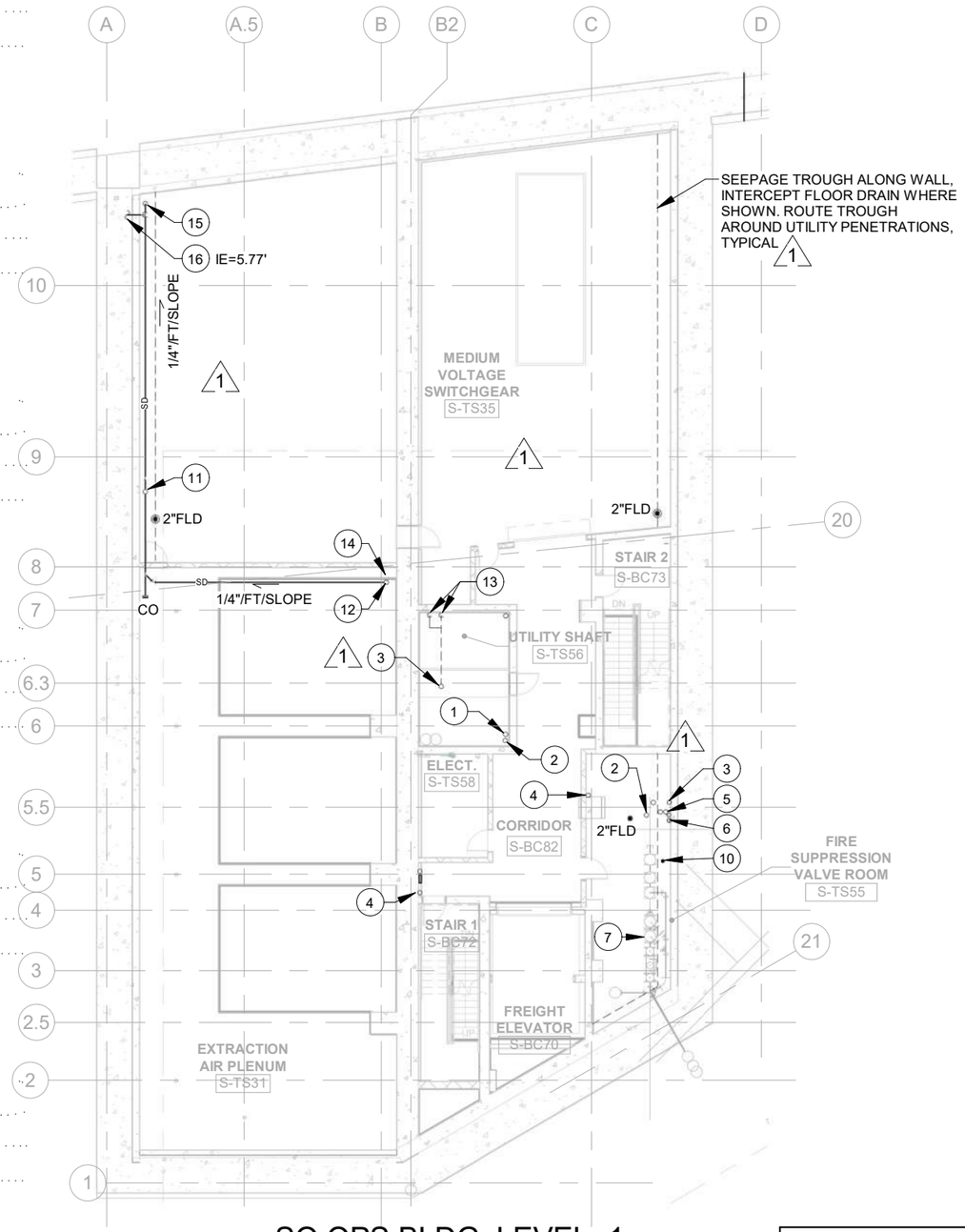

PLAN NOTES:

1. 3" PUMPED SANITARY SEWER MAIN UP AND DN.
2. 4" GRAVITY SANITARY SEWER UP AND DN.
3. 4"V UP AND DN.
4. 2"V UP AND DN.
5. 2"CW AND 1-1/2" MAKE-UP WATER UP AND DN.
6. 3" CW MAIN UP AND DN.
7. FIRE SPRINKLER HEADER BY OTHER.
8. NOT USED.
9. NOT USED.
10. 4" STANDPIPE DRAIN FOR FIRE SPRINKLER SYSTEM.
11. 6" PERIMETER FOOTING DRAIN UP. SEE SHEET DS142 FOR CONT. CONNECT 6" FOOTING DRAIN TO 8" SD.
12. 8" SD UP. SEE SHEET DS142 FOR CONT.
13. 2" V DN
14. FROM THIS LOCATION TO SUMP USE 221413 GALVANIZED STEEL PIPE WITH GROOVED COUPLINGS (H-D-PAK-TUN-TR2.37-00391). THIS PIPE WILL UTILIZE EPDM GASKET IN PLACE OF NITRILE GASKETS.
15. 8" SD DOWN WITH A 10" SLEEVE THROUGH THE ELEVATED DECK.
16. 4" SD. SEE UTL-E100 FOR CONTINUATION

RFI #01737
RFI #02012
RFI #02103
RFI #02342
RFI #02718
RFI #03784

SO OPS BLDG. LEVEL -1 PLUMBING FLOOR PLAN

1 DS141

1" = 20'-0"

AS-BUILT PLANS ACCURATLEY AND COMPLETELY REFLECT CHANGES AND CORRECTIONS MADE DURING CONSTRUCTION AS DOCUMENTED IN THE RFI AND NDC QA/QC PROCEDURES DEVELOPED FOR THIS PROJECT AND AS BASED ON AS-BUILT INFORMATION PROVIDED BY SEATTLE TUNNEL PARTNERS.

FILE NAME	C:\Users\trtran\Documents\South Building Mech-TWE-Central-HNTB_2018_trtran.rvt
DATE	5/7/2019 3:23:48
TIME	PM
PLOTTED BY	H. TANG
DESIGNED BY	D. MOORE
ENTERED BY	H. TANG
CHECKED BY	W. LI
PROJ. ENGR.	R. JOHNSON
REGIONAL ADM.	L. LAIRD

REVISION		DATE	BY
1	CONSOLIDATED CONSTRUCTION PACKAGE	07/14/14	DBP

REGION NO.	STATE	FED.AID PROJ.NO.
10	WASH	BR-0099(111)
JOB NUMBER 10A065		
CONTRACT NO. 007999		LOCATION NO.

EOR

CERTIFYING ENGINEER

Washington State Department of Transportation

U.S. Department of Transportation Federal Highway Administration

City of Seattle

SR 99 TUNNEL PROJECT

SOUTH OPS BUILDING MECH LEVEL -1 PLUMBING FLOOR PLAN

DS141

SHEET OF SHEETS

FOR AS-BUILT PLAN ONLY

H-D-PAK-SOB-TR2.34-00362-08-ASB-1905-14

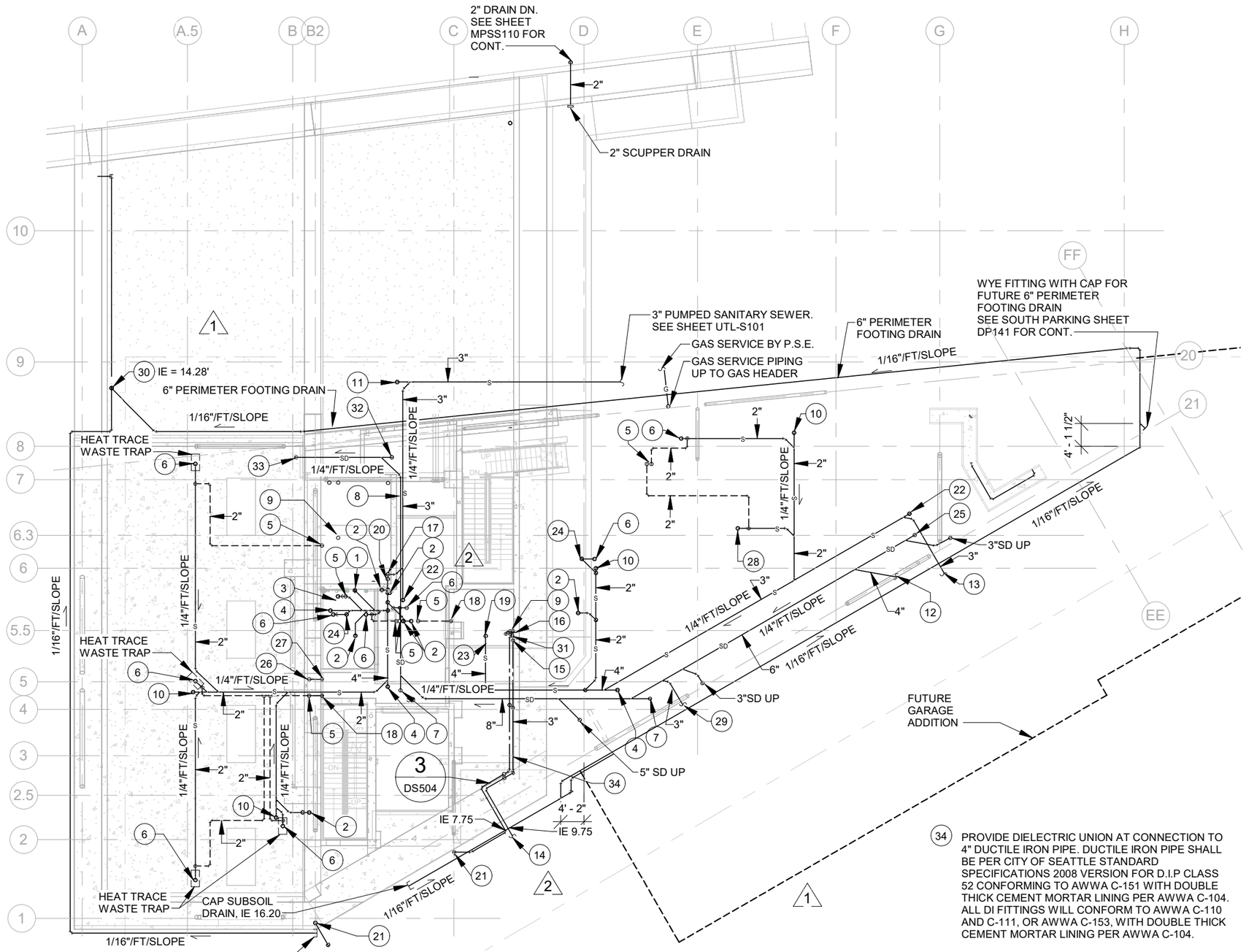

SO OPS BLDG. LEVEL -1 PLUMBING PLAN

1 / DS142

1" = 20'-0"

GENERAL NOTE:

1. VERIFY LOCATION OF SECANT PILES AND LOCATE PIPE PENETRATIONS TO AVOID REBAR IN SECANT PILES.

PLAN NOTES:

1. 4"W UP.
2. 2" W UP.
3. 3"W UP.
4. 4"W UP TO FCO.
5. 2" V UP.
6. 2"W UP TO 2"FLD.
7. 8" SD UP TO FCO.
8. 8" SD BELOW 3" PUMPED SANITARY SEWER.
9. 4"V UP AND DN.
10. 2"W UP TO FCO.
11. 3"W UP TO SCO.
12. 4" STORM DRAIN. SEE SOUTH PARKING SHEET DP141 FOR CONTINUATION. I.E. 14'-4".
13. 3" GRAVITY SANITARY SEWER. SEE SOUTH PARKING SHEET DP141 FOR CONTINUATION. I.E. 13'-0"
14. 4" COLD WATER MAIN. SEE CIVIL DRAWING FOR CONT.
15. 3" CW DN. TO COLD WATER HEADER.
16. 2"CW, 1-1/2" MAKE-UP CW DN. TO COLD WATER HEADER AND UP. SEE SHEET DS152 FOR CONT.
17. 3" PUMPED SANITARY SEWER DN. SEE SHEET DS111 FOR CONT.
18. 2"V DN.
19. 4" GRAVITY SANITARY SEWER DN. TO SUMP PUMP ON LEVEL -4. SEE SHEET DS111.
20. 4" GRAVITY SANITARY SEWER DN. SEE SHEET DS111 FOR CONT.
21. 2-1/2" CW UP TO FIRE HYDRANT VALVE FOR MR. BUBBLES. (TUNNEL WASHING MACHINE). SEE M5251 FOR LOCATION.
22. 3"W UP TO FCO.
23. OFFSET PIPING TO AVOID SPRINKLER HEADER.
24. 1-1/2"V UP AND 2"W DN.
25. 6" SD UP TO FCO.
26. 1"CW UP.
27. 1"CW DN.
28. 2" W UP TO AREA DRAIN.
29. 3" STORM DRAIN. SEE SOUTH PARKING SHEET DP141 FOR CONTINUATION. I.E. 13'-5".
30. 6" PERIMETER FOOTING DRAIN DN. SEE SHEET DS141 FOR CONT.
31. 2-1/2" CW DN. TO COLD WATER HEADER.
32. 8" SD UP TO SCO.
33. 8" SD DN. SEE SHEET DS141 FOR CONT.
34. PROVIDE DIELECTRIC UNION AT CONNECTION TO 4" DUCTILE IRON PIPE. DUCTILE IRON PIPE SHALL BE PER CITY OF SEATTLE STANDARD SPECIFICATIONS 2008 VERSION FOR D.I.P CLASS 52 CONFORMING TO AWWA C-151 WITH DOUBLE THICK CEMENT MORTAR LINING PER AWWA C-104. ALL DI FITTINGS WILL CONFORM TO AWWA C-110 AND C-111, OR AWWA C-153, WITH DOUBLE THICK CEMENT MORTAR LINING PER AWWA C-104.

AS-BUILT PLANS ACCURATLEY AND COMPLETELY REFLECT CHANGES AND CORRECTIONS MADE DURING CONSTRUCTION AS DOCUMENTED IN THE RFI AND NDC QA/QC PROCEDURES DEVELOPED FOR THIS PROJECT AND AS BASED ON AS-BUILT INFORMATION PROVIDED BY SEATTLE TUNNEL PARTNERS.

RFI #03743 R01
RFI #02578
RFI #02133
RFI #02072

FILE NAME	C:\Users\trtran\Documents\South Building Mech-TWE-Central-HNTB_2018_trtran.rvt
DATE	5/7/2019 3:23:53
TIME	PM
PLOTTED BY	H. TANG
DESIGNED BY	D. MOORE
ENTERED BY	H. TANG
CHECKED BY	W. LI
PROJ. ENGR.	R. JOHNSON
REGIONAL ADM.	L. LAIRD

REVISION	DATE	BY
1 NDC 085 SOUTH OPS BLDG PARKING MODIFICATION	04/25/2014	DBP

REGION NO. 10 | STATE WASH | FED.AID PROJ.NO. BR-0099(111)
JOB NUMBER 10A065
CONTRACT NO. 007999
LOCATION NO.

EOR — CERTIFYING ENGINEER

Washington State Department of Transportation
U.S. Department of Transportation Federal Highway Administration
City of Seattle

SR 99 TUNNEL PROJECT

SOUTH OPS BUILDING MECH LEVEL -1 PLUMBING PLAN

DS142 — SHEET OF SHEETS

FOR AS-BUILT PLAN ONLY

H-D-PAK-SOB-TR2.34-00362-08-ASB-1905-14

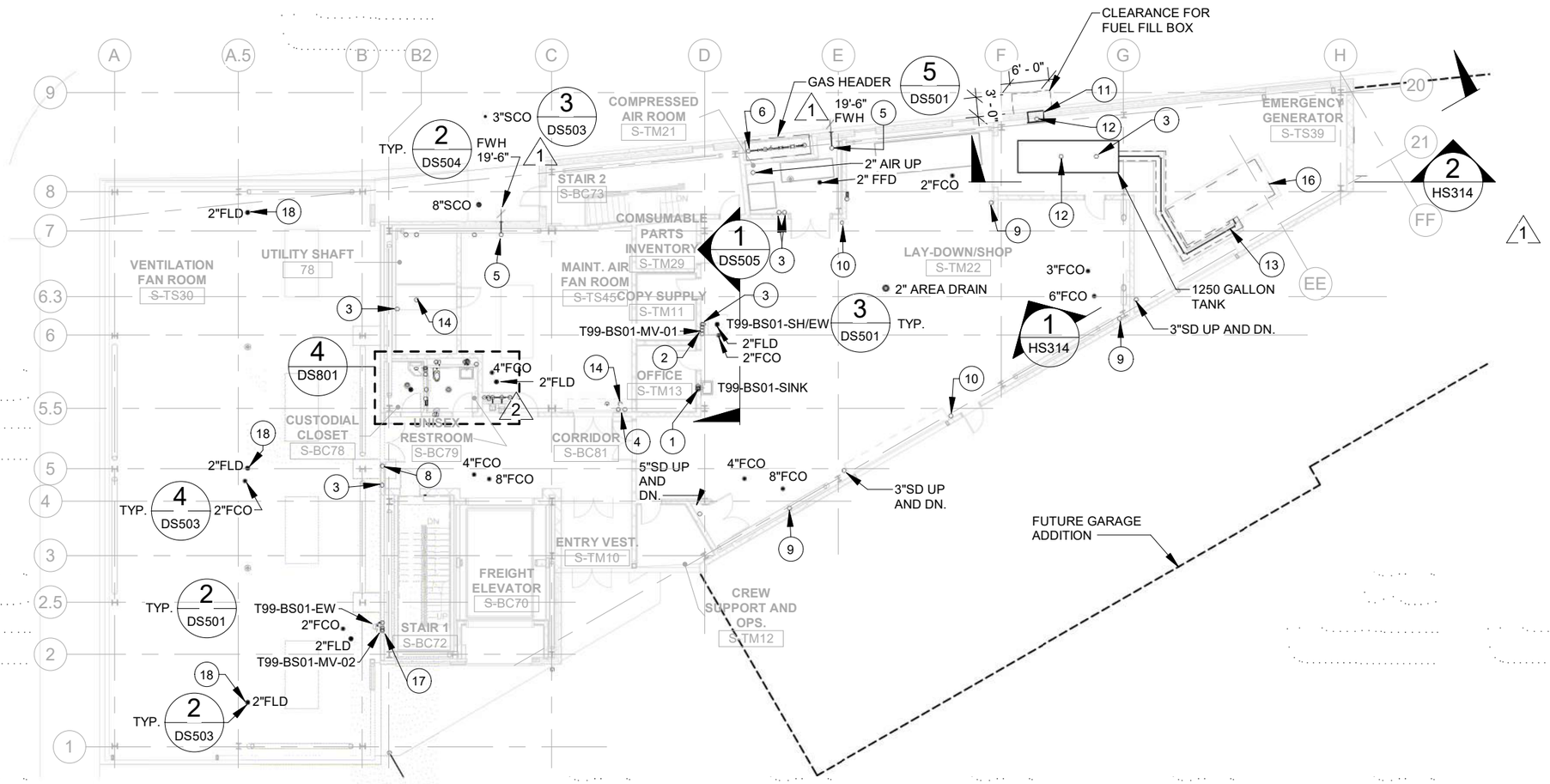

SO OPS BLDG. LEVEL 1 PLUMBING FLOOR PLAN (1 / DS151)

1" = 20'-0"

PLAN NOTES:

1. 1/2"CW, HW, HWC, 1-1/2"V UP AND 2" W DN. CONNECT HWC TO HW AT FIXTURE.
2. 1"CW, HW TO MIXING VALVE. 1-1/4" TEMPERED WATER TO EMERGENCY EYE WASH/SHOWER.
3. 2"V UP AND DN.
4. 2"CW AND 1-1/2" MAKE-UP WATER UP AND DN.
5. 3/4" CW UP. FWH ELEVATION NOTED NEXT TO CALLOUT
6. 1-1/2" GAS UP.
7. NOT USED.
8. 1"CW UP & DN.
9. 3/4" COMPRESSED AIR UP AND DN. TO COMPRESSED AIR OUTLET.
10. 3/4" COMPRESSED AIR UP AND DN. TO HOSE REEL.
11. RECESSED WALL MOUNTED FUEL FILL STATION.
12. 2" TANK FILL PIPING. (3 / DS505)
13. 3/4" SUPPLY AND RETURN FUEL PIPE, RUN IN TRENCH TO GENERATOR. PROVIDE INTERSTATE GRATING TYPE 11-W-4 GRATE. (2 / DS505)
14. 4" V UP AND DN.
15. 2-1/2" FIRE HYDRANT VALVE FOR MR. BUBBLES (TUNNEL WASHING MACHINE).
16. GENERATOR BY DIVISION 26. SHOWN HERE FOR CLARITY.
17. 1/2" CW, HW, 1-1/2" V UP AND 2" W DN.
18. COORDINATE FINAL DRAIN/CLEANOUTS LOCATION WITH VENTILATION FANS. PROVIDE 3.25" X 8.25" FUNNEL ASSEMBLY. ATTACH TO FLOOR DRAIN GRATE.
19. TERMINATE CLEANOUT OUT BELOW GRADE. PROTECT WITH CAST IRON RING AND COVER AT FINISHED GRADE ACCORDING TO WSDOT STD. PLAN B-85.40-00.
20. 3/4" COND. SERVING AIR DRYER AUTOMATIC DRAIN. TERMINATE AT 2" FFD.

RFI #02578
RFI #02072
RFI #02342
RFI #02723
RFI #03743 R01
RFI #03784
RFI #03903
RFI #02425
RFI #03568 R01
RFI #03165
RFI #03426

AS-BUILT PLANS ACCURATLEY AND COMPLETELY REFLECT CHANGES AND CORRECTIONS MADE DURING CONSTRUCTION AS DOCUMENTED IN THE RFI AND NDC QA/QC PROCEDURES DEVELOPED FOR THIS PROJECT AND AS BASED ON AS-BUILT INFORMATION PROVIDED BY SEATTLE TUNNEL PARTNERS.

FILE NAME	C:\Users\trtran\Documents\South Building Mech-TWE-Central-HNTB_2018_trtran.rvt
DATE	5/7/2019 3:24:00
TIME	PM
PLOTTED BY	H. TANG
DESIGNED BY	D. MOORE
ENTERED BY	H. TANG
CHECKED BY	W. LI
PROJ. ENGR.	R. JOHNSON
REGIONAL ADM.	L. LAIRD

REVISION		DATE	BY
2	CONSOLIDATED CONSTRUCTION PACKAGE	07/14/14	DBP
1	NDC 085 SOUTH OPS BLDG PARKING MODIFICATION	04/25/2014	DBP

REGION NO.	STATE	FED.AID PROJ.NO.
10	WASH	BR-0099(111)
JOB NUMBER 10A065		
CONTRACT NO. 007999		LOCATION NO.

EOR — CERTIFYING ENGINEER

Washington State Department of Transportation
U.S. Department of Transportation Federal Highway Administration
City of Seattle

SR 99 TUNNEL PROJECT

SOUTH OPS BUILDING MECH LEVEL 1 PLUMBING FLOOR PLAN

DS151

SHEET OF SHEETS

FOR AS-BUILT PLAN ONLY

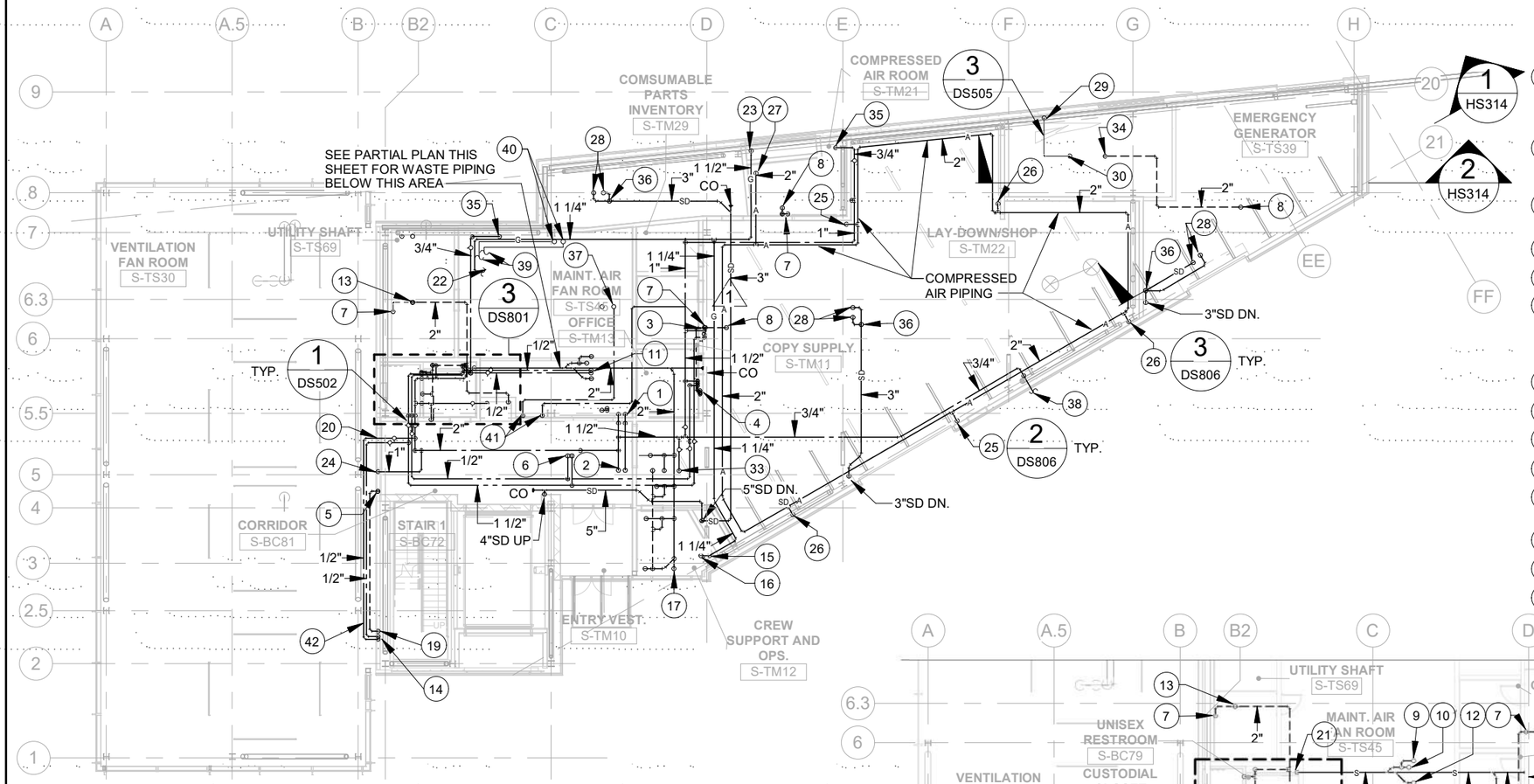

SO OPS BLDG. LEVEL 1 PLUMBING PLAN (1 / DS152)

1" = 20'-0"

41 1/2" CW DN TO REDUCED PRESSURE BACKFLOW PREVENTER WITH AIR GAP FITTING. PIPE DISCHARGE FULL SIZE TO FLOOR DRAIN.

42 HEAT TRACE EXPOSED DOMESTIC HOT AND COLD WATER PIPE INSIDE VENTILATION FAN ROOM.

RFI #02342
RFI #03519
RFI #03838
RFI #03670
RFI #02120

AS-BUILT PLANS ACCURATLEY AND COMPLETELY REFLECT CHANGES AND CORRECTIONS MADE DURING CONSTRUCTION AS DOCUMENTED IN THE RFI AND NDC QA/QC PROCEDURES DEVELOPED FOR THIS PROJECT AND AS BASED ON AS-BUILT INFORMATION PROVIDED BY SEATTLE TUNNEL PARTNERS.

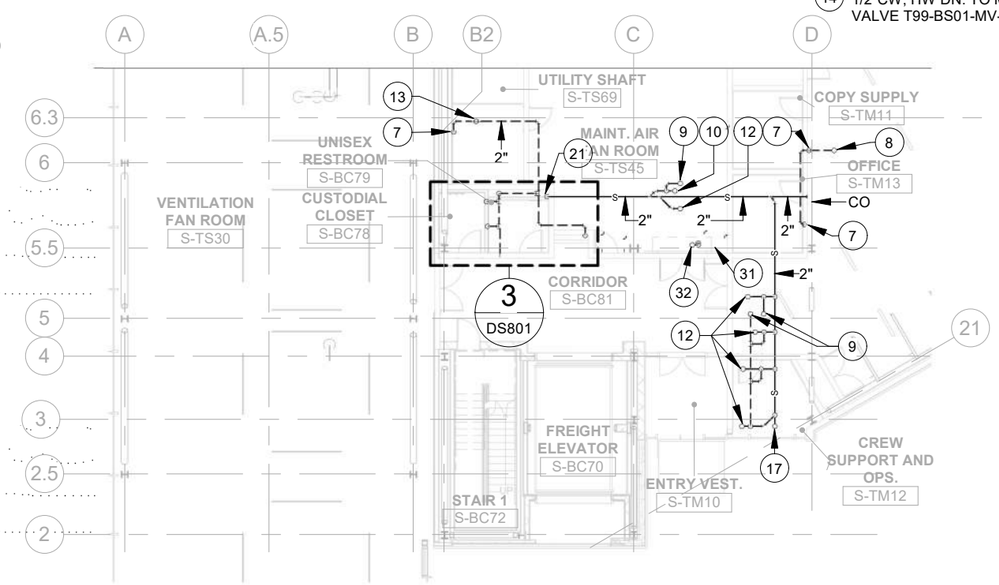

SO OPS BLDG. LEVEL 1 PARTIAL PLUMBING PLAN (2 / DS152)

1" = 20'-0"

PLAN NOTES:

1. 2"CW AND 1-1/2" MAKE-UP WATER DN. TO COLD WATER HEADER. SEE ENLARGED PLAN ON SHEET DS802 FOR CONT.
2. 2"CW AND 1-1/2" MAKE-UP WATER UP. SEE ENLARGED MECHANICAL ROOM PLAN ON SHEET DS802 FOR CONT.
3. 1"CW, HW DN. TO MIXING VALVE T99-BS01-MV-01.
4. 1/2"CW, HW AND 1-1/2" V DN.
5. 2"V DN. AND UP TO 2"VTR.
6. 1-1/2"HW, 3/4"HWC UP. SEE ENLARGED MECHANICAL ROOM PLUMBING FLOOR PLAN ON SHEET DS802 FOR CONT.
7. 2"V DN.
8. 2" V UP TO 2"VTR.
9. 2"V UP.
10. 2" W UP TO 2" FLD.
11. 1/2"CW, HW UP TO MIXING VALVE T99-BS02-MV-01.
12. 2"W UP.
13. 4"V UP AND DN.
14. 1/2"CW, HW DN. TO MIXING VALVE T99-BS01-MV-02.
15. 1-1/4" GAS PIPE DN.
16. 1-1/4"GAS UP. SEE ENLARGED MECHANICAL ROOM PLAN ON SHEET DS802 FOR CONT.
17. 2"W UP TO FCO.
18. NOT USED.
19. 1-1/2"V DN.
20. PROVIDE FLEXIBLE EXPANSION JOINT AT BUILDING SEPARATION.
21. 2" W DN.
22. 1-1/4" GAS PIPE TO FAN ROOM EQUIPMENT DUCT FURNACE. SEE HS854 FOR LOCATION OF GAS DUCT FURNANCE. SEE DS805 FOR CONNECTION DETAIL.
23. 1-1/2" GAS PIPE DN.
24. 1"CW DN.
25. 3/4" COMPRESSED AIR DN. TO HOSE REEL. MOUNT ON WALL.
26. 3/4" COMPRESSED AIR DN. TO COMPRESSED AIR OUTLET.
27. 2" COMPRESSED AIR DN. TO AIR DRYER. ROUTE LINE DN. SOUTH WALL, 0'-6" FROM EAST WALL AND TO 60" AFF. SEE DETAIL 4,/DS806.
28. 3" SD AND OSD UP TO ROOF DRAINS.
29. 2" FUEL PIPE DN. TO FUEL FILL STATION.
30. 2" FUEL PIPE DN. TO FUEL TANK.
31. 4" V DN.
32. 4" V UP.
33. 1" CW UP. SEE SHEET DS802 FOR CONT.
34. 2" V DN. TO FUEL TANK.
35. 3/4" DN. TO FWH.
36. CONNECT OSD TO SD ON VERTICAL DROP.
37. 1/2" CW UP TO HUMIDIFIER DE-IONIZED WATER TREATMENT SYSTEM.
38. 3/4" CW. SEE SOUTH PARKING SHEET DP152 FOR CONT.
39. FULL SIZE RELIEF VENT FROM FAN ROOM EQUIPMENT DUCT FURNACE GAS PRESSURE REGULATOR AND BURNER GAS PRESSURE REGULATOR.
40. GAS REGULATOR RELIEF VENTS UP.

H-D-PAK-SOB-TR2.34-00362-08-ASB-1905-14

FILE NAME	C:\Users\trtran\Documents\South Building Mech-TWE-Central-HNTB_2018_trtran.rvt
DATE	5/7/2019 3:24:08
TIME	PM
PLOTTED BY	H. TANG
DESIGNED BY	D. MOORE
ENTERED BY	H. TANG
CHECKED BY	W. LI
PROJ. ENGR.	R. JOHNSON
REGIONAL ADM.	L. LAIRD

REVISION		DATE	BY
1	CONSOLIDATED CONSTRUCTION PACKAGE	07/14/14	DBP

REGION NO.	STATE	FED.AID PROJ.NO.
10	WASH	BR-0099(111)
JOB NUMBER 10A065		
CONTRACT NO. 007999		LOCATION NO.

EOR — CERTIFYING ENGINEER

Washington State Department of Transportation
U.S. Department of Transportation Federal Highway Administration
City of Seattle

SR 99 TUNNEL PROJECT

SOUTH OPS BUILDING MECH LEVEL 1 PLUMBING PLAN

DS152 — SHEET OF SHEETS

FOR AS-BUILT PLAN ONLY

H-D-PAK-SOB-TR2.34-00362-08-ASB-1905-14

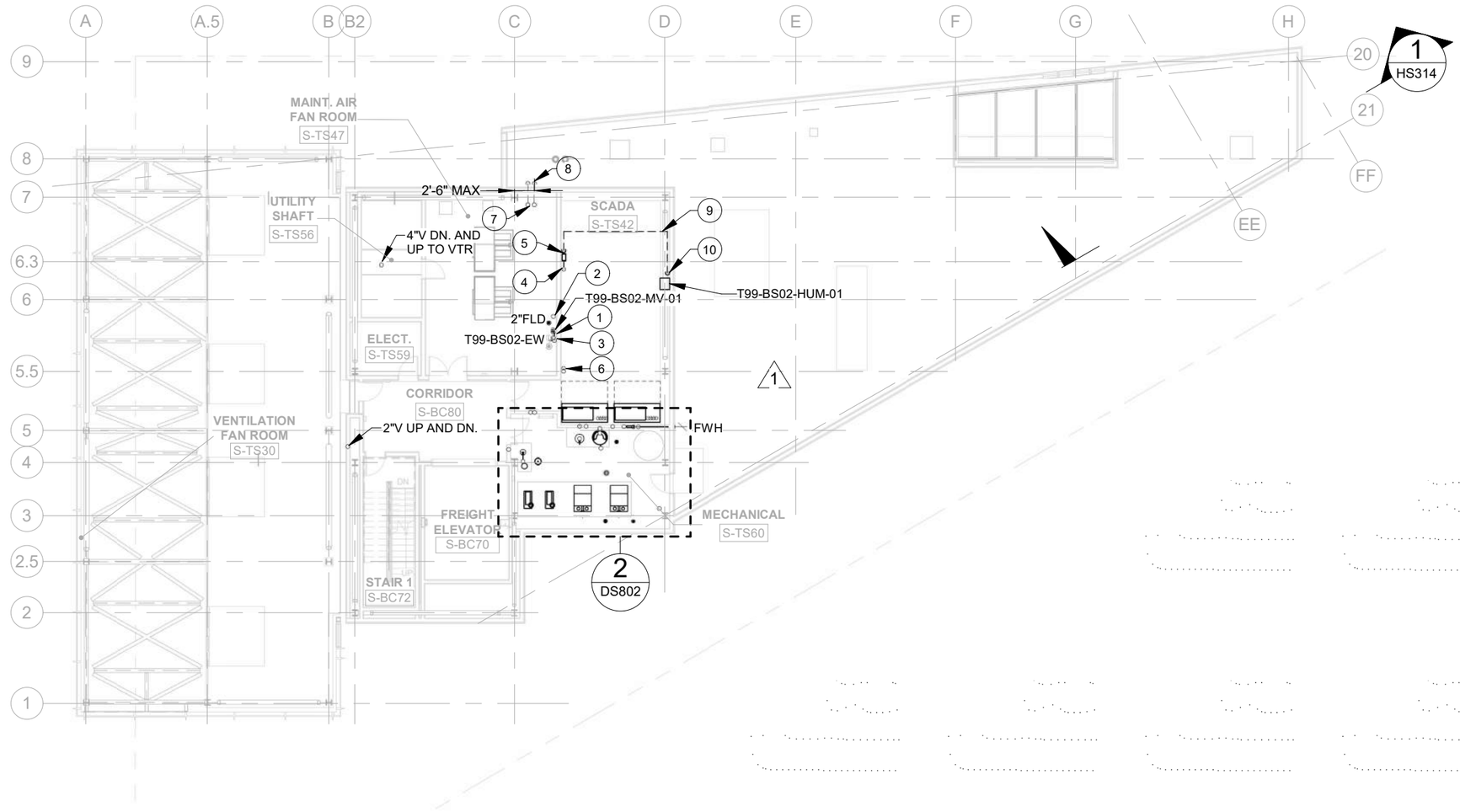

PLAN NOTES:

1. 1/2"CW, HW UP TO MIXING VALVE T99-BS02-MV-01
2. 1-1/2" V UP AND DN.
3. 2"W DN. 1-1/2"V UP.
4. 1/2" CW DN.
5. HUMIDIFIER DE-IONIZED WATER TREATMENT SYSTEM.
6. 4" V UP AND DN.
7. GAS REGULATOR RELIEF VENTS DN.
8. TERMINATE GAS VENT AT EXTERIOR WALL, 48" ABOVE FLOOR WITH ELBOW DOWN AND INSECT SCREEN, TYPICAL FOR 2.
9. 1/2" CW ABOVE CEILING.
10. 1/2" CW DOWN, SURFACE MOUNTED TO WALL AND BEHIND CROSS BRACE. CONNECT DE-IONIZED WATER FILTER TO HUMIDIFIER WITH 1/4" FLEXIBLE HOSE AND SURT OFF VALVE.

RFI #02120
RFI #02120 R01
RFI #03491
RFI #03519
RFI #03561
RFI #03605
RFI #03703

SO OPS BLDG. LEVEL 2 PLUMBING FLOOR PLAN (1 / DS161)

1" = 20'-0"

AS-BUILT PLANS ACCURATLEY AND COMPLETELY REFLECT CHANGES AND CORRECTIONS MADE DURING CONSTRUCTION AS DOCUMENTED IN THE RFI AND NDC QA/QC PROCEDURES DEVELOPED FOR THIS PROJECT AND AS BASED ON AS-BUILT INFORMATION PROVIDED BY SEATTLE TUNNEL PARTNERS.

FILE NAME	C:\Users\trtran\Documents\South Building Mech-TWE-Central-HNTB_2018_trtran.rvt
DATE	5/7/2019 3:24:15
TIME	PM
PLOTTED BY	H. TANG
DESIGNED BY	D. MOORE
ENTERED BY	H. TANG
CHECKED BY	W. LI
PROJ. ENGR.	R. JOHNSON
REGIONAL ADM.	L. LAIRD

REVISION		DATE	BY
1	CONSOLIDATED CONSTRUCTION PACKAGE	07/14/14	DBP

REGION NO.	STATE	FED.AID PROJ.NO.
10	WASH	BR-0099(111)
JOB NUMBER 10A065		
CONTRACT NO. 007999		LOCATION NO.

EOR — CERTIFYING ENGINEER

Washington State Department of Transportation
U.S. Department of Transportation Federal Highway Administration
City of Seattle

SR 99 TUNNEL PROJECT

SOUTH OPS BUILDING MECH LEVEL 2 PLUMBING FLOOR PLAN

DS161

SHEET OF SHEETS

FOR AS-BUILT PLAN ONLY

H-D-PAK-SOB-TR2.34-00362-08-ASB-1905-14

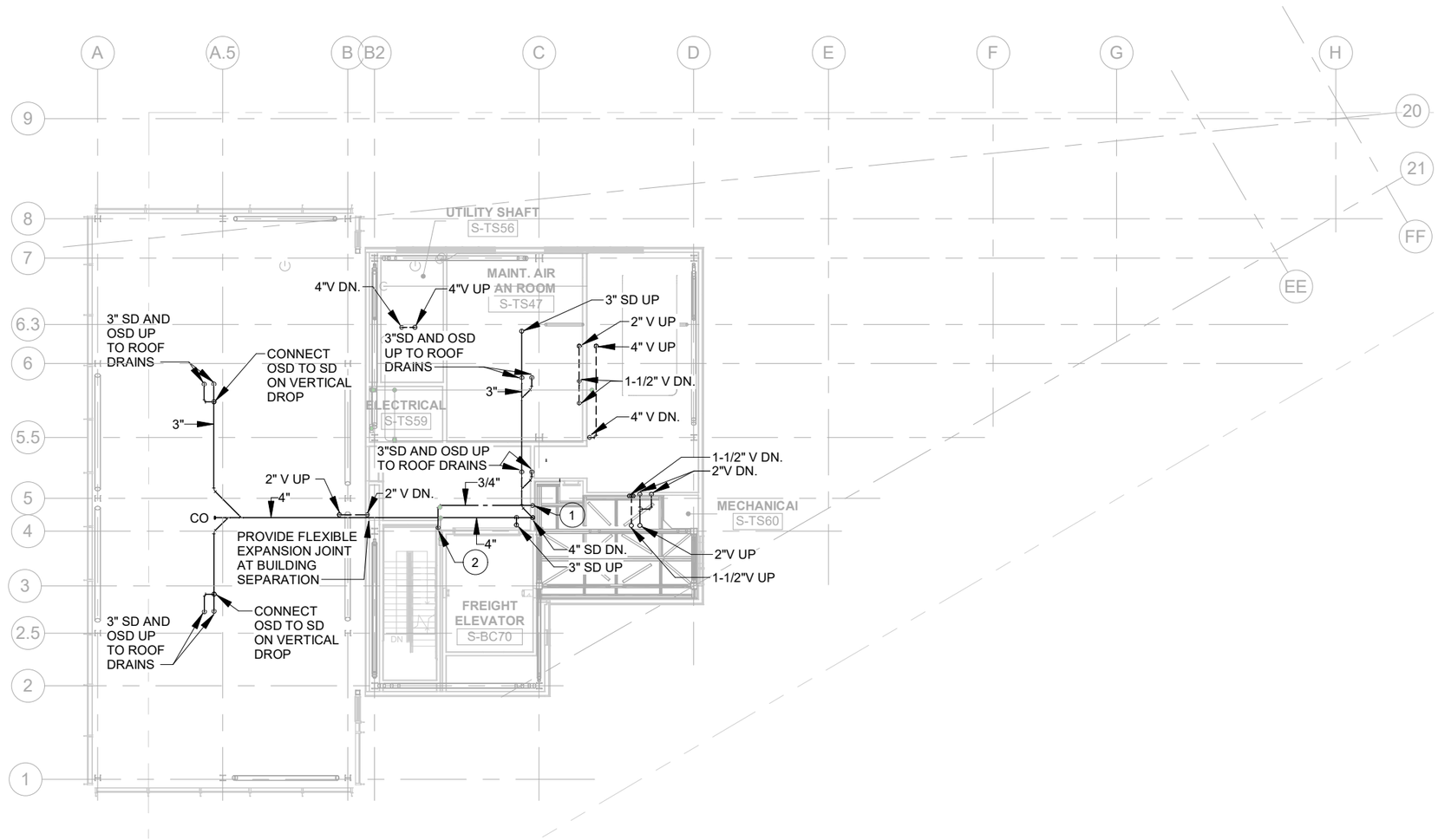

PLAN NOTES:

1. 3/4" CW. SEE SHEET DS802 FOR CONT.
2. 3/4" CW UP TO FWH.

RFI #03362

SO OPS BLDG. LEVEL 2 PLUMBING CEILING PLAN (1)

1" = 20'-0" DS162

AS-BUILT PLANS ACCURATLEY AND COMPLETELY REFLECT CHANGES AND CORRECTIONS MADE DURING CONSTRUCTION AS DOCUMENTED IN THE RFI AND NDC QA/QC PROCEDURES DEVELOPED FOR THIS PROJECT AND AS BASED ON AS-BUILT INFORMATION PROVIDED BY SEATTLE TUNNEL PARTNERS.

FILE NAME	C:\Users\trtran\Documents\South Building Mech-TWE-Central-HNTB_2018_trtran.rvt
DATE	5/7/2019 3:24:19
TIME	PM
PLOTTED BY	H. TANG
DESIGNED BY	D. MOORE
ENTERED BY	H. TANG
CHECKED BY	W. LI
PROJ. ENGR.	R. JOHNSON
REGIONAL ADM.	L. LAIRD

REVISION | DATE | BY

REGION NO.	STATE	FED.AID PROJ.NO.
10	WASH	BR-0099(111)
JOB NUMBER 10A065		
CONTRACT NO. 007999		LOCATION NO.

EOR — CERTIFYING ENGINEER

Washington State Department of Transportation
Federal Highway Administration
City of Seattle

SR 99 TUNNEL PROJECT

SOUTH OPS BUILDING MECH LEVEL 2 PLUMBING PLAN

DS162 SHEET OF SHEETS

FOR AS-BUILT PLAN ONLY

H-D-PAK-SOB-TR2.34-00362-08-ASB-1905-14

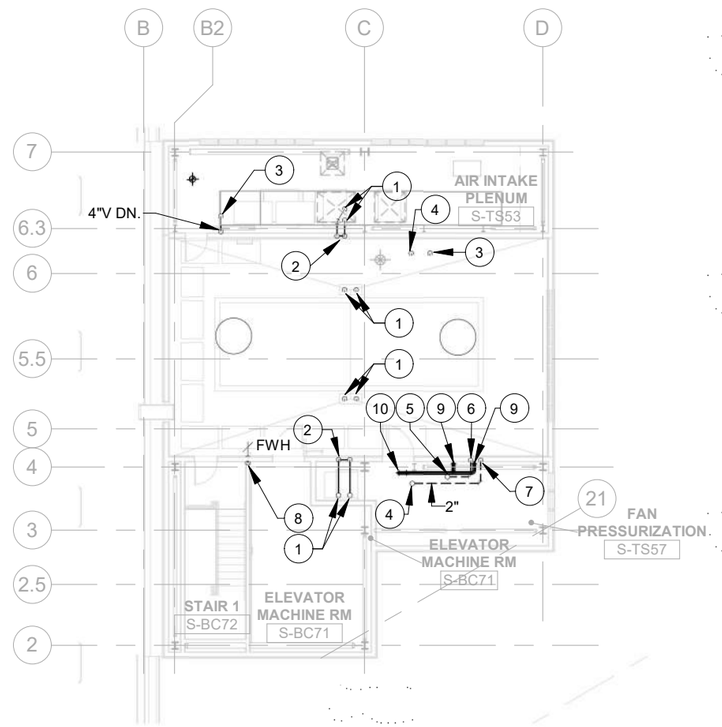

PLAN NOTES:

1. 3" SD AND OSD UP TO ROOF DRAIN
2. 3" OSD AND SD DN. CONNECT OSD TO SD ON VERTICAL DROP.
3. 4" V UP TO 4"VTR.
4. 2"V UP TO 2"VTR.
5. 1-1/2" UP TO 1-1/2"VTR.
6. 1-1/2" V DN.
7. 2" V DN.
8. 3/4" CW DN.
9. 4" AIR INTAKE AND EXHAUST DN. TO HOT WATER HEATER T99-BS02-GWHR-01.
10. 4" AIR INTAKE AND EXHAUST UP TO CONCENTRIC VENT KIT ON ROOF.

SO OPS BLDG. LEVEL 3 PLUMBING PLAN (1)

1" = 20'-0" DS171

AS-BUILT PLANS ACCURATLEY AND COMPLETELY REFLECT CHANGES AND CORRECTIONS MADE DURING CONSTRUCTION AS DOCUMENTED IN THE RFI AND NDC QA/QC PROCEDURES DEVELOPED FOR THIS PROJECT AND AS BASED ON AS-BUILT INFORMATION PROVIDED BY SEATTLE TUNNEL PARTNERS.

FILE NAME	C:\Users\trtran\Documents\South Building Mech-TWE-Central-HNTB_2018_trtran.rvt
DATE	5/7/2019 3:24:23
TIME	PM
PLOTTED BY	H. TANG
DESIGNED BY	D. MOORE
ENTERED BY	H. TANG
CHECKED BY	W. LI
PROJ. ENGR.	R. JOHNSON
REGIONAL ADM.	L. LAIRD

REVISION	DATE	BY

REGION NO.	STATE	FED.AID PROJ.NO.
10	WASH	BR-0099(111)
JOB NUMBER 10A065		
CONTRACT NO. 007999		LOCATION NO.

EOR — CERTIFYING ENGINEER

Washington State Department of Transportation
U.S. Department of Transportation Federal Highway Administration
City of Seattle

SR 99 TUNNEL PROJECT

SOUTH OPS BUILDING MECH LEVEL 3 PLUMBING PLAN

DS171 SHEET OF SHEETS

FOR AS-BUILT PLAN ONLY

H-D-PAK-SOB-TR2.34-00362-08-ASB-1905-14

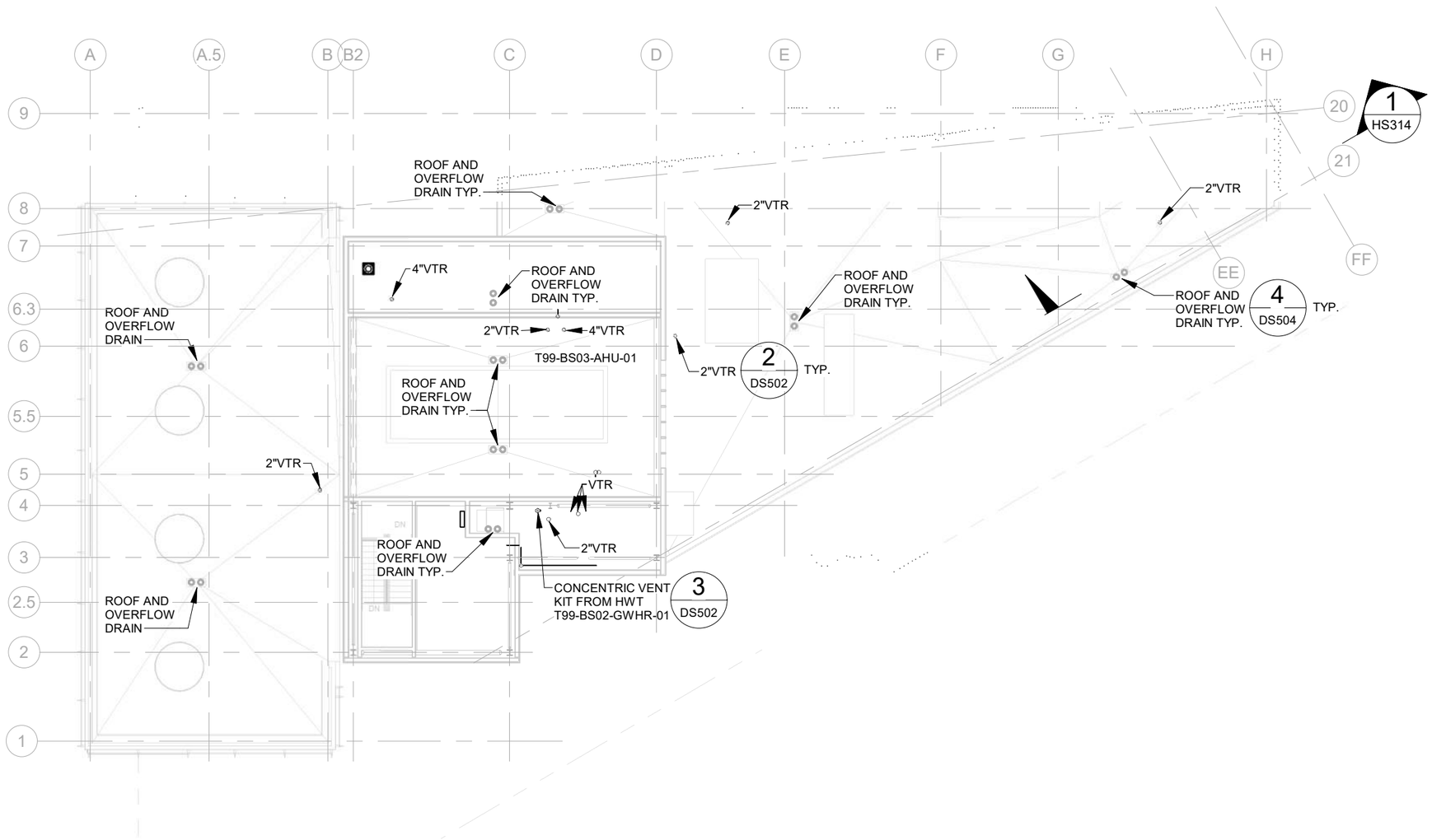

RFI# 03235
RFI# 03235 R01
RFI# 03584

SO OPS BLDG. PLUMBING ROOF PLAN 1 DS181

1" = 20'-0"

AS-BUILT PLANS ACCURATLEY AND COMPLETELY REFLECT CHANGES AND CORRECTIONS MADE DURING CONSTRUCTION AS DOCUMENTED IN THE RFI AND NDC QA/QC PROCEDURES DEVELOPED FOR THIS PROJECT AND AS BASED ON AS-BUILT INFORMATION PROVIDED BY SEATTLE TUNNEL PARTNERS.

FILE NAME	C:\Users\sparayil\Documents\South Building Mech-TWE-Central-HNTB_2018_sparayil.rvt
DATE	5/9/2019 9:33:47
TIME	AM
PLOTTED BY	H. TANG
DESIGNED BY	D. MOORE
ENTERED BY	H. TANG
CHECKED BY	W. LI
PROJ. ENGR.	R. JOHNSON
REGIONAL ADM.	L. LAIRD

REVISION | DATE | BY

REGION NO.	STATE	FED.AID PROJ.NO.
10	WASH	BR-0099(111)
JOB NUMBER 10A065		
CONTRACT NO. 007999		LOCATION NO.

EOR

CERTIFYING ENGINEER

Washington State Department of Transportation

U.S. Department of Transportation Federal Highway Administration

City of Seattle

SR 99 TUNNEL PROJECT

SOUTH OPS BUILDING MECH PLUMBING ROOF PLAN

DS181

SHEET OF SHEETS

FOR AS-BUILT PLAN ONLY

H-D-PAK-SOB-TR2.34-00362-08-ASB-1905-14

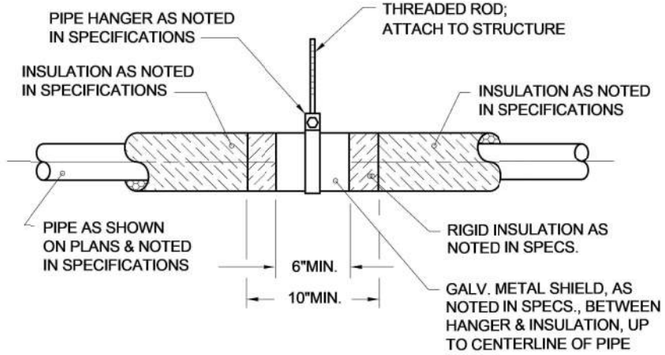

INSULATED PIPE HANGER DETAIL (1 / DS501)

SCALE: NONE

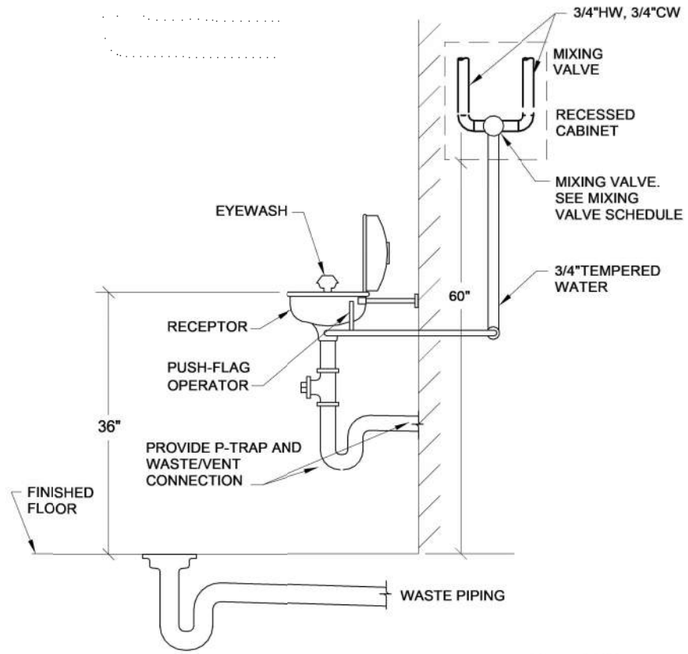

EMERGENCY EYEWASH DETAIL (2 / DS501)

SCALE: NONE

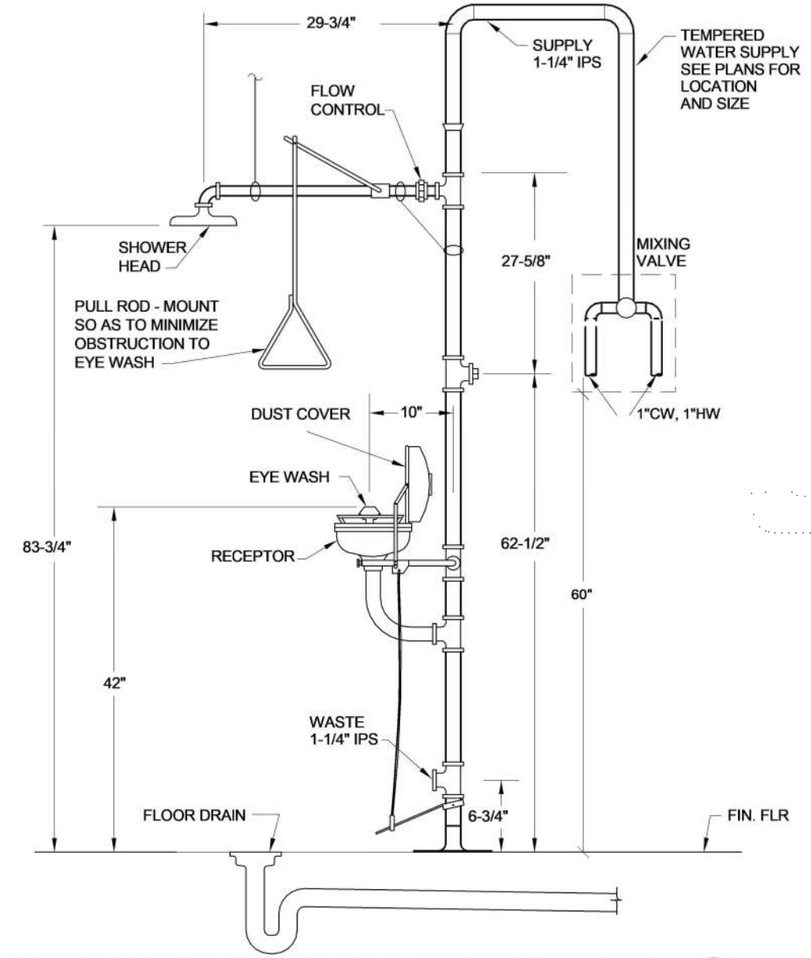

EMERGENCY EYEWASH & SHOWER DETAIL (3 / DS501)

SCALE: NONE

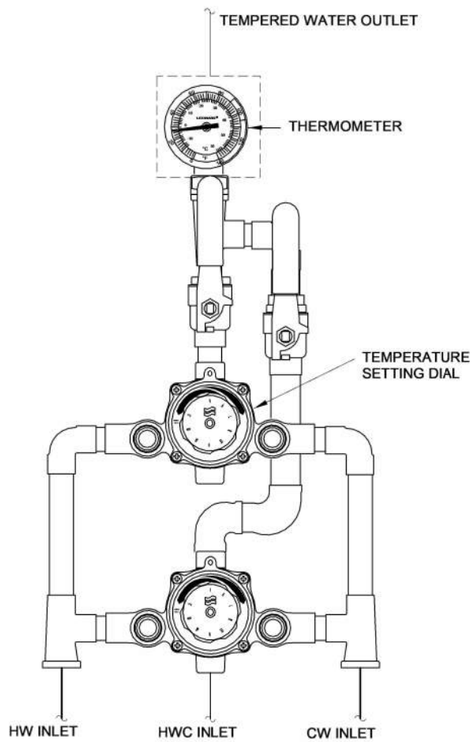

SEE MIXING VALVE SCHEDULE SHEET DS101 FOR INLET AND OUTLET SIZES

THERMOSTATIC MIXING VALVE DETAIL (4 / DS501)

SCALE: NONE

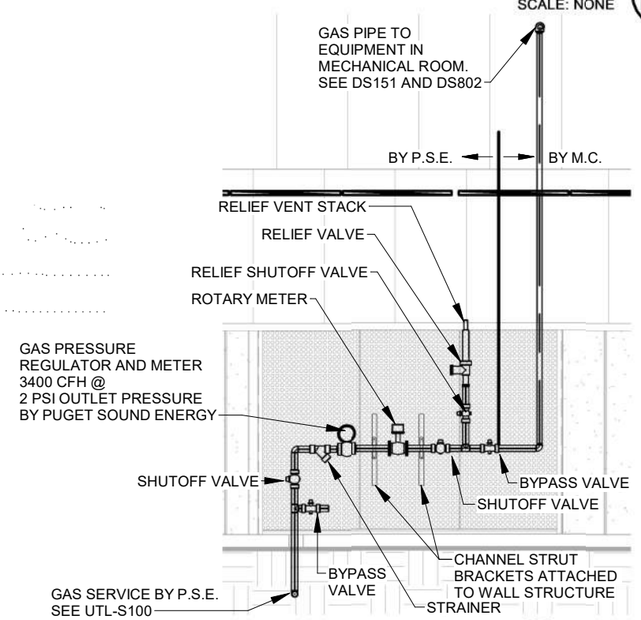

GAS HEADER DETAIL (5 / DS501)

SCALE: NONE

AS-BUILT PLANS ACCURATLEY AND COMPLETELY REFLECT CHANGES AND CORRECTIONS MADE DURING CONSTRUCTION AS DOCUMENTED IN THE RFI AND NDC QA/QC PROCEDURES DEVELOPED FOR THIS PROJECT AND AS BASED ON AS-BUILT INFORMATION PROVIDED BY SEATTLE TUNNEL PARTNERS.

FILE NAME	C:\Users\trtran\Documents\South Building Mech-TWE-Central-HNTB_2018_trtran.rvt
DATE	5/7/2019 3:24:34
TIME	PM
PLOTTED BY	H. TANG
DESIGNED BY	D. MOORE
ENTERED BY	H. TANG
CHECKED BY	W. LI
PROJ. ENGR.	R. JOHNSON
REGIONAL ADM.	L. LAIRD

REVISION	DATE	BY

REGION NO.	STATE	FED.AID PROJ.NO.
10	WASH	BR-0099(111)
JOB NUMBER 10A065		
CONTRACT NO. 007999		LOCATION NO.

EOR — CERTIFYING ENGINEER — 05-14-19

Washington State Department of Transportation
U.S. Department of Transportation Federal Highway Administration
City of Seattle

SR 99 TUNNEL PROJECT

SOUTH OPS BUILDING MECH PLUMBING DETAILS

DS501

SHEET OF SHEETS

FOR AS-BUILT PLAN ONLY

H-D-PAK-SOB-TR2.34-00362-08-ASB-1905-14

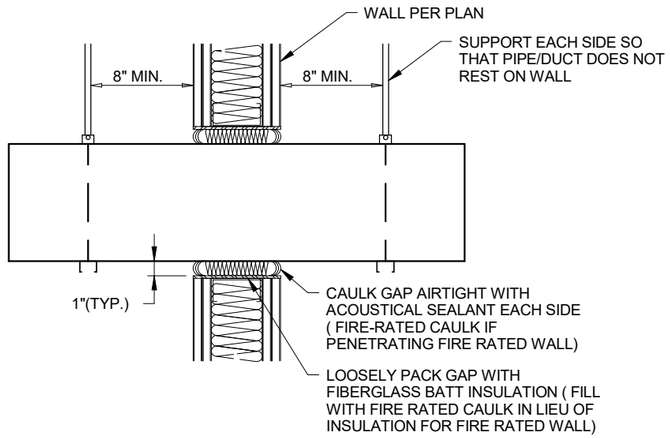

TYPICAL PIPE WALL PENETRATION DETAIL (1 / DS502)

SCALE: NONE

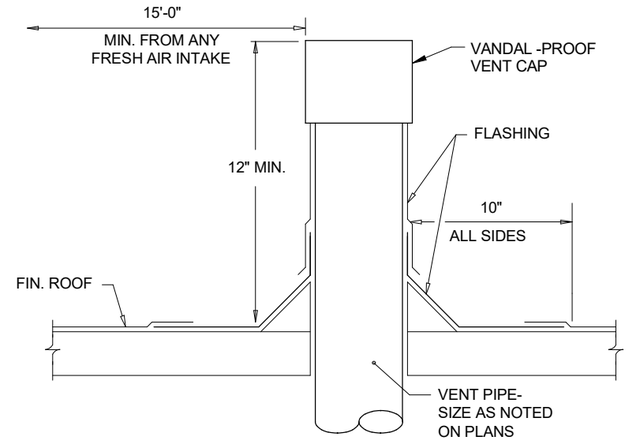

VENT THRU ROOF DETAIL (2 / DS502)

SCALE: NONE

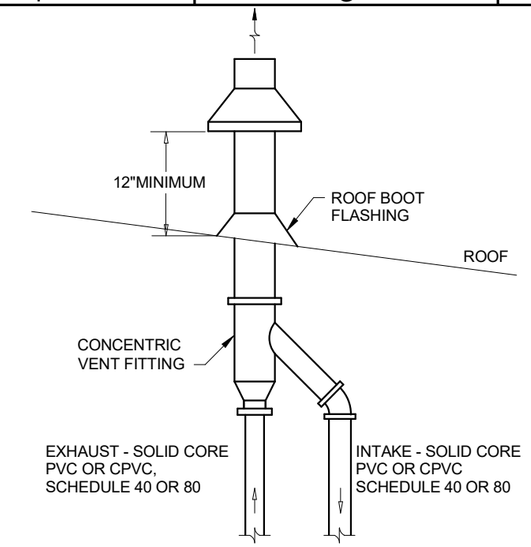

CONCENTRIC FLUE KIT DETAIL (3 / DS502)

SCALE: NONE

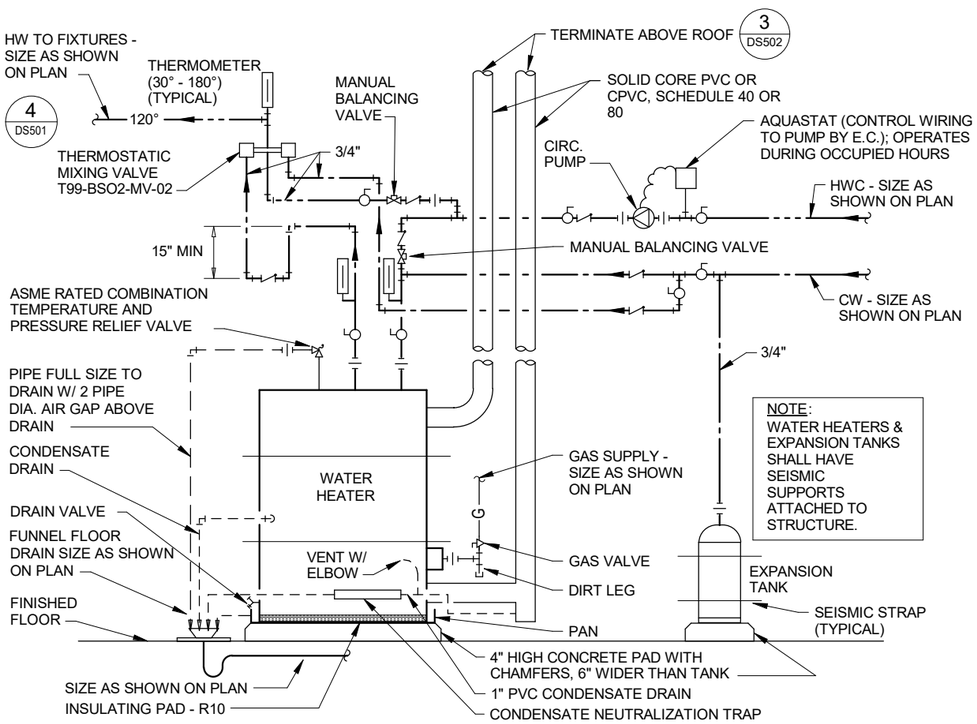

GAS HOT WATER TANK DETAIL (4 / DS502)

SCALE: NONE

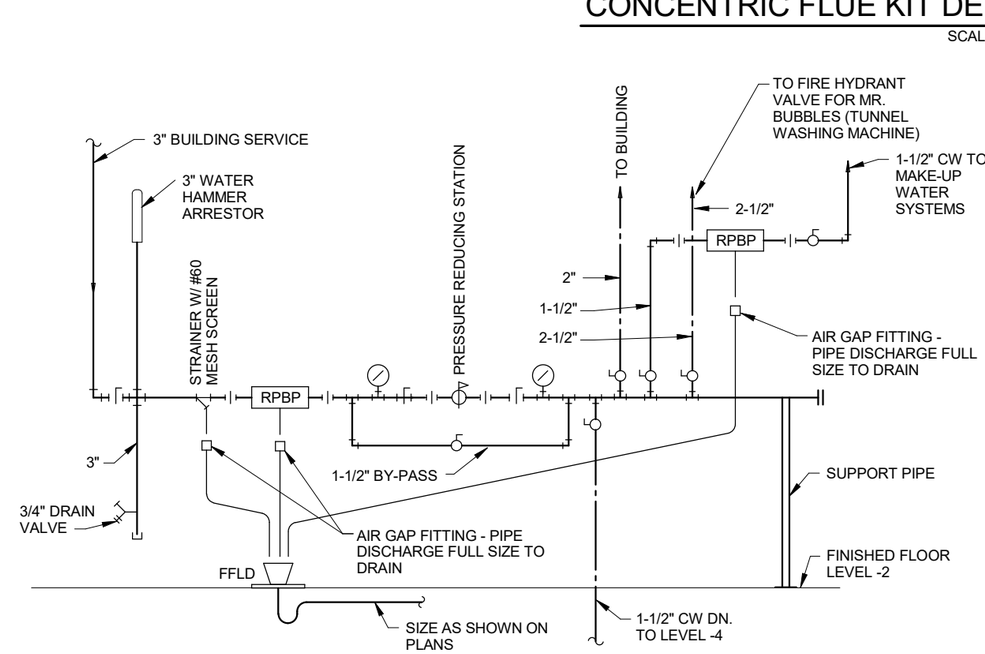

RFI#03536
RFI#03983

COLD WATER HEADER DETAIL (5 / DS502)

SCALE: NONE

AS-BUILT PLANS ACCURATLEY AND COMPLETELY REFLECT CHANGES AND CORRECTIONS MADE DURING CONSTRUCTION AS DOCUMENTED IN THE RFI AND NDC QA/QC PROCEDURES DEVELOPED FOR THIS PROJECT AND AS BASED ON AS-BUILT INFORMATION PROVIDED BY SEATTLE TUNNEL PARTNERS.

FILE NAME	C:\Users\trtran\Documents\South Building Mech-TWE-Central-HNTB_2018_trtran.rvt
DATE	5/7/2019 3:24:36
TIME	PM
PLOTTED BY	H. TANG
DESIGNED BY	D. MOORE
ENTERED BY	H. TANG
CHECKED BY	W. LI
PROJ. ENGR.	R. JOHNSON
REGIONAL ADM.	L. LAIRD

REVISION | DATE | BY

REGION NO. 10 | STATE WASH | FED.AID PROJ.NO. BR-0099(111)

JOB NUMBER 10A065

CONTRACT NO. 007999 | LOCATION NO.

EOR — CERTIFYING ENGINEER

Washington State Department of Transportation
U.S. Department of Transportation Federal Highway Administration
City of Seattle

SR 99 TUNNEL PROJECT

SOUTH OPS BUILDING MECH PLUMBING DETAILS

DS502

SHEET OF SHEETS

FOR AS-BUILT PLAN ONLY

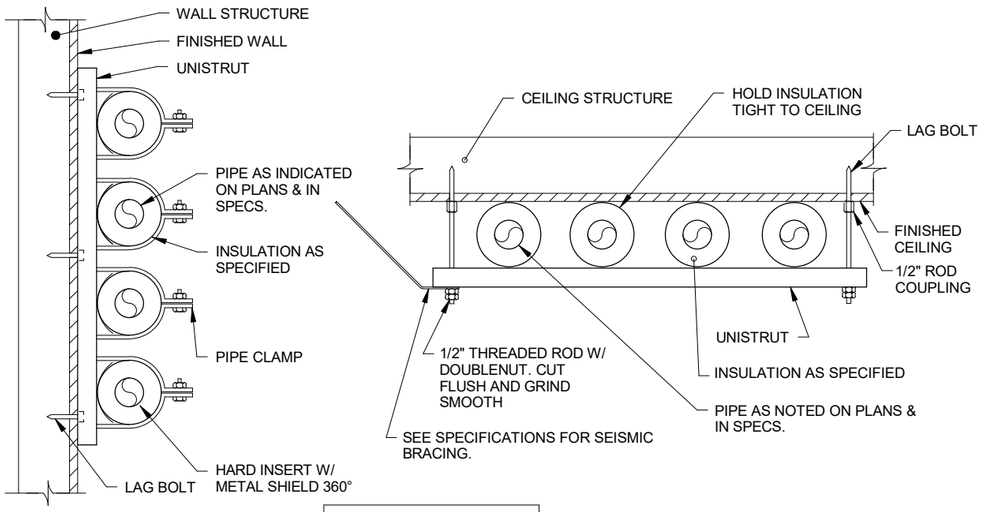

NOTE: PROVIDE RIGID PIPE INSULATION AT HANGERS AS SPECIFIED

INSULATED PIPE HANGING DETAIL 1 DS503

SCALE: NONE

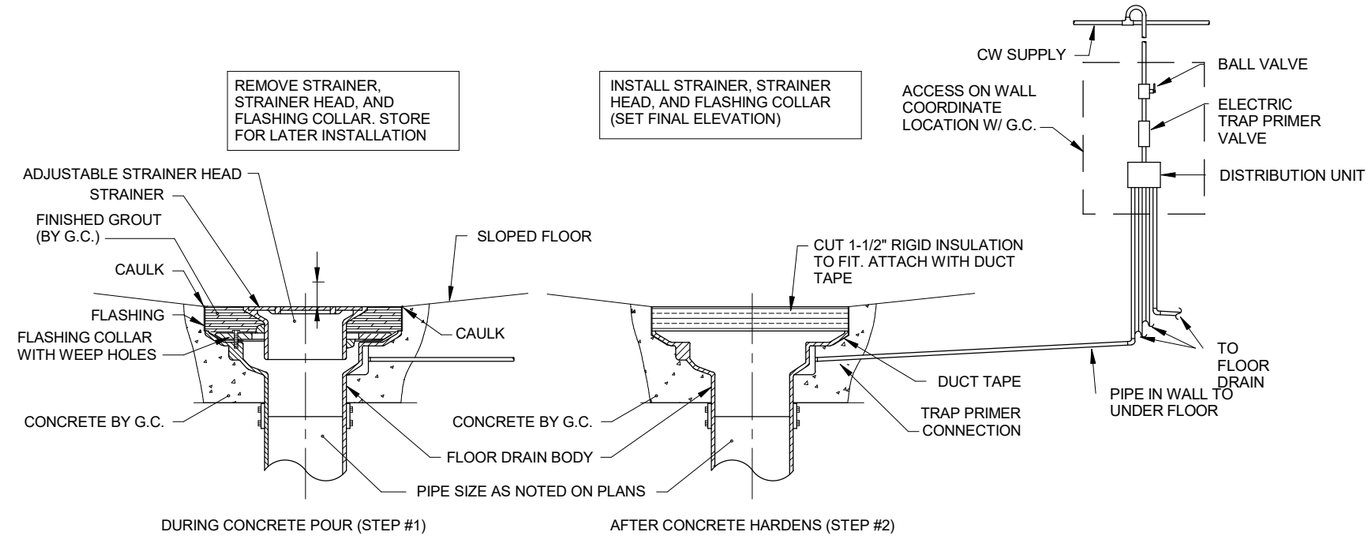

NOTES:

1. COMPLETE INSTALLATION OF FLOOR DRAIN AND SETTING OF FINAL ELEVATION WILL NOT BE ALLOWED DURING INITIAL CONCRETE POUR.
2. DO NOT ALLOW GROUT PENETRATE WEEP HOLES AND FILL UP TRAP.

FLOOR DRAIN INSTALLATION DETAIL 2 DS503

SCALE: NONE

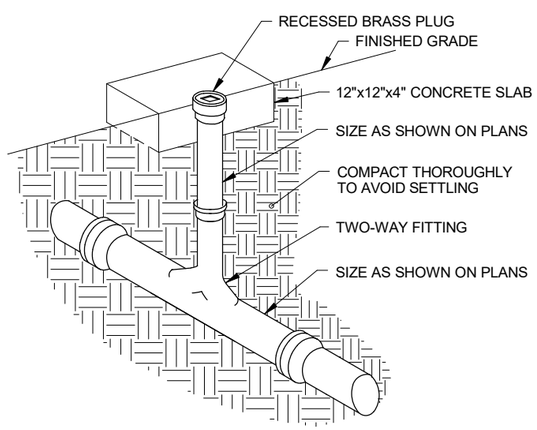

SURFACE CLEANOUT DETAIL 3 DS503

SCALE: NONE

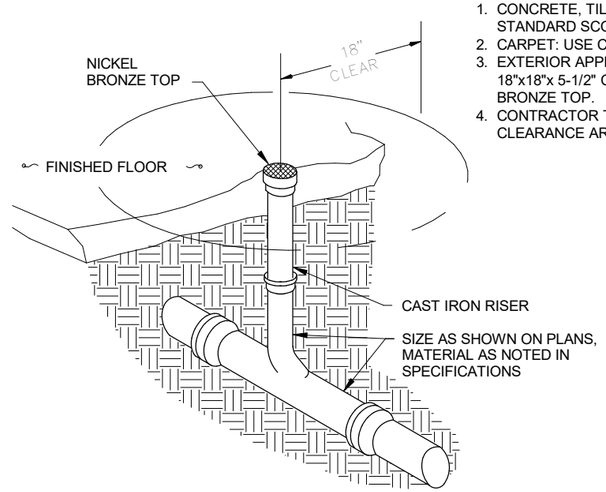

DETAIL NOTES:

1. CONCRETE, TILE, TERRAZZO: USE STANDARD SCORIATED CLEANOUT COVER.
2. CARPET: USE CARPET FLANGE (CF).
3. EXTERIOR APPLICATIONS: PROVIDE AN 18"x18"x 5-1/2" CONCRETE PAD WITH BRONZE TOP.
4. CONTRACTOR TO MAINTAIN 36" CLEARANCE AROUND ALL CLEANOUTS.

INTERIOR FLOOR CLEANOUT DETAIL 4 DS503

SCALE: NONE

AS-BUILT PLANS ACCURATLEY AND COMPLETELY REFLECT CHANGES AND CORRECTIONS MADE DURING CONSTRUCTION AS DOCUMENTED IN THE RFI AND NDC QA/QC PROCEDURES DEVELOPED FOR THIS PROJECT AND AS BASED ON AS-BUILT INFORMATION PROVIDED BY SEATTLE TUNNEL PARTNERS.

FILE NAME	C:\Users\trtran\Documents\South Building Mech-TWE-Central-HNTB_2018_trtran.rvt
DATE	5/7/2019 3:24:37
TIME	PM
PLOTTED BY	H. TANG
DESIGNED BY	D. MOORE
ENTERED BY	H. TANG
CHECKED BY	W. LI
PROJ. ENGR.	R. JOHNSON
REGIONAL ADM.	L. LAIRD

REVISION | DATE | BY

REGION NO.	STATE	FED.AID PROJ.NO.
10	WASH	BR-0099(111)
JOB NUMBER 10A065		
CONTRACT NO. 007999		LOCATION NO.

EOR — CERTIFYING ENGINEER

Washington State Department of Transportation
U.S. Department of Transportation Federal Highway Administration
City of Seattle

SR 99 TUNNEL PROJECT

SOUTH OPS BUILDING MECH PLUMBING DETAILS

DS503

SHEET OF SHEETS

H-D-PAK-SOB-TR2.34-00362-08-ASB-1905-14

FOR AS-BUILT PLAN ONLY

H-D-PAK-SOB-TR2.34-00362-08-ASB-1905-14

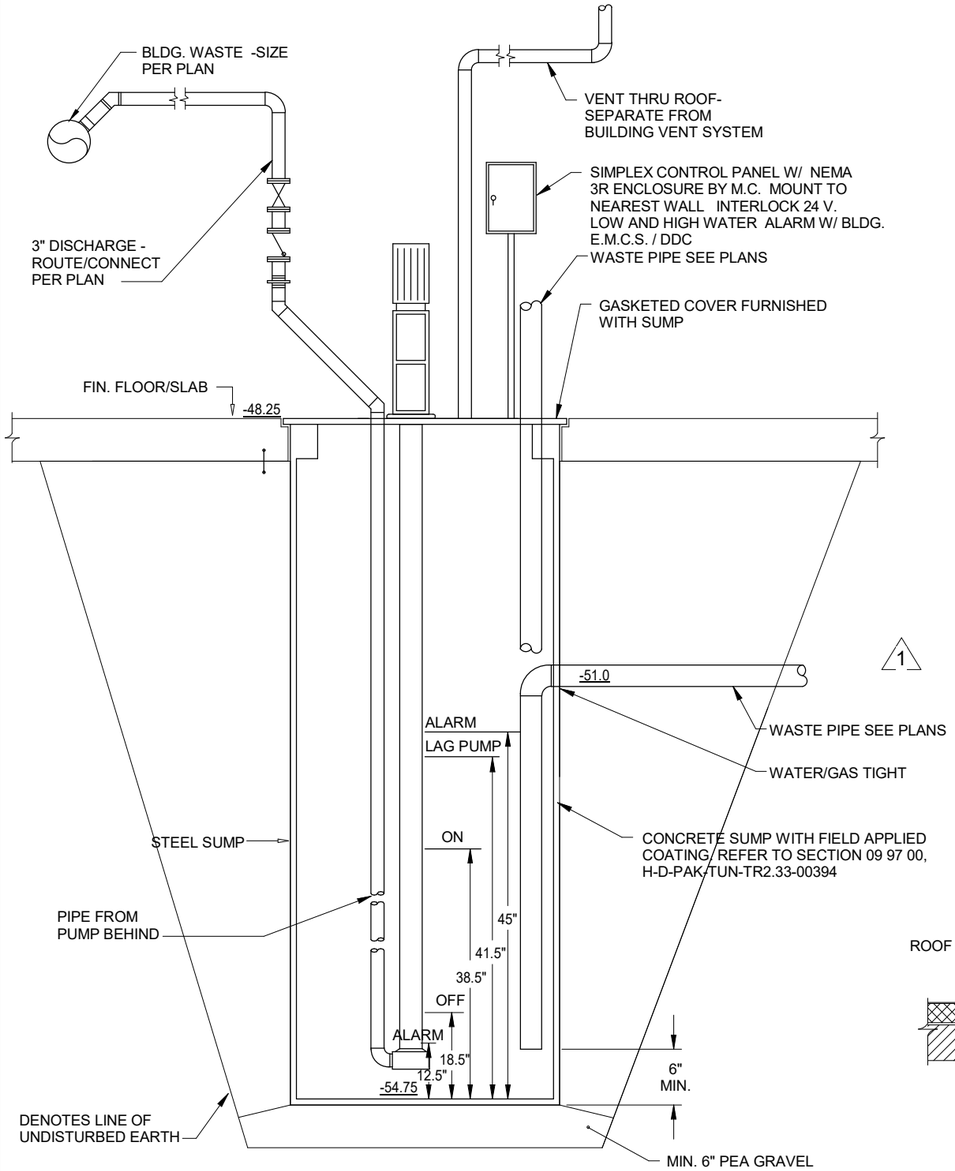

NOTES:

1. COORDINATE ALL WORK REQUIRED WITH G.C. & E.C.
2. ALL SURFACES OF STEEL PUMP, TO INCLUDE COVER, (INTERIOR & EXTERIOR) SHALL BE TREATED W/ ASPHALT COATING TO RESIST CORROSION.

TYPICAL SUMP W/ PUMP INSTALLATION DETAIL (1 / DS504)

SCALE: NONE

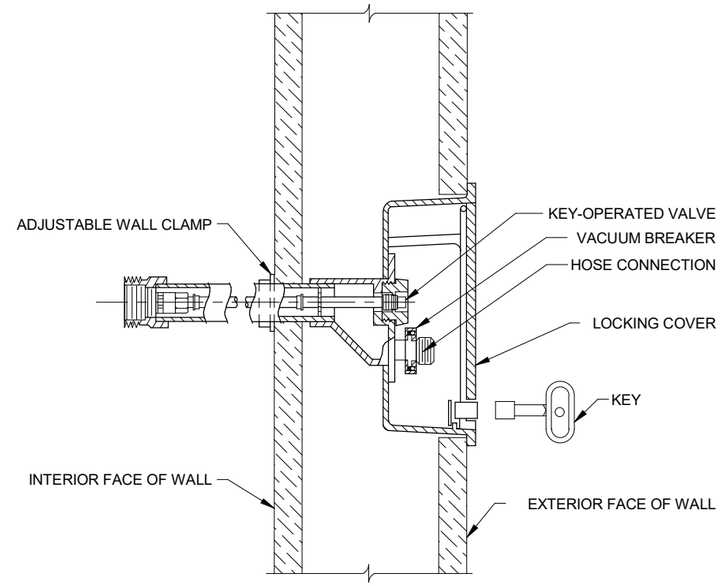

WALL HYDRANT DETAIL (2 / DS504)

SCALE: NONE

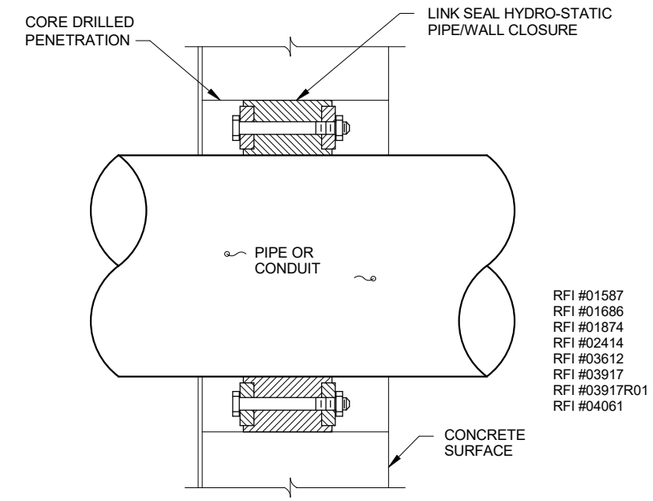

RFI #01587
RFI #01686
RFI #01874
RFI #02414
RFI #03612
RFI #03917
RFI #03917R01
RFI #04061

PIPING THROUGH WALL/FLOOR DETAIL (3 / DS504)

SCALE: NONE

AS-BUILT PLANS ACCURATLEY AND COMPLETELY REFLECT CHANGES AND CORRECTIONS MADE DURING CONSTRUCTION AS DOCUMENTED IN THE RFI AND NDC QA/QC PROCEDURES DEVELOPED FOR THIS PROJECT AND AS BASED ON AS-BUILT INFORMATION PROVIDED BY SEATTLE TUNNEL PARTNERS.

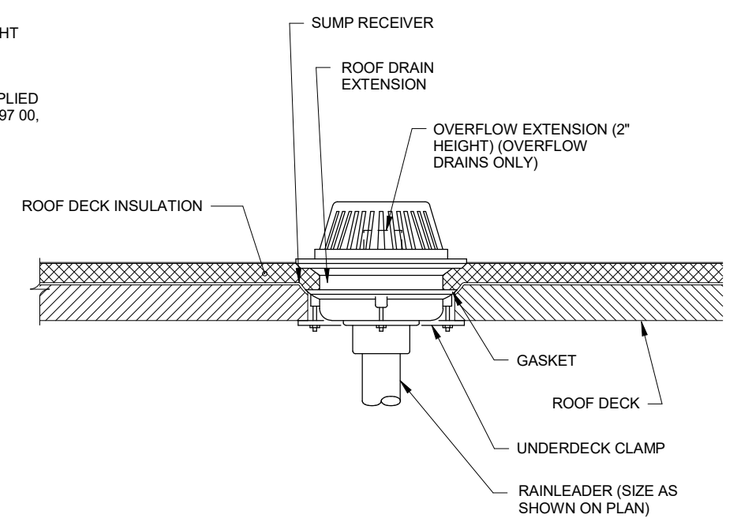

TYPICAL ROOF DRAIN AND OVERFLOW DRAIN INSTALLATION DETAIL (4 / DS504)

SCALE: NONE

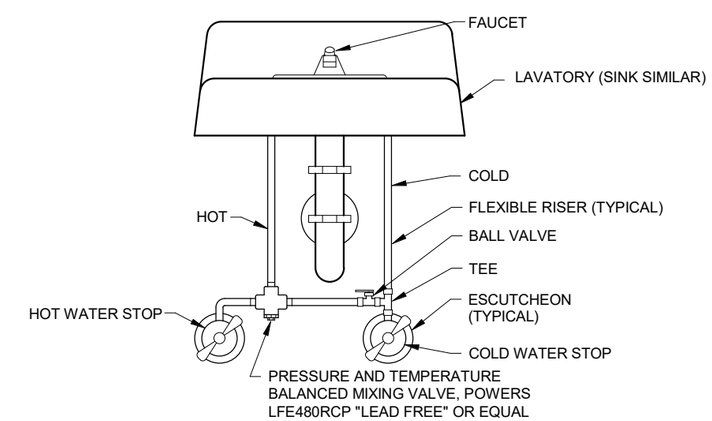

LAVATORY SERVICES INSTALLATION DETAIL (5 / DS504)

SCALE: NONE

FILE NAME	C:\Users\trtran\Documents\South Building Mech-TWE-Central-HNTB_2018_trtran.rvt
DATE	5/7/2019 3:24:37
TIME	PM
PLOTTED BY	H. TANG
DESIGNED BY	D. MOORE
ENTERED BY	H. TANG
CHECKED BY	W. LI
PROJ. ENGR.	R. JOHNSON
REGIONAL ADM.	L. LAIRD

REVISION		DATE	BY
1	CONSOLIDATED CONSTRUCTION PACKAGE	07/14/14	DBP

REGION NO. 10 | STATE WASH | JOB NUMBER 10A065 | CONTRACT NO. 007999 | LOCATION NO.

FED.AID PROJ.NO. BR-0099(111)

EOR — CERTIFYING ENGINEER 05-14-19

Washington State Department of Transportation
U.S. Department of Transportation Federal Highway Administration
City of Seattle

SR 99 TUNNEL PROJECT

SOUTH OPS BUILDING MECH PLUMBING DETAILS

DS504

SHEET OF SHEETS

FOR AS-BUILT PLAN ONLY

H-D-PAK-SOB-TR2.34-00362-08-ASB-1905-14

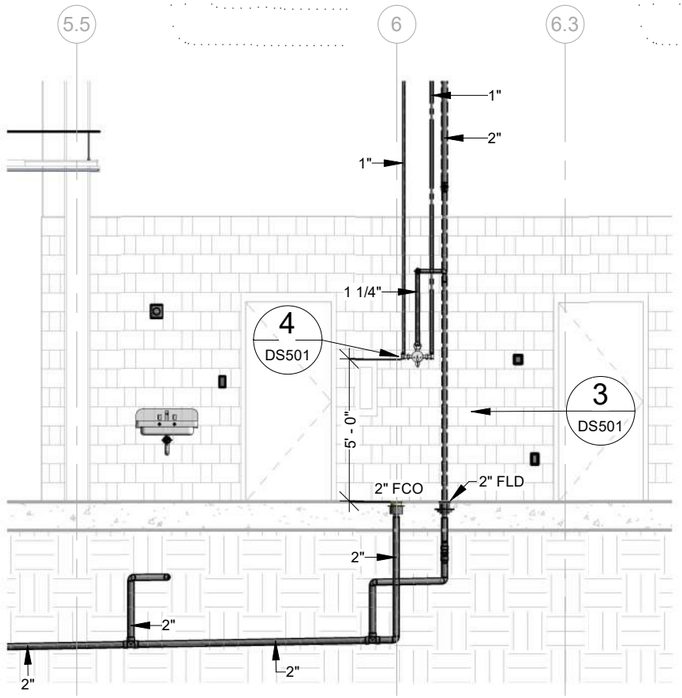

SECTION 1 DS505
SCALE: NONE

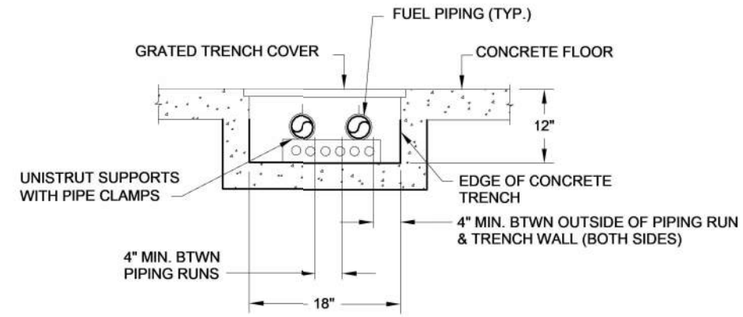

INTERIOR PIPING IN TRENCH 2 DS505
SCALE: NONE

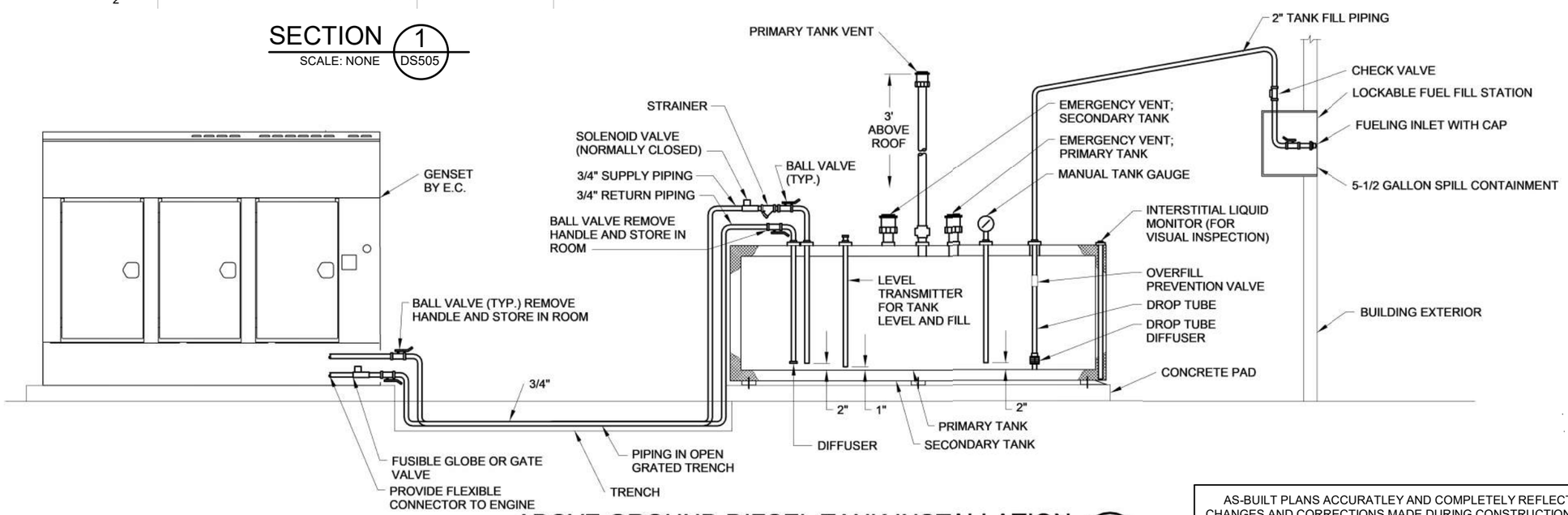

ABOVE GROUND DIESEL TANK INSTALLATION 3 DS505
SCALE: NONE

AS-BUILT PLANS ACCURATLEY AND COMPLETELY REFLECT CHANGES AND CORRECTIONS MADE DURING CONSTRUCTION AS DOCUMENTED IN THE RFI AND NDC QA/QC PROCEDURES DEVELOPED FOR THIS PROJECT AND AS BASED ON AS-BUILT INFORMATION PROVIDED BY SEATTLE TUNNEL PARTNERS.

FILE NAME	C:\Users\trtran\Documents\South Building Mech-TWE-Central-HNTB_2018_trtran.rvt
DATE	5/7/2019 3:24:41
TIME	PM
PLOTTED BY	H. TANG
DESIGNED BY	D. MOORE
ENTERED BY	H. TANG
CHECKED BY	W. LI
PROJ. ENGR.	R. JOHNSON
REGIONAL ADM.	L. LAIRD

REVISION	DATE	BY

REGION NO.	STATE	FED.AID PROJ.NO.
10	WASH	BR-0099(111)
JOB NUMBER 10A065		
CONTRACT NO. 007999		LOCATION NO.

EOR — CERTIFYING ENGINEER

Washington State Department of Transportation
U.S. Department of Transportation Federal Highway Administration
City of Seattle

SR 99 TUNNEL PROJECT

SOUTH OPS BUILDING MECH PLUMBING DETAILS

DS505

SHEET OF SHEETS

FOR AS-BUILT PLAN ONLY

H-D-PAK-SOB-TR2.34-00362-08-ASB-1905-14

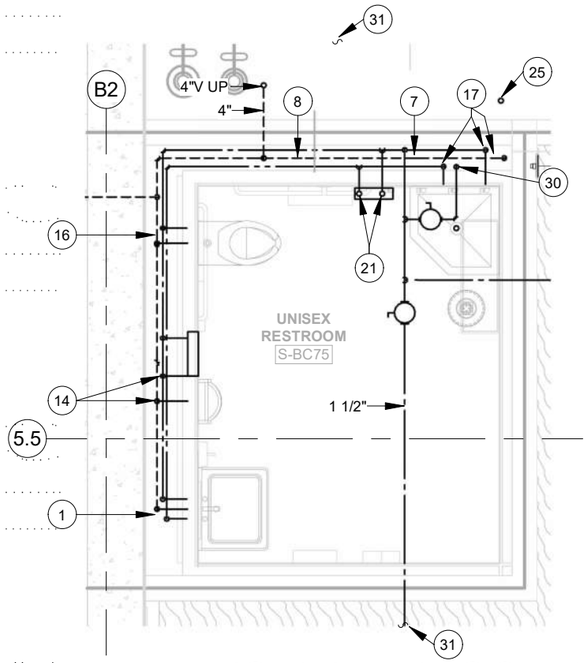

LEVEL -4 ENLARGED PLUMBING CEILING PLAN (1) DS801

1/4" = 1'-0"

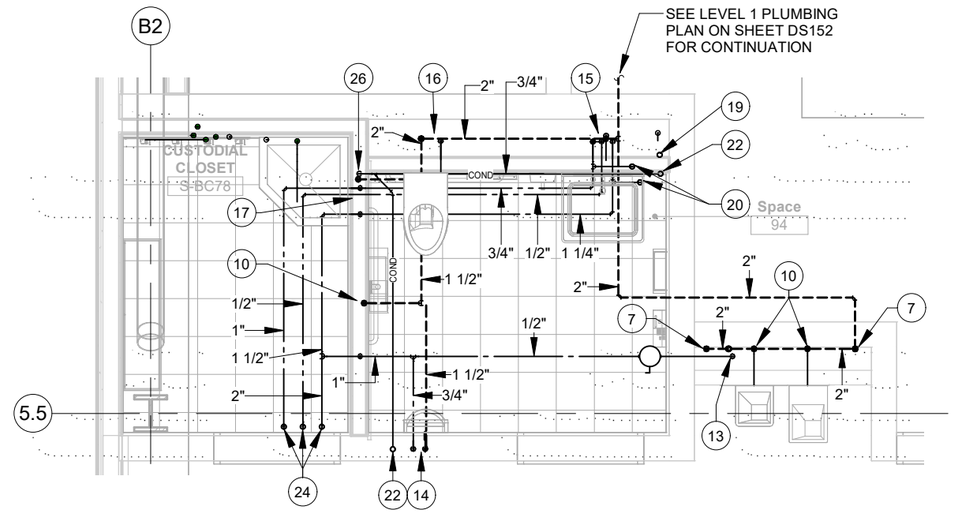

LEVEL 1 ENLARGED PLUMBING CEILING PLAN (3) DS801

1/4" = 1'-0"

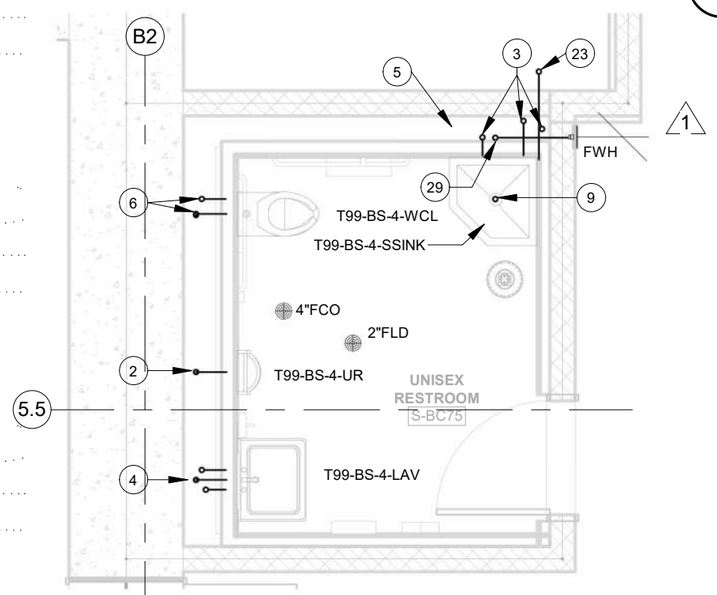

LEVEL -4 ENLARGED PLUMBING FLOOR PLAN (2) DS801

1/4" = 1'-0"

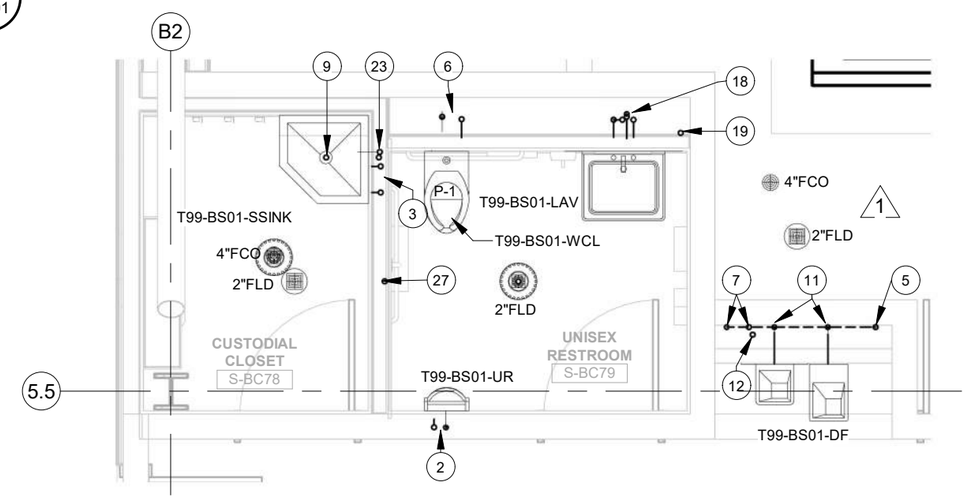

LEVEL 1 ENLARGED PLUMBING FLOOR PLAN (4) DS801

1/4" = 1'-0"

PLAN NOTES:

1. 1/2"CW, HW AND 1-1/2"V DN.
2. 3/4"CW UP, 2"W DN. AND 1-1/2"V UP.
3. 3/4"CW, HW UP AND 2"V UP.
4. 1/2"CW, HW UP. 2"W DN. AND 1-1/2"V UP.
5. 2"V UP AND DN.
6. 1"CW UP. 4"W DN. AND 2"V UP.
7. 2"V DN.
8. 4"V UP AND 2"V DN.
9. 3"W DN.
10. 1-1/2"V DN.
11. 2"W DN. AND 1-1/2"V UP.
12. 1/2" CW UP.
13. 1/2" CW DN.
14. 3/4"CW AND 1-1/2"V DN.
15. 1/2"CW, HW, HWC AND 1-1/2"V DN.
16. 1"CW AND 2" V DN.
17. 3/4"CW, HW AND 2"V DN.
18. 1/2"CW, HW, HWC UP. 2"W DN. AND 1-1/2"V UP. CONNECT HWC TO HW AT FIXTURE.
19. 2"W UP AND DN.
20. 1/2"CW, HW UP. SEE SHEET DS152 FOR CONTINUATION.
21. 3/4" CW, HW CONNECT TO T99-BS-4-EWHR-01.
22. 3/4" COND. UP.
23. 3/4" COND. UP. TERMINATE WITH A MINIMUM 2" AIRGAP ABOVE SERVICE SINK.
24. 2"CW, 1"HW, 3/4"HWC UP. SEE LEVEL 1 PLUMBING PLAN ON SHEET DS152 FOR CONTINUATION.
25. 3/4" COND. UP AND DN.
26. 3/4" COND. DN.
27. 1-1/2"V UP AND DN.
28. NOT USED.
29. NOT USED.
30. 3/4"CW DN.
31. SEE LEVEL -4 PLUMBING PLAN ON SHEET DS111 FOR CONTINUATION.
32. NOT USED.

RFI #03066
RFI #02215
RFI #02072
RFI #01653
RFI #02342

AS-BUILT PLANS ACCURATLEY AND COMPLETELY REFLECT CHANGES AND CORRECTIONS MADE DURING CONSTRUCTION AS DOCUMENTED IN THE RFI AND NDC QA/QC PROCEDURES DEVELOPED FOR THIS PROJECT AND AS BASED ON AS-BUILT INFORMATION PROVIDED BY SEATTLE TUNNEL PARTNERS.

FILE NAME	C:\Users\trtran\Documents\South Building Mech-TWE-Central-HNTB_2018_trtran.rvt
DATE	5/7/2019 3:24:50
TIME	PM
PLOTTED BY	H. TANG
DESIGNED BY	D. MOORE
ENTERED BY	H. TANG
CHECKED BY	W. LI
PROJ. ENGR.	R. JOHNSON
REGIONAL ADM.	L. LAIRD

REVISION		DATE	BY
1	CONSOLIDATED CONSTRUCTION PACKAGE	07/14/14	DBP

REGION NO.	STATE	FED.AID PROJ.NO.
10	WASH	BR-0099(111)
JOB NUMBER 10A065		
CONTRACT NO. 007999		LOCATION NO.

EOR — CERTIFYING ENGINEER

Washington State Department of Transportation
Federal Highway Administration
City of Seattle

SR 99 TUNNEL PROJECT

SOUTH OPS BUILDING MECH ENLARGED PLUMBING PLANS

DS801

SHEET OF SHEETS

FOR AS-BUILT PLAN ONLY

H-D-PAK-SOB-TR2.34-00362-08-ASB-1905-14

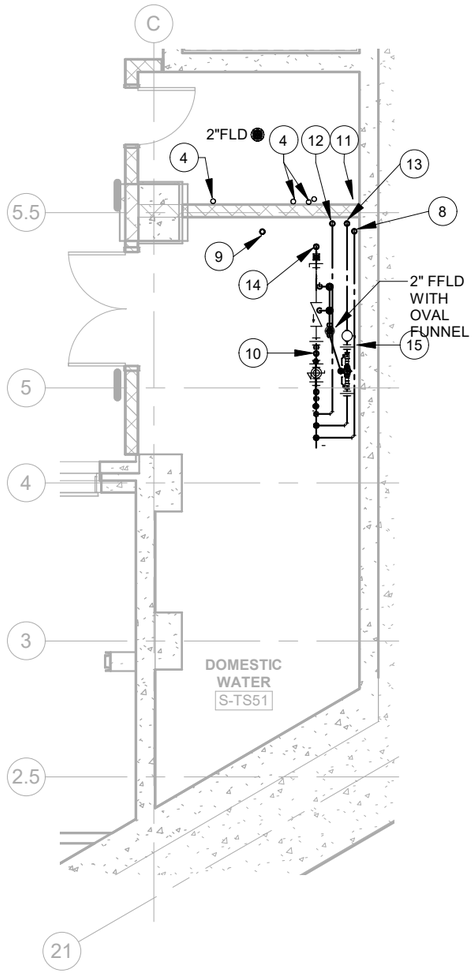

ENLARGED DOMESTIC WATER ROOM PLUMB. PLAN (1 / DS802)

1/8" = 1'-0"

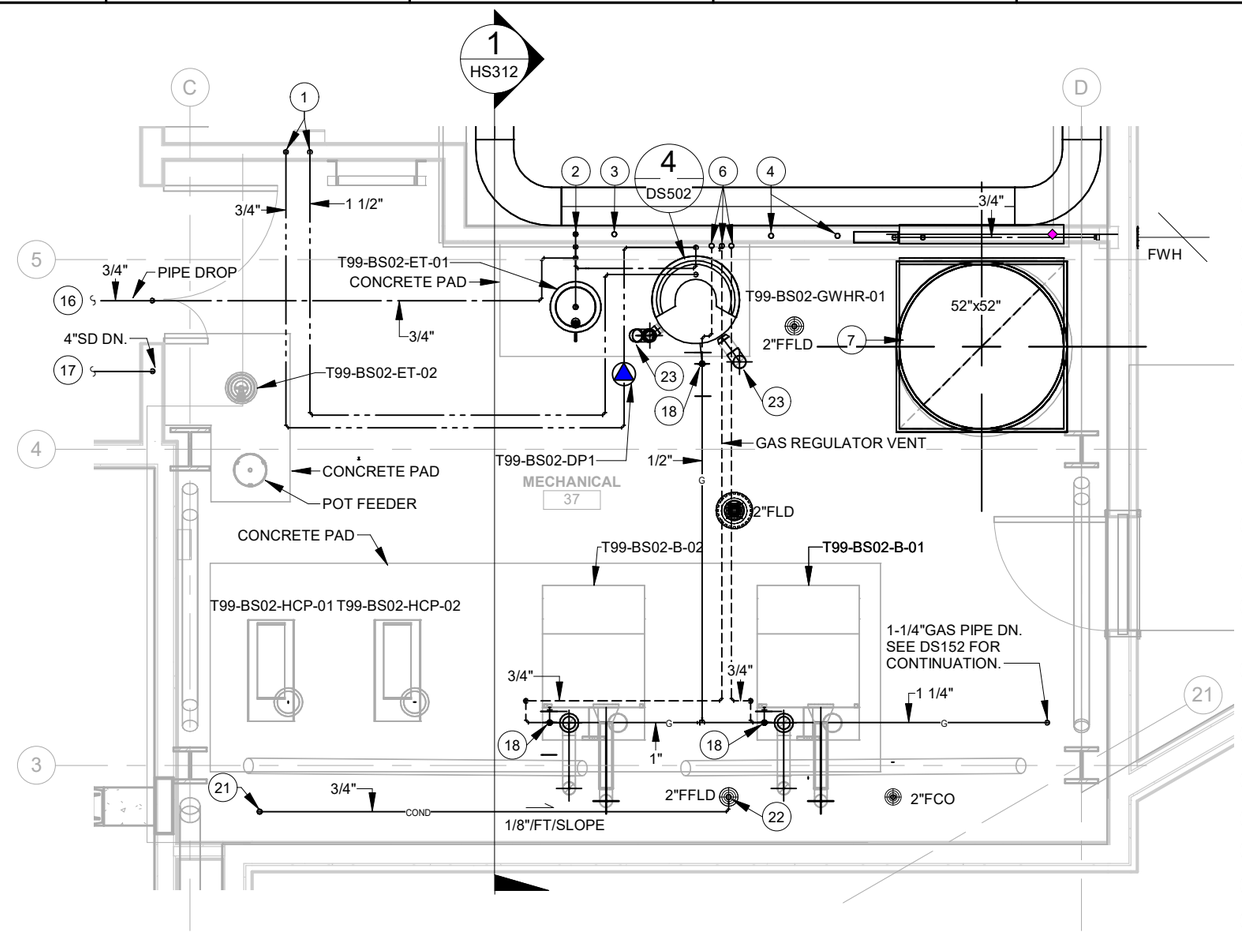

ENLARGED MECH. ROOM PLUMBING PLAN (2 / DS802)

1/4" = 1'-0"

PLAN NOTES:

1. 1-1/2" HW AND 3/4"HWC DN. TO LEVEL 1.
2. 2"CW DN. SEE SHEET DS152 FOR CONT.
3. 1-1/2" MAKE-UP CW UP AND DN. SEE SHEETA DS152 AND HS801 FOR CONT.
4. 2"V UP AND DN.
5. NOT USED.
6. GAS VENT UP TO VTR.
7. DUCT UP AND DN. SEE SHEETS HS154 AND HS164 FOR CONT.
8. 2-1/2" CW UP TO FIRE HYDRANT VALVE FOR MR. BUBBLES
9. 4" GRAVITY SANITARY SEWER UP AND DN. SEE SHEETS DS111 AND DS142 FOR CONT.
10. 1-1/2" CW DN. SEE SHEET DS111 FOR CONT.
11. 4" V UP AND DN.
12. 2" CW UP . SEE ENLARGED MECHANICAL ROOM PLAN THIS SHEET FOR CONT.
13. 1-1/2" CW UP FOR MAKE-UP WATER SYSTEM. SEE ENLARGED MECHANICAL ROOM PLAN THIS SHEET FOR CONT.
14. 3" CW MAIN UP. SEE SHEET DS142 FOR CONT.
15. COLD WATER HEADER (5 / DS502)
16. 3/4" CW. SEE SHEET DS162 FOR CONT.
17. SEE SHEET DS162 FOR CONT.
18. GAS PRESSURE REGULATOR.
19. NOT USED.
20. NOT USED.
21. 3/4" COND. UP. SEE SHEET HS171 FOR CONT.
22. 3/4" COND. TERMINATE WITH A MINIMUM 2" AIR GAP ABOVE 2" FFLD.
23. 4" AIR INTAKE AND EXHAUST UP.

RFI #02342
RFI #03561
RFI #03584

AS-BUILT PLANS ACCURATLEY AND COMPLETELY REFLECT CHANGES AND CORRECTIONS MADE DURING CONSTRUCTION AS DOCUMENTED IN THE RFI AND NDC QA/QC PROCEDURES DEVELOPED FOR THIS PROJECT AND AS BASED ON AS-BUILT INFORMATION PROVIDED BY SEATTLE TUNNEL PARTNERS.

FILE NAME	C:\Users\trtran\Documents\South Building Mech-TWE-Central-HNTB_2018_trtran.rvt
DATE	5/7/2019 3:24:54
TIME	PM
PLOTTED BY	H. TANG
DESIGNED BY	D. MOORE
ENTERED BY	H. TANG
CHECKED BY	W. LI
PROJ. ENGR.	R. JOHNSON
REGIONAL ADM.	L. LAIRD

REVISION | DATE | BY

REGION NO.	STATE	FED.AID PROJ.NO.
10	WASH	BR-0099(111)
JOB NUMBER 10A065		
CONTRACT NO. 007999		LOCATION NO.

EOR

CERTIFYING ENGINEER

Washington State Department of Transportation

U.S. Department of Transportation Federal Highway Administration

City of Seattle

SR 99 TUNNEL PROJECT

SOUTH OPS BUILDING MECH ENLARGED MECH ROOM PLAN

DS802

SHEET OF SHEETS

FOR AS-BUILT PLAN ONLY

H-D-PAK-SOB-TR2.34-00362-08-ASB-1905-14

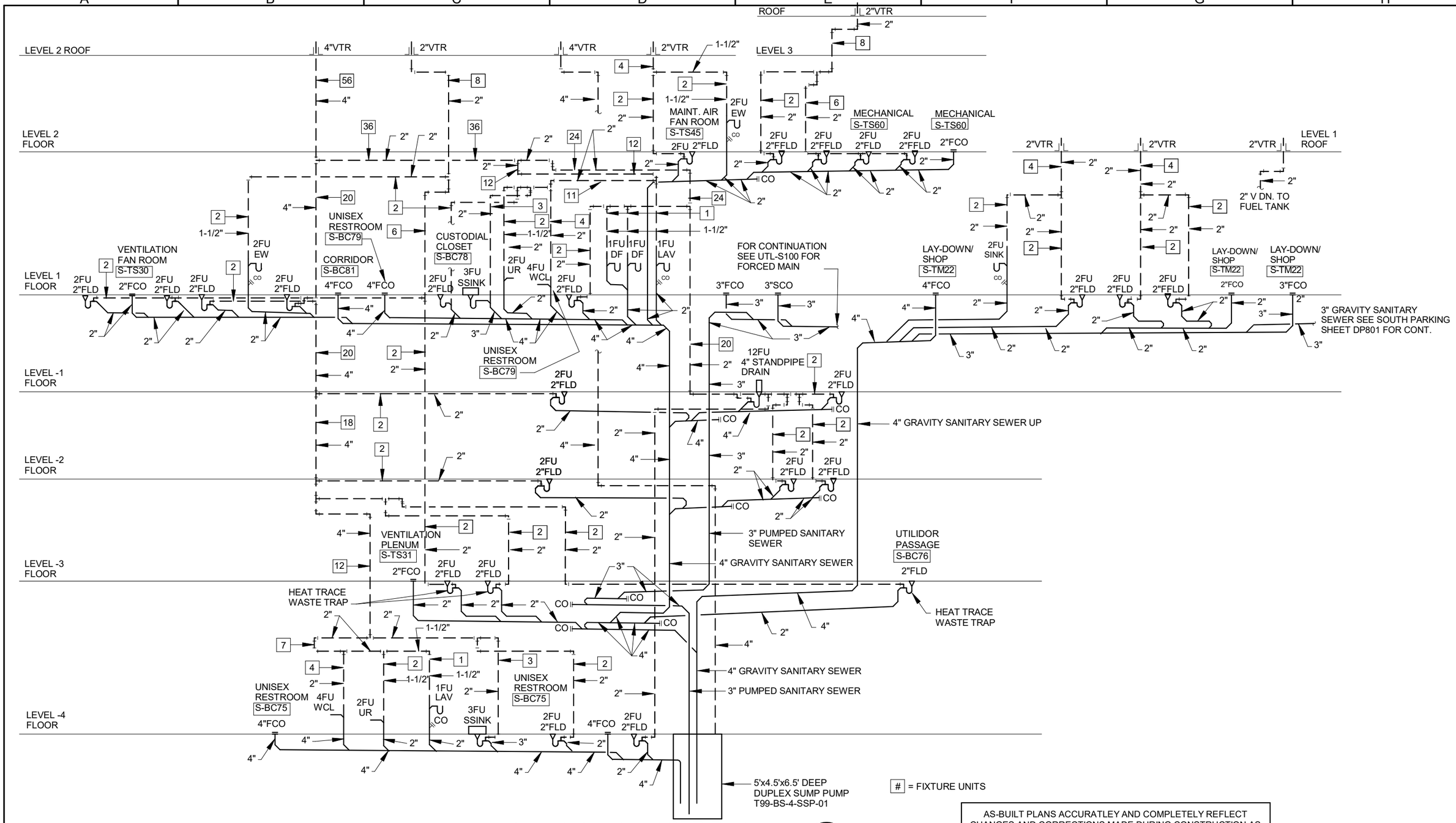

WASTE AND VENT RISER DIAGRAM

1 DS803

SCALE: SCHEMATIC

AS-BUILT PLANS ACCURATLEY AND COMPLETELY REFLECT CHANGES AND CORRECTIONS MADE DURING CONSTRUCTION AS DOCUMENTED IN THE RFI AND NDC QA/QC PROCEDURES DEVELOPED FOR THIS PROJECT AND AS BASED ON AS-BUILT INFORMATION PROVIDED BY SEATTLE TUNNEL PARTNERS.

FILE NAME	C:\Users\trtran\Documents\South Building Mech-TWE-Central-HNTB_2018_trtran.rvt
DATE	5/7/2019 3:24:55
TIME	PM
PLOTTED BY	H. TANG
DESIGNED BY	D. MOORE
ENTERED BY	H. TANG
CHECKED BY	W. LI
PROJ. ENGR.	R. JOHNSON
REGIONAL ADM.	L. LAIRD

REVISION | DATE | BY

REGION NO. 10 | STATE WASH | FED.AID PROJ.NO. BR-0099(111)

JOB NUMBER 10A065

CONTRACT NO. 007999

LOCATION NO.

EOR — CERTIFYING ENGINEER — 05-14-19

Washington State Department of Transportation
U.S. Department of Transportation Federal Highway Administration
City of Seattle

SR 99 TUNNEL PROJECT

SOUTH OPS BUILDING MECH WASTE AND VENT RISER DIAGRAM

DS803

SHEET OF SHEETS

FOR AS-BUILT PLAN ONLY

H-D-PAK-SOB-TR2.34-00362-08-ASB-1905-14

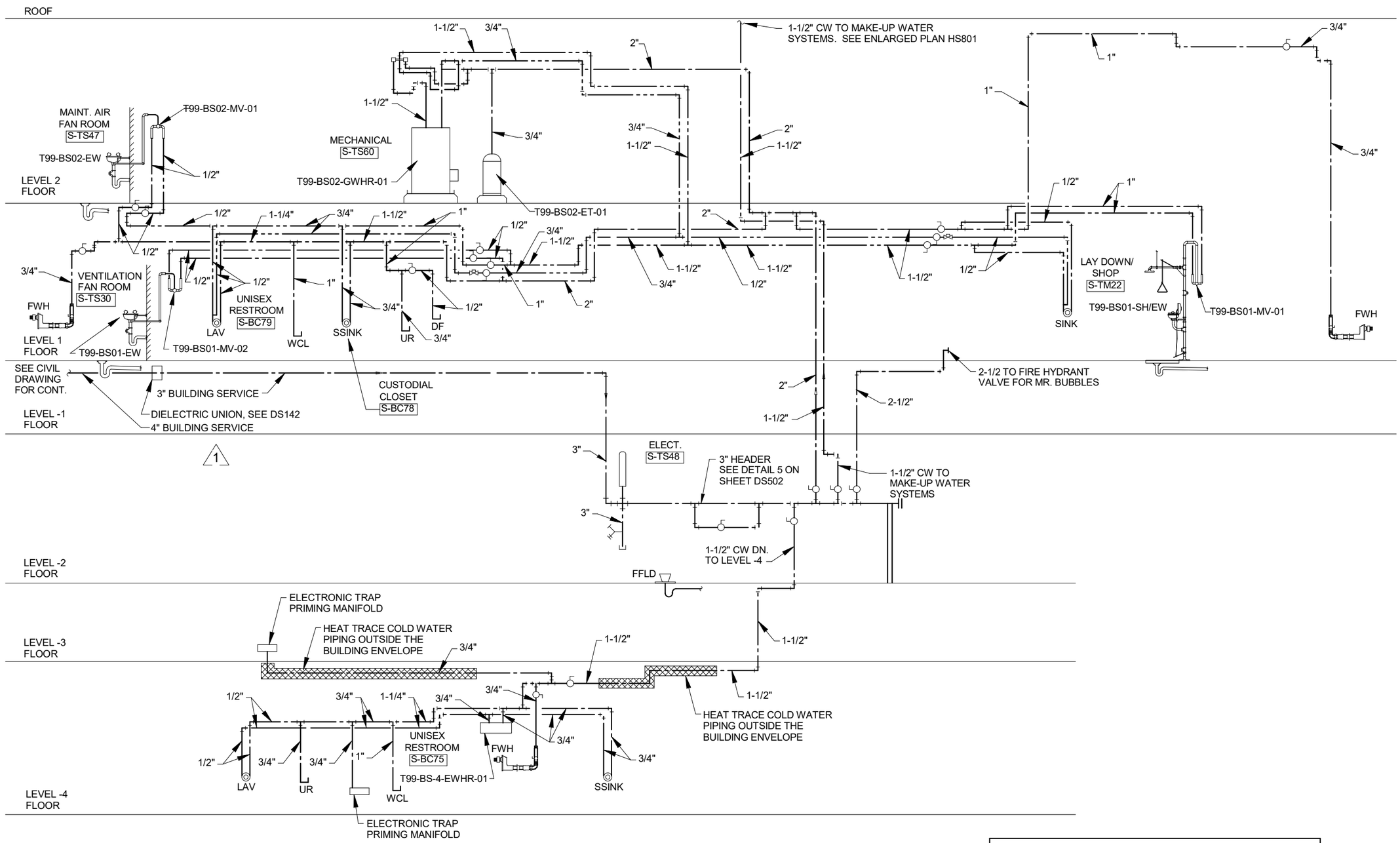

RFI #02342
RFI #02934
RFI #02136
RFI #02133

SOUTH BUILDING DOMESTIC PIPING RISER DIAGRAM (1)

SCALE: SCHEMATIC

DS804

AS-BUILT PLANS ACCURATLEY AND COMPLETELY REFLECT CHANGES AND CORRECTIONS MADE DURING CONSTRUCTION AS DOCUMENTED IN THE RFI AND NDC QA/QC PROCEDURES DEVELOPED FOR THIS PROJECT AND AS BASED ON AS-BUILT INFORMATION PROVIDED BY SEATTLE TUNNEL PARTNERS.

FILE NAME	C:\Users\trtran\Documents\South Building Mech-TWE-Central-HNTB_2018_trtran.rvt
DATE	5/7/2019 3:24:56
TIME	PM
PLOTTED BY	H. TANG
DESIGNED BY	D. MOORE
ENTERED BY	H. TANG
CHECKED BY	W. LI
PROJ. ENGR.	R. JOHNSON
REGIONAL ADM.	L. LAIRD

REVISION		DATE	BY
1	CONSOLIDATED CONSTRUCTION PACKAGE	07/14/14	DBP

REGION NO. 10 | STATE WASH | JOB NUMBER 10A065 | CONTRACT NO. 007999 | FED.AID PROJ.NO. BR-0099(111) | LOCATION NO.

EOR — CERTIFYING ENGINEER

Washington State Department of Transportation
U.S. Department of Transportation Federal Highway Administration
City of Seattle

SR 99 TUNNEL PROJECT

SOUTH OPS BUILDING MECH DOMESTIC PIPING DIAGRAM

DS804

SHEET OF SHEETS

FOR AS-BUILT PLAN ONLY

H-D-PAK-SOB-TR2.34-00362-08-ASB-1905-14

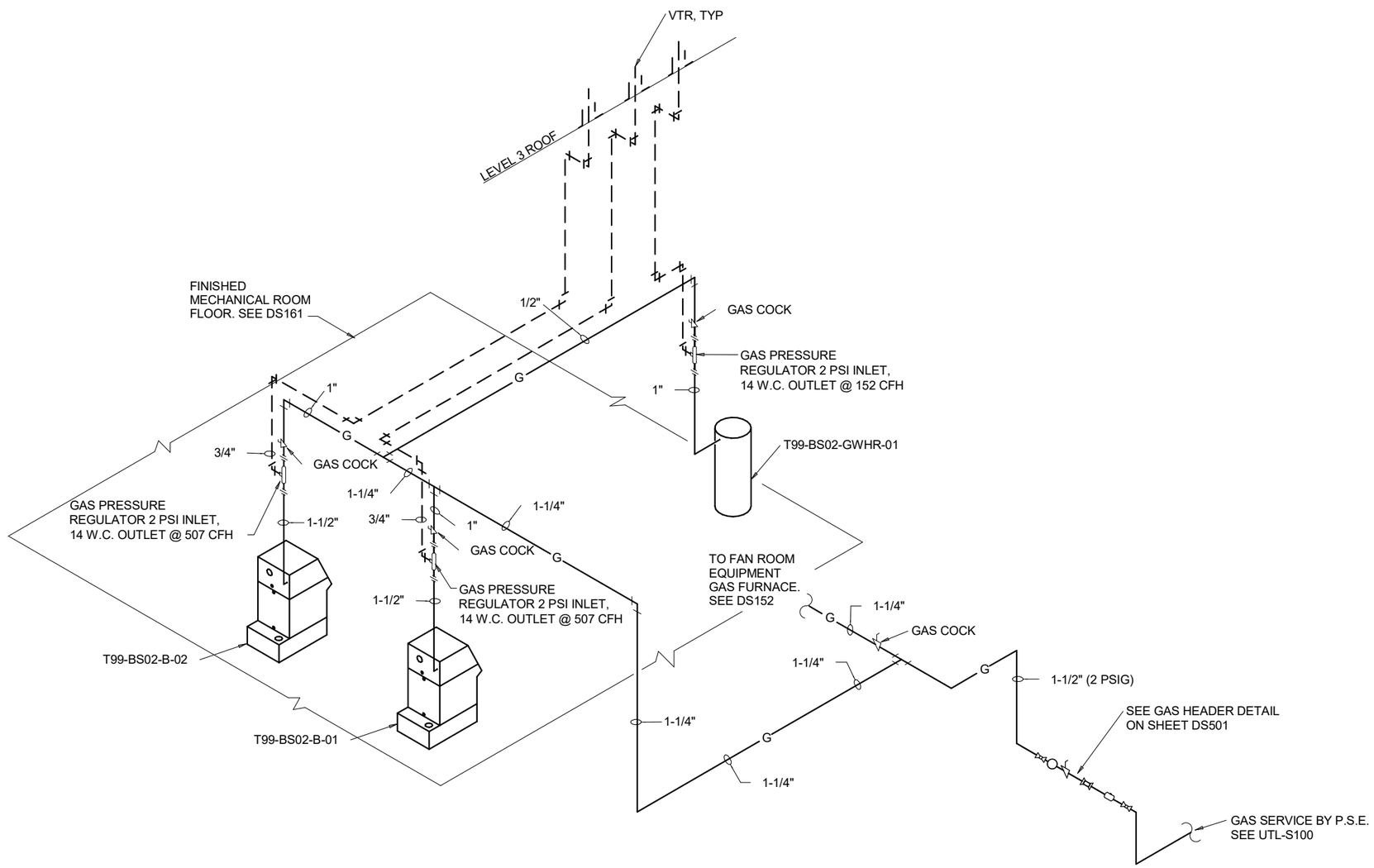

RFI #03584

GAS PIPING DIAGRAM (1 / DS805)

SCALE:
SCHEMATIC

AS-BUILT PLANS ACCURATLEY AND COMPLETELY REFLECT CHANGES AND CORRECTIONS MADE DURING CONSTRUCTION AS DOCUMENTED IN THE RFI AND NDC QA/QC PROCEDURES DEVELOPED FOR THIS PROJECT AND AS BASED ON AS-BUILT INFORMATION PROVIDED BY SEATTLE TUNNEL PARTNERS.

FILE NAME	C:\Users\trtran\Documents\South Building Mech-TWE-Central-HNTB_2018_trtran.rvt
DATE	5/7/2019 3:24:57
TIME	PM
PLOTTED BY	H. TANG
DESIGNED BY	D. MOORE
ENTERED BY	H. TANG
CHECKED BY	W. LI
PROJ. ENGR.	R. JOHNSON
REGIONAL ADM.	L. LAIRD

REVISION | DATE | BY

REGION NO. 10 | STATE WASH | FED.AID PROJ.NO. BR-0099(111)

JOB NUMBER 10A065

CONTRACT NO. 007999 | LOCATION NO.

EOR — CERTIFYING ENGINEER — 05-14-19

Washington State Department of Transportation
U.S. Department of Transportation Federal Highway Administration
City of Seattle

SR 99 TUNNEL PROJECT

SOUTH OPS BUUILDING MECH GAS PIPING DIAGRAM

DS805

SHEET OF SHEETS

FOR AS-BUILT PLAN ONLY

H-D-PAK-SOB-TR2.34-00362-08-ASB-1905-14

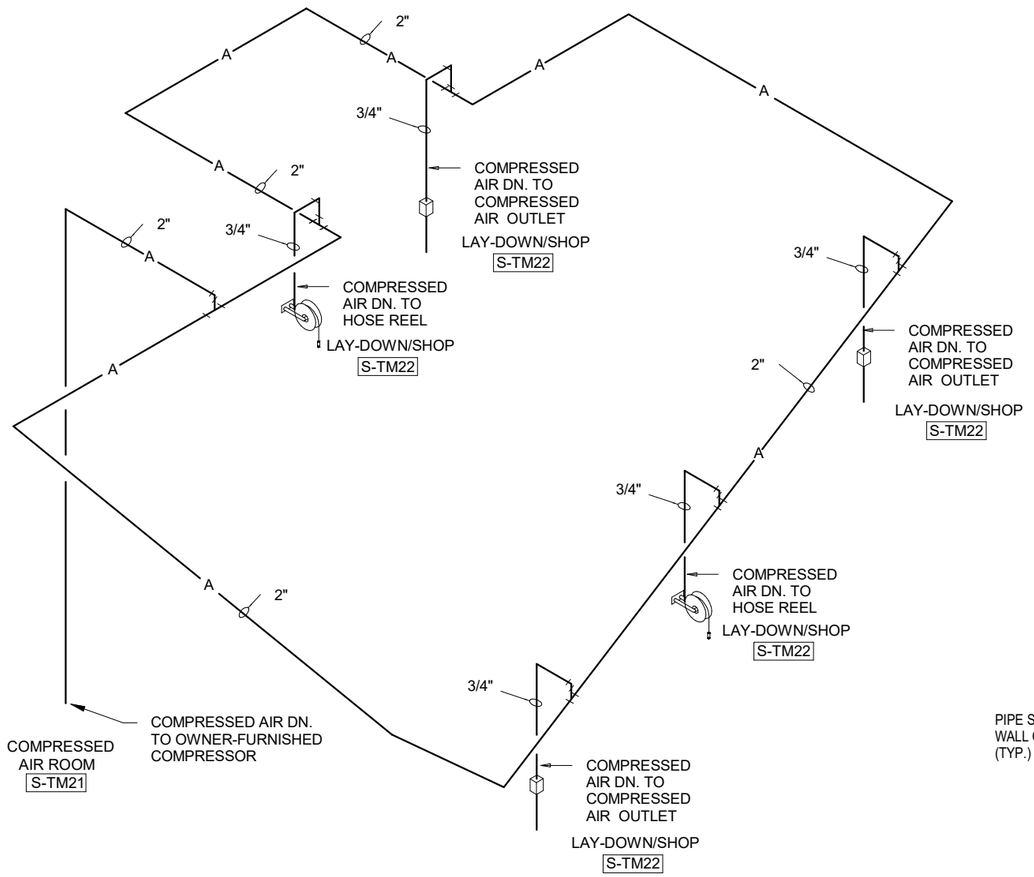

COMPRESSED AIR PIPING DIAGRAM 1 DS806

SCALE: SCHEMATIC

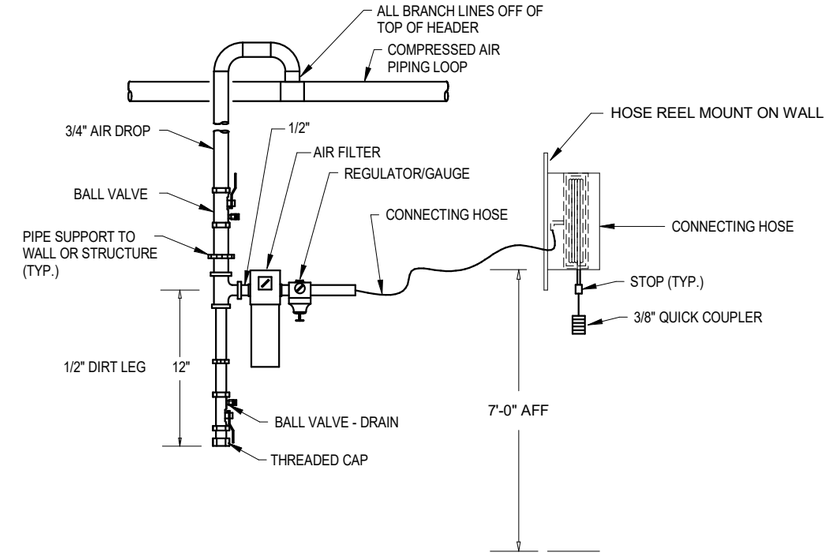

HOSE REEL DETAIL 2 DS806

SCALE: NONE

RFI #02723
RFI #03529

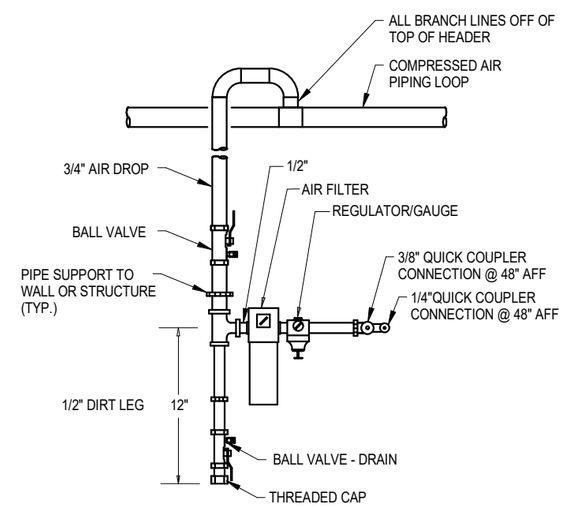

WALL COMPRESSED AIR OUTLET DETAIL 3 DS806

SCALE: NONE

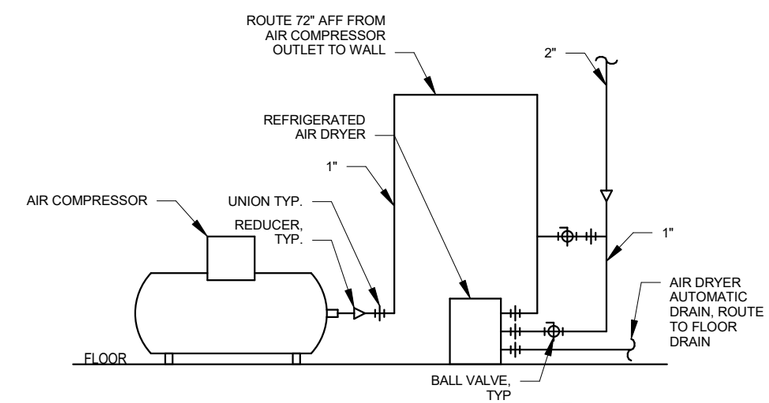

AIR COMPRESSOR DETAIL 4 DS806

SCALE: NONE

AS-BUILT PLANS ACCURATLEY AND COMPLETELY REFLECT CHANGES AND CORRECTIONS MADE DURING CONSTRUCTION AS DOCUMENTED IN THE RFI AND NDC QA/QC PROCEDURES DEVELOPED FOR THIS PROJECT AND AS BASED ON AS-BUILT INFORMATION PROVIDED BY SEATTLE TUNNEL PARTNERS.

FILE NAME	C:\Users\trtran\Documents\South Building Mech-TWE-Central-HNTB_2018_trtran.rvt
DATE	5/7/2019 3:24:57
TIME	PM
PLOTTED BY	H. TANG
DESIGNED BY	D. MOORE
ENTERED BY	H. TANG
CHECKED BY	W. LI
PROJ. ENGR.	R. JOHNSON
REGIONAL ADM.	L. LAIRD

REVISION | DATE | BY

REGION NO. 10 | STATE WASH | FED.AID PROJ.NO. BR-0099(111)

JOB NUMBER 10A065

CONTRACT NO. 007999 | LOCATION NO.

EOR — CERTIFYING ENGINEER 05-14-19

Washington State Department of Transportation
U.S. Department of Transportation Federal Highway Administration
City of Seattle

SR 99 TUNNEL PROJECT

SOUTH OPS BUILDING MECH COMPRESSED AIR PIPING DIAGRAM

DS806

SHEET OF SHEETS

FOR AS-BUILT PLAN ONLY

H-D-PAK-SOB-TR2.34-00362-08-ASB-1905-14

A B C D E F G H

FAN COIL UNIT SCHEDULE

MARK	MANUFACTURER	MODEL	AREA SERVED	SUPPLY CFM	MIN. OSA AIR	SUPPLY FAN ESP (" WC) FILTER NOT INCLUDED	COOLING COIL EAT (DB) °F	COOLING COIL EAT (WB) °F	COOLING COIL EWT °F	COOLING COIL LWT °F	COOLING CAP. (BTUH) SENSIBLE	COOLING CAP. (BTUH) TOTAL	COOLING COIL GPM	COOLING COIL WPD FT-WG	HEATING COIL EAT (DB) °F	HEATING COIL EWT °F	HEATING COIL LWT °F	HEATING COIL MBH	HEATING COIL GPM	HEATING COIL WPD	ELECTRICAL # OF FANS/ MOTORS	ELECTRICAL HP/W	ELECTRICAL VOLTS/ PHASE	WEIGHT LBS	REMARKS
T99-BS02-FCU-01	JOHNSON CONTROLS	FHP 60	MAINT. AIR FAN RM. S-TS47, MECHANICAL S-TS60	750	45	0.55	80	67	44	54	15110	16180	3.40	2.49	70	160	130	14.949	1.00	1.5	4/2	522 W	120/1	210	4 PIPE 1 2 4 5
T99-BS02-FCU-02	JOHNSON CONTROLS	FHP 50	CORRIDOR S-BC80, ELECT. S-TS59	480	30	0.57	80	67	44	54	10890	11920	2.50	1.47	70	160	130	25690	1.80	1.19	3/1	472 W	120/1	175	4 PIPE 1 2 4 5
T99-BS01-FCU-01	JOHNSON CONTROLS	AHI 16	LAY-DOWN/SHOP S-TM22	1465	1150	0.40	80	67	44	54	34860	46540	9.90	19.43	70	160	130	61.750	4.50	1.74	1	3/4	480/3	325	4 PIPE 1 3 4 5 7 7
T99-BS01-FCU-02	JOHNSON CONTROLS	AHI 16	LAY-DOWN/SHOP S-TM22	1465	1150	0.40	80	67	44	54	26050	26920	5.70	1.00	70	160	130	61.910	4.30	2.49	1	3/4	480/3	325	4 PIPE 1 3 4 5 7 7
T99-BS01-FCU-03	JOHNSON CONTROLS	FHP 60	CORR. S-BC81, RESTRM. S-BC79, CUST. S-BC78, RMS S-TM11, S-TM29, S-TM13	665	250	0.64	80	67	44	54	15150	17570	3.70	3.75	70	160	130	14.660	1.00	0.24	4/2	522 W	120/1	210	4 PIPE 1 2 4 5
T99-BS01-FCU-04	JOHNSON CONTROLS	FHP 60	MAINT. AIR FAN ROOM S-TS45	710	45	0.52	80	67	44	54	15365	15466	3.45	2.5	70	160	130	14.300	1.00	1.5	4/2	522 W	120/1	210	4 PIPE 1 2 4 5
T99-BS-1-FCU-01	JOHNSON CONTROLS	FHP 40	CORR. S-BC82, ELECT. S-TS58, FIRE SUPPRESSION VALVE ROOM S-TS55	320	72	0.44	-	-	-	-	-	-	-	-	70	160	130	12.300	0.90	0.95	2/1	261 W	120/1	95	2 PIPE 1 2 5
T99-BS-1-FCU-02	JOHNSON CONTROLS	AHI 30	MEDIUM VOLTAGE SWITCHGEAR S-TS35	2920	240	0.40	80	67	44	54	61470	67420	14.20	1.56	70	160	130	61.770	4.20	5.64	1	1.5	480/3	540	4 PIPE 1 3 4 5 6 7
T99-BS-2-FCU-01	JOHNSON CONTROLS	AHI 12	ELECT. S-TS43	1250	20	0.40	80	67	44	54	24380	26550	5.60	0.94	70	160	130	23.910	1.60	0.69	1	3/4	480/3	325	4 PIPE 1 3 4 5
T99-BS-2-FCU-02	JOHNSON CONTROLS	FHP 40	CORR. S-BC83BLDG. MECH S-TS50, DOM. WATER S-TS51	305	65	0.57	-	-	-	-	-	-	-	-	70	160	130	12.300	0.90	0.95	2/1	261 W	120/1	95	2 PIPE 1 2 5
T99-BS-3-FCU-01	JOHNSON CONTROLS	FHP 40	CORR. S-BC84, ELECT. S-TS48, UNASSIGNED S-TX12	340	70	0.49	-	-	-	-	-	-	-	-	70	160	130	12.820	0.90	1.02	2/1	261 W	120/1	95	2 PIPE 1 2 5
T99-BS-3-FCU-02	JOHNSON CONTROLS	AHI 30	EMERGENCY SWITCHGEAR S-TS40	3050	50	0.40	80	67	44	54	63190	68660	14.50	1.61	70	160	130	56.895	4.00	5.70	1	1.5	480/3	540	4 PIPE 1 3 4 5 6
T99-BS-3-FCU-03	JOHNSON CONTROLS	FHP 40	UNASSIGNED S-TX10	400	170	0.48	-	-	-	-	-	-	-	-	70	160	130	12.820	0.90	1.02	2/1	261 W	120/1	95	2 PIPE 1 2 5
T99-BS-4-FCU-01	JOHNSON CONTROLS	FHP 25	RESTROOM S-BC75, BLDG. WASTE WATER PUMP S-TS52	240	240	0.46	-	-	-	-	-	-	-	-	70	160	130	12.771	0.80	0.90	1/1	125 W	120/1	115	2 PIPE 1 2 5

NOTES:
1. PROVIDE 30% PROPYLENE GLYCOL.
2. PROVIDE FIELD BUILT 2" FILTER RACK AND MIXING BOX
3. PROVIDE 2" FILTER RACK AND MIXING BOX WITH MOTORIZED DAMPERS
4. PROVIDE STAINLESS STEEL DRAIN PAN
5. 100% OSA ECONOMIZER
6. PREMIUM EFFICIENCY 1750 RPM OPD MOTOR MINIMUM 86.5% EFF
7. UNIT OPERATES CONTINUOUSLY.

INDOOR AIR HANDLING UNIT SCHEDULE

MARK	MANUFACTURER	MODEL	AREA SERVED	SUPPLY CFM	COOLING COIL EAT (DB) °F	COOLING COIL EAT (WB) °F	COOLING COIL EWT °F	COOLING COIL LWT °F	COOLING CAP. (BTUH) SENSIBLE	COOLING CAP. (BTUH) TOTAL	COOLING COIL GPM	COOLING COIL WPD FT-WG	EAT (DB) °F	EWT °F	LWT °F	TOTAL HEATING (BTUH)	GPM	WPD FT-WG	EXTERNAL STATIC PRESSURE	ELECTRICAL FLA	ELECTRICAL MCA	ELECTRICAL MOP	ELECTRICAL RPM	ELECTRICAL HP	ELECTRICAL VOLTS/ PHASE	FILTER TYPE/SIZE	WEIGHT LBS	REMARKS
T99-BS-3-IAHU-01	HAKKON	CUSTOM	LOW VOLTAGE SWITCHGEAR S-TS38	10500	80	67	44	54	317870	328290	70	11.9	70	160	130	150945	15	3.30	0.5	14.2	20	30	1150	10	460/3	2" (MERV 8) FARR 30/30 4 @ 24x24 4 @ 24x12	5160	4 PIPE, VFD

NOTES:
1. PROVIDE WITH STAINLESS STEEL DRAIN PAN.
2. PROVIDE SEPARATE 120V/1 PH 20 AMP CONNECTION.
3. UNIT SHALL BE MODULAR 2 PIECE FOR TRANSPORT.
4. PROVIDE 30% PROPYLENE GLYCOL
5. 100% OSA ECONOMIZER
6. UNIT SHALL BE 2-PIECE CONSTRUCTION FOR FIELD ASSEMBLY TO FIT THROUGH 6' WIDE DOOR

SOUND POWER LEVELS (DB)

FREQ	63	125	250	500	1000	2000	4000	8000
SA DISCH	78	84	83	77	78	76	66	60
RA	77	82	83	77	78	76	66	60

UNIT HEATER SCHEDULE

MARK	MANUFACTURER	MODEL	SPACE SERVED	CFM	COIL EWT	COIL LWT	COIL MBH	COIL GPM	COIL WPD (FT)	MOTOR HP	VOLTS/PHASE	RPM	REMARKS
T99-BS01-UH-01	TRANE	P-42	STAIR 1 S-BC72	435	160	130	13.4	0.92	0.01	1/40	120/1	1150	PROVIDE WITH SPEED CONTROLLER
T99-BS01-UH-02	TRANE	P-42	COMPRESSED AIR ROOM S-TM21	435	160	130	13.4	0.92	0.01	1/40	120/1	1150	PROVIDE WITH SPEED CONTROLLER
T99-BS01-UH-03	TRANE	P-42	STAIR 2 S-BC73	435	160	130	13.4	0.92	0.01	1/40	120/1	1150	PROVIDE WITH SPEED CONTROLLER
T99-BS-3-UH-01	TRANE	P-42	STAIR 2 S-BC73	435	160	130	13.4	0.92	0.01	1/40	120/1	1150	PROVIDE WITH SPEED CONTROLLER
T99-BS-4-UH-01	TRANE	P-42	STAIR 1 S-BC72	435	160	130	13.4	0.92	0.01	1/40	120/1	1150	PROVIDE WITH SPEED CONTROLLER

RFI #03296
RFI #03742

ELECTRIC UNIT HEATER SCHEDULE

MARK	MANUFACTURER	MODEL	SPACE SERVED	SIZE WxLxH	KW	VOLT/PHASE	WEIGHT (LBS)	REMARKS
T99-BS01-EUH-01	TRANE	UHEC	EMERGENCY GENERATOR S-TS39	14-15/32"x17-3/4"X6-1/2"	3.3	480/3	27	PROVIDE WITH DDC CONTROL
T99-BS01-EUH-02	BRASCH	BCH1512	ENTRY VEST. S-TM10	14-1/4"x19-5/16"x4"	1500 W	120/1	32	RECESSED

AS-BUILT PLANS ACCURATLEY AND COMPLETELY REFLECT CHANGES AND CORRECTIONS MADE DURING CONSTRUCTION AS DOCUMENTED IN THE RFI AND NDC QA/QC PROCEDURES DEVELOPED FOR THIS PROJECT AND AS BASED ON AS-BUILT INFORMATION PROVIDED BY SEATTLE TUNNEL PARTNERS.

FILE NAME	C:\Users\trtran\Documents\South Building Mech-TWE-Central-HNTB_2018_trtran.rvt
DATE	5/7/2019 3:24:58
TIME	PM
PLOTTED BY	H. TANG
DESIGNED BY	D. MOORE
ENTERED BY	H. TANG
CHECKED BY	W. LI
PROJ. ENGR.	R. JOHNSON
REGIONAL ADM.	L. LAIRD

REVISION | DATE | BY

REGION NO. 10 | STATE WASH | FED.AID PROJ.NO. BR-0099(111)

JOB NUMBER 10A065

CONTRACT NO. 007999 | LOCATION NO.

EOR — CERTIFYING ENGINEER — 05-14-19

Washington State Department of Transportation
U.S. Department of Transportation Federal Highway Administration
City of Seattle

SR 99 TUNNEL PROJECT

SOUTH OPS BUILDING MECH SCHEDULES

HS101

SHEET OF SHEETS

FOR AS-BUILT PLAN ONLY

H-D-PAK-SOB-TR2.34-00362-08-ASB-1905-14

A B C D E F G H

ROOFTOP UNIT SCHEDULE

MARK	MANUFACTURER	MODEL	AREA SERVED	SUPPLY FAN CFM	SUPPLY FAN TSP	SUPPLY FAN FLA	SUPPLY FAN HP	SUPPLY FAN VOLTS/PH	EXHAUST FAN CFM	EXHAUST FAN TSP	EXHAUST FAN FLA	EXHAUST FAN HP	EXHAUST FAN VOLT/PH	ELECTRICAL CONNECTION MCA	ELECTRICAL CONNECTION MOP	ELECTRICAL CONNECTION VOLT/PH	DISCONNECT BY	OSA FILTER QUANTITY/SIZE	EA FILTER QUANTITY/SIZE RTU	VFD	OPERATING WEIGHT LBS	NOTES
T99-BS03-AHU-01	HAAKON	CUSTOM	SOUTH BUILDING VENTILATION	29805	5	50	40	460/3	29805	4.55	50	40	460/3	133	150	460/3	E.C.	2" (MERV 8) FARR 30/30 15 @ 24x24	2" (MERV 8) FARR 30/30 16 @ 24x24	X	27040	PROVIDE VFD FOR EACH FAN. PROVIDE SEPARATE 120V/1 PH 20 AMP CONNECTION

SOUND POWER LEVELS (DB)

FREQ	63	125	250	500	1000	2000	4000	8000
SA DISCH	90	94	88	84	86	81	74	68
RA INLET	89	89	82	78	81	75	69	63

1. UNIT IS 100% OSA. PROVIDE WITH PLATE/FRAME ENERGY RECOVERY MINIMUM 50% EFFICIENCY. PROVIDE OSA MONITORING STATION.

INDOOR SPLIT SYSTEM UNIT SCHEDULE

MARK	MANUFACTURER	MODEL	AREA SERVED	CFM	COOLING TOTAL BTUH	COOLING OA DB °F	COOLING EAT DB/WB °F	HEATING OAT DB/WB °F	HEATING EAT DB °F	HEATING TOTAL BTUH	POWER CONNECTION VOLT/PH	POWER CONNECTION FLA	POWER CONNECTION MCA	POWER CONNECTION STARTER BY	POWER CONNECTION DISCONNECT BY	WEIGHT LBS.	NOTES
T99-BS03-ACU-01	MITSUBISHI	PKA-A18GAL	ELEVATOR MACHINE ROOM S-BC71	325	18,000	95	80/67	47/43	70	19,000	208/1	0.33	1	E.C.	E.C.	23	1, 2, 3

NOTES:

1. SEE WIRING DIAGRAM FROM MANUFACTURER, POWER FED FROM OUTDOOR UNIT
2. PROVIDE WITH FACTORY CONTROLS
3. SEER AND HSPF ARE MORE THAN 15% ABOVE REQUIRED FOR THE OUTDOOR UNIT (T99-BS04-CU-01), IN COMPLIANCE WITH ECONOMIZER EXCEPTION 9A

OUTDOOR UNIT SCHEDULE

MARK	MANUFACTURER	MODEL	AREA/SERVED	COOLING BTUH	HEATING BTUH	O.A. TEMP (DB °F)	POWER CONNECTION VOLT/ PH	POWER CONNECTION MCA	POWER CONNECTION MOCP	POWER CONNECTION FLA	POWER CONNECTION STARTED BY	POWER CONNECTION DISCONNECT BY	SEER	HSPF	COP	WEIGHT LBS.	NOTES
T99-BS02-CU-01	LIEBERT	TCDV205A 2 FANS	SCADA S-TS42	211,000	-	95	460/3	4.8	15	4.2	E.C.	E.C.	-	-	-	500	3
T99-BS02-CU-02	LIEBERT	TCDV205A 2 FANS	SCADA S-TS42	211,000	-	95	460/3	4.8	15	4.2	E.C.	E.C.	-	-	-	500	3
T99-BS04-CU-01	MITSUBISHI	PUZ-A18NHA3	ELEVATOR MACHINE ROOM S-BC71	18,000	19,000	95	208/1	13	15	-	E.C.	E.C.	15.3	9.5	8.9	88	1, 2, 3, 4

NOTES:

1. ALL INTERCONNECTING CONTROL WIRING IS THE RESPONSIBILITY OF THE C.C.
2. ALL INTERCONNECTING PIPING IS THE RESPONSIBILITY OF THE M.C.
3. PROVIDE ROOF CURB MINIMUM 8" ABOVE ROOF FINISHED.
4. SEER AND HSPF ARE MORE THAN 15% ABOVE REQUIRED, IN COMPLIANCE WITH ECONOMIZER EXCEPTION 9A

CRAC UNIT SCHEDULE

MARK	MANUFACTURER	MODEL	CFM	AREA SERVED	EXTERNAL STATIC PRESSURE	COOLING MBH NOMINAL	COOLING MBH SENSIBLE	SCOP	ELECTRIC HEAT (KW)	ELECTRICAL FLA	ELECTRICAL MOCP	VOLTS/PHASE	WEIGHT LBS	DESCRIPTION
T99-BS02-CRACU-01	LIEBERT	DS-042	6600	SCADA S-TS42	1"	136	119	2.17	15	41.4	50	460/3	1930	PROVIDE WITH 100% OSA ECONOMIZER, MERV 8 FILTER, 670 CFM MIN. OSA
T99-BS02-CRACU-02	LIEBERT	DS-042	6600	SCADA S-TS42	1"	136	119	2.17	15	41.4	50	460/3	1930	PROVIDE WITH 100% OSA ECONOMIZER, MERV 8 FILTER

EXHAUST FAN SCHEDULE

MARK	MANUFACTURER	MODEL	LOCATION	CFM	SP "H20	SONES	ELECTRICAL HP	ELECTRICAL VOLTS/PHASE	WEIGHT LBS	REMARKS
T99-BS02-EFN-01	LOREN COOK	ACRU-365R11B	EMERGENCY GENERATOR S-TS39	17000	.5	26	5	480/3	380	PROVIDE WITH MFR. ROOF CURB. VFD, MOTORIZED DAMPER
T99-BS02-EFN-02	LOREN COOK	ACE-135C4B	COMPRESSED AIR ROOM S-TM21	1965	.25	13.7	1/3	120/1	60	PROVIDE WITH MFR. ROOF CURB. MOTORIZED DAMPER
T99-BS03-EFN-01	LOREN COOK	ACE-445C11B	VENTILATION FAN ROOM S-TS30	17600	.5	17.2	5	480/3	500	PROVIDE WITH MFR. ROOF CURB. VFD, MOTORIZED DAMPER
T99-BS03-EFN-02	LOREN COOK	ACE-445C11B	VENTILATION FAN ROOM S-TS30	17600	.5	17.2	5	480/3	500	PROVIDE WITH MFR. ROOF CURB. VFD, MOTORIZED DAMPER
T99-BS03-EFN-03	LOREN COOK	ACE-120C11D	MECHANICAL ROOM S-TS60	980	.25	7.3	1/6	120/1	67	PROVIDE WITH MFR. ROOF CURB. MOTORIZED DAMPER
T99-BS04-EFN-01	LOREN COOK	ACE-90C15DL	RESTROOMS S-BC75, S-BC78, S-BC79	350	.5	7	1/8	120/1	28	PROVIDE WITH MFR. ROOF CURB. MOTORIZED DAMPER
T99-BS04-EFN-02	GREENHECK	CUBE-099-4	WASTE WATER PUMP ROOM-T552	150	.5	5	1/4	120/1	65	SPARK RESISTANT CONSTRUCTION, EXPLOSION PROOF MOTOR. DISCONNECT AND WIRING FAN OPERATES CONTINOUSLY.

RFI #02729
RFI #03222
RFI #03296
RFI #03742
RFI #03479

SUPPLY FAN SCHEDULE

MARK	MANUFACTURER	MODEL	LOCATION	CFM	SP "H20	SONES	ELECTRICAL HP	ELECTRICAL VOLT/PHASE	WEIGHT LBS	REMARKS
T99-BS02-SFN-01	LOREN COOK	30HES9B	FAN PRESSURIZATION STAIR 2 S-BC73	9100	.5	33	2	480/3	566	PROVIDE WITH MFR. ROOF CURB. VFD, MOTORIZED DAMPER
T99-BS03-SFN-01	LOREN COOK	365SQN-B	FAN PRESSURIZATION FREIGHT ELEVATOR S-BC70	14400	.5	19	7.5	480/3	550	PROVIDE WITH VFD, MOTORIZED DAMPER
T99-BS04-SFN-01	LOREN COOK	48HES10B	FAN PRESSURIZATION STAIR 1 S-BC72	17515	.5	29	3	480/3	1110	PROVIDE WITH MFR. ROOF CURB. VFD, MOTORIZED DAMPER

AS-BUILT PLANS ACCURATLEY AND COMPLETELY REFLECT CHANGES AND CORRECTIONS MADE DURING CONSTRUCTION AS DOCUMENTED IN THE RFI AND NDC QA/QC PROCEDURES DEVELOPED FOR THIS PROJECT AND AS BASED ON AS-BUILT INFORMATION PROVIDED BY SEATTLE TUNNEL PARTNERS.

FILE NAME	C:\Users\trtran\Documents\South Building Mech-TWE-Central-HNTB_2018_trtran.rvt
DATE	5/7/2019 3:24:58
TIME	PM
PLOTTED BY	H. TANG
DESIGNED BY	D. MOORE
ENTERED BY	H. TANG
CHECKED BY	W. LI
PROJ. ENGR.	R. JOHNSON
REGIONAL ADM.	L. LAIRD

REVISION | DATE | BY

REGION NO. 10 | STATE WASH | FED.AID PROJ.NO. BR-0099(111)

JOB NUMBER 10A065

CONTRACT NO. 007999 | LOCATION NO.

EOR — CERTIFYING ENGINEER

Washington State Department of Transportation
U.S. Department of Transportation Federal Highway Administration
City of Seattle

SR 99 TUNNEL PROJECT

SOUTH OPS BUILDING MECH SCHEDULES

HS102 | SHEET OF SHEETS

FOR AS-BUILT PLAN ONLY

H-D-PAK-SOB-TR2.34-00362-08-ASB-1905-14

A B C D E F G H

AIR COOLED CHILLER SCHEDULE

MARK	MANUFACTURER	MODEL	AREA LOCATED	COOLING CAPACITY MBH/TONS	DESIGN CONDITIONS: CONDENSER ENTERING AIR TEMP.	ENTERING SOLUTION TEMP.	LEAVING SOLUTION TEMP.	SOLUTION: TYPE	SOLUTION: GPM	SOLUTION PRESSURE DROP (FT)	REFRIG. TYPE	COMP. TYPE	EER PER AHRI 550/590	IPLV PER AHRI 550/590	ELECTRICAL: VOLTS/PHASE	MIN. CIRCUIT AMPS	MOP	WEIGHT LBS	REMARKS
T99-BS02-CH-01	TRANE	CGAM-070	SOUTH BUILDING ROOF	66.3	85	54	44	PROP.	160	21	R-410A	SCROLL	10.2	15.5	460/3	164	175	5433	CHILLER SINGLE POINT POWER CONNECTION. PROPYLENE GLYCOL 30%

BOILER SCHEDULE

MARK	MANUFACTURER	MODEL	AREA LOCATED	INPUT HEATING MBH	OUTPUT HEATING MBH	AFUE	ELECTRICAL: VOLTS/PHASE	MIN. CIRCUIT AMPS	HACR CIRCUIT BREAKER	WEIGHT LBS	REMARKS
T99-BS02-B-01	CLEAVER BROOKS	CLEARFIRE CFC-500	MECHANICAL S-TS60	500	460	92%	120/1	5.5	15	2460	PROVIDE WITH CONTROLS, INCLUDING INTERMITTENT IGNITION MECHANICAL DRAFT
T99-BS02-B-02	CLEAVER BROOKS	CLEARFIRE CFC-500	MECHANICAL S-TS60	500	460	92%	120/1	5.5	15	2460	PROVIDE WITH CONTROLS, INCLUDING INTERMITTENT IGNITION MECHANICAL DRAFT

PUMP SCHEDULE

MARK	MANUFACTURER / MODEL	TYPE	SERVICE	GPM	TDH FT. H20	RPM	ELECTRICAL: HP	VOLTS/PHASE	REMARKS
T99-BS02-BCP-01	BELL & GOSSETT 90-1-1/2 AA	IN-LINE	HEATING SYSTEM-BOILER	33	15	1750	1/3	120/1	
T99-BS02-BCP-02	BELL & GOSSETT 90-1-1/2 AA	IN-LINE	HEATING SYSTEM-BOILER	33	15	1750	1/3	120/1	
T99-BS02-HCP-01	BELL & GOSSETT 1510-1-1/4 BC	BASE-MOUNTED	HEATING SYSTEM	60	64	1750	3	480/3	VFD
T99-BS02-HCP-02	BELL & GOSSETT 1510-1-1/4 BC	BASE-MOUNTED	HEATING SYSTEM	60	64	1750	3	480/3	VFD
T99-BS02-CCP-01	BELL & GOSSETT 1510-2E	BASE-MOUNTED	COOLING SYSTEM	160	110	1750	15	480/3	VFD, MIN. 100 GPM
T99-BS02-CCP-02	BELL & GOSSETT 1510-2E	BASE-MOUNTED	COOLING SYSTEM	160	110	1750	15	480/3	VFD, MIN. 100 GPM

AIR TERMINAL SCHEDULE

SYMBOL	AIR TERMINAL
CDF-*	CEILING DIFFUSER: TITUS MODEL TDCA ADJUSTABLE AIR DIFFUSER FOR INSTALLATION IN T-BAR CEILINGS. PROVIDE 24x12 OR 24x24 PANS AND OBD. FINISH SHALL BE #26 WHITE. "*" INDICATES THROW PATTERN. ADJUST PATTERN CONTROLLER VANES TO MODIFY THROW TO SUIT ROOM CONFIGURATION. SEE PLANS FOR SIZE AND THROW PATTERN.
CDFH-*	CEILING DIFFUSER: TITUS MODEL TDCA ADJUSTABLE AIR DIFFUSER FOR INSTALLATION IN HARD CEILINGS. PROVIDE WITH OBD. FINISH SHALL BE #26 WHITE. "*" INDICATES THROW PATTERN. ADJUST PATTERN CONTROLLER VANES TO MODIFY THROW TO SUIT ROOM CONFIGURATION. SEE PLANS FOR SIZE AND THROW PATTERN.
CRT	CEILING RETURN/RELIEF GRILLE: TITUS MODEL 50-F GRILLE FOR INSTALLATION IN T-BAR CEILINGS. PROVIDE WITH OPPOSED BLADE VOLUME DAMPER. PROVIDE WITH 24x12 OR 24x24 PANS WHERE SHOWN. FINISH SHALL BE #26 WHITE
CRTH	CEILING RETURN/RELIEF GRILLE: TITUS MODEL 50-F GRILLE FOR INSTALLATION ON HARD CEILING OR DUCT MOUNTED. PAINT DUCT MATTE BLACK BEHIND GRILLE. FINISH SHALL BE WHITE.
DRAG	DUCT MOUNTED RETURN GRILLE: TITUS MODEL 30RL HEAVY DUTY STEEL WITH AG-35 OPPOSED BLADE VOLUME DAMPER AND 0 DEGREE LOUVERS SPACED 3/8". PAINT DUCT MATTE BLACK BEHIND GRILLE. WHITE PRIME COAT FINISH.
CEG	CEILING EXHAUST GRILLE: TITUS MODEL 50-F FOR INSTALLATION IN T-BAR CEILINGS. PAINT DUCT MATTE BLACK BEHIND GRILLE. PROVIDE WITH 24x12 OF 24x24 PANS.
CEGH	CEILING EXHAUST GRILLE: TITUS MODEL 50-F FOR INSTALLATION IN HARD CEILINGS. PAINT DUCT MATTE BLACK BEHIND GRILLE.
HWRAG	HIGH WALL RETURN GRILLE: TITUS MODEL 30RL HEAVY DUTY STEEL WITH AG-35 OPPOSED BLADE DAMPER AND 0 DEGREE LOUVERS SPACED 3/8". PAINT DUCT MATTE BLACK BEHIND GRILLE. FINISH SHALL BE #26 WHITE
RAG	RETURN AIR GRILLE: TITUS MODEL 50-F GRILLE WITH OPPOSED BLADE VOLUME DAMPER. FINISH SHALL BE #26 WHITE
RC	ROOF CAP: COOK MODEL PR SPUN ALUMINUM INTAKE/RELIEF VENTILATOR.
RH	ROOF HOOD: PENNBARRY AIRETTE MODEL AEG GRAVITY VENTILATOR INTAKE/RELIEF HOOD CONSTRUCTED OF HEAVY GAUGE ALUMINUM
SDF-*	SUPPLY DIFFUSER: TITUS MODEL TDCA ADJUSTABLE AIR DIFFUSER. FINISH SHALL BE #26 WHITE. * INDICATES THROW PATTERN. SEE PLANS FOR SIZE AND THROW PATTERN.
SR	SUPPLY REGISTER: PRICE MODEL 520 3/4" BLADE SPACING. DOUBLE DEFLECTION AT 45 DEGREE UNLESS OTHERWISE NOTED. INDIVIDUALLY ADJUSTABLE BLADES, FRONT BLADES PARALLEL TO THE SHORT DIMENSION FOR INSTALLATION ON EXPOSED DUCTWORK OR WALL. COMPLETE WITH OPPOSED BLADE VOLUME DAMPER. FINISH SHALL BE WHITE.
SR1	SUPPLY REGISTER: PRICE MODEL 520 3/4" BLADE SPACING. DOUBLE DEFLECTION AT 22-1/2 DEGREE UNLESS OTHERWISE NOTED. INDIVIDUALLY ADJUSTABLE BLADES, FRONT BLADES PARALLEL TO THE SHORT DIMENSION FOR INSTALLATION ON EXPOSED DUCTWORK OR WALL. COMPLETE WITH OPPOSED BLADE VOLUME DAMPER. FINISH SHALL BE WHITE.
TRG	TRANSFER GRILLE: TITUS MODEL 50-F. PROVIDE 12x24 OR 24x24 PANS AS REQUIRED ON DRAWINGS. PAINT DUCT MATTE BLACK BEHIND GRILLE. FINISH SHALL BE #26 WHITE.
TRGH	TRANSFER GRILLE: TITUS MODEL 50-F. FOR DUCT MOUNTED OR HARD CEILING PAINT DUCT MATTE BLACK BEHIND GRILLE. FINISH SHALL BE WHITE.
WTG	WALL TRANSFER GRILLE: TITUS MODEL 350 RL, WITH HORIZONTAL BLADES SPACED 3/4" AND 35 DEGREE DEFLECTION. PAINT DUCT MATTE BLACK BEHIND GRILLE, FINISH SHALL BE #26 WHITE. TURN BLADES UP.

EXPANSION TANK SCHEDULE

SYMBOL	MANUFACTURER	SERVICE	MODEL	SERVICE TEMPERATURE	VOLUME (GALLONS): TANK	ACCEPTANCE	DIMENSIONS (IN): DIAMETER	HEIGHT	INITIAL CHARGE (PSI)	OPERATING WEIGHT (LBS)	NOTES
T99-BS02-ET-02	AMTROL	HEATING WATER	35-LBC	180	10	10	10	37	12	145	ASME, 125 PSI
T99-BS02-ET-03	AMTROL	CHILLED WATER	35-LBC	54	10	10	10	37	12	145	ASME, 125 PSI

SOUND TRAP SCHEDULE

SOUND TRAP	LOCATION	TYPE / SIZE	CFM	SOUTH TRAP LENGTH	PRESSURE DROP	VELOCITY (FPM)	MINIMUM SOUND TRAP INSERTION LOSSES (dB) — OCTAVE BAND CENTER FREQUENCIES (HZ): 63	125	250	500	1000	2000	4000	8000
T99-BS01-STS-01	EMERGENCY GENERATOR RM. OUTSIDE AIR PLENUM	IAC 3L108x54	11144	3'	0.05	275	3	5	9	15	22	21	13	9
T99-BS01-STS-02	EMERGENCY GENERATOR RM. OUTSIDE AIR PLENUM	IAC 3L120x54	12382	3'	0.05	275	3	5	9	15	22	21	13	9
T99-BS01-STS-03	EMERGENCY GENERATOR RM. OUTSIDE AIR PLENUM	IAC 3L120x54	12382	3'	0.05	275	3	5	9	15	22	21	13	9
T99-BS01-STS-04	EMERGENCY GENERATOR RM. OUTSIDE AIR PLENUM	IAC 3L132x54	13620	3'	0.05	275	3	5	9	15	22	21	13	9
T99-BS02-STR-01	T99-BS04-AHU-1 RETURN DUCT	VIBRO-ACOUSTICS RD-LV-F4 / 12"x12"	580	5'	0.19	-750	9	14	24	38	40	30	17	12
T99-BS02-STR-02	T99-BS04-AHU-1 RETURN DUCT	VIBRO-ACOUSTICS CD-LV-F1 / 52" DIA.	28575	6'	0.19	-1500	7	11	22	28	32	23	13	7
T99-BS02-STS-01	T99-BS04-AHU-1 SUPPLY DUCT	VIBRO-ACOUSTICS CD-LV-F1 / 16" DIA.	1205	5'	0.20	750	8	14	24	27	34	25	20	16
T99-BS02-STS-02	T99-BS04-AHU-1 SUPPLY DUCT	VIBRO-ACOUSTICS CD-LV-F1 / 52" DIA.	28575	6'	0.19	1500	7	11	21	26	29	21	13	7

ULTRASONIC HUMIDIFIER

MARK	MANUFACTURER	MODEL	#'S / HR	POWER	WATER CONNECTION	NOTES
T99-BS02-HUM-01	HUMIDIFIRST	MF-10	9	120V/1 360W 7' CORD/PLUG	1/4"	1 2 3

1. PROVIDE WITH SUPPLY WATER STRAINER, OVERFLOW SENSOR WITH AUTOMATIC SHUT DOWN.
2. PROVIDE WITH STANDARD CONTR0LS INCLUDING HUMIDISTAT
3. PROVIDE WITH 0.5 CF DISPOSABLE FILTER DE-IONIZED WATER SYSTEM. WATER SYSTEM SHALL 120V/1PH CORD AND PLUG AND ALARM.

AS-BUILT PLANS ACCURATLEY AND COMPLETELY REFLECT CHANGES AND CORRECTIONS MADE DURING CONSTRUCTION AS DOCUMENTED IN THE RFI AND NDC QA/QC PROCEDURES DEVELOPED FOR THIS PROJECT AND AS BASED ON AS-BUILT INFORMATION PROVIDED BY SEATTLE TUNNEL PARTNERS.

FILE NAME	C:\Users\trtran\Documents\South Building Mech-TWE-Central-HNTB_2018_trtran.rvt
DATE	5/7/2019 3:24:59
TIME	PM
PLOTTED BY	H. TANG
DESIGNED BY	D. MOORE
ENTERED BY	H. TANG
CHECKED BY	W. LI
PROJ. ENGR.	R. JOHNSON
REGIONAL ADM.	L. LAIRD

REVISION | DATE | BY

REGION NO. 10 | STATE WASH | FED.AID PROJ.NO. BR-0099(111)

JOB NUMBER 10A065

CONTRACT NO. 007999 | LOCATION NO.

EOR — CERTIFYING ENGINEER

Washington State Department of Transportation
U.S. Department of Transportation Federal Highway Administration
City of Seattle

SR 99 TUNNEL PROJECT

SOUTH OPS BUILDING MECH SCHEDULES

HS103

SHEET OF SHEETS

FOR AS-BUILT PLAN ONLY

H-D-PAK-SOB-TR2.34-00362-08-ASB-1905-14

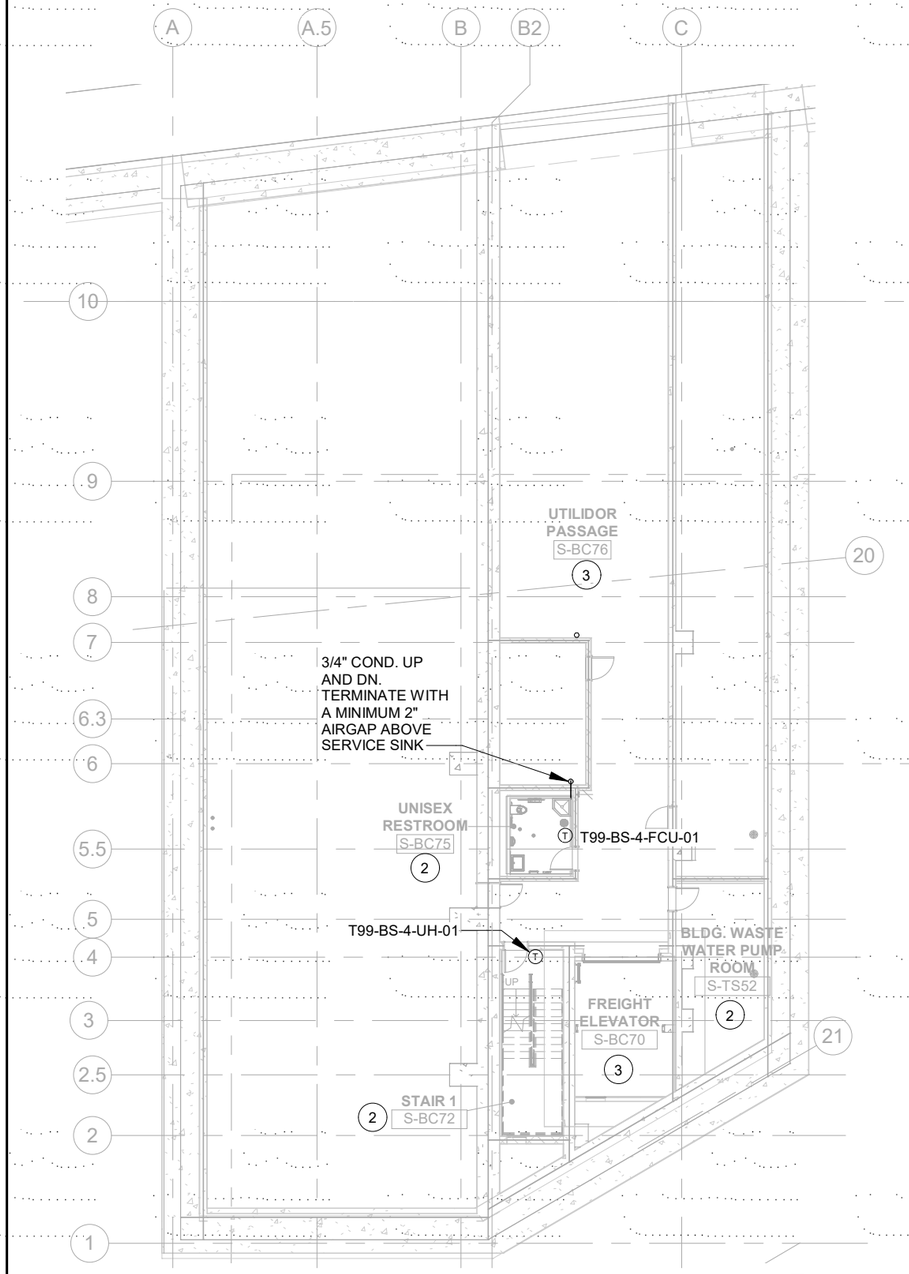

SO OPS BLDG. LEVEL -4 HVAC FLOOR PLAN (1 / HS111)

1" = 20'-0"

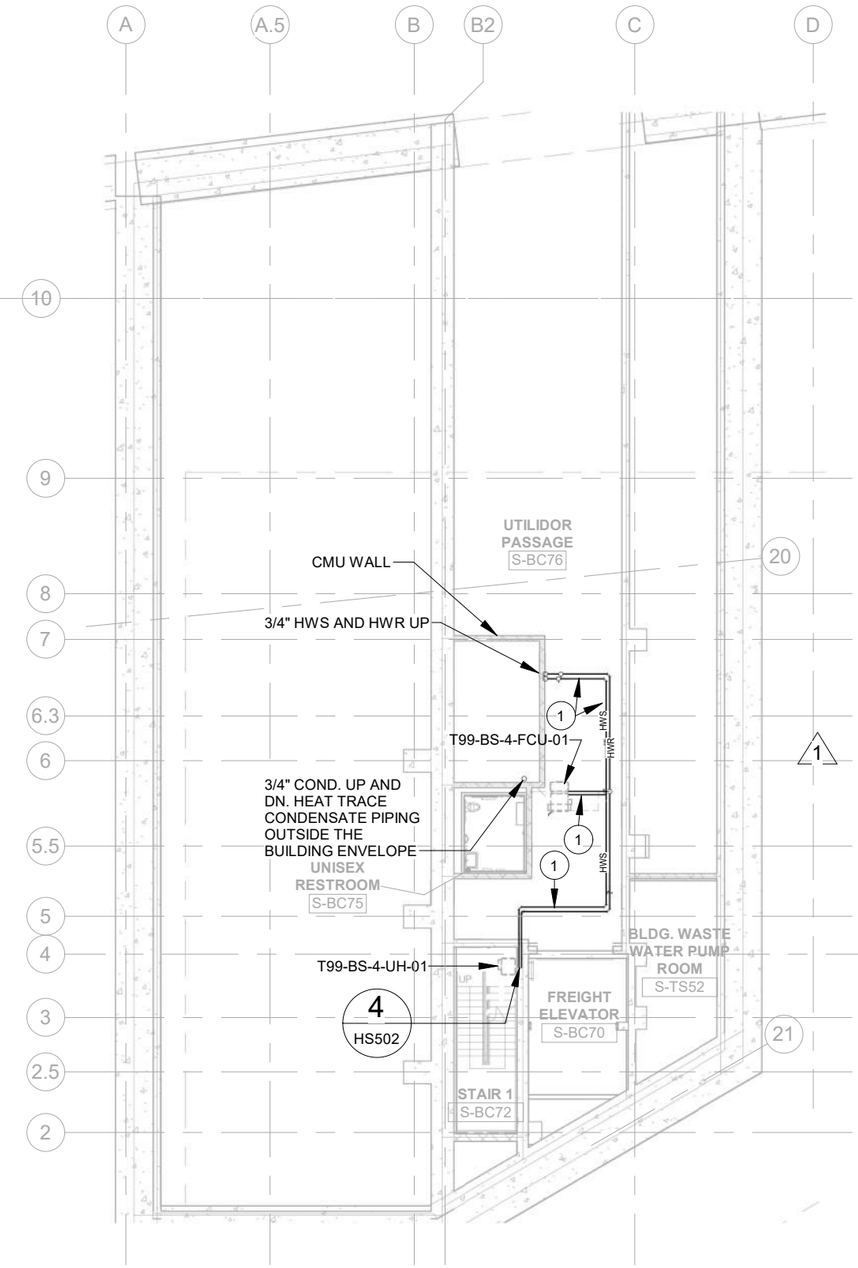

SO OPS BLDG. LEVEL -4 HVAC PIPING PLAN (2 / HS111)

1" = 20'-0"

PLAN NOTES:

1. 3/4" HWS AND HWR.
2. CONDITIONED SPACE, SEE SHEETS AS211 AND AS006.
3. UNCONDITIONED SPACE.

RFI #02215
RFI #02044
RFI #02197

AS-BUILT PLANS ACCURATLEY AND COMPLETELY REFLECT CHANGES AND CORRECTIONS MADE DURING CONSTRUCTION AS DOCUMENTED IN THE RFI AND NDC QA/QC PROCEDURES DEVELOPED FOR THIS PROJECT AND AS BASED ON AS-BUILT INFORMATION PROVIDED BY SEATTLE TUNNEL PARTNERS.

FILE NAME	C:\Users\trtran\Documents\South Building Mech-TWE-Central-HNTB_2018_trtran.rvt
DATE	5/7/2019 3:25:03
TIME	PM
PLOTTED BY	H. TANG
DESIGNED BY	D. MOORE
ENTERED BY	H. TANG
CHECKED BY	W. LI
PROJ. ENGR.	R. JOHNSON
REGIONAL ADM.	L. LAIRD

REVISION	DATE	BY
1 CONSOLIDATED CONSTRUCTION PACKAGE	07/14/14	DBP

REGION NO. 10 | STATE WASH | JOB NUMBER 10A065 | CONTRACT NO. 007999

FED.AID PROJ.NO. BR-0099(111)

LOCATION NO.

EOR — CERTIFYING ENGINEER — 05-14-19

Washington State Department of Transportation
U.S. Department of Transportation Federal Highway Administration
City of Seattle

SR 99 TUNNEL PROJECT

SOUTH OPS BUILDING MECH LEVEL -4 FLOOR PLANS

HS111

SHEET OF SHEETS

FOR AS-BUILT PLAN ONLY

H-D-PAK-SOB-TR2.34-00362-08-ASB-1905-14

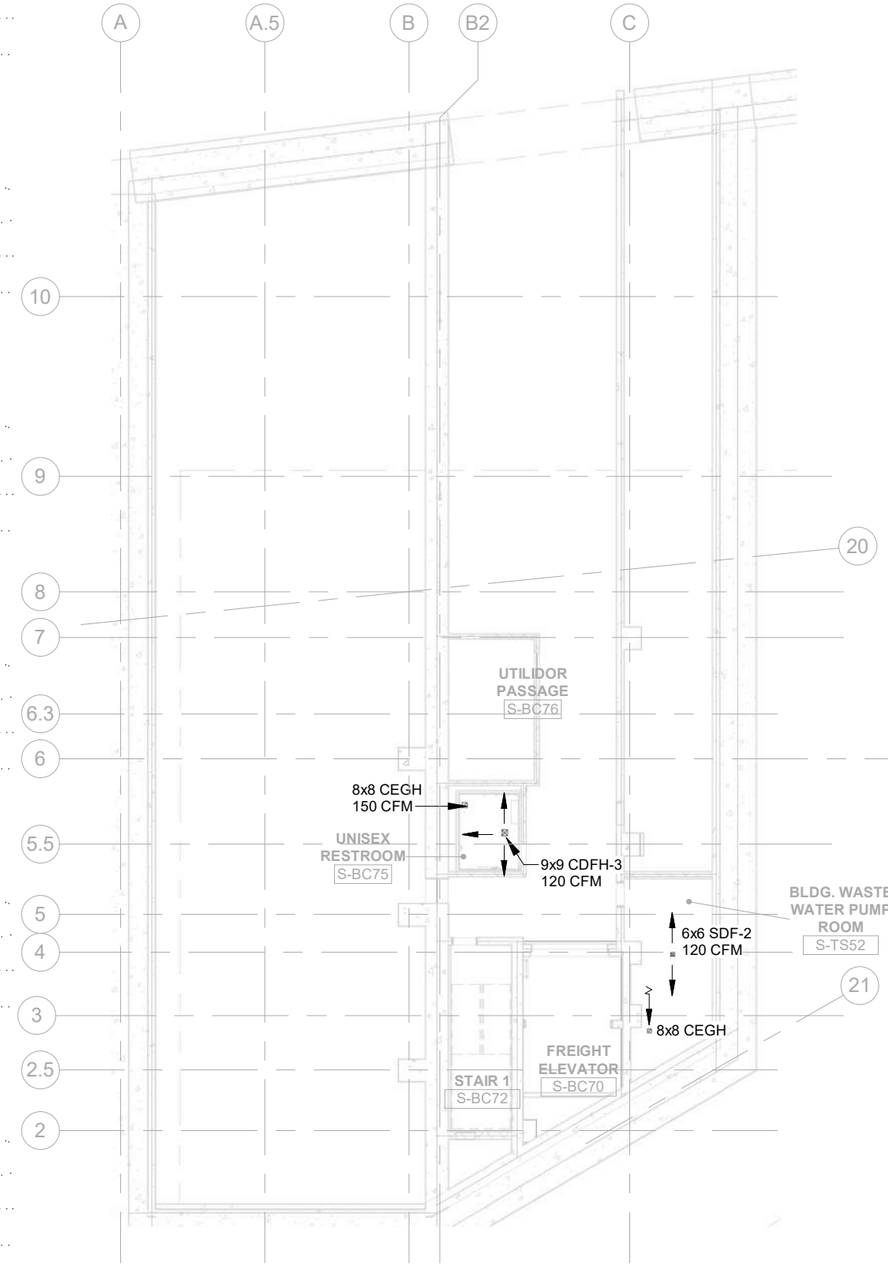

SO OPS BLDG. LEVEL -4 REFLECTED CEILING PLAN (1)

1" = 20'-0" HS112

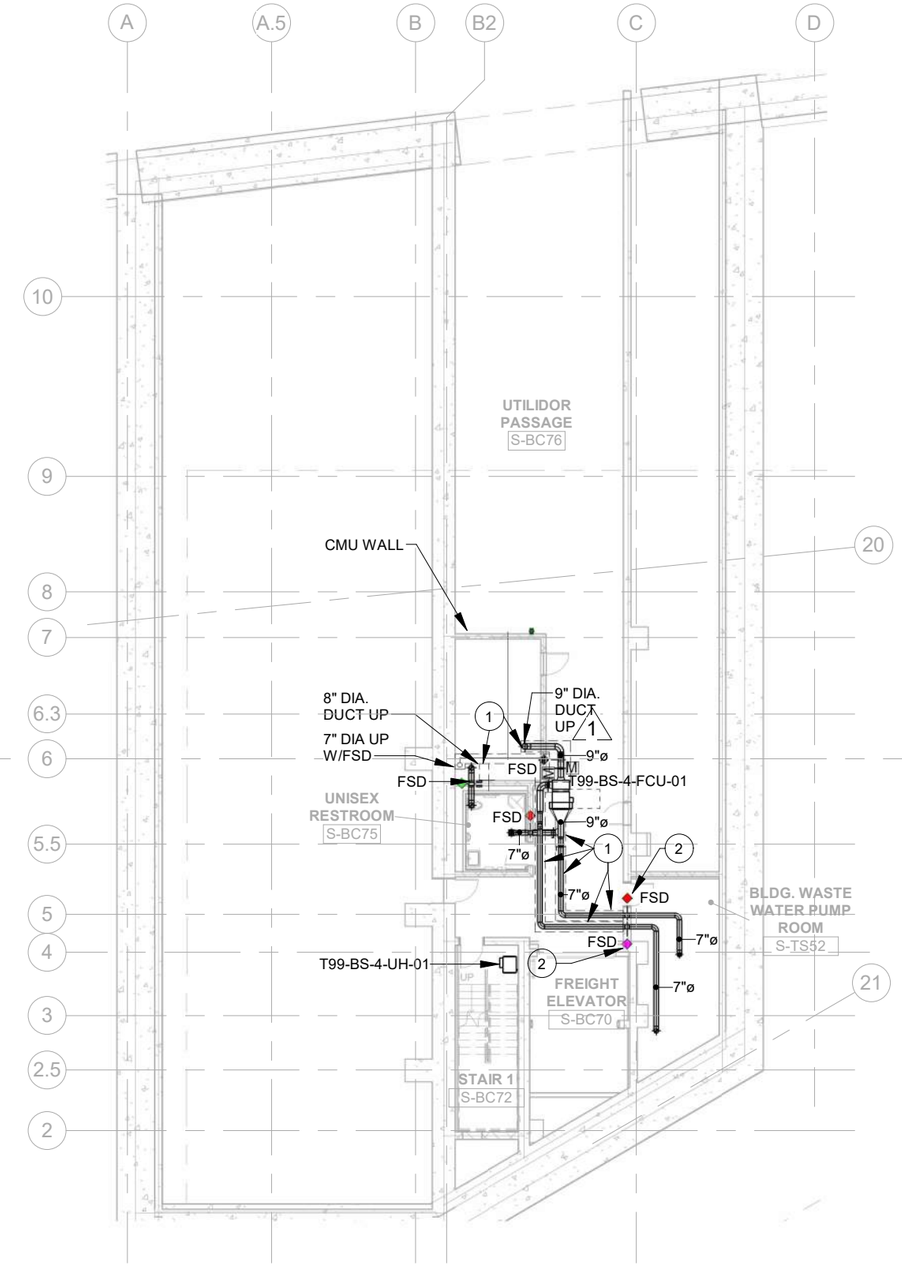

SO OPS BLDG. LEVEL -4 ABOVE CEILING HVAC PLAN (2)

1" = 20'-0" HS112

PLAN NOTES:

1. INSULATE DUCTWORK AND EQUIPMENT OUTSIDE OF CONDITIONED SPACE PER 2009 SEC SECTION 1414.2 AND TABLE 14.5.
2. FIRE/SMOKE DAMPER PROVIDED WITH NEMA 7 ENCLOSURE FOR CLASS 1, DIVISION 1 GROUP C & d AREA CLASSIFICATION.

RFI #02215
RFI #02729
RFI #03717
RFI #03716
RFI #03228
RFI #03325

AS-BUILT PLANS ACCURATLEY AND COMPLETELY REFLECT CHANGES AND CORRECTIONS MADE DURING CONSTRUCTION AS DOCUMENTED IN THE RFI AND NDC QA/QC PROCEDURES DEVELOPED FOR THIS PROJECT AND AS BASED ON AS-BUILT INFORMATION PROVIDED BY SEATTLE TUNNEL PARTNERS.

FILE NAME	C:\Users\trtran\Documents\South Building Mech-TWE-Central-HNTB_2018_trtran.rvt
DATE	5/7/2019 3:25:10
TIME	PM
PLOTTED BY	H. TANG
DESIGNED BY	D. MOORE
ENTERED BY	H. TANG
CHECKED BY	W. LI
PROJ. ENGR.	R. JOHNSON
REGIONAL ADM.	L. LAIRD

REVISION		DATE	BY
1	CONSOLIDATED CONSTRUCTION PACKAGE	07/14/14	DBP

REGION NO.	STATE	FED.AID PROJ.NO.
10	WASH	BR-0099(111)

JOB NUMBER 10A065

CONTRACT NO. 007999

LOCATION NO.

EOR — CERTIFYING ENGINEER

Washington State Department of Transportation
U.S. Department of Transportation Federal Highway Administration
City of Seattle

SR 99 TUNNEL PROJECT

SOUTH OPS BUILDING MECH LEVEL -4 HVAC PLANS

HS112

SHEET OF SHEETS

FOR AS-BUILT PLAN ONLY

H-D-PAK-SOB-TR2.34-00362-08-ASB-1905-14

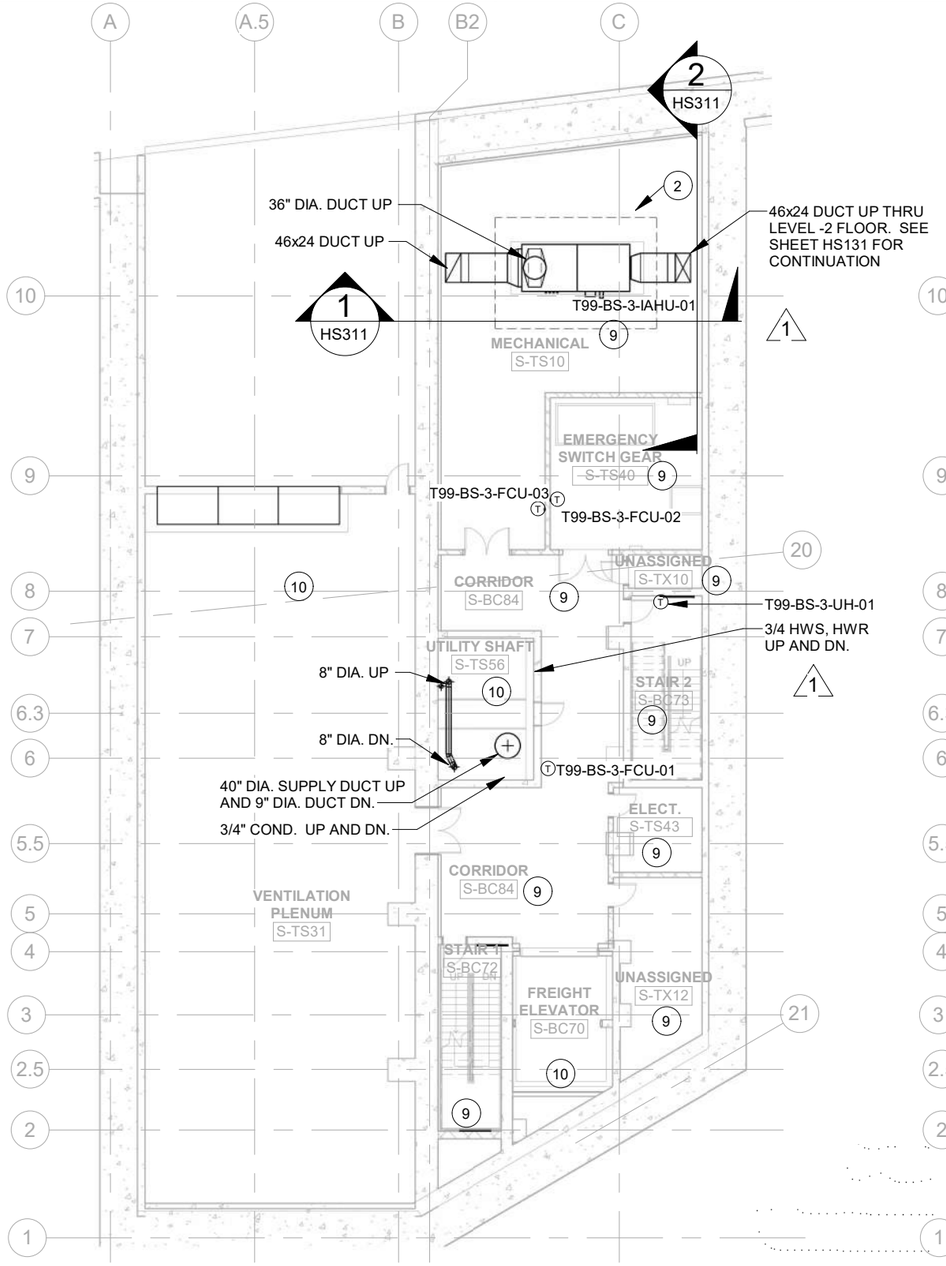

SO OPS BLDG. LEVEL -3 HVAC FLOOR PLAN (1 / HS121)

1" = 20'-0"

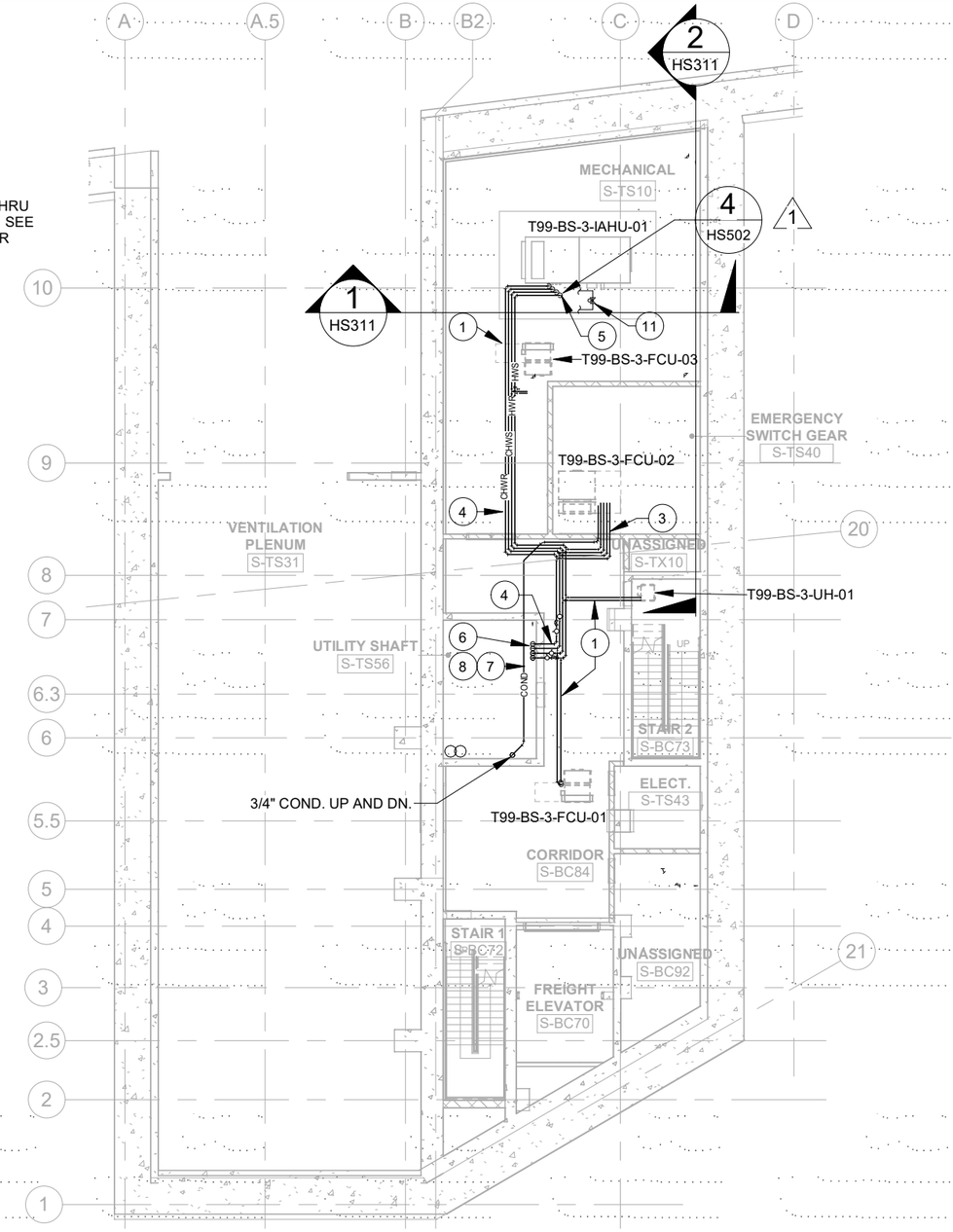

SO OPS BLDG. LEVEL -3 HVAC PIPING PLAN (2 / HS121)

1" = 20'-0"

PLAN NOTES:

1. 3/4" HWS AND HWR.
2. 3/4" COND. DN. TERMINATE WITH A MINIMUM 2" AIRGAP ABOVE 2" FFLD.
3. 1" HWS, HWR, 1-1/2" CHWS, CHWR.
4. 1-1/2" HWS, HWR, 3" CHWS, CHWR.
5. 1-1/2" HWS, HWR, 3" CHWS, CHWR DN. TO UNIT.
6. 3/4" HWS, HWR DN. 2" HWS, HWR UP. 3" CHWS, CHWR UP.
7. 3/4" COND.
8. MAINTAIN MINIMUM 1/8" PER FOOT SLOPE FOR CONDENSATE PIPING.
9. CONDITIONED SPACE SEE SHEETS AS221 AND AS006 FOR ENVELOPE INFORMATION.
10. UNCONDITIONED SPACE.
11. 1-1/2" END OF LOOP CHILLED WATER CONTROL VALVE AT LOCATION ACCESSIBLE FROM ACCESS PLATFORM SEE DS012 FOR OPERATION.

RFI #03221
RFI #02653
RFI #02956
RFI #01587

AS-BUILT PLANS ACCURATLEY AND COMPLETELY REFLECT CHANGES AND CORRECTIONS MADE DURING CONSTRUCTION AS DOCUMENTED IN THE RFI AND NDC QA/QC PROCEDURES DEVELOPED FOR THIS PROJECT AND AS BASED ON AS-BUILT INFORMATION PROVIDED BY SEATTLE TUNNEL PARTNERS.

FILE NAME	C:\Users\trtran\Documents\South Building Mech-TWE-Central-HNTB_2018_trtran.rvt
DATE	5/7/2019 3:25:17
TIME	PM
PLOTTED BY	H. TANG
DESIGNED BY	D. MOORE
ENTERED BY	H. TANG
CHECKED BY	W. LI
PROJ. ENGR.	R. JOHNSON
REGIONAL ADM.	L. LAIRD

REVISION	DATE	BY
1 CONSOLIDATED CONSTRUCTION PACKAGE	07/14/14	DBP

REGION NO. 10 | STATE WASH | FED.AID PROJ.NO. BR-0099(111)
JOB NUMBER 10A065
CONTRACT NO. 007999
LOCATION NO.

EOR — CERTIFYING ENGINEER

Washington State Department of Transportation
U.S. Department of Transportation Federal Highway Administration
City of Seattle

SR 99 TUNNEL PROJECT

SOUTH OPS BUILDING MECH LEVEL -3 FLOOR PLANS

HS121

SHEET OF SHEETS

FOR AS-BUILT PLAN ONLY

H-D-PAK-SOB-TR2.34-00362-08-ASB-1905-14

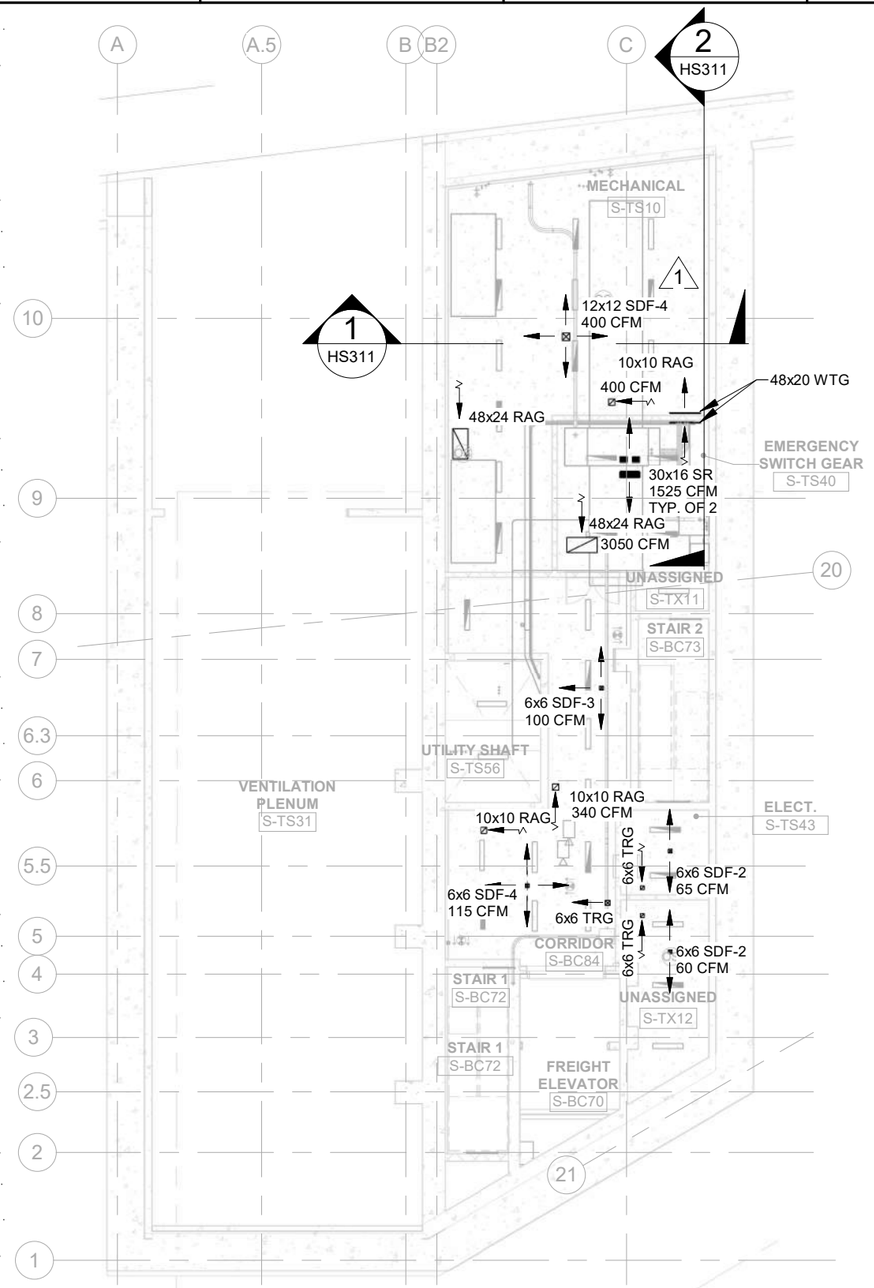

SO OPS BLDG. LEVEL -3 REFLECTED CEILING PLAN

1" = 20'-0" (1 / HS122)

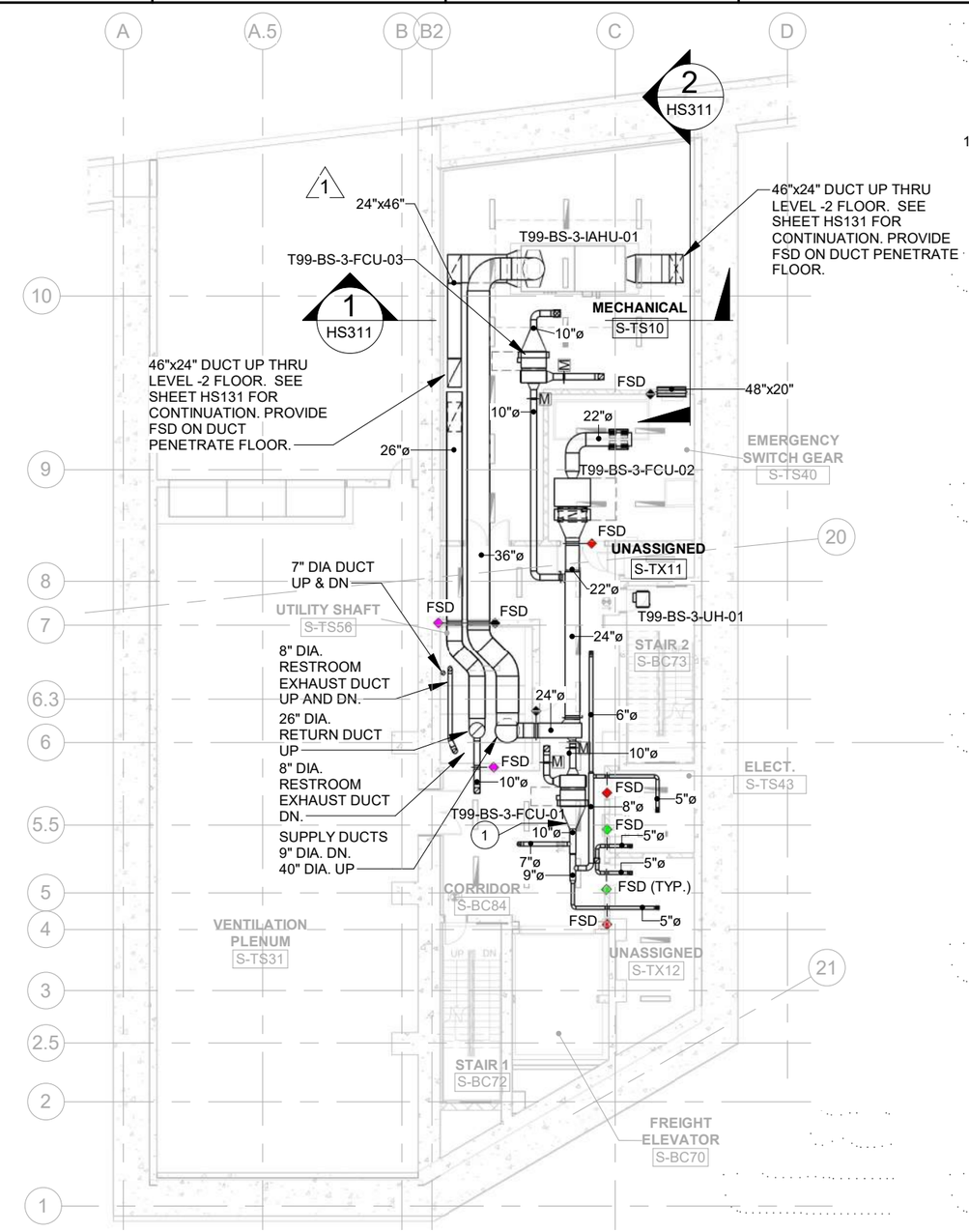

SO OPS BLDG. LEVEL -3 ABOVE CEILING HVAC PLAN

1" = 20'-0" (2 / HS122)

GENERAL NOTES:

1. LINE DUCTWORK FOR 6 FEET DOWNSTREAM OF ALL FAN COIL UNITS WITH 1" ACOUSTICAL DUCT LINER.

RFI #01587
RFI #02729
RFI #03742
RFI #03984
RFI #03984R01
RFI #04050

AS-BUILT PLANS ACCURATLEY AND COMPLETELY REFLECT CHANGES AND CORRECTIONS MADE DURING CONSTRUCTION AS DOCUMENTED IN THE RFI AND NDC QA/QC PROCEDURES DEVELOPED FOR THIS PROJECT AND AS BASED ON AS-BUILT INFORMATION PROVIDED BY SEATTLE TUNNEL PARTNERS.

FILE NAME	C:\Users\trtran\Documents\South Building Mech-TWE-Central-HNTB_2018_trtran.rvt
DATE	5/7/2019 3:25:26
TIME	PM
PLOTTED BY	H. TANG
DESIGNED BY	D. MOORE
ENTERED BY	H. TANG
CHECKED BY	W. LI
PROJ. ENGR.	R. JOHNSON
REGIONAL ADM.	L. LAIRD

	REVISION	DATE	BY
1	CONSOLIDATED CONSTRUCTION PACKAGE	07/14/14	DBP

REGION NO.	STATE	FED.AID PROJ.NO.
10	WASH	BR-0099(111)
JOB NUMBER 10A065		
CONTRACT NO. 007999		LOCATION NO.

EOR — CERTIFYING ENGINEER

Washington State Department of Transportation
U.S. Department of Transportation Federal Highway Administration
City of Seattle

SR 99 TUNNEL PROJECT

SOUTH OPS BUILDING MECH LEVEL -3 HVAC PLANS

HS122

SHEET OF SHEETS

FOR AS-BUILT PLAN ONLY

H-D-PAK-SOB-TR2.34-00362-08-ASB-1905-14

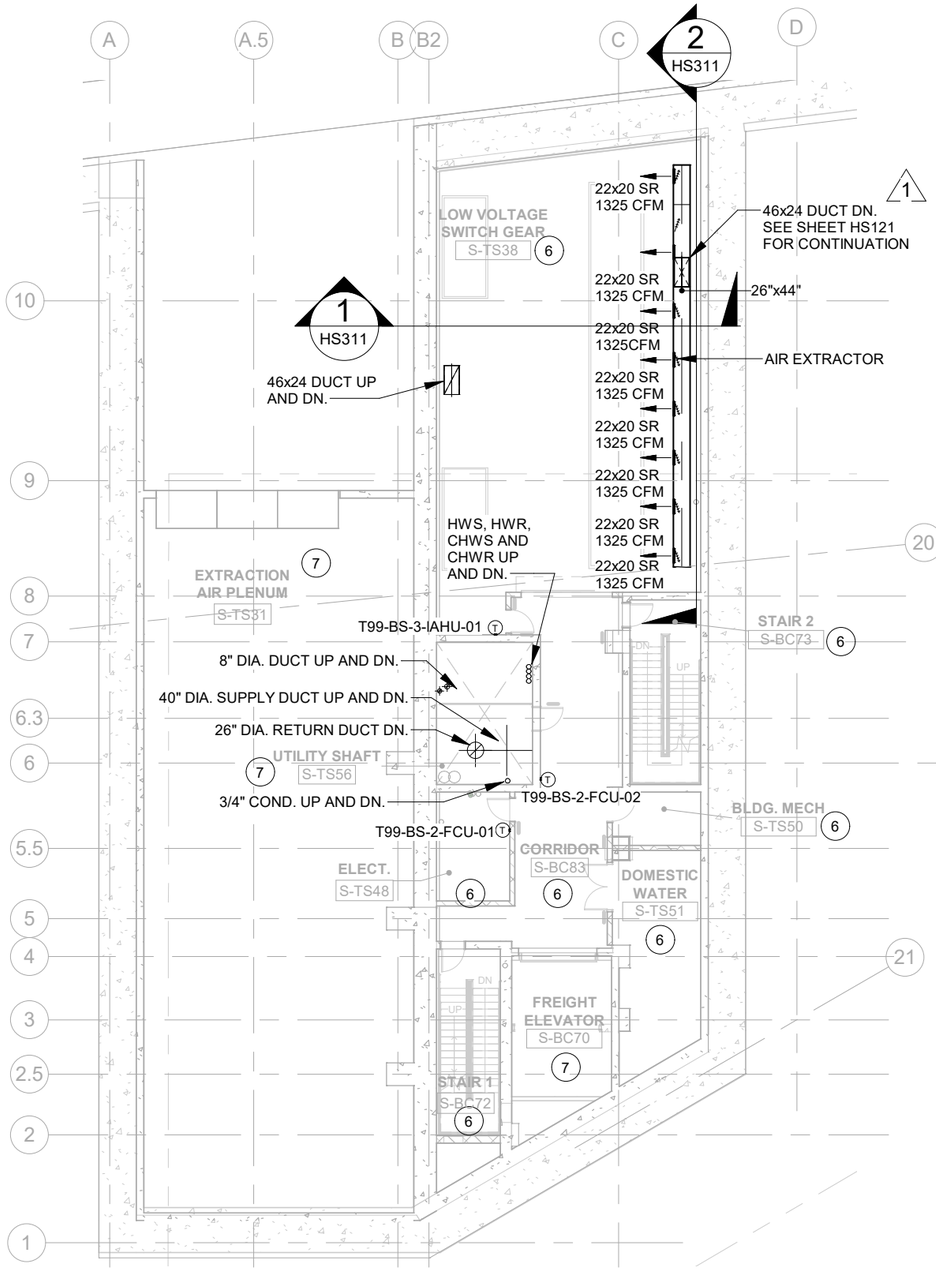

SO OPS BLDG. LEVEL -2 HVAC FLOOR PLAN (1)

1" = 20'-0" HS131

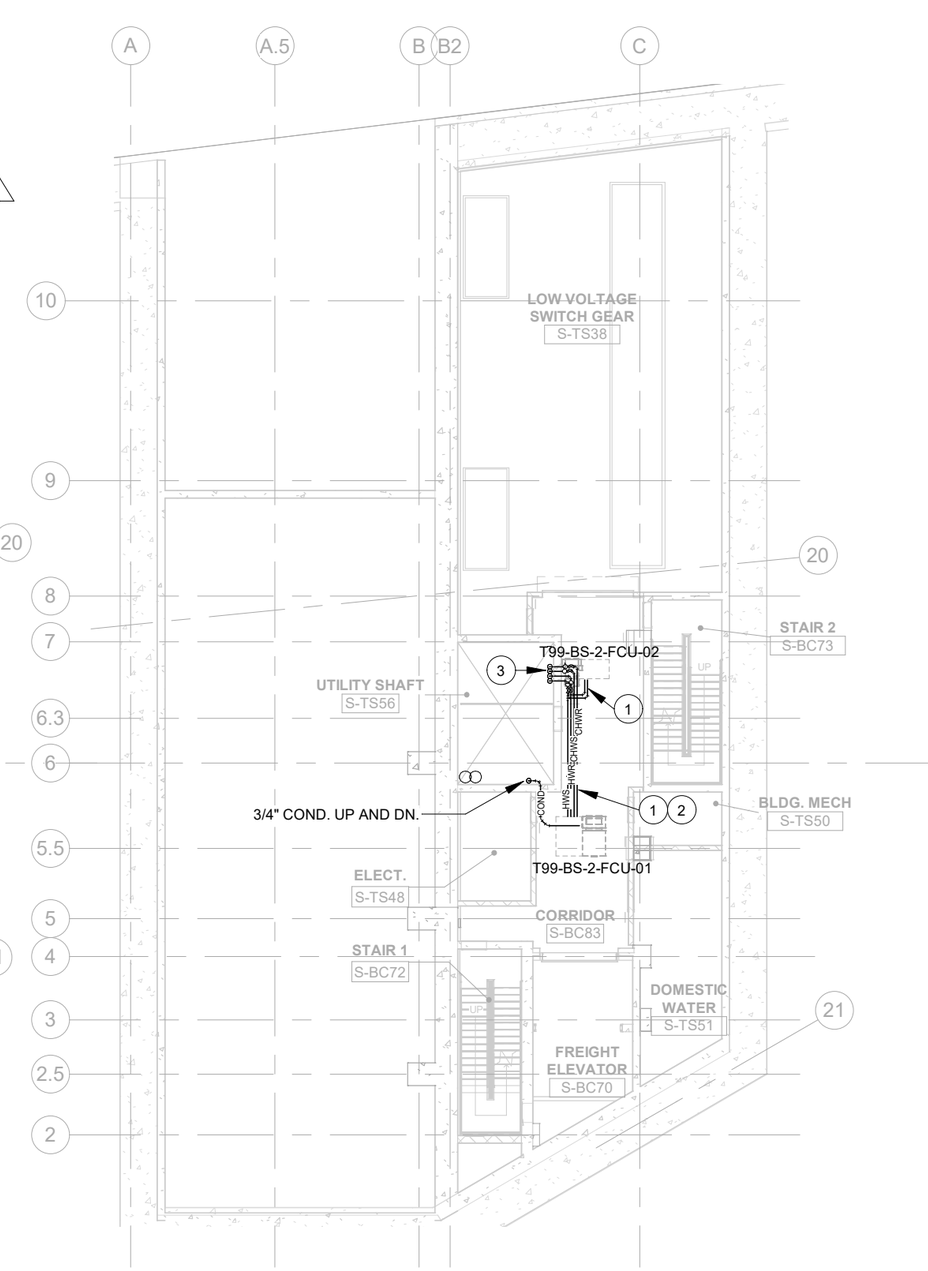

SO OPS BLDG. LEVEL -2 HVAC PIPING PLANS (2)

1" = 20'-0" HS131

PLAN NOTES:

1. 3/4" HWS AND HWR.
2. 1" CHWS AND CHWR.
3. 2" HWS, HWR, 3" CHWS AND CHWR UP AND DN.
4. 3/4" COND.
5. MAINTAIN MINIMUM 1/8" PER FOOT SLOPE FOR CONDENSATE PIPING.
6. CONDITIONED SPACE, SEE SHEETS AS231 AND AS006 FOR ENVELOPED INFORMATION.
7. UNCONDITIONED SPACE.

RFI#01587
RFI#02956
RFI#03258
RFI#04009

AS-BUILT PLANS ACCURATLEY AND COMPLETELY REFLECT CHANGES AND CORRECTIONS MADE DURING CONSTRUCTION AS DOCUMENTED IN THE RFI AND NDC QA/QC PROCEDURES DEVELOPED FOR THIS PROJECT AND AS BASED ON AS-BUILT INFORMATION PROVIDED BY SEATTLE TUNNEL PARTNERS.

FILE NAME	C:\Users\trtran\Documents\South Building Mech-TWE-Central-HNTB_2018_trtran.rvt
DATE	5/7/2019 3:25:31
TIME	PM
PLOTTED BY	H. TANG
DESIGNED BY	D. MOORE
ENTERED BY	H. TANG
CHECKED BY	W. LI
PROJ. ENGR.	R. JOHNSON
REGIONAL ADM.	L. LAIRD

REVISION	DATE	BY
1 CONSOLIDATED CONSTRUCTION PACKAGE	07/14/14	DBP

REGION NO. 10 | STATE WASH | JOB NUMBER 10A065 | CONTRACT NO. 007999

FED.AID PROJ.NO. BR-0099(111)

LOCATION NO.

EOR — CERTIFYING ENGINEER — 05-14-19

Washington State Department of Transportation
U.S. Department of Transportation Federal Highway Administration
City of Seattle

SR 99 TUNNEL PROJECT

SOUTH OPS BUILIDNG MECH LEVEL -2 FLOOR PLANS

HS131

SHEET OF SHEETS

FOR AS-BUILT PLAN ONLY

H-D-PAK-SOB-TR2.34-00362-08-ASB-1905-14

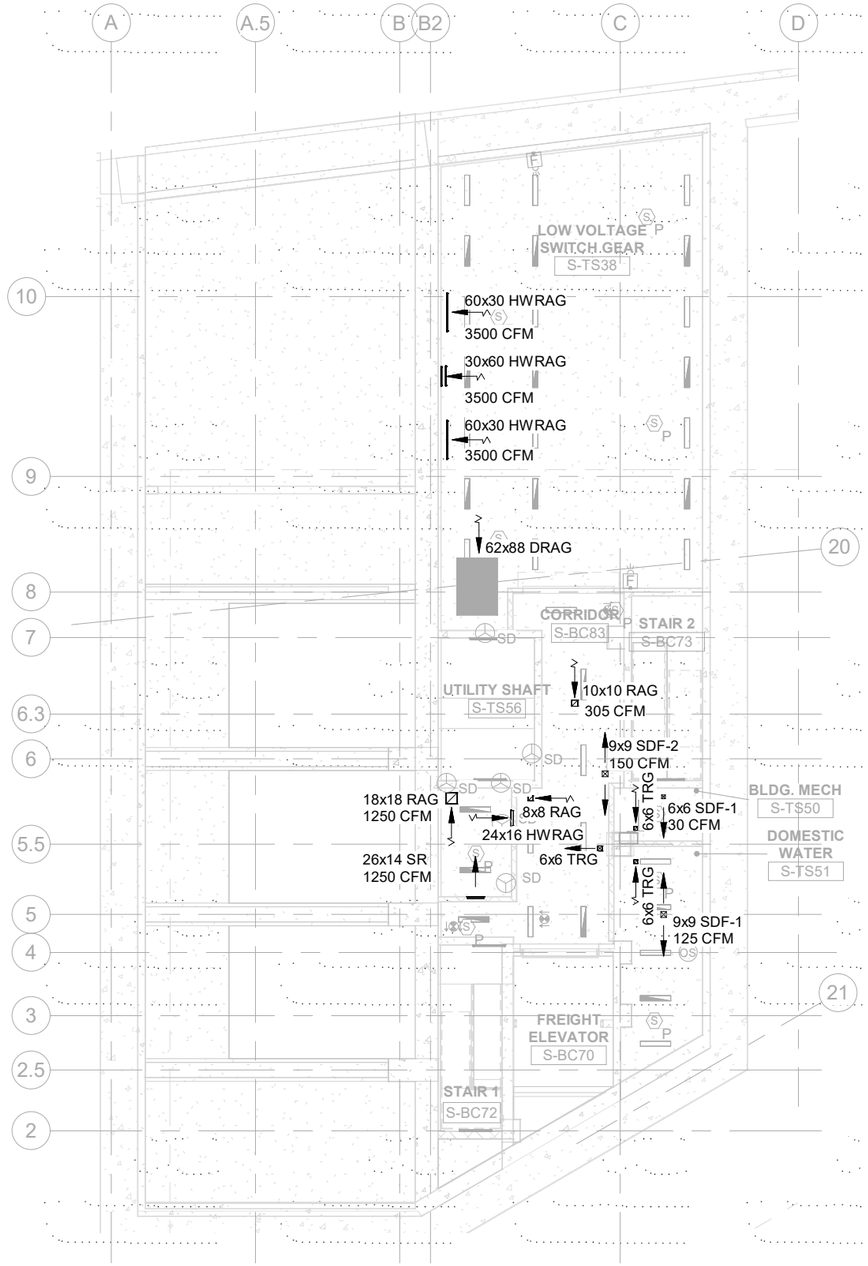

SO OPS BLDG. LEVEL -2 REFLECTED CEILING PLAN (1)

1" = 20'-0" HS132

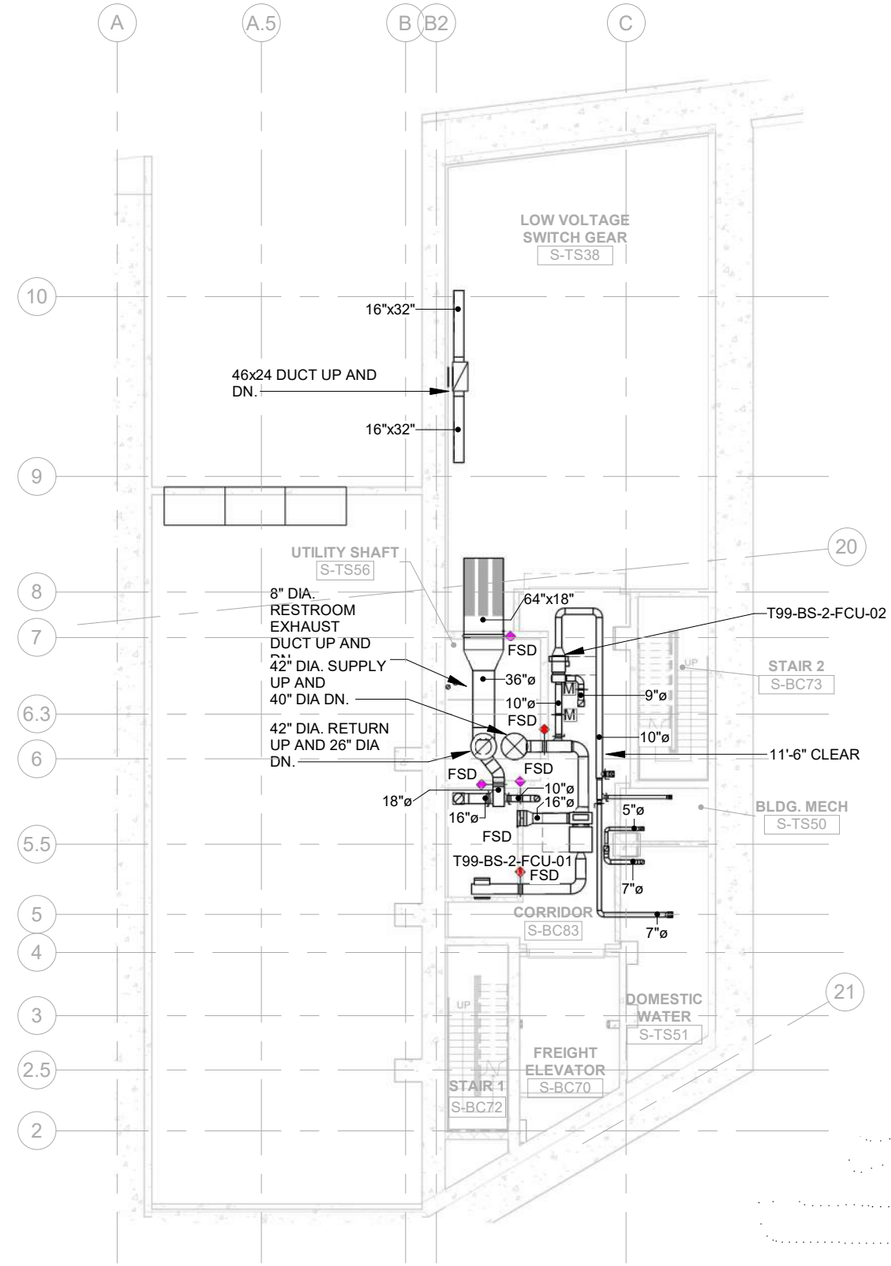

SO OPS BLDG. LEVEL -2 ABOVE CEILING HVAC PLANS (2)

1" = 20'-0" HS132

GENERAL NOTES:

1. LINE DUCTWORK FOR 6 FEET DOWNSTREAM OF ALL FAN COIL UNITS WITH 1" ACOUSTICAL DUCT LINER.

RFI#02729
RFI#03742
RFI#03984
RFI#03984R01

AS-BUILT PLANS ACCURATLEY AND COMPLETELY REFLECT CHANGES AND CORRECTIONS MADE DURING CONSTRUCTION AS DOCUMENTED IN THE RFI AND NDC QA/QC PROCEDURES DEVELOPED FOR THIS PROJECT AND AS BASED ON AS-BUILT INFORMATION PROVIDED BY SEATTLE TUNNEL PARTNERS.

FILE NAME	C:\Users\trtran\Documents\South Building Mech-TWE-Central-HNTB_2018_trtran.rvt
DATE	5/7/2019 3:25:37
TIME	PM
PLOTTED BY	H. TANG
DESIGNED BY	D. MOORE
ENTERED BY	H. TANG
CHECKED BY	W. LI
PROJ. ENGR.	R. JOHNSON
REGIONAL ADM.	L. LAIRD

REVISION	DATE	BY

REGION NO.	STATE	FED.AID PROJ.NO.
10	WASH	BR-0099(111)
JOB NUMBER 10A065		
CONTRACT NO. 007999		LOCATION NO.

EOR — CERTIFYING ENGINEER

Washington State Department of Transportation
U.S. Department of Transportation Federal Highway Administration
City of Seattle

SR 99 TUNNEL PROJECT

SOUTH OPS BUILDING MECH LEVEL -2 HVAC PLANS

HS132

SHEET OF SHEETS

FOR AS-BUILT PLAN ONLY

H-D-PAK-SOB-TR2.34-00362-08-ASB-1905-14

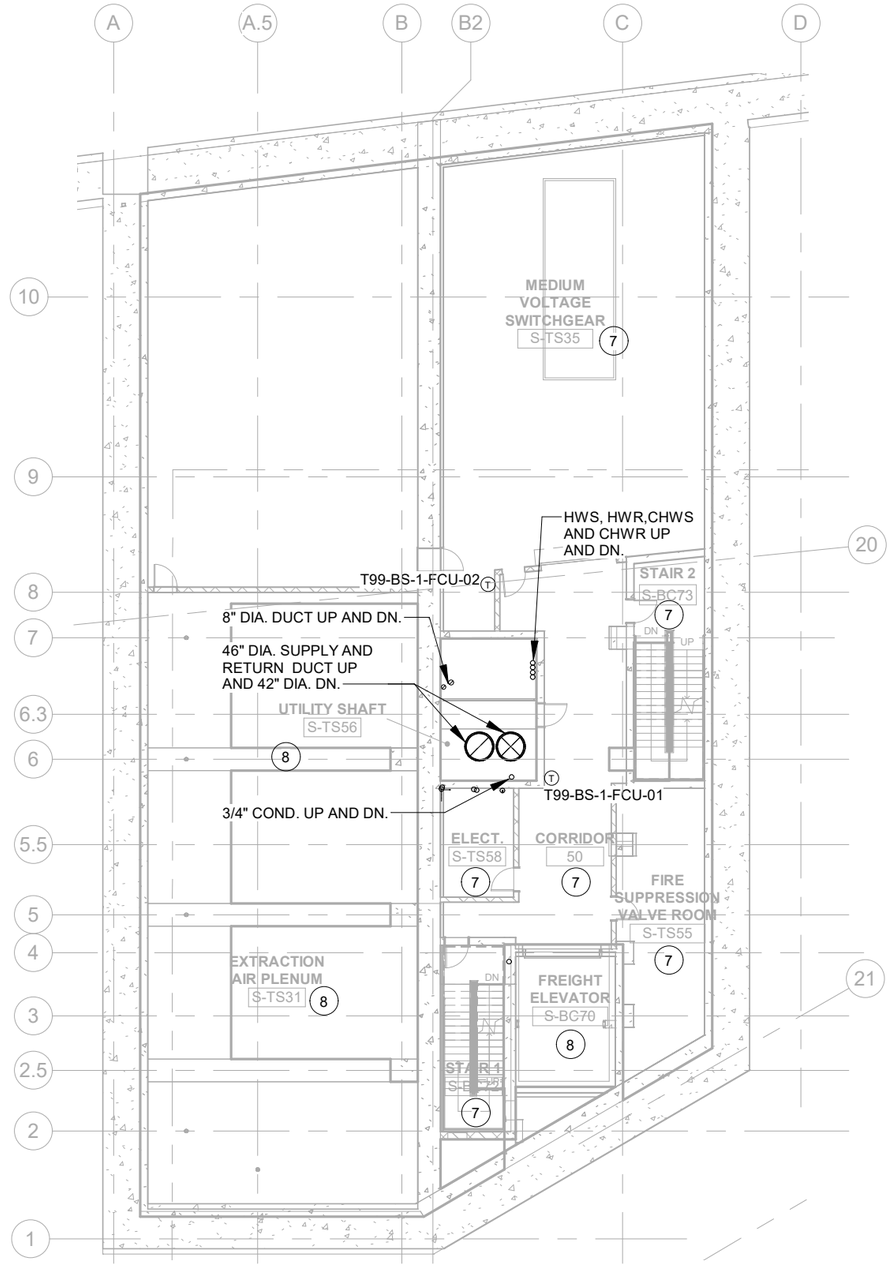

SO OPS BLDG. LEVEL -1 HVAC FLOOR PLAN (1)

1" = 20'-0" HS141

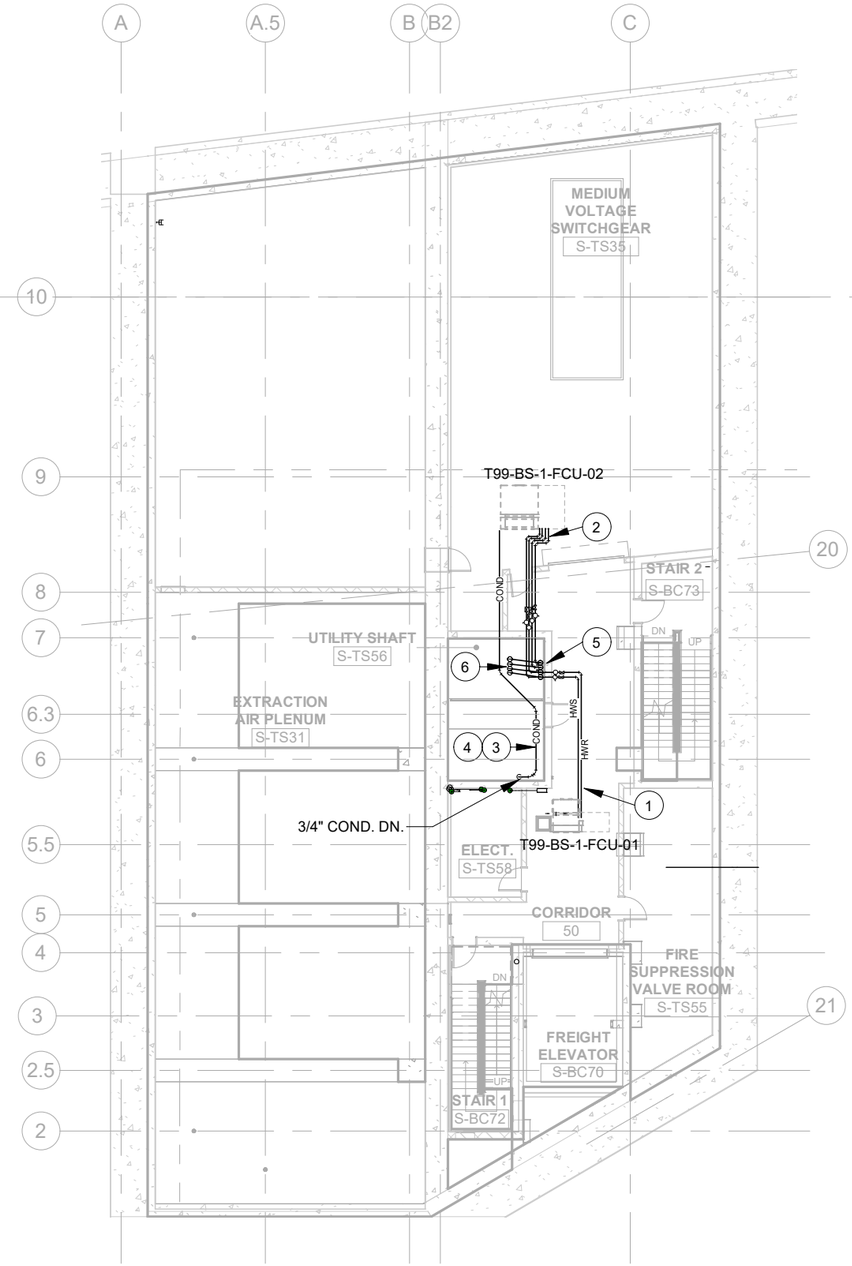

SO OPS BLDG. LEVEL -1 HVAC PIPING PLAN (2)

1" = 20'-0" HS141

PLAN NOTES:

1. 3/4" HWS AND HWR.
2. 1" HWS, HWR.1-1/2" CHWS, CHWR.
3. 3/4" COND.
4. MAINTAIN MINIMUM 1/8" PER FOOT SLOPE FOR CONDENSATE PIPING.
5. 2" HWS, HWR, 3" CHWS, CHWR DN.
6. 2" HWS, HWR, 4" CHWS, CHWR UP.
7. CONDITIONED SPACE, SEE SHEETS AS241 AND AS006 FOR ENVELOPE INFORMATION.
8. UNCONDITIONED SPACE.

RFI#02956
RFI#03258

AS-BUILT PLANS ACCURATLEY AND COMPLETELY REFLECT CHANGES AND CORRECTIONS MADE DURING CONSTRUCTION AS DOCUMENTED IN THE RFI AND NDC QA/QC PROCEDURES DEVELOPED FOR THIS PROJECT AND AS BASED ON AS-BUILT INFORMATION PROVIDED BY SEATTLE TUNNEL PARTNERS.

FILE NAME	C:\Users\trtran\Documents\South Building Mech-TWE-Central-HNTB_2018_trtran.rvt
DATE	5/7/2019 3:25:42
TIME	PM
PLOTTED BY	H. TANG
DESIGNED BY	D. MOORE
ENTERED BY	H. TANG
CHECKED BY	W. LI
PROJ. ENGR.	R. JOHNSON
REGIONAL ADM.	L. LAIRD

REVISION | DATE | BY

REGION NO. 10 | STATE WASH | JOB NUMBER 10A065 | CONTRACT NO. 007999

FED.AID PROJ.NO. BR-0099(111)

LOCATION NO.

EOR — CERTIFYING ENGINEER

Washington State Department of Transportation
U.S. Department of Transportation Federal Highway Administration
City of Seattle

SR 99 TUNNEL PROJECT

SOUTH OPS BUILDING MECH LEVEL -1 FLOOR PLANS

HS141

SHEET OF SHEETS

FOR AS-BUILT PLAN ONLY

H-D-PAK-SOB-TR2.34-00362-08-ASB-1905-14

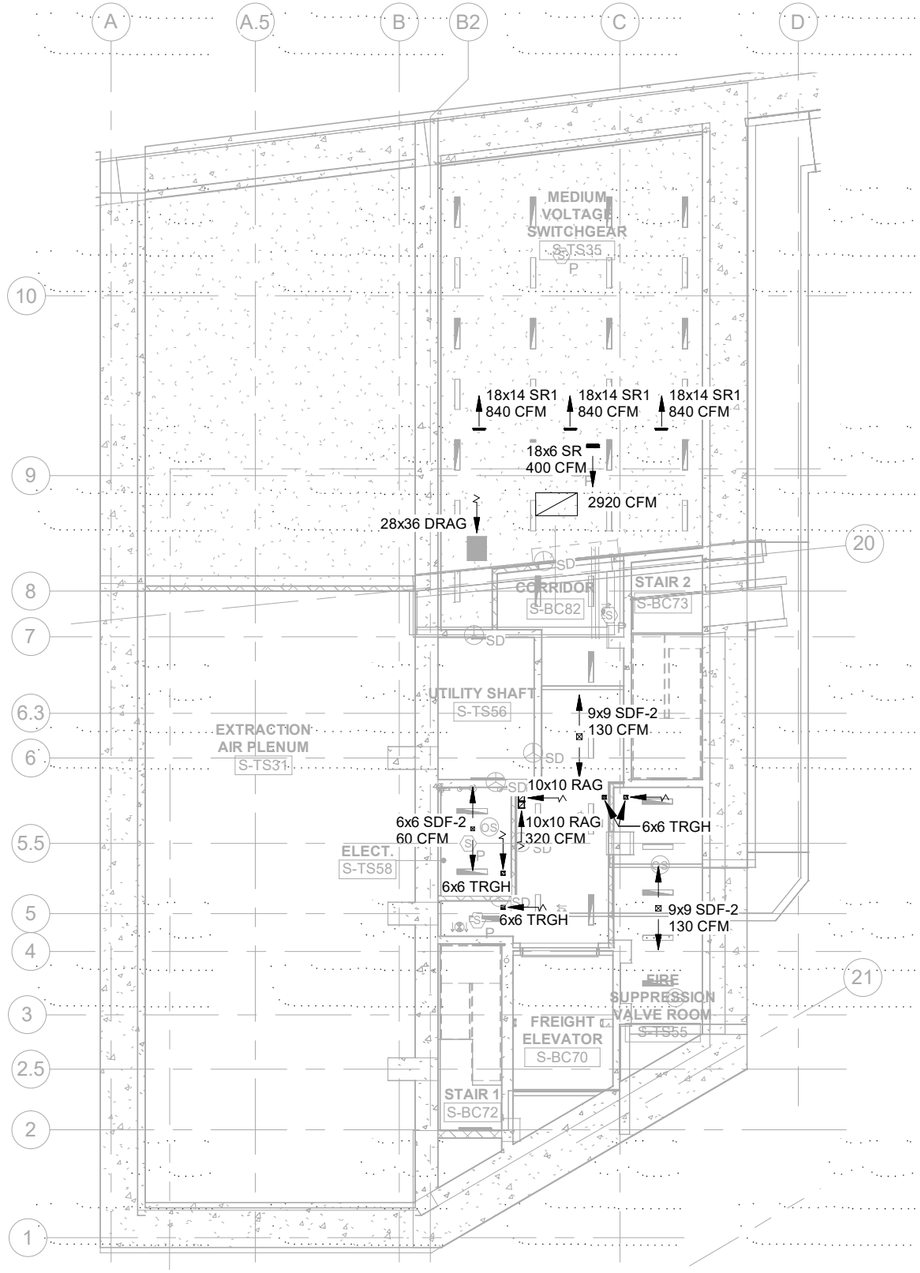

SO OPS BLDG. LEVEL -1 REFLECTED CEILING PLAN (1)

1" = 20'-0" HS142

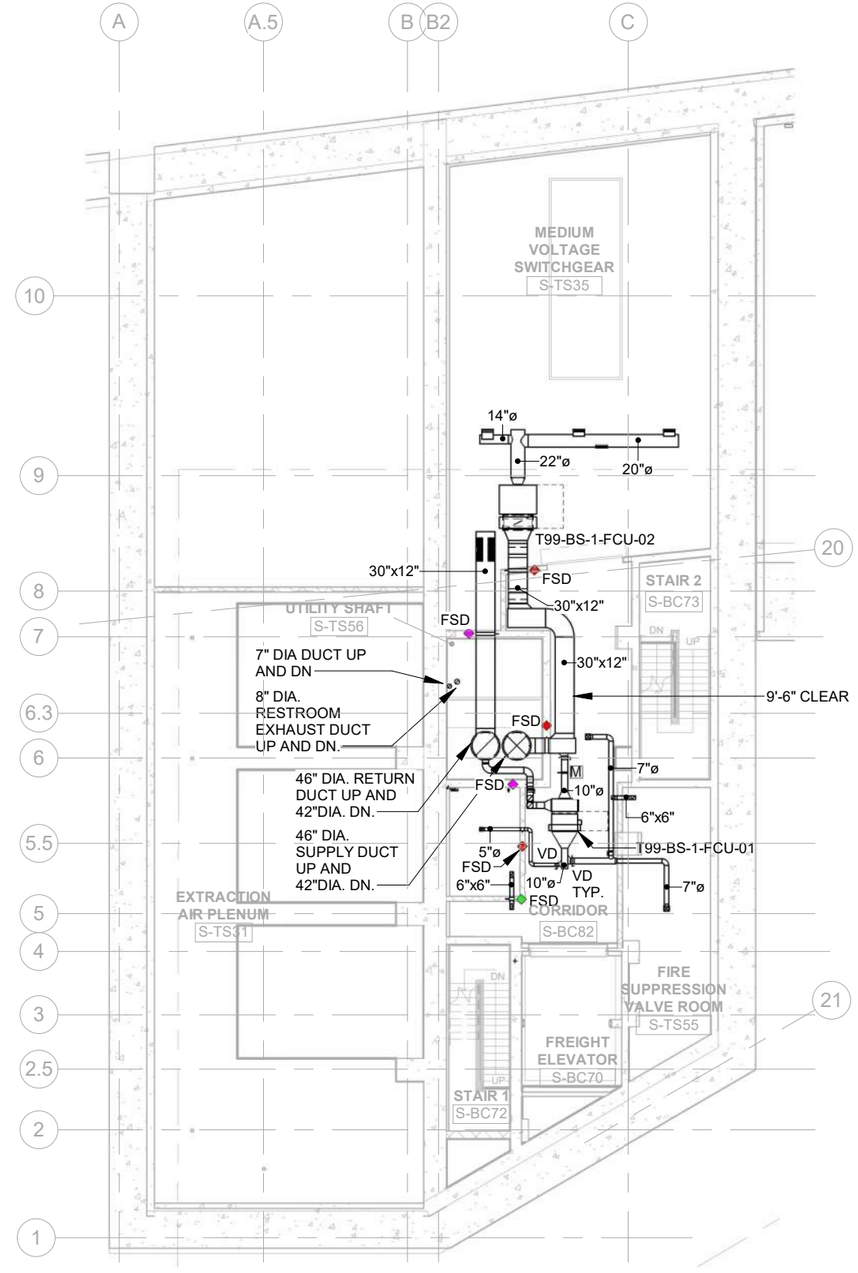

SO OPS BLDG. LEVEL -1 ABOVE CEILING HVAC PLAN (2)

1" = 20'-0" HS142

GENERAL NOTES:

1. LINE DUCTWORK FOR 6 FEET DOWNSTREAM OF ALL FAN COIL UNITS WITH 1" ACOUSTICAL DUCT LINER.

RFI #02729
RFI #03742
RFI #03984
RFI #03984R01
RFI #04050

AS-BUILT PLANS ACCURATLEY AND COMPLETELY REFLECT CHANGES AND CORRECTIONS MADE DURING CONSTRUCTION AS DOCUMENTED IN THE RFI AND NDC QA/QC PROCEDURES DEVELOPED FOR THIS PROJECT AND AS BASED ON AS-BUILT INFORMATION PROVIDED BY SEATTLE TUNNEL PARTNERS.

FILE NAME	C:\Users\trtran\Documents\South Building Mech-TWE-Central-HNTB_2018_trtran.rvt
DATE	5/7/2019 3:25:48
TIME	PM
PLOTTED BY	H. TANG
DESIGNED BY	D. MOORE
ENTERED BY	H. TANG
CHECKED BY	W. LI
PROJ. ENGR.	R. JOHNSON
REGIONAL ADM.	L. LAIRD

REVISION	DATE	BY

REGION NO.	STATE	FED.AID PROJ.NO.
10	WASH	BR-0099(111)
JOB NUMBER 10A065		
CONTRACT NO. 007999		LOCATION NO.

EOR — CERTIFYING ENGINEER

Washington State Department of Transportation
U.S. Department of Transportation Federal Highway Administration
City of Seattle

SR 99 TUNNEL PROJECT

SOUTH OPS BUILDING MECH LEVEL -1 HVAC PLANS

HS142

SHEET OF SHEETS

FOR AS-BUILT PLAN ONLY

H-D-PAK-SOB-TR2.34-00362-08-ASB-1905-14

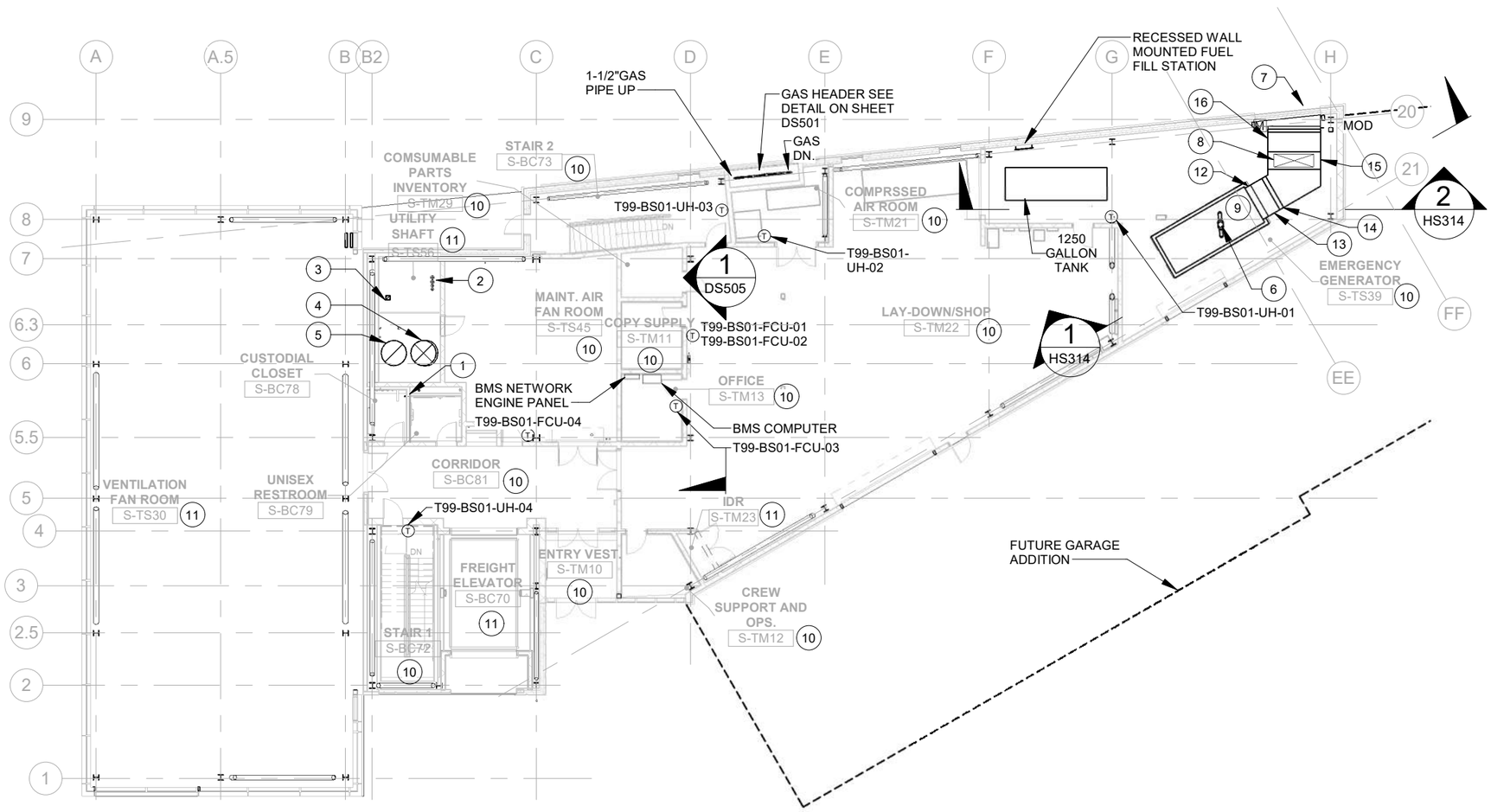

PLAN NOTES:

1. 3/4" COND. UP AND DN. TERMINATE WITH A MINIMUM 2" AIRGAP ABOVE SERVICE SINK.
2. 2"HWS, HWR AND 4" CHWS AND CHWR UP AND DN.
3. 8" DIA. EXHAUST DUCT UP AND DN. PROVIDE FSD AT FLOOR PENETRATION.
4. 46" DIA. SUPPLY DUCT UP AND DN. PROVIDE FSD AT FLOOR PENETRATION.
5. 46" DIA. RETURN DUCT UP AND DN. PROVIDE FSD AT FLOOR PENETRATION.
6. 10" DIA. EXHAUST DUCT UP.
7. 10'X11' RADIATOR EXHAUST LOUVER . SEE ARCH PLAN FOR EXACT LOCATION.
8. 72"x24" DUCT UP.
9. GENERATOR BY DIVISION 26. SHOWN HERE FOR CLARITY.
10. CONDITIONED SPACE, SEE SHEETS AS251 AND AS006 FOR ENVELOPE INFORMATION.
11. UNCONDITIONED SPACE.
12. 66"W X 65"H DUCT (APPROX) CONNECTION TO ENG/GEN RADIATOR .
13. DUCT TRANSITION
14. 66"W X 130"H DUCT
15. 96"W X 130"H DUCT
16. 3' LONG SILENCER

RFI#02956
RFI#03473
RFI#03596

SO OPS BLDG. LEVEL 1 HVAC FLOOR PLAN (1 / HS151)

1" = 20'-0"

AS-BUILT PLANS ACCURATLEY AND COMPLETELY REFLECT CHANGES AND CORRECTIONS MADE DURING CONSTRUCTION AS DOCUMENTED IN THE RFI AND NDC QA/QC PROCEDURES DEVELOPED FOR THIS PROJECT AND AS BASED ON AS-BUILT INFORMATION PROVIDED BY SEATTLE TUNNEL PARTNERS.

FILE NAME	C:\Users\sparayil\Documents\South Building Mech-TWE-Central-HNTB_2018_sparayil.rvt
DATE	5/9/2019 9:01:56
TIME	AM
PLOTTED BY	H. TANG
DESIGNED BY	D. MOORE
ENTERED BY	H. TANG
CHECKED BY	W. LI
PROJ. ENGR.	R. JOHNSON
REGIONAL ADM.	L. LAIRD

REVISION		DATE	BY
1	NDC 085 SOUTH OPS BLDG PARKING MODIFICATION	04/25/2014	DBP

REGION NO. 10 | STATE WASH | JOB NUMBER 10A065 | CONTRACT NO. 007999 | FED.AID PROJ.NO. BR-0099(111) | LOCATION NO.

EOR — CERTIFYING ENGINEER

Washington State Department of Transportation
U.S. Department of Transportation Federal Highway Administration
City of Seattle

SR 99 TUNNEL PROJECT

SOUTH OPS BUILDING MECH LEVEL 1 HVAC FLOOR PLAN

HS151

SHEET OF SHEETS

FOR AS-BUILT PLAN ONLY

H-D-PAK-SOB-TR2.34-00362-08-ASB-1905-14

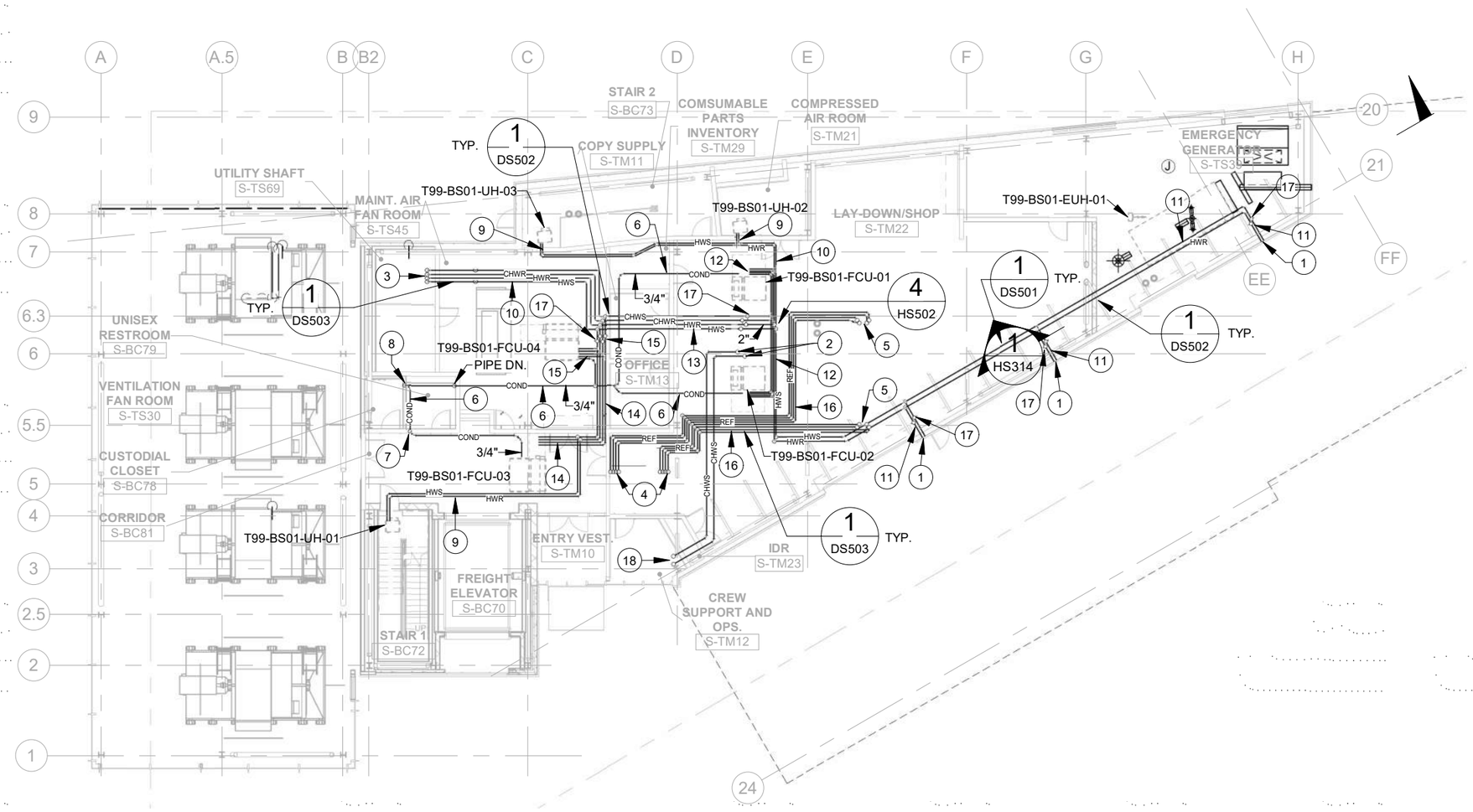

PLAN NOTES:

1. SEE SOUTH PARKING. ON SHEET HP151 FOR CONTINUATION.
2. 4" CHWS AND CHWR UP TO CHILLER T99-BS02-CH-01 ON ROOF.
3. 3" HWS, HWR UP, 2" HWS, HWR DN. 4" CHWS, CHWR UP AND DN. PROVIDE EXPANSION LOOP AS REQUIRED.
4. 7/8" HOT GAS AND 5/8" LIQUID REFRIGERANT PIPING UP TO T99-BS02-CRACU-01 AND T99-BS02-CRACU-02
5. 7/8" HOT GAS AND 5/8" LIQUID REFRIGERANT PIPING UP TO CONDENSING UNITS ON ROOF T99-BS02-CU-1 AND T99-BS02-CU-02.
6. MAINTAIN MINIMUM 1/8" PER FOOT SLOPE FOR CONDENSATE PIPING.
7. 3/4" CONDENSATE PIPE UP.
8. 3/4" CONDENSATE PIPE DN.
9. 3/4" HWS AND HWR.
10. 2" HWS, HWR, CHWS, CHWR.
11. 1" HWS AND HWR.
12. 1" HWS, HWR, 1-1/4" CHWS, CHWR.
13. 1-1/2" HWS, HWR, 2" CHWS, CHWR.
14. 3/4" HWS, HWR, CHWS, CHWR.
15. 3/4" HWS, HWR, 1" CHWS AND CHWR.
16. 7/8" HOT GAS AND 5/8" LIQUID LINE.
17. BALL VALVE TYP.
18. 4"CHWS, CHWR UP TO MECHANICAL ROOM. SEE ENLARGED MECHANICAL ROOM PLAN ON SHEET HS801 FOR CONTINUATION.

RFI#03386

SO OPS BLDG. LEVEL 1 HVAC PIPING PLAN

1" = 20'-0" (1 / HS152)

AS-BUILT PLANS ACCURATLEY AND COMPLETELY REFLECT CHANGES AND CORRECTIONS MADE DURING CONSTRUCTION AS DOCUMENTED IN THE RFI AND NDC QA/QC PROCEDURES DEVELOPED FOR THIS PROJECT AND AS BASED ON AS-BUILT INFORMATION PROVIDED BY SEATTLE TUNNEL PARTNERS.

FILE NAME	C:\Users\trtran\Documents\South Building Mech-TWE-Central-HNTB_2018_trtran.rvt
DATE	5/7/2019 3:26:01
TIME	PM
PLOTTED BY	H. TANG
DESIGNED BY	D. MOORE
ENTERED BY	H. TANG
CHECKED BY	W. LI
PROJ. ENGR.	R. JOHNSON
REGIONAL ADM.	L. LAIRD

REVISION	DATE	BY

REGION NO.	STATE	FED.AID PROJ.NO.
10	WASH	BR-0099(111)
JOB NUMBER 10A065		
CONTRACT NO. 007999		LOCATION NO.

EOR — CERTIFYING ENGINEER — 05-14-19

Washington State Department of Transportation
U.S. Department of Transportation Federal Highway Administration
City of Seattle

SR 99 TUNNEL PROJECT

SOUTH OPS BUILDING MECH LEVEL 1 HVAC PIPING PLAN

HS152 — SHEET OF SHEETS

FOR AS-BUILT PLAN ONLY

H-D-PAK-SOB-TR2.34-00362-08-ASB-1905-14

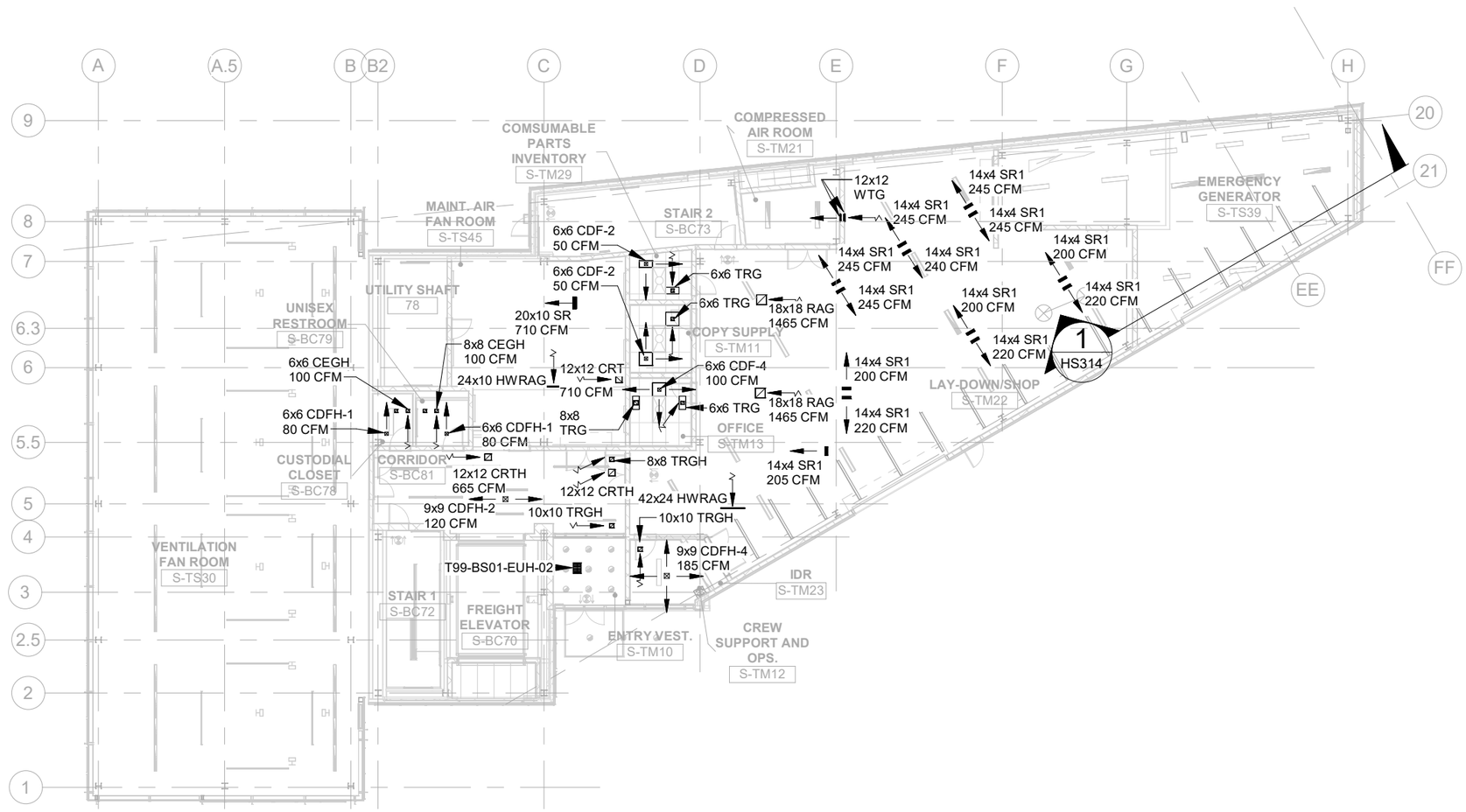

RFI#03742
RFI#03984
RFI#03984R01
RFI#04050

SO OPS BLDG. LEVEL 1 REFLECTED CEILING PLAN (1 / HS153)

1" = 20'-0"

AS-BUILT PLANS ACCURATLEY AND COMPLETELY REFLECT CHANGES AND CORRECTIONS MADE DURING CONSTRUCTION AS DOCUMENTED IN THE RFI AND NDC QA/QC PROCEDURES DEVELOPED FOR THIS PROJECT AND AS BASED ON AS-BUILT INFORMATION PROVIDED BY SEATTLE TUNNEL PARTNERS.

FILE NAME	C:\Users\trtran\Documents\South Building Mech-TWE-Central-HNTB_2018_trtran.rvt
DATE	5/7/2019 3:26:06
TIME	PM
PLOTTED BY	H. TANG
DESIGNED BY	D. MOORE
ENTERED BY	H. TANG
CHECKED BY	W. LI
PROJ. ENGR.	R. JOHNSON
REGIONAL ADM.	L. LAIRD

REVISION | DATE | BY

REGION NO.	STATE	FED.AID PROJ.NO.
10	WASH	BR-0099(111)
JOB NUMBER 10A065		
CONTRACT NO. 007999		LOCATION NO.

EOR — CERTIFYING ENGINEER — 05-14-19

Washington State Department of Transportation
U.S. Department of Transportation Federal Highway Administration
City of Seattle

SR 99 TUNNEL PROJECT

SOUTH OPS BUILDING MECH LEVEL 1 DIFFUSER PLAN

HS153

SHEET OF SHEETS

FOR AS-BUILT PLAN ONLY

H-D-PAK-SOB-TR2.34-00362-08-ASB-1905-14

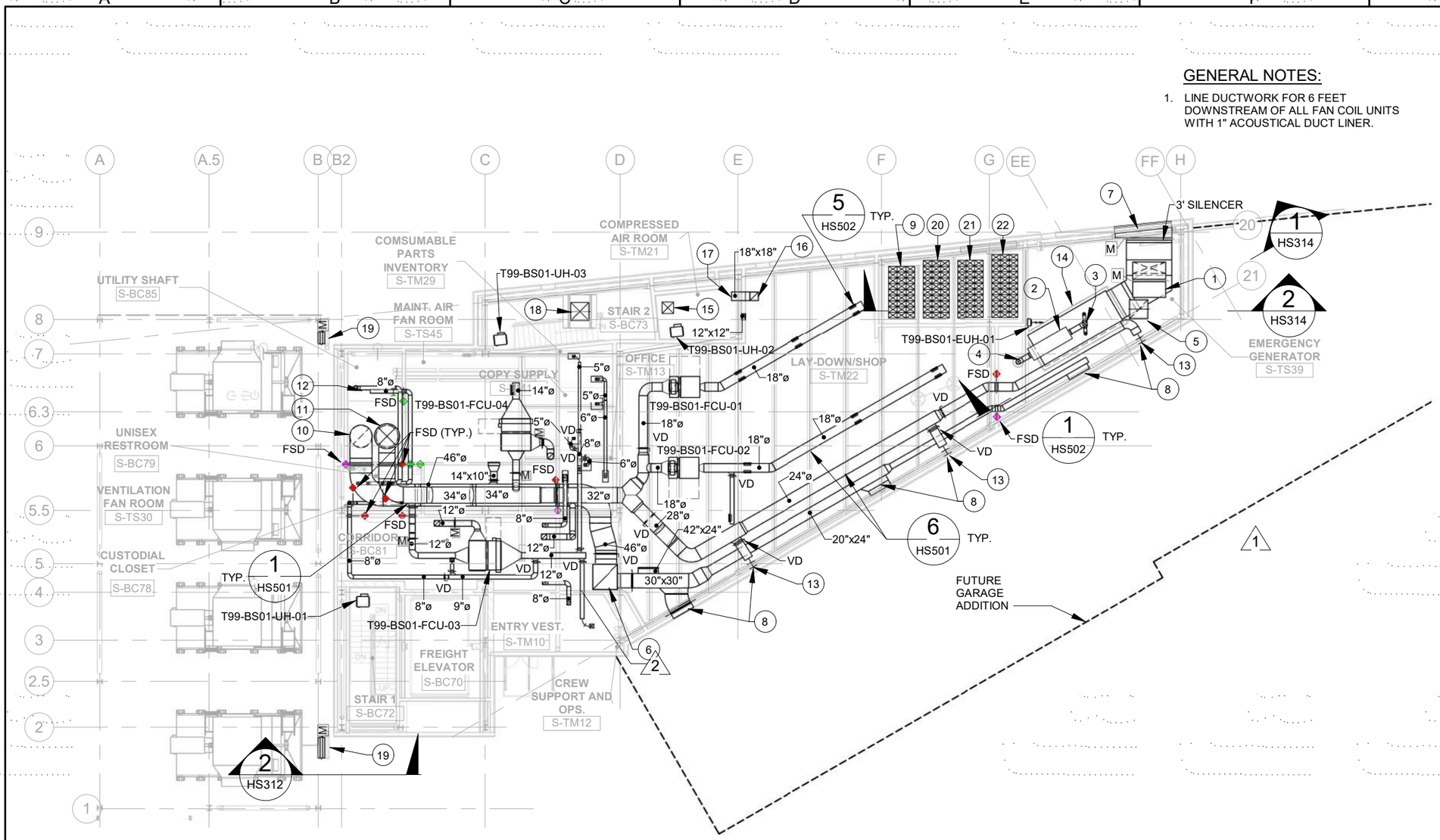

GENERAL NOTES:

1. LINE DUCTWORK FOR 6 FEET DOWNSTREAM OF ALL FAN COIL UNITS WITH 1" ACOUSTICAL DUCT LINER.

PLAN NOTES:

1. 70"x24" OPENING WITH BIRD SCREEN.
2. GENERATOR EXHAUST MUFFLER.
3. 10" DIA. EXHAUST DUCT DN. TO GENERATOR.
4. 10" DIA. EXHAUST DUCT UP THROUGH ROOF.
5. 40"x40" DUCT UP TO ROOF FAN T99-BSO2-EFN-01. PROVIDE MOTORIZED DAMPER ON DUCT RISE AND BIRD SCREEN AT END OF DUCT.
6. 46"x46" DIA DUCT UP.
7. 10'x11' RADIATOR EXHAUST LOUVER, SEE ARCH. PLAN FOR EXACT LOCATION.
8. SEE SOUTH PARKING SHEET HP151 FOR CONTINUATION.
9. 40.5 SQ.FT. OF 3' LONG SILENCERS. T99-BS01-STS-01.
10. 46" DIA. RETURN DUCT DN.
11. 52" DIA. SUPPLY DUCT UP AND 46" DIA. DN.
12. 10" DIA. RESTROOM EXHAUST DUCT UP AND 8" DIA. DN.
13. CAP DUCT FOR FUTURE CONNECTION TO SOUTH PARKING. PROVIDE FLEXIBLE EXPANSION DUCT AT BUILDING SEPARATION.
14. GENERATOR BY DIVISION 26 SHOWN HERE FOR CLARITY.
15. 24"x24" DUCT UP TO ROOF HOOD. PROVIDE BIRD SCREEN AT END OF DUCT.
16. 18"x18" DUCT UP TO ROOF FAN. T99-BS02-EFN-02.
17. PROVIDE BIRD SCREEN AT END OF DUCT.
18. 42"x42" DUCT UP TO ROOF FAN T99-BS02-SFN-01. PROVIDE MOTORIZED DAMPER ON DUCT RISE AND BIRD SCREEN AT END OF DUCT.
19. SEE ARCHITECTURAL PLAN FOR WPL SIZE. PROVIDE SHEET METAL PLENUM AND MOTORIZED DAMPER TO MATCH SIZE OF LOUVER. INTERLOCK DAMPER WITH T99-BS03-EFN-01 AND T99-BS03-EFN-02.
20. 45 SQ.FT. OF 3' LONG SILENCERS. T99-BS01-STS-02.
21. 45 SQ.FT. OF 3' LONG SILENCERS. T99-BS01-STS-03.
22. 49.5 SQ.FT. OF 3' LONG SILENCERS. T99-BS01-STS-04.

RFI #01895
RFI #02729
RFI #03170
RFI #03247
RFI #03472
RFI #03518
RFI #03526
RFI #03527
RFI #03558
RFI #03984
RFI #03984R01

SO OPS BLDG. LEVEL 1 HVAC PLAN (1 / HS154)

1" = 20'-0"

AS-BUILT PLANS ACCURATLEY AND COMPLETELY REFLECT CHANGES AND CORRECTIONS MADE DURING CONSTRUCTION AS DOCUMENTED IN THE RFI AND NDC QA/QC PROCEDURES DEVELOPED FOR THIS PROJECT AND AS BASED ON AS-BUILT INFORMATION PROVIDED BY SEATTLE TUNNEL PARTNERS.

FILE NAME	C:\Users\trtran\Documents\South Building Mech-TWE-Central-HNTB_2018_trtran.rvt
DATE	5/7/2019 3:26:15
TIME	PM
PLOTTED BY	H. TANG
DESIGNED BY	D. MOORE
ENTERED BY	H. TANG
CHECKED BY	W. LI
PROJ. ENGR.	R. JOHNSON
REGIONAL ADM.	L. LAIRD

	REVISION	DATE	BY
2	CONSOLIDATED CONSTRUCTION PACKAGE	07/14/14	DBP
1	NDC 085 SOUTH OPS BLDG PARKING MODIFICATION	04/25/2014	DBP

REGION NO.	STATE	FED.AID PROJ.NO.
10	WASH	BR-0099(111)
JOB NUMBER 10A065		
CONTRACT NO. 007999		LOCATION NO.

EOR — CERTIFYING ENGINEER

Washington State Department of Transportation
U.S. Department of Transportation Federal Highway Administration
City of Seattle

SR 99 TUNNEL PROJECT

SOUTH OPS BUILDING MECH LEVEL 1 HVAC PLAN

HS154

SHEET OF SHEETS

FOR AS-BUILT PLAN ONLY

H-D-PAK-SOB-TR2.34-00362-08-ASB-1905-14

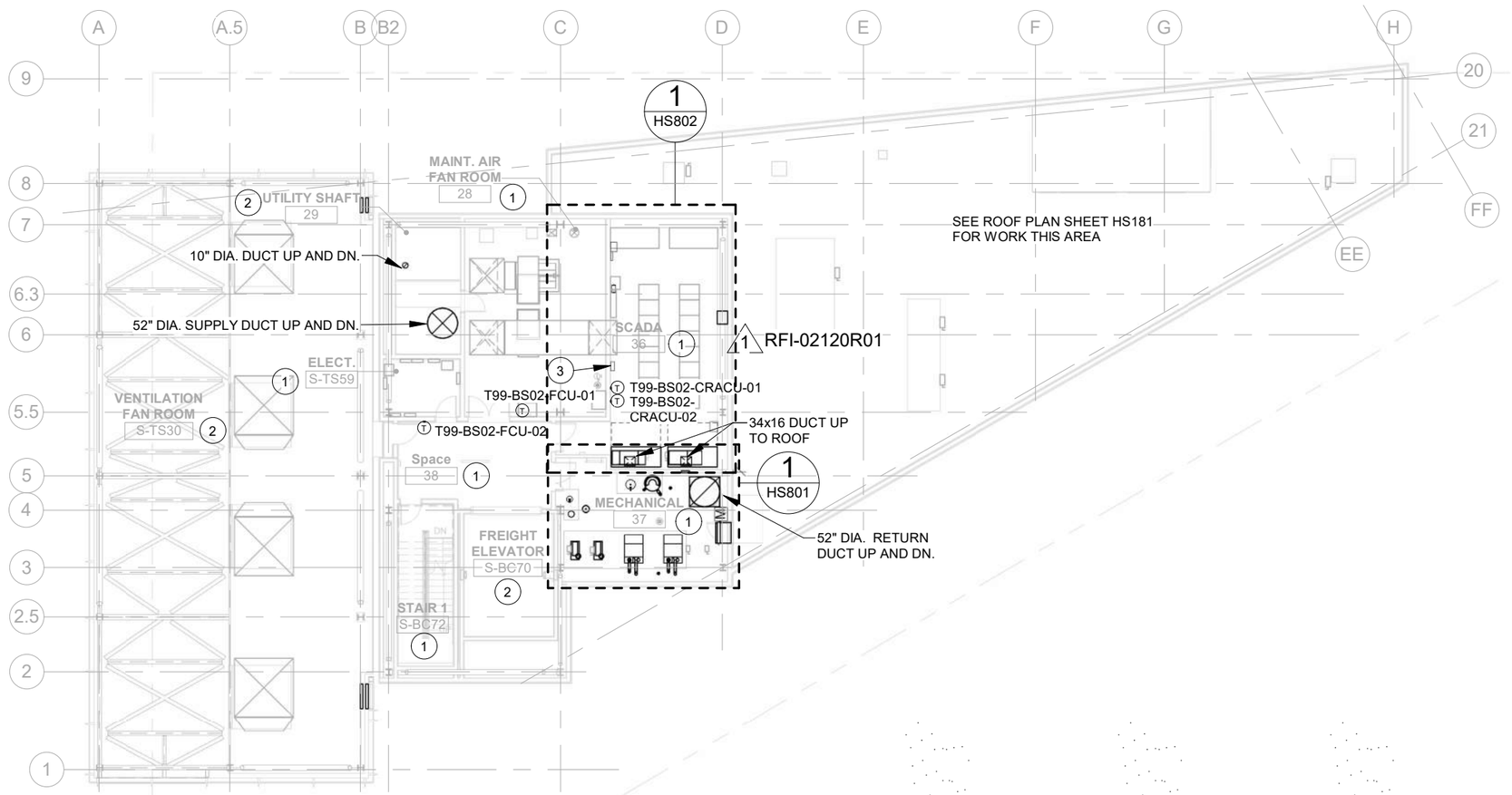

PLAN NOTES:

1. CONDITIONED SPACE, SEE SHEETS AS261 AND AS006.
2. UNCONDITIONED SPACE.
3. FIRE SMOKE DAMPER MAINTENANCE AND TESTING SYSTEM PANEL

RFI #02120
RFI #02120R01
RFI #03528
RFI #03528R01
RFI #03596

SO OPS BLDG. LEVEL 2 HVAC FLOOR PLAN (1 / HS161)

1" = 20'-0"

AS-BUILT PLANS ACCURATLEY AND COMPLETELY REFLECT CHANGES AND CORRECTIONS MADE DURING CONSTRUCTION AS DOCUMENTED IN THE RFI AND NDC QA/QC PROCEDURES DEVELOPED FOR THIS PROJECT AND AS BASED ON AS-BUILT INFORMATION PROVIDED BY SEATTLE TUNNEL PARTNERS.

FILE NAME	C:\Users\trtran\Documents\South Building Mech-TWE-Central-HNTB_2018_trtran.rvt
DATE	5/7/2019 3:32:26
TIME	PM
PLOTTED BY	H. TANG
DESIGNED BY	D. MOORE
ENTERED BY	H. TANG
CHECKED BY	W. LI
PROJ. ENGR.	R. JOHNSON
REGIONAL ADM.	L. LAIRD

REVISION		DATE	BY
1	CONSOLIDATED CONSTRUCTION PACKAGE	07/14/14	DBP

REGION NO.	STATE	FED.AID PROJ.NO.
10	WASH	BR-0099(111)
JOB NUMBER 10A065		
CONTRACT NO. 007999		LOCATION NO.

EOR — CERTIFYING ENGINEER

Washington State Department of Transportation
U.S. Department of Transportation Federal Highway Administration
City of Seattle

SR 99 TUNNEL PROJECT

SOUTH OPS BUILDING MECH LEVEL 2 HVAC FLOOR PLAN

HS161

SHEET OF SHEETS

FOR AS-BUILT PLAN ONLY

H-D-PAK-SOB-TR2.34-00362-08-ASB-1905-14

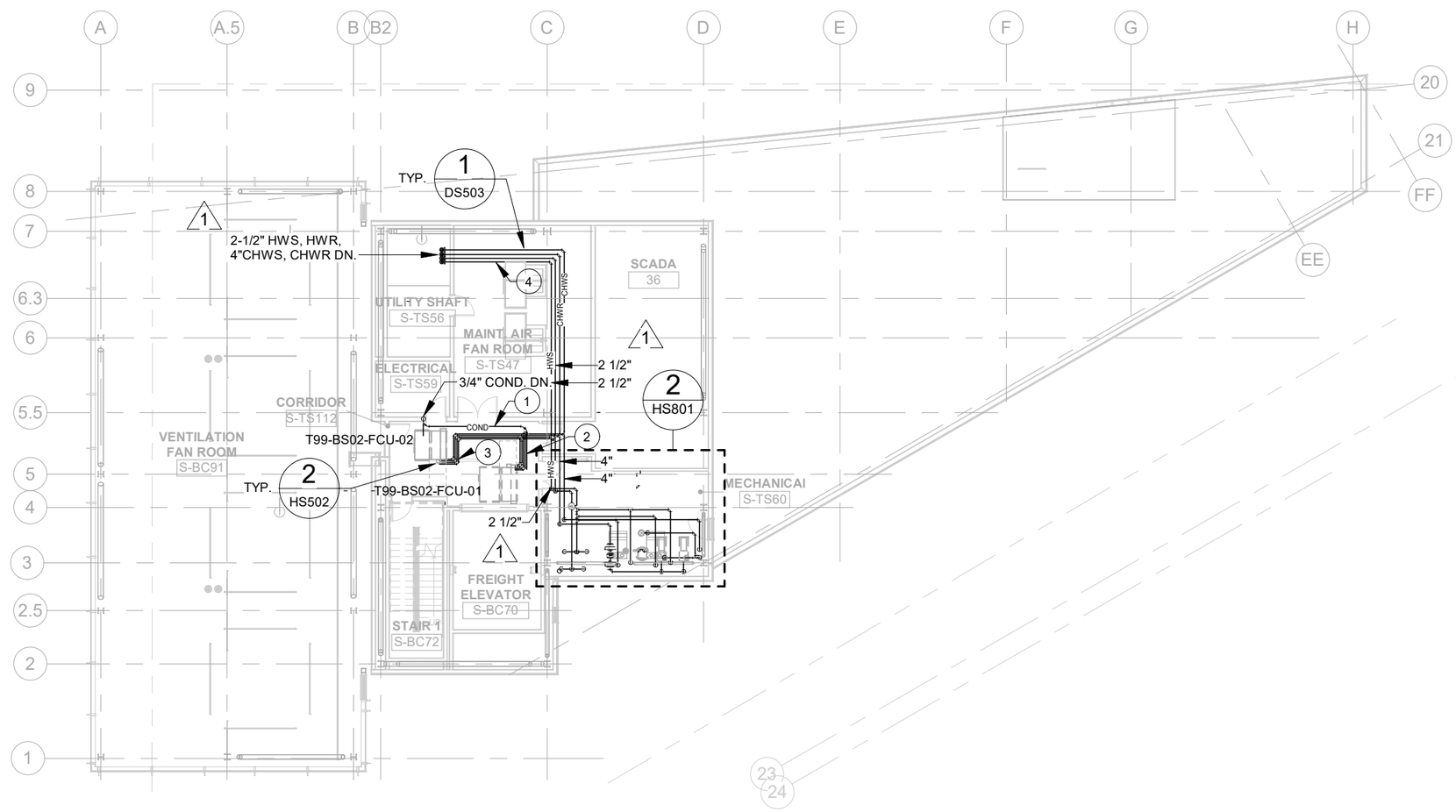

PLAN NOTES:

1. MAINTAIN MINIMUM 1/8" PER FOOT SLOPE FOR CONDENSATE PIPING.
2. 3/4" HWS, HWR, 1" CHWS AND CHWR.
3. 3/4" HWS, HWR, CHWS, CHWR.
4. 2-1/2" HWS, HWR, 4" CHWS, CHWR.

RFI #01916

SO OPS BLDG. LEVEL 2 HVAC PIPING PLAN (1 / HS162)

1" = 20'-0"

AS-BUILT PLANS ACCURATLEY AND COMPLETELY REFLECT CHANGES AND CORRECTIONS MADE DURING CONSTRUCTION AS DOCUMENTED IN THE RFI AND NDC QA/QC PROCEDURES DEVELOPED FOR THIS PROJECT AND AS BASED ON AS-BUILT INFORMATION PROVIDED BY SEATTLE TUNNEL PARTNERS.

FILE NAME	C:\Users\trtran\Documents\South Building Mech-TWE-Central-HNTB_2018_trtran.rvt
DATE	5/7/2019 3:26:22
TIME	PM
PLOTTED BY	H. TANG
DESIGNED BY	D. MOORE
ENTERED BY	H. TANG
CHECKED BY	W. LI
PROJ. ENGR.	R. JOHNSON
REGIONAL ADM.	L. LAIRD

REVISION		DATE	BY
1	CONSOLIDATED CONSTRUCTION PACKAGE	07/14/14	DBP

REGION NO.	STATE	FED.AID PROJ.NO.
10	WASH	BR-0099(111)
JOB NUMBER 10A065		
CONTRACT NO. 007999		LOCATION NO.

EOR

CERTIFYING ENGINEER

Washington State Department of Transportation

U.S. Department of Transportation Federal Highway Administration

City of Seattle

SR 99 TUNNEL PROJECT

SOUTH OPS BUILDING MECH LEVEL 2 HVAC PIPING PLAN

HS162

SHEET OF SHEETS

FOR AS-BUILT PLAN ONLY

H-D-PAK-SOB-TR2.34-00362-08-ASB-1905-14

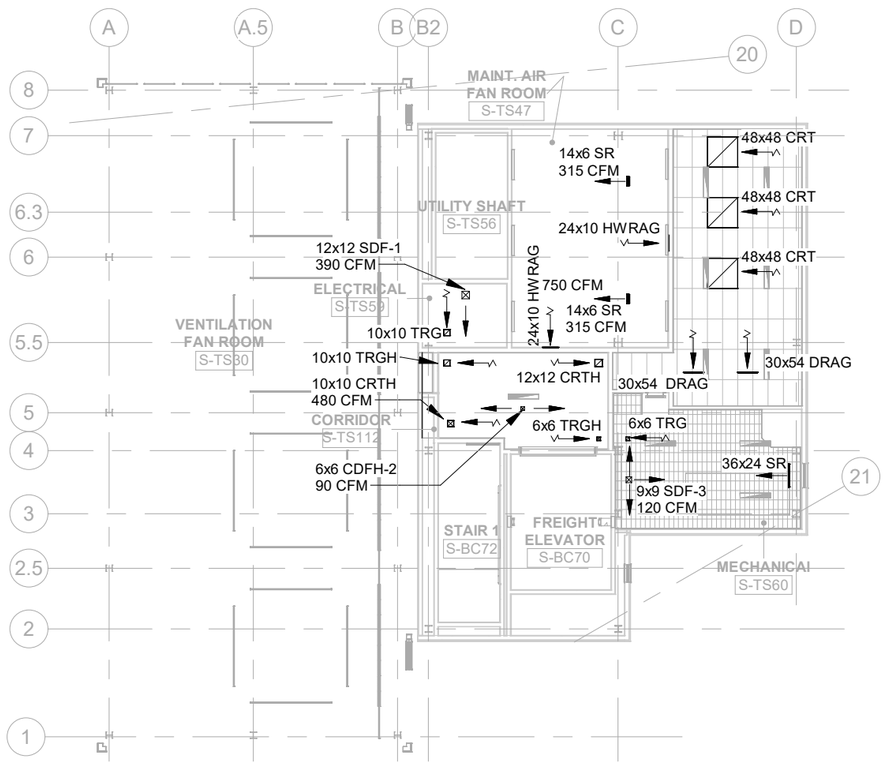

SO OPS BLDG. LEVEL 2 REFLECTED CEILING PLAN

1" = 20'-0"

1 / HS163

RFI #03742
RFI #03984
RFI #03984R01
RFI #04050

AS-BUILT PLANS ACCURATLEY AND COMPLETELY REFLECT CHANGES AND CORRECTIONS MADE DURING CONSTRUCTION AS DOCUMENTED IN THE RFI AND NDC QA/QC PROCEDURES DEVELOPED FOR THIS PROJECT AND AS BASED ON AS-BUILT INFORMATION PROVIDED BY SEATTLE TUNNEL PARTNERS.

FILE NAME	C:\Users\trtran\Documents\South Building Mech-TWE-Central-HNTB_2018_trtran.rvt
DATE	5/7/2019 3:26:25
TIME	PM
PLOTTED BY	H. TANG
DESIGNED BY	D. MOORE
ENTERED BY	H. TANG
CHECKED BY	W. LI
PROJ. ENGR.	R. JOHNSON
REGIONAL ADM.	L. LAIRD

REVISION | DATE | BY

REGION NO.	STATE	FED.AID PROJ.NO.
10	WASH	BR-0099(111)
JOB NUMBER 10A065		
CONTRACT NO. 007999		LOCATION NO.

EOR

CERTIFYING ENGINEER

Washington State Department of Transportation
U.S. Department of Transportation Federal Highway Administration
City of Seattle

SR 99 TUNNEL PROJECT

SOUTH OPS BUILDING MECH LEVEL 2 DIFFUSER PLAN

HS163

SHEET OF SHEETS

FOR AS-BUILT PLAN ONLY

H-D-PAK-SOB-TR2.34-00362-08-ASB-1905-14

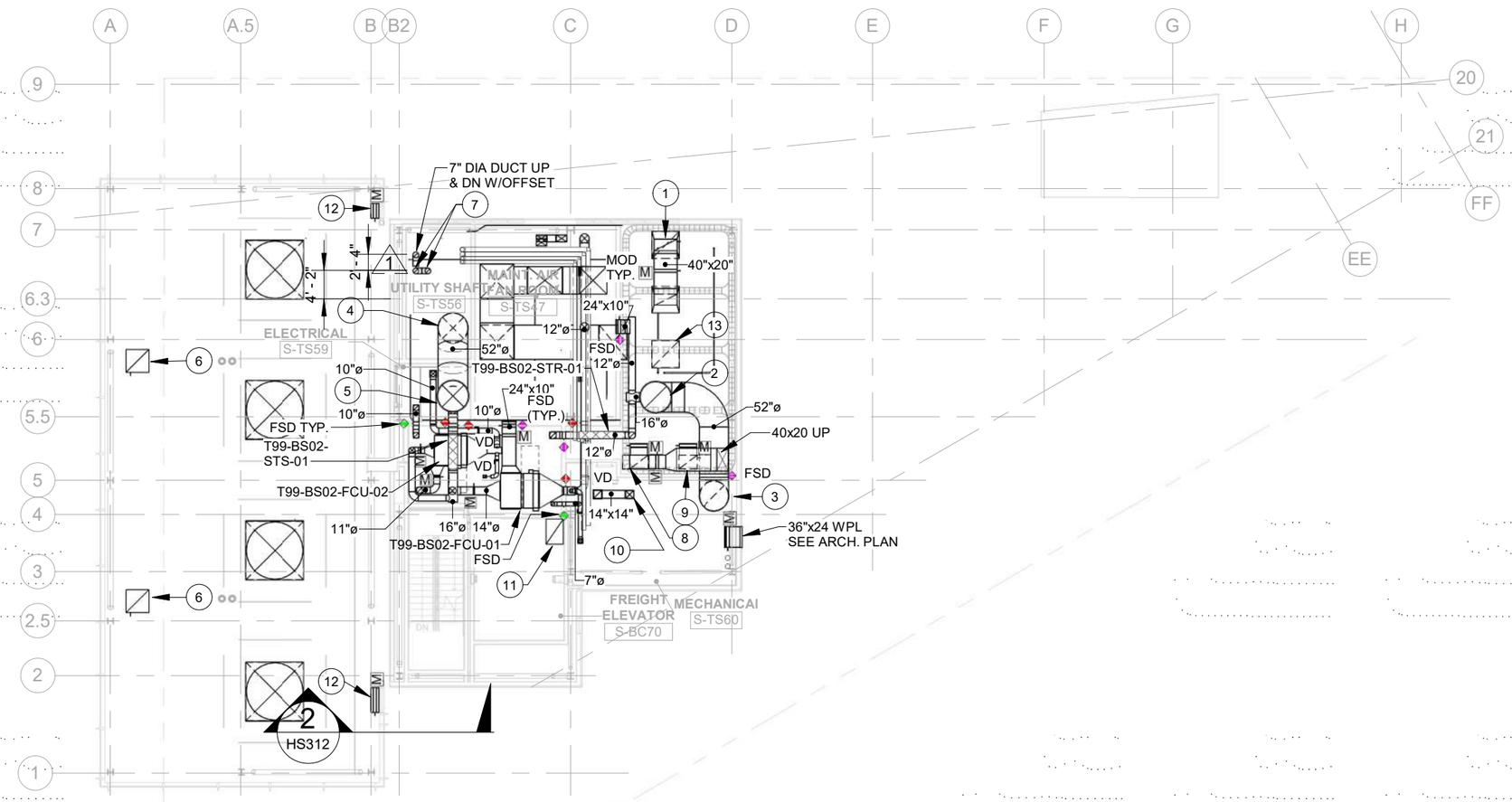

SO OPS BLDG. LEVEL 2 HVAC PLAN (1)

1" = 20'-0" HS164

GENERAL NOTES:

1. LINE DUCTWORK FOR 6 FEET WITH 1" ACOUSTICAL DUCT LINER.

PLAN NOTES:

(1) 40"x20" DUCT DN. TO RELIEF GRILLE AND UP TO ROOF HOOD. PROVIDE MOTORIZED DAMPER ON DUCT DROP.

(2) 52" DIA. RETURN DUCT UP TO T99-BS03-AHU-01 ON ROOF.

(1) (3) 52" DIA. RETURN DUCT DN. TO LEVEL 1. SEE SHEET HS154 FOR CONT. PROVIDE 6' SOUND TRAP ON VERTICAL DUCT DROP T99-BS02-STR-02. TRANSITION TO 46"X46" BELOW SOUND TRAP.

(4) 52" DIA. SUPPLY DUCT DN. PROVIDE 6' SOUND TRAP ON VERTICAL DUCT DROP T99-BS02-STS-02. TRANSITION TO 46"X46" BELOW SOUND TRAP.

(5) 54" DIA. SUPPLY DUCT UP TO T99-BS03-AHU-01 ON ROOF.

(6) 40"x40" DUCT UP TO ROOF FAN. PROVIDE MOTORIZED ON DUCT RISE. PROVIDE BIRD SCREEN AT END OF DUCT.

(7) 12" DIA. RESTROOM EXHAUST DUCT UP AND DN. OFFSET EXHAUST TO SOUTH WALL OF UTILITY SHAFT.

(8) 26"x22" DN. TO CRAC UNIT.

(9) 26"x22" DN. TO CRAC UNIT. PROVIDE MOTORIZED DAMPER ON DUCT DROP.

(10) 14"x14" DUCT UP TO ROOF FAN T99-BS03-EFN-03.

(11) 44"x30" DUCT UP.

(12) SEE ARCHITECTURAL PLAN FOR WPL SIZE PROVIDE SHEET METAL PLENUM AND MOTORIZED DAMPER TO MATCH SIZE OF LOUVER. INTERLOCK DAMPER WITH T99-BS03-EFN-01 AND T99-BS03-EFN-02.

(13) 48"x48" DUCT DN. TO GRILLE AND UP TO CEILING SPACE.

RFI #01895
RFI #02584
RFI #02729
RFI #02816
RFI #02975
RFI #04050
RFI #03984
RFI #03984 R01

AS-BUILT PLANS ACCURATLEY AND COMPLETELY REFLECT CHANGES AND CORRECTIONS MADE DURING CONSTRUCTION AS DOCUMENTED IN THE RFI AND NDC QA/QC PROCEDURES DEVELOPED FOR THIS PROJECT AND AS BASED ON AS-BUILT INFORMATION PROVIDED BY SEATTLE TUNNEL PARTNERS.

FILE NAME	C:\Users\trtran\Documents\South Building Mech-TWE-Central-HNTB_2018_trtran.rvt
DATE	5/7/2019 3:32:33
TIME	PM
PLOTTED BY	H. TANG
DESIGNED BY	D. MOORE
ENTERED BY	H. TANG
CHECKED BY	W. LI
PROJ. ENGR.	R. JOHNSON
REGIONAL ADM.	L. LAIRD

REVISION		DATE	BY
1	CONSOLIDATED CONSTRUCTION PACKAGE	07/14/14	DBP

REGION NO.	STATE	FED.AID PROJ.NO.
10	WASH	BR-0099(111)

JOB NUMBER 10A065

CONTRACT NO. 007999

LOCATION NO.

EOR — CERTIFYING ENGINEER — 05-14-19

Washington State Department of Transportation
U.S. Department of Transportation Federal Highway Administration
City of Seattle

SR 99 TUNNEL PROJECT

SOUTH OPS BUILDING MECH LEVEL 2 HVAC PLAN

HS164

SHEET OF SHEETS

FOR AS-BUILT PLAN ONLY

H-D-PAK-SOB-TR2.34-00362-08-ASB-1905-14

A B C D E F G H

PLAN NOTES:

1. CONDITIONED SPACE, SEE SHEETS AS271 AND AS006.
2. UNCONDITIONED SPACE.
3. 1/4" LIQUID AND 1/2" GAS REFRIGERANT PIPING UP TO T99-BS04-CU-01
4. 3/4" COND. DN. SEE SHEET HS801 FOR CONT.
5. REFER TO RFI-3479 FOR CHANGES TO ARCHITECTURAL WALL

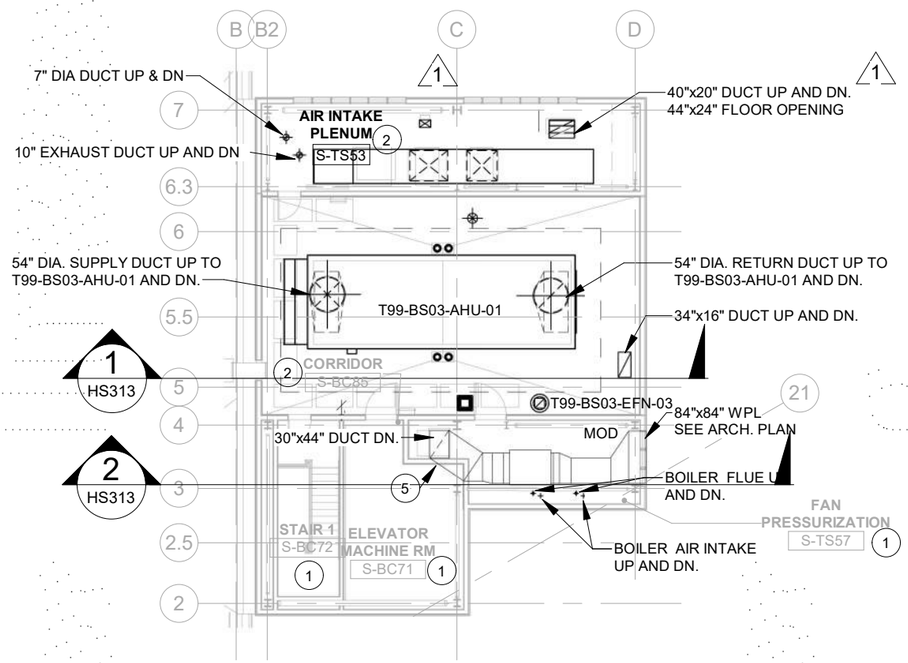

SO OPS BLDG. LEVEL 3 HVAC FLOOR PLAN (1)

1" = 20'-0" HS171

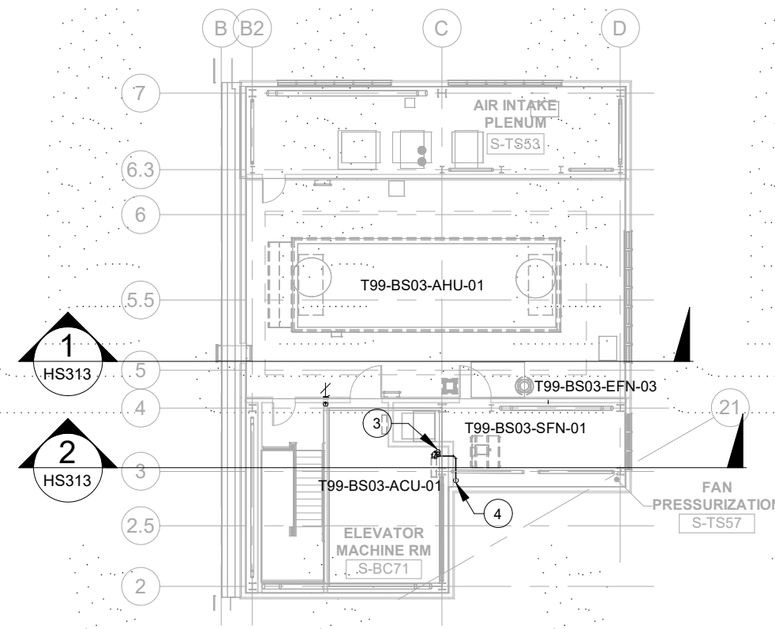

SO OPS BLDG. LEVEL 3 HVAC PIPING PLAN (2)

1" = 20'-0" HS171

RFI #02147
RFI #02729
RFI #03248
RFI #03479

AS-BUILT PLANS ACCURATLEY AND COMPLETELY REFLECT CHANGES AND CORRECTIONS MADE DURING CONSTRUCTION AS DOCUMENTED IN THE RFI AND NDC QA/QC PROCEDURES DEVELOPED FOR THIS PROJECT AND AS BASED ON AS-BUILT INFORMATION PROVIDED BY SEATTLE TUNNEL PARTNERS.

FILE NAME	C:\Users\trtran\Documents\South Building Mech-TWE-Central-HNTB_2018_trtran.rvt
DATE	5/8/2019 1:27:29
TIME	PM
PLOTTED BY	H. TANG
DESIGNED BY	D. MOORE
ENTERED BY	H. TANG
CHECKED BY	W. LI
PROJ. ENGR.	R. JOHNSON
REGIONAL ADM.	L. LAIRD

REVISION	DATE	BY
1 CONSOLIDATED CONSTRUCTION PACKAGE	07/14/14	DBP

REGION NO. 10 | STATE WASH | JOB NUMBER 10A065 | CONTRACT NO. 007999

FED.AID PROJ.NO. BR-0099(111)

LOCATION NO.

EOR — CERTIFYING ENGINEER — 05-14-19

Washington State Department of Transportation
U.S. Department of Transportation Federal Highway Administration
City of Seattle

SR 99 TUNNEL PROJECT

SOUTH OPS BUILDING MECH LEVEL 3 FLOOR PLANS

HS171 SHEET OF SHEETS

FOR AS-BUILT PLAN ONLY

H-D-PAK-SOB-TR2.34-00362-08-ASB-1905-14

A B C D E F G H

PLAN NOTES:

1. 12" DIA. DUCT DN. AND UP TO T99-BS04-EFN-01.WITH 1'-1" X 1'-1" ROOF OPENING. OFFSET EXHAUST TO SOUTHWALL OF AIR INTAKE PLENUM.
2. 40"x20" DUCT DN. AND UP TO ROOF HOOD.
3. WEATHERPROOF LOUVER. SEE ARCH. PLAN FOR LOUVER SIZE.
4. 4" DIA. BOILER FLUE AND 4" DIA. BOILER AIR INTAKE UP AND DN.
5. 40"x40" DUCT UP TO ROOF FAN T99-BS04-SFN-01. PROVIDE MOTORIZED DAMPER ON DUCT RISE AND BIRD SCREEN AT END OF DUCT.
6. 44"x30" DUCT DN. TO ELEVATOR SHAFT PROVIDE BIRD SCREEN AT END OF DUCT.
7. 1/4" LIQUID AND 1/2" GAS REFRIGERANT PIPING UP TO T99-BS04-CU-01. ON ROOF.
8. 7" DIA DUCT DN. AND UP TO T99-BS04-EFN-02 WITH 9" X 9" ROOF OPENING. OFFSET EXHAUST TO SOUTH WALL OF AIR INTAKE PLENUM.
9. REFER TO RFI 3479 FOR CHANGES TO ARCHITECTURAL WALL

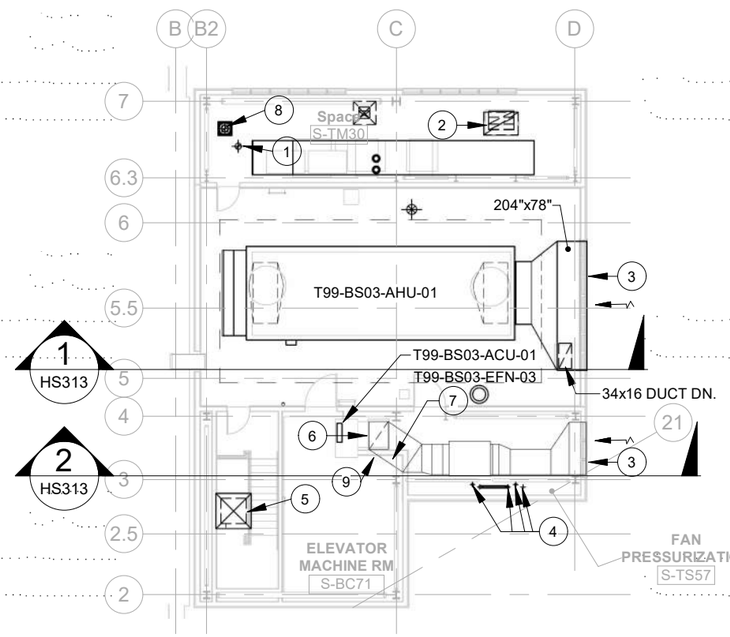

RFI #02584
RFI #02729
RFI #02816
RFI #03716

SO OPS BLDG. LEVEL 3 HVAC PLAN

1" = 20'-0"

1 HS172

AS-BUILT PLANS ACCURATLEY AND COMPLETELY REFLECT CHANGES AND CORRECTIONS MADE DURING CONSTRUCTION AS DOCUMENTED IN THE RFI AND NDC QA/QC PROCEDURES DEVELOPED FOR THIS PROJECT AND AS BASED ON AS-BUILT INFORMATION PROVIDED BY SEATTLE TUNNEL PARTNERS.

FILE NAME	C:\Users\trtran\Documents\South Building Mech-TWE-Central-HNTB_2018_trtran.rvt
DATE	5/8/2019 1:27:33
TIME	PM
PLOTTED BY	H. TANG
DESIGNED BY	D. MOORE
ENTERED BY	H. TANG
CHECKED BY	W. LI
PROJ. ENGR.	R. JOHNSON
REGIONAL ADM.	L. LAIRD

REVISION | DATE | BY

REGION NO.	STATE	FED.AID PROJ.NO.
10	WASH	BR-0099(111)
JOB NUMBER 10A065		
CONTRACT NO. 007999		LOCATION NO.

EOR — CERTIFYING ENGINEER — 05-14-19

Washington State Department of Transportation
U.S. Department of Transportation Federal Highway Administration
City of Seattle

SR 99 TUNNEL PROJECT

SOUTH OPS BUILDING MECH LEVEL 3 HVAC PLANS

HS172

SHEET OF SHEETS

FOR AS-BUILT PLAN ONLY

H-D-PAK-SOB-TR2.34-00362-08-ASB-1905-14

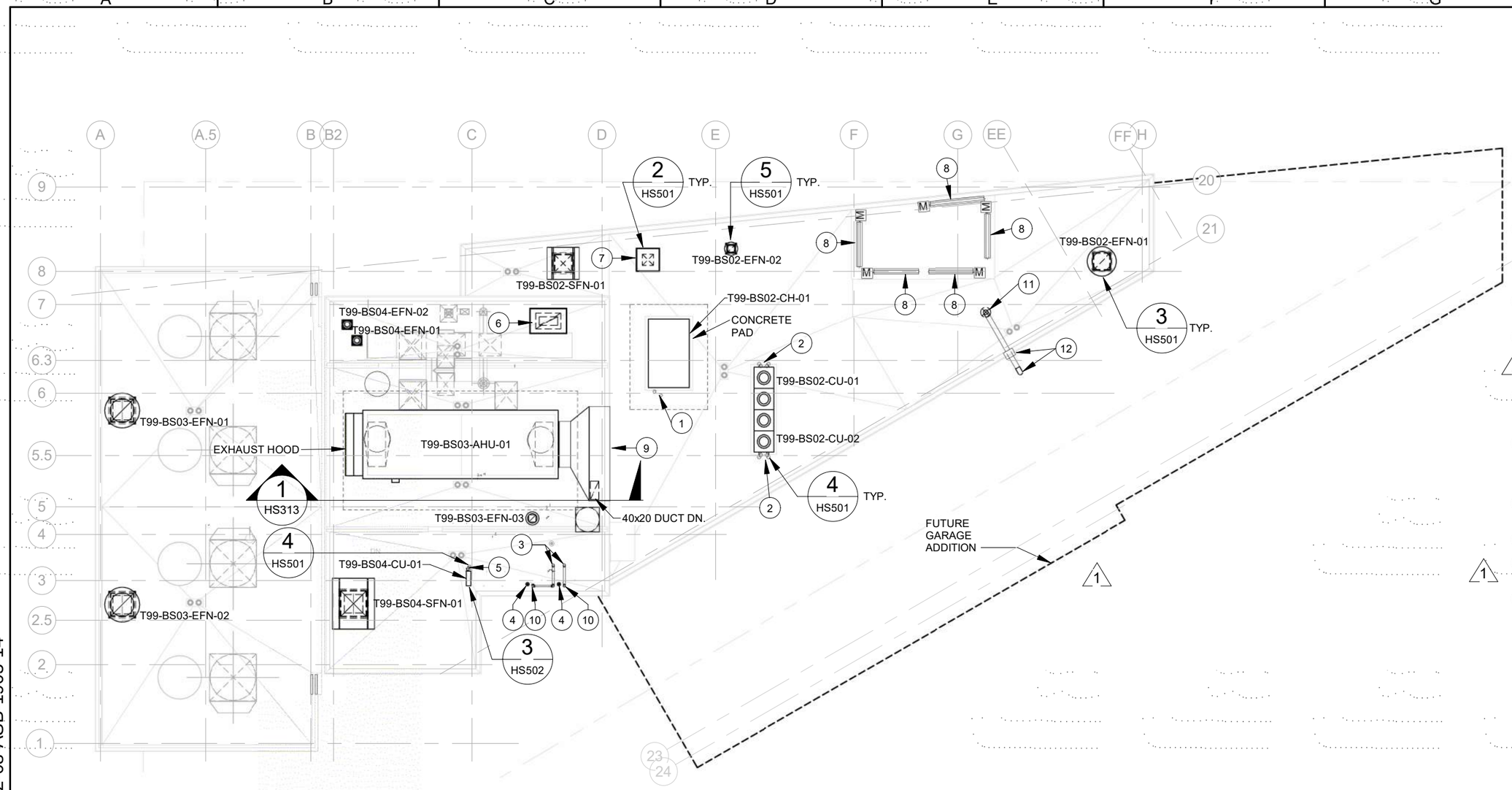

PLAN NOTES:

1. 4" CHWS AND CHWR DN. THRU ROOF.
2. 7/8" HOT GAS AND 5/8" LIQUID DN. TO T99-BS02-CRACU-01 AND T99-BS02-CRACU-02.
3. 4" DIA. BOILER AIR INTAKE WITH BIRD SCREEN.
4. 4" DIA. BOILER FLUE GAS VENT WITH BIRD SCREEN.
5. REFRIGERANT PIPING DN. TO T99-BS03-ACU-01.
6. ROOF HOOD T99-BS04-RH-01. THROAT SIZE 36"x54" HOOD SIZE 48"x78"x16"H. 38.5"X56.5" ROOF OPENING (2)
7. ROOF HOOD T99-BS02-RH-01 THROAT SIZE 24"x24" HOOD SIZE 48"x48"x12"H
8. DUCT PLENUM WITH MOTORIZED DAMPER TO MATCH ARCH. LOUVER. SEE ARCHITECTURAL PLAN FOR LOUVER SIZE.
9. WEATHERPROOF LOUVER . SEE ARCH. PLAN FOR LOUVER SIZE.
10. 4" DIA. BOILER AIR INTAKE DN.
11. 10" DIA. EXHAUST DN THROUGH ROOF. PROVIDE THIMBLE. (1)
12. 10" DIA. EXHAUST. TERMINATE 36" BEYOND PARAPET WALL. PROVIDE THIMBLE AT PARAPET WALL. TERMINATE EXHAUST PIPE INSULATION AT PARAPET WALL.

RFI #02584
RFI #02729
RFI #02858
RFI #02866
RFI #02978
RFI #03169
RFI #03220
RFI #03560

SO OPS BLDG. MECHANICAL ROOF PLAN (1 / HS181)

1" = 20'-0"

AS-BUILT PLANS ACCURATLEY AND COMPLETELY REFLECT CHANGES AND CORRECTIONS MADE DURING CONSTRUCTION AS DOCUMENTED IN THE RFI AND NDC QA/QC PROCEDURES DEVELOPED FOR THIS PROJECT AND AS BASED ON AS-BUILT INFORMATION PROVIDED BY SEATTLE TUNNEL PARTNERS.

FILE NAME	C:\Users\trtran\Documents\South Building Mech-TWE-Central-HNTB_2018_trtran.rvt
DATE	5/7/2019 3:32:43
TIME	PM
PLOTTED BY	H. TANG
DESIGNED BY	D. MOORE
ENTERED BY	H. TANG
CHECKED BY	W. LI
PROJ. ENGR.	R. JOHNSON
REGIONAL ADM.	L. LAIRD

	REVISION	DATE	BY
2	CONSOLIDATED CONSTRUCTION PACKAGE	07/14/14	DBP
1	NDC 085 SOUTH OPS BLDG PARKING MODIFICATION	04/25/2014	DBP

REGION NO.	STATE	FED.AID PROJ.NO.
10	WASH	BR-0099(111)
JOB NUMBER 10A065		
CONTRACT NO. 007999		LOCATION NO.

EOR — CERTIFYING ENGINEER

Washington State Department of Transportation
U.S. Department of Transportation Federal Highway Administration
City of Seattle

SR 99 TUNNEL PROJECT

SOUTH OPS BUILDING MECH ROOF PLAN

HS181

SHEET OF SHEETS

FOR AS-BUILT PLAN ONLY

H-D-PAK-SOB-TR2.34-00362-08-ASB-1905-14

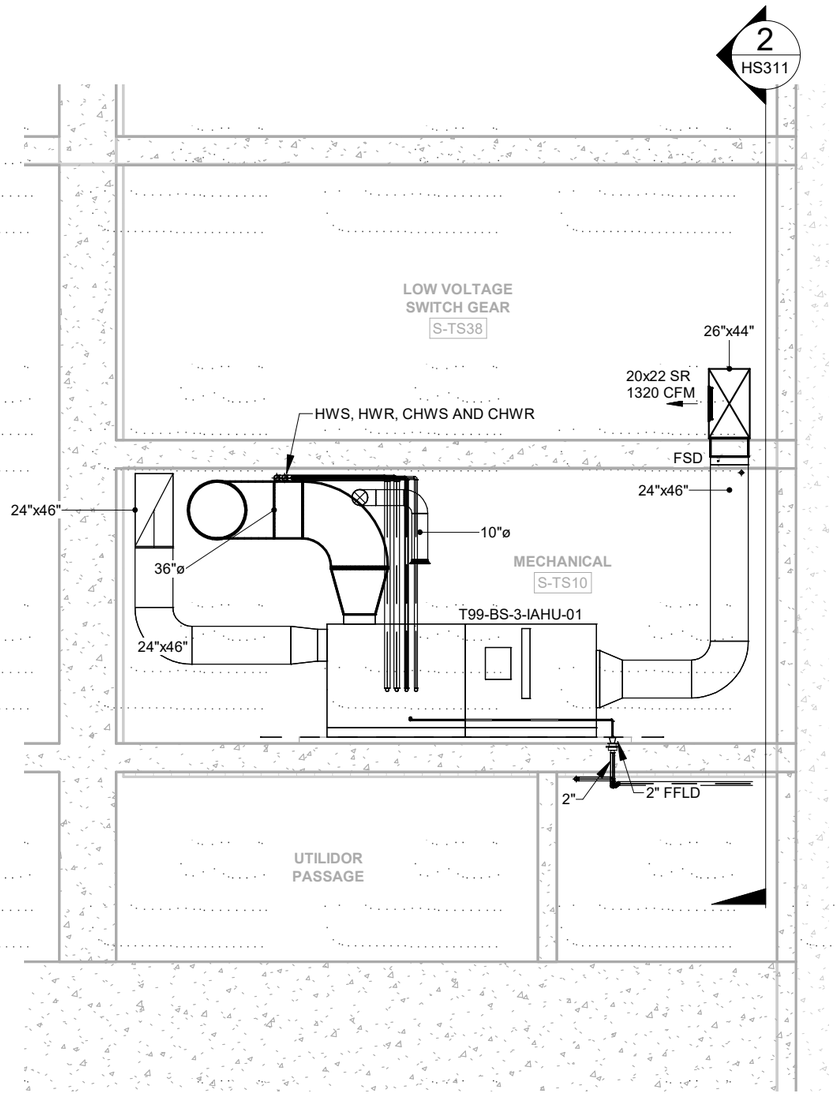

MECHANICAL SECTION 1
1/8" = 1'-0" HS311

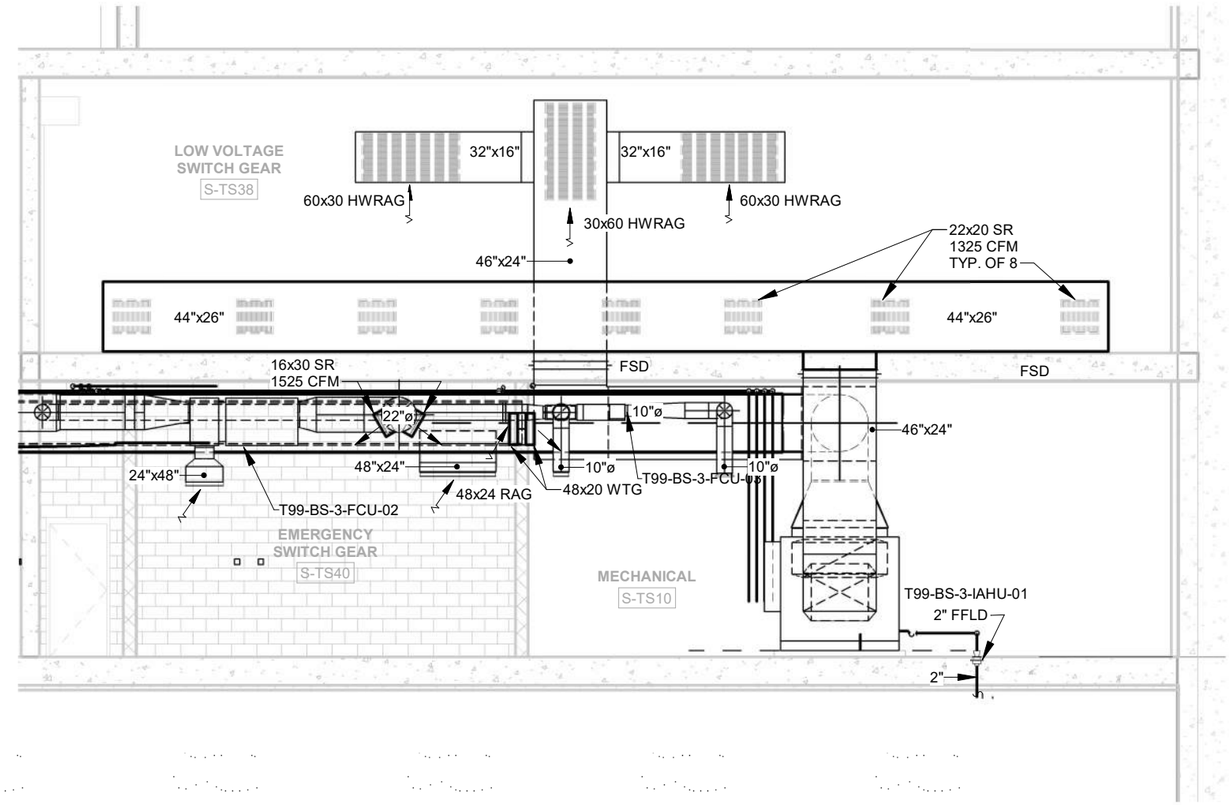

MECHANICAL SECTION 2
1/8" = 1'-0" 2 HS311

AS-BUILT PLANS ACCURATLEY AND COMPLETELY REFLECT CHANGES AND CORRECTIONS MADE DURING CONSTRUCTION AS DOCUMENTED IN THE RFI AND NDC QA/QC PROCEDURES DEVELOPED FOR THIS PROJECT AND AS BASED ON AS-BUILT INFORMATION PROVIDED BY SEATTLE TUNNEL PARTNERS.

FILE NAME	C:\Users\trtran\Documents\South Building Mech-TWE-Central-HNTB_2018_trtran.rvt
DATE	5/7/2019 3:32:48
TIME	PM
PLOTTED BY	H. TANG
DESIGNED BY	D. MOORE
ENTERED BY	H. TANG
CHECKED BY	W. LI
PROJ. ENGR.	R. JOHNSON
REGIONAL ADM.	L. LAIRD

REVISION	DATE	BY

REGION NO.	STATE	FED.AID PROJ.NO.
10	WASH	BR-0099(111)
JOB NUMBER 10A065		
CONTRACT NO. 007999		LOCATION NO.

EOR

CERTIFYING ENGINEER 05-14-19

Washington State Department of Transportation
U.S. Department of Transportation Federal Highway Administration
City of Seattle

SR 99 TUNNEL PROJECT

SOUTH OPS BUILDING MECHANICAL SECTIONS

HS311

SHEET OF SHEETS

FOR AS-BUILT PLAN ONLY

H-D-PAK-SOB-TR2.34-00362-08-ASB-1905-14

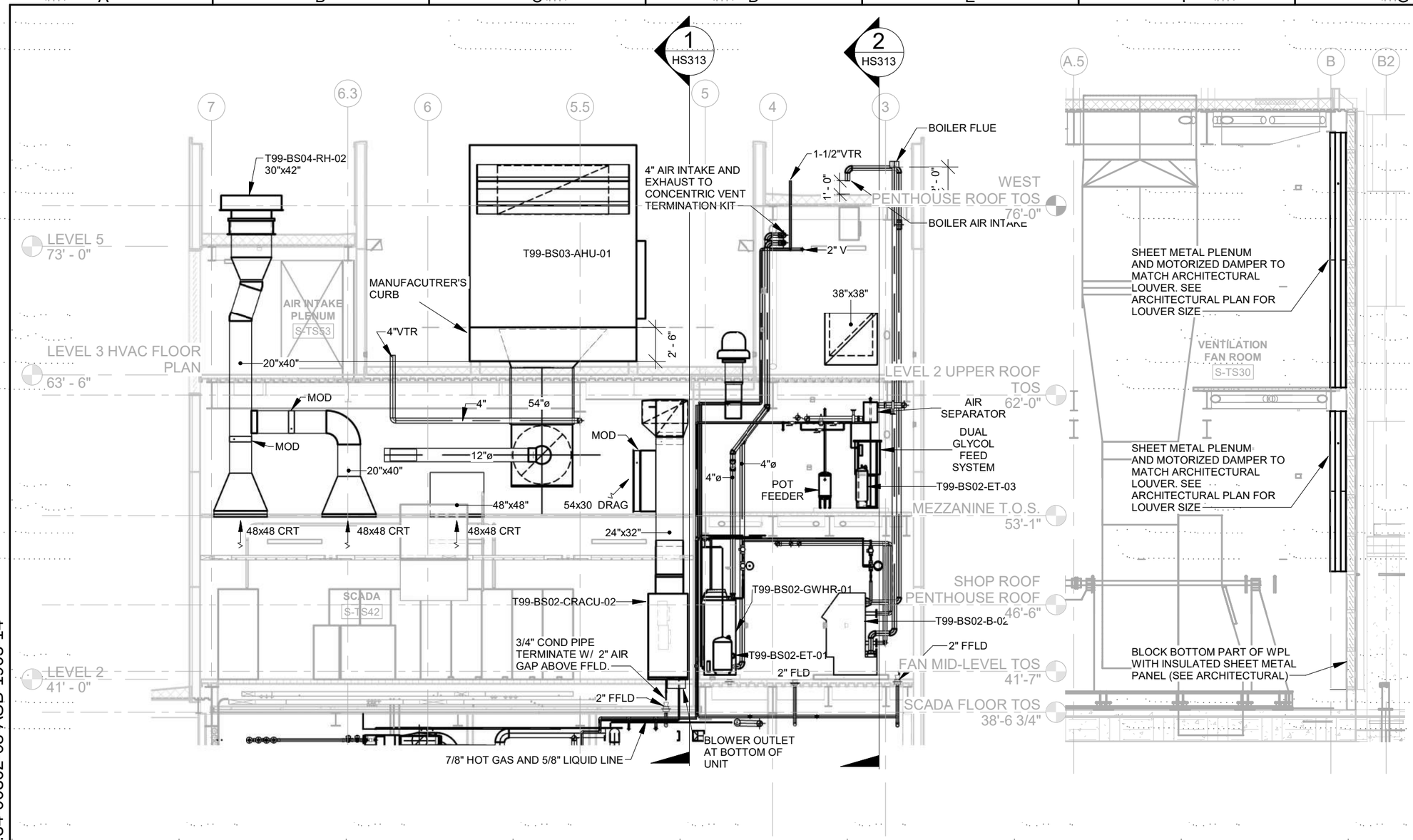

MECHANICAL SECTION 1 HS312
1/8" = 1'-0"

MECHANICAL SECTION 2 HS312
1/8" = 1'-0"

AS-BUILT PLANS ACCURATLEY AND COMPLETELY REFLECT CHANGES AND CORRECTIONS MADE DURING CONSTRUCTION AS DOCUMENTED IN THE RFI AND NDC QA/QC PROCEDURES DEVELOPED FOR THIS PROJECT AND AS BASED ON AS-BUILT INFORMATION PROVIDED BY SEATTLE TUNNEL PARTNERS.

FILE NAME	C:\Users\trtran\Documents\South Building Mech-TWE-Central-HNTB_2018_trtran.rvt
DATE	5/7/2019 3:26:46
TIME	PM
PLOTTED BY	H. TANG
DESIGNED BY	D. MOORE
ENTERED BY	H. TANG
CHECKED BY	W. LI
PROJ. ENGR.	R. JOHNSON
REGIONAL ADM.	L. LAIRD

REVISION | DATE | BY

REGION NO.	STATE	FED.AID PROJ.NO.
10	WASH	BR-0099(111)
JOB NUMBER 10A065		
CONTRACT NO. 007999		LOCATION NO.

EOR

CERTIFYING ENGINEER

Washington State Department of Transportation
U.S. Department of Transportation Federal Highway Administration
City of Seattle

SR 99 TUNNEL PROJECT

SOUTH OPS BUILDING MECHANICAL SECTIONS

HS312

SHEET OF SHEETS

FOR AS-BUILT PLAN ONLY

H-D-PAK-SOB-TR2.34-00362-08-ASB-1905-14

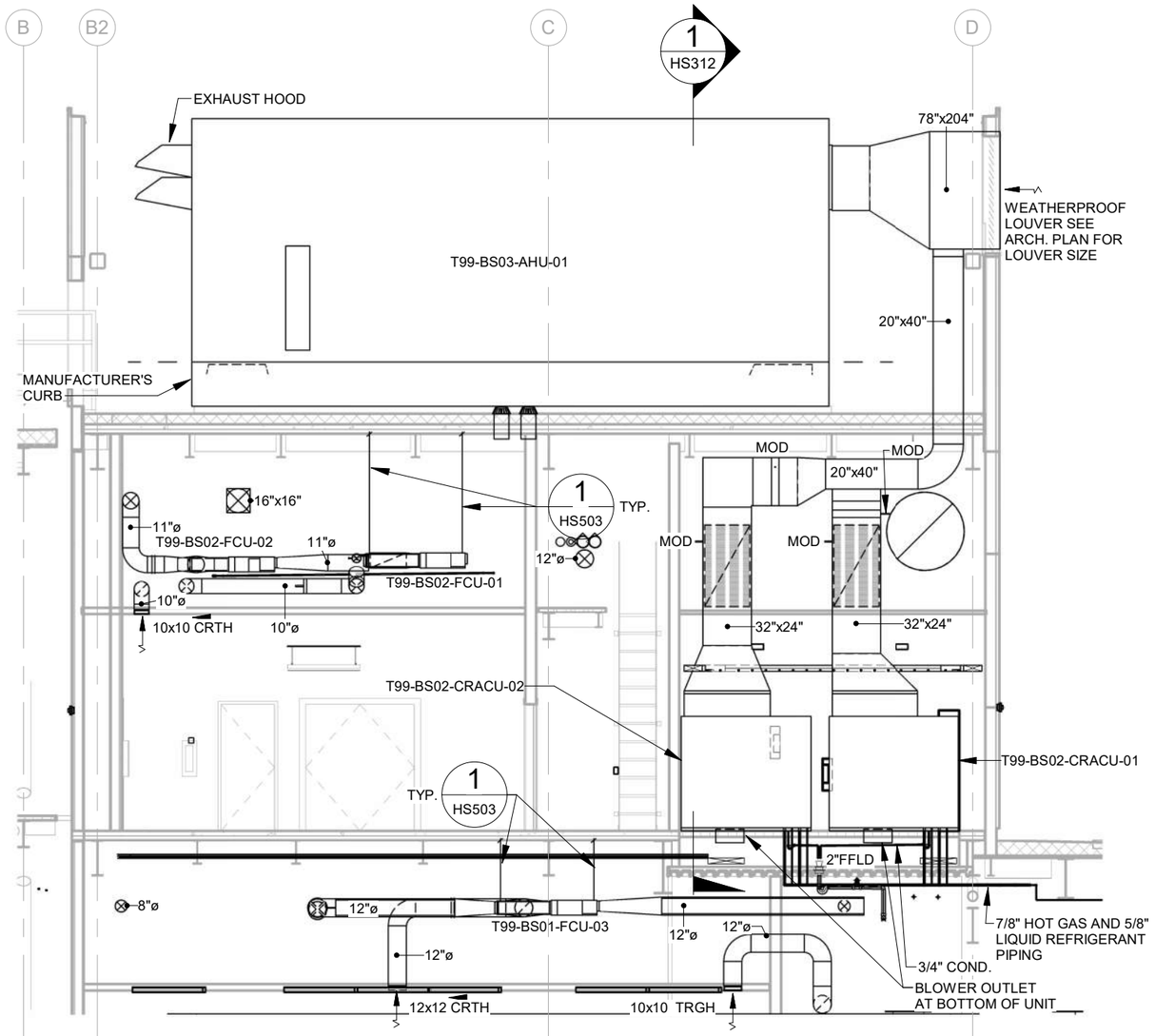

MECHANICAL SECTION 1 HS313

1/8" = 1'-0"

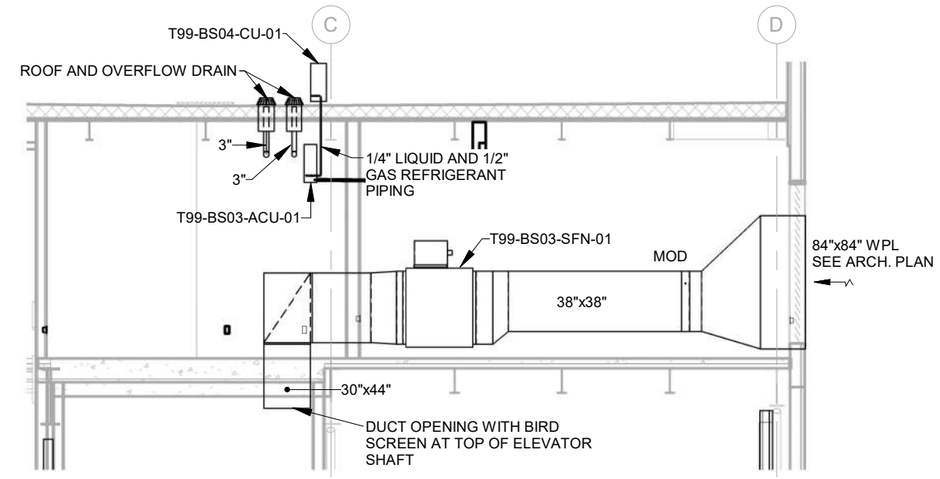

MECHANICAL SECTION 2 HS313

1/8" = 1'-0"

AS-BUILT PLANS ACCURATLEY AND COMPLETELY REFLECT CHANGES AND CORRECTIONS MADE DURING CONSTRUCTION AS DOCUMENTED IN THE RFI AND NDC QA/QC PROCEDURES DEVELOPED FOR THIS PROJECT AND AS BASED ON AS-BUILT INFORMATION PROVIDED BY SEATTLE TUNNEL PARTNERS.

FILE NAME	C:\Users\trtran\Documents\South Building Mech-TWE-Central-HNTB_2018_trtran.rvt
DATE	5/7/2019 3:26:53
TIME	PM
PLOTTED BY	H. TANG
DESIGNED BY	D. MOORE
ENTERED BY	H. TANG
CHECKED BY	W. LI
PROJ. ENGR.	R. JOHNSON
REGIONAL ADM.	L. LAIRD

	REVISION	DATE	BY
1	NDC 085 SOUTH OPS BLDG PARKING MODIFICATION	04/25/2014	DBP

REGION NO. 10 | STATE WASH | FED.AID PROJ.NO. BR-0099(111)

JOB NUMBER 10A065

CONTRACT NO. 007999

LOCATION NO.

EOR — CERTIFYING ENGINEER

Washington State Department of Transportation

U.S. Department of Transportation Federal Highway Administration

City of Seattle

SR 99 TUNNEL PROJECT

SOUTH OPS BUILDING MECHANICAL SECTIONS

HS313

SHEET OF SHEETS

FOR AS-BUILT PLAN ONLY

H-D-PAK-SOB-TR2.34-00362-08-ASB-1905-14

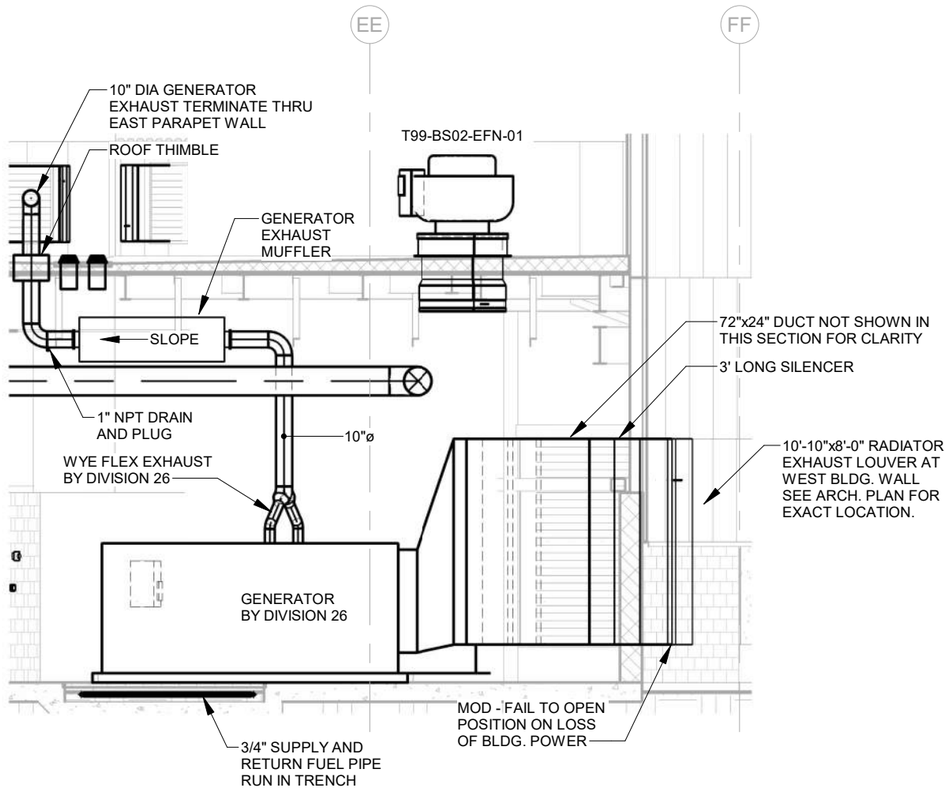

MECHANICAL SECTION 1 (DS151)

1/8" = 1'-0"

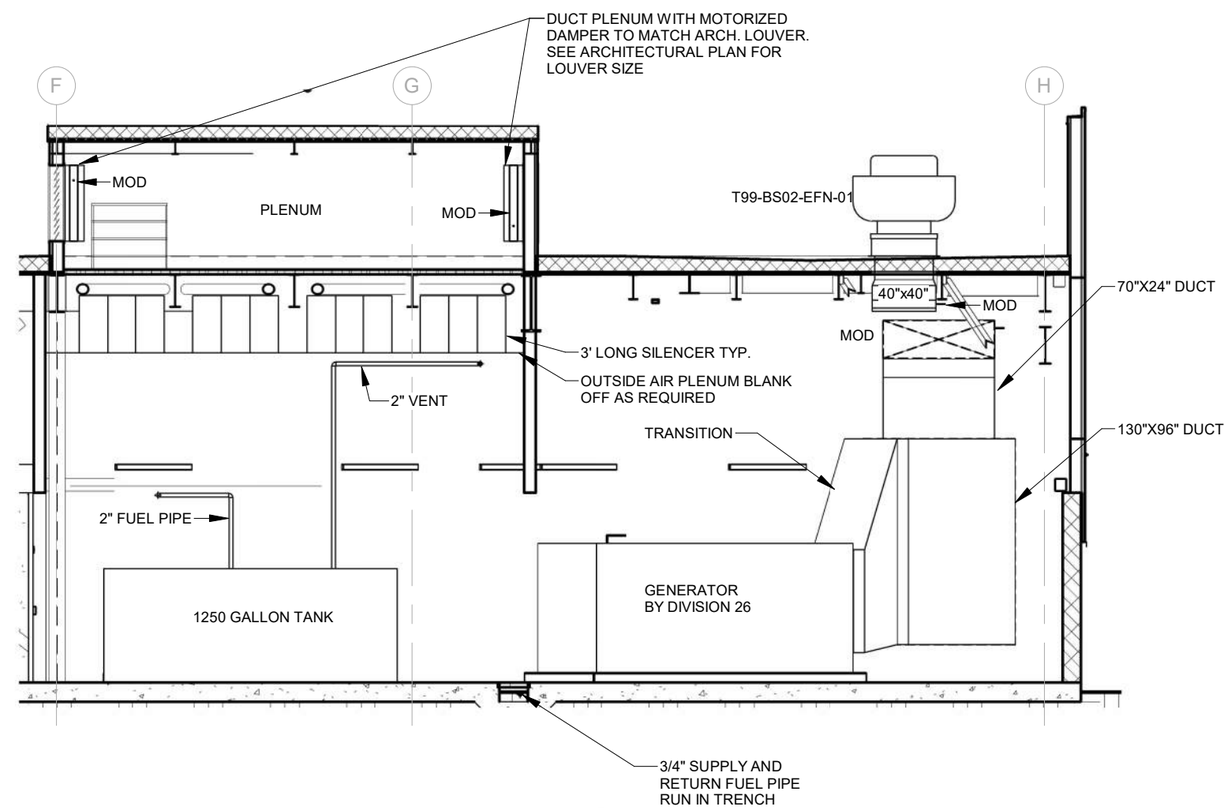

MECHANICAL SECTION 2 (DS151)

1/8" = 1'-0"

RFI #03383

AS-BUILT PLANS ACCURATLEY AND COMPLETELY REFLECT CHANGES AND CORRECTIONS MADE DURING CONSTRUCTION AS DOCUMENTED IN THE RFI AND NDC QA/QC PROCEDURES DEVELOPED FOR THIS PROJECT AND AS BASED ON AS-BUILT INFORMATION PROVIDED BY SEATTLE TUNNEL PARTNERS.

FILE NAME	C:\Users\trtran\Documents\South Building Mech-TWE-Central-HNTB_2018_trtran.rvt
DATE	5/7/2019 3:26:59
TIME	PM
PLOTTED BY	H. EMMETT
DESIGNED BY	D. PARKER
ENTERED BY	H. EMMETT
CHECKED BY	M. KELLEGREW
PROJ. ENGR.	R. JOHNSON
REGIONAL ADM.	L. LAIRD

	REVISION	DATE	BY
1	NDC 085 SOUTH OPS BLDG PARKING MODIFICATION - NEW SHEET	04/25/2014	DBP

REGION NO.	STATE	FED.AID PROJ.NO.
10	WASH	BR-0099(111)
JOB NUMBER 10A065		
CONTRACT NO. 007999		LOCATION NO.

EOR — CERTIFYING ENGINEER

Washington State Department of Transportation
U.S. Department of Transportation Federal Highway Administration
City of Seattle

SR 99 TUNNEL PROJECT

SOUTH OPS BUILDING MECHANICAL SECTIONS

HS314

SHEET OF SHEETS

FOR AS-BUILT PLAN ONLY

H-D-PAK-SOB-TR2.34-00362-08-ASB-1905-14

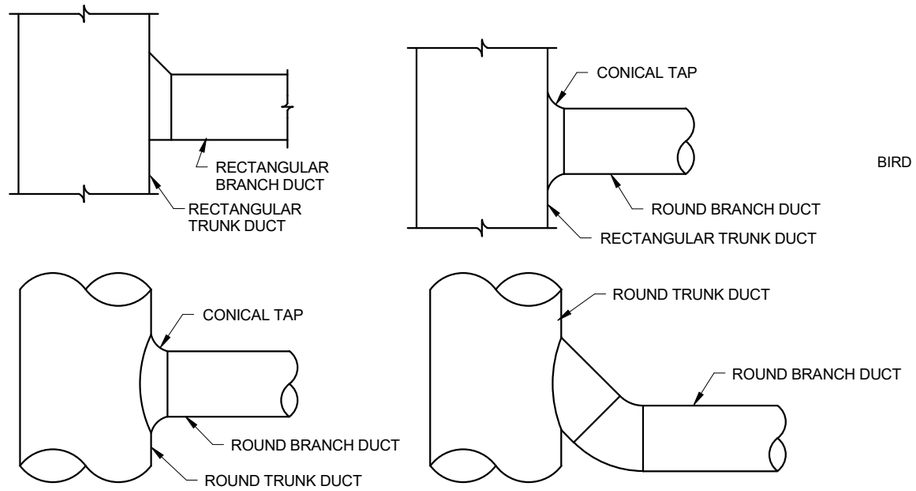

BRANCH DUCT CONNECTION DETAIL (1 / HS501)

SCALE: NONE

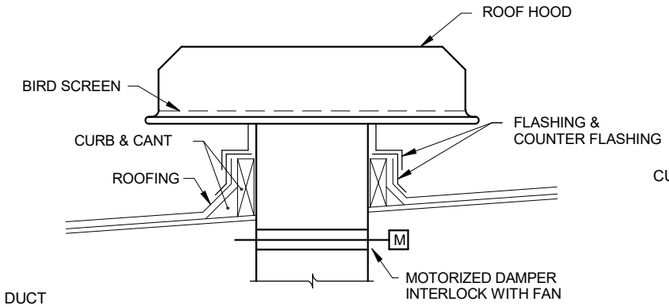

ROOF HOOD DETAIL (2 / HS501)

SCALE: NONE

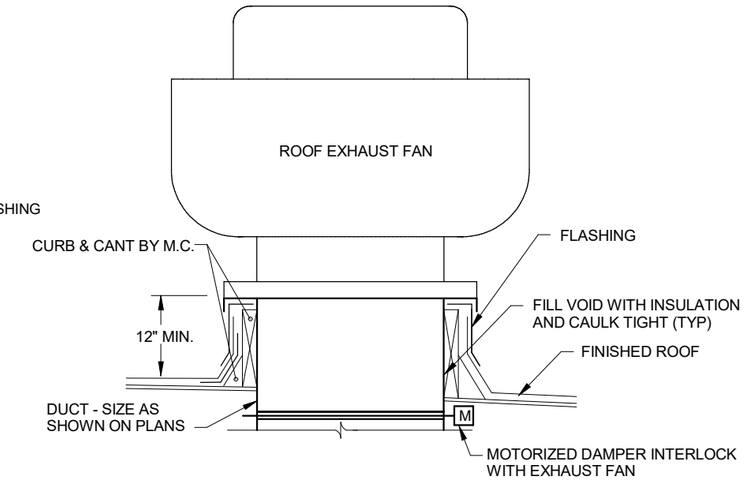

ROOF EXHAUST FAN DETAIL (3 / HS501)

SCALE: NONE

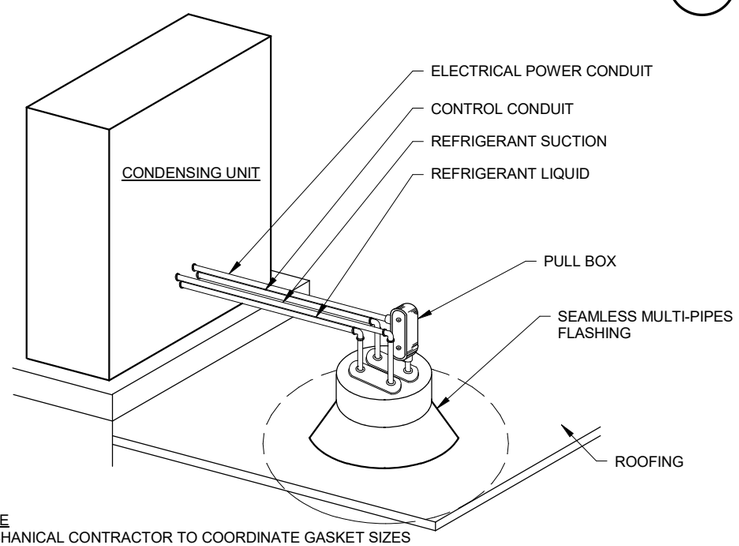

NOTE
MECHANICAL CONTRACTOR TO COORDINATE GASKET SIZES W/ CONTROL & ELECTRICAL DIVISIONS.
COORDINATE ALL ROOFING CONNECTION DETAILS WITH ARCHITECTURAL DETAILS

ROOFTOP CONDENSER PIPING AND CONDUIT ROOF PENETRATIONS DETAIL (4 / HS501)

SCALE: NONE

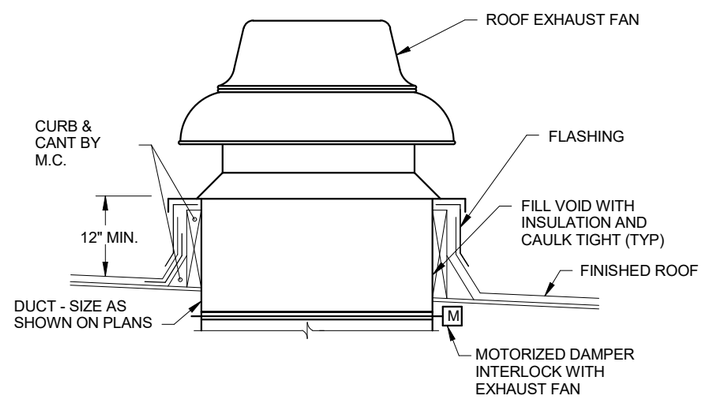

ROOF EXHAUST FAN DETAIL (5 / HS501)

SCALE: NONE

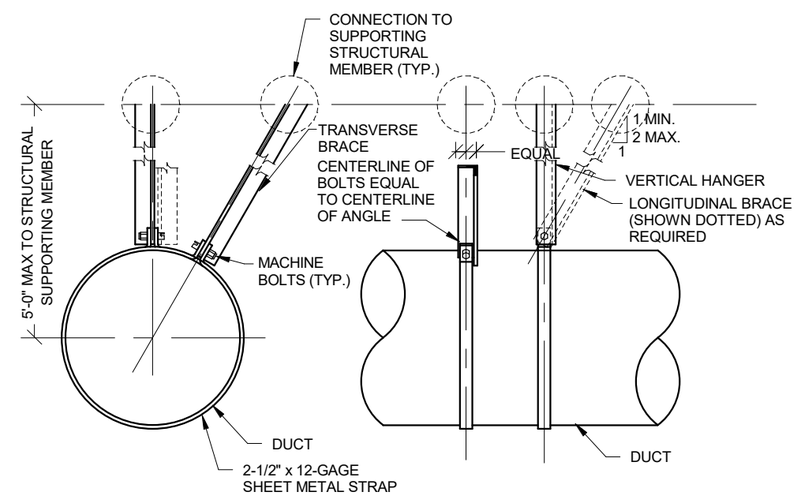

RFI#02984

SINGLE HANGER BRACING FOR ROUND DUCTWORK (6 / HS501)

SCALE: NONE

AS-BUILT PLANS ACCURATLEY AND COMPLETELY REFLECT CHANGES AND CORRECTIONS MADE DURING CONSTRUCTION AS DOCUMENTED IN THE RFI AND NDC QA/QC PROCEDURES DEVELOPED FOR THIS PROJECT AND AS BASED ON AS-BUILT INFORMATION PROVIDED BY SEATTLE TUNNEL PARTNERS.

FILE NAME	C:\Users\trtran\Documents\South Building Mech-TWE-Central-HNTB_2018_trtran.rvt
DATE	5/7/2019 3:27:01
TIME	PM
PLOTTED BY	H. TANG
DESIGNED BY	D. MOORE
ENTERED BY	H. TANG
CHECKED BY	W. LI
PROJ. ENGR.	R. JOHNSON
REGIONAL ADM.	L. LAIRD

REVISION | DATE | BY

REGION NO.	STATE	FED.AID PROJ.NO.
10	WASH	BR-0099(111)
JOB NUMBER 10A065		
CONTRACT NO. 007999		LOCATION NO.

EOR — CERTIFYING ENGINEER

Washington State Department of Transportation
Federal Highway Administration
City of Seattle

SR 99 TUNNEL PROJECT

SOUTH OPS BUILDING MECH DETAILS

HS501

SHEET OF SHEETS

FOR AS-BUILT PLAN ONLY

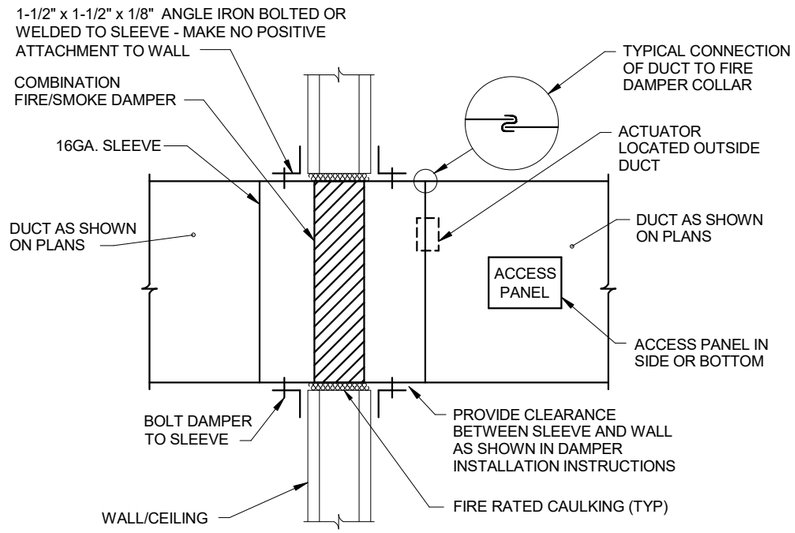

NOTE: IN CASE OF CONFLICT BETWEEN THIS DETAIL AND INSTALLATION INSTRUCTIONS, LISTING INSTRUCTIONS SHALL TAKE PRECEDENCE.

COMBINATION FIRE/SMOKE DAMPER DETAIL 1 HS502

SCALE: NONE

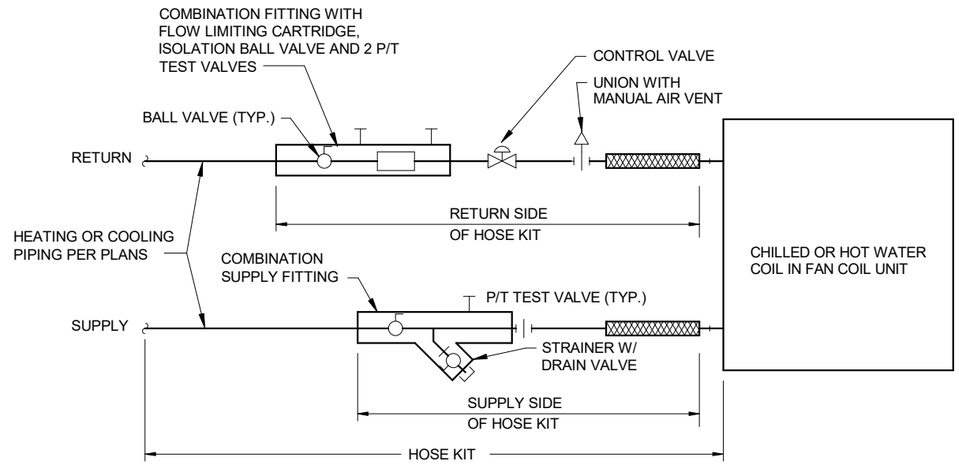

COIL PIPING DETAIL 2 HS502

SCALE: NONE

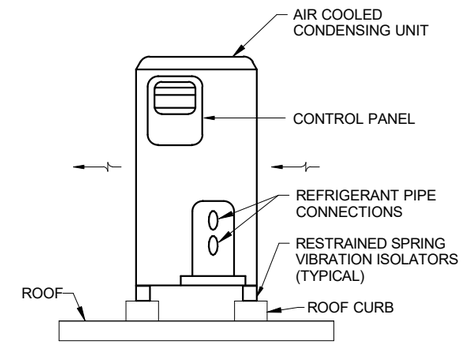

CONDENSING UNIT INSTALLATION DETAIL 3 HS502

SCALE: NONE

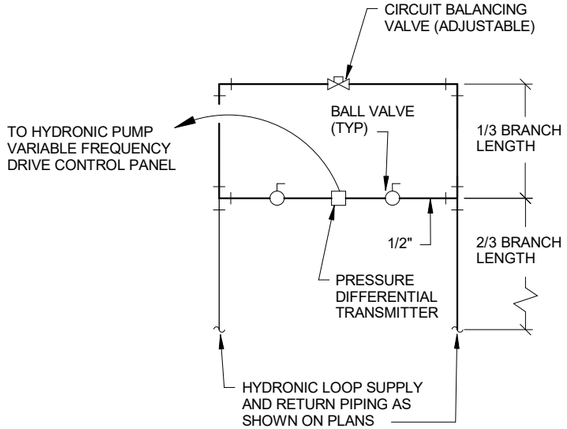

PRESSURE DIFFERENTIAL TRANSMITTER DETAIL 4 HS502

SCALE: NONE

NOTES:

1. FOLLOW SMACNA DUCT CONSTRUCTION STANDARDS.
2. ALL BRANCH DUCTS TO HAVE VOLUME DAMPERS.

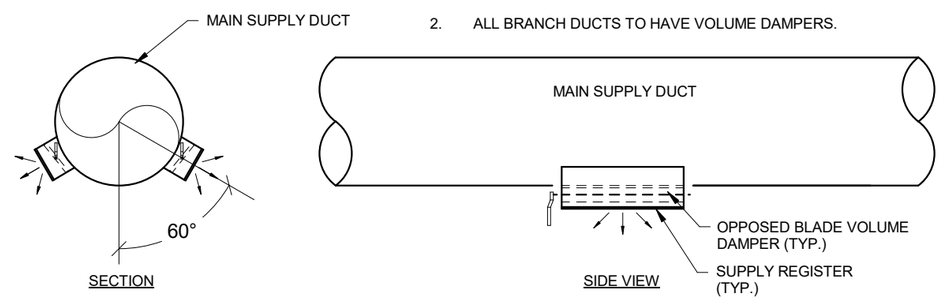

DUCT-MOUNTED SUPPLY REGISTER INSTALLATION DETAIL 5 HS502

SCALE: NONE

AS-BUILT PLANS ACCURATLEY AND COMPLETELY REFLECT CHANGES AND CORRECTIONS MADE DURING CONSTRUCTION AS DOCUMENTED IN THE RFI AND NDC QA/QC PROCEDURES DEVELOPED FOR THIS PROJECT AND AS BASED ON AS-BUILT INFORMATION PROVIDED BY SEATTLE TUNNEL PARTNERS.

FILE NAME	C:\Users\trtran\Documents\South Building Mech-TWE-Central-HNTB_2018_trtran.rvt
DATE	5/7/2019 3:27:02
TIME	PM
PLOTTED BY	H. TANG
DESIGNED BY	D. MOORE
ENTERED BY	H. TANG
CHECKED BY	W. LI
PROJ. ENGR.	R. JOHNSON
REGIONAL ADM.	L. LAIRD

REVISION	DATE	BY

REGION NO.	STATE	FED.AID PROJ.NO.
10	WASH	BR-0099(111)
JOB NUMBER 10A065		
CONTRACT NO. 007999		LOCATION NO.

EOR — CERTIFYING ENGINEER — 05-14-19

Washington State Department of Transportation
U.S. Department of Transportation Federal Highway Administration
City of Seattle

SR 99 TUNNEL PROJECT

SOUTH OPS BUILDING MECH DETAILS

HS502

SHEET OF SHEETS

H-D-PAK-SOB-TR2.34-00362-08-ASB-1905-14

FOR AS-BUILT PLAN ONLY

H-D-PAK-SOB-TR2.34-00362-08-ASB-1905-14

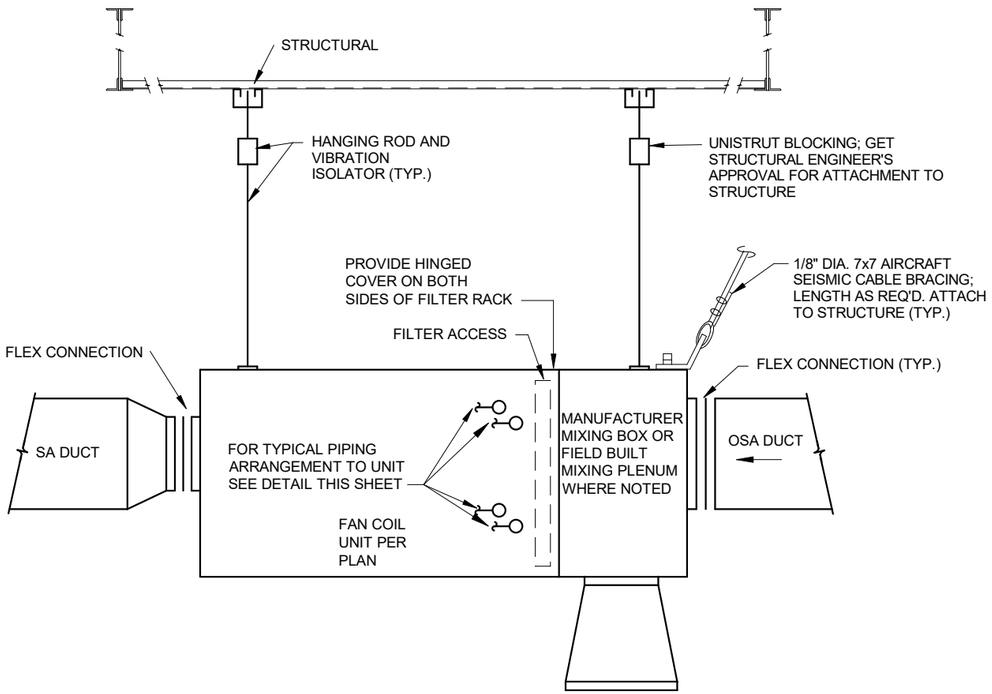

FAN COIL MOUNTING AND INSTALLATION DETAIL (1)

SCALE: NONE HS503

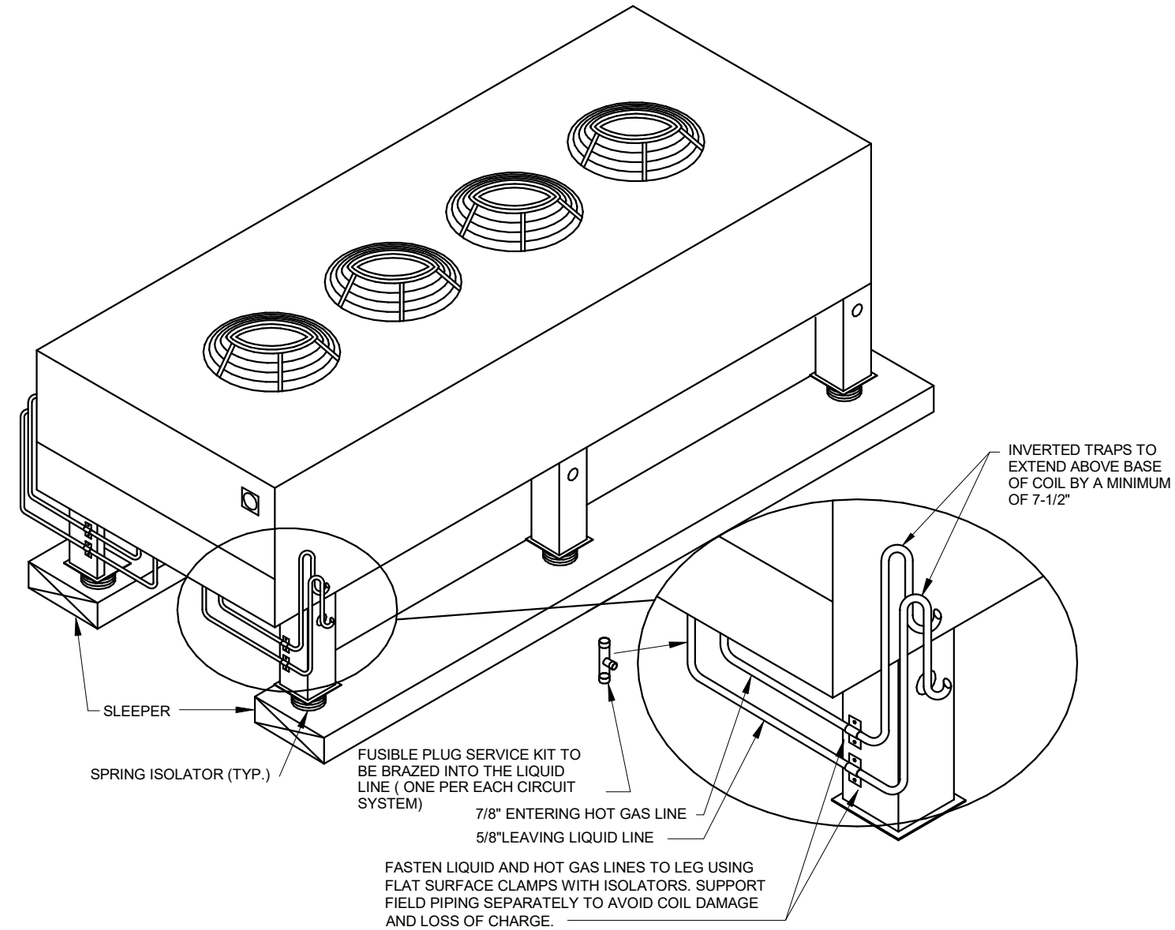

SCADA ROOM CONDENSER INSTALLATION DETAIL (2)

SCALE: NONE HS503

RFI#03334

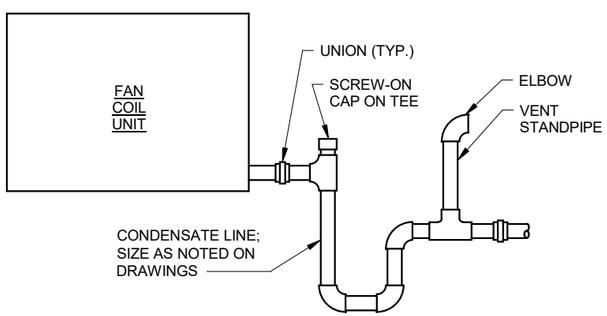

CONDENSATE TRAP DETAIL (3)

SCALE: NONE HS503

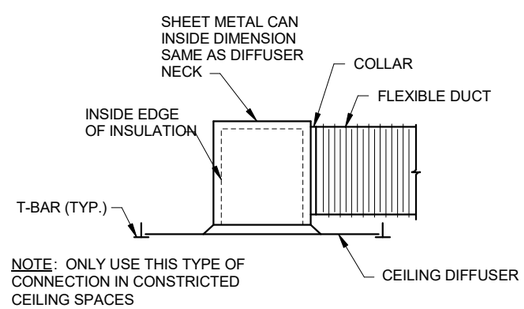

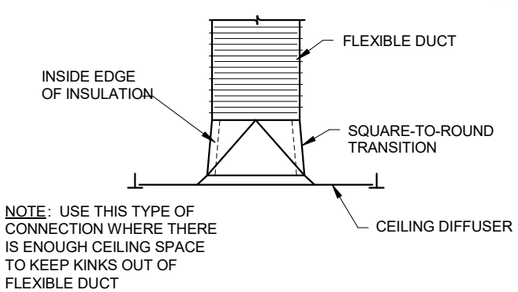

DIFFUSER CONNECTION DETAILS (4)

SCALE: NONE HS503

AS-BUILT PLANS ACCURATLEY AND COMPLETELY REFLECT CHANGES AND CORRECTIONS MADE DURING CONSTRUCTION AS DOCUMENTED IN THE RFI AND NDC QA/QC PROCEDURES DEVELOPED FOR THIS PROJECT AND AS BASED ON AS-BUILT INFORMATION PROVIDED BY SEATTLE TUNNEL PARTNERS.

FILE NAME	C:\Users\trtran\Documents\South Building Mech-TWE-Central-HNTB_2018_trtran.rvt
DATE	5/7/2019 3:27:03
TIME	PM
PLOTTED BY	H. TANG
DESIGNED BY	D. MOORE
ENTERED BY	H. TANG
CHECKED BY	W. LI
PROJ. ENGR.	R. JOHNSON
REGIONAL ADM.	L. LAIRD

REVISION | DATE | BY

REGION NO. 10 | STATE WASH | JOB NUMBER 10A065 | CONTRACT NO. 007999

FED.AID PROJ.NO. BR-0099(111)

LOCATION NO.

EOR — CERTIFYING ENGINEER — 05-14-19

Washington State Department of Transportation
U.S. Department of Transportation Federal Highway Administration
City of Seattle

SR 99 TUNNEL PROJECT

SOUTH OPS BUILDING MECH DETAILS

HS503

SHEET OF SHEETS

FOR AS-BUILT PLAN ONLY

H-D-PAK-SOB-TR2.34-00362-08-ASB-1905-14

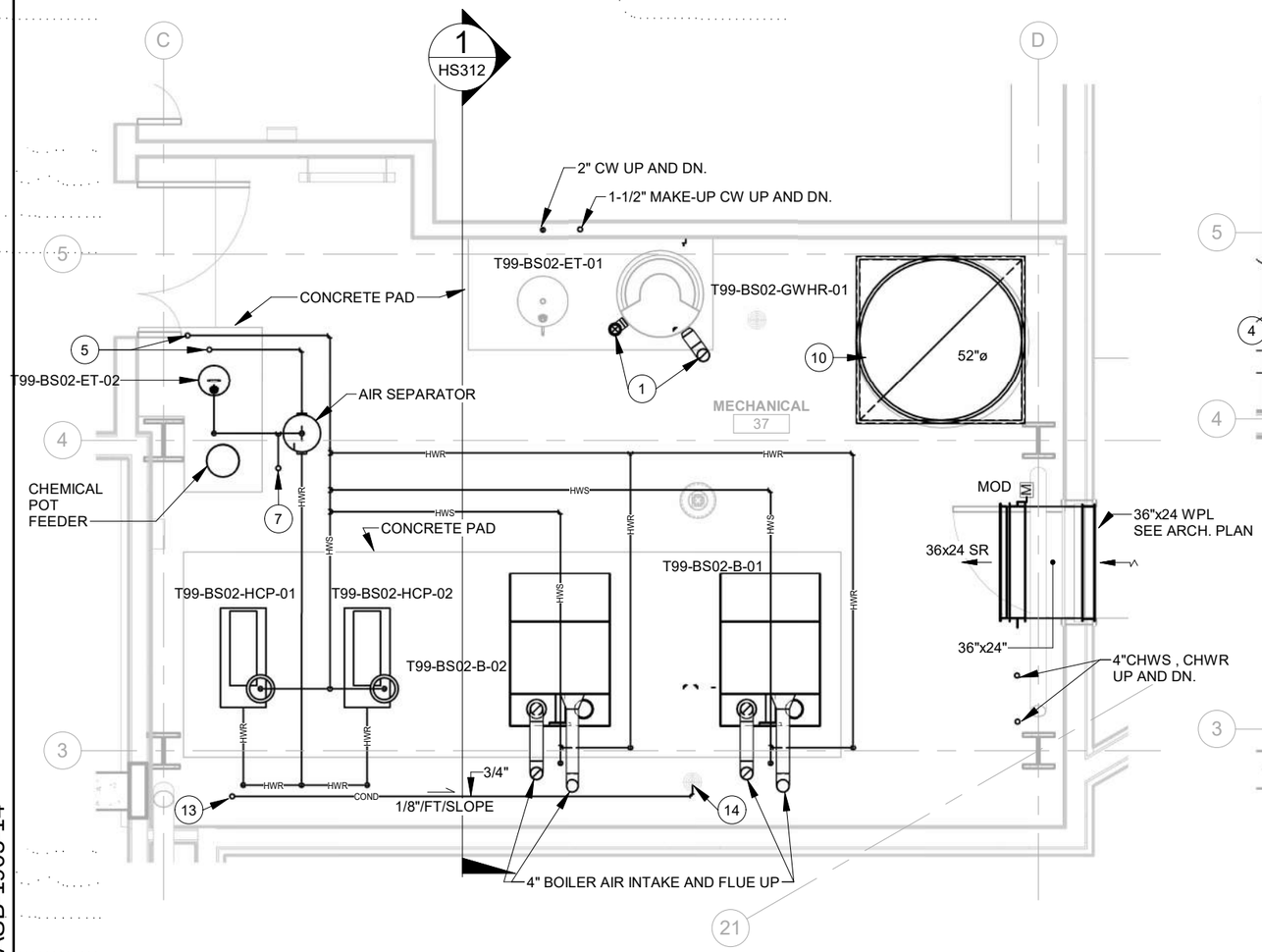

ENLARGED MECHANICAL ROOM FLOOR PLAN (1 / HS161)

1/4" = 1'-0"

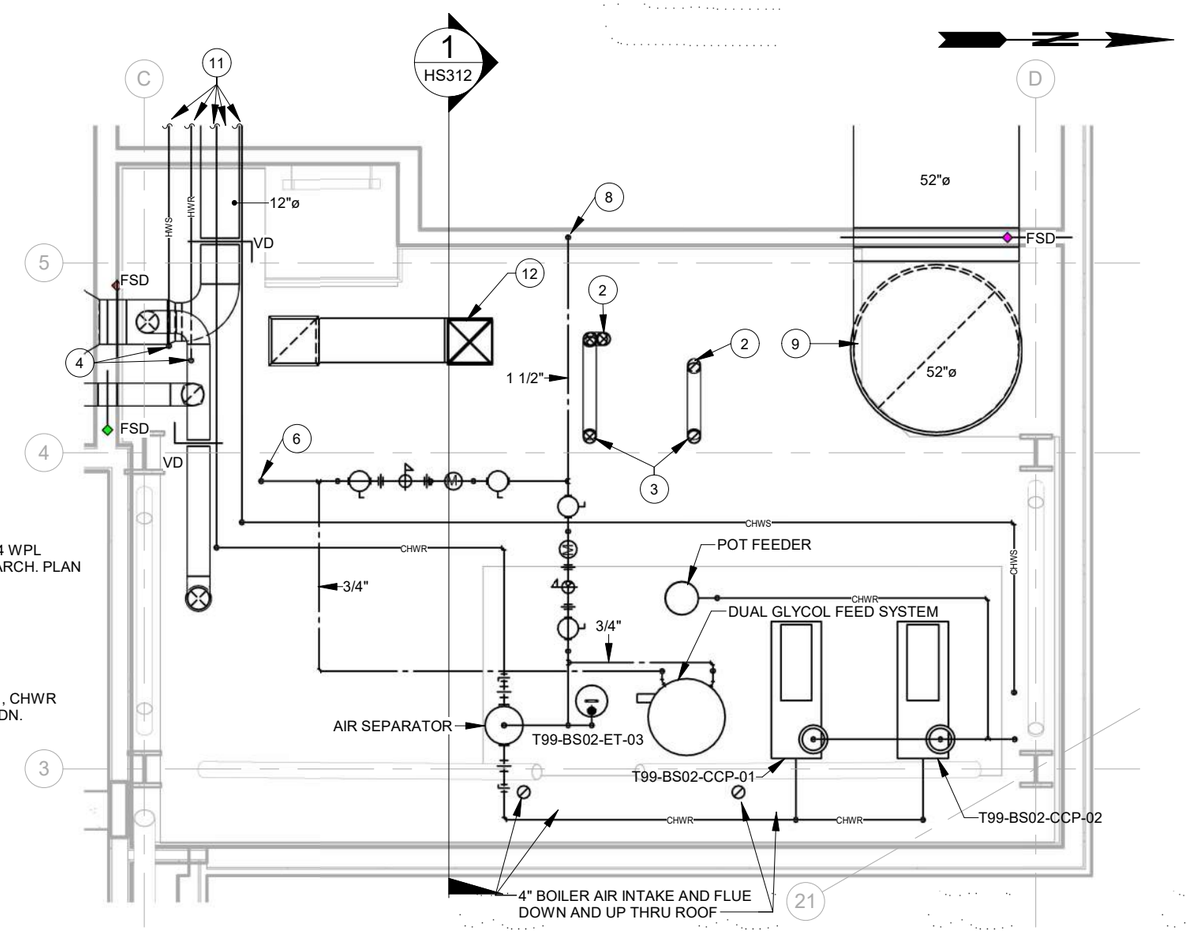

ENLARGED MECHANICAL ROOM UPPER LEVEL PLAN (2 / HS162)

1/4" = 1'-0"

PLAN NOTES:

1. 4" AIR INTAKE AND EXHAUST VENT UP.
2. 4" AIR INTAKE AND EXHAUST VENT DN. TO T99-BS02-GWHR-01
3. 4" AIR INTAKE AND EXHAUST VENT UP TO CONCENTRIC VENT TERMINATION KIT ON ROOF.
4. 2-1/2" HWS AND HWR DN.
5. 2-1/2" HWS AND HWR UP.
6. 1-1/4" CW DN.
7. 1-1/4" CW UP.
8. 1-1/2" CW DN.
9. DUCT DN. SEE SHEET HS154 FOR CONTINUATION.
10. DUCT UP AND DN. SEE SHEET HS164 AND HS154 FOR CONTINUATION.
11. SEE SHEETS HS162 AND HS164 FOR CONTINUATION.
12. 14"x14" DUCT UP TO ROOF FAN T99-BS04-EFN-02.
13. 3/4" COND. UP. SEE SHEET HS171 FOR CONT.
14. 3/4" COND. TERMINATE WITH A MINIMUM 2" AIR GAP ABOVE 2" FFLD

GENERAL NOTE:

1. ALL PIPING NOT SHOWN HERE. PIPING SHOWN ON SHEETS HS804 AND HS805 FOR CLARITY.

RFI #02584

AS-BUILT PLANS ACCURATLEY AND COMPLETELY REFLECT CHANGES AND CORRECTIONS MADE DURING CONSTRUCTION AS DOCUMENTED IN THE RFI AND NDC QA/QC PROCEDURES DEVELOPED FOR THIS PROJECT AND AS BASED ON AS-BUILT INFORMATION PROVIDED BY SEATTLE TUNNEL PARTNERS.

FILE NAME	C:\Users\trtran\Documents\South Building Mech-TWE-Central-HNTB_2018_trtran.rvt
DATE	5/7/2019 3:27:10
TIME	PM
PLOTTED BY	H. TANG
DESIGNED BY	D. MOORE
ENTERED BY	H. TANG
CHECKED BY	W. LI
PROJ. ENGR.	R. JOHNSON
REGIONAL ADM.	L. LAIRD

REVISION | DATE | BY

REGION NO. 10 | STATE WASH | FED.AID PROJ.NO. BR-0099(111)

JOB NUMBER 10A065

CONTRACT NO. 007999 | LOCATION NO.

EOR — CERTIFYING ENGINEER

Washington State Department of Transportation
U.S. Department of Transportation Federal Highway Administration
City of Seattle

SR 99 TUNNEL PROJECT

SOUTH OPS BUILDING MECH ENLARGED PLANS

HS801

SHEET OF SHEETS

FOR AS-BUILT PLAN ONLY

H-D-PAK-SOB-TR2.34-00362-08-ASB-1905-14

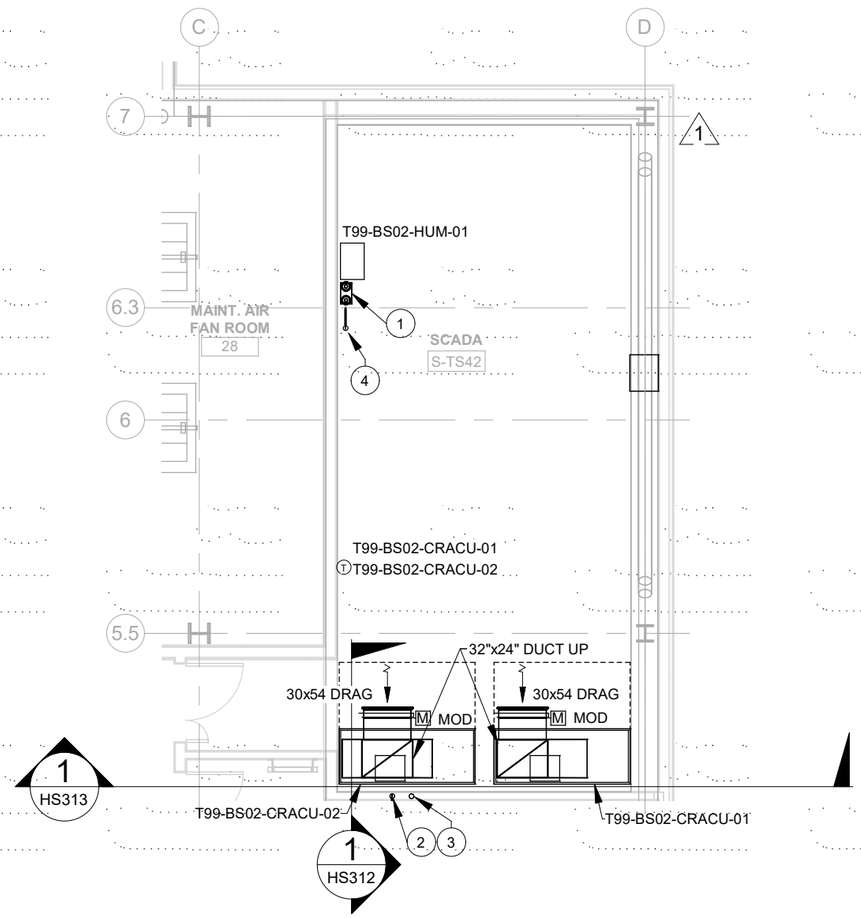

HVAC AND PIPING FLOOR PLAN

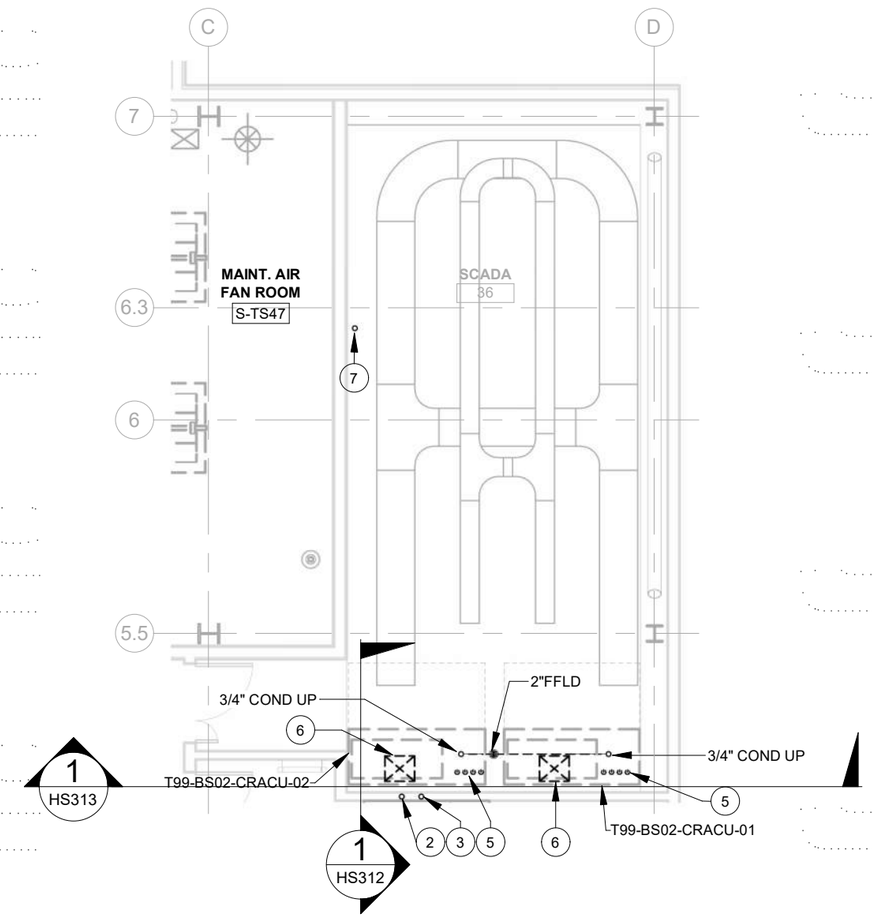

HVAC AND PIPING BELOW FLOOR PLAN

PLAN NOTES:

1. HUMIDIFIER DE-IONIZED WATER TREATMENT SYSTEM. CONNECT DE-IONIZED WATER FILTER TO HUMIDIFIER WITH 1/4" FLEXIBLE HOSE AND SHUT OFF VALVE.
2. 2" CW UP AND DN.
3. 1-1/2" MAKE-UP CW UP AND DN.
4. 1/2" CW DN. SEE SHEET DS152 FOR CONT.
5. 7/8" HOT GAS AND 5/8" LIQUID REFRIGERANT PIPE UP TO UNITS T99-BS02-CRACU-01, T99-BS02-CRACU-02. SEE SHEET HS152 FOR CONT.
6. BLOWER OUTLET AT BOTTOM OF UNIT SUPPLY AIR INTO PLENUM BELOW.
7. 1/2" CW UP AND DN.

RFI #02120
RFI #02120R01
RFI #03500
RFI #03578

ENLARGED SCADA ROOM PLANS

1/8" = 1'-0" (1 / HS161)

AS-BUILT PLANS ACCURATLEY AND COMPLETELY REFLECT CHANGES AND CORRECTIONS MADE DURING CONSTRUCTION AS DOCUMENTED IN THE RFI AND NDC QA/QC PROCEDURES DEVELOPED FOR THIS PROJECT AND AS BASED ON AS-BUILT INFORMATION PROVIDED BY SEATTLE TUNNEL PARTNERS.

FILE NAME	C:\Users\trtran\Documents\South Building Mech-TWE-Central-HNTB_2018_trtran.rvt
DATE	5/7/2019 3:27:16
TIME	PM
PLOTTED BY	H. TANG
DESIGNED BY	D. MOORE
ENTERED BY	H. TANG
CHECKED BY	W. LI
PROJ. ENGR.	R. JOHNSON
REGIONAL ADM.	L. LAIRD

REVISION	DATE	BY
1 CONSOLIDATED CONSTRUCTION PACKAGE	07/14/14	DBP

REGION NO.	STATE	FED.AID PROJ.NO.
10	WASH	BR-0099(111)
JOB NUMBER 10A065		
CONTRACT NO. 007999		LOCATION NO.

EOR

CERTIFYING ENGINEER

Washington State Department of Transportation
Federal Highway Administration
City of Seattle

SR 99 TUNNEL PROJECT

SOUTH OPS BUILDING SCADA ROOM ENLARGED PLAN

HS802

SHEET OF SHEETS

FOR AS-BUILT PLAN ONLY

H-D-PAK-SOB-TR2.34-00362-08-ASB-1905-14

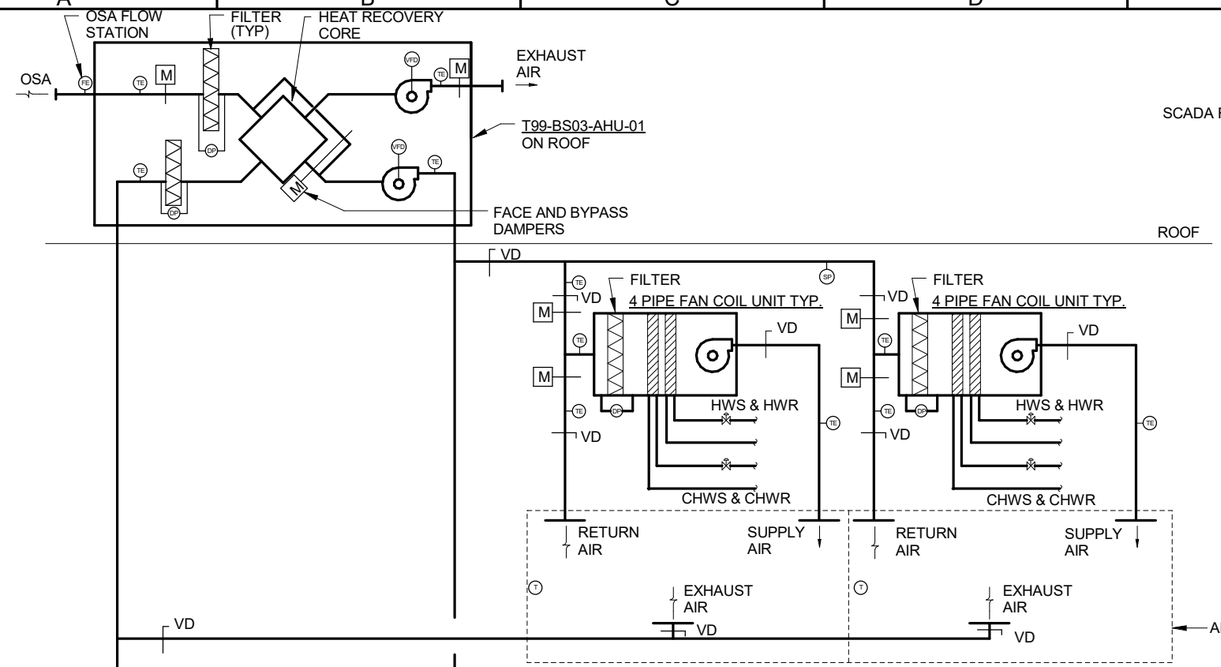

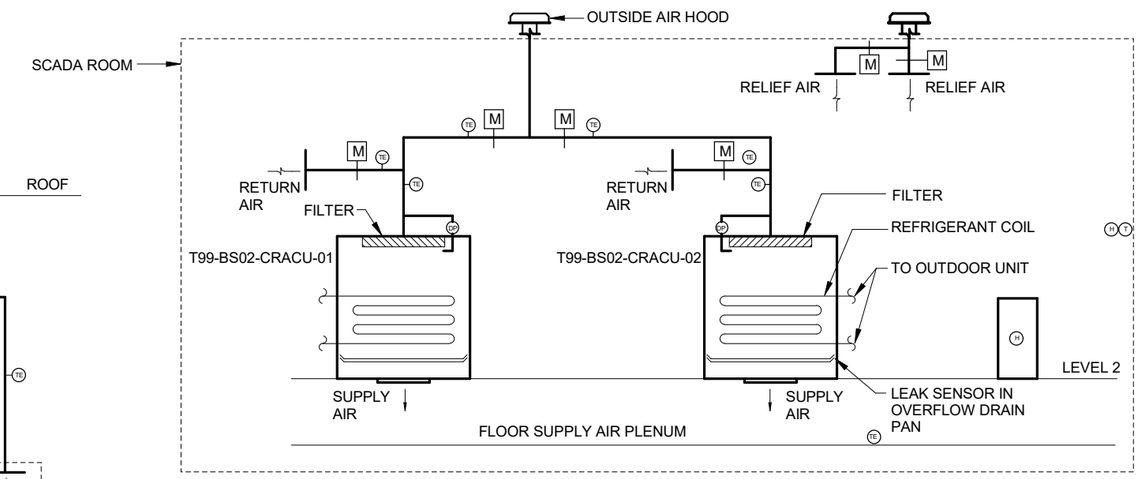

SCADA ROOM AIR HANDLING CONTROL DIAGRAM (2 / HS803)

SCALE: NONE

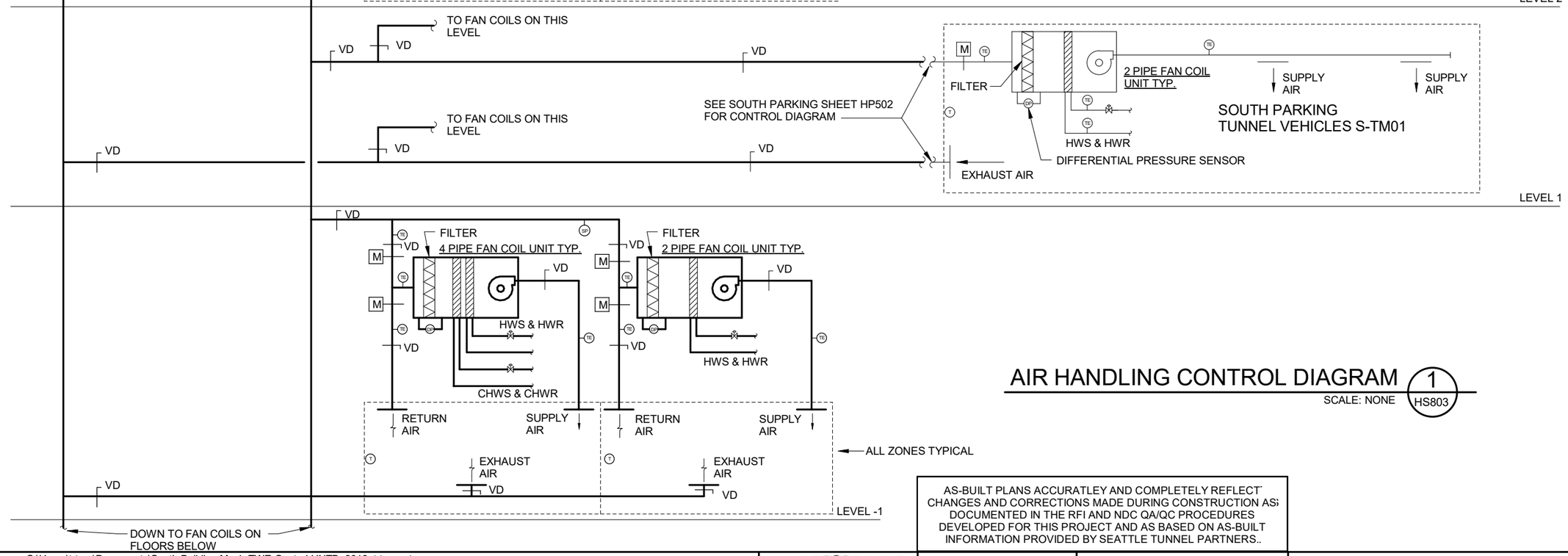

RFI#03250
RFI#04018

AIR HANDLING CONTROL DIAGRAM (1 / HS803)

SCALE: NONE

AS-BUILT PLANS ACCURATLEY AND COMPLETELY REFLECT CHANGES AND CORRECTIONS MADE DURING CONSTRUCTION AS DOCUMENTED IN THE RFI AND NDC QA/QC PROCEDURES DEVELOPED FOR THIS PROJECT AND AS BASED ON AS-BUILT INFORMATION PROVIDED BY SEATTLE TUNNEL PARTNERS..

FILE NAME	C:\Users\trtran\Documents\South Building Mech-TWE-Central-HNTB_2018_trtran.rvt
DATE	5/7/2019 3:27:18
TIME	PM
PLOTTED BY	H. TANG
DESIGNED BY	D. MOORE
ENTERED BY	H. TANG
CHECKED BY	W. LI
PROJ. ENGR.	R. JOHNSON
REGIONAL ADM.	L. LAIRD

REVISION | DATE | BY

REGION NO.	STATE	FED.AID PROJ.NO.
10	WASH	BR-0099(111)
JOB NUMBER 10A065		
CONTRACT NO. 007999		LOCATION NO.

EOR — CERTIFYING ENGINEER

Washington State Department of Transportation
Federal Highway Administration
City of Seattle

SR 99 TUNNEL PROJECT

SOUTH OPS BUILDING MECH CONTROL DIAGRAM

HS803

SHEET OF SHEETS

FOR AS-BUILT PLAN ONLY

H-D-PAK-SOB-TR2.34-00362-08-ASB-1905-14

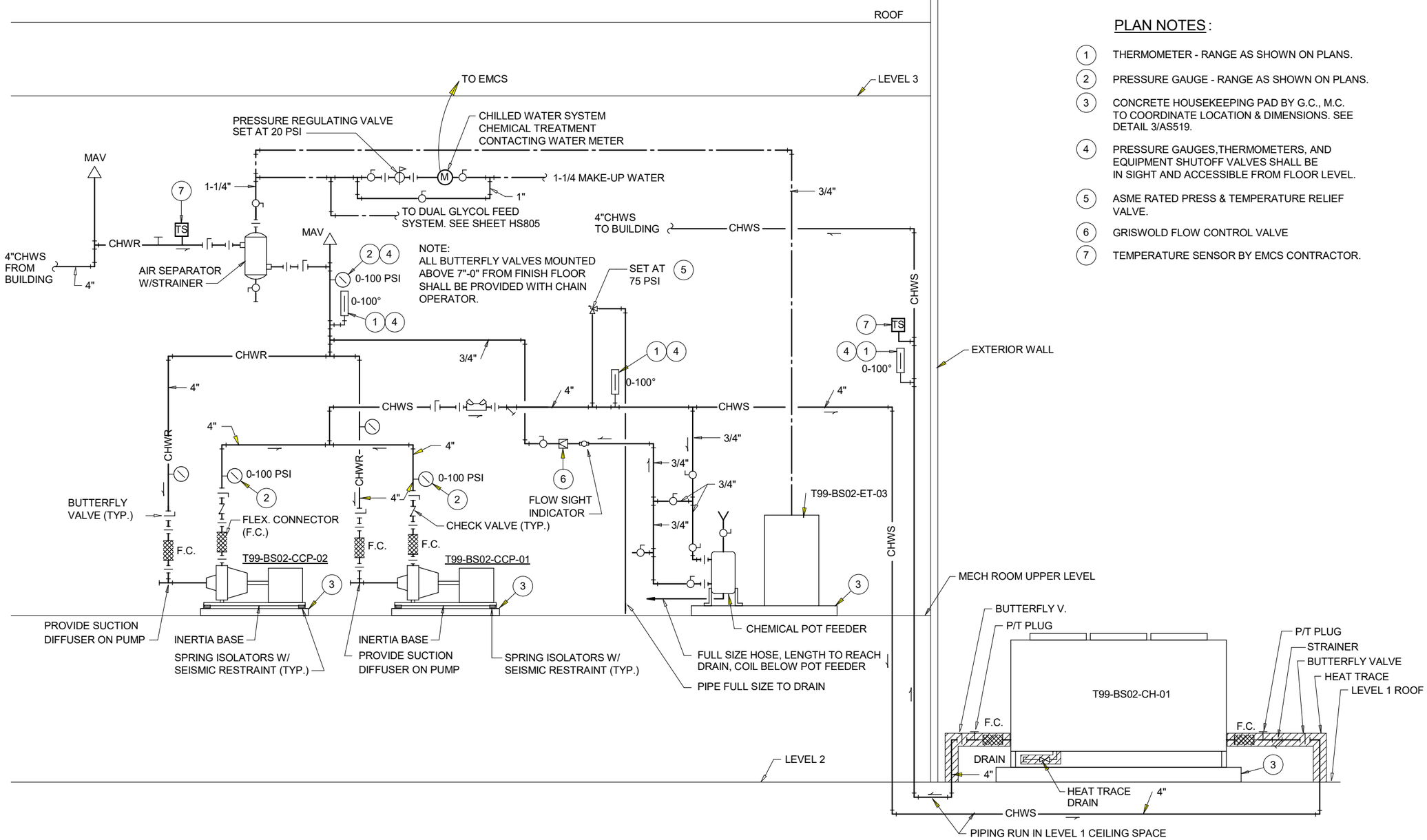

PLAN NOTES:

1. THERMOMETER - RANGE AS SHOWN ON PLANS.
2. PRESSURE GAUGE - RANGE AS SHOWN ON PLANS.
3. CONCRETE HOUSEKEEPING PAD BY G.C., M.C. TO COORDINATE LOCATION & DIMENSIONS. SEE DETAIL 3/AS519.
4. PRESSURE GAUGES,THERMOMETERS, AND EQUIPMENT SHUTOFF VALVES SHALL BE IN SIGHT AND ACCESSIBLE FROM FLOOR LEVEL.
5. ASME RATED PRESS & TEMPERATURE RELIEF VALVE.
6. GRISWOLD FLOW CONTROL VALVE
7. TEMPERATURE SENSOR BY EMCS CONTRACTOR.

RFI#02654
RFI#03091
RFI#03533
RFI#03537
RFI#03973
RFI#04041

MECHANICAL ROOM CHILLED WATER PIPING DIAGRAM

1 HS804

SCALE: NONE

AS-BUILT PLANS ACCURATLEY AND COMPLETELY REFLECT CHANGES AND CORRECTIONS MADE DURING CONSTRUCTION AS DOCUMENTED IN THE RFI AND NDC QA/QC PROCEDURES DEVELOPED FOR THIS PROJECT AND AS BASED ON AS-BUILT INFORMATION PROVIDED BY SEATTLE TUNNEL PARTNERS.

FILE NAME	C:\Users\trtran\Documents\South Building Mech-TWE-Central-HNTB_2018_trtran.rvt
DATE	5/7/2019 3:27:19
TIME	PM
PLOTTED BY	H. TANG
DESIGNED BY	D. MOORE
ENTERED BY	H. TANG
CHECKED BY	W. LI
PROJ. ENGR.	R. JOHNSON
REGIONAL ADM.	L. LAIRD

REVISION | DATE | BY

REGION NO. 10 | STATE WASH | FED.AID PROJ.NO. BR-0099(111)

JOB NUMBER 10A065

CONTRACT NO. 007999 | LOCATION NO.

EOR | CERTIFYING ENGINEER 05-14-19

Washington State Department of Transportation
U.S. Department of Transportation Federal Highway Administration
City of Seattle

SR 99 TUNNEL PROJECT

SOUTH OPS BUILDING MECH CHILLED WATER PIPING DIAGRAM

HS804

SHEET OF SHEETS

FOR AS-BUILT PLAN ONLY

H-D-PAK-SOB-TR2.34-00362-08-ASB-1905-14

PLAN NOTES:

1. THERMOMETER - RANGE AS SHOWN ON PLANS.
2. PRESSURE GAUGE - RANGE AS SHOWN ON PLANS.
3. GRISWOLD FLOW CONTROL VALVE.
4. CONCRETE HOUSEKEEPING PAD COORDINATE LOCATION & DIMENSIONS.
5. PRESSURE GAUGES,THERMOMETERS, AND EQUIPMENT SHUTOFF VALVES SHALL BE IN SIGHT AND ACCESSIBLE FROM FLOOR LEVEL.
6. BOILER RETURN WATER TEMPERATURE SENSOR BY EMCS CONTRACTOR.
7. BOILER SUPPLY WATER TEMPERATURE SENSOR BY EMCS CONTRACTOR.
8. MAIN HWS LOOP SUPPLY TEMPERATURE SENSOR BY EMCS CONTRACTOR.

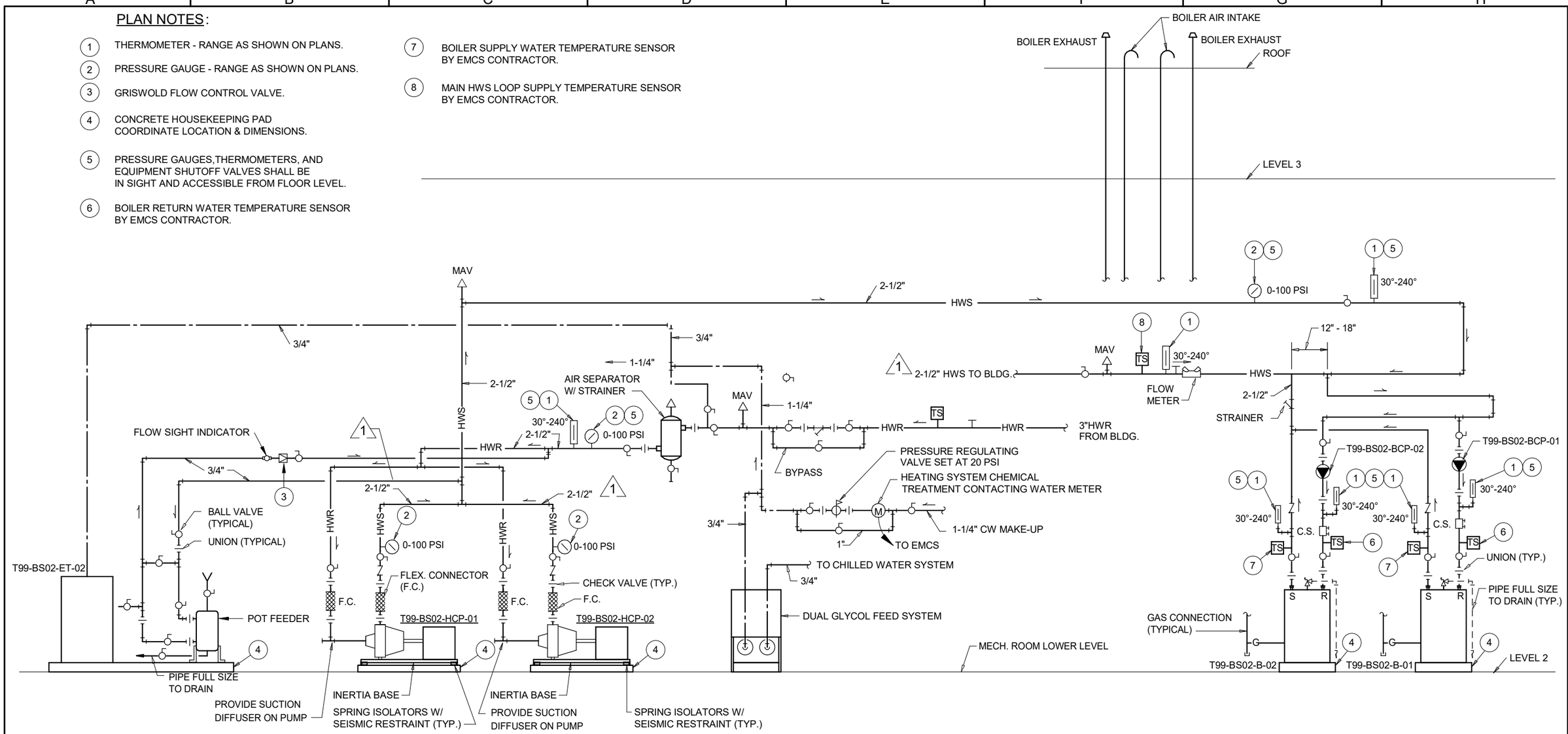

RFI#01916
RFI#02807
RFI#03221
RFI#03533
RFI#03537
RFI#03973

MECHANICAL ROOM HEATING WATER PIPING DIAGRAM (1 / HS805)

SCALE: NONE

AS-BUILT PLANS ACCURATLEY AND COMPLETELY REFLECT CHANGES AND CORRECTIONS MADE DURING CONSTRUCTION AS DOCUMENTED IN THE RFI AND NDC QA/QC PROCEDURES DEVELOPED FOR THIS PROJECT AND AS BASED ON AS-BUILT INFORMATION PROVIDED BY SEATTLE TUNNEL PARTNERS.

FILE NAME	C:\Users\trtran\Documents\South Building Mech-TWE-Central-HNTB_2018_trtran.rvt
DATE	5/7/2019 3:27:20
TIME	PM
PLOTTED BY	H. TANG
DESIGNED BY	D. MOORE
ENTERED BY	H. TANG
CHECKED BY	W. LI
PROJ. ENGR.	R. JOHNSON
REGIONAL ADM.	L. LAIRD

REVISION		DATE	BY
1	CONSOLIDATED CONSTRUCTION PACKAGE	07/14/14	DBP

REGION NO.	STATE	FED.AID PROJ.NO.
10	WASH	BR-0099(111)
JOB NUMBER 10A065		
CONTRACT NO. 007999		LOCATION NO.

EOR — CERTIFYING ENGINEER — 05-14-19

Washington State Department of Transportation
U.S. Department of Transportation Federal Highway Administration
City of Seattle

SR 99 TUNNEL PROJECT

SOUTH OPS BUILDING MECH HEATING PIPING DIAGRAM

HS805

SHEET OF SHEETS

FOR AS-BUILT PLAN ONLY

H-D-PAK-SOB-TR2.34-00362-08-ASB-1905-14

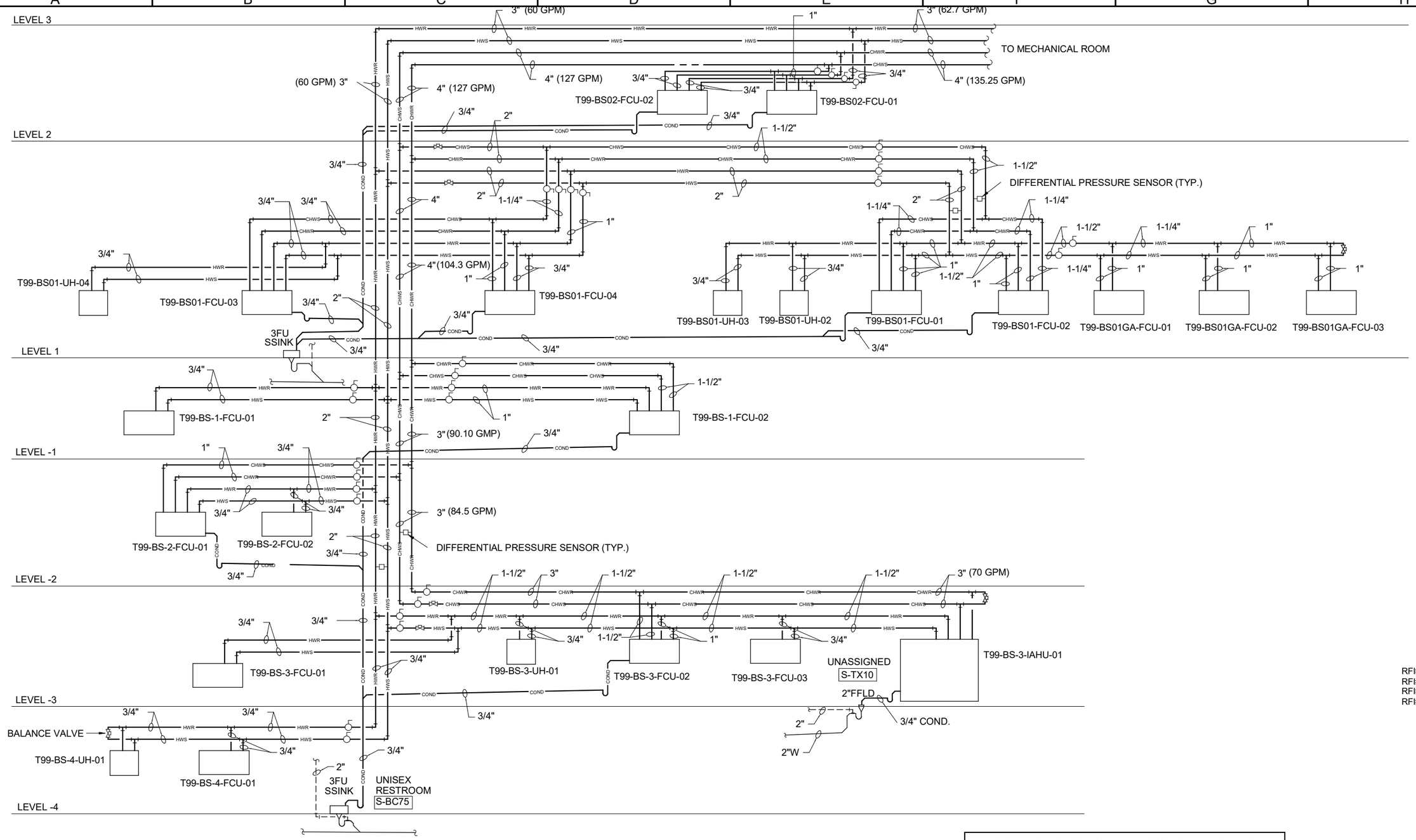

RF1#02986
RF1#03221
RF1#03258
RF1#03827

SOUTH BUILDING HYDRONIC PIPING DIAGRAM

1
HS806

SCALE:
SCHEMATIC

AS-BUILT PLANS ACCURATLEY AND COMPLETELY REFLECT CHANGES AND CORRECTIONS MADE DURING CONSTRUCTION AS DOCUMENTED IN THE RFI AND NDC QA/QC PROCEDURES DEVELOPED FOR THIS PROJECT AND AS BASED ON AS-BUILT INFORMATION PROVIDED BY SEATTLE TUNNEL PARTNERS.

FILE NAME	C:\Users\trtran\Documents\South Building Mech-TWE-Central-HNTB_2018_trtran.rvt
DATE	5/7/2019 3:27:20
TIME	PM
PLOTTED BY	H. TANG
DESIGNED BY	D. MOORE
ENTERED BY	H. TANG
CHECKED BY	W. LI
PROJ. ENGR.	R. JOHNSON
REGIONAL ADM.	L. LAIRD

REVISION	DATE	BY

REGION NO.	STATE	FED.AID PROJ.NO.
10	WASH	BR-0099(111)
JOB NUMBER 10A065		
CONTRACT NO. 007999		LOCATION NO.

EOR

CERTIFYING ENGINEER

Washington State Department of Transportation
U.S. Department of Transportation Federal Highway Administration
City of Seattle

SR 99 TUNNEL PROJECT

SOUTH OPS BUILDING MECH HYDRONIC PIPING DIAGRAM

HS806

SHEET OF SHEETS

FOR AS-BUILT PLAN ONLY

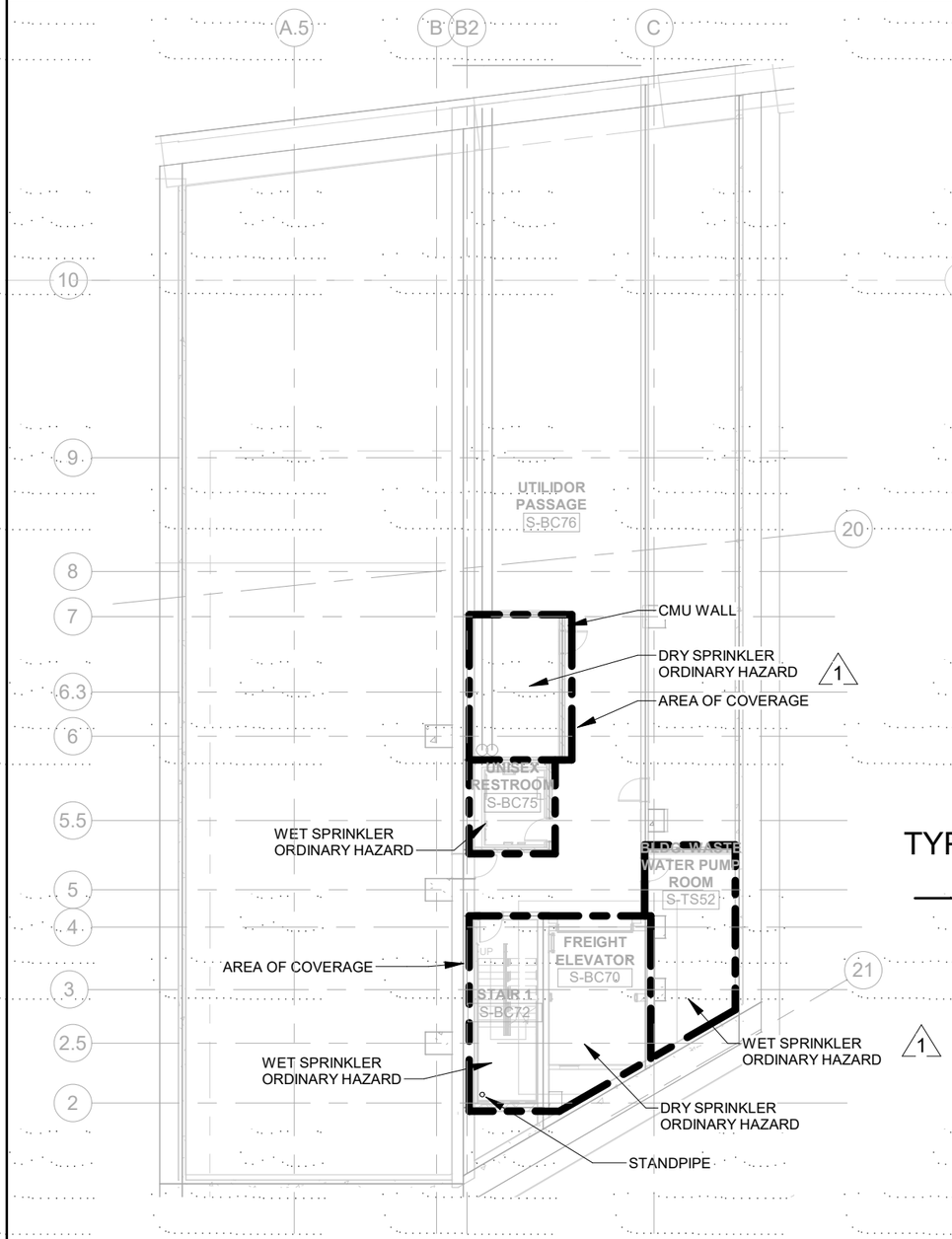

SO OPS BLDG. LEVEL -4 FIRE SPRINKLER PLAN (1)

1" = 20'-0" MS111

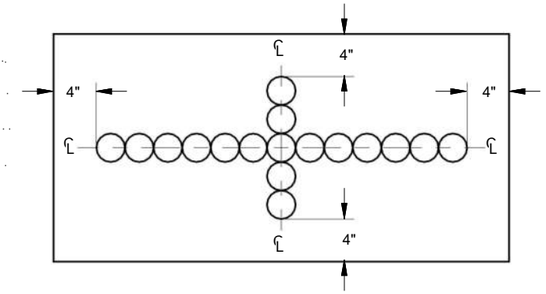

1. WHERE SPRINKLER HEADS ARE LOCATED IN REMOVABLE GRID CEILING, THE HEADS SHALL BE LOCATED ON THE CENTERLINE AXIS OF EITHER THE LONG OR SHORT SIDE DIMENSION (SEE DETAIL ABOVE), WITH THE HEAD CANOPY A MINIMUM OF 4" FROM EDGE OF PANEL. IN ROOMS WHERE MULTIPLE HEADS ARE NEEDED, HEADS SHALL BE LINED UP. IN ROOMS WITH HARD CEILINGS, THE HEADS SHALL ALSO BE LINED UP, NOT RANDOM PATTERN.
2. DUCTWORK AIR TERMINALS AND LIGHTING LOCATIONS TAKE FIRST PRIORITY OVER FIRE SPRINKLING SYSTEM. COORDINATION SHALL BE FIRE SPRINKLER CONTRACTOR'S RESPONSIBILITY.
3. SYSTEM DRAINAGE POINTS MUST BE CAREFULLY COORDINATED WITH ARCHITECT. IF NOT COORDINATED, FIRE SPRINKLER CONTRACTOR SHALL REMOVE AND REWORK LOCATIONS TO ARCHITECT'S SATISFACTION.
4. HEADS MUST NOT BE LOCATED IN SUCH MANNER THAT HEAT FROM DIFFUSER WILL SET OFF FIRE SYSTEM.

TYPICAL CEILING PANEL FIRE SPRINKLER HEAD LOCATIONS DETAIL (2)

SCALE: NONE MS111

FIRE SPRINKLER GENERAL NOTES

1. THE AUTOMATIC SPRINKLER SYSTEM SHALL BE DESIGNED AND INSTALLED IN ACCORDANCE WITH NFPA 13 (IBC 903.31 STANDARD). IBC IFC AND ALL LOCAL CODES AS A MINIMUM STANDARD. ADDITIONAL REQUIREMENTS ARE NOTED IN THE SPECIFICATIONS.
2. PROVIDE COVERAGE FOR THE ENTIRE FACILITY, INCLUDING AREAS ABOVE AND BELOW CEILINGS, INTERSTITIAL SPACES, OVERHANGS AND MECHANICAL/ELECTRICAL ROOMS. THE ASSUMPTION OF FIRE ALARM DEVICES OR SYSTEMS BEING INSTALLED DOES NOT RELIEVE THE FIRE SPRINKLER CONTRACTOR OF PROVIDING COVERAGE IN ALL AREAS.
3. THE INTENT OF THESE DRAWINGS ARE TO SHOW THE AREA OF COVERAGE AND RISER LOCATION. DO NOT RUN PIPING OVER ELECTRICAL PANEL OR SWITCHGEAR EXCEPT WHERE LOCATED ABOVE THE STRUCTURAL CEILING.
4. FIRE SPRINKLER MAIN NOT SHOWN SHALL BE LAID OUT PER FIRE SPRINKLER COVERAGE REQUIREMENTS. SEE ARCHITECTURAL DRAWINGS FOR AREAS NOT SHOWN OR FOR MULTIPLE FLOORS THAT REQUIRE FIRE SPRINKLER COVERAGE.
5. THE FIRE SPRINKLER CONTRACTOR SHALL COORDINATE THE LOCATION OF THE PIPING AND HEADS TO AVOID INTERFERENCES WITH LIGHT FIXTURES, HEATING/ COOLING EQUIPMENT, DUCTWORK AND ANY ARCHITECTURAL FEATURES SUCH AS EXPOSED SLOPE ROOF STRUCTURE, SKYLIGHT, STAIRWAYS, ETC. PIPING SHALL BE RUN AS HIGH AS POSSIBLE TO ALLOW THE MAXIMUM HEADROOM OVER THE MECHANICAL EQUIPMENT AND AISLE SPACES, MAXIMUM CLEARANCE SHALL MAINTAINED FOR SERVICE ACCESS AND MAINTENANCE FOR ALL EQUIPMENT. FAILURE TO COORDINATE SHALL BE JUSTIFICATION TO REQUIRE THE FIRE SPRINKLER CONTRACTOR, AT HIS OWN EXPENSE, TO MOVE AND REDO HIS WORK.
6. IT SHALL BE THE FIRE SPRINKLER'S CONTRACTOR FULL RESPONSIBILITY TO INSTALL A COMPLETE WORKING SYSTEM MEETING ALL CODES.
7. DESIGN AND FURNISH AND INSTALL A COMPLETE "WET PIPE" / "DRY PIPE" AUTOMATIC SPRINKLER SYSTEM OR THE ENTIRE FACILITY INCLUDING AREAS ABOVE AND BELOW CEILING ATTIC SPACES, MECHANICAL MEZZANINES, ELEVATOR SHAFT AND INTERSTITIAL SPACES AND EXCLUDING THOSE AREA REQUIRED TO HAVE DRY SYSTEM. THE SYSTEM SHALL BE DESIGNED TO MEET ALL REQUIREMENTS OF NFPA-13 AND LOCAL CODES.
8. PROVIDE COVERAGE AS REQUIRED FOR ALL CANOPIES AND OVERHANGS.

RFI #01794
RFI #02197
RFI #02215

AS-BUILT PLANS ACCURATLEY AND COMPLETELY REFLECT CHANGES AND CORRECTIONS MADE DURING CONSTRUCTION AS DOCUMENTED IN THE RFI AND NDC QA/QC PROCEDURES DEVELOPED FOR THIS PROJECT AND AS BASED ON AS-BUILT INFORMATION PROVIDED BY SEATTLE TUNNEL PARTNERS.

FILE NAME	C:\Users\trtran\Documents\South Building Mech-TWE-Central-HNTB_2018_trtran.rvt
DATE	5/7/2019 3:27:24
TIME	PM
PLOTTED BY	H. TANG
DESIGNED BY	D. MOORE
ENTERED BY	H. TANG
CHECKED BY	W. LI
PROJ. ENGR.	R. JOHNSON
REGIONAL ADM.	L. LAIRD

REVISION		DATE	BY
1	CONSOLIDATED CONSTRUCTION PACKAGE	07/14/14	DBP

REGION NO.	STATE	FED.AID PROJ.NO.
10	WASH	BR-0099(111)
JOB NUMBER 10A065		
CONTRACT NO. 007999		LOCATION NO.

EOR — CERTIFYING ENGINEER

Washington State Department of Transportation
U.S. Department of Transportation Federal Highway Administration
City of Seattle

SR 99 TUNNEL PROJECT

SOUTH OPS BUILDING MECH LEVEL -4 FIRE SPRINKLER PLAN

MS111

SHEET OF SHEETS

H-D-PAK-SOB-TR2.34-00362-08-ASB-1905-14

FOR AS-BUILT PLAN ONLY

H-D-PAK-SOB-TR2.34-00362-08-ASB-1905-14

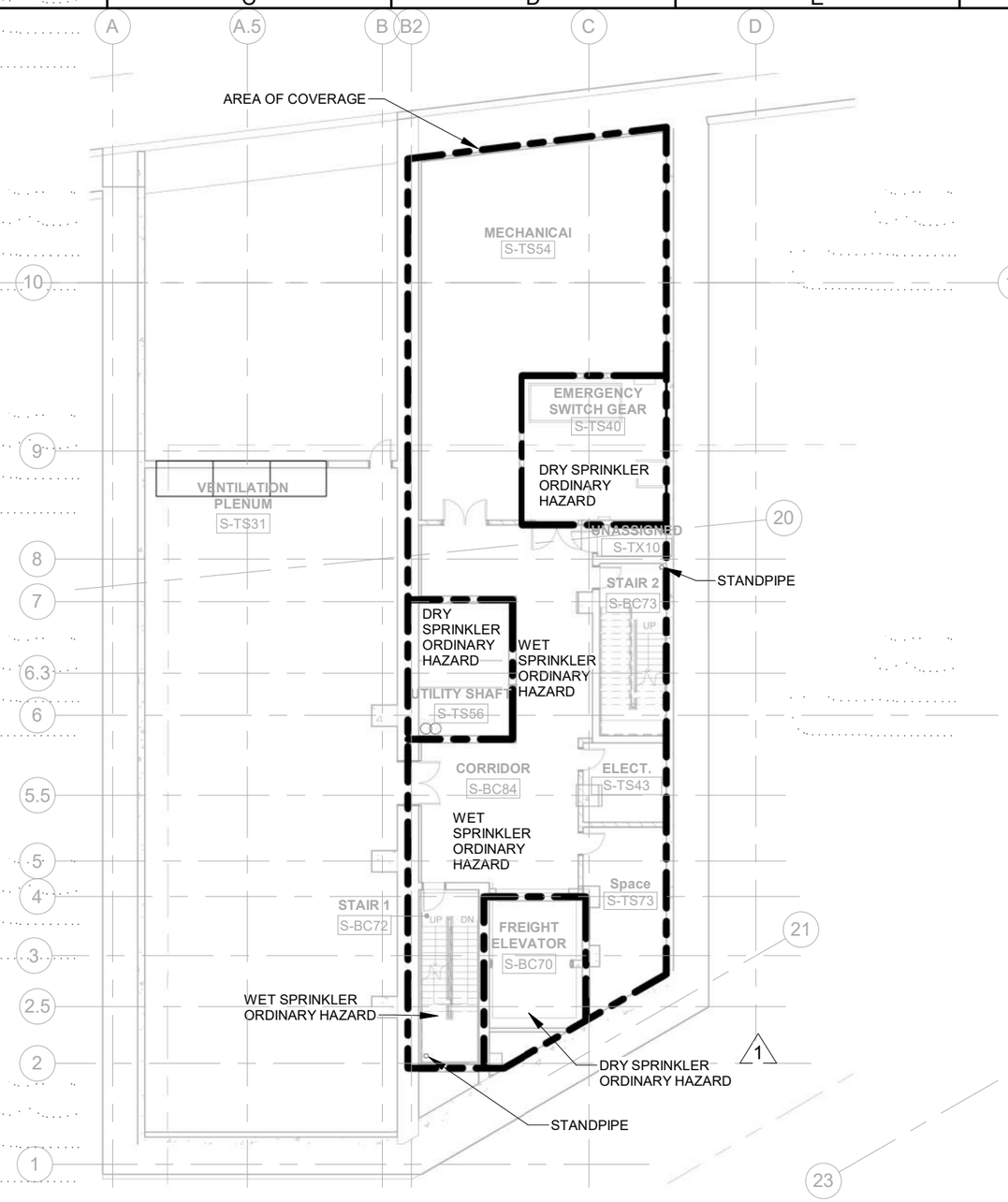

RFI#01794

SO OPS BLDG. LEVEL -3 FIRE SPRINKLER PLAN (1 / MS121)

1" = 20'-0"

AS-BUILT PLANS ACCURATLEY AND COMPLETELY REFLECT CHANGES AND CORRECTIONS MADE DURING CONSTRUCTION AS DOCUMENTED IN THE RFI AND NDC QA/QC PROCEDURES DEVELOPED FOR THIS PROJECT AND AS BASED ON AS-BUILT INFORMATION PROVIDED BY SEATTLE TUNNEL PARTNERS.

FILE NAME	C:\Users\trtran\Documents\South Building Mech-TWE-Central-HNTB_2018_trtran.rvt
DATE	5/7/2019 3:27:29
TIME	PM
PLOTTED BY	H. TANG
DESIGNED BY	D. MOORE
ENTERED BY	H. TANG
CHECKED BY	W. LI
PROJ. ENGR.	R. JOHNSON
REGIONAL ADM.	L. LAIRD

REVISION		DATE	BY
1	CONSOLIDATED CONSTRUCTION PACKAGE	07/14/14	DBP

REGION NO.	STATE	FED.AID PROJ.NO.
10	WASH	BR-0099(111)
JOB NUMBER 10A065		
CONTRACT NO. 007999		LOCATION NO.

EOR — CERTIFYING ENGINEER

Washington State Department of Transportation
U.S. Department of Transportation Federal Highway Administration
City of Seattle

SR 99 TUNNEL PROJECT

SOUTH OPS BUILDING MECH LEVEL -3 FIRE SPRINKLER PLAN

MS121 — SHEET OF SHEETS

FOR AS-BUILT PLAN ONLY

H-D-PAK-SOB-TR2.34-00362-08-ASB-1905-14

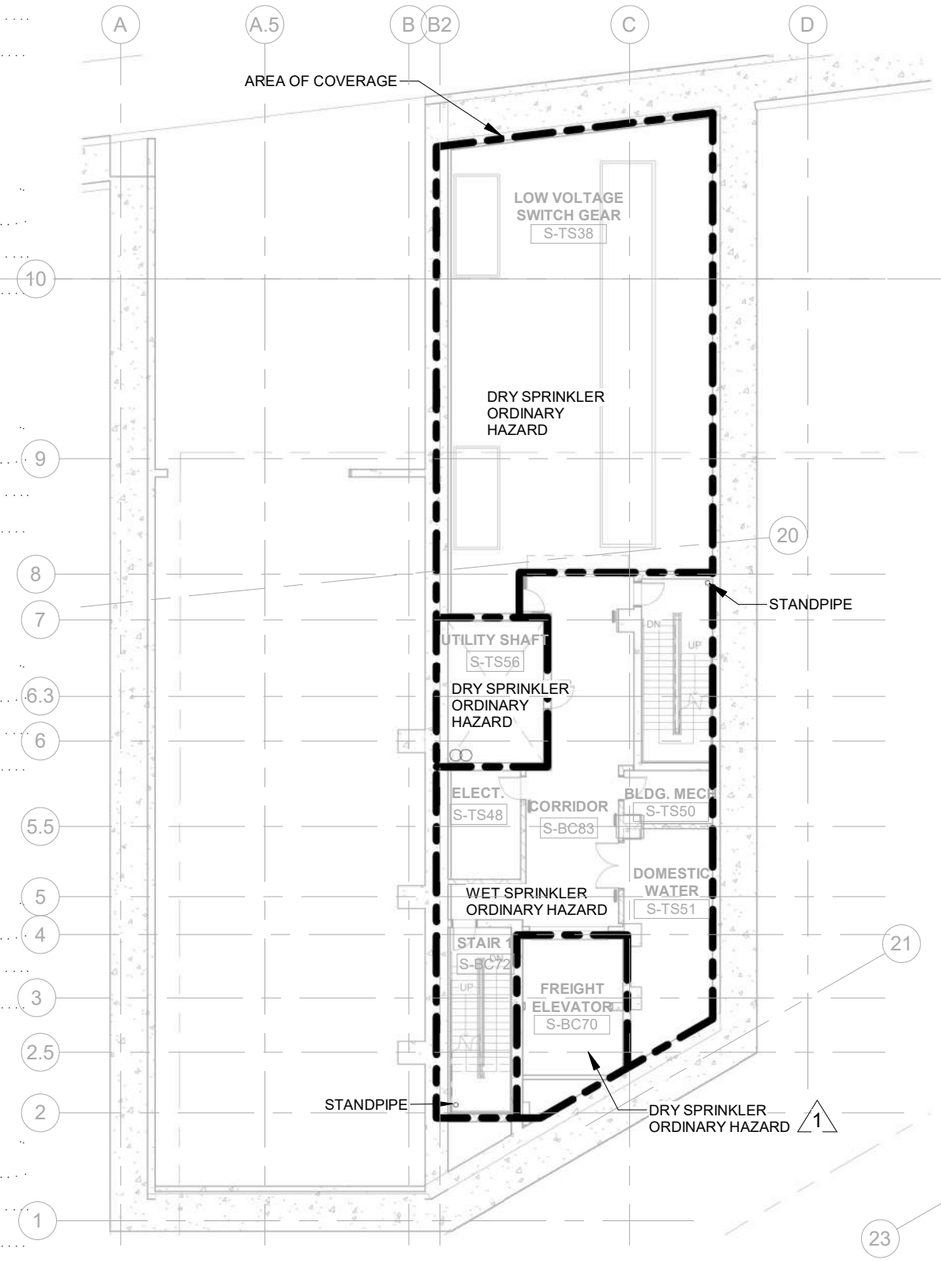

RFI#01794

SO OPS BLDG. LEVEL -2 FIRE SPRINKLER PLAN (1)

1" = 20'-0" MS131

AS-BUILT PLANS ACCURATLEY AND COMPLETELY REFLECT CHANGES AND CORRECTIONS MADE DURING CONSTRUCTION AS DOCUMENTED IN THE RFI AND NDC QA/QC PROCEDURES DEVELOPED FOR THIS PROJECT AND AS BASED ON AS-BUILT INFORMATION PROVIDED BY SEATTLE TUNNEL PARTNERS.

FILE NAME	C:\Users\trtran\Documents\South Building Mech-TWE-Central-HNTB_2018_trtran.rvt
DATE	5/7/2019 3:27:34
TIME	PM
PLOTTED BY	H. TANG
DESIGNED BY	D. MOORE
ENTERED BY	H. TANG
CHECKED BY	W. LI
PROJ. ENGR.	R. JOHNSON
REGIONAL ADM.	L. LAIRD

REVISION	DATE	BY
1 CONSOLIDATED CONSTRUCTION PACKAGE	07/14/14	DBP

REGION NO.	STATE	FED.AID PROJ.NO.
10	WASH	BR-0099(111)
JOB NUMBER 10A065		
CONTRACT NO. 007999		LOCATION NO.

EOR — CERTIFYING ENGINEER — 05-14-19

Washington State Department of Transportation
U.S. Department of Transportation Federal Highway Administration
City of Seattle

SR 99 TUNNEL PROJECT

SOUTH OPS BUILDING MECH LEVEL -2 FIRE SPRINKLER PLAN

MS131

SHEET OF SHEETS

FOR AS-BUILT PLAN ONLY

H-D-PAK-SOB-TR2.34-00362-08-ASB-1905-14

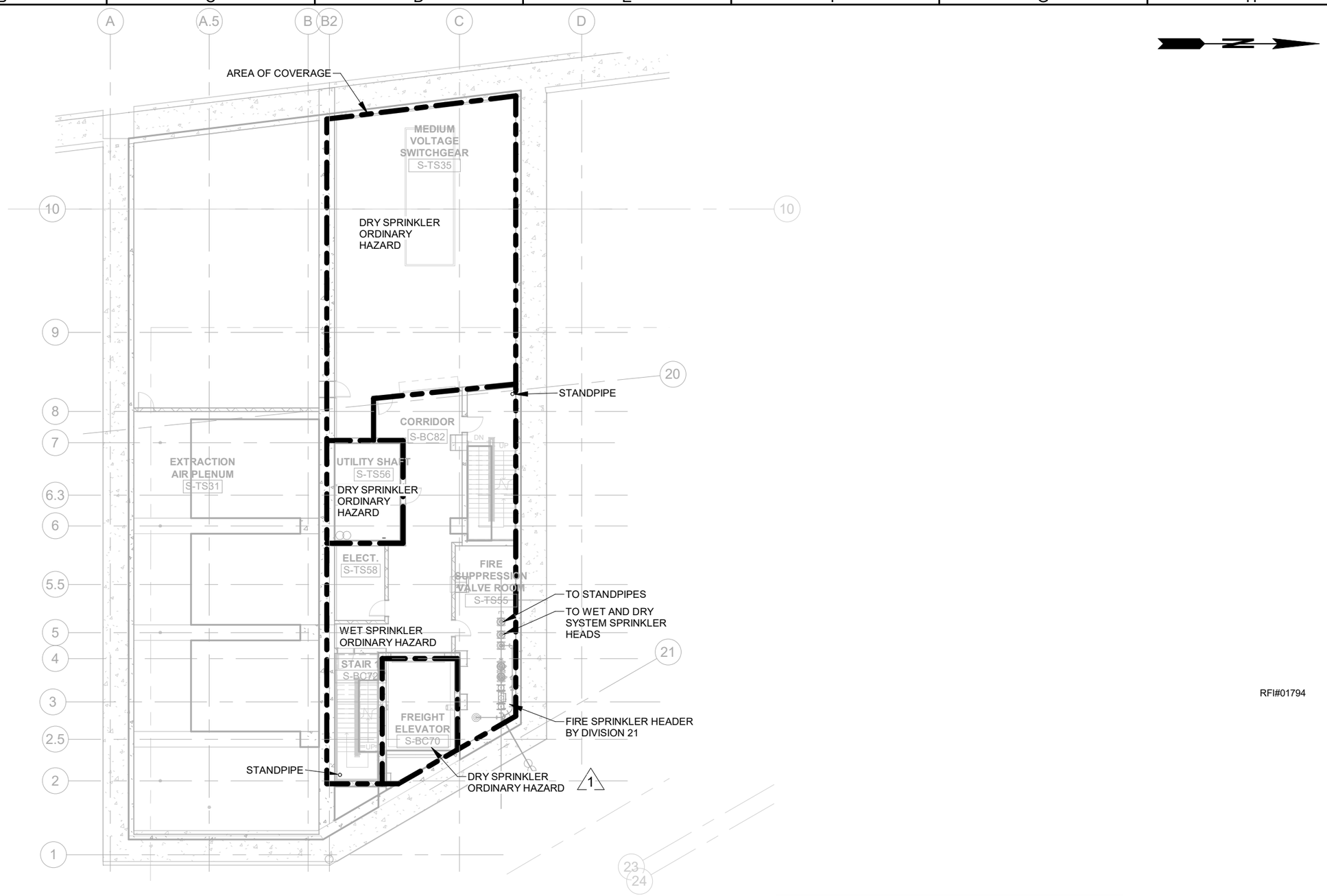

RFI#01794

SO OPS BLDG. LEVEL -1 FIRE SPRINKLER PLAN

1" = 20'-0" (1 / MS141)

AS-BUILT PLANS ACCURATLEY AND COMPLETELY REFLECT CHANGES AND CORRECTIONS MADE DURING CONSTRUCTION AS DOCUMENTED IN THE RFI AND NDC QA/QC PROCEDURES DEVELOPED FOR THIS PROJECT AND AS BASED ON AS-BUILT INFORMATION PROVIDED BY SEATTLE TUNNEL PARTNERS.

FILE NAME	C:\Users\trtran\Documents\South Building Mech-TWE-Central-HNTB_2018_trtran.rvt
DATE	5/7/2019 3:27:37
TIME	PM
PLOTTED BY	H. TANG
DESIGNED BY	D. MOORE
ENTERED BY	H. TANG
CHECKED BY	W. LI
PROJ. ENGR.	R. JOHNSON
REGIONAL ADM.	L. LAIRD

REVISION		DATE	BY
1	CONSOLIDATED CONSTRUCTION PACKAGE	07/14/14	DBP

REGION NO.	STATE	FED.AID PROJ.NO.
10	WASH	BR-0099(111)
JOB NUMBER 10A065		
CONTRACT NO. 007999		LOCATION NO.

EOR — CERTIFYING ENGINEER — 05-14-19

Washington State Department of Transportation
U.S. Department of Transportation Federal Highway Administration
City of Seattle

SR 99 TUNNEL PROJECT

SOUTH OPS BUILDING MECH LEVEL -1 FIRE SPRINKLER PLAN

MS141

SHEET OF SHEETS

FOR AS-BUILT PLAN ONLY

H-D-PAK-SOB-TR2.34-00362-08-ASB-1905-14

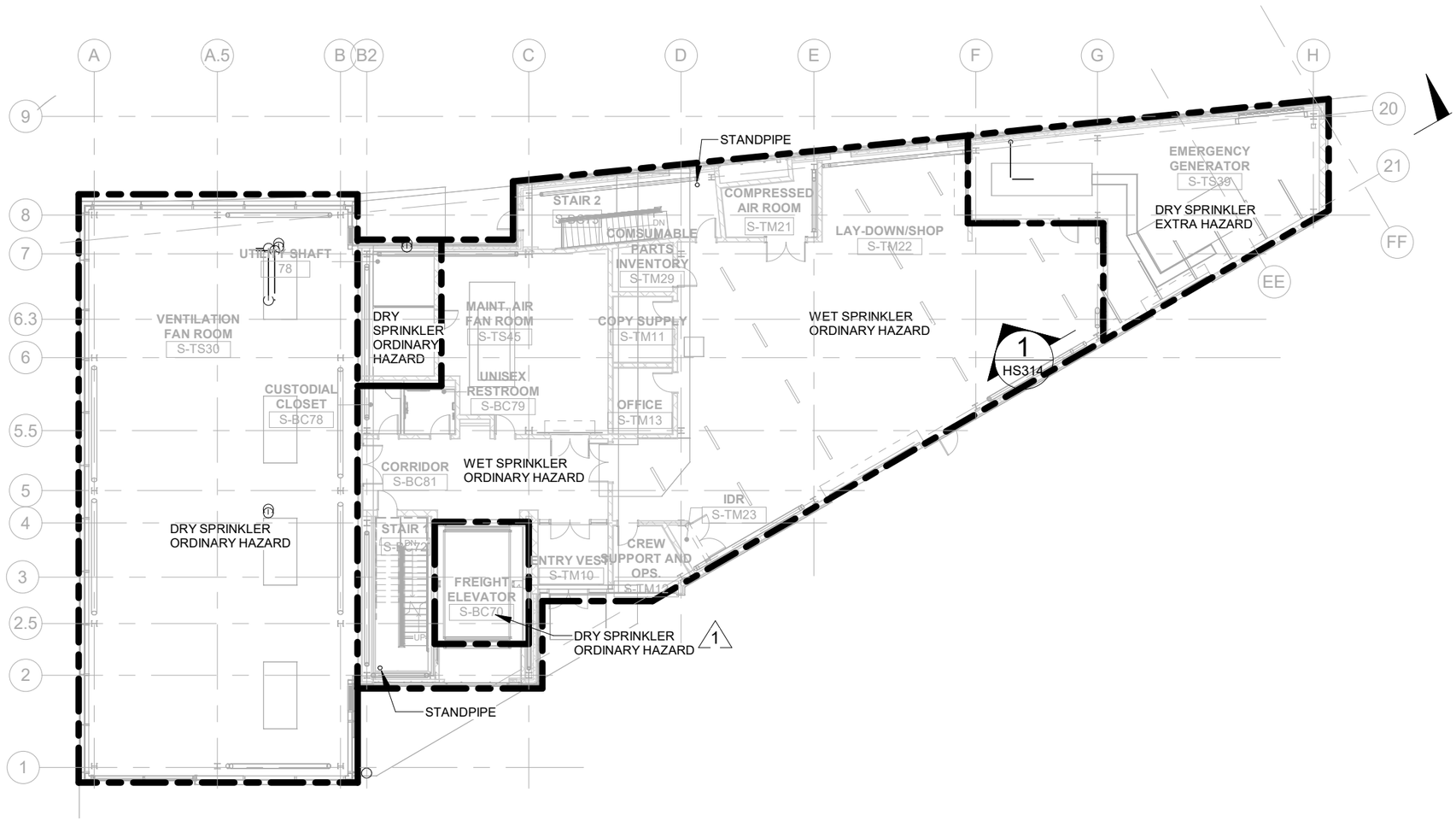

GENERAL NOTE

1. PROVIDE CAPACITY AND CAPPED MAIN PIPING STUB FOR FUTURE EXPANSION OF WET PIPE SYSTEM TO COVER 7,000 SQFT OF FUTURE PARKING GARAGE TO BE LOCATED ALONG GRID LINE 21.

RFI#01794

SO OPS BLDG. LEVEL 1 FIRE SPRINKLER PLAN

1" = 20'-0" (1) MS151

AS-BUILT PLANS ACCURATLEY AND COMPLETELY REFLECT CHANGES AND CORRECTIONS MADE DURING CONSTRUCTION AS DOCUMENTED IN THE RFI AND NDC QA/QC PROCEDURES DEVELOPED FOR THIS PROJECT AND AS BASED ON AS-BUILT INFORMATION PROVIDED BY SEATTLE TUNNEL PARTNERS.

FILE NAME	C:\Users\trtran\Documents\South Building Mech-TWE-Central-HNTB_2018_trtran.rvt
DATE	5/7/2019 3:27:40
TIME	PM
PLOTTED BY	H. TANG
DESIGNED BY	D. MOORE
ENTERED BY	H. TANG
CHECKED BY	W. LI
PROJ. ENGR.	R. JOHNSON
REGIONAL ADM.	L. LAIRD

REVISION		DATE	BY
1	CONSOLIDATED CONSTRUCTION PACKAGE	07/14/14	DBP

REGION NO.	STATE	FED.AID PROJ.NO.
10	WASH	BR-0099(111)

JOB NUMBER 10A065

CONTRACT NO. 007999

LOCATION NO.

EOR — CERTIFYING ENGINEER

Washington State Department of Transportation
U.S. Department of Transportation Federal Highway Administration
City of Seattle

SR 99 TUNNEL PROJECT

SOUTH OPS BUILDING MECH LEVEL 1 FIRE SPRINKLER PLAN

MS151

SHEET OF SHEETS

FOR AS-BUILT PLAN ONLY

H-D-PAK-SOB-TR2.34-00362-08-ASB-1905-14

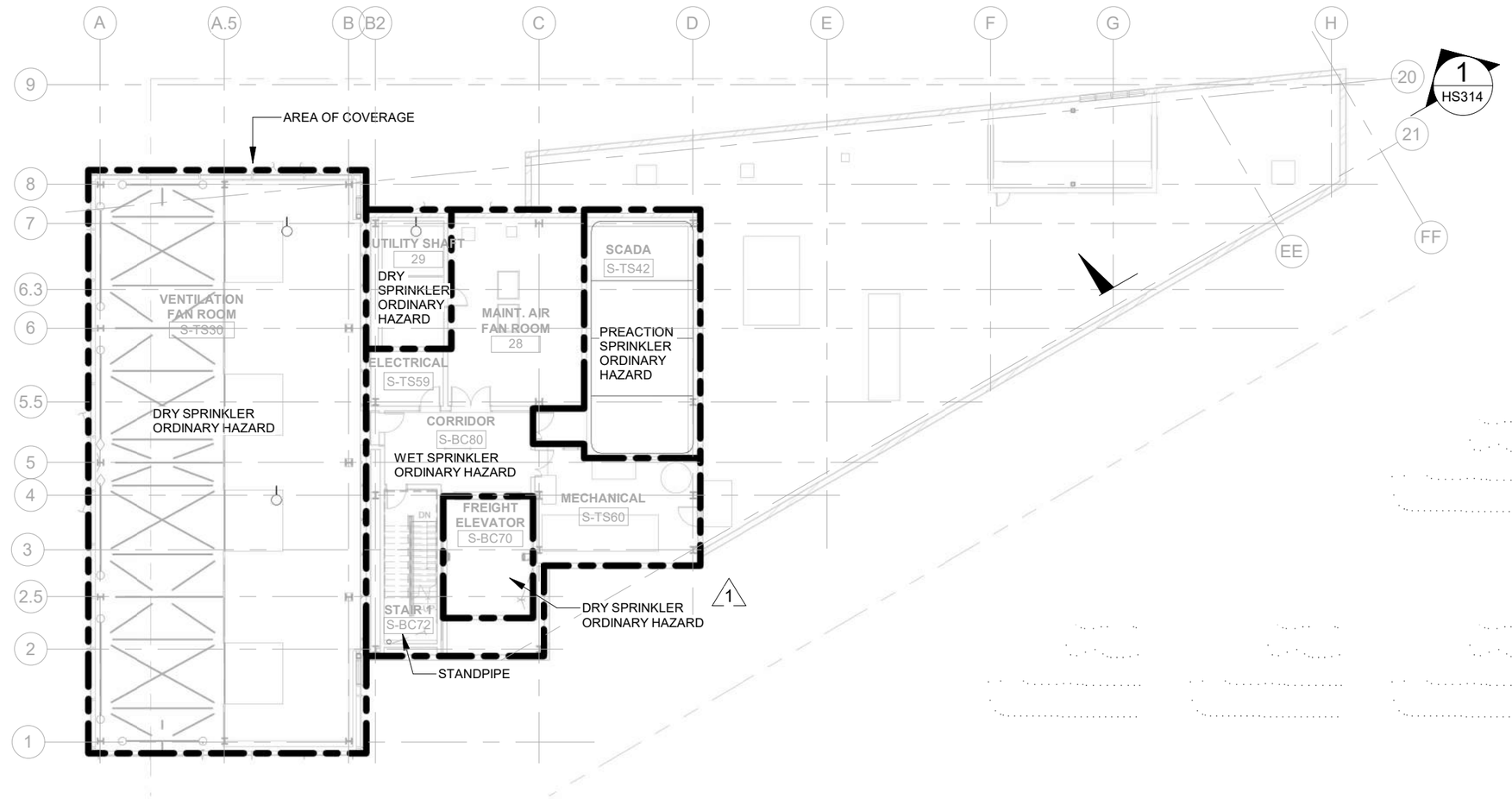

SO OPS BLDG. LEVEL 2 FIRE SPRINKLER PLAN

1 (MS161)

1" = 20'-0"

AS-BUILT PLANS ACCURATLEY AND COMPLETELY REFLECT CHANGES AND CORRECTIONS MADE DURING CONSTRUCTION AS DOCUMENTED IN THE RFI AND NDC QA/QC PROCEDURES DEVELOPED FOR THIS PROJECT AND AS BASED ON AS-BUILT INFORMATION PROVIDED BY SEATTLE TUNNEL PARTNERS.

FILE NAME	C:\Users\trtran\Documents\South Building Mech-TWE-Central-HNTB_2018_trtran.rvt
DATE	5/7/2019 3:27:46
TIME	PM
PLOTTED BY	H. TANG
DESIGNED BY	D. MOORE
ENTERED BY	H. TANG
CHECKED BY	W. LI
PROJ. ENGR.	R. JOHNSON
REGIONAL ADM.	L. LAIRD

REVISION	DATE	BY
1 CONSOLIDATED CONSTRUCTION PACKAGE	07/14/14	DBP

REGION NO.	STATE	FED.AID PROJ.NO.
10	WASH	BR-0099(111)
JOB NUMBER 10A065		
CONTRACT NO. 007999		LOCATION NO.

EOR — CERTIFYING ENGINEER

Washington State Department of Transportation
U.S. Department of Transportation Federal Highway Administration
City of Seattle

SR 99 TUNNEL PROJECT

SOUTH OPS BUILDING MECH LEVEL 2 FIRE SPRINKLER PLAN

MS161

SHEET OF SHEETS

FOR AS-BUILT PLAN ONLY

H-D-PAK-SOB-TR2.34-00362-08-ASB-1905-14

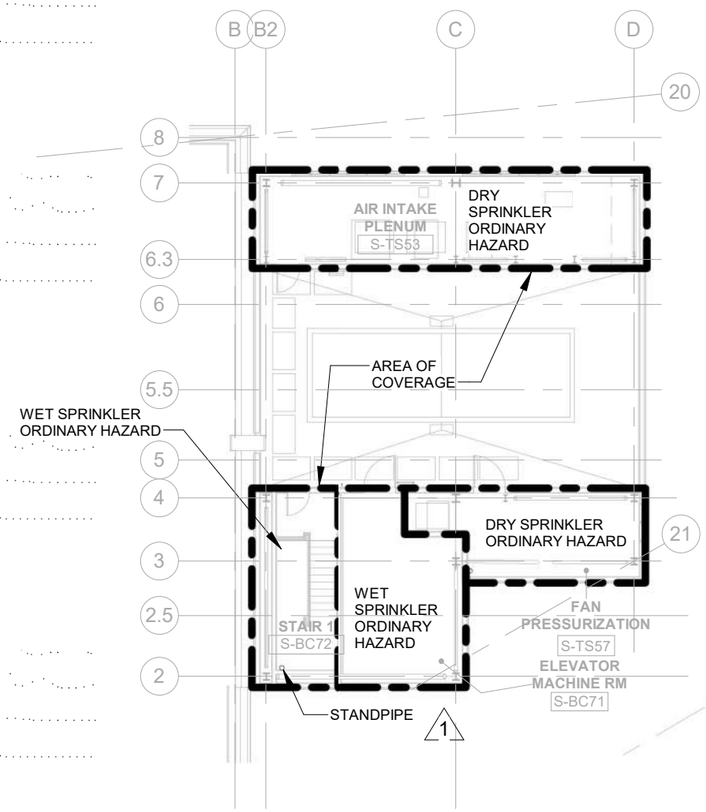

RFI #01683
RFI #01818
RFI #03520
RFI #04197

SO OPS BLDG. LEVEL 3 FIRE SPRINKLER PLAN (1)

1" = 20'-0" MS171

AS-BUILT PLANS ACCURATLEY AND COMPLETELY REFLECT CHANGES AND CORRECTIONS MADE DURING CONSTRUCTION AS DOCUMENTED IN THE RFI AND NDC QA/QC PROCEDURES DEVELOPED FOR THIS PROJECT AND AS BASED ON AS-BUILT INFORMATION PROVIDED BY SEATTLE TUNNEL PARTNERS.

FILE NAME	C:\Users\trtran\Documents\South Building Mech-TWE-Central-HNTB_2018_trtran.rvt
DATE	5/7/2019 3:27:51
TIME	PM
PLOTTED BY	H. TANG
DESIGNED BY	D. MOORE
ENTERED BY	H. TANG
CHECKED BY	W. LI
PROJ. ENGR.	R. JOHNSON
REGIONAL ADM.	L. LAIRD

	REVISION	DATE	BY
1	CONSOLIDATED CONSTRUCTION PACKAGE	07/14/14	DBP

REGION NO.	STATE	FED.AID PROJ.NO.
10	WASH	BR-0099(111)
JOB NUMBER 10A065		
CONTRACT NO. 007999		LOCATION NO.

EOR — CERTIFYING ENGINEER

Washington State Department of Transportation
U.S. Department of Transportation Federal Highway Administration
City of Seattle

SR 99 TUNNEL PROJECT

SOUTH OPS BUILDING MECH LEVEL 3 FIRE SPRINKLER PLAN

MS171

SHEET OF SHEETS

FOR AS-BUILT PLAN ONLY

H-D-PAK-SOB-TR2.34-00362-08-ASB-1905-14

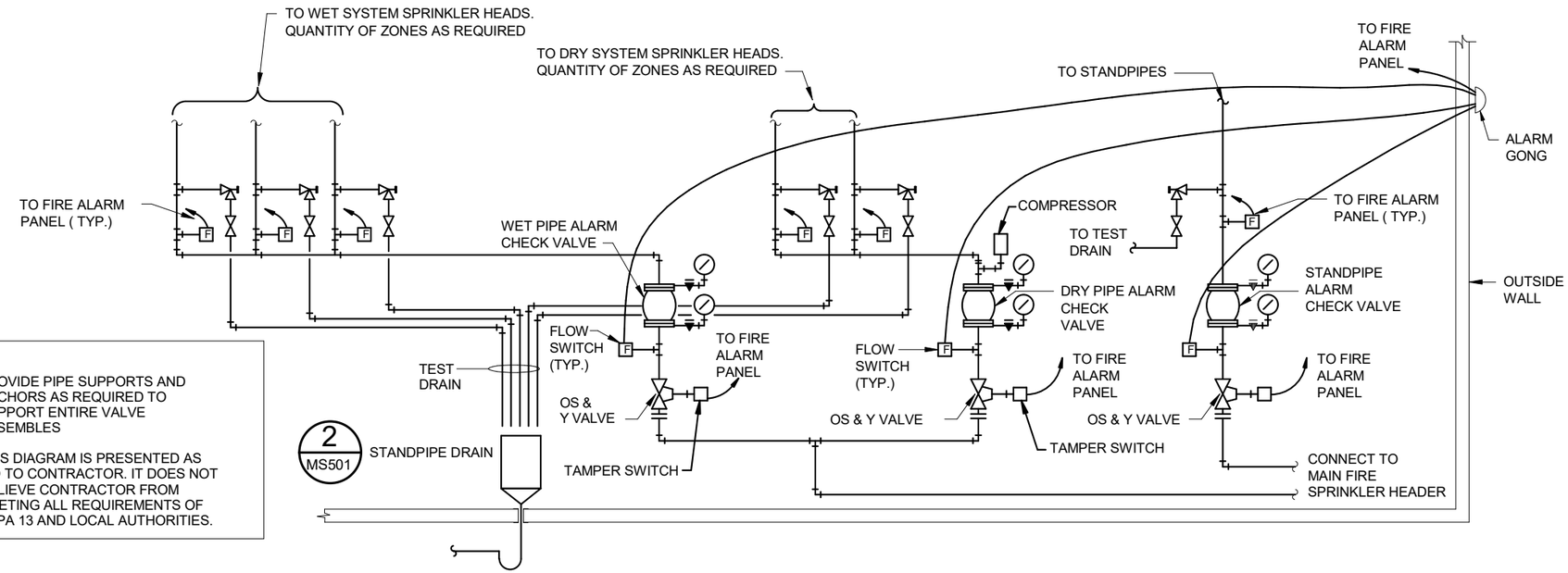

NOTES

1. PROVIDE PIPE SUPPORTS AND ANCHORS AS REQUIRED TO SUPPORT ENTIRE VALVE ASSEMBLES
2. THIS DIAGRAM IS PRESENTED AS AID TO CONTRACTOR. IT DOES NOT RELIEVE CONTRACTOR FROM MEETING ALL REQUIREMENTS OF NFPA 13 AND LOCAL AUTHORITIES.

FIRE SPRINKLER HEADER DIAGRAM (1 / MS501)

SCALE: NONE

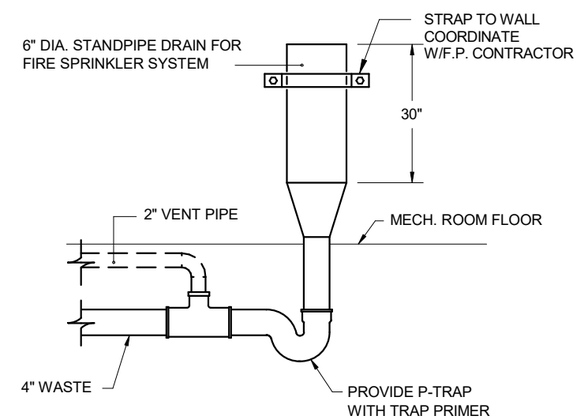

RFI #01939

FIRE SPRINKLER DRAIN DETAIL (2 / MS501)

SCALE: NONE

AS-BUILT PLANS ACCURATLEY AND COMPLETELY REFLECT CHANGES AND CORRECTIONS MADE DURING CONSTRUCTION AS DOCUMENTED IN THE RFI AND NDC QA/QC PROCEDURES DEVELOPED FOR THIS PROJECT AND AS BASED ON AS-BUILT INFORMATION PROVIDED BY SEATTLE TUNNEL PARTNERS.

FILE NAME	C:\Users\trtran\Documents\South Building Mech-TWE-Central-HNTB_2018_trtran.rvt
DATE	5/7/2019 3:27:52
TIME	PM
PLOTTED BY	H. TANG
DESIGNED BY	D. MOORE
ENTERED BY	H. TANG
CHECKED BY	W. LI
PROJ. ENGR.	R. JOHNSON
REGIONAL ADM.	L. LAIRD

REVISION | DATE | BY

REGION NO. 10 | STATE WASH | FED.AID PROJ.NO. BR-0099(111)

JOB NUMBER 10A065

CONTRACT NO. 007999 | LOCATION NO.

EOR — CERTIFYING ENGINEER — 05-14-19

Washington State Department of Transportation
U.S. Department of Transportation Federal Highway Administration
City of Seattle

SR 99 TUNNEL PROJECT

SOUTH OPS BUILDING MECH FIRE SPRINKLER DETAILS

MS501

SHEET OF SHEETS

FOR AS-BUILT PLAN ONLY

H-D-PAK-SOB-TR2.34-00362-08-ASB-1905-14

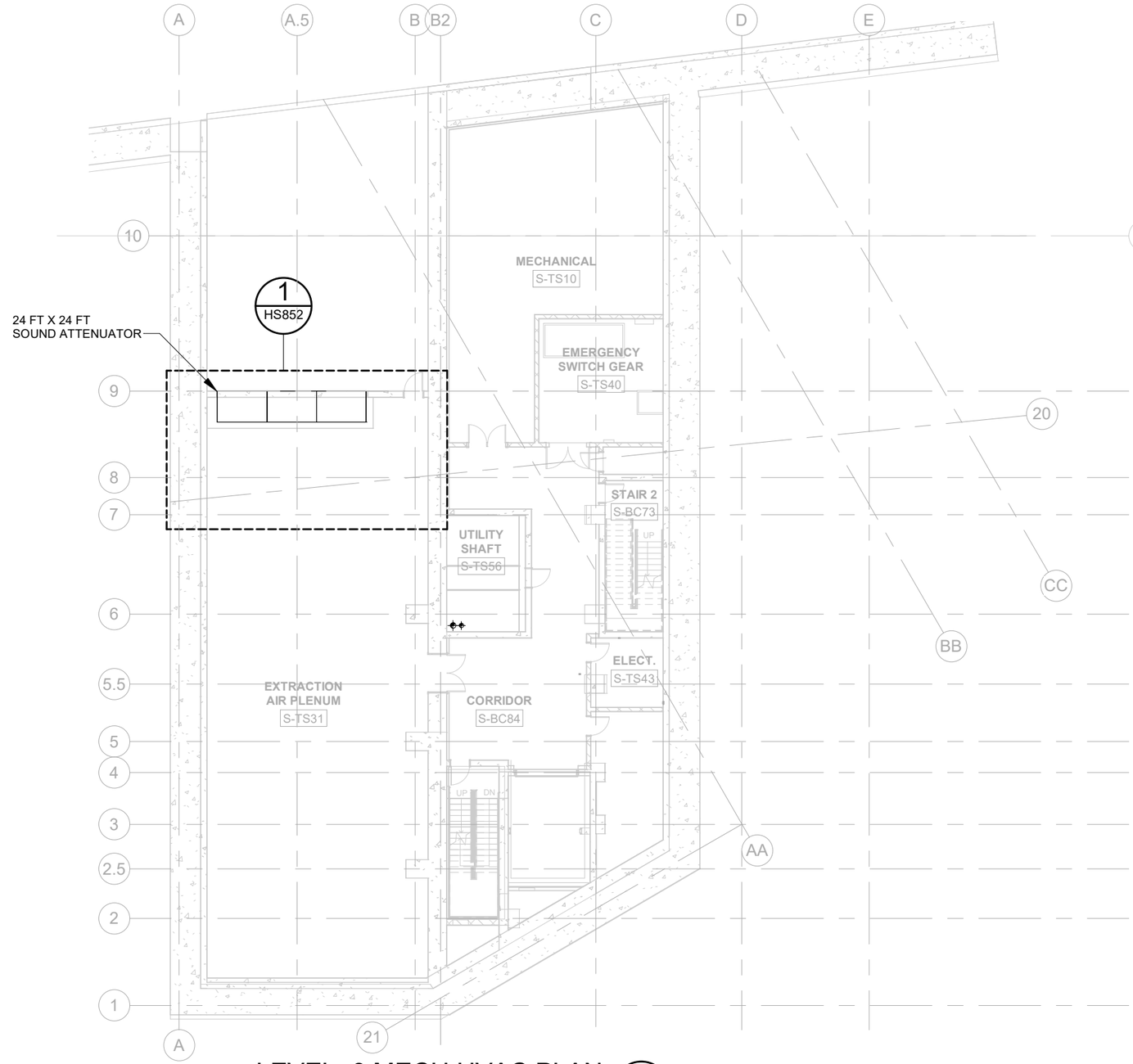

LEVEL -3 MECH HVAC PLAN (1 / HS221)

1" = 20'-0"

AS-BUILT PLANS ACCURATLEY AND COMPLETELY REFLECT CHANGES AND CORRECTIONS MADE DURING CONSTRUCTION AS DOCUMENTED IN THE RFI AND NDC QA/QC PROCEDURES DEVELOPED FOR THIS PROJECT AND AS BASED ON AS-BUILT INFORMATION PROVIDED BY SEATTLE TUNNEL PARTNERS.

FILE NAME	C:\Users\trtran\Documents\South Building MEP-Central_2018_trtran.rvt
DATE	5/7/2019 3:35:31
TIME	PM
PLOTTED BY	H. EMMETT
DESIGNED BY	D. PARKER
ENTERED BY	H. EMMETT
CHECKED BY	S. CASSADY
PROJ. ENGR.	R. JOHNSON
REGIONAL ADM.	L. LAIRD

REVISION | DATE | BY

REGION NO. 10 | STATE WASH | JOB NUMBER 10A065 | CONTRACT NO. 007999

FED.AID PROJ.NO. BR-0099(111)

LOCATION NO.

EOR 11/20/12

CERTIFYING ENGINEER 05-14-19

Washington State Department of Transportation

U.S. Department of Transportation Federal Highway Administration

City of Seattle

SR 99 TUNNEL PROJECT

SOUTH OPS BLDG - LEVEL -3 MECH HVAC PLAN

HS221

SHEET OF SHEETS

FOR AS-BUILT PLAN ONLY

H-D-PAK-SOB-TR2.34-00362-08-ASB-1905-14

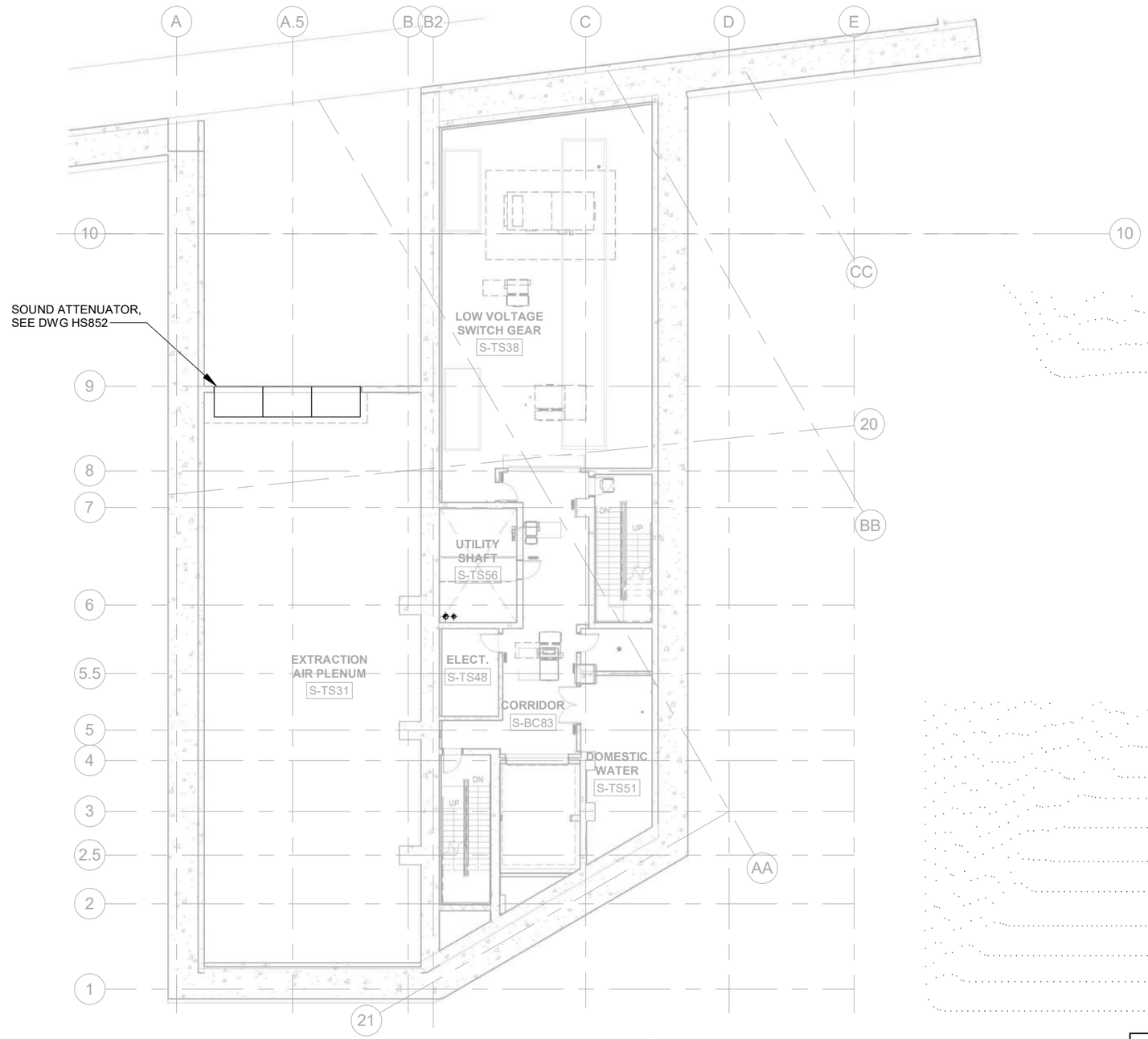

LEVEL -2 MECH HVAC PLAN (1)

1" = 20'-0" HS231

AS-BUILT PLANS ACCURATLEY AND COMPLETELY REFLECT CHANGES AND CORRECTIONS MADE DURING CONSTRUCTION AS DOCUMENTED IN THE RFI AND NDC QA/QC PROCEDURES DEVELOPED FOR THIS PROJECT AND AS BASED ON AS-BUILT INFORMATION PROVIDED BY SEATTLE TUNNEL PARTNERS.

FILE NAME	C:\Users\trtran\Documents\South Building MEP-Central_2018_trtran.rvt
DATE	5/7/2019 3:35:34
TIME	PM
PLOTTED BY	H. EMMETT
DESIGNED BY	D. PARKER
ENTERED BY	H. EMMETT
CHECKED BY	S. CASSADY
PROJ. ENGR.	R. JOHNSON
REGIONAL ADM.	L. AIRD

REVISION	DATE	BY

REGION NO.	STATE	FED.AID PROJ.NO.
10	WASH	BR-0099(111)
JOB NUMBER 10A065		
CONTRACT NO. 007999		LOCATION NO.

EOR — CERTIFYING ENGINEER

Washington State Department of Transportation
U.S. Department of Transportation Federal Highway Administration
City of Seattle

SR 99 TUNNEL PROJECT

SOUTH OPS BLDG - LEVEL -2 MECH HVAC PLAN

HS231

SHEET OF SHEETS

FOR AS-BUILT PLAN ONLY

H-D-PAK-SOB-TR2.34-00362-08-ASB-1905-14

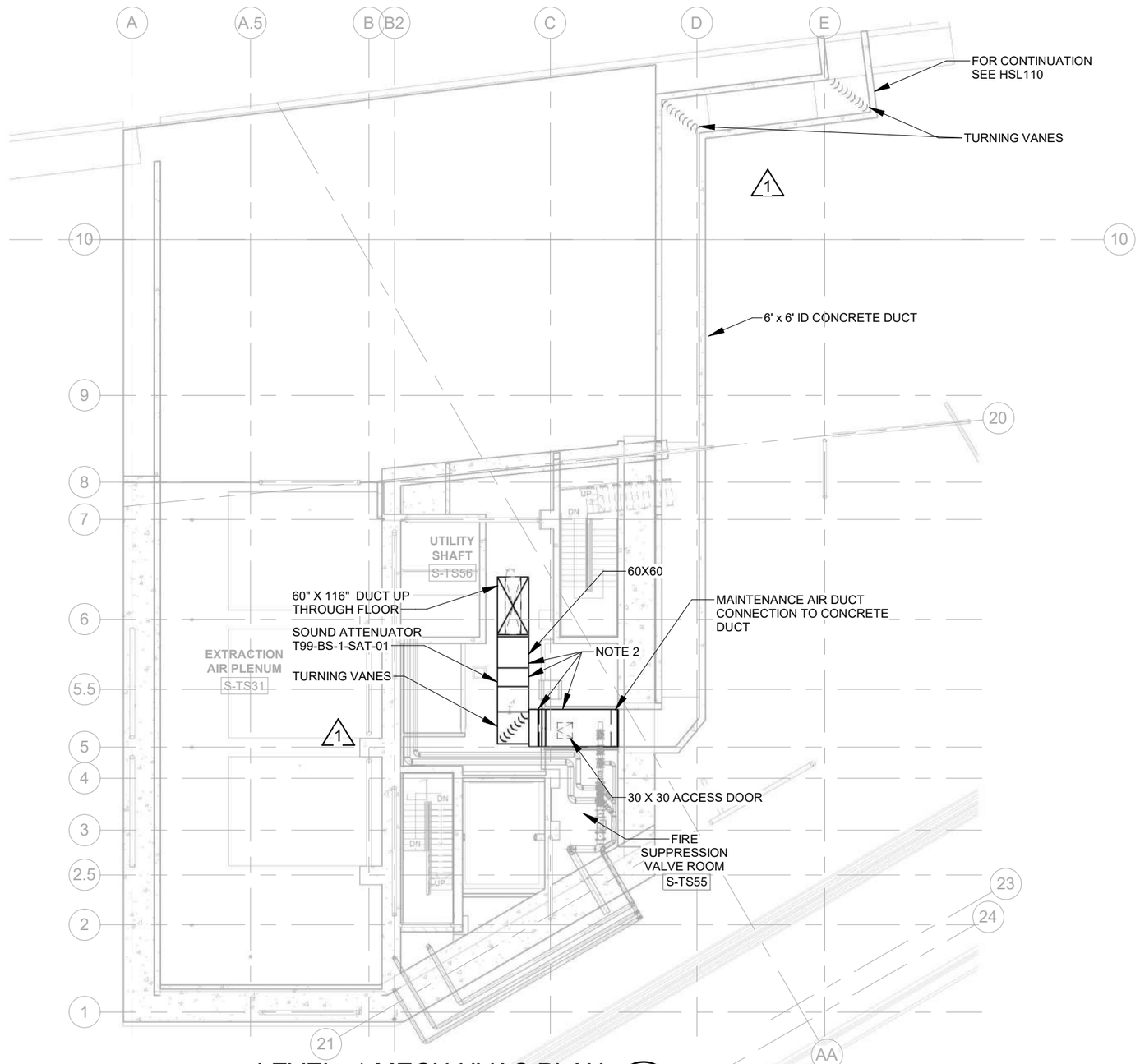

LEVEL -1 MECH HVAC PLAN (1 / HS241)

1" = 20'-0"

NOTES:

1. MAINTENANCE ACCESS FOR FAN DAMPER AND ACTUATOR WILL BE INDICATED IN FINAL DESIGN.
2. PROVIDE CERTIFIED SHOP DRAWINGS AND SUPPORTING INFORMATION PER TECHNICAL SPECIFICATIONS 23 34 57 1.06.C

AS-BUILT PLANS ACCURATLEY AND COMPLETELY REFLECT CHANGES AND CORRECTIONS MADE DURING CONSTRUCTION AS DOCUMENTED IN THE RFI AND NDC QA/QC PROCEDURES DEVELOPED FOR THIS PROJECT AND AS BASED ON AS-BUILT INFORMATION PROVIDED BY SEATTLE TUNNEL PARTNERS.

FILE NAME	C:\Users\trtran\Documents\South Building MEP-Central_2018_trtran.rvt
DATE	5/7/2019 3:35:37
TIME	PM
PLOTTED BY	H. EMMETT
DESIGNED BY	D. PARKER
ENTERED BY	H. EMMETT
CHECKED BY	S. CASSADY
PROJ. ENGR.	R. JOHNSON
REGIONAL ADM.	L. AIRD

REVISION		DATE	BY
1	NDC070 - AT&T CELL PHONE NETWORK IN TUNNEL - MECHANICAL	10/19/2012	DBP

REGION NO. 10 | STATE WASH | JOB NUMBER 10A065 | CONTRACT NO. 007999 | LOCATION NO.

FED.AID PROJ.NO. BR-0099(111)

EOR — DAVID B. PARKER, STATE OF WASHINGTON, 36243, REGISTERED PROFESSIONAL ENGINEER, 10/3/19

CERTIFYING ENGINEER — DAVID B. PARKER, STATE OF WASHINGTON, 36243, REGISTERED PROFESSIONAL ENGINEER, 05-14-19

Washington State Department of Transportation
U.S. Department of Transportation Federal Highway Administration
City of Seattle

SR 99 TUNNEL PROJECT

SOUTH OPS BLDG - LEVEL -1 MECH HVAC PLAN

HS241

SHEET OF SHEETS

FOR AS-BUILT PLAN ONLY

H-D-PAK-SOB-TR2.34-00362-08-ASB-1905-14

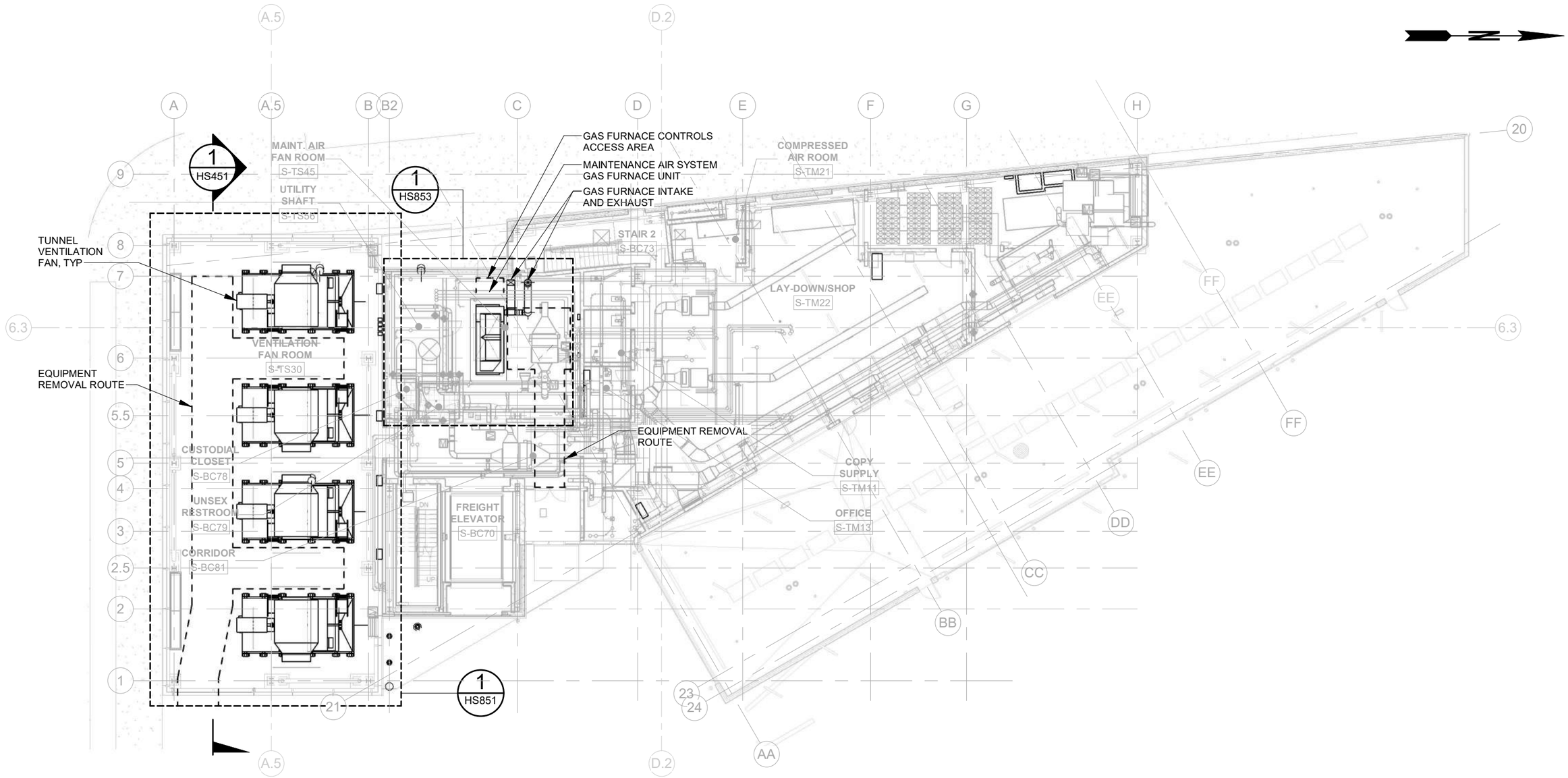

LEVEL 1 MECH HVAC PLAN (1 HS251)

1" = 20'-0"

AS-BUILT PLANS ACCURATLEY AND COMPLETELY REFLECT CHANGES AND CORRECTIONS MADE DURING CONSTRUCTION AS DOCUMENTED IN THE RFI AND NDC QA/QC PROCEDURES DEVELOPED FOR THIS PROJECT AND AS BASED ON AS-BUILT INFORMATION PROVIDED BY SEATTLE TUNNEL PARTNERS.

FILE NAME	C:\Users\trtran\Documents\South Building MEP-Central_2018_trtran.rvt
DATE	5/7/2019 3:35:41
TIME	PM
PLOTTED BY	H. EMMETT
DESIGNED BY	D. PARKER
ENTERED BY	H. EMMETT
CHECKED BY	S. CASSADY
PROJ. ENGR.	R. JOHNSON
REGIONAL ADM.	L. LAIRD

REVISION | DATE | BY

REGION NO. 10 | STATE WASH | JOB NUMBER 10A065 | CONTRACT NO. 007999

FED.AID PROJ.NO. BR-0099(111)

LOCATION NO.

EOR 11/20/12

CERTIFYING ENGINEER 05-14-19

Washington State Department of Transportation

U.S. Department of Transportation Federal Highway Administration

City of Seattle

SR 99 TUNNEL PROJECT

SOUTH OPS BLDG - LEVEL 1 MECH HVAC PLAN

HS251

SHEET OF SHEETS

FOR AS-BUILT PLAN ONLY

H-D-PAK-SOB-TR2.34-00362-08-ASB-1905-14

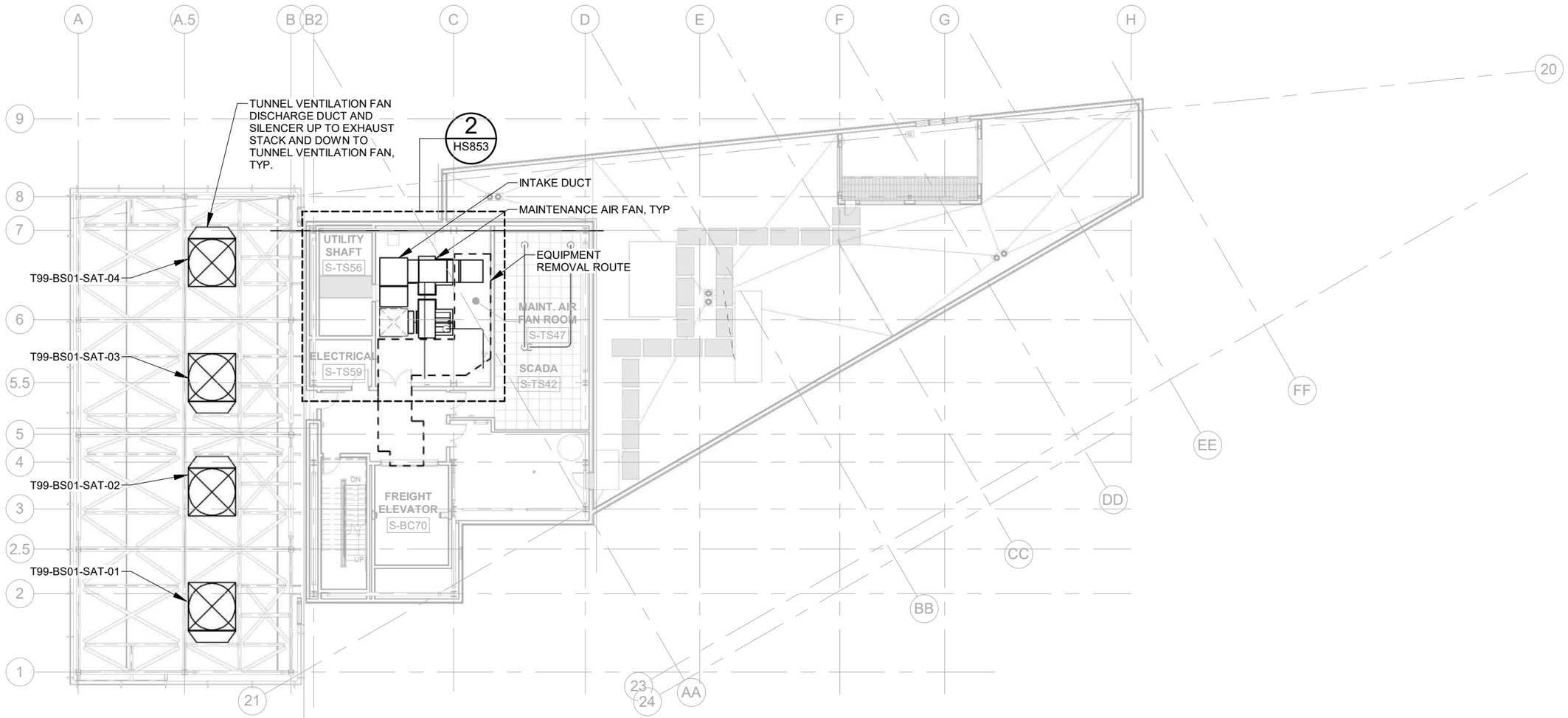

LEVEL 2 MECH HVAC PLAN (1 / HS261)

1" = 20'-0"

AS-BUILT PLANS ACCURATLEY AND COMPLETELY REFLECT CHANGES AND CORRECTIONS MADE DURING CONSTRUCTION AS DOCUMENTED IN THE RFI AND NDC QA/QC PROCEDURES DEVELOPED FOR THIS PROJECT AND AS BASED ON AS-BUILT INFORMATION PROVIDED BY SEATTLE TUNNEL PARTNERS.

FILE NAME	C:\Users\trtran\Documents\South Building MEP-Central_2018_trtran.rvt
DATE	5/7/2019 3:35:43
TIME	PM
PLOTTED BY	H. EMMETT
DESIGNED BY	D. PARKER
ENTERED BY	H. EMMETT
CHECKED BY	S. CASSADY
PROJ. ENGR.	R. JOHNSON
REGIONAL ADM.	L. LAIRD

REVISION | DATE | BY

REGION NO.	STATE	FED.AID PROJ.NO.
10	WASH	BR-0099(111)
JOB NUMBER 10A065		
CONTRACT NO. 007999		LOCATION NO.

EOR 11/20/12

CERTIFYING ENGINEER 05-14-19

Washington State Department of Transportation

U.S. Department of Transportation Federal Highway Administration

City of Seattle

SR 99 TUNNEL PROJECT

SOUTH OPS BLDG - LEVEL 2 MECH HVAC PLAN

HS261

SHEET OF SHEETS

FOR AS-BUILT PLAN ONLY

H-D-PAK-SOB-TR2.34-00362-08-ASB-1905-14

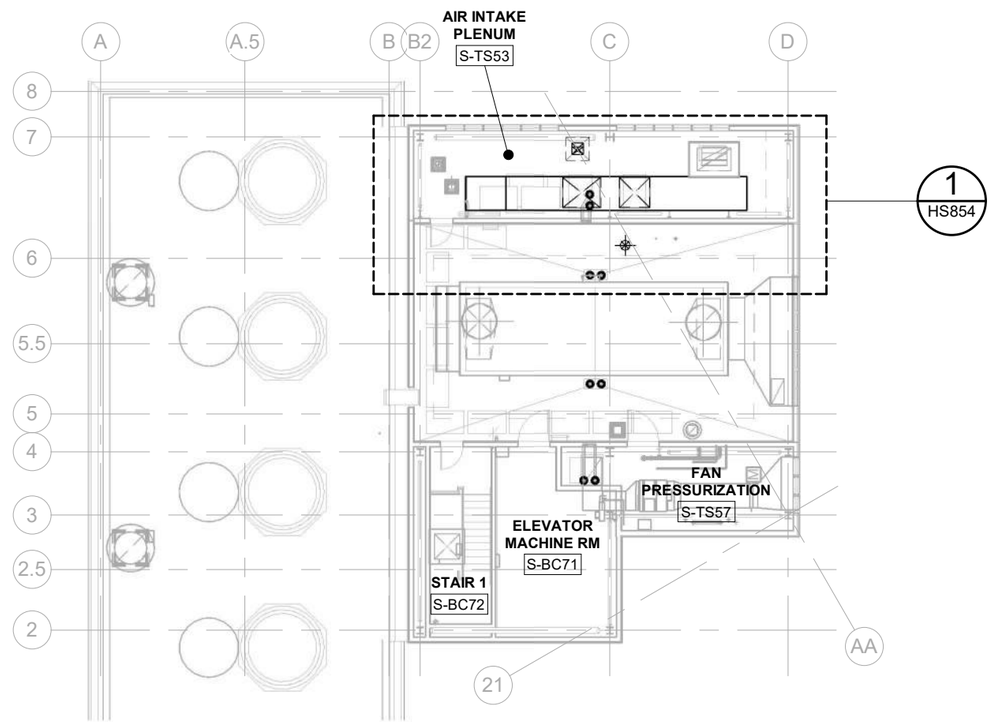

MAINTENANCE AIR ROOF PLAN (1 / HS271)

1" = 20'-0"

AS-BUILT PLANS ACCURATLEY AND COMPLETELY REFLECT CHANGES AND CORRECTIONS MADE DURING CONSTRUCTION AS DOCUMENTED IN THE RFI AND NDC QA/QC PROCEDURES DEVELOPED FOR THIS PROJECT AND AS BASED ON AS-BUILT INFORMATION PROVIDED BY SEATTLE TUNNEL PARTNERS.

FILE NAME	C:\Users\trtran\Documents\South Building MEP-Central_2018_trtran.rvt
DATE	5/7/2019 3:35:45
TIME	PM
PLOTTED BY	H. EMMETT
DESIGNED BY	D. PARKER
ENTERED BY	H. EMMETT
CHECKED BY	S. CASSADY
PROJ. ENGR.	R. JOHNSON
REGIONAL ADM.	L. LAIRD

REVISION	DATE	BY

REGION NO.	STATE	FED.AID PROJ.NO.
10	WASH	BR-0099(111)
JOB NUMBER 10A065		
CONTRACT NO. 007999		LOCATION NO.

EOR — CERTIFYING ENGINEER

Washington State Department of Transportation
U.S. Department of Transportation Federal Highway Administration
City of Seattle

SR 99 TUNNEL PROJECT

SOUTH OPS BLDG - LEVEL 3 MECH HVAC ROOF PLAN

HS271

SHEET OF SHEETS

FOR AS-BUILT PLAN ONLY

H-D-PAK-SOB-TR2.34-00362-08-ASB-1905-14

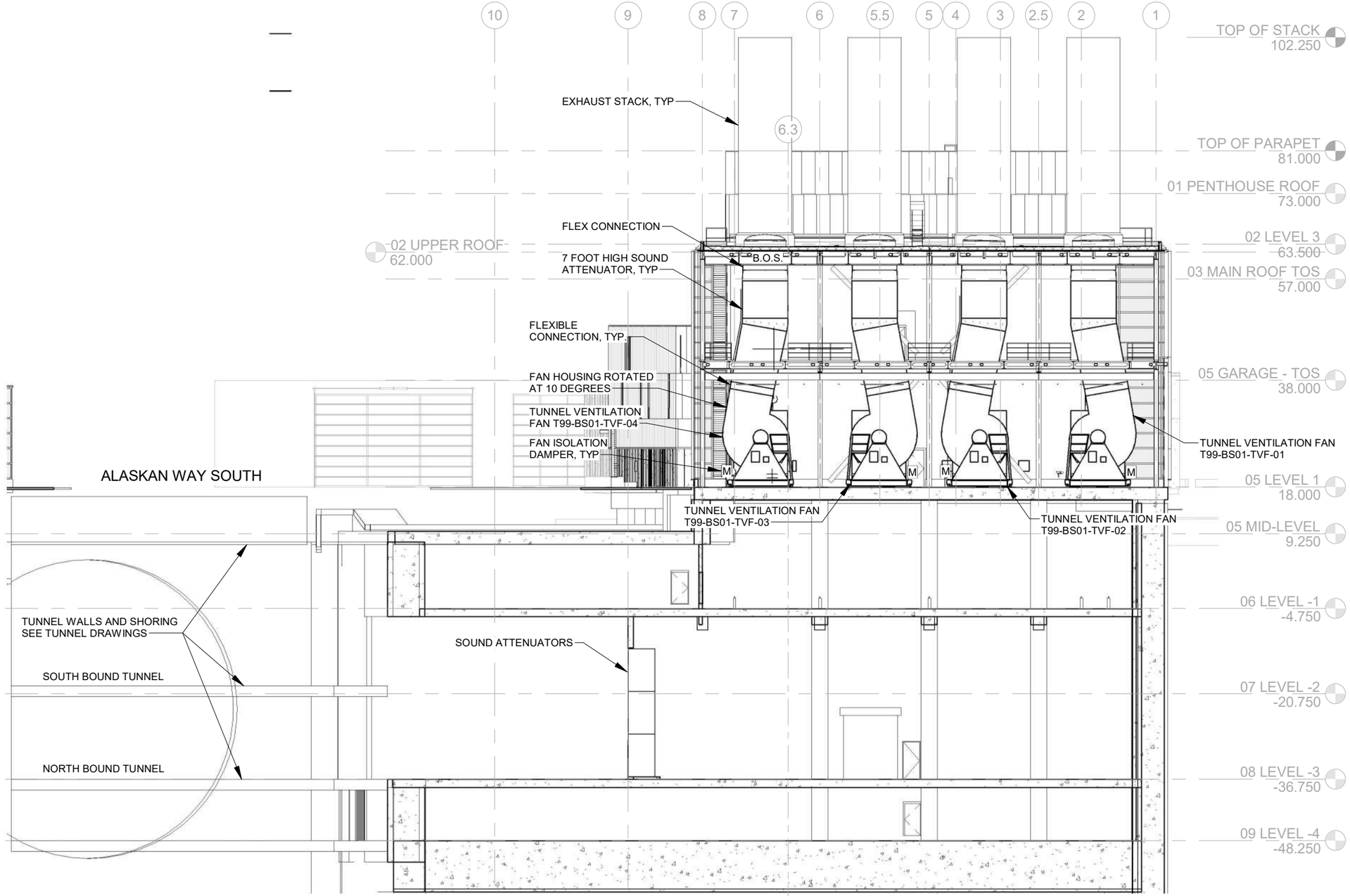

EXTRACTION FANS SECTION 1 HS251

1" = 20'-0"

AS-BUILT PLANS ACCURATLEY AND COMPLETELY REFLECT CHANGES AND CORRECTIONS MADE DURING CONSTRUCTION AS DOCUMENTED IN THE RFI AND NDC QA/QC PROCEDURES DEVELOPED FOR THIS PROJECT AND AS BASED ON AS-BUILT INFORMATION PROVIDED BY SEATTLE TUNNEL PARTNERS.

FILE NAME	C:\Users\trtran\Documents\South Building MEP-Central_2018_trtran.rvt
DATE	5/7/2019 3:35:48
TIME	PM
PLOTTED BY	H. EMMETT
DESIGNED BY	D. PARKER
ENTERED BY	H. EMMETT
CHECKED BY	S. CASSADY
PROJ. ENGR.	R. JOHNSON
REGIONAL ADM.	L. LAIRD

REVISION | DATE | BY

REGION NO.	STATE	FED.AID PROJ.NO.
10	WASH	BR-0099(111)
JOB NUMBER 10A065		
CONTRACT NO. 007999		LOCATION NO.

EOR — CERTIFYING ENGINEER

Washington State Department of Transportation
U.S. Department of Transportation Federal Highway Administration
City of Seattle

SR 99 TUNNEL PROJECT

SOUTH OPS BLDG - LEVEL 1 MECH VENT FAN ROOM SECTION

HS451

SHEET OF SHEETS

FOR AS-BUILT PLAN ONLY

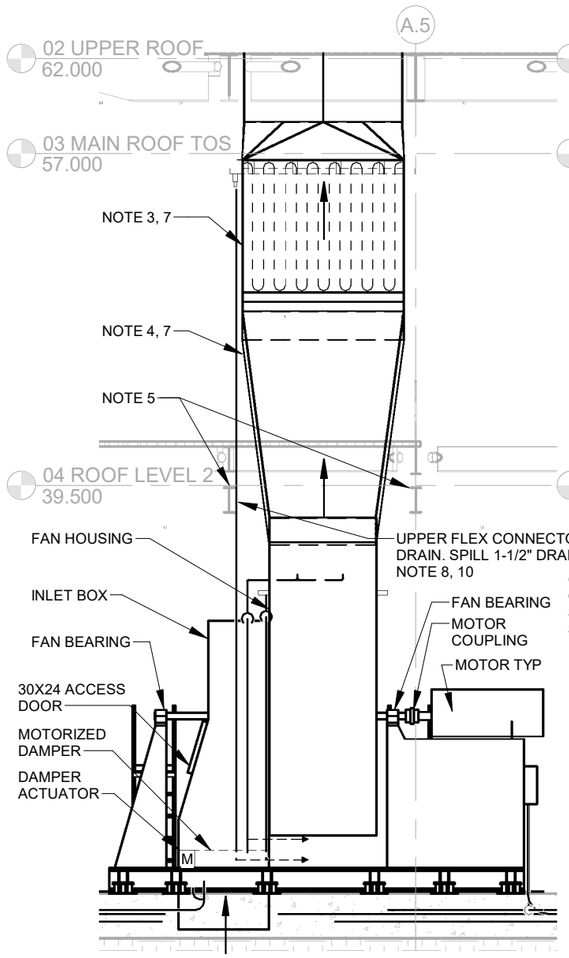

VENT FAN WEST SIDE (1 / HS551)
1/8" = 1'-0"

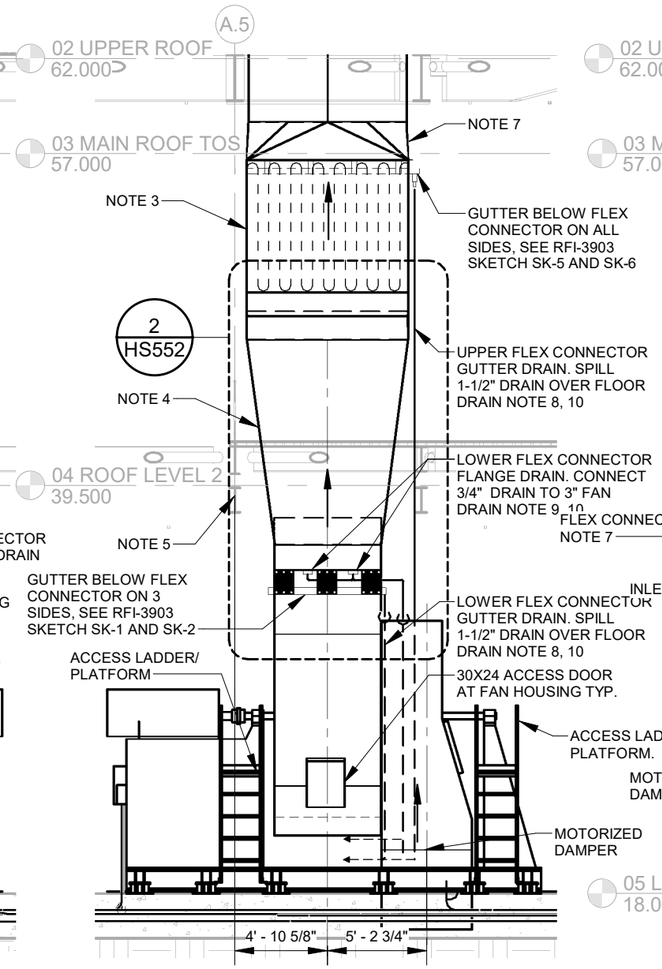

VENT FAN EAST SIDE (2 / HS551)
1/8" = 1'-0"

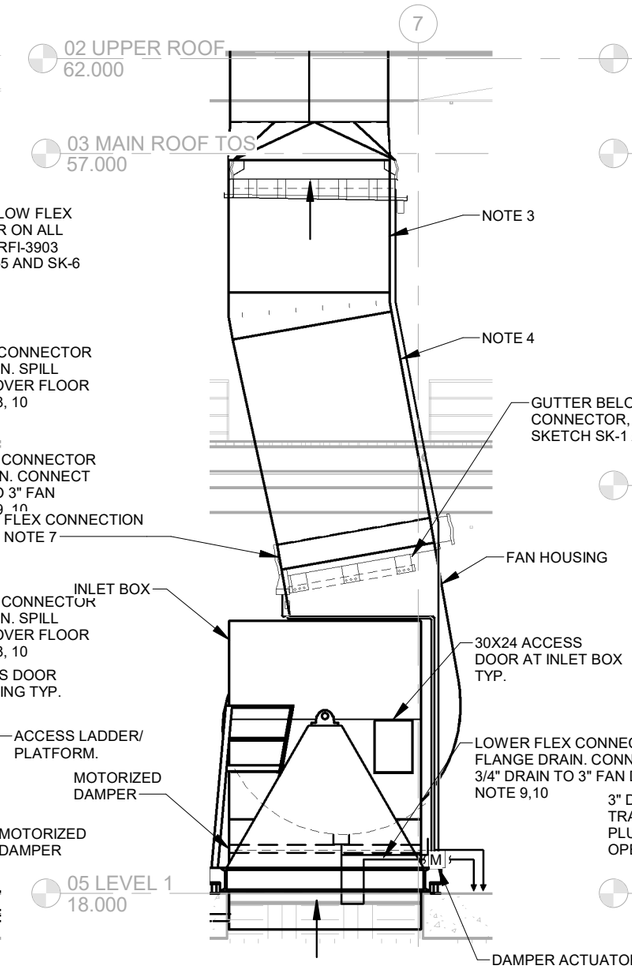

VENT FAN NORTH SIDE (3 / HS851)
1/8" = 1'-0"

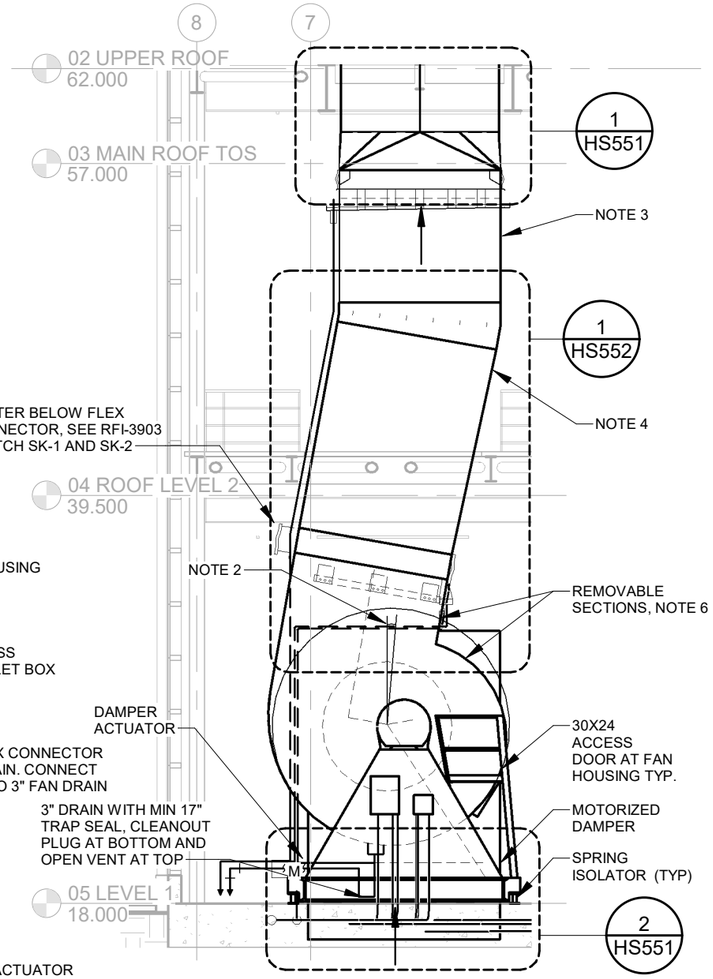

VENT FAN SOUTH SIDE (4 / HS851)
1/8" = 1'-0"

NOTES:

1. ALL FAN HOUSING REINFORCEMENT NOT SHOWN. SOUND LAGGING AND CLADDING NOT SHOWN.
2. REFER TO FAN SCHEDULE ON HG951 FOR FAN SCROLL ROTATION.
3. 102 X 102 DISCHARGE SILENCER. SUPPORT SILENCER FROM FAN ROOM MID-LEVEL FRAMING SEE NOTE 10 ON MG002.
4. TRANSITION FROM FAN DISCHARGE FLEX CONNECTION TO SILENCER. BASIS OF DESIGN FAN DISCHARGE IS 101-7/8" X 69'-1/2". SUPPORT DUCT FROM FAN ROOM MID-LEVEL FRAMING. SEE NOTE 10 ON MG002.
5. REFER TO STRUCTURAL DRAWINGS FOR LOCATION OF EQUIPMENT LIFTING RAILS. PROVIDE TWO 5 TON HAND CHAIN HOIST WITH GEARED TROLLEY COMPATIBLE WITH BEAM PROVIDED, HARRINGTON CB050 HOIST WITH C-TF2050 TROLLEY OR EQUAL.
6. FAN SPLITS SHALL BE LOCATED TO ACCOMMODATE REMOVAL OF FAN SHAFT AND WHEEL USING OVERHEAD HOISTS TROLLEYS.
7. PROVIDE CERTIFIED SHOP DRAWINGS AND SUPPORTING INFORMATION PER TECHNICAL SPECIFICATIONS 23 34 57 1.06.C
8. ROUTE COPPER OR STAINLESS STEEL DRAIN PIPE ALONG EXTERIOR OF FAN CASING. PROVIDE CLEANOUTS AT ACCESSIBLE LOCATIONS WHERE HORIZONTAL BENDS EXCEED 135 DEGREES. COMBINE UPPER AND LOWER DRAINS NEAR THE FLOOR AND TERMINATE WITH 1-1/2" 90-DEGREE ELBOW OVER FLOOR DRAIN. PROVIDE COUPLINGS TO ALLOW DRAIN PIPE TO BE REMOVED AND REPLACED FOR FAN MAINTENANCE.
9. ROUTE COPPER OR STAINLESS STEEL DRAIN PIPE ALONG EXTERIOR OF FAN CASING. PROVIDE CLEANOUTS AT ACCESSIBLE LOCATIONS WHERE HORIZONTAL BENDS EXCEED 135 DEGREES. CONNECT TO 3" TVF DRAIN PIPING ABOVE WATER TRAP SEAL. PROVIDE COUPLINGS TO ALLOW DRAIN PIPE TO BE REMOVED AND REPLACED FOR FAN MAINTENANCE.
10. SUPPORT PIPING INDEPENDENT OF DRAIN GUTTERS AND ANY PORTION OF THE FAN TO RECEIVE LAGGING/CLADDING. NO ATTACHMENTS SHALL PENETRATE FAN SCROLL OR INLET BOX CASING.

RFI #02146
RFI #03732
RFI #03903

AS-BUILT PLANS ACCURATLEY AND COMPLETELY REFLECT CHANGES AND CORRECTIONS MADE DURING CONSTRUCTION AS DOCUMENTED IN THE RFI AND NDC QA/QC PROCEDURES DEVELOPED FOR THIS PROJECT AND AS BASED ON AS-BUILT INFORMATION PROVIDED BY SEATTLE TUNNEL PARTNERS.

FILE NAME	C:\Users\sparayil\Documents\South Building MEP-Central_2018_v2_sparayil.rvt
DATE	5/13/2019
TIME	9:58:06 AM
PLOTTED BY	H. EMMETT
DESIGNED BY	D. PARKER
ENTERED BY	H. EMMETT
CHECKED BY	S. CASSADY
PROJ. ENGR.	R. JOHNSON
REGIONAL ADM.	L. LAIRD

REVISION | DATE | BY

REGION NO.	STATE	FED.AID PROJ.NO.
10	WASH	BR-0099(111)
JOB NUMBER 10A065		
CONTRACT NO. 007999		LOCATION NO.

EOR — CERTIFYING ENGINEER

Washington State Department of Transportation
U.S. Department of Transportation Federal Highway Administration
City of Seattle

SR 99 TUNNEL PROJECT

SOUTH OPS BLDG - LEVEL 1
VENTILATION FAN SECTIONS

HS452
SHEET OF SHEETS

H-D-PAK-SOB-TR2.34-00362-08-ASB-1905-14

FOR AS-BUILT PLAN ONLY

H-D-PAK-SOB-TR2.34-00362-08-ASB-1905-14

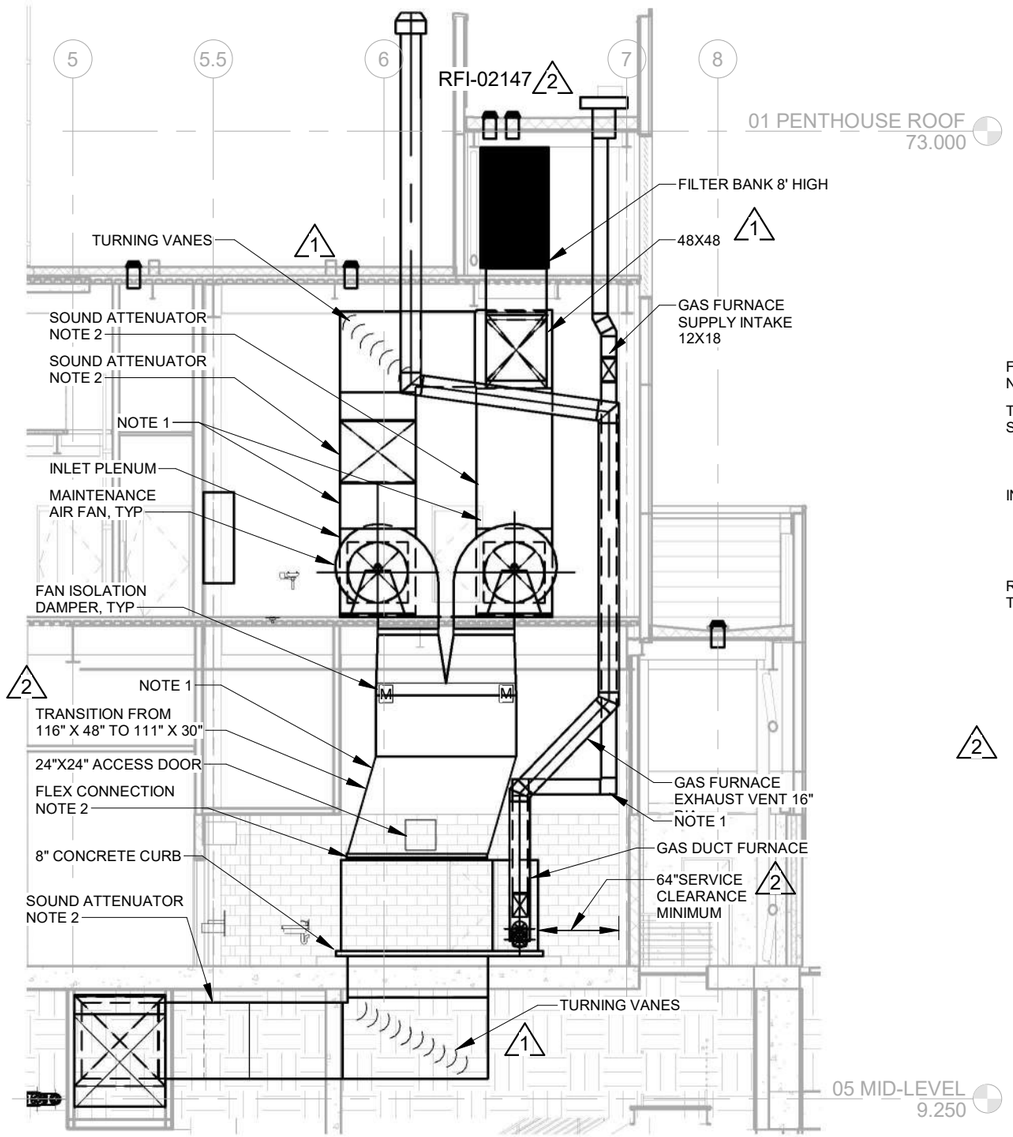

MAU ELEVATION 1 HS853

1" = 10'-0"

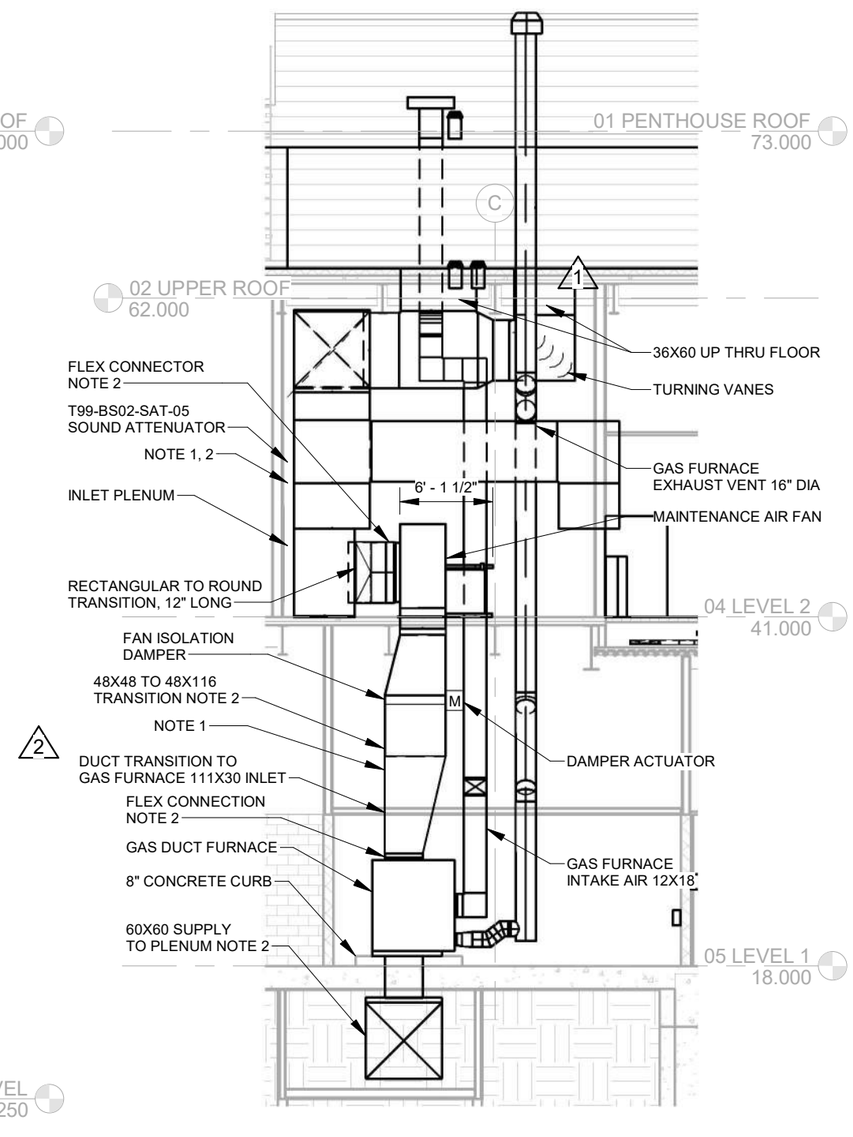

MAU SECTION 2 HS853

1" = 10'-0"

RFI #02072
RFI #02117

NOTES:

1. INSULATE EXPOSED MAINTENANCE AIR SYSTEM OUTDOOR AIR INTAKE DUCTS, PLENUMS, SUPPLY AIR DUCT AND GAS FURNACE UNIT SUPPLY INTAKE DUCT IN THE FAN PRESSURIZATION FAN ROOM ON LEVELS 1 AND 2.
2. PROVIDE CERTIFIED SHOP DRAWINGS AND SUPPORTING INFORMATION PER TECHNICAL SPECIFICATIONS 23 34 57 1.06.C

AS-BUILT PLANS ACCURATLEY AND COMPLETELY REFLECT CHANGES AND CORRECTIONS MADE DURING CONSTRUCTION AS DOCUMENTED IN THE RFI AND NDC QA/QC PROCEDURES DEVELOPED FOR THIS PROJECT AND AS BASED ON AS-BUILT INFORMATION PROVIDED BY SEATTLE TUNNEL PARTNERS.

FILE NAME	C:\Users\trtran\Documents\South Building MEP-Central_2018_trtran.rvt
DATE	5/7/2019 3:35:55
TIME	PM
PLOTTED BY	H. EMMETT
DESIGNED BY	D. PARKER
ENTERED BY	H. EMMETT
CHECKED BY	S. CASSADY
PROJ. ENGR.	R. JOHNSON
REGIONAL ADM.	L. LAIRD

	REVISION	DATE	BY
2	CONSOLIDATED CONSTRUCTION PACKAGE	09/23/14	DBP
1	NDC070 - AT&T CELL PHONE NETWORK IN TUNNEL - MECHANICAL	10/19/2012	DBP

REGION NO. 10 | STATE WASH | JOB NUMBER 10A065 | CONTRACT NO. 007999 | FED.AID PROJ.NO. BR-0099(111) | LOCATION NO.

EOR — CERTIFYING ENGINEER

Washington State Department of Transportation
U.S. Department of Transportation Federal Highway Administration
City of Seattle

SR 99 TUNNEL PROJECT

SOUTH OPS BLDG - MAINTENANCE AIR SYSTEM SECTIONS

HS453

SHEET OF SHEETS

FOR AS-BUILT PLAN ONLY

H-D-PAK-SOB-TR2.34-00362-08-ASB-1905-14

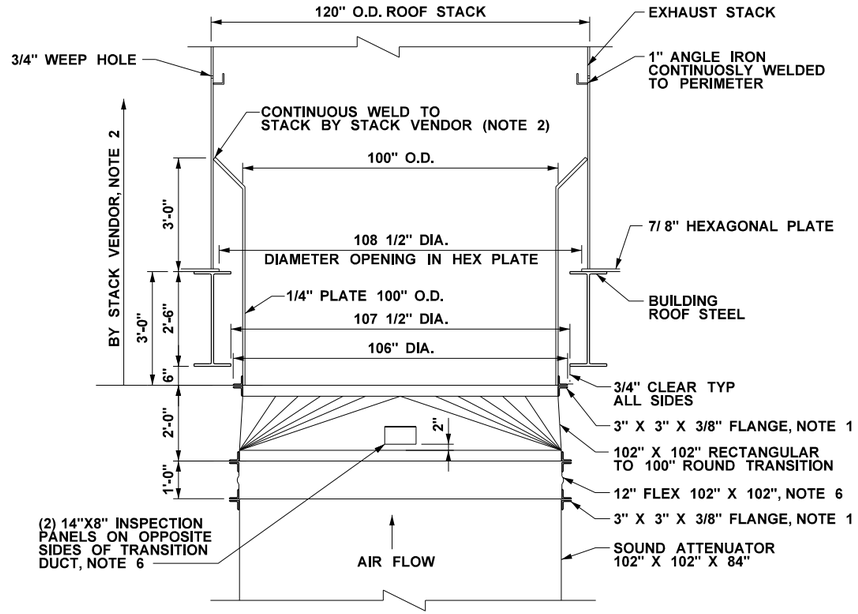

VENTILATION EXHAUST DUCT CONNECTION

(NOTE 1) SCALE: 1/4"=1'-0"

1 / HS452

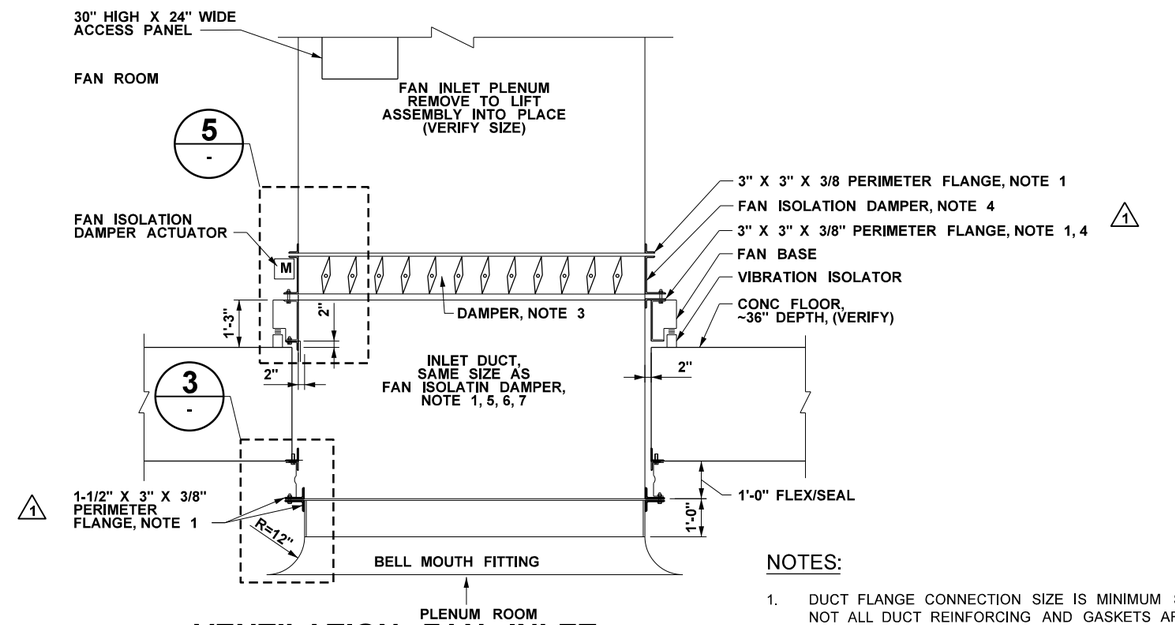

VENTILATION FAN INLET DUCT CONNECTION

(NOTE 1) SCALE: 1/4"=1'-0"

2 / HS452

NOTES:

1. DUCT FLANGE CONNECTION SIZE IS MINIMUM SIZE. NOT ALL DUCT REINFORCING AND GASKETS ARE SHOWN. REFER TO SECTION 23 34 57 FOR INLET DUCT AND BELLMOUTH FITTING DESIGN REQUIREMENTS.
2. REFER TO NORTH OPERATIONS BUILDING ARCHITECTURAL AND STRUCTURAL PACKAGE, DRAWING SCN613 AND SOUTH OPERATION ARCHITECTURAL AND STRUCTURAL PACKAGE DRAWINGS SCS609 FOR STACK MATERIAL AND SUPPORT REQUIREMENTS. SEE ARCHITECTURAL SPECIFICATIONS AND FINISH SCHEDULE FOR STACK PAINTING REQUIREMENTS.
3. REFER TO THE SPECIFICATION FOR DIELECTRIC SEPARATION REQUIREMENTS FOR STAINLESS STEEL FAN ISOLATION DAMPER AND GALVANIZED DUCTWORK.
4. 1 LOWER FAN ISOLATION DAMPER CHANNEL FRAME TO MATCH FAN BASE FRAME.
5. FAN ISOLATION DAMPER AND INLET DUCT PERIMETER FLANGE SHALL BE SECURED AND SUPPORTED FROM VENTILATION FAN BASE EXTERIOR AND INTERIOR FRAME MEMBERS. COORDINATE SUPPORT REQUIREMENTS WITH FAN MANUFACTURER. APPROXIMATE WEIGHT OF INLET DUCT AND BELL MOUTH FITTING IS 1600 LBS.
6. PROVIDE CERTIFIED SHOP DRAWINGS AND SUPPORTING INFORMATION PER TECHNICAL SPECIFICATIONS 23 34 57 1.06.C.
7. COORDINATE EXACT FLOOR OPENING SIZE WITH WORK INDICATED ON NORTH AND SOUTH OPERATIONS BUILDING STRUCTURAL PACKAGES.

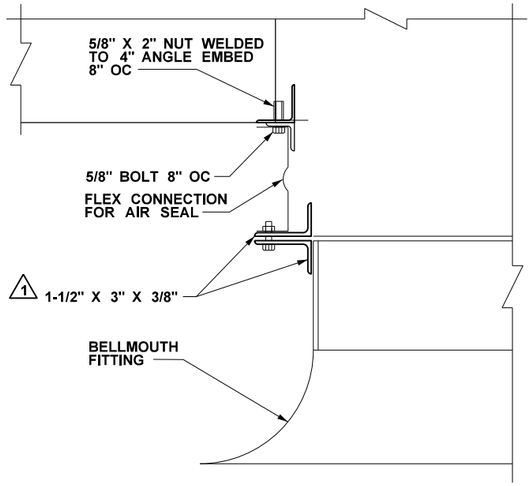

DETAIL

NO SCALE

3 / -

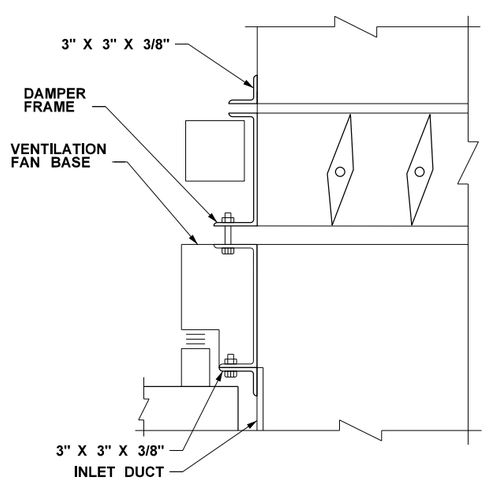

1 DETAIL

NO SCALE

5 / -

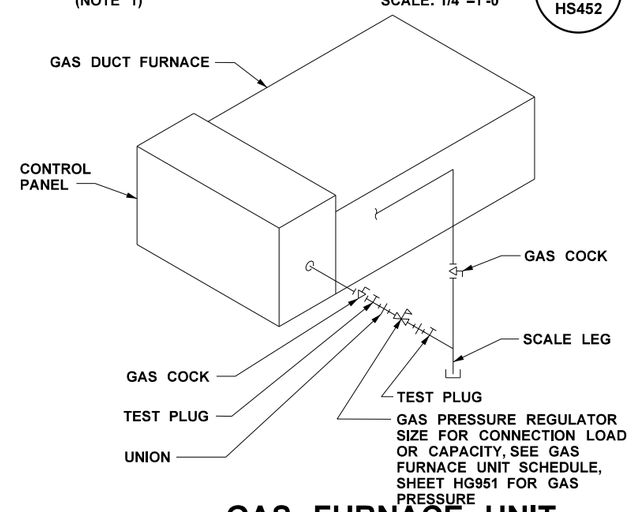

GAS FURNACE UNIT GAS CONNECTION DETAIL

NO SCALE

4 / -

AS-BUILT PLANS ACCURATELY AND COMPLETELY REFLECT CHANGES AND CORRECTIONS MADE DURING CONSTRUCTION AS DOCUMENTED IN THE RFI AND NDC QA/QC PROCEDURES DEVELOPED FOR THIS PROJECT AND AS BASED ON AS-BUILT INFORMATION PROVIDED BY SEATTLE TUNNEL PARTNERS.

RFI #02042

FILE NAME	XL7999-Sxx-14HS551.dlv
TIME	2:53:32 PM
DATE	4/23/2019
PLOTTED BY	smkelley
DESIGNED BY	D. PARKER
ENTERED BY	H. EMMETT
CHECKED BY	S. CASSADY
PROJ. ENGR.	R. JOHNSON
REGIONAL ADM.	L. LAIRD

REVISION	DATE	BY
1 CONSOLIDATED CONSTRUCTION PACKAGE	09/23/14	DBP

REGION NO.	STATE	FED.AID PROJ.NO.
10	WASH	BR-0099(111)
JOB NUMBER 10A065		
CONTRACT NO. 007999		LOCATION NO.

EOR — CERTIFYING ENGINEER

Washington State Department of Transportation
U.S. DEPARTMENT OF TRANSPORTATION Federal Highway Administration
City of Seattle

SR 99 TUNNEL PROJECT

SOUTH OPS BLDG - VENTILATION FAN DETAILS

HS551

SHEET OF SHEETS

FOR AS-BUILT PLAN ONLY

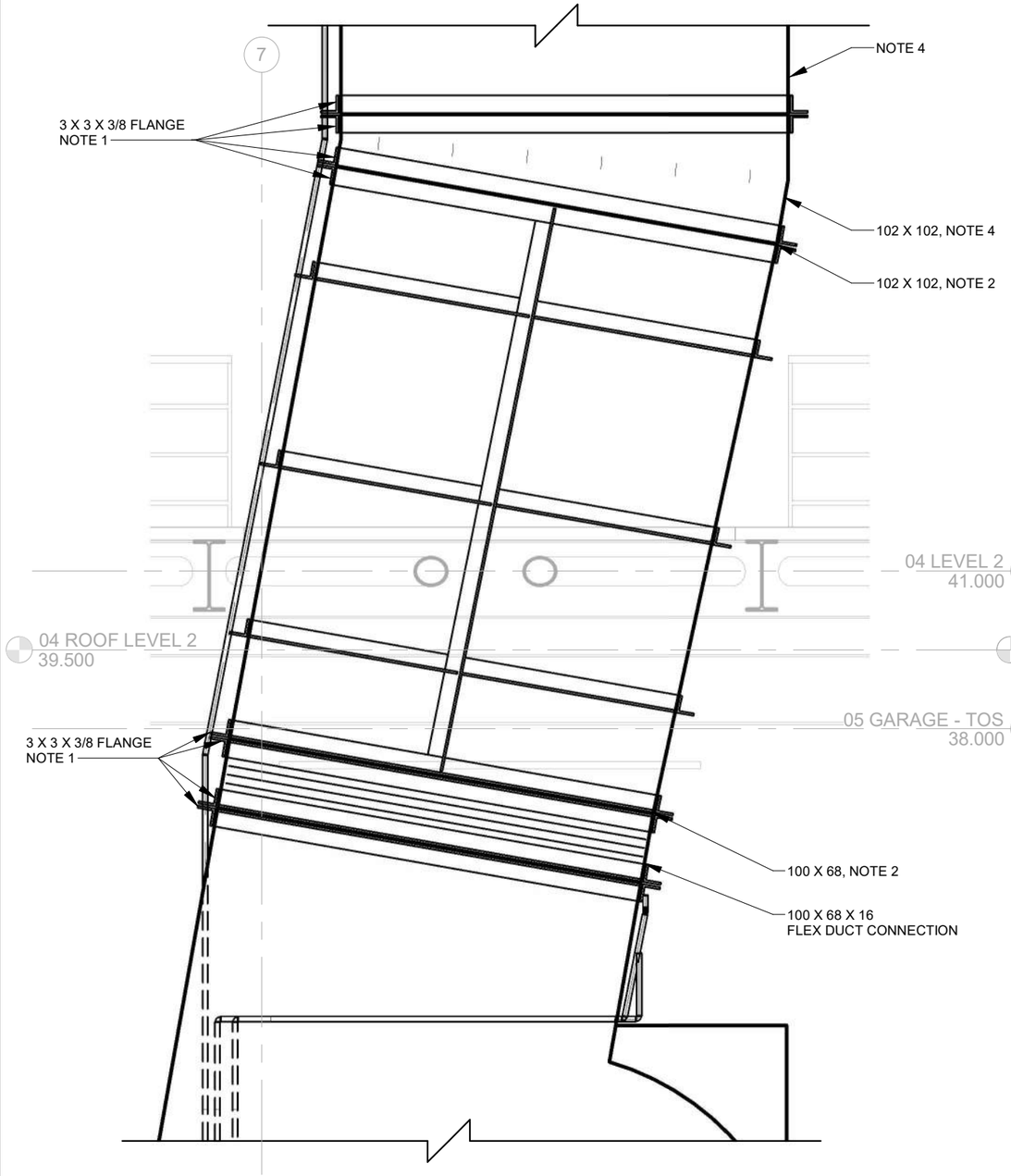

SECTION VENT FAN SOUTH SIDE (1)

3/8" = 1'-0" HS452

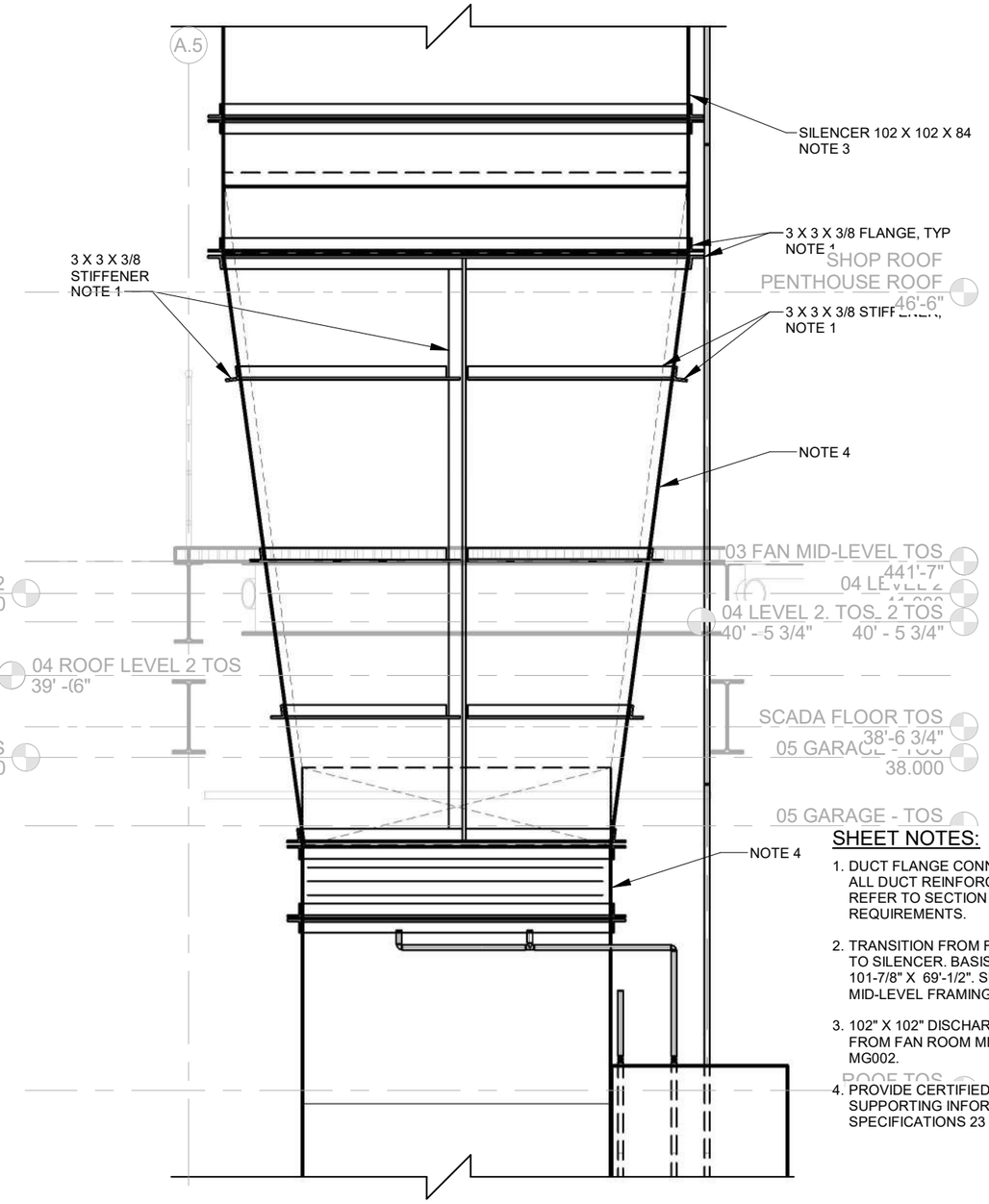

VENT FAN TRANSITION DUCT SUPPORT (2)

3/8" = 1'-0" HS452

SHEET NOTES:

1. DUCT FLANGE CONNECTION SIZE IS MINIMUM SIZE. NOT ALL DUCT REINFORCING AND GASKETS ARE SHOWN. REFER TO SECTION 23 34 57 FOR DUCT DESIGN REQUIREMENTS.
2. TRANSITION FROM FAN DISCHARGE FLEX CONNECTION TO SILENCER. BASIS OF DESIGN FAN DISCHARGE IS 101-7/8" X 69'-1/2". SUPPORT DUCT FROM FAN ROOM MID-LEVEL FRAMING. SEE NOTE 10 ON MG002.
3. 102" X 102" DISCHARGE SILENCER. SUPPORT SILENCER FROM FAN ROOM MID-LEVEL FRAMING SEE NOTE 10 ON MG002.
4. PROVIDE CERTIFIED SHOP DRAWINGS AND SUPPORTING INFORMATION PER TECHNICAL SPECIFICATIONS 23 34 57 1..06.C

AS-BUILT PLANS ACCURATLEY AND COMPLETELY REFLECT CHANGES AND CORRECTIONS MADE DURING CONSTRUCTION AS DOCUMENTED IN THE RFI AND NDC QA/QC PROCEDURES DEVELOPED FOR THIS PROJECT AND AS BASED ON AS-BUILT INFORMATION PROVIDED BY SEATTLE TUNNEL PARTNERS.

H-D-PAK-SOB-TR2.34-00362-08-ASB-1905-14

FILE NAME	C:\Users\trtran\Documents\South Building MEP-Central_2018_trtran.rvt
DATE	5/7/2019 3:35:57
TIME	PM
PLOTTED BY	H. EMMETT
DESIGNED BY	D. PARKER
ENTERED BY	H. EMMETT
CHECKED BY	S. CASSADY
PROJ. ENGR.	R. JOHNSON
REGIONAL ADM.	L. LAIRD

REVISION | DATE | BY

REGION NO. 10 | STATE WASH | FED.AID PROJ.NO. BR-0099(111)

JOB NUMBER 10A065

CONTRACT NO. 007999

LOCATION NO.

EOR — CERTIFYING ENGINEER

Washington State Department of Transportation
U.S. Department of Transportation Federal Highway Administration
City of Seattle

SR 99 TUNNEL PROJECT

SOUTH OPS BLDG - VENTILATION FAN DETAILS

HS552

SHEET OF SHEETS

FOR AS-BUILT PLAN ONLY

H-D-PAK-SOB-TR2.34-00362-08-ASB-1905-14

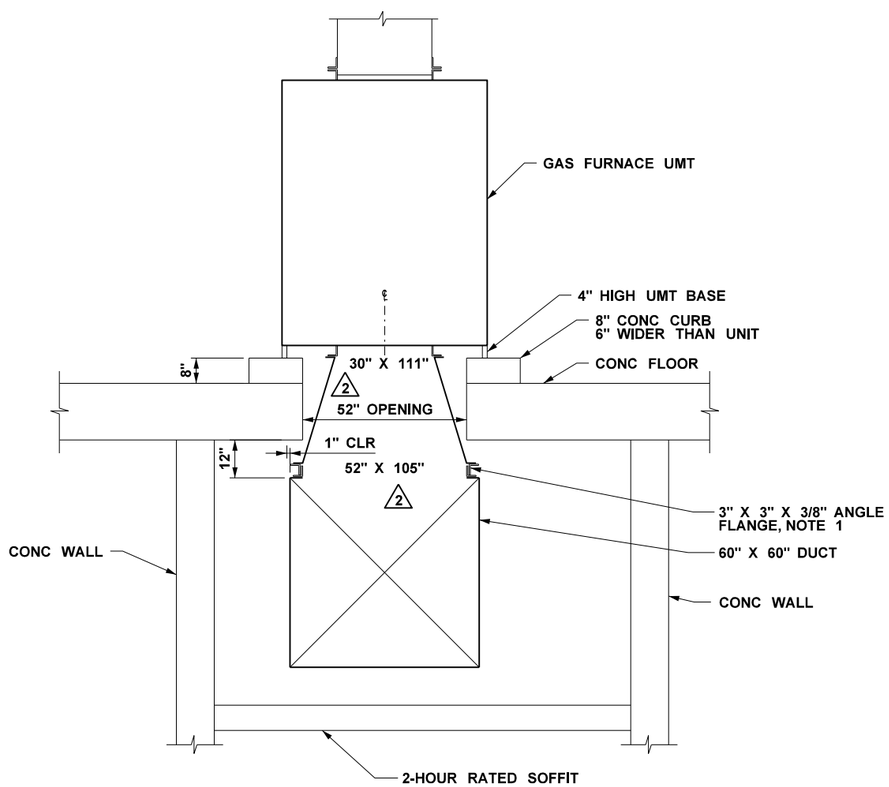

MAINTENANCE AIR FURNACE 1

SCALE: 1/4"=1'-0"

HS453

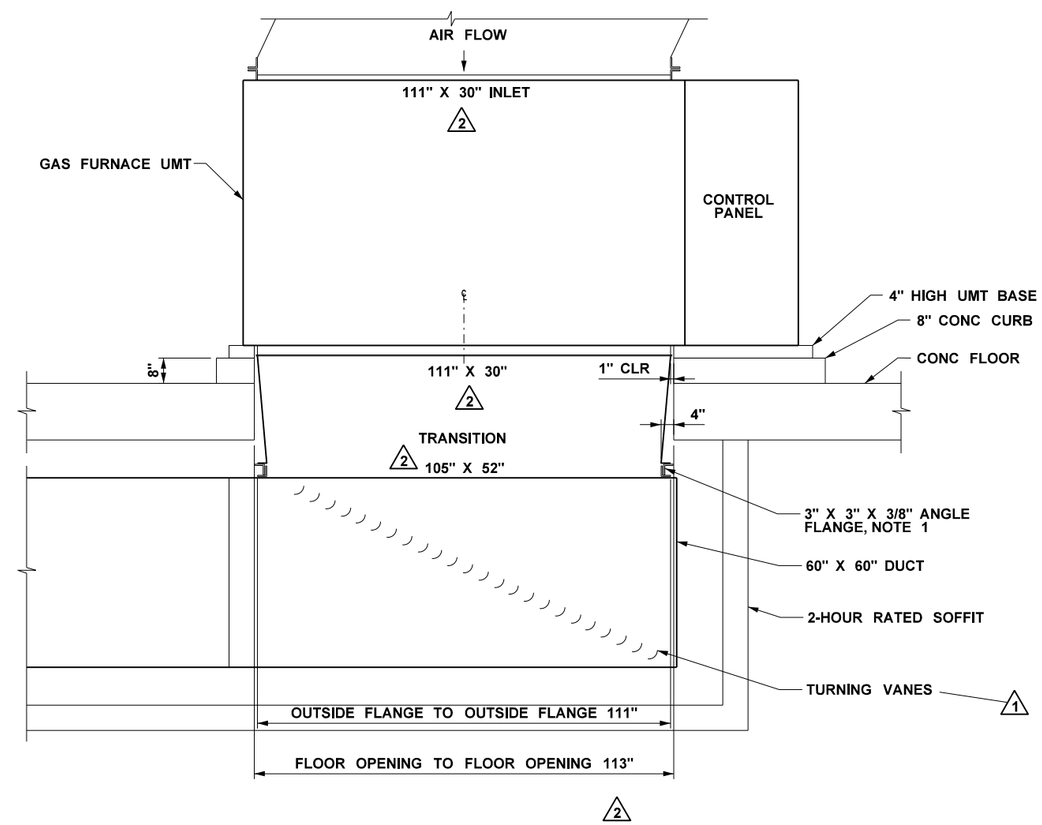

MAINTENANCE AIR FURNACE 2

SCALE: 1/4"=1'-0"

-

NOTES:

1. DIMENSIONS ARE FOR BASIS OF DESIGN DUCT FURNACE.
2. DUCT CONNECTION SIZE IS MINIMUM SIZE. NOT ALL DUCT REINFORCING AND GASKETS ARE SHOWN. REFER TO SECTION 23 34 57 FOR DUCT DESIGN REQUIREMENTS.

RFI #02072
RFI #03525
RFI #03525R01

AS-BUILT PLANS ACCURATELY AND COMPLETELY REFLECT CHANGES AND CORRECTIONS MADE DURING CONSTRUCTION AS DOCUMENTED IN THE RFI AND NDC QA/QC PROCEDURES DEVELOPED FOR THIS PROJECT AND AS BASED ON AS-BUILT INFORMATION PROVIDED BY SEATTLE TUNNEL PARTNERS.

FILE NAME	XL7999-Sxx-14HS553.dlv
TIME	3:00:41 PM
DATE	4/17/2019
PLOTTED BY	smkelley
DESIGNED BY	D. PARKER
ENTERED BY	H. EMMETT
CHECKED BY	S. CASSADY
PROJ. ENGR.	R. JOHNSON
REGIONAL ADM.	L. LAIRD

REVISION	DATE	BY
2 CONSOLIDATED CONSTRUCTION PACKAGE	09/23/14	DP
1 NDC070 - AT&T CELL PHONE NETWORK IN TUNNEL - MECHANICAL	07/15/2013	DP

REGION NO.	STATE	FED.AID PROJ.NO.
10	WASH	BR-0099(111)
JOB NUMBER 10A065		
CONTRACT NO. 007999		LOCATION NO.

EOR

CERTIFYING ENGINEER 05-14-19

Washington State Department of Transportation
U.S. DEPARTMENT OF TRANSPORTATION Federal Highway Administration
City of Seattle

SR 99 TUNNEL PROJECT

SOUTH OPS BLDG - VENTILATION FAN DETAILS

HS553

SHEET OF SHEETS

FOR AS-BUILT PLAN ONLY

H-D-PAK-SOB-TR2.34-00362-08-ASB-1905-14

A B C D E F G H

1 2 3 4 5

SHEET NOTES:

1. THIS AREA IS RESERVED FOR AN EQUIPMENT REMOVAL ROUTE. AREA SHALL REMAIN FREE OF AN OBSTRUCTIONS FOR A MINIMUM WIDTH OF 9'-11" AND A MINIMUM HEIGHT OF 18'-0".

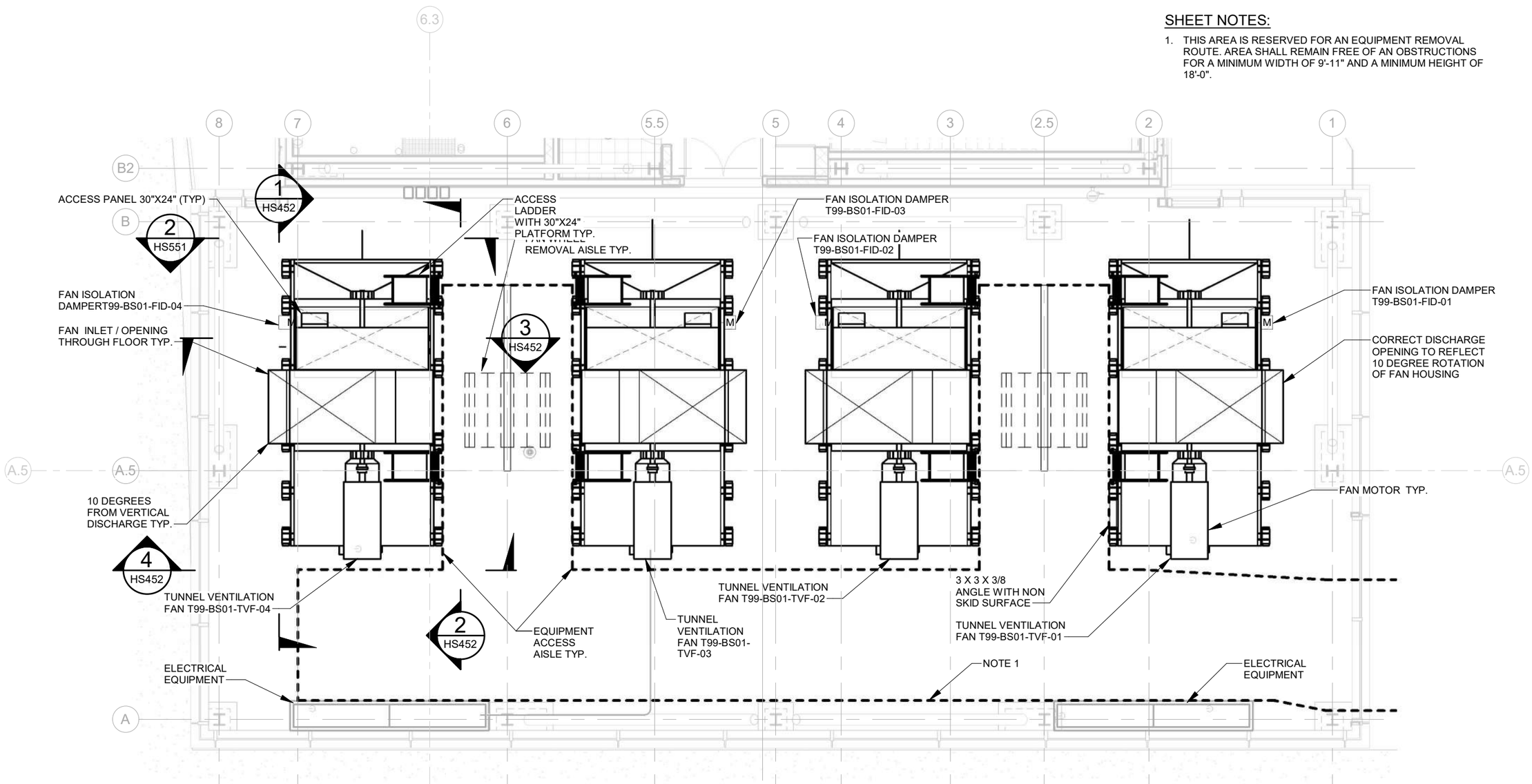

LEVEL 1 VENT FAN ROOM (1 / HS251)

1/8" = 1'-0"

AS-BUILT PLANS ACCURATLEY AND COMPLETELY REFLECT CHANGES AND CORRECTIONS MADE DURING CONSTRUCTION AS DOCUMENTED IN THE RFI AND NDC QA/QC PROCEDURES DEVELOPED FOR THIS PROJECT AND AS BASED ON AS-BUILT INFORMATION PROVIDED BY SEATTLE TUNNEL PARTNERS.

FILE NAME	C:\Users\trtran\Documents\South Building MEP-Central_2018_trtran.rvt
DATE	5/7/2019 3:36:00
TIME	PM
PLOTTED BY	H. EMMETT
DESIGNED BY	D. PARKER
ENTERED BY	H. EMMETT
CHECKED BY	S. CASSADY
PROJ. ENGR.	R. JOHNSON
REGIONAL ADM.	L. LAIRD

REVISION	DATE	BY

REGION NO.	STATE	FED.AID PROJ.NO.
10	WASH	BR-0099(111)
JOB NUMBER 10A065		
CONTRACT NO. 007999		LOCATION NO.

EOR — DAVID B. PARKER, STATE OF WASHINGTON, 36243, REGISTERED PROFESSIONAL ENGINEER, 11/20/12

CERTIFYING ENGINEER — DAVID B. PARKER, STATE OF WASHINGTON, 36243, REGISTERED PROFESSIONAL ENGINEER, 05-14-19

Washington State Department of Transportation

U.S. Department of Transportation Federal Highway Administration

City of Seattle

SR 99 TUNNEL PROJECT

SOUTH OPS BLDG - LEVEL 1
ENLARGED MECH HVAC PLAN

HS851

SHEET OF SHEETS

FOR AS-BUILT PLAN ONLY

H-D-PAK-SOB-TR2.34-00362-08-ASB-1905-14

RFI #01847

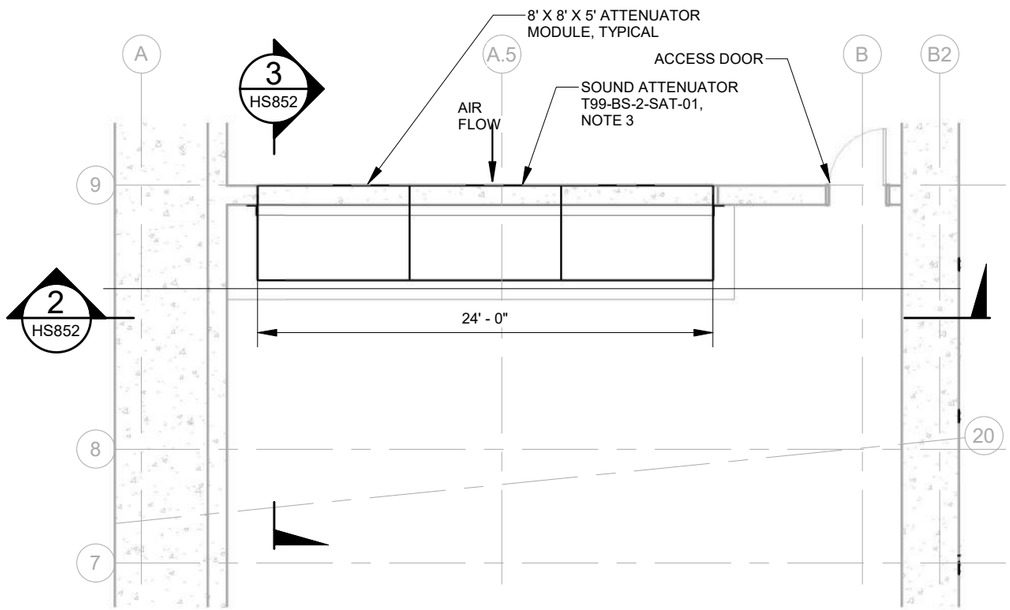

LEVEL -3 ENLARGED MECH HVAC PLAN 1 HS221
1/8" = 1'-0"

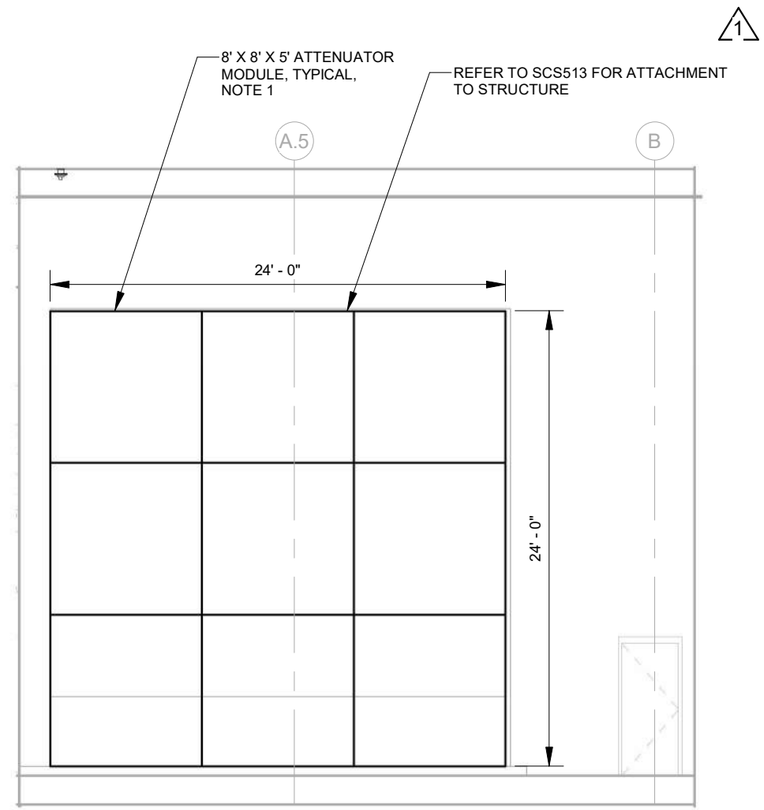

TUNNEL VENT SOUND ATTENUATOR ARRANGEMENT 2 HS852
1/8" = 1'-0"

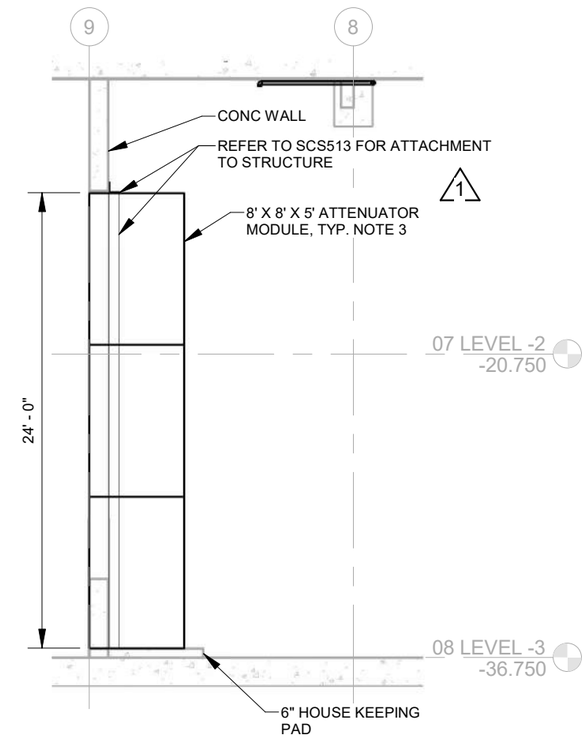

SECTION 3 HS852
1/8" = 1'-0"

SHEET NOTES:

1. MINIMUM SILENCER FACE AREA IS 576 SF. NINE (9) 8' X 8' X 5' LONG MODULE SIZE SHOWN IS ONE POSSIBLE ARRANGEMENT TO ALLOW FOR DISASSEMBLY AND REMOVAL AFTER INITIAL INSTALLATION PROVIDE FIELD APPLIED MOUNTING FLANGES ON MODULES FOR CONNECTION TO STRUCTURAL STEEL SUPPORT ELEMENTS. REFER TO SPECIFICATIONS FOR ADDITIONAL REQUIREMENTS.
2. COORDINATE STRUCTURAL OPENING SIZE TO ACCOMODATE SILENCER MODULES.
3. PROVIDE CERTIFIED SHOP DRAWINGS AND SUPPORTING INFORAMATION PER TECHNICAL SPECIFICATIONS 23 34 57 1..06.C

AS-BUILT PLANS ACCURATLEY AND COMPLETELY REFLECT CHANGES AND CORRECTIONS MADE DURING CONSTRUCTION AS DOCUMENTED IN THE RFI AND NDC QA/QC PROCEDURES DEVELOPED FOR THIS PROJECT AND AS BASED ON AS-BUILT INFORMATION PROVIDED BY SEATTLE TUNNEL PARTNERS.

FILE NAME	C:\Users\trtran\Documents\South Building MEP-Central_2018_trtran.rvt
DATE	5/7/2019 3:36:02
TIME	PM
PLOTTED BY	H. EMMETT
DESIGNED BY	D. PARKER
ENTERED BY	H. EMMETT
CHECKED BY	S. CASSADY
PROJ. ENGR.	R. JOHNSON
REGIONAL ADM.	L. LAIRD

REVISION		DATE	BY
1	CONSOLIDATED CONSTRUCTION PACKAGE	09/23/14	DBP

REGION NO.	STATE	FED.AID PROJ.NO.
10	WASH	BR-0099(111)
JOB NUMBER 10A065		
CONTRACT NO. 007999		LOCATION NO.

EOR — CERTIFYING ENGINEER

Washington State Department of Transportation
U.S. Department of Transportation Federal Highway Administration
City of Seattle

SR 99 TUNNEL PROJECT

SOUTH OPS BLDG - LEVEL -3
ENLARGED MECH HVAC PLAN

HS852

SHEET OF SHEETS

FOR AS-BUILT PLAN ONLY

H-D-PAK-SOB-TR2.34-00362-08-ASB-1905-14

SHEET NOTES

1 THIS AREA IS RESERVED FOR AN EQUIPMENT REMOVAL ROUTE. AREA SHALL REMAIN FREE OF ANY OBSTRUCTIONS FOR A MINIMUM WIDTH OF 6'-0" AND A MINIMUM HEIGHT OF 7'-0".

2 GAS FURNACE MAINTENANCE CLEARANCE.

3 SEE HS551 FOR GAS FURNACE GAS. CONNECTION. SEE DS152 FOR GAS LINE SERVING FURNACE UNIT.

4 PRESSURE VENT.

5 1" CONDENSATE WITH 4" DEEP TRAP SEAL AND CLEANOUT PLUG. CONNECT TO 1/2" CONDENSATE OUTLET AT UNIT. ROUTE 1" DRAIN BENEATH DUCT AND TERMINATE OVER FLOOR DRAIN, SEE DN148.

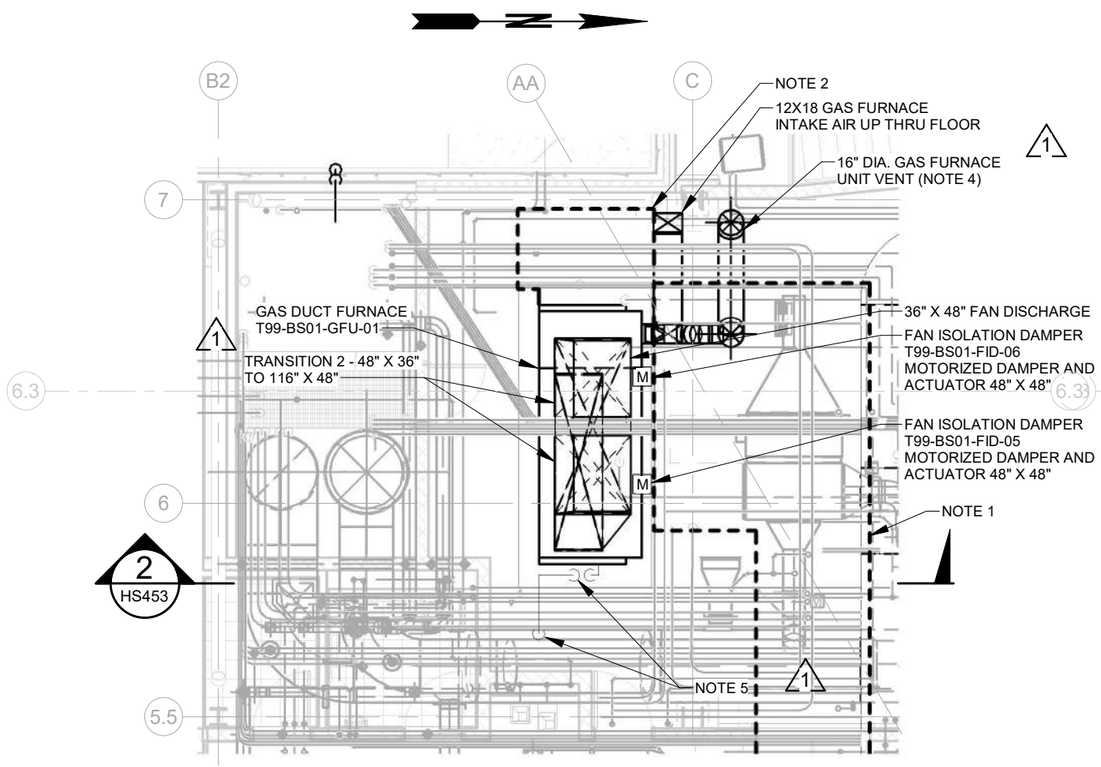

LEVEL 1 MAINT. AIR ROOM 1 HS251

1/8" = 1'-0"

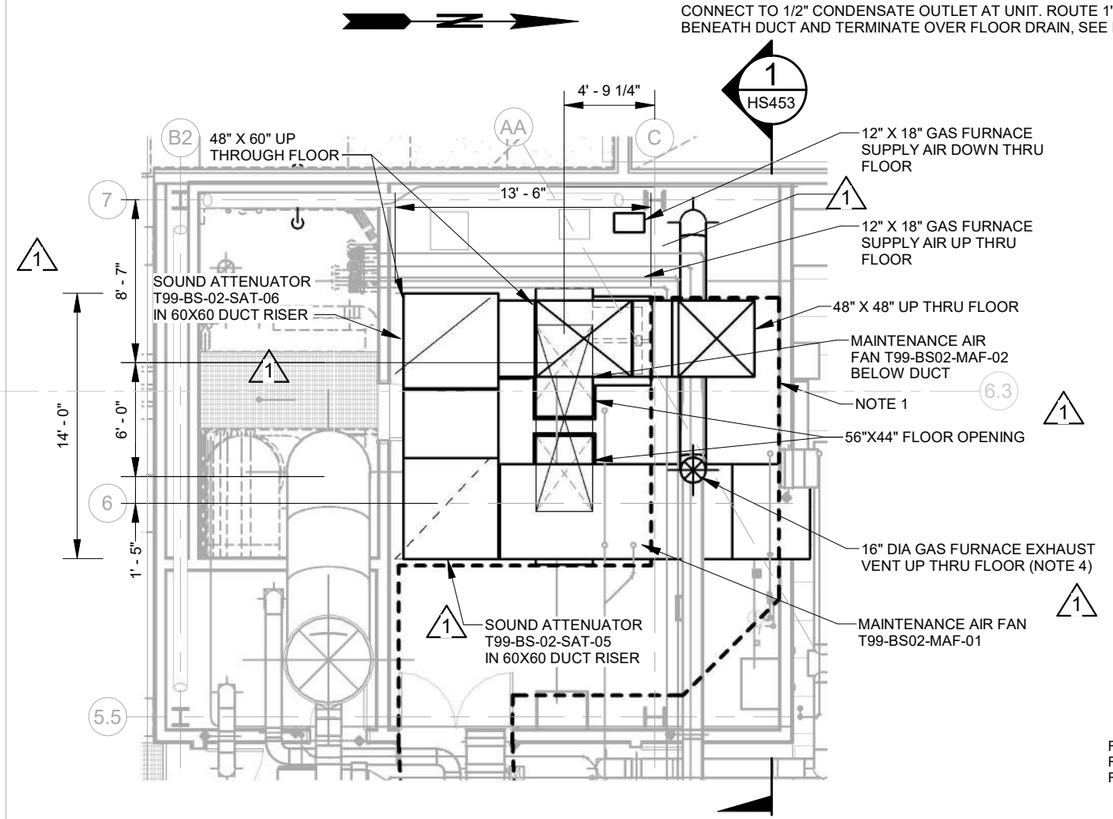

RFI #01848
RFI #02072
RFI #02147

LEVEL 2 MAINT. AIR FAN ROOM 2 HS261

1/8" = 1'-0"

AS-BUILT PLANS ACCURATLEY AND COMPLETELY REFLECT CHANGES AND CORRECTIONS MADE DURING CONSTRUCTION AS DOCUMENTED IN THE RFI AND NDC QA/QC PROCEDURES DEVELOPED FOR THIS PROJECT AND AS BASED ON AS-BUILT INFORMATION PROVIDED BY SEATTLE TUNNEL PARTNERS.

FILE NAME	C:\Users\trtran\Documents\South Building MEP-Central_2018_trtran.rvt
DATE	5/7/2019 3:36:06
TIME	PM
PLOTTED BY	H. EMMETT
DESIGNED BY	D. PARKER
ENTERED BY	H. EMMETT
CHECKED BY	S. CASSADY
PROJ. ENGR.	R. JOHNSON
REGIONAL ADM.	L. LAIRD

REVISION	DATE	BY
1 CONSOLIDATED CONSTRUCTION PACKAGE	09/23/14	DBP

REGION NO.	STATE	FED.AID PROJ.NO.
10	WASH	BR-0099(111)

JOB NUMBER 10A065

CONTRACT NO. 007999

LOCATION NO.

EOR

CERTIFYING ENGINEER

Washington State Department of Transportation

U.S. Department of Transportation Federal Highway Administration

City of Seattle

SR 99 TUNNEL PROJECT

SOUTH OPS BLDG - ENLARGED MECH HVAC PLANS

HS853

SHEET OF SHEETS

FOR AS-BUILT PLAN ONLY

H-D-PAK-SOB-TR2.34-00362-08-ASB-1905-14

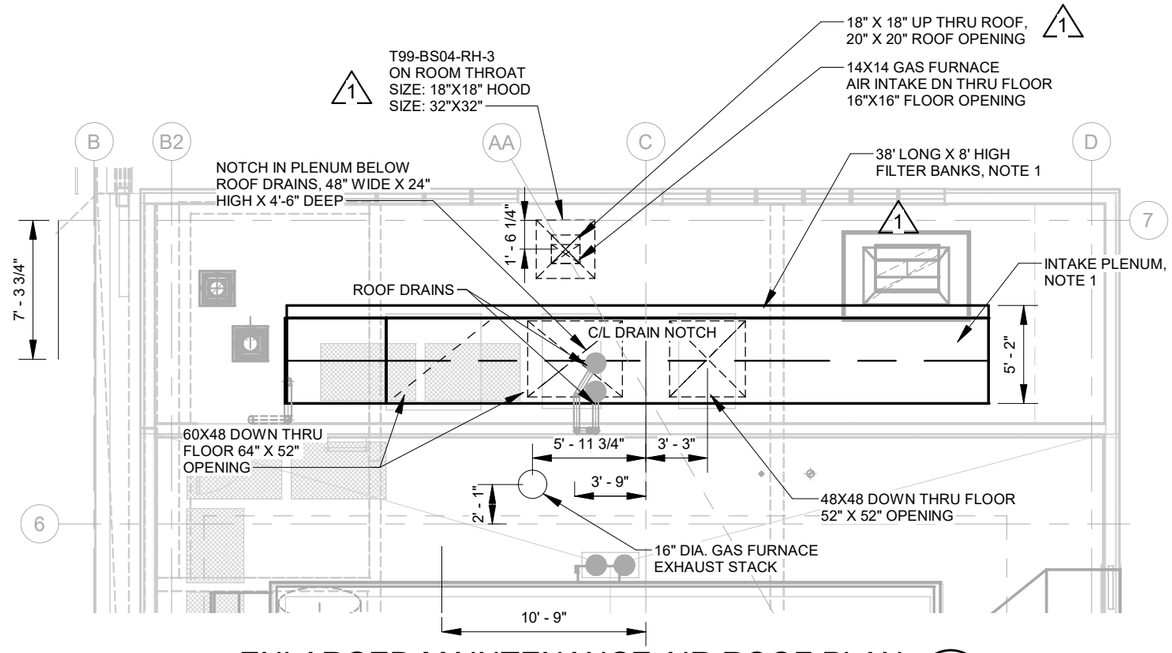

ENLARGED MAINTENANCE AIR ROOF PLAN (1 / HS271)

1/8" = 1'-0"

RFI #01937
RFI #02147
RFI #02253

SHEET NOTES:

1. PROVIDE CERTIFIED SHOP DRAWINGS AND SUPPORTING INFORMATION PER TECHNICAL SPECIFICATIONS 23 34 57 1..06.C

AS-BUILT PLANS ACCURATLEY AND COMPLETELY REFLECT CHANGES AND CORRECTIONS MADE DURING CONSTRUCTION AS DOCUMENTED IN THE RFI AND NDC QA/QC PROCEDURES DEVELOPED FOR THIS PROJECT AND AS BASED ON AS-BUILT INFORMATION PROVIDED BY SEATTLE TUNNEL PARTNERS.

FILE NAME	C:\Users\sparayil\Documents\South Building MEP-Central_2018_v2_sparayil.rvt
DATE	5/9/2019
TIME	10:09:47 AM
PLOTTED BY	H. EMMETT
DESIGNED BY	D. PARKER
ENTERED BY	H. EMMETT
CHECKED BY	S. CASSADY
PROJ. ENGR.	R. JOHNSON
REGIONAL ADM.	L. LAIRD

	REVISION	DATE	BY
1	CONSOLIDATED CONSTRUCTION PACKAGE	09/23/14	DBP

REGION NO. 10 | STATE WASH | JOB NUMBER 10A065 | CONTRACT NO. 007999 | FED.AID PROJ.NO. BR-0099(111) | LOCATION NO.

EOR — CERTIFYING ENGINEER

Washington State Department of Transportation
U.S. Department of Transportation Federal Highway Administration
City of Seattle

SR 99 TUNNEL PROJECT

SOUTH OPS BLDG - LEVEL 3 MECH
ENLARGED HVAC ROOF PLAN

HS854

SHEET OF SHEETS

FOR AS-BUILT PLAN ONLY

H-D-PAK-SOB-TR2.34-00362-08-ASB-1905-14

SOUND ATTENUATOR SCHEDULE

EQUIPMENT NUMBER	LOCATION	BASIS OF DESIGN/ MFR. MODEL	SERVES	AIRSTREAM F-FORWARD R-REVERSE E-EXHAUST S-SUPPLY	AIRFLOW CFM	MAX STATIC PR DROP INCH W.G. (NOTE 2)	WIDTH (INCH)	HEIGHT (INCH)	LENGTH (INCH)	OPERATING WEIGHT (LBS)	VELOCITY (FPM)	REMARKS	MINIMUM SOUND TRAP INSERTION LOSSES (dB) OCTAVE BAND CENTER FREQUENCIES (Hz) 63	125	250	500	1000	2000	4000	8000
T99-BS01-SAT-01	VENT FAN ROOM	DYNASONICS LF35	T99-BS01-TVF-01	E	160733	0.36	102	102	84	3650	2225	1,2,3,4,5	6	10	17	24	30	19	14	13
T99-BS01-SAT-02	VENT FAN ROOM	DYNASONICS LF35	T99-BS01-TVF-02	E	160733	0.36	102	102	84	3650	2225	1,2,3,4,5	6	10	17	24	30	19	14	13
T99-BS01-SAT-03	VENT FAN ROOM	DYNASONICS LF35	T99-BS01-TVF-03	E	160733	0.36	102	102	84	3650	2225	1,2,3,4,5	6	10	17	24	30	19	14	13
T99-BS01-SAT-04	VENT FAN ROOM	DYNASONICS LF35	T99-BS01-TVF-04	E	160733	0.36	102	102	84	3650	2225	1,2,3,4,5	6	10	17	24	30	19	14	13
T99-BS-2-SAT-01	EXTRACT PLENUM	DYNASONICS SF-207278	T99-BS01-TVF-01 THRU -04	E	642932	0.06	288	288	60	52200	1116	1,2,3,4,5	4	5	6	19	37	23	14	12
T99-BN01-SAT-01	VENT FAN ROOM	DYNASONICS LF35	T99-BN01-TVF-01	E	160733	0.36	102	102	84	3650	2225	1,2,3,4,5	6	10	17	24	30	19	14	13
T99-BN01-SAT-02	VENT FAN ROOM	DYNASONICS LF35	T99-BN01-TVF-02	E	160733	0.36	102	102	84	3650	2225	1,2,3,4,5	6	10	17	24	30	19	14	13
T99-BN01-SAT-03	VENT FAN ROOM	DYNASONICS LF35	T99-BN01-TVF-03	E	160733	0.36	102	102	84	3650	2225	1,2,3,4,5	6	10	17	24	30	19	14	13
T99-BN01-SAT-04	VENT FAN ROOM	DYNASONICS LF35	T99-BN01-TVF-04	E	160733	0.36	102	102	84	3650	2225	1,2,3,4,5	6	10	17	24	30	19	14	13
T99-BN-1-SAT-01	EXTRACT PLENUM	DYNASONICS LF35 SF-207278	T99-BN01-TVF-01 THRU -04	E	642932	0.10	336	192	60	40600	1435	1,2,3,4,5	5	5	7	19	37	23	13	11
T99-BS02-SAT-05	PRESS FAN ROOM	DYNASONICS LF35	T99-BS01-MAF-01	S	41000	0.18	60	60	36	1150	1640	1,2,3,4,5	3	3	6	16	23	19	15	13
T99-BS02-SAT-06	PRESS FAN ROOM	DYNASONICS LF35	T99-BS01-MAF-02	S	41000	0.18	60	60	36	1150	1640	1,2,3,4,5	3	3	6	16	23	19	15	13
T99-BS-1-SAT-01	PRESS FAN ROOM	DYNASONICS LF35	T99-BS01-MAF-01 THRU -02	S	41000	0.18	60	60	36	1150	1640	1,2,3,4,5	3	3	6	16	23	19	15	13
T99-BN01-SAT-05	PRESS FAN ROOM	DYNASONICS LF35	T99-BN01-MAF-01	S	41000	0.19	48	72	36	1100	1708	1,2,3,4,5	3	3	6	16	23	19	15	13
T99-BN01-SAT-06	PRESS FAN ROOM	DYNASONICS LF35	T99-BN01-MAF-02	S	41000	0.19	48	72	36	1100	1708	1,2,3,4,5	3	3	6	16	23	19	15	13
T99-BN01-SAT-07	PRESS FAN ROOM	DYNASONICS LF35	T99-BN01-MAF-01 THRU -02	S	41000	0.18	60	60	36	1150	1640	1,2,3,4,5	3	3	6	16	23	19	15	13

REMARKS:

1. MAXIMUM AIRFLOW VALUES SHOWN REPRESENT AIRFLOW DURING EMERGENCY OPERATIONS.
2. MAXIMUM STATIC PRESSURE DROP SHOWN IS PER SOUND ATTENUATOR AND BASED ON AIRFLOW AND FACE AREA OF THE SOUND ATTENUATOR.
3. DIMENSIONS SHOWN ARE NOMINAL OPENINGS.
4. VERIFY EQUIPMENT WEIGHTS FROM APPROVED SHOP DRAWINGS.
5. SOUND ATTENUATOR IS BASED ON MAXIMUM PERMISSIBLE SOUND POWER LEVELS FOR FANS AND DESIGN CRITERIA FOR SOUND ATTENUATORS SPECIFIED IN SPECIFICATION SECTION 23 34 57.

TUNNEL VENTILATION FAN ISOLATION DAMPER SCHEDULE

EQUIPMENT NUMBER	LOCATION	BASIS OF DESIGN MFR./MODEL	SIZE L x W	REMARKS
T99-BS01-FID-01	VENT FAN ROOM	TROX JFM	120 x 58	1
T99-BS01-FID-02	VENT FAN ROOM	TROX JFM	120 x 58	1
T99-BS01-FID-03	VENT FAN ROOM	TROX JFM	120 x 58	1
T99-BS01-FID-04	VENT FAN ROOM	TROX JFM	120 x 58	1
T99-BN01-FID-01	VENT FAN ROOM	TROX JFM	120 x 58	1
T99-BN01-FID-02	VENT FAN ROOM	TROX JFM	120 x 58	1
T99-BN01-FID-03	VENT FAN ROOM	TROX JFM	120 x 58	1
T99-BN01-FID-04	VENT FAN ROOM	TROX JFM	120 x 58	1

REMARKS:

1. POWERED BY RCS SURE ACTUATOR, 120V

MAINTENANCE AIR FAN ISOLATION DAMPER SCHEDULE

EQUIPMENT NUMBER	LOCATION	BASIS OF DESIGN MFR./MODEL	SIZE L x W	REMARKS
T99-BS01-FID-05	PRESS FAN RM	RUSKIN / CD30AF1-SS-304	48" X 48"	1, 2
T99-BS01-FID-06	PRESS FAN RM	RUSKIN / CD30AF1-SS-304	48" X 48"	1, 2
T99-BN01-FID-05	PRESS FAN RM	RUSKIN / CD30AF1-SS-304	60" X 48"	1, 2
T99-BN01-FID-06	PRESS FAN RM	RUSKIN / CD30AF1-SS-304	60" X 48"	1, 2

REMARKS:

1. 304 STAINLESS STEEL CONSTRUCTION.
2. ACTUATOR OUTSIDE AIR STREAM.

RFI #01723
RFI #01805
RFI #02225
RFI #02402

AS-BUILT PLANS ACCURATELY AND COMPLETELY REFLECT CHANGES AND CORRECTIONS MADE DURING CONSTRUCTION AS DOCUMENTED IN THE RFI AND NDC QA/QC PROCEDURES DEVELOPED FOR THIS PROJECT AND AS BASED ON AS-BUILT INFORMATION PROVIDED BY SEATTLE TUNNEL PARTNERS.

FILE NAME	XL7999-ALL-14HG952.dlv
TIME	2:29:48 PM
DATE	4/17/2019
PLOTTED BY	smkelley
DESIGNED BY	D. PARKER
ENTERED BY	H. EMMETT
CHECKED BY	S. CASSADY
PROJ. ENGR.	R. JOHNSON
REGIONAL ADM.	L. LAIRD

REVISION	DATE	BY
1 CONSOLIDATED CONSTRUCTION PACKAGE	07/29/14	DBP

REGION NO. 10 | STATE WASH | FED.AID PROJ.NO. BR-0099(111)
JOB NUMBER 10A065
CONTRACT NO. 007999 | LOCATION NO.

EOR — CERTIFYING ENGINEER

Washington State Department of Transportation
U.S. DEPARTMENT OF TRANSPORTATION Federal Highway Administration
City of Seattle

SR 99 TUNNEL PROJECT

MECH HVAC SCHEDULES

HG952

SHEET OF SHEETS

FOR AS-BUILT PLAN ONLY

H-D-PAK-SOB-TR2.34-00362-08-ASB-1905-14

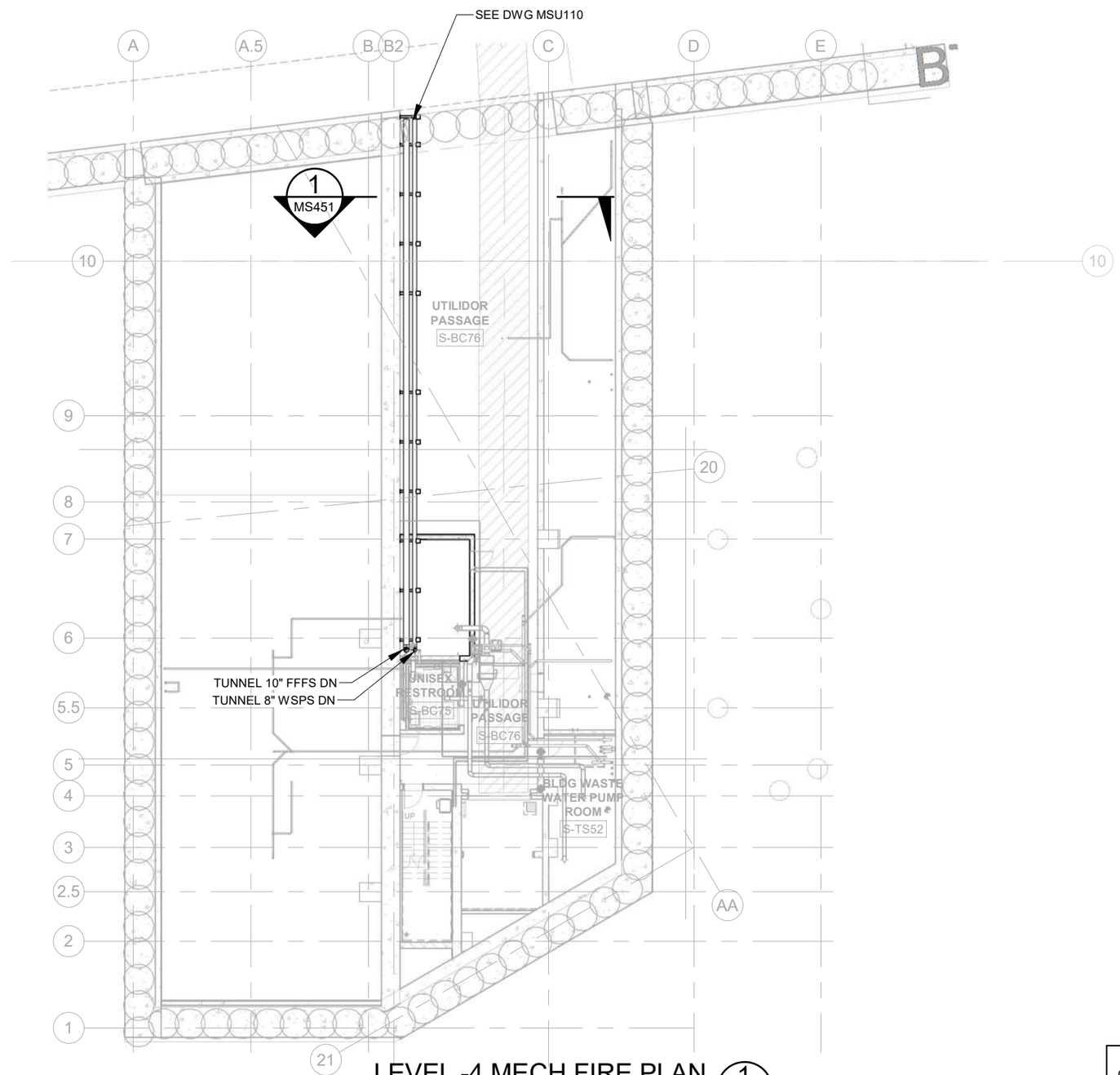

RFI #03070

LEVEL -4 MECH FIRE PLAN (1 / MS211)

1" = 20'-0"

AS-BUILT PLANS ACCURATLEY AND COMPLETELY REFLECT CHANGES AND CORRECTIONS MADE DURING CONSTRUCTION AS DOCUMENTED IN THE RFI AND NDC QA/QC PROCEDURES DEVELOPED FOR THIS PROJECT AND AS BASED ON AS-BUILT INFORMATION PROVIDED BY SEATTLE TUNNEL PARTNERS.

FILE NAME	C:\Users\trtran\Documents\South Building MEP-Central_2018_trtran.rvt
DATE	5/7/2019 3:36:11
TIME	PM
PLOTTED BY	H. EMMETT
DESIGNED BY	D. PARKER
ENTERED BY	H. EMMETT
CHECKED BY	S. CASSADY
PROJ. ENGR.	R. JOHNSON
REGIONAL ADM.	L. LAIRD

REVISION	DATE	BY

REGION NO.	STATE	FED.AID PROJ.NO.
10	WASH	BR-0099(111)
JOB NUMBER 10A065		
CONTRACT NO. 007999		LOCATION NO.

EOR — CERTIFYING ENGINEER

Washington State Department of Transportation
U.S. Department of Transportation Federal Highway Administration
City of Seattle

SR 99 TUNNEL PROJECT

SOUTH OPS BLDG - LEVEL -4 PLAN

MS211

SHEET OF SHEETS

FOR AS-BUILT PLAN ONLY

H-D-PAK-SOB-TR2.34-00362-08-ASB-1905-14

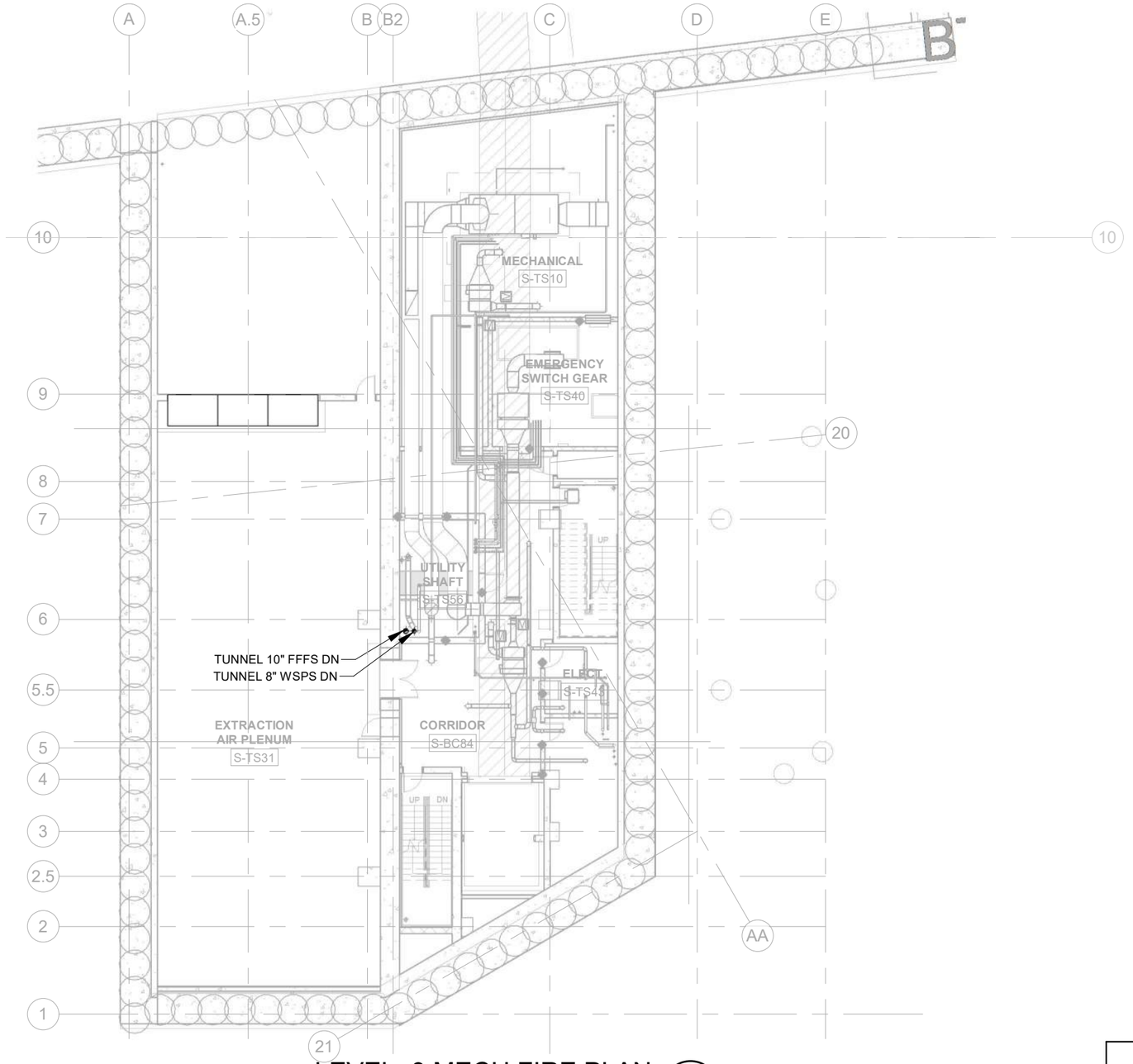

LEVEL -3 MECH FIRE PLAN (1)

1" = 20'-0" MS221

AS-BUILT PLANS ACCURATLEY AND COMPLETELY REFLECT CHANGES AND CORRECTIONS MADE DURING CONSTRUCTION AS DOCUMENTED IN THE RFI AND NDC QA/QC PROCEDURES DEVELOPED FOR THIS PROJECT AND AS BASED ON AS-BUILT INFORMATION PROVIDED BY SEATTLE TUNNEL PARTNERS.

FILE NAME	C:\Users\trtran\Documents\South Building MEP-Central_2018_trtran.rvt
DATE	5/7/2019 3:36:15
TIME	PM
PLOTTED BY	H. EMMETT
DESIGNED BY	D. PARKER
ENTERED BY	H. EMMETT
CHECKED BY	S. CASSADY
PROJ. ENGR.	R. JOHNSON
REGIONAL ADM.	L. LAIRD

REVISION	DATE	BY

REGION NO.	STATE	FED.AID PROJ.NO.
10	WASH	BR-0099(111)
JOB NUMBER 10A065		
CONTRACT NO. 007999		LOCATION NO.

EOR — DAVID B. PARKER, STATE OF WASHINGTON, 36243, REGISTERED PROFESSIONAL ENGINEER, 11/20/12

CERTIFYING ENGINEER — DAVID B. PARKER, STATE OF WASHINGTON, 36243, REGISTERED PROFESSIONAL ENGINEER, 05-14-19

Washington State Department of Transportation

U.S. Department of Transportation Federal Highway Administration

City of Seattle

SR 99 TUNNEL PROJECT

SOUTH OPS BLDG - LEVEL -3 PLAN

MS221

SHEET OF SHEETS

FOR AS-BUILT PLAN ONLY

H-D-PAK-SOB-TR2.34-00362-08-ASB-1905-14

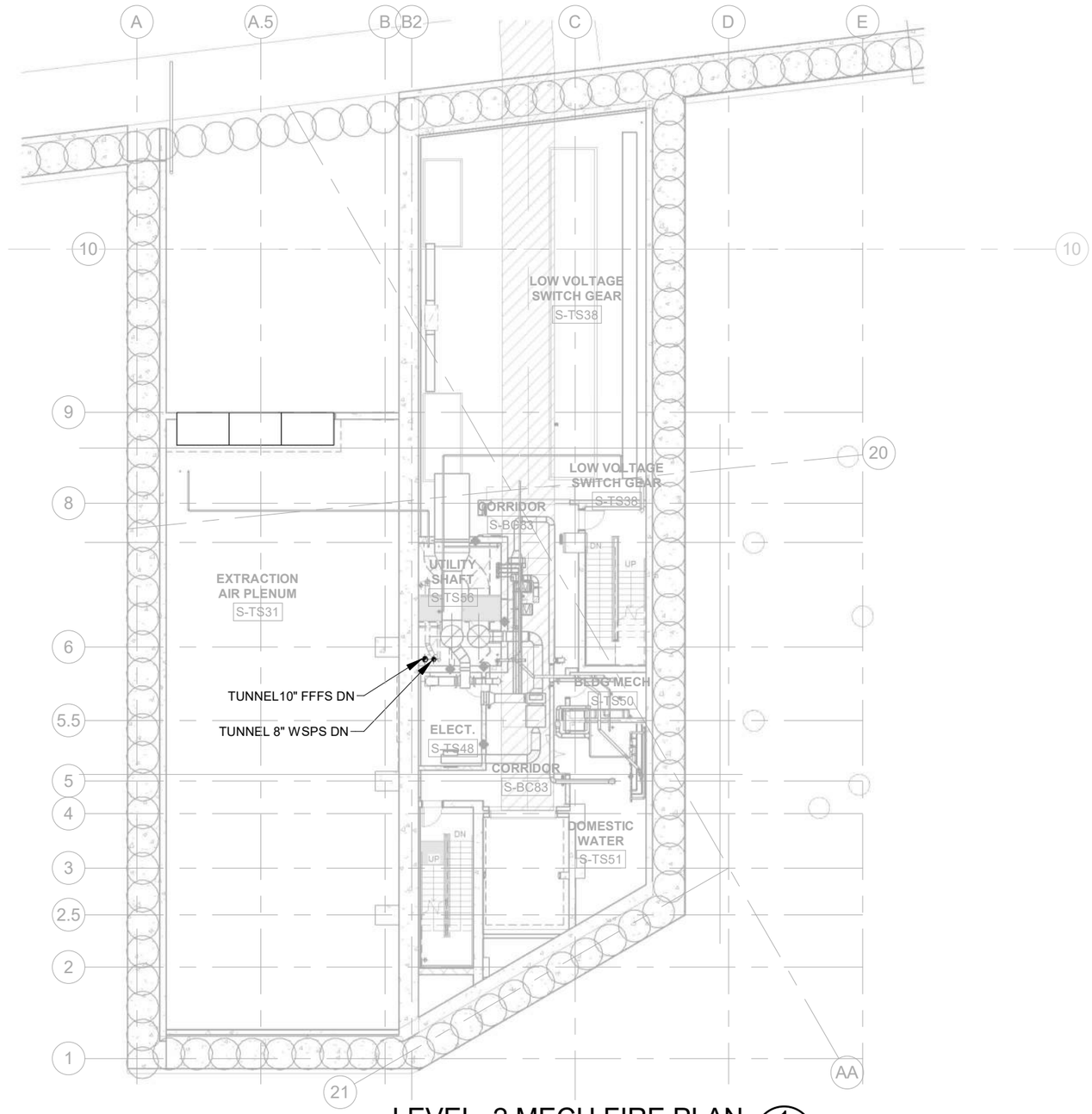

LEVEL -2 MECH FIRE PLAN

1 MS231

1" = 20'-0"

AS-BUILT PLANS ACCURATLEY AND COMPLETELY REFLECT CHANGES AND CORRECTIONS MADE DURING CONSTRUCTION AS DOCUMENTED IN THE RFI AND NDC QA/QC PROCEDURES DEVELOPED FOR THIS PROJECT AND AS BASED ON AS-BUILT INFORMATION PROVIDED BY SEATTLE TUNNEL PARTNERS.

FILE NAME	C:\Users\trtran\Documents\South Building MEP-Central_2018_trtran.rvt
DATE	5/7/2019 3:36:18
TIME	PM
PLOTTED BY	H. EMMETT
DESIGNED BY	D. PARKER
ENTERED BY	H. EMMETT
CHECKED BY	S. CASSADY
PROJ. ENGR.	R. JOHNSON
REGIONAL ADM.	L. LAIRD

REVISION | DATE | BY

REGION NO.	STATE	FED.AID PROJ.NO.
10	WASH	BR-0099(111)
JOB NUMBER 10A065		
CONTRACT NO. 007999		LOCATION NO.

EOR 11/20/12

CERTIFYING ENGINEER 05-14-19

Washington State Department of Transportation

U.S. Department of Transportation Federal Highway Administration

City of Seattle

SR 99 TUNNEL PROJECT

SOUTH OPS BLDG - LEVEL -2 PLAN

MS231

SHEET OF SHEETS

FOR AS-BUILT PLAN ONLY

H-D-PAK-SOB-TR2.34-00362-08-ASB-1905-14

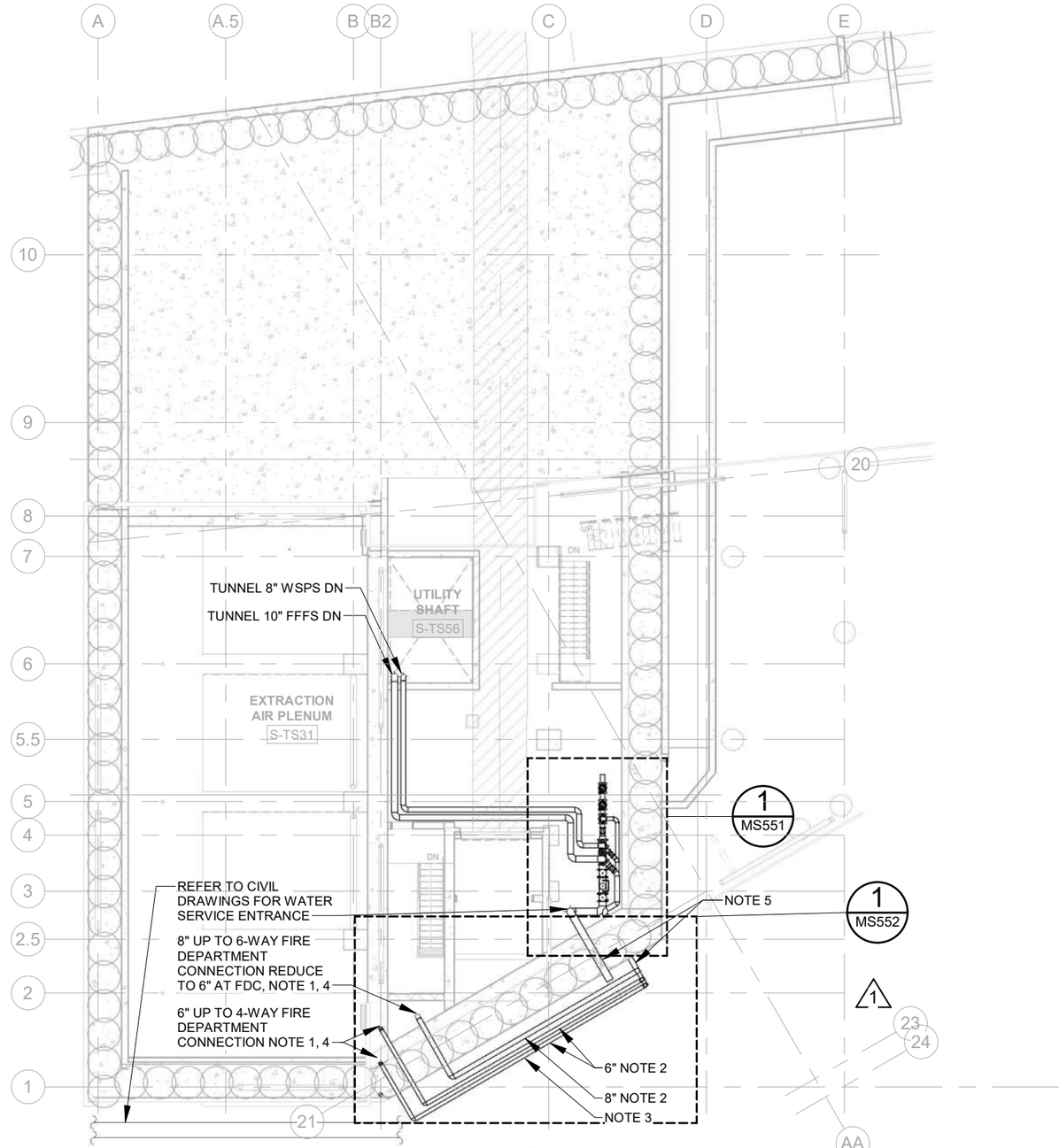

LEVEL -1 MECH FIRE PLAN

1" = 20'-0" (1 / MS241)

N

PLAN NOTES:

1. CENTER LINE ELEVATION OF CONNECTION PORT AT EL.= 20.00
2. ALL BURIED PIPE JOINTS BETWEEN BUILDING AND FDC SHALL BE RESTRAINED.
3. PIPE I.E. = 13.81, TYPICAL FOR 3 FDC PIPES.
4. PIPE I.E. = 15.76, TYPICAL FOR 3 FDC PIPES ABOVE STRUCTURAL SLAB.
5. PIPE PENETRATION INTO BUILDING, SEE DETAIL 2/MS552.

RFI #03743
RFI #03743R01

AS-BUILT PLANS ACCURATLEY AND COMPLETELY REFLECT CHANGES AND CORRECTIONS MADE DURING CONSTRUCTION AS DOCUMENTED IN THE RFI AND NDC QA/QC PROCEDURES DEVELOPED FOR THIS PROJECT AND AS BASED ON AS-BUILT INFORMATION PROVIDED BY SEATTLE TUNNEL PARTNERS.

FILE NAME	C:\Users\trtran\Documents\South Building MEP-Central_2018_trtran.rvt						
DATE	5/7/2019 3:36:21				REGION NO. 10	STATE WASH	FED.AID PROJ.NO. BR-0099(111)
TIME	PM						
PLOTTED BY	H. EMMETT				JOB NUMBER 10A065		
DESIGNED BY	D. PARKER						
ENTERED BY	H. EMMETT						
CHECKED BY	S. CASSADY	1	NDC085- SOUTH OPS BLDG PARKING MODIFICATION	04/25/2014	DBP	CONTRACT NO. 007999	LOCATION NO.
PROJ. ENGR.	R. JOHNSON						
REGIONAL ADM.	L. LAIRD		REVISION	DATE	BY		

EOR — CERTIFYING ENGINEER

Washington State Department of Transportation
U.S. Department of Transportation Federal Highway Administration
City of Seattle

SR 99 TUNNEL PROJECT

SOUTH OPS BLDG - LEVEL -1 PLAN

MS241

SHEET OF SHEETS

FOR AS-BUILT PLAN ONLY

H-D-PAK-SOB-TR2.34-00362-08-ASB-1905-14

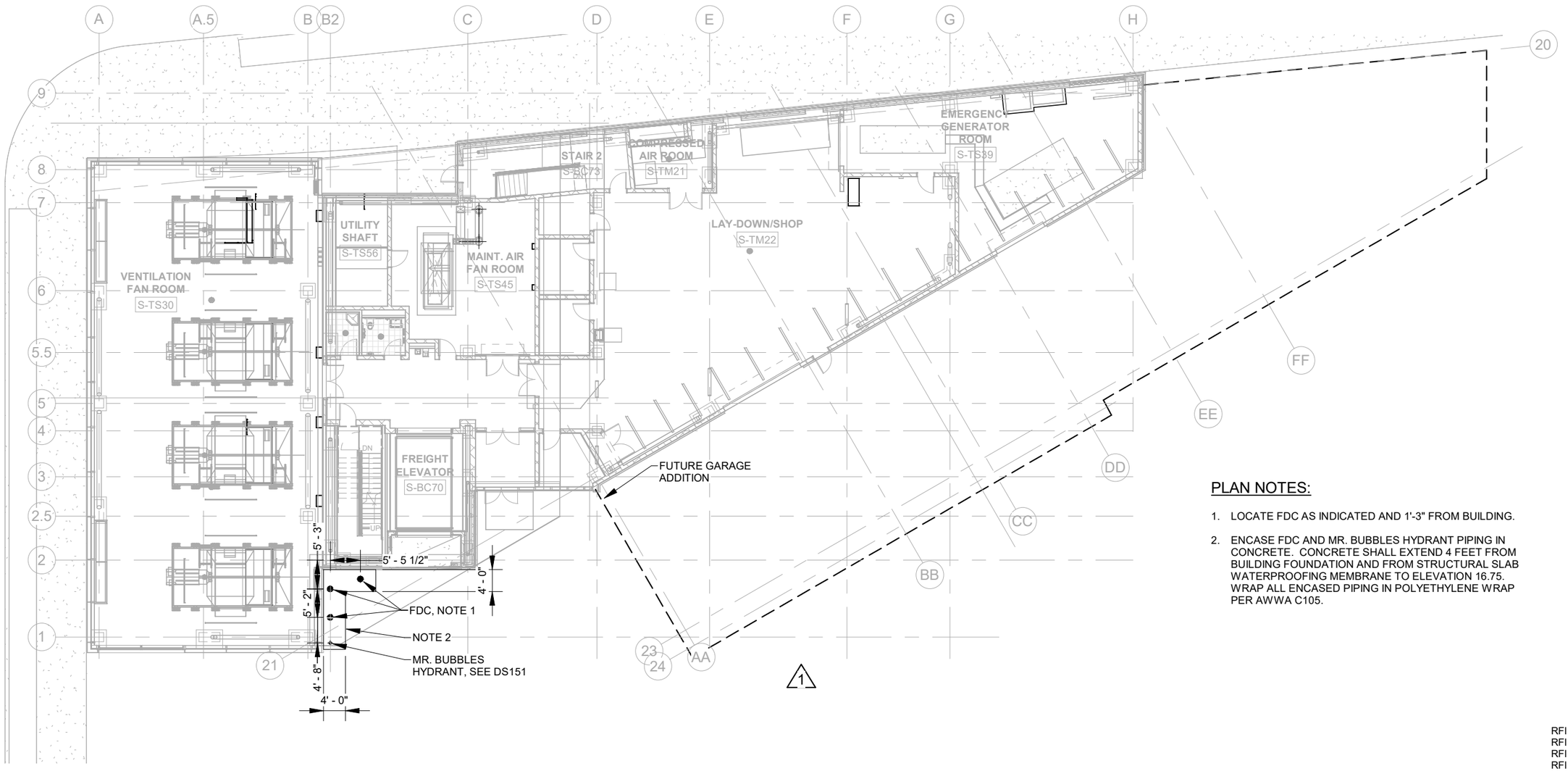

PLAN NOTES:

1. LOCATE FDC AS INDICATED AND 1'-3" FROM BUILDING.
2. ENCASE FDC AND MR. BUBBLES HYDRANT PIPING IN CONCRETE. CONCRETE SHALL EXTEND 4 FEET FROM BUILDING FOUNDATION AND FROM STRUCTURAL SLAB WATERPROOFING MEMBRANE TO ELEVATION 16.75. WRAP ALL ENCASED PIPING IN POLYETHYLENE WRAP PER AWWA C105.

RFI #02524
RFI #03628
RFI #03743
RFI #03743R01

LEVEL 1 MECH FIRE PLAN (1)

1" = 20'-0" MS251

AS-BUILT PLANS ACCURATLEY AND COMPLETELY REFLECT CHANGES AND CORRECTIONS MADE DURING CONSTRUCTION AS DOCUMENTED IN THE RFI AND NDC QA/QC PROCEDURES DEVELOPED FOR THIS PROJECT AND AS BASED ON AS-BUILT INFORMATION PROVIDED BY SEATTLE TUNNEL PARTNERS.

FILE NAME	C:\Users\trtran\Documents\South Building MEP-Central_2018_trtran.rvt
DATE	5/7/2019 3:36:21
TIME	PM
PLOTTED BY	H. EMMETT
DESIGNED BY	D. PARKER
ENTERED BY	H. EMMETT
CHECKED BY	S. CASSADY
PROJ. ENGR.	R. JOHNSON
REGIONAL ADM.	L. LAIRD

REVISION		DATE	BY
1	NDC085- SOUTH OPS BLDG PARKING MODIFICATION	04/25/2014	DBP

REGION NO.	STATE	FED.AID PROJ.NO.
10	WASH	BR-0099(111)
JOB NUMBER 10A065		
CONTRACT NO. 007999		LOCATION NO.

EOR — CERTIFYING ENGINEER

Washington State Department of Transportation
U.S. Department of Transportation Federal Highway Administration
City of Seattle

SR 99 TUNNEL PROJECT

SOUTH OPS BLDG - LEVEL 1 PLAN

MS251

SHEET OF SHEETS

FOR AS-BUILT PLAN ONLY

H-D-PAK-SOB-TR2.34-00362-08-ASB-1905-14

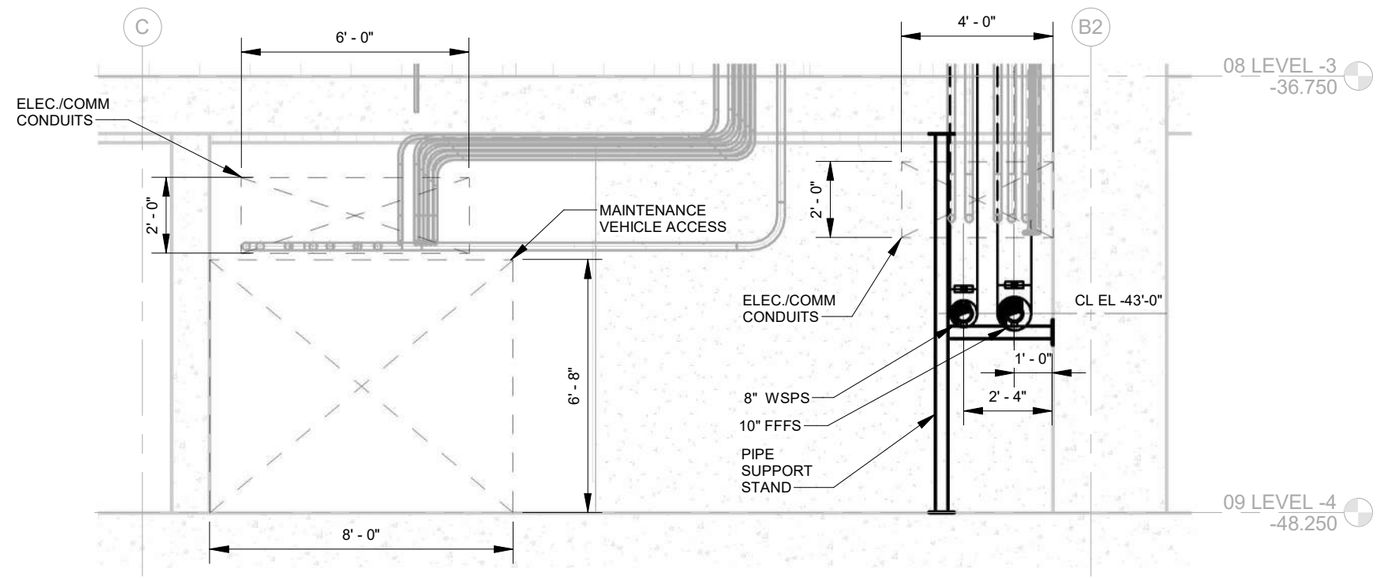

UTILIDOR SECTION 1

1/4" = 1'-0" MS211

RFI #02169

AS-BUILT PLANS ACCURATLEY AND COMPLETELY REFLECT CHANGES AND CORRECTIONS MADE DURING CONSTRUCTION AS DOCUMENTED IN THE RFI AND NDC QA/QC PROCEDURES DEVELOPED FOR THIS PROJECT AND AS BASED ON AS-BUILT INFORMATION PROVIDED BY SEATTLE TUNNEL PARTNERS.

FILE NAME	C:\Users\trtran\Documents\South Building MEP-Central_2018_trtran.rvt
DATE	5/7/2019 3:36:24
TIME	PM
PLOTTED BY	H. EMMETT
DESIGNED BY	D. PARKER
ENTERED BY	H. EMMETT
CHECKED BY	S. CASSADY
PROJ. ENGR.	R. JOHNSON
REGIONAL ADM.	L. LAIRD

REVISION | DATE | BY

REGION NO. 10 | STATE WASH | JOB NUMBER 10A065 | CONTRACT NO. 007999

FED.AID PROJ.NO. BR-0099(111)

LOCATION NO.

EOR 11/20/12

CERTIFYING ENGINEER 05-14-19

Washington State Department of Transportation

U.S. Department of Transportation Federal Highway Administration

City of Seattle

SR 99 TUNNEL PROJECT

LEVEL -4 ENLARGED MECH FIRE SECTION

MS451

SHEET OF SHEETS

FOR AS-BUILT PLAN ONLY

H-D-PAK-SOB-TR2.34-00362-08-ASB-1905-14

GENERAL NOTES:

1. PROVIDE SLEEVE, SIZE AS RECOMMENDED BY MANUFACTURER OF MODULAR RUBBER SEALING ELEMENT.
2. VERIFY LOCATION OF SECANT PILES. LOCATE PIPES PENETRATIONS TO AVOID SECANT PILE REBAR.
3. SEE MS111 FOR BUILDING SPRINKLER AND STANDPIPE REQUIREMENTS.
4. OFFSET FDC LINES TO PIPE PENETRATION ELEVATION. SEE 2/MS552.

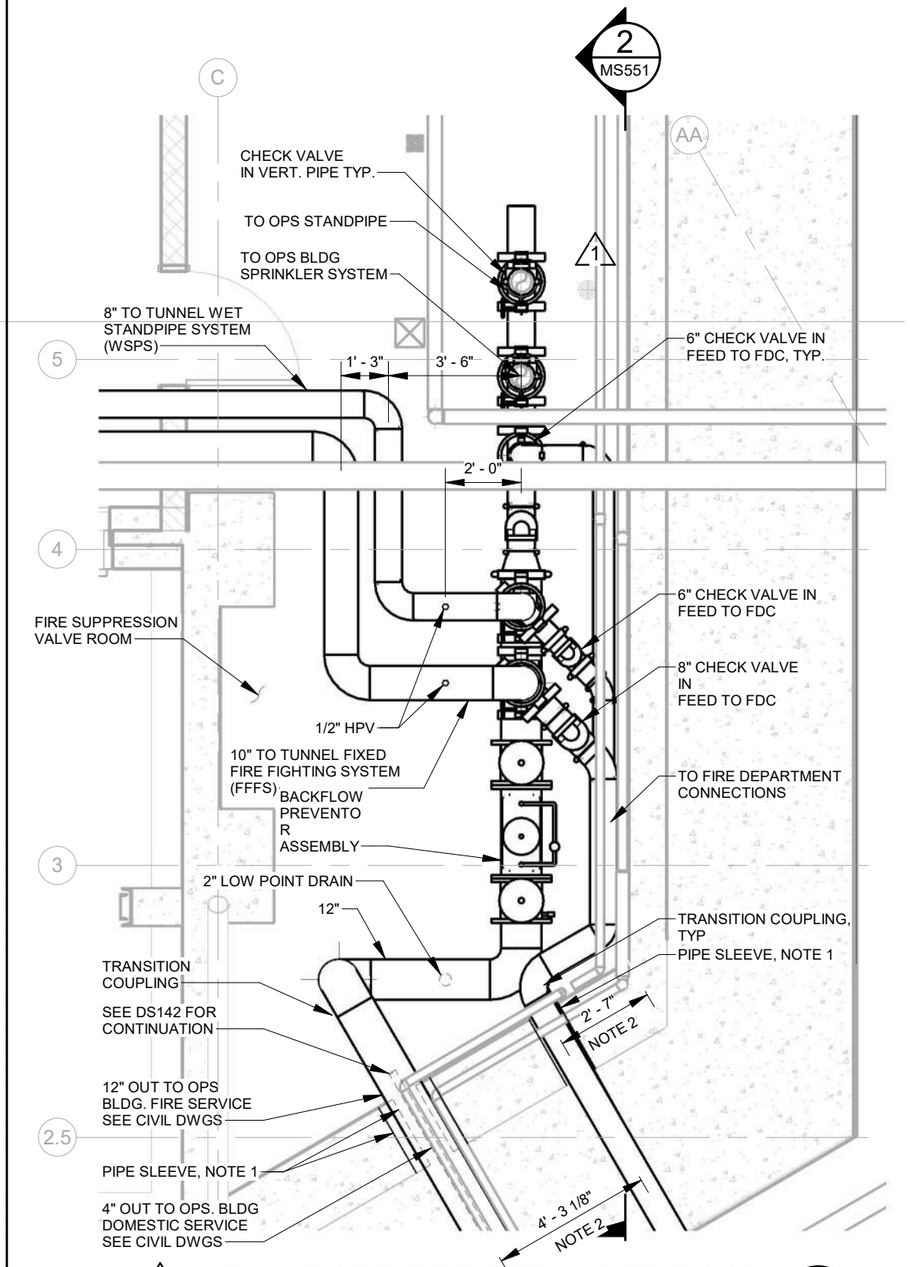

2 ENLARGED FIRE SPRINKLER ROOM 1 MS241

1/4" = 1'-0"

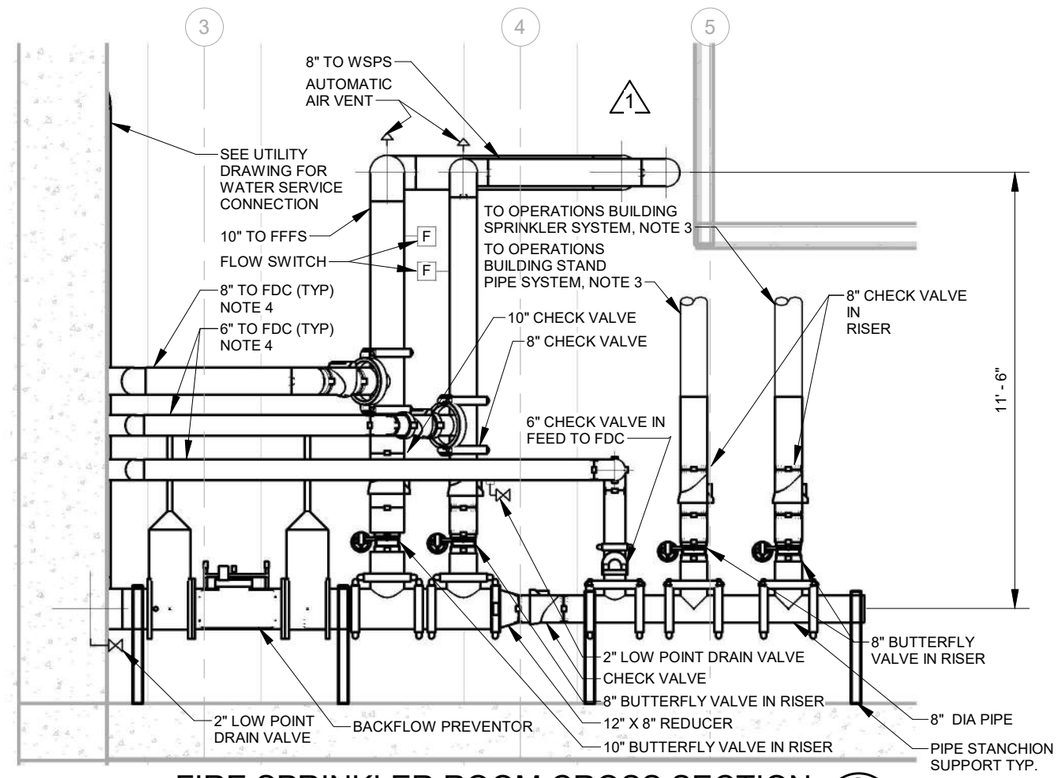

FIRE SPRINKLER ROOM CROSS SECTION 2 MS551

1/4" = 1'-0"

RFI #02169
RFI #02524
RFI #03255
RFI #03255R01

AS-BUILT PLANS ACCURATLEY AND COMPLETELY REFLECT CHANGES AND CORRECTIONS MADE DURING CONSTRUCTION AS DOCUMENTED IN THE RFI AND NDC QA/QC PROCEDURES DEVELOPED FOR THIS PROJECT AND AS BASED ON AS-BUILT INFORMATION PROVIDED BY SEATTLE TUNNEL PARTNERS.

FILE NAME	C:\Users\trtran\Documents\South Building MEP-Central_2018_trtran.rvt
DATE	5/7/2019 3:36:27
TIME	PM
PLOTTED BY	H. EMMETT
DESIGNED BY	D. PARKER
ENTERED BY	H. EMMETT
CHECKED BY	S. CASSADY
PROJ. ENGR.	R. JOHNSON
REGIONAL ADM.	L. LAIRD

	REVISION	DATE	BY
2	CONSOLIDATED CONSTRUCTION PACKAGE	09/23/14	DBP
1	NDC085- SOUTH OPS BLDG PARKING MODIFICATION	04/25/2014	DBP

REGION NO. 10 | STATE WASH | JOB NUMBER 10A065 | CONTRACT NO. 007999

FED.AID PROJ.NO. BR-0099(111)

LOCATION NO.

EOR — CERTIFYING ENGINEER

Washington State Department of Transportation
Federal Highway Administration
City of Seattle

SR 99 TUNNEL PROJECT

SOUTH OPS BUILDING MECH LEVEL -1 FIRE PROTECTION DETAIL

MS551

SHEET OF SHEETS

FOR AS-BUILT PLAN ONLY

H-D-PAK-SOB-TR2.34-00362-08-ASB-1905-14

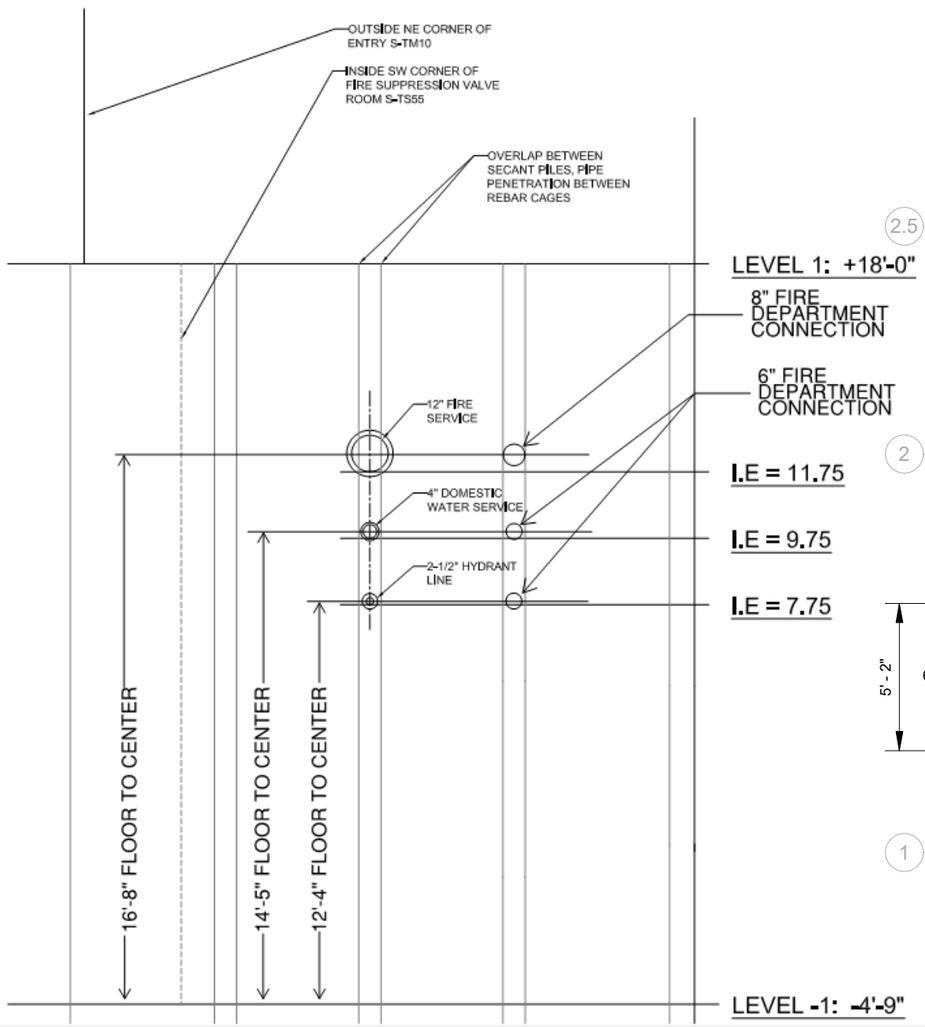

SOB - NORTHEAST ELEVATION SHOWING PIPE PENETRATIONS

SCALE: NTS

2 MS522

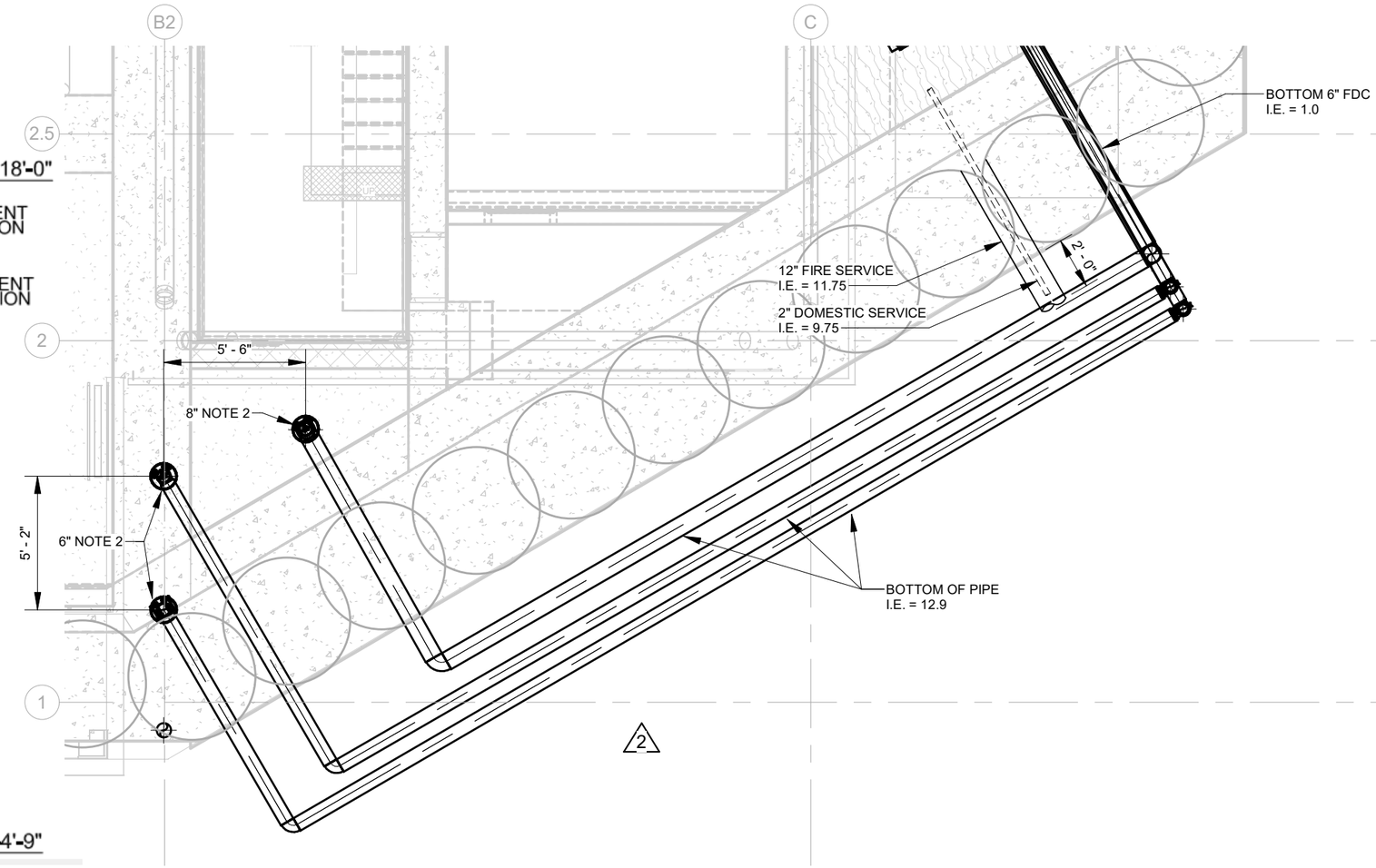

FDC PIPING

3/16" = 1'-0"

1 MS241

AS-BUILT PLANS ACCURATLEY AND COMPLETELY REFLECT CHANGES AND CORRECTIONS MADE DURING CONSTRUCTION AS DOCUMENTED IN THE RFI AND NDC QA/QC PROCEDURES DEVELOPED FOR THIS PROJECT AND AS BASED ON AS-BUILT INFORMATION PROVIDED BY SEATTLE TUNNEL PARTNERS.

FILE NAME	C:\Users\sparayil\Documents\South Building MEP-Central_2018_v2_sparayil.rvt
DATE	5/9/2019 8:36:20
TIME	AM
PLOTTED BY	Author
DESIGNED BY	Designer
ENTERED BY	Author
CHECKED BY	Checker
PROJ. ENGR.	R. JOHNSON
REGIONAL ADM.	L. LAIRD

	REVISION	DATE	BY
2	CONSOLIDATED CONSTRUCTION PACKAGE	09/23/14	DBP
1	NDC085- SOUTH OPS BLDG PARKING MODIFICATION - NEW SHEET	04/25/2014	DBP

REGION NO.	STATE	FED.AID PROJ.NO.
10	WASH	BR-0099(111)
JOB NUMBER		
10A065		
CONTRACT NO.		LOCATION NO.
007999		

EOR — CERTIFYING ENGINEER

Washington State Department of Transportation

U.S. Department of Transportation Federal Highway Administration

City of Seattle

SR 99 TUNNEL PROJECT

SOUTH OPS BLDG MECH LEVEL -1 FIRE PROTECTION DETAIL

MS552

SHEET OF SHEETS