INDEX

SHEET NO.	PLAN REFERENCE NO.	TITLE
		VOLUME 1
1	IN1	INDEX
2	VM1	VICINITY MAP
3-4	SQ1-SQ2	SUMMARY OF QUANTITIES
		VOLUME 2
5	IN2	INDEX
6	CT1	CERTIFICATION SHEET
7-10	BA1-BA4	BRIDGE PLAN FOR US 12 BRIDGE 282
11-13	BB1-BB3	BRIDGE PLAN FOR US 97 BRIDGE 008
14-15	PM1-PM2	PAVEMENT MARKINGS
16-17	CS1-CS2	CONSTRUCTION SIGNS - CLASS A
18-24	TC1-TC7	TRAFFIC CONTROL PLANS

INDEX (CONTINUED)

SHEET NO.	PLAN REFERENCE NO.	TITLE

PLAN REFERENCE NO.

SHEET OF SHEETS

NOTE: ALL SHEET REFERENCES, FIRST NOS. OF STRUCTURE CODE DESIGNATIONS AND MATCH LINE SHEET REFERENCES, ETC., THROUGHOUT THE PLANS, REFER TO THE ENTRY IN THE PLAN REFERENCE NUMBER BOX.

FILE NAME	G:\444302\03 - Design\XL6625 - US 12 Clear Fork Bridge - Expansion Joint, Deck Repair and Overlay\13 - CAD Plans\Index\XL6625_SH_IN_CT.dgn
TIME	9:50:11 AM
DATE	7/6/2023
PLOTTED BY	hartmat
DESIGNED BY	K. SIN
ENTERED BY	K. SIN
CHECKED BY	T. HARTMANN
PROJ. ENGR.	M. BRIGGS
REGIONAL ADM.	C. FRANCIS

REVISION | DATE | BY

REGION NO. 10 | STATE WASH | FED.AID PROJ.NO.

JOB NUMBER 23X329

CONTRACT NO.

LOCATION NO. XL6625

P.E. STAMP BOX DATE

P.E. STAMP BOX DATE

Washington State Department of Transportation

US 12/CLEAR FORK BR
US 97/BR OVER BICKLETON RD
BRIDGE AND DECK REHAB

INDEX

Plot 3

PLAN REF NO IN2

SHEET 5 OF 24 SHEETS

PROJECT LICENSED PROFESSIONAL CERTIFICATES

Greg Banks Greg Banks (Jul 10, 2023 07:52 PDT) Greg Banks Jul 10, 2023 AS A LICENSED PROFESSIONAL IN DIRECT RESPONSIBLE CHARGE OF DEVELOPING THIS CONTRACT, I CERTIFY THAT ALL PLANS THAT CONTAIN MY STAMP HAVE BEEN DEVELOPED UNDER MY SUPERVISION.	Mike Briggs Jul 10, 2023 AS A LICENSED PROFESSIONAL IN DIRECT RESPONSIBLE CHARGE OF DEVELOPING THIS CONTRACT, I CERTIFY THAT ALL PLANS THAT CONTAIN MY STAMP HAVE BEEN DEVELOPED UNDER MY SUPERVISION.	AS A LICENSED PROFESSIONAL IN DIRECT RESPONSIBLE CHARGE OF DEVELOPING THIS CONTRACT, I CERTIFY THAT ALL PLANS THAT CONTAIN MY STAMP HAVE BEEN DEVELOPED UNDER MY SUPERVISION.	AS A LICENSED PROFESSIONAL IN DIRECT RESPONSIBLE CHARGE OF DEVELOPING THIS CONTRACT, I CERTIFY THAT ALL PLANS THAT CONTAIN MY STAMP HAVE BEEN DEVELOPED UNDER MY SUPERVISION.
AS A LICENSED PROFESSIONAL IN DIRECT RESPONSIBLE CHARGE OF DEVELOPING THIS CONTRACT, I CERTIFY THAT ALL PLANS THAT CONTAIN MY STAMP HAVE BEEN DEVELOPED UNDER MY SUPERVISION.	AS A LICENSED PROFESSIONAL IN DIRECT RESPONSIBLE CHARGE OF DEVELOPING THIS CONTRACT, I CERTIFY THAT ALL PLANS THAT CONTAIN MY STAMP HAVE BEEN DEVELOPED UNDER MY SUPERVISION.	AS A LICENSED PROFESSIONAL IN DIRECT RESPONSIBLE CHARGE OF DEVELOPING THIS CONTRACT, I CERTIFY THAT ALL PLANS THAT CONTAIN MY STAMP HAVE BEEN DEVELOPED UNDER MY SUPERVISION.	AS A LICENSED PROFESSIONAL IN DIRECT RESPONSIBLE CHARGE OF DEVELOPING THIS CONTRACT, I CERTIFY THAT ALL PLANS THAT CONTAIN MY STAMP HAVE BEEN DEVELOPED UNDER MY SUPERVISION.
AS A LICENSED PROFESSIONAL IN DIRECT RESPONSIBLE CHARGE OF DEVELOPING THIS CONTRACT, I CERTIFY THAT ALL PLANS THAT CONTAIN MY STAMP HAVE BEEN DEVELOPED UNDER MY SUPERVISION.	AS A LICENSED PROFESSIONAL IN DIRECT RESPONSIBLE CHARGE OF DEVELOPING THIS CONTRACT, I CERTIFY THAT ALL PLANS THAT CONTAIN MY STAMP HAVE BEEN DEVELOPED UNDER MY SUPERVISION.	AS A LICENSED PROFESSIONAL IN DIRECT RESPONSIBLE CHARGE OF DEVELOPING THIS CONTRACT, I CERTIFY THAT ALL PLANS THAT CONTAIN MY STAMP HAVE BEEN DEVELOPED UNDER MY SUPERVISION.	AS A LICENSED PROFESSIONAL IN DIRECT RESPONSIBLE CHARGE OF DEVELOPING THIS CONTRACT, I CERTIFY THAT ALL PLANS THAT CONTAIN MY STAMP HAVE BEEN DEVELOPED UNDER MY SUPERVISION.

NOTES:

THIS PLAN SET WAS DEVELOPED ELECTRONICALLY UNDER THE DIRECT SUPERVISION OF THE LICENSED PROFESSIONALS THAT HAVE AFFIXED THEIR SIGNATURE TO THIS PAGE.

THIS SHEET SERVES AS THE CERTIFICATION BY THE ABOVE LICENSED PROFESSIONALS OF ALL SHEETS IN THIS PLAN SET WHERE THEIR STAMPS AND SIGNATURES APPEAR.

SEC. 29, T. 14 N., R. 10 E., W.M.
LEWIS COUNTY

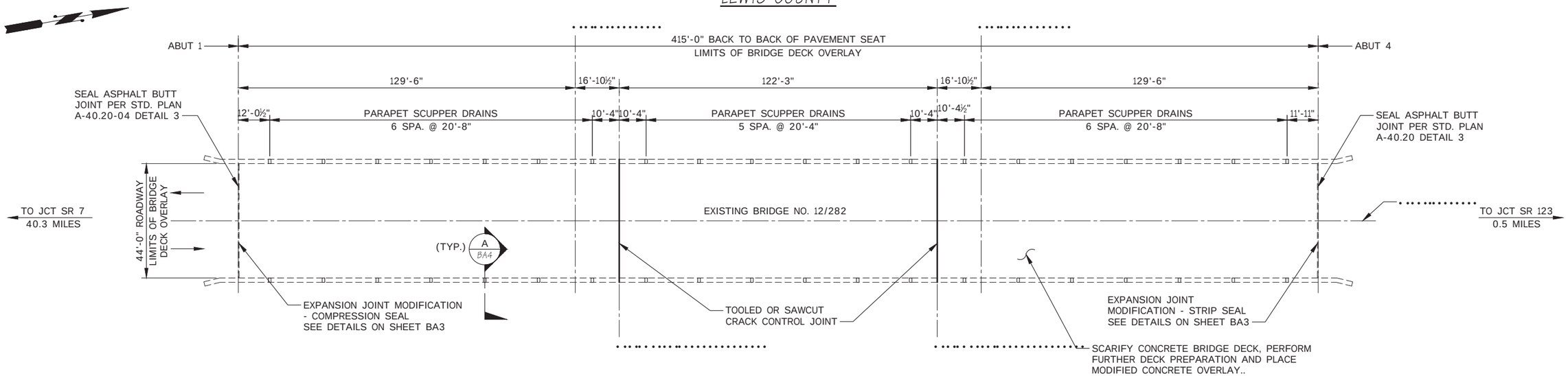

PLAN

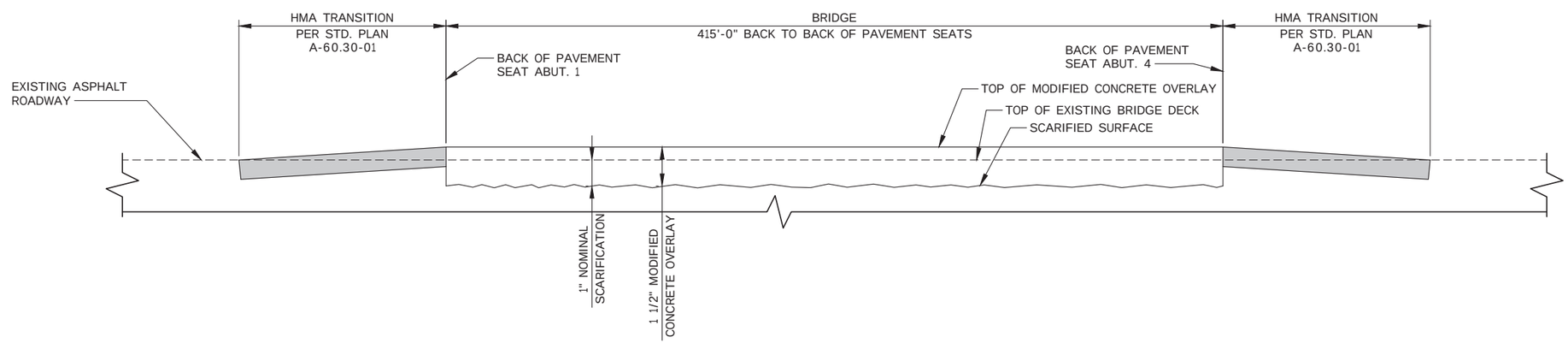

OVERLAY PROFILE
SCALE EXAGGERATED FOR CLARITY

GENERAL NOTES

1. ALL MATERIALS AND WORKMANSHIP SHALL BE IN ACCORDANCE WITH THE REQUIREMENTS OF THE WASHINGTON STATE DEPARTMENT OF TRANSPORTATION "STANDARD SPECIFICATIONS FOR ROAD, BRIDGE, AND MUNICIPAL CONSTRUCTION", DATED 2023.
2. EXISTING FEATURES AND DIMENSIONS ARE BASED ON AS-BUILT PLANS. ALL RELEVANT DIMENSIONS SHALL BE MEASURED IN THE FIELD AND VERIFIED BY THE CONTRACTOR PRIOR TO ORDERING MATERIALS AND PROCEEDING WITH CONSTRUCTION.
3. SEE SHEET BA4 FOR DECK AND REINF. STEEL REPAIR DETAILS.

MODIFIED CONCRETE OVERLAY
AND EXPANSION JOINT MODIFICATIONS

FILE NAME	01_BA01.DWG			
BRIDGE DES. ENG.	A. LELAND			
BRIDGE PROJ. ENG.	M. ROSA			
SUPERVISOR	-			
DESIGNED BY	M. CHANG			
CHECKED BY	M. BARBER			
ENTERED BY	P. LAVOCHIN			
PRELIM. PLAN BY				
ARCH. / SPEC.		REVISION	DATE	BY

REGION NO.	STATE
10	WASH

JOB NUMBER 23x329

CONTRACT NO.

WSDOT
WSP

GREGORY A. BANKS, STATE OF WASHINGTON, 45120, STRUCTURAL ENGINEER, PROFESSIONAL ENGINEER
6-30-2023
SEE SHEET CT1
DATE
P.E. STAMP BOX

SEE SHEET CT1
DATE
P.E. STAMP BOX

US 12 / CLEAR FORK BR
US 97 BR OVER BICKLETON RD
BRIDGE AND DECK REHAB
BRIDGE NO. 12/282

LAYOUT

PLAN REF NO BA1

SHEET 7 OF 24 SHEETS

SR BRIDGE SHEET OF 000 FILE NO.

PLOT DATE: 6/30/23 PLOT TIME: 11:12 AM PLOTTED BY: USPL675440 FILE PATH: C:\USERS\USPL675440\WSP O365\NW BRIDGE GROUP - PROJECTS\30902269\002\CADD\DWGS

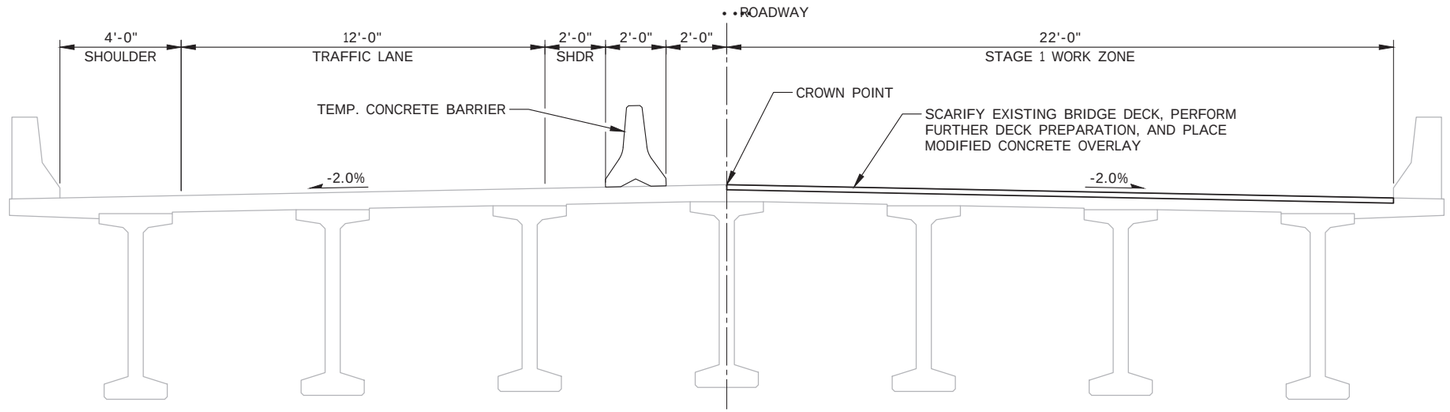

ROADWAY SECTION - STAGE 1

LOOKING NORTH
WORK AT ABUTMENT EXPANSION JOINTS NOT SHOWN

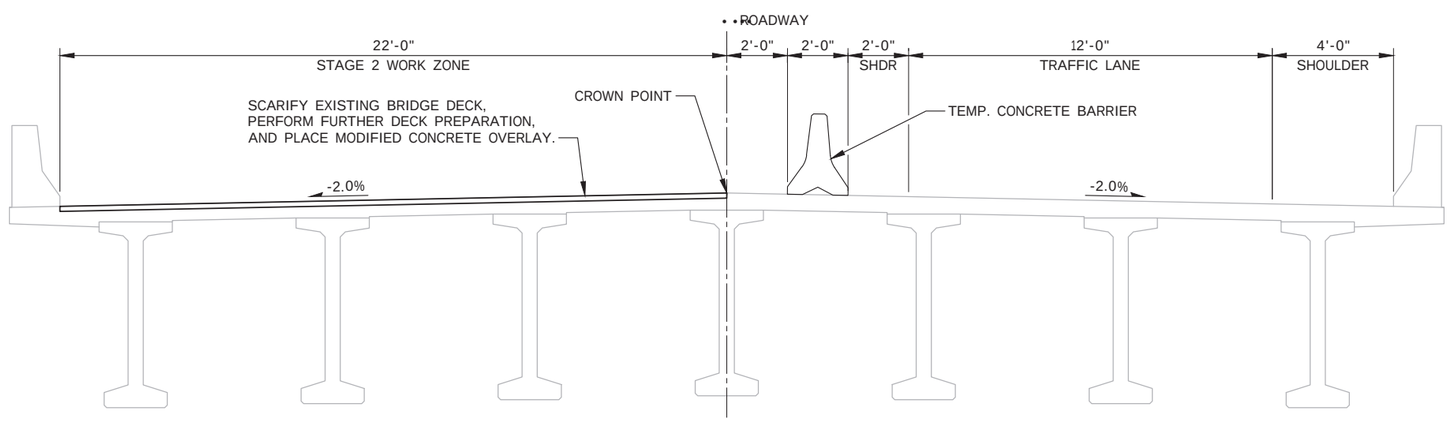

ROADWAY SECTION - STAGE 2

LOOKING NORTH
WORK AT ABUTMENT EXPANSION JOINTS NOT SHOWN

FILE NAME	01_BA02.DWG			
BRIDGE DES. ENG.	A. LELAND			
BRIDGE PROJ. ENG.	M. ROSA			
SUPERVISOR	-			
DESIGNED BY	M. CHANG			
CHECKED BY	M. BARBER			
ENTERED BY	P. LAVOCHIN			
PRELIM. PLAN BY				
ARCH. / SPEC.		REVISION	DATE	BY

REGION NO.	STATE
10	WASH

JOB NUMBER 23x329

CONTRACT NO.

WSDOT WSP

GREGORY A. BANKS, STATE OF WASHINGTON, 45120, STRUCTURAL ENGINEER, PROFESSIONAL ENGINEER
6-30-2023
SEE SHEET CT1
DATE
P.E. STAMP BOX

SEE SHEET CT1
DATE
P.E. STAMP BOX

US 12 / CLEAR FORK BR
US 97 BR OVER BICKLETON RD
BRIDGE AND DECK REHAB
BRIDGE NO. 12/282

CONSTRUCTION SEQUENCE

PLAN REF NO BA2

SHEET 8 OF 24 SHEETS

SR BRIDGE SHEET OF 000 FILE NO.

PLOT DATE: 6/30/23 PLOT TIME: 11:14 AM PLOTTED BY: USPL675440 FILE PATH: C:\USERS\USPL675440\WSP O365\NW BRIDGE GROUP - PROJECTS\30902269\002\CADD\DWGS

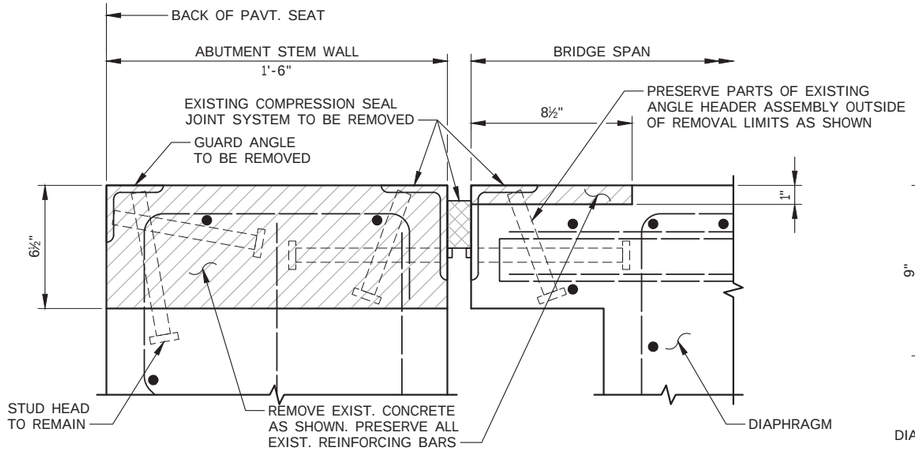

EXPANSION JOINT AT ABUT. 1
EXISTING CONDITION

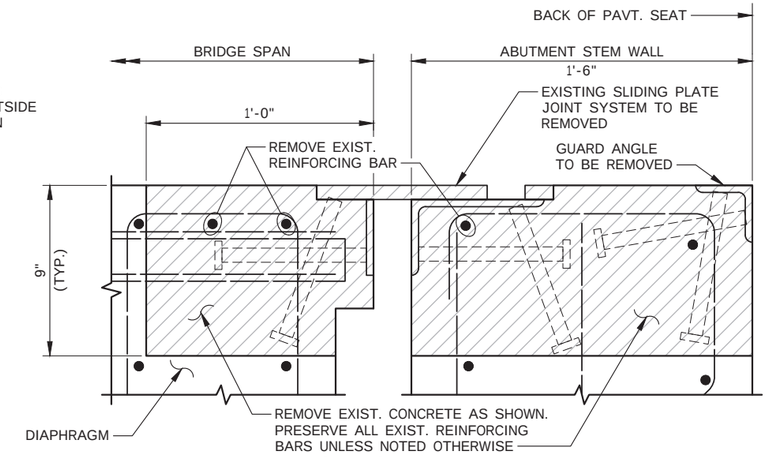

EXPANSION JOINT AT ABUT. 4
EXISTING CONDITION

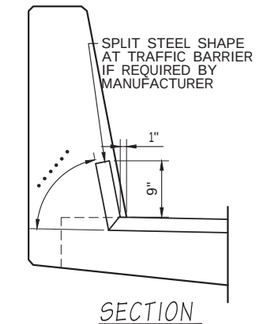

SECTION
STRIP SEAL

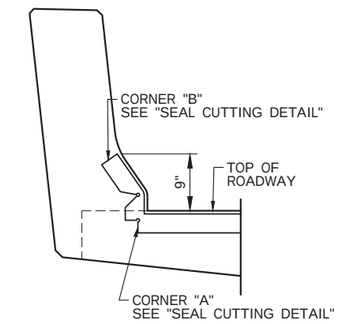

SECTION
COMPRESSION SEAL

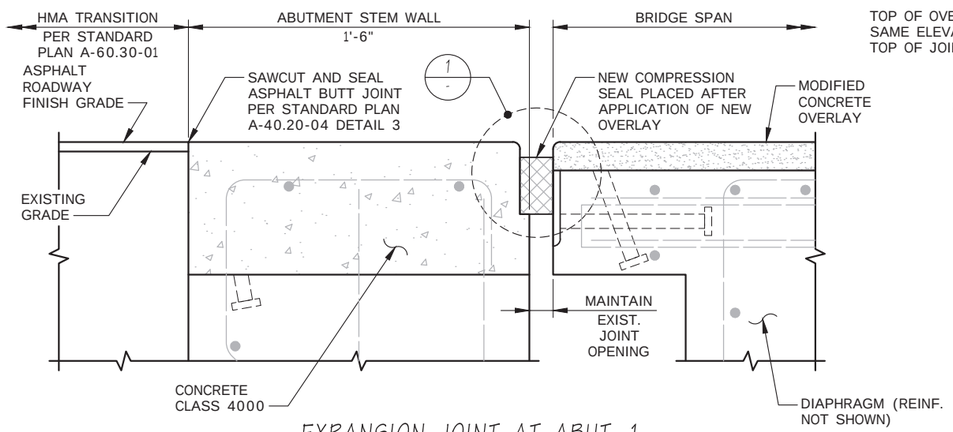

EXPANSION JOINT AT ABUT. 1
MODIFIED CONDITION

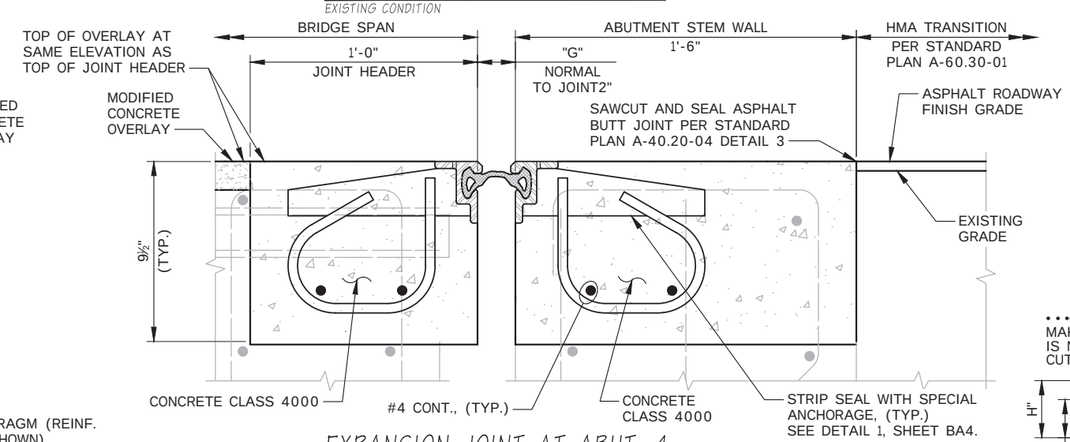

EXPANSION JOINT AT ABUT. 4
MODIFIED CONDITION

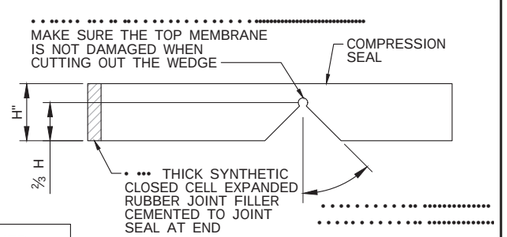

SEAL CUTTING DETAIL
COMPRESSION SEAL

STEEL SHAPE TYPES:

MANUFACTURER	ITEM NAME	BRIDGE DECK (S, T)			TRAFFIC BARRIER (V, W)		
		TYPE	S	T	TYPE	V	W
D. S. BROWN	DSB STRIP SEAL	SSCM2	1 1/4"	3 3/4"	SSA2	1 1/4"	2"
WATSON BOWMAN ACME	WABO STRIP SEAL	R	1 1/4"	3 1/4"	A	1 1/4"	2"
R.J. WATSON, INC.	RJ STRIP SEAL	RJM	2 3/4"	3 1/4"	RJA	1 1/4"	2"

STRIP SEAL TABLE (5" MOTION RANGE)

MANUFACTURER	ITEM NAME	OPENING "G" NORMAL TO JT.		MIN. INSTALLATION WIDTH NORMAL TO JOINT	OPENING "G" NORMAL TO JOINT *		
		MIN.	MAX.				
D. S. BROWN	DSB STRIP SEAL A2R-XTRA	1/2"	5 1/2"	2"	2 7/8"	2 3/16"	1 3/4"
WATSON BOWMAN ACME	WABO STRIP SEAL SE-500	0"	5"	1 1/2"	2 7/8"	2 3/16"	1 3/4"
R.J. WATSON, INC.	R.J. STRIP SEAL 500	1/2"	5"	1 1/2"	2 7/8"	2 3/16"	1 3/4"

* "G" DIMENSION IS GIVEN AS NOMINAL OPENING WIDTH. CONTRACTOR SHALL MAINTAIN EXISTING JOINT OPENING WIDTH.

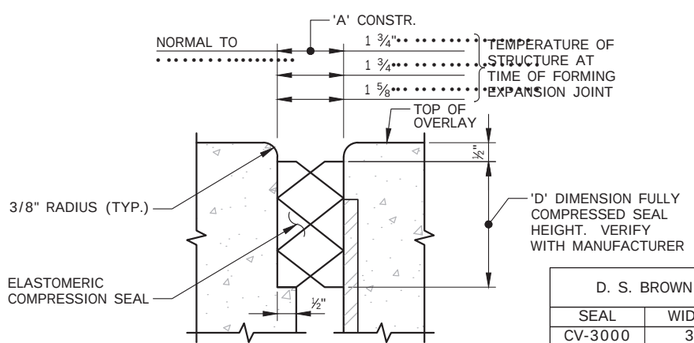

COMPRESSION SEAL 1/-

D. S. BROWN		WATSON BOWMAN ACME	
SEAL	WIDTH	SEAL	WIDTH
CV-3000	3"	WA-300	3"

COMPRESSION SEAL TABLE

FILE NAME	01_BA03.DWG
BRIDGE DES. ENG.	A. LELAND
BRIDGE PROJ. ENG.	M. ROSA
SUPERVISOR	-
DESIGNED BY	M. CHANG
CHECKED BY	M. BARBER
ENTERED BY	P. LAVOCHIN
PRELIM. PLAN BY	
ARCH. / SPEC.	

REVISION | DATE | BY

REGION NO. 10 | STATE WASH | JOB NUMBER 23x329 | CONTRACT NO.

WSDOT WSP

GREGORY A. BANKS, STATE OF WASHINGTON, 45120, STRUCTURAL ENGINEER, PROFESSIONAL ENGINEER — 6-30-2023 DATE — SEE SHEET CT1 — P.E. STAMP BOX

SEE SHEET CT1 DATE — P.E. STAMP BOX

US 12 / CLEAR FORK BR
US 97 BR OVER BICKLETON RD
BRIDGE AND DECK REHAB
BRIDGE NO. 12/282

EXPANSION JOINT MODIFICATION DETAILS

PLAN REF NO BA3

SHEET 9 OF 24 SHEETS

BRIDGE SHEET SR 000 OF FILE NO.

PLOT DATE: 6/30/23 PLOT TIME: 11:14 AM PLOTTED BY: USPL675440 FILE PATH: C:\USERS\USPL675440\WSP O365\NW BRIDGE GROUP - PROJECTS\30902269\002\CADD\DWGS

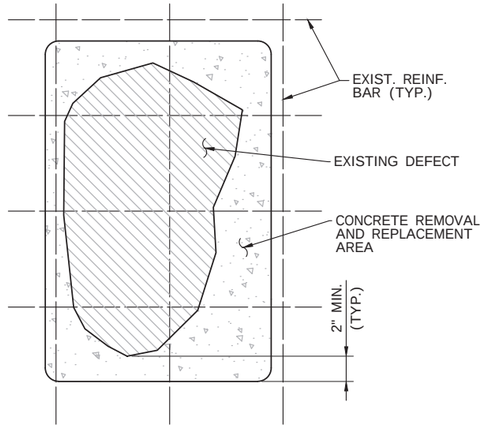

PLAN
TYPE 1 PARTIAL DEPTH DECK REPAIR

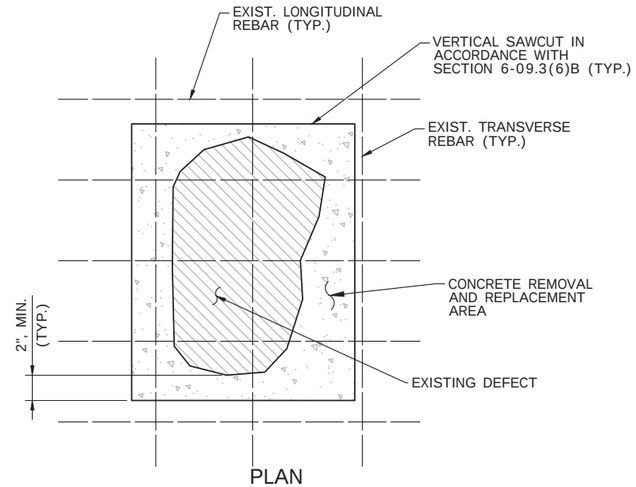

PLAN
TYPE 2 PARTIAL DEPTH DECK REPAIR

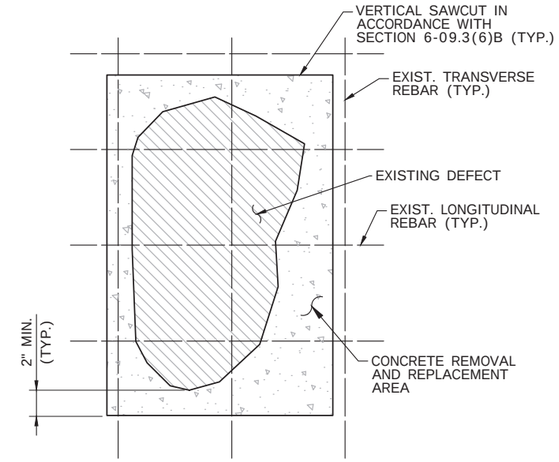

PLAN
TYPE 2 FULL DEPTH DECK REPAIR

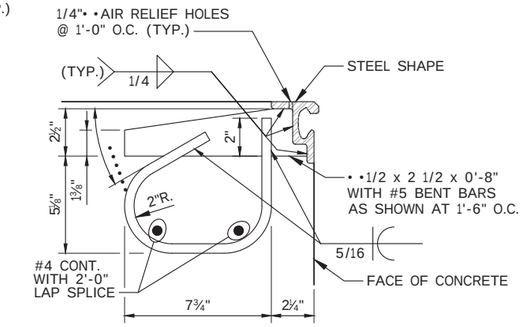

STRIP SEAL (1 / BA3)
SPECIAL ANCHORAGE

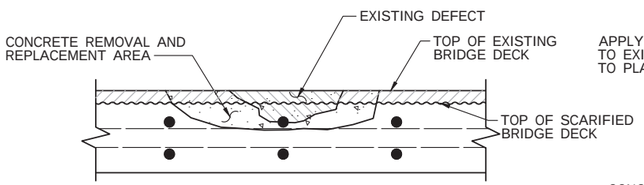

TYPICAL SECTION
TYPE 1 PARTIAL DEPTH DECK REPAIR
DECK OVERLAY NOT SHOWN FOR CLARITY

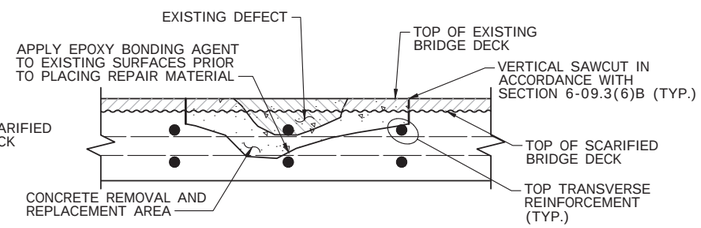

TYPICAL SECTION
TYPE 2 PARTIAL DEPTH DECK REPAIR
DECK OVERLAY NOT SHOWN FOR CLARITY

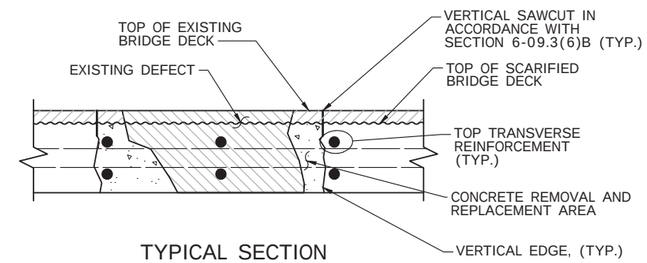

TYPICAL SECTION
TYPE 2 FULL DEPTH DECK REPAIR
DECK OVERLAY NOT SHOWN FOR CLARITY

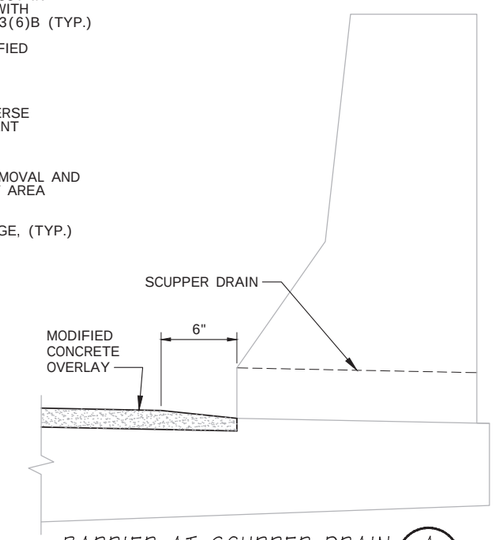

BARRIER AT SCUPPER DRAIN (A / BA1)

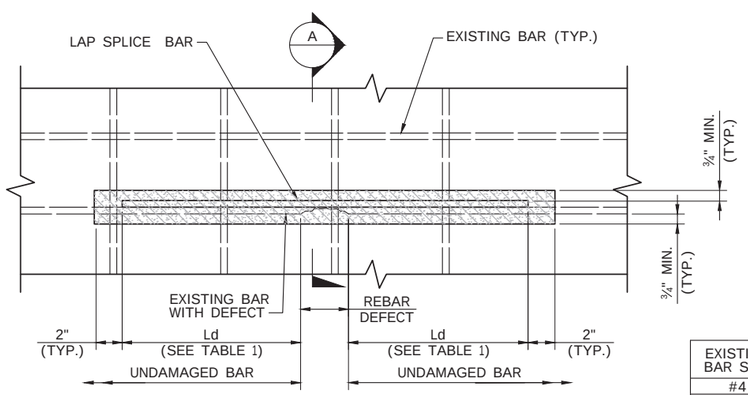

REBAR REPAIR DETAIL (1)
REINFORCING SHOWN IN REPAIR DETAIL IS PROVIDED FOR CONCEPTUAL PURPOSES ONLY. ACTUAL SIZE, LOCATION, DEPTH AND QUANTITY WILL VARY. SCARIFICATION NOT SHOWN FOR CLARITY

LEGENDS:

- CONCRETE TO BE REMOVED
- REPAIR MATERIAL PER 6-09.3 AT BRIDGE DECK

TABLE 1 - ALLOWABLE BAR DIAMETER AND BAR LENGTH

EXISTING BAR SIZE	ORIGINAL DIAMETER (INCHES)	LAP SPLICE BAR SIZE	TIED SPLICE LAP LENGTH, Ld
#4	0.500	#4	2'-0"
#5	0.625	#5	2'-1"

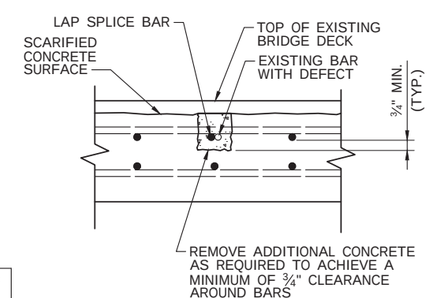

REBAR REPAIR SECTION (A)

REINFORCING STEEL REPAIR NOTES:

1. FOR ANY REINFORCEMENT BAR WITH GREATER THAN 20% SECTION LOSS PLACE NEW EPOXY-COATED REINFORCEMENT BAR OF THE SAME SIZE AS THE ORIGINAL BAR ADJACENT AND PARALLEL TO THE DEFICIENT BAR.
2. ALL REINFORCING STEEL USED IN REPAIRS SHALL CONFORM TO ASTM A706 GRADE 60.
3. REINFORCING STEEL CLEAR COVER SHALL MATCH EXISTING.

SEC. 16 & 21, T.4 N., R. 16 E., W.M.
KLICKITAT COUNTY

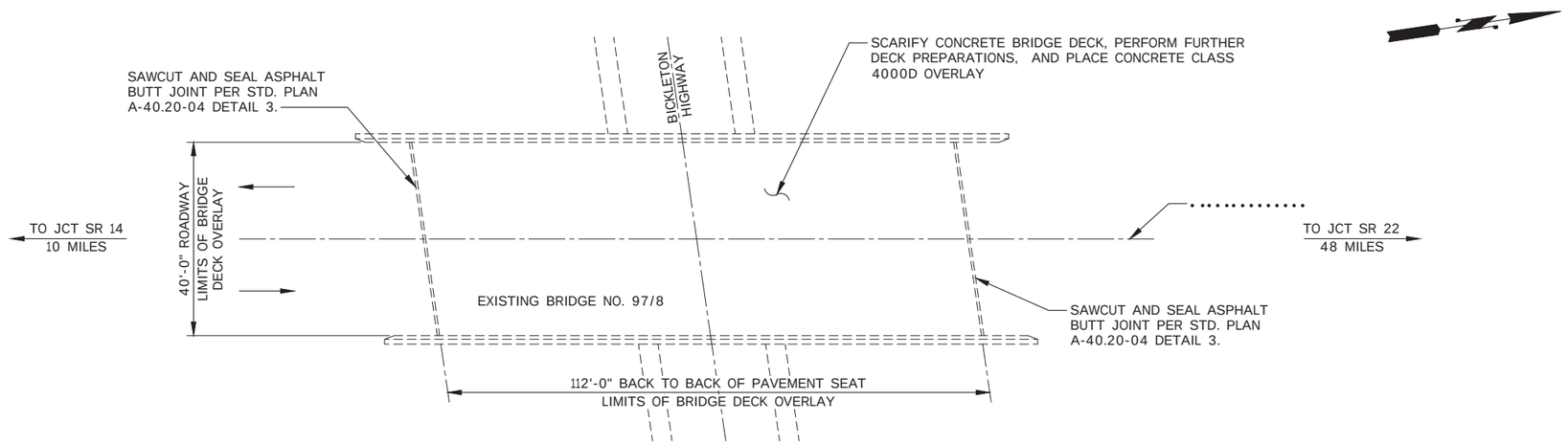

PLAN

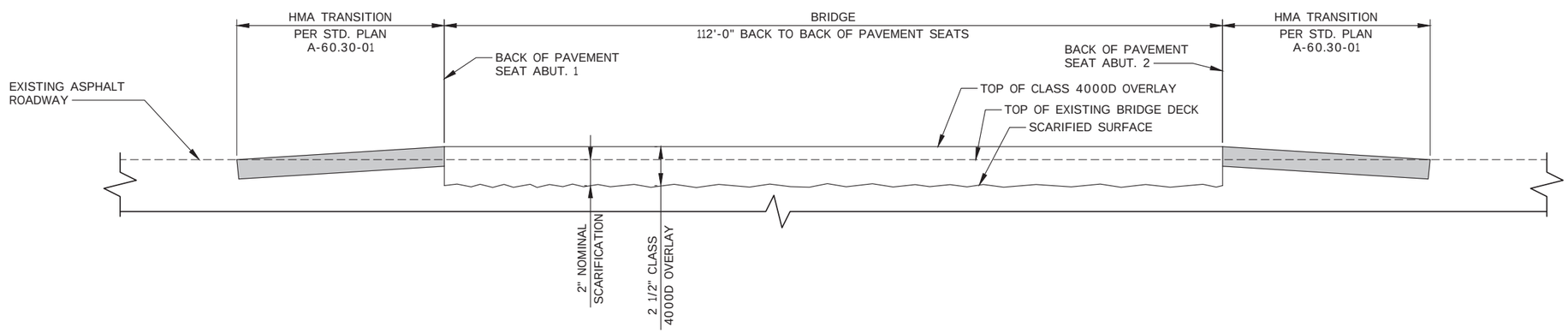

OVERLAY PROFILE
SCALE EXAGGERATED FOR CLARITY

GENERAL NOTES

1. ALL MATERIALS AND WORKMANSHIP SHALL BE IN ACCORDANCE WITH THE REQUIREMENTS OF THE WASHINGTON STATE DEPARTMENT OF TRANSPORTATION "STANDARD SPECIFICATIONS FOR ROAD, BRIDGE, AND MUNICIPAL CONSTRUCTION", DATED 2023.
2. EXISTING FEATURES AND DIMENSIONS ARE BASED ON AS-BUILT PLANS. ALL RELEVANT DIMENSIONS SHALL BE MEASURED IN THE FIELD AND VERIFIED BY THE CONTRACTOR PRIOR TO ORDERING MATERIALS AND PROCEEDING WITH CONSTRUCTION.
3. SEE SHEET BB3 FOR DECK AND REINFORCING STEEL REPAIR DETAILS.

CLASS 4000D OVERLAY

FILE NAME	05_BB01.DWG			
BRIDGE DES. ENG.	A. LELAND			
BRIDGE PROJ. ENG.	M. ROSA			
SUPERVISOR	-			
DESIGNED BY	C. STILWILL			
CHECKED BY	M. BARBER			
ENTERED BY	P. LAVOCHIN			
PRELIM. PLAN BY				
ARCH. / SPEC.		REVISION	DATE	BY

REGION NO.	STATE
10	WASH

JOB NUMBER 23x329

CONTRACT NO.

WSDOT WSP

GREGORY A. BANKS, STATE OF WASHINGTON, 45120, STRUCTURAL ENGINEER, PROFESSIONAL ENGINEER
6-30-2023
SEE SHEET CT1
DATE
P.E. STAMP BOX

SEE SHEET CT1
DATE
P.E. STAMP BOX

US 12 / CLEAR FORK BR
US 97 BR OVER BICKLETON RD
BRIDGE AND DECK REHAB
BRIDGE NO. 97/8

LAYOUT

PLAN REF NO BB1

SHEET 11 OF 24 SHEETS

SR 000 BRIDGE SHEET OF FILE NO.

PLOT DATE: 6/30/23 PLOT TIME: 11:14 AM PLOTTED BY: USPL675440 FILE PATH: C:\USERS\USPL675440\WSP O365\NW BRIDGE GROUP - PROJECTS\30902269\002\CADD\DWGS

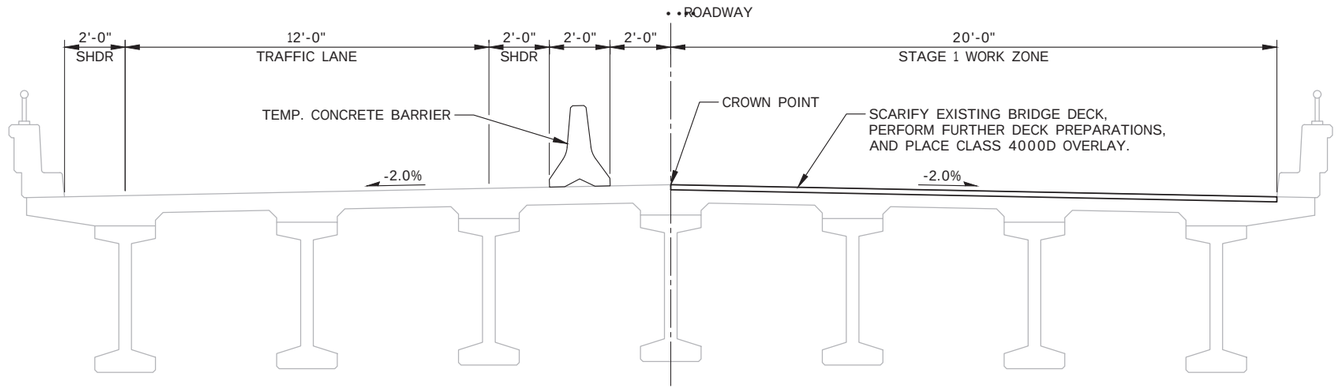

ROADWAY SECTION - STAGE 1

LOOKING NORTH

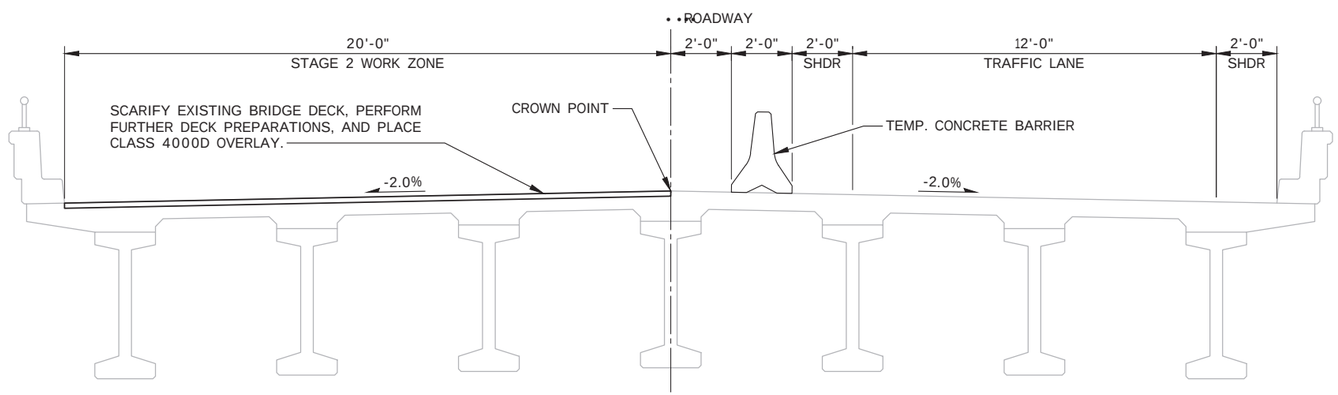

ROADWAY SECTION - STAGE 2

LOOKING NORTH

FILE NAME	05_BB02.DWG			
BRIDGE DES. ENG.	A. LELAND			
BRIDGE PROJ. ENG.	M. ROSA			
SUPERVISOR	-			
DESIGNED BY	C. STILWILL			
CHECKED BY	M. BARBER			
ENTERED BY	P. LAVOCHIN			
PRELIM. PLAN BY				
ARCH. / SPEC.		REVISION	DATE	BY

REGION NO.	STATE
10	WASH

JOB NUMBER 23x329

CONTRACT NO.

WSDOT WSP

GREGORY A. BANKS, STATE OF WASHINGTON, 45120, STRUCTURAL ENGINEER, PROFESSIONAL ENGINEER

6-30-2023

SEE SHEET CT1 DATE

P.E. STAMP BOX

SEE SHEET CT1 DATE

P.E. STAMP BOX

US 12 / CLEAR FORK BR
US 97 BR OVER BICKLETON RD
BRIDGE AND DECK REHAB

BRIDGE NO. 97/8

CONSTRUCTION SEQUENCE

PLAN REF NO BB2

SHEET 12 OF 24 SHEETS

SR BRIDGE SHEET OF 000 FILE NO.

PLOT DATE: 6/30/23 PLOT TIME: 11:14 AM PLOTTED BY: USPL675440 FILE PATH: C:\USERS\USPL675440\WSP O365\NW BRIDGE GROUP - PROJECTS\30902269\002\CADD\DWGS

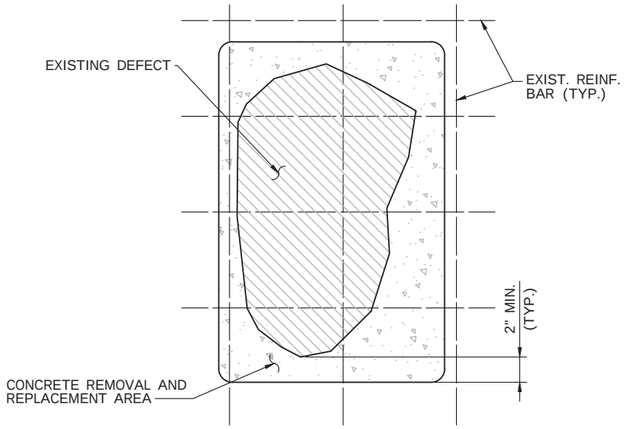

PLAN
TYPE 1 PARTIAL DEPTH DECK REPAIR

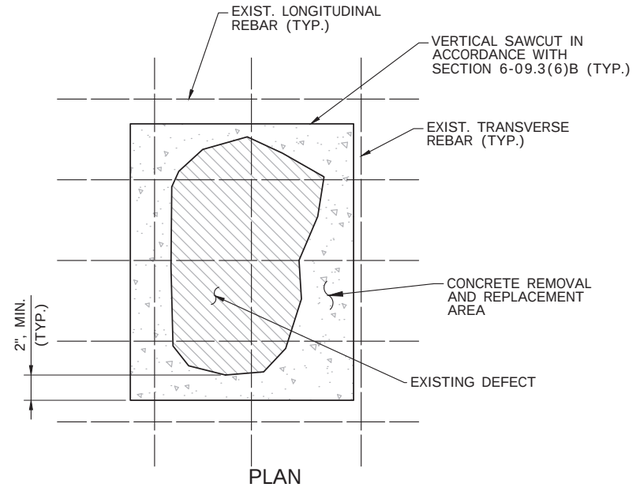

PLAN
TYPE 2 PARTIAL DEPTH DECK REPAIR

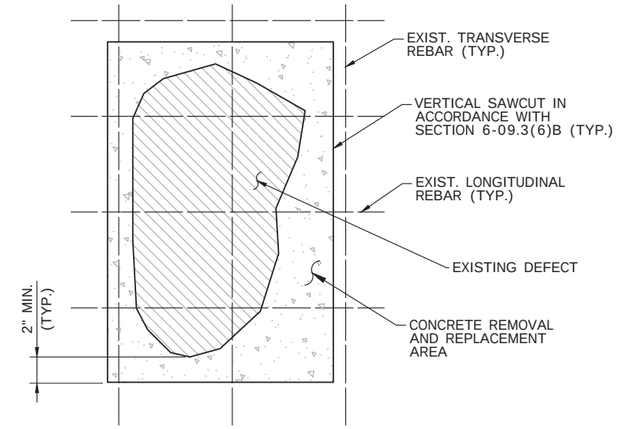

PLAN
TYPE 2 FULL DEPTH DECK REPAIR

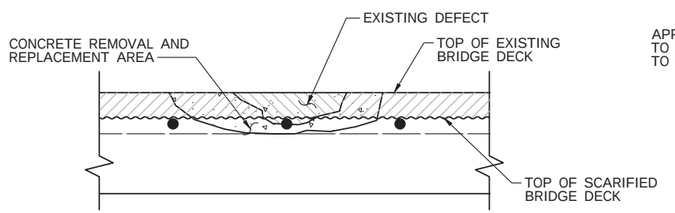

TYPICAL SECTION
TYPE 1 PARTIAL DEPTH DECK REPAIR

DECK OVERLAY NOT SHOWN FOR CLARITY

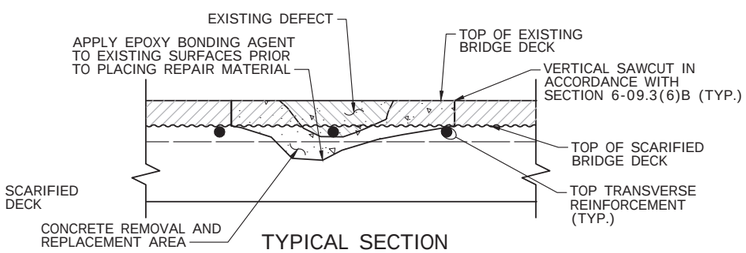

TYPICAL SECTION
TYPE 2 PARTIAL DEPTH DECK REPAIR

DECK OVERLAY NOT SHOWN FOR CLARITY

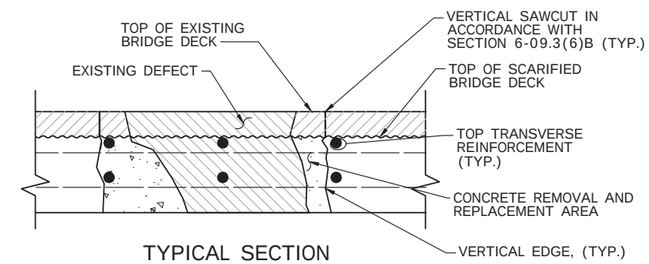

TYPICAL SECTION
TYPE 2 FULL DEPTH DECK REPAIR

DECK OVERLAY NOT SHOWN FOR CLARITY

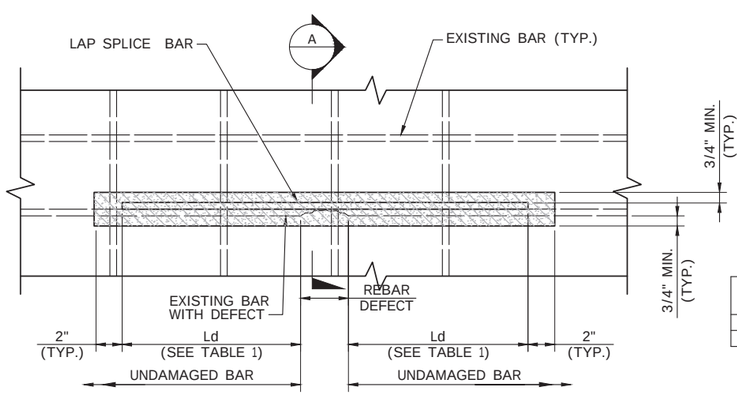

REBAR REPAIR DETAIL (1)

REINFORCING SHOWN IN REPAIR DETAIL IS PROVIDED FOR CONCEPTUAL PURPOSES ONLY. ACTUAL SIZE, LOCATION, DEPTH AND QUANTITY WILL VARY. SCARIFICATION NOT SHOWN FOR CLARITY

LEGENDS:

CONCRETE TO BE REMOVED

REPAIR MATERIAL PER 6-09.3 AT BRIDGE DECK

TABLE 1 - ALLOWABLE BAR DIAMETER AND BAR LENGTH

EXISTING BAR SIZE	ORIGINAL DIAMETER (INCHES)	LAP SPLICE BAR SIZE	TIED SPLICE LAP LENGTH, Ld
#4	0.500	#4	2'-0"
#5	0.625	#5	2'-1"

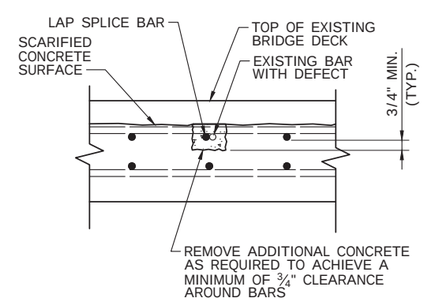

REBAR REPAIR SECTION (A)

REINFORCING STEEL REPAIR NOTES:

1. FOR ANY REINFORCEMENT BAR WITH GREATER THAN 20% SECTION LOSS PLACE NEW EPOXY-COATED REINFORCEMENT BAR OF THE SAME SIZE AS THE ORIGINAL BAR ADJACENT AND PARALLEL TO THE DEFICIENT BAR.
2. ALL REINFORCING STEEL USED IN REPAIRS SHALL CONFORM TO ASTM A706 GRADE 60.
3. REINFORCING STEEL CLEAR COVER SHALL MATCH EXISTING.

FILE NAME	05_BB03.DWG
BRIDGE DES. ENG.	A. LELAND
BRIDGE PROJ. ENG.	M. ROSA
SUPERVISOR	-
DESIGNED BY	C. STILWILL
CHECKED BY	M. BARBER
ENTERED BY	P. LAVOCHIN
PRELIM. PLAN BY	
ARCH. / SPEC.	

REVISION | DATE | BY

REGION NO. 10 | STATE WASH | JOB NUMBER 23x329 | CONTRACT NO.

WSDOT WSP

GREGORY A. BANKS, STATE OF WASHINGTON, 45120, STRUCTURAL ENGINEER, PROFESSIONAL ENGINEER
7/6/2023
SEE SHEET CT1
DATE
P.E. STAMP BOX

SEE SHEET CT1
DATE
P.E. STAMP BOX

US 12 / CLEAR FORK BR
US 97 BR OVER BICKLETON RD
BRIDGE AND DECK REHAB
BRIDGE NO. 97/8

DECK AND REINFORCING STEEL REPAIR DETAILS

PLAN REF NO BB3

SHEET 13 OF 24 SHEETS

SR BRIDGE SHEET OF 000 FILE NO.

PLOT DATE: 7/5/23 PLOT TIME: 5:54 AM PLOTTED BY: USPL675440 FILE PATH: C:\USERS\USPL675440\WSP O365\NW BRIDGE GROUP - PROJECTS\30902269\002\CADD\DWGS

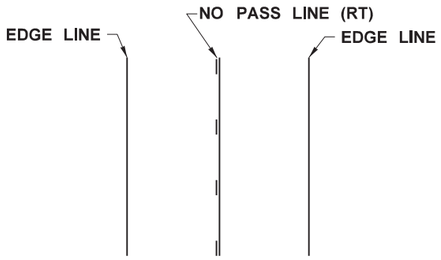

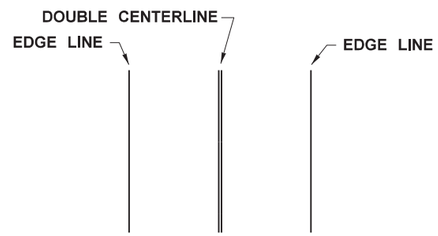

US 12 EDGE LINE (White Paint)				
Begin MP	End MP	LT/RT	LENGTH (FT)	TOTAL (FT)
138.05	138.06	LT	50	
138.06	138.14	LT	415	
138.14	138.15	LT	50	
138.05	138.06	RT	50	
138.06	138.14	RT	415	
138.14	138.15	RT	50	1030

US 12 RECESSED PAVEMENT MARKING PER STD. PLN M-20.30	
BEGIN MP	END MP
138.06	138.14
TOTAL (HUND)	0.06

US 12 NO PASS LINE (RT) (YELLOW) (PAINT)	
BEGIN MP	END MP
138.06	138.14
TOTAL (LF)	515

US 97 DOUBLE CENTERLINE (YELLOW) (PAINT)	
Begin MP	End MP
12.55	12.57
TOTAL (LF)	212

US 97 EDGE LINE (White Paint)				
Begin MP	End MP	LT/RT	LENGTH (FT)	TOTAL (FT)
12.54	12.55	LT	50	
12.55	12.57	LT	112	
12.57	12.58	LT	50	
12.54	12.55	RT	50	
12.55	12.57	RT	112	
12.57	12.58	RT	50	424

US 97 RECESSED PAVEMENT MARKING PER STD. PLN M-20.30	
BEGIN MP	END MP
12.55	12.57
TOTAL (HUND)	0.02

GUARDRAIL SCHEDULE

	REMOVING GUARDRAIL	REMOVING GUARDRAIL ANCHOR	BEAM GUARDRAIL TYPE 31	BEAM GUARDRAIL TRANSITION SECTION TYPE 21	BEAM GUARDRAIL TYPE 31 NON-FLARED TERMINAL	BEAM GUARDRAIL ANCHOR TYPE 11	CRUSHED SURFACING BASE COURSE	SEE GENERAL NOTES
LOCATION	L.F.	EACH	L.F.	EACH	EACH	EACH	C.Y.	
US 12 MP 138.00 TO 138.04 (LT)	264	1	262.5	0		1	0	1,3
US 12 MP 138.12 TO 138.22 (LT)	519	1	487.5	0	1		2	1,2
US 12 MP 138.00 TO 138.04 (RT)	207	1	175.0	0	1		2	1,2
US 12 MP 138.12 TO 138.18 (RT)	357	1	325.0	0	1		2	1,2
US 97 MP 12.51 TO 12.53 (LT)	90	1	50.0	1	1		2	1,2,4,5,6
US 97 MP 12.56 TO 12.59 (LT)	202	1	125.0	1	1		2	1,2,4,5,6
US 97 MP 12.50 TO 12.53 (RT)	203	1	125.0	1	1		2	1,2,4,5,6
US 97 MP 12.56 TO 12.60 (RT)	213	1	162.5	1		1	2	1,3,4,5,6
TOTAL	2055	8	1712.5	4	6	2	15	

GENERAL NOTES:

1. INSTALL BEAM GUARDRAIL TYPE 31 PER STD PLN C-20.10.
2. INSTALL BEAM GUARDRAIL TYPE 31 NON-FLARED TERMINAL PER STD PLN C-22.40.
3. INSTALL BEAM GUARDRAIL TYPE 31 ANCHOR TYPE 11 PER STD PLN C-23.70.
4. INSTALL BEAM GUARDRAIL TYPE 31 TRANSITION SECTION TYPE 21 PER STD PLN C-25.20.
5. INSTALL GUARDRAIL CONNECTION B TO BRIDGE TRAFFIC BARRIER PER STD PLN C-24.10.
6. INSTALL BEAM GUARDRAIL CONNECTION TO STRUCTURE - ADAPER PLATE PER STD PLN C-24.15.

NOTES:

1. SEE CENTERLINE, DOUBLE CENTERLINE, NO PASS LINE, EDGE LINE, MEDIAN EDGE LINE ON STANDARD PLAN M-20.10, "LONGITUDINAL MARKING PATTERNS".

2. LOCATIONS ARE APPROXIMATE. IT IS THE CONTRACTOR'S RESPONSIBILITY TO MAINTAIN EXISTING CHANNELIZATION CONFIGURATIONS.

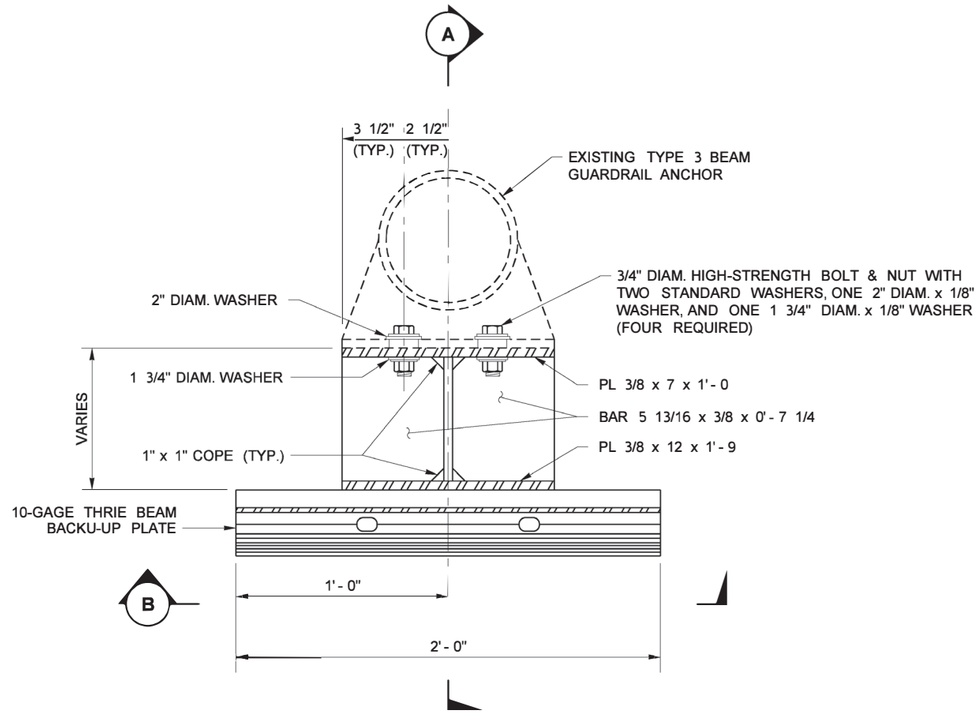

PLAN VIEW

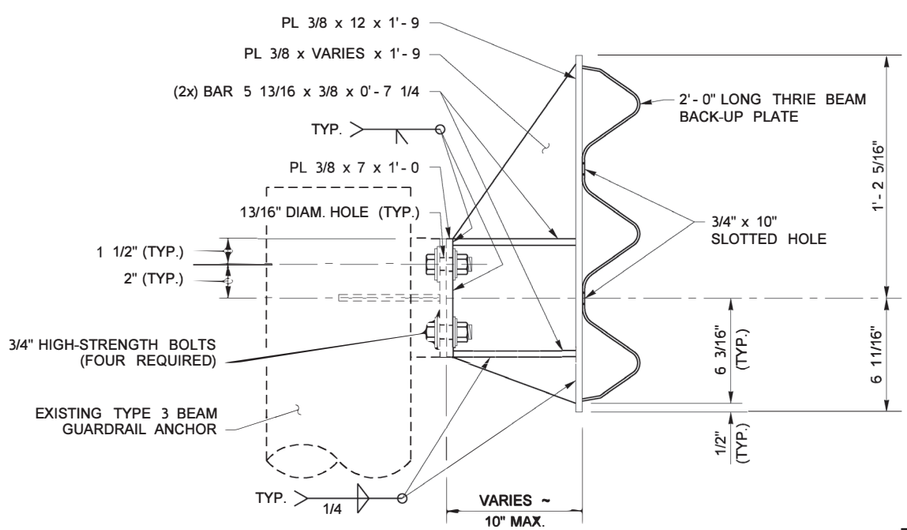

SECTION A

NOTES

1. MATERIAL SPECIFICATIONS:

   STEEL SHAPES & PLATES — ASTM A 36 OR ASTM A 992

   BOLTS, NUTS & WASHERS UNLESS OTHERWISE NOTED — SECTION 9-16.8(1)

2. ALL STEEL POSTS AND PLATES SHALL BE GALVANIZED IN ACCORDANCE WITH AASHTO M 111 AFTER FABRICATION. BOLTS AND HARDWARE SHALL BE GALVANIZED IN ACCORDANCE WITH AASHTO M 232.

3. ALL BOLT HOLES SHALL BE 1/16" LARGER THAN THE BOLT DIAMETER UNLESS OTHERWISE SPECIFIED. BOLT LENGTHS NOT SHOWN SHALL BE SIZED TO PROVIDE A 1/4" MIN. OF THREAD EXPOSED BEYOND THE NUT.

4. DIMENSIONS SHALL BE MEASURED IN THE FIELD BY THE CONTRACTOR PRIOR TO FABRICATION OF ANY COMPONENTS.

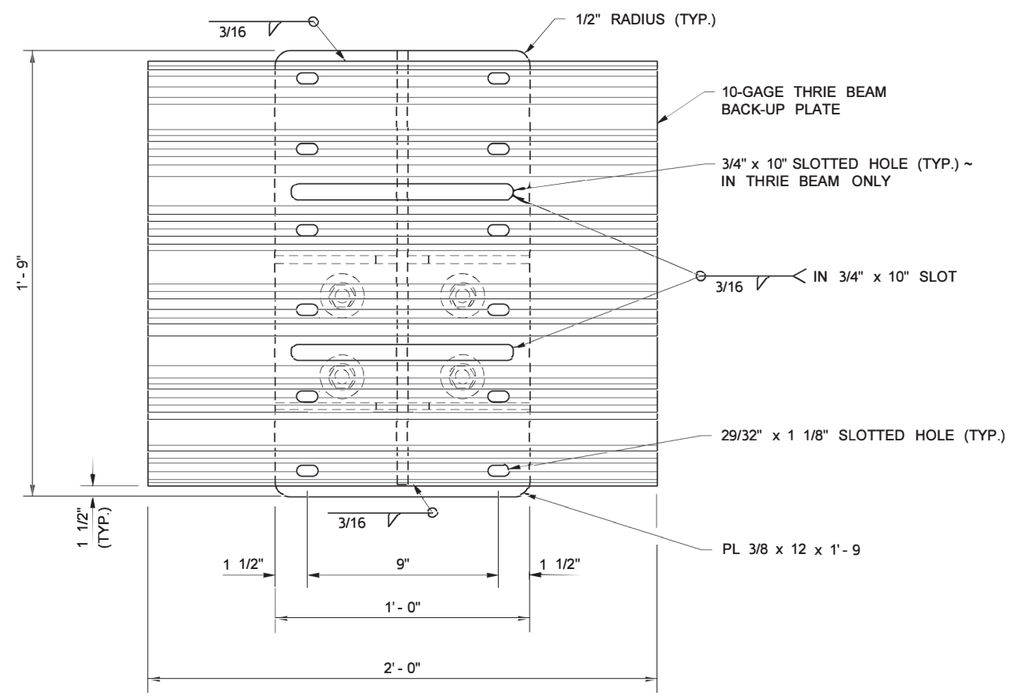

SECTION B

TYPE 3 GUARDRAIL ANCHOR RETROFIT FOR THRIE BEAM (DESIGN A)

FILE NAME	G:\444302\03 - Design\XL6625 - US 12 Clear Fork Bridge - Expansion Joint, Deck Repair and Overlay\13 - CAD Plans\Pavement Marking Plan\XL6625 SH PM.dgn				REGION NO. 10	STATE WASH	FED.AID PROJ.NO.
TIME	9:53:45 AM						
DATE	7/6/2023						
PLOTTED BY	hartmat						
DESIGNED BY	K. SIN				JOB NUMBER 23X329		
ENTERED BY	K. SIN						
CHECKED BY	T. HARTMANN				CONTRACT NO.		LOCATION NO. XL6625
PROJ. ENGR.	M. BRIGGS						
REGIONAL ADM.	C. FRANCIS	REVISION	DATE	BY			

P.E. STAMP BOX — SEE SHEET CT1 — DATE

P.E. STAMP BOX — DATE

Washington State Department of Transportation

US 12/CLEAR FORK BR
US 97/BR OVER BICKLETON RD
BRIDGE AND DECK REHAB

PAVEMENT MARKINGS

Plot 2

PLAN REF NO PM2

SHEET 15 OF 24 SHEETS

CLASS A SIGN

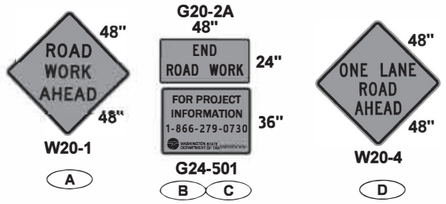

PCMS

BEFORE PROJECT START

1	2
US 12 ROAD WORK	BEGINS (DATE)
2 SEC.	2 SEC.

FIELD LOCATE FIVE CALENDAR DAYS IN ADVANCE OF LANE CLOSURE AS STAKED BY THE ENGINEER

PCMS

DURING PROJECT ACTIVITIES

1	2
ROAD WORK AHEAD	SLOW OR STOPPED TRAFFIC
2 SEC.	2 SEC.

FIELD LOCATE 1.5 MILES PRIOR TO TEMP SIGNAL

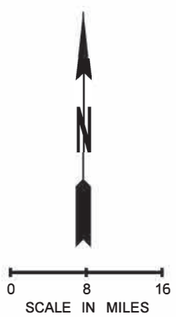

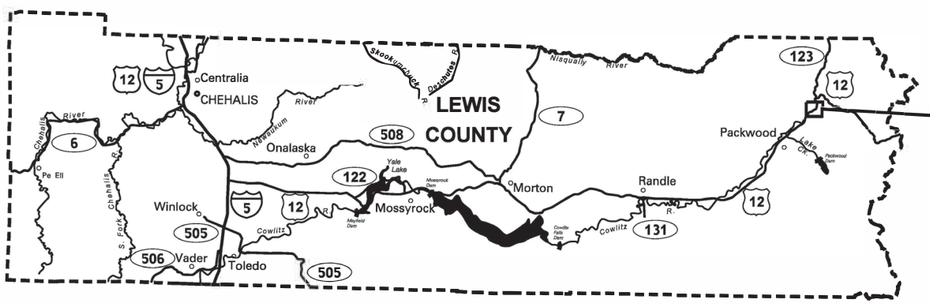

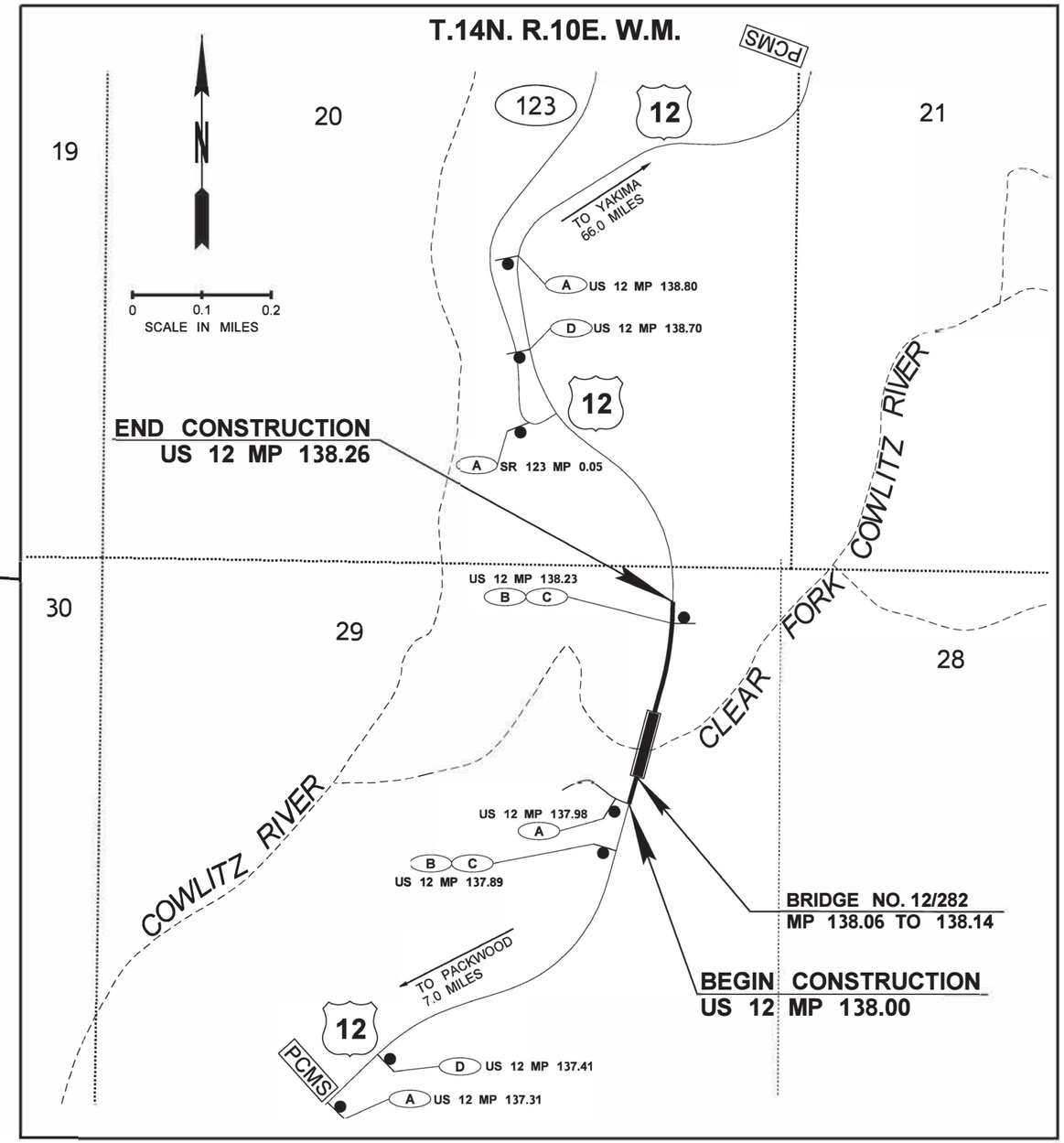

NOTES

1. REMOVE OR COVER ALL CONFLICTING SIGNAGE PER STANDARD SPECIFICATIONS 1-10.3(3)A.
2. ACTUAL LOCATIONS TO BE STAKED BY THE ENGINEER.
3. ALL SIGNS SHALL BE BLACK ON ORANGE UNLESS OTHERWISE SPECIFIED.
4. PORTABLE CHANGEABLE MESSAGE SIGNS (PCMS) SHALL BE IN PLACE AND IN 24 HOUR OPERATION FIVE (5) CALENDAR DAYS PRIOR TO FIRST WORKING DAY. ALL PCMS SHALL BE FIELD LOCATED AS STAKED BY THE ENGINEER.

FILE NAME	G:\444302\03 - Design\XL6625 - US 12 Clear Fork Bridge - Expansion Joint, Deck Repair and Overlay\13 - CAD Plans\Class A Signs Plan\XL6625 SH CS_5.dgn				REGION NO.	STATE	FED.AID PROJ.NO.
TIME	9:07:22 AM				10	WASH	
DATE	7/7/2023				JOB NUMBER		
PLOTTED BY	prendet						
DESIGNED BY	K. SIN				CONTRACT NO.		LOCATION NO.
ENTERED BY	K. SIN						XL6625
CHECKED BY	T. HARTMANN						
PROJ. ENGR.	M. BRIGGS						
REGIONAL ADM.	C. FRANCIS	REVISION	DATE	BY			

SEE SHEET CT1

DATE

P.E. STAMP BOX

DATE

P.E. STAMP BOX

Washington State Department of Transportation

US 12/CLEAR FORK BR
US 97/BR OVER BICKLETON RD
BRIDGE AND DECK REHAB

CLASS A SIGNING PLAN

Plot 1

PLAN REF NO CS1

SHEET 16 OF 24 SHEETS

CLASS A SIGN

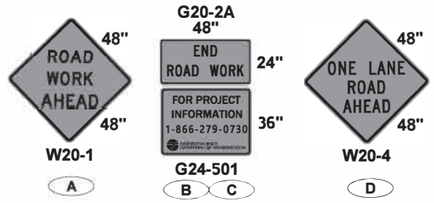

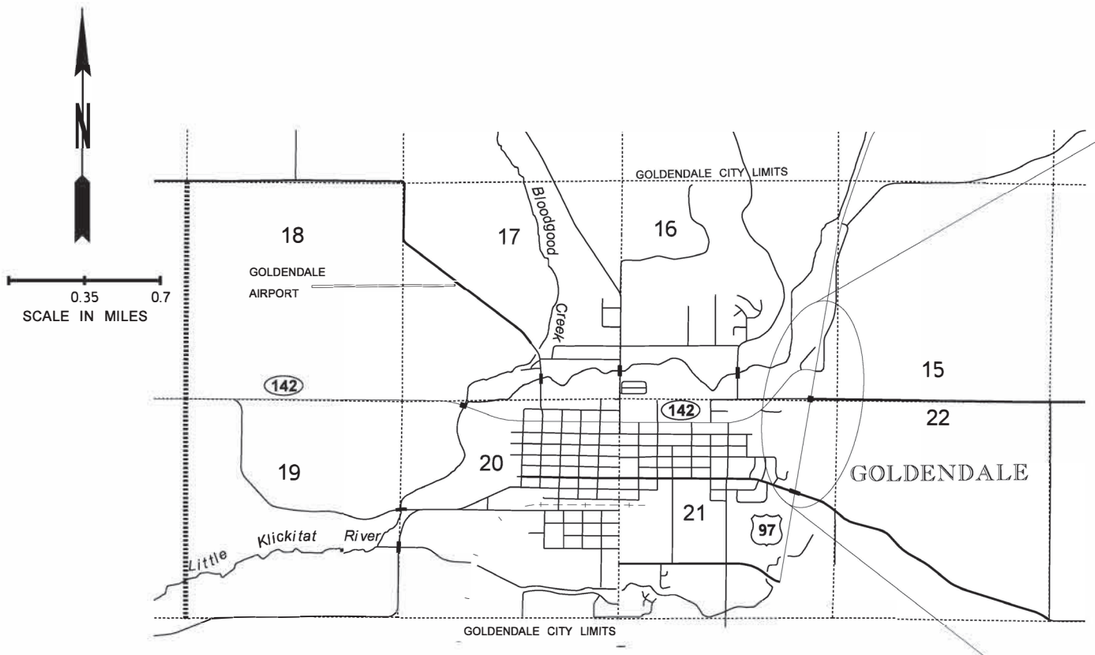

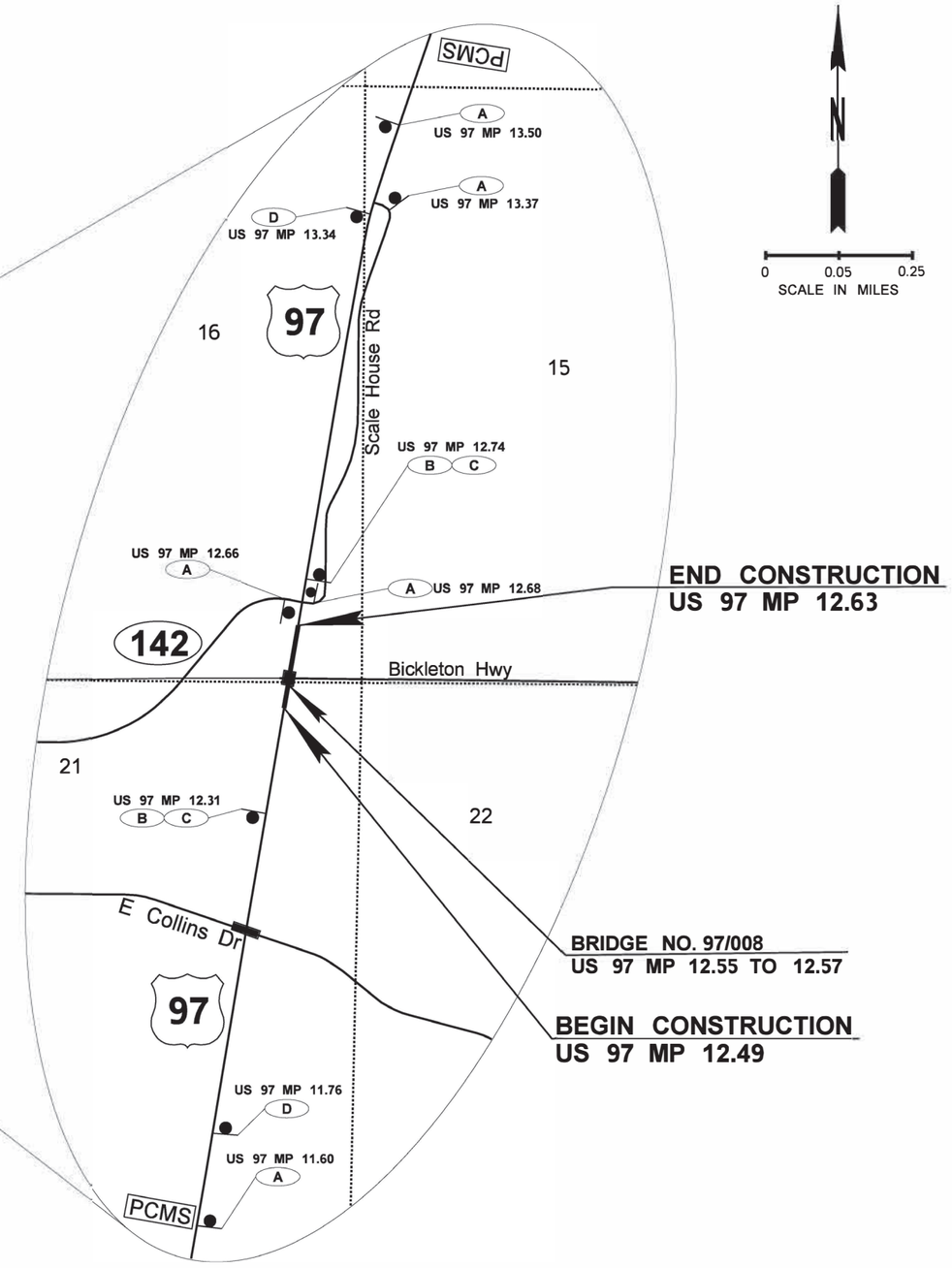

NOTES

1. REMOVE OR COVER ALL CONFLICTING SIGNAGE PER STANDARD SPECIFICATIONS 1-10.3(3)A.
2. ACTUAL LOCATIONS TO BE STAKED BY THE ENGINEER.
3. ALL SIGNS SHALL BE BLACK ON ORANGE UNLESS OTHERWISE SPECIFIED.
4. PORTABLE CHANGEABLE MESSAGE SIGNS (PCMS) SHALL BE IN PLACE AND IN 24 HOUR OPERATION FIVE (5) CALENDAR DAYS PRIOR TO FIRST WORKING DAY. ALL PCMS SHALL BE FIELD LOCATED AS STAKED BY THE ENGINEER.

PCMS

BEFORE PROJECT START

1	2
US 12 ROAD WORK	BEGINS (DATE)
2 SEC.	2 SEC.

PCMS

DURING PROJECT ACTIVITIES

1	2
ROAD WORK AHEAD	SLOW OR STOPPED TRAFFIC
2 SEC.	2 SEC.

FIELD LOCATE 1 MILE ± IN ADVANCE OF LANE CLOSURE SIGNING.

FILE NAME	G:\444302\03 - Design\XL6625 - US 12 Clear Fork Bridge - Expansion Joint, Deck Repair and Overlay\13 - CAD Plans\Class A Signs Plan\XL6625 SH CS.dgn				REGION NO. 10	STATE WASH	FED.AID PROJ.NO.
TIME	9:56:03 AM				JOB NUMBER 23X329		
DATE	7/6/2023				CONTRACT NO.		LOCATION NO. XL6625
PLOTTED BY	hartmat						
DESIGNED BY	K. SIN						
ENTERED BY	K. SIN						
CHECKED BY	T. HARTMANN						
PROJ. ENGR.	M. BRIGGS						
REGIONAL ADM.	C. FRANCIS	REVISION	DATE	BY			

RICHARD ROBERT VERLON BRIGGS, STATE OF WASHINGTON, 55548, REGISTERED PROFESSIONAL ENGINEER

SEE SHEET CT1

DATE

P.E. STAMP BOX

DATE

P.E. STAMP BOX

Washington State Department of Transportation

US 12/CLEAR FORK BR
US 97/BR OVER BICKLETON RD
BRIDGE AND DECK REHAB

CLASS A SIGNING PLAN

Plot 2

PLAN REF NO CS2

SHEET 17 OF 24 SHEETS

BUFFER DATA										
LONGITUDINAL BUFFER SPACE = B										
SPEED (MPH)	25	30	35	40	45	50	55	60	65	70
LENGTH (feet)	155	200	250	305	360	425	495	570	645	730

TRANSPORTABLE ATTENUATOR ROLL AHEAD DISTANCE = R					
HOST VEHICLE WEIGHT 9,900 TO 22,000 lbs.			HOST VEHICLE WEIGHT > 22,000 lbs.		
< 45 MPH	45-55 MPH	> 55 MPH	< 45 MPH	45-55 MPH	> 55 MPH
100'	123'	172'	74'	100'	150'

PROTECTIVE VEHICLE (WORK VEHICLE) = R
NO SPECIFIED DISTANCE REQUIRED

SIGN SPACING = X (1)		
RURAL HIGHWAYS	60 / 65 MPH	800' ±
RURAL ROADS	45 / 55 MPH	500' ±
RURAL ROADS & URBAN ARTERIALS	35 / 40 MPH	350' ±
RURAL ROADS, URBAN ARTERIALS, RESIDENTIAL & BUSINESS DISTRICTS	25 / 30 MPH	200' ± (2)
URBAN STREETS	25 MPH OR LESS	100' ± (2)

(1) ALL SPACING MAY BE ADJUSTED TO ACCOMMODATE INTERSECTIONS AND DRIVEWAYS.
(2) THIS SPACING MAY BE REDUCED IN URBAN AREAS TO FIT ROADWAY CONDITIONS.

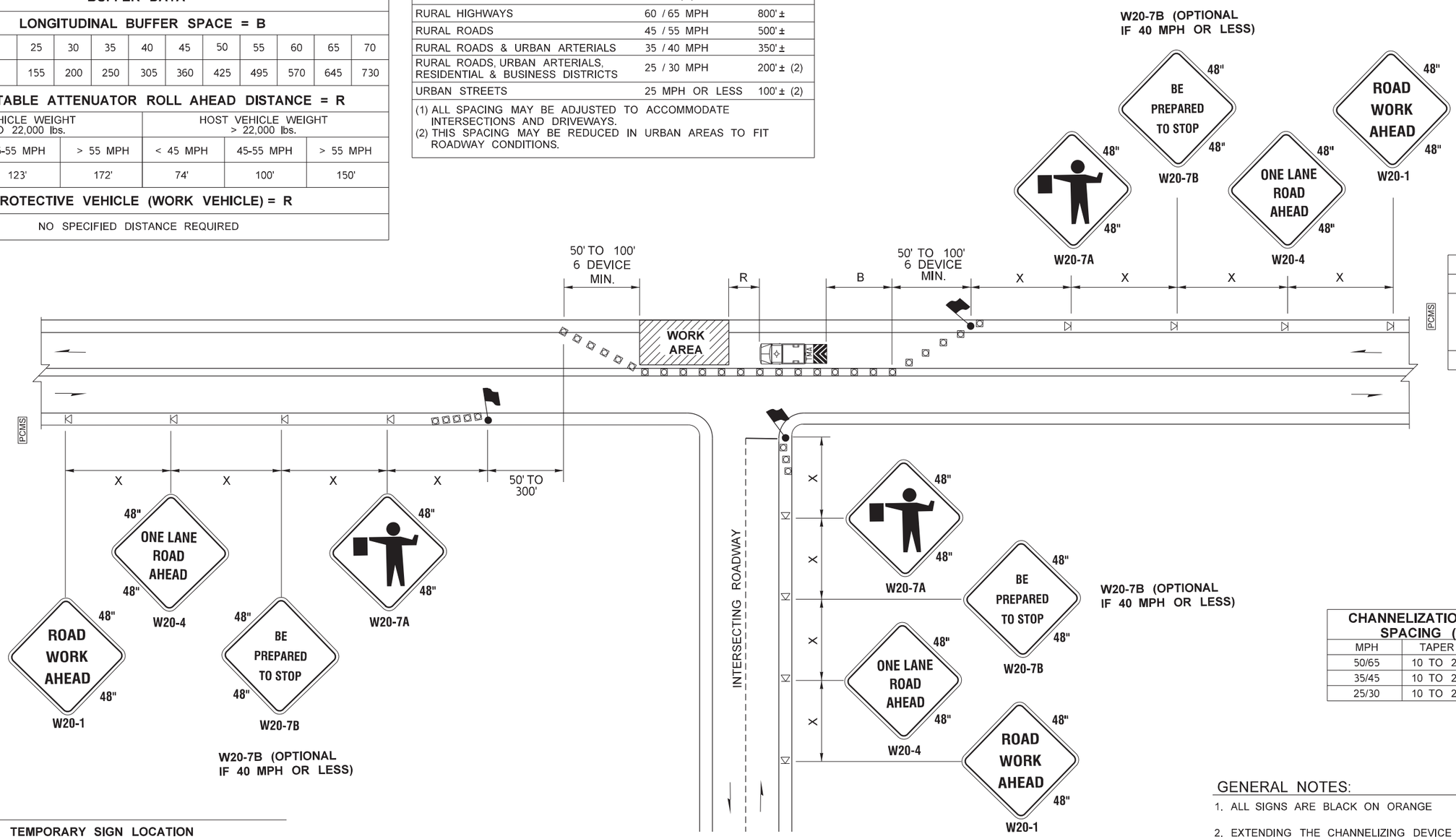

PCMS MESSAGE	
PHASE 1	PHASE 2
ROAD WORK AHEAD	EXPECT DELAYS
2.0 SEC	2.0 SEC

CHANNELIZATION DEVICE SPACING (FEET)		
MPH	TAPER	TANGENT
50/65	10 TO 20	80
35/45	10 TO 20	60
25/30	10 TO 20	40

LEGEND

- TEMPORARY SIGN LOCATION
- TRAFFIC SAFETY DRUM
- TRANSPORTABLE ATTENUATOR
- PORTABLE CHANGEABLE MESSAGE SIGN
- FLAGGING STATION

ONE-LANE, TWO-WAY TRAFFIC CONTROL WITH FLAGGERS

GENERAL NOTES:

1. ALL SIGNS ARE BLACK ON ORANGE
2. EXTENDING THE CHANNELIZING DEVICE TAPER ACROSS SHOULDER IS RECOMMENDED.
3. NIGHT WORK REQUIRES ADDITIONAL ROADWAY LIGHTING AT FLAGGING STATIONS. SEE THE STANDARD SPECIFICATIONS FOR ADDITIONAL DETAILS.
4. SEE SPECIAL PROVISIONS FOR WORK HOUR RESTRICTIONS.
5. PCMS MESSAGE MAY BE REVISED BY THE ENGINEER.

FILE NAME	G:\444302\03 - Design\XL6625 - US 12 Clear Fork Bridge - Expansion Joint, Deck Repair and Overlay\13 - CAD Plans\Traffic Control\XL6625_XL6626 SH TC.dgn
TIME	9:42:13 AM
DATE	7/6/2023
PLOTTED BY	hartmat
DESIGNED BY	K. SIN
ENTERED BY	K. SIN
CHECKED BY	T. HARTMANN
PROJ. ENGR.	M. BRIGGS
REGIONAL ADM.	C. FRANCIS

REVISION | DATE | BY

REGION NO. 10 | STATE WASH | FED.AID PROJ.NO.

JOB NUMBER 23X329

CONTRACT NO.

LOCATION NO. XL6625

DATE — P.E. STAMP BOX

DATE — P.E. STAMP BOX

Washington State Department of Transportation

US 12/CLEAR FORK BR
US 97/BR OVER BICKLETON RD
BRIDGE AND DECK REHAB

TRAFFIC CONTROL PLAN

Plot 1

PLAN REF NO TC1

SHEET 18 OF 24 SHEETS

MINIMUM SHOULDER TAPER LENGTH = L/3 (feet)										
SHOULDER WIDTH (feet)	Posted Speed (mph)									
	25	30	35	40	45	50	55	60	65	70
8'	-	-	-	-	120	130	150	160	170	190
10'	-	-	-	-	150	170	190	200	220	240
USE A MINIMUM 3 DEVICES TAPER FOR SHOULDER LESS THEN 8'.										

SIGN SPACING = X (1)		
FREEWAYS & EXPRESSWAYS	55 / 70 MPH	1500' ±
RURAL HIGHWAYS	60 / 65 MPH	800' ±
RURAL ROADS	45 / 55 MPH	500' ±
(1) ALL SPACING MAY BE ADJUSTED TO ACCOMMODATE INTERCHANGE RAMPS, AT-GRADE INTERSECTIONS AND DRIVEWAYS.		

CHANNELIZATION DEVICE SPACING (feet)		
MPH	TAPER	TANGENT
50/70	40	80
35/45	30	60

BUFFER DATA										
LONGITUDINAL BUFFER SPACE = B										
SPEED (MPH)	25	30	35	40	45	50	55	60	65	70
LENGTH (feet)	155	200	250	305	360	425	495	570	645	730

TRANSPORTABLE ATTENUATOR ROLL AHEAD DISTANCE = R					
HOST VEHICLE WEIGHT 9,900 TO 22,000 lbs.			HOST VEHICLE WEIGHT > 22,000 lbs.		
< 45 MPH	45-55 MPH	> 55 MPH	< 45 MPH	45-55 MPH	> 55 MPH
100'	123'	172'	74'	100'	150'

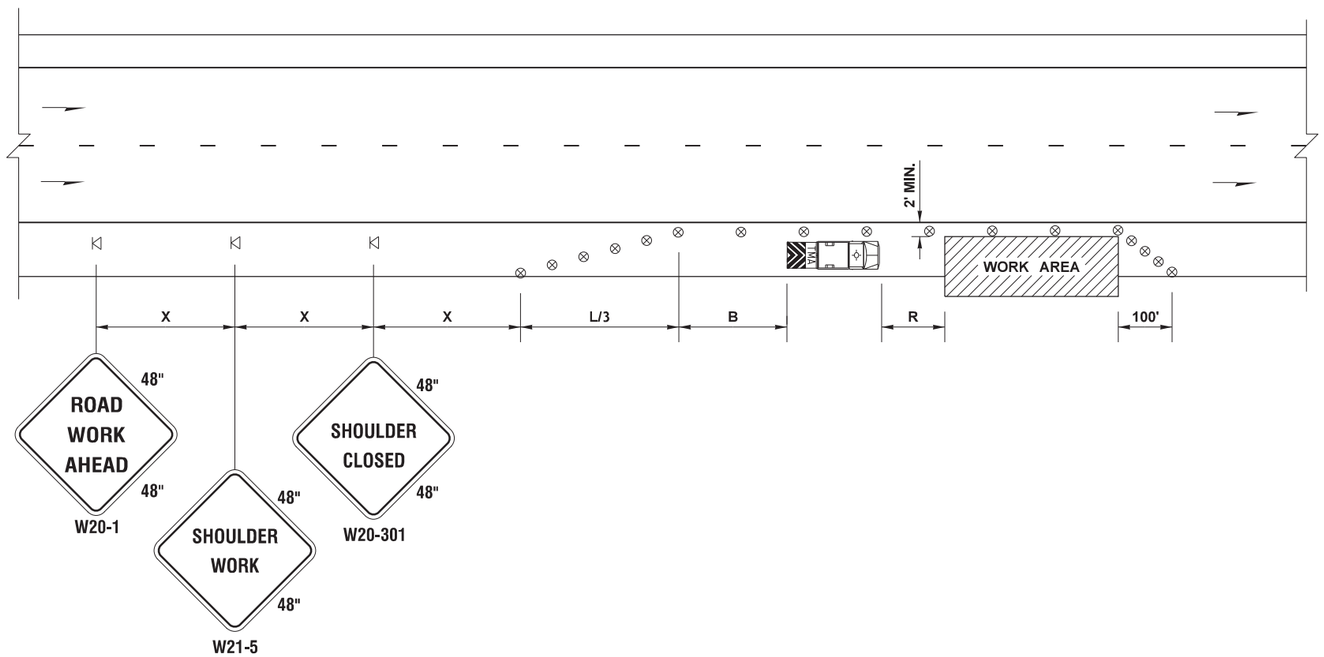

LEGEND

- TEMPORARY SIGN LOCATION
- TRAFFIC SAFETY DRUM
- TRANSPORTABLE ATTENUATOR

SHOULDER CLOSURE - HIGH SPEED

NOT TO SCALE

NOTES

1. NO ENCROACHMENT IN TRAVELED LANE. IF ENCROACHMENT IS NECESSARY, LANE SHALL BE CLOSED.
2. DEVICE SPACING FOR THE DOWNSTREAM TAPER SHALL BE 20' (FT) O.C.
3. ALL SIGNS ARE BLACK ON ORANGE.

FILE NAME	G:\444302\03 - Design\XL6625 - US 12 Clear Fork Bridge - Expansion Joint, Deck Repair and Overlay\13 - CAD Plans\Traffic Control\XL6625_XL6626 SH TC.dgn						
TIME	9:43:11 AM				REGION NO. 10	STATE WASH	FED.AID PROJ.NO.
DATE	7/6/2023						
PLOTTED BY	hartmat						
DESIGNED BY	K. SIN				JOB NUMBER 23X329		
ENTERED BY	K. SIN						
CHECKED BY	T. HARTMANN				CONTRACT NO.		LOCATION NO. XL6625
PROJ. ENGR.	M. BRIGGS						
REGIONAL ADM.	C. FRANCIS	REVISION	DATE	BY			

P.E. STAMP BOX DATE

P.E. STAMP BOX DATE

Washington State Department of Transportation

US 12/CLEAR FORK BR
US 97/BR OVER BICKLETON RD
BRIDGE AND DECK REHAB

TRAFFIC CONTROL PLAN

Plot 2

PLAN REF NO TC2

SHEET 19 OF 24 SHEETS

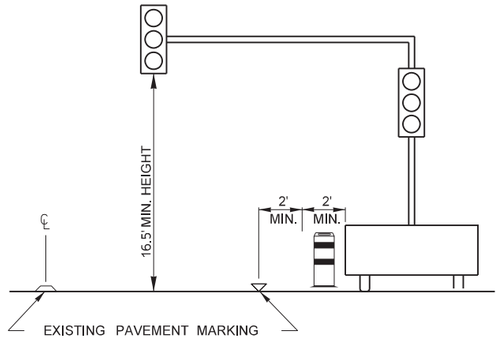

PORTABLE TEMPORARY TRAFFIC SIGNAL

PCMS MESSAGE	
1	2
TRAFFIC SIGNAL AHEAD	SLOW OR STOPPED TRAFFIC
2.0 SEC	2.0 SEC

FIELD LOCATE 1 MILE ± IN ADVANCE OF W20-1.

NOTES

1. ALL SIGNS ARE BLACK ON ORANGE UNLESS SPECIFIED OTHERWISE.

2. NIGHT WORK REQUIRES ADDITIONAL ROADWAY LIGHTING AT STOP LINES. SEE STANDARD SPECIFICATIONS 1-10.3 FOR HOURS OF DARKNESS.

3. PER STANDARD SPECIFICATIONS, SIGNAL HEADS SHALL BE FURNISHED WITH BACKPLATES AND 1" YELLOW REFLECTIVE SHEETING (1-10.3(3)K AND 9-35.14)."

4. CONTRACTOR SHALL NOTIFY WSDOT TRAFFIC MANAGEMENT CENTER (TMC) WHEN PORTABLE TEMPORARY TRAFFIC SIGNAL IS OPERATIONAL AT 360-759-1300. SIGNAL TIMING SHALL BE OBTAINED AND VERIFIED BY WSDOT SWR REGION TRAFFIC OFFICE. THE CONTRACTOR SHALL REQUEST SIGNAL TIMING NO LESS THAN 5 WORKING DAYS PRIOR TO SIGNAL INITIATION.

5. CONTRACTOR SHALL MAINTAIN TEMPORARY STOP BAR MARKING PER STANDARD SPECIFICATION 8-23.3(4)D. MOBILIZATION AND REPLACEMENT COSTS ARE INCIDENTALTO THE BID ITEM FOR TEMPORARY PAVEMENT MARKING.

6. SEE SPECIAL PROVISIONS FOR WORK HOUR RESTRICTIONS.

7. EXISTING CENTERLINE PAVEMENT MARKINGS MAY VARY. IF PASSING ZONE PRESENT WITHIN 600' OF TEMPORARY STOPBAR, REMOVE EXISTING CENTERLINE MARKING AND INSTALL LONG-DURATION TEMP. DOUBLE YELLOW LINE PER STD PLN M-20.10.(MAY BE SUPPLEMENTED WITH SURFACE-MOUNTED TYPE 2YY RPMs @ 40' SPACING). ALL OTHER CONFLICTING PAVEMENT MARKINGS SHALL BE REMOVED (THOSE WITHIN THE WORK AREA MAY REMAIN AS SHOWN).

8. SPEED REDUCTION SIGNS SHALL BE COVERED OUTSIDE OF WORKING HOURS WHEN PORTABLE TEMPORARY SIGNAL IS NOT IN USE.

9. TYPE 2 OR F-SHAPED TEMPORARY BARRIER PERMITTED. SLOPED CONCRETE TERMINAL ALLOWED FOR REGULATORY WORK ZONE SPEED LIMITS 25 MPH OR LESS. TYPE 2 TEMPORARY BARRIER AND SLOPED CONCRETE TERMINAL PER STANDARD PLAN K80-32. F-SHAPED TEMPROARY BARRIER PER STANDARD PLAN C-60.10 (C-60.15 IF SCUPPERS USED FOR DRAINAGE) AND STANDARD PLAN C-60.80 FOR F-SHAPE CONCRETE BARRIER TERMINAL.

10. SECURE TEMPORARY RUMBLE STRIPS TO PAVEMENT VIA ADHESIVE (DO NOT USE PRIMER). FOR ROADWAYS WITH SHOULDERS LESS THAN 4 FEET, PROVIDE A 4-FOOT CLEAR PATH FOR BICYCLES MEASURED FROM EDGE OF PAVED SHOULDER. AVOID PLACING THEMP WITHIN HORIZONTAL CURVES, ADJUST SIGN SPACING IF NEEDED.
USE THE FOLLOWING:
* Advanced Traffic Marking (ATM) Self-Adhesive Rumble Strips (1/4" x 4", Orange)
* Stop-Painting (1/4" x 4", Orange)
* Seton (1/4" x 4", Orange)

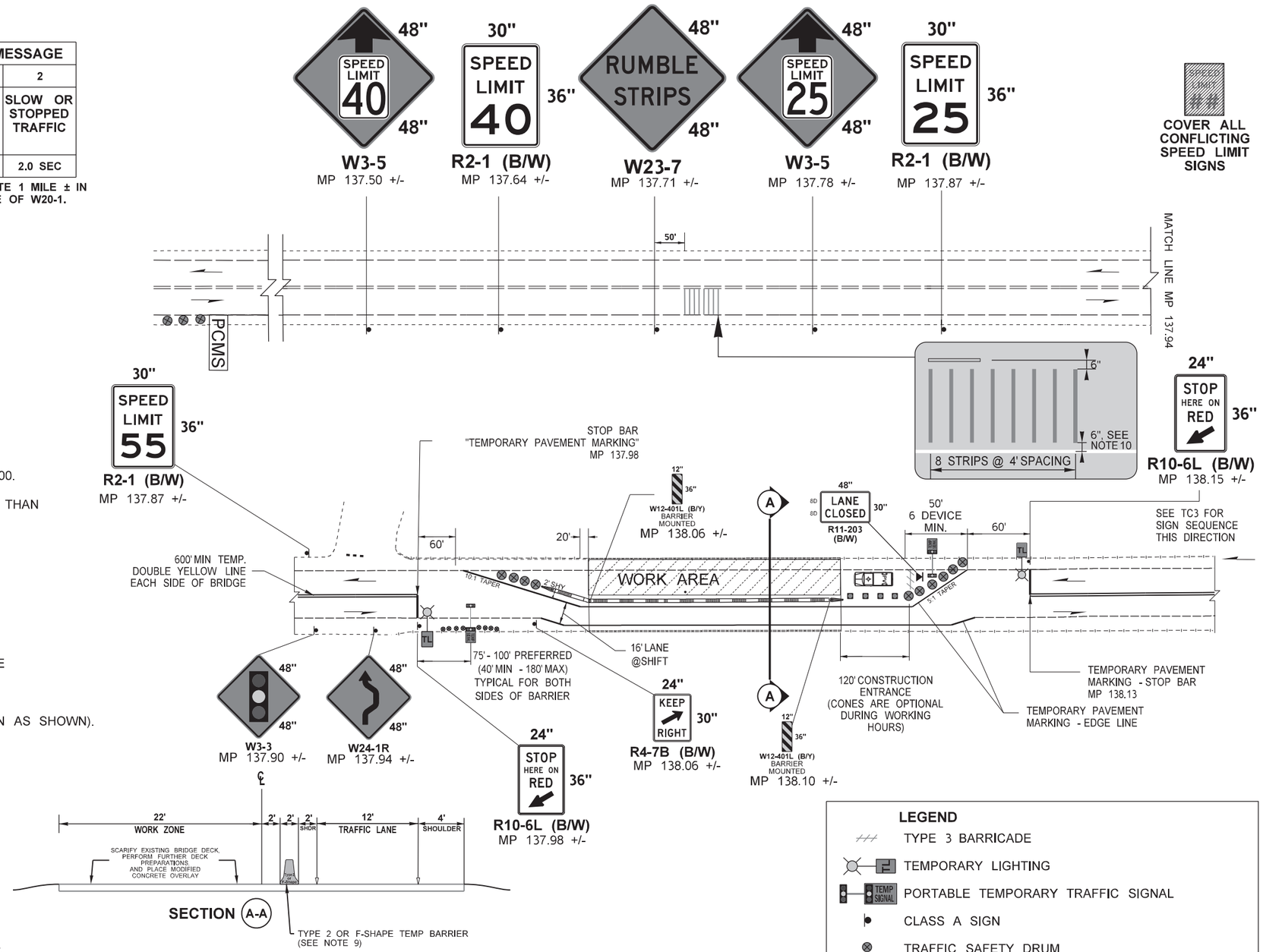

US 12 SOUTHBOUND LANE CLOSURE PORTABLE TEMPORARY SIGNAL CONTROLLED WITH REDUCED SPEED ZONE

NOT TO SCALE

LEGEND

- TYPE 3 BARRICADE
- TEMPORARY LIGHTING
- PORTABLE TEMPORARY TRAFFIC SIGNAL
- CLASS A SIGN
- TRAFFIC SAFETY DRUM
- TRAFFIC CONE
- PROTECTIVE VEHICLE
- UNANCHORED TEMPORARY BARRIER (SEE NOTE 9)

FILE NAME	G:\444302\03 - Design\XL6625 - US 12 Clear Fork Bridge - Expansion Joint, Deck Repair and Overlay\13 - CAD Plans\Traffic Control\XL6625_XL6626 SH TC.dgn						
TIME	9:43:20 AM				REGION NO. 10	STATE WASH	FED.AID PROJ.NO.
DATE	7/6/2023						
PLOTTED BY	hartmat				JOB NUMBER 23X329		
DESIGNED BY	K. SIN				CONTRACT NO.	LOCATION NO. XL6625	
ENTERED BY	K. SIN						
CHECKED BY	T. HARTMANN						
PROJ. ENGR.	M. BRIGGS						
REGIONAL ADM.	C. FRANCIS	REVISION	DATE	BY			

P.E. STAMP BOX DATE

P.E. STAMP BOX DATE

Washington State Department of Transportation

US 12/CLEAR FORK BR
US 97/BR OVER BICKLETON RD
BRIDGE AND DECK REHAB

TRAFFIC CONTROL PLAN

Plot 3

PLAN REF NO TC3

SHEET 20 OF 24 SHEETS

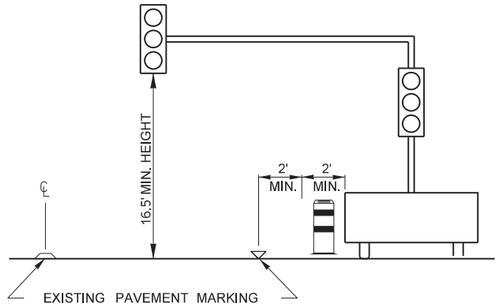

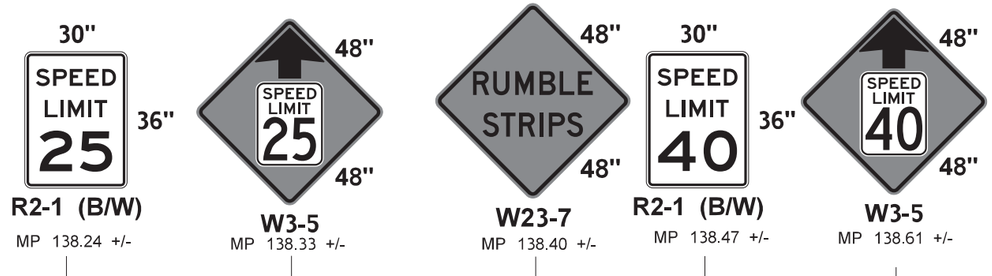

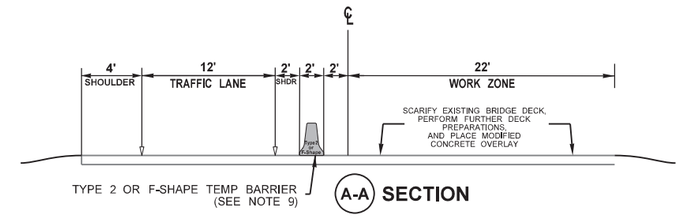

PORTABLE TEMPORARY TRAFFIC SIGNAL NOTES

1. ALL SIGNS ARE BLACK ON ORANGE UNLESS SPECIFIED OTHERWISE.

2. NIGHT WORK REQUIRES ADDITIONAL ROADWAY LIGHTING AT STOP LINES. SEE STANDARD SPECIFICATIONS 1-10.3 FOR HOURS OF DARKNESS.

3. PER STANDARD SPECIFICATIONS, SIGNAL HEADS SHALL BE FURNISHED WITH BACKPLATES AND 1" YELLOW REFLECTIVE SHEETING (1-10.3(3)K AND 9-35.14)."

4. CONTRACTOR SHALL NOTIFY WSDOT TRAFFIC MANAGEMENT CENTER (TMC) WHEN PORTABLE TEMPORARY TRAFFIC SIGNAL IS OPERATIONAL AT 360-759-1300. SIGNAL TIMING SHALL BE OBTAINED AND VERIFIED BY WSDOT SWR REGION TRAFFIC OFFICE. THE CONTRACTOR SHALL REQUEST SIGNAL TIMING NO LESS THAN 5 WORKING DAYS PRIOR TO SIGNAL INITIATION.

5. CONTRACTOR SHALL MAINTAIN TEMPORARY STOP BAR MARKING PER STANDARD SPECIFICATION 8-23.3(4)D. MOBILIZATION AND REPLACEMENT COSTS ARE INCIDENTALTO THE BID ITEM FOR TEMPORARY PAVEMENT MARKING.

6. SEE SPECIAL PROVISIONS FOR WORK HOUR RESTRICTIONS.

7. EXISTING CENTERLINE PAVEMENT MARKINGS MAY VARY. IF PASSING ZONE PRESENT WITHIN 600' OF TEMPORARY STOPBAR, REMOVE EXISTING CENTERLINE MARKING AND INSTALL LONG-DURATION TEMP. DOUBLE YELLOW LINE PER STD PLN M-20.10.(MAY BE SUPPLEMENTED WITH SURFACE-MOUNTED TYPE 2YY RPMs @ 40' SPACING). ALL OTHER CONFLICTING PAVEMENT MARKINGS SHALL BE REMOVED (THOSE WITHIN THE WORK AREA MAY REMAIN AS SHOWN).

8. SPEED REDUCTION SIGNS SHALL BE COVERED OUTSIDE OF WORKING HOURS WHEN PORTABLE TEMPORARY SIGNAL IS NOT IN USE.

9. TYPE 2 OR F-SHAPED TEMPORARY BARRIER PERMITTED. SLOPED CONCRETE TERMINAL ALLOWED FOR REGULATORY WORK ZONE SPEED LIMITS 25 MPH OR LESS. TYPE 2 TEMPORARY BARRIER AND SLOPED CONCRETE TERMINAL PER STANDARD PLAN K80-32. F-SHAPED TEMPROARY BARRIER PER STANDARD PLAN C-60.10 (C-60.15 IF SCUPPERS USED FOR DRAINAGE) AND STANDARD PLAN C-60.80 FOR F-SHAPE CONCRETE BARRIER TERMINAL.

10. SECURE TEMPORARY RUMBLE STRIPS TO PAVEMENT VIA ADHESIVE (DO NOT USE PRIMER). FOR ROADWAYS WITH SHOULDERS LESS THAN 4 FEET, PROVIDE A 4-FOOT CLEAR PATH FOR BICYCLES MEASURED FROM EDGE OF PAVED SHOULDER. AVOID PLACING THEMP WITHIN HORIZONTAL CURVES, ADJUST SIGN SPACING IF NEEDED.
USE THE FOLLOWING:
* Advanced Traffic Marking (ATM) Self-Adhesive Rumble Strips (1/4" x 4", Orange)
* Stop-Painting (1/4" x 4", Orange)
* Seton (1/4" x 4", Orange)

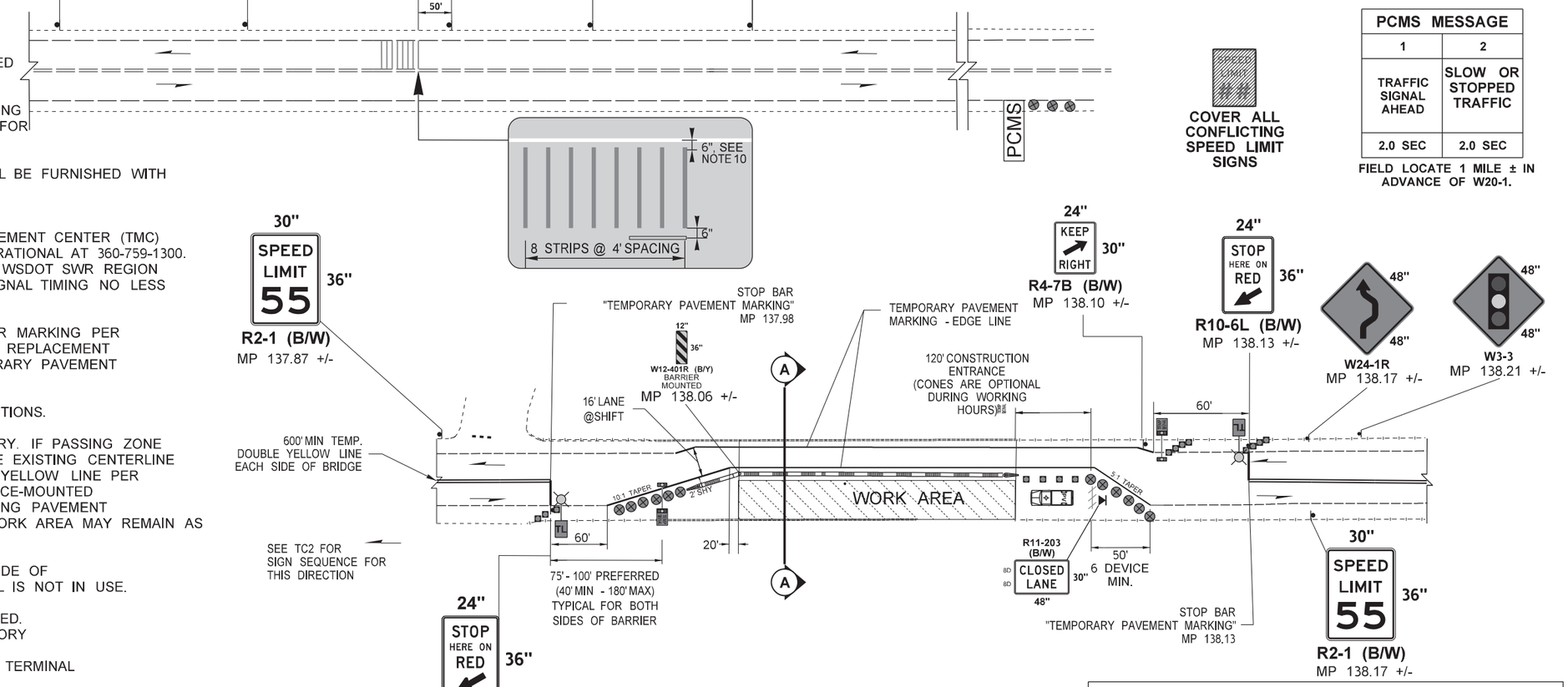

COVER ALL CONFLICTING SPEED LIMIT SIGNS

PCMS MESSAGE	
1	2
TRAFFIC SIGNAL AHEAD	SLOW OR STOPPED TRAFFIC
2.0 SEC	2.0 SEC

FIELD LOCATE 1 MILE ± IN ADVANCE OF W20-1.

LEGEND

- TEMPORARY LIGHTING
- PORTABLE TEMPORARY TRAFFIC SIGNAL
- CLASS A SIGN
- TRAFFIC SAFETY DRUM
- PROTECTIVE VEHICLE
- UNANCHORED TEMPORARY BARRIER (SEE NOTE 9)

US 12 NORTHBOUND LANE CLOSURE PORTABLE TEMPORARY SIGNAL CONTROLLED WITH REDUCED SPEED ZONE

NOT TO SCALE

FILE NAME	G:\444302\03 - Design\XL6625 - US 12 Clear Fork Bridge - Expansion Joint, Deck Repair and Overlay\13 - CAD Plans\Traffic Control\XL6625_XL6626 SH TC.dgn						
TIME	9:43:30 AM				REGION NO. 10	STATE WASH	FED.AID PROJ.NO.
DATE	7/6/2023						
PLOTTED BY	hartmat				JOB NUMBER 23X329		
DESIGNED BY	C. CORDOVA				CONTRACT NO.	LOCATION NO. XL6625	
ENTERED BY	C. CORDOVA						
CHECKED BY	T. HARTMANN						
PROJ. ENGR.	M. BRIGGS						
REGIONAL ADM.	C. FRANCIS	REVISION	DATE	BY			

P.E. STAMP BOX DATE

P.E. STAMP BOX DATE

Washington State Department of Transportation

US 12/CLEAR FORK BR
US 97/BR OVER BICKLETON RD
BRIDGE AND DECK REHAB

TRAFFIC CONTROL PLAN

Plot 4

PLAN REF NO TC4

SHEET 21 OF 24 SHEETS

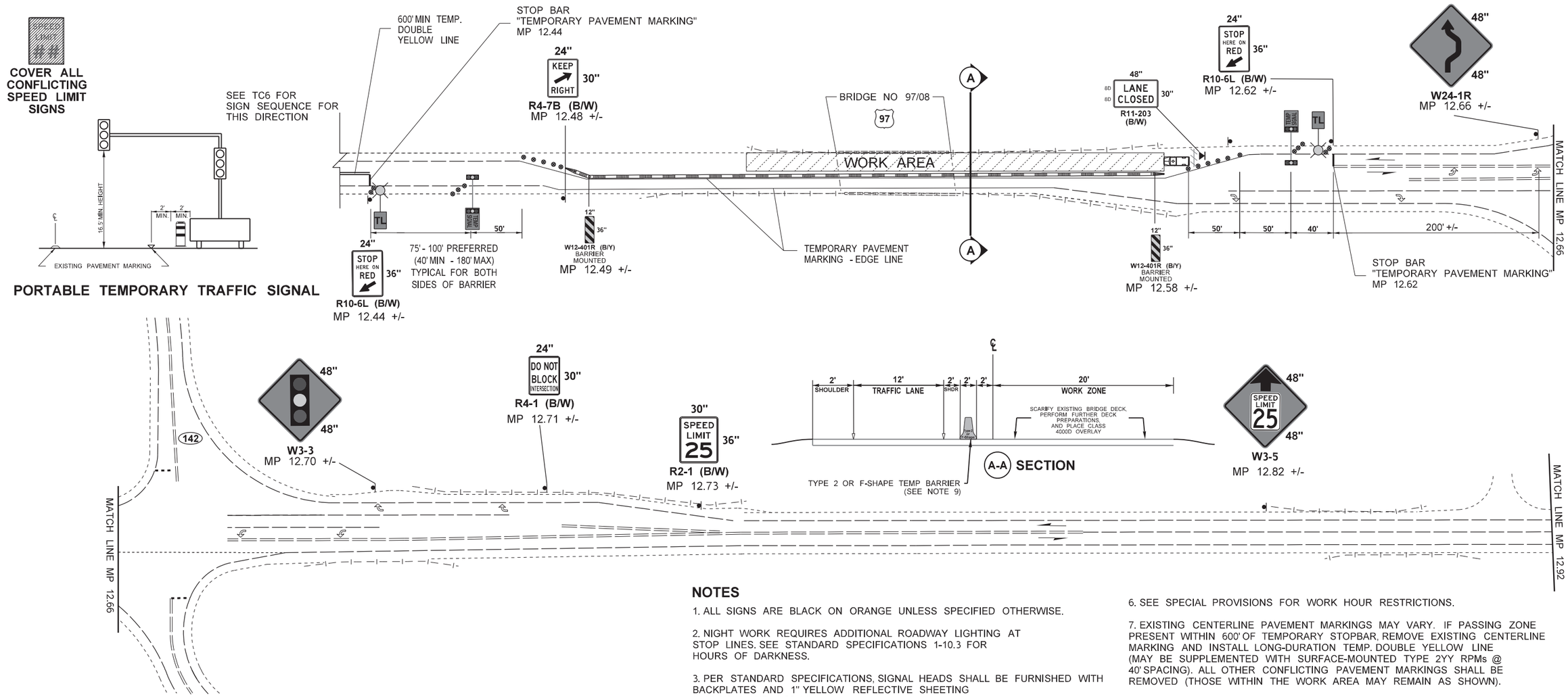

NOTES

1. ALL SIGNS ARE BLACK ON ORANGE UNLESS SPECIFIED OTHERWISE.

2. NIGHT WORK REQUIRES ADDITIONAL ROADWAY LIGHTING AT STOP LINES. SEE STANDARD SPECIFICATIONS 1-10.3 FOR HOURS OF DARKNESS.

3. PER STANDARD SPECIFICATIONS, SIGNAL HEADS SHALL BE FURNISHED WITH BACKPLATES AND 1" YELLOW REFLECTIVE SHEETING (1-10.3(3)K AND 9-35.14)."

4. CONTRACTOR SHALL NOTIFY WSDOT TRAFFIC MANAGEMENT CENTER (TMC) WHEN PORTABLE TEMPORARY TRAFFIC SIGNAL IS OPERATIONAL AT 360-759-1300. SIGNAL TIMING SHALL BE OBTAINED AND VERIFIED BY WSDOT SWR REGION TRAFFIC OFFICE. THE CONTRACTOR SHALL REQUEST SIGNAL TIMING NO LESS THAN 5 WORKING DAYS PRIOR TO SIGNAL INITIATION.

5. CONTRACTOR SHALL MAINTAIN TEMPORARY STOP BAR MARKING PER STANDARD SPECIFICATION 8-23.3(4)D. MOBILIZATION AND REPLACEMENT COSTS ARE INCIDENTALTO THE BID ITEM FOR TEMPORARY PAVEMENT MARKING.

6. SEE SPECIAL PROVISIONS FOR WORK HOUR RESTRICTIONS.

7. EXISTING CENTERLINE PAVEMENT MARKINGS MAY VARY. IF PASSING ZONE PRESENT WITHIN 600' OF TEMPORARY STOPBAR, REMOVE EXISTING CENTERLINE MARKING AND INSTALL LONG-DURATION TEMP. DOUBLE YELLOW LINE (MAY BE SUPPLEMENTED WITH SURFACE-MOUNTED TYPE 2YY RPMs @ 40' SPACING). ALL OTHER CONFLICTING PAVEMENT MARKINGS SHALL BE REMOVED (THOSE WITHIN THE WORK AREA MAY REMAIN AS SHOWN).

8. SECURE TEMPORARY RUMBLE STRIPS TO PAVEMENT VIA ADHESIVE (DO NOT USE PRIMER). FOR ROADWAYS WITH SHOULDERS LESS THAN 4 FEET, PROVIDE A 4-FOOT CLEAR PATH FOR BICYCLES MEASURED FROM EDGE OF PAVED SHOULDER. AVOID PLACING THEMP WITHIN HORIZONTAL CURVES, ADJUST SIGN SPACING IF NEEDED.
USE THE FOLLOWING:
* Advanced Traffic Marking (ATM) Self-Adhesive Rumble Strips (1/4" x 4", Orange)
* Stop-Painting (1/4" x 4", Orange)
* Seton (1/4" x 4", Orange)

9. TYPE 2 OR F-SHAPED TEMPORARY BARRIER PERMITTED.
SLOPED CONCRETE TERMINAL ALLOWED FOR REGULATORY WORK ZONE SPEED LIMITS 25 MPH OR LESS.
TYPE 2 TEMPORARY BARRIER AND SLOPED CONCRETE TERMINAL PER STANDARD PLAN K80-32.
F-SHAPED TEMPROARY BARRIER PER STANDARD PLAN C-60.10 (C-60.15 IF SCUPPERS USED FOR DRAINAGE) AND STANDARD PLAN C-60.80 FOR F-SHAPE CONCRETE BARRIER TERMINAL.

LEGEND

- TEMPORARY LIGHTING
- PORTABLE TEMPORARY TRAFFIC SIGNAL
- CLASS A SIGN
- TRAFFIC SAFETY DRUM
- PROTECTIVE VEHICLE
- UNANCHORED TEMPORARY BARRIER (SEE NOTE 9)

US 97 SOUTHBOUND LANE CLOSURE PORTABLE TEMPORARY SIGNAL CONTROLLED WITH REDUCED SPEED ZONE

NOT TO SCALE

FILE NAME	G:\444302\03 - Design\XL6625 - US 12 Clear Fork Bridge - Expansion Joint, Deck Repair and Overlay\13 - CAD Plans\Traffic Control\XL6625_XL6626 SH TC.dgn						
TIME	9:43:39 AM				REGION NO. 10	STATE WASH	FED.AID PROJ.NO.
DATE	7/6/2023						
PLOTTED BY	hartmat				JOB NUMBER 23X329		
DESIGNED BY	C. CORDOVA						
ENTERED BY	C. CORDOVA						
CHECKED BY	T. HARTMANN				CONTRACT NO.		LOCATION NO. XL6625
PROJ. ENGR.	M. BRIGGS						
REGIONAL ADM.	C. FRANCIS	REVISION	DATE	BY			

P.E. STAMP BOX DATE

P.E. STAMP BOX DATE

Washington State Department of Transportation

US 12/CLEAR FORK BR
US 97/BR OVER BICKLETON RD
BRIDGE AND DECK REHAB

TRAFFIC CONTROL PLAN

Plot 5

PLAN REF NO TC5

SHEET 22 OF 24 SHEETS

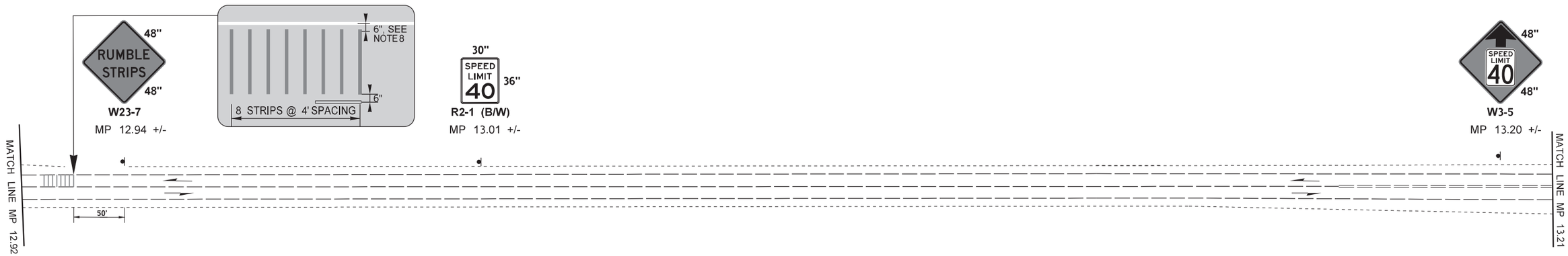

PCMS MESSAGE	
1	2
TRAFFIC SIGNAL AHEAD	SLOW OR STOPPED TRAFFIC
2.0 SEC	2.0 SEC

FIELD LOCATE 1 MILE ± IN ADVANCE OF W20-1.

COVER ALL CONFLICTING SPEED LIMIT SIGNS

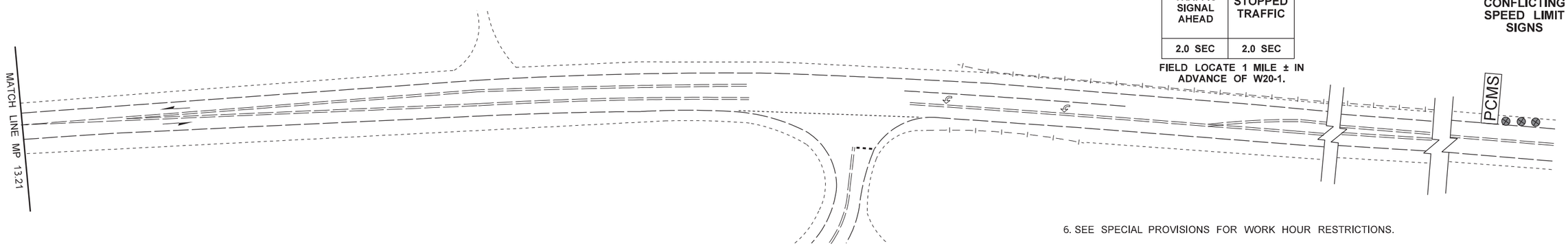

NOTES

1. ALL SIGNS ARE BLACK ON ORANGE UNLESS SPECIFIED OTHERWISE.

2. NIGHT WORK REQUIRES ADDITIONAL ROADWAY LIGHTING AT STOP LINES. SEE STANDARD SPECIFICATIONS 1-10.3 FOR HOURS OF DARKNESS.

3. PER STANDARD SPECIFICATIONS, SIGNAL HEADS SHALL BE FURNISHED WITH BACKPLATES AND 1" YELLOW REFLECTIVE SHEETING (1-10.3(3)K AND 9-35.14)."

4. CONTRACTOR SHALL NOTIFY WSDOT TRAFFIC MANAGEMENT CENTER (TMC) WHEN PORTABLE TEMPORARY TRAFFIC SIGNAL IS OPERATIONAL AT 360-759-1300. SIGNAL TIMING SHALL BE OBTAINED AND VERIFIED BY WSDOT SWR REGION TRAFFIC OFFICE. THE CONTRACTOR SHALL REQUEST SIGNAL TIMING NO LESS THAN 5 WORKING DAYS PRIOR TO SIGNAL INITIATION.

5. CONTRACTOR SHALL MAINTAIN TEMPORARY STOP BAR MARKING PER STANDARD SPECIFICATION 8-23.3(4)D. MOBILIZATION AND REPLACEMENT COSTS ARE INCIDENTALTO THE BID ITEM FOR TEMPORARY PAVEMENT MARKING.

6. SEE SPECIAL PROVISIONS FOR WORK HOUR RESTRICTIONS.

7. EXISTING CENTERLINE PAVEMENT MARKINGS MAY VARY. IF PASSING ZONE PRESENT WITHIN 600' OF TEMPORARY STOPBAR, REMOVE EXISTING CENTERLINE MARKING AND INSTALL LONG-DURATION TEMP. DOUBLE YELLOW LINE (MAY BE SUPPLEMENTED WITH SURFACE-MOUNTED TYPE 2YY RPMs @ 40' SPACING). ALL OTHER CONFLICTING PAVEMENT MARKINGS SHALL BE REMOVED (THOSE WITHIN THE WORK AREA MAY REMAIN AS SHOWN).

8. SECURE TEMPORARY RUMBLE STRIPS TO PAVEMENT VIA ADHESIVE (DO NOT USE PRIMER). FOR ROADWAYS WITH SHOULDERS LESS THAN 4 FEET, PROVIDE A 4-FOOT CLEAR PATH FOR BICYCLES MEASURED FROM EDGE OF PAVED SHOULDER. AVOID PLACING THEMP WITHIN HORIZONTAL CURVES, ADJUST SIGN SPACING IF NEEDED.
USE THE FOLLOWING:
* Advanced Traffic Marking (ATM) Self-Adhesive Rumble Strips (1/4" x 4", Orange)
* Stop-Painting (1/4" x 4", Orange)
* Seton (1/4" x 4", Orange)

9. TYPE 2 OR F-SHAPED TEMPORARY BARRIER PERMITTED.
SLOPED CONCRETE TERMINAL ALLOWED FOR REGULATORY WORK ZONE SPEED LIMITS 25 MPH OR LESS.
TYPE 2 TEMPORARY BARRIER AND SLOPED CONCRETE TERMINAL PER STANDARD PLAN K80-32.
F-SHAPED TEMPROARY BARRIER PER STANDARD PLAN C-60.10 (C-60.15 IF SCUPPERS USED FOR DRAINAGE) AND STANDARD PLAN C-60.80 FOR F-SHAPE CONCRETE BARRIER TERMINAL.

LEGEND

- CLASS A SIGN
- TRAFFIC SAFETY DRUM
- TEMPORARY ADHESIVE TRANSVERSE RUMBLE STRIPS

US 97 SOUTHBOUND LANE CLOSURE PORTABLE TEMPORARY SIGNAL CONTROLLED WITH REDUCED SPEED ZONE

NOT TO SCALE

FILE NAME	G:\444302\03 - Design\XL6625 - US 12 Clear Fork Bridge - Expansion Joint, Deck Repair and Overlay\13 - CAD Plans\Traffic Control\XL6625_XL6626 SH TC.dgn
TIME	9:43:50 AM
DATE	7/6/2023
PLOTTED BY	hartmat
DESIGNED BY	C. CORDOVA
ENTERED BY	C. CORDOVA
CHECKED BY	T. HARTMANN
PROJ. ENGR.	M. BRIGGS
REGIONAL ADM.	C. FRANCIS

REVISION	DATE	BY

REGION NO.	STATE	FED.AID PROJ.NO.
10	WASH	
JOB NUMBER 23X329		
CONTRACT NO.		LOCATION NO. XL6625

P.E. STAMP BOX DATE

P.E. STAMP BOX DATE

Washington State Department of Transportation

US 12/CLEAR FORK BR
US 97/BR OVER BICKLETON RD
BRIDGE AND DECK REHAB

TRAFFIC CONTROL PLAN

Plot 6

PLAN REF NO TC6

SHEET 23 OF 24 SHEETS

PCMS MESSAGE	
1	2
TRAFFIC SIGNAL AHEAD	SLOW OR STOPPED TRAFFIC
2.0 SEC	2.0 SEC

FIELD LOCATE 1 MILE ± IN ADVANCE OF W20-1.

COVER ALL CONFLICTING SPEED LIMIT SIGNS

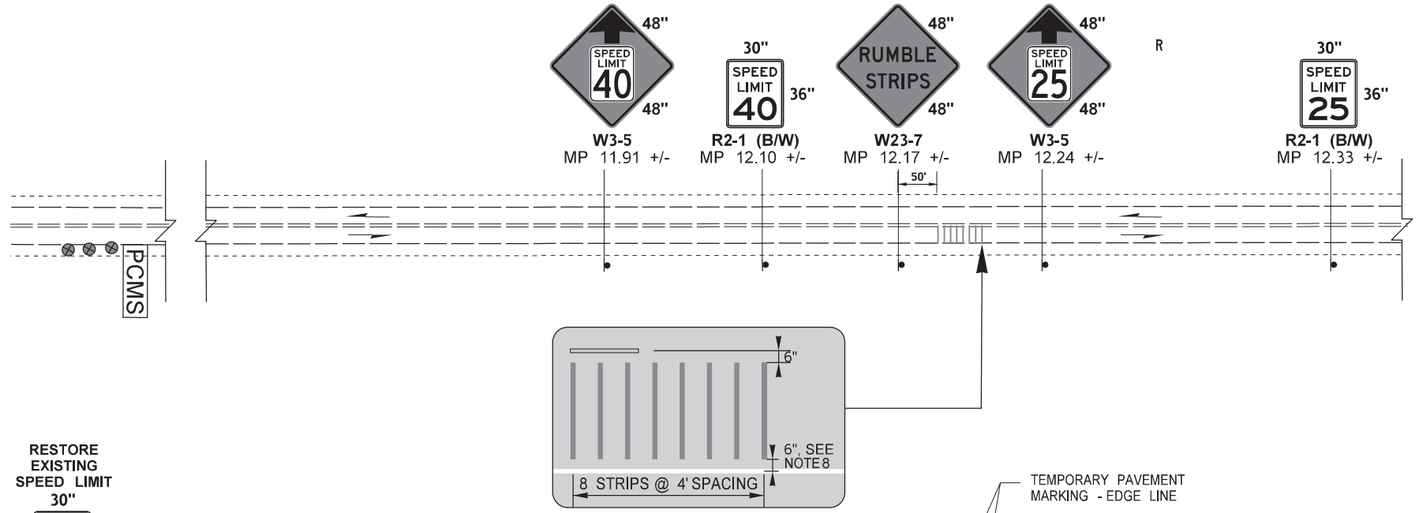

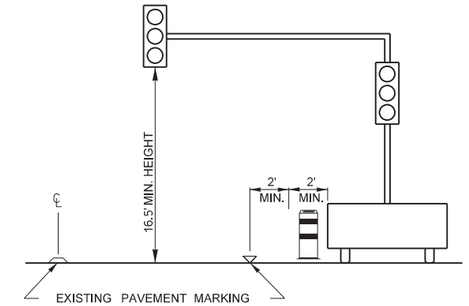

PORTABLE TEMPORARY TRAFFIC SIGNAL

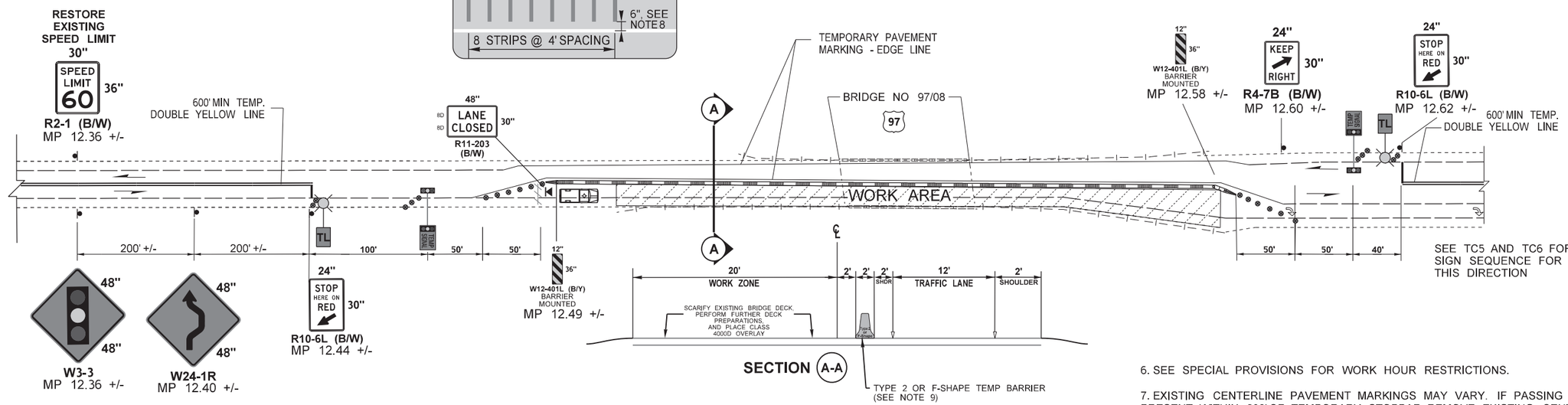

LEGEND

- TEMPORARY LIGHTING
- PORTABLE TEMPORARY TRAFFIC SIGNAL
- CLASS A SIGN
- TRAFFIC SAFETY DRUM
- PROTECTIVE VEHICLE
- TEMPORARY SIGN LOCATION (5' MIN HEIGHT)
- ADVESIVE TEMPORARY RUMBLE STRIPS
- UNANCHORED TEMPORARY BARRIER (SEE NOTE 9)

NOTES

1. ALL SIGNS ARE BLACK ON ORANGE UNLESS SPECIFIED OTHERWISE.

2. NIGHT WORK REQUIRES ADDITIONAL ROADWAY LIGHTING AT STOP LINES. SEE STANDARD SPECIFICATIONS 1-10.3 FOR HOURS OF DARKNESS.

3. PER STANDARD SPECIFICATIONS, SIGNAL HEADS SHALL BE FURNISHED WITH BACKPLATES AND 1" YELLOW REFLECTIVE SHEETING (1-10.3(3)K AND 9-35.14)."

4. CONTRACTOR SHALL NOTIFY WSDOT TRAFFIC MANAGEMENT CENTER (TMC) WHEN PORTABLE TEMPORARY TRAFFIC SIGNAL IS OPERATIONAL AT 360-759-1300. SIGNAL TIMING SHALL BE OBTAINED AND VERIFIED BY WSDOT SWR REGION TRAFFIC OFFICE. THE CONTRACTOR SHALL REQUEST SIGNAL TIMING NO LESS THAN 5 WORKING DAYS PRIOR TO SIGNAL INITIATION.

5. CONTRACTOR SHALL MAINTAIN TEMPORARY STOP BAR MARKING PER STANDARD SPECIFICATION 8-23.3(4)D. MOBILIZATION AND REPLACEMENT COSTS ARE INCIDENTALTO THE BID ITEM FOR TEMPORARY PAVEMENT MARKING.

6. SEE SPECIAL PROVISIONS FOR WORK HOUR RESTRICTIONS.

7. EXISTING CENTERLINE PAVEMENT MARKINGS MAY VARY. IF PASSING ZONE PRESENT WITHIN 600' OF TEMPORARY STOPBAR, REMOVE EXISTING CENTERLINE MARKING AND INSTALL LONG-DURATION TEMP. DOUBLE YELLOW LINE (MAY BE SUPPLEMENTED WITH SURFACE-MOUNTED TYPE 2YY RPMs @ 40' SPACING). ALL OTHER CONFLICTING PAVEMENT MARKINGS SHALL BE REMOVED (THOSE WITHIN THE WORK AREA MAY REMAIN AS SHOWN).

8. SECURE TEMPORARY RUMBLE STRIPS TO PAVEMENT VIA ADHESIVE (DO NOT USE PRIMER). FOR ROADWAYS WITH SHOULDERS LESS THAN 4 FEET, PROVIDE A 4-FOOT CLEAR PATH FOR BICYCLES MEASURED FROM EDGE OF PAVED SHOULDER. AVOID PLACING THEMP WITHIN HORIZONTAL CURVES, ADJUST SIGN SPACING IF NEEDED.
USE THE FOLLOWING:
* Advanced Traffic Marking (ATM) Self-Adhesive Rumble Strips (1/4" x 4", Orange)
* Stop-Painting (1/4" x 4", Orange)
* Seton (1/4" x 4", Orange)

9. TYPE 2 OR F-SHAPED TEMPORARY BARRIER PERMITTED.
SLOPED CONCRETE TERMINAL ALLOWED FOR REGULATORY WORK ZONE SPEED LIMITS 25 MPH OR LESS.
TYPE 2 TEMPORARY BARRIER AND SLOPED CONCRETE TERMINAL PER STANDARD PLAN K80-32.
F-SHAPED TEMPROARY BARRIER PER STANDARD PLAN C-60.10 (C-60.15 IF SCUPPERS USED FOR DRAINAGE)
AND STANDARD PLAN C-60.80 FOR F-SHAPE CONCRETE BARRIER TERMINAL.

US 97 NORTHBOUND LANE CLOSURE PORTABLE TEMPORARY SIGNAL CONTROLLED WITH REDUCED SPEED ZONE

NOT TO SCALE

FILE NAME	G:\444302\03 - Design\XL6625 - US 12 Clear Fork Bridge - Expansion Joint, Deck Repair and Overlay\13 - CAD Plans\Traffic Control\XL6625_XL6626 SH TC.dgn			
TIME	9:43:59 AM			
DATE	7/6/2023			
PLOTTED BY	hartmat			
DESIGNED BY	C. CORDOVA			
ENTERED BY	C. CORDOVA			
CHECKED BY	T. HARTMANN			
PROJ. ENGR.	M. BRIGGS			
REGIONAL ADM.	C. FRANCIS	REVISION	DATE	BY

REGION NO.	STATE	FED.AID PROJ.NO.
10	WASH	
JOB NUMBER 23X329		
CONTRACT NO.	LOCATION NO. XL6625	

DATE
P.E. STAMP BOX

DATE
P.E. STAMP BOX

Washington State Department of Transportation

US 12/CLEAR FORK BR
US 97/BR OVER BICKLETON RD
BRIDGE AND DECK REHAB

TRAFFIC CONTROL PLAN

Plot 7

PLAN REF NO TC7

SHEET 24 OF 24 SHEETS