INDEX

SHEET NO.	PLAN REFERENCE NO.	TITLE
1	IN1	INDEX
2	CT1	CERTIFICATION SHEET
3	VM1	VICINITY MAP
4 - 5	SQ1 - SQ2	SUMMARY OF QUANTITIES
6 - 7	RS1 - RS2	ROADWAY SECTIONS
8 - 10	AL1 - AL3	ALIGNMENT PLAN
11 - 13	SP1 - SP3	SITE PREPARATION AND TESC PLAN
14	DR1	TEMPORARY DRAINAGE PLAN
15	DP1	TEMPORARY DRAINAGE PROFILE
16	QTPM1	QUANTITY TABULATION - PAVEMENT MARKINGS/TEMPORARY PAVEMENT MARKINGS
17 - 21	TPV1 - TPV5	TEMPOARARY PAVING AND PAVEMENT MARKING PLAN
22 - 23	SS1 - SS2	SIGN SPECIFICATIONS
24 - 25	TEL1 - TEL2	TEMPORARY ELECTRICAL & SIGNING PLAN
26 - 27	EL1 - EL2	ELECTRICAL & SIGNING PLAN
28	ELD1	ELECTRICAL & SIGNING DETAILS
29 - 34	TSG1 - TSG6	TEMPORARY SIGNAL PLAN
35	BR1	LAYOUT 1
36	BR2	LAYOUT 2
37	BR3	LAYOUT 3
38	BR4	GENERAL NOTES & CONSTRUCTION STAGING
39	BR5	RIVET EVALUATION CRITERIA & TEMP. CONSTRUCTION LOADS
40	BR6	SPAN A FRAMING AND RETROFIT PLAN
41	BR7	SPAN B FRAMING AND RETROFIT PLAN
42	BR8	SPAN B-LIFT SPAN PAINT EXCLUSION & OVERCOAT AREAS
43	BR9	SPAN B-LIFT SPAN PAINT EXCLUSION & OVERCOAT AREAS 1
44	BR10	LIFT SPAN TEMP SUPPORT
45	BR11	LIFT SPAN TEMPORARY SUPPORT TYPICAL SECTION
46	BR12	LIFT SPAN TEMPORARY SUPPORT DETAILS
47	BR13	SPAN C FRAMING AND RETROFIT PLAN
48	BR14	TYPICAL SECTION SPANS A AND C
49	BR15	LIFT SPAN TYPICAL SECTION
50	BR16	SWAY DETAILS - TYPE 1 L2-U2
51	BR17	SWAY DETAILS - TYPE 2 L3-U3
52	BR18	SWAY DETAILS - TYPE 3 L4-U4 & L5-U5
53	BR19	SWAY CONNECTION DETAILS
54	BR20	529/10E SPAN I PORTAL REPAIRS DETAILS 1
55	BR21	529/10E SPAN I PORTAL REPAIRS DETAILS 2
56	BR22	529/10E SPAN I PORTAL REPAIRS DETAILS 3
57	BR23	529/10E SPAN I PORTAL REPAIRS DETAILS 4
58	BR24	SIDEWALK REPLACEMENT DETAILS
59	BR25	GUARDRAIL POST DETAILS FOR PAINTING
60	BR26	ROADWAY DECK JOINT DETAILS
61	BR27	OPERATING DRUM TOP CHORD REPAIR PREPARATION WORK
62	BR28	OPERATING DRUM TOP CHORD REPAIR REPAIR DETAILS
63	BR29	COUNTERWEIGHT GUIDE REPLACEMENT
64	BR30	COUNTERWEIGHT GUIDE BRACKET
65	BR31	529/20W TRAFFIC GATE SUPPORT REPLACEMENT DETAIL
66	BR32	529/20W TRAFFIC GATE SUPPORT REPLACEMENT DETAILS 2 OF 2
67	BR33	529/20W RACK ANCHOR BOLT REPAIR
68	BR34	529/20E PIER 7 PAINTING LIMITS
69	BR35	529/20E RACK ANCHOR BOLT REPAIR
70	BA1	BENT 3 SPALL REPAIR UPPER CROSSBEAM
71	BA2	BENT 5 SPALL REPAIR UPPER CROSSBEAM
72	BA3	BENT 5 SPALL REPAIR LOWER STRUT
73	BA4	BENT 6 SPALL REPAIR UPPER CROSSBEAM
74	BA5	BENT 7 & 8 SPALL REPAIR LOWER STRUT
75	BA6	BENT 8 GIRDER REPAIR
76	BA7	BENT 9 SPALL REPAIR UPPER CROSSBEAM
77	BA8	BENT 10 SPALL REPAIR UPPER CROSSBEAM
78	BA9	BENT 11 SPALL REPAIR UPPER CROSSBEAM
79	BA10	EMBEDDED ANODE DETAILS
80	G1	WORK ITEMS AND GENERAL NOTES I
81	G2	WORK ITEMS AND GENERAL NOTES II
82	G3	SUGGESTED REHABILITATION CONSTRUCTION SEQUENCE
83	M1	529/20W - END LIFT REHABILITATION
84	M2	529/20W - END LIFT DETAILS I
85	M3	529/20W - END LIFT DETAILS II
86	M4	529/20W - END LIFT DETAILS III
87	M5	529/20E - UPPER WHEEL REHABILITATION
88	M6	529/20E - UPPER WHEEL ASSEMBLY AND DETAILS
89	M7	529/20E - UPPER WHEEL AND BUSHING DETAILS
90	M8	529/20E - SUPPORT PLATE DETAILS
91	M9	529/10E - OPERATING DRUMS AND OPERATING ROPES
92	M10	529/10E - OPERATING DRUMS COVER REPAIRS
93	M11	529/10E - OPERATING DRUMS COVER REPAIR DETAILS
94	E1	529/10E ELECTRICAL PLAN
95 - 130	TC1 - TC36	TRAFFIC CONTROL PLAN
131 - 136	DT1 - DT6	DETOUR PLAN

FILE NAME	T:\412348\XL5462\CAD\ContractPlans\XL5462_PS_03VM.dgn				
TIME	11:32:29 AM				
DATE	4/18/2023				
PLOTTED BY	walgame				
DESIGNED BY	E. WALGAMOTT				
ENTERED BY	E. WALGAMOTT				
CHECKED BY	Y. KUANG				
PROJ. ENGR.	C. ANDERSON				
REGIONAL ADM.	B. NIELSEN	REVISION	DATE	BY	

REGION NO.	STATE	FED.AID PROJ.NO.
10	WASH	0529(020)
JOB NUMBER 23A003		
CONTRACT NO.		LOCATION NO.

P.E. STAMP BOX DATE

P.E. STAMP BOX DATE

Washington State Department of Transportation

SR 529
SNOHOMISH RIVER & STEAMBOAT SLOUGH
BRIDGE REPAIR, REHAB & PAINT

INDEX

Plot 2

PLAN REF NO IN1

SHEET 1 OF 136 SHEETS

PROJECT LICENSED PROFESSIONAL CERTIFICATES

Cullen Anderson Apr 24, 2023 AS A LICENSED PROFESSIONAL IN DIRECT RESPONSIBLE CHARGE OF DEVELOPING THIS CONTRACT, I CERTIFY THAT ALL PLANS THAT CONTAIN MY STAMP HAVE BEEN DEVELOPED UNDER MY SUPERVISION.	DUKE H DO Apr 24, 2023 AS A LICENSED PROFESSIONAL IN DIRECT RESPONSIBLE CHARGE OF DEVELOPING THIS CONTRACT, I CERTIFY THAT ALL PLANS THAT CONTAIN MY STAMP HAVE BEEN DEVELOPED UNDER MY SUPERVISION.	Amy C Leland Apr 24, 2023 AS A LICENSED PROFESSIONAL IN DIRECT RESPONSIBLE CHARGE OF DEVELOPING THIS CONTRACT, I CERTIFY THAT ALL PLANS THAT CONTAIN MY STAMP HAVE BEEN DEVELOPED UNDER MY SUPERVISION.	Geoffrey D Swett Apr 24, 2023 AS A LICENSED PROFESSIONAL IN DIRECT RESPONSIBLE CHARGE OF DEVELOPING THIS CONTRACT, I CERTIFY THAT ALL PLANS THAT CONTAIN MY STAMP HAVE BEEN DEVELOPED UNDER MY SUPERVISION.
Richard Zeldenrust Apr 24, 2023 AS A LICENSED PROFESSIONAL IN DIRECT RESPONSIBLE CHARGE OF DEVELOPING THIS CONTRACT, I CERTIFY THAT ALL PLANS THAT CONTAIN MY STAMP HAVE BEEN DEVELOPED UNDER MY SUPERVISION.	Frank Marzella Frank Marzella (Apr 24, 2023 12:33 PDT) Frank Marzella Apr 24, 2023 AS A LICENSED PROFESSIONAL IN DIRECT RESPONSIBLE CHARGE OF DEVELOPING THIS CONTRACT, I CERTIFY THAT ALL PLANS THAT CONTAIN MY STAMP HAVE BEEN DEVELOPED UNDER MY SUPERVISION.	Christopher H. Svara Christopher H. Svara (Apr 24, 2023 12:31 PDT) Christopher H. Svara Apr 24, 2023 AS A LICENSED PROFESSIONAL IN DIRECT RESPONSIBLE CHARGE OF DEVELOPING THIS CONTRACT, I CERTIFY THAT ALL PLANS THAT CONTAIN MY STAMP HAVE BEEN DEVELOPED UNDER MY SUPERVISION.	AS A LICENSED PROFESSIONAL IN DIRECT RESPONSIBLE CHARGE OF DEVELOPING THIS CONTRACT, I CERTIFY THAT ALL PLANS THAT CONTAIN MY STAMP HAVE BEEN DEVELOPED UNDER MY SUPERVISION.
AS A LICENSED PROFESSIONAL IN DIRECT RESPONSIBLE CHARGE OF DEVELOPING THIS CONTRACT, I CERTIFY THAT ALL PLANS THAT CONTAIN MY STAMP HAVE BEEN DEVELOPED UNDER MY SUPERVISION.	AS A LICENSED PROFESSIONAL IN DIRECT RESPONSIBLE CHARGE OF DEVELOPING THIS CONTRACT, I CERTIFY THAT ALL PLANS THAT CONTAIN MY STAMP HAVE BEEN DEVELOPED UNDER MY SUPERVISION.	AS A LICENSED PROFESSIONAL IN DIRECT RESPONSIBLE CHARGE OF DEVELOPING THIS CONTRACT, I CERTIFY THAT ALL PLANS THAT CONTAIN MY STAMP HAVE BEEN DEVELOPED UNDER MY SUPERVISION.	AS A LICENSED PROFESSIONAL IN DIRECT RESPONSIBLE CHARGE OF DEVELOPING THIS CONTRACT, I CERTIFY THAT ALL PLANS THAT CONTAIN MY STAMP HAVE BEEN DEVELOPED UNDER MY SUPERVISION.

NOTES:

THIS PLAN SET WAS DEVELOPED ELECTRONICALLY UNDER THE DIRECT SUPERVISION OF THE LICENSED PROFESSIONALS THAT HAVE AFFIXED THEIR SIGNATURE TO THIS PAGE.

THIS SHEET SERVES AS THE CERTIFICATION BY THE ABOVE LICENSED PROFESSIONALS OF ALL SHEETS IN THIS PLAN SET WHERE THEIR STAMPS AND SIGNATURES APPEAR.

T. 29N. R. 5E. W.M. / T. 30N. R. 5E. W.M.

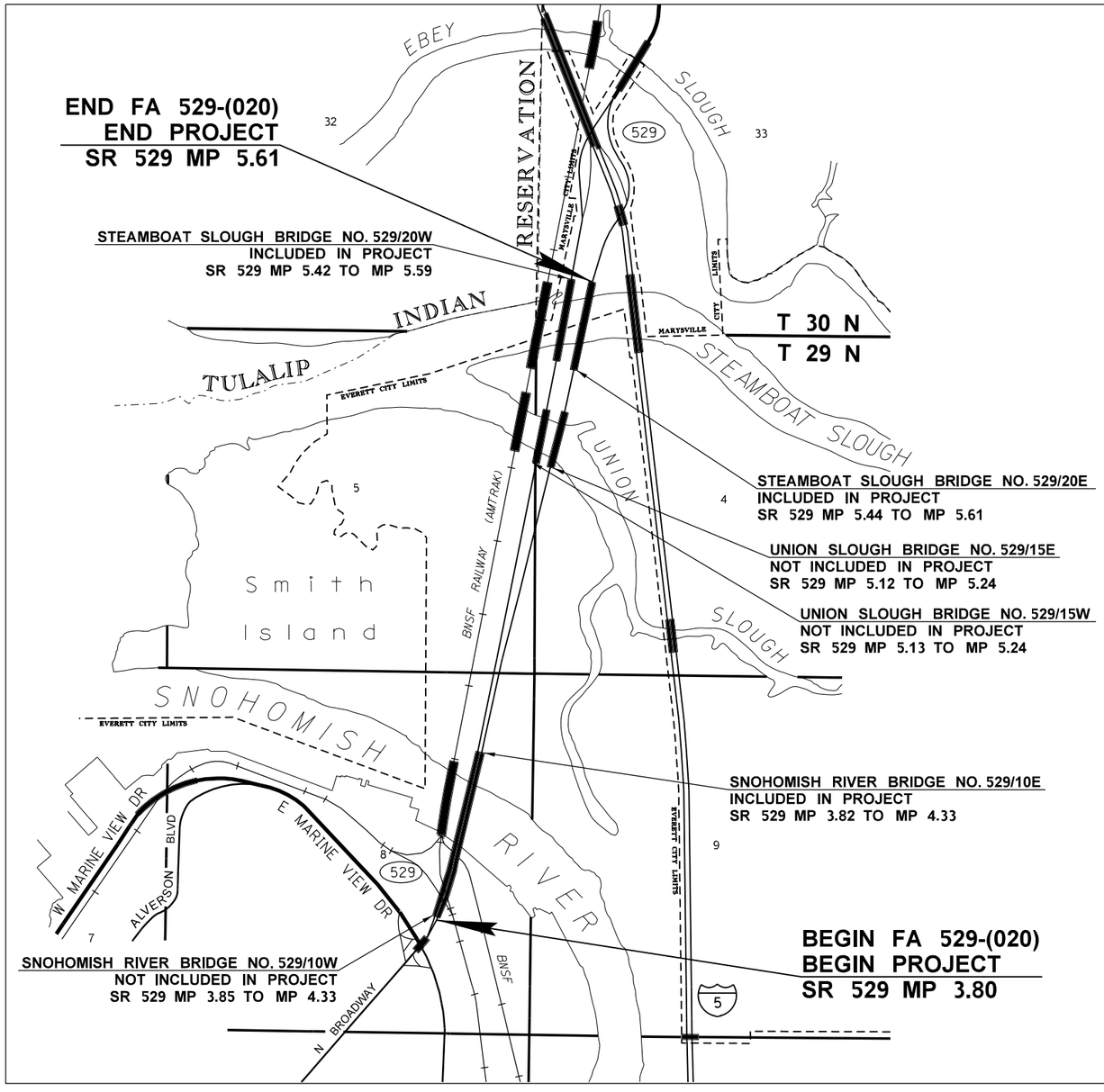

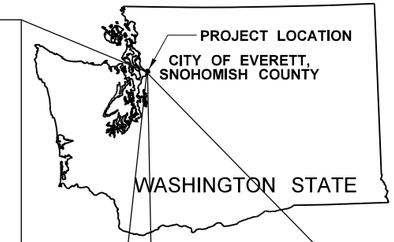

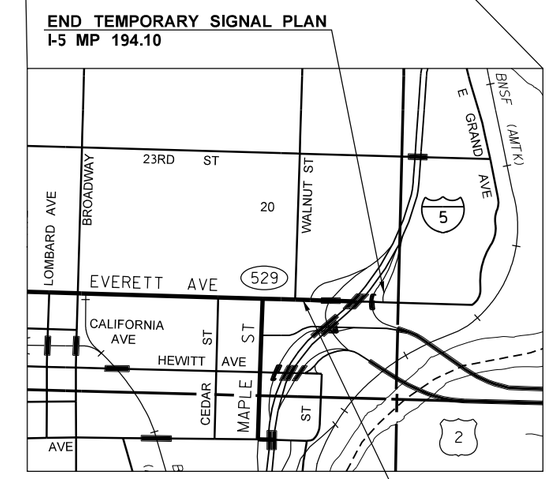

N

PLAN REFERENCE NO.
SHEET OF SHEETS

NOTE: ALL SHEET REFERENCES, FIRST NOS. OF STRUCTURE CODE DESIGNATIONS AND MATCH LINE SHEET REFERENCES, ETC., THROUGHOUT THE PLANS, REFER TO THE ENTRY IN THE PLAN REFERENCE NUMBER BOX.

0 1000 2000
SCALE IN FEET

FILE NAME	T:\412348\XL5462\CAD\ContractPlans\XL5462_PS_03VM.dgn				REGION NO. 10	STATE WASH	FED.AID PROJ.NO.
TIME	9:25:51 AM						
DATE	4/17/2023				JOB NUMBER 23A003		
PLOTTED BY	carterra						
DESIGNED BY	E. WALGAMOTT				CONTRACT NO.		LOCATION NO.
ENTERED BY	E. WALGAMOTT						
CHECKED BY	Y. KUANG						
PROJ. ENGR.	C. ANDERSON						
REGIONAL ADM.	B. NIELSEN	REVISION	DATE	BY			

P.E. STAMP BOX DATE

P.E. STAMP BOX DATE

Washington State Department of Transportation

SR 529
SNOHOMISH RIVER & STEAMBOAT SLOUGH
BRIDGE REPAIR, REHAB & PAINT

VICINITY MAP

Plot 3
PLAN REF NO VM1
SHEET 3 OF 136 SHEETS

SUMMARY OF QUANTITIES

ITEM NO	TOTAL QUANTITY	SUB-TOTAL * SECTION I-07.2(1) OF STANDARD SPECS	SUB-TOTAL ** SECTION I-07.2(2) OF STANDARD SPECS	STD. ITEM NO.	UNIT	ITEM	GROUP 1 BRIDGE 529/10E LIFT SPAN	GROUP 2 BRIDGE 529/10E REHAB & PAINT	GROUP 3 BRIDGE 529/20E	GROUP 3 BRIDGE 529/20W	GROUP 4 THIRD PARTY DAMAGES
						PREPARATION					
1	LUMP SUM		LUMP SUM	0001	L.S.	MOBILIZATION	L.S.	L.S.	L.S.	L.S.	
2	0.65		0.65	0025	ACRE	CLEARING AND GRUBBING		0.65			
3	LUMP SUM		LUMP SUM	0050	L.S.	REMOVAL OF STRUCTURES AND OBSTRUCTIONS	L.S.	L.S.			
4	LUMP SUM		LUMP SUM	0259	L.S.	WORK ACCESS		L.S.			
5	LUMP SUM		LUMP SUM	0250	L.S.	REMOVAL AND DISPOSAL OF ASBESTOS MATERIAL	L.S.				
6	10000.00		10000.00		DOL	UNANTICIPATED HAZARDOUS MATERIAL HANDLING AND DISPOSAL		10,000.00			
						GRADING					
7	690.00		690.00	0310	C.Y.	ROADWAY EXCAVATION INCL. HAUL		690.00			
8	190.00		190.00	0408	TON	SELECT BORROW INCL. HAUL		190.00			
9	100.00		100.00	0470	C.Y.	EMBANKMENT COMPACTION		100.00			
10	810.00		810.00		S.Y.	SEPARATION LAYER		810.00			
						STORM SEWER					
11	2.00		2.00	3091	EACH	CATCH BASIN TYPE 1		2.00			
12	740.00		740.00	3480	L.F.	CL. V REINF. CONC. STORM SEWER PIPE 12 IN. DIAM.		740.00			
						STRUCTURE					
13	LUMP SUM		LUMP SUM	4235	L.S.	STRUCTURAL LOW ALLOY STEEL		L.S.			
14	7.00		7.00	4284	MBM	TIMBER AND LUMBER - SALTS TREATED		7.00			
15	100.00		100.00		C.F.	CONCRETE SPAN SUBSTRUCTURE REPAIRS		100.00			
16	LUMP SUM		LUMP SUM	4442	L.S.	EXPANSION JOINT MODIFICATION		L.S.			
17	LUMP SUM		LUMP SUM	4468	L.S.	CLEANING AND PAINTING BR. NO. 529/10E		L.S.			
18	4500.00		4500.00	4487	L.F.	SEALING AND CAULKING PACK RUST		4,500.00			
19	LUMP SUM		LUMP SUM	4469	L.S.	CONTAINMENT OF ABRASIVES		L.S.			
20	110000.00		110000.00	4470	DOL	TESTING AND DISPOSAL OF CONTAINMENT WASTE		110,000.00			
21	LUMP SUM		LUMP SUM		L.S.	MECHANICAL REHABILITATION BR NO 529/10E	L.S.				
22	LUMP SUM		LUMP SUM		L.S.	ELECTRICAL REHABILITATION BR NO 529/10E	L.S.				
23	LUMP SUM		LUMP SUM		L.S.	MECHANICAL REHABILITATION BR NO 529/20W				L.S.	
24	LUMP SUM		LUMP SUM		L.S.	ELECTRICAL REHABILITATION BR NO 529/20W				L.S.	
25	LUMP SUM		LUMP SUM		L.S.	MECHANICAL REHABILITATION BR NO 529/20E			L.S.		
26	500.00		500.00		EACH	REPLACE VACANT/DAMAGED RIVET WITH HS BOLT		500.00			
27	25.00		25.00		EACH	REPLACE DAMAGED OR CORRODED LACING BAR WITH NEW BAR	25.00				
						SURFACING					
28	390.00		390.00	5100	TON	CRUSHED SURFACING BASE COURSE		390.00			
						HOT MIX ASPHALT					
29	554.00		554.00	5711	S.Y.	PLANING BITUMINOUS PAVEMENT		554.00			
30	714.00		714.00	5767	TON	HMA CL. 1/2 IN. PG		714.00			
31	4071.00		4071.00	5830	DOL	JOB MIX COMPLIANCE PRICE ADJUSTMENT		4,071.00			
32	6785.00		6785.00	5835	DOL	COMPACTION PRICE ADJUSTMENT		6,785.00			
33	2714.00		2714.00	5837	DOL	ASPHALT COST PRICE ADJUSTMENT		2,714.00			
						EROSION CONTROL AND ROADSIDE PLANTING					
34	90.00		90.00	6403	DAY	ESC LEAD		70.00	10.00	10.00	
35	3170.00		3170.00	6453	S.Y.	COMPOST BLANKET		3,170.00			

GROUP LEGEND

GROUP NUMBER	SR	CONTROL SECTION	TAX SCHEDULE	FUND PARTICIPANTS
1	529	310311	**	FEDERAL
2	529	310311	**	FEDERAL
3	529	310312	**	FEDERAL
4	529	310311	**	STATE

DATE	REVISION	BY

REGION	STATE	FEDERAL AID PROJECT. NO.
10	WA	0529(020)

JOB NUMBER 23A003/4

CONTRACT NO 000000

Washington State
Department of Transportation

SR 529
SNOHOMISH RIVER & STEAMBOAT SLOUGH
BRIDGE REPAIR, REHAB & PAINT

SUMMARY OF QUANTITIES

SQ1

SUMMARY OF QUANTITIES

ITEM NO	TOTAL QUANTITY	SUB-TOTAL * SECTION I-07.2(1) OF STANDARD SPECS	SUB-TOTAL ** SECTION I-07.2(2) OF STANDARD SPECS	STD. ITEM NO.	UNIT	ITEM	GROUP 1 BRIDGE 529/10E LIFT SPAN	GROUP 2 BRIDGE 529/10E REHAB & PAINT	GROUP 3 BRIDGE 529/20E	GROUP 3 BRIDGE 529/20W	GROUP 4 THIRD PARTY DAMAGES
36	26.00		26.00	6463	L.F.	CHECK DAM		26.00			
37	2.00		2.00	6471	EACH	INLET PROTECTION		2.00			
38	1.00		1.00	6473	EACH	OUTLET PROTECTION		1.00			
39	50.00		50.00	6470	HR	STREET CLEANING		50.00			
40	0.65		0.65	6414	ACRE	SEEDING, FERTILIZING, AND MULCHING		0.65			
41	80.00		80.00	6635	L.F.	HIGH VISIBILITY SILT FENCE		80.00			
42	17500.00		17500.00	6490	DOL	EROSION/WATER POLLUTION CONTROL	2,500.00	10,000.00	2,500.00	2,500.00	
						TRAFFIC					
43	600.00		600.00	6840	L.F.	PRECAST SLOPED MOUNTABLE CURB		600.00			
44	16120.00		16120.00	6806	L.F.	PAINT LINE		16,120.00			
45	2.90		2.90	6884	HUND	RAISED PAVEMENT MARKER TYPE 2		2.90			
46	LUMP SUM		LUMP SUM	6890	L.S.	PERMANENT SIGNING		L.S.			
47	LUMP SUM		LUMP SUM		L.S.	TEMPORARY ELECTRICAL SYSTEM		L.S.			
48	LUMP SUM		LUMP SUM		L.S.	ELECTRICAL SYSTEM MODIFICATIONS		L.S.			
49	LUMP SUM		LUMP SUM		L.S.	TEMPORARY SIGNAL PLAN		L.S.			
50	7070.00		7070.00	6896	L.F.	TEMPORARY PAVEMENT MARKING-LONG DURATION		7,070.00			
51	2.00		2.00	6894	EACH	TEMPORARY MISC. PAVEMENT MARKINGS - LONG DURATION		2.00			
52	87.00		87.00	6843	L.F.	TEMPORARY STOP LINE - LONG DURATION		87.00			
53	250.00		250.00		EACH	TEMPORARY DELINEATION PYLON		250.00			
54	LUMP SUM		LUMP SUM	6971	L.S.	PROJECT TEMPORARY TRAFFIC CONTROL	L.S.	L.S.	L.S.	L.S.	
55	996.00		996.00	6982	S.F.	CONSTRUCTION SIGNS CLASS A		996.00			
56	LUMP SUM		LUMP SUM		L.S.	PEDESTRIAN SHUTTLE SERVICE	L.S.	L.S.	L.S.	L.S.	
57	5.00		5.00		DAY	RAILROAD PROTECTIVE SERVICES		5.00			
						OTHER ITEMS					
58	LUMP SUM		LUMP SUM		L.S.	REFERENCING EXISTING PAVEMENT MARKINGS		L.S.			
59	LUMP SUM		LUMP SUM	7003	L.S.	TYPE B PROGRESS SCHEDULE	L.S.	L.S.	L.S.	L.S.	
60	174.00		174.00	7006	C.Y.	STRUCTURE EXCAVATION CLASS B INCL. HAUL		174.00			
61	37.00		37.00	7017	C.Y.	GRAVEL BACKFILL FOR PIPE ZONE BEDDING		37.00			
62	LUMP SUM		LUMP SUM	7038	L.S.	ROADWAY SURVEYING		L.S.			
63	50000.00		50000.00	7715	DOL	FORCE ACCOUNT MISC. STEEL REPAIR BR. NO. 529/10E		50,000.00			
64	10000.00		10000.00	7715	DOL	FORCE ACCOUNT REM AND REPL DAMAGED OR DECAYED WOOD		10,000.00			
65	800.00		800.00	7400	HR	TRAINING	800.00				
66	15000.00		15000.00	7480	DOL	ROADSIDE CLEANUP	5,000.00	5,000.00	2,500.00	2,500.00	
67	75000.00		75000.00	7572	DOL	WORK ZONE SAFETY CONTINGENCY	15,000.00	30,000.00	15,000.00	15,000.00	
68	5.00		5.00	7725	DOL	REIMBURSEMENT FOR THIRD PARTY DAMAGE					5.00
69	4.00		4.00	7728	DOL	MINOR CHANGE	1.00	1.00	1.00	1.00	
70	-1.00		-1.00	7730	DOL	FUEL COST ADJUSTMENT	-1.00				
71	-1.00		-1.00	7732	DOL	AGGREGATE COMPLIANCE PRICE ADJUSTMENT	-1.00				
72	LUMP SUM		LUMP SUM	7736	L.S.	SPCC PLAN	L.S.	L.S.	L.S.	L.S.	
73	1.00		1.00	7569	EACH	NO TRESPASSING SIGN		1.00			
74	LUMP SUM		LUMP SUM	7570	L.S.	HEALTH AND SAFETY PLAN		L.S.			
75	10000.00		10000.00	7571	DOL	FA-SITE CLEANUP OF BIO. AND PHYSICAL HAZARDS		10,000.00			
76	LUMP SUM		LUMP SUM	1941	L.S.	BIRD PROTECTION AND MONITORING		L.S.			

GROUP LEGEND

GROUP NUMBER	SR	CONTROL SECTION	TAX SCHEDULE	FUND PARTICIPANTS
1	529	310311	**	FEDERAL
2	529	310311	**	FEDERAL

DATE	REVISION	BY

REGION	STATE	FEDERAL AID PROJECT. NO.
10	WA	0529(020)

JOB NUMBER 23A003/4

CONTRACT NO 000000

Washington State Department of Transportation

SR 529
SNOHOMISH RIVER & STEAMBOAT SLOUGH
BRIDGE REPAIR, REHAB & PAINT

SUMMARY OF QUANTITIES

SQ2

LEGEND

1. HMA CLASS 1/2 IN. PG 58H-22
2. CRUSHED SURFACING BASE COURSE
3. SELECT BORROW INCL. HAUL
4. ROADWAY EXCAVATION INCL. HAUL
5. PLANING BITUMINOUS PAVEMENT
6. SEPARATION LAYER
7. PRECAST SLOPED MOUNTABLE CURB

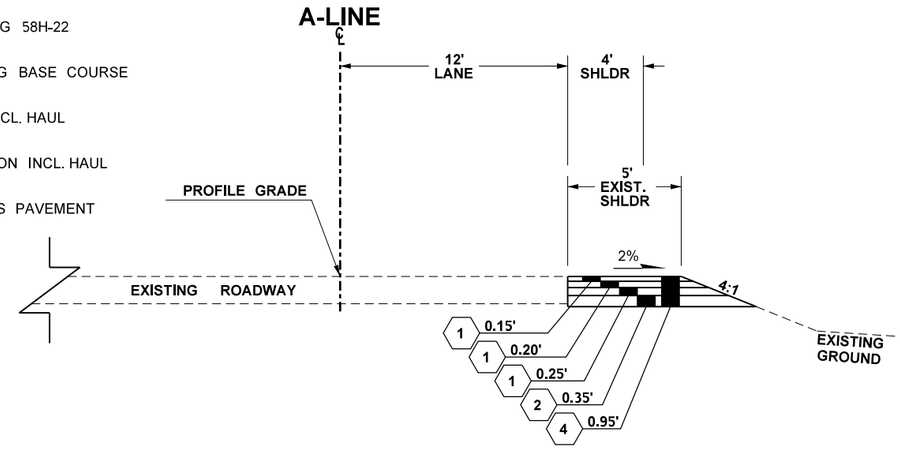

ROADWAY SECTION A

A 101+13.6 TO A 101+91.0

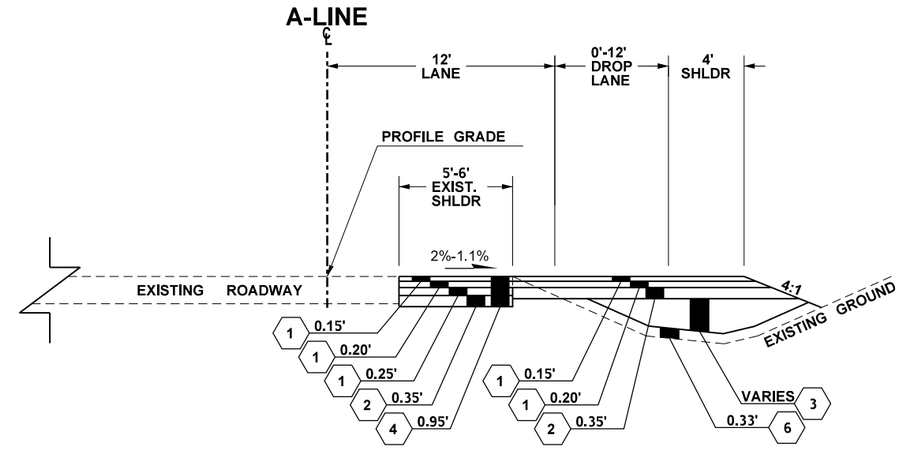

ROADWAY SECTION B

A 101+91.0 TO A 103+79.9

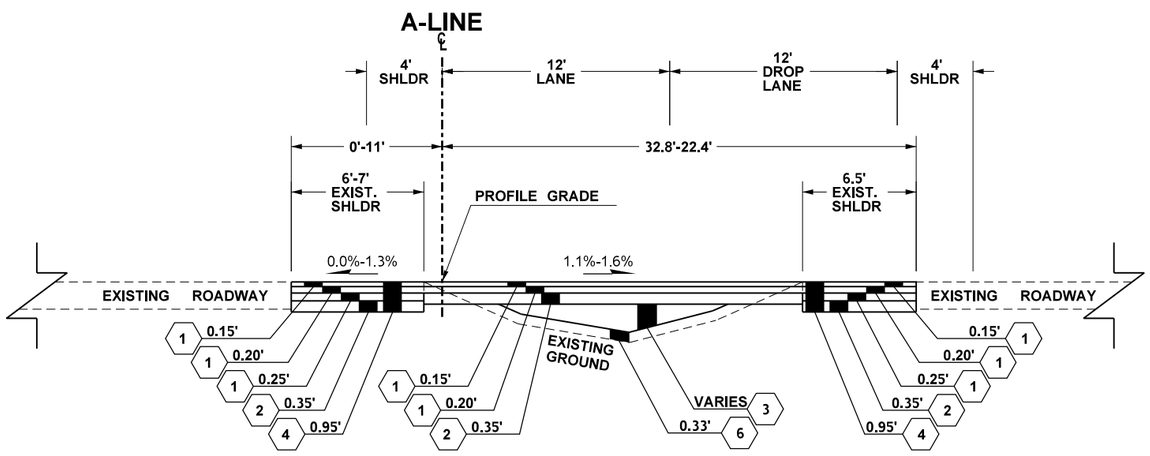

ROADWAY SECTION C

A 103+79.9 TO A 105+03.7

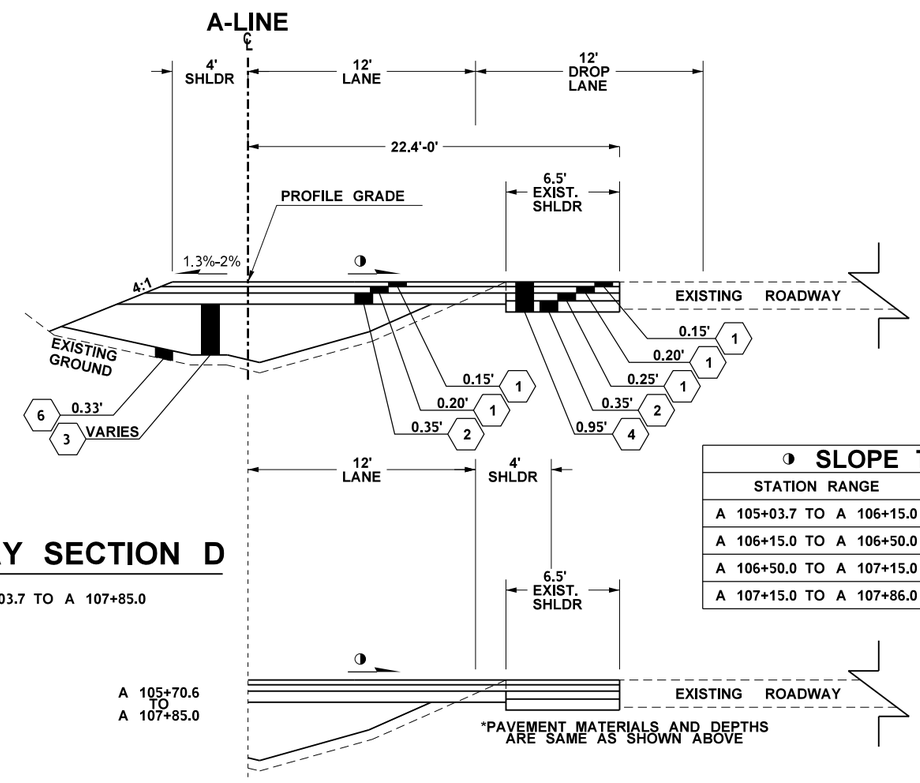

ROADWAY SECTION D

A 105+03.7 TO A 107+85.0

◑ SLOPE TABLE

STATION RANGE	SLOPE
A 105+03.7 TO A 106+15.0	1.6% TO 0%
A 106+15.0 TO A 106+50.0	0% TO 1.5%
A 106+50.0 TO A 107+15.0	1.5% TO 0%
A 107+15.0 TO A 107+86.0	1.6% TO 0%

NOTES:

1. ALL DEPTHS SHOWN ARE COMPACTED DEPTHS.
2. CROSSOVER TO BE REMOVED WHEN NO LONGER NECESSARY.
3. MAINTAIN MINIMUM HMA DEPTH OF 0.35' ACROSS FULL WIDTH OF SHOULDER AFTER MEDIAN CROSSOVER REMOVAL.
4. RESTORE MEDIAN WHEN CROSSOVER IS NO LONGER NECESSARY.
5. SEE STANDARD PLAN F-10.62 FOR PRECAST SLOPED MOUNTABLE CURB.

FILE NAME	T:\412348\XL5462\CAD\ContractPlans\XL5462_PS_06RS.dgn				REGION NO. 10	STATE WASH	FED.AID PROJ.NO.
TIME	11:16:15 AM				JOB NUMBER 23A003		
DATE	4/19/2023						
PLOTTED BY	walgame						
DESIGNED BY	R. CARTER				CONTRACT NO.		LOCATION NO.
ENTERED BY	R. CARTER						
CHECKED BY	Y. KUANG						
PROJ. ENGR.	C. ANDERSON						
REGIONAL ADM.	B. NIELSEN	REVISION	DATE	BY			

SEE SHEET CT1
DATE
P.E. STAMP BOX

DATE
P.E. STAMP BOX

Washington State Department of Transportation

SR 529
SNOHOMISH RIVER & STEAMBOAT SLOUGH
BRIDGE REPAIR, REHAB, & PAINT

ROADWAY SECTIONS

Plot 1
PLAN REF NO RS1
SHEET 6 OF 136 SHEETS

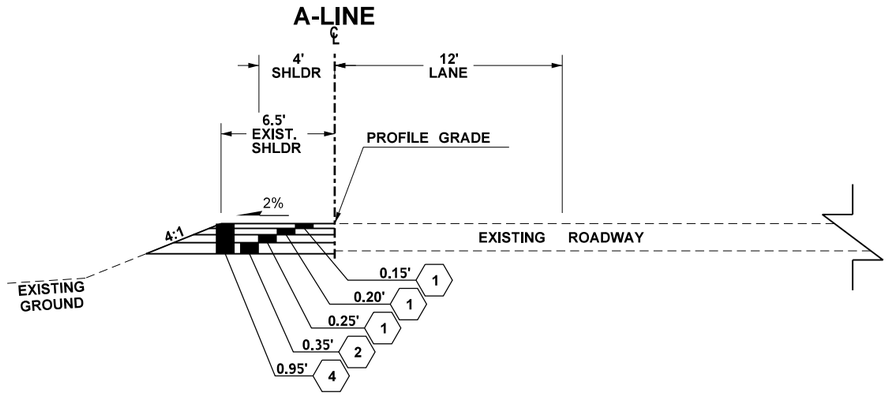

ROADWAY SECTION E

A 107+86.0 TO A 109+03.6

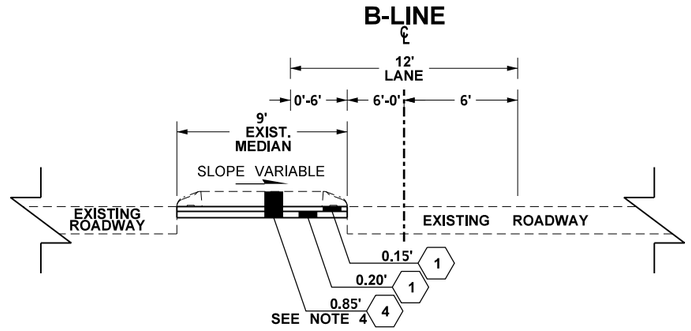

ROADWAY SECTION F

B 200+00 TO B 200+84.49

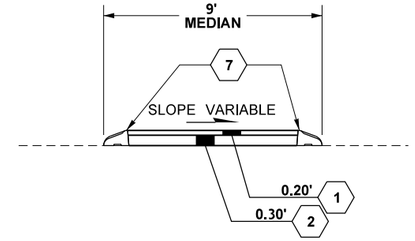

MEDIAN RESTORATION

B 200+00 TO B 203+00

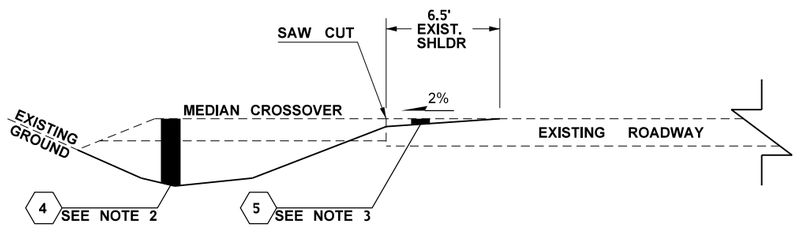

NB WEST SHOULDER & MEDIAN RESTORATION

A 103+79.9 TO A 107+86.0

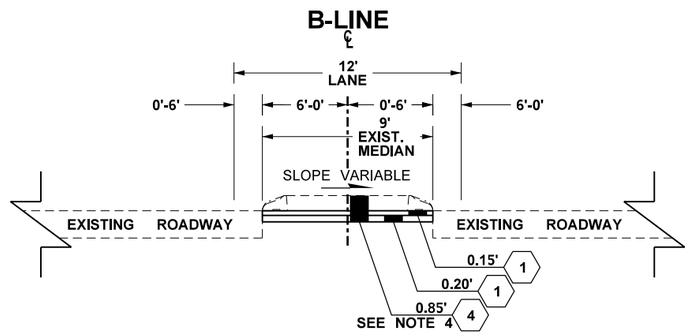

ROADWAY SECTION G

B 200+84.49 TO B 202+08.73

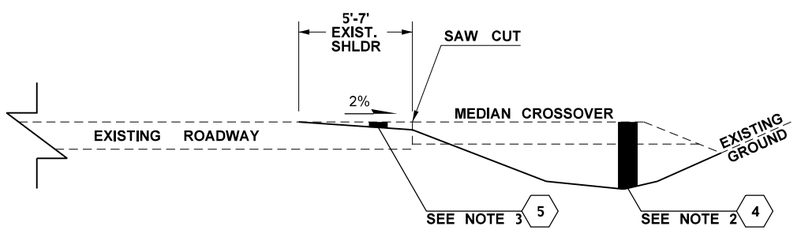

SB EAST SHOULDER & MEDIAN RESTORATION

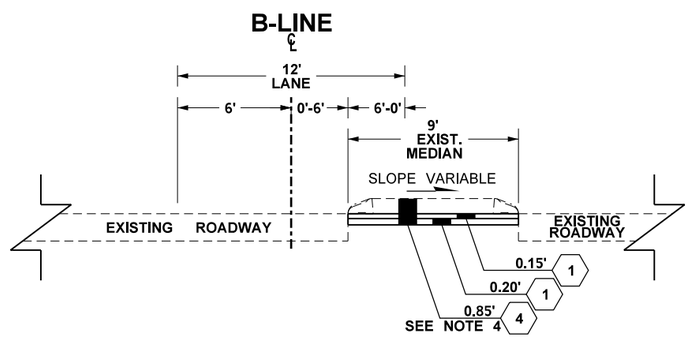

ROADWAY SECTION H

B 202+08.73 TO B 203+00

NOTES:

1. ALL DEPTHS SHOWN ARE COMPACTED DEPTHS. A 101+91.0 TO A 105+03.7
2. CROSSOVER TO BE REMOVED WHEN NO LONGER NECESSARY.
3. MAINTAIN MINIMUM HMA DEPTH OF 0.35' ACROSS FULL WIDTH OF SHOULDER AFTER MEDIAN CROSSOVER REMOVAL.
4. RESTORE MEDIAN WHEN CROSSOVER IS NO LONGER NECESSARY.
5. SEE STANDARD PLAN F-10.62 FOR PRECAST SLOPED MOUNTABLE CURB.

LEGEND

1. HMA CLASS 1/2 IN. PG 58H-22
2. CRUSHED SURFACING BASE COURSE
3. SELECT BORROW INCL. HAUL
4. ROADWAY EXCAVATION INCL. HAUL
5. PLANING BITUMINOUS PAVEMENT
6. SEPARATION LAYER
7. PRECAST SLOPED MOUNTABLE CURB

FILE NAME	T:\412348\XL5462\CAD\ContractPlans\XL5462_PS_06RS.dgn			
TIME	11:16:24 AM			
DATE	4/19/2023			
PLOTTED BY	walgame			
DESIGNED BY	R. CARTER			
ENTERED BY	R. CARTER			
CHECKED BY	Y. KUANG			
PROJ. ENGR.	C. ANDERSON			
REGIONAL ADM.	B. NIELSEN	REVISION	DATE	BY

REGION NO.	STATE	FED.AID PROJ.NO.
10	WASH	
JOB NUMBER 23A003		
CONTRACT NO.		LOCATION NO.

SEE SHEET CT1
DATE
P.E. STAMP BOX

DATE
P.E. STAMP BOX

Washington State Department of Transportation

SR 529
SNOHOMISH RIVER & STEAMBOAT SLOUGH
BRIDGE REPAIR, REHAB, & PAINT

ROADWAY SECTIONS

Plot 2
PLAN REF NO RS2
SHEET 7 OF 136 SHEETS

CURVE DATA				
P.I. STATION	DELTA	RADIUS	TANGENT	LENGTH
LL 23+54.58	30°18'14.30" LT	2880.10	779.91	1523.30

T. 29N. R. 5E. W.M.

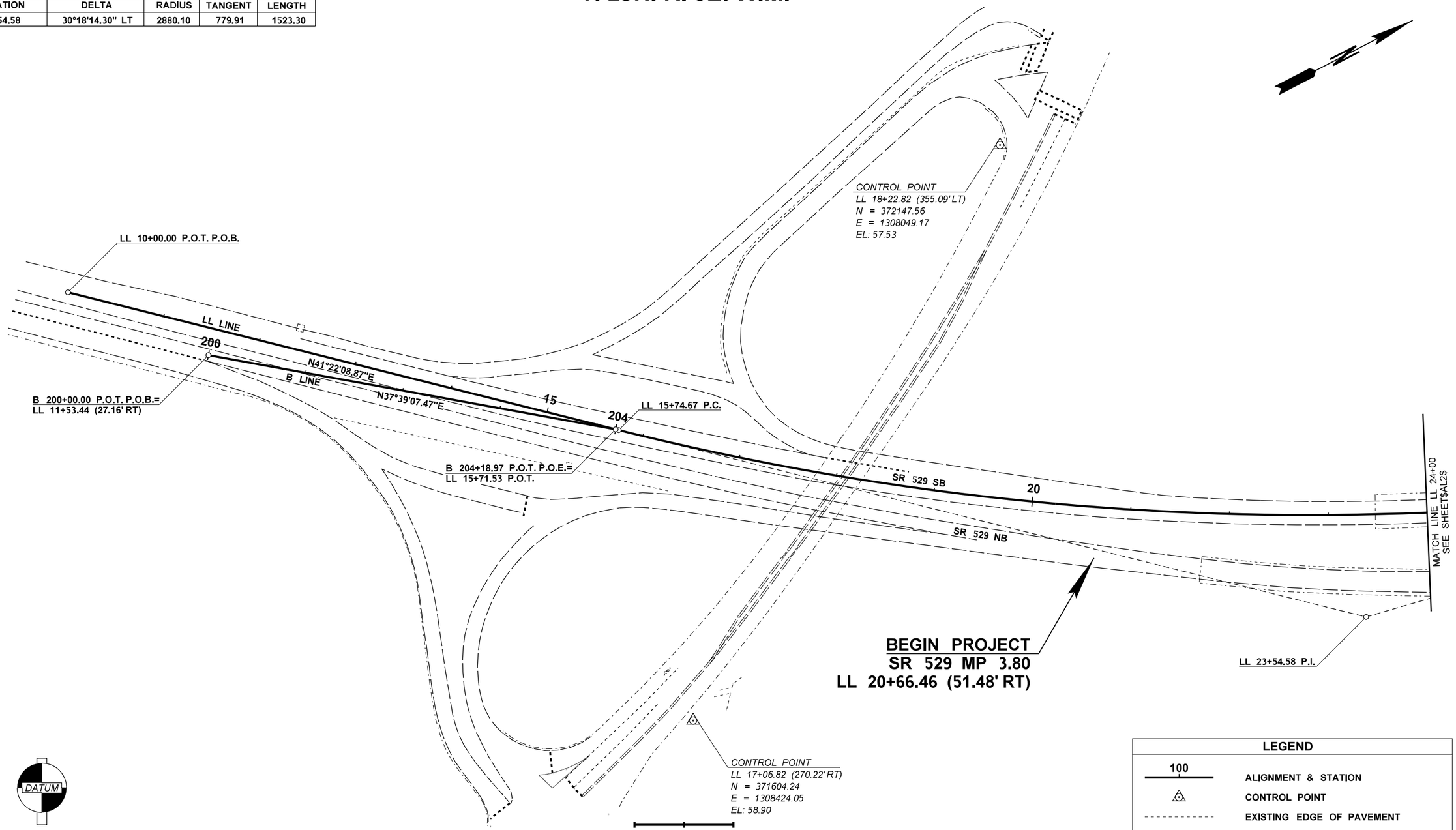

DATUM

NAD 83/11 & (NAVD) 88
STATE PLANE US SURVEY FEET

LEGEND	
100	ALIGNMENT & STATION
	CONTROL POINT
	EXISTING EDGE OF PAVEMENT
	EXISTING EDGE LINE
	EXISTING CURB FACE

FILE NAME	T:\412348\XL5462\CAD\ContractPlans\XL5462_PS_08AL.dgn
TIME	11:24:14 AM
DATE	4/19/2023
PLOTTED BY	walgame
DESIGNED BY	R. CARTER
ENTERED BY	R. CARTER
CHECKED BY	Y. KUANG
PROJ. ENGR.	C. ANDERSON
REGIONAL ADM.	B. NIELSEN

REVISION	DATE	BY

REGION NO.	STATE	FED.AID PROJ.NO.
10	WASH	
JOB NUMBER 23A003		
CONTRACT NO.		LOCATION NO.

SEE SHEET CT1
DATE
P.E. STAMP BOX

DATE
P.E. STAMP BOX

Washington State
Department of Transportation

SR 529
SNOHOMISH RIVER & STEAMBOAT SLOUGH
BRIDGE REPAIR, REHAB & PAINT

ALIGNMENT PLAN

Plot 1
PLAN REF NO
AL1
SHEET 8 OF 136 SHEETS

CURVE DATA				
P.I. STATION	DELTA	RADIUS	TANGENT	LENGTH
LL 53+17.66	3°59'08.34" RT	9333.51	324.76	649.26

T. 29N. R. 5E. W.M.

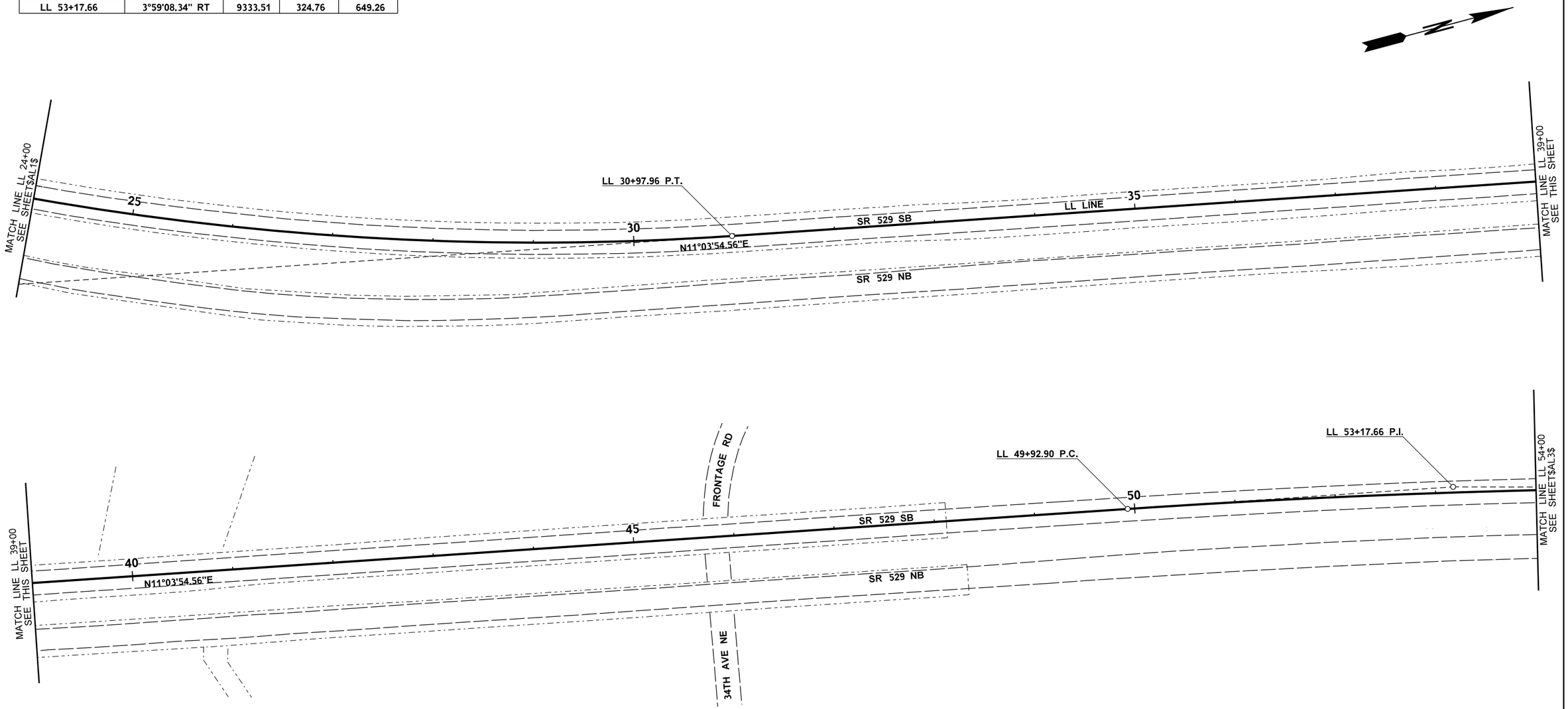

NAD 83/11 & (NAVD) 88
STATE PLANE US SURVEY FEET

0 50 100
SCALE IN FEET

LEGEND

100	ALIGNMENT & STATION
	CONTROL POINT
	EXISTING EDGE OF PAVEMENT
	EXISTING EDGE LINE
	EXISTING CURB FACE

FILE NAME	T:\412348\XL5462\CAD\ContractPlans\XL5462_PS_08AL.dgn
TIME	11:24:23 AM
DATE	4/19/2023
PLOTTED BY	walgame
DESIGNED BY	R. CARTER
ENTERED BY	R. CARTER
CHECKED BY	Y. KUANG
PROJ. ENGR.	C. ANDERSON
REGIONAL ADM.	B. NIELSEN

REVISION | DATE | BY

REGION NO. 10 | STATE WASH | FED.AID PROJ.NO.

JOB NUMBER 23A003

CONTRACT NO. | LOCATION NO.

SEE SHEET CT1
DATE
P.E. STAMP BOX

DATE
P.E. STAMP BOX

Washington State Department of Transportation

SR 529
SNOHOMISH RIVER & STEAMBOAT SLOUGH
BRIDGE REPAIR, REHAB & PAINT

ALIGNMENT PLAN

Plot 2
PLAN REF NO AL2
SHEET 9 OF 136 SHEETS

T. 29N. R. 5E. W.M.

CURVE DATA				
P.I. STATION	DELTA	RADIUS	TANGENT	LENGTH
A 102+39.80	4°49'02.41" RT	3000.00	126.19	252.24
A 107+82.43	4°37'49.66" LT	3000.00	121.29	242.45
LL 61+28.98	3°52'49.83" LT	14370.11	486.81	973.25

LEGEND	
100	ALIGNMENT & STATION
	CONTROL POINT
	EXISTING EDGE OF PAVEMENT
	EXISTING EDGE LINE
	EXISTING CURB FACE

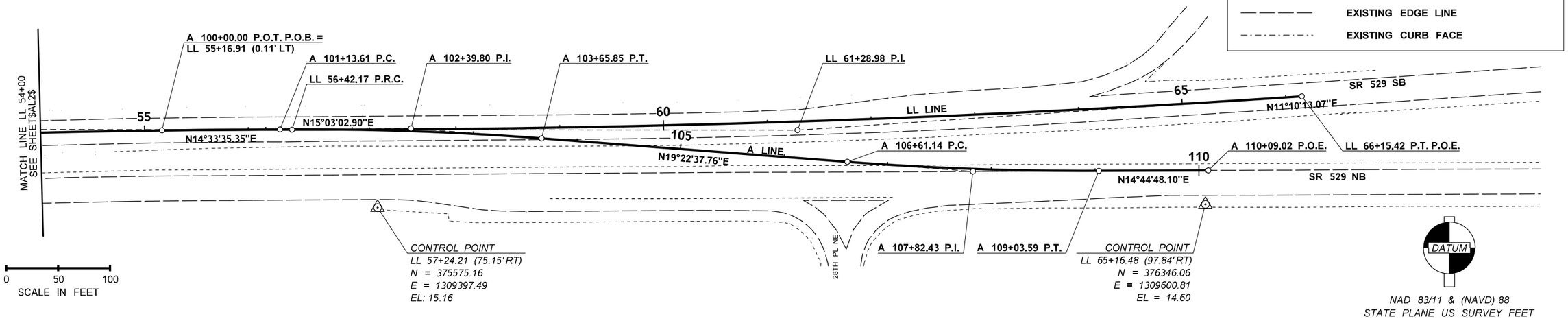

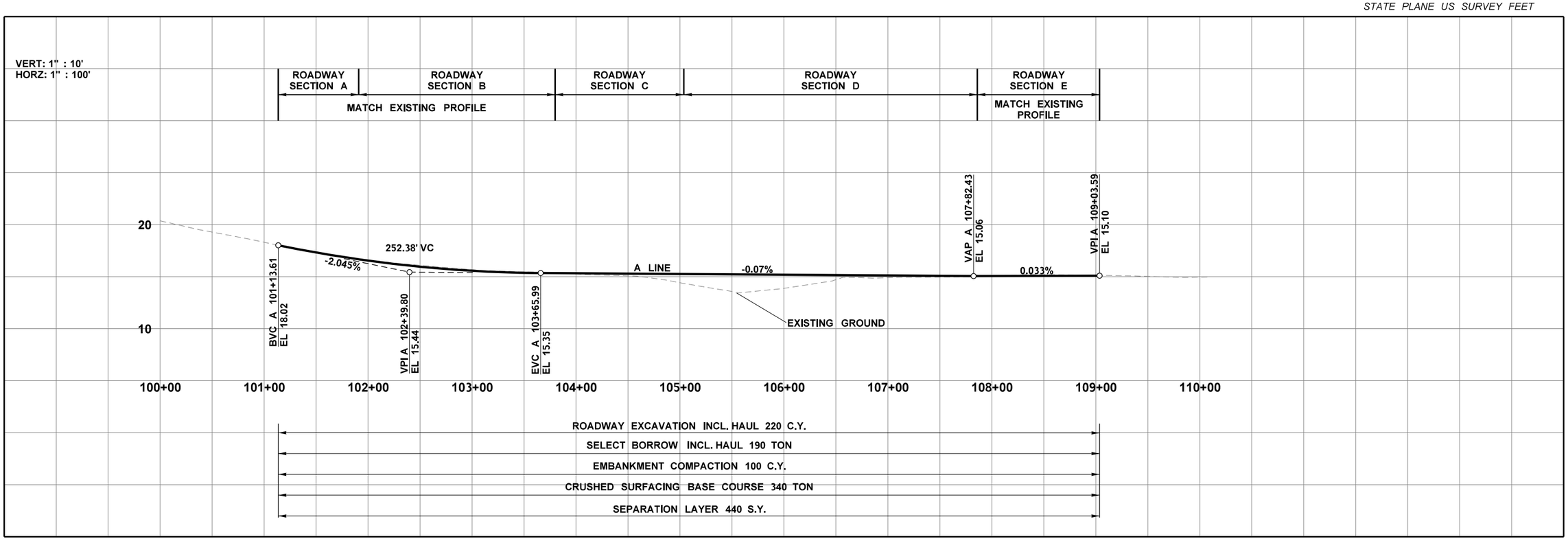

FILE NAME	T:\412348\XL5462\CAD\ContractPlans\XL5462_PS_08AL.dgn
TIME	11:24:32 AM
DATE	4/19/2023
PLOTTED BY	walgame
DESIGNED BY	R. CARTER
ENTERED BY	R. CARTER
CHECKED BY	Y. KUANG
PROJ. ENGR.	C. ANDERSON
REGIONAL ADM.	B. NIELSEN

REVISION	DATE	BY

REGION NO.	STATE	FED.AID PROJ.NO.
10	WASH	
JOB NUMBER 23A003		
CONTRACT NO.		LOCATION NO.

SEE SHEET CT1
DATE
P.E. STAMP BOX

DATE
P.E. STAMP BOX

Washington State Department of Transportation

SR 529
SNOHOMISH RIVER & STEAMBOAT SLOUGH
BRIDGE REPAIR, REHAB & PAINT

ALIGNMENT PLAN

Plot 3
PLAN REF. NO. AL3
SHEET 10 OF 136 SHEETS

QUANTIES - THIS SHEET ONLY		
ITEM	UNIT	QTY.
INLET PROTECTION	EACH	2

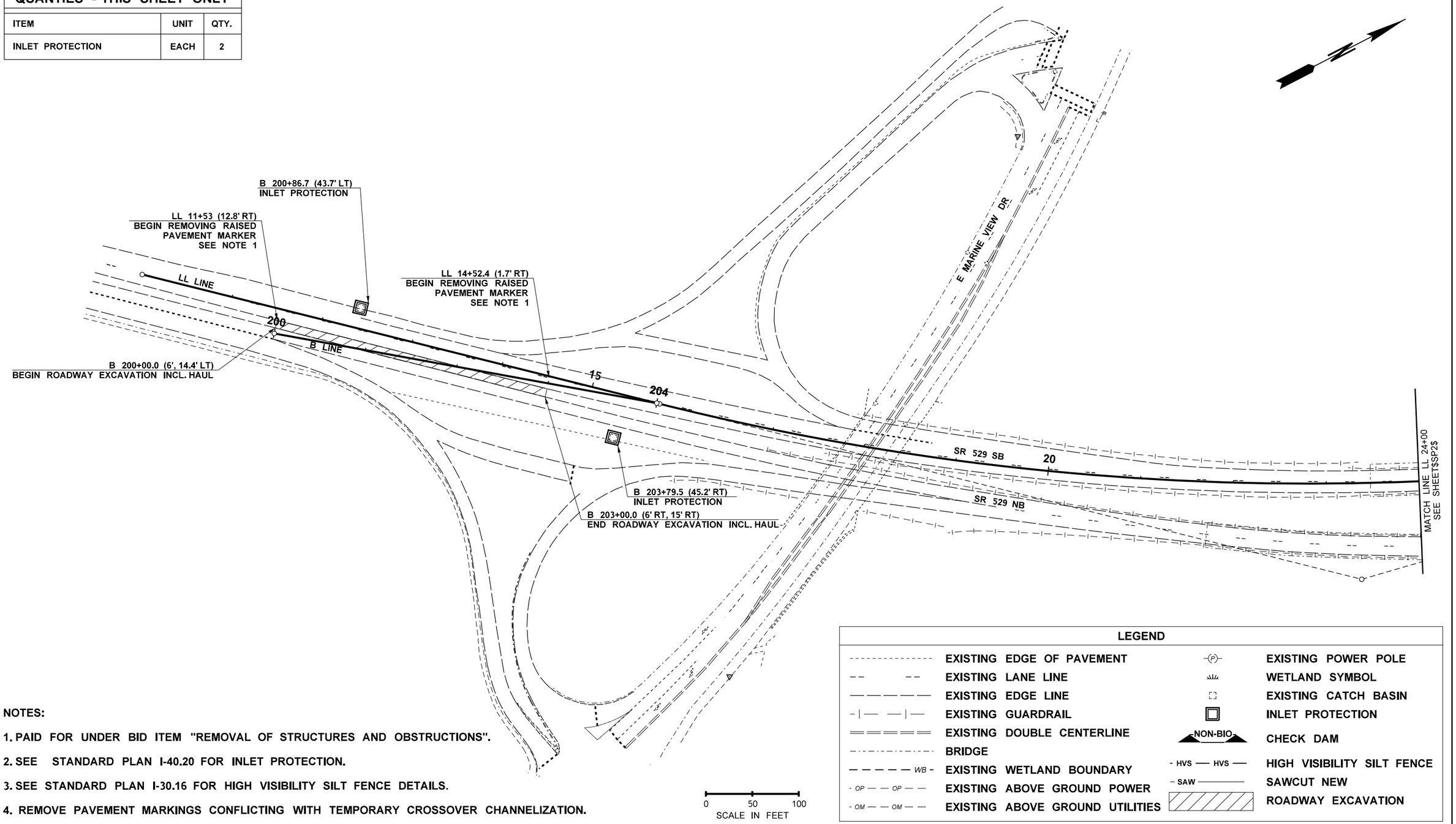

LEGEND

	EXISTING EDGE OF PAVEMENT		EXISTING POWER POLE
	EXISTING LANE LINE		WETLAND SYMBOL
	EXISTING EDGE LINE		EXISTING CATCH BASIN
	EXISTING GUARDRAIL		INLET PROTECTION
	EXISTING DOUBLE CENTERLINE	NON-BIO	CHECK DAM
	BRIDGE		
WB	EXISTING WETLAND BOUNDARY	HVS — HVS	HIGH VISIBILITY SILT FENCE
OP — OP	EXISTING ABOVE GROUND POWER	SAW	SAWCUT NEW
OM — OM	EXISTING ABOVE GROUND UTILITIES		ROADWAY EXCAVATION

NOTES:

1. PAID FOR UNDER BID ITEM "REMOVAL OF STRUCTURES AND OBSTRUCTIONS".
2. SEE STANDARD PLAN I-40.20 FOR INLET PROTECTION.
3. SEE STANDARD PLAN I-30.16 FOR HIGH VISIBILITY SILT FENCE DETAILS.
4. REMOVE PAVEMENT MARKINGS CONFLICTING WITH TEMPORARY CROSSOVER CHANNELIZATION.

FILE NAME	T:\412348\XL5462\CAD\ContractPlans\XL5462_PS_11SP.dgn			
TIME	11:28:52 AM			
DATE	4/19/2023			
PLOTTED BY	walgame			
DESIGNED BY	R. CARTER			
ENTERED BY	R. CARTER			
CHECKED BY	Y. KUANG			
PROJ. ENGR.	C. ANDERSON			
REGIONAL ADM.	B. NIELSEN	REVISION	DATE	BY

REGION NO.	STATE	FED.AID PROJ.NO.
10	WASH	
JOB NUMBER 23A003		
CONTRACT NO.		LOCATION NO.

SEE SHEET CT1
DATE
P.E. STAMP BOX

DATE
P.E. STAMP BOX

Washington State
Department of Transportation

SR 529
SNOHOMISH RIVER & STEAMBOAT SLOUGH
BRIDGE REPAIR, REHAB & PAINT

SITE PREPARATION AND TESC PLAN

Plot 2
PLAN REF NO
SP1
SHEET 11 OF 136 SHEETS

NOTES:

1. PAID FOR UNDER BID ITEM "REMOVAL OF STRUCTURES AND OBSTRUCTIONS".
2. SEE STANDARD PLAN I-40.20 FOR INLET PROTECTION.
3. SEE STANDARD PLAN I-30.16 FOR HIGH VISIBILITY SILT FENCE DETAILS.
4. REMOVE PAVEMENT MARKINGS CONFLICTING WITH TEMPORARY CROSSOVER CHANNELIZATION.

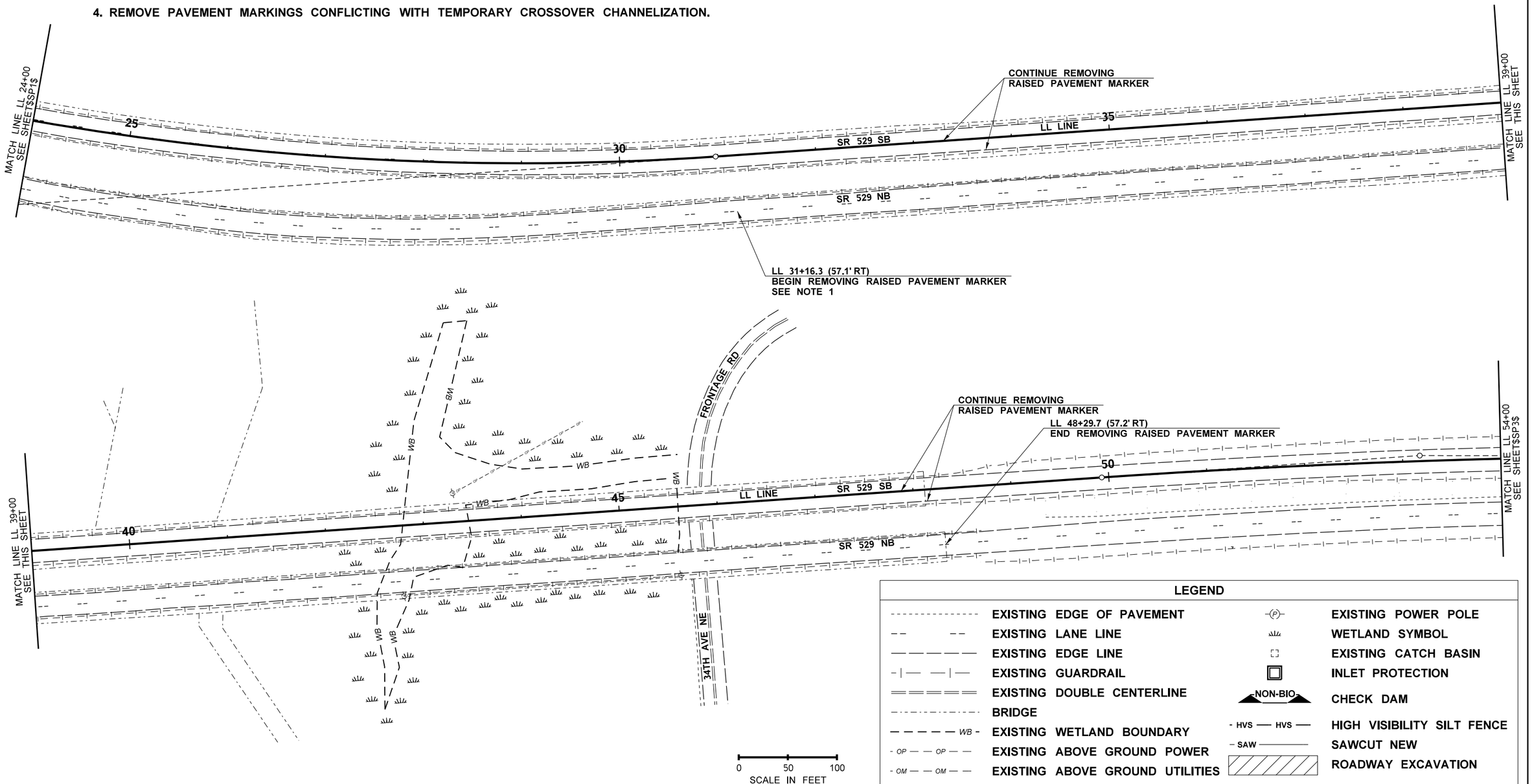

FILE NAME	T:\412348\XL5462\CAD\ContractPlans\XL5462_PS_11SP.dgn						
TIME	11:29:01 AM						
DATE	4/19/2023						
PLOTTED BY	walgame						
DESIGNED BY	R. CARTER						
ENTERED BY	R. CARTER						
CHECKED BY	Y. KUANG						
PROJ. ENGR.	C. ANDERSON						
REGIONAL ADM.	B. NIELSEN	REVISION	DATE	BY			

REGION NO.	STATE	FED.AID PROJ.NO.
10	WASH	
JOB NUMBER 23A003		
CONTRACT NO.		LOCATION NO.

SEE SHEET CT1
DATE
P.E. STAMP BOX

DATE
P.E. STAMP BOX

Washington State
Department of Transportation

SR 529
SNOHOMISH RIVER & STEAMBOAT SLOUGH
BRIDGE REPAIR, REHAB & PAINT

SITE PREPARATION AND TESC PLAN

Plot 2
PLAN REF NO
SP2
SHEET 12 OF 136 SHEETS

QUANTIES - THIS SHEET ONLY

ITEM	UNIT	QTY.
CHECK DAM	L.F.	26
HIGH VISIBILITY SILT FENCE	L.F.	80

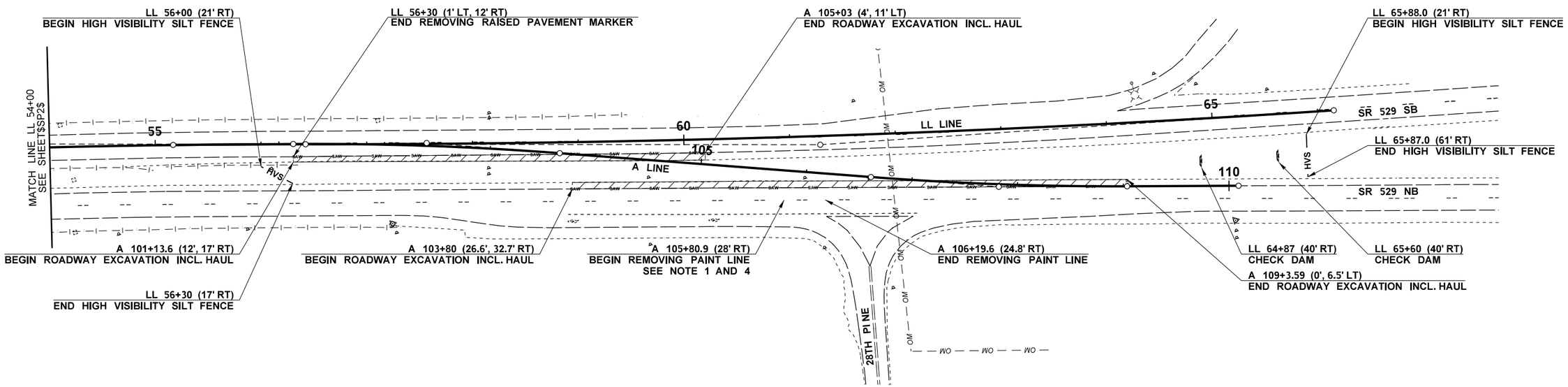

NOTES:

1. PAID FOR UNDER BID ITEM "REMOVAL OF STRUCTURES AND OBSTRUCTIONS".
2. SEE STANDARD PLAN I-40.20 FOR INLET PROTECTION.
3. SEE STANDARD PLAN I-30.16 FOR HIGH VISIBILITY SILT FENCE DETAILS.
4. REMOVE PAVEMENT MARKINGS CONFLICTING WITH TEMPORARY CROSSOVER CHANNELIZATION.

0 50 100
SCALE IN FEET

LEGEND

- - - - - - - - - - - - - -	EXISTING EDGE OF PAVEMENT	-(P)-	EXISTING POWER POLE
- - - -	EXISTING LANE LINE		WETLAND SYMBOL
— — — — —	EXISTING EDGE LINE		EXISTING CATCH BASIN
- | — — | —	EXISTING GUARDRAIL		INLET PROTECTION
═ ═ ═ ═ ═ ═	EXISTING DOUBLE CENTERLINE	NON-BIO	CHECK DAM
- - - - - - - - - - - -	BRIDGE		
— — — — — WB -	EXISTING WETLAND BOUNDARY	- HVS — HVS —	HIGH VISIBILITY SILT FENCE
- OP — — OP — —	EXISTING ABOVE GROUND POWER	- SAW —	SAWCUT NEW
- OM — — OM — —	EXISTING ABOVE GROUND UTILITIES		ROADWAY EXCAVATION

FILE NAME	T:\412348\XL5462\CAD\ContractPlans\XL5462_PS_11SP.dgn					
TIME	11:29:11 AM				REGION NO. 10	STATE WASH
DATE	4/19/2023					FED.AID PROJ.NO.
PLOTTED BY	walgame				JOB NUMBER 23A003	
DESIGNED BY	R. CARTER					
ENTERED BY	R. CARTER					
CHECKED BY	Y. KUANG				CONTRACT NO.	LOCATION NO.
PROJ. ENGR.	C. ANDERSON					
REGIONAL ADM.	B. NIELSEN	REVISION	DATE	BY		

SEE SHEET CT1
DATE
P.E. STAMP BOX

DATE
P.E. STAMP BOX

Washington State
Department of Transportation

SR 529
SNOHOMISH RIVER & STEAMBOAT SLOUGH
BRIDGE REPAIR, REHAB & PAINT

SITE PREPARATION AND TESC PLAN

Plot 3
PLAN REF NO SP3
SHEET 13 OF 136 SHEETS

STRUCTURE NOTES

THE FIRST NUMBER OF "CODE DESIGNATION" REFERS TO THE SHEET NUMBER OF THE CONTRACT PLANS. THE SECOND NUMBER REFERS TO THE CONSTRUCTION FEATURE FOUND ON THE PARTICULAR SHEET

CODE DESIG-NATION	LOCATION	CATCH BASIN TYPE 1 (L.F.)	CL. V REINF. CONC. STORM SEWER PIPE 12 IN. DIAM. (L.F.)	OUTLET PROTECTION (EACH)	SEE GENERAL NOTES
DR1-1	A 102+14.6 (27.3' RT) TO A 106+46.1 (9.3' LT)	1	432'		1, 2
DR1-2	A 106+46.1 (9.3' LT) TO A 109+55.2 (24.3' LT)	1	308'	1	1, 2

GENERAL NOTES:

1. PIPE ZONE BEDDING AND BACKFILL STANDARD PLAN B-55.20.

2. REMOVE CATCH BASINS, STORM SEWER PIPES, AND OUTLET PROTECTION WHEN THE TEMPORARY CROSSOVER IS NO LONOGER NEEDED. PAID FOR UNDER BID ITEM "REMOVAL OF STRUCTURES AND OBSTRUCTIONS".

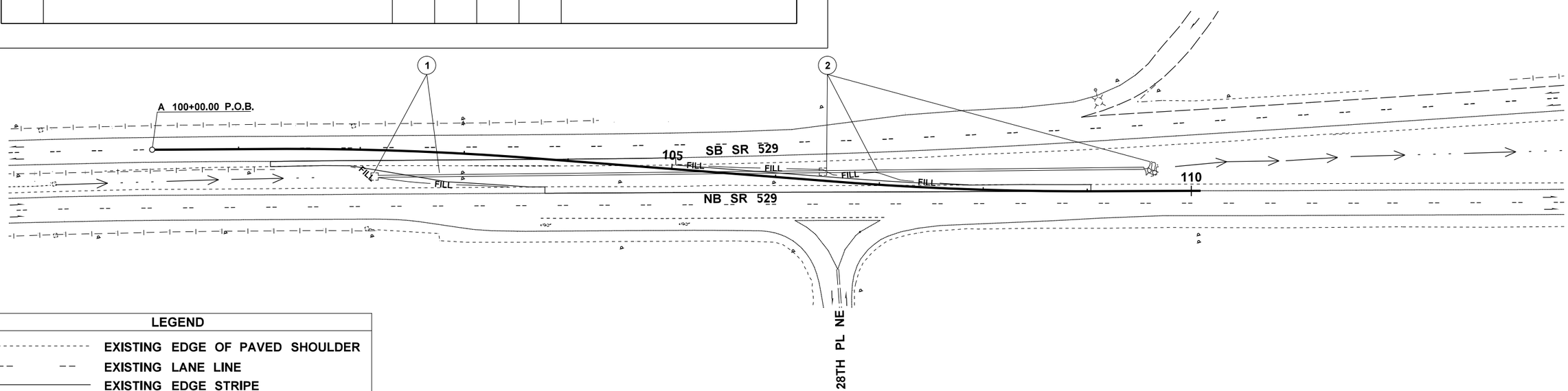

LEGEND

- EXISTING EDGE OF PAVED SHOULDER
- EXISTING LANE LINE
- EXISTING EDGE STRIPE
- EXISTING GUARDRAIL
- EXISTING DOUBLE CENTERLINE
- EXISTING DITCH
- OUTLET PROTECTION
- CATCH BASIN TYPE 1
- CULVERT / PIPE
- EXISTING SIGN
- EXISTING CATCH BASIN

FILE NAME	T:\412348\XL5462\CAD\ContractPlans\XL5462_PS_18DR.dgn
TIME	8:26:57 AM
DATE	4/19/2023
PLOTTED BY	walgame
DESIGNED BY	E. WALGAMOTT
ENTERED BY	E. WALGAMOTT
CHECKED BY	Y. KUANG
PROJ. ENGR.	C. ANDERSON
REGIONAL ADM.	B. NIELSEN

REVISION | DATE | BY

REGION NO. 10 | STATE WASH | FED.AID PROJ.NO.

JOB NUMBER 23A003

CONTRACT NO. | LOCATION NO.

SEE SHEET CT1 DATE
P.E. STAMP BOX

DATE
P.E. STAMP BOX

Washington State Department of Transportation

SR 529
SNOHOMISH RIVER & STEAMBOAT SLOUGH
BRIDGE REPAIR, REHAB & PAINT

TEMPORARY DRAINAGE PLAN

Plot 1
PLAN REF NO DR1
SHEET 14 OF 136 SHEETS

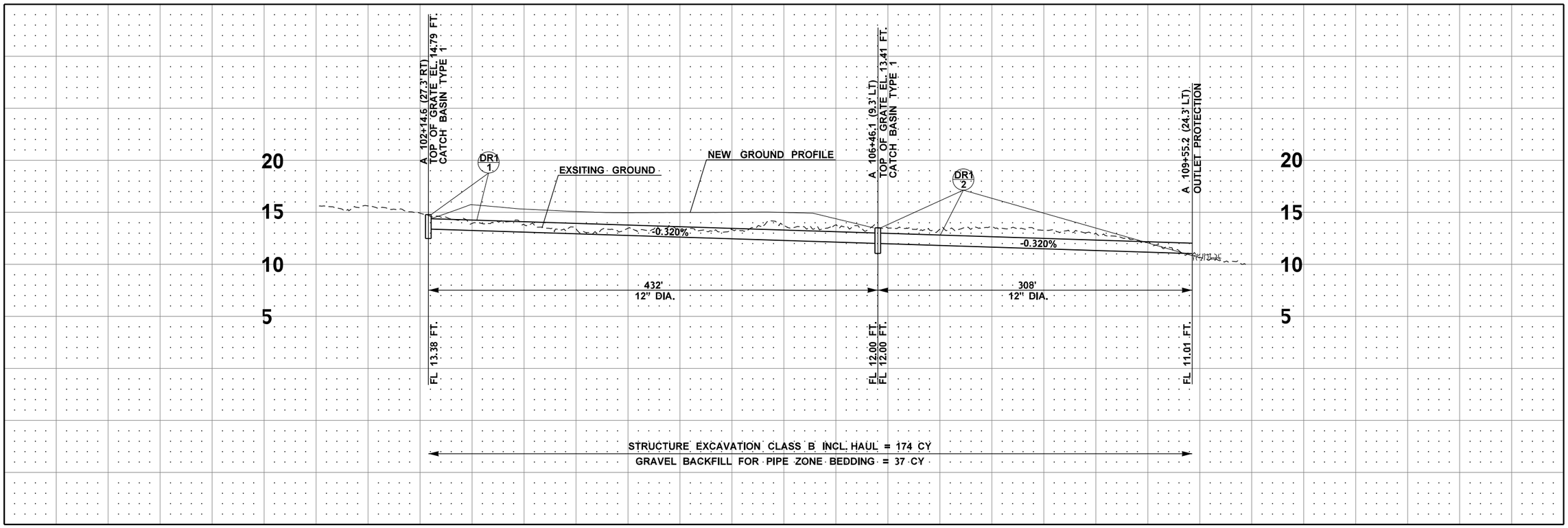

DATUM

(NAVD) 88
NAD 83/91 STATE PLANE US SURVEY FEET

NOTES:

1. PIPE ZONE BEDDING AND BACKFILL STANDARD PLAN B-55.02-03

FILE NAME	T:\412348\XL5462\CAD\ContractPlans\XL5462_PS_18DR.dgn				REGION NO. 10	STATE WASH	FED.AID PROJ.NO.	Washington State Department of Transportation
TIME	8:27:15 AM				JOB NUMBER 23A003			SR 529 SNOHOMISH RIVER & STEAMBOAT SLOUGH BRIDGE REPAIR, REHAB & PAINT
DATE	4/19/2023				CONTRACT NO.		LOCATION NO.	TEMPORARY DRAINAGE PROFILE
PLOTTED BY	walgame							
DESIGNED BY	E. WALGAMOTT							
ENTERED BY	E. WALGAMOTT							
CHECKED BY	Y. KUANG							
PROJ. ENGR.	C. ANDERSON							
REGIONAL ADM.	B. NIELSEN	REVISION	DATE	BY				

SEE SHEET CT1
DATE
P.E. STAMP BOX

DATE
P.E. STAMP BOX

Plot 2
PLAN REF NO DP1
SHEET 15 OF 136 SHEETS

QUANTITY TABULATION - PAVEMENT MARKINGS /TEMPORARY PAVEMENT MARKINGS

NOTE:
THE FIRST NUMBER OF THE "CODE" BELOW REFERS TO THE SHEET NO. OR THE SHEET REFERENCE NO. SHOWING THE CONSTRUCTION FEATURE.

THE SECOND NUMBER REFERS TO THE CONSTRUCTION FEATURE FOUND ON THAT SHEET.

CODE	LOCATION ➢ \ UNIT OF MEASURE ➢	PAINT LINE	RAISED PAVEMENT MARKER TYPE 2		TEMPORARY PAVEMENT MARKING-LONG DURATION	TEMPORARY MISC. PAVEMENT MARKING-LONG DURATION	TEMPORARY STOP LINE - LONG DURATION	TEMPORARY DELINEATION PYLON									SEE GENERAL NOTES
		L.F.	HUND		L.F.	EACH	L.F.	EACH									
TPV1-1	B 200+00 (6' LT) TO 203+00 (6' LT)				300												2
TPV1-2	B 200+00 (6' RT) TO 203+00 (6' RT)				300												2
TPV1-3	LL 14+52.4 (1.7' RT) TO LL 56+30.5 (0.3' LT)				4180												1, 2, 7
TPV1-4	LL 14+53.2(13.7' RT) TO LL 56+30.6 (11.8' RT)				4180												1, 2, 6
TPV1-5	LL 14+57.4 (1.6' RT) TO LL 57+15.5 (1.2' LT)							250									4
					4180												
TPV3-1	A 101+13.6 TO A 110+09		0.2		900												2, 3
TPV3-2	A 101+13.6 (12.0' RT) TO A 106+46.5 (89.3' RT)				570												2
TPV3-3	A 101+91 (12.0' RT) TO A 103+27 (12.0' RT)		0.1		140												2, 3
TPV3-4	A 103+27 (12.0' RT) TO A 110+09 (12.0' RT)		0.2		690												2, 3
TPV3-5	A 105+70.6 (12.0' RT) TO A 106+66.4 (83.9' RT)		0.1		130												2, 3
TPV3-6	A 103+75 (18' RT)					1											5
TPV3-7	A 105+13 (18' RT)					1											5
TPV3-8							12										8
TPV3-9							25										8
TPV3-10							22										8
TPV3-11							28										8
TPV4-1	LL 24+36.3 (82.1' RT) TO LL 48+29.7 (57.2' RT)				2410												2,3
TPV5-1	LL 24+36.3 (60.9' RT) TO LL 48+29.7 (57.2' RT)				2410												2,3
	LL 12+00 TO LL 60+00	4800	1.2														1,2,3,7
	LL 12+00 (12' RT) TO LL 60+00 (12' RT)	4800	1.2														1,2,3,7
	LL 12+00 (12' LT) TO LL 60+00 (12' LT)	4800															1,2,7
	LL 31+16.3 (57.1' RT) TO LL 48+29.7 (57.2' RT)	1720	0.5														1,2,3
	SHEET TOTAL	16120	3.5		20390	2	87	250									
	PROJECT TOTAL	16120	3.5		20390	2	87	250									

GENERAL NOTES:

1. PAVEMENT MARKINGS SHALL BE REFERENCED AND REPLACED IN THEIR PREVIOUS LOCATIONS PER SPECIAL PROVISION "REFERENCE EXISTING PAVEMENT MARKING", UNLESS OTHERWISE SHOWN IN THE PLANS.

2. SEE STD. PLAN M-20.10 SHEET 1 AND 2 FOR LONGITUDINAL MARKING PATTERNS.

3. LANE LINES AND LEFT EDGE LINES SHALL BE SUPPLEMENTED WITH RAISED PAVEMENT MARKERS PER STD. PLAN M-20.30. ALL RPMs SPACED AT 40' (FT) INTERVALS FOR LEFT EDGE & LANE LINES.

4.TEMPORARY DELINEATION PYLONS SHALL BE INSTALLED PER SPECIAL PROVISION "TEMPORARY DELINEATION PYLON" AND SHALL BE SPACED AT 20' (FT) INTERVALS.

5. SEE STD. PLAN M-24.20 FOR TYPE 2R ARROW.

6. REPLACE EXISTING YELLOW EDGE LINES AND RPMS WITH WHITE EDGE LINES FOR THE DURATION OF NB SR 529 TRAFFIC CROSSOVER ONTO SB SR 529 INSIDE LANE.

7. REPLACE IMPACTED EXISTING PAVEMENT MARKINGS AND RPMS AFTER THE CROSSOVER.

8. SEE STD. PLAN M-24.60 FOR STOP LINE.

DESIGNED BY	R. CARTER				
ENTERED BY	R. CARTER				
CHECKED BY	Y. KUANG				
PROJ. ENGR.	C. ANDERSON				
REGION ADM.	B. NIELSEN				
		DATE	**DATE**	**REVISION**	**BY**

REGION NO.	STATE	FED. AID PROJ. NO.
10	WASH	

JOB NUMBER 23A003

CONTRACT NO.

Washington State Department of Transportation

SR 529
SNOHOMISH RIVER & STEAMBOAT SLOUGH BRIDGE REPAIR, REHAB & PAINT

QUANTITY TABULATION - PAVEMENT MARKINGS /TEMPORARY PAVEMENT MARKINGS

PLAN REF NO **QTPM1**

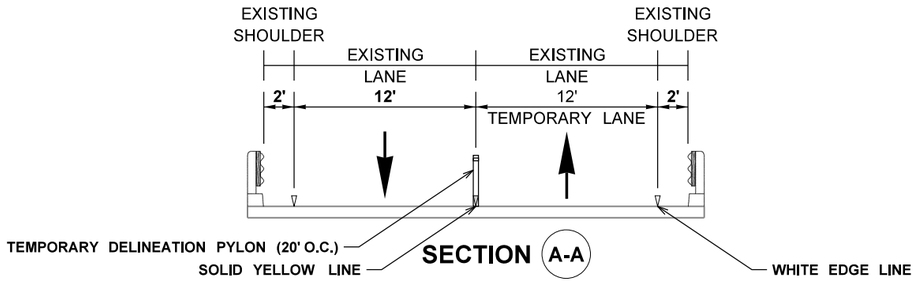

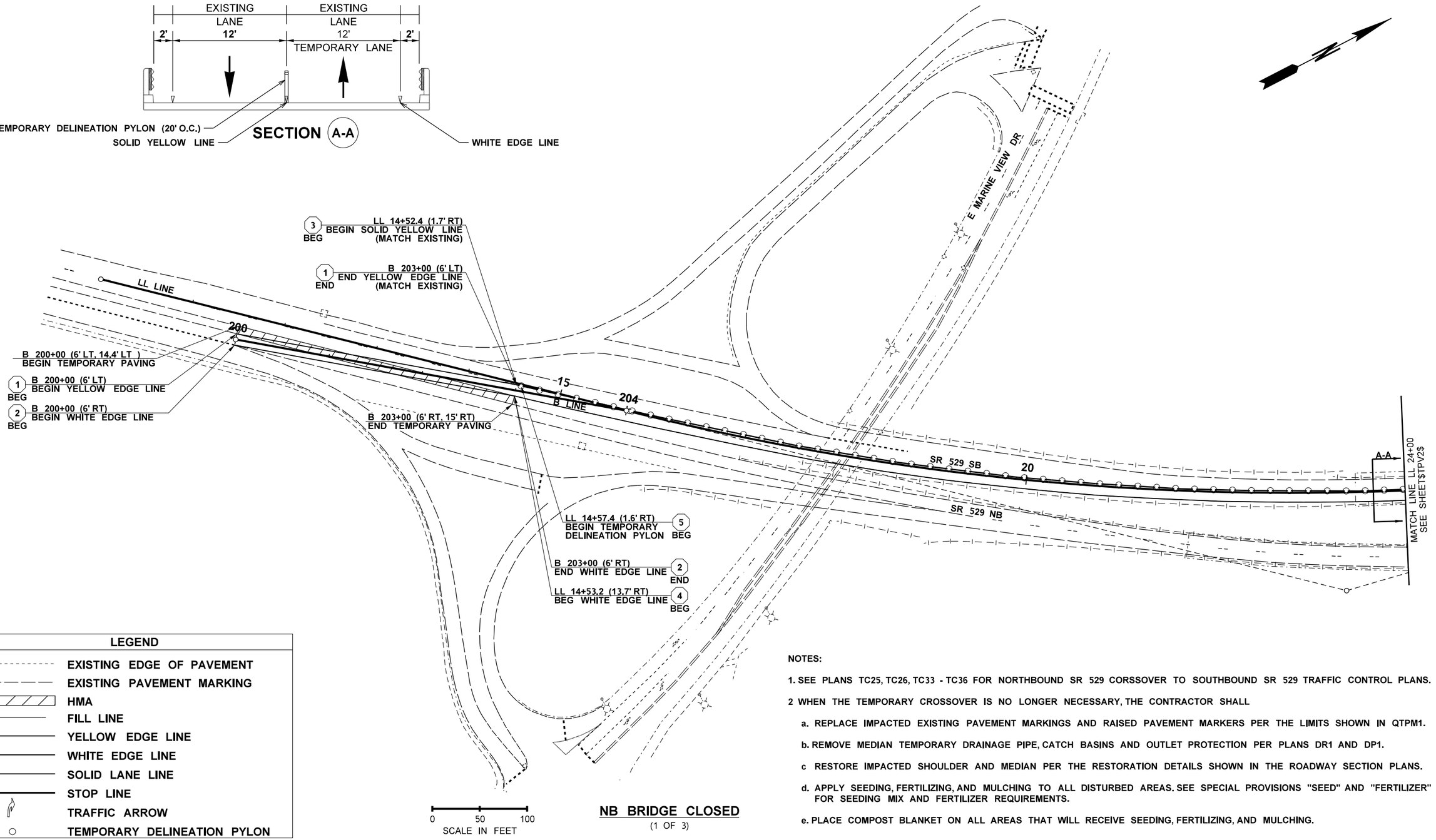

LEGEND

- EXISTING EDGE OF PAVEMENT
- EXISTING PAVEMENT MARKING
- HMA
- FILL — FILL LINE
- YELLOW EDGE LINE
- WHITE EDGE LINE
- SOLID LANE LINE
- STOP LINE
- TRAFFIC ARROW
- TEMPORARY DELINEATION PYLON

NB BRIDGE CLOSED

(1 OF 3)

NOTES:

1. SEE PLANS TC25, TC26, TC33 - TC36 FOR NORTHBOUND SR 529 CORSSOVER TO SOUTHBOUND SR 529 TRAFFIC CONTROL PLANS.
2. WHEN THE TEMPORARY CROSSOVER IS NO LONGER NECESSARY, THE CONTRACTOR SHALL
   a. REPLACE IMPACTED EXISTING PAVEMENT MARKINGS AND RAISED PAVEMENT MARKERS PER THE LIMITS SHOWN IN QTPM1.
   b. REMOVE MEDIAN TEMPORARY DRAINAGE PIPE, CATCH BASINS AND OUTLET PROTECTION PER PLANS DR1 AND DP1.
   c RESTORE IMPACTED SHOULDER AND MEDIAN PER THE RESTORATION DETAILS SHOWN IN THE ROADWAY SECTION PLANS.
   d. APPLY SEEDING, FERTILIZING, AND MULCHING TO ALL DISTURBED AREAS. SEE SPECIAL PROVISIONS "SEED" AND "FERTILIZER" FOR SEEDING MIX AND FERTILIZER REQUIREMENTS.
   e. PLACE COMPOST BLANKET ON ALL AREAS THAT WILL RECEIVE SEEDING, FERTILIZING, AND MULCHING.

FILE NAME	T:\412348\XL5462\CAD\ContractPlans\XL5462_PS_32TPV.dgn
TIME	8:21:28 AM
DATE	4/19/2023
PLOTTED BY	walgame
DESIGNED BY	R. CARTER
ENTERED BY	R. CARTER
CHECKED BY	Y. KUANG
PROJ. ENGR.	C. ANDERSON
REGIONAL ADM.	B. NIELSEN

REVISION | DATE | BY

REGION NO.	STATE	FED.AID PROJ.NO.
10	WASH	
JOB NUMBER 23A003		
CONTRACT NO.		LOCATION NO.

SEE SHEET CT1
DATE
P.E. STAMP BOX

DATE
P.E. STAMP BOX

Washington State Department of Transportation

SR 529
SNOHOMISH RIVER & STEAMBOAT SLOUGH
BRIDGE REPAIR, REHAB & PAINT

TEMPORARY PAVING AND PAVEMENT MARKING PLAN

Plot 1
PLAN REF NO TPV1
SHEET 17 OF 136 SHEETS

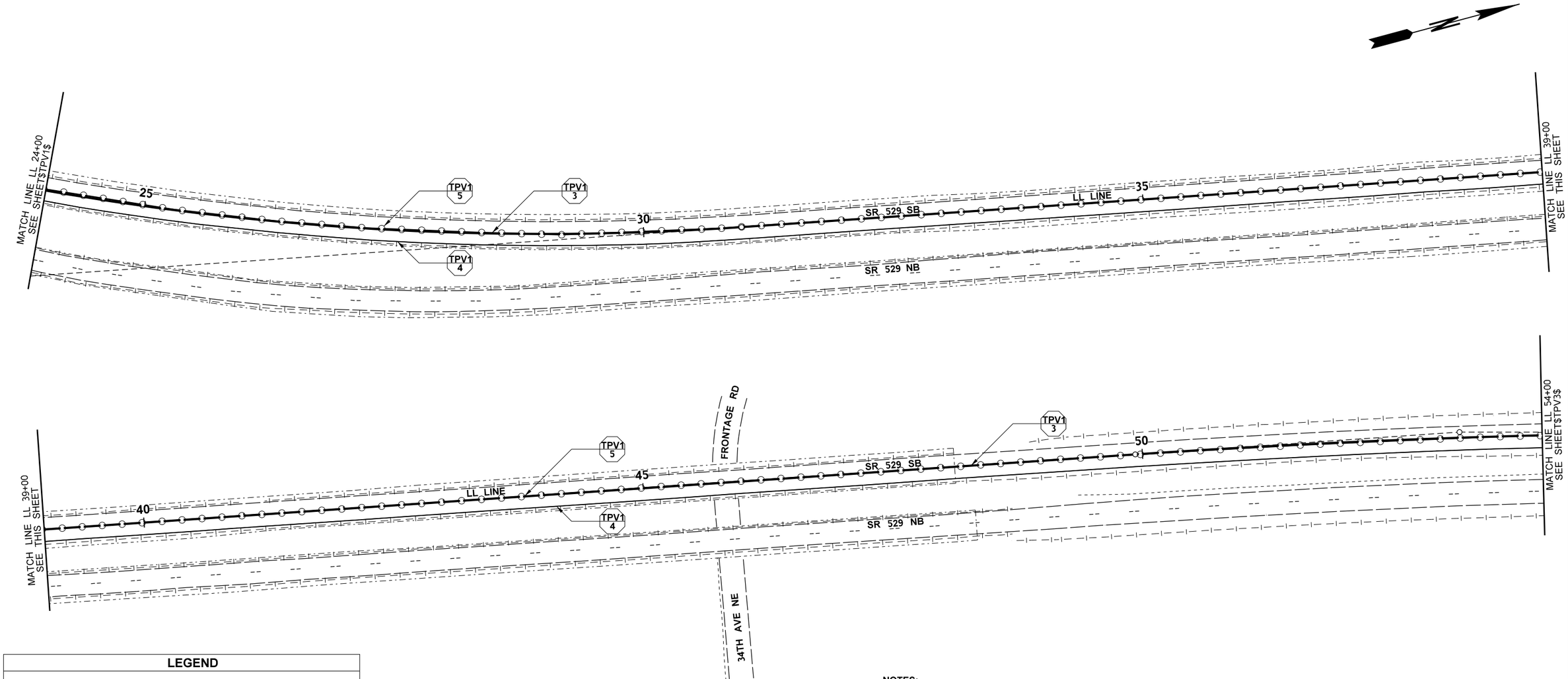

LEGEND

- EXISTING EDGE OF PAVEMENT
- EXISTING PAVEMENT MARKING
- HMA
- FILL — FILL LINE
- YELLOW EDGE LINE
- WHITE EDGE LINE
- SOLID LANE LINE
- STOP LINE
- TRAFFIC ARROW
- TEMPORARY DELINEATION PYLON

0 50 100
SCALE IN FEET

NB BRIDGE CLOSED
(2 OF 3)

NOTES:

1. SEE PLANS TC25, TC26, TC33 - TC36 FOR NORTHBOUND SR 529 CORSSOVER TO SOUTHBOUND SR 529 TRAFFIC CONTROL PLANS.
2 WHEN THE TEMPORARY CROSSOVER IS NO LONGER NECESSARY, THE CONTRACTOR SHALL
   a. REPLACE IMPACTED EXISTING PAVEMENT MARKINGS AND RAISED PAVEMENT MARKERS PER THE LIMITS SHOWN IN QTPM1.
   b. REMOVE MEDIAN TEMPORARY DRAINAGE PIPE, CATCH BASINS AND OUTLET PROTECTION PER PLANS DR1 AND DP1.
   c RESTORE IMPACTED SHOULDER AND MEDIAN PER THE RESTORATION DETAILS SHOWN IN THE ROADWAY SECTION PLANS.
   d. APPLY SEEDING, FERTILIZING, AND MULCHING TO ALL DISTURBED AREAS. SEE SPECIAL PROVISIONS "SEED" AND "FERTILIZER" FOR SEEDING MIX AND FERTILIZER REQUIREMENTS.
   e. PLACE COMPOST BLANKET ON ALL AREAS THAT WILL RECEIVE SEEDING, FERTILIZING, AND MULCHING.

FILE NAME	T:\412348\XL5462\CAD\ContractPlans\XL5462_PS_32TPV.dgn
TIME	8:21:38 AM
DATE	4/19/2023
PLOTTED BY	walgame
DESIGNED BY	R. CARTER
ENTERED BY	R. CARTER
CHECKED BY	Y. KUANG
PROJ. ENGR.	C. ANDERSON
REGIONAL ADM.	B. NIELSEN

REVISION | DATE | BY

REGION NO. 10 | STATE WASH | FED.AID PROJ.NO.
JOB NUMBER 23A003
CONTRACT NO. | LOCATION NO.

SEE SHEET CT1
DATE
P.E. STAMP BOX

DATE
P.E. STAMP BOX

Washington State Department of Transportation

SR 529
SNOHOMISH RIVER & STEAMBOAT SLOUGH
BRIDGE REPAIR, REHAB & PAINT

TEMPORARY PAVING AND PAVEMENT MARKING PLAN

Plot 2
PLAN REF NO TPV2
SHEET 18 OF 136 SHEETS

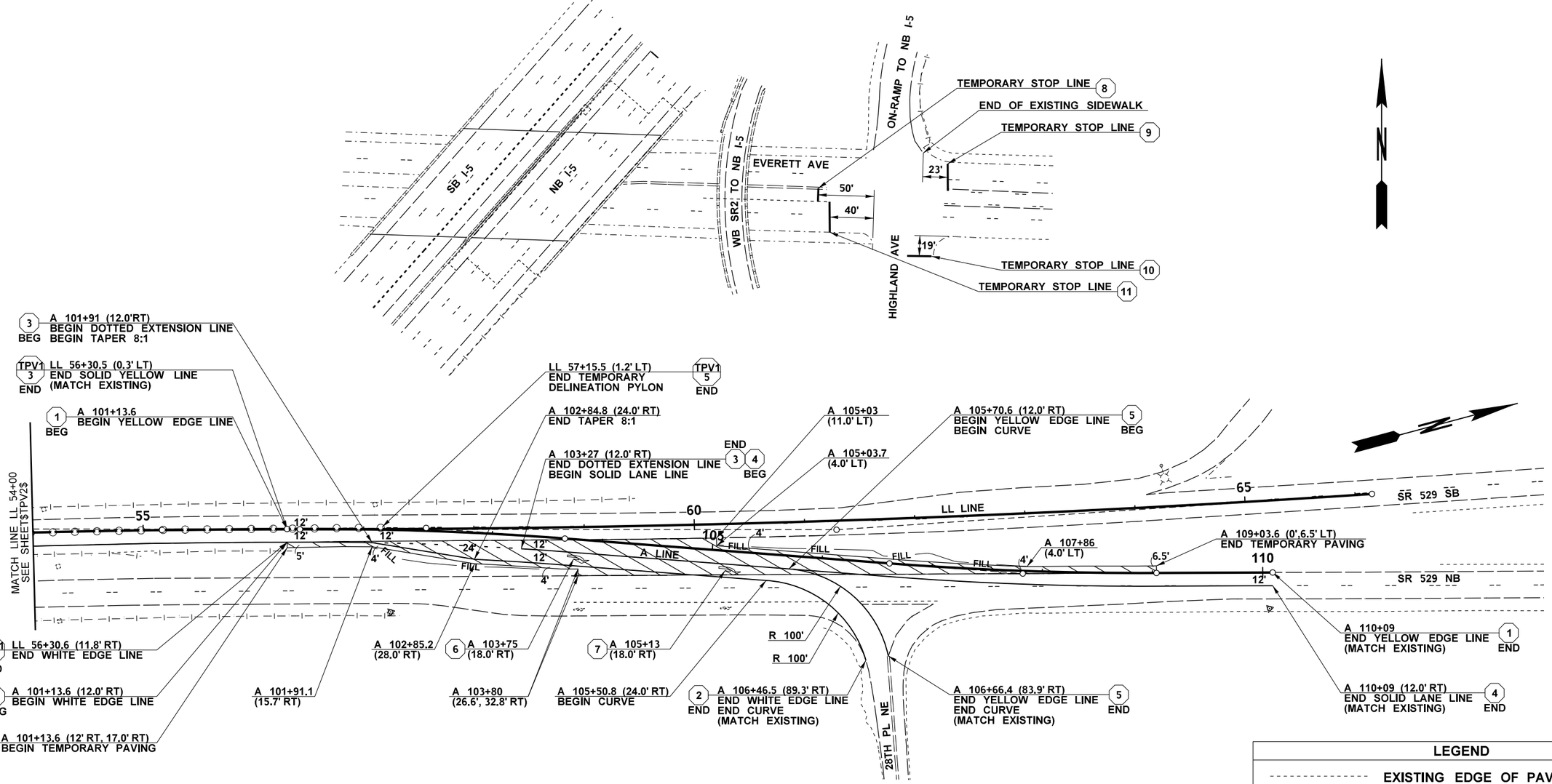

NOTES:

1. SEE PLANS TC25, TC26, TC33 - TC36 FOR NORTHBOUND SR 529 CORSSOVER TO SOUTHBOUND SR 529 TRAFFIC CONTROL PLANS.

2 WHEN THE TEMPORARY CROSSOVER IS NO LONGER NECESSARY, THE CONTRACTOR SHALL

a. REPLACE IMPACTED EXISTING PAVEMENT MARKINGS AND RAISED PAVEMENT MARKERS PER THE LIMITS SHOWN IN QTPM1.

b. REMOVE MEDIAN TEMPORARY DRAINAGE PIPE, CATCH BASINS AND OUTLET PROTECTION PER PLANS DR1 AND DP1.

c RESTORE IMPACTED SHOULDER AND MEDIAN PER THE RESTORATION DETAILS SHOWN IN THE ROADWAY SECTION PLANS.

d. APPLY SEEDING, FERTILIZING, AND MULCHING TO ALL DISTURBED AREAS. SEE SPECIAL PROVISIONS "SEED" AND "FERTILIZER" FOR SEEDING MIX AND FERTILIZER REQUIREMENTS.

e. PLACE COMPOST BLANKET ON ALL AREAS THAT WILL RECEIVE SEEDING, FERTILIZING, AND MULCHING.

NB BRIDGE CLOSED
(3 OF 3)

0 50 100
SCALE IN FEET

LEGEND

- EXISTING EDGE OF PAVEMENT
- EXISTING PAVEMENT MARKING
- HMA
- FILL — FILL LINE
- YELLOW EDGE LINE
- WHITE EDGE LINE
- SOLID LANE LINE
- STOP LINE
- TRAFFIC ARROW
- TEMPORARY DELINEATION PYLON

FILE NAME	T:\412348\XL5462\CAD\ContractPlans\XL5462_PS_32TPV.dgn
TIME	8:21:47 AM
DATE	4/19/2023
PLOTTED BY	walgame
DESIGNED BY	R. CARTER
ENTERED BY	R. CARTER
CHECKED BY	Y. KUANG
PROJ. ENGR.	C. ANDERSON
REGIONAL ADM.	B. NIELSEN

REVISION | DATE | BY

REGION NO. 10 | STATE WASH | FED.AID PROJ.NO.

JOB NUMBER 23A003

CONTRACT NO. | LOCATION NO.

SEE SHEET CT1
DATE
P.E. STAMP BOX

DATE
P.E. STAMP BOX

Washington State Department of Transportation

SR 529
SNOHOMISH RIVER & STEAMBOAT SLOUGH
BRIDGE REPAIR, REHAB & PAINT

TEMPORARY PAVING AND PAVEMENT MARKING PLAN

Plot 3
PLAN REF NO TPV3
SHEET 19 OF 136 SHEETS

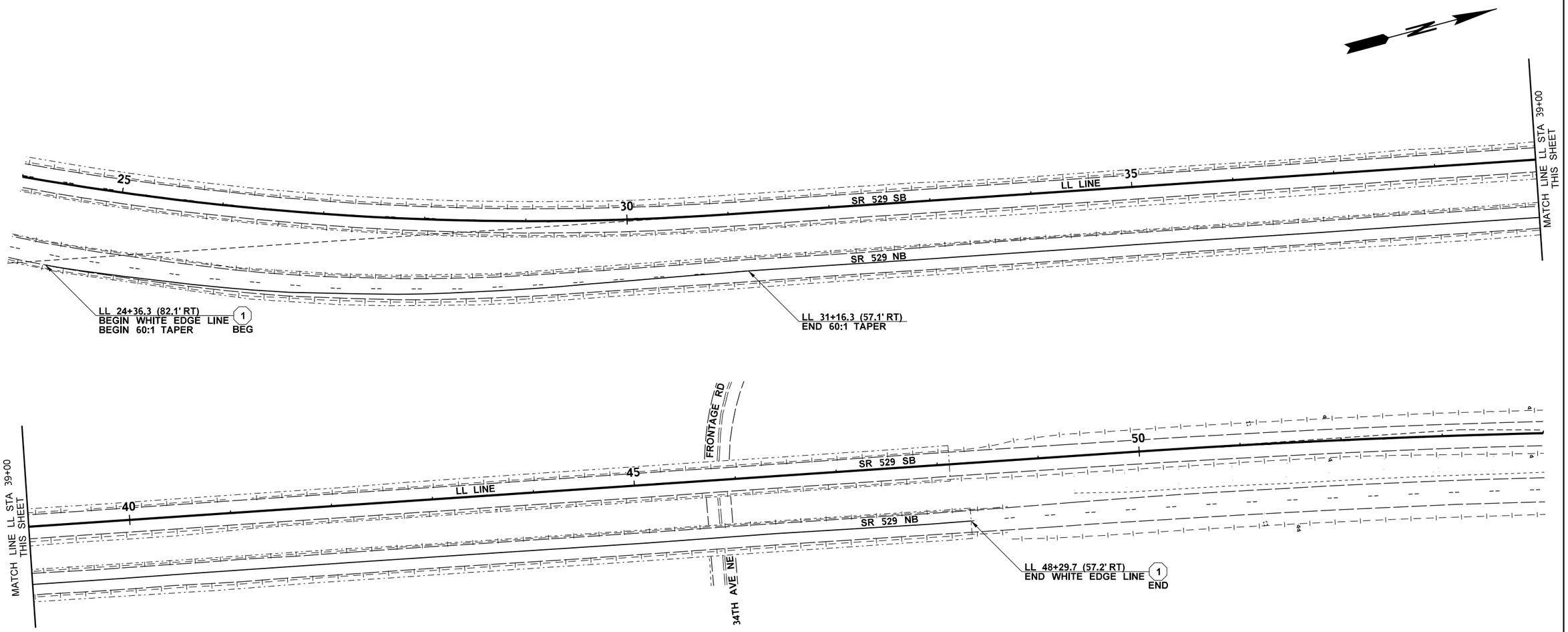

LEGEND

- EXISTING EDGE OF PAVEMENT
- EXISTING PAVEMENT MARKING
- HMA
- FILL — FILL LINE
- YELLOW EDGE LINE
- WHITE EDGE LINE
- SOLID LANE LINE
- STOP LINE
- TRAFFIC ARROW
- TEMPORARY DELINEATION PYLON

NOTES:

1. TEMPORARY PAVEMENT MARKINGS TO BE USED WITH TRAFFIC CONTROL PLANS TC1 - TC4.

2. WHEN NO LONGER NECESSARY, THE CONTRACTOR SHALL REMOVE TEMPORARY PAVEMENT MARKINGS AND REINSTATE EXISTING PAVEMENT MARKINGS.

NB OUTSIDE LANE CLOSED

(1 OF 1)

0 50 100
SCALE IN FEET

FILE NAME	T:\412348\XL5462\CAD\ContractPlans\XL5462_PS_32TPV.dgn
TIME	8:21:55 AM
DATE	4/19/2023
PLOTTED BY	walgame
DESIGNED BY	R. CARTER
ENTERED BY	R. CARTER
CHECKED BY	Y. KUANG
PROJ. ENGR.	C. ANDERSON
REGIONAL ADM.	B. NIELSEN

REVISION | DATE | BY

REGION NO. 10 | STATE WASH | FED.AID PROJ.NO.

JOB NUMBER 23A003

CONTRACT NO. | LOCATION NO.

SEE SHEET CT1
DATE
P.E. STAMP BOX

DATE
P.E. STAMP BOX

Washington State Department of Transportation

SR 529
SNOHOMISH RIVER & STEAMBOAT SLOUGH
BRIDGE REPAIR, REHAB & PAINT

TEMPORARY PAVING AND PAVEMENT MARKING PLAN

Plot 4
PLAN REF NO TPV4
SHEET 20 OF 136 SHEETS

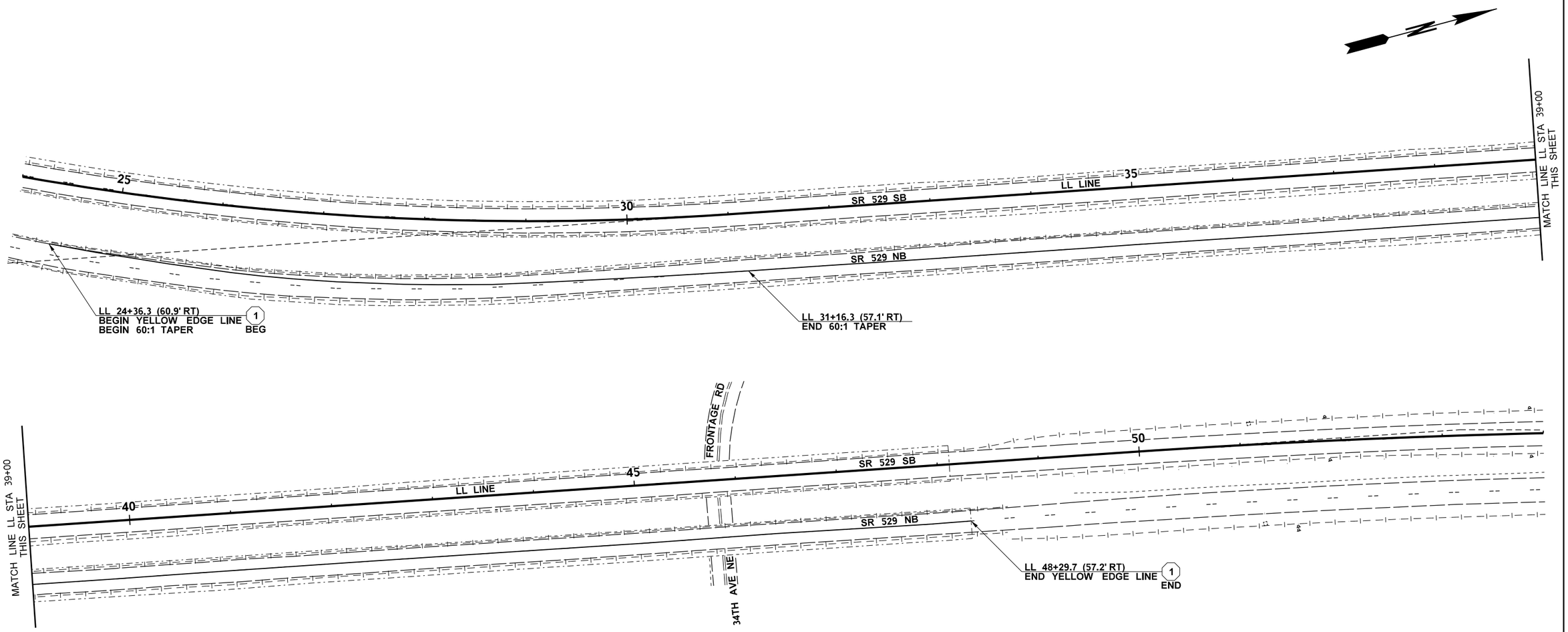

LEGEND

- - - - - - - -	EXISTING EDGE OF PAVEMENT
— — — — —	EXISTING PAVEMENT MARKING
	HMA
– FILL ———	FILL LINE
———	YELLOW EDGE LINE
———	WHITE EDGE LINE
———	SOLID LANE LINE
———	STOP LINE
	TRAFFIC ARROW
○	TEMPORARY DELINEATION PYLON

NOTES:

1. TEMPORARY PAVEMENT MARKINGS TO BE USED WITH TRAFFIC CONTROL PLANS TC7 - TC10.

2. WHEN NO LONGER NECESSARY, THE CONTRACTOR SHALL REMOVE TEMPORARY PAVEMENT MARKINGS AND REINSTATE EXISTING PAVEMENT MARKINGS.

NB INSIDE LANE CLOSED

(1 OF 1)

0 50 100
SCALE IN FEET

FILE NAME	T:\412348\XL5462\CAD\ContractPlans\XL5462_PS_32TPV.dgn
TIME	8:22:06 AM
DATE	4/19/2023
PLOTTED BY	walgame
DESIGNED BY	R. CARTER
ENTERED BY	R. CARTER
CHECKED BY	Y. KUANG
PROJ. ENGR.	C. ANDERSON
REGIONAL ADM.	B. NIELSEN

REVISION	DATE	BY

REGION NO.	STATE	FED.AID PROJ.NO.
10	WASH	
JOB NUMBER 23A003		
CONTRACT NO.		LOCATION NO.

SEE SHEET CT1
DATE
P.E. STAMP BOX

DATE
P.E. STAMP BOX

Washington State
Department of Transportation

SR 529
SNOHOMISH RIVER & STEAMBOAT SLOUGH
BRIDGE REPAIR, REHAB & PAINT

TEMPORARY PAVING AND
PAVEMENT MARKING PLAN

Plot 5
PLAN REF NO
TPV5

SHEET 21 OF 136 SHEETS

SIGN SPECIFICATIONS

GENERAL NOTES (GN):

A) POST LENGTHS AND "W" VALUES SHOWN ARE APPROXIMATE. FINAL VALUES SHALL BE DETERMINED IN THE FIELD BY THE CONTRACTOR PRIOR TO FABRICATION AND INSTALLATION.
B) FOR STRUCTURE AND MOUNTING DETAILS SEE STANDARD PLAN SERIES "G".
C) FOR CODE REFERENCES AND STANDARD DETAILS SEE WASHINGTON STATE SIGN FABRICATION MANUAL.
D) ALL 2.5" PERFORATED SQUARE STEEL TUBE (PSST) POSTS SHALL BE 12 GAGE.
E) 2.5" SQ (SB) AND 2.5" SQ (5) PSST POSTS SHALL HAVE A 12 GAGE 2 1/4" PSST INSERT OF THE SAME LENGTH.
F) SEE STANDARD PLAN G-24.40.
G) ALL WIDE FLANGE STEEL POSTS SHALL BE ASTM A992.
H) ALL ROUND STEEL POSTS ARE MEASURED TO OUTSIDE DIAMETER AND SHALL HAVE TYPE AP SIGN SUPPORTS.
I) ALL SIGNS 36" OR WIDER SHALL BE BRACED IN ACCORDANCE WITH STANDARD PLAN G-50.10.
J) 5", 6", 7" AND 8" SQUARE STEEL TUBE SIGN POSTS SHALL HAVE TYPE TP-B BASES. ASTM A36 W6x12 FOUNDATION SPECIFICATIONS SHALL BE USED UNLESS OTHERWISE NOTED IN THE PLANS .
K) ALL 3" SOLID SQUARE STEEL TUBE POSTS SHALL BE 7 GAGE.
L) SEE STANDARD PLAN G-24.50.
M) ALL OVERHEAD SIGN MOUNTING HARDWARE SHALL BE NEW UNLESS OTHERWISE SHOWN ON THE PLANS OR SIGN SPECIFICATION SHEETS.

OVERHEAD SHEETING

TYPE OF SIGN	SHEETING TYPE	
	BACKGROUND	LEGEND / BORDER
GUIDE	IV	XI
EXIT ONLY / LEFT PLAQUE	IV	XI
STREET NAME	IV	XI
REGULATORY	IV	N/A
WARNING	IX OR XI	N/A

ABBREVIATIONS LEGEND

AAH	ADOPT A HIGHWAY
AHD	AHEAD
BR MOUNT	BRIDGE MOUNTED SIGN BRACKET
BTWN	BETWEEN
CANT	CANTILEVER
CL	CENTER LINE
CN	CONSTRUCTION NOTE
CONT	CONTINUED
EX OR EXIST	EXISTING
FY	FLUORESCENT YELLOW
HAR	HIGHWAY ADVISORY RADIO
I/S	INTERSECTION
LT	LEFT
LT STD	LIGHT STANDARD
MOD	MODIFIED
MP	MILE POST
MTG HDWR	MOUNTING HARDWARE
N/A	NOT APPLICABLE
NO.	NUMBER
PED	PEDESTRIAN
PERP	PERPENDICULAR
PSST	PERFORATED SQUARE STEEL TUBE
R-	REMOVAL
RT	RIGHT
SIG POLE	SIGNAL POLE
SIGN BR	SIGN BRIDGE
SB	SLIP BASE
SQ	SQUARE
STA	STATION
TYP	TYPICAL
W/	WITH
XING OR X-ING	CROSSING

2 1/2" PERFORATED & 3" SQUARE STEEL TUBE SIGN POST SUPPORTS

POST SIZE (#)	CALL OUT IN THE POST SIZE COLUMN	SIGN SUPPORT TYPE	GENERAL NOTE
2 1/2"	2.5" SQ (1)	ST-1	D, L
2 1/2"	2.5" SQ (4)	ST-4	D, L
2 1/2"	2.5" SQ (SB)	SB-1, SB-2 OR SB-3	D, E, F
2 1/2"	2.5" SQ (5)	ST-4	D, E, L
3"	3" SQ (SB)	SB-1 OR SB-3	K, F
3"	3" SQ (5)	ST-4	K. L

DESIGNED BY	W. ALMUSTAFA			
ENTERED BY	W. ALMUSTAFA			
CHECKED BY	C. WOO			
PROJ. ENGR.	C. ANDERSON			
REGION ADM.	B. NIELSEN			
		REVISION	DATE	BY

REGION NO.	STATE	FED. AID PROJ. NO.
10	WASH	
JOB NUMBER 23A003		
CONTRACT NO.		

SEE SHEET CT1
DATE
P.E. STAMP BOX

Washington State Department of Transportation

SR 529
SNOHOMISH RIVER & STEAMBOAT SLOUGH
BRIDGE REPAIR, REHAB & PAINT

SIGN SPECIFICATIONS

SS1

SHEET 22 OF 136 SHEETS

SIGN SPECIFICATIONS

SIGN NO.	SIGNCODE	DESCRIPTION	STATION	SIGN SIZE X	SIGN SIZE Y	SHEETING TYPE	LETTER SIZE OR CODE	POST MATERIAL	POST SIZE	SIGN SUPPORT	POST LENGTH	CLEARANCE V	CLEARANCE W	REMARKS
R-1		DRAW BRIDGE	529 A 102+99.51 (21 RT)	EX	EX			EX						REMOVE EXISTING SIGN AND POST.
R-2		BE PREPARED TO STOP	529 A 102+99.51 (21 RT)	EX	EX			EX						REMOVE EXISTING SIGN AND POST.
R-3		WRONG WAY	529 A 104+51.31 (16 RT)	EX	EX			EX						REMOVE EXISTING SIGN AND POST.
R-4		DO NOT ENTER	529 A 105+98.81 (5 RT)	EX	EX			EX						REMOVE EXISTING SIGN AND POST.
R-5		MARINA NEXT RIGHT	529 LL 54+63.93 (83 RT)	EX	EX			EX						REMOVE EXISTING SIGN AND POST.
6	D1-602 MOD	28TH PI NE SMITH ISLAND NEXT RIGHT	529 LL 54+78.46 (86 RT)	6'-6"	54"	IV	SEE SIGN DETAIL	STEEL		ST-4	*			INSTALL NEW SIGN WITH DOUBLE POST. SEE SIGN DETAILS IN SHEET ELD1
7		EVERETT ANIMAL SHELTER	529 LL 57+20.88 (86 RT)	EX	EX			EX						RELOCATE EXISTING SIGN AND POST TO NEW LOCATION
R-8		ADOPT A HIGHWAY LITTER CONTROL	529 LL 57+27.91 (83 RT)	EX	EX			EX						REMOVE EXISTING SIGN AND POST.
R-9		DRAW BRIDGE	529 LL 58+16.66 (26 LT)	EX	EX			EX						REMOVE EXISTING SIGN AND POST.
R-10		BE PREPARED TO STOP	529 LL 58+16.66 (26 LT)	EX	EX			EX						REMOVE EXISTING SIGN AND POST.
11	W14-1001	DRAW BRIDGE	529 LL 58+18.17 (32 LT)	48"	48"	IV	STANDARD	STEEL				7' MIN.		MOUNT SIGN ON FB POLE. SEE SHEET ELD1.
12	W20-7B MOD	BE PREPARED TO STOP	529 LL 58+18.17 (32 LT)	5'-6"	30"	IV	SEE SIGN DETAIL	STEEL				5' MIN.		MOUNT SIGN ON FB POLE. SEE SHEET ELD1.
13	W14-1001	DRAW BRIDGE	529 LL 58+18.23 (25 RT)	48"	48"	IV	STANDARD	STEEL				7' MIN.		MOUNT SIGN ON FB POLE. SEE SHEET ELD1.
14	W20-7B MOD	BE PREPARED TO STOP	529 LL 58+18.23 (25 RT)	5'-6"	30"	IV	SEE SIGN DETAIL	STEEL				5' MIN.		MOUNT SIGN ON FB POLE. SEE SHEET ELD1.
15	R5-A	WRONG WAY	529 LL 59+65.79 (34 RT)	42"	30"	IV	STANDARD	STEEL	2.5" SQ	ST-4	*			INSTALL NEW SIGN AND POST.
16	D1-602 MOD	28TH PI NE SMITH ISLAND ACCESS –>	529 LL 61+05.8 (102 RT)	5'	48"	IV	SEE SIGN DETAIL	STEEL	2.5" SQ	ST-4	*			INSTALL NEW SIGN WITH DOUBLE POST. SEE SIGN DETAILS IN SHEET ELD1
17	R5-1	DO NOT ENTER	529 LL 61+13.43 (39 RT)	48"	48"	IV	STANDARD	STEEL	2.5" SQ	ST-4	*			INSTALL NEW SIGN AND POST.
18	R5-1	DO NOT ENTER	529 LL 61+14.67 (103 RT)	48"	48"	IV	STANDARD	STEEL	2.5" SQ	ST-4	*			INSTALL NEW SIGN AND POST.
19		28TH PI NE SMITH ISLAND ACCESS –>	529 LL 61+29.65 (105 RT)	EX	EX			EX						REMOVE EXISTING SIGN AND POST.
20		DO NOT ENTER	529 LL 61+29.65 (105 RT)	EX	EX			EX						REMOVE EXISTING SIGN AND POST.
21	R6-1R	ONE WAY ---->	529 LL 61+85.64 (36 RT)	54"	18"	IV	STANDARD	STEEL	2.5" SQ	ST-4	*			INSTALL NEW SIGN AND POST.

CONSTRUCTION NOTES

* POST LENGTHS SHALL BE DETERMINED IN THE FIELD BY THE CONTRACTOR PRIOR TO FABRICATION AND INSTALLATION.

GENERAL NOTES

1. FOR GROUND MOUNTING DETAILS SEE STANDARD PLAN G-20.10 FOR MOUNTING DETAILS. USE ALL NEW MOUNTING HARDWARE.
2. FOR CODE REFERENCES AND STANDARD DETAILS SEE WASHINGTON STATE SIGN FABRICATION MANUAL.
3. ALL SIGNS IDENTIFIED TO BE REMOVED SHALL BE REMOVED PER WSDOT STD. SPECIFICATIONS

CONSTRUCTION NOTES:

1. REMOVE EXISTING SIGN, POSTS, AND FLASHING BEACONS.
2. DISCONNECT FLASHING BEACON WIRES. COIL AND STORE THE WIRE INSIDE THE JUNCTION BOX.
3. INSTALL 50' CLASS 5 TIMBER LIGHT STANDARD. REMOVE AFTER PERMANENT CONFIGURATION IS RESTORED.
4. INSTALL 50' CLASS 5 TIMBER POLE. INSTALL 2" CONDUIT RISER MIN. 10' UP THE TIMBER POLE. ROUTE THE CONDUIT TO THE EXISTING JUNCTION BOX.
5. REPLACE EXISTING JUNCTION BOXES WITH HEAVY DUTY JUNCTION BOX. ADJUST TO GRADE. RAISE CONDUIT STUB OUT TO MIN. 6" FROM LID.
6. REMOVE EXISTING LIGHT STANDARD FOUNDATION. REMOVE EXISTING CONDUIT FROM THE FOUNDATION TO THE JUNCTION BOX.
7. INSTALL CONDUIT AND ROUTE TO THE EXISTING JUNCTION BOX.
8. SPAN WIRE SHALL BE 17.5' MIN. VERTICAL CLEARANCE AND SHALL HAVE 10' MIN. CLEARANCE FROM UTILITY POWER LINE.
9. COIL AND STORE EXISTING LIGHTING WIRES INSIDE THE JUNCTION BOX.

WIRING SCHEDULE — **SERVICE NO. SAC 0557**

NO.	CONDUIT SIZE	CONDUCTORS EXISTING	CONDUCTORS NEW	CIRCUIT	COMMENTS
1	SPAN WIRE		1-#6 TRIPLEX	1	
2	2"		1-#6 TRIPLEX	1	
3	EX 2"		1-#6 TRIPLEX	1	
		EX			

LEGEND

EXISTING	NEW	
		JUNCTION BOX TYPE 1
		JUNCTION BOX TYPE 2
		JUNCTION BOX TYPE 4
		ELECTRICAL SERVICE CABINET
		TIMBER LIGHT STANDARD
		STEEL LIGHT STANDARD
		TIMBER POLE
		DOWN GUY
		SPAN WIRE
	R-___	SIGN REMOVAL NOTE
	?	SIGN NOTE FLAG
		EXISTING SIGN(S) & POST(S)
		NEW SIGN(S) & POST(S)
		FLASHING BEACON
		CONDUIT
	X	CONSRUCTION NOTE FLAG
	x	WIRING NOTE FLAG
	?	POLE NOTE FLAG

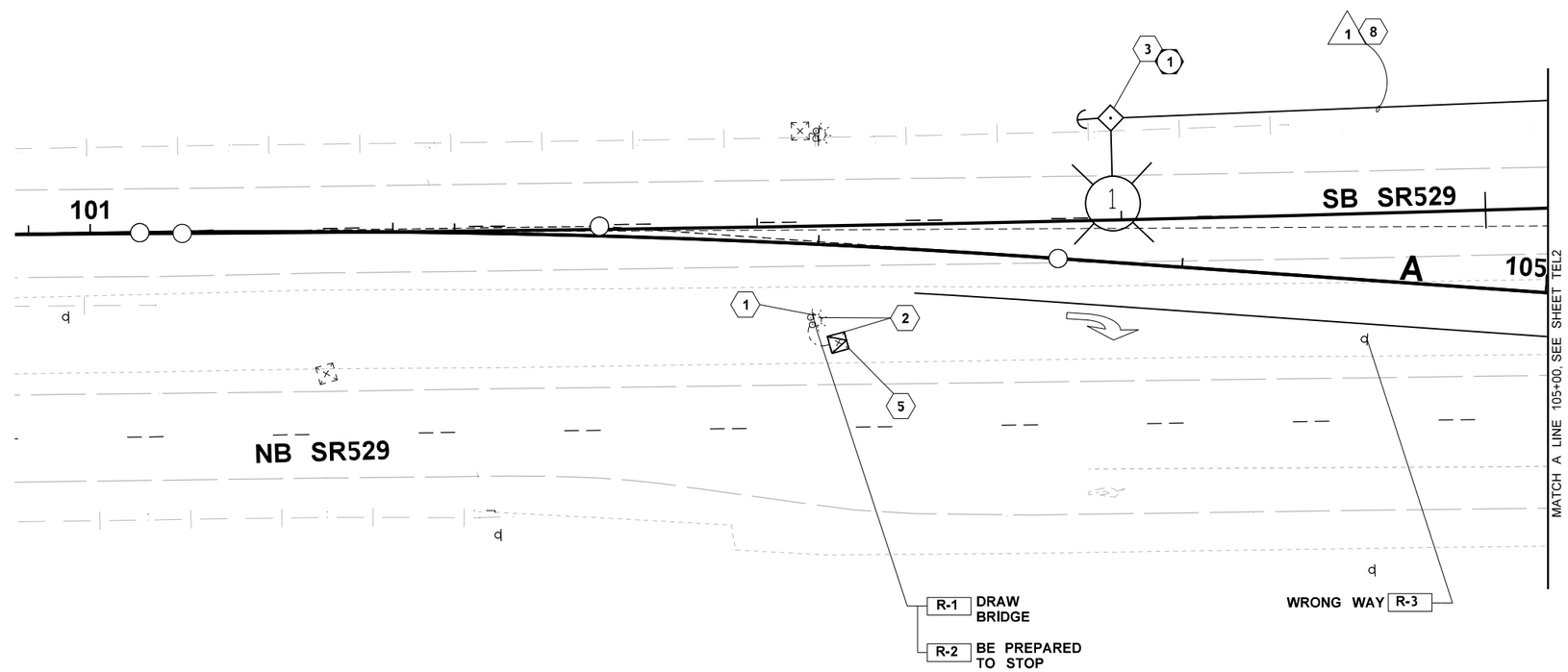

ABBREVIATION LIST

AMP	AMPERAGE
EX., EXIST.	EXISTING
FB	FLASHING BEACON
LT	LEFT
N/A	NOT APPLICABLE
NO.	NUMBER
R/W	RIGHT OF WAY
RT	RIGHT
STA.	STATION
V	VOLT

0 20 40
SCALE IN FEET

FILE NAME	T:\414121\Traffic Design_PROJECTS\SR 529\XL5462 - SR529 Snohomish River- Bridge Repair, Rehab &Paint\XL5462_PS_EL.dgn
TIME	4:43:14 PM
DATE	4/11/2023
PLOTTED BY	AlmustW
DESIGNED BY	W. ALMUSTAFA
ENTERED BY	W. ALMUSTAFA
CHECKED BY	C. WOO
PROJ. ENGR.	C. ANDERSON
REGIONAL ADM.	B. NIELSEN

REVISION | DATE | BY

REGION NO. 10 | STATE WASH | FED.AID PROJ.NO.

JOB NUMBER 23A003

CONTRACT NO. | LOCATION NO.

DUKE HUU DO — STATE OF WASHINGTON — 31740 — REGISTERED PROFESSIONAL ENGINEER

SEE SHEET CT1

DATE

P.E. STAMP BOX

DATE

P.E. STAMP BOX

Washington State Department of Transportation

SR 529
SNOHOMISH RIVER & STEAMBOAT SLOUGH
BRIDGE REPAIR, REHAB & PAINT

TEMPORARY ELECTRICAL & SIGNING PLAN

Plot 4

PLAN REF NO TEL1

SHEET 24 OF 136 SHEETS

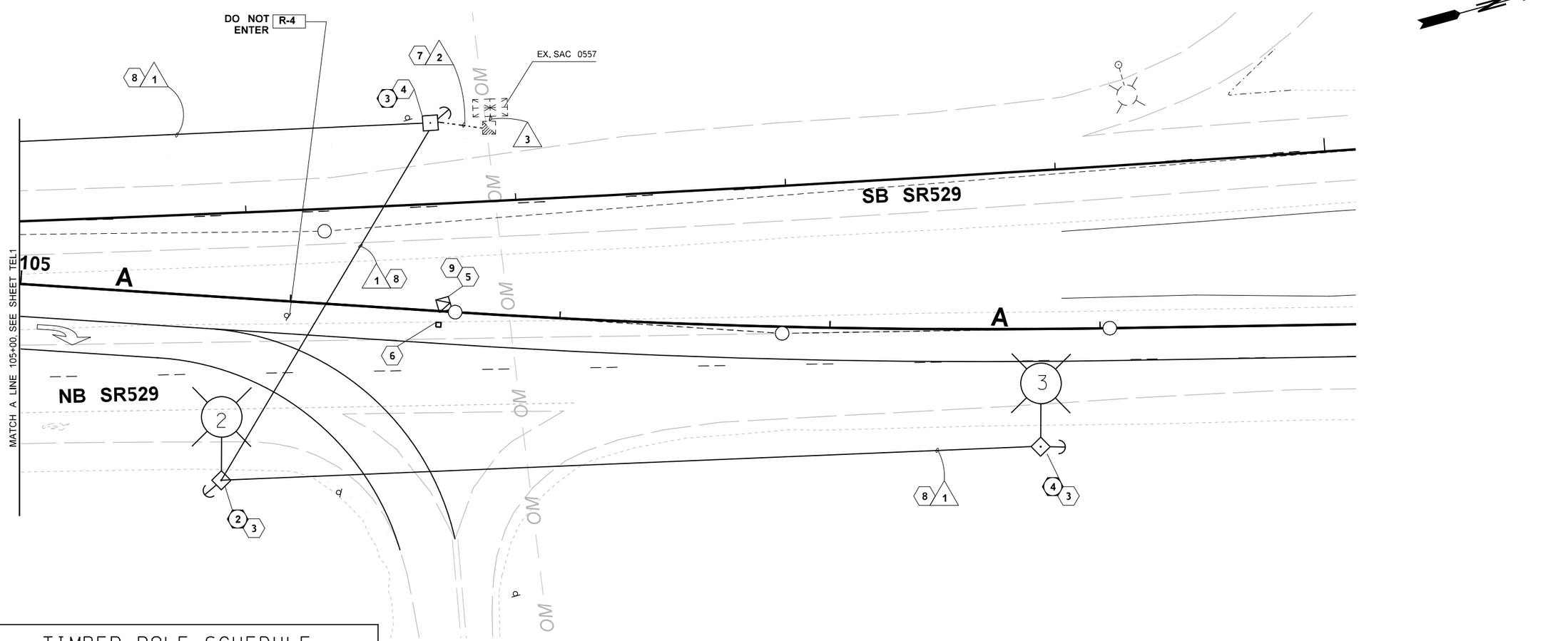

TIMBER POLE SCHEDULE

⬡	LOCATION	POLE CLASS	HEIGHT
1	A 103+77.54 (39' LT)	CLASS 5	50'
2	A 105+78.81 (68' RT)	CLASS 5	50'
3	A 106+47.43 (69' LT)	CLASS 5	50'
4	A 108+79.79 (44' RT)	CLASS 5	50'

LUMINAIRE SCHEDULE

EX. SERVICE NO. SAC 0557 (120/240)

LUMINAIRE NUMBER	CIRCUIT	LOCATION		TYPE- DISTRIBUTION- EWATTAGE	MAST ARM	H1	BASE TYPE	FOUNDATION TYPE	COMMENTS
		STATION	OFFSET						
1	1	A 103+77.54	39' RT	LED* (400W HPS EQUIVALENT)	16'	40'	---	---	TIMBER POLE
2	1	A 105+78.81	68' RT	LED* (400W HPS EQUIVALENT)	16'	40'	---	---	TIMBER POLE
3	1	A 108+79.79	44' RT	LED* (400W HPS EQUIVALENT)	16'	40'	---	---	TIMBER POLE

* LED LUMINAIRE SHALL BE EQUIVALENT TO 400W/ 240V HPS

GENERAL NOTES:
FOR CONSTRUCTION NOTES, LEGEND, ABBREVIATIONS, AND WIRE NOTES, SEE SHEET TEL1.

0 20 40
SCALE IN FEET

FILE NAME	T:\414121\Traffic Design_PROJECTS\SR 529\XL5462 - SR529 Snohomish River- Birdge Repair, Rehab &Paint\XL5462_PS_EL.dgn
TIME	4:43:15 PM
DATE	4/11/2023
PLOTTED BY	AlmustW
DESIGNED BY	W. ALMUSTAFA
ENTERED BY	W. ALMUSTAFA
CHECKED BY	C. WOO
PROJ. ENGR.	C. ANDERSON
REGIONAL ADM.	B. NIELSEN

REVISION | DATE | BY

REGION NO. 10 | STATE WASH | FED.AID PROJ.NO.

JOB NUMBER 23A003

CONTRACT NO. | LOCATION NO.

DUKE HULDO STATE OF WASHINGTON 31740 REGISTERED PROFESSIONAL ENGINEER

SEE SHEET CT1
DATE
P.E. STAMP BOX

DATE
P.E. STAMP BOX

Washington State Department of Transportation

SR 529
SNOHOMISH RIVER & STEAMBOAT SLOUGH
BRIDGE REPAIR, REHAB & PAINT

TEMPORARY ELECTRICAL & SIGNING PLAN

Plot 5
PLAN REF NO TEL2
SHEET 25 OF 136 SHEETS

CONSTRUCTION NOTES:

1. INSTALL FLASHING BEACON TYPE FB SIGNAL STANDARD,SLIP BASE FOUNDATION, 12" LED SIGNAL FLASHING BEACON ASSEMBLY, SIGNS, WIRES WITH QUICK DISCONNECTS, AND ASSOCIATED EQUIPMENT IN ACCORDANCE WITH STANDARD PLAN J-21.16, AND ELECTRICAL AND SIGNING DETAILS SHEET ELD1. UNCOIL AND SPLICE WIRES IN THE JUNCTION BOX.
2. ADJUST JUNCTION BOX TO GRADE. LOWER CONDUIT STUB TO MIN. 6" FROM LID.
3. CONSTRUCT FOUNDATION AND INSTALL LUMINARE STANDARD. SEE LUMINAIRE SCHEDULE.
4. UNCOIL AND SPLICE EXISTING LIGHTING WIRES WITH NEW 2- #10 WIRES INSIDE THE JUNCTION BOX.
5. DISCONNECT AND REMOVE FLASHING BEACON, SIGNS, AND POST. INSTALL FLASHING BEACON TYPE FB SIGNAL STANDARD, SLIP BASE FOUNDATION,12" LED SIGNAL FLASHING BEACON ASSEMBLY, SIGNS, WIRES WITH QUICK DISCONNECTS, AND ASSOCIATED EQUIPMENT IN ACCORDANCE WITH STANDARD PLAN J-21.16, AND ELECTRICAL AND SIGNING DETAILS SHEET ELD1.
6. INSTALL NEW CONDUIT AND ROUTE TO THE JUNCTION BOX. SPLICE FLASHING BEACON WIRES INSIDE THE JUNCTION BOX.

LEGEND

EXISTING	NEW	
		JUNCTION BOX TYPE 1
		JUNCTION BOX TYPE 2
		JUNCTION BOX TYPE 4
		ELECTRICAL SERVICE CABINET
		STEEL LIGHT STANDARD
		NEW LOCATION
	?	SIGN REMOVAL NOTE
		EXISTING LOCATION
	R-___	SIGN REMOVAL NOTE
	?	SIGN NOTE FLAG
		EXISTING SIGN(S) & POST(S)
		NEW SIGN(S) & POST(S)
		FLASHING BEACON
		CONDUIT
	X	CONSRUCTION NOTE FLAG
	x	WIRING NOTE FLAG
	?	POLE NOTE FLAG

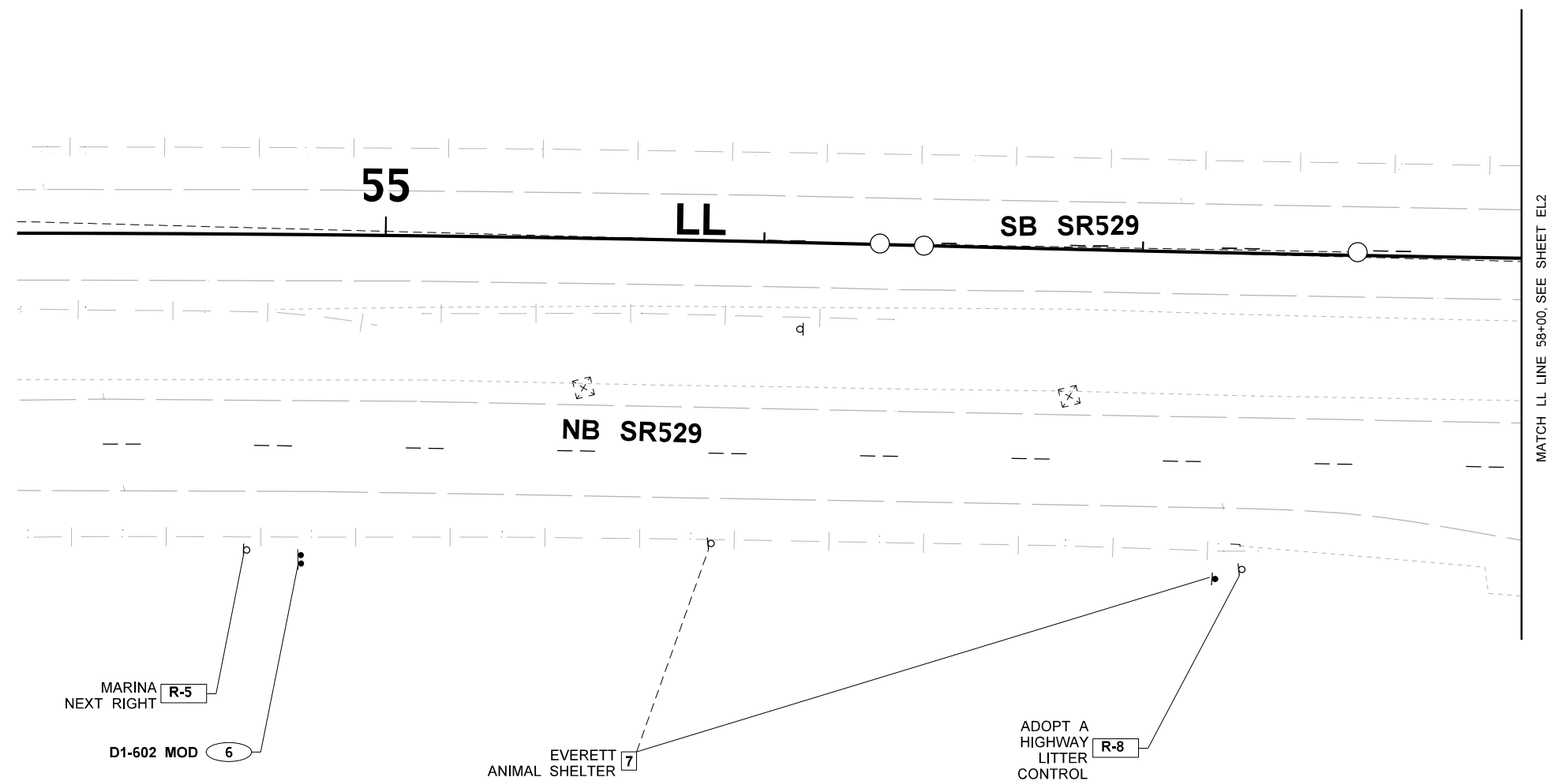

ABBREVIATION LIST

AMP	AMPERAGE
EX., EXIST.	EXISTING
FB	FLASHING BEACON
LT	LEFT
N/A	NOT APPLICABLE
NO.	NUMBER
R/W	RIGHT OF WAY
RT	RIGHT
STA.	STATION
V	VOLT

FILE NAME	T:\414121\Traffic Design_PROJECTS\SR 529\XL5462 - SR529 Snohomish River- Bridge Repair, Rehab &Paint\XL5462_PS_EL.dgn					
TIME	4:43:16 PM					
DATE	4/11/2023					
PLOTTED BY	AlmustW					
DESIGNED BY	W. ALMUSTAFA					
ENTERED BY	W. ALMUSTAFA					
CHECKED BY	C. WOO					
PROJ. ENGR.	C. ANDERSON					
REGIONAL ADM.	B. NIELSEN	REVISION	DATE	BY		

REGION NO.	STATE	FED.AID PROJ.NO.
10	WASH	
JOB NUMBER 23A003		
CONTRACT NO.		LOCATION NO.

SEE SHEET CT1

P.E. STAMP BOX — DATE

P.E. STAMP BOX — DATE

Washington State Department of Transportation

SR 529
SNOHOMISH RIVER & STEAMBOAT SLOUGH
BRIDGE REPAIR, REHAB & PAINT

ELECTRICAL & SIGNING PLAN

Plot 15

PLAN REF NO EL1

SHEET 26 OF 136 SHEETS

LUMINAIRE SCHEDULE — EX. SERVICE NO. SAC 0557 (120/240)

LUMINAIRE NUMBER	CIRCUIT	LOCATION STATION	LOCATION OFFSET	TYPE- DISTRIBUTION- EWATTAGE	MAST ARM	H1	BASE TYPE	FOUNDATION TYPE	COMMENTS
4	1	LL 61+71.28	39' RT	LED* (400W HPS EQUIVALENT)	16'	40'	SLIP	B	METAL LIGHT POLE

* LED LUMINAIRE SHALL BE EQUIVALENT TO 400W/ 240V HPS

WIRING SCHEDULE — EX. SERVICE NO. SAC 0557

NO.	CONDUIT SIZE	CONDUCTORS EXISTING	CONDUCTORS NEW	CIRCUIT	COMMENTS
1	1"		2-#10	1	
2	2"		1-3C		

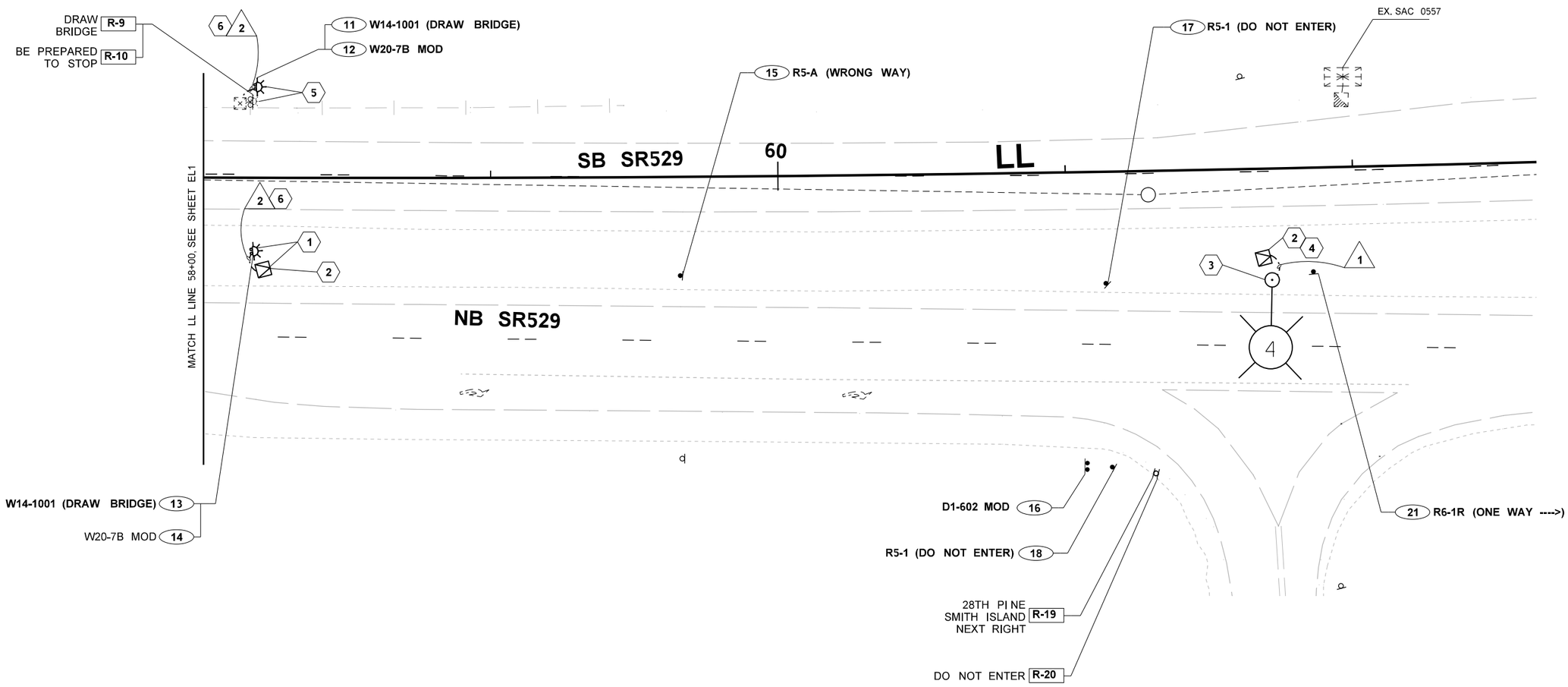

GENERAL NOTES:
FOR LEGEND, AND ABBREVIATIONS SEE SHEET EL1.

0 20 40
SCALE IN FEET

FILE NAME	T:\414121\Traffic Design_PROJECTS\SR 529\XL5462 - SR529 Snohomish River- Bridge Repair, Rehab &Paint\XL5462_PS_EL.dgn
TIME	4:43:17 PM
DATE	4/11/2023
PLOTTED BY	AlmustW
DESIGNED BY	W. ALMUSTAFA
ENTERED BY	W. ALMUSTAFA
CHECKED BY	C. WOO
PROJ. ENGR.	C. ANDERSON
REGIONAL ADM.	B. NIELSEN

REVISION | DATE | BY

REGION NO. 10 | STATE WASH | FED.AID PROJ.NO.
JOB NUMBER 23A003
CONTRACT NO. | LOCATION NO.

DUKE HULDO — STATE OF WASHINGTON — 31740 — REGISTERED PROFESSIONAL ENGINEER
SEE SHEET CT1
DATE
P.E. STAMP BOX

DATE
P.E. STAMP BOX

Washington State Department of Transportation

SR 529
SNOHOMISH RIVER & STEAMBOAT SLOUGH
BRIDGE REPAIR, REHAB & PAINT

ELECTRICAL & SIGNING PLAN

Plot 6
PLAN REF NO EL2
SHEET 27 OF 136 SHEETS

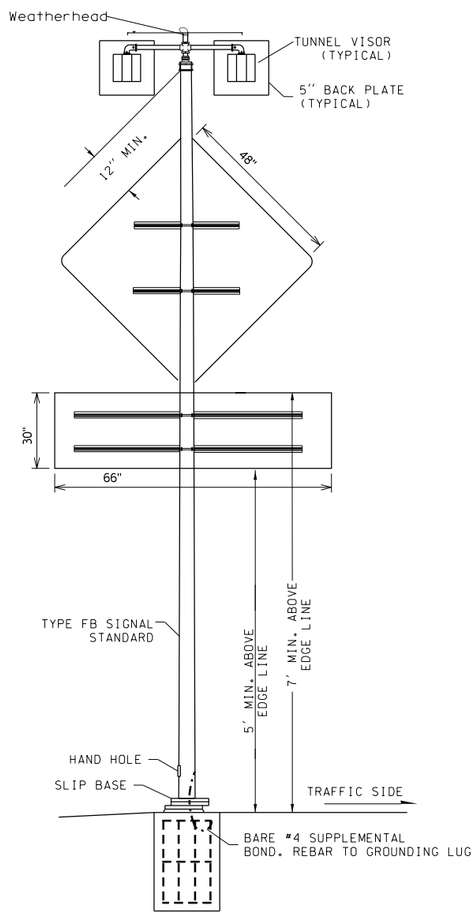

FLASHING BEACON DETAIL

3.0" Radius, 1.3" Border, 0.8" Indent, None on None;
"BE PREPARED", C; "TO STOP", C;

W20-7B MOD
BLACK ON YELLOW

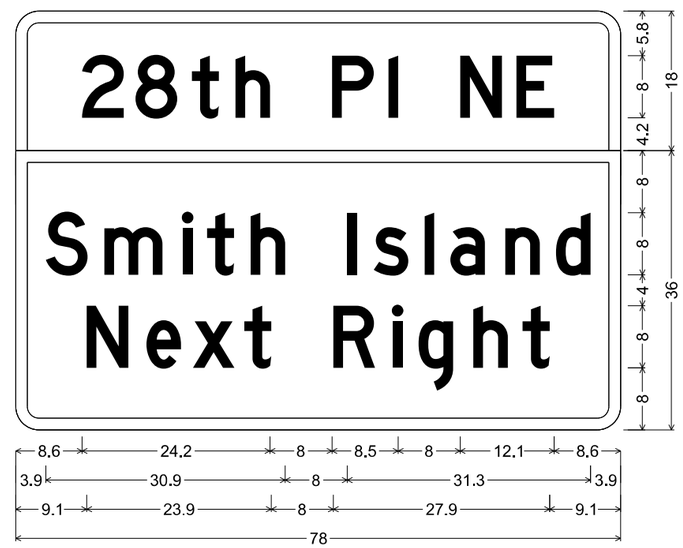

3.0" Radius, 1.5" Border, None on None;
"28th Pl NE", D;
3.0" Radius, 1.5" Border, None on None;
"Smith Island", D; "Next Right", D;

D1-602 MOD
WHITE ON GREEN

6

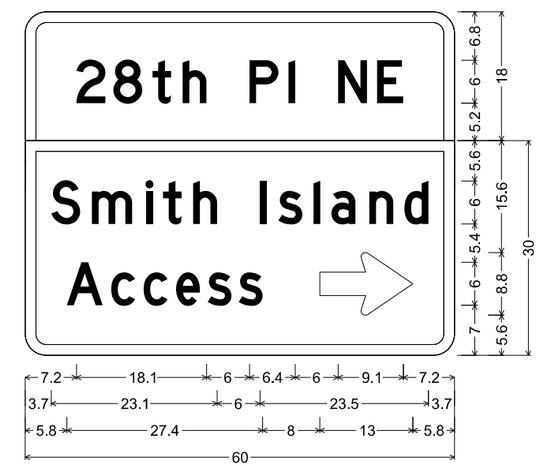

3.0" Radius, 1.5" Border, None on None;
"28th Pl NE", D;
"Smith Island", D; "Access ", D;
Standard Arrow Custom 13.0" X 8.8" 0°;

D1-602 MOD
WHITE ON GREEN

16

* ALL DIMENSIONS IN INCHES

FILE NAME	T:\414121\Traffic Design_PROJECTS\SR 529\XL5462 - SR529 Snohomish River- Bridge Repair, Rehab &Paint\XL5462_PS_EL.dgn			
TIME	4:43:18 PM			
DATE	4/11/2023			
PLOTTED BY	AlmustW			
DESIGNED BY	W. ALMUSTAFA			
ENTERED BY	W. ALMUSTAFA			
CHECKED BY	C. WOO			
PROJ. ENGR.	C. ANDERSON			
REGIONAL ADM.	B. NIELSEN	REVISION	DATE	BY

REGION NO.	STATE	FED.AID PROJ.NO.
10	WASH	
JOB NUMBER 23A003		
CONTRACT NO.		LOCATION NO.

DUKE HULL DO
STATE OF WASHINGTON
31740
REGISTERED
PROFESSIONAL ENGINEER

SEE SHEET CT1
DATE
P.E. STAMP BOX

DATE
P.E. STAMP BOX

Washington State
Department of Transportation

SR 529
SNOHOMISH RIVER & STEAMBOAT SLOUGH
BRIDGE REPAIR, REHAB & PAINT

ELECTRICAL & SIGNING DETAILS

Plot 8
PLAN REF NO
ELD1
SHEET 28 OF 136 SHEETS

CONSTRUCTION NOTES:

1. INSTALL TIMBER POLE, DOWN GUY PER STANDARD PLAN J-15.15. SEE TIMBER POLE SCHEDULE. VERIFY LOCATION WITH ENGINEER. INSTALL POLE LINE HARDWARE AND 3/8" MESSENGER CABLES ON TIMBER POLE. REMOVE TIMBER POLE AND ASSOCIATED EQUIPMENT AFTER TEMPORARY CONFIGURATION PERIOD IS DONE.
2. INSTALL SPAN WIRE ON TIMBER POLE, MAINTAIN MINIMUM VERTICAL CLEARANCE OF 16.5' PER STANDARD PLAN J-15.15. INSTALL SIGNAL HEADS WITH CAP VISORS, SIGNAL CABLES, AND PREEMPTION DETECTORS ON SPAN WIRE. REMOVE THE SPAN WIRE AND ASSOCIATED EQUIPMENT AFTER THE TEMPORARY CONFIGURATION PERIOD IS DONE.
3. INSTALL VIDEO DETECTION CAMERA ON TIMBER POLE AND MAKE CONNECTION. REMOVE CAMERA AND ASSOCIATED EQUIPMENT AFTER TEMPORARY CONFIGURATION PERIOD IS DONE.
4. INSTALL TIMBER POLE WITH TERMINAL CABINET, PEDESTRIAN SIGNAL DISPLAY AND APS PUSHBUTTON ASSEMBLY WITH THE SIGN ARROW POINTING TO THE LEFT AND PARALLEL WITH ASSOCIATED CROSSWALK. INSTALL THE CENTER OF THE PUSHBUTTON 42" ABOVE GRADE AND 9" MAXIMUM REACH.
5. INSTALL PRE-FABRICATED FOUNDATION, SEE SHEET TSG6 FOR DETAIL. INSTALL TYPE 332 CONTROLLER CABINET WITH 2070 CONTROLLER ON FOUNDATION. CONTRACTOR SHALL PROVIDE ALL OTHER ASSOCIATED EQUIPMENT FOR FULLY OPERATIONAL SIGNAL SYSTEM. REMOVE CONTROLLER CABINET, FOUNDATION AND ALL ASSOCIATED EQUIPMENT AFTER THE TEMPORARY CONFIGURATION PERIOD IS DONE.
6. INSTALL 16' TEMPORARY TIMBER POST IN A CONCRETE BARREL WITH PEDESTRIAN SIGNAL DISPLAY AND APS PUSHBUTTON ASSEMBLY WITH THE SIGN ARROW POINTING TO THE RIGHT AND PARALLEL WITH ASSOCIATED CROSSWALK. INSTALL THE CENTER OF THE PUSHBUTTON 42" ABOVE GRADE AND 9" MAXIMUM REACH. MAINTAIN MINIMUM 4' HORIZONTAL CLEARANCE OF THE SIDEWALK EAST OF THE CONCRETE BARREL. ROUTE TEMPORARY PEDESTRIAN WIRES AERIALLY AND ATTACH TO THE SPAN WIRE.
7. INSTALL 3" CONDUIT RISER MIN. 10' UP ON TIMBER POLE WITH WEATHER HEADS.
8. INSTALL LUMINAIRE ON TIMBER POLE IN ACCORDANCE WITH STANDARD PLAN J-15.10.
9. PROTECT AND PRESERVE EXISTING CONDUIT.
10. INSTALL SPANWIRE ON EXISTING LUMINAIRE POLE. ROUTE TO TIMBER POLE 6. ATTACH PED HEAD AND PED DISPLAY WIRES ON SPAN WIRE AND ROUTE TO THE SIGNAL CONTROLLER.
11. INSTALL 1.25" CONDUIT RISER MIN. 10' UP ON TIMBER POLE WITH WEATHER HEADS. ROUTE CONDUIT TO EXISTING JUNCTION BOX. SPLICE A NEW CONDUCTORS TO THE EXISTING LIGHTING CIRCUIT INSIDE JUNCTION BOX.
12. INSTALL 2" CONDUIT FROM SIGNAL CABINET TO THE EXISTING JUNCTION BOX.
13. INSTALL 1" CONDUIT FROM SIGNAL CABINET TO THE EXISTING PULL BOX.

WIRING SCHEDULE SERVICE NO. SAC 1585

NO.	CONDUIT SIZE	P / V DETECT 2C(S)	E. V. DETECT 3C(S)	VEH HEAD 5C	PED HEAD 5C	VIDEO CABLE CCC	PED APS 2C	POWER SIGNAL #2	POWER ILLUM. #8	POWER #4	FIBER 36 SMFO	CAT6	SIGN FLASHER 3C	COMMENTS
1	SPANWIRE				1		1							
2	SPANWIRE			1		2								
3	SPANWIRE		2	6		2								
4	SPANWIRE		2	3	2	2	2							
5	SPANWIRE		3	5	2		2							
6	AERIAL				1		1							
7	3"		3	5	2	3	2							
8	2"							2						CIRCUIT 2 FROM 005xf19405
9	1.25"								2					CIRCUIT B
10	EX. 2"								EX. 2					CIRCUIT B
	EX. 2"													SPARE
11	EX. 2"							2	EX. 2					CIRCUIT 2, CIRCUIT B
12	EX. 2"							2		EX. 2				CIRCUIT 2, CIRCUIT H FROM SAC 1585
13	EX. 2"								2	EX. 2				CIRCUIT B, CIRCUIT H
14	1"											1		COMMUNICATION FROM 005vc14906
15	EX. 2"										EX. 2			DISTRIBUTION COMMUNICATIONS
	EX. 2"											1		COMMUNICATION FROM 005vc14906
15	EX. 2"												EX. 2	FLASHING BEACON SIGN

LEGEND

Existing	New	
		TYPE 2 JUNCTION BOX
		CONTROLLER CABINET
		SERVICE CABINET
		EMERGENCY VEHICLE PREEMPTION
		VEHICLE SIGNAL HEAD
		APS PUSHBUTTON
		CONDUIT
		STEEL LIGHT STANDARD
		TIMBER LIGHT STANDARD
		TIMBER POLE
		SPAN WIRE
		VIDEO DETECTION CAMERA
		VIDEO DETECTION ZONE
		DOWN GUY
		PPB POST
	X	CONSTRUCTION NOTE FLAG
	X	POLE NOTE FLAG
	X	WIRING NOTE FLAG

ABBREVIATIONS:

ADA	AMERICANS WITH DISABILITY ACT	JB	JUNCTION BOX	SP	SPARE
APS	ACCESSIBLE PEDESTRIAN SIGNALS	MAX	MAXIMUM	SR	STATE ROUTE
B	BLACK	MIN	MINIMUM	ST	STREET
C	CONDUCTORS	N	NORTH	STD	STANDARD
CAB	CABINET	NTS	NOT TO SCALE	TEMP	TEMPORARY
CS	CONDUCTOR SHIELDED	O	ORANGE	TYP	TYPICAL
DET	DETECTOR	PED	PEDESTRIAN	VDC	VIDEO DETECTION CAMERA
DIA	DIAMETER	PLS	PLACES	VDZ	VIDEO DETECTION ZONE
EVP	EMERGENCY VEHICLE PREEMPTION	PPB	PEDESTRIAN PUSHBUTTON	VEH	VEHICLE
EX	EXISTING	PS	PEDESTRIAN SIGNAL	W	WHITE
FY	FLASHING YELLOW	P/V	PEDESTRIAN/ VEHICLE	W/	WITH
G	GREEN	SH	SHIELDED	WB	WHITE/BLACK
ILL	ILLUMINATION	SIG	SIGNAL	Y	YELLOW

FILE NAME	T:\414121\Traffic Design_PROJECTS\SR 529\XL5462 - SR529 Snohomish River- Bridge Repair, Rehab &Paint\XL5462_PS_EL.dgn
TIME	4:43:18 PM
DATE	4/11/2023
PLOTTED BY	AlmustW
DESIGNED BY	W. ALMUSTAFA
ENTERED BY	W. ALMUSTAFA
CHECKED BY	D. DO
PROJ. ENGR.	C. ANDERSON
REGIONAL ADM.	B. NIELSEN

REVISION | DATE | BY

REGION NO.	STATE	FED.AID PROJ.NO.
10	WASH	
JOB NUMBER 23A003		
CONTRACT NO.		LOCATION NO.

DUKE HUI DO — STATE OF WASHINGTON — 51740 — REGISTERED PROFESSIONAL ENGINEER

SEE SHEET CT1

DATE

P.E. STAMP BOX

DATE

P.E. STAMP BOX

Washington State Department of Transportation

SR 529
SNOHOMISH RIVER & STEAMBOAT SLOUGH
BRIDGE REPAIR, REHAB & PAINT

TEMPORARY SIGNAL PLAN

Plot 9

PLAN REF NO TSG1

SHEET 29 OF 136 SHEETS

LUMINAIRE SCHEDULE

EX. SERVICE NO. SAC 1585

LUMINAIRE NUMBER	CIRCUIT	LOCATION		TYPE- DISTRIBUTION- EWATTAGE	MAST ARM	H1	BASE TYPE	FOUNDATION TYPE	COMMENTS
		EASTING	NORTHING						
5	B	1309279.76	361056.35	LED* (400W HPS EQUIVALENT)	16'	40'	---	---	TIMBER POLE

* LED LUMINAIRE SHALL BE EQUIVALENT TO 400W/ 240V HPS

SIGNAL HEAD DISPLAY NOTES

VEHICLE SIGNAL HEADS 21,22,61,62 82

VEHICLE SIGNAL HEADS 51/OLC, 52/OLC

VEHICLE SIGNAL HEADS 81

COUNTDOWN PED HEADS 28,29

PHASE DIAGRAM

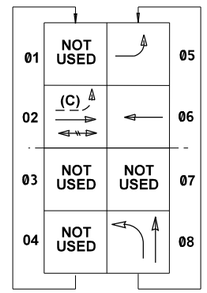

VEHICLE MOVEMENT
PED MOVEMENT
PERMISSIVE VEHICLE (FYA)
(C) OVERLAP (PHASE)

PREEMPTION SCHEDULE

CIRCUIT	PHASE(S)
A	2 & 5
B	-----
C	6
D	8

GENERAL NOTES:

1. ALL VEHICLE HEADS SHALL HAVE BACKPLATES WITH RETRO-REFLECTIVE TAPE AND 12" LED MODULES.
2. ALL PEDESTRIAN SIGNAL HEADS SHALL BE LED TYPE.
3. VEHICLE HEAD 52/OLC SHALL BE MOUNTED ON TYPE "K" MOUNTING. VEHICLE HEADS 21, 22, 61, 62, 51/OLC, 31, & 61 SHALL BE INSTALLED ON TYPE "P" MOUNTING.
4. PED HEADS 28 & 29 SHALL BE INSTALLED ON TYPE "E" MOUNTING.
5. INSTALL PEDESTRIAN DETECTION CONTROL BOARD IN THE PEDESTRIAN SIGNAL DISPLAY. ROUTE 4C CABLE FROM THE CORRESPONDING PUSHBUTTON ASSEMBLY TO THE CONTROL BOARD AND MAKE CONNECTIONS PER MANUFACTURER'S REQUIREMENTS.

TIMBER POLE SCHEDULE

⬡	LOCATION		POLE CLASS	HEIGHT
	EASTING	NORTHING		
5	1309279.76	361056.35	CLASS 2	50'
6	1309285.49	360958.64	CLASS H2	50'
7	1309358.99	361058.25	CLASS 1	50'

NAD 83/11
STATE PLANE US SURVEY FEET

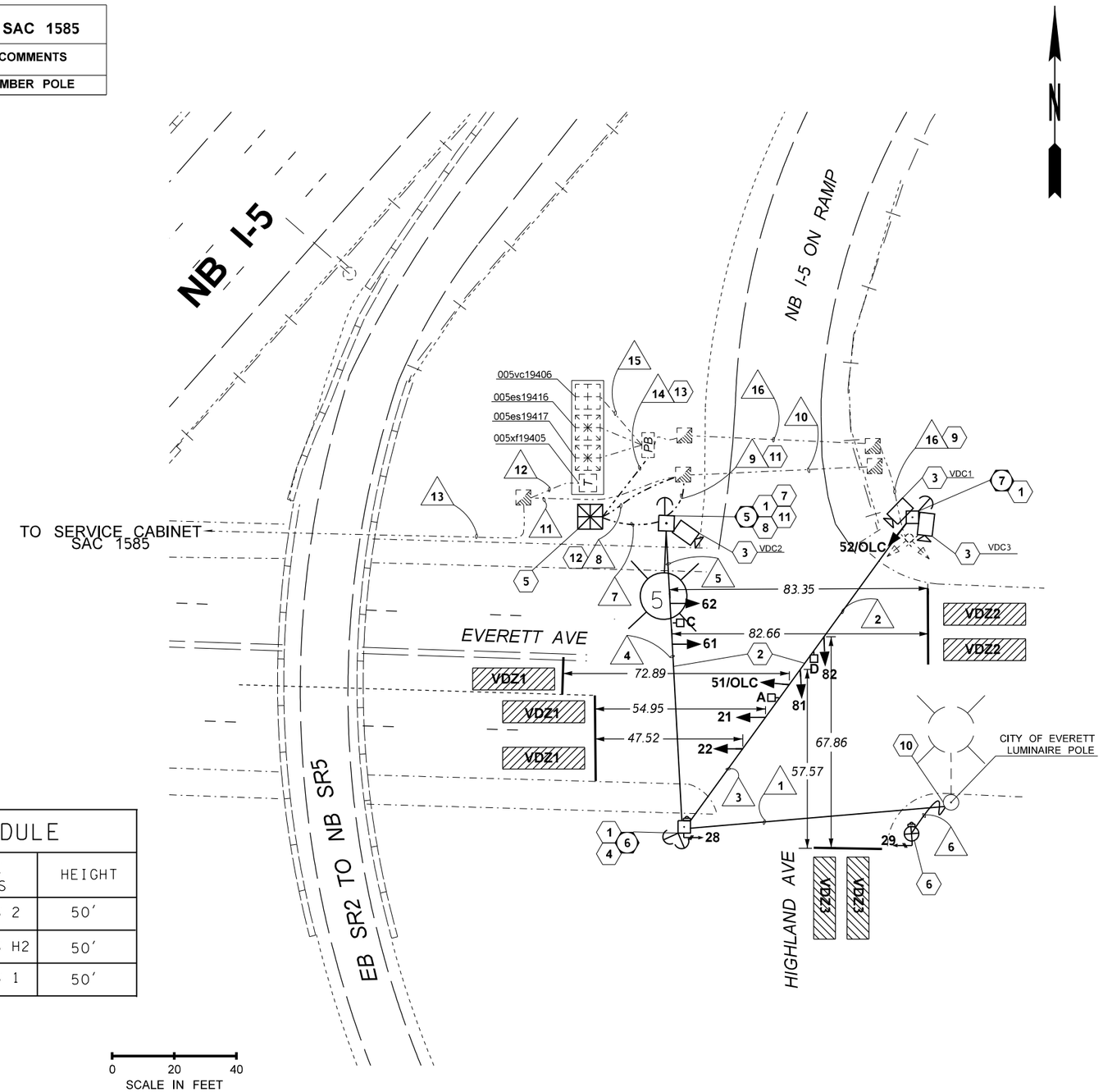

FILE NAME	T:\414121\Traffic Design_PROJECTS\SR 529\XL5462 - SR529 Snohomish River- Bridge Repair, Rehab &Paint\XL5462_PS_EL.dgn						
TIME	4:43:19 PM				REGION NO. 10	STATE WASH	FED.AID PROJ.NO.
DATE	4/11/2023						
PLOTTED BY	AlmustW				JOB NUMBER 23A003		
DESIGNED BY	W. ALMUSTAFA				CONTRACT NO.		LOCATION NO.
ENTERED BY	W. ALMUSTAFA						
CHECKED BY	D. DO						
PROJ. ENGR.	C. ANDERSON						
REGIONAL ADM.	B. NIELSEN	REVISION	DATE	BY			

DUKE HUU DO — STATE OF WASHINGTON — 31740 — REGISTERED PROFESSIONAL ENGINEER

SEE SHEET CT1
DATE
P.E. STAMP BOX

DATE
P.E. STAMP BOX

Washington State Department of Transportation

SR 529
SNOHOMISH RIVER & STEAMBOAT SLOUGH
BRIDGE REPAIR, REHAB & PAINT

TEMPORARY SIGNAL PLAN

Plot 10
PLAN REF NO TSG2
SHEET 30 OF 136 SHEETS

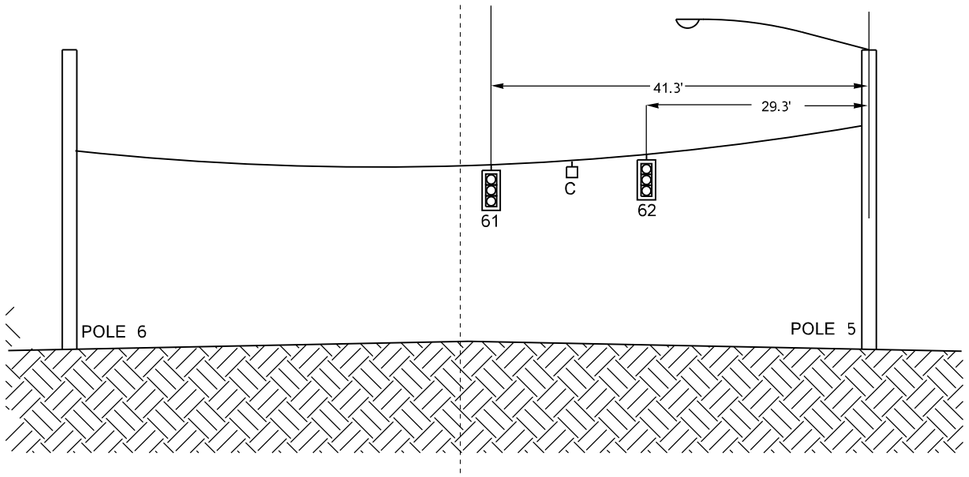

SIGNAL POLES AND SIGNAL HEAD PLACEMENTS

EVERETT AVE/ NB I-5 ON RAMP

NTS

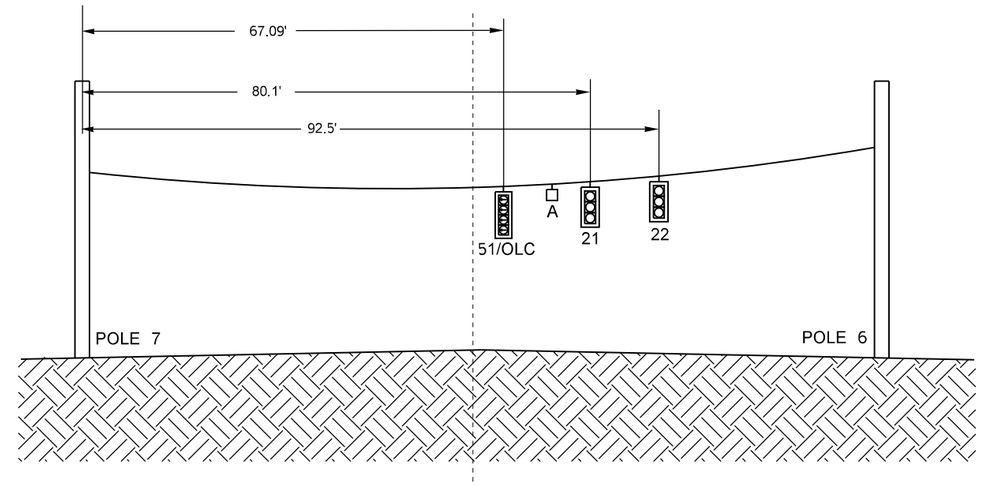

SIGNAL POLES AND SIGNAL HEAD PLACEMENTS

EVERETT AVE/ NB I-5 ON RAMP

NTS

NOTES:

1. MAINTAIN A VERTICAL CLEARANCE OF 16.5' AND A MAXIMUM VERTICAL CLEARANCE OF 22.0' BETWEEN THE BOTTOM OF SIGNAL HEAD AND ROAD SURFACE.
2. LOCATIONS SHOWN ARE MEASURED ALONG SPAN WIRE FROM POLE CENTER TO SIGNAL HEAD CENTER.
3. LOCATIONS SHOWN ARE APPROXIMATE. FIELD VERIFY WITH WSDOT ENGINEER.

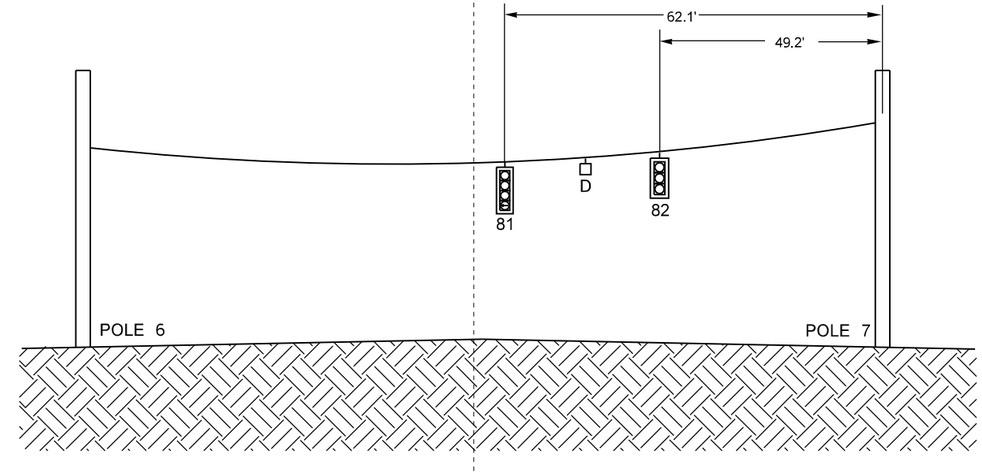

SIGNAL POLES AND SIGNAL HEAD PLACEMENTS

EVERETT AVE/ NB I-5 ON RAMP

N.T.S

FILE NAME	T:\414121\Traffic Design_PROJECTS\SR 529\XL5462 - SR529 Snohomish River- Bridge Repair, Rehab &Paint\XL5462_PS_EL.dgn					
TIME	4:43:20 PM				REGION NO. 10	STATE WASH
DATE	4/11/2023					FED.AID PROJ.NO.
PLOTTED BY	AlmustW				JOB NUMBER 23A003	
DESIGNED BY	W. ALMUSTAFA				CONTRACT NO.	LOCATION NO.
ENTERED BY	W. ALMUSTAFA					
CHECKED BY	D. DO					
PROJ. ENGR.	C. ANDERSON					
REGIONAL ADM.	B. NIELSEN	REVISION	DATE	BY		

DUKE HULDO STATE OF WASHINGTON 31740 REGISTERED PROFESSIONAL ENGINEER

SEE SHEET CT1

DATE

P.E. STAMP BOX

DATE

P.E. STAMP BOX

Washington State Department of Transportation

SR 529

SNOHOMISH RIVER & STEAMBOAT SLOUGH BRIDGE REPAIR, REHAB & PAINT

TEMPORARY SIGNAL PLAN

Plot 11

PLAN REF NO TSG3

SHEET 31 OF 136 SHEETS

FIELD CONNECTION DIAGRAM

SR 529 / EVERETT AVE

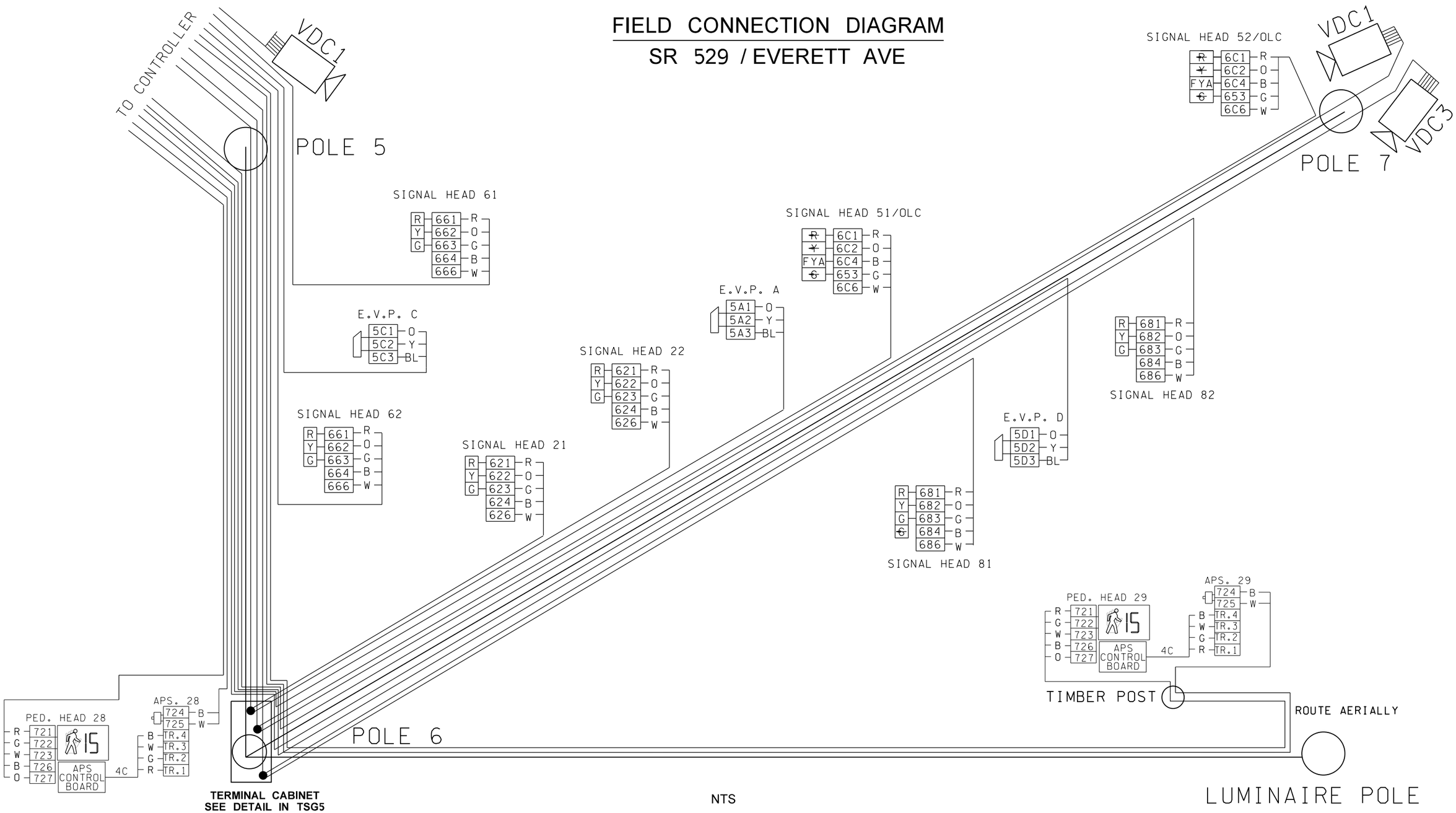

NTS

FILE NAME	T:\414121\Traffic Design_PROJECTS\SR 529\XL5462 - SR529 Snohomish River- Birdge Repair, Rehab &Paint\XL5462_PS_EL.dgn						
TIME	4:43:21 PM						
DATE	4/11/2023						
PLOTTED BY	AlmustW						
DESIGNED BY	W. ALMUSTAFA						
ENTERED BY	W. ALMUSTAFA						
CHECKED BY	D. DO						
PROJ. ENGR.	C. ANDERSON						
REGIONAL ADM.	B. NIELSEN	REVISION	DATE	BY			

REGION NO.	STATE	FED.AID PROJ.NO.
10	WASH	
JOB NUMBER 23A003		
CONTRACT NO.		LOCATION NO.

DUKE HUU DO — STATE OF WASHINGTON — 31740 — REGISTERED PROFESSIONAL ENGINEER

SEE SHEET CT1

DATE

P.E. STAMP BOX

DATE

P.E. STAMP BOX

Washington State Department of Transportation

SR 529
SNOHOMISH RIVER & STEAMBOAT SLOUGH BRIDGE REPAIR, REHAB & PAINT

TEMPORARY SIGNAL PLAN

Plot 12

PLAN REF NO **TSG4**

SHEET 32 OF 136 SHEETS

TERMINAL CABINET

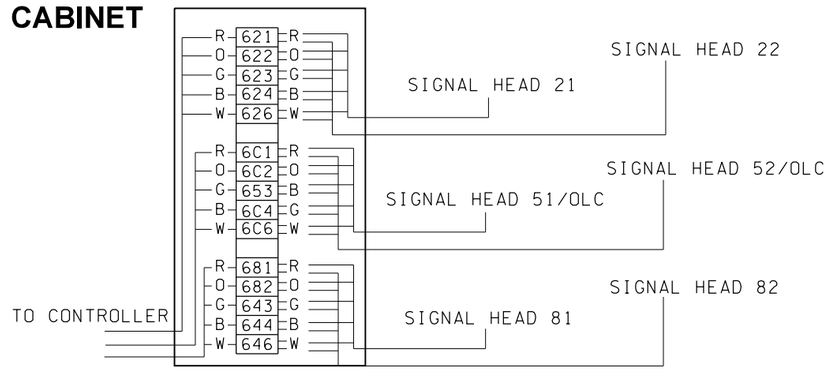

	1	2	3	4	5	6	7	8	9	10	11	12	13	14	
	111	213	231	211	311	413	431	411	113			28,29	68,69		MARKER AREA
U															
I															
L															
	112	223	212/222	221	312	423	412/422	421	313			48,49	88,89		MARKER AREA
	511	613	631	611	711	813	831	811	513			EVA	EVB	RR1	
U															
J															
L															
	512	623	612/622	621	712	823	812/822	821	713			EVC	EVD	RR2	MARKER AREA

INPUT FILE MARKING DETAIL

	1	2	3	4	5	6	7	8	9	10	11	12	13	14
	\1E,C	\2E,C	\2C		\3E,C	\4E,C	\4E,C	\4C	\1E,C			\2P	\6P	FLH
U														
I	---		VDZ1		---			---				28,29		
L	222	222			222	222	222	222	222			242	242	
	\1E,C	\2E,C	\2E		\3E,C	\4E,C	\4E	\4C	\3E,C			\4P	\8P	ST
	\5E,C	\6E,C	\6C		\7E,C	\8E,C	\8C		\5E,C			EVA	EVB	RR1
U														
J	---		VDZ2		---		VDZ3					A		
L	222	222			222	222			222			C *	D *	
	\5E,C	\6E,C	\6C		\7E,C	\8E,C	\8C		\7E,C			EVC	EVD	RR2

* SEE SPECIAL PROVISIONS

INPUT FILE LAYOUT - PROGRAM WAPITI W4IKS

XX-XX MODULE
XX-XX INPUT NO.
XXX INPUT NO.
XXX MODEL TYPE

E = EXTENSION
C = CALL

CABINET WIRE TERMINATIONS

DISPLAY OUTPUT TERMINALS

FT1

641	FT1-101	
642	FT1-102	
643	FT1-103	
741	FT1-104	
5B4	FT1-105	
742	FT1-106	
681	FT1-107	R
682	FT1-108	O
683	FT1-109	G
781	FT1-110	
5D4	FT1-111	
782	FT1-112	

81, 82

FT2

721	FT2-113	R
5A4	FT2-114	
722	FT2-115	G
631	FT2-116	
632	FT2-117	
633	FT2-118	
761	FT2-119	
5C4	FT2-120	
762	FT2-121	
671	FT2-122	
672	FT2-123	
673	FT2-124	

28, 29

FT3

611	FT3-125	
612	FT3-126	
613	FT3-127	
621	FT3-128	R
622	FT3-129	O
623	FT3-130	G
651	FT3-131	
652	FT3-132	
653	FT3-133	G
661	FT3-134	R
662	FT3-135	O
663	FT3-136	G

21, 22 (R, O, G)
51, 52 (G)
61, 62 (R, O, G)

FT4

6D1	FT4-A101	R
6D2	FT4-A102	O
6D3	FT4-A103	B
---	FT4-A104	
---	FT4-A105	
---	FT4-A106	

FT5

---	FT5-A111	
---	FT5-A112	
---	FT5-A113	
6C1	FT5-A114	R
6C2	FT5-A115	O
6C3	FT5-A116	B

CI, C2

FT6

6A1	FT6-A121	R
6A2	FT6-A122	O
6A3	FT6-A123	B
6B1	FT6-A124	R
6B2	FT6-A125	O
6B3	FT6-A126	B

DETECTION INPUT TERMINALS

TB 9

		1			
DC-		2	5AC3	BL	A&C
	J13K	3	5BD3	BL	D
EVA	J12D	4	5A2	Y	A
EVC	J12J	5	5C2	Y	C
DC+	J12E	6	5AC1	O	A&C
EVB	J13D	7	5B2		
EVD	J13J	8	5D2	Y	D
DC+	J13E	9	5BD1	O	D
RR1	J14D	10	516		
RR2	J14J	11	517		
COM	J14E	12	518		

NTS

FILE NAME	T:\414121\Traffic Design_PROJECTS\SR 529\XL5462 - SR529 Snohomish River- Bridge Repair, Rehab &Paint\XL5462_PS_EL.dgn				
TIME	4:43:21 PM				
DATE	4/11/2023				
PLOTTED BY	AlmustW				
DESIGNED BY	W. ALMUSTAFA				
ENTERED BY	W. ALMUSTAFA				
CHECKED BY	D. DO				
PROJ. ENGR.	C. ANDERSON				
REGIONAL ADM.	B. NIELSEN	REVISION	DATE	BY	

REGION NO. 10 | STATE WASH | FED.AID PROJ.NO.
JOB NUMBER 23A003
CONTRACT NO. | LOCATION NO.

DUKE HULL DO — STATE OF WASHINGTON — 31740 — REGISTERED PROFESSIONAL ENGINEER
SEE SHEET CT1
DATE
P.E. STAMP BOX

DATE
P.E. STAMP BOX

Washington State Department of Transportation

SR 529
SNOHOMISH RIVER & STEAMBOAT SLOUGH
BRIDGE REPAIR, REHAB & PAINT

TEMPORARY SIGNAL PLAN

Plot 13
PLAN REF NO TSG5
SHEET 33 OF 136 SHEETS

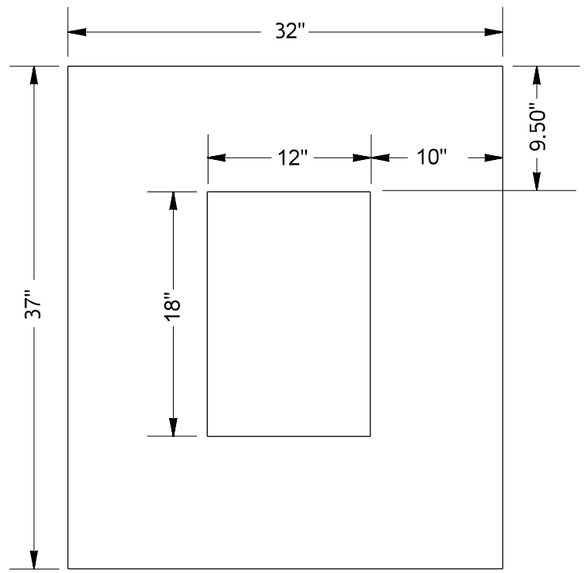

TOP VIEW

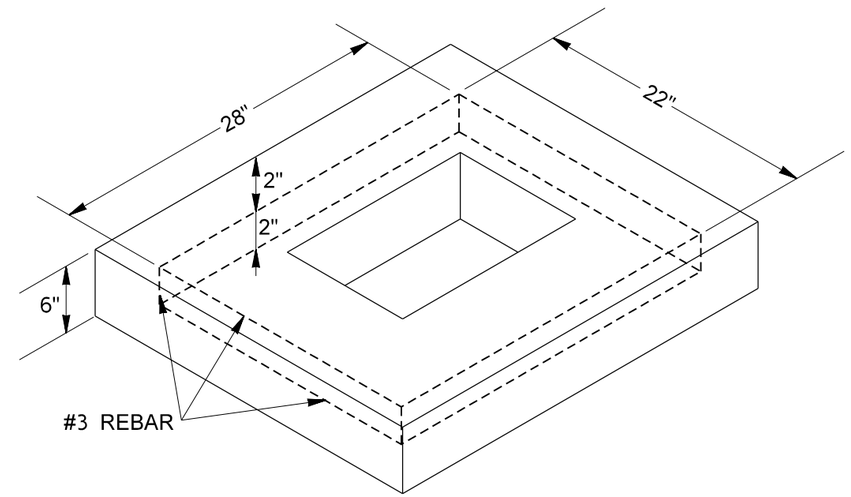

ISOMETRIC VIEW

CONTROLLER CABINET FOUNDATION DETAIL

NTS

FILE NAME	T:\414121\Traffic Design_PROJECTS\SR 529\XL5462 - SR529 Snohomish River- Bridge Repair, Rehab &Paint\XL5462_PS_EL.dgn						
TIME	4:43:22 PM				REGION NO. 10	STATE WASH	FED.AID PROJ.NO.
DATE	4/11/2023						
PLOTTED BY	AlmustW				JOB NUMBER 23A003		
DESIGNED BY	W. ALMUSTAFA						
ENTERED BY	W. ALMUSTAFA				CONTRACT NO.		LOCATION NO.
CHECKED BY	D. DO						
PROJ. ENGR.	C. ANDERSON						
REGIONAL ADM.	B. NIELSEN	REVISION	DATE	BY			

DUKE HUU DO — STATE OF WASHINGTON — 31740 — REGISTERED PROFESSIONAL ENGINEER

SEE SHEET CT1

DATE

P.E. STAMP BOX

DATE

P.E. STAMP BOX

Washington State Department of Transportation

SR 529
SNOHOMISH RIVER & STEAMBOAT SLOUGH
BRIDGE REPAIR, REHAB & PAINT

TEMPORARY SIGNAL PLAN

Plot 14

PLAN REF NO TSG6

SHEET 34 OF 136 SHEETS

SEC. 8, T. 29 N., R. 5 E., W.M.
CITY OF EVERETT

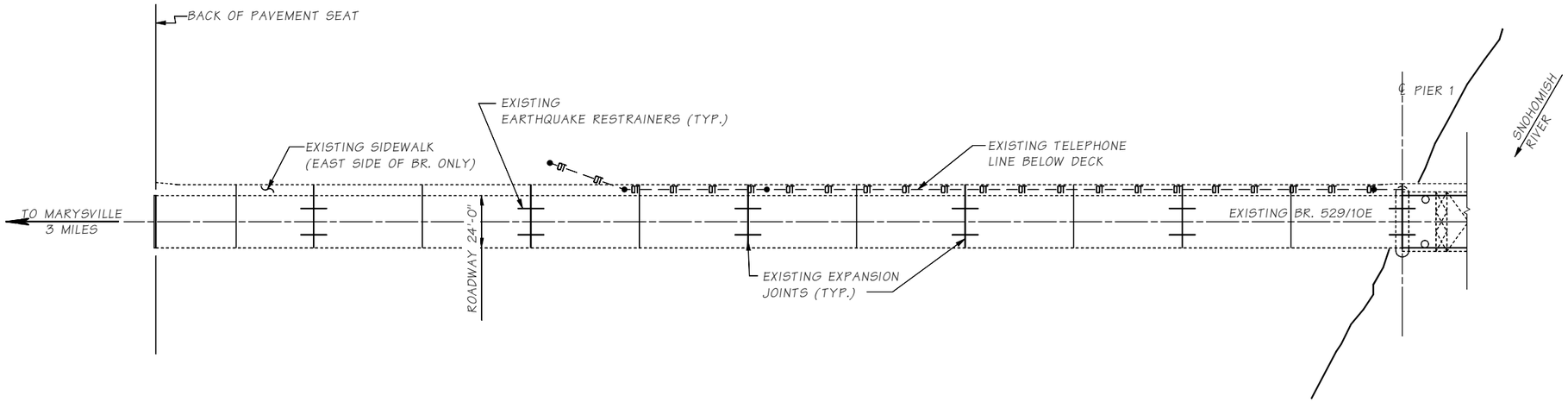

PLAN
NORTH CONCRETE APPROACH SPANS

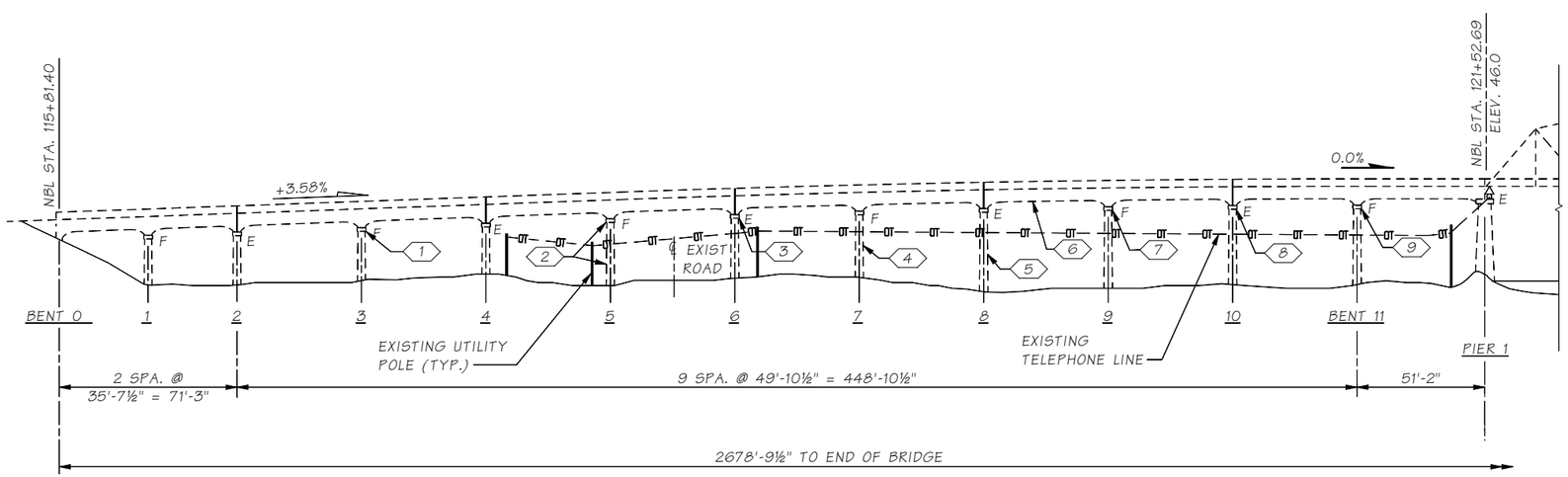

ELEVATION
E = EXPANSION END
F = FIXED END

KEY NOTES:

1. BENT 3 - UPPER CROSSBEAM SPALL REPAIR - SEE BR. SHT. BA1
2. BENT 5 - UPPER CROSSBEAM CRACK REPAIR AND LOWER STRUT SPALL REPAIR - SEE BR. SHT. BA2 AND BR. SHT. BA3
3. BENT 6 - UPPER CROSSBEAM SPALL REPAIR - SEE BR. SHT. BA4
4. BENT 7 - LOWER STRUT SPALL REPAIR - SEE BR. SHT. BA5
5. BENT 8 - LOWER STRUT SPALL REPAIR - SEE BR. SHT. BA5
6. SPAN 9 GIRDER SPALL REPAIR - EAST - SEE BR. SHT. BA6
7. BENT 9 UPPER CROSSBEAM SPALL REPAIR - SEE BR. SHT. BA7
8. BENT 10 UPPER CROSSBEAM SPALL REPAIR - SEE BR. SHT. BA8
9. BENT 11 UPPER CROSSBEAM SPALL REPAIR - SEE BR. SHT. BA9

SR 529 FILE NO. ____ SHEET BR1

Bridge Design Engr.	Leland, AC		
Supervisor	Zeldenrust, RP		
Designed By	Swett, GD	09/18	
Checked By	Miller III, WJ	03/23	
Detailed By	Uhde, T	09/18	
Bridge Projects Engr.			
Prelim. Plan By			
Architect/Specialist			

M:\Z-Team\SR529_10E Rehab and Painter\SR529_10E Rehab and Painter\window files\01 LAYOUT.wnd

DATE	REVISION	BY	APP'D

REGION NO.	STATE	FED. AID PROJ. NO.	SHEET NO.	TOTAL SHEETS
10	WASH.	0529(020)		
JOB NUMBER 23A003				
CONTRACT NO.				

P.E. STAMP BOX
SEE SHEET CT1
DATE

BRIDGE AND STRUCTURES OFFICE

P.E. STAMP BOX
AMY C. LELAND
STATE OF WASHINGTON
38196
STRUCTURAL ENGINEER
PROFESSIONAL ENGINEER
SEE SHEET CT1
DATE

Washington State Department of Transportation

SR 529
SNOHOMISH RIVER & STEAMBOAT SLOUGH
BRIDGE REPAIR, REHAB & PAINT
BR. NO. 529/10E

LAYOUT 1

BRIDGE SHEET NO. BR1
SHEET 35 OF 136 SHEETS

Thu Apr 13 14:37:24 2023

SEC. 8, T. 29 N., R. 5 E., W.M.
CITY OF EVERETT

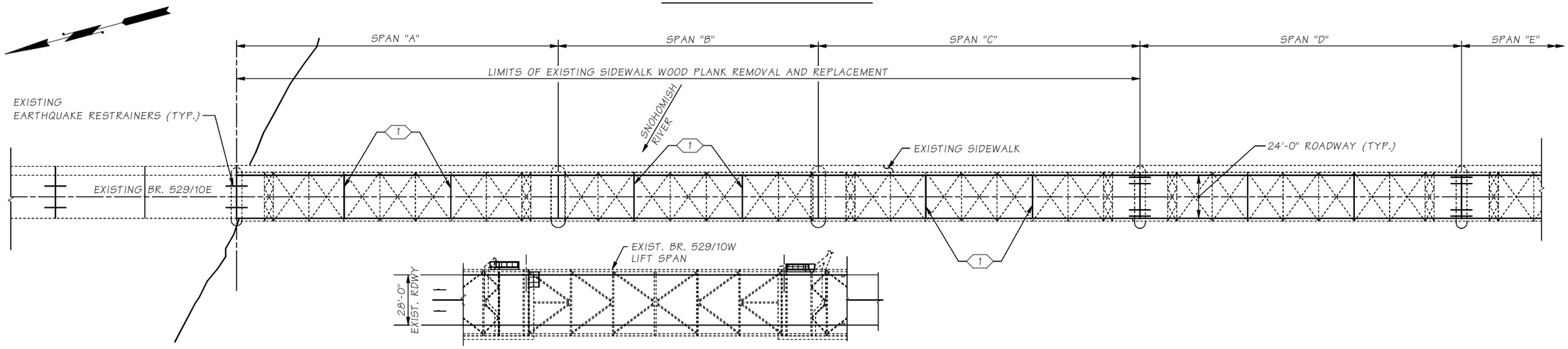

PLAN

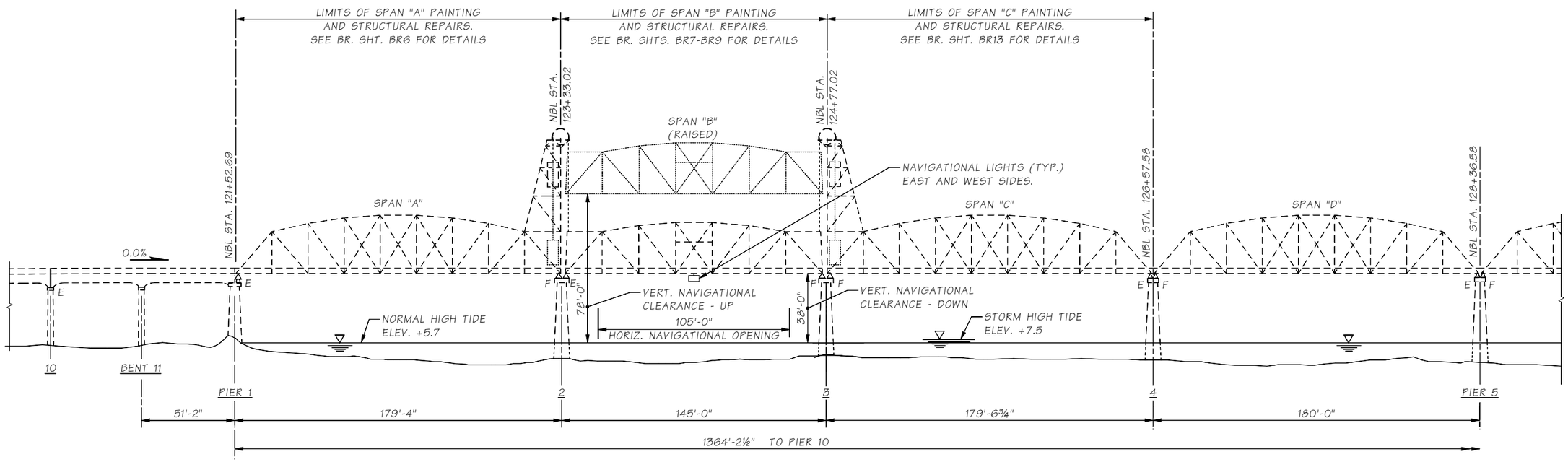

ELEVATION

E = EXPANSION END
F = FIXED END

KEY NOTES:

1. REMOVE AND REPLACE EXISTING DECK JOINTS WITH RAPID CURE SILICONE SEALANT. SEE DETAILS ON BR. SHT. 26. WORK SHALL BE COMPLETED PRIOR TO PAINTING BELOW THE DECK.

Bridge Design Engr.	Leland, AC	
Supervisor	Zeldenrust, RP	
Designed By	Swett, GD	09/18
Checked By	Olson, DE	03/23
Detailed By	Uhde, T	09/18
Bridge Projects Engr.		
Prelim. Plan By		
Architect/Specialist		

M:\Z-Team\SR529_10E Rehab and Painter\SR529_10E Rehab and Painter\window files\02 LAYOUT.wnd

DATE	REVISION	BY	APP'D

REGION NO.	STATE	FED. AID PROJ. NO.	SHEET NO.	TOTAL SHEETS
10	WASH.	0529(020)		
JOB NUMBER 23A003				
CONTRACT NO.				

P.E. STAMP BOX
SEE SHEET CT1
DATE

BRIDGE AND STRUCTURES OFFICE

P.E. STAMP BOX
AMY C. LELAND
STATE OF WASHINGTON
39195
PROFESSIONAL ENGINEER
SEE SHEET CT1
DATE

Washington State Department of Transportation

SR 529
SNOHOMISH RIVER & STEAMBOAT SLOUGH
BRIDGE REPAIR, REHAB & PAINT
BR. NO. 529/10E

LAYOUT 2

BRIDGE SHEET NO. BR2

SHEET 36 OF 136 SHEETS

SR 529 FILE NO. SHEET BR2

Thu Apr 13 14:37:28 2023

SEC. 8, T. 29 N., R. 5 E., W.M.
CITY OF EVERETT

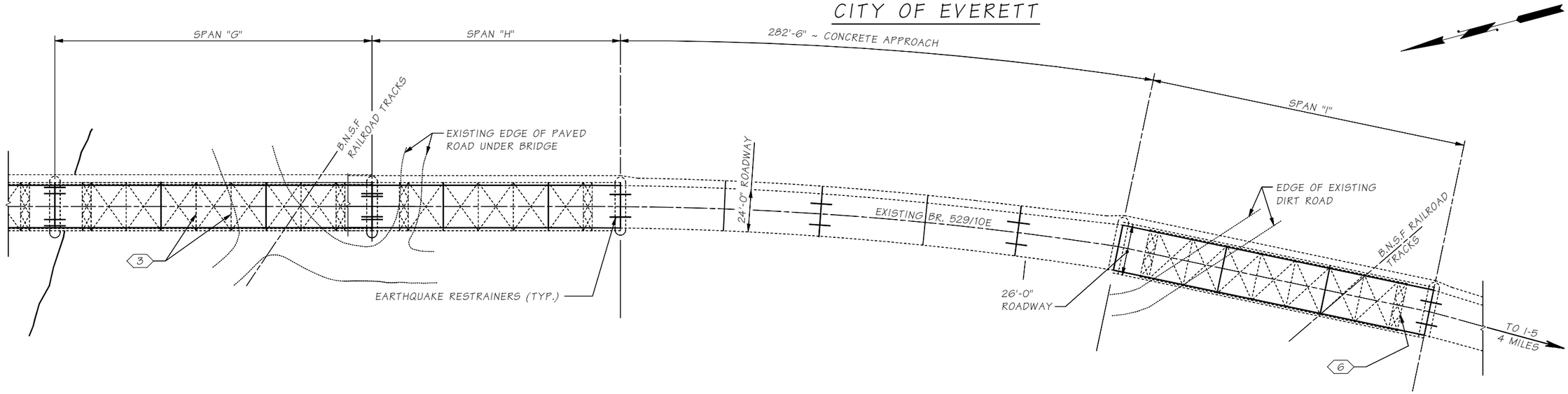

PLAN

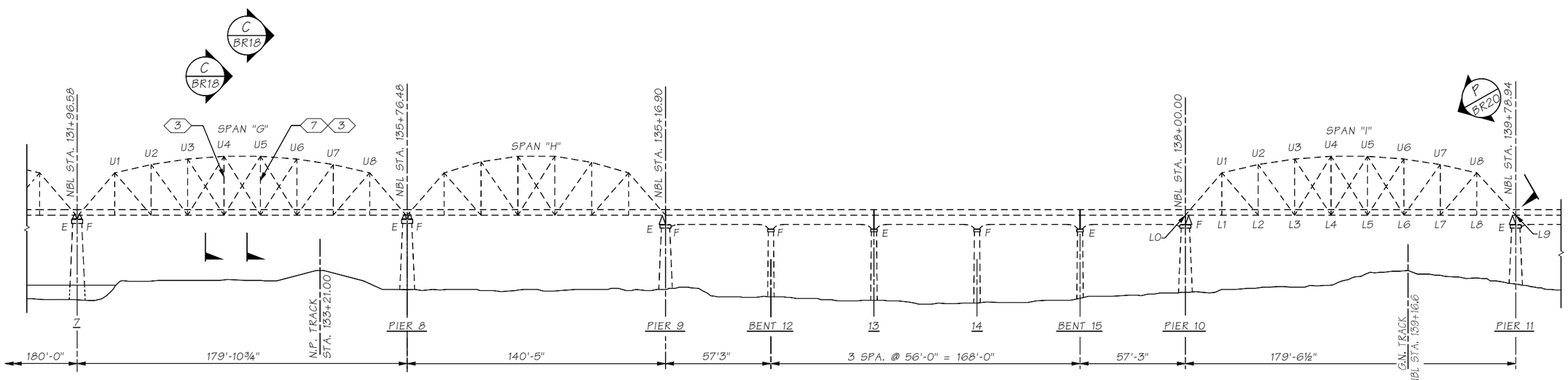

ELEVATION

E = EXPANSION END
F = FIXED END

KEY NOTES:

3 SWAY FRAME TYPE 3 RETROFIT. SEE DETAILS ON BR. SHT. BR18.

6 PORTAL RETROFIT. SEE DETAILS ON BR. SHT. BR20-23.

7 HEAT STRAIGHTEN VERTICALS. SEE SPECIAL PROVISIONS.

SR 529 FILE NO. ____ SHEET BR3

Bridge Design Engr.	Leland, AC	
Supervisor	Zeldenrust, RP	
Designed By	Swett, GD	09/18
Checked By	Olson, DE	03/23
Detailed By	Uhde, T	09/18
Bridge Projects Engr.		
Prelim. Plan By		
Architect/Specialist		

M:\Z-Team\SR529_10E Rehab and Painter\SR529_10E Rehab and Painter\window files\03 LAYOUT.wnd

DATE	REVISION	BY	APP'D

REGION NO.	STATE	FED. AID PROJ. NO.	SHEET NO.	TOTAL SHEETS
10	WASH.	0529(020)		

JOB NUMBER 23A003

CONTRACT NO.

P.E. STAMP BOX

SEE SHEET CT1
DATE:

BRIDGE AND STRUCTURES OFFICE

P.E. STAMP BOX

AMY C. LELAND
STATE OF WASHINGTON
39195
PROFESSIONAL ENGINEER

SEE SHEET CT1
DATE:

Washington State Department of Transportation

SR 529
SNOHOMISH RIVER & STEAMBOAT SLOUGH
BRIDGE REPAIR, REHAB & PAINT
BR. NO. 529/10E

LAYOUT 3

BRIDGE SHEET NO. BR3

SHEET 37 OF 136 SHEETS

Thu Apr 13 14:37:44 2023

GENERAL NOTES

1. ALL MATERIAL AND WORKMANSHIP SHALL BE IN ACCORDANCE WITH THE REQUIREMENTS OF THE WASHINGTON STATE DEPARTMENT OF TRANSPORTATION, STANDARD SPECIFICATIONS FOR ROAD, BRIDGE AND MUNICIPAL CONSTRUCTION, DATED 2023.

2. THE DIMENSIONS SHOWN IN THE PLANS ARE BASED ON AS-BUILT PLANS. ALL RELEVANT DETAILS AND DIMENSIONS SHALL BE FIELD MEASURED AND VERIFIED BY THE CONTRACTOR PRIOR TO ORDERING MATERIALS, DEVELOPING SHOP PLANS, AND PROCEEDING WITH CONSTRUCTION.

3. EXISTING VERTICAL CLEARANCE MUST BE MAINTAINED OVER LIVE TRAFFIC LANES.

4. REMOVED PAINT, DEBRIS AND SPENT ABRASIVE BLAST MEDIA SHALL BE COLLECTED AND REMOVED FROM THE BRIDGE DAILY, AT A MINIMUM, AND SHALL NOT EXCEED THE ALLOWED TEMPORARY CONSTRUCTION LOADS AT ANY TIME.

5. REMOVE AND REPLACE TIMBER DECKING IN SIDEWALKS TO FACILITATE PAINTING OF STRUCTURAL STEEL. ALL TIMBER AND LUMBER SHALL BE U-CATEGORY 4B TREATED IN ACCORDANCE WITH AWPA'S USE CATEGORY SYSTEM AND SHALL MEET THE REQUIREMENTS OF SECTION 9-09.3. ALL TIMBER SHALL BE SURFACED ONE SIDE ONE EDGE (S1S1E) UNLESS NOTED OTHERWISE. ALL HARDWARE INCLUDING BOLTS, NUTS, WASHERS AND SCREWS SHALL STAINLESS STEEL TYPE 304 OR 18-8.

STRUCTURAL STEEL NOTES

1. ALL STRUCTURAL STEEL SHALL BE STRUCTURAL LOW ALLOY STEEL AASHTO M270 GRADE 50 OR 50S UNLESS NOTED OTHERWISE. ROLLED STEEL BEAMS AND WT-SECTIONS MAY CONFORM TO ASTM A992 INCLUDING SUPPLEMENTAL REQUIREMENT S5 - CHARPY V-NOTCH IMPACT TESTS WHEN CVN TESTING IS REQUIRED. WITH THE APPROVAL OF THE ENGINEER, ROLLED ANGLES, CHANNELS AND BARS MAY CONFORM TO ASTM A572 GR 50 WITH SUPPLEMENTAL REQUIREMENT S5 - CHARPY V-NOTCH IMPACT TESTS WHEN CVN TESTING IS REQUIRED. CVN TESTING SHALL MEET SECTION 6-03.2. MEMBERS MARKED © MAY BE FABRICATED FROM GRADE 36 STEEL.

2. ASTM A 1011 GR 50 MAY BE USED FOR FILLER PLATES LESS THAN ¼ INCH THICKNESS.

3. ALL FIELD AND SHOP CONNECTIONS SHALL BE MADE WITH HIGH STRENGTH BOLTS, WITH THE BOLT HEADS TOWARD THE OUTSIDE AND UNDERSIDE OF THE BRIDGE UNLESS OTHERWISE SHOWN IN THE PLANS. HIGH STRENGTH BOLTS SHALL BE GALVANIZED ASTM F3125 GRADE A325 TYPE 1 OR 3, ¾ INCH DIAMETER, EXCEPT AS NOTED OTHERWISE. NUTS AND WASHERS SHALL CONFORM TO SECTION 9-06.5(3). THE MINIMUM CENTER-TO-CENTER DIMENSION SHALL BE 3" UNLESS SHOWN OTHERWISE. ALL CONNECTIONS SHOWN ARE FOR FIELD BOLTING UNLESS OTHERWISE SHOWN OR APPROVED IN THE SHOP PLANS. SHOP INSTALLED BOLTS MAY BE BLACK CONFORMING TO ASTM F3125 GRADE A325 OR ASTM F3125 GRADE F1852 TYPE 1 OR 3 IF THE BOLTS WILL BE BLASTED AND PRIMED IN THE SHOP AFTER INSTALLATION.

4. ALL WELDING SHALL BE DONE TO MINIMIZE DISTORTION. THE WELDING SEQUENCES AND PROCEDURES TO BE USED SHALL BE SUBMITTED TO THE ENGINEER FOR APPROVAL PRIOR TO THE START OF WELDING.

5. MEMBERS MARKED Ⓥ ARE MAIN LOAD CARRYING TENSILE MEMBERS OR TENSION COMPONENTS OF FLEXURAL MEMBERS AND SHALL MEET THE LONGITUDINAL CHARPY V-NOTCH TESTS AS DESCRIBED IN THE SECTION 6-03.2.

6. ⊗ DENOTES TENSION BUTT SPLICE FOR FLANGES OR WEBS.

7. ALL STRUCTURAL STEEL SHALL BE PAINTED IN ACCORDANCE WITH SECTION 6-07, AND AS SUPPLEMENTED IN THE SPECIAL PROVISIONS. WHEN SPECIFIED, GALVANIZING SHALL BE IN ACCORDANCE WITH AASHTO M 111, M 232, ASTM F2329, OR ASTM B695 CLASS 55 AS APPLICABLE. GALVANIZED BOLTS TO BE PAINTED SHALL BE PREPARED IN ACCORDANCE WITH SECTION 6-07.3(11)A.

8. ALL VACANT HOLES REMAINING IN EXISTING MEMBERS SHALL BE TREATED IN ACCORDANCE WITH THE STANDARD SPECIFICATIONS 6-02.3(17)K.

9. ALL DIMENSIONS ARE HORIZONTAL AND VERTICAL UNLESS OTHERWISE SHOWN.

10. THE FOLLOWING MEMBERS OR COMPONENTS ARE CLASSIFIED AS ANCILLARY PRODUCTS IN ACCORDANCE WITH THE LATEST EDITION OF THE AWS D1.5 BRIDGE WELDING CODE: EXPANSION JOINTS (EXCEPT MODULAR), DRAINAGE COMPONENTS, BEARINGS, RAILINGS, OTHER MISC. ITEMS AS APPROVED BY THE ENGINEER.

CONSTRUCTION SEQUENCE

1. AS A FIRST ORDER OF WORK AND DURING A WEEKEND FULL CLOSURE OF NB SR529, FIELD MEASURE AND VERIFY ALL DIMENSIONS NECESSARY TO DEVELOP SHOP PLANS FOR REPLACEMENT OF PORTAL AND SWAY FRAMES AND MISC. STRUCTURAL REPAIRS SPECIFIED IN THE PLANS ON BRIDGE NO. 529/10E. AFTER APPROVAL OF SHOP PLANS, FABRICATE ALL STEEL ELEMENTS FOR PORTAL AND SWAY FRAMES AND MISC. STRUCTURAL REPAIRS. SWAY AND PORTAL FRAMES SHALL BE REMOVED AND REPLACED WHILE NB SR529 IS CLOSED FOR PAINTING OF SPAN B. THE CONTRACTOR MAY WORK ON A MAXIMUM OF 3 SWAY FRAMES AT A TIME ON EACH SPAN BUT NOT ON 2 ADJACENT SWAY FRAMES.

2. AFTER PROCUREMENT OF ALL SWAY AND PORTAL FRAMES AND MISC. STRUCTURAL AND MECHANICAL COMPONENTS FOR SPAN B, CLOSE NB SR529 ROADWAY AND DETOUR PER TRAFFIC CONTROL PLANS.

3. SEE FIGURE "ELEVATION - CONTAINMENT AND TEMP. SUPPORTS" ON THIS SHEET. PHASE I WORK FOR SPAN B SHALL INCLUDE THE FOLLOWING:
   - RAISE LIFT SPAN B AND INSTALL TEMPORARY SUPPORTS.
   - INSTALL CONTAINMENT AND WORK ACCESS PLATFORMS. EXTENSION OR CONTAINMENT AND PLATFORMS BELOW BOTTOM CHORD OF SPAN B SHALL BE LIMITED TO 5 FEET.
   - CLEAN AND PAINT SPAN B.
   - COMPLETE ALL STRUCTURAL REPAIRS AND MECHANCIAL WORK ON SPAN B. SEE MECH. SHTS FOR DETAILS.
   - REMOVE AND REPLACE ALL DECK JOINTS IN SPANS A, B & C.

4. AFTER COMPLETION OF SPAN B PAINTING AND STRUCTURAL/MECHANICAL WORK, REMOVE ALL CONTAINMENT, WORK ACCESS PLATFORMS, AND TEMPORARY SUPPORTS FOR SPAN B. PERFORM SPAN BALANCING AND ADJUSTMENTS AS REQUIRED PER THE SPECIAL PROVISIONS. AFTER ACCEPTANCE OF THE SPAN, RE-OPEN NB SR529.

5. PHASES II AND III WORK FOR SPANS A AND C SHALL INCLUDE THE FOLLOWING
   - INSTALL CONTAINMENT AND WORK ACCESS PLATFORMS (THE CONTRACTOR MAY INSTALL CONTAINMENT ON SPANS A & C DURING PHASE I).
   - CLEAN AND PAINT SPANS A AND C (SPANS A & C MAY BE PAINTED CONCURRENTLY OR ONE SPAN AT A TIME).

6. CONTAINMENT MAY BE INSTALLED OVER THE ENTIRE SPAN LENGTH FOR SPANS A, B, & C PROVIDED THE SIDES CAN BE REMOVED IN ACCORDANCE WITH THE MAX WIND LIMITATIONS SPECIFIED IN THE SPECIAL PROVISIONS. CONTAINMENT IN SPAN B SHALL HAVE OPENINGS OR OTHER ACCEPTABLE METHODS TO ALLOW THE BRIDGE TENDER IN THE CONTROL HOUSE TO MAINTAIN OPERATIONS OF BRIDGE NO. 529/10W.

7. AFTER SPAN B LIFT SPAN WORK IS COMPLETED AND TEMPORARY SUPPORTS REMOVED, THE LIFT SPAN SHALL REMAIN OPERATIONAL FOR MARINE TRAFFIC AT ALL TIMES WHILE WORK IS PERFORMED ON SPANS A & C.

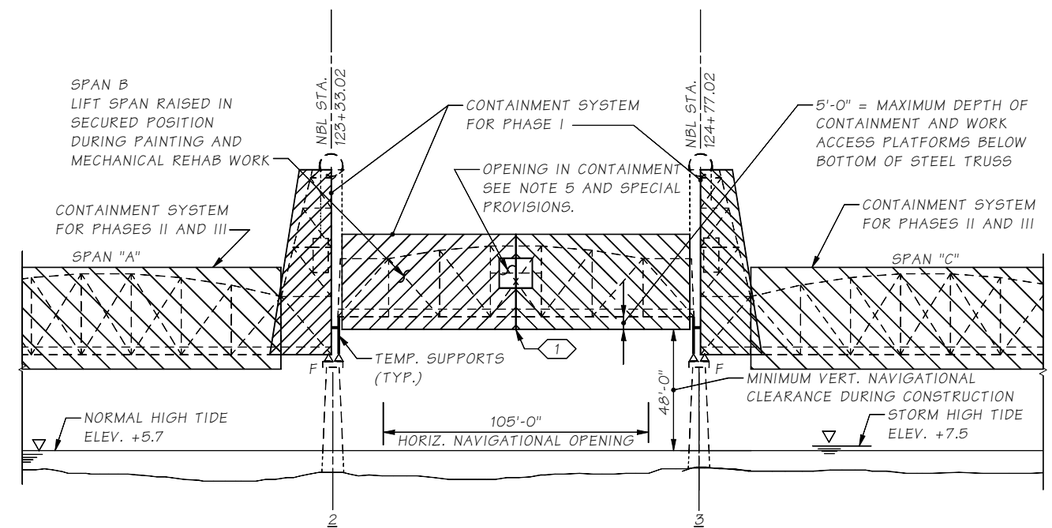

1 TEMP. NAV. LIGHTS AS NEEDED

ELEVATION - CONTAINMENT AND TEMP. SUPPORTS

Bridge Design Engr.	Leland, AC		
Supervisor	Zeldenrust, RP		
Designed By	Swett, GD	09/18	
Checked By	Olson, DE	03/23	
Detailed By	Uhde, T	09/18	
Bridge Projects Engr.			
Prelim. Plan By			
Architect/Specialist			

M:\Z-Team\SR529_10E Rehab and Painter\SR529_10E Rehab and Painter\window files\04 GENERAL NOTES.wnd

DATE	REVISION	BY	APP'D

REGION NO.	STATE	FED. AID PROJ. NO.	SHEET NO.	TOTAL SHEETS
10	WASH.	0529(020)		

JOB NUMBER 23A003

CONTRACT NO.

P.E. STAMP BOX — GEOFFREY D. SWETT, STATE OF WASHINGTON, 36860, PROFESSIONAL ENGINEER — SEE SHEET CT1 — DATE

BRIDGE AND STRUCTURES OFFICE

P.E. STAMP BOX — RICHARD P. ZELDENRUST, STATE OF WASHINGTON, 25470, PROFESSIONAL ENGINEER — SEE SHEET CT1 — DATE

Washington State Department of Transportation

SR 529
SNOHOMISH RIVER & STEAMBOAT SLOUGH
BRIDGE REPAIR, REHAB & PAINT
BR. NO. 529/10E

GENERAL NOTES & CONSTRUCTION STAGING

BRIDGE SHEET NO. BR4

SHEET 38 OF 136 SHEETS

SR 529 FILE NO. ____ SHEET BR4

Thu Apr 13 14:37:47 2023

RIVET INSPECTION AND REPLACEMENT NOTES

1. EXISTING RIVETS TO REMAIN ON MEMBERS AND/OR GUSSETS BEING PAINTED SHALL BE EVALUATED AFTER FIELD PREPARATION FOR PAINTING AND PRIMING IS COMPLETED AND SHALL BE REMOVED AND REPLACED IN ACCORDANCE WITH THE RIVET EVALUATION CRITERIA SHOWN ON THIS SHEET. NEW H.S. BOLTS SHALL BE INSTALLED AND TENSIONED IN ACCORDANCE WITH SECTION 6-03.3(33), AND PREPARED FOR PAINT IN ACCORDANCE WITH SECTION 6-07.3(11)A.

2. BOLTS SHALL CONFORM TO ASTM F3125 GR A325 AND SHALL BE GALVANIZED. BOLTS REPLACING RIVETS SHALL HAVE A DIAMETER MATCHING THE DIAMETER OF THE RIVET THEY REPLACE. EXISTING HOLES MAY BE REAMED TO THE RIVET DIAMETER PLUS 1/8" MAXIMUM TO FACILITATE BOLT INSTALLATION IF NEEDED.

3. UNLESS OTHERWISE SHOWN IN THE PLANS OR APPROVED BY THE ENGINEER, ONLY ONE RIVET MAY BE REMOVED AND REPLACED AT A TIME AT ANY CONNECTION. THE REPLACEMENT BOLT SHALL BE FULLY INSTALLED AND TENSIONED BEFORE THE NEXT RIVET MAY BE REMOVED.

4. PRIOR TO STARTING ANY RIVET REMOVAL, THE CONTRACTOR SHALL SUBMIT A TYPE 2 WORKING DRAWING DETAILING PROPOSED RIVET REMOVAL METHODS TO THE ENGINEER. ACCEPTANCE WILL REQUIRE DEMONSTRATION BY THE CONTRACTOR TO ENSURE NO DAMAGE WILL OCCUR TO THE EXISTING MEMBER TO REMAIN. NO FLAME CUTTING METHODS WILL BE PERMITTED.

TEMPORARY CONSTRUCTION LOADS

1. THE CONTRACTOR MAY SUPPORT A TEMPORARY BELOW DECK WORK PLATFORM FROM THE EXISTING STEEL FIXED AND MOVEABLE LIFT SPAN PROVIDED THE SUPPORT POINTS ARE LOCATED AT THE TRUSS PANEL POINTS ONLY. NO ATTACHMENT OF SUPPORTS SHALL BE MADE TO THE TRUSS MEMBERS BETWEEN PANEL POINTS OR TO THE EXISTING STEEL FLOORBEAMS AND/OR STRINGERS.

2. THE TOTAL CONSTRUCTION LOAD (SELF WEIGHT PLUS IMPOSED LIVE LOADS) IMPARTED TO THE BRIDGE BY THE BELOW DECK WORK PLATFORM AND CONTAINMENT SYSTEM SHALL NOT EXCEED 20 POUNDS PER SQUARE FOOT TOTAL. FOR PURPOSES OF COMPUTING LOAD LIMITS, THE WIDTH CAN BE ASSUMED TO BE 36'-10" WIDE. THE CONSTRUCTION LOAD LIMIT CAN BE ADJUSTED UP OR DOWN PROPORTIONAL WITH ACTUAL WIDTH OF CONTAINMENT USED.

3. THE MAXIMUM REACTION AT ANY PANEL POINT FOR THE BELOW DECK WORK PLATFORM SHALL NOT EXCEED THE FOLLOWING:
   A. SPANS A AND C FIXED TRUSS SPAN = 5500 LBS
   B. SPAN B LIFT SPAN = 6500 LBS
   THE CONTRACTOR IS RESPONSIBLE FOR LIMITING LOCAL STRESSES AT REACTION POINTS AS TO NOT CAUSE DAMAGE OR YIELD ANY EXISTING MEMBERS AND COMPONENTS.

4. METHOD(S) OF ATTACHMENT TO THE BRIDGE SHALL BE SUBMITTED TO THE ENGINEER FOR APPROVAL IN ACCORDANCE WITH STANDARD SPECIFICATION SECTION 6-07.3(2)F. ALL WORKING DRAWINGS AND CALCULATIONS SHALL BE SUBMITTED IN ACCORDANCE WITH SECTION 1-05.3 NO WELDING OR NEW HOLES IN BRIDGE MEMBERS IS ALLOWED. REMOVAL OF EXISTING RIVETS, AT SELECT LOCATIONS WITHIN THE TRUSS PANEL POINTS, MAY BE PERMITTED FOR ATTACHMENT OF SUPPORT BRACKETS. THE CONTRACTOR SHALL SUBMIT, FOR APPROVAL BY THE ENGINEER, THE LOCATION, QUANTITY, AND SEQUENCE OF REMOVAL OF RIVETS FOR REPLACMENT WITH BOLTS. IF APPROVED, ALL BOLTS USED FOR SUPPORT OF TEMPORARY WORKS SHALL BE REMOVED AND REPLACED WITH NEW TENSIONED, ASTM F3125 GRADE A325 GALV. BOLTS IN ACCORDANCE WITH STANDARD SPECIFICATION SECTION 6-03.3(33) WHEN THE WORK IS COMPLETE.

NOTE:
LACING BAR MATERIAL SHALL BE ASTM A36 OR ASTM A572 AND SHALL BE PRIME PAINTED PRIOR TO INSTALLATION.

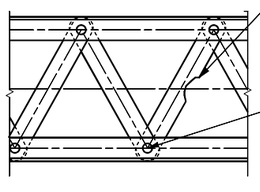

LACING EVALUATION & REPLACEMENT DETAILS

RIVET EVALUATION CRITERIA

RIVETS SHALL BE REPLACED IF THEY FAIL TO MEET ANY ONE OF THESE CRITERIA.

1. REPLACE RIVET IF THERE IS SEPARATION BETWEEN THE SOUND METAL SURFACES OF EITHER RIVET HEAD AND THE RIVETED PARTS. (SEE SYMBOL δδ)

2. REPLACE RIVET IF THE RIVET VISUALLY APPEARS TO BE LOOSE FOR ANY REASON. RIVETS VISUALLY SUSPECT OF BEING LOOSE SHALL BE CONFIRMED LOOSE IF IT CAN BE FELT TO MOVE AFTER BEING STRUCK ON THE SIDE OF THE HEAD IN A DIRECTION APPROXIMATELY PERPENDICULAR TO ITS SHANK WITH A 40 OZ HAMMER.

3. REPLACE RIVET IF SECTION LOSS IS EQUAL TO OR GREATER THAN THE DIAGRAM SHOWN BELOW. THE ENGINEER SHALL BE CONSULTED IF UNCLEAR AS TO THE RIVET LOADING CONDITION OR USE THE SECTION LOSS CRITERIA FOR "UNKNOWN" LOADING CONDITION. FOR RIVETS WITH IRREGULAR SECTION LOSS, CONTACT THE ENGINEER FOR DIRECTION.

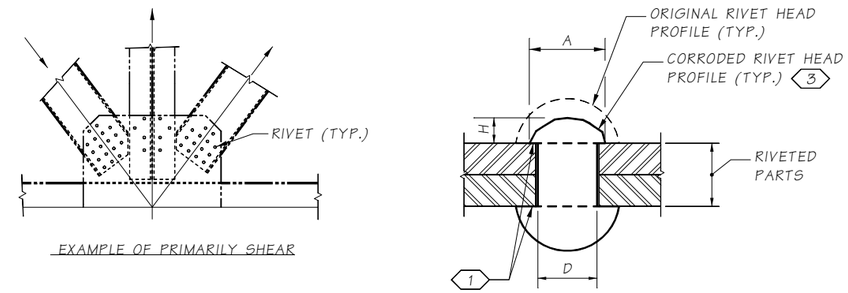

EXAMPLE OF PRIMARILY SHEAR

RIVET LOADING CONDITION - PRIMARILY SHEAR

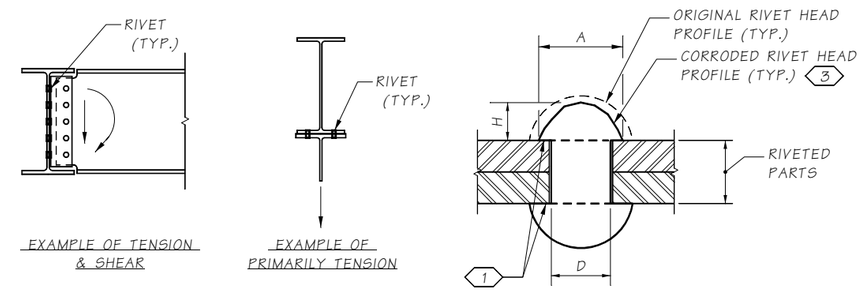

EXAMPLE OF TENSION & SHEAR

EXAMPLE OF PRIMARILY TENSION

RIVET LOADING CONDITION
PRIMARILY TENSION, TENSION & SHEAR, OR UNKNOWN

MINIMUM RIVET DIMENSIONS				
	LOADING: PRIMARILY SHEAR		LOADING: TENSION & SHEAR, TENSION OR UNKNOWN	
RIVET SHANK DIAMETER "D"	MINIMUM HEAD DIAMETER "A"	MINIMUM HEAD HEIGHT "H"	MINIMUM HEAD DIAMETER "A"	MINIMUM HEAD HEIGHT "H"
5/8"	7/8"	3/16"	1"	3/8"
3/4"	1"	1/4"	1 1/8"	7/16"
7/8"	1 1/8"	3/8"	1 1/4"	9/16"

Bridge Design Engr.	Leland, AC		M:\Z-Team\SR529_10E Rehab and Painter\SR529_10E Rehab and Painter\window files\RIVET EVALUATION CRITERIA.wnd							
Supervisor	Zeldenrust, RP					REGION NO.	STATE	FED. AID PROJ. NO.	SHEET NO.	TOTAL SHEETS
Designed By	Swett, GD	02/22				10	WASH.	0529(020)		
Checked By	Olson, DE	03/23				JOB NUMBER 23A003				
Detailed By	Uhde, T	02/22								
Bridge Projects Engr.						CONTRACT NO.				
Prelim. Plan By										
Architect/Specialist			DATE	REVISION	BY	APP'D				

P.E. STAMP BOX: GEOFFREY D. SWETT, STATE OF WASHINGTON, 38365, PROFESSIONAL ENGINEER — SEE SHEET CT1 — DATE

BRIDGE AND STRUCTURES OFFICE

P.E. STAMP BOX: RICHARD P. ZELDENRUST, STATE OF WASHINGTON, 24340, PROFESSIONAL ENGINEER — SEE SHEET CT1 — DATE

Washington State Department of Transportation

SR 529
SNOHOMISH RIVER & STEAMBOAT SLOUGH
BRIDGE REPAIR, REHAB & PAINT
BR. NO. 529/10E

RIVET EVALUATION CRITERIA & TEMP. CONSTRUCTION LOADS

BRIDGE SHEET NO. BR5

SHEET 39 OF 136 SHEETS

SR 529 FILE NO. SHEET BR5

Thu Apr 13 14:37:50 2023

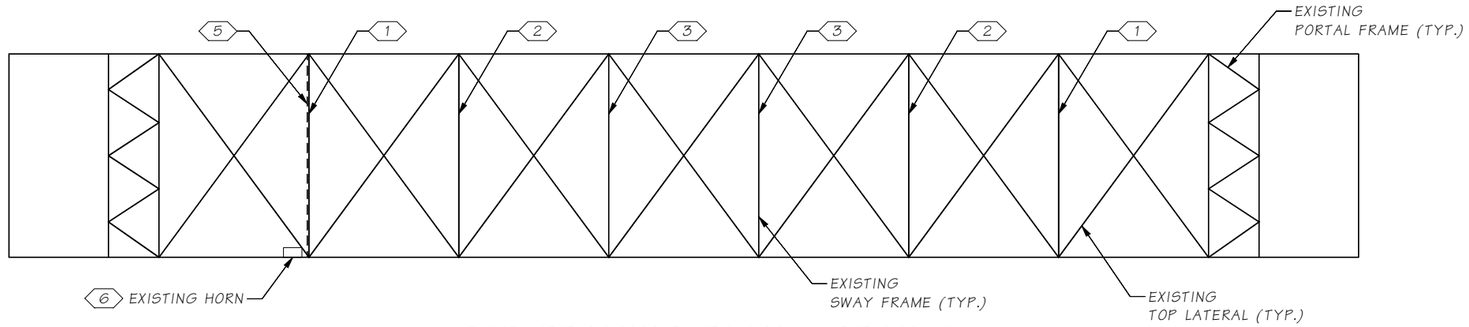

TOP FRAMING PLAN - SPAN A

XX - INDICATES APPROXIMATE THICKNESS OF EXISTING PAINT IN MILS MEASURED AT RANDOM AND DISCRETE LOCATIONS. THESE ARE PROVIDED FOR INFORMATION ONLY. CONTRACTOR IS RESPONSIBLE FOR MEANS AND METHODS TO ACHIEVE AN SSPC-SP10 SURFACE PREPARATION.

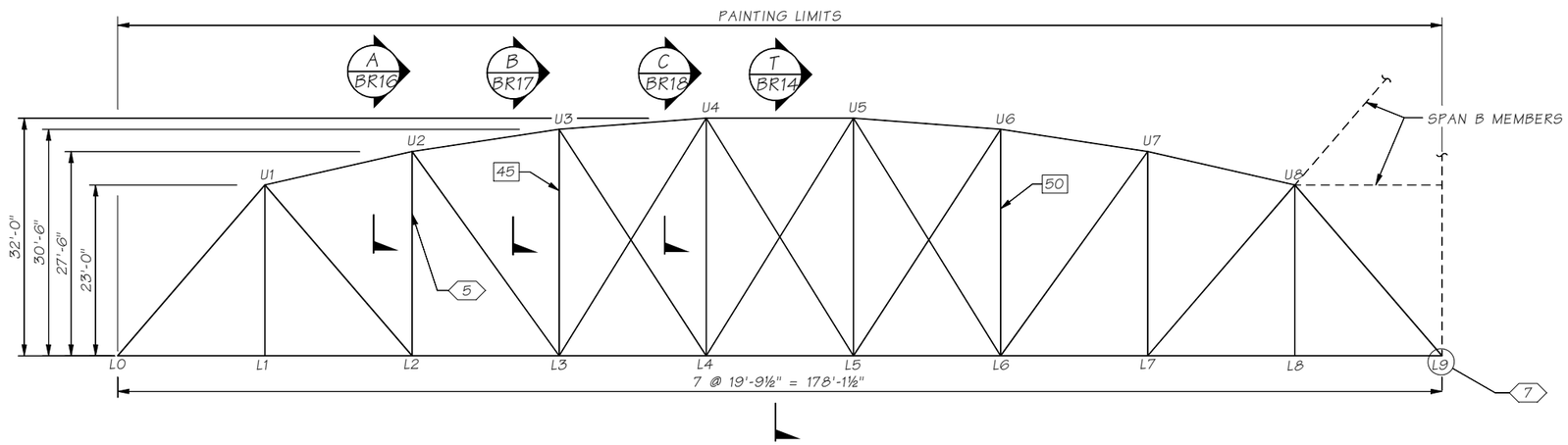

ELEVATION - SPAN A

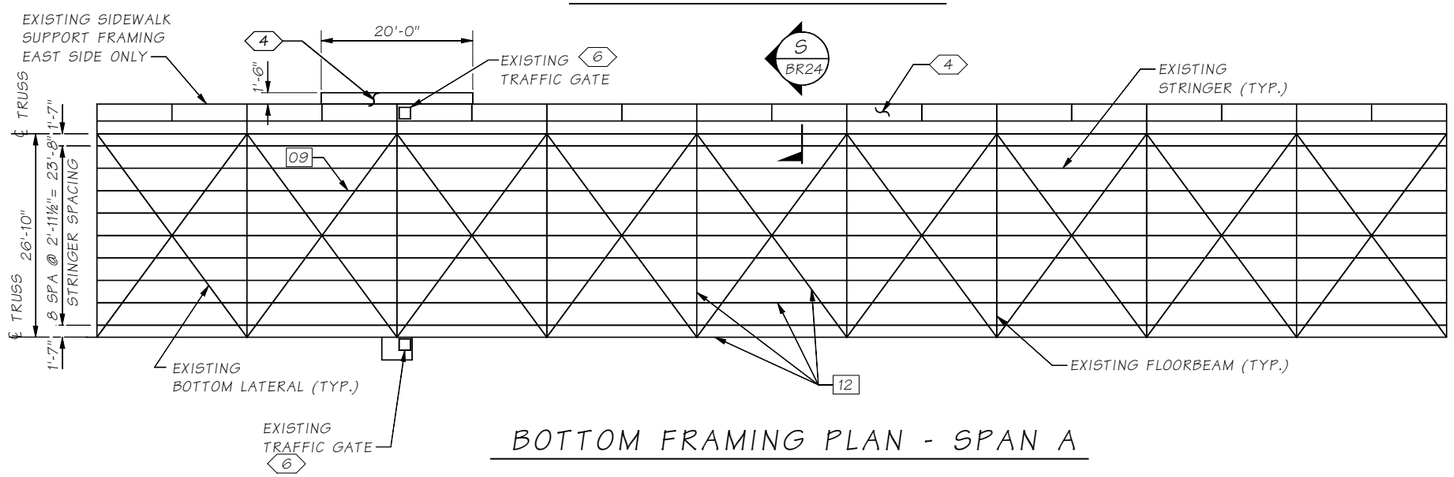

BOTTOM FRAMING PLAN - SPAN A

KEY NOTES:

1. SWAY FRAME TYPE 1 RETROFIT. SEE DETAILS ON BR. SHT. BR16
2. SWAY FRAME TYPE 2 RETROFIT. SEE DETAILS ON BR. SHT. BR17
3. SWAY FRAME TYPE 3 RETROFIT. SEE DETAILS ON BR. SHT. BR18
4. REMOVE AND REPLACE SIDEWALK TIMBER WALKWAY FULL LENGTH OF SPAN AND AT TRAFFIC GATE. SEE DETAILS ON BR. SHT. BR24
5. DURING SWAY FRAME RETROFIT AND PAINTING ACTIVIES AT L2-U2, TAKE CARE NOT TO DAMAGE AND WORK AROUND EXISTING HORN AND CONDUIT.
6. PROTECT FROM BLASTING, CLEANING, AND PAINTING OPERATIONS
7. SEE BR. SHT. BR25 FOR GUARDRAIL POST DETAILS FOR PAINTING

Bridge Design Engr.	Leland, AC	
Supervisor	Zeldenrust, RP	
Designed By	Swett, GD	01/22
Checked By	Olson, DE	03/23
Detailed By	Uhde, T	01/23
Bridge Projects Engr.		
Prelim. Plan By		
Architect/Specialist		

M:\Z-Team\SR529_10E Rehab and Painter\SR529_10E Rehab and Painter\window files\SPAN A FRAMING.wnd

DATE	REVISION	BY	APP'D

REGION NO.	STATE	FED. AID PROJ. NO.	SHEET NO.	TOTAL SHEETS
10	WASH.	0529(020)		

JOB NUMBER 23A003

CONTRACT NO.

P.E. STAMP BOX — GEOFFREY D. SWETT, STATE OF WASHINGTON, 52860, STRUCTURAL ENGINEER, PROFESSIONAL ENGINEER — SEE SHEET CT1 — DATE

BRIDGE AND STRUCTURES OFFICE

P.E. STAMP BOX — RICHARD P. ZELDENRUST, STATE OF WASHINGTON, 35790, STRUCTURAL ENGINEER, PROFESSIONAL ENGINEER — SEE SHEET CT1 — DATE

Washington State Department of Transportation

SR 529
SNOHOMISH RIVER & STEAMBOAT SLOUGH
BRIDGE REPAIR, REHAB & PAINT
BR. NO. 529/10E

SPAN A FRAMING AND RETROFIT PLAN

BRIDGE SHEET NO. BR6

SHEET 40 OF 136 SHEETS

SR 529 FILE NO. SHEET BR6

Thu Apr 13 14:37:53 2023

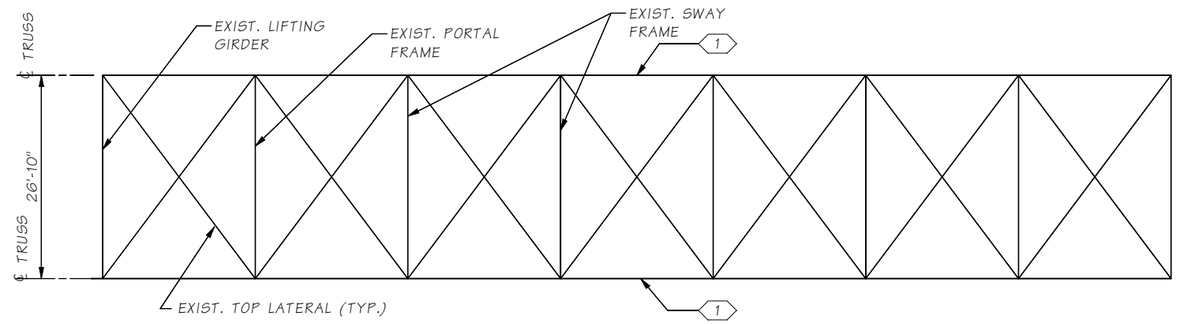

TOP FRAMING PLAN - SPAN B

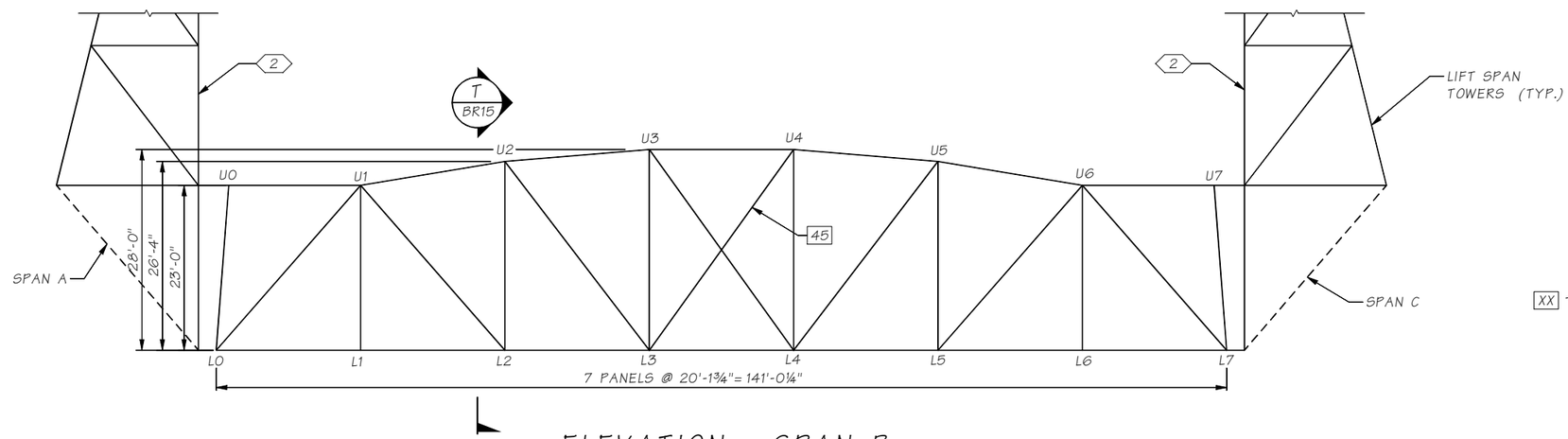

ELEVATION - SPAN B

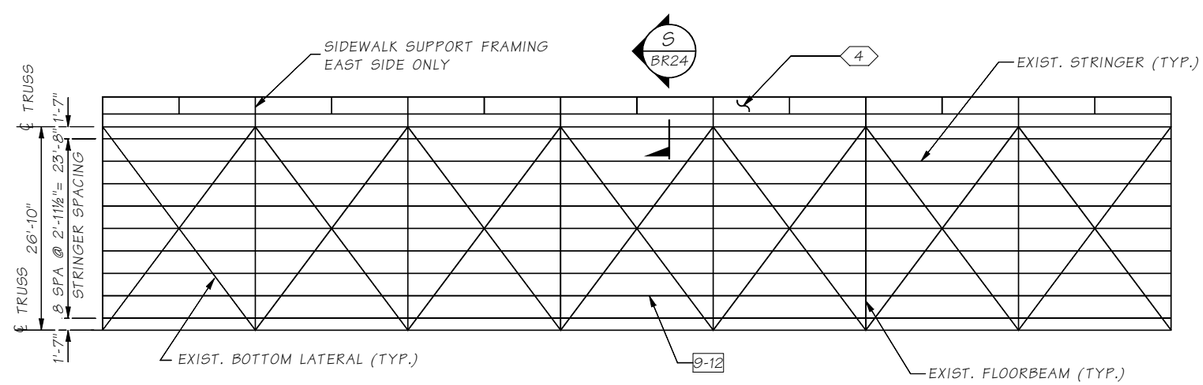

BOTTOM FRAMING PLAN - SPAN B

XX - INDICATES APPROXIMATE THICKNESS OF EXISTING PAINT IN MILS MEASURED AT RANDOM AND DISCRETE LOCATIONS. THESE ARE PROVIDED FOR INFORMATION ONLY. CONTRACTOR IS RESPONSIBLE FOR MEANS AND METHODS TO ACHIEVE AN SSPC-SP10 SURFACE PREPARATION.

NOTES:

1. REPAIR TOP CHORD AFTER REMOVAL OF OPERATING DRUM FRAME. SEE DETAILS ON BR. SHTS. BR27 & BR28
2. COUNTERWEIGHT GUIDE REPLACEMENT. SEE BR. SHT. BR29 & BR30 FOR DETAILS.
4. REMOVE AND REPLACE SIDEWALK TIMBER WALKWAY. SEE DETAILS ON BR. SHT. BR24
5. FOR PAINT EXCLUSION AND OVERCOAT AREAS, SEE SHEETS BR8 & BR9

SR 529 FILE NO. ____ SHEET BR7

Bridge Design Engr.	Khaleghi, B	M:\Z-Team\SR529_10E Rehab and Painter\SR529_10E Rehab and Painter\window files\SPAN B FRAMING.wnd			
Supervisor	Zeldenrust, RP				
Designed By	Swett, GD 01/22				
Checked By					
Detailed By	Uhde, T				
Bridge Projects Engr.					
Prelim. Plan By					
Architect/Specialist		DATE	REVISION	BY	APP'D

REGION NO.	STATE	FED. AID PROJ. NO.	SHEET NO.	TOTAL SHEETS
10	WASH.	0529(020)		
JOB NUMBER 23A003				
CONTRACT NO.				

P.E. STAMP BOX — GEOFFREY D. SWETT, STATE OF WASHINGTON, 32820, PROFESSIONAL ENGINEER — SEE SHEET CT1 — DATE:

BRIDGE AND STRUCTURES OFFICE

P.E. STAMP BOX — RICHARD P. ZELDENRUST, STATE OF WASHINGTON, 25470, PROFESSIONAL ENGINEER — SEE SHEET CT1 — DATE:

Washington State Department of Transportation

SR 529
NB SNOHOMISH RIVER & STEAMBOAT SLOUGH
BRIDGE & MECHANICAL REHAB
BR. NO. 529/10E

SPAN B FRAMING AND RETROFIT PLAN

BRIDGE SHEET NO. BR7

SHEET 41 OF 136 SHEETS

Thu Apr 13 14:37:56 2023

SR-529

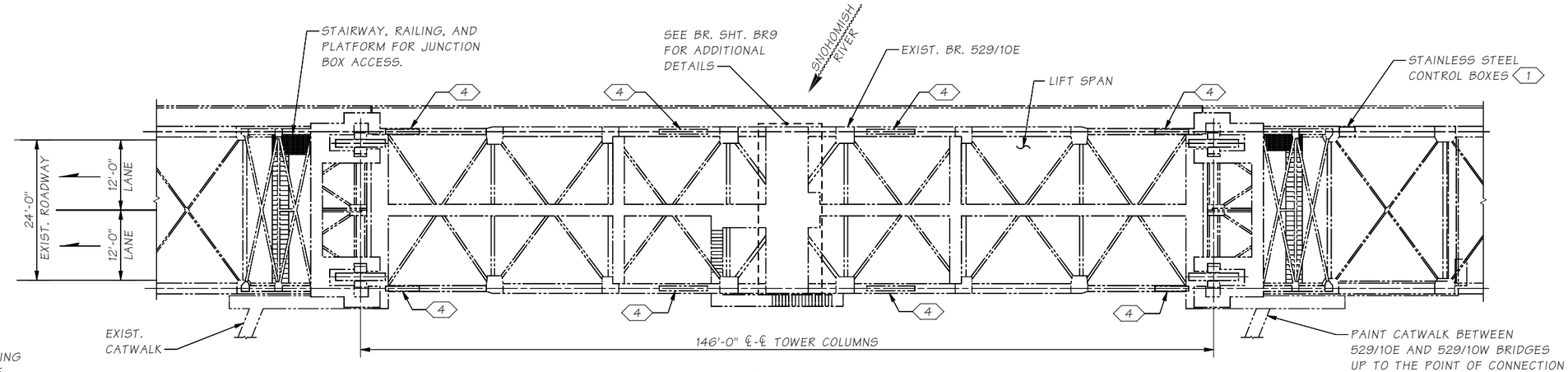

PLAN

GENERAL NOTES:

1. THIS PLAN SHEET IDENTIFIES A PORTION OF THE MECHANICAL, ELECTRICAL, AND OTHER COMPONENTS TO BE PROTECTED FROM PAINTING OPERATIONS. SOME COMPONENTS ARE TO BE OVERCOAT PAINTED, BUT IN ALL CASES SHALL BE PROTECTED FROM ABRASIVE BLASTING OPERATIONS. SEE KEY NOTES FOR SPECIFIC LOCATIONS. REFER TO THE SPECIAL PROVISIONS FOR A MORE COMPREHENSIVE LIST OF ITEMS TO BE PROTECTED. IF THE CONTRACTOR IDENTIFIES COMPONENTS THAT ARE IN QUESTION AS TO SURFACE PREPARATION AND PAINTING REQUIREMENTS, NOTIFY THE ENGINEER FOR CLARIFICATION.

2. IN GENERAL, SURFACES THAT ARE STAINLESS STEEL, GALVANIZED, PLASTIC, GREASED OR LUBRICATED SHALL BE PROTECTED AND SHALL NOT BE PAINTED. CONDUIT, CABLING, WIRING, OR WIRE ROPES THAT HAVE NOT BEEN PREVIOUSLY PAINTED SHALL BE PROTECTED AND SHALL NOT BE PAINTED.

KEY NOTES:

1 PROTECT FROM CLEANING, BLASTING, AND PAINTING OPERATIONS.

2 PROTECT FROM CLEANING AND BLASTING OPERATIONS. SURFACE PREPARE AND OVERCOAT PAINT PER THE REQUIREMENTS OF THE STANDARD SPECIFICATIONS AND SPECIAL PROVISIONS.

3 PROTECT BOTTOM OF CONTROL HOUSE WHILE, BLASTING, CLEANING, AND PAINTING STRUCTURAL STEEL SUPPORT MEMBERS. AREAS IN CLOSE PROXIMITY TO THE BOTTOM SURFACE MAY BE PREPARED WITH POWER TOOL METHODS (SSPC-SP11)

4 UPHAUL AND DOWNHAUL WIRE ROPE GUIDES ON TOP OF STEEL CHORDS. TO BE REMOVED AND DISCARDED.

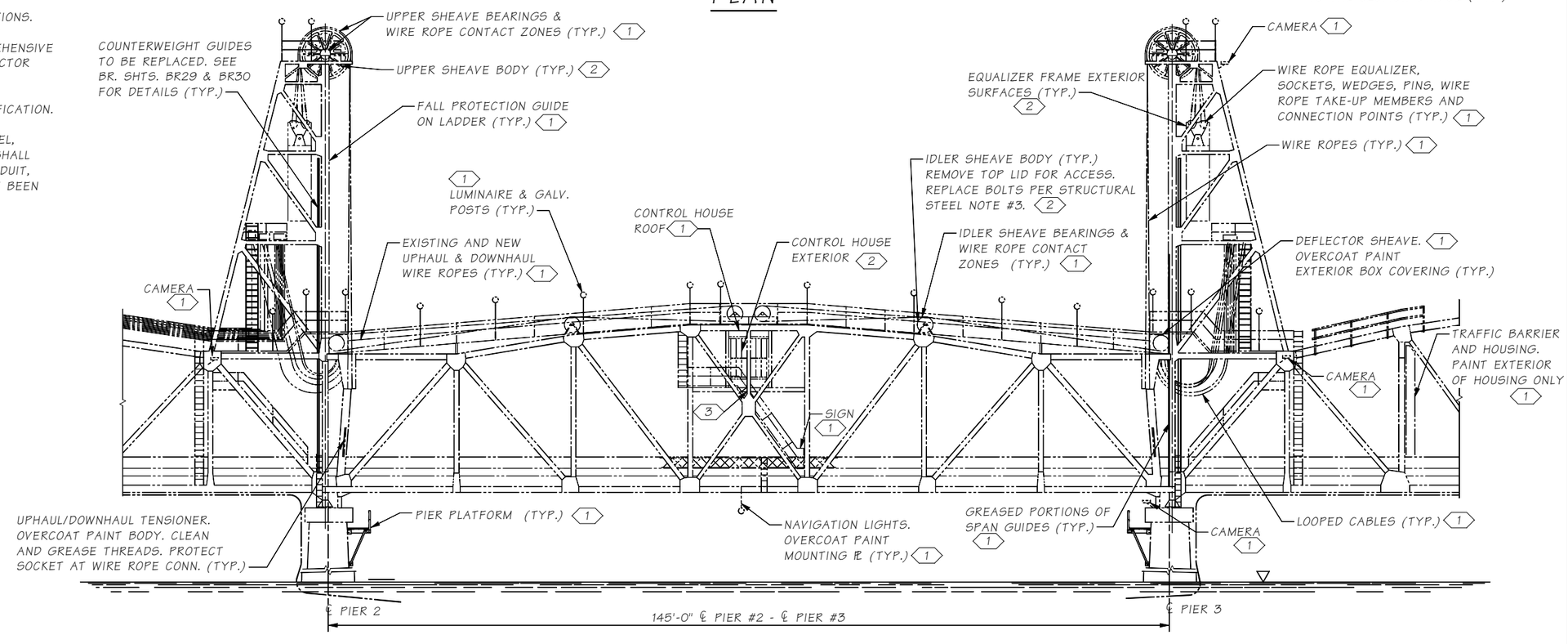

ELEVATION

Bridge Design Engr.	Leland, AC		M:\Z-Team\SR529_10E Rehab and Painter\SR529_10E Rehab and Painter\window files\05 MOVABLE BRIDGE LAYOUT.wwd								
Supervisor	Zeldenrust, RP										
Designed By	Swett, GD	09/18									
Checked By	Olson, DE	03/23									
Detailed By	Uhde, T	09/18									
Bridge Projects Engr.											
Prelim. Plan By											
Architect/Specialist			DATE	REVISION	BY	APP'D					

REGION NO.	STATE	FED. AID PROJ. NO.	SHEET NO.	TOTAL SHEETS
10	WASH.	0529(020)		
JOB NUMBER 23A003				
CONTRACT NO.				

P.E. STAMP BOX — GEOFFREY D. SWETT, STATE OF WASHINGTON, 36360, PROFESSIONAL ENGINEER — SEE SHEET CT1 — DATE

BRIDGE AND STRUCTURES OFFICE

P.E. STAMP BOX — RICHARD P. ZELDENRUST, STATE OF WASHINGTON, 35470, PROFESSIONAL ENGINEER — SEE SHEET CT1 — DATE

Washington State Department of Transportation

SR 529
SNOHOMISH RIVER & STEAMBOAT SLOUGH
BRIDGE REPAIR, REHAB & PAINT
BR. NO. 529/10E

SPAN B-LIFT SPAN PAINT EXCLUSION & OVERCOAT AREAS

BRIDGE SHEET NO. BR8

SHEET 42 OF 136 SHEETS

SR 529 FILE NO. SHEET BR8

Thu Apr 13 14:37:59 2023

SEE GENERAL NOTES ON BRIDGE SHEET BR4

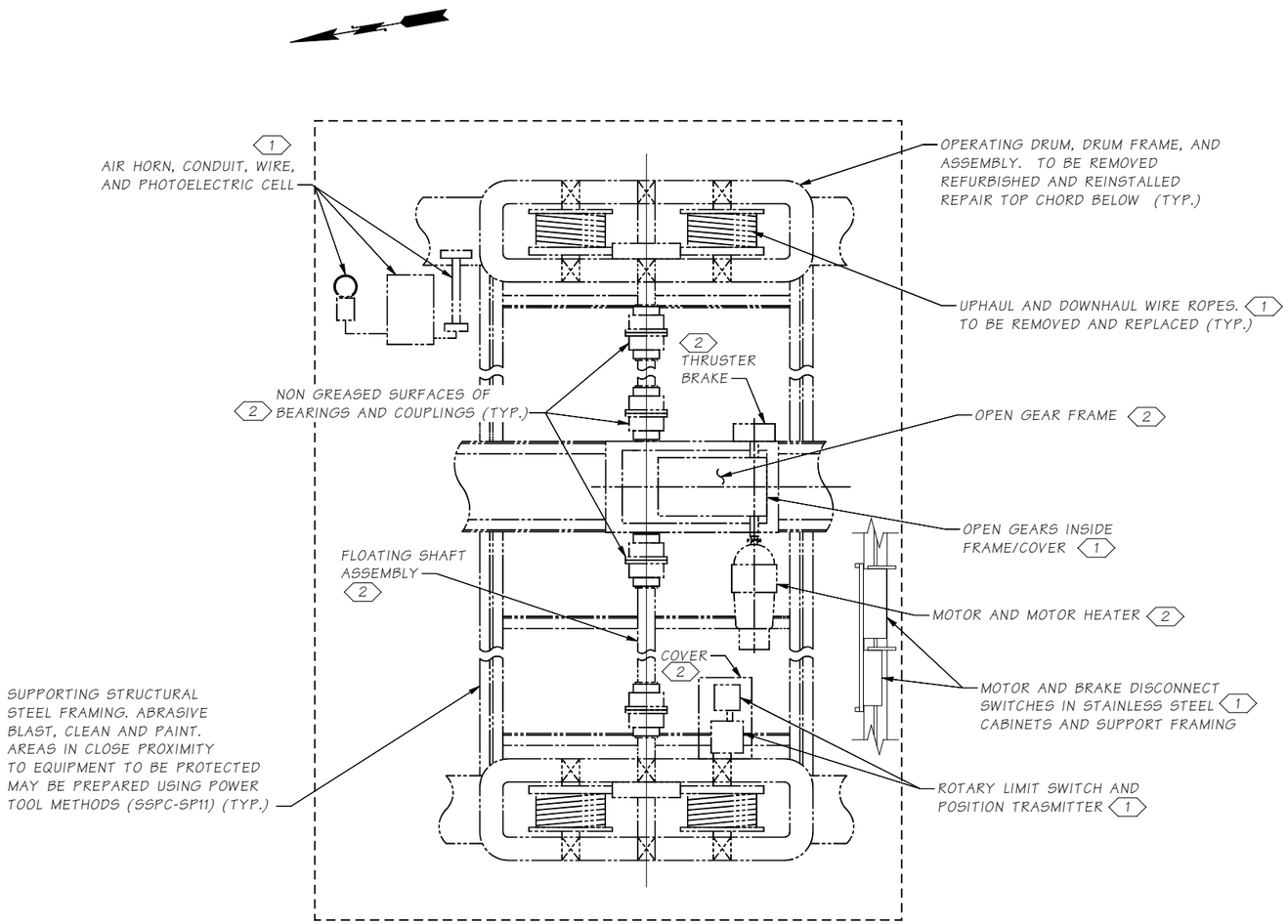

KEY NOTES:

1. PROTECT FROM CLEANING, BLASTING, AND PAINTING OPERATIONS.
2. PROTECT FROM CLEANING AND BLASTING OPERATIONS. SURFACE PREPARE AND OVERCOAT PAINT PER THE REQUIREMENTS OF THE STANDARD SPECIFICATIONS AND SPECIAL PROVISIONS.

SR 529 FILE NO. ____ SHEET BR9

Bridge Design Engr.	Leland, AC	
Supervisor	Zeldenrust, RP	
Designed By	Swett, GD	05/22
Checked By	Olson, DE	03/23
Detailed By	Uhde, T	05/22
Bridge Projects Engr.		
Prelim. Plan By		
Architect/Specialist		

M:\Z-Team\SR529_10E Rehab and Painter\SR529_10E Rehab and Painter\window files\G2 SR529-WORK IDENTIFICATION.WND

DATE	REVISION	BY	APP'D

REGION NO.	STATE	FED. AID PROJ. NO.	SHEET NO.	TOTAL SHEETS
10	WASH.	0529(020)		

JOB NUMBER 23A003

CONTRACT NO.

P.E. STAMP BOX — GEOFFREY D. SWETT, STATE OF WASHINGTON, 32820, STRUCTURAL ENGINEER, PROFESSIONAL ENGINEER — SEE SHEET CT1 — DATE

BRIDGE AND STRUCTURES OFFICE

P.E. STAMP BOX — RICHARD P. ZELDENRUST, STATE OF WASHINGTON, 25470, STRUCTURAL ENGINEER, PROFESSIONAL ENGINEER — SEE SHEET CT1 — DATE

Washington State Department of Transportation

SR 529
SNOHOMISH RIVER & STEAMBOAT SLOUGH
BRIDGE REPAIR, REHAB & PAINT
BR. NO. 529/10E

SPAN B-LIFT SPAN PAINT
EXCLUSION & OVERCOAT AREAS 1

BRIDGE SHEET NO. BR9

SHEET 43 OF 136 SHEETS

Mon Apr 17 12:59:04 2023

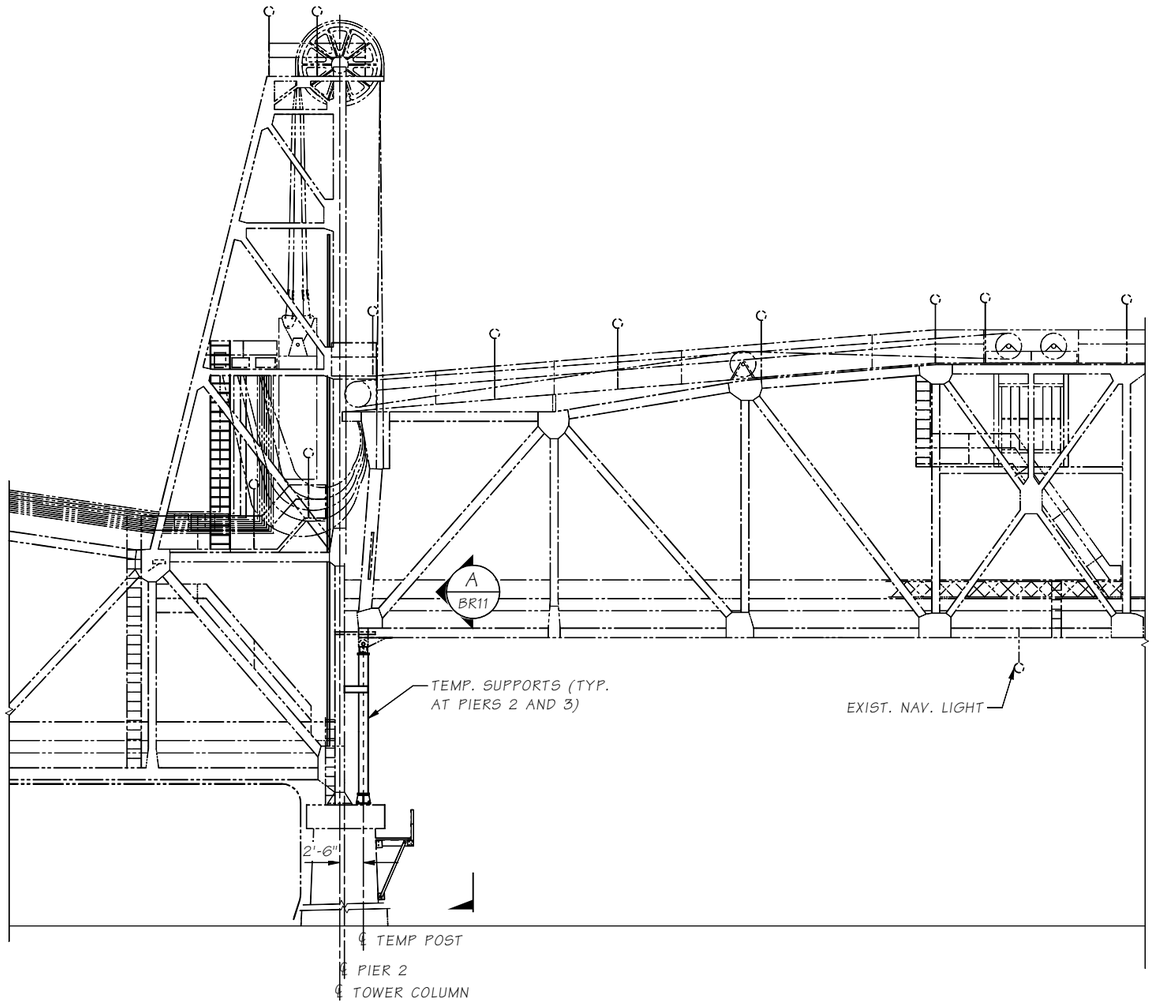

LIFT SPAN - TEMP SUPPORT ELEVATION

TEMP. SUPPORT NOTES

1. ALL STRUCTURAL STEEL FOR TEMPORARY SUPPORT COMPONENTS SHALL BE ASTM A572 GR 50, UNLESS NOTED OTHERWISE. PAINTING OF TEMPORARY MEMBERS IS NOT REQUIRED.
2. ALL TEMPORARY BOLTS SHALL BE ASTM F3125 GR A325. ANCHOR BOLT THREADED ROD SHALL BE ASTM F1554 GR 105. COUNTERSUNK BOLTS FOR RE-ATTACHING STRIKE PLATES AT PIER 3 BEARINGS SHALL BE ASTM F3125 GR A325 AND SHALL BE GALVANIZED. CONTRACTOR SHALL VERIFY LENGTHS OF EXISTING BOLTS PRIOR TO ORDERING REPLACEMENT BOLTS.
3. THE CONTRACTOR SHALL FIELD MEASURE AND VERIFY LENGTHS OF TEMPORARY POSTS SO THAT ALL 4 CORNERS BEAR EVENLY AND LEVEL WHILE THE SPAN IS RAISED 15'-0" (-0",+6"). MEASUREMENTS SHALL BE VERIFIED AND INCLUDED IN SHOP PLANS PRIOR TO SUBMITTING FOR ACCEPTANCE.
4. SEE SPECIAL PROVISIONS FOR BRIDGE NO. 529/10W OPERATIONAL REQUIREMENTS WHILE BRIDGE NO. 529/10E BRIDGE IS RAISED AND BLOCKED ON POSTS.
5. PRIOR TO RAISING THE LIFT SPAN FOR BLOCKING, THE CONTRACTOR SHALL ADD 3000 LBS OF DEAD LOAD TO EACH CORNER OF THE BRIDGE ON THE ROADWAY DECK TO ACCOUNT FOR NET LOSS IN WEIGHT FROM PAINTING OPERATIONS. THE SPAN SHALL NOT BE RAISED FOR BLOCKING UNTIL NB SR529 TRAFFIC HAS BEEN DETOURED PER TRAFFIC CONTROL PLANS.
6. PROVIDE ACCESS FOR THE BRIDGE TENDER FROM SPAN A AND C TO THE RAISED DECK OF SPAN B AT ALL TIMES.

SR 529 FILE NO. ____ SHEET BR10

Bridge Design Engr.	Leland, AC	
Supervisor	Zeldenrust, RP	
Designed By	Swett, GD	08/22
Checked By	Olson, DE	03/23
Detailed By	Tubbs, N	01/23
Bridge Projects Engr.		
Prelim. Plan By		
Architect/Specialist		

M:\Z-Team\SR529_10E Rehab and Painter\SR529_10E Rehab and Painter\window files\1LIFT SPAN SUPPORT 1.wnd

DATE	REVISION	BY	APP'D

REGION NO.	STATE	FED. AID PROJ. NO.	SHEET NO.	TOTAL SHEETS
10	WASH.	0529(020)		

JOB NUMBER 23A003

CONTRACT NO.

P.E. STAMP BOX — GEOFFREY D. SWETT, STATE OF WASHINGTON, 32820, REGISTERED PROFESSIONAL ENGINEER — SEE SHEET CT1 — DATE:

BRIDGE AND STRUCTURES OFFICE

P.E. STAMP BOX — RICHARD P. ZELDENRUST, STATE OF WASHINGTON, 25470, REGISTERED PROFESSIONAL ENGINEER — SEE SHEET CT1 — DATE:

Washington State Department of Transportation

SR 529
SNOHOMISH RIVER & STEAMBOAT SLOUGH
BRIDGE REPAIR, REHAB & PAINT
BR. NO. 529/10E

LIFT SPAN TEMP SUPPORT

BRIDGE SHEET NO. BR10

SHEET 44 OF 136 SHEETS

Thu Apr 13 14:38:19 2023

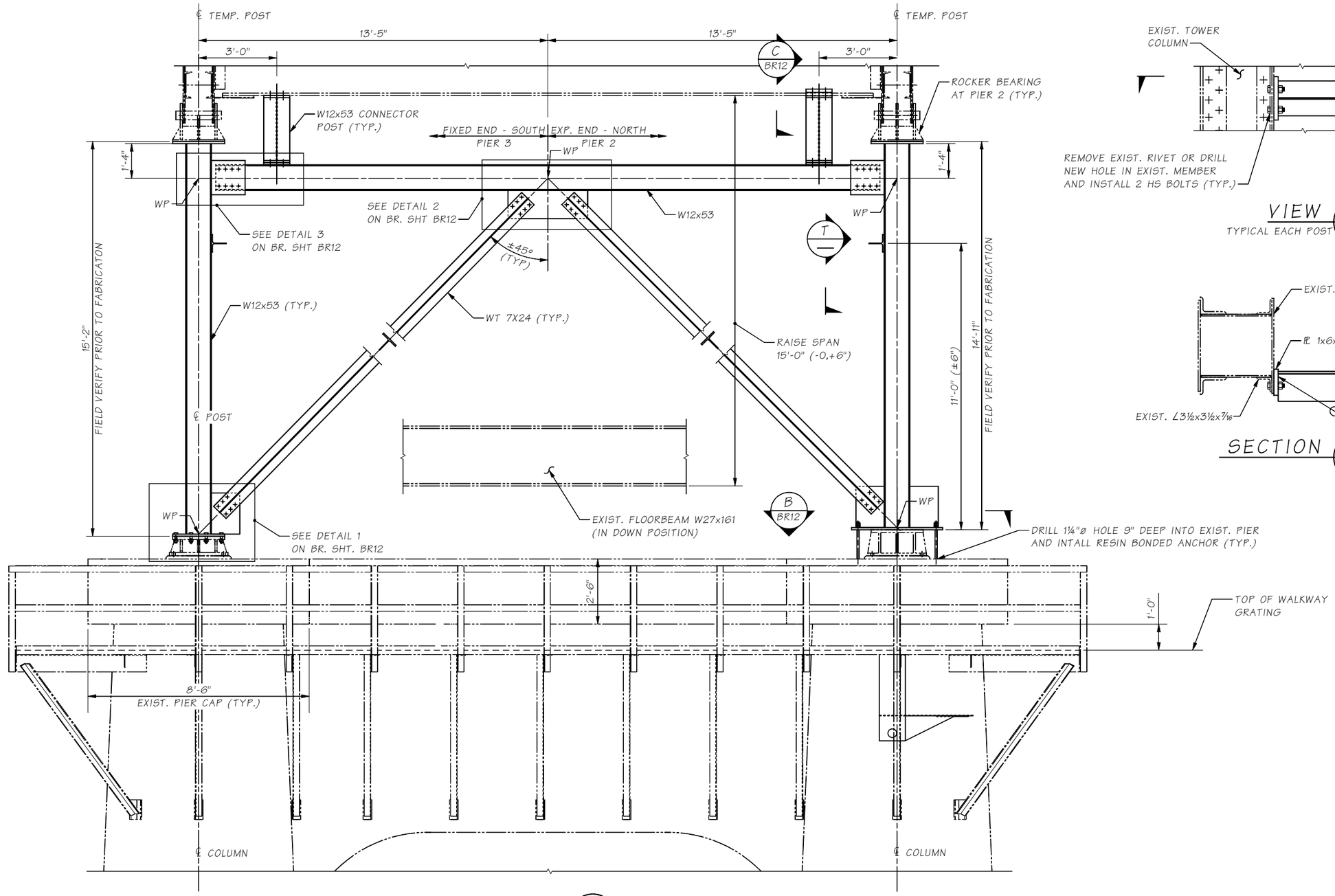

SECTION A
BR10

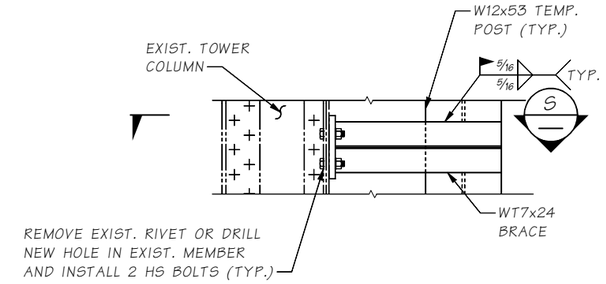

VIEW T
TYPICAL EACH POST

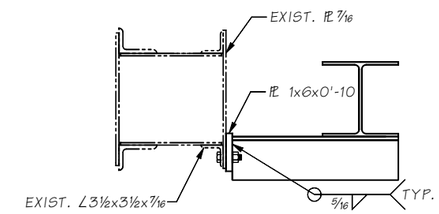

SECTION S

Bridge Design Engr.	Leland, AC	
Supervisor	Zeldenrust, RP	
Designed By	Swett, GD	11/22
Checked By	Olson, DE	03/23
Detailed By	Uhde, T	11/22
Bridge Projects Engr.		
Prelim. Plan By		
Architect/Specialist		

M:\Z-Team\SR529_10E Rehab and Painter\SR529_10E Rehab and Painter\window files\LIFT SPAN SUP SECTION.wnd

DATE	REVISION	BY	APP'D

REGION NO.	STATE	FED. AID PROJ. NO.	SHEET NO.	TOTAL SHEETS
10	WASH.	0529(020)		
JOB NUMBER 23A003				
CONTRACT NO.				

P.E. STAMP BOX
GEOFFREY D. SWETT
STATE OF WASHINGTON
33820
STRUCTURAL ENGINEER
PROFESSIONAL ENGINEER
SEE SHEET CT1
DATE

BRIDGE AND STRUCTURES OFFICE

P.E. STAMP BOX
RICHARD P. ZELDENRUST
STATE OF WASHINGTON
25470
STRUCTURAL ENGINEER
PROFESSIONAL ENGINEER
SEE SHEET CT1
DATE

Washington State Department of Transportation

SR 529
SNOHOMISH RIVER & STEAMBOAT SLOUGH
BRIDGE REPAIR, REHAB & PAINT
BR. NO. 529/10E

LIFT SPAN TEMPORARY SUPPORT
TYPICAL SECTION

BRIDGE SHEET NO. BR11
SHEET 45 OF 136 SHEETS

SR 529 FILE NO. ____ SHEET BR11

Thu Apr 13 14:38:21 2023

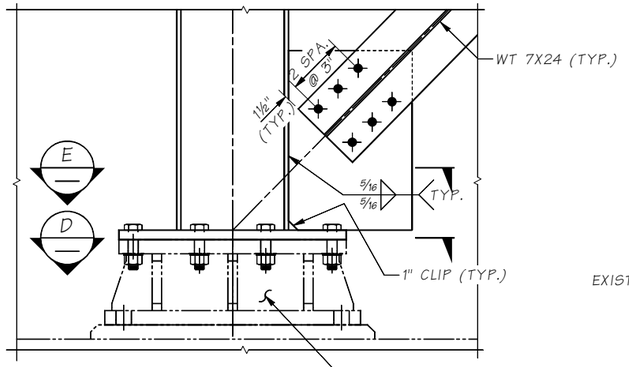

DETAIL 1 / BR11
BRG. AT PIER 3

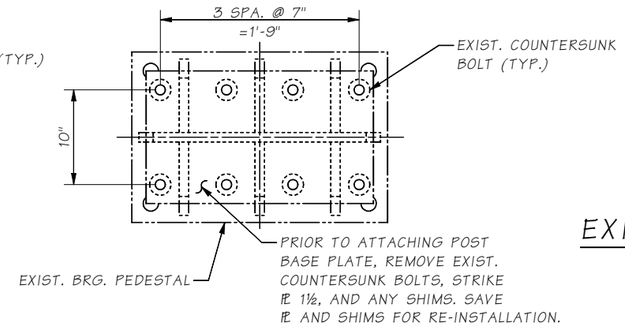

SECTION D

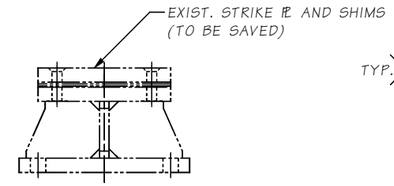

EXIST. BRG. PEDESTAL
PIER 3

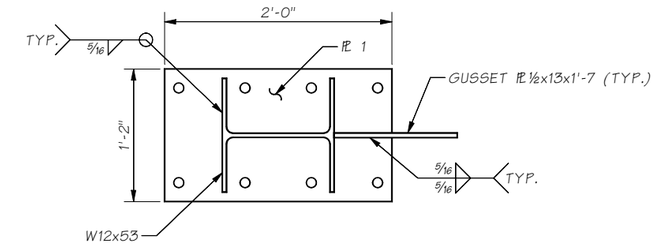

SECTION E

LOWER BASE PLATE WELDED TO W12X53 SHOWN, TOP BASE PLATE THE SAME

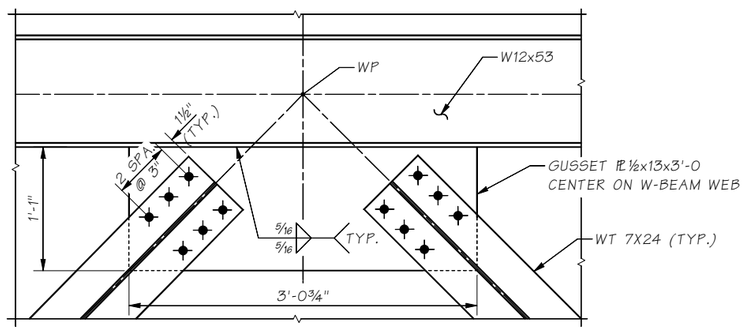

DETAIL 2 / BR11

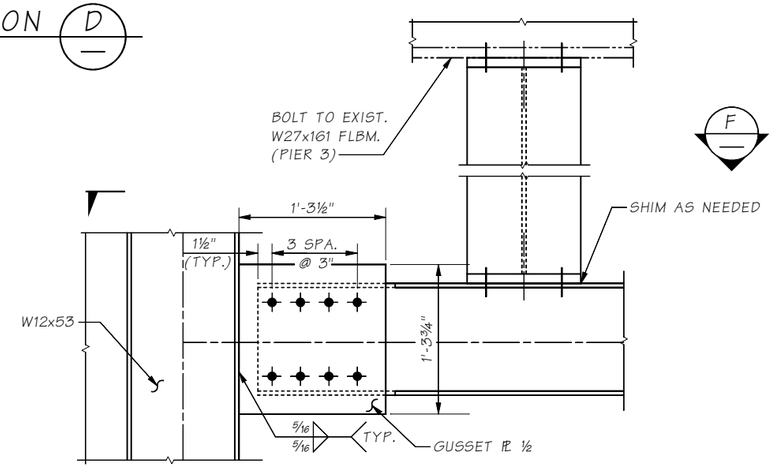

DETAIL 3 / BR11

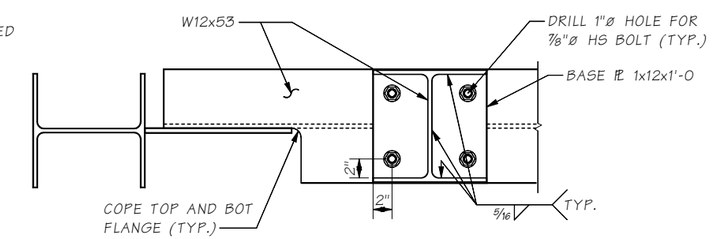

SECTION F

NOTE: AT PIER 3 CONNECTION AT TOP OF CONNECTOR POST SIMILAR EXCEPT BOLTING TO EXIST. W27x161. USE POST BASE PLATE HOLES TO MATCH DRILL HOLES W27X161 (TYP.)

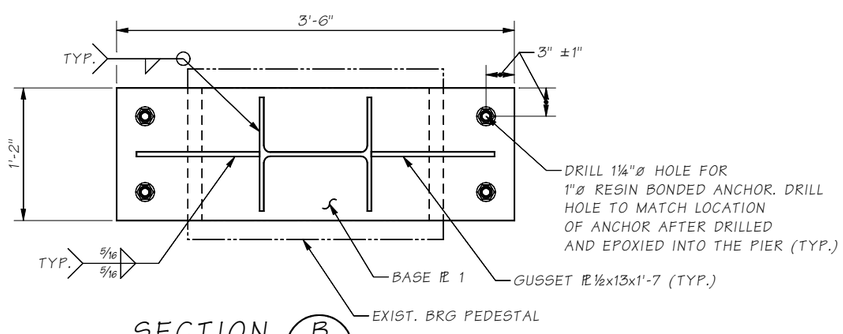

SECTION B / BR11
BRG. AT PIER 2

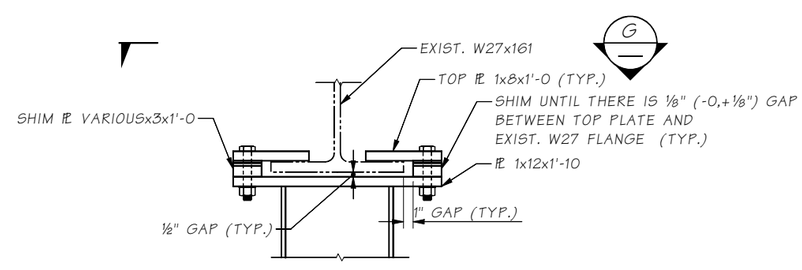

SECTION C / BR11
PIER 2

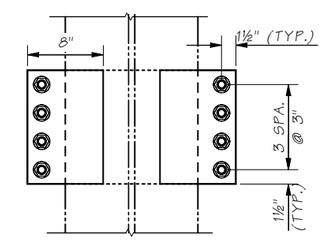

SECTION G

Bridge Design Engr.	Leland, AC	M:\2-Team\SR529_10E Rehab and Painter\SR529_10E Rehab and Painter\window files\STRIKEPLATEDETAIL.wnd				REGION NO.	STATE	FED. AID PROJ. NO.	SHEET NO.	TOTAL SHEETS	
Supervisor	Zeldenrust, RP					10	WASH.	0529(020)			
Designed By	Swett, GD 11/22					JOB NUMBER 23A003					
Checked By	Olson, DE 03/23										
Detailed By	Uhde, T 11/22					CONTRACT NO.					
Bridge Projects Engr.											
Prelim. Plan By											
Architect/Specialist		DATE	REVISION	BY	APP'D						

P.E. STAMP BOX: GEOFFREY D. SWETT, STATE OF WASHINGTON, 25490, PROFESSIONAL ENGINEER
SEE SHEET CT1
DATE

BRIDGE AND STRUCTURES OFFICE

P.E. STAMP BOX: RICHARD P. ZELDENRUST, STATE OF WASHINGTON, 25490, PROFESSIONAL ENGINEER
SEE SHEET CT1
DATE

Washington State Department of Transportation

SR 529
SNOHOMISH RIVER & STEAMBOAT SLOUGH
BRIDGE REPAIR, REHAB & PAINT
BR. NO. 529/10E

LIFT SPAN TEMPORARY SUPPORT DETAILS

BRIDGE SHEET NO. BR12

SHEET 46 OF 136 SHEETS

SR 529 FILE NO. ____ SHEET BR12

Thu Apr 13 14:38:26 2023

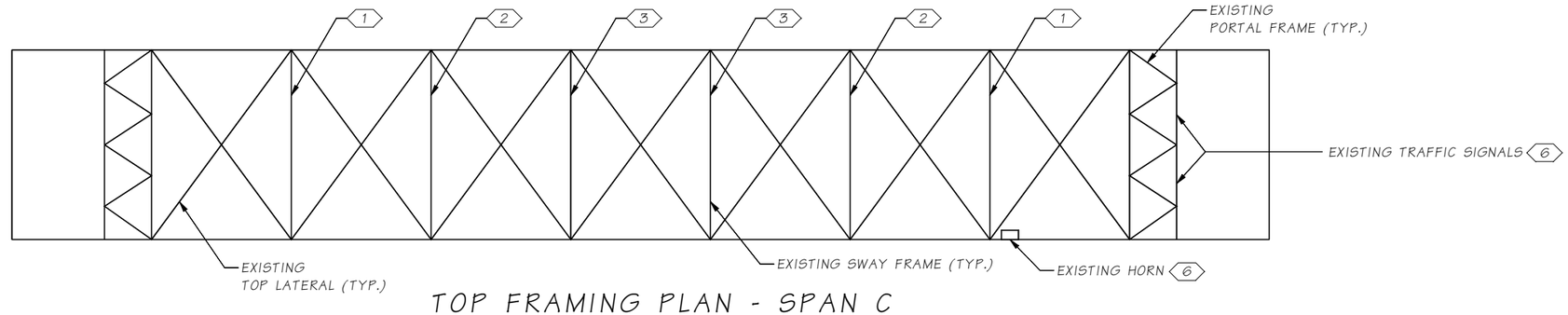

TOP FRAMING PLAN - SPAN C

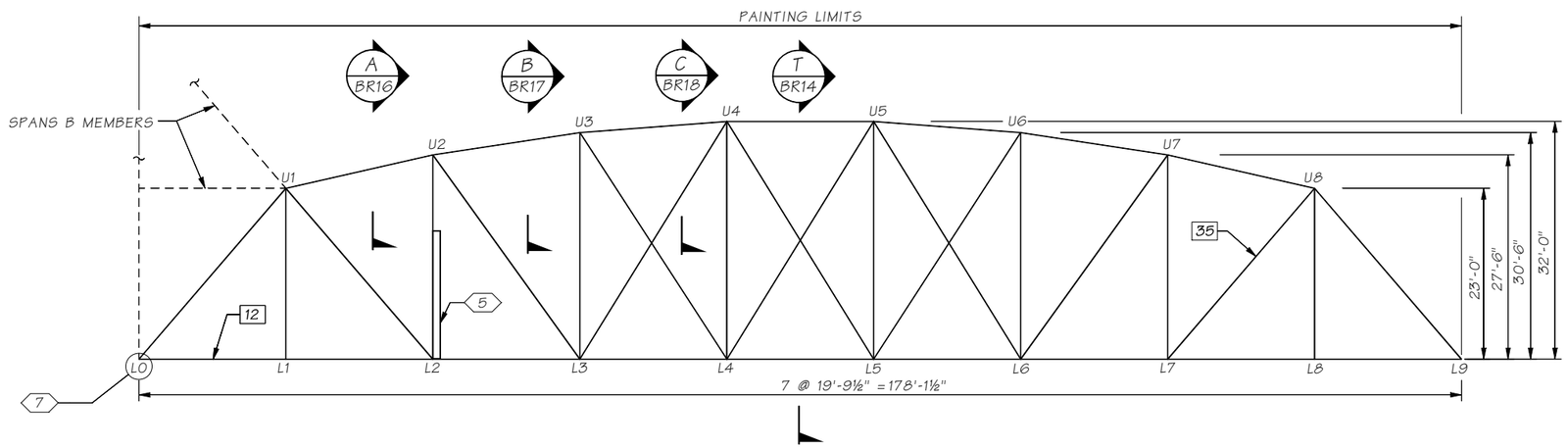

EAST ELEVATION - SPAN C

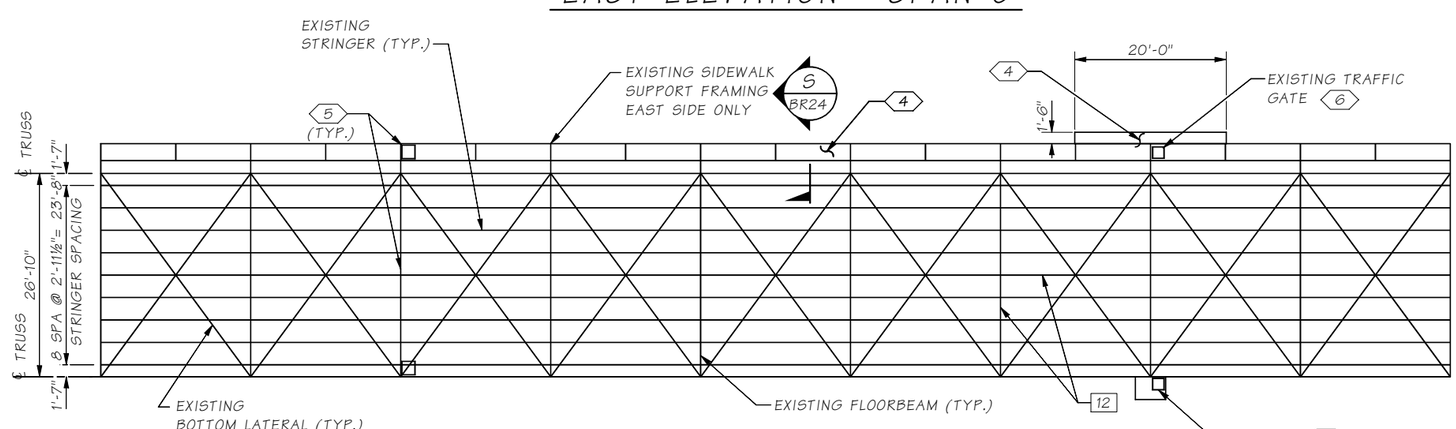

BOTTOM FRAMING PLAN - SPAN C

XX - INDICATES APPROXIMATE THICKNESS OF EXISTING PAINT IN MILS MEASURED AT RANDOM AND DISCRETE LOCATIONS. THESE ARE PROVIDED FOR INFORMATION ONLY. CONTRACTOR IS RESPONSIBLE FOR MEANS AND METHODS TO ACHIEVE AN SSPC-SP10 SURFACE PREPARATION.

NOTES:

1. SWAY FRAME TYPE 1 RETROFIT. SEE DETAILS ON BR. SHT. BR16
2. SWAY FRAME TYPE 2 RETROFIT. SEE DETAILS ON BR. SHT. BR17
3. SWAY FRAME TYPE 3 RETROFIT. SEE DETAILS ON BR. SHT. BR18
4. REMOVE AND REPLACE SIDEWALK TIMBER WALKWAY FULL LENGTH OF SPAN AND AT TRAFFIC GATE. SEE DETAILS ON BR. SHT. BR24
5. EXISTING TRAFFIC ARREST BARRIER AND HOUSING. ONLY PAINT EXTERIOR OF HOUSING. PROTECT GATE AND INTERNAL HARDWARE FROM BLASTING, CLEANING, AND PAINTING OPERATIONS
6. PROTECT FROM BLASTING, CLEANING, AND PAINTING OPERATIONS.
7. SEE BR. SHT. BR25 FOR GUARDRAIL POST DETAILS FO PAINTING

Bridge Design Engr.	Leland, AC	
Supervisor	Zeldenrust, RP	
Designed By	Swett, GD	01/22
Checked By	Olson, DE	03/23
Detailed By	Uhde, T	01/23
Bridge Projects Engr.		
Prelim. Plan By		
Architect/Specialist		

M:\Z-Team\SR529_10E Rehab and Painter\SR529_10E Rehab and Painter\window files\SPAN C FRAMING.wnd

DATE	REVISION	BY	APP'D

REGION NO.	STATE	FED. AID PROJ. NO.	SHEET NO.	TOTAL SHEETS
10	WASH.	0529(020)		
JOB NUMBER 23A003				
CONTRACT NO.				

P.E. STAMP BOX
GEOFFREY D. SWETT, STATE OF WASHINGTON, 38820, PROFESSIONAL ENGINEER
SEE SHEET CT1
DATE

BRIDGE AND STRUCTURES OFFICE

P.E. STAMP BOX
RICHARD P. ZELDENRUST, STATE OF WASHINGTON, 35479, PROFESSIONAL ENGINEER
SEE SHEET CT1
DATE

Washington State Department of Transportation

SR 529
SNOHOMISH RIVER & STEAMBOAT SLOUGH
BRIDGE REPAIR, REHAB & PAINT
BR. NO. 529/10E

SPAN C FRAMING AND RETROFIT PLAN

BRIDGE SHEET NO. BR13

SHEET 47 OF 136 SHEETS

SR 529 FILE NO. SHEET BR13

Thu Apr 13 14:38:31 2023

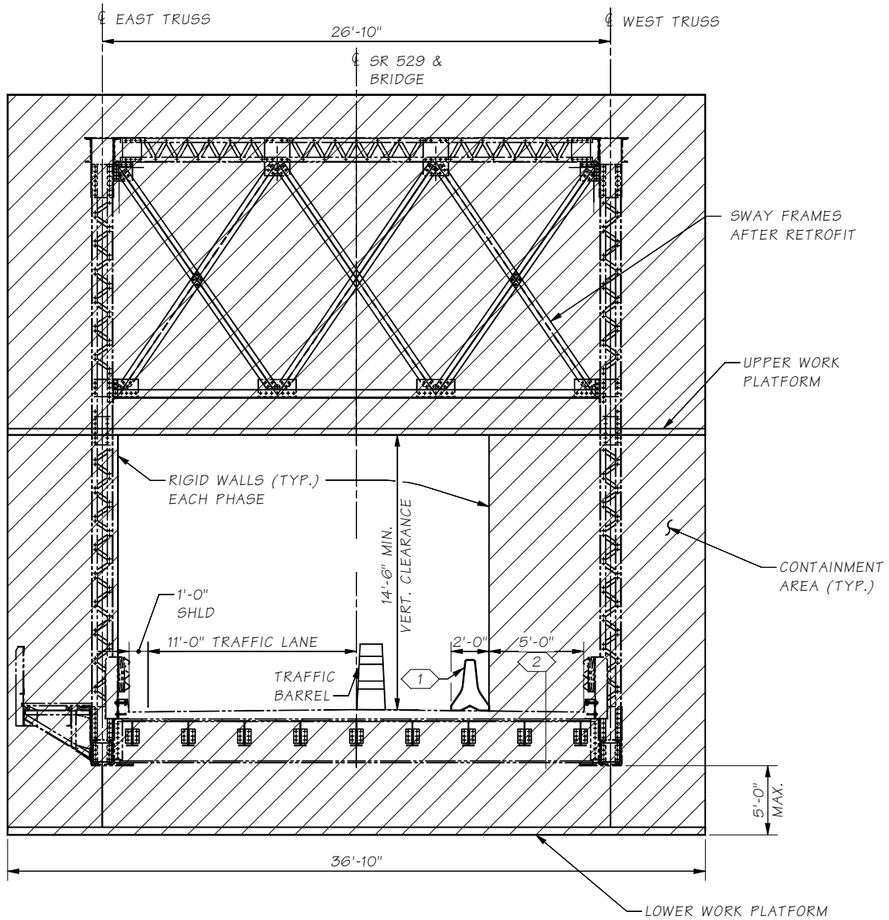

SECTION T
BR6, BR13

PHASE II TRAFFIC & CONTAINMENT

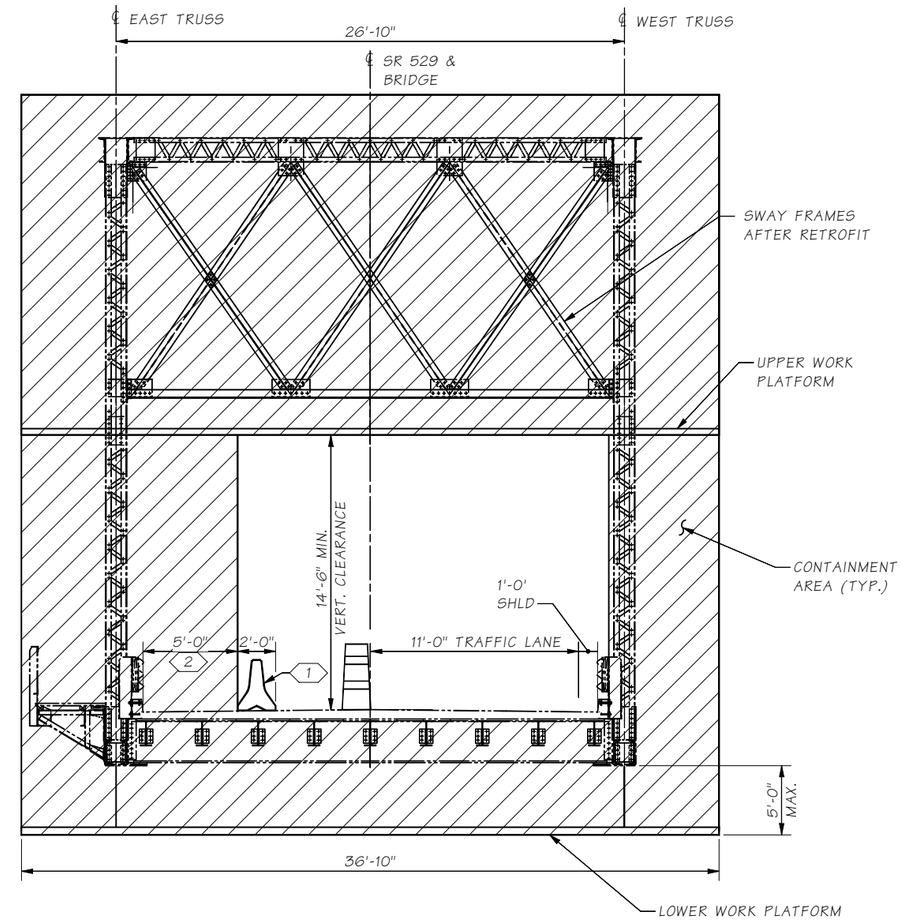

SECTION T
BR6, BR13

PHASE III TRAFFIC & CONTAINMENT

NOTES & KEY NOTES:

1. TEMPORARY TYPE 2 TRAFFIC BARRIER ATTACHED TO BRIDGE DECK USING TYPE 1 ANCHOR (STD. PLAN K-80.35-01). USE ROTARY DRILLING TOOLS ONLY.
2. TRUSS LOAD RATING RESTRICTS TRAFFIC BARRIER LOCATION TO A MAXIMUM OF 5'-0" FROM FACE OF CURB LINE
3. PORTALS AT U1 AND U8 WILL NOT BE FULLY ENCLOSED IN CONTAINMENT AS SHOWN.

TYPICAL SECTION SPANS A & C

LOCATION NEAR L4-U4

SR 529 FILE NO. ____ SHEET BR14

Bridge Design Engr.	Leland, AC	
Supervisor	Zeldenrust, RP	
Designed By	Swett, GD	02/22
Checked By	Olson, DE	03/23
Detailed By	Uhde, T	02/22
Bridge Projects Engr.		
Prelim. Plan By		
Architect/Specialist		

M:\Z-Team\SR529_10E Rehab and Painter\SR529_10E Rehab and Painter\window files\TYP SECTION SPAN A & C.wnd

DATE	REVISION	BY	APP'D

REGION NO.	STATE	FED. AID PROJ. NO.	SHEET NO.	TOTAL SHEETS
10	WASH.	0529(020)		
JOB NUMBER 23A003				
CONTRACT NO.				

P.E. STAMP BOX
GEOFFREY D. SWETT
STATE OF WASHINGTON
PROFESSIONAL ENGINEER
SEE SHEET CT1
DATE:

BRIDGE AND STRUCTURES OFFICE

P.E. STAMP BOX
RICHARD P. ZELDENRUST
STATE OF WASHINGTON
PROFESSIONAL ENGINEER
SEE SHEET CT1
DATE:

Washington State Department of Transportation

SR 529
SNOHOMISH RIVER & STEAMBOAT SLOUGH
BRIDGE REPAIR, REHAB & PAINT
BR. NO. 529/10E

TYPICAL SECTION SPANS A AND C

BRIDGE SHEET NO. BR14
SHEET 48 OF 136 SHEETS

Thu Apr 13 14:38:38 2023

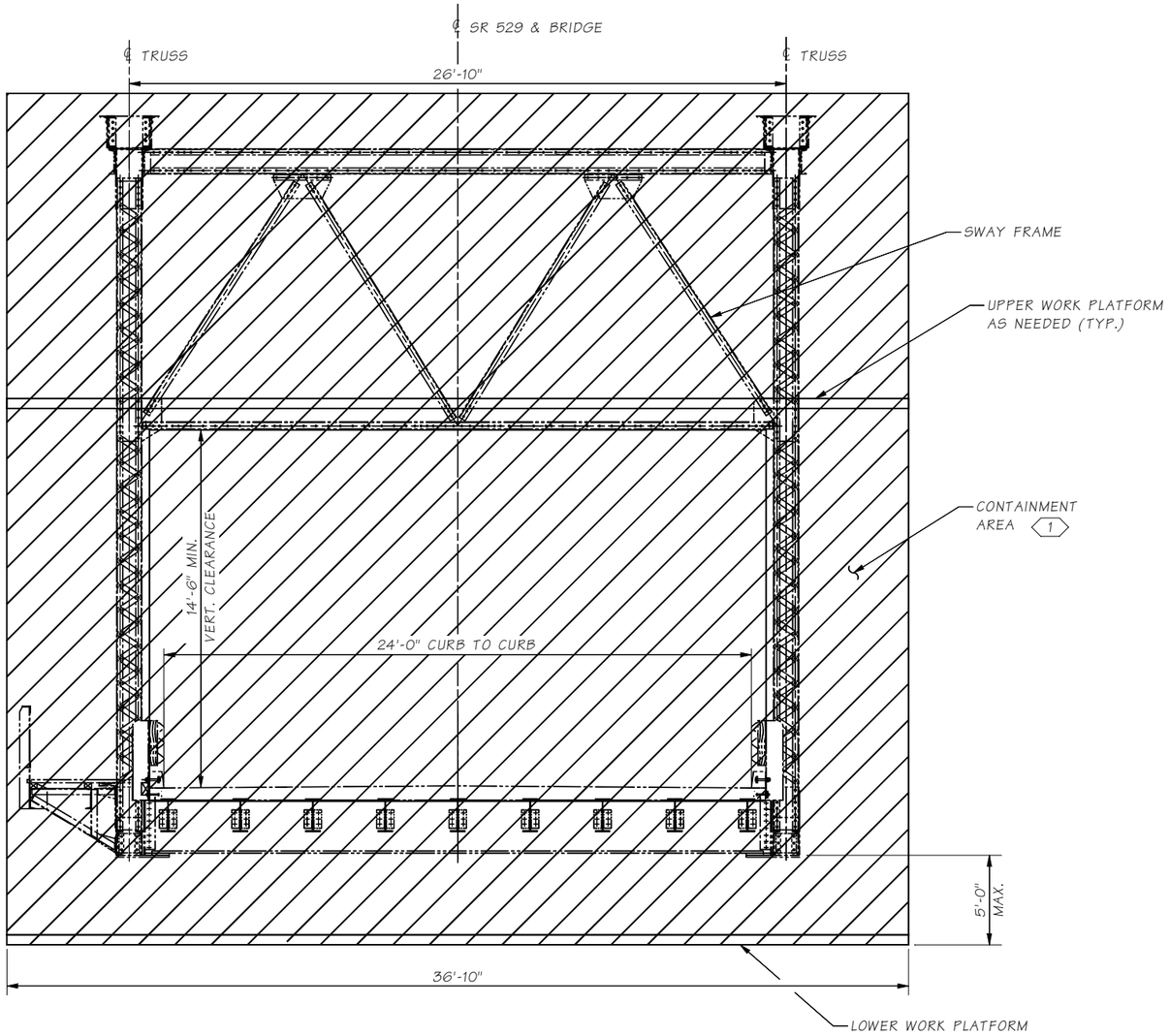

SECTION T / BR7

PHASE I TRAFFIC & CONTAINMENT

NB SR529 TRAFFIC CLOSURE AND FULL CONTAINMENT OF LIFT SPAN

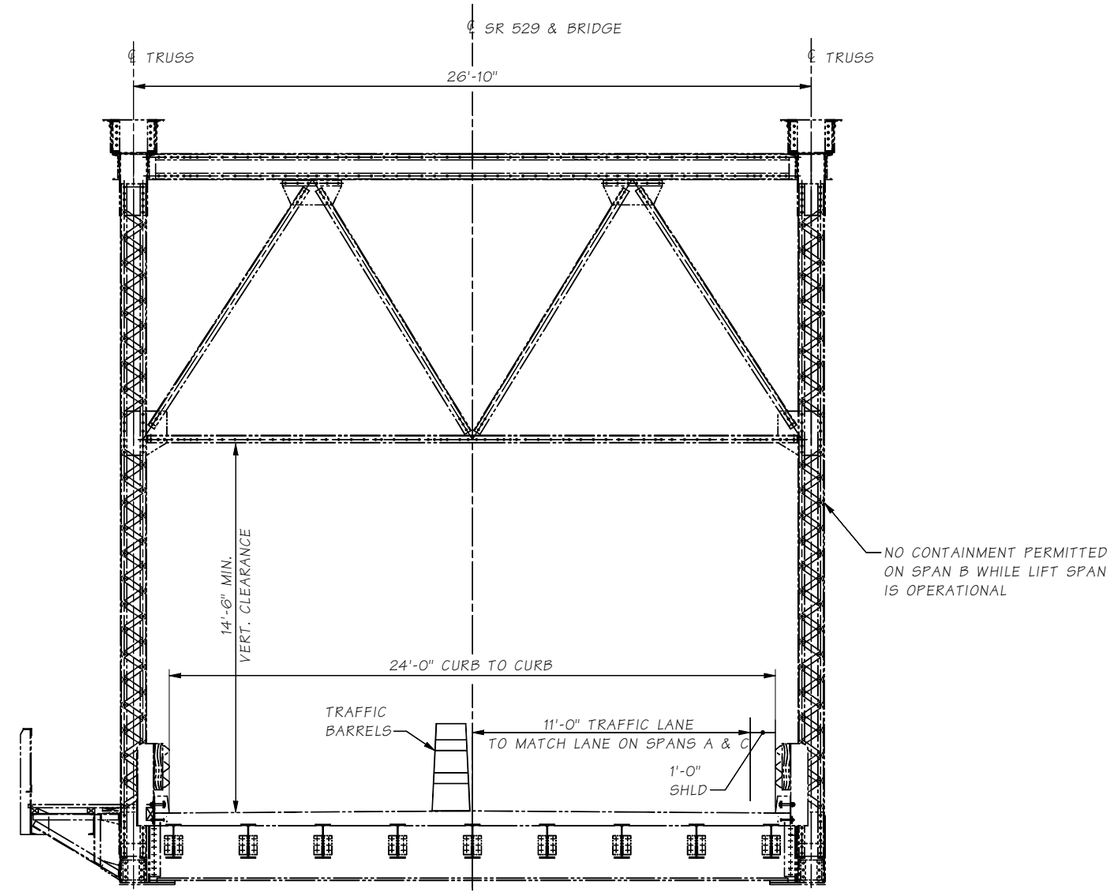

SECTION T / BR7

PHASES II & III TRAFFIC & CONTAINMENT

NB SR529 ONE LANE TRAFFIC WITH NO CONTAINMENT ON LIFT SPAN. CONCRETE TRAFFIC BARRIER NOT PERMITTED ON LIFT SPAN. TRAFFIC BARRELS SHALL BE UTILIZED TO DELINEATE TRAFFIC DURING PHASES II & III. SECTION VIEW SHOWS NB LEFT TRAFFIC LANE OPEN AND NB RIGHT TRAFFIC LANE CLOSED DURING PHASE II. PHASE III SIMILAR, BUT MIRRORED ABOUT CENTERLINE OF BRIDGE WITH NB RIGHT TRAFFIC LANE OPEN AND NB LEFT TRAFFIC LANE CLOSED.

NOTES:

1. LIFT SPAN SHALL BE RAISED AND SECURED WITH TEMP. SUPPORTS UNTIL AFTER MECHANICAL, PAINTING, AND STRUCTURAL WORK IS COMPLETED. THE SPAN CAN BE FULLY CONTAINED EXCEPT FOR AS DESCRIBED IN THE SPECIALS FOR BRIDGE TENDER ACCESS AND OPERATION OF BRIDGE NO. 529/10W.

SR SR 529 FILE NO. ____ SHEET BR15

Bridge Design Engr.	Leland, AC	
Supervisor	Zeldenrust, RP	
Designed By	Swett, GD	01/22
Checked By	Olson, DE	03/23
Detailed By	Uhde, T	01/23
Bridge Projects Engr.		
Prelim. Plan By		
Architect/Specialist		

M:\Z-Team\SR529_10E Rehab and Painter\SR529_10E Rehab and Painter\window files\LIFT SPAN TYP SECTION.wnd

DATE	REVISION	BY	APP'D

REGION NO.	STATE	FED. AID PROJ. NO.	SHEET NO.	TOTAL SHEETS
10	WASH.	0529(020)		

JOB NUMBER 23A003

CONTRACT NO.

P.E. STAMP BOX — GEOFFREY D. SWETT, STATE OF WASHINGTON, 28820, REGISTERED PROFESSIONAL ENGINEER — SEE SHEET CT1 — DATE

BRIDGE AND STRUCTURES OFFICE

P.E. STAMP BOX — RICHARD P. ZELDENRUST, STATE OF WASHINGTON, 29970, REGISTERED PROFESSIONAL ENGINEER — SEE SHEET CT1 — DATE

Washington State Department of Transportation

SR 529
SNOHOMISH RIVER & STEAMBOAT SLOUGH
BRIDGE REPAIR, REHAB & PAINT
BR. NO. 529/10E

LIFT SPAN
TYPICAL SECTION

BRIDGE SHEET NO. BR15

SHEET 49 OF 136 SHEETS

Thu Apr 13 14:38:42 2023

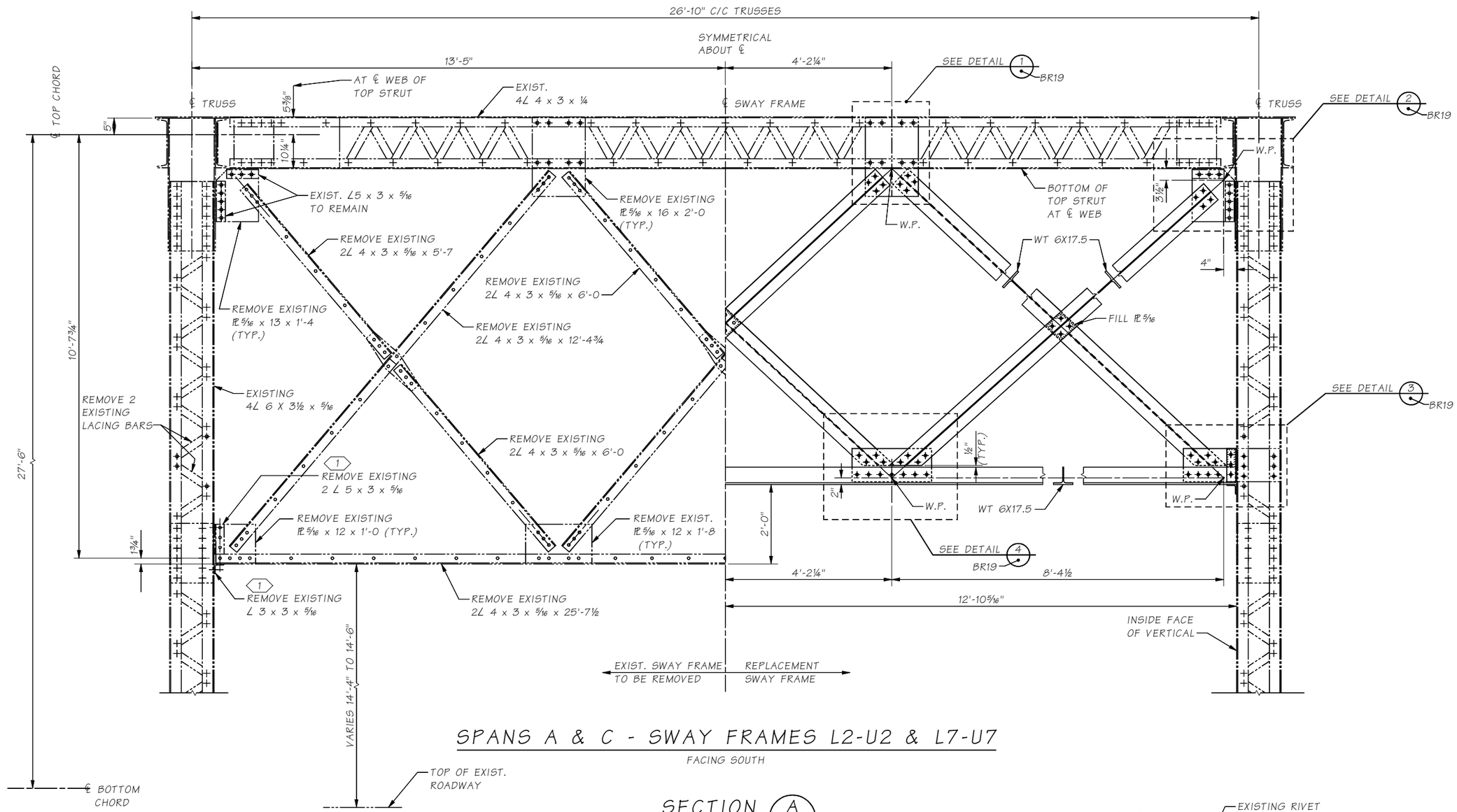

SPANS A & C - SWAY FRAMES L2-U2 & L7-U7

FACING SOUTH

SECTION A

BR6, BR13

FASTENER LEGEND

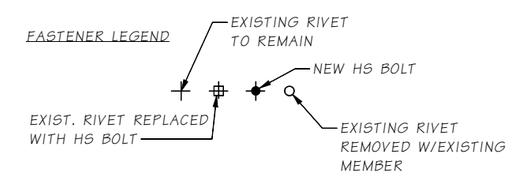

NOTE:

1. VACANT HOLES SHALL BE FILLED WITH ¾"ø HIGH STRENGTH BOLTS TENSIONED IN ACCORDANCE WITH STD. SPEC. SECTION 6-03.3(33)

SR 529 FILE NO. ____ SHEET BR16

Bridge Design Engr.	Leland, AC	
Supervisor	Zeldenrust, RP	
Designed By	Swett, GD	09/18
Checked By	Olson, DE	03/23
Detailed By	Uhde, T	09/18
Bridge Projects Engr.		
Prelim. Plan By		
Architect/Specialist		

M:\Z-Team\SR529_10E Rehab and Painter\SR529_10E Rehab and Painter\window files\07 SWAY DETAILS L2-U2.wnd

DATE	REVISION	BY	APP'D

REGION NO.	STATE	FED. AID PROJ. NO.	SHEET NO.	TOTAL SHEETS
10	WASH.	0529(020)		

JOB NUMBER 23A003

CONTRACT NO.

P.E. STAMP BOX — GEOFFREY D. SWETT, STATE OF WASHINGTON, 42820, REGISTERED PROFESSIONAL ENGINEER — SEE SHEET CT1 — DATE

BRIDGE AND STRUCTURES OFFICE

P.E. STAMP BOX — RICHARD P. ZELDENRUST, STATE OF WASHINGTON, 25470, REGISTERED PROFESSIONAL ENGINEER — SEE SHEET CT1 — DATE

Washington State Department of Transportation

SR 529
SNOHOMISH RIVER & STEAMBOAT SLOUGH
BRIDGE REPAIR, REHAB & PAINT
BR. NO. 529/10E

SWAY DETAILS - TYPE 1
L2-U2

BRIDGE SHEET NO. BR16

SHEET 50 OF 136 SHEETS

Thu Apr 13 14:38:46 2023

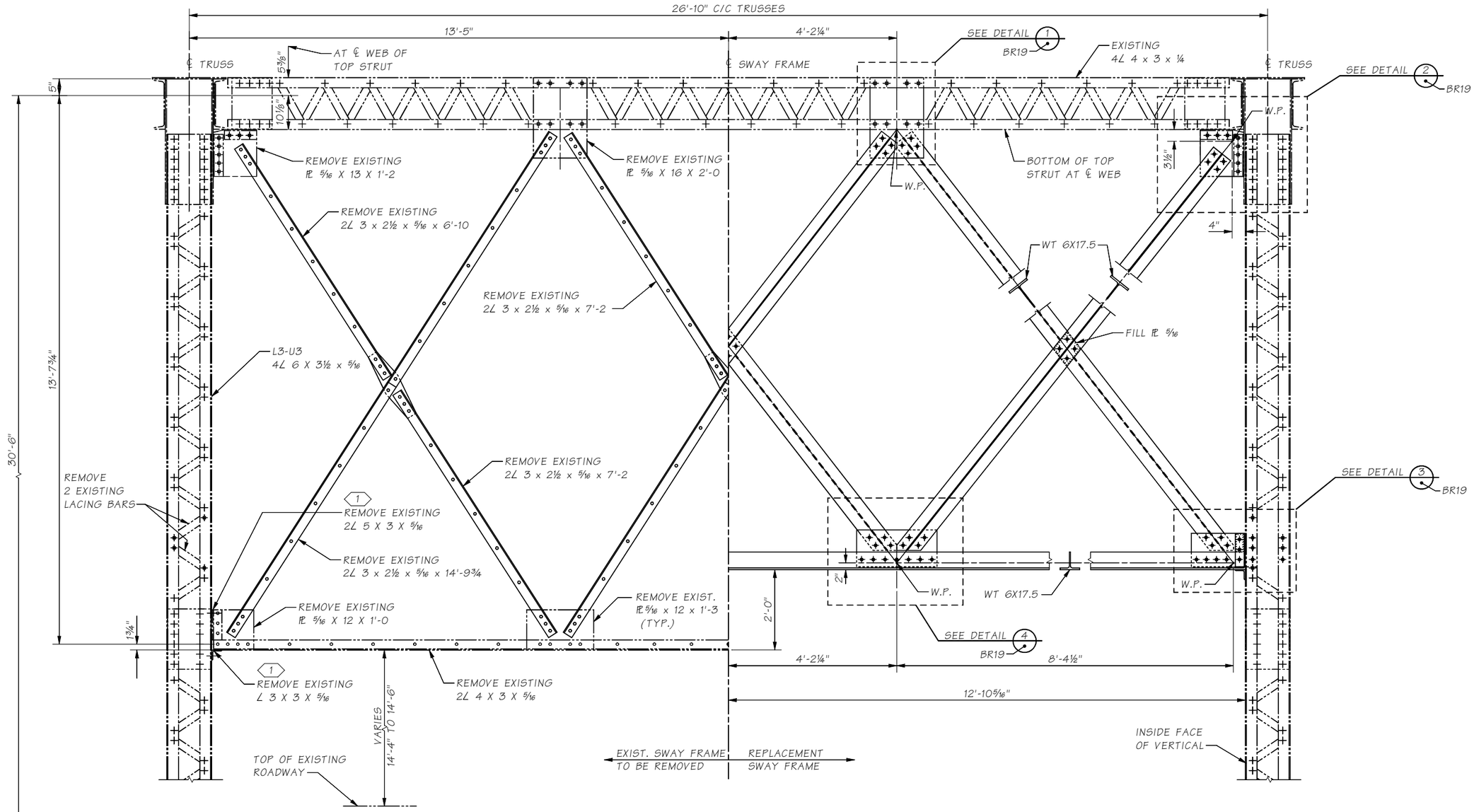

SPANS A & C ~ SWAY FRAMES L3-U3 & L6-U6

FACING SOUTH

SECTION B

BR6, BR13

FASTENER LEGEND

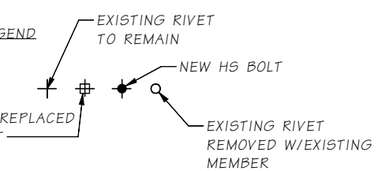

NOTE:

1 VACANT HOLES SHALL BE FILLED WITH ¾"ø HIGH STRENGTH BOLTS TENSIONED IN ACCORDANCE WITH STD. SPEC. SECTION 6-03.3(33)

SR 529 FILE NO. ____ SHEET BR17

Bridge Design Engr.	Leland, AC	
Supervisor	Zeldenrust, RP	
Designed By	Swett, GD	10/18
Checked By	Olson, DE	03/23
Detailed By	Uhde, T	10/18
Bridge Projects Engr.		
Prelim. Plan By		
Architect/Specialist		

M:\Z-Team\SR529_10E Rehab and Painter\SR529_10E Rehab and Painter\window files\08 SWAY DETAILS L3-U3.wnd

DATE	REVISION	BY	APP'D

REGION NO.	STATE	FED. AID PROJ. NO.	SHEET NO.	TOTAL SHEETS
10	WASH.	0529(020)		

JOB NUMBER 23A003

CONTRACT NO.

P.E. STAMP BOX — GEOFFREY D. SWETT, STATE OF WASHINGTON, 32820, STRUCTURAL ENGINEER, PROFESSIONAL ENGINEER — SEE SHEET CT1 DATE:

BRIDGE AND STRUCTURES OFFICE

P.E. STAMP BOX — RICHARD P. ZELDENRUST, STATE OF WASHINGTON, 25470, STRUCTURAL ENGINEER, PROFESSIONAL ENGINEER — SEE SHEET CT1 DATE:

Washington State Department of Transportation

SR 529
SNOHOMISH RIVER & STEAMBOAT SLOUGH
BRIDGE REPAIR, REHAB & PAINT
BR. NO. 529/10E

SWAY DETAILS - TYPE 2
L3-U3

BRIDGE SHEET NO. BR17

SHEET 51 OF 136 SHEETS

Thu Apr 13 14:38:50 2023

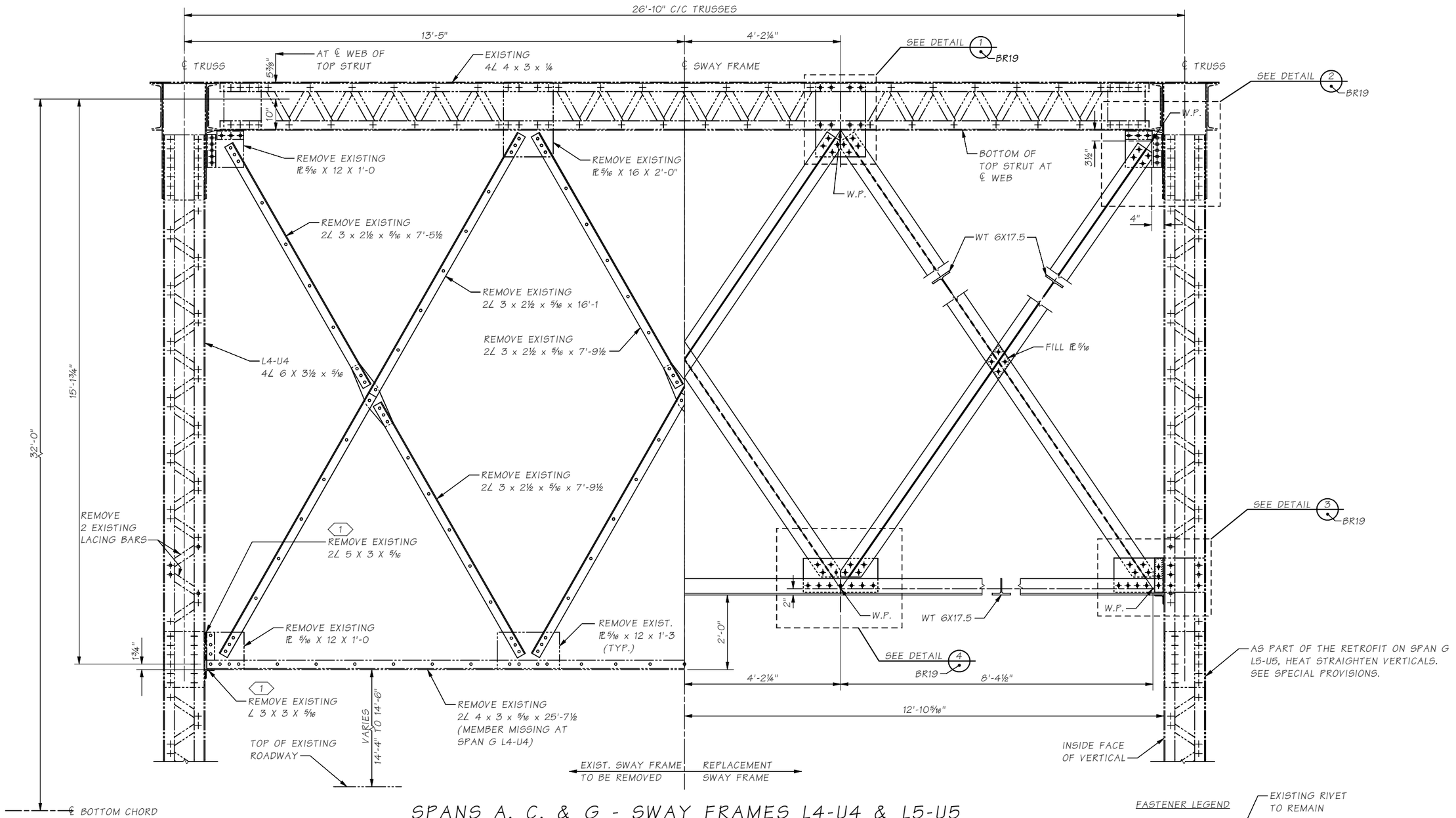

SPANS A, C, & G - SWAY FRAMES L4-U4 & L5-U5

FACING SOUTH

SECTION C — BR3, BR6, BR13

FASTENER LEGEND

- EXISTING RIVET TO REMAIN
- NEW HS BOLT
- EXIST. RIVET REPLACED WITH HS BOLT
- EXISTING RIVET REMOVED W/EXISTING MEMBER

NOTE:

1. VACANT HOLES SHALL BE FILLED WITH ¾"ø HIGH STRENGTH BOLTS TENSIONED IN ACCORDANCE WITH STD. SPEC. SECTION 6-03.3(33)

Bridge Design Engr.	Leland, AC	
Supervisor	Zeldenrust, RP	
Designed By	Swett, GD	10/18
Checked By	Olson, DE	03/23
Detailed By	Uhde, T	10/18
Bridge Projects Engr.		
Prelim. Plan By		
Architect/Specialist		

M:\2-Team\SR529_10E Rehab and Painter\SR529_10E Rehab and Painter\window files\09 SWAY DETAILS L4-U4.wnd

DATE	REVISION	BY	APP'D

REGION NO.	STATE	FED. AID PROJ. NO.	SHEET NO.	TOTAL SHEETS
10	WASH.	0529(020)		
JOB NUMBER 23A003				
CONTRACT NO.				

P.E. STAMP BOX — GEOFFREY D. SWETT, STATE OF WASHINGTON, 33820, PROFESSIONAL ENGINEER — SEE SHEET CT1 — DATE

BRIDGE AND STRUCTURES OFFICE

P.E. STAMP BOX — RICHARD P. ZELDENRUST, STATE OF WASHINGTON, 25470, PROFESSIONAL ENGINEER — SEE SHEET CT1 — DATE

Washington State Department of Transportation

SR 529
SNOHOMISH RIVER & STEAMBOAT SLOUGH
BRIDGE REPAIR, REHAB & PAINT
BR. NO. 529/10E

SWAY DETAILS - TYPE 3
L4-U4 & L5-U5

BRIDGE SHEET NO. BR18

SHEET 52 OF 136 SHEETS

SR 529 FILE NO. ____ SHEET BR18

Thu Apr 13 14:38:55 2023

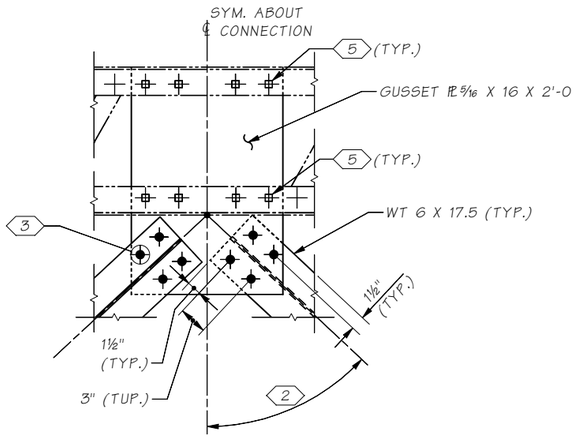

DETAIL 1

BR16, BR17, BR18

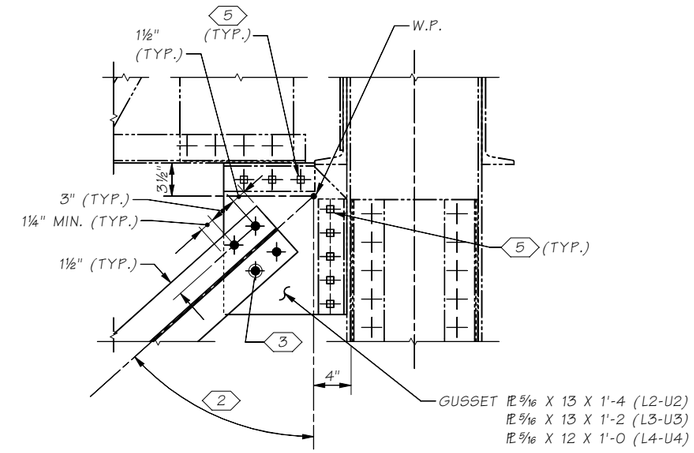

DETAIL 2

BR16, BR17, BR18

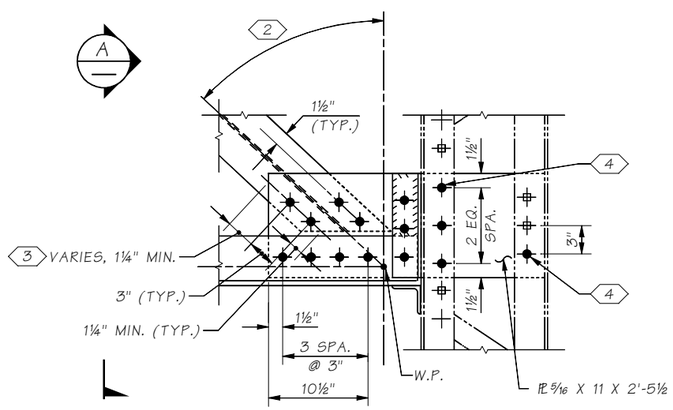

DETAIL 3

BR16, BR17, BR18

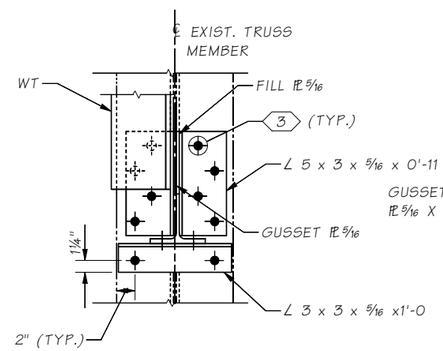

SECTION A

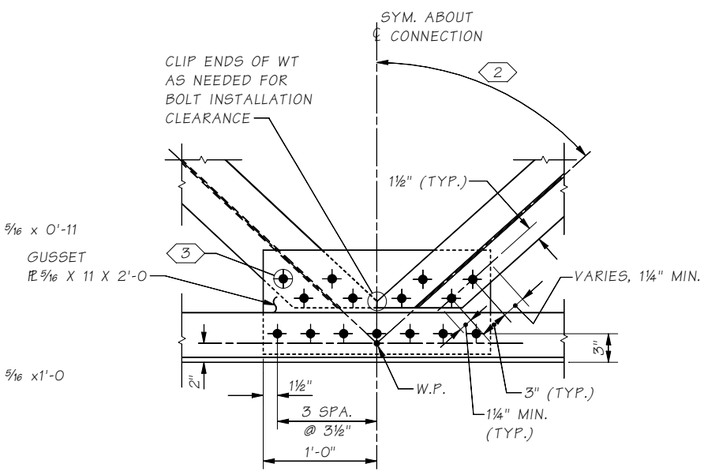

DETAIL 4

BR16, BR17, BR18

KEY NOTES:

1. VACANT HOLES SHALL BE FILLED WITH ¾"ø HIGH STRENGTH BOLTS TENSIONED IN ACCORDANCE WITH STD. SPEC. SECTION 6-03.3 (33)
2. ANGLE VARIES DEPENDING ON SWAY FRAME LOCATION.
3. USE SHOP DRILLED HOLES IN WT AND ANGLES AS TEMPLATE FOR FIELD DRILLING HOLES IN NEW GUSSET PLATES.
4. FIELD DRILL ALL PLIES OF STEEL.
5. USE EXISTING HOLES TO MATCH DRILL HOLES IN NEW PLATES OR MEMBERS

FASTENER LEGEND

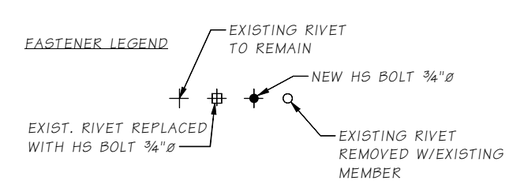

SR 529 FILE NO. SHEET BR19

Bridge Design Engr.	Leland, AC	
Supervisor	Zeldenrust, RP	
Designed By	Swett, GD	02/22
Checked By	Olson, DE	03/23
Detailed By	Uhde, T	02/22
Bridge Projects Engr.		
Prelim. Plan By		
Architect/Specialist		

M:\Z-Team\SR529_10E Rehab and Painter\SR529_10E Rehab and Painter\window files\SWAY DETAILS 2.wnd

DATE	REVISION	BY	APP'D

REGION NO.	STATE	FED. AID PROJ. NO.	SHEET NO.	TOTAL SHEETS
10	WASH.	0529(020)		

JOB NUMBER 23A003

CONTRACT NO.

P.E. STAMP BOX — GEOFFREY D. SWETT, STATE OF WASHINGTON, 32820, PROFESSIONAL ENGINEER — SEE SHEET CT1 — DATE

BRIDGE AND STRUCTURES OFFICE

P.E. STAMP BOX — RICHARD P. ZELDENRUST, STATE OF WASHINGTON, 25470, PROFESSIONAL ENGINEER — SEE SHEET CT1 — DATE

Washington State Department of Transportation

SR 529
SNOHOMISH RIVER & STEAMBOAT SLOUGH
BRIDGE REPAIR, REHAB & PAINT
BR. NO. 529/10E

SWAY CONNECTION DETAILS

BRIDGE SHEET NO. BR19

SHEET 53 OF 136 SHEETS

Thu Apr 13 14:39:01 2023

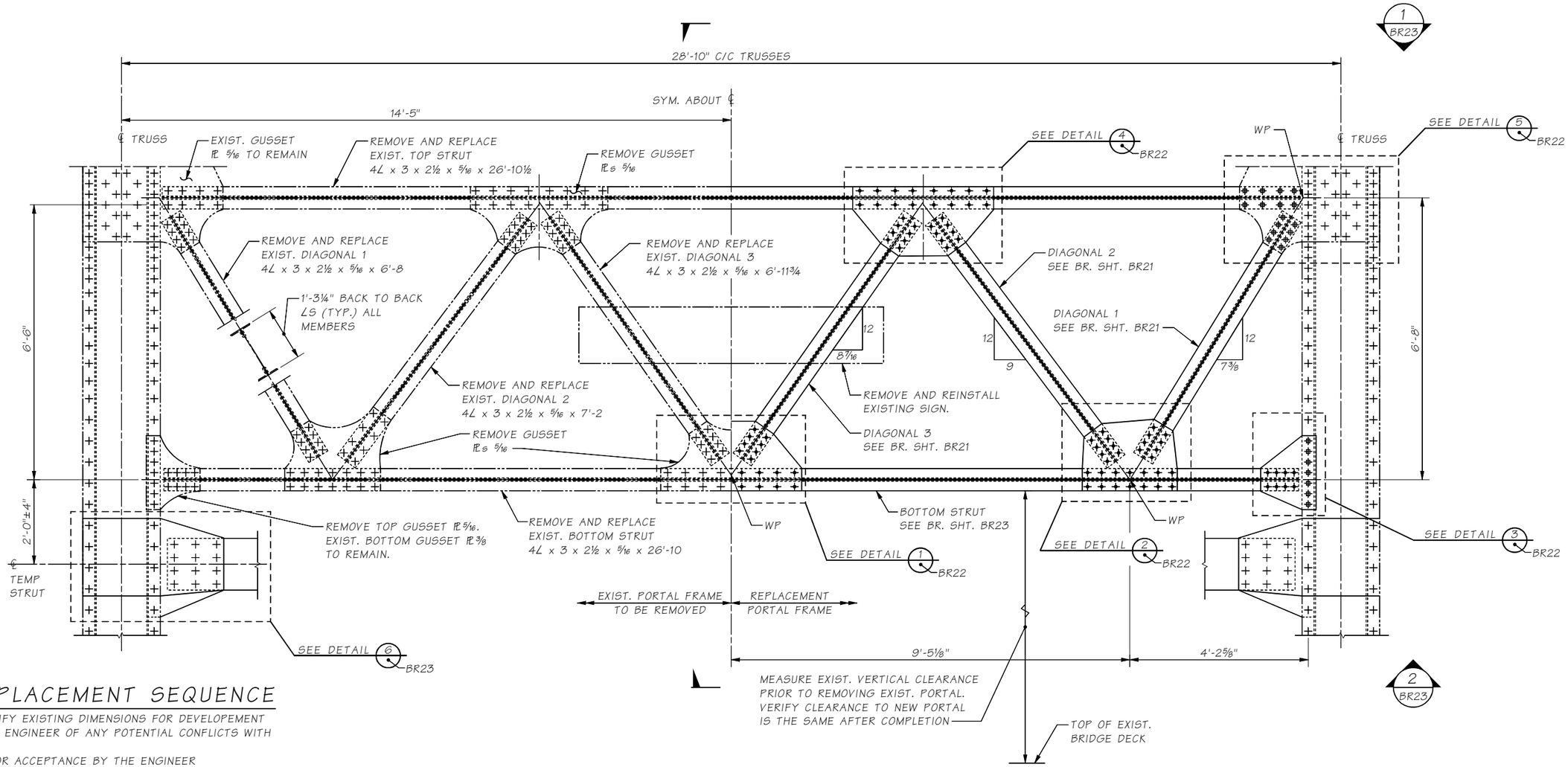

PORTAL REPLACEMENT SEQUENCE

1. ASBUILT AND FIELD VERIFY EXISTING DIMENSIONS FOR DEVELOPEMENT OF SHOP PLANS. NOTIFY ENGINEER OF ANY POTENTIAL CONFLICTS WITH REPLACEMENT DETAILS.
2. SUBMIT SHOP PLANS FOR ACCEPTANCE BY THE ENGINEER
3. FABRICATE REPLACEMENT PORTAL MEMBERS AND TEMPORARY STRUT
4. DURING NB S529 CLOSURE, INSTALL TEMPORARY STRUT BELOW EXISTING PORTAL.
5. REMOVE AND REPLACE PORTAL MEMBERS. PAINT NEW MEMBERS AND CONNECTION POINTS ON EXISTING MEMBERS. PAINTING LIMITS AT CONNECTION POINTS SHALL BE A MINIMUM OF 1'-0" VERTICAL AND HORIZONTAL FROM THE LIMITS OF THE CONNECTION.
6. REPLACE SIGN.
7. REMOVE TEMPORARY STRUT. FILL ALL HOLES WITH NEW HIGH STRENGTH BOLTS AND TENSION IN ACCORDANCE WITH SECTION 6-03.3(33).

TYPICAL SECTION ~ PORTAL L9-U8

SPAN I

FASTENER LEGEND

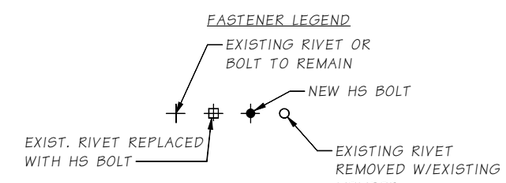

Bridge Design Engr.	Leland, AC		M:\Z-Team\SR529_10E Rehab and Painter\SR529_10E Rehab and Painter\window files\06 PORTAL DETAILS.wnd								
Supervisor	Zeldenrust, RP										
Designed By	Swett, GD	09/18									
Checked By	Olson, DE	03/23									
Detailed By	Uhde, T	09/18									
Bridge Projects Engr.											
Prelim. Plan By											
Architect/Specialist			DATE	REVISION	BY	APP'D					

REGION NO.	STATE	FED. AID PROJ. NO.	SHEET NO.	TOTAL SHEETS
10	WASH.	0529(020)		
JOB NUMBER 23A003				
CONTRACT NO.				

P.E. STAMP BOX — GEOFFREY D. SWETT, STATE OF WASHINGTON, 28820, REGISTERED PROFESSIONAL ENGINEER — SEE SHEET CT1 — DATE

BRIDGE AND STRUCTURES OFFICE

P.E. STAMP BOX — RICHARD P. ZELDENRUST, STATE OF WASHINGTON, 25470, REGISTERED PROFESSIONAL ENGINEER — SEE SHEET CT1 — DATE

Washington State Department of Transportation

SR 529
SNOHOMISH RIVER & STEAMBOAT SLOUGH
BRIDGE REPAIR, REHAB & PAINT
BR. NO. 529/10E

529/10E SPAN I PORTAL REPAIRS DETAILS 1

BRIDGE SHEET NO. BR20

SHEET 54 OF 136 SHEETS

SR 529 FILE NO. ____ SHEET BR20

Thu Apr 13 14:39:07 2023

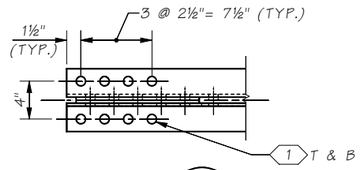

VIEW A

UPPER END SHOWN.
OPPOSITE END SIMILAR.

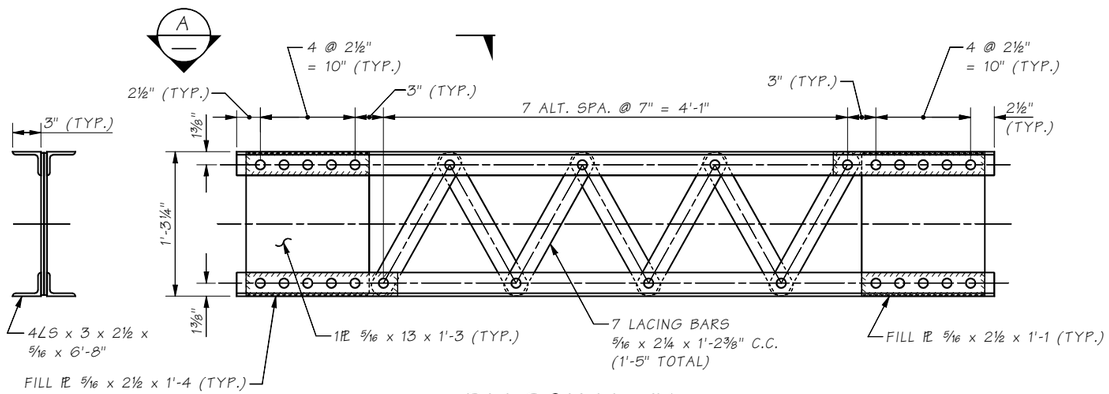

DIAGONAL #1

2 TOTAL

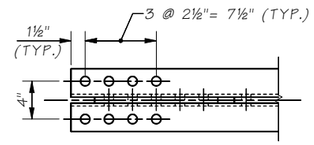

VIEW B

UPPER END SHOWN.
OPPOSITE END SIMILAR.

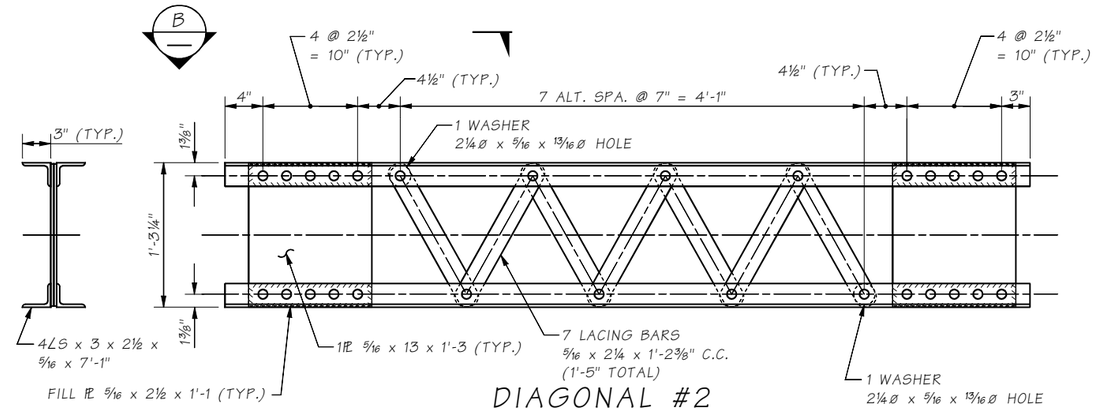

DIAGONAL #2

2 TOTAL

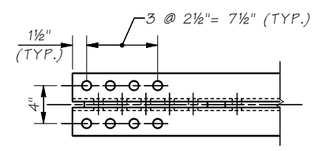

VIEW C

UPPER END SHOWN.
OPPOSITE END SIMILAR.

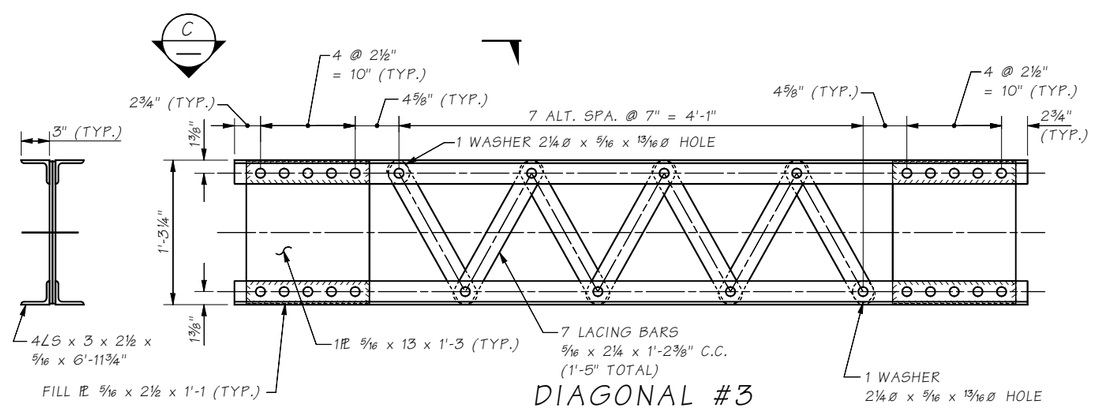

DIAGONAL #3

2 TOTAL

NOTE:

1. ALL BOLTS ¾"Ø

O = NEW HS BOLT

KEY NOTE:

1 USE HOLES IN EXISTING OR NEW GUSSET PLS TO MATCH DRILL HOLES IN NEW MEMBERS.

SR 529 FILE NO. ____ SHEET BR21

Bridge Design Engr.	Leland, AC	
Supervisor	Zeldenrust, RP	
Designed By	Swett, GD	06/22
Checked By	Olson, DE	03/23
Detailed By	Uhde, T	06/22
Bridge Projects Engr.		
Prelim. Plan By		
Architect/Specialist		

M:\Z-Team\SR529_10E Rehab and Painter\SR529_10E Rehab and Painter\Window files\06A PORTAL DETAILS I.WND

DATE	REVISION	BY	APP'D

REGION NO.	STATE	FED. AID PROJ. NO.	SHEET NO.	TOTAL SHEETS
10	WASH.	0529(020)		

JOB NUMBER 23A003

CONTRACT NO.

P.E. STAMP BOX — GEOFFREY D. SWETT, STATE OF WASHINGTON, 32820, PROFESSIONAL ENGINEER — SEE SHEET CT1 — DATE:

BRIDGE AND STRUCTURES OFFICE

P.E. STAMP BOX — RICHARD P. ZELDENRUST, STATE OF WASHINGTON, 26470, PROFESSIONAL ENGINEER — SEE SHEET CT1 — DATE:

Washington State Department of Transportation

SR 529
SNOHOMISH RIVER & STEAMBOAT SLOUGH
BRIDGE REPAIR, REHAB & PAINT
BR. NO. 529/10E

529/10E SPAN 1 PORTAL REPAIRS DETAILS 2

BRIDGE SHEET NO. BR21

SHEET 55 OF 136 SHEETS

Mon Apr 17 12:18:42 2023

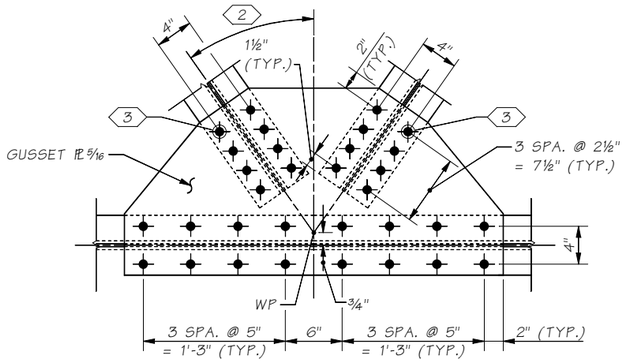

DETAIL 1 BR20
TYPICAL T & B GUSSETS

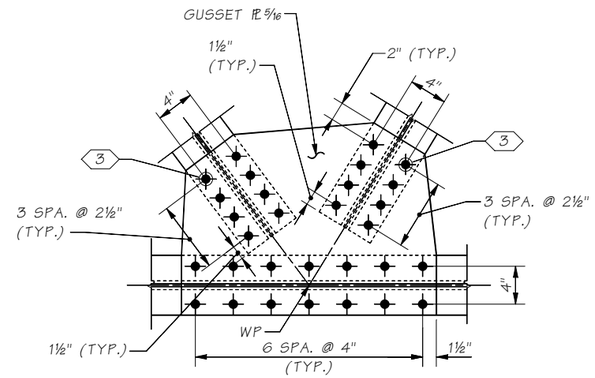

DETAIL 2 BR20
TYPICAL T & B GUSSETS

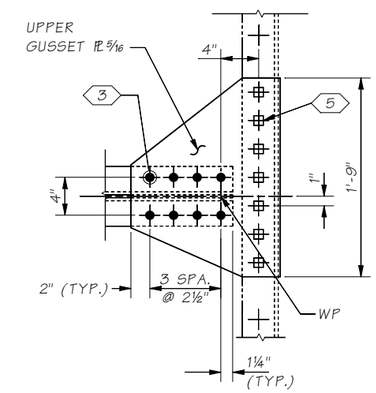

DETAIL 3 BR20

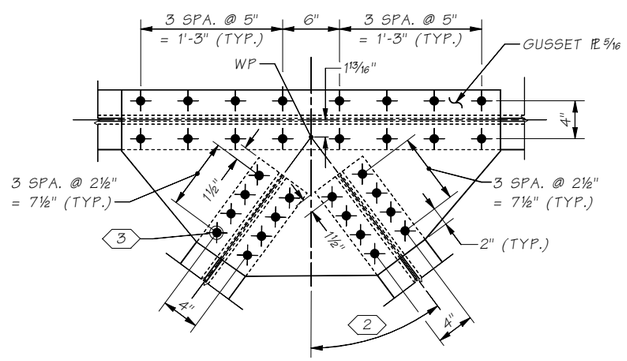

DETAIL 4 BR20
TYPICAL T & B GUSSETS

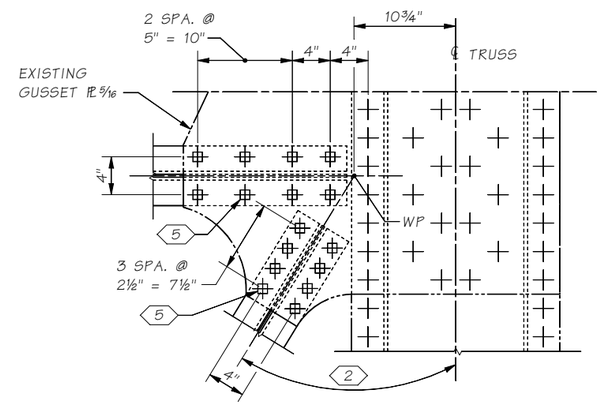

DETAIL 5 BR20
TOP GUSSET SHOWN. LOWER EXIST. GUSSET SIMILAR WITH SAME FASTENER SPACING.

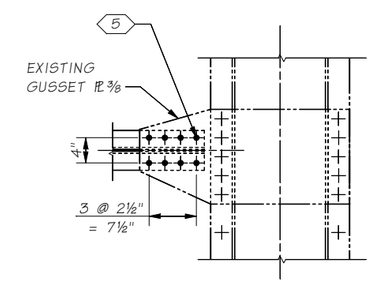

VIEW 5 BR23
BOTTOM GUSSET PL 3/8 - TO REMAIN

KEY NOTES:

1. VACANT HOLES SHALL BE FILLED WITH ¾"ø HIGH STRENGTH BOLTS TENSIONED IN ACCORDANCE WITH STD. SPEC. SECTION 6-03.3 (33)
2. ANGLE VARIES DEPENDING ON SWAY FRAME LOCATION. SEE BR. SHT. BR20 FOR SLOPES.
3. USE SHOP DRILLED HOLES IN GUSSET PLS AS TEMPLATE FOR FIELD DRILLING HOLES IN NEW MEMBERS.
4. FIELD DRILL ALL PLIES OF STEEL.
5. USE EXISTING HOLES TO MATCH DRILL HOLES IN NEW PLATES OR MEMBERS

FASTENER LEGEND

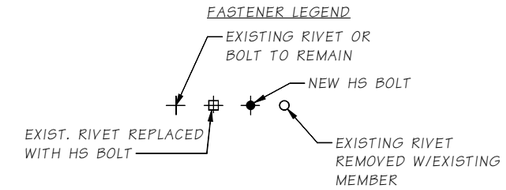

Bridge Design Engr.	Leland, AC		M:\Z-Team\SR529_10E Rehab and Painter\SR529_10E Rehab and Painter\window files\PORTAL DETAILS 3.wnd							
Supervisor	Zeldenrust, RP									
Designed By	Swett, GD	08/22								
Checked By	Olson, DE	03/23								
Detailed By	Uhde, T	08/22								
Bridge Projects Engr.										
Prelim. Plan By										
Architect/Specialist			DATE	REVISION	BY	APP'D				

REGION NO.	STATE	FED. AID PROJ. NO.	SHEET NO.	TOTAL SHEETS
10	WASH.	0529(020)		
JOB NUMBER 23A003				
CONTRACT NO.				

P.E. STAMP BOX
GEOFFREY D. SWETT, STATE OF WASHINGTON, 32820, PROFESSIONAL ENGINEER
SEE SHEET CT1
DATE:

BRIDGE AND STRUCTURES OFFICE

P.E. STAMP BOX
RICHARD P. ZELDENRUST, STATE OF WASHINGTON, 25470, PROFESSIONAL ENGINEER
SEE SHEET CT1
DATE:

Washington State Department of Transportation

SR 529
SNOHOMISH RIVER & STEAMBOAT SLOUGH
BRIDGE REPAIR, REHAB & PAINT
BR. NO. 529/10E

529/10E SPAN I PORTAL REPAIRS
DETAILS 3

BRIDGE SHEET NO. BR22
SHEET 56 OF 136 SHEETS

SR 529 FILE NO. SHEET BR22

Thu Apr 13 14:39:21 2023

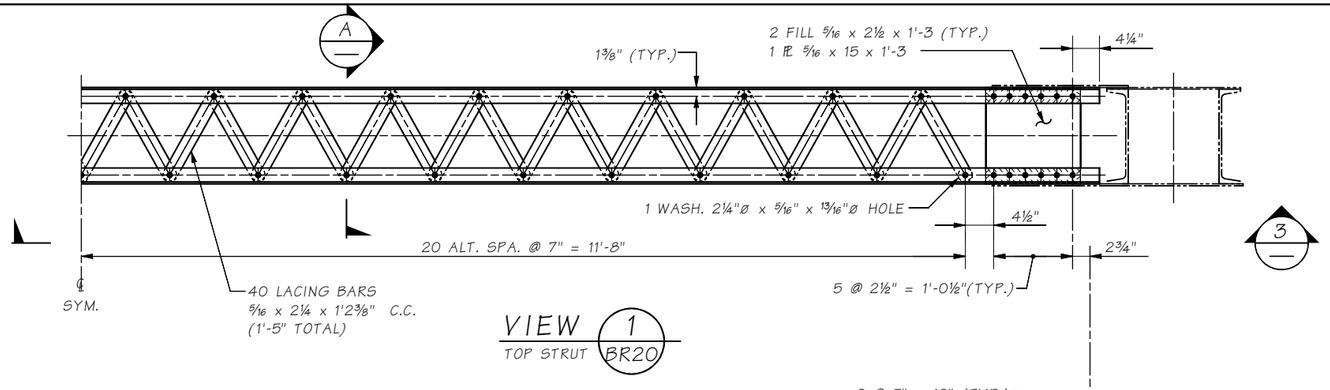

VIEW 1 / TOP STRUT BR20

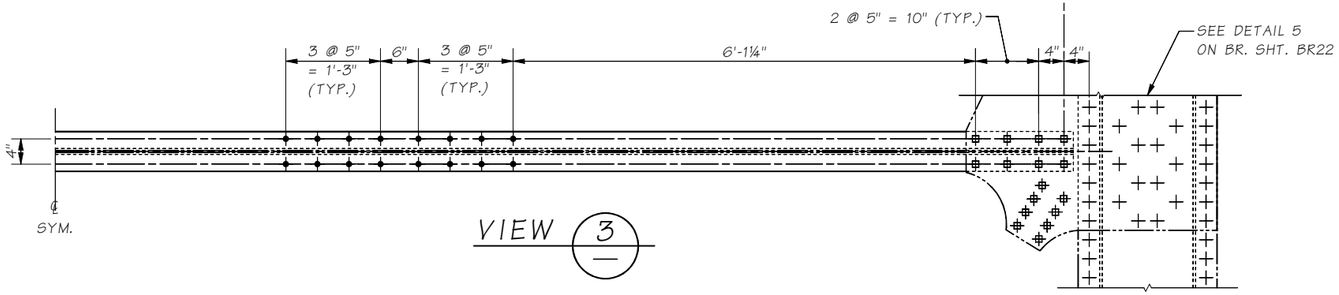

VIEW 3

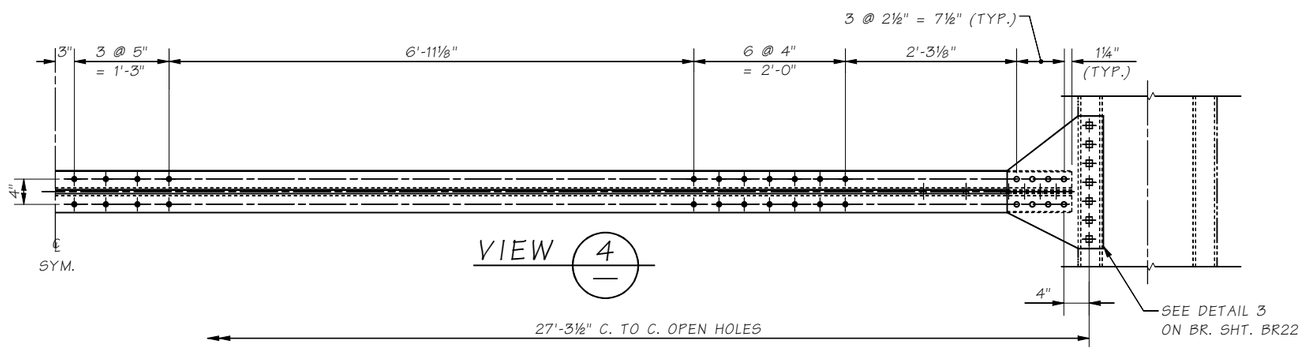

VIEW 4

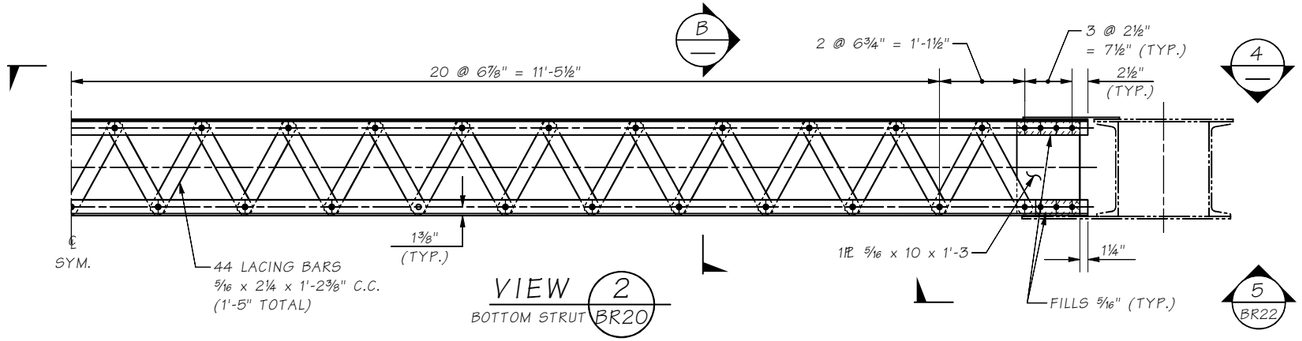

VIEW 2 / BOTTOM STRUT BR20

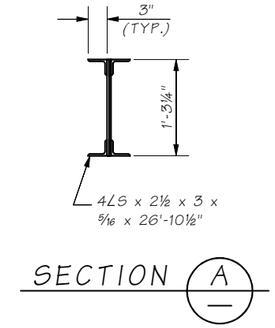

SECTION A

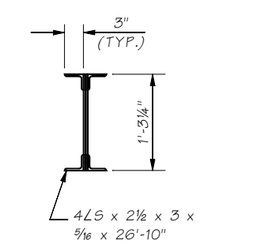

SECTION B

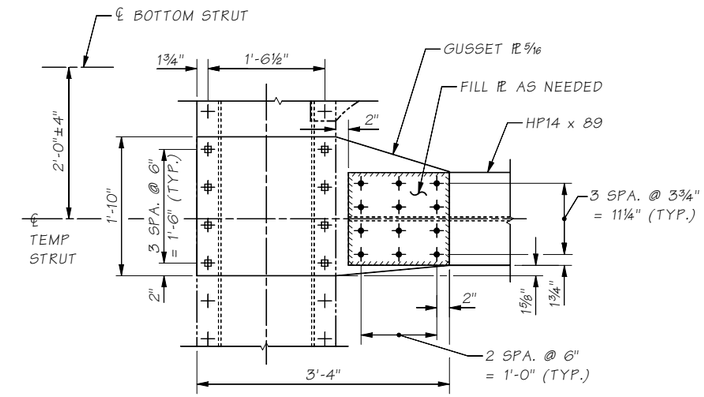

DETAIL 6 / BR20

TEMPORARY STRUT CONNECTION
TOP VIEW
BOTTOM PLATE NOT SHOWN FOR CLARITY

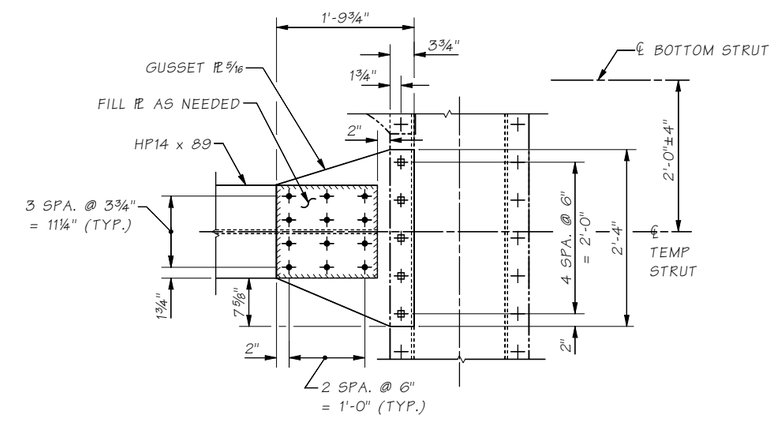

DETAIL 6 / BR20

TEMPORARY STRUT CONNECTION
BOTTOM VIEW
TOP PLATE NOT SHOWN FOR CLARITY

FASTENER LEGEND

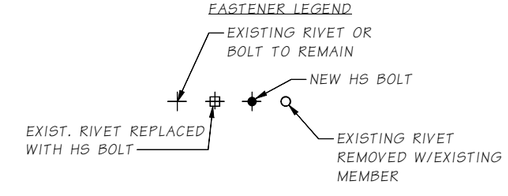

Bridge Design Engr.	Leland, AC				
Supervisor	Zeldenrust, RP				
Designed By	Swett, GD	10/22			
Checked By	Olson, DE	03/23			
Detailed By	Uhde, T	10/22			
Bridge Projects Engr.					
Prelim. Plan By					
Architect/Specialist					

M:\Z-Team\SR529_10E Rehab and Painter\SR529_10E Rehab and Painter\Window files\PORTAL DETAILS 4.WND

DATE	REVISION	BY	APP'D

REGION NO.	STATE	FED. AID PROJ. NO.	SHEET NO.	TOTAL SHEETS
10	WASH.	0529(020)		

JOB NUMBER 23A003

CONTRACT NO.

P.E. STAMP BOX — GEOFFREY D. SWETT, STATE OF WASHINGTON, 32880, PROFESSIONAL ENGINEER — SEE SHEET CT1 — DATE

BRIDGE AND STRUCTURES OFFICE

P.E. STAMP BOX — RICHARD P. ZELDENRUST, STATE OF WASHINGTON, 25476, PROFESSIONAL ENGINEER, U.S.A. — SEE SHEET CT1 — DATE

Washington State Department of Transportation

SR 529
SNOHOMISH RIVER & STEAMBOAT SLOUGH
BRIDGE REPAIR, REHAB & PAINT
BR. NO. 529/10E

529/10E SPAN 1 PORTAL REPAIRS
DETAILS 4

BRIDGE SHEET NO. BR23

SHEET 57 OF 136 SHEETS

SR 529 FILE NO. ____ SHEET BR23

Mon Apr 17 12:18:47 2023

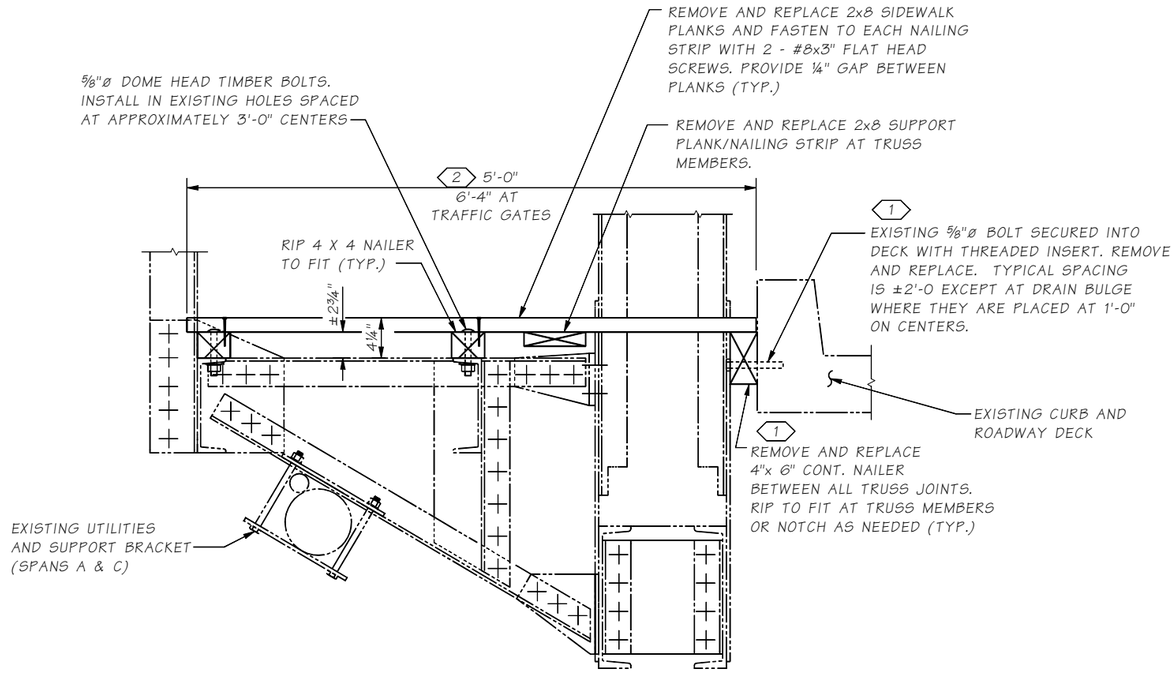

SECTION S

BR6, BR7, BR13

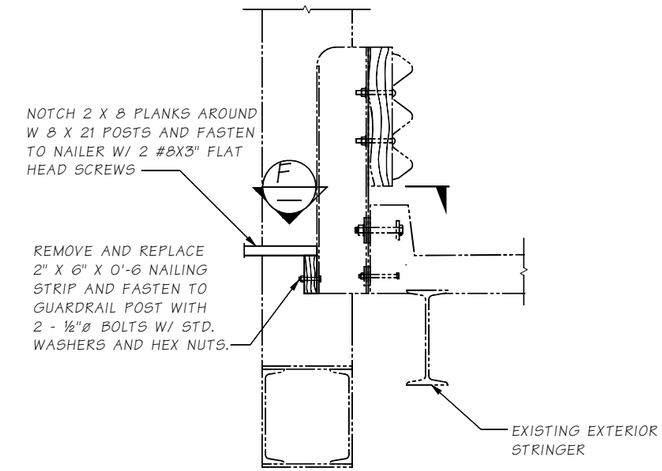

DETAIL @ GUARDRAIL POST

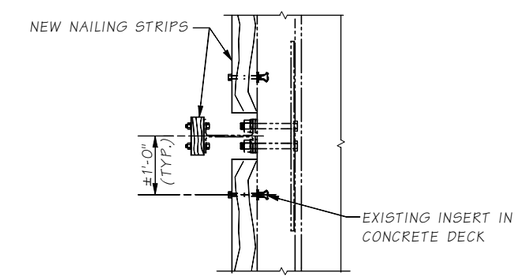

VIEW F

2 x 8 DECKING NOT SHOWN FOR CLARITY

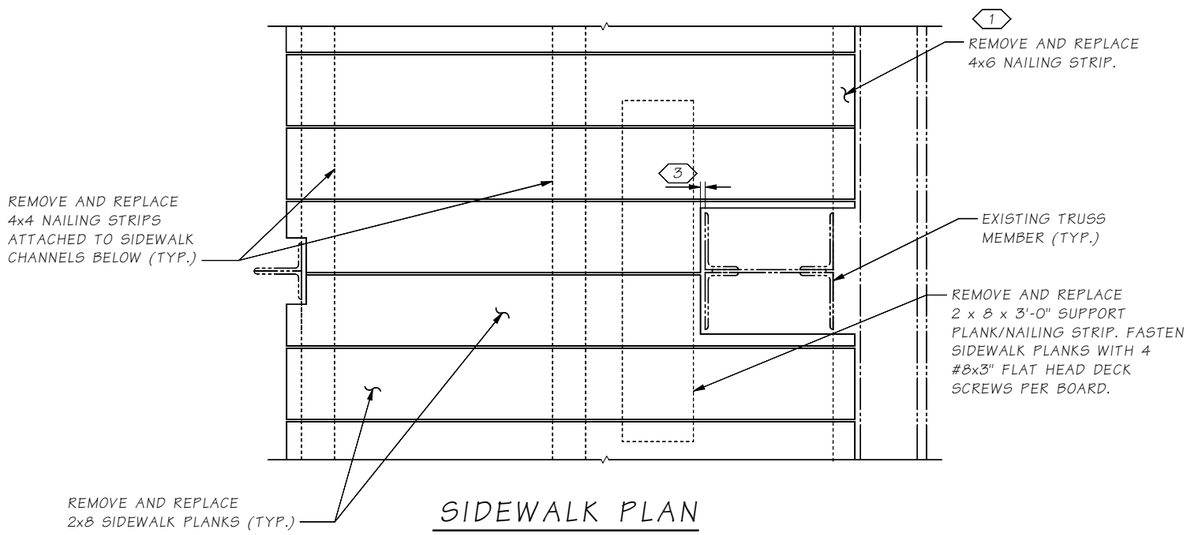

SIDEWALK PLAN

KEY NOTES:

1. WITH THE APPROVAL OF THE ENGINEER AND IF THE NAILING STRIP ON THE BACK OF THE BARRIER IS IN ACCEPTABLE CONDITION, THE NAILER MAY BE LEFT IN PLACE AND REUSED
2. WIDTH OF SIDEWALK VARIES AT TRAFFIC GATE LOCATIONS FIELD VERIFY PRIOR TO PURCHASE OF MATERIALS
3. ½" CLR., TYP. FOR ALL STEEL MEMBERS.
4. SEE SPECIAL PROVISIONS FOR REQUIRED TREATMENT OF TOP SURFACES OF EXISTING STEEL MEMBERS PRIOR TO INSTALLING TIMBERS.

FASTENER LEGEND

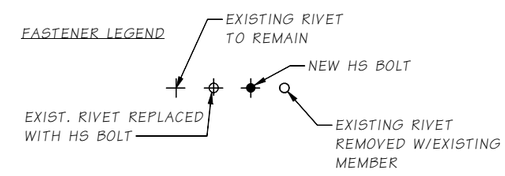

Bridge Design Engr.	Leland, AC		
Supervisor	Zeldenrust, RP		
Designed By	Swett, GD	02/22	
Checked By	Olson, DE	03/23	
Detailed By	Uhde, T	02/22	
Bridge Projects Engr.			
Prelim. Plan By			
Architect/Specialist			

M:\Z-Team\SR529_10E Rehab and Painter\SR529_10E Rehab and Painter\window files\SIDEWALK.wnd

DATE	REVISION	BY	APP'D

REGION NO.	STATE	FED. AID PROJ. NO.	SHEET NO.	TOTAL SHEETS
10	WASH.	0529(020)		
JOB NUMBER 23A003				
CONTRACT NO.				

P.E. STAMP BOX — GEOFFREY D. SWETT, STATE OF WASHINGTON, 52820, PROFESSIONAL ENGINEER — SEE SHEET CT1 — DATE

BRIDGE AND STRUCTURES OFFICE

P.E. STAMP BOX — RICHARD P. ZELDENRUST, STATE OF WASHINGTON, 35470, PROFESSIONAL ENGINEER — SEE SHEET CT1 — DATE

Washington State Department of Transportation

SR 529
SNOHOMISH RIVER & STEAMBOAT SLOUGH
BRIDGE REPAIR, REHAB & PAINT
BR. NO. 529/10E

SIDEWALK REPLACEMENT DETAILS

BRIDGE SHEET NO. BR24

SHEET 58 OF 136 SHEETS

SR 529 FILE NO. ____ SHEET BR24

Thu Apr 13 14:39:34 2023

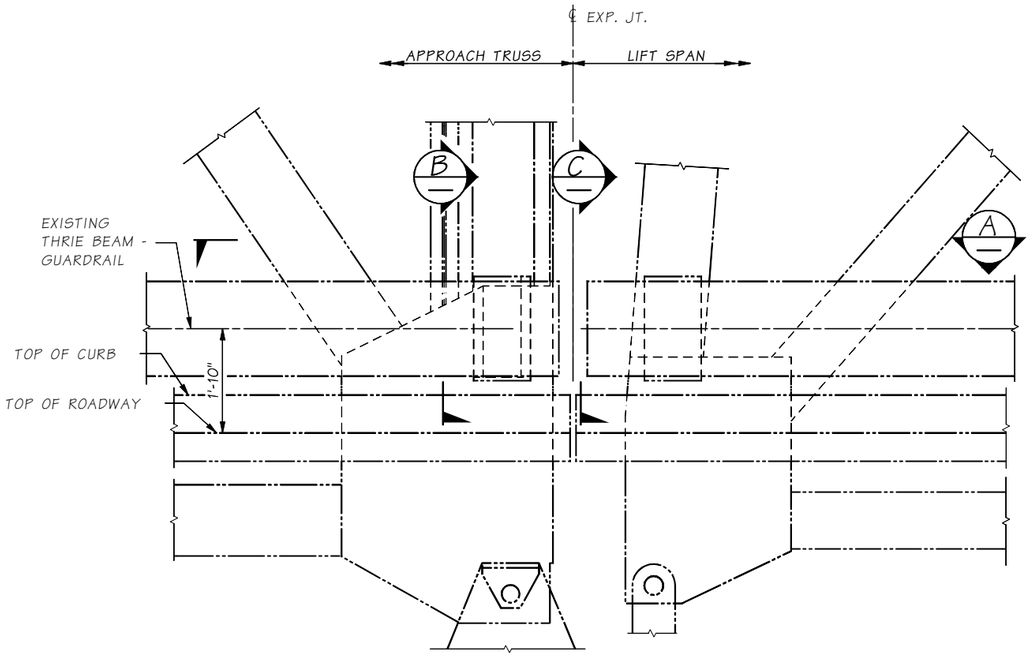

BR. RAIL JOINT BETWEEN APPROACH TRUSS AND LIFT SPAN

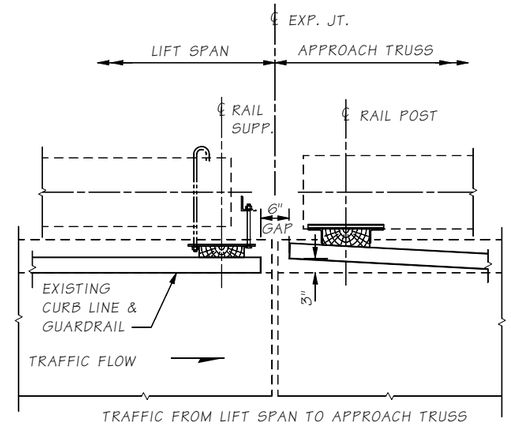

TRAFFIC FROM LIFT SPAN TO APPROACH TRUSS
(AT PIER 2)
(TYP. EAST & WEST SIDE OF BR.)

VIEW A

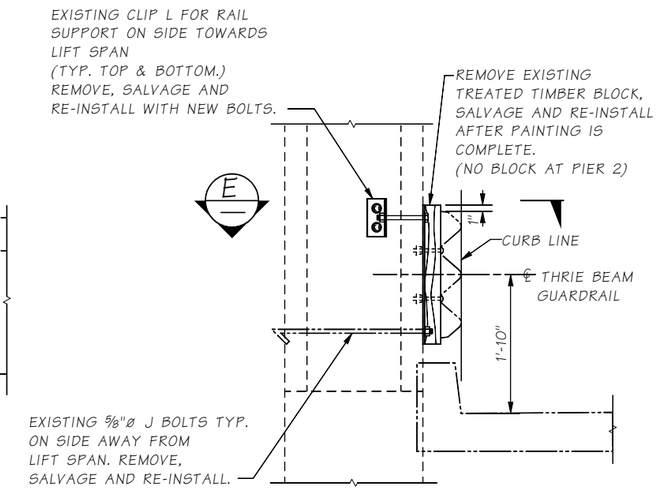

SECTION B

THRIE BEAM SUPPORT AT PIER 3 SHOWN
PIER 2 SIMILAR, EXCEPT AS NOTED

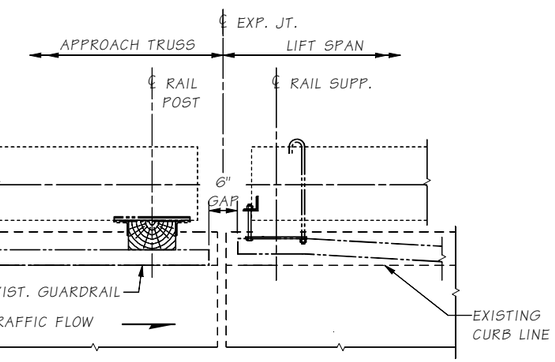

TRAFFIC FROM APPROACH TRUSS TO LIFT SPAN
(AT PIER 3)
(TYP. EAST & WEST SIDE OF BR.)

VIEW A

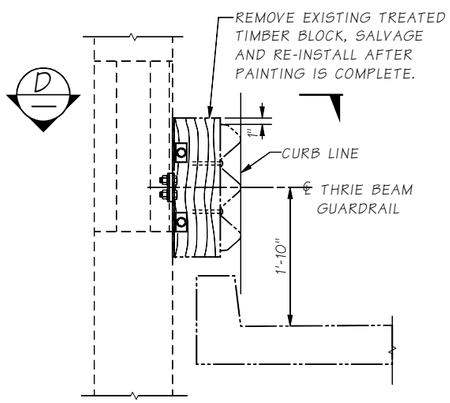

SECTION C

THRIE BEAM SUPPORT AT PIER 2 SHOWN
PIER 3 SIMILAR

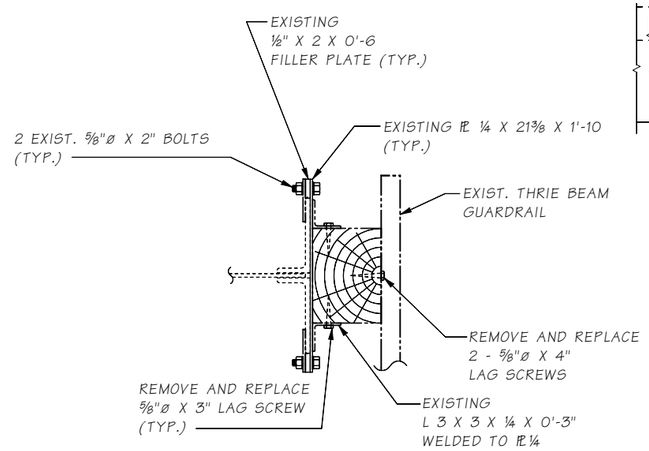

SECTION D

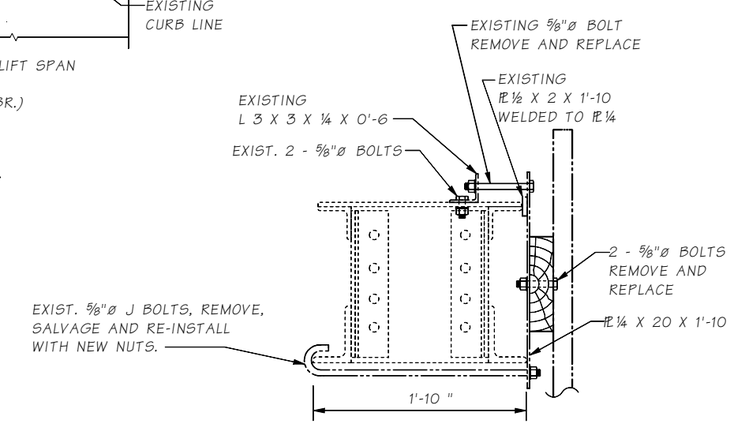

SECTION E

NOTE:

GUARDRAIL TIMBER BLOCKS SHALL BE REMOVED JUST PRIOR TO SURFACE PREPARATION AND SHALL BE RE-INSTALLED AS SOON AS PAINTING IS COMPLETED AND CURED.

Bridge Design Engr.	Leland, AC	M:\Z-Team\SR529_10E Rehab and Painter\SR529_10E Rehab and Painter\window files\GUARDRAIL MODIFICATONS.wnd				REGION NO.	STATE	FED. AID PROJ. NO.	SHEET NO.	TOTAL SHEETS	P.E. STAMP BOX
Supervisor	Zeldenrust, RP					10	WASH.	0529(020)			CHOPFREY D. SWATT, STATE OF WASHINGTON, 32820, PROFESSIONAL ENGINEER — SEE SHEET CT1 — DATE
Designed By	Swett, GD 03/22										
Checked By	Olson, DE 03/23					JOB NUMBER 23A003					
Detailed By	Uhde, T 03/22										
Bridge Projects Engr.											
Prelim. Plan By						CONTRACT NO.					
Architect/Specialist		DATE	REVISION	BY	APP'D						

Thu Apr 13 14:39:37 2023

BRIDGE AND STRUCTURES OFFICE

P.E. STAMP BOX: RICHARD P. ZELDENRUST, STATE OF WASHINGTON, 25470, PROFESSIONAL ENGINEER — SEE SHEET CT1 — DATE

Washington State Department of Transportation

SR 529
SNOHOMISH RIVER & STEAMBOAT SLOUGH
BRIDGE REPAIR, REHAB & PAINT
BR. NO. 529/10E

GUARDRAIL POST DETAILS FOR PAINTING

BRIDGE SHEET NO. BR25

SHEET 59 OF 136 SHEETS

SR 529 FILE NO. SHEET BR25

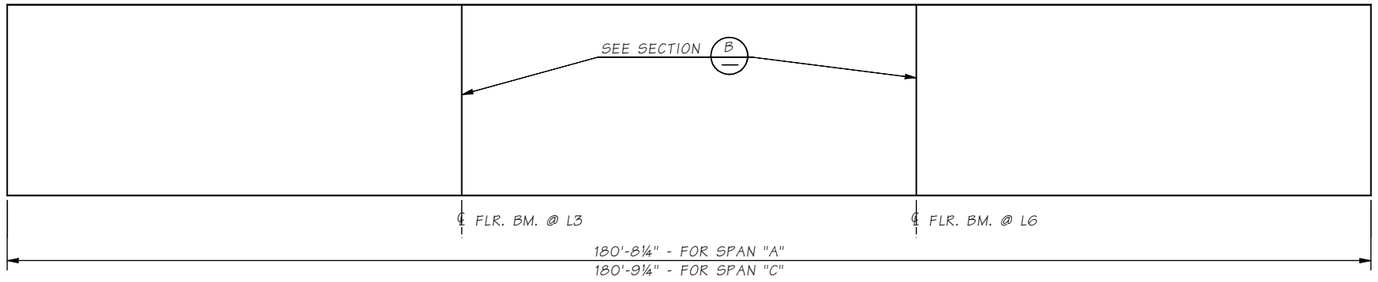

DECK JOINT LOCATIONS
TYPICAL FOR SPANS 'A" & "C"

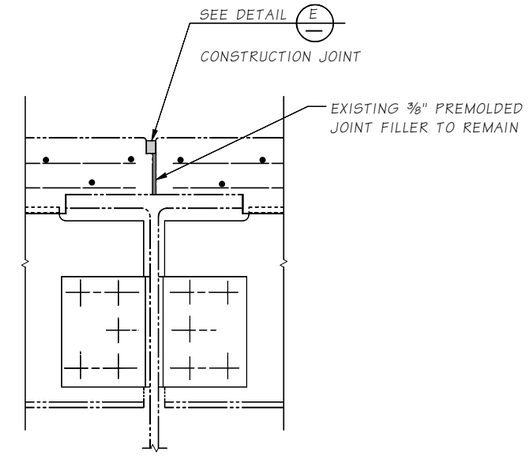

SECTION B

DETAIL OF DECK JOINT
AT FLOOR BEAMS

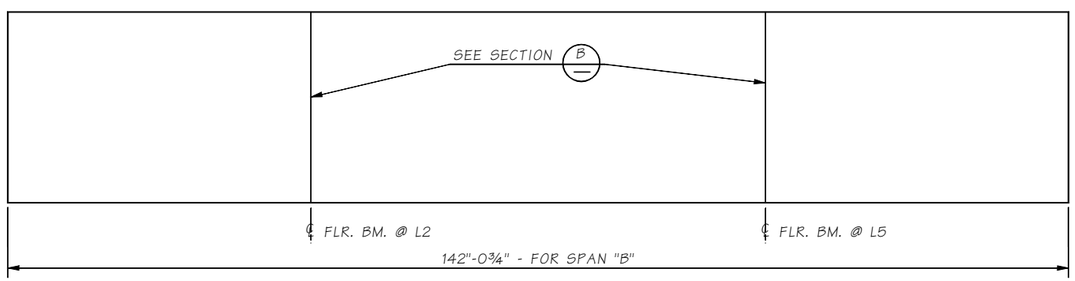

DECK JOINT LOCATIONS
TYPICAL FOR SPAN "B"

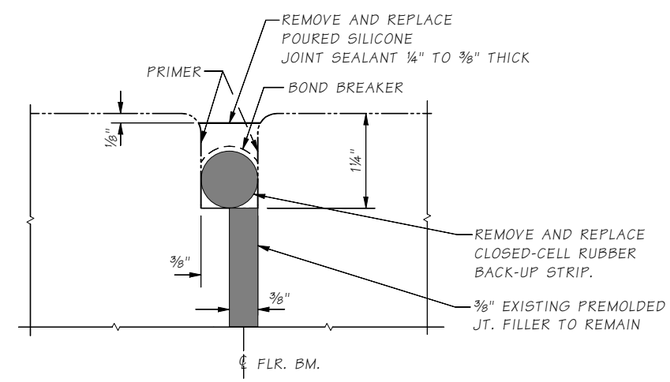

DETAIL E
TYPICAL DECK JOINT

SR 529 FILE NO. ____ SHEET BR26

Bridge Design Engr.	Leland, AC		
Supervisor	Zeldenrust, RP		
Designed By	Swett, GD	06/22	
Checked By	Olson, DE	03/23	
Detailed By	Uhde, T	06/22	
Bridge Projects Engr.			
Prelim. Plan By			
Architect/Specialist			

M:\2-Team\SR529_10E Rehab and Painter\SR529_10E Rehab and Painter\window files\ROADWAY DECK JOINT DETAILS.wnd

DATE	REVISION	BY	APP'D

REGION NO.	STATE	FED. AID PROJ. NO.	SHEET NO.	TOTAL SHEETS
10	WASH.	0529(020)		

JOB NUMBER 23A003

CONTRACT NO.

P.E. STAMP BOX — GEOFFREY D. SWETT, STATE OF WASHINGTON, 48850, PROFESSIONAL ENGINEER — SEE SHEET CT1 — DATE

BRIDGE AND STRUCTURES OFFICE

P.E. STAMP BOX — RICHARD P. ZELDENRUST, STATE OF WASHINGTON, 35470, PROFESSIONAL ENGINEER — SEE SHEET CT1 — DATE

Washington State Department of Transportation

SR 529
SNOHOMISH RIVER & STEAMBOAT SLOUGH
BRIDGE REPAIR, REHAB & PAINT
BR. NO. 529/10E

ROADWAY DECK
JOINT DETAILS

BRIDGE SHEET NO. BR26

SHEET 60 OF 136 SHEETS

Thu Apr 13 14:39:41 2023

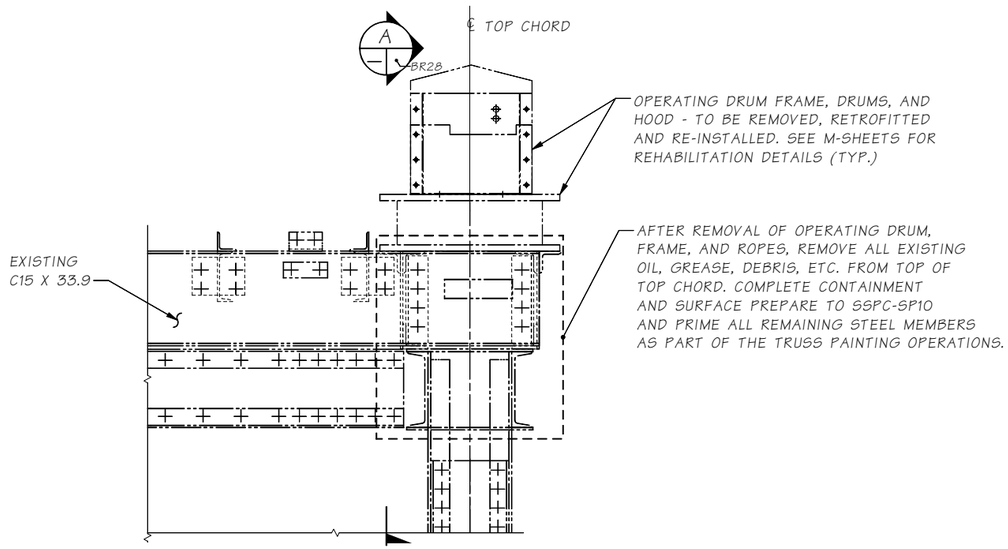

END VIEW ~ TOP CHORD AT OPERATING DRUM

EXISTING MACHINERY AND CATWALK GRATING NOT SHOWN FOR CLARITY

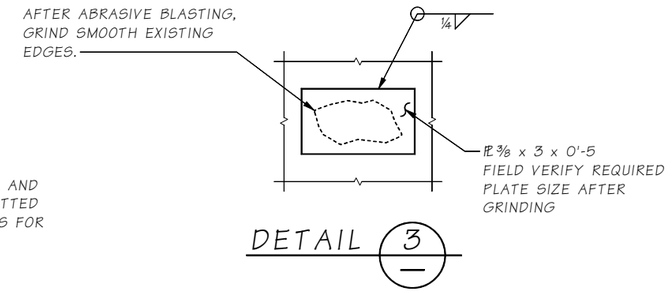

DETAIL 3

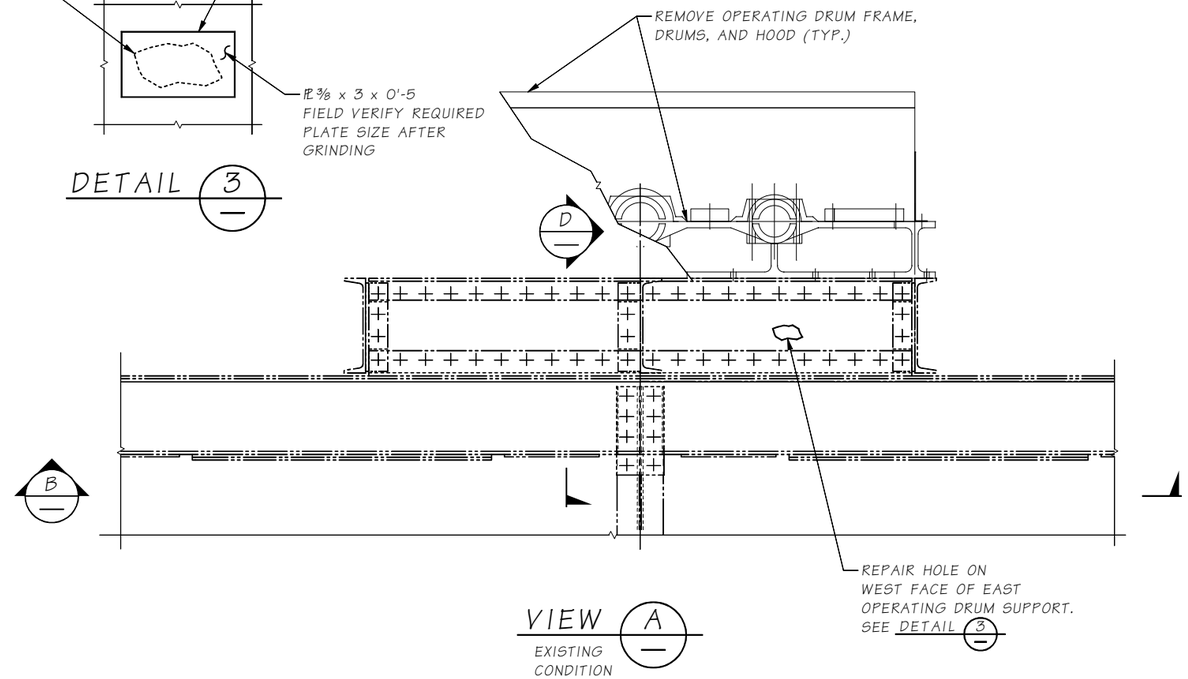

VIEW A

EXISTING CONDITION

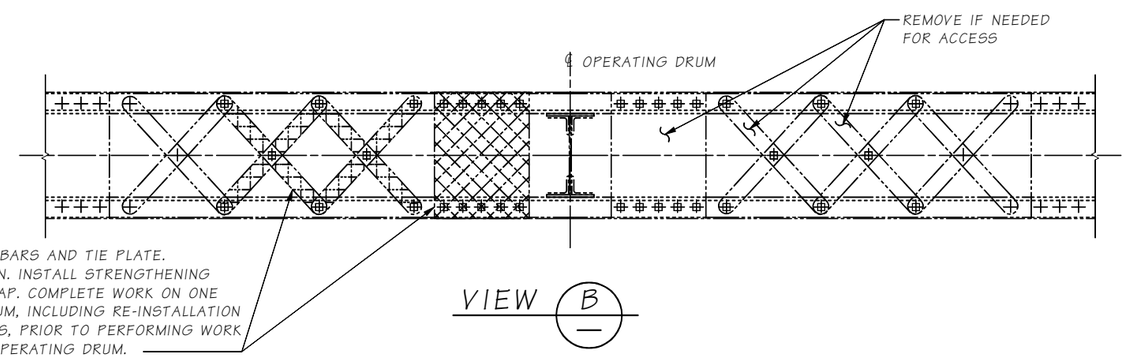

VIEW B

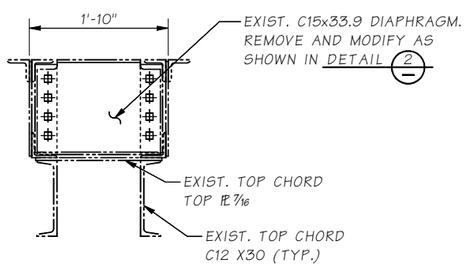

SECTION D

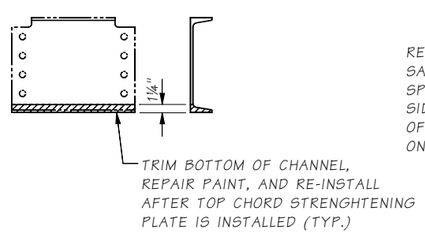

DETAIL 2

FASTENER LEGEND

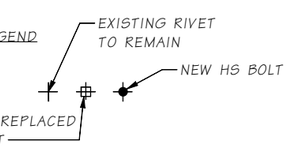

Bridge Design Engr.	Leland, AC		
Supervisor	Zeldenrust, RP		
Designed By	Swett, GD	09/19	
Checked By	Olson, DE	03/23	
Detailed By	Uhde, T	09/19	
Bridge Projects Engr.			
Prelim. Plan By			
Architect/Specialist			

M:\2-Team\SR529_10E Rehab and Painter\SR529_10E Rehab and Painter\window files\15 DRUM FRAME DETAILS.wnd

DATE	REVISION	BY	APP'D

REGION NO.	STATE	FED. AID PROJ. NO.	SHEET NO.	TOTAL SHEETS
10	WASH.	0529(020)		
JOB NUMBER 23A003				
CONTRACT NO.				

P.E. STAMP BOX — GEOFFREY D. SWETT, STATE OF WASHINGTON, PROFESSIONAL ENGINEER — SEE SHEET CT1 — DATE

BRIDGE AND STRUCTURES OFFICE

P.E. STAMP BOX — RICHARD P. ZELDENRUST, STATE OF WASHINGTON, 35470, PROFESSIONAL ENGINEER — SEE SHEET CT1 — DATE

Washington State Department of Transportation

SR 529
SNOHOMISH RIVER & STEAMBOAT SLOUGH
BRIDGE REPAIR, REHAB & PAINT
BR. NO. 529/10E

OPERATING DRUM TOP CHORD REPAIR PREPARATION WORK

BRIDGE SHEET NO. BR27

SHEET 61 OF 136 SHEETS

SR 529 FILE NO. ____ SHEET BR27

Thu Apr 13 14:39:48 2023

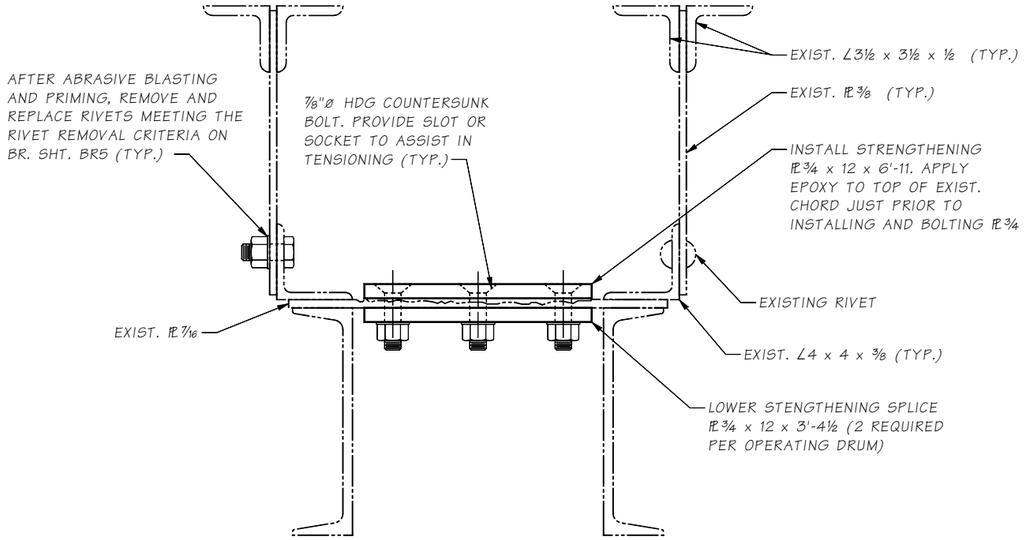

SECTION C

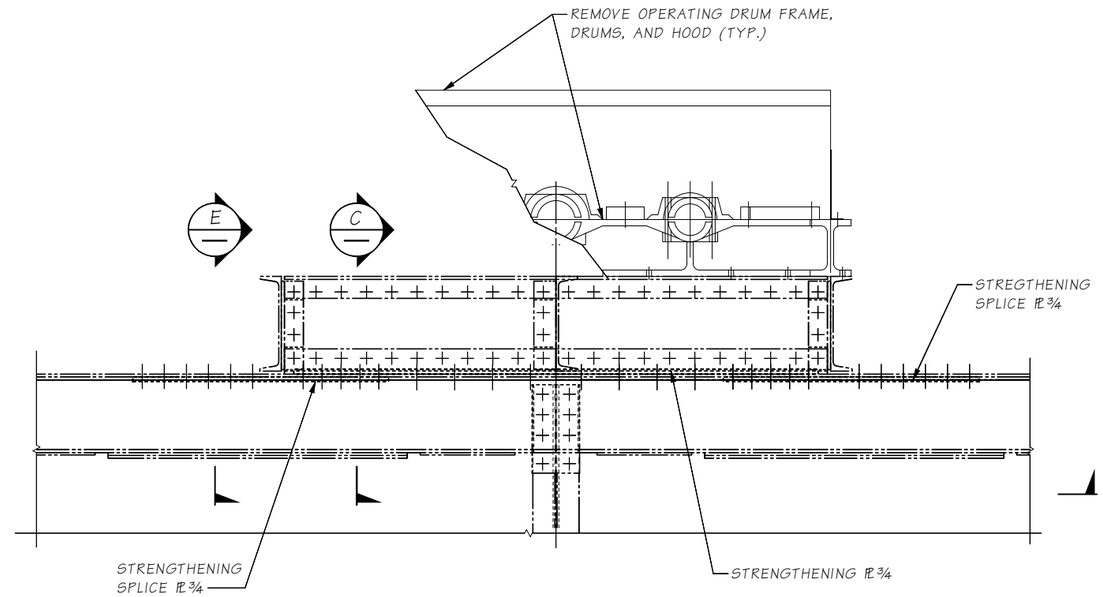

VIEW A BR27

RETROFIT CONDITION

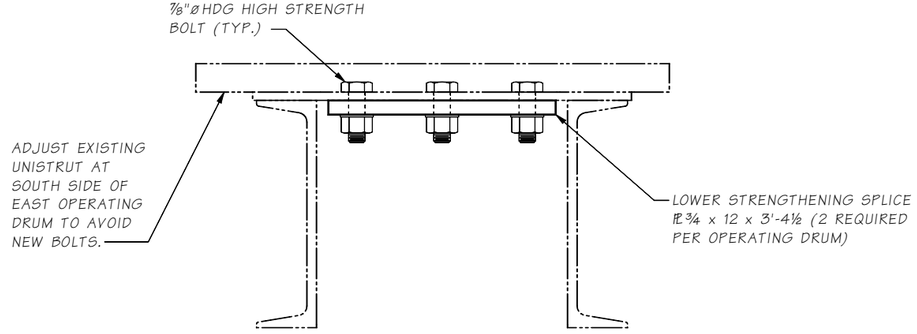

SECTION E

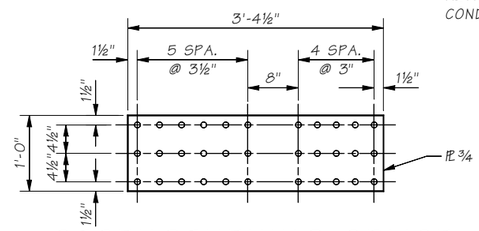

STRENGTHENING SPLICE PLATE DETAIL

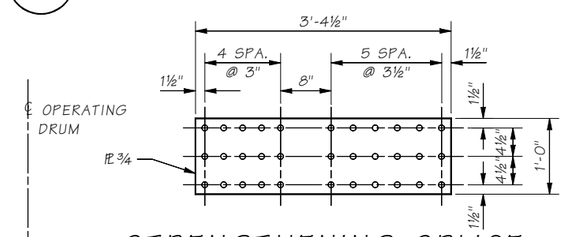

STRENGTHENING SPLICE PLATE DETAIL

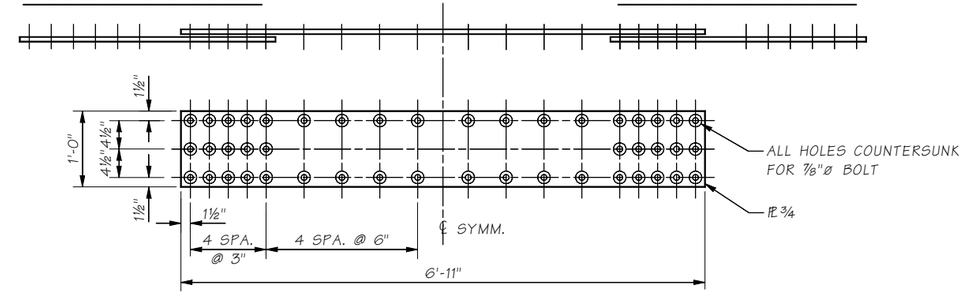

STRENGTHENING PLATE DETAILS

2 LOCATIONS

NOTES:

1. PLATES = ASTM A709 GR 50 OR ASTM A572 GR 50.
2. ALL PLATES SHALL BE HOT DIP GALVANIZED IN ACCORDANCE WITH AASHTO M111 AND PAINTED AFTER INSTALLATION.
3. USE SHOP DRILLED HOLES IN PLATES AS TEMPLATE FOR FIELD DRILLING IN EXISTING MEMBERS.

FASTENER LEGEND

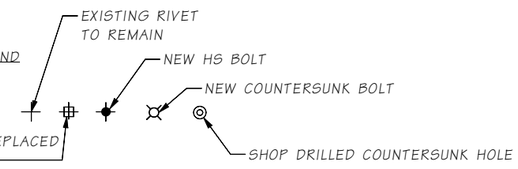

Bridge Design Engr.	Leland, AC	M:\2-Team\SR529_10E Rehab and Painter\SR529_10E Rehab and Painter\window files\15 DRUM FRAME DETAILS 2.wnd				REGION NO.	STATE	FED. AID PROJ. NO.	SHEET NO.	TOTAL SHEETS
Supervisor	Zeldenrust, RP					10	WASH.	0529(020)		
Designed By	Swett, GD 06/22									
Checked By	Olson, DE 03/23					JOB NUMBER 23A003				
Detailed By	Uhde, T 06/22									
Bridge Projects Engr.										
Prelim. Plan By						CONTRACT NO.				
Architect/Specialist		DATE	REVISION	BY	APP'D					

Thu Apr 13 14:39:53 2023

P.E. STAMP BOX — GEOFFREY D. SWETT, STATE OF WASHINGTON, 35860, PROFESSIONAL ENGINEER — SEE SHEET CT1 — DATE

BRIDGE AND STRUCTURES OFFICE

P.E. STAMP BOX — RICHARD P. ZELDENRUST, STATE OF WASHINGTON, 25400, PROFESSIONAL ENGINEER — SEE SHEET CT1 — DATE

Washington State Department of Transportation

SR 529
SNOHOMISH RIVER & STEAMBOAT SLOUGH
BRIDGE REPAIR, REHAB & PAINT
BR. NO. 529/10E

OPERATING DRUM TOP CHORD REPAIR
REPAIR DETAILS

BRIDGE SHEET NO. BR28

SHEET 62 OF 136 SHEETS

SR 529 FILE NO. ____ SHEET BR28

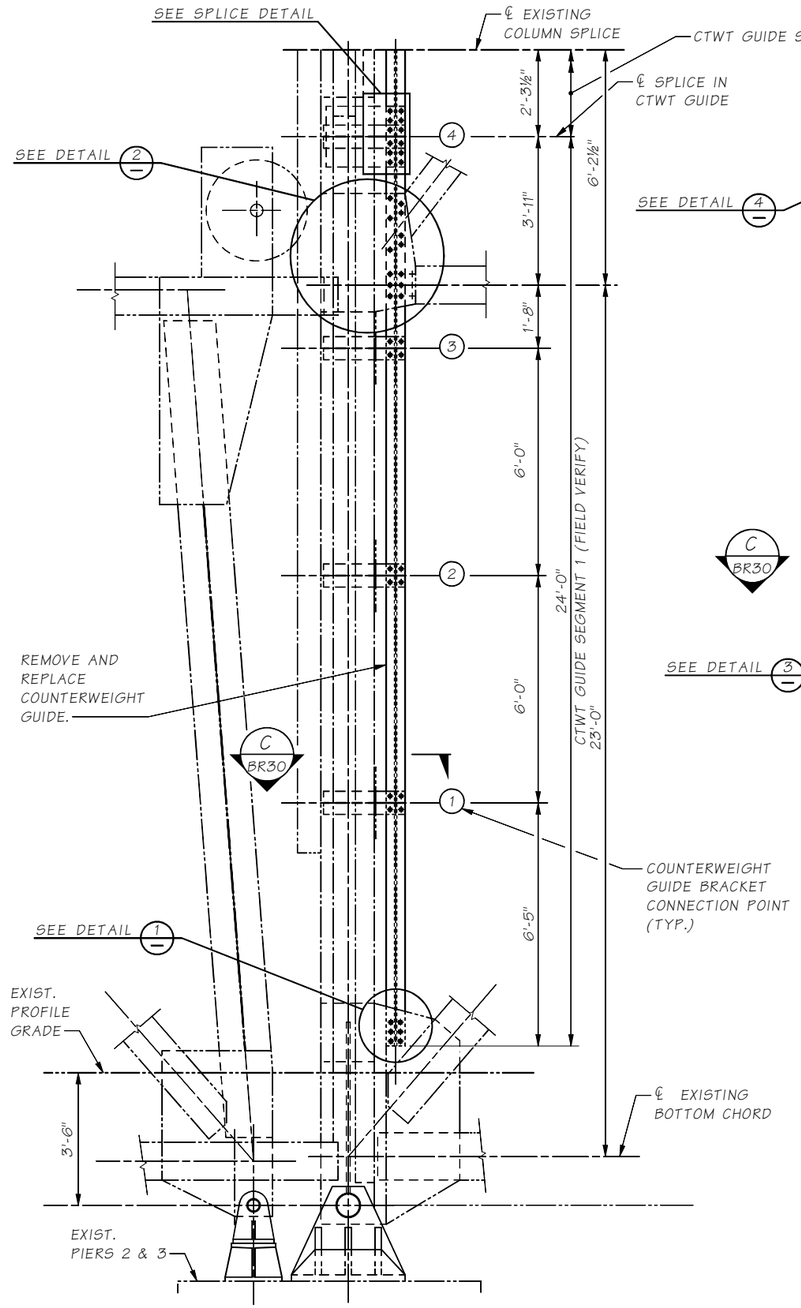

TOWER COLUMN - LOWER ELEVATION

4 LOCATIONS

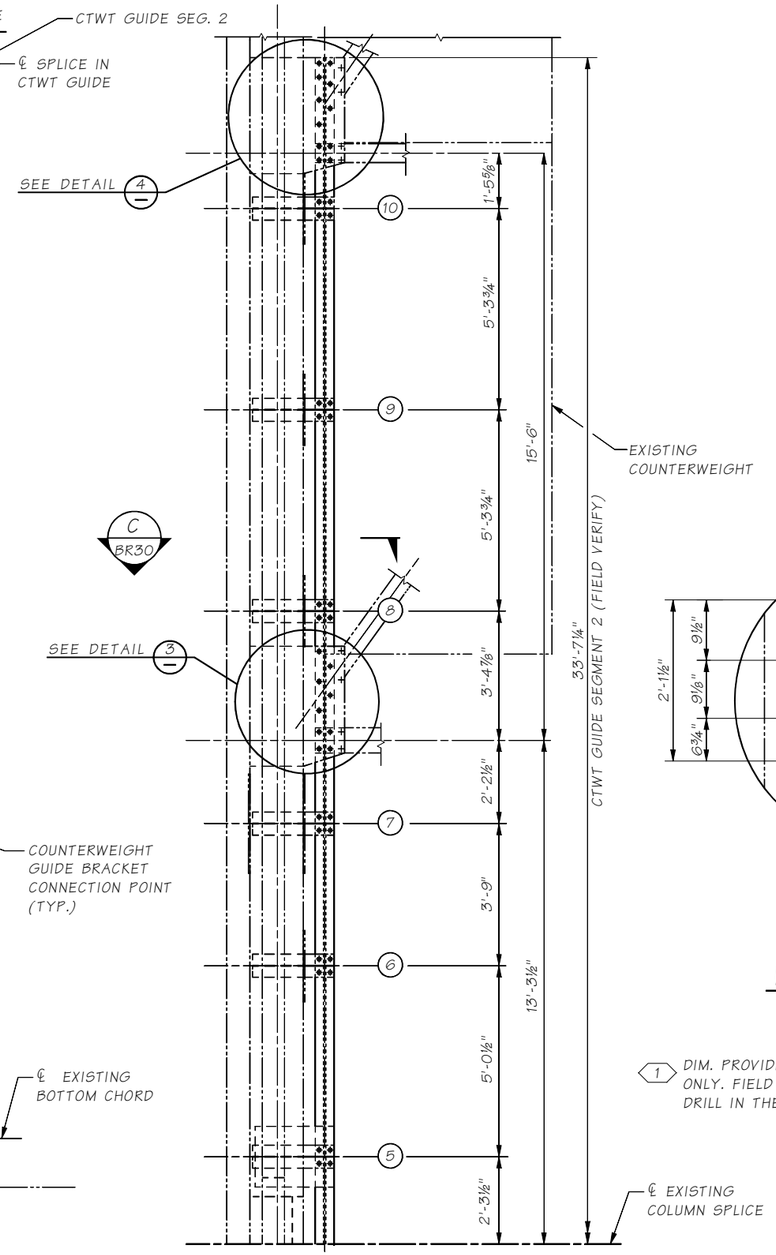

TOWER COLUMN - UPPER ELEVATION

4 LOCATIONS

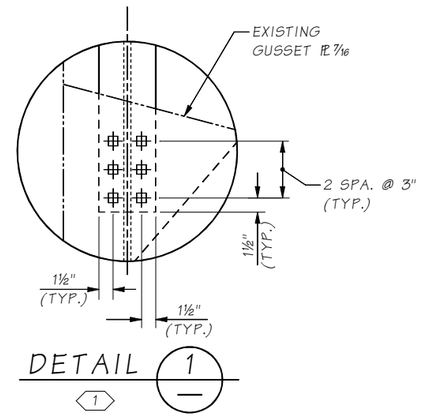

DETAIL 1

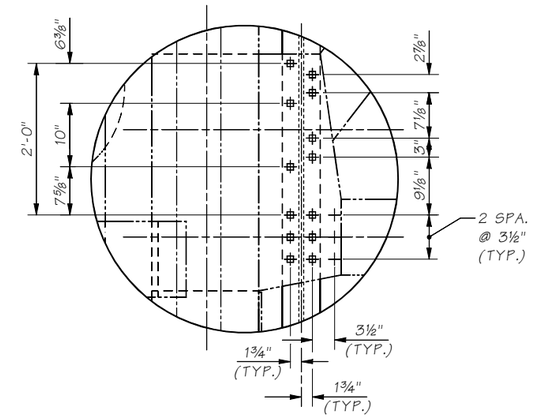

DETAIL 2

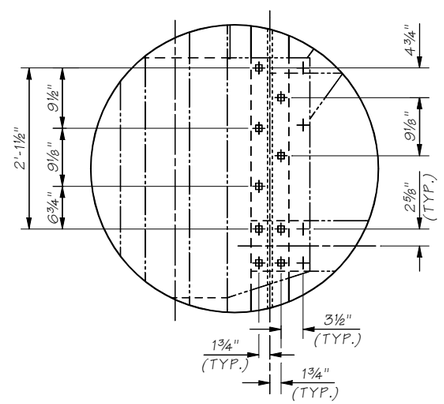

DETAIL 3

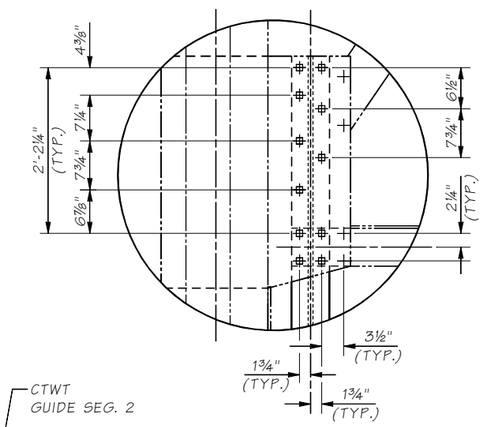

DETAIL 4

1 DIM. PROVIDED FOR INFORMATION ONLY. FIELD VERIFY AND MATCH DRILL IN THE FIELD (TYP.)

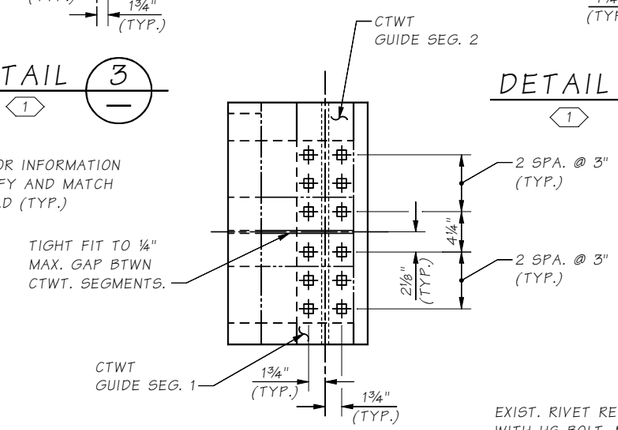

1 SPLICE DETAIL

FASTENER LEGEND

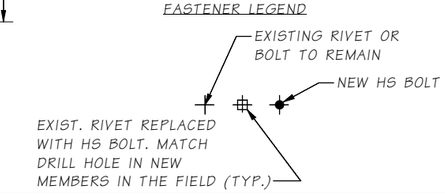

Bridge Design Engr.	Leland, AC	M:\2-Team\SR529_10E Rehab and Painter\SR529_10E Rehab and Painter\window files\COUNTERWEIGHT GUIDE REPLACEMENT.wnd								
Supervisor	Zeldenrust, RP									
Designed By	Swett, GD 06/22									
Checked By	Olson, DE 03/23									
Detailed By	Uhde, T 06/22									
Bridge Projects Engr.										
Prelim. Plan By										
Architect/Specialist		DATE	REVISION	BY	APP'D					

REGION NO.	STATE	FED. AID PROJ. NO.	SHEET NO.	TOTAL SHEETS
10	WASH.	0529(020)		
JOB NUMBER 23A003				
CONTRACT NO.				

P.E. STAMP BOX — GEOFFREY D. SWETT, STATE OF WASHINGTON, 46860, PROFESSIONAL ENGINEER — SEE SHEET CT1 — DATE

BRIDGE AND STRUCTURES OFFICE

P.E. STAMP BOX — RICHARD P. ZELDENRUST, STATE OF WASHINGTON, 25790, PROFESSIONAL ENGINEER — SEE SHEET CT1 — DATE

Washington State Department of Transportation

SR 529
SNOHOMISH RIVER & STEAMBOAT SLOUGH BRIDGE REPAIR, REHAB & PAINT
BR. NO. 529/10E

COUNTERWEIGHT GUIDE REPLACEMENT

BRIDGE SHEET NO. BR29

SHEET 63 OF 136 SHEETS

SR 529 FILE NO. SHEET BR29

Thu Apr 13 14:40:00 2023

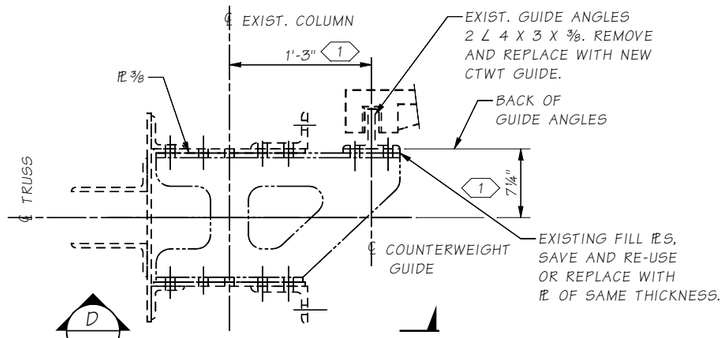

SECTION C / BR29

TYPICAL ALL BRACKETS EXCEPT FOR TIE PL'S

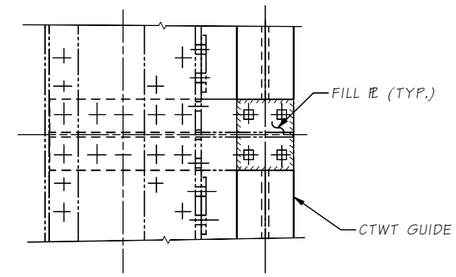

ELEVATION D

TYPICAL ALL BRACKETS EXCEPT FOR TIE PL'S

NOTES:

1. ONLY ONE CTWT GUIDE SHALL BE REMOVED AND REPLACED AT EACH CTWT AT A TIME.
2. CTWT GUIDES SHALL BE PRIMED IN THE SHOP. ALL WEARING SURFACES SHALL BE GREASED AFTER INSTALLATION AND REMAINING PORTIONS PAINTED WITH ADDITIONAL FIELD COATS.
3. THE HORIZONTAL DISTANCE BETWEEN EXISTING CTWT GUIDES SHALL BE FIELD MEASURED AND RECORDED PRIOR TO REMOVAL. DISTANCE BETWEEN NEW GUIDES AFTER INSTALLATION SHALL BE THE SAME ±⅛".
4. LIFT SPAN SHALL BE OPERATED AFTER GUIDES ARE INSTALLED AND OPERATION VERIFIED TO BE ACCEPTABLE BY THE ENGINEER. THE CONTRACTOR SHALL MAKE ADJUSTMENTS AS NEEDED TO BRING THE OPERATION INTO AN ACCEPTABLE CONDITION.

OPTION 1

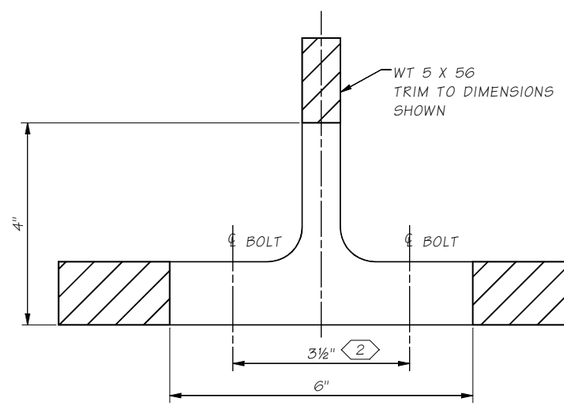

OPTION 2

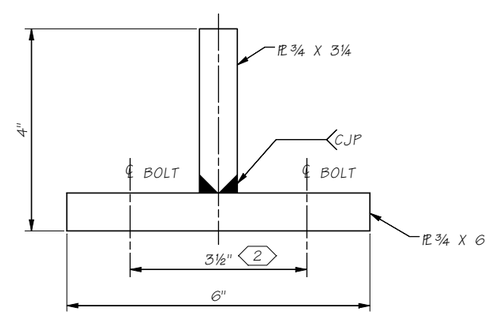

KEY NOTES:

1. FIELD MEASURE LOCATION OF GUIDE AT EACH BRACKET. MAINTAIN LOCATION TOLERANCE OF 1/16" AT EACH CONNECTION LOCATION.
2. MATCH DRILL HOLES TO EXISTING COUNTERWEIGHT BRACKET HOLE LOCATIONS.

FASTENER LEGEND

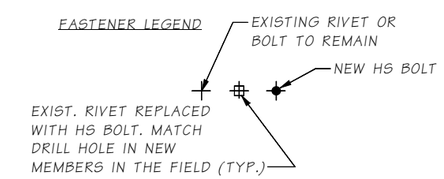

REPLACEMENT COUNTERWEIGHT GUIDE

Bridge Design Engr.	Leland, AC		M:\2-Team\SR529_10E Rehab and Painter\SR529_10E Rehab and Painter\window files\COUNTERWEIGHT GUIDE BRACKET.wnd			REGION NO.	STATE	FED. AID PROJ. NO.	SHEET NO.	TOTAL SHEETS
Supervisor	Zeldenrust, RP					10	WASH.	0529(020)		
Designed By	Swett, GD	06/22				JOB NUMBER 23A003				
Checked By	Olson, DE	03/23								
Detailed By	Uhde, T	06/22				CONTRACT NO.				
Bridge Projects Engr.										
Prelim. Plan By										
Architect/Specialist			DATE	REVISION	BY	APP'D				

P.E. STAMP BOX: GEOFFREY D. SWETT, STATE OF WASHINGTON, 21411, PROFESSIONAL ENGINEER — SEE SHEET CT1 — DATE

BRIDGE AND STRUCTURES OFFICE

P.E. STAMP BOX: RICHARD P. ZELDENRUST, STATE OF WASHINGTON, 25479, PROFESSIONAL ENGINEER — SEE SHEET CT1 — DATE

Washington State Department of Transportation

SR 529
SNOHOMISH RIVER & STEAMBOAT SLOUGH
BRIDGE REPAIR, REHAB & PAINT
BR. NO. 529/10E

COUNTERWEIGHT GUIDE BRACKET

BRIDGE SHEET NO. BR30

SHEET 64 OF 136 SHEETS

SR 529 FILE NO. ____ SHEET BR30

Thu Apr 13 14:40:08 2023

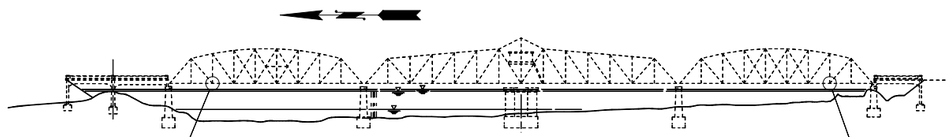

SR 529/20W

FASTENER LEGEND

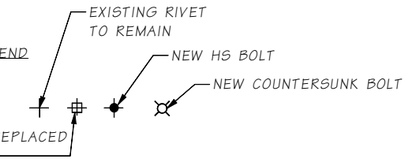

NOTES:

1. DISCONNECT AND REMOVE EXISTING TRAFFIC GATES ON EAST AND WEST SIDES OF BRIDGE. IDENTIFY AND TAG LOCATION AND STORE. REMOVE TIMBER DECKING ON EAST SIDEWALK AS NEEDED FOR ACCESS.
2. REMOVE EXISTING GATE SUPPORT STRUCTURAL STEEL AS SHOWN IN DETAIL 1
3. INSTALL NEW GATE SUPPORT STRUCTURAL STEEL.
4. RE-INSTALL SALVAGED TRAFFIC GATES.
5. REPLACE SIDEWALK TIMBER DECKING WITH NEW TIMBER AND HARDWARE. SEE SHEET BR4 FOR MATERIAL REQUIREMENTS
6. ALL PLATES AND ANGLES SHALL BE ASTM A572 GR50. ALL BOLTS SHALL BE ¾"ø WITH 13/16"ø HOLES.

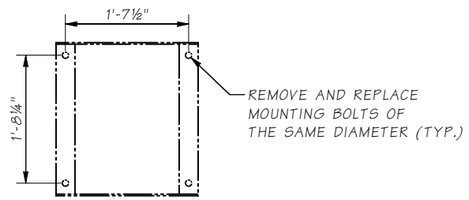

SECTION A

EXIST. GATE BASE BOLT SPACING. (FIELD VERIFY)

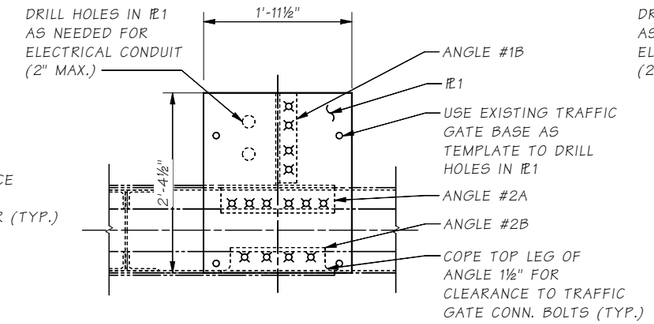

SECTION B

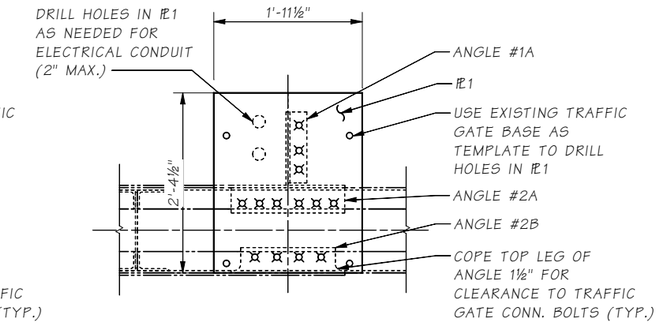

SECTION D

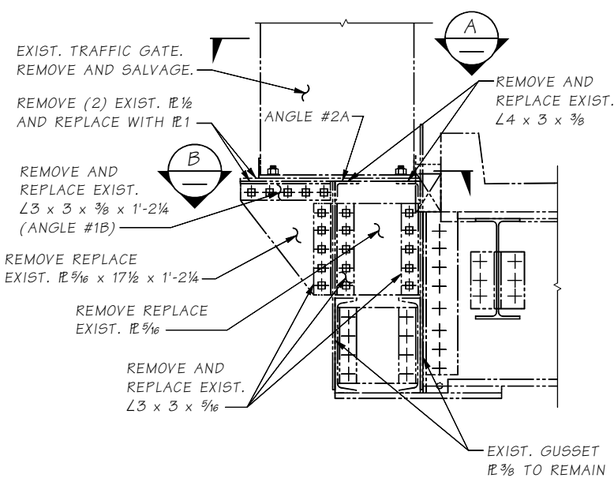

PLATFORM SIDE (WEST)

SEE (EAST) DETAIL FOR DIMENSIONS NOT SHOWN

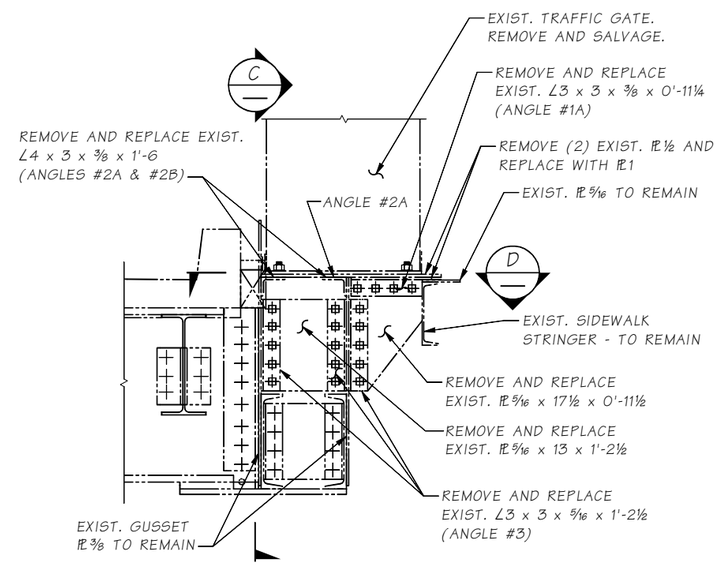

SIDEWALK SIDE (EAST)

TIMBER DECKING NOT SHOWN FOR CLARITY

DETAIL 1

TRAFFIC GATE SUPPORT REMOVAL

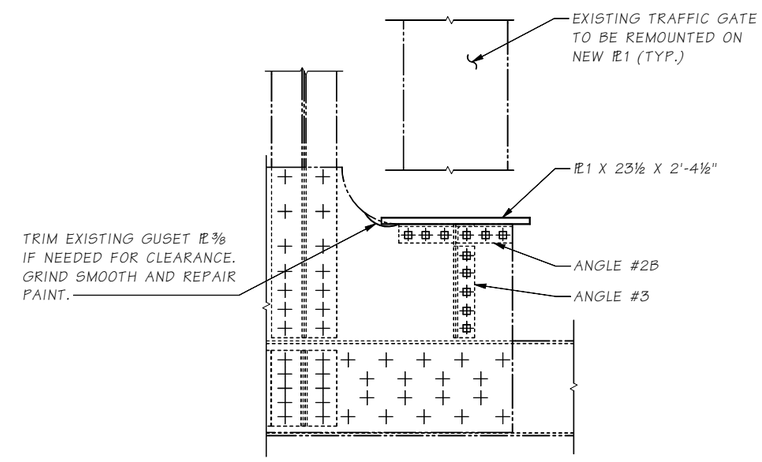

SECTION C

Bridge Design Engr.	Leland, AC	
Supervisor	Zeldenrust, RP	
Designed By	Swett, GD	07/21
Checked By	Olson, DE	03/23
Detailed By	Uhde, T	07/21
Bridge Projects Engr.		
Prelim. Plan By		
Architect/Specialist		

M:\2-Team\SR529_10E Rehab and Painter\SR529_10E Rehab and Painter\window files\TRAFFIC GATE SUPPORT REPL.wnd

DATE	REVISION	BY	APP'D

REGION NO.	STATE	FED. AID PROJ. NO.	SHEET NO.	TOTAL SHEETS
10	WASH.	0529(020)		
JOB NUMBER 23A003				
CONTRACT NO.				

P.E. STAMP BOX — GEOFFREY D. SWETT, STATE OF WASHINGTON, 55820, PROFESSIONAL ENGINEER — SEE SHEET CT1 — DATE

BRIDGE AND STRUCTURES OFFICE

P.E. STAMP BOX — RICHARD P. ZELDENRUST, STATE OF WASHINGTON, 35470, PROFESSIONAL ENGINEER — SEE SHEET CT1 — DATE

Washington State Department of Transportation

SR 529
SNOHOMISH RIVER & STEAMBOAT SLOUGH
BRIDGE REPAIR, REHAB & PAINT
BR. NO. 529/20W

529/20W TRAFFIC GATE SUPPORT REPLACEMENT DETAIL

BRIDGE SHEET NO. BR31

SHEET 65 OF 136 SHEETS

SR 529 FILE NO. SHEET BR31

Thu Apr 13 14:40:14 2023

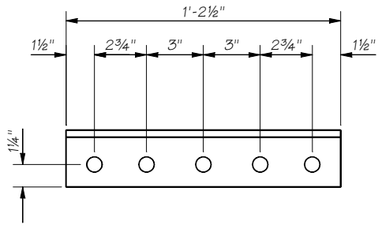

ANGLE #3 - L3 x 3 x 5/16

HOLE SPACING SAME ON BOTH LEGS
(12 TOTAL)

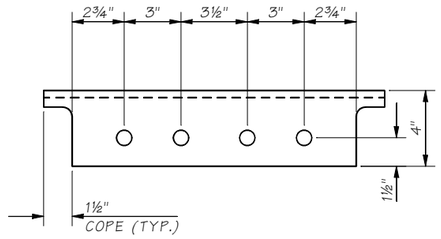

VIEW G
ANGLE #2B

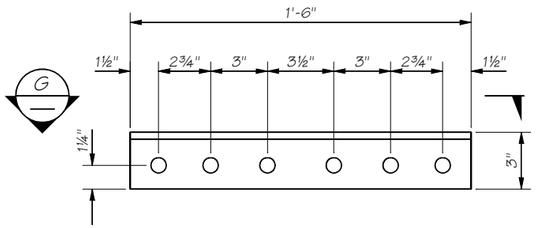

ANGLE #2A & #2B - L4 x 3 x 3/8

(4 EACH TOTAL)

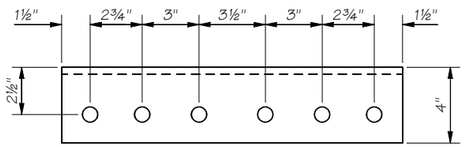

VIEW G
ANGLE #2A

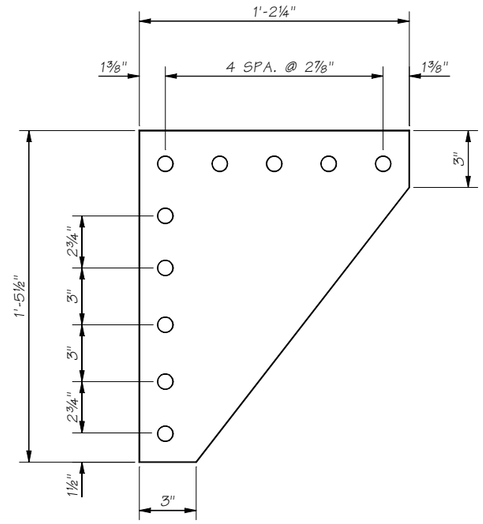

PL 5/16 x 17½ x 1'-2¼

(2 TOTAL WEST)

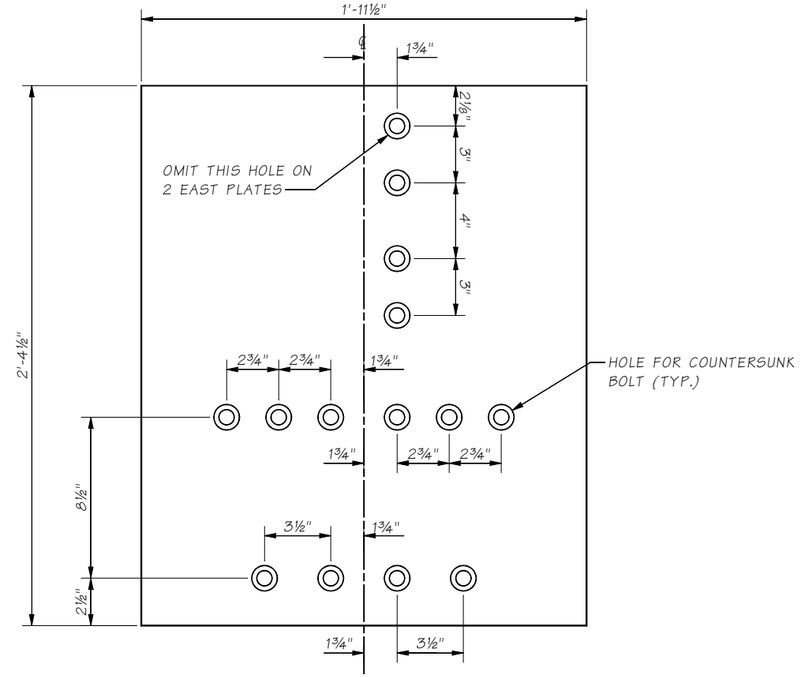

PL 1 x 23½ x 2'-4½

(4 TOTAL)

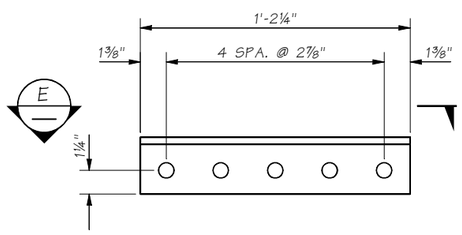

ANGLE #1B - L3 x 3 x 3/8

(2 TOTAL)

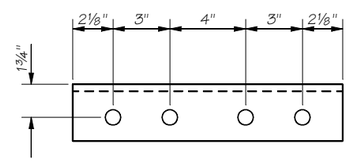

VIEW E

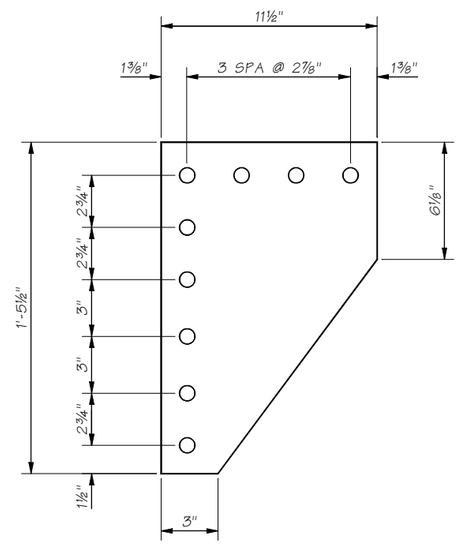

PL 5/16 x 17½ x 0'-11½

(2 TOTAL EAST)

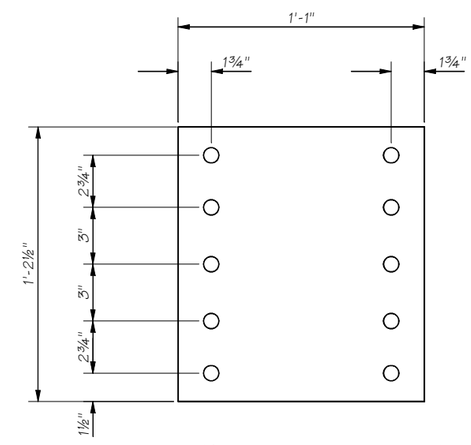

PL 5/16 x 13 x 1'-2½

(4 TOTAL)

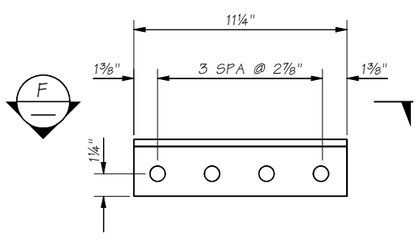

ANGLE #1A - L3 x 3 x 3/8

(2 TOTAL)

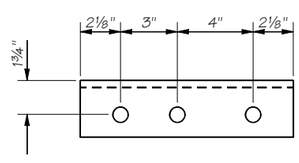

VIEW F

NOTE:
1. ALL DIMENSIONS AND HOLE SPACING ARE PROVIDED FOR INFORMATION ONLY. ALL DIMENSIONS SHALL BE FIELD VERIFIED PRIOR TO FABRICATION OR MATCH DRILLED IN THE FIELD.

Bridge Design Engr.	Leland, AC		M:\Z-Team\SR529_10E Rehab and Painter\SR529_10E Rehab and Painter\window files\TRAFFIC GATE SUPPORT 2.wnd				REGION NO.	STATE	FED. AID PROJ. NO.	SHEET NO.	TOTAL SHEETS
Supervisor	Zeldenrust, RP						10	WASH.	0529(020)		
Designed By	Swett, GD	06/22					JOB NUMBER 23A003				
Checked By	Olson, DE	03/23									
Detailed By	DeBoer, J	06/22					CONTRACT NO.				
Bridge Projects Engr.											
Prelim. Plan By											
Architect/Specialist			DATE	REVISION	BY	APP'D					

P.E. STAMP BOX
GEOFFREY D. SWETT
STATE OF WASHINGTON
PROFESSIONAL ENGINEER
SEE SHEET CT1
DATE

BRIDGE AND STRUCTURES OFFICE

P.E. STAMP BOX
RICHARD P. ZELDENRUST
STATE OF WASHINGTON
PROFESSIONAL ENGINEER
SEE SHEET CT1
DATE

Washington State
Department of Transportation

SR 529
SNOHOMISH RIVER & STEAMBOAT SLOUGH
BRIDGE REPAIR, REHAB & PAINT
BR. NO. 529/20W

529/20W TRAFFIC GATE SUPPORT
REPLACEMENT DETAILS 2 OF 2

BRIDGE SHEET NO. BR32

SHEET 66 OF 136 SHEETS

SR 529 FILE NO. ____ SHEET BR32

Thu Apr 13 14:40:17 2023

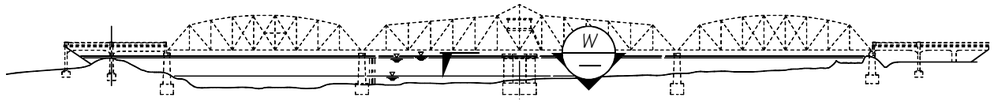

SR 529/20W BRIDGE

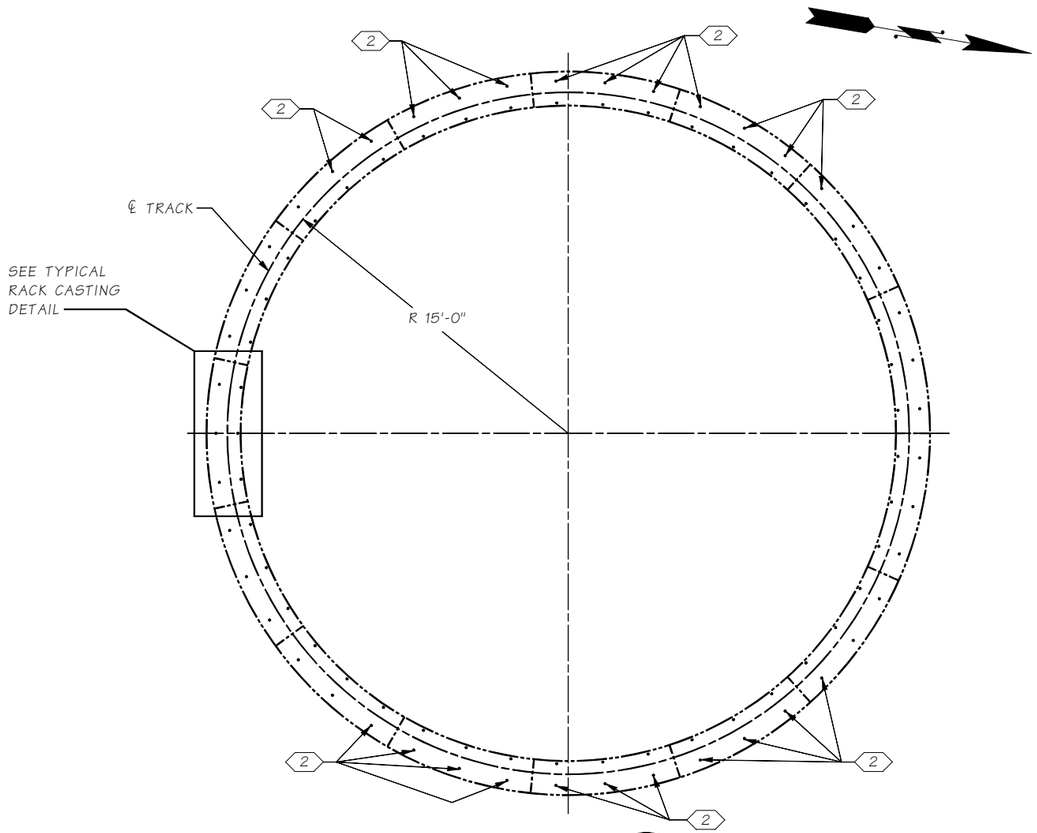

SECTION W

SWING SPAN RACK PLAN VIEW

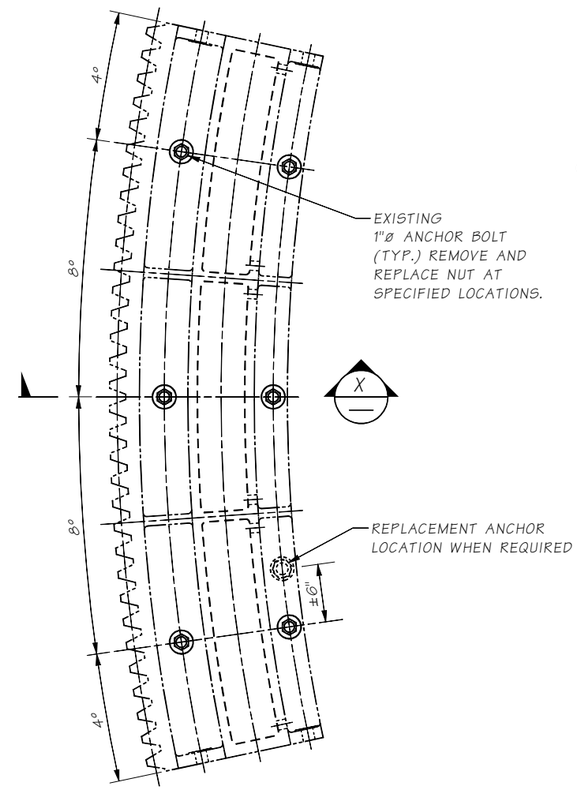

TYPICAL RACK CASTING DETAIL

(15 TOTAL)

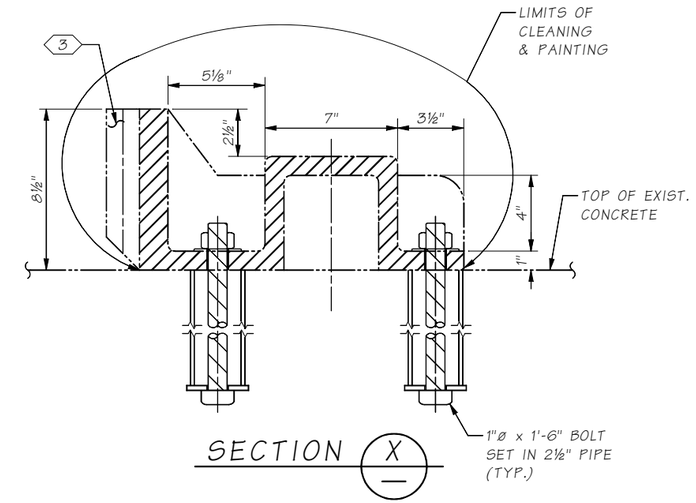

SECTION X

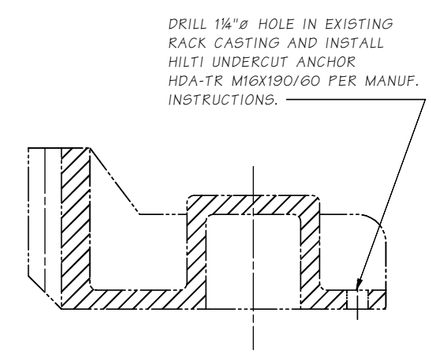

ANCHOR REPLACEMENT DETAIL

NOTES:

1. ALL NUTS SPECIFIED TO BE REMOVED AND REPLACED SHALL BE VERIFIED BY THE ENGINEER PRIOR TO STARTING WORK. IF A NUT IS UNABLE TO BE REPLACED, AND IF DIRECTED BY THE ENGINEER, THE CONTRACTOR SHALL INSTALL A REPLACEMENT ANCHOR PER THE DETAILS SHOWN.

KEY NOTES:

2 AFTER CLEANING OPERATIONS, REMOVE AND REPLACE EXISTING NUTS FOR 1"ø ANCHOR BOLT.

3 PROTECT AND DO NOT CLEAN AND PAINT RACK TEETH THAT ARE GREASED.

Bridge Design Engr.	Leland, AC	
Supervisor	Zeldenrust, RP	
Designed By	Swett, GD	06/22
Checked By	Olson, DE	03/23
Detailed By	Uhde, T	06/23
Bridge Projects Engr.		
Prelim. Plan By		
Architect/Specialist		

M:\Z-Team\SR529_10E Rehab and Painter\SR529_10E Rehab and Painter\window files\RACK ANCHOR BOLTS 1.wnd

DATE	REVISION	BY	APP'D

REGION NO.	STATE	FED. AID PROJ. NO.	SHEET NO.	TOTAL SHEETS
10	WASH.	0529(020)		
JOB NUMBER 23A003				
CONTRACT NO.				

P.E. STAMP BOX — GEOFFREY D. SWETT, STATE OF WASHINGTON, 32820, PROFESSIONAL ENGINEER — SEE SHEET CT1 — DATE

BRIDGE AND STRUCTURES OFFICE

P.E. STAMP BOX — RICHARD P. ZELDENRUST, STATE OF WASHINGTON, 25470, PROFESSIONAL ENGINEER — SEE SHEET CT1 — DATE

Washington State Department of Transportation

SR 529
SNOHOMISH RIVER & STEAMBOAT SLOUGH
BRIDGE REPAIR, REHAB & PAINT
BR. NO. 529/20W

529/20W
RACK ANCHOR BOLT REPAIR

BRIDGE SHEET NO. BR33

SHEET 67 OF 136 SHEETS

SR 529 FILE NO. ____ SHEET BR33

Thu Apr 13 14:40:28 2023

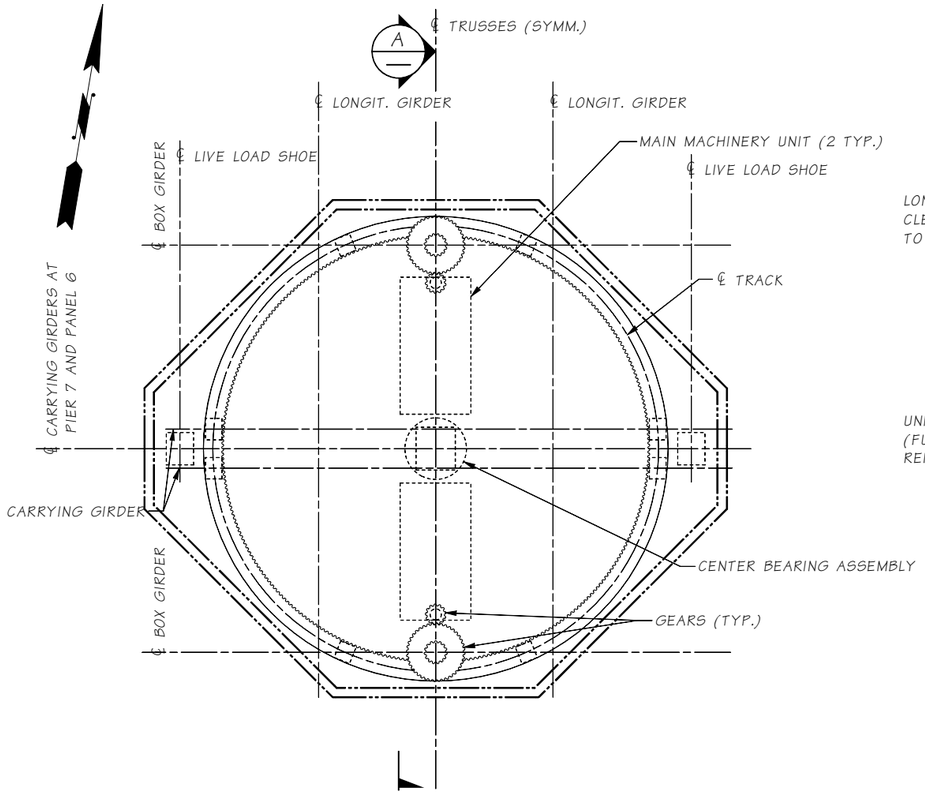

PLAN

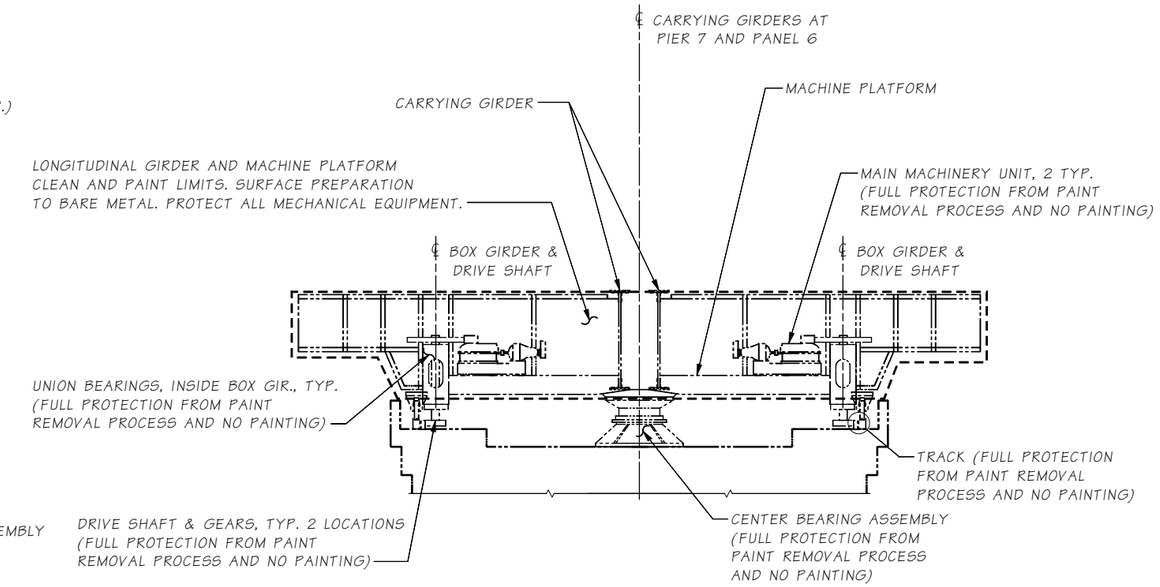

SECTION A

TRUSS AND DECK NOT SHOWN FOR CLARITY.

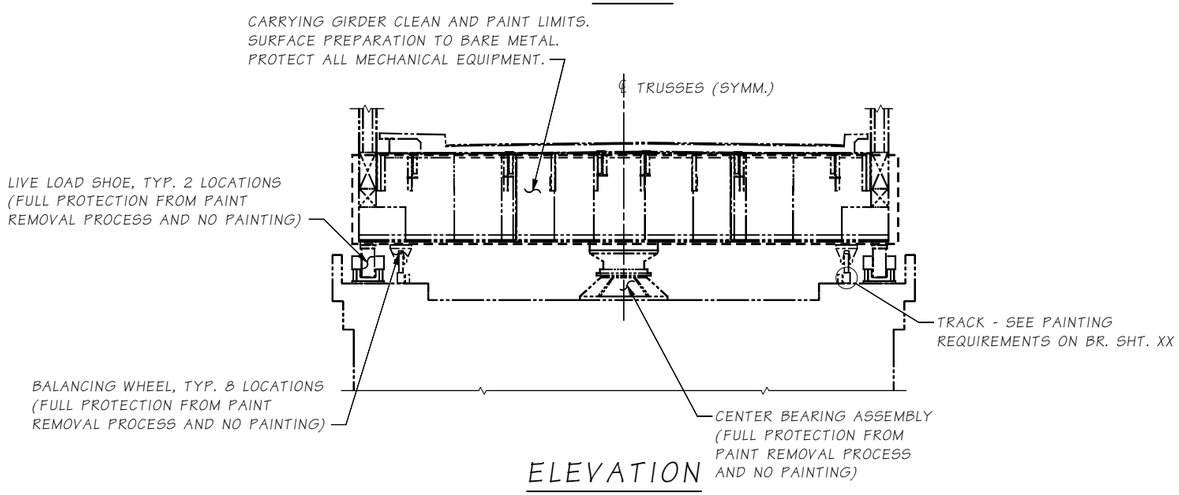

ELEVATION

PAINT NOTES:

1. LIMITS SHOWN OF PROTECTED AREAS ARE FOR PROTECTION FROM SAND BLASTING AND OTHER SURFACE PREPARATION AND PAINT OPERATONS.
2. AREAS INACCESSIBLE TO SAND BLASTING OR IN CLOSE PROXIMITY TO AREAS REQUIRING PROTECTION, MAY BE PREPARED IN ACCORDANCE WITH SSPC-SP11 - POWER TOOL CLEANING TO BARE METAL.
3. SWING SPAN MECHANICAL AREA SHALL BE FULLY PROTECTED DURING FULL PAINT REMOVAL AND PAINTING PROCESSES OF LONGITUDINAL AND CARRYING GIRDERS.

SR 529 FILE NO. SHEET BR34

Bridge Design Engr.	Leland, AC	M:\Z-Team\SR529_10E Rehab and Painter\SR529_10E Rehab and Painter\window files\529 20E PIER 7 PAINTING.wnd							
Supervisor	Zeldenrust, RP								
Designed By	Swett, GD 06/22								
Checked By									
Detailed By									
Bridge Projects Engr.									
Prelim. Plan By									
Architect/Specialist		DATE	REVISION	BY	APP'D				

REGION NO.	STATE	FED. AID PROJ. NO.	SHEET NO.	TOTAL SHEETS
10	WASH.	0529(020)		
JOB NUMBER 23A003				
CONTRACT NO.				

P.E. STAMP BOX
GEOFFREY D. SWETT
STATE OF WASHINGTON
PROFESSIONAL ENGINEER
SEE SHEET CT1
DATE

BRIDGE AND STRUCTURES OFFICE

P.E. STAMP BOX
RICHARD P. ZELDENRUST
STATE OF WASHINGTON
PROFESSIONAL ENGINEER
SEE SHEET CT1
DATE

Washington State Department of Transportation

SR 529
SNOHOMISH RIVER & STEAMBOAT SLOUGH
BRIDGE REPAIR, REHAB & PAINT
BR. NO. 529/20E

529/20E
PIER 7 PAINTING LIMITS

BRIDGE SHEET NO. BR34
SHEET 68 OF 136 SHEETS

Thu Apr 13 14:40:32 2023

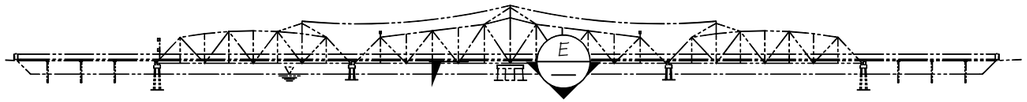

SR529/20E BRIDGE

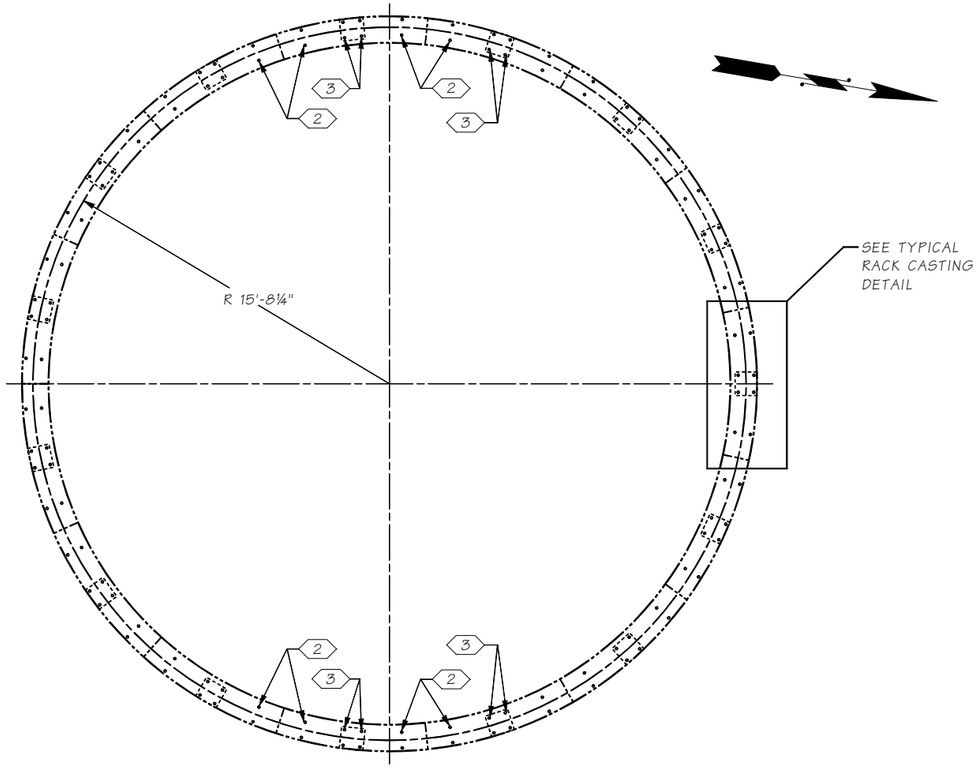

SECTION E

SWING SPAN RACK PLAN VIEW

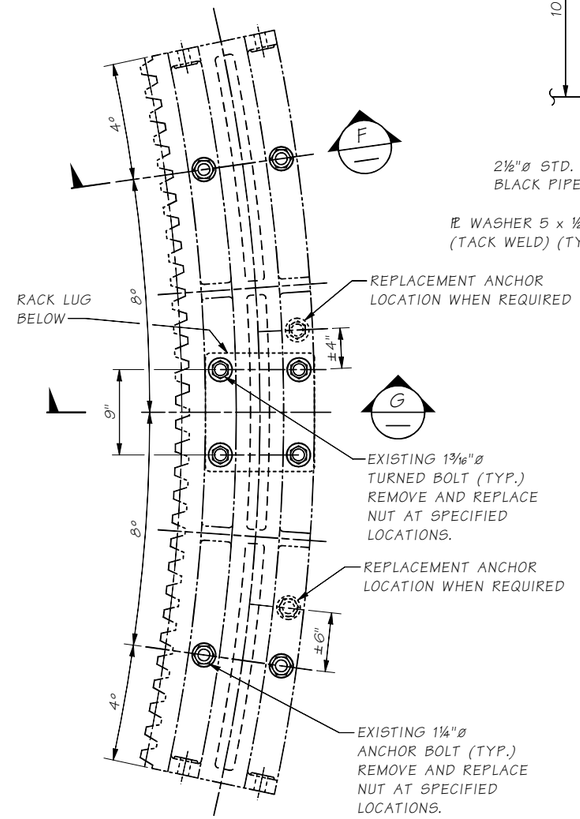

TYPICAL RACK CASTING DETAIL

(15 TOTAL)

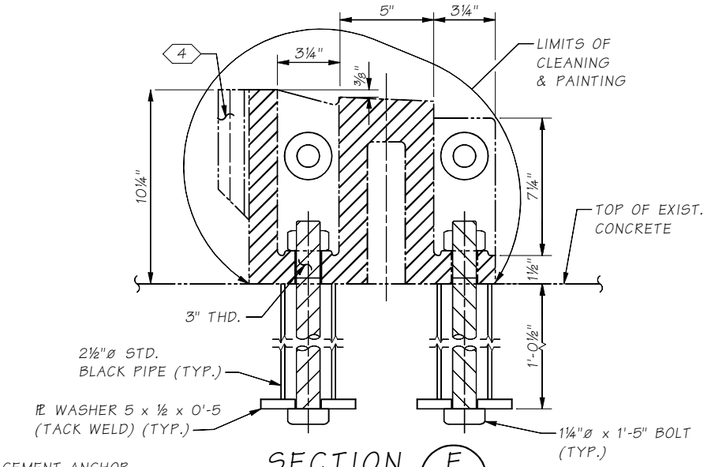

SECTION F

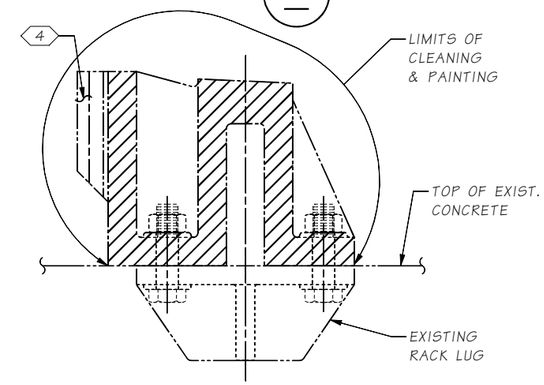

SECTION G

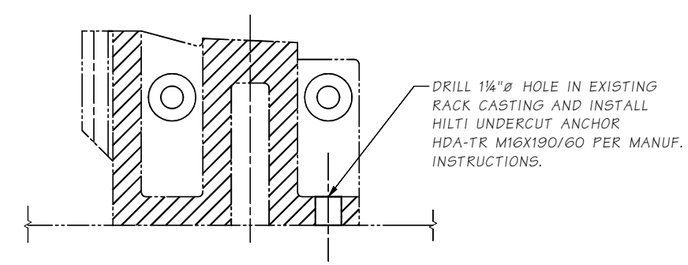

ANCHOR REPLACEMENT DETAIL

NOTES:

1. ALL NUTS SPECIFIED TO BE REMOVED AND REPLACED SHALL BE VERIFIED BY THE ENGINEER PRIOR TO STARTING WORK. IF A NUT IS UNABLE TO BE REPLACED, AND IF DIRECTED BY THE ENGINEER, THE CONTRACTOR SHALL INSTALL A REPLACEMENT ANCHOR PER THE DETAILS SHOWN.

KEY NOTES:

2 AFTER CLEANING OPERATIONS, REMOVE AND REPLACE EXISTING NUTS FOR 1¼"ø ANCHOR BOLT.

3 AFTER CLEANING OPERATIONS, REMOVE AND REPLACE EXISTING NUTS FOR 1³⁄₁₆ø ANCHOR BOLT.

4 PROTECT AND DO NOT CLEAN AND PAINT RACK TEETH THAT ARE GREASED.

SR 529 FILE NO. ____ SHEET BR35

Bridge Design Engr.	Leland, AC	
Supervisor	Zeldenrust, RP	
Designed By	Swett, GD	06/22
Checked By	Olson, DE	03/23
Detailed By	Uhde, T	06/23
Bridge Projects Engr.		
Prelim. Plan By		
Architect/Specialist		

M:\Z-Team\SR529_10E Rehab and Painter\SR529_10E Rehab and Painter\window files\RACK ANCHOR BOLTS.wnd

DATE	REVISION	BY	APP'D

REGION NO.	STATE	FED. AID PROJ. NO.	SHEET NO.	TOTAL SHEETS
10	WASH.	0529(020)		
JOB NUMBER 23A003				
CONTRACT NO.				

P.E. STAMP BOX — GEOFFREY D. SWETT, STATE OF WASHINGTON, 32820, PROFESSIONAL ENGINEER — SEE SHEET CT1 — DATE

BRIDGE AND STRUCTURES OFFICE

P.E. STAMP BOX — RICHARD P. ZELDENRUST, STATE OF WASHINGTON, 26970, PROFESSIONAL ENGINEER — SEE SHEET CT1 — DATE

Washington State Department of Transportation

SR 529
SNOHOMISH RIVER & STEAMBOAT SLOUGH
BRIDGE REPAIR, REHAB & PAINT
BR. NO. 529/20E

529/20E
RACK ANCHOR BOLT REPAIR

BRIDGE SHEET NO. BR35

SHEET 69 OF 136 SHEETS

Thu Apr 13 14:40:38 2023

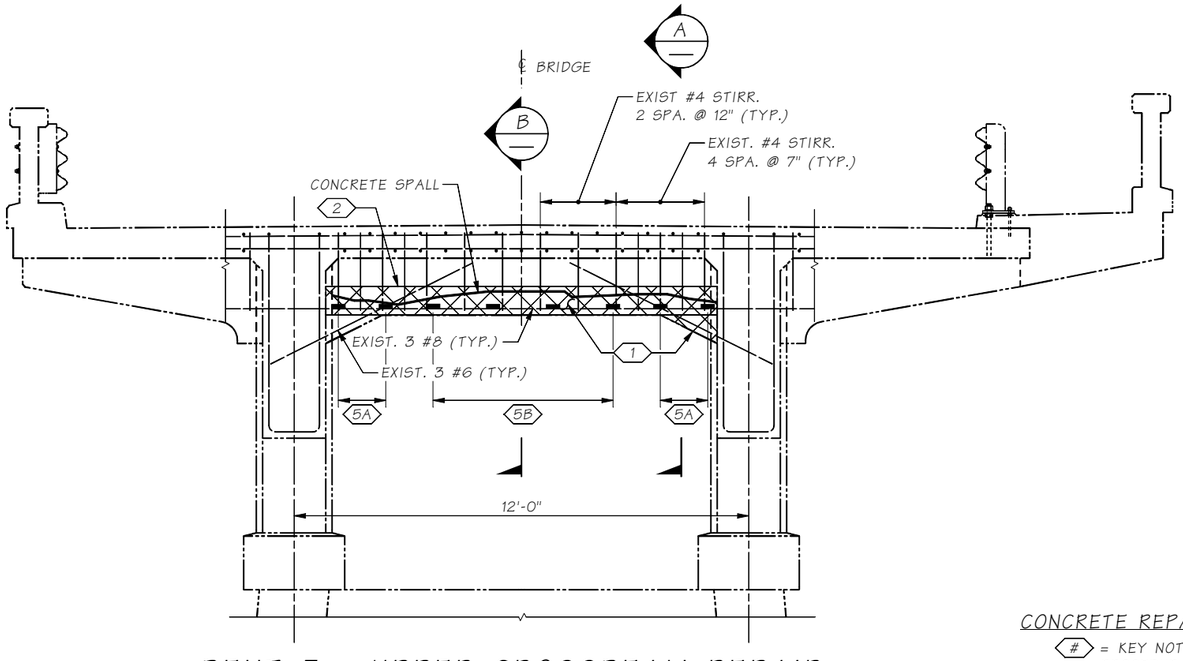

BENT 3 - UPPER CROSSBEAM REPAIR

FACING NORTH

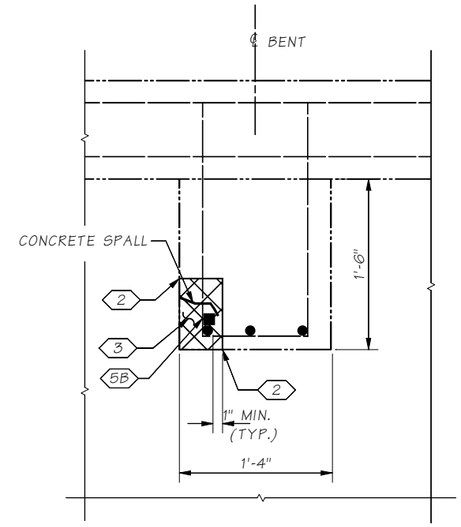

SECTION B

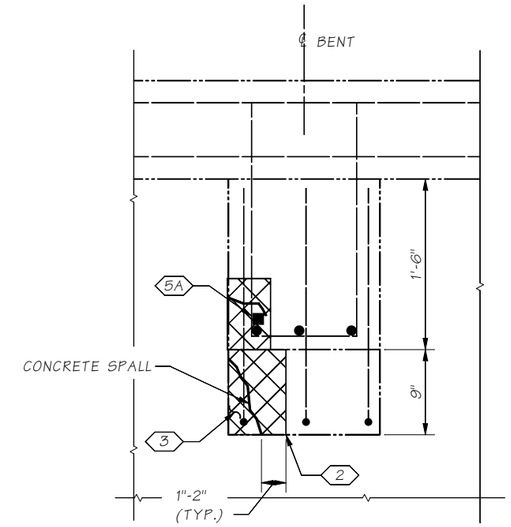

SECTION A

CONCRETE REPAIR REQUIREMENTS AND KEY NOTES

(#) = KEY NOTE. IF NO SYMBOL, THE NOTE IS JUST A GENERAL PROCEDURAL NOTE

(1) WHILE BEING WITNESSED AND AGREED UPON BY A WSDOT FIELD ENGINEER, SOUND THE EXISTING CONCRETE SURFACE TO IDENTIFY AND DELINEATE THE LIMITS OF THE SPALL/UNSOUND CONCRETE USING A HAMMER, CHAINS, OR OTHER ACCEPTABLE METHOD. MEASURE 1"-2" BEYOND THE IDENTIFIED REPAIR, SQUARE OFF THE EDGES, AND MARK THE AREAS TO BE SAWCUT.

(2) FOLLOWING THE PROCEDURES SPECIFIED IN SECTION 6-01.16(2)A PART 2, SAWCUT THE EDGES OF THE REPAIR AREA.

(3) FOLLOWING THE IMPACT BREAKER SIZE LIMITATIONS AND OPERATION ANGLES SPECIFIED IN SECTION 6-01.16(2)A PART 1, REMOVE ALL THE LOOSE AND UNSOUND CONCRETE WITHIN THE REPAIR LIMITS. REMOVE CONCRETE A MINIMUM OF 1" BEYOND ANY EXPOSED REINFORCING STEEL. SURFACE SHALL BE ROUGHENED TO AT LEAST CONCRETE SURFACE PROFILE (CSP) 5 IN ACCORDANCE WITH ICRI GUIDELINE NO. 310.2R. INSPECT THE CONCRETE REPAIR SURFACE FOR DELAMINATIONS, DEBONDING, MICROCRACKING AND VOIDS USING A HAMMER OR CHAIN. REMOVE ANY ADDITIONAL LOOSE OR UNSOUND CONCRETE.

4. USING OIL-FREE ABRASIVE BLASTING, CLEAN ALL EXPOSED REINFORCING STEEL TO REMOVE ANY RUST AND CLEAN THE CONCRETE SURFACE TO REMOVE ALL DIRT, DUST, LOOSE PARTICLES, RUST, LAITENANCE, OIL, FILM, MICROCRACKED CONCRETE OR ANY FOREIGN MATERIAL IN PREPARATION FOR CONCRETE PATCHING MATERIAL. PATCHING MATERIAL SHALL BE APPLIED PRIOR TO ANY VISIBLE RUST FORMING ON THE EXPOSED REINFORCEMENT. IF RUST IS PRESENT, RE-ABRASIVE BLAST THE EXPOSED REINFORCEMENT.

(5A) INSTALL EMBEDDED GALVANIC ANODES TIED TO EXISTING REBAR AT 15" MAX CENTER TO CENTER SPACING PER THE SPECIAL PROVISIONS AND MANUFACTURER'S RECOMMENDATIONS.

(5B) INSTALL EMBEDDED GALVANIC ANODES TIED TO EXISTING REBAR AT 19" MAX CENTER TO CENTER SPACING PER THE SPECIAL PROVISIONS AND MANUFACTURER'S RECOMMENDATIONS.

BENT 3 - EXISTING UPPER CROSSBEAM FILLET DAMAGED CONDITION

FACING NORTHEAST

BENT 3 - EXISTING UPPER CROSSBEAM DAMAGED CONDITION

FACING NORTH

6. SELECT A PATCHING MATERIAL IN ACCORDANCE WITH SECTION 9-20.2 THAT IS APPROPRIATE FOR THE REPAIR LOCATION AND THICKNESS. SUBMIT PROPOSED PATCHING MATERIAL TO THE ENGINEER FOR ACCEPTANCE. PREPARE THE SURFACE FOR PATCHING IN ACCORDANCE WITH SECTION 6-01.16(2)A PART 8.

7. FORM, PLACE, CONSOLIDATE, TEXTURE AND FINISH THE CONCRETE PATCH IN ACCORDANCE WITH SECTION 6-01.16(2)A PARTS 7, 9, 10, & 11.

Bridge Design Engr.	Leland, AC	
Supervisor	Zeldenrust, RP	
Designed By	Swett, GD	02/22
Checked By	Miller III, WJ	03/23
Detailed By	Uhde, T	02/23
Bridge Projects Engr.		
Prelim. Plan By		
Architect/Specialist		

M:\Z-Team\SR529_10E Rehab and Painter\SR529_10E Rehab and Painter\window files\BENT 3 REPAIR.wnd

DATE	REVISION	BY	APP'D

REGION NO.	STATE	FED. AID PROJ. NO.	SHEET NO.	TOTAL SHEETS
10	WASH.	0529(020)		

JOB NUMBER 23A003

CONTRACT NO.

P.E. STAMP BOX — GEOFFREY D. SWETT, STATE OF WASHINGTON, 32820, PROFESSIONAL ENGINEER — SEE SHEET CT1 — DATE

BRIDGE AND STRUCTURES OFFICE

P.E. STAMP BOX — RICHARD P. ZELDENRUST, STATE OF WASHINGTON, 25470, PROFESSIONAL ENGINEER — SEE SHEET CT1 — DATE

Washington State Department of Transportation

SR 529
SNOHOMISH RIVER & STEAMBOAT SLOUGH
BRIDGE REPAIR, REHAB & PAINT
BR. NO. 529/10E

BENT 3 SPALL REPAIR
UPPER CROSSBEAM

BRIDGE SHEET NO. BA1

SHEET 70 OF 136 SHEETS

SR 529 FILE NO. ____ SHEET BA1

Thu Apr 13 14:40:42 2023

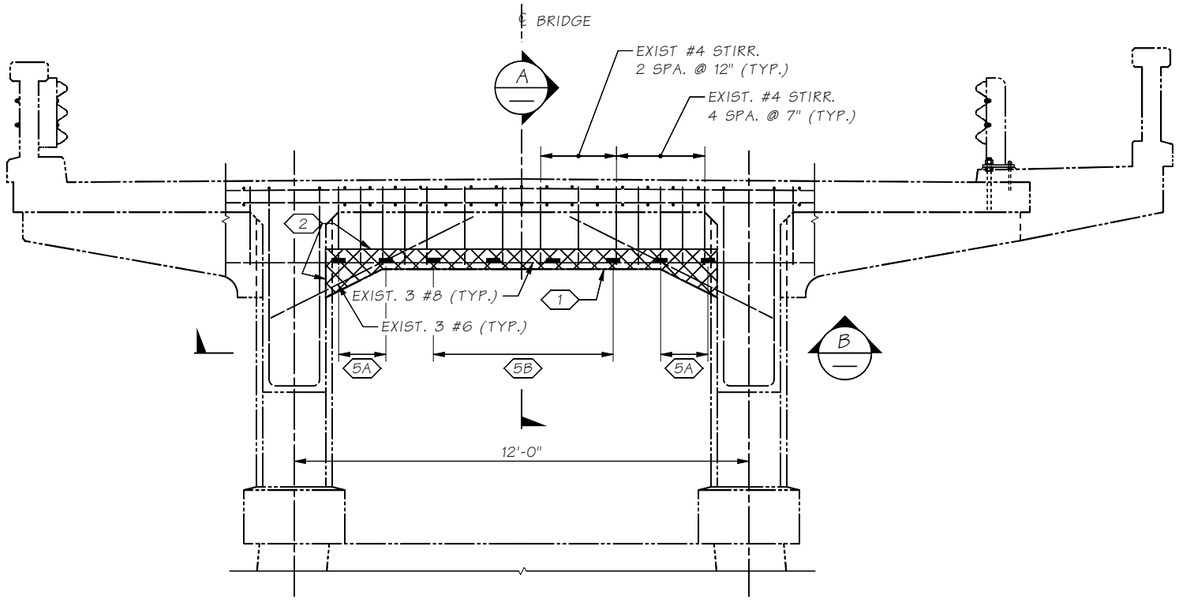

BENT 5 - UPPER CROSSBEAM REPAIR

FACING NORTH

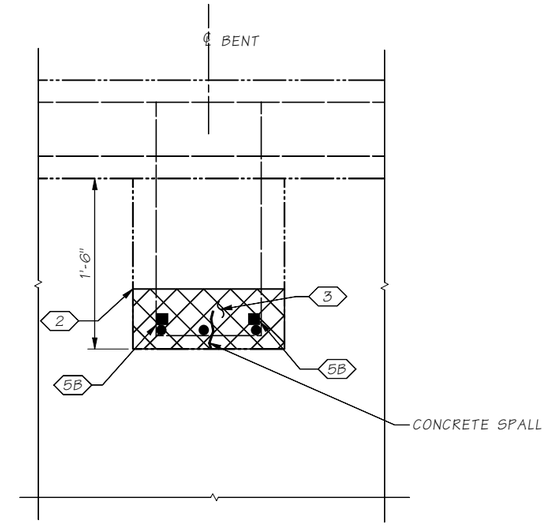

SECTION A

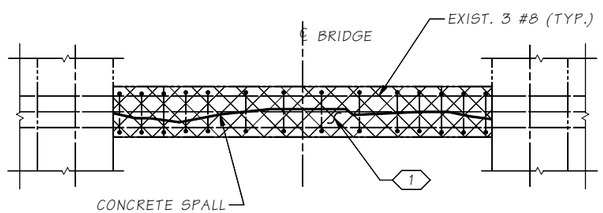

VIEW B

ANODES NOT SHOWN

BENT 5 - EXISTING UPPER CROSSBEAM DAMAGED CONDITION

FACING SOUTH

NOTE:

FOR CONCRETE REPAIR REQUIREMENT NOTES AND KEY NOTES, SEE SHEET BA1

SR 529 FILE NO. ____ SHEET BA2

Bridge Design Engr.	Leland, AC	M:\Z-Team\SR529_10E Rehab and Painter\SR529_10E Rehab and Painter\window files\BENT 5 REPAIR.wnd									
Supervisor	Zeldenrust, RP										
Designed By	Swett, GD 02/22										
Checked By	Miller III, WJ 03/23										
Detailed By	Uhde, T 02/22										
Bridge Projects Engr.											
Prelim. Plan By											
Architect/Specialist		DATE	REVISION	BY	APP'D						

REGION NO.	STATE	FED. AID PROJ. NO.	SHEET NO.	TOTAL SHEETS
10	WASH.	0529(020)		
JOB NUMBER 23A003				
CONTRACT NO.				

P.E. STAMP BOX
GEOFFREY D. SWETT
STATE OF WASHINGTON
STRUCTURAL ENGINEER
PROFESSIONAL ENGINEER
SEE SHEET CT1
DATE

BRIDGE AND STRUCTURES OFFICE

P.E. STAMP BOX
RICHARD P. ZELDENRUST
STATE OF WASHINGTON
STRUCTURAL ENGINEER
PROFESSIONAL ENGINEER
SEE SHEET CT1
DATE

Washington State Department of Transportation

SR 529
SNOHOMISH RIVER & STEAMBOAT SLOUGH
BRIDGE REPAIR, REHAB & PAINT
BR. NO. 529/10E

BENT 5 SPALL REPAIR
UPPER CROSSBEAM

BRIDGE SHEET NO. BA2

SHEET 71 OF 136 SHEETS

Thu Apr 13 14:41:00 2023

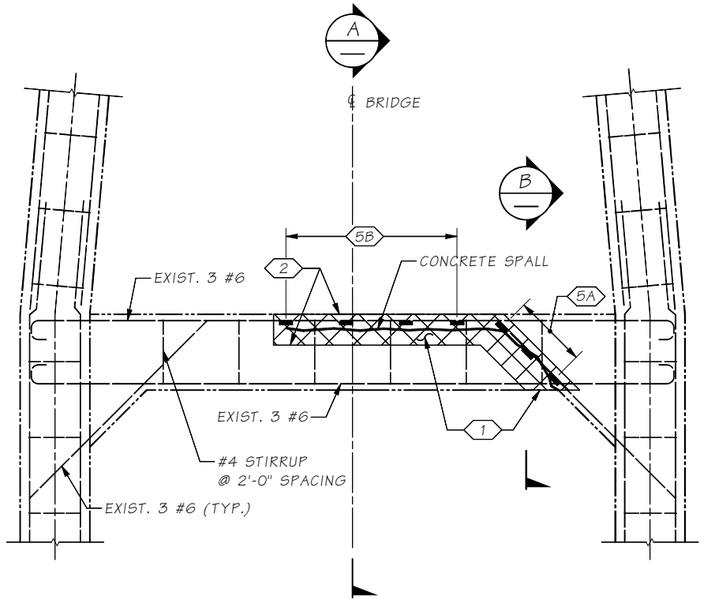

BENT 5 - LOWER STRUT REPAIR

FACING NORTH

BENT 5 - EXISTING LOWER STRUT DAMAGED CONDITION

FACING NORTH

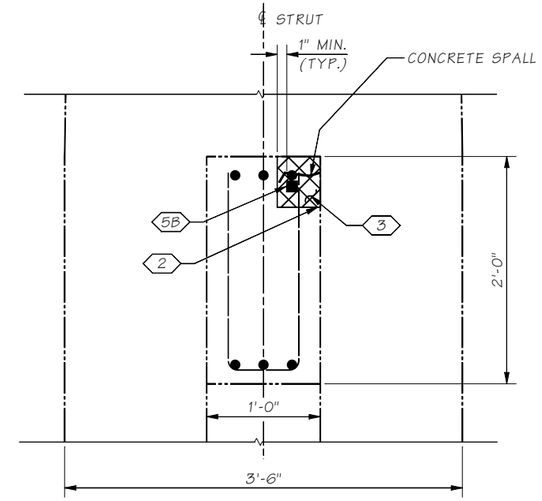

SECTION A

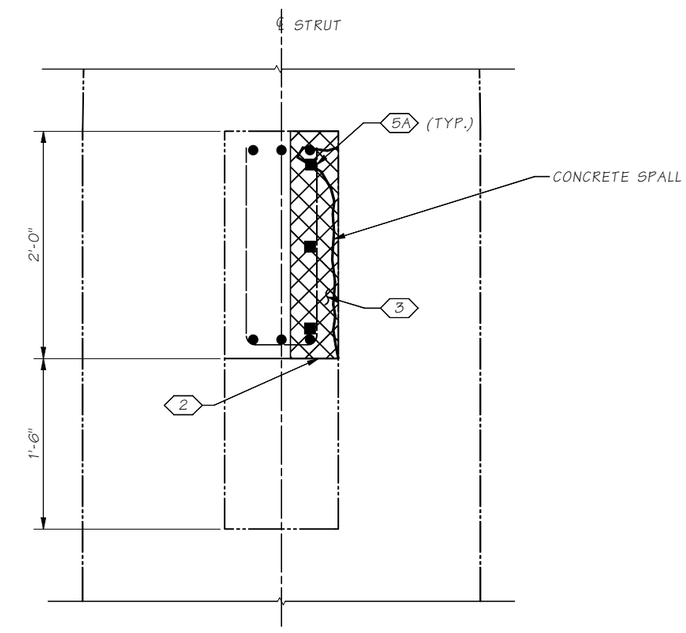

SECTION B

NOTE:

FOR CONCRETE REPAIR REQUIREMENT NOTES AND KEY NOTES, SEE SHEET BA1

Bridge Design Engr.	Leland, AC	M:\Z-Team\SR529_10E Rehab and Painter\SR529_10E Rehab and Painter\window files\BENT 5 REPAIR LOWER.wnd				REGION NO.	STATE	FED. AID PROJ. NO.	SHEET NO.	TOTAL SHEETS	P.E. STAMP BOX
Supervisor	Zeldenrust, RP					10	WASH.	0529(020)			GEOFFREY D. SWETT, STATE OF WASHINGTON, 32820, PROFESSIONAL ENGINEER
Designed By	Swett, GD 02/22					JOB NUMBER 23A003					SEE SHEET CT1 DATE:
Checked By	Miller III, WJ 03/23										
Detailed By	Uhde, T 02/22										
Bridge Projects Engr.						CONTRACT NO.					
Prelim. Plan By											
Architect/Specialist		DATE	REVISION	BY	APP'D						

BRIDGE AND STRUCTURES OFFICE

P.E. STAMP BOX: RICHARD P. ZELDENRUST, STATE OF WASHINGTON, 25470, PROFESSIONAL ENGINEER — SEE SHEET CT1 DATE:

Washington State Department of Transportation

SR 529
SNOHOMISH RIVER & STEAMBOAT SLOUGH
BRIDGE REPAIR, REHAB & PAINT
BR. NO. 529/10E

BENT 5 SPALL REPAIR
LOWER STRUT

BRIDGE SHEET NO. BA3

SHEET 72 OF 136 SHEETS

SR 529 FILE NO. SHEET BA3

Thu Apr 13 14:41:13 2023

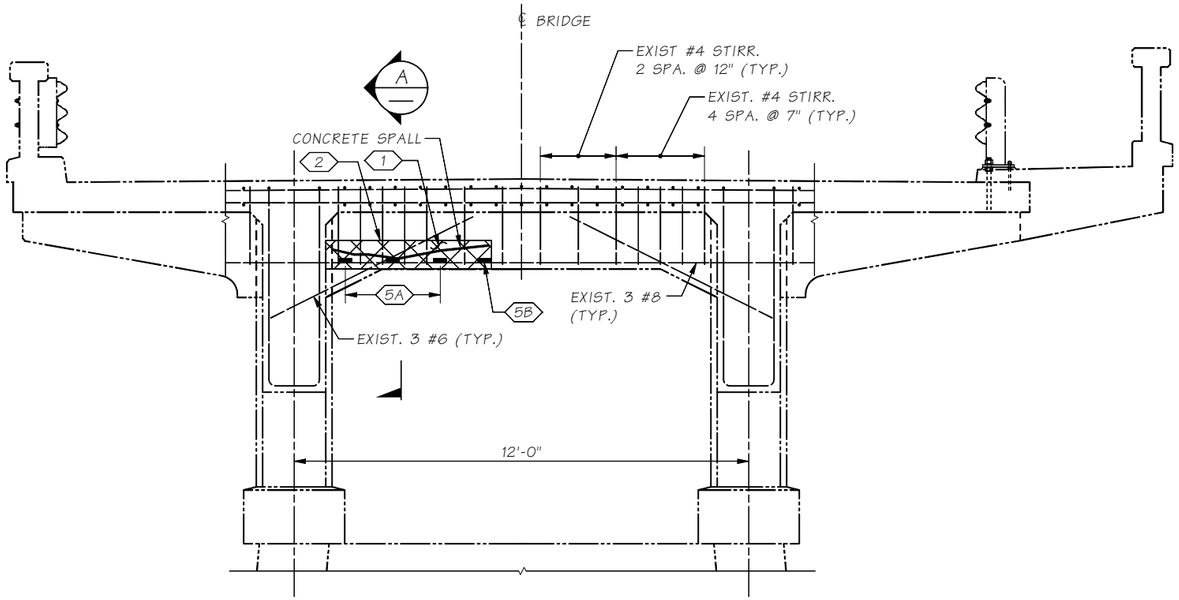

BENT 6 - UPPER CROSSBEAM REPAIR

FACING NORTH

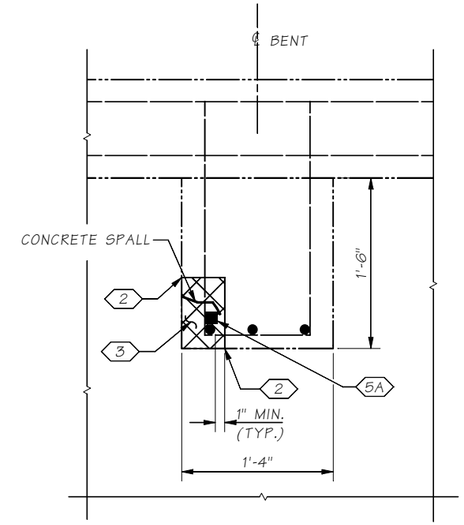

SECTION A

NOTE:

FOR CONCRETE REPAIR REQUIREMENT NOTES AND KEY NOTES, SEE SHEET BA1

SR 529 FILE NO. ____ SHEET BA4

Bridge Design Engr.	Leland, AC	M:\Z-Team\SR529_10E Rehab and Painter\SR529_10E Rehab and Painter\window files\BENT 6 REPAIR.wnd									
Supervisor	Zeldenrust, RP										
Designed By	Swett, GD 03/22					REGION NO.	STATE	FED. AID PROJ. NO.	SHEET NO.	TOTAL SHEETS	
Checked By	Miller III, WJ 03/23					10	WASH.	0529(020)			
Detailed By	Uhde, T 03/22					JOB NUMBER 23A003					
Bridge Projects Engr.											
Prelim. Plan By						CONTRACT NO.					
Architect/Specialist		DATE	REVISION	BY	APP'D						

P.E. STAMP BOX
GEOFFREY D. SWETT
STATE OF WASHINGTON
32820
PROFESSIONAL ENGINEER
SEE SHEET CT1
DATE

BRIDGE AND STRUCTURES OFFICE

P.E. STAMP BOX
RICHARD P. ZELDENRUST
STATE OF WASHINGTON
25470
PROFESSIONAL ENGINEER
SEE SHEET CT1
DATE

Washington State Department of Transportation

SR 529
SNOHOMISH RIVER & STEAMBOAT SLOUGH
BRIDGE REPAIR, REHAB & PAINT
BR. NO. 529/10E

BENT 6 SPALL REPAIR
UPPER CROSSBEAM

BRIDGE SHEET NO. BA4

SHEET 73 OF 136 SHEETS

Thu Apr 13 14:41:25 2023

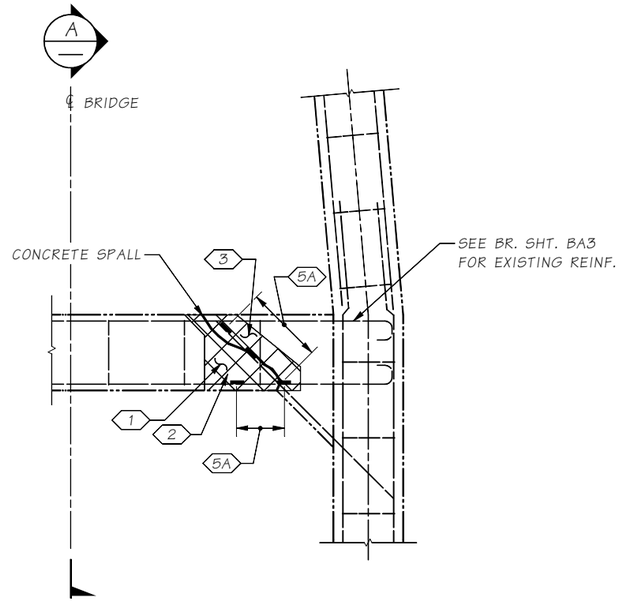

BENT 7 & 8 - LOWER STRUT REPAIR

FACING NORTH

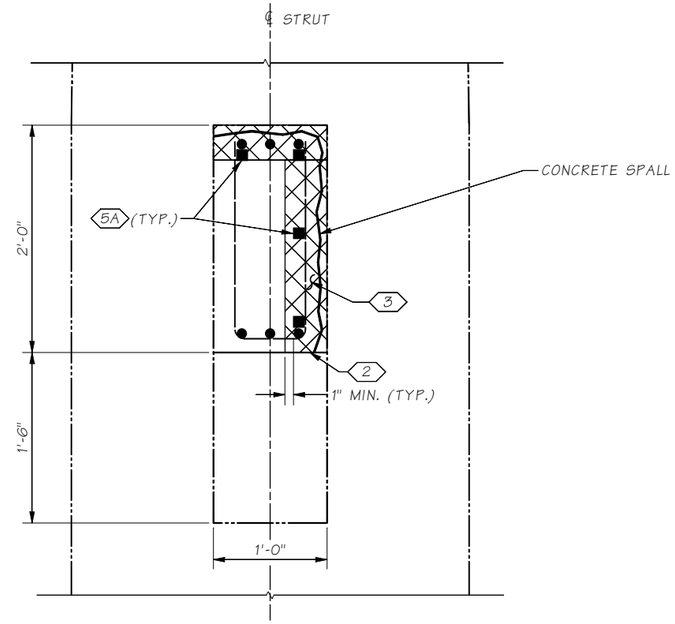

SECTION A

BENT 7 - EXISTING LOWER STRUT DAMAGED CONDITION

SOUTH FACE

BENT 8 - EXISTING LOWER STRUT DAMAGED CONDITION

SOUTH FACE

NOTE:

FOR CONCRETE REPAIR REQUIREMENT NOTES AND KEY NOTES, SEE SHEET BA1

Bridge Design Engr.	Leland, AC		M:\Z-Team\SR529_10E Rehab and Painter\SR529_10E Rehab and Painter\window files\BENTS 7 & 8 REPAIR LOWER.wnd								
Supervisor	Zeldenrust, RP										
Designed By	Swett, GD	02/22									
Checked By	Miller III, WJ	03/23									
Detailed By	Uhde, T	02/22									
Bridge Projects Engr.											
Prelim. Plan By											
Architect/Specialist			DATE	REVISION	BY	APP'D					

REGION NO.	STATE	FED. AID PROJ. NO.	SHEET NO.	TOTAL SHEETS
10	WASH.	0529(020)		
JOB NUMBER 23A003				
CONTRACT NO.				

P.E. STAMP BOX
GEOFFREY D. SWETT
STATE OF WASHINGTON
32820
PROFESSIONAL ENGINEER
SEE SHEET CT1
DATE

BRIDGE AND STRUCTURES OFFICE

P.E. STAMP BOX
RICHARD P. ZELDENRUST
STATE OF WASHINGTON
25470
PROFESSIONAL ENGINEER
SEE SHEET CT1
DATE

Washington State Department of Transportation

SR 529
SNOHOMISH RIVER & STEAMBOAT SLOUGH
BRIDGE REPAIR, REHAB & PAINT
BR. NO. 529/10E

BENT 7 & 8 SPALL REPAIR
LOWER STRUT

BRIDGE SHEET NO. BA5

SHEET 74 OF 136 SHEETS

SR 529 FILE NO. ____ SHEET BA5

Thu Apr 13 14:41:30 2023

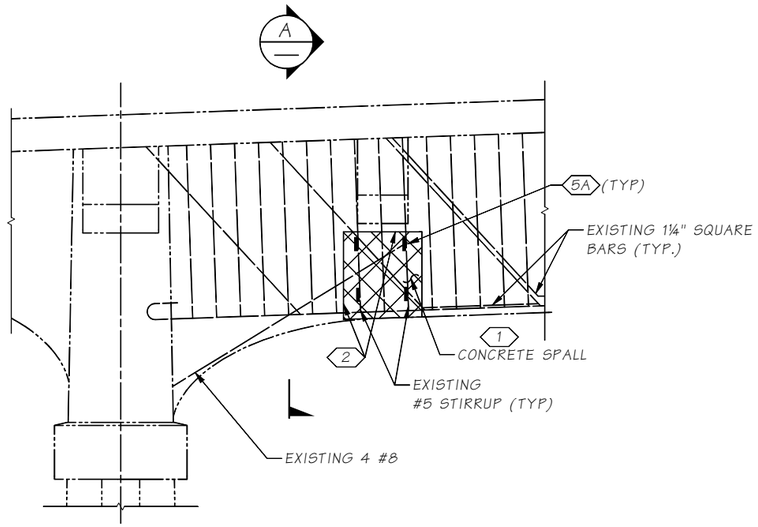

SPAN 9 - EAST FACE OF EXISTING GIRDER DAMAGED CONDITION

FACING WEST

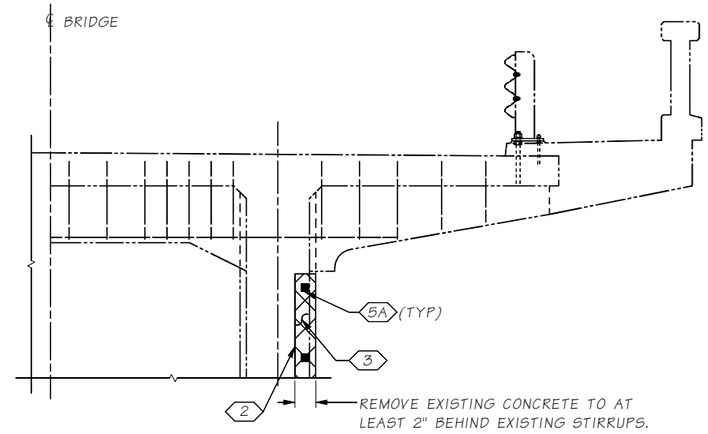

SECTION A

GIRDER 9A, EAST FACE DAMAGED CONDITION

NOTE:

FOR CONCRETE REPAIR REQUIREMENT NOTES AND KEY NOTES, SEE SHEET BA1

SR 529 FILE NO. ____ SHEET BA6

Bridge Design Engr.	Leland, AC	M:\2-Team\SR529_10E Rehab and Painter\SR529_10E Rehab and Painter\window files\SPAN 8 GIRDER REPAIR.wnd				REGION NO.	STATE	FED. AID PROJ. NO.	SHEET NO.	TOTAL SHEETS	P.E. STAMP BOX
Supervisor	Zeldenrust, RP					10	WASH.	0529(020)			GEOFFREY D. SWETT STATE OF WASHINGTON 35400 PROFESSIONAL ENGINEER SEE SHEET CT1 DATE
Designed By	Swett, GD 06/22										BRIDGE AND STRUCTURES OFFICE
Checked By	Miller III, WJ 03/23					JOB NUMBER 23A003					P.E. STAMP BOX RICHARD P. ZELDENRUST STATE OF WASHINGTON 35470 PROFESSIONAL ENGINEER SEE SHEET CT1 DATE
Detailed By	Uhde, T 06/22										
Bridge Projects Engr.						CONTRACT NO.					
Prelim. Plan By											
Architect/Specialist		DATE	REVISION	BY	APP'D						

Thu Apr 13 14:41:56 2023

Washington State Department of Transportation

SR 529
SNOHOMISH RIVER & STEAMBOAT SLOUGH
BRIDGE REPAIR, REHAB & PAINT
BR. NO. 529/10E

SPAN 9
GIRDER REPAIR

BRIDGE SHEET NO. BA6

SHEET 75 OF 136 SHEETS

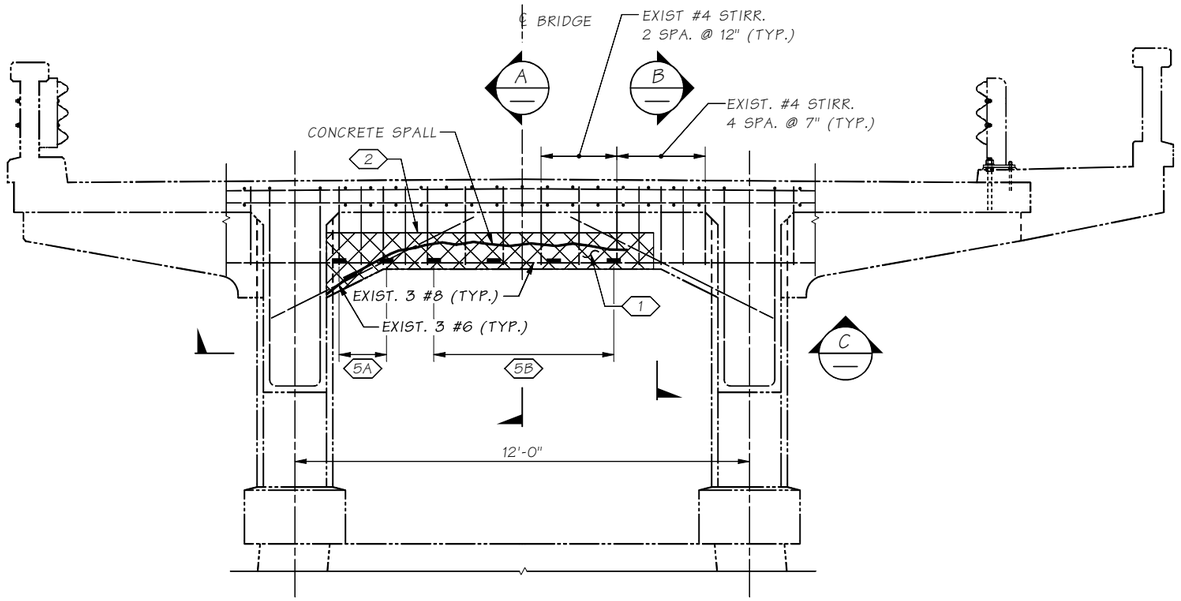

BENT 9 - UPPER CROSSBEAM REPAIR

FACING NORTH

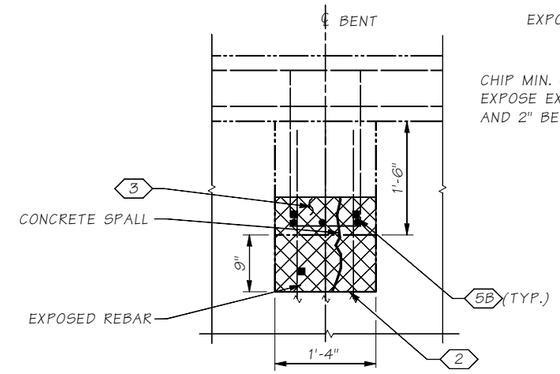

SECTION A

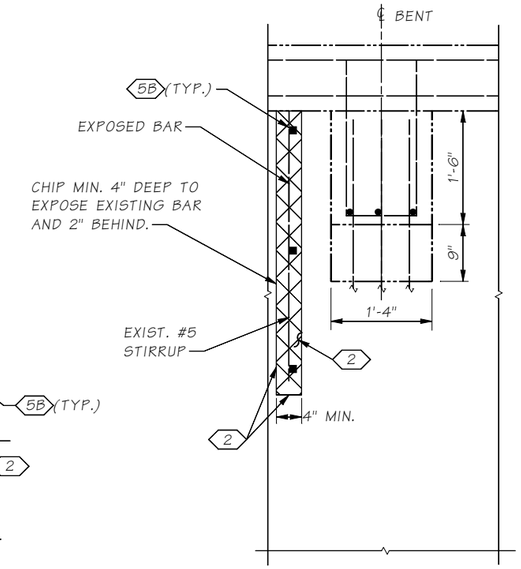

SECTION B

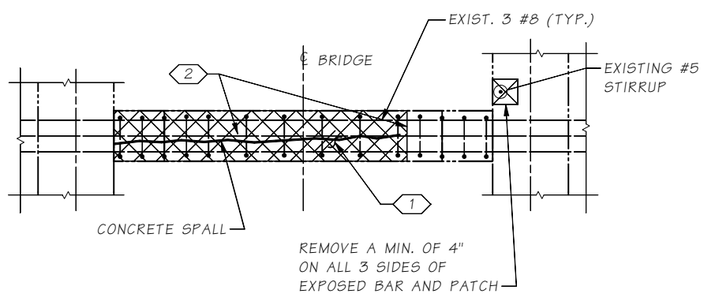

VIEW C

ANODES NOT SHOWN

BENT 9 - EXISTING UPPER CROSSBEAM DAMAGED CONDITION

SOUTH FACE

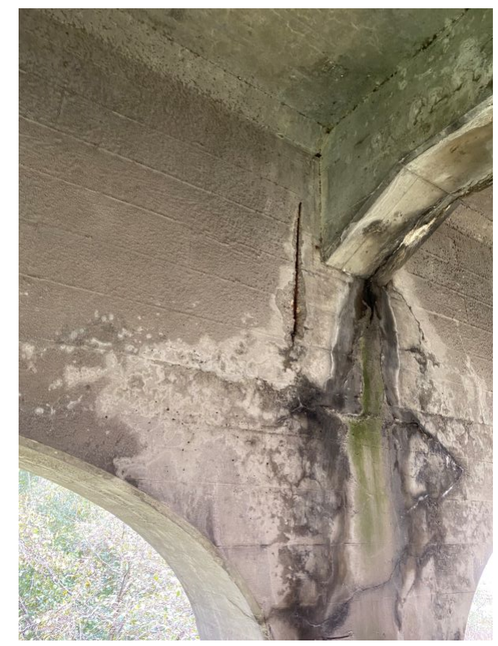

BENT 9 - NE SIDE EXISTING GIRDER DAMAGED CONDITION

NOTE:

FOR CONCRETE REPAIR REQUIREMENT NOTES AND KEY NOTES, SEE SHEET BA1

SR 529 FILE NO. ____ SHEET BA7

Bridge Design Engr.	Leland, AC	
Supervisor	Zeldenrust, RP	
Designed By	Swett, GD	02/22
Checked By	Miller III, WJ	03/23
Detailed By	Uhde, T	02/22
Bridge Projects Engr.		
Prelim. Plan By		
Architect/Specialist		

M:\Z-Team\SR529_10E Rehab and Painter\SR529_10E Rehab and Painter\window files\BENT 9 REPAIR LOWER.wnd

DATE	REVISION	BY	APP'D

REGION NO.	STATE	FED. AID PROJ. NO.	SHEET NO.	TOTAL SHEETS
10	WASH.	0529(020)		

JOB NUMBER 23A003

CONTRACT NO.

P.E. STAMP BOX — GEOFFREY D. SWETT, STATE OF WASHINGTON, 32620, REGISTERED PROFESSIONAL ENGINEER — SEE SHEET CT1 — DATE:

BRIDGE AND STRUCTURES OFFICE

P.E. STAMP BOX — RICHARD P. ZELDENRUST, STATE OF WASHINGTON, 25476, REGISTERED PROFESSIONAL ENGINEER — SEE SHEET CT1 — DATE:

Washington State Department of Transportation

SR 529
SNOHOMISH RIVER & STEAMBOAT SLOUGH
BRIDGE REPAIR, REHAB & PAINT
BR. NO. 529/10E

BENT 9 SPALL REPAIR
UPPER CROSSBEAM

BRIDGE SHEET NO. BA7

SHEET 76 OF 136 SHEETS

Thu Apr 13 14:42:15 2023

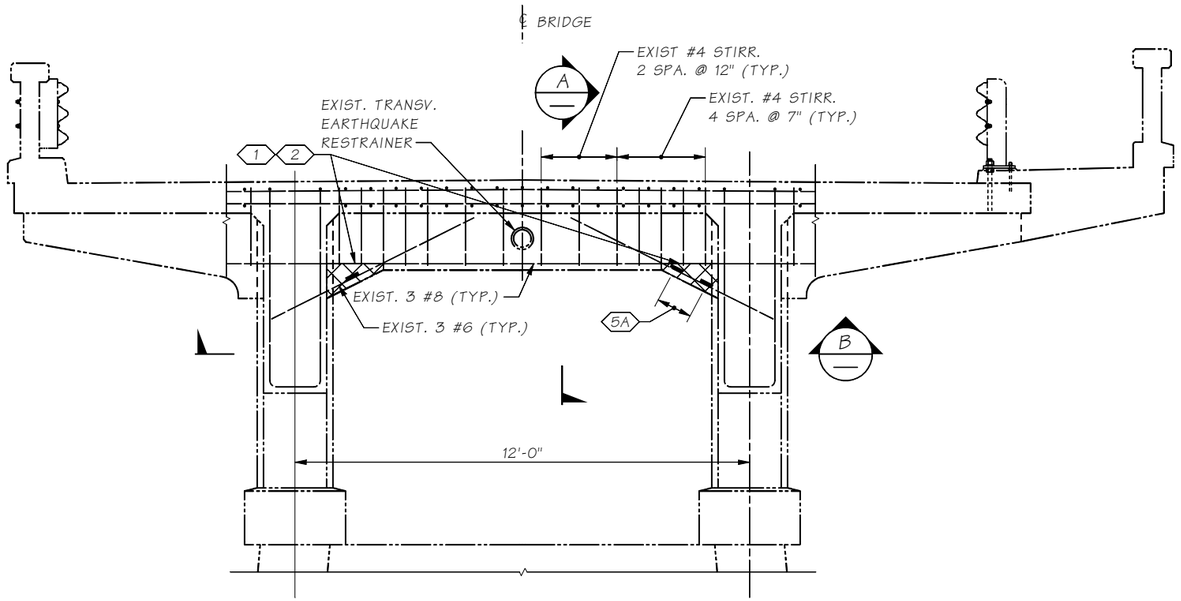

BENT 5 - UPPER CROSSBEAM REPAIR

FACING NORTH

BENT 10, NE CORNER -
EXISTING UPPER CROSSBEAM
DAMAGED CONDITION

FACING NORTHEAST

BENT 10, SW CORNER -
EXISTING UPPER CROSSBEAM
DAMAGED CONDITION

FACING NORTHWEST

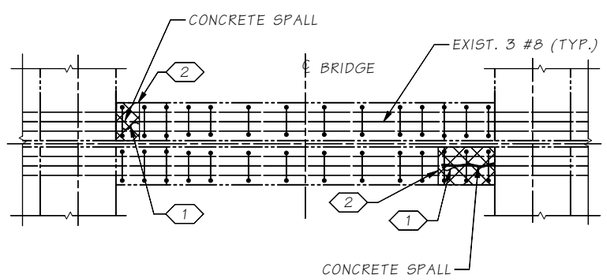

VIEW B

ANODES NOT SHOWN

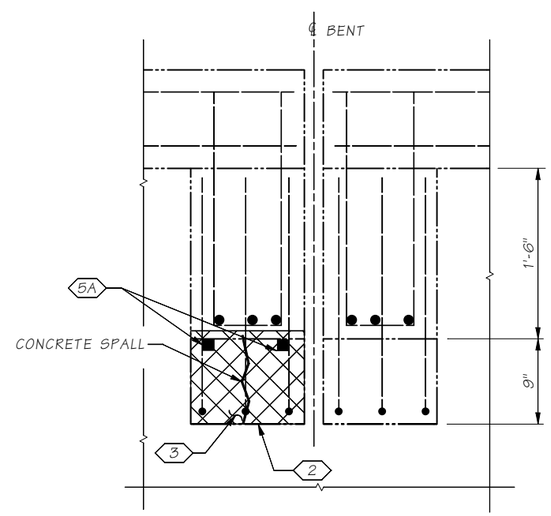

SECTION A

NOTE:

FOR CONCRETE REPAIR REQUIREMENT NOTES AND KEY NOTES, SEE SHEET BA1

SR 529 FILE NO. ____ SHEET BA8

Bridge Design Engr.	Leland, AC	
Supervisor	Zeldenrust, RP	
Designed By	Swett, GD	02/22
Checked By	Miller III, WJ	03/23
Detailed By	Uhde, T	02/22
Bridge Projects Engr.		
Prelim. Plan By		
Architect/Specialist		

M:\Z-Team\SR529_10E Rehab and Painter\SR529_10E Rehab and Painter\window files\BENT 10 REPAIR.wnd

DATE	REVISION	BY	APP'D

REGION NO.	STATE	FED. AID PROJ. NO.	SHEET NO.	TOTAL SHEETS
10	WASH.	0529(020)		

JOB NUMBER 23A003

CONTRACT NO.

P.E. STAMP BOX

GEOFFREY D. SWETT, STATE OF WASHINGTON, 22820, PROFESSIONAL ENGINEER

SEE SHEET CT1

DATE

BRIDGE AND STRUCTURES OFFICE

P.E. STAMP BOX

RICHARD P. ZELDENRUST, STATE OF WASHINGTON, 25470, PROFESSIONAL ENGINEER

SEE SHEET CT1

DATE

Washington State Department of Transportation

SR 529
SNOHOMISH RIVER & STEAMBOAT SLOUGH
BRIDGE REPAIR, REHAB & PAINT
BR. NO. 529/10E

BENT 10 SPALL REPAIR
UPPER CROSSBEAM

BRIDGE SHEET NO. BA8

SHEET 77 OF 136 SHEETS

Thu Apr 13 14:42:27 2023

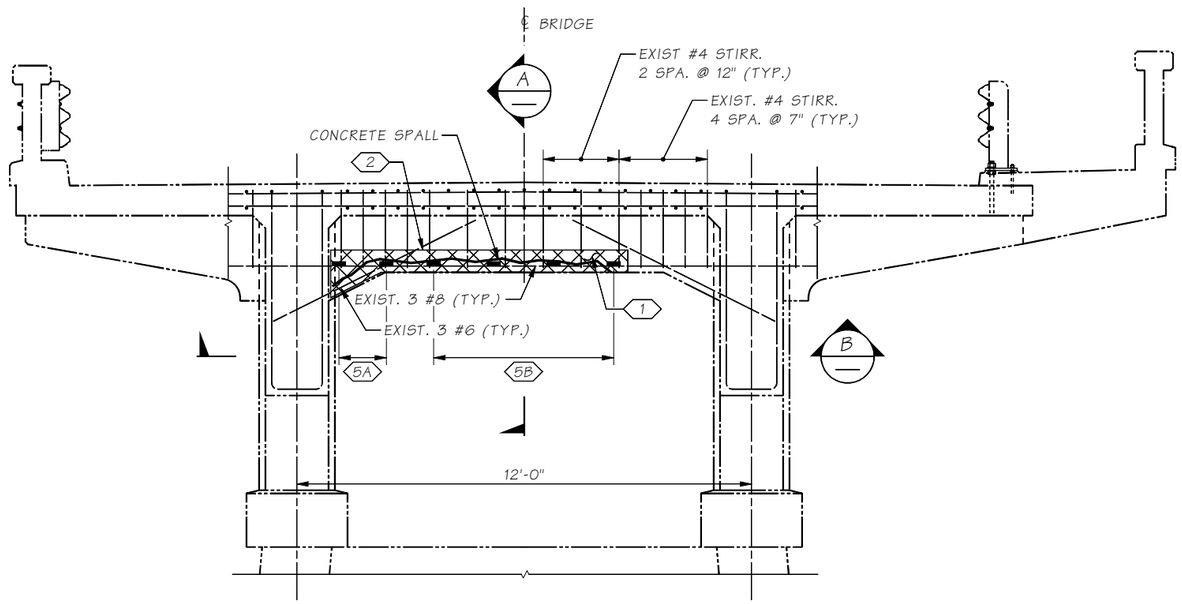

BENT 11 - UPPER CROSSBEAM REPAIR

FACING NORTH

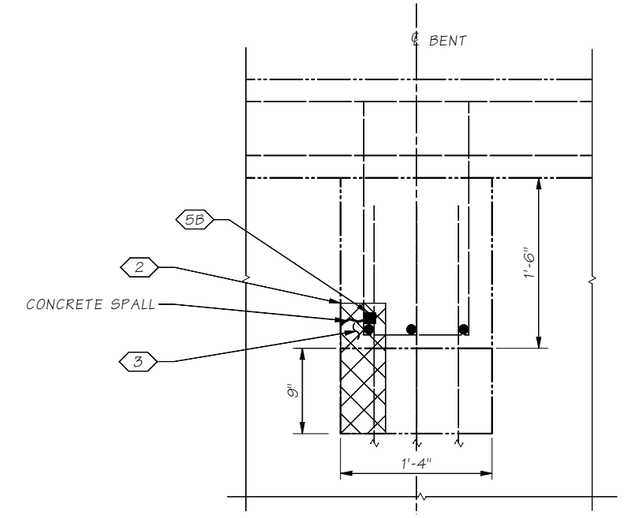

SECTION A

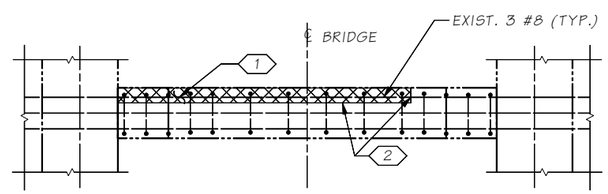

VIEW B

ANODES NOT SHOWN

BENT 11 - EXISTING UPPER CROSSBEAM DAMAGED CONDITION

SOUTH FACE

NOTE:

FOR CONCRETE REPAIR REQUIREMENT NOTES AND KEY NOTES, SEE SHEET BA1

SR 529 FILE NO. ____ SHEET BA9

Bridge Design Engr.	Leland, AC	
Supervisor	Zeldenrust, RP	
Designed By	Swett, GD	02/22
Checked By	Miller III, WJ	03/23
Detailed By	Uhde, T	02/22
Bridge Projects Engr.		
Prelim. Plan By		
Architect/Specialist		

M:\Z-Team\SR529_10E Rehab and Painter\SR529_10E Rehab and Painter\window files\BENT 11 REPAIR LOWER.wnd

DATE	REVISION	BY	APP'D

REGION NO.	STATE	FED. AID PROJ. NO.	SHEET NO.	TOTAL SHEETS
10	WASH.	0529(020)		

JOB NUMBER 23A003

CONTRACT NO.

P.E. STAMP BOX — GEOFFREY D. SWETT, STATE OF WASHINGTON, 32820, PROFESSIONAL ENGINEER, STRUCTURAL ENGINEER — SEE SHEET CT1 — DATE:

BRIDGE AND STRUCTURES OFFICE

P.E. STAMP BOX — RICHARD P. ZELDENRUST, STATE OF WASHINGTON, 25470, PROFESSIONAL ENGINEER, STRUCTURAL ENGINEER — SEE SHEET CT1 — DATE:

Washington State Department of Transportation

SR 529
SNOHOMISH RIVER & STEAMBOAT SLOUGH
BRIDGE REPAIR, REHAB & PAINT
BR. NO. 529/10E

BENT 11 SPALL REPAIR
UPPER CROSSBEAM

BRIDGE SHEET NO. BA9

SHEET 78 OF 136 SHEETS

Thu Apr 13 14:42:57 2023

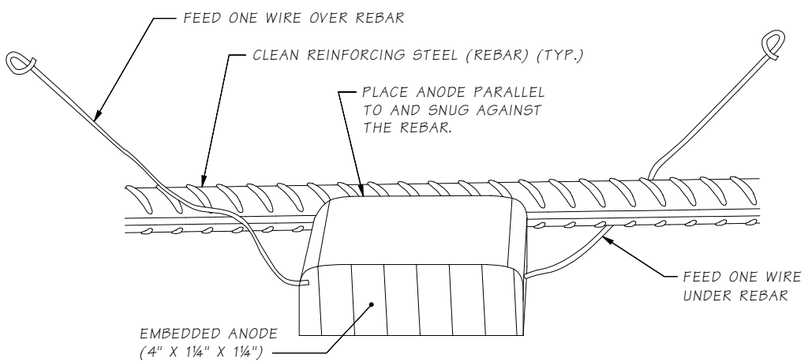

INSTALLATION STEP #1

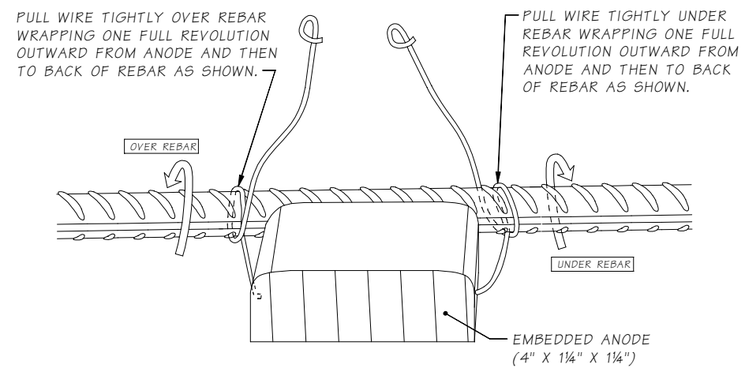

INSTALLATION STEP #2

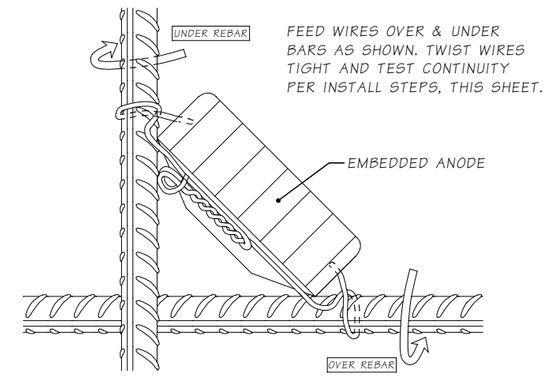

ALTERNATE INSTALLATION @ REBAR INTERSECTION

NOTE:

1. ANODE ORIENTATION: ANODES MAY BE INSTALLED AS SHOWN WITH THE WIDER SIDE ON THE BOTTOM, OR MAY BE ROTATED 180-DEGREES TO HAVE THE WIDER SIDE AT THE TOP.

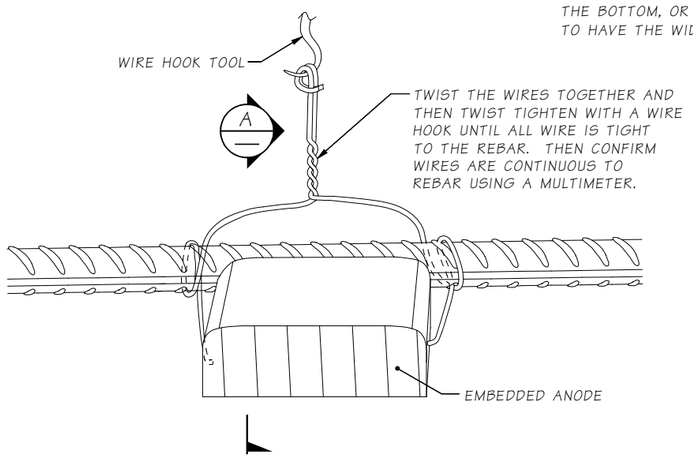

INSTALLATION STEP #3

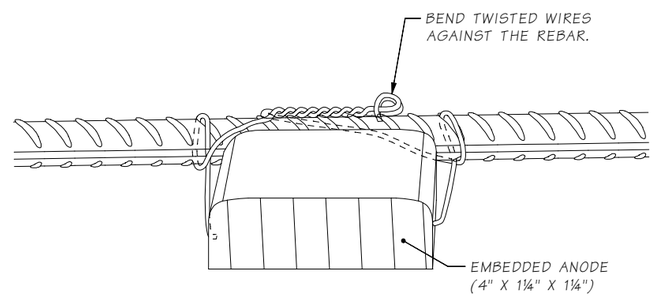

INSTALLATION STEP #4

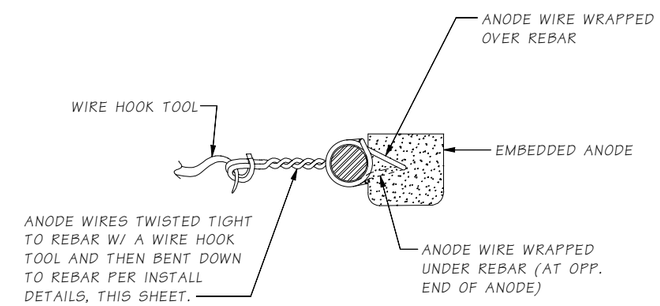

SECTION A

SR 529 FILE NO. ____ SHEET BA10

Bridge Design Engr.	Leland, AC	M:\Z-Team\SR529_10E Rehab and Painter\SR529_10E Rehab and Painter\window files\EMBED ANODE DETAILS.wnd				REGION NO.	STATE	FED. AID PROJ. NO.	SHEET NO.	TOTAL SHEETS	
Supervisor	Zeldenrust, RP					10	WASH.	0529(020)			
Designed By	Swett, GD 06/22										
Checked By	Miller III, WJ 03/23					JOB NUMBER 23A003					
Detailed By	DeBoer, J 06/22										
Bridge Projects Engr.						CONTRACT NO.					
Prelim. Plan By											
Architect/Specialist		DATE	REVISION	BY	APP'D						

P.E. STAMP BOX: GEOFFREY D. SWETT, STATE OF WASHINGTON, 32820, PROFESSIONAL ENGINEER — SEE SHEET CT1 — DATE

BRIDGE AND STRUCTURES OFFICE

P.E. STAMP BOX: RICHARD P. ZELDENRUST, STATE OF WASHINGTON, 25470, PROFESSIONAL ENGINEER — SEE SHEET CT1 — DATE

Washington State Department of Transportation

SR 529
SNOHOMISH RIVER & STEAMBOAT SLOUGH
BRIDGE REPAIR, REHAB & PAINT
BR. NO. 529/10E

EMBEDDED ANODE DETAILS

BRIDGE SHEET NO. BA10

SHEET 79 OF 136 SHEETS

Thu Apr 13 14:43:28 2023

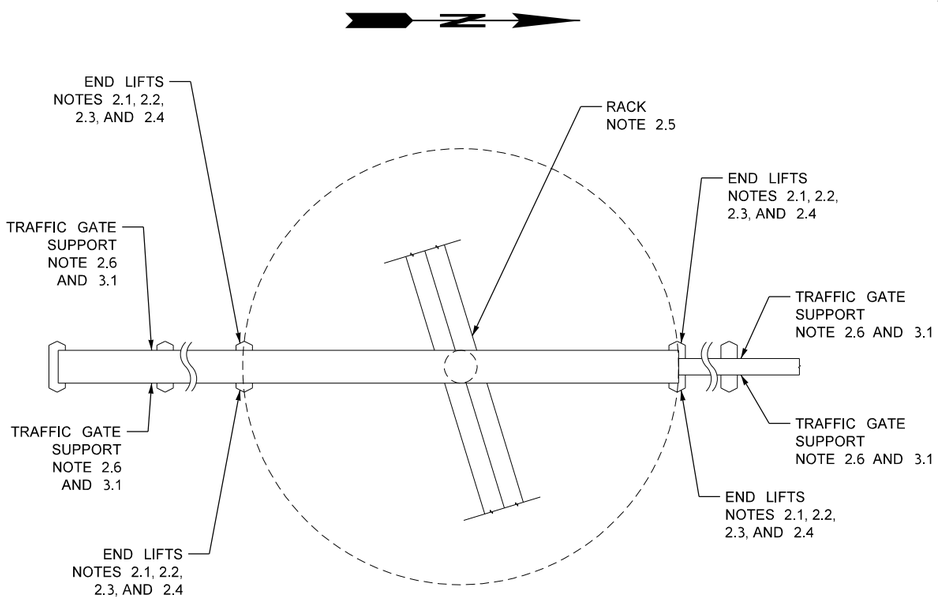

SR 529/20W SWING BRIDGE - PLAN

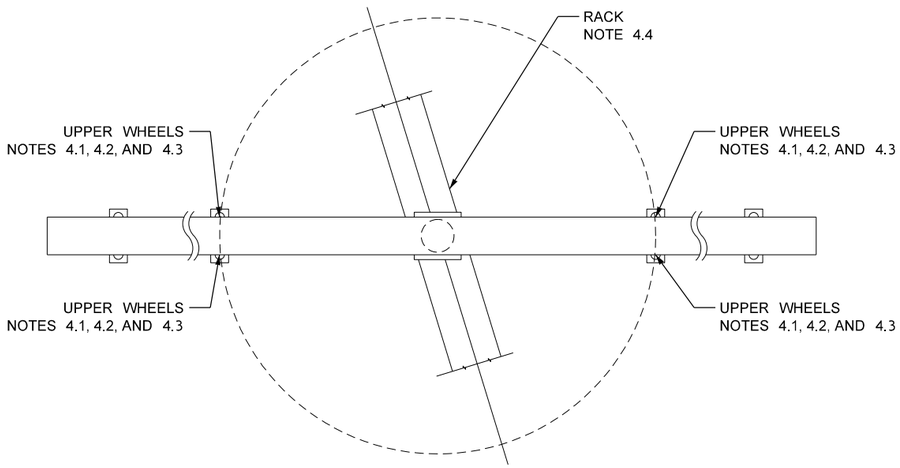

SR 529/20E SWING BRIDGE - PLAN

1.0 SR 529 GENERAL NOTES

1. ALL MATERIAL AND WORKMANSHIP SHALL BE IN ACCORDANCE WITH THE REQUIREMENTS OF THE WASHINGTON STATE DEPARTMENT OF TRANSPORTATION STANDARD SPECIFICATIONS FOR ROAD, BRIDGE, AND MUNICIPAL CONSTRUCTION, DATED 2023.

2. THE DIMENSIONS SHOWN IN THE PLANS ARE BASED ON ORIGINAL CONSTRUCTION RECORDS TOGETHER WITH FIELD SURVEY DATA. PRIOR TO PREPARING SHOP DRAWINGS AND FABRICATING ASSEMBLIES, THE CONTRACTOR SHALL FIELD MEASURE ALL DIMENSIONS SHOWN IN THE PLANS REQUIRED TO ACCURATELY FABRICATE THE COMPONENTS. SEE THE SPECIAL PROVISIONS.

3. DESIGN SPECIFICATIONS:

   DESIGN AND DETAILS OF MACHINERY SHALL CONFORM TO THE AASHTO LRFD MOVABLE HIGHWAY BRIDGE DESIGN SPECIFICATIONS 2ND EDITION 2008 AND ALL SUBSEQUENT INTERIMS, UNLESS OTHERWISE SHOWN IN THE PLANS, OR PROVIDED FOR IN THE SPECIAL PROVISIONS.

4. TYPICAL H.S. TURNED BOLT DETAIL:

   SHANK LENGTH TO BE 1/4" LESS THAN GRIP THICKNESS OF CONNECTION.

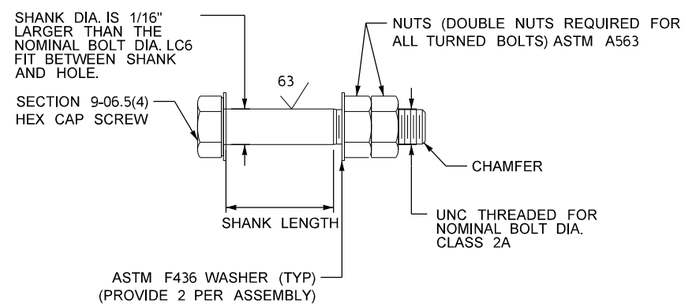

5. GENERAL MACHINERY NOTES

   MACHINERY DIMENSIONS SHOWN ON DRAWINGS ARE DIMENSIONS AFTER MACHINING. UNLESS OTHERWISE INDICATED OR REQUIRED FOR THE PROPER ASSEMBLY OF PARTS, DIMENSIONAL TOLERANCES FOR MACHINERY IN GENERAL SHALL BE AS FOLLOWS:

SURFACE	TOLERANCE		
STRAIGHTNESS:	—	.010	
FLATNESS:	▱	.010	
PARALLELISM:	//	.005	–
PERPENDICULARITY (PER LINEAR FOOT):	⊥	.005	–
ANGULARITY (PER LINEAR FOOT):	∠	.02	–
POSITION (FEATURES WITHIN A COMPONENT):	⌖	.02	–
CONCENTRICITY:	◎	.005	–
CIRCULAR RUNOUT:	↗	.002	–
REFERENCE DIMENSION: (CERTIFIED DIMENSION OF SUPPLIED COMPONENT TO BE USED TO DETERMINE EXACT DIMENSION)		X.XX	

   DETAILS SHOWN HEREIN MATING WITH MANUFACTURED ITEMS SHALL BE SIZED BASED ON THE ACTUAL MANUFACTURED ITEMS SELECTED BY THE CONTRACTOR.

   UNLESS OTHERWISE SPECIFIED, DIMENSIONS BETWEEN MACHINED SURFACES HAVE A TOLERANCE OF +/- 0.010-INCH.

2.0 SR 529 20W MECHANICAL WORK ITEMS

2.1 REFURBISH OWNER SUPPLIED SPARE PARTS

THE CONTRACTOR SHALL TAKE POSSESSION OF THE CONTRACTING AGENCY PROVIDED SPARE PARTS; UPPER PIN BRACKETS, CENTERING WEDGE, ECCENTRIC LINK, LINK FOR LIFTING BLOCK, LIFTING BLOCK, LARGE GUIDE FOR LIFTING BLOCK, AND SMALL GUIDE FOR LIFTING BLOCK. BLAST CLEAN, REMACHINE, AND PAINT AS SHOWN HEREIN.

2.2 FABRICATION AND ASSEMBLY OF REPLACEMENT COMPONENTS

FABRICATE REPLACEMENT COMPONENTS INCLUDING; UPPER PIN, UPPER PIN BUSHING, CENTER PIN, CENTER PIN BUSHING, PIN FOR ECCENTRIC LINK, BUSHING FOR ECCENTRIC LINK, LIFTING BLOCK PIN, LIFTING BLOCK BUSHING AS SHOWN ON SHEETS M3 AND M4.

ASSEMBLE REPLACEMENT UPPER PIN BUSHING, CENTER PIN BUSHING, AND BUSHING FOR ECCENTRIC LINK IN REFURBISHED CENTERING DEVICE. ASSEMBLE LIFTING BLOCK BUSHING IN REFURBISHED LINK FOR LIFTING BLOCK.

2.3 DEMOLITION

REMOVE EXISTING END LIFT COMPONENTS INCLUDING; UPPER PIN, UPPER PIN BRACKETS, UPPER PIN BUSHING, CENTERING WEDGE, CENTER PIN, CENTER PIN BUSHING, ECCENTRIC LINK, PIN FOR ECCENTRIC LINK, BUSHING FOR ECCENTRIC LINK, LINK FOR LIFTING BLOCK, LIFTING BLOCK PIN, LIFTING BLOCK BUSHING, LIFTING BLOCK, LARGE GUIDE FOR LIFTING BLOCK, AND SMALL GUIDE FOR LIFTING BLOCK.

2.4 INSTALLATION

INSTALL THE REFURBISHED END LIFT COMPONENTS INTO THE BRIDGE. REPLACE ALL BOLTS WITH HIGH STRENGTH BOLTS AS REQUIRED. FUNCTIONAL TEST FOR PROPER OPERATION.

2.5 RACK REHABILITATION.

RETROFIT/REPLACE DETERIORATED RACK ANCHOR BOLTS. SEE THE STRUCTURAL DRAWINGS.

2.6 TRAFFIC GATE SUPPORT REHABILITATION.

REMOVE TRAFFIC GATES. STRENGTHEN/REPLACE THE DETERIORATED STRUCTURAL STEEL SUPPORTS UNDER THE TRAFFIC GATES. SEE THE STRUCTURAL DRAWINGS. COORDINATE THIS WORK WITH WORK ITEM 3.1 BELOW.

3.0 SR 529 20W ELECTRICAL WORK ITEMS

3.1 TRAFFIC GATES

PRIOR TO THE REMOVAL OF THE TRAFFIC GATES, DOCUMENT THE ELECTRICAL AS-FOUND CONDITIONS, PROTECT, UN-TERMINATE AND REMOVE THE TRAFFIC GATES TO FACILITATE THE TRAFFIC GATE SUPPORT REHABILITATION (2.6).

ALL DISCONNECTED TRAFFIC GATES SHALL BE REMOVED FROM SITE AND SECURELY STORED DURING THE TRAFFIC GATE SUPPORT REHABILITATION.

AFTER THE TRAFFIC GATE SUPPORT REHABILITATION WORK IS COMPLETE, PLACE ALL PREVIOUSLY REMOVED TRAFFIC GATES INTO SERVICE AND FUNCTIONALLY TEST FOR PROPER OPERATION.

4.0 SR 529 20E MECHANICAL WORK ITEMS

4.1 FABRICATION AND ASSEMBLY OF REPLACEMENT COMPONENTS

FABRICATE REPLACEMENT COMPONENTS INCLUDING; UPPER WHEEL, UPPER WHEEL PIN, AND UPPER WHEEL BUSHING.

4.2 DEMOLITION

REMOVE UPPER WHEEL, UPPER WHEEL PIN, AND UPPER WHEEL BUSHING.

4.3 INSTALLATION

INSTALL UPPER WHEEL PIN STRENGTHENING PLATES. DRILL AND TAP FOR UPPER WHEEL PIN KEEPER PLATES. LINE BORE REPLACEMENT HOLES FOR UPPER WHEEL PINS.

INSTALL THE REPLACEMENT UPPER WHEEL ASSEMBLIES INTO THE BRIDGE. FUNCTIONAL TEST FOR PROPER OPERATION.

4.4 RACK REHABILITATION.

RETROFIT/REPLACE DETERIORATED RACK ANCHOR BOLTS. SEE THE STRUCTURAL DRAWINGS.

Hardesty & Hanover
ISO 9001 CERTIFICATE NO. WA 10008

FILE NAME: c:\users\cstone\hhprod\dms09372\G1 SR529-Work IDentification.dgn						
BRIDGE DESIGN ENGR:						FED.AID PROJ.NO.
SUPERVISOR: CS						
DESIGNED BY: FM						0529(020)
ENTERED BY: DM						REGION NO. / STATE
CHECKED BY: SM						WASH
MAR PROJ ENGR:						JOB NUMBER 23A003
DGN ENGR MNGR:						CONTRACT NO.
ASST SECRETARY:		REVISION	DATE	BY		

DATE

FRANK M. MARZELLA — STATE OF WASHINGTON — REGISTERED PROFESSIONAL ENGINEER

SEE SHEET CT1

DATE

Washington State Department of Transportation
BRIDGE AND STRUCTURES OFFICE

SR 529
SNOHOMISH RIVER & STEAMBOAT SLOUGH BRIDGE REPAIR, REHAB & PAINT

WORK ITEMS AND GENERAL NOTES I

G1

SHEET 80 OF 136 SHEETS

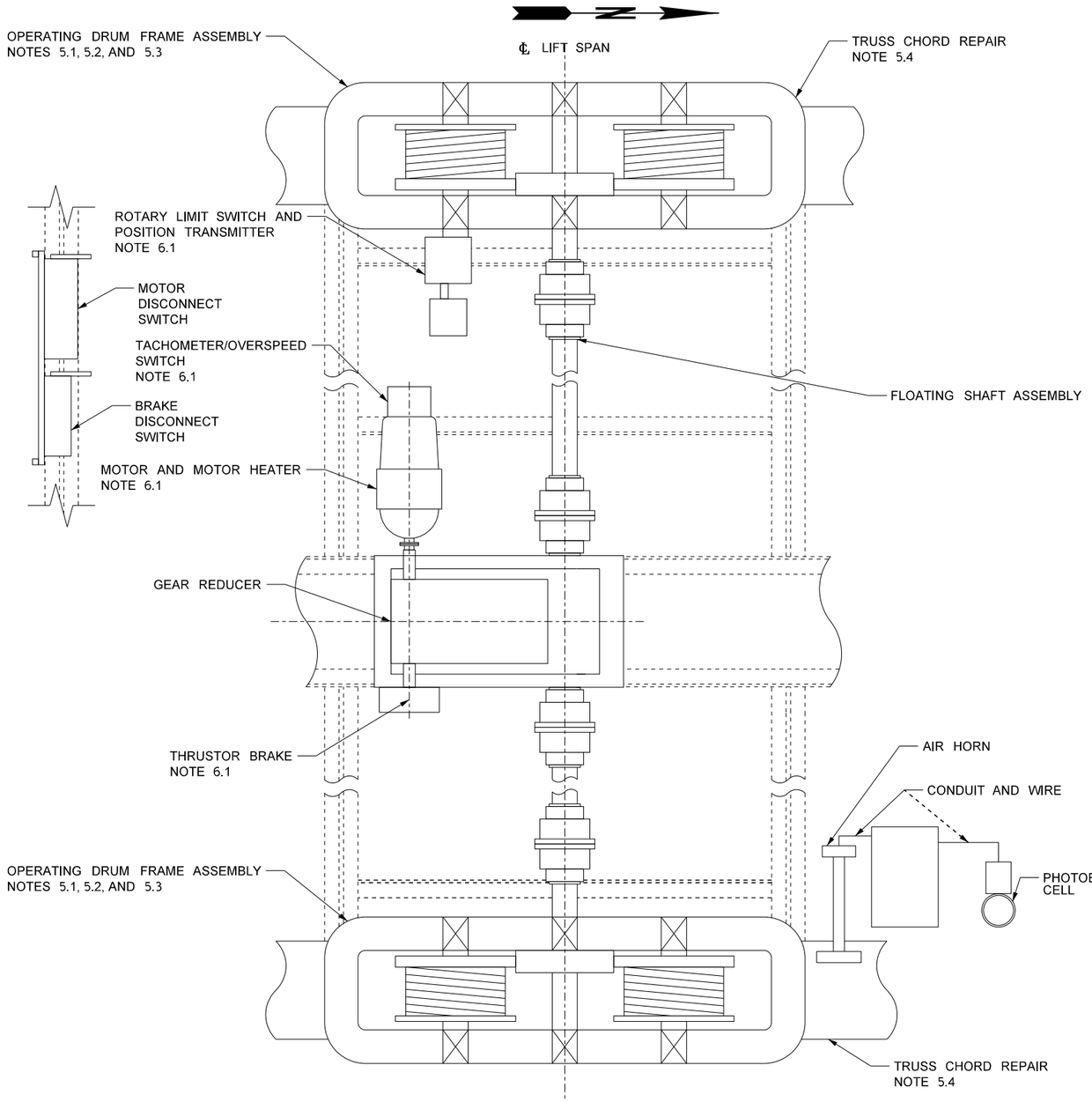

SR 529/10E VERTICAL LIFT BRIDGE - PLAN AT SPAN DRIVE MACHINERY

N.T.S.

5.0 SR 529 10E MECHANICAL WORK ITEMS

5.1 FABRICATION AND ASSEMBLY OF REPLACEMENT COMPONENTS

FABRICATE REPLACEMENT COMPONENTS INCLUDING: PROCURE REPLACEMENT UPHAUL AND DOWNHAUL ROPES. REFURBISH OPERATING DRUM FRAMES, AND OPERATING DRUM ASSEMBLIES.

5.2 DEMOLITION

AFTER THE SPAN IS RAISED 15' AND SUPPORTED PER THE STRUCTURAL PLANS, REMOVE AND REFURBISH OPERATING DRUM FRAMES, DRUM COVERS, OPERATING DRUMS, AND OPERATING DRUM BEARING CAPS. REMOVE AND DISCARD OPERATING ROPES.

5.3 INSTALLATION

RE-INSTALL REFURBISHED OPERATING MACHINERY AND OPERATING MACHINERY FRAME AFTER THE UPPER TRUSS STRUCTURAL STEEL IS REPAIRED. FUNCTIONAL TEST FOR PROPER OPERATION.

5.4 TRUSS CHORD REPAIR

REHABILITATE UPPER TRUSS CHORD STRUCTURAL STEEL (SEE THE STRUCTURAL DRAWINGS).

* THE ESTIMATED WEIGHT OF THE OPERATING MACHINERY FRAME AND OPERATING MACHINERY IS 18,500 POUNDS.

6.0 SR 529 10E ELECTRICAL WORK ITEMS

6.1 ELECTRICAL EQUIPMENT

PRIOR TO PERFORMING THE MECHANICAL WORK, DOCUMENT THE AS-FOUND ELECTRICAL CONDITIONS. PROTECT, UN-TERMINATE AND REMOVE THE ELECTRICAL EQUIPMENT TO FACILITATE THE MECHANICAL AND STRUCTURAL REHABILITATION.

ELECTRICAL EQUIPMENT SHALL BE DISCONNECTED TO ACCOMMODATE THE MECHANICAL AND STRUCTURAL WORK. THE EQUIPMENT SHALL BE SAFELY DISCONNECTED BY UN-TERMINATING WIRES, DISCONNECTING FASTENERS, DISCONNECTING SUPPORTS, AND CONDUIT CONNECTIONS. THE EQUIPMENT TO BE DISCONNECTED AND RELOCATED SHALL INCLUDE, BUT IS NOT LIMITED TO: ROTARY LIMIT SWITCH, POSITION TRANSMITTER, MOTOR, MOTOR HEATER, THRUSTOR BRAKE, TACHOMETER, SPEED SWITCH, LIGHTS, RECEPTACLE, CONDUIT, RACEWAY, AND WIRES.

ALL DISCONNECTED ELECTRICAL EQUIPMENT SHALL BE REMOVED FROM SITE AND SECURELY STORED DURING THE MECHANICAL AND STRUCTURAL REHABILITATION.

AFTER THE MECHANICAL AND STRUCTURAL WORK IS COMPLETE, RE-INSTALL THE ELECTRICAL EQUIPMENT. FUNCTIONAL TEST FOR PROPER OPERATION.

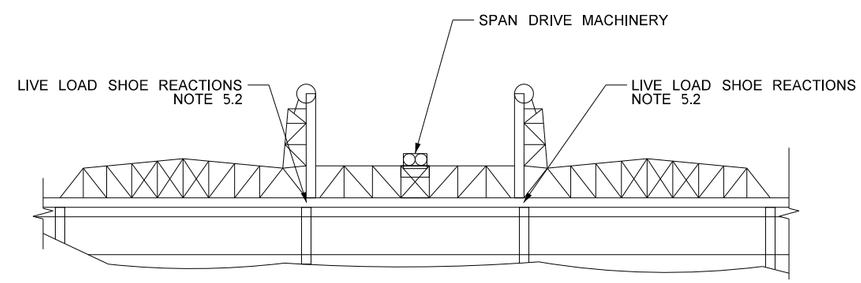

SR 529/10E VERTICAL LIFT BRIDGE - ELEVATION AT SPAN DRIVE MACHINERY

N.T.S.

Hardesty & Hanover

FILE NAME: c:\users\cstone\hhprod\dms09372\G2 SR529-Work Identification.dgn						
BRIDGE DESIGN ENGR:						FED.AID PROJ.NO.
SUPERVISOR: CS						0529(020)
DESIGNED BY: FM						REGION NO. / STATE
ENTERED BY: DM						WASH
CHECKED BY: SM						JOB NUMBER 23A003
MAR PROJ ENGR:						
DGN ENGR MNGR:						CONTRACT NO.
ASST SECRETARY:		REVISION	DATE	BY		

DATE

FRANK M. MARZELLA — STATE OF WASHINGTON — REGISTERED PROFESSIONAL ENGINEER

SEE SHEET CT1

DATE

Washington State Department of Transportation
BRIDGE AND STRUCTURES OFFICE

SR 529
SNOHOMISH RIVER & STEAMBOAT SLOUGH
BRIDGE REPAIR, REHAB & PAINT

WORK ITEMS AND GENERAL NOTES II

G2

SHEET 81 OF 136 SHEETS

SUGGESTED REHABILITATION CONSTRUCTION SEQUENCE

SR 529/20W SWING BRIDGE

SHOP DRAWING ACCEPTANCE, FABRICATION AND PROCUREMENT

WORK ITEMS:

1. THE CONTRACTOR SHALL TAKE POSSESSION OF ALL SPARE END TOGGLE MACHINERY COMPONENTS FROM WSDOT STORAGE.
2. SUBMIT THE REQUIRED SHOP DRAWINGS FOR ACCEPTANCE FOR THE REPLACEMENT AND RETROFITTED END TOGGLE SYSTEM MECHANICAL COMPONENTS. MANUFACTURE REPLACEMENT END TOGGLE COMPONENTS AND RETROFIT THE SPARE END TOGGLE COMPONENTS AS REQUIRED TO PROVIDE FOUR REPLACEMENT END TOGGLE ASSEMBLIES FOR INSTALLATION ON THE BRIDGE.
3. SUBMIT THE REQUIRED ELECTRICAL WORKING DRAWINGS AND PROCEDURES FOR ACCEPTANCE.
4. PRE-ASSEMBLE THE FOUR END TOGGLE ASSEMBLIES FOR INSTALLATION.
5. DELIVER THE EQUIPMENT TO THE SITE STAGING AREA FOR INSTALLATION.
6. SUBMIT THE ELECTRICAL AS-FOUND DOCUMENTATION FOR ACCEPTANCE.
7. SUBMIT THE START-UP AND COMMISIONING PLANS FOR ACCEPTANCE.

PHASE 1 INTERMITTENT LANE OR FULL BRIDGE (ROADWAY) CLOSURES

WORK ITEMS:

1. PREPARE THE END LIFT TOGGLES FOR REMOVAL.
2. CLEAN AND PAINT THE ACCESSIBLE STRUCTURAL STEEL IN THE END TOGGLE AREAS.
3. TRAFFIC GATE ELECTRICAL EQUIPMENT SHALL BE DISCONNECTED TO ACCOMMODATE THE STRUCTURAL WORK. THE EQUIPMENT SHALL BE SAFELY DISCONNECTED BY UN-TERMINATING WIRES, DISCONNECTING FASTENERS, DISCONNECTING SUPPORTS, AND CONDUIT CONNECTIONS. ALL EQUIPMENT AND WIRES SHALL BE TAGGED AND IDENTIFIED.
4. TRAFFIC GATE ELECTRICAL EQUIPMENT SHALL BE RE-INSTALLED AFTER THE STRUCTURAL WORK IS COMPLETED. THE WIRING SHALL BE RE-TERMINATED AND FASTENERS SECURED.

PHASE 2 BRIDGE DETOUR (CLOSED TO ROADWAY AND WATERWAY TRAFFIC)

THIS PHASE CAN ONLY BE PERFORMED WHEN ALL REPLACEMENT AND RETROFITTED END TOGGLE MACHINERY COMPONENTS AND STRUCTURAL STEEL REPAIRS ARE ACCEPTED, FABRICATED, TESTED, ASSEMBLED, ON SITE AND READY TO BE INSTALLED. NO CONSTRUCTION TRAFFIC PERMITTED ON THE SWING SPAN WHILE THE END LIFT ASSEMBLIES ARE RETRACTED.

WORK ITEMS:

1. REMOVE THE EXISTING END TOGGLE COMPONENTS FROM THE NORTH SIDE OF THE SWING SPAN (TWO END TOGGLE ASSEMBLIES).
2. COMPLETE THE CLEANING AND PAINT THE REMAINING STRUCTURAL STEEL IN THE END TOGGLE AREAS.
3. INSTALL REPLACEMENT END TOGGLE ASSEMBLIES (TWO END TOGGLE ASSEMBLIES).
4. TEST THE END TOGGLE OPERATION. ADJUST AS REQUIRED.
5. REPEAT THE ABOVE ON THE SOUTH SIDE OF THE SWING SPAN (TWO END TOGGLE ASSEMBLIES.
6. PERFORM START-UP AND COMMISSIONING.

ESTIMATED TOTAL DURATION OF PHASE 2, 2 THREE DAY BRIDGE CLOSURES

SR 529/20E SWING BRIDGE

SHOP DRAWING ACCEPTANCE, FABRICATION AND PROCUREMENT

WORK ITEMS:

1. SUBMIT THE REQUIRED SHOP DRAWINGS FOR ACCEPTANCE FOR THE REPLACEMENT UPPER WHEEL ASSEMBLIES. MANUFACTURE THE REPLACEMENT UPPER WHEEL COMPONENTS AS REQUIRED TO PROVIDE FOUR REPLACEMENT UPPER WHEEL ASSEMBLIES FOR INSTALLATION ON THE BRIDGE.
2. PRE-ASSEMBLE THE FOUR UPPERWHEEL ASSEMBLIES.
3. DELIVER THE EQUIPMENT TO THE SITE STAGING AREA FOR INSTALLATION.
4. SUBMIT THE ELECTRICAL PROCEDURES FOR ACCEPTANCE.
5. SUBMIT THE START-UP AND COMMISIONING PLANS FOR ACCEPTANCE.

PHASE 1 INTERMITTENT SINGLE LANE CLOSURES

WORK ITEMS:

1. PREPARE THE UPPER WHEELS FOR REMOVAL.
2. CLEAN AND PAINT THE ACCESSIBLE STRUCTURAL STEEL IN THE UPPER WHEEL AREAS.

PHASE 2 BRIDGE DETOUR (CLOSED TO ROADWAY AND WATERWAY TRAFFIC)

THIS PHASE CAN ONLY BE PERFORMED WHEN ALL THE UPPER WHEEL COMPONENTS ARE ACCEPTED, FABRICATED, TESTED, ASSEMBLED, ON SITE AND READY TO BE INSTALLED. NO CONSTRUCTION TRAFFIC PERMITTED ON THE SWING SPAN WHILE THE UPPER WHEELS ARE REMOVED.

WORK ITEMS:

1. REMOVE THE EXISTING UPPER WHEEL COMPONENTS FROM THE NORTH SIDE OF THE SWING SPAN (TWO UPPER WHEEL ASSEMBLIES).
2. COMPLETE THE CLEANING AND PAINT THE REMAINING STRUCTURAL STEEL IN THE UPPER WHEEL AREAS.
3. INSTALL THE UPPER WHEEL SUPPORT STRENGTHENING PLATES.
4. LINE BORE REPLACEMENT HOLES FOR THE UPPER WHEEL PINS.
5. INSTALL THE REPLACEMENT UPPER WHEEL ASSEMBLIES.
6. TEST THE UPPER WHEEL OPERATION. ADJUST AS REQUIRED.
7. REPEAT WORK ITEMS 1 THROUGH 6 ON THE SOUTH SIDE OF THE SWING SPAN (TWO UPPER WHEEL ASSEMBLIES).
8. PERFORM START-UP AND COMMISSIONING.

ESTIMATED TOTAL DURATION OF PHASE 2, 2 FOUR DAY BRIDGE CLOSURES

SR 529/10E VERTICAL LIFT BRIDGE

SHOP DRAWING ACCEPTANCE, FABRICATION AND PROCUREMENT

WORK ITEMS:

1. SUBMIT THE REQUIRED SHOP DRAWINGS FOR ACCEPTANCE FOR THE TOP CHORD TRUSS STRUCTURAL REPAIRS.
2. SUBMIT THE REQUIRED SHOP DRAWINGS FOR ACCEPTANCE FOR THE OPERATING DRUM REPAIRS, TRUSS REPAIRS AND REPLACEMENT UPHAUL AND DOWNHAUL OPERATING ROPES. MANUFACTURE REPLACEMENT UPHAUL AND DOWNHAUL OPERATING ROPES FOR INSTALLATION ON THE BRIDGE.
3. SUBMIT THE REQUIRED ELECTRICAL WORKING DRAWINGS AND PROCEDURES FOR ACCEPTANCE.
4. SUBMIT THE ELECTRICAL AS-FOUND DOCUMENTATION FOR ACCEPTANCE.
6. DELIVER EQUIPMENT TO THE SITE STAGING AREA FOR INSTALLATION.
7. THE CONTRACTOR SHALL COMPLETE THE ELECTRICAL AS-FOUND DOCUMENTATION PRIOR TO BEGINNING THE CONSTRUCTION.
8. SUBMIT THE START-UP AND COMMISSIONING PLANS FOR ACCEPTANCE.

FULL BRIDGE (ROADWAY) CLOSURE

WORK ITEMS:

1. ADD 3000 POUNDS OF WEIGHT TO EACH OF THE FOUR CORNERS OF THE LIFT SPAN. RAISE BRIDGE AND SUPPORT PER STRUCTURAL PLANS. SEE SPECIAL PROVISIONS FOR ADDITIONAL REQUIREMENTS.
2. COORDINATE THE ELECTRICAL EQUIPMENT REQUIRED TO BE REMOVED TO ALLOW THE MECHANICAL AND STRUTURAL WORK ITEMS. THE ELECTRICAL EQUIPMENT SHALL BE DISCONNECTED TO ACCOMMODATE TEMPORARY REMOVAL. THE EQUIPMENT SHALL BE SAFELY DISCONNECTED BY UN-TERMINATING WIRES, DISCONNECTING FASTENERS, DISCONNECTING SUPPORTS, AND CONDUIT CONNECTIONS. ALL EQUIPMENT AND WIRES SHALL BE TAGGED AND IDENTIFIED. THE EQUIPMENT SHALL BE SECURED AND PROTECTED FOR RE-USE.
3. REMOVE OPERATING DRUM FRAME ASSEMBLIES AND UPHAUL AND DOWNHAUL ROPES. MATCH MARK ALL OPERATING DRUM COMPONENT LOCATIONS AND ORIENTATIONS.
4. PRESERVE THE UPHAUL AND DOWNHAUL ROPE TO TOWER ATTACHMENTS FOR REUSE.
5. SEND THE OPERATING DRUM FRAME ASSEMBLIES TO A SHOP FOR DISASSEMBLY, CLEANING, PAINTING AND RETROFITTING.
6. REPAIR THE UPPER TRUSS CHORD STRUCTURAL STEEL BELOW THE OPERATING DRUM FRAMES.
7. RE-INSTALL THE REFURBISHED OPERATING DRUMS.
8. INSTALL THE REPLACEMENT UPHAUL AND DOWNHAUL OPERATING ROPES.
9. ELECTRICAL EQUIPMENT SHALL BE RE-INSTALLED AFTER THE MECHANICAL AND STRUCTURAL WORK IS COMPLETED. THE WIRING SHALL BE RE-TERMINATED AND FASTENERS SECURED. ELECTRICAL EQUIPMENT SHALL BE ALIGNED AND CORRECTLY INSTALLED. THE ELECTRICAL EQUIPMENT SHALL BE RETURNED TO SERVICE.
10. PERFORM SPAN BALANCING PER THE SPECIAL PROVISIONS. REMOVE TEMPORARY WEIGHT FROM THE LIFT SPAN BEFORE THE OPERATING ROPE TENSIONING PROCEDURE AND TESTING.
11. PERFORM OPERATING ROPE TENSIONING PROCEDURE.
12. TEST THE UPHAUL/DOWNHAUL OPERATION. ADJUST AS REQUIRED.
13. PERFORM START-UP AND COMMISSIONING.

TOTAL DURATION - SEE SPECIAL PROVISIONS FOR ALLOWABLE CLOSURE DURATION

Hardesty & Hanover
150 BROADWAY, NY, NY 10038

FILE NAME: c:\users\cstone\hhprod\dms09372\G3_Suggested_Rehabilitation_Construction_Sequence.dgn						
BRIDGE DESIGN ENGR:						FED.AID PROJ.NO.
SUPERVISOR: CS						0529(020)
DESIGNED BY: FM						REGION NO. / STATE
ENTERED BY: DM						WASH
CHECKED BY: SM						JOB NUMBER 23A003
MAR PROJ ENGR:						
DGN ENGR MNGR:						CONTRACT NO.
ASST SECRETARY:		REVISION	DATE	BY		

DATE

FRANK M. MARZELLA — STATE OF WASHINGTON — 11975 — REGISTERED PROFESSIONAL ENGINEER

SEE SHEET CT1

DATE

Washington State Department of Transportation
BRIDGE AND STRUCTURES OFFICE

SR 529
SNOHOMISH RIVER & STEAMBOAT SLOUGH
BRIDGE REPAIR, REHAB & PAINT

SUGGESTED REHABILITATION CONSTRUCTION SEQUENCE

G3

SHEET 82 OF 136 SHEETS

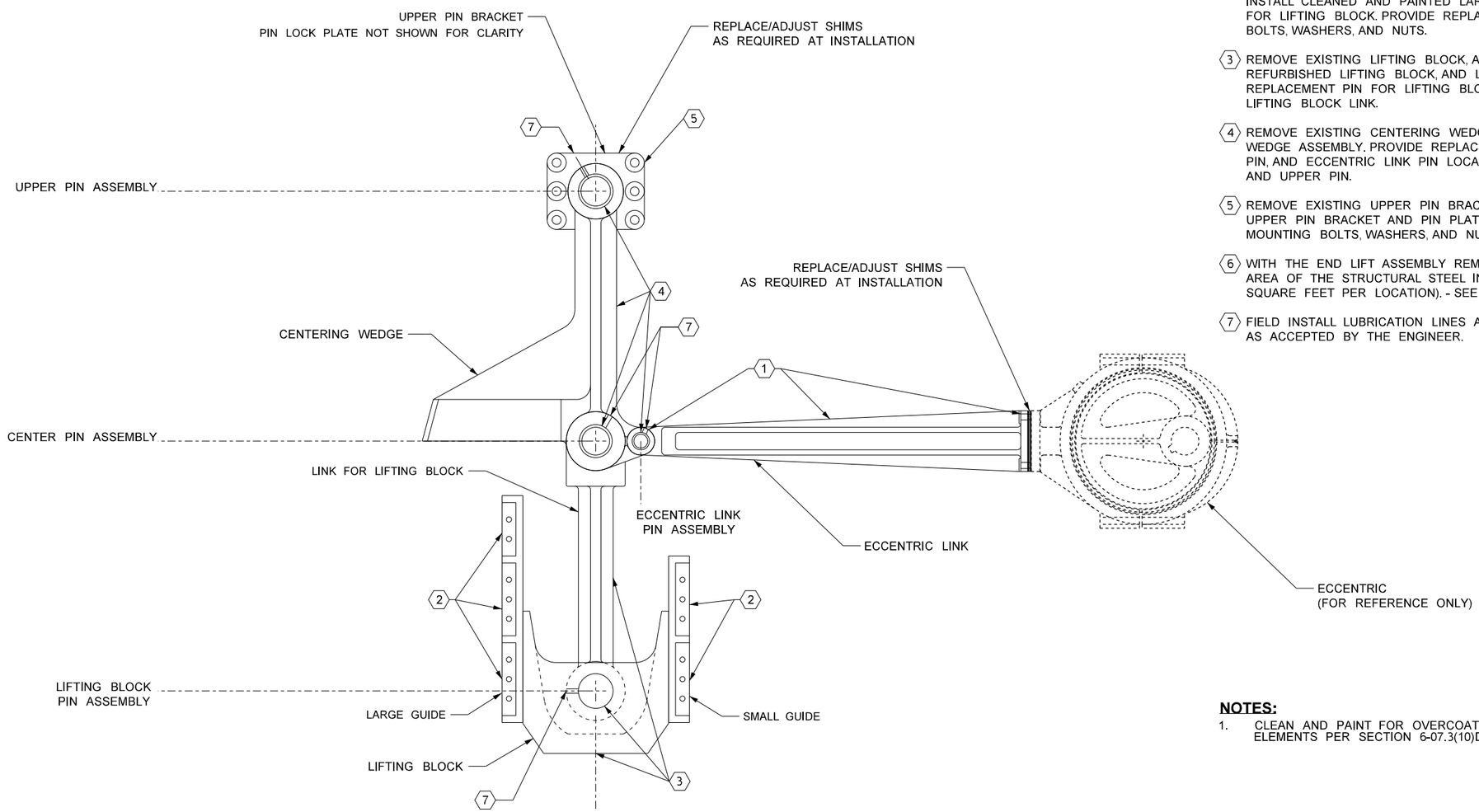

END LIFT ASSEMBLY ELEVATION AT L0

4 LOCATIONS
N.T.S.
(SHOWN FULL TOGGLED POSITION)

END LIFT REHABILITATION

1. REMOVE EXISTING ECCENTRIC LINK. INSTALL REFURBISHED ECCENTRIC LINK ASSEMBLY. PROVIDE REPLACEMENT PIN. PROVIDE REPLACEMENT ECCENTRIC MOUNTING BOLTS.
2. REMOVE EXISTING LARGE GUIDE AND SMALL GUIDE FOR LIFTING BLOCK. INSTALL CLEANED AND PAINTED LARGE GUIDE AND SMALL GUIDE ASSEMBLIES. FOR LIFTING BLOCK. PROVIDE REPLACEMENT HIGH STRENGTH MOUNTING BOLTS, WASHERS, AND NUTS.
3. REMOVE EXISTING LIFTING BLOCK, AND LINK FOR LIFTING BLOCK. INSTALL REFURBISHED LIFTING BLOCK, AND LINK FOR LIFTING BLOCK. PROVIDE REPLACEMENT PIN FOR LIFTING BLOCK. PROVIDE REPLACEMENT BUSHING IN LIFTING BLOCK LINK.
4. REMOVE EXISTING CENTERING WEDGE. INSTALL REFURBISHED CENTERING WEDGE ASSEMBLY. PROVIDE REPLACEMENT BUSHINGS AT UPPER PIN, CENTER PIN, AND ECCENTRIC LINK PIN LOCATIONS. PROVIDE REPLACEMENT CENTER PIN AND UPPER PIN.
5. REMOVE EXISTING UPPER PIN BRACKET AND PIN PLATE. INSTALL REFURBISHED UPPER PIN BRACKET AND PIN PLATE. PROVIDE REPLACEMENT HIGH STRENGTH MOUNTING BOLTS, WASHERS, AND NUTS.
6. WITH THE END LIFT ASSEMBLY REMOVED. CLEAN AND PAINT THE INACCESSIBLE AREA OF THE STRUCTURAL STEEL INSIDE THE TRUSS (APPROXIMATELY 60 SQUARE FEET PER LOCATION). - SEE NOTE 1.
7. FIELD INSTALL LUBRICATION LINES AND FITTINGS TO ACCESSIBLE LOCATIONS AS ACCEPTED BY THE ENGINEER.

NOTES:

1. CLEAN AND PAINT FOR OVERCOATING EXISTING STEEL MEMBERS AND ELEMENTS PER SECTION 6-07.3(10)D OF THE STANDARD SPECIFICATIONS.

Hardesty & Hanover

FILE NAME: c:\users\cstone\hhprod\dms09372\M01 20W END LIFT REHABILITATION.dgn						
BRIDGE DESIGN ENGR:						FED.AID PROJ.NO.
SUPERVISOR:	CS					0529(020)
DESIGNED BY:	FM					REGION NO. / STATE
ENTERED BY:	MG					WASH
CHECKED BY:	SM					JOB NUMBER 23A003
MAR PROJ ENGR:						CONTRACT NO.
DGN ENGR MNGR:						
ASST SECRETARY:		REVISION	DATE	BY		

DATE

FRANK M. MARZELLA
STATE OF WASHINGTON
REGISTERED PROFESSIONAL ENGINEER

SEE SHEET CT1
DATE

Washington State
Department of Transportation
BRIDGE AND STRUCTURES OFFICE

SR 529
SNOHOMISH RIVER & STEAMBOAT SLOUGH
BRIDGE REPAIR, REHAB & PAINT

SR 529/20W - END LIFT REHABILITAION

M1

SHEET 83 OF 136 SHEETS

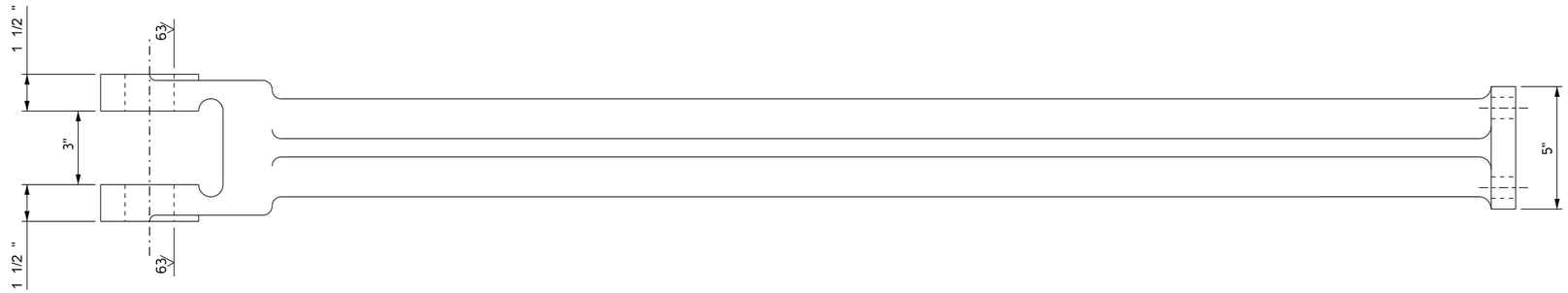

NOTES:

1. ECCENTRIC LINKS SHALL BE CLEANED, PREPARED, AND REPAINTED IN ACCORDANCE WITH STANDARD SPECIFICATION SECTION 6-07.3(10).
2. PROVIDE REPLACEMENT PINS AND BUSHINGS AS SHOWN.
3. SEE THE SPECIAL PROVISIONS FOR SHIM REQUIREMENTS.

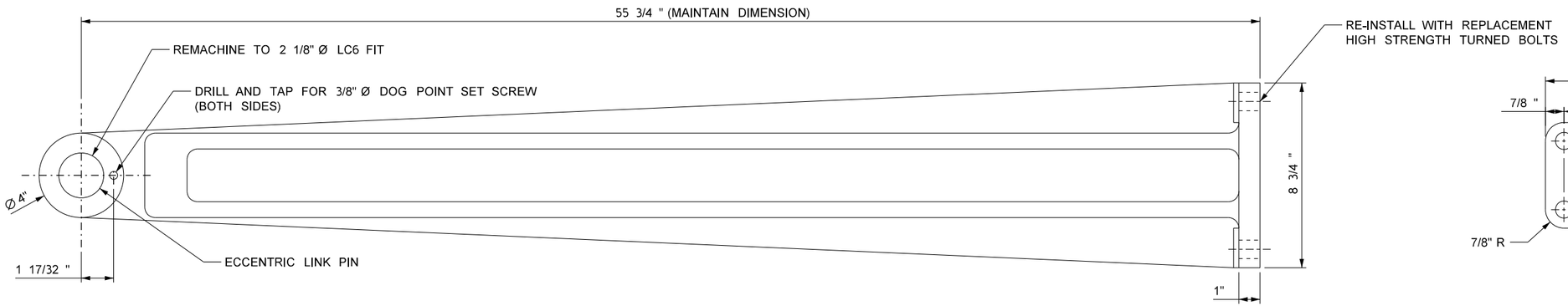

EXISTING ECCENTRIC LINK - QUANTITY (4)

N.T.S.

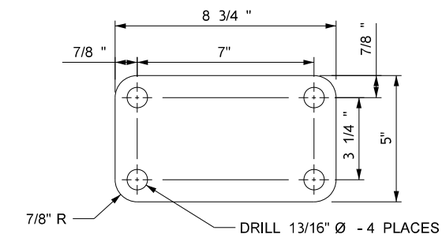

REPLACEMENT ECCENTRIC LINK SHIM PACK

QUANTITY: 4 - 1/2" SHIM PACKS
N.T.S.

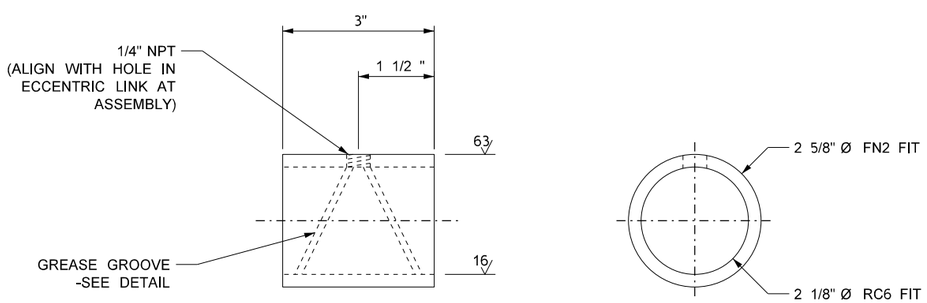

MARK NO. 5 - REPLACEMENT ECCENTRIC LINK BUSHING

N.T.S.

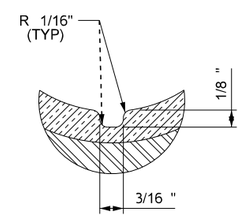

GREASE GROOVE DETAIL

N.T.S.

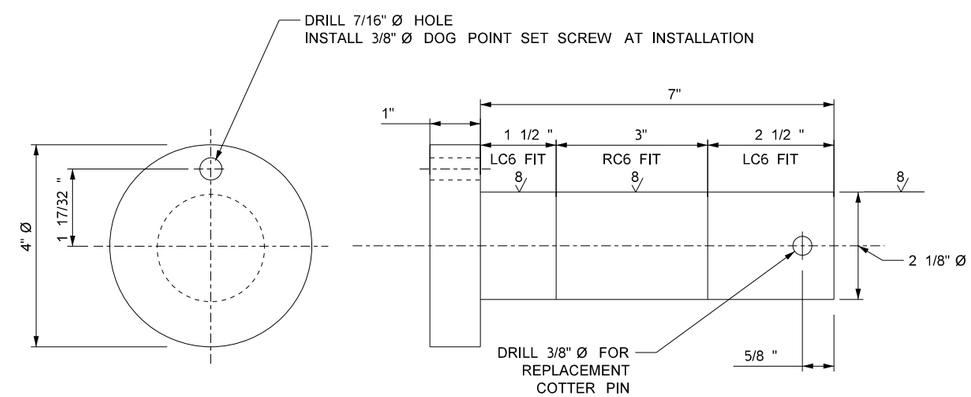

MARK NO. 1 - REPLACEMENT ECCENTRIC LINK PIN

N.T.S.

Hardesty & Hanover

FILE NAME: c:\users\cstone\hhprod\dms09372\M02 20W Endlift Details I.dgn						
BRIDGE DESIGN ENGR:						FED.AID PROJ.NO.
SUPERVISOR:	CS					0529(020)
DESIGNED BY:	FM					REGION NO. / STATE
ENTERED BY:	JT					WASH
CHECKED BY:	SM					JOB NUMBER 23A003
MAR PROJ ENGR:						CONTRACT NO.
DGN ENGR MNGR:						
ASST SECRETARY:		REVISION	DATE	BY		

DATE

FRANK M. MARZELLA — STATE OF WASHINGTON — REGISTERED PROFESSIONAL ENGINEER

SEE SHEET CT1

DATE

Washington State Department of Transportation
BRIDGE AND STRUCTURES OFFICE

SR 529
SNOHOMISH RIVER & STEAMBOAT SLOUGH
BRIDGE REPAIR, REHAB & PAINT

SR 529/20W - END LIFT DETAILS I

M2

SHEET 84 OF 136 SHEETS

NOTES:

1. CENTERING WEDGE UPPER PIN BRACKET AND LOCK PLATE SHALL BE CLEANED, PREPARED, AND REPAINTED IN ACCORDANCE WITH STANDARD SPECIFICATION SECTION 6-07.3(10).
2. PROVIDE REPLACEMENT PINS AND BUSHINGS AS SPECIFIED.
3. REPLACE ALL PIN SET SCREWS.
4. CLEAN, PREPARE, AND REPAINT ALL CONTRACTING AGENCY SUPPLIED LOCK PLATES.
5. CLEAN, PREPARE, AND REPAINT CONTRACTING AGENCY SUPPLIED LARGE AND SMALL LIFTING BLOCK GUIDES (4 EACH).
6. RE-INSTALL WITH REPLACEMENT HIGH-STRENGTH BOLTS. LARGE AND SMALL LIFTING BLOCKS ARE NOT SHOWN.
7. SEE THE SPECIAL PROVISIONS FOR SHIM REQUIREMENTS.

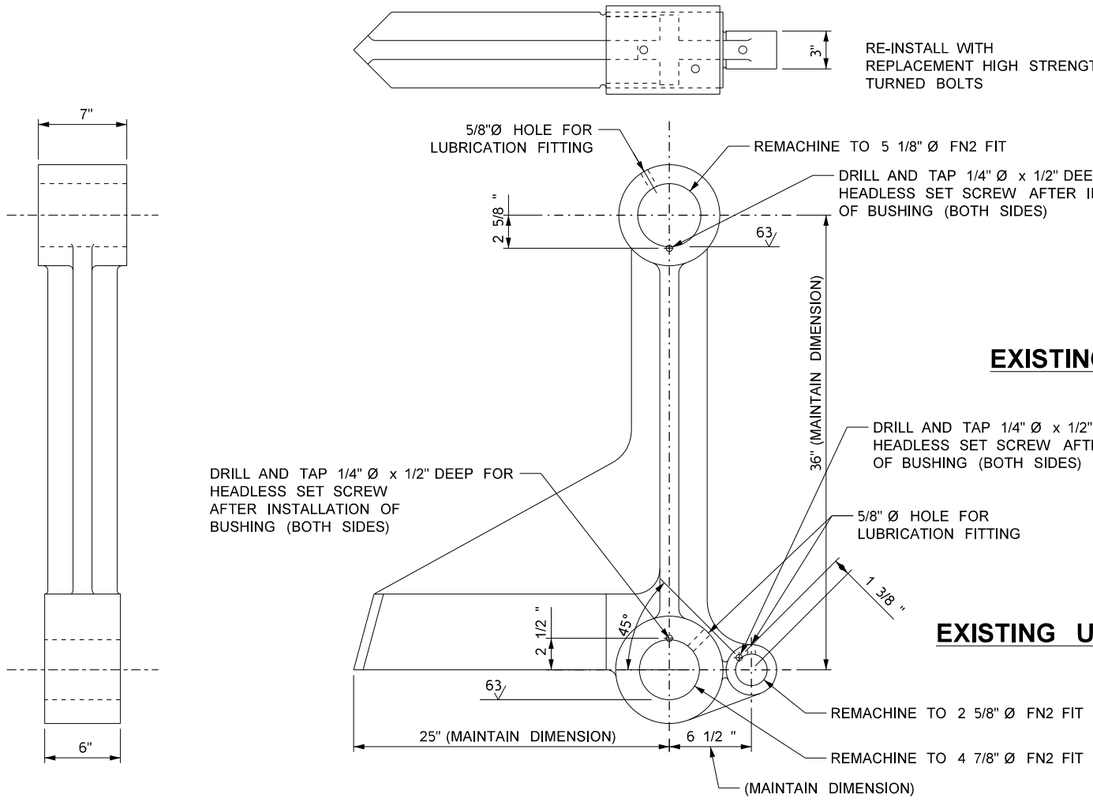

EXISTING CENTERING WEDGE - QUANTITY (4)

N.T.S.

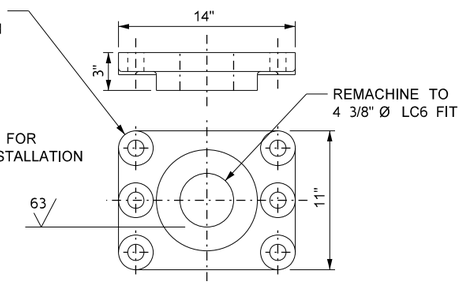

EXISTING UPPER PIN BRACKET - QUANTITY (8)

N.T.S.

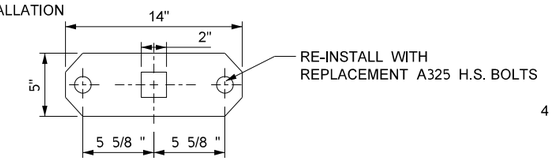

EXISTING UPPER PIN LOCK PLATE - QUANTITY (8)

N.T.S.

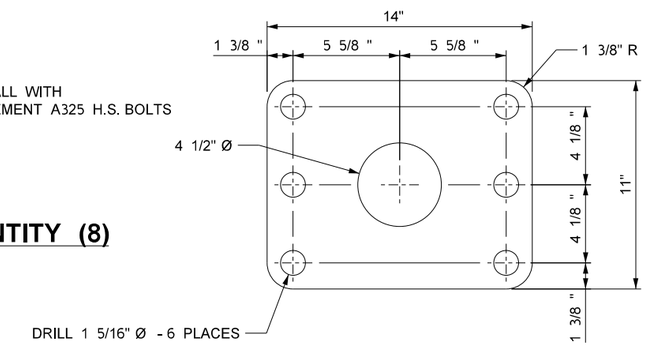

REPLACEMENT UPPER PIN BRACKET SHIM PACK

QUANTITY: 4 - 1/2" SHIM PACKS
N.T.S.

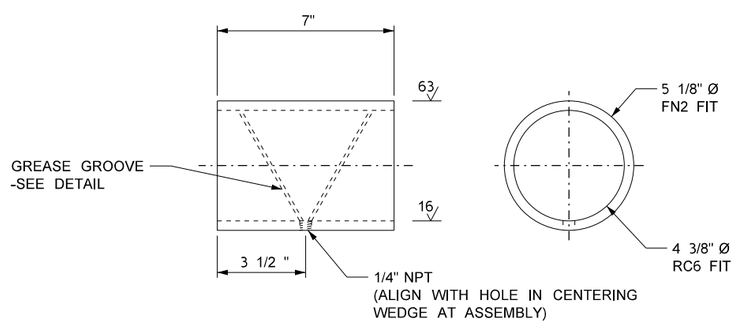

MARK NO. 7 - REPLACEMENT UPPER BUSHING

N.T.S.

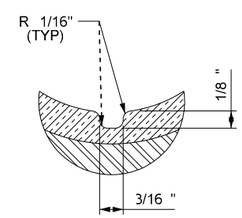

GREASE GROOVE DETAIL

N.T.S.

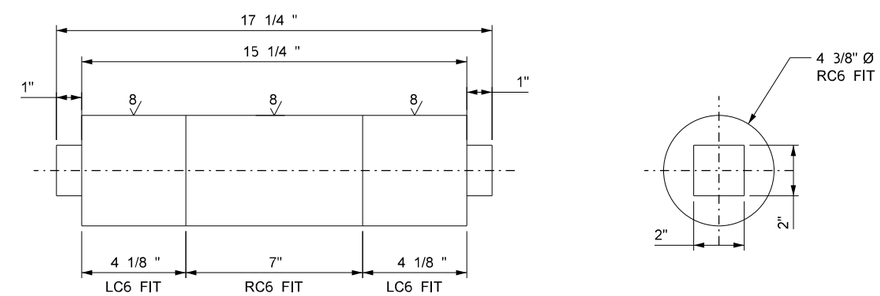

MARK NO. 3 - REPLACEMENT UPPER PIN

N.T.S.

Hardesty & Hanover 150 BROADWAY, NY, NY 10038

FILE NAME: c:\users\cstone\hhprod\dms09372\M03 20W ENDLIFT DETAILS II.dgn						FED.AID PROJ.NO.
BRIDGE DESIGN ENGR:						0529(020)
SUPERVISOR: CS						REGION NO. / STATE
DESIGNED BY: FM						WASH
ENTERED BY: JT						JOB NUMBER 23A003
CHECKED BY: SM						CONTRACT NO.
MAR PROJ ENGR:						
DGN ENGR MNGR:						
ASST SECRETARY:		REVISION	DATE	BY		

DATE

FRANK M. MARZELLA — STATE OF WASHINGTON — 31094 — REGISTERED PROFESSIONAL ENGINEER

SEE SHEET CT1
DATE

Washington State Department of Transportation
BRIDGE AND STRUCTURES OFFICE

SR 529
SNOHOMISH RIVER & STEAMBOAT SLOUGH BRIDGE REPAIR, REHAB & PAINT

SR 529/20W - END LIFT DETAILS II

M3

SHEET 85 OF 136 SHEETS

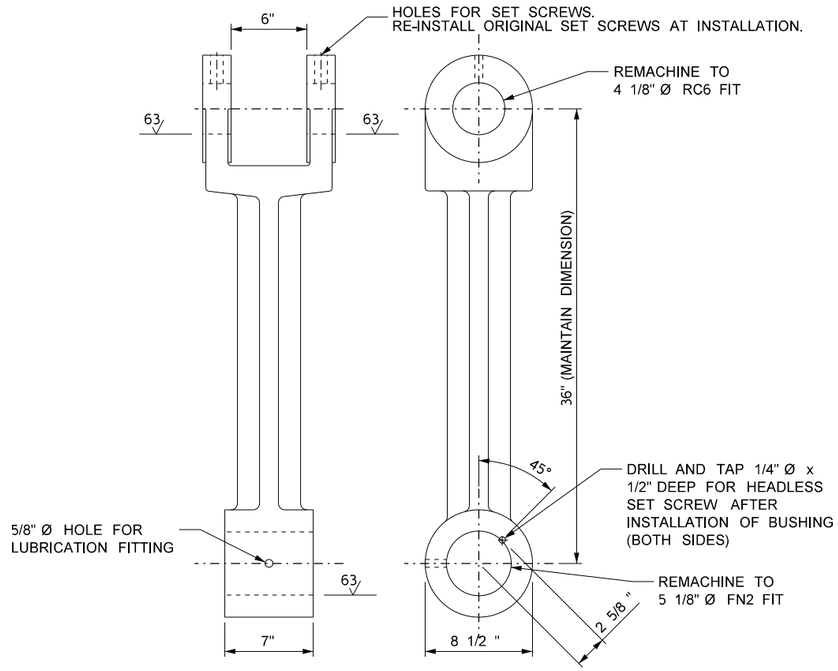

EXISTING LINK FOR LIFTING BLOCK - QUANTITY (4)

N.T.S.

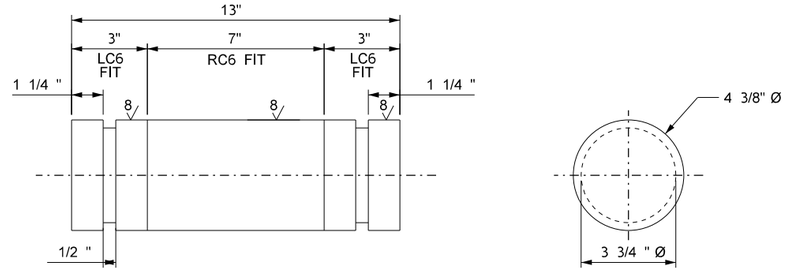

MARK NO. 4 - REPLACEMENT LIFTING BLOCK PIN

N.T.S.

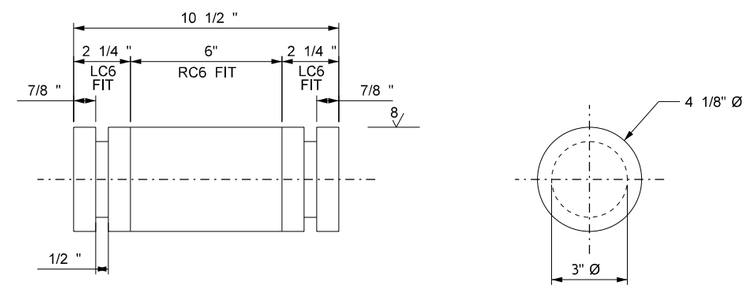

MARK NO. 2 - REPLACEMENT CENTER PIN

N.T.S.

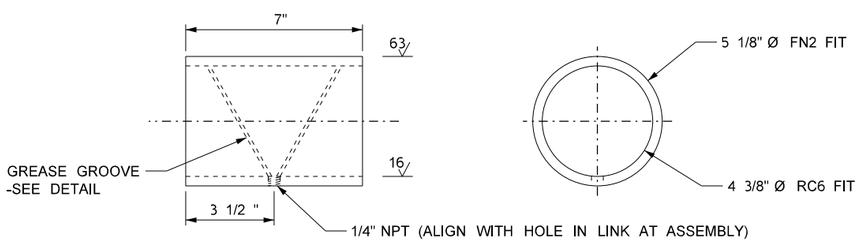

MARK NO. 8 - REPLACEMENT LIFTING BLOCK BUSHING

N.T.S.

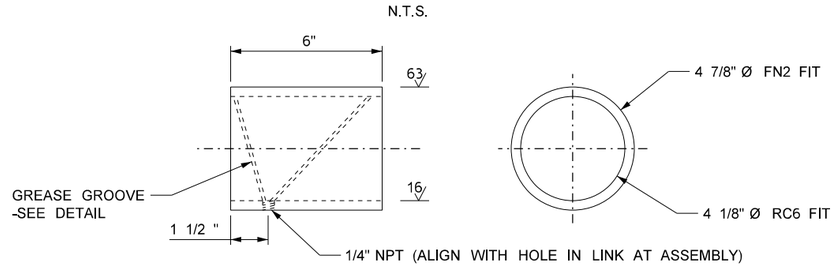

MARK NO. 6 - REPLACEMENT CENTER BUSHING

N.T.S.

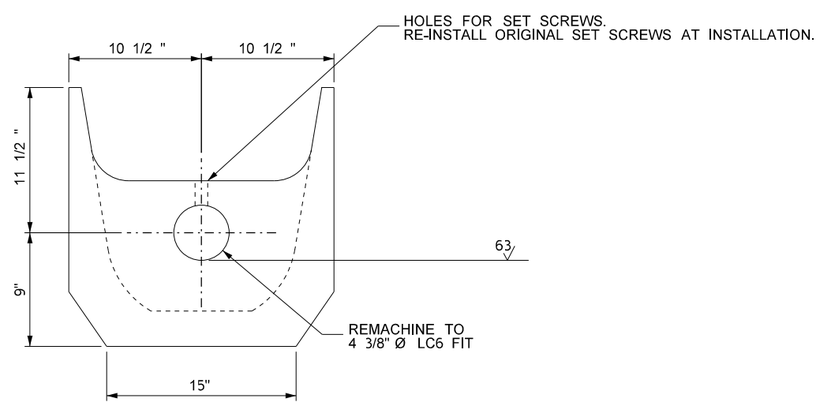

EXISTING LIFTING BLOCK QUANTITY (4)

N.T.S.

NOTES:

1. LIFTING BLOCK AND LINK FOR LIFTING BLOCK SHALL BE CLEANED, PREPARED AND REPAINTED IN ACCORDANCE WITH STANDARD SPECIFICATION SECTION 6-07.3(10).
2. PROVIDE REPLACEMENT PINS AND BUSHINGS AS SPECIFIED.

BILL OF MATERIALS			
MARK NO.	DESCRIPTION	QTY	MATERIAL
1	ECCENTRIC LINK PIN	4	SECTION 9-06.11
2	CENTER PIN	4	SECTION 9-06.11
3	UPPER PIN	4	SECTION 9-06.11
4	LIFTING BLOCK PIN	4	SECTION 9-06.11
5	ECCENTRIC LINK BUSHING	4	SECTION 9-06.12
6	CENTER BUSHING	4	SECTION 9-06.12
7	UPPER BUSHING	4	SECTION 9-06.12
8	LIFTING BLOCK BUSHING	4	SECTION 9-06.12

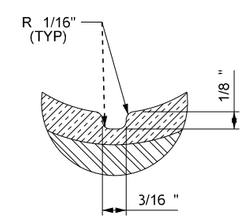

GREASE GROOVE DETAIL

N.T.S.

Hardesty & Hanover

FILE NAME: c:\users\cstone\hhprod\dms09372\M04 20W Endlift Details III.dgn					
BRIDGE DESIGN ENGR:					FED.AID PROJ.NO.
SUPERVISOR: CS					
DESIGNED BY: FM					0529(020)
ENTERED BY: JT					REGION NO. / STATE
CHECKED BY: SM					WASH
MAR PROJ ENGR:					JOB NUMBER 23A003
DGN ENGR MNGR:					CONTRACT NO.
ASST SECRETARY:		REVISION	DATE	BY	

DATE

FRANK M. MARZELLA — STATE OF WASHINGTON — REGISTERED PROFESSIONAL ENGINEER

SEE SHEET CT1

DATE

Washington State Department of Transportation
BRIDGE AND STRUCTURES OFFICE

SR 529
SNOHOMISH RIVER & STEAMBOAT SLOUGH
BRIDGE REPAIR, REHAB & PAINT

SR 529/20W - END LIFT DETAILS III

M4

SHEET 86 OF 136 SHEETS

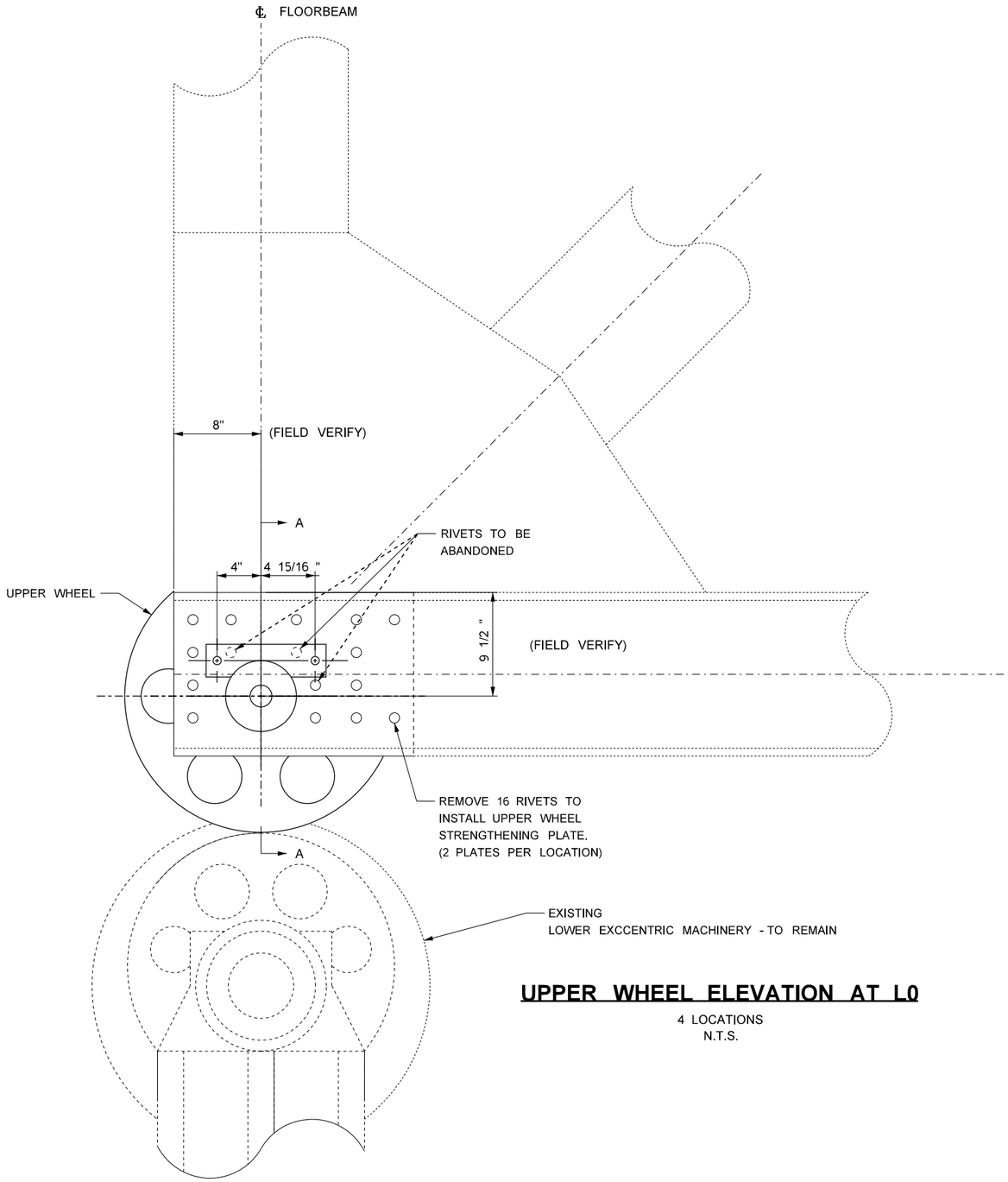

UPPER WHEEL ELEVATION AT L0

4 LOCATIONS
N.T.S.

UPPER WHEEL REHABILITATION

1. REMOVE EXISTING UPPER WHEEL PIN NUTS AND PINS, WHEEL PIN KEYS AND UPPER WHEELS.
2. REMOVE EXISTING 7/8" DIAMETER RIVETS TO FACILITATE INSTALLATION OF THE UPPER WHEEL STRENGTHENING PLATES. REMOVED RIVETS SHALL BE REPLACED WITH ASTM F3125 GRADE A325 HIGH STRENGTH BOLTS. ABANDON RIVETS AS SHOWN. - SEE NOTE 1.
3. INSTALL UPPER WHEEL STRENGTHENING PLATES. LINE BORE 6.500 INCH DIAMETER HOLE IN THE STRENGTHENED TRUSS LOWER CHORDS TO ACCEPT THE REPLACEMENT UPPER WHEEL PINS. MAINTAIN THE EXISTING UPPER WHEEL CENTERLINE POSITION IN BOTH THE VERTICAL AND HORIZONTAL DIRECTIONS.
4. FIELD DRILL AND TAP HOLES TO SECURE THE UPPER WHEEL PIN KEEPER PLATES.
5. WITH THE EXISTING UPPER WHEELS REMOVED CLEAN AND PAINT THE INACCESSIBLE AREA OF THE STRUCTURAL STEEL INSIDE THE BOTTOM CHORDS (APPROXIMATELY 10 SQUARE FEET PER LOCATION). - SEE NOTE 2.
6. INSTALL THE REPLACEMENT UPPER WHEEL ASSEMBLIES AND TEST OPERATION.

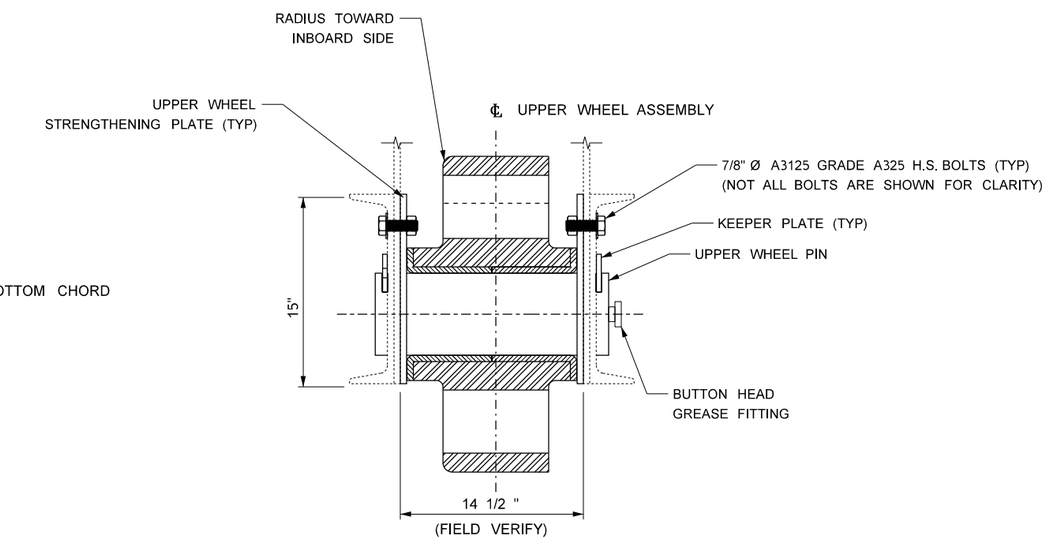

SECTION A-A

N.T.S.

NOTES

1. THE CONTRACTOR SHALL SUBMIT A RIVET REMOVAL PROCEDURE FOR REVIEW AND ACCEPTANCE. TORCH OR FLAME CUTTING IS NOT PERMITTED.
2. CLEAN AND PAINT FOR OVERCOATING EXISTING STEEL MEMBERS AND ELEMENTS PER SECTION 6-07.3(10)D OF THE STANDARD SPECIFICATIONS.

Hardesty & Hanover

FILE NAME: c:\users\cstone\hhprod\dms09372\M05_20E_Upper_Wheel_Rehabilitation.dgn						
BRIDGE DESIGN ENGR:						FED.AID PROJ.NO.
SUPERVISOR:	CS					0529(020)
DESIGNED BY:	FM					REGION NO. / STATE
ENTERED BY:	DM					WASH
CHECKED BY:	SM					JOB NUMBER 23A003
MAR PROJ ENGR:						
DGN ENGR MNGR:						CONTRACT NO.
ASST SECRETARY:		REVISION	DATE	BY		

DATE

FRANK M. MARZELLA — STATE OF WASHINGTON — REGISTERED PROFESSIONAL ENGINEER

SEE SHEET CT1
DATE

Washington State Department of Transportation
BRIDGE AND STRUCTURES OFFICE

SR 529
SNOHOMISH RIVER & STEAMBOAT SLOUGH BRIDGE REPAIR, REHAB & PAINT
SR 529/20E - UPPER WHEEL REHABILITATION

M5
SHEET 87 OF 136 SHEETS

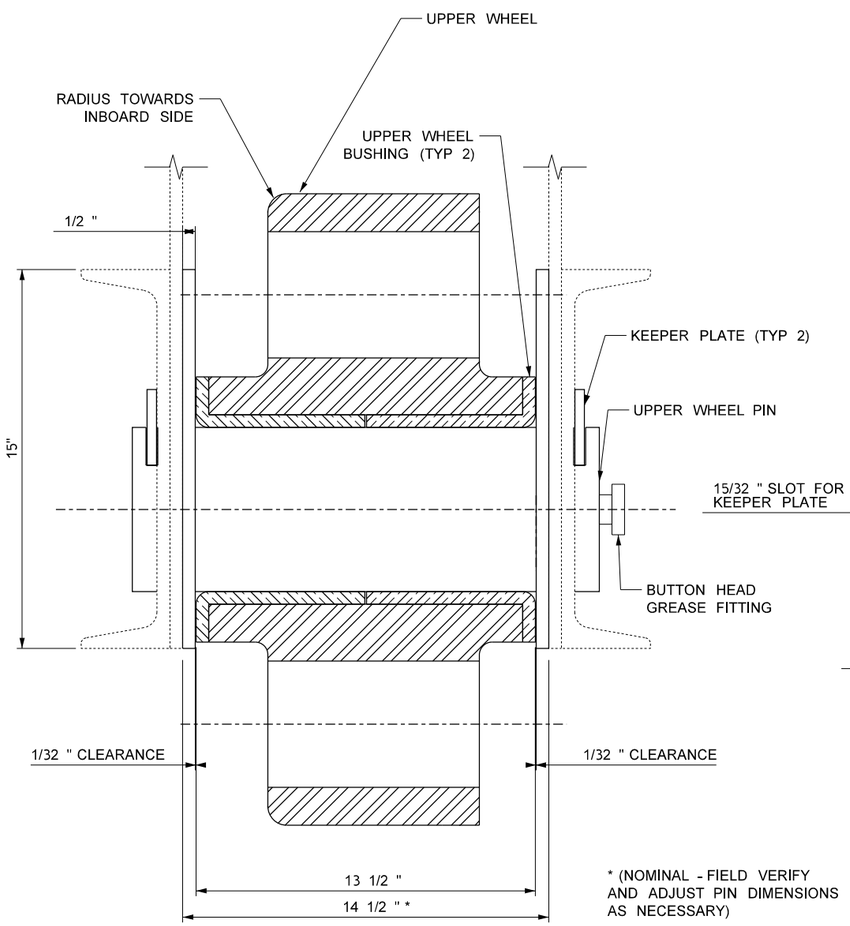

UPPER WHEEL ASSEMBLY ELEVATION SIDE VIEW

N.T.S.

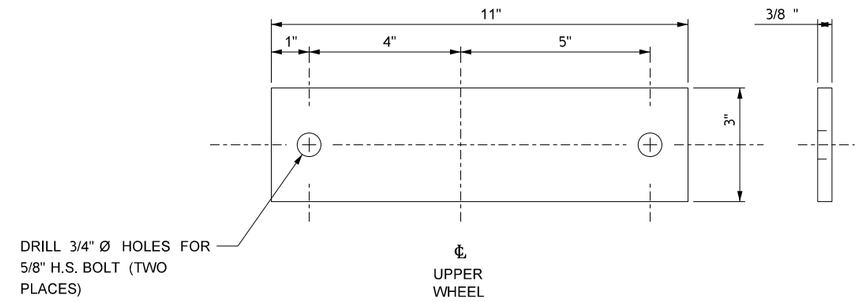

MARK NO. 2 - KEEPER PLATE

N.T.S.

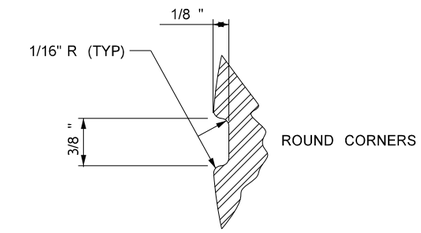

GREASE GROOVE DETAIL

N.T.S.

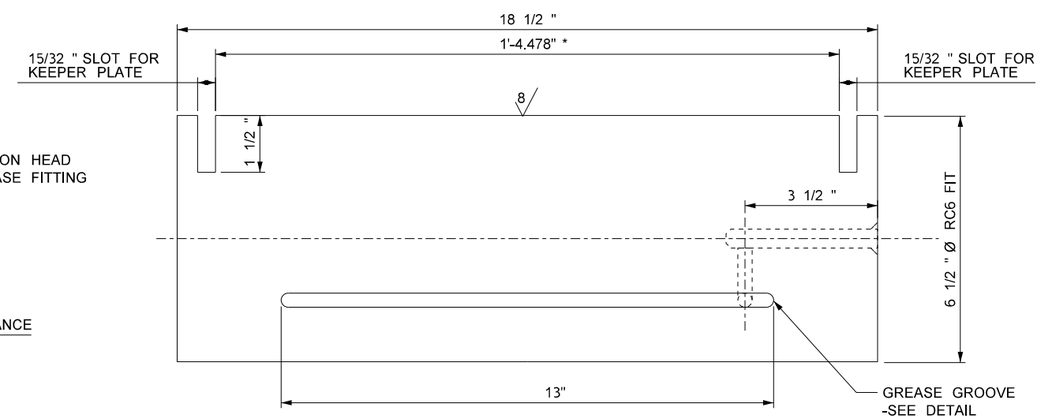

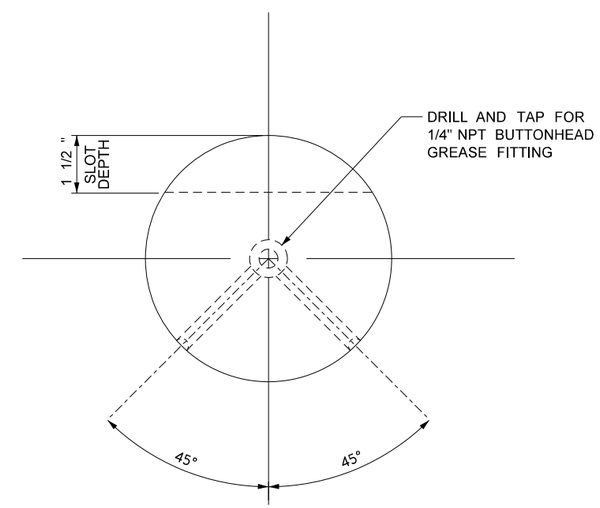

MARK NO. 1 - REPLACEMENT UPPER WHEEL PIN

N.T.S.

Hardesty & Hanover

FILE NAME: c:\users\cstone\hhprod\dms09372\M06_Upper_Wheel_Assembly.dgn					
BRIDGE DESIGN ENGR:					FED.AID PROJ.NO.
SUPERVISOR: CS					0529(020)
DESIGNED BY: FM					REGION NO. / STATE
ENTERED BY: DM					WASH
CHECKED BY: SM					JOB NUMBER 23A003
MAR PROJ ENGR:					
DGN ENGR MNGR:					CONTRACT NO.
ASST SECRETARY:		REVISION	DATE	BY	

DATE

STATE OF WASHINGTON — FRANK M. MARZELLA — REGISTERED PROFESSIONAL ENGINEER

SEE SHEET CT1

DATE

Washington State Department of Transportation
BRIDGE AND STRUCTURES OFFICE

SR 529
SNOHOMISH RIVER & STEAMBOAT SLOUGH BRIDGE REPAIR, REHAB & PAINT

SR 529/20E - UPPER WHEEL ASSEMBLY AND DETAILS

M6

SHEET 88 OF 136 SHEETS

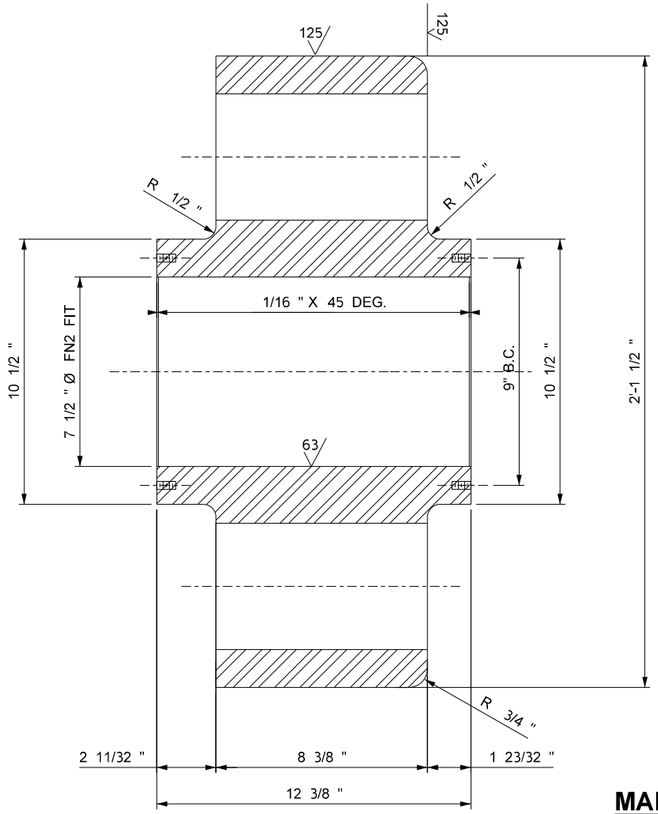

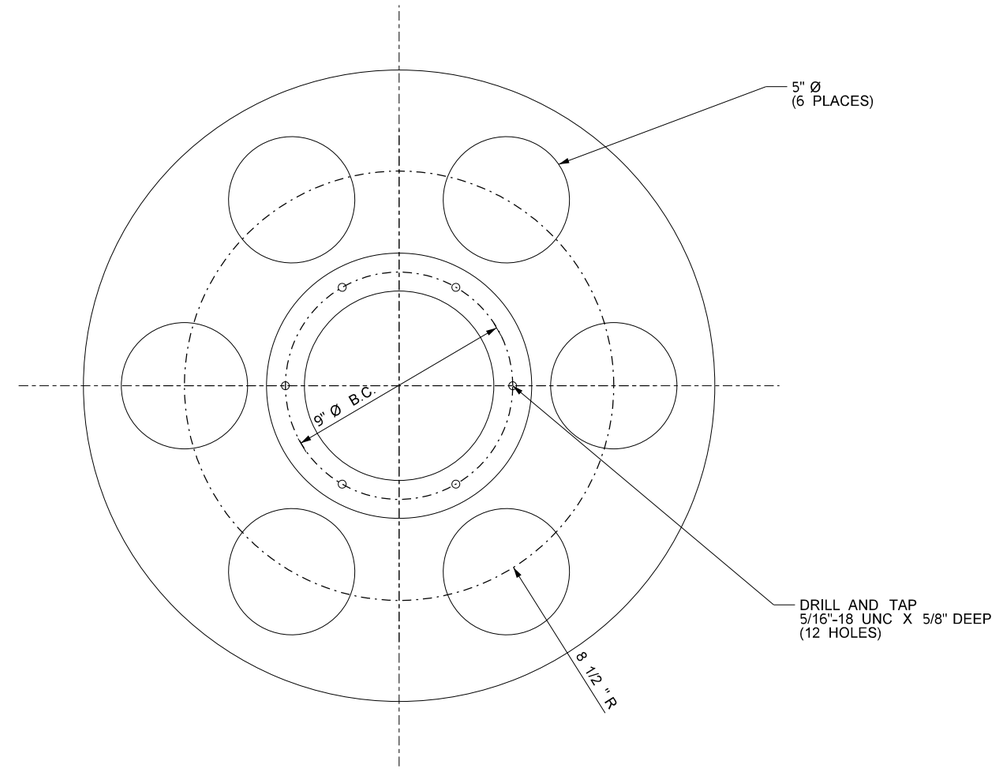

MARK NO. 3 - REPLACEMENT UPPER WHEEL

N.T.S.

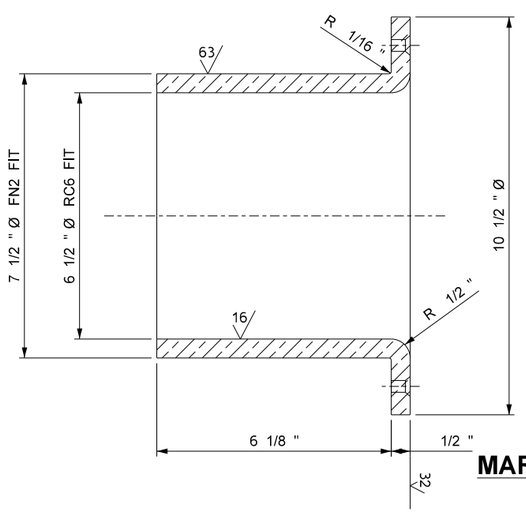

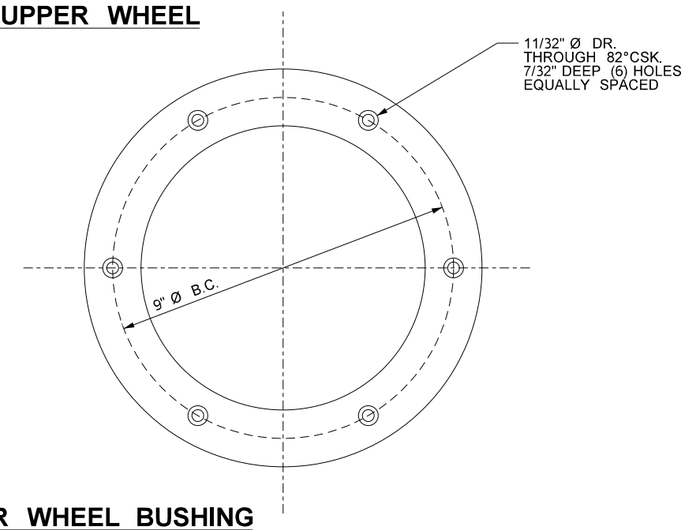

MARK NO. 4 - REPLACEMENT UPPER WHEEL BUSHING

NOTE: (2) BUSHINGS PER UPPER WHEEL

N.T.S.

Hardesty & Hanover
1501 BROADWAY, NY, NY 10036

FILE NAME: c:\users\cstone\hhprod\dms09372\M07_20E Upper_Wheel_And_Bushing.dgn						
BRIDGE DESIGN ENGR:						FED.AID PROJ.NO.
SUPERVISOR: CS						0529(020)
DESIGNED BY: FM						REGION NO. / STATE
ENTERED BY: DM						WASH
CHECKED BY: SM						JOB NUMBER 23A003
MAR PROJ ENGR:						
DGN ENGR MNGR:						CONTRACT NO.
ASST SECRETARY:		REVISION	DATE	BY		

DATE

FRANK M. MARZELLA — STATE OF WASHINGTON — 1995 — REGISTERED PROFESSIONAL ENGINEER

SEE SHEET CT1

DATE

Washington State Department of Transportation
BRIDGE AND STRUCTURES OFFICE

SR 529
SNOHOMISH RIVER & STEAMBOAT SLOUGH
BRIDGE REPAIR, REHAB & PAINT

SR 529/20E - UPPER WHEEL AND BUSHING DETAILS

M7

SHEET 89 OF 136 SHEETS

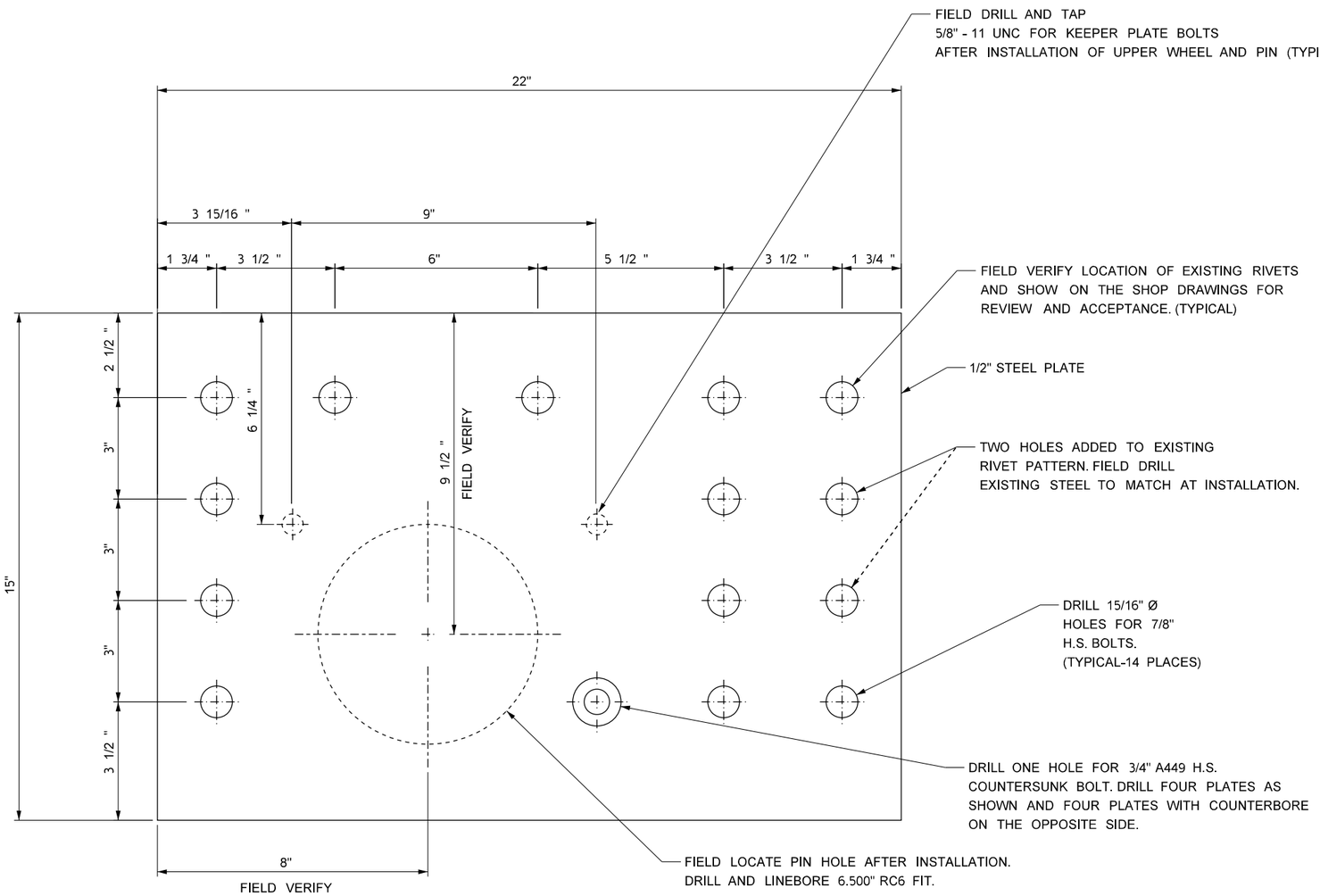

BILL OF MATERIALS			
MARK NO.	DESCRIPTION	QTY	MATERIAL
1	UPPER WHEEL PIN	4	SECTION 9-06.11
2	PIN KEEPER PLATE	8	SECTION 9-06.2
3	UPPER WHEEL	4	SECTION 9-06.8
4	UPPER WHEEL BUSHING	8	SECTION 9-06.12
5	UPPER WHEEL STRENGTHENING PLATE	8	SECTION 9-06.2

MARK NO. 5 UPPER WHEEL STRENGTHENING PLATE

N.T.S.

Hardesty & Hanover

FILE NAME: c:\users\cstone\hhprod\dms09372\M08_Support_Plate.dgn						
BRIDGE DESIGN ENGR:						FED.AID PROJ.NO.
SUPERVISOR: CS						0529(020)
DESIGNED BY: FM						REGION NO. / STATE
ENTERED BY: DM						WASH
CHECKED BY: SM						JOB NUMBER 23A003
MAR PROJ ENGR:						CONTRACT NO.
DGN ENGR MNGR:						
ASST SECRETARY:		REVISION	DATE	BY		

DATE

FRANK M. MARZELLA — STATE OF WASHINGTON — REGISTERED PROFESSIONAL ENGINEER

SEE SHEET CT1

DATE

Washington State Department of Transportation
BRIDGE AND STRUCTURES OFFICE

SR 529
SNOHOMISH RIVER & STEAMBOAT SLOUGH
BRIDGE REPAIR, REHAB & PAINT

SR 529/20E - SUPPORT PLATE DETAILS

M8

SHEET 90 OF 136 SHEETS

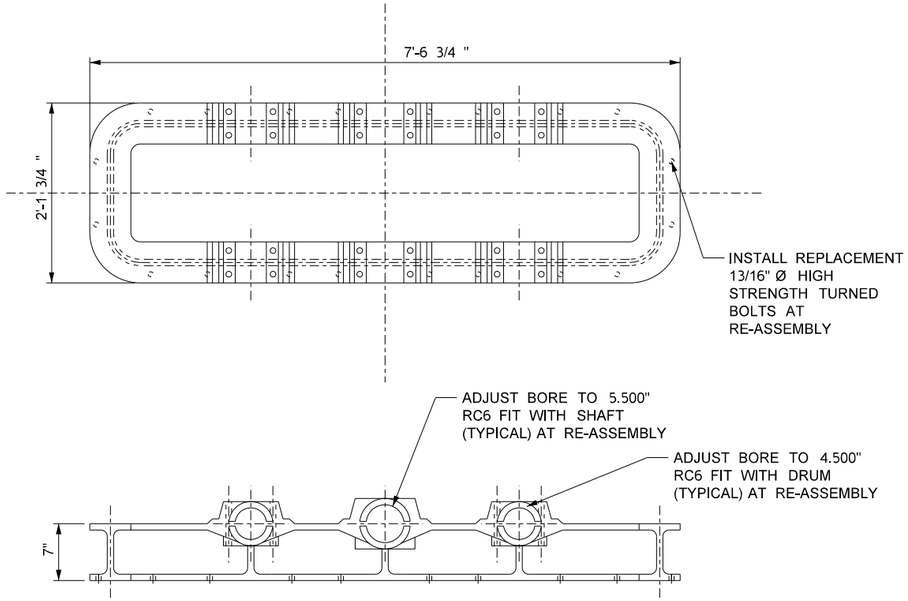

OPERATING DRUM FRAME

(2 ASSEMBLIES - DRUMS AND SHAFTS NOT SHOWN)
N.T.S.

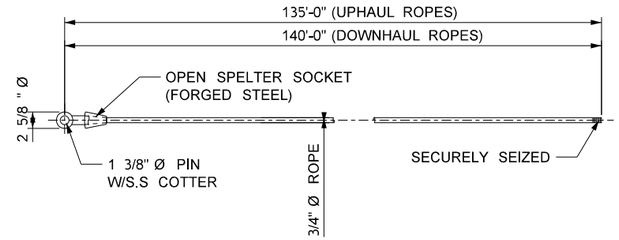

OPERATING ROPES

MATERIAL: EXTRA IMPROVED PLOW STEEL 6x19 CLASS WITH POLYPROPYLENE CORE
MINIMUM BREAKING STRENGTH = 52,400 POUNDS
QUANTITY: 4 UPHAUL ROPES
4 DOWNHAUL ROPES

OPERATING DRUM ASSEMBLY REHABILITATION

1. MATCH MARK FRAME LOCATIONS AND ORIENTATIONS IN THE FIELD BEFORE REMOVING THE OPERATING DRUM ASSEMBLIES. MATCH MARK ALL BEARING CAPS AND BUSHING SHIMS INCLUDING ORIENTATIONS TO FACILITATE RE-ASSEMBLY.
2. REMOVE BEARING CAPS, OPERATING DRUMS AND OPERATING ROPES.
3. CLEAN AND PREPARE SURFACES OF THE OPERATING DRUM FRAMES. REMOVE ALL RUST, PAINT, GREASE AND DEBRIS. SOLVENT AND HAND TOOL CLEAN BRONZE BEARING SURFACES - SEE NOTE 1.
4. CLEAN AND PREPARE SURFACES OF THE OPERATING DRUMS. REMOVE ALL RUST, PAINT, GREASE AND DEBRIS. SOLVENT AND HAND TOOL CLEAN THE SHAFT JOURNALS, GEARING AND ROPE GROOVES - SEE NOTE 1.
5. CLEAN AND PREPARE SURFACES OF THE PINION SHAFT ASSEMBLY. REMOVE ALL RUST, PAINT, GREASE AND DEBRIS. SOLVENT AND HAND TOOL CLEAN THE SHAFT JOURNALS AND GEARING.
6. MODIFY THE OPERATING DRUM HOUSING COVERS.
7. REPLACE ALL LUBRICATION FITTINGS.
8. REPAINT ALL NON-SLIDING AND NON-CONTACTING SURFACES OF THE OPERATING DRUM FRAME COMPONENTS. DO NOT PAINT THE BRONZE SHAFT BUSHINGS. THE FRAME FAYING SURFACES TO RECEIVE PRIME COAT ONLY.
9. RE-ASSEMBLE AND VERIFY THAT SHAFT JOURNAL TO BUSHING CLEARANCES MEET RC6 SPECIFICATIONS. ADJUST THE BEARING CAP SHIMS TO ACHIEVE PROPER CLEARANCES.
10. RE-ALIGN THE COMPLETED OPERATING DRUM FRAMES AND MOUNT THEM WITH REPLACEMENT HIGH STRENGTH TURNED BOLTS.
11. REPLACE AND TENSION THE OPERATING ROPES.

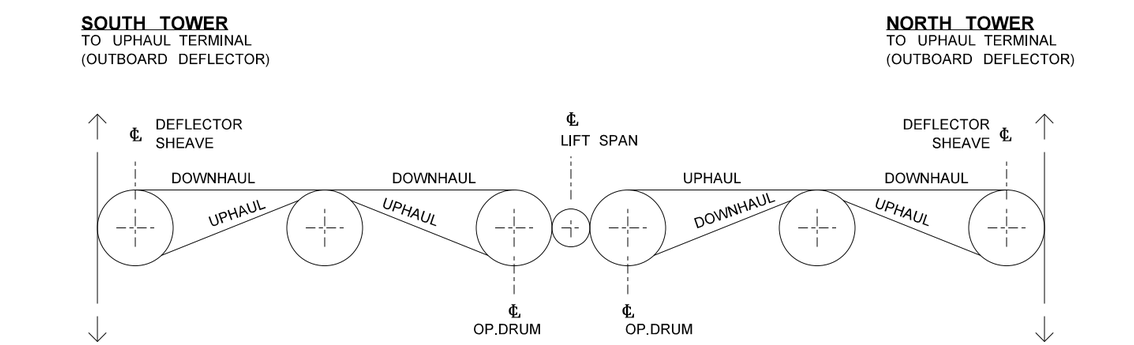

OPERATING ROPE REEVING DIAGRAM

WEST TRUSS - LOOKING WEST
EAST TRUSS SIMILAR
N.T.S.

OPERATING ROPE INSTALLATION AND TENSIONING PROCEDURE

1. INSTALL/REEVE THE REPLACEMENT UPHAUL AND DOWNHAUL ROPES ONTO THE OPERATING DRUMS, DEFLECTOR SHEAVES AND ATTACH THE ROPE TAKE UPS (SEE OPERATING ROPE REEVING DIAGRAM).
2. WITH THE LIFT SPAN IN THE DOWN POSITION, TENSION THE UPHAUL ROPES USING A CALIBRATED TORQUE WRENCH. TORQUE EACH UPHAUL ROPE TAKE UP NUT TO 80 FT-LBS +/- 3 FT-LBS.
3. RAISE THE LIFT SPAN TO FULL HEIGHT AND TENSION THE DOWNHAUL ROPES USING A CALIBRATED TORQUE WRENCH. TORQUE EACH DOWNHAUL TAKE UP NUT TO 80 FT-LBS +/- 3 FT FT-LBS.
4. LOWER THE LIFT SPAN. OPEN AND CLOSE THE LIFT SPAN THREE TIMES. RECHECK AND ADJUST THE UPHAUL AND DOWNHAUL ROPE TAKE UP TORQUES AS REQUIRED. REPEAT THE PROCESS UNTIL THE FINAL UPHAUL AND DOWNHAUL ROPE TAKE UP TORQUE VALUES ARE WITHIN 5% OF EACH OTHER AND THE BRIDGE LIFT IS SMOOTH AND ACCEPTABLE TO THE ENGINEER. VERIFY THAT THE LIFT SPAN SKEW IS ACCEPTABLE.
5. AFTER THE FINAL ROPE TENSIONING ADJUSTMENTS, AT LEAST 18 INCHES OF THREADED ROD MUST REMAIN AT ALL TAKE UP RODS FOR FUTURE ROPE STRETCH. IF AT LEAST 18 INCHES OF THREADED ROD DOES NOT REMAIN FOR FUTURE ROPE STRETCH, THE UPHAUL AND DOWNHAUL ROPES SHALL BE UN-REEVED, THE ROPES SHORTED AND THE ROPES RETENSIONED IN ACCORDANCE WITH THE ABOVE PROCEDURE.
6. AFTER COMPLETION OF THE OPERATING ROPE TENSIONING PROCEDURE, ADJUST THE ROTARY LIMIT SWITCH AND POSITION TRANSMITTER TO THE AS-FOUND CONDITION AND ADJUST AS NECESSARY FOR PROPER OPERATION.

NOTES

1. CLEAN AND PAINT FOR OVERCOATING EXISTING STEEL MEMBERS AND ELEMENTS PER SECTION 6-07.3(10)D OF THE STANDARD SPECIFICATIONS.

Hardesty & Hanover
150 BROADWAY, NY, NY 10038

FILE NAME: c:\users\cstone\hhprod\dms09372\M09_Operating_Drums_And_Operating_Ropes.dgn					
BRIDGE DESIGN ENGR:					FED.AID PROJ.NO.
SUPERVISOR: CS					0529(020)
DESIGNED BY: FM					REGION NO. / STATE
ENTERED BY: DM					WASH
CHECKED BY: SM					JOB NUMBER 23A003
MAR PROJ ENGR:					
DGN ENGR MNGR:					CONTRACT NO.
ASST SECRETARY:		REVISION	DATE	BY	

DATE

FRANK M. MARZELLA, STATE OF WASHINGTON, 21575, REGISTERED PROFESSIONAL ENGINEER

SEE SHEET CT1
DATE

Washington State Department of Transportation
BRIDGE AND STRUCTURES OFFICE

SR 529
SNOHOMISH RIVER & STEAMBOAT SLOUGH BRIDGE REPAIR, REHAB & PAINT

SR 529/10E - OPERATING DRUMS AND OPERATING ROPES

M9

SHEET 91 OF 136 SHEETS

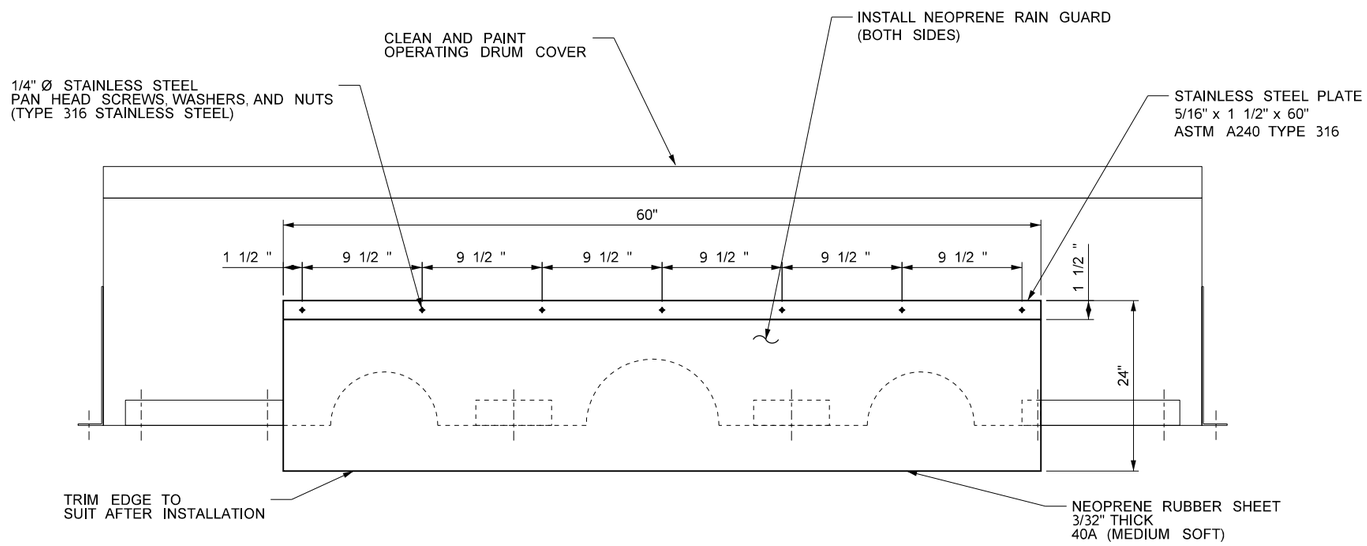

OPERATING DRUM COVER - ELEVATION

(2 LOCATIONS)
N.T.S.

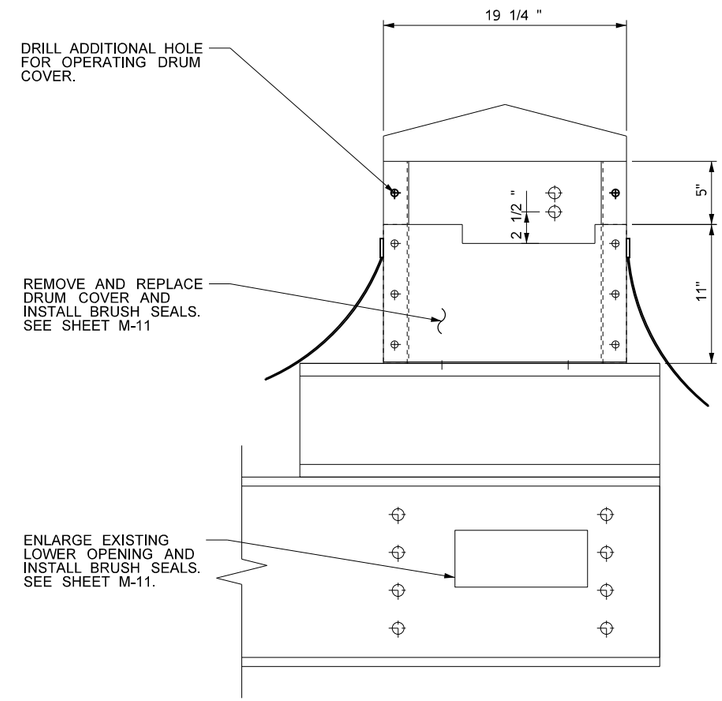

SIDE ELEVATION

N.T.S.

Hardesty & Hanover

FILE NAME: c:\users\cstone\hhprod\dms09372\M10_Operating_Drum_Cover_Repairs.dgn						
BRIDGE DESIGN ENGR:						FED.AID PROJ.NO.
SUPERVISOR:	CS					0529(020)
DESIGNED BY:	FM					REGION NO. / STATE
ENTERED BY:	DM					WASH
CHECKED BY:	SM					JOB NUMBER
MAR PROJ ENGR:						23A003
DGN ENGR MNGR:						CONTRACT NO.
ASST SECRETARY:		REVISION	DATE	BY		

DATE

FRANK M. MARZELLA
STATE OF WASHINGTON
31995
REGISTERED PROFESSIONAL ENGINEER

SEE SHEET CT1
DATE

Washington State
Department of Transportation
BRIDGE AND STRUCTURES OFFICE

SR 529
SNOHOMISH RIVER & STEAMBOAT SLOUGH
BRIDGE REPAIR, REHAB & PAINT

SR 529/10E - OPERATING DRUM
COVER REPAIRS

M10

SHEET
92
OF
136
SHEETS

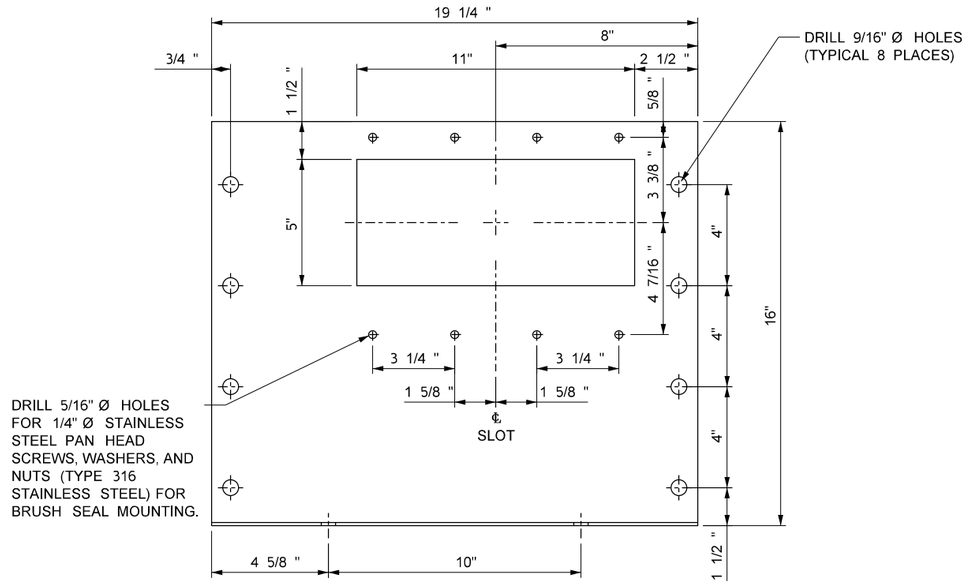

OPERATING DRUM COVER - UPPER OPENING REPLACEMENT

MATERIAL: HOT ROLLED SHEET STEEL ASTM A569, 10 GAUGE
(4 LOCATIONS, 2 AS SHOWN, 2 OPPOSITE)
N.T.S.

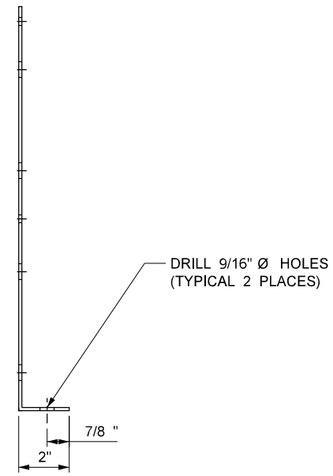

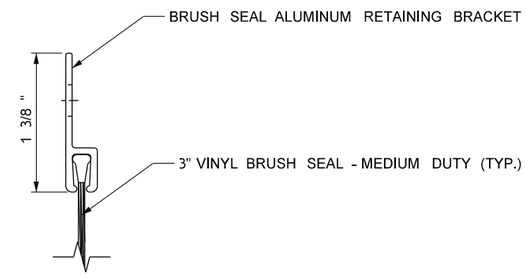

BRUSH SEAL MOUNT

MATERIAL: HIGH STRENGTH ALUMINUM CASTING ASTM B686
(8 LOCATIONS)
N.T.S.

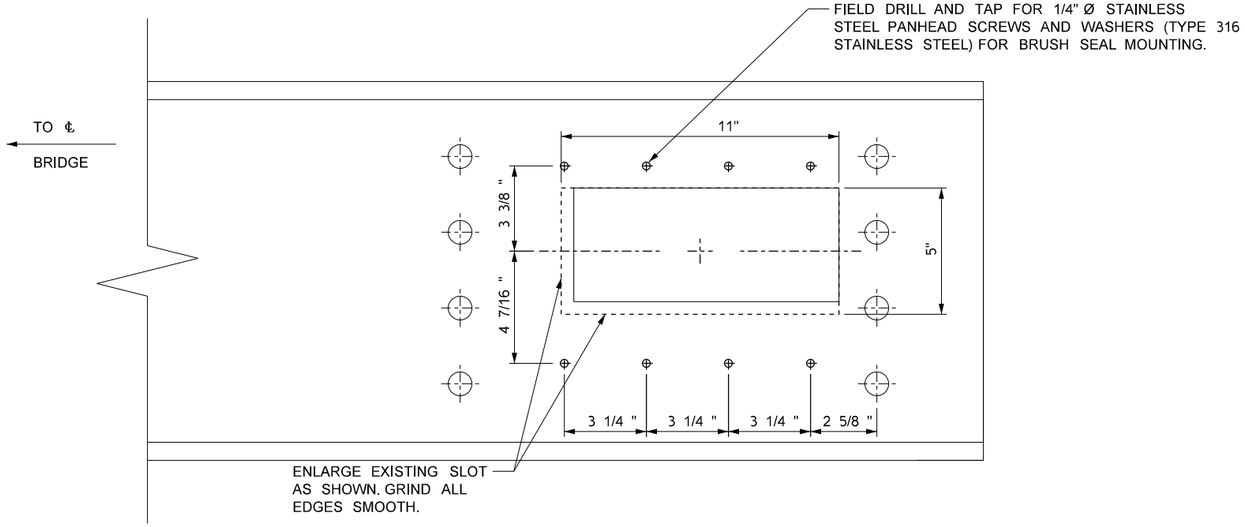

OPERATING DRUM - LOWER OPENING MODIFICATION

(4 LOCATIONS)
N.T.S.

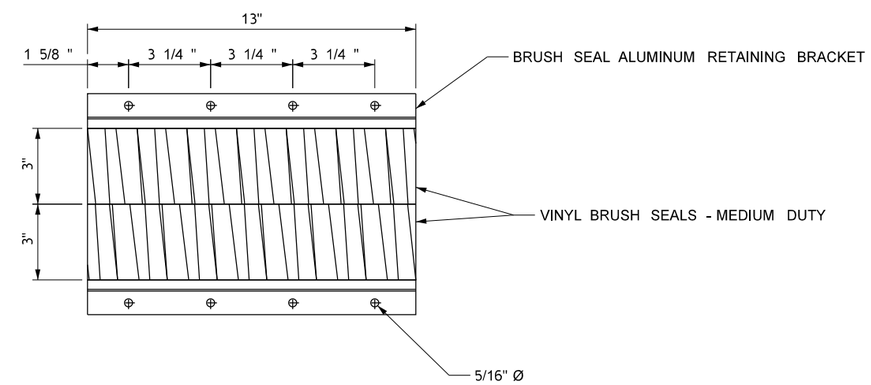

BRUSH SEALS

(8 LOCATIONS)
N.T.S.

Hardesty & Hanover

FILE NAME: c:\users\cstone\hhprod\dms09372\M11_Op_Drum_CR_Details.dgn						FED.AID PROJ.NO.
BRIDGE DESIGN ENGR:						0529(020)
SUPERVISOR: CS						REGION NO. / STATE
DESIGNED BY: FM						WASH
ENTERED BY: DM						JOB NUMBER
CHECKED BY: SM						23A003
MAR PROJ ENGR:						CONTRACT NO.
DGN ENGR MNGR:						
ASST SECRETARY:		REVISION	DATE	BY		

DATE

FRANK M. MARZELLA — STATE OF WASHINGTON — REGISTERED PROFESSIONAL ENGINEER

SEE SHEET CT1
DATE

Washington State Department of Transportation
BRIDGE AND STRUCTURES OFFICE

SR 529
SNOHOMISH RIVER & STEAMBOAT SLOUGH
BRIDGE REPAIR, REHAB & PAINT

SR 529/10E - OPERATING DRUM
COVER REPAIR DETAILS

M11

SHEET 93 OF 136 SHEETS

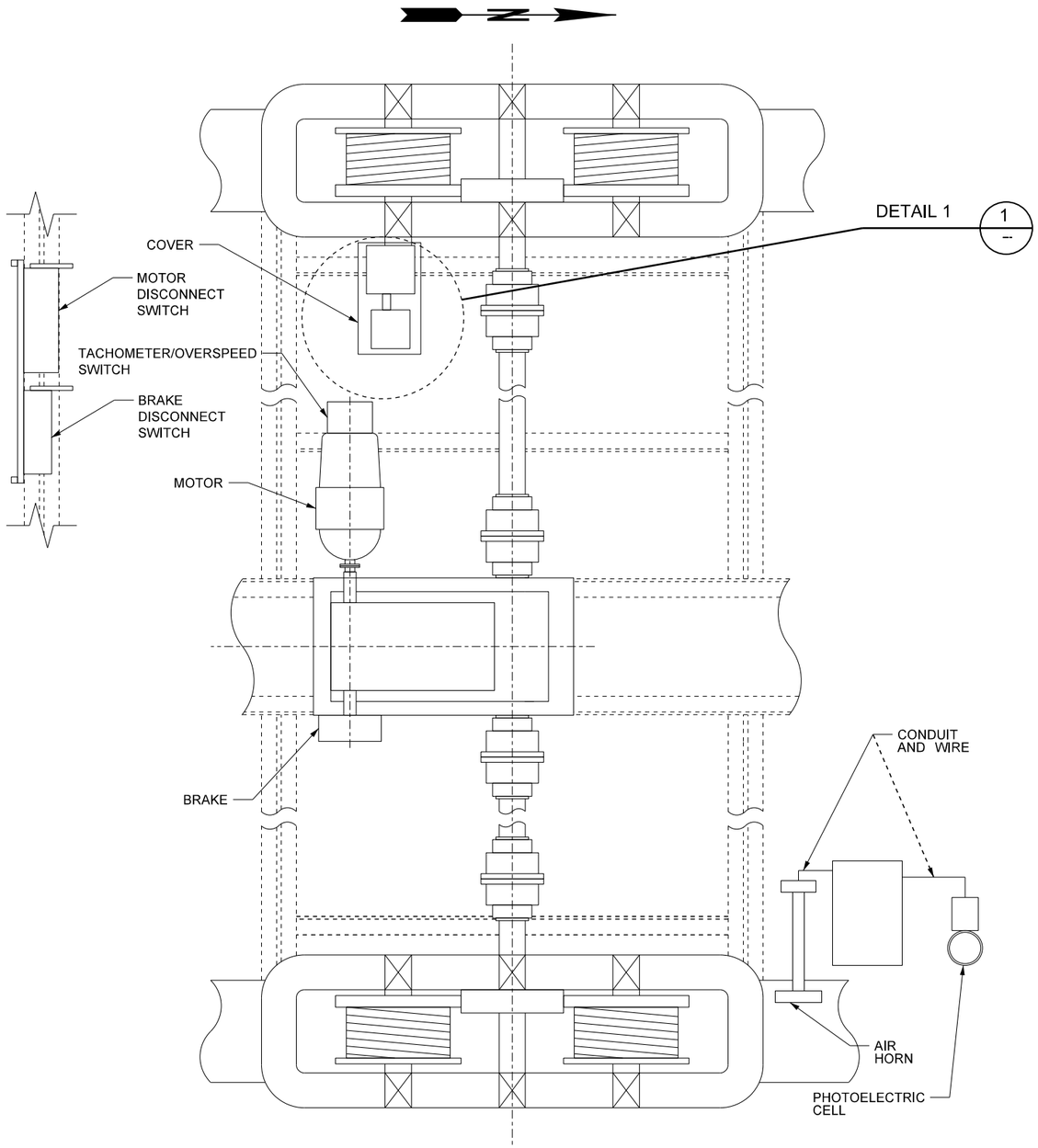

SR 529/10E VERTICAL LIFT BRIDGE - SIMPLIFIED PLAN AT SPAN DRIVE MACHINERY

N.T.S.

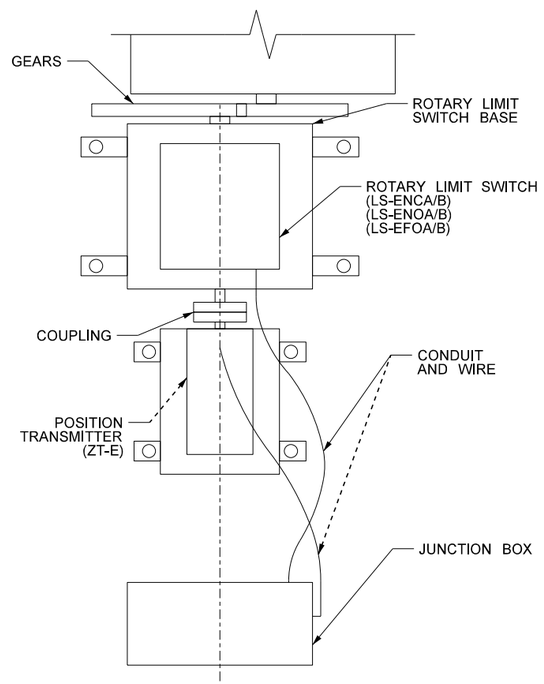

DETAIL 1: COVER REMOVED

1
--

N.T.S.

ELECTRICAL WORK INCLUDES:

1. VERIFY THE ELECTRICAL EQUIPMENT REQUIRED TO BE DISCONNECTED AND REMOVED. THIS EQUIPMENT SHALL INCLUDE, BUT IS NOT LIMITED TO: ROTARY LIMIT SWITCH, POSITION TRANSMITTER, MOTOR, MOTOR HEATER, THRUSTOR BRAKE, TACHOMETER, SPEED SWITCH, LIGHTS, RECEPTACLES, CONDUIT, RACEWAY, AND WIRES. COORDINATE THE EQUIPMENT REMOVAL WITH THE MECHANICAL AND STRUCTURAL WORK. PREPARE AS-FOUND DRAWINGS OF THE ELECTRICAL WIRING DIAGRAMS FOR THE EQUIPMENT TO BE DISCONNECTED AND REMOVED IN ACCORDANCE WITH THE SPECIAL PROVISIONS.
2. RECORD THE PLC POSITION TRANSMITTER REGISTER VALUES WITH THE MOVABLE SPAN IN THE FULLY LOWERED, NEARLY LOWERED, NEARLY RAISED, AND FULLY RAISED POSITIONS. MATCH MARK ALL ROTATING ELECTRICAL EQUIPMENT TO BE REMOVED AND THEIR ASSOCIATED MOUNTINGS TO ASSIST IN THE RE-INSTALLATION OF THE EQUIPMENT. RECORD THE DIRECTION OF THE MOTOR ROTATION WHILE RAISING AND WHILE LOWERING.
3. IMMOBILIZE THE ROTARY LIMIT SWITCH SHAFT FROM ROTATION BEFORE REMOVING THE ASSEMBLY. CARE SHALL BE TAKEN TO MAINTAIN AND PROTECT THE EQUIPMENT AND THE SHAFT POSITION.
4. ALL EQUIPMENT TO BE REMOVED SHALL BE LABELED PRIOR TO UN-TERMINATING THE WIRING. ALL WIRING SHALL BE TAGGED WITH THEIR AS-FOUND WIRE ALPHANUMERIC TAGS PRIOR TO UN-TERMINATING THE WIRING. THE ELECTRICAL EQUIPMENT TO BE REMOVED SHALL BE DISCONNECTED BY UN-TERMINATING WIRES, DISCONNECTING FASTENERS, DISCONNECTING SUPPORTS, AND CONDUIT CONNECTIONS. THE EQUIPMENT SHALL BE SECURED FOR RE-USE.
5. PROTECT THE EQUIPMENT, CONDUIT, AND WIRING FROM PHYSICAL DAMAGE AS REQUIRED.
6. AFTER THE MECHANICAL AND STRUCTURAL REHABILITATION IS COMPLETE, A QUALIFIED MILLWRIGHT AS DEFINED IN THE SPECIAL PROVISIONS, SHALL REMOUNT THE MOTOR, THRUSTOR BRAKE, TACHOMETER, SPEED SWITCH, ROTARY LIMIT SWITCH, AND POSITION TRANSMITTER, ENSURING PROPER MESH OF GEARING AND PROPER ALIGNMENT OF COUPLED SHAFTS.
7. RECONNECT THE ELECTRICAL EQUIPMENT REMOVED IN STEP 1 TO THE AS-FOUND CONDITIONS.
8. ELECTRICAL EQUIPMENT SHALL BE RETURNED TO THE DOCUMENTED AS-FOUND OPERATING CONDITION IN COMPLIANCE WITH THE SPECIAL PROVISION SECTION "BRIDGE ELECTRICAL".
9. SUBMIT THE START-UP AND COMMISSIONING PLANS FOR ACCEPTANCE.
10. PERFORM THE START-UP AND COMMISSIONING.

Hardesty & Hanover
1501 BROADWAY, NY, NY 10036

FILE NAME: c:\users\cstone\hhprod\dms09373\E_Plan.dgn					
BRIDGE DESIGN ENGR:					FED.AID PROJ.NO.
SUPERVISOR: CS					0529(020)
DESIGNED BY:					REGION NO. / STATE
ENTERED BY: DM					WASH
CHECKED BY:					JOB NUMBER 23A003
MAR PROJ ENGR:					
DGN ENGR MNGR:					CONTRACT NO.
ASST SECRETARY:		REVISION	DATE	BY	

CHRISTOPHER H. SYARA — STATE OF WASHINGTON — 37558 — REGISTERED PROFESSIONAL ENGINEER

SEE SHEET CT1

DATE

DATE

Washington State Department of Transportation
BRIDGE AND STRUCTURES OFFICE

SR 529
SNOHOMISH RIVER & STEAMBOAT SLOUGH BRIDGE REPAIR, REHAB & PAINT

SR 529/10E ELECTRICAL PLAN

E1

SHEET 94 OF 136 SHEETS

SIGN SPACING = X (1)		
FREEWAYS & EXPRESSWAYS	50-75 MPH	1500' +/-
RURAL HIGHWAYS	60-65 MPH	800' +/-
RURAL ROADS	45-55 MPH	500' +/-
RURAL ROADS & URBAN ARTERIALS	35-40 MPH	350' +/-
RURAL ROADS & URBAN ARTERIALS RESIDENTAL & BUSINESS DISTRICTS	25-30 MPH	**200' +/- (2)**
URBAN STREETS	25 MPH OR LESS	**100' +/- (2)**

(1) ALL SPACING MAY BE ADJUSTED TO ACCOMMODATE INTERCHANGE RAMPS, AT-GRADE INTERSECTIONS AND DRIVEWAYS.

(2) THIS SPACING MAY BE REDUCED IN URBAN AREAS TO FIT ROADWAY CONDITIONS.

LONGITUDINAL BUFFER SPACE = B										
SPEED (MPH)	20	25	30	35	40	45	50	55	60	65
LENGTH (feet)	115	155	200	250	305	360	425	495	570	645

MINIMUM LANE CLOSURE TAPER LENGTH = L											
LANE WIDTH	SPEED (MPH)	20	25	30	35	40	45	50	55	60	65
12'	L (feet)	80	140	180	270	330	540	600	680	720	800

MAXIMUM CHANNELIZATION DEVICE SPACING (feet)		
MPH	TAPER	TANGENT
50-65	40	80
35-45	30	60
20-30	20	40

MOBILE TRANSPORTABLE ATTENUATOR ROLL AHEAD DISTANCE = R					
HOST VEHICLE WEIGHT 9,900 TO 22,000 lbs.			HOST VEHICLE WEIGHT 22,001+ lbs.		
UP TO 40 MPH	45-55 MPH	60+ MPH	UP TO 40 MPH	45-55 MPH	60+ MPH
100'	172'	222'	100'	150'	172'

SHOULDER CLOSURE TAPER LENGTH = L/3											
SHOULDER WIDTH	SPEED (MPH)	20	25	30	35	40	45	50	55	60	65
6'	L/3 (feet)	40	40	40	60	60	90	120	120	120	160
10'		40	40	60	90	90	150	200	200	200	240
FOR SHOULDERS LESS THAN 6', USE 3 DEVICES MINIMUM											

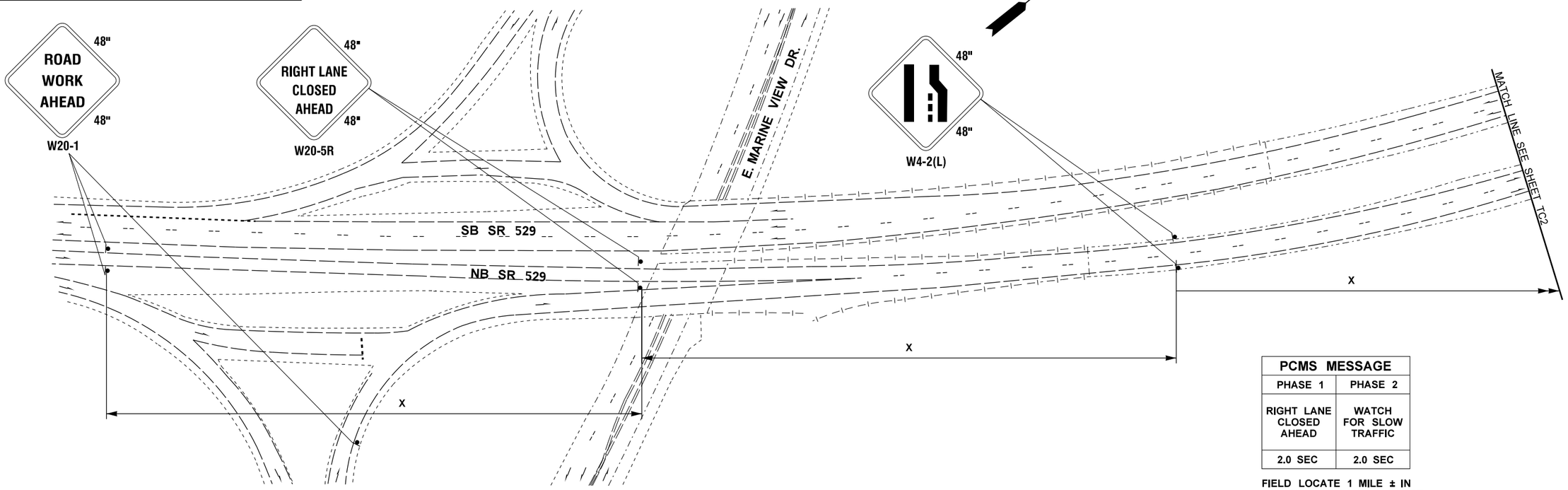

PCMS MESSAGE	
PHASE 1	PHASE 2
RIGHT LANE CLOSED AHEAD	WATCH FOR SLOW TRAFFIC
2.0 SEC	2.0 SEC

FIELD LOCATE 1 MILE ± IN ADVANCE OF LANE CLOSURE

LOCATE PCMS PER WSDOT STANDARD SPEC. 1-10.3(3)C.

LEGEND

EXISTING SIGN		PORTABLE CHANGEABLE MESSAGE SIGN	PCMS
CONSTRUCTION SIGN CLASS B		TEMPORARY IMPACT ATTENUATOR	
CONSTRUCTION SIGN CLASS A		TRANSPORTABLE ATTENUATOR	
CONSTRUCTION SIGN CLASS B (5' MOUNTING HEIGHT)		WORK AREA	
TRAFFIC SAFETY DRUM SEE SPECIAL PROVISIONS		CONTAINMENT ZONE (SECTION VIEW)	
SEQUENTIAL ARROW SIGN		TEMPORARY BARRIER	
TYPE 3 BARRICADE WITH MUTCD TYPE A WARNING LIGHTS		FLAGGER	

NORTHBOUND SR 529 CONTINUOUS SINGLE RIGHT LANE CLOSURE (BRIDGE 529/10E MP 4.10 TO MP 4.34)

1 OF 4 N.T.S

NOTES

1. USE TRANSVERSE DEVICES IN CLOSED LANE EVERY ±500 FEET.
2. DEVICES SHALL NOT ENCROACH ONTO ADJACENT LANE.
3. EXTEND DEVICE TAPER ACROSS SHOULDER.
4. DEVICE SPACING FOR DOWNSTREAM TAPER SHALL BE 20'.
5. ALL SIGNS ARE BLACK ON ORANGE UNLESS OTHERWISE DESIGNATED.
6. SEE SPECIAL PROVISIONS FOR CLOSURE RESTRICTIONS.
7. SEE SHEET TC4 FOR LANE CLOSURE DETAILS
8. SEE TPV SHEETS FOR PAVEMENT MARKING PLAN

FILE NAME	C:\pse\XL5462\CAD\XL5462_PS_TC ew.dgn				
TIME					
DATE					
PLOTTED BY					
DESIGNED BY	E. WALGAMOTT				
ENTERED BY	E. WALGAMOTT				
CHECKED BY	Y. KUANG				
PROJ. ENGR.	C. ANDERSON				
REGIONAL ADM.	B. NIELSEN	REVISION	DATE	BY	

REGION NO.	STATE	FED.AID PROJ.NO.
10	WASH	
JOB NUMBER 23A003		
CONTRACT NO.		LOCATION NO.

P.E. STAMP BOX DATE

P.E. STAMP BOX DATE

Washington State Department of Transportation

SR 529
SNOHOMISH RIVER & STEAMBOAT SLOUGH
BRIDGE REPAIR, REHAB & PAINT

TRAFFIC CONTROL PLAN

Plot 1

PLAN REF NO TC1

SHEET 95 OF 136 SHEETS

SIGN SPACING = X (1)		
FREEWAYS & EXPRESSWAYS	50-75 MPH	1500' +/-
RURAL HIGHWAYS	60-65 MPH	800' +/-
RURAL ROADS	45-55 MPH	500' +/-
RURAL ROADS & URBAN ARTERIALS	35-40 MPH	350' +/-
RURAL ROADS & URBAN ARTERIALS RESIDENTAL & BUSINESS DISTRICTS	25-30 MPH	**200' +/- (2)**
URBAN STREETS	25 MPH OR LESS	**100' +/- (2)**

(1) ALL SPACING MAY BE ADJUSTED TO ACCOMMODATE INTERCHANGE RAMPS, AT-GRADE INTERSECTIONS AND DRIVEWAYS.

(2) THIS SPACING MAY BE REDUCED IN URBAN AREAS TO FIT ROADWAY CONDITIONS.

LONGITUDINAL BUFFER SPACE = B										
SPEED (MPH)	20	25	30	35	40	45	50	55	60	65
LENGTH (feet)	115	155	200	250	305	360	425	495	570	645

MINIMUM LANE CLOSURE TAPER LENGTH = L											
LANE WIDTH	SPEED (MPH)	20	25	30	35	40	45	50	55	60	65
12'	L (feet)	80	140	180	270	330	540	600	680	720	800

MAXIMUM CHANNELIZATION DEVICE SPACING (feet)		
MPH	TAPER	TANGENT
50-65	40	80
35-45	30	60
20-30	20	40

MOBILE TRANSPORTABLE ATTENUATOR ROLL AHEAD DISTANCE = R					
HOST VEHICLE WEIGHT 9,900 TO 22,000 lbs.			HOST VEHICLE WEIGHT 22,001+ lbs.		
UP TO 40 MPH	45-55 MPH	60+ MPH	UP TO 40 MPH	45-55 MPH	60+ MPH
100'	172'	222'	100'	150'	172'

SHOULDER CLOSURE TAPER LENGTH = L/3											
SHOULDER WIDTH	SPEED (MPH)	20	25	30	35	40	45	50	55	60	65
6'	L/3 (feet)	40	40	40	60	60	90	120	120	120	160
10'		40	40	60	90	90	150	200	200	200	240
FOR SHOULDERS LESS THAN 6', USE 3 DEVICES MINIMUM											

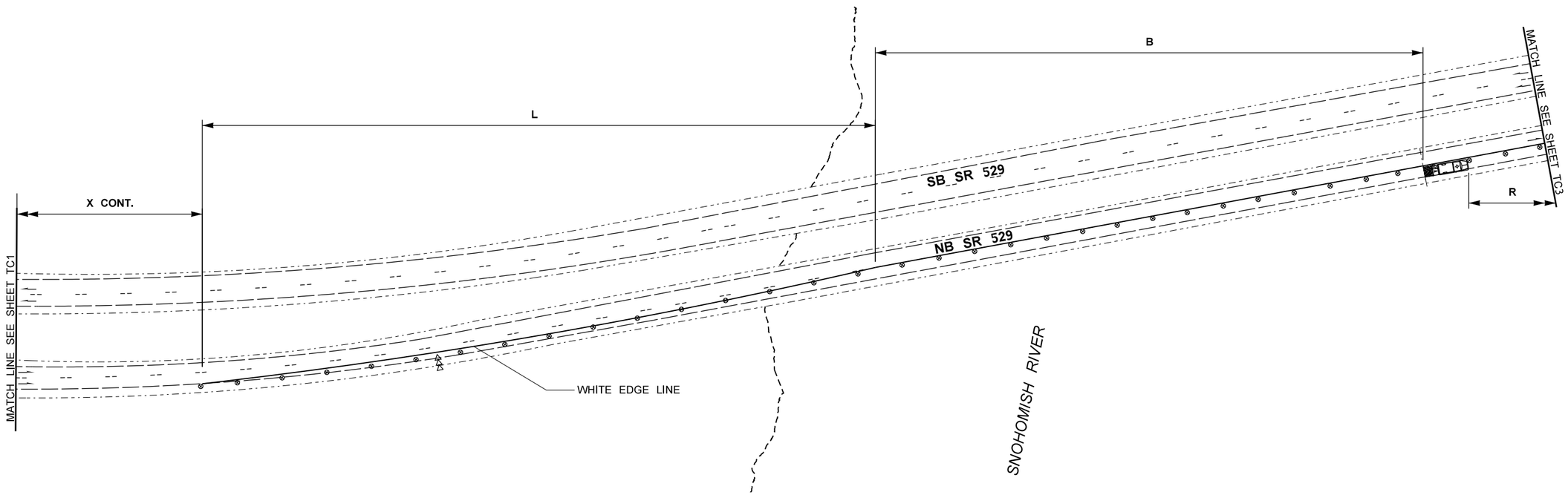

LEGEND

EXISTING SIGN		PORTABLE CHANGEABLE MESSAGE SIGN	PCMS
CONSTRUCTION SIGN CLASS B		TEMPORARY IMPACT ATTENUATOR	
CONSTRUCTION SIGN CLASS A		TRANSPORTABLE ATTENUATOR	
CONSTRUCTION SIGN CLASS B (5' MOUNTING HEIGHT)		WORK AREA	
TRAFFIC SAFETY DRUM SEE SPECIAL PROVISIONS		CONTAINMENT ZONE (SECTION VIEW)	
SEQUENTIAL ARROW SIGN		TEMPORARY BARRIER	
TYPE 3 BARRICADE WITH MUTCD TYPE A WARNING LIGHTS		FLAGGER	

NORTHBOUND SR 529 CONTINUOUS SINGLE RIGHT LANE CLOSURE
(BRIDGE 529/10E MP 4.10 TO MP 4.34)

2 OF 4 N.T.S

NOTES

1. USE TRANSVERSE DEVICES IN CLOSED LANE EVERY ±500 FEET.
2. DEVICES SHALL NOT ENCROACH ONTO ADJACENT LANE.
3. EXTEND DEVICE TAPER ACROSS SHOULDER.
4. DEVICE SPACING FOR DOWNSTREAM TAPER SHALL BE 20'.
5. ALL SIGNS ARE BLACK ON ORANGE UNLESS OTHERWISE DESIGNATED.
6. SEE SPECIAL PROVISIONS FOR CLOSURE RESTRICTIONS.
7. SEE SHEET TC4 FOR LANE CLOSURE DETAILS
8. SEE TPV SHEETS FOR PAVEMENT MARKING PLAN

FILE NAME	C:\pse\XL5462\CAD\XL5462_PS_TC ew.dgn				
TIME					
DATE					
PLOTTED BY					
DESIGNED BY	E. WALGAMOTT				
ENTERED BY	E. WALGAMOTT				
CHECKED BY	Y. KUANG				
PROJ. ENGR.	C. ANDERSON				
REGIONAL ADM.	B. NIELSEN	REVISION	DATE	BY	

REGION NO.	STATE	FED.AID PROJ.NO.
10	WASH	
JOB NUMBER 23A003		
CONTRACT NO.		LOCATION NO.

P.E. STAMP BOX DATE

P.E. STAMP BOX DATE

Washington State Department of Transportation

SR 529
SNOHOMISH RIVER & STEAMBOAT SLOUGH
BRIDGE REPAIR, REHAB & PAINT

TRAFFIC CONTROL PLAN

Plot 2

PLAN REF NO TC2

SHEET 96 OF 136 SHEETS

SIGN SPACING = X (1)		
FREEWAYS & EXPRESSWAYS	50-75 MPH	1500' +/-
RURAL HIGHWAYS	60-65 MPH	800' +/-
RURAL ROADS	45-55 MPH	500' +/-
RURAL ROADS & URBAN ARTERIALS	35-40 MPH	350' +/-
RURAL ROADS & URBAN ARTERIALS RESIDENTAL & BUSINESS DISTRICTS	25-30 MPH	**200' +/- (2)**
URBAN STREETS	25 MPH OR LESS	**100' +/- (2)**

(1) ALL SPACING MAY BE ADJUSTED TO ACCOMMODATE INTERCHANGE RAMPS, AT-GRADE INTERSECTIONS AND DRIVEWAYS.

(2) THIS SPACING MAY BE REDUCED IN URBAN AREAS TO FIT ROADWAY CONDITIONS.

LONGITUDINAL BUFFER SPACE = B										
SPEED (MPH)	20	25	30	35	40	45	50	55	60	65
LENGTH (feet)	115	155	200	250	305	360	425	495	570	645

MINIMUM LANE CLOSURE TAPER LENGTH = L										
LANE WIDTH	SPEED (MPH)	20	25	30	35	40	45	50	55	60	65
12'	L (feet)	80	140	180	270	330	540	600	680	720	800

MAXIMUM CHANNELIZATION DEVICE SPACING (feet)		
MPH	TAPER	TANGENT
50-65	40	80
35-45	30	60
20-30	20	40

MOBILE TRANSPORTABLE ATTENUATOR ROLL AHEAD DISTANCE = R					
HOST VEHICLE WEIGHT 9,900 TO 22,000 lbs.			HOST VEHICLE WEIGHT 22,001+ lbs.		
UP TO 40 MPH	45-55 MPH	60+ MPH	UP TO 40 MPH	45-55 MPH	60+ MPH
100'	172'	222'	100'	150'	172'

SHOULDER CLOSURE TAPER LENGTH = L/3											
SHOULDER WIDTH	SPEED (MPH)	20	25	30	35	40	45	50	55	60	65
6'	L/3 (feet)	40	40	40	60	60	90	120	120	120	160
10'		40	40	60	90	90	150	200	200	200	240
FOR SHOULDERS LESS THAN 6', USE 3 DEVICES MINIMUM											

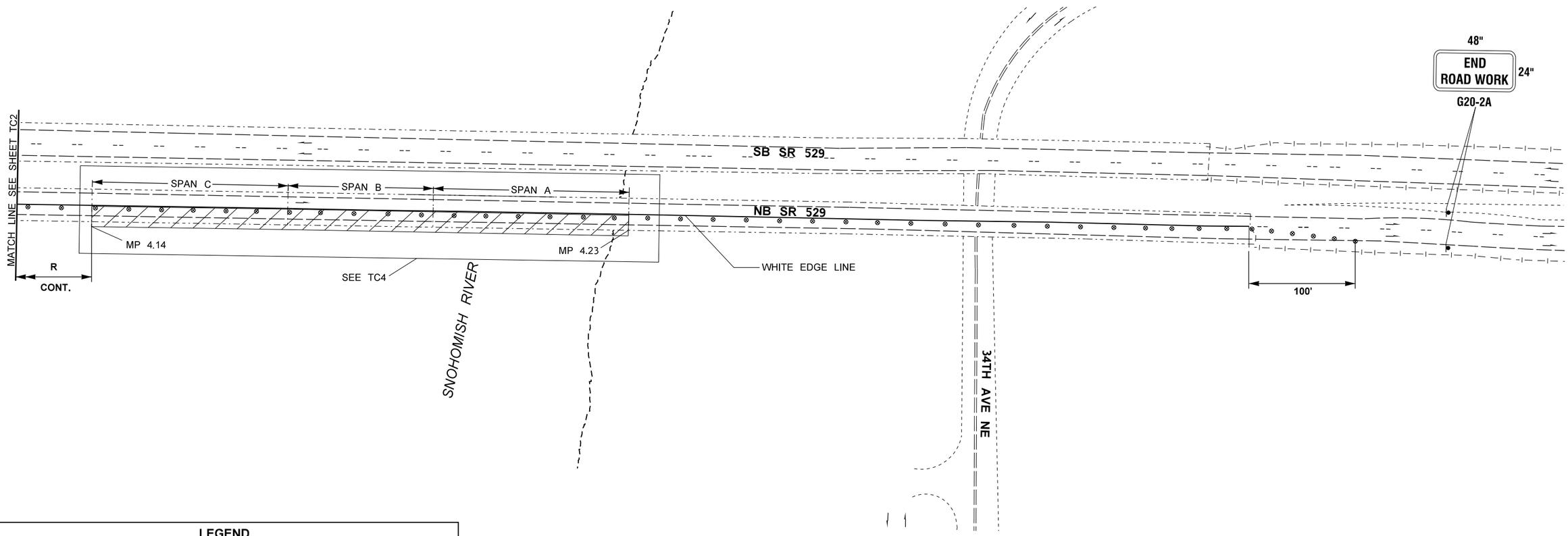

LEGEND

EXISTING SIGN		PORTABLE CHANGEABLE MESSAGE SIGN	PCMS
CONSTRUCTION SIGN CLASS B		TEMPORARY IMPACT ATTENUATOR	
CONSTRUCTION SIGN CLASS A		TRANSPORTABLE ATTENUATOR	
CONSTRUCTION SIGN CLASS B (5' MOUNTING HEIGHT)		WORK AREA	
TRAFFIC SAFETY DRUM SEE SPECIAL PROVISIONS		CONTAINMENT ZONE (SECTION VIEW)	
SEQUENTIAL ARROW SIGN		TEMPORARY BARRIER	
TYPE 3 BARRICADE WITH MUTCD TYPE A WARNING LIGHTS		FLAGGER	

NORTHBOUND SR 529 CONTINUOUS SINGLE RIGHT LANE CLOSURE (BRIDGE 529/10E MP 4.10 TO MP 4.34)

3 OF 4 N.T.S

NOTES

1. USE TRANSVERSE DEVICES IN CLOSED LANE EVERY ±500 FEET.
2. DEVICES SHALL NOT ENCROACH ONTO ADJACENT LANE.
3. EXTEND DEVICE TAPER ACROSS SHOULDER.
4. DEVICE SPACING FOR DOWNSTREAM TAPER SHALL BE 20'.
5. ALL SIGNS ARE BLACK ON ORANGE UNLESS OTHERWISE DESIGNATED.
6. SEE SPECIAL PROVISIONS FOR CLOSURE RESTRICTIONS.
7. SEE SHEET TC4 FOR LANE CLOSURE DETAILS
8. SEE TPV SHEETS FOR PAVEMENT MARKING PLAN

FILE NAME	C:\pse\XL5462\CAD\XL5462_PS_TC ew.dgn				
TIME					
DATE					
PLOTTED BY					
DESIGNED BY	E. WALGAMOTT				
ENTERED BY	E. WALGAMOTT				
CHECKED BY	Y. KUANG				
PROJ. ENGR.	C. ANDERSON				
REGIONAL ADM.	B. NIELSEN	REVISION	DATE	BY	

REGION NO.	STATE	FED.AID PROJ.NO.
10	WASH	
JOB NUMBER 23A003		
CONTRACT NO.		LOCATION NO.

P.E. STAMP BOX DATE

P.E. STAMP BOX DATE

Washington State Department of Transportation

SR 529
SNOHOMISH RIVER & STEAMBOAT SLOUGH
BRIDGE REPAIR, REHAB & PAINT

TRAFFIC CONTROL PLAN

Plot 3

PLAN REF NO TC3

SHEET 97 OF 136 SHEETS

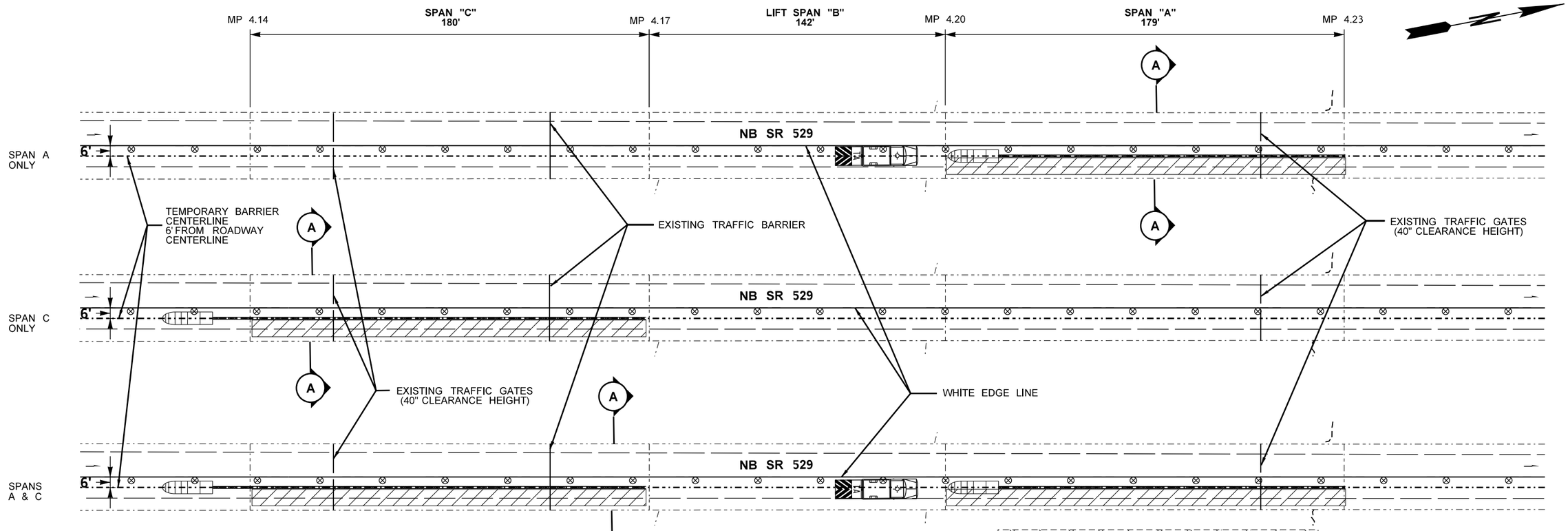

MAXIMUM CHANNELIZATION DEVICE SPACING (feet)		
MPH	TAPER	TANGENT
50-65	40	80
35-45	30	60
20-30	20	40

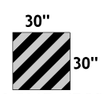

W12-501R (B/Y)

TO BE PLACED ON ALL TEMPORARY IMPACT ATTENUATORS THIS SHEET

SPANS A & C
TEMPORARY BARRIER
LOADING CONFIGURATIONS

TL-3 APPROVED TEMPORARY IMPACT ATTENUATOR LIST	
ABSORB 350 TL-3	TRITON CET TL-3
ABSORB-M TL-3	ACZ-350 TL-3

LEGEND

EXISTING SIGN		PORTABLE CHANGEABLE MESSAGE SIGN	PCMS
CONSTRUCTION SIGN CLASS B		TEMPORARY IMPACT ATTENUATOR	
CONSTRUCTION SIGN CLASS A		TRANSPORTABLE ATTENUATOR	
CONSTRUCTION SIGN CLASS B (5' MOUNTING HEIGHT)		WORK AREA	
TRAFFIC SAFETY DRUM SEE SPECIAL PROVISIONS		CONTAINMENT ZONE (SECTION VIEW)	
SEQUENTIAL ARROW SIGN		TEMPORARY BARRIER	
TYPE 3 BARRICADE WITH MUTCD TYPE A WARNING LIGHTS		FLAGGER	

NORTHBOUND SR 529 CONTINUOUS SINGLE RIGHT LANE CLOSURE
(BRIDGE 529/10E MP 4.10 TO MP 4.34)
4 OF 4 N.T.S

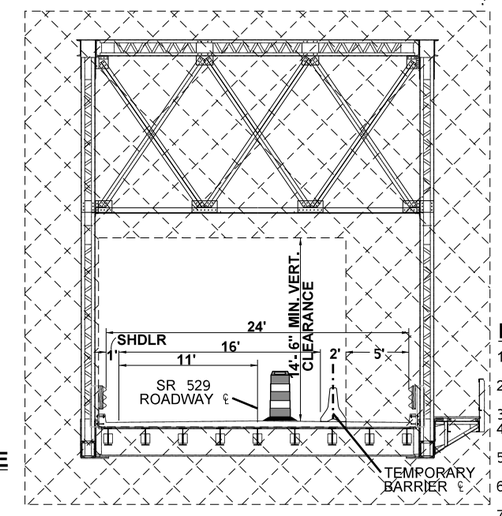

A-A SECTION

NOTES

1. USE TRANSVERSE DEVICES IN CLOSED LANE EVERY ±500 FEET.
2. DEVICES SHALL NOT ENCROACH ONTO ADJACENT LANE.
3. EXTEND DEVICE TAPER ACROSS SHOULDER.
4. DEVICE SPACING FOR DOWNSTREAM TAPER SHALL BE 20'.
5. ALL SIGNS ARE BLACK ON ORANGE UNLESS OTHERWISE DESIGNATED.
6. SEE SPECIAL PROVISIONS FOR CLOSURE RESTRICTIONS.
7. TEMPORARY BARRIER MUST BE PLACED ON LANE CENTER WHERE SHOWN.
8. SEE TPV SHEETS FOR PAVEMENT MARKING PLAN
9. SPAN "B" WORK TO BE DONE DURING NORTHBOUND SR 529 CROSSOVER OR 529/10E ROADWAY CLOSURE

FILE NAME	C:\pse\XL5462\CAD\XL5462_PS_TC ew.dgn				
TIME					
DATE					
PLOTTED BY					
DESIGNED BY	E. WALGAMOTT				
ENTERED BY	E. WALGAMOTT				
CHECKED BY	Y. KUANG				
PROJ. ENGR.	C. ANDERSON				
REGIONAL ADM.	B. NIELSEN	REVISION	DATE	BY	

REGION NO.	STATE	FED.AID PROJ.NO.
10	WASH	
JOB NUMBER 23A003		
CONTRACT NO.		LOCATION NO.

P.E. STAMP BOX DATE

P.E. STAMP BOX DATE

Washington State Department of Transportation

SR 529
SNOHOMISH RIVER & STEAMBOAT SLOUGH
BRIDGE REPAIR, REHAB & PAINT

TRAFFIC CONTROL PLAN

Plot 8
PLAN REF NO TC4
SHEET 98 OF 136 SHEETS

SIGN SPACING = X (1)		
FREEWAYS & EXPRESSWAYS	50-75 MPH	1500' +/-
RURAL HIGHWAYS	60-65 MPH	800' +/-
RURAL ROADS	45-55 MPH	500' +/-
RURAL ROADS & URBAN ARTERIALS	35-40 MPH	350' +/-
RURAL ROADS & URBAN ARTERIALS RESIDENTAL & BUSINESS DISTRICTS	25-30 MPH	**200' +/- (2)**
URBAN STREETS	25 MPH OR LESS	**100' +/- (2)**

(1) ALL SPACING MAY BE ADJUSTED TO ACCOMMODATE INTERCHANGE RAMPS, AT-GRADE INTERSECTIONS AND DRIVEWAYS.

(2) THIS SPACING MAY BE REDUCED IN URBAN AREAS TO FIT ROADWAY CONDITIONS.

LONGITUDINAL BUFFER SPACE = B										
SPEED (MPH)	20	25	30	35	40	45	50	55	60	65
LENGTH (feet)	115	155	200	250	305	360	425	495	570	645

MINIMUM LANE CLOSURE TAPER LENGTH = L											
LANE WIDTH	SPEED (MPH)	20	25	30	35	40	45	50	55	60	65
12'	L (feet)	80	140	180	270	330	540	600	680	720	800

MAXIMUM CHANNELIZATION DEVICE SPACING (feet)		
MPH	TAPER	TANGENT
50-65	40	80
35-45	30	60
20-30	20	40

MOBILE TRANSPORTABLE ATTENUATOR ROLL AHEAD DISTANCE = R					
HOST VEHICLE WEIGHT 9,900 TO 22,000 lbs.			HOST VEHICLE WEIGHT 22,001+ lbs.		
UP TO 40 MPH	45-55 MPH	60+ MPH	UP TO 40 MPH	45-55 MPH	60+ MPH
100'	172'	222'	100'	150'	172'

SHOULDER CLOSURE TAPER LENGTH = L/3											
SHOULDER WIDTH	SPEED (MPH)	20	25	30	35	40	45	50	55	60	65
6'	L/3 (feet)	40	40	40	60	60	90	120	120	120	160
10'		40	40	60	90	90	150	200	200	200	240
FOR SHOULDERS LESS THAN 6', USE 3 DEVICES MINIMUM											

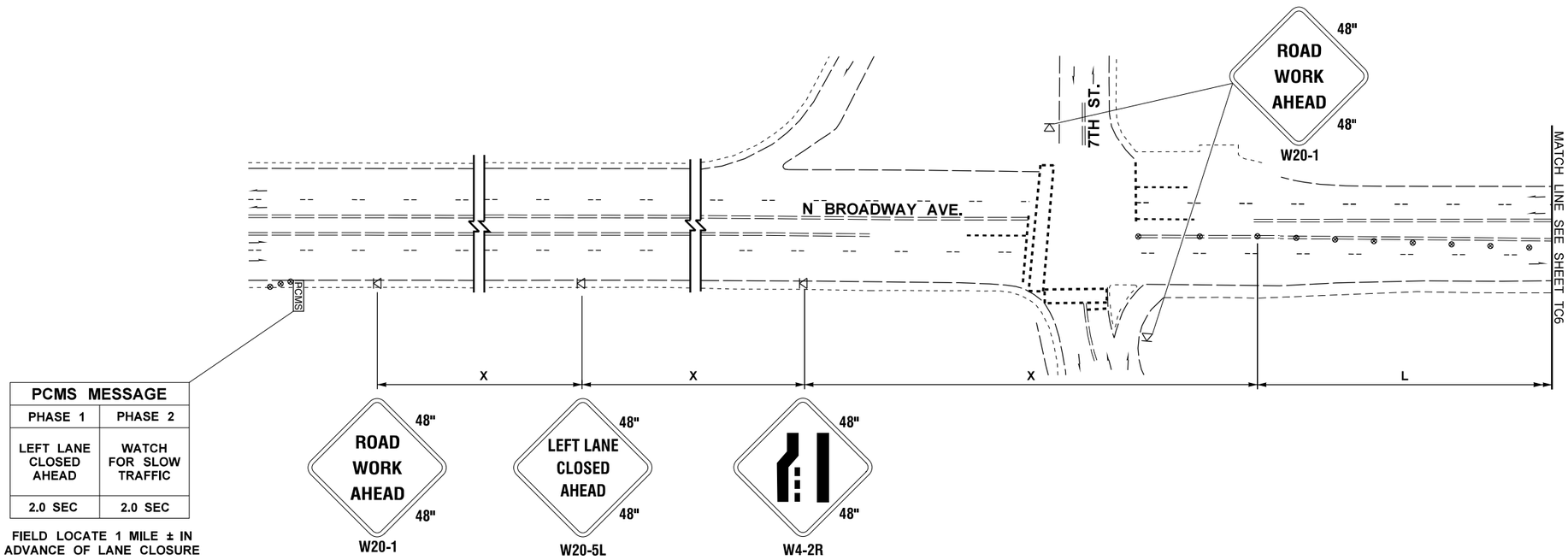

PCMS MESSAGE	
PHASE 1	PHASE 2
LEFT LANE CLOSED AHEAD	WATCH FOR SLOW TRAFFIC
2.0 SEC	2.0 SEC

FIELD LOCATE 1 MILE ± IN ADVANCE OF LANE CLOSURE

LEGEND

EXISTING SIGN		PORTABLE CHANGEABLE MESSAGE SIGN	PCMS
CONSTRUCTION SIGN CLASS B		TEMPORARY IMPACT ATTENUATOR	
CONSTRUCTION SIGN CLASS A		TRANSPORTABLE ATTENUATOR	
CONSTRUCTION SIGN CLASS B (5' MOUNTING HEIGHT)		WORK AREA	
TRAFFIC SAFETY DRUM SEE SPECIAL PROVISIONS		CONTAINMENT ZONE (SECTION VIEW)	
SEQUENTIAL ARROW SIGN		TEMPORARY BARRIER	
TYPE 3 BARRICADE WITH MUTCD TYPE A WARNING LIGHTS		FLAGGER	

NORTHBOUND SR 529 SINGLE LEFT LANE CLOSURE (N BROADWAY TO MP 5.61)

N BROADWAY TO MP 3.74 - 1 OF 2 N.T.S

NOTES

1. USE TRANSVERSE DEVICES IN CLOSED LANE EVERY ±500 FEET.
2. DEVICES SHALL NOT ENCROACH ONTO ADJACENT LANE.
3. EXTEND DEVICE TAPER ACROSS SHOULDER.
4. DEVICE SPACING FOR DOWNSTREAM TAPER SHALL BE 20'.
5. ALL SIGNS ARE BLACK ON ORANGE UNLESS OTHERWISE DESIGNATED.
6. SEE SPECIAL PROVISIONS FOR CLOSURE RESTRICTIONS.

FILE NAME	C:\pse\XL5462\CAD\XL5462_PS_TC 2.dgn				
TIME					
DATE					
PLOTTED BY					
DESIGNED BY	E. WALGAMOTT				
ENTERED BY	E. WALGAMOTT				
CHECKED BY	Y. KUANG				
PROJ. ENGR.	C. ANDERSON				
REGIONAL ADM.	B. NIELSEN	REVISION	DATE	BY	

REGION NO.	STATE	FED.AID PROJ.NO.
10	WASH	
JOB NUMBER 23A003		
CONTRACT NO.		LOCATION NO.

P.E. STAMP BOX DATE

P.E. STAMP BOX DATE

Washington State Department of Transportation

SR 529
SNOHOMISH RIVER & STEAMBOAT SLOUGH BRIDGE REPAIR, REHAB & PAINT

TRAFFIC CONTROL PLAN

Plot 2

PLAN REF NO TC5

SHEET 99 OF 136 SHEETS

SIGN SPACING = X (1)		
FREEWAYS & EXPRESSWAYS	50-75 MPH	1500' +/-
RURAL HIGHWAYS	60-65 MPH	800' +/-
RURAL ROADS	45-55 MPH	500' +/-
RURAL ROADS & URBAN ARTERIALS	35-40 MPH	350' +/-
RURAL ROADS & URBAN ARTERIALS RESIDENTAL & BUSINESS DISTRICTS	25-30 MPH	**200' +/- (2)**
URBAN STREETS	25 MPH OR LESS	**100' +/- (2)**

(1) ALL SPACING MAY BE ADJUSTED TO ACCOMMODATE INTERCHANGE RAMPS, AT-GRADE INTERSECTIONS AND DRIVEWAYS.

(2) THIS SPACING MAY BE REDUCED IN URBAN AREAS TO FIT ROADWAY CONDITIONS.

LONGITUDINAL BUFFER SPACE = B										
SPEED (MPH)	20	25	30	35	40	45	50	55	60	65
LENGTH (feet)	115	155	200	250	305	360	425	495	570	645

MINIMUM LANE CLOSURE TAPER LENGTH = L											
LANE WIDTH	SPEED (MPH)	20	25	30	35	40	45	50	55	60	65
12'	L (feet)	80	140	180	270	330	540	600	680	720	800

MAXIMUM CHANNELIZATION DEVICE SPACING (feet)		
MPH	TAPER	TANGENT
50-65	40	80
35-45	30	60
20-30	20	40

MOBILE TRANSPORTABLE ATTENUATOR ROLL AHEAD DISTANCE = R					
HOST VEHICLE WEIGHT 9,900 TO 22,000 lbs.			HOST VEHICLE WEIGHT 22,001+ lbs.		
UP TO 40 MPH	45-55 MPH	60+ MPH	UP TO 40 MPH	45-55 MPH	60+ MPH
100'	172'	222'	100'	150'	172'

SHOULDER CLOSURE TAPER LENGTH = L/3											
SHOULDER WIDTH	SPEED (MPH)	20	25	30	35	40	45	50	55	60	65
6'	L/3 (feet)	40	40	40	60	60	90	120	120	120	160
10'		40	40	60	90	90	150	200	200	200	240
FOR SHOULDERS LESS THAN 6', USE 3 DEVICES MINIMUM											

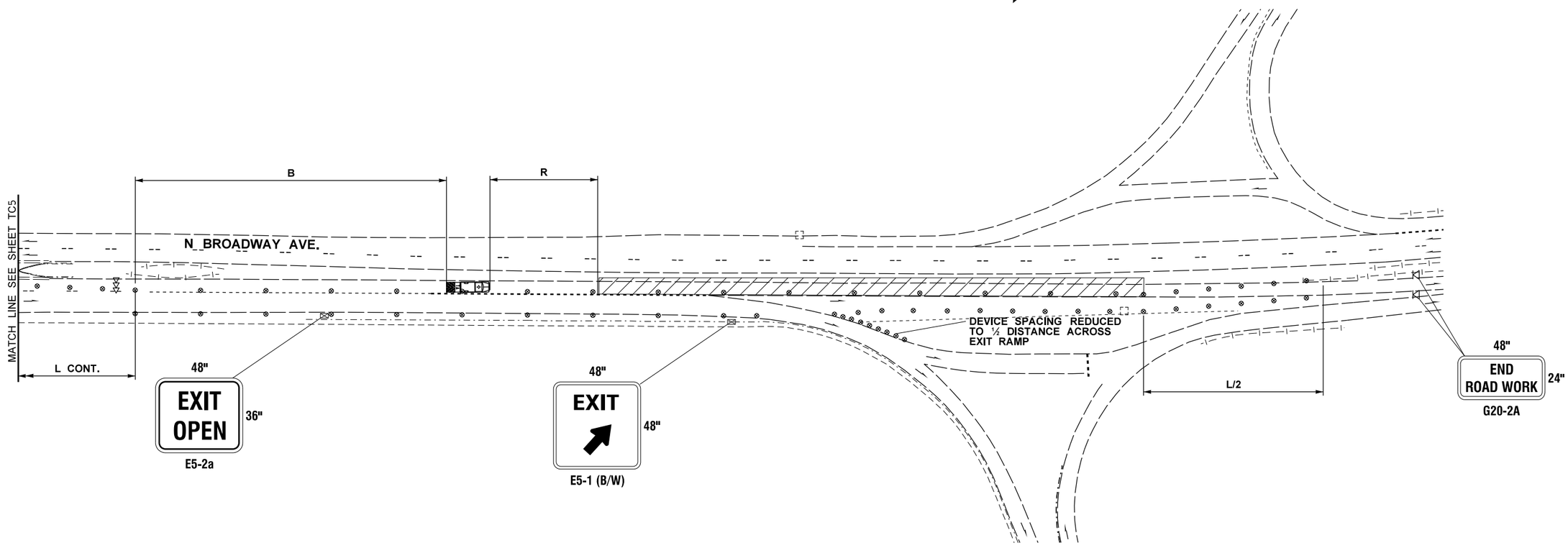

LEGEND

EXISTING SIGN		PORTABLE CHANGEABLE MESSAGE SIGN	PCMS
CONSTRUCTION SIGN CLASS B		TEMPORARY IMPACT ATTENUATOR	
CONSTRUCTION SIGN CLASS A		TRANSPORTABLE ATTENUATOR	
CONSTRUCTION SIGN CLASS B (5' MOUNTING HEIGHT)		WORK AREA	
TRAFFIC SAFETY DRUM SEE SPECIAL PROVISIONS		CONTAINMENT ZONE (SECTION VIEW)	
SEQUENTIAL ARROW SIGN		TEMPORARY BARRIER	
TYPE 3 BARRICADE WITH MUTCD TYPE A WARNING LIGHTS		FLAGGER	

NORTHBOUND SR 529 SINGLE LEFT LANE CLOSURE
(N BROADWAY TO MP 5.61)

N BROADWAY TO MP 3.74 - 2 OF 2 N.T.S

NOTES

1. USE TRANSVERSE DEVICES IN CLOSED LANE EVERY ±500 FEET.
2. DEVICES SHALL NOT ENCROACH ONTO ADJACENT LANE.
3. EXTEND DEVICE TAPER ACROSS SHOULDER.
4. DEVICE SPACING FOR DOWNSTREAM TAPER SHALL BE 20'.
5. ALL SIGNS ARE BLACK ON ORANGE UNLESS OTHERWISE DESIGNATED.
6. SEE SPECIAL PROVISIONS FOR CLOSURE RESTRICTIONS.

FILE NAME	C:\pse\XL5462\CAD\XL5462_PS_TC 2.dgn					
TIME						
DATE						
PLOTTED BY						
DESIGNED BY	E. WALGAMOTT					
ENTERED BY	E. WALGAMOTT					
CHECKED BY	Y. KUANG					
PROJ. ENGR.	C. ANDERSON					
REGIONAL ADM.	B. NIELSEN	REVISION	DATE	BY		

REGION NO.	STATE	FED.AID PROJ.NO.
10	WASH	
JOB NUMBER 23A003		
CONTRACT NO.		LOCATION NO.

P.E. STAMP BOX DATE

P.E. STAMP BOX DATE

Washington State Department of Transportation

SR 529
SNOHOMISH RIVER & STEAMBOAT SLOUGH
BRIDGE REPAIR, REHAB & PAINT

TRAFFIC CONTROL PLAN

Plot 3

PLAN REF NO TC6

SHEET 100 OF 136 SHEETS

SIGN SPACING = X (1)		
FREEWAYS & EXPRESSWAYS	50-75 MPH	1500' +/-
RURAL HIGHWAYS	60-65 MPH	800' +/-
RURAL ROADS	45-55 MPH	500' +/-
RURAL ROADS & URBAN ARTERIALS	35-40 MPH	350' +/-
RURAL ROADS & URBAN ARTERIALS RESIDENTAL & BUSINESS DISTRICTS	25-30 MPH	**200' +/- (2)**
URBAN STREETS	25 MPH OR LESS	**100' +/- (2)**

(1) ALL SPACING MAY BE ADJUSTED TO ACCOMMODATE INTERCHANGE RAMPS, AT-GRADE INTERSECTIONS AND DRIVEWAYS.

(2) THIS SPACING MAY BE REDUCED IN URBAN AREAS TO FIT ROADWAY CONDITIONS.

LONGITUDINAL BUFFER SPACE = B										
SPEED (MPH)	20	25	30	35	40	45	50	55	60	65
LENGTH (feet)	115	155	200	250	305	360	425	495	570	645

MINIMUM LANE CLOSURE TAPER LENGTH = L										
LANE WIDTH	SPEED (MPH)	20	25	30	35	40	45	50	55	60	65
12'	L (feet)	80	140	180	270	330	540	600	680	720	800

MAXIMUM CHANNELIZATION DEVICE SPACING (feet)		
MPH	TAPER	TANGENT
50-65	40	80
35-45	30	60
20-30	20	40

MOBILE TRANSPORTABLE ATTENUATOR ROLL AHEAD DISTANCE = R					
HOST VEHICLE WEIGHT 9,900 TO 22,000 lbs.			HOST VEHICLE WEIGHT 22,001+ lbs.		
UP TO 40 MPH	45-55 MPH	60+ MPH	UP TO 40 MPH	45-55 MPH	60+ MPH
100'	172'	222'	100'	150'	172'

SHOULDER CLOSURE TAPER LENGTH = L/3											
SHOULDER WIDTH	SPEED (MPH)	20	25	30	35	40	45	50	55	60	65
6'	L/3 (feet)	40	40	40	60	60	90	120	120	120	160
10'		40	40	60	90	90	150	200	200	200	240
FOR SHOULDERS LESS THAN 6', USE 3 DEVICES MINIMUM											

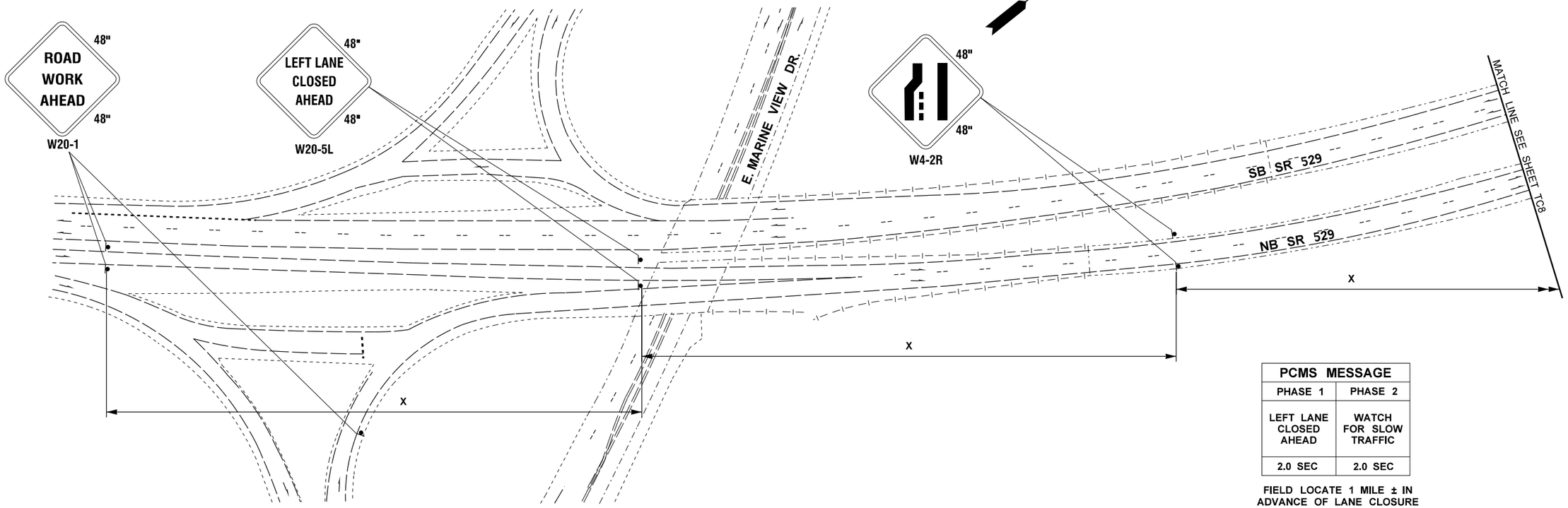

PCMS MESSAGE	
PHASE 1	PHASE 2
LEFT LANE CLOSED AHEAD	WATCH FOR SLOW TRAFFIC
2.0 SEC	2.0 SEC

FIELD LOCATE 1 MILE ± IN ADVANCE OF LANE CLOSURE

LOCATE PCMS PER WSDOT STANDARD SPEC. 1-10.3(3)C.

LEGEND

EXISTING SIGN		PORTABLE CHANGEABLE MESSAGE SIGN	PCMS
CONSTRUCTION SIGN CLASS B		TEMPORARY IMPACT ATTENUATOR	
CONSTRUCTION SIGN CLASS A		TRANSPORTABLE ATTENUATOR	
CONSTRUCTION SIGN CLASS B (5' MOUNTING HEIGHT)		WORK AREA	
TRAFFIC SAFETY DRUM SEE SPECIAL PROVISIONS		CONTAINMENT ZONE (SECTION VIEW)	
SEQUENTIAL ARROW SIGN		TEMPORARY BARRIER	
TYPE 3 BARRICADE WITH MUTCD TYPE A WARNING LIGHTS		FLAGGER	

NORTHBOUND SR 529 CONTINUOUS SINGLE LEFT LANE CLOSURE
(BRIDGE 529/10E MP 4.10 TO MP 4.34)

MP 4.14 TO MP 4.23 - 1 OF 4 N.T.S

NOTES

1. USE TRANSVERSE DEVICES IN CLOSED LANE EVERY ±500 FEET.
2. DEVICES SHALL NOT ENCROACH ONTO ADJACENT LANE.
3. EXTEND DEVICE TAPER ACROSS SHOULDER.
4. DEVICE SPACING FOR DOWNSTREAM TAPER SHALL BE 20'.
5. ALL SIGNS ARE BLACK ON ORANGE UNLESS OTHERWISE DESIGNATED.
6. SEE SPECIAL PROVISIONS FOR CLOSURE RESTRICTIONS.
7. SEE TPV SHEETS FOR PAVEMENT MARKING PLAN

FILE NAME	C:\pse\XL5462\CAD\XL5462_PS_TC ew.dgn					
TIME					REGION NO. 10	STATE WASH
DATE						FED.AID PROJ.NO.
PLOTTED BY						
DESIGNED BY	E. WALGAMOTT				JOB NUMBER 23A003	
ENTERED BY	E. WALGAMOTT					
CHECKED BY	Y. KUANG				CONTRACT NO.	LOCATION NO.
PROJ. ENGR.	C. ANDERSON					
REGIONAL ADM.	B. NIELSEN	REVISION	DATE	BY		

P.E. STAMP BOX DATE

P.E. STAMP BOX DATE

Washington State Department of Transportation

SR 529
SNOHOMISH RIVER & STEAMBOAT SLOUGH
BRIDGE REPAIR, REHAB & PAINT

TRAFFIC CONTROL PLAN

Plot 11

PLAN REF NO TC7

SHEET 101 OF 136 SHEETS

SIGN SPACING = X (1)		
FREEWAYS & EXPRESSWAYS	50-75 MPH	1500' +/-
RURAL HIGHWAYS	60-65 MPH	800' +/-
RURAL ROADS	45-55 MPH	500' +/-
RURAL ROADS & URBAN ARTERIALS	35-40 MPH	350' +/-
RURAL ROADS & URBAN ARTERIALS RESIDENTAL & BUSINESS DISTRICTS	25-30 MPH	**200' +/- (2)**
URBAN STREETS	25 MPH OR LESS	**100' +/- (2)**

(1) ALL SPACING MAY BE ADJUSTED TO ACCOMMODATE INTERCHANGE RAMPS, AT-GRADE INTERSECTIONS AND DRIVEWAYS.

(2) THIS SPACING MAY BE REDUCED IN URBAN AREAS TO FIT ROADWAY CONDITIONS.

LONGITUDINAL BUFFER SPACE = B										
SPEED (MPH)	20	25	30	35	40	45	50	55	60	65
LENGTH (feet)	115	155	200	250	305	360	425	495	570	645

MINIMUM LANE CLOSURE TAPER LENGTH = L											
LANE WIDTH	SPEED (MPH)	20	25	30	35	40	45	50	55	60	65
12'	L (feet)	80	140	180	270	330	540	600	680	720	800

MAXIMUM CHANNELIZATION DEVICE SPACING (feet)		
MPH	TAPER	TANGENT
50-65	40	80
35-45	30	60
20-30	20	40

MOBILE TRANSPORTABLE ATTENUATOR ROLL AHEAD DISTANCE = R					
HOST VEHICLE WEIGHT 9,900 TO 22,000 lbs.			HOST VEHICLE WEIGHT 22,001+ lbs.		
UP TO 40 MPH	45-55 MPH	60+ MPH	UP TO 40 MPH	45-55 MPH	60+ MPH
100'	172'	222'	100'	150'	172'

SHOULDER CLOSURE TAPER LENGTH = L/3											
SHOULDER WIDTH	SPEED (MPH)	20	25	30	35	40	45	50	55	60	65
6'	L/3 (feet)	40	40	40	60	60	90	120	120	120	160
10'		40	40	60	90	90	150	200	200	200	240
FOR SHOULDERS LESS THAN 6', USE 3 DEVICES MINIMUM											

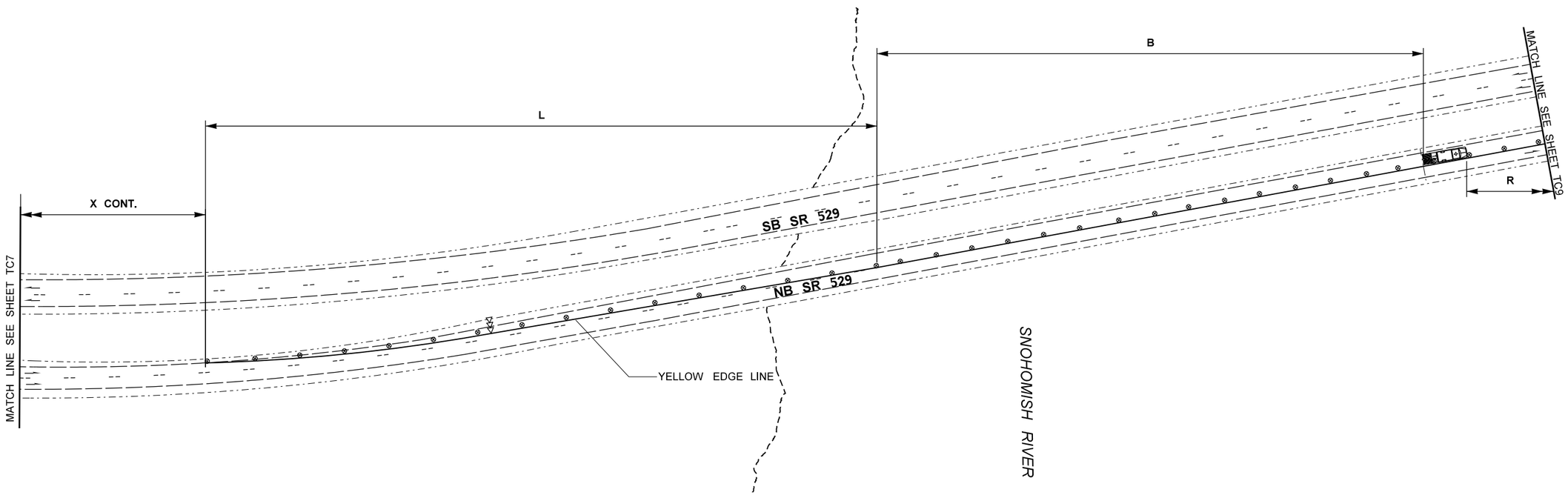

LEGEND

EXISTING SIGN		PORTABLE CHANGEABLE MESSAGE SIGN	PCMS
CONSTRUCTION SIGN CLASS B		TEMPORARY IMPACT ATTENUATOR	
CONSTRUCTION SIGN CLASS A		TRANSPORTABLE ATTENUATOR	
CONSTRUCTION SIGN CLASS B (5' MOUNTING HEIGHT)		WORK AREA	
TRAFFIC SAFETY DRUM SEE SPECIAL PROVISIONS		CONTAINMENT ZONE (SECTION VIEW)	
SEQUENTIAL ARROW SIGN		TEMPORARY BARRIER	
TYPE 3 BARRICADE WITH MUTCD TYPE A WARNING LIGHTS		FLAGGER	

NORTHBOUND SR 529 CONTINUOUS SINGLE LEFT LANE CLOSURE
(BRIDGE 529/10E MP 4.10 TO MP 4.34)

MP 4.14 TO MP 4.23 - 2 OF 4 N.T.S

NOTES

1. USE TRANSVERSE DEVICES IN CLOSED LANE EVERY ±500 FEET.
2. DEVICES SHALL NOT ENCROACH ONTO ADJACENT LANE.
3. EXTEND DEVICE TAPER ACROSS SHOULDER.
4. DEVICE SPACING FOR DOWNSTREAM TAPER SHALL BE 20'.
5. ALL SIGNS ARE BLACK ON ORANGE UNLESS OTHERWISE DESIGNATED.
6. SEE SPECIAL PROVISIONS FOR CLOSURE RESTRICTIONS.
7. SEE TPV SHEETS FOR PAVEMENT MARKING PLAN

FILE NAME	C:\pse\XL5462\CAD\XL5462_PS_TC ew.dgn					
TIME						
DATE						
PLOTTED BY						
DESIGNED BY	E. WALGAMOTT					
ENTERED BY	E. WALGAMOTT					
CHECKED BY	Y. KUANG					
PROJ. ENGR.	C. ANDERSON					
REGIONAL ADM.	B. NIELSEN	REVISION	DATE	BY		

REGION NO.	STATE	FED.AID PROJ.NO.
10	WASH	
JOB NUMBER 23A003		
CONTRACT NO.		LOCATION NO.

P.E. STAMP BOX DATE

P.E. STAMP BOX DATE

Washington State Department of Transportation

SR 529
SNOHOMISH RIVER & STEAMBOAT SLOUGH
BRIDGE REPAIR, REHAB & PAINT

TRAFFIC CONTROL PLAN

Plot 12

PLAN REF NO TC8

SHEET 102 OF 136 SHEETS

SIGN SPACING = X (1)		
FREEWAYS & EXPRESSWAYS	50-75 MPH	1500' +/-
RURAL HIGHWAYS	60-65 MPH	800' +/-
RURAL ROADS	45-55 MPH	500' +/-
RURAL ROADS & URBAN ARTERIALS	35-40 MPH	350' +/-
RURAL ROADS & URBAN ARTERIALS RESIDENTAL & BUSINESS DISTRICTS	25-30 MPH	**200' +/- (2)**
URBAN STREETS	25 MPH OR LESS	**100' +/- (2)**

(1) ALL SPACING MAY BE ADJUSTED TO ACCOMMODATE INTERCHANGE RAMPS, AT-GRADE INTERSECTIONS AND DRIVEWAYS.

(2) THIS SPACING MAY BE REDUCED IN URBAN AREAS TO FIT ROADWAY CONDITIONS.

LONGITUDINAL BUFFER SPACE = B										
SPEED (MPH)	20	25	30	35	40	45	50	55	60	65
LENGTH (feet)	115	155	200	250	305	360	425	495	570	645

MINIMUM LANE CLOSURE TAPER LENGTH = L											
LANE WIDTH	SPEED (MPH)	20	25	30	35	40	45	50	55	60	65
12'	L (feet)	80	140	180	270	330	540	600	680	720	800

MAXIMUM CHANNELIZATION DEVICE SPACING (feet)		
MPH	TAPER	TANGENT
50-65	40	80
35-45	30	60
20-30	20	40

MOBILE TRANSPORTABLE ATTENUATOR ROLL AHEAD DISTANCE = R					
HOST VEHICLE WEIGHT 9,900 TO 22,000 lbs.			HOST VEHICLE WEIGHT 22,001+ lbs.		
UP TO 40 MPH	45-55 MPH	60+ MPH	UP TO 40 MPH	45-55 MPH	60+ MPH
100'	172'	222'	100'	150'	172'

SHOULDER CLOSURE TAPER LENGTH = L/3											
SHOULDER WIDTH	SPEED (MPH)	20	25	30	35	40	45	50	55	60	65
6'	L/3 (feet)	40	40	40	60	60	90	120	120	120	160
10'		40	40	60	90	90	150	200	200	200	240
FOR SHOULDERS LESS THAN 6', USE 3 DEVICES MINIMUM											

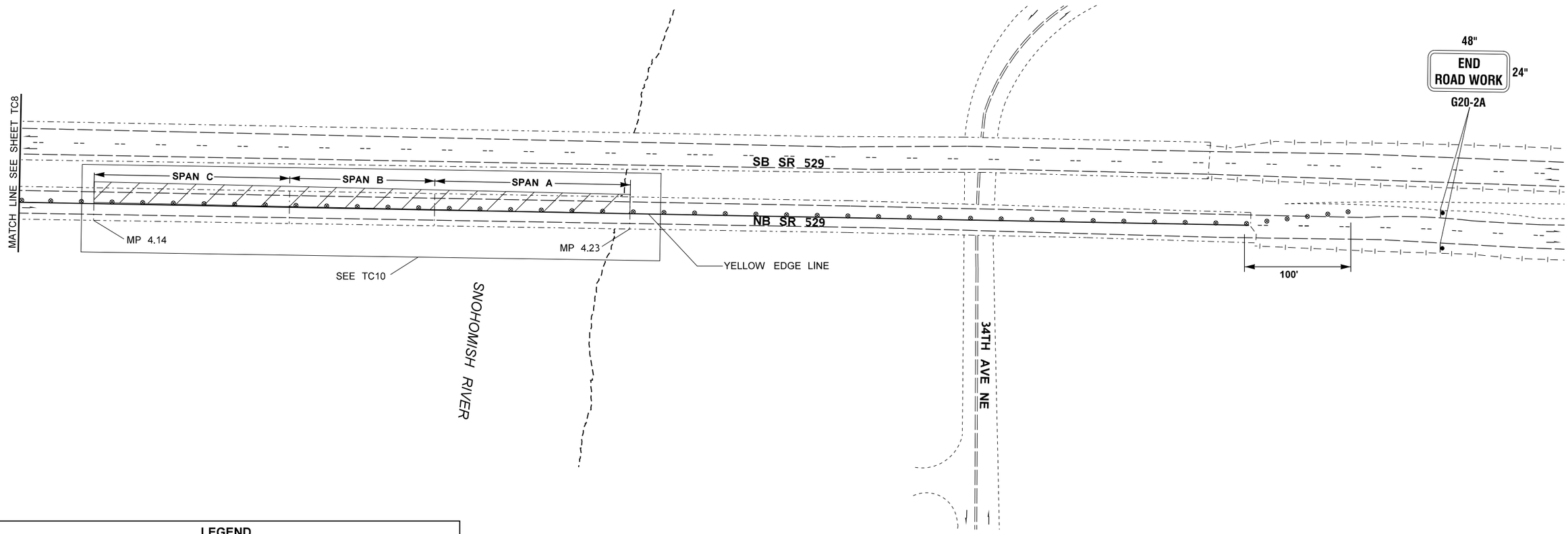

LEGEND

EXISTING SIGN		PORTABLE CHANGEABLE MESSAGE SIGN	PCMS
CONSTRUCTION SIGN CLASS B		TEMPORARY IMPACT ATTENUATOR	
CONSTRUCTION SIGN CLASS A		TRANSPORTABLE ATTENUATOR	
CONSTRUCTION SIGN CLASS B (5' MOUNTING HEIGHT)		WORK AREA	
TRAFFIC SAFETY DRUM SEE SPECIAL PROVISIONS		CONTAINMENT ZONE (SECTION VIEW)	
SEQUENTIAL ARROW SIGN		TEMPORARY BARRIER	
TYPE 3 BARRICADE WITH MUTCD TYPE A WARNING LIGHTS		FLAGGER	

NORTHBOUND SR 529 CONTINUOUS SINGLE LEFT LANE CLOSURE (BRIDGE 529/10E MP 4.10 TO MP 4.34)

MP 4.14 TO MP 4.23 - 3 OF 4 N.T.S

NOTES

1. USE TRANSVERSE DEVICES IN CLOSED LANE EVERY ±500 FEET.
2. DEVICES SHALL NOT ENCROACH ONTO ADJACENT LANE.
3. EXTEND DEVICE TAPER ACROSS SHOULDER.
4. DEVICE SPACING FOR DOWNSTREAM TAPER SHALL BE 20'.
5. ALL SIGNS ARE BLACK ON ORANGE UNLESS OTHERWISE DESIGNATED.
6. SEE SPECIAL PROVISIONS FOR CLOSURE RESTRICTIONS.
7. SEE TPV SHEETS FOR PAVEMENT MARKING PLAN

FILE NAME	C:\pse\XL5462\CAD\XL5462_PS_TC ew.dgn						
TIME					REGION NO. 10	STATE WASH	FED.AID PROJ.NO.
DATE							
PLOTTED BY							
DESIGNED BY	E. WALGAMOTT				JOB NUMBER 23A003		
ENTERED BY	E. WALGAMOTT						
CHECKED BY	Y. KUANG				CONTRACT NO.		LOCATION NO.
PROJ. ENGR.	C. ANDERSON						
REGIONAL ADM.	B. NIELSEN	REVISION	DATE	BY			

P.E. STAMP BOX DATE

P.E. STAMP BOX DATE

Washington State Department of Transportation

SR 529
SNOHOMISH RIVER & STEAMBOAT SLOUGH
BRIDGE REPAIR, REHAB & PAINT

TRAFFIC CONTROL PLAN

Plot 13

PLAN REF NO TC9

SHEET 103 OF 136 SHEETS

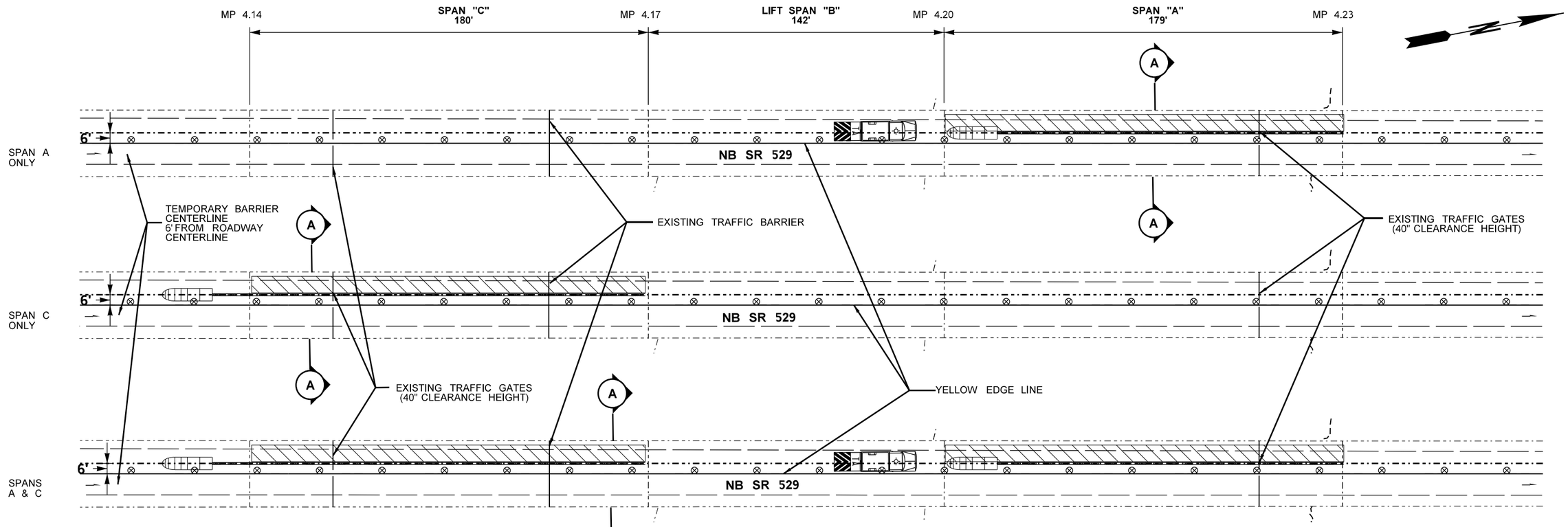

MAXIMUM CHANNELIZATION DEVICE SPACING (feet)		
MPH	TAPER	TANGENT
50-65	40	80
35-45	30	60
20-30	20	40

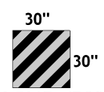

W12-501R (B/Y)

TO BE PLACED ON ALL TEMPORARY IMPACT ATTENUATORS THIS SHEET

SPANS A & C
TEMPORARY BARRIER
LOADING CONFIGURATIONS

TL-3 APPROVED TEMPORARY IMPACT ATTENUATOR LIST	
ABSORB 350 TL-3	TRITON CET TL-3
ABSORB-M TL-3	ACZ-350 TL-3

LEGEND

EXISTING SIGN		PORTABLE CHANGEABLE MESSAGE SIGN	PCMS
CONSTRUCTION SIGN CLASS B		TEMPORARY IMPACT ATTENUATOR	
CONSTRUCTION SIGN CLASS A		TRANSPORTABLE ATTENUATOR	
CONSTRUCTION SIGN CLASS B (5' MOUNTING HEIGHT)		WORK AREA	
TRAFFIC SAFETY DRUM SEE SPECIAL PROVISIONS		CONTAINMENT ZONE (SECTION VIEW)	
SEQUENTIAL ARROW SIGN		TEMPORARY BARRIER	
TYPE 3 BARRICADE WITH MUTCD TYPE A WARNING LIGHTS		FLAGGER	

NORTHBOUND SR 529 CONTINUOUS SINGLE LEFT LANE CLOSURE
(BRIDGE 529/10E MP 4.10 TO MP 4.34)
MP 4.14 TO MP 4.23 - 4 OF 4 N.T.S

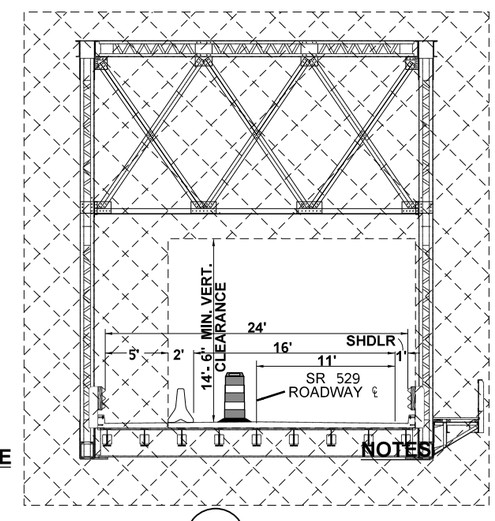

A-A SECTION

NOTES

1. USE TRANSVERSE DEVICES IN CLOSED LANE EVERY ±500 FEET.
2. DEVICES SHALL NOT ENCROACH ONTO ADJACENT LANE.
3. EXTEND DEVICE TAPER ACROSS SHOULDER.
4. DEVICE SPACING FOR DOWNSTREAM TAPER SHALL BE 20'.
5. ALL SIGNS ARE BLACK ON ORANGE UNLESS OTHERWISE DESIGNATED.
6. SEE SPECIAL PROVISIONS FOR CLOSURE RESTRICTIONS.
7. TEMPORARY BARRIER MUST BE PLACED ON LANE CENTER WHERE SHOWN.
8. SEE TPV SHEETS FOR PAVEMENT MARKING PLAN
9. SPAN "B" WORK TO BE DONE DURING NORTHBOUND SR 529 CROSSOVER OR 529/10E ROADWAY CLOSURE

FILE NAME	C:\pse\XL5462\CAD\XL5462_PS_TC ew.dgn				
TIME					
DATE					
PLOTTED BY					
DESIGNED BY	E. WALGAMOTT				
ENTERED BY	E. WALGAMOTT				
CHECKED BY	Y. KUANG				
PROJ. ENGR.	C. ANDERSON				
REGIONAL ADM.	B. NIELSEN	REVISION	DATE	BY	

REGION NO.	STATE	FED.AID PROJ.NO.
10	WASH	
JOB NUMBER 23A003		
CONTRACT NO.		LOCATION NO.

P.E. STAMP BOX DATE

P.E. STAMP BOX DATE

Washington State Department of Transportation

SR 529
SNOHOMISH RIVER & STEAMBOAT SLOUGH
BRIDGE REPAIR, REHAB & PAINT

TRAFFIC CONTROL PLAN

Plot 9
PLAN REF NO TC10
SHEET 104 OF 136 SHEETS

SIGN SPACING = X (1)		
FREEWAYS & EXPRESSWAYS	50-75 MPH	1500' +/-
RURAL HIGHWAYS	60-65 MPH	800' +/-
RURAL ROADS	45-55 MPH	500' +/-
RURAL ROADS & URBAN ARTERIALS	35-40 MPH	350' +/-
RURAL ROADS & URBAN ARTERIALS RESIDENTAL & BUSINESS DISTRICTS	25-30 MPH	**200' +/- (2)**
URBAN STREETS	25 MPH OR LESS	**100' +/- (2)**

(1) ALL SPACING MAY BE ADJUSTED TO ACCOMMODATE INTERCHANGE RAMPS, AT-GRADE INTERSECTIONS AND DRIVEWAYS.

(2) THIS SPACING MAY BE REDUCED IN URBAN AREAS TO FIT ROADWAY CONDITIONS.

LONGITUDINAL BUFFER SPACE = B										
SPEED (MPH)	20	25	30	35	40	45	50	55	60	65
LENGTH (feet)	115	155	200	250	305	360	425	495	570	645

MINIMUM LANE CLOSURE TAPER LENGTH = L											
LANE WIDTH	SPEED (MPH)	20	25	30	35	40	45	50	55	60	65
12'	L (feet)	80	140	180	270	330	540	600	680	720	800

MAXIMUM CHANNELIZATION DEVICE SPACING (feet)		
MPH	TAPER	TANGENT
50-65	40	80
35-45	30	60
20-30	20	40

MOBILE TRANSPORTABLE ATTENUATOR ROLL AHEAD DISTANCE = R					
HOST VEHICLE WEIGHT 9,900 TO 22,000 lbs.			HOST VEHICLE WEIGHT 22,001+ lbs.		
UP TO 40 MPH	45-55 MPH	60+ MPH	UP TO 40 MPH	45-55 MPH	60+ MPH
100'	172'	222'	100'	150'	172'

SHOULDER CLOSURE TAPER LENGTH = L/3											
SHOULDER WIDTH	SPEED (MPH)	20	25	30	35	40	45	50	55	60	65
6'	L/3 (feet)	40	40	40	60	60	90	120	120	120	160
10'		40	40	60	90	90	150	200	200	200	240
FOR SHOULDERS LESS THAN 6', USE 3 DEVICES MINIMUM											

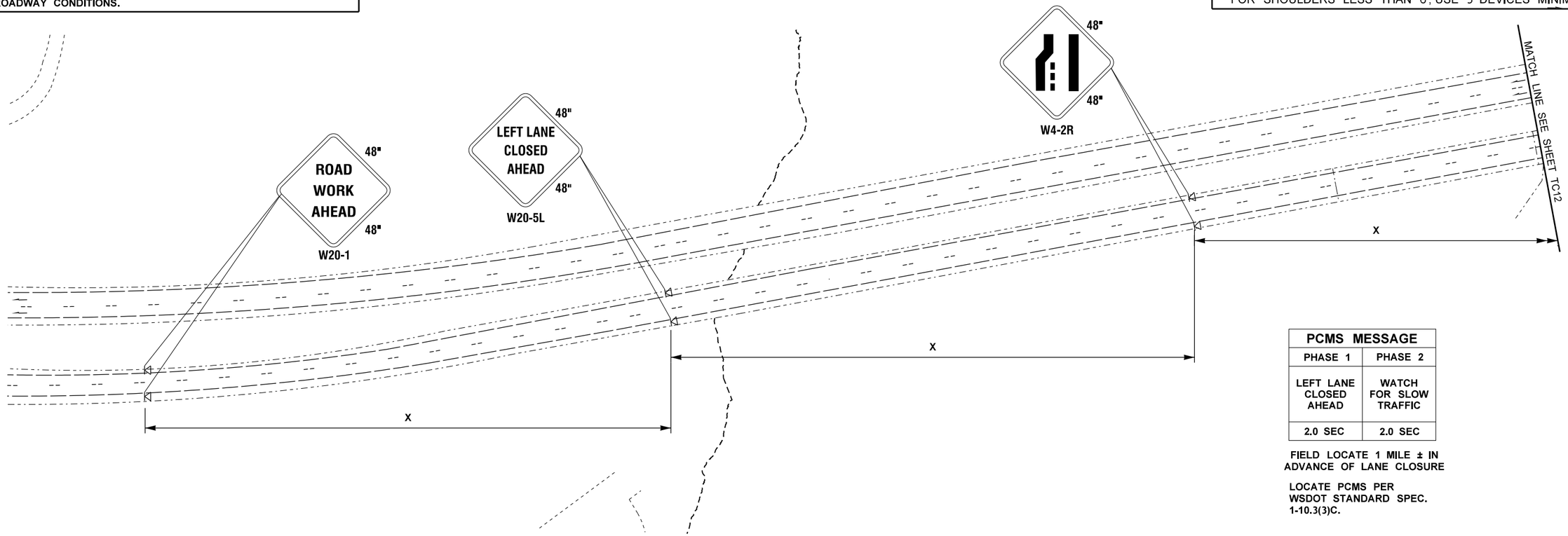

PCMS MESSAGE	
PHASE 1	PHASE 2
LEFT LANE CLOSED AHEAD	WATCH FOR SLOW TRAFFIC
2.0 SEC	2.0 SEC

FIELD LOCATE 1 MILE ± IN ADVANCE OF LANE CLOSURE

LOCATE PCMS PER WSDOT STANDARD SPEC. 1-10.3(3)C.

LEGEND

EXISTING SIGN		PORTABLE CHANGEABLE MESSAGE SIGN	PCMS
CONSTRUCTION SIGN CLASS B		TEMPORARY IMPACT ATTENUATOR	
CONSTRUCTION SIGN CLASS A		TRANSPORTABLE ATTENUATOR	
CONSTRUCTION SIGN CLASS B (5' MOUNTING HEIGHT)		WORK AREA	
TRAFFIC SAFETY DRUM SEE SPECIAL PROVISIONS		CONTAINMENT ZONE (SECTION VIEW)	
SEQUENTIAL ARROW SIGN		TEMPORARY BARRIER	
TYPE 3 BARRICADE WITH MUTCD TYPE A WARNING LIGHTS			

NORTHBOUND SR 529 SINGLE LEFT LANE CLOSURE
(N BROADWAY AVE TO MP 5.61)

MP 4.45 TO MP 4.66 - 1 OF 3 N.T.S

NOTES

1. USE TRANSVERSE DEVICES IN CLOSED LANE EVERY ±500 FEET.
2. DEVICES SHALL NOT ENCROACH ONTO ADJACENT LANE.
3. EXTEND DEVICE TAPER ACROSS SHOULDER.
4. DEVICE SPACING FOR DOWNSTREAM TAPER SHALL BE 20'.
5. ALL SIGNS ARE BLACK ON ORANGE UNLESS OTHERWISE DESIGNATED.
6. SEE SPECIAL PROVISIONS FOR CLOSURE RESTRICTIONS.

FILE NAME	C:\pse\XL5462\CAD\XL5462_PS_TC ew.dgn					
TIME						
DATE						
PLOTTED BY						
DESIGNED BY	E. WALGAMOTT					
ENTERED BY	E. WALGAMOTT					
CHECKED BY	Y. KUANG					
PROJ. ENGR.	C. ANDERSON					
REGIONAL ADM.	B. NIELSEN	REVISION	DATE	BY		

REGION NO.	STATE	FED.AID PROJ.NO.
10	WASH	
JOB NUMBER 23A003		
CONTRACT NO.		LOCATION NO.

P.E. STAMP BOX DATE

P.E. STAMP BOX DATE

Washington State Department of Transportation

SR 529
SNOHOMISH RIVER & STEAMBOAT SLOUGH BRIDGE REPAIR, REHAB & PAINT

TRAFFIC CONTROL PLAN

Plot 26

PLAN REF NO **TC11**

SHEET 105 OF 136 SHEETS

SIGN SPACING = X (1)		
FREEWAYS & EXPRESSWAYS	50-75 MPH	1500' +/-
RURAL HIGHWAYS	60-65 MPH	800' +/-
RURAL ROADS	45-55 MPH	500' +/-
RURAL ROADS & URBAN ARTERIALS	35-40 MPH	350' +/-
RURAL ROADS & URBAN ARTERIALS RESIDENTAL & BUSINESS DISTRICTS	25-30 MPH	**200' +/- (2)**
URBAN STREETS	25 MPH OR LESS	**100' +/- (2)**

(1) ALL SPACING MAY BE ADJUSTED TO ACCOMMODATE INTERCHANGE RAMPS, AT-GRADE INTERSECTIONS AND DRIVEWAYS.

(2) THIS SPACING MAY BE REDUCED IN URBAN AREAS TO FIT ROADWAY CONDITIONS.

LONGITUDINAL BUFFER SPACE = B										
SPEED (MPH)	20	25	30	35	40	45	50	55	60	65
LENGTH (feet)	115	155	200	250	305	360	425	495	570	645

MINIMUM LANE CLOSURE TAPER LENGTH = L											
LANE WIDTH	SPEED (MPH)	20	25	30	35	40	45	50	55	60	65
12'	L (feet)	80	140	180	270	330	540	600	680	720	800

MAXIMUM CHANNELIZATION DEVICE SPACING (feet)		
MPH	TAPER	TANGENT
50-65	40	80
35-45	30	60
20-30	20	40

MOBILE TRANSPORTABLE ATTENUATOR ROLL AHEAD DISTANCE = R					
HOST VEHICLE WEIGHT 9,900 TO 22,000 lbs.			HOST VEHICLE WEIGHT 22,001+ lbs.		
UP TO 40 MPH	45-55 MPH	60+ MPH	UP TO 40 MPH	45-55 MPH	60+ MPH
100'	172'	222'	100'	150'	172'

SHOULDER CLOSURE TAPER LENGTH = L/3											
SHOULDER WIDTH	SPEED (MPH)	20	25	30	35	40	45	50	55	60	65
6'	L/3 (feet)	40	40	40	60	60	90	120	120	120	160
10'		40	40	60	90	90	150	200	200	200	240
FOR SHOULDERS LESS THAN 6', USE 3 DEVICES MINIMUM											

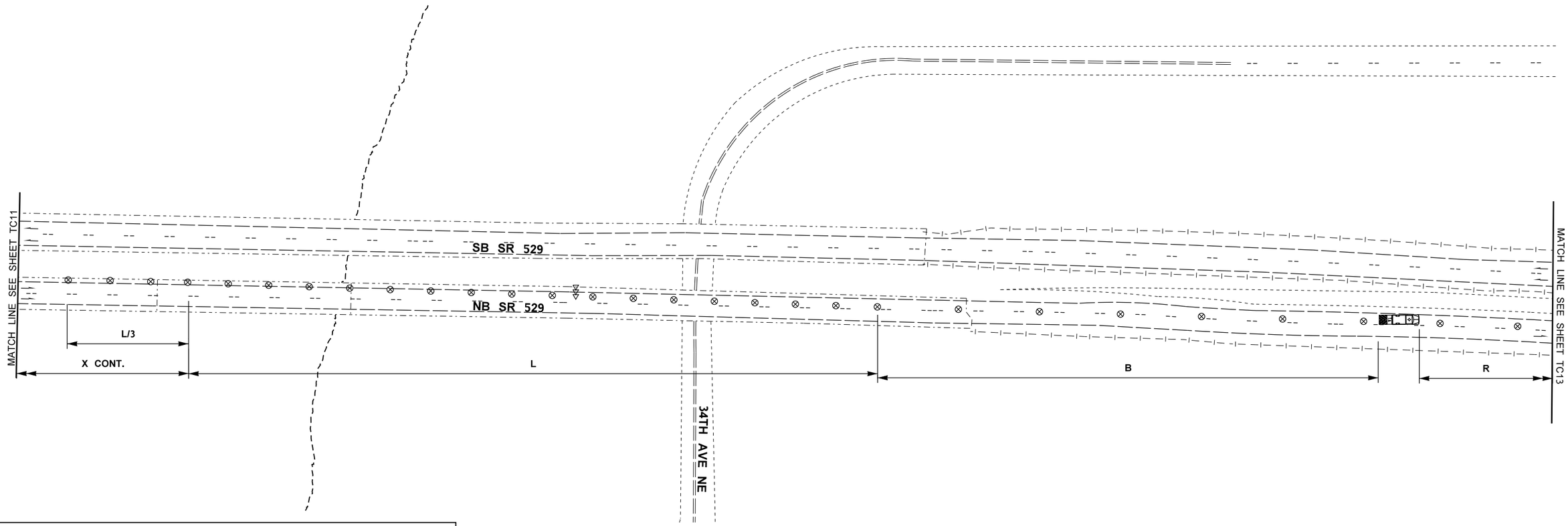

LEGEND

EXISTING SIGN		PORTABLE CHANGEABLE MESSAGE SIGN	PCMS
CONSTRUCTION SIGN CLASS B		TEMPORARY IMPACT ATTENUATOR	
CONSTRUCTION SIGN CLASS A		TRANSPORTABLE ATTENUATOR	
CONSTRUCTION SIGN CLASS B (5' MOUNTING HEIGHT)		WORK AREA	
TRAFFIC SAFETY DRUM SEE SPECIAL PROVISIONS		CONTAINMENT ZONE (SECTION VIEW)	
SEQUENTIAL ARROW SIGN		TEMPORARY BARRIER	
TYPE 3 BARRICADE WITH MUTCD TYPE A WARNING LIGHTS			

NORTHBOUND SR 529 SINGLE LEFT LANE CLOSURE
(N BROADWAY AVE TO MP 5.61)

MP 4.45 TO MP 4.66 - 2 OF 3 N.T.S

NOTES

1. USE TRANSVERSE DEVICES IN CLOSED LANE EVERY ±500 FEET.
2. DEVICES SHALL NOT ENCROACH ONTO ADJACENT LANE.
3. EXTEND DEVICE TAPER ACROSS SHOULDER.
4. DEVICE SPACING FOR DOWNSTREAM TAPER SHALL BE 20'.
5. ALL SIGNS ARE BLACK ON ORANGE UNLESS OTHERWISE DESIGNATED.
6. SEE SPECIAL PROVISIONS FOR CLOSURE RESTRICTIONS.

FILE NAME	C:\pse\XL5462\CAD\XL5462_PS_TC ew.dgn				
TIME					
DATE					
PLOTTED BY					
DESIGNED BY	E. WALGAMOTT				
ENTERED BY	E. WALGAMOTT				
CHECKED BY	Y. KUANG				
PROJ. ENGR.	C. ANDERSON				
REGIONAL ADM.	B. NIELSEN	REVISION	DATE	BY	

REGION NO.	STATE	FED.AID PROJ.NO.
10	WASH	
JOB NUMBER 23A003		
CONTRACT NO.		LOCATION NO.

P.E. STAMP BOX DATE

P.E. STAMP BOX DATE

Washington State Department of Transportation

SR 529
SNOHOMISH RIVER & STEAMBOAT SLOUGH
BRIDGE REPAIR, REHAB & PAINT

TRAFFIC CONTROL PLAN

Plot 27

PLAN REF NO TC12

SHEET 106 OF 136 SHEETS

SIGN SPACING = X (1)		
FREEWAYS & EXPRESSWAYS	50-75 MPH	1500' +/-
RURAL HIGHWAYS	60-65 MPH	800' +/-
RURAL ROADS	45-55 MPH	500' +/-
RURAL ROADS & URBAN ARTERIALS	35-40 MPH	350' +/-
RURAL ROADS & URBAN ARTERIALS RESIDENTAL & BUSINESS DISTRICTS	25-30 MPH	**200' +/- (2)**
URBAN STREETS	25 MPH OR LESS	**100' +/- (2)**

(1) ALL SPACING MAY BE ADJUSTED TO ACCOMMODATE INTERCHANGE RAMPS, AT-GRADE INTERSECTIONS AND DRIVEWAYS.

(2) THIS SPACING MAY BE REDUCED IN URBAN AREAS TO FIT ROADWAY CONDITIONS.

LONGITUDINAL BUFFER SPACE = B										
SPEED (MPH)	20	25	30	35	40	45	50	55	60	65
LENGTH (feet)	115	155	200	250	305	360	425	495	570	645

MINIMUM LANE CLOSURE TAPER LENGTH = L											
LANE WIDTH	SPEED (MPH)	20	25	30	35	40	45	50	55	60	65
12'	L (feet)	80	140	180	270	330	540	600	680	720	800

MAXIMUM CHANNELIZATION DEVICE SPACING (feet)		
MPH	TAPER	TANGENT
50-65	40	80
35-45	30	60
20-30	20	40

MOBILE TRANSPORTABLE ATTENUATOR ROLL AHEAD DISTANCE = R					
HOST VEHICLE WEIGHT 9,900 TO 22,000 lbs.			HOST VEHICLE WEIGHT 22,001+ lbs.		
UP TO 40 MPH	45-55 MPH	60+ MPH	UP TO 40 MPH	45-55 MPH	60+ MPH
100'	172'	222'	100'	150'	172'

SHOULDER CLOSURE TAPER LENGTH = L/3											
SHOULDER WIDTH	SPEED (MPH)	20	25	30	35	40	45	50	55	60	65
6'	L/3 (feet)	40	40	40	60	60	90	120	120	120	160
10'		40	40	60	90	90	150	200	200	200	240
FOR SHOULDERS LESS THAN 6', USE 3 DEVICES MINIMUM											

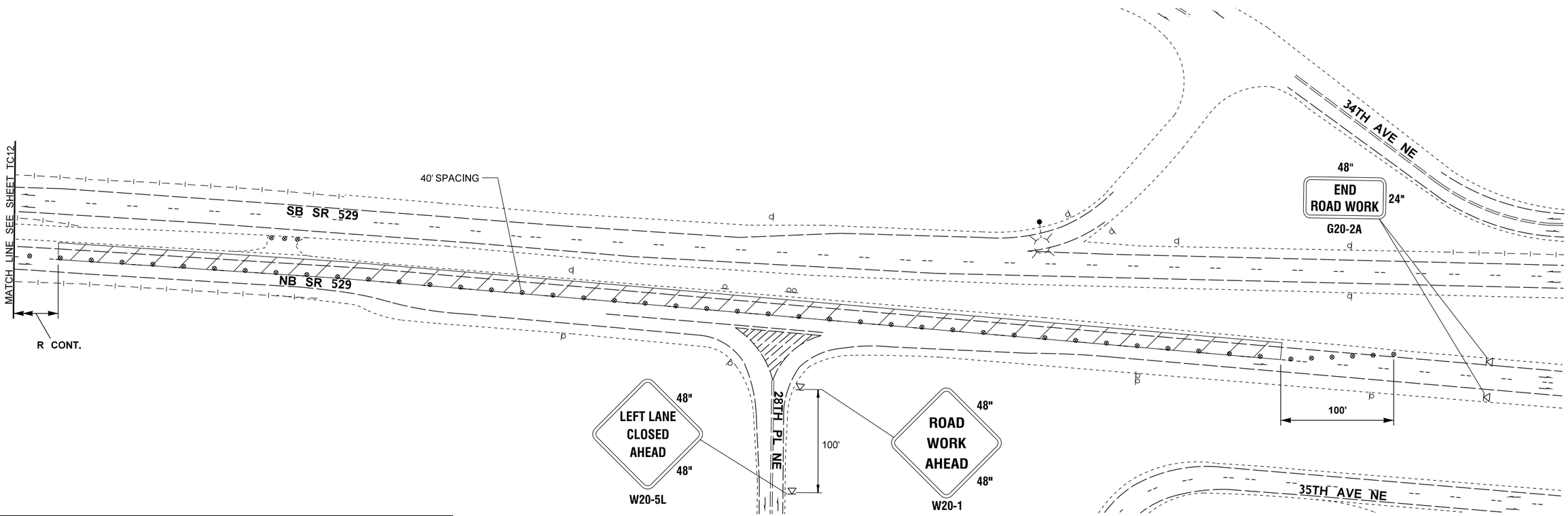

LEGEND

EXISTING SIGN		PORTABLE CHANGEABLE MESSAGE SIGN	PCMS
CONSTRUCTION SIGN CLASS B		TEMPORARY IMPACT ATTENUATOR	
CONSTRUCTION SIGN CLASS A		TRANSPORTABLE ATTENUATOR	
CONSTRUCTION SIGN CLASS B (5' MOUNTING HEIGHT)		WORK AREA	
TRAFFIC SAFETY DRUM SEE SPECIAL PROVISIONS		CONTAINMENT ZONE (SECTION VIEW)	
SEQUENTIAL ARROW SIGN		TEMPORARY BARRIER	
TYPE 3 BARRICADE WITH MUTCD TYPE A WARNING LIGHTS		FLAGGER	

NORTHBOUND SR 529 SINGLE LEFT LANE CLOSURE (N BROADWAY AVE TO MP 5.61)

MP 4.45 TO MP 4.66 - 3 OF 3 N.T.S

NOTES

1. USE TRANSVERSE DEVICES IN CLOSED LANE EVERY ±500 FEET.
2. DEVICES SHALL NOT ENCROACH ONTO ADJACENT LANE.
3. EXTEND DEVICE TAPER ACROSS SHOULDER.
4. DEVICE SPACING FOR DOWNSTREAM TAPER SHALL BE 20'.
5. ALL SIGNS ARE BLACK ON ORANGE UNLESS OTHERWISE DESIGNATED.
6. SEE SPECIAL PROVISIONS FOR CLOSURE RESTRICTIONS.

FILE NAME	C:\pse\XL5462\CAD\XL5462_PS_TC ew.dgn						
TIME					REGION NO. 10	STATE WASH	FED.AID PROJ.NO.
DATE							
PLOTTED BY							
DESIGNED BY	E. WALGAMOTT				JOB NUMBER 23A003		
ENTERED BY	E. WALGAMOTT						
CHECKED BY	Y. KUANG				CONTRACT NO.		LOCATION NO.
PROJ. ENGR.	C. ANDERSON						
REGIONAL ADM.	B. NIELSEN	REVISION	DATE	BY			

P.E. STAMP BOX DATE

P.E. STAMP BOX DATE

Washington State Department of Transportation

SR 529
SNOHOMISH RIVER & STEAMBOAT SLOUGH
BRIDGE REPAIR, REHAB & PAINT

TRAFFIC CONTROL PLAN

Plot 14

PLAN REF NO TC13

SHEET 107 OF 136 SHEETS

SIGN SPACING = X (1)		
FREEWAYS & EXPRESSWAYS	50-75 MPH	1500' +/-
RURAL HIGHWAYS	60-65 MPH	800' +/-
RURAL ROADS	45-55 MPH	500' +/-
RURAL ROADS & URBAN ARTERIALS	35-40 MPH	350' +/-
RURAL ROADS & URBAN ARTERIALS RESIDENTAL & BUSINESS DISTRICTS	25-30 MPH	**200' +/- (2)**
URBAN STREETS	25 MPH OR LESS	**100' +/- (2)**

(1) ALL SPACING MAY BE ADJUSTED TO ACCOMMODATE INTERCHANGE RAMPS, AT-GRADE INTERSECTIONS AND DRIVEWAYS.

(2) THIS SPACING MAY BE REDUCED IN URBAN AREAS TO FIT ROADWAY CONDITIONS.

LONGITUDINAL BUFFER SPACE = B										
SPEED (MPH)	20	25	30	35	40	45	50	55	60	65
LENGTH (feet)	115	155	200	250	305	360	425	495	570	645

MINIMUM LANE CLOSURE TAPER LENGTH = L											
LANE WIDTH	SPEED (MPH)	20	25	30	35	40	45	50	55	60	65
12'	L (feet)	80	140	180	270	330	540	600	680	720	800

MAXIMUM CHANNELIZATION DEVICE SPACING (feet)		
MPH	TAPER	TANGENT
50-65	40	80
35-45	30	60
20-30	20	40

MOBILE TRANSPORTABLE ATTENUATOR ROLL AHEAD DISTANCE = R					
HOST VEHICLE WEIGHT 9,900 TO 22,000 lbs.			HOST VEHICLE WEIGHT 22,001+ lbs.		
UP TO 40 MPH	45-55 MPH	60+ MPH	UP TO 40 MPH	45-55 MPH	60+ MPH
100'	172'	222'	100'	150'	172'

SHOULDER CLOSURE TAPER LENGTH = L/3											
SHOULDER WIDTH	SPEED (MPH)	20	25	30	35	40	45	50	55	60	65
6'	L/3 (feet)	40	40	40	60	60	90	120	120	120	160
10'		40	40	60	90	90	150	200	200	200	240
FOR SHOULDERS LESS THAN 6', USE 3 DEVICES MINIMUM											

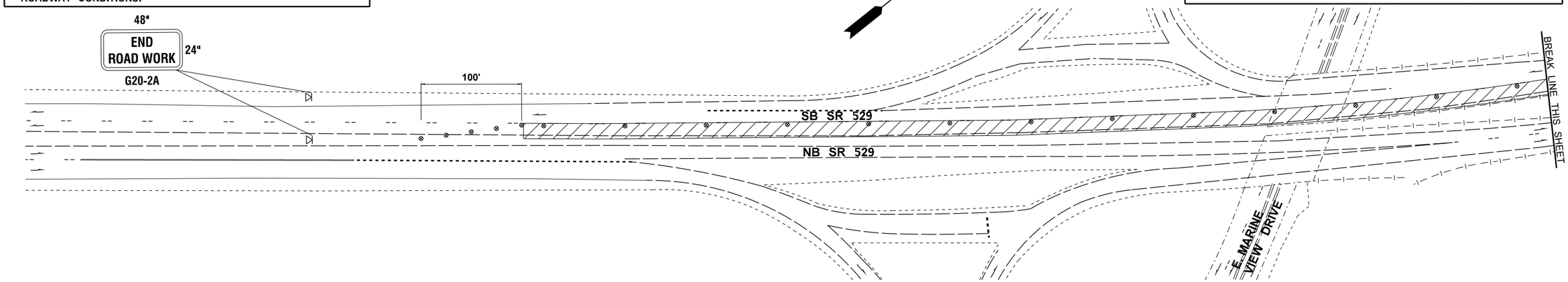

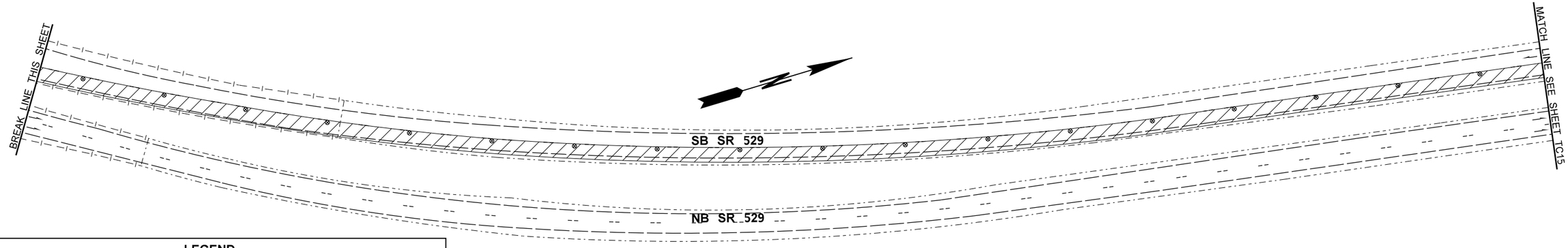

LEGEND

EXISTING SIGN		PORTABLE CHANGEABLE MESSAGE SIGN	PCMS
CONSTRUCTION SIGN CLASS B		TEMPORARY IMPACT ATTENUATOR	
CONSTRUCTION SIGN CLASS A		TRANSPORTABLE ATTENUATOR	
CONSTRUCTION SIGN CLASS B (5' MOUNTING HEIGHT)		WORK AREA	
TRAFFIC SAFETY DRUM SEE SPECIAL PROVISIONS		CONTAINMENT ZONE (SECTION VIEW)	
SEQUENTIAL ARROW SIGN		TEMPORARY BARRIER	
TYPE 3 BARRICADE WITH MUTCD TYPE A WARNING LIGHTS		FLAGGER	

SOUTHBOUND SR 529 SINGLE LEFT LANE CLOSURE (N BROADWAY AVE TO MP 4.65)

1 OF 4 N.T.S

NOTES

1. USE TRANSVERSE DEVICES IN CLOSED LANE EVERY ±500 FEET.
2. DEVICES SHALL NOT ENCROACH ONTO ADJACENT LANE.
3. EXTEND DEVICE TAPER ACROSS SHOULDER.
4. DEVICE SPACING FOR DOWNSTREAM TAPER SHALL BE 20'.
5. ALL SIGNS ARE BLACK ON ORANGE UNLESS OTHERWISE DESIGNATED.
6. SEE SPECIAL PROVISIONS FOR CLOSURE RESTRICTIONS.

FILE NAME	C:\pse\XL5462\CAD\XL5462_PS_TC ew.dgn		
TIME			
DATE			
PLOTTED BY			
DESIGNED BY	E. WALGAMOTT		
ENTERED BY	E. WALGAMOTT		
CHECKED BY	Y. KUANG		
PROJ. ENGR.	C. ANDERSON		
REGIONAL ADM.	B. NIELSEN	REVISION	DATE / BY

REGION NO.	STATE	FED.AID PROJ.NO.
10	WASH	
JOB NUMBER 23A003		
CONTRACT NO.		LOCATION NO.

P.E. STAMP BOX DATE

P.E. STAMP BOX DATE

Washington State Department of Transportation

SR 529
SNOHOMISH RIVER & STEAMBOAT SLOUGH BRIDGE REPAIR, REHAB & PAINT

TRAFFIC CONTROL PLAN

Plot 22

PLAN REF NO TC14

SHEET 108 OF 136 SHEETS

SIGN SPACING = X (1)		
FREEWAYS & EXPRESSWAYS	50-75 MPH	1500' +/-
RURAL HIGHWAYS	60-65 MPH	800' +/-
RURAL ROADS	45-55 MPH	500' +/-
RURAL ROADS & URBAN ARTERIALS	35-40 MPH	350' +/-
RURAL ROADS & URBAN ARTERIALS RESIDENTAL & BUSINESS DISTRICTS	25-30 MPH	**200' +/- (2)**
URBAN STREETS	25 MPH OR LESS	**100' +/- (2)**

(1) ALL SPACING MAY BE ADJUSTED TO ACCOMMODATE INTERCHANGE RAMPS, AT-GRADE INTERSECTIONS AND DRIVEWAYS.

(2) THIS SPACING MAY BE REDUCED IN URBAN AREAS TO FIT ROADWAY CONDITIONS.

LONGITUDINAL BUFFER SPACE = B										
SPEED (MPH)	20	25	30	35	40	45	50	55	60	65
LENGTH (feet)	115	155	200	250	305	360	425	495	570	645

MINIMUM LANE CLOSURE TAPER LENGTH = L											
LANE WIDTH	SPEED (MPH)	20	25	30	35	40	45	50	55	60	65
12'	L (feet)	80	140	180	270	330	540	600	680	720	800

MAXIMUM CHANNELIZATION DEVICE SPACING (feet)		
MPH	TAPER	TANGENT
50-65	40	80
35-45	30	60
20-30	20	40

MOBILE TRANSPORTABLE ATTENUATOR ROLL AHEAD DISTANCE = R					
HOST VEHICLE WEIGHT 9,900 TO 22,000 lbs.			HOST VEHICLE WEIGHT 22,001+ lbs.		
UP TO 40 MPH	45-55 MPH	60+ MPH	UP TO 40 MPH	45-55 MPH	60+ MPH
100'	172'	222'	100'	150'	172'

SHOULDER CLOSURE TAPER LENGTH = L/3											
SHOULDER WIDTH	SPEED (MPH)	20	25	30	35	40	45	50	55	60	65
6'	L/3 (feet)	40	40	40	60	60	90	120	120	120	160
10'		40	40	60	90	90	150	200	200	200	240
FOR SHOULDERS LESS THAN 6', USE 3 DEVICES MINIMUM											

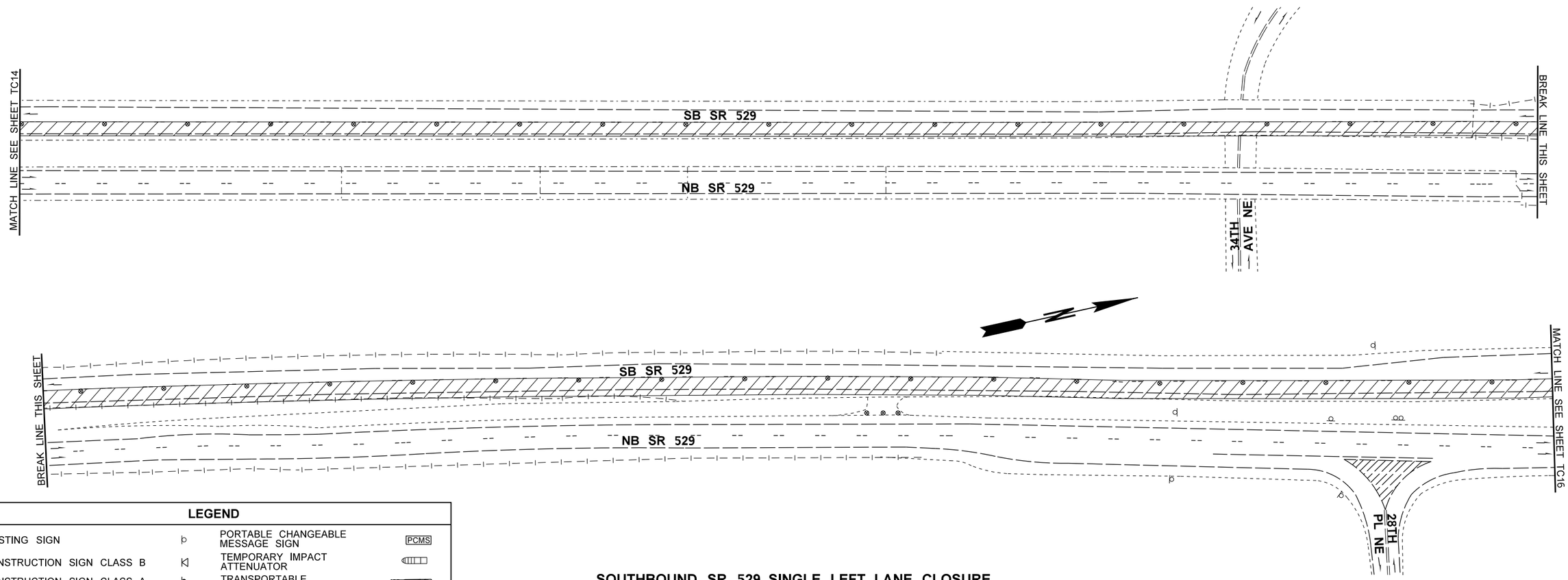

LEGEND

EXISTING SIGN		PORTABLE CHANGEABLE MESSAGE SIGN	PCMS
CONSTRUCTION SIGN CLASS B		TEMPORARY IMPACT ATTENUATOR	
CONSTRUCTION SIGN CLASS A		TRANSPORTABLE ATTENUATOR	
CONSTRUCTION SIGN CLASS B (5' MOUNTING HEIGHT)		WORK AREA	
TRAFFIC SAFETY DRUM SEE SPECIAL PROVISIONS		CONTAINMENT ZONE (SECTION VIEW)	
SEQUENTIAL ARROW SIGN		TEMPORARY BARRIER	
TYPE 3 BARRICADE WITH MUTCD TYPE A WARNING LIGHTS		FLAGGER	

SOUTHBOUND SR 529 SINGLE LEFT LANE CLOSURE (N BROADWAY AVE TO MP 4.65)

2 OF 4 N.T.S

NOTES

1. USE TRANSVERSE DEVICES IN CLOSED LANE EVERY ±500 FEET.
2. DEVICES SHALL NOT ENCROACH ONTO ADJACENT LANE.
3. EXTEND DEVICE TAPER ACROSS SHOULDER.
4. DEVICE SPACING FOR DOWNSTREAM TAPER SHALL BE 20'.
5. ALL SIGNS ARE BLACK ON ORANGE UNLESS OTHERWISE DESIGNATED.
6. SEE SPECIAL PROVISIONS FOR CLOSURE RESTRICTIONS.

FILE NAME	C:\pse\XL5462\CAD\XL5462_PS_TC ew.dgn			
TIME				
DATE				
PLOTTED BY				
DESIGNED BY	E. WALGAMOTT			
ENTERED BY	E. WALGAMOTT			
CHECKED BY	Y. KUANG			
PROJ. ENGR.	C. ANDERSON			
REGIONAL ADM.	B. NIELSEN	REVISION	DATE	BY

REGION NO.	STATE	FED.AID PROJ.NO.
10	WASH	
JOB NUMBER 23A003		
CONTRACT NO.		LOCATION NO.

P.E. STAMP BOX DATE

P.E. STAMP BOX DATE

Washington State Department of Transportation

SR 529
SNOHOMISH RIVER & STEAMBOAT SLOUGH BRIDGE REPAIR, REHAB & PAINT

TRAFFIC CONTROL PLAN

Plot 23

PLAN REF NO TC15

SHEET 109 OF 136 SHEETS

SIGN SPACING = X (1)		
FREEWAYS & EXPRESSWAYS	50-75 MPH	1500' +/-
RURAL HIGHWAYS	60-65 MPH	800' +/-
RURAL ROADS	45-55 MPH	500' +/-
RURAL ROADS & URBAN ARTERIALS	35-40 MPH	350' +/-
RURAL ROADS & URBAN ARTERIALS RESIDENTAL & BUSINESS DISTRICTS	25-30 MPH	**200' +/- (2)**
URBAN STREETS	25 MPH OR LESS	**100' +/- (2)**

(1) ALL SPACING MAY BE ADJUSTED TO ACCOMMODATE INTERCHANGE RAMPS, AT-GRADE INTERSECTIONS AND DRIVEWAYS.

(2) THIS SPACING MAY BE REDUCED IN URBAN AREAS TO FIT ROADWAY CONDITIONS.

LONGITUDINAL BUFFER SPACE = B										
SPEED (MPH)	20	25	30	35	40	45	50	55	60	65
LENGTH (feet)	115	155	200	250	305	360	425	495	570	645

MINIMUM LANE CLOSURE TAPER LENGTH = L											
LANE WIDTH	SPEED (MPH)	20	25	30	35	40	45	50	55	60	65
12'	L (feet)	80	140	180	270	330	540	600	680	720	800

MAXIMUM CHANNELIZATION DEVICE SPACING (feet)		
MPH	TAPER	TANGENT
50-65	40	80
35-45	30	60
20-30	20	40

MOBILE TRANSPORTABLE ATTENUATOR ROLL AHEAD DISTANCE = R					
HOST VEHICLE WEIGHT 9,900 TO 22,000 lbs.			HOST VEHICLE WEIGHT 22,001+ lbs.		
UP TO 40 MPH	45-55 MPH	60+ MPH	UP TO 40 MPH	45-55 MPH	60+ MPH
100'	172'	222'	100'	150'	172'

SHOULDER CLOSURE TAPER LENGTH = L/3											
SHOULDER WIDTH	SPEED (MPH)	20	25	30	35	40	45	50	55	60	65
6'	L/3 (feet)	40	40	40	60	60	90	120	120	120	160
10'		40	40	60	90	90	150	200	200	200	240
FOR SHOULDERS LESS THAN 6', USE 3 DEVICES MINIMUM											

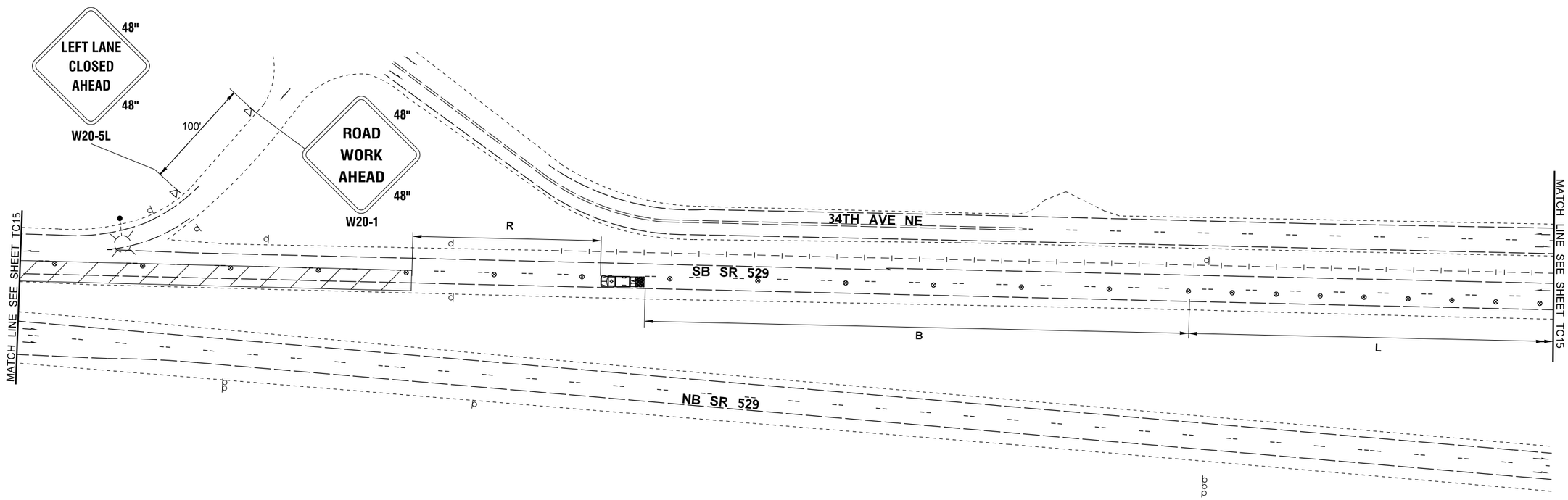

LEGEND

EXISTING SIGN		PORTABLE CHANGEABLE MESSAGE SIGN	PCMS
CONSTRUCTION SIGN CLASS B		TEMPORARY IMPACT ATTENUATOR	
CONSTRUCTION SIGN CLASS A		TRANSPORTABLE ATTENUATOR	
CONSTRUCTION SIGN CLASS B (5' MOUNTING HEIGHT)		WORK AREA	
TRAFFIC SAFETY DRUM SEE SPECIAL PROVISIONS		CONTAINMENT ZONE (SECTION VIEW)	
SEQUENTIAL ARROW SIGN		TEMPORARY BARRIER	
TYPE 3 BARRICADE WITH MUTCD TYPE A WARNING LIGHTS		FLAGGER	

SOUTHBOUND SR 529 SINGLE LEFT LANE CLOSURE (N BROADWAY AVE TO MP 4.65)

3 OF 4 N.T.S

NOTES

1. USE TRANSVERSE DEVICES IN CLOSED LANE EVERY ±500 FEET.
2. DEVICES SHALL NOT ENCROACH ONTO ADJACENT LANE.
3. EXTEND DEVICE TAPER ACROSS SHOULDER.
4. DEVICE SPACING FOR DOWNSTREAM TAPER SHALL BE 20'.
5. ALL SIGNS ARE BLACK ON ORANGE UNLESS OTHERWISE DESIGNATED.
6. SEE SPECIAL PROVISIONS FOR CLOSURE RESTRICTIONS.

FILE NAME	C:\pse\XL5462\CAD\XL5462_PS_TC ew.dgn		
TIME			
DATE			
PLOTTED BY			
DESIGNED BY	E. WALGAMOTT		
ENTERED BY	E. WALGAMOTT		
CHECKED BY	Y. KUANG		
PROJ. ENGR.	C. ANDERSON		
REGIONAL ADM.	B. NIELSEN	REVISION	DATE / BY

REGION NO.	STATE	FED.AID PROJ.NO.
10	WASH	
JOB NUMBER 23A003		
CONTRACT NO.		LOCATION NO.

P.E. STAMP BOX DATE

P.E. STAMP BOX DATE

Washington State Department of Transportation

SR 529
SNOHOMISH RIVER & STEAMBOAT SLOUGH BRIDGE REPAIR, REHAB & PAINT

TRAFFIC CONTROL PLAN

Plot 24

PLAN REF NO TC16

SHEET 110 OF 136 SHEETS

SIGN SPACING = X (1)		
FREEWAYS & EXPRESSWAYS	50-75 MPH	1500' +/-
RURAL HIGHWAYS	60-65 MPH	800' +/-
RURAL ROADS	45-55 MPH	500' +/-
RURAL ROADS & URBAN ARTERIALS	35-40 MPH	350' +/-
RURAL ROADS & URBAN ARTERIALS RESIDENTAL & BUSINESS DISTRICTS	25-30 MPH	**200' +/- (2)**
URBAN STREETS	25 MPH OR LESS	**100' +/- (2)**

(1) ALL SPACING MAY BE ADJUSTED TO ACCOMMODATE INTERCHANGE RAMPS, AT-GRADE INTERSECTIONS AND DRIVEWAYS.

(2) THIS SPACING MAY BE REDUCED IN URBAN AREAS TO FIT ROADWAY CONDITIONS.

LONGITUDINAL BUFFER SPACE = B										
SPEED (MPH)	20	25	30	35	40	45	50	55	60	65
LENGTH (feet)	115	155	200	250	305	360	425	495	570	645

MINIMUM LANE CLOSURE TAPER LENGTH = L											
LANE WIDTH	SPEED (MPH)	20	25	30	35	40	45	50	55	60	65
12'	L (feet)	80	140	180	270	330	540	600	680	720	800

MAXIMUM CHANNELIZATION DEVICE SPACING (feet)		
MPH	TAPER	TANGENT
50-65	40	80
35-45	30	60
20-30	20	40

MOBILE TRANSPORTABLE ATTENUATOR ROLL AHEAD DISTANCE = R					
HOST VEHICLE WEIGHT 9,900 TO 22,000 lbs.			HOST VEHICLE WEIGHT 22,001+ lbs.		
UP TO 40 MPH	45-55 MPH	60+ MPH	UP TO 40 MPH	45-55 MPH	60+ MPH
100'	172'	222'	100'	150'	172'

SHOULDER CLOSURE TAPER LENGTH = L/3											
SHOULDER WIDTH	SPEED (MPH)	20	25	30	35	40	45	50	55	60	65
6'	L/3 (feet)	40	40	40	60	60	90	120	120	120	160
10'		40	40	60	90	90	150	200	200	200	240
FOR SHOULDERS LESS THAN 6', USE 3 DEVICES MINIMUM											

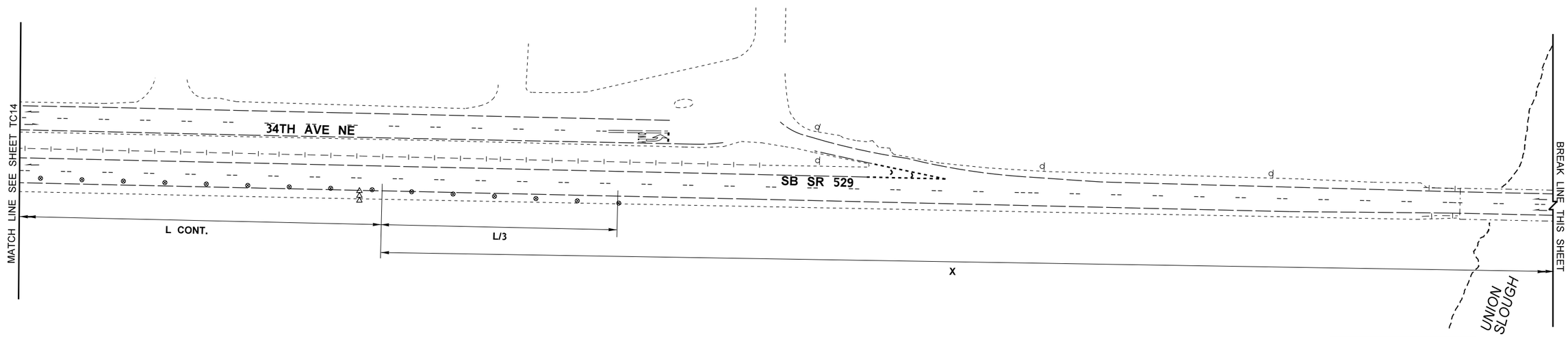

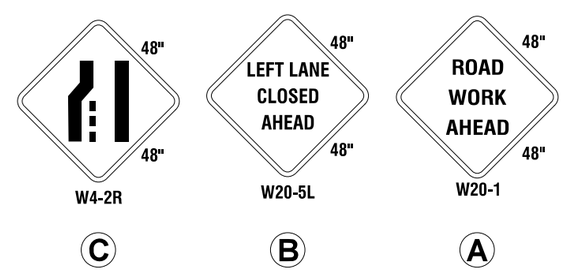

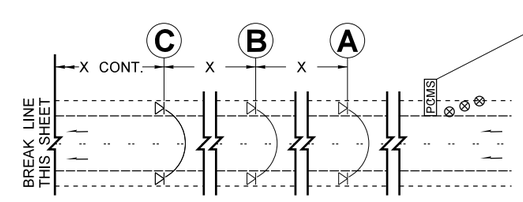

PCMS MESSAGE	
PHASE 1	PHASE 2
LEFT LANE CLOSED	EXIT RAMP OPEN
2.0 SEC	2.0 SEC

FIELD LOCATE 1 MILE ± IN ADVANCE OF LANE CLOSURE

LEGEND

EXISTING SIGN		PORTABLE CHANGEABLE MESSAGE SIGN	PCMS
CONSTRUCTION SIGN CLASS B		TEMPORARY IMPACT ATTENUATOR	
CONSTRUCTION SIGN CLASS A		TRANSPORTABLE ATTENUATOR	
CONSTRUCTION SIGN CLASS B (5' MOUNTING HEIGHT)		WORK AREA	
TRAFFIC SAFETY DRUM SEE SPECIAL PROVISIONS		CONTAINMENT ZONE (SECTION VIEW)	
SEQUENTIAL ARROW SIGN		TEMPORARY BARRIER	
TYPE 3 BARRICADE WITH MUTCD TYPE A WARNING LIGHTS		FLAGGER	

SOUTHBOUND SR 529 SINGLE LEFT LANE CLOSURE
(N BROADWAY AVE TO MP 4.65)

4 OF 4 N.T.S

NOTES

1. USE TRANSVERSE DEVICES IN CLOSED LANE EVERY ±500 FEET.
2. DEVICES SHALL NOT ENCROACH ONTO ADJACENT LANE.
3. EXTEND DEVICE TAPER ACROSS SHOULDER.
4. DEVICE SPACING FOR DOWNSTREAM TAPER SHALL BE 20'.
5. ALL SIGNS ARE BLACK ON ORANGE UNLESS OTHERWISE DESIGNATED.
6. SEE SPECIAL PROVISIONS FOR CLOSURE RESTRICTIONS.

FILE NAME	C:\pse\XL5462\CAD\XL5462_PS_TC ew.dgn			
TIME				
DATE				
PLOTTED BY				
DESIGNED BY	E. WALGAMOTT			
ENTERED BY	E. WALGAMOTT			
CHECKED BY	Y. KUANG			
PROJ. ENGR.	C. ANDERSON			
REGIONAL ADM.	B. NIELSEN	REVISION	DATE	BY

REGION NO.	STATE	FED.AID PROJ.NO.
10	WASH	
JOB NUMBER 23A003		
CONTRACT NO.		LOCATION NO.

P.E. STAMP BOX DATE

P.E. STAMP BOX DATE

Washington State Department of Transportation

SR 529
SNOHOMISH RIVER & STEAMBOAT SLOUGH
BRIDGE REPAIR, REHAB & PAINT

TRAFFIC CONTROL PLAN

Plot 25

PLAN REF NO TC17

SHEET 111 OF 136 SHEETS

SIGN SPACING = X (1)		
FREEWAYS & EXPRESSWAYS	50-75 MPH	1500' +/-
RURAL HIGHWAYS	60-65 MPH	800' +/-
RURAL ROADS	45-55 MPH	500' +/-
RURAL ROADS & URBAN ARTERIALS	35-40 MPH	350' +/-
RURAL ROADS & URBAN ARTERIALS RESIDENTAL & BUSINESS DISTRICTS	25-30 MPH	**200' +/- (2)**
URBAN STREETS	25 MPH OR LESS	**100' +/- (2)**

(1) ALL SPACING MAY BE ADJUSTED TO ACCOMMODATE INTERCHANGE RAMPS, AT-GRADE INTERSECTIONS AND DRIVEWAYS.

(2) THIS SPACING MAY BE REDUCED IN URBAN AREAS TO FIT ROADWAY CONDITIONS.

LONGITUDINAL BUFFER SPACE = B										
SPEED (MPH)	20	25	30	35	40	45	50	55	60	65
LENGTH (feet)	115	155	200	250	305	360	425	495	570	645

MINIMUM LANE CLOSURE TAPER LENGTH = L											
LANE WIDTH	SPEED (MPH)	20	25	30	35	40	45	50	55	60	65
12'	L (feet)	80	140	180	270	330	540	600	680	720	800

MAXIMUM CHANNELIZATION DEVICE SPACING (feet)		
MPH	TAPER	TANGENT
50-65	40	80
35-45	30	60
20-30	20	40

MOBILE TRANSPORTABLE ATTENUATOR ROLL AHEAD DISTANCE = R					
HOST VEHICLE WEIGHT 9,900 TO 22,000 lbs.			HOST VEHICLE WEIGHT 22,001+ lbs.		
UP TO 40 MPH	45-55 MPH	60+ MPH	UP TO 40 MPH	45-55 MPH	60+ MPH
100'	172'	222'	100'	150'	172'

SHOULDER CLOSURE TAPER LENGTH = L/3											
SHOULDER WIDTH	SPEED (MPH)	20	25	30	35	40	45	50	55	60	65
6'	L/3 (feet)	40	40	40	60	60	90	120	120	120	160
10'		40	40	60	90	90	150	200	200	200	240
FOR SHOULDERS LESS THAN 6', USE 3 DEVICES MINIMUM											

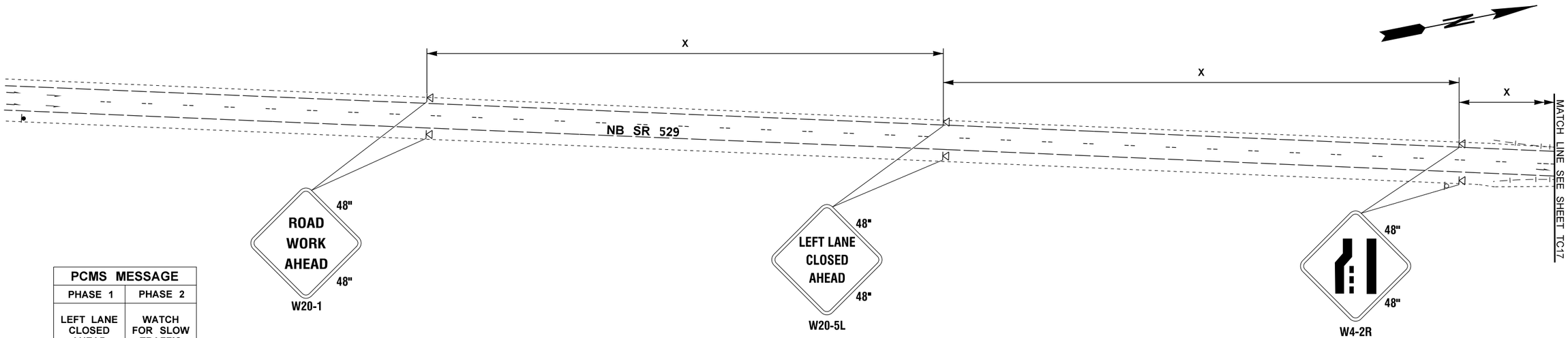

PCMS MESSAGE	
PHASE 1	PHASE 2
LEFT LANE CLOSED AHEAD	WATCH FOR SLOW TRAFFIC
2.0 SEC	2.0 SEC

FIELD LOCATE 1 MILE ± IN ADVANCE OF LANE CLOSURE

LOCATE PCMS PER WSDOT STANDARD SPEC. 1-10.3(3)C.

LEGEND

EXISTING SIGN		PORTABLE CHANGEABLE MESSAGE SIGN	PCMS
CONSTRUCTION SIGN CLASS B		TEMPORARY IMPACT ATTENUATOR	
CONSTRUCTION SIGN CLASS A		TRANSPORTABLE ATTENUATOR	
CONSTRUCTION SIGN CLASS B (5' MOUNTING HEIGHT)		WORK AREA	
TRAFFIC SAFETY DRUM SEE SPECIAL PROVISIONS		CONTAINMENT ZONE (SECTION VIEW)	
SEQUENTIAL ARROW SIGN		TEMPORARY BARRIER	
TYPE 3 BARRICADE WITH MUTCD TYPE A WARNING LIGHTS		FLAGGER	

NORTHBOUND SR 529 SINGLE LEFT LANE CLOSURE (N BROADWAY AVE TO MP 5.61)

MP 5.44 TO MP 5.61 - 1 OF 3 N.T.S

NOTES

1. USE TRANSVERSE DEVICES IN CLOSED LANE EVERY ±500 FEET.
2. DEVICES SHALL NOT ENCROACH ONTO ADJACENT LANE.
3. EXTEND DEVICE TAPER ACROSS SHOULDER.
4. DEVICE SPACING FOR DOWNSTREAM TAPER SHALL BE 20'.
5. ALL SIGNS ARE BLACK ON ORANGE UNLESS OTHERWISE DESIGNATED.
6. SEE SPECIAL PROVISIONS FOR CLOSURE RESTRICTIONS.

FILE NAME	C:\pse\XL5462\CAD\XL5462_PS_TC ew.dgn				
TIME					
DATE					
PLOTTED BY					
DESIGNED BY	E. WALGAMOTT				
ENTERED BY	E. WALGAMOTT				
CHECKED BY	Y. KUANG				
PROJ. ENGR.	C. ANDERSON				
REGIONAL ADM.	B. NIELSEN	REVISION	DATE	BY	

REGION NO.	STATE	FED.AID PROJ.NO.
10	WASH	
JOB NUMBER 23A003		
CONTRACT NO.		LOCATION NO.

P.E. STAMP BOX DATE

P.E. STAMP BOX DATE

Washington State Department of Transportation

SR 529
SNOHOMISH RIVER & STEAMBOAT SLOUGH
BRIDGE REPAIR, REHAB & PAINT

TRAFFIC CONTROL PLAN

Plot 5

PLAN REF NO TC18

SHEET 112 OF 136 SHEETS

SIGN SPACING = X (1)		
FREEWAYS & EXPRESSWAYS	50-75 MPH	1500' +/-
RURAL HIGHWAYS	60-65 MPH	800' +/-
RURAL ROADS	45-55 MPH	500' +/-
RURAL ROADS & URBAN ARTERIALS	35-40 MPH	350' +/-
RURAL ROADS & URBAN ARTERIALS RESIDENTAL & BUSINESS DISTRICTS	25-30 MPH	**200' +/- (2)**
URBAN STREETS	25 MPH OR LESS	**100' +/- (2)**

(1) ALL SPACING MAY BE ADJUSTED TO ACCOMMODATE INTERCHANGE RAMPS, AT-GRADE INTERSECTIONS AND DRIVEWAYS.

(2) THIS SPACING MAY BE REDUCED IN URBAN AREAS TO FIT ROADWAY CONDITIONS.

LONGITUDINAL BUFFER SPACE = B										
SPEED (MPH)	20	25	30	35	40	45	50	55	60	65
LENGTH (feet)	115	155	200	250	305	360	425	495	570	645

MINIMUM LANE CLOSURE TAPER LENGTH = L											
LANE WIDTH	SPEED (MPH)	20	25	30	35	40	45	50	55	60	65
12'	L (feet)	80	140	180	270	330	540	600	680	720	800

MAXIMUM CHANNELIZATION DEVICE SPACING (feet)		
MPH	TAPER	TANGENT
50-65	40	80
35-45	30	60
20-30	20	40

MOBILE TRANSPORTABLE ATTENUATOR ROLL AHEAD DISTANCE = R					
HOST VEHICLE WEIGHT 9,900 TO 22,000 lbs.			HOST VEHICLE WEIGHT 22,001+ lbs.		
UP TO 40 MPH	45-55 MPH	60+ MPH	UP TO 40 MPH	45-55 MPH	60+ MPH
100'	172'	222'	100'	150'	172'

SHOULDER CLOSURE TAPER LENGTH = L/3											
SHOULDER WIDTH	SPEED (MPH)	20	25	30	35	40	45	50	55	60	65
6'	L/3 (feet)	40	40	40	60	60	90	120	120	120	160
10'		40	40	60	90	90	150	200	200	200	240
FOR SHOULDERS LESS THAN 6', USE 3 DEVICES MINIMUM											

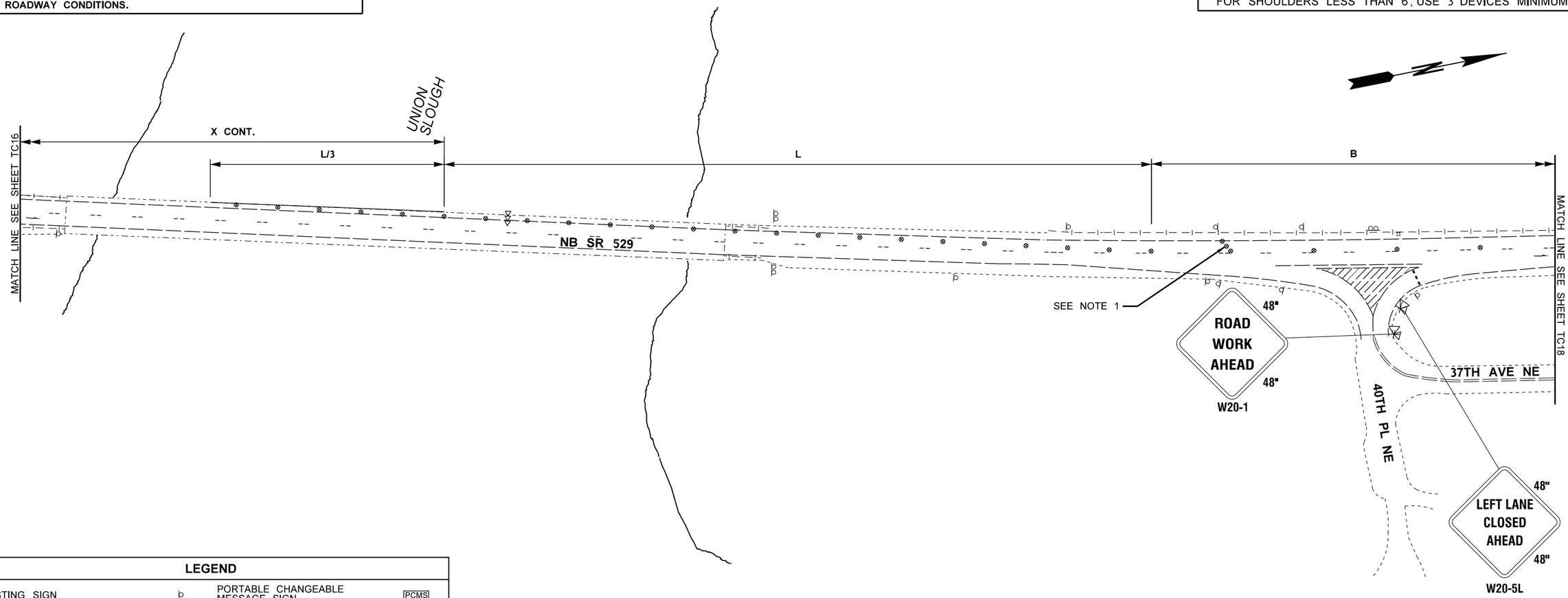

LEGEND

EXISTING SIGN		PORTABLE CHANGEABLE MESSAGE SIGN	PCMS
CONSTRUCTION SIGN CLASS B		TEMPORARY IMPACT ATTENUATOR	
CONSTRUCTION SIGN CLASS A		TRANSPORTABLE ATTENUATOR	
CONSTRUCTION SIGN CLASS B (5' MOUNTING HEIGHT)		WORK AREA	
TRAFFIC SAFETY DRUM SEE SPECIAL PROVISIONS		CONTAINMENT ZONE (SECTION VIEW)	
SEQUENTIAL ARROW SIGN		TEMPORARY BARRIER	
TYPE 3 BARRICADE WITH MUTCD TYPE A WARNING LIGHTS		FLAGGER	

NORTHBOUND SR 529 SINGLE LEFT LANE CLOSURE (N BROADWAY AVE TO MP 5.61)

MP 5.44 TO MP 5.61 - 2 OF 3 N.T.S

NOTES

1. USE TRANSVERSE DEVICES IN CLOSED LANE EVERY ±500 FEET.
2. DEVICES SHALL NOT ENCROACH ONTO ADJACENT LANE.
3. EXTEND DEVICE TAPER ACROSS SHOULDER.
4. DEVICE SPACING FOR DOWNSTREAM TAPER SHALL BE 20'.
5. ALL SIGNS ARE BLACK ON ORANGE UNLESS OTHERWISE DESIGNATED.
6. SEE SPECIAL PROVISIONS FOR CLOSURE RESTRICTIONS.

FILE NAME	C:\pse\XL5462\CAD\XL5462_PS_TC ew.dgn					
TIME						
DATE						
PLOTTED BY						
DESIGNED BY	E. WALGAMOTT					
ENTERED BY	E. WALGAMOTT					
CHECKED BY	Y. KUANG					
PROJ. ENGR.	C. ANDERSON					
REGIONAL ADM.	B. NIELSEN	REVISION	DATE	BY		

REGION NO.	STATE	FED.AID PROJ.NO.
10	WASH	
JOB NUMBER 23A003		
CONTRACT NO.		LOCATION NO.

P.E. STAMP BOX DATE

P.E. STAMP BOX DATE

Washington State Department of Transportation

SR 529
SNOHOMISH RIVER & STEAMBOAT SLOUGH
BRIDGE REPAIR, REHAB & PAINT

TRAFFIC CONTROL PLAN

Plot 6

PLAN REF NO TC19

SHEET 113 OF 136 SHEETS

SIGN SPACING = X (1)		
FREEWAYS & EXPRESSWAYS	50-75 MPH	1500' +/-
RURAL HIGHWAYS	60-65 MPH	800' +/-
RURAL ROADS	45-55 MPH	500' +/-
RURAL ROADS & URBAN ARTERIALS	35-40 MPH	350' +/-
RURAL ROADS & URBAN ARTERIALS RESIDENTAL & BUSINESS DISTRICTS	25-30 MPH	**200' +/- (2)**
URBAN STREETS	25 MPH OR LESS	**100' +/- (2)**

(1) ALL SPACING MAY BE ADJUSTED TO ACCOMMODATE INTERCHANGE RAMPS, AT-GRADE INTERSECTIONS AND DRIVEWAYS.

(2) THIS SPACING MAY BE REDUCED IN URBAN AREAS TO FIT ROADWAY CONDITIONS.

LONGITUDINAL BUFFER SPACE = B										
SPEED (MPH)	20	25	30	35	40	45	50	55	60	65
LENGTH (feet)	115	155	200	250	305	360	425	495	570	645

MINIMUM LANE CLOSURE TAPER LENGTH = L										
LANE WIDTH	SPEED (MPH)	20	25	30	35	40	45	50	55	60	65
12'	L (feet)	80	140	180	270	330	540	600	680	720	800

MAXIMUM CHANNELIZATION DEVICE SPACING (feet)		
MPH	TAPER	TANGENT
50-65	40	80
35-45	30	60
20-30	20	40

MOBILE TRANSPORTABLE ATTENUATOR ROLL AHEAD DISTANCE = R					
HOST VEHICLE WEIGHT 9,900 TO 22,000 lbs.			HOST VEHICLE WEIGHT 22,001+ lbs.		
UP TO 40 MPH	45-55 MPH	60+ MPH	UP TO 40 MPH	45-55 MPH	60+ MPH
100'	172'	222'	100'	150'	172'

SHOULDER CLOSURE TAPER LENGTH = L/3											
SHOULDER WIDTH	SPEED (MPH)	20	25	30	35	40	45	50	55	60	65
6'	L/3 (feet)	40	40	40	60	60	90	120	120	120	160
10'		40	40	60	90	90	150	200	200	200	240
FOR SHOULDERS LESS THAN 6', USE 3 DEVICES MINIMUM											

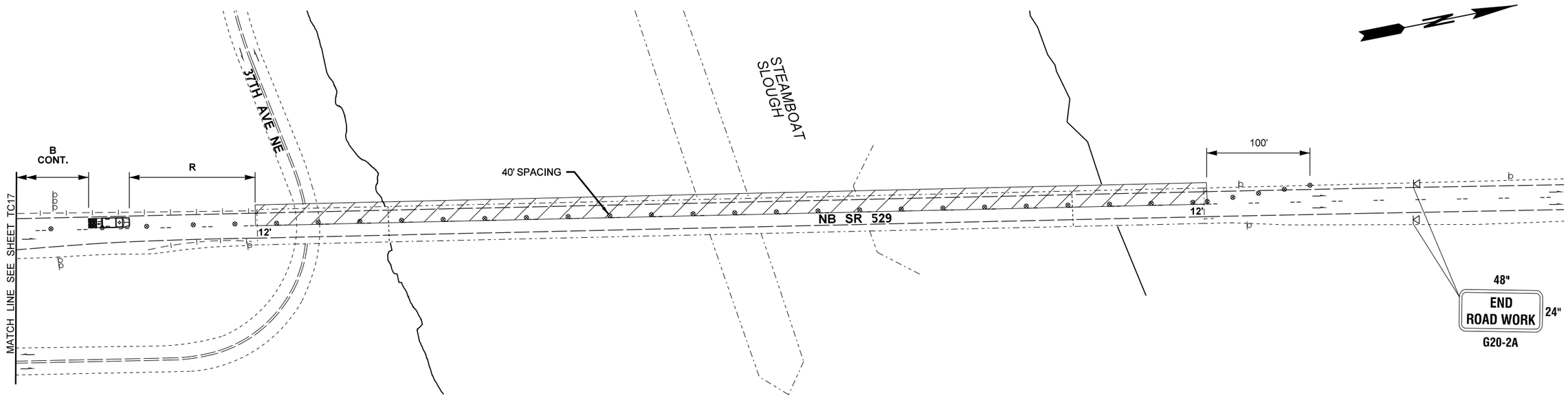

LEGEND

EXISTING SIGN		PORTABLE CHANGEABLE MESSAGE SIGN	PCMS
CONSTRUCTION SIGN CLASS B		TEMPORARY IMPACT ATTENUATOR	
CONSTRUCTION SIGN CLASS A		TRANSPORTABLE ATTENUATOR	
CONSTRUCTION SIGN CLASS B (5' MOUNTING HEIGHT)		WORK AREA	
TRAFFIC SAFETY DRUM SEE SPECIAL PROVISIONS		CONTAINMENT ZONE (SECTION VIEW)	
SEQUENTIAL ARROW SIGN		TEMPORARY BARRIER	
TYPE 3 BARRICADE WITH MUTCD TYPE A WARNING LIGHTS		FLAGGER	

NORTHBOUND SR 529 SINGLE LEFT LANE CLOSURE
(N BROADWAY AVE TO MP 5.61)

MP 5.44 TO MP 5.61 - 3 OF 3 N.T.S

NOTES

1. USE TRANSVERSE DEVICES IN CLOSED LANE EVERY ±500 FEET.
2. DEVICES SHALL NOT ENCROACH ONTO ADJACENT LANE.
3. EXTEND DEVICE TAPER ACROSS SHOULDER.
4. DEVICE SPACING FOR DOWNSTREAM TAPER SHALL BE 20'.
5. ALL SIGNS ARE BLACK ON ORANGE UNLESS OTHERWISE DESIGNATED.
6. SEE SPECIAL PROVISIONS FOR CLOSURE RESTRICTIONS.

FILE NAME	C:\pse\XL5462\CAD\XL5462_PS_TC ew.dgn				
TIME					
DATE					
PLOTTED BY					
DESIGNED BY	E. WALGAMOTT				
ENTERED BY	E. WALGAMOTT				
CHECKED BY	Y. KUANG				
PROJ. ENGR.	C. ANDERSON				
REGIONAL ADM.	B. NIELSEN	REVISION	DATE	BY	

REGION NO.	STATE	FED.AID PROJ.NO.
10	WASH	
JOB NUMBER 23A003		
CONTRACT NO.		LOCATION NO.

P.E. STAMP BOX DATE

P.E. STAMP BOX DATE

Washington State Department of Transportation

SR 529
SNOHOMISH RIVER & STEAMBOAT SLOUGH
BRIDGE REPAIR, REHAB & PAINT

TRAFFIC CONTROL PLAN

Plot 7

PLAN REF NO TC20

SHEET 114 OF 136 SHEETS

SIGN SPACING = X (1)		
FREEWAYS & EXPRESSWAYS	50-75 MPH	1500' +/-
RURAL HIGHWAYS	60-65 MPH	800' +/-
RURAL ROADS	45-55 MPH	500' +/-
RURAL ROADS & URBAN ARTERIALS	35-40 MPH	350' +/-
RURAL ROADS & URBAN ARTERIALS RESIDENTAL & BUSINESS DISTRICTS	25-30 MPH	**200' +/- (2)**
URBAN STREETS	25 MPH OR LESS	**100' +/- (2)**

(1) ALL SPACING MAY BE ADJUSTED TO ACCOMMODATE INTERCHANGE RAMPS, AT-GRADE INTERSECTIONS AND DRIVEWAYS.

(2) THIS SPACING MAY BE REDUCED IN URBAN AREAS TO FIT ROADWAY CONDITIONS.

LONGITUDINAL BUFFER SPACE = B										
SPEED (MPH)	20	25	30	35	40	45	50	55	60	65
LENGTH (feet)	115	155	200	250	305	360	425	495	570	645

MINIMUM LANE CLOSURE TAPER LENGTH = L											
LANE WIDTH	SPEED (MPH)	20	25	30	35	40	45	50	55	60	65
12'	L (feet)	80	140	180	270	330	540	600	680	720	800

MAXIMUM CHANNELIZATION DEVICE SPACING (feet)		
MPH	TAPER	TANGENT
50-65	40	80
35-45	30	60
20-30	20	40

MOBILE TRANSPORTABLE ATTENUATOR ROLL AHEAD DISTANCE = R					
HOST VEHICLE WEIGHT 9,900 TO 22,000 lbs.			HOST VEHICLE WEIGHT 22,001+ lbs.		
UP TO 40 MPH	45-55 MPH	60+ MPH	UP TO 40 MPH	45-55 MPH	60+ MPH
100'	172'	222'	100'	150'	172'

SHOULDER CLOSURE TAPER LENGTH = L/3											
SHOULDER WIDTH	SPEED (MPH)	20	25	30	35	40	45	50	55	60	65
6'	L/3 (feet)	40	40	40	60	60	90	120	120	120	160
10'		40	40	60	90	90	150	200	200	200	240
FOR SHOULDERS LESS THAN 6', USE 3 DEVICES MINIMUM											

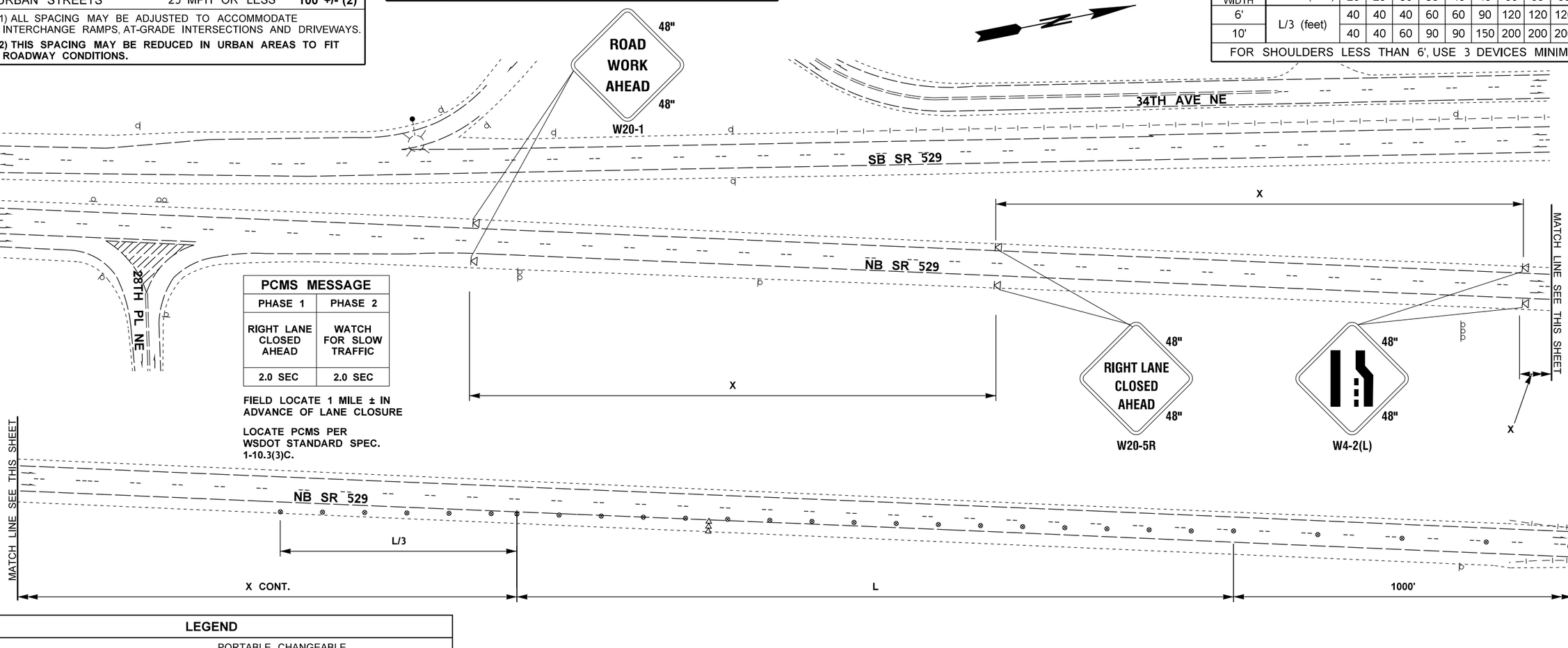

PCMS MESSAGE	
PHASE 1	PHASE 2
RIGHT LANE CLOSED AHEAD	WATCH FOR SLOW TRAFFIC
2.0 SEC	2.0 SEC

FIELD LOCATE 1 MILE ± IN ADVANCE OF LANE CLOSURE

LOCATE PCMS PER WSDOT STANDARD SPEC. 1-10.3(3)C.

LEGEND

EXISTING SIGN		PORTABLE CHANGEABLE MESSAGE SIGN	PCMS
CONSTRUCTION SIGN CLASS B		TEMPORARY IMPACT ATTENUATOR	
CONSTRUCTION SIGN CLASS A		TRANSPORTABLE ATTENUATOR	
CONSTRUCTION SIGN CLASS B (5' MOUNTING HEIGHT)		WORK AREA	
TRAFFIC SAFETY DRUM SEE SPECIAL PROVISIONS		CONTAINMENT ZONE (SECTION VIEW)	
SEQUENTIAL ARROW SIGN		TEMPORARY BARRIER	
TYPE 3 BARRICADE WITH MUTCD TYPE A WARNING LIGHTS		FLAGGER	

NORTHBOUND SR 529 SINGLE RIGHT LANE CLOSURE (N BROADWAY AVE TO MP 5.61)

MP 5.44 TO MP 5.61 - 1 OF 3 N.T.S

NOTES

1. USE TRANSVERSE DEVICES IN CLOSED LANE EVERY ±500 FEET.
2. DEVICES SHALL NOT ENCROACH ONTO ADJACENT LANE.
3. EXTEND DEVICE TAPER ACROSS SHOULDER.
4. DEVICE SPACING FOR DOWNSTREAM TAPER SHALL BE 20'.
5. ALL SIGNS ARE BLACK ON ORANGE UNLESS OTHERWISE DESIGNATED.
6. SEE SPECIAL PROVISIONS FOR CLOSURE RESTRICTIONS.

FILE NAME	C:\pse\XL5462\CAD\XL5462_PS_TC ew.dgn				
TIME					
DATE					
PLOTTED BY					
DESIGNED BY	E. WALGAMOTT				
ENTERED BY	E. WALGAMOTT				
CHECKED BY	Y. KUANG				
PROJ. ENGR.	C. ANDERSON				
REGIONAL ADM.	B. NIELSEN	REVISION	DATE	BY	

REGION NO.	STATE	FED.AID PROJ.NO.
10	WASH	
JOB NUMBER 23A003		
CONTRACT NO.		LOCATION NO.

P.E. STAMP BOX DATE

P.E. STAMP BOX DATE

Washington State Department of Transportation

SR 529
SNOHOMISH RIVER & STEAMBOAT SLOUGH
BRIDGE REPAIR, REHAB & PAINT

TRAFFIC CONTROL PLAN

Plot 16

PLAN REF NO TC21

SHEET 115 OF 136 SHEETS

SIGN SPACING = X (1)		
FREEWAYS & EXPRESSWAYS	50-75 MPH	1500' +/-
RURAL HIGHWAYS	60-65 MPH	800' +/-
RURAL ROADS	45-55 MPH	500' +/-
RURAL ROADS & URBAN ARTERIALS	35-40 MPH	350' +/-
RURAL ROADS & URBAN ARTERIALS RESIDENTAL & BUSINESS DISTRICTS	25-30 MPH	**200' +/- (2)**
URBAN STREETS	25 MPH OR LESS	**100' +/- (2)**

(1) ALL SPACING MAY BE ADJUSTED TO ACCOMMODATE INTERCHANGE RAMPS, AT-GRADE INTERSECTIONS AND DRIVEWAYS.

(2) THIS SPACING MAY BE REDUCED IN URBAN AREAS TO FIT ROADWAY CONDITIONS.

LONGITUDINAL BUFFER SPACE = B										
SPEED (MPH)	20	25	30	35	40	45	50	55	60	65
LENGTH (feet)	115	155	200	250	305	360	425	495	570	645

MINIMUM LANE CLOSURE TAPER LENGTH = L										
LANE WIDTH	SPEED (MPH)	20	25	30	35	40	45	50	55	60	65
12'	L (feet)	80	140	180	270	330	540	600	680	720	800

MAXIMUM CHANNELIZATION DEVICE SPACING (feet)		
MPH	TAPER	TANGENT
50-65	40	80
35-45	30	60
20-30	20	40

MOBILE TRANSPORTABLE ATTENUATOR ROLL AHEAD DISTANCE = R					
HOST VEHICLE WEIGHT 9,900 TO 22,000 lbs.			HOST VEHICLE WEIGHT 22,001+ lbs.		
UP TO 40 MPH	45-55 MPH	60+ MPH	UP TO 40 MPH	45-55 MPH	60+ MPH
100'	172'	222'	100'	150'	172'

SHOULDER CLOSURE TAPER LENGTH = L/3											
SHOULDER WIDTH	SPEED (MPH)	20	25	30	35	40	45	50	55	60	65
6'	L/3 (feet)	40	40	40	60	60	90	120	120	120	160
10'		40	40	60	90	90	150	200	200	200	240
FOR SHOULDERS LESS THAN 6', USE 3 DEVICES MINIMUM											

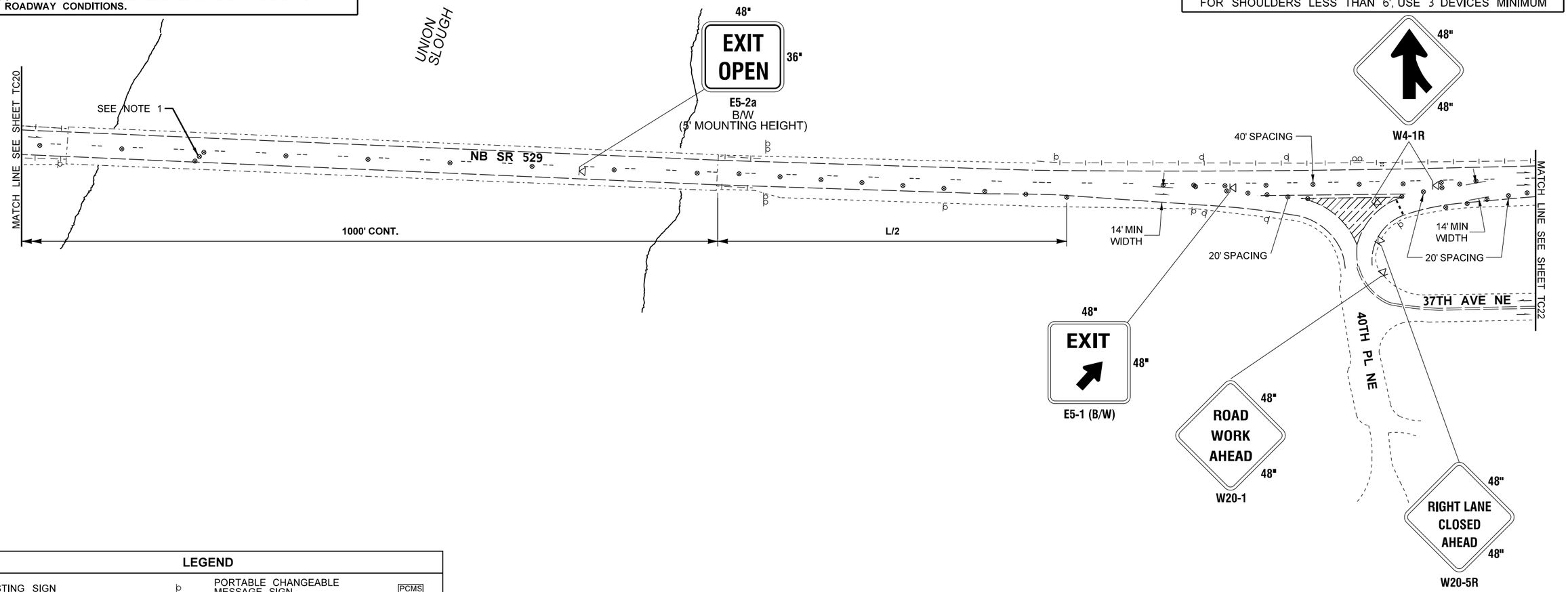

LEGEND

EXISTING SIGN		PORTABLE CHANGEABLE MESSAGE SIGN	PCMS
CONSTRUCTION SIGN CLASS B		TEMPORARY IMPACT ATTENUATOR	
CONSTRUCTION SIGN CLASS A		TRANSPORTABLE ATTENUATOR	
CONSTRUCTION SIGN CLASS B (5' MOUNTING HEIGHT)		WORK AREA	
TRAFFIC SAFETY DRUM SEE SPECIAL PROVISIONS		CONTAINMENT ZONE (SECTION VIEW)	
SEQUENTIAL ARROW SIGN		TEMPORARY BARRIER	
TYPE 3 BARRICADE WITH MUTCD TYPE A WARNING LIGHTS		FLAGGER	

NORTHBOUND SR 529 SINGLE RIGHT LANE CLOSURE (N BROADWAY AVE TO MP 5.61)

MP 5.44 TO MP 5.61 - 2 OF 3 N.T.S

NOTES

1. USE TRANSVERSE DEVICES IN CLOSED LANE EVERY ±500 FEET.
2. DEVICES SHALL NOT ENCROACH ONTO ADJACENT LANE.
3. EXTEND DEVICE TAPER ACROSS SHOULDER.
4. DEVICE SPACING FOR DOWNSTREAM TAPER SHALL BE 20'.
5. ALL SIGNS ARE BLACK ON ORANGE UNLESS OTHERWISE DESIGNATED.
6. SEE SPECIAL PROVISIONS FOR CLOSURE RESTRICTIONS.

FILE NAME	C:\pse\XL5462\CAD\XL5462_PS_TC ew.dgn						
TIME					REGION NO. 10	STATE WASH	FED.AID PROJ.NO.
DATE							
PLOTTED BY							
DESIGNED BY	E. WALGAMOTT				JOB NUMBER 23A003		
ENTERED BY	E. WALGAMOTT						
CHECKED BY	Y. KUANG				CONTRACT NO.		LOCATION NO.
PROJ. ENGR.	C. ANDERSON						
REGIONAL ADM.	B. NIELSEN	REVISION	DATE	BY			

P.E. STAMP BOX DATE

P.E. STAMP BOX DATE

Washington State Department of Transportation

SR 529
SNOHOMISH RIVER & STEAMBOAT SLOUGH
BRIDGE REPAIR, REHAB & PAINT

TRAFFIC CONTROL PLAN

Plot 17

PLAN REF NO TC22

SHEET 116 OF 136 SHEETS

SIGN SPACING = X (1)		
FREEWAYS & EXPRESSWAYS	50-75 MPH	1500' +/-
RURAL HIGHWAYS	60-65 MPH	800' +/-
RURAL ROADS	45-55 MPH	500' +/-
RURAL ROADS & URBAN ARTERIALS	35-40 MPH	350' +/-
RURAL ROADS & URBAN ARTERIALS RESIDENTAL & BUSINESS DISTRICTS	25-30 MPH	**200' +/- (2)**
URBAN STREETS	25 MPH OR LESS	**100' +/- (2)**

(1) ALL SPACING MAY BE ADJUSTED TO ACCOMMODATE INTERCHANGE RAMPS, AT-GRADE INTERSECTIONS AND DRIVEWAYS.

(2) THIS SPACING MAY BE REDUCED IN URBAN AREAS TO FIT ROADWAY CONDITIONS.

LONGITUDINAL BUFFER SPACE = B										
SPEED (MPH)	20	25	30	35	40	45	50	55	60	65
LENGTH (feet)	115	155	200	250	305	360	425	495	570	645

MINIMUM LANE CLOSURE TAPER LENGTH = L										
LANE WIDTH	SPEED (MPH)	20	25	30	35	40	45	50	55	60	65
12'	L (feet)	80	140	180	270	330	540	600	680	720	800

MAXIMUM CHANNELIZATION DEVICE SPACING (feet)		
MPH	TAPER	TANGENT
50-65	40	80
35-45	30	60
20-30	20	40

MOBILE TRANSPORTABLE ATTENUATOR ROLL AHEAD DISTANCE = R					
HOST VEHICLE WEIGHT 9,900 TO 22,000 lbs.			HOST VEHICLE WEIGHT 22,001+ lbs.		
UP TO 40 MPH	45-55 MPH	60+ MPH	UP TO 40 MPH	45-55 MPH	60+ MPH
100'	172'	222'	100'	150'	172'

SHOULDER CLOSURE TAPER LENGTH = L/3											
SHOULDER WIDTH	SPEED (MPH)	20	25	30	35	40	45	50	55	60	65
6'	L/3 (feet)	40	40	40	60	60	90	120	120	120	160
10'		40	40	60	90	90	150	200	200	200	240
FOR SHOULDERS LESS THAN 6', USE 3 DEVICES MINIMUM											

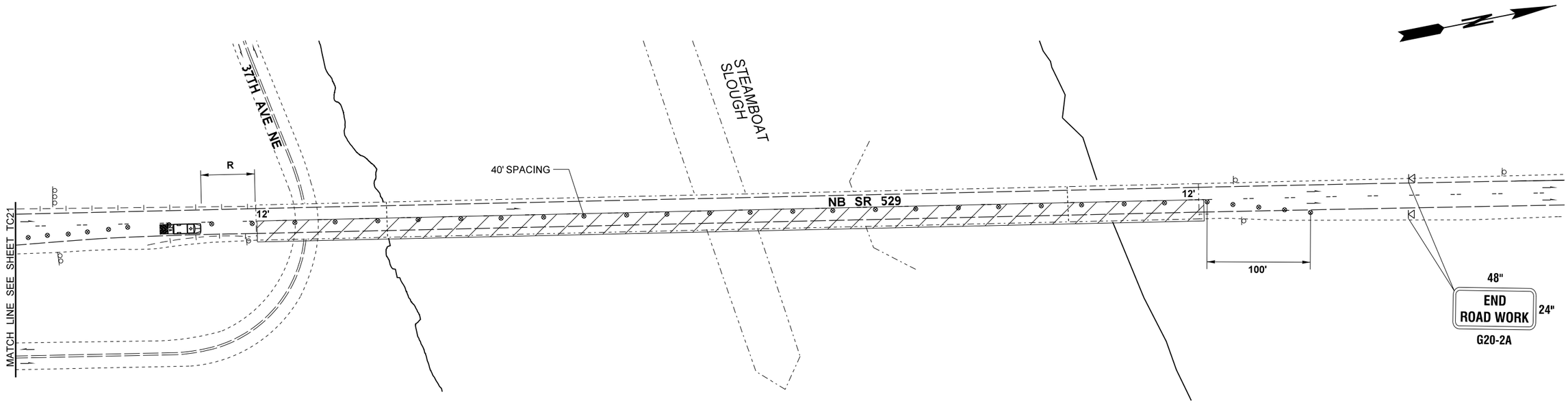

LEGEND

EXISTING SIGN		PORTABLE CHANGEABLE MESSAGE SIGN	PCMS
CONSTRUCTION SIGN CLASS B		TEMPORARY IMPACT ATTENUATOR	
CONSTRUCTION SIGN CLASS A		TRANSPORTABLE ATTENUATOR	
CONSTRUCTION SIGN CLASS B (5' MOUNTING HEIGHT)		WORK AREA	
TRAFFIC SAFETY DRUM SEE SPECIAL PROVISIONS		CONTAINMENT ZONE (SECTION VIEW)	
SEQUENTIAL ARROW SIGN		TEMPORARY BARRIER	
TYPE 3 BARRICADE WITH MUTCD TYPE A WARNING LIGHTS		FLAGGER	

NORTHBOUND SR 529 SINGLE RIGHT LANE CLOSURE
(N BROADWAY AVE TO MP 5.61)

MP 5.44 TO MP 5.61 - 3 OF 3 N.T.S

NOTES

1. USE TRANSVERSE DEVICES IN CLOSED LANE EVERY ±500 FEET.
2. DEVICES SHALL NOT ENCROACH ONTO ADJACENT LANE.
3. EXTEND DEVICE TAPER ACROSS SHOULDER.
4. DEVICE SPACING FOR DOWNSTREAM TAPER SHALL BE 20'.
5. ALL SIGNS ARE BLACK ON ORANGE UNLESS OTHERWISE DESIGNATED.
6. SEE SPECIAL PROVISIONS FOR CLOSURE RESTRICTIONS.

FILE NAME	C:\pse\XL5462\CAD\XL5462_PS_TC ew.dgn		
TIME			
DATE			
PLOTTED BY			
DESIGNED BY	E. WALGAMOTT		
ENTERED BY	E. WALGAMOTT		
CHECKED BY	Y. KUANG		
PROJ. ENGR.	C. ANDERSON		
REGIONAL ADM.	B. NIELSEN	REVISION	DATE / BY

REGION NO.	STATE	FED.AID PROJ.NO.
10	WASH	
JOB NUMBER 23A003		
CONTRACT NO.		LOCATION NO.

P.E. STAMP BOX DATE

P.E. STAMP BOX DATE

Washington State Department of Transportation

SR 529
SNOHOMISH RIVER & STEAMBOAT SLOUGH
BRIDGE REPAIR, REHAB & PAINT

TRAFFIC CONTROL PLAN

Plot 18

PLAN REF NO TC23

SHEET 117 OF 136 SHEETS

SIGN SPACING = X (1)		
FREEWAYS & EXPRESSWAYS	50-75 MPH	1500' +/-
RURAL HIGHWAYS	60-65 MPH	800' +/-
RURAL ROADS	45-55 MPH	500' +/-
RURAL ROADS & URBAN ARTERIALS	35-40 MPH	350' +/-
RURAL ROADS & URBAN ARTERIALS RESIDENTAL & BUSINESS DISTRICTS	25-30 MPH	**200' +/- (2)**
URBAN STREETS	25 MPH OR LESS	**100' +/- (2)**

(1) ALL SPACING MAY BE ADJUSTED TO ACCOMMODATE INTERCHANGE RAMPS, AT-GRADE INTERSECTIONS AND DRIVEWAYS.

(2) THIS SPACING MAY BE REDUCED IN URBAN AREAS TO FIT ROADWAY CONDITIONS.

LONGITUDINAL BUFFER SPACE = B										
SPEED (MPH)	20	25	30	35	40	45	50	55	60	65
LENGTH (feet)	115	155	200	250	305	360	425	495	570	645

MINIMUM LANE CLOSURE TAPER LENGTH = L											
LANE WIDTH	SPEED (MPH)	20	25	30	35	40	45	50	55	60	65
12'	L (feet)	80	140	180	270	330	540	600	680	720	800

MAXIMUM CHANNELIZATION DEVICE SPACING (feet)		
MPH	TAPER	TANGENT
50-65	40	80
35-45	30	60
20-30	20	40

MOBILE TRANSPORTABLE ATTENUATOR ROLL AHEAD DISTANCE = R					
HOST VEHICLE WEIGHT 9,900 TO 22,000 lbs.			HOST VEHICLE WEIGHT 22,001+ lbs.		
UP TO 40 MPH	45-55 MPH	60+ MPH	UP TO 40 MPH	45-55 MPH	60+ MPH
100'	172'	222'	100'	150'	172'

SHOULDER CLOSURE TAPER LENGTH = L/3											
SHOULDER WIDTH	SPEED (MPH)	20	25	30	35	40	45	50	55	60	65
6'	L/3 (feet)	40	40	40	60	60	90	120	120	120	160
10'		40	40	60	90	90	150	200	200	200	240
FOR SHOULDERS LESS THAN 6', USE 3 DEVICES MINIMUM											

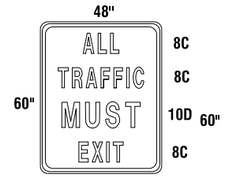

SPECIAL (5' MOUNTING HEIGHT)
B/W

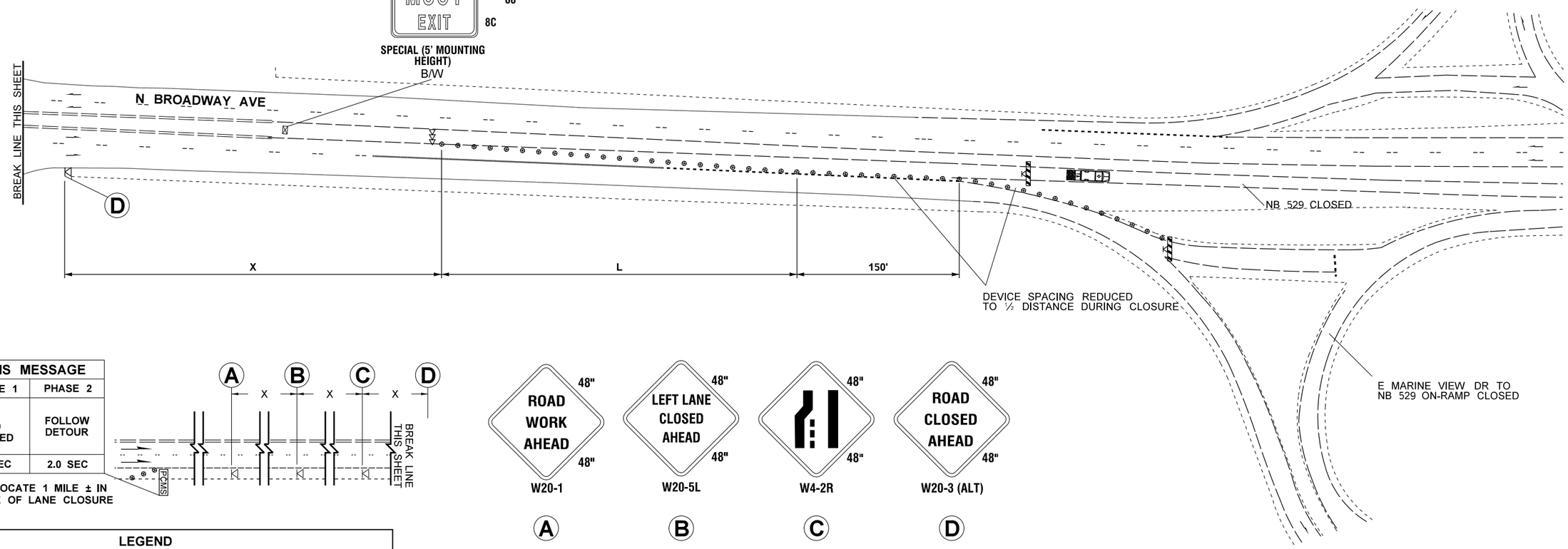

PCMS MESSAGE	
PHASE 1	PHASE 2
NB 529 CLOSED	FOLLOW DETOUR
2.0 SEC	2.0 SEC

FIELD LOCATE 1 MILE ± IN ADVANCE OF LANE CLOSURE

LEGEND

EXISTING SIGN		PORTABLE CHANGEABLE MESSAGE SIGN	PCMS
CONSTRUCTION SIGN CLASS B		TEMPORARY IMPACT ATTENUATOR	
CONSTRUCTION SIGN CLASS A		TRANSPORTABLE ATTENUATOR	
CONSTRUCTION SIGN CLASS B (5' MOUNTING HEIGHT)		WORK AREA	
TRAFFIC SAFETY DRUM SEE SPECIAL PROVISIONS		CONTAINMENT ZONE (SECTION VIEW)	
SEQUENTIAL ARROW SIGN		TEMPORARY BARRIER	
TYPE 3 BARRICADE WITH MUTCD TYPE A WARNING LIGHTS		FLAGGER	

NORTHBOUND SR 529 ROADWAY CLOSURE (BRIDGE 529/10E MP 3.74 TO 4.58)

1 OF 3 N.T.S

NOTES

1. USE TRANSVERSE DEVICES IN CLOSED LANE EVERY ±500 FEET.
2. DEVICES SHALL NOT ENCROACH ONTO ADJACENT LANE.
3. EXTEND DEVICE TAPER ACROSS SHOULDER.
4. DEVICE SPACING FOR DOWNSTREAM TAPER SHALL BE 20'.
5. ALL SIGNS ARE BLACK ON ORANGE UNLESS OTHERWISE DESIGNATED.
6. SEE SPECIAL PROVISIONS FOR CLOSURE RESTRICTIONS.
7. SEE SHEET DT2 FOR DETOUR INFO

FILE NAME	C:\pse\XL5462\CAD\XL5462_PS_TC ew.dgn						
TIME					REGION NO. 10	STATE WASH	FED.AID PROJ.NO.
DATE							
PLOTTED BY							
DESIGNED BY	E. WALGAMOTT				JOB NUMBER 23A003		
ENTERED BY	E. WALGAMOTT						
CHECKED BY	Y. KUANG				CONTRACT NO.		LOCATION NO.
PROJ. ENGR.	C. ANDERSON						
REGIONAL ADM.	B. NIELSEN	REVISION	DATE	BY			

DATE
P.E. STAMP BOX

DATE
P.E. STAMP BOX

Washington State Department of Transportation

SR 529
SNOHOMISH RIVER & STEAMBOAT SLOUGH
BRIDGE REPAIR, REHAB & PAINT

TRAFFIC CONTROL PLAN

Plot 34
PLAN REF NO TC24
SHEET 118 OF 136 SHEETS

SIGN SPACING = X (1)		
FREEWAYS & EXPRESSWAYS	50-75 MPH	1500' +/-
RURAL HIGHWAYS	60-65 MPH	800' +/-
RURAL ROADS	45-55 MPH	500' +/-
RURAL ROADS & URBAN ARTERIALS	35-40 MPH	350' +/-
RURAL ROADS & URBAN ARTERIALS RESIDENTAL & BUSINESS DISTRICTS	25-30 MPH	**200' +/- (2)**
URBAN STREETS	25 MPH OR LESS	**100' +/- (2)**

(1) ALL SPACING MAY BE ADJUSTED TO ACCOMMODATE INTERCHANGE RAMPS, AT-GRADE INTERSECTIONS AND DRIVEWAYS.

(2) THIS SPACING MAY BE REDUCED IN URBAN AREAS TO FIT ROADWAY CONDITIONS.

LONGITUDINAL BUFFER SPACE = B										
SPEED (MPH)	20	25	30	35	40	45	50	55	60	65
LENGTH (feet)	115	155	200	250	305	360	425	495	570	645

MINIMUM LANE CLOSURE TAPER LENGTH = L										
LANE WIDTH	SPEED (MPH)	20	25	30	35	40	45	50	55	60	65
12'	L (feet)	80	140	180	270	330	540	600	680	720	800

MAXIMUM CHANNELIZATION DEVICE SPACING (feet)		
MPH	TAPER	TANGENT
50-65	40	80
35-45	30	60
20-30	20	40

MOBILE TRANSPORTABLE ATTENUATOR ROLL AHEAD DISTANCE = R					
HOST VEHICLE WEIGHT 9,900 TO 22,000 lbs.			HOST VEHICLE WEIGHT 22,001+ lbs.		
UP TO 40 MPH	45-55 MPH	60+ MPH	UP TO 40 MPH	45-55 MPH	60+ MPH
100'	172'	222'	100'	150'	172'

SHOULDER CLOSURE TAPER LENGTH = L/3											
SHOULDER WIDTH	SPEED (MPH)	20	25	30	35	40	45	50	55	60	65
6'	L/3 (feet)	40	40	40	60	60	90	120	120	120	160
10'		40	40	60	90	90	150	200	200	200	240
FOR SHOULDERS LESS THAN 6', USE 3 DEVICES MINIMUM											

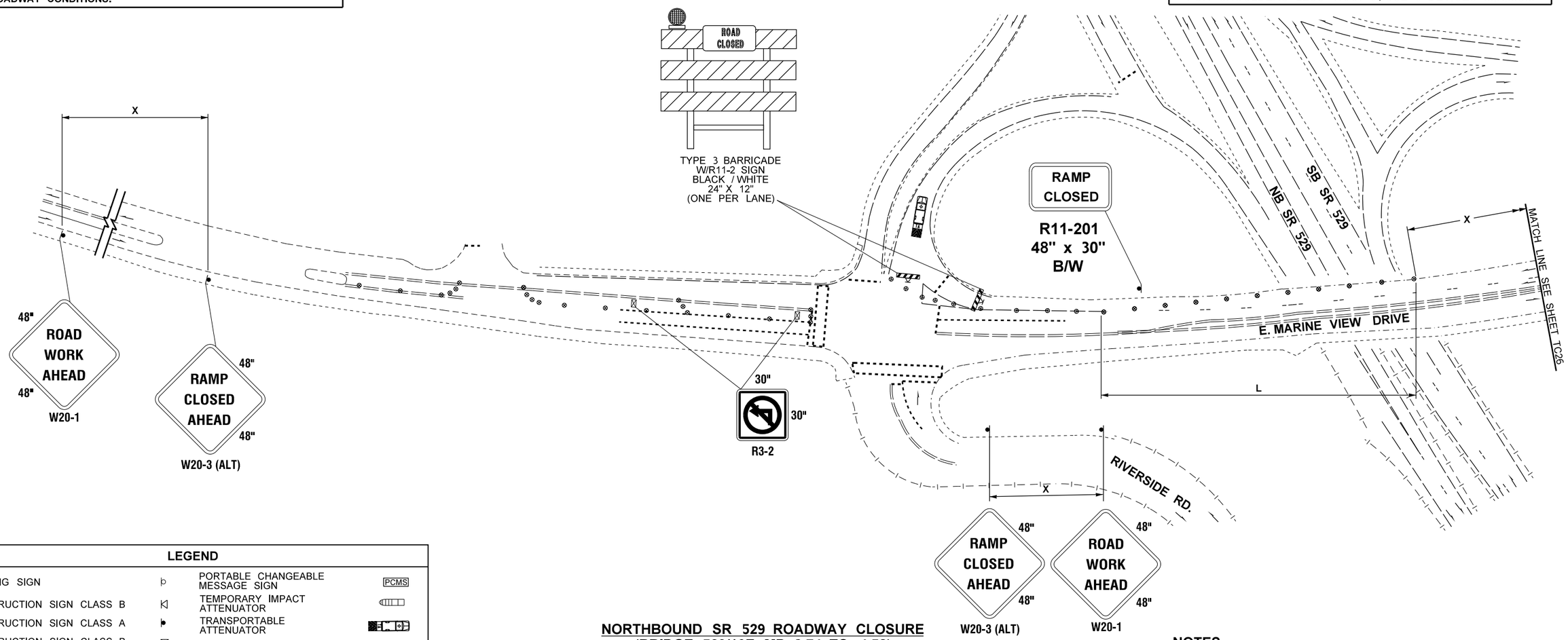

LEGEND

EXISTING SIGN		PORTABLE CHANGEABLE MESSAGE SIGN	PCMS
CONSTRUCTION SIGN CLASS B		TEMPORARY IMPACT ATTENUATOR	
CONSTRUCTION SIGN CLASS A		TRANSPORTABLE ATTENUATOR	
CONSTRUCTION SIGN CLASS B (5' MOUNTING HEIGHT)		WORK AREA	
TRAFFIC SAFETY DRUM SEE SPECIAL PROVISIONS		CONTAINMENT ZONE (SECTION VIEW)	
SEQUENTIAL ARROW SIGN		TEMPORARY BARRIER	
TYPE 3 BARRICADE WITH MUTCD TYPE A WARNING LIGHTS		FLAGGER	

NORTHBOUND SR 529 ROADWAY CLOSURE
(BRIDGE 529/10E MP 3.74 TO 4.58)
2 OF 3

NORTHBOUND SR 529 CROSSOVER TO SOUTHBOUND SR 529
(N BROADWAY AVE TO MP 4.65)
1 OF 6

N.T.S

NOTES

1. USE TRANSVERSE DEVICES IN CLOSED LANE EVERY ±500 FEET.
2. DEVICES SHALL NOT ENCROACH ONTO ADJACENT LANE.
3. EXTEND DEVICE TAPER ACROSS SHOULDER.
4. DEVICE SPACING FOR DOWNSTREAM TAPER SHALL BE 20'.
5. ALL SIGNS ARE BLACK ON ORANGE UNLESS OTHERWISE DESIGNATED.
6. SEE SPECIAL PROVISIONS FOR CLOSURE RESTRICTIONS.
7. SEE SHEET DT2 AND DT5 FOR DETOUR INFO

FILE NAME	C:\pse\XL5462\CAD\XL5462_PS_TC ew.dgn						
TIME							
DATE							
PLOTTED BY							
DESIGNED BY	E. WALGAMOTT						
ENTERED BY	E. WALGAMOTT						
CHECKED BY	Y. KUANG						
PROJ. ENGR.	C. ANDERSON						
REGIONAL ADM.	B. NIELSEN	REVISION	DATE	BY			

REGION NO.	STATE	FED.AID PROJ.NO.
10	WASH	
JOB NUMBER 23A003		
CONTRACT NO.		LOCATION NO.

P.E. STAMP BOX DATE

P.E. STAMP BOX DATE

Washington State Department of Transportation

SR 529
SNOHOMISH RIVER & STEAMBOAT SLOUGH
BRIDGE REPAIR, REHAB & PAINT

TRAFFIC CONTROL PLAN

Plot 31

PLAN REF NO TC25

SHEET 119 OF 136 SHEETS

SIGN SPACING = X (1)		
FREEWAYS & EXPRESSWAYS	50-75 MPH	1500' +/-
RURAL HIGHWAYS	60-65 MPH	800' +/-
RURAL ROADS	45-55 MPH	500' +/-
RURAL ROADS & URBAN ARTERIALS	35-40 MPH	350' +/-
RURAL ROADS & URBAN ARTERIALS RESIDENTAL & BUSINESS DISTRICTS	25-30 MPH	**200' +/- (2)**
URBAN STREETS	25 MPH OR LESS	**100' +/- (2)**

(1) ALL SPACING MAY BE ADJUSTED TO ACCOMMODATE INTERCHANGE RAMPS, AT-GRADE INTERSECTIONS AND DRIVEWAYS.

(2) THIS SPACING MAY BE REDUCED IN URBAN AREAS TO FIT ROADWAY CONDITIONS.

LONGITUDINAL BUFFER SPACE = B										
SPEED (MPH)	20	25	30	35	40	45	50	55	60	65
LENGTH (feet)	115	155	200	250	305	360	425	495	570	645

MINIMUM LANE CLOSURE TAPER LENGTH = L											
LANE WIDTH	SPEED (MPH)	20	25	30	35	40	45	50	55	60	65
12'	L (feet)	80	140	180	270	330	540	600	680	720	800

MAXIMUM CHANNELIZATION DEVICE SPACING (feet)		
MPH	TAPER	TANGENT
50-65	40	80
35-45	30	60
20-30	20	40

MOBILE TRANSPORTABLE ATTENUATOR ROLL AHEAD DISTANCE = R					
HOST VEHICLE WEIGHT 9,900 TO 22,000 lbs.			HOST VEHICLE WEIGHT 22,001+ lbs.		
UP TO 40 MPH	45-55 MPH	60+ MPH	UP TO 40 MPH	45-55 MPH	60+ MPH
100'	172'	222'	100'	150'	172'

SHOULDER CLOSURE TAPER LENGTH = L/3											
SHOULDER WIDTH	SPEED (MPH)	20	25	30	35	40	45	50	55	60	65
6'	L/3 (feet)	40	40	40	60	60	90	120	120	120	160
10'		40	40	60	90	90	150	200	200	200	240
FOR SHOULDERS LESS THAN 6', USE 3 DEVICES MINIMUM											

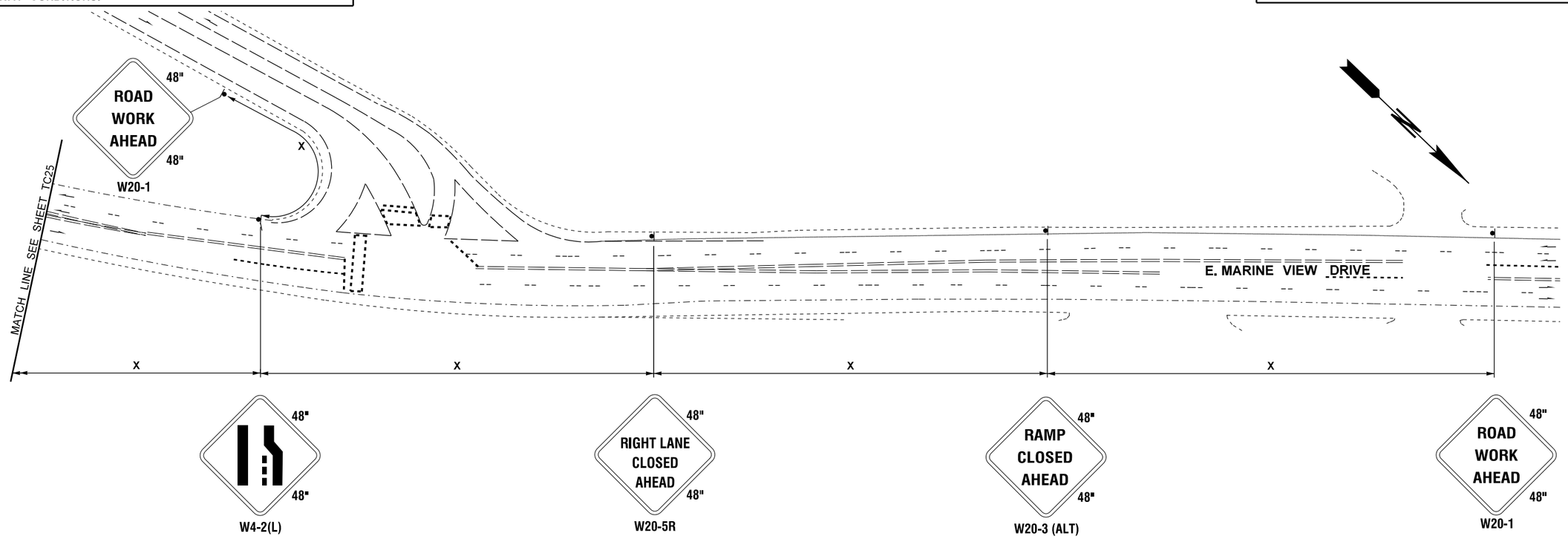

LEGEND

EXISTING SIGN		PORTABLE CHANGEABLE MESSAGE SIGN	PCMS
CONSTRUCTION SIGN CLASS B		TEMPORARY IMPACT ATTENUATOR	
CONSTRUCTION SIGN CLASS A		TRANSPORTABLE ATTENUATOR	
CONSTRUCTION SIGN CLASS B (5' MOUNTING HEIGHT)		WORK AREA	
TRAFFIC SAFETY DRUM SEE SPECIAL PROVISIONS		CONTAINMENT ZONE (SECTION VIEW)	
SEQUENTIAL ARROW SIGN		TEMPORARY BARRIER	
TYPE 3 BARRICADE WITH MUTCD TYPE A WARNING LIGHTS		FLAGGER	

NORTHBOUND SR 529 ROADWAY CLOSURE
(BRIDGE 529/10E MP 3.74 TO 4.58)
3 OF 3

NORTHBOUND SR 529 CROSSOVER TO SOUTHBOUND SR 529
(N BROADWAY AVE TO MP 4.65)
2 OF 6

N.T.S

NOTES

1. USE TRANSVERSE DEVICES IN CLOSED LANE EVERY ±500 FEET.
2. DEVICES SHALL NOT ENCROACH ONTO ADJACENT LANE.
3. EXTEND DEVICE TAPER ACROSS SHOULDER.
4. DEVICE SPACING FOR DOWNSTREAM TAPER SHALL BE 20'.
5. ALL SIGNS ARE BLACK ON ORANGE UNLESS OTHERWISE DESIGNATED.
6. SEE SPECIAL PROVISIONS FOR CLOSURE RESTRICTIONS.
7. SEE SHEET DT2 AND DT5 FOR DETOUR INFO

FILE NAME	C:\pse\XL5462\CAD\XL5462_PS_TC ew.dgn					
TIME						
DATE						
PLOTTED BY						
DESIGNED BY	E. WALGAMOTT					
ENTERED BY	E. WALGAMOTT					
CHECKED BY	Y. KUANG					
PROJ. ENGR.	C. ANDERSON					
REGIONAL ADM.	B. NIELSEN	REVISION	DATE	BY		

REGION NO.	STATE	FED.AID PROJ.NO.
10	WASH	
JOB NUMBER 23A003		
CONTRACT NO.		LOCATION NO.

P.E. STAMP BOX DATE

P.E. STAMP BOX DATE

Washington State Department of Transportation

SR 529
SNOHOMISH RIVER & STEAMBOAT SLOUGH
BRIDGE REPAIR, REHAB & PAINT

TRAFFIC CONTROL PLAN

Plot 32

PLAN REF NO TC26

SHEET 120 OF 136 SHEETS

SIGN SPACING = X (1)		
FREEWAYS & EXPRESSWAYS	50-75 MPH	1500' +/-
RURAL HIGHWAYS	60-65 MPH	800' +/-
RURAL ROADS	45-55 MPH	500' +/-
RURAL ROADS & URBAN ARTERIALS	35-40 MPH	350' +/-
RURAL ROADS & URBAN ARTERIALS RESIDENTAL & BUSINESS DISTRICTS	25-30 MPH	**200' +/- (2)**
URBAN STREETS	25 MPH OR LESS	**100' +/- (2)**

(1) ALL SPACING MAY BE ADJUSTED TO ACCOMMODATE INTERCHANGE RAMPS, AT-GRADE INTERSECTIONS AND DRIVEWAYS.

(2) THIS SPACING MAY BE REDUCED IN URBAN AREAS TO FIT ROADWAY CONDITIONS.

LONGITUDINAL BUFFER SPACE = B										
SPEED (MPH)	20	25	30	35	40	45	50	55	60	65
LENGTH (feet)	115	155	200	250	305	360	425	495	570	645

MINIMUM LANE CLOSURE TAPER LENGTH = L											
LANE WIDTH	SPEED (MPH)	20	25	30	35	40	45	50	55	60	65
12'	L (feet)	80	140	180	270	330	540	600	680	720	800

MAXIMUM CHANNELIZATION DEVICE SPACING (feet)		
MPH	TAPER	TANGENT
50-65	40	80
35-45	30	60
20-30	20	40

MOBILE TRANSPORTABLE ATTENUATOR ROLL AHEAD DISTANCE = R					
HOST VEHICLE WEIGHT 9,900 TO 22,000 lbs.			HOST VEHICLE WEIGHT 22,001+ lbs.		
UP TO 40 MPH	45-55 MPH	60+ MPH	UP TO 40 MPH	45-55 MPH	60+ MPH
100'	172'	222'	100'	150'	172'

SHOULDER CLOSURE TAPER LENGTH = L/3											
SHOULDER WIDTH	SPEED (MPH)	20	25	30	35	40	45	50	55	60	65
6'	L/3 (feet)	40	40	40	60	60	90	120	120	120	160
10'		40	40	60	90	90	150	200	200	200	240
FOR SHOULDERS LESS THAN 6', USE 3 DEVICES MINIMUM											

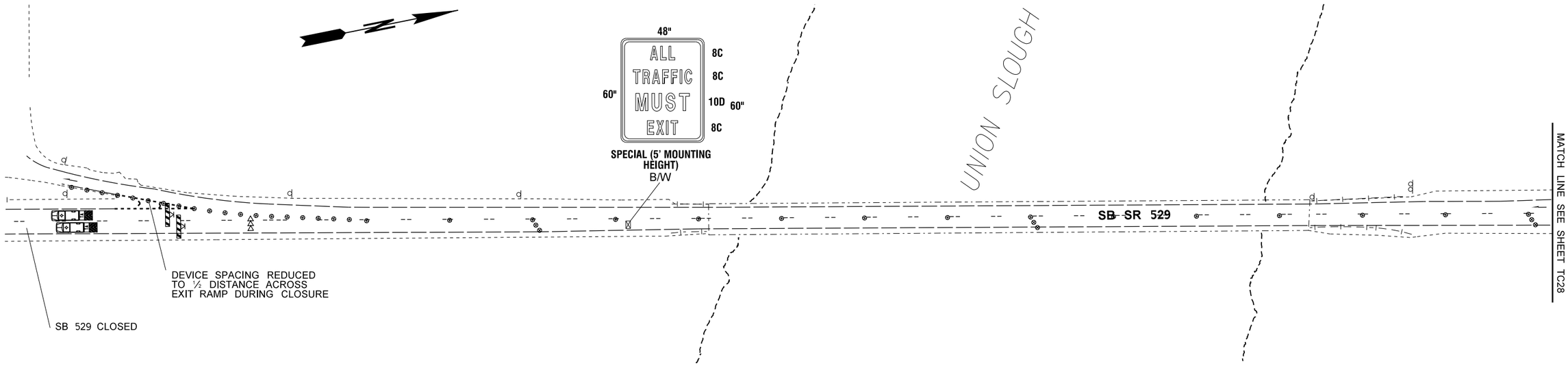

LEGEND

EXISTING SIGN		PORTABLE CHANGEABLE MESSAGE SIGN	PCMS
CONSTRUCTION SIGN CLASS B		TEMPORARY IMPACT ATTENUATOR	
CONSTRUCTION SIGN CLASS A		TRANSPORTABLE ATTENUATOR	
CONSTRUCTION SIGN CLASS B (5' MOUNTING HEIGHT)		WORK AREA	
TRAFFIC SAFETY DRUM SEE SPECIAL PROVISIONS		CONTAINMENT ZONE (SECTION VIEW)	
SEQUENTIAL ARROW SIGN		TEMPORARY BARRIER	
TYPE 3 BARRICADE WITH MUTCD TYPE A WARNING LIGHTS		FLAGGER	

SOUTHBOUND SR 529 ROADWAY CLOSURE
(N BROADWAY AVE TO MP 4.65)

1 OF 4 N.T.S

NOTES

1. USE TRANSVERSE DEVICES IN CLOSED LANE EVERY ±500 FEET.
2. DEVICES SHALL NOT ENCROACH ONTO ADJACENT LANE.
3. EXTEND DEVICE TAPER ACROSS SHOULDER.
4. DEVICE SPACING FOR DOWNSTREAM TAPER SHALL BE 20'.
5. ALL SIGNS ARE BLACK ON ORANGE UNLESS OTHERWISE DESIGNATED.
6. SEE SPECIAL PROVISIONS FOR CLOSURE RESTRICTIONS.
7. SEE SHEET DT6 FOR DETOUR INFO

FILE NAME	C:\pse\XL5462\CAD\XL5462_PS_TC ew.dgn				
TIME					
DATE					
PLOTTED BY					
DESIGNED BY	E. WALGAMOTT				
ENTERED BY	E. WALGAMOTT				
CHECKED BY	Y. KUANG				
PROJ. ENGR.	C. ANDERSON				
REGIONAL ADM.	B. NIELSEN	REVISION	DATE	BY	

REGION NO.	STATE	FED.AID PROJ.NO.
10	WASH	
JOB NUMBER 23A003		
CONTRACT NO.		LOCATION NO.

P.E. STAMP BOX DATE

P.E. STAMP BOX DATE

Washington State Department of Transportation

SR 529
SNOHOMISH RIVER & STEAMBOAT SLOUGH
BRIDGE REPAIR, REHAB & PAINT

TRAFFIC CONTROL PLAN

Plot 38

PLAN REF NO TC27

SHEET 121 OF 136 SHEETS

SIGN SPACING = X (1)		
FREEWAYS & EXPRESSWAYS	50-75 MPH	1500' +/-
RURAL HIGHWAYS	60-65 MPH	800' +/-
RURAL ROADS	45-55 MPH	500' +/-
RURAL ROADS & URBAN ARTERIALS	35-40 MPH	350' +/-
RURAL ROADS & URBAN ARTERIALS RESIDENTAL & BUSINESS DISTRICTS	25-30 MPH	**200' +/- (2)**
URBAN STREETS	25 MPH OR LESS	**100' +/- (2)**

(1) ALL SPACING MAY BE ADJUSTED TO ACCOMMODATE INTERCHANGE RAMPS, AT-GRADE INTERSECTIONS AND DRIVEWAYS.

(2) THIS SPACING MAY BE REDUCED IN URBAN AREAS TO FIT ROADWAY CONDITIONS.

LONGITUDINAL BUFFER SPACE = B										
SPEED (MPH)	20	25	30	35	40	45	50	55	60	65
LENGTH (feet)	115	155	200	250	305	360	425	495	570	645

MINIMUM LANE CLOSURE TAPER LENGTH = L											
LANE WIDTH	SPEED (MPH)	20	25	30	35	40	45	50	55	60	65
12'	L (feet)	80	140	180	270	330	540	600	680	720	800

MAXIMUM CHANNELIZATION DEVICE SPACING (feet)		
MPH	TAPER	TANGENT
50-65	40	80
35-45	30	60
20-30	20	40

MOBILE TRANSPORTABLE ATTENUATOR ROLL AHEAD DISTANCE = R					
HOST VEHICLE WEIGHT 9,900 TO 22,000 lbs.			HOST VEHICLE WEIGHT 22,001+ lbs.		
UP TO 40 MPH	45-55 MPH	60+ MPH	UP TO 40 MPH	45-55 MPH	60+ MPH
100'	172'	222'	100'	150'	172'

SHOULDER CLOSURE TAPER LENGTH = L/3											
SHOULDER WIDTH	SPEED (MPH)	20	25	30	35	40	45	50	55	60	65
6'	L/3 (feet)	40	40	40	60	60	90	120	120	120	160
10'		40	40	60	90	90	150	200	200	200	240
FOR SHOULDERS LESS THAN 6', USE 3 DEVICES MINIMUM											

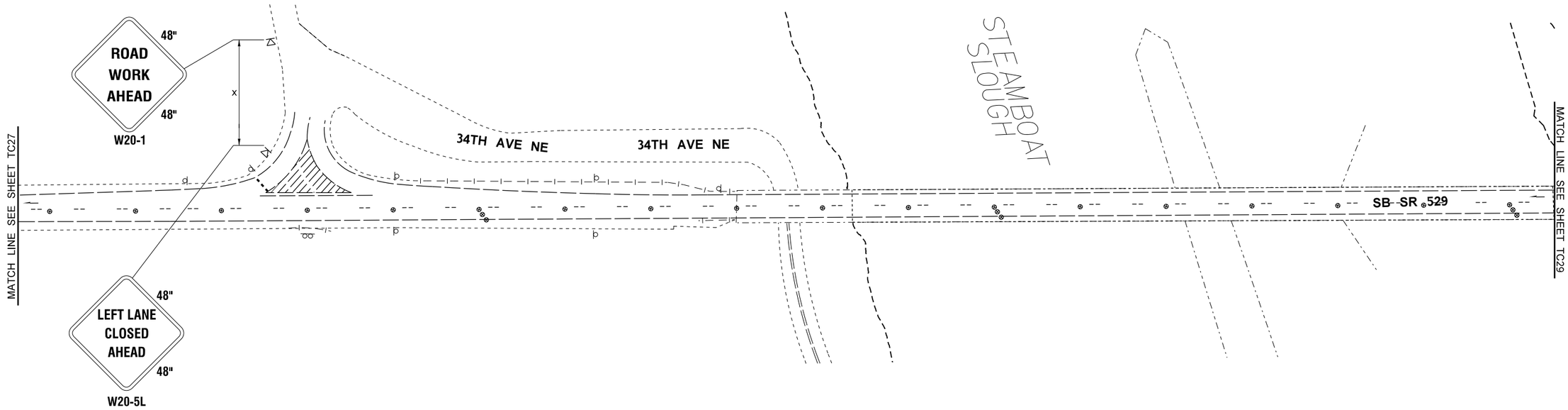

LEGEND

EXISTING SIGN		PORTABLE CHANGEABLE MESSAGE SIGN	PCMS
CONSTRUCTION SIGN CLASS B		TEMPORARY IMPACT ATTENUATOR	
CONSTRUCTION SIGN CLASS A		TRANSPORTABLE ATTENUATOR	
CONSTRUCTION SIGN CLASS B (5' MOUNTING HEIGHT)		WORK AREA	
TRAFFIC SAFETY DRUM SEE SPECIAL PROVISIONS		CONTAINMENT ZONE (SECTION VIEW)	
SEQUENTIAL ARROW SIGN		TEMPORARY BARRIER	
TYPE 3 BARRICADE WITH MUTCD TYPE A WARNING LIGHTS		FLAGGER	

SOUTHBOUND SR 529 ROADWAY CLOSURE
(N BROADWAY AVE TO MP 4.65)

2 OF 4 N.T.S

NOTES

1. USE TRANSVERSE DEVICES IN CLOSED LANE EVERY ±500 FEET.
2. DEVICES SHALL NOT ENCROACH ONTO ADJACENT LANE.
3. EXTEND DEVICE TAPER ACROSS SHOULDER.
4. DEVICE SPACING FOR DOWNSTREAM TAPER SHALL BE 20'.
5. ALL SIGNS ARE BLACK ON ORANGE UNLESS OTHERWISE DESIGNATED.
6. SEE SPECIAL PROVISIONS FOR CLOSURE RESTRICTIONS.
7. SEE SHEET DT6 FOR DETOUR INFO

FILE NAME	C:\pse\XL5462\CAD\XL5462_PS_TC ew.dgn				
TIME					
DATE					
PLOTTED BY					
DESIGNED BY	E. WALGAMOTT				
ENTERED BY	E. WALGAMOTT				
CHECKED BY	Y. KUANG				
PROJ. ENGR.	C. ANDERSON				
REGIONAL ADM.	B. NIELSEN	REVISION	DATE	BY	

REGION NO.	STATE	FED.AID PROJ.NO.
10	WASH	
JOB NUMBER 23A003		
CONTRACT NO.		LOCATION NO.

DATE
P.E. STAMP BOX

DATE
P.E. STAMP BOX

Washington State Department of Transportation

SR 529
SNOHOMISH RIVER & STEAMBOAT SLOUGH
BRIDGE REPAIR, REHAB & PAINT

TRAFFIC CONTROL PLAN

Plot 39
PLAN REF NO TC28
SHEET 122 OF 136 SHEETS

SIGN SPACING = X (1)		
FREEWAYS & EXPRESSWAYS	50-75 MPH	1500' +/-
RURAL HIGHWAYS	60-65 MPH	800' +/-
RURAL ROADS	45-55 MPH	500' +/-
RURAL ROADS & URBAN ARTERIALS	35-40 MPH	350' +/-
RURAL ROADS & URBAN ARTERIALS RESIDENTAL & BUSINESS DISTRICTS	25-30 MPH	**200' +/- (2)**
URBAN STREETS	25 MPH OR LESS	**100' +/- (2)**

(1) ALL SPACING MAY BE ADJUSTED TO ACCOMMODATE INTERCHANGE RAMPS, AT-GRADE INTERSECTIONS AND DRIVEWAYS.

(2) THIS SPACING MAY BE REDUCED IN URBAN AREAS TO FIT ROADWAY CONDITIONS.

LONGITUDINAL BUFFER SPACE = B										
SPEED (MPH)	20	25	30	35	40	45	50	55	60	65
LENGTH (feet)	115	155	200	250	305	360	425	495	570	645

MINIMUM LANE CLOSURE TAPER LENGTH = L											
LANE WIDTH	SPEED (MPH)	20	25	30	35	40	45	50	55	60	65
12'	L (feet)	80	140	180	270	330	540	600	680	720	800

MAXIMUM CHANNELIZATION DEVICE SPACING (feet)		
MPH	TAPER	TANGENT
50-65	40	80
35-45	30	60
20-30	20	40

MOBILE TRANSPORTABLE ATTENUATOR ROLL AHEAD DISTANCE = R					
HOST VEHICLE WEIGHT 9,900 TO 22,000 lbs.			HOST VEHICLE WEIGHT 22,001+ lbs.		
UP TO 40 MPH	45-55 MPH	60+ MPH	UP TO 40 MPH	45-55 MPH	60+ MPH
100'	172'	222'	100'	150'	172'

SHOULDER CLOSURE TAPER LENGTH = L/3											
SHOULDER WIDTH	SPEED (MPH)	20	25	30	35	40	45	50	55	60	65
6'	L/3 (feet)	40	40	40	60	60	90	120	120	120	160
10'		40	40	60	90	90	150	200	200	200	240
FOR SHOULDERS LESS THAN 6', USE 3 DEVICES MINIMUM											

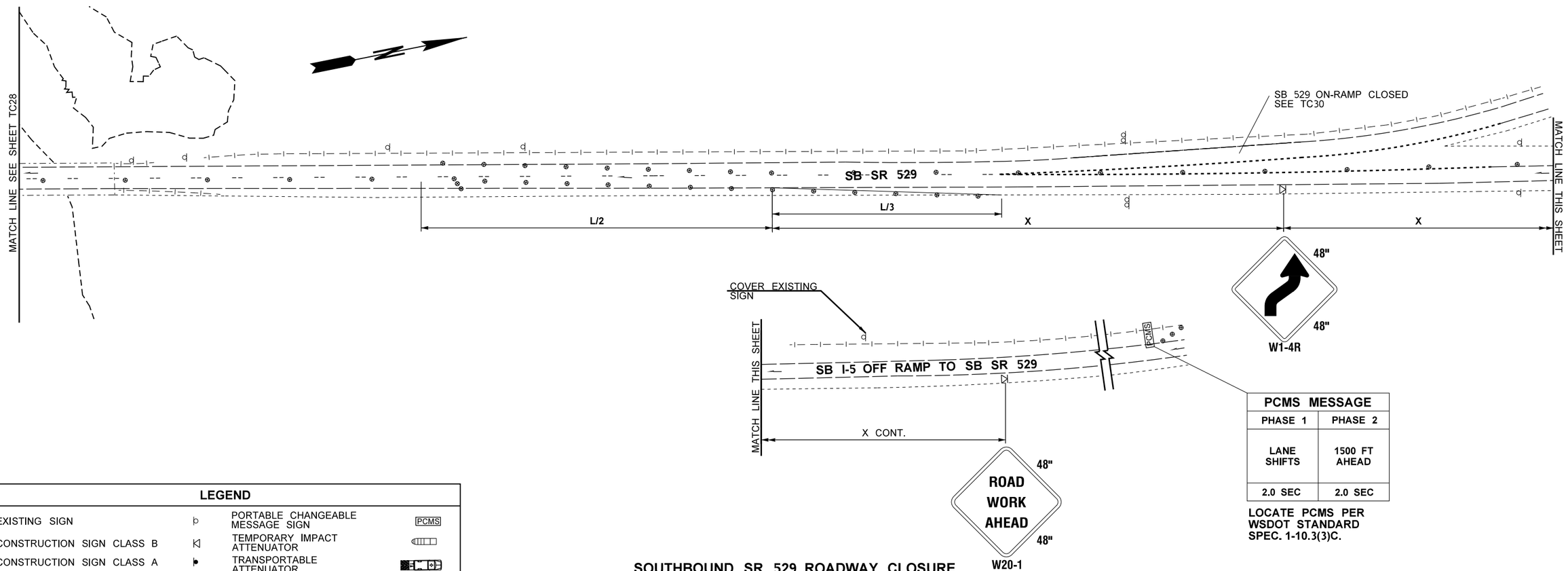

PCMS MESSAGE	
PHASE 1	PHASE 2
LANE SHIFTS	1500 FT AHEAD
2.0 SEC	2.0 SEC

LOCATE PCMS PER WSDOT STANDARD SPEC. 1-10.3(3)C.

LEGEND

EXISTING SIGN		PORTABLE CHANGEABLE MESSAGE SIGN	PCMS
CONSTRUCTION SIGN CLASS B		TEMPORARY IMPACT ATTENUATOR	
CONSTRUCTION SIGN CLASS A		TRANSPORTABLE ATTENUATOR	
CONSTRUCTION SIGN CLASS B (5' MOUNTING HEIGHT)		WORK AREA	
TRAFFIC SAFETY DRUM SEE SPECIAL PROVISIONS		CONTAINMENT ZONE (SECTION VIEW)	
SEQUENTIAL ARROW SIGN		TEMPORARY BARRIER	
TYPE 3 BARRICADE WITH MUTCD TYPE A WARNING LIGHTS		FLAGGER	

SOUTHBOUND SR 529 ROADWAY CLOSURE (N BROADWAY AVE TO MP 4.65)

3 OF 4 N.T.S

NOTES

1. USE TRANSVERSE DEVICES IN CLOSED LANE EVERY ±500 FEET.
2. DEVICES SHALL NOT ENCROACH ONTO ADJACENT LANE.
3. EXTEND DEVICE TAPER ACROSS SHOULDER.
4. DEVICE SPACING FOR DOWNSTREAM TAPER SHALL BE 20'.
5. ALL SIGNS ARE BLACK ON ORANGE UNLESS OTHERWISE DESIGNATED.
6. SEE SPECIAL PROVISIONS FOR CLOSURE RESTRICTIONS.
7. SEE SHEET DT6 FOR DETOUR INFO

FILE NAME	C:\pse\XL5462\CAD\XL5462_PS_TC ew.dgn					
TIME						
DATE						
PLOTTED BY						
DESIGNED BY	E. WALGAMOTT					
ENTERED BY	E. WALGAMOTT					
CHECKED BY	Y. KUANG					
PROJ. ENGR.	C. ANDERSON					
REGIONAL ADM.	B. NIELSEN	REVISION	DATE	BY		

REGION NO.	STATE	FED.AID PROJ.NO.
10	WASH	
JOB NUMBER 23A003		
CONTRACT NO.		LOCATION NO.

P.E. STAMP BOX DATE

P.E. STAMP BOX DATE

Washington State Department of Transportation

SR 529
SNOHOMISH RIVER & STEAMBOAT SLOUGH
BRIDGE REPAIR, REHAB & PAINT

TRAFFIC CONTROL PLAN

Plot 40

PLAN REF NO TC29

SHEET 123 OF 136 SHEETS

SIGN SPACING = X (1)		
FREEWAYS & EXPRESSWAYS	50-75 MPH	1500' +/-
RURAL HIGHWAYS	60-65 MPH	800' +/-
RURAL ROADS	45-55 MPH	500' +/-
RURAL ROADS & URBAN ARTERIALS	35-40 MPH	350' +/-
RURAL ROADS & URBAN ARTERIALS RESIDENTAL & BUSINESS DISTRICTS	25-30 MPH	**200' +/- (2)**
URBAN STREETS	25 MPH OR LESS	**100' +/- (2)**

(1) ALL SPACING MAY BE ADJUSTED TO ACCOMMODATE INTERCHANGE RAMPS, AT-GRADE INTERSECTIONS AND DRIVEWAYS.

(2) THIS SPACING MAY BE REDUCED IN URBAN AREAS TO FIT ROADWAY CONDITIONS.

LONGITUDINAL BUFFER SPACE = B										
SPEED (MPH)	20	25	30	35	40	45	50	55	60	65
LENGTH (feet)	115	155	200	250	305	360	425	495	570	645

MINIMUM LANE CLOSURE TAPER LENGTH = L										
LANE WIDTH	SPEED (MPH)	20	25	30	35	40	45	50	55	60	65
12'	L (feet)	80	140	180	270	330	540	600	680	720	800

MAXIMUM CHANNELIZATION DEVICE SPACING (feet)		
MPH	TAPER	TANGENT
50-65	40	80
35-45	30	60
20-30	20	40

MOBILE TRANSPORTABLE ATTENUATOR ROLL AHEAD DISTANCE = R					
HOST VEHICLE WEIGHT 9,900 TO 22,000 lbs.			HOST VEHICLE WEIGHT 22,001+ lbs.		
UP TO 40 MPH	45-55 MPH	60+ MPH	UP TO 40 MPH	45-55 MPH	60+ MPH
100'	172'	222'	100'	150'	172'

SHOULDER CLOSURE TAPER LENGTH = L/3											
SHOULDER WIDTH	SPEED (MPH)	20	25	30	35	40	45	50	55	60	65
6'	L/3 (feet)	40	40	40	60	60	90	120	120	120	160
10'		40	40	60	90	90	150	200	200	200	240
FOR SHOULDERS LESS THAN 6', USE 3 DEVICES MINIMUM											

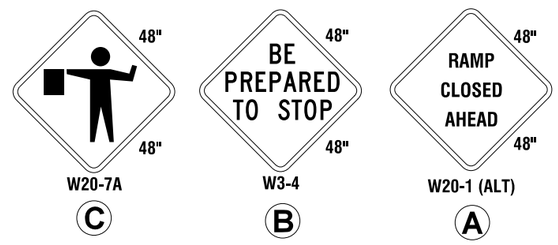

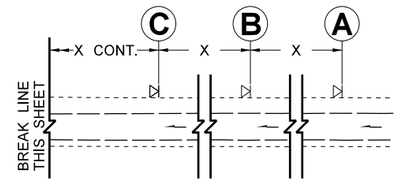

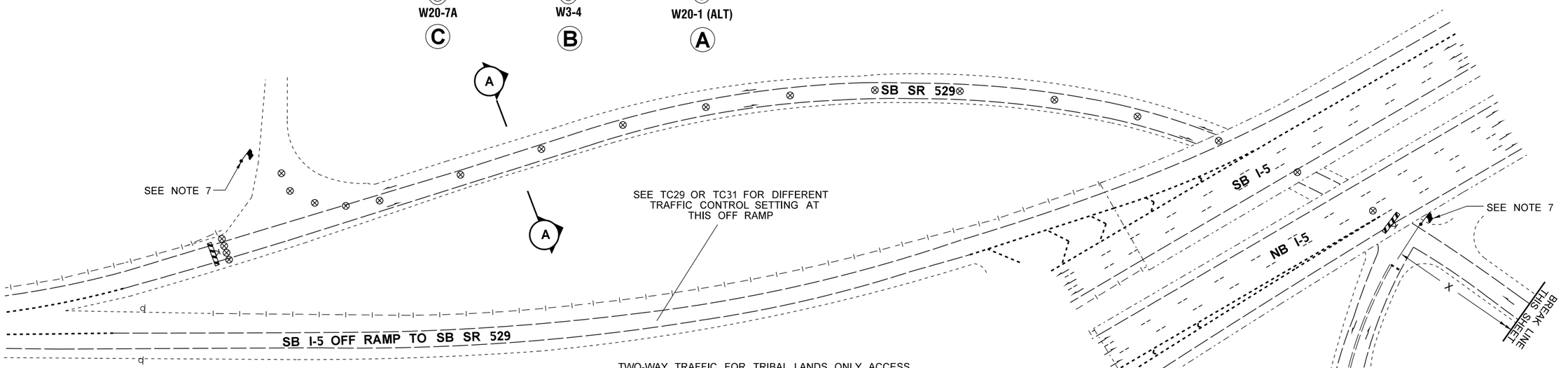

TWO-WAY TRAFFIC FOR TRIBAL LANDS ONLY ACCESS

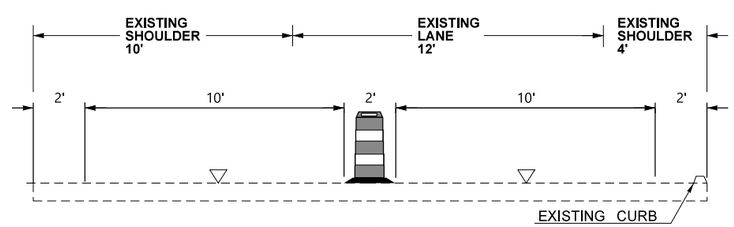

A-A SECTION

LEGEND

EXISTING SIGN		PORTABLE CHANGEABLE MESSAGE SIGN	PCMS
CONSTRUCTION SIGN CLASS B		TEMPORARY IMPACT ATTENUATOR	
CONSTRUCTION SIGN CLASS A		TRANSPORTABLE ATTENUATOR	
CONSTRUCTION SIGN CLASS B (5' MOUNTING HEIGHT)		WORK AREA	
TRAFFIC SAFETY DRUM SEE SPECIAL PROVISIONS		CONTAINMENT ZONE (SECTION VIEW)	
SEQUENTIAL ARROW SIGN		TEMPORARY BARRIER	
TYPE 3 BARRICADE WITH MUTCD TYPE A WARNING LIGHTS		FLAGGER	

SOUTHBOUND SR 529 ROADWAY CLOSURE
(N BROADWAY AVE TO MP 4.65)
4 OF 4 N.T.S

SOUTHBOUND SR 529 ROADWAY CLOSURE
(BRIDGE 529/20W MP 5.42 TO MP 5.59)
1 OF 2 N.T.S

NOTES

1. USE TRANSVERSE DEVICES IN CLOSED LANE EVERY ±500 FEET.
2. DEVICES SHALL NOT ENCROACH ONTO ADJACENT LANE.
3. EXTEND DEVICE TAPER ACROSS SHOULDER.
4. DEVICE SPACING FOR DOWNSTREAM TAPER SHALL BE 20'.
5. ALL SIGNS ARE BLACK ON ORANGE UNLESS OTHERWISE DESIGNATED.
6. SEE SPECIAL PROVISIONS FOR CLOSURE RESTRICTIONS.
7. FLAGGERS SHALL BE IN PLACE FROM 7:00AM TO 7:00PM. ACCESS TO TULALIP TRIBE'S LAND SHALL BE CLOSED WHEN FLAGGERS ARE NOT IN PLACE.
8. SEE SHEET DT4 AND DT6 FOR DETOUR INFO

FILE NAME	C:\pse\XL5462\CAD\XL5462_PS_TC ew.dgn				
TIME					
DATE					
PLOTTED BY					
DESIGNED BY	E. WALGAMOTT				
ENTERED BY	E. WALGAMOTT				
CHECKED BY	Y. KUANG				
PROJ. ENGR.	C. ANDERSON				
REGIONAL ADM.	B. NIELSEN	REVISION	DATE	BY	

REGION NO.	STATE	FED.AID PROJ.NO.
10	WASH	
JOB NUMBER 23A003		
CONTRACT NO.		LOCATION NO.

P.E. STAMP BOX DATE

P.E. STAMP BOX DATE

Washington State Department of Transportation

SR 529
SNOHOMISH RIVER & STEAMBOAT SLOUGH
BRIDGE REPAIR, REHAB & PAINT

TRAFFIC CONTROL PLAN

Plot 28

PLAN REF NO **TC30**

SHEET 124 OF 136 SHEETS

SIGN SPACING = X (1)		
FREEWAYS & EXPRESSWAYS	50-75 MPH	1500' +/-
RURAL HIGHWAYS	60-65 MPH	800' +/-
RURAL ROADS	45-55 MPH	500' +/-
RURAL ROADS & URBAN ARTERIALS	35-40 MPH	350' +/-
RURAL ROADS & URBAN ARTERIALS RESIDENTAL & BUSINESS DISTRICTS	25-30 MPH	**200' +/- (2)**
URBAN STREETS	25 MPH OR LESS	**100' +/- (2)**

(1) ALL SPACING MAY BE ADJUSTED TO ACCOMMODATE INTERCHANGE RAMPS, AT-GRADE INTERSECTIONS AND DRIVEWAYS.

(2) THIS SPACING MAY BE REDUCED IN URBAN AREAS TO FIT ROADWAY CONDITIONS.

LONGITUDINAL BUFFER SPACE = B										
SPEED (MPH)	20	25	30	35	40	45	50	55	60	65
LENGTH (feet)	115	155	200	250	305	360	425	495	570	645

MINIMUM LANE CLOSURE TAPER LENGTH = L											
LANE WIDTH	SPEED (MPH)	20	25	30	35	40	45	50	55	60	65
12'	L (feet)	80	140	180	270	330	540	600	680	720	800

MAXIMUM CHANNELIZATION DEVICE SPACING (feet)		
MPH	TAPER	TANGENT
50-65	40	80
35-45	30	60
20-30	20	40

MOBILE TRANSPORTABLE ATTENUATOR ROLL AHEAD DISTANCE = R					
HOST VEHICLE WEIGHT 9,900 TO 22,000 lbs.			HOST VEHICLE WEIGHT 22,001+ lbs.		
UP TO 40 MPH	45-55 MPH	60+ MPH	UP TO 40 MPH	45-55 MPH	60+ MPH
100'	172'	222'	100'	150'	172'

SHOULDER CLOSURE TAPER LENGTH = L/3											
SHOULDER WIDTH	SPEED (MPH)	20	25	30	35	40	45	50	55	60	65
6'	L/3 (feet)	40	40	40	60	60	90	120	120	120	160
10'		40	40	60	90	90	150	200	200	200	240
FOR SHOULDERS LESS THAN 6', USE 3 DEVICES MINIMUM											

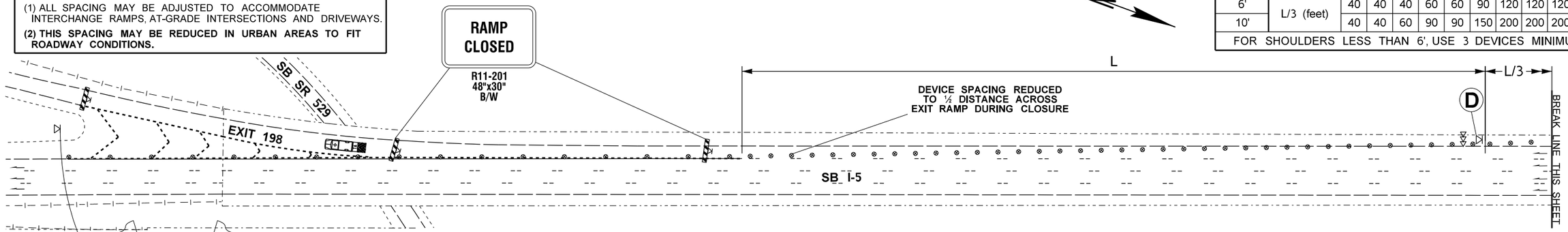

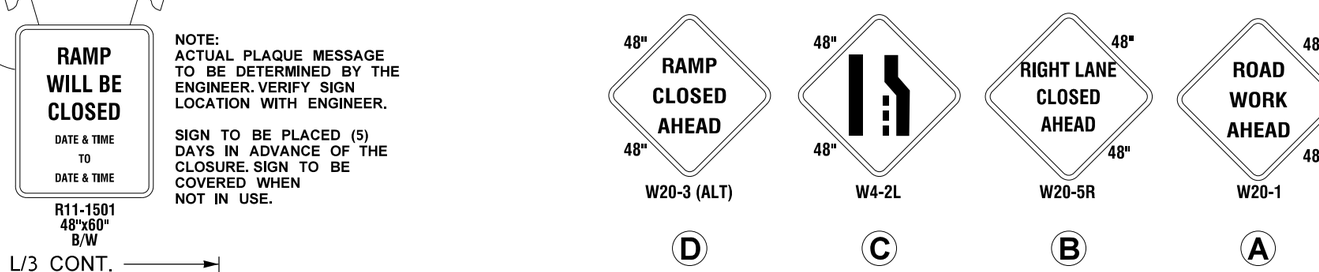

NOTE:
ACTUAL PLAQUE MESSAGE TO BE DETERMINED BY THE ENGINEER. VERIFY SIGN LOCATION WITH ENGINEER.

SIGN TO BE PLACED (5) DAYS IN ADVANCE OF THE CLOSURE. SIGN TO BE COVERED WHEN NOT IN USE.

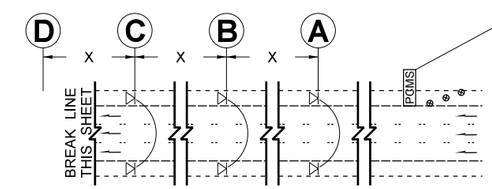

PCMS MESSAGE	
PHASE 1	PHASE 2
SB 529 CLOSED	FOLLOW DETOUR
2.0 SEC	2.0 SEC

FIELD LOCATE 1 MILE ± IN ADVANCE OF LANE CLOSURE

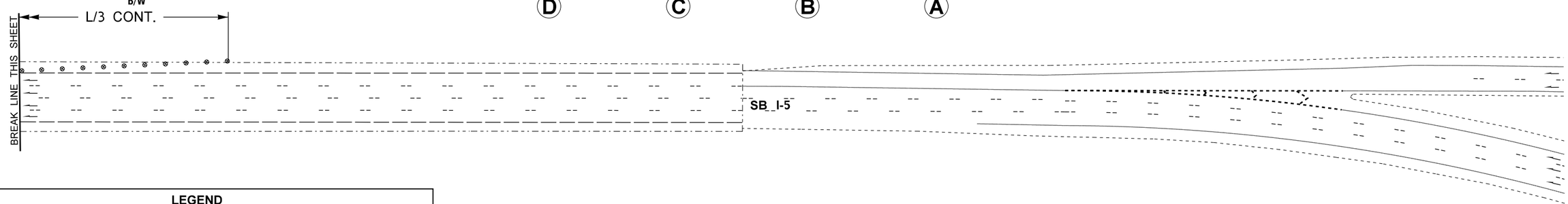

LEGEND

EXISTING SIGN		PORTABLE CHANGEABLE MESSAGE SIGN	PCMS
CONSTRUCTION SIGN CLASS B		TEMPORARY IMPACT ATTENUATOR	
CONSTRUCTION SIGN CLASS A		TRANSPORTABLE ATTENUATOR	
CONSTRUCTION SIGN CLASS B (5' MOUNTING HEIGHT)		WORK AREA	
TRAFFIC SAFETY DRUM SEE SPECIAL PROVISIONS		CONTAINMENT ZONE (SECTION VIEW)	
SEQUENTIAL ARROW SIGN		TEMPORARY BARRIER	
TYPE 3 BARRICADE WITH MUTCD TYPE A WARNING LIGHTS		FLAGGER	

SOUTHBOUND SR 529 ROADWAY CLOSURE
(BRIDGE 529/20W MP 5.42 TO MP 5.59)

2 OF 2 N.T.S

NOTES

1. USE TRANSVERSE DEVICES IN CLOSED LANE EVERY ±500 FEET.
2. DEVICES SHALL NOT ENCROACH ONTO ADJACENT LANE.
3. EXTEND DEVICE TAPER ACROSS SHOULDER.
4. DEVICE SPACING FOR DOWNSTREAM TAPER SHALL BE 20'.
5. ALL SIGNS ARE BLACK ON ORANGE UNLESS OTHERWISE DESIGNATED.
6. SEE SPECIAL PROVISIONS FOR CLOSURE RESTRICTIONS.
7. SEE SHEET DT4 FOR DETOUR INFO

FILE NAME	C:\pse\XL5462\CAD\XL5462_PS_TC ew.dgn				
TIME					
DATE					
PLOTTED BY					
DESIGNED BY	E. WALGAMOTT				
ENTERED BY	E. WALGAMOTT				
CHECKED BY	Y. KUANG				
PROJ. ENGR.	C. ANDERSON				
REGIONAL ADM.	B. NIELSEN	REVISION	DATE	BY	

REGION NO.	STATE	FED.AID PROJ.NO.
10	WASH	
JOB NUMBER 23A003		
CONTRACT NO.		LOCATION NO.

DATE
P.E. STAMP BOX

DATE
P.E. STAMP BOX

Washington State Department of Transportation

SR 529
SNOHOMISH RIVER & STEAMBOAT SLOUGH
BRIDGE REPAIR, REHAB & PAINT

TRAFFIC CONTROL PLAN

Plot 33
PLAN REF NO TC31
SHEET 125 OF 136 SHEETS

SIGN SPACING = X (1)		
FREEWAYS & EXPRESSWAYS	50-75 MPH	1500' +/-
RURAL HIGHWAYS	60-65 MPH	800' +/-
RURAL ROADS	45-55 MPH	500' +/-
RURAL ROADS & URBAN ARTERIALS	35-40 MPH	350' +/-
RURAL ROADS & URBAN ARTERIALS RESIDENTAL & BUSINESS DISTRICTS	25-30 MPH	**200' +/- (2)**
URBAN STREETS	25 MPH OR LESS	**100' +/- (2)**

(1) ALL SPACING MAY BE ADJUSTED TO ACCOMMODATE INTERCHANGE RAMPS, AT-GRADE INTERSECTIONS AND DRIVEWAYS.

(2) THIS SPACING MAY BE REDUCED IN URBAN AREAS TO FIT ROADWAY CONDITIONS.

LONGITUDINAL BUFFER SPACE = B										
SPEED (MPH)	20	25	30	35	40	45	50	55	60	65
LENGTH (feet)	115	155	200	250	305	360	425	495	570	645

MINIMUM LANE CLOSURE TAPER LENGTH = L											
LANE WIDTH	SPEED (MPH)	20	25	30	35	40	45	50	55	60	65
12'	L (feet)	80	140	180	270	330	540	600	680	720	800

MAXIMUM CHANNELIZATION DEVICE SPACING (feet)		
MPH	TAPER	TANGENT
50-65	40	80
35-45	30	60
20-30	20	40

MOBILE TRANSPORTABLE ATTENUATOR ROLL AHEAD DISTANCE = R					
HOST VEHICLE WEIGHT 9,900 TO 22,000 lbs.			HOST VEHICLE WEIGHT 22,001+ lbs.		
UP TO 40 MPH	45-55 MPH	60+ MPH	UP TO 40 MPH	45-55 MPH	60+ MPH
100'	172'	222'	100'	150'	172'

SHOULDER CLOSURE TAPER LENGTH = L/3											
SHOULDER WIDTH	SPEED (MPH)	20	25	30	35	40	45	50	55	60	65
6'	L/3 (feet)	40	40	40	60	60	90	120	120	120	160
10'		40	40	60	90	90	150	200	200	200	240
FOR SHOULDERS LESS THAN 6', USE 3 DEVICES MINIMUM											

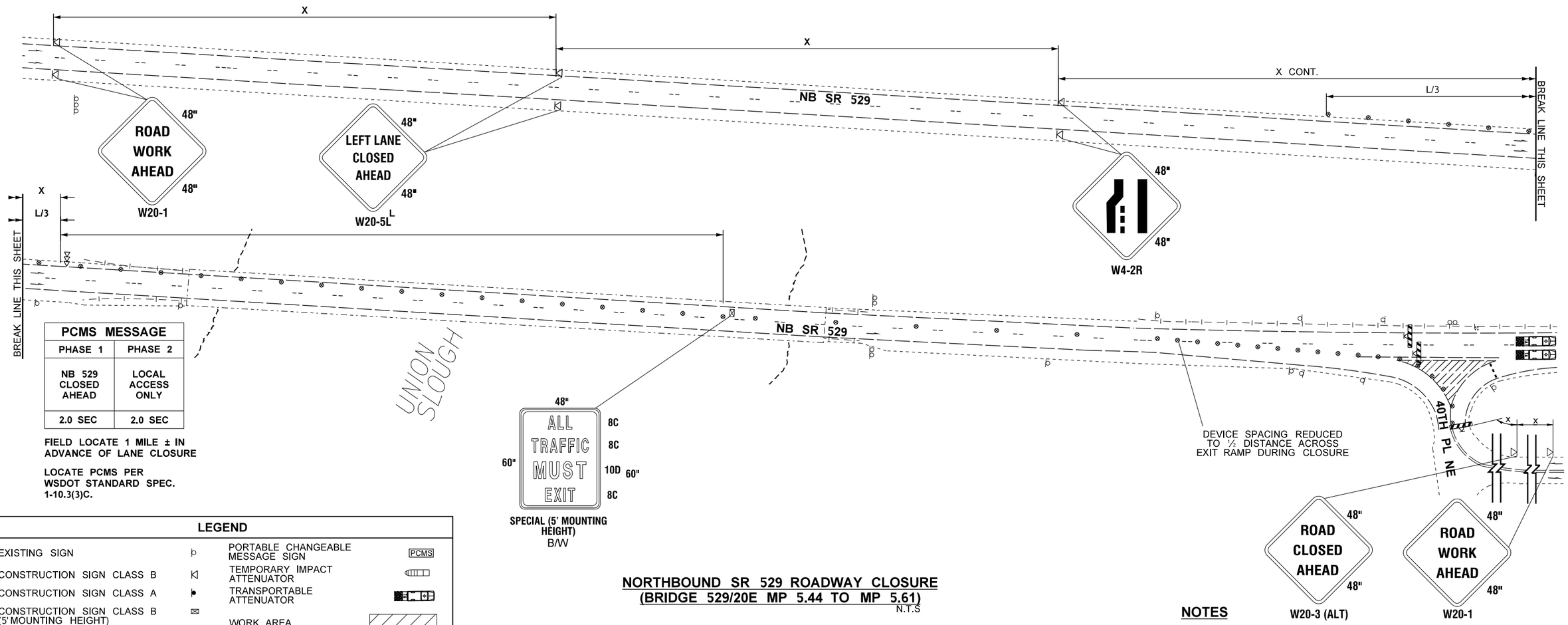

PCMS MESSAGE	
PHASE 1	PHASE 2
NB 529 CLOSED AHEAD	LOCAL ACCESS ONLY
2.0 SEC	2.0 SEC

FIELD LOCATE 1 MILE ± IN ADVANCE OF LANE CLOSURE

LOCATE PCMS PER WSDOT STANDARD SPEC. 1-10.3(3)C.

LEGEND

EXISTING SIGN		PORTABLE CHANGEABLE MESSAGE SIGN	PCMS
CONSTRUCTION SIGN CLASS B		TEMPORARY IMPACT ATTENUATOR	
CONSTRUCTION SIGN CLASS A		TRANSPORTABLE ATTENUATOR	
CONSTRUCTION SIGN CLASS B (5' MOUNTING HEIGHT)		WORK AREA	
TRAFFIC SAFETY DRUM SEE SPECIAL PROVISIONS		CONTAINMENT ZONE (SECTION VIEW)	
SEQUENTIAL ARROW SIGN		TEMPORARY BARRIER	
TYPE 3 BARRICADE WITH MUTCD TYPE A WARNING LIGHTS		FLAGGER	

NORTHBOUND SR 529 ROADWAY CLOSURE (BRIDGE 529/20E MP 5.44 TO MP 5.61)

N.T.S

NOTES

1. USE TRANSVERSE DEVICES IN CLOSED LANE EVERY ±500 FEET.
2. DEVICES SHALL NOT ENCROACH ONTO ADJACENT LANE.
3. EXTEND DEVICE TAPER ACROSS SHOULDER.
4. DEVICE SPACING FOR DOWNSTREAM TAPER SHALL BE 20'.
5. ALL SIGNS ARE BLACK ON ORANGE UNLESS OTHERWISE DESIGNATED.
6. SEE SPECIAL PROVISIONS FOR CLOSURE RESTRICTIONS.
7. SEE SHEET DT3 FOR DETOUR INFO

FILE NAME	C:\pse\XL5462\CAD\XL5462_PS_TC ew.dgn				
TIME					
DATE					
PLOTTED BY					
DESIGNED BY	E. WALGAMOTT				
ENTERED BY	E. WALGAMOTT				
CHECKED BY	Y. KUANG				
PROJ. ENGR.	C. ANDERSON				
REGIONAL ADM.	B. NIELSEN	REVISION	DATE	BY	

REGION NO.	STATE	FED.AID PROJ.NO.
10	WASH	
JOB NUMBER 23A003		
CONTRACT NO.		LOCATION NO.

P.E. STAMP BOX DATE

P.E. STAMP BOX DATE

Washington State Department of Transportation

SR 529
SNOHOMISH RIVER & STEAMBOAT SLOUGH
BRIDGE REPAIR, REHAB & PAINT

TRAFFIC CONTROL PLAN

Plot 29

PLAN REF NO **TC32**

SHEET 126 OF 136 SHEETS

SIGN SPACING = X (1)		
FREEWAYS & EXPRESSWAYS	50-75 MPH	1500' +/-
RURAL HIGHWAYS	60-65 MPH	800' +/-
RURAL ROADS	45-55 MPH	500' +/-
RURAL ROADS & URBAN ARTERIALS	35-40 MPH	350' +/-
RURAL ROADS & URBAN ARTERIALS RESIDENTAL & BUSINESS DISTRICTS	25-30 MPH	**200' +/- (2)**
URBAN STREETS	25 MPH OR LESS	**100' +/- (2)**

(1) ALL SPACING MAY BE ADJUSTED TO ACCOMMODATE INTERCHANGE RAMPS, AT-GRADE INTERSECTIONS AND DRIVEWAYS.

(2) THIS SPACING MAY BE REDUCED IN URBAN AREAS TO FIT ROADWAY CONDITIONS.

LONGITUDINAL BUFFER SPACE = B										
SPEED (MPH)	20	25	30	35	40	45	50	55	60	65
LENGTH (feet)	115	155	200	250	305	360	425	495	570	645

MINIMUM LANE CLOSURE TAPER LENGTH = L											
LANE WIDTH	SPEED (MPH)	20	25	30	35	40	45	50	55	60	65
12'	L (feet)	80	140	180	270	330	540	600	680	720	800

TL-2 APPROVED TEMPORARY IMPACT ATTENUATOR LIST	
ABSORB 350 TL2	N-E-A-T
ABSORB-M TL-2	ACZ-350 TL-2

MAXIMUM CHANNELIZATION DEVICE SPACING (feet)		
MPH	TAPER	TANGENT
50-65	40	80
35-45	30	60
20-30	20	40

SHOULDER CLOSURE TAPER LENGTH = L/3											
SHOULDER WIDTH	SPEED (MPH)	20	25	30	35	40	45	50	55	60	65
6'	L/3 (feet)	40	40	40	60	60	90	120	120	120	160
10'		40	40	60	90	90	150	200	200	200	240
FOR SHOULDERS LESS THAN 6', USE 3 DEVICES MINIMUM											

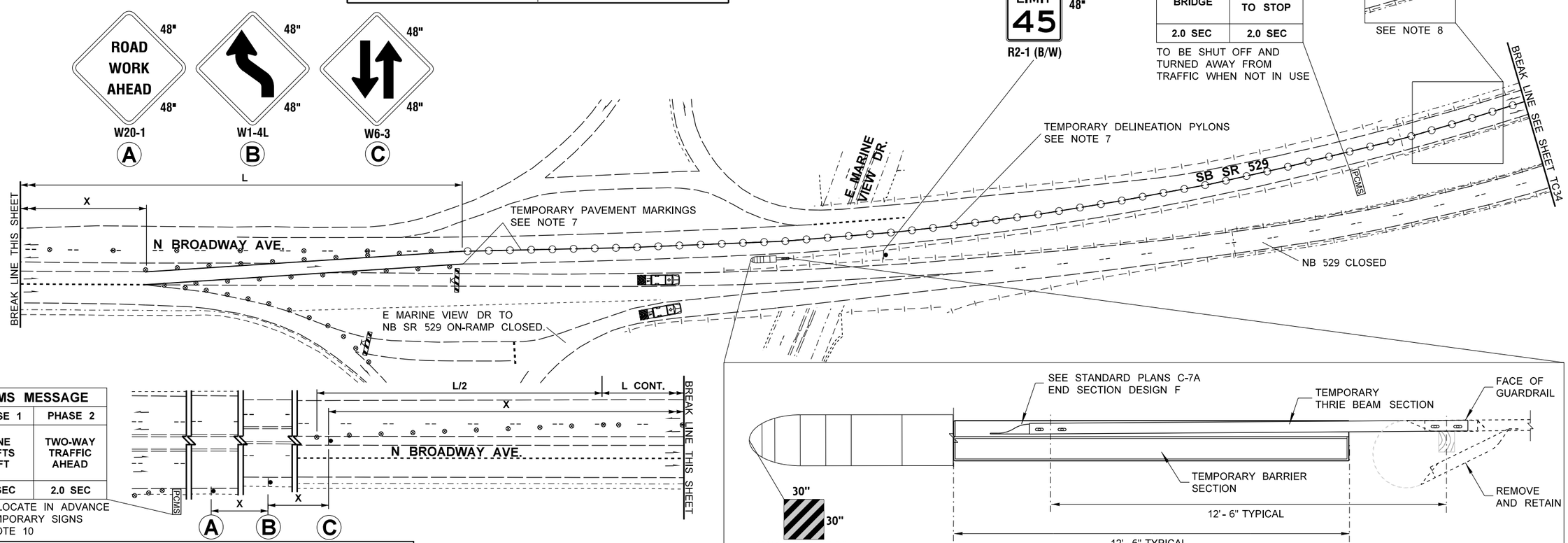

TEMPORARY GUARDRAIL PROTECTION DETAIL
NOT TO SCALE

LEGEND

EXISTING SIGN		PORTABLE CHANGEABLE MESSAGE SIGN	PCMS
CONSTRUCTION SIGN CLASS B		TEMPORARY IMPACT ATTENUATOR	
CONSTRUCTION SIGN CLASS A		TRANSPORTABLE ATTENUATOR	
CONSTRUCTION SIGN CLASS B (5' MOUNTING HEIGHT)		WORK AREA	
TRAFFIC SAFETY DRUM SEE SPECIAL PROVISIONS		CONTAINMENT ZONE (SECTION VIEW)	
SEQUENTIAL ARROW SIGN		TEMPORARY BARRIER	
TYPE 3 BARRICADE WITH MUTCD TYPE A WARNING LIGHTS		FLAGGER	

NORTHBOUND SR 529 CROSSOVER TO SOUTHBOUND SR 529
(N BROADWAY AVE TO MP 4.65)
3 OF 6 N.T.S

NOTES

1. USE TRANSVERSE DEVICES IN CLOSED LANE EVERY ±500 FEET.
2. DEVICES SHALL NOT ENCROACH ONTO ADJACENT LANE.
3. EXTEND DEVICE TAPER ACROSS SHOULDER.
4. DEVICE SPACING FOR DOWNSTREAM TAPER SHALL BE 20'.
5. ALL SIGNS ARE BLACK ON ORANGE UNLESS OTHERWISE DESIGNATED.
6. SEE SPECIAL PROVISIONS FOR CLOSURE RESTRICTIONS.
7. SEE TPV PLANS FOR PAVEMENT MARKINGS AND TEMPORARY DELINEATION PYLONS, REFERENCE ONLY THIS SHEET.
8. TRANSPORTABLE ATTENUATORS IN PLACE DURING DRAW BRIDGE OPERATION.
9. SEE TC24, TC25 FOR TRAFFIC CONTROL ON E MARINE VIEW DR.
10. PCMS MAY BE REMOVED AFTER 14 DAYS AT ENGINEER'S DISCRETION.
11. SEE SHEET DT5 FOR DETOUR INFO

FILE NAME	C:\pse\XL5462\CAD\XL5462_PS_TC 2.dgn						
TIME					REGION NO. 10	STATE WASH	FED.AID PROJ.NO.
DATE							
PLOTTED BY							
DESIGNED BY	E. WALGAMOTT				JOB NUMBER 23A003		
ENTERED BY	E. WALGAMOTT						
CHECKED BY	Y. KUANG				CONTRACT NO.		LOCATION NO.
PROJ. ENGR.	C. ANDERSON						
REGIONAL ADM.	B. NIELSEN	REVISION	DATE	BY			

P.E. STAMP BOX DATE

P.E. STAMP BOX DATE

Washington State Department of Transportation

SR 529
SNOHOMISH RIVER & STEAMBOAT SLOUGH
BRIDGE REPAIR, REHAB & PAINT

TRAFFIC CONTROL PLAN

Plot 5

PLAN REF NO TC33

SHEET 127 OF 136 SHEETS

SIGN SPACING = X (1)		
FREEWAYS & EXPRESSWAYS	50-75 MPH	1500' +/-
RURAL HIGHWAYS	60-65 MPH	800' +/-
RURAL ROADS	45-55 MPH	500' +/-
RURAL ROADS & URBAN ARTERIALS	35-40 MPH	350' +/-
RURAL ROADS & URBAN ARTERIALS RESIDENTAL & BUSINESS DISTRICTS	25-30 MPH	**200' +/- (2)**
URBAN STREETS	25 MPH OR LESS	**100' +/- (2)**

(1) ALL SPACING MAY BE ADJUSTED TO ACCOMMODATE INTERCHANGE RAMPS, AT-GRADE INTERSECTIONS AND DRIVEWAYS.

(2) THIS SPACING MAY BE REDUCED IN URBAN AREAS TO FIT ROADWAY CONDITIONS.

LONGITUDINAL BUFFER SPACE = B										
SPEED (MPH)	20	25	30	35	40	45	50	55	60	65
LENGTH (feet)	115	155	200	250	305	360	425	495	570	645

MINIMUM LANE CLOSURE TAPER LENGTH = L											
LANE WIDTH	SPEED (MPH)	20	25	30	35	40	45	50	55	60	65
12'	L (feet)	80	140	180	270	330	540	600	680	720	800

MAXIMUM CHANNELIZATION DEVICE SPACING (feet)		
MPH	TAPER	TANGENT
50-65	40	80
35-45	30	60
20-30	20	40

MOBILE TRANSPORTABLE ATTENUATOR ROLL AHEAD DISTANCE = R					
HOST VEHICLE WEIGHT 9,900 TO 22,000 lbs.			HOST VEHICLE WEIGHT 22,001+ lbs.		
UP TO 40 MPH	45-55 MPH	60+ MPH	UP TO 40 MPH	45-55 MPH	60+ MPH
100'	172'	222'	100'	150'	172'

SHOULDER CLOSURE TAPER LENGTH = L/3											
SHOULDER WIDTH	SPEED (MPH)	20	25	30	35	40	45	50	55	60	65
6'	L/3 (feet)	40	40	40	60	60	90	120	120	120	160
10'		40	40	60	90	90	150	200	200	200	240
FOR SHOULDERS LESS THAN 6', USE 3 DEVICES MINIMUM											

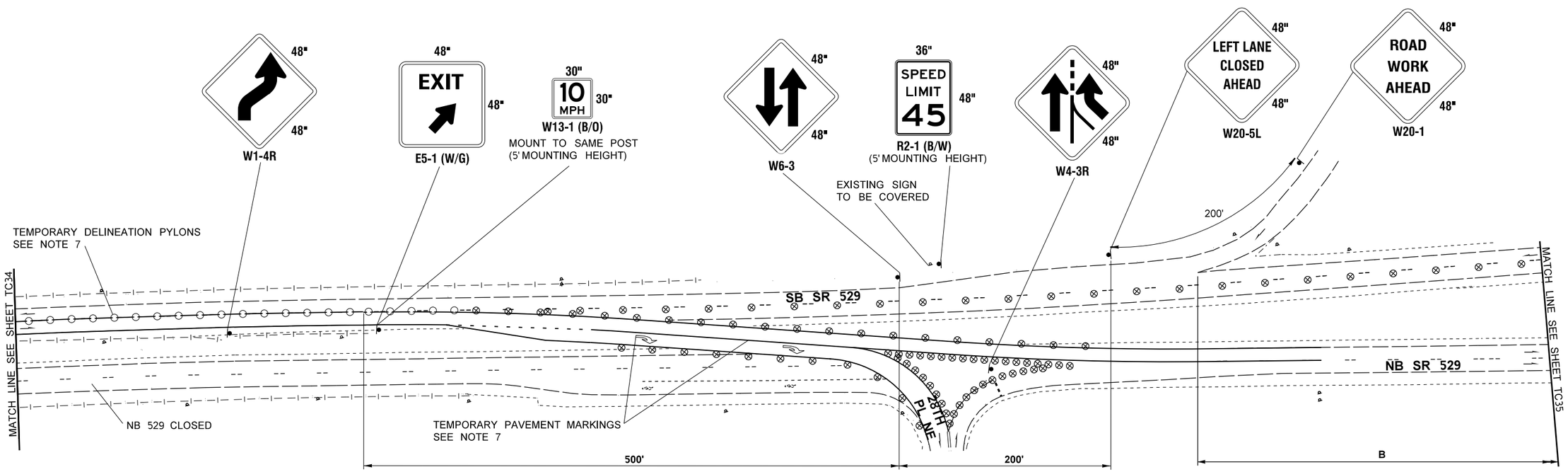

LEGEND

EXISTING SIGN		PORTABLE CHANGEABLE MESSAGE SIGN	PCMS
CONSTRUCTION SIGN CLASS B		TEMPORARY IMPACT ATTENUATOR	
CONSTRUCTION SIGN CLASS A		TRANSPORTABLE ATTENUATOR	
CONSTRUCTION SIGN CLASS B (5' MOUNTING HEIGHT)		WORK AREA	
TRAFFIC SAFETY DRUM SEE SPECIAL PROVISIONS		CONTAINMENT ZONE (SECTION VIEW)	
SEQUENTIAL ARROW SIGN		TEMPORARY BARRIER	
TYPE 3 BARRICADE WITH MUTCD TYPE A WARNING LIGHTS		FLAGGER	

NORTHBOUND SR 529 CROSSOVER TO SOUTHBOUND SR 529
(N BROADWAY AVE TO MP 4.65)
4 OF 6 N.T.S

NOTES

1. USE TRANSVERSE DEVICES IN CLOSED LANE EVERY ±500 FEET.
2. DEVICES SHALL NOT ENCROACH ONTO ADJACENT LANE.
3. EXTEND DEVICE TAPER ACROSS SHOULDER.
4. DEVICE SPACING FOR DOWNSTREAM TAPER SHALL BE 20'.
5. ALL SIGNS ARE BLACK ON ORANGE UNLESS OTHERWISE DESIGNATED.
6. SEE SPECIAL PROVISIONS FOR CLOSURE RESTRICTIONS.
7. SEE TPV PLANS FOR PAVEMENT MARKINGS AND TEMPORARY DELINEATION PYLONS, REFERENCE ONLY THIS SHEET
8. SEE SHEET DT5 FOR DETOUR INFO

FILE NAME	C:\pse\XL5462\CAD\XL5462_PS_TC 2.dgn				
TIME					
DATE					
PLOTTED BY					
DESIGNED BY	E. WALGAMOTT				
ENTERED BY	E. WALGAMOTT				
CHECKED BY	Y. KUANG				
PROJ. ENGR.	C. ANDERSON				
REGIONAL ADM.	B. NIELSEN	REVISION	DATE	BY	

REGION NO.	STATE	FED.AID PROJ.NO.
10	WASH	
JOB NUMBER 23A003		
CONTRACT NO.		LOCATION NO.

P.E. STAMP BOX DATE

P.E. STAMP BOX DATE

Washington State Department of Transportation

SR 529
SNOHOMISH RIVER & STEAMBOAT SLOUGH BRIDGE REPAIR, REHAB & PAINT

TRAFFIC CONTROL PLAN

Plot 7

PLAN REF NO **TC34**

SHEET 128 OF 136 SHEETS

SIGN SPACING = X (1)		
FREEWAYS & EXPRESSWAYS	50-75 MPH	1500' +/-
RURAL HIGHWAYS	60-65 MPH	800' +/-
RURAL ROADS	45-55 MPH	500' +/-
RURAL ROADS & URBAN ARTERIALS	35-40 MPH	350' +/-
RURAL ROADS & URBAN ARTERIALS RESIDENTAL & BUSINESS DISTRICTS	25-30 MPH	**200' +/- (2)**
URBAN STREETS	25 MPH OR LESS	**100' +/- (2)**

(1) ALL SPACING MAY BE ADJUSTED TO ACCOMMODATE INTERCHANGE RAMPS, AT-GRADE INTERSECTIONS AND DRIVEWAYS.

(2) THIS SPACING MAY BE REDUCED IN URBAN AREAS TO FIT ROADWAY CONDITIONS.

LONGITUDINAL BUFFER SPACE = B										
SPEED (MPH)	20	25	30	35	40	45	50	55	60	65
LENGTH (feet)	115	155	200	250	305	360	425	495	570	645

MINIMUM LANE CLOSURE TAPER LENGTH = L											
LANE WIDTH	SPEED (MPH)	20	25	30	35	40	45	50	55	60	65
12'	L (feet)	80	140	180	270	330	540	600	680	720	800

MAXIMUM CHANNELIZATION DEVICE SPACING (feet)		
MPH	TAPER	TANGENT
50-65	40	80
35-45	30	60
20-30	20	40

MOBILE TRANSPORTABLE ATTENUATOR ROLL AHEAD DISTANCE = R					
HOST VEHICLE WEIGHT 9,900 TO 22,000 lbs.			HOST VEHICLE WEIGHT 22,001+ lbs.		
UP TO 40 MPH	45-55 MPH	60+ MPH	UP TO 40 MPH	45-55 MPH	60+ MPH
100'	172'	222'	100'	150'	172'

SHOULDER CLOSURE TAPER LENGTH = L/3											
SHOULDER WIDTH	SPEED (MPH)	20	25	30	35	40	45	50	55	60	65
6'	L/3 (feet)	40	40	40	60	60	90	120	120	120	160
10'		40	40	60	90	90	150	200	200	200	240
FOR SHOULDERS LESS THAN 6', USE 3 DEVICES MINIMUM											

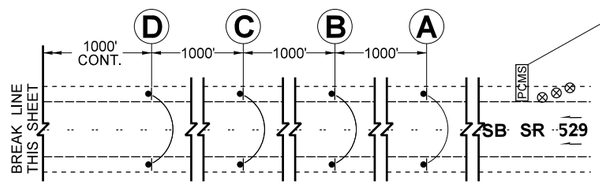

PCMS MESSAGE	
PHASE 1	PHASE 2
LEFT LANE CLOSED	WATCH FOR SLOW TRAFFIC
2.0 SEC	2.0 SEC

FIELD LOCATE 1 MILE ± IN ADVANCE OF LANE CLOSURE

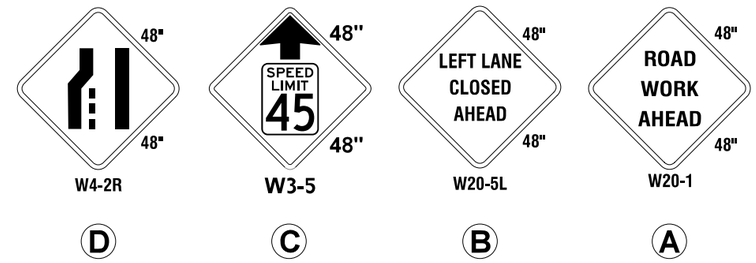

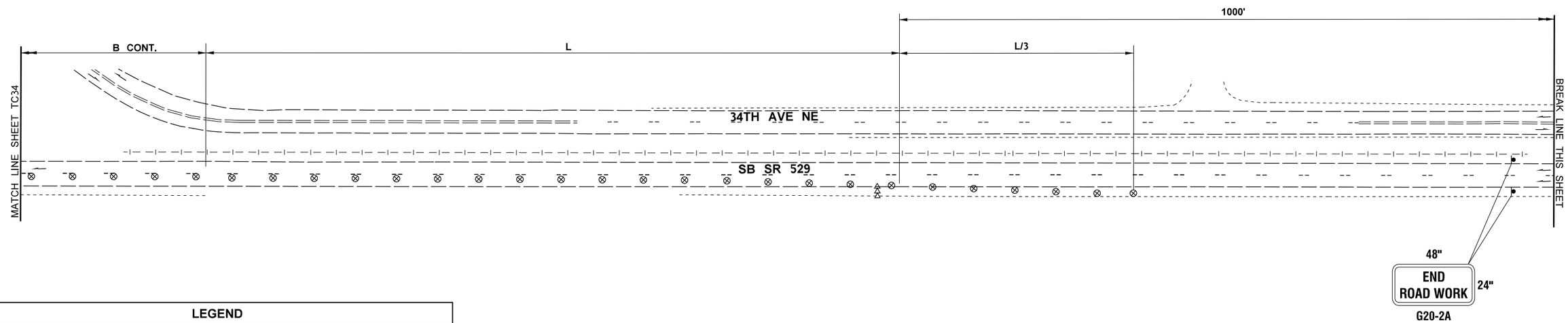

LEGEND

EXISTING SIGN		PORTABLE CHANGEABLE MESSAGE SIGN	PCMS
CONSTRUCTION SIGN CLASS B		TEMPORARY IMPACT ATTENUATOR	
CONSTRUCTION SIGN CLASS A		TRANSPORTABLE ATTENUATOR	
CONSTRUCTION SIGN CLASS B (5' MOUNTING HEIGHT)		WORK AREA	
TRAFFIC SAFETY DRUM SEE SPECIAL PROVISIONS		CONTAINMENT ZONE (SECTION VIEW)	
SEQUENTIAL ARROW SIGN		TEMPORARY BARRIER	
TYPE 3 BARRICADE WITH MUTCD TYPE A WARNING LIGHTS		FLAGGER	

NORTHBOUND SR 529 CROSSOVER TO SOUTHBOUND SR 529 (N BROADWAY AVE TO MP 4.65)

5 OF 6 N.T.S

NOTES

1. USE TRANSVERSE DEVICES IN CLOSED LANE EVERY ±500 FEET.
2. DEVICES SHALL NOT ENCROACH ONTO ADJACENT LANE.
3. EXTEND DEVICE TAPER ACROSS SHOULDER.
4. DEVICE SPACING FOR DOWNSTREAM TAPER SHALL BE 20'.
5. ALL SIGNS ARE BLACK ON ORANGE UNLESS OTHERWISE DESIGNATED.
6. SEE SPECIAL PROVISIONS FOR CLOSURE RESTRICTIONS.
7. SEE SHEET DT5 FOR DETOUR INFO

FILE NAME	C:\pse\XL5462\CAD\XL5462_PS_TC 2.dgn						
TIME					REGION NO. 10	STATE WASH	FED.AID PROJ.NO.
DATE							
PLOTTED BY					JOB NUMBER 23A003		
DESIGNED BY	E. WALGAMOTT				CONTRACT NO.	LOCATION NO.	
ENTERED BY	E. WALGAMOTT						
CHECKED BY	Y. KUANG						
PROJ. ENGR.	C. ANDERSON						
REGIONAL ADM.	B. NIELSEN	REVISION	DATE	BY			

P.E. STAMP BOX DATE

P.E. STAMP BOX DATE

Washington State Department of Transportation

SR 529
SNOHOMISH RIVER & STEAMBOAT SLOUGH
BRIDGE REPAIR, REHAB & PAINT

TRAFFIC CONTROL PLAN

Plot 8

PLAN REF NO TC35

SHEET 129 OF 136 SHEETS

SIGN SPACING = X (1)		
FREEWAYS & EXPRESSWAYS	50-75 MPH	1500' +/-
RURAL HIGHWAYS	60-65 MPH	800' +/-
RURAL ROADS	45-55 MPH	500' +/-
RURAL ROADS & URBAN ARTERIALS	35-40 MPH	350' +/-
RURAL ROADS & URBAN ARTERIALS RESIDENTAL & BUSINESS DISTRICTS	25-30 MPH	**200' +/- (2)**
URBAN STREETS	25 MPH OR LESS	**100' +/- (2)**

(1) ALL SPACING MAY BE ADJUSTED TO ACCOMMODATE INTERCHANGE RAMPS, AT-GRADE INTERSECTIONS AND DRIVEWAYS.

(2) THIS SPACING MAY BE REDUCED IN URBAN AREAS TO FIT ROADWAY CONDITIONS.

LONGITUDINAL BUFFER SPACE = B										
SPEED (MPH)	20	25	30	35	40	45	50	55	60	65
LENGTH (feet)	115	155	200	250	305	360	425	495	570	645

MINIMUM LANE CLOSURE TAPER LENGTH = L											
LANE WIDTH	SPEED (MPH)	20	25	30	35	40	45	50	55	60	65
12'	L (feet)	80	140	180	270	330	540	600	680	720	800

MAXIMUM CHANNELIZATION DEVICE SPACING (feet)		
MPH	TAPER	TANGENT
50-65	40	80
35-45	30	60
20-30	20	40

MOBILE TRANSPORTABLE ATTENUATOR ROLL AHEAD DISTANCE = R					
HOST VEHICLE WEIGHT 9,900 TO 22,000 lbs.			HOST VEHICLE WEIGHT 22,001+ lbs.		
UP TO 40 MPH	45-55 MPH	60+ MPH	UP TO 40 MPH	45-55 MPH	60+ MPH
100'	172'	222'	100'	150'	172'

SHOULDER CLOSURE TAPER LENGTH = L/3											
SHOULDER WIDTH	SPEED (MPH)	20	25	30	35	40	45	50	55	60	65
6'	L/3 (feet)	40	40	40	60	60	90	120	120	120	160
10'		40	40	60	90	90	150	200	200	200	240
FOR SHOULDERS LESS THAN 6', USE 3 DEVICES MINIMUM											

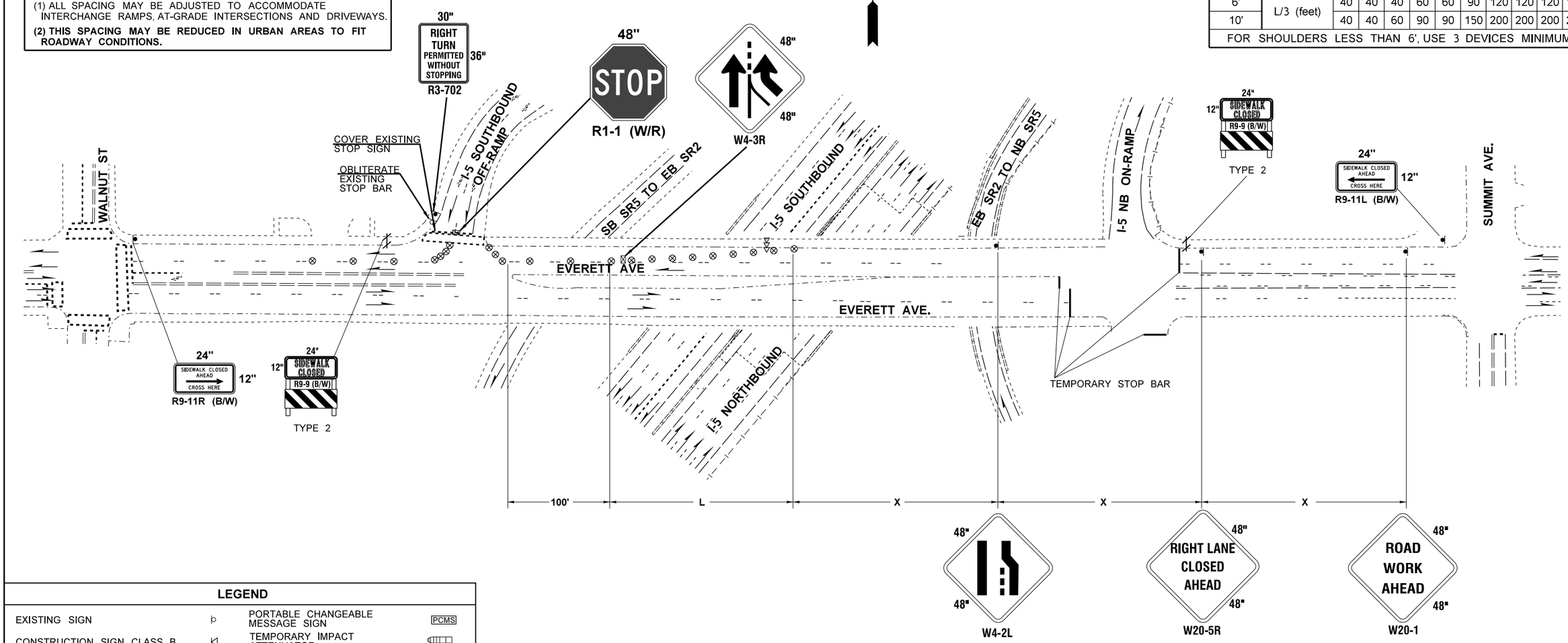

LEGEND

EXISTING SIGN		PORTABLE CHANGEABLE MESSAGE SIGN	PCMS
CONSTRUCTION SIGN CLASS B		TEMPORARY IMPACT ATTENUATOR	
CONSTRUCTION SIGN CLASS A		TRANSPORTABLE ATTENUATOR	
CONSTRUCTION SIGN CLASS B (5' MOUNTING HEIGHT)		WORK AREA	
TRAFFIC SAFETY DRUM SEE SPECIAL PROVISIONS		CONTAINMENT ZONE (SECTION VIEW)	
SEQUENTIAL ARROW SIGN		TEMPORARY BARRIER	
TYPE 3 BARRICADE WITH MUTCD TYPE A WARNING LIGHTS		FLAGGER	

NORTHBOUND SR 529 CROSSOVER TO SOUTHBOUND SR 529 (N BROADWAY AVE TO MP 4.65)

6 OF 6 N.T.S

NOTES

1. USE TRANSVERSE DEVICES IN CLOSED LANE EVERY ±500 FEET.
2. DEVICES SHALL NOT ENCROACH ONTO ADJACENT LANE.
3. EXTEND DEVICE TAPER ACROSS SHOULDER.
4. DEVICE SPACING FOR DOWNSTREAM TAPER SHALL BE 20'.
5. ALL SIGNS ARE BLACK ON ORANGE UNLESS OTHERWISE DESIGNATED.
6. SEE SPECIAL PROVISIONS FOR CLOSURE RESTRICTIONS.
7. SEE SHEET DT5 FOR DETOUR INFO

FILE NAME	C:\pse\XL5462\CAD\XL5462_PS_TC ew.dgn				
TIME					
DATE					
PLOTTED BY					
DESIGNED BY	E. WALGAMOTT				
ENTERED BY	E. WALGAMOTT				
CHECKED BY	Y. KUANG				
PROJ. ENGR.	C. ANDERSON				
REGIONAL ADM.	B. NIELSEN	REVISION	DATE	BY	

REGION NO.	STATE	FED.AID PROJ.NO.
10	WASH	
JOB NUMBER 23A003		
CONTRACT NO.		LOCATION NO.

P.E. STAMP BOX DATE

P.E. STAMP BOX DATE

Washington State Department of Transportation

SR 529
SNOHOMISH RIVER & STEAMBOAT SLOUGH
BRIDGE REPAIR, REHAB & PAINT

TRAFFIC CONTROL PLAN

Plot 21

PLAN REF NO TC36

SHEET 130 OF 136 SHEETS

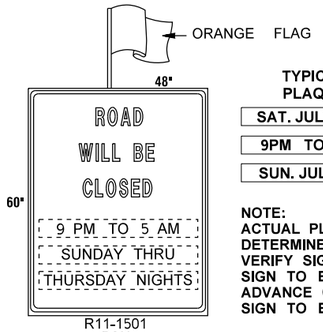

R11-1501
B/W
CLASS "A"

1

TYPICAL PLAQUES

SAT. JULY 11
9PM TO 5AM
SUN. JULY 12

NOTE:
ACTUAL PLAQUE MESSAGE TO BE DETERMINED BY THE ENGINEER.
VERIFY SIGN LOCATION WITH ENGINEER.
SIGN TO BE PLACED FIVE DAYS IN ADVANCE OF THE CLOSURE.
SIGN TO BE REMOVED DURING CLOSURE.

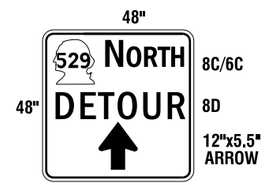

M4-9 MOD
BLACK/ORANGE
12" SHIELD (B/W)

2

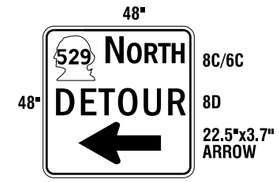

M4-9L MOD
BLACK/ORANGE
12" SHIELD (B/W)

3

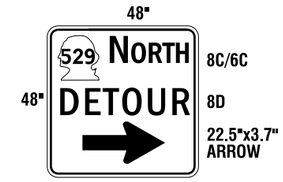

M4-9R MOD
BLACK/ORANGE
12" SHIELD (B/W)

4

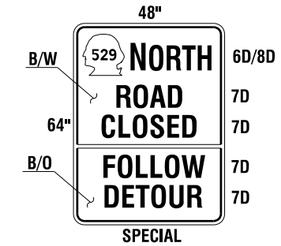

SPECIAL
18" SHIELD

5

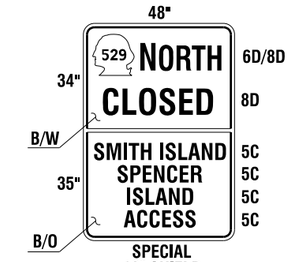

SPECIAL
18" SHIELD

6

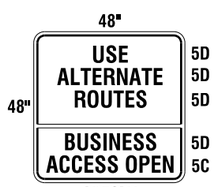

SPECIAL
BLACK / ORANGE
18" SHIELD

7

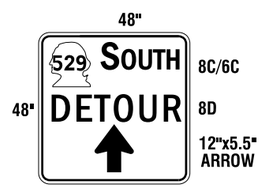

M4-9 MOD
BLACK/ORANGE
12" SHIELD (B/W)

8

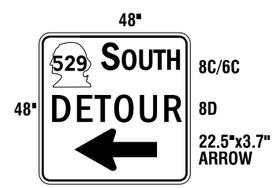

M4-9L MOD
BLACK/ORANGE
12" SHIELD (B/W)

9

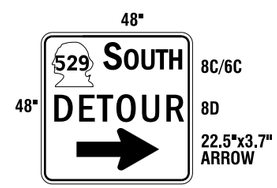

M4-9R MOD
BLACK/ORANGE
12" SHIELD (B/W)

10

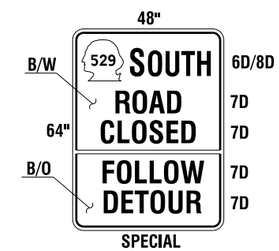

SPECIAL
18" SHIELD

11

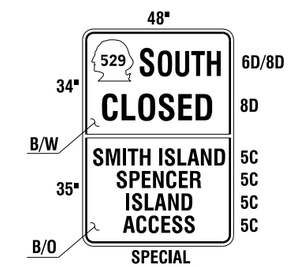

SPECIAL
18" SHIELD

12

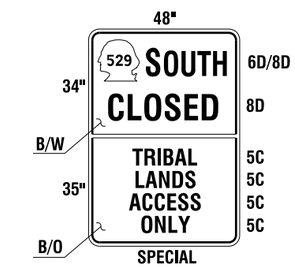

SPECIAL
18" SHIELD

13

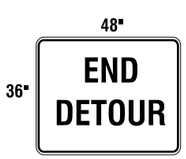

M4-8a

14

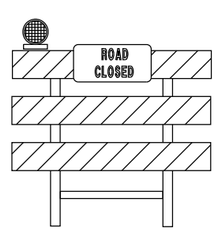

TYPE 3 BARRICADE
W/R11-2 SIGN
BLACK / WHITE
24" X 12"
(ONE PER LANE)

15

PCMS	
1	2
NB 529 CLOSED	USE ALT ROUTE
2.0 SEC	2.0 SEC

PORTABLE CHANGEABLE MESSAGE SIGN
FIELD LOCATE

16

PCMS	
1	2
SB 529 CLOSED	USE ALT ROUTE
2.0 SEC	2.0 SEC

PORTABLE CHANGEABLE MESSAGE SIGN
FIELD LOCATE

17

W12-2

18

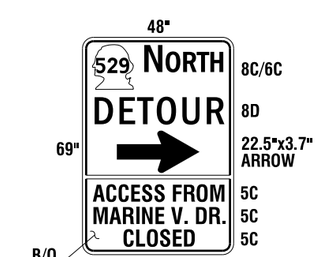

SPECIAL
12" SHIELD

19

N.T.S

FILE NAME	T:\412348\XL5462\CAD\ContractPlans\XL5462_PS_DT ew.dgn					
TIME					REGION NO. 10	STATE WASH	FED.AID PROJ.NO.
DATE						
PLOTTED BY						
DESIGNED BY	E. WALGAMOTT				JOB NUMBER 23A003	
ENTERED BY	E. WALGAMOTT					
CHECKED BY	Y. KUANG				CONTRACT NO.	LOCATION NO.
PROJ. ENGR.	C. ANDERSON					
REGIONAL ADM.	B. NIELSEN	REVISION	DATE	BY		

P.E. STAMP BOX DATE

P.E. STAMP BOX DATE

Washington State
Department of Transportation

SR 529
SNOHOMISH RIVER & STEAMBOAT SLOUGH
BRIDGE REPAIR, REHAB & PAINT

DETOUR PLAN

PLAN REF NO
DT1

SHEET 131 OF 136 SHEETS

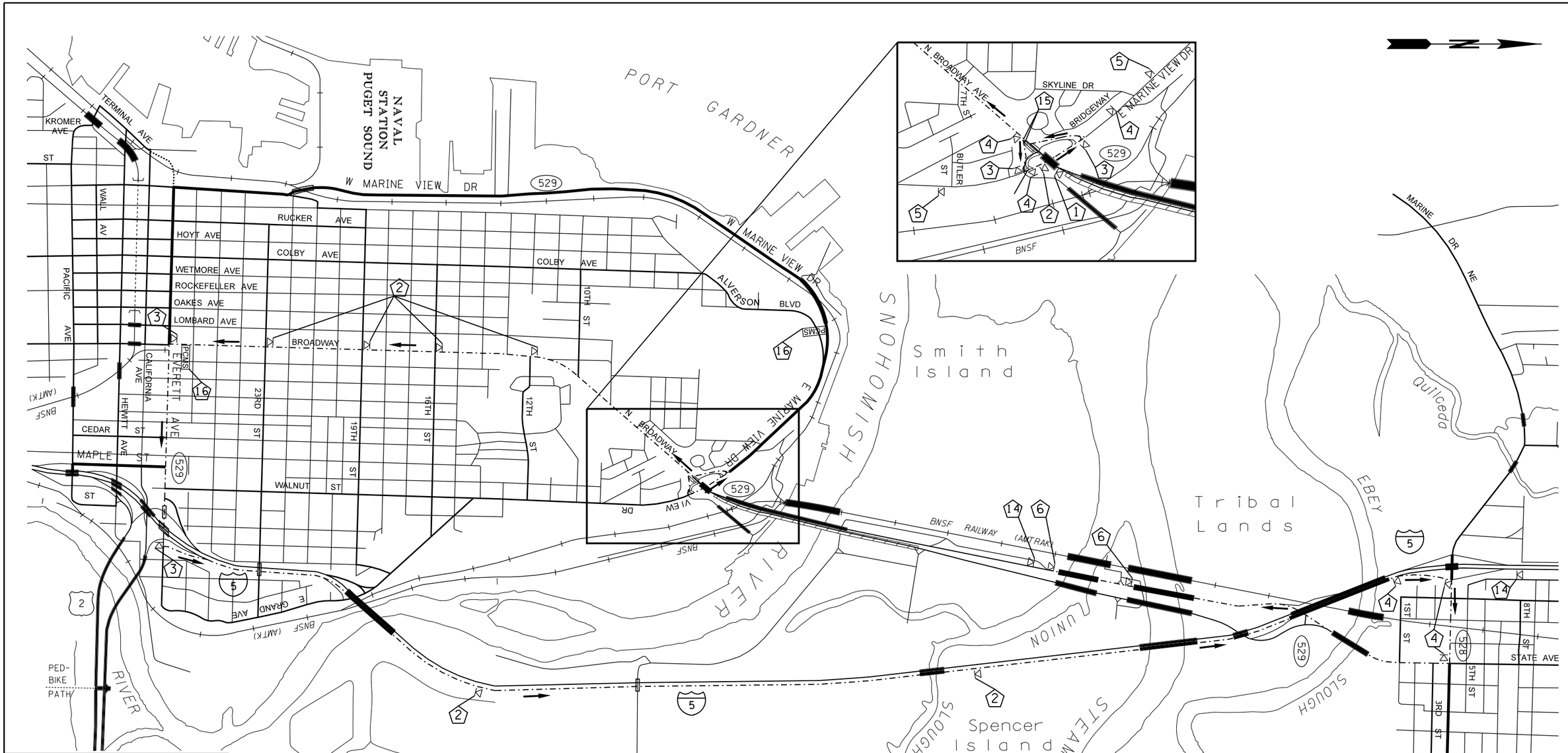

LEGEND

DETOUR ROUTE	
DETOUR DIRECTION	
CLASS A SIGN	
CLASS B SIGN	
DETOUR NOTE SEE SHEET DT1	?
PORTABLE CHANGEABLE MESSAGE SIGN	PCMS
ROAD CLOSURE	
BRIDGE	

NORTHBOUND SR 529 ROADWAY CLOSURE
(BRIDGE 529/10E MP 3.74 TO 4.58)

N.T.S

NOTES

1. SEE DT1 FOR SIGNS
2. SEE TC24 - TC26 FOR ADDITIONAL DETAILS

FILE NAME	T:\412348\XL5462\CAD\ContractPlans\XL5462_PS_DT ew.dgn			
TIME				
DATE				
PLOTTED BY				
DESIGNED BY	E. WALGAMOTT			
ENTERED BY	E. WALGAMOTT			
CHECKED BY	Y. KUANG			
PROJ. ENGR.	C. ANDERSON			
REGIONAL ADM.	B. NIELSEN	REVISION	DATE	BY

REGION NO.	STATE	FED.AID PROJ.NO.
10	WASH	
JOB NUMBER 23A003		
CONTRACT NO.		LOCATION NO.

P.E. STAMP BOX DATE

P.E. STAMP BOX DATE

Washington State Department of Transportation

SR 529
SNOHOMISH RIVER & STEAMBOAT SLOUGH
BRIDGE REPAIR, REHAB & PAINT

DETOUR PLAN

Plot 2
PLAN REF NO DT2
SHEET 132 OF 136 SHEETS

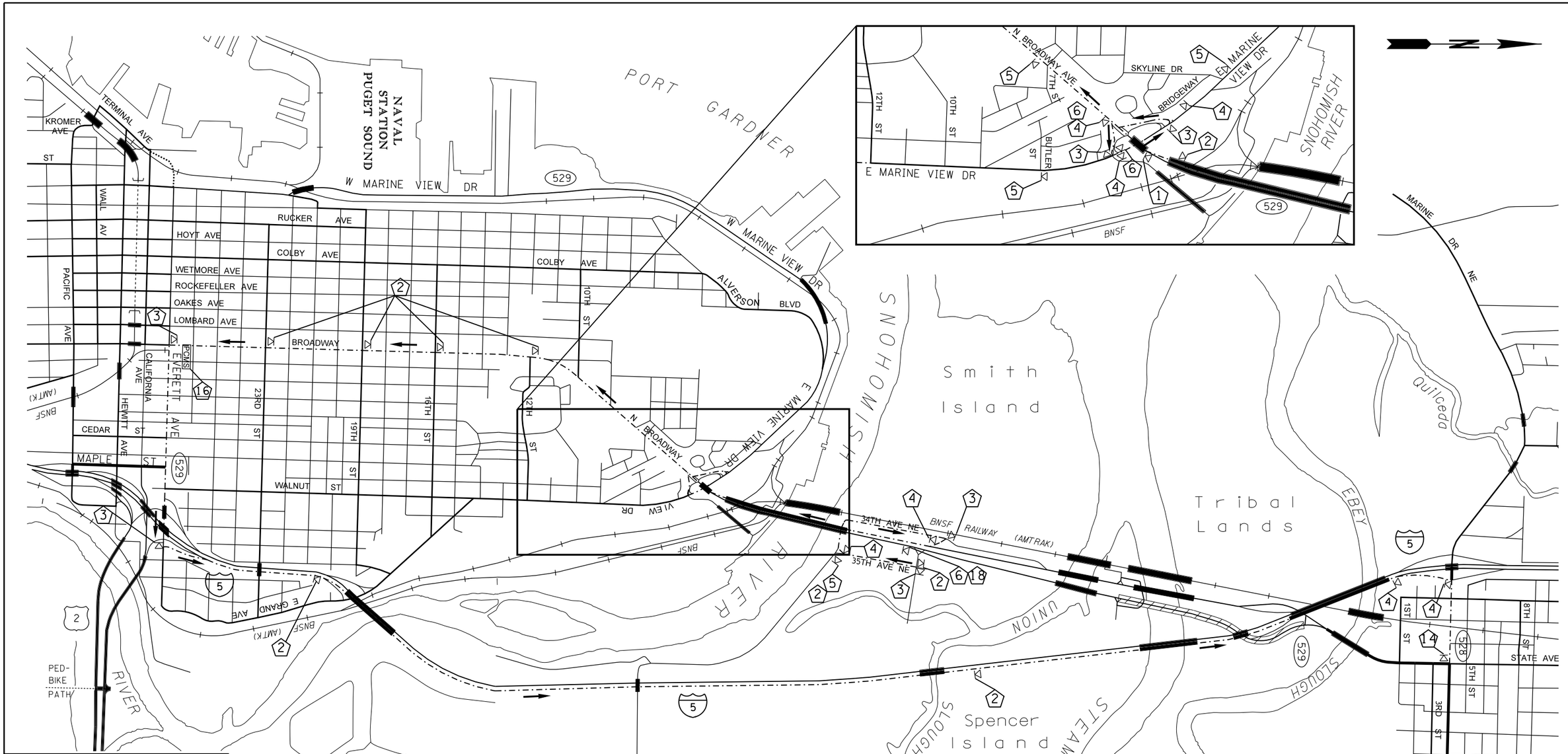

LEGEND

- DETOUR ROUTE
- DETOUR DIRECTION
- CLASS A SIGN
- CLASS B SIGN
- DETOUR NOTE SEE SHEET DT1
- PORTABLE CHANGEABLE MESSAGE SIGN (PCMS)
- ROAD CLOSURE
- BRIDGE

NORTHBOUND SR 529 ROADWAY CLOSURE
(BRIDGE 529/20E MP 5.44 TO MP 5.61)
N.T.S

NOTES

1. SEE DT1 FOR SIGNS
2. SEE TC32 FOR ADDITIONAL DETAILS

FILE NAME	T:\412348\XL5462\CAD\ContractPlans\XL5462_PS_DT ew.dgn		
TIME			
DATE			
PLOTTED BY			
DESIGNED BY	E. WALGAMOTT		
ENTERED BY	E. WALGAMOTT		
CHECKED BY	Y. KUANG		
PROJ. ENGR.	C. ANDERSON		
REGIONAL ADM.	B. NIELSEN	REVISION	DATE / BY

REGION NO.	STATE	FED.AID PROJ.NO.
10	WASH	
JOB NUMBER 23A003		
CONTRACT NO.		LOCATION NO.

P.E. STAMP BOX — DATE

P.E. STAMP BOX — DATE

Washington State Department of Transportation

SR 529
SNOHOMISH RIVER & STEAMBOAT SLOUGH
BRIDGE REPAIR, REHAB & PAINT

DETOUR PLAN

Plot 3

PLAN REF NO **DT3**

SHEET 133 OF 136 SHEETS

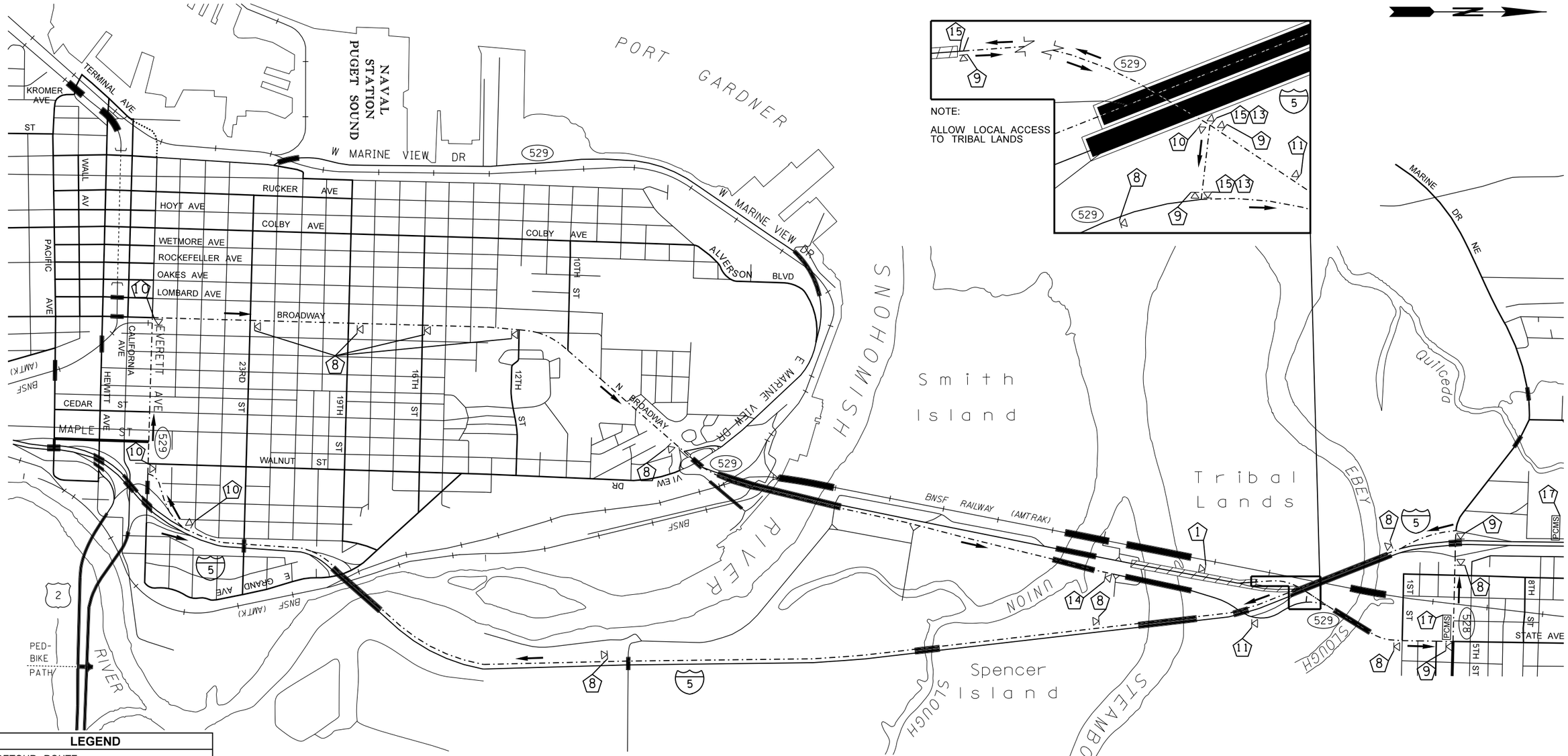

LEGEND

DETOUR ROUTE	
DETOUR DIRECTION	
CLASS A SIGN	
CLASS B SIGN	
DETOUR NOTE SEE SHEET DT1	?
PORTABLE CHANGEABLE MESSAGE SIGN	PCMS
ROAD CLOSURE	
BRIDGE	

SOUTHBOUND SR 529 ROADWAY CLOSURE
(BRIDGE 529/20W MP 5.42 TO MP 5.59)
N.T.S

NOTES

1. SEE DT1 FOR SIGNS
2. SEE TC30 & TC31 FOR ADDITIONAL DETAILS

FILE NAME	T:\412348\XL5462\CAD\ContractPlans\XL5462_PS_DT ew.dgn					
TIME						
DATE						
PLOTTED BY						
DESIGNED BY	E. WALGAMOTT					
ENTERED BY	E. WALGAMOTT					
CHECKED BY	Y. KUANG					
PROJ. ENGR.	C. ANDERSON					
REGIONAL ADM.	B. NIELSEN	REVISION	DATE	BY		

REGION NO.	STATE	FED.AID PROJ.NO.
10	WASH	
JOB NUMBER 23A003		
CONTRACT NO.		LOCATION NO.

P.E. STAMP BOX DATE

P.E. STAMP BOX DATE

Washington State Department of Transportation

SR 529
SNOHOMISH RIVER & STEAMBOAT SLOUGH
BRIDGE REPAIR, REHAB & PAINT

DETOUR PLAN

Plot 4

PLAN REF NO **DT4**

SHEET 134 OF 136 SHEETS

PCMS	
1	2
NB 529 ON RAMP CLOSED	USE ALT ROUTE
2.0 SEC	2.0 SEC

PORTABLE CHANGEABLE MESSAGE SIGN FIELD LOCATE

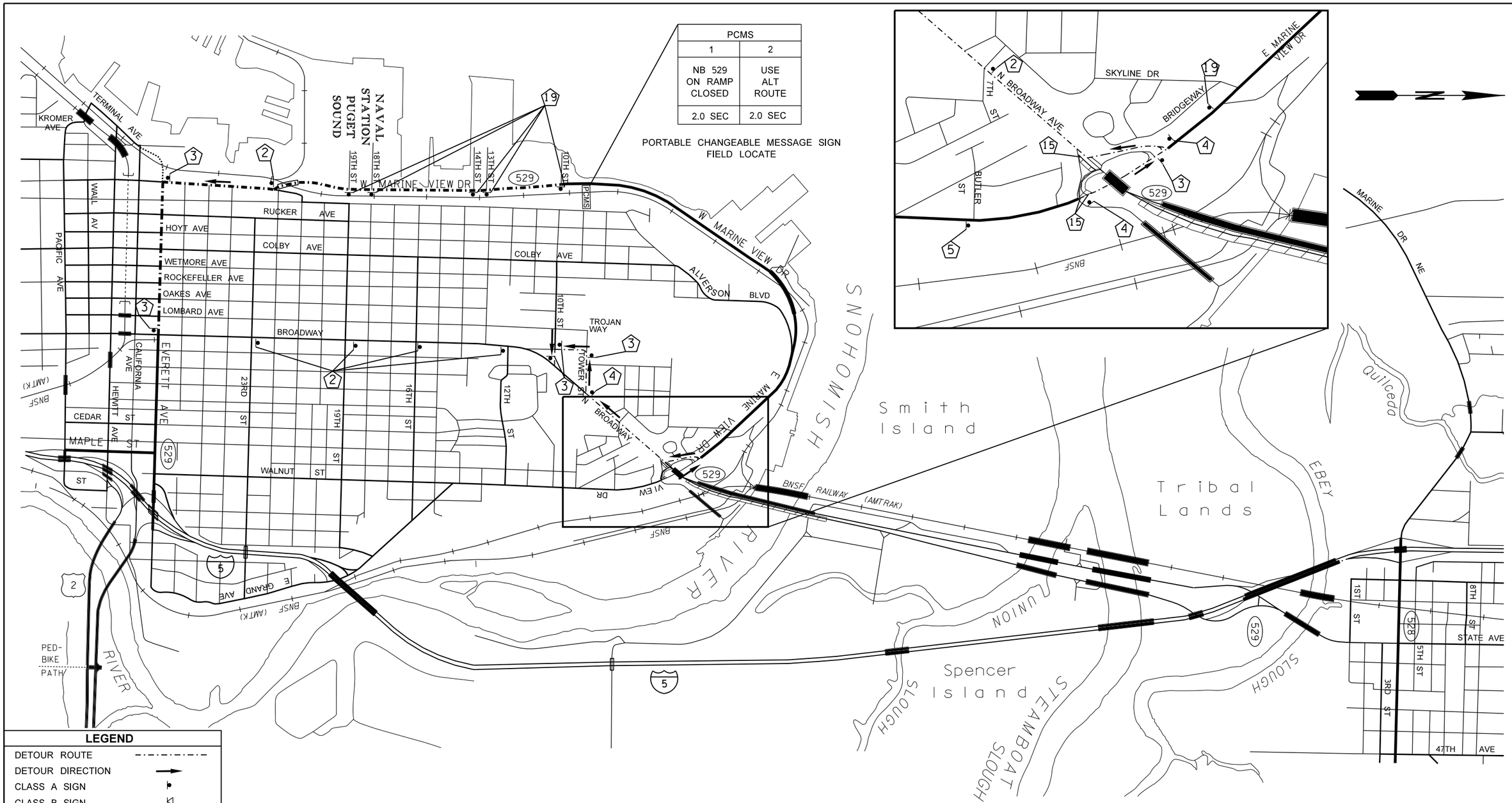

LEGEND

DETOUR ROUTE	
DETOUR DIRECTION	
CLASS A SIGN	
CLASS B SIGN	
DETOUR NOTE SEE SHEET DT1	?
PORTABLE CHANGEABLE MESSAGE SIGN	PCMS
ROAD CLOSURE	
BRIDGE	

NORTHBOUND SR 529 CROSSOVER TO SOUTHBOUND SR 529
(N BROADWAY AVE TO MP 4.65)
N.T.S

NOTES

1. SEE DT1 FOR SIGNS
2. SEE TC25 - TC26 & TC33 - TC36 FOR ADDITIONAL DETAILS

FILE NAME	T:\412348\XL5462\CAD\ContractPlans\XL5462_PS_DT ew.dgn					
TIME	5:45:02 PM					
DATE	4/18/2023					
PLOTTED BY	walgame					
DESIGNED BY	E. WALGAMOTT					
ENTERED BY	E. WALGAMOTT					
CHECKED BY	Y. KUANG					
PROJ. ENGR.	C. ANDERSON					
REGIONAL ADM.	B. NIELSEN	REVISION	DATE	BY		

REGION NO.	STATE	FED.AID PROJ.NO.
10	WASH	
JOB NUMBER 23A003		
CONTRACT NO.		LOCATION NO.

P.E. STAMP BOX DATE

P.E. STAMP BOX DATE

Washington State Department of Transportation

SR 529
SNOHOMISH RIVER & STEAMBOAT SLOUGH
BRIDGE REPAIR, REHAB & PAINT

DETOUR PLAN

Plot 9

PLAN REF NO DT5

SHEET 135 OF 136 SHEETS

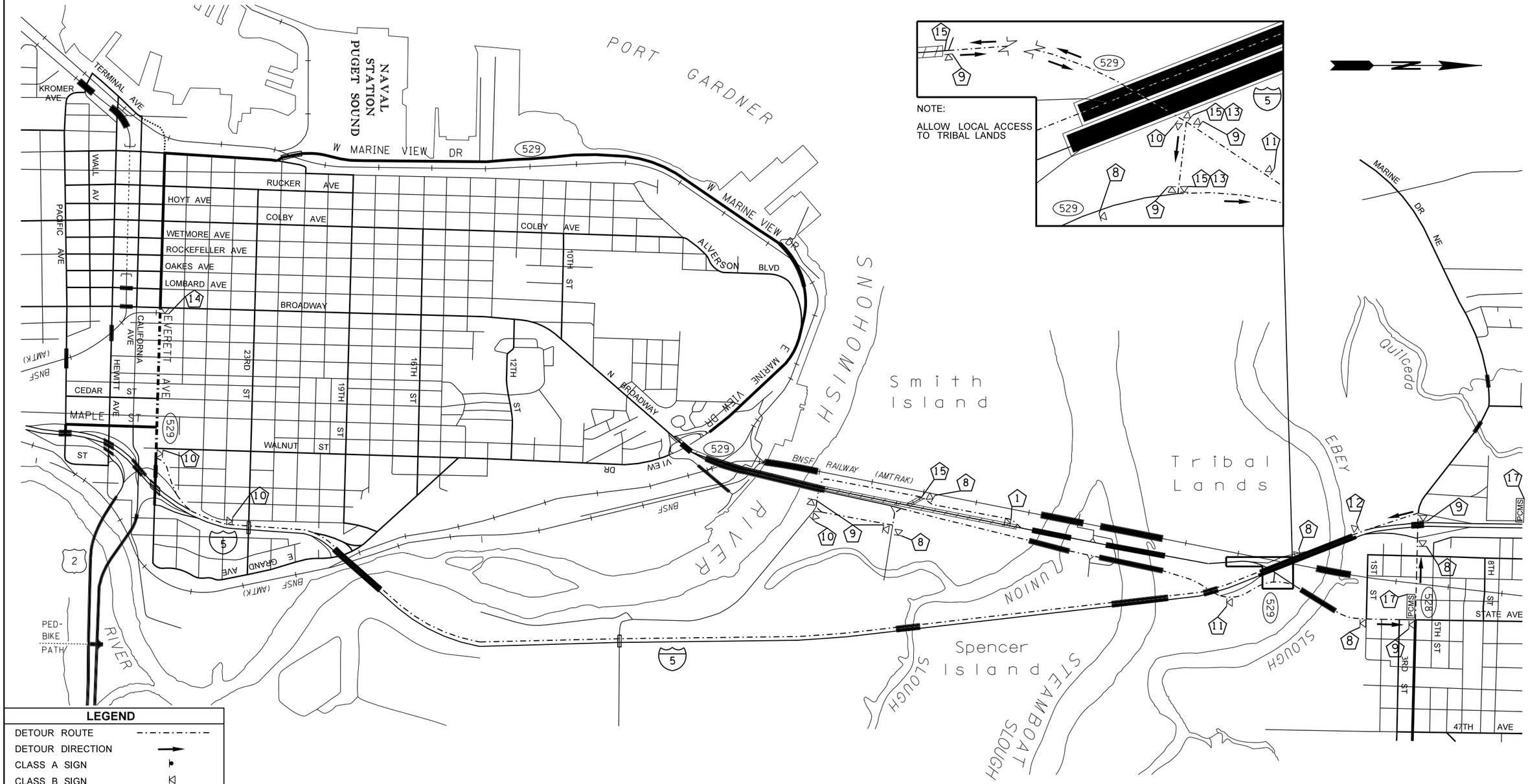

LEGEND

DETOUR ROUTE	
DETOUR DIRECTION	
CLASS A SIGN	
CLASS B SIGN	
DETOUR NOTE SEE SHEET DT1	?
PORTABLE CHANGEABLE MESSAGE SIGN	PCMS
ROAD CLOSURE	
BRIDGE	

SOUTHBOUND SR 529 ROADWAY CLOSURE (N BROADWAY AVE TO MP 4.65)

N.T.S

NOTES

1. SEE DT1 FOR SIGNS
2. SEE TC27 - TC30 FOR ADDITIONAL DETAILS

FILE NAME	T:\412348\XL5462\CAD\ContractPlans\XL5462_PS_DT ew.dgn						
TIME					REGION NO. 10	STATE WASH	FED.AID PROJ.NO.
DATE							
PLOTTED BY							
DESIGNED BY	E. WALGAMOTT				JOB NUMBER 23A003		
ENTERED BY	E. WALGAMOTT						
CHECKED BY	Y. KUANG				CONTRACT NO.		LOCATION NO.
PROJ. ENGR.	C. ANDERSON						
REGIONAL ADM.	B. NIELSEN	REVISION	DATE	BY			

P.E. STAMP BOX DATE

P.E. STAMP BOX DATE

Washington State Department of Transportation

SR 529
SNOHOMISH RIVER & STEAMBOAT SLOUGH BRIDGE REPAIR, REHAB & PAINT

DETOUR PLAN

Plot 8

PLAN REF NO DT6

SHEET 136 OF 136 SHEETS