T.26N. R.2E. W.M.

SR 305 SAM SNYDER CREEK

REMOVE FISH BARRIER

MP 8.83 - MP 9.08

INDEX OF SHEETS		
SHEET NO.	PLAN REFERENCE NO.	TITLE
1	G1	COVER SHEET
2	CT1	CERTIFICATION SHEET
3 - 6	SQ1 - SQ4	SUMMARY OF QUANTITIES
7 - 16	RS1 - RS10	ROADWAY SECTIONS
17 - 19	SU1 - SU3	STAGING PLAN
20 - 22	TDR1 - TDR3	TEMPORARY DRAINAGE PLAN
23 - 27	AL1 - AL5	ALIGNMENT AND RIGHT OF WAY PLAN
28 - 29	QTSP1 - QTSP2	QUANTITY TABULATION - SITE PREPARATION
30 - 33	SP1 - SP4	SITE PREPARATION PLAN
34 - 35	SPD1 - SPD2	SITE PREPARATION DETAILS
36 - 38	RP1 - RP3	ROADWAY PROFILES
39 - 44	DSN1 - DSN6	STRUCTURE NOTES DRAINAGE
45 - 47	DR1 - DR3	DRAINAGE PLAN
48 - 57	DP1 - DP10	DRAINAGE PROFILE
58 - 65	DD1 - DD8	DRAINAGE DETAILS
66	SGR1	STREAM GRADING PLAN
67	SGR2	STREAM GRADING PROFILE
68	SGR3	STREAM GRADING DETAILS
69	SR1	STREAM RESTORATION PLAN
70	SRD1	WOODY MATERIAL LOCATION TABLE
71 - 72	SRD2 - SRD3	WOODY MATERIAL DETAILS
73	SRD4	MEANDER BAR DETAILS
74 - 77	SPP1 - SPP4	SOIL PREPARATION PLAN
78	SPPD1	SOIL PREPARATION DETAILS
79 - 82	LS1 - LS4	LANDSCAPE PLAN
83	LD1	LANDSCAPE DETAILS
84	QTPV1	QUANTITY TABULATION - PAVING
85 - 87	PV1 - PV3	PAVING PLAN
88 - 90	PVD1 - PVD3	PAVING DETAILS
91 - 93	QTMK1 - QTMK3	QUANTITY TABULATION - PAVEMENT MARKING
94 - 96	MK1 - MK3	PAVEMENT MARKING PLAN
97 - 112	WR1 - WR16	RETAINING WALL PLANS & DETAILS
113 - 115	IL1 - IL3	ILLUMINATION PLAN
116	TIL1	TEMPORARY ILLUMINATION PLAN
117	SS1	SIGN SCHEDULE
118 - 120	SN1 - SN3	SIGNING PLAN
121 - 173	BG01 - BG53	BRIDGE PLANS AND DETAILS
174 - 186	TC1 - TC13	TRAFFIC CONTROL PLAN

END PROJECT
SR 305 MP 9.08
ML 6031+05.87

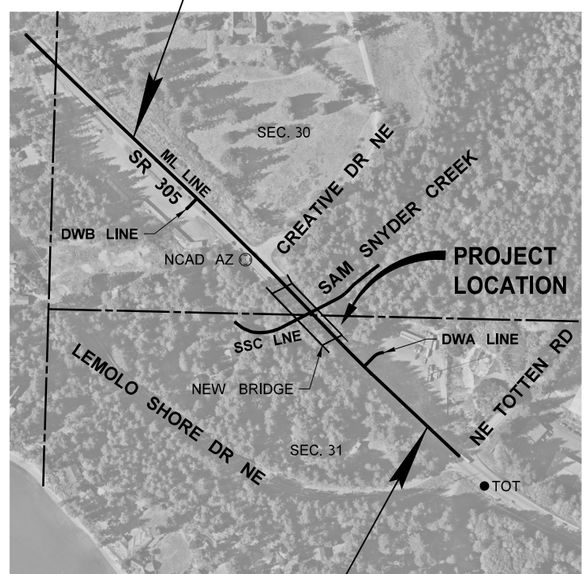

BEGIN PROJECT
SR 305 MP 8.83
ML 6017+45.12

N

PROJECT LOCATION

NOT TO SCALE

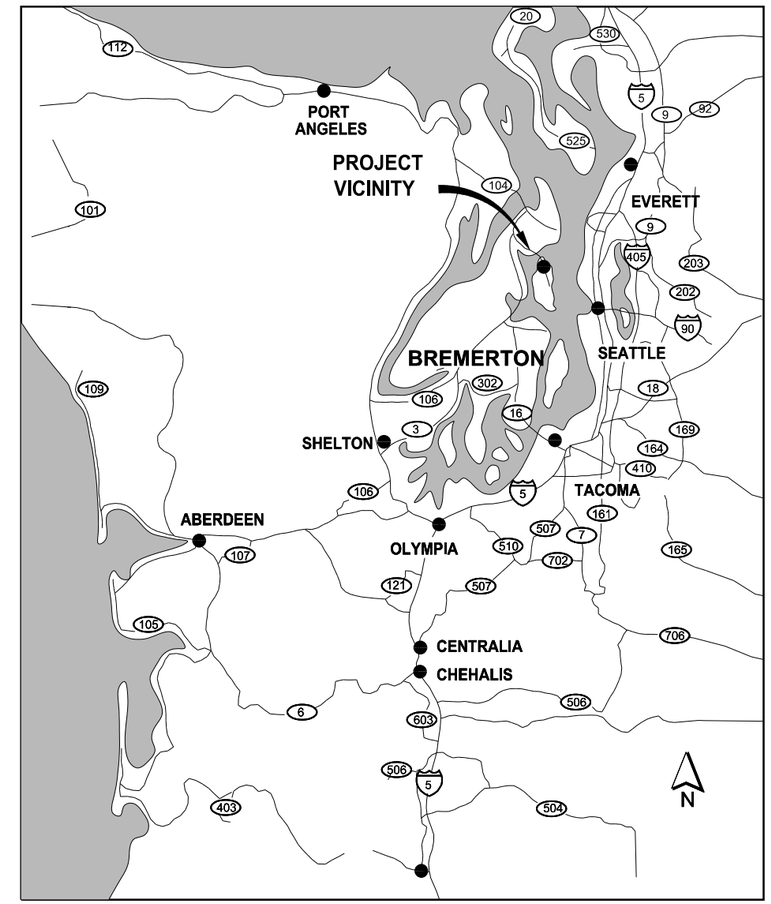

VICINITY MAP

NOT TO SCALE

FILE NAME	c:\users\whltekev\documents\d0335724\XL6050_SAM_COVER.dgn						
TIME	10:30:54 AM				REGION NO. 10	STATE WASH	FED.AID PROJ.NO.
DATE	3/28/2023						
PLOTTED BY	whitekev				JOB NUMBER 22C533		
DESIGNED BY	K. WHITEHOUSE						
ENTERED BY	K. WHITEHOUSE						
CHECKED BY	C. JOHNSON				CONTRACT NO.		LOCATION NO. XL6050
PROJ. ENGR.	A. AMOS						
REGIONAL ADM.	S. ROARK	REVISION	DATE	BY			

KEVIN L. HOUSER STATE OF WASHINGTON 51824 REGISTERED PROFESSIONAL ENGINEER
SEE SHEET CT1
DATE
P.E. STAMP BOX

DATE
P.E. STAMP BOX

Washington State Department of Transportation
Parametrix

SR 305
SAM SNYDER CREEK
REMOVE FISH BARRIER

COVER SHEET

PLAN REF NO G1

SHEET 1 OF 186 SHEETS

PROJECT LICENSED PROFESSIONAL CERTIFICATES

Kevin House Apr 18, 2023 AS A LICENSED PROFESSIONAL IN DIRECT RESPONSIBLE CHARGE OF DEVELOPING THIS CONTRACT, I CERTIFY THAT ALL PLANS THAT CONTAIN MY STAMP HAVE BEEN DEVELOPED UNDER MY SUPERVISION.	Janina Glovatchi Apr 19, 2023 AS A LICENSED PROFESSIONAL IN DIRECT RESPONSIBLE CHARGE OF DEVELOPING THIS CONTRACT, I CERTIFY THAT ALL PLANS THAT CONTAIN MY STAMP HAVE BEEN DEVELOPED UNDER MY SUPERVISION.	Theodore Prince Apr 18, 2023 AS A LICENSED PROFESSIONAL IN DIRECT RESPONSIBLE CHARGE OF DEVELOPING THIS CONTRACT, I CERTIFY THAT ALL PLANS THAT CONTAIN MY STAMP HAVE BEEN DEVELOPED UNDER MY SUPERVISION.	Terrence Hew Apr 18, 2023 AS A LICENSED PROFESSIONAL IN DIRECT RESPONSIBLE CHARGE OF DEVELOPING THIS CONTRACT, I CERTIFY THAT ALL PLANS THAT CONTAIN MY STAMP HAVE BEEN DEVELOPED UNDER MY SUPERVISION.
Dylan Bailey Dylan Bailey Apr 18, 2023 AS A LICENSED PROFESSIONAL IN DIRECT RESPONSIBLE CHARGE OF DEVELOPING THIS CONTRACT, I CERTIFY THAT ALL PLANS THAT CONTAIN MY STAMP HAVE BEEN DEVELOPED UNDER MY SUPERVISION.	Joseph Merth Joseph Merth (Apr 18, 2023 20:31 PDT) Joseph Merth Apr 18, 2023 AS A LICENSED PROFESSIONAL IN DIRECT RESPONSIBLE CHARGE OF DEVELOPING THIS CONTRACT, I CERTIFY THAT ALL PLANS THAT CONTAIN MY STAMP HAVE BEEN DEVELOPED UNDER MY SUPERVISION.	Christopher A Grgich Christopher A Grgich Apr 18, 2023 AS A LICENSED PROFESSIONAL IN DIRECT RESPONSIBLE CHARGE OF DEVELOPING THIS CONTRACT, I CERTIFY THAT ALL PLANS THAT CONTAIN MY STAMP HAVE BEEN DEVELOPED UNDER MY SUPERVISION.	Shane L. Brown Shane Brown Apr 18, 2023 AS A LICENSED PROFESSIONAL IN DIRECT RESPONSIBLE CHARGE OF DEVELOPING THIS CONTRACT, I CERTIFY THAT ALL PLANS THAT CONTAIN MY STAMP HAVE BEEN DEVELOPED UNDER MY SUPERVISION.
AS A LICENSED PROFESSIONAL IN DIRECT RESPONSIBLE CHARGE OF DEVELOPING THIS CONTRACT, I CERTIFY THAT ALL PLANS THAT CONTAIN MY STAMP HAVE BEEN DEVELOPED UNDER MY SUPERVISION.	AS A LICENSED PROFESSIONAL IN DIRECT RESPONSIBLE CHARGE OF DEVELOPING THIS CONTRACT, I CERTIFY THAT ALL PLANS THAT CONTAIN MY STAMP HAVE BEEN DEVELOPED UNDER MY SUPERVISION.	AS A LICENSED PROFESSIONAL IN DIRECT RESPONSIBLE CHARGE OF DEVELOPING THIS CONTRACT, I CERTIFY THAT ALL PLANS THAT CONTAIN MY STAMP HAVE BEEN DEVELOPED UNDER MY SUPERVISION.	AS A LICENSED PROFESSIONAL IN DIRECT RESPONSIBLE CHARGE OF DEVELOPING THIS CONTRACT, I CERTIFY THAT ALL PLANS THAT CONTAIN MY STAMP HAVE BEEN DEVELOPED UNDER MY SUPERVISION.

NOTES:

THIS PLAN SET WAS DEVELOPED ELECTRONICALLY UNDER THE DIRECT SUPERVISION OF THE LICENSED PROFESSIONALS THAT HAVE AFFIXED THEIR SIGNATURE TO THIS PAGE.

THIS SHEET SERVES AS THE CERTIFICATION BY THE ABOVE LICENSED PROFESSIONALS OF ALL SHEETS IN THIS PLAN SET WHERE THEIR STAMPS AND SIGNATURES APPEAR.

SUMMARY OF QUANTITIES

ITEM NO	TOTAL QUANTITY	SUB-TOTAL * SECTION I-07.2(1) OF STANDARD SPECS	SUB-TOTAL ** SECTION I-07.2(2) OF STANDARD SPECS	STD. ITEM NO.	UNIT	ITEM	GROUP 1 SR 305 MP 8.83 TO MP 9.08	GROUP 2 REIMBURSE FOR THIRD PARTY DAMAGES
						PREPARATION		
1	LUMP SUM		LUMP SUM	0001	L.S.	MOBILIZATION	L.S.	
2	3.40		3.40	0025	ACRE	CLEARING AND GRUBBING	3.40	
3	LUMP SUM		LUMP SUM	0050	L.S.	REMOVAL OF STRUCTURES AND OBSTRUCTIONS	L.S.	
4	105766.00		105766.00	0254	DOL	REMOVING SOLDIER PILE SHAFT OBSTRUCTIONS	105,766.00	
5	81859.20		81859.20	0256	DOL	REMOVING SHAFT OBSTRUCTIONS	81,859.20	
6	3328.00		3328.00	0187	L.F.	REMOVING PAINT LINE	3,328.00	
7	6.00		6.00	0200	EACH	REMOVING PLASTIC TRAFFIC MARKING	6.00	
8	2850.00		2850.00		S.F.	REMOVING RETAINING WALL	2,850.00	
						GRADING		
9	6240.00		6240.00	0310	C.Y.	ROADWAY EXCAVATION INCL. HAUL	6,240.00	
10	18650.00		18650.00	0330	C.Y.	ROADWAY EXCAVATION INCL. HAUL - AREA POND	18,650.00	
11	20.00		20.00	0405	C.Y.	COMMON BORROW INCL. HAUL	20.00	
12	2220.00		2220.00	0431	TON	GRAVEL BORROW INCL. HAUL	2,220.00	
13	4279.00		4279.00	0470	C.Y.	EMBANKMENT COMPACTION	4,279.00	
						DRAINAGE		
14	590.00		590.00	1030	C.Y.	DITCH EXCAVATION INCL. HAUL	590.00	
15	59200.00		59200.00	1040	C.Y.	CHANNEL EXCAVATION INCL. HAUL	59,200.00	
16	1.00		1.00	1054	EACH	GRATE INLET TYPE 2	1.00	
17	1336.00		1336.00	1093	TON	STREAMBED SEDIMENT	1,336.00	
18	33.00		33.00	1090	TON	STREAMBED SAND	33.00	
19	400.00		400.00	0903	TON	STREAMBED COBBLES 10 IN.	400.00	
20	50.00		50.00	0918	EACH	WOODY MATERIAL-LOG WITHOUT ROOTWAD DBH 0.83 FT	50.00	
21	16.00		16.00	0919	EACH	WOODY MATERIAL-LOG WITH ROOTWAD DBH 1.5 FT	16.00	
22	16.00		16.00	0919	EACH	WOODY MATERIAL-LOG WITH ROOTWAD DBH 2.0 FT	16.00	
23	19.00		19.00	0919	EACH	WOODY MATERIAL-LOG WITH ROOTWAD DBH 2.5 FT	19.00	
24	678.00		678.00	0925	TON	ROCK FOR EROSION AND SCOUR PROTECTION CLASS C	678.00	
25	80.00		80.00	1086	TON	QUARRY SPALLS	80.00	
26	949.00		949.00	1160	L.F.	UNDERDRAIN PIPE 6 IN. DIAM.	949.00	
27	121.00		121.00	1171	L.F.	DRAIN PIPE 8 IN. DIAM.	121.00	
28	226.00		226.00	3016	L.F.	HIGH-DENSITY POLYETHYLENE (HDPE) PIPE 12 IN. DIAM.	226.00	
29	LUMP SUM		LUMP SUM	3075	L.S.	TEMPORARY STREAM DIVERSION	L.S.	
30	10000.00		10000.00	3076	DOL	FISH EXCLUSION	10,000.00	
31	5000.00		5000.00	3077	DOL	FISH EXCLUSION ASSISTANCE	5,000.00	
32	10000.00		10000.00		DOL	ADDITIONAL STREAMBED GRADING	10,000.00	
33	LUMP SUM		LUMP SUM		L.S.	TEMPORARY DRAINAGE	L.S.	
34	LUMP SUM		LUMP SUM		L.S.	TEMPORARY DRAINAGE PLAN	L.S.	
						STORM SEWER		
35	1.00		1.00	3090	EACH	CATCH BASIN TYPE 2 54 IN. DIAM. W/FR	1.00	
36	10.00		10.00	3091	EACH	CATCH BASIN TYPE 1	10.00	
37	18.00		18.00	3105	EACH	CATCH BASIN TYPE 2 48 IN. DIAM.	18.00	
38	2373.00		2373.00	3151	L.F.	TESTING STORM SEWER PIPE	2,373.00	
39	379.00		379.00	3430	L.F.	CL. III REINF. CONC. STORM SEWER PIPE 12 IN. DIAM.	379.00	
40	96.00		96.00	3432	L.F.	CL. III REINF. CONC. STORM SEWER PIPE 18 IN. DIAM.	96.00	
41	183.00		183.00	3455	L.F.	CL. IV REINF. CONC. STORM SEWER PIPE 12 IN. DIAM.	183.00	

GROUP LEGEND

GROUP NUMBER	SR	CONTROL SECTION	TAX SCHEDULE	FUND PARTICIPANTS
1	305	183340	**	FEDERAL,STATE
2	305	183330	**	STATE

DATE	REVISION	BY

REGION	STATE	FEDERAL AID PROJECT. NO.
10	WA	ARPA(001)

JOB NUMBER 22C533/3

CONTRACT NO 000000

Washington State Department of Transportation

SR 305
SAM SNYDER CREEK
REMOVE FISH BARRIER

SUMMARY OF QUANTITIES

SQ1

SUMMARY OF QUANTITIES

ITEM NO	TOTAL QUANTITY	SUB-TOTAL * SECTION I-07.2(1) OF STANDARD SPECS	SUB-TOTAL ** SECTION I-07.2(2) OF STANDARD SPECS	STD. ITEM NO.	UNIT	ITEM	GROUP 1 SR 305 MP 8.83 TO MP 9.08	GROUP 2 REIMBURSE FOR THIRD PARTY DAMAGES
42	132.00		132.00	3457	L.F.	CL. IV REINF. CONC. STORM SEWER PIPE 18 IN. DIAM.	132.00	
43	28.00		28.00	3480	L.F.	CL. V REINF. CONC. STORM SEWER PIPE 12 IN. DIAM.	28.00	
44	1208.00		1208.00	3541	L.F.	SCHEDULE A STORM SEWER PIPE 12 IN. DIAM.	1,208.00	
45	125.00		125.00		L.F.	DUCTILE IRON STORM SEWER PIPE 15 IN. DIAM.	125.00	
						SANITARY SEWER		
46	6.00		6.00	3640	EACH	SEWER CLEANOUT	6.00	
						STRUCTURE		
47	12186.00		12186.00	4006	C.Y.	STRUCTURE EXCAVATION CLASS A INCL. HAUL	12,186.00	
48	LUMP SUM		LUMP SUM	4013	L.S.	SHORING OR EXTRA EXCAVATION CL. A >10FT	L.S.	
49	160.00		160.00	4025	C.Y.	GRAVEL BACKFILL FOR WALL	160.00	
50	560.00		560.00	4088	L.F.	CONSTRUCTING 7 FT. DIAM SHAFT	560.00	
51	2220.00		2220.00	4048	L.F.	SHAFT - 30 IN. DIAMETER	2,220.00	
52	2169.00		2169.00	4053	L.F.	FURNISHING SOLDIER PILE HP16X183	2,169.00	
53	941.00		941.00	4053	L.F.	FURNISHING SOLDIER PILE HP12X74	941.00	
54	112592.00		112592.00	4149	LB.	ST. REINF. BAR FOR BRIDGE	112,592.00	
55	8.00		8.00	4160	EACH	QA SHAFT TEST	8.00	
56	652.00		652.00	4322	C.Y.	CONC. CLASS 4000 FOR BRIDGE	652.00	
57	LUMP SUM		LUMP SUM	4235	L.S.	STRUCTURAL LOW ALLOY STEEL	L.S.	
58	3010.00		3010.00	4299	S.F.	LAGGING	3,010.00	
59	12.00		12.00	4312	EACH	DISC BEARING - SUPERSTR.	12.00	
60	LUMP SUM		LUMP SUM	4300	L.S.	SUPERSTRUCTURE SAM SNYDER CREEK BRIDGE	L.S.	
61	455.00		455.00	4410	L.F.	BRIDGE RAILING TYPE BP-22	455.00	
62	600.00		600.00	4410	L.F.	BRIDGE RAILING TYPE PEDESTRIAN/TRAFFIC RAILING	600.00	
63	140.00		140.00	4410	L.F.	BRIDGE RAILING TYPE CHAIN LINK PIPE RAIL	140.00	
64	300.00		300.00	4415	L.F.	TRAFFIC BARRIER	300.00	
65	300.00		300.00	4117	L.F.	PEDESTRIAN BARRIER	300.00	
66	4250.00		4250.00	4474	S.F.	CONCRETE FASCIA PANEL	4,250.00	
67	236.00		236.00	4482	S.Y.	PREFABRICATED DRAINAGE MAT	236.00	
68	2180.00		2180.00	7169	S.F.	STRUCTURAL EARTH WALL	2,180.00	
69	501.00		501.00	5656	S.Y.	BRIDGE APPROACH SLAB	501.00	
70	455.00		455.00		L.F.	RETAINING WALL TRAFFIC BARRIER	455.00	
71	2400.00		2400.00		C.Y.	CELLULAR CONC. CLASS 4	2,400.00	
						SURFACING		
72	6616.00		6616.00	5100	TON	CRUSHED SURFACING BASE COURSE	6,616.00	
						HOT MIX ASPHALT		
73	3387.00		3387.00	5711	S.Y.	PLANING BITUMINOUS PAVEMENT	3,387.00	
74	2.20		2.20	5717	TON	HMA FOR PRELEVELING CL. 1/2 IN. PG 58H-22	2.20	
75	2338.00		2338.00	5767	TON	HMA CL. 1/2 IN. PG 58H-22	2,338.00	
76	12000.00		12000.00	5830	DOL	JOB MIX COMPLIANCE PRICE ADJUSTMENT	12,000.00	
77	19900.00		19900.00	5835	DOL	COMPACTION PRICE ADJUSTMENT	19,900.00	
78	19900.00		19900.00	5837	DOL	ASPHALT COST PRICE ADJUSTMENT	19,900.00	
						EROSION CONTROL AND ROADSIDE PLANTING		
79	LUMP SUM		LUMP SUM	6488	L.S.	EROSION CONTROL AND WATER POLLUTION PREVENTION	L.S.	
80	0.72		0.72	6414	ACRE	SEEDING, FERTILIZING, AND MULCHING	0.72	

GROUP LEGEND

GROUP NUMBER	SR	CONTROL SECTION	TAX SCHEDULE	FUND PARTICIPANTS
1	305	183340	**	FEDERAL,STATE
2	305	183330	**	STATE

DATE	REVISION	BY

REGION	STATE	FEDERAL AID PROJECT. NO.
10	WA	ARPA(001)

JOB NUMBER 22C533/3

CONTRACT NO 000000

Washington State
Department of Transportation

SR 305
SAM SNYDER CREEK
REMOVE FISH BARRIER

SUMMARY OF QUANTITIES

SQ2

SUMMARY OF QUANTITIES

ITEM NO	TOTAL QUANTITY	SUB-TOTAL * SECTION I-07.2(1) OF STANDARD SPECS	SUB-TOTAL ** SECTION I-07.2(2) OF STANDARD SPECS	STD. ITEM NO.	UNIT	ITEM	GROUP 1 SR 305 MP 8.83 TO MP 9.08	GROUP 2 REIMBURSE FOR THIRD PARTY DAMAGES
81	0.82		0.82	6407	ACRE	TOPSOIL TYPE A	0.82	
82	508.00		508.00	6531	C.Y.	SPECIAL SOIL MIX	508.00	
83	72.00		72.00	6552	EACH	PSIPE CAREX OBNUPTA	72.00	
84	1343.00		1343.00	6552	EACH	PSIPE CORNUS SERICEA	1,343.00	
85	806.00		806.00	6552	EACH	PSIPE CORYLUS CORNUTA	806.00	
86	215.00		215.00	6552	EACH	PSIPE FRANGULA PURSHIANA	215.00	
87	121.00		121.00	6552	EACH	PSIPE GAULTHERIA SHALLON	121.00	
88	90.00		90.00	6552	EACH	PSIPE JUNCUS ENSIFOLIUS	90.00	
89	3147.00		3147.00	6552	EACH	PSIPE POLYSTICHUM MUNITUM	3,147.00	
90	215.00		215.00	6552	EACH	PSIPE PSEUDOTSUGA MENZIESII	215.00	
91	54.00		54.00	6552	EACH	PSIPE RIBES BRACTEOSUM	54.00	
92	806.00		806.00	6552	EACH	PSIPE RUBUS PARVIFLORUS	806.00	
93	41.00		41.00	6552	EACH	PSIPE RUBUS SPECTABILIS	41.00	
94	41.00		41.00	6552	EACH	PSIPE SALIX HOOKERIANA	41.00	
95	215.00		215.00	6552	EACH	PSIPE TSUGA HETEROPHYLLA	215.00	
96	806.00		806.00	6552	EACH	PSIPE VACCINIUM OVATUM	806.00	
97	648.00		648.00	6552	EACH	PSIPE 2 IN. HARDWOOD TREE STAKE	648.00	
98	0.74		0.74	6480	ACRE	FINE COMPOST	0.74	
99	1.83		1.83	6481	ACRE	MEDIUM COMPOST	1.83	
100	2.29		2.29	6579	ACRE	BARK OR WOOD CHIP MULCH	2.29	
101	2964.00		2964.00	6630	L.F.	HIGH VISIBILITY FENCE	2,964.00	
102	2.10		2.10		ACRE	SOIL DECOMPACTION	2.10	
103	LUMP SUM		LUMP SUM		L.S.	TESC PLAN	L.S.	
						TRAFFIC		
104	412.00		412.00	6727	L.F.	EXTRUDED CURB	412.00	
105	392.00		392.00	6841	L.F.	PRECAST DUAL FACED SLOPED MOUNTABLE CURB	392.00	
106	275.00		275.00	6711	L.F.	BEAM GUARDRAIL TYPE 31 - 8 FT. LONG POST	275.00	
107	175.00		175.00	6757	L.F.	BEAM GUARDRAIL TYPE 31	175.00	
108	2.00		2.00	6760	EACH	BEAM GUARDRAIL TRANSITION SECTION TYPE 21	2.00	
109	2.00		2.00	6719	EACH	BEAM GUARDRAIL TYPE 31 NON-FLARED TERMINAL	2.00	
110	4.00		4.00		EACH	BEAM GUARDRAIL ANCHOR TYPE 11	4.00	
111	6.00		6.00	6832	EACH	FLEXIBLE GUIDE POST	6.00	
112	4889.00		4889.00	6807	L.F.	PLASTIC LINE	4,889.00	
113	34.00		34.00	6859	L.F.	PLASTIC STOP LINE	34.00	
114	9.00		9.00	6833	EACH	PLASTIC TRAFFIC ARROW	9.00	
115	30.00		30.00	6881	EACH	PLASTIC DRAINAGE MARKING	30.00	
116	9.00		9.00	6875	EACH	PLASTIC JUNCTION BOX MARKING	9.00	
117	0.14		0.14	6893	MI.	CENTERLINE RUMBLE STRIP	0.14	
118	0.06		0.06	6884	HUND	RAISED PAVEMENT MARKER TYPE 2	0.06	
119	0.17		0.17	6889	HUND	RECESSED PAVEMENT MARKER	0.17	
120	LUMP SUM		LUMP SUM	6890	L.S.	PERMANENT SIGNING	L.S.	
121	4850.00		4850.00	6895	L.F.	TEMPORARY PAVEMENT MARKING-SHORT DURATION	4,850.00	
122	8380.00		8380.00	6896	L.F.	TEMPORARY PAVEMENT MARKING-LONG DURATION	8,380.00	
123	35.00		35.00	6843	L.F.	TEMPORARY STOP LINE - LONG DURATION	35.00	
124	LUMP SUM		LUMP SUM	6903	L.S.	TEMPORARY ILLUMINATION SYSTEM	L.S.	
125	LUMP SUM		LUMP SUM	6904	L.S.	ILLUMINATION SYSTEM	L.S.	
126	600.00		600.00	6945	L.F.	CONDUIT PIPE 2 IN. DIAM.	600.00	
127	LUMP SUM		LUMP SUM	6971	L.S.	PROJECT TEMPORARY TRAFFIC CONTROL	L.S.	

GROUP LEGEND

GROUP NUMBER	SR	CONTROL SECTION	TAX SCHEDULE	FUND PARTICIPANTS
1	305	183340	**	FEDERAL,STATE
2	305	183330	**	STATE

DATE	REVISION	BY

REGION	STATE	FEDERAL AID PROJECT. NO.
10	WA	ARPA(001)

JOB NUMBER 22C533/3

CONTRACT NO 000000

Washington State Department of Transportation

SR 305
SAM SNYDER CREEK
REMOVE FISH BARRIER

SUMMARY OF QUANTITIES

SQ3

SUMMARY OF QUANTITIES

ITEM NO	TOTAL QUANTITY	SUB-TOTAL * SECTION I-07.2(1) OF STANDARD SPECS	SUB-TOTAL ** SECTION I-07.2(2) OF STANDARD SPECS	STD. ITEM NO.	UNIT	ITEM	GROUP 1 SR 305 MP 8.83 TO MP 9.08	GROUP 2 REIMBURSE FOR THIRD PARTY DAMAGES
128	75000.00		75000.00	7572	DOL	WORK ZONE SAFETY CONTINGENCY	75,000.00	
129	10.00		10.00	6822	L.F.	PLASTIC CROSSHATCH MARKING	10.00	
130	149.00		149.00	6818	L.F.	PLASTIC WIDE LINE	149.00	
						OTHER ITEMS		
131	12000.00		12000.00	9004	DOL	PROJECT PARTNERING	12,000.00	
132	7.00		7.00	7069	EACH	WHEEL STOP	7.00	
133	LUMP SUM		LUMP SUM	7003	L.S.	TYPE B PROGRESS SCHEDULE	L.S.	
134	2360.00		2360.00	7006	C.Y.	STRUCTURE EXCAVATION CLASS B INCL. HAUL	2,360.00	
135	15900.00		15900.00	7008	S.F.	SHORING OR EXTRA EXCAVATION CLASS B	15,900.00	
136	70.00		70.00	7014	C.Y.	GRAVEL BACKFILL FOR DRAIN	70.00	
137	LUMP SUM		LUMP SUM	7037	L.S.	STRUCTURE SURVEYING	L.S.	
138	LUMP SUM		LUMP SUM	7038	L.S.	ROADWAY SURVEYING	L.S.	
139	2000.00		2000.00	7040	DOL	LICENSED SURVEYING	2,000.00	
140	1.00		1.00	7380	EACH	ADJUST MONUMENT CASE AND COVER	1.00	
141	578.00		578.00	7083	L.F.	CHAIN LINK FENCE TYPE 3	578.00	
142	58.00		58.00	7097	EACH	END, GATE, CORNER, AND PULL POST FOR CHAIN LINK FENCE	58.00	
143	1.00		1.00	7104	EACH	DOUBLE 20 FT. CHAIN LINK GATE	1.00	
144	5.00		5.00	7360	EACH	MANHOLE 48 IN. DIAM. TYPE 1	5.00	
145	30.00		30.00	7369	L.F.	MANHOLE ADDITIONAL HEIGHT 48 IN. DIAM. TYPE 1	30.00	
146	LUMP SUM		LUMP SUM	7350	L.S.	CLEANING EXISTING DRAINAGE STRUCTURE	L.S.	
147	24000.00		24000.00	7480	DOL	ROADSIDE CLEANUP	24,000.00	
148	5.00		5.00	7725	DOL	REIMBURSEMENT FOR THIRD PARTY DAMAGE		5.00
149	-1.00		-1.00	7728	DOL	MINOR CHANGE	-1.00	
150	1.00		1.00	7730	DOL	FUEL COST ADJUSTMENT	1.00	
151	1.00		1.00	7731	DOL	STEEL COST ADJUSTMENT	1.00	
152	1.00		1.00	7732	DOL	AGGREGATE COMPLIANCE PRICE ADJUSTMENT	1.00	
153	LUMP SUM		LUMP SUM	7736	L.S.	SPCC PLAN	L.S.	
154	LUMP SUM		LUMP SUM	7500	L.S.	FIELD OFFICE BUILDING	L.S.	
155	737.00		737.00	7550	S.Y.	CONSTRUCTION GEOTEXTILE FOR UNDERGROUND DRAINAGE	737.00	
156	640.00		640.00	7552	S.Y.	CONSTRUCTION GEOTEXTILE FOR SOIL STABILIZATION	640.00	
157	645.00		645.00	7567	C.Y.	GRAVEL BORROW FOR STRUCTURAL EARTH WALL INCL. HAUL	645.00	
158	LUMP SUM		LUMP SUM		L.S.	PROJECT STAGING	L.S.	
159	16.00		16.00		L.F.	BIOFILTRATION SWALE LEVEL SPREADER	16.00	

GROUP LEGEND

GROUP NUMBER	SR	CONTROL SECTION	TAX SCHEDULE	FUND PARTICIPANTS
1	305	183340	**	FEDERAL,STATE
2	305	183330	**	STATE

DATE	REVISION	BY

REGION	STATE	FEDERAL AID PROJECT. NO.
10	WA	ARPA(001)

JOB NUMBER 22C533/3

CONTRACT NO 000000

Washington State
Department of Transportation

SR 305
SAM SNYDER CREEK
REMOVE FISH BARRIER

SUMMARY OF QUANTITIES

SQ4

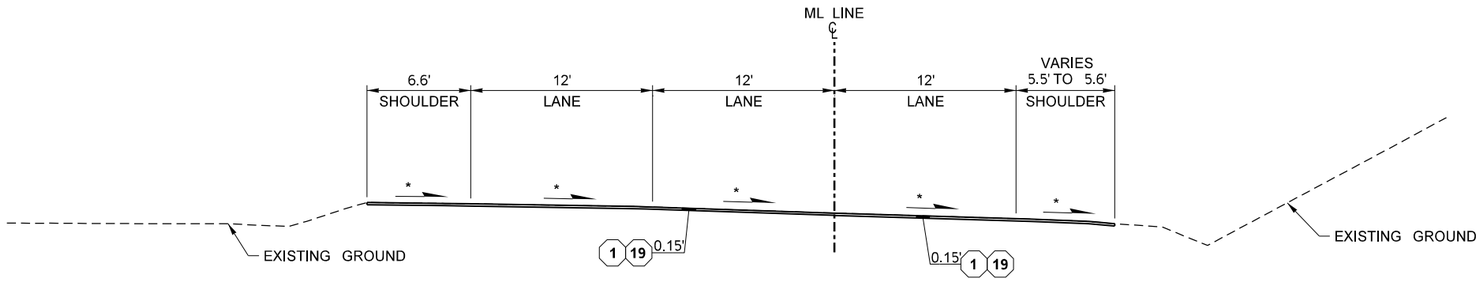

*MATCH EXISTING SLOPE

ROADWAY SECTION A

ML 6017+50 TO ML 6017+55

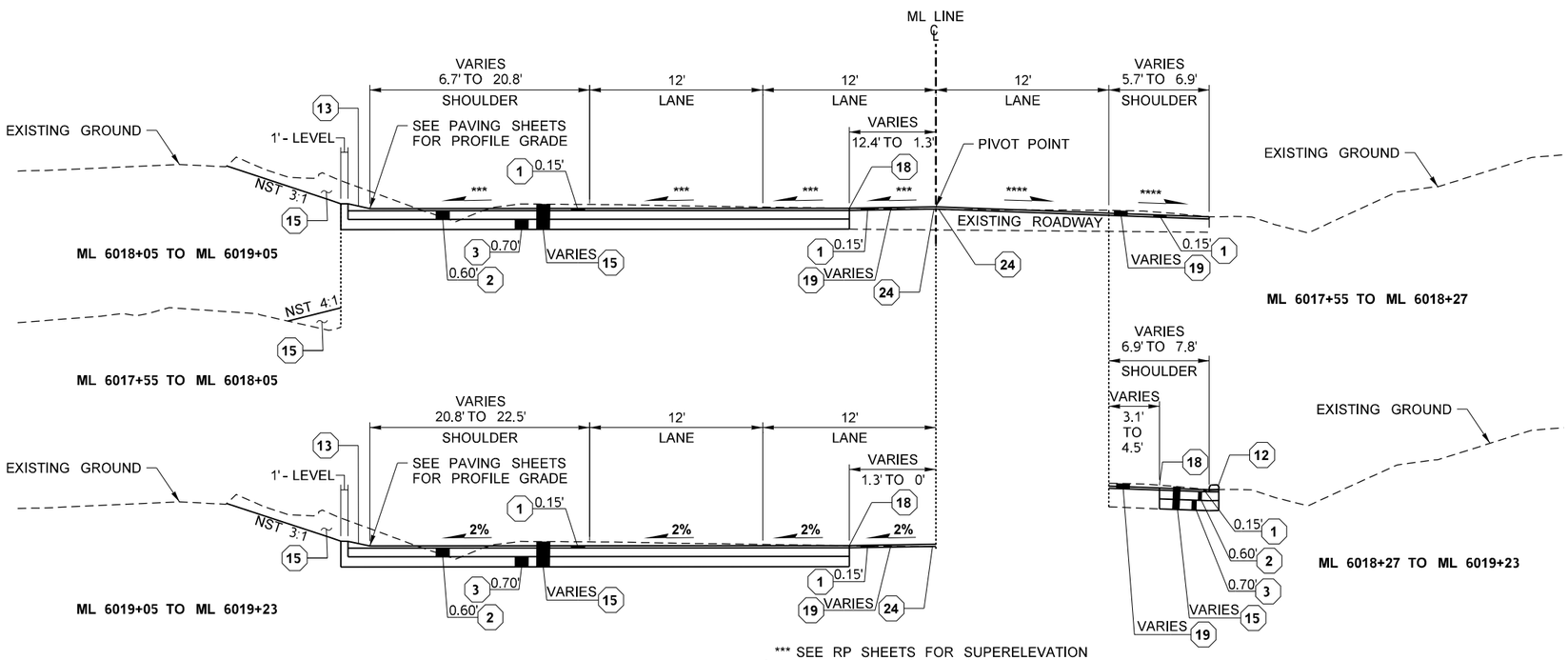

*** SEE RP SHEETS FOR SUPERELEVATION
**** VARIES TO MATCH INTO EXISTING EDGE OF PAVEMENT

ROADWAY SECTION B

ML 6017+55 TO ML 6019+23

GENERAL NOTES:

1. ALL SURFACING AND PAVEMENT DEPTHS ARE COMPACTED DEPTHS AND SHALL NOT EXCEED THE DEPTHS DEFINED IN THE STANDARD SPECIFICATIONS.
2. SEE PAVING PLANS AND PAVING DETAIL SHEETS FOR DRIVEWAY LOCATIONS AND DETAILS.
3. SEE SHEETS DD1-DD7 FOR DRAINAGE DETAILS, INCLUDING DITCHES, PIPE OUTLET PROTECTION, COMPOST AMENDED BIOFILTRATION SWALE (CABS), DETENTION POND, AND MAINTENANCE ACCESS ROAD DETAILS.

CONSTRUCTION NOTES:

- 1 WEARING LIFT, HMA CL. 1/2 IN. PG 58H-22
- 2 HMA CL. 1/2 IN. PG 58H-22
- 3 CRUSHED SURFACING BASE COURSE
- 13 ASPHALT THICKENED EDGE PER DETAIL ON SHEET PVD3
- 15 ROADWAY EXCAVATION INCL. HAUL
- 18 SAWCUT, LOCATION VARIES, SEE SITE PREPARATION SHEETS FOR SAWCUT LOCATIONS
- 19 PLANING BITUMINOUS PAVEMENT
- 24 HMA FOR PRELEVELING CL. 1/2 IN. PG 58H-22

FILE NAME	c:\users\whltekev\documents\d0335726\XL6050_PS_RS_SAM_001.dgn						
TIME	11:54:44 AM				REGION NO. 10	STATE WASH	FED.AID PROJ.NO.
DATE	3/27/2023						
PLOTTED BY	whitekev				JOB NUMBER 22C533		
DESIGNED BY	R. MCCABE						
ENTERED BY	R. MCCABE						
CHECKED BY	K. HOUSE				CONTRACT NO.	LOCATION NO. XL6050	
PROJ. ENGR.	A. AMOS						
REGIONAL ADM.	S. ROARK	REVISION	DATE	BY			

KEVIN L. HOUSER STATE OF WASHINGTON 41824 REGISTERED PROFESSIONAL ENGINEER

SEE SHEET CT1 DATE
P.E. STAMP BOX

DATE
P.E. STAMP BOX

Washington State Department of Transportation

Parametrix

SR 305
SAM SNYDER CREEK
REMOVE FISH BARRIER

ROADWAY SECTIONS

PLAN REF NO RS1

SHEET 7 OF 186 SHEETS

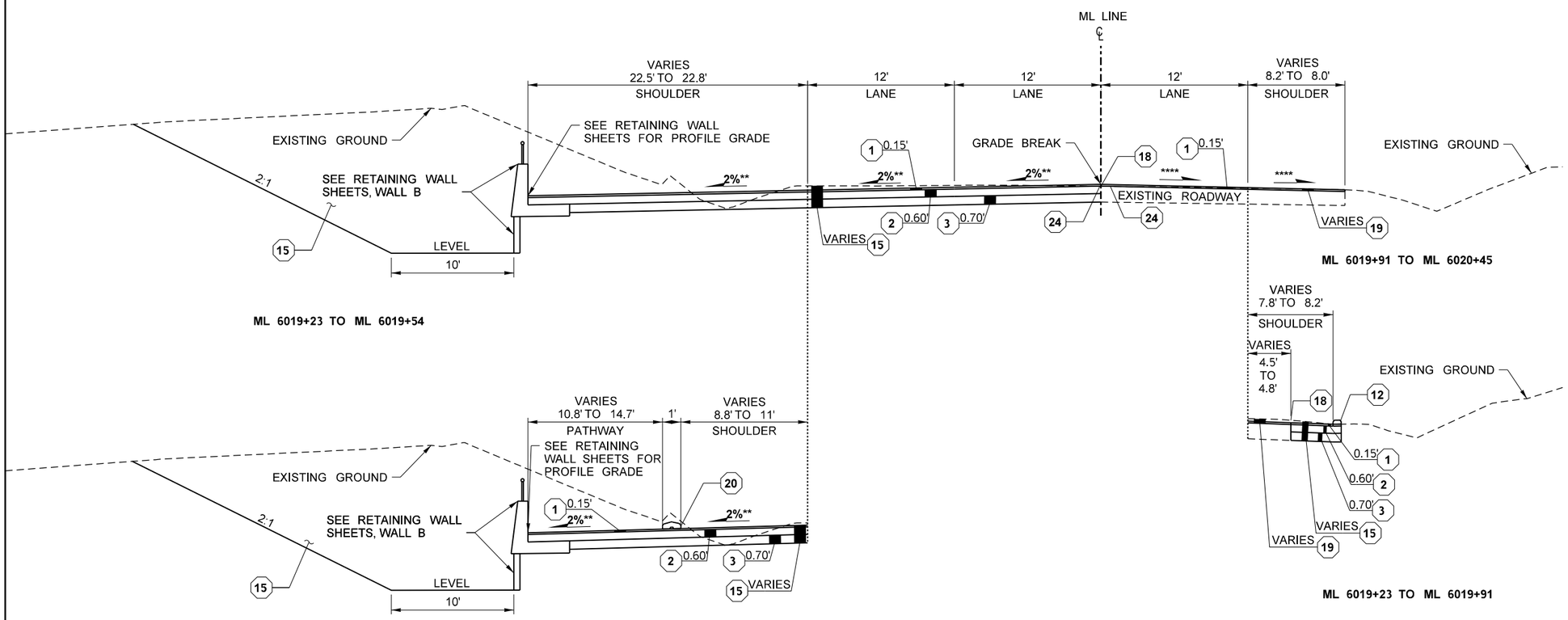

GENERAL NOTES:

1. ALL SURFACING AND PAVEMENT DEPTHS ARE COMPACTED DEPTHS AND SHALL NOT EXCEED THE DEPTHS DEFINED IN THE STANDARD SPECIFICATIONS.
2. SEE PAVING PLANS AND PAVING DETAIL SHEETS FOR DRIVEWAY LOCATIONS AND DETAILS.
3. SEE SHEETS DD1-DD7 FOR DRAINAGE DETAILS, INCLUDING DITCHES, PIPE OUTLET PROTECTION, COMPOST AMENDED BIOFILTRATION SWALE (CABS), DETENTION POND, AND MAINTENANCE ACCESS ROAD DETAILS.

CONSTRUCTION NOTES:

1. WEARING LIFT, HMA CL. 1/2 IN. PG 58H-22
2. HMA CL. 1/2 IN. PG 58H-22
3. CRUSHED SURFACING BASE COURSE
15. ROADWAY EXCAVATION INCL. HAUL
18. SAWCUT, LOCATION VARIES, SEE SITE PREPARATION SHEETS FOR SAWCUT LOCATIONS
19. PLANING BITUMINOUS PAVEMENT
20. PRECAST DUAL FACED SLOPED MOUNTABLE CURB PER WSDOT STANDARD PLAN F-10.64
24. HMA FOR PRELEVELING CL. 1/2 IN. PG 58H-22

** GRADE FROM WALL B PROFILE, SEE WP SHEETS
**** VARIES TO MATCH INTO EXISTING EDGE OF PAVEMENT

ROADWAY SECTION C

ML 6019+23 TO ML 6020+45

NOT TO SCALE

FILE NAME	c:\users\whitekev\documents\d0335726\XL6050_PS_RS_SAM_002.dgn						
TIME	11:54:45 AM				REGION NO. 10	STATE WASH	FED.AID PROJ.NO.
DATE	3/27/2023						
PLOTTED BY	whitekev				JOB NUMBER 22C533		
DESIGNED BY	R. MCCABE						
ENTERED BY	R. MCCABE						
CHECKED BY	K. HOUSE				CONTRACT NO.		LOCATION NO. XL6050
PROJ. ENGR.	A. AMOS						
REGIONAL ADM.	S. ROARK	REVISION	DATE	BY			

KEVIN L. HOUSE, STATE OF WASHINGTON, 41824, REGISTERED PROFESSIONAL ENGINEER
SEE SHEET CT1
DATE
P.E. STAMP BOX

DATE
P.E. STAMP BOX

Washington State Department of Transportation
Parametrix

SR 305
SAM SNYDER CREEK
REMOVE FISH BARRIER

ROADWAY SECTIONS

PLAN REF NO RS2

SHEET 8 OF 186 SHEETS

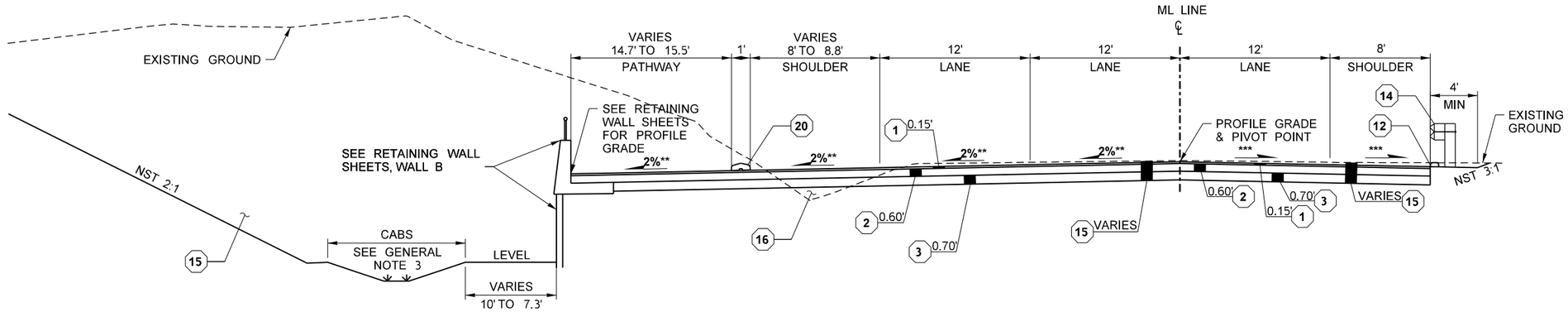

** GRADE FROM WALL B PROFILE, SEE WP SHEETS
*** SEE RP SHEETS FOR SUPERELEVATION

ROADWAY SECTION D

ML 6020+45 TO ML 6021+30

GENERAL NOTES:

1. ALL SURFACING AND PAVEMENT DEPTHS ARE COMPACTED DEPTHS AND SHALL NOT EXCEED THE DEPTHS DEFINED IN THE STANDARD SPECIFICATIONS.
2. SEE PAVING PLANS AND PAVING DETAIL SHEETS FOR DRIVEWAY LOCATIONS AND DETAILS.
3. SEE SHEETS DD1-DD7 FOR DRAINAGE DETAILS, INCLUDING DITCHES, PIPE OUTLET PROTECTION, COMPOST AMENDED BIOFILTRATION SWALE (CABS), DETENTION POND, AND MAINTENANCE ACCESS ROAD DETAILS.

CONSTRUCTION NOTES:

- 1 WEARING LIFT, HMA CL. 1/2 IN. PG 58H-22
- 2 HMA CL. 1/2 IN. PG 58H-22
- 3 CRUSHED SURFACING BASE COURSE
- 12 EXTRUDED CURB TYPE 1 PER WSDOT STANDARD PLAN F-10.42
- 14 BEAM GUARDRAIL TYPE 31 PER WSDOT STANDARD PLAN C-20.10, SEE PAVING PLANS FOR LOCATION
- 15 ROADWAY EXCAVATION INCL. HAUL
- 16 GRAVEL BORROW INCL. HAUL
- 20 PRECAST DUAL FACED SLOPED MOUNTABLE CURB PER WSDOT STANDARD PLAN F-10.64

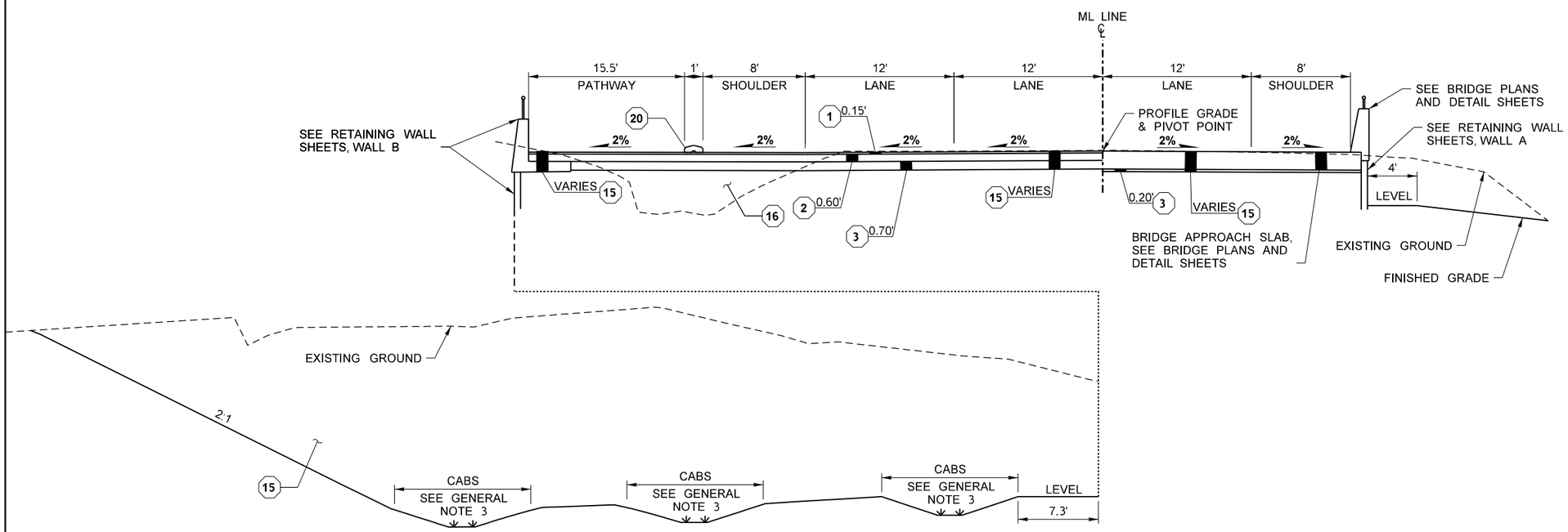

ROADWAY SECTION E

ML 6021+30 TO ML 6021+39

NOT TO SCALE

FILE NAME	c:\users\projectwiseworkingfolder\d0335726\XL6050_PS_RS_SAM_003.dgn
TIME	5:20:12 PM
DATE	4/4/2023
PLOTTED BY	mccabrya
DESIGNED BY	R. MCCABE
ENTERED BY	R. MCCABE
CHECKED BY	K. HOUSE
PROJ. ENGR.	A. AMOS
REGIONAL ADM.	S. ROARK

REVISION	DATE	BY

REGION NO.	STATE	FED.AID PROJ.NO.
10	WASH	
JOB NUMBER 22C533		
CONTRACT NO.		LOCATION NO. XL6050

KEVIN L. HOUSE, STATE OF WASHINGTON, 41524, REGISTERED PROFESSIONAL ENGINEER
SEE SHEET CT1
DATE
P.E. STAMP BOX

DATE
P.E. STAMP BOX

Washington State Department of Transportation
Parametrix

SR 305
SAM SNYDER CREEK
REMOVE FISH BARRIER

ROADWAY SECTIONS

PLAN REF NO RS3

SHEET 9 OF 186 SHEETS

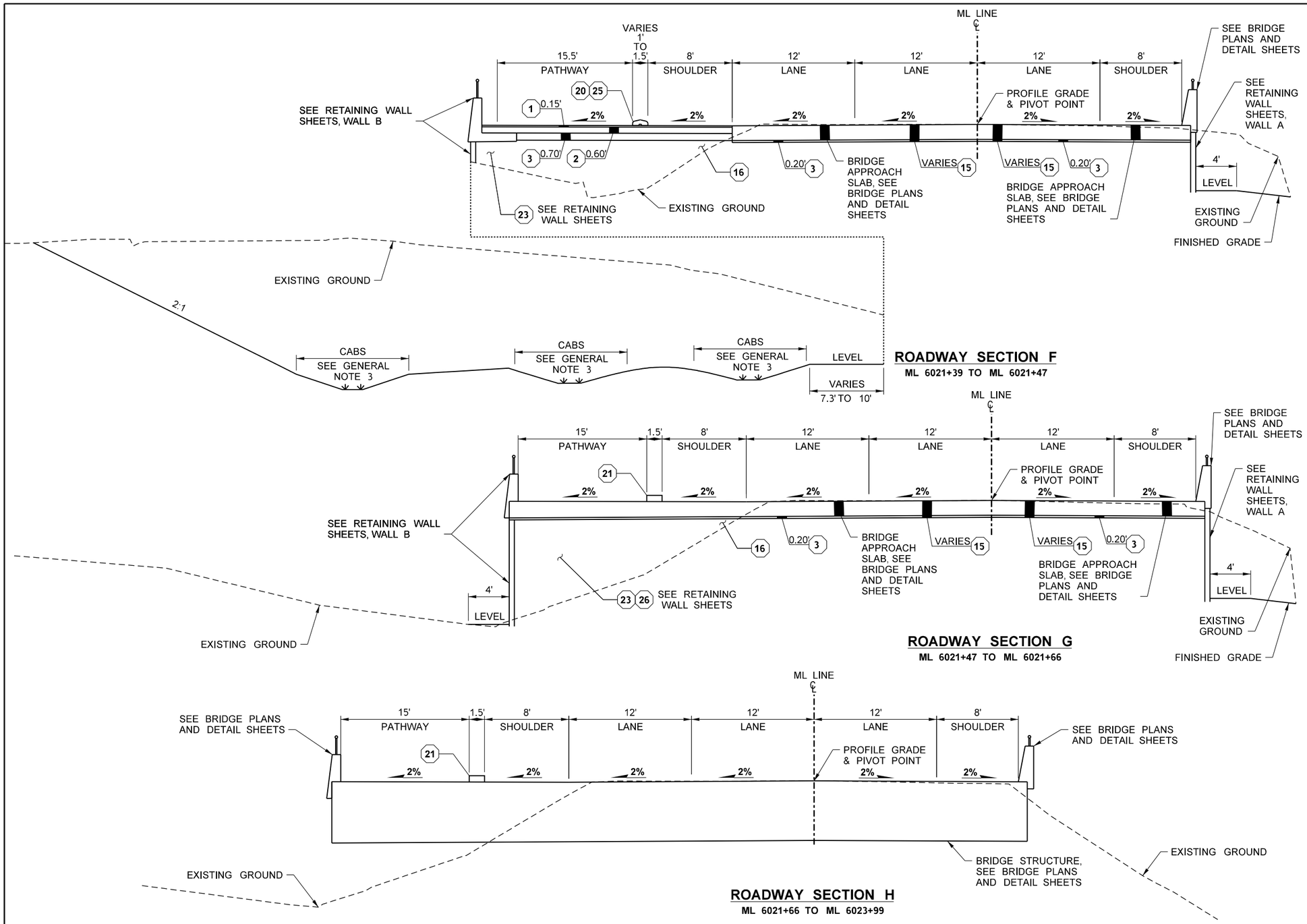

NOT TO SCALE

GENERAL NOTES:

1. ALL SURFACING AND PAVEMENT DEPTHS ARE COMPACTED DEPTHS AND SHALL NOT EXCEED THE DEPTHS DEFINED IN THE STANDARD SPECIFICATIONS.
2. SEE PAVING PLANS AND PAVING DETAIL SHEETS FOR DRIVEWAY LOCATIONS AND DETAILS.
3. SEE SHEETS DD1-DD7 FOR DRAINAGE DETAILS, INCLUDING DITCHES, PIPE OUTLET PROTECTION, COMPOST AMENDED BIOFILTRATION SWALE (CABS), DETENTION POND, AND MAINTENANCE ACCESS ROAD DETAILS.

CONSTRUCTION NOTES:

- (1) WEARING LIFT, HMA CL. 1/2 IN. PG 58H-22
- (2) HMA CL. 1/2 IN. PG 58H-22
- (3) CRUSHED SURFACING BASE COURSE
- (15) ROADWAY EXCAVATION INCL. HAUL
- (16) GRAVEL BORROW INCL. HAUL
- (20) PRECAST DUAL FACED SLOPED MOUNTABLE CURB PER WSDOT STANDARD PLAN F-10.64
- (21) CAST IN PLACE CONCRETE CURB, SEE SHEETS BG37/50
- (23) GRAVEL BACKFILL FOR WALL
- (25) 18"x12" TAPER BLOCK PRECAST DUAL FACED SLOPED MOUNTABLE CURB, SEE PV SHEETS FOR LOCATION AND PVD3 FOR DETAIL
- (26) CELLULAR CONC. CLASS 4

FILE NAME	c:\users\whltekev\documents\d0335726\XL6050_PS_RS_SAM_004.dgn				REGION NO. 10	STATE WASH	FED.AID PROJ.NO.
TIME	11:54:47 AM				JOB NUMBER 22C533		
DATE	3/27/2023				CONTRACT NO.		LOCATION NO. XL6050
PLOTTED BY	whitekev						
DESIGNED BY	R. MCCABE						
ENTERED BY	R. MCCABE						
CHECKED BY	K. HOUSE						
PROJ. ENGR.	A. AMOS						
REGIONAL ADM.	S. ROARK	REVISION	DATE	BY			

KEVIN L. HOUSE, STATE OF WASHINGTON, 41824, REGISTERED PROFESSIONAL ENGINEER
SEE SHEET CT1
DATE
P.E. STAMP BOX

DATE
P.E. STAMP BOX

Washington State Department of Transportation
Parametrix

SR 305
SAM SNYDER CREEK
REMOVE FISH BARRIER

ROADWAY SECTIONS

PLAN REF NO RS4

SHEET 10 OF 186 SHEETS

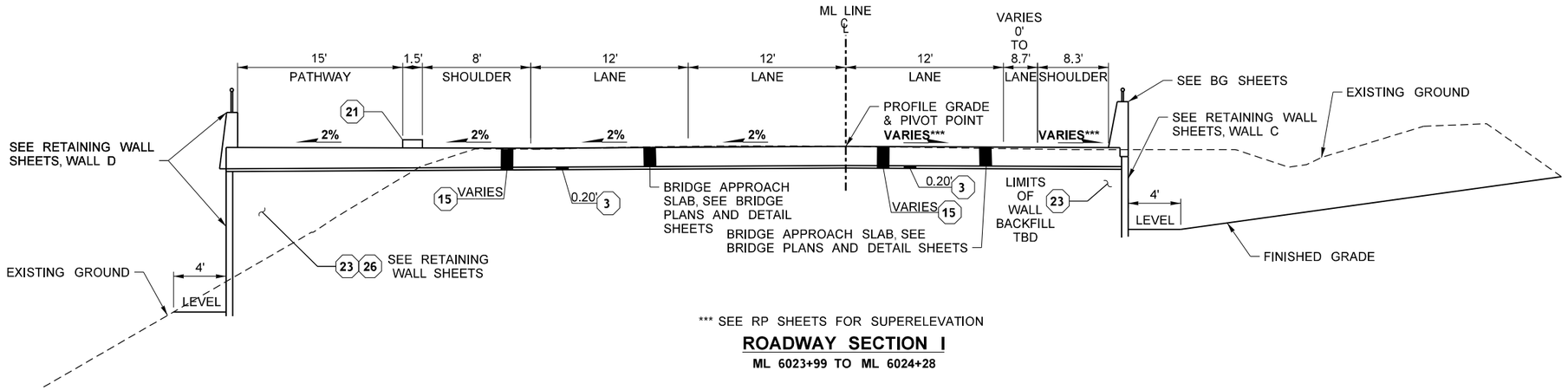

*** SEE RP SHEETS FOR SUPERELEVATION

ROADWAY SECTION I

ML 6023+99 TO ML 6024+28

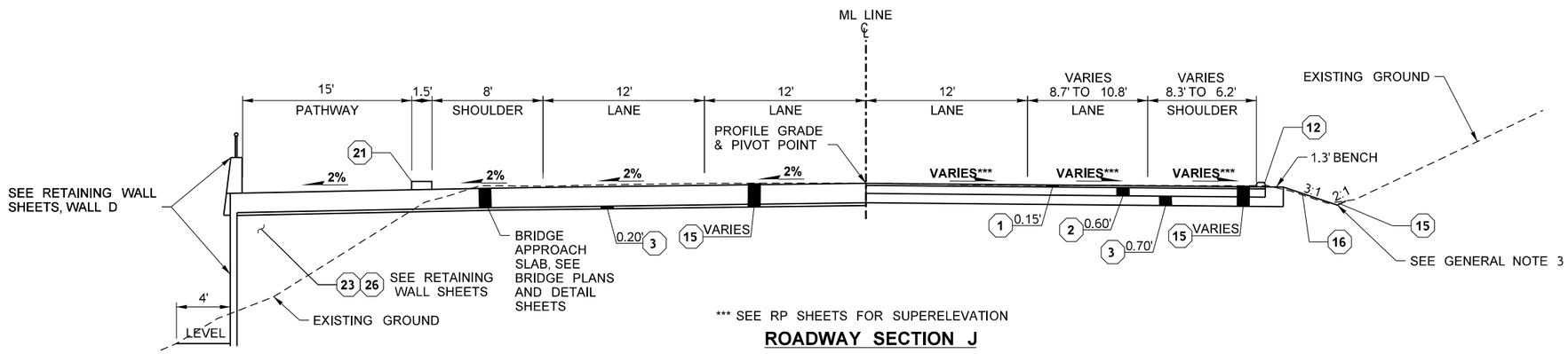

*** SEE RP SHEETS FOR SUPERELEVATION

ROADWAY SECTION J

ML 6024+28 TO ML 6024+36

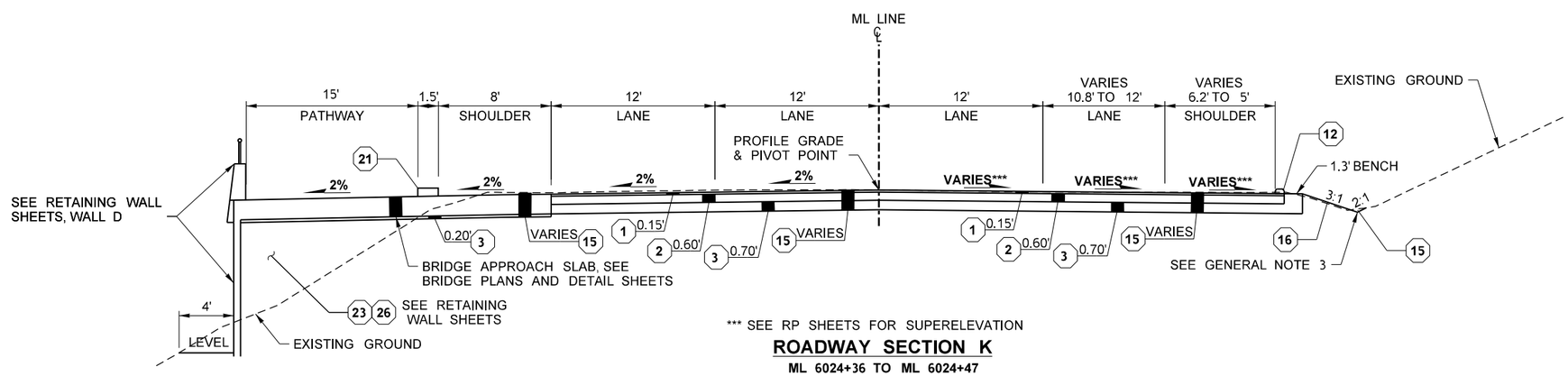

*** SEE RP SHEETS FOR SUPERELEVATION

ROADWAY SECTION K

ML 6024+36 TO ML 6024+47

NOT TO SCALE

GENERAL NOTES:

1. ALL SURFACING AND PAVEMENT DEPTHS ARE COMPACTED DEPTHS AND SHALL NOT EXCEED THE DEPTHS DEFINED IN THE STANDARD SPECIFICATIONS.
2. SEE PAVING PLANS AND PAVING DETAIL SHEETS FOR DRIVEWAY LOCATIONS AND DETAILS.
3. SEE SHEETS DD1-DD7 FOR DRAINAGE DETAILS, INCLUDING DITCHES, PIPE OUTLET PROTECTION, COMPOST AMENDED BIOFILTRATION SWALE (CABS), DETENTION POND, AND MAINTENANCE ACCESS ROAD DETAILS.

CONSTRUCTION NOTES:

- (1) WEARING LIFT, HMA CL. 1/2 IN. PG 58H-22
- (2) HMA CL. 1/2 IN. PG 58H-22
- (3) CRUSHED SURFACING BASE COURSE
- (12) EXTRUDED CURB TYPE 1 PER WSDOT STANDARD PLAN F-10.42
- (15) ROADWAY EXCAVATION INCL. HAUL
- (16) GRAVEL BORROW INCL. HAUL
- (21) CAST IN PLACE CONCRETE CURB, SEE SHEETS BG37/50
- (23) GRAVEL BACKFILL FOR WALL
- (26) CELLULAR CONC. CLASS 4

FILE NAME	c:\users\whltekev\documents\d0335726\XL6050_PS_RS_SAM_005.dgn
TIME	11:54:48 AM
DATE	3/27/2023
PLOTTED BY	whitekev
DESIGNED BY	R. MCCABE
ENTERED BY	R. MCCABE
CHECKED BY	K. HOUSE
PROJ. ENGR.	A. AMOS
REGIONAL ADM.	S. ROARK

REVISION | DATE | BY

REGION NO. 10 | STATE WASH | FED.AID PROJ.NO.

JOB NUMBER 22C533

CONTRACT NO.

LOCATION NO. XL6050

SEE SHEET CT1 DATE
P.E. STAMP BOX

DATE
P.E. STAMP BOX

Washington State Department of Transportation

Parametrix

SR 305
SAM SNYDER CREEK
REMOVE FISH BARRIER

ROADWAY SECTIONS

PLAN REF NO RS5

SHEET 11 OF 186 SHEETS

GENERAL NOTES:

1. ALL SURFACING AND PAVEMENT DEPTHS ARE COMPACTED DEPTHS AND SHALL NOT EXCEED THE DEPTHS DEFINED IN THE STANDARD SPECIFICATIONS.
2. SEE PAVING PLANS AND PAVING DETAIL SHEETS FOR DRIVEWAY LOCATIONS AND DETAILS.
3. SEE SHEETS DD1-DD7 FOR DRAINAGE DETAILS, INCLUDING DITCHES, PIPE OUTLET PROTECTION, COMPOST AMENDED BIOFILTRATION SWALE (CABS), DETENTION POND, AND MAINTENANCE ACCESS ROAD DETAILS.

CONSTRUCTION NOTES:

- (1) WEARING LIFT, HMA CL. 1/2 IN. PG 58H-22
- (2) HMA CL. 1/2 IN. PG 58H-22
- (3) CRUSHED SURFACING BASE COURSE
- (15) ROADWAY EXCAVATION INCL. HAUL
- (16) GRAVEL BORROW INCL. HAUL
- (18) SAWCUT, LOCATION VARIES, SEE SITE PREPARATION SHEETS FOR SAWCUT LOCATIONS
- (19) PLANING BITUMINOUS PAVEMENT
- (20) PRECAST DUAL FACED SLOPED MOUNTABLE CURB PER WSDOT STANDARD PLAN F-10.64
- (23) GRAVEL BACKFILL FOR WALL
- (25) 18"x12" TAPER BLOCK PRECAST DUAL FACED SLOPED MOUNTABLE CURB, SEE PV SHEETS FOR LOCATION AND PVD3 FOR DETAIL
- (26) CELLULAR CONC. CLASS 4

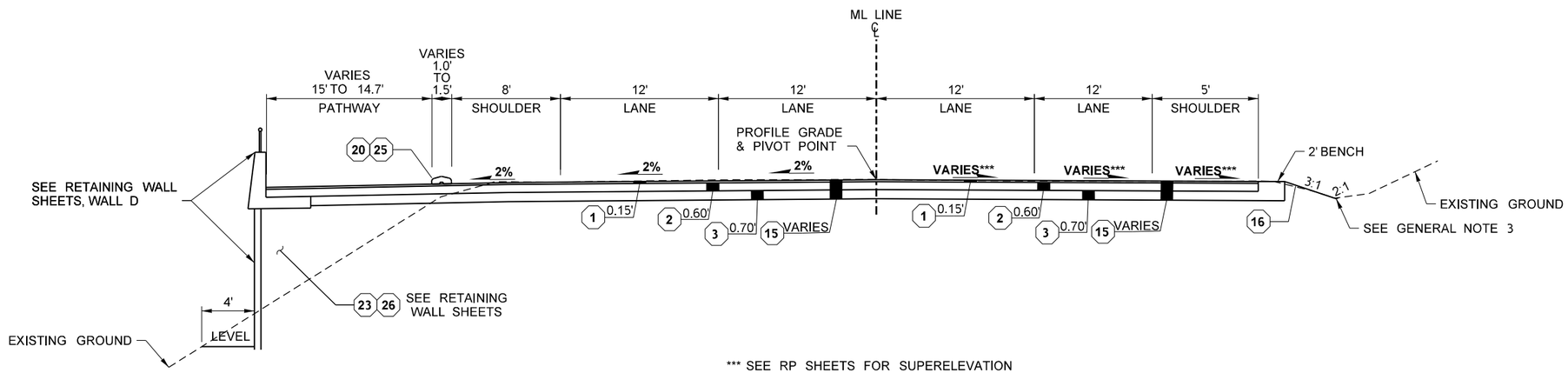

*** SEE RP SHEETS FOR SUPERELEVATION

ROADWAY SECTION L

ML 6024+47 TO ML 6024+70

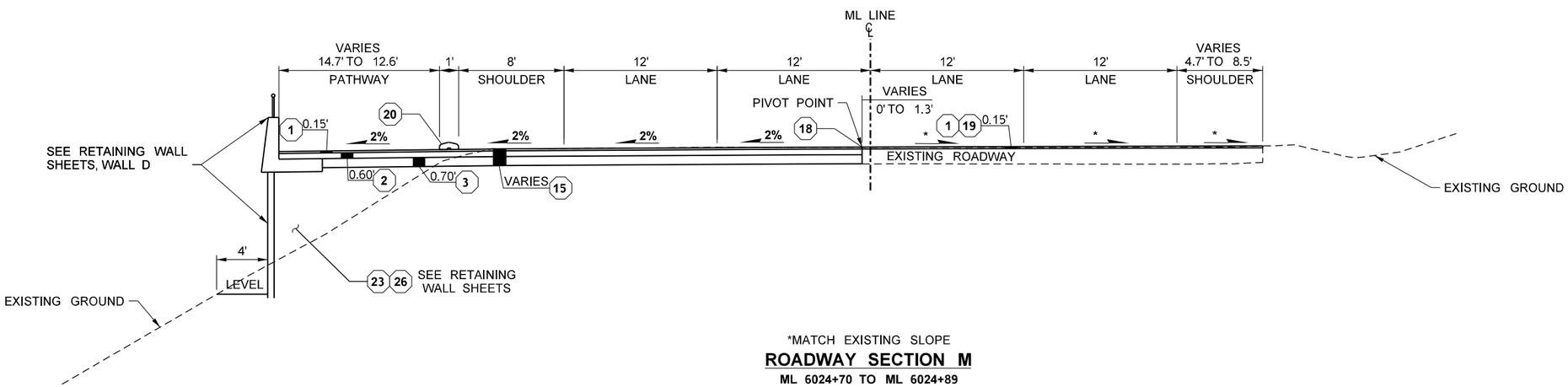

*MATCH EXISTING SLOPE

ROADWAY SECTION M

ML 6024+70 TO ML 6024+89

NOT TO SCALE

FILE NAME	c:\users\whltekev\documents\d0335726\XL6050_PS_RS_SAM_006.dgn						
TIME	11:54:49 AM				REGION NO. 10	STATE WASH	FED.AID PROJ.NO.
DATE	3/27/2023						
PLOTTED BY	whitekev				JOB NUMBER 22C533		
DESIGNED BY	R. MCCABE						
ENTERED BY	R. MCCABE						
CHECKED BY	K. HOUSE				CONTRACT NO.		LOCATION NO. XL6050
PROJ. ENGR.	A. AMOS						
REGIONAL ADM.	S. ROARK	REVISION	DATE	BY			

KEVIN L. HOUSE STATE OF WASHINGTON 51824 REGISTERED PROFESSIONAL ENGINEER

SEE SHEET CT1 DATE

P.E. STAMP BOX

P.E. STAMP BOX DATE

Washington State Department of Transportation

Parametrix

SR 305
SAM SNYDER CREEK
REMOVE FISH BARRIER

ROADWAY SECTIONS

PLAN REF NO RS6

SHEET 12 OF 186 SHEETS

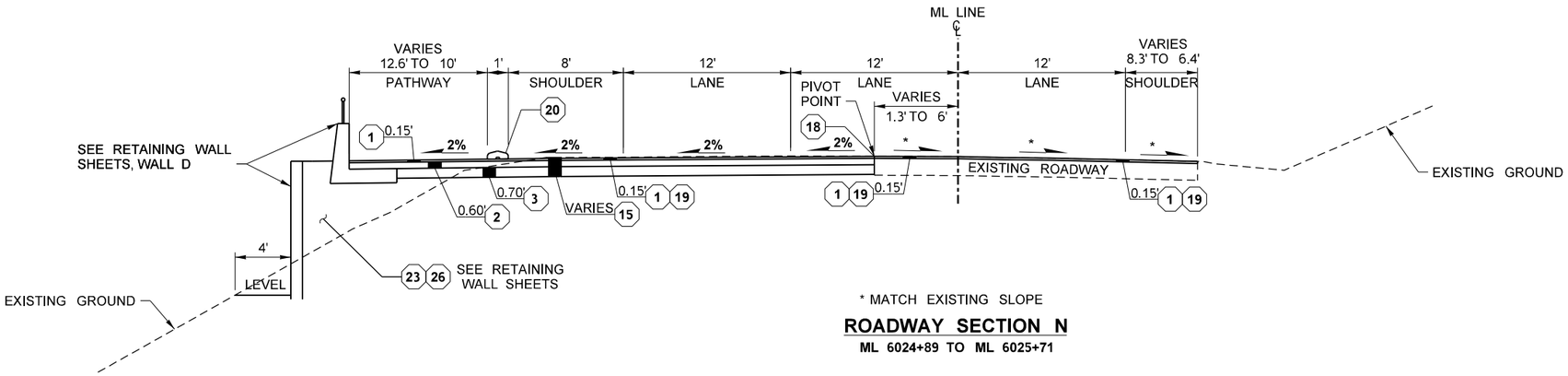

ROADWAY SECTION N

ML 6024+89 TO ML 6025+71

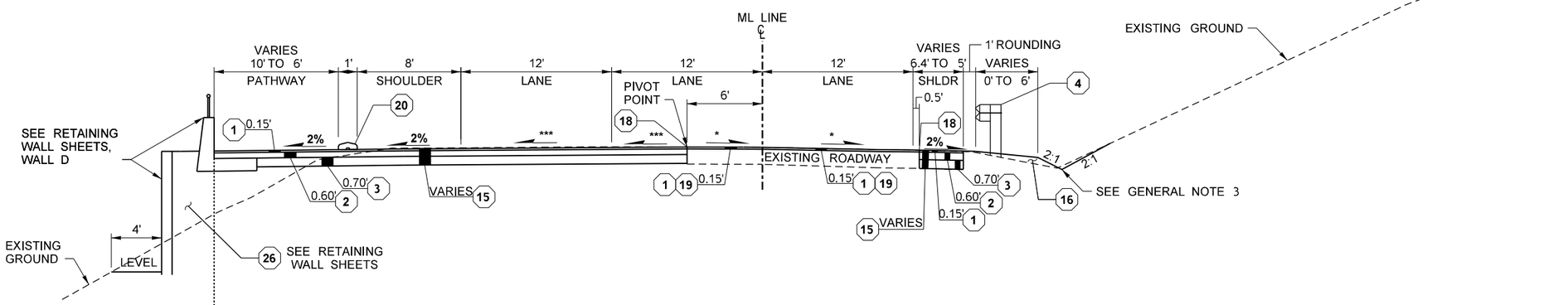

* MATCH EXISTING SLOPE
*** SEE RP SHEETS FOR SUPERELEVATION

ROADWAY SECTION O

ML 6025+71 TO ML 6026+44

GENERAL NOTES:

1. ALL SURFACING AND PAVEMENT DEPTHS ARE COMPACTED DEPTHS AND SHALL NOT EXCEED THE DEPTHS DEFINED IN THE STANDARD SPECIFICATIONS.
2. SEE PAVING PLANS AND PAVING DETAIL SHEETS FOR DRIVEWAY LOCATIONS AND DETAILS.
3. SEE SHEETS DD1-DD7 FOR DRAINAGE DETAILS, INCLUDING DITCHES, PIPE OUTLET PROTECTION, COMPOST AMENDED BIOFILTRATION SWALE (CABS), DETENTION POND, AND MAINTENANCE ACCESS ROAD DETAILS.

CONSTRUCTION NOTES:

1. WEARING LIFT, HMA CL. 1/2 IN. PG 58H-22
2. HMA CL. 1/2 IN. PG 58H-22
3. CRUSHED SURFACING BASE COURSE
4. BEAM GUARDRAIL TYPE 31 - 8 FT. LONG POST PER WSDOT STANDARD PLAN C-20.10, SEE PAVING PLANS FOR LOCATION
12. EXTRUDED CURB TYPE 1 PER WSDOT STANDARD PLAN F-10.42
14. BEAM GUARDRAIL TYPE 31 PER WSDOT STANDARD PLAN C-20.10, SEE PAVING PLANS FOR LOCATION
15. ROADWAY EXCAVATION INCL. HAUL
16. GRAVEL BORROW INCL. HAUL
18. SAWCUT, LOCATION VARIES, SEE SITE PREPARATION SHEETS FOR SAWCUT LOCATIONS
19. PLANING BITUMINOUS PAVEMENT
20. PRECAST DUAL FACED SLOPED MOUNTABLE CURB PER WSDOT STANDARD PLAN F-10.64
22. GRAVEL BORROW FOR STRUCTURAL EARTH WALL INCL. HAUL
23. GRAVEL BACKFILL FOR WALL
26. CELLULAR CONC. CLASS 4
27. STRUCTURE EXCAVATION CLASS A INCL. HAUL

NOT TO SCALE

FILE NAME	c:\users\whitekev\documents\d0335726\XL6050_PS_RS_SAM_007.dgn
TIME	11:54:51 AM
DATE	3/27/2023
PLOTTED BY	whitekev
DESIGNED BY	R. MCCABE
ENTERED BY	R. MCCABE
CHECKED BY	K. HOUSE
PROJ. ENGR.	A. AMOS
REGIONAL ADM.	S. ROARK

REVISION | DATE | BY

REGION NO. 10 | STATE WASH | FED.AID PROJ.NO.

JOB NUMBER 22C533

CONTRACT NO.

LOCATION NO. XL6050

SEE SHEET CT1 DATE

P.E. STAMP BOX

P.E. STAMP BOX DATE

Washington State Department of Transportation

Parametrix

SR 305
SAM SNYDER CREEK
REMOVE FISH BARRIER

ROADWAY SECTIONS

PLAN REF NO RS7

SHEET 13 OF 186 SHEETS

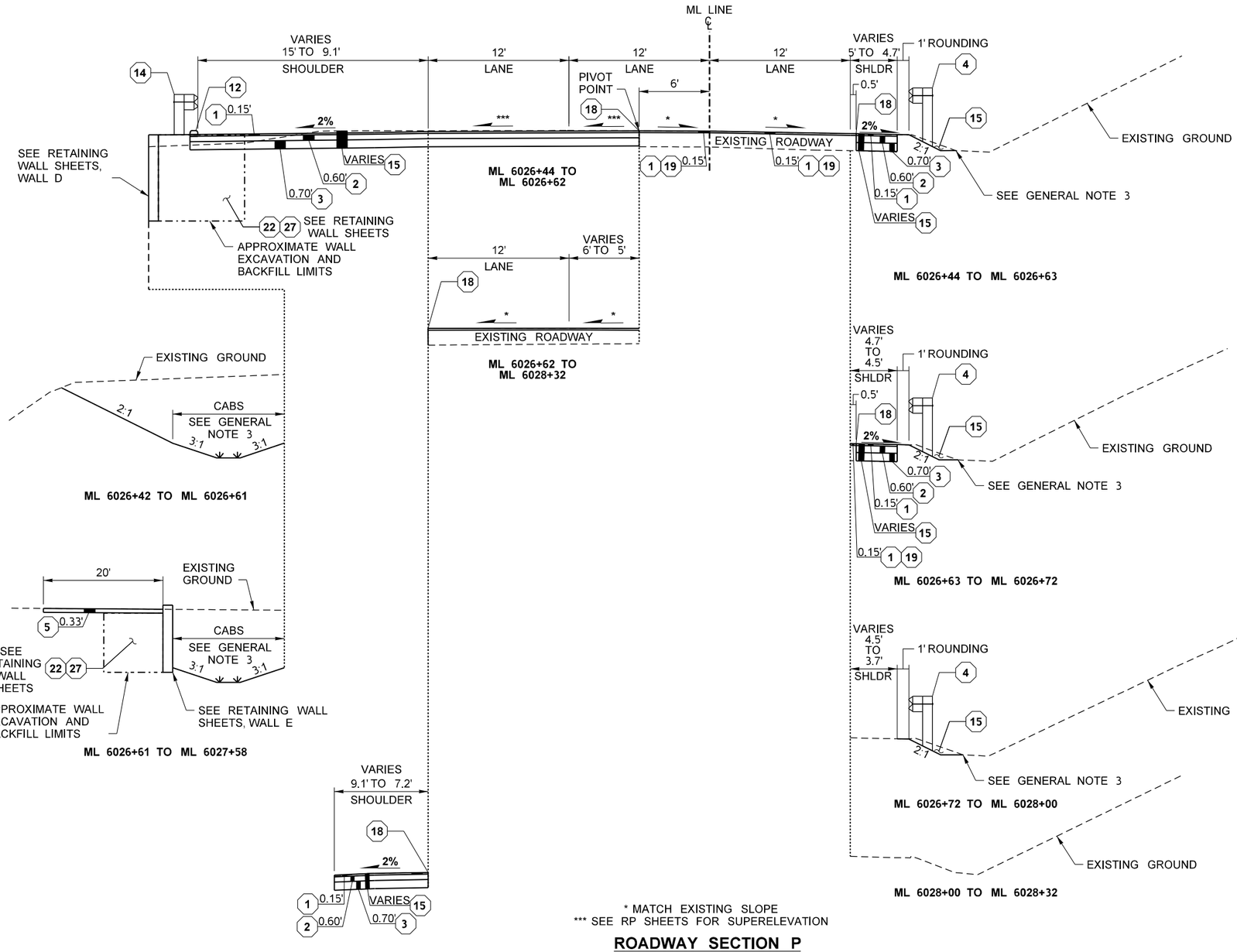

* MATCH EXISTING SLOPE
*** SEE RP SHEETS FOR SUPERELEVATION

ROADWAY SECTION P

ML 6026+44 TO ML 6028+32

NOT TO SCALE

GENERAL NOTES:

1. ALL SURFACING AND PAVEMENT DEPTHS ARE COMPACTED DEPTHS AND SHALL NOT EXCEED THE DEPTHS DEFINED IN THE STANDARD SPECIFICATIONS.
2. SEE PAVING PLANS AND PAVING DETAIL SHEETS FOR DRIVEWAY LOCATIONS AND DETAILS.
3. SEE SHEETS DD1-DD7 FOR DRAINAGE DETAILS, INCLUDING DITCHES, PIPE OUTLET PROTECTION, COMPOST AMENDED BIOFILTRATION SWALE (CABS), DETENTION POND, AND MAINTENANCE ACCESS ROAD DETAILS.

CONSTRUCTION NOTES:

- (1) WEARING LIFT, HMA CL. 1/2 IN. PG 58H-22
- (2) HMA CL. 1/2 IN. PG 58H-22
- (3) CRUSHED SURFACING BASE COURSE
- (4) BEAM GUARDRAIL TYPE 31 - 8 FT. LONG POST PER WSDOT STANDARD PLAN C-20.10, SEE PAVING PLANS FOR LOCATION
- (5) CRUSHED SURFACING TOP COURSE
- (12) EXTRUDED CURB TYPE 1 PER WSDOT STANDARD PLAN F-10.42
- (14) BEAM GUARDRAIL TYPE 31 PER WSDOT STANDARD PLAN C-20.10, SEE PAVING PLANS FOR LOCATION
- (15) ROADWAY EXCAVATION INCL. HAUL
- (16) GRAVEL BORROW INCL. HAUL
- (18) SAWCUT, LOCATION VARIES, SEE SITE PREPARATION SHEETS FOR SAWCUT LOCATIONS
- (19) PLANING BITUMINOUS PAVEMENT
- (22) GRAVEL BORROW FOR STRUCTURAL EARTH WALL INCL. HAUL
- (27) STRUCTURE EXCAVATION CLASS A INCL. HAUL

FILE NAME	c:\users\whltekev\documents\d0335726\XL6050_PS_RS_SAM_008.dgn				REGION NO. 10	STATE WASH	FED.AID PROJ.NO.
TIME	11:54:52 AM				JOB NUMBER 22C533		
DATE	3/27/2023						
PLOTTED BY	whitekev						
DESIGNED BY	R. MCCABE						
ENTERED BY	R. MCCABE						
CHECKED BY	K. HOUSE				CONTRACT NO.		LOCATION NO. XL6050
PROJ. ENGR.	A. AMOS						
REGIONAL ADM.	S. ROARK	REVISION	DATE	BY			

KEVIN L. HOUSE, STATE OF WASHINGTON, 41824, REGISTERED PROFESSIONAL ENGINEER
SEE SHEET CT1
DATE
P.E. STAMP BOX

DATE
P.E. STAMP BOX

Washington State Department of Transportation

Parametrix

SR 305
SAM SNYDER CREEK
REMOVE FISH BARRIER

ROADWAY SECTIONS

PLAN REF NO RS8

SHEET 14 OF 186 SHEETS

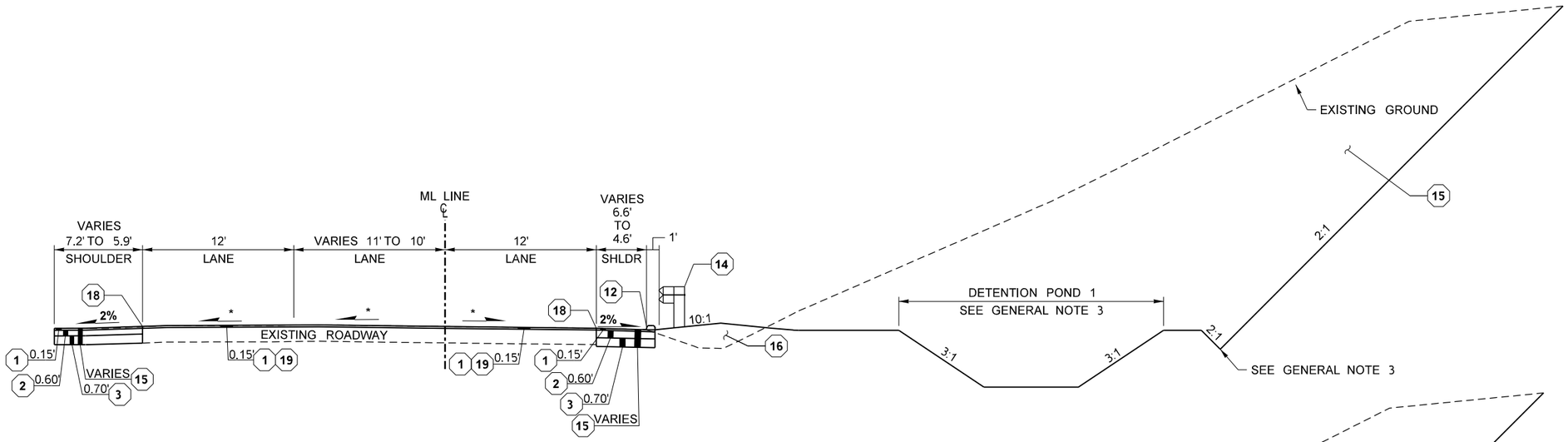

*MATCH EXISTING SLOPE

ROADWAY SECTION Q

ML 6028+32 TO ML 6028+85

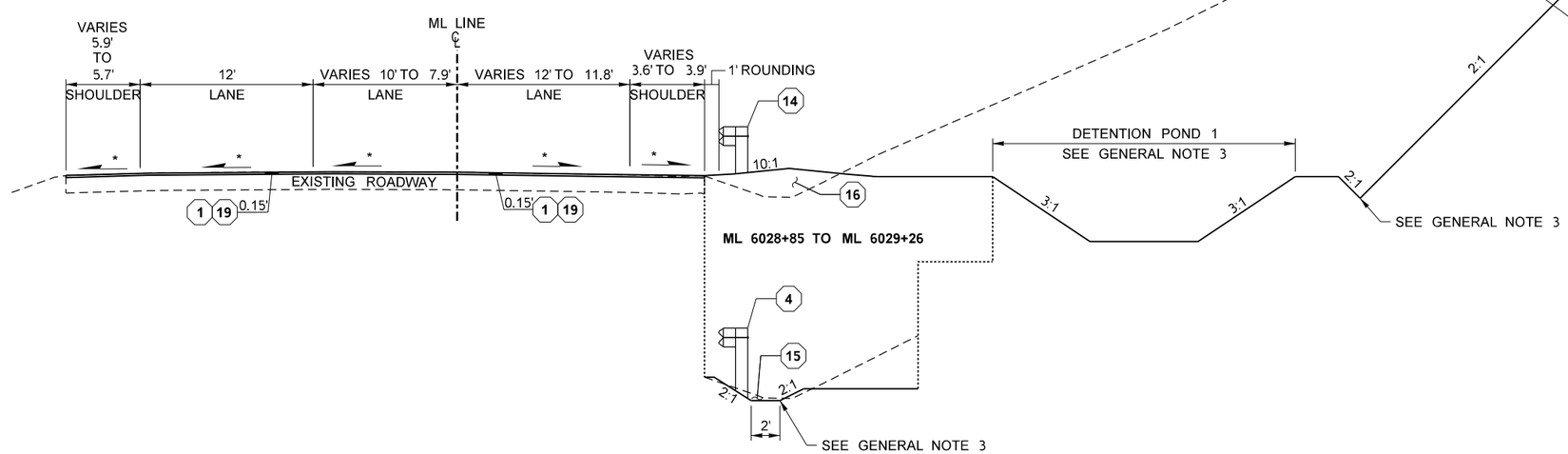

ML 6028+85 TO ML 6029+26

ML 6029+26 TO ML 6029+75

*MATCH EXISTING SLOPE

ROADWAY SECTION R

ML 6028+85 TO ML 6029+75

GENERAL NOTES:

1. ALL SURFACING AND PAVEMENT DEPTHS ARE COMPACTED DEPTHS AND SHALL NOT EXCEED THE DEPTHS DEFINED IN THE STANDARD SPECIFICATIONS.
2. SEE PAVING PLANS AND PAVING DETAIL SHEETS FOR DRIVEWAY LOCATIONS AND DETAILS.
3. SEE SHEETS DD1-DD7 FOR DRAINAGE DETAILS, INCLUDING DITCHES, PIPE OUTLET PROTECTION, COMPOST AMENDED BIOFILTRATION SWALE (CABS), DETENTION POND, AND MAINTENANCE ACCESS ROAD DETAILS.

CONSTRUCTION NOTES:

1. WEARING LIFT, HMA CL. 1/2 IN. PG 58H-22
2. HMA CL. 1/2 IN. PG 58H-22
3. CRUSHED SURFACING BASE COURSE
4. BEAM GUARDRAIL TYPE 31 - 8 FT. LONG POST PER WSDOT STANDARD PLAN C-20.10, SEE PAVING PLANS FOR LOCATION
12. EXTRUDED CURB TYPE 1 PER WSDOT STANDARD PLAN F-10.42
14. BEAM GUARDRAIL TYPE 31 PER WSDOT STANDARD PLAN C-20.10, SEE PAVING PLANS FOR LOCATION
15. ROADWAY EXCAVATION INCL. HAUL
16. GRAVEL BORROW INCL. HAUL
18. SAWCUT, LOCATION VARIES, SEE SITE PREPARATION SHEETS FOR SAWCUT LOCATIONS
19. PLANING BITUMINOUS PAVEMENT

NOT TO SCALE

FILE NAME	c:\users\whltekev\documents\d0335726\XL6050_PS_RS_SAM_009.dgn
TIME	11:54:53 AM
DATE	3/27/2023
PLOTTED BY	whitekev
DESIGNED BY	R. MCCABE
ENTERED BY	R. MCCABE
CHECKED BY	K. HOUSE
PROJ. ENGR.	A. AMOS
REGIONAL ADM.	S. ROARK

REVISION	DATE	BY

REGION NO.	STATE	FED.AID PROJ.NO.
10	WASH	
JOB NUMBER 22C533		
CONTRACT NO.		LOCATION NO. XL6050

KEVIN L. HOUSER STATE OF WASHINGTON 41824 REGISTERED PROFESSIONAL ENGINEER

SEE SHEET CT1 DATE

P.E. STAMP BOX

DATE

P.E. STAMP BOX

Washington State Department of Transportation

Parametrix

SR 305
SAM SNYDER CREEK
REMOVE FISH BARRIER

ROADWAY SECTIONS

PLAN REF NO **RS9**

SHEET 15 OF 186 SHEETS

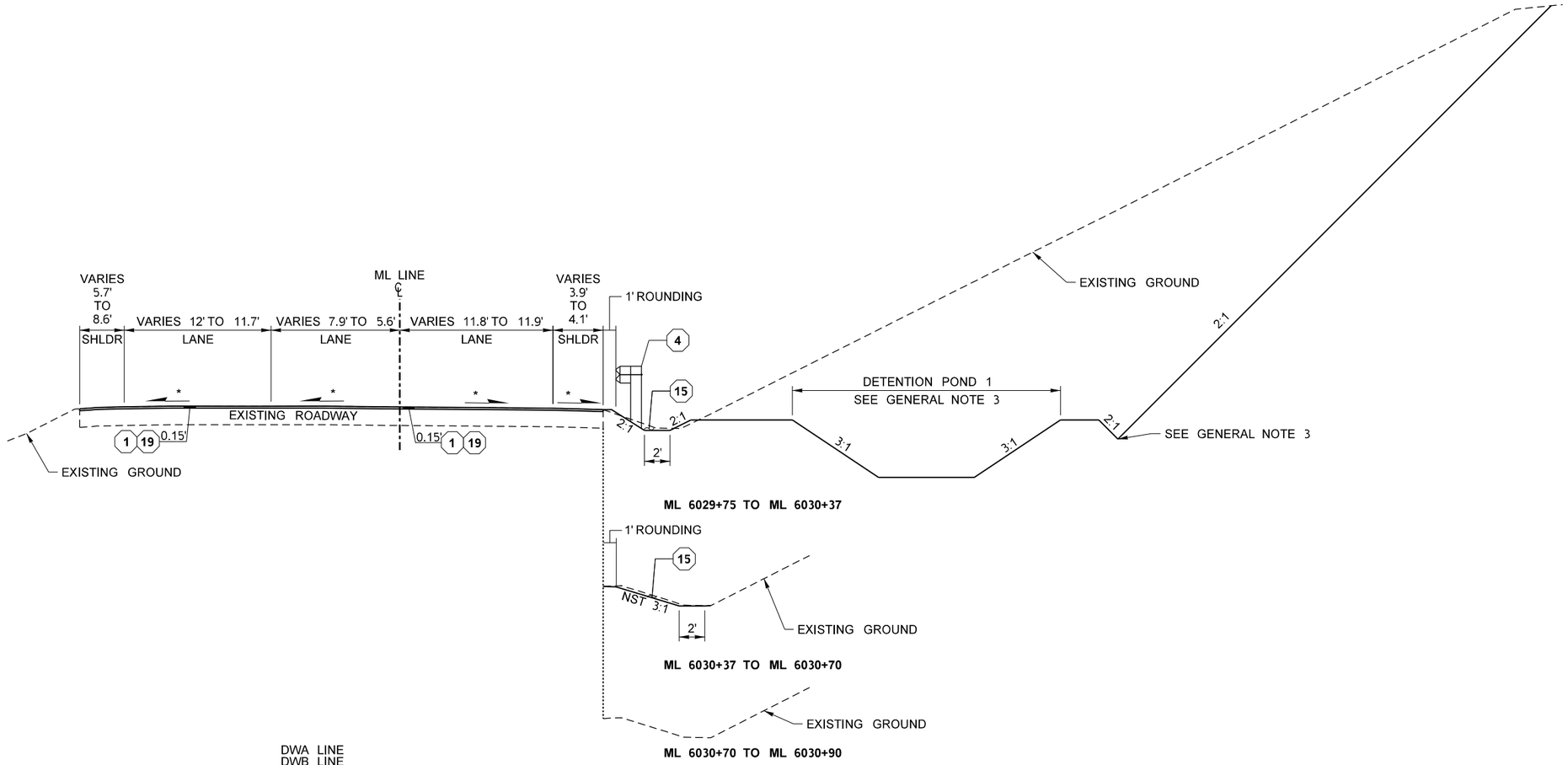

*MATCH EXISTING SLOPE

ROADWAY SECTION S

ML 6029+75 TO ML 6030+90

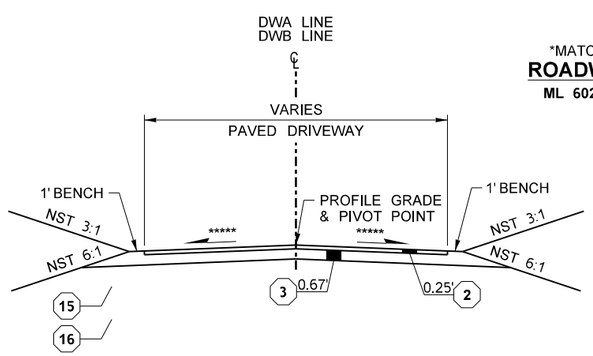

***** SEE PVD SHEETS FOR CROSS SLOPES AND DRIVEWAY DETAILS

ROADWAY SECTION T

DWA 40+20 TO DWA 40+45
DWB 50+31 TO DWB 50+50

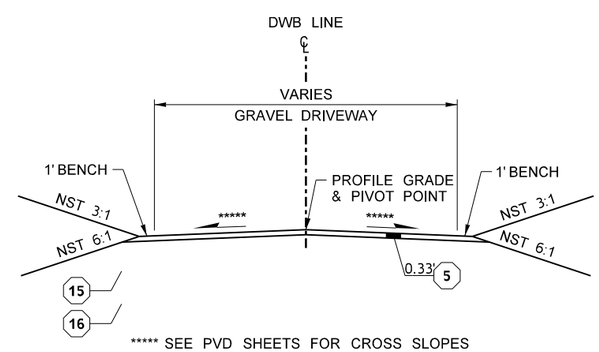

***** SEE PVD SHEETS FOR CROSS SLOPES AND DRIVEWAY DETAILS

ROADWAY SECTION U

DWB 40+45 TO DWB 40+81

GENERAL NOTES:

1. ALL SURFACING AND PAVEMENT DEPTHS ARE COMPACTED DEPTHS AND SHALL NOT EXCEED THE DEPTHS DEFINED IN THE STANDARD SPECIFICATIONS.
2. SEE PAVING PLANS AND PAVING DETAIL SHEETS FOR DRIVEWAY LOCATIONS AND DETAILS.
3. SEE SHEETS DD1-DD7 FOR DRAINAGE DETAILS, INCLUDING DITCHES, PIPE OUTLET PROTECTION, COMPOST AMENDED BIOFILTRATION SWALE (CABS), DETENTION POND, AND MAINTENANCE ACCESS ROAD DETAILS.

CONSTRUCTION NOTES:

1. WEARING LIFT, HMA CL. 1/2 IN. PG 58H-22
2. HMA CL. 1/2 IN. PG 58H-22
3. CRUSHED SURFACING BASE COURSE
4. BEAM GUARDRAIL TYPE 31 - 8 FT. LONG POST PER WSDOT STANDARD PLAN C-20.10, SEE PAVING PLANS FOR LOCATION
5. CRUSHED SURFACING TOP COURSE
15. ROADWAY EXCAVATION INCL. HAUL
16. GRAVEL BORROW INCL. HAUL
19. PLANING BITUMINOUS PAVEMENT

NOT TO SCALE

FILE NAME	c:\users\whltekev\documents\d0335726\XL6050_PS_RS_SAM_010.dgn
TIME	11:54:54 AM
DATE	3/27/2023
PLOTTED BY	whitekev
DESIGNED BY	R. MCCABE
ENTERED BY	R. MCCABE
CHECKED BY	K. HOUSE
PROJ. ENGR.	A. AMOS
REGIONAL ADM.	S. ROARK

REVISION	DATE	BY

REGION NO.	STATE	FED.AID PROJ.NO.
10	WASH	
JOB NUMBER 22C533		
CONTRACT NO.		LOCATION NO. XL6050

KEVIN L. HOUSE STATE OF WASHINGTON 51824 REGISTERED PROFESSIONAL ENGINEER

SEE SHEET CT1
DATE
P.E. STAMP BOX

DATE
P.E. STAMP BOX

Washington State Department of Transportation

Parametrix

SR 305
SAM SNYDER CREEK
REMOVE FISH BARRIER

ROADWAY SECTIONS

PLAN REF NO RS10

SHEET 16 OF 186 SHEETS

T.26N. R.2E. W.M. SEC. 31

CURVE DATA					
P.I. STATION	DELTA	RADIUS	TANGENT	LENGTH	S
SA 108+31.86	04°28'56.4" LT	1000.00'	39.14'	78.23'	-
SA 109+03.88	02°30'54.2" RT	1500.00'	32.93'	65.84'	-

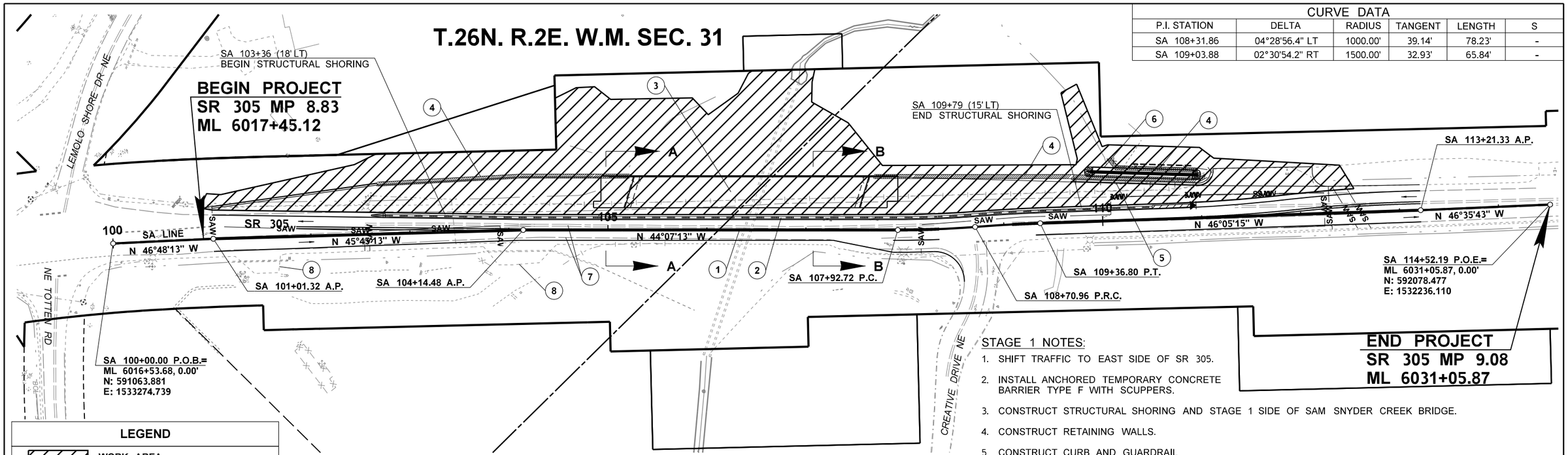

LEGEND

- WORK AREA
- TEMPORARY IMPACT ATTENUATOR
- TEMPORARY BARRIER
- SAW — SAWCUT
- TRAVEL DIRECTION
- BARRIER TERMINAL
- (#) NOTE

GENERAL NOTES:

1. THESE STAGING PLANS ARE INTENDED TO IDENTIFY SIGNIFICANT ITEMS OF WORK WITH EACH STAGE. THE CONTRACTOR IS RESPONSIBLE FOR STAGING AND PERFORMING THE WORK IN ACCORDANCE WITH THE CONTRACT REQUIREMENTS.
2. REFER TO STANDARD SPECIFICATION 1-07.23(1) FOR MINIMUM OFFSETS TO DROP-OFFS.

STAGE 1 CONSTRUCTION

CONSTRUCT WEST SIDE OF BRIDGE

STAGE 1 NOTES:

1. SHIFT TRAFFIC TO EAST SIDE OF SR 305.
2. INSTALL ANCHORED TEMPORARY CONCRETE BARRIER TYPE F WITH SCUPPERS.
3. CONSTRUCT STRUCTURAL SHORING AND STAGE 1 SIDE OF SAM SNYDER CREEK BRIDGE.
4. CONSTRUCT RETAINING WALLS.
5. CONSTRUCT CURB AND GUARDRAIL.
6. CONSTRUCT COMPOST-AMENDED BIOFILTRATION SWALES (CABS).
7. ALL PAVEMENT MARKINGS AND RUMBLE STRIPS THAT CONFLICT WITH TEMPORARY CHANNELIZATION SHALL BE REMOVED.
8. MAINTAIN ACCESS TO DRIVEWAYS.
9. SEE SHEET AL1 FOR PROJECT DATUM CONVERSION PROCESS.

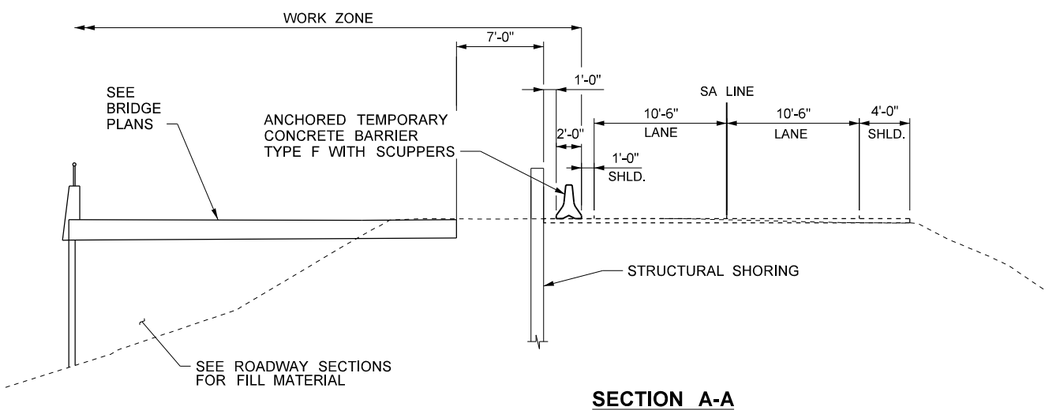

SECTION A-A
NOT TO SCALE

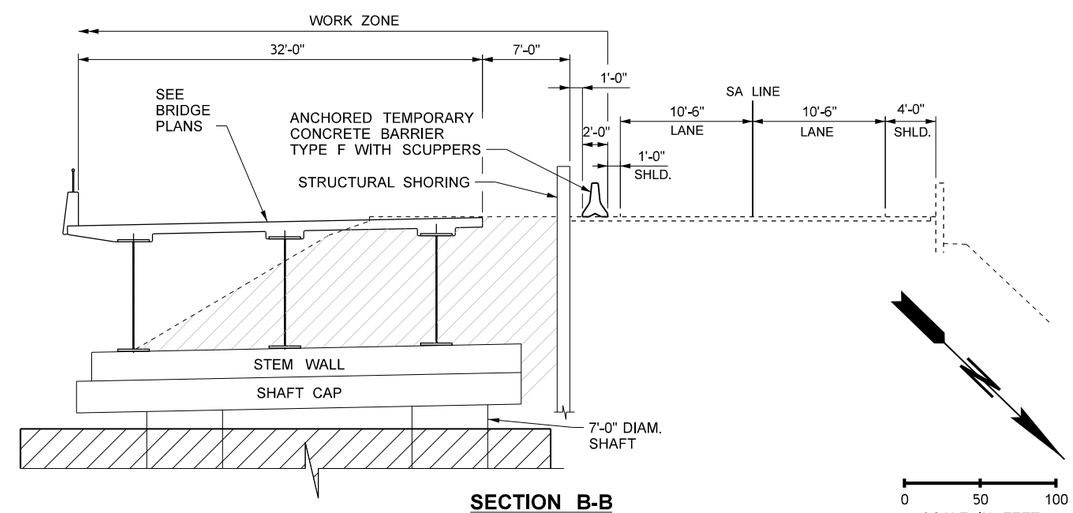

SECTION B-B
NOT TO SCALE

FILE NAME	c:\users\projectwlseworkingfolder\d0335728\XL6050_PS_SU_SAM_001.dgn				REGION NO. 10	STATE WASH	FED.AID PROJ.NO.
TIME	6:36:11 PM				JOB NUMBER 22C533		
DATE	4/4/2023				CONTRACT NO.		LOCATION NO. XL6050
PLOTTED BY	mccabrya						
DESIGNED BY	C. JOHNSON						
ENTERED BY	K. WHITEHOUSE						
CHECKED BY	K. HOUSE						
PROJ. ENGR.	A. AMOS						
REGIONAL ADM.	S. ROARK	REVISION	DATE	BY			

KEVIN L. HOUSE, STATE OF WASHINGTON, 41824, REGISTERED PROFESSIONAL ENGINEER
SEE SHEET CT1
DATE
P.E. STAMP BOX

DATE
P.E. STAMP BOX

Washington State Department of Transportation
Parametrix

SR 305
SAM SNYDER CREEK
REMOVE FISH BARRIER

STAGING PLAN

PLAN REF NO
SU1

SHEET 17 OF 186 SHEETS

T.26N. R.2E. W.M. SEC. 31

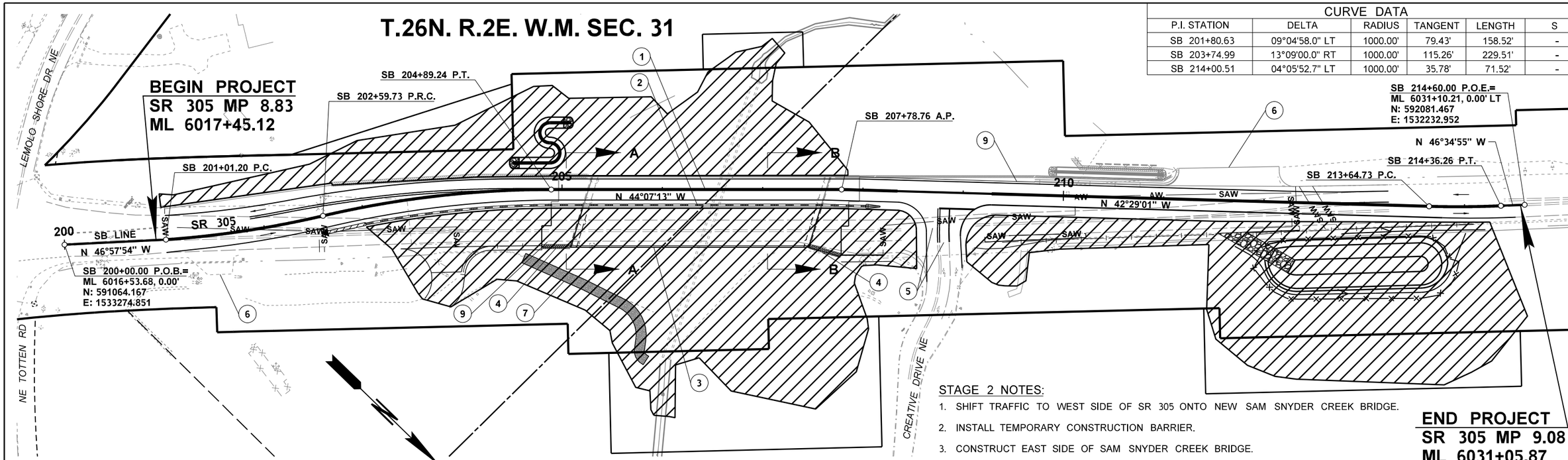

CURVE DATA					
P.I. STATION	DELTA	RADIUS	TANGENT	LENGTH	S
SB 201+80.63	09°04'58.0" LT	1000.00'	79.43'	158.52'	-
SB 203+74.99	13°09'00.0" RT	1000.00'	115.26'	229.51'	-
SB 214+00.51	04°05'52.7" LT	1000.00'	35.78'	71.52'	-

LEGEND

- WORK AREA
- TEMPORARY IMPACT ATTENUATOR
- TEMPORARY BARRIER
- SAW — SAWCUT
- TRAVEL DIRECTION
- BARRIER TERMINAL
- # — NOTE

STAGE 2 CONSTRUCTION

CONSTRUCT EAST SIDE OF BRIDGE

GENERAL NOTES:

1. THESE STAGING PLANS ARE INTENDED TO IDENTIFY IGNIFICANT ITEMS OF WORK WITH EACH STAGE. THE CONTRACTOR IS RESPONSIBLE FOR STAGING AND PERFORMING THE WORK IN ACCORDANCE ITH THE CONTRACT REQUIREMENTS.
2. REFER TO STANDARD SPECIFICATION 1-07.23 OR MINIMUM OFFSETS TO DROP-OFFS.
3. EXISTING ILLUMINATION SHALL REMAIN OPERATIONAL UNLESS OTHERWISE NOTED. SEE ILLUMINATION PLANS.

STAGE 2 NOTES:

1. SHIFT TRAFFIC TO WEST SIDE OF SR 305 ONTO NEW SAM SNYDER CREEK BRIDGE.
2. INSTALL TEMPORARY CONSTRUCTION BARRIER.
3. CONSTRUCT EAST SIDE OF SAM SNYDER CREEK BRIDGE.
4. CONSTRUCT EAST RETAINING WALL FOR SAM SNYDER CREEK BRIDGE.
5. ALL PAVEMENT MARKINGS THAT CONFLICT WITH TEMPORARY CHANNELIZATION SHALL BE REMOVED.
6. MAINTAIN ACCESS TO DRIVEWAYS.
7. INSTALL TEMPORARY CONSTRUCTION ACCESS ROAD.
8. SEE SHEET AL1 FOR PROJECT DATUM CONVERSION PROCESS.
9. CONNECT EXISTING ILLUMINATION SYSTEM TO NEW WIRING PRIOR TO REMOVING EXSITING CONDUIT AND WIRING, SEE ILLUMINATION PLANS.

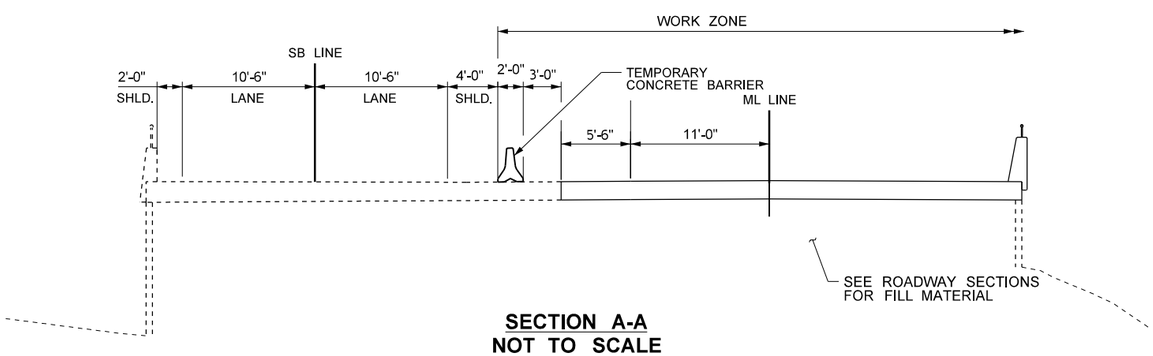

SECTION A-A
NOT TO SCALE

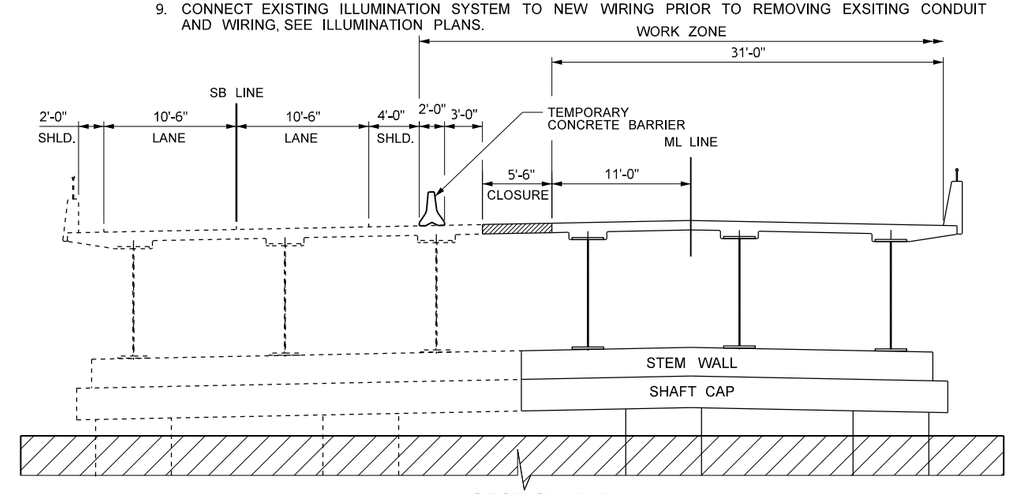

SECTION B-B
NOT TO SCALE

FILE NAME	c:\users\whltekev\documents\d0335728\XL6050_PS_SU_SAM_002.dgn
TIME	11:54:57 AM
DATE	3/27/2023
PLOTTED BY	whitekev
DESIGNED BY	C. JOHNSON
ENTERED BY	K. WHITEHOUSE
CHECKED BY	K. HOUSE
PROJ. ENGR.	A. AMOS
REGIONAL ADM.	S. ROARK

REVISION | DATE | BY

REGION NO. 10 | STATE WASH | FED.AID PROJ.NO.

JOB NUMBER 22C533

CONTRACT NO.

LOCATION NO. XL6050

KEVIN L. HOUSE STATE OF WASHINGTON 51824 REGISTERED PROFESSIONAL ENGINEER

SEE SHEET CT1

DATE

P.E. STAMP BOX

DATE

P.E. STAMP BOX

Washington State Department of Transportation

Parametrix

SR 305
SAM SNYDER CREEK
REMOVE FISH BARRIER

STAGING PLAN

PLAN REF NO SU2

SHEET 18 OF 186 SHEETS

T.26N. R.2E. W.M. SEC. 31

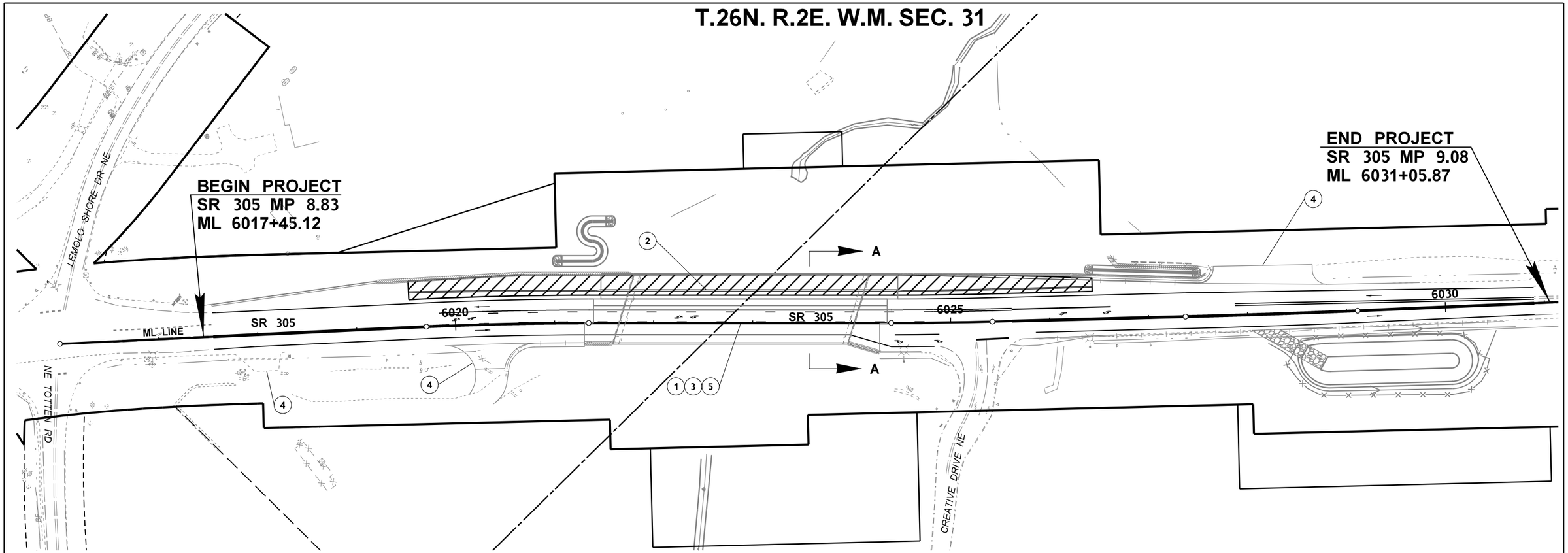

GENERAL NOTES:

1. THESE STAGING PLANS ARE INTENDED TO IDENTIFY SIGNIFICANT ITEMS OF WORK WITH EACH STAGE. THE CONTRACTOR IS RESPONSIBLE FOR STAGING AND PERFORMING THE WORK IN ACCORDANCE WITH THE CONTRACT REQUIREMENTS.
2. REFER TO STANDARD SPECIFICATION 1-07.23(1) FOR MINIMUM OFFSETS TO DROP-OFFS.

STAGE 3 CONSTRUCTION

CONSTRUCT CAST-IN-PLACE CURB

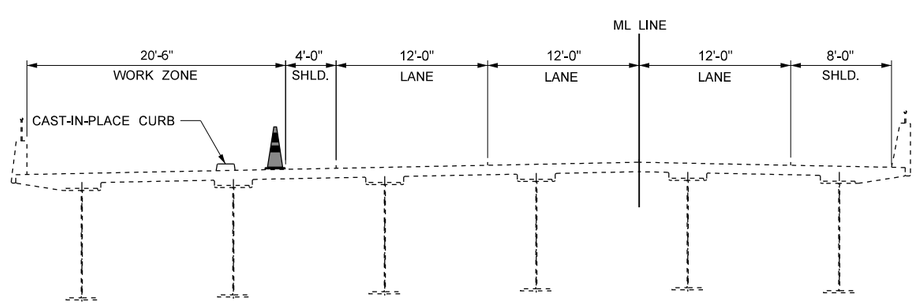

SECTION A-A
NOT TO SCALE

STAGE 3 NOTES:

1. SHIFT TRAFFIC TO PERMANENT LANE CONFIGURATION.
2. CONSTRUCT WEST CURB ALONG SR 305 WITHIN WORK ZONE.
3. ALL PAVEMENT MARKINGS THAT CONFLICT WITH CHANNELIZATION SHALL BE REMOVED.
4. MAINTAIN ACCESS TO DRIVEWAYS.
5. SEE SHEET AL1 FOR PROJECT DATUM CONVERSION PROCESS.

LEGEND

- WORK AREA
- TEMPORARY IMPACT ATTENUATOR
- TEMPORARY BARRIER
- SAW — SAWCUT
- TRAVEL DIRECTION
- BARRIER TERMINAL
- # NOTE

0 50 100
SCALE IN FEET

FILE NAME	c:\users\whitekev\documents\d0335728\XL6050_PS_SU_SAM_003.dgn						
TIME	11:54:58 AM				REGION NO. 10	STATE WASH	FED.AID PROJ.NO.
DATE	3/27/2023						
PLOTTED BY	whitekev				JOB NUMBER 22C533		
DESIGNED BY	C. JOHNSON						
ENTERED BY	K. WHITEHOUSE				CONTRACT NO.		LOCATION NO. XL6050
CHECKED BY	K. HOUSE						
PROJ. ENGR.	A. AMOS						
REGIONAL ADM.	S. ROARK	REVISION	DATE	BY			

KEVIN L. HOUSE STATE OF WASHINGTON 41624 REGISTERED PROFESSIONAL ENGINEER
SEE SHEET CT1
DATE
P.E. STAMP BOX

DATE
P.E. STAMP BOX

Washington State Department of Transportation
Parametrix

SR 305
SAM SNYDER CREEK
REMOVE FISH BARRIER

STAGING PLAN

PLAN REF NO SU3

SHEET 19 OF 186 SHEETS

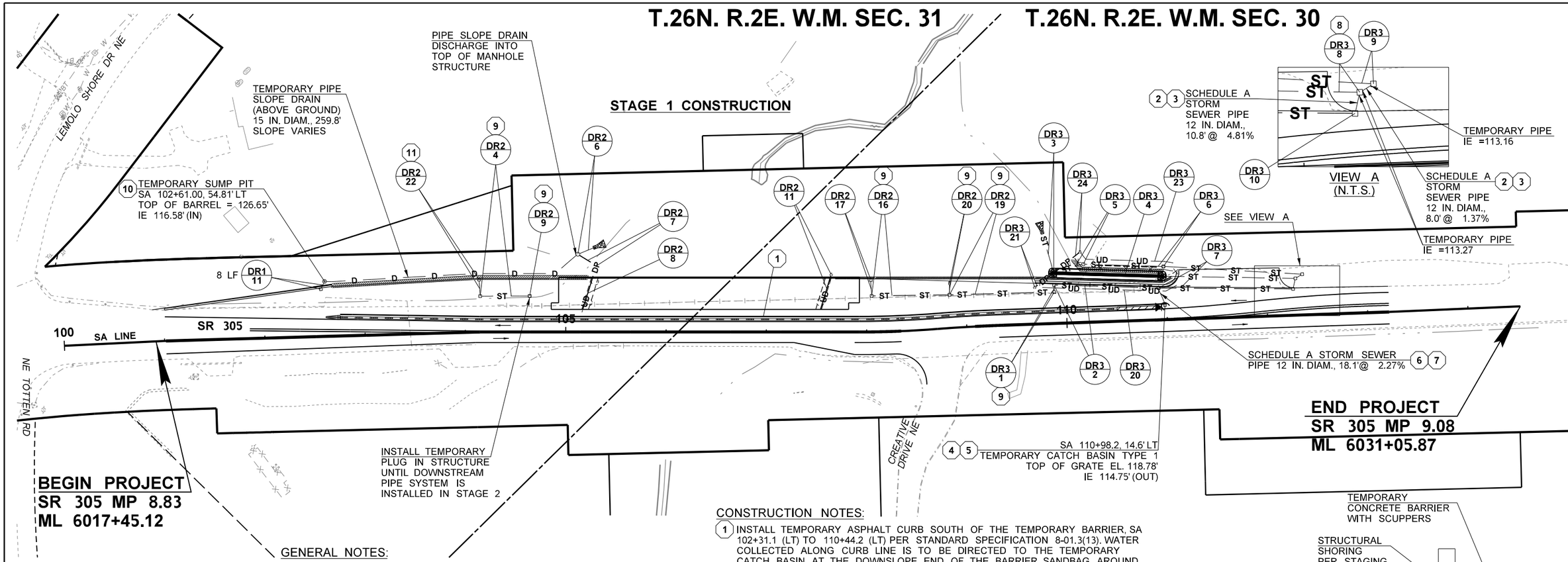

GENERAL NOTES:

1. REFER TO SPECIAL PROVISION 8-05 TEMPORARY DRAINAGE REQUIREMENTS.
2. TEMPORARY DRAINAGE PLANS ARE BASED ON STAGING PLANS INCLUDED IN THE CONTRACT DOCUMENTS.
3. THE CONTRACTOR IS RESPONSIBLE FOR UPDATING THE TEMPORARY DRAINAGE PLANS AND TEMPORARY DRAINAGE DESIGN ANALYSIS IF DEVIATING FROM THE STAGING OR TEMPORARY DRAINAGE PLANS IN THE CONTRACT.
4. THE STATION AND OFFSETS NOTED FOR TEMPORARY DRAINAGE STRUCTURES AND PIPES ARE APPROXIMATE. THE CONTRACTOR IS RESPONSIBLE FOR ADJUSTING ANY EXISTING, TEMPORARY OR PERMANENT DRAINAGE STRUCTURES AS NECESSARY TO ACCOMODATE ANY INTERIM PAVING AND PLACEMENT OF TEMPORARY BARRIERS IN CURRENT AND SUBSEQUENT CONSTRUCTION STAGES.
5. BARRIER PLACEMENT MAY BE ADJUSTED TO DIRECT GUTTER FLOW DURING THE TEMPORARY CONDITION TO THE TEMPORARY DRAINAGE STRUCTURE OR INTENDED OUTFALL.
6. FOR TEMPORARY BARRIER, SAWCUT, AND STAGING INFORMATION, SEE STAGING AND TRAFFIC CONTROL PLANS.
7. TEMPORARY PIPE LENGTHS SHALL BE VERIFIED AND UPDATED BY THE CONTRACTOR PRIOR TO INSTALLATION.
8. FOR TEMPORARY PIPE OUTFALL PROTECTION DETAILS, SEE PIPE OUTFALL PROTECTION DIMENSIONS AND MATERIAL DETAILS ON SHEET DD1.
9. TEMPORARY PIPE SLOPE DRAINS ARE TO BE PLACED ABOVE GROUND. MAINTAIN EXISTING VEGETATION TO THE MAXIMUM EXTENT PRACTICABLE ALONG DRAIN PIPE.
10. PLACE SANDBAGS AROUND DRAIN PIPE INLETS, WHERE APPLICABLE, TO CAPTURE INCOMING RUNOFF.

LEGEND

	TEMPORARY IMPACT ATTENUATOR
	TEMPORARY BARRIER
	TRAVEL DIRECTION
ST —— ST	STORM SEWER LINE
D —— D	TEMPORARY PIPE
UD —— UD	UNDERDRAIN PIPE
DP —— DP	DRAIN PIPE
	CATCH BASIN
	GRATE INLET
	TEMPORARY SUMP PIT
	DITCH BOTTOM
	SANDBAG BERM
	TEMPORARY DRAINAGE REMOVAL
	ROCK OUTFALL PROTECTION PAD
#	CONSTRUCTION NOTE
DR# / #	PERMANENT STRUCTURE NOTE CODE

CONSTRUCTION NOTES:

1. INSTALL TEMPORARY ASPHALT CURB SOUTH OF THE TEMPORARY BARRIER, SA 102+31.1 (LT) TO 110+44.2 (LT) PER STANDARD SPECIFICATION 8-01.3(13). WATER COLLECTED ALONG CURB LINE IS TO BE DIRECTED TO THE TEMPORARY CATCH BASIN AT THE DOWNSLOPE END OF THE BARRIER. SANDBAG AROUND TEMPORARY CATCH BASIN AS NEEDED TO COLLECT FLOW. SEE STAGE 1 - TEMPORARY CURB OFFSET DETAIL, THIS SHEET.
2. INSTALL TEMPORARY PIPE CONNECTION TO ROUTE UPSTREAM FLOWS TO DOWNSTREAM DISCHARGE LOCATION DURING CONSTRUCTION OF CABS.
3. REMOVE OR PLUG PIPE AFTER CABS IS CONSTRUCTED AND STABILIZED.
4. INSTALL TEMPORARY CATCH BASIN TYPE 1. PLACE TEMPORARY CB ADJACENT THE TEMPORARY CURB TO COLLECT TEMPORARY CURB RUNOFF.
5. REMOVE TEMPORARY CATCH BASIN AT THE END OF STAGE 1 PRIOR TO PAVING.
6. INSTALL TEMPORARY PIPE CONNECTION.
7. ABANDON TEMPORARY PIPE WHEN UPSTREAM TEMPORARY CATCH BASIN IS REMOVED.
8. INSTALL A TEMPORARY PLUG AT THE UPSTREAM END OF PIPE DR3-8 AT CATCH BASIN DR3-8.
9. TEMPORARILY SEAL DRAINAGE STRUCTURE LOCATED IN FUTURE CONSTRUCTION STAGE TRAVEL LANES. FRAME AND GRATE TO BE INSTALLED IN STAGE 3. SEE SPECIAL PROVISION 8-05 FOR HS-20 LOADING REQUIREMENT ON STEEL PLATES IF USED TO TEMPORARILY SEAL DRAINAGE STRUCTURES.
10. INSTALL TEMPORARY SUMP PIT AND PUMP STORMWATER INFLOW TO TEMPORARY PIPE SLOPE DRAIN. SEE TEMPORARY SUMP PIT DETAIL, THIS SHEET. PLACE SANDBAG BERM AROUND SUMP PIT TO DIVERT OFFSITE FLOW AROUND THE PIT DOWNSLOPE.
11. TEMPORARILY SEAL DRAINAGE STRUCTURE UNTIL DOWNSTREAM PIPE SYSTEM IS CONSTRUCTED IN STAGE 2. SEE NOTE 9 HS-20 LOADING REQUIREMENTS.

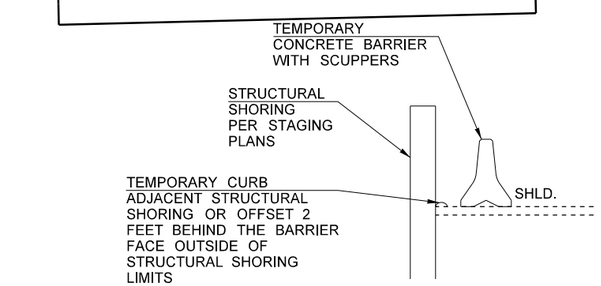

STAGE 1 - TEMPORARY CURB OFFSET DETAIL (N.T.S.)

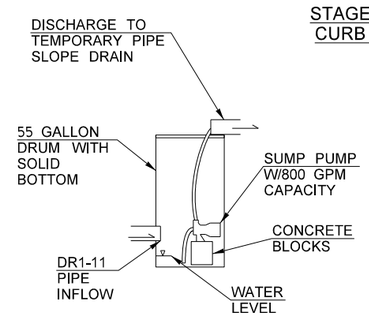

TEMPORARY SUMP PIT DETAIL (N.T.S)

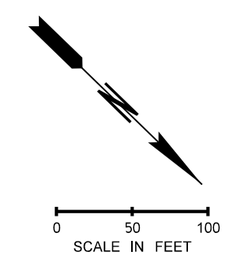

FILE NAME	c:\pw_working_jsg\d0335737\XL6050_PS_TDR_SAM_001.dgn
TIME	4:32:01 PM
DATE	3/24/2023
PLOTTED BY	janinag
DESIGNED BY	J. GLOVATCHI
ENTERED BY	J. GLOVATCHI
CHECKED BY	D. MUNGASAVALLI
PROJ. ENGR.	A. AMOS
REGIONAL ADM.	S. ROARK

REVISION | DATE | BY

REGION NO.	STATE	FED.AID PROJ.NO.
10	WASH	
JOB NUMBER 22C533		
CONTRACT NO.		LOCATION NO. XL6050

JANINA STOJAK GLOVATCHI — STATE OF WASHINGTON — 45915 — REGISTERED PROFESSIONAL ENGINEER

SEE SHEET CT1 DATE

P.E. STAMP BOX

DATE

P.E. STAMP BOX

Washington State Department of Transportation

OSBORN CONSULTING INCORPORATED

SR 305
SAM SNYDER CREEK
REMOVE FISH BARRIER

TEMPORARY DRAINAGE PLAN

PLAN REF NO TDR1

SHEET 20 OF 186 SHEETS

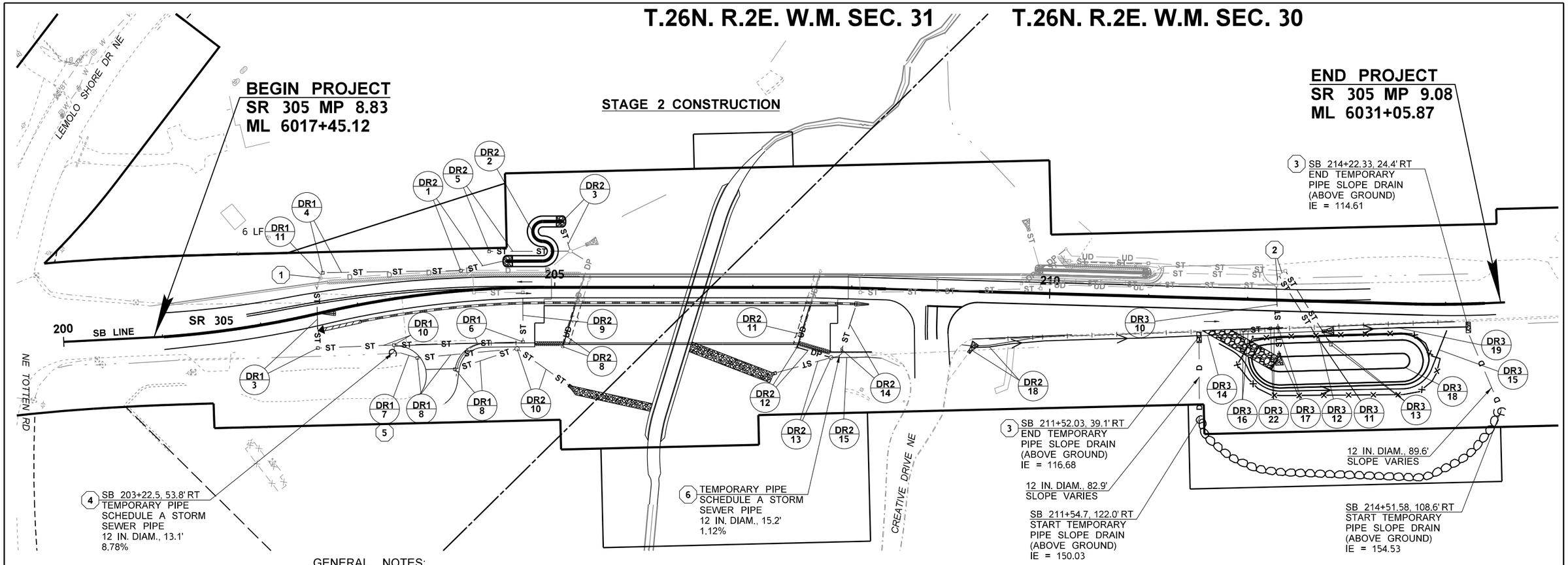

LEGEND

- TEMPORARY IMPACT ATTENUATOR
- TEMPORARY BARRIER
- TRAVEL DIRECTION
- ST —— ST STORM SEWER LINE
- D —— D TEMPORARY PIPE
- UD —— UD UNDERDRAIN PIPE
- DP —— DP DRAIN PIPE
- CATCH BASIN
- GRATE INLET
- TEMPORARY SUMP PIT
- DITCH BOTTOM
- SANDBAG BERM
- TEMPORARY DRAINAGE REMOVAL
- ROCK OUTFALL PROTECTION PAD
- # CONSTRUCTION NOTE
- DR# / # PERMANENT STRUCTURE NOTE CODE

GENERAL NOTES:

1. REFER TO SPECIAL PROVISION 8-05 TEMPORARY DRAINAGE REQUIREMENTS.
2. TEMPORARY DRAINAGE PLANS ARE BASED ON STAGING PLANS INCLUDED IN THE CONTRACT DOCUMENTS.
3. THE CONTRACTOR IS RESPONSIBLE FOR UPDATING THE TEMPORARY DRAINAGE PLANS AND TEMPORARY DRAINAGE DESIGN ANALYSIS IF DEVIATING FROM THE STAGING OR TEMPORARY DRAINAGE PLANS IN THE CONTRACT.
4. THE STATION AND OFFSETS NOTED FOR TEMPORARY DRAINAGE STRUCTURES AND PIPES ARE APPROXIMATE. THE CONTRACTOR IS RESPONSIBLE FOR ADJUSTING ANY EXISTING, TEMPORARY OR PERMANENT DRAINAGE STRUCTURES AS NECESSARY TO ACCOMODATE ANY INTERIM PAVING AND PLACEMENT OF TEMPORARY BARRIERS IN CURRENT AND SUBSEQUENT CONSTRUCTION STAGES.
5. BARRIER PLACEMENT MAY BE ADJUSTED TO DIRECT GUTTER FLOW DURING THE TEMPORARY CONDITION TO THE TEMPORARY DRAINAGE STRUCTURE OR INTENDED OUTFALL.
6. FOR TEMPORARY BARRIER, SAWCUT, AND STAGING INFORMATION, SEE STAGING AND TRAFFIC CONTROL PLANS.
7. TEMPORARY PIPE LENGTHS SHALL BE VERIFIED AND UPDATED BY THE CONTRACTOR PRIOR TO INSTALLATION.
8. FOR TEMPORARY PIPE OUTFALL PROTECTION DETAILS, SEE PIPE OUTFALL PROTECTION DIMENSIONS AND MATERIAL DETAILS ON SHEET DD1.
9. TEMPORARY PIPE SLOPE DRAINS ARE TO BE PLACED ABOVE GROUND. MAINTAIN EXISTING VEGETATION TO THE MAXIMUM EXTENT PRACTICABLE ALONG DRAIN PIPE.
10. PLACE SANDBAGS AROUND DRAIN PIPE INLETS, WHERE APPLICABLE, TO CAPTURE INCOMING RUNOFF.

CONSTRUCTION NOTES:

1. MAINTAIN TEMPORARY SUMP PIT, TEMPORARY PIPE SLOPE DRAIN, AND PUMPING OPERATIONS UNTIL PIPE SYSTEM DOWNSTREAM OF DR1-4 HAS BEEN CONSTRUCTED AND CABS DR2-2 IS CONSTRUCTED AND UPSTREAM AREA IS STABILIZED. REMOVE TEMPORARY SUMP PIT AND TEMPORARY PIPE SLOPE DRAIN. INSTALL REMAINING DR1-11 PIPE.
2. ROUTE STORMWATER TO CABS DR2-2 AND DR3-4 AFTER UPSTREAM AREA IS STABILIZED. EVALUATE WHICH EROSION CONTROL MEASURES ARE TO REMAIN IN PLACE DURING CONSTRUCTION. REMOVE OR ABANDON TEMPORARY PIPES. PLUG TEMPORARY CUT OUTS IN CATCH BASINS IF USED. REMOVE TEMPORARY PLUG AT CATCH BASIN DR3-10.
3. INSTALL ROCK FOR EROSION AND SCOUR PROTECTION CLASS C FOR TEMPORARY PIPE OUTFALL PROTECTION.
4. INSTALL TEMPORARY PIPE CONNECTION TO ROUTE UPSTREAM DITCH FLOWS TO DR1-10 WHILE DR1-7 TO DR1-10 IS CONSTRUCTED AND CREEK CHANNEL IS GRADED AND STABILIZED TO RECEIVE STORMWATER FLOWS.
5. INSTALL TEMPORARY PLUG AT THE UPSTREAM END OF DR1-7.
6. INSTALL TEMPORARY PIPE CONNECTION FROM DR2-13 (IE = 117.48) TO DR2-14 TO DIVERT FLOWS AWAY FROM PIPE DR2-13 UNTIL DOWNSTREAM CREEK CHANNEL IS GRADED AND STABILIZED TO RECEIVE STORMWATER FLOWS. INSTALL A TEMPORARY PLUG AT THE UPSTREAM END OF PIPE DR2-13.

0 50 100
SCALE IN FEET

FILE NAME	c:\pw_working_jsg\d0335737\XL6050_PS_TDR_SAM_002.dgn
TIME	4:32:05 PM
DATE	3/24/2023
PLOTTED BY	janinag
DESIGNED BY	J. GLOVATCHI
ENTERED BY	J. GLOVATCHI
CHECKED BY	D. MUNGASAVALLI
PROJ. ENGR.	A. AMOS
REGIONAL ADM.	S. ROARK

REVISION | DATE | BY

REGION NO.	STATE	FED.AID PROJ.NO.
10	WASH	
JOB NUMBER 22C533		
CONTRACT NO.		LOCATION NO. XL6050

JANINA STOJAK GLOVATCHI, STATE OF WASHINGTON, 53915, REGISTERED PROFESSIONAL ENGINEER

SEE SHEET CT1
DATE
P.E. STAMP BOX

DATE
P.E. STAMP BOX

Washington State Department of Transportation

OSBORN CONSULTING INCORPORATED

SR 305
SAM SNYDER CREEK
REMOVE FISH BARRIER

TEMPORARY DRAINAGE PLAN

PLAN REF NO
TDR2

SHEET 21 OF 186 SHEETS

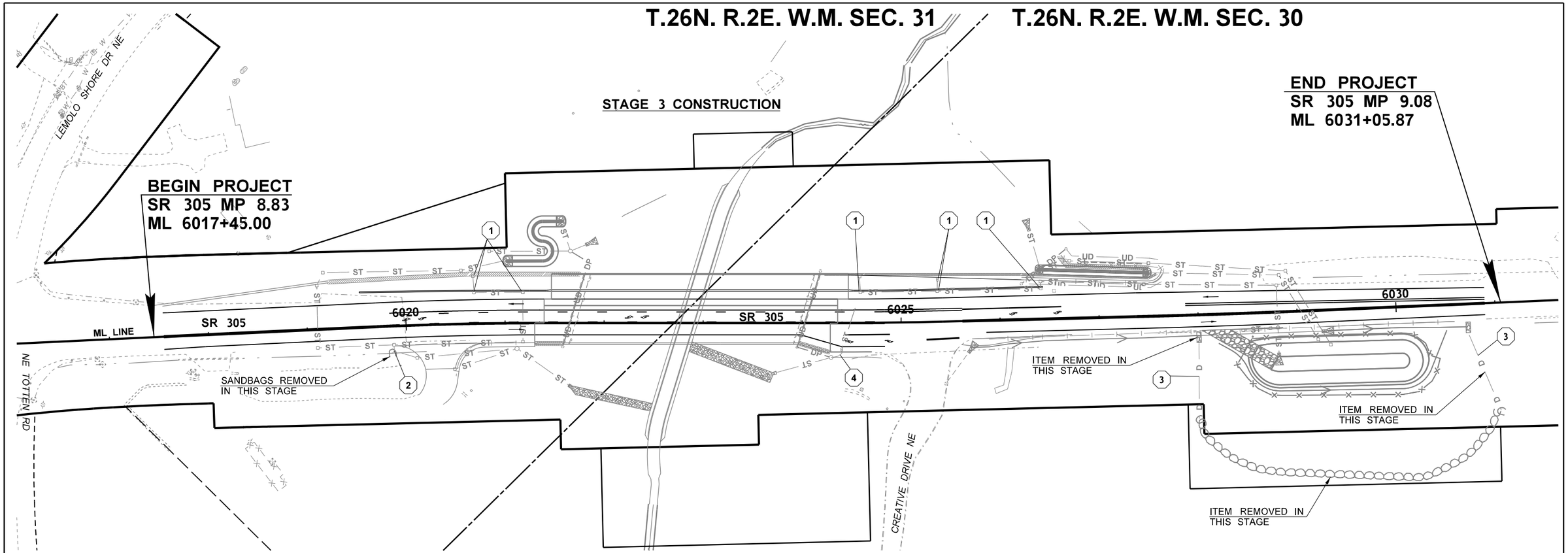

LEGEND

- TEMPORARY IMPACT ATTENUATOR
- TEMPORARY BARRIER
- TRAVEL DIRECTION
- ST — ST STORM SEWER LINE
- D — D TEMPORARY PIPE
- UD — UD UNDERDRAIN PIPE
- DP — DP DRAIN PIPE
- CATCH BASIN
- GRATE INLET
- TEMPORARY SUMP PIT
- DITCH BOTTOM
- SANDBAG BERM
- TEMPORARY DRAINAGE REMOVAL
- ROCK OUTFALL PROTECTION PAD
- # CONSTRUCTION NOTE
- DR# / # PERMANENT STRUCTURE NOTE CODE

GENERAL NOTES:

1. REFER TO SPECIAL PROVISION 8-05 TEMPORARY DRAINAGE REQUIREMENTS.
2. TEMPORARY DRAINAGE PLANS ARE BASED ON STAGING PLANS INCLUDED IN THE CONTRACT DOCUMENTS.
3. THE CONTRACTOR IS RESPONSIBLE FOR UPDATING THE TEMPORARY DRAINAGE PLANS AND TEMPORARY DRAINAGE DESIGN ANALYSIS IF DEVIATING FROM THE STAGING OR TEMPORARY DRAINAGE PLANS IN THE CONTRACT.
4. THE STATION AND OFFSETS NOTED FOR TEMPORARY DRAINAGE STRUCTURES AND PIPES ARE APPROXIMATE. THE CONTRACTOR IS RESPONSIBLE FOR ADJUSTING ANY EXISTING, TEMPORARY OR PERMANENT DRAINAGE STRUCTURES AS NECESSARY TO ACCOMODATE ANY INTERIM PAVING AND PLACEMENT OF TEMPORARY BARRIERS IN CURRENT AND SUBSEQUENT CONSTRUCTION STAGES.
5. BARRIER PLACEMENT MAY BE ADJUSTED TO DIRECT GUTTER FLOW DURING THE TEMPORARY CONDITION TO THE TEMPORARY DRAINAGE STRUCTURE OR INTENDED OUTFALL.
6. FOR TEMPORARY BARRIER, SAWCUT, AND STAGING INFORMATION, SEE STAGING AND TRAFFIC CONTROL PLANS.
7. TEMPORARY PIPE LENGTHS SHALL BE VERIFIED AND UPDATED BY THE CONTRACTOR PRIOR TO INSTALLATION.
8. FOR TEMPORARY PIPE OUTFALL PROTECTION DETAILS, SEE PIPE OUTFALL PROTECTION DIMENSIONS AND MATERIAL DETAILS ON SHEET DD1.
9. TEMPORARY PIPE SLOPE DRAINS ARE TO BE PLACED ABOVE GROUND. MAINTAIN EXISTING VEGETATION TO THE MAXIMUM EXTENT PRACTICABLE ALONG DRAIN PIPE.
10. PLACE SANDBAGS AROUND DRAIN PIPE INLETS, WHERE APPLICABLE, TO CAPTURE INCOMING RUNOFF.

CONSTRUCTION NOTES:

1. REMOVE TEMPORARY DRAINAGE STRUCTURE SEAL AND INSTALL FRAME AND GRATE TO FINISHED GRADE TO COLLECT STORMWATER IN THIS STAGE.
2. AFTER THE CREEK HAS BEEN STABLIZED TO RECEIVE STORMWATER DISCHARGES, REMOVE TEMPORARY PIPE TO EDGE OF GRADED SLOPE AND PLUG BOTH ENDS OF PIPE. ABANDON PIPE.
3. REMOVE TEMPORARY PIPES AFTER CREEK AND POND HAVE BEEN GRADED AND STABILIZED.
4. PLUG PIPE AT UPSTREAM AND DOWNSTREAM STRUCTURES. ABANDON PIPE.

0 50 100
SCALE IN FEET

FILE NAME	c:\pw_working_jsg\d0335737\XL6050_PS_TDR_SAM_003.dgn						
TIME	4:32:09 PM				REGION NO. 10	STATE WASH	FED.AID PROJ.NO.
DATE	3/24/2023						
PLOTTED BY	janinag				JOB NUMBER 22C533		
DESIGNED BY	J. GLOVATCHI						
ENTERED BY	J. GLOVATCHI						
CHECKED BY	D. MUNGASAVALLI				CONTRACT NO.		LOCATION NO. XL6050
PROJ. ENGR.	A. AMOS						
REGIONAL ADM.	S. ROARK	REVISION	DATE	BY			

JANINA STOJAK GLOVATCHI — STATE OF WASHINGTON — 53915 — REGISTERED PROFESSIONAL ENGINEER

SEE SHEET CT1
DATE
P.E. STAMP BOX

DATE
P.E. STAMP BOX

Washington State Department of Transportation

OSBORN CONSULTING INCORPORATED

SR 305
SAM SNYDER CREEK
REMOVE FISH BARRIER

TEMPORARY DRAINAGE PLAN

PLAN REF NO TDR3

SHEET 22 OF 186 SHEETS

ML LINE CURVE DATA					
P.I. STATION	DELTA	RADIUS	TANGENT	LENGTH	S
ML 6020+52.47	02°41'00" RT	3500.00'	81.97'	163.91'	-
DWA 40+62.50	41°14'14" RT	45.00'	16.93'	32.39'	-

T.26N.R.2E. W.M. SEC. 31

PRIMARY CONTROL TABLE					
HORIZONTAL DATUM NAD 83(11) WA NORTH US FEET			PROJECT DATUM COMBINED FACTOR 0.999970094		VERTICAL DATUM NAVD 88
DESIGNATION	NORTHING	EASTING	NORTHING	EASTING	ELEVATION
TOT	262839.097	1205275.805	590930.291	1533395.184	134.27
NCAD AZ	263585.608	1204487.361	591676.824	1532606.717	119.63

TANSFORM SPC TO PDC (SPC US FEET * (1/CF)) + ((39.37/12) * 100000) = PDC
TRANSFORM PDC TO SPC (PDC US FEET - ((39.37/12) * 100000)) * CF = SPC

LEGEND

- EXISTING MONUMENT CASE AND COVER
- EXISTING MONUMENT
- EXISTING BENCH MARK
- EXISTING PROPERTY CORNER
- # MONUMENT SURVEY CODE, SEE SHEET AL4 FOR MONUMENT QUANTITIES
- # PROPERTY CORNER CODE, SEE SHEET AL4 FOR EXISTING PROPERTY CORNERS INFORMATION
- PARCEL ACCESS TEMPORARILY UNAVAILABLE, SEE SPECIAL PROVISION 1-07.24 RIGHTS OF WAY

NOTES:

1. THE BASIS OF BEARINGS AND DISTANCES ARE DETERMINED FROM WASHINGTON COORDINATE SYSTEM NAD 83(11) NORTH ZONE.
2. THE DISTANCES SHOWN ARE GROUND DIMENSIONS. TO OBTAIN THE GRID DIMENSIONS MULTIPLY THE GROUND DIMENSION BY THE COMBINED FACTOR OF 0.999970094.
3. THE COMBINED FACTOR IS DERIVED BY MULTIPLING THE ELEVATION FACTOR OF 1 BY THE SCALE FACTOR OF 0.999970094.
4. PER RCW 58.09.130, ANY MONUMENT OR CORNER DISTURBED BY THE CONTRACTOR'S OPERATION SHALL BE REPLACED AT NO COST TO THE CONTRACTING AGENCY.

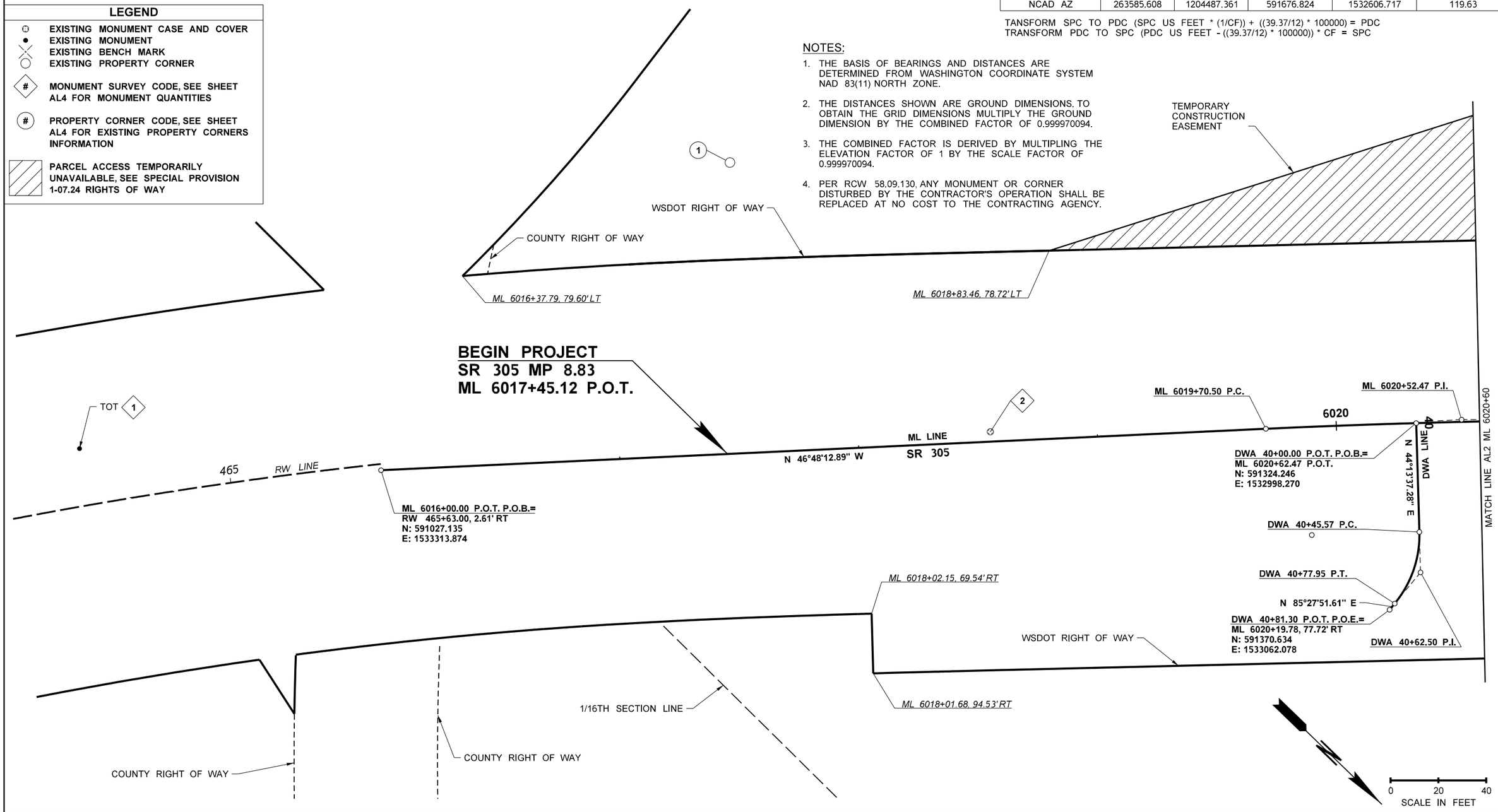

FILE NAME	c:\users\whitekev\documents\d0335729\XL6050_PS_AL_SAM_001.dgn				REGION NO. 10	STATE WASH	FED.AID PROJ.NO.
TIME	11:55:04 AM				JOB NUMBER 22C533		
DATE	3/27/2023						
PLOTTED BY	whitekev						
DESIGNED BY	C. JOHNSON						
ENTERED BY	K. WHITEHOUSE				CONTRACT NO.		LOCATION NO. XL6050
CHECKED BY	K. HOUSE						
PROJ. ENGR.	A. AMOS						
REGIONAL ADM.	S. ROARK	REVISION	DATE	BY			

KEVIN L. HOUSE, STATE OF WASHINGTON, 41824, REGISTERED PROFESSIONAL ENGINEER

SEE SHEET CT1
DATE
P.E. STAMP BOX

DATE
P.E. STAMP BOX

Washington State Department of Transportation

Parametrix

SR 305
SAM SNYDER CREEK
REMOVE FISH BARRIER

ALIGNMENT AND RIGHT OF WAY PLAN

PLAN REF NO AL1

SHEET 23 OF 186 SHEETS

ML LINE CURVE DATA					
P.I. STATION	DELTA	RADIUS	TANGENT	LENGTH	S
ML 6024+91.14	01°27'53.5" LT	4000.00'	51.14'	102.26'	-

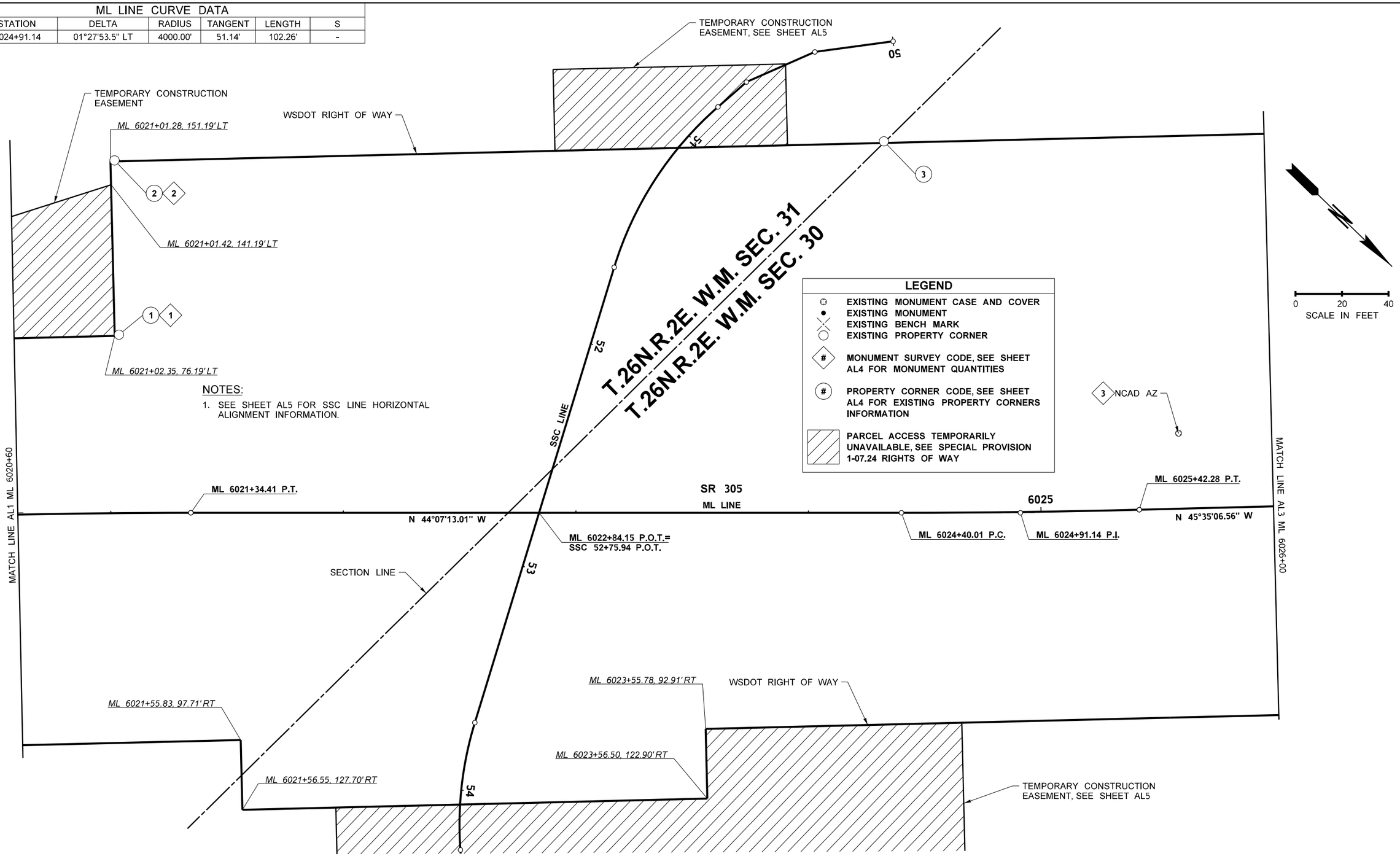

NOTES:

1. SEE SHEET AL5 FOR SSC LINE HORIZONTAL ALIGNMENT INFORMATION.

FILE NAME	c:\users\whitekev\documents\d0335729\XL6050_PS_AL_SAM_002.dgn
TIME	11:55:05 AM
DATE	3/27/2023
PLOTTED BY	whitekev
DESIGNED BY	C. JOHNSON
ENTERED BY	K. WHITEHOUSE
CHECKED BY	K. HOUSE
PROJ. ENGR.	A. AMOS
REGIONAL ADM.	S. ROARK

REVISION | DATE | BY

REGION NO. 10 | STATE WASH | FED.AID PROJ.NO.

JOB NUMBER 22C533

CONTRACT NO.

LOCATION NO. XL6050

KEVIN L. HOUSE, STATE OF WASHINGTON, 41824, REGISTERED PROFESSIONAL ENGINEER

SEE SHEET CT1 DATE

P.E. STAMP BOX

DATE

P.E. STAMP BOX

Washington State Department of Transportation

Parametrix

SR 305
SAM SNYDER CREEK
REMOVE FISH BARRIER

ALIGNMENT AND RIGHT OF WAY PLAN

PLAN REF NO AL2

SHEET 24 OF 186 SHEETS

ML LINE CURVE DATA					
P.I. STATION	DELTA	RADIUS	TANGENT	LENGTH	S
ML 6028+24.28	00°59'49.5" LT	10000.00'	87.01'	174.02'	-

T.26N.R.2E. W.M. SEC. 30

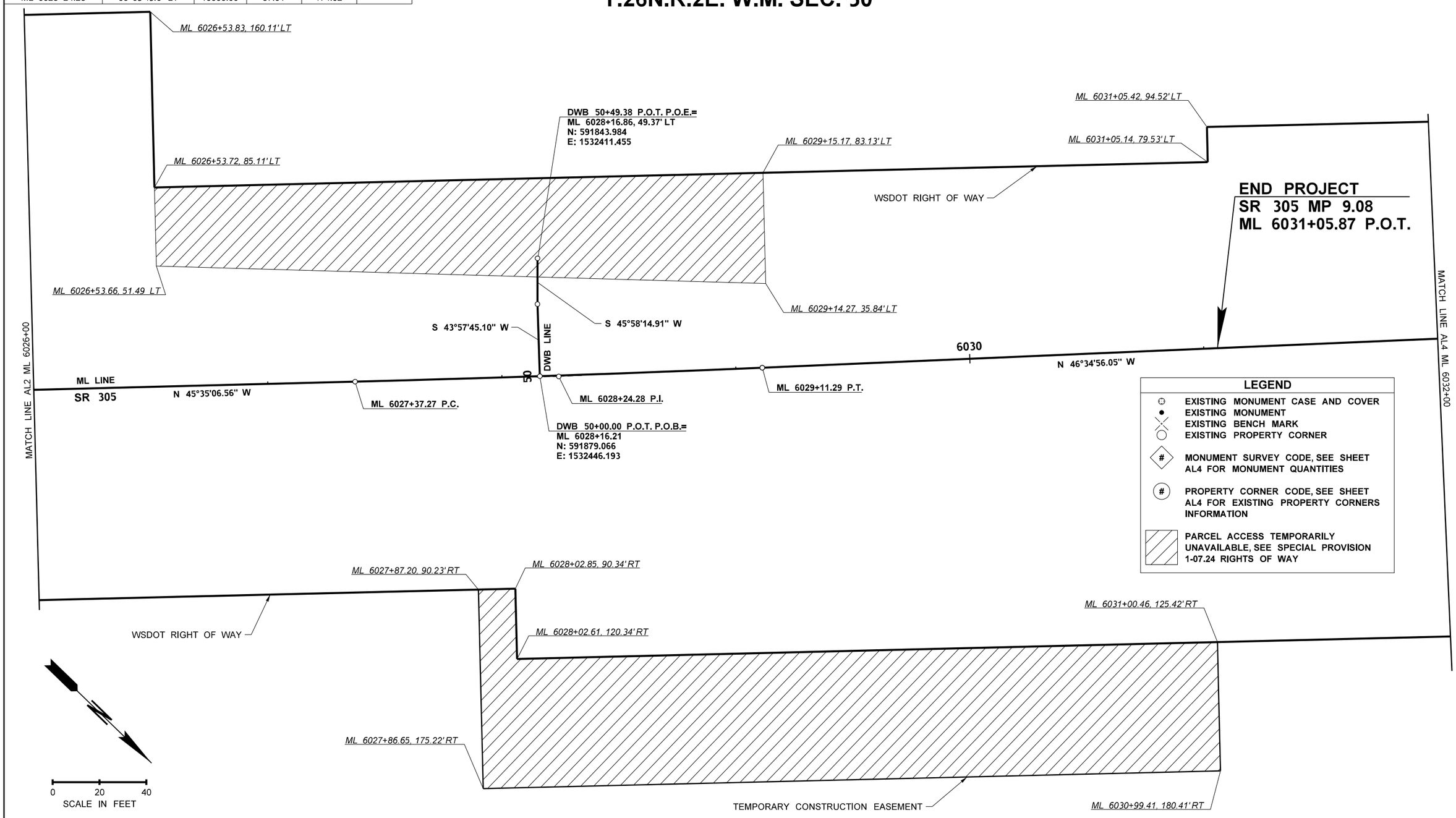

FILE NAME	c:\users\johnschr\d0335729\XL6050_PS_AL_SAM_003.dgn				REGION NO. 10	STATE WASH	FED.AID PROJ.NO.
TIME	12:42:44 PM				JOB NUMBER 22C533		
DATE	4/5/2023						
PLOTTED BY	JohnsChr						
DESIGNED BY	C. JOHNSON						
ENTERED BY	K. WHITEHOUSE						
CHECKED BY	K. HOUSE				CONTRACT NO.		LOCATION NO. XL6050
PROJ. ENGR.	A. AMOS						
REGIONAL ADM.	S. ROARK	REVISION	DATE	BY			

KEVIN L. HOUSE, STATE OF WASHINGTON, 41824, REGISTERED PROFESSIONAL ENGINEER

SEE SHEET CT1 DATE

P.E. STAMP BOX

DATE

P.E. STAMP BOX

Washington State Department of Transportation

Parametrix

SR 305
SAM SNYDER CREEK
REMOVE FISH BARRIER

ALIGNMENT AND RIGHT OF WAY PLAN

PLAN REF NO AL3

SHEET 25 OF 186 SHEETS

LEGEND

- EXISTING MONUMENT CASE AND COVER
- EXISTING MONUMENT
- EXISTING BENCH MARK
- EXISTING PROPERTY CORNER
- MONUMENT SURVEY CODE, SEE SHEET AL4 FOR MONUMENT QUANTITIES
- PROPERTY CORNER CODE, SEE SHEET AL4 FOR EXISTING PROPERTY CORNERS INFORMATION
- PARCEL ACCESS TEMPORARILY UNAVAILABLE, SEE SPECIAL PROVISION 1-07.24 RIGHTS OF WAY

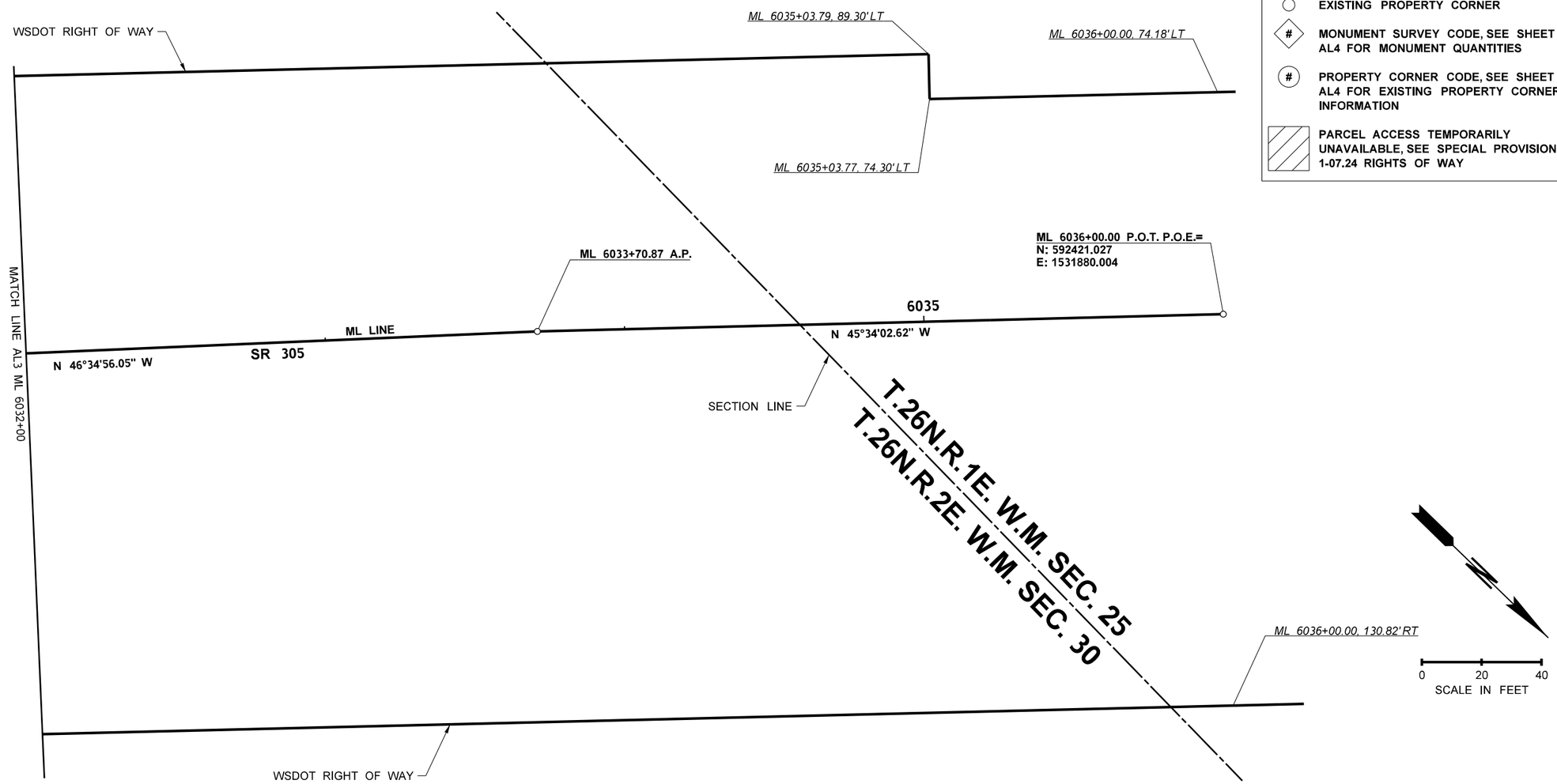

MONUMENT QUANTITIES

SURVEY CODE	STATION	OFFSET	DESCRIPTION	NOTE	ACTION REQUIRED BY CONTRACTOR	ADJUST MONUMENT CASE & COVER	DESTROY MONUMENT	LICENSED SURVEYING
AL1-1	SEE TOT ON AL1		MON	FOUND MON IN CASE	DO NOT DISTURB			
AL1-2	ML 6018+55.34	4.17' LT	MON	FOUND MON IN CASE	DESTROY MONUMENT		1	
AL2-1	ML 6021+04.15	76.70' LT	MON	CONCRETE R/W MARKER	RESET AT NEW R/W LINE			1
AL2-2	ML 6021+02.94	151.67' LT	MON	CONCRETE R/W MARKER	DO NOT DISTURB			
AL2-3	ML 6025+60.01	32.43' LT	MON	FOUND MON IN CASE	LOWER AND RAISE	1		
					TOTAL	1	1	1

EXISTING PROPERTY CORNERS

SURVEY CODE	STATION	OFFSET	DESCRIPTION	ACTION REQUIRED BY CONTRACTOR ✱	SET PROPERTY CORNER
AL1-1	ML 6017+51.81	121.81' LT	FOUND 1" IRON PIPE & CAP WITH TACK	DO NOT DISTURB	
AL2-1	ML 6021+04.15	76.70' LT	1" IRON PIPE / CAP & TACK	RESET AT NEW R/W LINE	1
AL2-2	ML 6021+02.94	151.67' LT	1" IRON PIPE / CAP & TACK	DO NOT DISTURB	
AL2-3	ML 6024+32.43	159.72' LT	1" IRON PIPE	DO NOT DISTURB	1

✱ PER RCW 58.09.130, ANY MONUMENT OR CORNER DISTURBED BY THE CONTRACOTR'S OPERATION SHALL BE REPLACED AT NO COST TO THE CONTRACTING AGENCY.

FILE NAME	c:\users\whitekev\documents\d0335729\XL6050_PS_AL_SAM_004.dgn
TIME	11:55:08 AM
DATE	3/27/2023
PLOTTED BY	whitekev
DESIGNED BY	C. JOHNSON
ENTERED BY	K. WHITEHOUSE
CHECKED BY	K. HOUSE
PROJ. ENGR.	A. AMOS
REGIONAL ADM.	S. ROARK

REVISION | DATE | BY

REGION NO. 10 | STATE WASH | FED.AID PROJ.NO.

JOB NUMBER 22C533

CONTRACT NO.

LOCATION NO. XL6050

KEVIN L. HOUSE, STATE OF WASHINGTON, 41824, REGISTERED PROFESSIONAL ENGINEER

SEE SHEET CT1 DATE

P.E. STAMP BOX

P.E. STAMP BOX DATE

Washington State Department of Transportation

Parametrix

SR 305
SAM SNYDER CREEK
REMOVE FISH BARRIER

ALIGNMENT AND RIGHT OF WAY PLAN

PLAN REF NO AL4

SHEET 26 OF 186 SHEETS

CURVE DATA					
P.I. STATION	DELTA	RADIUS	TANGENT	LENGTH	S
SSC 51+25.06	31°46'53.5" LT	150.00'	42.70'	83.20'	-
SSC 53+98.31	21°09'42.6" LT	150.00'	28.02'	55.40'	-

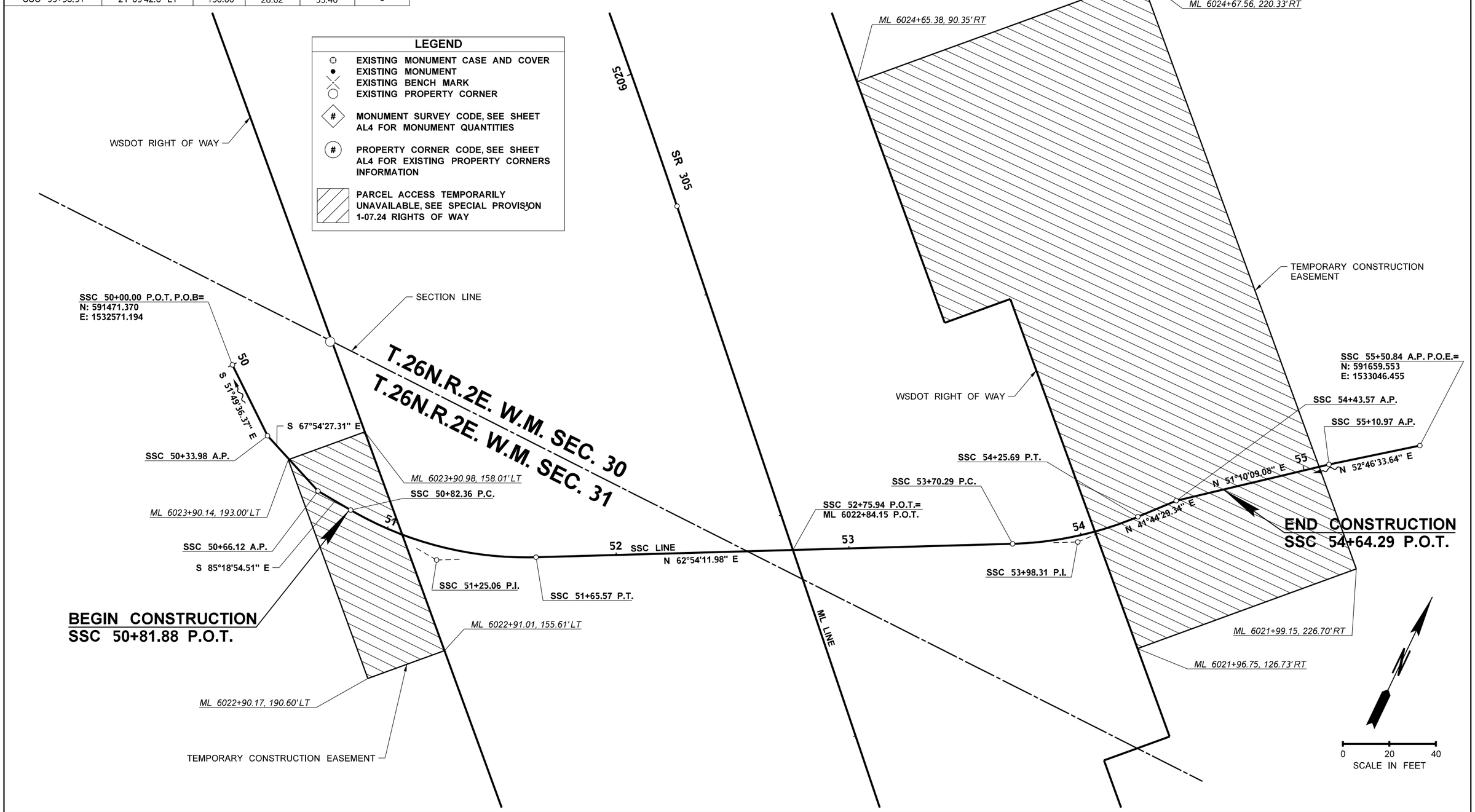

FILE NAME	c:\users\whltekev\documents\d0335729\XL6050_PS_AL_SAM_005.dgn					
TIME	11:55:09 AM					
DATE	3/27/2023					
PLOTTED BY	whitekev					
DESIGNED BY	C. JOHNSON					
ENTERED BY	K. WHITEHOUSE					
CHECKED BY	K. HOUSE					
PROJ. ENGR.	A. AMOS					
REGIONAL ADM.	S. ROARK	REVISION	DATE	BY		

REGION NO.	STATE	FED.AID PROJ.NO.
10	WASH	
JOB NUMBER 22C533		
CONTRACT NO.		LOCATION NO. XL6050

KEVIN L. HOUSE, STATE OF WASHINGTON, 41824, REGISTERED PROFESSIONAL ENGINEER

SEE SHEET CT1
DATE
P.E. STAMP BOX

DATE
P.E. STAMP BOX

Washington State Department of Transportation

Parametrix

SR 305
SAM SNYDER CREEK
REMOVE FISH BARRIER

ALIGNMENT AND RIGHT OF WAY PLAN

PLAN REF NO
AL5

SHEET 27 OF 186 SHEETS

QUANTITY TABULATION - SITE PREPARATION

NOTE:
THE FIRST NUMBER OF THE "CODE" BELOW REFERS TO THE SHEET NO. OR THE SHEET REFERENCE NO. SHOWING THE CONSTRUCTION FEATURE

THE SECOND NUMBER REFERS TO THE CONSTRUCTION FEATURE FOUND ON THAT SHEET.

CODE	LOCATION ↓ / UNIT OF MEASURE →	REMOVING PAINT LINE	REMOVING PLASTIC TRAFFIC MARKING	PLANING BITUMINOUS PAVEMENT	HIGH VISIBILITY FENCE	REMOVING RETAINING WALL	GENERAL NOTES
		L.F.	EACH	S.Y.	L.F.	S.F.	
SP1-1	ML 6017+51.55 (30.89' LT) TO SSC 50+75.95 (4.02' RT)				724		1
SP1-2	ML 6017+50.00 (0.00') TO ML 6019+07.90 (0.00')			434			
SP1-3	ML 6019+79.72 (20.10' RT) TO ML 6020+07.47 (71.02' RT)				58		1
SP1-4	ML 6017+50.00 (0.02' LT) TO ML 6024+83.44 (0.13' LT)			245			2
SP1-5	ML 6017+50.00 (13.01' RT) TO ML 6024+70.00 (24.17' RT)	740					
SP1-6	ML 6019+08.72 (7.51' LT) TO ML 6020+64.01 (0.67' LT)	156					
SP1-7	ML 6017+55.00 (24.09' LT) TO ML 6024+62.92 (23.86' LT)	709					
SP1-8	ML 6019+12.90 (0.00') TO ML ML 6020+45.00 (0.00')			265			
SP1-9	ML 6017+46.82 (5.00' LT)		1				
SP2-1	ML 6020+84.59 (53.07' RT) TO SSC 54+70.42 (7.45' RT)				229		1
SP2-2	ML 6023+73.99 (5.86' LT)		1				
SP2-3	ML 6023+81.29 (9.61' LT) TO ML 6026+62.08 (12.01' LT)	281					
SP2-4	ML 6024+20.98 (6.48' LT)		1				
SP2-5	ML 6024+29.92 (13.42' RT) TO ML 6024+61.32 (12.27' RT)	32					
SP2-6	ML 6024+37.26 (19.71' RT)		1				
SP2-7	SSC 50+76.59 (3.39' LT) TO ML 6026+21.65 (99.19' LT)				394		1
SP2-8	SSC 54+70.31 (7.65' LT) TO ML 6024+99.46 (42.77' RT)				432		1
SP2-9	ML 6024+70.00 (0.00') TO ML 6028+77.68 (0.00')			1380			
SP2-10	ML 6025+22.35 (24.50' LT) TO ML 6030+89.84 (17.22' LT)	568					
SP2-11	ML 6025+61.98 (0.00') TO ML 6030+89.78 (0.10' RT)			176			2
SP2-12	ML 6025+85.77 (12.17' RT) TO ML ML 6030+89.74 (11.94' RT)	505					
SP2-13	ML 6025+58.80 (26.49' RT) TO ML 6030+75.23 (17.42' RT)				825		1
SP2-14	ML 6022+01.09 (19.87' RT) TO ML 6023+88.37 (24.45' RT)					2850	3
SP2-15	ML 6025+25.31 (17.87' RT) TO ML 6025+58.39 (16.99' RT)	34					
SP3-1	ML 6026+05.96 (4.89' LT)		1				
SP3-2	ML 6026+56.07 (4.62' LT)		1				
SP3-3	ML 6026+43.18 (105.90' LT) TO ML 6029+07.00 (27.36' LT)				302		1
	SHEET TOTAL	3,025	6	2,500	2,964	2,850	
	PROJECT TOTAL	3,328	6	3,387	2,964	2,850	

GENERAL NOTES

1. SEE WSDOT STANDARD PLAN I-10.10.
2. SEE SHEET SPD2 FOR RUMBLE STRIP REMOVAL AND INLAY DETAIL.
3. SEE SPECIAL PROVISIONS.

Designed	C. JOHNSON	4/14/2023		
Entered	R. MCCABE	4/14/2023		
Checked	K. HOUSE	4/14/2023		
Proj.Eng.	A. AMOS	4/14/2023		
Reg Admin	S. ROARK	4/14/2023		
		DATE	DATE	REVISION

BY

REGION NO.	STATE	FED. AID PROJ. NO.
10	WASH	

JOB NUMBER 22C533

CONTRACT NO.

Parametrix
ENGINEERING . PLANNING . ENVIRONMENTAL SCIENCES

Washington State Department of Transportation

SR 305
SAM SNYDER CREEK
REMOVE FISH BARRIER

QUANTITY TABULATION - SITE PREPARATION

QTSP1

SHEET 28 OF 186 SHEETS

QUANTITY TABULATION - SITE PREPARATION

NOTE:
THE FIRST NUMBER OF THE "CODE" BELOW REFERS TO THE SHEET NO. OR THE SHEET REFERENCE NO. SHOWING THE CONSTRUCTION FEATURE

THE SECOND NUMBER REFERS TO THE CONSTRUCTION FEATURE FOUND ON THAT SHEET.

CODE	LOCATION ↓ / UNIT OF MEASURE →	REMOVING PAINT LINE	REMOVING PLASTIC TRAFFIC MARKING	PLANING BITUMINOUS PAVEMENT	HIGH VISIBILITY FENCE	REMOVING RETAINING WALL											GENERAL NOTES
		L.F.	EACH	S.Y.	L.F.	S.F.											
SP3-4	ML 6027+87.36 (10.79' LT) TO ML 6030+89.80 (5.57' LT)	303															
SP3-5	ML 6028+82.63 (0.00') TO ML 6029+01.97 (0.00')			76													
SP3-6	ML 6029+15.15 (0.00') TO ML 6030+89.78 (0.00')			811													
	SHEET TOTAL	303	0	887	0	0											
	PROJECT TOTAL	3,328	6	3,387	2,964	2,850											

GENERAL NOTES

1. SEE WSDOT STANDARD PLAN I-10.10.
2. SEE SHEET SPD2 FOR RUMBLE STRIP REMOVAL AND INLAY DETAIL.
3. SEE SPECIAL PROVISIONS.

Designed	C. JOHNSON	4/14/2023		
Entered	R. MCCABE	4/14/2023		
Checked	K. HOUSE	4/14/2023		
Proj.Eng.	A. AMOS	4/14/2023		
Reg Admin	S. ROARK	4/14/2023		
		DATE	DATE	REVISION

BY

REGION NO.	STATE	FED. AID PROJ. NO.
10	WASH	

JOB NUMBER 22C533

CONTRACT NO.

Parametrix
ENGINEERING . PLANNING . ENVIRONMENTAL SCIENCES

Washington State Department of Transportation

SR 305
SAM SNYDER CREEK
REMOVE FISH BARRIER

QUANTITY TABULATION - SITE PREPARATION

QTSP2

SHEET 29 OF 186 SHEETS

LEGEND

PLANING BITUMINOUS PAVEMENT	ABOVE GROUND POWER	DITCH BOTTOM	
REMOVING ASPHALT CONC. PAVEMENT	ABOVE GROUND COMM. LINE	IRRIGATION VALVE	
HIGH VISIBILITY FENCE	STORM PIPE		
SILT FENCE	DRAIN PIPE		
REMOVING ASPHALT CONC. PAVEMENT	UNDERGROUND POWER	GUY POLE	
SAWCUT	DOUBLE YELLOW CENTERLINE	POWER POLE	
CLEARING AND GRUBBING LIMIT	STORM INLET	TELEPHONE MANHOLE	
EDGE OF PAVEMENT	DRY WELL	LIGHTING STANDARD	
EDGE OF GRAVEL SHOULDER	QUANTITY TAB NOTE	GUIDE POST	
CEMENT CONC. CURB	QUANTITY TAB NOTE	TREE	
PAINT LINE	CONTINUED	MAILBOX	
STOP LINE	MONITORING WELL	SIGN	
RETAINING WALL	WELL	GATE	
FENCE	WATER TANK	BUILDING	
GUARDRAIL	WATER VALVE		
	POWER METER BOX	ANGLE POINT NOTE, SEE SPD1 AND SPD2	
	JUNCTION BOX		

T.26N.R.2E. W.M. SEC. 31

GENERAL NOTES:

1. HIGH VISIBILITY FENCING LIMITS ARE APPROXIMATELY 1' OUTSIDE OF CLEARING AND GRUBBING LIMITS PER THE CONSTRUCTION FENCE DETAIL ON SHEET SPD1.
2. SEE TESC NARRATIVE FOR TEMPORARY EROSION CONTROL MEASURES.
3. NOT ALL TREES WITHIN THE PROJECT LIMITS ARE SHOWN ON THIS PLAN. ALL TREES WITHIN THE CLEARING AND GRUBBING LIMITS SHALL BE REMOVED UNLESS OTHERWISE DIRECTED BY THE ENGINEER. CONTRACTOR SHALL NOTIFY WSDOT A MINIMUM OF 7 DAYS IN ADVANCE OF TREE REMOVAL WORK. PROTECT ALL EXISTING TREES OUTSIDE OF CLEARING AND GRUBBING LIMITS. SEE STANDARD SPECIFICATION SECTION 1-07.16.
4. SEE SIGNING PLANS FOR SIGN REMOVALS AND RELOCATIONS.
5. SEE SHEET SP4 FOR STREAM RELATED SITE PREPARATION DETAILS.
6. EXISTING TREES TO BE REMOVED WITHIN THE STREAM AREA MAY BE USED FOR WOODY MATERIAL IF MEETING THE REQUIREMENTS OF THE SPECIAL PROVISIONS.
7. ALL PAVEMENT MARKINGS AND RUMBLE STRIPS THAT CONFLICT WITH TEMPORARY CHANNELIZATION SHALL BE REMOVED.

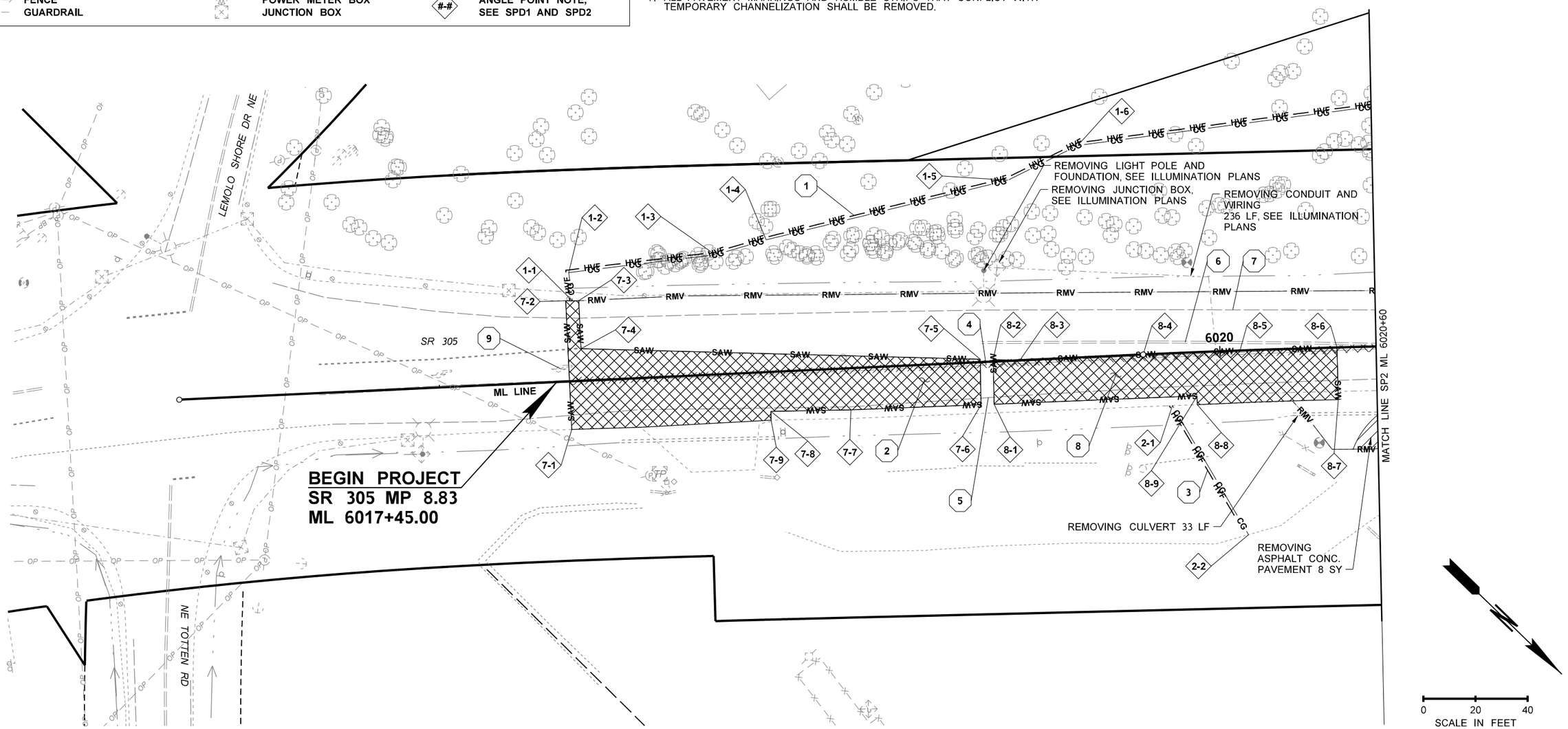

FILE NAME	c:\users\whltekev\documents\d0335732\XL6050_PS_SP_SAM_001.dgn
TIME	12:25:04 PM
DATE	3/27/2023
PLOTTED BY	whitekev
DESIGNED BY	C. JOHNSON
ENTERED BY	R. MCCABE
CHECKED BY	K. HOUSE
PROJ. ENGR.	A. AMOS
REGIONAL ADM.	S. ROARK

REVISION | DATE | BY

REGION NO.	STATE	FED.AID PROJ.NO.
10	WASH	
JOB NUMBER 22C533		
CONTRACT NO.		LOCATION NO. XL6050

KEVIN L. HOUSE, STATE OF WASHINGTON, 41824, REGISTERED PROFESSIONAL ENGINEER — SEE SHEET CT1 DATE — P.E. STAMP BOX

THEODORE PRINCE, STATE OF WASHINGTON, 41859, REGISTERED PROFESSIONAL ENGINEER — SEE SHEET CT1 DATE — P.E. STAMP BOX

Washington State Department of Transportation

Parametrix

SR 305
SAM SNYDER CREEK
REMOVE FISH BARRIER

SITE PREPARATION PLAN

PLAN REF NO SP1

SHEET 30 OF 186 SHEETS

T.26N.R.2E. W.M. SEC. 31

T.26N.R.2E. W.M. SEC. 30

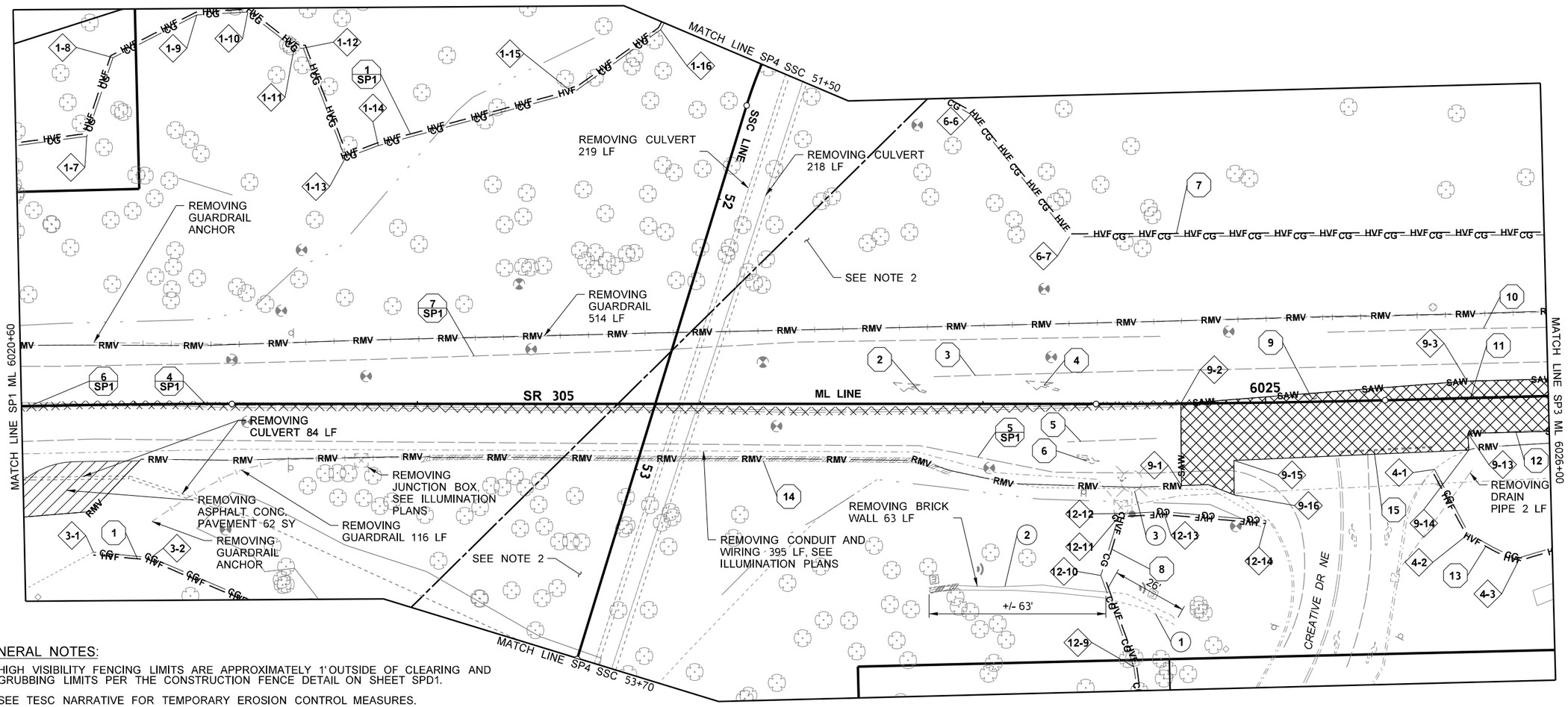

GENERAL NOTES:

1. HIGH VISIBILITY FENCING LIMITS ARE APPROXIMATELY 1' OUTSIDE OF CLEARING AND GRUBBING LIMITS PER THE CONSTRUCTION FENCE DETAIL ON SHEET SPD1.
2. SEE TESC NARRATIVE FOR TEMPORARY EROSION CONTROL MEASURES.
3. NOT ALL TREES WITHIN THE PROJECT LIMITS ARE SHOWN ON THIS PLAN. ALL TREES WITHIN THE CLEARING AND GRUBBING LIMITS SHALL BE REMOVED UNLESS OTHERWISE DIRECTED BY THE ENGINEER. CONTRACTOR SHALL NOTIFY WSDOT A MINIMUM OF 7 DAYS IN ADVANCE OF TREE REMOVAL WORK. PROTECT ALL EXISTING TREES OUTSIDE OF CLEARING AND GRUBBING LIMITS. SEE STANDARD SPECIFICATION SECTION 1-07.16.
4. SEE SIGNING PLANS FOR SIGN REMOVALS AND RELOCATIONS.
5. SEE SHEET SP4 FOR STREAM RELATED SITE PREPARATION DETAILS.
6. EXISTING TREES TO BE REMOVED WITHIN THE STREAM AREA MAY BE USED FOR WOODY MATERIAL IF MEETING THE REQUIREMENTS OF THE SPECIAL PROVISIONS.
7. ALL PAVEMENT MARKINGS AND RUMBLE STRIPS THAT CONFLICT WITH TEMPORARY CHANNELIZATION SHALL BE REMOVED.
8. SEE SHEET SP1 FOR LEGEND.

CONSTRUCTION NOTES:

1. PROTECT 26 LF SEGMENT OF WALL.
2. SAWCUT AND REMOVE 63 LF TO EXISTING WALL JOINT.
3. PROTECT EXISTING LIGHT POLE, SEE ILLUMINATION PLANS.

0 20 40
SCALE IN FEET

FILE NAME	c:\users\whitekev\documents\d0335732\XL6050_PS_SP_SAM_002.dgn				REGION NO. 10	STATE WASH	FED.AID PROJ.NO.
TIME	12:25:06 PM						
DATE	3/27/2023						
PLOTTED BY	whitekev				JOB NUMBER 22C533		
DESIGNED BY	C. JOHNSON						
ENTERED BY	R. MCCABE						
CHECKED BY	K. HOUSE				CONTRACT NO.		LOCATION NO. XL6050
PROJ. ENGR.	A. AMOS						
REGIONAL ADM.	S. ROARK	REVISION	DATE	BY			

KEVIN L. HOUSE, STATE OF WASHINGTON, 41824, REGISTERED PROFESSIONAL ENGINEER
SEE SHEET CT1 DATE
P.E. STAMP BOX

THEODORE PRINCE, STATE OF WASHINGTON, 41859, REGISTERED PROFESSIONAL ENGINEER
SEE SHEET CT1 DATE
P.E. STAMP BOX

Washington State Department of Transportation

Parametrix

SR 305
SAM SNYDER CREEK
REMOVE FISH BARRIER

SITE PREPARATION PLAN

PLAN REF NO SP2

SHEET 31 OF 186 SHEETS

T.26N.R.2E. W.M. SEC. 30

CONSTRUCTION NOTES:

3 PROTECT EXISTING LIGHT POLE, SEE ILLUMINATION PLANS.

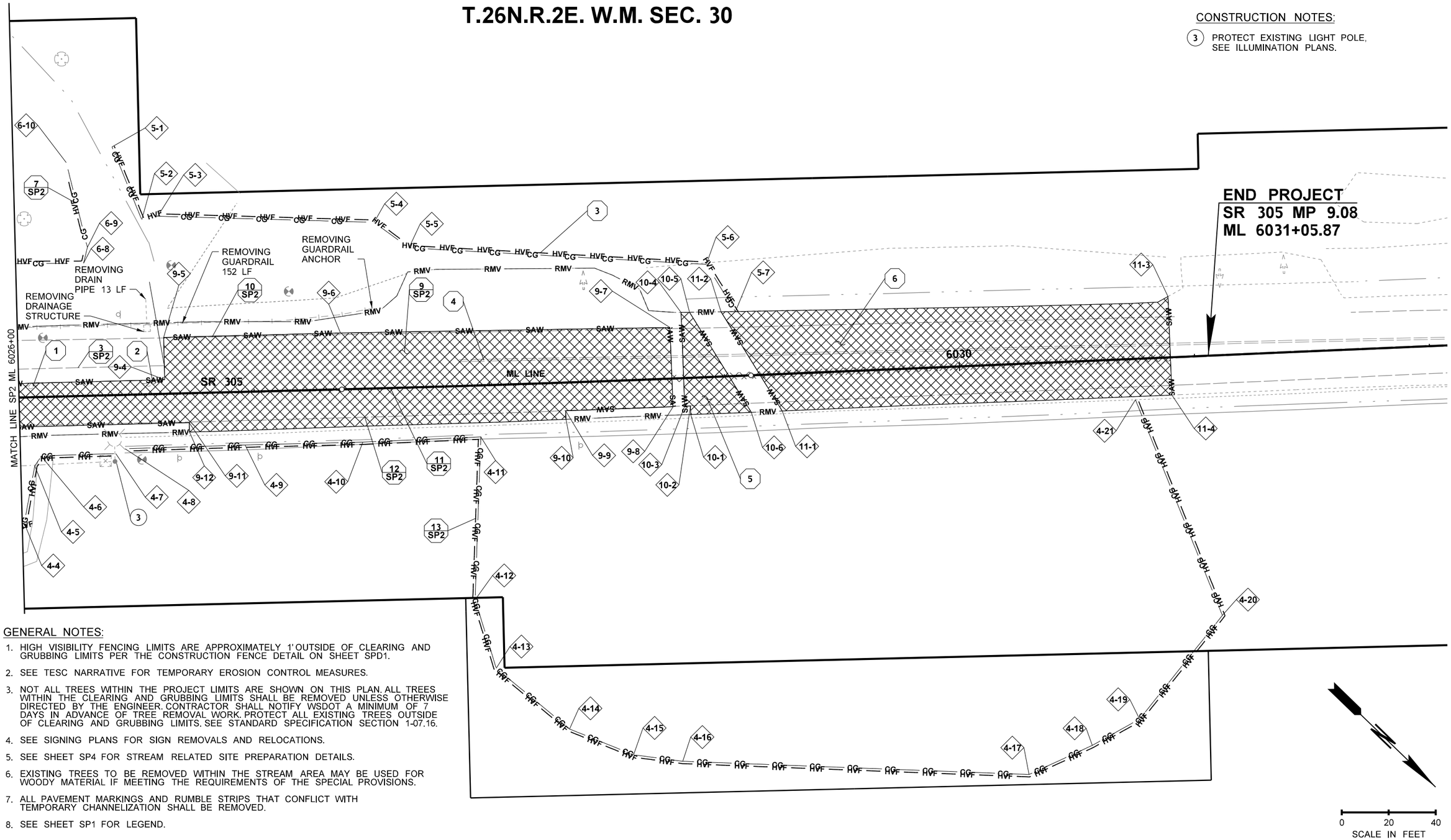

GENERAL NOTES:

1. HIGH VISIBILITY FENCING LIMITS ARE APPROXIMATELY 1' OUTSIDE OF CLEARING AND GRUBBING LIMITS PER THE CONSTRUCTION FENCE DETAIL ON SHEET SPD1.
2. SEE TESC NARRATIVE FOR TEMPORARY EROSION CONTROL MEASURES.
3. NOT ALL TREES WITHIN THE PROJECT LIMITS ARE SHOWN ON THIS PLAN. ALL TREES WITHIN THE CLEARING AND GRUBBING LIMITS SHALL BE REMOVED UNLESS OTHERWISE DIRECTED BY THE ENGINEER. CONTRACTOR SHALL NOTIFY WSDOT A MINIMUM OF 7 DAYS IN ADVANCE OF TREE REMOVAL WORK. PROTECT ALL EXISTING TREES OUTSIDE OF CLEARING AND GRUBBING LIMITS. SEE STANDARD SPECIFICATION SECTION 1-07.16.
4. SEE SIGNING PLANS FOR SIGN REMOVALS AND RELOCATIONS.
5. SEE SHEET SP4 FOR STREAM RELATED SITE PREPARATION DETAILS.
6. EXISTING TREES TO BE REMOVED WITHIN THE STREAM AREA MAY BE USED FOR WOODY MATERIAL IF MEETING THE REQUIREMENTS OF THE SPECIAL PROVISIONS.
7. ALL PAVEMENT MARKINGS AND RUMBLE STRIPS THAT CONFLICT WITH TEMPORARY CHANNELIZATION SHALL BE REMOVED.
8. SEE SHEET SP1 FOR LEGEND.

FILE NAME	c:\users\whltekev\documents\d0335732\XL6050_PS_SP_SAM_003.dgn				REGION NO. 10	STATE WASH	FED.AID PROJ.NO.
TIME	12:25:07 PM					
DATE	3/27/2023				JOB NUMBER 22C533	
PLOTTED BY	whitekev					
DESIGNED BY	C. JOHNSON				CONTRACT NO.	LOCATION NO. XL6050
ENTERED BY	R. MCCABE					
CHECKED BY	K. HOUSE					
PROJ. ENGR.	A. AMOS					
REGIONAL ADM.	S. ROARK	REVISION	DATE	BY		

KEVIN L. HOUSE, STATE OF WASHINGTON, 41824, REGISTERED PROFESSIONAL ENGINEER — SEE SHEET CT1 DATE — P.E. STAMP BOX

THEODORE PRINCE, STATE OF WASHINGTON, 41859, REGISTERED PROFESSIONAL ENGINEER — SEE SHEET CT1 DATE — P.E. STAMP BOX

Washington State Department of Transportation

Parametrix

SR 305
SAM SNYDER CREEK
REMOVE FISH BARRIER

SITE PREPARATION PLAN

PLAN REF NO SP3

SHEET 32 OF 186 SHEETS

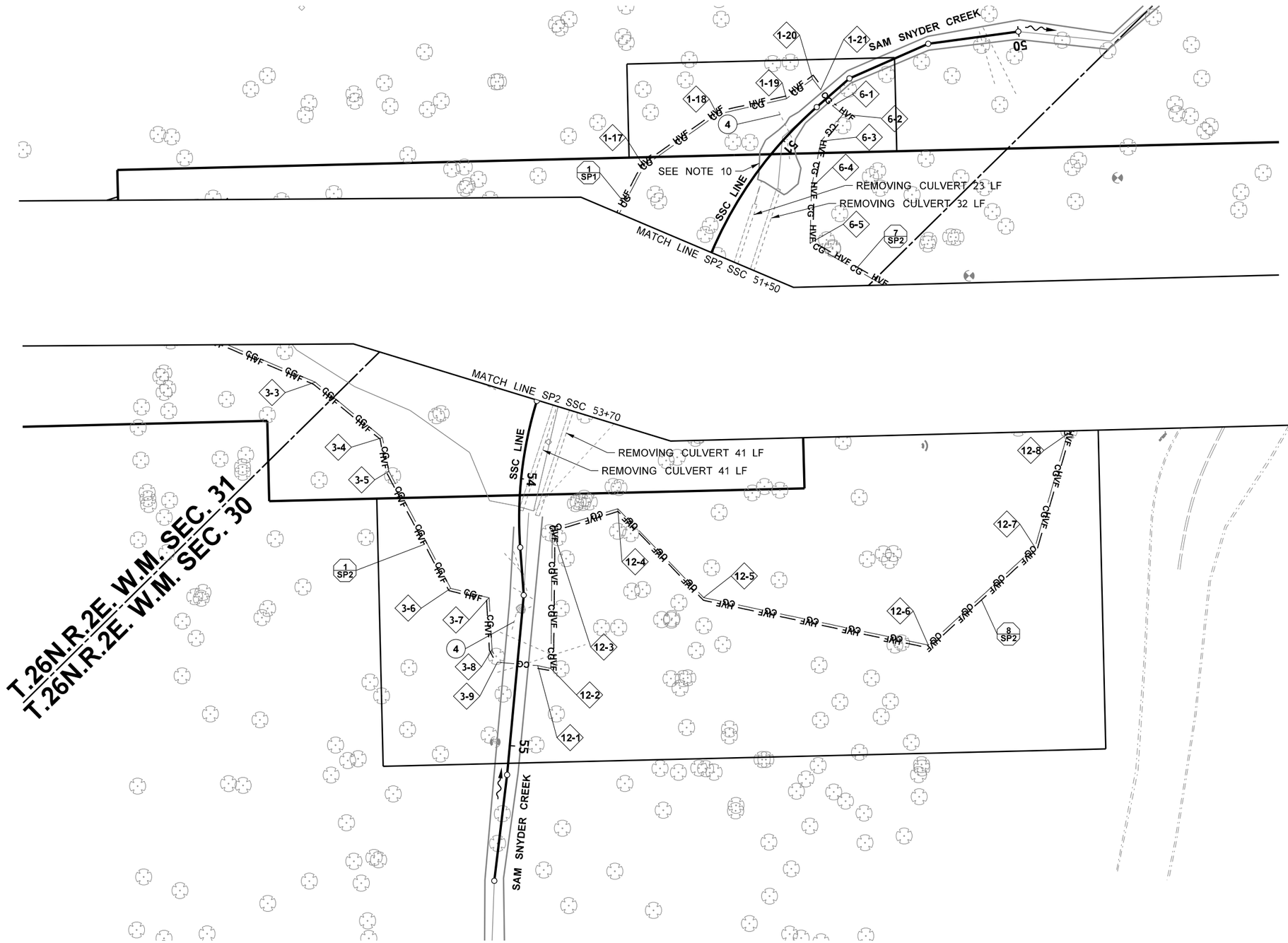

GENERAL NOTES:

1. HIGH VISIBILITY FENCING LIMITS ARE APPROXIMATELY 1' OUTSIDE OF CLEARING AND GRUBBING LIMITS PER THE CONSTRUCTION FENCE DETAIL ON SHEET SPD1.
2. SEE TESC NARRATIVE FOR TEMPORARY EROSION CONTROL MEASURES.
3. NOT ALL TREES WITHIN THE PROJECT LIMITS ARE SHOWN ON THIS PLAN. ALL TREES WITHIN THE CLEARING AND GRUBBING LIMITS SHALL BE REMOVED UNLESS OTHERWISE DIRECTED BY THE ENGINEER. CONTRACTOR SHALL NOTIFY WSDOT A MINIMUM OF 7 DAYS IN ADVANCE OF TREE REMOVAL WORK. PROTECT ALL EXISTING TREES OUTSIDE OF CLEARING AND GRUBBING LIMITS. SEE STANDARD SPECIFICATION SECTION 1-07.16.
4. SEE SIGNING PLANS FOR SIGN REMOVALS AND RELOCATIONS.
5. SEE SHEET SP4 FOR STREAM RELATED SITE PREPARATION DETAILS.
6. EXISTING TREES TO BE REMOVED WITHIN THE STREAM AREA MAY BE USED FOR WOODY MATERIAL IF MEETING THE REQUIREMENTS OF THE SPECIAL PROVISIONS.
7. ALL PAVEMENT MARKINGS AND RUMBLE STRIPS THAT CONFLICT WITH TEMPORARY CHANNELIZATION SHALL BE REMOVED.
8. SEE SHEET SP1 FOR LEGEND.

CONSTRUCTION NOTES:

4 LOG JAM AT LIMITS OF STREAM GRADING SHALL BE REMOVED AS PART OF CLEARING AND GRUBBING.

0 20 40
SCALE IN FEET

FILE NAME	c:\users\whltekev\documents\d0335732\XL6050_PS_SP_SAM_004.dgn
TIME	12:25:08 PM
DATE	3/27/2023
PLOTTED BY	whitekev
DESIGNED BY	T. PRINCE
ENTERED BY	C. ODEGARD
CHECKED BY	K. HOUSE
PROJ. ENGR.	A. AMOS
REGIONAL ADM.	S. ROARK

REVISION | DATE | BY

REGION NO.	STATE	FED.AID PROJ.NO.
10	WASH	
JOB NUMBER 22C533		
CONTRACT NO.		LOCATION NO. XL6050

KEVIN L. HOUSER — STATE OF WASHINGTON — 49824 — REGISTERED PROFESSIONAL ENGINEER
SEE SHEET CT1
DATE
P.E. STAMP BOX

THEODORE PRINCE — STATE OF WASHINGTON — 41859 — REGISTERED PROFESSIONAL ENGINEER
SEE SHEET CT1
DATE
P.E. STAMP BOX

Washington State Department of Transportation
Parametrix

SR 305
SAM SNYDER CREEK
REMOVE FISH BARRIER

SITE PREPARATION PLAN

PLAN REF NO
SP4

SHEET 33 OF 186 SHEETS

CLEARING AND GRUBBING ANGLE POINT TABLE	
1-#	LOCATION
1-1	ML 6017+52.55 (30.84' LT)
1-2	ML 6017+51.66 (41.76' LT)
1-3	ML 6018+08.20 (45.94' LT)
1-4	ML 6018+27.99 (50.74' LT)
1-5	ML 6019+21.75 (69.29' LT)
1-6	ML 6019+49.20 (81.34' LT)
1-7	ML 6020+84.46 (94.99' LT)
1-8	ML 6020+93.79 (122.68' LT)
1-9	ML 6021+22.48 (137.60' LT)
1-10	ML 6021+40.04 (138.61' LT)
1-11	ML 6021+56.40 (125.75' LT)
1-12	ML 6021+59.69 (125.81' LT)
1-13	ML 6021+74.50 (86.96' LT)
1-14	ML 6021+86.20 (91.36' LT)
1-15	ML 6022+55.06 (109.99' LT)
1-16	SSC 51+52.17 (37.67' RT)
1-17	SSC 51+34.11 (36.88' RT)
1-18	SSC 51+07.97 (24.99' RT)
1-19	SSC 50+88.42 (9.95' RT)
1-20	SSC 50+76.60 (8.94' RT)
1-21	SSC 50+76.96 (3.95' RT)

CLEARING AND GRUBBING ANGLE POINT TABLE	
2-#	LOCATION
2-1	ML 6019+80.86 (20.08' RT)
2-2	ML 6020+08.50 (70.78' RT)

CLEARING AND GRUBBING ANGLE POINT TABLE	
3-#	LOCATION
3-1	ML 6020+84.70 (52.08' RT)
3-2	ML 6021+05.33 (54.25' RT)
3-3	SSC 53+81.66 (81.83' RT)
3-4	SSC 53+92.54 (53.32' RT)
3-5	SSC 54+01.61 (49.43' RT)
3-6	SSC 54+39.07 (27.03' RT)
3-7	SSC 54+45.74 (12.76' RT)
3-8	SSC 54+65.03 (9.90' RT)
3-9	SSC 54+69.42 (7.46' RT)

CLEARING AND GRUBBING ANGLE POINT TABLE	
4-#	LOCATION
4-1	ML 6025+59.14 (24.93' RT)
4-2	ML 6025+70.65 (47.95' RT)
4-3	ML 6025+88.53 (56.82' RT)
4-4	ML 6026+00.85 (53.51' RT)
4-5	ML 6026+05.94 (29.20' RT)
4-6	ML 6026+08.81 (25.21' RT)
4-7	ML 6026+40.48 (24.84' RT)
4-8	ML 6026+44.51 (22.89' RT)
4-9	ML 6026+95.52 (22.59' RT)
4-10	ML 6027+45.61 (22.66' RT)
4-11	ML 6027+95.68 (21.91' RT)
4-12	ML 6027+91.14 (91.04' RT)
4-13	ML 6027+99.10 (120.45' RT)
4-14	ML 6028+29.01 (147.31' RT)
4-15	ML 6028+55.42 (159.26' RT)
4-16	ML 6028+75.85 (162.80' RT)
4-17	ML 6030+22.11 (174.69' RT)
4-18	ML 6030+49.50 (163.45' RT)
4-19	ML 6030+70.06 (153.17' RT)
4-20	ML 6031+07.16 (110.62' RT)
4-21	ML 6030+74.16 (17.41' RT)

CLEARING AND GRUBBING ANGLE POINT TABLE	
5-#	LOCATION
5-1	ML 6026+42.25 (105.54' LT)
5-2	ML 6026+54.09 (74.29' LT)
5-3	ML 6026+60.92 (75.63' LT)
5-4	ML 6027+52.90 (70.64' LT)
5-5	ML 6027+67.52 (59.38' LT)
5-6	ML 6028+94.27 (47.94' LT)
5-7	ML 6029+05.83 (27.39' LT)

CLEARING AND GRUBBING ANGLE POINT TABLE	
6-#	LOCATION
6-1	SSC 50+77.57 (3.56' LT)
6-2	SSC 50+76.75 (8.49' LT)
6-3	SSC 50+90.06 (10.44' LT)
6-4	SSC 51+06.97 (19.58' LT)
6-5	SSC 51+27.73 (31.22' LT)
6-6	ML 6023+95.81 (102.38' LT)
6-7	ML 6024+30.69 (59.15' LT)
6-8	ML 6026+28.87 (56.36' LT)
6-9	ML 6026+30.68 (63.17' LT)
6-10	ML 6026+22.62 (99.41' LT)

CLEARING AND GRUBBING ANGLE POINT TABLE	
12-#	LOCATION
12-1	SSC 54+69.31 (7.64' LT)
12-2	SSC 54+69.90 (12.64' LT)
12-3	SSC 54+19.05 (12.30' LT)
12-4	SSC 54+10.07 (36.78' LT)
12-5	SSC 54+43.57 (67.23' LT)
12-6	SSC 54+48.22 (152.18' LT)
12-7	SSC 54+39.52 (191.78' LT)
12-8	SSC 53+24.11 (193.15' LT)
12-9	ML 6024+53.08 (93.00' RT)
12-10	ML 6024+41.69 (60.65' RT)
12-11	ML 6024+47.96 (39.90' RT)
12-12	ML 6024+50.48 (38.74' RT)
12-13	ML 6024+63.58 (38.19' RT)
12-14	ML 6024+99.56 (41.78' RT)

GENERAL NOTES:

1. SEE SITE PREPARATION PLAN SHEETS FOR CLEARING AND GRUBBING LIMITS AND SAWCUT LIMITS.
2. SEE TRAFFIC CONTROL PLAN SHEETS FOR TEMPORARY BARRIER LOCATION, AND INGRESS/EGRESS POINTS.
3. SEE DRAINAGE PLAN AND DRAINAGE DETAIL SHEETS FOR PROPOSED DRAINAGE FEATURES INCLUDING DRAINAGE STRUCTURES AND PIPES.
4. CONTRACTOR SHALL INSTALL HIGH VISIBILITY FENCE (HVF) ALONG PRESERVATION LINES AS SHOWN ON THE SITE PREPARATION PLAN AND AS DIRECTED BY THE ENGINEER. SEE SITE PREPARATION PLANS.

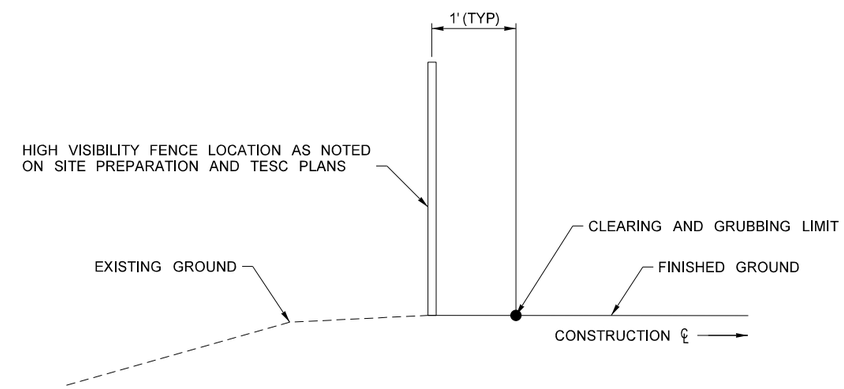

HIGH VISIBILITY FENCE PLACEMENT
NOT TO SCALE

FILE NAME	c:\users\whltekev\documents\d0335732\XL6050_PS_SPD_SAM_001.dgn					
TIME	12:25:09 PM				REGION NO. 10	STATE WASH	FED.AID PROJ.NO.
DATE	3/27/2023					
PLOTTED BY	whitekev				JOB NUMBER 22C533	
DESIGNED BY	C. JOHNSON					
ENTERED BY	R. MCCABE					
CHECKED BY	K. HOUSE				CONTRACT NO.	LOCATION NO. XL6050
PROJ. ENGR.	A. AMOS					
REGIONAL ADM.	S. ROARK	REVISION	DATE	BY		

KEVIN L. HOUSE — STATE OF WASHINGTON — 51824 — REGISTERED PROFESSIONAL ENGINEER
SEE SHEET CT1 DATE
P.E. STAMP BOX

THEODORE PRINCE — STATE OF WASHINGTON — 41859 — REGISTERED PROFESSIONAL ENGINEER
SEE SHEET CT1 DATE
P.E. STAMP BOX

Washington State Department of Transportation
Parametrix

SR 305
SAM SNYDER CREEK
REMOVE FISH BARRIER

SITE PREPARATION DETAILS

PLAN REF NO **SPD1**

SHEET 34 OF 186 SHEETS

PLANING ANGLE POINT TABLE	
7-#	LOCATION
7-1	ML 6017+50.00 (18.47' RT)
7-2	ML 6017+50.00 (30.97' LT)
7-3	ML 6017+55.00 (30.79' LT)
7-4	ML 6017+55.00 (12.35' LT)
7-5	ML 6019+07.93 (1.12' LT)
7-6	ML 6019+07.43 (16.33' RT)
7-7	ML 6018+57.47 (15.95' RT)
7-8	ML 6018+26.70 (15.13' RT)
7-9	ML 6018+26.61 (18.52' RT)

PLANING ANGLE POINT TABLE	
8-#	LOCATION
8-1	ML 6019+12.43 (16.38' RT)
8-2	ML 6019+12.92 (0.75' LT)
8-3	ML 6019+23.12 (0.00')
8-4	ML 6019+70.50 (0.00')
8-5	ML 6020+07.75 (0.00')
8-6	ML 6020+46.11 (0.78' LT)
8-7	ML 6020+45.00 (20.00' RT)
8-8	ML 6019+90.50 (20.16' RT)
8-9	ML 6019+90.52 (16.84' RT)

PLANING ANGLE POINT TABLE	
9-#	LOCATION
9-1	ML 6024+70.00 (29.00' RT)
9-2	ML 6024+70.00 (0.00')
9-3	ML 6025+71.39 (6.00' LT)
9-4	ML 6026+62.08 (6.00' LT)
9-5	ML 6026+62.08 (24.00' LT)
9-6	ML 6027+37.32 (24.00' LT)
9-7	ML 6028+77.67 (21.76' LT)
9-8	ML 6028+77.69 (12.00' RT)
9-9	ML 6028+32.04 (12.00' RT)
9-10	ML 6028+32.04 (15.64' RT)
9-11	ML 6026+72.08 (16.49' RT)
9-12	ML 6026+72.01 (12.50' RT)
9-13	ML 6025+71.24 (12.50' RT)
9-14	ML 6025+71.39 (18.35' RT)
9-15	ML 6024+88.50 (20.26' RT)
9-16	ML 6024+88.50 (32.48' RT)

PLANING ANGLE POINT TABLE	
10-#	LOCATION
10-1	ML 6028+85.06 (15.60' RT)
10-2	ML 6028+85.06 (12.00' RT)
10-3	ML 6028+82.61 (12.00' RT)
10-4	ML 6028+82.68 (27.97' LT)
10-5	ML 6028+86.30 (27.88' LT)
10-6	ML 6029+10.78 (15.75' RT)

PLANING ANGLE POINT TABLE	
11-#	LOCATION
11-1	ML 6029+23.94 (15.73' RT)
11-2	ML 6028+99.71 (27.54' LT)
11-3	ML 6030+89.87 (25.89' LT)
11-4	ML 6030+89.73 (16.07' RT)

GENERAL NOTES:

1. SEE SITE PREPARATION PLAN SHEETS FOR CLEARING AND GRUBBING LIMITS AND SAWCUT LIMITS.
2. SEE TRAFFIC CONTROL PLAN SHEETS FOR TEMPORARY BARRIER LOCATION, AND INGRESS/EGRESS POINTS.
3. SEE DRAINAGE PLAN AND DRAINAGE DETAIL SHEETS FOR PROPOSED DRAINAGE FEATURES INCLUDING DRAINAGE STRUCTURES AND PIPES.
4. CONTRACTOR SHALL INSTALL HIGH VISIBILITY FENCE (HVF) ALONG PRESERVATION LINES AS SHOWN ON THE SITE PREPARATION PLAN AND AS DIRECTED BY THE ENGINEER. SEE SITE PREPARATION PLANS.

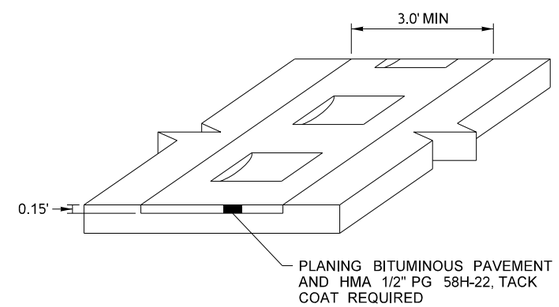

RUMBLE STRIP REMOVAL AND INLAY DETAIL
NOT TO SCALE

FILE NAME	c:\users\whltekev\documents\d0335732\XL6050_PS_SPD_SAM_002.dgn
TIME	12:25:10 PM
DATE	3/27/2023
PLOTTED BY	whitekev
DESIGNED BY	C. JOHNSON
ENTERED BY	R. MCCABE
CHECKED BY	K. HOUSE
PROJ. ENGR.	A. AMOS
REGIONAL ADM.	S. ROARK

REVISION | DATE | BY

REGION NO.	STATE	FED.AID PROJ.NO.
10	WASH	
JOB NUMBER 22C533		
CONTRACT NO.		LOCATION NO. XL6050

SEE SHEET CT1 DATE
P.E. STAMP BOX

SEE SHEET CT1 DATE
P.E. STAMP BOX

Washington State Department of Transportation

Parametrix

SR 305
SAM SNYDER CREEK
REMOVE FISH BARRIER

SITE PREPARATION DETAILS

PLAN REF NO SPD2

SHEET 35 OF 186 SHEETS

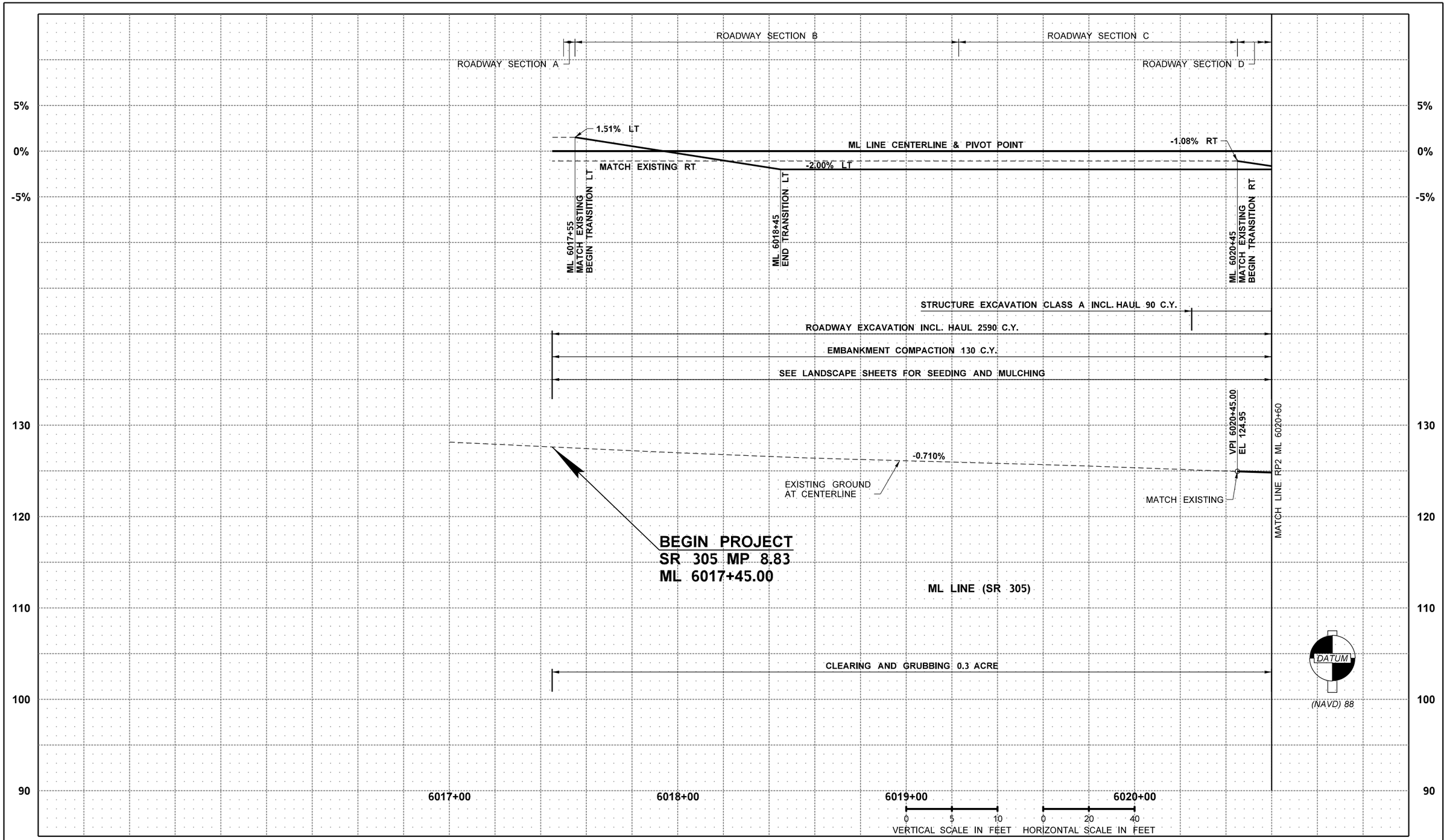

FILE NAME	c:\users\projectwise\workingfolder\d0335735\XL6050_PS_RP_SAM_001.dgn						
TIME	6:33:46 PM				REGION NO. 10	STATE WASH	FED.AID PROJ.NO.
DATE	4/4/2023						
PLOTTED BY	mccabrya				JOB NUMBER 22C533		
DESIGNED BY	C. JOHNSON						
ENTERED BY	K. WHITEHOUSE						
CHECKED BY	K. HOUSE				CONTRACT NO.		LOCATION NO. XL6050
PROJ. ENGR.	A. AMOS						
REGIONAL ADM.	S. ROARK	REVISION	DATE	BY			

KEVIN L. HOUSE
STATE OF WASHINGTON
41824
REGISTERED PROFESSIONAL ENGINEER

SEE SHEET CT1
DATE
P.E. STAMP BOX

DATE
P.E. STAMP BOX

Washington State Department of Transportation

Parametrix

SR 305
SAM SNYDER CREEK
REMOVE FISH BARRIER

ROADWAY PROFILES

PLAN REF NO
RP1

SHEET 36 OF 186 SHEETS

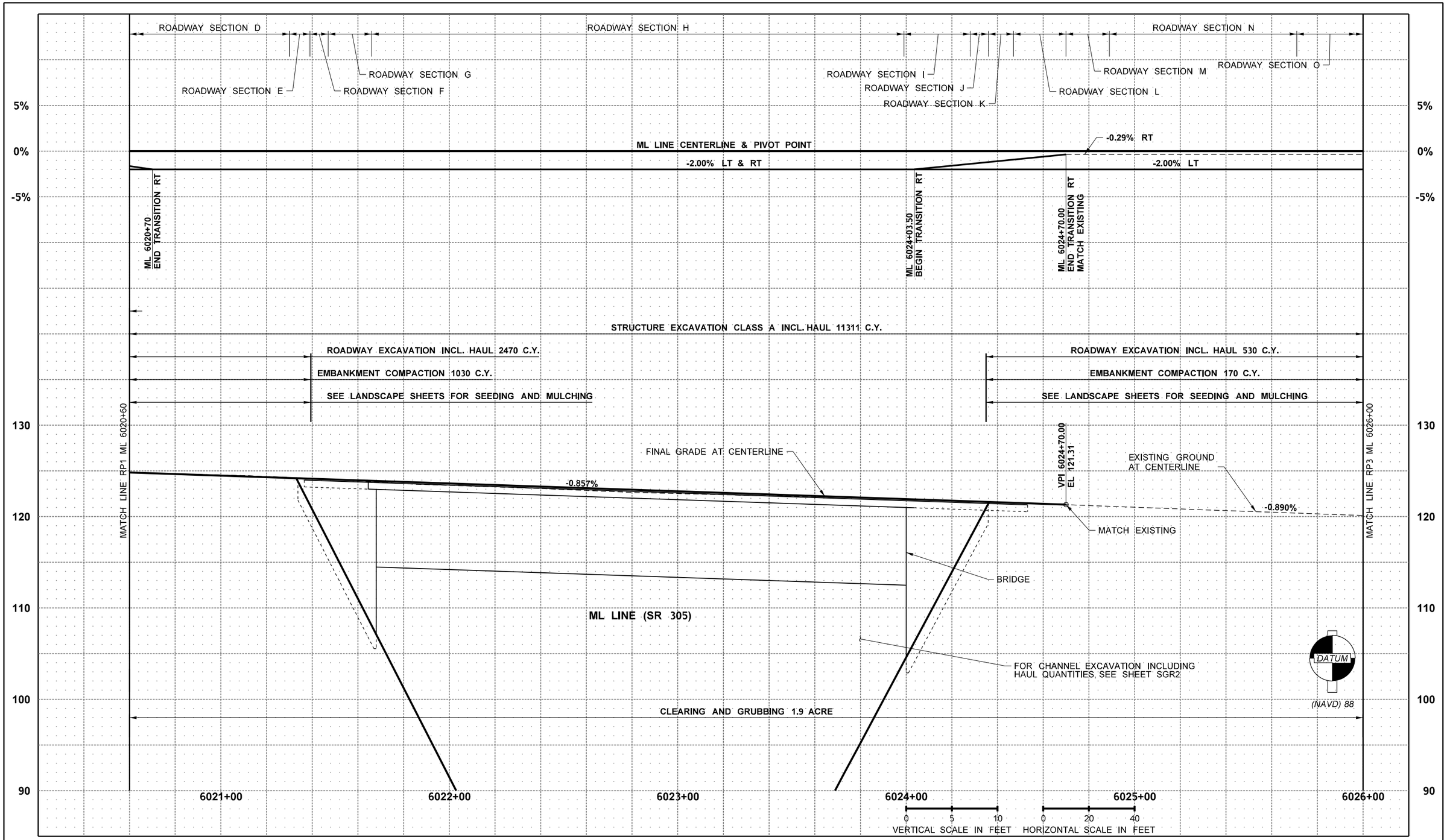

FILE NAME	c:\users\projectwiseworkingfolder\d0335735\XL6050_PS_RP_SAM_002.dgn						
TIME	6:33:47 PM				REGION NO. 10	STATE WASH	FED.AID PROJ.NO.
DATE	4/4/2023				JOB NUMBER 22C533		
PLOTTED BY	mccabrya						
DESIGNED BY	C. JOHNSON				CONTRACT NO.		LOCATION NO. XL6050
ENTERED BY	K. WHITEHOUSE						
CHECKED BY	K. HOUSE						
PROJ. ENGR.	A. AMOS						
REGIONAL ADM.	S. ROARK	REVISION	DATE	BY			

KEVIN L. HOUSE, STATE OF WASHINGTON, 41624, REGISTERED PROFESSIONAL ENGINEER

SEE SHEET CT1
DATE
P.E. STAMP BOX

DATE
P.E. STAMP BOX

Washington State Department of Transportation

Parametrix

SR 305
SAM SNYDER CREEK
REMOVE FISH BARRIER

ROADWAY PROFILES

PLAN REF NO
RP2

SHEET 37 OF 186 SHEETS

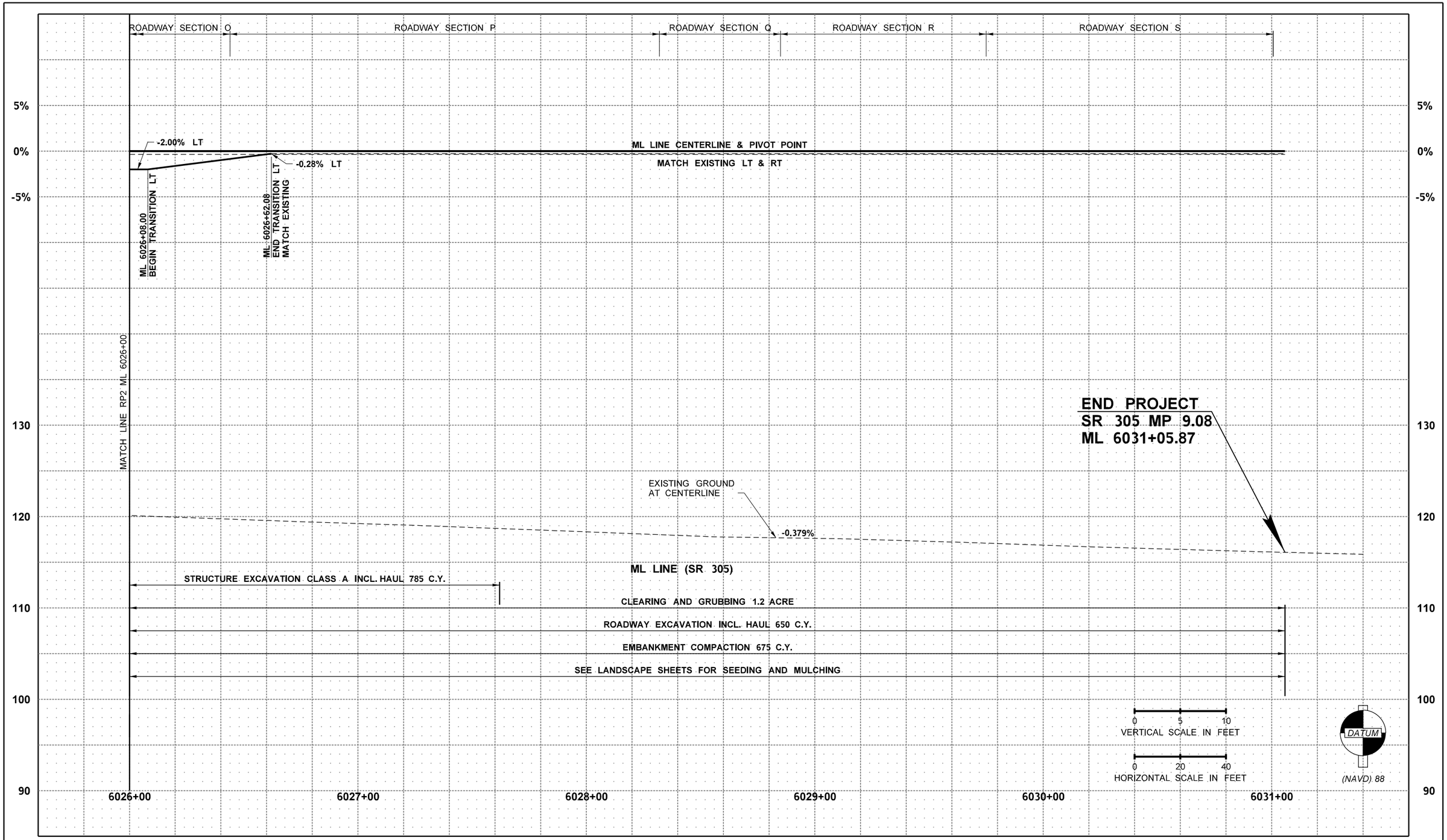

FILE NAME	c:\users\projectwlseworkingfolder\d0335735\XL6050_PS_RP_SAM_003.dgn
TIME	6:33:48 PM
DATE	4/4/2023
PLOTTED BY	mccabrya
DESIGNED BY	C. JOHNSON
ENTERED BY	K. WHITEHOUSE
CHECKED BY	K. HOUSE
PROJ. ENGR.	A. AMOS
REGIONAL ADM.	S. ROARK

REVISION	DATE	BY

REGION NO.	STATE	FED.AID PROJ.NO.
10	WASH	
JOB NUMBER 22C533		
CONTRACT NO.		LOCATION NO. XL6050

KEVIN L. HOUSE STATE OF WASHINGTON 61824 REGISTERED PROFESSIONAL ENGINEER

SEE SHEET CT1
DATE
P.E. STAMP BOX

DATE
P.E. STAMP BOX

Washington State Department of Transportation

Parametrix

SR 305
SAM SNYDER CREEK
REMOVE FISH BARRIER

ROADWAY PROFILES

PLAN REF NO
RP3

SHEET 38 OF 186 SHEETS

STRUCTURE NOTES

NOTE:
THE FIRST NUMBER OF THE "CODE DESIGNATION" BELOW REFERS TO THE SHEET NO. OR THE SHEET REFERENCE NO. SHOWING THE DRAINAGE FEATURE.

THE SECOND NUMBER REFERS TO THE DRAINAGE FEATURE FOUND ON THAT SHEET.

CODE	LOCATION ▼ \ UNIT OF MEASURE ➢	ROADWAY EXCAVATION INCL. HAUL - AREA POND	COMMON BORROW INCL. HAUL	ROCK FOR EROSION AND SCOUR PROTECTION CLASS C	DITCH EXCAVATION INCL. HAUL	GRATE INLET TYPE 2		QUARRY SPALLS	UNDERDRAIN PIPE 6 IN. DIAM.	DRAIN PIPE 8 IN. DIAM.	HIGH-DENSITY POLYETHYLENE (HDPE) PIPE 12 IN. DIAM.	CATCH BASIN TYPE 2 54 IN. DIAM. W/FR		CATCH BASIN TYPE 1	CATCH BASIN TYPE 2 48 IN. DIAM.	TESTING STORM SEWER PIPE	SEE GENERAL NOTES
		C.Y.	C.Y.	TON	C.Y.	EACH		TON	L.F.	L.F.	L.F.	EACH		EACH	EACH	L.F.	
DR1-1	ML 6020+56.5 (53.8' LT) TO ML 6020+98.3 (62.6' LT)													1		43.9	1,7
DR1-2	ML 6020+48.2 (45.6' RT) TO ML 6021+11.9 (25.8' RT)														1	66.1	3,7
DR1-3	ML 6019+09.9 (19.2' RT) TO ML 6019+11.7 (44.4' LT)														1	63	3,7
DR1-4	ML 6019+18.5 (57.1' LT) TO ML 6020+56.5 (53.8' LT)														1	139.3	3,8
DR1-6	ML 6021+18.0 (19.0' RT) TO ML 6019+87.0 (21.5' RT)														1	130.2	3,7
DR1-7	ML 6019+93.6 (27.4' RT) TO ML 6020+10.1 (33.1' RT)															17.3	
DR1-8	ML 6020+10.1 (33.1' RT) TO ML 6021+11.9 (25.8' RT)													1		101.2	3,8
DR1-10	ML 6019+87.0 (21.5' RT) TO ML 6019+09.9 (19.2' RT)														1	77.1	3,7
DR1-11	ML 6019+11.7 (44.4' LT) TO ML 6019+18.5 (57.1' LT)														1	14.4	3,7
DR1-12	ML 6019+23.0 (48.5' LT) TO ML 6021+79.7 (50.5' LT)								270								24
DR2-2	ML 6020+98.3 (62.6' LT) TO ML 6021+55.7 (102.5' LT)				95			20									12,14
DR2-3	ML 6021+55.7 (102.5' LT) TO ML 6021+65.9 (72.6' LT)										31.7					31.7	7,15
DR2-4	ML 6020+69.1 (31.4' LT) TO ML 6021+18.0 (31.0' LT)														1	49.3	3,7
DR2-5	ML 6020+85.0 (72.7' LT) TO ML 6021+65.9 (72.6' LT)														1	69	3,8
DR2-6	ML 6021+65.9 (72.6' LT) TO ML 6021+85.0 (80.2' LT)			21							20.6					20.6	13,15
DR2-7	ML 6021+82.3 (54.9' LT) TO ML 6021+65.9 (72.6' LT)									28.4							5
DR2-8	ML 6021+58.3 (23.8' RT) TO ML 6021+82.3 (54.9' LT)								82.3								5,19
DR2-9	ML 6021+18.0 (31.0' LT) TO ML 6021+18.0 (19.0' RT)														1	49.9	3,7
DR2-10	ML 6021+11.9 (25.8' RT) TO ML 6021+70.3 (53.0' RT)			268	170						67.8					67.8	13,15
DR2-11	ML 6034+18.5 (52.3' LT) TO ML 6023+95.0 (24.4' RT)								80.3								5
DR2-12	ML 6023+95.0 (24.4' RT) TO ML 6024+29.2 (34.9' RT)									35.3							5
DR2-13	ML 6024+29.2 (34.9' RT) TO ML 6023+73.4 (43.8' RT)			368	230						60.9					60.9	13,15
DR2-14	ML 6024+40.0 (26.8' RT) TO ML 6024+59.0 (30.9' LT)														1	60.7	3,9,21
DR2-15	ML 6024+28.4 (RT) TO ML 6024+79.9 (RT)																22
DR2-16	ML 6024+59.0 (30.9' LT) TO ML 6025+37.2 (30.9' LT)														1	77.6	3,7
DR2-17	ML 6024+58.2 (46.9' LT) TO ML 6024+59.0 (30.9' LT)													1		16	1,7
DR2-18	ML 6025+71.5 (27.0' RT) TO ML 6028+02.3 (21.0' RT)							28									22
DR2-19	ML 6025+37.2 (30.9' LT) TO ML 6026+41.7 (30.9' LT)														1	104.5	3,7
DR2-20	ML 6025+37.6 (42.5' LT) TO ML 6025+37.2 (30.9' LT)					1										11.6	4,9
DR2-22	ML 6020+68.4 (47.9' LT) TO ML 6020+69.1 (31.4' LT)													1		16.5	1,7
DR2-23	ML 6021+29.9 (22.0' RT) TO ML 6021+57.9 (22.0' RT)								32								24
DR2-24	ML 6023+96.8 (21.9' RT) TO ML 6024+23.7 (29.7' RT)								32								24
DR2-25	ML 6024+18.5 (50.5' LT) TO ML 6026+23.0 (47.1' LT)								210								24
	SHEET TOTAL			657	495	1		48	707	64	181			4	12	1289	

GENERAL NOTES:

A. DRAINAGE STRUCTURE STATIONING AND OFFSET IS TO THE CENTER OF THE GRATE REGARDLESS OF STRUCTURE TYPE AND SIZE.

B. PIPE ZONE BEDDING AND BACKFILL SEE STANDARD PLAN B-55.20.

1. SEE CATCH BASIN TYPE 1 – SEE STANDARD PLAN B-5.20.
2. SEE SPECIAL PROVISION "DUCTILE IRON STORM SEWER PIPE".
3. SEE CATCH BASIN TYPE 2 - SEE STANDARD PLAN B-10.20.
4. SEE GRATE INLET TYPE 2 - SEE STANDARD PLAN B-35.40.
5. SEE 8 INCH SEWER CLEAN-OUT - SEE STANDARD PLAN B-85.40.
6. SEE CATCH BASIN TYPE 2 54 IN. W/ FR, DETAIL ON SHEET DD6.
7. SEE RECTANGULAR VANED GRATE - SEE STANDARD PLAN B-30.30 AND RECTANGULAR FRAME (REVERSIBLE) - SEE STANDARD PLAN B-30.10.
8. SEE RECTANGULAR SOLID METAL COVER – SEE STANDARD PLAN B-30.20 AND RECTANGULAR FRAME (REVERSIBLE) - SEE STANDARD PLAN B-30.10.
9. SEE FRAME AND DUAL VANED GRATES FOR GRATE INLET (ROTATED INSTALLATION) – SEE STANDARD PLAN B-40.40.
10. SEE CATCH BASIN TYPE 2 48 IN. DIAM. W/CAGE DETAIL ON SHEET DD6.
11. NOT USED.
12. SEE COMPOST AMENDED BIOFILTRATION SWALE DETAIL, SHEET DD2, DD3 AND DD8.
13. SEE SPECIAL PROVISION "ROCK FOR EROSION AND SCOUR PROTECTION CLASS C".

DESIGNED BY	T. HEW	04/04/23	
ENTERED BY	R. MCCABE	04/04/23	
CHECKED BY	T. HEW	04/04/23	
PROJ. ENGR.	A. AMOS		
REGION ADM.	S. ROARK		
		DATE	DATE

REVISION | BY

REGION NO.	STATE	FED. AID PROJ. NO.
10	WASH	

JOB NUMBER 22C533

CONTRACT NO. | LOCATION No.

Washington State Department of Transportation

OSBORN CONSULTING INCORPORATED

SR305
SAM SNYDER CREEK
REMOVE FISH BARRIER

STRUCTURE NOTES
DRAINAGE

DSN1

SHEET 39 OF 186 SHEETS

STRUCTURE NOTES

NOTE:
THE FIRST NUMBER OF THE "CODE DESIGNATION" BELOW REFERS TO THE SHEET NO. OR THE SHEET REFERENCE NO. SHOWING THE DRAINAGE FEATURE.

THE SECOND NUMBER REFERS TO THE DRAINAGE FEATURE FOUND ON THAT SHEET.

CODE	LOCATION ➢ \ UNIT OF MEASURE ➢	CL. III REINF. CONC. STORM SEWER PIPE 12 IN. DIAM.	CL. III REINF. CONC. STORM SEWER PIPE 18 IN. DIAM.		CL. IV REINF. CONC. STORM SEWER PIPE 12 IN. DIAM.	CL. IV REINF. CONC. STORM SEWER PIPE 18 IN. DIAM.	CL. V REINF. CONC. STORM SEWER PIPE 12 IN. DIAM.	SCHEDULE A STORM SEWER PIPE 12 IN. DIAM.	DUCTILE IRON STORM SEWER PIPE 15 IN. DIAM.		SEWER CLEANOUT	CRUSHED SURFACING BASE COURSE	TOPSOIL TYPE A	MEDIUM COMPOST	FLEXIBLE GUIDE POST		SEE GENERAL NOTES
		L.F.	L.F.		L.F.	L.F.	L.F.	L.F.	L.F.		EACH	TON	ACRE	ACRE	EACH		
DR1-1	ML 6020+56.5 (53.8' LT) TO ML 6020+98.3 (62.6' LT)							43.9									1,7
DR1-2	ML 6020+48.2 (45.6' RT) TO ML 6021+11.9 (25.8' RT)							66.1									3,7
DR1-3	ML 6019+09.9 (19.2' RT) TO ML 6019+11.7 (44.4' LT)							63									3,7
DR1-4	ML 6019+18.5 (57.1' LT) TO ML 6020+56.5 (53.8' LT)							139.3									3,8
DR1-6	ML 6021+18.0 (19.0' RT) TO ML 6019+87.0 (21.5' RT)							130.2									3,7
DR1-7	ML 6019+93.6 (27.4' RT) TO ML 6020+10.1 (33.1' RT)							17.3									
DR1-8	ML 6020+10.1 (33.1' RT) TO ML 6021+11.9 (25.8' RT)							101.2									3,8
DR1-10	ML 6019+87.0 (21.5' RT) TO ML 6019+09.9 (19.2' RT)							77.1									3,7
DR1-11	ML 6019+11.7 (44.4' LT) TO ML 6019+18.5 (57.1' LT)							14.4									3,7
DR1-12	ML 6019+23.0 (48.5' LT) TO ML 6021+79.7 (50.5' LT)																24
DR2-2	ML 6020+98.3 (62.6' LT) TO ML 6021+55.7 (102.5' LT)												0.05	0.05	2		12,14
DR2-3	ML 6021+55.7 (102.5' LT) TO ML 6021+65.9 (72.6' LT)																7,15
DR2-4	ML 6020+69.1 (31.4' LT) TO ML 6021+18.0 (31.0' LT)							49.3									3,7
DR2-5	ML 6020+85.0 (72.7' LT) TO ML 6021+65.9 (72.6' LT)							69									3,8
DR2-6	ML 6021+65.9 (72.6' LT) TO ML 6021+85.0 (80.2' LT)																13,15
DR2-7	ML 6021+82.3 (54.9' LT) TO ML 6021+65.9 (72.6' LT)										1						5
DR2-8	ML 6021+58.3 (23.8' RT) TO ML 6021+82.3 (54.9' LT)										1						5,19
DR2-9	ML 6021+18.0 (31.0' LT) TO ML 6021+18.0 (19.0' RT)							49.9									3,7
DR2-10	ML 6021+11.9 (25.8' RT) TO ML 6021+70.3 (53.0' RT)																13,15
DR2-11	ML 6034+18.5 (52.3' LT) TO ML 6023+95.0 (24.4' RT)										1						5
DR2-12	ML 6023+95.0 (24.4' RT) TO ML 6024+29.2 (34.9' RT)										1						5
DR2-13	ML 6024+29.2 (34.9' RT) TO ML 6023+73.4 (43.8' RT)																13,15
DR2-14	ML 6024+40.0 (26.8' RT) TO ML 6024+59.0 (30.9' LT)							60.7									3,9,21
DR2-15	ML 6024+28.4 (RT) TO ML 6024+79.9 (RT)																22
DR2-16	ML 6024+59.0 (30.9' LT) TO ML 6025+37.2 (30.9' LT)				77.6												3,7
DR2-17	ML 6024+58.2 (46.9' LT) TO ML 6024+59.0 (30.9' LT)						16										1,7
DR2-18	ML 6025+71.5 (27.0' RT) TO ML 6028+02.3 (21.0' RT)																22
DR2-19	ML 6025+37.2 (30.9' LT) TO ML 6026+41.7 (30.9' LT)				104.5												3,7
DR2-20	ML 6025+37.6 (42.5' LT) TO ML 6025+37.2 (30.9' LT)						11.6										4,9
DR2-22	ML 6020+68.4 (47.9' LT) TO ML 6020+69.1 (31.4' LT)							16.5									1,7
DR2-23	ML 6021+29.9 (22.0' RT) TO ML 6021+57.9 (22.0' RT)																24
DR2-24	ML 6023+96.8 (21.9' RT) TO ML 6024+23.7 (29.7' RT)																24
DR2-25	ML 6024+18.5 (50.5' LT) TO ML 6026+23.0 (47.1' LT)																24
	SHEET TOTAL				182		28	898			4		0.05	0.05	2		

GENERAL NOTES:

A. DRAINAGE STRUCTURE STATIONING AND OFFSET IS TO THE CENTER OF THE GRATE REGARDLESS OF STRUCTURE TYPE AND SIZE.

B. PIPE ZONE BEDDING AND BACKFILL SEE STANDARD PLAN B-55.20.

14. SEE SPECIAL PROVISION "BIOFILTRATION SWALE LEVEL SPREADER".
15. SEE MANHOLE TYPE 1 - SEE STANDARD PLAN B-15.20.
16. SEE DETENTION POND AND MAINTENANCE ACCESS ROAD DETAILS ON SHEET DD4, DD5 AND DD6. SEE STANDARD PLAN L-20.10, CHAIN LINK FENCE TYPE 3 AND STANDARD PLAN L-30.10, CHAIN LINK GATE.
17. NOT USED.
18. SEE CIRCULAR FRAME (RING) AND COVER TYPE 2 - SEE STANDARD PLAN B-30.70
19. SEE DRAINAGE DETAIL ON SHEET BG10.
20. DITCH EARTHWORKS QUANTITIES ARE INCLUDED IN RP SHEETS.
21. SEE GRATE INLET ON CATCH BASIN - TYPE 2 SEE STANDARD PLAN B-30.60.
22. SEE DITCH TYPICAL SECTION AND TABLE ON SHEET DD1.
23. SEE SLOPE ARMORING PLAN ON SHEET DD1.
24. SEE RETAINING WALL SHEETS FOR VERTICAL LOCATION AND DETAILS. EXTEND AND DAYLIGHT UNDERDRAIN PIPE TO PROPOSED 2:1 STREAM GRADING SLOPE.

DESIGNED BY	T. HEW	04/04/23		REGION NO.	STATE	FED. AID PROJ. NO.
ENTERED BY	R. MCCABE	04/04/23		10	WASH	
CHECKED BY	T. HEW	04/04/23		JOB NUMBER		
PROJ. ENGR.	A. AMOS			22C533		
REGION ADM.	S. ROARK			CONTRACT NO.		LOCATION No.
		DATE	DATE	REVISION	BY	

Washington State Department of Transportation

OSBORN CONSULTING INCORPORATED

SR305
SAM SNYDER CREEK
REMOVE FISH BARRIER

STRUCTURE NOTES
DRAINAGE

DSN2

STRUCTURE NOTES

NOTE:
THE FIRST NUMBER OF THE "CODE DESIGNATION" BELOW REFERS TO THE SHEET NO. OR THE SHEET REFERENCE NO. SHOWING THE DRAINAGE FEATURE.

THE SECOND NUMBER REFERS TO THE DRAINAGE FEATURE FOUND ON THAT SHEET.

CODE	LOCATION ↓ \ UNIT OF MEASURE →	STRUCTURE EXCAVATION CLASS B INCL. HAUL	SHORING OR EXTRA EXCAVATION CLASS B	GRAVEL BACKFILL FOR DRAIN	CHAIN LINK FENCE TYPE 3	END, GATE, CORNER, AND PULL POST FOR CHAIN LINK FENCE		DOUBLE 20 FT. CHAIN LINK GATE	MANHOLE 48 IN. DIAM. TYPE 1	MANHOLE ADDITIONAL HEIGHT 48 IN. DIAM. TYPE 1	CONSTRUCTION GEOTEXTILE FOR UNDERGROUND DRAINAGE	CONSTRUCTION GEOTEXTILE FOR SOIL STABILIZATION		BIOFILTRATION SWALE LEVEL SPREADER			SEE GENERAL NOTES
		C.Y.	S.F.	C.Y.	L.F.	EACH		EACH	EACH	V.F.	S.Y.	S.Y.		L.F.			
DR1-1	ML 6020+56.5 (53.8' LT) TO ML 6020+98.3 (62.6' LT)	20	150														1,7
DR1-2	ML 6020+48.2 (45.6' RT) TO ML 6021+11.9 (25.8' RT)	80	540														3,7
DR1-3	ML 6019+09.9 (19.2' RT) TO ML 6019+11.7 (44.4' LT)	90	610														3,7
DR1-4	ML 6019+18.5 (57.1' LT) TO ML 6020+56.5 (53.8' LT)	160	1170														3,8
DR1-6	ML 6021+18.0 (19.0' RT) TO ML 6019+87.0 (21.5' RT)	140	990														3,7
DR1-7	ML 6019+93.6 (27.4' RT) TO ML 6020+10.1 (33.1' RT)	10	40														
DR1-8	ML 6020+10.1 (33.1' RT) TO ML 6021+11.9 (25.8' RT)	60	450														3,8
DR1-10	ML 6019+87.0 (21.5' RT) TO ML 6019+09.9 (19.2' RT)	100	700														3,7
DR1-11	ML 6019+11.7 (44.4' LT) TO ML 6019+18.5 (57.1' LT)	30	160														3,7
DR1-12	ML 6019+23.0 (48.5' LT) TO ML 6021+79.7 (50.5' LT)			20							210						24
DR2-2	ML 6020+98.3 (62.6' LT) TO ML 6021+55.7 (102.5' LT)											80		8			12,14
DR2-3	ML 6021+55.7 (102.5' LT) TO ML 6021+65.9 (72.6' LT)	70	480						1	4							7,15
DR2-4	ML 6020+69.1 (31.4' LT) TO ML 6021+18.0 (31.0' LT)	50	300														3,7
DR2-5	ML 6020+85.0 (72.7' LT) TO ML 6021+65.9 (72.6' LT)	90	600														3,8
DR2-6	ML 6021+65.9 (72.6' LT) TO ML 6021+85.0 (80.2' LT)	40	240						1	5		30					13,15
DR2-7	ML 6021+82.3 (54.9' LT) TO ML 6021+65.9 (72.6' LT)	20	130														5
DR2-8	ML 6021+58.3 (23.8' RT) TO ML 6021+82.3 (54.9' LT)			6							64						5,19
DR2-9	ML 6021+18.0 (31.0' LT) TO ML 6021+18.0 (19.0' RT)	50	320														3,7
DR2-10	ML 6021+11.9 (25.8' RT) TO ML 6021+70.3 (53.0' RT)	110	750						1	8		80					13,15
DR2-11	ML 6034+18.5 (52.3' LT) TO ML 6023+95.0 (24.4' RT)			6							62						5
DR2-12	ML 6023+95.0 (24.4' RT) TO ML 6024+29.2 (34.9' RT)	50	340														5
DR2-13	ML 6024+29.2 (34.9' RT) TO ML 6023+73.4 (43.8' RT)	90	620						1	7		90					13,15
DR2-14	ML 6024+40.0 (26.8' RT) TO ML 6024+59.0 (30.9' LT)	50	330														3,9,21
DR2-15	ML 6024+28.4 (RT) TO ML 6024+79.9 (RT)																22
DR2-16	ML 6024+59.0 (30.9' LT) TO ML 6025+37.2 (30.9' LT)	70	460														3,7
DR2-17	ML 6024+58.2 (46.9' LT) TO ML 6024+59.0 (30.9' LT)	20	90														1,7
DR2-18	ML 6025+71.5 (27.0' RT) TO ML 6028+02.3 (21.0' RT)											70					22
DR2-19	ML 6025+37.2 (30.9' LT) TO ML 6026+41.7 (30.9' LT)	80	590														3,7
DR2-20	ML 6025+37.6 (42.5' LT) TO ML 6025+37.2 (30.9' LT)	20	90														4,9
DR2-22	ML 6020+68.4 (47.9' LT) TO ML 6020+69.1 (31.4' LT)	20	100														1,7
DR2-23	ML 6021+29.9 (22.0' RT) TO ML 6021+57.9 (22.0' RT)			2							25						24
DR2-24	ML 6023+96.8 (21.9' RT) TO ML 6024+23.7 (29.7' RT)			2							25						24
DR2-25	ML 6024+18.5 (50.5' LT) TO ML 6026+23.0 (47.1' LT)			16							163						24
	SHEET TOTAL	1520	10250	52					4	24	549	350		8			

GENERAL NOTES:

A. DRAINAGE STRUCTURE STATIONING AND OFFSET IS TO THE CENTER OF THE GRATE REGARDLESS OF STRUCTURE TYPE AND SIZE.

B. PIPE ZONE BEDDING AND BACKFILL SEE STANDARD PLAN B-55.20.

DESIGNED BY	T. HEW	04/04/23	
ENTERED BY	R. MCCABE	04/04/23	
CHECKED BY	T. HEW	04/04/23	
PROJ. ENGR.	A. AMOS		
REGION ADM.	S. ROARK		
		DATE	DATE

REVISION | BY

REGION NO.	STATE	FED. AID PROJ. NO.
10	WASH	

JOB NUMBER 22C533

CONTRACT NO. | LOCATION No.

Washington State Department of Transportation

OSBORN CONSULTING INCORPORATED

SR305
SAM SNYDER CREEK
REMOVE FISH BARRIER

STRUCTURE NOTES
DRAINAGE

DSN3

SHEET 41 OF 186 SHEETS

STRUCTURE NOTES

NOTE:
THE FIRST NUMBER OF THE "CODE DESIGNATION" BELOW REFERS TO THE SHEET NO. OR THE SHEET REFERENCE NO. SHOWING THE DRAINAGE FEATURE.

THE SECOND NUMBER REFERS TO THE DRAINAGE FEATURE FOUND ON THAT SHEET.

CODE	LOCATION ➢ \ UNIT OF MEASURE ➢	ROADWAY EXCAVATION INCL. HAUL - AREA POND	COMMON BORROW INCL. HAUL	ROCK FOR EROSION AND SCOUR PROTECTION CLASS C	DITCH EXCAVATION INCL. HAUL	GRATE INLET TYPE 2		QUARRY SPALLS	UNDERDRAIN PIPE 6 IN. DIAM.	DRAIN PIPE 8 IN. DIAM.	HIGH-DENSITY POLYETHYLENE (HDPE) PIPE 12 IN. DIAM.	CATCH BASIN TYPE 2 54 IN. DIAM. W/FR		CATCH BASIN TYPE 1	CATCH BASIN TYPE 2 48 IN. DIAM.	TESTING STORM SEWER PIPE	SEE GENERAL NOTES
		C.Y.	C.Y.	TON	C.Y.	EACH		TON	L.F.	L.F.	L.F.	EACH		EACH	EACH	L.F.	
DR3-1	ML 6026+41.7 (30.9' LT) TO ML 6026+41.7 (38.0' LT)													1		7.1	1,7
DR3-2	ML 6026+41.7 (38.0' LT) TO ML 6027+45.9 (32.4' LT)													1		104.2	1,7
DR3-3	ML 6026+41.7 (49.9' LT) TO ML 6026+30.6 (92.9' LT)			21							44.4					44.4	7,13,15
DR3-4	ML 6027+50.6 (44.0' LT) TO ML 6026+41.7 (49.9' LT)				88			20									12,14
DR3-5	ML 6026+71.4 (58.0' LT) TO ML 6026+41.7 (49.9' LT)														1	30.8	3,8
DR3-6	ML 6027+51.3 (53.7' LT) TO ML 6026+71.4 (58.0' LT)														1	80	3,8
DR3-7	ML 6027+45.9 (32.4' LT) TO ML 6028+80.2 (27.0' LT)													1		134.1	1,7
DR3-8	ML 6028+83.0 (37.4' LT) TO ML 6027+50.6 (44.0' LT)														1	132	3,8
DR3-9	ML 6028+89.9 (41.3' LT) TO ML 6027+51.3 (53.7' LT)														1	138.5	3,8
DR3-10	ML 6028+80.2 (27.0' LT) TO ML 6028+80.2 (15.7' RT)													1		42.7	1,8
DR3-11	ML 6029+20.2 (29.1' RT) TO ML 6028+83.0 (37.4' LT)											1				76.2	6,18
DR3-12	ML 6029+29.5 (45.6' RT) TO ML 6029+20.2 (29.1' RT)															18.9	
DR3-13	ML 6029+32.8 (35.1' RT) TO ML 6028+89.9 (41.3' LT)														1	87.7	10
DR3-14	ML 6028+02.3 (21.0' RT) TO ML 6029+26.3 (21.3' RT)							7								124.2	2
DR3-15	ML 6028+20.0 (29.4' RT) TO ML 6030+50.4 (25.7' RT)																
DR3-16	ML 6028+45.0 (17.2' RT) TO ML 6028+72.6 (16.0' RT)													1		27.7	1,7
DR3-17	ML 6028+80.2 (15.7' RT) TO ML 6028+80.2 (43.6' RT)							5							1	27.9	3,8
DR3-18	6029+42.6 (52.9' RT)	18650	20														16
DR3-19	ML 6029+26.3 (RT) TO ML 6030+70.0 (RT)																22
DR3-20	ML 6027+64.0 (34.6' LT) TO ML 6026+22.4 (36.2' LT)								143.1								
DR3-21	ML 6026+22.4 (36.2' LT) TO ML 6026+41.7 (49.9' LT)									23.7							5
DR3-22	ML 6028+72.6 (16.0' RT) TO ML 6028+80.2 (15.7' RT)													1		7.6	1,7
DR3-23	ML 6027+63.2 (56.6' LT) TO ML 6026+68.3 (70.3' LT)								98.7								
DR3-24	ML 6026+68.3 (70.3' LT) TO ML 6026+41.7 (49.9' LT)									33.6							5
	SHEET TOTAL	18650	20	21	90			32	242	57	44	1		6	6	1084	
	PROJECT TOTAL	18650	20	678	585	1		80	949	121	225	1		10	18	2373	

GENERAL NOTES:

A. DRAINAGE STRUCTURE STATIONING AND OFFSET IS TO THE CENTER OF THE GRATE REGARDLESS OF STRUCTURE TYPE AND SIZE.

B. PIPE ZONE BEDDING AND BACKFILL SEE STANDARD PLAN B-55.20.

1. SEE CATCH BASIN TYPE 1 – SEE STANDARD PLAN B-5.20.
2. SEE SPECIAL PROVISION "DUCTILE IRON STORM SEWER PIPE".
3. SEE CATCH BASIN TYPE 2 - SEE STANDARD PLAN B-10.20.
4. SEE GRATE INLET TYPE 2 - SEE STANDARD PLAN B-35.40.
5. SEE 8 INCH SEWER CLEAN-OUT - SEE STANDARD PLAN B-85.40.
6. SEE CATCH BASIN TYPE 2 54 IN. W/ FR, DETAIL ON SHEET DD6.
7. SEE RECTANGULAR VANED GRATE - SEE STANDARD PLAN B-30.30 AND RECTANGULAR FRAME (REVERSIBLE) - SEE STANDARD PLAN B-30.10.
8. SEE RECTANGULAR SOLID METAL COVER – SEE STANDARD PLAN B-30.20 AND RECTANGULAR FRAME (REVERSIBLE) - SEE STANDARD PLAN B-30.10.
9. SEE FRAME AND DUAL VANED GRATES FOR GRATE INLET (ROTATED INSTALLATION) – SEE STANDARD PLAN B-40.40.
10. SEE CATCH BASIN TYPE 2 48 IN. DIAM. W/CAGE DETAIL ON SHEET DD6.
11. NOT USED.
12. SEE COMPOST AMENDED BIOFILTRATION SWALE DETAIL, SHEET DD2, DD3 AND DD8.
13. SEE SPECIAL PROVISION "ROCK FOR EROSION AND SCOUR PROTECTION CLASS C".

DESIGNED BY	T. HEW	04/04/23	
ENTERED BY	R. MCCABE	04/04/23	
CHECKED BY	T. HEW	04/04/23	
PROJ. ENGR.	A. AMOS		
REGION ADM.	S. ROARK		
		DATE	**DATE**

REVISION | **BY**

REGION NO.	STATE	FED. AID PROJ. NO.
10	WASH	

JOB NUMBER 22C533

CONTRACT NO. | **LOCATION No.**

Washington State Department of Transportation

OSBORN CONSULTING INCORPORATED

SR305
SAM SNYDER CREEK
REMOVE FISH BARRIER

STRUCTURE NOTES
DRAINAGE

DSN4

STRUCTURE NOTES

NOTE:
THE FIRST NUMBER OF THE "CODE DESIGNATION" BELOW REFERS TO THE SHEET NO. OR THE SHEET REFERENCE NO. SHOWING THE DRAINAGE FEATURE.

THE SECOND NUMBER REFERS TO THE DRAINAGE FEATURE FOUND ON THAT SHEET.

CODE	LOCATION ↓ \ UNIT OF MEASURE →	CL. III REINF. CONC. STORM SEWER PIPE 12 IN. DIAM.	CL. III REINF. CONC. STORM SEWER PIPE 18 IN. DIAM.		CL. IV REINF. CONC. STORM SEWER PIPE 12 IN. DIAM.	CL. IV REINF. CONC. STORM SEWER PIPE 18 IN. DIAM.	CL. V REINF. CONC. STORM SEWER PIPE 12 IN. DIAM.	SCHEDULE A STORM SEWER PIPE 12 IN. DIAM.	DUCTILE IRON STORM SEWER PIPE 15 IN. DIAM.		SEWER CLEANOUT	CRUSHED SURFACING BASE COURSE	TOPSOIL TYPE A	MEDIUM COMPOST	FLEXIBLE GUIDE POST		SEE GENERAL NOTES
		L.F.	L.F.		L.F.	L.F.	L.F.	L.F.	L.F.		EACH	TON	ACRE	ACRE	EACH		
DR3-1	ML 6026+41.7 (30.9' LT) TO ML 6026+41.7 (38.0' LT)							7.1									1,7
DR3-2	ML 6026+41.7 (38.0' LT) TO ML 6027+45.9 (32.4' LT)							104.2									1,7
DR3-3	ML 6026+41.7 (49.9' LT) TO ML 6026+30.6 (92.9' LT)																7,13,15
DR3-4	ML 6027+50.6 (44.0' LT) TO ML 6026+41.7 (49.9' LT)												0.05	0.05	2		12,14
DR3-5	ML 6026+71.4 (58.0' LT) TO ML 6026+41.7 (49.9' LT)							30.8									3,8
DR3-6	ML 6027+51.3 (53.7' LT) TO ML 6026+71.4 (58.0' LT)							80									3,8
DR3-7	ML 6027+45.9 (32.4' LT) TO ML 6028+80.2 (27.0' LT)	134.1															1,7
DR3-8	ML 6028+83.0 (37.4' LT) TO ML 6027+50.6 (44.0' LT)					132											3,8
DR3-9	ML 6028+89.9 (41.3' LT) TO ML 6027+51.3 (53.7' LT)	138.5															3,8
DR3-10	ML 6028+80.2 (27.0' LT) TO ML 6028+80.2 (15.7' RT)	42.7															1,8
DR3-11	ML 6029+20.2 (29.1' RT) TO ML 6028+83.0 (37.4' LT)		76.2														6,18
DR3-12	ML 6029+29.5 (45.6' RT) TO ML 6029+20.2 (29.1' RT)		18.9														
DR3-13	ML 6029+32.8 (35.1' RT) TO ML 6028+89.9 (41.3' LT)							87.7									10
DR3-14	ML 6028+02.3 (21.0' RT) TO ML 6029+26.3 (21.3' RT)								124.2								2
DR3-15	ML 6028+20.0 (29.4' RT) TO ML 6030+50.4 (25.7' RT)																
DR3-16	ML 6028+45.0 (17.2' RT) TO ML 6028+72.6 (16.0' RT)	27.7															1,7
DR3-17	ML 6028+80.2 (15.7' RT) TO ML 6028+80.2 (43.6' RT)	27.9															3,8
DR3-18	6029+42.6 (52.9' RT)											40			2		16
DR3-19	ML 6029+26.3 (RT) TO ML 6030+70.0 (RT)																22
DR3-20	ML 6027+64.0 (34.6' LT) TO ML 6026+22.4 (36.2' LT)																
DR3-21	ML 6026+22.4 (36.2' LT) TO ML 6026+41.7 (49.9' LT)										1						5
DR3-22	ML 6028+72.6 (16.0' RT) TO ML 6028+80.2 (15.7' RT)	7.6															1,7
DR3-23	ML 6027+63.2 (56.6' LT) TO ML 6026+68.3 (70.3' LT)																
DR3-24	ML 6026+68.3 (70.3' LT) TO ML 6026+41.7 (49.9' LT)										1						5
	SHEET TOTAL	379	95			132		310	124		2	40	0.05	0.05	4		
	PROJECT TOTAL	379	95		182	132	28	1208	124		6	40	0.1	0.1	6		

GENERAL NOTES:

A. DRAINAGE STRUCTURE STATIONING AND OFFSET IS TO THE CENTER OF THE GRATE REGARDLESS OF STRUCTURE TYPE AND SIZE.

B. PIPE ZONE BEDDING AND BACKFILL SEE STANDARD PLAN B-55.20.

14. SEE SPECIAL PROVISION "BIOFILTRATION SWALE LEVEL SPREADER".
15. SEE MANHOLE TYPE 1 - SEE STANDARD PLAN B-15.20.
16. SEE DETENTION POND AND MAINTENANCE ACCESS ROAD DETAILS ON SHEET DD4, DD5 AND DD6. SEE STANDARD PLAN L-20.10, CHAIN LINK FENCE TYPE 3 AND STANDARD PLAN L-30.10, CHAIN LINK GATE.
17. NOT USED.
18. SEE CIRCULAR FRAME (RING) AND COVER TYPE 2 - SEE STANDARD PLAN B-30.70
19. SEE DRAINAGE DETAIL ON SHEET BG10.
20. DITCH EARTHWORKS QUANTITIES ARE INCLUDED IN RP SHEETS.
21. SEE GRATE INLET ON CATCH BASIN - TYPE 2 SEE STANDARD PLAN B-30.60.
22. SEE DITCH TYPICAL SECTION AND TABLE ON SHEET DD1.
23. SEE SLOPE ARMORING PLAN ON SHEET DD1.
24. SEE RETAINING WALL SHEETS FOR VERTICAL LOCATION AND DETAILS. EXTEND AND DAYLIGHT UNDERDRAIN PIPE TO PROPOSED 2:1 STREAM GRADING SLOPE.

DESIGNED BY	T. HEW	04/04/23	
ENTERED BY	R. MCCABE	04/04/23	
CHECKED BY	T. HEW	04/04/23	
PROJ. ENGR.	A. AMOS		
REGION ADM.	S. ROARK		
		DATE	DATE

REVISION | BY

REGION NO.	STATE	FED. AID PROJ. NO.
10	WASH	

JOB NUMBER 22C533

CONTRACT NO. | LOCATION No.

Washington State Department of Transportation

OSBORN CONSULTING INCORPORATED

SR305
SAM SNYDER CREEK
REMOVE FISH BARRIER

STRUCTURE NOTES
DRAINAGE

DSN5

SHEET 43 OF 186 SHEETS

STRUCTURE NOTES

NOTE:
THE FIRST NUMBER OF THE "CODE DESIGNATION" BELOW REFERS TO THE SHEET NO. OR THE SHEET REFERENCE NO. SHOWING THE DRAINAGE FEATURE.

THE SECOND NUMBER REFERS TO THE DRAINAGE FEATURE FOUND ON THAT SHEET.

CODE	LOCATION ➢ \ UNIT OF MEASURE ➢	STRUCTURE EXCAVATION CLASS B INCL. HAUL	SHORING OR EXTRA EXCAVATION CLASS B	GRAVEL BACKFILL FOR DRAIN	CHAIN LINK FENCE TYPE 3	END, GATE, CORNER, AND PULL POST FOR CHAIN LINK FENCE		DOUBLE 20 FT. CHAIN LINK GATE	MANHOLE 48 IN. DIAM. TYPE 1	MANHOLE ADDITIONAL HEIGHT 48 IN. DIAM. TYPE 1	CONSTRUCTION GEOTEXTILE FOR UNDERGROUND DRAINAGE	CONSTRUCTION GEOTEXTILE FOR SOIL STABILIZATION		BIOFILTRATION SWALE LEVEL SPREADER			SEE GENERAL NOTES
		C.Y.	S.F.	C.Y.	L.F.	EACH		EACH	EACH	V.F.	S.Y.	S.Y.		L.F.			
DR3-1	ML 6026+41.7 (30.9' LT) TO ML 6026+41.7 (38.0' LT)	10	50														1,7
DR3-2	ML 6026+41.7 (38.0' LT) TO ML 6027+45.9 (32.4' LT)	80	540														1,7
DR3-3	ML 6026+41.7 (49.9' LT) TO ML 6026+30.6 (92.9' LT)	70	460						1	6		30					7,13,15
DR3-4	ML 6027+50.6 (44.0' LT) TO ML 6026+41.7 (49.9' LT)											80		8			12,14
DR3-5	ML 6026+71.4 (58.0' LT) TO ML 6026+41.7 (49.9' LT)	40	250														3,8
DR3-6	ML 6027+51.3 (53.7' LT) TO ML 6026+71.4 (58.0' LT)	110	770														3,8
DR3-7	ML 6027+45.9 (32.4' LT) TO ML 6028+80.2 (27.0' LT)	90	640														1,7
DR3-8	ML 6028+83.0 (37.4' LT) TO ML 6027+50.6 (44.0' LT)	60	380														3,8
DR3-9	ML 6028+89.9 (41.3' LT) TO ML 6027+51.3 (53.7' LT)	140	1020														3,8
DR3-10	ML 6028+80.2 (27.0' LT) TO ML 6028+80.2 (15.7' RT)	30	200														1,8
DR3-11	ML 6029+20.2 (29.1' RT) TO ML 6028+83.0 (37.4' LT)	60	390														6,18
DR3-12	ML 6029+29.5 (45.6' RT) TO ML 6029+20.2 (29.1' RT)	10	50														
DR3-13	ML 6029+32.8 (35.1' RT) TO ML 6028+89.9 (41.3' LT)	70	500														10
DR3-14	ML 6028+02.3 (21.0' RT) TO ML 6029+26.3 (21.3' RT)	20	90									30					2
DR3-15	ML 6028+20.0 (29.4' RT) TO ML 6030+50.4 (25.7' RT)																
DR3-16	ML 6028+45.0 (17.2' RT) TO ML 6028+72.6 (16.0' RT)	20	130														1,7
DR3-17	ML 6028+80.2 (15.7' RT) TO ML 6028+80.2 (43.6' RT)	20	120									30					3,8
DR3-18	6029+42.6 (52.9' RT)				470	52		1				120					16
DR3-19	ML 6029+26.3 (RT) TO ML 6030+70.0 (RT)																22
DR3-20	ML 6027+64.0 (34.6' LT) TO ML 6026+22.4 (36.2' LT)			11							111						
DR3-21	ML 6026+22.4 (36.2' LT) TO ML 6026+41.7 (49.9' LT)																5
DR3-22	ML 6028+72.6 (16.0' RT) TO ML 6028+80.2 (15.7' RT)	10	60														1,7
DR3-23	ML 6027+63.2 (56.6' LT) TO ML 6026+68.3 (70.3' LT)			7							77						
DR3-24	ML 6026+68.3 (70.3' LT) TO ML 6026+41.7 (49.9' LT)																5
	SHEET TOTAL	840	5650	18	470	52		1	1	6	188	290		8			
	PROJECT TOTAL	2360	15900	70	470	52		1	5	30	737	640		16			

GENERAL NOTES:

A. DRAINAGE STRUCTURE STATIONING AND OFFSET IS TO THE CENTER OF THE GRATE REGARDLESS OF STRUCTURE TYPE AND SIZE.

B. PIPE ZONE BEDDING AND BACKFILL SEE STANDARD PLAN B-55.20.

DESIGNED BY	T. HEW	04/04/23	
ENTERED BY	R. MCCABE	04/04/23	
CHECKED BY	T. HEW	04/04/23	
PROJ. ENGR.	A. AMOS		
REGION ADM.	S. ROARK		
		DATE	DATE

REVISION | BY

REGION NO.	STATE	FED. AID PROJ. NO.
10	WASH	

JOB NUMBER 22C533

CONTRACT NO. | LOCATION No.

Washington State Department of Transportation

OSBORN CONSULTING INCORPORATED

SR305
SAM SNYDER CREEK
REMOVE FISH BARRIER

STRUCTURE NOTES
DRAINAGE

DSN6

SHEET 44 OF 186 SHEETS

T.26N.R.2E. W.M. SEC. 31

DRAINAGE REFERENCE SUMMARY	
DESCRIPTION	PROFILE SHEET(S)
3,4,6,10,11	DP1
1,7,8	DP2
2	DP3

LEGEND

#	STRUCTURE NOTE CODE		EXISTING FENCE
	EXISTING DITCH BOTTOM		EXISTING SHOULDER EDGE
	EXISTING CATCH BASIN	ST	STORM SEWER LINE
	EXISTING MANHOLE		CATCH BASIN
	EXISTING CULVERT		DITCH BOTTOM

NOTES:

1. FOR DRAINAGE PROFILES, SEE DRAINAGE PROFILE SHEETS.
2. FOR DRAINAGE DETAILS INCLUDING DRAINAGE DITCHES, COMPOST AMENDED BIOFILTRATION SWALE (CABS), AND DETENTION POND, SEE DRAINAGE DETAIL (DD) SHEETS.

CONSTRUCTION NOTES:

1. CLEAN DRAINAGE STRUCTURE AND PIPES PER STANDARD SPECIFICATION 7-07.3.

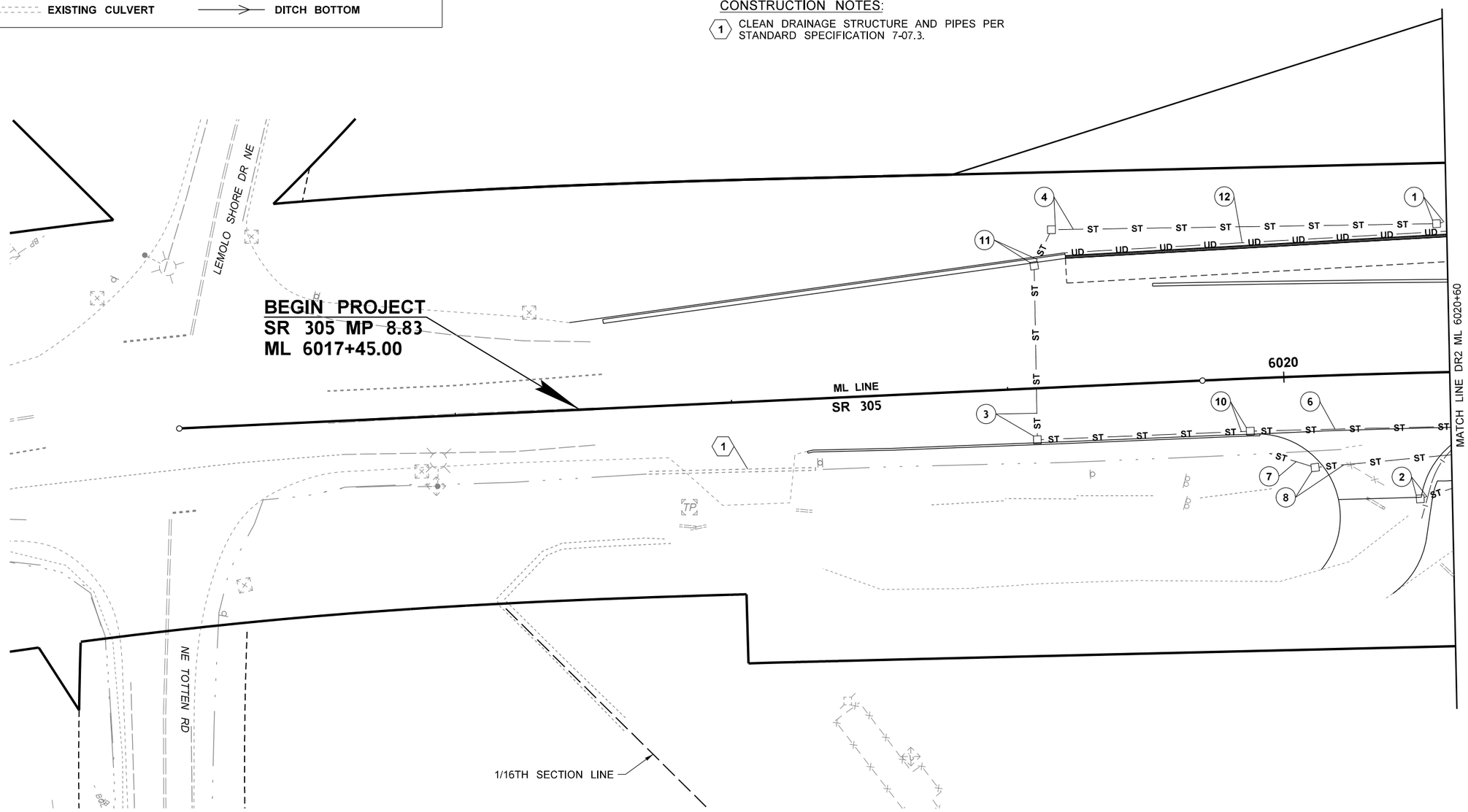

FILE NAME	c:\users\projectwiseworkingfolder\d0335737\XL6050_PS_DR_SAM_001.dgn
TIME	10:08:52 AM
DATE	4/5/2023
PLOTTED BY	mccabrya
DESIGNED BY	T. HEW
ENTERED BY	R. MCCABE
CHECKED BY	D. MUNGASAVALLI
PROJ. ENGR.	A. AMOS
REGIONAL ADM.	S. ROARK

REVISION	DATE	BY

REGION NO.	STATE	FED.AID PROJ.NO.
10	WASH	
JOB NUMBER 22C533		
CONTRACT NO.		LOCATION NO. XL6050

TERRENCE JOSEPH HEW, STATE OF WASHINGTON, 20119929, REGISTERED PROFESSIONAL ENGINEER

SEE SHEET CT1 DATE

P.E. STAMP BOX

DATE

P.E. STAMP BOX

Washington State Department of Transportation

OSBORN CONSULTING INCORPORATED

SR 305
SAM SNYDER CREEK
REMOVE FISH BARRIER

DRAINAGE PLAN

PLAN REF NO DR1

SHEET 45 OF 186 SHEETS

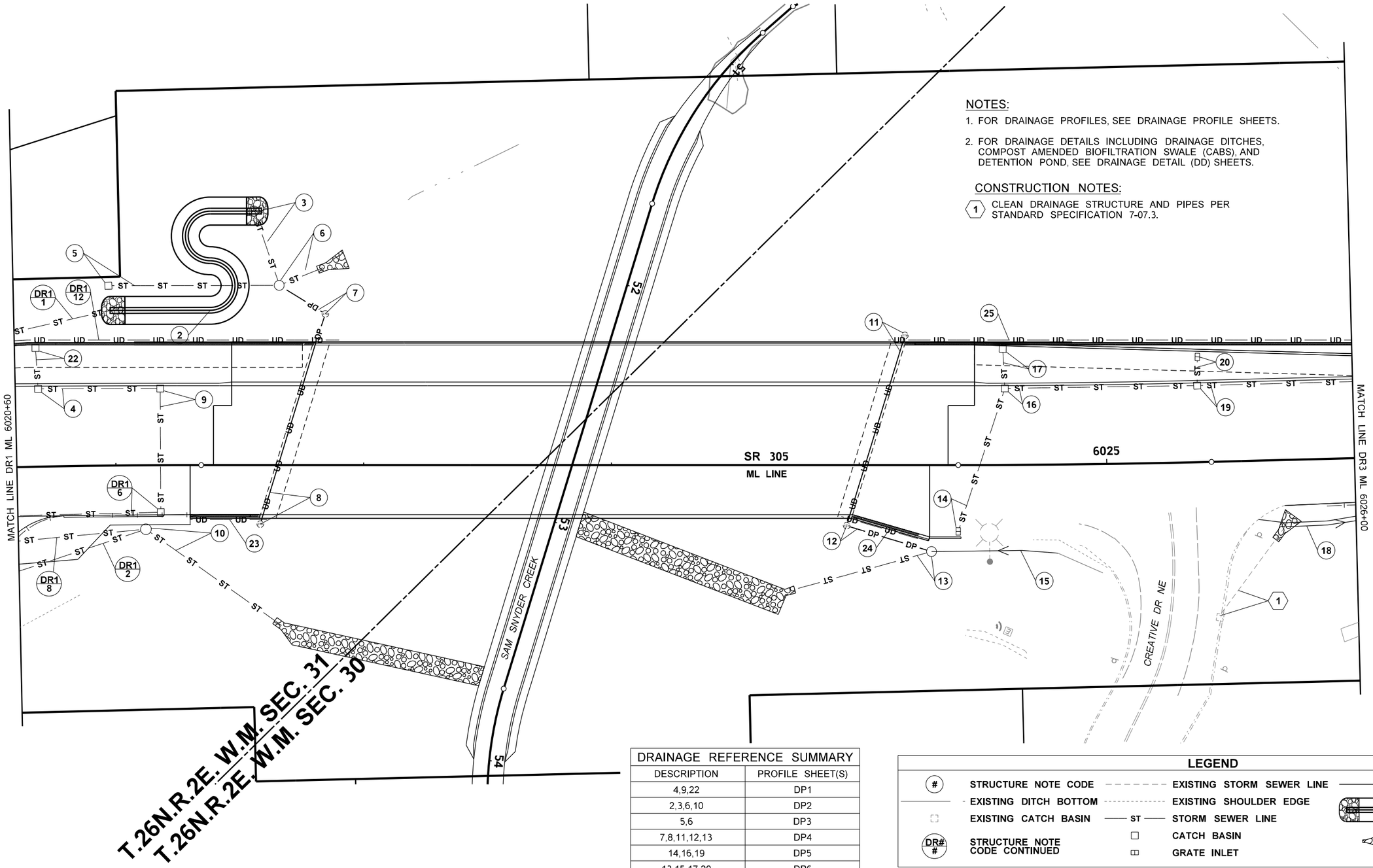

NOTES:

1. FOR DRAINAGE PROFILES, SEE DRAINAGE PROFILE SHEETS.
2. FOR DRAINAGE DETAILS INCLUDING DRAINAGE DITCHES, COMPOST AMENDED BIOFILTRATION SWALE (CABS), AND DETENTION POND, SEE DRAINAGE DETAIL (DD) SHEETS.

CONSTRUCTION NOTES:

1. CLEAN DRAINAGE STRUCTURE AND PIPES PER STANDARD SPECIFICATION 7-07.3.

0 20 40
SCALE IN FEET

DRAINAGE REFERENCE SUMMARY

DESCRIPTION	PROFILE SHEET(S)
4,9,22	DP1
2,3,6,10	DP2
5,6	DP3
7,8,11,12,13	DP4
14,16,19	DP5
13,15,17,20	DP6
18	DP9

LEGEND

#	STRUCTURE NOTE CODE		EXISTING STORM SEWER LINE		DITCH BOTTOM
	EXISTING DITCH BOTTOM		EXISTING SHOULDER EDGE		COMPOST AMENDED BIOFILTRATION SWALE (CABS)
	EXISTING CATCH BASIN	ST	STORM SEWER LINE		
DR# #	STRUCTURE NOTE CODE CONTINUED		CATCH BASIN		PIPE OUTLET PROTECTION
			GRATE INLET		

FILE NAME	c:\users\projectwiseworkingfolder\d0335737\XL6050_PS_DR_SAM_002.dgn
TIME	10:08:53 AM
DATE	4/5/2023
PLOTTED BY	mccabrya
DESIGNED BY	T. HEW
ENTERED BY	R. MCCABE
CHECKED BY	D. MUNGASAVALLI
PROJ. ENGR.	A. AMOS
REGIONAL ADM.	S. ROARK

REVISION | DATE | BY

REGION NO. 10 | STATE WASH | FED.AID PROJ.NO.

JOB NUMBER 22C533

CONTRACT NO.

LOCATION NO. XL6050

TERRENCE JOSEPH HEW, STATE OF WASHINGTON, 20119899, REGISTERED PROFESSIONAL ENGINEER

SEE SHEET CT1
DATE
P.E. STAMP BOX

DATE
P.E. STAMP BOX

Washington State Department of Transportation
OSBORN CONSULTING INCORPORATED

SR 305
SAM SNYDER CREEK
REMOVE FISH BARRIER

DRAINAGE PLAN

PLAN REF NO DR2

SHEET 46 OF 186 SHEETS

T.26N.R.2E. W.M. SEC. 30

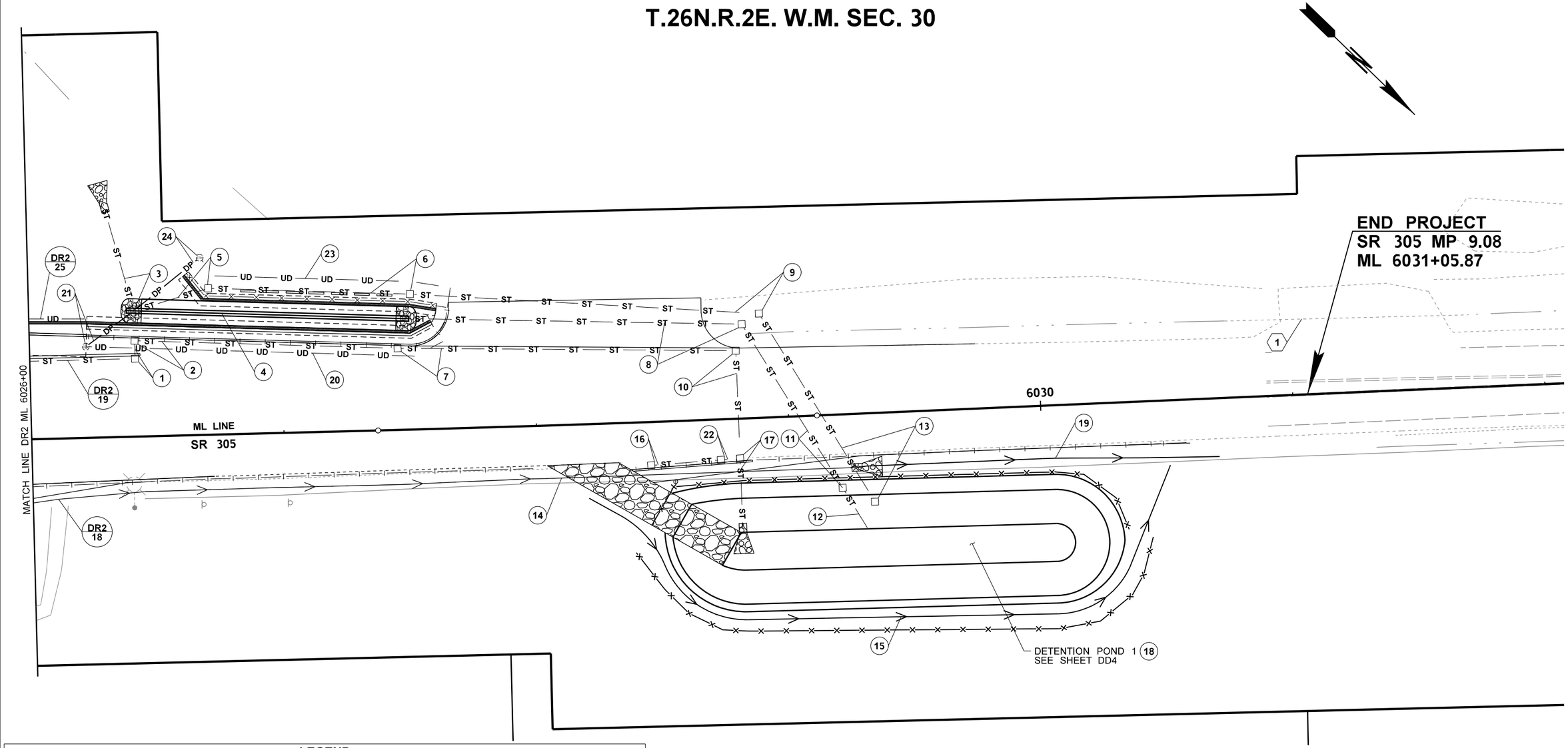

LEGEND

#	STRUCTURE NOTE CODE		EXISTING SHOULDER EDGE		COMPOST AMENDED BIOFILTRATION SWALE (CABS)
	EXISTING DITCH BOTTOM	ST	STORM SEWER LINE		CHAIN LINK FENCE
	EXISTING CATCH BASIN		CATCH BASIN		PIPE OUTLET PROTECTION
	EXISTING MANHOLE		GRATE INLET		MAINTENANCE ACCESS ROAD
	EXISTING CULVERT		DITCH BOTTOM		QUARRY SPALLS
DR# #	STRUCTURE NOTE CODE CONTINUED				

DRAINAGE REFERENCE SUMMARY	
DESCRIPTION	PROFILE SHEET(S)
16,17,22	DP4
1,2,7,10	DP5
3,4,8,11,12	DP7
5,6,9,13	DP8
14,15	DP9
20,21,23,24	DP10

NOTES:

1. FOR DRAINAGE PROFILES, SEE DRAINAGE PROFILE SHEETS.
2. FOR DRAINAGE DETAILS INCLUDING DRAINAGE DITCHES, COMPOST AMENDED BIOFILTRATION SWALE (CABS), AND DETENTION POND, SEE DRAINAGE DETAIL (DD) SHEETS.

CONSTRUCTION NOTES:

1. CLEAN DRAINAGE STRUCTURE AND PIPES PER STANDARD SPECIFICATION 7-07.3.

0 20 40
SCALE IN FEET

FILE NAME	c:\users\projectwiseworkingfolder\d0335737\XL6050_PS_DR_SAM_003.dgn
TIME	10:08:55 AM
DATE	4/5/2023
PLOTTED BY	mccabrya
DESIGNED BY	T. HEW
ENTERED BY	R. MCCABE
CHECKED BY	D. MUNGASAVALLI
PROJ. ENGR.	A. AMOS
REGIONAL ADM.	S. ROARK

REVISION | DATE | BY

REGION NO. 10 | STATE WASH | FED.AID PROJ.NO.

JOB NUMBER 22C533

CONTRACT NO. | LOCATION NO. XL6050

TERRENCE JOSEPH HEW — STATE OF WASHINGTON — 20119899 — REGISTERED PROFESSIONAL ENGINEER

SEE SHEET CT1
DATE
P.E. STAMP BOX

DATE
P.E. STAMP BOX

Washington State Department of Transportation
OSBORN CONSULTING INCORPORATED

SR 305
SAM SNYDER CREEK
REMOVE FISH BARRIER

DRAINAGE PLAN

PLAN REF NO DR3

SHEET 47 OF 186 SHEETS

NOTES:

1. OFFSETS NOTED FOR DRAINAGE STRUCTURES ARE TO THE CENTER OF GRATE.
2. ALL PIPES ARE SCHEDULE A UNLESS OTHERWISE NOTED.
3. SEE SHEET DD1 FOR PIPE OUTLET PROTECTION DETAILS.

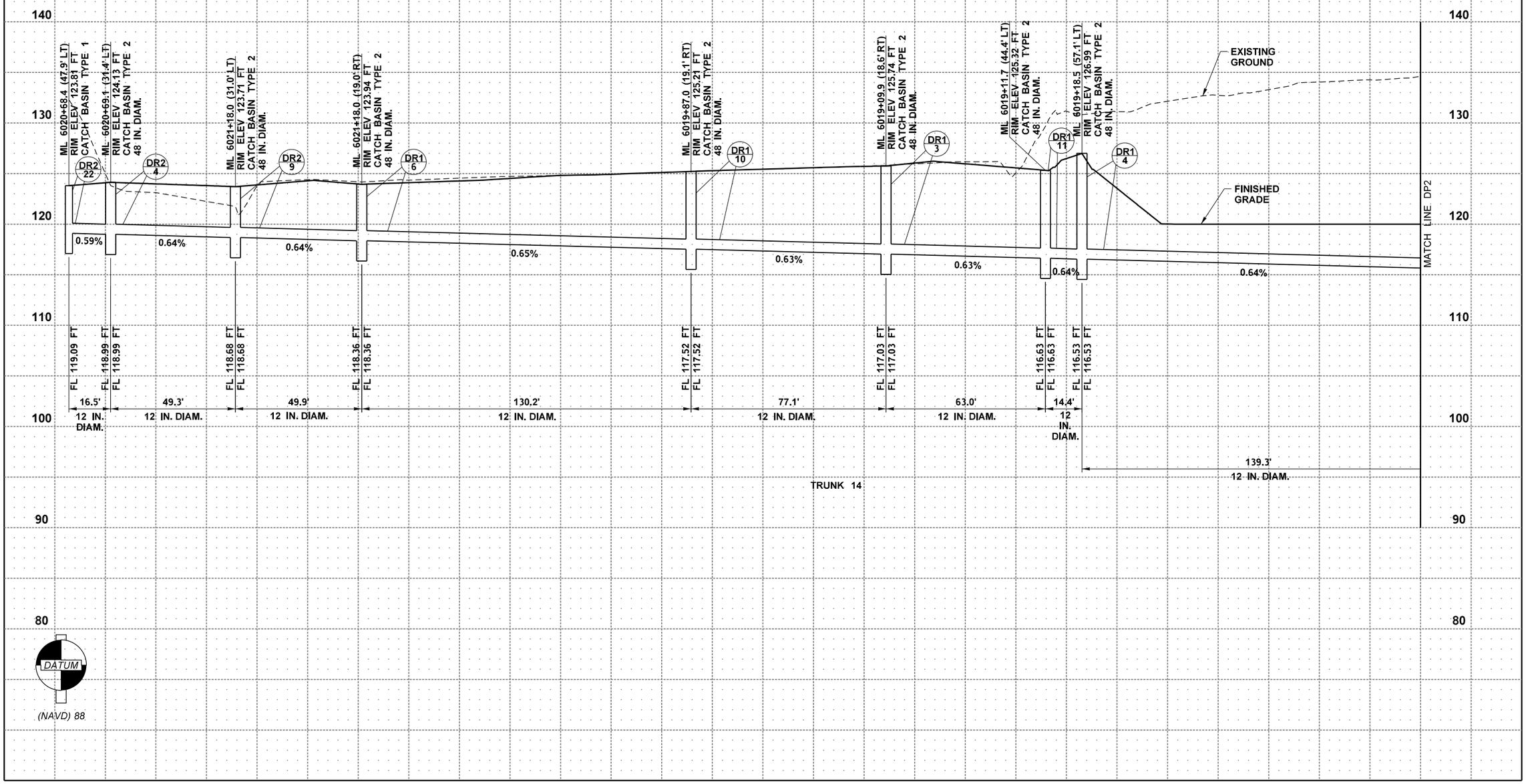

FILE NAME	c:\users\whitekev\documents\d0335737\XL6050_PS_DP_SAM_001.dgn			
TIME	3:13:00 PM			
DATE	3/27/2023			
PLOTTED BY	whitekev			
DESIGNED BY	T. HEW			
ENTERED BY	R. MCCABE			
CHECKED BY	D. MUNGASAVALLI			
PROJ. ENGR.	A. AMOS			
REGIONAL ADM.	S. ROARK	REVISION	DATE	BY

REGION NO.	STATE	FED.AID PROJ.NO.
10	WASH	
JOB NUMBER 22C533		
CONTRACT NO.		LOCATION NO. XL6050

TERRENCE JOSEPH HEW
STATE OF WASHINGTON
20119899
REGISTERED PROFESSIONAL ENGINEER

SEE SHEET CT1
DATE
P.E. STAMP BOX

DATE
P.E. STAMP BOX

Washington State Department of Transportation
OSBORN CONSULTING INCORPORATED

SR 305
SAM SNYDER CREEK
REMOVE FISH BARRIER

DRAINAGE PROFILE

PLAN REF NO DP1

SHEET 48 OF 186 SHEETS

NOTES:

1. OFFSETS NOTED FOR DRAINAGE STRUCTURES ARE TO THE CENTER OF GRATE.
2. ALL PIPES ARE SCHEDULE A UNLESS OTHERWISE NOTED.
3. SEE SHEET DD1 FOR PIPE OUTLET PROTECTION DETAILS.

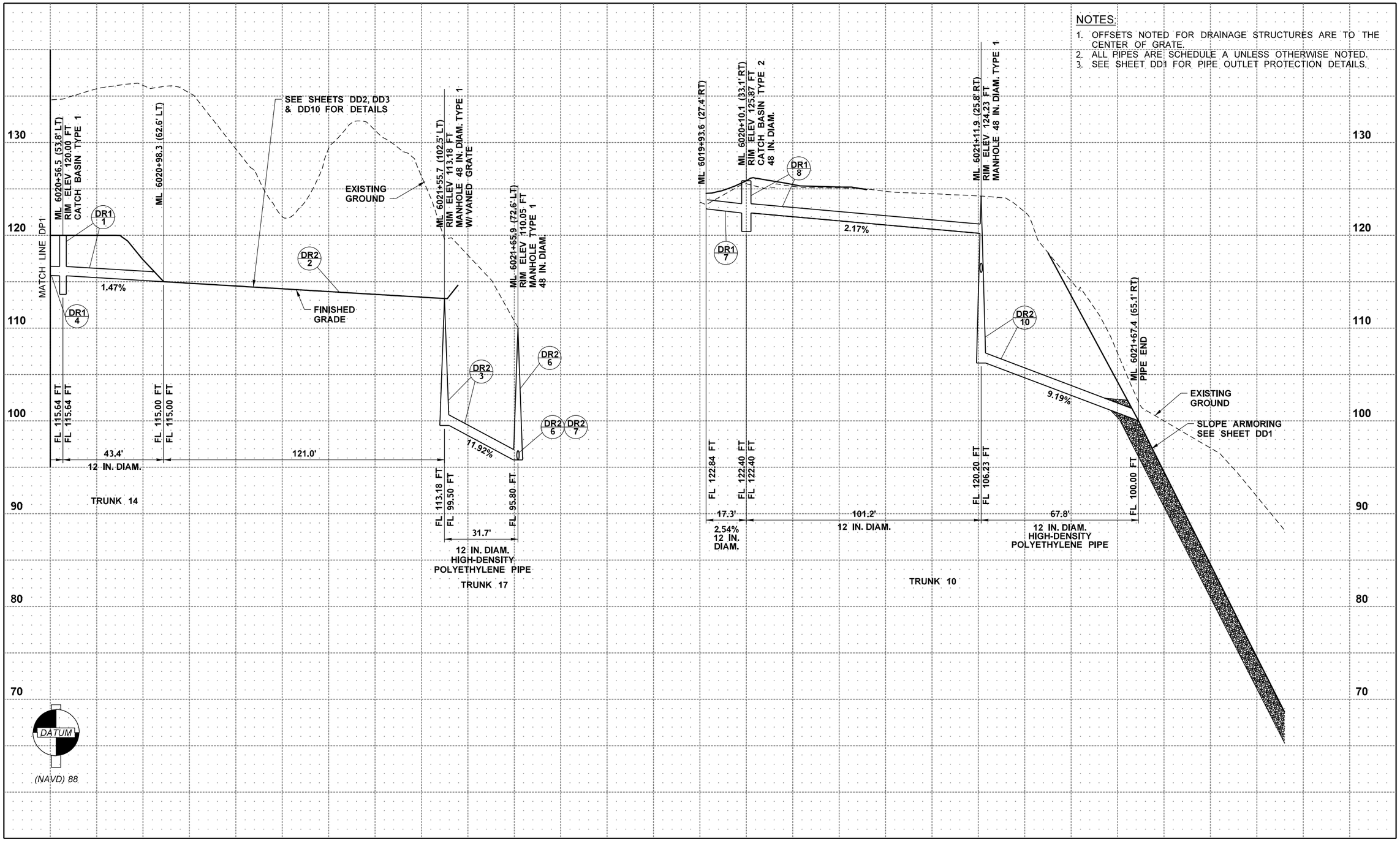

FILE NAME	c:\users\whitekev\documents\d0335737\XL6050_PS_DP_SAM_002.dgn						
TIME	3:13:01 PM				REGION NO. 10	STATE WASH	FED.AID PROJ.NO.
DATE	3/27/2023						
PLOTTED BY	whitekev				JOB NUMBER 22C533		
DESIGNED BY	T. HEW						
ENTERED BY	R. MCCABE				CONTRACT NO.		LOCATION NO. XL6050
CHECKED BY	D. MUNGASAVALLI						
PROJ. ENGR.	A. AMOS						
REGIONAL ADM.	S. ROARK	REVISION	DATE	BY			

TERENCE JOSEPH HEW — STATE OF WASHINGTON — 20139893 — REGISTERED PROFESSIONAL ENGINEER

SEE SHEET CT1 DATE

P.E. STAMP BOX

DATE

P.E. STAMP BOX

Washington State Department of Transportation

OSBORN CONSULTING INCORPORATED

SR 305
SAM SNYDER CREEK
REMOVE FISH BARRIER

DRAINAGE PROFILE

PLAN REF NO DP2

SHEET 49 OF 186 SHEETS

NOTES:

1. OFFSETS NOTED FOR DRAINAGE STRUCTURES ARE TO THE CENTER OF GRATE.
2. ALL PIPES ARE SCHEDULE A UNLESS OTHERWISE NOTED.
3. SEE SHEET DD1 FOR PIPE OUTLET PROTECTION DETAILS.

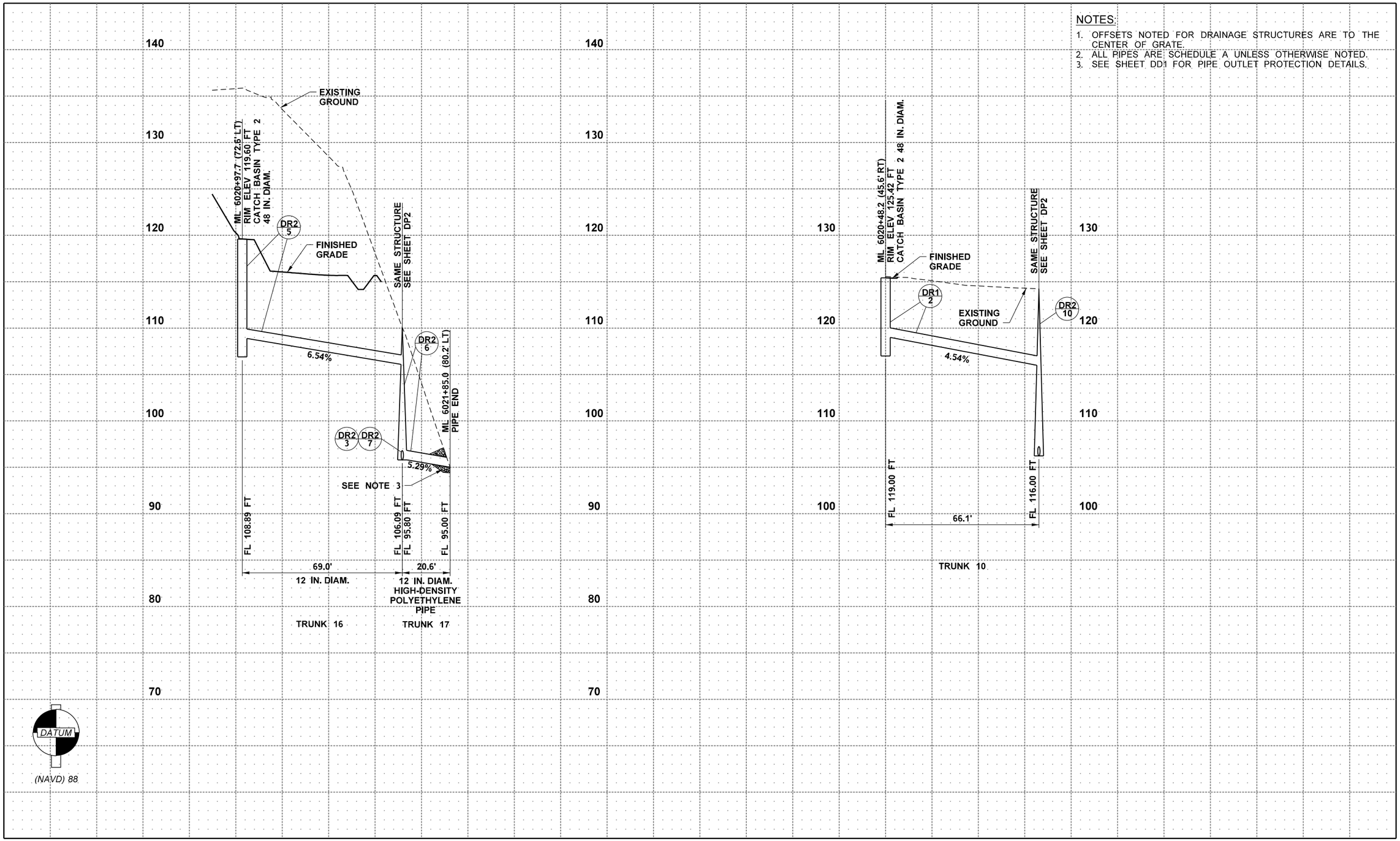

FILE NAME	c:\users\whltekev\documents\d0335737\XL6050_PS_DP_SAM_003.dgn					
TIME	3:13:02 PM					
DATE	3/27/2023					
PLOTTED BY	whitekev					
DESIGNED BY	T. HEW					
ENTERED BY	R. MCCABE					
CHECKED BY	D. MUNGASAVALLI					
PROJ. ENGR.	A. AMOS					
REGIONAL ADM.	S. ROARK	REVISION	DATE	BY		

REGION NO.	STATE	FED.AID PROJ.NO.
10	WASH	
JOB NUMBER 22C533		
CONTRACT NO.		LOCATION NO. XL6050

TERRENCE JOSEPH HEW
STATE OF WASHINGTON
REGISTERED PROFESSIONAL ENGINEER

SEE SHEET CT1
DATE
P.E. STAMP BOX

DATE
P.E. STAMP BOX

Washington State Department of Transportation

OSBORN CONSULTING INCORPORATED

SR 305
SAM SNYDER CREEK
REMOVE FISH BARRIER

DRAINAGE PROFILE

PLAN REF NO
DP3

SHEET 50 OF 186 SHEETS

NOTES:

1. OFFSETS NOTED FOR DRAINAGE STRUCTURES ARE TO THE CENTER OF GRATE.
2. ALL PIPES ARE SCHEDULE A UNLESS OTHERWISE NOTED.
3. SEE SHEET DD1 FOR PIPE OUTLET PROTECTION DETAILS.

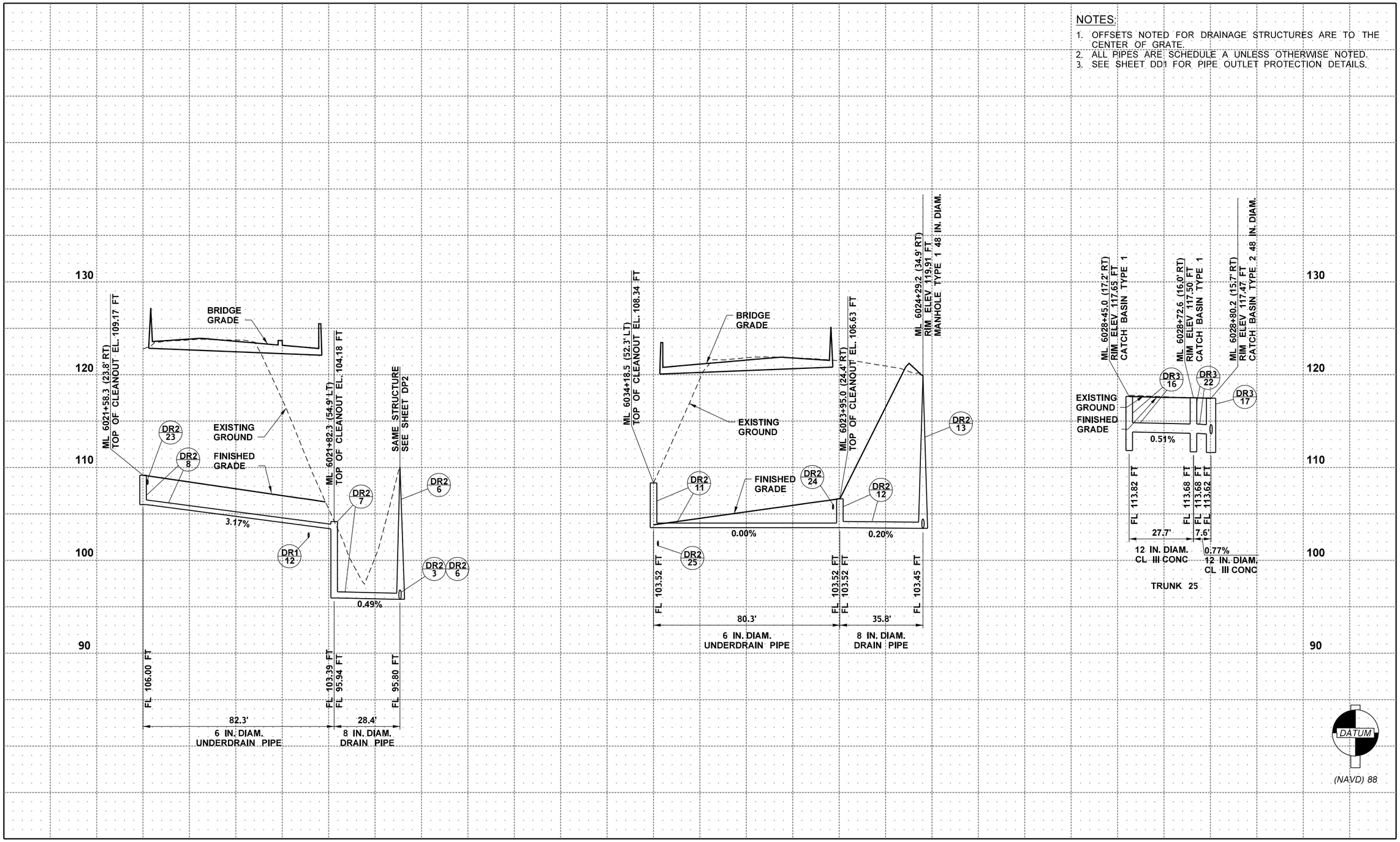

FILE NAME	c:\users\projectwiseworkingfolder\d0335737\XL6050_PS_DP_SAM_004.dgn			
TIME	9:47:09 AM			
DATE	4/5/2023			
PLOTTED BY	mccabrya			
DESIGNED BY	T. HEW			
ENTERED BY	R. MCCABE			
CHECKED BY	D. MUNGASAVALLI			
PROJ. ENGR.	A. AMOS			
REGIONAL ADM.	S. ROARK	REVISION	DATE	BY

REGION NO.	STATE	FED.AID PROJ.NO.
10	WASH	
JOB NUMBER 22C533		
CONTRACT NO.		LOCATION NO. XL6050

TERRENCE JOSEPH HEW, STATE OF WASHINGTON, 20119899, REGISTERED PROFESSIONAL ENGINEER

SEE SHEET CT1 DATE

P.E. STAMP BOX

DATE

P.E. STAMP BOX

Washington State Department of Transportation

OSBORN CONSULTING INCORPORATED

SR 305
SAM SNYDER CREEK
REMOVE FISH BARRIER

DRAINAGE PROFILE

PLAN REF NO DP4

SHEET 51 OF 186 SHEETS

NOTES:

1. OFFSETS NOTED FOR DRAINAGE STRUCTURES ARE TO THE CENTER OF GRATE.
2. ALL PIPES ARE SCHEDULE A UNLESS OTHERWISE NOTED.
3. SEE SHEET DD1 FOR PIPE OUTLET PROTECTION DETAILS.

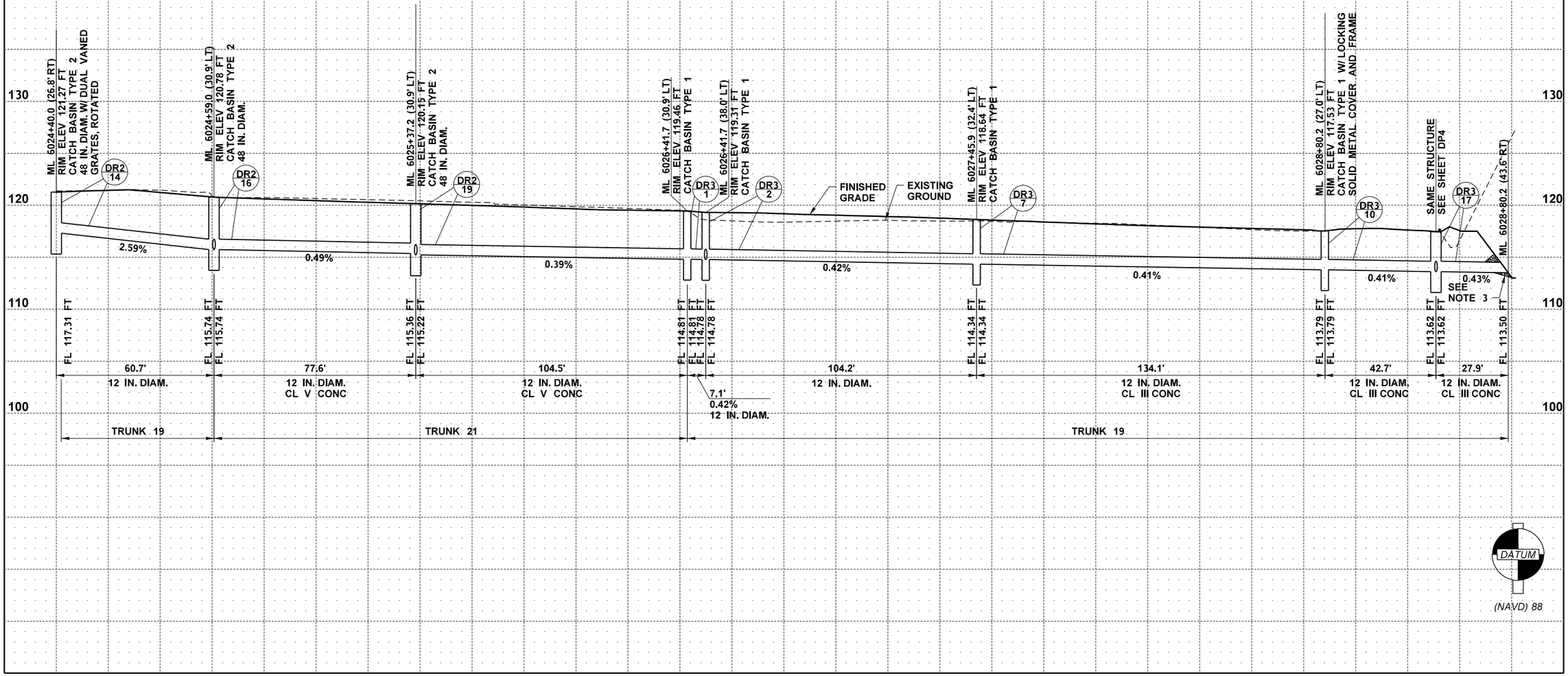

FILE NAME	c:\users\whitekev\documents\d0335737\XL6050_PS_DP_SAM_005.dgn			
TIME	3:13:04 PM			
DATE	3/27/2023			
PLOTTED BY	whitekev			
DESIGNED BY	T. HEW			
ENTERED BY	R. MCCABE			
CHECKED BY	D. MUNGASAVALLI			
PROJ. ENGR.	A. AMOS			
REGIONAL ADM.	S. ROARK	REVISION	DATE	BY

REGION NO.	STATE	FED.AID PROJ.NO.
10	WASH	
JOB NUMBER 22C533		
CONTRACT NO.		LOCATION NO. XL6050

TERRENCE JOSEPH HEW
STATE OF WASHINGTON
20119899
REGISTERED PROFESSIONAL ENGINEER

SEE SHEET CT1
DATE
P.E. STAMP BOX

DATE
P.E. STAMP BOX

Washington State Department of Transportation
OSBORN CONSULTING INCORPORATED

SR 305
SAM SNYDER CREEK
REMOVE FISH BARRIER

DRAINAGE PROFILE

PLAN REF NO DP5

SHEET 52 OF 186 SHEETS

NOTES:

1. OFFSETS NOTED FOR DRAINAGE STRUCTURES ARE TO THE CENTER OF GRATE.
2. ALL PIPES ARE SCHEDULE A UNLESS OTHERWISE NOTED.
3. SEE SHEET DD1 FOR PIPE OUTLET PROTECTION DETAILS.

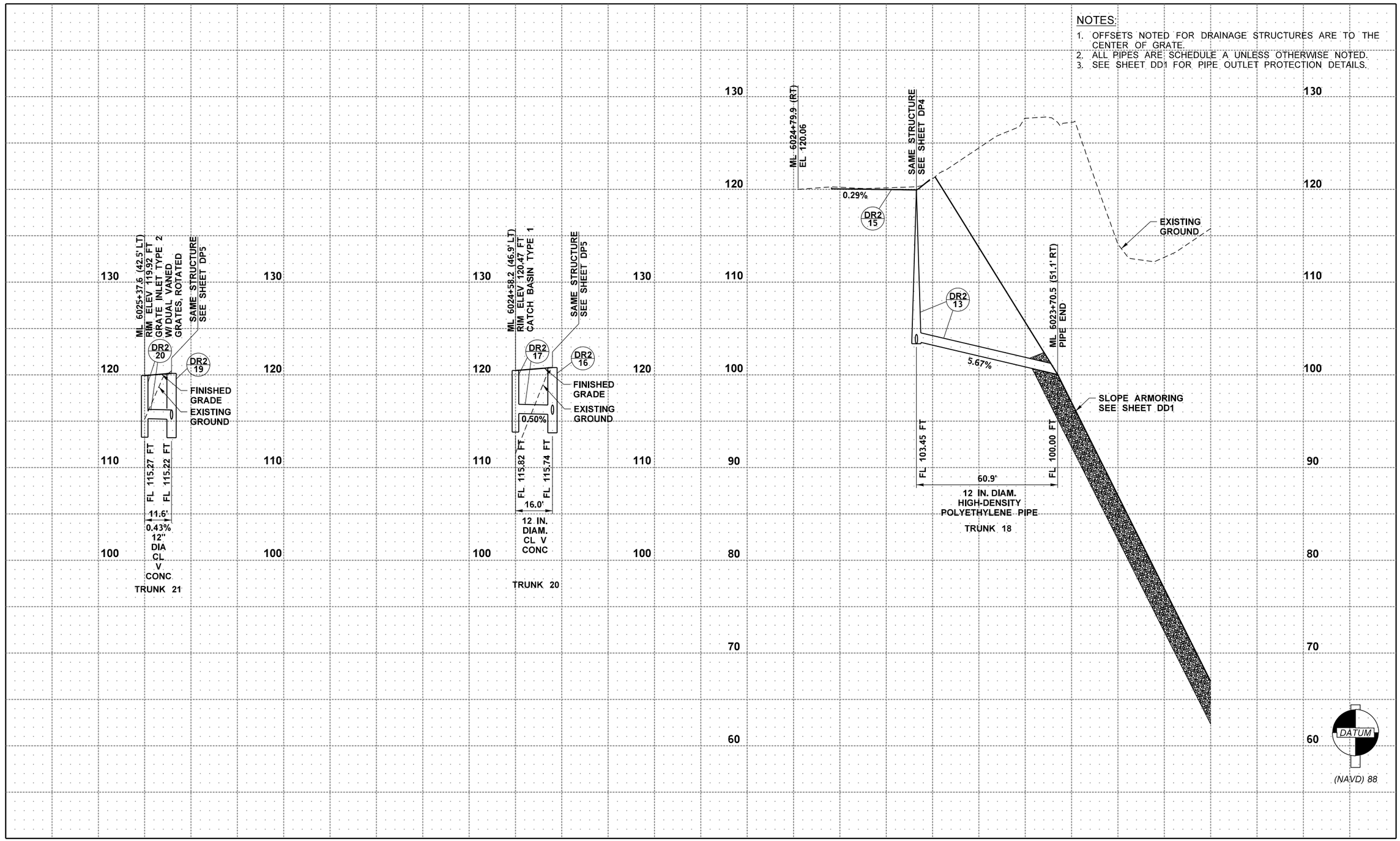

FILE NAME	c:\users\whltekev\documents\d0335737\XL6050_PS_DP_SAM_006.dgn
TIME	3:13:05 PM
DATE	3/27/2023
PLOTTED BY	whitekev
DESIGNED BY	T. HEW
ENTERED BY	R. MCCABE
CHECKED BY	D. MUNGASAVALLI
PROJ. ENGR.	A. AMOS
REGIONAL ADM.	S. ROARK

REVISION	DATE	BY

REGION NO.	STATE	FED.AID PROJ.NO.
10	WASH	
JOB NUMBER 22C533		
CONTRACT NO.	LOCATION NO. XL6050	

TERRENCE JOSEPH HEW
STATE OF WASHINGTON
REGISTERED PROFESSIONAL ENGINEER

SEE SHEET CT1
DATE
P.E. STAMP BOX

DATE
P.E. STAMP BOX

Washington State Department of Transportation

OSBORN CONSULTING INCORPORATED

SR 305
SAM SNYDER CREEK
REMOVE FISH BARRIER

DRAINAGE PROFILE

PLAN REF NO
DP6

SHEET 53 OF 186 SHEETS

NOTES:

1. OFFSETS NOTED FOR DRAINAGE STRUCTURES ARE TO THE CENTER OF GRATE.
2. ALL PIPES ARE SCHEDULE A UNLESS OTHERWISE NOTED.
3. SEE SHEET DD1 FOR PIPE OUTLET PROTECTION DETAILS.

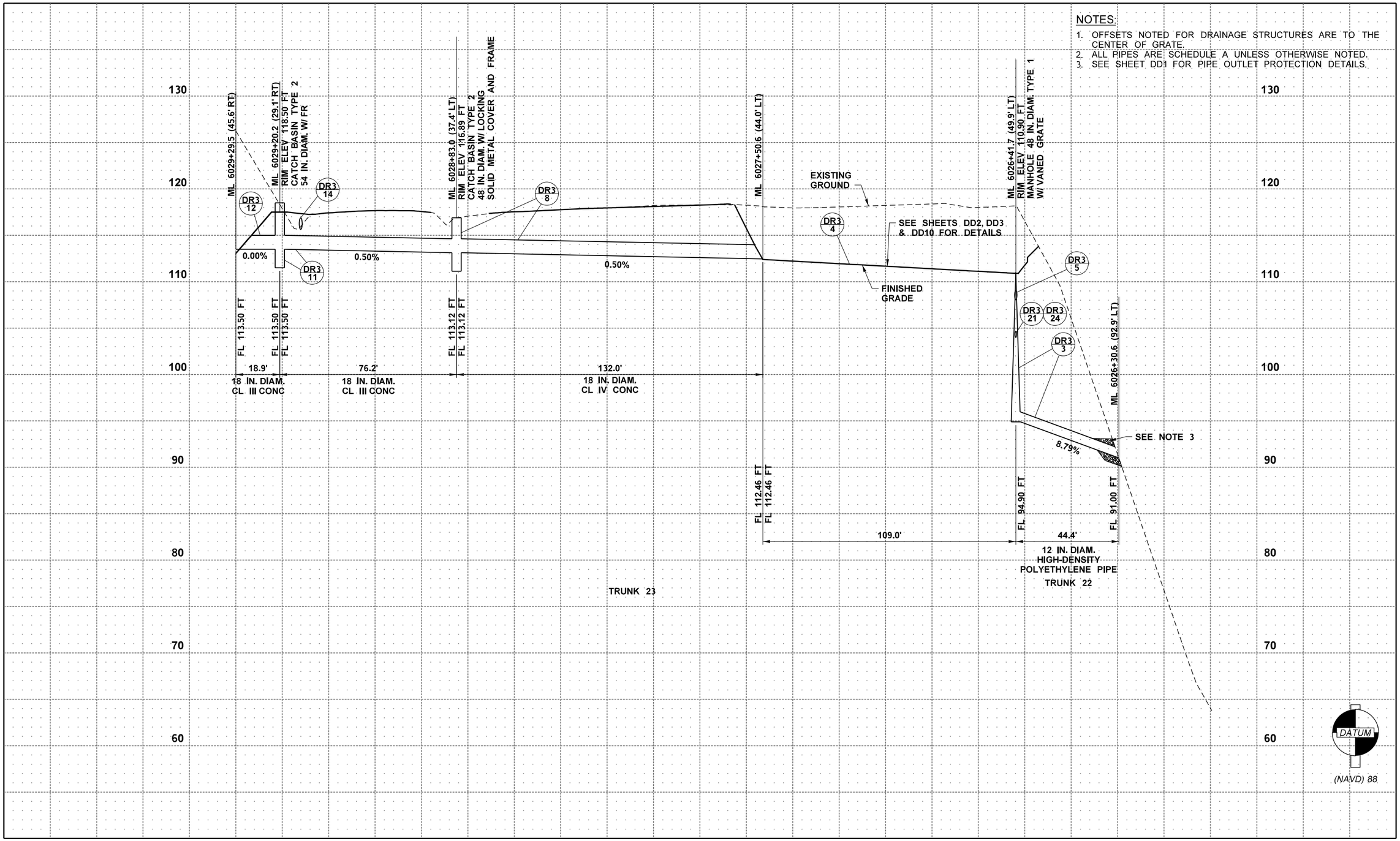

FILE NAME	c:\users\whitekev\documents\d0335737\XL6050_PS_DP_SAM_007.dgn						
TIME	3:13:06 PM				REGION NO. 10	STATE WASH	FED.AID PROJ.NO.
DATE	3/27/2023				JOB NUMBER 22C533		
PLOTTED BY	whitekev						
DESIGNED BY	T. HEW						
ENTERED BY	R. MCCABE				CONTRACT NO.		LOCATION NO. XL6050
CHECKED BY	D. MUNGASAVALLI						
PROJ. ENGR.	A. AMOS						
REGIONAL ADM.	S. ROARK	REVISION	DATE	BY			

TERRENCE JOSEPH HEW
STATE OF WASHINGTON
20139893
REGISTERED PROFESSIONAL ENGINEER

SEE SHEET CT1
DATE
P.E. STAMP BOX

P.E. STAMP BOX
DATE

Washington State Department of Transportation

OSBORN CONSULTING INCORPORATED

SR 305
SAM SNYDER CREEK
REMOVE FISH BARRIER

DRAINAGE PROFILE

PLAN REF NO
DP7

SHEET 54 OF 186 SHEETS

NOTES:

1. OFFSETS NOTED FOR DRAINAGE STRUCTURES ARE TO THE CENTER OF GRATE.
2. ALL PIPES ARE SCHEDULE A UNLESS OTHERWISE NOTED.
3. SEE SHEET DD1 FOR PIPE OUTLET PROTECTION DETAILS.

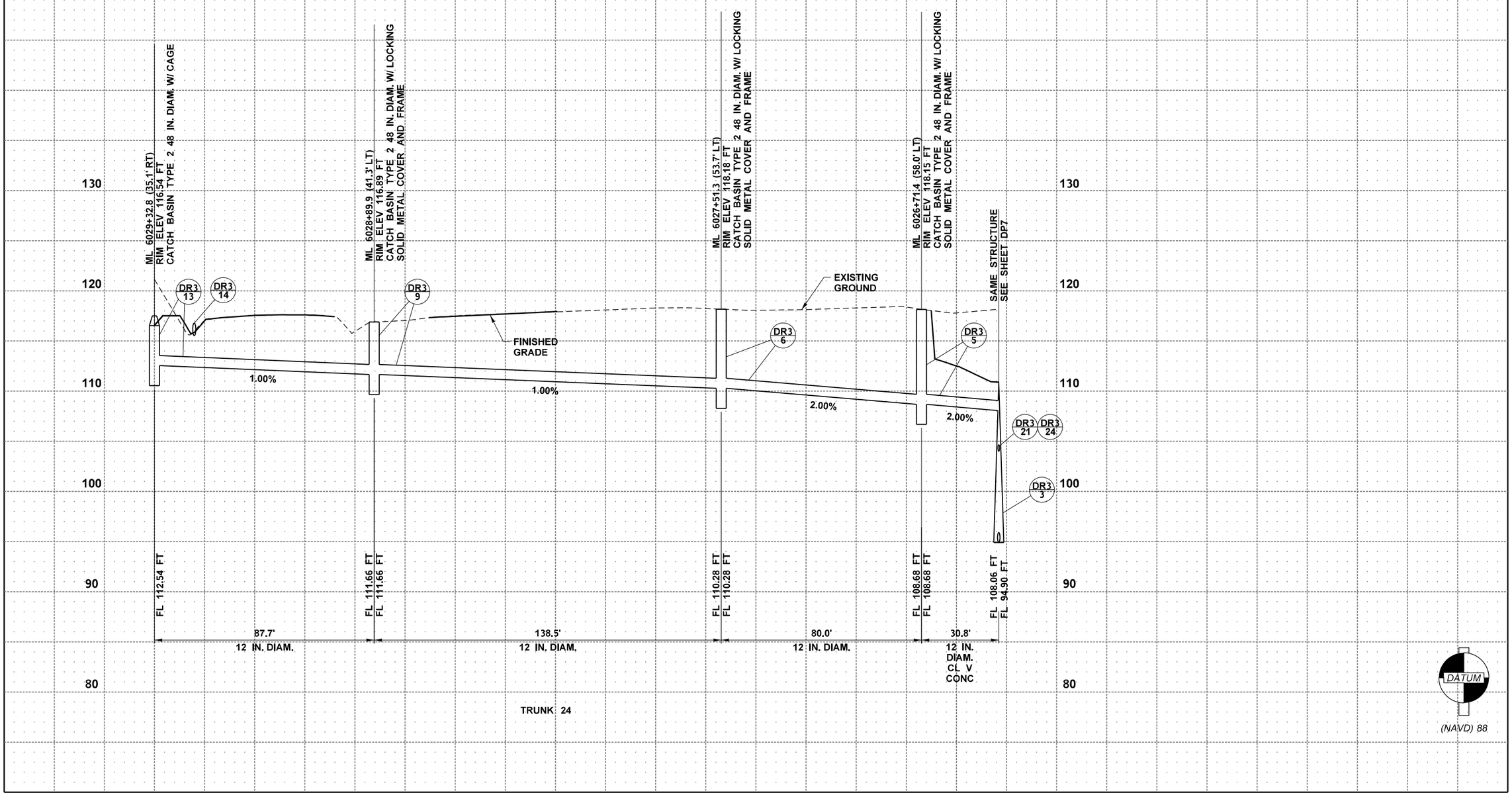

FILE NAME	c:\users\whitekev\documents\d0335737\XL6050_PS_DP_SAM_008.dgn			
TIME	3:13:07 PM			
DATE	3/27/2023			
PLOTTED BY	whitekev			
DESIGNED BY	T. HEW			
ENTERED BY	R. MCCABE			
CHECKED BY	D. MUNGASAVALLI			
PROJ. ENGR.	A. AMOS			
REGIONAL ADM.	S. ROARK	REVISION	DATE	BY

REGION NO.	STATE	FED.AID PROJ.NO.
10	WASH	
JOB NUMBER 22C533		
CONTRACT NO.		LOCATION NO. XL6050

TERRENCE JOSEPH HEW
STATE OF WASHINGTON
20119899
REGISTERED PROFESSIONAL ENGINEER

SEE SHEET CT1
DATE
P.E. STAMP BOX

DATE
P.E. STAMP BOX

Washington State Department of Transportation
OSBORN CONSULTING INCORPORATED

SR 305
SAM SNYDER CREEK
REMOVE FISH BARRIER

DRAINAGE PROFILE

PLAN REF NO DP8

SHEET 55 OF 186 SHEETS

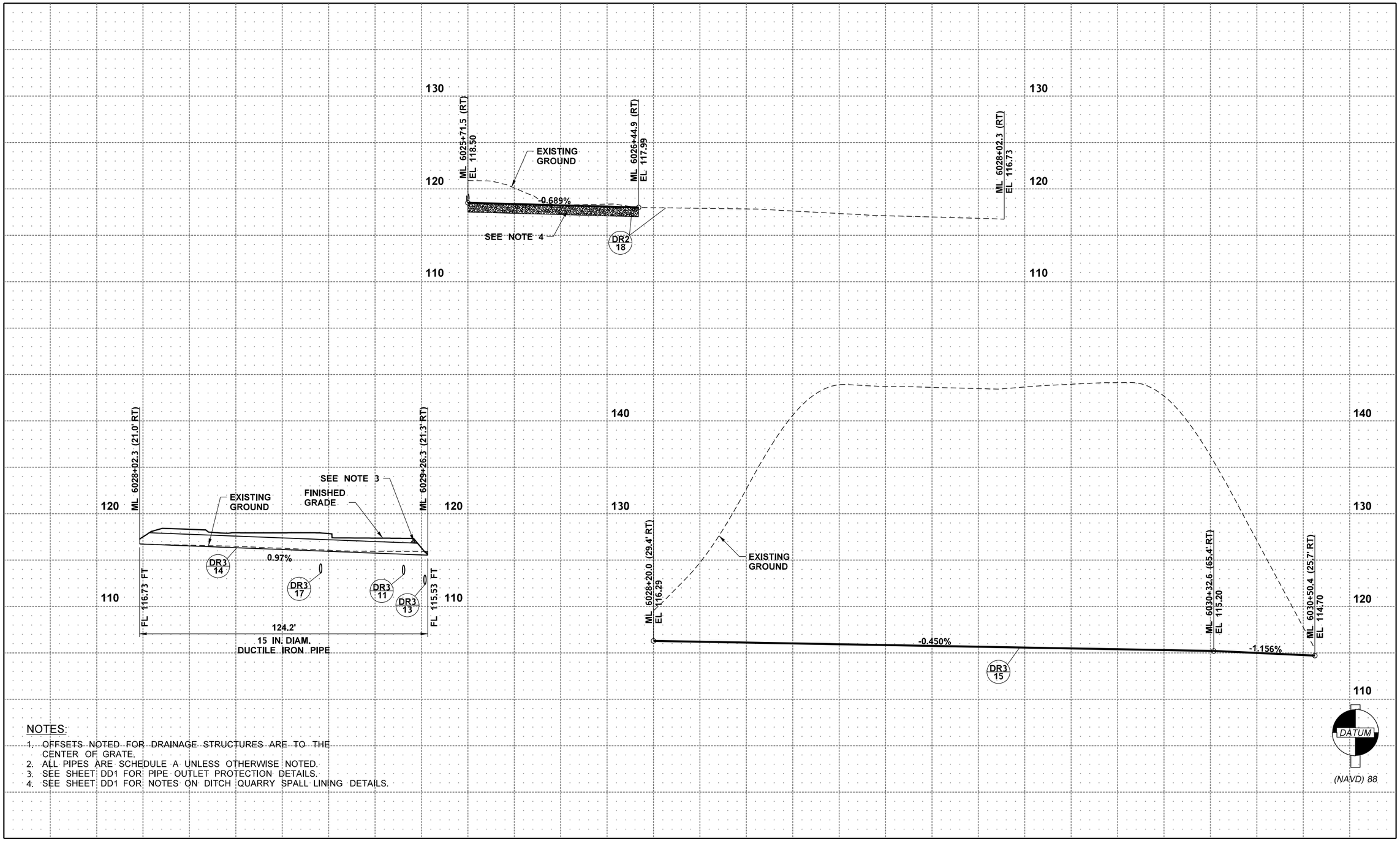

NOTES:

1. OFFSETS NOTED FOR DRAINAGE STRUCTURES ARE TO THE CENTER OF GRATE.
2. ALL PIPES ARE SCHEDULE A UNLESS OTHERWISE NOTED.
3. SEE SHEET DD1 FOR PIPE OUTLET PROTECTION DETAILS.
4. SEE SHEET DD1 FOR NOTES ON DITCH QUARRY SPALL LINING DETAILS.

FILE NAME	c:\users\whitekev\documents\d0335737\XL6050_PS_DP_SAM_009.dgn
TIME	3:13:09 PM
DATE	3/27/2023
PLOTTED BY	whitekev
DESIGNED BY	T. HEW
ENTERED BY	R. MCCABE
CHECKED BY	D. MUNGASAVALLI
PROJ. ENGR.	A. AMOS
REGIONAL ADM.	S. ROARK

REVISION | DATE | BY

REGION NO.	STATE	FED.AID PROJ.NO.
10	WASH	
JOB NUMBER 22C533		
CONTRACT NO.		LOCATION NO. XL6050

TERRENCE JOSEPH HEW
STATE OF WASHINGTON
20119899
REGISTERED PROFESSIONAL ENGINEER

SEE SHEET CT1
DATE
P.E. STAMP BOX

DATE
P.E. STAMP BOX

Washington State Department of Transportation
OSBORN CONSULTING INCORPORATED

SR 305
SAM SNYDER CREEK
REMOVE FISH BARRIER

DRAINAGE PROFILE

PLAN REF NO
DP9

SHEET 56 OF 186 SHEETS

NOTES:

1. OFFSETS NOTED FOR DRAINAGE STRUCTURES ARE TO THE CENTER OF GRATE.
2. ALL PIPES ARE SCHEDULE A UNLESS OTHERWISE NOTED.
3. SEE SHEET DD1 FOR PIPE OUTLET PROTECTION DETAILS.

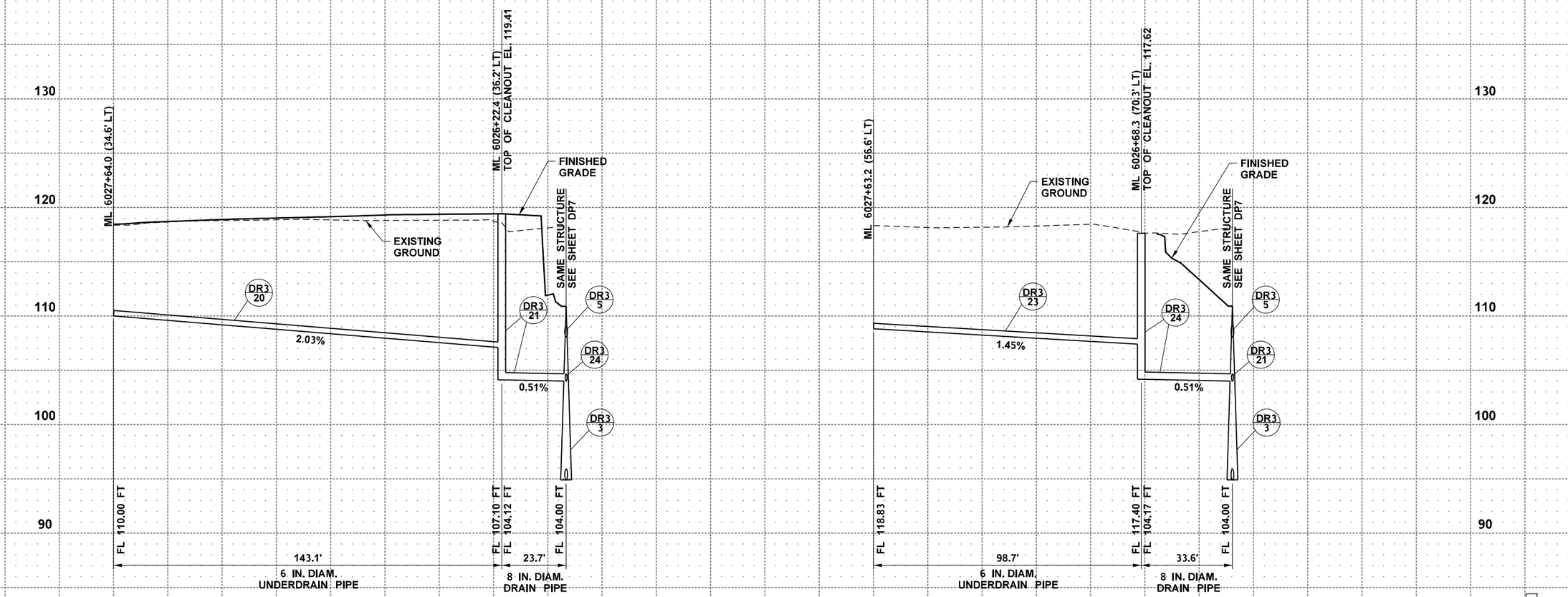

FILE NAME	c:\users\whitekev\documents\d0335737\XL6050_PS_DP_SAM_010.dgn						
TIME	3:13:10 PM				REGION NO. 10	STATE WASH	FED.AID PROJ.NO.
DATE	3/27/2023				JOB NUMBER 22C533		
PLOTTED BY	whitekev						
DESIGNED BY	T. HEW				CONTRACT NO.	LOCATION NO. XL6050	
ENTERED BY	R. MCCABE						
CHECKED BY	D. MUNGASAVALLI						
PROJ. ENGR.	A. AMOS						
REGIONAL ADM.	S. ROARK	REVISION	DATE	BY			

TERRENCE JOSEPH HEW, STATE OF WASHINGTON, 20159893, REGISTERED PROFESSIONAL ENGINEER

SEE SHEET CT1 DATE

P.E. STAMP BOX

P.E. STAMP BOX DATE

Washington State Department of Transportation

OSBORN CONSULTING INCORPORATED

SR 305
SAM SNYDER CREEK
REMOVE FISH BARRIER

DRAINAGE PROFILE

PLAN REF NO DP10

SHEET 57 OF 186 SHEETS

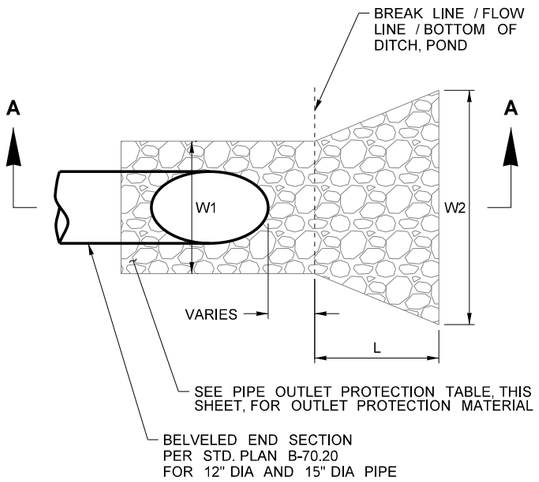

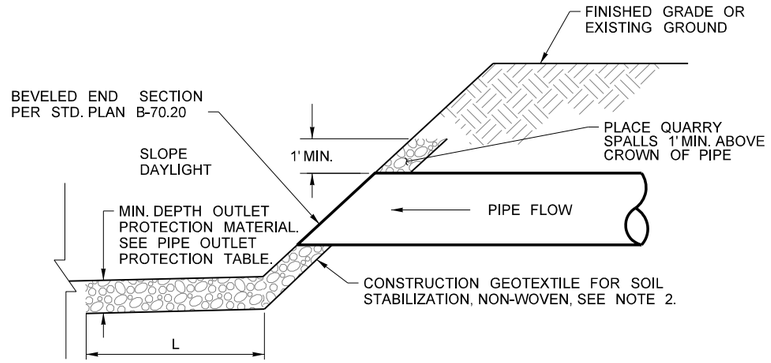

PIPE OUTLET TO STREAM/DETENTION POND

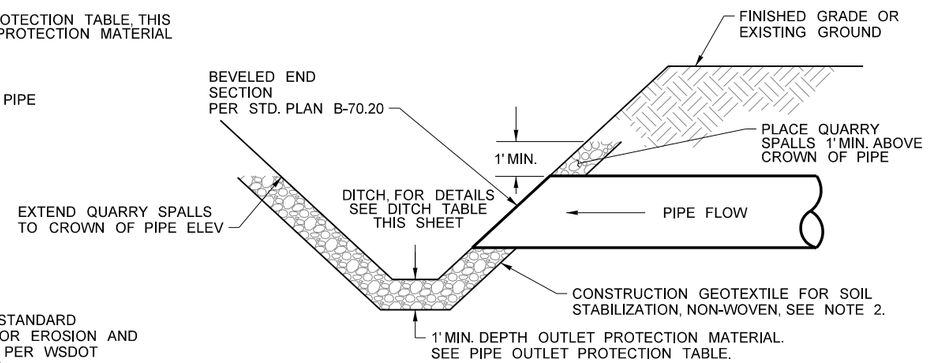

PIPE OUTLET TO DITCH

SECTION A-A

NOTES:

1. QUARRY SPALLS SHALL BE PER WSDOT STANDARD SPECIFICATION SECTION 9-13.1(5). ROCK FOR EROSION AND SCOUR PROTECTION CLASS C SHALL BE PER WSDOT STANDARD SPECIFICATION SECTION 9-13.4.
2. CONSTRUCTION GEOTEXTILE FOR SOIL STABILIZATION PER WSDOT STANDARD SPECIFICATION SECTION 9-33-2(1), TABLE 3, NON-WOVEN. ADJACENT GEOTEXTILE SECTIONS SHALL OVERLAP A MINIMUM OF 2 FT IN CONFORMANCE WITH WSDOT STANDARD SPECIFICATION SECTION 2-12.3(3).

PIPE OUTLET PROTECTION

STR NO	PIPE DIA	OUTLET PROTECTION MATERIAL	MIN. MATERIAL DEPTH	W1	W2	L
DR2-6	12	ROCK FOR EROSION AND SOUR PROTECTION CLASS C	5'	3'	9'	5'
DR2-10	12	ROCK FOR EROSION AND SOUR PROTECTION CLASS C	5'	3'	*	*
DR2-13	12	ROCK FOR EROSION AND SOUR PROTECTION CLASS C	5'	3'	*	*
DR2-18	12 (EX PIPE AT INLET)	QUARRY SPALLS	1'	3'	9'	9
DR3-3	12	ROCK FOR EROSION AND SOUR PROTECTION CLASS C	5'	3'	9'	9'
DR3-14	15	QUARRY SPALLS	1'	3.75'	10.75'	10.5'
DR3-17	12	QUARRY SPALLS	1'	3'	9'	9'

*SEE SLOPE ARMORING DETAIL THIS SHEET

PIPE OUTLET PROTECTION

NOT TO SCALE

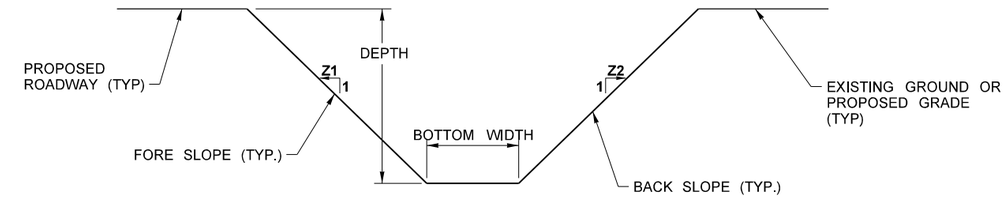

NOTES:

1. DITCH EXCAVATION IS QUANTIFIED AND INCLUDED IN ROADWAY EXCAVATION INCLUDING HAUL ON (RP) SHEETS.
2. FOR DITCH GRADING DETAILS, SEE ROADWAY TYPICAL SECTIONS (RS) SHEETS.
3. MAXIMUM DITCH SIDE SLOPE IS 2H:1V. DITCH SIDE SLOPES MAY VARY FROM TYPICAL 3H:1V TO MATCH INTO EXISTING SIDE SLOPES AND ROADWAY EMBANKMENT SLOPES.

DITCH TABLE

STRUCTURE NO.	DITCH LOCATION	DEPTH*	BOTTOM WIDTH	FORE SLOPE (Z1)	BACK SLOPE (Z2)
		LF	LF	X:1	X:1
DR2-15	ML 6024+28.4 (RT) TO ML 6024+79.9 (RT)	1.6	0	3	2
DR2-18****	ML 6025+71.5 (27.0 RT) TO ML 6026+44.9 (21.9 RT)	1	0	2	2
	ML 6026+44.9 (21.9 RT) TO ML 6028+02.3 (21.0 RT)	***	***	2	***
DR3-15	ML 6028+20.0 (RT) TO ML 6030+50.4 (RT)	1.3**	0	2	2
DR3-19	ML 6029+26.3 (RT) TO ML 6030+70.0 (RT)	1.6	2	2	2

* MINIMUM DITCH DEPTH FROM EDGE OF PAVEMENT (DEPTH TO TOP OF DITCH FOR DR3-15)
** END OF DITCH INTERCEPTS DITCH DR3-19, SEE DR SHEETS. SEE SHEET DP9 FOR DITCH PROFILE
*** MATCH EXISTING DITCH GRADES.
**** DITCH DR2-18, TRIANGULAR DITCH SECTION, SHALL BE LINED WITH QUARRY SPALLS OVER CONSTRUCTION GEOTEXTILE FABRIC, PLACED 1 FOOT DEEP ALONG THE DITCH LENGTH AND 1 FOOT GRADED DITCH HEIGHT.

DITCH TYPICAL SECTION

NOT TO SCALE

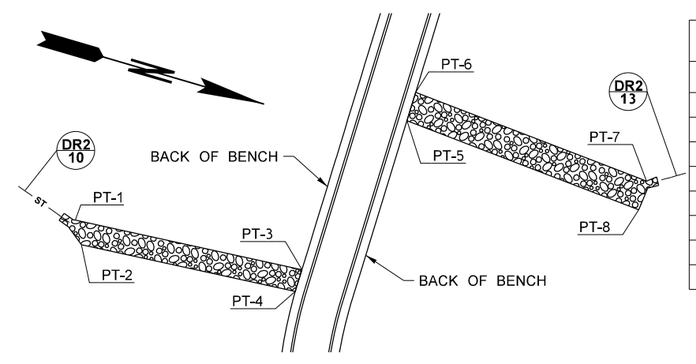

SLOPE ARMORING ANGLE POINT TABLE

PT	STATION	OFFSET
PT-1	ML 6021+68.98	63.89' RT
PT-2	ML 6021+71.12	72.55' RT
PT-3	ML 6022+48.78	81.37' RT
PT-4	ML 6022+46.45	89.05' RT
PT-5	ML 6022+85.76	28.91' RT
PT-6	ML 6022+88.81	18.95' RT
PT-7	ML 6023+70.08	50.19' RT
PT-8	ML 6023+67.36	60.28' RT

NOTES:

1. SEE SHEET DD8 FOR SLOPE ARMORING DETAIL

SLOPE ARMORING PLAN

NOT TO SCALE

FILE NAME	c:\users\whitekev\documents\d0335737\XL6050_PS_DD_SAM_001.dgn
TIME	3:13:11 PM
DATE	3/27/2023
PLOTTED BY	whitekev
DESIGNED BY	T. HEW
ENTERED BY	R. MCCABE
CHECKED BY	D. MUNGASAVALLI
PROJ. ENGR.	A. AMOS
REGIONAL ADM.	S. ROARK

REVISION | DATE | BY

REGION NO. 10 | STATE WASH | FED.AID PROJ.NO.

JOB NUMBER 22C533

CONTRACT NO.

LOCATION NO. XL6050

TERRENCE JOSEPH HEW, STATE OF WASHINGTON, 20119893, REGISTERED PROFESSIONAL ENGINEER

SEE SHEET CT1 DATE
P.E. STAMP BOX

DATE
P.E. STAMP BOX

Washington State Department of Transportation

OSBORN CONSULTING INCORPORATED

SR 305
SAM SNYDER CREEK
REMOVE FISH BARRIER

DRAINAGE DETAILS

PLAN REF NO DD1

SHEET 58 OF 186 SHEETS

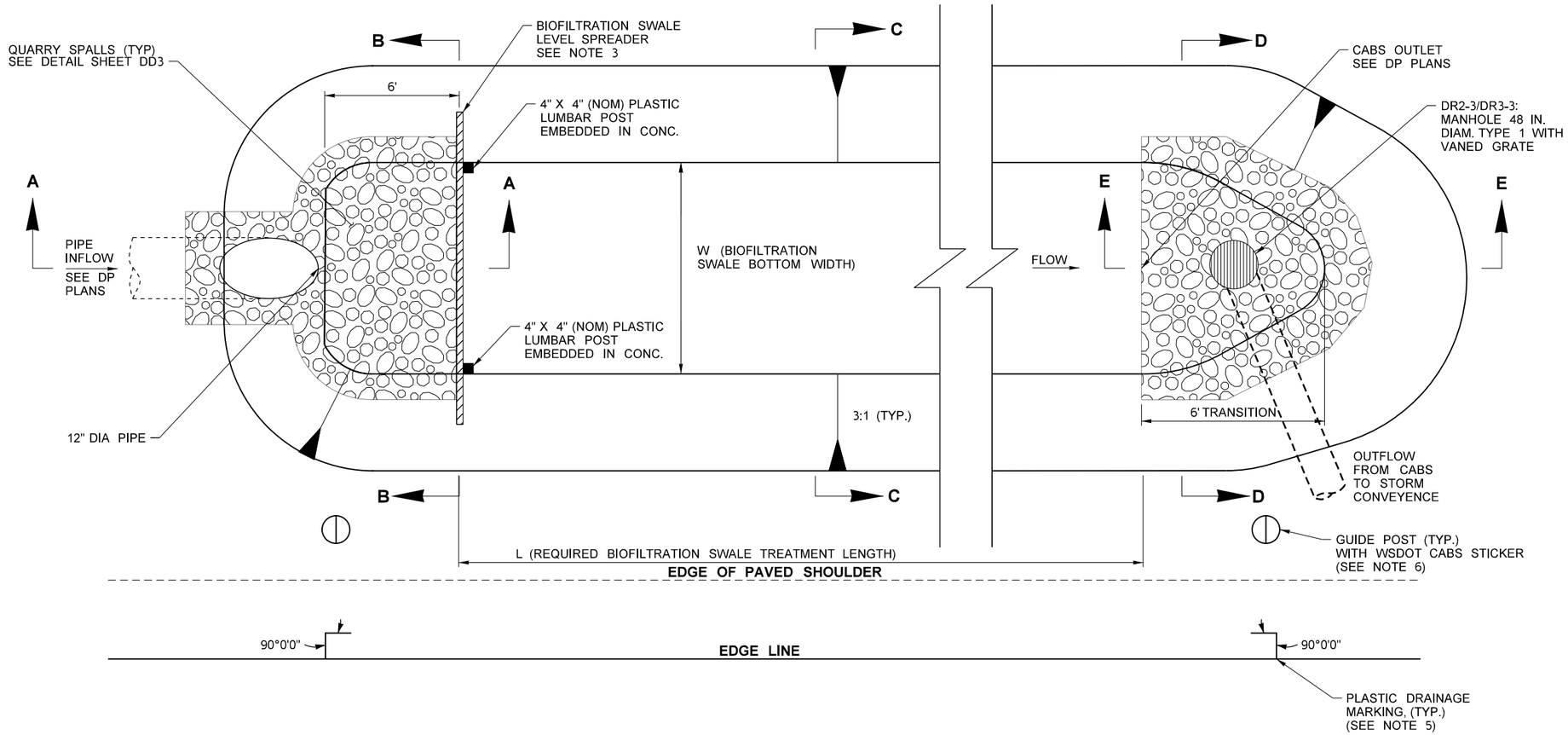

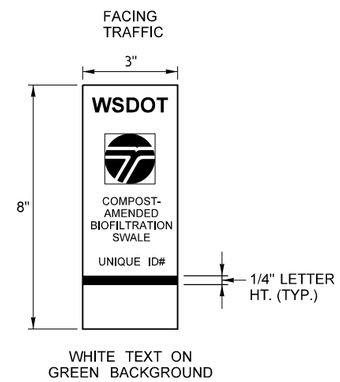

WSDOT CABS STICKER

NOT TO SCALE

NOTES:

1. ALL DIMENSIONS ARE IN FEET UNLESS OTHERWISE NOTED.
2. FOR LOCATION OF "CABS", SEE DRAINAGE PLAN SHEETS DR2 AND DR3.
3. INSTALL BIOFILTRATION LEVEL SPREADER PERPENDICULAR TO THE CENTERLINE OF THE SWALE. SEE PLATE INSTALLATION DETAIL SHEET DD3.
4. CABS SHALL BE SEEDED AS SHOWN IN LS SHEETS.
5. PLASTIC DRAINAGE MARKER PER WSDOT STANDARD PLAN M-24.65.
6. GUIDE POST SHALL BE FLEXIBLE, NON-REFLECTIVE AND BROWN IN COLOR. INSTALL GUIDE POST PER WSDOT STANDARD PLAN M-24.65.
7. SEE SHEET DD4 FOR "CABS" SECTIONS.

COMPOST-AMENDED BIOFILTRATION SWALE (CABS) TABLE

STRUCTURE CODE	LOCATION	BOTTOM WIDTH (FEET)	LENGTH* (FEET)	HEIGHT (FEET)	LONGITUDINAL SLOPE (%)	PLASTIC DRAINAGE MARKING (EACH)
DR2-2	ML 6021+01.98 (62.6' LT) TO ML 6021+51.88 (102.5' LT)	2.3	124	1.5	1.50	2
DR3-4	ML 6026+41.68 (49.9' LT) TO ML 6027+50.60 (44.0' LT)	2	112	1.5	1.50	2

* LENGTH PROVIDED IS THE TOTAL GRADED LENGTH OF THE CABS

COMPOST AMENDED BIOFILTRATION SWALE (CABS) PLAN VIEW

NOT TO SCALE

FILE NAME	c:\users\whitekev\documents\d0335737\XL6050_PS_DD_SAM_002.dgn
TIME	3:13:12 PM
DATE	3/27/2023
PLOTTED BY	whitekev
DESIGNED BY	T. HEW
ENTERED BY	R. MCCABE
CHECKED BY	D. MUNGASAVALLI
PROJ. ENGR.	A. AMOS
REGIONAL ADM.	S. ROARK

REVISION | DATE | BY

REGION NO. 10 | STATE WASH | FED.AID PROJ.NO.

JOB NUMBER 22C533

CONTRACT NO. | LOCATION NO. XL6050

TERRENCE JOSEPH HEW, STATE OF WASHINGTON, 20119899, REGISTERED PROFESSIONAL ENGINEER

SEE SHEET CT1 DATE

P.E. STAMP BOX

DATE

P.E. STAMP BOX

Washington State Department of Transportation

OSBORN CONSULTING INCORPORATED

SR 305
SAM SNYDER CREEK
REMOVE FISH BARRIER

DRAINAGE DETAILS

PLAN REF NO DD2

SHEET 59 OF 186 SHEETS

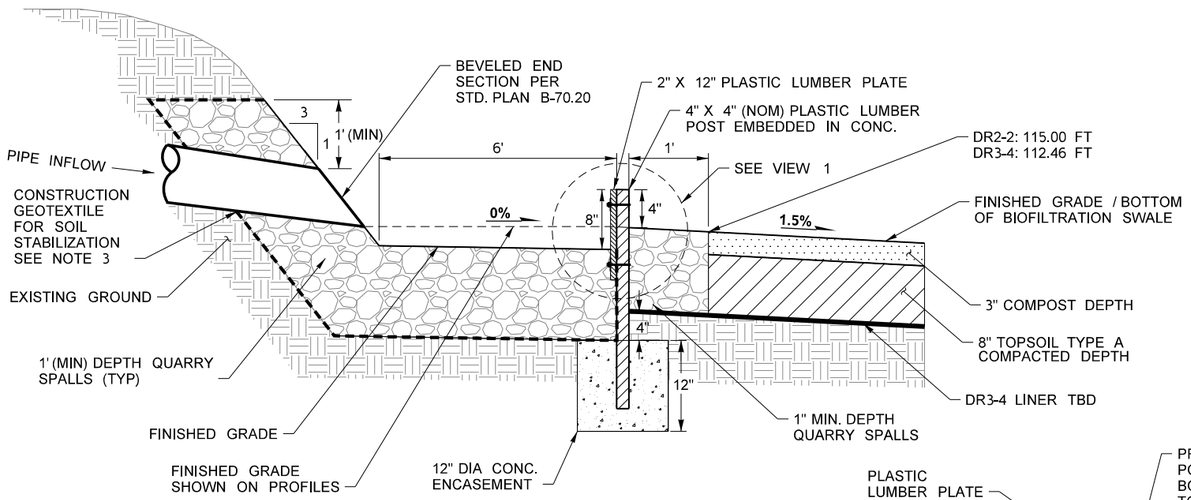

SECTION A-A (DETAIL DD2)

NOT TO SCALE

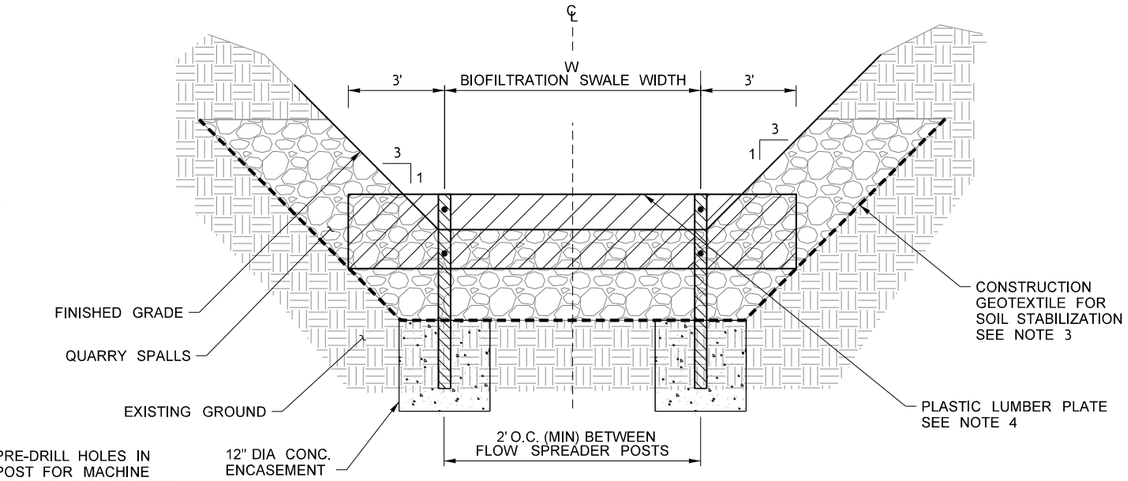

BIOFILTRATION SWALE LEVEL SPREADER SECTION B-B (DETAIL DD2)

NOT TO SCALE

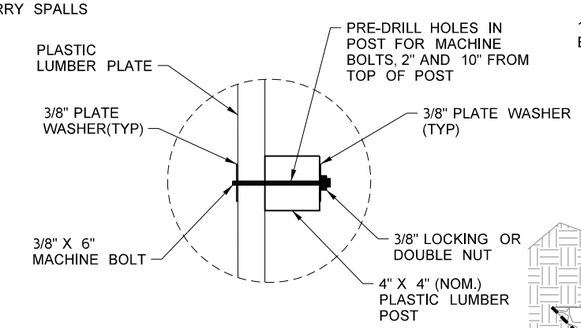

VIEW 1 PLATE INSTALLATION PLAN

NOT TO SCALE

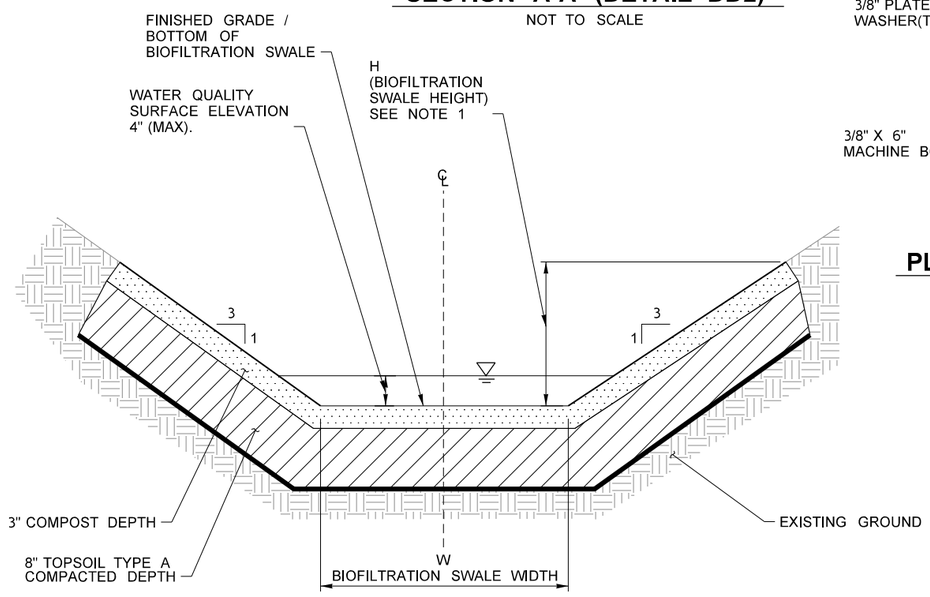

BIOFILTRATION SWALE TREATMENT SECTION C-C (DETAIL DD2)

NOT TO SCALE

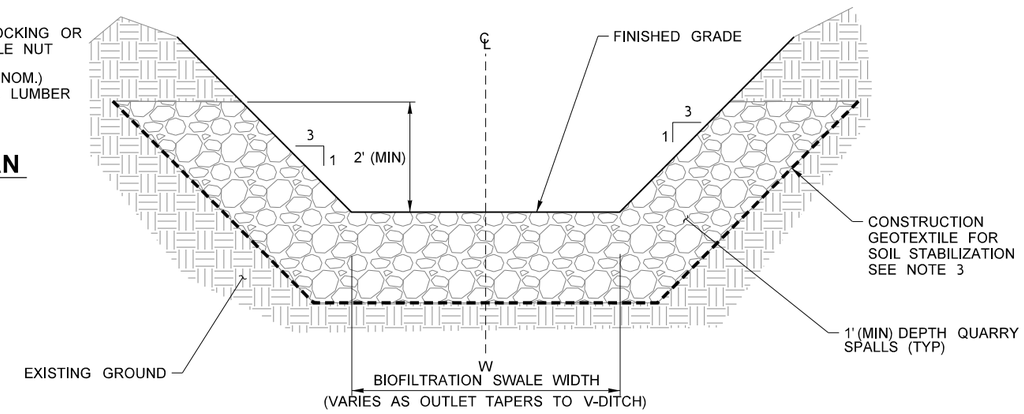

SECTION D-D (DETAIL DD2)

NOT TO SCALE

NOTES:

1. EXTEND COMPOST AND TOPSOIL FROM THE BOTTOM OF THE BIOFILTRATION SWALE ONTO THE SIDE SLOPES UP TO THE BIOFILTRATION SWALE HEIGHT NOTED IN THE TABLE ON DETAIL DD2.
2. EXCAVATION FOR CABS BELOW FINISHED GRADE IS INCLUDED IN DITCH EXCAVATION INCLUDING HAUL.
3. CONSTRUCTION GEOTEXTILE FOR SOIL STABILIZATION PER STANDARD SPECIFICATION 9-33.2(1), TABLE 3, NON-WOVEN. ADJACENT GEOTEXTILE SECTIONS SHALL OVERLAP A MINIMUM OF 2' IN CONFORMANCE WITH STANDARD SPECIFICATION SECTION 2-12.3(3).
4. PLASTIC LUMBER PLATE SHALL BE INSTALLED LEVEL.
5. QUARRY SPALLS SHALL CONFORM TO STANDARD SPECIFICATION SECTION 9-13.1.

FILE NAME	c:\users\whitekev\documents\d0335737\XL6050_PS_DD_SAM_003.dgn						
TIME	3:13:13 PM				REGION NO. 10	STATE WASH	FED.AID PROJ.NO.
DATE	3/27/2023						
PLOTTED BY	whitekev				JOB NUMBER 22C533		
DESIGNED BY	T. HEW						
ENTERED BY	R. MCCABE						
CHECKED BY	D. MUNGASAVALLI				CONTRACT NO.		LOCATION NO. XL6050
PROJ. ENGR.	A. AMOS						
REGIONAL ADM.	S. ROARK	REVISION	DATE	BY			

TERRENCE JOSEPH HEW STATE OF WASHINGTON 20119893 REGISTERED PROFESSIONAL ENGINEER

SEE SHEET CT1 DATE

P.E. STAMP BOX

DATE

P.E. STAMP BOX

Washington State Department of Transportation

OSBORN CONSULTING INCORPORATED

SR 305
SAM SNYDER CREEK
REMOVE FISH BARRIER

DRAINAGE DETAILS

PLAN REF NO DD3

SHEET 60 OF 186 SHEETS

NOTES:

1. FOR CROSS SECTIONS, SEE SHEET DD5.
2. SEE SHEET DD6 FOR OUTLET CONTROL STRUCTURE, FLOW RESTRICTOR, AND EMERGENCY OVERFLOW STRUCTURE DETAIL AND DIMENSIONS.
3. FOR CHAIN LINK FENCE AND DOUBLE GATE GENERAL NOTES, DIMENSIONS, AND DETAILS NOT SHOWN, SEE WSDOT STANDARD PLAN L-20.10 AND L-30.10.
4. DETENTION POND SHALL BE SEEDED AS SHOWN IN LS SHEETS.
5. GUIDE POST, POND MARKER, AND PLASTIC DRAINAGE MARKER SHALL BE IN ACCORDANCE WITH STANDARD PLAN M-24.66.
6. CONSTRUCTION GEOTEXTILE FOR SOIL STABLIZATION SHALL BE IN ACCORDANCE WITH WSDOT STANDARD SPECIFICATION SECTION 9-33.2(1), TABLE 3, NON-WOVEN.

POND DESIGN TABLE

STRUCTURE ID	POND BOTTOM ELEVATION	DESIGN WSEL	STORAGE VOLUME TO DESIGN WSEL
			CUBIC FEET
DR3-18	113.00'	116.50'	12,107

POND ANGLE POINT TABLE

PT	STATION	OFFSET	ELEVATION
PT-1	ML 6028+79.45	45.11' RT	113.00'
PT-2	ML 6030+04.17	46.90' RT	113.00'
PT-3	ML 6030+03.94	61.90' RT	113.00'
PT-4	ML 6028+81.13	60.09' RT	113.00'
PT-5	ML 6028+71.56	57.84' RT	113.00'
PT-6	ML 6028+60.35	33.19' RT	117.50'
PT-7	ML 6028+81.50	31.59' RT	117.50'
PT-8	ML 6030+04.39	33.40' RT	117.50'
PT-9	ML 6030+03.76	75.40' RT	117.50'
PT-10	ML 6028+81.00	73.59' RT	117.50'
PT-11	ML 6028+52.48	45.94' RT	117.50'
PT-12	ML 6028+49.46	44.06' RT	117.50'
PT-13	ML 6028+08.63	18.83' RT	118.50'
PT-14	ML 6028+03.83	15.88' RT	118.00'
PT-15	ML 6028+32.03	15.63' RT	117.76'
PT-16	ML 6028+36.83	18.60' RT	118.26'
PT-17	ML 6028+52.83	28.52' RT	117.50'
PT-18	ML 6028+80.93	79.6' RT	117.50'
PT-19	ML 6030+25.07	54.7' RT	117.50'
PT-20	ML 6030+31.07	54.8' RT	117.50'

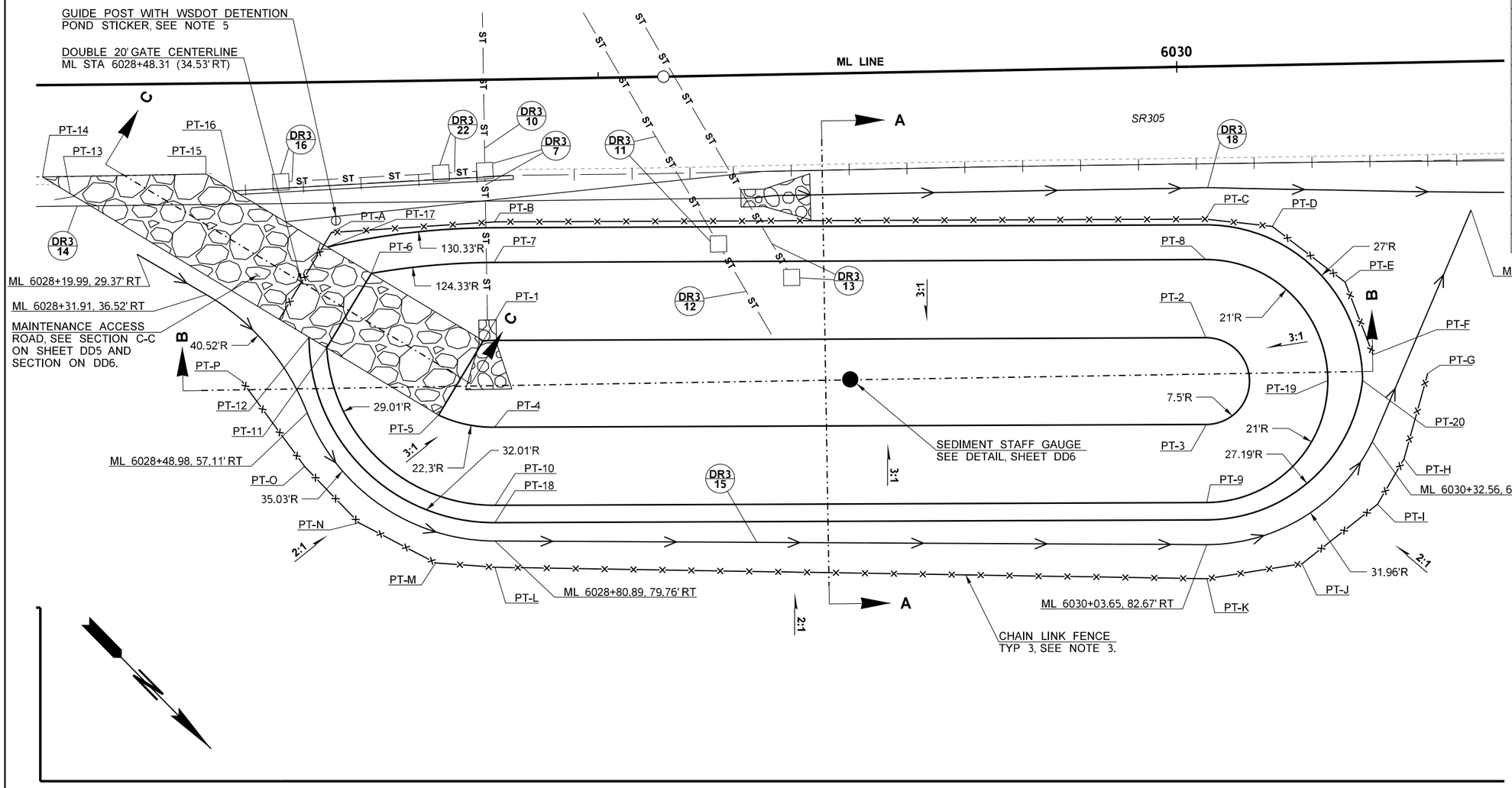

CHAIN LINK FENCE TYPE 3 POINTS TABLE

PT	STATION	OFFSET
PT-A	ML 6028+53.56	26.02' RT
PT-B	ML 6028+81.69	24.59' RT
PT-C	ML 6030+04.50	26.40' RT
PT-D	ML 6030+15.98	27.88' RT
PT-E	ML 6030+28.38	37.74' RT
PT-F	ML 6030+32.97	50.39' RT
PT-G	ML 6030+42.36	53.82' RT
PT-H	ML 6030+37.98	68.51' RT
PT-I	ML 6030+33.24	76.27' RT
PT-J	ML 6030+20.02	86.29' RT
PT-K	ML 6030+03.54	88.57' RT
PT-L	ML 6028+80.82	84.31' RT
PT-M	ML 6028+70.66	83.39' RT
PT-N	ML 6028+57.61	76.27' RT
PT-O	ML 6028+48.45	66.42' RT
PT-P	ML 6028+37.84	51.54' RT

PLAN VIEW

DETENTION POND DR3 18

NOT TO SCALE

FILE NAME	c:\users\whltekev\documents\d0335737\XL6050_PS_DD_SAM_004.dgn
TIME	3:13:15 PM
DATE	3/27/2023
PLOTTED BY	whitekev
DESIGNED BY	T. HEW
ENTERED BY	R. MCCABE
CHECKED BY	D. MUNGASAVALLI
PROJ. ENGR.	A. AMOS
REGIONAL ADM.	S. ROARK

REVISION | DATE | BY

REGION NO. 10 | STATE WASH | FED.AID PROJ.NO.

JOB NUMBER 22C533

CONTRACT NO. | LOCATION NO. XL6050

TERRANCE JOSEPH HEW — STATE OF WASHINGTON — 20170820 — REGISTERED PROFESSIONAL ENGINEER

SEE SHEET CT1 DATE

P.E. STAMP BOX

DATE

P.E. STAMP BOX

Washington State Department of Transportation

OSBORN CONSULTING INCORPORATED

SR 305
SAM SNYDER CREEK
REMOVE FISH BARRIER

DRAINAGE DETAILS

PLAN REF NO DD4

SHEET 61 OF 186 SHEETS

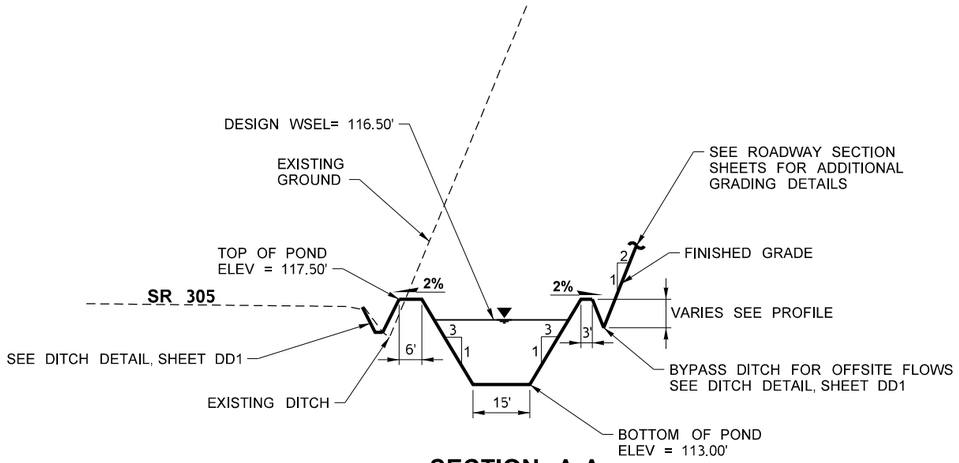

SECTION A-A

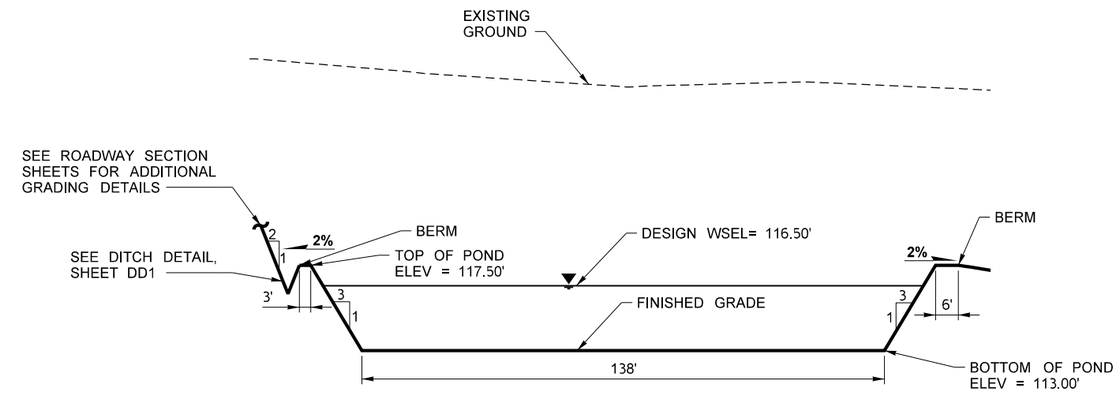

SECTION B-B

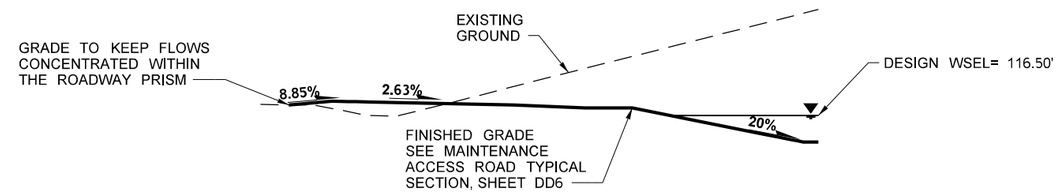

SECTION C-C

DETENTION POND

DR3 18

NOT TO SCALE

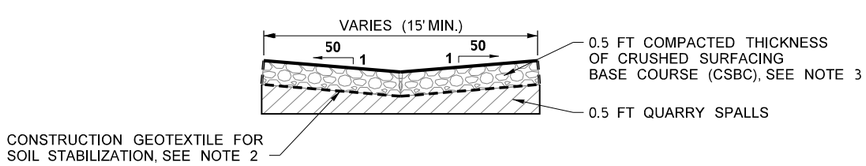

SECTION C-C

NOTES:

1. FOR ADDITIONAL SLOPE AND SECTION DETAILS, SEE DRAINAGE DETAILS DD4-DD5.
2. CONSTRUCTION GEOTEXTILE FOR SOIL STABILIZATION SHALL BE IN ACCORDANCE WITH WSDOT STANDARD SPECIFICATION SECTION 9-33.2(1), TABLE 3 NON-WOVEN. ADJACENT GEOTEXTILE SECTIONS SHALL OVERLAP A MINIMUM OF 2 FT IN CONFROMANCE WITH STANDARD SPECIFICAION SECTION 2-12.3(3).
3. CRUSHED SURFACING BASE COURSE (CSBC) SHALL BE IN ACCORDANCE WITH STANDARD SPECIFICATION SECTION 9-03.9(3).
4. EXCAVATION FOR MAINTENANCE ACCESS ROAD IS INCLUDED IN ROADWAY EXCAVATION INCL. HAUL - AREA POND.
5. SEE MAINTENANCE ACCESS ROAD SECTION C-C, THIS SHEET.
6. QUARRY SPALLS SHALL BE IN ACCORDANCE WITH WSDOT STANDARD SPECIFICATION SECTION 9-13.1(15).

MAINTANANCE ACCESS ROAD TYPICAL SECTION

NOT TO SCALE

FILE NAME	c:\users\whitekev\documents\d0335737\XL6050_PS_DD_SAM_005.dgn				REGION NO.	STATE	FED.AID PROJ.NO.	TERRENCE JOSEPH HEW STATE OF WASHINGTON 20119899 REGISTERED PROFESSIONAL ENGINEER		Washington State Department of Transportation	SR 305 SAM SNYDER CREEK REMOVE FISH BARRIER	PLAN REF NO DD5
TIME	3:13:16 PM				10	WASH						
DATE	3/27/2023				JOB NUMBER 22C533							SHEET 62 OF 186 SHEETS
PLOTTED BY	whitekev											
DESIGNED BY	T. HEW											
ENTERED BY	R. MCCABE											
CHECKED BY	D. MUNGASAVALLI				CONTRACT NO.		LOCATION NO. XL6050	SEE SHEET CT1 DATE		OSBORN CONSULTING INCORPORATED	DRAINAGE DETAILS	
PROJ. ENGR.	A. AMOS											
REGIONAL ADM.	S. ROARK	REVISION	DATE	BY				P.E. STAMP BOX	P.E. STAMP BOX DATE			

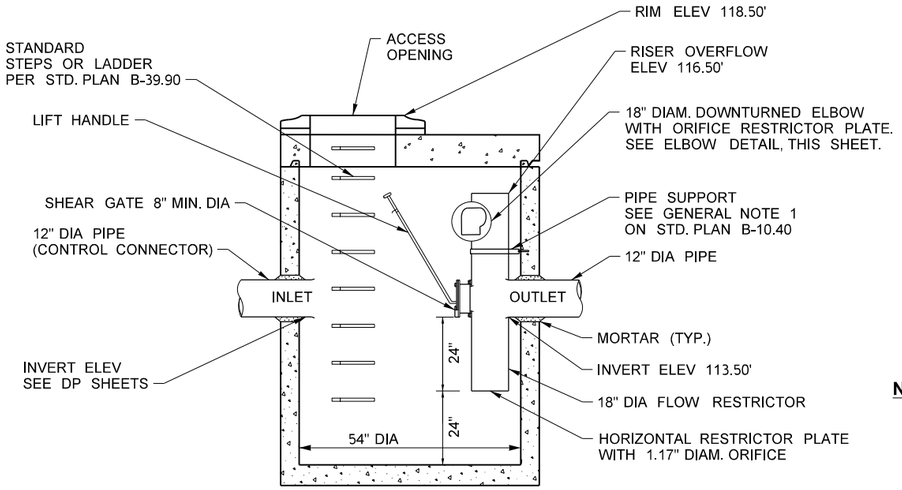

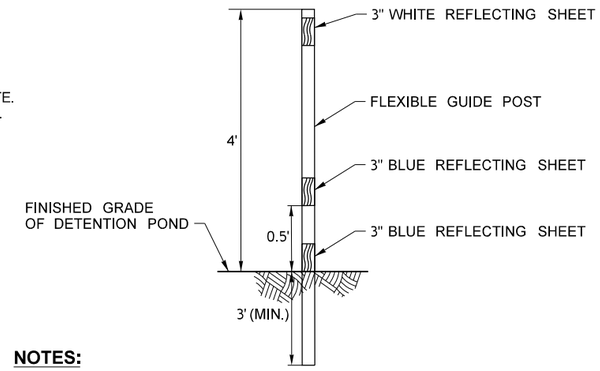

NOTES:

1. SEDIMENT STAFF GAUGE SHALL BE FLEXIBLE, WHITE, NON-REFLECTIVE, AND IN ACCORDANCE WITH SPECIFICATION SECTION 9-17 AND PAID FOR AS FLEXIBLE GUIDE POST.
2. INSTALL SEDIMENT STAFF GAUGE AT THE CENTER OF THE POND AS SHOWN ON DD4.

SEDIMENT STAFF GAUGE DETAIL

NOT TO SCALE

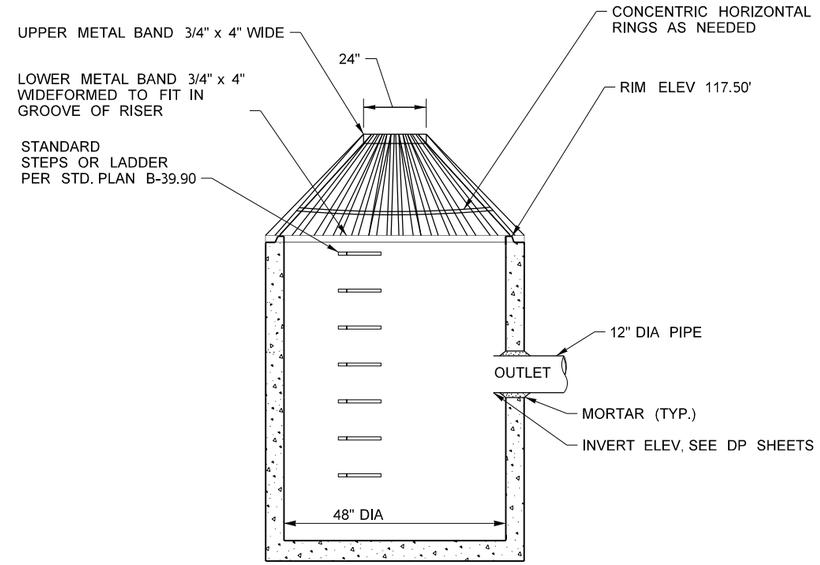

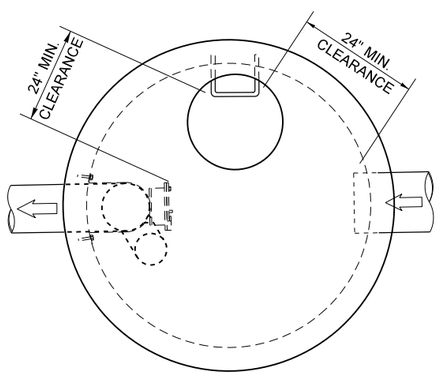

PLAN VIEW

CATCH BASIN TYPE 2 54 IN. DIA W/ FR

NOT TO SCALE

DR3
11

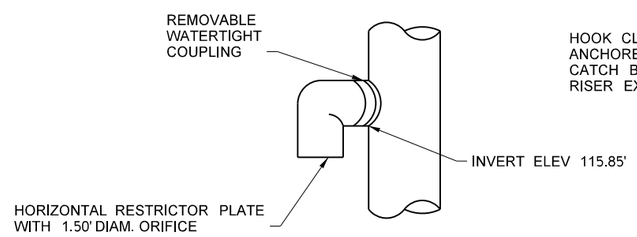

ELBOW DETAIL

NOT TO SCALE

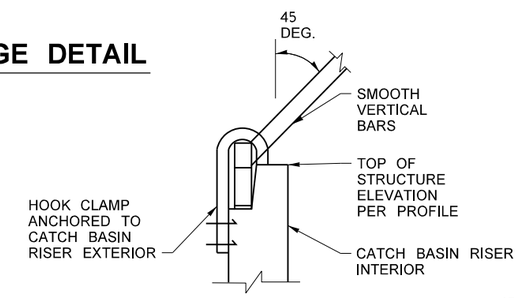

DETAIL HOOK CLAMP

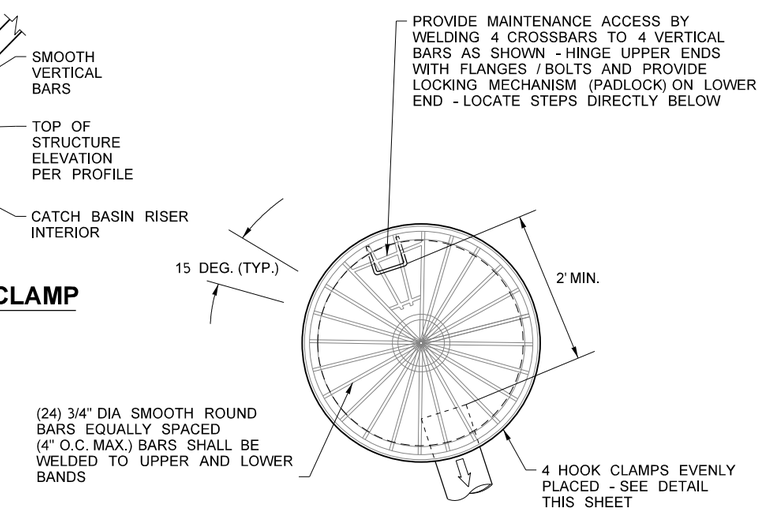

PLAN VIEW

CATCH BASIN TYPE 2 48 IN. DIAM W/ CAGE

NOT TO SCALE

DR3
13

FILE NAME	c:\users\whitekev\documents\d0335737\XL6050_PS_DD_SAM_006.dgn				REGION NO. 10	STATE WASH	FED.AID PROJ.NO.
TIME	3:13:16 PM				JOB NUMBER 22C533		
DATE	3/27/2023						
PLOTTED BY	whitekev						
DESIGNED BY	T. HEW						
ENTERED BY	R. MCCABE						
CHECKED BY	D. MUNGASAVALLI				CONTRACT NO.		LOCATION NO. XL6050
PROJ. ENGR.	A. AMOS						
REGIONAL ADM.	S. ROARK	REVISION	DATE	BY			

TERRENCE JOSEPH HEW
STATE OF WASHINGTON
20139893
REGISTERED
PROFESSIONAL ENGINEER

SEE SHEET CT1
DATE
P.E. STAMP BOX

DATE
P.E. STAMP BOX

Washington State
Department of Transportation
OSBORN CONSULTING
INCORPORATED

SR 305
SAM SNYDER CREEK
REMOVE FISH BARRIER

DRAINAGE DETAILS

PLAN REF NO
DD6

SHEET
63
OF
186
SHEETS

NOTES:

1. SEE SHEETS DD2/DD3 FOR ADDITIONAL CABS DETAILS.

POND ANGLE POINT TABLE			
PT	STATION	OFFSET	ELEVATION
PT-1	ML 6020+98.32	68.26' LT	116.50'
PT-2	ML 6020+98.29	63.76' LT	115.00'
PT-3	ML 6020+98.27	61.46' LT	115.00'
PT-4	ML 6020+98.23	56.96' LT	116.50'
PT-5	ML 6021+38.09	68.15' LT	115.89'
PT-6	ML 6021+38.10	63.65' LT	114.39'
PT-7	ML 6021+38.10	61.35' LT	114.39'
PT-8	ML 6021+38.11	56.85' LT	115.89'
PT-9	ML 6021+38.07	76.85' LT	115.42'
PT-10	ML 6021+38.06	81.35' LT	113.92'
PT-11	ML 6021+38.06	83.65' LT	113.92'
PT-12	ML 6021+38.05	88.15' LT	115.42'
PT-13	ML 6021+38.03	96.85' LT	114.95'
PT-14	ML 6021+38.02	101.35' LT	113.45'
PT-15	ML 6021+38.01	103.65' LT	113.45'
PT-16	ML 6021+38.00	108.15' LT	114.95'
PT-17	ML 6021+57.87	108.20' LT	114.65'
PT-18	ML 6021+58.71	103.70' LT	113.14'
PT-19	ML 6021+58.72	101.40' LT	113.14'
PT-20	ML 6021+57.90	96.90' LT	114.65'

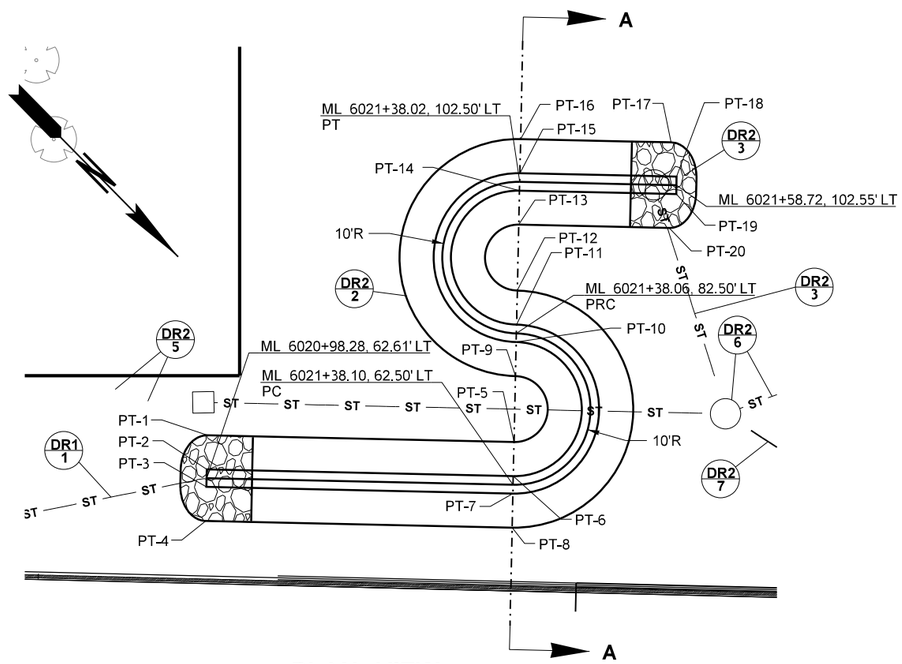

PLAN VIEW

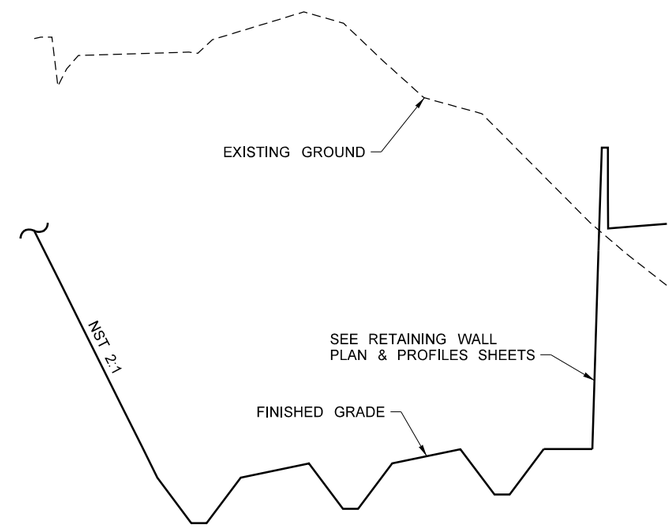

SECTION A-A

DR2-2 CABS

NOT TO SCALE

FILE NAME	c:\users\whltekev\documents\d0335737\XL6050_PS_DD_SAM_007.dgn						
TIME	3:13:18 PM				REGION NO. 10	STATE WASH	FED.AID PROJ.NO.
DATE	3/27/2023						
PLOTTED BY	whitekev				JOB NUMBER 22C533		
DESIGNED BY	T. HEW						
ENTERED BY	R. MCCABE				CONTRACT NO.		LOCATION NO. XL6050
CHECKED BY	D. MUNGASAVALLI						
PROJ. ENGR.	A. AMOS						
REGIONAL ADM.	S. ROARK	REVISION	DATE	BY			

TERRENCE JOSEPH HEW STATE OF WASHINGTON 20119893 REGISTERED PROFESSIONAL ENGINEER

SEE SHEET CT1 DATE

P.E. STAMP BOX

P.E. STAMP BOX DATE

Washington State Department of Transportation

OSBORN CONSULTING INCORPORATED

SR 305
SAM SNYDER CREEK
REMOVE FISH BARRIER

DRAINAGE DETAILS

PLAN REF NO DD7

SHEET 64 OF 186 SHEETS

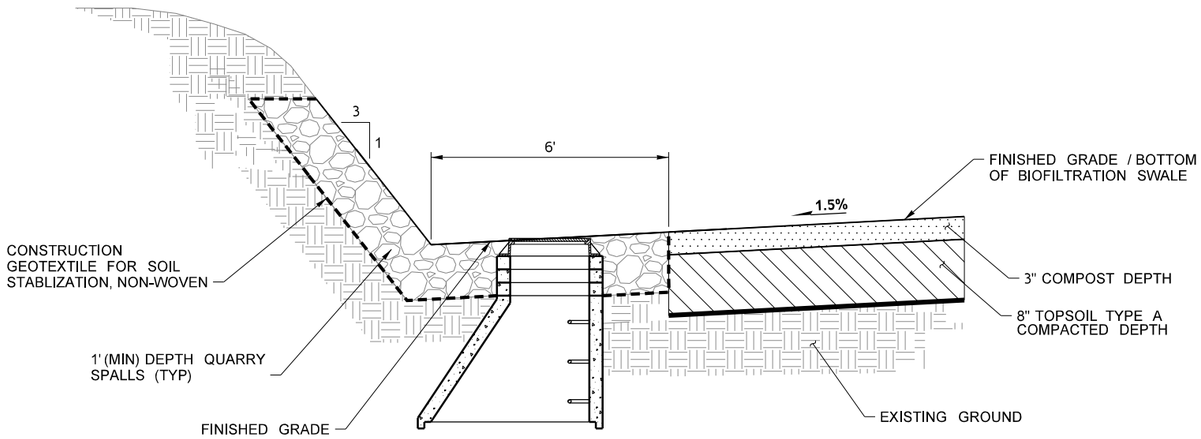

NOTES:

1. CONSTRUCTION GEOTEXTILE FOR SOIL STABILIZATION PER STANDARD SPECIFICATION 9-33.2(1), TABLE 3, NON-WOVEN. ADJACENT GEOTEXTILE SECTIONS SHALL OVERLAP A MINIMUM OF 2' IN CONFORMANCE WITH STANDARD SPECIFICATION SECTION 2-12.3(3).
2. QUARRY SPALLS SHALL CONFORM TO STANDARD SPECIFICATION SECTION 9-13.1.

SECTION E-E (DETAIL DD2)

NOT TO SCALE

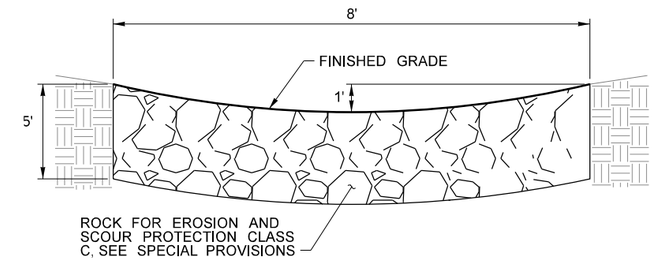

SLOPE ARMORING DETAIL

NOT TO SCALE

FILE NAME	c:\users\projectwiseworkingfolder\d0335737\XL6050_PS_DD_SAM_008.dgn			
TIME	9:24:36 AM			
DATE	4/18/2023			
PLOTTED BY	mccabrya			
DESIGNED BY	T. HEW			
ENTERED BY	R. MCCABE			
CHECKED BY	D. MUNGASAVALLI			
PROJ. ENGR.	A. AMOS			
REGIONAL ADM.	S. ROARK	REVISION	DATE	BY

REGION NO.	STATE	FED.AID PROJ.NO.
10	WASH	
JOB NUMBER 22C533		
CONTRACT NO.		LOCATION NO. XL6050

TERRENCE JOSEPH HEW, STATE OF WASHINGTON, 20119899, REGISTERED PROFESSIONAL ENGINEER

SEE SHEET CT1
DATE
P.E. STAMP BOX

DATE
P.E. STAMP BOX

Washington State Department of Transportation
OSBORN CONSULTING INCORPORATED

SR 305
SAM SNYDER CREEK
REMOVE FISH BARRIER

DRAINAGE DETAILS

PLAN REF NO DD8

SHEET 65 OF 186 SHEETS

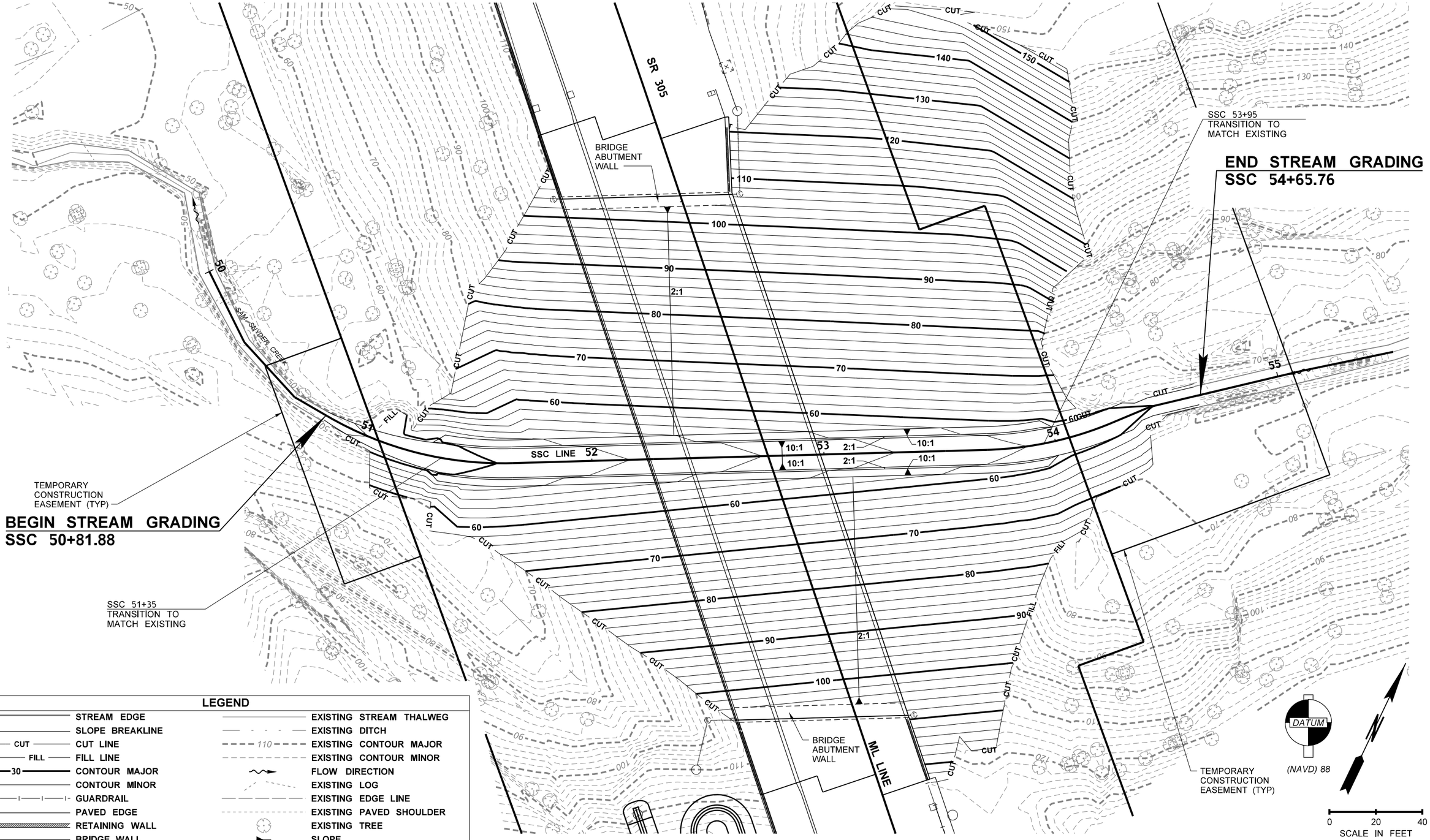

LEGEND

STREAM EDGE	EXISTING STREAM THALWEG
SLOPE BREAKLINE	EXISTING DITCH
CUT — CUT LINE	110 — EXISTING CONTOUR MAJOR
FILL — FILL LINE	EXISTING CONTOUR MINOR
30 — CONTOUR MAJOR	FLOW DIRECTION
CONTOUR MINOR	EXISTING LOG
GUARDRAIL	EXISTING EDGE LINE
PAVED EDGE	EXISTING PAVED SHOULDER
RETAINING WALL	EXISTING TREE
BRIDGE WALL	SLOPE

FILE NAME	c:\users\whltekev\documents\d0335743\XL6050_PS_CRK_SAM_001.dgn
TIME	2:09:29 PM
DATE	3/27/2023
PLOTTED BY	whitekev
DESIGNED BY	T. PRINCE
ENTERED BY	A. MILLER
CHECKED BY	K. HOUSE
PROJ. ENGR.	A. AMOS
REGIONAL ADM.	S. ROARK

REVISION | DATE | BY

REGION NO.	STATE	FED.AID PROJ.NO.
10	WASH	
JOB NUMBER 22C533		
CONTRACT NO.		LOCATION NO. XL6050

THEODORE PRINCE — STATE OF WASHINGTON — 41859 — REGISTERED PROFESSIONAL ENGINEER

SEE SHEET CT1 — DATE

P.E. STAMP BOX

DATE

P.E. STAMP BOX

Washington State Department of Transportation

Parametrix

SR 305
SAM SNYDER CREEK
REMOVE FISH BARRIER

STREAM GRADING PLAN

PLAN REF NO SGR1

SHEET 66 OF 186 SHEETS

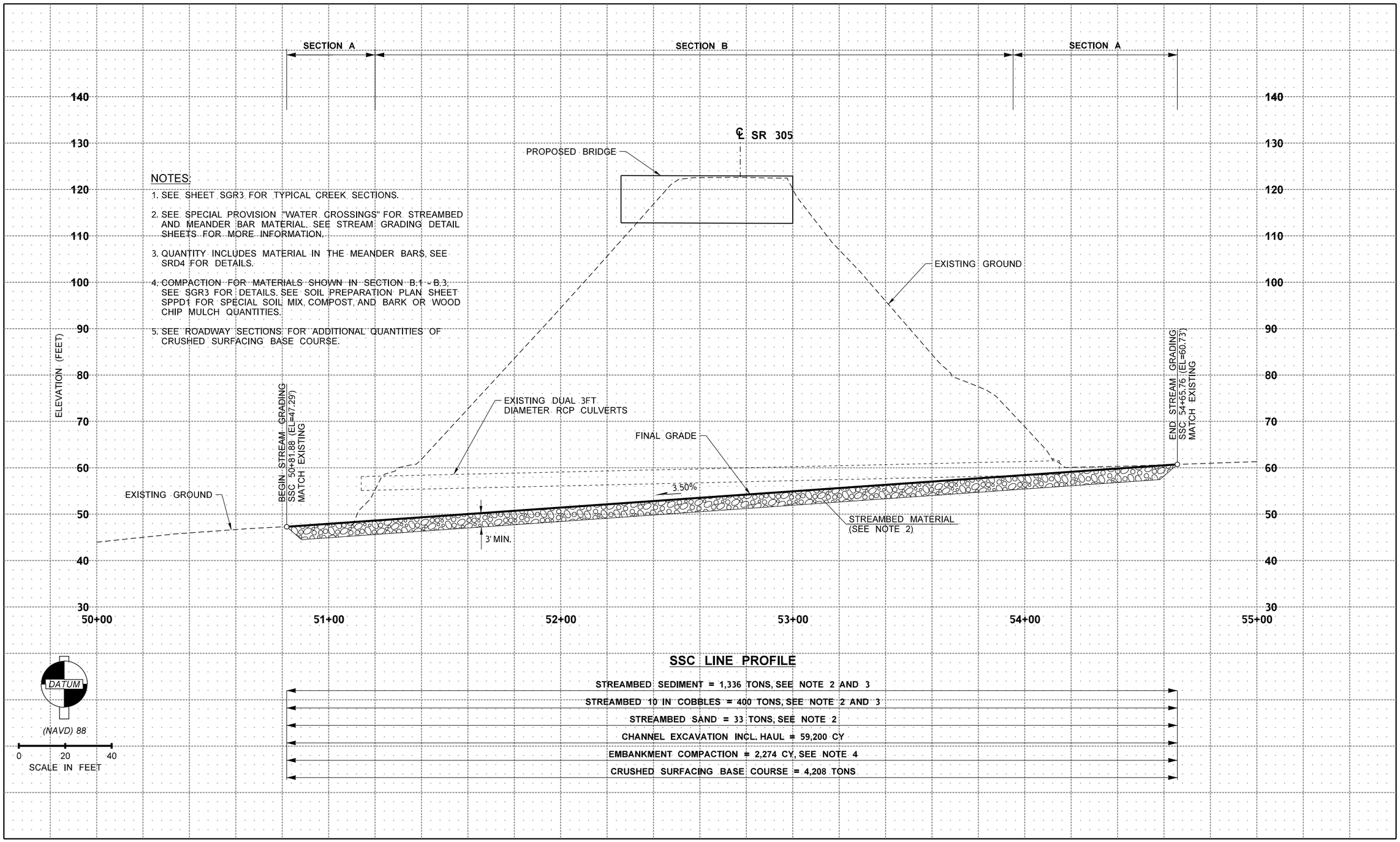

NOTES:

1. SEE SHEET SGR3 FOR TYPICAL CREEK SECTIONS.
2. SEE SPECIAL PROVISION "WATER CROSSINGS" FOR STREAMBED AND MEANDER BAR MATERIAL. SEE STREAM GRADING DETAIL SHEETS FOR MORE INFORMATION.
3. QUANTITY INCLUDES MATERIAL IN THE MEANDER BARS, SEE SRD4 FOR DETAILS.
4. COMPACTION FOR MATERIALS SHOWN IN SECTION B.1 - B.3, SEE SGR3 FOR DETAILS. SEE SOIL PREPARATION PLAN SHEET SPPD1 FOR SPECIAL SOIL MIX, COMPOST, AND BARK OR WOOD CHIP MULCH QUANTITIES.
5. SEE ROADWAY SECTIONS FOR ADDITIONAL QUANTITIES OF CRUSHED SURFACING BASE COURSE.

SSC LINE PROFILE

STREAMBED SEDIMENT = 1,336 TONS, SEE NOTE 2 AND 3
STREAMBED 10 IN COBBLES = 400 TONS, SEE NOTE 2 AND 3
STREAMBED SAND = 33 TONS, SEE NOTE 2
CHANNEL EXCAVATION INCL. HAUL = 59,200 CY
EMBANKMENT COMPACTION = 2,274 CY, SEE NOTE 4
CRUSHED SURFACING BASE COURSE = 4,208 TONS

FILE NAME	c:\users\whltekev\documents\d0335743\XL6050_PS_CRK_SAM_002.dgn
TIME	5:22:55 PM
DATE	3/28/2023
PLOTTED BY	whitekev
DESIGNED BY	T. PRINCE
ENTERED BY	A. MILLER
CHECKED BY	K. HOUSE
PROJ. ENGR.	A. AMOS
REGIONAL ADM.	S. ROARK

REVISION | DATE | BY

REGION NO. 10 | STATE WASH | FED.AID PROJ.NO.

JOB NUMBER 22C533

CONTRACT NO. | LOCATION NO. XL6050

THEODORE PRINCE, STATE OF WASHINGTON, 41859, REGISTERED PROFESSIONAL ENGINEER

SEE SHEET CT1 DATE

P.E. STAMP BOX

P.E. STAMP BOX DATE

Washington State Department of Transportation

Parametrix

SR 305
SAM SNYDER CREEK
REMOVE FISH BARRIER

STREAM GRADING PROFILE

PLAN REF NO SGR2

SHEET 67 OF 186 SHEETS

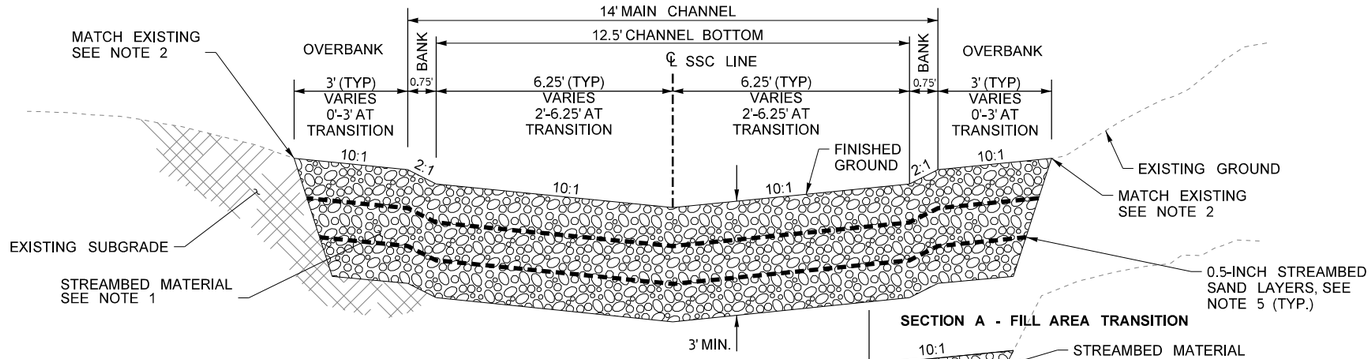

SECTION A

NOT TO SCALE
TRANSITION TO EXISTING
SSC 50+82 TO SSC 51+30 - CHANNEL BOTTOM TRANSITION
SSC 51+30 TO SSC 51+35 - BANK AND OVERBANK TRANSITION
SSC 53+95 TO SSC 54+00 - BANK AND OVERBANK TRANSITION
SSC 54+00 TO SSC 54+66 - CHANNEL BOTTOM TRANSITION

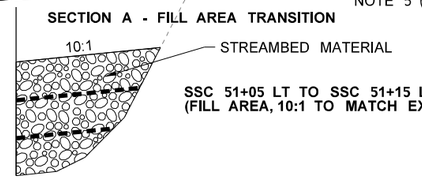

SSC 51+05 LT TO SSC 51+15 LT
(FILL AREA, 10:1 TO MATCH EX.)

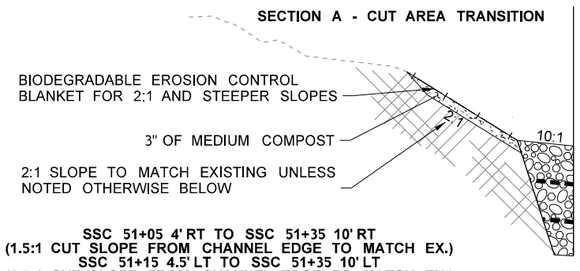

SSC 51+05 4' RT TO SSC 51+35 10' RT
(1.5:1 CUT SLOPE FROM CHANNEL EDGE TO MATCH EX.)
SSC 51+15 4.5' LT TO SSC 51+35 10' LT
(1.5:1 CUT SLOPE FROM CHANNEL EDGE TO MATCH EX.)

NOTES:

1. SEE SPECIAL PROVISIONS "WATER CROSSINGS" FOR STREAMBED MATERIAL.
2. SLOPES SHOWN OUTSIDE OF MINIMUM CHANNEL SECTION ARE FOR ILLUSTRATION PURPOSES ONLY. ACTUAL AREAS OF IMPACT ARE DEPENDENT ON TIE IN TO ADJACENT EXISTING GROUND. SEE SHEET SGR1.
3. ALL DISTURBED 2:1 SLOPES SHALL BE OVEREXCAVATED THEN BACKFILLED AS DETAILED IN SECTIONS B.1 - B.3 SHOWN BELOW. SEE SR1 FOR SECTION EXTENTS AND LANDSCAPE SHEETS FOR PLANTING DETAILS.
4. SEE SOIL PREPARATION SHEET SPPD1 FOR SPECIAL SOIL MIX, MULCH, AND COMPOST QUANTITIES.
5. PLACE 0.5-INCH THICK LAYER OF STREAMBED SAND UNIFORMLY ABOVE EACH LIFT OF STREAMBED MATERIAL AND APPLY WATER TO THE STREAMBED SAND TO FACILITATE FILLING OF THE INTERSTITIAL VOIDS. SEE SPECIAL PROVISIONS "WATER CROSSINGS" FOR MORE DETAILS.
6. EROSION CONTROL BLANKET IS INCIDENTAL TO EROSION AND WATER POLLUTION PREVENTION.

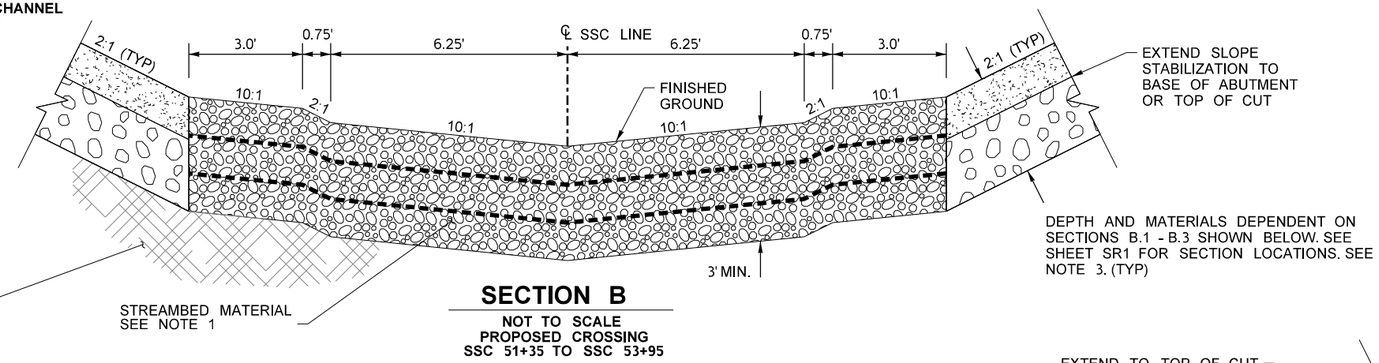

SECTION B

NOT TO SCALE
PROPOSED CROSSING
SSC 51+35 TO SSC 53+95

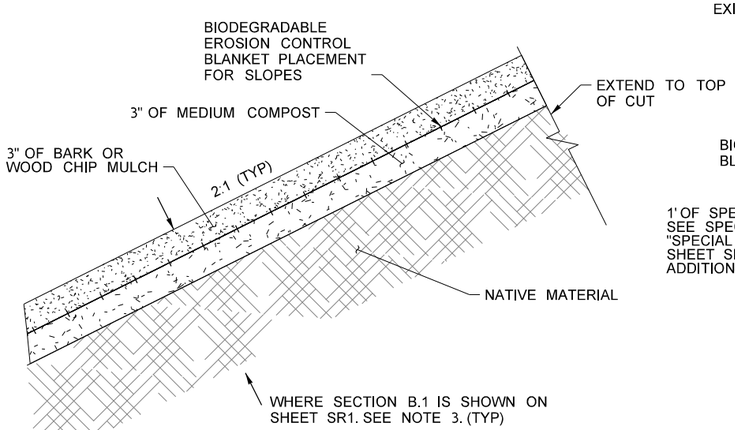

SECTION B.1

NOT TO SCALE
2:1 SLOPE AREAS OUTSIDE 20' FROM BRIDGE FOOTPRINT
SSC 51+35 10' LT TO SSC 52+00 10' LT
SSC 53+16 10' LT TO SSC 54+15 6' LT
SSC 51+35 10' RT TO SSC 52+06 10' RT
SSC 53+22 10' RT TO SSC 53+95 10' RT

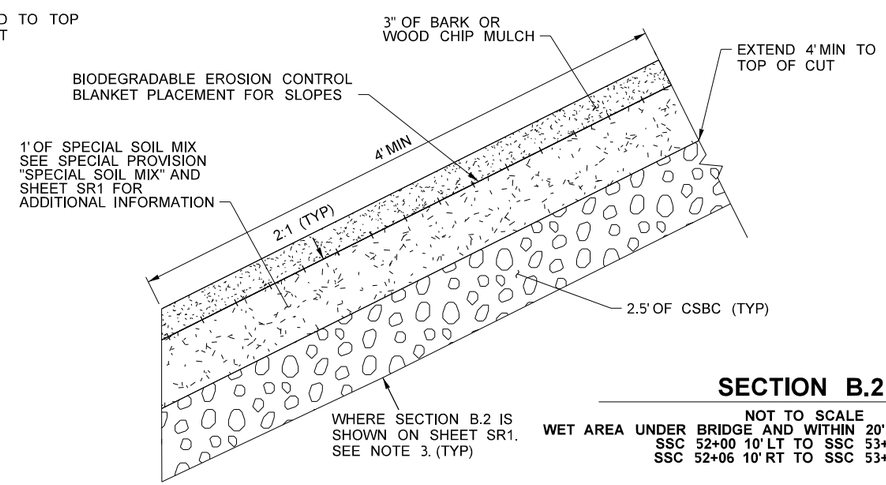

SECTION B.2

NOT TO SCALE
WET AREA UNDER BRIDGE AND WITHIN 20' OF BRIDGE FOOTPRINT
SSC 52+00 10' LT TO SSC 53+16 10' LT
SSC 52+06 10' RT TO SSC 53+22 10' RT

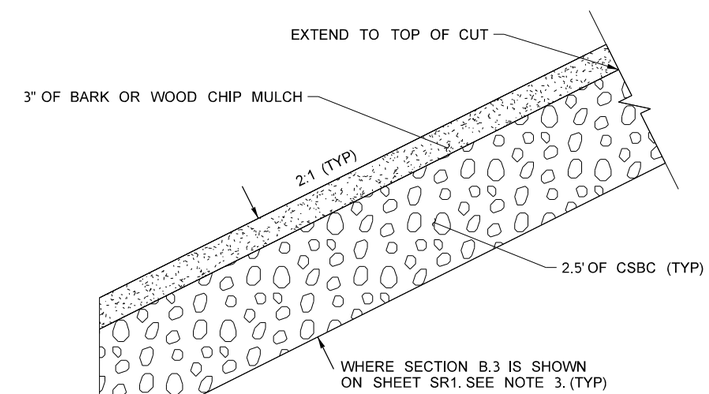

SECTION B.3

NOT TO SCALE
DRY AREA UNDER BRIDGE
SSC 52+40 14' LT TO SSC 52+77 14' LT
SSC 52+46 14' RT TO SSC 52+84 14' RT

FILE NAME	c:\users\whitekev\documents\d0335743\XL6050_PS_CRK_SAM_003.dgn				REGION NO. 10	STATE WASH	FED.AID PROJ.NO.
TIME	5:19:15 PM				JOB NUMBER 22C533		
DATE	3/28/2023						
PLOTTED BY	whitekev						
DESIGNED BY	T. PRINCE				CONTRACT NO.		LOCATION NO. XL6050
ENTERED BY	A. MILLER						
CHECKED BY	K. HOUSE						
PROJ. ENGR.	A. AMOS						
REGIONAL ADM.	S. ROARK	REVISION	DATE	BY			

THEODORE PRINCE — STATE OF WASHINGTON — 41839 — REGISTERED PROFESSIONAL ENGINEER
SEE SHEET CT1
DATE
P.E. STAMP BOX

DATE
P.E. STAMP BOX

Washington State Department of Transportation

Parametrix

SR 305
SAM SNYDER CREEK
REMOVE FISH BARRIER

STREAM GRADING DETAILS

PLAN REF NO SGR3

SHEET 68 OF 186 SHEETS

SLOPE TREATMENT QUANTITIES

- SECTION A, SEE SHEET SGR3
- SECTION B.1, SEE SHEET SGR3
- SECTION B.2, SEE SHEET SGR3
- SECTION B.3, SEE SHEET SGR3

SEE SOIL PREPARATION SHEET SPPD1 FOR SPECIAL SOIL MIX, COMPOST, AND BARK MULCH QUANTITIES.

NOTES:

1. CHANNEL THALWEG SHOWN IS APPROXIMATE. FINAL THALWEG AND LOW FLOW CHANNEL TO BE PLACED AS DIRECTED BY ENGINEER IN THE FIELD.
2. SHADED PORTION OF LOG INDICATES APPROXIMATE LENGTH OF LOG THAT IS COMPLETELY BURIED.
3. LOCATION AND ORIENTATION OF STREAMBED FEATURES, (WOODY MATERIAL, MEANDER BARS, LOW FLOW CHANNEL) ARE APPROXIMATE AND SHALL BE STAKED PER PLAN BY THE CONTRACTOR AND APPROVED BY THE ENGINEER. FINAL LOCATION AND ORIENTATION OF THESE STREAMBED FEATURES SHALL BE DIRECTED BY THE ENGINEER.
4. BIODEGRADABLE EROSION CONTROL BLANKET SHALL BE INSTALLED ON ALL SECTION B.1 AND B.2 AREAS WITH SLOPES AT OR STEEPER THAN 2:1.

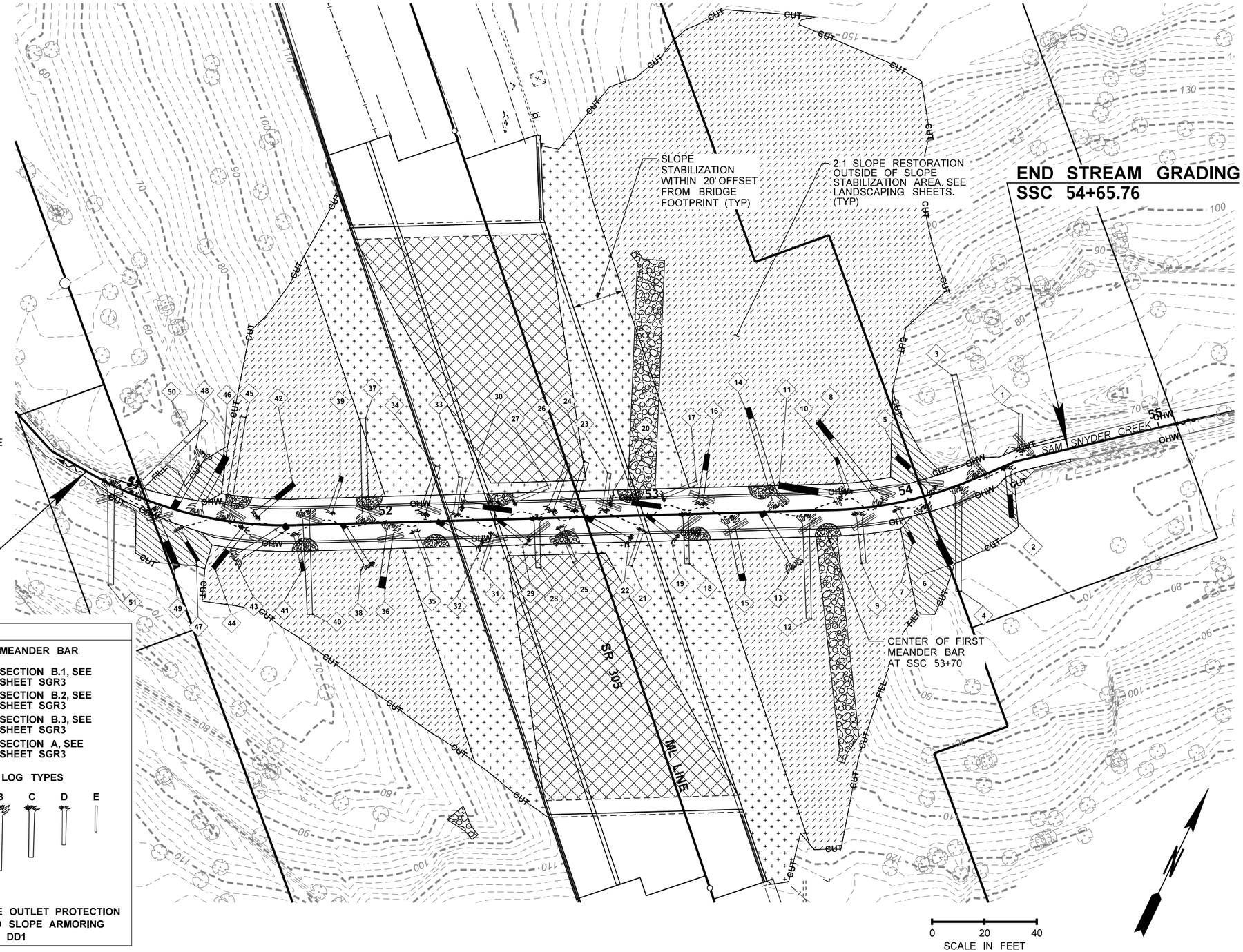

LEGEND

- STREAM EDGE
- LOW FLOW CHANNEL
- CUT — CUT LINE
- FILL — FILL LINE
- OHW — ORDINARY HIGH WATER
- GUARDRAIL
- PAVED EDGE
- RETAINING WALL
- BRIDGE STRUCTURE
- EXISTING STREAM ALIGNMENT
- FLOW DIRECTION
- EXISTING LOG
- EXISTING TREE
- ## — LOG NUMBER, SEE SHEET SRD1
- MEANDER BAR
- SECTION B.1, SEE SHEET SGR3
- SECTION B.2, SEE SHEET SGR3
- SECTION B.3, SEE SHEET SGR3
- SECTION A, SEE SHEET SGR3

LOG TYPES

A B C D E

PIPE OUTLET PROTECTION AND SLOPE ARMORING SEE DD1

FILE NAME	c:\users\whitekev\documents\d0335743\XL6050_PS_CRK_SAM_004.dgn			
TIME	2:09:33 PM			
DATE	3/27/2023			
PLOTTED BY	whitekev			
DESIGNED BY	T. PRINCE			
ENTERED BY	A. MILLER			
CHECKED BY	K. HOUSE			
PROJ. ENGR.	A. AMOS			
REGIONAL ADM.	S. ROARK	REVISION	DATE	BY

REGION NO.	STATE	FED.AID PROJ.NO.
10	WASH	
JOB NUMBER 22C533		
CONTRACT NO.		LOCATION NO. XL6050

THEODORE PRINCE — STATE OF WASHINGTON — 41839 — REGISTERED PROFESSIONAL ENGINEER

SEE SHEET CT1 DATE

P.E. STAMP BOX

P.E. STAMP BOX DATE

Washington State Department of Transportation

Parametrix

SR 305
SAM SNYDER CREEK
REMOVE FISH BARRIER

STREAM RESTORATION PLAN

PLAN REF NO SR1

SHEET 69 OF 186 SHEETS

LOG NO.	TYPE	IN CHANNEL FEATURE	IN-CHANNEL STATION / OFFSET	STATION / OFFSET 2	DBH (MIN.)	ROOTWAD DIAMETER (MIN.)	LENGTH (MIN.) (SEE NOTE 1)	DISTANCE A (FT) (SEE NOTE 2)	DISTANCE B (FT) (SEE NOTE 2)
1	D	RW	SSC 54+47 (5' LT)	SSC 54+50 (18' LT)	18 IN	54 IN	15 FT	0.5	N/A
2	C	RW	SSC 54+39 (3' RT)	SSC 54+34 (19' RT)	24 IN	72 IN	20 FT	6.1	0.1
3	A	RW	SSC 54+29 (4' LT)	SSC 54+35 (40' LT)	30 IN	90 IN	40 FT	0.7	N/A
4	A	RW	SSC 54+19 (4' RT)	SSC 54+09 (38' RT)	30 IN	90 IN	40 FT	N/A	N/A
5	C	RW	SSC 54+09 (3' LT)	SSC 53+99 (17' LT)	24 IN	72 IN	20 FT	5.1	N/A
6	B	RW	SSC 54+05 (7' RT)	SSC 54+09 (28' RT)	30 IN	90 IN	25 FT	6.8	N/A
7	D	RW	SSC 53+96 (4' RT)	SSC 53+99 (16' RT)	18 IN	54 IN	15 FT	3.8	N/A
8	A	RW	SSC 53+88 (4' LT)	SSC 53+66 (34' LT)	30 IN	90 IN	40 FT	4.1	N/A
9	C	RW	SSC 53+81 (4' RT)	SSC 53+81 (21' RT)	24 IN	72 IN	20 FT	N/A	N/A
10	D	RW	SSC 53+77 (8' LT)	SSC 53+73 (20' LT)	18 IN	54 IN	15 FT	1.8	0.1
11	B	RW	SSC 53+71 (6' LT)	SSC 53+50 (10' LT)	30 IN	90 IN	25 FT	6.7	0.7
12	A	RW	SSC 53+60 (5' RT)	SSC 53+60 (41' RT)	30 IN	90 IN	40 FT	0.4	0.2
13	B	STEM	SSC 53+44 (0' RT)	SSC 53+54 (18' RT)	30 IN	90 IN	25 FT	2.9	0.5
14	A	RW	SSC 53+49 (5' LT)	SSC 53+40 (40' LT)	30 IN	90 IN	40 FT	3.2	0.1
15	B	RW	SSC 53+32 (5' RT)	SSC 53+36 (26' RT)	30 IN	90 IN	25 FT	3.3	0.1
16	C	RW	SSC 53+21 (6' LT)	SSC 53+23 (23' LT)	24 IN	72 IN	20 FT	3.7	0.3
17	D	RW	SSC 53+07 (7.5' LT)	SSC 53+19 (12' LT)	18 IN	54 IN	15 FT	N/A	N/A
18	C	RW	SSC 53+15 (2' RT)	SSC 53+15 (19' RT)	24 IN	72 IN	20 FT	N/A	N/A
19	D	STEM	SSC 53+00 (0' RT)	SSC 53+09 (8' LT)	18 IN	54 IN	15 FT	2.3	N/A
20	C	STEM	SSC 53+05 (3' LT)	SSC 52+88 (6' LT)	24 IN	72 IN	20 FT	4.2	0.9
21	D	RW	SSC 52+97 (7' RT)	SSC 52+93 (19' RT)	18 IN	54 IN	15 FT	N/A	N/A
22	C	STEM	SSC 52+76 (0' LT)	SSC 52+91 (8' RT)	24 IN	72 IN	20 FT	2.5	N/A
23	D	RW	SSC 52+84 (4' LT)	SSC 52+86 (17' LT)	18 IN	54 IN	15 FT	0.1	N/A
24	C	RW	SSC 52+72 (5' LT)	SSC 52+77 (21' LT)	24 IN	72 IN	20 FT	0.3	N/A
25	D	RW	SSC 52+67 (5' RT)	SSC 52+72 (17' RT)	18 IN	54 IN	15 FT	N/A	N/A
26	C	RW	SSC 52+64 (5' LT)	SSC 52+70 (21' LT)	24 IN	72 IN	20 FT	0.3	N/A
27	D	RW	SSC 52+50 (7.5' LT)	SSC 52+62 (12' LT)	18 IN	54 IN	15 FT	N/A	N/A
28	C	RW	SSC 52+58 (2' RT)	SSC 52+58 (19' RT)	24 IN	72 IN	20 FT	N/A	N/A
29	D	STEM	SSC 52+43 (0' RT)	SSC 52+52 (8' RT)	18 IN	54 IN	15 FT	2.3	N/A
30	C	STEM	SSC 52+48 (3' RT)	SSC 52+31 (6' RT)	24 IN	72 IN	20 FT	4.2	0.9
31	D	RW	SSC 52+40 (7' RT)	SSC 52+36 (19' RT)	18 IN	54 IN	15 FT	N/A	N/A
32	C	STEM	SSC 52+19 (0' RT)	SSC 52+34 (9' RT)	24 IN	72 IN	20 FT	2.5	N/A
33	D	RW	SSC 52+27 (4' LT)	SSC 52+29 (17' LT)	18 IN	54 IN	15 FT	0.1	N/A
34	C	RW	SSC 52+15 (5' LT)	SSC 52+20 (21' LT)	24 IN	72 IN	20 FT	0.3	N/A
35	D	RW	SSC 52+12 (5' RT)	SSC 52+16 (17' RT)	18 IN	54 IN	15 FT	N/A	N/A
36	B	RW	SSC 52+01 (4' RT)	SSC 51+98 (25' RT)	30 IN	90 IN	25 FT	3.9	N/A
37	A	RW	SSC 51+92 (4' LT)	SSC 51+92 (40' LT)	30 IN	90 IN	40 FT	N/A	N/A
38	C	STEM	SSC 51+83 (0' RT)	SSC 51+92 (15' RT)	24 IN	72 IN	20 FT	2.5	0.3
39	D	RW	SSC 51+79 (6' LT)	SSC 51+83 (18' LT)	18 IN	54 IN	15 FT	2.2	N/A
40	A	RW	SSC 51+69 (2' LT)	SSC 51+79 (34' RT)	30 IN	90 IN	40 FT	N/A	0.5
41	D	RW	SSC 51+66 (5' RT)	SSC 51+86 (18' RT)	18 IN	54 IN	15 FT	3.0	N/A
42	C	RW	SSC 51+51 (5' LT)	SSC 51+65 (16' LT)	24 IN	72 IN	20 FT	6.1	N/A
43	B	STEM	SSC 51+62 (0' RT)	SSC 51+46 (12' RT)	30 IN	90 IN	25 FT	2.9	0.6
44	C	RW	SSC 51+45 (4' RT)	SSC 51+37 (19' RT)	24 IN	72 IN	20 FT	6.4	N/A
45	A	RW	SSC 51+39 (4' LT)	SSC 51+39 (40' LT)	30 IN	90 IN	40 FT	N/A	N/A
46	B	RW	SSC 51+27 (4' LT)	SSC 51+34 (24' LT)	30 IN	90 IN	25 FT	4.9	N/A
47	D	RW	SSC 51+23 (8' RT)	SSC 51+31 (17' RT)	18 IN	54 IN	15 FT	4.2	0.6
48	B	STEM	SSC 51+18 (0' LT)	SSC 51+23 (21' LT)	30 IN	90 IN	25 FT	3.4	1.0
49	B	RW	SSC 51+12 (5' RT)	SSC 51+25 (21' RT)	30 IN	90 IN	25 FT	6.8	0.1
50	A	RW	SSC 51+03 (3' LT)	SSC 51+21 (36' LT)	30 IN	90 IN	40 FT	N/A	N/A
51	A	RW	SSC 50+93 (2' RT)	SSC 51+06 (35' RT)	30 IN	90 IN	40 FT	0.2	N/A

NOTES:

1. MINIMUM LENGTH INCLUDES ROOTWAD LENGTH. ROOTWAD LENGTH SHOULD BE 1.5X LOG DIAMETER AT BREAST HEIGHT (DBH).
2. POSITIVE DISTANCE A AND B VALUES INDICATE LOG IS BELOW GRADE. N/A VALUES INDICATE LOG IS AT OR ABOVE GRADE. SEE SHEETS SRD2 AND SRD3.
3. SEE SRD SHEETS FOR WOODY MATERIAL DETAILS.
4. ALL TYPE E WOOD DOES NOT REQUIRE ROOTWADS AND SHALL BE PLACED ABOVE TYPES A THROUGH D AS DIRECTED BY THE ENGINEER.
5. SEE SPECIAL PROVISIONS "WOODY MATERIAL" FOR MATERIAL AND CONSTRUCTION REQUIREMENTS.
6. LOCATIONS AND ORIENTATIONS OF STREAMBED FEATURES (WOODY MATERIAL, MEANDER BARS, LOW FLOW CHANNEL) ARE APPROXIMATE AND SHALL BE STAKED PER PLAN BY THE CONTRACTOR AND APPROVED BY THE ENGINEER. FINAL LOCATION AND ORIENTATION OF THESE STREAMBED FEATURES SHALL BE DIRECTED BY THE ENGINEER.

WOODY MATERIAL TABLE

DESCRIPTION	LOG TYPE	TOTAL	MINIMUM LENGTH (ft)	MINIMUM DIAMETER AT BREAST HEIGHT (DBH) (ft)	MAX. DBH TO TIP DIAMETER DIFFERENCE AT MIN. LENGTH (inches)
LOG WITH ROOTWOOD DBH 2.5 FT.	A	10	40	2.5	9
LOG WITH ROOTWOOD DBH 2.5 FT.	B	9	25	2.5	6
LOG WITH ROOTWOOD DBH 2.0 FT.	C	16	20	2.0	5
LOG WITH ROOTWOOD DBH 1.5 FT.	D	16	16	1.5	4
LOG WITH ROOTWOOD DBH 0.83 FT.	E	50	10	0.83	4

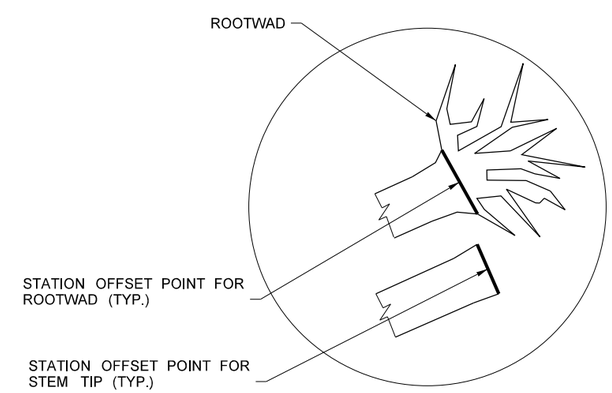

LOG LOCATION DETAIL
PLAN VIEW

FILE NAME	c:\users\whltekev\documents\d0335743\XL6050_PS_CRK_SAM_005.dgn						
TIME	2:09:34 PM				REGION NO. 10	STATE WASH	FED.AID PROJ.NO.
DATE	3/27/2023						
PLOTTED BY	whitekev				JOB NUMBER 22C533		
DESIGNED BY	T. PRINCE						
ENTERED BY	A. MILLER				CONTRACT NO.		LOCATION NO. XL6050
CHECKED BY	K. HOUSE						
PROJ. ENGR.	A. AMOS						
REGIONAL ADM.	S. ROARK	REVISION	DATE	BY			

THEODORE PRINCE — STATE OF WASHINGTON — 41850 — REGISTERED PROFESSIONAL ENGINEER
SEE SHEET CT1
DATE
P.E. STAMP BOX

DATE
P.E. STAMP BOX

Washington State Department of Transportation
Parametrix

SR 305
SAM SNYDER CREEK
REMOVE FISH BARRIER

WOODY MATERIAL LOCATION TABLE

PLAN REF NO SRD1
SHEET 70 OF 186 SHEETS

NOTES:

1. SEE SPECIAL PROVISIONS "WATER CROSSINGS" FOR STREAMBED MATERIAL.
2. SEE SPECIAL PROVISION "WOODY MATERIAL" FOR CONSTRUCTION REQUIREMENTS AND TABLE ON SHEET SRD1 FOR LOG TYPE, DISTANCE A, DISTANCE B, AND STATION OFFSETS.
3. DISTANCE A REFERS TO VERTICAL DISTANCE BETWEEN FINISHED GRADE AND STEM TIP BOTTOM. DISTANCE B REFERS TO VERTICAL DISTANCE BETWEEN FINISHED GRADE AND ROOTWAD COLLAR BOTTOM. POSITIVE VALUES INDICATE BURIAL. N/A INDICATES LOG IS AT GRADE.
4. LOCATIONS AND SIZE OF PREFORMED SCOUR POOLS SHALL BE DIRECTED BY THE ENGINEER IN THE FIELD.
5. WHERE WOODY MATERIAL IS PLACED OUTSIDE OF CLEARING AND GRUBBING LIMITS, LIMIT DISTURBANCE FOR PLACEMENT AND BURY OF WOOD. EXISTING TREES OUTSIDE OF CLEAR AND GRUB LIMITS SHALL BE PROTECTED AND NO EXCAVATION SHALL OCCUR WITHIN THE CRITICAL ROOT ZONE OF ANY TREES TO REMAIN. CONTRACTOR SHALL RESTORE DISTURBED AREAS TO EXISTING CONDITIONS.
6. SEE SPECIAL PROVISIONS "WATER CROSSINGS" FOR MATERIAL AND CONSTRUCTION REQUIREMENTS.

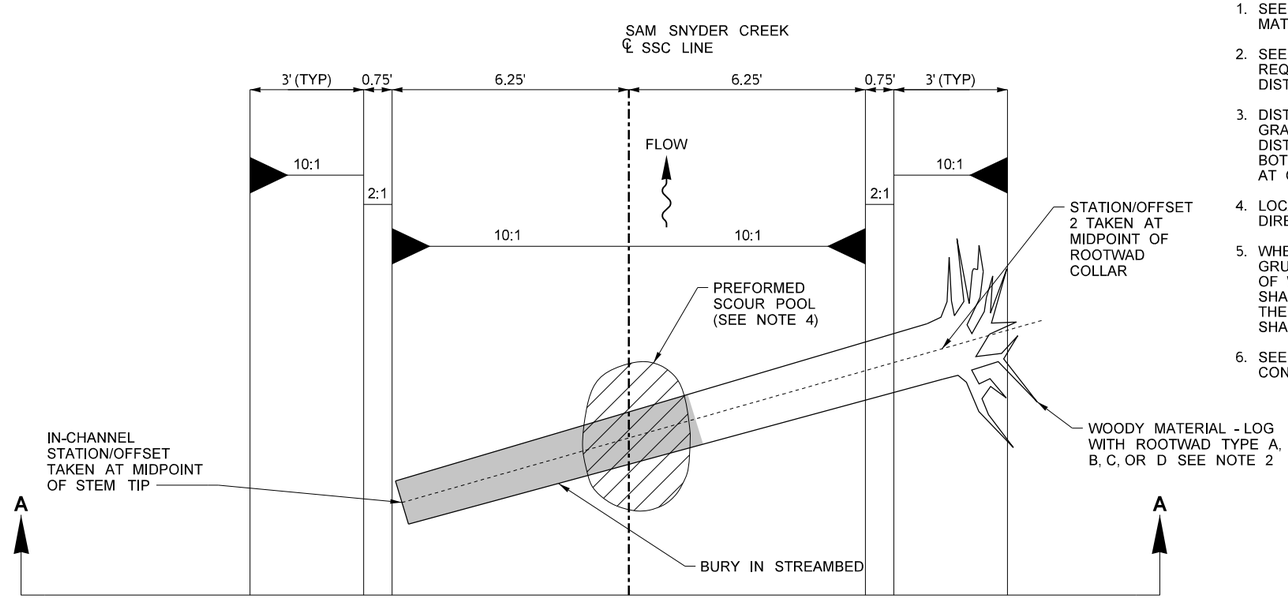

WOODY MATERIAL - LOG WITH ROOTWAD TYPE A, B, C, OR D - STEM TIP IN CHANNEL

(NOT TO SCALE)

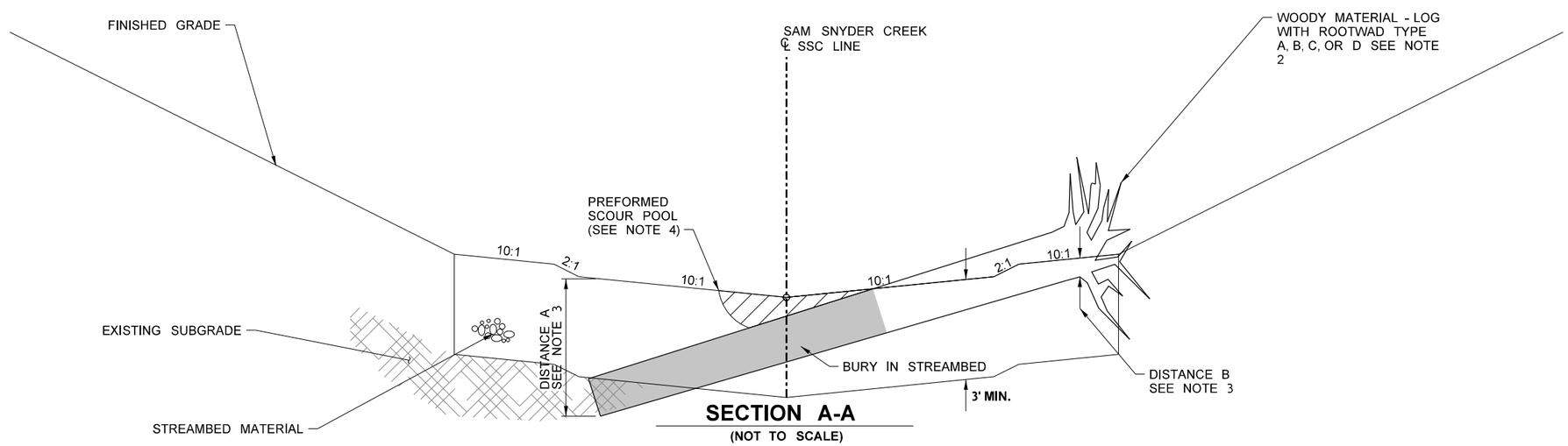

SECTION A-A

(NOT TO SCALE)

FILE NAME	c:\users\whltekev\documents\d0335743\XL6050_PS_CRK_SAM_006.dgn						
TIME	2:09:35 PM				REGION NO. 10	STATE WASH	FED.AID PROJ.NO.
DATE	3/27/2023						
PLOTTED BY	whitekev				JOB NUMBER 22C533		
DESIGNED BY	T. PRINCE						
ENTERED BY	A. MILLER						
CHECKED BY	K. HOUSE				CONTRACT NO.		LOCATION NO. XL6050
PROJ. ENGR.	A. AMOS						
REGIONAL ADM.	S. ROARK	REVISION	DATE	BY			

THEODORE PRINCE, STATE OF WASHINGTON, 41850, REGISTERED PROFESSIONAL ENGINEER

SEE SHEET CT1 DATE

P.E. STAMP BOX

DATE

P.E. STAMP BOX

Washington State Department of Transportation

Parametrix

SR 305
SAM SNYDER CREEK
REMOVE FISH BARRIER

WOODY MATERIAL DETAILS

PLAN REF NO SRD2

SHEET 71 OF 186 SHEETS

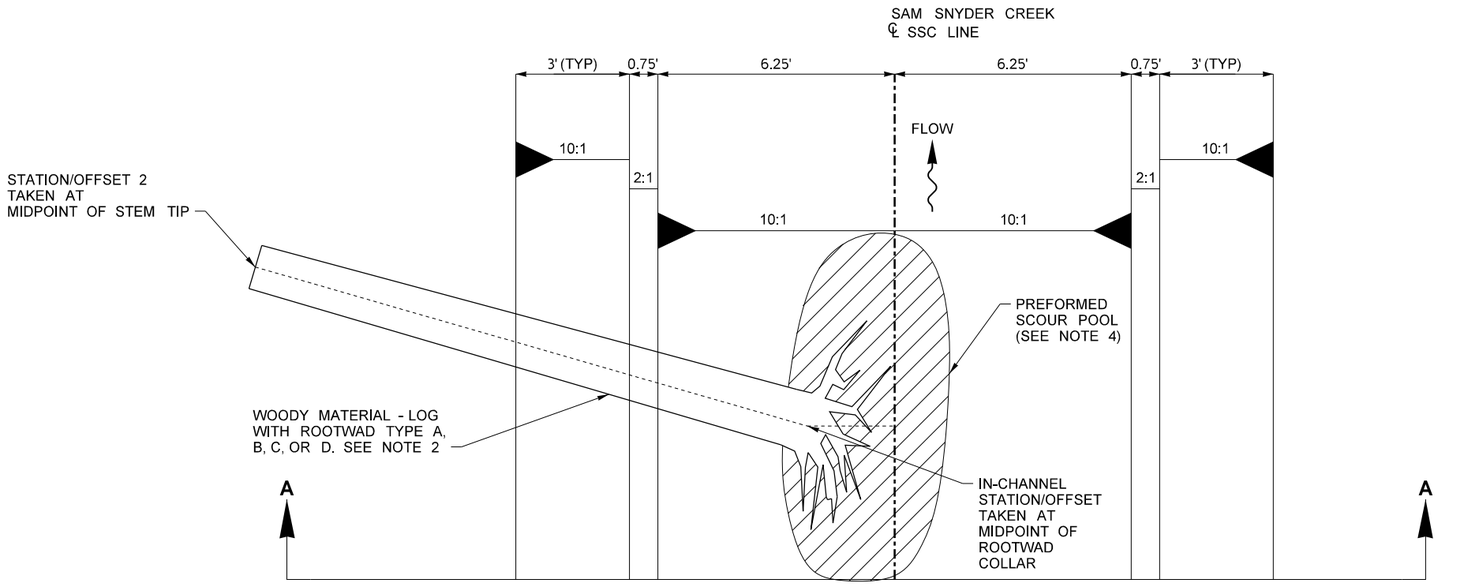

WOODY MATERIAL - LOG WITH ROOTWAD TYPE A, B, C, OR D - ROOTWAD IN CHANNEL

(NOT TO SCALE)

NOTES:

1. SEE SPECIAL PROVISIONS "WATER CROSSINGS" FOR STREAMBED MATERIAL.
2. SEE SPECIAL PROVISION "WOODY MATERIAL" FOR CONSTRUCTION REQUIREMENTS AND TABLE ON SHEET SRD1 FOR LOG TYPE, DISTANCE A, DISTANCE B, AND STATION OFFSETS.
3. DISTANCE A REFERS TO VERTICAL DISTANCE BETWEEN FINISHED GRADE AND STEM TIP BOTTOM. DISTANCE B REFERS TO VERTICAL DISTANCE BETWEEN FINISHED GRADE AND ROOTWAD COLLAR BOTTOM. POSITIVE VALUES INDICATE BURIAL. N/A INDICATES LOG IS AT GRADE.
4. LOCATIONS AND SIZE OF PREFORMED SCOUR POOLS SHALL BE DIRECTED BY THE ENGINEER IN THE FIELD.
5. WHERE WOODY MATERIAL IS PLACED OUTSIDE OF CLEARING AND GRUBBING LIMITS, LIMIT DISTURBANCE FOR PLACEMENT AND BURY OF WOOD. EXISTING TREES OUTSIDE OF CLEAR AND GRUB LIMITS SHALL BE PROTECTED AND NO EXCAVATION SHALL OCCUR WITHIN THE CRITICAL ROOT ZONE OF ANY TREES TO REMAIN. CONTRACTOR SHALL RESTORE DISTURBED AREAS TO EXISTING CONDITIONS.
6. SEE SPECIAL PROVISIONS "WATER CROSSINGS" FOR MATERIAL AND CONSTRUCTION REQUIREMENTS.

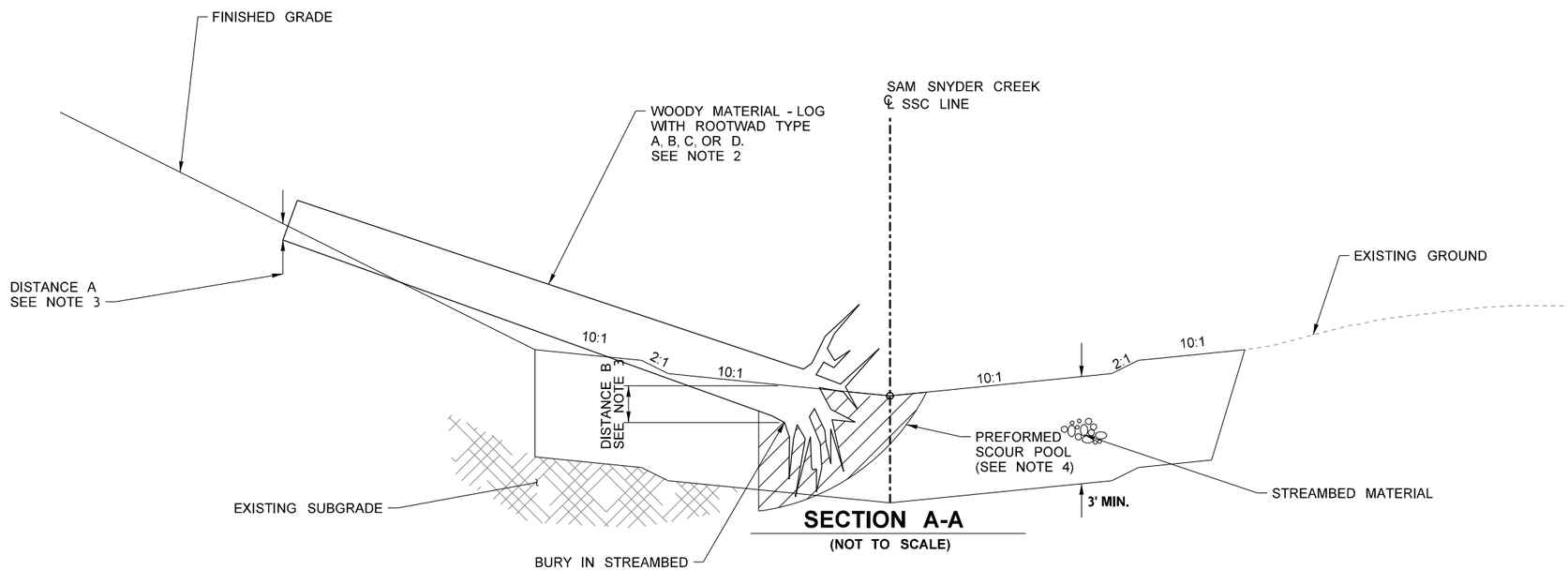

SECTION A-A

(NOT TO SCALE)

FILE NAME	c:\users\whltekev\documents\d0335743\XL6050_PS_CRK_SAM_007.dgn						
TIME	4:06:45 PM				REGION NO. 10	STATE WASH	FED.AID PROJ.NO.
DATE	3/28/2023						
PLOTTED BY	whitekev						
DESIGNED BY	T. PRINCE				JOB NUMBER 22C533		
ENTERED BY	A. MILLER						
CHECKED BY	K. HOUSE				CONTRACT NO.	LOCATION NO. XL6050	
PROJ. ENGR.	A. AMOS						
REGIONAL ADM.	S. ROARK	REVISION	DATE	BY			

THEODORE PRINCE — STATE OF WASHINGTON — 41859 — REGISTERED PROFESSIONAL ENGINEER

SEE SHEET CT1 DATE

P.E. STAMP BOX

DATE

P.E. STAMP BOX

Washington State Department of Transportation

Parametrix

SR 305
SAM SNYDER CREEK
REMOVE FISH BARRIER

WOODY MATERIAL DETAILS

PLAN REF NO SRD3

SHEET 72 OF 186 SHEETS

NOTES:

1. SEE SPECIAL PROVISIONS "WATER CROSSINGS".
2. LOCATIONS AND ORIENTATIONS OF STREAMBED FEATURES (WOODY MATERIAL, MEANDER BARS, LOW FLOW CHANNEL, AND PREFORMED SCOUR POOLS) ARE APPROXIMATE AND SHALL BE STAKED PER PLAN BY THE CONTRACTOR AND APPROVED BY THE ENGINEER. FINAL LOCATION AND ORIENTATION OF THESE STREAMBED FEATURES SHALL BE DIRECTED BY THE ENGINEER.

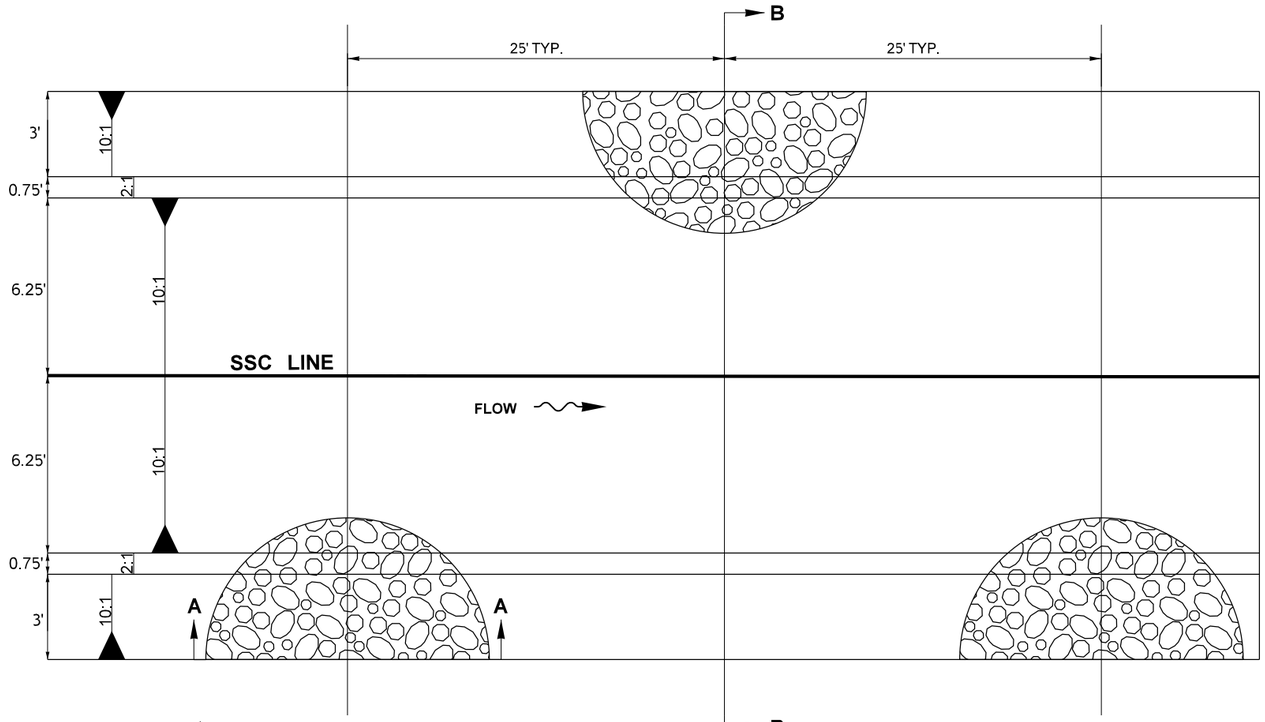

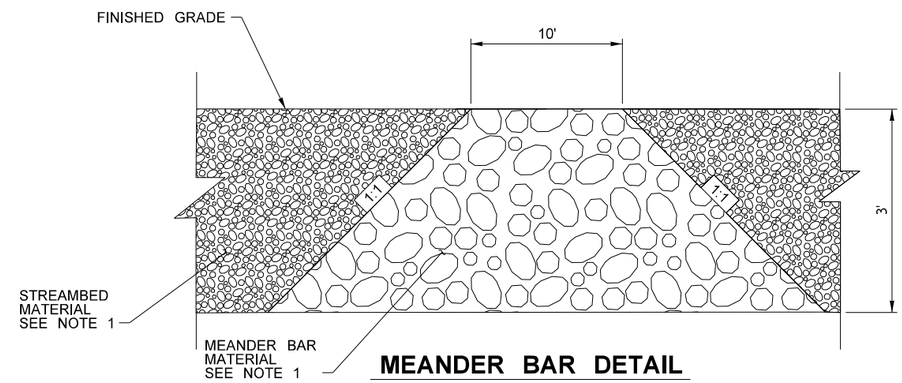

MEANDER BAR DETAIL

SECTION A-A
(NOT TO SCALE)

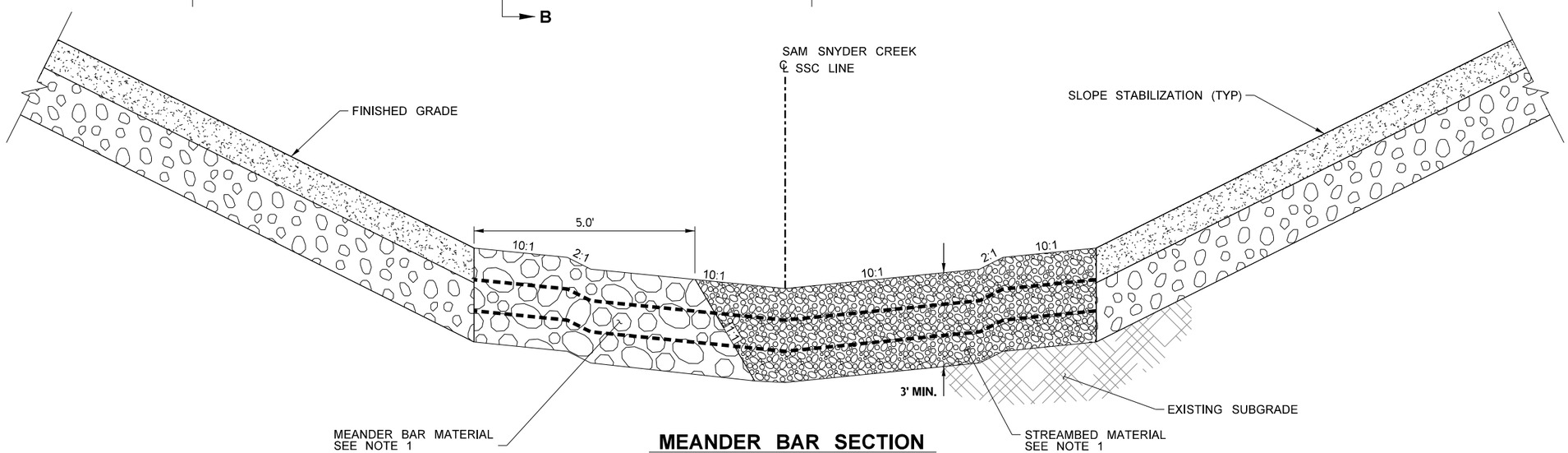

MEANDER BAR SECTION

SECTION B-B
NOT TO SCALE

FILE NAME	c:\users\whltekev\documents\d0335743\XL6050_PS_CRK_SAM_008.dgn				REGION NO. 10	STATE WASH	FED.AID PROJ.NO.
TIME	2:09:37 PM						
DATE	3/27/2023						
PLOTTED BY	whitekev				JOB NUMBER 22C533		
DESIGNED BY	T. PRINCE						
ENTERED BY	A. MILLER						
CHECKED BY	K. HOUSE				CONTRACT NO.		LOCATION NO. XL6050
PROJ. ENGR.	A. AMOS						
REGIONAL ADM.	S. ROARK	REVISION	DATE	BY			

THEODORE PRINCE — STATE OF WASHINGTON — 41859 — REGISTERED PROFESSIONAL ENGINEER

SEE SHEET CT1
DATE
P.E. STAMP BOX

DATE
P.E. STAMP BOX

Washington State Department of Transportation

Parametrix

SR 305
SAM SNYDER CREEK
REMOVE FISH BARRIER

MEANDER BAR DETAILS

PLAN REF NO SRD4

SHEET 73 OF 186 SHEETS

LEGEND

- SECTION S.1, SEE SHEET SPPD1
- SECTION S.2, SEE SHEET SPPD1
- SECTION S.3, SEE SHEET SPPD1
- SECTION C-C, SEE SHEET DD3
- RESTORATION SEED, SEE PLANTING AREA SOIL PREARATION DETAIL ON SHEET SPPD1
- PIPE OUTLET PROTECTION

T.26N.R.2E. W.M. SEC. 31

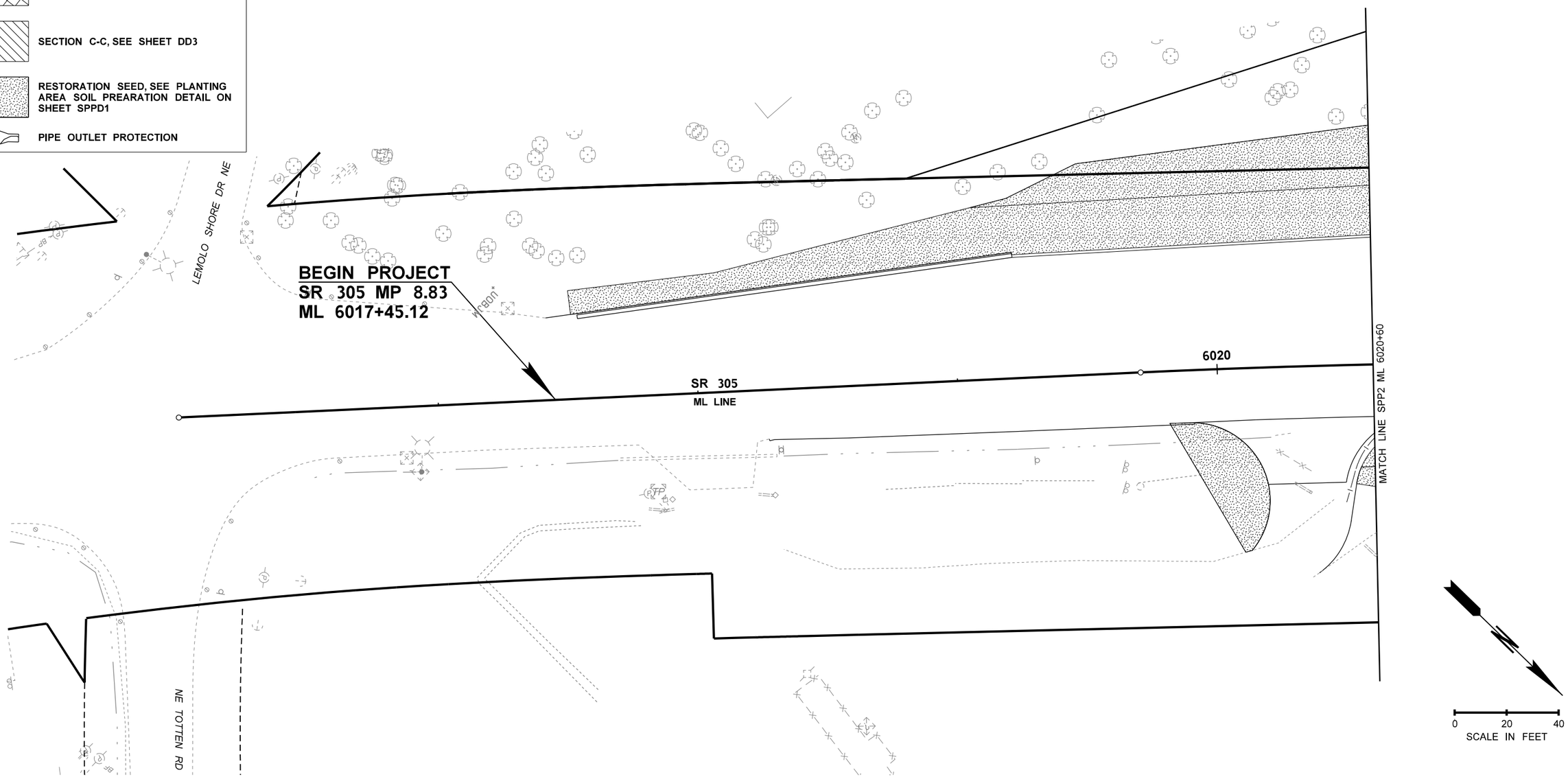

FILE NAME	c:\users\whltekev\documents\d0335740\XL6050_PS_SPP_SAM_001.dgn						
TIME	3:48:21 PM				REGION NO. 10	STATE WASH	FED.AID PROJ.NO.
DATE	3/27/2023						
PLOTTED BY	whitekev				JOB NUMBER 22C533		
DESIGNED BY	D. BAILEY						
ENTERED BY	K. WHITEHOUSE						
CHECKED BY	D. SANDENO				CONTRACT NO.		LOCATION NO. XL6050
PROJ. ENGR.	A. AMOS						
REGIONAL ADM.	S. ROARK	REVISION	DATE	BY			

STATE OF WASHINGTON — DYLAN S. BAILEY — NO. 9503 EXP. 09/04/2023 — LANDSCAPE ARCHITECT

SEE SHEET CT1
DATE
P.E. STAMP BOX

DATE
P.E. STAMP BOX

Washington State Department of Transportation

Parametrix

SR 305
SAM SNYDER CREEK
REMOVE FISH BARRIER

SOIL PREPARATION PLAN

PLAN REF NO
SPP1

SHEET 74 OF 186 SHEETS

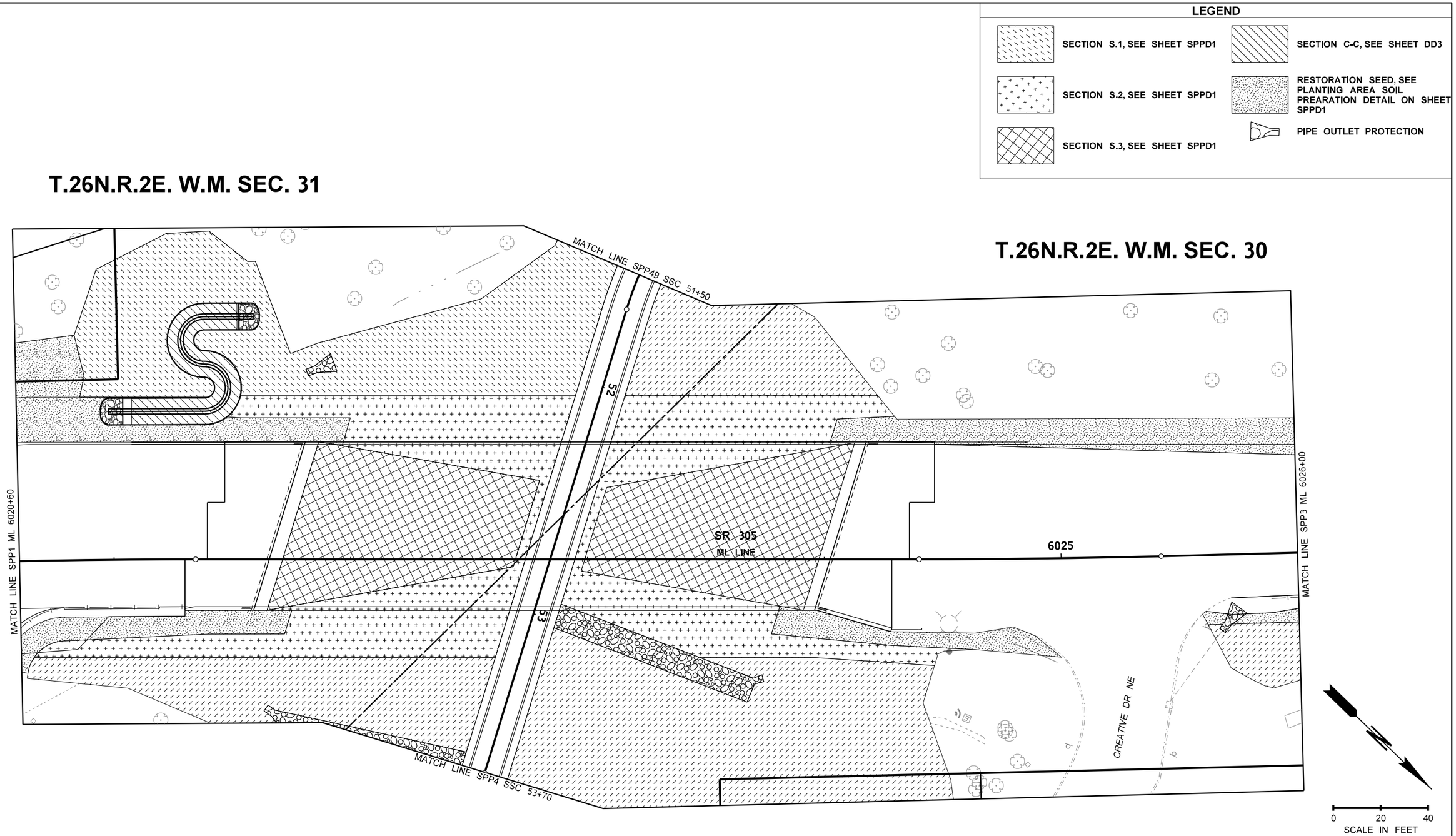

FILE NAME	c:\users\whitekev\documents\d0335740\XL6050_PS_SPP_SAM_002.dgn
TIME	3:48:23 PM
DATE	3/27/2023
PLOTTED BY	whitekev
DESIGNED BY	D. BAILEY
ENTERED BY	K. WHITEHOUSE
CHECKED BY	D. SANDENO
PROJ. ENGR.	A. AMOS
REGIONAL ADM.	S. ROARK

REVISION | DATE | BY

REGION NO. 10 | STATE WASH | FED.AID PROJ.NO.

JOB NUMBER 22C533

CONTRACT NO.

LOCATION NO. XL6050

STATE OF WASHINGTON DYLAN S. BAILEY NO. 1503 EXP. 06/04/2023 LANDSCAPE ARCHITECT

SEE SHEET CT1 DATE

P.E. STAMP BOX

P.E. STAMP BOX DATE

Washington State Department of Transportation

Parametrix

SR 305
SAM SNYDER CREEK
REMOVE FISH BARRIER

SOIL PREPARATION PLAN

PLAN REF NO SPP2

SHEET 75 OF 186 SHEETS

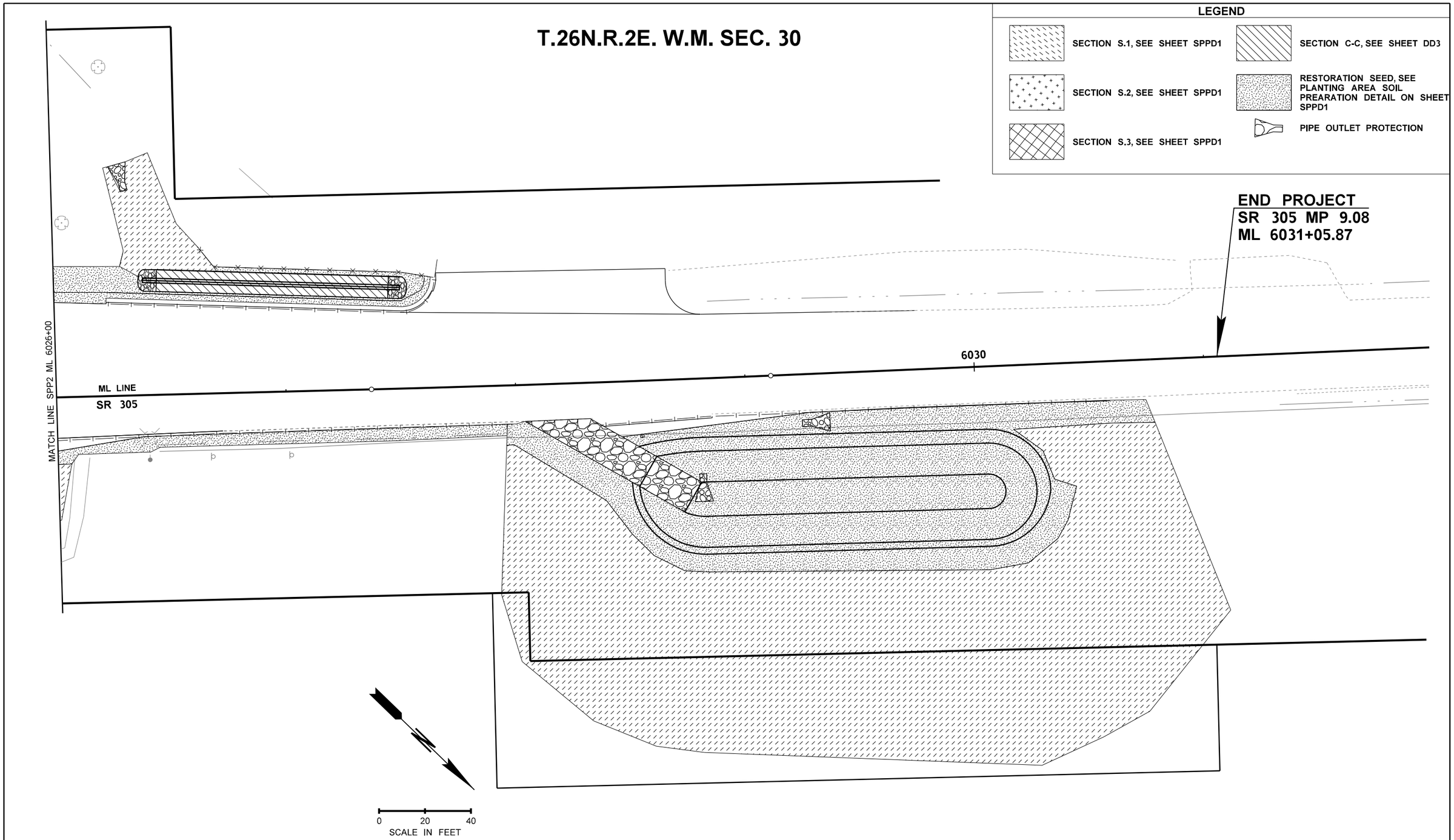

FILE NAME	c:\users\whitekev\documents\d0335740\XL6050_PS_SPP_SAM_003.dgn			
TIME	3:48:24 PM			
DATE	3/27/2023			
PLOTTED BY	whitekev			
DESIGNED BY	D. BAILEY			
ENTERED BY	K. WHITEHOUSE			
CHECKED BY	D. SANDENO			
PROJ. ENGR.	A. AMOS			
REGIONAL ADM.	S. ROARK	REVISION	DATE	BY

REGION NO.	STATE	FED.AID PROJ.NO.
10	WASH	
JOB NUMBER 22C533		
CONTRACT NO.		LOCATION NO. XL6050

STATE OF WASHINGTON DYLAN S. BAILEY NO. 1503 EXP. 06/04/2023 LANDSCAPE ARCHITECT

SEE SHEET CT1
DATE
P.E. STAMP BOX

DATE
P.E. STAMP BOX

Washington State Department of Transportation

Parametrix

SR 305
SAM SNYDER CREEK
REMOVE FISH BARRIER

SOIL PREPARATION PLAN

PLAN REF NO SPP3

SHEET 76 OF 186 SHEETS

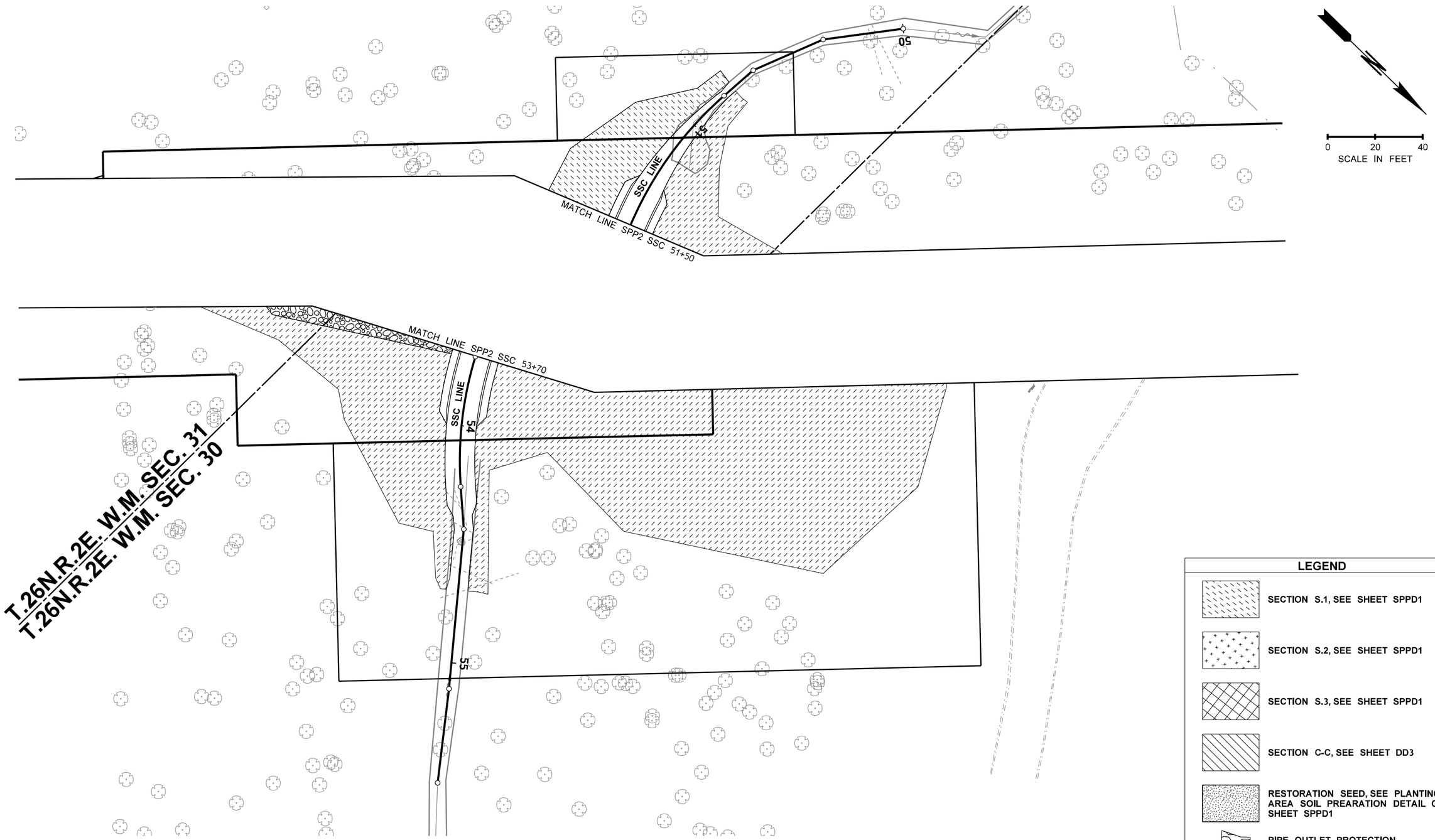

FILE NAME	c:\users\whitekev\documents\d0335740\XL6050_PS_SPP_SAM_004.dgn			
TIME	3:48:25 PM			
DATE	3/27/2023			
PLOTTED BY	whitekev			
DESIGNED BY	D. BAILEY			
ENTERED BY	K. WHITEHOUSE			
CHECKED BY	D. SANDENO			
PROJ. ENGR.	A. AMOS			
REGIONAL ADM.	S. ROARK	REVISION	DATE	BY

REGION NO.	STATE	FED.AID PROJ.NO.
10	WASH	
JOB NUMBER 22C533		
CONTRACT NO.		LOCATION NO. XL6050

STATE OF WASHINGTON DYLAN S. BAILEY NO. 1503 EXP. 06/04/2023 LANDSCAPE ARCHITECT

SEE SHEET CT1
DATE
P.E. STAMP BOX

DATE
P.E. STAMP BOX

Washington State Department of Transportation

Parametrix

SR 305
SAM SNYDER CREEK
REMOVE FISH BARRIER

SOIL PREPARATION PLAN

PLAN REF NO SPP4

SHEET 77 OF 186 SHEETS

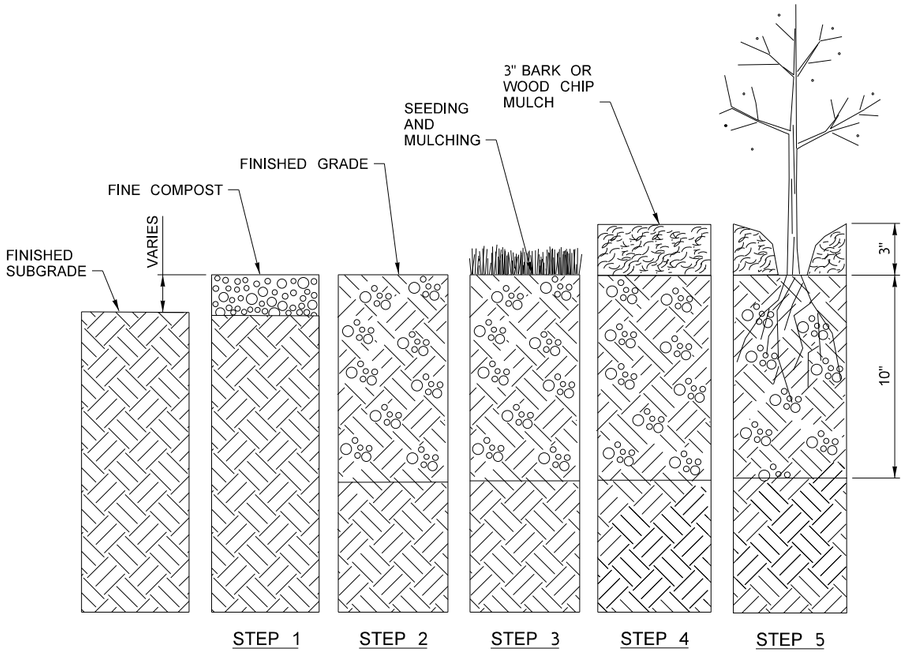

STEP 1

PLACE 2" FINE COMPOST IN AREAS TO BE SEEDED. REFERENCE SECTION DETAILS BELOW FOR ALL OTHER DEPTHS AND LOCATIONS.

STEP 2

INCORPORATE COMPOST TO 10" DEPTH.

STEP 3

APPLY SEEDING AND MULCHING IN THE LOCATIONS SHOWN ON THE PLANTING PLANS.

STEP 4

PRIOR TO PLANTING, CLEAR 4 FT DIAM. RING IN SEEDED AREAS. INSTALL BARK OR WOOD CHIP MULCH 3" DEEP SEE PLANTING PLANS FOR LOCATION OF MULCH RINGS OR FULL MULCH COVER.

STEP 5

INSTALL PLANT (SEE STANDARD PLAN H-10-10.00)

SOIL TYPE QUANTITIES	
DESCRIPTION	QUANTITY
SPECIAL SOIL MIX	508 CY
BARK OR WOOD CHIP MULCH	2.29 AC
FINE COMPOST	0.74 AC
MEDIUM COMPOST	1.73 AC

PLANTING AREA SOIL PREPARATION - SEQUENCE OF WORK

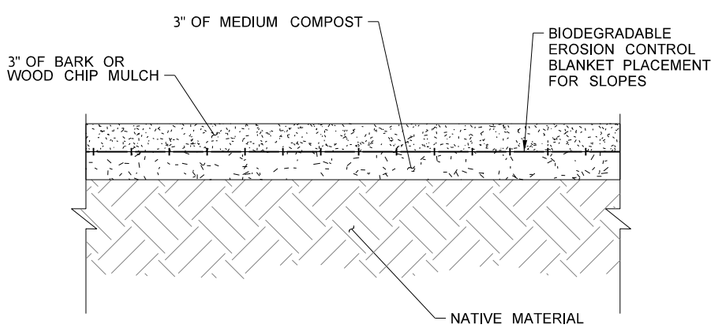

SECTION S.1

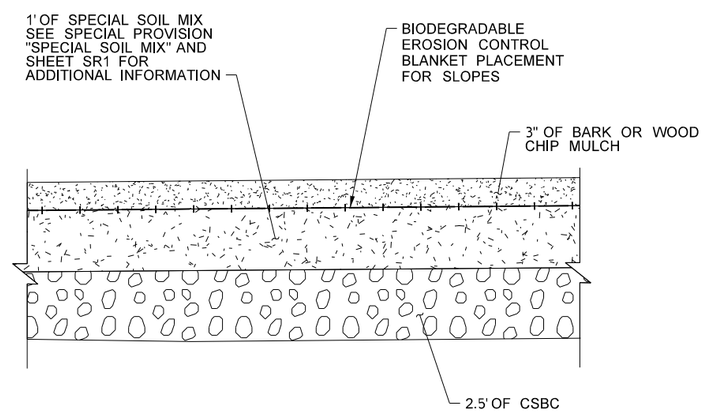

SECTION S.2

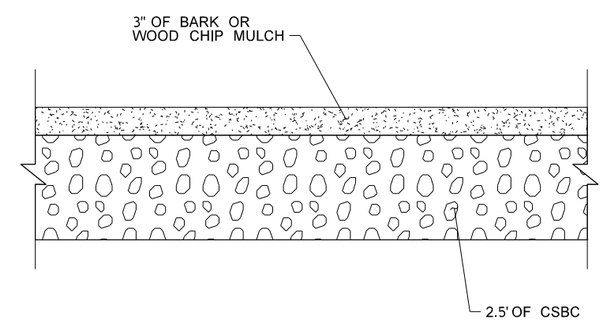

SECTION S.3

NOTES:

1. EROSION CONTROL BLANKET IS INCIDENTAL TO EROSION AND WATER POLLUTION PREVENTION.

NOT TO SCALE

FILE NAME	c:\users\whitekev\documents\d0335740\XL6050_PS_SPPD_SAM_001.dgn			
TIME	9:38:59 PM			
DATE	3/28/2023			
PLOTTED BY	whitekev			
DESIGNED BY	D. BAILEY			
ENTERED BY	K. WHITEHOUSE			
CHECKED BY	D. SANDENO			
PROJ. ENGR.	A. AMOS			
REGIONAL ADM.	S. ROARK	REVISION	DATE	BY

REGION NO.	STATE	FED.AID PROJ.NO.
10	WASH	
JOB NUMBER 22C533		
CONTRACT NO.		LOCATION NO. XL6050

STATE OF WASHINGTON DYLAN S. BAILEY NO. 1503 EXP. 06/04/2023 LANDSCAPE ARCHITECT

SEE SHEET CT1 DATE

P.E. STAMP BOX

DATE

P.E. STAMP BOX

Washington State Department of Transportation

Parametrix

SR 305
SAM SNYDER CREEK
REMOVE FISH BARRIER

SOIL PREPARATION DETAILS

PLAN REF NO SPPD1

SHEET 78 OF 186 SHEETS

LEGEND

- EXISTING TREE TO REMAIN
- WESTERN HEMLOCK 12' O.C.
- CASCARA BUCKTHORN 12' O.C.
- DOUGLAS FIR 12' O.C.
- DRY RESTORATION PLANTS
- WET RESTORATION PLANTS
- UNDERPASS PLANTS
- ROADSIDE RESTORATION SEED MIX A
- ROADSIDE RESTORATION SEED MIX B
- PIPE OUTLET PROTECTION

T.26N.R.2E. W.M. SEC. 31

NOTES:

1. SEE SHEET LD1 FOR PLANTING DETAILS AND NOTES.
2. INSTALL SOIL AMENDMENT IN ACCORDANCE WITH PROJECT SPECIFICATIONS.
3. ALL RESTORATION AREAS SHOWN DIAGRAMMATICALLY ONLY. FIELD ADJUST AS NECESSARY TO MATCH ADJACENT EXISTING CONDITIONS. ALL AREAS DISTURBED BY CONSTRUCTION TO BE RESTORED.

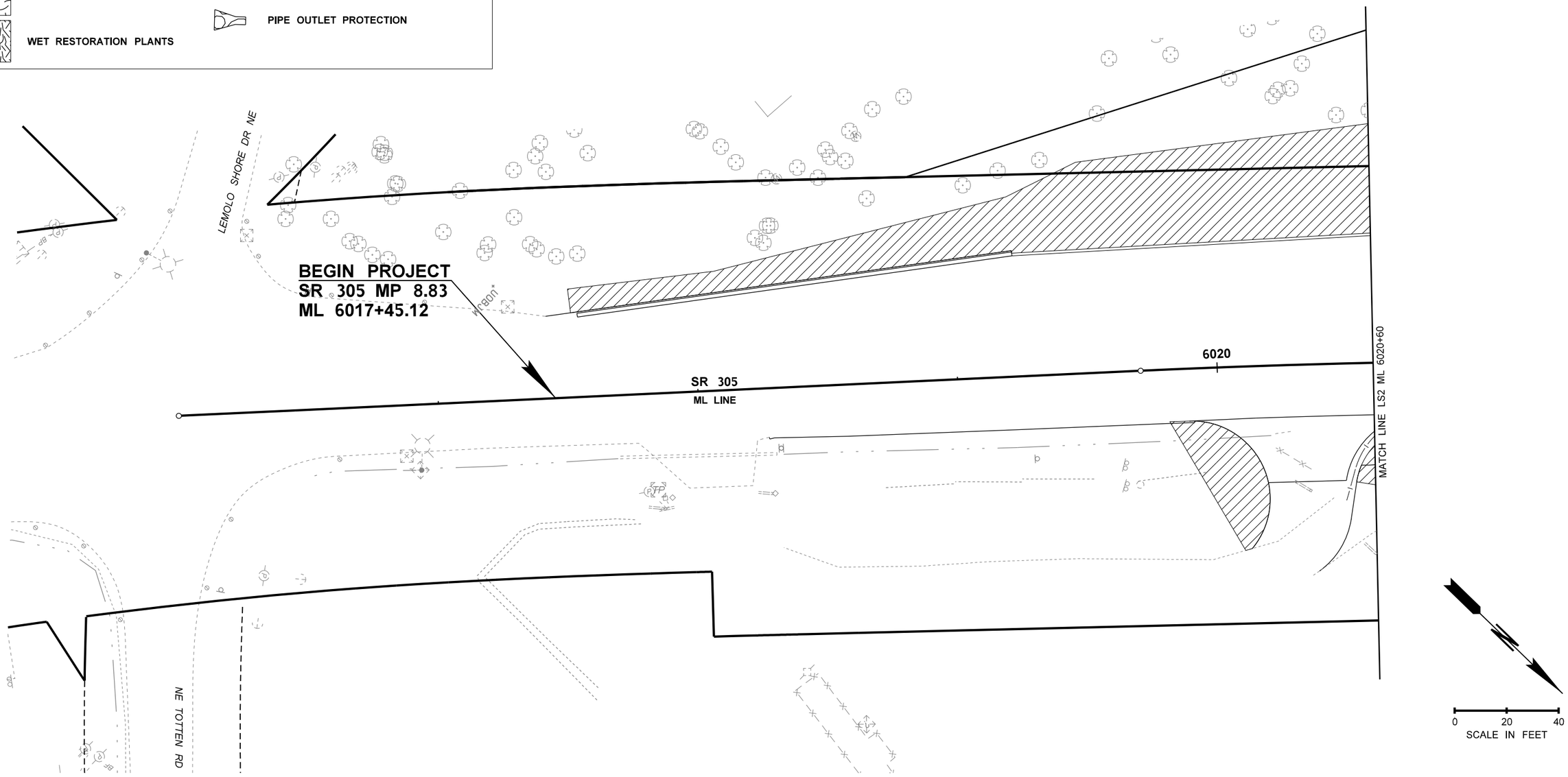

FILE NAME	c:\users\whitekev\documents\d0335740\XL6050_PS_LS_SAM_001.dgn
TIME	3:48:28 PM
DATE	3/27/2023
PLOTTED BY	whitekev
DESIGNED BY	D. BAILEY
ENTERED BY	K. WHITEHOUSE
CHECKED BY	D. SANDENO
PROJ. ENGR.	A. AMOS
REGIONAL ADM.	S. ROARK

REVISION | DATE | BY

REGION NO. 10 | STATE WASH | FED.AID PROJ.NO.

JOB NUMBER 22C533

CONTRACT NO.

LOCATION NO. XL6050

STATE OF WASHINGTON DYLAN S. BAILEY NO. 1503 EXP. 06/04/2023 LANDSCAPE ARCHITECT

SEE SHEET CT1 DATE

P.E. STAMP BOX

P.E. STAMP BOX DATE

Washington State Department of Transportation

Parametrix

SR 305
SAM SNYDER CREEK
REMOVE FISH BARRIER

LANDSCAPE PLAN

PLAN REF NO LS1

SHEET 79 OF 186 SHEETS

NOTES:

1. SEE SHEET LD1 FOR PLANTING DETAILS AND NOTES. SEE SHEET LD2 FOR PLANT SCHEDULE DETAILING PLANT PALETTE FOR EACH HATCH AREA.
2. INSTALL SOIL AMENDMENT IN ACCORDANCE WITH PROJECT SPECIFICATIONS.
3. ALL RESTORATION AREAS SHOWN DIAGRAMMATICALLY ONLY. FIELD ADJUST AS NECESSARY TO MATCH ADJACENT EXISTING CONDITIONS. ALL AREAS DISTURBED BY CONSTRUCTION TO BE RESTORED.

LEGEND

- EXISTING TREE TO REMAIN
- WESTERN HEMLOCK 12' O.C.
- CASCARA BUCKTHORN 12' O.C.
- DOUGLAS FIR 12' O.C.
- DRY RESTORATION PLANTS
- WET RESTORATION PLANTS
- UNDERPASS PLANTS
- ROADSIDE RESTORATION SEED MIX A
- ROADSIDE RESTORATION SEED MIX B
- PIPE OUTLET PROTECTION

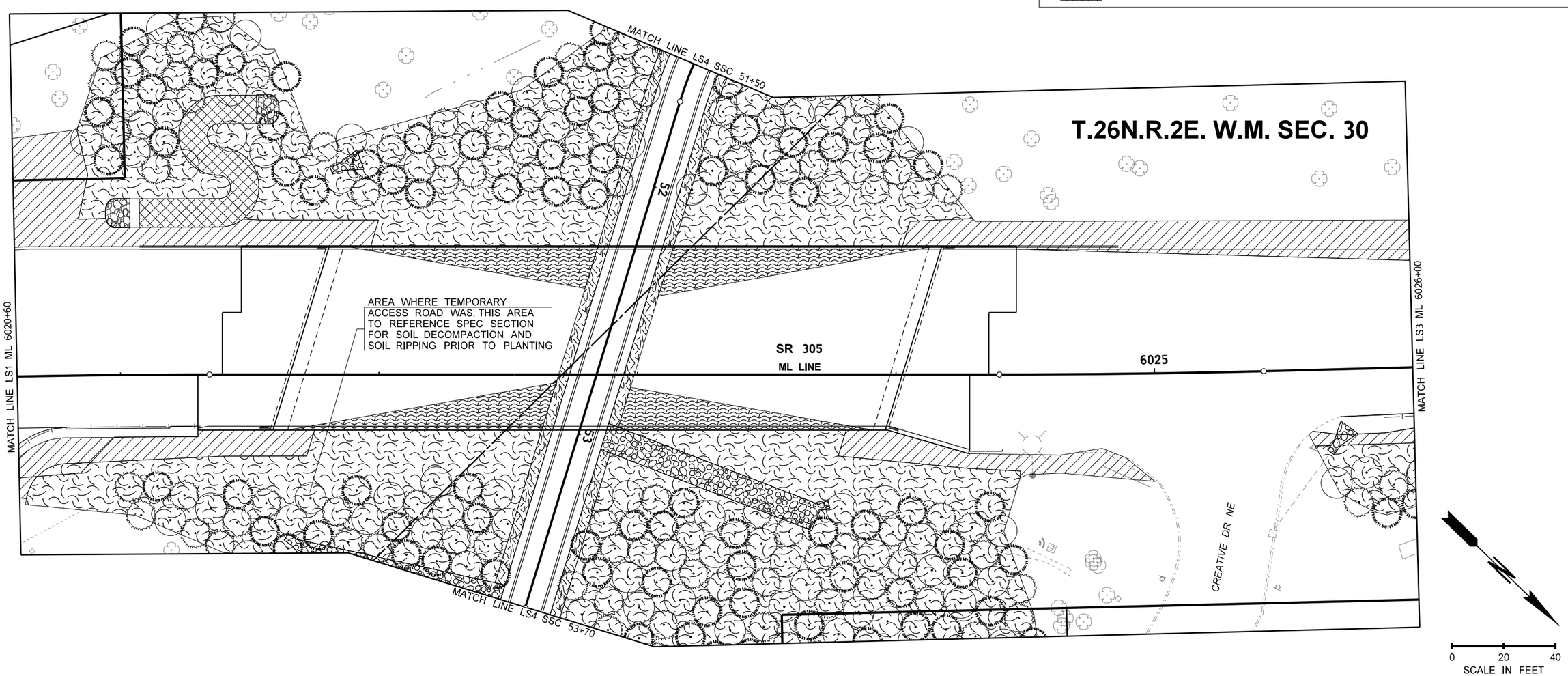

FILE NAME	c:\users\whitekev\documents\d0335740\XL6050_PS_LS_SAM_002.dgn
TIME	3:48:30 PM
DATE	3/27/2023
PLOTTED BY	whitekev
DESIGNED BY	D. BAILEY
ENTERED BY	K. WHITEHOUSE
CHECKED BY	D. SANDENO
PROJ. ENGR.	A. AMOS
REGIONAL ADM.	S. ROARK

REVISION | DATE | BY

REGION NO. 10 | STATE WASH | FED.AID PROJ.NO.

JOB NUMBER 22C533

CONTRACT NO.

LOCATION NO. XL6050

STATE OF WASHINGTON DYLAN S. BAILEY NO. 1503 EXP. 06/04/2023 LANDSCAPE ARCHITECT

SEE SHEET CT1 DATE

P.E. STAMP BOX

DATE

P.E. STAMP BOX

Washington State Department of Transportation

Parametrix

SR 305
SAM SNYDER CREEK
REMOVE FISH BARRIER

LANDSCAPE PLAN

PLAN REF NO LS2

SHEET 80 OF 186 SHEETS

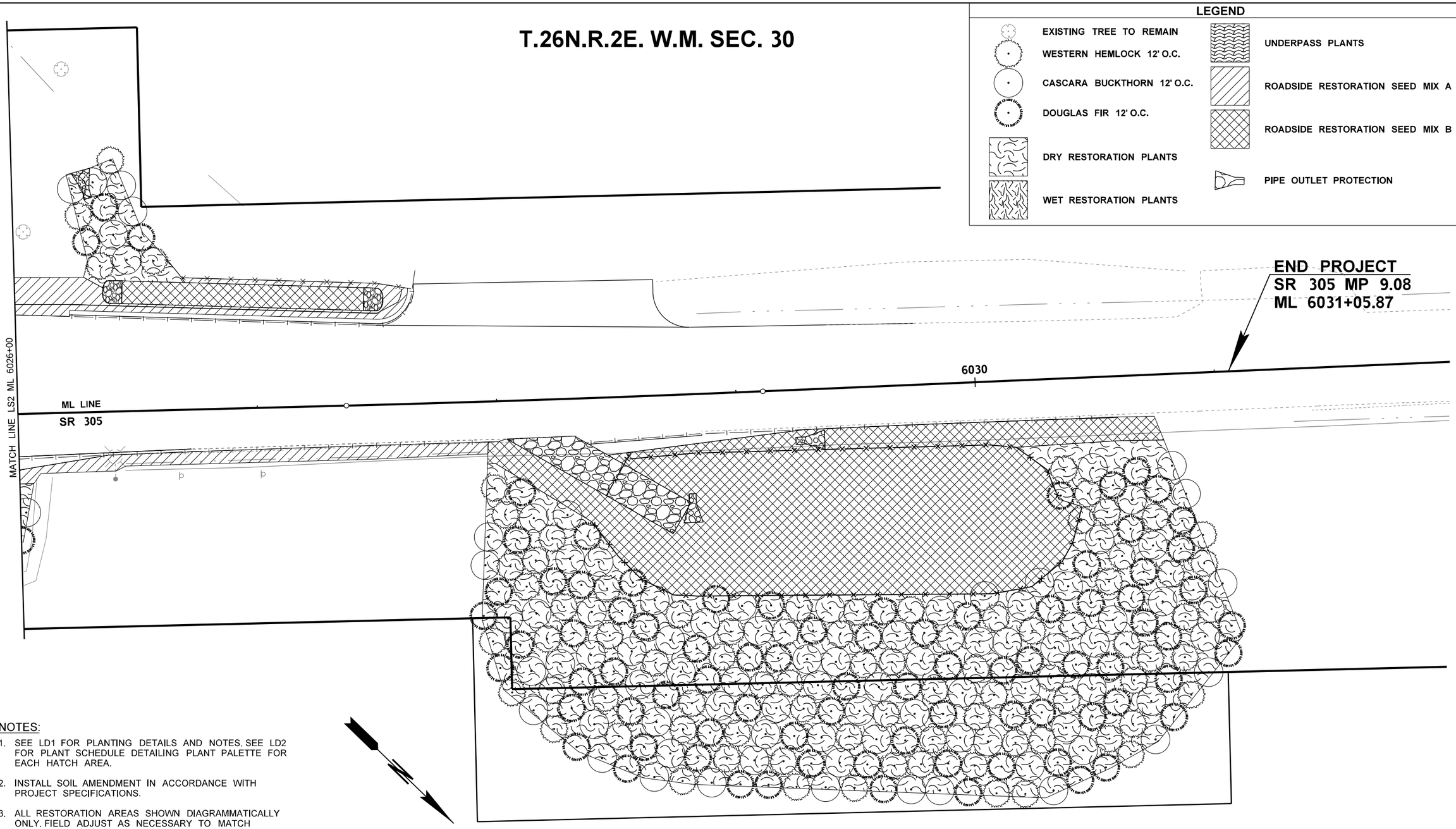

NOTES:

1. SEE LD1 FOR PLANTING DETAILS AND NOTES. SEE LD2 FOR PLANT SCHEDULE DETAILING PLANT PALETTE FOR EACH HATCH AREA.
2. INSTALL SOIL AMENDMENT IN ACCORDANCE WITH PROJECT SPECIFICATIONS.
3. ALL RESTORATION AREAS SHOWN DIAGRAMMATICALLY ONLY. FIELD ADJUST AS NECESSARY TO MATCH ADJACENT EXISTING CONDITIONS. ALL AREAS DISTURBED BY CONSTRUCTION TO BE RESTORED.

FILE NAME	c:\users\whitekev\documents\d0335740\XL6050_PS_LS_SAM_003.dgn
TIME	3:48:32 PM
DATE	3/27/2023
PLOTTED BY	whitekev
DESIGNED BY	D. BAILEY
ENTERED BY	K. WHITEHOUSE
CHECKED BY	D. SANDENO
PROJ. ENGR.	A. AMOS
REGIONAL ADM.	S. ROARK

REVISION | DATE | BY

REGION NO. 10 | STATE WASH | FED.AID PROJ.NO.

JOB NUMBER 22C533

CONTRACT NO.

LOCATION NO. XL6050

STATE OF WASHINGTON DYLAN S. BAILEY NO. 1503 EXP. 06/04/2023 LANDSCAPE ARCHITECT

SEE SHEET CT1 DATE

P.E. STAMP BOX

DATE

P.E. STAMP BOX

Washington State Department of Transportation

Parametrix

SR 305
SAM SNYDER CREEK
REMOVE FISH BARRIER

LANDSCAPE PLAN

PLAN REF NO LS3

SHEET 81 OF 186 SHEETS

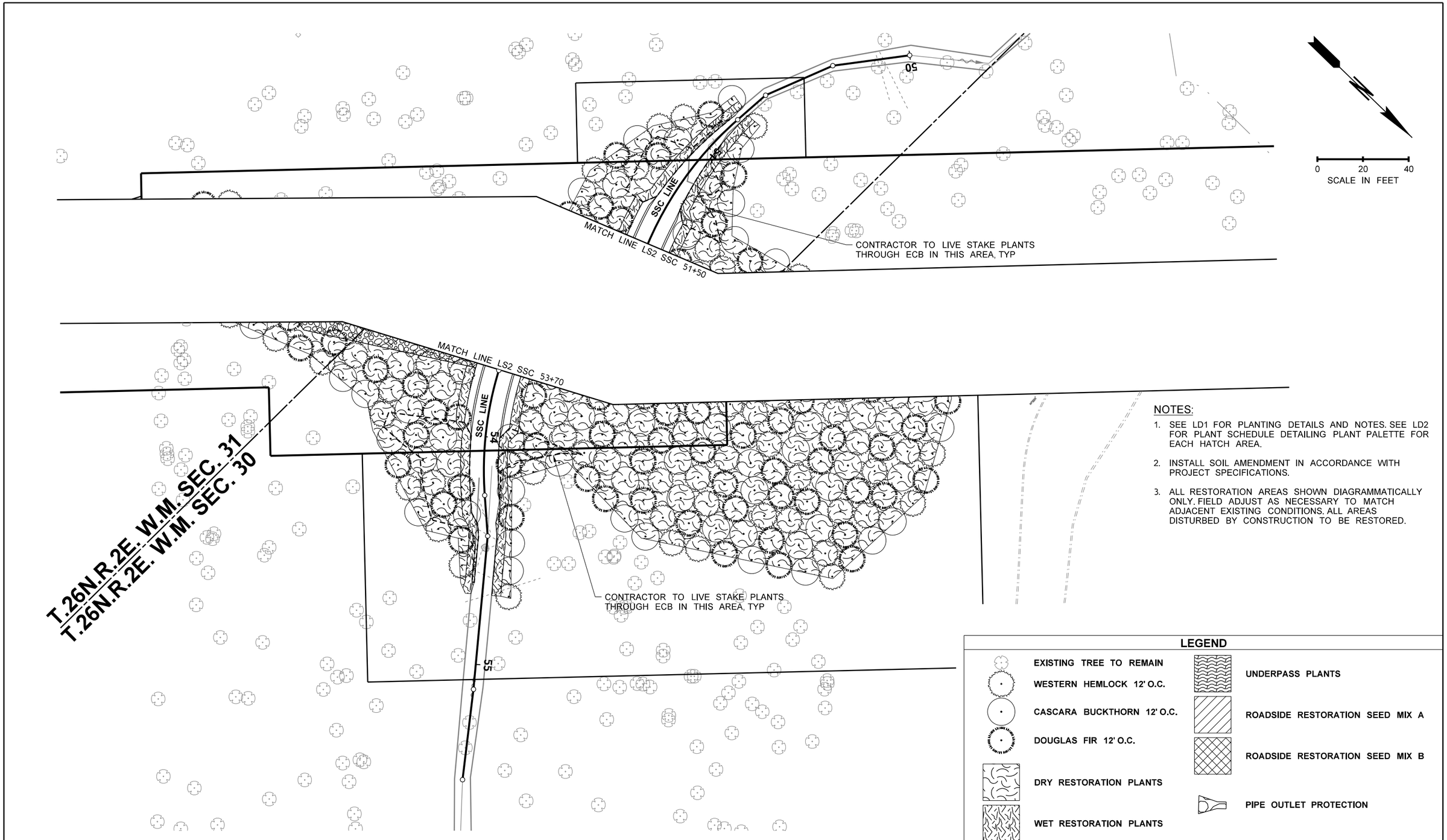

NOTES:

1. SEE LD1 FOR PLANTING DETAILS AND NOTES. SEE LD2 FOR PLANT SCHEDULE DETAILING PLANT PALETTE FOR EACH HATCH AREA.
2. INSTALL SOIL AMENDMENT IN ACCORDANCE WITH PROJECT SPECIFICATIONS.
3. ALL RESTORATION AREAS SHOWN DIAGRAMMATICALLY ONLY. FIELD ADJUST AS NECESSARY TO MATCH ADJACENT EXISTING CONDITIONS. ALL AREAS DISTURBED BY CONSTRUCTION TO BE RESTORED.

LEGEND

- EXISTING TREE TO REMAIN
- WESTERN HEMLOCK 12' O.C.
- CASCARA BUCKTHORN 12' O.C.
- DOUGLAS FIR 12' O.C.
- DRY RESTORATION PLANTS
- WET RESTORATION PLANTS
- UNDERPASS PLANTS
- ROADSIDE RESTORATION SEED MIX A
- ROADSIDE RESTORATION SEED MIX B
- PIPE OUTLET PROTECTION

FILE NAME	c:\users\whitekev\documents\d0335740\XL6050_PS_LS_SAM_004.dgn
TIME	3:48:33 PM
DATE	3/27/2023
PLOTTED BY	whitekev
DESIGNED BY	D. BAILEY
ENTERED BY	K. WHITEHOUSE
CHECKED BY	D. SANDENO
PROJ. ENGR.	A. AMOS
REGIONAL ADM.	S. ROARK

REVISION | DATE | BY

REGION NO.	STATE	FED.AID PROJ.NO.
10	WASH	
JOB NUMBER 22C533		
CONTRACT NO.		LOCATION NO. XL6050

STATE OF WASHINGTON DYLAN S. BAILEY NO. 1503 EXP. 06/04/2023 LANDSCAPE ARCHITECT

SEE SHEET CT1 DATE

P.E. STAMP BOX

P.E. STAMP BOX DATE

Washington State Department of Transportation

Parametrix

SR 305
SAM SNYDER CREEK
REMOVE FISH BARRIER

LANDSCAPE PLAN

PLAN REF NO LS4

SHEET 82 OF 186 SHEETS

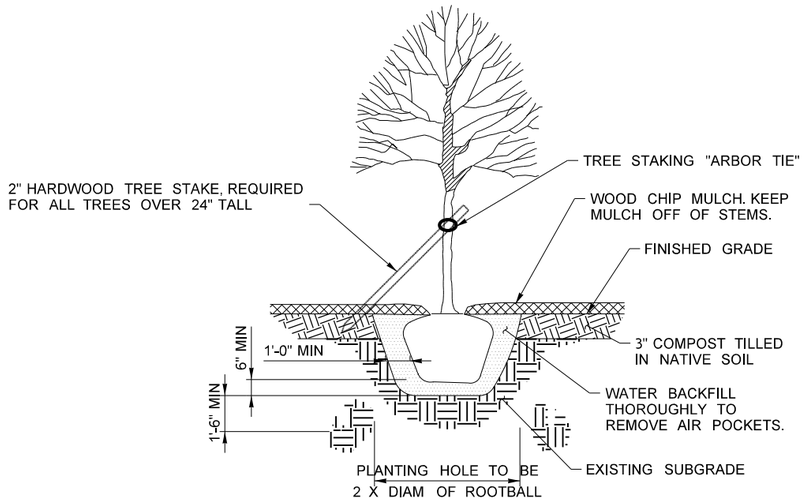

TREE PLANTING (1)

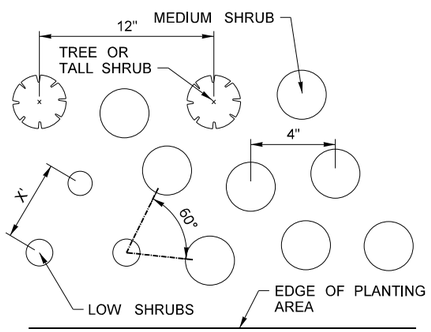

TYPICAL TREE & SHRUB SPACING (2)

NOTES:

1. PLANT SHRUBS IN SINGLE SPECIES GROUPS OF 5 TO 10 PLANTS EACH. PLANT TREES IN SINGLE SPECIES AS SHOWN.
2. ADJUST PLANT LOCATIONS SLIGHTLY SO PLANTINGS APPEAR TO BE IN A MORE RANDOM ARRANGEMENT AND NOT IN STRAIGHT ROWS.

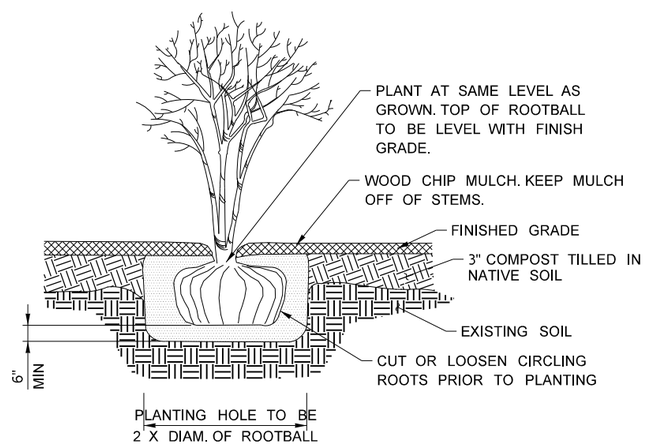

CONTAINER SHRUB PLANTING (3)

NOT TO SCALE

PLANT SCHEDULE (LS1 - LS4)

TREES	CODE	QTY	BOTANICAL / COMMON NAME	CAL.	(H℄ X W℄)	SPACING
	FP	215	FRANGULA PURSHIANA / CASCARA BUCKTHORN	N/A	#2	12' o.c.
	PD	215	PSEUDOTSUGA MENZIESII / DOUGLAS FIR	N/A	#2	12' o.c.
	TH	215	TSUGA HETEROPHYLLA / WESTERN HEMLOCK	N/A	#2	12' o.c.

SHRUB AREAS	CODE	QTY	BOTANICAL / COMMON NAME	CONDITION	SPACING	SPACING
		82,696 SF	DRY RESTORATION PLANT MIX			
	CR	1,343	CORNUS SERICEA / RED TWIG DOGWOOD	#1		25% @ 48" o.c.
	CW	806	CORYLUS CORNUTA / WESTERN HAZELNUT	#1		15% @ 48" o.c.
	PM	2,865	POLYSTICHUM MUNITUM / WESTERN SWORD FERN	#1		30% @ 36" o.c.
	RT	806	RUBUS PARVIFLORUS / THIMBLEBERRY	#1		15% @ 48" o.c.
	VO	806	VACCINIUM OVATUM / EVERGREEN HUCKLEBERRY	#1		15% @ 48" o.c.
		3,031 SF	WET RESTORATION PLANT MIX			
	CO	70	CAREX OBNUPTA / SLOUGH SEDGE	#1		20% @ 36" o.c.
	JE	88	JUNCUS ENSIFOLIUS / SWORDLEAF RUSH	#2		25% @ 36" o.c.
	RB	53	RIBES BRACTEOSUM / STINK CURRANT	#1		15% @ 36" o.c.
	RS2	40	RUBUS SPECTABILIS / SALMONBERRY	#1		20% @ 48" o.c.
	SH	40	SALIX HOOKERIANA / DUNE WILLOW	#1		20% @ 48" o.c.
		3,485 SF	UNDERPASS PLANT MIX			
	MR	121	GAULTHERIA SHALLON / SALAL	#1		30% @ 36" o.c.
	PM4	282	POLYSTICHUM MUNITUM / WESTERN SWORD FERN	#1		70% @ 36" o.c.

GROUND COVERS	CODE	QTY	BOTANICAL / COMMON NAME	CONT	LBS. OF PURE LIVE SEED PER ACRE
			ROADSIDE RESTORATION SEED MIX		
		17,367 SF	SEEDING MIX A HYDROSEED OF THE FOLLOWING COMPOSITION, PROPORTION, AND QUANTITY SHALL BE APPLIED AT A RATE OF 100 POUNDS PER ACRE IN A 10 FT. WIDE MOW STRIP OVER A 2" LAYER OF COMPOST		
	AT		AGROSTIS TENUIS / COMMON BENTGRASS	SEED	10
	FR2		FESTUCA RUBRA / RED FESCUE	SEED	40
	LP		LOLIUM PERENNE / PERENNIAL RYEGRASS	SEED	40
	TR		TRIFOLIUM REPENS / WHITE CLOVER	SEED	10
		15,071 SF	SEEDING MIX B HYDROSEED OF THE FOLLOWING COMPOSITION, PROPORTION, AND QUANTITY SHALL BE APPLIED AT A RATE OF 220 POUNDS PER ACRE		
	AT2		AGROSTIS TENUIS / COMMON BENTGRASS	SEED	112.69
	FA		FESTUCA ARUNDINACEA / TALL FESCUE	SEED	80.08
	FR3		FESTUCA RUBRA / RED FESCUE	SEED	26.83
	LP2		LOLIUM PERENNE / PERENNIAL RYEGRASS	SEED	0.40

TYPICAL PLANTING SETBACKS

TYPE:	GUARDRAIL BARRIER	EDGE OF ROADWAY	WALL	FENCE	SIGNS	EXISITING TREE TRUNK	EXISITING VEGETATION MASS	OVERHEAD POWER	BRIDGE STRUCTURE	DRAINAGE STRUCTURE	DRAINAGE ACCESS ROAD	CULVERT WALLS
GROUNDCOVER*	5'	5'	3'	1.5'	1.5'	5'	5'	–	3'	5'	5'	3'
SMALL SHRUB**		10'	5'	3'	6'				5'			5'
TALL SHRUB***	10'	15'	10'	3'	6'	10'	10'	10'	10'	10'	10'	10'
SMALL TREE****		20'										
DECIDUOUS TREE	15'	30'	15'	10'	15'	15'		20'	40'		15'	15'
EVERGREEN TREE												

NOTES:
1. THIS CHART SUPPLEMENTS SECTION 8.02.3(7) OF THE STANDARD SPECIFICATION
2. * GROUNDCOVERS GROW NO TALLER THAN 1.5 FEET AT MATURITY
3. ** SMALL SHRUBS GROW NO TALLER THAN 3 FEET AT MATURITY
4. *** TALL SHRUBS GROW TALLER THAN 6 FEET AT MATURITY
5. **** SMALL TREES GROW NO TALLER THAN 25 FEET AT MATURITY
6. REFER TO WSDOT DESIGN MANUAL M 22-01.16, PAGE 1600-15, EXHIBIT 1600-2 DESIGN CLEAR ZONE DISTANCE TABLE FOR TYPICAL REQUIRED CLEARANCES FOR EDGE OF ROADWAY SETBACKS.

FILE NAME	c:\users\whltekev\documents\d0335740\XL6050_PS_LD_SAM_001.dgn
TIME	3:48:35 PM
DATE	3/27/2023
PLOTTED BY	whitekev
DESIGNED BY	D. BAILEY
ENTERED BY	K. WHITEHOUSE
CHECKED BY	D. SANDENO
PROJ. ENGR.	A. AMOS
REGIONAL ADM.	S. ROARK

REVISION | DATE | BY

REGION NO.	STATE	FED.AID PROJ.NO.
10	WASH	
JOB NUMBER 22C533		
CONTRACT NO.		LOCATION NO. XL6050

STATE OF WASHINGTON · DYLAN S. BAILEY · NO. 8603 EXP. 06/04/2023 · LANDSCAPE ARCHITECT

SEE SHEET CT1
DATE
P.E. STAMP BOX

DATE
P.E. STAMP BOX

Washington State Department of Transportation

Parametrix

SR 305
SAM SNYDER CREEK
REMOVE FISH BARRIER

LANDSCAPE DETAILS

PLAN REF NO
LD1

SHEET 83 OF 186 SHEETS

QUANTITY TABULATION - PAVING

NOTE:
THE FIRST NUMBER OF THE "CODE" BELOW REFERS TO THE SHEET NO. OR THE SHEET REFERENCE NO. SHOWING THE CONSTRUCTION FEATURE

THE SECOND NUMBER REFERS TO THE CONSTRUCTION FEATURE FOUND ON THAT SHEET.

CODE	LOCATION ↓ / UNIT OF MEASURE →	EXTRUDED CURB	PRECAST DUAL FACED SLOPED MOUNTABLE CURB	BEAM GUARDRAIL TYPE 31 - 8 FT. LONG POST	BEAM GUARDRAIL TYPE 31	BEAM GUARDRAIL TRANSITION SECTION TYPE 21		BEAM GUARDRAIL ANCHOR TYPE 11	BEAM GUARDRAIL TYPE 31 NON-FLARED TERMINAL	WHEEL STOP	CHAIN LINK FENCE TYPE 3	END, GATE, CORNER, AND PULL POST FOR CHAIN LINK FENCE					GENERAL NOTES
		L.F.	L.F.	L.F.	L.F.	EACH		EACH	EACH	EACH	L.F.	EACH					
PV1-1	ML 6019+54.10, (35.50' LT) TO ML 6021+41.75, (32.50' LT)		190														1
PV1-2	ML 6020+48.61 (52.70' RT TO ML 6020+52.28 (40.74' RT)							1									3,12
PV1-3	ML 6020+52.28 (40.74' RT) TO ML 6020+80.65 (20.00' RT)				37.5												4,5
PV1-4	ML 6018+26.60 (18.89' RT) TO ML 6019+90.50 (20.24' RT)	164															1
PV2-1	ML 6020+80.65 (20.00' RT) TO ML 6021+30.94 (20.00' RT)					1											4,8
PV2-2	ML 6021+41.75, (32.50' LT) TO ML 6021+46.75, (33.75' LT)		5														7,11
PV2-3	ML 6024+46.67 (32.75' LT) TO ML 6024+51.67 (32.50' LT)		5														7,11
PV2-4	ML 6024+51.67 (32.50' LT) TO ML 6026+43.72 (32.50' LT)		192														1,2
PV2-5	ML 6024+28.48, (29.33' RT) TO ML 6024+41.14, (29.33' RT)	13															1
PV2-6	ML 6025+88.40 (19.04' RT) TO ML 6026+37.40 (18.13' RT)								1								4,6
PV2-7	ML 6020+78.64 (20.33' RT) TO ML 6021+19.10 (20.33' RT)	41															1
PV3-1	ML 6026+62.93, (64.17' LT) TO ML 6027+65.59, (48.05 LT)										108	6					9
PV3-2	ML 6026+84.27, (57.09' LT) TO ML 6027+44.22, (53.84' LT)									7							10
PV3-3	ML 6026+21.57 (40.21' LT) TO ML 6026+71.50 (37.50' LT)					1											4,5
PV3-4	ML 6026+71.50 (37.50' LT) TO ML 6027+65.59 (44.99' LT)				100												3
PV3-5	ML 6026+71.50 (37.50' LT) TO ML 6027+67.75 (57.30' LT)							1									
PV3-6	ML 6026+37.40 (18.13' RT) TO ML 6027+87.30, (16.86' RT)			150													3
PV3-7	ML 6027+87.30 (16.86' RT) TO ML 6027+99.78 (16.87' RT)							1									4,5
PV3-8	ML 6028+36.86 (18.61' RT) TO ML 6028+83.60 (16.59' RT)								1								3,13
PV3-9	ML 6029+21.06 (16.73' RT) TO ML 6030+46.06 (16.99' RT)			125													3
PV3-10	ML 6030+46.06 (16.99' RT) TO ML 6030+58.56 (17.02' RT)							1									4,6
PV3-11	ML 6028+33.10, (15.96' RT) TO ML 6028+85.06, (15.93' RT)	48															1
PV3-12	ML 6026+22.59 (40.49' LT) TO ML 6027+64.94 (42.11' LT)	146															1
PV3-13	ML 6028+83.60 (16.59' RT) TO ML 6029+21.06 (16.73' RT)				37.5												3
	SHEET TOTAL	412	392	275	175	2		4	2	7	108	6					

GENERAL NOTES

1. FOR EXTRUDED CURB TYPE 1, SEE WSDOT STD PLAN F-10.40 AND F-10.42.
2. FOR PRECAST DUAL FACED SLOPED MOUNTABLE CURB AND NOSING BLOCK, SEE WSDOT STD PLAN F-10.64 (DUAL SLOPED BLOCK).
3. FOR BEAM GUARDRAIL TYPE 31, SEE WSDOT STD PLAN C-20.10.
4. FOR BEAM GUARDRAIL TRANSITION SECTION TYPE 21, SEE WSDOT STD PLAN C-25.20 AND C-24.10.
5. FOR BEAM GUARDRAIL TYPE 31 NON-FLARED TERMINAL, SEE WSDOT STD PLAN C-22.40.
6. FOR BEAM GUARDRAIL (TYPE 31) ANCHOR TYPE 11, SEE WSDOT STD PLAN C-23.70.
7. SEE PV1 FOR DETAIL.
8. GUARDRAIL CONNECTION TO BRIDGE RAIL AND CONCRETE BARRIER, D CONNECTION, SEE WSDOT STD PLAN C-24.10.
9. FOR CHAIN LINK FENCE TYPE 3, SEE WSDOT STD PLAN L-20.10.
10. FOR WHEEL STOP, SEE WSDOT STD PLAN M-17.10.
11. FOR 18"x12" TAPER BLOCK DETAIL, SEE PVD3.
12. SEE WSDOT STD PLAN C-20.42 FOR TYPE 31 BEAM GUARDRAIL PLACED ON A RADIUS.
13. 2 FOOT OFFSET, SEE NOTE 6 ON WSDOT STANDARD PLAN C-22.40.

Designed	C. JOHNSON	1/23/2023			
Entered	E. EMMANUEL	1/23/2023			
Checked	K. HOUSE	1/23/2023			
Proj.Eng.	A. AMOS	1/23/2023			
Reg Admin	S. ROARK	1/23/2023			
		DATE	DATE	REVISION	BY

REGION NO.	STATE	FED. AID PROJ. NO.
10	WASH	
JOB NUMBER		
22C533		
CONTRACT NO.		

Parametrix
ENGINEERING . PLANNING . ENVIRONMENTAL SCIENCES

Washington State Department of Transportation

SR 305
SAM SNYDER CREEK
REMOVE FISH BARRIER

QUANTITY TABULATION - PAVING

QTPV1

SHEET 84 OF 186 SHEETS

LEGEND

- PAVING LIMITS
- 0.15' HMA CL.1/2 IN PG 58H-22 INLAY
- HMA CL. 1/2 IN. PG 58H-22
- CUT — CUT LINE
- FILL — FILL LINE
- GUARDRAIL
- ? — QUANTITY TAB NOTE
- ? PV? — QUANTITY TAB NOTE CONTINUED

T.26N.R.2E. W.M. SEC. 31

CURB LINE TABLE

DRIVEWAY A

LINE/CURVE NUMBER	BEARING	DISTANCE	RADIUS	DELTA	LENGTH	EDGE OF PAVEMENT ELEVATION (FT)				
						BEGIN	1/4	1/2	3/4	END
PV1-L1	N52°09'29"W	90.39'				128.19	127.67	127.10	126.53	125.94
PV1-L2	N52°09'29"W	78.47'				125.94	125.75	125.56	125.38	125.19

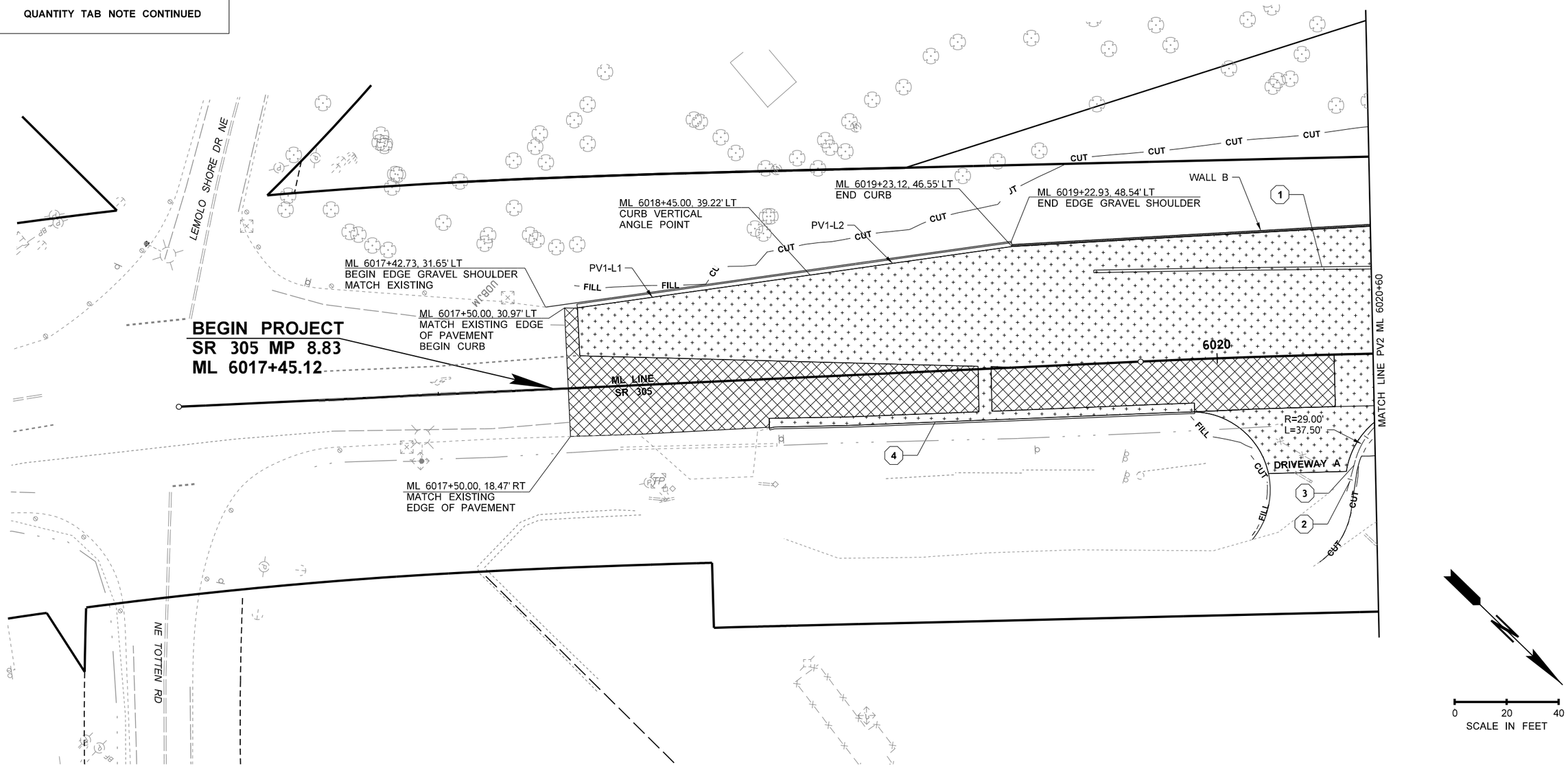

FILE NAME	c:\users\whitekev\documents\d0335742\XL6050_PS_PV_SAM_001.dgn						
TIME	11:55:14 AM				REGION NO. 10	STATE WASH	FED.AID PROJ.NO.
DATE	3/27/2023				JOB NUMBER 22C533		
PLOTTED BY	whitekev						
DESIGNED BY	C. JOHNSON				CONTRACT NO.		LOCATION NO. XL6050
ENTERED BY	E. EMMANUEL						
CHECKED BY	K. HOUSE						
PROJ. ENGR.	A. AMOS						
REGIONAL ADM.	S. ROARK	REVISION	DATE	BY			

KEVIN L. HOUSE — STATE OF WASHINGTON — 41824 — REGISTERED PROFESSIONAL ENGINEER

SEE SHEET CT1
DATE
P.E. STAMP BOX

DATE
P.E. STAMP BOX

Washington State Department of Transportation

Parametrix

SR 305
SAM SNYDER CREEK
REMOVE FISH BARRIER

PAVING PLAN

PLAN REF NO
PV1

SHEET 85 OF 186 SHEETS

LEGEND

- PAVING LIMITS
- 0.15' HMA CL.1/2 IN PG 58H-22 INLAY
- HMA CL. 1/2 IN. PG 58H-22
- CUT — CUT LINE
- FILL — FILL LINE
- GUARDRAIL
- ? — QUANTITY TAB NOTE
- ? PV? — QUANTITY TAB NOTE CONTINUED

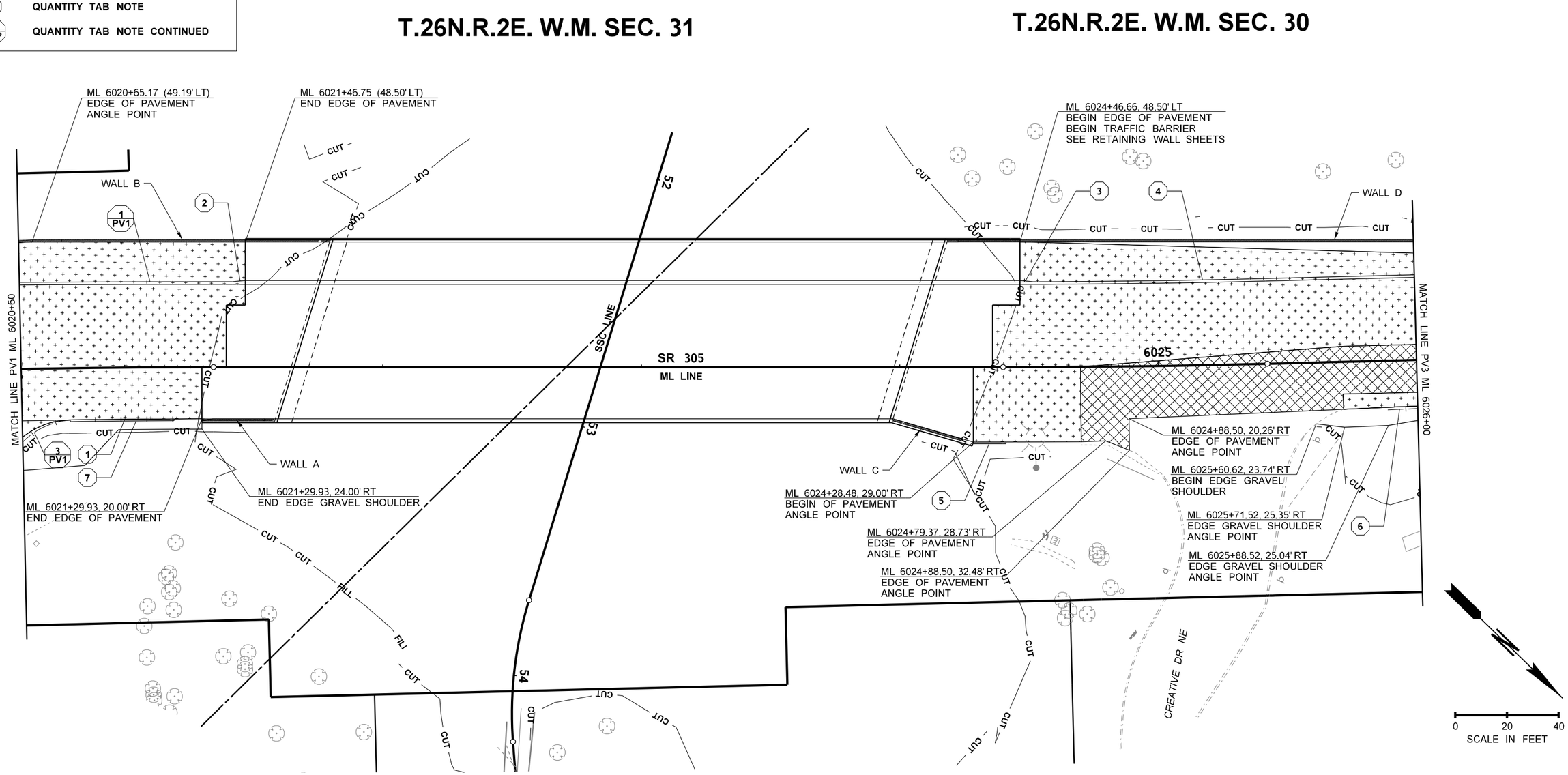

FILE NAME	c:\users\whltekev\documents\d0335742\XL6050_PS_PV_SAM_002.dgn				
TIME	11:55:15 AM				
DATE	3/27/2023				
PLOTTED BY	whitekev				
DESIGNED BY	C. JOHNSON				
ENTERED BY	E. EMMANUEL				
CHECKED BY	K. HOUSE				
PROJ. ENGR.	A. AMOS				
REGIONAL ADM.	S. ROARK	REVISION	DATE	BY	

REGION NO.	STATE	FED.AID PROJ.NO.
10	WASH	
JOB NUMBER 22C533		
CONTRACT NO.		LOCATION NO. XL6050

KEVIN L. HOUSE — STATE OF WASHINGTON — 40824 — REGISTERED PROFESSIONAL ENGINEER

SEE SHEET CT1 DATE

P.E. STAMP BOX

DATE

P.E. STAMP BOX

Washington State Department of Transportation

Parametrix

SR 305
SAM SNYDER CREEK
REMOVE FISH BARRIER

PAVING PLAN

PLAN REF NO PV2

SHEET 86 OF 186 SHEETS

T.26N.R.2E. W.M. SEC. 30

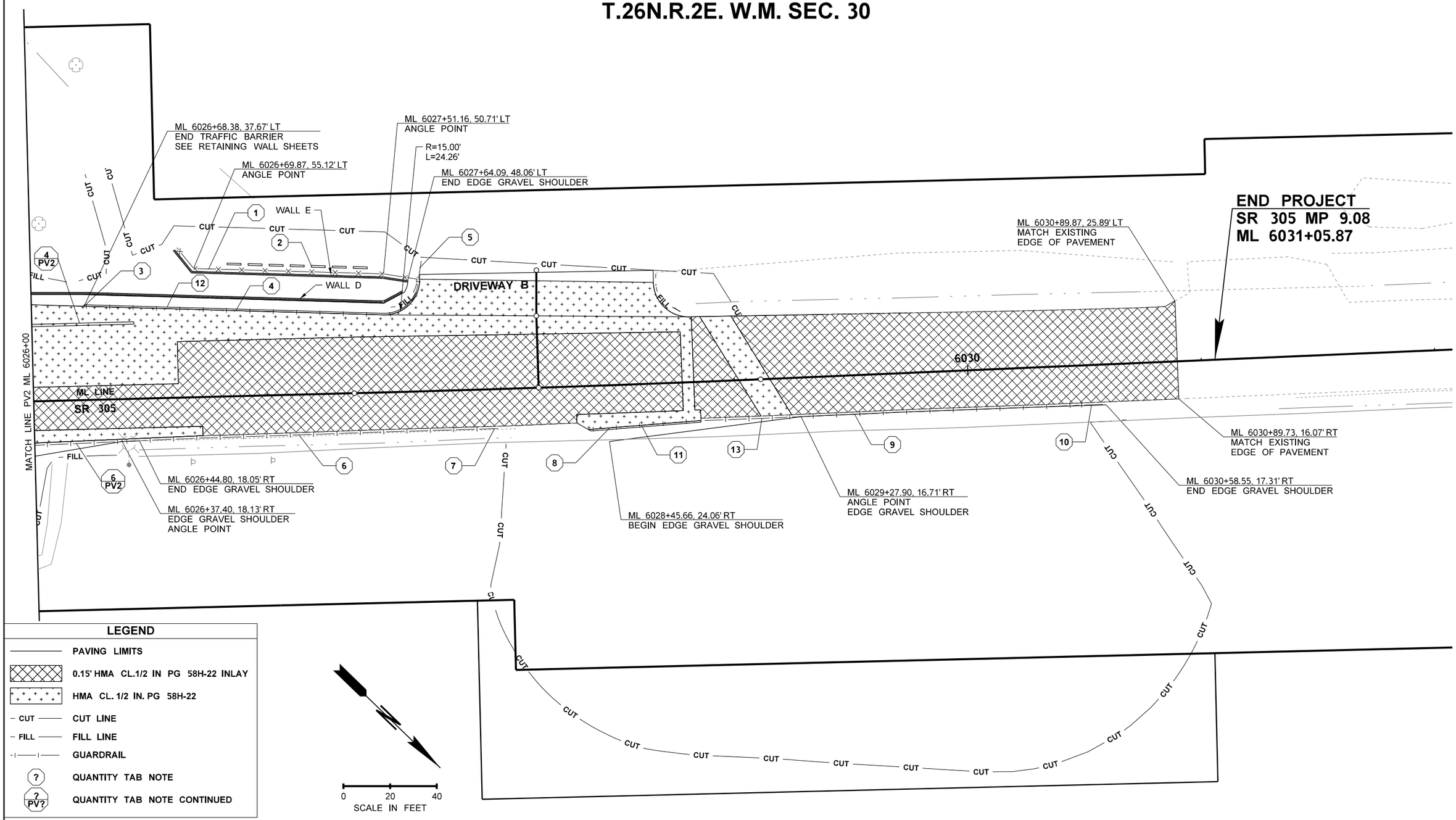

LEGEND

	PAVING LIMITS
	0.15' HMA CL.1/2 IN PG 58H-22 INLAY
	HMA CL. 1/2 IN. PG 58H-22
CUT	CUT LINE
FILL	FILL LINE
	GUARDRAIL
?	QUANTITY TAB NOTE
? PV?	QUANTITY TAB NOTE CONTINUED

FILE NAME	c:\users\whltekev\documents\d0335742\XL6050_PS_PV_SAM_003.dgn
TIME	11:55:16 AM
DATE	3/27/2023
PLOTTED BY	whitekev
DESIGNED BY	C. JOHNSON
ENTERED BY	E. EMMANUEL
CHECKED BY	K. HOUSE
PROJ. ENGR.	A. AMOS
REGIONAL ADM.	S. ROARK

REVISION | DATE | BY

REGION NO. 10 | STATE WASH | FED.AID PROJ.NO.

JOB NUMBER 22C533

CONTRACT NO. | LOCATION NO. XL6050

KEVIN L. HOUSER STATE OF WASHINGTON 41824 REGISTERED PROFESSIONAL ENGINEER

SEE SHEET CT1 DATE

P.E. STAMP BOX

DATE

P.E. STAMP BOX

Washington State Department of Transportation

Parametrix

SR 305
SAM SNYDER CREEK
REMOVE FISH BARRIER

PAVING PLAN

PLAN REF NO PV3

SHEET 87 OF 186 SHEETS

CURVE DATA							
P.I. STATION	DELTA	RADIUS	TANGENT	LENGTH	S	NORTHING	EASTING
DWA 40+62.50	41°14'14.33" RT	45.00'	16.93'	32.39'	0%	591369.03	1533041.86

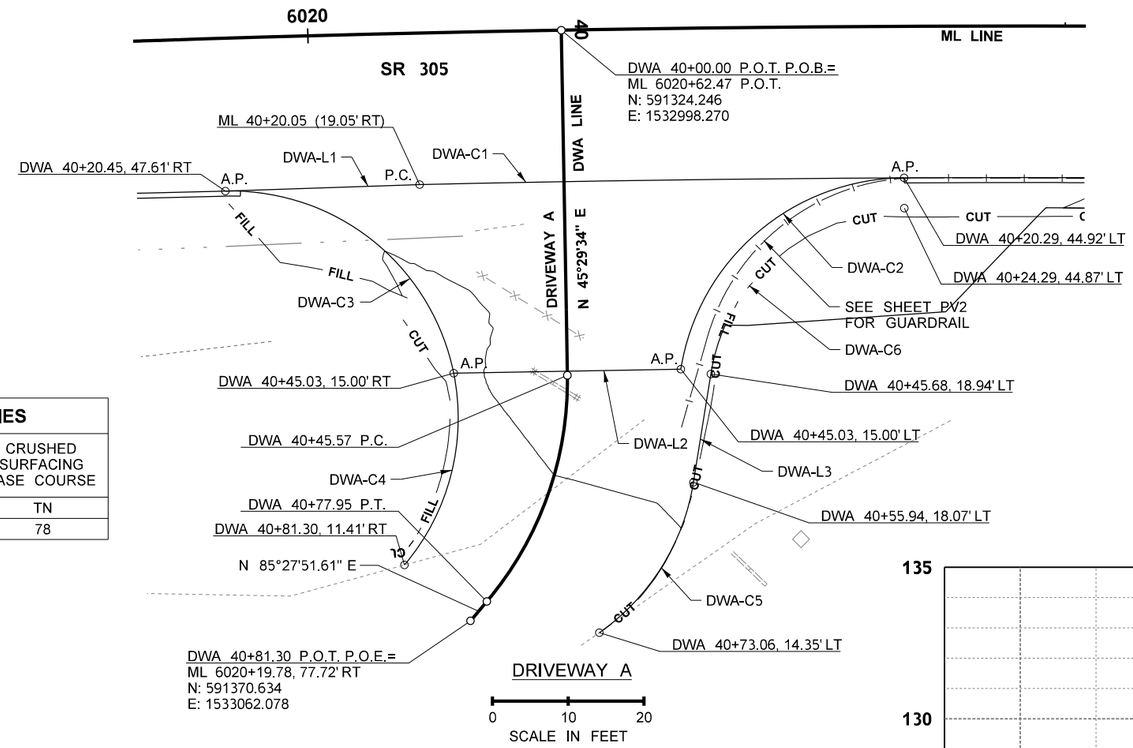

DRIVEWAY A

0 10 20
SCALE IN FEET

DRIVEWAY QUANTITIES		
DRIVEWAY	HMA CL. 1/2 IN. PG 58H-22	CRUSHED SURFACING BASE COURSE
	TN	TN
DRIVEWAY A	22	78

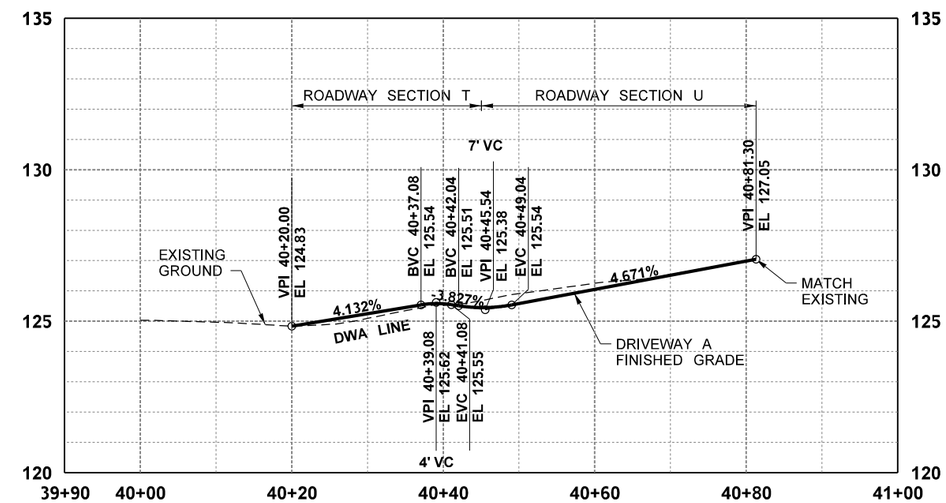

0 5
VERTICAL SCALE IN FEET

0 10 20
HORIZONTAL SCALE IN FEET

DRIVEWAY LINE/CURVE TABLE										
DRIVEWAY A										
LINE/CURVE NUMBER	BEARING	DISTANCE	RADIUS	DELTA	LENGTH	EDGE OF PAVEMENT ELEVATION (FT)				
						BEGIN	1/4	1/2	3/4	END
DWA-L1	N46°39'48"W	25.66'				125.18	125.15	125.09	125.02	124.96
DWA-C1			3480.00'	1°03'47" LT	63.97	124.96	124.85	124.71	125.45	124.26
DWA-C2			30.00'	80°39'05" LT	42.23'	124.26	124.64	125.02	125.41	125.42
DWA-L2	S45°46'23"W	30.00'				125.42	125.44	125.45	125.83	126.19
DWA-C3			30.00'	79°58'20" LT	41.87'	126.19	126.30	125.92	125.54	125.18
DWA-C4			30.00'	51°38'29" LT	27.04'	126.82	126.80	126.58	126.36	126.19
DWA-C5			30.00'	45°59'03" LT	24.08'	126.67	126.44	126.21	125.99	125.79
DWA-L3	S54°18'73"W	14.47'				125.79	125.67	125.54	125.41	125.34
DWA-C6			26.00'	80°39'05" RT	36.60'	125.34	125.33	124.95	124.56	124.20

FILE NAME	c:\users\whltekev\documents\d0335742\XL6050_PS_PVD_SAM_201.dgn
TIME	11:55:18 AM
DATE	3/27/2023
PLOTTED BY	whitekev
DESIGNED BY	C. JOHNSON
ENTERED BY	E. EMMANUEL
CHECKED BY	K. HOUSE
PROJ. ENGR.	A. AMOS
REGIONAL ADM.	S. ROARK

REVISION | DATE | BY

REGION NO.	STATE	FED.AID PROJ.NO.
10	WASH	
JOB NUMBER 22C533		
CONTRACT NO.		LOCATION NO. XL6050

KEVIN L. HOUSE STATE OF WASHINGTON 40824 REGISTERED PROFESSIONAL ENGINEER

SEE SHEET CT1
DATE
P.E. STAMP BOX

DATE
P.E. STAMP BOX

Washington State Department of Transportation

Parametrix

SR 305
SAM SNYDER CREEK
REMOVE FISH BARRIER

DRIVEWAY DETAILS

PLAN REF NO PVD1

SHEET 88 OF 186 SHEETS

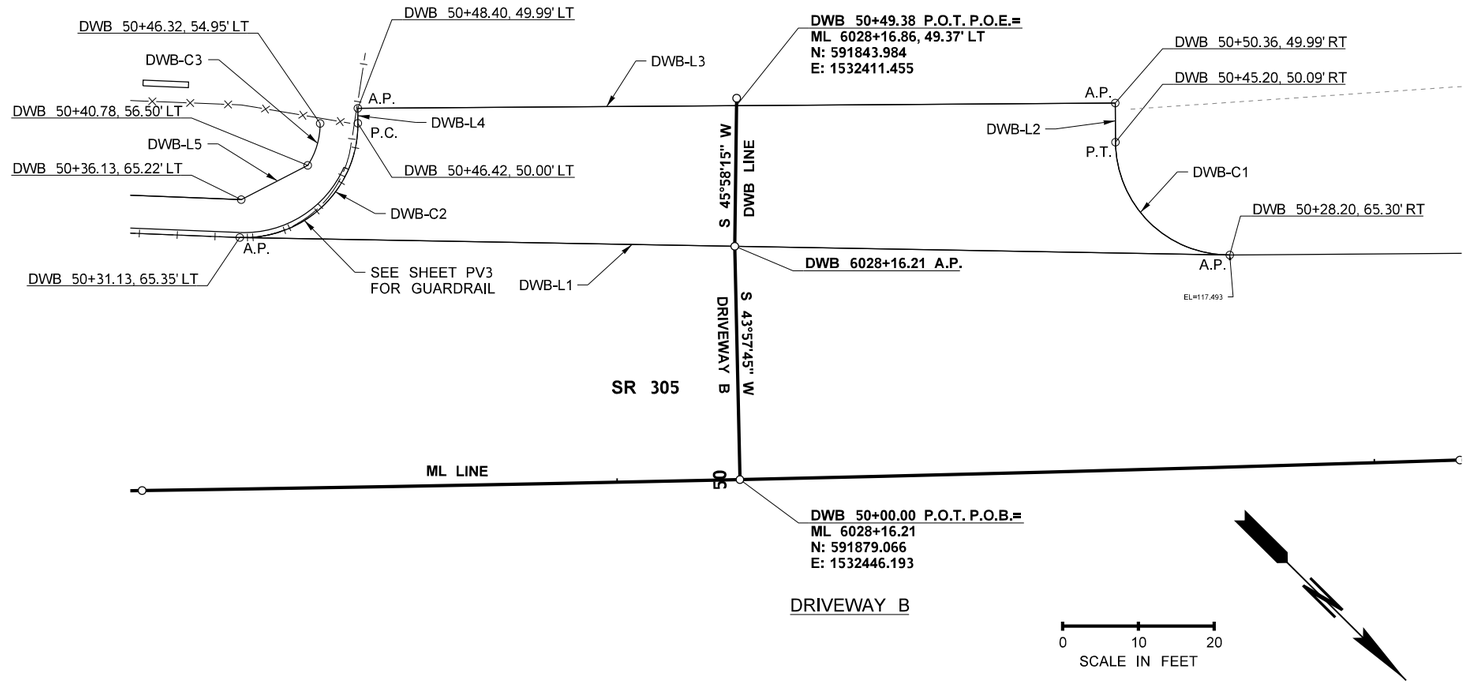

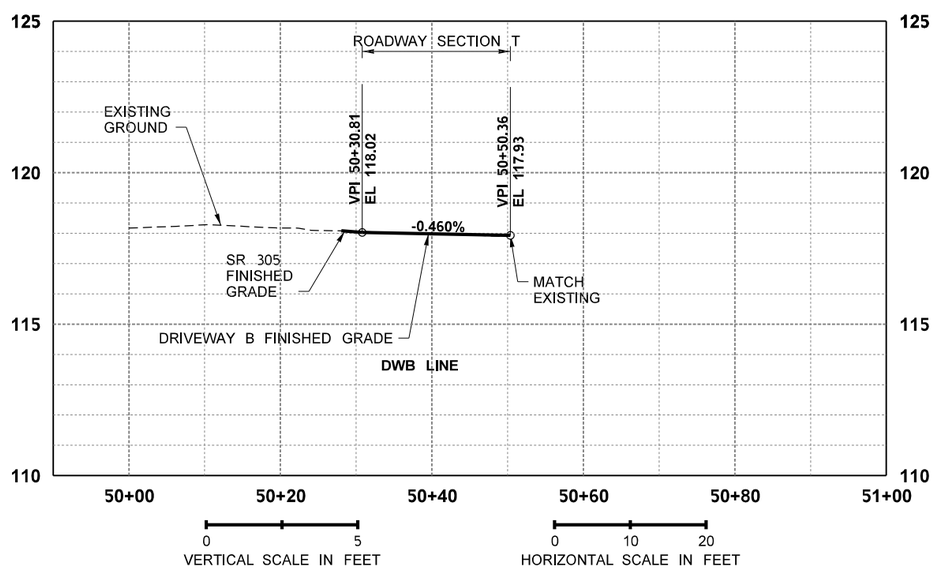

DRIVEWAY QUANTITIES		
DRIVEWAY	HMA CL. 1/2 IN. PG 58H-22	CRUSHED SURFACING BASE COURSE
	TN	TN
DRIVEWAY B	37	90

DRIVEWAY LINE/CURVE TABLE										
DRIVEWAY B										
LINE/CURVE NUMBER	BEARING	DISTANCE	RADIUS	DELTA	LENGTH	EDGE OF PAVEMENT ELEVATION (FT)				
						BEGIN	1/4	1/2	3/4	END
DWB-L1	N43°45'00"W	130.71'				118.57	118.28	117.99	118.74	117.49
DWB-C1			15.00'	89°53'13" RT	23.53'	117.49	117.45	117.42	117.38	117.34
DWB-L2	S44°50'51"W	5.16'				117.34	117.33	117.32	117.31	117.31
DWB-L3	S45°09'09"E	100.00'				117.31	117.62	117.92	118.11	118.30
DWB-L4	N44°50'51"E	1.98'				118.30	118.30	118.31	118.32	118.32
DWB-C2			15.00'	92°40'08" RT	24.26'	118.32	118.38	118.45	118.51	118.57
DWB-L5	N72°06'34"W	9.89				-	-	-	-	-
DWB-C3			10.00'	33°25'02" LT	5.83'	-	-	-	-	-

FILE NAME	c:\users\whltekev\documents\d0335742\XL6050_PS_PVD_SAM_202.dgn			
TIME	11:55:19 AM			
DATE	3/27/2023			
PLOTTED BY	whitekev			
DESIGNED BY	C. JOHNSON			
ENTERED BY	E. EMMANUEL			
CHECKED BY	K. HOUSE			
PROJ. ENGR.	A. AMOS			
REGIONAL ADM.	S. ROARK	REVISION	DATE	BY

REGION NO.	STATE	FED.AID PROJ.NO.
10	WASH	
JOB NUMBER 22C533		
CONTRACT NO.		LOCATION NO. XL6050

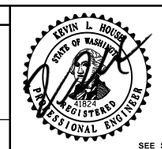

SEE SHEET CT1
DATE
P.E. STAMP BOX

DATE
P.E. STAMP BOX

Washington State
Department of Transportation
Parametrix

SR 305
SAM SNYDER CREEK
REMOVE FISH BARRIER

DRIVEWAY DETAILS

PLAN REF NO
PVD2

SHEET
89
OF
186
SHEETS

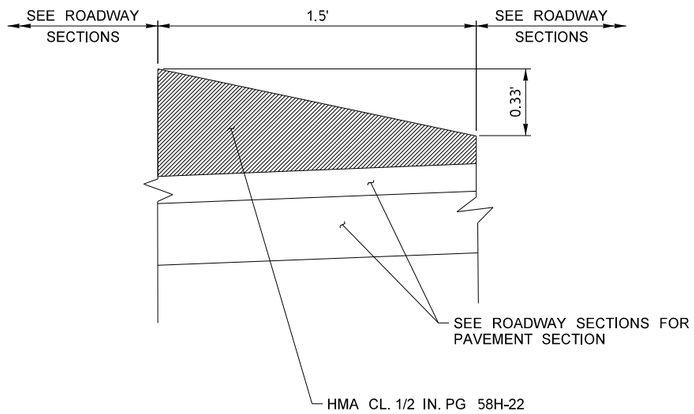

ASPHALT THICKENED EDGE DETAIL

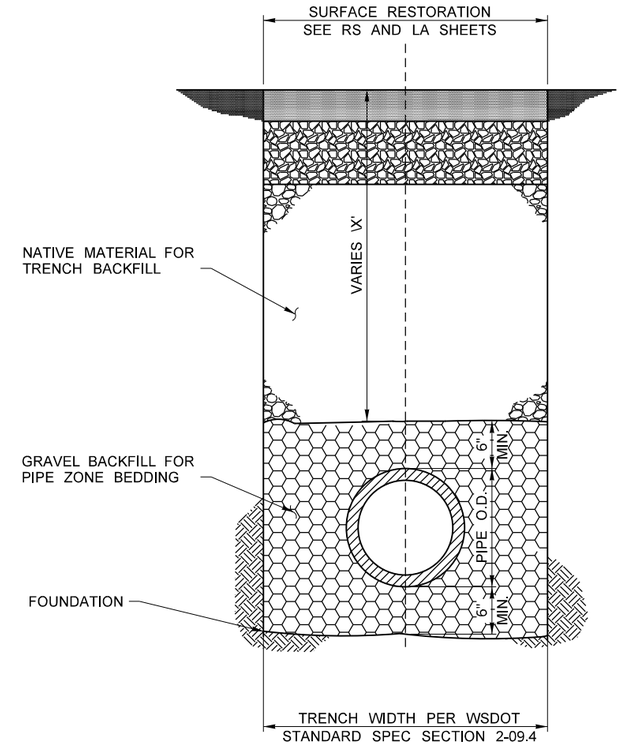

PIPE TRENCH DETAIL

NOTES:

1. ALL MATERIALS EXCEPT BEDDING MATERIAL SHALL BE COMPACTED IN 6-INCH MAXIMUM LIFTS.
2. COMPACTION: BEDDING SHALL BE COMPACTED TO AT LEAST 95% OF THE MAXIMUM DRY DENITY (MDD) AS DETERMINED BY ASTM TEST METHOD D1557. BACKFILL SHALL BE COMPACTED TO 85% IN UNPAVED AREA, AND 95% IN DRIVEWAY OR ROADWAY AREAS AS DETERMINED BY ASTM D1557.
3. ALL MATERIALS, WORKMANSHIP, AND INSTALLATION SHALL BE IN CONFORMANCE WITH THE LATEST VERSION OF WSDOT STANDARD SPECIFICATIONS FOR ROAD, BRIDGE AND MUNICIPAL CONSTRUCTION.
4. THE CONTRACTOR SHALL NOTIFY THE ENGINEER AT LEAST 24 HOURS BEFORE INSTALLATION OF STORM SEWER PIPE. ENGINEER WILL PROVIDE CONSTRUCTION OBSERVATION.
5. THE CONTRACTOR SHALL USE A STEEL PLATE TO COVER PIPE TRENCH OPENINGS TO ACCOMMODATE LOCAL TRAFFIC DURING NON-WORKING HOURS.
6. PIPE TRENCH DETAIL SHALL APPLY TO STORM SEWER, DRAIN, AND CULVERT PIPES.

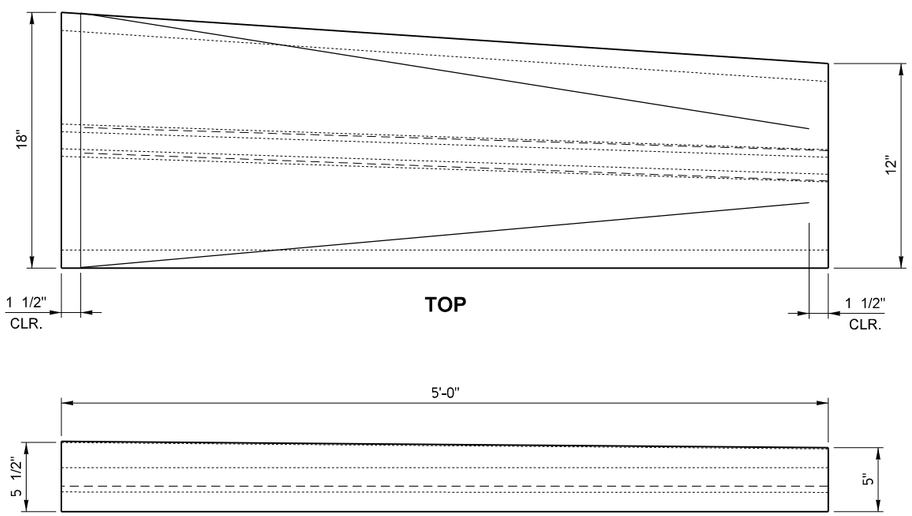

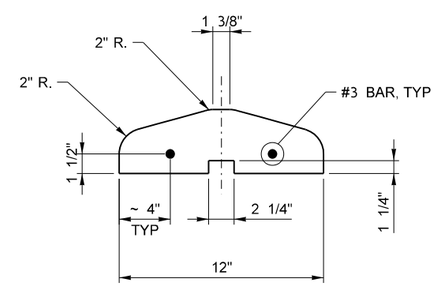

BACK

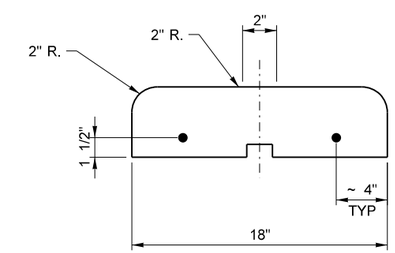

FRONT

18"x12" TAPER BLOCK
PRECAST DUAL FACED SLOPED MOUNTABLE CURB

FILE NAME	c:\users\whltekev\documents\d0335742\XL6050_PS_PVD_SAM_203.dgn						
TIME	11:55:20 AM				REGION NO. 10	STATE WASH	FED.AID PROJ.NO.
DATE	3/27/2023						
PLOTTED BY	whitekev				JOB NUMBER 22C533		
DESIGNED BY	C. JOHNSON						
ENTERED BY	E. EMMANUEL						
CHECKED BY	K. HOUSE				CONTRACT NO.		LOCATION NO. XL6050
PROJ. ENGR.	A. AMOS						
REGIONAL ADM.	S. ROARK	REVISION	DATE	BY			

KEVIN L. HOUSE — STATE OF WASHINGTON — 41824 — REGISTERED PROFESSIONAL ENGINEER

SEE SHEET CT1 DATE
P.E. STAMP BOX

DATE
P.E. STAMP BOX

Washington State Department of Transportation

Parametrix

SR 305
SAM SNYDER CREEK
REMOVE FISH BARRIER

DRIVEWAY DETAILS

PLAN REF NO PVD3

SHEET 90 OF 186 SHEETS

QUANTITY TABULATION - PAVEMENT MARKING

NOTE:
THE FIRST NUMBER OF THE "CODE" BELOW REFERS TO THE SHEET NO. OR THE SHEET REFERENCE NO. SHOWING THE CONSTRUCTION FEATURE

THE SECOND NUMBER REFERS TO THE CONSTRUCTION FEATURE FOUND ON THAT SHEET.

CODE	LOCATION ↓ / UNIT OF MEASURE →	PLASTIC LINE	PLASTIC STOP LINE	PLASTIC TRAFFIC ARROW	PLASTIC DRAINAGE MARKING	PLASTIC JUNCTION BOX MARKING		CENTERLINE RUMBLE STRIP	RAISED PAVEMENT MARKER TYPE 2	RECESSED PAVEMENT MARKER	PLASTIC CROSSHATCH MARKING	PLASTIC WIDE LINE				GENERAL NOTES
		L.F.	L.F.	EACH	EACH	EACH		MI.	HUND	HUND	L.F.	L.F.				
MK1-1	ML 6017+50.00 (24.38' LT) TO ML 6030+89.71, (17.23' LT)	1,340														1
MK1-2	ML 6019+83.57, (12.00' LT) TO ML 6024+83.13, (12.00' LT)	500														3
MK1-3	ML 6019+83.57 (12.00' LT) TO ML 60211+39.38 (12.00' LT)									0.01						8
MK1-4	ML 6020+00.83, (6.00' LT)			1												12
MK1-5	ML 6020+16.47, (6.00' LT)			1												12
MK1-6	ML 6017+50.00, (0.00) TO ML 6019+83.57, (0.00)	235						0.04		0.02						2, 6, 8
MK1-7	ML 6017+50.00, (12.83' RT) TO ML ML 6024+83.44, (24.00' RT)	735														1
MK1-8	ML 6019+83.57, (0.00) TO ML ML 6024+83.44, (0.00)	500														3
MK1-09	ML 6019+83.57 (0.0') TO ML 6021+39.38 (0.0)									0.01						8
MK1-10	ML 6019+10.13, (24.00' LT)					1										11
MK1-11	ML 6019+11.66, (24.00' LT)				1											9
MK1-12	ML 6019+18.50, (24.00' LT)				1											9
MK1-13	ML 6019+45.47, (24.00' LT)					1										11
MK1-14	ML 6020+45.32, (24.00' LT)					1										11
MK1-15	ML 6020+56.45, (24.00' LT)				1											9
MK1-16	ML 6020+09.85, (12.00' RT)				1											9
MK1-17	ML 6019+86.99, (12.00' RT)				1											9
MK1-18	ML 6020+10.09, (12.00' RT				1											9
MK1-19	ML 6020+48.22, (12.00' RT)				1											9
MK1-20	ML 6017+50.00, (12.35' LT) TO ML 6017+53.62, (12.46' LT)											4				4, 8
MK1-21	ML 6017+50.00, (6.17' LT)			1												12
	SHEET TOTAL	3310	0	3	7	3		0.04	0.00	0.04	0	4				
	PROJECT TOTAL	4,889	34	9	30	9		0.14	0.06	0.17	10	149				

GENERAL NOTES

1. SEE WSDOT STD PLAN M-20.10, WHITE PLASTIC EDGE LINE.
2. SEE WSDOT STD PLAN M-20.10, YELLOW PLASTIC DOUBLE CENTERLINE.
3. SEE WSDOT STD PLAN M-20.10, NO-PASS LINE & TWO-WAY LEFT-TURN CENTERLINE.
4. SEE WSDOT STD PLAN M-20.10, WHITE PLASTIC WIDE SOLID LANE LINE.
5. SEE WSDOT STD PLAN M-24.60, PLASTIC STOP LINE.
6. SEE WSDOT STD PLAN M-65.10, CENTERLINE RUMBLE STRIP.
7. SEE WSDOT STD PLAN M-20.30, RAISED PAVEMENT MARKERS.
8. SEE WSDOT STD PLAN M-20.30, RECESSED PAVEMENT MARKERS.
9. SEE WSDOT STD PLAN M-24.60, PLASTIC DRAINAGE STRUCTURE INLET MARKING. STATIONING IS APPROXIMATE, PLACE MARKING IN LINE WITH FEATRUEIT IS IDENTIFYING.
10. SEE WSDOT STD PLAN M-24.60, PLASTIC CROSS CULVERT MARKING. STATIONING IS APPROXIMATE, PLACE MARKING IN LINE WITH FEATRUEIT IS IDENTIFYING.
11. SEE WSDOT STD PLAN M-24.60, PLASTIC JUNCTION BOX MARKING. STATIONING IS APPROXIMATE, PLACE MARKING IN LINE WITH FEATRUE IT IS IDENTIFYING.
12. SEE WSDOT STD PLAN M-24.20, TRAFFIC ARROW TYPE 2SL.
13. SEE WSDOT STD PLAN M-24.20, TRAFFIC ARROW TYPE 2SR.
14. SEE WSDOT STD PLAN M-24.60, CROSSHATCH MARKING.

Designed	C. JOHNSON	1/23/2023			
Entered	E. EMMANUEL	1/23/2023			
Checked	K. HOUSE	1/23/2023			
Proj.Eng.	A. AMOS	1/23/2023			
Reg Admin	S. ROARK	1/23/2023			
		DATE	DATE		BY

REGION NO.	STATE	FED. AID PROJ. NO.
10	WASH	

JOB NUMBER 22C533

CONTRACT NO.

Parametrix
ENGINEERING . PLANNING . ENVIRONMENTAL SCIENCES

Washington State Department of Transportation

SR 305
SAM SNYDER CREEK
REMOVE FISH BARRIER

QUANTITY TABULATION - PAVEMENT MARKING

QTMK1

SHEET 91 OF 186 SHEETS

QUANTITY TABULATION - PAVEMENT MARKING

NOTE:
THE FIRST NUMBER OF THE "CODE" BELOW REFERS TO THE SHEET NO. OR THE SHEET REFERENCE NO. SHOWING THE CONSTRUCTION FEATURE

THE SECOND NUMBER REFERS TO THE CONSTRUCTION FEATURE FOUND ON THAT SHEET.

CODE	LOCATION ↓ / UNIT OF MEASURE →	PLASTIC LINE	PLASTIC STOP LINE	PLASTIC TRAFFIC ARROW	PLASTIC DRAINAGE MARKING	PLASTIC JUNCTION BOX MARKING		CENTERLINE RUMBLE STRIP	RAISED PAVEMENT MARKER TYPE 2	RECESSED PAVEMENT MARKER	PLASTIC CROSSHATCH MARKING	PLASTIC WIDE LINE				GENERAL NOTES
		L.F.	L.F.	EACH	EACH	EACH		MI.	HUND	HUND	L.F.	L.F.				
MK2-1	ML 6020+69.14, (24.00' LT)				1											9
MK2-2	ML 6024+09.80, (24.00' RT)				1											10
MK2-3	ML 6022+25.14, (5.93' LT)			1												12
MK2-4	ML 6022+41.14, (5.93' LT)			1												12
MK2-5	ML 6021+18.02, (24.00' LT)				1											9
MK2-6	ML 6021+18.01, (12.00' RT)				1											9
MK2-7	ML 6021+48.24, (24.00' LT)					1										11
MK2-8	ML 6022+98.27, (24.00' LT)				1											9
MK2-9	ML 6024+83.13, (12.00' LT) TO ML 6025+62.00, (12.00' LT)	79								0.01						2, 8
MK2-10	ML 6024+49.61, (24.00' LT)					1										11
MK2-11	ML 6025+62.00, (12.00' LT) TO ML 6026+62.08, (12.00' LT)									0.01		100				4, 8
MK2-12	ML 6024+39.92, (24.00' RT)				1											9
MK2-13	ML 6024+58.97, (24.00' LT)				1											9
MK2-14	ML 6024+43.56, (12.00' RT) TO ML 6024+88.50, (12.00' RT)									0.01		45				4, 8
MK2-15	ML 6024+47.57, (19.00' RT)			1												13
MK2-16	ML 6023+98.76, (12.00' RT)				1											10
MK2-17	ML 6024+87.50, (19.00' RT)			1												13
MK2-18	ML 6025+61.98, (0.00) TO ML 6030+89.71, (0.04' RT)	528						0.1		0.05						2, 6, 8
MK2-19	ML 6025+85.78, (12.00' RT) TO ML 6030+89.71, (11.94' RT)	504														1
MK2-20	ML 6025+25.31, (17.87' RT) TO ML 6025+58.39, (16.99' RT)		34													5
MK2-21	ML 6024+39.92, (24.00' RT)					1										11
MK2-22	ML 6021+39.38, (12.00' LT) TO ML 6024+35.95, (12.00' LT)								0.03							7
MK2-23	ML 6024+35.95, (12.00') TO ML 6024+83.13, (12.00' LT)	45								0.01						8
MK2-24	ML 6021+39.38, (0.00') TO ML 6024+35.95, (0.00')								0.03							7
MK2-25	ML 6024+35.95, (0.00') TO ML 6024+83.13, (0.00')	45								0.01						8
MK2-26	ML 6025+37.04, (24.00' LT)					1										11
MK2-27	ML 6025+99.64, (24.00' LT)				1											9
MK2-28	ML 6024+56.67, (24.00' LT)				1											10
MK2-29	ML 6024+40.92, (12.00' RT)				1											10
	SHEET TOTAL	1201	34	4	11	4		0.10	0.06	0.1	0	145				
	PROJECT TOTAL	4,889	34	9	30	9		0.14	0.06	0.17	10	149				

GENERAL NOTES

1. SEE WSDOT STD PLAN M-20.10, WHITE PLASTIC EDGE LINE.
2. SEE WSDOT STD PLAN M-20.10, YELLOW PLASTIC DOUBLE CENTERLINE.
3. SEE WSDOT STD PLAN M-20.10, NO-PASS LINE & TWO-WAY LEFT-TURN CENTERLINE.
4. SEE WSDOT STD PLAN M-20.10, WHITE PLASTIC WIDE SOLID LANE LINE.
5. SEE WSDOT STD PLAN M-24.60, PLASTIC STOP LINE.
6. SEE WSDOT STD PLAN M-65.10, CENTERLINE RUMBLE STRIP.
7. SEE WSDOT STD PLAN M-20.30, RAISED PAVEMENT MARKERS.
8. SEE WSDOT STD PLAN M-20.30, RECESSED PAVEMENT MARKERS.
9. SEE WSDOT STD PLAN M-24.60, PLASTIC DRAINAGE STRUCTURE INLET MARKING. STATIONING IS APPROXIMATE, PLACE MARKING IN LINE WITH FEATRUEIT IS IDENTIFYING.
10. SEE WSDOT STD PLAN M-24.60, PLASTIC CROSS CULVERT MARKING. STATIONING IS APPROXIMATE, PLACE MARKING IN LINE WITH FEATRUEIT IS IDENTIFYING.
11. SEE WSDOT STD PLAN M-24.60, PLASTIC JUNCTION BOX MARKING. STATIONING IS APPROXIMATE, PLACE MARKING IN LINE WITH FEATRUE IT IS IDENTIFYING.
12. SEE WSDOT STD PLAN M-24.20, TRAFFIC ARROW TYPE 2SL.
13. SEE WSDOT STD PLAN M-24.20, TRAFFIC ARROW TYPE 2SR.
14. SEE WSDOT STD PLAN M-24.60, CROSSHATCH MARKING.

Designed	C. JOHNSON	01/23/23			
Entered	E. EMMANUEL	01/23/23			
Checked	K. HOUSE	01/23/23			
Proj.Eng.	A. AMOS	01/23/23			
Reg Admin	S. ROARK	01/23/23			
		DATE	DATE	REVISION	BY

REGION NO.	STATE	FED. AID PROJ. NO.
10	WASH	

JOB NUMBER 22C533

CONTRACT NO.

Parametrix
ENGINEERING . PLANNING . ENVIRONMENTAL SCIENCES

Washington State Department of Transportation

SR 305
SAM SNYDER CREEK
REMOVE FISH BARRIER

QUANTITY TABULATION - PAVEMENT MARKING

QTMK2

SHEET 92 OF 186 SHEETS

QUANTITY TABULATION - PAVEMENT MARKING

NOTE:
THE FIRST NUMBER OF THE "CODE" BELOW REFERS TO THE SHEET NO. OR THE SHEET REFERENCE NO. SHOWING THE CONSTRUCTION FEATURE

THE SECOND NUMBER REFERS TO THE CONSTRUCTION FEATURE FOUND ON THAT SHEET.

CODE	LOCATION ↓ / UNIT OF MEASURE →	PLASTIC LINE	PLASTIC STOP LINE	PLASTIC TRAFFIC ARROW	PLASTIC DRAINAGE MARKING	PLASTIC JUNCTION BOX MARKING		CENTERLINE RUMBLE STRIP	RAISED PAVEMENT MARKER TYPE 2	RECESSED PAVEMENT MARKER	PLASTIC CROSSHATCH MARKING	PLASTIC WIDE LINE				GENERAL NOTES
		L.F.	L.F.	EACH	EACH	EACH		MI.	HUND	HUND	L.F.	L.F.				
MK3-1	ML 6026+13.32, (6.00' LT)			1												12
MK3-2	ML 6026+58.08, (6.00' LT)			1												12
MK3-3	ML 6026+34.65, (24.00' LT)					1										9
MK3-4	SEE CROSSHATCH DETAIL, SHEET MK3	76														1
MK3-5	ML 6026+41.72, (24.00' LT)				1											11
MK3-6	ML 6027+87.36, (10.79' LT) TO ML 6030+89.71, (5.57' LT)	302								0.03						2, 8
MK3-7	ML 6029+01.00 (21.66' LT)				1											10
MK3-8	ML 6027+45.77, (23.92' LT)				1											11
MK3-9	ML 6029+19.80, (11.91' RT)				1											10
MK3-10	ML 6028+80.05, (21.71' LT)				1											11
MK3-11	ML 6028+82.57, (21.65' LT)				1											11
MK3-12	ML 6028+90.00, (21.47' LT)				1											11
MK3-13	ML 6026+36.00, (12.00' RT)					1										9
MK3-14	ML 6028+41.98, (12.00' RT)				1											11
MK3-15	ML 6028+72.65, (12.00' RT)				1											11
MK3-16	ML 6028+80.20, (12.00' RT)				1											11
MK3-17	SEE CROSSHATCH DETAIL, SHEET MK3										10					14
MK3-18	ML 6028+91.70, (21.87' LT)				1											10
MK3-19	ML 6029+10.65, 11.93' RT)				1											10
	SHEET TOTAL	378	0	2	12	2		0.00	0.00	0.03	10	0				
	PROJECT TOTAL	4,889	34	9	30	9		0.14	0.06	0.17	10	149				

GENERAL NOTES

1. SEE WSDOT STD PLAN M-20.10, WHITE PLASTIC EDGE LINE.
2. SEE WSDOT STD PLAN M-20.10, YELLOW PLASTIC DOUBLE CENTERLINE.
3. SEE WSDOT STD PLAN M-20.10, NO-PASS LINE & TWO-WAY LEFT-TURN CENTERLINE.
4. SEE WSDOT STD PLAN M-20.10, WHITE PLASTIC WIDE SOLID LANE LINE.
5. SEE WSDOT STD PLAN M-24.60, PLASTIC STOP LINE.
6. SEE WSDOT STD PLAN M-65.10, CENTERLINE RUMBLE STRIP.
7. SEE WSDOT STD PLAN M-20.30, RAISED PAVEMENT MARKERS.
8. SEE WSDOT STD PLAN M-20.30, RECESSED PAVEMENT MARKERS.
9. SEE WSDOT STD PLAN M-24.60, PLASTIC DRAINAGE STRUCTURE INLET MARKING. STATIONING IS APPROXIMATE, PLACE MARKING IN LINE WITH FEATRUEIT IS IDENTIFYING.
10. SEE WSDOT STD PLAN M-24.60, PLASTIC CROSS CULVERT MARKING. STATIONING IS APPROXIMATE, PLACE MARKING IN LINE WITH FEATRUEIT IS IDENTIFYING.
11. SEE WSDOT STD PLAN M-24.60, PLASTIC JUNCTION BOX MARKING. STATIONING IS APPROXIMATE, PLACE MARKING IN LINE WITH FEATRUE IT IS IDENTIFYING.
12. SEE WSDOT STD PLAN M-24.20, TRAFFIC ARROW TYPE 2SL.
13. SEE WSDOT STD PLAN M-24.20, TRAFFIC ARROW TYPE 2SR.
14. SEE WSDOT STD PLAN M-24.60, CROSSHATCH MARKING.

Designed	C. JOHNSON	01/23/23			
Entered	E. EMMANUEL	01/23/23			
Checked	K. HOUSE	01/23/23			
Proj.Eng.	A. AMOS	01/23/23			
Reg Admin	S. ROARK	01/23/23			
		DATE	DATE	REVISION	BY

REGION NO.	STATE	FED. AID PROJ. NO.
10	WASH	

JOB NUMBER 22C533

CONTRACT NO.

Parametrix
ENGINEERING . PLANNING . ENVIRONMENTAL SCIENCES

Washington State Department of Transportation

SR 305
SAM SNYDER CREEK
REMOVE FISH BARRIER

QUANTITY TABULATION - PAVEMENT MARKING

QTMK2

SHEET 93 OF 186 SHEETS

T.26N.R.2E. W.M. SEC. 31

LEGEND

- SOLID EDGE LINE
- TWO-WAY LEFT-TURN LINE
- DOUBLE YELLOW CENTERLINE
- WIDE SOLID LANE LINE
- TYPE 2L (SL) TRAFFIC ARROW
- TYPE 2R (SR) TRAFFIC ARROW
- DRAINAGE MARKING
- JUNCTION BOX MARKING
- QUANTITY TAB NOTE
- QUANTITY TAB NOTE CONTINUED

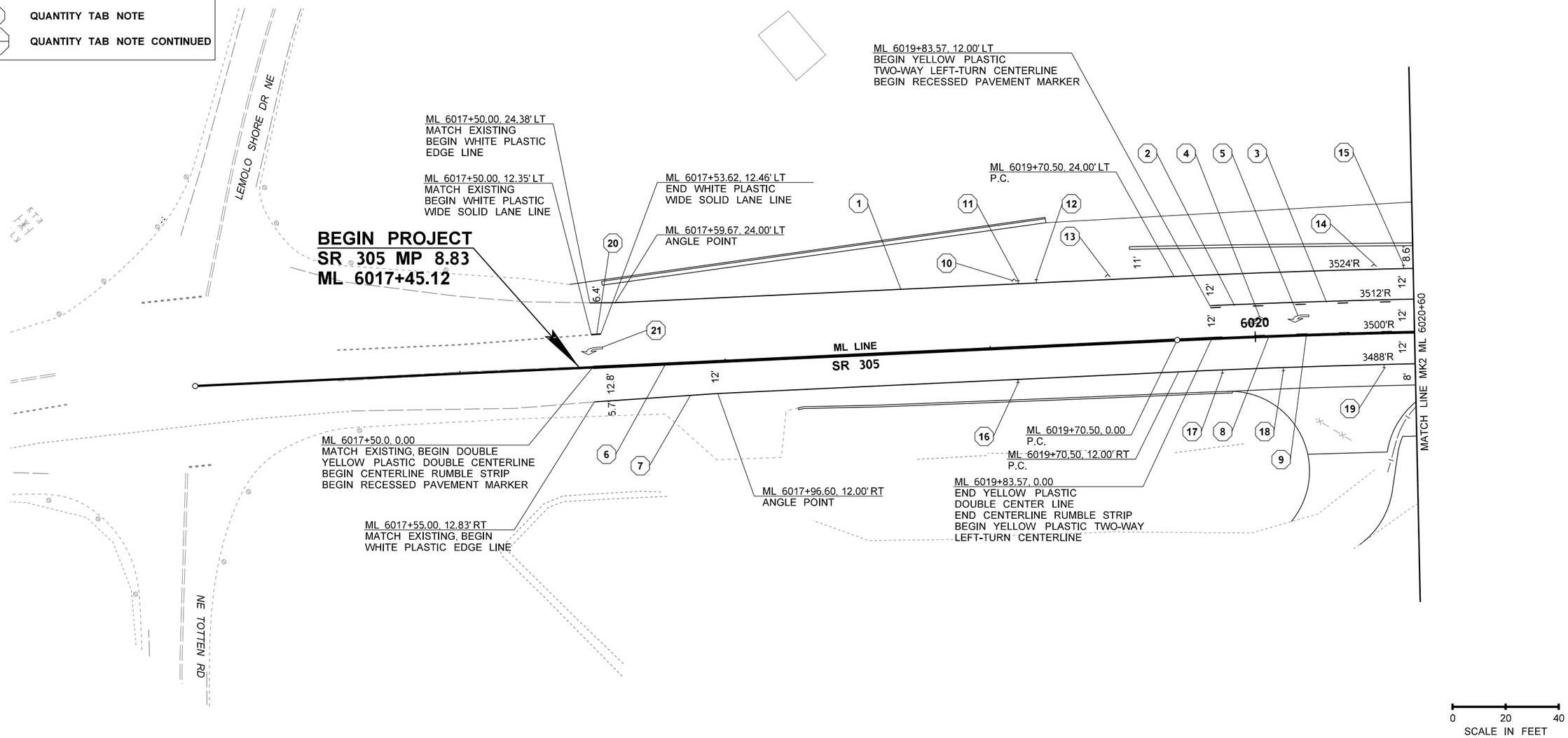

FILE NAME	c:\users\whltekev\documents\d0335744\XL6050_PS_MK_SAM_001.dgn						
TIME	11:55:22 AM				REGION NO. 10	STATE WASH	FED.AID PROJ.NO.
DATE	3/27/2023						
PLOTTED BY	whitekev				JOB NUMBER 22C533		
DESIGNED BY	C. JOHNSON						
ENTERED BY	E. EMMANUEL				CONTRACT NO.		LOCATION NO. XL6050
CHECKED BY	K. HOUSE						
PROJ. ENGR.	A. AMOS						
REGIONAL ADM.	S. ROARK	REVISION	DATE	BY			

KEVIN L. HOUSE — STATE OF WASHINGTON — 49324 — REGISTERED PROFESSIONAL ENGINEER

SEE SHEET CT1
DATE
P.E. STAMP BOX

DATE
P.E. STAMP BOX

Washington State Department of Transportation

Parametrix

SR 305
SAM SNYDER CREEK
REMOVE FISH BARRIER

PAVEMENT MARKING PLAN

PLAN REF NO **MK1**

SHEET **94** OF **186** SHEETS

T.26N.R.2E. W.M. SEC. 30

LEGEND

- SOLID EDGE LINE
- TWO-WAY LEFT-TURN LINE
- DOUBLE YELLOW CENTERLINE
- WIDE SOLID LANE LINE
- TYPE 2L (SL) TRAFFIC ARROW
- TYPE 2R (SR) TRAFFIC ARROW
- DRAINAGE MARKING
- JUNCTION BOX MARKING
- QUANTITY TAB NOTE
- QUANTITY TAB NOTE CONTINUED

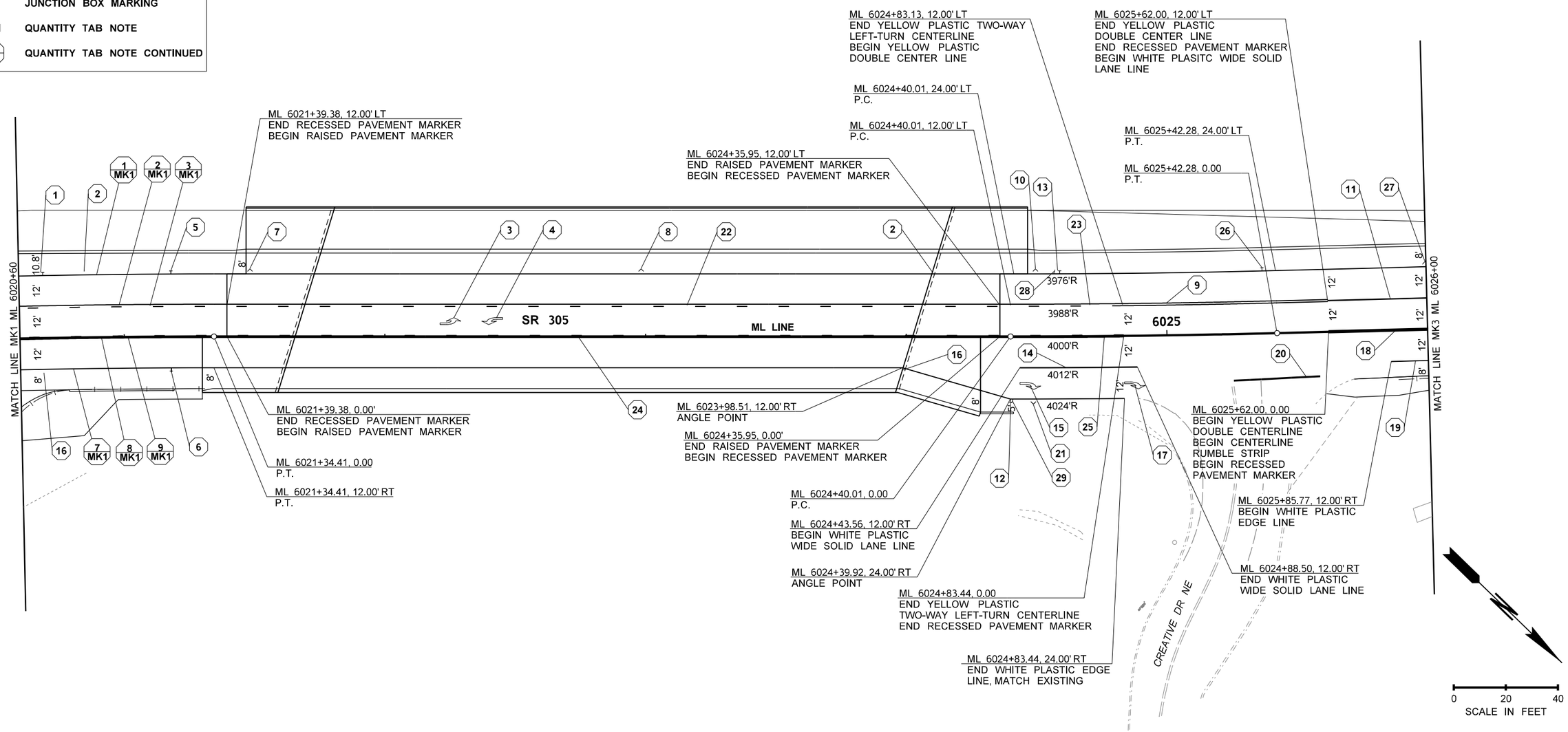

FILE NAME	c:\users\whltekev\documents\d0335744\XL6050_PS_MK_SAM_002.dgn						
TIME	11:55:23 AM						
DATE	3/27/2023						
PLOTTED BY	whitekev						
DESIGNED BY	C. JOHNSON						
ENTERED BY	E. EMMANUEL						
CHECKED BY	K. HOUSE						
PROJ. ENGR.	A. AMOS						
REGIONAL ADM.	S. ROARK	REVISION	DATE	BY			

REGION NO.	STATE	FED.AID PROJ.NO.
10	WASH	
JOB NUMBER 22C533		
CONTRACT NO.		LOCATION NO. XL6050

KEVIN L. HOUSE, STATE OF WASHINGTON, 41824, REGISTERED PROFESSIONAL ENGINEER

SEE SHEET CT1
DATE
P.E. STAMP BOX

DATE
P.E. STAMP BOX

Washington State Department of Transportation

Parametrix

SR 305
SAM SNYDER CREEK
REMOVE FISH BARRIER

PAVEMENT MARKING PLAN

PLAN REF NO MK2

SHEET 95 OF 186 SHEETS

T.26N.R.2E. W.M. SEC. 30

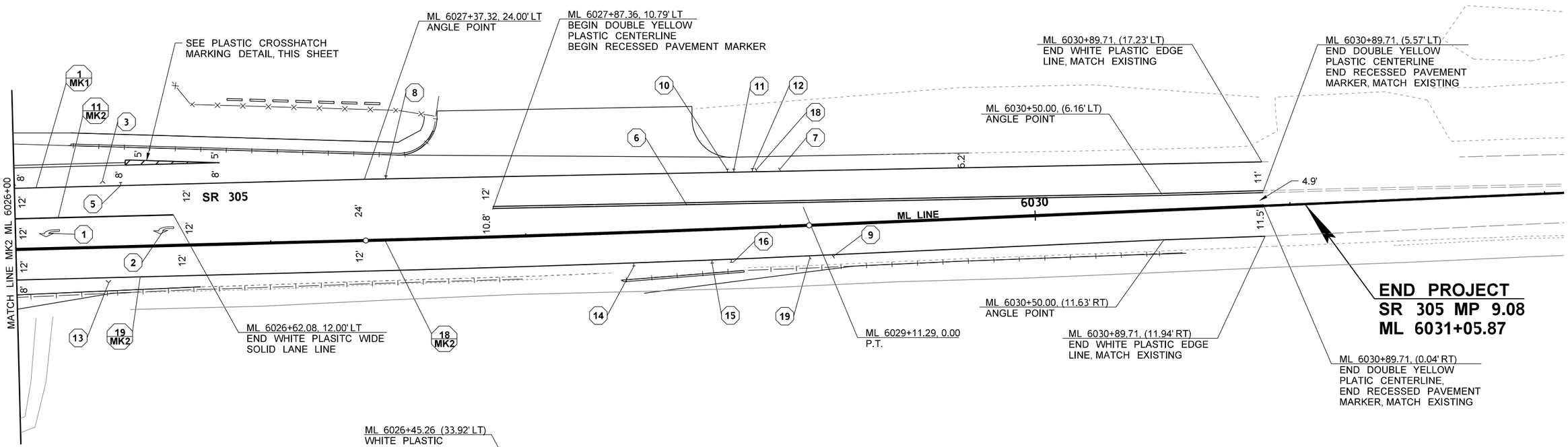

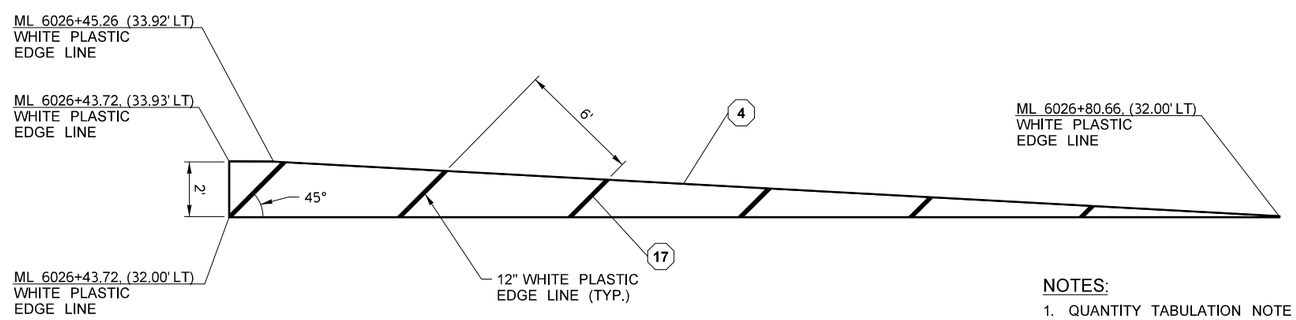

LEGEND

- SOLID EDGE LINE
- TWO-WAY LEFT-TURN LINE
- DOUBLE YELLOW CENTERLINE
- WIDE SOLID LANE LINE
- TYPE 2L (SL) TRAFFIC ARROW
- TYPE 2R (SR) TRAFFIC ARROW
- DRAINAGE MARKING
- JUNCTION BOX MARKING
- QUANTITY TAB NOTE
- QUANTITY TAB NOTE CONTINUED

PLASTIC CROSSHATCH MARKING DETAIL

(NOT TO SCALE)

NOTES:

1. QUANTITY TABULATION NOTE "4" INCLUDES COST FOR ALL EXTERIOR CROSSHATCH BOUNDARY LINES.
2. QUANTITY TABULATION NOTE "5" INCLUDES COST FOR ALL INTERIOR CROSSHATCH LINES.

0 20 40
SCALE IN FEET

FILE NAME	c:\users\whltekev\documents\d0335744\XL6050_PS_MK_SAM_003.dgn
TIME	11:55:24 AM
DATE	3/27/2023
PLOTTED BY	whitekev
DESIGNED BY	C. JOHNSON
ENTERED BY	E. EMMANUEL
CHECKED BY	K. HOUSE
PROJ. ENGR.	A. AMOS
REGIONAL ADM.	S. ROARK

REVISION | DATE | BY

REGION NO.	STATE	FED.AID PROJ.NO.
10	WASH	
JOB NUMBER 22C533		
CONTRACT NO.		LOCATION NO. XL6050

KEVIN L. HOUSE, STATE OF WASHINGTON, 41824, REGISTERED PROFESSIONAL ENGINEER

SEE SHEET CT1
DATE
P.E. STAMP BOX

DATE
P.E. STAMP BOX

Washington State Department of Transportation

Parametrix

SR 305
SAM SNYDER CREEK
REMOVE FISH BARRIER

PAVEMENT MARKING PLAN

PLAN REF NO MK3

SHEET 96 OF 186 SHEETS

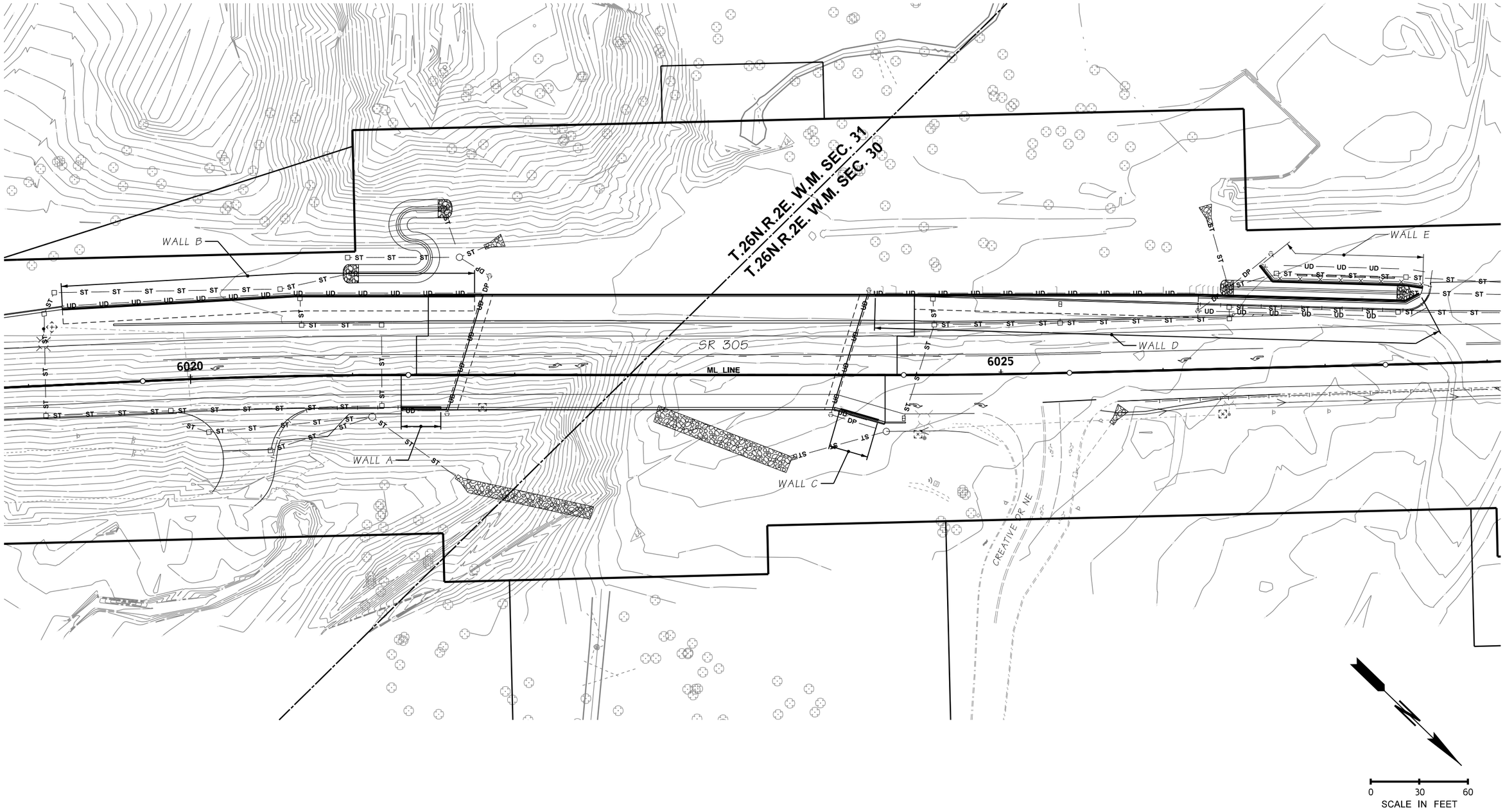

Bridge Design Engr.		c:\users\projectwiseworkingfolder\d0335745\XL6050_PS_WR_SAM_001.dgn							
Supervisor					REGION NO.	STATE	FED. AID. PROJ. NO.	SHEET NO.	TOTAL SHEETS
Designed By	M. JARRAH				10	WASH.			
Checked By	J. MERTH				JOB NUMBER				
Detailed By	C.D. CLARK				22C533				
Bridge Projects Engr.	A. AMOS								
Prelim. Plan By									
Architect/Specialist		DATE	REVISION	BY	APP'D				

JOSEPH R. MERTH
STATE OF WASHINGTON
33224
REGISTERED PROFESSIONAL ENGINEER

SEE SHEET CT1
DATE

BRIDGE AND STRUCTURES OFFICE

Washington State Department of Transportation

SR305
SAM SNYDER CREEK
REMOVE FISH BARRIER

WALL LOCATION PLAN

BRIDGE SHEET NO. WR1

SHEET 97 OF 186 SHEETS

4/4/2023 7:25:20 PM

pw:\\HQOLYMAPPPW03P.WSDOT.LOC:WSDOT\Documents_HQ\Fish Passage\ORproj\305\8.92_SamSnyderCreek\Design_CAD_Base\Sheets\...\XL6050_PS_WR_SAM_001.dgn

SR 305 FILE NO. SHEET WR1

T.26N.R.2E. W.M. SEC. 31

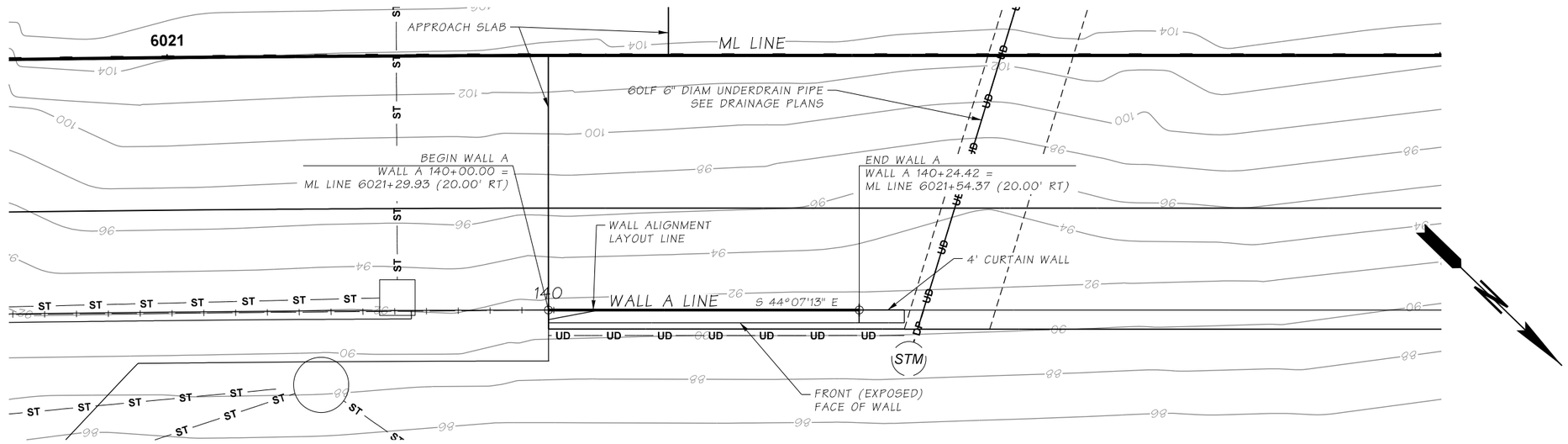

WALL A PLAN

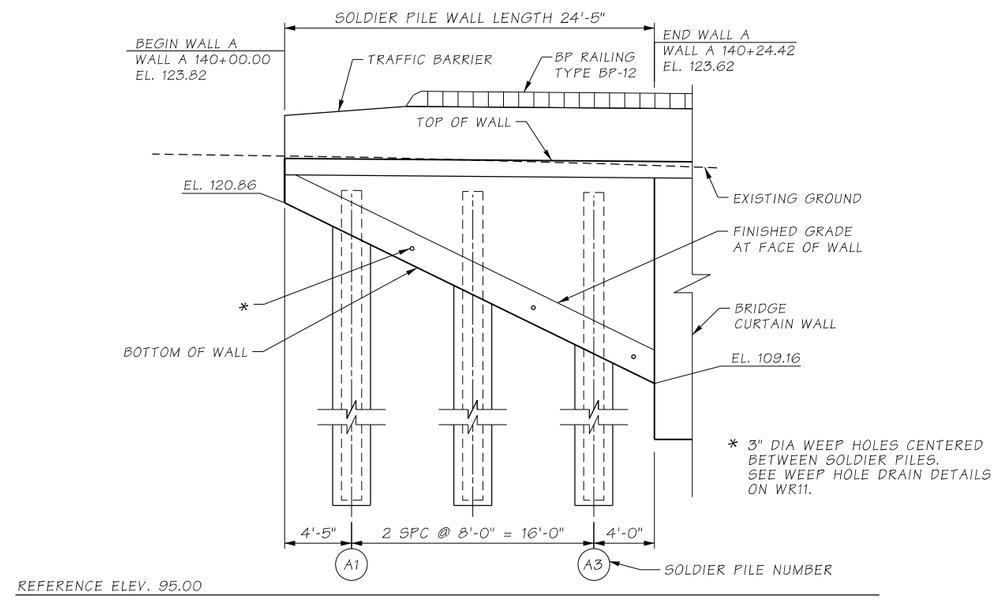

WALL A ELEVATION

Bridge Design Engr.		c:\users\projectwiseworkingfolder\d0335745\XL6050_PS_WR_SAM_002.dgn							
Supervisor					REGION NO.	STATE	FED. AID. PROJ. NO.	SHEET NO.	TOTAL SHEETS
Designed By	M. JARRAH				10	WASH.			
Checked By	J. MERTH				JOB NUMBER				
Detailed By	C.D. CLARK				22C533				
Bridge Projects Engr.	A. AMOS								
Prelim. Plan By									
Architect/Specialist		DATE	REVISION	BY	APP'D				

JOSEPH R. MERTH
STATE OF WASHINGTON
33224
REGISTERED PROFESSIONAL ENGINEER

SEE SHEET CT1
DATE

BRIDGE AND STRUCTURES OFFICE

Washington State Department of Transportation

SR305
SAM SNYDER CREEK
REMOVE FISH BARRIER

WALL A LAYOUT

BRIDGE SHEET NO. WR2

SHEET 98 OF 186 SHEETS

pw:\\HQOLYMAPPPW03P.WSDOT.LOC:WSDOT\Documents_HQ\Fish Passage\ORproj\305\8.92_SamSnyderCreek\Design_CAD_Base\Sheets\Structural\XL6050_PS_WR_SAM_002.dgn
SR 305 FILE NO. SHEET WR2

4/4/2023 7:25:23 PM

T.26N.R.2E. W.M. SEC. 31

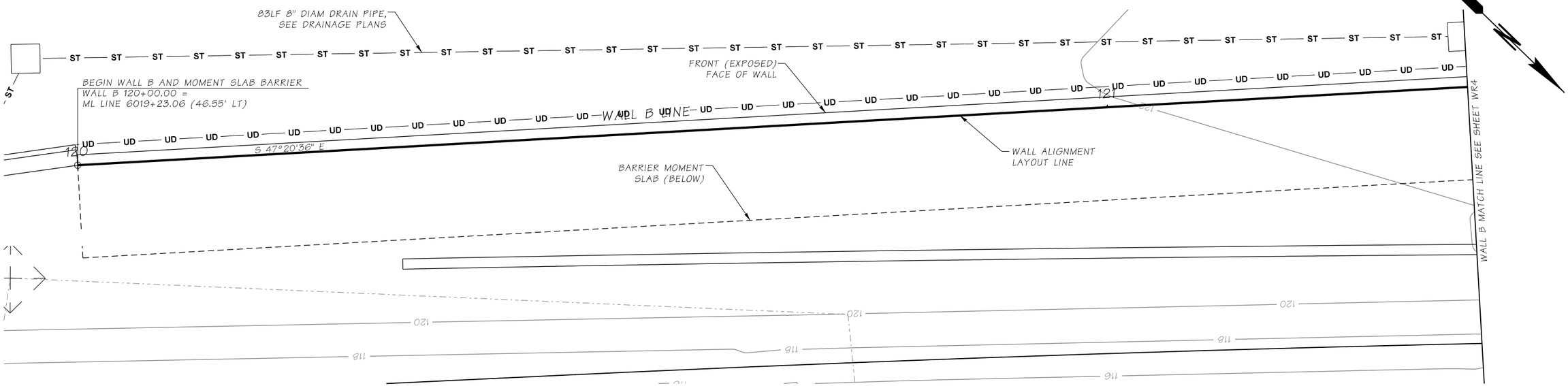

WALL B PLAN

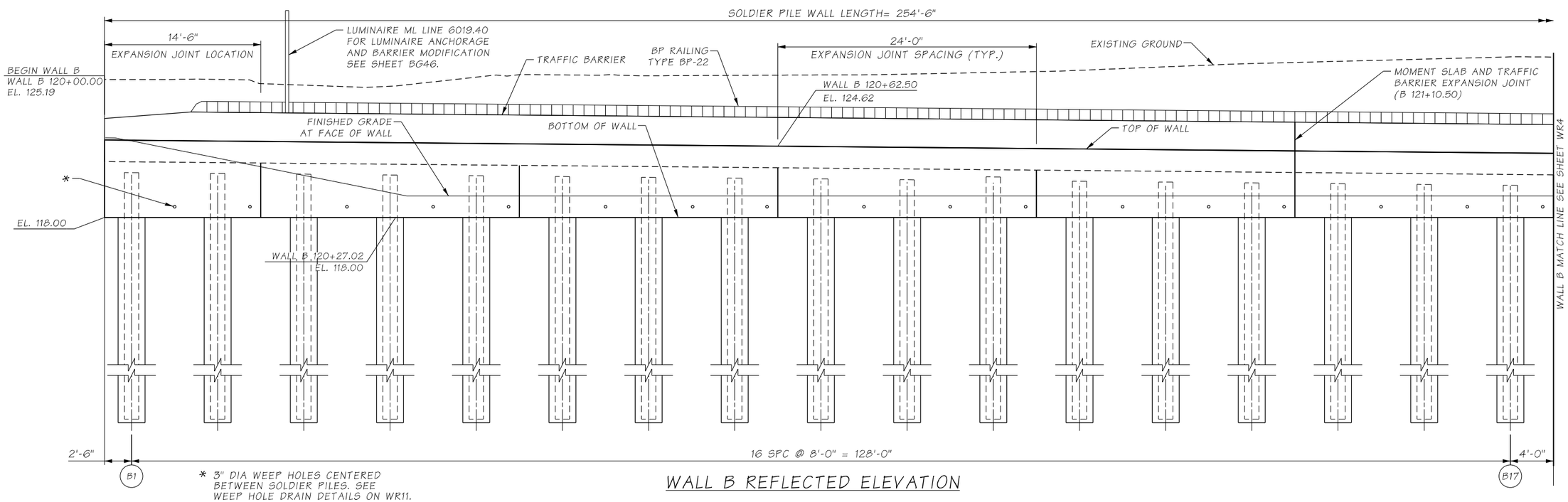

WALL B REFLECTED ELEVATION

REFERENCE ELEV. 90.00

Bridge Design Engr.		c:\users\projectwiseworkingfolder\d0335745\XL6050_PS_WR_SAM_003.dgn							
Supervisor					REGION NO.	STATE	FED. AID. PROJ. NO.	SHEET NO.	TOTAL SHEETS
Designed By	M. JARRAH				10	WASH.			
Checked By	J. MERTH				JOB NUMBER				
Detailed By	C.D. CLARK				22C533				
Bridge Projects Engr.	A. AMOS								
Prelim. Plan By									
Architect/Specialist		DATE	REVISION	BY	APP'D				

JOSEPH R. MERTH STATE OF WASHINGTON 33224 REGISTERED PROFESSIONAL ENGINEER

SEE SHEET CT1
DATE

BRIDGE AND STRUCTURES OFFICE

Washington State Department of Transportation

SR305
SAM SNYDER CREEK
REMOVE FISH BARRIER

WALL B - LAYOUT 1

BRIDGE SHEET NO. WR3

SHEET 99 OF 186 SHEETS

pw:\\HQOLYMAPPW03P.WSDOT.LOC:WSDOT\Documents_HQ\Fish Passage\ORproj\3058.92_SamSnyderCreek\Design_CAD_Baselines\XL6050_PS_WR_SAM_003.dgn

SR 305 FILE NO. SHEET WR3

4/4/2023 7:25:24 PM

T.26N.R.2E. W.M. SEC. 31

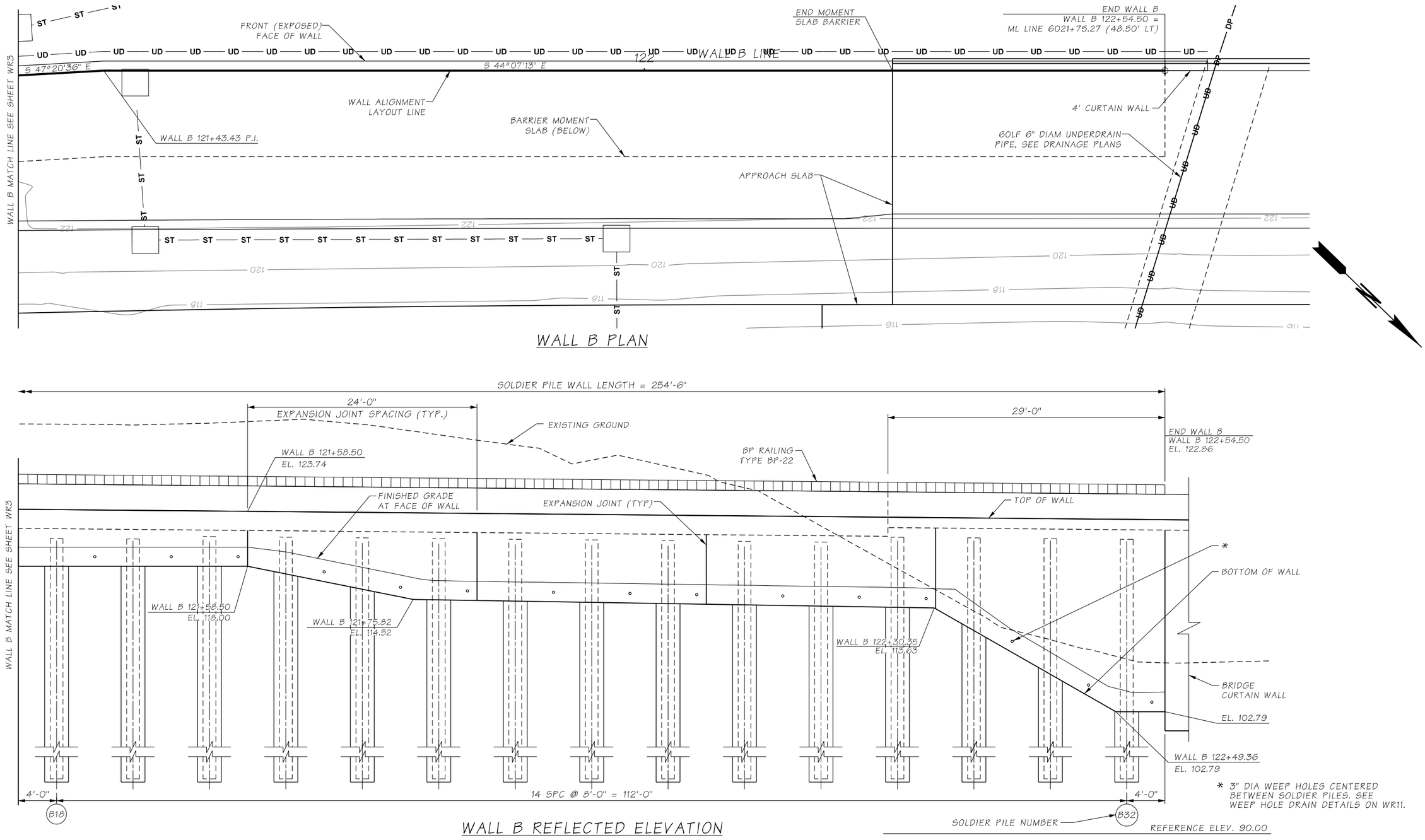

WALL B REFLECTED ELEVATION

Bridge Design Engr.	c:\users\projectwiseworkingfolder\d0335745\XL6050_PS_WR_SAM_004.dgn								
Supervisor					REGION NO.	STATE	FED. AID. PROJ. NO.	SHEET NO.	TOTAL SHEETS
Designed By M. JARRAH					10	WASH.			
Checked By J. MERTH					JOB NUMBER 22C533				
Detailed By C.D. CLARK									
Bridge Projects Engr. A. AMOS									
Prelim. Plan By									
Architect/Specialist	DATE	REVISION	BY	APP'D					

JOSEPH R. MERTH, STATE OF WASHINGTON, 33224, REGISTERED PROFESSIONAL ENGINEER

SEE SHEET CT1 DATE

BRIDGE AND STRUCTURES OFFICE

Washington State Department of Transportation

SR305
SAM SNYDER CREEK
REMOVE FISH BARRIER

WALL B - LAYOUT 2

BRIDGE SHEET NO. WR4

SHEET 100 OF 186 SHEETS

pw:\\HQOLYMAPPPW03P.WSDOT.LOC:WSDOT\Documents_HQ\Fish Passage\ORproj\305\8.92_SamSnyderCreek\Design_CAD_Baseline\Sheets\WR\XL6050_PS_WR_SAM_004.dgn

SR 305 FILE NO. SHEET WR4

4/4/2023 7:25:26 PM

T.26N.R.2E. W.M. SEC. 30

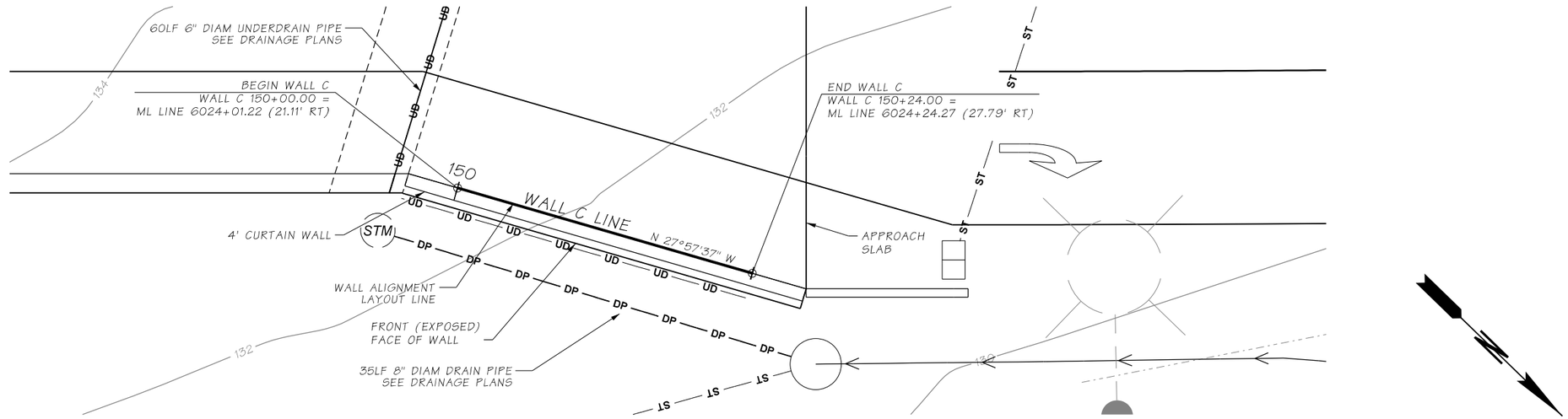

WALL C PLAN

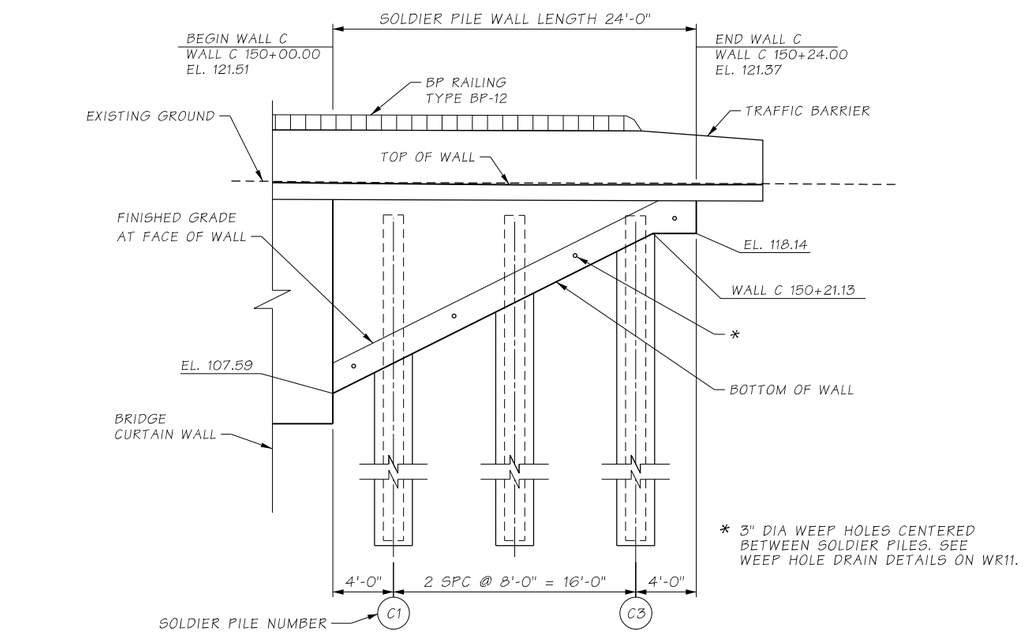

WALL C ELEVATION

Bridge Design Engr.		c:\users\projectwiseworkingfolder\d0335745\XL6050_PS_WR_SAM_005.dgn							
Supervisor					REGION NO.	STATE	FED. AID. PROJ. NO.	SHEET NO.	TOTAL SHEETS
Designed By	M. JARRAH				10	WASH.			
Checked By	J. MERTH				JOB NUMBER				
Detailed By	C.D. CLARK				22C533				
Bridge Projects Engr.	A. AMOS								
Prelim. Plan By									
Architect/Specialist		DATE	REVISION	BY	APP'D				

JOSEPH R. MERTH
STATE OF WASHINGTON
33224
REGISTERED PROFESSIONAL ENGINEER

SEE SHEET CT1
DATE

BRIDGE AND STRUCTURES OFFICE

Washington State Department of Transportation

SR305
SAM SNYDER CREEK
REMOVE FISH BARRIER

WALL C - LAYOUT

BRIDGE SHEET NO. WR5

SHEET 101 OF 186 SHEETS

pw:\\HQOLYMAPPPW03P.WSDOT.LOC:WSDOT\Documents_HQ\Fish Passage\ORproj\305\8.92_SamSnyderCreek\Design_CAD_Base\Sheets\Sheets\XL6050_PS_WR_SAM_005.dgn
SR 305 FILE NO. SHEET WR5

4/4/2023 7:25:28 PM

T.26N.R.2E. W.M. SEC. 30

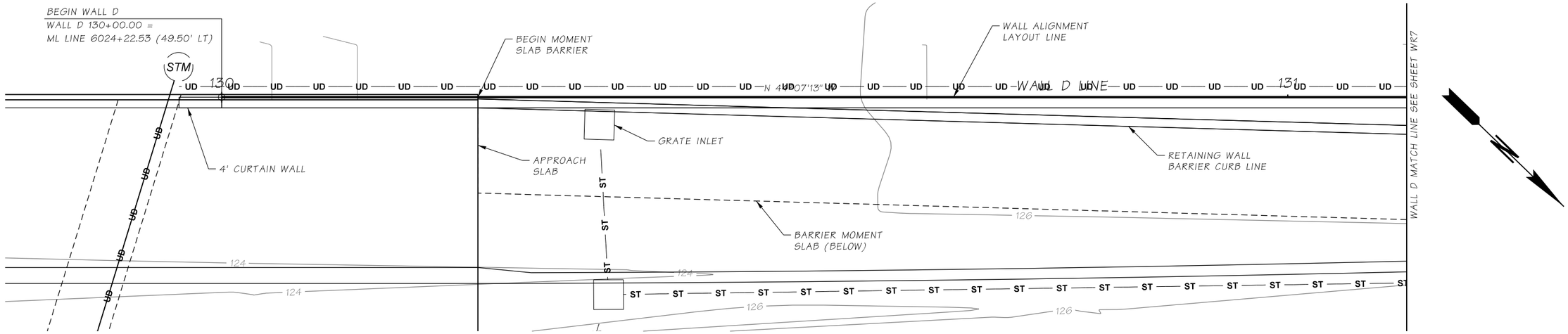

WALL D PLAN

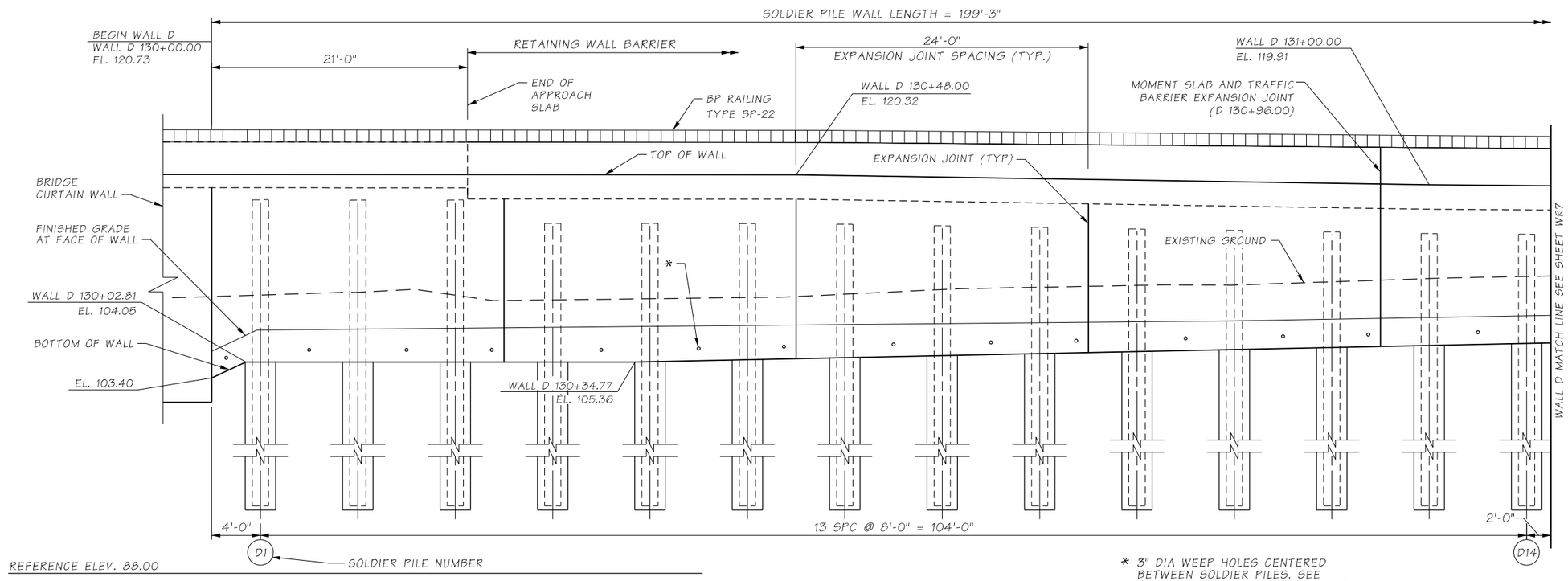

* 3" DIA WEEP HOLES CENTERED BETWEEN SOLDIER PILES. SEE WEEP HOLE DRAIN DETAILS ON WR11.

WALL D REFLECTED ELEVATION

Bridge Design Engr.		c:\users\projectwiseworkingfolder\d0335745\XL6050_PS_WR_SAM_006.dgn							
Supervisor									
Designed By	M. JARRAH								
Checked By	J. MERTH								
Detailed By	C.D. CLARK								
Bridge Projects Engr.	A. AMOS								
Prelim. Plan By									
Architect/Specialist		DATE	REVISION	BY	APP'D				

REGION NO.	STATE	FED. AID. PROJ. NO.	SHEET NO.	TOTAL SHEETS
10	WASH.			
JOB NUMBER 22C533				

JOSEPH R. MERTH, STATE OF WASHINGTON, 33224, REGISTERED PROFESSIONAL ENGINEER

SEE SHEET CT1
DATE

BRIDGE AND STRUCTURES OFFICE

Washington State Department of Transportation

SR305
SAM SNYDER CREEK
REMOVE FISH BARRIER

WALL D - LAYOUT 1

BRIDGE SHEET NO. WR6

SHEET 102 OF 186 SHEETS

pw:\\HQOLYMAPPPW03P.WSDOT.LOC:WSDOT\Documents_HQ\Fish Passage\ORproj\305\8.92_SamSnyderCreek\Design_CAD_Baseline\Sheets\WR\XL6050_PS_WR_SAM_006.dgn

SR 305 FILE NO. SHEET WR6

4/4/2023 7:25:29 PM

T.26N.R.2E. W.M. SEC. 30

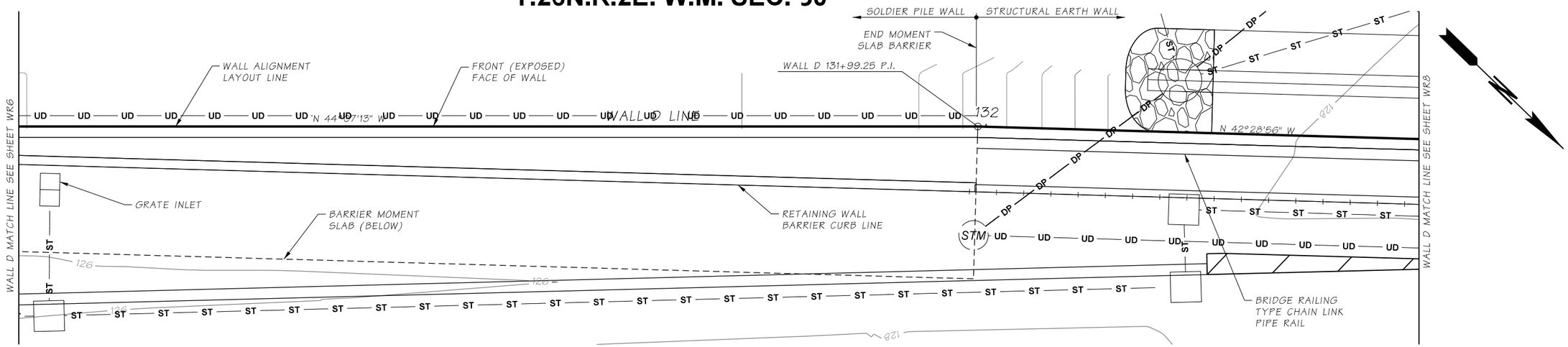

WALL D PLAN

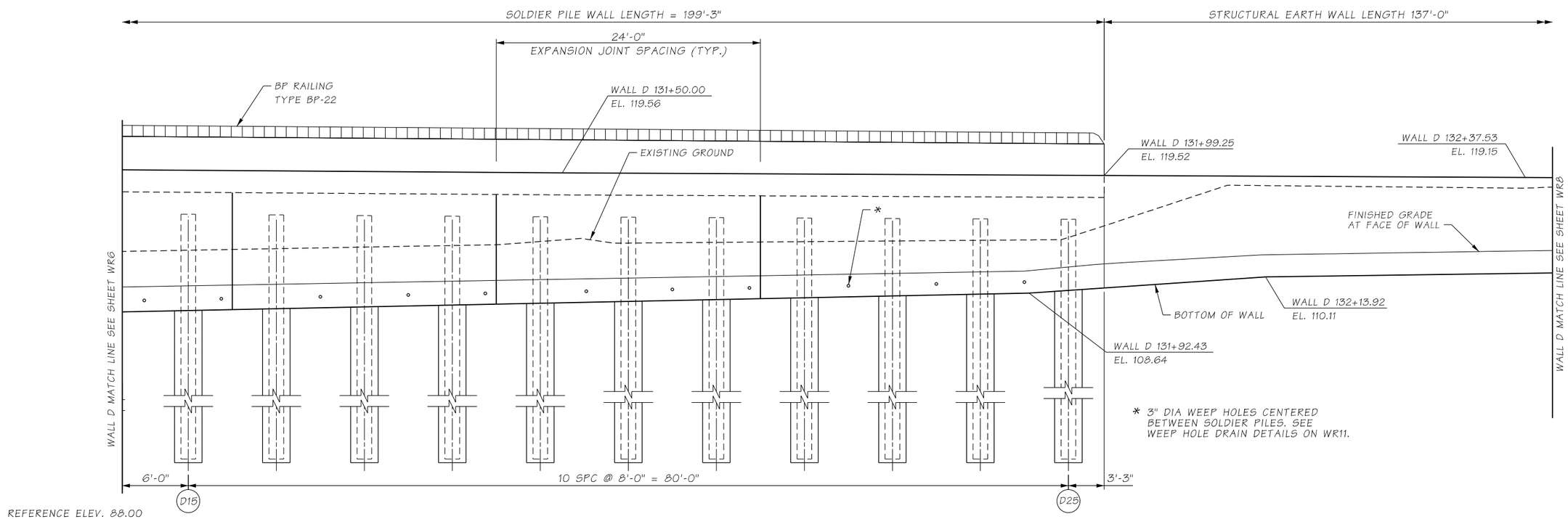

WALL D REFLECTED ELEVATION

Bridge Design Engr.		c:\users\projectwiseworkingfolder\d0335745\XL6050_PS_WR_SAM_007.dgn							
Supervisor									
Designed By	M. JARRAH				REGION NO.	STATE	FED. AID. PROJ. NO.	SHEET NO.	TOTAL SHEETS
Checked By	J. MERTH				10	WASH.			
Detailed By	C.D. CLARK				JOB NUMBER				
Bridge Projects Engr.	A. AMOS				22C533				
Prelim. Plan By									
Architect/Specialist		DATE	REVISION	BY	APP'D				

JOSEPH R. MERTH — STATE OF WASHINGTON — 33224 — REGISTERED PROFESSIONAL ENGINEER

SEE SHEET CT1
DATE

BRIDGE AND STRUCTURES OFFICE

Washington State Department of Transportation

SR305
SAM SNYDER CREEK
REMOVE FISH BARRIER

WALL D - LAYOUT 2

BRIDGE SHEET NO. WR7

SHEET 103 OF 186 SHEETS

pw:\\HQOLYMAPPPW03P.WSDOT.LOC:WSDOT\Documents_HQ\Fish Passage\ORproj\30518.92_SamSnyderCreek\Design_CAD_Sheets\SAM\XL6050_PS_WR_SAM_007.dgn
SR 305 FILE NO. SHEET WR7

4/4/2023 7:25:31 PM

T.26N.R.2E. W.M. SEC. 30

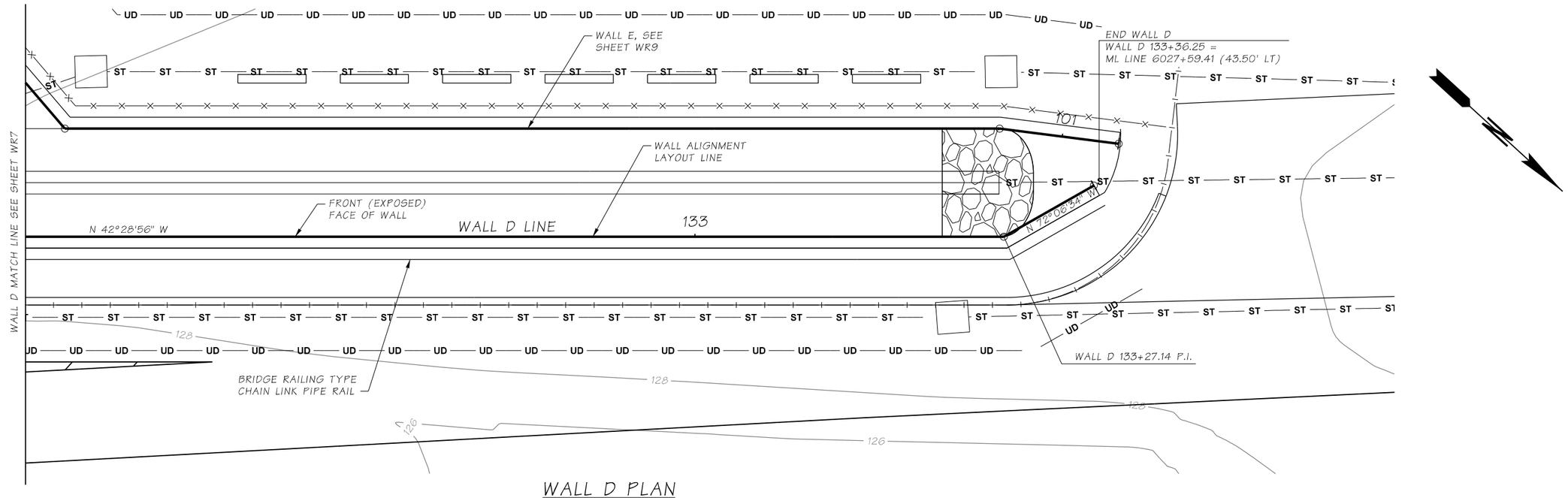

WALL D PLAN

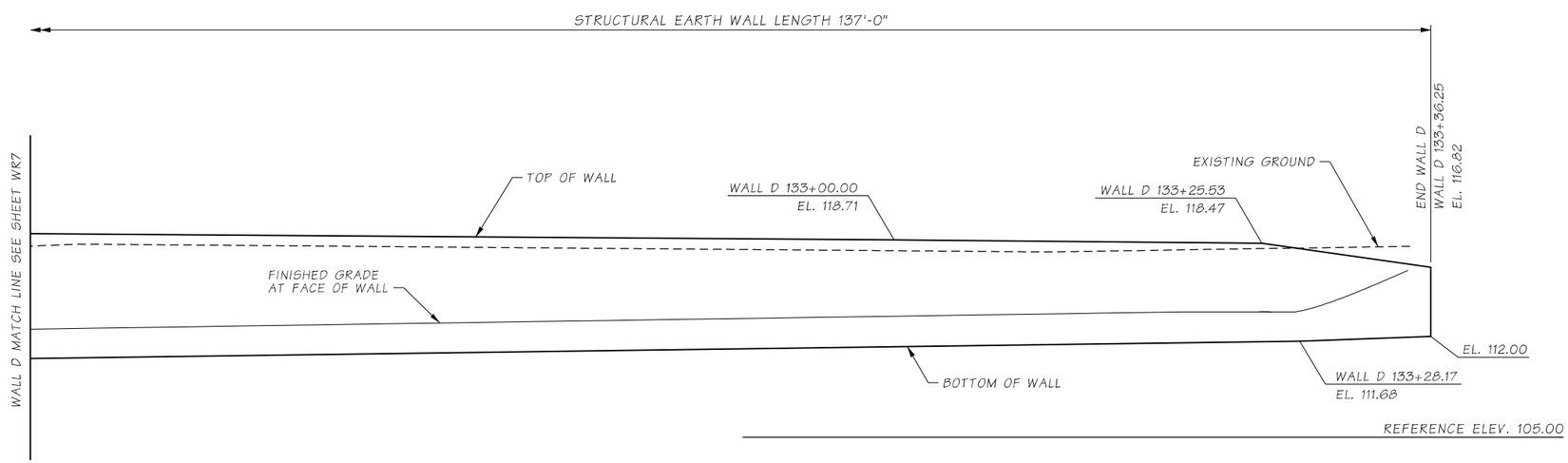

WALL D REFLECTED ELEVATION

Bridge Design Engr.		c:\users\clarkc\pw_wsdot\d0335745\XL6050_PS_WR_SAM_008.dgn						
Supervisor					REGION NO.	STATE	FED. AID. PROJ. NO.	SHEET NO.	TOTAL SHEETS
Designed By	M. JARRAH				10	WASH.			
Checked By	J. MERTH				JOB NUMBER				
Detailed By	C.D. CLARK				22C533				
Bridge Projects Engr.	A. AMOS								
Prelim. Plan By									
Architect/Specialist		DATE	REVISION	BY	APP'D				

JOSEPH R. MERTH, STATE OF WASHINGTON, 33224, REGISTERED PROFESSIONAL ENGINEER
SEE SHEET CT1
DATE

BRIDGE AND STRUCTURES OFFICE

Washington State Department of Transportation

SR305
SAM SNYDER CREEK
REMOVE FISH BARRIER

WALL D - LAYOUT 3

BRIDGE SHEET NO. WR8

SHEET 104 OF 186 SHEETS

pw:\\HQOLYMAPPPW03P.WSDOT.LOC.WSDOT\Documents_HQ\Fish Passage\ORproj\30518.92_SamSnyderCreek\Design_CAD_Bseet\Files\SR305\WR\XL6050\XL6050_WR008.dgn

SR 305 FILE NO. WR8 SHEET

3/28/2023 2:38:52 PM

T.26N.R.2E. W.M. SEC. 30

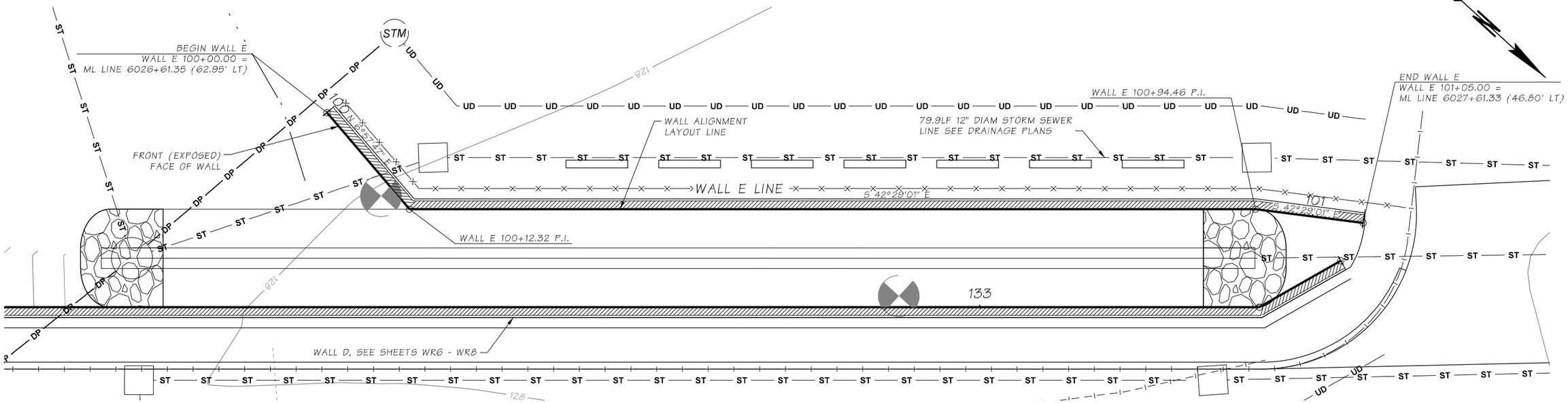

WALL E PLAN

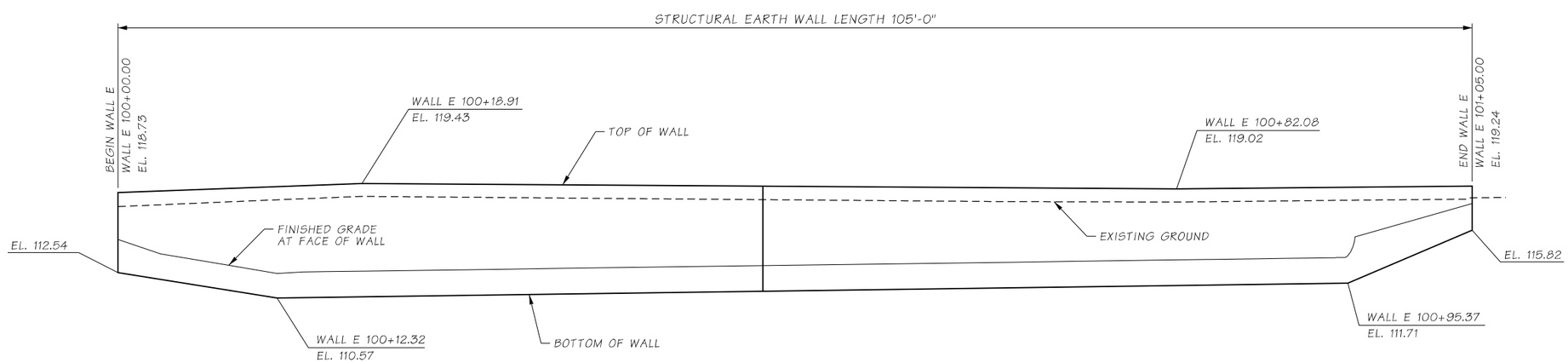

WALL E ELEVATION

Bridge Design Engr.	c:\users\clarkc\pw_wsdot\d0335745\XL6050_PS_WR_SAM_009.dgn								
Supervisor					REGION NO.	STATE	FED. AID. PROJ. NO.	SHEET NO.	TOTAL SHEETS
Designed By M. JARRAH					10	WASH.			
Checked By J. MERTH					JOB NUMBER				
Detailed By C.D. CLARK					22C533				
Bridge Projects Engr. A. AMOS									
Prelim. Plan By									
Architect/Specialist	DATE	REVISION	BY	APP'D					

JOSEPH R. MERTH, STATE OF WASHINGTON, 33224, REGISTERED PROFESSIONAL ENGINEER
SEE SHEET CT1
DATE

BRIDGE AND STRUCTURES OFFICE

Washington State Department of Transportation

SR305
SAM SNYDER CREEK
REMOVE FISH BARRIER

WALL E - LAYOUT

BRIDGE SHEET NO. WR9

SHEET 105 OF 186 SHEETS

SR 305 FILE NO. SHEET WR9

pw:\\HQOLYMAPPPW03P.WSDOT.LOC:WSDOT\Documents_HQ\Fish Passage\ORproj\305\8.92_SamSnyderCreek\Design_CAD_Bases\Sheets\XL6050_PS_WR_SAM_009.dgn

3/28/2023 2:40:56 PM

WALL GENERAL NOTES:

1. ALL MATERIAL AND WORKMANSHIP SHALL BE IN ACCORDANCE WITH THE REQUIREMENT OF THE WASHINGTON STATE DEPARTMENT OF TRANSPORTATION STANDARD SPECIFICATIONS FOR ROAD, BRIDGE, AND MUNICIPAL CONSTRUCTION DATED 2023.
2. THE WALLS HAVE BEEN DESIGNED IN ACCORDANCE WITH THE REQUIREMENTS OF THE AASHTO LRFD BRIDGE DESIGN SPECIFICATIONS 9" EDITION 2020.
3. SEISMIC DESIGN IS BASED ON INFORMATION INCLUDED IN THE GEOTECHNICAL REPORT PREPARED FOR THE PROJECT.
4. HP SECTION STEEL SOLDIER PILES SHALL CONFORM TO ASTM A572 GR. 50. SOLDIER PILES SHALL BE PAINTED TO THE LIMITS SHOWN IN THE PLANS IN ACCORDANCE WITH SECTION 6-16.3(4).
5. EXISTING GROUND LINE IS APPROXIMATE AND SHALL BE VERIFIED BY THE CONTRACTOR IN THE FIELD.
6. FOR LOCATIONS AND DETAILS OF STORM SEWER PIPES AND CATCH BASINS SEE DRAINAGE PLANS AND DETAILS.
7. TIMBER LAGGING SHALL BE NON-TREATED DOUGLAS FIR-LARCH GRADE NO. 2 OR BETTER CONFORMING TO SECTION 9-09.2.
8. CONCRETE FOR FASCIA WALLS SHALL BE CLASS 4000.
9. THE MINIMUM CONCRETE COVER TO MAIN REINFORCING BARS SHALL BE IN ACCORDANCE WITH 6-02.3(24)C. THE MINIMUM COVER TO STIRRUPS AND TIES SHALL BE 1-1/2".
10. CONTRACTOR SHALL COORDINATE INSTALLATION OF CATCH BASIN WITH LDCC PLACEMENT.

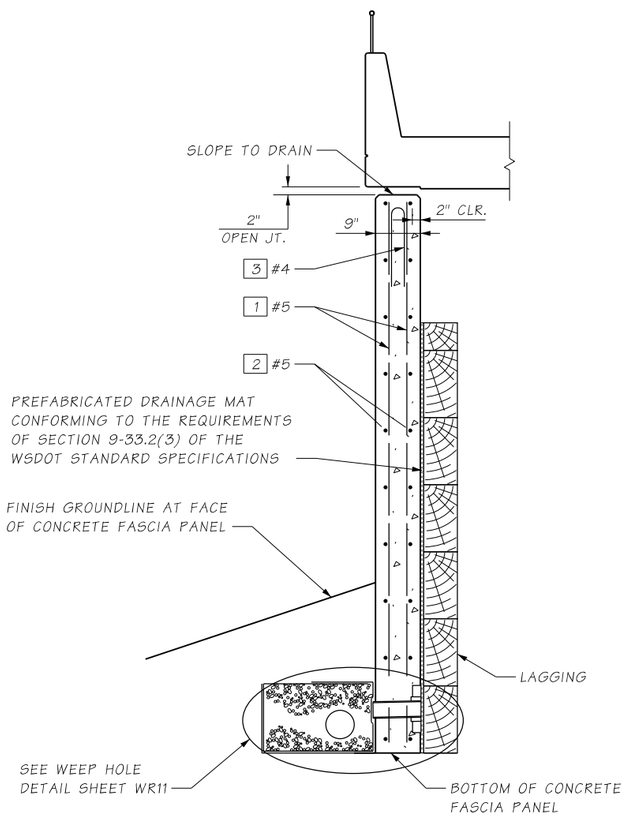

SECTION A

SOLDIER PILE WALL SCHEDULE
WALLS A & B

PILE #	SOLDIER PILE SIZE	EMBEDMENT DEPTH "D" (FT)	TOTAL LENGTH OF SOLDIER PILE (FT)	SHAFT DIAMETER (IN)
A1	HP16X183	32'-0"	34.30	30
A2	HP16X183	28'-0"	34.06	30
A3	HP16X183	24'-0"	33.83	30
B1	HP12X74	42'-0"	45.50	30
B2	HP12X74	42'-0"	45.43	30
B3	HP12X74	42'-0"	45.36	30
B4	HP12X74	42'-0"	45.28	30
B5	HP12X74	42'-0"	45.21	30
B6	HP12X74	42'-0"	45.14	30
B7	HP12X74	42'-0"	45.06	30
B8	HP12X74	42'-0"	44.99	30
B9	HP12X74	42'-0"	44.92	30
B10	HP12X74	42'-0"	44.84	30
B11	HP12X74	42'-0"	44.77	30
B12	HP12X74	42'-0"	44.70	30
B13	HP12X74	42'-0"	44.62	30
B14	HP12X74	42'-0"	44.55	30
B15	HP12X74	42'-0"	44.48	30
B16	HP12X74	42'-0"	44.40	30
B17	HP12X74	42'-0"	44.33	30
B18	HP12X74	42'-0"	44.26	30
B19	HP12X74	42'-0"	44.18	30
B20	HP12X74	42'-0"	44.11	30
B21	HP12X74	42'-0"	44.85	30
B22	HP16X183	41'-0"	45.38	30
B23	HP16X183	40'-0"	45.41	30
B24	HP16X183	40'-0"	45.47	30
B25	HP16X183	39'-0"	44.53	30
B26	HP16X183	39'-0"	44.59	30
B27	HP16X183	39'-0"	44.64	30
B28	HP16X183	39'-0"	44.70	30
B29	HP16X183	39'-0"	45.67	30
B30	HP16X183	37'-0"	46.03	30
B31	HP16X183	32'-0"	45.53	30
B32	HP16X183	29'-0"	46.37	30

SOLDIER PILE WALL SCHEDULE
WALLS C & D

PILE #	SOLDIER PILE SIZE	EMBEDMENT DEPTH "D" (FT)	TOTAL LENGTH OF SOLDIER PILE (FT)	SHAFT DIAMETER (IN)
C1	HP16X183	23'-0"	32.13	30
C2	HP16X183	23'-0"	28.10	30
C3	HP16X183	23'-0"	24.07	30
D1	HP16X183	46'-0"	59.85	30
D2	HP16X183	46'-0"	59.45	30
D3	HP16X183	47'-0"	60.05	30
D4	HP16X183	48'-0"	59.74	30
D5	HP16X183	48'-0"	59.37	30
D6	HP16X183	48'-0"	59.14	30
D7	HP16X183	48'-0"	58.91	30
D8	HP16X183	49'-0"	59.68	30
D9	HP16X183	49'-0"	59.45	30
D10	HP16X183	49'-0"	59.23	30
D11	HP16X183	49'-0"	59.00	30
D12	HP16X183	50'-0"	59.77	30
D13	HP16X183	50'-0"	59.55	30
D14	HP16X183	50'-0"	59.32	30
D15	HP16X183	50'-0"	59.10	30
D16	HP16X183	50'-0"	58.87	30
D17	HP16X183	51'-0"	59.64	30
D18	HP16X183	51'-0"	59.42	30
D19	HP16X183	51'-0"	59.19	30
D20	HP16X183	51'-0"	59.01	30
D21	HP16X183	51'-0"	58.83	30
D22	HP16X183	52'-0"	59.66	30
D23	HP16X183	52'-0"	59.49	30
D24	HP16X183	52'-0"	59.31	30
D25	HP16X183	52'-0"	58.95	30

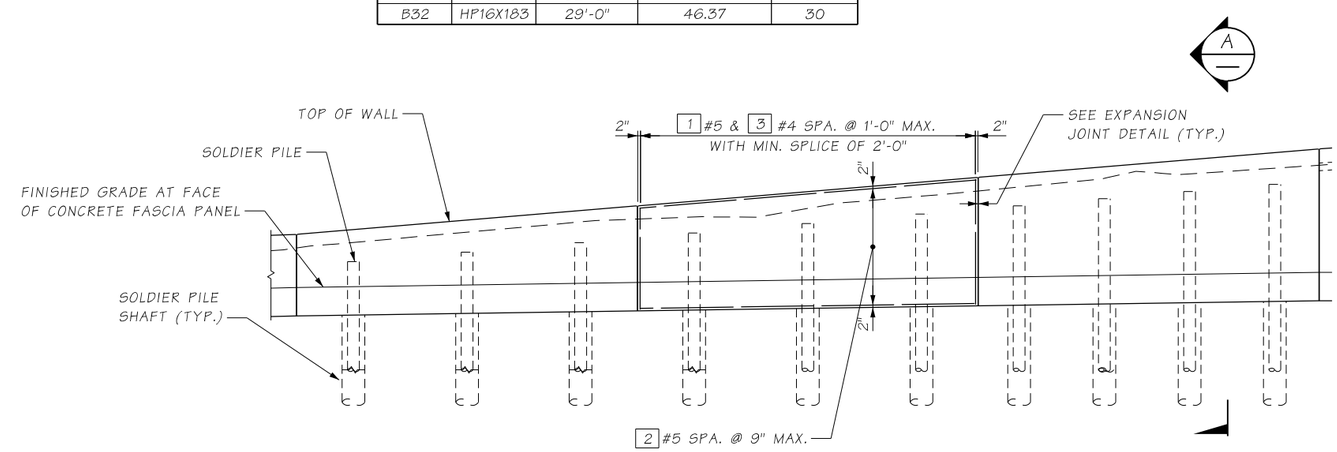

TYPICAL SOLDIER PILE WALL REINFORCING

Bridge Design Engr.		c:\users\schicvin\pw_wsdot\d0335745\XL6050_PS_WR_SAM_010.dgn			REGION NO.	STATE	FED. AID. PROJ. NO.	SHEET NO.	TOTAL SHEETS
Supervisor					10	WASH.			
Designed By	M. JARRAH				JOB NUMBER 22C533				
Checked By	J. MERTH								
Detailed By	C.D. CLARK								
Bridge Projects Engr.	A. AMOS								
Prelim. Plan By									
Architect/Specialist		DATE	REVISION	BY	APP'D				

3/28/2023 7:01:06 PM

JOSEPH R. MERTH STATE OF WASHINGTON 33224 REGISTERED PROFESSIONAL ENGINEER
SEE SHEET CT1 DATE

BRIDGE AND STRUCTURES OFFICE

Washington State Department of Transportation

SR305
SAM SNYDER CREEK
REMOVE FISH BARRIER

SOLDIER PILE WALL SCHEDULE & GENERAL NOTES

BRIDGE SHEET NO. WR10

SHEET 106 OF 186 SHEETS

pw:\\HQOLYMAPPPW03P.WSDOT.LOC:WSDOTDocuments_HQ\Fish Passage\ORproj\30598.92_SamSnyderCreek\Design_CAD_Bheetfiles\WR\XL6050_PS_WR_SAM_010.dgn
SR 305 FILE NO. SHEET WR10

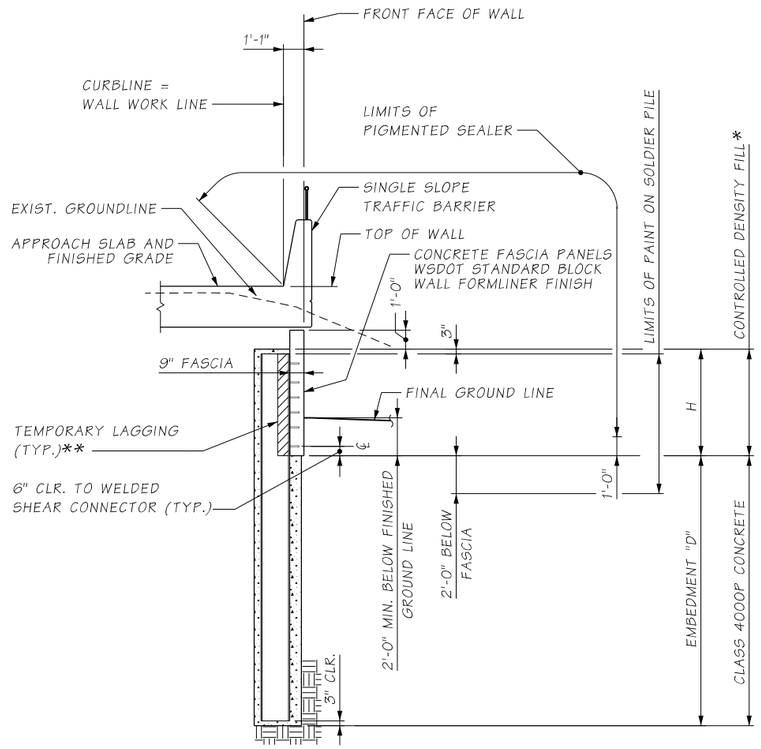

* USE CONTROLLED DENSITY FILL WHEN PLACED IN THE DRY, USE PUMPABLE LEAN CONCRETE WHEN PLACED IN THE WET.

** LAGGING SYSTEM SHALL BE DESIGNED BY THE CONTRACTOR AND SUBMITTED TO THE ENGINEER FOR APPROVAL IN ACCORDANCE WITH THE STANDARD SPECIFICATION 6-16.3(6).

TYPICAL SECTION - WALLS A & C

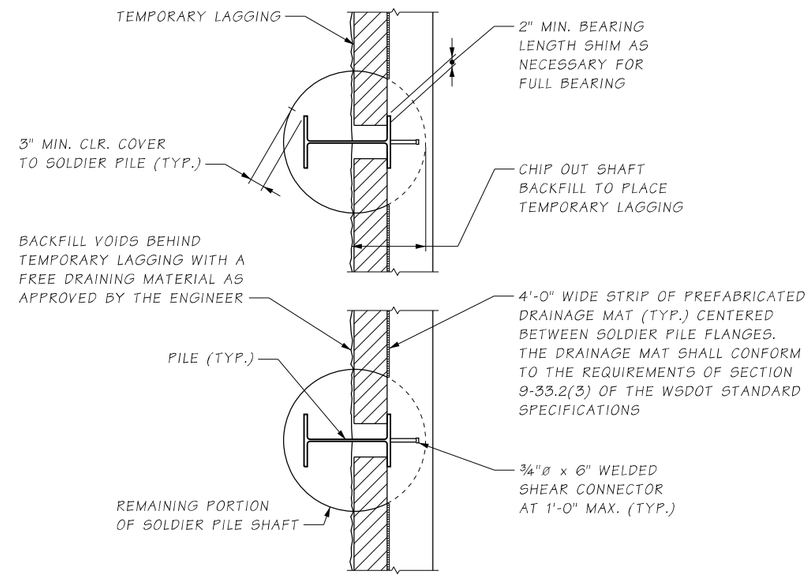

PLAN
SOLDIER PILE WALL

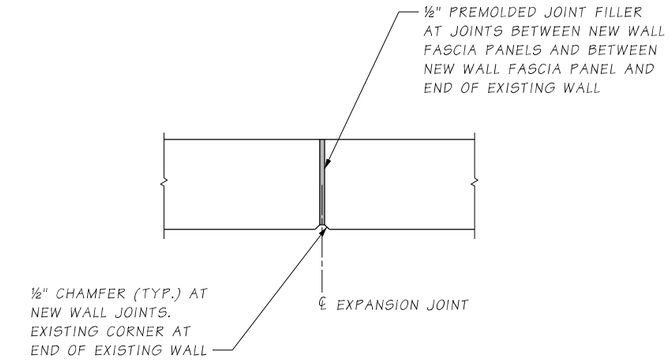

EXPANSION JOINT DETAIL

EXPANSION JOINTS SHALL BE LOCATED AS SHOWN ON WALL LAYOUT SHEETS

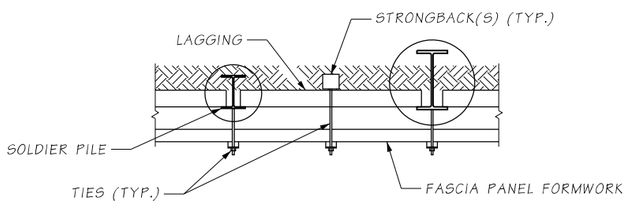

TYPICAL FASCIA PANEL FORMWORK

- SEE SECTION 6-16.3(2) FOR FASCIA PANEL FORMING REQUIREMENTS.
- STRONGBACK(S) AND TIES SPACED AS REQUIRED FOR FORMING.

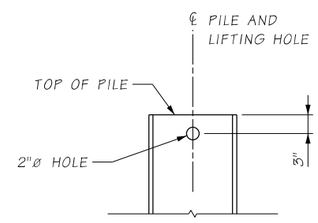

SOLDIER PILE LIFTING HOLE

LIFTING HOLE TO BE DRILLED IN THE SHOP PRIOR TO PAINTING THE PILE.

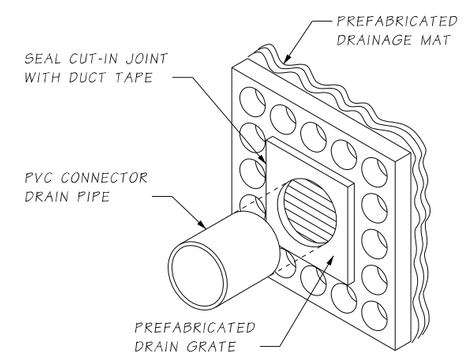

ISOMETRIC VIEW

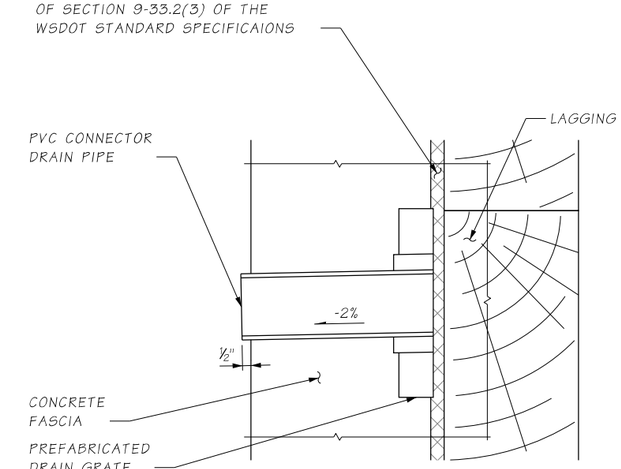

SECTIONAL VIEW

WEEP HOLE DRAIN DETAILS

DRAIN GRATE INSTALLATION SHALL NOT DISRUPT PREFABRICATED DRAINAGE MAT
ADJUST WEEP HOLES 1'-0" HORIZONTALLY AT EXPANSION JOINT LOCATIONS

Bridge Design Engr.		c:\users\clarkc\pw_wsdot\d0335745\XL6050_PS_WR_SAM_011.dgn							
Supervisor					REGION NO.	STATE	FED. AID. PROJ. NO.	SHEET NO.	TOTAL SHEETS
Designed By	M. JARRAH				10	WASH.			
Checked By	J. MERTH				JOB NUMBER 22C533				
Detailed By	C.D. CLARK								
Bridge Projects Engr.	A. AMOS								
Prelim. Plan By									
Architect/Specialist		DATE	REVISION	BY	APP'D				

JOSEPH R. MERTH — STATE OF WASHINGTON — 33224 — REGISTERED PROFESSIONAL ENGINEER
SEE SHEET CT1
DATE

BRIDGE AND STRUCTURES OFFICE

Washington State Department of Transportation

SR305
SAM SNYDER CREEK
REMOVE FISH BARRIER

SOLDIER PILE WALL TYPICAL DETAILS

BRIDGE SHEET NO. WR11

SHEET 107 OF 186 SHEETS

pw:\\HQOLYMAPPW03P.WSDOT.LOC.WSDOT\Documents_HQ\Fish Passage\ORproj\30518.92_SamSnyderCreek\Design_CAD_Baselines\SR305\XL6050_PS_WR_SAM_011.dgn
SR 305 FILE NO. SHEET WR11
3/28/2023 3:43:57 PM

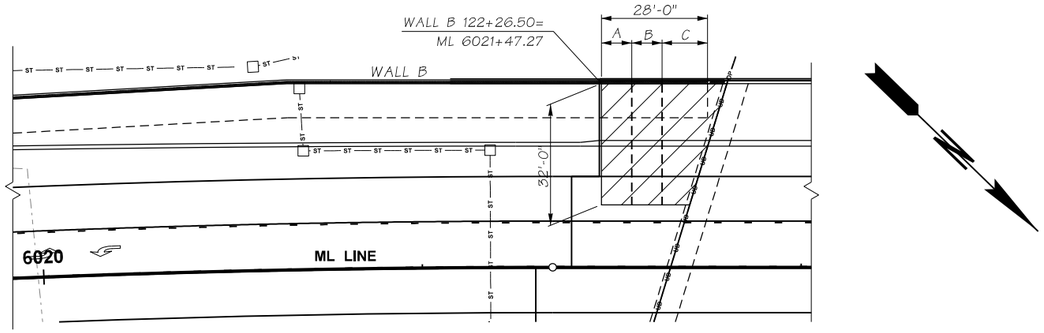

LDCC LIMITS - WALL B

	WALL B STATION	LDCC THICKNESS (FT)
A	122+26.50 TO 122+34.50	3
B	122+34.50 TO 122+42.50	9
C	122+42.50 TO 122+54.50	15

LDCC THICKNESS - WALL B

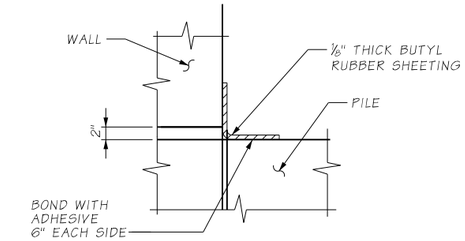

DETAIL 1 - WALL B

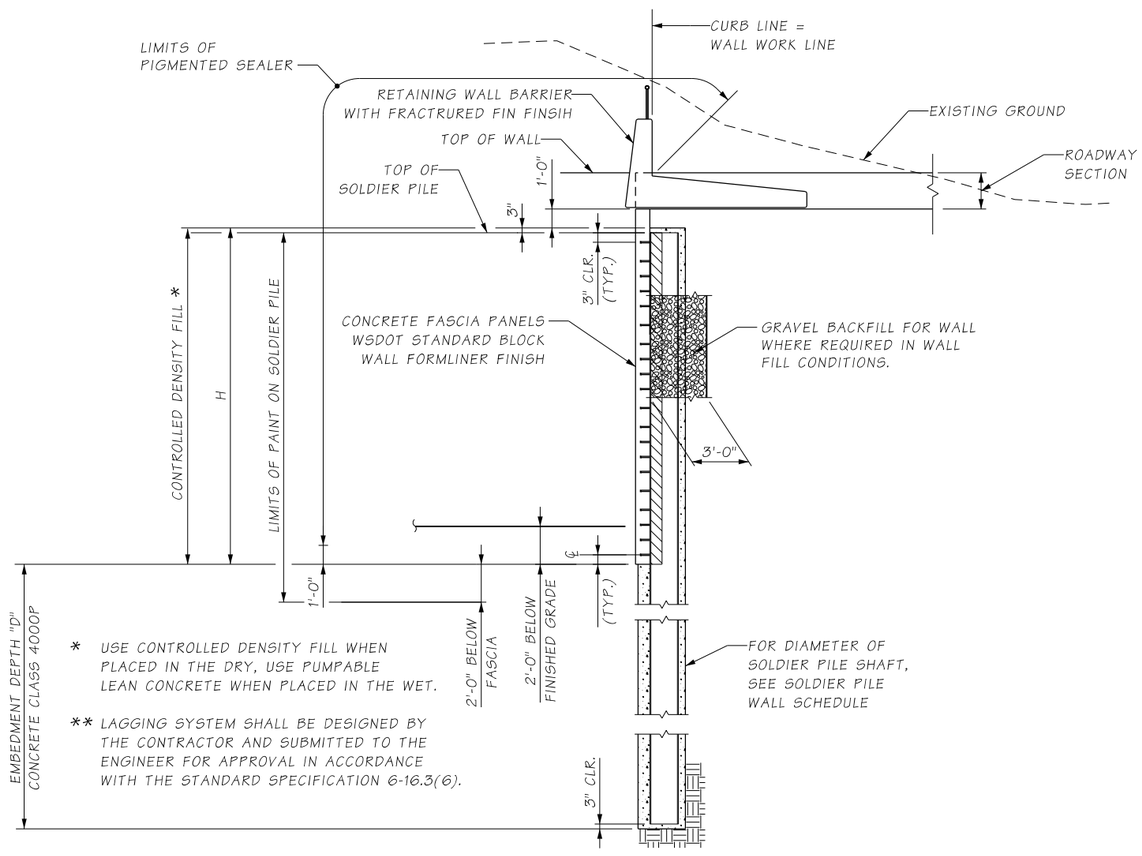

TYPICAL SECTION - WALL B

BEGIN WALL TO STATION ML LINE 6021+47.27

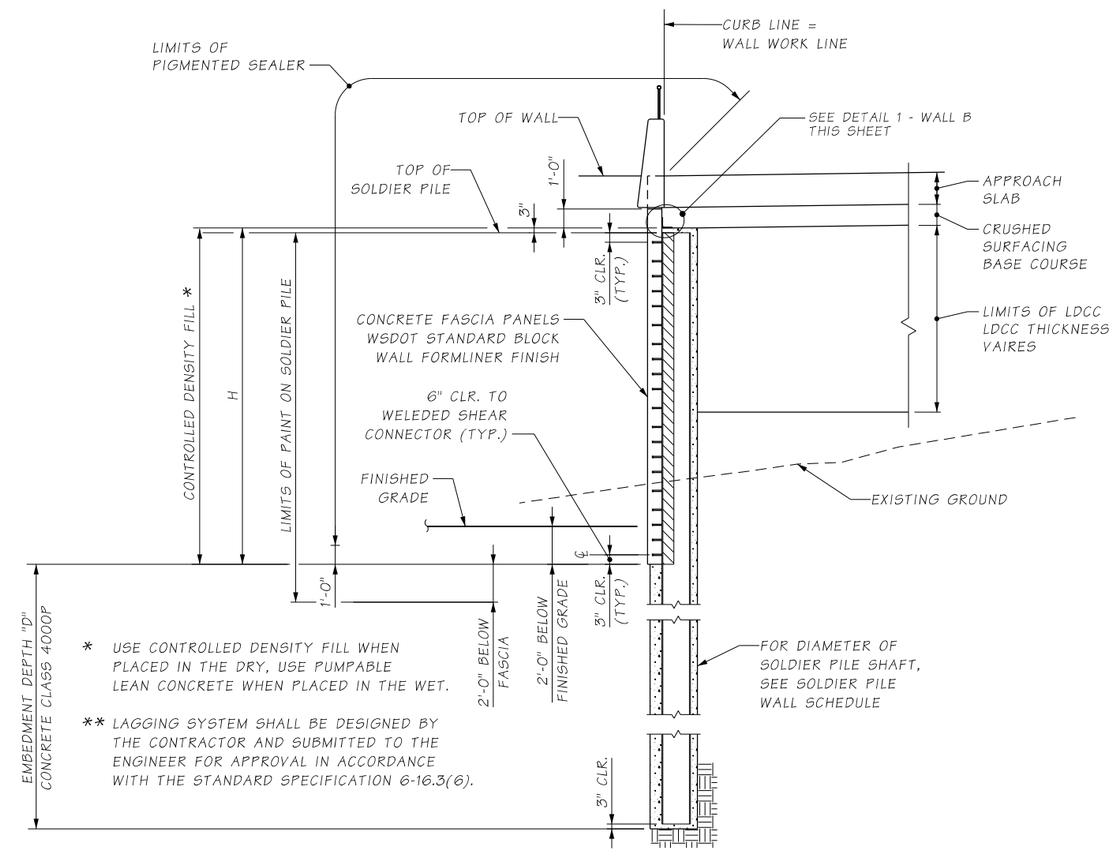

TYPICAL SECTION - WALL B

BEGIN LOW DENSITY CELLULAR CONCRETE (LDCC) AT
ML LINE 6021+47.27 TO BACK OF PIER 1 WALL

Bridge Design Engr.		c:\users\schicvin\pw_wsdot\d0335745\XL6050_PS_WR_SAM_012.dgn			REGION NO.	STATE	FED. AID. PROJ. NO.	SHEET NO.	TOTAL SHEETS
Supervisor					10	WASH.			
Designed By	M. JARRAH				JOB NUMBER 22C533				
Checked By	J. MERTH								
Detailed By	C.D. CLARK								
Bridge Projects Engr.	A. AMOS								
Prelim. Plan By									
Architect/Specialist		DATE	REVISION	BY	APP'D				

4/4/2023 3:05:03 PM

JOSEPH R. MERTH
STATE OF WASHINGTON
33224
REGISTERED PROFESSIONAL ENGINEER
SEE SHEET CT1
DATE

BRIDGE AND STRUCTURES OFFICE

Washington State Department of Transportation

SR305
SAM SNYDER CREEK
REMOVE FISH BARRIER

WALL B - SOLDIER PILE SECTION

BRIDGE SHEET NO. WR12

SHEET 108 OF 186 SHEETS

pw:\\WQOLYMAPPPW03P.WSDOT.LOC:WSDOT\Documents_HQ\Fish Passage\ORproj\30518.92_SamSnyder\Creek\Design_CAD_Sheets\SR305\WR\XL6050_PS_WR_SAM_012.dgn
SR 305 FILE NO. SHEET WR12

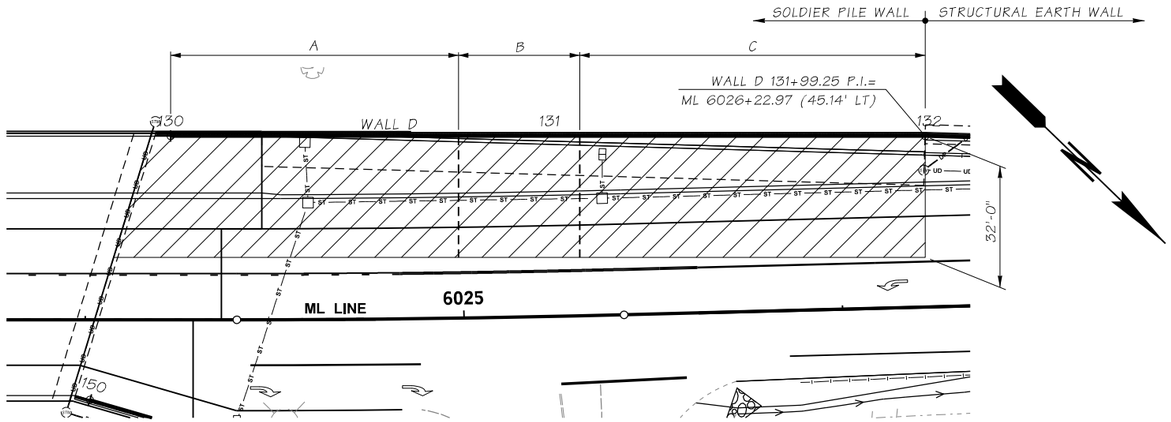

LDCC LIMITS - WALL D

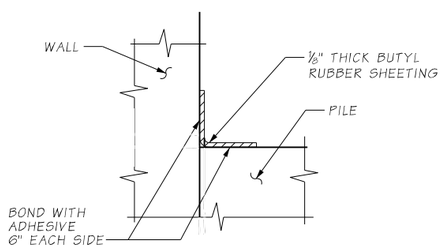

DETAIL 1 - WALL D

	WALL D STATION	LDCC THICKNESS (FT)
A	130+00.00 TO 130+76.00	12
B	130+76.00 TO 131+08.00	9
C	131+08.00 TO 131+99.25	6

LDCC THICKNESS - WALL D

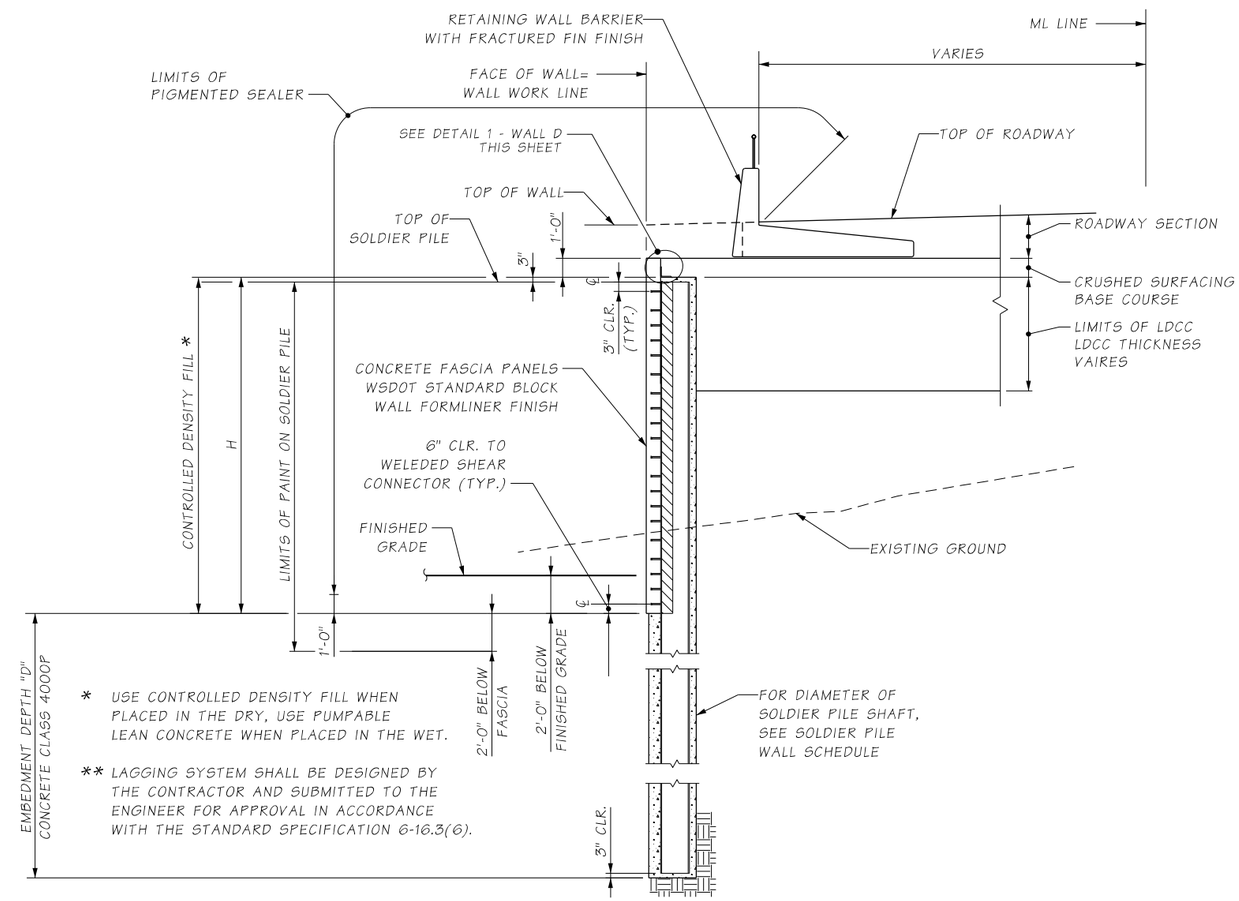

TYPICAL SECTION - WALL D

Bridge Design Engr.		c:\users\clarkc\pw_wsdot\d0335745\XL6050_PS_WR_SAM_013.dgn							
Supervisor					REGION NO.	STATE	FED. AID. PROJ. NO.	SHEET NO.	TOTAL SHEETS
Designed By	M. JARRAH				10	WASH.			
Checked By	J. MERTH								
Detailed By	C.D. CLARK				JOB NUMBER				
Bridge Projects Engr.	A. AMOS				22C533				
Prelim. Plan By									
Architect/Specialist		DATE	REVISION	BY	APP'D				

3/28/2023 3:59:35 PM

JOSEPH R. MERTH
STATE OF WASHINGTON
33224
REGISTERED
PROFESSIONAL ENGINEER
SEE SHEET CT1
DATE

BRIDGE
AND
STRUCTURES
OFFICE

Washington State
Department of Transportation

SR305
SAM SNYDER CREEK
REMOVE FISH BARRIER

WALL D - SOLDIER PILE SECTION

BRIDGE SHEET NO. WR13

SHEET 109 OF 186 SHEETS

pw:\\HQOLYMAPPPW03P.WSDOT.LOC:WSDOT\Documents_HQ\Fish Passage\ORproj\30518.92_SamSnyderCreek\Design_CAD_Bsee\Files\SR305\WR13.dgn

SR 305 FILE NO. SHEET WR13

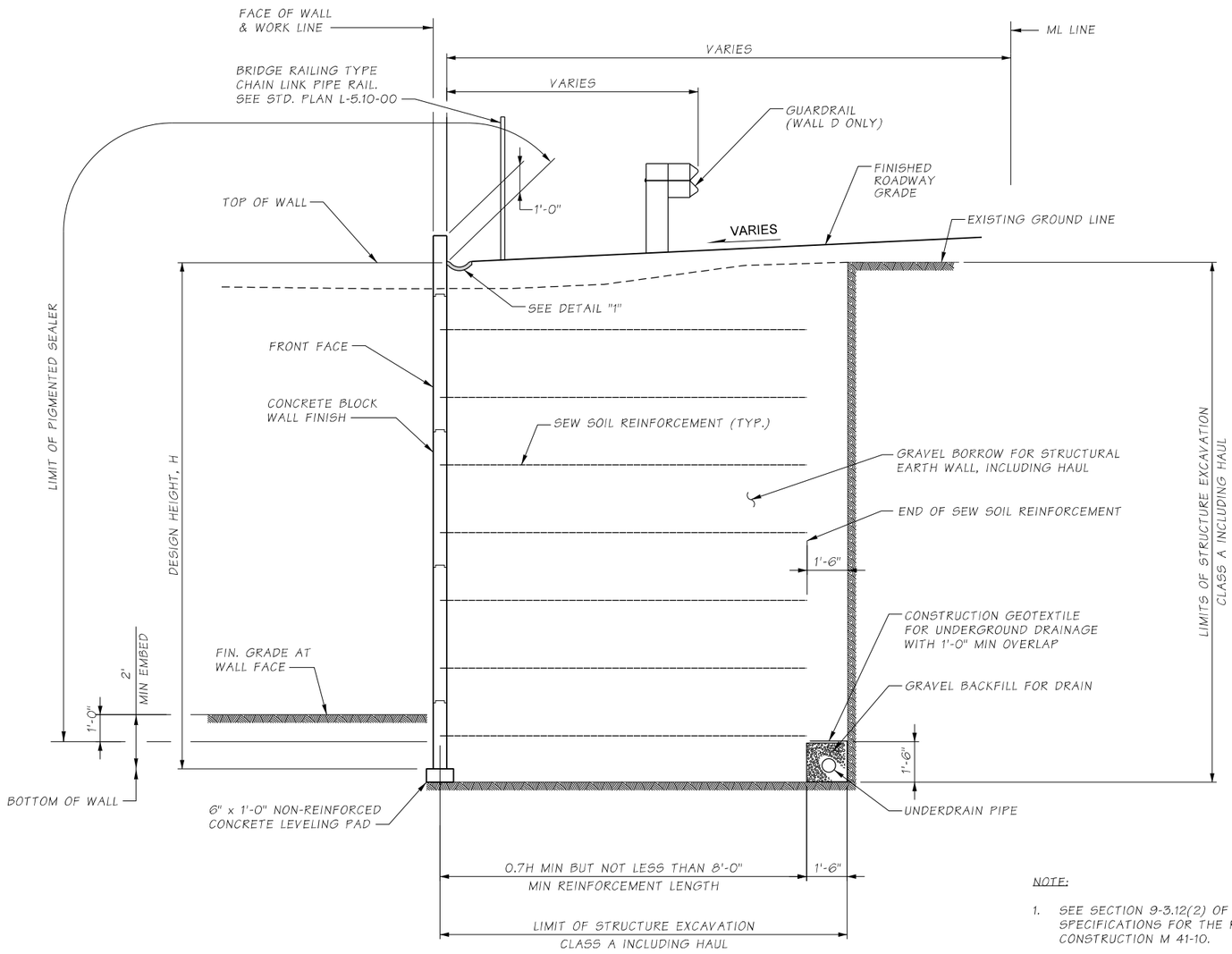

TYPICAL CROSS SECTION

NOT TO SCALE

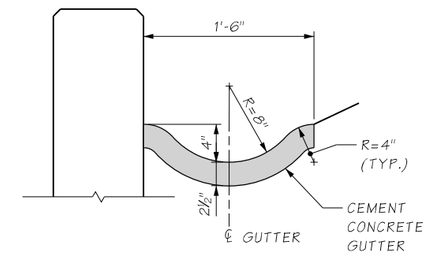

DETAIL 1

NOTE:

1. SEE SECTION 9-3.12(2) OF THE CURRENT WSDOT STANDARD SPECIFICATIONS FOR THE ROAD, BRIDGE AND MUNICIPAL CONSTRUCTION M 41-10.
2. SEE SECTION 9-03.12(14) OF THE CURRENT WSDOT STANDARD SPECIFICATIONS FOR THE ROAD, BRIDGE AND MUNICIPAL CONSTRUCTION M 41-10.
3. CONSTRUCTION GEOTEXTILE FOR SOIL STABILIZATION PER STANDARD SPECIFICATION 9-33.2(1), TABLE 3 NON-WOVEN.

pw:\\HQOLYMAPPPW03P.WSDOT.LOC:WSDOT\Documents_HQ\Fish Passage\ORproj\305\8.92_SamSnyderCreek\Design_CAD_Baseline\Sheets\XL6050_PS_WR_SAM_014.dgn
SR 305 FILE NO. SHEET WR14

Bridge Design Engr.		c:\users\clarkc\pw_wsdot\d0335745\XL6050_PS_WR_SAM_014.dgn								
Supervisor						REGION NO.	STATE	FED. AID. PROJ. NO.	SHEET NO.	TOTAL SHEETS
Designed By	M. JARRAH					10	WASH.			
Checked By	J. MERTH									
Detailed By	C.D. CLARK					JOB NUMBER				
Bridge Projects Engr.	A. AMOS					22C533				
Prelim. Plan By										
Architect/Specialist		DATE	REVISION	BY	APP'D					

3/28/2023 4:00:21 PM

JOSEPH R. MERTH
STATE OF WASHINGTON
33224
REGISTERED PROFESSIONAL ENGINEER
SEE SHEET CT1
DATE

BRIDGE AND STRUCTURES OFFICE

Washington State Department of Transportation

SR305
SAM SNYDER CREEK
REMOVE FISH BARRIER

STRUCTURAL EARTH WALL SECTION

BRIDGE SHEET NO. WR14

SHEET 110 OF 186 SHEETS

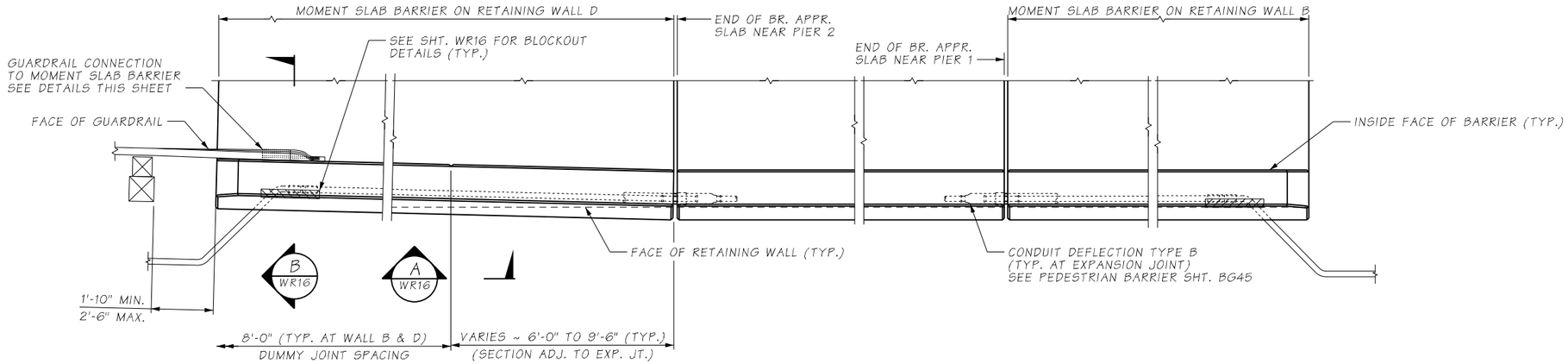

PLAN
MOMENT SLAB BARRIER

SEE WALL B & D LAYOUT SHEETS FOR GEOMETRY

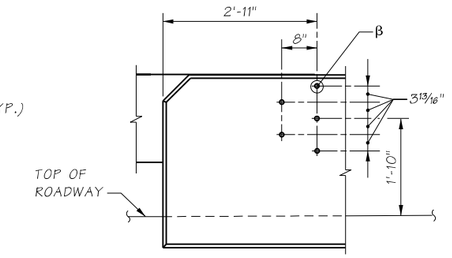

THRIE BEAM END SECTION DESIGN "F" (SEE STD. PLAN C-7a)

OUTSIDE ELEVATION
MOMENT SLAB BARRIER
GUARDRAIL CONNECTION

(WHERE SHOWN ON LAYOUT - WALL D)

β PROVIDE 7/8"ø ROCKET/KOHLER F-50, LANCASTER MALLEABLE, OR DAYTON/RICHMOND F-62 FLARED THIN SLAB FERRULE INSERTS OR APPROVED EQUAL (TYP.). RESIN-BONDED ANCHORS MAY BE SUBSTITUTED.

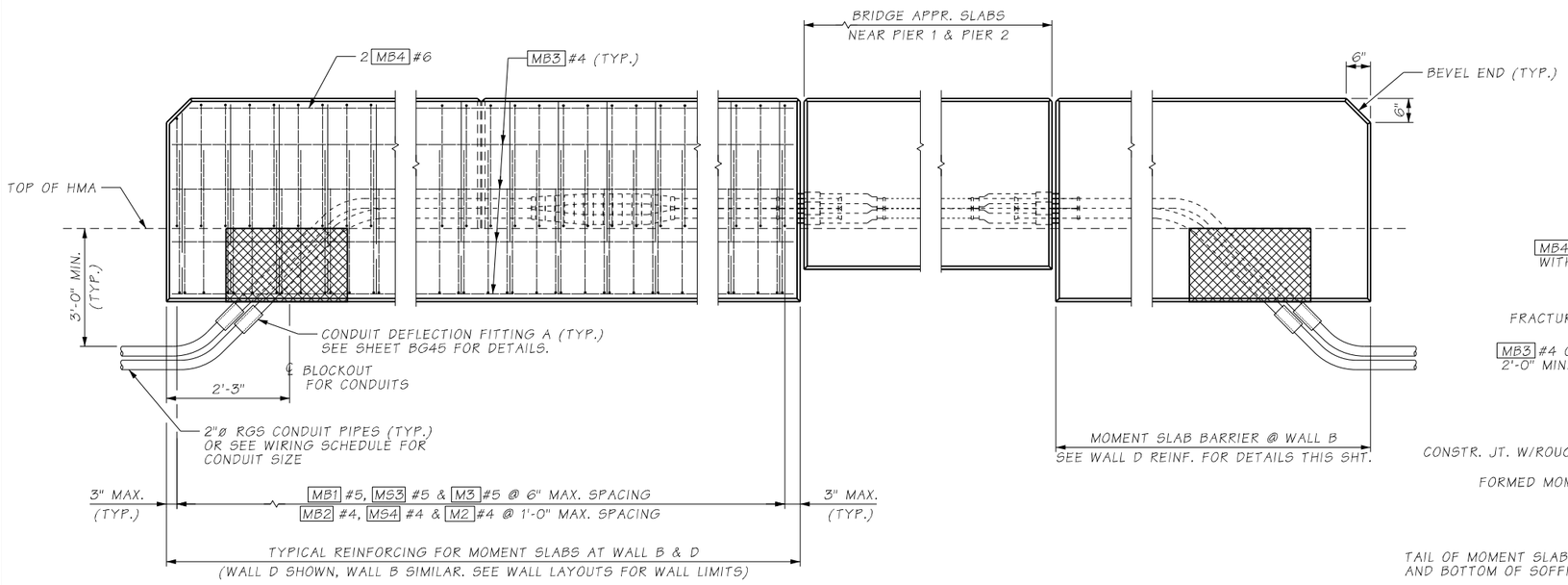

OUTSIDE ELEVATION
MOMENT SLAB BARRIER

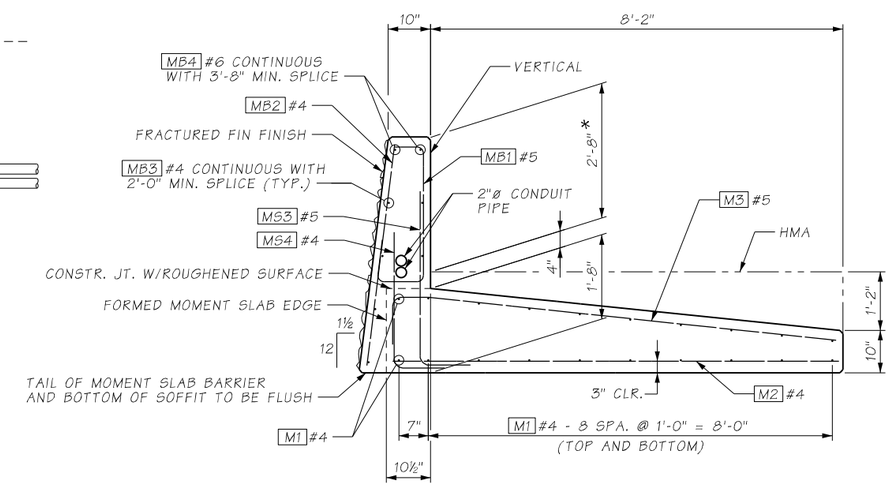

TYPICAL SECTION
MOMENT SLAB BARRIER

* MIN. HEIGHT. PEDESTRIAN BARRIER HEIGHT MAY VARY IF REQUIRED TO PROVIDE A SMOOTH PROFILE.

Bridge Design Engr.		c:\users\clarkc\pw_wsdot\d0335745\XL6050_PS_WR_SAM_015.dgn							
Supervisor					REGION NO.	STATE	FED. AID. PROJ. NO.	SHEET NO.	TOTAL SHEETS
Designed By	M. JARRAH				10	WASH.			
Checked By	J. MERTH				JOB NUMBER				
Detailed By	C.D. CLARK				22C533				
Bridge Projects Engr.	A. AMOS								
Prelim. Plan By									
Architect/Specialist		DATE	REVISION	BY	APP'D				

JOSEPH R. MERTH — STATE OF WASHINGTON — 33224 — REGISTERED PROFESSIONAL ENGINEER
SEE SHEET CT1 DATE

BRIDGE AND STRUCTURES OFFICE

Washington State Department of Transportation

SR305
SAM SNYDER CREEK
REMOVE FISH BARRIER

RETAINING WALL BARRIER 1

BRIDGE SHEET NO. WR15

SHEET 111 OF 186 SHEETS

pw:\\HQOLYMAPPPW03P.WSDOT.LOC:WSDOTDocuments_HQ\Fish Passage\QRproj\30598.92_SamSnyderCreek\Design_CAD_Sheets\WR\XL6050-PS_WR_SAM_015.dgn
SR 305 FILE NO. SHEET WR15
3/28/2023 4:07:23 PM

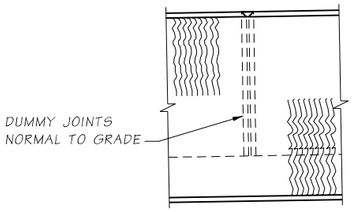

VIEW A WR15

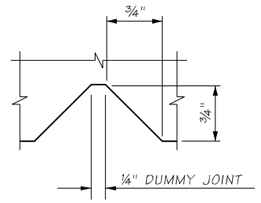

DUMMY JOINT DETAIL

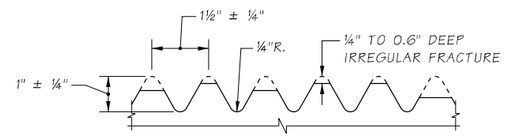

FRACTURED FIN FINISH

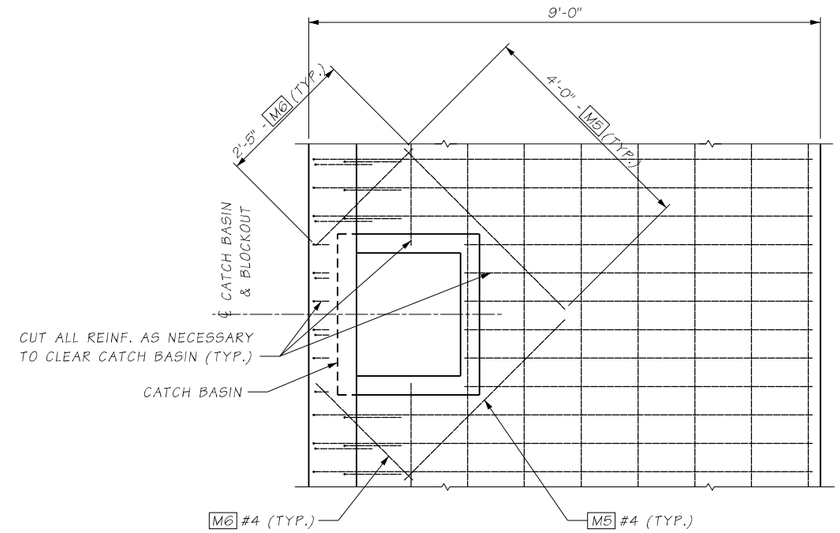

PLAN AT CATCH BASIN
MOMENT SLAB BARRIER

FOR INFORMATION NOT SHOWN SEE SHEET WR15.

JUNCTION BOX LOCATIONS

STATION	OFFSET	"TS" OR "LT"
ML STA 6019+43	48.50' LT	LT
ML STA 6019+53	48.50' LT	TS
ML STA 6020+43	48.50' LT	LT
ML STA 6020+53	48.50' LT	TS
ML STA 6025+06	48.50' LT	LT
ML STA 6025+16	48.50' LT	TS

TS = TRAFFIC SYSTEM
LT = LIGHTING SYSTEM

JUNCTION BOX LOCATIONS SHOWN ARE APPROXIMATE. CENTER JUNCTION BOX INSTALLATION BETWEEN BARRIER DUMMY JOINTS.

INSTALL ALL CONDUIT RUNS TO DRAIN TO A BRIDGE END OR PROVIDE DRAIN AT ALL LOW POINTS IN CONDUIT RUN ON BRIDGE.

BENDING DIAGRAM

ALL DIMENSIONS ARE OUT TO OUT
▽ = EPOXY COATED REINFORCING STEEL

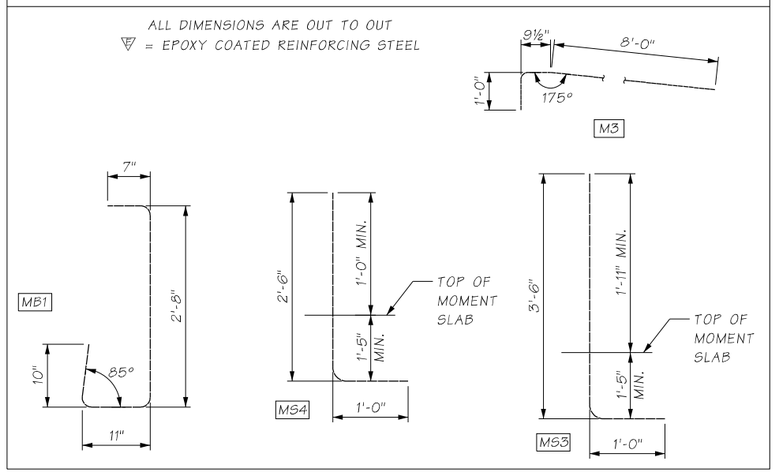

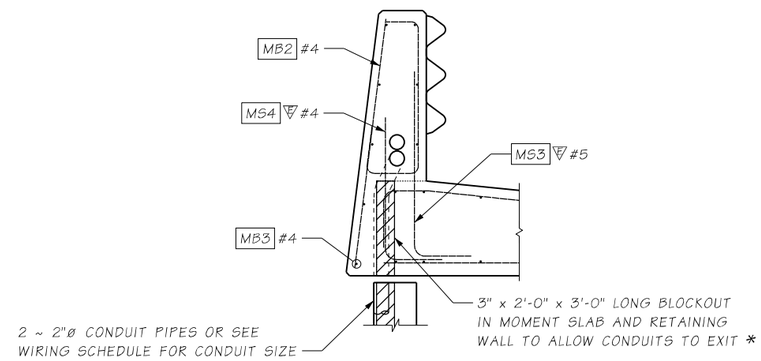

SECTION B WR15

FOR DETAILS NOT SHOWN SEE "OUTSIDE ELEVATION" AND "TYPICAL SECTION ~ MOMENT SLAB BARRIER" SHEET WR15.

* BLOCKOUT WIDTH MAY BE INCREASED TO 6" TO ALLOW CONDUITS OF A LARGER DIAMETER THAN 2" TO EXIT BARRIER OR WALL WITHOUT REBAR STEEL CONFLICT.

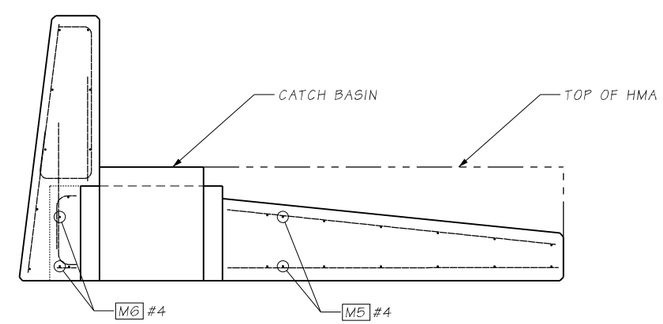

SECTION AT CATCH BASIN
MOMENT SLAB BARRIER

FOR INFORMATION NOT SHOWN SEE SHEET WR15.

Bridge Design Engr.		c:\users\clarkc\pw_wsdot\d0335745\XL6050_PS_WR_SAM_016.dgn							
Supervisor					REGION NO.	STATE	FED. AID. PROJ. NO.	SHEET NO.	TOTAL SHEETS
Designed By	M. JARRAH				10	WASH.			
Checked By	J. MERTH				JOB NUMBER				
Detailed By	C.D. CLARK				22C533				
Bridge Projects Engr.	A. AMOS								
Prelim. Plan By									
Architect/Specialist		DATE	REVISION	BY	APP'D				

JOSEPH R. MERTH STATE OF WASHINGTON 33224 REGISTERED PROFESSIONAL ENGINEER
SEE SHEET CT1
DATE

BRIDGE AND STRUCTURES OFFICE

Washington State Department of Transportation

SR305
SAM SNYDER CREEK
REMOVE FISH BARRIER

RETAINING WALL BARRIER 2

BRIDGE SHEET NO. WR16

SHEET 112 OF 186 SHEETS

pw:\\HQOLYMAPPPW03P.WSDOT.LOC.WSDOT\Documents_HQ\Fish Passage\ORproj\30518.92_SamSnyderCreek\Design_CAD_Bsee\Files\SC\WR16.dgn
SR 305 FILE NO. SHEET WR16
3/28/2023 4:11:01 PM

LEGEND

- CONDUIT AND WIRING
- EXISTING CONDUIT
- LUMINAIRE
- EXISTING LUMINAIRE
- TYPE 1 JUNCTION BOX
- TYPE 2 JUNCTION BOX
- NEMA 4X FLUSH MOUNT JUNCTION BOX
- EXISTING ELECTRICAL SERVICE CABINET

T.26N.R.2E. W.M. SEC. 31

LUMINAIRE SCHEDULE / SERVICE NO. SCB 1519

LUMINAIRE NUMBER	CIRCUIT	LOCATION STATION	LOCATION OFFSET	TYPE -DISTRIBUTION -WATTAGE	MAST ARM	H1	BASE TYPE	FOUNDATION TYPE	PLACEMENT CASE	COMMENTS
L1	--	ML 6019+40	48.5' LT				--	--	--	INSTALL ELBOW MOUNT ON BARRIER WALL PER WSDOT STD PLAN J-28.45. BARRIER FACE HAS 12:1.5 SLOPE. POLE AND LUMINAIRE NOT PART OF CONTRACT, TO BE FURNISHED AND INSTALLED BY OTHERS.
L2	--	ML 6020+50	53.0' LT				--	--	--	INSTALL ELBOW MOUNT ON BARRIER WALL PER WSDOT STD PLAN J-28.45. BARRIER FACE HAS 12:1.5 SLOPE. POLE AND LUMINAIRE NOT PART OF CONTRACT, TO BE FURNISHED AND INSTALLED BY OTHERS.

WIRE SCHEDULE

NO.	CONDUIT SIZE	CONDUCTORS	CIRCUIT	COMMENTS
1	2" PVC	2 - #8 1 GROUND - #8	A	
2	2" PVC	2 - #8 1 GROUND - #8	A	BARRIER CONDUIT FOR ILLUMINATION.
	2" PVC	EMPTY	--	BARRIER CONDUIT SPARE FOR FUTURE USE.
3	1" PVC	EMPTY	--	EMPTY FOR FUTURE USE.

NOTE:

1. JUNCTION BOXES SHALL HAVE BASIC SECURITY COLLARS PER WSDOT STD PLAN J-40.01.
2. ALL CONDUIT RUNS SHALL BE SCHEDULE 80 PVC.
3. NEMA 4X JUNCTION BOX IN BARRIER ON STRUCTURE, PER WSDOT STD PLANS J-60.11 AND J-40.36. TRAFFIC SIGNAL BOXES WILL BE EMPTY IN BARRIER.

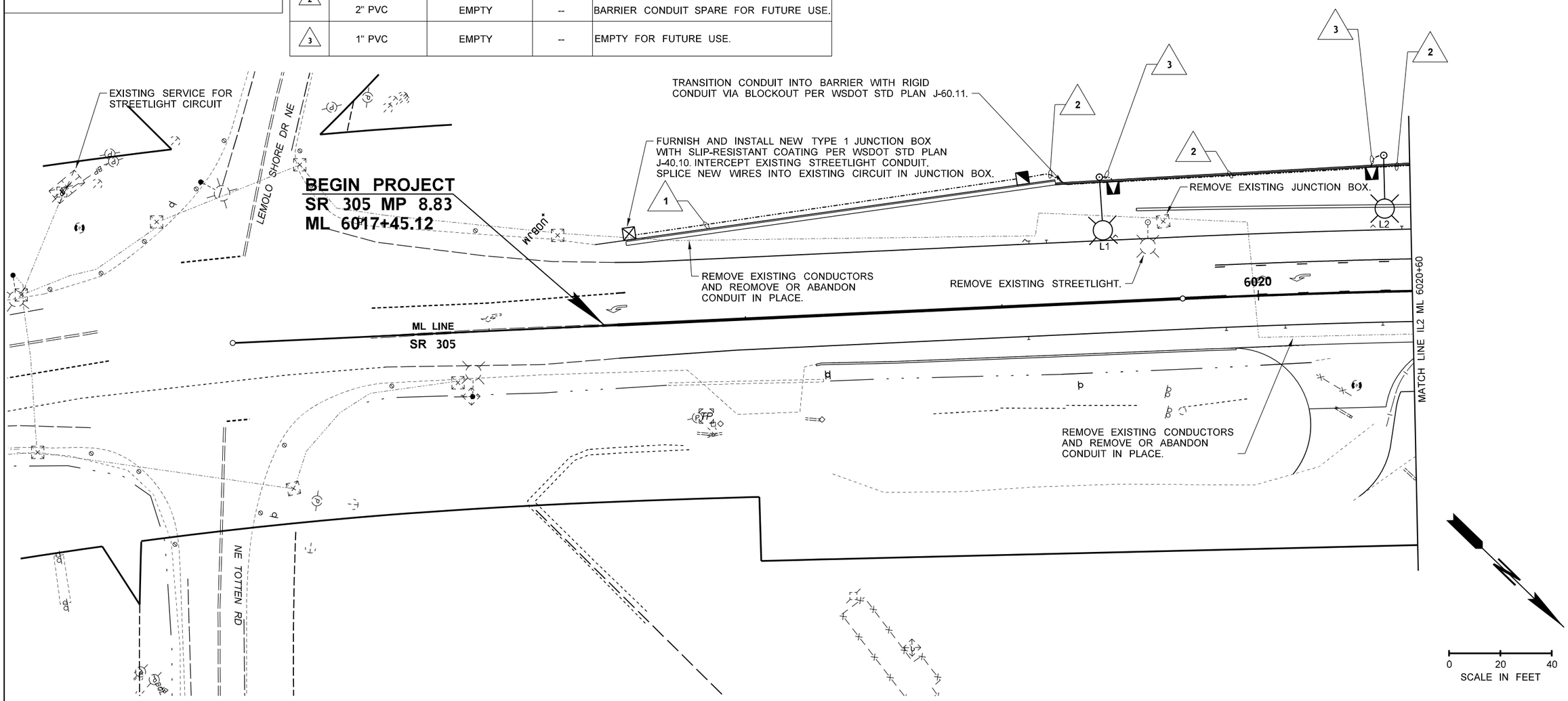

FILE NAME	c:\users\nharris\pw_wsdot\d0335746\XL6050_PS_IL_SAM_001.dgn
TIME	5:14:58 PM
DATE	3/1/2023
PLOTTED BY	nharris
DESIGNED BY	N. HARRIS
ENTERED BY	N. HARRIS
CHECKED BY	C. GRGICH
PROJ. ENGR.	A. AMOS
REGIONAL ADM.	S. ROARK

REVISION	DATE	BY

REGION NO.	STATE	FED.AID PROJ.NO.
10	WASH	
JOB NUMBER 22C533		
CONTRACT NO.		LOCATION NO. XL6050

P.E. STAMP BOX — EXPIRES 8/24/2023 — SEE SHEET CT1 — DATE

P.E. STAMP BOX — DATE

Washington State Department of Transportation

FEHR PEERS

SR 305
SAM SNYDER CREEK
REMOVE FISH BARRIER

ILLUMINATION PLAN

PLAN REF NO IL1

SHEET 113 OF 186 SHEETS

LEGEND

- CONDUIT AND WIRING
- EXISTING CONDUIT
- LUMINAIRE
- EXISTING LUMINAIRE
- TYPE 1 JUNCTION BOX
- TYPE 2 JUNCTION BOX
- NEMA 4X FLUSH MOUNT JUNCTION BOX
- EXISTING ELECTRICAL SERVICE CABINET

LUMINAIRE SCHEDULE

SERVICE NO. SCB 1519

LUMINAIRE NUMBER	CIRCUIT	LOCATION STATION	LOCATION OFFSET	TYPE - DISTRIBUTION - WATTAGE	MAST ARM	H1	BASE TYPE	COMMENTS
L3	A	ML 6021+53	51.7' LT	III - MED CUTOFF - 250HPS	12'	40'	SLIP	INSTALL ELBOW MOUNT ON BRIDGE WALL PER WSDOT STD PLAN J-28.45. BARRIER FACE HAS 12:1.5 SLOPE.
L4	A	ML 6024+53	39.2' RT	III - MED CUTOFF - 250HPS	12'	40'	SLIP	PROTECT EXISTING POLE IN PLACE. INSTALL NEW LED LUMINAIRE AND WIRING.

WIRE SCHEDULE

NO.	CONDUIT SIZE	CONDUCTORS	CIRCUIT	COMMENTS
2	2" PVC	2 - #8 1 GROUND #8	A	BARRIER CONDUIT FOR ILLUMINATION.
	2" PVC	EMPTY	--	BARRIER CONDUIT SPARE FOR FUTURE USE.
4	1" PVC	2 - #8 1 GROUND #8	A	
6	EXISTING	2 - #8 1 GROUND #8	A	REPLACE EXISTING CONDUCTORS.
7	2" PVC	EMPTY	--	
	2" PVC	EMPTY	--	

NOTES:

1. SEE WSDOT STANDARD PLAN J-28.10 FOR STREET LIGHT STANDARD.
2. ALL SPARE CONDUITS TO POSSESS A PULL TAPE AND #8 BONDING GROUND.
3. ALL CONDUIT RUNS SHALL BE SCHEDULE 80 PVC.
3. NEMA 4X JUNCTION BOX IN BARRIER ON STRUCTURE, PER WSDOT STD PLANS J-60.11 AND J-40.36. TRAFFIC SIGNAL BOXES WILL BE EMPTY IN BARRIER ON BOTH SIDES. ILLUMINATION BOXES WILL BE EMPTY ON NORTH SIDE ONLY.

BREAKER SCHEDULE EXISTING

SCB1519
120/240V

CIRCUIT	DESCRIPTION	BREAKER RATING POLES	BREAKER RATING AMPS	CONTACTOR RATING	VOLTAGE	LOAD (KVA)
---	MAIN	2P	125 AMP	---	---	---
A	EXISTING		20 AMP	30 AMP	240	0.583
BUSSWORK SHALL BE RATED AT 200 AMP MINIMUM				PEAK		0.583
				CONTINUOUS		0.583

NOTE: CONTRACTOR TO IDENTIFY THE EXISTING CIRCUIT CONNECTING TO THE EXISTING LIGHTS AND SPLICE NEW WIRES AS SHOWN IN THE WIRING PLAN.

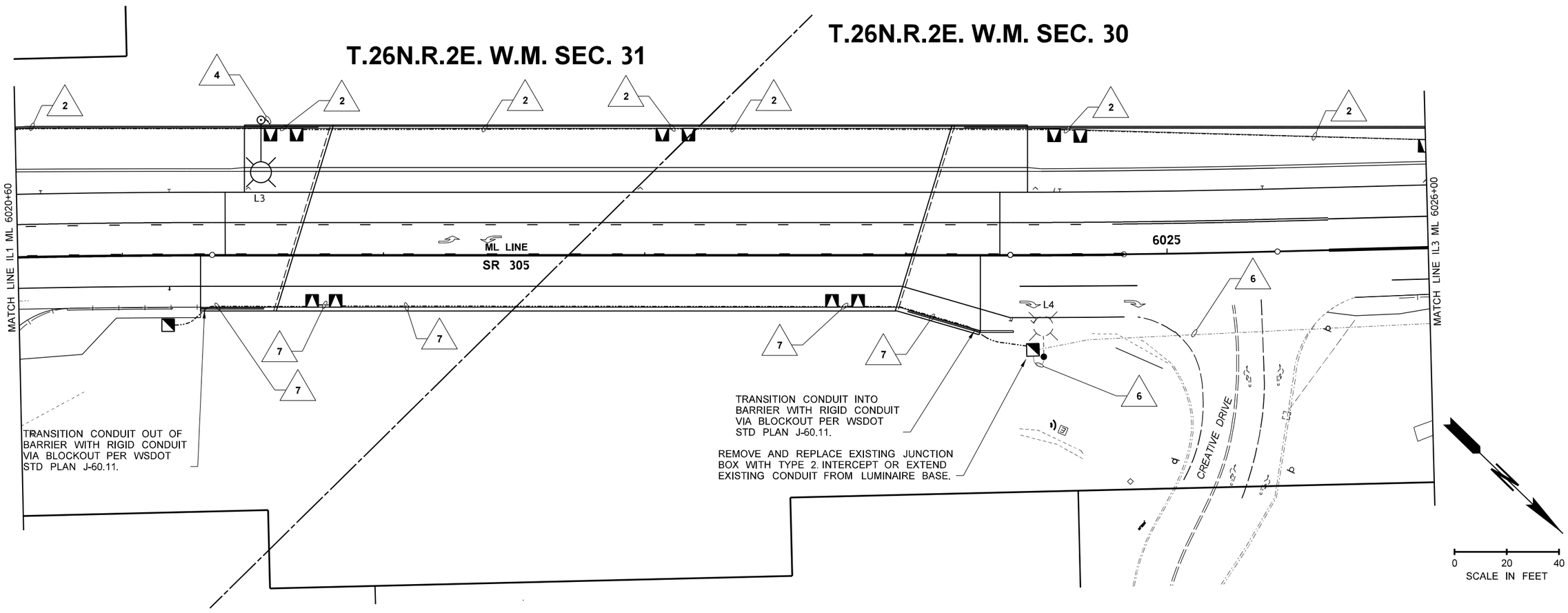

FILE NAME	c:\users\nharris\pw_wsdot\d0335746\XL6050_PS_IL_SAM_002.dgn
TIME	5:17:06 PM
DATE	3/1/2023
PLOTTED BY	nharris
DESIGNED BY	N. HARRIS
ENTERED BY	N. HARRIS
CHECKED BY	C. GRGICH
PROJ. ENGR.	A. AMOS
REGIONAL ADM.	S. ROARK

REVISION	DATE	BY

REGION NO.	STATE	FED.AID PROJ.NO.
10	WASH	
JOB NUMBER 22C533		
CONTRACT NO.		LOCATION NO. XL6050

CHRISTOPHER A. GRGICH, STATE OF WASHINGTON, 54058, REGISTERED PROFESSIONAL ENGINEER, EXPIRES 8/24/2023

SEE SHEET CT1
DATE
P.E. STAMP BOX

DATE
P.E. STAMP BOX

Washington State Department of Transportation

FEHR PEERS

SR 305
SAM SNYDER CREEK
REMOVE FISH BARRIER

ILLUMINATION PLAN

PLAN REF NO IL2

SHEET 114 OF 186 SHEETS

T.26N.R.2E. W.M. SEC. 30

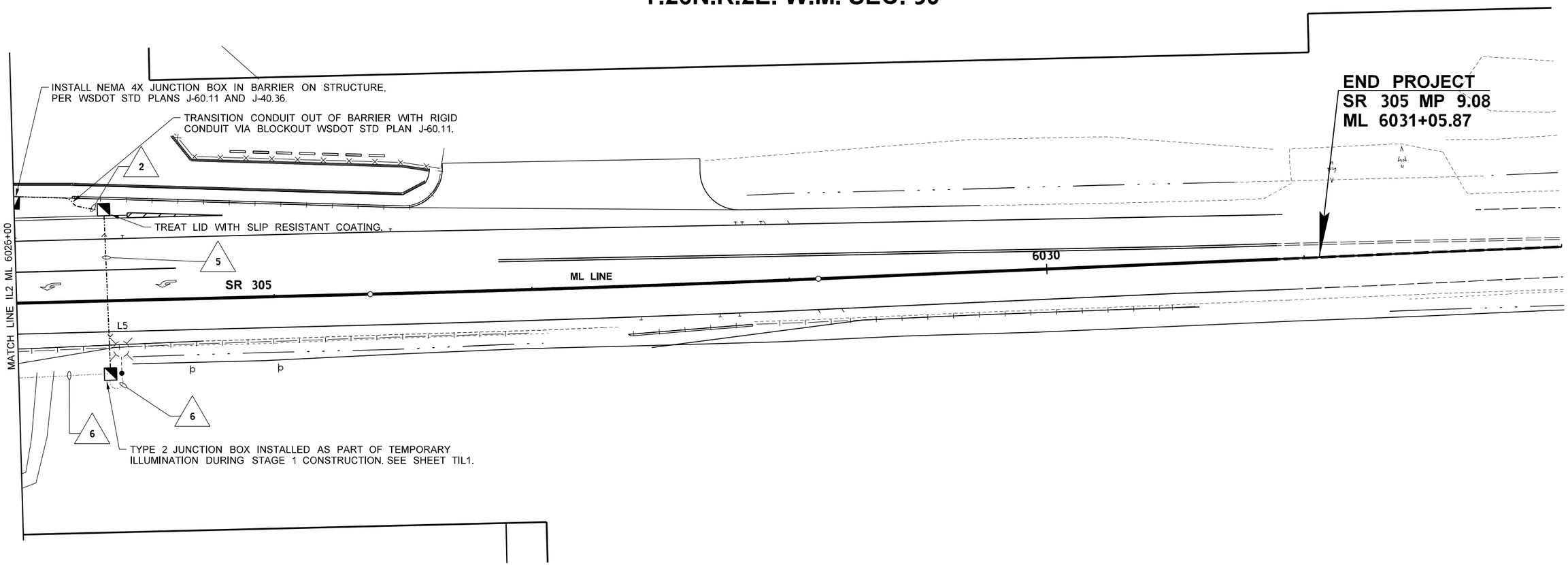

LEGEND

- CONDUIT AND WIRING
- EXISTING CONDUIT
- LUMINAIRE
- EXISTING LUMINAIRE
- TYPE 1 JUNCTION BOX
- TYPE 2 JUNCTION BOX
- NEMA 4X FLUSH MOUNT JUNCTION BOX
- EXISTING ELECTRICAL SERVICE CABINET

LUMINAIRE SCHEDULE

SERVICE NO. SCB 1519

LUMINAIRE NUMBER	CIRCUIT	LOCATION STATION	LOCATION OFFSET	TYPE - DISTRIBUTION - WATTAGE	MAST ARM	H1	BASE TYPE	COMMENTS
L5	A	ML 6026+40	28.3' RT	III - MED CUTOFF - 250HPS	12'	40'	SLIP	PROTECT EXISTING POLE IN PLACE INSTALL NEW LED LUMINAIRE AND WIRING

WIRE SCHEDULE

NO.	CONDUIT SIZE	CONDUCTORS	CIRCUIT	COMMENTS
2	2" PVC	2 - #8 1 GROUND - #8	A	BARRIER CONDUIT FOR ILLUMINATION.
	2" PVC	EMPTY	--	BARRIER CONDUIT SPARE FOR FUTURE USE.
5	2" PVC	2 - #8 1 GROUND - #8	A	
	2" PVC	SPARE	--	
6	EXISTING	2 - #8 1 GROUND - #8	A	REPLACE EXISTING CONDUCTORS.

NOTES:

1. ALL CONDUIT RUNS SHALL BE SCHEDULE 80 PVC.
2. NEMA 4X JUNCTION BOX IN BARRIER ON STRUCTURE, PER WSDOT SRD PLANS J-60.11 AND J-40.36. TRAFFIC SIGNAL BOXES WILL BE EMPTY.

0 20 40
SCALE IN FEET

FILE NAME	c:\users\nharris\pw_wsdot\d0335746\XL6050_PS_IL_SAM_003.dgn
TIME	5:18:59 PM
DATE	3/1/2023
PLOTTED BY	nharris
DESIGNED BY	N. HARRIS
ENTERED BY	N. HARRIS
CHECKED BY	C. GRGICH
PROJ. ENGR.	A. AMOS
REGIONAL ADM.	S. ROARK

REVISION | DATE | BY

REGION NO. 10 | STATE WASH | FED.AID PROJ.NO.

JOB NUMBER 22C533

CONTRACT NO.

LOCATION NO. XL6050

CHRIS ANTON GRGICH, STATE OF WASHINGTON, 54058, REGISTERED PROFESSIONAL ENGINEER, EXPIRES 8/24/2023

SEE SHEET CT1
DATE
P.E. STAMP BOX

DATE
P.E. STAMP BOX

Washington State Department of Transportation

FEHR PEERS

SR 305
SAM SNYDER CREEK
REMOVE FISH BARRIER

ILLUMINATION PLAN

PLAN REF NO IL3

SHEET 115 OF 186 SHEETS

T.26N.R.2E. W.M. SEC. 31

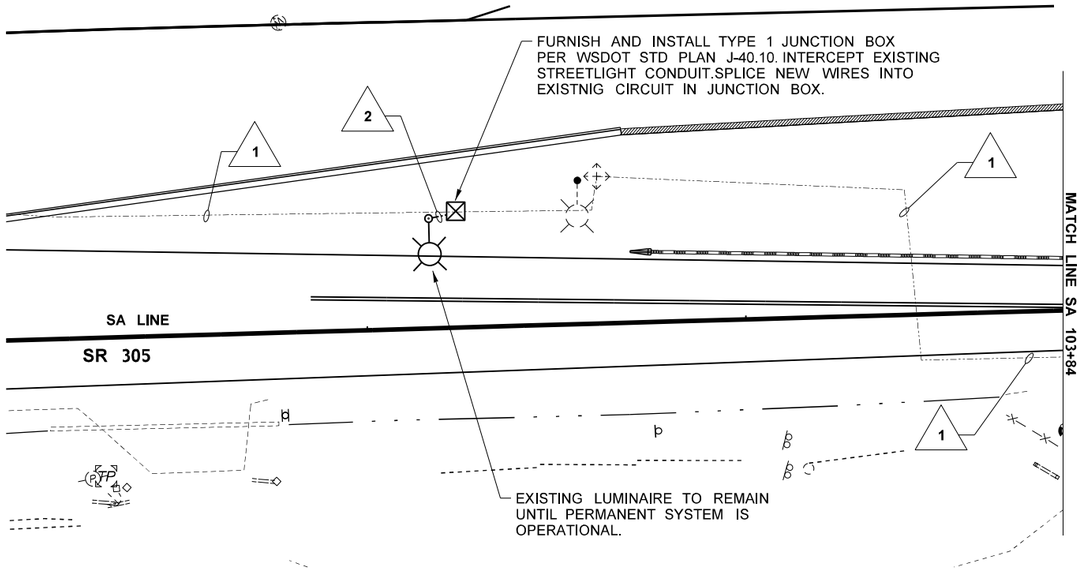

T.26N.R.2E. W.M. SEC. 30

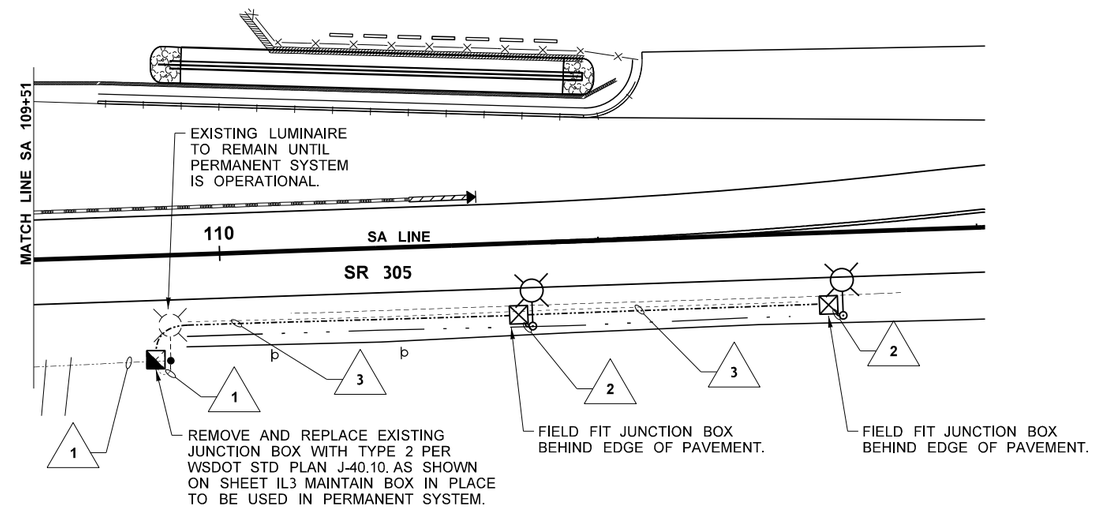

NOTE:

1. JUNCTION BOXES SHALL HAVE BASIC SECURITY COLLARS PER WSDOT STD PLAN J-40.01
2. ALL CONDUIT RUNS SHALL BE SCHEDULE 80 PVC.
3. UNLESS OTHERWISE STATED IN PLANS, ALL NEW JUNCTION BOXES ARE TEMPORARY AND SHALL BE REMOVED UPON COMPLETION OF STAGE 1 CONSTRUCTION PHASE.
4. TEMPORARY LUMINAIRES SHALL BE POWERED FROM EXISTING SERVICE CABINET LOCATED ON THE SE CORNER OF SR 305 AND LEMOLO SHORE DR NE.
5. EXISTING LUMINAIRES SHALL REMAIN IN PLACE AND OPERATIONAL UNTIL PERMANENT ILLUMINATION SYSTEM IS INSTALLED
6. TEMPORARY ILLUMINATION SYSTEM IS DESIGNED PER WSDOT DESIGN MANUAL CHAPTER 1040. ANY MODIFICATIONS OR ADDITIONS TO THE TEMPORARY ILLUMINATION SYSTEM OR PLAN SHALL BE REVIEWED AND APPROVED BY THE ENGINEER PRIOR TO INSTALLATION.
7. TEMPORARY ILLUMINATION SHALL BE INSTALLED PRIOR TO THE START OF STAGE 1 CONSTRUCTION, AND SHALL BE MAINTAINED AND OPERATIONAL THROUGHOUT THE ENTIRETY OF STAGE 1. THE TEMPORARY ILLUMINATION SHALL NOT BE REMOVED UNTIL ALL STAGE 1 CONSTRUCTION WORK IS COMPLETE AND BARRIERS ARE REMOVED FROM THE VEHICLE CLEAR ZONE.

BREAKER SCHEDULE EXISTING — **SCB1519 120/240V**

CIRCUIT	DESCRIPTION	BREAKER RATING POLES	BREAKER RATING AMPS	CONTACTOR RATING	VOLTAGE	LOAD (KVA)
---	MAIN	1P	125 AMP	---	---	---
A	EXISTING	1P	20 AMP	30 AMP	240	1.278
BUSSWORK SHALL BE RATED AT 200 AMP MINIMUM				PEAK		1.278
				CONTINUOUS		1.278

NOTE: CONTRACTOR TO IDENTIFY THE EXISTING CIRCUIT CONNECTING TO THE EXISTING LIGHTS AND SPLICE NEW WIRES AS SHOWN IN THE WIRING PLAN.

WIRE SCHEDULE

NO.	CONDUIT SIZE	CONDUCTORS	CIRCUIT	COMMENTS
1	EXISTING	2 - #8 1 GROUND - #8	A	
2	1" PVC	2 - #8 1 GROUND - #8	A	
3	2" PVC	2 - #8 1 GROUND - #8	A	

LEGEND

- CONDUIT AND WIRING
- EXISTING CONDUIT
- LUMINAIRE
- EXISTING LUMINAIRE
- TYPE 1 JUNCTION BOX
- TYPE 2 JUNCTION BOX

LUMINAIRE SCHEDULE — **SERVICE NO. SCB 1519**

LUMINAIRE NUMBER	CIRCUIT	LOCATION STATION	LOCATION OFFSET	TYPE -DISTRIBUTION -WATTAGE	MAST ARM	H1	BASE TYPE	COMMENTS
L1	A	SA 102+17	29.0' LT	III - MED CUTOFF - 250HPS	12'	30'	--	INSTALL NEW TEMPORARY LUMINAIRE ON TIMBER POLE PER WSDOT STD PLAN J-15.10.
L2	A	SA 103+05	34.1' LT	III - MED CUTOFF - 250HPS	12'	40'	SLIP	EXISTING POLE AND LUMINAIRE.
L3	A	SA 109+95	27.9' RT	III - MED CUTOFF - 250HPS	12'	40'	SLIP	EXISTING POLE AND LUMINAIRE.
L4	A	SA 110+82	22' RT	III - MED CUTOFF - 250HPS	12'	30'	--	INSTALL NEW TEMPORARY LUMINAIRE ON TIMBER POLE PER WSDOT STD PLAN J-15.10.
L5	A	SA 111+64	22' RT	III - MED CUTOFF - 250HPS	12'	30'	--	INSTALL NEW TEMPORARY LUMINAIRE ON TIMBER POLE PER WSDOT STD PLAN J-15.10.

0 20 40
SCALE IN FEET

FILE NAME	c:\users\nharris\pw_wsdot\d0335746\XL6050_PS_TIL_SAM_001.dgn
TIME	2:22:08 PM
DATE	3/17/2023
PLOTTED BY	nharris
DESIGNED BY	N. HARRIS
ENTERED BY	N. HARRIS
CHECKED BY	C. GRGICH
PROJ. ENGR.	A. AMOS
REGIONAL ADM.	S. ROARK

REVISION | DATE | BY

REGION NO. 10 | STATE WASH | FED.AID PROJ.NO.

JOB NUMBER 22C533

CONTRACT NO.

LOCATION NO. XL6050

STATE OF WASHINGTON — CHRISTOPHER ANTON GRGICH — 54068 — REGISTERED PROFESSIONAL ENGINEER — EXPIRES 8/24/2023

SEE SHEET CT1 DATE

P.E. STAMP BOX

DATE

P.E. STAMP BOX

Washington State Department of Transportation

FEHR PEERS

SR 305
SAM SNYDER CREEK
REMOVE FISH BARRIER

TEMPORARY ILLUMINATION PLAN

PLAN REF NO TIL1

SHEET 116 OF 186 SHEETS

SIGN SPECIFICATIONS

SIGN NO.	SIGN CODE NUMBER	SIGN DESCRIPTION	LOCATION (STATION/OFFSET)	SIGN SIZE		SHEETING TYPE	LETTER SIZE OR CODE	POST MATERIAL	POST SIZE (INCH X INCH)	POST LENGTH		CLEARANCE		REMARKS
				X (INCH)	Y (INCH)					H 1	H 2	V	W	
SN1-1A	-	KITSAP COUNTY BUS STOP	ML 6018+31.0, 23.3' RT	12	18	III OR IV	STANDARD	STEEL	2.5 x 2.5	11.2	-	7	11.3	REMOVE SIGN / INSTALL NEW SIGN ON NEW POST BY OTHERS. COORDINATE WITH KITSAP TRANSIT.
SN1-1B	-	ROUTE 390 / 333	"	12	18	III OR IV	STANDARD	"	"	11.2	-	7	11.3	SAME AS SIGN SN1-1A
SN2-2A	W2-1	CROSS ROAD SYMBOL	ML 6021+56.00, 50.00' LT	48	48	III OR IV	STANDARD	STEEL	STEEL	13.8	-	7	10.2	REMOVE SIGN AND POST FOR CONST. MOUNT SIGN ON BARRIER PER STD PLAN G-26.10. (CN1) (CN4)
SN2-2B	D3-302	<TOTTEN RD NE, LEMOLO SHORE DR NE>	"	36	48	III OR IV	STANDARD	"	"	13.8	-	5	10.2	SAME AS SIGN SN2-2A
SN2-3A	W2-1	CROSS ROAD SYMBOL	ML 6021+56.00, 22.00' RT	48	48	III OR IV	STANDARD	STEEL	2.5 X 2.5	13.8	-	7	26	REMOVE SIGN AND POST FOR CONST. MOUNT SIGN ON BARRIER PER STD PLAN G-26.10. (CN1) (CN4)
SN2-3B	D3-302	<TOTTEN RD NE, LEMOLO SHORE DR NE>	"	36	48	III OR IV	STANDARD	-	-	13.8	-	5	26	SAME AS SIGN SN2-1A
SN2-4A	-	KITSAP COUNTY BUS STOP	ML 6024+35.7, 31.8' RT	12	18	III OR IV	STANDARD	STEEL	2.5 X 2.5	13.9	-	7	7.8	REMOVE SIGN / INSTALL NEW SIGN ON NEW POST BY OTHERS. COORDINATE WITH KITSAP TRANSIT.
SN2-4B	-	ROUTE 390 / 333	"	12	18	III OR IV	STANDARD	"	"	13.9	-	7	7.8	SAME AS SIGN SN2-3A
SN3-5	W2-601	LEFT TURNS AHEAD	ML 6026+42.2, 43.0' LT	30	30	III OR IV	STANDARD	STEEL	2.5 x 2.5	12.4	-	7	4	REMOVE SIGN/POST FOR CONST. RESET AT 6027+85.0, 25.0' RT (CN 2)(CN3)
SN3-6	R2-1	SPEED LIMIT 50	ML 6028+37.9, 27.0' RT	24	30	III OR IV	STANDARD	STEEL	2.5 x 2.5	12.7	-	7	13	REMOVE SIGN/POST FOR CONST. RESET AT 6027+85.0, 25.0' RT (CN 1)(CN3)

CONSTRUCTION NOTES (CN):

1. WIDTH MEASUREMENT FROM CENTER OF POST TO EDGE OF TRAVELED WAY
2. WIDTH MEASUREMENT FROM CENTER OF POST TO FACE OF CURB
3. NEW STEEL POST SHALL HAVE SLIP BASE ASSEMBLY.
4. BARRIER MOUNTED POST SHALL HAVE FIXED BASE ASSEMBLY.

FILE NAME	c:\users\whltekev\documents\d0335750\XL6050_PS_SS_SAM_001.dgn
TIME	11:55:25 AM
DATE	3/27/2023
PLOTTED BY	whitekev
DESIGNED BY	T. MASTERSON
ENTERED BY	T. MASTERSON
CHECKED BY	K. HOUSE
PROJ. ENGR.	A. AMOS
REGIONAL ADM.	S. ROARK

REVISION | DATE | BY

REGION NO. 10 | STATE WASH | FED.AID PROJ.NO.

JOB NUMBER 22C533

CONTRACT NO.

LOCATION NO. XL6050

KEVIN L. HOUSE STATE OF WASHINGTON 40824 REGISTERED PROFESSIONAL ENGINEER

SEE SHEET CT1 DATE

P.E. STAMP BOX

DATE

P.E. STAMP BOX

Washington State Department of Transportation

Parametrix

SR 305
SAM SNYDER CREEK
REMOVE FISH BARRIER

SIGN SPECIFICATIONS

PLAN REF NO SS1

SHEET 117 OF 186 SHEETS

GENERAL NOTES:

1. POST LENGTHS AND "W" VALUES SHOWN ARE APPROXIMATE FINAL VALUES SHALL BE DETERMINED IN THE FIELD PRIOR TO FABRICATION AND INSTALLATION.
2. FOR CODE REFERENCES AND STANDARD DETAILS SEE WASHINGTON STATE SIGN FABRICATION MANUAL.
3. FOR STEEL SIGN SUPPORT INSTALLATION DETAILS, SEE WSDOT STANDARD PLAN G-24.40.
4. FOR GROUND MOUNTED SIGN PLACEMENT DETAILS SEE WSDOT STANDARD PLAN G-20-10.
5. FOR STEEL SIGN SUPPORT TYPE ST-4 INSTALLATION DETAILS, SEE WSDOT STANDARD PLAN G-24.50.

CONSTRUCTION NOTES:

1 PROTECT IN PLACE

T.26N.R.2E. W.M. SEC. 31

LEGEND

- SIGN NOTE
- R-___ SIGN REMOVAL NOTE
- NEW LOCATION / SIGN RELOCATION NOTE / EXISTING LOCATION
- EXISTING SIGN ON POST
- NEW/RELOCATED SIGN ON POST
- EXISTING SIGN ON DOUBLE POST
- EXISTING DOUBLE SIGN
- NEW/RELOCATED DOUBLE SIGN
- RETAINING WALL
- LUMINAIRE
- EXISTING LUMINAIRE

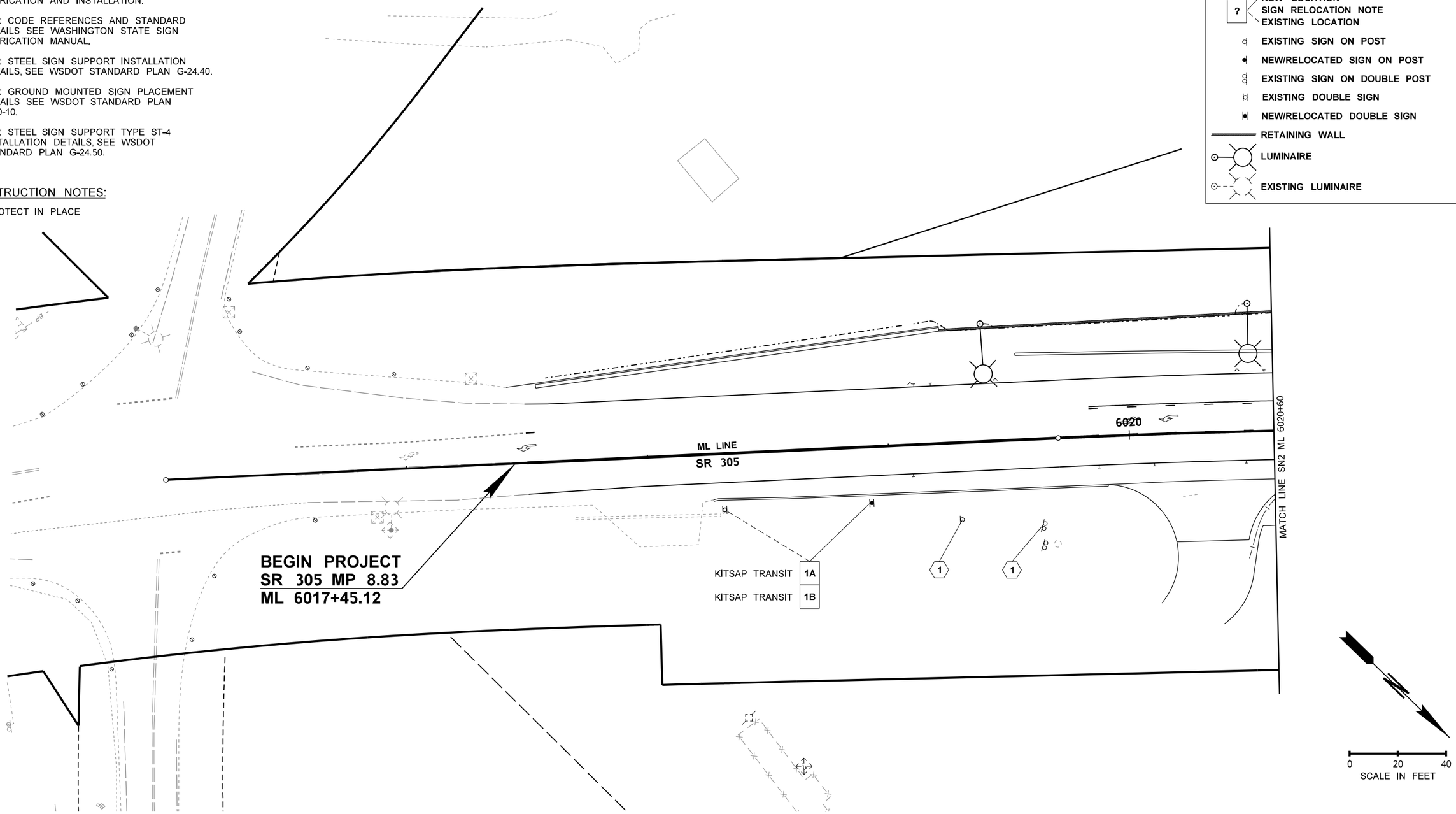

FILE NAME	c:\users\whltekev\documents\d0335750\XL6050_PS_SN_SAM_001.dgn						
TIME	11:55:26 AM				REGION NO. 10	STATE WASH	FED.AID PROJ.NO.
DATE	3/27/2023						
PLOTTED BY	whitekev				JOB NUMBER 22C533		
DESIGNED BY	T. MASTERSON						
ENTERED BY	T. MASTERSON						
CHECKED BY	K. HOUSE				CONTRACT NO.		LOCATION NO. XL6050
PROJ. ENGR.	A. AMOS						
REGIONAL ADM.	S. ROARK	REVISION	DATE	BY			

KEVIN L. HOUSE, STATE OF WASHINGTON, 41824, REGISTERED PROFESSIONAL ENGINEER

SEE SHEET CT1 DATE
P.E. STAMP BOX

DATE
P.E. STAMP BOX

Washington State Department of Transportation

Parametrix

SR 305
SAM SNYDER CREEK
REMOVE FISH BARRIER

SIGNING PLAN

PLAN REF NO SN1

SHEET 118 OF 186 SHEETS

GENERAL NOTES:

1. POST LENGTHS AND "W" VALUES SHOWN ARE APPROXIMATE FINAL VALUES SHALL BE DETERMINED IN THE FIELD PRIOR TO FABRICATION AND INSTALLATION.
2. FOR CODE REFERENCES AND STANDARD DETAILS SEE WASHINGTON STATE SIGN FABRICATION MANUAL.
3. FOR STEEL SIGN SUPPORT INSTALLATION DETAILS, SEE WSDOT STANDARD PLAN G-24.40.
4. FOR GROUND MOUNTED SIGN PLACEMENT DETAILS SEE WSDOT STANDARD PLAN G-20-10.
5. FOR STEEL SIGN SUPPORT TYPE ST-4 INSTALLATION DETAILS, SEE WSDOT STANDARD PLAN G-24.50.

CONSTRUCTION NOTES:

1 PROTECT IN PLACE

LEGEND

- SIGN NOTE
- R-___ SIGN REMOVAL NOTE
- ? NEW LOCATION / SIGN RELOCATION NOTE / EXISTING LOCATION
- EXISTING SIGN ON POST
- NEW/RELOCATED SIGN ON POST
- EXISTING SIGN ON DOUBLE POST
- EXISTING DOUBLE SIGN
- NEW/RELOCATED DOUBLE SIGN
- RETAINING WALL
- LUMINAIRE
- EXISTING LUMINAIRE

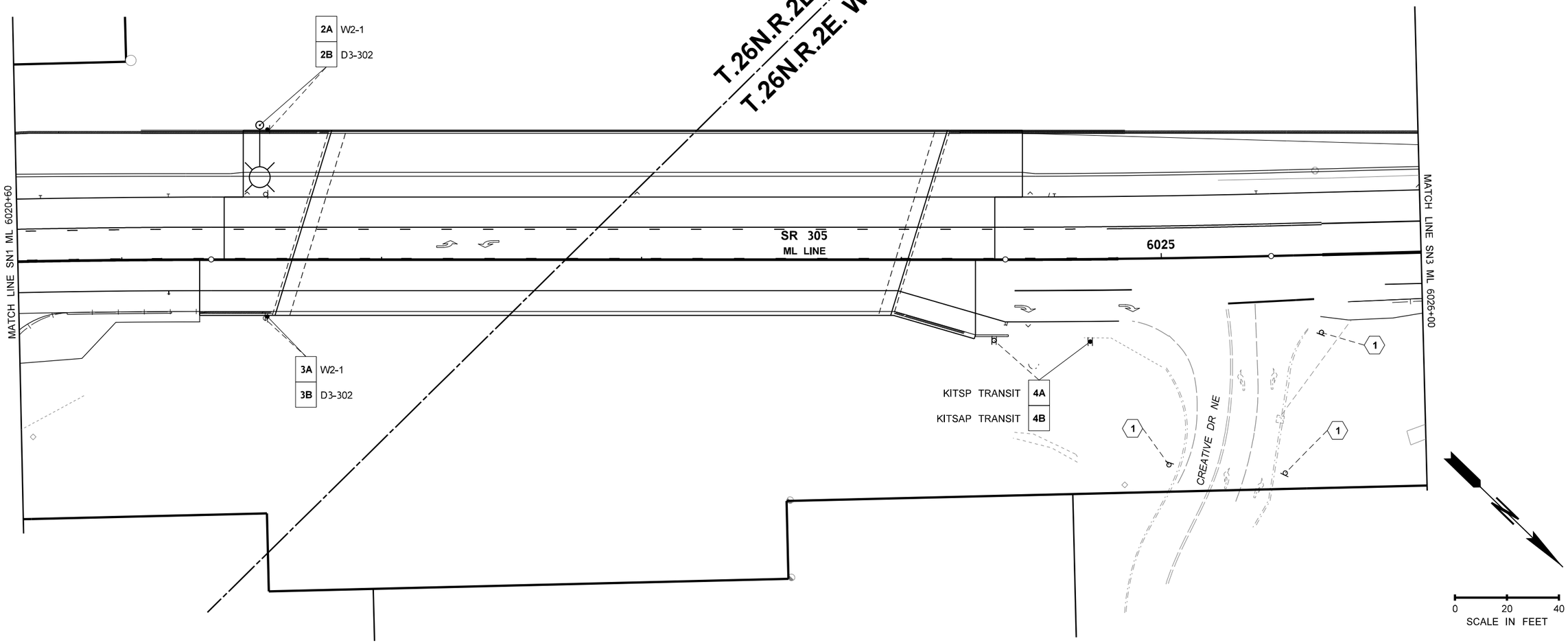

FILE NAME	c:\users\whltekev\documents\d0335750\XL6050_PS_SN_SAM_002.dgn						
TIME	11:55:28 AM				REGION NO. 10	STATE WASH	FED.AID PROJ.NO.
DATE	3/27/2023						
PLOTTED BY	whitekev				JOB NUMBER 22C533		
DESIGNED BY	T. MASTERSON						
ENTERED BY	T. MASTERSON				CONTRACT NO.	LOCATION NO. XL6050	
CHECKED BY	K. HOUSE						
PROJ. ENGR.	A. AMOS						
REGIONAL ADM.	S. ROARK	REVISION	DATE	BY			

KEVIN L. HOUSE STATE OF WASHINGTON 18824 REGISTERED PROFESSIONAL ENGINEER

SEE SHEET CT1 DATE

P.E. STAMP BOX

DATE

P.E. STAMP BOX

Washington State Department of Transportation

Parametrix

SR 305
SAM SNYDER CREEK
REMOVE FISH BARRIER

SIGNING PLAN

PLAN REF NO SN2

SHEET 119 OF 186 SHEETS

T.26N.R.2E. W.M. SEC. 30

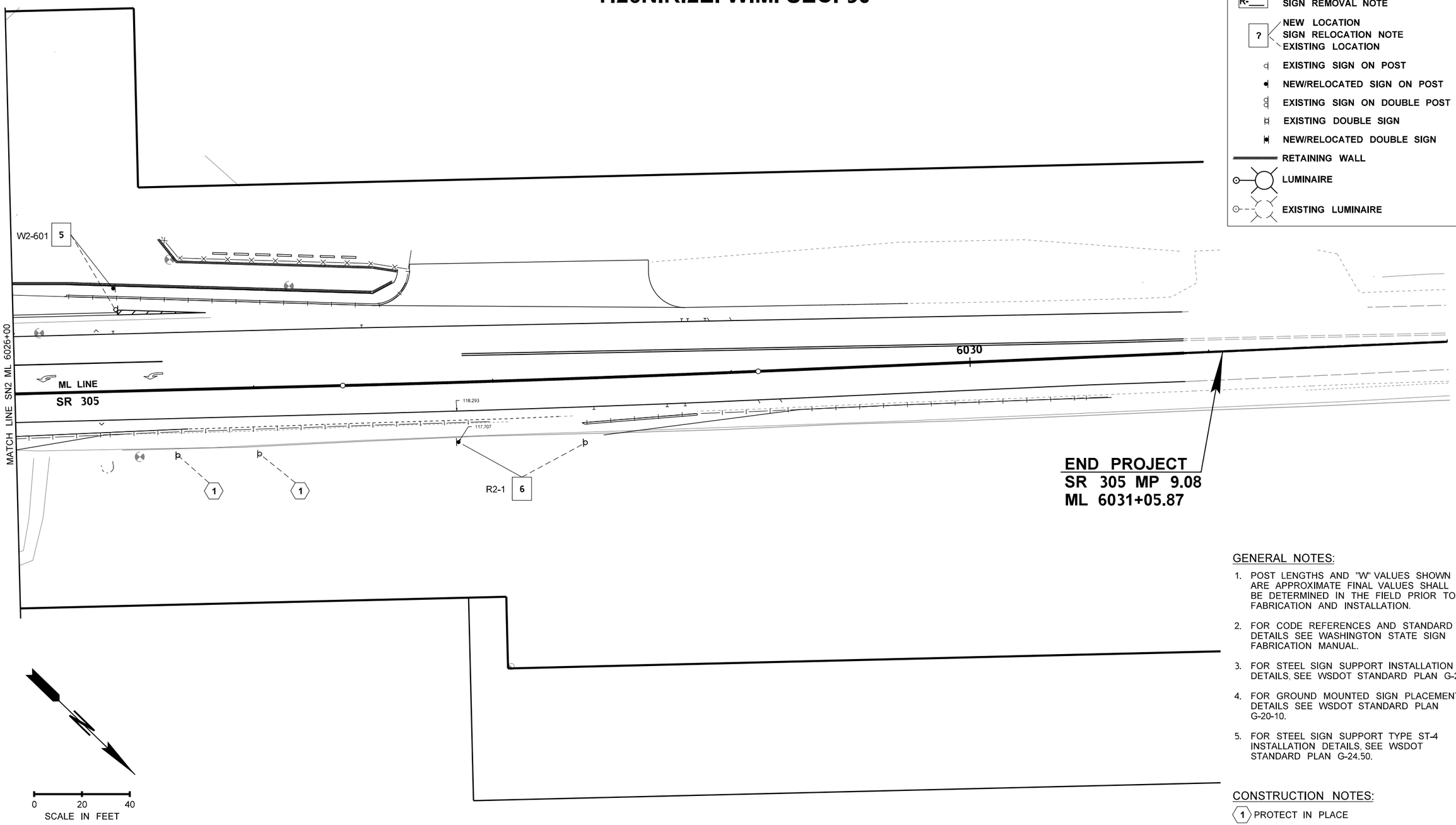

LEGEND

- SIGN NOTE
- SIGN REMOVAL NOTE
- NEW LOCATION / SIGN RELOCATION NOTE / EXISTING LOCATION
- EXISTING SIGN ON POST
- NEW/RELOCATED SIGN ON POST
- EXISTING SIGN ON DOUBLE POST
- EXISTING DOUBLE SIGN
- NEW/RELOCATED DOUBLE SIGN
- RETAINING WALL
- LUMINAIRE
- EXISTING LUMINAIRE

GENERAL NOTES:

1. POST LENGTHS AND "W" VALUES SHOWN ARE APPROXIMATE FINAL VALUES SHALL BE DETERMINED IN THE FIELD PRIOR TO FABRICATION AND INSTALLATION.
2. FOR CODE REFERENCES AND STANDARD DETAILS SEE WASHINGTON STATE SIGN FABRICATION MANUAL.
3. FOR STEEL SIGN SUPPORT INSTALLATION DETAILS, SEE WSDOT STANDARD PLAN G-24.40.
4. FOR GROUND MOUNTED SIGN PLACEMENT DETAILS SEE WSDOT STANDARD PLAN G-20-10.
5. FOR STEEL SIGN SUPPORT TYPE ST-4 INSTALLATION DETAILS, SEE WSDOT STANDARD PLAN G-24.50.

CONSTRUCTION NOTES:

1 PROTECT IN PLACE

FILE NAME	c:\users\whltekev\documents\d0335750\XL6050_PS_SN_SAM_003.dgn						
TIME	11:55:29 AM				REGION NO. 10	STATE WASH	FED.AID PROJ.NO.
DATE	3/27/2023						
PLOTTED BY	whitekev				JOB NUMBER 22C533		
DESIGNED BY	T. MASTERSON						
ENTERED BY	T. MASTERSON				CONTRACT NO.	LOCATION NO. XL6050	
CHECKED BY	K. HOUSE						
PROJ. ENGR.	A. AMOS						
REGIONAL ADM.	S. ROARK	REVISION	DATE	BY			

KEVIN L. HOUSE STATE OF WASHINGTON 46824 REGISTERED PROFESSIONAL ENGINEER

SEE SHEET CT1 DATE

P.E. STAMP BOX

DATE

P.E. STAMP BOX

Washington State Department of Transportation

Parametrix

SR 305
SAM SNYDER CREEK
REMOVE FISH BARRIER

SIGNING PLAN

PLAN REF NO SN3

SHEET 120 OF 186 SHEETS

CURVE DATA

P.I. STATION	DELTA	RADIUS	TANGENT	LENGTH	BK. TANGENT BRG.
ML 6020+52.47	2°41'00"RT	3,500.0'	81.97'	163.91'	N 46° 48'13" W
ML 6024+91.15	1 27'53"LT	4,000.0'	51.14'	102.27'	N 44°07'13" W

SECTIONS 30 & 31, T.26N. R.2E. W.M.

SR 305

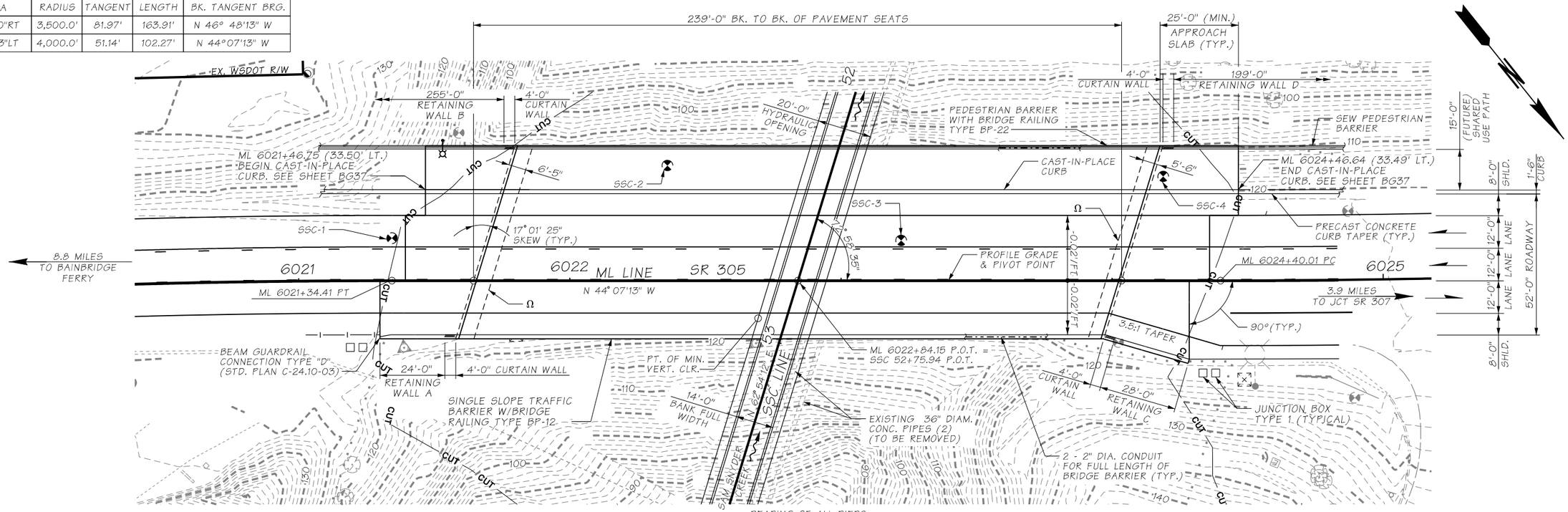

PLAN

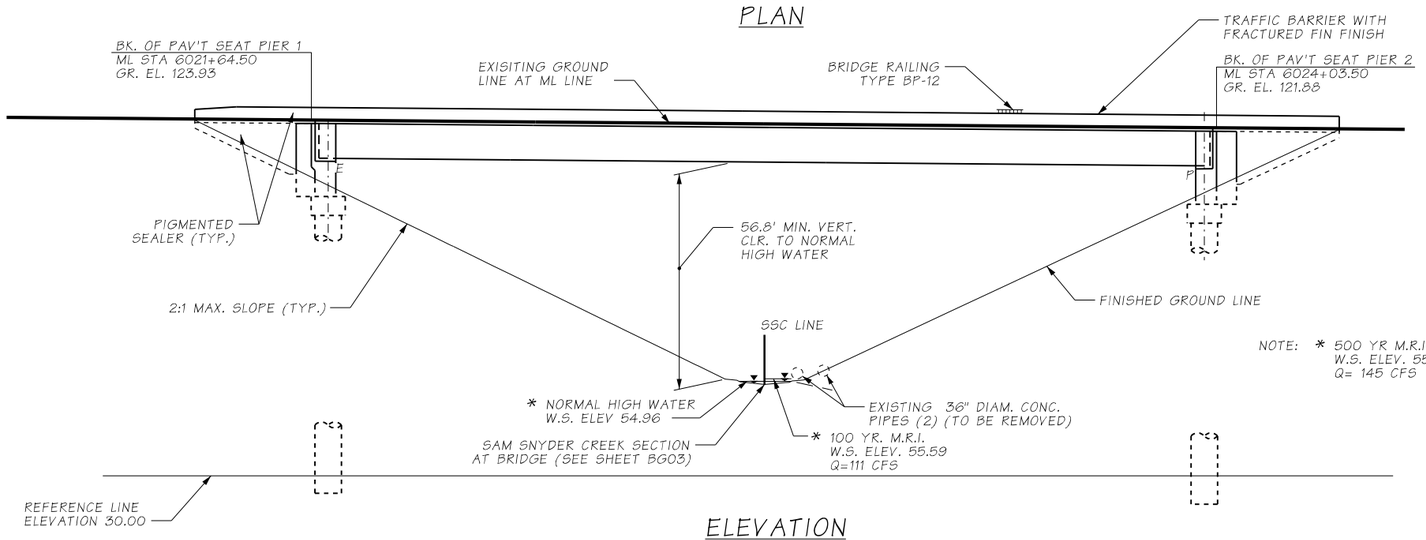

ELEVATION

GRADE ELEVATION SHOWN ARE FINISH GRADES AT TOP OF BRIDGE DECK ON ML LINE AND ARE EQUAL TO PROFILE GRADE. SEE STANDARD PLAN A-50.10 FOR EMBANKMENT DETAILS AT BRIDGE ENDS.

LEGEND

- SOIL BORING
- Ω FRONT FACE OF ABUTMENT WALL
- E EXPANSION BEARING
- P PINNED BEARING

* STREAM ELEVATIONS TAKEN AT STA. SSC 52+60

NOTE: * 500 YR M.R.I. W.S. ELEV. 55.84 Q= 145 CFS

COMPOSITE STEEL PLATE GIRDERS LOADING: HL-93

SEISMIC OPERATIONAL CLASSIFICATION: ORDINARY

DATUM

N.A.V.D. 1988

Bridge Design Engr.	A. LELAND	c:\users\schicvin\pw_wsdot\d0335751\XL6050_PS_BG_SAM_LYT.dgn			REGION NO.	STATE	FED. AID. PROJ. NO.	SHEET NO.	TOTAL SHEETS
Supervisor					10	WASH.			
Designed By	N. CABLE				JOB NUMBER				
Checked By	J. MERTH				22C533				
Detailed By	C.D. CLARK								
Bridge Projects Engr.	A. AMOS								
Prelim. Plan By									
Architect/Specialist		DATE	REVISION	BY	APP'D				

SHANE L. BROWN — STATE OF WASHINGTON — 49140 — STRUCTURAL ENGINEER — PROFESSIONAL ENGINEER

SEE SHEET CT1 DATE

BRIDGE AND STRUCTURES OFFICE

Washington State Department of Transportation

SR305
SAM SNYDER CREEK
REMOVE FISH BARRIER

BRIDGE LAYOUT

BRIDGE SHEET NO. BG01

SHEET 121 OF 186 SHEETS

pw:\\WQOLYMAPPPW03P.WSDOT.LOC:WSDOT\Documents_HQ\Fish Passage\ORproj\30518.92_SamSnyderCreek\Design_CAD_Sheets\390-BridgeStrPlan\XL6050_BB_BG_SAM_LYT.dgn
SR 305 FILE NO. SHEET BG01
3/23/2023 11:54:28 AM

GENERAL NOTES

1. ALL MATERIAL AND WORKMANSHIP SHALL BE IN ACCORDANCE WITH THE REQUIREMENTS OF THE WASHINGTON STATE DEPARTMENT OF TRANSPORTATION STANDARD SPECIFICATIONS FOR ROAD, BRIDGE, AND MUNICIPAL CONSTRUCTION DATED 2023.

2. THIS STRUCTURE HAS BEEN DESIGNED IN ACCORDANCE WITH THE REQUIREMENTS OF THE AASHTO LRFD BRIDGE DESIGN SPECIFICATIONS 9TH EDITION 2020. DEAD LOAD INCLUDES ADDITIONAL FUTURE WEARING SURFACE OF 35 POUNDS PER SQUARE FOOT.

3. THE SEISMIC DESIGN OF THIS STRUCTURE HAS BEEN COMPLETED IN ACCORDANCE WITH THE REQUIREMENTS OF THE AASHTO GUIDE SPECIFICATIONS FOR LRFD SEISMIC BRIDGE DESIGN 2ND EDITION 2011 WITH INTERIMS THROUGH 2015, USING SEISMIC DESIGN CATEGORY C, SITE CLASS C, A PEAK GROUND ACCELERATION OF 0.51, AND 0.2 SECOND AND 1.0 SECOND SPECTRAL ACCELERATION OF 1.169 AND 0.432, RESPECTIVELY.

4. THE CONCRETE IN BRIDGE DECK SHALL BE CLASS 4000D. THE CONCRETE IN BRIDGE APPROACH SLABS SHALL BE CLASS 4000A. THE CONCRETE IN THE SHAFTS SHALL BE CLASS 5000P. ALL OTHER CAST-IN-PLACE CONCRETE SHALL BE CLASS 4000.

5. THE BACKFILL BEHIND THE ABUTMENTS MAY BE PLACED PRIOR TO PLACEMENT OF THE SUPERSTRUCTURE.

6. UNLESS OTHERWISE SHOWN IN THE PLANS, CONCRETE COVER MEASURED FROM THE FACE OF CONCRETE TO THE FACE OF ANY REINFORCING STEEL SHALL BE 2½" AT THE TOP OF THE BRIDGE DECK, 1" AT THE BOTTOM OF THE BRIDGE DECK, 3" AT THE BOTTOM OF SHAFT CAP, 2" AT THE TOP OF SHAFT CAP AND 2" AT ALL OTHER LOCATIONS.

7. FALSEWORK SHALL BE CAREFULLY RELEASED TO PREVENT IMPACT OR UNDUE STRESS IN THE STRUCTURE.

8. CONDUITS, JUNCTION BOXES, AND UTILITIES ARE SHOWN FOR REFERENCE ONLY, THE CONTRACTOR SHALL COORDINATE THESE PLANS WITH THE ELECTRICAL, I.T.S. AND OTHER CIVIL PLANS.

9. THE BRIDGE SHALL BE CONSTRUCTED TO THE LINE AND PROFILE GRADE OF THE ML LINE. ALL ELEVATIONS ARE BASED OFF THE ML LINE.

10. BARRIERS HAVE BEEN DESIGNED USING A MINIMUM TEST LEVEL 4 (TL-4).

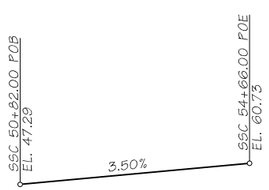

SSC-LINE PROFILE

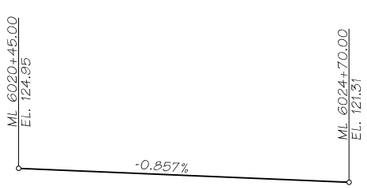

ML-LINE PROFILE

LEGEND

B / BG15 — IDENTIFIES SECTION, VIEW OR DETAIL
TAKEN OR SHOWN ON BRIDGE SHEET BG15

B / - — TAKEN OR SHOWN ON THE SAME SHEET

Bridge Design Engr.	A. LELAND	c:\users\schicvin\pw_wsdot\d0335751\XL6050_PS_BG_SAM_GN.dgn							
Supervisor					REGION NO.	STATE	FED. AID. PROJ. NO.	SHEET NO.	TOTAL SHEETS
Designed By	N. CABLE				10	WASH.			
Checked By	J. MERTH				JOB NUMBER				
Detailed By	V.B. SCHICCHI				22C533				
Bridge Projects Engr.	A. AMOS								
Prelim. Plan By									
Architect/Specialist		DATE	REVISION	BY	APP'D				

SHANE L. BROWN — STATE OF WASHINGTON — 49140 — STRUCTURAL ENGINEER — PROFESSIONAL ENGINEER
SEE SHEET CT1
DATE

BRIDGE AND STRUCTURES OFFICE

Washington State Department of Transportation

SR305
SAM SNYDER CREEK
REMOVE FISH BARRIER

GEOMETRIC DATA / GENERAL NOTES

BRIDGE SHEET NO. BG02

SHEET 122 OF 186 SHEETS

pw:\\WQOLYMAPPPW03P.WSDOT.LOC:WSDOT\Documents_HQ\Fish Passage\ORproj\30518.92_SamSnyderCreek\Design_CAD_Sheets\390-BridgeStrPlan\XL6050_BB_BG_SAM_GN.dgn
SR 305 FILE NO. SHEET BG02
3/23/2023 11:55:58 AM

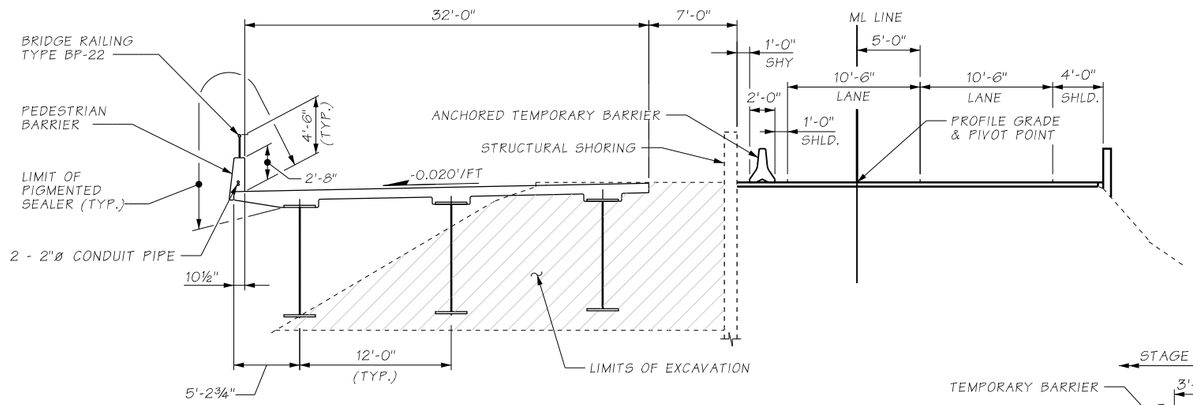

STAGE 1 CONSTRUCTION

CONSTRUCT WEST SIDE OF BRIDGE

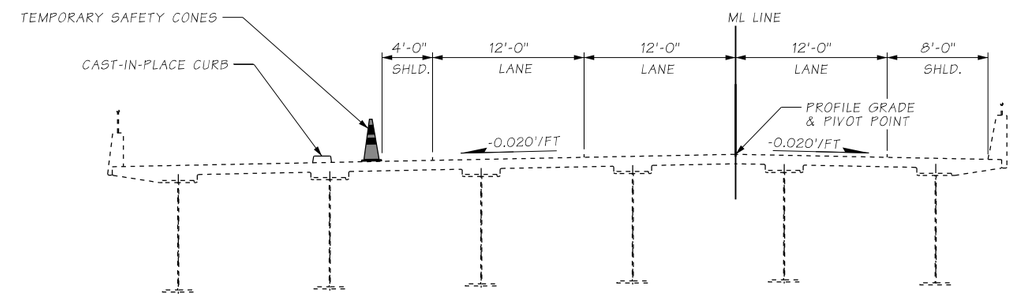

STAGE 3 CONSTRUCTION

CONSTRUCT CAST-IN-PLACE CURB

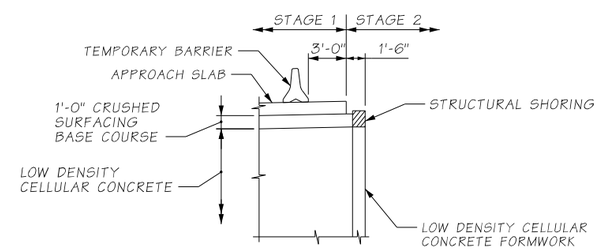

STAGE 1 CONSTRUCTION AT APPROACH SLAB

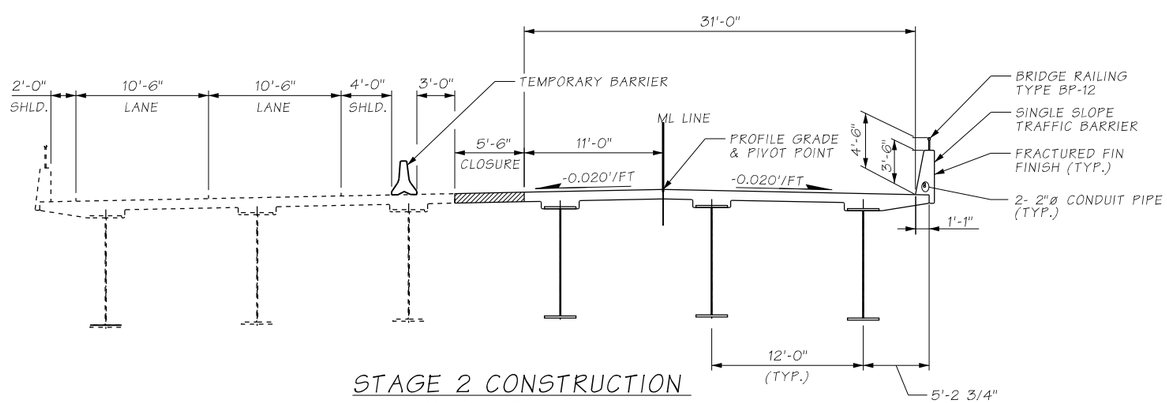

STAGE 2 CONSTRUCTION

CONSTRUCT EAST SIDE OF BRIDGE

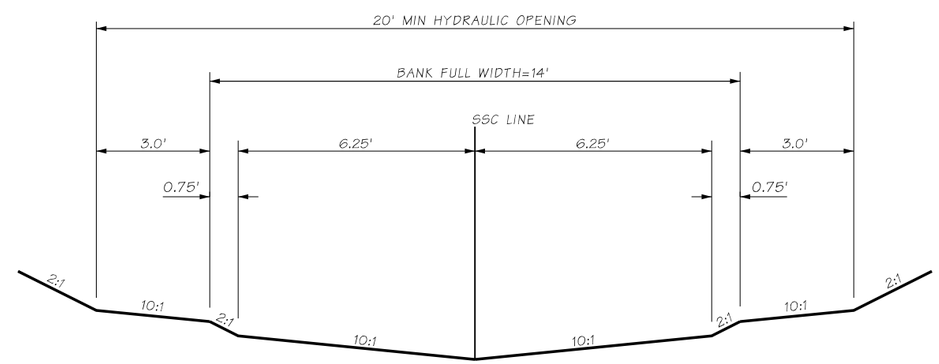

SAM SNYDER CREEK SECTION AT BRIDGE

LOOKING DOWNSTREAM
DIMENSIONS MEASURED NORMAL TO SSC LINE

Bridge Design Engr.	A. LELAND	c:\users\schicvin\pw_wsdot\d0335751\XL6050_PS_BG_SAM_STG1.dgn							
Supervisor					REGION NO.	STATE	FED. AID. PROJ. NO.	SHEET NO.	TOTAL SHEETS
Designed By	N. CABLE				10	WASH.			
Checked By	J. MERTH				JOB NUMBER				
Detailed By	C.D. CLARK				22C533				
Bridge Projects Engr.	A. AMOS								
Prelim. Plan By									
Architect/Specialist		DATE	REVISION	BY	APP'D				

4/4/2023 4:15:55 PM

SHANE L. BROWN — STATE OF WASHINGTON — 49140 — STRUCTURAL ENGINEER — PROFESSIONAL ENGINEER

SEE SHEET CT1 DATE

BRIDGE AND STRUCTURES OFFICE

Washington State Department of Transportation

SR305
SAM SNYDER CREEK
REMOVE FISH BARRIER

STAGED CONSTRUCTION

BRIDGE SHEET NO. BG03

SHEET 123 OF 186 SHEETS

pw:\\WQOLYMAPPPW03P.WSDOT.LOC:WSDOT\Documents_HQ\Fish Passage\ORproj\30518.92_SamSnyderCreek\Design_CAD_Sheets\390-BridgeStrPlan\XL6050_BB_BG_SAM_STG1.dgn

SR 305 FILE NO. SHEET BG03

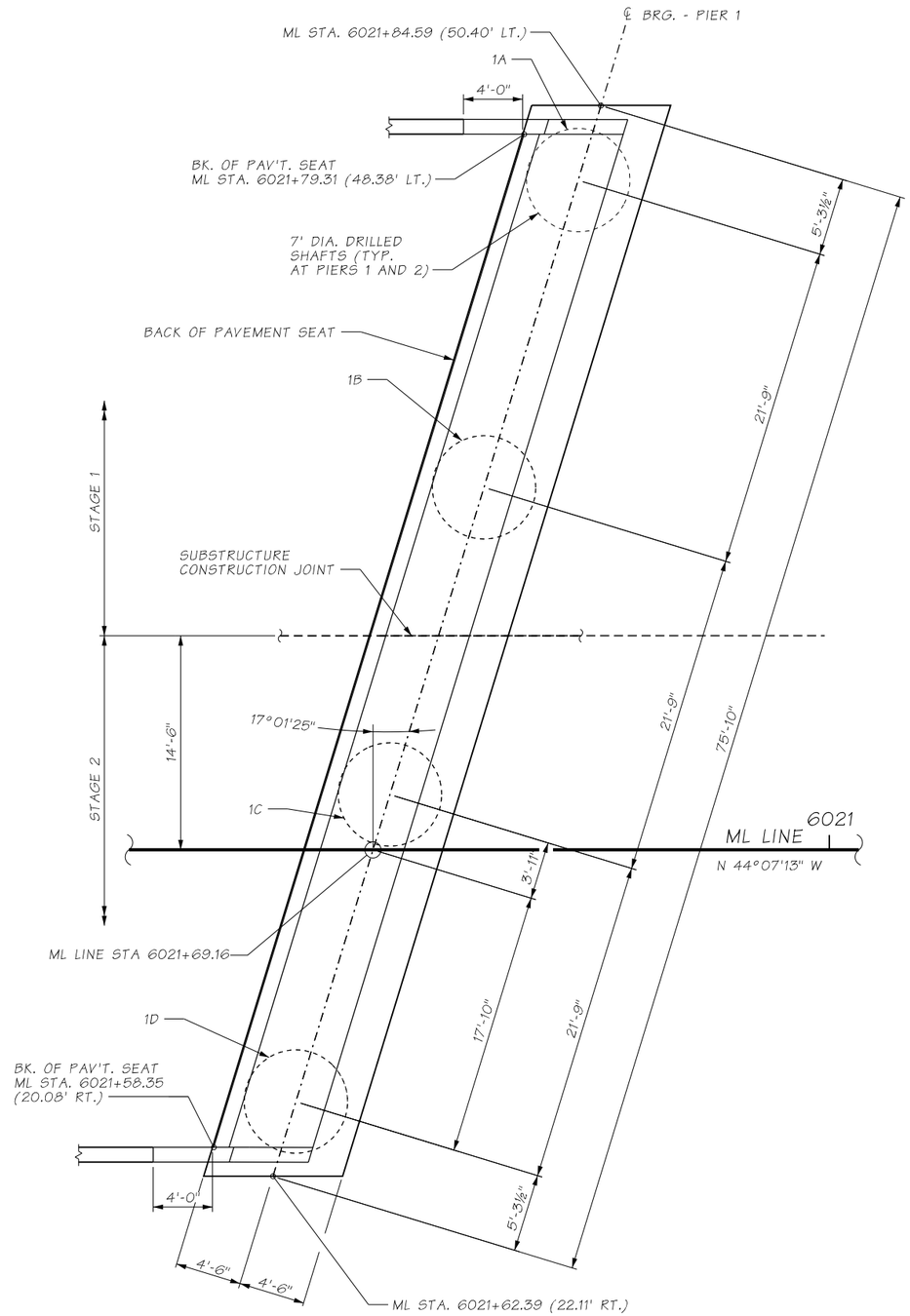

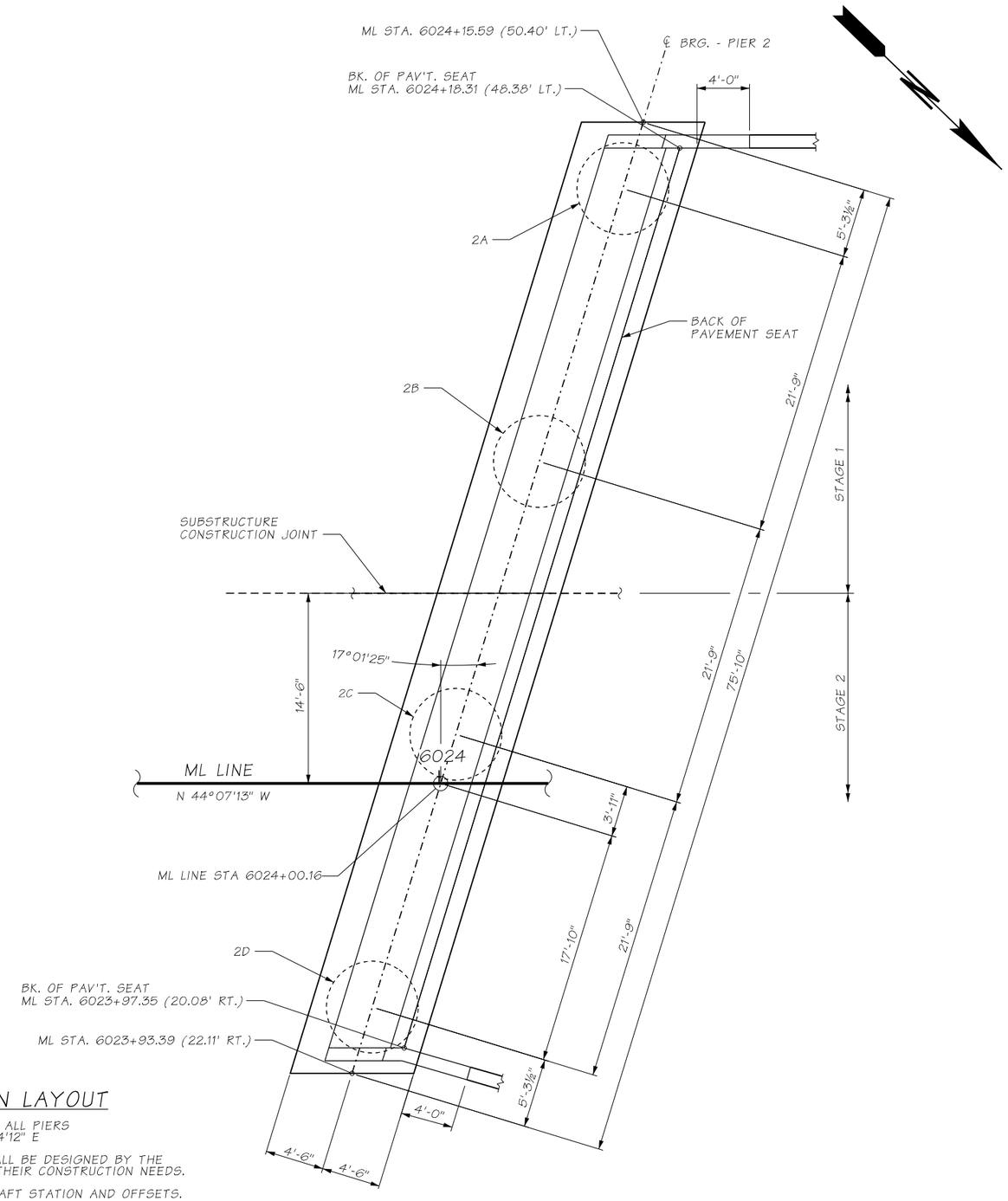

FOUNDATION LAYOUT

BEARING OF ALL PIERS
N 62°54'12" E

STRUCTURAL SHORING SHALL BE DESIGNED BY THE CONTRACTOR TO FACILITATE THEIR CONSTRUCTION NEEDS.

SEE BG05 AND BG13 FOR SHAFT STATION AND OFFSETS.

Bridge Design Engr.	A. LELAND	c:\users\schicvin\pw_wsdot\d0335751\XL6050_PS_BG_SAM_FND.dgn			REGION NO.	STATE	FED. AID. PROJ. NO.	SHEET NO.	TOTAL SHEETS
Supervisor					10	WASH.			
Designed By	N. CABLE				JOB NUMBER				
Checked By	J. MERTH				22C533				
Detailed By	C.D. CLARK								
Bridge Projects Engr.	A. AMOS								
Prelim. Plan By									
Architect/Specialist		DATE	REVISION	BY	APP'D				

SHANE L. BROWN — STATE OF WASHINGTON — 49149 — STRUCTURAL ENGINEER — PROFESSIONAL ENGINEER

SEE SHEET CT1
DATE

BRIDGE AND STRUCTURES OFFICE

Washington State Department of Transportation

SR305
SAM SNYDER CREEK
REMOVE FISH BARRIER

FOUNDATION LAYOUT

BRIDGE SHEET NO. BG04

SHEET 124 OF 186 SHEETS

pw:\\HQOLYMAPPPW03P.WSDOT.LOC:WSDOTDocuments_HQ\Fish Passage\ORproj\30518.92_SamSnyderCreek\Design_CAD_Sheets\390-BridgeStrPlan\XL6050_BP_BG_SAM_TB.dgn
SR 305 FILE NO. SHEET BG04

3/23/2023 11:59:55 AM

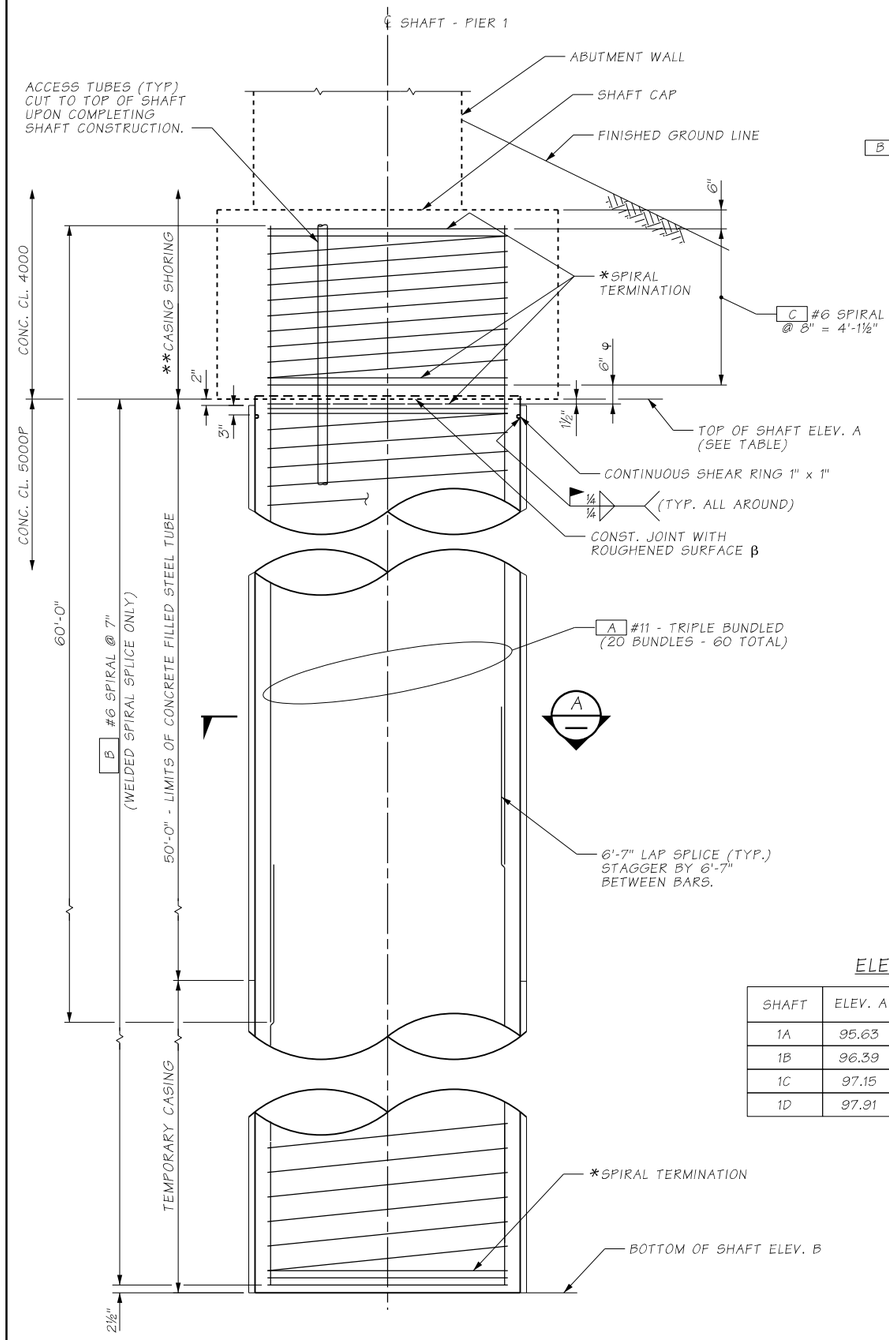

ELEVATION

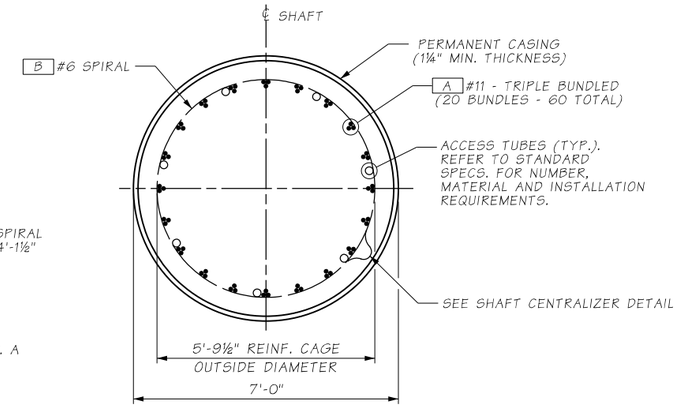

SECTION A

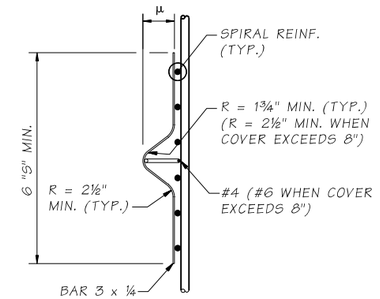

VIEW B

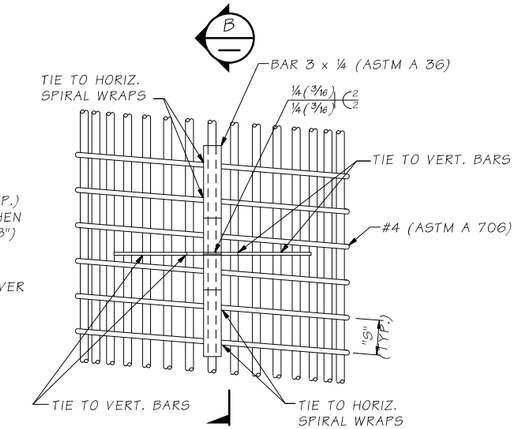

CENTRALIZER DETAIL

1. EPOXY COAT CENTRALIZER OR PAINTED WITH PAINT CONFORMING TO STD. SPEC. 9-08.1(2)C OR 9-08.1(2)F AFTER FABRICATION.
2. EACH LEG SHOULD BE TIED TO TWO VERTICAL BAR BUNDLES AND TWO SPIRAL WRAPS OR TWO HOOPS.
3. SEE STD. SPEC. SECTION 6-19.3(5)B FOR SPACING REQUIREMENTS.
4. CAGECASTER® REBAR CAGE SPACERS MAY BE USED IN LIEU OF DETAIL SHOWN. SPACING REQUIREMENTS SHALL BE PER THE MANUFACTURER'S RECOMMENDATIONS. EACH LEG SHALL BE TIED TO A MINIMUM OF 2 SPIRAL WRAPS.
5. SEE STD. SPEC. SECTION 6-19.3(5)C FOR MINIMUM CONCRETE COVER.

μ MINIMUM CONCRETE COVER MINUS ½"

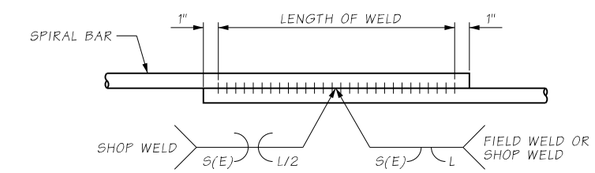

WELDED LAP SPLICE DETAIL

WELDING SHALL MEET THE REQUIREMENTS OF STD. SPEC. 6-02.3(24)E FOR WELDED DIMENSIONS, SEE TABLE BELOW

	WELD DIMENSION (IN.)		
BAR SIZE	S	E	LENGTH (L)
#6	3/16	3/16	6

SHAFT SPIRAL WELD

ELEVATIONS TABLE

SHAFT	ELEV. A	ELEV. B	STA.	OFFSET
1A	95.63	25.6	6021+83.04	45.34' LT.
1B	96.39	26.4	6021+76.67	24.54' LT.
1C	97.15	27.2	6021+70.31	3.74' LT.
1D	97.91	27.9	6021+63.94	17.05' RT.

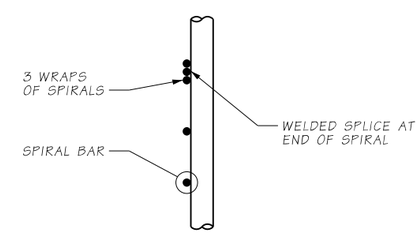

SPIRAL TERMINATION DETAIL

LEGEND

* SEE "SPIRAL TERMINATION DETAIL".

** CASING SHORING MAY BE DELETED PROVIDED THAT THE CONTRACTOR SHORES AND EXCAVATES FOR THE SHAFT CAP PRIOR TO THE SHAFT EXCAVATION.

β REMOVE SEDIMENT LAITANCE AND WEAK CONCRETE TO SOUND CONCRETE PRIOR TO PLACING SHAFT CAP CONCRETE.

φ PROVIDE 1½" CLEAR FROM TOP OF SPIRAL TO LOWEST POINT OF CONSTRUCTION JOINT. PROVIDE 6" VERTICAL BREAK IN SPIRAL TO ALLOW PLACEMENT OF CAP BOTTOM MAT REINFORCEMENT.

Bridge Design Engr.	A. LELAND	c:\users\schicvin\pw_wsdot\d0335751\XL6050_PS_BG_SAM_SHAFT1.dgn						
Supervisor					REGION NO.	STATE	FED. AID. PROJ. NO.	SHEET NO. / TOTAL SHEETS
Designed By	N. CABLE				10	WASH.		
Checked By	J. MERTH				JOB NUMBER			
Detailed By	V.B. SCHICCHI				22C533			
Bridge Projects Engr.	A. AMOS							
Prelim. Plan By								
Architect/Specialist		DATE	REVISION	BY	APP'D			

SHANE L. BROWN — STATE OF WASHINGTON — 49149 — STRUCTURAL ENGINEER — PROFESSIONAL ENGINEER

SEE SHEET CT1 DATE

BRIDGE AND STRUCTURES OFFICE

Washington State Department of Transportation

SR305
SAM SNYDER CREEK
REMOVE FISH BARRIER

PIER 1 SHAFT DETAILS

BRIDGE SHEET NO. BG05

SHEET 125 OF 186 SHEETS

pw:\\HQOLYMAPPPW03P.WSDOT.LOC:WSDOT\Documents_HQ\Fish Passage\ORproj\305\8.92_SamSnyderCreek\Design_CAD_Sheets\390-BridgeStrPlan\XL6050_BP_BG_SAM_TB.dgn
SR 305 FILE NO. SHEET BG05

3/23/2023 12:00:33 PM

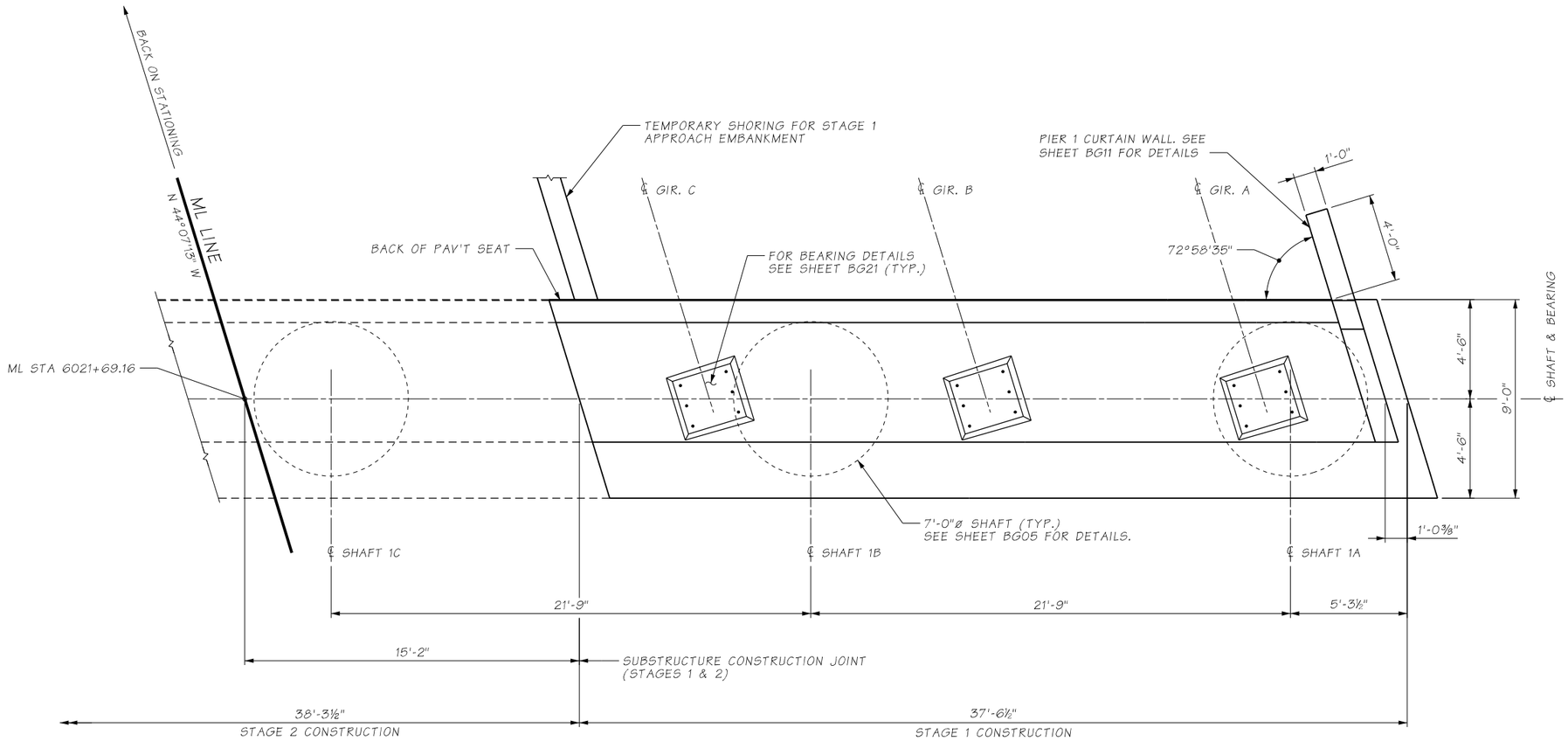

PLAN - PIER 1, STAGE 1

pw:\\HQOLYMAPPPW03P.WSDOT.LOC:WSDOT\Documents_HQ\Fish Passage\ORproj\30598.92_SamSnyderCreek\Design_CAD_Sheets\390-BridgeStrPlan\XL6049_PB_BG_SAM_ABUT1-1.dgn

SR 305 FILE NO. SHEET BG06

Bridge Design Engr.	A. LELAND	c:\users\schicvin\pw_wsdot\d0335751\XL6049_PS_BG_SAM_ABUT1-1.dgn								
Supervisor					REGION NO.	STATE	FED. AID. PROJ. NO.	SHEET NO.	TOTAL SHEETS	
Designed By	N. CABLE				10	WASH.				
Checked By	J. MERTH				JOB NUMBER					
Detailed By	V.B. SCHICCI				22C533					
Bridge Projects Engr.	A. AMOS									
Prelim. Plan By										
Architect/Specialist		DATE	REVISION	BY	APP'D					

3/23/2023 12:01:01 PM

SHANE L. BROWN — STATE OF WASHINGTON — 49149 — STRUCTURAL ENGINEER — PROFESSIONAL ENGINEER

SEE SHEET CT1
DATE

BRIDGE AND STRUCTURES OFFICE

Washington State Department of Transportation

SR305
SAM SNYDER CREEK
REMOVE FISH BARRIER

PIER 1 PLAN STAGE 1

BRIDGE SHEET NO. BG06

SHEET 126 OF 186 SHEETS

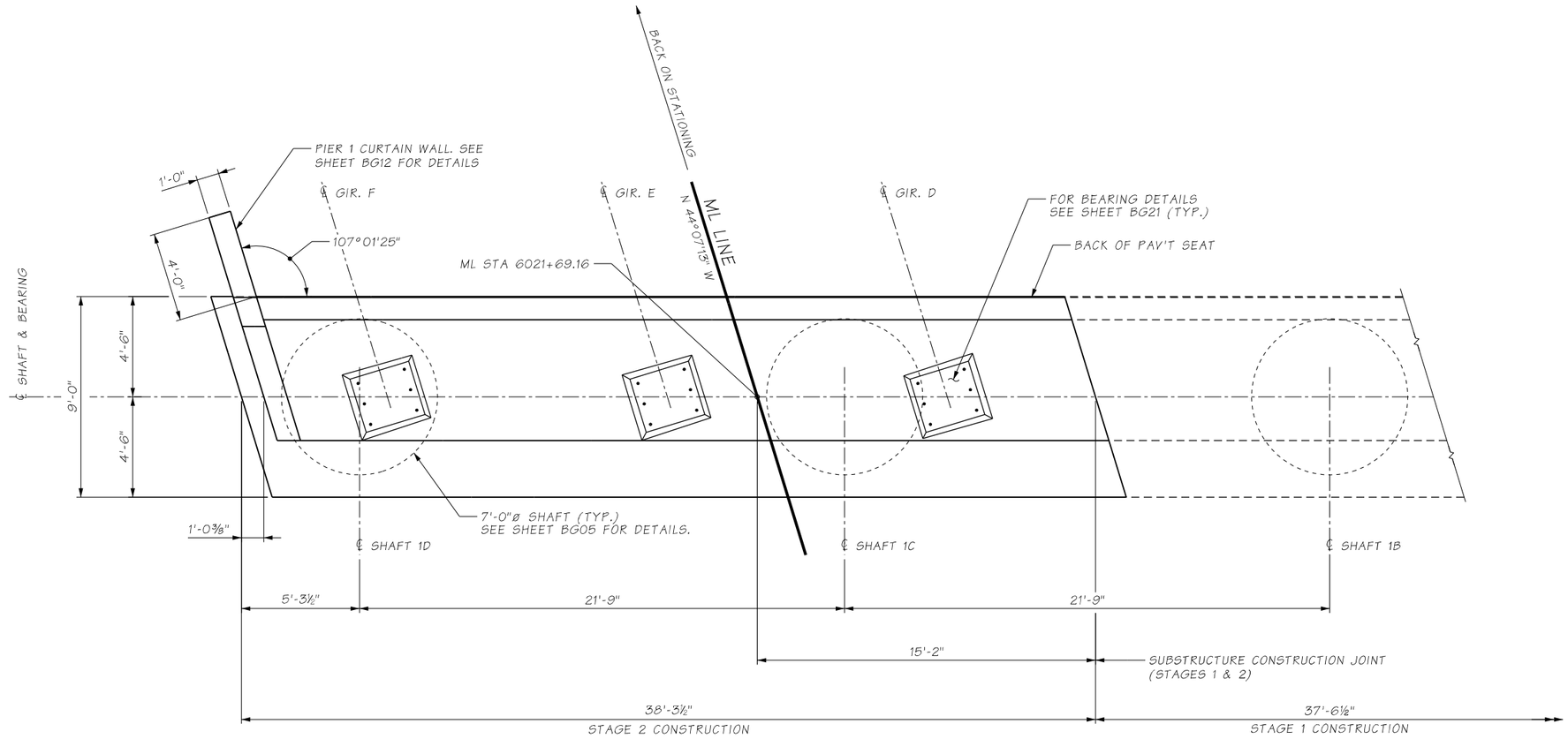

PLAN - PIER 1, STAGE 2

pw:\\HQOLYMAPPPW03P.WSDOT.LOC:WSDOT\Documents_HQ\Fish Passage\ORproj\3058.92_SamSnyderCreek\Design_CAD_Sheets\390-BridgeStrPlan\XL6050_BP_BG_SAM_TB.dgn

SR 305 FILE NO. SHEET BG07

Bridge Design Engr. A. LELAND	c:\users\schicvin\pw_wsdot\d0335751\XL6049_PS_BG_SAM_ABUT1-2.dgn				REGION NO.	STATE	FED. AID. PROJ. NO.	SHEET NO.	TOTAL SHEETS
Supervisor					10	WASH.			
Designed By									
Checked By J. MERTH					JOB NUMBER				
Detailed By					22C533				
Bridge Projects Engr. A. AMOS									
Prelim. Plan By									
Architect/Specialist	DATE	REVISION	BY	APP'D					

3/23/2023 12:02:33 PM

SHANE L. BROWN — STATE OF WASHINGTON — 49149 — STRUCTURAL ENGINEER — PROFESSIONAL ENGINEER

SEE SHEET CT1
DATE

BRIDGE AND STRUCTURES OFFICE

Washington State Department of Transportation

SR305
SAM SNYDER CREEK
REMOVE FISH BARRIER

PIER 1 PLAN STAGE 2

BRIDGE SHEET NO. BG07

SHEET 127 OF 186 SHEETS

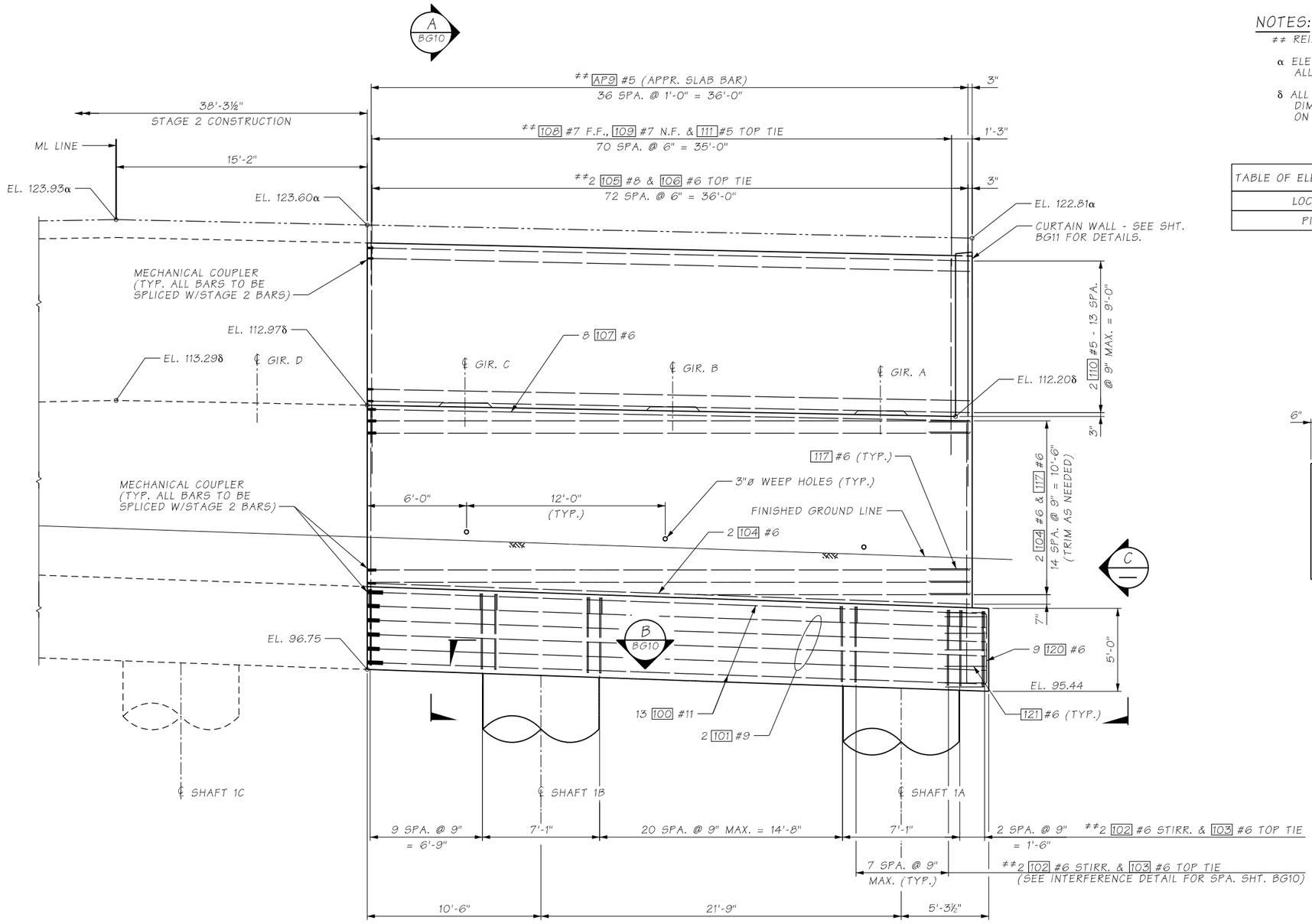

ELEVATION - PIER 1, STAGE 1

LOOKING BACK STATION ALONG ℄ OF PIER 1

NOTES:

REINFORCEMENT PLACED PARALLEL TO ML LINE

α ELEVATION TAKEN AT BACK OF PAVEMENT SEAT. ALL OTHER ELEVATIONS TAKEN AT ℄ BEARING.

δ ALL ELEVATIONS ARE BASED ON ASSUMED BEARING DIMENSIONS. ADJUSTMENTS SHALL BE MADE BASED ON FINAL DISC BEARING DESIGN HEIGHT.

TABLE OF ELEVATIONS @ ℄ OF BRG. @ TOP OF GROUT PAD δ

LOCATION	A	B	C
PIER 1	112.42	112.69	112.96

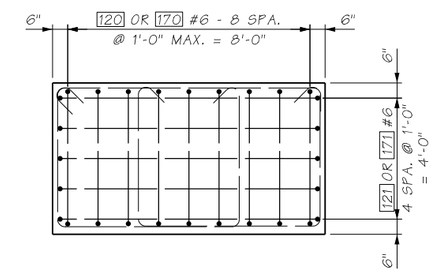

VIEW C

Bridge Design Engr.	A. LELAND	c:\users\schicvin\pw_wsdot\d0335751\XL6049_PS_BG_SAM_ABUT1-3.dgn							
Supervisor					REGION NO.	STATE	FED. AID. PROJ. NO.	SHEET NO.	TOTAL SHEETS
Designed By	N. CABLE				10	WASH.			
Checked By	J. MERTH								
Detailed By	V.B. SCHICCHI				JOB NUMBER				
Bridge Projects Engr.	A. AMOS				22C533				
Prelim. Plan By									
Architect/Specialist		DATE	REVISION	BY	APP'D				

SHANE L. BROWN STATE OF WASHINGTON 49149 STRUCTURAL ENGINEER PROFESSIONAL ENGINEER

SEE SHEET CT1 DATE

BRIDGE AND STRUCTURES OFFICE

Washington State Department of Transportation

SR305
SAM SNYDER CREEK
REMOVE FISH BARRIER

PIER 1 ELEVATION STAGE 1

BRIDGE SHEET NO. BG08

SHEET 128 OF 186 SHEETS

pw:\\HQOLYMAPPPW03P.WSDOT.LOC:WSDOT\Documents_HQ\Fish Passage\ORproj\30518.92_SamSnyderCreek\Design_CAD_Sheets\390-BridgeStrPlan\XL6050_BP_BG_SAM_TB.dgn

SR 305 FILE NO. SHEET BG08

3/23/2023 12:01:43 PM

NOTES:

REINFORCEMENT PLACED PARALLEL TO ML LINE

α ELEVATION TAKEN AT BACK OF PAVEMENT SEAT. ALL OTHER ELEVATIONS TAKEN AT ℄ BEARING.

δ ALL ELEVATIONS ARE BASED ON ASSUMED BEARING DIMENSIONS. ADJUSTMENTS SHALL BE MADE BASED ON FINAL DISC BEARING DESIGN HEIGHT.

TABLE OF ELEVATIONS @ ℄ OF BRG. @ TOP OF GROUT PAD δ			
LOCATION	D	E	F
PIER 1	113.23	113.35	113.14

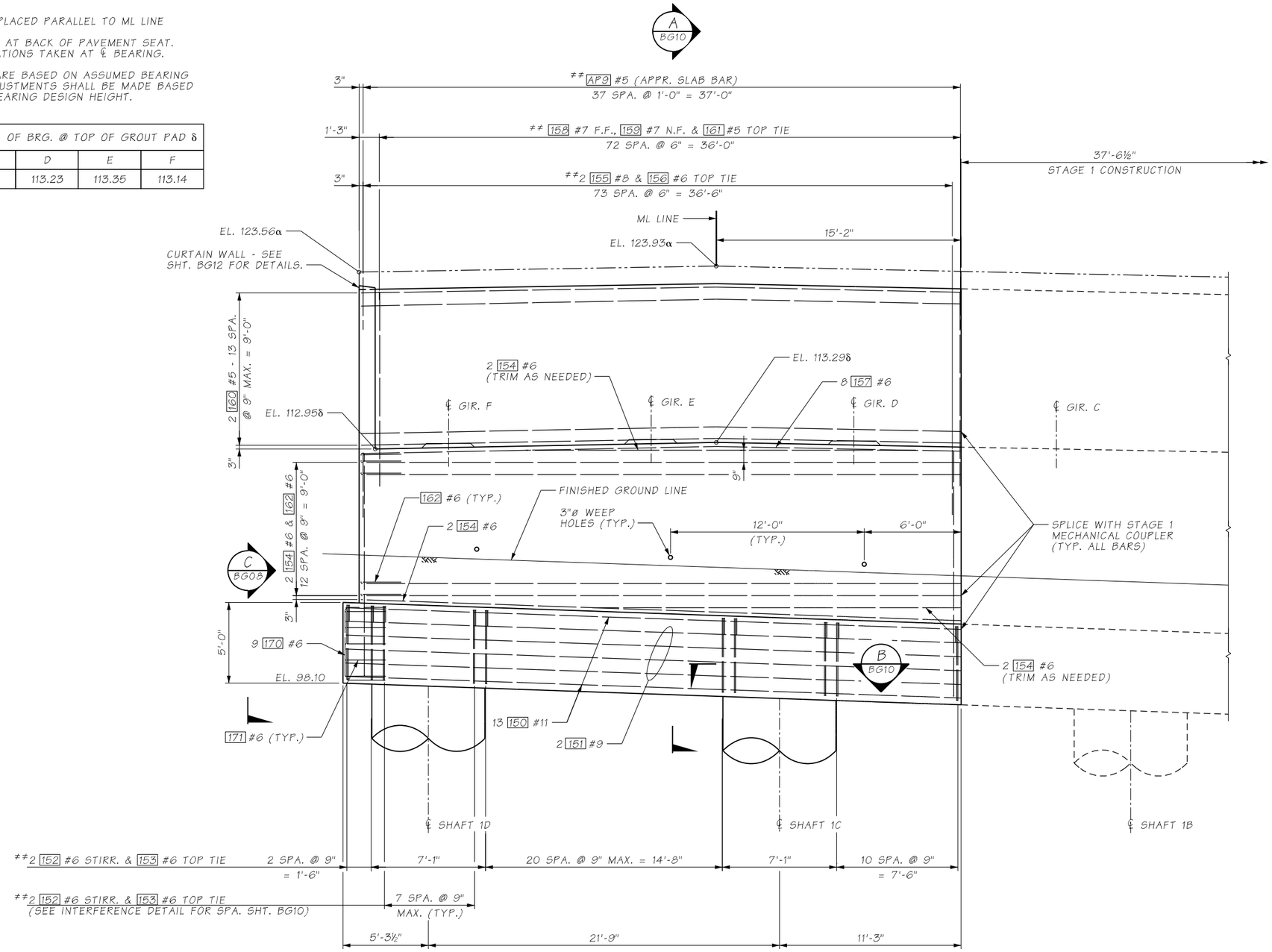

ELEVATION - PIER 1, STAGE 2

LOOKING BACK STATION ALONG ℄ OF PIER 1

Bridge Design Engr.	A. LELAND	c:\users\schicvin\pw_wsdot\d0335751\XL6049_PS_BG_SAM_ABUT1-4.dgn			REGION NO.	STATE	FED. AID. PROJ. NO.	SHEET NO.	TOTAL SHEETS
Supervisor					10	WASH.			
Designed By	N. CABLE				JOB NUMBER				
Checked By	J. MERTH				22C533				
Detailed By	V.B. SCHICCHI								
Bridge Projects Engr.	A. AMOS								
Prelim. Plan By									
Architect/Specialist		DATE	REVISION	BY	APP'D				

SHANE L. BROWN — STATE OF WASHINGTON — 49149 — STRUCTURAL ENGINEER — PROFESSIONAL ENGINEER

SEE SHEET CT1
DATE

BRIDGE AND STRUCTURES OFFICE

Washington State Department of Transportation

SR305
SAM SNYDER CREEK
REMOVE FISH BARRIER

PIER 1 ELEVATION STAGE 2

BRIDGE SHEET NO. BG09

SHEET 129 OF 186 SHEETS

pw:\\HQOLYMAPPPW03P.WSDOT.LOC:WSDOT\Documents_HQ\Fish Passage\ORproj\30518.92_SamSnyderCreek\Design_CAD_Sheets\390-BridgeStrPlan\XL6050_BP_BG_SAM_TB.dgn

SR 305 FILE NO. SHEET BG09

3/23/2023 12:02:59 PM

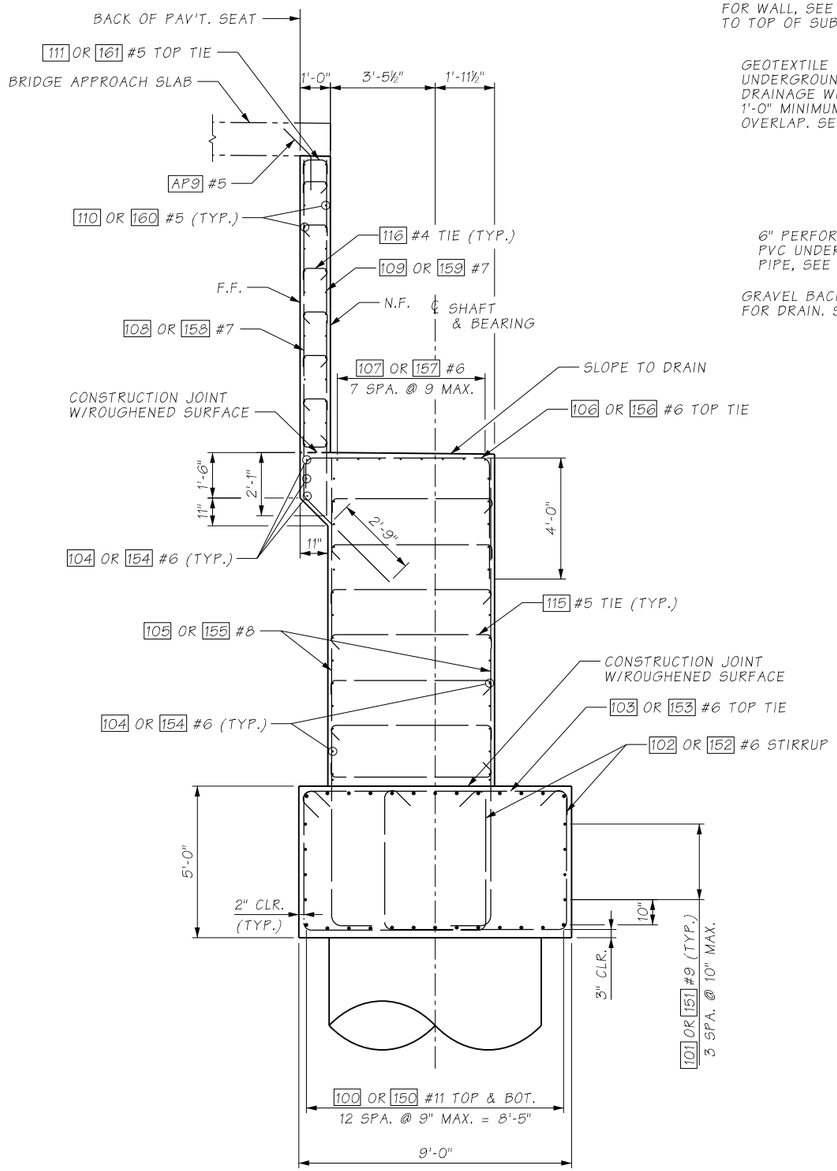

SECTION A

BG08 & BG09

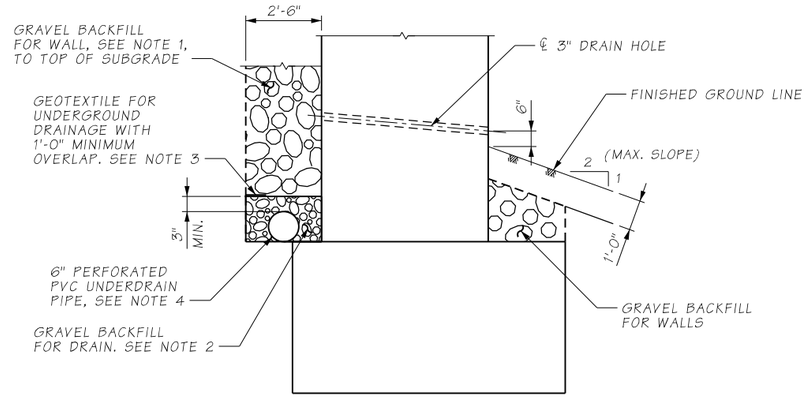

DRAINAGE DETAIL

NOTE:
1. SEE SECTION 9-3.12(2) OF THE CURRENT WSDOT STANDARD SPECIFICATIONS FOR THE ROAD, BRIDGE AND MUNICIPAL CONSTRUCTION M 41-10.
2. SEE SECTION 9-03.12(14) OF THE CURRENT WSDOT STANDARD SPECIFICATIONS FOR THE ROAD, BRIDGE AND MUNICIPAL CONSTRUCTION M 41-10.
3. CONSTRUCTION GEOTEXTILE FOR SOIL STABILIZATION PER STANDERD SPECIFICATION 9-33.2(1), TABLE 3 NON-WOVEN.
4. 6" PERFORATED PVC UNDERDRAIN PIPE PER STANDARD SPECIFICATION 9-05.2(6).

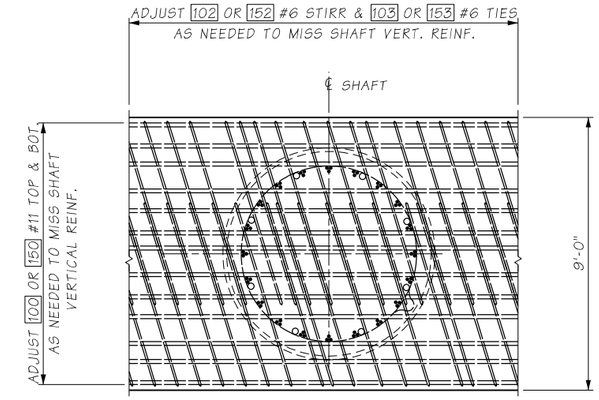

SECTION B

BG08 & BG09

SHAFT CAP REBAR INTERFERENCE DETAIL

TYPICAL FOR ALL SHAFTS

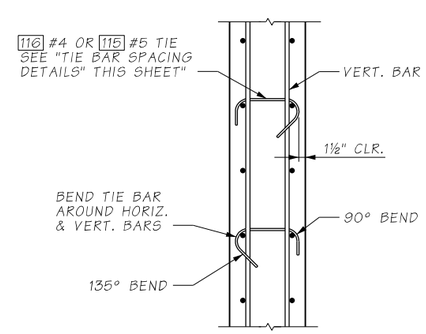

TIE BAR DETAIL

ALTERNATE 135° HOOK EVERY OTHER TIE BAR

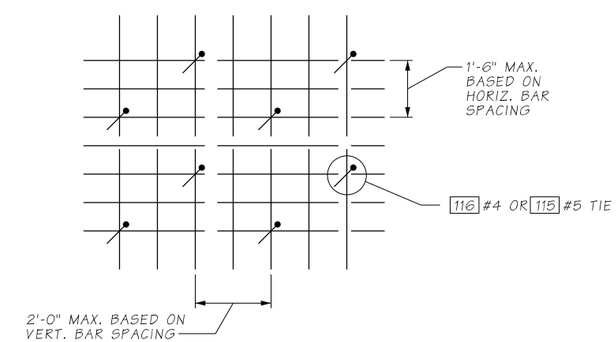

NOTES:
N.F. = NEAR FACE
F.F. = FAR FACE

Bridge Design Engr.	A. LELAND	c:\users\schicvin\pw_wsdot\d0335751\XL6049_PS_BG_SAM_ABUT1-5.dgn							
Supervisor					REGION NO.	STATE	FED. AID. PROJ. NO.	SHEET NO.	TOTAL SHEETS
Designed By	N. CABLE				10	WASH.			
Checked By	J. MERTH				JOB NUMBER				
Detailed By	V.B. SCHICCHI				22C533				
Bridge Projects Engr.	A. AMOS								
Prelim. Plan By									
Architect/Specialist		DATE	REVISION	BY	APP'D				

SHANE L. BROWN, STATE OF WASHINGTON, 49149, STRUCTURAL ENGINEER, PROFESSIONAL ENGINEER
SEE SHEET CT1
DATE

BRIDGE AND STRUCTURES OFFICE

Washington State Department of Transportation

SR305
SAM SNYDER CREEK
REMOVE FISH BARRIER

PIER 1 SECTIONS AND DETAILS

BRIDGE SHEET NO. BG10

SHEET 130 OF 186 SHEETS

pw:\\HQOLYMAPPPW03P.WSDOT.LOC:WSDOT\Documents_HQ\Fish Passage\ORproj\305\8.92_SamSnyderCreek\Design_CAD_Sheets\390-BridgeStrPlan\XL6050_BP_BG_SAM_TB.dgn
SR 305 FILE NO. ____ SHEET ____
3/23/2023 12:03:32 PM

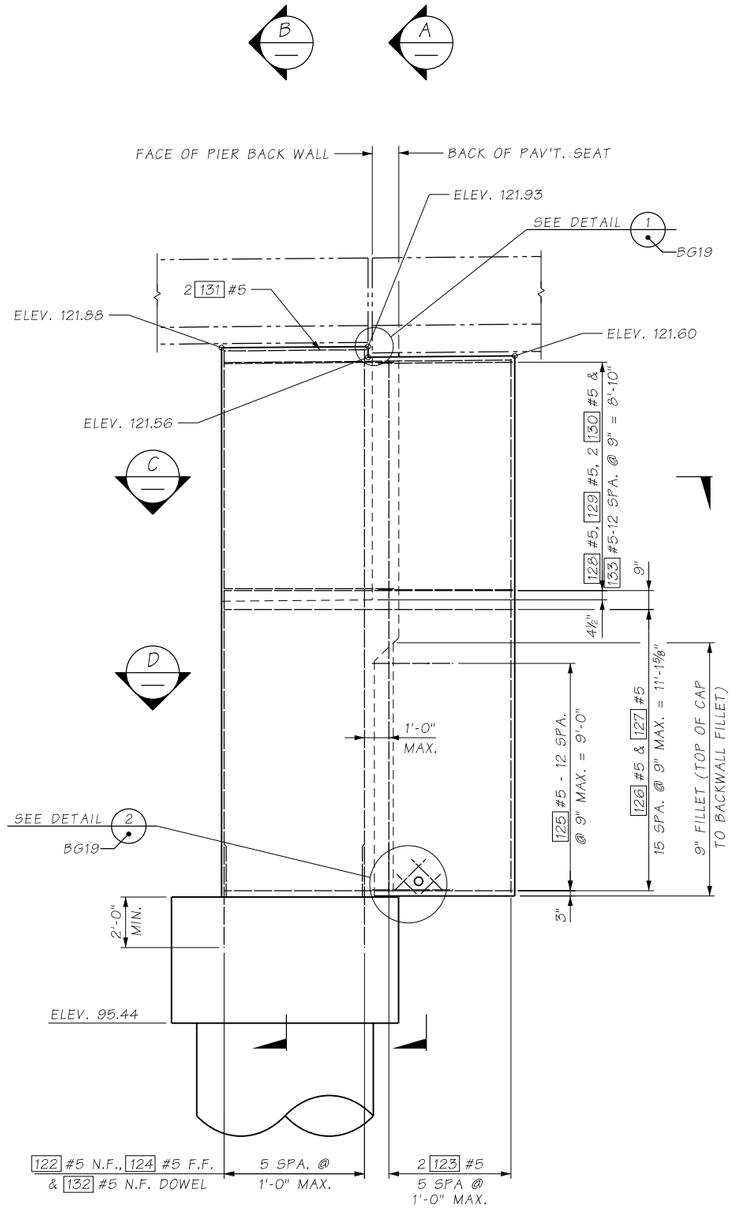

ELEVATION
PIER 1 LEFT
LOOKING NORTH

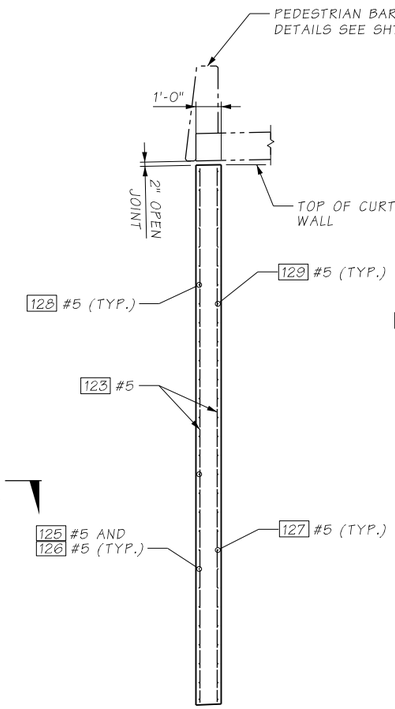

SECTION A

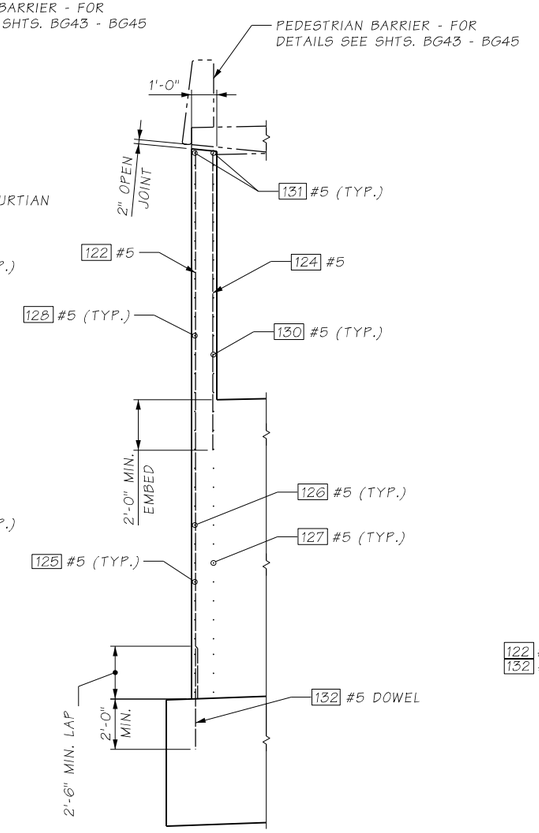

SECTION B

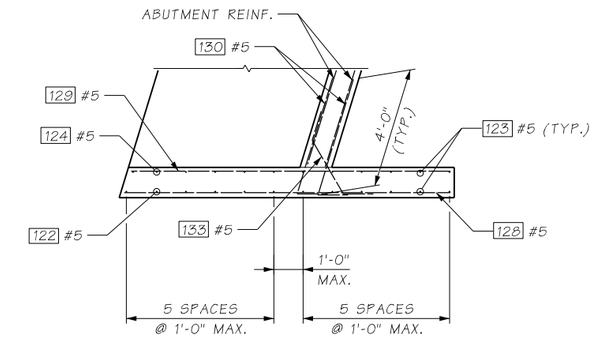

SECTION C

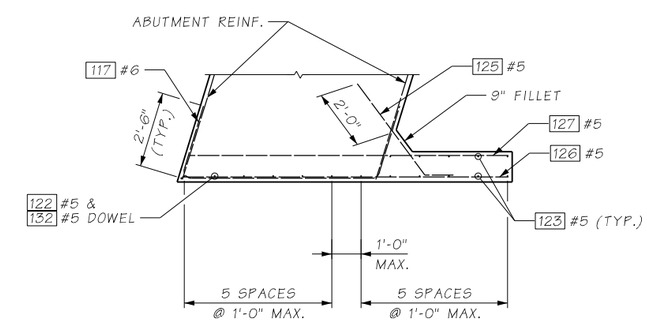

SECTION D

Bridge Design Engr.	A. LELAND	c:\users\schicvin\pw_wsdot\d0335751\XL6049_PS_BG_SAM_CW1L.dgn			REGION NO.	STATE	FED. AID. PROJ. NO.	SHEET NO.	TOTAL SHEETS
Supervisor					10	WASH.			
Designed By	N. CABLE				JOB NUMBER 22C533				
Checked By	J. MERTH								
Detailed By	V.B. SCHICCHI								
Bridge Projects Engr.	A. AMOS								
Prelim. Plan By									
Architect/Specialist		DATE	REVISION	BY	APP'D				

SHANE L. BROWN STATE OF WASHINGTON 49149 STRUCTURAL ENGINEER PROFESSIONAL ENGINEER
SEE SHEET CT1
DATE

BRIDGE AND STRUCTURES OFFICE

Washington State Department of Transportation

SR305
SAM SNYDER CREEK
REMOVE FISH BARRIER

PIER 1 CURTAIN WALL SOUTH
SECTIONS AND DETAILS

BRIDGE SHEET NO. BG11

SHEET 131 OF 186 SHEETS

pw:\\HQOLYMAPPPW03P.WSDOT.LOC:WSDOT\Documents_HQ\Fish Passage\ORproj\30518.92_SamSnyderCreek\Design_CAD_Sheets\390-BridgeStrPlan\XL6050_BP_BG_SAM_TB.dgn
SR 305 FILE NO. SHEET BG11

3/23/2023 12:03:56 PM

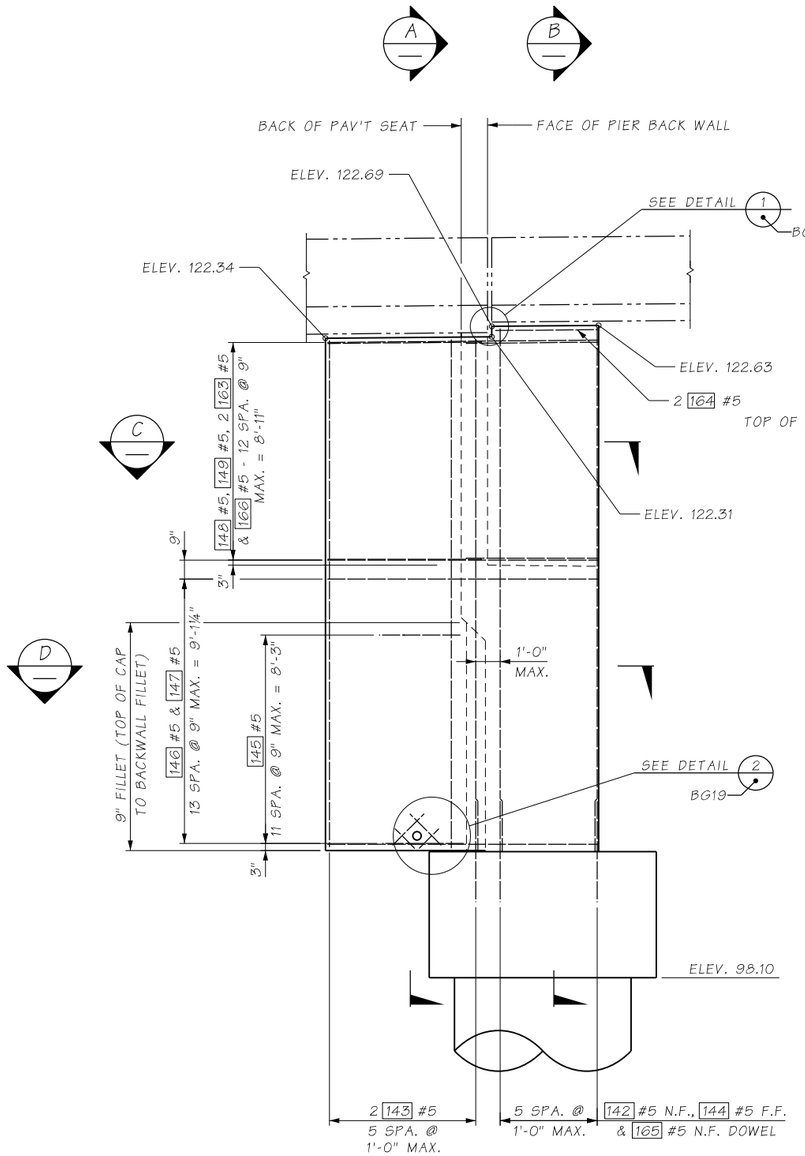

ELEVATION
PIER 1 RIGHT
LOOKING SOUTH

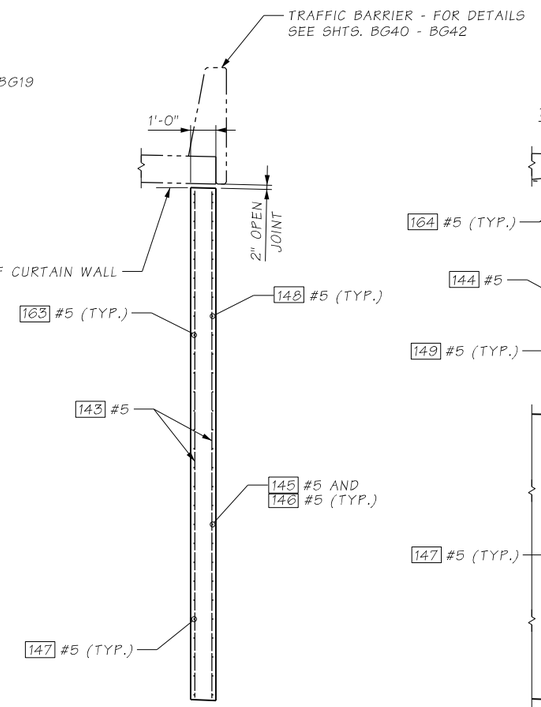

SECTION A

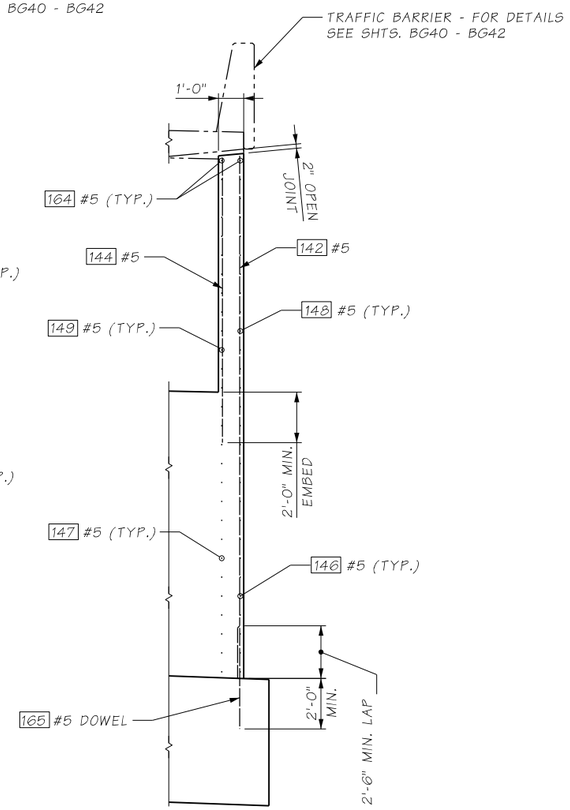

SECTION B

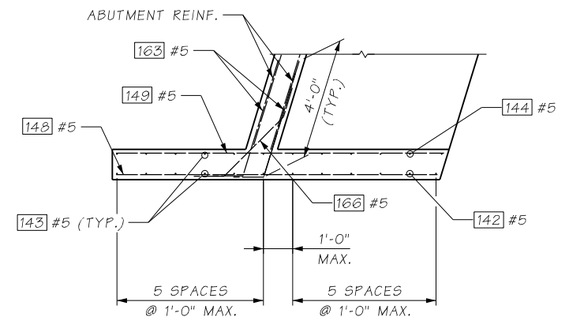

SECTION C

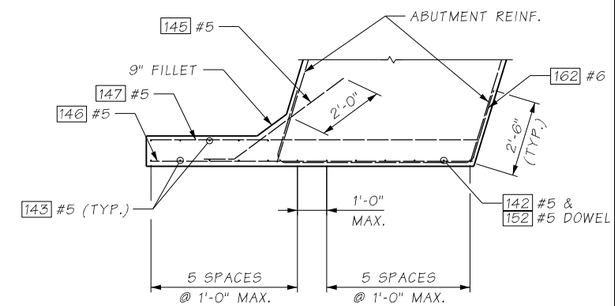

SECTION D

pw:\\WQOLYMAPPPW03P.WSDOT.LOC:WSDOT\Documents_HQ\Fish Passage\ORproj\305\8.92_SamSnyderCreek\Design_CAD_Sheets\390-BridgeStrPlan\XL6050_BP_BG_SAM_TB.dgn
SR 305 FILE NO. ____ SHEET BG12

Bridge Design Engr.	A. LELAND	c:\users\schicvin\pw_wsdot\d0335751\XL6049_PS_BG_SAM_CW1R.dgn							
Supervisor					REGION NO.	STATE	FED. AID. PROJ. NO.	SHEET NO.	TOTAL SHEETS
Designed By	N. CABLE				10	WASH.			
Checked By	J. MERTH				JOB NUMBER				
Detailed By	V.B. SCHICCHI				22C533				
Bridge Projects Engr.	A. AMOS								
Prelim. Plan By									
Architect/Specialist		DATE	REVISION	BY	APP'D				

3/23/2023 12:04:22 PM

SHANE L. BROWN, STATE OF WASHINGTON, 49140, STRUCTURAL ENGINEER, PROFESSIONAL ENGINEER
SEE SHEET CT1
DATE

BRIDGE AND STRUCTURES OFFICE

Washington State Department of Transportation

SR305
SAM SNYDER CREEK
REMOVE FISH BARRIER

PIER 1 CURTAIN WALL NORTH
SECTIONS AND DETAILS

BRIDGE SHEET NO. BG12

SHEET 132 OF 186 SHEETS

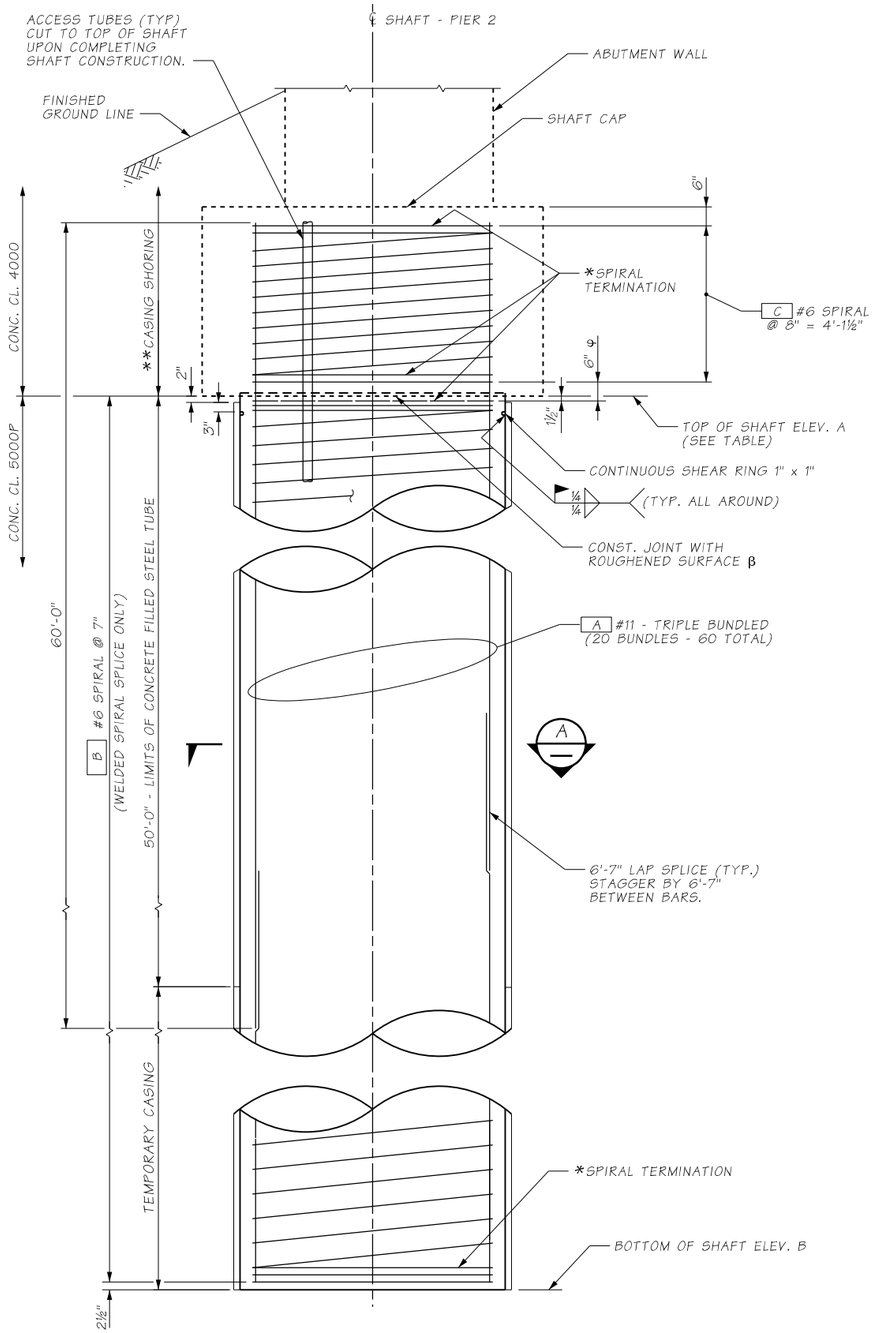

ELEVATION

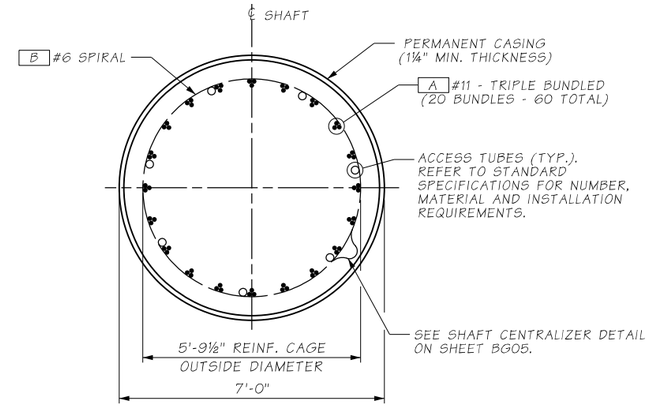

SECTION A

ELEVATIONS TABLE

SHAFT	ELEV. A	ELEV. B	STA.	OFFSET
2A	93.85	23.9	6024+14.04	45.34' LT.
2B	94.61	24.6	6024+07.67	24.54' LT.
2C	95.37	25.4	6024+01.31	3.74' LT.
2D	96.13	26.1	6023+94.94	17.05' RT.

LEGEND

FOR WELDED LAP SPLICE AND SHAFT SPIRAL DETAILS SEE SHEET BG05.

* SEE "SPIRAL TERMINATION DETAIL" SHEET B05.

** CASING SHORING MAY BE DELETED PROVIDED THAT THE CONTRACTOR SHORES AND EXCAVATES FOR THE SHAFT CAP PRIOR TO THE SHAFT EXCAVATION.

β REMOVE SEDIMENT LAITANCE AND WEAK CONCRETE TO SOUND CONCRETE PRIOR TO PLACING SHAFT CAP CONCRETE.

φ PROVIDE 1½" CLEAR FROM TOP OF SPIRAL TO LOWEST POINT OF CONSTRUCTION JOINT. PROVIDE 6" VERTICAL BREAK IN SPIRAL TO ALLOW PLACEMENT OF CAP BOTTOM MAT REINFORCEMENT.

SR305
SAM SNYDER CREEK
REMOVE FISH BARRIER

PIER 2 SHAFT DETAILS

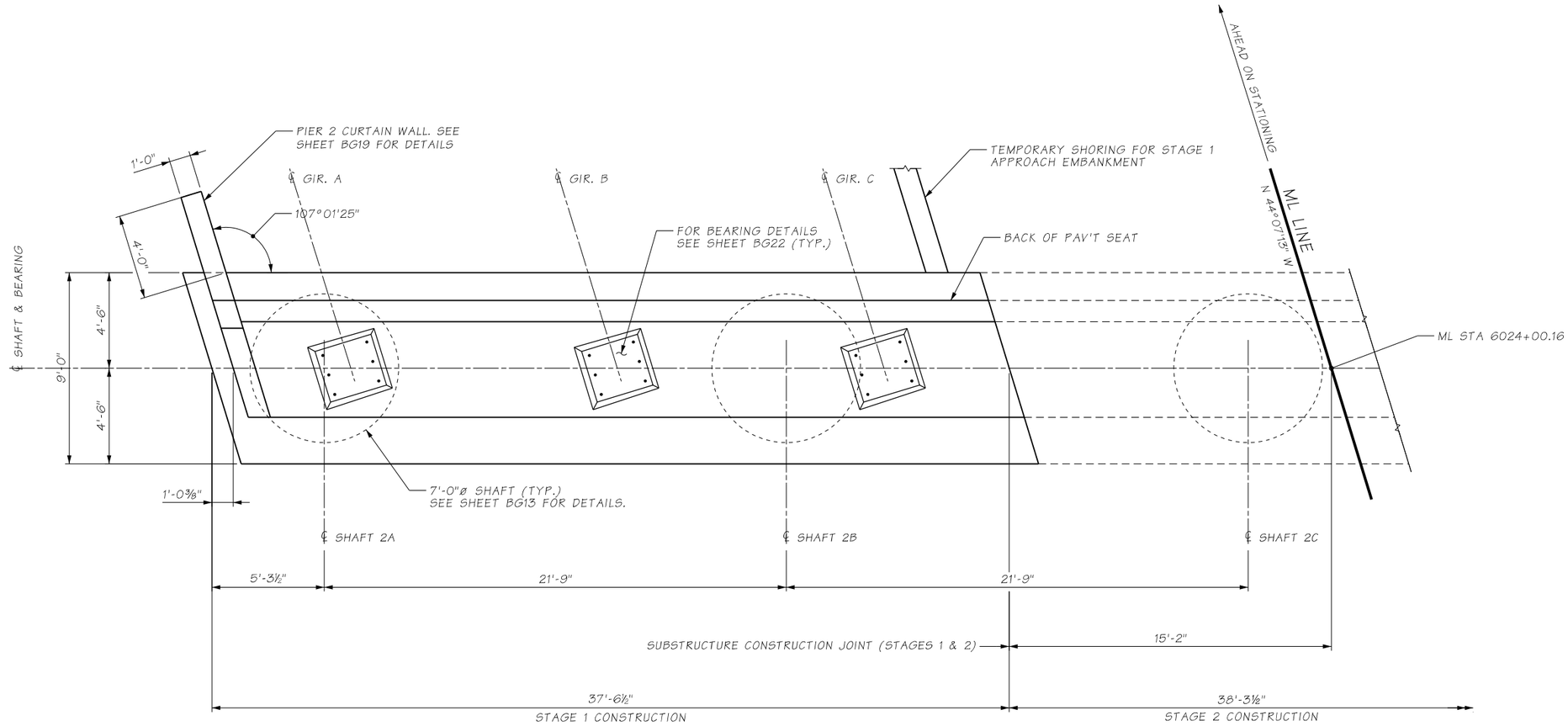

PLAN - PIER 2, STAGE 1

pw:\\HQOLYMAPPPW03P.WSDOT.LOC:WSDOT\Documents_HQ\Fish Passage\ORproj\30518.92_SamSnyderCreek\Design_CAD_Sheets\390-BridgeStrPlan\XL6050_BP_BG_SAM_TB.dgn

SR 305 FILE NO. SHEET BG14

Bridge Design Engr.	A. LELAND	c:\users\schicvin\pw_wsdot\d0335751\XL6049_PS_BG_SAM_ABUT2-1.dgn							
Supervisor					REGION NO.	STATE	FED. AID. PROJ. NO.	SHEET NO.	TOTAL SHEETS
Designed By	N. CABLE				10	WASH.			
Checked By	J. MERTH				JOB NUMBER				
Detailed By	V.B. SCHICCHI				22C533				
Bridge Projects Engr.	A. AMOS								
Prelim. Plan By									
Architect/Specialist		DATE	REVISION	BY	APP'D				

3/23/2023 12:05:18 PM

SHANE L. BROWN STATE OF WASHINGTON 49149 STRUCTURAL ENGINEER PROFESSIONAL ENGINEER

SEE SHEET CT1
DATE

BRIDGE AND STRUCTURES OFFICE

Washington State Department of Transportation

SR305
SAM SNYDER CREEK
REMOVE FISH BARRIER

PIER 2 PLAN STAGE 1

BRIDGE SHEET NO. BG14

SHEET 134 OF 186 SHEETS

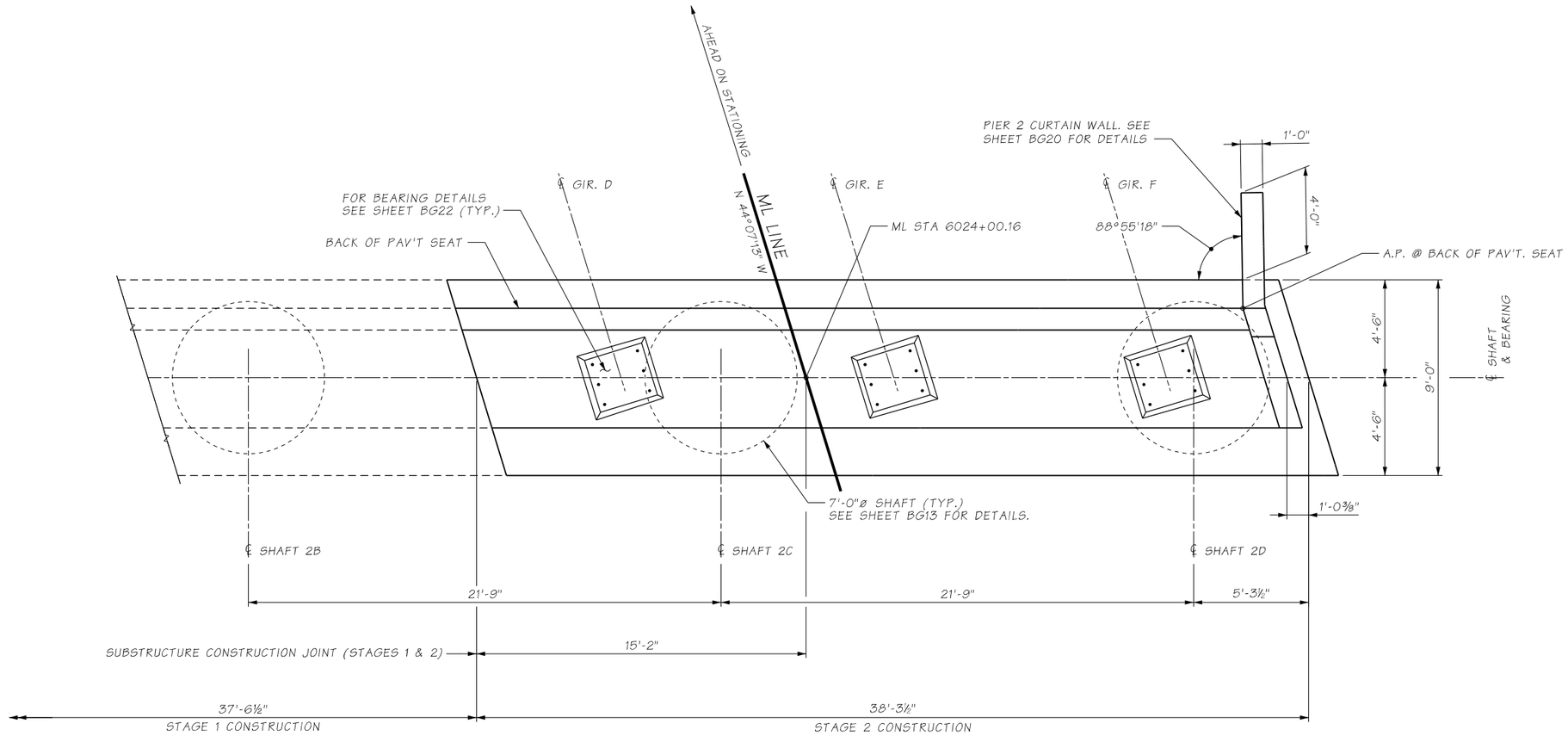

PLAN - PIER 2, STAGE 2

pw:\\HQOLYMAPPPW03P.WSDOT.LOC:WSDOT\Documents_HQ\Fish Passage\ORproj\30518.92_SamSnyderCreek\Design_CAD_Sheets\390-BridgeStrPlan\XL6050_BP_BG_SAM_TB.dgn

SR 305 FILE NO. SHEET BG15

Bridge Design Engr.	A. LELAND	c:\users\schicvin\pw_wsdot\d0335751\XL6049_PS_BG_SAM_ABUT2-2.dgn							
Supervisor					REGION NO.	STATE	FED. AID. PROJ. NO.	SHEET NO.	TOTAL SHEETS
Designed By	N. CABLE				10	WASH.			
Checked By	J. MERTH				JOB NUMBER				
Detailed By	V.B. SCHICCHI				22C533				
Bridge Projects Engr.	A. AMOS								
Prelim. Plan By									
Architect/Specialist		DATE	REVISION	BY	APP'D				

3/23/2023 12:05:43 PM

SHANE L. BROWN — STATE OF WASHINGTON — 49149 — STRUCTURAL ENGINEER — PROFESSIONAL ENGINEER

SEE SHEET CT1
DATE

BRIDGE AND STRUCTURES OFFICE

Washington State Department of Transportation

SR305
SAM SNYDER CREEK
REMOVE FISH BARRIER

PIER 2 PLAN STAGE 2

BRIDGE SHEET NO. BG15

SHEET 135 OF 186 SHEETS

NOTES:

REINFORCEMENT PLACED PARALLEL TO ML LINE

α ELEVATION TAKEN AT BACK OF PAVEMENT SEAT. ALL OTHER ELEVATIONS TAKEN AT ℄ BEARING.

δ ALL ELEVATIONS ARE BASED ON ASSUMED BEARING DIMENSIONS. ADJUSTMENTS SHALL BE MADE BASED ON FINAL DISC BEARING DESIGN HEIGHT.

TABLE OF ELEVATIONS @ ℄ OF BRG. @ TOP OF GROUT PAD δ			
LOCATION	A	B	C
PIER 2	110.45	110.72	110.99

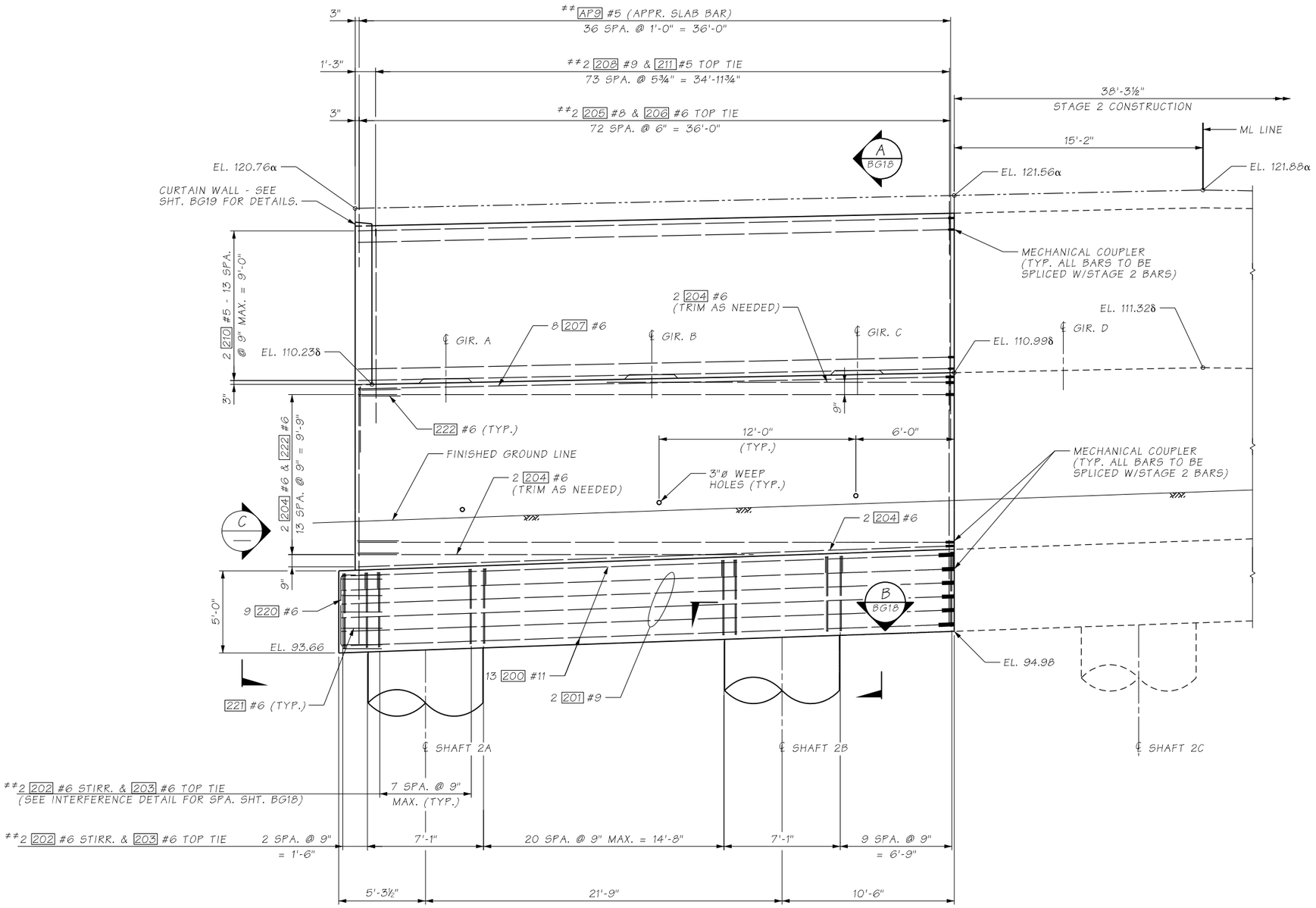

ELEVATION - PIER 2, STAGE 1

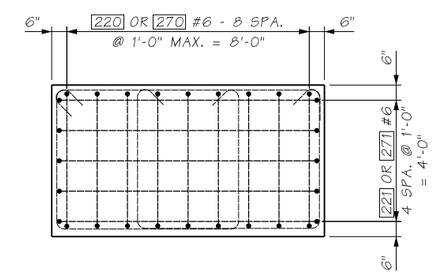

VIEW C

Bridge Design Engr.	A. LELAND	c:\users\schicvin\pw_wsdot\d0335751\XL6049_PS_BG_SAM_ABUT2-3.dgn			REGION NO.	STATE	FED. AID. PROJ. NO.	SHEET NO.	TOTAL SHEETS
Supervisor					10	WASH.			
Designed By	N. CABLE				JOB NUMBER				
Checked By	J. MERTH				22C533				
Detailed By	V.B. SCHICCHI								
Bridge Projects Engr.	A. AMOS								
Prelim. Plan By									
Architect/Specialist		DATE	REVISION	BY	APP'D				

SHANE L. BROWN — STATE OF WASHINGTON — 49149 — STRUCTURAL ENGINEER — PROFESSIONAL ENGINEER

SEE SHEET CT1 DATE

BRIDGE AND STRUCTURES OFFICE

Washington State Department of Transportation

SR305
SAM SNYDER CREEK
REMOVE FISH BARRIER

PIER 2 ELEVATION STAGE 1

BRIDGE SHEET NO. BG16

SHEET 136 OF 186 SHEETS

pw:\\HQOLYMAPPPW03P.WSDOT.LOC:WSDOT\Documents_HQ\Fish Passage\ORprj\30518.92_SamSnyderCreek\Design_CAD_Sheets\390-BridgeStrPlan\XL6050_BP_BG_SAM_TB.dgn

SR 305 FILE NO. SHEET BG16

3/23/2023 12:06:10 PM

NOTES:

REINFORCEMENT PLACED PARALLEL TO ML LINE

α ELEVATION TAKEN AT BACK OF PAVEMENT SEAT. ALL OTHER ELEVATIONS TAKEN AT ℄ BEARING.

δ ALL ELEVATIONS ARE BASED ON ASSUMED BEARING DIMENSIONS. ADJUSTMENTS SHALL BE MADE BASED ON FINAL DISC BEARING DESIGN HEIGHT.

TABLE OF ELEVATIONS @ ℄ OF BRG. @ TOP OF GROUT PAD δ			
LOCATION	D	E	F
PIER 2	111.26	111.38	111.17

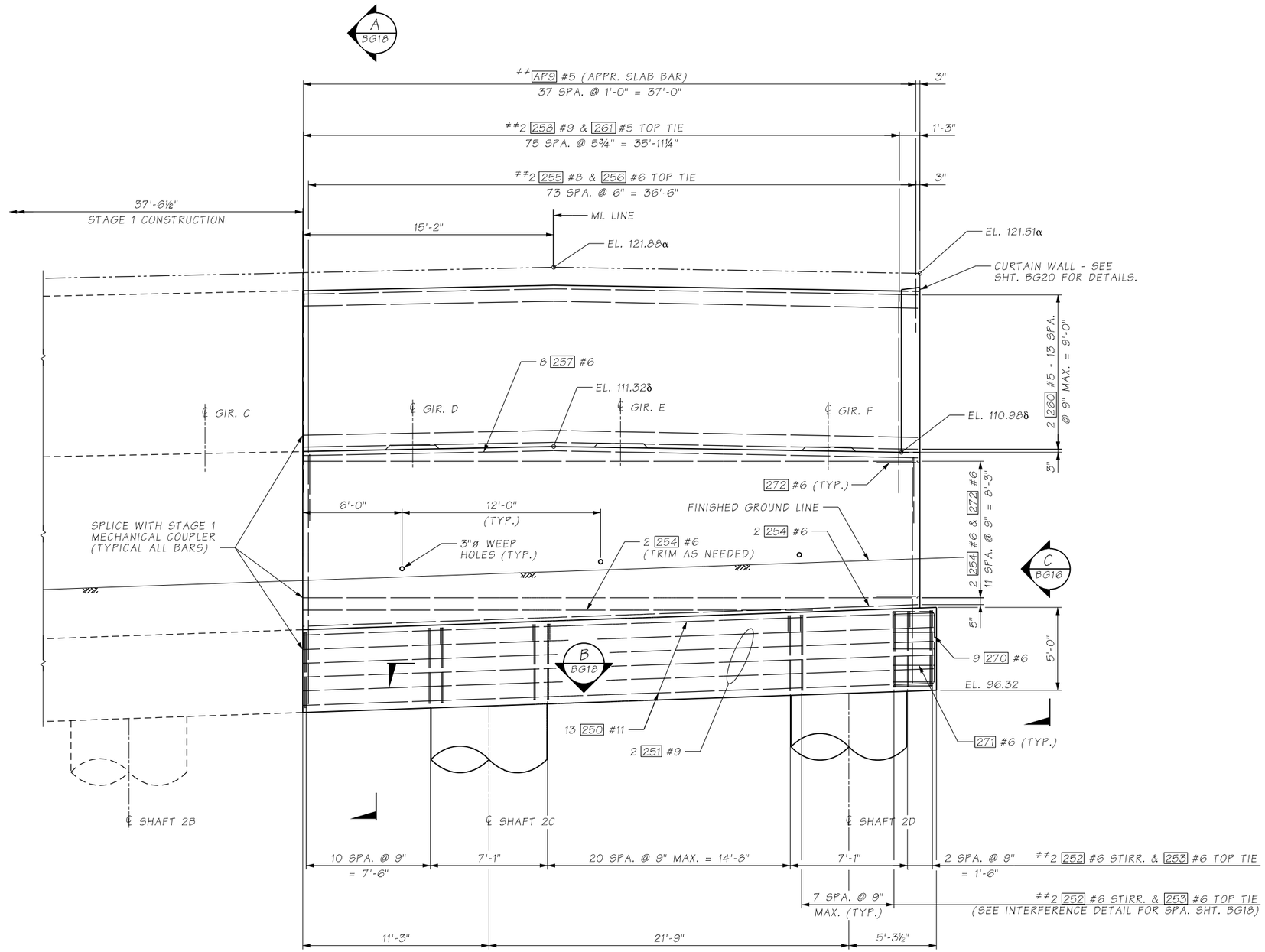

ELEVATION - PIER 2, STAGE 2

Bridge Design Engr.	A. LELAND	c:\users\schicvin\pw_wsdot\d0335751\XL6049_PS_BG_SAM_ABUT2-4.dgn							
Supervisor					REGION NO.	STATE	FED. AID. PROJ. NO.	SHEET NO.	TOTAL SHEETS
Designed By	N. CABLE				10	WASH.			
Checked By	J. MERTH				JOB NUMBER				
Detailed By	V.B. SCHICCHI				22C533				
Bridge Projects Engr.	A. AMOS								
Prelim. Plan By									
Architect/Specialist		DATE	REVISION	BY	APP'D				

SHAVE L. BROWN — STATE OF WASHINGTON — 49149 — STRUCTURAL ENGINEER — PROFESSIONAL ENGINEER

SEE SHEET CT1 DATE

BRIDGE AND STRUCTURES OFFICE

Washington State Department of Transportation

SR305
SAM SNYDER CREEK
REMOVE FISH BARRIER

PIER 2 ELEVATION STAGE 2

BRIDGE SHEET NO. BG17

SHEET 137 OF 186 SHEETS

pw:\\HQOLYMAPPPW03P.WSDOT.LOC:WSDOT\Documents_HQ\Fish Passage\ORproj\30598.92_SamSnyderCreek\Design_CAD_Sheets\390-BridgeStrPlan\XL6050_BP_BG_SAM_TB.dgn

SR 305 FILE NO. SHEET BG17

3/23/2023 12:06:33 PM

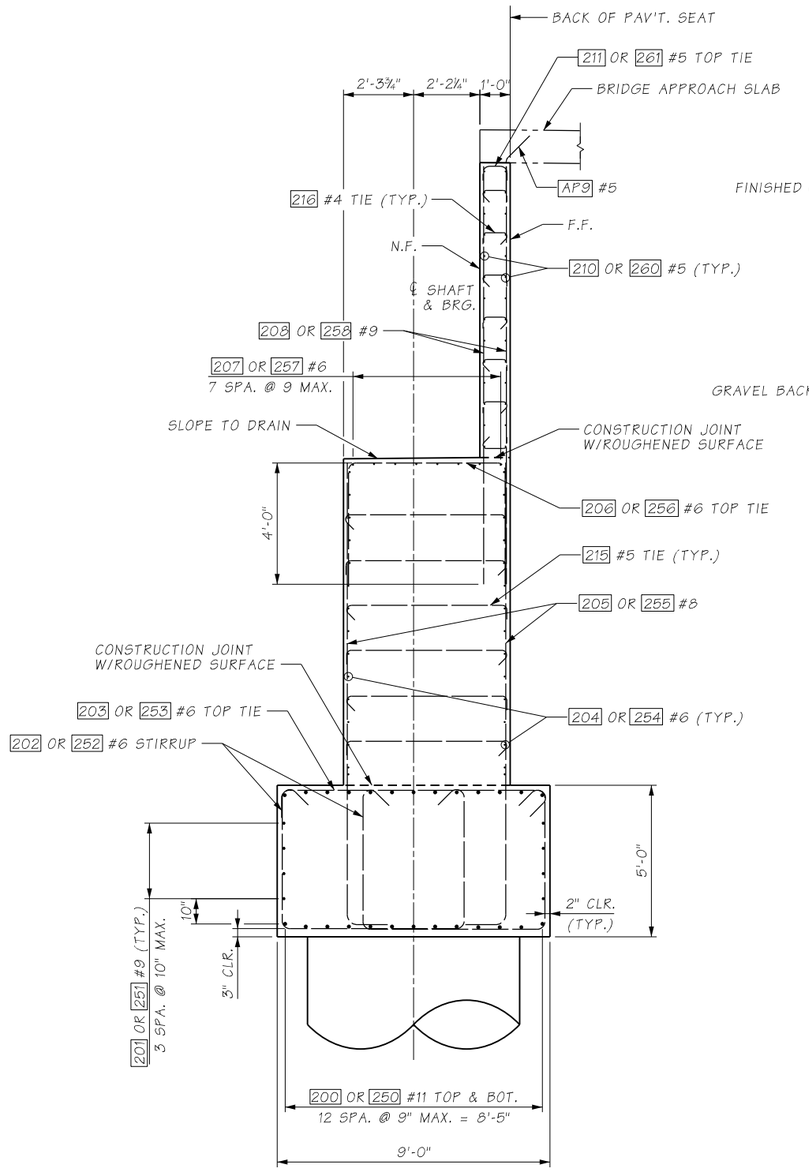

SECTION A

BG16 & BG17

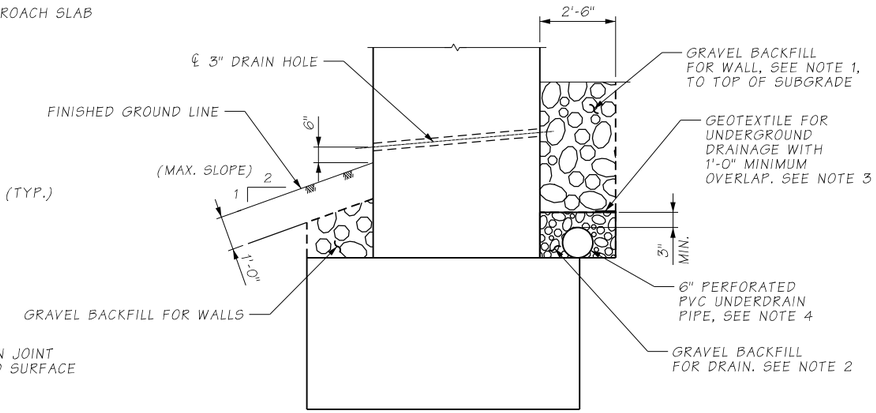

DRAINAGE DETAIL

NOTE:

1. SEE SECTION 9-3.12(2) OF THE CURRENT WSDOT STANDARD SPECIFICATIONS FOR THE ROAD, BRIDGE AND MUNICIPAL CONSTRUCTION M 41-10.
2. SEE SECTION 9-03.12(14) OF THE CURRENT WSDOT STANDARD SPECIFICATIONS FOR THE ROAD, BRIDGE AND MUNICIPAL CONSTRUCTION M 41-10.
3. CONSTRUCTION GEOTEXTILE FOR SOIL STABILIZATION PER STANDERD SPECIFICATION 9-33.2(1), TABLE 3 NON-WOVEN.
4. 6" PERFORATED PVC UNDERDRAIN PIPE PER STANDARD SPECIFICATION 9-05.2(6).

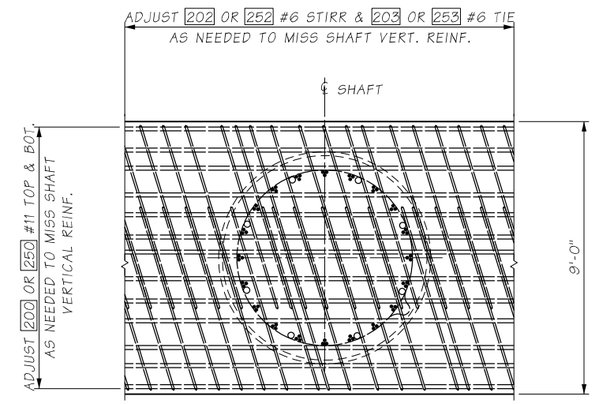

SECTION B

BG16 & BG17

SHAFT CAP REBAR INTERFERENCE DETAIL

TYPICAL FOR ALL SHAFTS

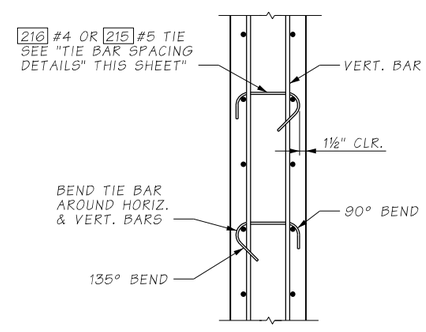

TIE BAR DETAIL

ALTERNATE 135° HOOK EVERY OTHER TIE BAR

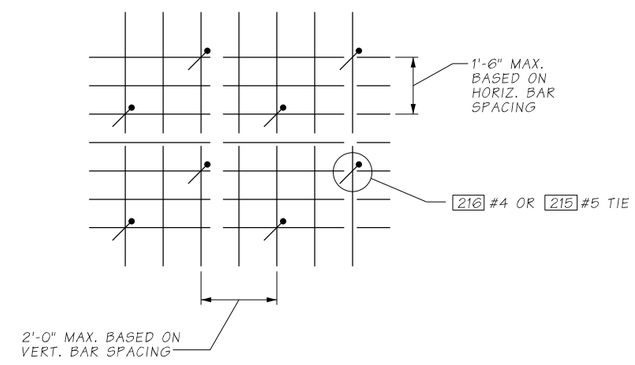

NOTES:

N.F. = NEAR FACE
F.F. = FAR FACE

Bridge Design Engr.	A. LELAND	c:\users\schicvin\pw_wsdot\d0335751\XL6049_PS_BG_SAM_ABUT2-5.dgn							
Supervisor					REGION NO.	STATE	FED. AID. PROJ. NO.	SHEET NO.	TOTAL SHEETS
Designed By	N. CABLE				10	WASH.			
Checked By	J. MERTH				JOB NUMBER				
Detailed By	V.B. SCHICCHI				22C533				
Bridge Projects Engr.	A. AMOS								
Prelim. Plan By									
Architect/Specialist		DATE	REVISION	BY	APP'D				

SHANE L. BROWN, STATE OF WASHINGTON, 49149, STRUCTURAL ENGINEER, PROFESSIONAL ENGINEER

SEE SHEET CT1

DATE

BRIDGE AND STRUCTURES OFFICE

Washington State Department of Transportation

SR305
SAM SNYDER CREEK
REMOVE FISH BARRIER

PIER 2 SECTIONS & DETAILS

BRIDGE SHEET NO. BG18

SHEET 138 OF 186 SHEETS

pw:\\HQOLYMAPPPW03P.WSDOT.LOC:WSDOT\Documents_HQ\Fish Passage\ORproj\305\8.92_SamSnyderCreek\Design_CAD_Sheets\390-BridgeStrPlan\XL6050_BP_BG_SAM_TB.dgn

SR 305 FILE NO. SHEET BG18

3/23/2023 12:06:59 PM

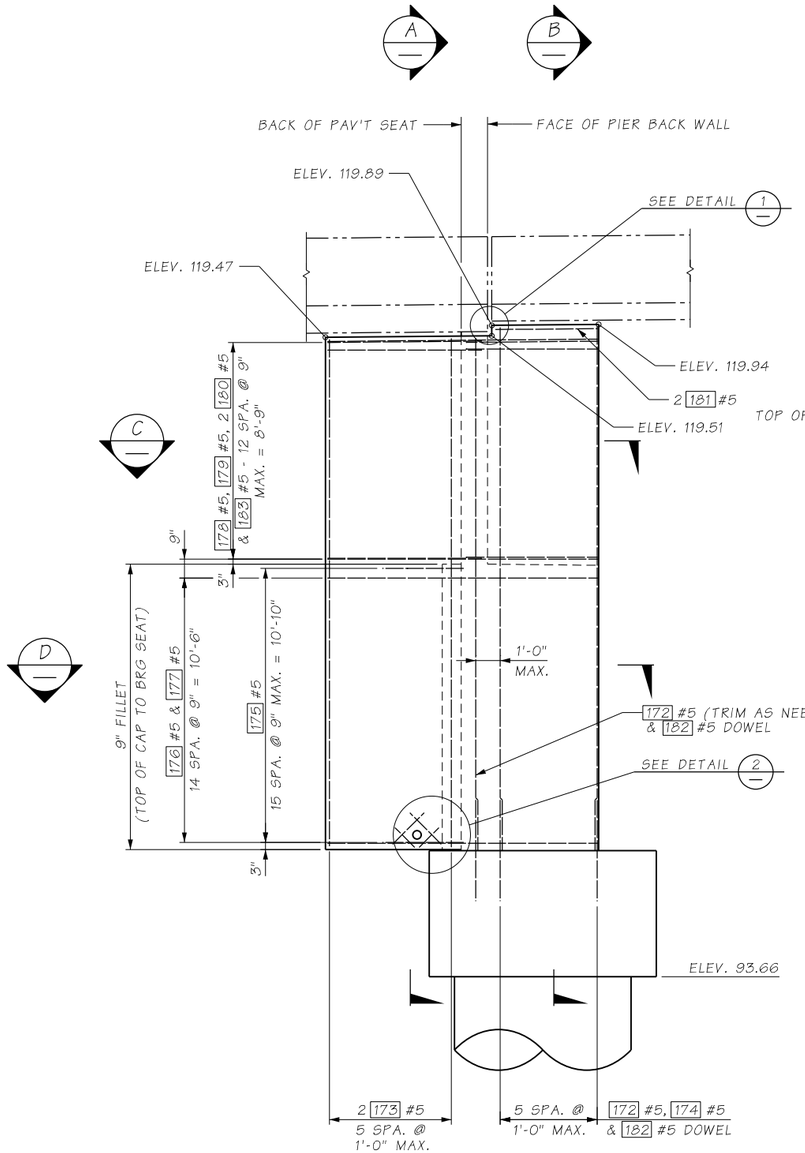

ELEVATION
PIER 2 LEFT
LOOKING NORTH

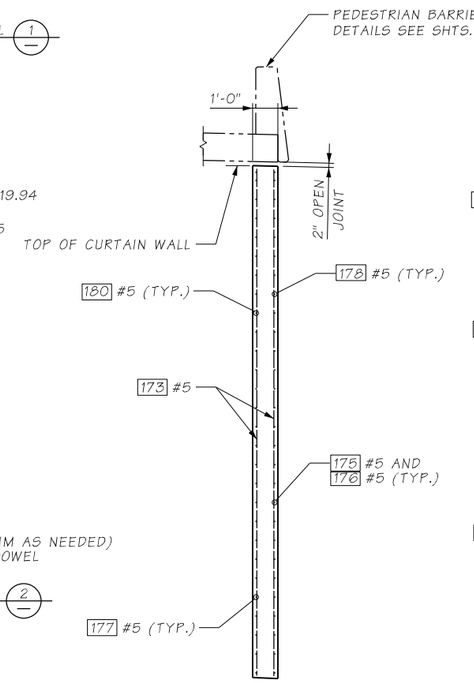

SECTION A

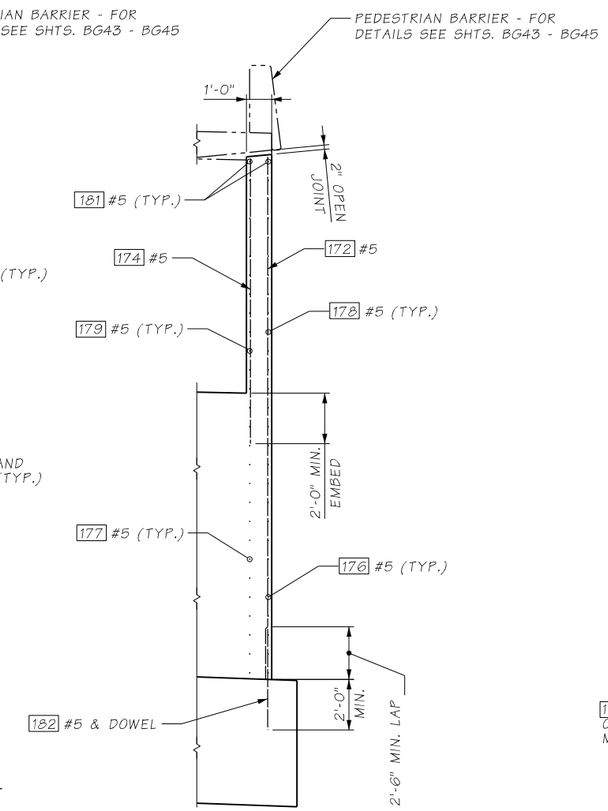

SECTION B

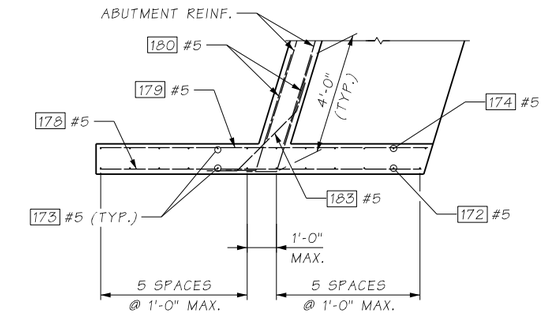

SECTION C

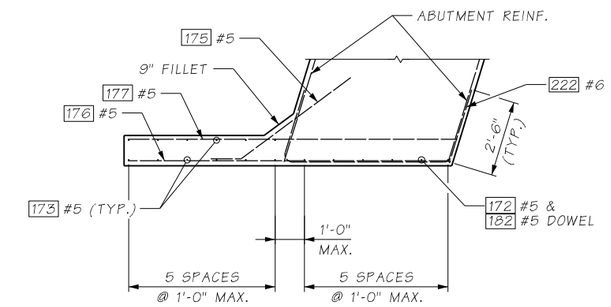

SECTION D

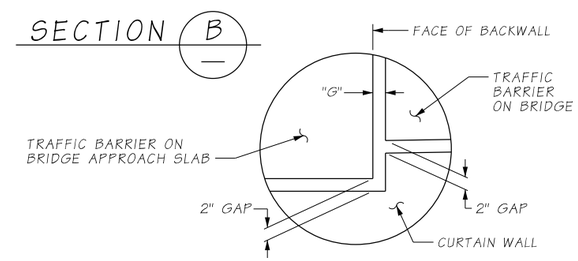

DETAIL 1

-, BG 11, BG12, BG19 & BG20

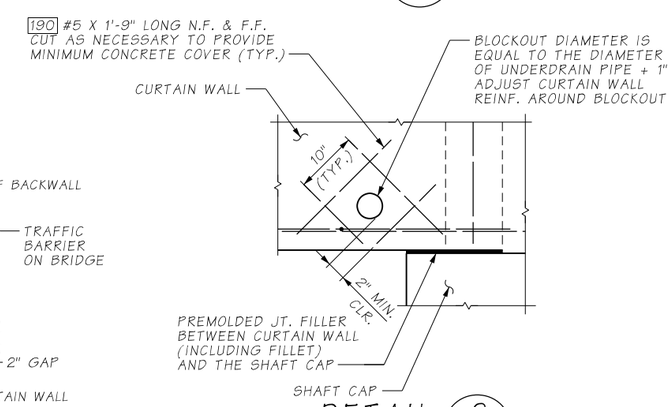

DETAIL 2

-, BG 11, BG12, BG19 & BG20

Bridge Design Engr.	A. LELAND	c:\users\schicvin\pw_wsdot\d0335751\XL6049_PS_BG_SAM_CW2L.dgn							
Supervisor					REGION NO.	STATE	FED. AID. PROJ. NO.	SHEET NO.	TOTAL SHEETS
Designed By	N. CABLE				10	WASH.			
Checked By	J. MERTH				JOB NUMBER				
Detailed By	V.B. SCHICCHI				22C533				
Bridge Projects Engr.	A. AMOS								
Prelim. Plan By									
Architect/Specialist		DATE	REVISION	BY	APP'D				

SHANE L. BROWN, STATE OF WASHINGTON, 49149, STRUCTURAL ENGINEER, PROFESSIONAL ENGINEER
SEE SHEET CT1
DATE

BRIDGE AND STRUCTURES OFFICE

Washington State Department of Transportation

SR305
SAM SNYDER CREEK
REMOVE FISH BARRIER

PIER 2 CURTAIN WALL SOUTH
SECTIONS AND DETAILS

BRIDGE SHEET NO. BG19

SHEET 139 OF 186 SHEETS

pw:\\HQOLYMAPPPW03P.WSDOT.LOC:WSDOT\Documents_HQ\Fish Passage\ORproj\305\8.92_SamSnyderCreek\Design_CAD_Sheets\390-BridgeStrPlan\XL6050_BP_BG_SAM_TB.dgn
SR 305 FILE NO. SHEET BG19
3/23/2023 12:07:26 PM

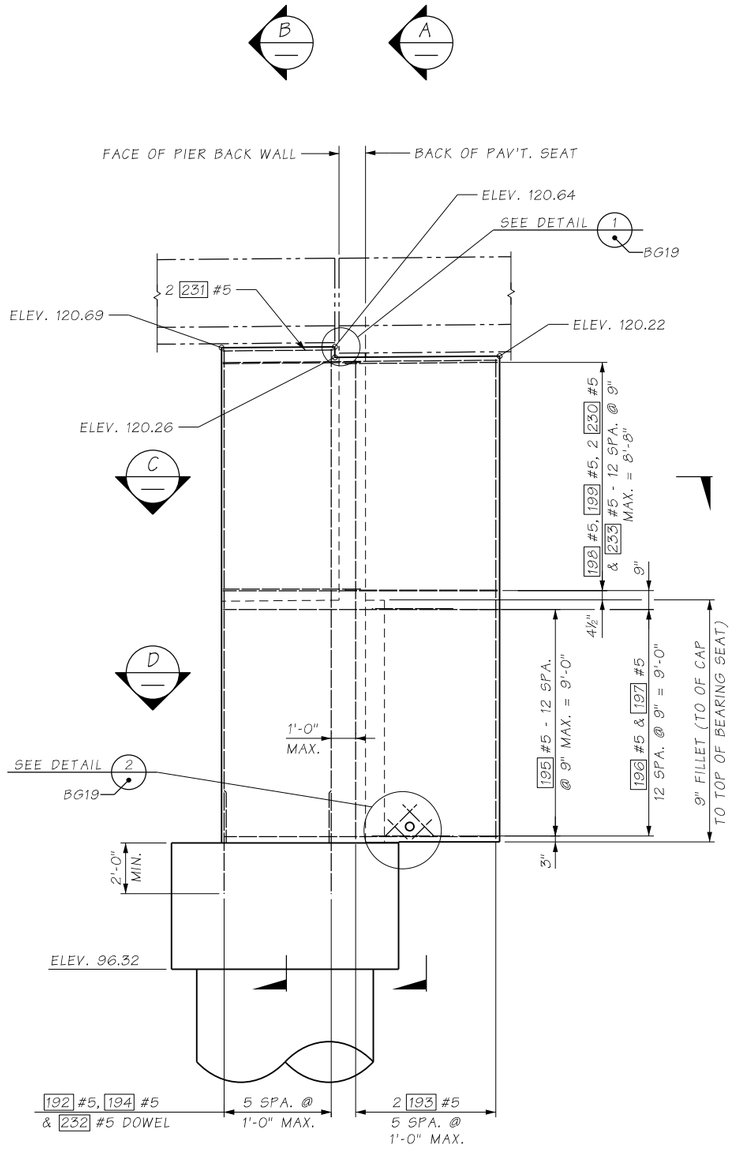

ELEVATION
PIER 2 RIGHT
LOOKING SOUTH

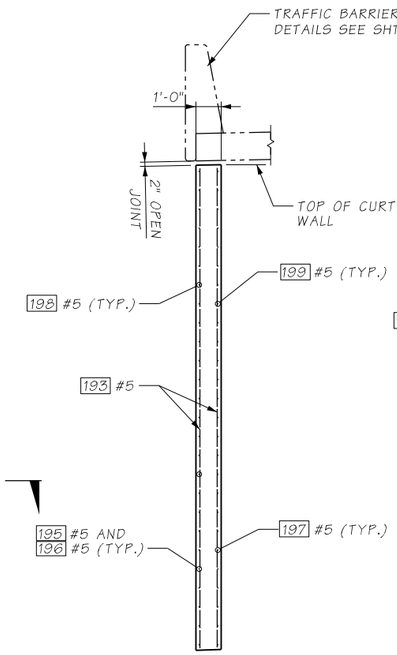

SECTION A

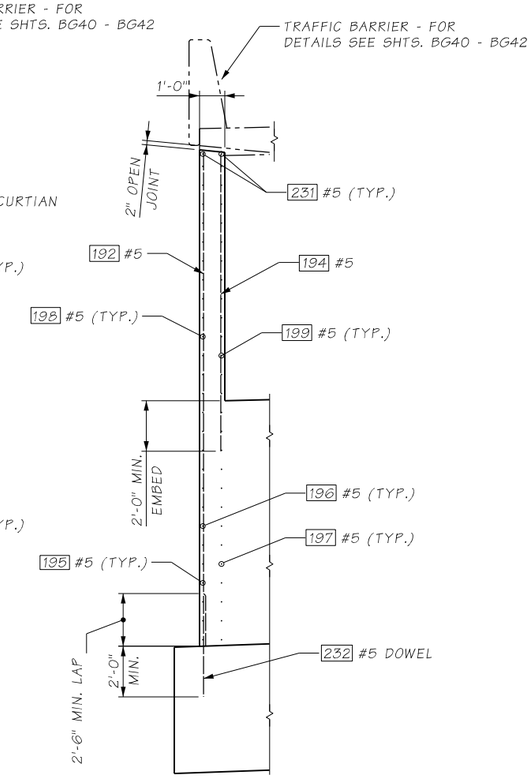

SECTION B

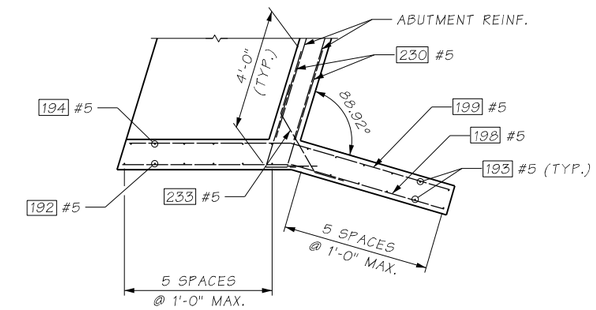

SECTION C

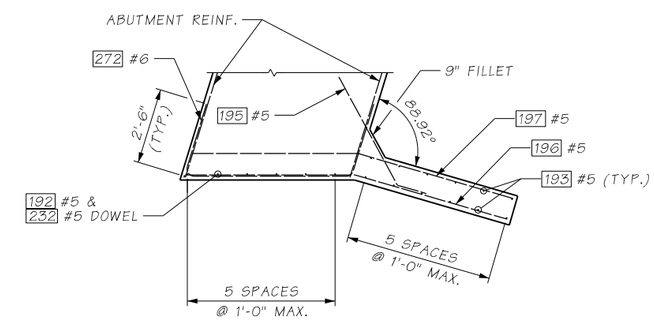

SECTION D

Bridge Design Engr.	A. LELAND	c:\users\schicvin\pw_wsdot\d0335751\XL6049_PS_BG_SAM_CW2R.dgn			REGION NO.	STATE	FED. AID. PROJ. NO.	SHEET NO.	TOTAL SHEETS
Supervisor					10	WASH.			
Designed By	N. CABLE				JOB NUMBER				
Checked By	J. MERTH				22C533				
Detailed By	V.B. SCHICCHI								
Bridge Projects Engr.	A. AMOS								
Prelim. Plan By									
Architect/Specialist		DATE	REVISION	BY	APP'D				

SHANE L. BROWN, STATE OF WASHINGTON, 49149, STRUCTURAL ENGINEER, PROFESSIONAL ENGINEER
SEE SHEET CT1
DATE

BRIDGE AND STRUCTURES OFFICE

Washington State Department of Transportation

SR305
SAM SNYDER CREEK
REMOVE FISH BARRIER

PIER 2 CURTAIN WALL NORTH
SECTIONS AND DETAILS

BRIDGE SHEET NO. BG20

SHEET 140 OF 186 SHEETS

pw:\\HQOLYMAPPPW03P.WSDOT.LOC:WSDOT\Documents_HQ\Fish Passage\ORproj\30518.92_SamSnyderCreek\Design_CAD_Sheets\390-BridgeStrPlan\XL6050_BP_BG_SAM_TB.dgn
SR 305 FILE NO. SHEET BG20
3/23/2023 12:08:10 PM

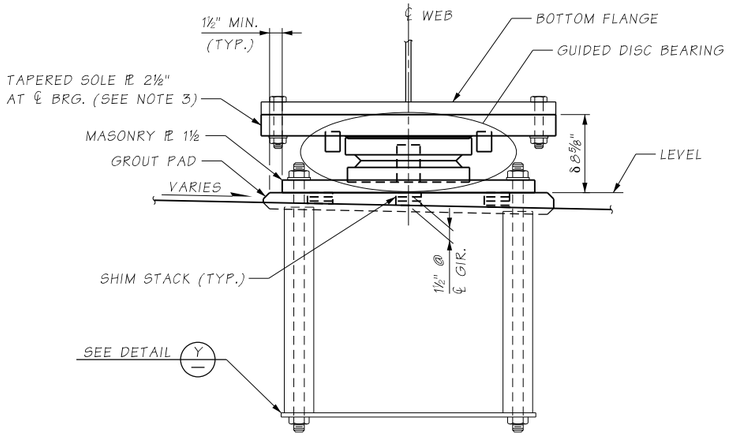

ELEVATION - PIER 1 BEARING

GIRDER A SHOWN.
PIER REINFORCEMENT NOT SHOWN FOR CLARITY.

δ GROUT PAD ELEVATIONS ARE BASED ON ASSUMED DISC BEARING HEIGHT. ADJUSTMENT SHALL BE MADE TO GROUT PAD ELEVATION BASED ON FINAL DISC BEARING DESIGN UNDER DEAD LOAD.

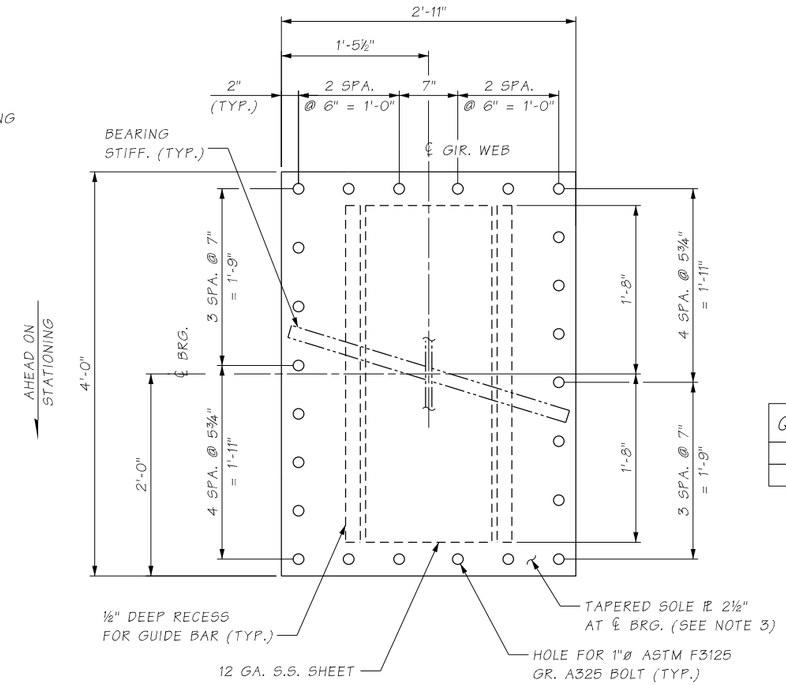

SOLE PLATE PLAN

NOTE:

FOR BEARING NOTES SEE "DISC BEARING DETAILS" SHEET BG22.

PIER 1 BEARING DESIGN LOADS TABLE		
DIRECTION	LOAD CASE	LOAD
MIN. VERTICAL	SERVICE	281kips
MAX. VERTICAL	SERVICE	554kips
TRANSVERSE	SERVICE	5.79kips
MIN. VERTICAL	STRENGTH	216kips
MAX. VERTICAL	STRENGTH	802kips
TRANSVERSE	STRENGTH	10.2kips
MIN. VERTICAL	EXTREME	180kips
MAX. VERTICAL	EXTREME	495kips
TRANSVERSE	EXTREME	185kips

QUANTITY TABLE	
PIER	BRG. QTY.
1	6

PIER 1 BEARING DESIGN MOVEMENTS TABLE	
LOAD CASE	MOVEMENT
SERVICE ROTATION	0.0251 RADIANS
LONGIT. DISPLACEMENT	±12.25 INCHES
TRANSV. DISPLACEMENT	±0.25 INCHES
STRENGTH ROTATION	0.0342 RADIANS

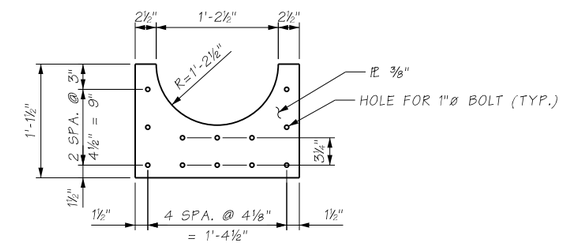

KEEPER PLATE

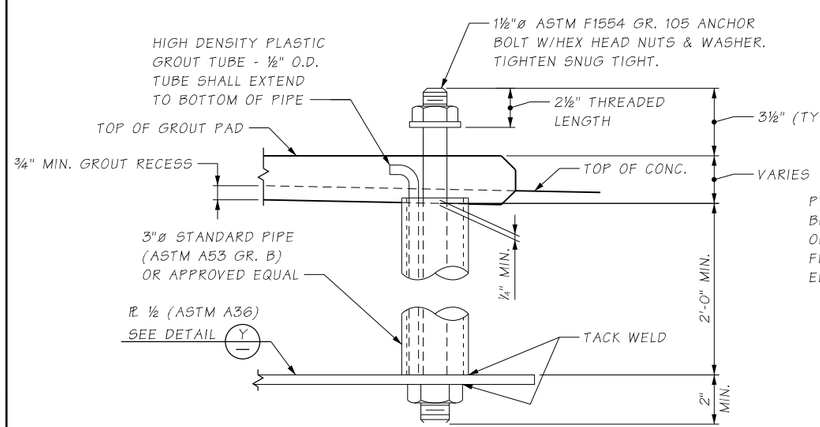

ANCHOR BOLT DETAIL

ANCHOR BOLTS SHALL BE HOT DIP GALVANIZED IN ACCORDANCE WITH AASHTO M 232.

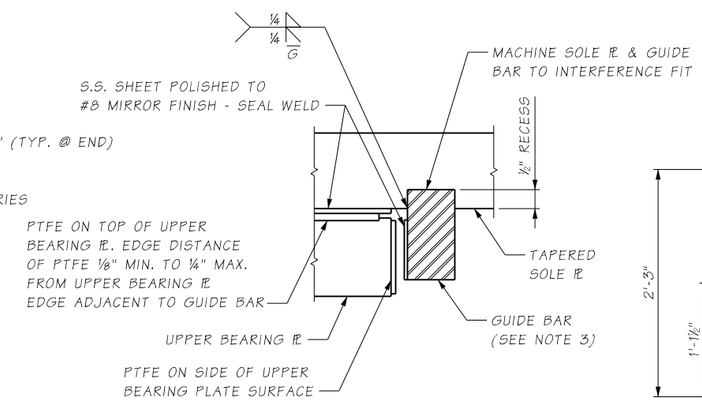

GUIDE BAR DETAIL

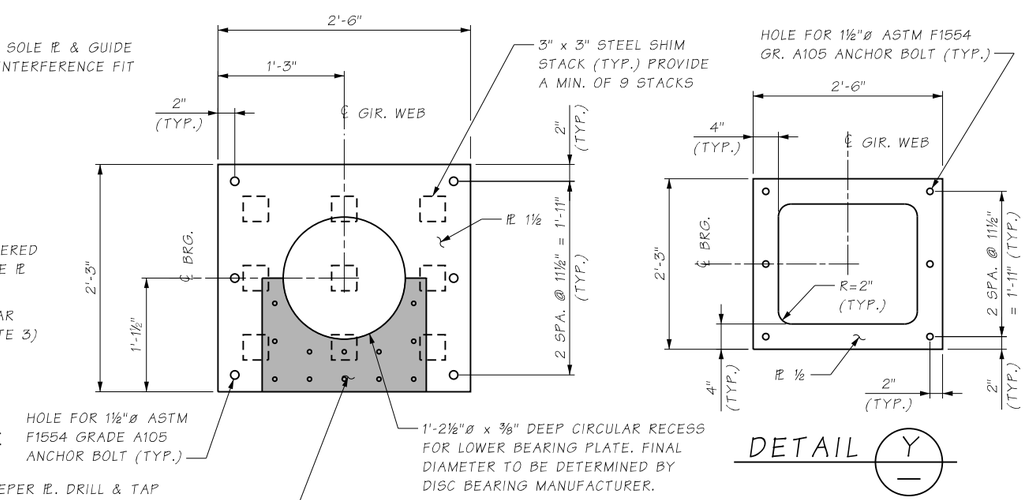

MASONRY PLATE PLAN

DETAIL Y

Bridge Design Engr.	A. LELAND	c:\users\schicvin\pw_wsdot\d0335751\XL6050_PS_BG_SAM_BRG1.dgn							
Supervisor					REGION NO.	STATE	FED. AID. PROJ. NO.	SHEET NO.	TOTAL SHEETS
Designed By	S. BENSON				10	WASH.			
Checked By	J. MERTH				JOB NUMBER				
Detailed By	V.B. SCHICCHI				22C533				
Bridge Projects Engr.	A. AMOS								
Prelim. Plan By									
Architect/Specialist		DATE	REVISION	BY	APP'D				

SHANE L. BROWN — STATE OF WASHINGTON — 49140 — STRUCTURAL ENGINEER — PROFESSIONAL ENGINEER
SEE SHEET CT1
DATE

BRIDGE AND STRUCTURES OFFICE

Washington State Department of Transportation

SR305
SAM SNYDER CREEK
REMOVE FISH BARRIER

DISC BEARING DETAILS - PIER 1

BRIDGE SHEET NO. BG21

SHEET 141 OF 186 SHEETS

pw:\\WQOLYMAPPPW03P.WSDOT.LOC:WSDOT\Documents_HQ\Fish Passage\ORproj\30518.92_SamSnyderCreek\Design_CAD_Sheets\390-BridgeStrPlan\XL6050_BB_BG_SAM_BRG01.dgn
SR 305 FILE NO. SHEET BG21
3/23/2023 12:08:41 PM

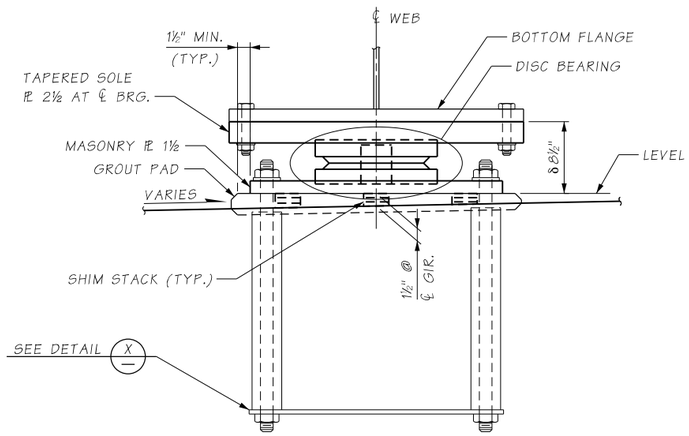

ELEVATION - PIER 2 BEARING

GIRDER A SHOWN.
PIER REINFORCEMENT NOT SHOWN FOR CLARITY.

δ GROUT PAD ELEVATIONS ARE BASED ON ASSUMED DISC BEARING HEIGHT. ADJUSTMENT SHALL BE MADE TO GROUT PAD ELEVATION BASED ON FINAL DISC BEARING DESIGN UNDER DEAD LOAD.

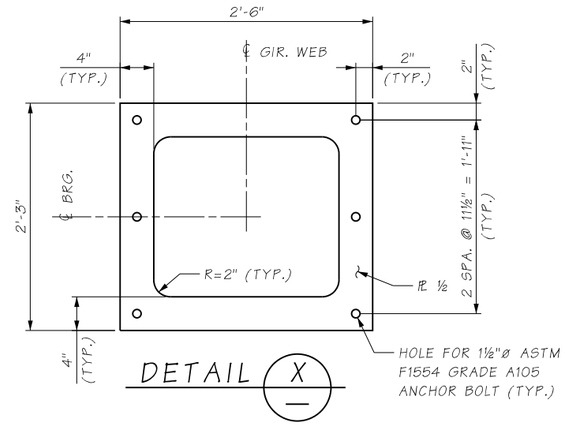

DETAIL X

NOTES:

1. BEARING DIMENSIONS ARE ASSUMED. BEARING ELEMENTS SHALL BE DESIGNED BY THE MANUFACTURER IN ACCORDANCE WITH THESE DETAILS AND THE STANDARD SPECIFICATIONS TO RESIST THE DESIGN SERVICE, STRENGTH AND EXTREME EVENT LOADS GIVEN IN THE "BEARING DESIGN LOADS TABLE". ADJUSTMENT SHALL BE MADE TO GROUT PAD ELEVATION BASED ON FINAL DISC BEARING DESIGN.
2. BEARING ELEMENTS SHALL BE DESIGNED USING AASHTO LRFD BRIDGE DESIGN SPECIFICATIONS FOR HIGHWAY BRIDGES, 9TH EDITION 2020.
3. FINAL MINIMUM PLATE DIMENSIONS SHOWN. INCREASE THICKNESS AS REQUIRED FOR MACHINING TO FLATNESS TOLERANCE AFTER FABRICATION.
4. CIRCULAR BEARING PLATES, SOLE PLATE AND MASONRY PLATE SHALL BE MACHINED TO PROVIDE A CLASS LC-6 FIT.
5. SOLE AND MASONRY PLATES SHALL BE AASHTO M 270 GRADE 50 STEEL.
6. BEARING COMPONENTS SHALL BE REMOVABLE AND REPLACEABLE.
7. WORKING DRAWINGS AND DESIGN CALCULATIONS SHALL BE SUBMITTED TO THE ENGINEER FOR APPROVAL PRIOR TO THE MANUFACTURE OF THE BEARINGS IN ACCORDANCE WITH STANDARD SPECIFICATION 6-02.3(19)B.
8. SEE STANDARD SPECIFICATIONS FOR CORROSION PROTECTION AND PAINTING REQUIREMENTS FOR BEARINGS AND ANCHORAGE COMPONENTS.
9. PROVIDE LEVEL AREA LOCALLY IN TOP OF CROSSBEAMS OR PIERS AT EACH SHIM STACK SO SHIMS SIT LEVEL IN LONGITUDINAL AND TRANSVERSE DIRECTIONS.
10. PLATE SIZES AND BOLT PATTERNS FOR BEARING CONNECTIONS ARE BASED ON ASSUMED BEARING DIMENSIONS AND SHALL BE ADJUSTED IF NECESSARY TO ACCOMMODATE FINAL BEARING DESIGN. ANY CHANGES SHALL BE SUBMITTED TO THE ENGINEER FOR APPROVAL AND COORDINATION BETWEEN THE BEARING AND STEEL FABRICATORS.
11. PLACE GROUT AFTER GIRDER PLACEMENT AND BEFORE BRIDGE DECK PLACEMENT.
12. TAPERED SOLE PLATE SHALL MATCH PROFILE GRADE.

PIER 2 BEARING DESIGN LOADS TABLE

DIRECTION	LOAD CASE	LOAD
MIN. VERTICAL	SERVICE	281kips
MAX. VERTICAL	SERVICE	554kips
LONGITUDINAL	SERVICE	93kips
TRANSVERSE	SERVICE	5.79kips
MIN. VERTICAL	STRENGTH	216kips
MAX. VERTICAL	STRENGTH	802kips
LONGITUDINAL	STRENGTH	100kips
TRANSVERSE	STRENGTH	10.2kips
MIN. VERTICAL	EXTREME	180kips
MAX. VERTICAL	EXTREME	495kips
LONGITUDINAL	EXTREME	369kips
TRANSVERSE	EXTREME	185kips

PIERS 2 BEARING DESIGN MOVEMENTS TABLE

LOAD CASE	MOVEMENT
SERVICE ROTATION	0.0251 RADIANS
STRENGTH ROTATION	0.0342 RADIANS

QUANTITY TABLE

PIER	BRG. QTY.
2	6

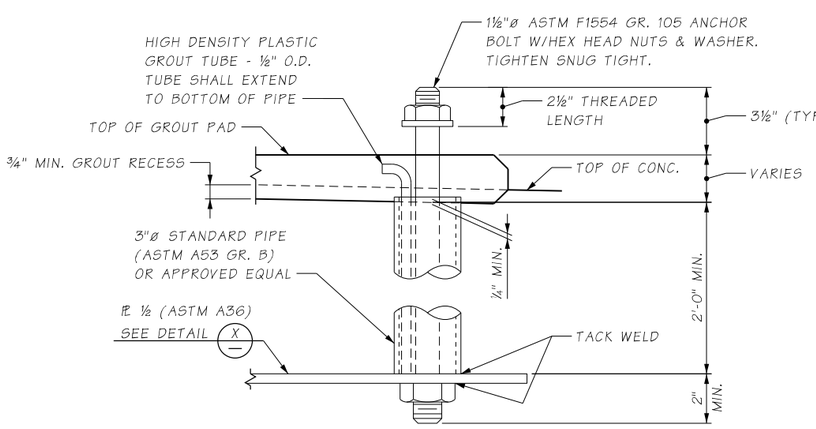

ANCHOR BOLT DETAIL

ANCHOR BOLT SHALL BE HOT DIP GALVANIZED IN ACCORDANCE WITH AASHTO M 232.

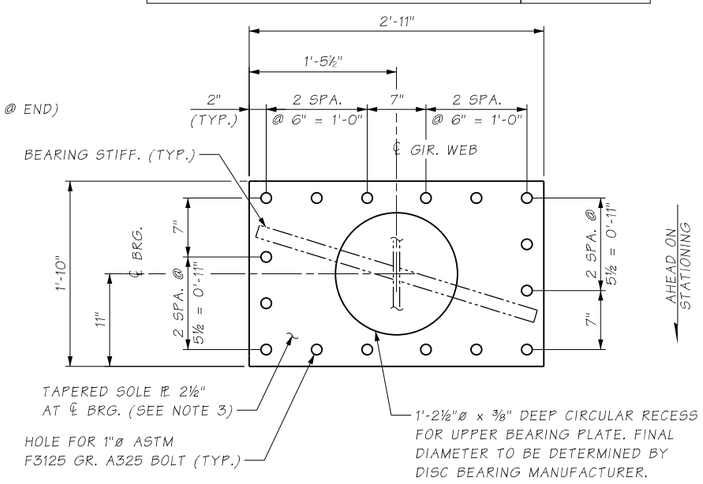

SOLE PLATE PLAN

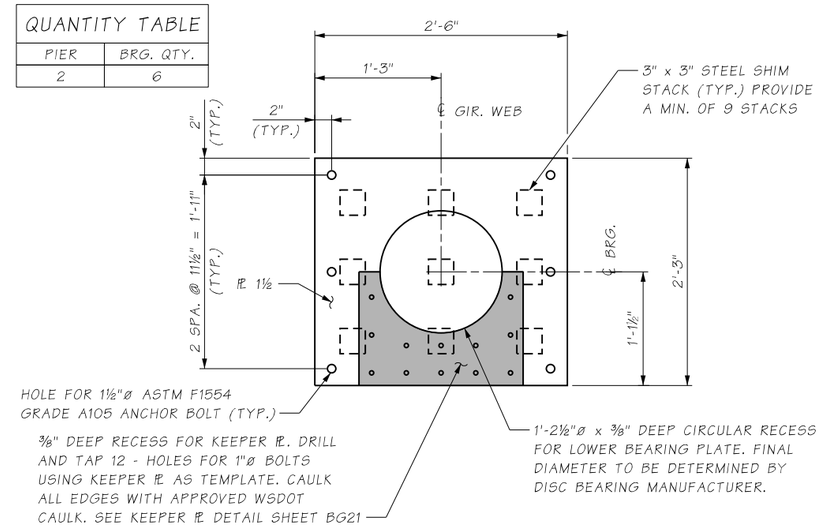

MASONRY PLATE PLAN

Bridge Design Engr.	A. LELAND	c:\users\schicvin\pw_wsdot\d0335751\XL6050_PS_BG_SAM_BRG2.dgn			REGION NO.	STATE	FED. AID. PROJ. NO.	SHEET NO.	TOTAL SHEETS
Supervisor					10	WASH.			
Designed By	S. BENSON				JOB NUMBER				
Checked By	J. MERTH				22C533				
Detailed By	V.B. SCHICCHI								
Bridge Projects Engr.	A. AMOS								
Prelim. Plan By									
Architect/Specialist		DATE	REVISION	BY	APP'D				

SHANE L. BROWN — STATE OF WASHINGTON — 49149 — STRUCTURAL ENGINEER — PROFESSIONAL ENGINEER
SEE SHEET CT1
DATE

BRIDGE AND STRUCTURES OFFICE

Washington State Department of Transportation

SR305
SAM SNYDER CREEK
REMOVE FISH BARRIER

DISC BEARING DETAILS - PIER 2

BRIDGE SHEET NO. BG22

SHEET 142 OF 186 SHEETS

pw:\\HQOLYMAPPPW03P.WSDOT.LOC:WSDOT\Documents_HQ\Fish Passage\ORproj\30518.92_SamSnyderCreek\Design_CAD_Sheets\390-BridgeStrPlan\XL6050_BB_BG_SAM_BRG2.dgn
SR 305 FILE NO. SHEET BG22
3/23/2023 12:09:04 PM

STRUCTURAL STEEL NOTES

1. ALL STRUCTURAL STEEL SHALL BE STRUCTURAL LOW ALLOY STEEL AASHTO M270 GRADE 50W UNLESS NOTED OTHERWISE. ALL PLATES FOR FLANGE MATERIAL SHALL BE PURCHASED SUCH THAT THE RATIO OF REDUCTION OF THICKNESS FROM A SLAB TO PLATE SHALL BE AT LEAST 3.0:1. PLATES FOR FLANGE MATERIAL GREATER THAN 2" THICK SHALL BE SUPPLIED BASED ON ACCEPTABLE ULTRASONIC TESTING (UT) INSPECTION IN ACCORDANCE WITH ASTM A578. UT SCANNING AND ACCEPTANCE SHALL BE AS FOLLOWS:
   i. THE ENTIRE PLATE SHALL BE SCANNED IN ACCORDANCE WITH ASTM A578 AND SHALL MEET THE ACCEPTANCE STANDARD C, AND
   ii. PLATE MATERIAL WITHIN 12" OF FLANGE COMPLETE JOINT PENETRATION SPLICE WELDS SHALL BE SCANNED IN ACCORDANCE WITH ASTM A578 SUPPLEMENTARY S1 AND SHALL MEET ACCEPTANCE STANDARD C.

   WITH THE APPROVAL OF THE ENGINEER, ROLLED AGLES, CHANNELS AND BARS MAY CONFORM TO ASTM A572 GR 50 WITH SUPPLEMENTAL REQUIREMENT S5 - CHARPY V-NOTCH IMPACT TESTS WHEN CVN IS REQUIRED. CVN TESTING SHALL MEET SECTION 6-03.2.

2. ASTM A606 GRADE 50 MAY BE USED FOR FILLER PLATES LESS THEN ¼ INCH THICKNESS.

3. ALL FIELD AND SHOP CONNECTIONS SHALL BE MADE WITH HIGH STRENGTH BOLTS, WITH THE BOLT HEADS TOWARD THE OUTSIDE AND UNDERSIDE OF THE BRIDGE. HIGH STRENGTH BOLTS SHALL BE GALVANIZED ASTM F3125 GR A325 TYPE 3 ⅞ INCH DIAMETER, EXCEPT AS NOTED OTHERWISE. NUTS AND WASHERS SHALL CONFORM TO SECTION 9-06.5(3). THE MINIMUM CENTER-TO-CENTER DIMENSION SHALL BE 3 INCHES UNLESS SHOWN OTHERWISE. ALL CONNECTIONS SHOWN ARE FOR FIELD BOLTING UNLESS OTHERWISE SHOWN OR APPROVED IN THE SHOP PLANS.

4. ALL WELDING SHALL BE DONE TO MINIMIZE DISTORTION. THE WELDING SEQUENCES AND PROCEDURES TO BE USED SHALL BE SUBMITTED TO THE ENGINEER FOR APPROVAL PRIOR TO THE START OF WELDING. TOP FLANGES, BOTTOM FLANGES AND WEBS SHALL BE FABRICATED TO FULL LENGTH BETWEEN FIELD SPLICES PRIOR TO WELDING FLANGES TO WEBS.

   WELDING SEQUENCE:
   a) FLANGE AND WEB SPLICES, b) FLANGES TO WEB, c) STIFF. TO WEBS AND FLANGES, d) GUSSET PLATES TO WEBS

5. ONE BUTT SPLICE WILL BE PERMITTED FOR FLANGE AND WEB PLATES EXCEEDING 60 FEET IN LENGTH. A PERMISSABLE LOCATION WILL BE SHOWN IN THE PLANS. ANY PROPOSED BUTT SPLICE SHALL BE SHOWN ON THE SHOP DRAWINGS SUBMITTED FOR ACCEPTANCE.

6. INTERMEDIATE TRANSVERSE STIFFENERS, WEB SPLICES AND ALL INTERMEDIATE CROSSFRAMES SHALL BE NORMAL TO THE FLANGES. AFTER COMPLETION OF TOTAL DEAD LOAD OF SUPERSTRUCTURE, BEARING AND JACKING STIFFENERS SHALL BE PLUMB.

7. CROSSFRAMES SHALL BE DETAILED TO FIT WITH GIRDERS IN THE NO LOAD CONDITION.

8. ALL WELDED SHEAR CONNECTORS SHALL BE ⅞ INCH DIAMETER.

9. MEMBERS MARKED Ⓥ ARE MAIN LOAD CARRYING TENSILE MEMBERS OR TENSION COMPONENTS OF FLEXURAL MEMBERS AND SHALL MEET THE LONGITUDINAL CHARPY V-NOTCH TESTS AS DESCRIBED IN THE SECTION 6-03.2.

10. ⊗ DENOTES TENSION BUTT SPLICE FOR FLANGES OR WEBS.

11. ALL STRUCTURAL STEEL SHALL BE PAINTED IN ACCORDANCE WITH SECTION 6-07, UNLESS OTHERWISE NOTED. PAINT ALL STEEL IN SHOP WITH ONE COAT INORGANIC ZINC PRIMER AT A MINIMUM DRY FILM THICKNESS OF 3.5 MILS AND MAXIMUM FILM THICKNESS OF 5 MILS. INORGANIC ZINC PRIMER SHALL BE IN ACCORDANCE WITH SECTION 9-08.1(2)C. TOUCH UP DAMAGED AREAS IN FIELD WITH ZINC-RICH PRIMER. ZINC-RICH PRIMER FOR FIELD TOUCH UP SHALL BE IN ACCORDANCE WITH SECTION 9-08.1(2)F. WHEN SPECIFIED, GALVANIZING SHALL BE IN ACCORDANCE WITH AASHTO M 111, M 232, ASTM F2329, OR ASTM B695 CLASS 55 AS APPLICABLE. GALVANIZED BOLTS TO BE PAINTED SHALL BE PREPARED IN ACCORDANCE WITH SECTION 6-07.3(11)A.

12. BOLT HOLES REMAINING IN GIRDER WEBS UPON REMOVAL OF DECK FORMWORK AND TEMPORARY BRACING SHALL BE TREATED IN ACCORDANCE WITH THE STANDARD SPECIFICATIONS 6-02.3(17)K.

13. THE CONTRACTOR SHALL PROVIDE, AS REQUIRED, TEMPORARY BRACING AND/OR WEB STIFFENING AT LOCATIONS WHERE DECK FORMS ARE ATTACHED TO UNBRACED OR UNSTIFFENED WEBS.

14. CAUTION SHALL BE EXERCISED IN HANDLING AND PLACING GIRDERS IN ACCORDANCE WITH SECTION 6-03.3. ALL GIRDERS SHALL BE CHECKED BY THE CONTRACTOR TO ENSURE THAT THEY ARE BRACED ADEQUATELY TO PREVENT TIPPING AND TO CONTROL LATERAL BENDING DURING SHIPPING. ONCE ERECTED, ALL GIRDERS SHALL BE BRACED TO PREVENT TIPPING UNTIL THE CROSSFRAMES ARE ERECTED.

15. ALL DIMENSIONS ARE HORIZONTAL AND VERTICAL UNLESS OTHERWISE SHOWN.

16. THE FOLLOWING MEMBERS OR COMPONENTS ARE CLASSIFIED AS ANCILLARY PRODUCTS IN ACCORDANCE WITH THE LATEST EDITION OF THE AWS BRIDGE WELDING CODE: EXPANSION JOINTS (EXCEPT MODULAR), DRAINAGE COMPONENTS, BEARINGS, RAILINGS, OTHER MISC. ITEMS AS APPROVED BY THE ENGINEER.

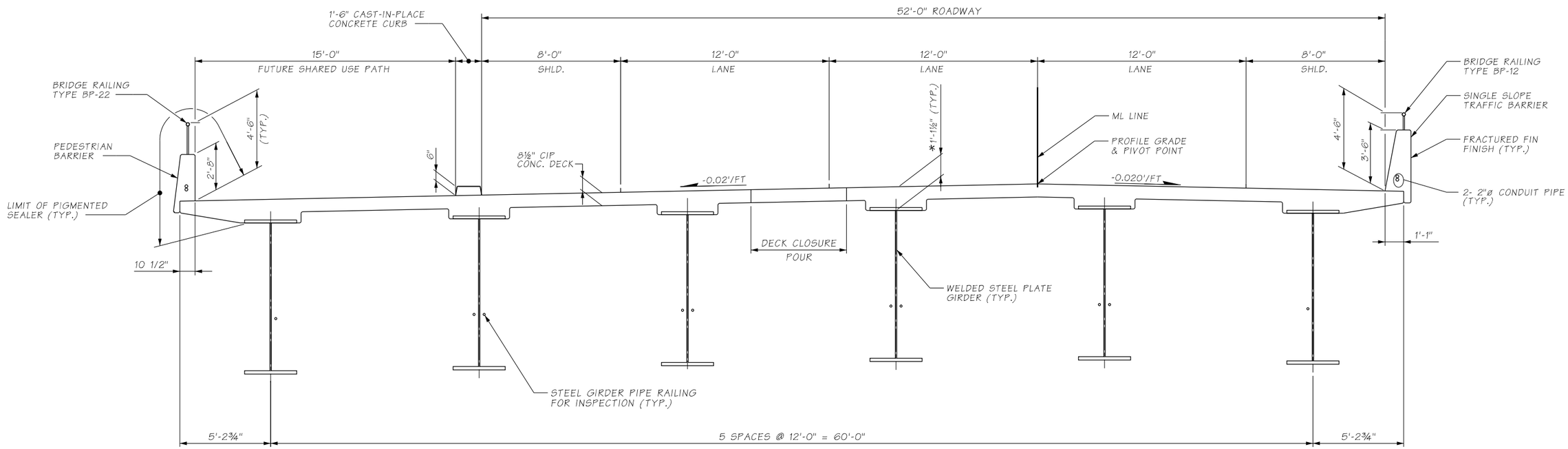

TYPICAL SECTION

* DIMENSIONS TO BE ADJUSTED AFTER SURVEY OF GIRDER ELEVATIONS. REFER TO STD. SPECIFICATION 6-03.3(39)

pw:\\HQOLYMAPPPW03P.WSDOT.LOC:WSDOT\Documents_HQ\Fish Passage\ORproj\30518.92_SamSnyderCreek\Design_CADL_Sheets\390-BridgeStrPlan\XL6050_BB_BG_SAM_SECT.dgn
SR 305 FILE NO. SHEET BG24

Bridge Design Engr.	A. LELAND	c:\users\schicvin\pw_wsdot\d0335751\XL6050_PS_BG_SAM_SECT.dgn							
Supervisor					REGION NO.	STATE	FED. AID. PROJ. NO.	SHEET NO.	TOTAL SHEETS
Designed By	S. BENSON				10	WASH.			
Checked By	J. MERTH								
Detailed By	C.D. CLARK				JOB NUMBER				
Bridge Projects Engr.	A. AMOS				22C533				
Prelim. Plan By									
Architect/Specialist		DATE	REVISION	BY	APP'D				

SHANE L. BROWN, STATE OF WASHINGTON, 49149, STRUCTURAL ENGINEER, PROFESSIONAL ENGINEER
SEE SHEET CT1
DATE

BRIDGE AND STRUCTURES OFFICE

Washington State Department of Transportation

SR305
SAM SNYDER CREEK
REMOVE FISH BARRIER

TYPICAL SECTION

BRIDGE SHEET NO. BG24

SHEET 144 OF 186 SHEETS

3/23/2023 12:09:58 PM

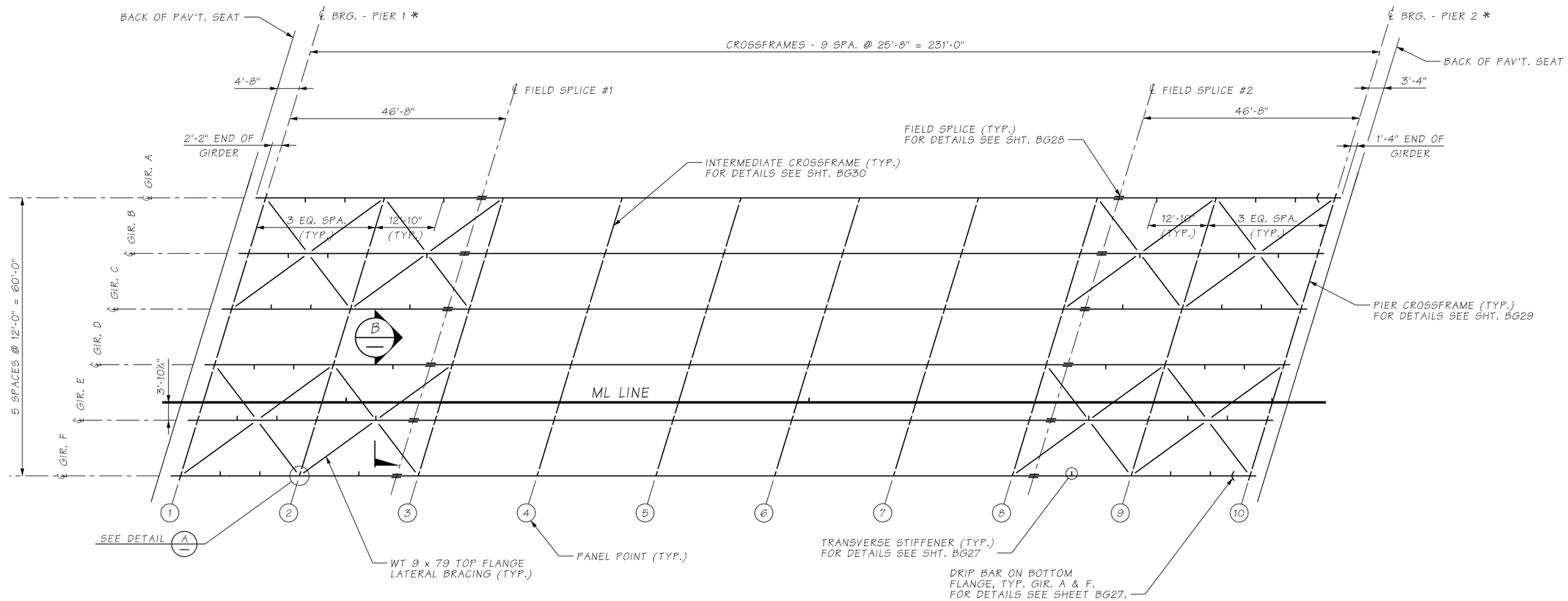

FRAMING PLAN

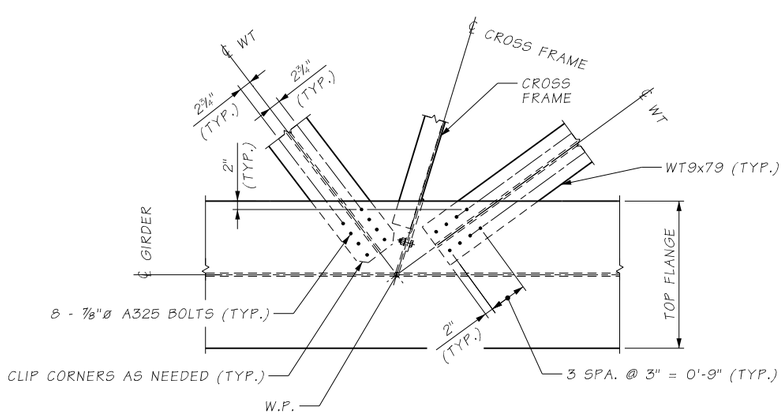

DETAIL A

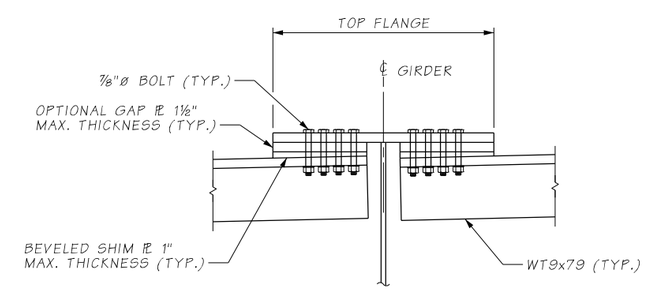

SECTION B

Bridge Design Engr.	A. LELAND	c:\users\schicvin\pw_wsdot\d0335751\XL6050_PS_BG_SAM_FP.dgn							
Supervisor					REGION NO.	STATE	FED. AID. PROJ. NO.	SHEET NO.	TOTAL SHEETS
Designed By	S. BENSON				10	WASH.			
Checked By	J. MERTH				JOB NUMBER				
Detailed By	V.B. SCHICCHI				22C533				
Bridge Projects Engr.	A. AMOS								
Prelim. Plan By									
Architect/Specialist		DATE	REVISION	BY	APP'D				

3/23/2023 12:10:27 PM

SHANE L. BROWN — STATE OF WASHINGTON — 49149 — STRUCTURAL ENGINEER — PROFESSIONAL ENGINEER

SEE SHEET CT1 DATE

BRIDGE AND STRUCTURES OFFICE

Washington State Department of Transportation

SR305
SAM SNYDER CREEK
REMOVE FISH BARRIER

FRAMING PLAN

BRIDGE SHEET NO. BG25

SHEET 145 OF 186 SHEETS

pw:\\HQOLYMAPPPW03P.WSDOT.LOC\WSDOT\Documents_HQ\Fish Passage\ORproj\30518.92_SamSnyderCreek\Design_CAD_Sheets\390-BridgeStrPlan\XL6050_BB_BG_SAM_FB.dgn

SR 305 FILE NO. SHEET BG25

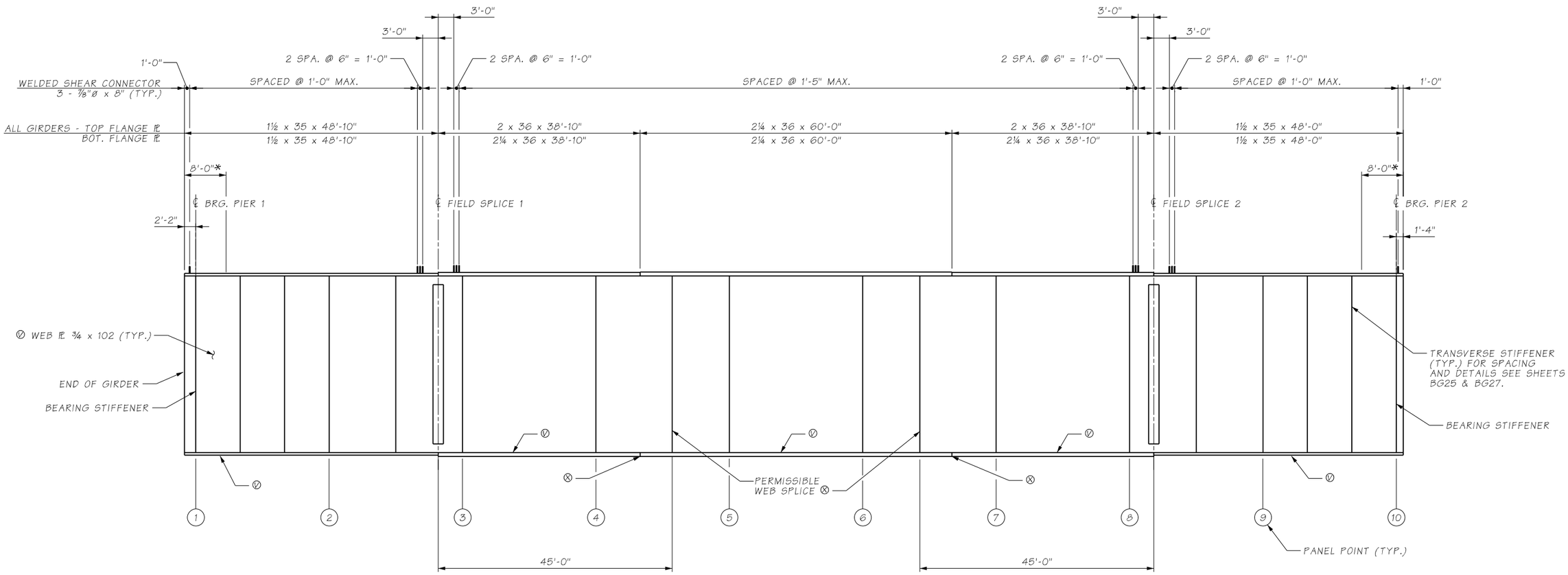

GIRDER ELEVATION

* PAINT LAST 8'-0" OF EACH GIRDER, END DIAPHRAGMS, STIFFENERS, AND DRIP GROOVE PER SECTION 6-07. APPLY INTERMEDIATE TOP COATS IN FIELD.

DETAILS.

pw:\\HQOLYMAPPPW03P.WSDOT.LOC:WSDOT\Documents_HQ\Fish Passage\ORproj\30518.92_SamSnyderCreek\Design_CAD_Sheets\390-BridgeStrPlan\XL6050_PB_BG_SAM_GIR1.dgn

SR 305 FILE NO. SHEET BG26

Bridge Design Engr.	A. LELAND	c:\users\schicvin\pw_wsdot\d0335751\XL6050_PS_BG_SAM_GIR1.dgn							
Supervisor					REGION NO.	STATE	FED. AID. PROJ. NO.	SHEET NO.	TOTAL SHEETS
Designed By	S. BENSON				10	WASH.			
Checked By	J. MERTH								
Detailed By	V.B. SCHICCHI				JOB NUMBER				
Bridge Projects Engr.	A. AMOS				22C533				
Prelim. Plan By									
Architect/Specialist		DATE	REVISION	BY	APP'D				

3/23/2023 12:10:50 PM

SHANE L. BROWN — STATE OF WASHINGTON — 49149 — STRUCTURAL ENGINEER — PROFESSIONAL ENGINEER

SEE SHEET CT1
DATE

BRIDGE AND STRUCTURES OFFICE

Washington State Department of Transportation

SR305
SAM SNYDER CREEK
REMOVE FISH BARRIER

GIRDER ELEVATION

BRIDGE SHEET NO. BG26

SHEET 146 OF 186 SHEETS

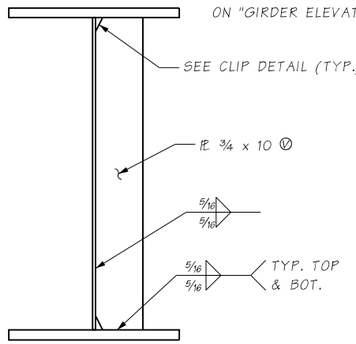

TYPICAL STIFFENER BETWEEN CROSSFRAMES

FOR LOCATIONS USED, SEE "GIRDER FRAMING PLAN"
STIFFENERS ARE NORMAL TO ℄ GIRDER (TRANSVERSE STIFFENERS)

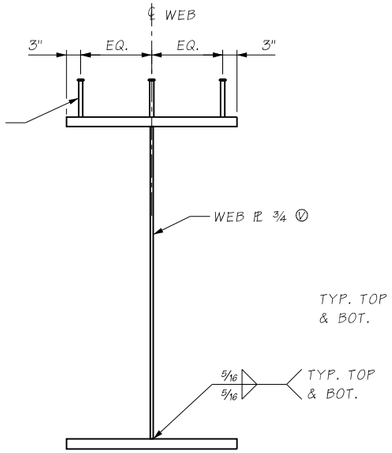

TYPICAL GIRDER SECTION

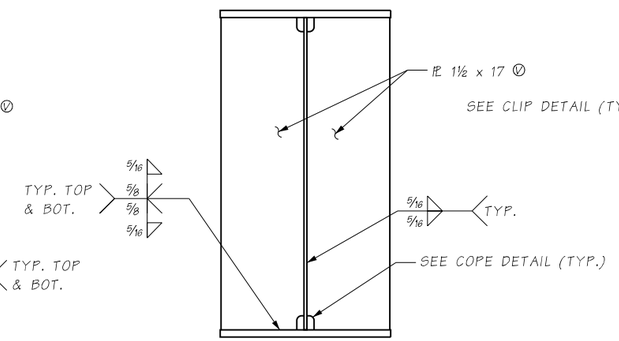

BEARING STIFFENER

STIFFENERS ARE PARALLEL TO ℄ BEARING

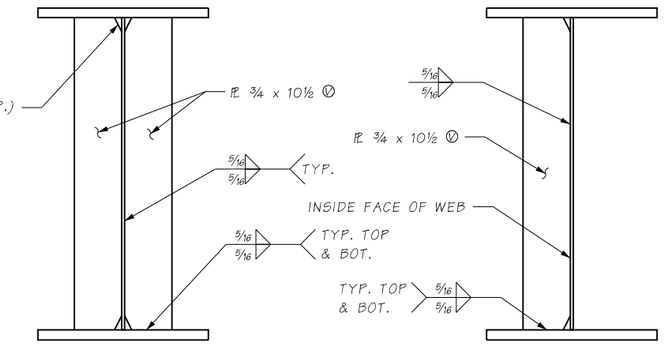

INTERIOR GIRDERS

EXTERIOR GIRDERS

TYPICAL STIFFENER AT INTERMEDIATE CROSSFRAME

STIFFENERS ARE PARALLEL TO CROSSFRAME SKEW (℄ BEARING)

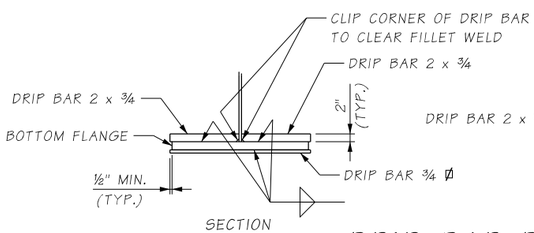

SECTION

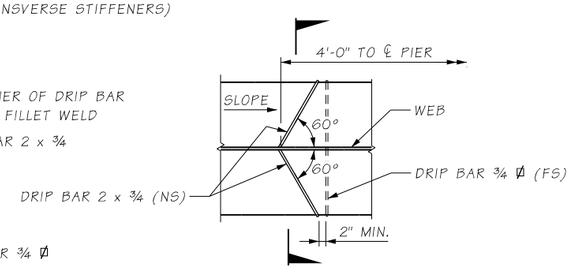

PLAN

DRIP BAR DETAIL

PROVIDE ON EXTERIOR GIRDERS A & F AT LOW END OF PROFILE 4'-0" FROM ℄ BEARING. DRIP BAR ON TOP OF BOTTOM FLANGE SHALL BE CAULKED AGAINST FLANGE, WEB AND FILLET WELD SUBJECT TO APPROVAL OF THE ENGINEER.

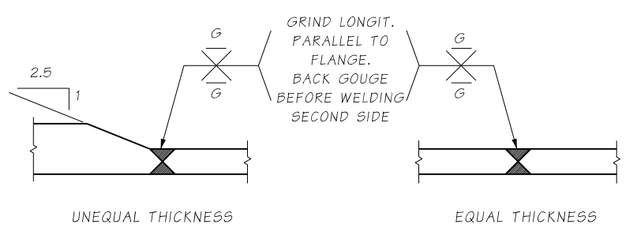

TENSION OR COMPRESSION FLANGE SPLICE

WELDED GIRDER SPLICE DETAILS

FABRICATOR MAY SUBSTITUTE B-L2C-S AND B-U2-GF FOR B-U3C-S AND B-U3-GF RESPECTIVELY, SUBJECT TO THICKNESS LIMITATIONS.

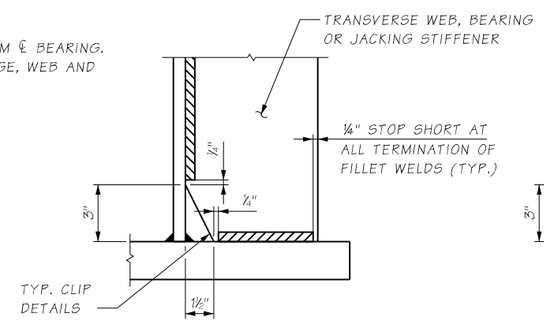

TYP. CLIP & FILLET WELD TERMINATION DETAIL

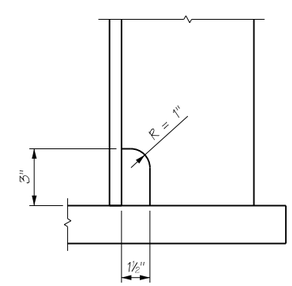

BEARING & JACKING STIFFENER COPE DETAIL

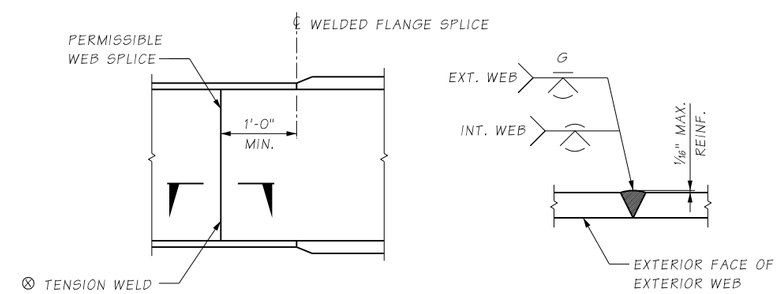

ELEVATION

SECTION

PERMISSIBLE WEB SPLICE

Bridge Design Engr.	A. LELAND	c:\users\schicvin\pw_wsdot\d0335751\XL6050_PS_BG_SAM_STFF.dgn							
Supervisor					REGION NO.	STATE	FED. AID. PROJ. NO.	SHEET NO.	TOTAL SHEETS
Designed By	S. BENSON				10	WASH.			
Checked By	J. MERTH				JOB NUMBER				
Detailed By	V.B. SCHICCHI				22C533				
Bridge Projects Engr.	A. AMOS								
Prelim. Plan By									
Architect/Specialist		DATE	REVISION	BY	APP'D				

SHANE L. BROWN — STATE OF WASHINGTON — 49149 — STRUCTURAL ENGINEER — PROFESSIONAL ENGINEER

SEE SHEET CT1 DATE

BRIDGE AND STRUCTURES OFFICE

Washington State Department of Transportation

SR305
SAM SNYDER CREEK
REMOVE FISH BARRIER

TRANSVERSE STIFFENER AND MISC. SPLICE DETAILS

BRIDGE SHEET NO. BG27

SHEET 147 OF 186 SHEETS

3/23/2023 12:11:15 PM

pw:\\HQOLYMAPPPW03P.WSDOT.LOC:WSDOTDocuments_HQ\Fish Passage\ORproj\30518.92_SamSnyderCreek\Design_CAD_Sheets\390-BridgeStrPlan\XL6050_BB_BG_SAM_STFF.dgn

SR 305 FILE NO. SHEET BG27

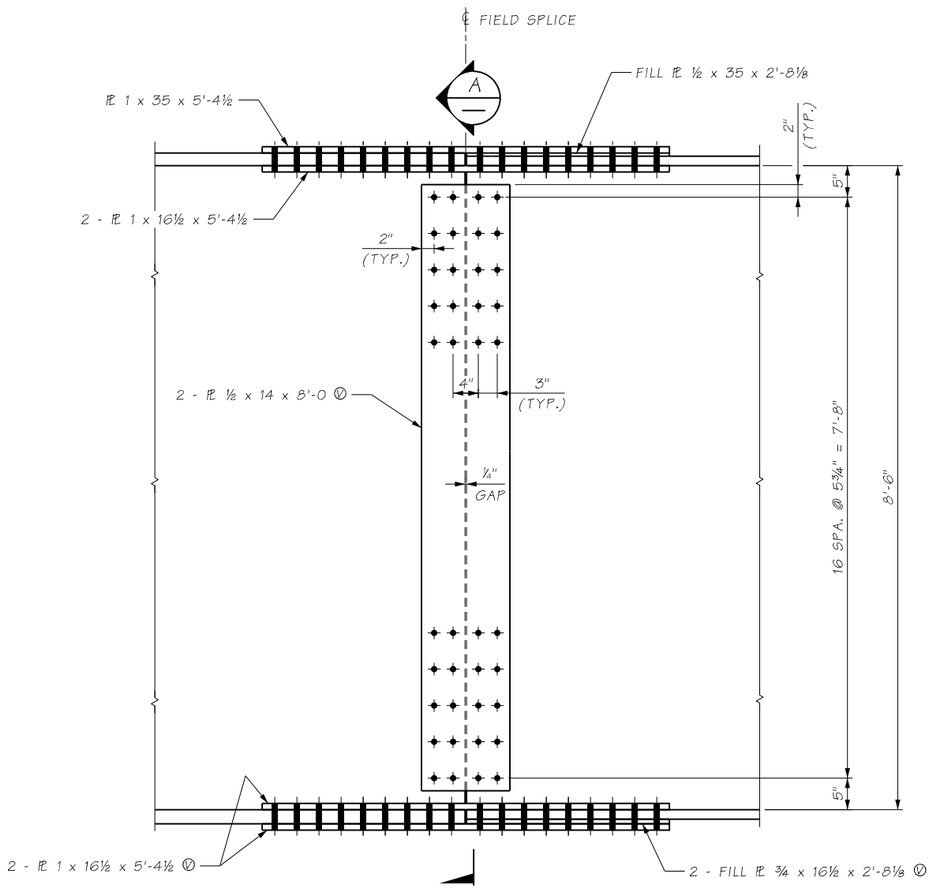

ELEVATION

SHEAR CONNECTORS NOT SHOWN

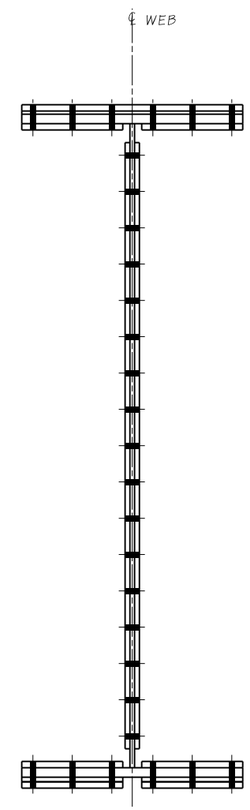

SECTION A

SHEAR CONNECTORS NOT SHOWN

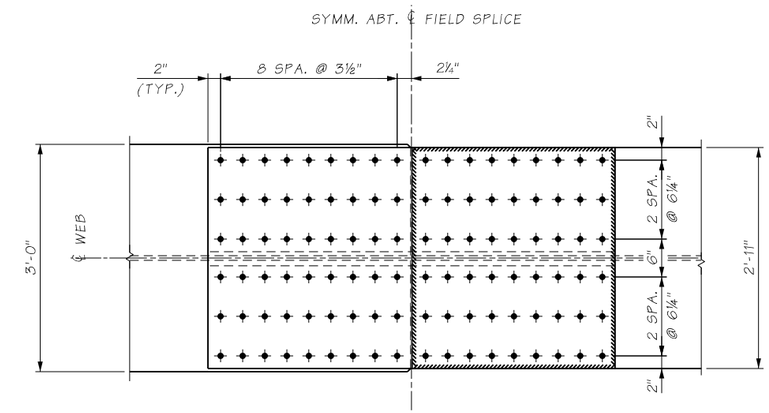

PLAN - TOP FLANGE

SEE " GIRDER ELEVATIONS" FOR FLANGE SIZES.

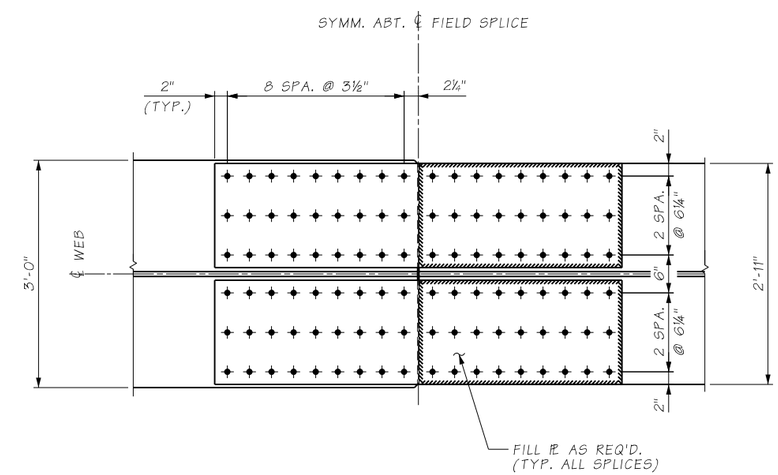

PLAN - BOTTOM FLANGE

SEE "GIRDER ELEVATIONS" FOR FLANGE SIZES.

NOTE:

WELDED SHEAR CONNECTOR SPACING OUTSIDE OF FIELD SPLICES ARE SHOWN ON THE "GIRDER ELEVATION" SHEET BG26.

BOLTS SHALL HAVE THREADS EXCLUDED FROM THE SHEAR PLANES.

Bridge Design Engr.	A. LELAND	c:\users\schicvin\pw_wsdot\d0335751\XL6050_PS_BG_SAM_FSPL.dgn							
Supervisor					REGION NO.	STATE	FED. AID. PROJ. NO.	SHEET NO.	TOTAL SHEETS
Designed By	S. BENSON				10	WASH.			
Checked By	J. MERTH				JOB NUMBER				
Detailed By	V.B. SCHICCHI				22C533				
Bridge Projects Engr.	A. AMOS								
Prelim. Plan By									
Architect/Specialist		DATE	REVISION	BY	APP'D				

SHANE L. BROWN — STATE OF WASHINGTON — 49149 — STRUCTURAL ENGINEER — PROFESSIONAL ENGINEER

SEE SHEET CT1 DATE

BRIDGE AND STRUCTURES OFFICE

Washington State Department of Transportation

SR305
SAM SNYDER CREEK
REMOVE FISH BARRIER

GIRDER FIELD SPLICE DETAILS

BRIDGE SHEET NO. BG28

SHEET 148 OF 186 SHEETS

pw:\\WQOLYMAPPPW03P.WSDOT.LOC:WSDOT\Documents_HQ\Fish Passage\ORproj\30518.92_SamSnyderCreek\Design_CADD_Sheets\390-BridgeStrPlan\XL6050_BB_BG_SAM_FBR.dgn
SR 305 FILE NO. SHEET BG28
3/23/2023 12:11:38 PM

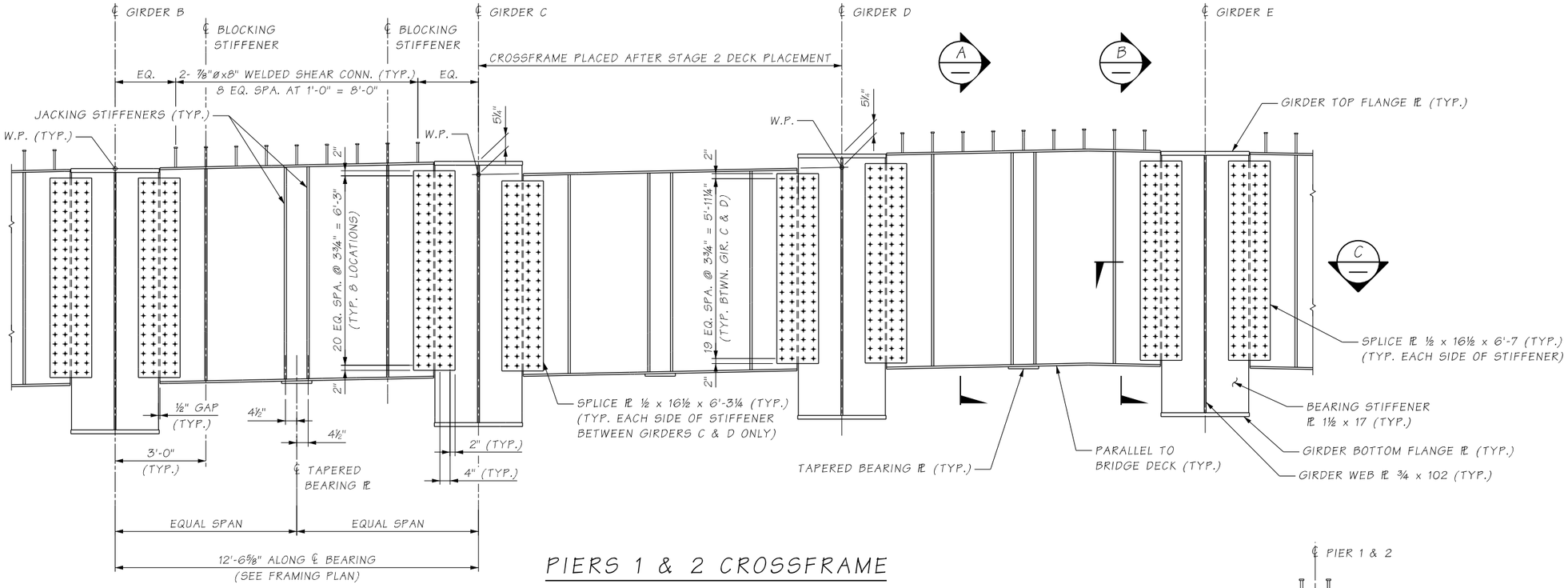

PIERS 1 & 2 CROSSFRAME

SHOWN AT PIER 2, PIER 1 SIMILAR.
CROSSFRAME MEMBERS AND SPLICE ℙ's ARE Ⓥ
(TOTAL 10, 5 EACH PIER)

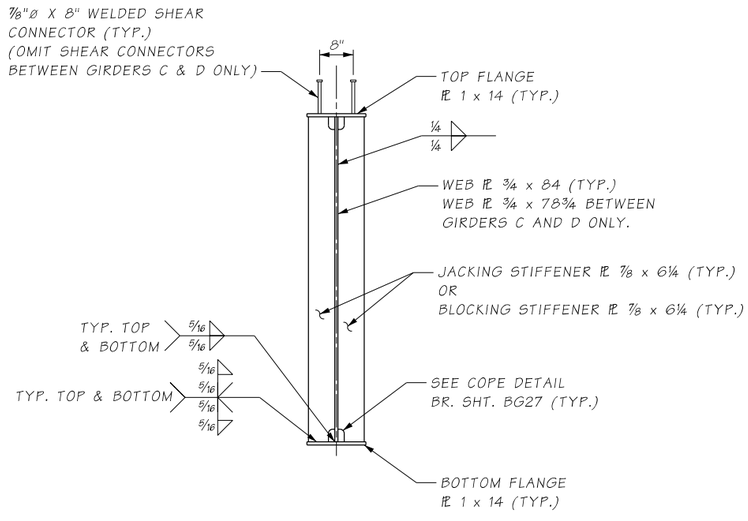

SECTION A

JACKING STIFFENER SHOWN,
BLOCKING STIFFENER SIMILAR.

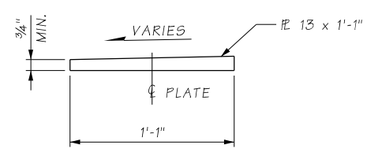

TAPERED BEARING
PLATE DETAIL

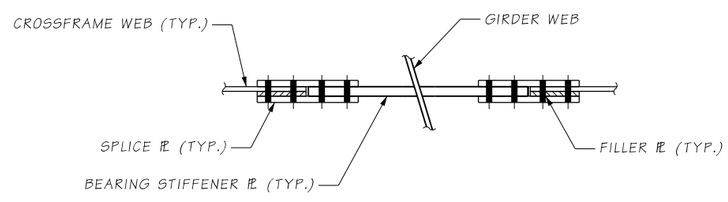

SECTION C

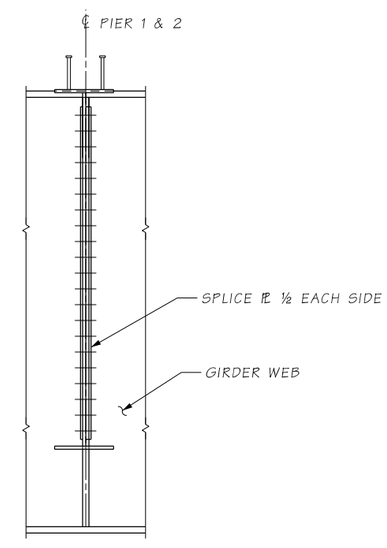

SECTION B

Bridge Design Engr.	A. LELAND	c:\users\schicvin\pw_wsdot\d0335751\XL6050_PS_BG_SAM_XFRP_1.dgn							
Supervisor					REGION NO.	STATE	FED. AID. PROJ. NO.	SHEET NO.	TOTAL SHEETS
Designed By	S. BENSON				10	WASH.			
Checked By	J. MERTH				JOB NUMBER				
Detailed By	V.B. SCHICCHI				22C533				
Bridge Projects Engr.	A. AMOS								
Prelim. Plan By									
Architect/Specialist		DATE	REVISION	BY	APP'D				

SHANE L. BROOKS — STATE OF WASHINGTON — 49149 — STRUCTURAL ENGINEER — PROFESSIONAL ENGINEER
SEE SHEET CT1
DATE

BRIDGE
AND
STRUCTURES
OFFICE

Washington State
Department of Transportation

SR305
SAM SNYDER CREEK
REMOVE FISH BARRIER

PIER CROSSFRAMES

BRIDGE SHEET NO. BG29

SHEET 149 OF 186 SHEETS

pw:\\HQOLYMAPPPW03P.WSDOT.LOC:WSDOTDocuments_HQ\Fish Passage\ORproj\30518.92_SamSnyderCreek\Design_CAD_Sheets\390-BridgeStrPlan\XL6050_BB_BG_SAM_XFRP_1.dgn
SR 305 FILE NO. SHEET BG29

3/23/2023 12:12:02 PM

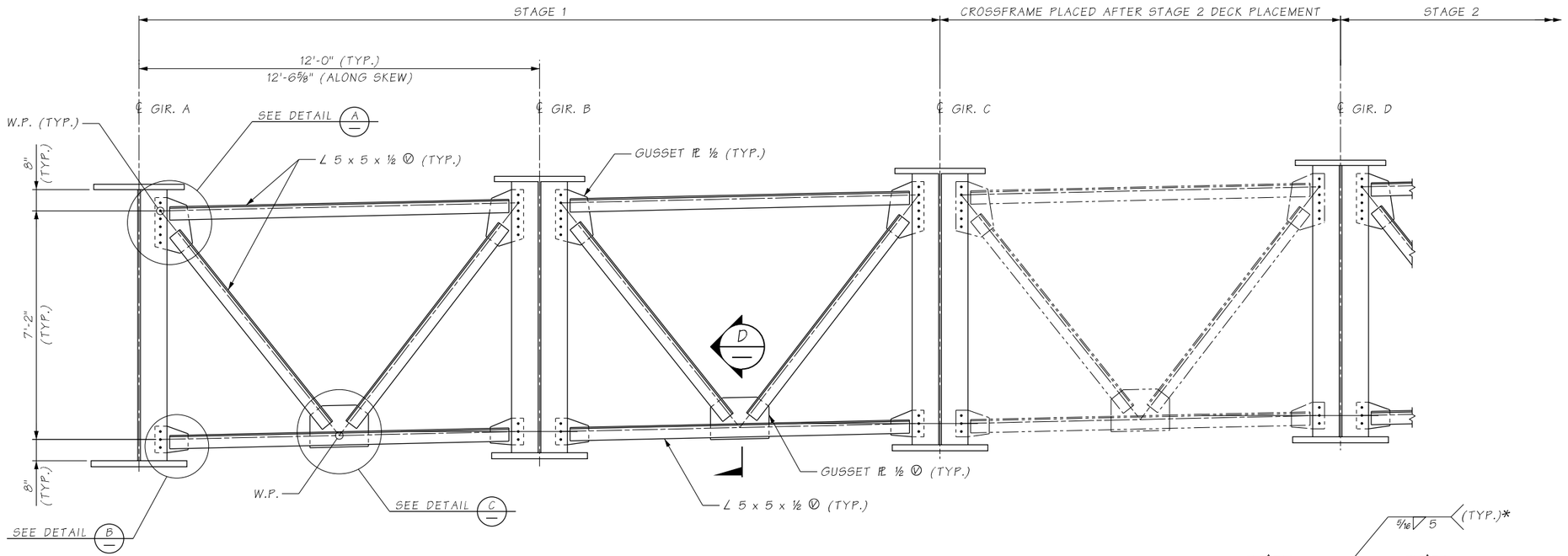

ELEVATION - INTERMEDIATE CROSSFRAMES

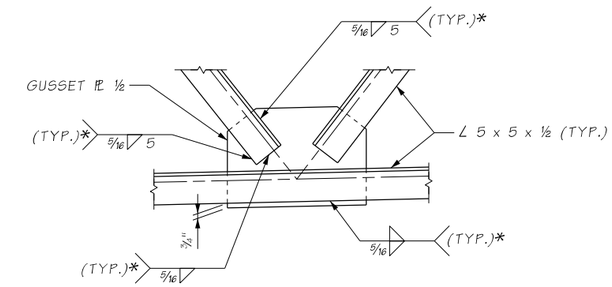

DETAIL C

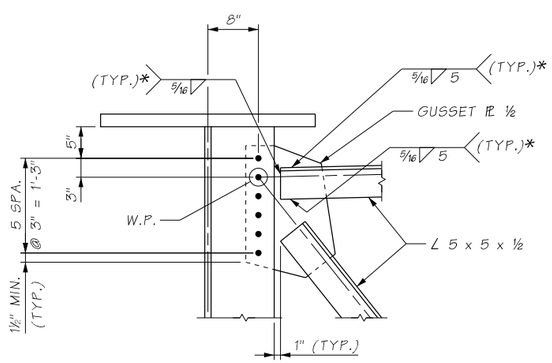

DETAIL A

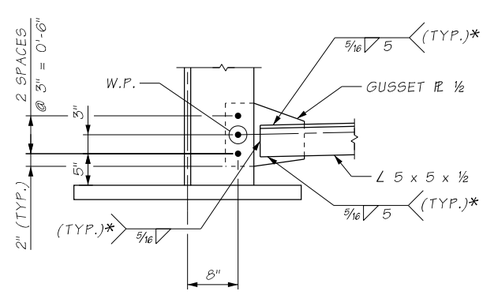

DETAIL B

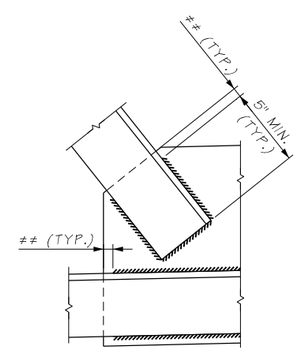

TYPICAL FILLET WELD TERMINATION DETAIL

¾" STOP SHORT AT ALL TERMINATION OF FILLET WELDS TYPICAL

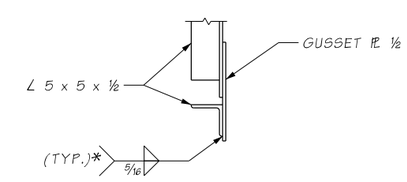

SECTION D

* SEE "TYPICAL FILLET WELD TERMINATION DETAIL" THIS SHEET.

Bridge Design Engr.	A. LELAND	c:\users\schicvin\pw_wsdot\d0335751\XL6050_PS_BG_SAM_XFRI_1.dgn			REGION NO.	STATE	FED. AID. PROJ. NO.	SHEET NO.	TOTAL SHEETS
Supervisor					10	WASH.			
Designed By	S. BENSON				JOB NUMBER				
Checked By	J. MERTH				22C533				
Detailed By	V.B. SCHICCHI								
Bridge Projects Engr.	A. AMOS								
Prelim. Plan By									
Architect/Specialist		DATE	REVISION	BY	APP'D				

SHANE L. BROWN — STATE OF WASHINGTON — 49149 — STRUCTURAL ENGINEER — PROFESSIONAL ENGINEER

SEE SHEET CT1
DATE

BRIDGE AND STRUCTURES OFFICE

Washington State Department of Transportation

SR305
SAM SNYDER CREEK
REMOVE FISH BARRIER

INTERMEDIATE CROSSFRAMES

BRIDGE SHEET NO. BG30

SHEET 150 OF 186 SHEETS

pw:\\HQOLYMAPPPW03P.WSDOT.LOC:WSDOT\Documents_HQ\Fish Passage\ORproj\30518.92_SamSnyderCreek\Design_CAD_Sheets\390-BridgeStrPlan\XL6050_BB_BG_SAM_XFRI_1.dgn
SR 305 FILE NO. SHEET BG30
3/23/2023 12:12:34 PM

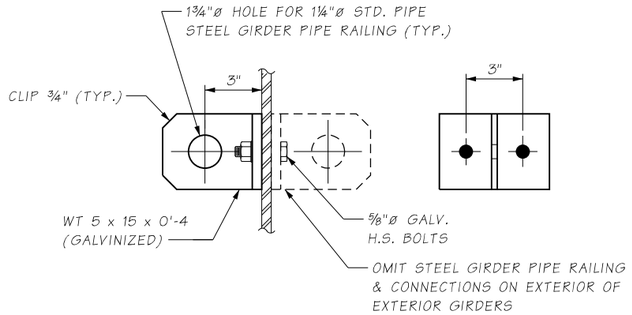

CLIP DETAIL

USE CLIP DETAIL(S) BETWEEN WEB STIFFENERS
TO PROVIDE SUPPORT AT 8'-0" MAXIMUM SPACING

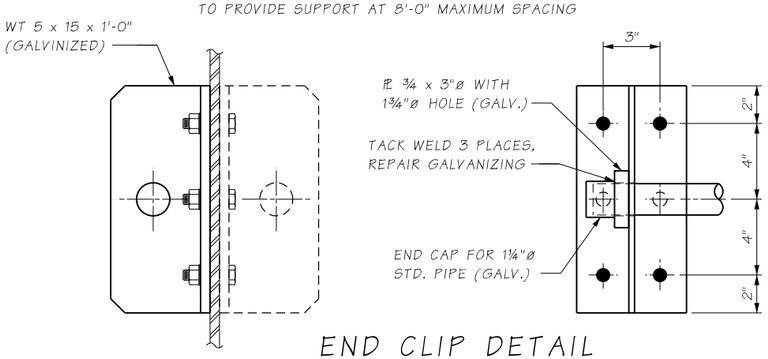

END CLIP DETAIL

FOR INFO AND CALLOUTS NOT SHOWN
SEE "CLIP DETAIL" THIS SHEET.

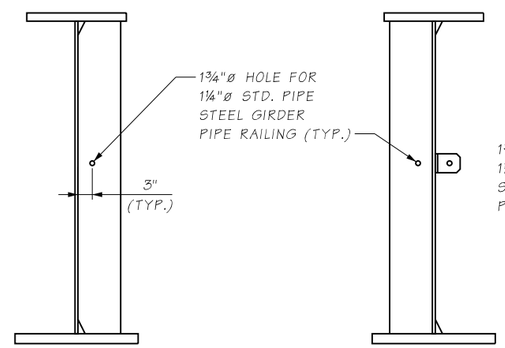

EXT. GIRDER

INT. GIRDER

SECTION A

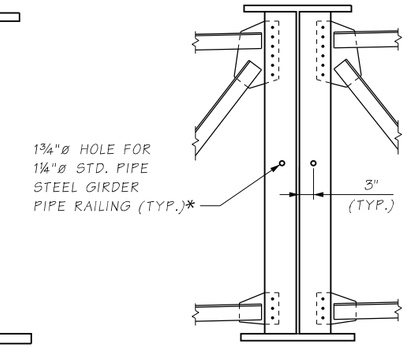

INT. GIRDER @ CROSSFRAME

SECTION B

* OMIT STEEL GIRDER PIPE RAILING
& CONNECTIONS ON EXTERIOR OF
EXTERIOR GIRDERS

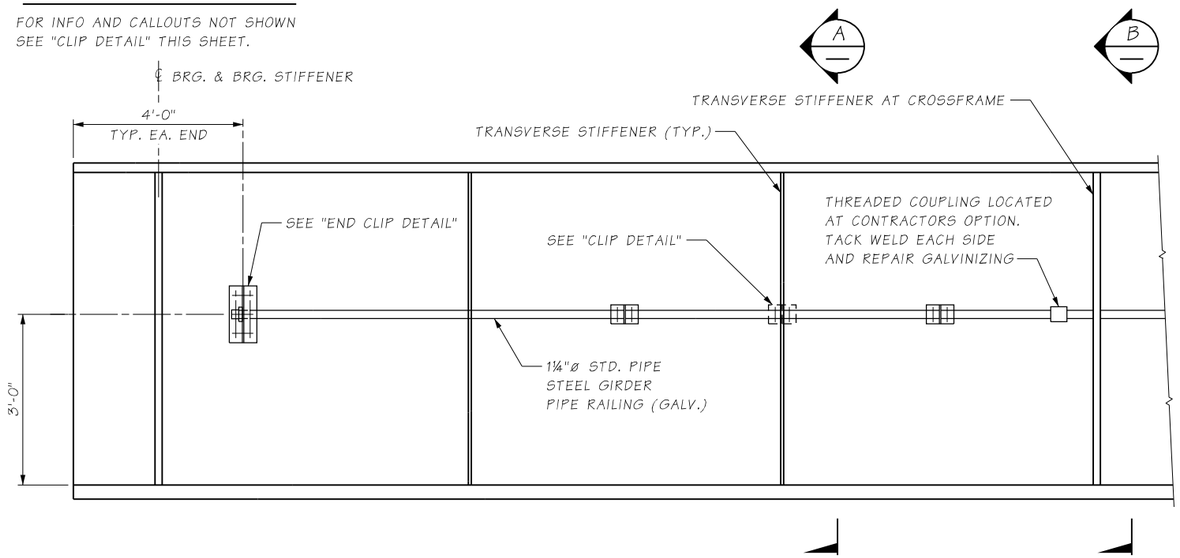

ELEVATION - GIRDER WITH STEEL GIRDER PIPE RAILING

NOTES:

1. THE STEEL GIRDER PIPE RAILING SHALL BE 1¼"ø STD. PIPE, ASTM A53 GR. A OR B OR ASTM A500 GR. B. ALL HARDWARE SHALL BE HOT DIPPED GALVANIZED.
2. THE INTERMEDIATE CLIPS SHALL BE ASTM A992 OR ASTM A572 GR. 50, GALVANIZED AFTER FABRICATION. HIGH STRENGTH BOLTS SHALL BE ASTM F3125 GR. A325 GALVANIZED. NUTS SHALL BE HEAVY HEX ASTM A563 GRADE DH. UNION COUPLERS MAY BE UTILIZED IN THE VICINTY OF GIRDER FIELD SPLICES, PROPERLY TIGHTENED AND TACK WELDED SEE DETAIL C
3. FASTEN TO BRIDGE AFTER GIRDERS ARE SHOP PAINTED. OVERSPRAY FROM FIELD PAINTING IS PERMITTED.
4. STEEL GIRDER PIPE RAILING IS DESIGNED TO BE USED WITH SHORT LENGTH, FIXED LANYARDS. DESIGN LOADING IS 200 LB VERTICAL AND HORIZONTAL ACTING CONCURRENTLY. ONLY ONE PERSON IS PERMITTTED TO ATTACH WITHIN EACH 8 FOOT BAY.

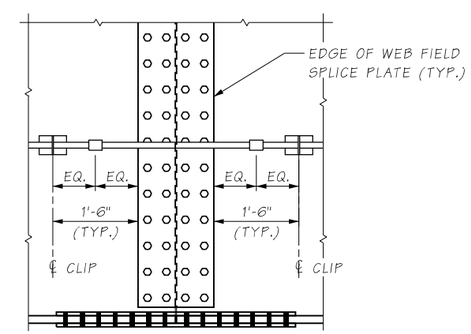

DETAIL C

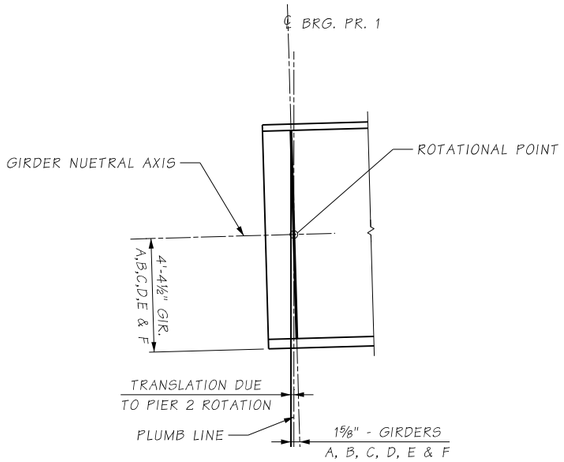

BEARING STIFFENER ROTATIONAL CAMBER DIAGRAM

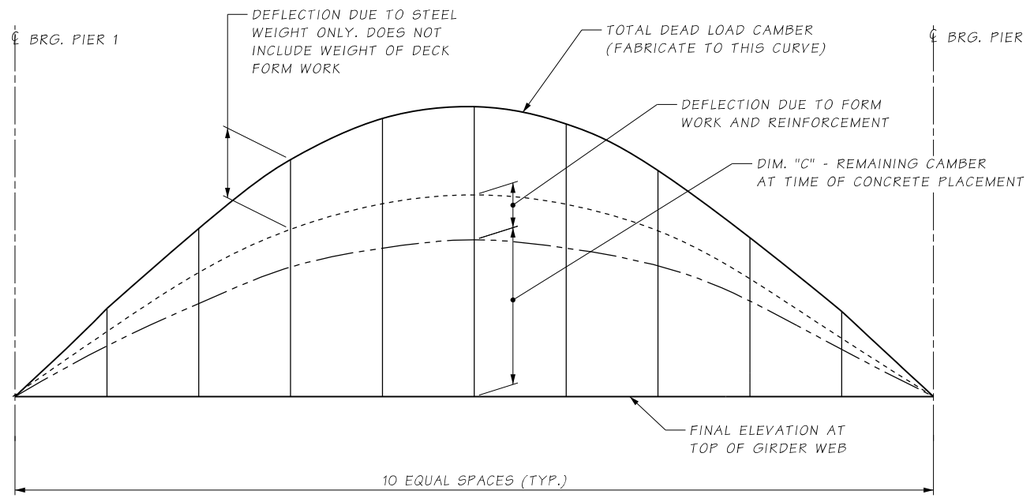

DEAD LOAD CAMBER DIAGRAM

EFFECTS OF PROFILE GRADE ARE NOT SHOWN. FOR THE PURPOSE OF MEASURING CAMBER TOLERANCES AT THE TIME OF SHOP ASSEMBLY, GIRDER TOP FLANGES ARE EMBEDDED IN CONCRETE WITHOUT A DESIGNED HAUNCH.

δ - INCLUDES EFFECTS OF SLAB SHRINKAGE AND AN ALLOWABLE OF 10 PSF FOR DECK FORMWORK.

ψ - DOES NOT INCLUDE WEIGHT OF DECK FORMWORK.

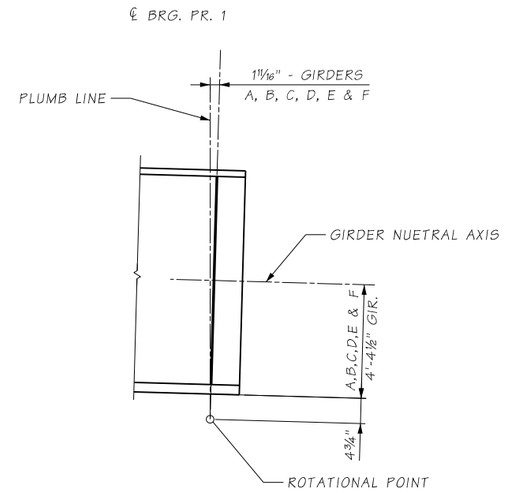

BEARING STIFFENER ROTATIONAL CAMBER DIAGRAM

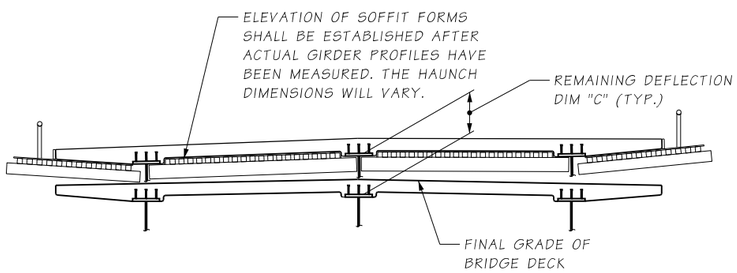

SCREED SETTING DETAIL

OFFSET CORRECTIONS FOR SETTING THE SCREED RAILS SHALL BE THE RESPONSIBILITY OF THE CONTRACTOR.

	TENTH POINTS - SPAN								
	0.1	0.2	0.3	0.4	0.5	0.6	0.7	0.8	0.9
TOTAL DEAD LOAD CAMBER (INCHES) δ	4½	8⅜	11⅛	12¾	13⅜	12¾	11⅛	8⅜	4½
CAMBER DUE TO STEEL WT. (INCHES) ψ	1⅜	2⅝	3½	4⅛	4¼	4⅛	3½	2⅝	1⅜
CAMBER DUE TO FORMS & REBAR (INCHES)	⅛	⅜	½	½	½	½	½	⅜	⅛
REMAINING CAMBER "C" GIR. A-F (INCHES)	3	5⅜	7⅛	8⅛	8⅝	8⅛	7⅛	5⅜	3

SCREED SETTING ADJUSTMENT NOTES

ASSUMED SEQUENCE OF DECK FORMING:

1. SET ALL STEEL FRAMING AND RELEASE ANY SHORING.
2. SURVEY ELEVATIONS OF GIRDERS.
3. ADJUST SOFFIT (DECK FORMWORK) ELEVATIONS USING DIFFERENCE BETWEEN ACTUAL AND THEORETICAL GIRDER ELEVATIONS.
4. INSTALL DECK REINFORCING.
5. SET SCREED RAIL ELEVATIONS USING THEORETICAL PROFILE GRADES ADJUSTED BY DIM. "C" COMPENSATING FOR ADDITIONAL STEEL FRAMING ROTATION DUE TO CURVATURE AND/OR SKEW.

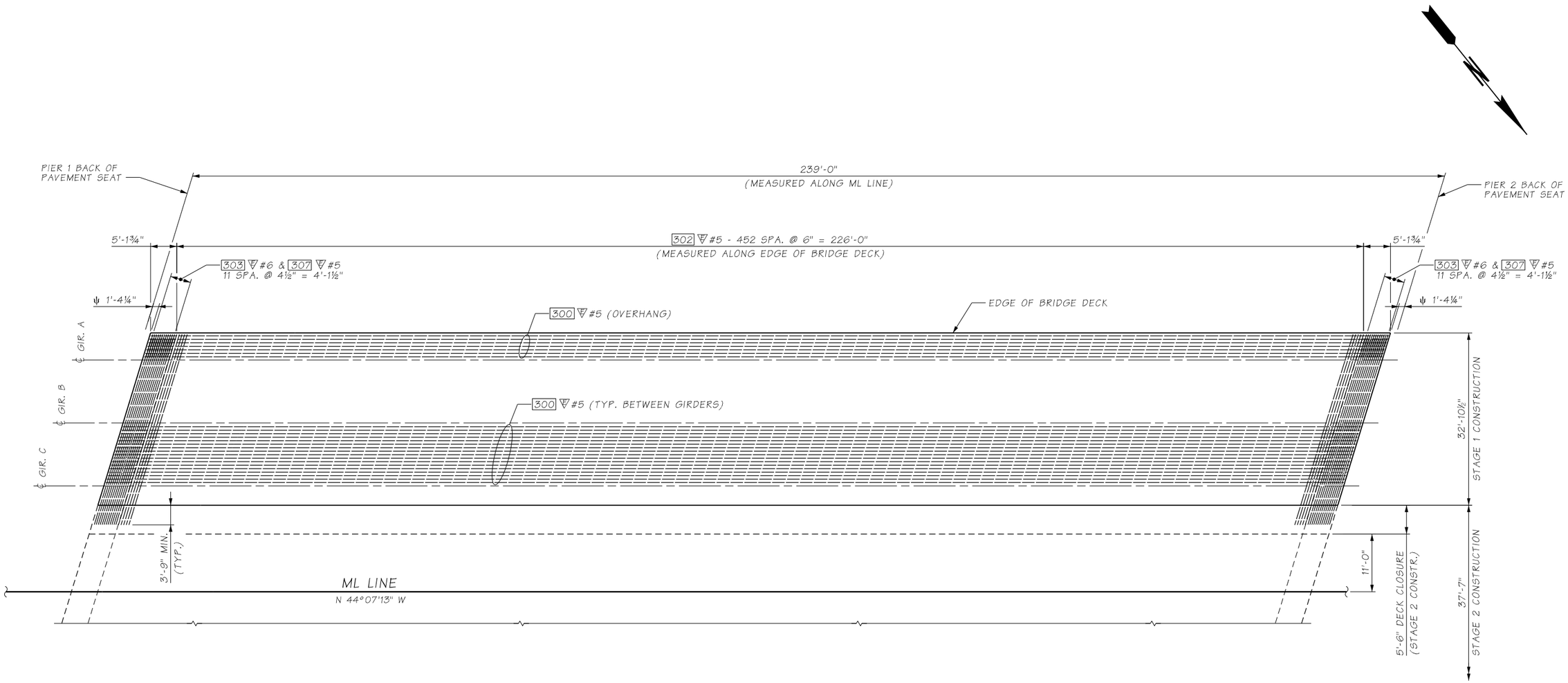

BRIDGE DECK REINFORCEMENT BOTTOM MAT - STAGE 1

ψ DIMENSION BASED ON A TEMPERATURE OF 64°. ADJUST FOR TEMPERATURE CHANGES PER THE "MOTION RANGE TABLE" ON THE EXPANSION JOINT DETAILS ON BRIDGE SHEET BG39.

NOTES:

1. SEE NOTES ON "BRIDGE DECK REINFORCING SECTION AND CLOSURE POUR", BRIDGE SHEET BG37.

Bridge Design Engr.	A. LELAND	c:\users\schicvin\pw_wsdot\d0335751\XL6050_PS_BG_SAM_DECK-1.dgn							
Supervisor					REGION NO.	STATE	FED. AID. PROJ. NO.	SHEET NO.	TOTAL SHEETS
Designed By	S. BENSON				10	WASH.			
Checked By	J. MERTH				JOB NUMBER				
Detailed By	V.B. SCHICCHI				22C533				
Bridge Projects Engr.	A. AMOS								
Prelim. Plan By									
Architect/Specialist		DATE	REVISION	BY	APP'D				

SHANE L. BROWN — STATE OF WASHINGTON — 49149 — STRUCTURAL ENGINEER — PROFESSIONAL ENGINEER

SEE SHEET CT1

DATE

BRIDGE AND STRUCTURES OFFICE

Washington State Department of Transportation

SR305
SAM SNYDER CREEK
REMOVE FISH BARRIER

BRIDGE DECK REINFORCING PLAN
BOTTOM MAT - STAGE 1

BRIDGE SHEET NO. BG33

SHEET 153 OF 186 SHEETS

pw:\\HQOLYMAPPPW03P.WSDOT.LOC:WSDOT\Documents_HQ\Fish Passage\ORproj\305\8.92_SamSnyderCreek\Design_CAD_Sheets\390-BridgeStrPlan\XL6050_BB_BG_SAM_DECK-1.dgn

SR 305 FILE NO. SHEET BG33

3/23/2023 12:13:51 PM

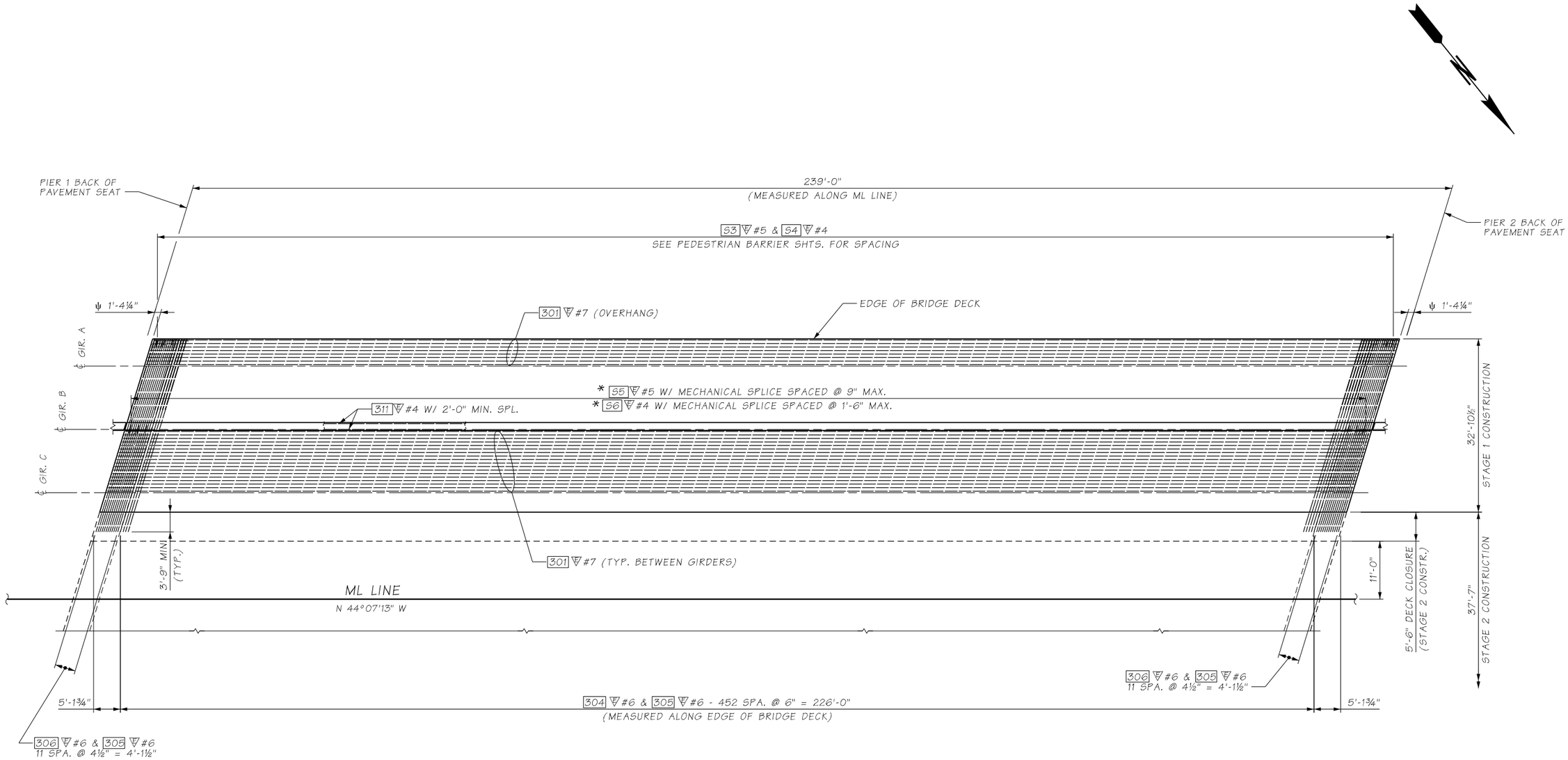

BRIDGE DECK REINFORCEMENT TOP MAT - STAGE 1

ψ DIMENSION BASED ON A TEMPERATURE OF 64°. ADJUST FOR TEMPERATURE CHANGES PER THE "MOTION RANGE TABLE" ON THE EXPANSION JOINT DETAILS ON BRIDGE SHEET BG39.

* SPACE 55 & 56 SAME AS 51 & 52 FOR FUTURE BARRIER.

NOTES:

1. SEE NOTES ON "BRIDGE DECK REINFORCING SECTION AND CLOSURE POUR", BRIDGE SHEET BG37.

Bridge Design Engr.	A. LELAND	c:\users\schicvin\pw_wsdot\d0335751\XL6050_PS_BG_SAM_DECK-2.dgn							
Supervisor					REGION NO.	STATE	FED. AID. PROJ. NO.	SHEET NO.	TOTAL SHEETS
Designed By	S. BENSON				10	WASH.			
Checked By	J. MERTH				JOB NUMBER				
Detailed By	V.B. SCHICCHI				22C533				
Bridge Projects Engr.	A. AMOS								
Prelim. Plan By									
Architect/Specialist		DATE	REVISION	BY	APP'D				

SHANE L. BROWN — STATE OF WASHINGTON — 49140 — STRUCTURAL ENGINEER — PROFESSIONAL ENGINEER

SEE SHEET CT1 DATE

BRIDGE AND STRUCTURES OFFICE

Washington State Department of Transportation

SR305
SAM SNYDER CREEK
REMOVE FISH BARRIER

BRIDGE DECK REINFORCING PLAN
TOP MAT - STAGE 1

BRIDGE SHEET NO. BG34

SHEET 154 OF 186 SHEETS

pw:\\WQOLYMAPPPW03P.WSDOT.LOC:WSDOT\Documents_HQ\Fish Passage\ORproj\30518.92_SamSnyderCreek\Design_CAD_Sheets\390-BridgeStrPlan\XL6050_BB_BG_SAM_DECK-2.dgn

SR 305 FILE NO. SHEET BG34

3/23/2023 12:14:18 PM

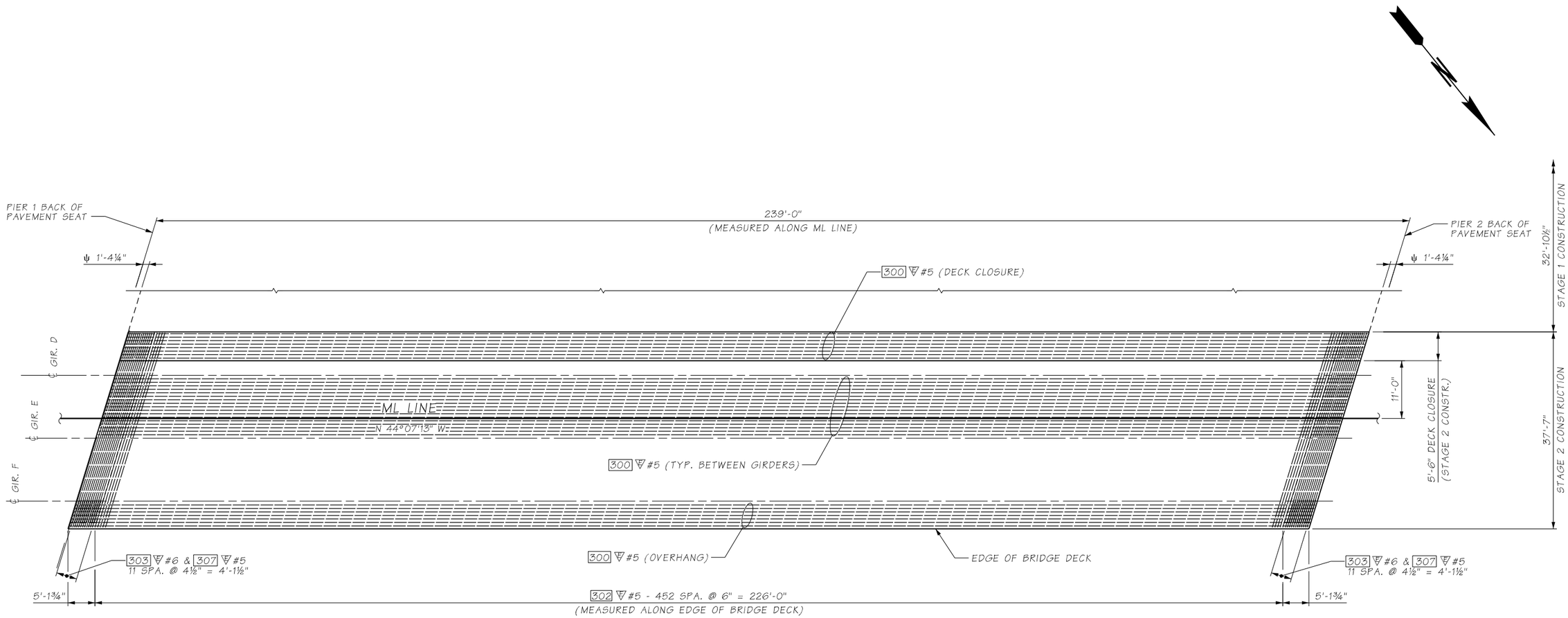

BRIDGE DECK REINFORCEMENT
BOTTOM MAT - STAGE 2

ψ DIMENSION BASED ON A TEMPERATURE OF 64°. ADJUST FOR TEMPERATURE CHANGES PER THE "MOTION RANGE TABLE" ON THE EXPANSION JOINT DETAILS ON BRIDGE SHEET BG39.

NOTES:

1. SEE NOTES ON "BRIDGE DECK REINFORCING SECTION AND CLOSURE POUR", BRIDGE SHEET BG37.

pw:\\HQOLYMAPPPW03P.WSDOT.LOC:WSDOT\Documents_HQ\Fish Passage\ORproj\305\8.92_SamSnyderCreek\Design_CAD_Sheets\390-BridgeStrPlan\XL6050_BB_BG_SAM_DECK3.dgn
SR 305 FILE NO. SHEET BG35

Bridge Design Engr.	A. LELAND	c:\users\schicvin\pw_wsdot\d0335751\XL6050_PS_BG_SAM_DECK-3.dgn								
Supervisor						REGION NO.	STATE	FED. AID. PROJ. NO.	SHEET NO.	TOTAL SHEETS
Designed By	S. BENSON					10	WASH.			
Checked By	J. MERTH					JOB NUMBER				
Detailed By	V.B. SCHICCHI					22C533				
Bridge Projects Engr.	A. AMOS									
Prelim. Plan By										
Architect/Specialist		DATE	REVISION	BY	APP'D					

3/23/2023 12:14:39 PM

SHANE L. BROWN, STATE OF WASHINGTON, 49149, STRUCTURAL ENGINEER, PROFESSIONAL ENGINEER

SEE SHEET CT1
DATE

BRIDGE AND STRUCTURES OFFICE

Washington State Department of Transportation

SR305
SAM SNYDER CREEK
REMOVE FISH BARRIER

BRIDGE DECK REINFORCING PLAN
BOTTOM MAT - STAGE 2

BRIDGE SHEET NO. BG35

SHEET 155 OF 186 SHEETS

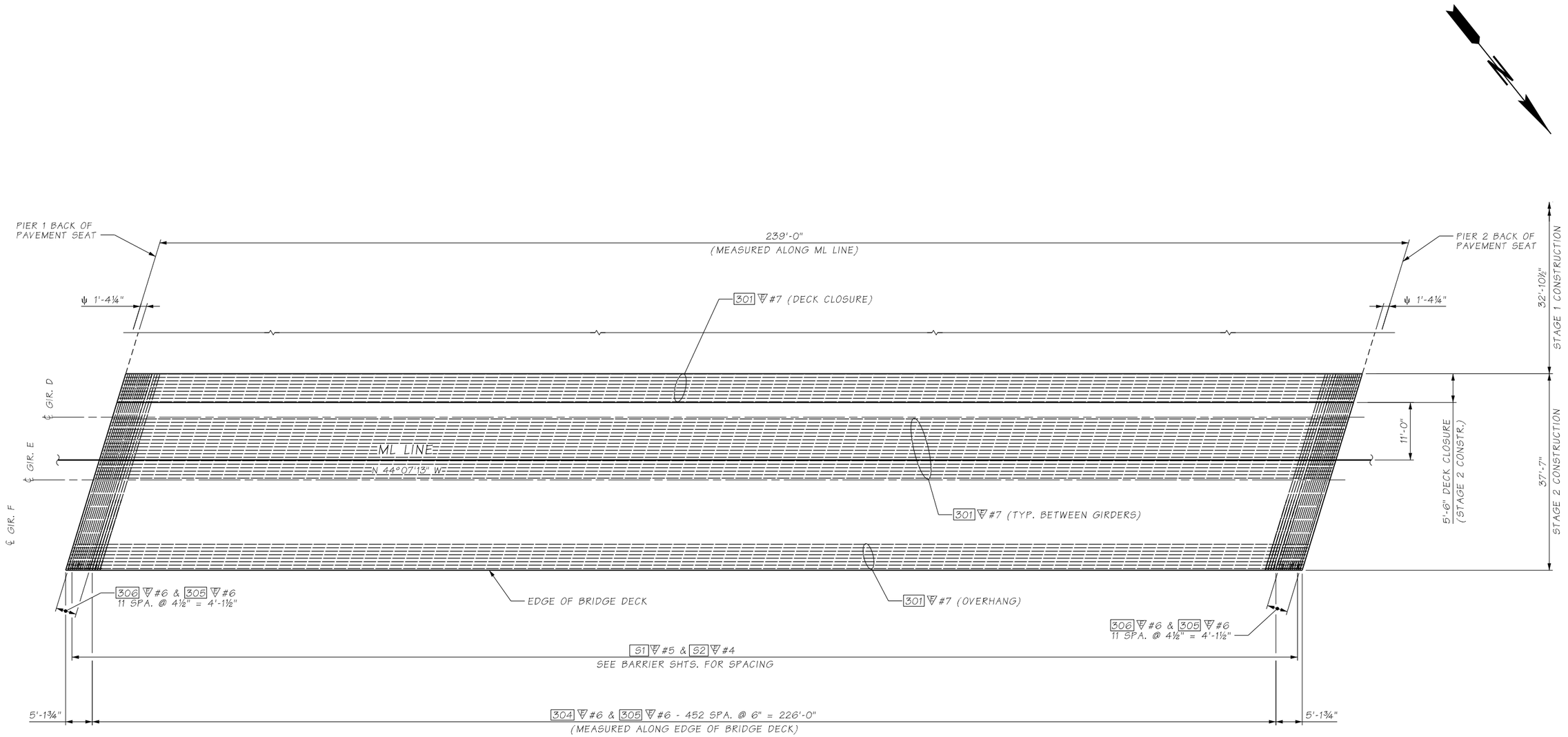

BRIDGE DECK REINFORCEMENT
TOP MAT - STAGE 2

ψ DIMENSION BASED ON A TEMPERATURE OF 64°. ADJUST FOR TEMPERATURE CHANGES PER THE "MOTION RANGE TABLE" ON THE EXPANSION JOINT DETAILS ON BRIDGE SHEET BG39.

NOTES:

1. SEE NOTES ON "BRIDGE DECK REINFORCING SECTION AND CLOSURE POUR", BRIDGE SHEET BG37.

Bridge Design Engr.	A. LELAND	c:\users\schicvin\pw_wsdot\d0335751\XL6050_PS_BG_SAM_DECK-4.dgn							
Supervisor					REGION NO.	STATE	FED. AID. PROJ. NO.	SHEET NO.	TOTAL SHEETS
Designed By	S. BENSON				10	WASH.			
Checked By	J. MERTH								
Detailed By	V.B. SCHICCHI				JOB NUMBER				
Bridge Projects Engr.	A. AMOS				22C533				
Prelim. Plan By									
Architect/Specialist		DATE	REVISION	BY	APP'D				

SHANE L. BROWN — STATE OF WASHINGTON — 49149 — STRUCTURAL ENGINEER — PROFESSIONAL ENGINEER
SEE SHEET CT1
DATE

BRIDGE AND STRUCTURES OFFICE

Washington State Department of Transportation

SR305
SAM SNYDER CREEK
REMOVE FISH BARRIER

BRIDGE DECK REINFORCING PLAN
TOP MAT - STAGE 2

BRIDGE SHEET NO. BG36

SHEET 156 OF 186 SHEETS

pw:\\HQOLYMAPPPW03P.WSDOT.LOC:WSDOTDocuments_HQ\Fish Passage\ORproj\30518.92_SamSnyderCreek\Design_CAD_Sheets\390-BridgeStrPlan\XL6050_PB_BG_SAM_DECK-4.dgn
SR 305 FILE NO. SHEET BG36
3/23/2023 12:15:02 PM

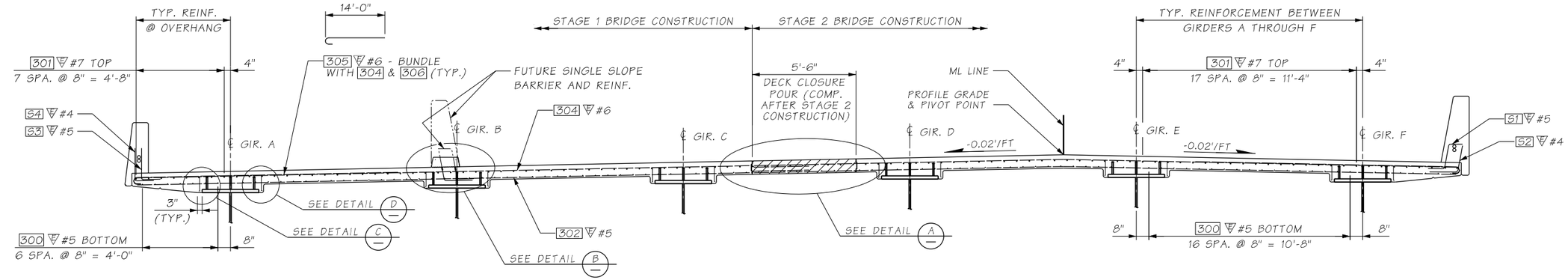

BRIDGE DECK - REINFORCED SECTION

NOTES:

1. LOCATION OF SPLICES AT CONTRACTORS OPTION. ALL SPLICES SHALL BE STAGGERED SO NOT MORE THAN 50% OF THE REBAR IS SPLICED AT THE SAME LOCATION.
2. MINIMUM REBAR LAP SPLICE LENGTH:
   - #4 = 2'-6"
   - #5 = 3'-0"
   - #6 = 3'-0"
   - #7 = 4'-0"

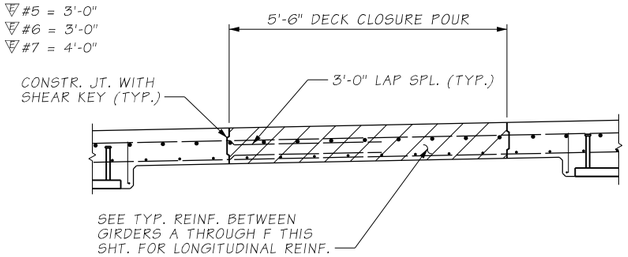

DETAIL A
DECK CLOSURE POUR

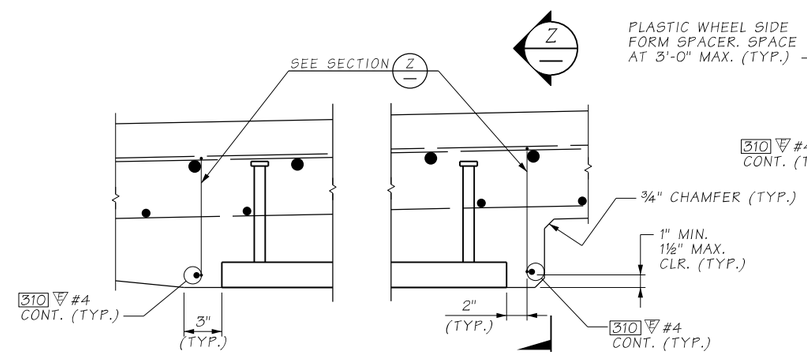

DETAIL C
TYPICAL AT OVERHANGS

DETAIL D
TYPICAL EXCEPT AT OVERHANGS

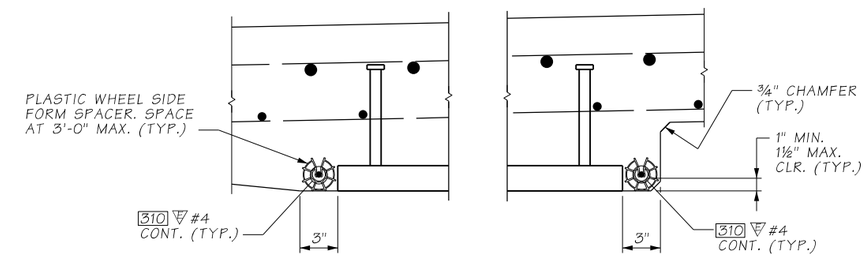

ALTERNATE DETAILS C D

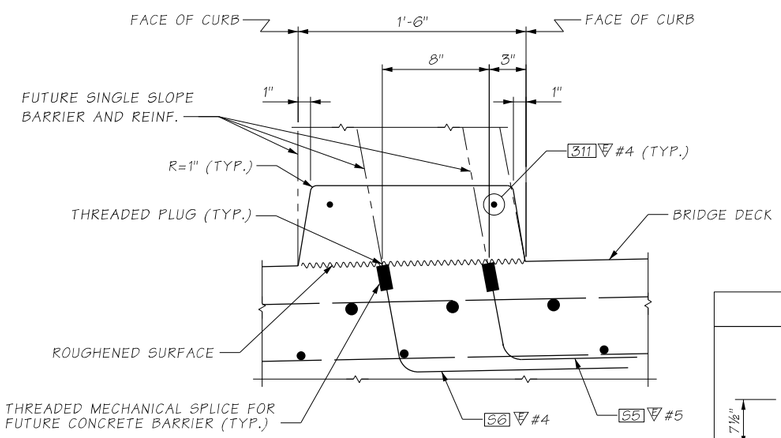

DETAIL B
CAST-IN-PLACE CURB

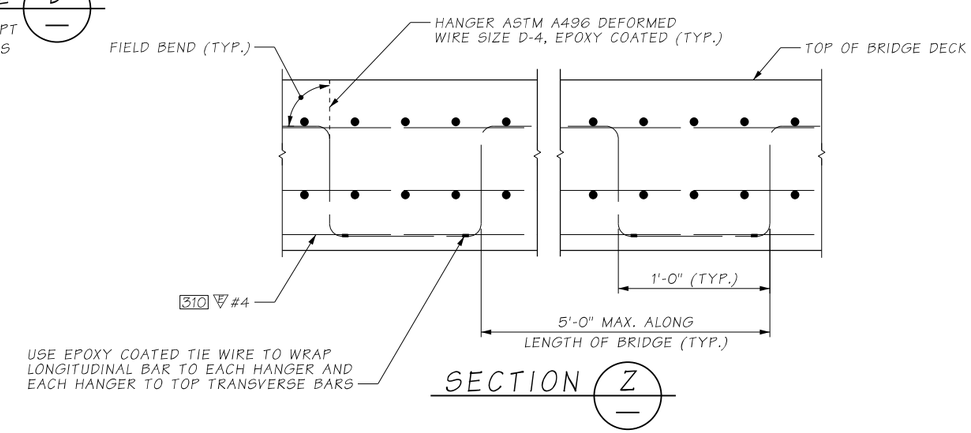

SECTION Z

BENDING DIAGRAM

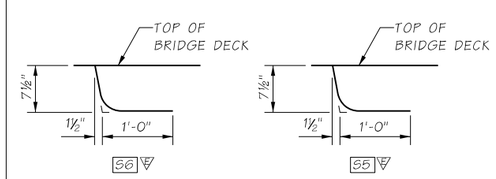

Bridge Design Engr.	A. LELAND	c:\users\schicvin\pw_wsdot\d0335751\XL6050_PS_BG_SAM_DECK-5.dgn							
Supervisor					REGION NO.	STATE	FED. AID. PROJ. NO.	SHEET NO.	TOTAL SHEETS
Designed By	S. BENSON				10	WASH.			
Checked By	J. MERTH				JOB NUMBER				
Detailed By	V.B. SCHICCHI				22C533				
Bridge Projects Engr.	A. AMOS								
Prelim. Plan By									
Architect/Specialist		DATE	REVISION	BY	APP'D				

SHANE L. BROWN — STATE OF WASHINGTON — 49149 — STRUCTURAL ENGINEER — PROFESSIONAL ENGINEER
SEE SHEET CT1
DATE

BRIDGE AND STRUCTURES OFFICE

Washington State Department of Transportation

SR305
SAM SNYDER CREEK
REMOVE FISH BARRIER

DECK TYPICAL SECTION

BRIDGE SHEET NO. BG37

SHEET 157 OF 186 SHEETS

pw:\\HQOLYMAPPPW03P.WSDOT.LOC:WSDOT\Documents_HQ\Fish Passage\Orproj\30518.92_SamSnyderCreek\Design_CAD_Sheets\390-BridgeStrPlan\XL6050_BB_BG_SAM_DECK-5.dgn
SR 305 FILE NO. SHEET BG37
3/23/2023 12:15:29 PM

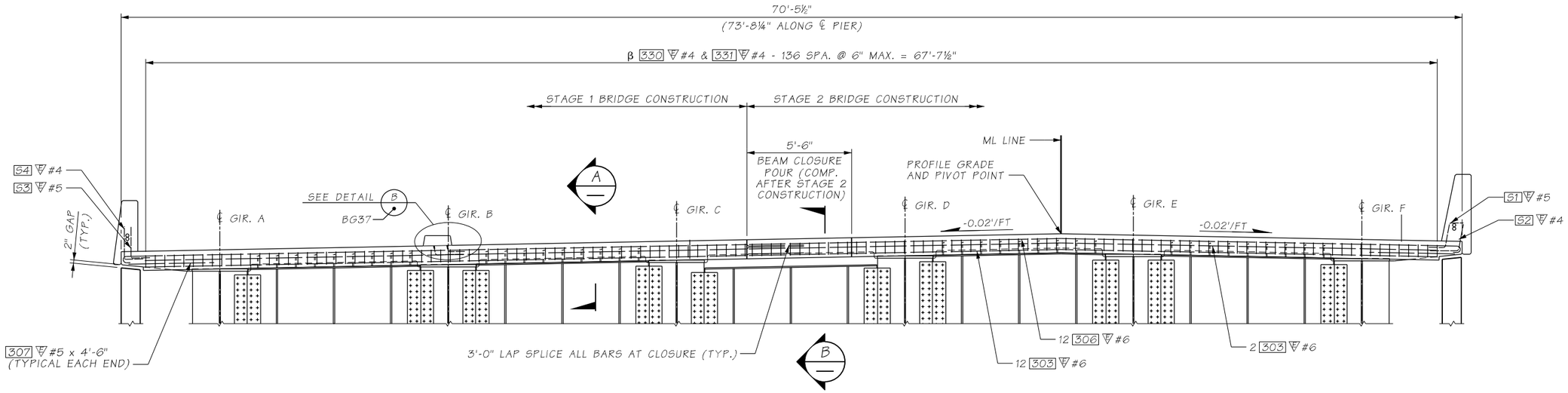

ELEVATION - BRIDGE DECK EDGE BEAM

PIER 1 SHOWN LOOKING AHEAD ON STATION, PIER 2 SIMILAR.
LONGITUDINAL DECK REINFORCEMENT NOT SHOWN FOR CLARITY.

β ALL 330 #4 BARS PLACED PARALLEL TO ℄ GIRDERS.

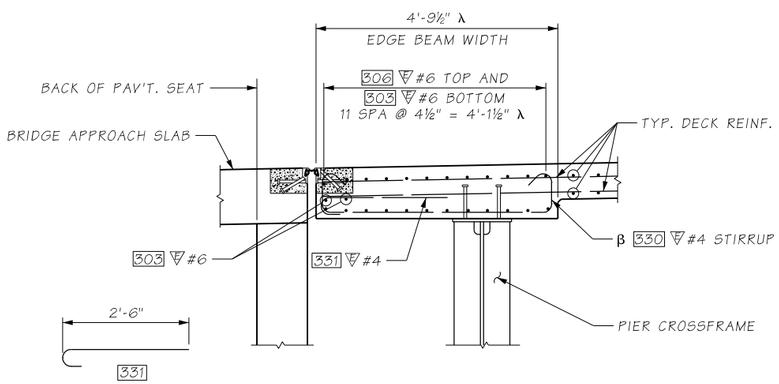

SECTION A

PIER 1 SHOWN, PIER 2 SIMILAR.

NOTE:

λ DIMENSION IS MEASURED PERPENDICULAR TO BACK OF PAVMENT SEAT (SKEW)

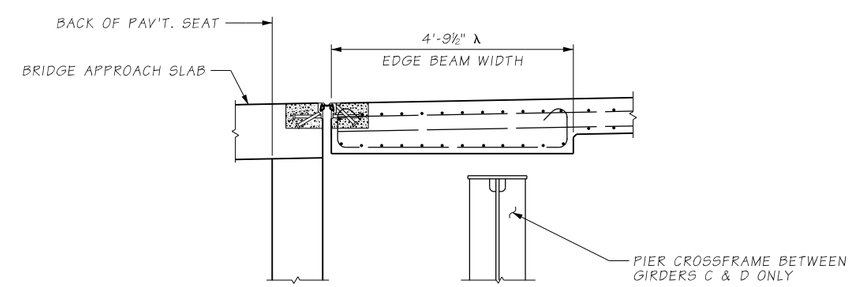

SECTION B

FOR INFORMATION AND CALLOUTS NOT SHOWN SEE SECTION "A" THIS SHEET.

Bridge Design Engr.	A. LELAND	c:\users\schicvin\pw_wsdot\d0335751\XL6050_PS_BG_SAM_DECK-6.dgn							
Supervisor					REGION NO.	STATE	FED. AID. PROJ. NO.	SHEET NO.	TOTAL SHEETS
Designed By	S. BENSON				10	WASH.			
Checked By	J. MERTH				JOB NUMBER				
Detailed By	V.B. SCHICCHI				22C533				
Bridge Projects Engr.	A. AMOS								
Prelim. Plan By									
Architect/Specialist		DATE	REVISION	BY	APP'D				

SHANE L. BROWN — STATE OF WASHINGTON — 49140 — STRUCTURAL ENGINEER — PROFESSIONAL ENGINEER
SEE SHEET CT1
DATE

BRIDGE AND STRUCTURES OFFICE

Washington State Department of Transportation

SR305
SAM SNYDER CREEK
REMOVE FISH BARRIER

BRIDGE DECK EDGE BEAM DETAILS
PIERS 1 & 2

BRIDGE SHEET NO. BG38

SHEET 158 OF 186 SHEETS

pw:\\WQOLYMAPPPW03P.WSDOT.LOC:WSDOT\Documents_HQ\Fish Passage\ORproj\30518.92_SamSnyderCreek\Design_CAD_Sheets\390-BridgeStrPlan\XL6050_BB_BG_SAM_DECK-6.dgn
SR 305 FILE NO. SHEET BG38
3/23/2023 12:15:55 PM

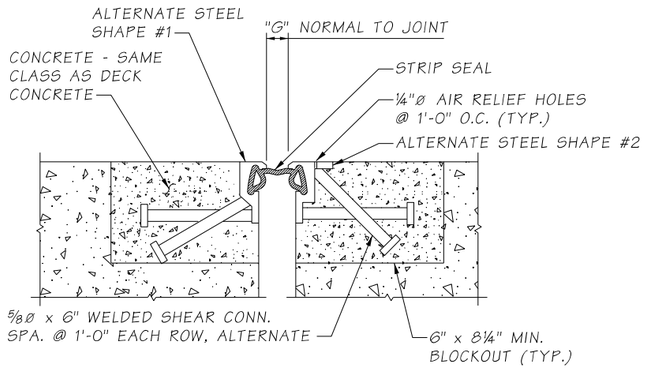

STRIP SEAL

EXTEND BRIDGE DECK REINF. INTO THE BLOCKOUT.
EXTEND BLOCKOUT TO EDGE OF BRIDGE DECK.

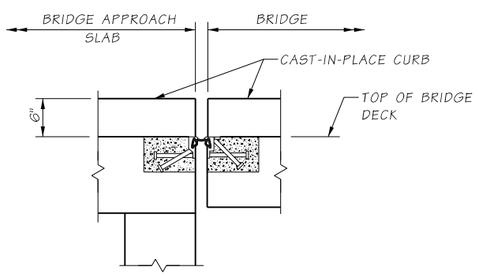

CURB AT JOINT DETAIL

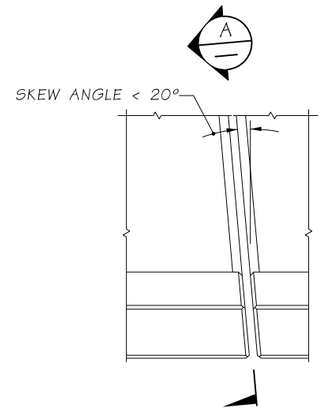

PLAN
EXPANSION JOINT

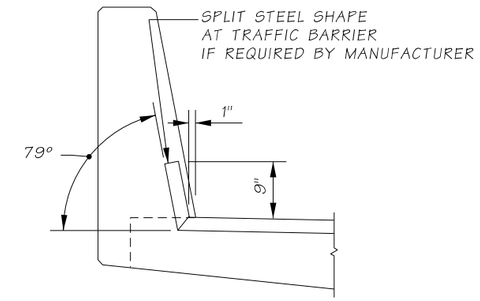

SINGLE SLOPE BARRIER

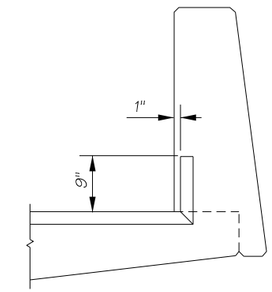

PEDESTRIAN BARRIER

SECTION A

STEEL SHAPE TYPES

MANUFACTURER	ITEM NAME	BRIDGE DECK			TRAFFIC BARRIERS					
		TYPE	S	T	TYPE	V	W	TYPE	X	Y
D.S. BROWN	DSB STRIP SEAL	SSCM2	1¼"	3¾"	SSA2, α	1¼"	2"	SSE2M α	1"	1½"
WATSON BOWMAN ACME	WABO STRIP SEAL	R	1¼"	3¼"	A	1¼"	2"	E	1½"	1½"
R.J. WATSON, INC.	RJ STRIP SEAL	RJM	2¾"	3¼"	RJA	1¼"	2"	RJE	1¼"	1½"

α ALTERNATIVELY, TRIM VERTICAL LEG OF SSCM2 SHAPE FOR USE IN TRAFFIC BARRIER

5" MOTION RANGE

MANUFACTURER	ITEM NAME	OPENING "G" NORMAL TO JT.		MIN. INSTALLATION WIDTH NORMAL TO JOINT	OPENING "G" NORMAL TO JT.		
		MIN.	MAX.		@40°F	@64°F	@80°F
D.S. BROWN	DSB STRIP SEAL A2R-XTRA	½"	5½"	2"	4⅛"	3⅝"	3⅜"
WATSON BOMAN ACME	WABO STRIP SEAL SE-500	0"	5"	1½"	3⅝"	3⅛"	2⅞"
R.J. WATSON, INC.	R.J. STRIP SEAL 500	½"	5"	1½"	4⅛"	3⅝"	3⅜"

STRIP SEAL NOTES:

1. DO NOT USE STEEL SHAPES WITH HORIZONTAL LEGS IN BARRIER REGION.

pw:\\HQOLYMAPPPW03P.WSDOT.LOC:WSDOT\Documents_HQ\Fish Passage\ORproj\30518.92_SamSnyderCreek\Design_CAD_Sheets\390-BridgeStrPlan\XL6050_BP_BG_SAM_TB.dgn
SR 305 FILE NO. SHEET BG39

Bridge Design Engr.	A. LELAND	c:\users\schicvin\pw_wsdot\d0335751\XL6050_PS_BG_SAM_EXJT.dgn							
Supervisor					REGION NO.	STATE	FED. AID. PROJ. NO.	SHEET NO.	TOTAL SHEETS
Designed By	S. BENSON				10	WASH.			
Checked By	J. MERTH								
Detailed By	V.B. SCHICCHI				JOB NUMBER				
Bridge Projects Engr.	A. AMOS				22C533				
Prelim. Plan By									
Architect/Specialist		DATE	REVISION	BY	APP'D				

3/23/2023 12:16:18 PM

SHANE L. BROWN STATE OF WASHINGTON 49149 STRUCTURAL ENGINEER PROFESSIONAL ENGINEER
SEE SHEET CT1
DATE

BRIDGE AND STRUCTURES OFFICE

Washington State Department of Transportation

SR305
SAM SNYDER CREEK
REMOVE FISH BARRIER

PIER 1 AND 2
EXPANSION JOINT DETAILS

BRIDGE SHEET NO. BG39

SHEET 159 OF 186 SHEETS

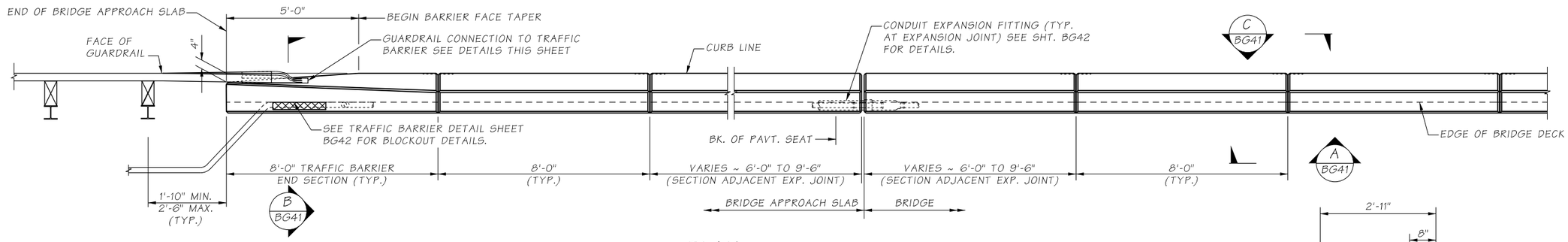

PLAN
TRAFFIC BARRIER
2

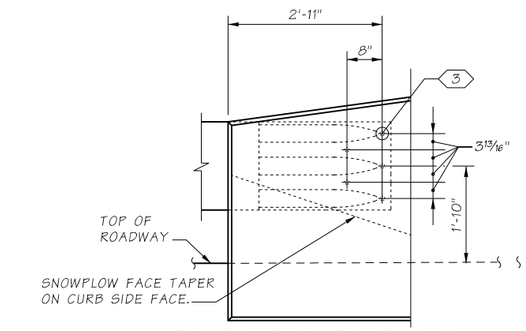

THRIE BEAM END SECTION DESIGN "F"
(SEE STD. PLAN C-7a)

OUTSIDE ELEVATION
TRAFFIC BARRIER - GUARDRAIL CONNECTION
(WHERE SHOWN ON LAYOUT)

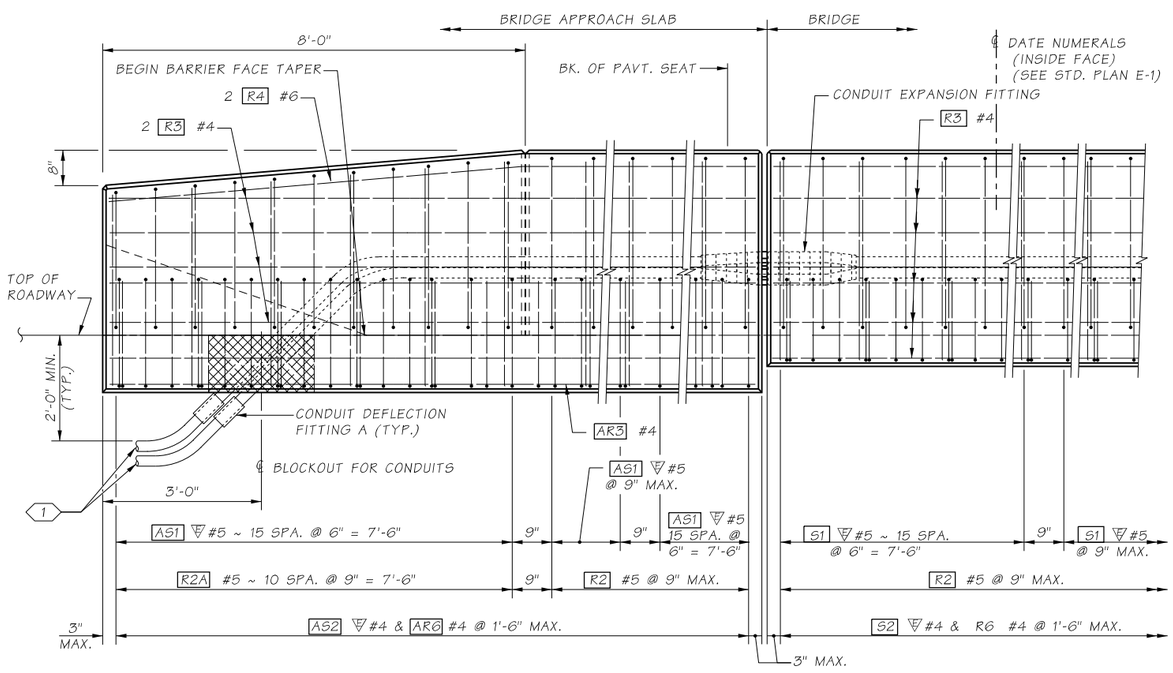

OUTSIDE ELEVATION
END OF TRAFFIC BARRIER
SHOWN WITH BRIDGE APPROACH SLAB

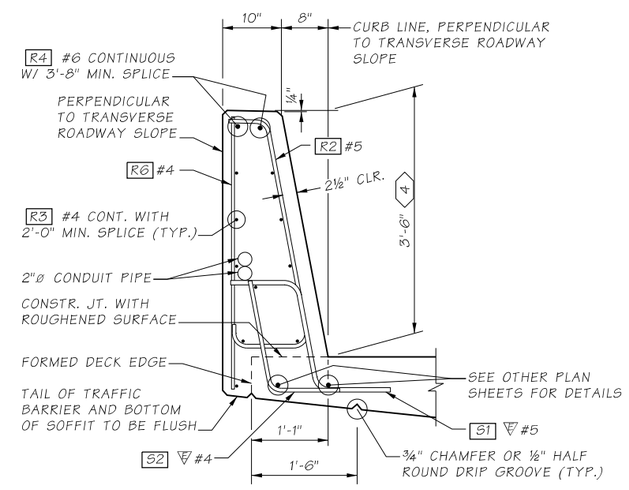

TYPICAL SECTION
TRAFFIC BARRIER
SHOWN ON BRIDGE

NOTES:

1. 2"ø RGS CONDUIT PIPES (TYP.) OR SEE WIRING SCHEDULE FOR CONDUIT SIZE.
2. BARRIER CONTINUOUS BETWEEN BRIDGE DECK EXPANSION JOINTS. CONSTRUCTION JOINTS WITH SHEAR KEYS ARE PERMISSIBLE AT DUMMY JOINT LOCATIONS. FORM JOINTS BETWEEN DUMMY JOINTS SHALL NOT BE PERMITTED.
3. ⅞"ø ROCKET/KOHLER F-50, LANCASTER MALLEABLE, OR DAYTON/RICHMOND F-62 FLARED THIN SLAB FERRULE INSERTS OR APPROVED EQUAL (TYP.). RESIN-BONDED ANCHORS MAY BE SUBSTITUTED.
4. HEIGHT MAY VARY IF REQUIRED TO PROVIDE A PROFILE PLEASING TO THE EYE.

Bridge Design Engr.	A. LELAND	c:\users\schicvin\pw_wsdot\d0335751\XL6050_PS_BG_SAM_BAR1.dgn							
Supervisor					REGION NO.	STATE	FED. AID. PROJ. NO.	SHEET NO.	TOTAL SHEETS
Designed By	S. BENSON				10	WASH.			
Checked By	J. MERTH				JOB NUMBER				
Detailed By	C.D. CLARK				22C533				
Bridge Projects Engr.	A. AMOS								
Prelim. Plan By									
Architect/Specialist		DATE	REVISION	BY	APP'D				

SEE SHEET CT1
DATE

BRIDGE AND STRUCTURES OFFICE

Washington State Department of Transportation

SR305
SAM SNYDER CREEK
REMOVE FISH BARRIER

SINGLE SLOPE TRAFFIC BARRIER
DETAILS 1 OF 3

BRIDGE SHEET NO. BG40

SHEET 160 OF 186 SHEETS

pw:\\HQOLYMAPPPW03P.WSDOT.LOC:WSDOTDocuments_HQ\Fish Passage\ORproj\30518.92_SamSnyderCreek\Design_CAD_Sheets\390-BridgeSrPlan\XL6050_BB_BG_SAM_BAR1.dgn
SR 305 FILE NO. SHEET BG40
3/23/2023 12:16:52 PM

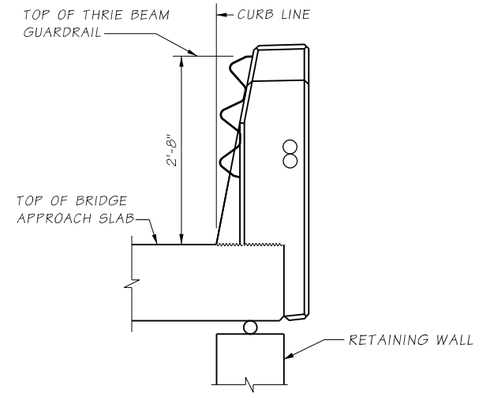

END VIEW

THRIE BEAM SHOWN WITH "D" CONNECTION OR "F" CONNECTION (SEE STD. PLAN C-7a)

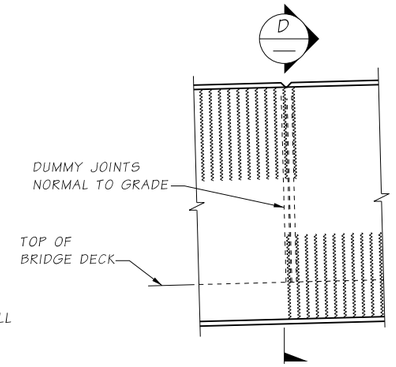

VIEW A BG40

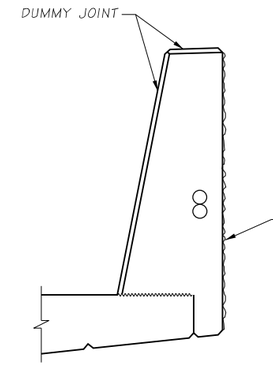

SECTION D

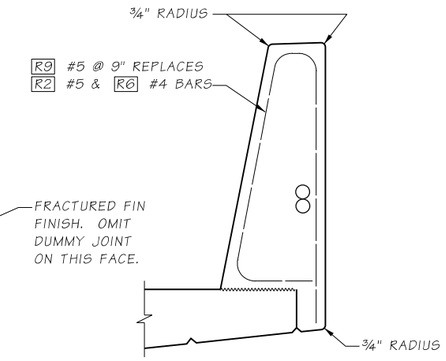

SLIPFORM ALTERNATE

SEE "TYPICAL SECTION - TRAFFIC BARRIER" FOR ADDITIONAL DETAILS.

THE CONTRACTOR IS ADVISED THAT THE SLIPFORM CONSTRUCTION METHOD IS A PATENTED PROPRIETARY PROCESS FOR BARRIERS WITH A FRACTURED FIN FINISH.

JUNCTION BOX LOCATIONS

STATION	OFFSET	"TS" OR "LT"
6021+72.00	20.00' RT.	LT
6021+82.00	20.00' RT.	TS
6023+72.00	20.00' RT.	LT
6023+82.00	20.00' RT.	TS

TS = TRAFFIC SYSTEM
LT = LIGHTING SYSTEM

JUNCTION BOX LOCATIONS SHOWN ARE APPROXIMATE. CENTER JUNCTION BOX INSTALLATION BETWEEN BARRIER DUMMY JOINTS.

INSTALL ALL CONDUIT RUNS TO DRAIN TO A BRIDGE END OR PROVIDE DRAIN AT ALL LOW POINTS IN CONDUIT RUN ON BRIDGE.

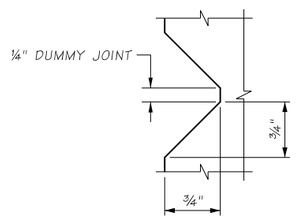

DUMMY JOINT DETAIL

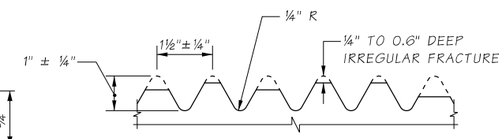

FRACTURED FIN FINISH

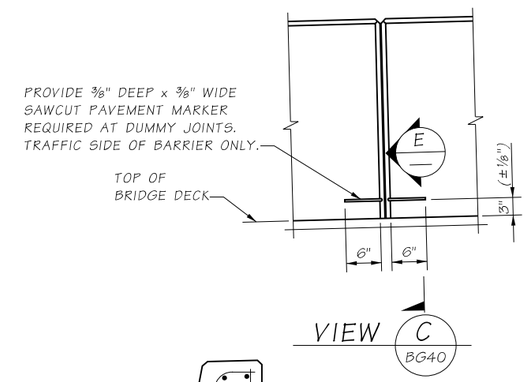

VIEW C BG40

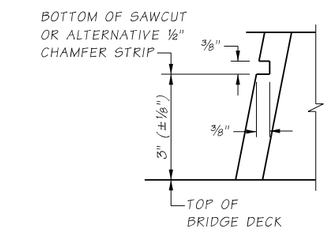

SECTION E PAVEMENT MARKER

BENDING DIAGRAM

ALL DIMENSIONS ARE OUT TO OUT.

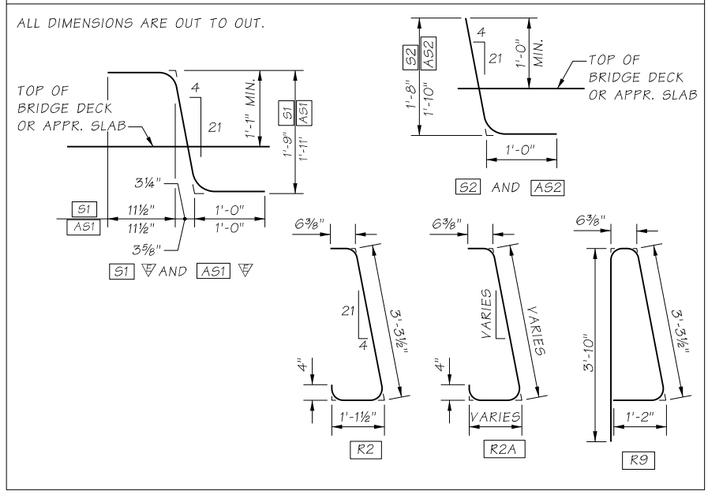

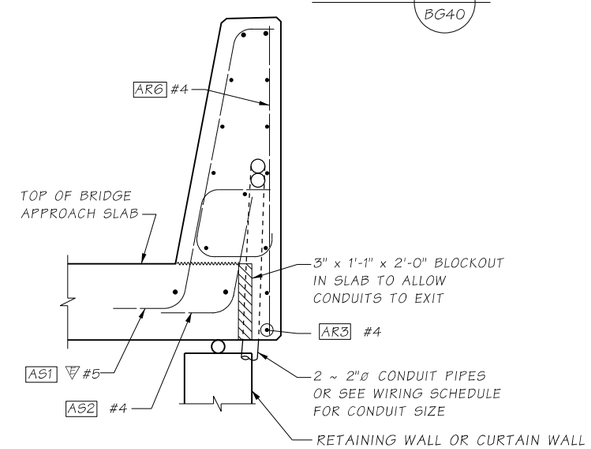

SECTION B BG40 BRIDGE APPROACH SLAB

FOR DETAILS NOT SHOWN SEE "OUTSIDE ELEVATION" AND "TYPICAL SECTION - TRAFFIC BARRIER"

pw:\\HQOLYMAPPPW03P.WSDOT.LOC:WSDOT\Documents_HQ\Fish Passage\ORproj\30598.92_SamSnyderCreek\Design_CAD_Sheets\390-BridgeStrPlan\XL6050_PS_BG_SAM_BAR2.dgn
SR 305 FILE NO. SHEET BG41

Bridge Design Engr.	A. LELAND	c:\users\schicvin\pw_wsdot\d0335751\XL6050_PS_BG_SAM_BAR2.dgn							
Supervisor					REGION NO.	STATE	FED. AID. PROJ. NO.	SHEET NO.	TOTAL SHEETS
Designed By	S. BENSON				10	WASH.			
Checked By	J. MERTH				JOB NUMBER				
Detailed By	C.D. CLARK				22C533				
Bridge Projects Engr.	A. AMOS								
Prelim. Plan By									
Architect/Specialist		DATE	REVISION	BY	APP'D				

3/23/2023 12:17:15 PM

SHANE L. BROWN STATE OF WASHINGTON 49149 STRUCTURAL ENGINEER PROFESSIONAL ENGINEER
SEE SHEET CT1 DATE

BRIDGE AND STRUCTURES OFFICE

Washington State Department of Transportation

SR305
SAM SNYDER CREEK
REMOVE FISH BARRIER

SINGLE SLOPE TRAFFIC BARRIER DETAILS 2 OF 3

BRIDGE SHEET NO. BG41

SHEET 161 OF 186 SHEETS

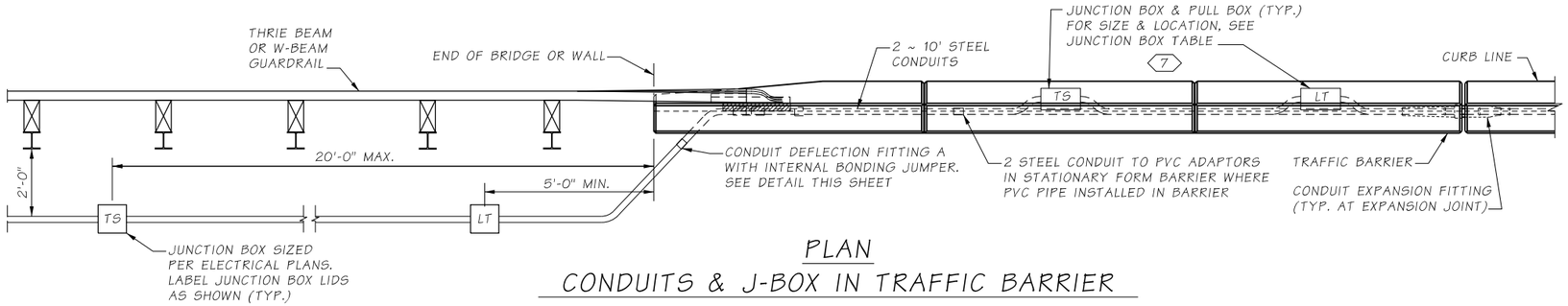

PLAN
CONDUITS & J-BOX IN TRAFFIC BARRIER

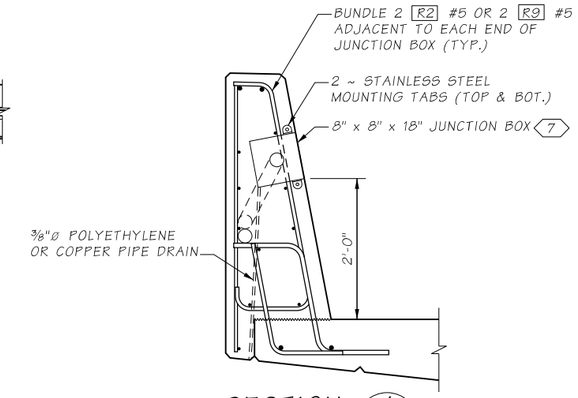

SECTION A

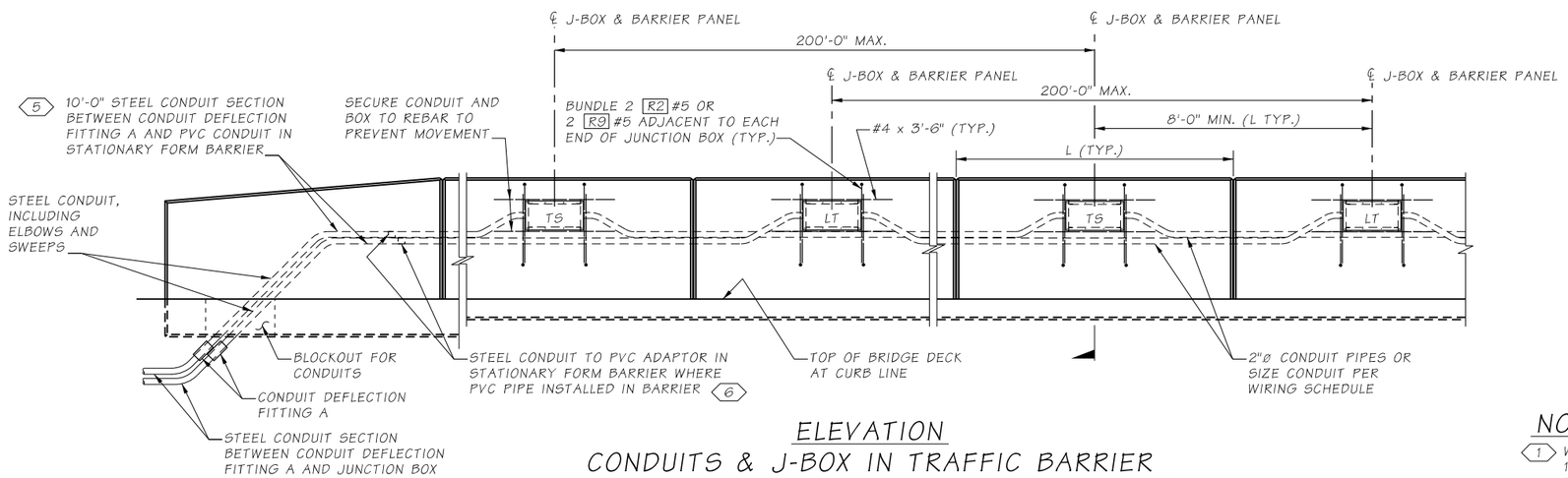

ELEVATION
CONDUITS & J-BOX IN TRAFFIC BARRIER
4

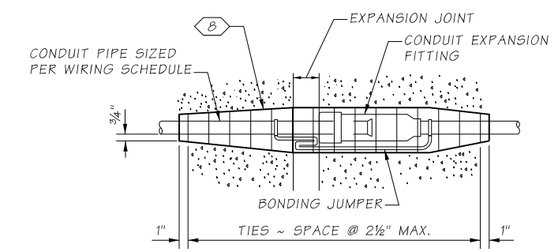

CONDUIT EXPANSION FITTING

CONDUIT FITTING - (TYPE AX FOR MOVEMENT OF ± 2") AT BRIDGE EXPANSION JOINTS

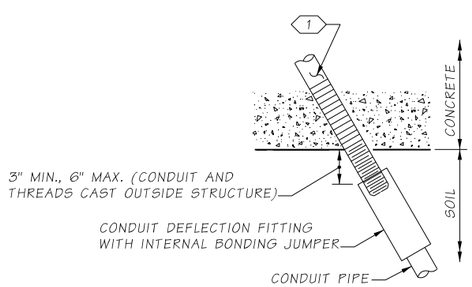

CONDUIT DEFLECTION FITTING A

CONDUIT FITTING - TYPE DX FOR DEFLECTION OF 30° AND ¾" MOVEMENT.
2

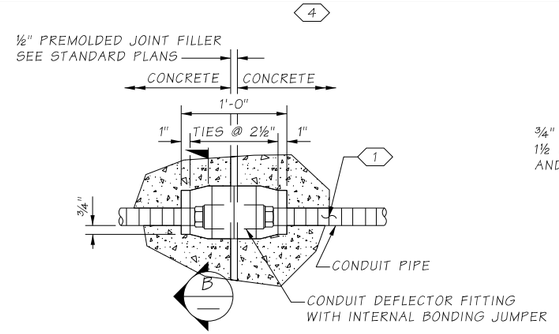

CONDUIT DEFLECTION FITTING B

CONDUIT FITTING - TYPE DX FOR DEFLECTION OF 30° AND ¾" MOVEMENT.
3

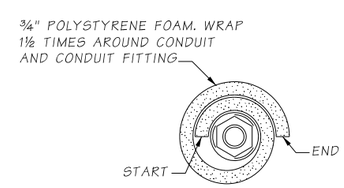

SECTION B

NOTES:

1. WHERE CONDUIT IN A STRUCTURE IS ROUTED ACROSS A JOINT, WRAP STEEL CONDUIT PIPE FOR 1'-0" ON EACH SIDE OF JOINT. PIPE WRAP TAPE SHALL BE 2" WIDE, 20 MIL THICK, AND INSTALLED WITH A MINIMUM OF 1" OVERLAP.
2. PLACE AT CONDUIT PIPE EXIT FROM STRUCTURE AND SHALL BE IN NEUTRAL STATE AFTER INSTALLATION.
3. CONDUIT PIPES PLACED THROUGH RETAINING WALL TRAFFIC BARRIER SHALL BE FITTED WITH DEFLECTION FITTINGS AT A MAXIMUM SPACING OF 120'. THE DEFLECTION FITTINGS SHALL BE PLACED AT THE TRAFFIC BARRIER OPEN JOINT THAT COINCIDES WITH THE RETAINING WALL EXPANSION JOINT.
4. LABEL JUNCTION BOX COVER IN ACCORDANCE WITH STANDARD SPECIFICATION SECTION 9-29.2(4). ADJACENT JUNCTION BOXES ARE SHOWN CENTERED BETWEEN ADJACENT DUMMY JOINTS. IF THE DISTANCE BETWEEN ADJACENT DUMMY JOINTS IS 16'-0" OR GREATER, PLACE ADJACENT JUNCTION BOXES SYMMETRICALLY ON EITHER SIDE OF THE CENTER OF ONE DUMMY PANEL WHILE MAINTAINING 8'-0" MINIMUM BETWEEN CENTER LINES OF THE JUNCTION BOXES.
5. TERMINATE STEEL CONDUIT IN JUNCTION BOX IF LESS THAN 10'-0" FROM ELBOW OR SWEEP.
6. INSTALL ONLY WHERE CONDUIT IS HORIZONTAL.
7. NEMA 4X IN STATIONARY FORM BARRIER, OR NEMA 3R IN SLIP FORM BARRIER. MOUNT JUNCTION BOX SO COVER IS FLUSH WITH BARRIER, CAN BE RECESSED UP TO ⅛".
8. 3'-0" LONG EXPANDED POLYSTYRENE SLEEVE AROUND CONDUIT. DUCT TAPE SEAMS AND ENDS TO SEAL AND PREVENT CONCRETE FROM BONDING WITH FITTING AND CONDUIT.

Bridge Design Engr.	A. LELAND	c:\users\schicvin\pw_wsdot\d0335751\XL6050_PS_BG_SAM_BAR3.dgn			REGION NO.	STATE	FED. AID. PROJ. NO.	SHEET NO.	TOTAL SHEETS
Supervisor					10	WASH.			
Designed By	S. BENSON				JOB NUMBER				
Checked By	J. MERTH				22C533				
Detailed By	C.D. CLARK								
Bridge Projects Engr.	A. AMOS								
Prelim. Plan By									
Architect/Specialist		DATE	REVISION	BY	APP'D				

SHANE L. BROWN, STATE OF WASHINGTON, 49149, STRUCTURAL ENGINEER, PROFESSIONAL ENGINEER
SEE SHEET CT1
DATE

BRIDGE AND STRUCTURES OFFICE

Washington State Department of Transportation

SR305
SAM SNYDER CREEK
REMOVE FISH BARRIER

SINGLE SLOPE TRAFFIC BARRIER DETAILS 3 OF 3

BRIDGE SHEET NO. BG42

SHEET 162 OF 186 SHEETS

pw:\\HQOLYMAPPPW03P.WSDOT.LOC\WSDOT\Documents_HQ\Fish Passage\ORproj\30518.92_SamSnyderCreek\Design_CAD_Sheets\390-BridgeStrPlan\XL6050_BB_BG_SAM_BAR3.dgn
SR 305 FILE NO. SHEET BG42
3/23/2023 12:17:41 PM

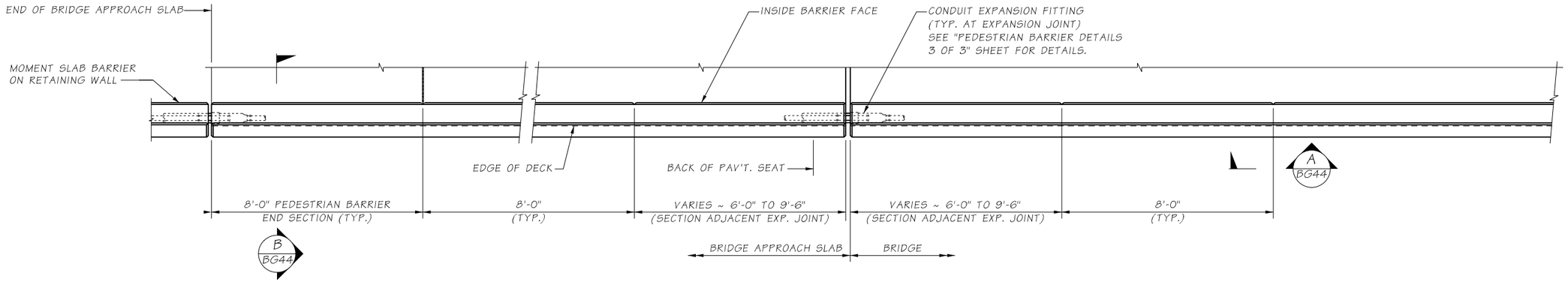

PLAN
PEDESTRIAN BARRIER

BARRIER CONTINUOUS BETWEEN BRIDGE DECK EXPANSION JOINTS.
CONSTRUCTION JOINTS WITH SHEAR KEYS ARE PERMISSIBLE AT DUMMY JOINT LOCATIONS.
FORM JOINTS BETWEEN DUMMY JOINTS SHALL NOT BE PERMITTED.

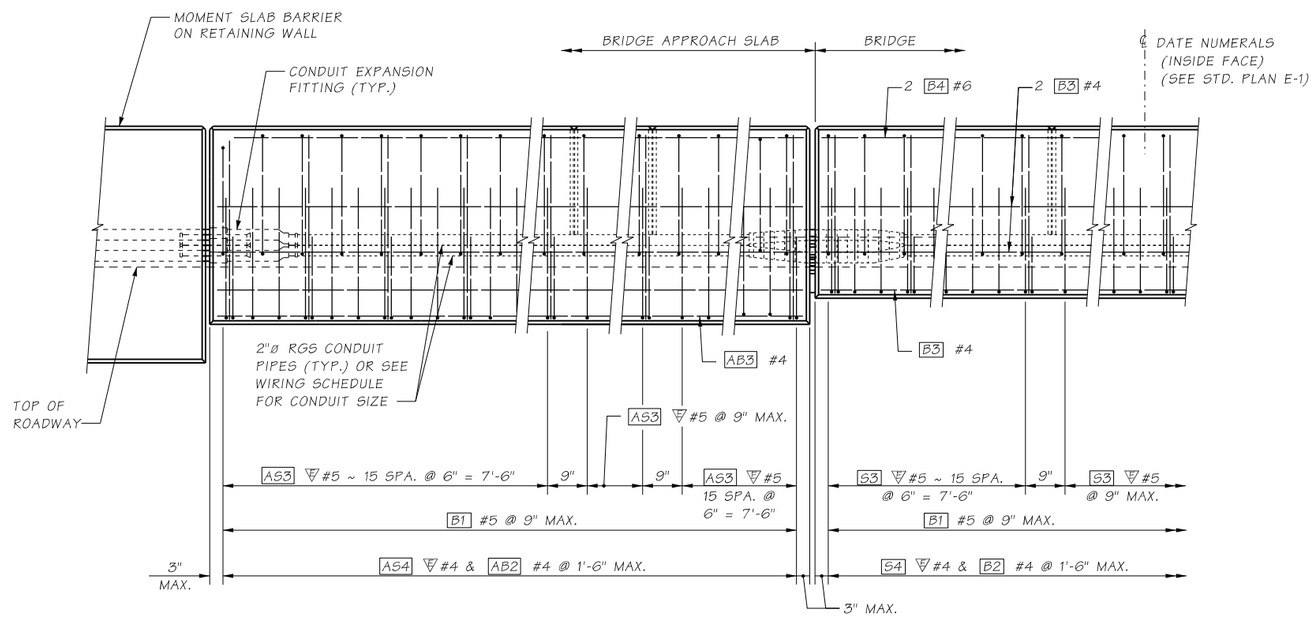

OUTSIDE ELEVATION
END OF PEDESTRIAN BARRIER

SHOWN WITH BRIDGE APPROACH SLAB

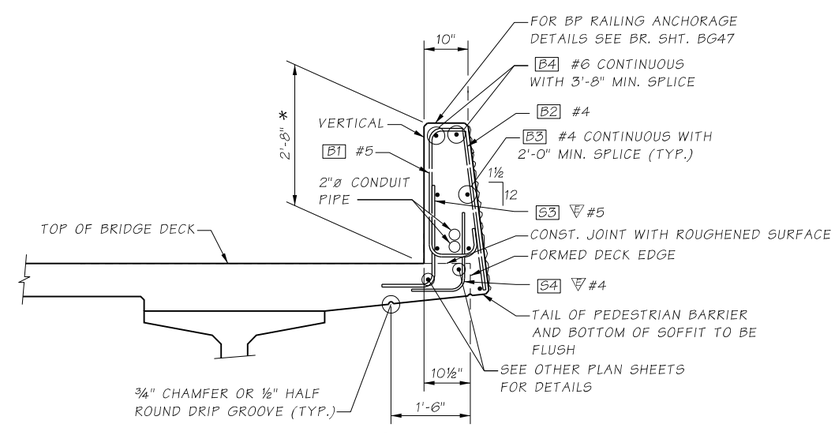

TYPICAL SECTION
PEDESTRIAN BARRIER

SHOWN ON BRIDGE

* MIN. HEIGHT. PEDESTRIAN BARRIER HEIGHT MAY VARY IF REQUIRED TO PROVIDE A SMOOTH PROFILE.

Bridge Design Engr.	A. LELAND	c:\users\schicvin\pw_wsdot\d0335751\XL6050_PS_BG_SAM_PED1.dgn			REGION NO.	STATE	FED. AID. PROJ. NO.	SHEET NO.	TOTAL SHEETS
Supervisor					10	WASH.			
Designed By	S. BENSON				JOB NUMBER 22C533				
Checked By	J. MERTH								
Detailed By	C.D. CLARK								
Bridge Projects Engr.	A. AMOS								
Prelim. Plan By									
Architect/Specialist		DATE	REVISION	BY	APP'D				

SHANE L. BROWN — STATE OF WASHINGTON — 49149 — STRUCTURAL ENGINEER — PROFESSIONAL ENGINEER
SEE SHEET CT1 DATE

BRIDGE AND STRUCTURES OFFICE

Washington State Department of Transportation

SR305
SAM SNYDER CREEK
REMOVE FISH BARRIER

PEDESTRIAN BARRIER DETAILS 1 OF 3

BRIDGE SHEET NO. BG43

SHEET 163 OF 186 SHEETS

pw:\\HQOLYMAPPPW03P.WSDOT.LOC:WSDOTDocuments_HQ\Fish Passage\ORproj\30518.92_SamSnyderCreek\Design_CAD_Sheets\390-BridgeStrPlan\XL6050_BB_BG_SAM_PED1.dgn
SR 305 FILE NO. SHEET BG43
3/23/2023 12:18:12 PM

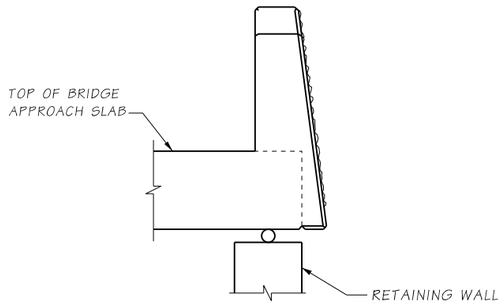

END VIEW

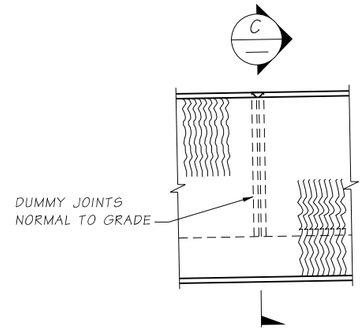

VIEW A BG43

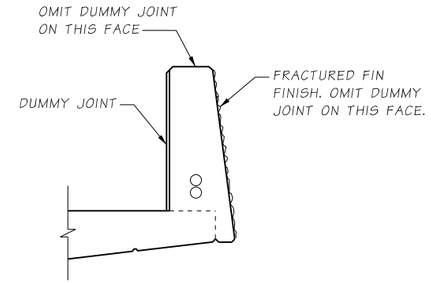

SECTION C

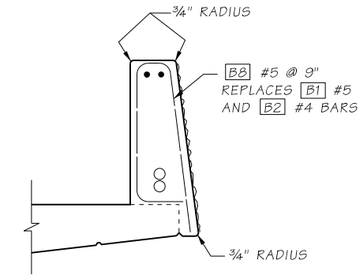

SLIPFORM ALTERNATE

SEE TYPICAL SECTION - PEDESTRIAN BARRIER FOR ADDITIONAL DETAILS

THE CONTRACTOR IS ADVISED THAT THE SLIPFORM CONSTRUCTION METHOD IS A PATENTED PROPRIETARY PROCESS FOR BARRIERS WITH A FRACTURED FIN FINISH.

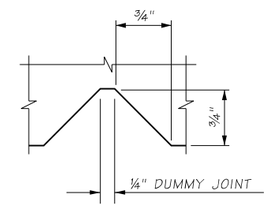

DUMMY JOINT DETAIL

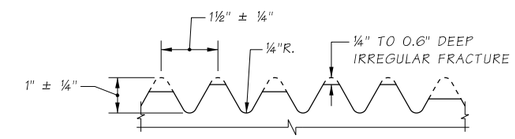

FRACTURED FIN FINISH

JUNCTION BOX LOCATIONS

STATION	OFFSET	"TS" OR "LT"
ML STA. 6021+56.00	48.50' LT.	LT
ML STA. 6021+66.00	48.50' LT.	TS
ML STA. 6023+06.00	48.50' LT.	LT
ML STA. 6023+16.00	48.50' LT.	TS

TS = TRAFFIC SYSTEM
LT = LIGHTING SYSTEM

JUNCTION BOX LOCATIONS SHOWN ARE APPROXIMATE. CENTER JUNCTION BOX INSTALLATION BETWEEN BARRIER DUMMY JOINTS.

INSTALL ALL CONDUIT RUNS TO DRAIN TO A BRIDGE END OR PROVIDE DRAIN AT ALL LOW POINTS IN CONDUIT RUN ON BRIDGE.

BENDING DIAGRAM

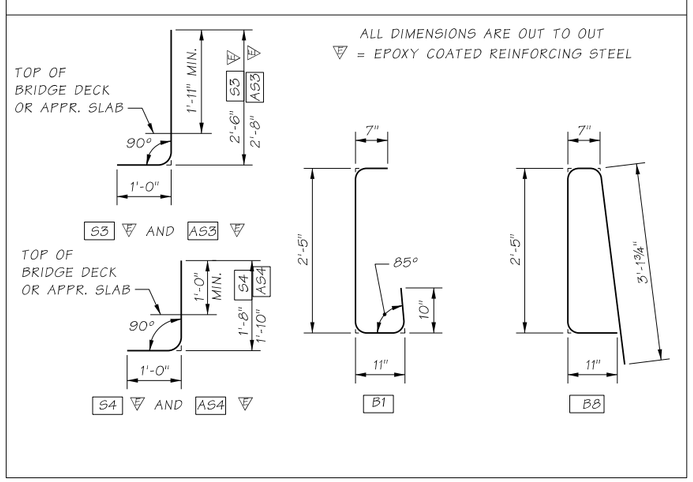

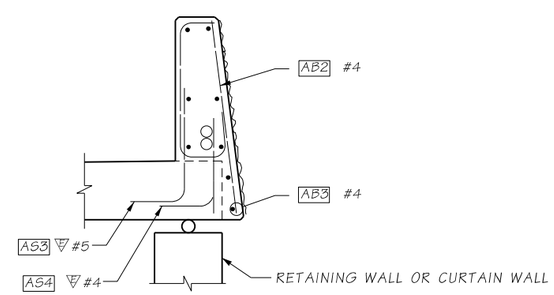

SECTION B BRIDGE APPROACH SLAB
BG43

FOR DETAILS NOT SHOWN SEE "OUTSIDE ELEVATION" AND "TYPICAL SECTION ~ PEDESTRIAN BARRIER"

Bridge Design Engr.	A. LELAND	c:\users\schicvin\pw_wsdot\d0335751\XL6050_PS_BG_SAM_PED2.dgn							
Supervisor					REGION NO.	STATE	FED. AID. PROJ. NO.	SHEET NO.	TOTAL SHEETS
Designed By	S. BENSON				10	WASH.			
Checked By	J. MERTH				JOB NUMBER				
Detailed By	C.D. CLARK				22C533				
Bridge Projects Engr.	A. AMOS								
Prelim. Plan By									
Architect/Specialist		DATE	REVISION	BY	APP'D				

SHANE L. BROWN STATE OF WASHINGTON 49149 STRUCTURAL ENGINEER PROFESSIONAL ENGINEER
SEE SHEET CT1
DATE

BRIDGE AND STRUCTURES OFFICE

Washington State Department of Transportation

SR305
SAM SNYDER CREEK
REMOVE FISH BARRIER

PEDESTRIAN BARRIER DETAILS 2 OF 3

BRIDGE SHEET NO. BG44

SHEET 164 OF 186 SHEETS

pw:\\HQOLYMAPPPW03P.WSDOT.LOC:WSDOT\Documents_HQ\Fish Passage\ORproj\30518.92_SamSnyderCreek\Design_CAD_Sheets\390-BridgeStrPlan\XL6050_BB_BG_SAM_PED2.dgn
SR 305 FILE NO. SHEET BG44
3/23/2023 12:18:52 PM

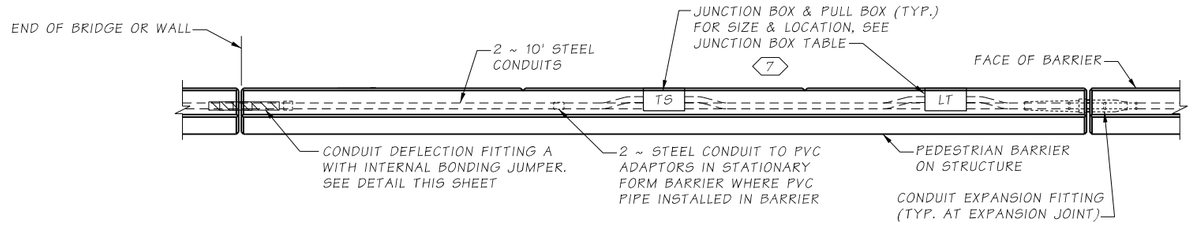

PLAN
CONDUITS & J-BOX IN PEDESTRIAN BARRIER

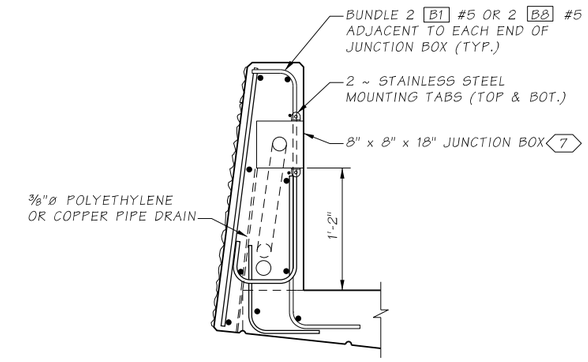

SECTION A

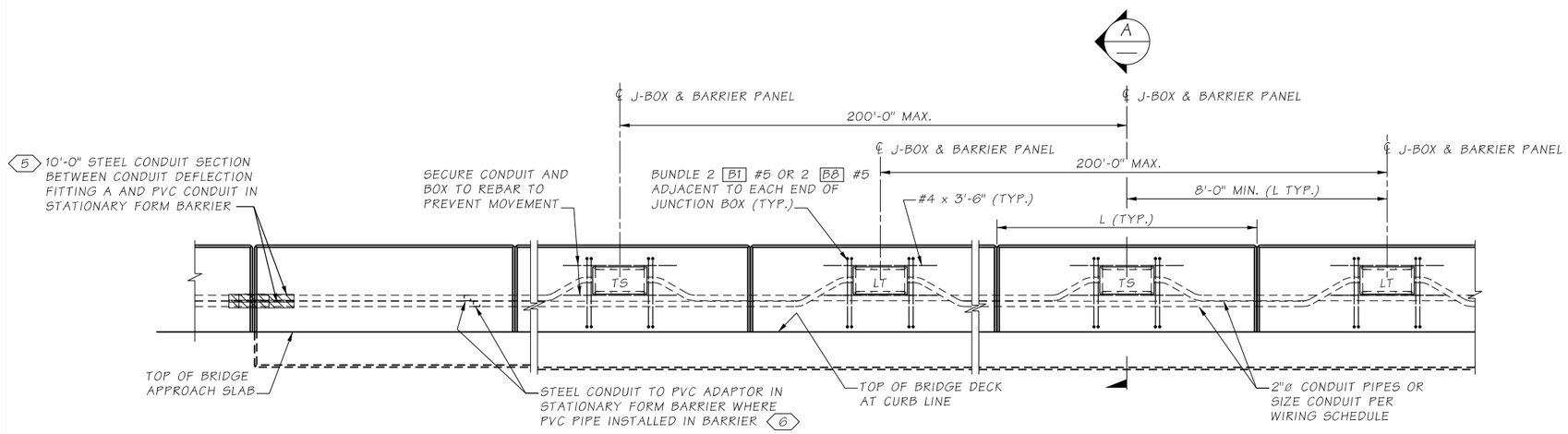

ELEVATION
CONDUITS & J-BOX IN PEDESTRIAN BARRIER
4

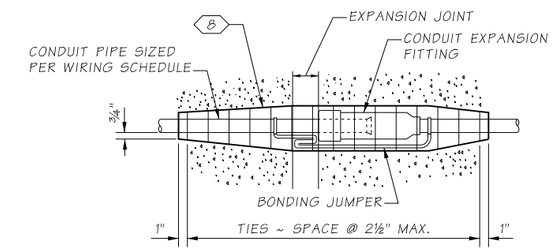

CONDUIT EXPANSION FITTING

CONDUIT FITTING - (TYPE AX FOR MOVEMENT OF ± 2") AT BRIDGE EXPANSION JOINTS

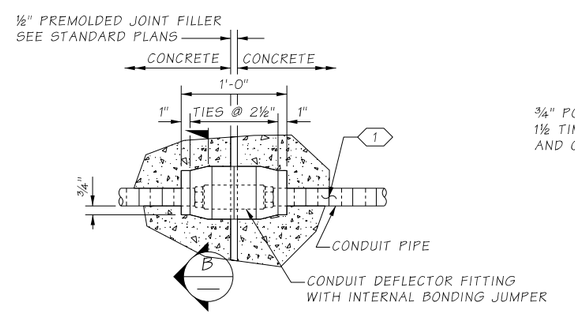

CONDUIT DEFLECTION FITTING B

CONDUIT FITTING - TYPE DX FOR DEFLECTION OF 30° AND ¾" MOVEMENT.
3

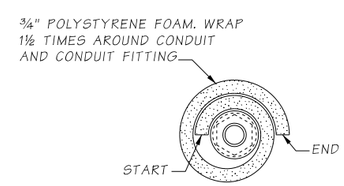

SECTION B

NOTES:

1. WHERE CONDUIT IN A STRUCTURE IS ROUTED ACROSS A JOINT, WRAP STEEL CONDUIT PIPE FOR 1'-0" ON EACH SIDE OF JOINT. PIPE WRAP TAPE SHALL BE 2" WIDE, 20 MIL THICK, AND INSTALLED WITH A MINIMUM OF 1" OVERLAP.
2. PLACE AT CONDUIT PIPE EXIT FROM STRUCTURE AND SHALL BE IN NEUTRAL STATE AFTER INSTALLATION.
3. CONDUIT PIPES PLACED THROUGH RETAINING WALL TRAFFIC BARRIER SHALL BE FITTED WITH DEFLECTION FITTINGS AT A MAXIMUM SPACING OF 120'. THE DEFLECTION FITTINGS SHALL BE PLACED AT THE TRAFFIC BARRIER OPEN JOINT THAT COINCIDES WITH THE RETAINING WALL EXPANSION JOINT.
4. LABEL JUNCTION BOX COVER IN ACCORDANCE WITH STANDARD SPECIFICATION SECTION 9-29.2(4). ADJACENT JUNCTION BOXES ARE SHOWN CENTERED BETWEEN ADJACENT DUMMY JOINTS. IF THE DISTANCE BETWEEN ADJACENT DUMMY JOINTS IS 16'-0" OR GREATER, PLACE ADJACENT JUNCTION BOXES SYMMETRICALLY ON EITHER SIDE OF THE CENTER OF ONE DUMMY PANEL WHILE MAINTAINING 8'-0" MINIMUM BETWEEN CENTER LINES OF THE JUNCTION BOXES.
5. TERMINATE STEEL CONDUIT IN JUNCTION BOX IF LESS THAN 10'-0" FROM ELBOW OR SWEEP.
6. INSTALL ONLY WHERE CONDUIT IS HORIZONTAL.
7. NEMA 4X IN STATIONARY FORM BARRIER, OR NEMA 3R IN SLIP FORM BARRIER. MOUNT JUNCTION BOX SO COVER IS FLUSH WITH BARRIER, CAN BE RECESSED UP TO ⅛".
8. 3'-0" LONG EXPANDED POLYSTYRENE SLEEVE AROUND CONDUIT. DUCT TAPE SEAMS AND ENDS TO SEAL AND PREVENT CONCRETE FROM BONDING WITH FITTING AND CONDUIT.

Bridge Design Engr.	A. LELAND	c:\users\schicvin\pw_wsdot\d0335751\XL6050_PS_BG_SAM_PED3.dgn							
Supervisor					REGION NO.	STATE	FED. AID. PROJ. NO.	SHEET NO.	TOTAL SHEETS
Designed By	S. BENSON				10	WASH.			
Checked By	J. MERTH				JOB NUMBER				
Detailed By	C.D. CLARK				22C533				
Bridge Projects Engr.	A. AMOS								
Prelim. Plan By									
Architect/Specialist		DATE	REVISION	BY	APP'D				

SHANE L. BROWN, STATE OF WASHINGTON, 49149, STRUCTURAL ENGINEER, PROFESSIONAL ENGINEER
SEE SHEET CT1
DATE

BRIDGE AND STRUCTURES OFFICE

Washington State Department of Transportation

SR305
SAM SNYDER CREEK
REMOVE FISH BARRIER

PEDESTRIAN BARRIER DETAILS 3 OF 3

BRIDGE SHEET NO. BG45

SHEET 165 OF 186 SHEETS

pw:\\HQOLYMAPPPW03P.WSDOT.LOC:WSDOT\Documents_HQ\Fish Passage\ORproj\30518.92_SamSnyderCreek\Design_CAD_Sheets\3390-BridgeStrPlan\XL6050_PB_BG_SAM_PED3.dgn
SR 305 FILE NO. SHEET BG45
3/23/2023 12:19:16 PM

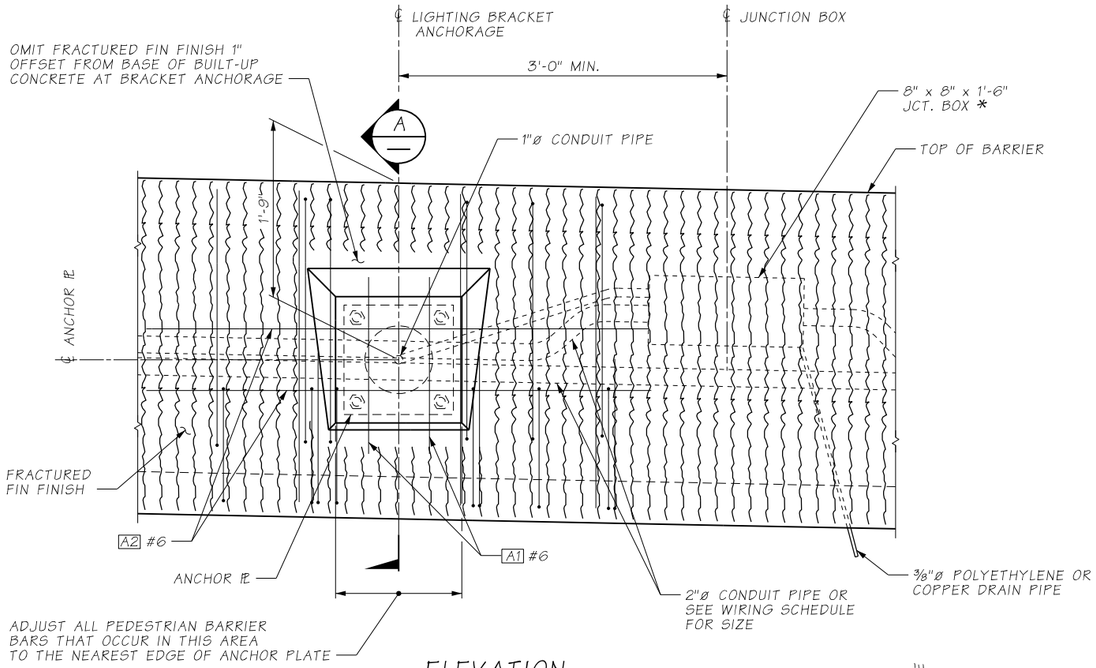

ELEVATION

LUMINAIRE LOCATED AT ML LINE STA.6021+53.08 (OFFSET LT.)

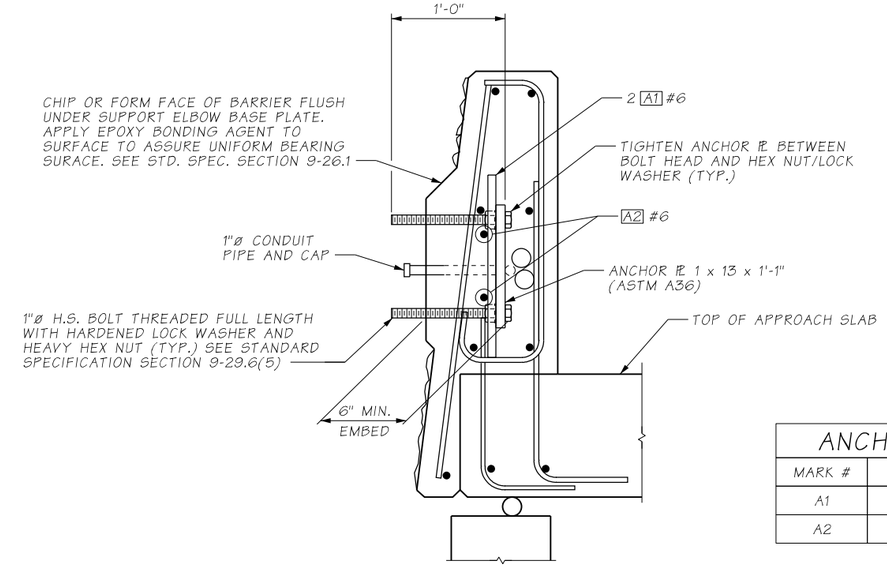

SECTION A

SEE PEDESTRIAN BARRIER SHEETS FOR INFORMATION NOT SHOWN.

ANCHORAGE BARLIST			
MARK #	SIZE	LENGTH	BEND TYPE
A1	6	1'-9"	STRAIGHT
A2	6	5'-0"	STRAIGHT

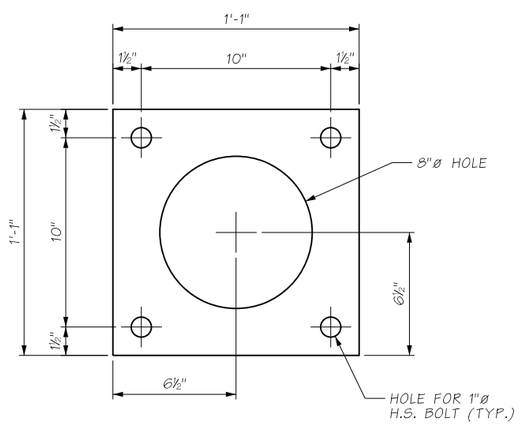

ANCHOR PLATE

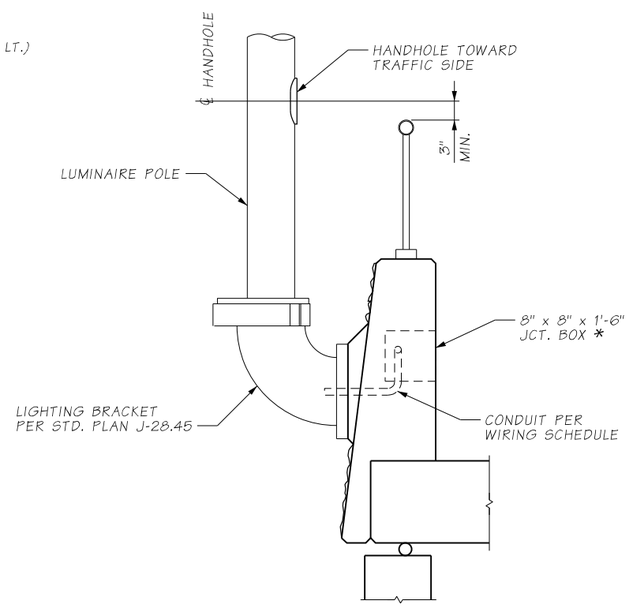

ELEVATION PROFILE LUMINAIRE SUPPORT

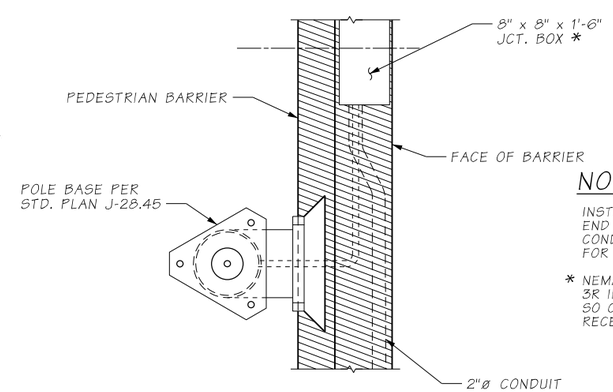

PLAN

NOTES:

INSTALL ALL CONDUIT RUNS TO DRAIN TO A BRIDGE END OR PROVIDE DRAIN AT ALL LOW POINTS WITHIN CONDUIT RUN. SEE "PEDESTRIAN BARRIER SHEETS" FOR BARRIER DIMENSIONS.

* NEMA 4X IN STATIONARY FORM BARRIER, OR NEMA 3R IN SLIP FORM BARRIER. MOUNT JUNCTION BOX SO COVER IS FLUSH WITH BARRIER, CAN BE RECESSED UP TO 1/8".

pw:\\HQOLYMAPPPW03P.WSDOT.LOC:WSDOT\Documents_HQ\Fish Passage\ORproj\305\8.92_SamSnyderCreek\Design_CAD_Sheets\390-BridgeStrPlan\XL6050_BP_BG_SAM_TB.dgn
SR 305 FILE NO. SHEET BG46

Bridge Design Engr.	A. LELAND	c:\users\schicvin\pw_wsdot\d0335751\XL6050_PS_BG_SAM_LUM.dgn							
Supervisor					REGION NO.	STATE	FED. AID. PROJ. NO.	SHEET NO.	TOTAL SHEETS
Designed By	N. CABLE				10	WASH.			
Checked By	J. MERTH				JOB NUMBER				
Detailed By	V.B. SCHICCHI				22C533				
Bridge Projects Engr.	A. AMOS								
Prelim. Plan By									
Architect/Specialist		DATE	REVISION	BY	APP'D				

3/23/2023 12:19:45 PM

SHANE L. BROWN, STATE OF WASHINGTON, 49140, STRUCTURAL ENGINEER, PROFESSIONAL ENGINEER
SEE SHEET CT1 DATE

BRIDGE AND STRUCTURES OFFICE

Washington State Department of Transportation

SR305
SAM SNYDER CREEK
REMOVE FISH BARRIER

LUMINAIRE DETAILS

BRIDGE SHEET NO. BG46

SHEET 166 OF 186 SHEETS

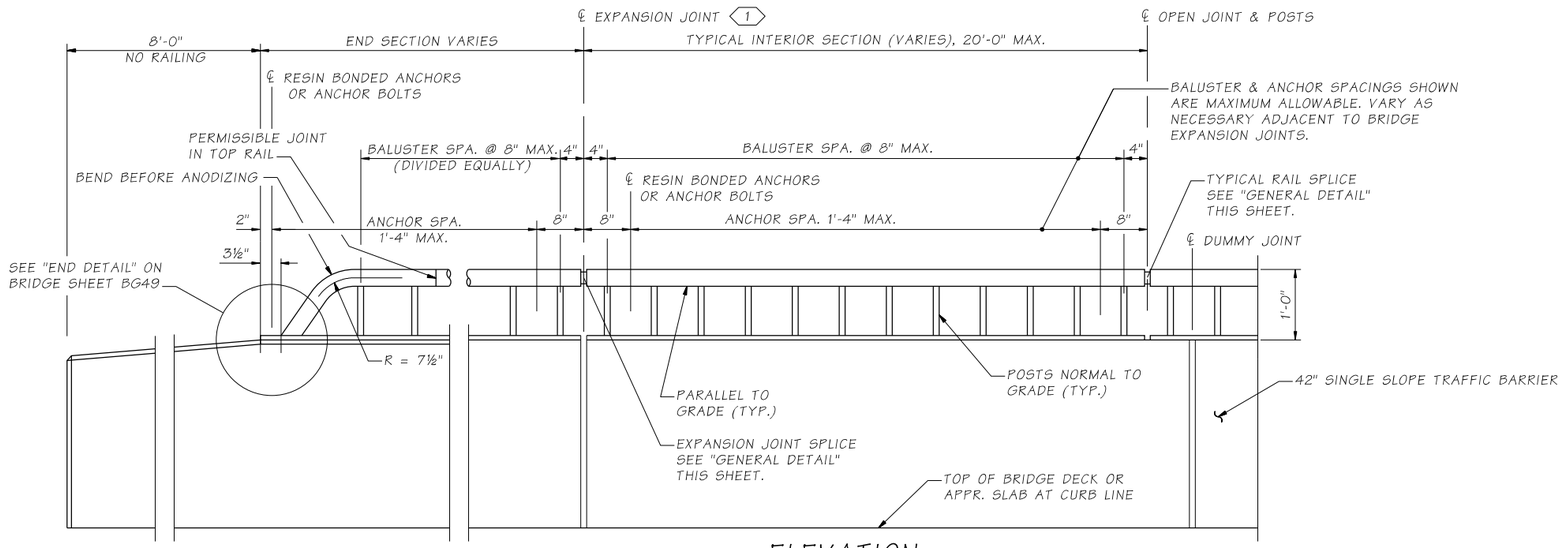

ELEVATION

BALUSTER AND GUARDRAIL SECTION
ATTACHMENT DETAILS NOT SHOWN.

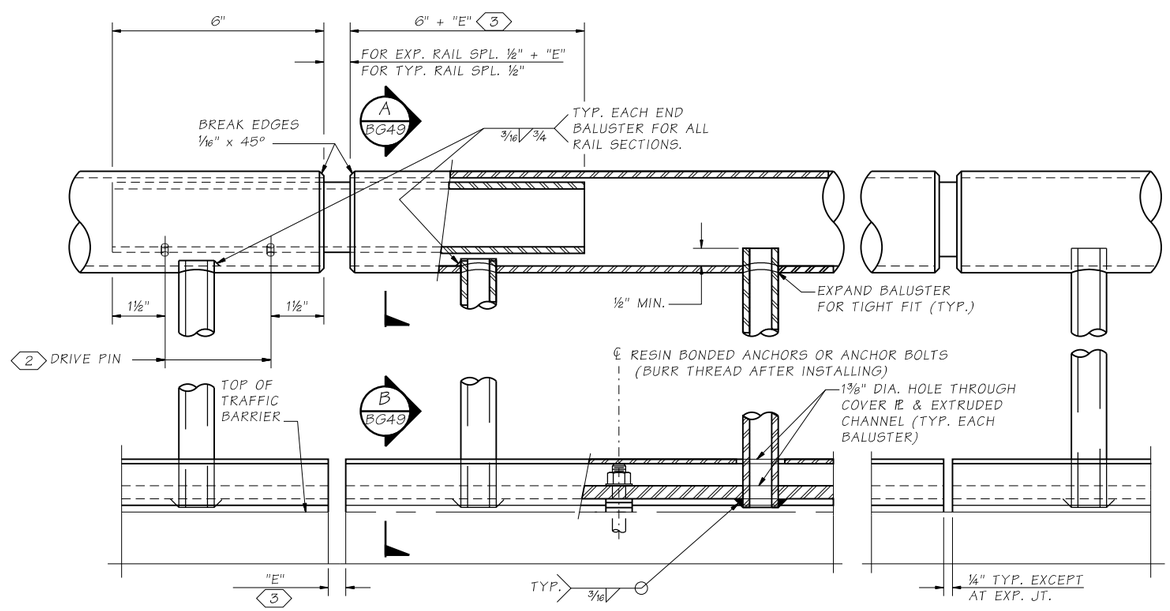

GENERAL DETAIL

RAILING NOTES:

1. PIPE RAILING, PIPE RAILING SPLICES, COVER PLATES AND BOTTOM EXTRUDED CHANNELS SHALL BE BENT TO THE HORIZONTAL CURVE WHERE THE RADIUS OF CURVATURE IS LESS THAN 200'. THESE ITEMS MAY BE HEATED TO NOT MORE THAN 400°F FOR A PERIOD NOT TO EXCEED 30 MINUTES TO FACILITATE FORMING OR BENDING TO HORIZONTAL CURVATURE.
2. SHOP DRAWINGS OF RAILING SHALL BE SUBMITTED AS A TYPE 2 WORKING DRAWING SHOWING COMPLETE DIMENSIONS AND DETAILS OF FABRICATION AND INCLUDING AN ERECTION DIAGRAM. MATERIAL SPECIFICATIONS SHALL BE PROVIDED IN THE SHOP DRAWINGS FOR ALL COMPONENTS.
3. CUTTING SHALL BE DONE BY SAWING OR MILLING AND ALL CUTS SHALL BE TRUE AND SMOOTH. FLAME CUTTING WILL NOT BE PERMITTED.
4. WELDING OF ALUMINUM SHALL CONFORM TO STD. SPEC. SECTION 9-28.14(3).
5. ALL ALUMINUM PARTS SHALL BE GIVEN A CLEAR ANODIC COATING OF AT LEAST 0.0006" THICK AND SEALED TO MEET THE REQUIREMENTS OF ASTM B 580 WITH A UNIFORM FINISH.
6. PIPE RAILING, PIPE BALUSTERS AND PIPE RAILING SPLICES SHALL BE ADEQUATELY WRAPPED TO INSURE SURFACE PROTECTION DURING HANDLING AND TRANSPORTATION TO THE JOB SITE.

NOTES:

1. PROVIDE EXPANSION RAIL SPLICE AT TRAFFIC BARRIER EXPANSION JOINTS. RAIL SPLICE JOINTS ARE NOT REQUIRED AT TRAFFIC BARRIER DUMMY JOINTS.
2. LOCATE ON OPPOSITE SIDE OF TRAFFIC. DRIVE PINS SHALL BE DRIVEN FLUSH WITH THE OUTSIDE FACE OF THE RAILING.
3. "E" DIMENSION SHALL BE EQUAL TO OPENING OF TRAFFIC BARRIER EXPANSION JOINTS.

Bridge Design Engr.	A. LELAND	c:\users\schicvin\pw_wsdot\d0335751\XL6050_PS_BG_SAM_BR1.dgn			REGION NO.	STATE	FED. AID. PROJ. NO.	SHEET NO.	TOTAL SHEETS
Supervisor					10	WASH.			
Designed By	S. BENSON				JOB NUMBER				
Checked By	J. MERTH				22C533				
Detailed By	C.D. CLARK								
Bridge Projects Engr.	A. AMOS								
Prelim. Plan By									
Architect/Specialist		DATE	REVISION	BY	APP'D				

STATE OF WASHINGTON SHANE L. BROWN 49149 STRUCTURAL ENGINEER PROFESSIONAL ENGINEER
SEE SHEET CT1
DATE

BRIDGE AND STRUCTURES OFFICE

Washington State Department of Transportation

SR305
SAM SNYDER CREEK
REMOVE FISH BARRIER

BRIDGE RAILING TYPE BP-12

BRIDGE SHEET NO. BG47

SHEET 167 OF 186 SHEETS

pw:\\HQOLYMAPPPW03P.WSDOT.LOC:WSDOTDocuments_HQ\Fish Passage\ORproj\30518.92_SamSnyderCreek\Design_CAD_Sheets\390-BridgeStrPlan\XL6050_BB_BG_SAM_BR1.dgn
SR 305 FILE NO. SHEET BG47

3/23/2023 12:20:10 PM

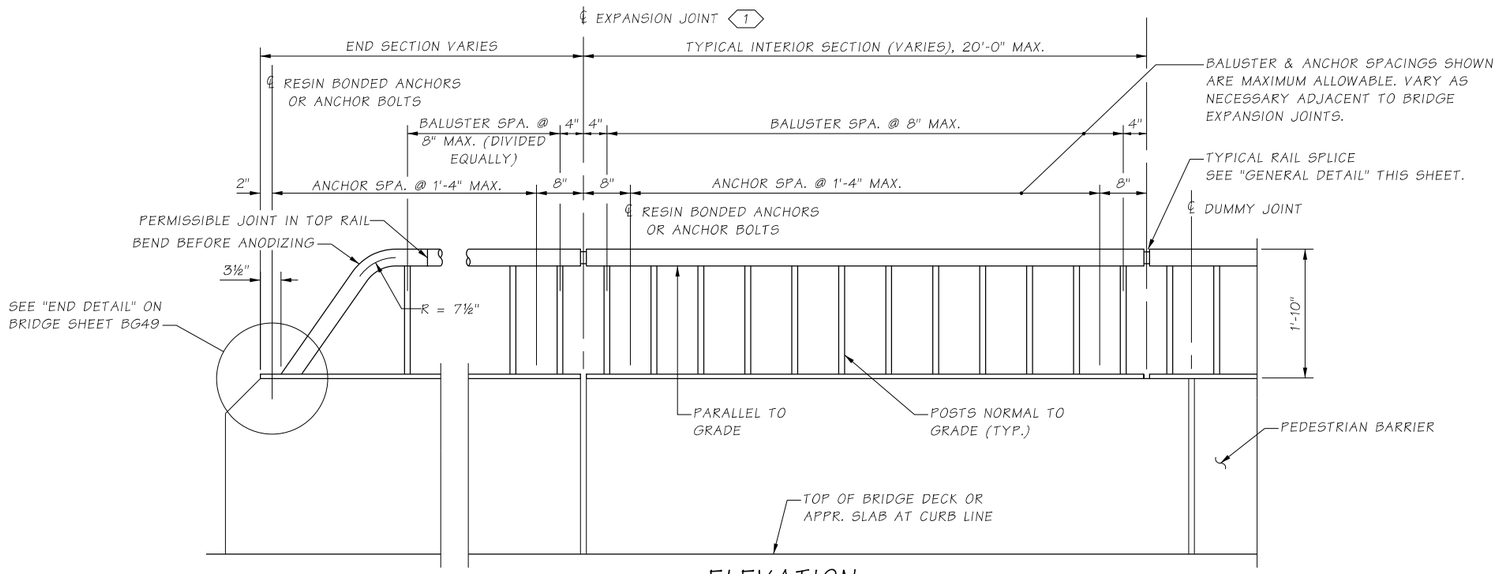

ELEVATION

BALUSTER AND GUARDRAIL SECTION ATTACHMENT DETAILS NOT SHOWN.

NOTES

1. PIPE RAILING, PIPE RAILING SPLICES, COVER PLATES AND BOTTOM EXTRUDED CHANNELS SHALL BE BENT TO THE HORIZONTAL CURVE WHERE THE RADIUS OF CURVATURE IS LESS THAN 200'. THESE ITEMS MAY BE HEATED TO NOT MORE THAN 400°F FOR A PERIOD NOT TO EXCEED 30 MINUTES TO FACILITATE FORMING OR BENDING TO HORIZONTAL CURVATURE.
2. SHOP DRAWINGS OF RAILING SHALL BE SUBMITTED AS A TYPE 2 WORKING DRAWING SHOWING COMPLETE DIMENSIONS AND DETAILS OF FABRICATION AND INCLUDING AN ERECTION DIAGRAM. MATERIAL SPECIFICATIONS SHALL BE PROVIDED IN THE SHOP DRAWINGS FOR ALL COMPONENTS.
3. CUTTING SHALL BE DONE BY SAWING OR MILLING AND ALL CUTS SHALL BE TRUE AND SMOOTH. FLAME CUTTING WILL NOT BE PERMITTED.
4. WELDING OF ALUMINUM SHALL CONFORM TO STD. SPEC. SECTION 9-28.14(3).
5. ALL ALUMINUM PARTS SHALL BE GIVEN A CLEAR ANODIC COATING OF AT LEAST 0.0006" THICK AND SEALED TO MEET THE REQUIREMENTS OF ASTM B 580 WITH A UNIFORM FINISH.
6. PIPE RAILING, PIPE BALUSTERS AND PIPE RAILING SPLICES SHALL BE ADEQUATELY WRAPPED TO INSURE SURFACE PROTECTION DURING HANDLING AND TRANSPORTATION TO THE JOB SITE.

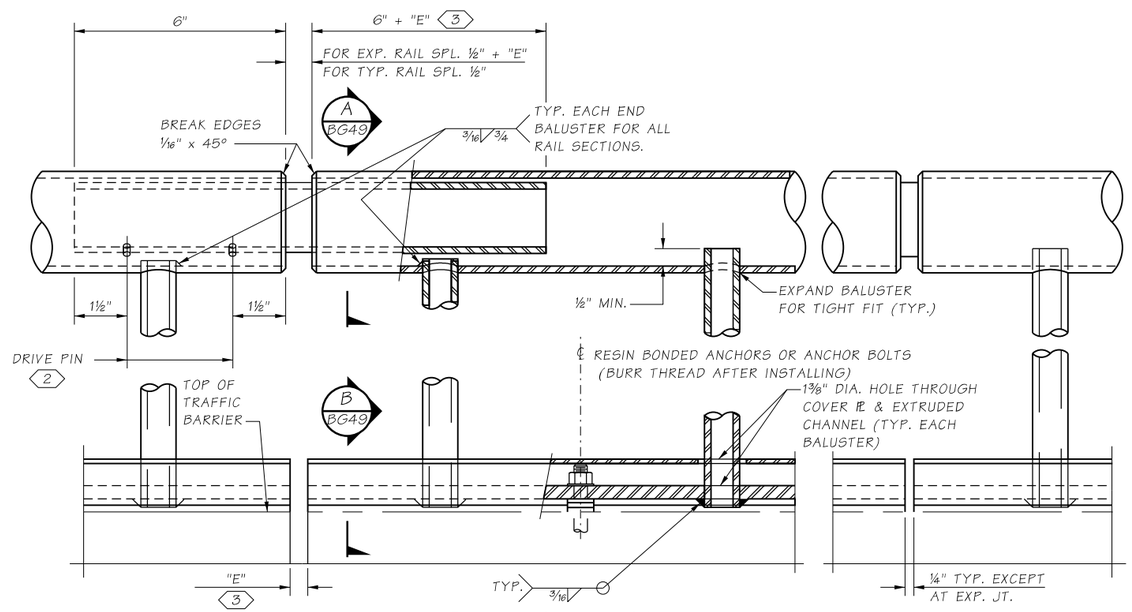

GENERAL DETAIL

NOTES:

1. PROVIDE EXPANSION RAIL SPLICE AT TRAFFIC BARRIER EXPANSION JOINTS. RAIL SPLICE JOINTS ARE NOT REQUIRED AT TRAFFIC BARRIER DUMMY JOINTS.
2. LOCATE ON OPPOSITE SIDE OF TRAFFIC. DRIVE PINS SHALL BE DRIVEN FLUSH WITH THE OUTSIDE FACE OF THE RAILING.
3. "E" DIMENSION SHALL BE EQUAL TO OPENING OF TRAFFIC BARRIER EXPANSION JOINTS.

Bridge Design Engr.	A. LELAND	c:\users\schicvin\pw_wsdot\d0335751\XL6050_PS_BG_SAM_BR2.dgn							
Supervisor					REGION NO.	STATE	FED. AID. PROJ. NO.	SHEET NO.	TOTAL SHEETS
Designed By	S. BENSON				10	WASH.			
Checked By	J. MERTH				JOB NUMBER				
Detailed By	C.D. CLARK				22C533				
Bridge Projects Engr.	A. AMOS								
Prelim. Plan By									
Architect/Specialist		DATE	REVISION	BY	APP'D				

SHANE L. BROWN — STATE OF WASHINGTON — 49149 — STRUCTURAL ENGINEER — PROFESSIONAL ENGINEER
SEE SHEET CT1
DATE

BRIDGE AND STRUCTURES OFFICE

Washington State Department of Transportation

SR305
SAM SNYDER CREEK
REMOVE FISH BARRIER

BRIDGE RAILING TYPE BP-22

BRIDGE SHEET NO. BG48

SHEET 168 OF 186 SHEETS

pw:\\HQOLYMAPPPW03P.WSDOT.LOC:WSDOT\Documents_HQ\Fish Passage\ORproj\30518.92_SamSnyderCreek\Design_CADL_Sheets\390-BridgeStrPlan\XL6050_BB_BG_SAM_BR2.dgn
SR 305 FILE NO. SHEET BG48

3/23/2023 12:20:34 PM

DRIVE PIN DETAIL

SLOTTED TYPE SPRING PIN (ANSI B18.8.2)

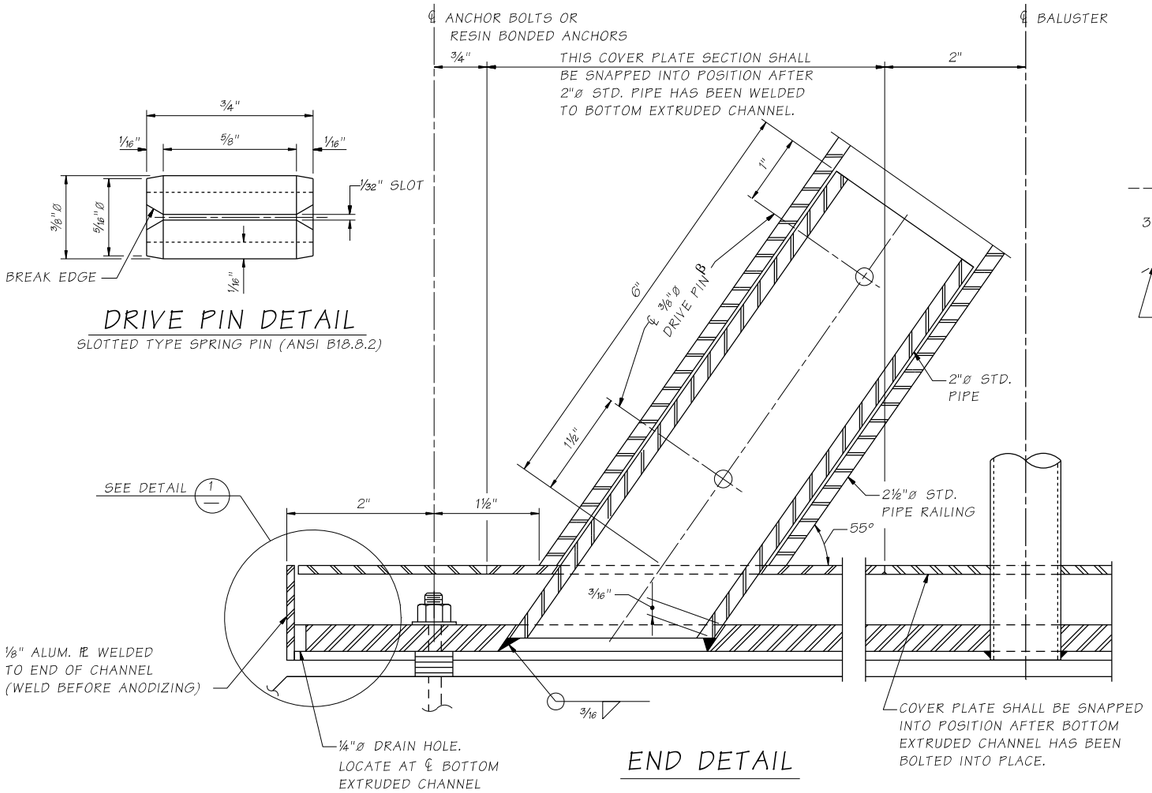

END DETAIL

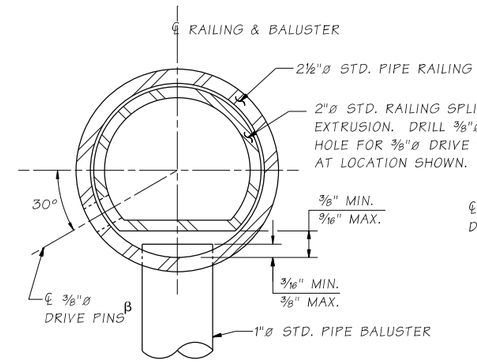

SECTION A

OPTION #1

BG47 & BG48

β LOCATE ON OPPOSITE SIDE OF TRAFFIC. DRIVE PINS SHALL BE DRIVEN FLUSH WITH THE OUTSIDE FACE OF THE RAILING.

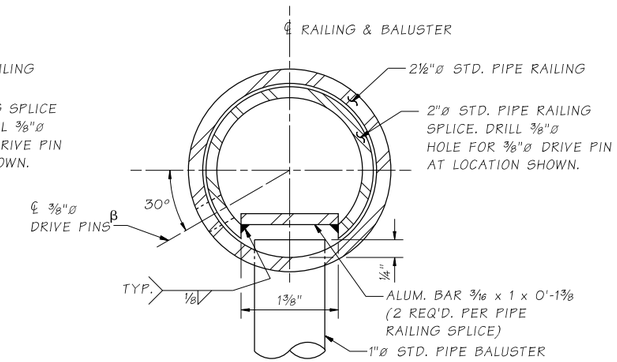

SECTION A

OPTION #2

BG47 & BG48

β LOCATE ON OPPOSITE SIDE OF TRAFFIC. DRIVE PINS SHALL BE DRIVEN FLUSH WITH THE OUTSIDE FACE OF THE RAILING.

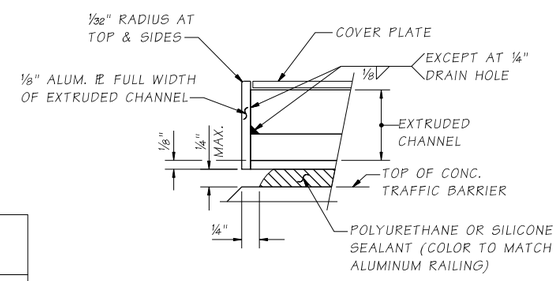

DETAIL 1

DRAIN HOLES NOT SHOWN

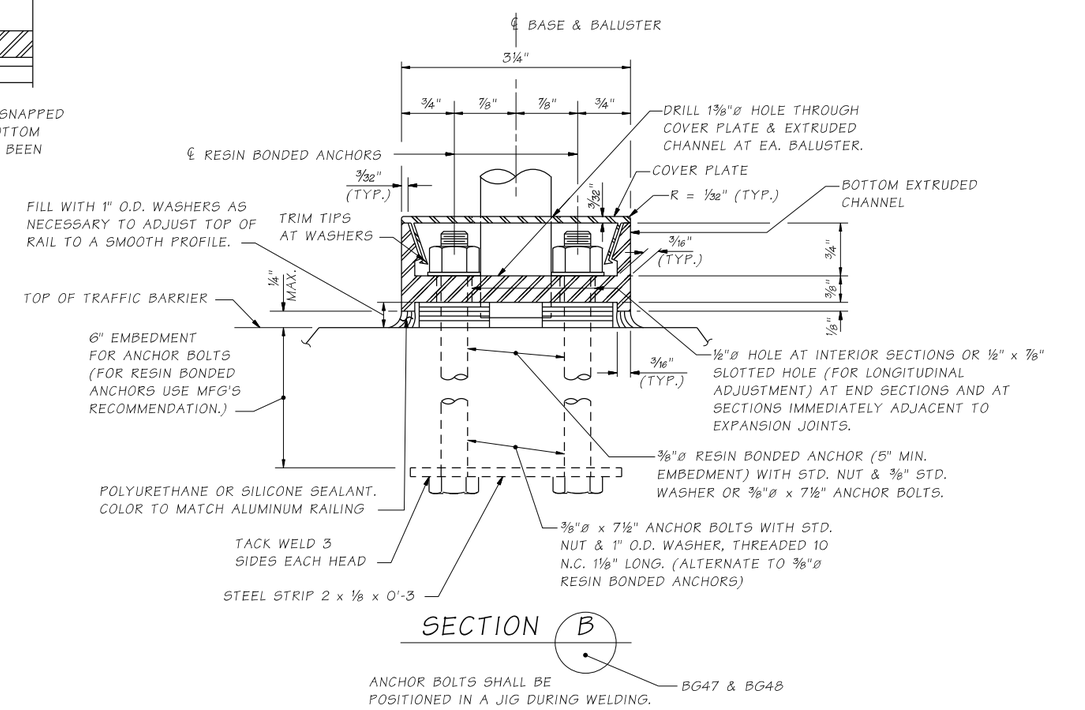

SECTION B

ANCHOR BOLTS SHALL BE POSITIONED IN A JIG DURING WELDING.

BG47 & BG48

MATERIAL SPECIFICATION TABLE

MAT'L	PART	MATERIAL SPECIFICATION
ALUMINUM	RAILS & BALUSTERS	ASTM B221-6005-T5, 6005A-T5 OR ASTM B241-6061-T6
ALUMINUM	EXTRUDED CHANNELS, COVER PLATES & BAR	ASTM B221-6005-T5, 6005A-T5 OR 6063-T6
STEEL	STRIP	ASTM A36
STEEL	ANCHOR BOLTS, NUTS & WASHERS	STANDARD SPECIFICATION SECTION 9-06.5(4) GR. 36 (GALVANIZE IN ACCORDANCE WITH AASHTO SPECIFICATION M 232)
STEEL	DRIVE PINS	ASTM A276 OR A240 TYPE 302 STAINLESS STEEL

Bridge Design Engr.	A. LELAND	c:\users\schicvin\pw_wsdot\d0335751\XL6050_PS_BG_SAM_BR3.dgn							
Supervisor					REGION NO.	STATE	FED. AID. PROJ. NO.	SHEET NO.	TOTAL SHEETS
Designed By	S. BENSON				10	WASH.			
Checked By	J. MERTH				JOB NUMBER 22C533				
Detailed By	C.D. CLARK								
Bridge Projects Engr.	A. AMOS								
Prelim. Plan By									
Architect/Specialist		DATE	REVISION	BY	APP'D				

SHANE L. BROWN — STATE OF WASHINGTON — 49149 — STRUCTURAL ENGINEER — PROFESSIONAL ENGINEER

SEE SHEET CT1 DATE

BRIDGE AND STRUCTURES OFFICE

Washington State Department of Transportation

SR305
SAM SNYDER CREEK
REMOVE FISH BARRIER

BRIDGE RAILING DETAILS

BRIDGE SHEET NO. BG49

SHEET 169 OF 186 SHEETS

pw:\\HQOLYMAPPPW03P.WSDOT.LOC:WSDOT\Documents_HQ\Fish Passage\ORproj\30518.92_SamSnyderCreek\Design_CAD_Sheets\390-BridgeStrPlan\XL6050_BB_BG_SAM_BR3.dgn
SR 305 FILE NO. SHEET BG49
3/23/2023 12:20:58 PM

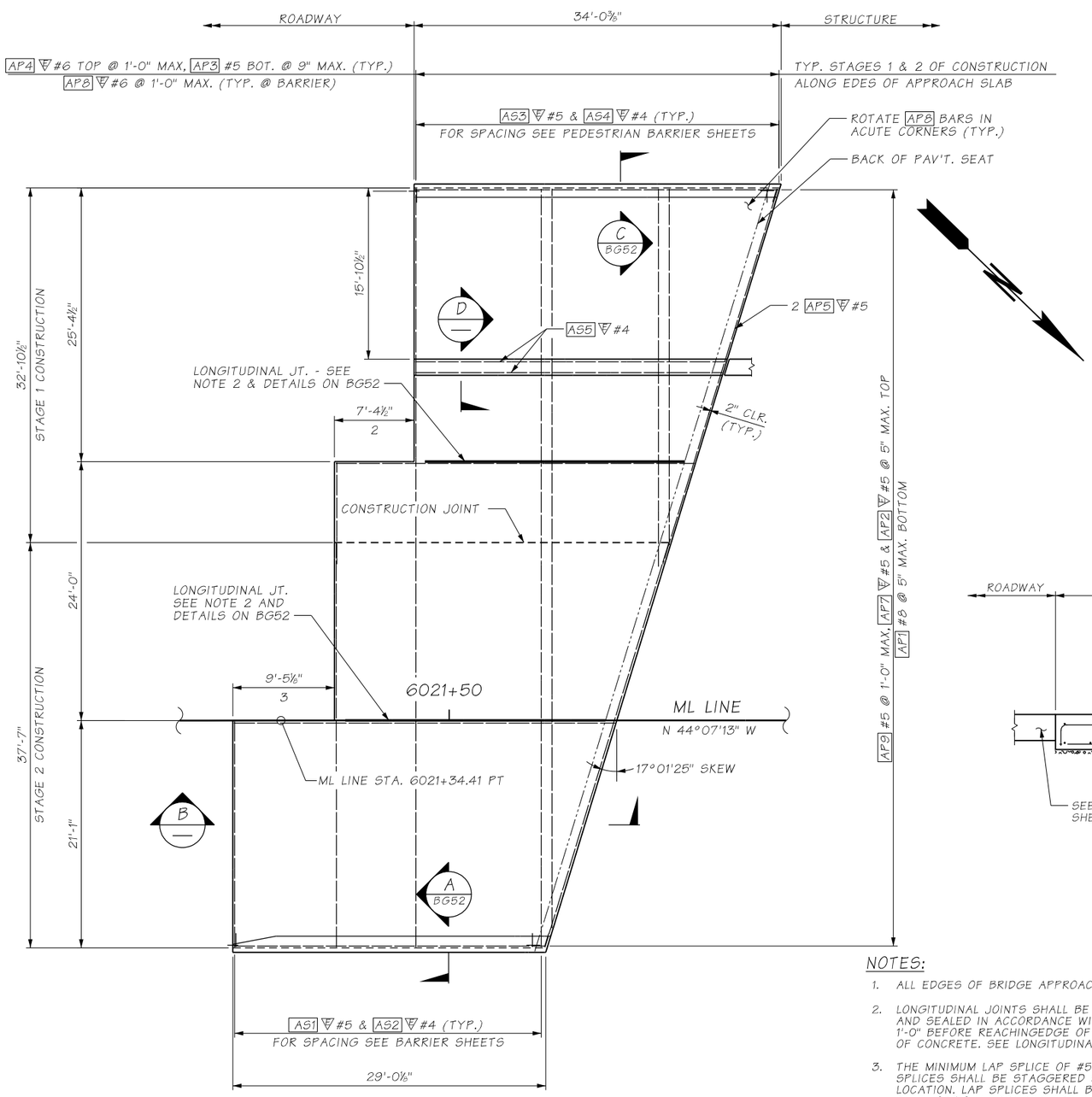

PLAN

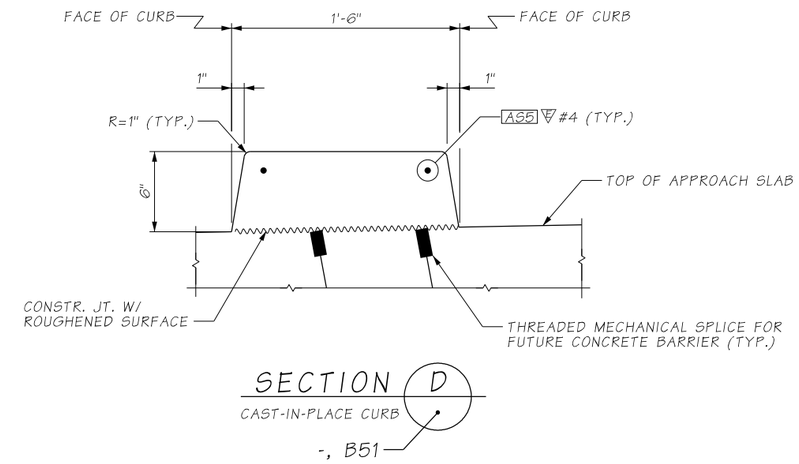

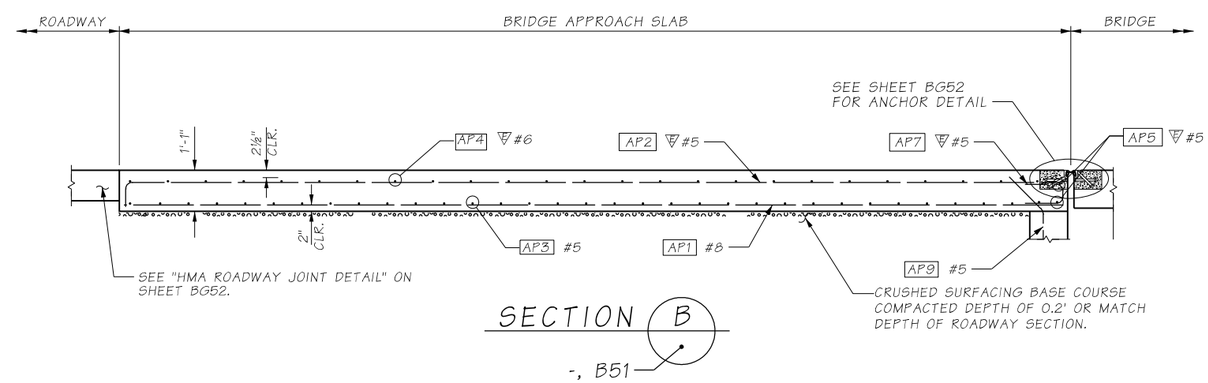

NOTES:

1. ALL EDGES OF BRIDGE APPROACH SLAB SHALL HAVE ½" RADIUS EXCEPT AT LONGITUDINAL JOINTS.
2. LONGITUDINAL JOINTS SHALL BE A SAWCUT JOINT PLACED ON LANE LINES AND SHALL BE CONSTRUCTED AND SEALED IN ACCORDANCE WITH STD. SPEC. SECTION 5-05.3(8). SAWCUT JOINTS SHALL TERMINATE 1'-0" BEFORE REACHINGEDGE OF SLAB AND MUST BE SAW CUT AS SOON AS POSSIBLE AFTER PLACEMENT OF CONCRETE. SEE LONGITUDINAL JOINT DETAIL ON BRIDGE APPROACH SLAB DETAILS.
3. THE MINIMUM LAP SPLICE OF #5 IS 2'-0", #5 IS 2'-6", #6 IS 3'-0",AND #8 IS 3'-3". ALL LAP SPLICES SHALL BE STAGGERED SO THAT NO MORE THAN 50% OF REBAR IS SPLICED AT THE SAME LOCATION. LAP SPLICES SHALL BE LOCATED WITHIN THE MIDDLE HALF OF THE BRIDGE APPROACH SLAB. OPTIONAL SPLICES ARE ALLOWED FOR AP4 #6. AP4 HOOKS ARE ONLY REQUIRED AT THE TRAFFIC BARRIER EDGES.
4. FOR TRAFFIC BARRIER DETAILS, INCLUDING ANY BRIDGE APPROACH SLAB BLOCKOUT INFORMATION SEE TRAFFIC BARRIER SHEETS.

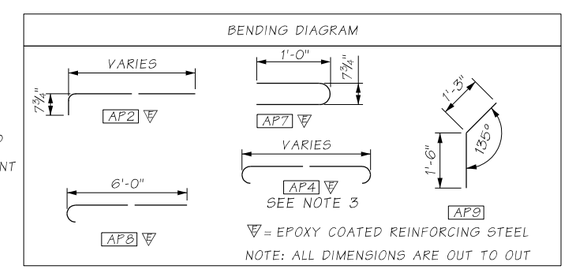

Bridge Design Engr.	A. LELAND	c:\users\schicvin\pw_wsdot\d0335751\XL6050_PS_BG_SAM_AS_1.dgn						
Supervisor					REGION NO.	STATE	FED. AID. PROJ. NO.	SHEET NO. / TOTAL SHEETS
Designed By	S. BENSON				10	WASH.		
Checked By	J. MERTH				JOB NUMBER			
Detailed By	V.B. SCHICCHI				22C533			
Bridge Projects Engr.	A. AMOS							
Prelim. Plan By								
Architect/Specialist		DATE	REVISION	BY	APP'D			

SHANE L. BROWN — STATE OF WASHINGTON — 49149 — STRUCTURAL ENGINEER — PROFESSIONAL ENGINEER

SEE SHEET CT1
DATE

BRIDGE AND STRUCTURES OFFICE

Washington State Department of Transportation

SR305
SAM SNYDER CREEK
REMOVE FISH BARRIER

PIER 1 APPROACH SLAB

BRIDGE SHEET NO. BG50

SHEET 170 OF 186 SHEETS

pw:\\HQOLYMAPPPW03P.WSDOT.LOC:WSDOT\Documents_HQ\Fish Passage\ORproj\30518.92_SamSnyderCreek\Design_CAD_Sheets\390-BridgeStrPlan\XL6050_PS_BG_SAM_AS.dgn
SR 305 FILE NO. SHEET BG50
3/23/2023 12:21:23 PM

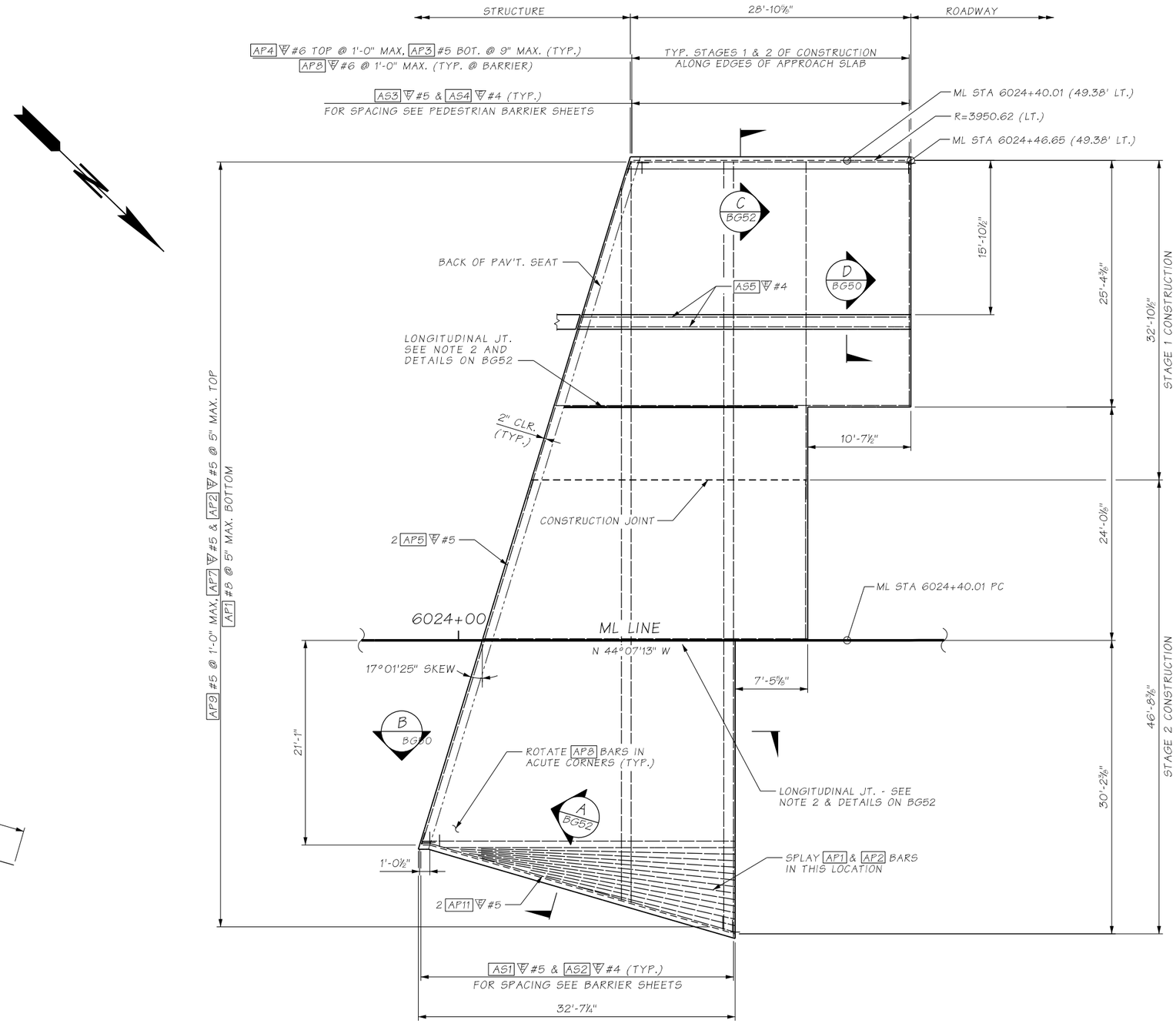

PLAN

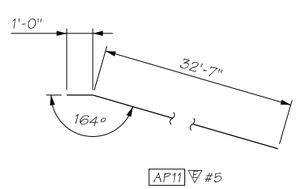

NOTES:

FOR NOTES AND BENDING DIAGRAM SEE SHEET BG49.

Bridge Design Engr.	A. LELAND	c:\users\schicvin\pw_wsdot\d0335751\XL6050_PS_BG_SAM_AS_2.dgn							
Supervisor					REGION NO.	STATE	FED. AID. PROJ. NO.	SHEET NO.	TOTAL SHEETS
Designed By	S. BENSON				10	WASH.			
Checked By	J. MERTH				JOB NUMBER				
Detailed By	V.B. SCHICCHI				22C533				
Bridge Projects Engr.	A. AMOS								
Prelim. Plan By									
Architect/Specialist		DATE	REVISION	BY	APP'D				

3/23/2023 12:21:52 PM

SHANE L. BROWN STATE OF WASHINGTON 49149 STRUCTURAL ENGINEER PROFESSIONAL ENGINEER

SEE SHEET CT1 DATE

BRIDGE AND STRUCTURES OFFICE

Washington State Department of Transportation

SR305
SAM SNYDER CREEK
REMOVE FISH BARRIER

PIER 2 APPROACH SLAB

BRIDGE SHEET NO. BG51

SHEET 171 OF 186 SHEETS

pw:\\HQOLYMAPPPW03P.WSDOT.LOC:WSDOT\Documents_HQ\Fish Passage\ORproj\30518.92_SamSnyderCreek\Design_CAD_Sheets\390-BridgeStrPlan\XL6050_BB_BG_SAM_AB.dgn

SR 305 FILE NO. SHEET BG51

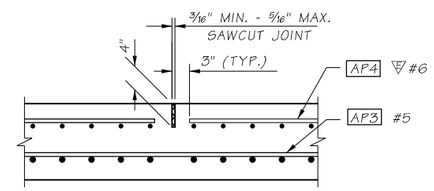

LONGITUDINAL JOINT DETAIL

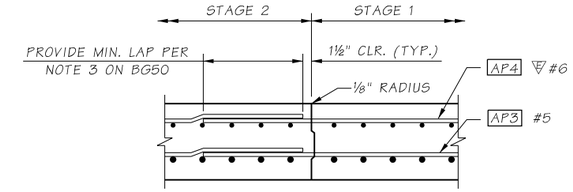

LONGITUDINAL CONSTRUCTION JOINT DETAIL

EDGE PRECEDING PLACEMENT ONLY WITH ⅛" RADIUS.

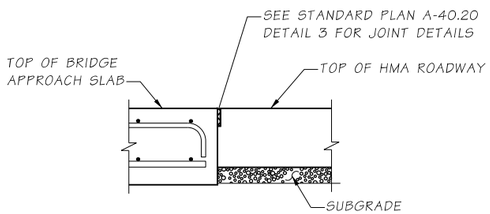

HMA ROADWAY JOINT DETAIL

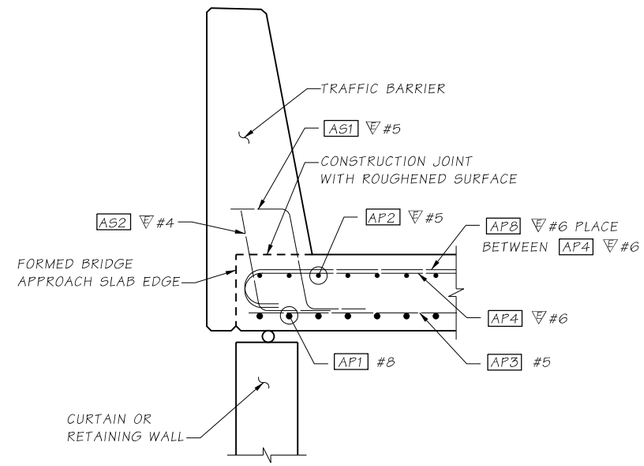

SECTION A

BG50 & BG51

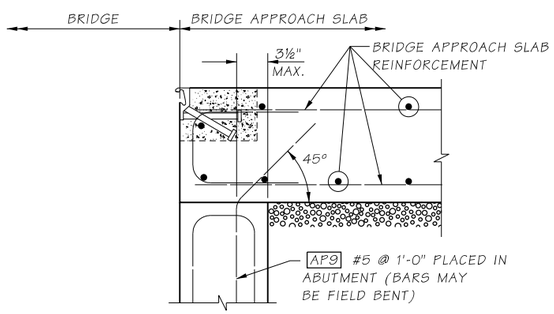

ANCHOR DETAIL

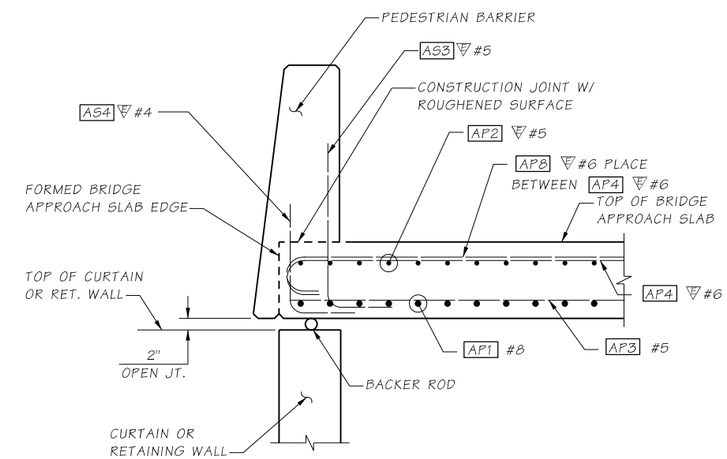

SECTION C

BG50 & BG51

pw:\\WQOLYMAPPPW03P.WSDOT.LOC:WSDOT\Documents_HQ\Fish Passage\ORproj\30518.92_SamSnyderCreek\Design_CAD_Sheets\390-BridgeStrPlan\XL6050_BB_BG_SAM_AB.dgn
SR 305 FILE NO. SHEET BG52

Bridge Design Engr.	A. LELAND	c:\users\schicvin\pw_wsdot\d0335751\XL6050_PS_BG_SAM_AS_3.dgn							
Supervisor					REGION NO.	STATE	FED. AID. PROJ. NO.	SHEET NO.	TOTAL SHEETS
Designed By	S. BENSON				10	WASH.			
Checked By	J. MERTH				JOB NUMBER				
Detailed By	C.D. CLARK				22C533				
Bridge Projects Engr.	A. AMOS								
Prelim. Plan By									
Architect/Specialist		DATE	REVISION	BY	APP'D				

3/23/2023 12:22:13 PM

SHANE L. BROWN — STATE OF WASHINGTON — 49140 — STRUCTURAL ENGINEER — PROFESSIONAL ENGINEER

SEE SHEET CT1 DATE

BRIDGE AND STRUCTURES OFFICE

Washington State Department of Transportation

SR305
SAM SNYDER CREEK
REMOVE FISH BARRIER

APPROACH SLAB DETAILS

BRIDGE SHEET NO. BG52

SHEET 172 OF 186 SHEETS

S = Bar is included in substructure quantities.
L = Lump sum quantity.
T = Transverse or S = Seismic
E = Bar is to be epoxy coated.
V = Bar dimesnions vary between dimensions shown on this line and the following line.

MARK NO.	LOCATION	SIZE	NO. REQ'D.	BEND TYPE	TIE OR STIR.	LUMP SUM	SUBSTR.	EPOXY COAT	VARIES	NO. EACH	U Ft.	U In.	W Ft.	W In.	X Ft.	X In.	Y Ft.	Y In.	Z Ft.	Z In.	θ_1 Deg.	θ_2 Deg.	LENGTH Ft.	LENGTH In.	WEIGHT Lbs.
	SUBSTRUCTURE																								
	SHAFT CAP PIER 1 STAGE 1																								
100	TOP & BOTTOM MAT	11	26	50		S					37	4.0											37	4	5157
101	N.F., F.F. HORIZONTAL	9	8	50		S					37	4.0											37	4	1015
102	STIRRUPS	6	100	72	T	S					6	0.0	4	7.0	4	7.0							16	2	2423
103	TOP TIES	6	50	58	T	S					8	8.0											10	2	762
120	END CAP	6	9	74		S					4	6.0	2	6.0	2	6.0							9	2	124
121	END CAP	6	5	74		S					8	6.0	2	6.0	2	6.0							13	2	99
	PIER WALL 1 STAGE 1																								
104	HORIZONTAL N.F./F.F	6	33	50		S					36	5.0											36	5	1805
105	VERTICAL N.F. & F.F	8	146	54	T	S			V	2	15	2.0											16	3	6464
											15	9.0											16	10	
106	TOP FACE TIES	6	73	74	T	S					6	2.0	4	0.0	1	0.0							10	10	1190
107	TOP FACE HORIZONTAL	6	8	50		S					36	5.0											36	5	438
108	VERTICAL F.F	7	71	80	T	S					11	1.0	4	0.0	0	0.0	0	3.5	0	0.0	135	0	15	1	2183
109	VERTICAL N.F	7	71	50	T	S					11	10.0											11	10	1717
110	HORIZONTAL N.F./F.F	5	28	50	T	S					36	5.0											36	5	1064
111	TOP TIE	5	71	56	T	S					0	9.0											1	6	109
115	WALL TIES	5	136	58	T	S					5	3.0											6	1	862
116	TIES	4	124	58	T	S					0	9.0											1	5	117
117	END BARS	6	15	80	T	S					5	2.0	2	6.0	2	6.0	0	3.0	0	3.0	107	73	9	10	221
	SHAFT CAP PIER 1 STAGE 2																								
150	TOP & BOTTOM MAT	11	26	50		S					38	1.0											38	1	5261
151	N.F., F.F. HORIZONTAL	9	8	50		S					38	1.0											38	1	1036
152	STIRRUPS	6	102	72	T	S					6	0.0	4	7.0	4	7.0							16	2	2472
153	TOP TIES	6	50	58	T	S					8	8.0											10	2	762
170	END CAP	6	9	74		S					4	6.0	2	6.0	2	6.0							9	2	124
171	END CAP	6	5	74		S					8	6.0	2	6.0	2	6.0							13	2	99
	PIER WALL 1 STAGE 2																								
115	WALL TIES	5	111	58	T	S					5	3.0											6	1	703
116	TIES	4	126	58	T	S					0	9.0											1	5	119
154	HORIZONTAL N.F./F.F	6	33	50		S					37	2.0											37	2	1842
155	VERTICAL N.F. & F.F	8	148	54	T	S			V	1	13	9.0											14	10	6158
											15	2.0											16	3	
156	TOP FACE TIES	6	74	74	T	S					6	2.0	4	0.0	1	0.0							10	10	1206
157	TOP FACE HORIZONTAL	6	8	50		S					37	2.0											37	2	447
158	VERTICAL F.F	7	73	80	T	S					11	1.0	4	0.0	0	0.0	0	3.0	0	0.0	135	0	15	1	2245
159	VERTICAL N.F	7	73	50	T	S					11	10.0											11	10	1766
160	HORIZONTAL N.F./F.F	5	28	50	T	S					37	2.0											37	2	1085
161	TOP TIE	5	73	56	T	S					0	9.0											1	6	112
162	END BARS	6	15	80	T	S					5	2.0	2	6.0	2	6.0	0	3.0	0	3.0	107	73	9	10	221
	.....																								
	SHAFT CAP PIER 2 STAGE 1																								
200	TOP & BOTTOM MAT	11	26	50		S					37	4.0											37	4	5157
201	N.F., F.F. HORIZONTAL	9	8	50		S					37	4.0											37	4	1015
202	STIRRUPS	6	100	72	T	S					6	0.0	4	7.0	4	7.0							16	2	2423
203	TOP TIES	6	50	58	T	S					8	8.0											10	2	762
220	END CAP	6	9	74		S					4	6.0	2	6.0	2	6.0							9	2	124
221	END CAP	6	5	74		S					8	6.0	2	6.0	2	6.0							13	2	99
	PIER WALL 2 STAGE 1																								
204	HORIZONTAL N.F./F.F	6	30	50		S					36	5.0											36	5	1641
205	VERTICAL N.F. & F.F	8	146	54	T	S			V	2	15	8.0											16	9	6432
											15	1.0											16	2	
206	TOP FACE TIES	6	73	74	T	S					5	2.0	4	0.0	4	0.0							12	10	1409
207	TOP FACE HORIZONTAL	6	8	50		S					36	5.0											36	5	438
208	VERTICAL F.F	9	148	50	T	S					13	9.5											13	10	6659
210	HORIZONTAL N.F./F.F	5	28	56	T	S					36	5.0											37	2	1085
211	TOP TIE	5	74	56	T	S					0	9.0											1	6	109
215	WALL TIES	5	126	58	T	S					5	3.0											6	1	798
216	TIES	4	105	58	T	S					0	9.0											1	5	99
222	END BARS	6	14	80	T	S					5	2.0	2	6.0	2	6.0	0	3.0	0	3.0	107	73	9	10	206
	SHAFT CAP PIER 2 STAGE 2																								
250	TOP & BOTTOM MAT	11	26	50		S					38	1.0											38	1	5261
251	N.F., F.F. HORIZONTAL	9	8	50		S					38	1.0											38	1	1036
252	STIRRUPS	6	102	72	T	S					6	0.0	4	7.0	4	7.0							16	2	2472
253	TOP TIES	6	51	58	T	S					8	8.0											10	2	778
270	END CAP	6	9	74		S					4	6.0	2	6.0	2	6.0							9	2	124
271	END CAP	6	5	74		S					8	6.0	2	6.0	2	6.0							13	2	99
	PIER WALL 2 STAGE 2																								
215	WALL TIES	5	111	58	T	S					5	3.0											6	1	703
114	TIES	4	126	58	T	S					0	9.0											1	5	119
254	HORIZONTAL N.F./F.F	6	28	50		S					37	2.0											37	2	1563
255	VERTICAL N.F. & F.F	8	148	54	T	S			V	2	13	9.0											14	10	6158
											15	2.0											16	3	
256	TOP FACE TIES	6	74	74	T	S					5	2.0	4	0.0	4	0.0							12	10	1429
257	TOP FACE HORIZONTAL	6	8	50		S					37	2.0											37	2	447
258	VERTICAL F.F	9	152	50	T	S					12	0.0											12	0	5957
260	HORIZONTAL N.F./F.F	5	28	50	T	S					37	2.0											37	2	1085
261	TOP TIE	5	76	56	T	S					0	9.0											1	6	112
272	END BARS	6	12	80	T	S					5	2.0	2	6.0	2	6.0	0	3.0	0	3.0	107	73	9	10	177
	PIER 1 CURTAIN WALL																								
122	VERTICAL	5	6	50							19	6.5											19	6	122
123	VERTICAL	5	12	50							19	0.0											19	0	238
124	VERTICAL	5	6	50							11	9.0											11	9	74
125	FILLET HORIZONTAL	5	16	80							3	9.0	1	1.0	0	0.0	0	5.0	0	0.0	126	0	4	9	80
126	BOTTOM HORIZONTAL	5	16	50							10	9.0											10	9	179
127	BOTTOM HORIZONTAL	5	16	50							10	6.5											10	6	176
128	SEAT HORIZONTAL	5	13	50							10	9.0											10	9	146
129	SEAT HORIZONTAL FILLET	5	13	80							3	2.0	4	9.5	0	0.0	0	3.0	0	0.0	73	0	7	8	104
130	SEAT HORIZONTAL FILLET	5	13	80							3	2.0	6	4.5	0	0.0	0	3.0	0	0.0	107	0	9	5	128
131	TOP HORIZONTAL	5	2	50							5	8.0											5	8	12
132	VERTICAL DOWEL	5	6	50							4	6.0											4	6	28
190	BLOCKOUT	5	4	50							1	9.0											1	9	7
	PIER 1 CURTAIN WALL RT																								
142	VERTICAL	5	7	50							19	4.0											19	4	141

S = Bar is included in substructure quantities.
L = Lump sum quantity.
T = Transverse or S = Seismic
E = Bar is to be epoxy coated.
V = Bar dimesnions vary between dimensions shown on this line and the following line.

MARK NO.	LOCATION	SIZE	NO. REQ'D.	BEND TYPE	TIE OR STIR.	LUMP SUM	SUBSTR.	EPOXY COAT	VARIES	NO. EACH	U Ft.	U In.	W Ft.	W In.	X Ft.	X In.	Y Ft.	Y In.	Z Ft.	Z In.	θ_1 Deg.	θ_2 Deg.	LENGTH Ft.	LENGTH In.	WEIGHT Lbs.
143	VERTICAL	5	12	50							19	0.0											19	0	238
144	VERTICAL	5	6	50							11	7.0											11	7	72
145	FILLET HORIZONTAL	5	12	80							4	6.0	1	1.0	0	0.0	0	5.0	0	0.0	126	0	5	6	69
146	BOTTOM HORIZONTAL	5	14	50							10	9.0											10	9	157
147	BOTTOM HORIZONTAL	5	14	50							10	6.5											10	6	154
148	SEAT HORIZONTAL	5	13	50							10	9.0											10	9	146
149	SEAT HORIZONTAL	5	13	80							3	2.0	4	9.5	0	0.0	0	3.0	0	0.0	73	0	7	8	104
163	SEAT HORIZONTAL	5	13	80							3	2.0	6	4.5	0	0.0	0	3.0	0	0.0	107	0	9	5	128
164	TOP HORIZONTAL	5	2	50							5	8.0											5	8	12
165	VERTICAL DOWEL	5	7	50							4	6.0											4	6	33
190	BLOCKOUT	5	4	50							1	9.0											1	9	7
	PIER 2 CURTAIN WALL																								
172	VERTICAL	5	7	50							21	0.0											21	0	153
173	VERTICAL	5	12	50							20	6.0											20	6	257
174	VERTICAL	5	6	50							11	6.0											11	6	72
175	FILLET HORIZONTAL	5	16	80							5	4.0	1	2.0	0	0.0	0	5.0	0	0.0	126	0	6	5	108
176	BOTTOM HORIZONTAL	5	15	50							10	6.0											10	6	164
177	BOTTOM HORIZONTAL	5	15	50							10	10.0											10	10	169
178	SEAT HORIZONTAL	5	13	50							10	6.0											10	6	142
179	SEAT HORIZONTAL FILLET	5	13	80							3	2.0	5	5.0	0	0.0	0	3.0	0	0.0	73	0	8	4	113
180	SEAT HORIZONTAL FILLET	5	13	80							3	2.0	6	0.0	0	0.0	0	3.0	0	0.0	107	0	9	1	123
181	TOP HORIZONTAL	5	2	50							4	0.0											4	0	8
182	VERTICAL DOWEL	5	7	50							4	6.0											4	6	33
190	BLOCKOUT	5	4	50							1	9.0											1	9	7
	PIER 2 CURTAIN WALL RT																								
192	VERTICAL	5	7	50							19	2.5											19	2	140
193	VERTICAL	5	12	50							18	8.0											18	8	234
194	VERTICAL	5	7	50							11	4.0											11	4	83
195	FILLET HORIZONTAL	5	13	80							4	1.0	1	1.0	0	0.0	0	5.0	0	0.0	126	0	5	1	69
196	BOTTOM HORIZONTAL	5	13	80							6	7.0	5	3.0	0	0.0	0	2.5	0	0.0	164	0	11	10	160
197	BOTTOM HORIZONTAL	5	13	80							6	5.0	5	4.0	0	0.0	0	2.5	0	0.0	164	0	11	9	159
198	SEAT HORIZONTAL	5	13	80							6	7.0	5	4.0	0	0.0	0	2.5	0	0.0	164	0	11	11	161
199	SEAT HORIZONTAL FILLET	5	13	80							6	0.0	3	2.0	0	0.0	0	3.0	0	0.0	90	0	9	0	122
230	SEAT HORIZONTAL FILLET	5	13	80							6	4.0	3	2.0	0	0.0	0	2.5	0	0.0	107	0	9	5	128
231	TOP HORIZONTAL	5	2	50							4	3.0											4	3	9
232	VERTICAL DOWEL	5	6	50							4	6.0											4	6	28
190	BLOCKOUT	5	4	50							1	9.0											1	9	7
	SUPERSTRUCTURE																								
	BRIDGE DECK																								
300	BOTTOM MAT LONGITUDINAL	5	99	89			E				235	0.0	3	0.0									244	0	25195
301	TOP MAT LONGITUDINAL	7	106	89			E				235	0.0	3	0.0									244	0	52866
302	BOTTOM MAT TRANSV STG 1	5	453	50			E				38	0.0											38	0	17954
303	BOTTOM EDGE TRANSV STG 1	6	24	50			E				38	0.0											38	0	1370
302	BOTTOM MAT TRANSV STG 2	5	453	50			E				38	10.0											38	10	18348
303	BOTTOM EDGE TRANSV STG 2	6	28	50			E				38	10.0											38	10	1633
304	TOP MAT TRANSV STG 1	6	453	51			E				38	2.0											38	10	26436
306	TOP MAT TRANSV STG 1	5	24	51			E				38	3.0											38	10	972
304	TOP MAT TRANSV STG 2	6	453	51			E				39	0.0											39	8	27003
306	TOP MAT TRANSV STG 2	5	24	51			E				39	0.0											39	7	991
305	TOP MAT EDGE TRANSV STG 1	6	478	51			E				14	0.0											14	8	10545
305	TOP MAT EDGE TRANSV STG 2	6	478	51			E				14	0.0											14	8	10545
307	BOT MAT EDGE TRANSV STG 1 2	5	48	50			E				4	6.0											4	6	225
310	BOT MAT GIRDER CHAMFER	4	12	89			E				234	6.0	2	6.0									247	0	1980
330	EDGE BEAM STIRRUP PR 1 2	4	274	72	T		E				4	6.5	0	9.0	0	9.0							6	7	1210
331	EDGE BEAM PR 1 2	4	274	51			E				2	6.0											2	12	549

BENDING DIAGRAMS

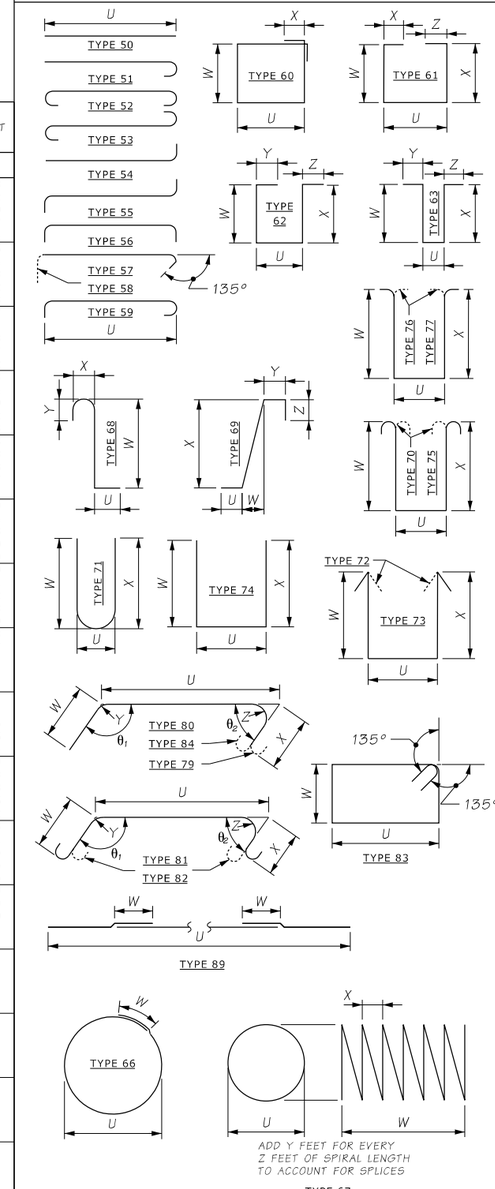

NOTES:

1. SEE PLANS FOR REINFORCEMENT NOT SHOWN.
2. BEND FOR TRANSVERSE BARS DUE TO ROADWAY CROWN CONDITIONS HAS NOT BEEN SHOWN. THESE BARS SHALL BE BENT AS REQUIRED TO CONFORM TO THE CONFIGURATION OF THE STRUCTURE.
3. BARLIST IS FOR QUANTITY ESTIMATION ONLY. REINFORCEMENT FABRICATION DETAILS SHALL BE DETERMINED FROM THE PLANS.

Bridge Design Engr. A. LELAND	c:\users\schicvin\pw_wsdot\d0335751\XL6050_PS_BG_SAM_LIST.dgn							
Supervisor				REGION NO.	STATE	FED. AID. PROJ. NO.	SHEET NO.	TOTAL SHEETS
Designed By				10	WASH.			
Checked By J. MERTH				JOB NUMBER				
Detailed By V. SCHICCHI				22C533				
Bridge Projects Engr. A. AMOS								
Prelim. Plan By								
Architect/Specialist	DATE	REVISION	BY	APP'D				

BRIDGE AND STRUCTURES OFFICE

Washington State Department of Transportation

SR305
SAM SNYDER CREEK
REMOVE FISH BARRIER

BARLIST

BRIDGE SHEET NO. BG53

SHEET 173 OF 186 SHEETS

pw:\\HQOLYMAPPPW03P.WSDOT.LOC:WSDOT\Documents_HQ\Fish Passage\ORproj\30518.92_SamSnyderCreek\Design_CAD_Sheets\390-BridgeStrPlan\XL6050_BG_SAM_LIST.dgn
SR 305 FILE NO. SHEET
3/23/2023 12:22:46 PM

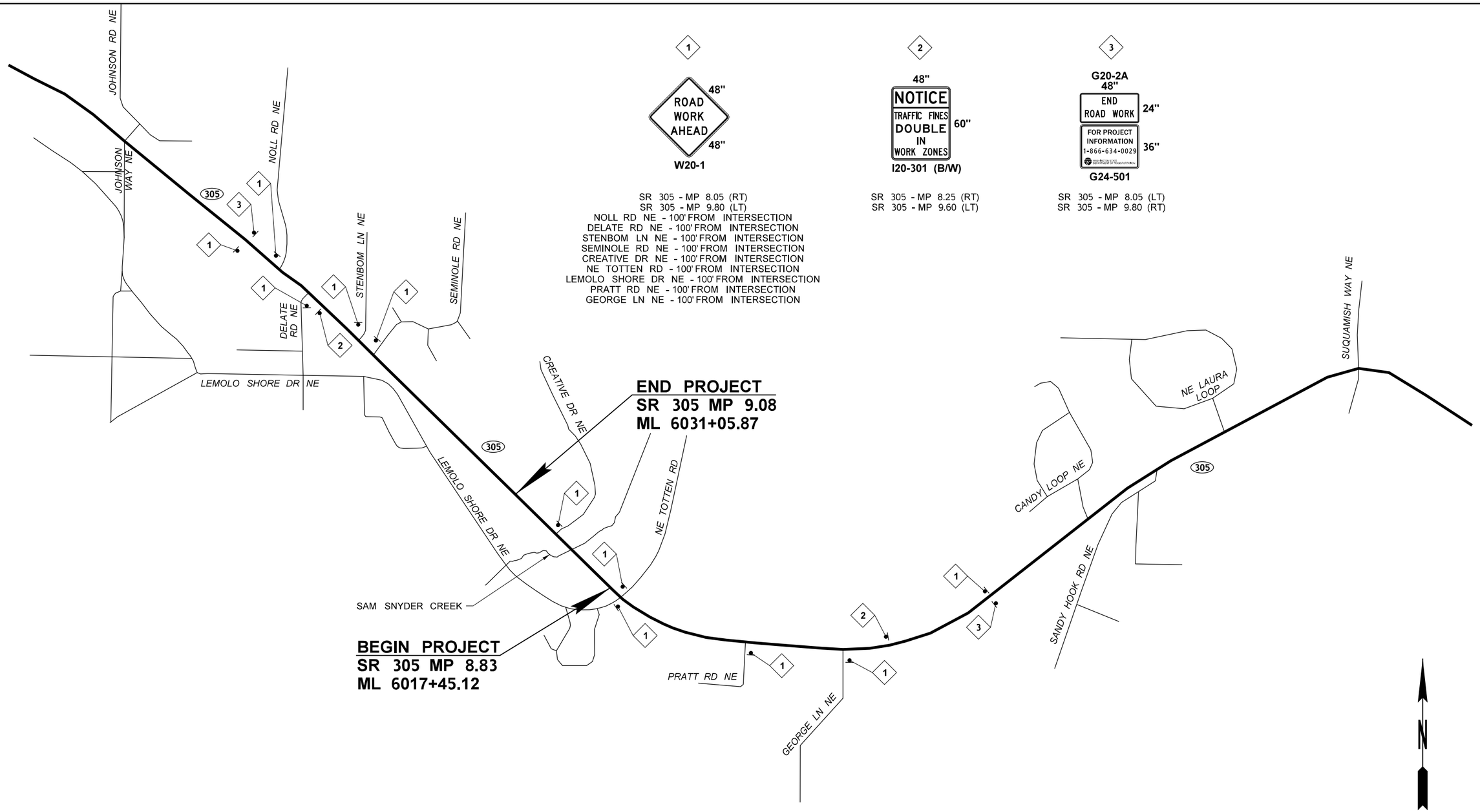

1

ROAD WORK AHEAD
48" 48"
W20-1

SR 305 - MP 8.05 (RT)
SR 305 - MP 9.80 (LT)
NOLL RD NE - 100' FROM INTERSECTION
DELATE RD NE - 100' FROM INTERSECTION
STENBOM LN NE - 100' FROM INTERSECTION
SEMINOLE RD NE - 100' FROM INTERSECTION
CREATIVE DR NE - 100' FROM INTERSECTION
NE TOTTEN RD - 100' FROM INTERSECTION
LEMOLO SHORE DR NE - 100' FROM INTERSECTION
PRATT RD NE - 100' FROM INTERSECTION
GEORGE LN NE - 100' FROM INTERSECTION

2

48"
NOTICE
TRAFFIC FINES DOUBLE IN WORK ZONES
60"
I20-301 (B/W)

SR 305 - MP 8.25 (RT)
SR 305 - MP 9.60 (LT)

3

G20-2A
48"
END ROAD WORK 24"
FOR PROJECT INFORMATION 1-866-634-0029 36"
G24-501

SR 305 - MP 8.05 (LT)
SR 305 - MP 9.80 (RT)

LEGEND	
●	SIGN LOCATION - POST MOUNT
X	SIGN NOTE FLAG

CLASS A SIGN LOCATION PLAN
NOT TO SCALE

NOTES:
1. SEE STANDARD PLAN K-80.10 FOR CLASS A CONSTRUCTION SIGNING INSTALLATION.
2. ALL SIGNS SHALL BE 48"x48" BLACK ON ORANGE UNLESS OTHERWISE SHOWN.

FILE NAME	c:\users\whltekev\documents\d0335753\XL6050_PS_TC_SAM_001.dgn						
TIME	4:12:25 PM				REGION NO. 10	STATE WASH	FED.AID PROJ.NO.
DATE	3/27/2023						
PLOTTED BY	whitekev				JOB NUMBER 22C533		
DESIGNED BY	C. JOHNSON						
ENTERED BY	C. JOHNSON						
CHECKED BY	K. HOUSE				CONTRACT NO.		LOCATION NO. XL6050
PROJ. ENGR.	A. AMOS						
REGIONAL ADM.	S. ROARK	REVISION	DATE	BY			

P.E. STAMP BOX DATE

P.E. STAMP BOX DATE

Washington State Department of Transportation

Parametrix

SR 305
SAM SNYDER CREEK
REMOVE FISH BARRIER

TRAFFIC CONTROL PLAN

PLAN REF NO TC1

SHEET 174 OF 186 SHEETS

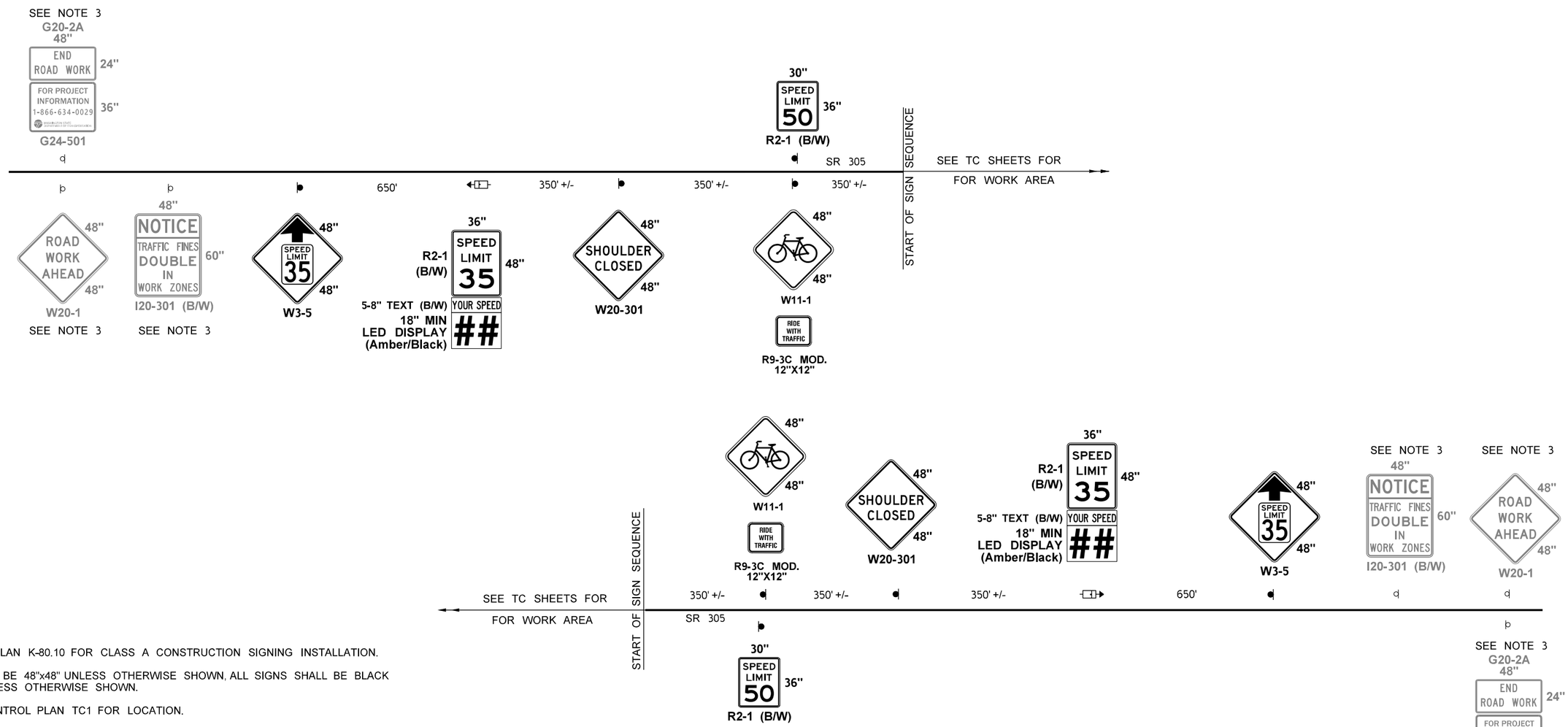

NOTES:

1. SEE STANDARD PLAN K-80.10 FOR CLASS A CONSTRUCTION SIGNING INSTALLATION.
2. ALL SIGNS SHALL BE 48"x48" UNLESS OTHERWISE SHOWN, ALL SIGNS SHALL BE BLACK ON ORANGE UNLESS OTHERWISE SHOWN.
3. SEE TRAFFIC CONTROL PLAN TC1 FOR LOCATION.
4. SEE TRAFFIC CONTROL PLANS FOR ADDITIONAL SIGNAGE.
5. SPEED REDUCTION PLAN ONLY APPLIES TO STAGE 1 AND STAGE 2 WHILE TRAFFIC IS SHIFTED ONTO TEMPORARY ALIGNMENTS.

LEGEND

- EXISTING SIGN LOCATION - POST MOUNT
- SIGN LOCATION - POST MOUNT
- RADAR SPEED DISPLAY SIGN (RSDS)

SPEED REDUCTION PLAN
SR 305 - ADDITIONAL CLASS A SIGNS

NOT TO SCALE

FILE NAME	c:\users\whitekev\documents\d0335753\XL6050_PS_TC_SAM_002.dgn				REGION NO. 10	STATE WASH	FED.AID PROJ.NO.
TIME	4:12:26 PM				JOB NUMBER 22C533		
DATE	3/27/2023						
PLOTTED BY	whitekev						
DESIGNED BY	C. JOHNSON						
ENTERED BY	C. JOHNSON						
CHECKED BY	K. HOUSE				CONTRACT NO.		LOCATION NO. XL6050
PROJ. ENGR.	A. AMOS						
REGIONAL ADM.	S. ROARK	REVISION	DATE	BY			

P.E. STAMP BOX DATE

P.E. STAMP BOX DATE

Washington State Department of Transportation

Parametrix

SR 305
SAM SNYDER CREEK
REMOVE FISH BARRIER

TRAFFIC CONTROL PLAN

PLAN REF NO TC2

SHEET 175 OF 186 SHEETS

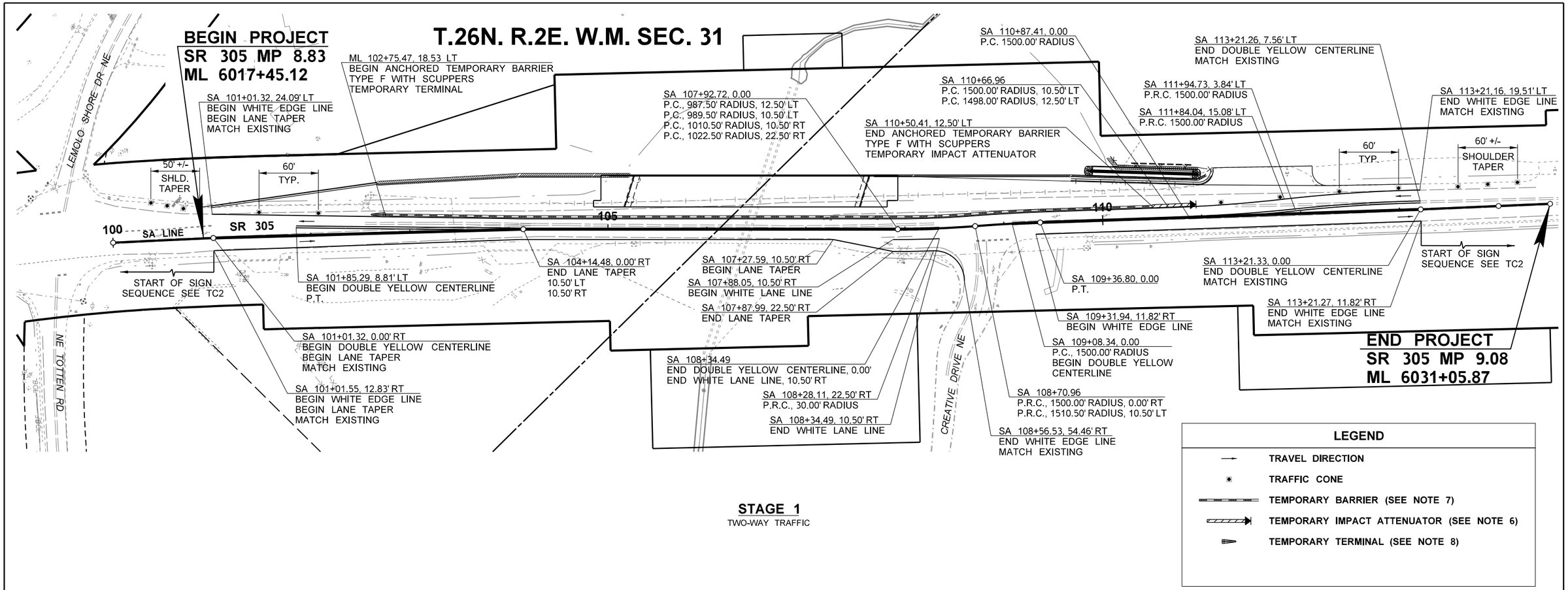

STAGE 1
TWO-WAY TRAFFIC

LEGEND

- TRAVEL DIRECTION
- TRAFFIC CONE
- TEMPORARY BARRIER (SEE NOTE 7)
- TEMPORARY IMPACT ATTENUATOR (SEE NOTE 6)
- TEMPORARY TERMINAL (SEE NOTE 8)

STAGE 1 NOTES:

1. SEE SHEET SU1 FOR STAGING DETAILS AND SA LINE ALIGNMENT DATA.
2. ALL SIGNS SHALL BE 48"x48", UNLESS OTHERWISE SHOWN. ALL SIGNS SHALL BE BLACK ON ORANGE, UNLESS OTHERWISE SHOWN.
3. REFER TO STANDARD SPECIFICATION 1-07.23(1) FOR MINIMUM OFFSETS TO DROP-OFFS.
4. ALL PAVEMENT MARKINGS, RUMBLE STRIPS AND PAVEMENT MARKERS THAT CONFLICT WITH TEMPORARY CHANNELIZATION SHALL BE REMOVED.
5. DEVICES SHALL NOT ENCROACH INTO ADJACENT LANE.
6. TEMPORARY IMPACT ATTENUATOR SHALL BE ABSORB-M TL-2, ABSORB 350 TL-2 OR TRITON CET TL-2.
7. ANCHORED TEMPORARY BARRIER TYPE F WITH SCUPPERS PER WSDOT STANDARD PLAN C-60.15.
8. TEMPORARY TERMINAL SHALL BE CONCRETE BARRIER TYPE F (PRECAST) TERMINAL PER WSDOT STANDARD PLAN C-60.80.
9. MAINTAIN SIGHT DISTANCE TRIANGLES PER WSDOT DESIGN STANDARDS.
10. SEE SHEET TC9 FOR INTERSECTION PEDESTRIAN CONTROL.

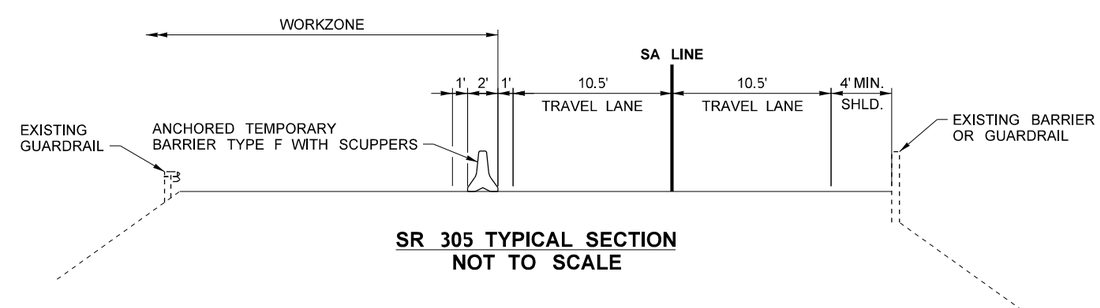

SR 305 TYPICAL SECTION
NOT TO SCALE

0 50 100
SCALE IN FEET

FILE NAME	c:\users\whitekev\documents\d0335753\XL6050_PS_TC_SAM_003.dgn						
TIME	4:12:27 PM				REGION NO. 10	STATE WASH	FED.AID PROJ.NO.
DATE	3/27/2023						
PLOTTED BY	whitekev				JOB NUMBER 22C533		
DESIGNED BY	C. JOHNSON						
ENTERED BY	C. JOHNSON						
CHECKED BY	K. HOUSE				CONTRACT NO.		LOCATION NO. XL6050
PROJ. ENGR.	A. AMOS						
REGIONAL ADM.	S. ROARK	REVISION	DATE	BY			

P.E. STAMP BOX DATE

P.E. STAMP BOX DATE

Washington State Department of Transportation

Parametrix

SR 305
SAM SNYDER CREEK
REMOVE FISH BARRIER

TRAFFIC CONTROL PLAN

PLAN REF NO TC3

SHEET 176 OF 186 SHEETS

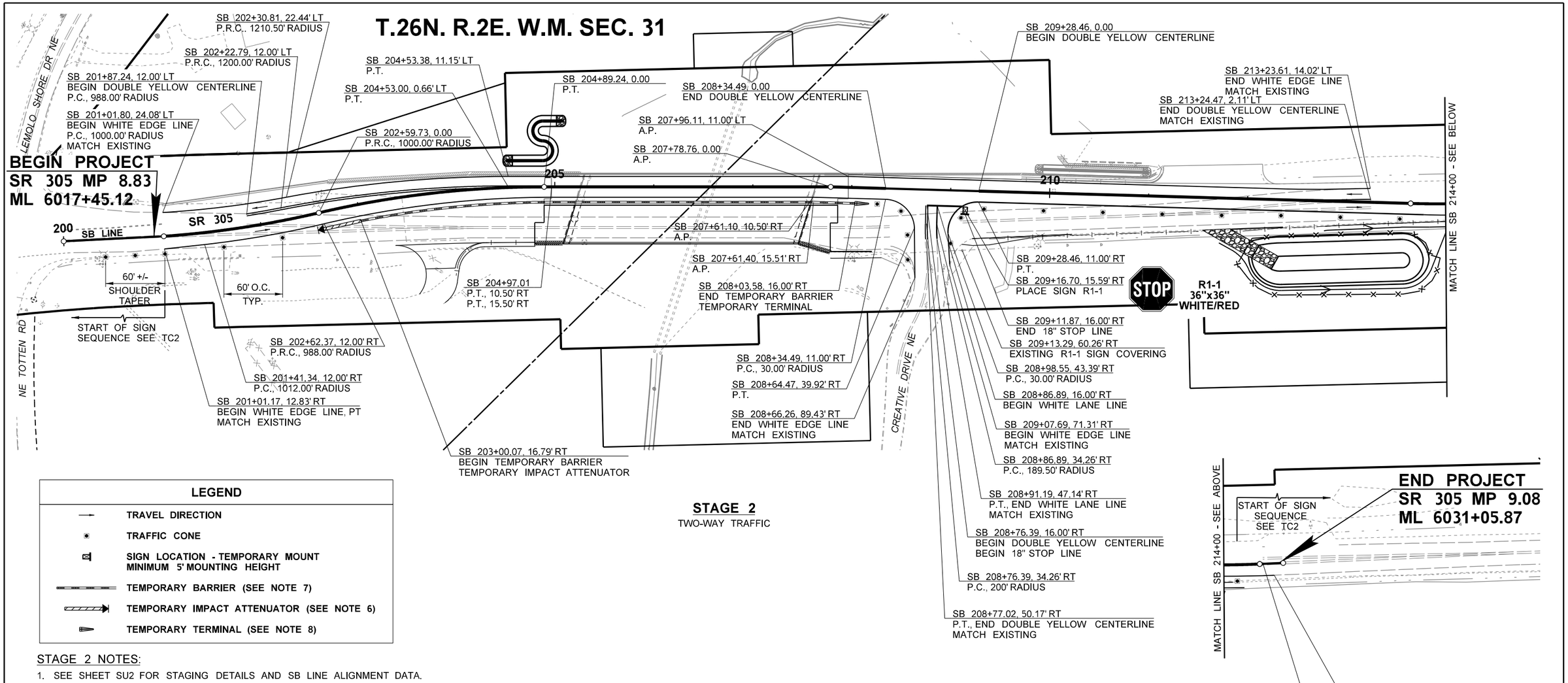

STAGE 2

TWO-WAY TRAFFIC

LEGEND

- TRAVEL DIRECTION
- TRAFFIC CONE
- SIGN LOCATION - TEMPORARY MOUNT MINIMUM 5' MOUNTING HEIGHT
- TEMPORARY BARRIER (SEE NOTE 7)
- TEMPORARY IMPACT ATTENUATOR (SEE NOTE 6)
- TEMPORARY TERMINAL (SEE NOTE 8)

STAGE 2 NOTES:

1. SEE SHEET SU2 FOR STAGING DETAILS AND SB LINE ALIGNMENT DATA.
2. ALL SIGNS SHALL BE 48"x48", UNLESS OTHERWISE SHOWN. ALL SIGNS SHALL BE BLACK ON ORANGE, UNLESS OTHERWISE SHOWN.
3. REFER TO STANDARD SPECIFICATION 1-07.23(1) FOR MINIMUM OFFSETS TO DROP-OFFS.
4. ALL PAVEMENT MARKINGS, RUMBLE STRIPS AND PAVEMENT MARKERS THAT CONFLICT WITH TEMPORARY CHANNELIZATION SHALL BE REMOVED.
5. DEVICES SHALL NOT ENCROACH INTO ADJACENT LANE.
6. TEMPORARY IMPACT ATTENUATOR SHALL BE ABSORB-M TL-2, ABSORB 350 TL-2 OR TRITON CET TL-2.
7. TEMPORARY BARRIER PER WSDOT STANDARD PLAN C-60.10.
8. TEMPORARY TERMINAL SHALL BE CONCRETE BARRIER TYPE F (PRECAST) TERMINAL PER WSDOT STANDARD PLAN C-60.80.
9. MAINTAIN SIGHT DISTANCE TRIANGLES PER WSDOT DESIGN STANDARDS.
10. SEE SHEET TC9 FOR INTERSECTION PEDESTRIAN CONTROL.

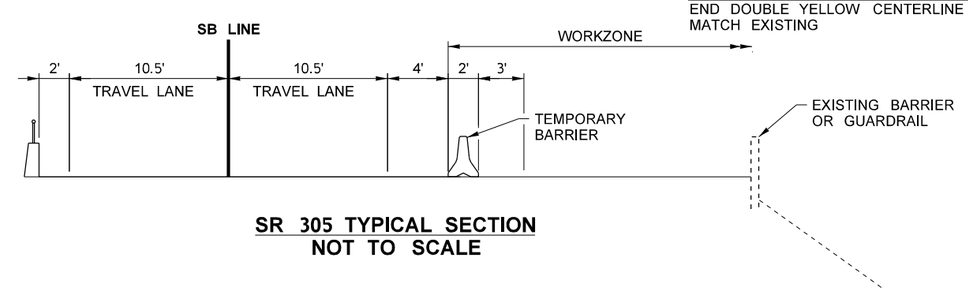

SR 305 TYPICAL SECTION
NOT TO SCALE

0 50 100
SCALE IN FEET

FILE NAME	c:\users\whltekev\documents\d0335753\XL6050_PS_TC_SAM_004.dgn				REGION NO. 10	STATE WASH	FED.AID PROJ.NO.
TIME	4:12:28 PM				JOB NUMBER 22C533		
DATE	3/27/2023						
PLOTTED BY	whitekev						
DESIGNED BY	C. JOHNSON						
ENTERED BY	C. JOHNSON						
CHECKED BY	K. HOUSE				CONTRACT NO.		LOCATION NO. XL6050
PROJ. ENGR.	A. AMOS						
REGIONAL ADM.	S. ROARK	REVISION	DATE	BY			

P.E. STAMP BOX DATE

P.E. STAMP BOX DATE

Washington State Department of Transportation

Parametrix

SR 305
SAM SNYDER CREEK
REMOVE FISH BARRIER

TRAFFIC CONTROL PLAN

PLAN REF NO TC4

SHEET 177 OF 186 SHEETS

T.26N. R.2E. W.M. SEC. 31

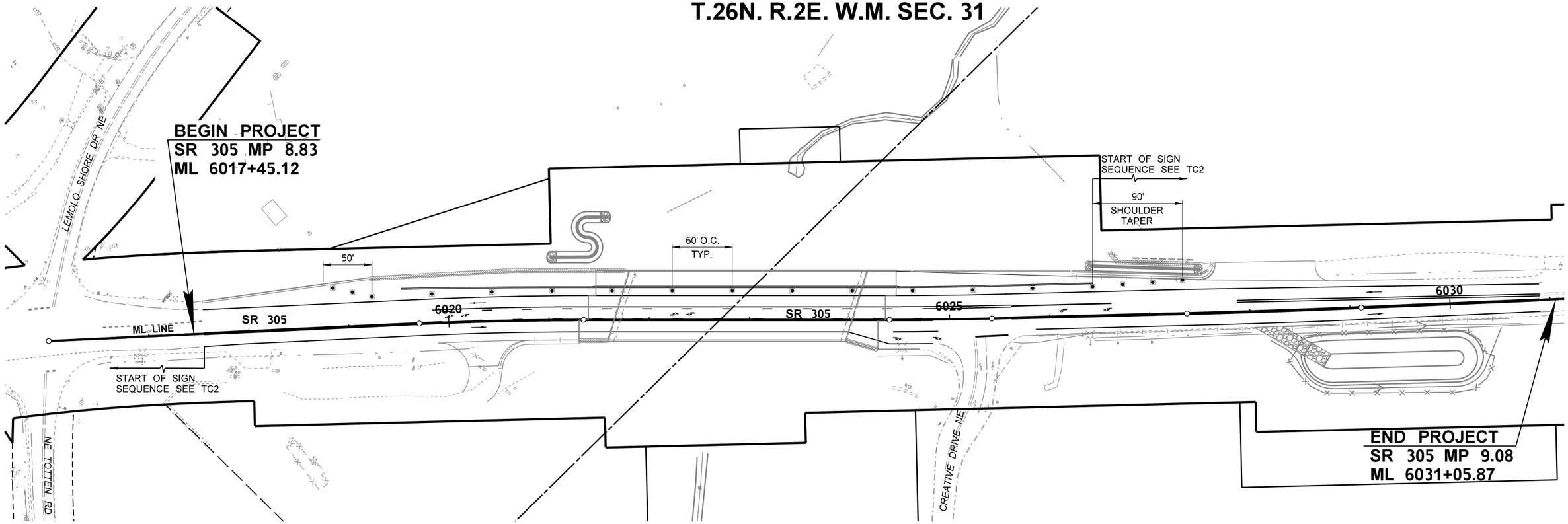

LEGEND	
→	TRAVEL DIRECTION
●	TRAFFIC CONE

STAGE 3

TWO-WAY TRAFFIC

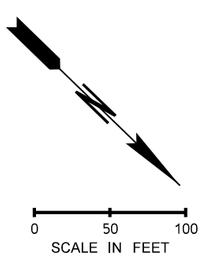

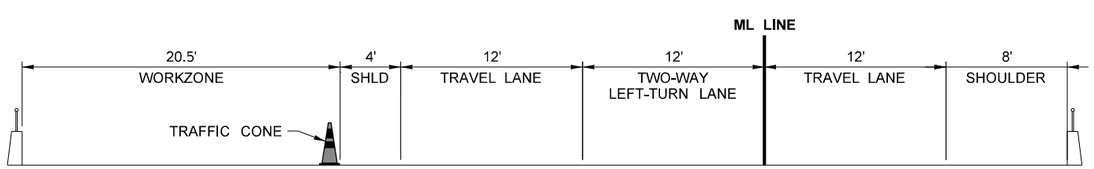

SR 305 TYPICAL SECTION
NOT TO SCALE

STAGE 3 NOTES:

1. SEE SHEET SU3 FOR STAGING DETAILS AND SEE ALIGNMENT AND RIGHT OF WAY PLANS FOR ML LINE ALIGNMENT DATA.
2. ALL SIGNS SHALL BE 48"x48", UNLESS OTHERWISE SHOWN. ALL SIGNS SHALL BE BLACK ON ORANGE, UNLESS OTHERWISE SHOWN.
3. REFER TO STANDARD SPECIFICATION 1-07.23(1) FOR MINIMUM OFFSETS TO DROP-OFFS.
4. ALL PAVEMENT MARKINGS, RUMBLE STRIPS AND PAVEMENT MARKERS THAT CONFLICT WITH CHANNELIZATION SHALL BE REMOVED.
5. DEVICES SHALL NOT ENCROACH INTO ADJACENT LANE.
6. SEE PAVEMENT MARKING SHEETS FOR STAGE 3 CHANNELIZATION.
7. MAINTAIN SIGHT DISTANCE TRIANGLES PER WSDOT DESIGN STANDARDS.
8. SEE SHEET TC9 FOR INTERSECTION PEDESTRIAN CONTROL.
9. CONTRACTOR SHALL REMOVE SPEED REDUCTION SIGNING PRIOR TO OPENING TRAFFIC TO THIS STAGE.

FILE NAME	c:\users\whltekev\documents\d0335753\XL6050_PS_TC_SAM_005.dgn				REGION NO. 10	STATE WASH	FED.AID PROJ.NO.
TIME	4:12:29 PM				JOB NUMBER 22C533		
DATE	3/27/2023						
PLOTTED BY	whitekev						
DESIGNED BY	C. JOHNSON						
ENTERED BY	C. JOHNSON						
CHECKED BY	K. HOUSE				CONTRACT NO.		LOCATION NO. XL6050
PROJ. ENGR.	A. AMOS						
REGIONAL ADM.	S. ROARK	REVISION	DATE	BY			

P.E. STAMP BOX DATE

P.E. STAMP BOX DATE

Washington State Department of Transportation

Parametrix

SR 305
SAM SNYDER CREEK
REMOVE FISH BARRIER

TRAFFIC CONTROL PLAN

PLAN REF NO TC5

SHEET 178 OF 186 SHEETS

MINIMUM SHOULDER TAPER LENGTH = L/3 (feet)										
SHOULDER WIDTH (feet)	Posted Speed (mph)									
	25	30	35	40	45	50	55	60	65	70
8'	40	40	60	90	120	130	150	160	170	190
10'	40	60	90	90	150	170	190	200	220	240
USE A MINIMUM 3 DEVICES TAPER FOR SHOULDER LESS THAN 8'.										

SIGN SPACING = X (1)		
FREEWAYS & EXPRESSWAYS	55 / 70 MPH	1500' ±
RURAL HIGHWAYS	60 / 65 MPH	800' ±
RURAL ROADS	45 / 55 MPH	500' ±
RURAL ROADS & URBAN ARTERIALS	35 / 40 MPH	350' ±
RURAL ROADS & URBAN ARTERIALS RESIDENTIAL & BUSINESS DISTRICTS	25 / 30 MPH	200' ± (2)
URBAN STREETS	25 MPH OR LESS	100' ± (2)

(1) ALL SPACING MAY BE ADJUSTED TO ACCOMMODATE INTERCHANGE RAMPS, AT-GRADE INTERSECTIONS AND DRIVEWAYS.
(2) THIS SPACING MAY BE REDUCED IN URBAN AREAS TO FIT ROADWAY CONDITIONS.

BUFFER DATA										
LONGITUDINAL BUFFER SPACE = B										
SPEED (MPH)	25	30	35	40	45	50	55	60	65	70
LENGTH (feet)	155	200	250	305	360	425	495	570	645	730

TRANSPORTABLE ATTENUATOR ROLL AHEAD DISTANCE = R					
HOST VEHICLE WEIGHT 9,900 TO 22,000 lbs.			HOST VEHICLE WEIGHT > 22,000 lbs.		
< 45 MPH	45-55 MPH	> 55 MPH	< 45 MPH	45-55 MPH	> 55 MPH
100'	123'	172'	74'	100'	150'

CHANNELIZATION DEVICE SPACING (feet)		
MPH	TAPER	TANGENT
50/70	40	80
35/45	30	60
25/30	20	40

PCMS	
1	2
SHOULDER CLOSED AHEAD	1 MILE AHEAD
2.0 SEC	2.0 SEC

LOCATE AS SHOWN

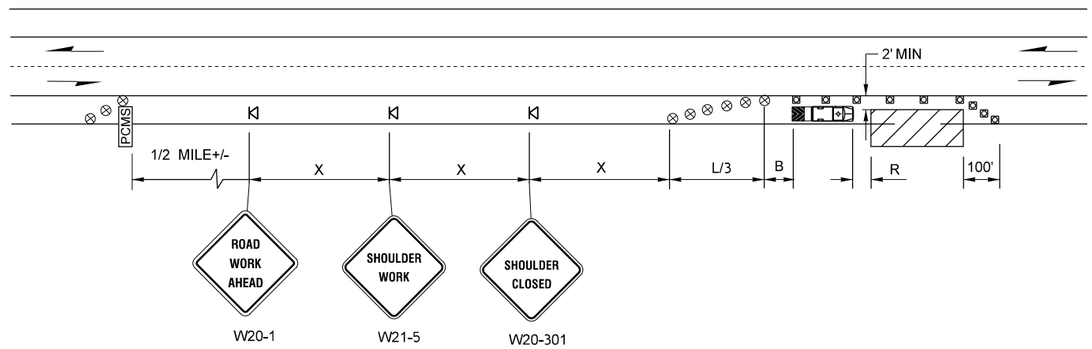

SHOULDER CLOSURE - HIGH SPEED (> 40 MPH)
NOT TO SCALE

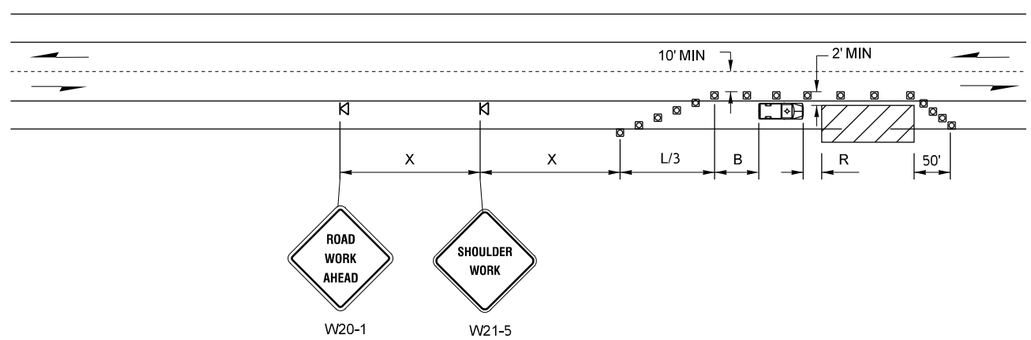

SHOULDER CLOSURE - LOW SPEED (≤ 40 MPH)
NOT TO SCALE

LEGEND

- SIGN LOCATION - TEMPORARY MOUNT (CLASS "B")
- TRAFFIC CONE
- TRAFFIC SAFETY DRUM
- TRAVEL DIRECTION OF OPEN LANE
- PROTECTIVE VEHICLE - ATTENUATOR OPTIONAL FOR SPEEDS 40MPH OR LESS
- PROTECTIVE VEHICLE
- PCMS — PORTABLE CHANGEABLE MESSAGE SIGN
- WORK AREA

NOTES:

1. SEE SPECIAL PROVISIONS : "PUBLIC CONVENIENCE AND SAFETY - CONSTRUCTION UNDER TRAFFIC" FOR WORK HOUR RESTRICTIONS.
2. ALL SIGNS SHALL BE 48"x48", UNLESS OTHERWISE SHOWN. ALL SIGNS SHALL BE BLACK ON ORANGE, UNLESS OTHERWISE SHOWN.
3. PROTECTIVE VEHICLE REQUIRED - MAY BE A WORK VEHICLE FOR SPEEDS 40 MPH OR LESS.
4. EXTEND CHANNELIZING DEVICE TAPER ACROSS SHOULDER.
5. CLOSURES NEAR INTERSECTIONS SHALL NOT BLOCK SIGHT DISTANCE FOR VEHICLES ENTERING FROM THE SIDE ROAD.

FILE NAME	c:\users\whltekev\documents\d0335753\XL6050_PS_TC_SAM_006.dgn				
TIME	4:12:30 PM				
DATE	3/27/2023				
PLOTTED BY	whitekev				
DESIGNED BY	C. JOHNSON				
ENTERED BY	C. JOHNSON				
CHECKED BY	K. HOUSE				
PROJ. ENGR.	A. AMOS				
REGIONAL ADM.	S. ROARK	REVISION	DATE	BY	

REGION NO.	STATE	FED.AID PROJ.NO.
10	WASH	
JOB NUMBER 22C533		
CONTRACT NO.		LOCATION NO. XL6050

P.E. STAMP BOX DATE

P.E. STAMP BOX DATE

Washington State Department of Transportation

Parametrix

SR 305
SAM SNYDER CREEK
REMOVE FISH BARRIER

TRAFFIC CONTROL PLAN

PLAN REF NO TC6

SHEET 179 OF 186 SHEETS

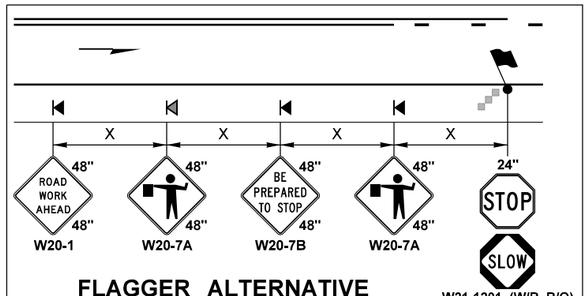

FLAGGER ALTERNATIVE

FLAGGER MAY REPLACE AFAD

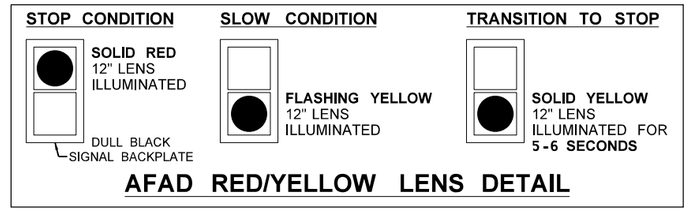

AFAD RED/YELLOW LENS DETAIL

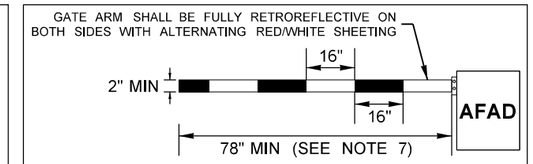

AFAD GATE ARM DETAIL

SIGN SPACING = X (1)		
RURAL HIGHWAYS	60 / 65 MPH	800' ±
RURAL ROADS	45 / 55 MPH	500' ±
RURAL ROADS & URBAN ARTERIALS	35 / 40 MPH	350' ±
RURAL ROADS, URBAN ARTERIALS, RESIDENTIAL & BUSINESS DISTRICTS	25 / 30 MPH	200' ± (2)
URBAN STREETS	25 MPH OR LESS	100' ± (2)

(1) ALL SPACING MAY BE ADJUSTED TO ACCOMMODATE INTERSECTIONS AND DRIVEWAYS.
(2) THIS SPACING MAY BE REDUCED IN URBAN AREAS TO FIT ROADWAY CONDITIONS.

MAXIMUM CHANNELIZATION DEVICE SPACING (feet)		
MPH	TAPER	TANGENT
50-65	10 to 20	80
45	10 to 20	60

FOR DRIVEWAY, BUSINESS ACCESS, AND INTERSECTING ROADWAY DETAILS SEE SHEET TC13.

INSTALL 3 DAYS PRIOR TO OPERATION

PCMS	
1	2
EXPECT ## MIN DELAYS	XX/XX-XX #:##XM - #:##XM
2.0 SEC	2.0 SEC

SEE NOTE 1 FOR LOCATION

USE ESTIMATED DELAY OF TIME, UP TO 30 MIN. MAX. (SEE NOTE 4)

XX/XX-XX USE ESTIMATED DATES OF SHORT TERM CLOSURES

#:##XM - #:##XM USE ESTIMATED TIME FRAME OF SHORT TERM CLOSURES (SEE SPECIAL PROVISIONS)

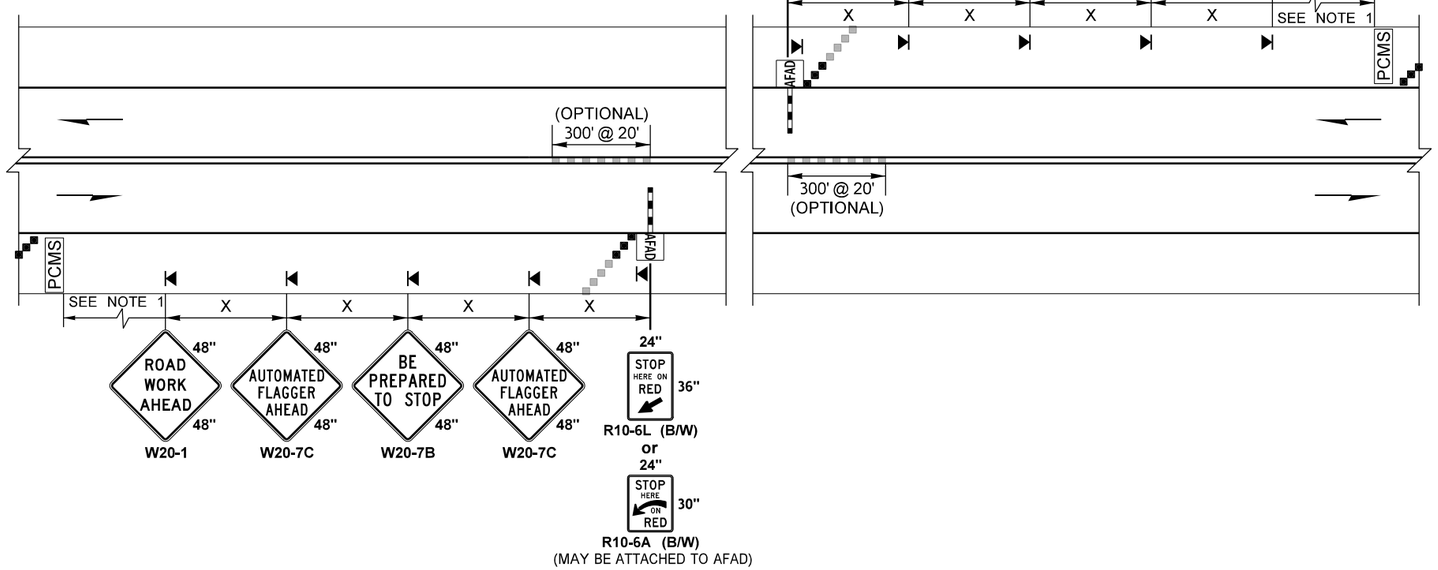

LEGEND

- TEMPORARY SIGN LOCATION
- 28" REFLECTIVE TRAFFIC CONE (SEE NOTE 2)
- OPTIONAL CHANNELIZATION DEVICE
- PCMS — PORTABLE CHANGEABLE MESSAGE SIGN (SEE NOTE 1)
- FLAGGER
- AFAD — AUTOMATED FLAGGER ASSISTANCE DEVICE (SEE NOTES 7 & 8)

TREE FALLING OPERATIONS AND GIRDER SETTING OPERATIONS SHORT TERM TRAFFIC STOP

NOT TO SCALE

NOTES:

1. PORTABLE CHANGEABLE MESSAGE SIGNS SHALL BE FIELD LOCATED 2 MILES PRIOR TO AFAD (OR FLAGGER) FOR TREE FALLING OPERATIONS AND 1 MILE PRIOR TO AFAD (OR FLAGGER) FOR GIRDER SETTING OPERATIONS.
2. 36" TRAFFIC CONES, 42" TALL CHANNELIZATION DEVICES, OR TRAFFIC SAFETY DRUMS OK.
3. DURING TREE FALLING OPERATIONS AND GIRDER SETTING OPERATIONS, FLAGGERS SHALL BE PLACED AT ALL ACCESS POINTS TO CONTROL VEHICLES FROM ENTERING THE AREA.
4. AT NO TIME SHALL TRAFFIC ON THE ROADWAY BE STOPPED FOR LONGER THAN 20 MINUTES FOR TREE FALLING OPERATIONS OR 30 MINUTES FOR GIRDER SETTING OPERATIONS.
5. SEE **STANDARD SPECIFICATIONS** FOR ADDITIONAL REQUIREMENTS:
   - **1-07.8(1)** HIGH-VISIBILITY APPAREL
   - **1-10.3(1)A** FLAGGERS AND NIGHTTIME ILLUMINATION
   - **1-10.3(2)A** TRAFFIC CONTROL PROCEDURES
   - **9-35.1** 24-INCH STOP/SLOW PADDLE SIZE
6. FOR PROJECT-SPECIFIC REQUIREMENTS, SEE **SPECIAL PROVISIONS**.
7. AFAD GATE ARM SHALL REACH HALFWAY ACROSS LANE BEING CONTROLLED ON RED LENS DISPLAY & ASCEND TO AN UPRIGHT POSITION ON FLASHING YELLOW LENS DISPLAY. GATE ARM SHALL NOT DESCEND UNTIL AFTER RED LENS DISPLAYED.
8. FLAGGERS SHALL BE TRAINED IN OPERATION OF AFAD. FLAGGER SHALL BE POSITIONED TO SEE BOTH AFAD AND APPROACHING TRAFFIC (DIGITAL ALTERNATIVES ARE ACCEPTABLE). LEAVING AFAD UNATTENDED PROHIBITED.
9. SIGNS ARE BLACK ON ORANGE UNLESS OTHERWISE INDICATED.
10. ACTUAL CENTERLINE PAVEMENT MARKINGS MAY VARY.

FILE NAME	c:\users\whltekev\documents\d0335753\XL6050_PS_TC_SAM_007.dgn
TIME	4:12:31 PM
DATE	3/27/2023
PLOTTED BY	whitekev
DESIGNED BY	C. JOHNSON
ENTERED BY	C. JOHNSON
CHECKED BY	K. HOUSE
PROJ. ENGR.	A. AMOS
REGIONAL ADM.	S. ROARK

REVISION | DATE | BY

REGION NO. 10 | STATE WASH | FED.AID PROJ.NO.

JOB NUMBER 22C533

CONTRACT NO.

LOCATION NO. XL6050

P.E. STAMP BOX DATE

P.E. STAMP BOX DATE

Washington State Department of Transportation

Parametrix

SR 305
SAM SNYDER CREEK
REMOVE FISH BARRIER

TRAFFIC CONTROL PLAN

PLAN REF NO TC7

SHEET 180 OF 186 SHEETS

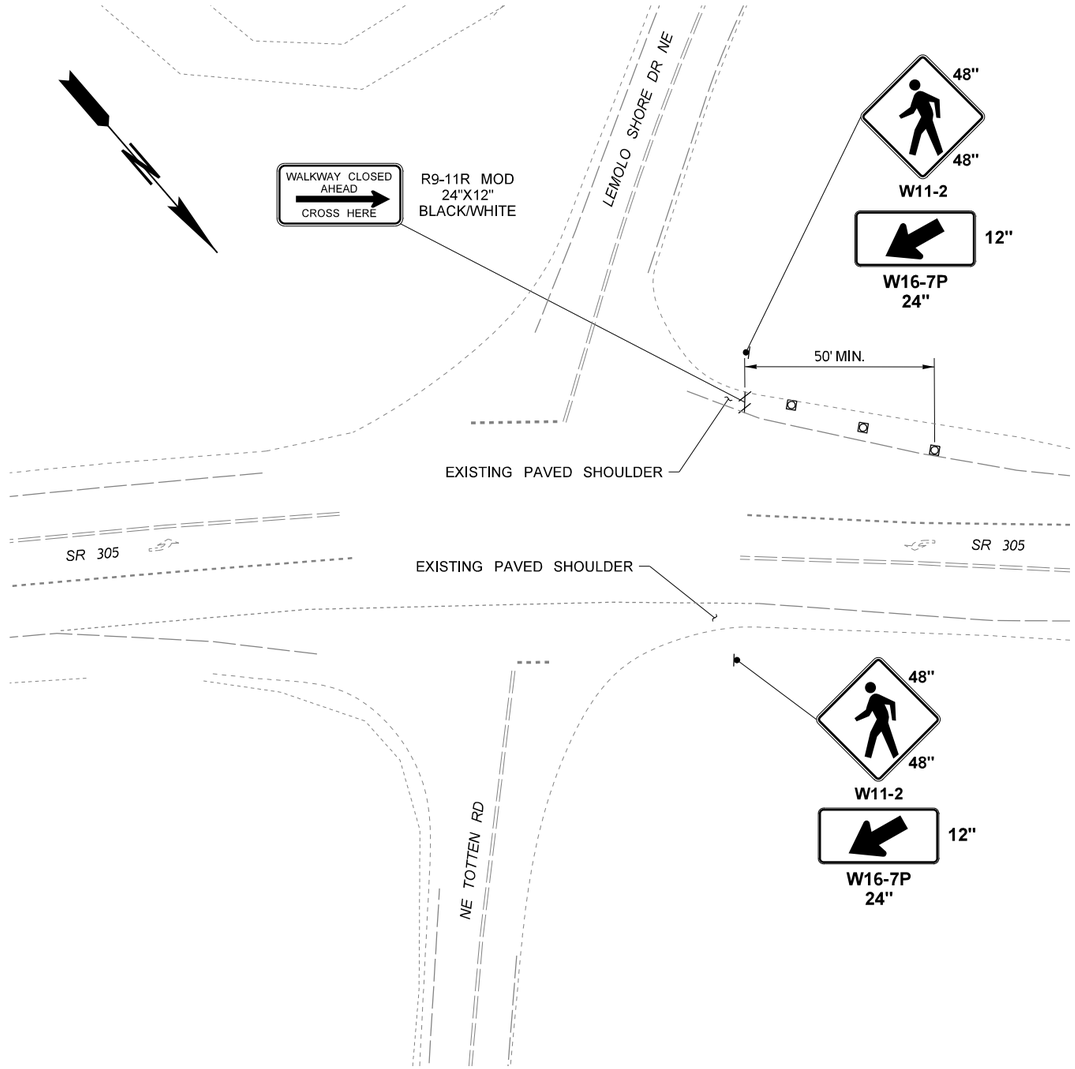

SHOULDER DETOUR
SR 305/NE TOTTEN RD

NOT TO SCALE

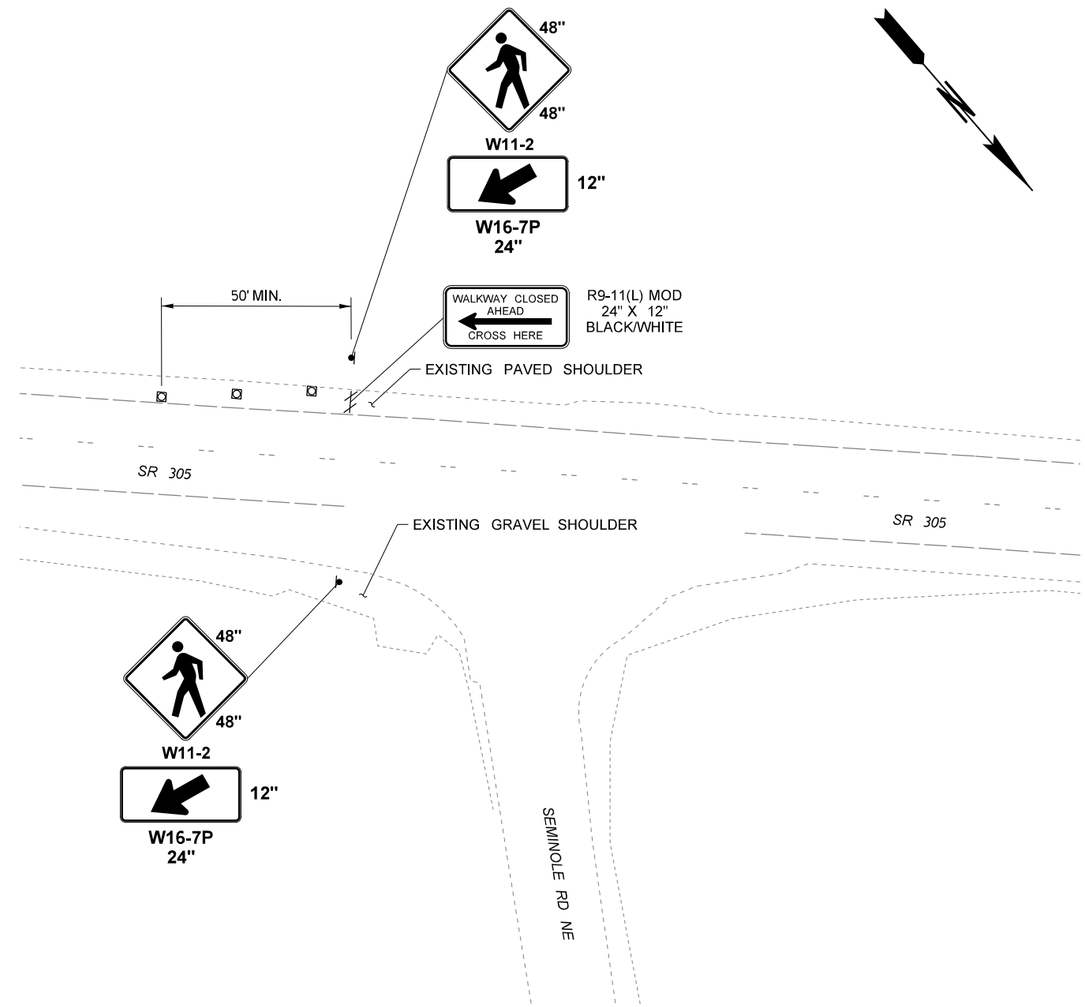

SHOULDER DETOUR
SR 305/SEMINOLE RD NE

NOT TO SCALE

LEGEND

- TRAFFIC CONE
- TYPE 2 BARRICADE
- SIGN LOCATION - TEMPORARY POST MOUNT

NOTES:

1. CONTACT AND COORDINATE WITH KITSAP TRANSIT PRIOR TO IMPLEMENTING ANY CLOSURES.
2. CONTRACTOR SHALL PROVIDE PEDESTRIAN ACCESS ROUTES IN ACCORDANCE WITH WSDOT FIELD GUIDE FOR ACCESSIBLE PUBLIC RIGHT OF WAY.

FILE NAME	c:\users\whitekev\documents\d0335753\XL6050_PS_TC_SAM_008.dgn
TIME	4:12:32 PM
DATE	3/27/2023
PLOTTED BY	whitekev
DESIGNED BY	C. JOHNSON
ENTERED BY	C. JOHNSON
CHECKED BY	K. HOUSE
PROJ. ENGR.	A. AMOS
REGIONAL ADM.	S. ROARK

REVISION | DATE | BY

REGION NO. 10 | STATE WASH | FED.AID PROJ.NO.

JOB NUMBER 22C533

CONTRACT NO.

LOCATION NO. XL6050

P.E. STAMP BOX DATE

P.E. STAMP BOX DATE

Washington State Department of Transportation

Parametrix

SR 305
SAM SNYDER CREEK
REMOVE FISH BARRIER

TRAFFIC CONTROL PLAN

PLAN REF NO TC8

SHEET 181 OF 186 SHEETS

MINIMUM TAPER LENGTH = L (feet)

LANE WIDTH (feet)	Posted Speed (mph)									
	25	30	35	40	45	50	55	60	65	70
10	105	150	205	270	450	500	550	-	-	-
11	115	165	225	295	495	550	605	660	-	-
12	125	180	245	320	540	600	660	720	-	-

SIGN SPACING = X (1)

RURAL HIGHWAYS	60 / 65 MPH	800' ±
RURAL ROADS	45 / 55 MPH	500' ±
RURAL ROADS & URBAN ARTERIALS	35 / 40 MPH	350' ±
RURAL ROADS & URBAN ARTERIALS RESIDENTAL & BUSINESS DISTRICTS	25 / 30 MPH	200' ± (2)
URBAN STREETS	25 MPH OR LESS	100' ± (2)

(1) ALL SPACING MAY BE ADJUSTED TO ACCOMMODATE INTERCHANGE RAMPS, AT-GRADE INTERSECTIONS AND DRIVEWAYS.
(2) THIS SPACING MAY BE REDUCED IN URBAN AREAS TO FIT ROADWAY CONDITIONS.

CHANNELIZATION DEVICE SPACING (feet)

MPH	TAPER	TANGENT
50/70	40	80
35/45	30	60
25/30	20	40

BUFFER DATA

LONGITUDINAL BUFFER SPACE = B

SPEED (MPH)	25	30	35	40	45	50	55	60	65	70
LENGTH (feet)	155	200	250	305	360	425	495	570	645	730

TRANSPORTABLE ATTENUATOR ROLL AHEAD DISTANCE = R

HOST VEHICLE WEIGHT 9,900 TO 22,000 lbs.			HOST VEHICLE WEIGHT > 22,000 lbs.		
< 45 MPH	45-55 MPH	> 55 MPH	< 45 MPH	45-55 MPH	> 55 MPH
100'	123'	172'	74'	100'	150'

PROTECTIVE VEHICLE (WORK VEHICLE) = R

NO SPECIFIED DISTANCE REQUIRED

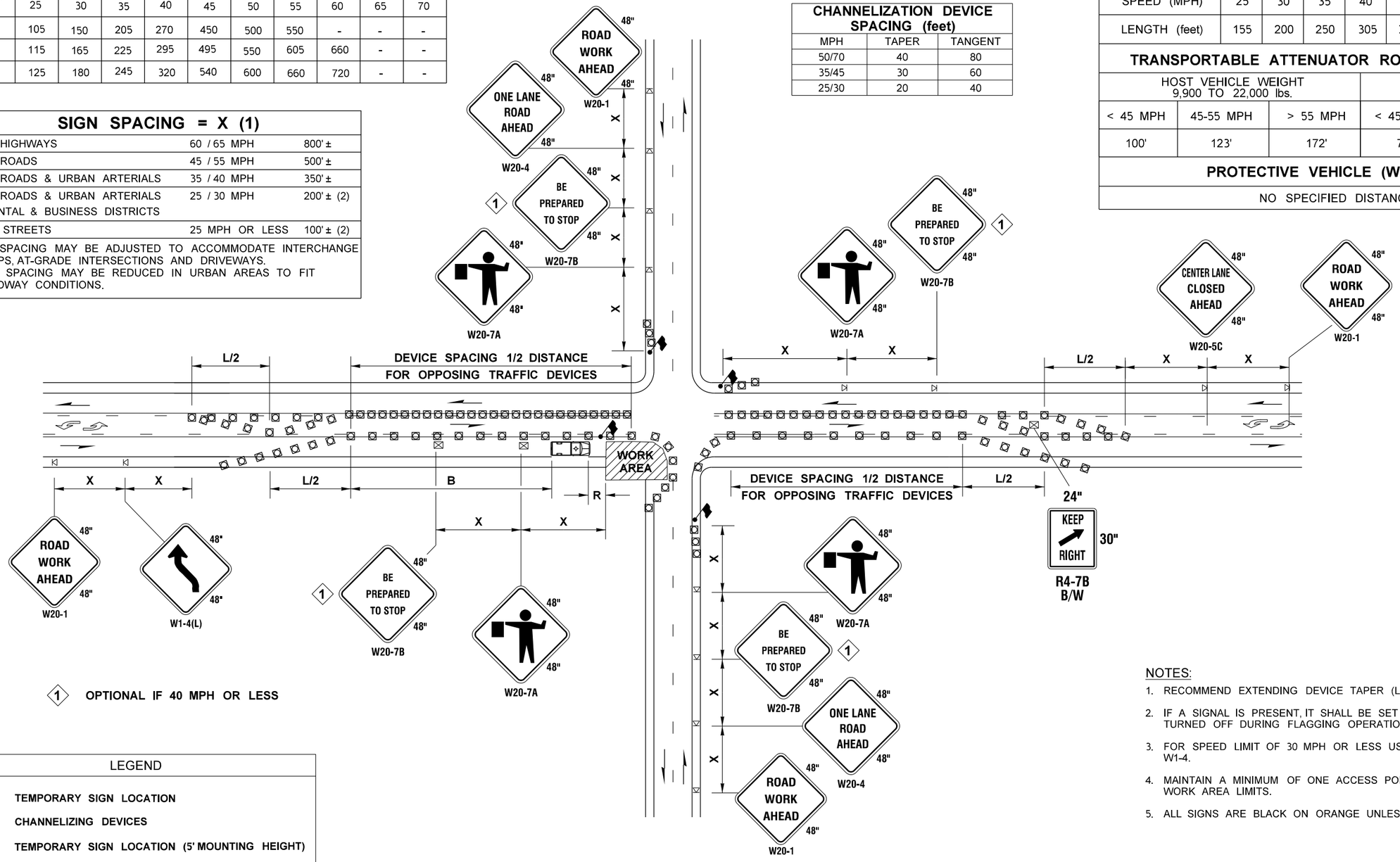

NOTES:

1. RECOMMEND EXTENDING DEVICE TAPER (L/3) ACROSS SHOULDER.
2. IF A SIGNAL IS PRESENT, IT SHALL BE SET TO "RED FLASH MODE" OR TURNED OFF DURING FLAGGING OPERATIONS.
3. FOR SPEED LIMIT OF 30 MPH OR LESS USE SIGN W1-3 IN LIEU OF SIGN W1-4.
4. MAINTAIN A MINIMUM OF ONE ACCESS POINT FOR EACH BUSINESS WITHIN WORK AREA LIMITS.
5. ALL SIGNS ARE BLACK ON ORANGE UNLESS OTHERWISE DESIGNATED.

LEGEND

- TEMPORARY SIGN LOCATION
- CHANNELIZING DEVICES
- TEMPORARY SIGN LOCATION (5' MOUNTING HEIGHT)
- PROTECTIVE VEHICLE - RECOMMENDED
- FLAGGER

INTERSECTION LANE CLOSURE - THREE LANE ROADWAY

NOT TO SCALE

FILE NAME	c:\users\whltekev\documents\d0335753\XL6050_PS_TC_SAM_009.dgn
TIME	4:12:33 PM
DATE	3/27/2023
PLOTTED BY	whitekev
DESIGNED BY	C. JOHNSON
ENTERED BY	C. JOHNSON
CHECKED BY	K. HOUSE
PROJ. ENGR.	A. AMOS
REGIONAL ADM.	S. ROARK

REVISION | DATE | BY

REGION NO. 10 | STATE WASH | FED.AID PROJ.NO.

JOB NUMBER 22C533

CONTRACT NO. | LOCATION NO. XL6050

P.E. STAMP BOX DATE

P.E. STAMP BOX DATE

Washington State Department of Transportation

Parametrix

SR 305
SAM SNYDER CREEK
REMOVE FISH BARRIER

TRAFFIC CONTROL PLAN

PLAN REF NO TC9

SHEET 182 OF 186 SHEETS

LEGEND

- TEMPORARY SIGN LOCATION
- 28" REFLECTIVE TRAFFIC CONE (SEE NOTE 3)
- OPTIONAL CHANNELIZATION DEVICE
- PROTECTIVE VEHICLE (SEE NOTE 2)
- FLAGGER

FOR DRIVEWAY, BUSINESS ACCESS, AND INTERSECTING ROADWAY DETAILS SEE TC11.

STATIONARY TRANSPORTABLE ATTENUATOR ROLL AHEAD DISTANCE = R			
HOST VEHICLE WEIGHT LESS THAN 22,000 lbs.		HOST VEHICLE WEIGHT 22,000+ lbs.	
45-55 MPH	60+ MPH	45-55 MPH	60+ MPH
123'	172'	100'	150'

CHANNELIZATION DEVICE SPACING (feet)		
MPH	TAPER	TANGENT
50/70	40	80
35/45	30	60
25/30	20	40

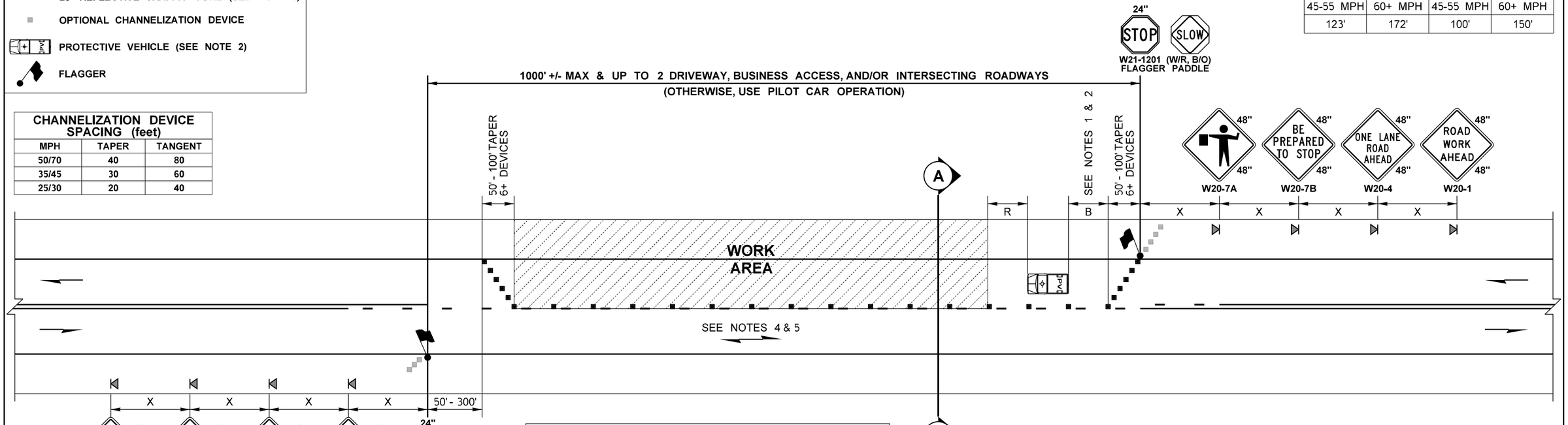

SIGN SPACING = X (1)		
RURAL HIGHWAYS	60 / 65 MPH	800' ±
RURAL ROADS	45 / 55 MPH	500' ±
RURAL ROADS & URBAN ARTERIALS	35 / 40 MPH	350' ±
RURAL ROADS, URBAN ARTERIALS, RESIDENTIAL & BUSINESS DISTRICTS	25 / 30 MPH	200' ± (2)
URBAN STREETS	25 MPH OR LESS	100' ± (2)

(1) ALL SPACING MAY BE ADJUSTED TO ACCOMMODATE INTERSECTIONS AND DRIVEWAYS.
(2) THIS SPACING MAY BE REDUCED IN URBAN AREAS TO FIT ROADWAY CONDITIONS.

NOTES:

1. AVOID PLACING LANE CLOSURE TAPERS WITHIN OR IMMEDIATELY FOLLOWING HORIZONTAL & VERTICAL CURVES BY ADJUSTING LONGITUDINAL BUFFER SPACE.
2. IF LONGITUDINAL BUFFER SPACE IS REDUCED FROM DISTANCES LISTED IN TABLE, UPGRADE PROTECTIVE VEHICLE TO A TRANSPORTABLE ATTENUATOR.
3. 36" TRAFFIC CONES, 42" TALL CHANNELIZATION DEVICES, OR TRAFFIC SAFETY DRUMS OK.
4. BICYCLISTS MAY BE COMBINED WITH ALTERNATING VEHICULAR TRAFFIC. BIKES TO CLEAR PRIOR TO FLAGGERS RELEASING ONCOMING TRAFFIC.
5. ACCOMEDIATE PEDESTRIANS VIA SHUTTLE THROUGH LANE CLOSURE, USING THE PAVED SHOULDER OPPOSITE THE WORK AREA, OR ANOTHER METHOD THE ENGINEER ACCEPTS.
6. SEE STANDARD SPECIFICATIONS FOR ADDITIONAL REQUIREMENTS:
   1-07.8(1) HIGH-VISIBILITY APPAREL
   1-10.3(1)A FLAGGERS AND NIGHTTIME ILLUMINATION
   1-10.3(2)A TRAFFIC CONTROL PROCEDURES
   9-35.1 24-INCH STOP/SLOW PADDLE SIZE
7. FOR PROJECT-SPECIFIC REQUIREMENTS, SEE SPECIAL PROVISIONS.
8. SIGNS ARE BLACK ON ORANGE UNLESS OTHERWISE INDICATED.
9. ACTUAL CENTERLINE PAVEMENT MARKINGS MAY VARY.

W20-1	** W20-7A	W20-7B	W20-7A

BUFFER DATA

LONGITUDINAL BUFFER SPACE = B										
SPEED (MPH)	25	30	35	40	45	50	55	60	65	70
LENGTH (feet)	155	200	250	305	360	425	495	570	645	730

TRANSPORTABLE ATTENUATOR ROLL AHEAD DISTANCE = R					
HOST VEHICLE WEIGHT 9,900 TO 22,000 lbs.			HOST VEHICLE WEIGHT > 22,000 lbs.		
< 45 MPH	45-55 MPH	> 55 MPH	< 45 MPH	45-55 MPH	> 55 MPH
100'	123'	172'	74'	100'	150'

PROTECTIVE VEHICLE ROLL AHEAD DISTANCE = R
NO SPECIFIED DISTANCE REQUIRED STRATEGICALLY POSITION WORK VEHICLE TO PROTECT WORK CREW.

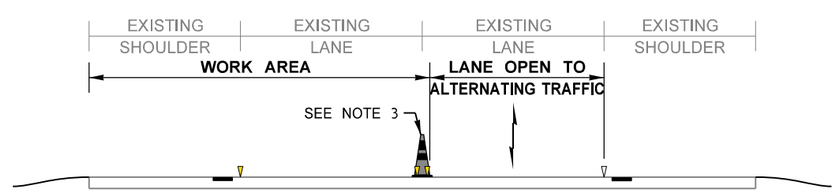

SECTION A-A

ALTERNATING 1-LANE, 2-WAY TRAFFIC: FLAGGER-CONTROLLED
NOT TO SCALE

FILE NAME	c:\users\whltekev\documents\d0335753\XL6050_PS_TC_SAM_010.dgn				
TIME	4:12:34 PM				
DATE	3/27/2023				
PLOTTED BY	whitekev				
DESIGNED BY	C. JOHNSON				
ENTERED BY	C. JOHNSON				
CHECKED BY	K. HOUSE				
PROJ. ENGR.	A. AMOS				
REGIONAL ADM.	S. ROARK	REVISION	DATE	BY	

REGION NO.	STATE	FED.AID PROJ.NO.
10	WASH	
JOB NUMBER 22C533		
CONTRACT NO.		LOCATION NO. XL6050

P.E. STAMP BOX DATE

P.E. STAMP BOX DATE

Washington State Department of Transportation

Parametrix

SR 305
SAM SNYDER CREEK
REMOVE FISH BARRIER

TRAFFIC CONTROL PLAN

PLAN REF NO TC10

SHEET 183 OF 186 SHEETS

NOTES:

1. FOR LEGEND, TABLES, AND ADDITIONAL NOTES: SEE TC10.
2. WORK MAY OCCUR ACROSS INTERSECTING ROADWAY APPROACH BY HOLDING ACCESS TRAFFIC UP TO 5 MINUTES AND RESTRICTING TURNS FROM MAINLINE. CHANNELIZATION DEVICES DELINEATING APPROACH MAY BE REMOVED.
3. SINGLE FLAGGER MAY BE ADDED TO THE INTERSECTING ROADWAY APPROACH TO HELP GUIDE ALTERNATING TRAFFIC THROUGH INTERSECTION.
4. WORK MAY OCCUR ACROSS DRIVEWAY OR ACCESS APPROACH BY HOLDING ACCESS TRAFFIC UP TO 5 MINUTES AND RESTRICTING TURNS FROM MAINLINE. CHANNELIZATION DEVICES DELINEATING ACCESS MAY BE REMOVED.
5. PAVEMENT MARKINGS MAY VARY.

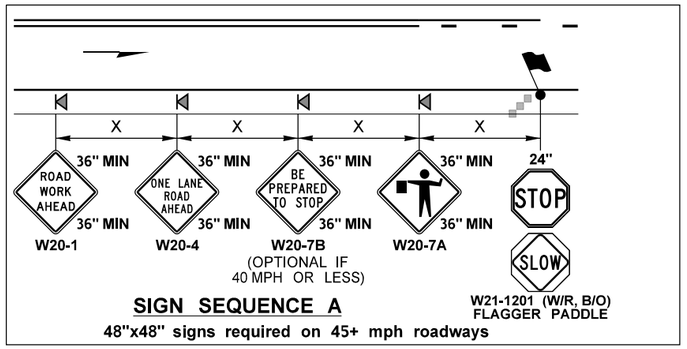

SIGN SEQUENCE A

48"x48" signs required on 45+ mph roadways

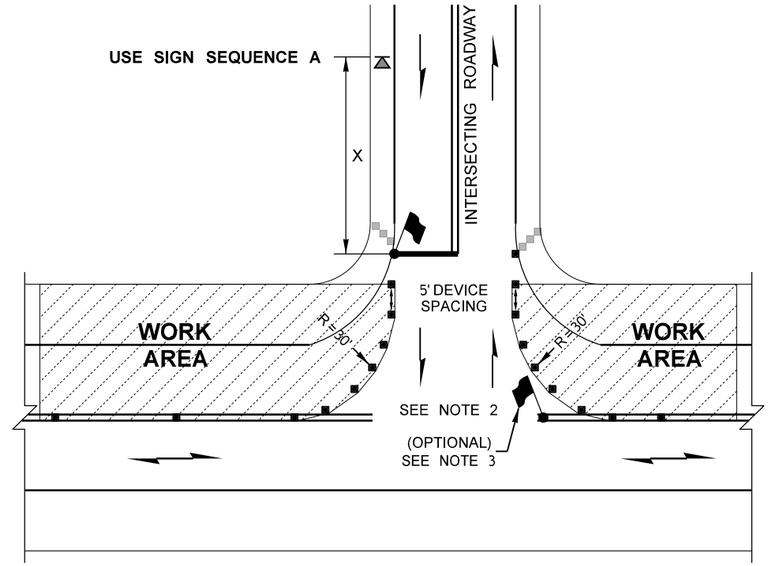

UNSIGNALIZED INTERSECTING ROADWAY DETAIL
SAME SIDE AS LANE CLOSURE (TWO OPEN LANES)

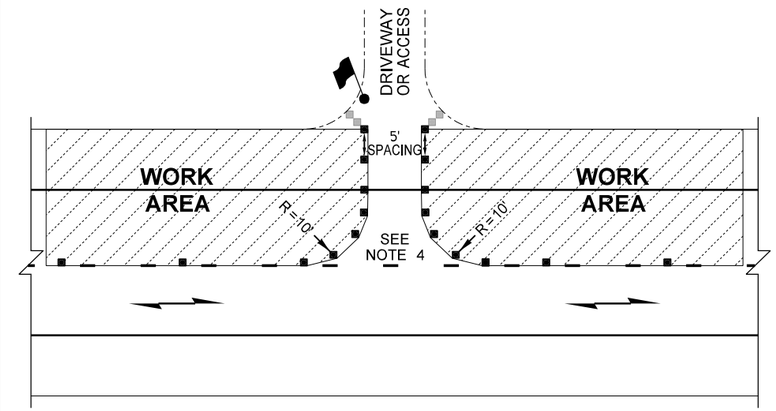

DRIVEWAY OR BUSINESS ACCESS DETAIL
SAME SIDE AS LANE CLOSURE

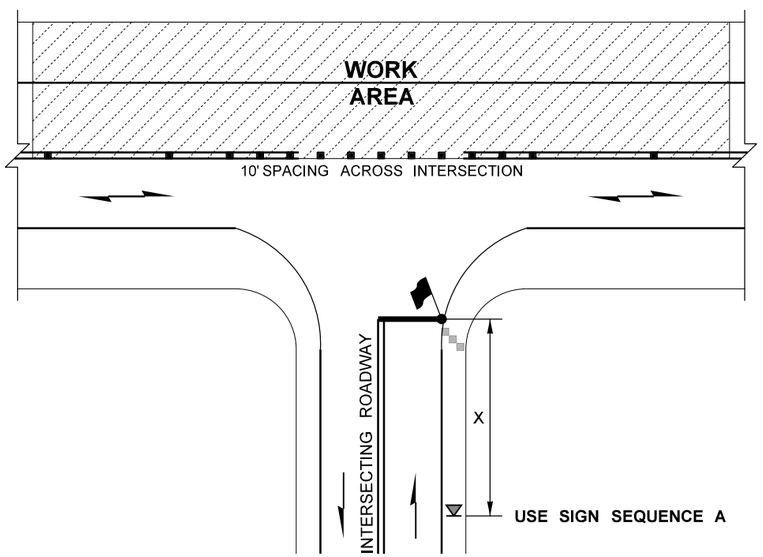

UNSIGNALIZED INTERSECTING ROADWAY DETAIL
OPPOSITE OF LANE CLOSURE

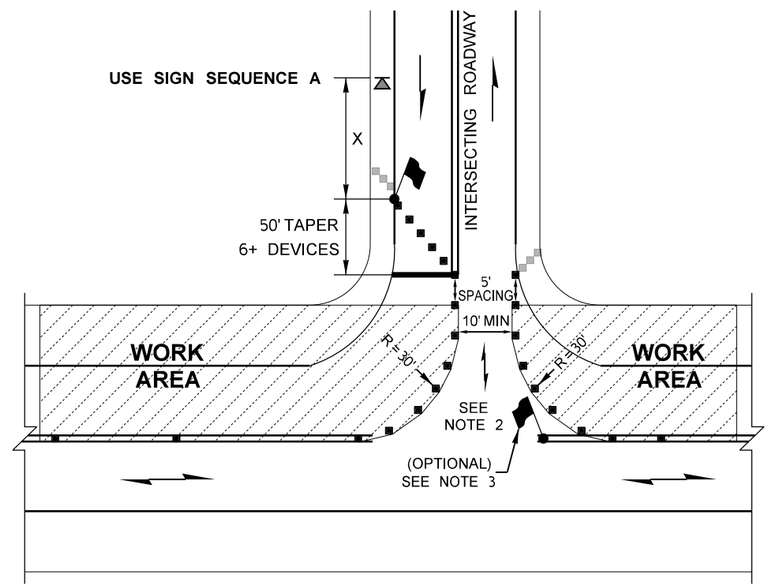

UNSIGNALIZED INTERSECTING ROADWAY DETAIL
SAME SIDE AS LANE CLOSURE (SINGLE OPEN LANE)

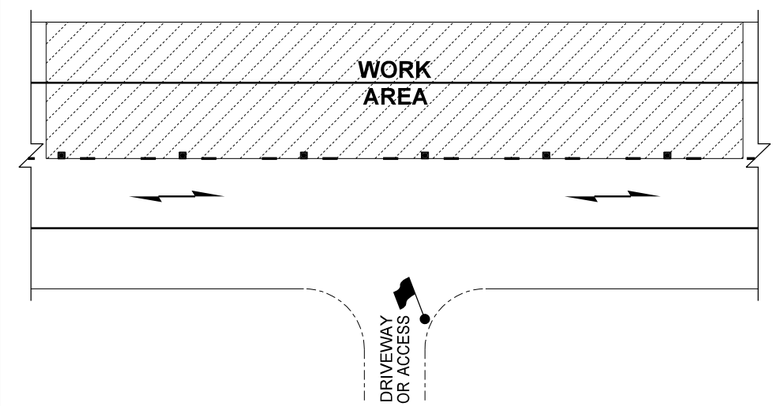

DRIVEWAY OR BUSINESS ACCESS DETAIL
OPPOSITE OF LANE CLOSURE

ALTERNATING 1-LANE, 2-WAY TRAFFIC: FLAGGER-CONTROLLED
NOT TO SCALE

FILE NAME	c:\users\whltekev\documents\d0335753\XL6050_PS_TC_SAM_011.dgn				REGION NO.	STATE	FED.AID PROJ.NO.		Washington State Department of Transportation	SR 305 SAM SNYDER CREEK REMOVE FISH BARRIER	PLAN REF NO TC11
TIME	4:12:34 PM				10	WASH					
DATE	3/27/2023				JOB NUMBER 22C533						SHEET 184 OF 186 SHEETS
PLOTTED BY	whitekev										
DESIGNED BY	C. JOHNSON										
ENTERED BY	C. JOHNSON										
CHECKED BY	K. HOUSE				CONTRACT NO.		LOCATION NO. XL6050				
PROJ. ENGR.	A. AMOS										
REGIONAL ADM.	S. ROARK	REVISION	DATE	BY				P.E. STAMP BOX DATE	P.E. STAMP BOX DATE	Parametrix	TRAFFIC CONTROL PLAN

SIGN SPACING = X (1)		
RURAL HIGHWAYS	60-65 MPH	800' +/-
RURAL ROADS	45-55 MPH	500' +/-

(1) ALL SPACING MAY BE ADJUSTED TO ACCOMMODATE INTERCHANGE RAMPS, AT-GRADE INTERSECTIONS AND DRIVEWAYS.

LONGITUDINAL BUFFER SPACE = B					
SPEED (MPH)	45	50	55	60	65
LENGTH (feet)	360	425	495	570	645

MAXIMUM CHANNELIZATION DEVICE SPACING (feet)		
MPH	TAPER	TANGENT
50-65	10 to 20	80
45	10 to 20	60

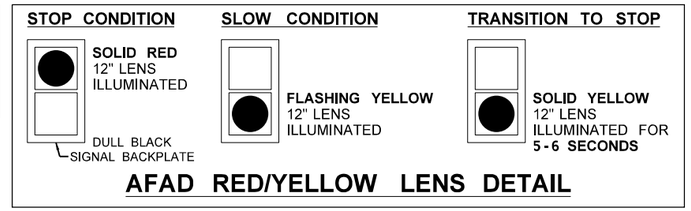

AFAD RED/YELLOW LENS DETAIL

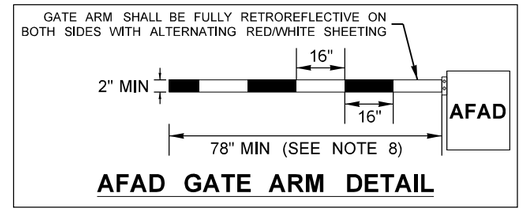

AFAD GATE ARM DETAIL

PROTECTIVE VEHICLE ROLL AHEAD DISTANCE = R
NO SPECIFIED DISTANCE REQUIRED. STRATEGICALLY POSITION WORK VEHICLE TO PROTECT WORK CREW.

(MAY BE ATTACHED TO AFAD)

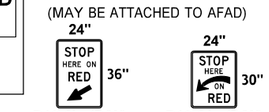

R10-6L (B/W) or R10-6A (B/W)

STATIONARY TRANSPORTABLE ATTENUATOR ROLL AHEAD DISTANCE = R			
HOST VEHICLE WEIGHT LESS THAN 22,000 lbs.		HOST VEHICLE WEIGHT 22,000+ lbs.	
45-55 MPH	60+ MPH	45-55 MPH	60+ MPH
123'	172'	100'	150'

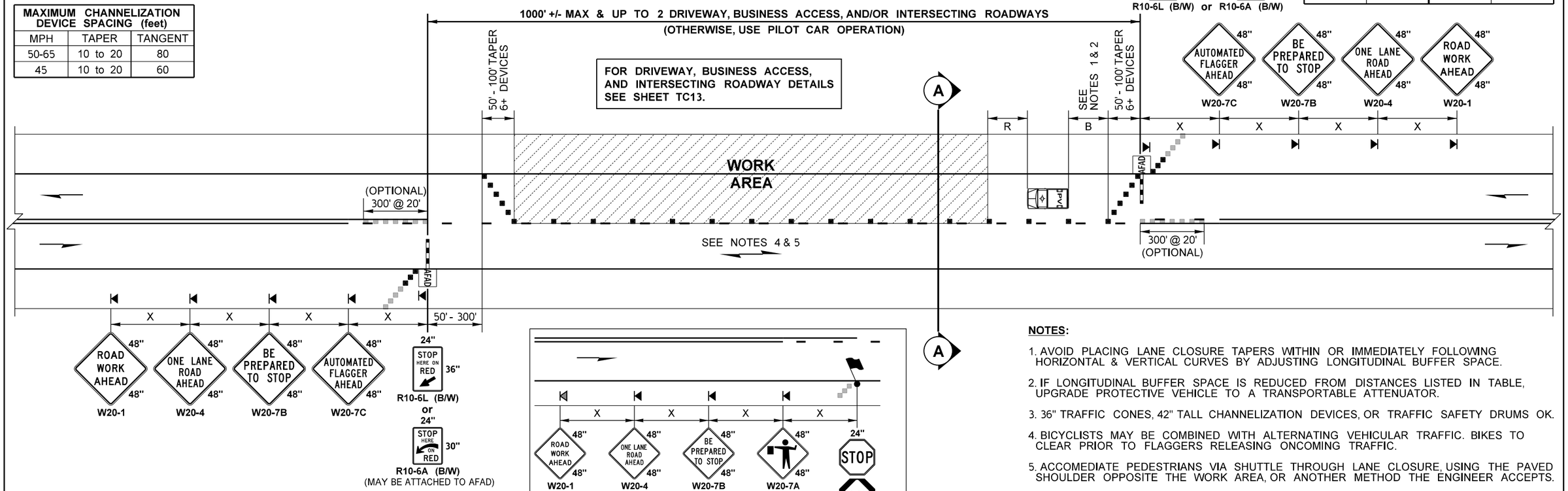

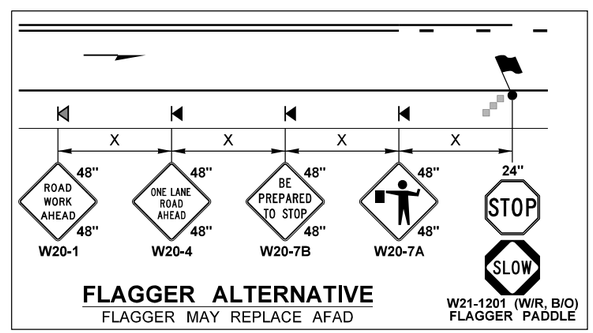

FLAGGER ALTERNATIVE

FLAGGER MAY REPLACE AFAD

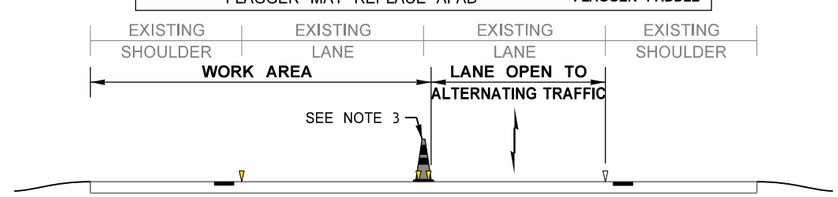

SECTION A-A

NOTES:

1. AVOID PLACING LANE CLOSURE TAPERS WITHIN OR IMMEDIATELY FOLLOWING HORIZONTAL & VERTICAL CURVES BY ADJUSTING LONGITUDINAL BUFFER SPACE.
2. IF LONGITUDINAL BUFFER SPACE IS REDUCED FROM DISTANCES LISTED IN TABLE, UPGRADE PROTECTIVE VEHICLE TO A TRANSPORTABLE ATTENUATOR.
3. 36" TRAFFIC CONES, 42" TALL CHANNELIZATION DEVICES, OR TRAFFIC SAFETY DRUMS OK.
4. BICYCLISTS MAY BE COMBINED WITH ALTERNATING VEHICULAR TRAFFIC. BIKES TO CLEAR PRIOR TO FLAGGERS RELEASING ONCOMING TRAFFIC.
5. ACCOMEDIATE PEDESTRIANS VIA SHUTTLE THROUGH LANE CLOSURE, USING THE PAVED SHOULDER OPPOSITE THE WORK AREA, OR ANOTHER METHOD THE ENGINEER ACCEPTS.
6. SEE **STANDARD SPECIFICATIONS** FOR ADDITIONAL REQUIREMENTS:
   - **1-07.8(1)** HIGH-VISIBILITY APPAREL
   - **1-10.3(1)A** FLAGGERS AND NIGHTTIME ILLUMINATION
   - **1-10.3(2)A** TRAFFIC CONTROL PROCEDURES
   - **9-35.1** 24-INCH STOP/SLOW PADDLE SIZE
7. FOR PROJECT-SPECIFIC REQUIREMENTS, SEE **SPECIAL PROVISIONS**.
8. AFAD GATE ARM SHALL REACH HALFWAY ACROSS LANE BEING CONTROLLED ON RED LENS DISPLAY & ASCEND TO AN UPRIGHT POSITION ON FLASHING YELLOW LENS DISPLAY. GATE ARM SHALL NOT DESCEND UNTIL AFTER RED LENS DISPLAYED.
9. FLAGGERS SHALL BE TRAINED IN OPERATION OF AFAD. FLAGGER SHALL BE POSITIONED TO SEE BOTH AFAD AND APPROACHING TRAFFIC (DIGITAL ALTERNATIVES ARE ACCEPTABLE). LEAVING AFAD UNATTENDED PROHIBITED.
10. SIGNS ARE BLACK ON ORANGE UNLESS OTHERWISE INDICATED.
11. ACTUAL CENTERLINE PAVEMENT MARKINGS MAY VARY.

LEGEND

- TEMPORARY SIGN LOCATION
- 28" REFLECTIVE TRAFFIC CONE (SEE NOTE 3)
- OPTIONAL CHANNELIZATION DEVICE
- PROTECTIVE VEHICLE (SEE NOTE 2)
- FLAGGER
- AFAD — AUTOMATED FLAGGER ASSISTANCE DEVICE (SEE NOTES 8 & 9)

ALTERNATING 1-LANE, 2-WAY TRAFFIC: AFAD-CONTROLLED (45+ MPH HIGHWAYS)

NOT TO SCALE

FILE NAME	c:\users\whitekev\documents\d0335753\XL6050_PS_TC_SAM_012.dgn
TIME	4:12:35 PM
DATE	3/27/2023
PLOTTED BY	whitekev
DESIGNED BY	C. JOHNSON
ENTERED BY	C. JOHNSON
CHECKED BY	K. HOUSE
PROJ. ENGR.	A. AMOS
REGIONAL ADM.	S. ROARK

REVISION | DATE | BY

REGION NO.	STATE	FED.AID PROJ.NO.
10	WASH	
JOB NUMBER 22C533		
CONTRACT NO.		LOCATION NO. XL6050

P.E. STAMP BOX DATE

P.E. STAMP BOX DATE

Washington State Department of Transportation

Parametrix

SR 305
SAM SNYDER CREEK
REMOVE FISH BARRIER

TRAFFIC CONTROL PLAN

PLAN REF NO TC12

SHEET 185 OF 186 SHEETS

NOTES:

12. FOR LEGEND, TABLES, AND ADDITIONAL NOTES: SEE SHEET TC12.

13. WORK MAY OCCUR ACROSS INTERSECTING ROADWAY APPROACH BY HOLDING ACCESS TRAFFIC UP TO 5 MINUTES AND RESTRICTING TURNS FROM MAINLINE. CHANNELIZATION DEVICES DELINEATING APPROACH MAY BE REMOVED.

14. SINGLE FLAGGER MAY BE ADDED TO THE INTERSECTING ROADWAY APPROACH TO HELP GUIDE ALTERNATING TRAFFIC THROUGH INTERSECTION.

15. WORK MAY OCCUR ACROSS DRIVEWAY OR ACCESS APPROACH BY HOLDING ACCESS TRAFFIC UP TO 5 MINUTES AND RESTRICTING TURNS FROM MAINLINE. CHANNELIZATION DEVICES DELINEATING ACCESS MAY BE REMOVED.

16. PAVEMENT MARKINGS MAY VARY.

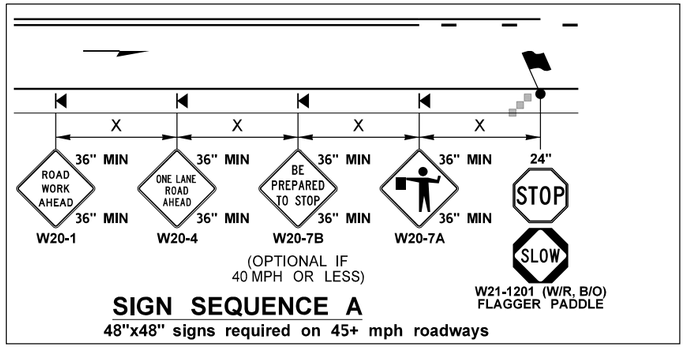

SIGN SEQUENCE A
48"x48" signs required on 45+ mph roadways

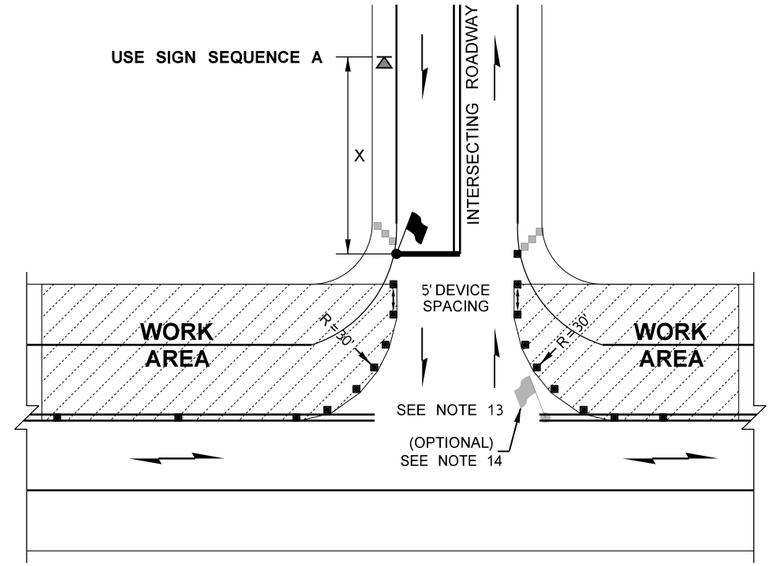

UNSIGNALIZED INTERSECTING ROADWAY DETAIL
SAME SIDE AS LANE CLOSURE (TWO OPEN LANES)

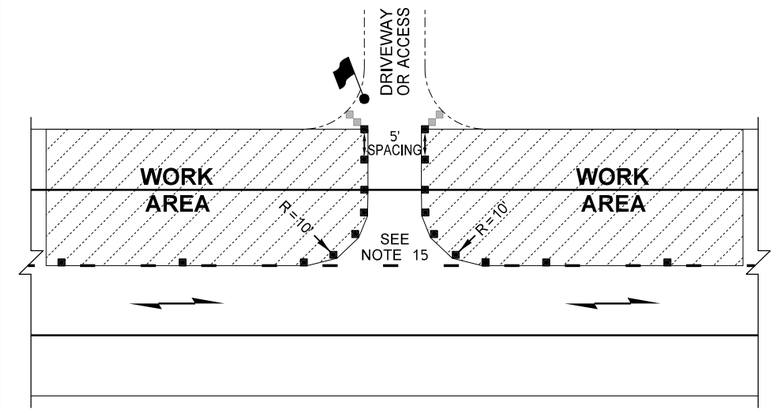

DRIVEWAY OR BUSINESS ACCESS DETAIL
SAME SIDE AS LANE CLOSURE

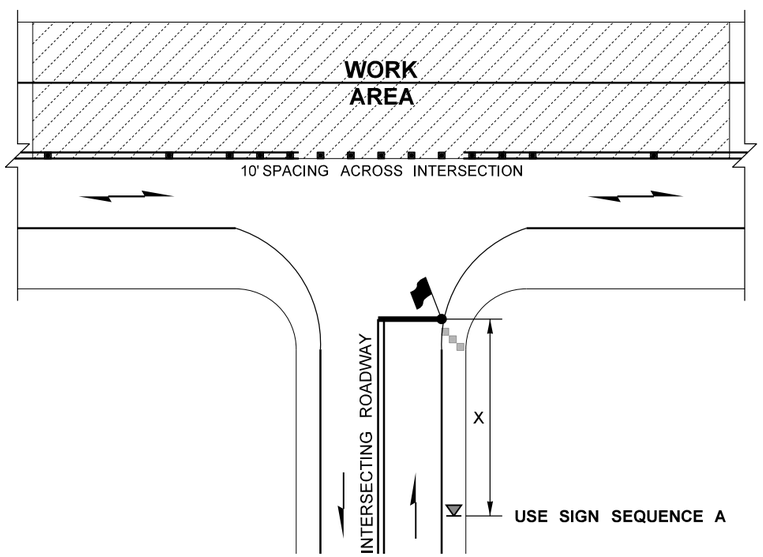

UNSIGNALIZED INTERSECTING ROADWAY DETAIL
OPPOSITE OF LANE CLOSURE

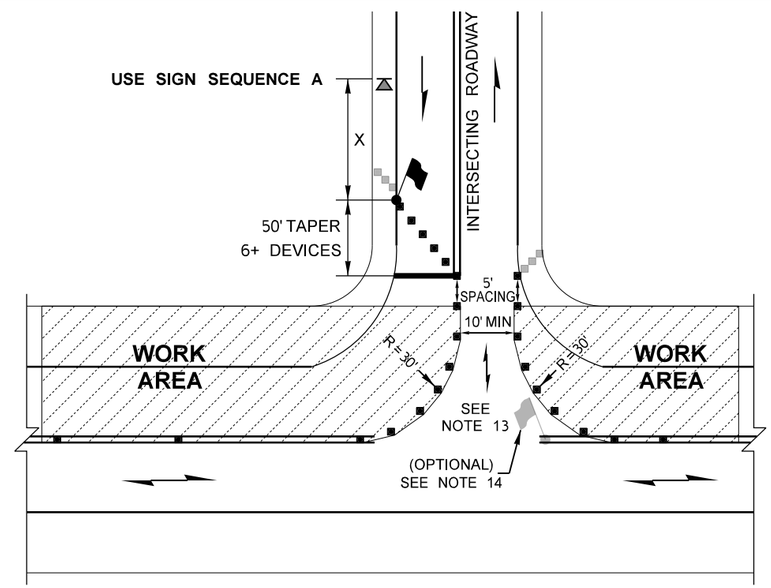

UNSIGNALIZED INTERSECTING ROADWAY DETAIL
SAME SIDE AS LANE CLOSURE (SINGLE OPEN LANE)

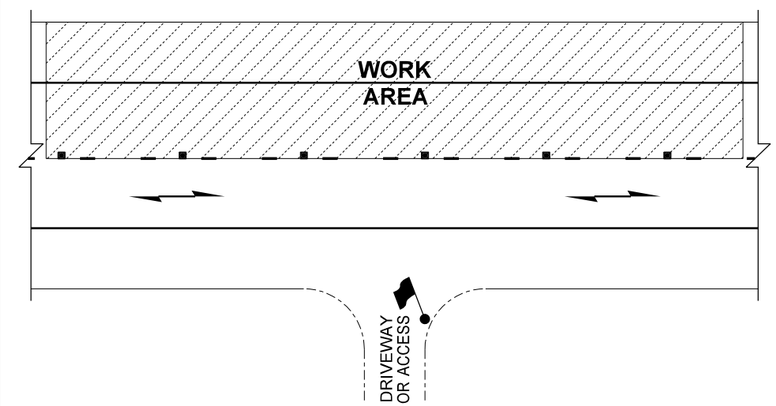

DRIVEWAY OR BUSINESS ACCESS DETAIL
OPPOSITE OF LANE CLOSURE

ALTERNATING 1-LANE, 2-WAY TRAFFIC: AFAD-CONTROLLED (45+ MPH HIGHWAYS)

NOT TO SCALE

FILE NAME	c:\users\whltekev\documents\d0335753\XL6050_PS_TC_SAM_013.dgn									
TIME	4:12:36 PM				REGION NO. 10	STATE WASH	FED.AID PROJ.NO.			PLAN REF NO TC13
DATE	3/27/2023								Washington State Department of Transportation	SR 305 SAM SNYDER CREEK REMOVE FISH BARRIER
PLOTTED BY	whitekev				JOB NUMBER 22C533					SHEET 186 OF 186 SHEETS
DESIGNED BY	C. JOHNSON									
ENTERED BY	C. JOHNSON									
CHECKED BY	K. HOUSE				CONTRACT NO.		LOCATION NO. XL6050			
PROJ. ENGR.	A. AMOS								Parametrix	TRAFFIC CONTROL PLAN
REGIONAL ADM.	S. ROARK	REVISION	DATE	BY				P.E. STAMP BOX DATE	P.E. STAMP BOX DATE	