INDEX

SHEET NO.	PLAN REFERENCE NO.	TITLE
1 - 3	IN1 - IN3	INDEX
4	CT1	CERTIFICATION SHEET
5	VM1	VICINITY MAP
6 - 7	SQ1 - SQ2	SUMMARY OF QUANTITIES
8	RS1	ROADWAY SECTIONS
9 - 12	AL1 - AL4	ALIGNMENT / SITE PREP / STAGING PLAN
13	PR1	ROADWAY PROFILE
14 - 16	PV1 - PV3	PAVING / PAVEMENT MARKING PLAN
17	W1	LAYOUT (APPROACH RETAINING WALLS 241/2)
18	W2	GENERAL NOTES CONSTRUCTION SEQUENCE
19	W3	STONE COLUMN GROUND IMPROVEMENT PLAN
20	W4	WALL 2 ELEVATION
21	W5	WALL 4 ELEVATION
22	W6	CELLULAR CONC. RETAINING WALL DETAILS 1 OF 8
23	W7	CELLULAR CONC. RETAINING WALL DETAILS 2 OF 8
24	W8	CELLULAR CONC. RETAINING WALL DETAILS 3 OF 8
25	W9	CELLULAR CONC. RETAINING WALL DETAILS 4 OF 8
26	W10	CELLULAR CONC. RETAINING WALL DETAILS 5 OF 8
27	W11	CELLULAR CONC. RETAINING WALL DETAILS 6 OF 8
28	W12	CELLULAR CONC. RETAINING WALL DETAILS 7 OF 8
29	W13	CELLULAR CONC. RETAINING WALL DETAILS 8 OF 8
30	W14	SHOTCRETE FACING DETAILS
31	W15	TRAFFIC BARRIER DETAILS 1 OF 3

INDEX (CONTINUED)

SHEET NO.	PLAN REFERENCE NO.	TITLE
32	W16	TRAFFIC BARRIER DETAILS 2 OF 3
33	W17	TRAFFIC BARRIER DETAILS 3 OF 3
34	W18	BRIDGE RAILING TYPE BP-12 DETAILS 1 OF 2
35	W19	BRIDGE RAILING TYPE BP-12 DETAILS 2 OF 2
36	W20	CELLULAR CONC. DISTRIBUTION SLAB DETAILS 1 OF 2
37	W21	CELLULAR CONC. DISTRIBUTION SLAB DETAILS 2 OF 2
38	BA1	LAYOUT (241/2 REPLACEMENT)
39	BA2	GENERAL NOTES & GEOMETRIC DATA
40	BA3	CONSTRUCTION SEQUENCE SUPERSTRUCTURE
41	BA4	FOUNDATION LAYOUT
42	BA5	PIER 1 SHAFT DETAILS 1 OF 2
43	BA6	PIER 1 SHAFT DETAILS 2 OF 2
44	BA7	PIER 2 SHAFT DETAILS
45	BA8	PIER 3 SHAFT DETAILS
46	BA9	PIER 4 SHAFT DETAILS 1 OF 2
47	BA10	PIER 4 SHAFT DETAILS 2 OF 2
48	BA11	PIER 1 PLAN
49	BA12	PIER 1 ELEVATION

PLAN REFERENCE NO.

SHEET OF SHEETS

NOTE: ALL SHEET REFERENCES, FIRST NOS. OF STRUCTURE CODE DESIGNATIONS AND MATCH LINE SHEET REFERENCES, ETC., THROUGHOUT THE PLANS, REFER TO THE ENTRY IN THE PLAN REFERENCE NUMBER BOX.

INDEX

SHEET NO.	PLAN REFERENCE NO.	TITLE
50	BA13	PIER 1 DETAILS 1 OF 2
51	BA14	PIER 1 DETAILS 2 OF 2
52	BA15	PIER 1 CURTAIN WALL DETAILS
53	BA16	PIER 2 COLUMN DETAILS
54	BA17	PIER 2 CROSSBEAM DETAILS 1 OF 4
55	BA18	PIER 2 CROSSBEAM DETAILS 2 OF 4
56	BA19	PIER 2 CROSSBEAM DETAILS 3 OF 4
57	BA20	PIER 2 CROSSBEAM DETAILS 4 OF 4
58	BA21	PIER 3 COLUMN DETAILS
59	BA22	PIER 3 CROSSBEAM DETAILS 1 OF 4
60	BA23	PIER 3 CROSSBEAM DETAILS 2 OF 4
61	BA24	PIER 3 CROSSBEAM DETAILS 3 OF 4
62	BA25	PIER 3 CROSSBEAM DETAILS 4 OF 4
63	BA26	PIER 4 PLAN
64	BA27	PIER 4 ELEVATION
65	BA28	PIER 4 DETAILS 1 OF 2
66	BA29	PIER 4 DETAILS 2 OF 2
67	BA30	PIER 4 CURTAIN WALL DETAILS
68	BA31	BEARING DETAILS 1 OF 3
69	BA32	BEARING DETAILS 2 OF 3
70	BA33	BEARING DETAILS 3 OF 3
71	BA34	FRAMING PLAN
72	BA35	TYPICAL SECTION

INDEX (CONTINUED)

SHEET NO.	PLAN REFERENCE NO.	TITLE
73	BA36	WF58TDG THIN DECK GIRDER DETAILS 1 OF 5
74	BA37	WF58TDG THIN DECK GIRDER DETAILS 2 OF 5
75	BA38	WF58TDG THIN DECK GIRDER DETAILS 3 OF 5
76	BA39	WF58TDG THIN DECK GIRDER DETAILS 4 OF 5
77	BA40	WF58TDG THIN DECK GIRDER DETAILS 5 OF 5
78	BA41	INTERMEDIIATE DIAPHRAGM
79	BA42	END DIAPHRAGM
80	BA43	BRIDGE DECK REINFORCEMENT PLAN SPAN 1 AND PARTIAL SPAN 2
81	BA44	BRIDGE DECK REINFORCEMENT PLAN PARTIAL SPAN 2 AND SPAN 3
82	BA45	BRIDGE DECK REINFORCEMENT SECTION NEAR END PIERS AND MID-SPANS
83	BA46	BRIDGE DECK REINFORCEMENT SECTION NEAR PIER 2
84	BA47	TRAFFIC BARRIER DETAILS 1 OF 3
85	BA48	TRAFFIC BARRIER DETAILS 2 OF 3
86	BA49	TRAFFIC BARRIER DETAILS 3 OF 3
87	BA50	BRIDGE RAILING TYPE BP-12 DETAILS 1 OF 2
88	BA51	BRIDGE RAILING TYPE BP-12 DETAILS 2 OF 2
89	BA52	BRIDGE APPROACH SLAB DETAILS 1 OF 3
90	BA53	BRIDGE APPROACH SLAB DETAILS 2 OF 3

PLAN REFERENCE NO.

SHEET OF SHEETS

NOTE: ALL SHEET REFERENCES, FIRST NOS. OF STRUCTURE CODE DESIGNATIONS AND MATCH LINE SHEET REFERENCES, ETC., THROUGHOUT THE PLANS, REFER TO THE ENTRY IN THE PLAN REFERENCE NUMBER BOX.

INDEX

SHEET NO.	PLAN REFERENCE NO.	TITLE
91	BA54	BRIDGE APPROACH SLAB DETAILS 3 OF 3
92	BA55	BARLIST DETAILS 1 OF 2
93	BA56	BARLIST DETAILS 2 OF 2
94	BB1	LAYOUT (241/5)
95	BB2	GENERAL NOTES
96	BB3	CONSTRUCTION SEQUENCE
97	BB4	HINGE 1 REMOVAL DETAILS
98	BB5	HINGE 2 REMOVAL DETAILS
99	BB6	BEARING DETAILS
100	BB7	HINGE 1 BEARING DETAILS
101	BB8	HINGE 2 BEARING DETAILS
102	BB9	ELEVATION AND SECTION HINGE 1 DETAIL
103	BB10	SECTIONS HINGE 1 DETAIL
104	BB11	PLAN HINGE 1 DETAIL
105	BB12	ELEVATION HINGE 2 DETAIL
106	BB13	SECTION HINGE 2 DETAIL
107	BB14	PLAN HINGE 2 DETAILS
108	BB15	EXPANSION JOINT DETAILS STRIP SEAL
109	BB16	EXPANSION JOINT DETAILS COMPRESSION SEAL
110	BB17	SIDEWALK AND RAILING DETAILS
111	BB18	BARLIST
112 - 114	TC1 - TC3	TRAFFIC CONTROL PLANS
115	DU1	DETOUR PLAN

INDEX (CONTINUED)

SHEET NO.	PLAN REFERENCE NO.	TITLE

PLAN REFERENCE NO.

SHEET OF SHEETS

NOTE: ALL SHEET REFERENCES, FIRST NOS. OF STRUCTURE CODE DESIGNATIONS AND MATCH LINE SHEET REFERENCES, ETC., THROUGHOUT THE PLANS, REFER TO THE ENTRY IN THE PLAN REFERENCE NUMBER BOX.

FILE NAME	K:\454306\Projects\XL5661 - SR 241 Mabton Vicinity - Retrofit Bridges\CAD\ContractPlans_Alt\010-Index\XL5661_IN.dgn
TIME	6:20:31 AM
DATE	12/21/2022
PLOTTED BY	McCoyK
DESIGNED BY	M. WILHELM
ENTERED BY	K. MCCOY
CHECKED BY	P. COOPER
PROJ. ENGR.	A. SANGUINO
REGIONAL ADM.	T. TREPANIER

REVISION | DATE | BY

REGION NO. 10 | STATE WASH | FED.AID PROJ.NO.

JOB NUMBER 21Y001

CONTRACT NO. | LOCATION NO.

P.E. STAMP BOX DATE

P.E. STAMP BOX DATE

Washington State Department of Transportation

SR 241
MABTON VICINITY -
RETROFIT BRIDGES

INDEX

Plot 3

PLAN REF. NO. IN3

SHEET 3 OF 115 SHEETS

PROJECT LICENSED PROFESSIONAL CERTIFICATES

Alejandro Sanguino Feb 6, 2023 AS A LICENSED PROFESSIONAL IN DIRECT RESPONSIBLE CHARGE OF DEVELOPING THIS CONTRACT, I CERTIFY THAT ALL PLANS THAT CONTAIN MY STAMP HAVE BEEN DEVELOPED UNDER MY SUPERVISION.	Brian Aldrich Feb 6, 2023 AS A LICENSED PROFESSIONAL IN DIRECT RESPONSIBLE CHARGE OF DEVELOPING THIS CONTRACT, I CERTIFY THAT ALL PLANS THAT CONTAIN MY STAMP HAVE BEEN DEVELOPED UNDER MY SUPERVISION.	David Johnson Feb 6, 2023 AS A LICENSED PROFESSIONAL IN DIRECT RESPONSIBLE CHARGE OF DEVELOPING THIS CONTRACT, I CERTIFY THAT ALL PLANS THAT CONTAIN MY STAMP HAVE BEEN DEVELOPED UNDER MY SUPERVISION.	SchultE@wsdot.wa.gov Feb 6, 2023 AS A LICENSED PROFESSIONAL IN DIRECT RESPONSIBLE CHARGE OF DEVELOPING THIS CONTRACT, I CERTIFY THAT ALL PLANS THAT CONTAIN MY STAMP HAVE BEEN DEVELOPED UNDER MY SUPERVISION.
Chris Feely Feb 6, 2023 AS A LICENSED PROFESSIONAL IN DIRECT RESPONSIBLE CHARGE OF DEVELOPING THIS CONTRACT, I CERTIFY THAT ALL PLANS THAT CONTAIN MY STAMP HAVE BEEN DEVELOPED UNDER MY SUPERVISION.	Anthony Mizumori Feb 6, 2023 AS A LICENSED PROFESSIONAL IN DIRECT RESPONSIBLE CHARGE OF DEVELOPING THIS CONTRACT, I CERTIFY THAT ALL PLANS THAT CONTAIN MY STAMP HAVE BEEN DEVELOPED UNDER MY SUPERVISION.	AS A LICENSED PROFESSIONAL IN DIRECT RESPONSIBLE CHARGE OF DEVELOPING THIS CONTRACT, I CERTIFY THAT ALL PLANS THAT CONTAIN MY STAMP HAVE BEEN DEVELOPED UNDER MY SUPERVISION.	AS A LICENSED PROFESSIONAL IN DIRECT RESPONSIBLE CHARGE OF DEVELOPING THIS CONTRACT, I CERTIFY THAT ALL PLANS THAT CONTAIN MY STAMP HAVE BEEN DEVELOPED UNDER MY SUPERVISION.
AS A LICENSED PROFESSIONAL IN DIRECT RESPONSIBLE CHARGE OF DEVELOPING THIS CONTRACT, I CERTIFY THAT ALL PLANS THAT CONTAIN MY STAMP HAVE BEEN DEVELOPED UNDER MY SUPERVISION.	AS A LICENSED PROFESSIONAL IN DIRECT RESPONSIBLE CHARGE OF DEVELOPING THIS CONTRACT, I CERTIFY THAT ALL PLANS THAT CONTAIN MY STAMP HAVE BEEN DEVELOPED UNDER MY SUPERVISION.	AS A LICENSED PROFESSIONAL IN DIRECT RESPONSIBLE CHARGE OF DEVELOPING THIS CONTRACT, I CERTIFY THAT ALL PLANS THAT CONTAIN MY STAMP HAVE BEEN DEVELOPED UNDER MY SUPERVISION.	AS A LICENSED PROFESSIONAL IN DIRECT RESPONSIBLE CHARGE OF DEVELOPING THIS CONTRACT, I CERTIFY THAT ALL PLANS THAT CONTAIN MY STAMP HAVE BEEN DEVELOPED UNDER MY SUPERVISION.

NOTES:

THIS PLAN SET WAS DEVELOPED ELECTRONICALLY UNDER THE DIRECT SUPERVISION OF THE LICENSED PROFESSIONALS THAT HAVE AFFIXED THEIR SIGNATURE TO THIS PAGE.

THIS SHEET SERVES AS THE CERTIFICATION BY THE ABOVE LICENSED PROFESSIONALS OF ALL SHEETS IN THIS PLAN SET WHERE THEIR STAMPS AND SIGNATURES APPEAR.

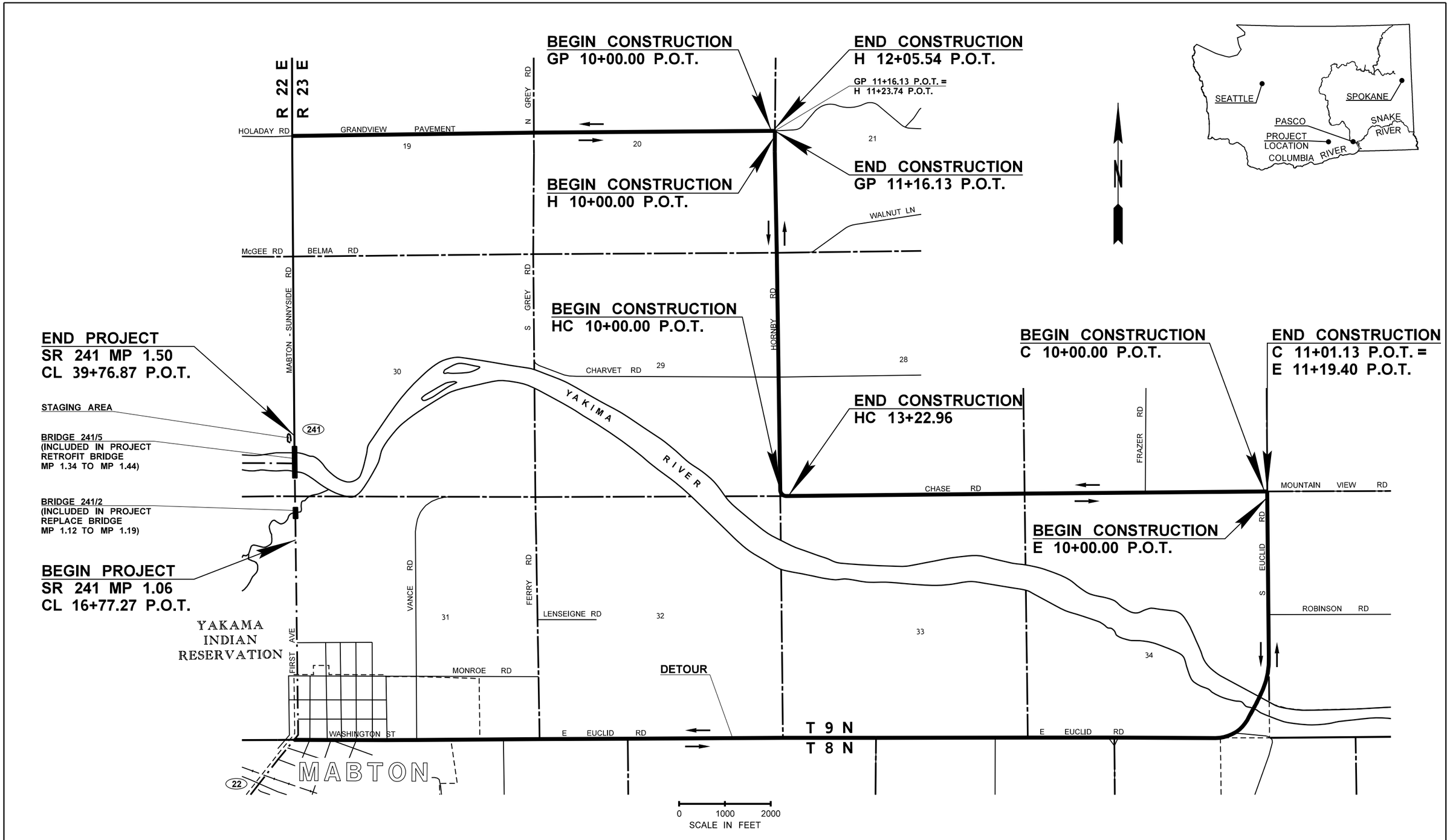

FILE NAME	K:\454306\Projects\XL5661 - SR 241 Mabton Vicinity - Retrofit Bridges\CAD\ContractPlans_Alt\020-Vicinity\XL5661_PS_VM.dgn						
TIME	6:20:34 AM				REGION NO. 10	STATE WASH	FED.AID PROJ.NO.
DATE	12/21/2022						
PLOTTED BY	McCoyK				JOB NUMBER 21Y001		
DESIGNED BY	M. WILHELM						
ENTERED BY	K. McCOY						
CHECKED BY	P. COOPER				CONTRACT NO.		LOCATION NO.
PROJ. ENGR.	A. SANGUINO						
REGIONAL ADM.	T. TREPANIER	REVISION	DATE	BY			

SEE SHEET CT1
DATE
P.E. STAMP BOX

DATE
P.E. STAMP BOX

Washington State
Department of Transportation

SR 241
MABTON VICINITY -
RETROFIT BRIDGES

VICINITY MAP

Plot 1
PLAN REF NO
VM1
SHEET 5 OF 115 SHEETS

SUMMARY OF QUANTITIES

ITEM NO	TOTAL QUANTITY	SUB-TOTAL * SECTION I-07.2(1) OF STANDARD SPECS	SUB-TOTAL ** SECTION I-07.2(2) OF STANDARD SPECS	STD. ITEM NO.	UNIT	ITEM	GROUP 1 SR 241 CL 16+77 TO CL 39+76	GROUP 1 SR 241 RETAINING WALLS BR. 241/2	GROUP 1 SR 241 BR 241/2	GROUP 1 SR 241 BRIDGE NO. 241/5	GROUP 1 E 10+00 TO E 11+19	GROUP 1 C 10+00 TO C 11+01	GROUP 1 GP 10+00 TO GP 11+16	GROUP 1 H 10+00 TO H 11+23	GROUP 1 HC 10+00 TO HC 13+22	GROUP 2 THIRD PARTY DAMAGE
						PREPARATION										
1	LUMP SUM		LUMP SUM	0001	L.S.	MOBILIZATION	L.S.	L.S.	L.S.	L.S.	L.S.	L.S.	L.S.	L.S.	L.S.	
2	LUMP SUM		LUMP SUM	0035	L.S.	CLEARING AND GRUBBING	L.S.				L.S.	L.S.	L.S.	L.S.	L.S.	
3	65000.00		65000.00	0256	DOL	REMOVING SHAFT OBSTRUCTIONS			65,000.00							
4	LUMP SUM		LUMP SUM	0259	L.S.	WORK ACCESS - BRIDGE NO. 241/2			L.S.							
5	LUMP SUM		LUMP SUM	0259	L.S.	WORK ACCESS - BRIDGE NO. 241/5				L.S.						
6	LUMP SUM		LUMP SUM	0071	L.S.	REMOVING EXISTING BRIDGE - BRIDGE NO. 241/2			L.S.							
7	600.00		600.00	0170	L.F.	REMOVING GUARDRAIL	600.00									
						GRADING										
8	10947.00		10947.00	0310	C.Y.	ROADWAY EXCAVATION INCL. HAUL	555.00	10,330.00			12.00	14.00	3.00	6.00	27.00	
9	13.00		13.00	0405	C.Y.	COMMON BORROW INCL. HAUL							8.00	3.00	2.00	
10	1996.00		1996.00	0470	C.Y.	EMBANKMENT COMPACTION		1,950.00			0.25	0.25	11.00	5.50	29.00	
						DRAINAGE										
11	100.00		100.00	1160	L.F.	UNDERDRAIN PIPE 6 IN. DIAM.		100.00								
						STRUCTURE										
12	695.00		695.00	4006	C.Y.	STRUCTURE EXCAVATION CLASS A INCL. HAUL			695.00							
13	LUMP SUM		LUMP SUM	4013	L.S.	SHORING OR EXTRA EXCAVATION CL. A BR. NO. 241/2			L.S.							
14	33.30		33.30	4025	C.Y.	GRAVEL BACKFILL FOR WALL		33.30								
15	480.00		480.00		L.F.	CONSTRUCTING CFST 8 FT. DIAM SHAFT			480.00							
16	89516.00		89516.00	4149	LB.	ST. REINF. BAR FOR BRIDGE			89,516.00							
17	178.00		178.00	4089	L.F.	CONSTRUCTING 8 FT. DIAM SHAFT			178.00							
18	6.00		6.00	4160	EACH	QA SHAFT TEST			6.00							
19	-1.00		-1.00	4219	DOL	DEFICIENT STRENGTH CONC. PRICE ADJUSTMENT				-1.00						
20	LUMP SUM		LUMP SUM	4230	L.S.	STRUCTURAL CARBON STEEL			L.S.							
21	348.00		348.00	4322	C.Y.	CONC. CLASS 4000 FOR BRIDGE			348.00							
22	1750.00		1750.00	4269	L.F.	PRESTRESSED CONC. GIRDER WF58TDG - BRIDGE NO. 241/2			1,750.00							
23	6.00		6.00	4312	EACH	DISC BEARING - SUPERSTR.				6.00						
24	LUMP SUM		LUMP SUM	4300	L.S.	SUPERSTRUCTURE BRIDGE NO, 241/2 REPLACEMENT			L.S.							
25	LUMP SUM		LUMP SUM	4300	L.S.	SUPERSTRUCTURE - BRIDGE NO. 241/5 RETROFIT				L.S.						
26	19250.00		19250.00		LB.	WELDED WIRE FOR CELLULAR CONC RETAINING WALL		19,250.00								
27	2600.00		2600.00		C.Y.	CELLULAR CONC CLASS 2		2,600.00								
28	450.00		450.00		C.Y.	CELLULAR CONC CLASS 4		450.00								
29	400.00		400.00		C.Y.	CELLULAR CONC CLASS 6		400.00								
30	587.00		587.00		S.Y.	CELLULAR CONC DISTRIBUTION SLAB		587.00								
31	820.00		820.00	4410	L.F.	BRIDGE RAILING TYPE BP-12			820.00							
32	1143.00		1143.00	4415	L.F.	TRAFFIC BARRIER		323.00	820.00							
33	190.00		190.00	5656	S.Y.	BRIDGE APPROACH SLAB			190.00							
						SURFACING										
34	928.00		928.00	5100	TON	CRUSHED SURFACING BASE COURSE	425.00				47.00	84.00	62.00	62.00	248.00	
						HOT MIX ASPHALT										
35	333.00		333.00	5739	TON	HMA FOR PAVEMENT REPAIR CL. 1/2 IN. PG 64H-28					66.50	66.50	66.50	66.50	67.00	
36	495.00		495.00	5767	TON	HMA CL. 1/2 IN. PG 64H-28	287.00				30.00	24.00	25.00	25.00	104.00	
37	2228.00		2228.00	5830	DOL	JOB MIX COMPLIANCE PRICE ADJUSTMENT	1,292.00				135.00	108.00	112.50	112.50	468.00	

GROUP LEGEND

GROUP NUMBER	SR	CONTROL SECTION	TAX SCHEDULE	FUND PARTICIPANTS
1	241	393800	**	STATE CWA
2	241	393800	**	STATE THIRD PARTY

DATE	REVISION	BY

REGION	STATE	FEDERAL AID PROJECT. NO.
10	WA	

JOB NUMBER 21Y001/2

CONTRACT NO 000000

Washington State Department of Transportation

SR 241
MABTON VICINITY
RETROFIT BRIDGES

SUMMARY OF QUANTITIES

SQ1

SUMMARY OF QUANTITIES

ITEM NO	TOTAL QUANTITY	SUB-TOTAL * SECTION I-07.2(1) OF STANDARD SPECS	SUB-TOTAL ** SECTION I-07.2(2) OF STANDARD SPECS	STD. ITEM NO.	UNIT	ITEM	GROUP 1 SR 241 CL 16+77 TO CL 39+76	GROUP 1 SR 241 RETAINING WALLS BR. 241/2	GROUP 1 SR 241 BR 241/2	GROUP 1 SR 241 BRIDGE NO. 241/5	GROUP 1 E 10+00 TO E 11+19	GROUP 1 C 10+00 TO C 11+01	GROUP 1 GP 10+00 TO GP 11+16	GROUP 1 H 10+00 TO H 11+23	GROUP 1 HC 10+00 TO HC 13+22	GROUP 2 THIRD PARTY DAMAGE
38	3713.00		3713.00	5835	DOL	COMPACTION PRICE ADJUSTMENT	2,153.00				225.00	180.00	187.50	187.50	780.00	
39	1742.00		1742.00	5837	DOL	ASPHALT COST PRICE ADJUSTMENT	1,010.00				106.00	84.00	88.00	88.00	366.00	
40	64.00		64.00	6511	L.F.	HMA SAWCUT AND SEAL	64.00									
						EROSION CONTROL AND ROADSIDE PLANTING										
41	1000.00		1000.00	6479	L.F.	WATTLE		500.00	500.00							
42	LUMP SUM		LUMP SUM	6488	L.S.	EROSION CONTROL AND WATER POLLUTION PREVENTION	L.S.				L.S.	L.S.	L.S.	L.S.	L.S.	
43	0.31		0.31	6422	ACRE	SEEDING AND MULCHING	0.18				0.01	0.03	0.02	0.02	0.05	
44	2640.00		2640.00	6635	L.F.	HIGH VISIBILITY SILT FENCE	1,036.00				135.00	285.00	217.00	225.00	742.00	
45	LUMP SUM		LUMP SUM	6404	L.S.	ENVIRONMENTAL COMPLIANCE LEAD	L.S.	L.S.	L.S.	L.S.	L.S.	L.S.	L.S.	L.S.	L.S.	
						TRAFFIC										
46	4.00		4.00	6760	EACH	BEAM GUARDRAIL TRANSITION SECTION TYPE 21	4.00									
47	387.50		387.50	6783	L.F.	RAISING EXISTING BEAM GUARDRAIL	387.50									
48	12.00		12.00	6832	EACH	FLEXIBLE GUIDE POST	12.00									
49	12.00		12.00		EACH	BARRIER DELINEATOR STRIPS	12.00									
50	2748.00		2748.00	6806	L.F.	PAINT LINE	1,902.00				61.00	110.00	141.00	106.00	428.00	
51	LUMP SUM		LUMP SUM	6890	L.S.	PERMANENT SIGNING	L.S.									
52	1640.00		1640.00	6945	L.F.	CONDUIT PIPE 2 IN. DIAM.			1,640.00							
53	13200.00		13200.00	6993	HR	PORTABLE CHANGEABLE MESSAGE SIGN	800.00	2,800.00	2,800.00	2,800.00	800.00	800.00	800.00	800.00	800.00	
54	LUMP SUM		LUMP SUM	6971	L.S.	PROJECT TEMPORARY TRAFFIC CONTROL	L.S.	L.S.	L.S.	L.S.	L.S.	L.S.	L.S.	L.S.	L.S.	
55	75000.00		75000.00	7572	DOL	WORK ZONE SAFETY CONTINGENCY	5,000.00	15,000.00	15,000.00	15,000.00	5,000.00	5,000.00	5,000.00	5,000.00	5,000.00	
56	282.00		282.00	6982	S.F.	CONSTRUCTION SIGNS CLASS A	33.00	58.00	58.00	58.00	15.00	15.00	15.00	15.00	15.00	
						OTHER ITEMS										
57	5000.00		5000.00	9004	DOL	PROJECT PARTNERING			5,000.00							
58	LUMP SUM		LUMP SUM	7003	L.S.	TYPE B PROGRESS SCHEDULE			L.S.							
59	LUMP SUM		LUMP SUM	7037	L.S.	STRUCTURE SURVEYING			L.S.	L.S.						
60	LUMP SUM		LUMP SUM	7038	L.S.	ROADWAY SURVEYING	L.S.				L.S.	L.S.	L.S.	L.S.	L.S.	
61	4200.00		4200.00	7480	DOL	ROADSIDE CLEANUP	1,000.00				800.00	800.00	800.00	800.00		
62	5.00		5.00	7725	DOL	REIMBURSEMENT FOR THIRD PARTY DAMAGE										5.00
63	-1.00		-1.00	7728	DOL	MINOR CHANGE	-1.00									
64	-1.00		-1.00	7732	DOL	AGGREGATE COMPLIANCE PRICE ADJUSTMENT	-1.00									
65	3250.00		3250.00	7535	S.Y.	CONSTRUCTION GEOTEXTILE FOR DITCH LINING		3,250.00								
66	2700.00		2700.00	7552	S.Y.	CONSTRUCTION GEOTEXTILE FOR SOIL STABILIZATION		2,700.00								
67	1050.00		1050.00	7567	C.Y.	GRAVEL BORROW FOR STRUCTURAL EARTH WALL INCL. HAUL		1,050.00								
68	2450.00		2450.00		C.Y.	STONE COLUMNS		2,450.00								
69	6371.00		6371.00	7561	S.F.	SHOTCRETE FACING		6,371.00								
70	LUMP SUM		LUMP SUM	7736	L.S.	SPCC PLAN			L.S.							
71	LUMP SUM		LUMP SUM	1941	L.S.	BIRD PROTECTION AND MONITORING			L.S.							

GROUP LEGEND

GROUP NUMBER	SR	CONTROL SECTION	TAX SCHEDULE	FUND PARTICIPANTS
1	241	393800	**	STATE CWA
2	241	393800	**	STATE THIRD PARTY

DATE	REVISION	BY

REGION	STATE	FEDERAL AID PROJECT. NO.
10	WA	

JOB NUMBER 21Y001/2

CONTRACT NO 000000

Washington State Department of Transportation

SR 241
MABTON VICINITY
RETROFIT BRIDGES

SUMMARY OF QUANTITIES

SQ2

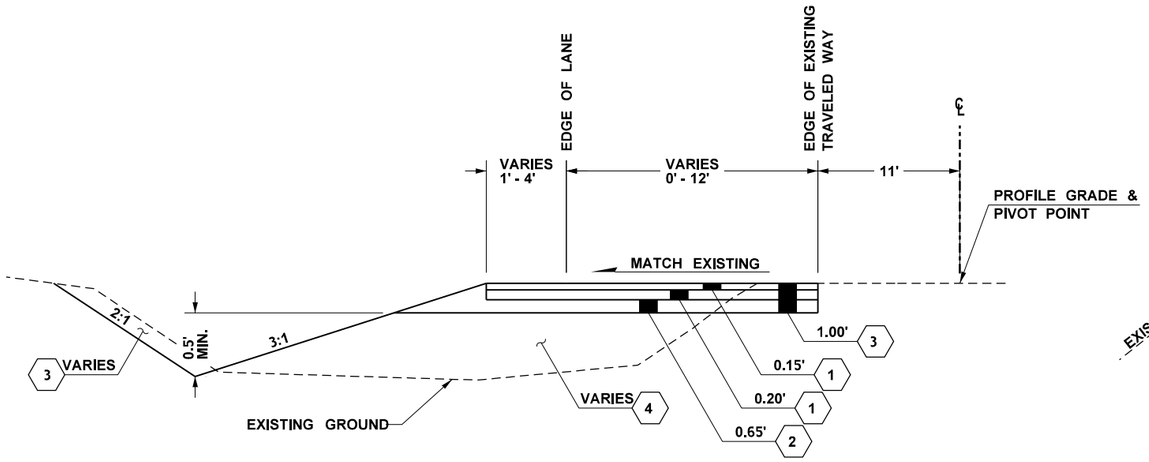

ROADWAY SECTION A

GP	10+03	10+88	LT.	
GP	10+39	10+86	RT.	REVERSED SECTION
H	10+00	10+94	LT.	
H	11+52	12+06	LT.	
HC	10+00	13+23	RT.	REVERSED SECTION
HC	10+41	12+61	LT.	
C	10+00	10+79	RT.	REVERSED SECTION
E	10+00	10+97	LT.	

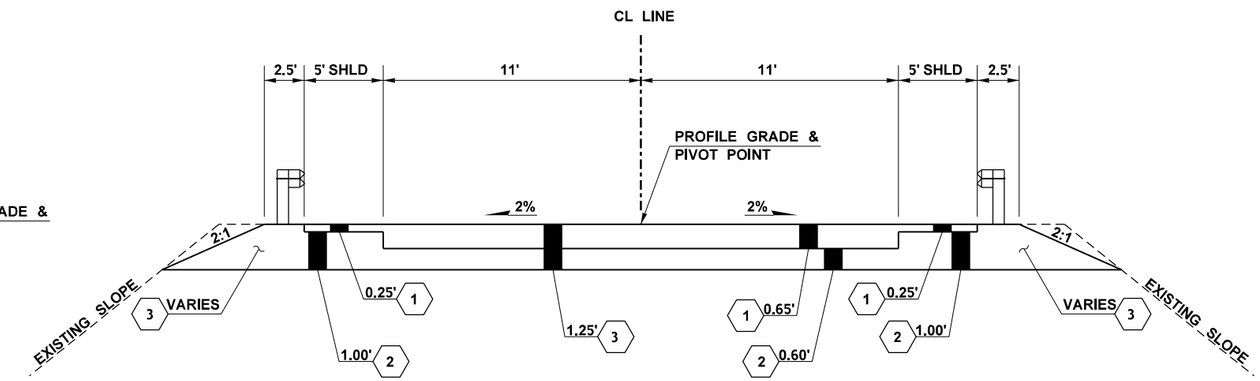

ROADWAY SECTION B

CL 18+12 TO CL 18+57

CL 24+22 TO CL 24+46

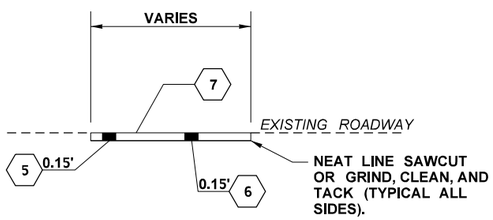

PATCH REPAIR SECTION A

NOT TO SCALE

PATCH REPAIR FOR DETOUR SHALL BE REQUIRED AS NEEDED TO MAINTAIN EXISTING ROADWAY THROUGHOUT DUARATION OF PROJECT

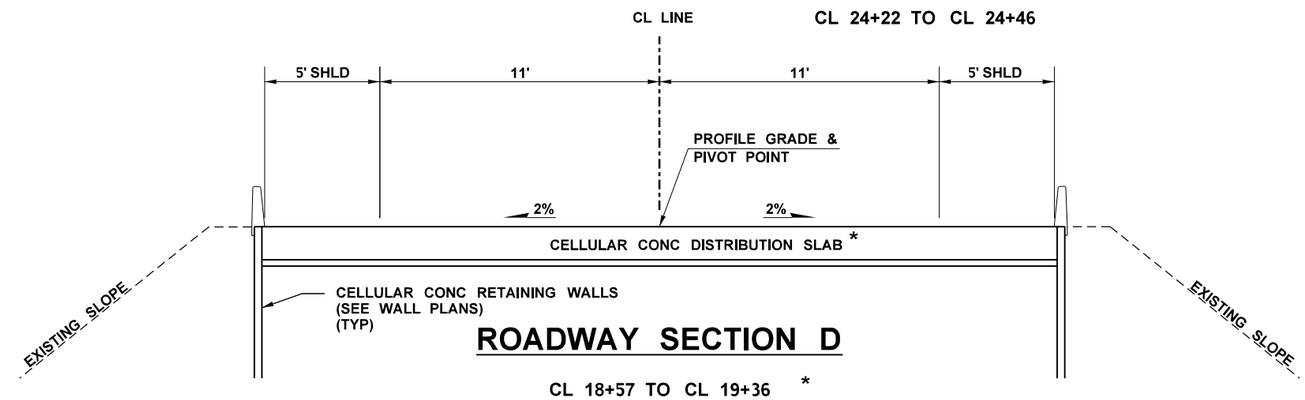

ROADWAY SECTION D

CL 18+57 TO CL 19+36 *

CL 23+45 TO CL 24+22 *

LEGEND

1	HMA CL. 1/2 IN. PG 64H-28
2	CRUSHED SURFACING BASE COURSE
3	ROADWAY EXCAVATION INCL. HAUL
4	EMBANKMENT COMPACTION
5	PAVEMENT REPAIR EXCAVATION INCL. HAUL
6	HMA FOR PAVEMENT REPAIR CL. 1/2 IN. PG 64H-28
7	ASPHALT FOR FOG SEAL
7	EXTRUDED CURB TYPE 5 (SEE NOTE 2)

BRIDGE 241/2*

CL 19+61 TO CL 23+21 *

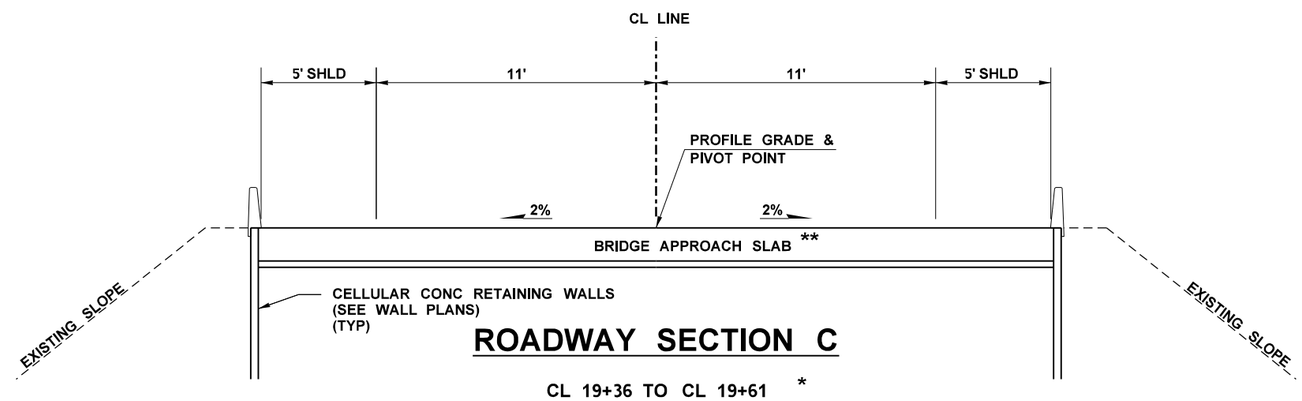

ROADWAY SECTION C

CL 19+36 TO CL 19+61 *

CL 23+21 TO CL 23+45 *

NOTES:

1. ALL DEPTHS SHOWN ARE COMPACTED DEPTHS.
2. SEE STANDARD PLAN F-10.40 & F-10.42 FOR EXTRUDED CURB PLACEMENT.

* SEE BRIDGE SHEET(S) FOR DETAILS

** SEE STANDARD PLAN A-40.50 FOR DETAILS

NOT TO SCALE

FILE NAME	C:\AAWork\Documents\C_Design Projects\XL5661 - SR 241 Mabton Vicinity - Retrofit Bridges\050-RdwySec\XL5661_XS_RS.dgn
TIME	1:16:17 PM
DATE	1/31/2023
PLOTTED BY	McCoyK
DESIGNED BY	M. WILHELM
ENTERED BY	K. McCOY
CHECKED BY	P. COOPER
PROJ. ENGR.	A. SANGUINO
REGIONAL ADM.	T. TREPANIER

REVISION | DATE | BY

REGION NO. 10 | STATE WASH | FED.AID PROJ.NO.

JOB NUMBER 21Y001

CONTRACT NO. | LOCATION NO.

ALEJANDRO SANGUINO, STATE OF WASHINGTON, 43221, REGISTERED PROFESSIONAL ENGINEER

SEE SHEET CT1

DATE

P.E. STAMP BOX

DATE

P.E. STAMP BOX

Washington State Department of Transportation

SR 241
MABTON VICINITY - RETROFIT BRIDGES

ROADWAY SECTIONS

Plot 1

PLAN REF NO RS1

SHEET 8 OF 115 SHEETS

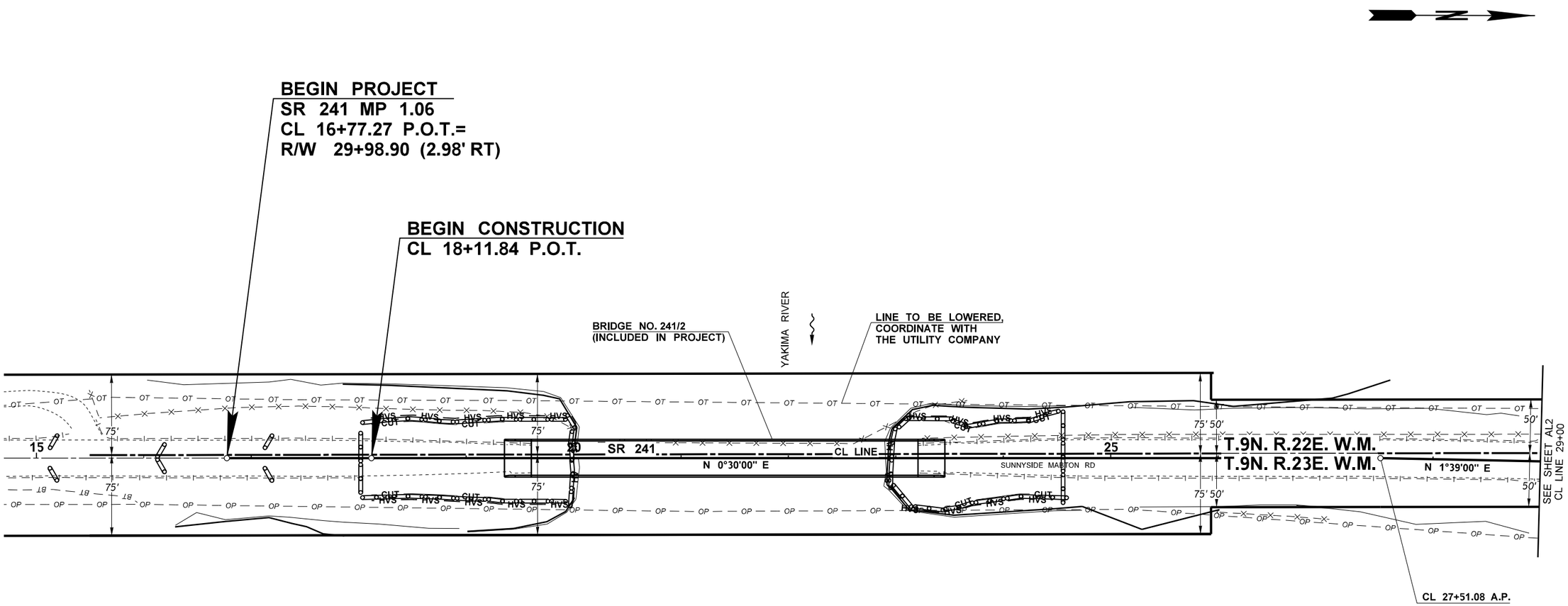

LEGEND

– CUT ——	CUT LINE
- HVS ——	HIGH VISIBILTY SILT FENCE
	WATTLE
	POND EDGE
-X— —X— -	EXISTING FENCE
-|— —|— -	EXISTING GUARDRAIL
- OT — —	EXISTING OVERHEAD TELEPHONE
- OP — —	EXISTING OVERHEAD POWER

0 50 100
SCALE IN FEET

HIGH VISIBILITY SILT FENCE

STATION		TO	STATION		LF
GP	9+50	(LT)	GP	10+72	(LT)	128
GP	9+90	(RT)	GP	10+72	(RT)	89
H	9+50	(LT)	H	10+74	(LT)	131
H	11+68	(LT)	H	12+56	(LT)	94
HC	9+90	(LT)	HC	13+10	(LT)	274
HC	9+50	(RT)	HC	13+75	(RT)	468
C	9+55	(LT)	C	10+77	(LT)	165
C	9+50	(RT)	C	10+63	(RT)	120
E	9+50	(LT)	E	10+79	(LT)	135
CL	17+61	(LT)	CL	20+02	(LT)	285
CL	17+61	(RT)	CL	20+02	(RT)	285
CL	22+93	(LT)	CL	24+96	(LT)	233
CL	22+93	(RT)	CL	24+96	(RT)	233
					TOTAL	2640

NOTES:

1. UTILITY LOCATIONS ARE APPROXIMATE. CONTRACTOR TO VERIFY.
2. EXISTING BRIDGE 241/2 TO BE REMOVED.

FILE NAME	K:\454306\Projects\XL5661 - SR 241 Mabton Vicinity - Retrofit Bridges\CAD\ContractPlans_Alt\080-AlignRWPlan\XL5661_PS_AL.dgn
TIME	6:22:28 AM
DATE	1/24/2023
PLOTTED BY	McCoyK
DESIGNED BY	M. WILHELM
ENTERED BY	K. McCOY
CHECKED BY	P. COOPER
PROJ. ENGR.	A. SANGUINO
REGIONAL ADM.	T. TREPANIER

REVISION | DATE | BY

REGION NO. 10 | STATE WASH | FED.AID PROJ.NO.
JOB NUMBER 21Y001
CONTRACT NO. | LOCATION NO.

SEE SHEET CT1
DATE
P.E. STAMP BOX

DATE
P.E. STAMP BOX

Washington State
Department of Transportation

SR 241
MABTON VICINITY -
RETROFIT BRIDGES

ALIGNMENT / SITE PREP / STAGING PLAN

Plot 1
PLAN REF NO AL1
SHEET 9 OF 115 SHEETS

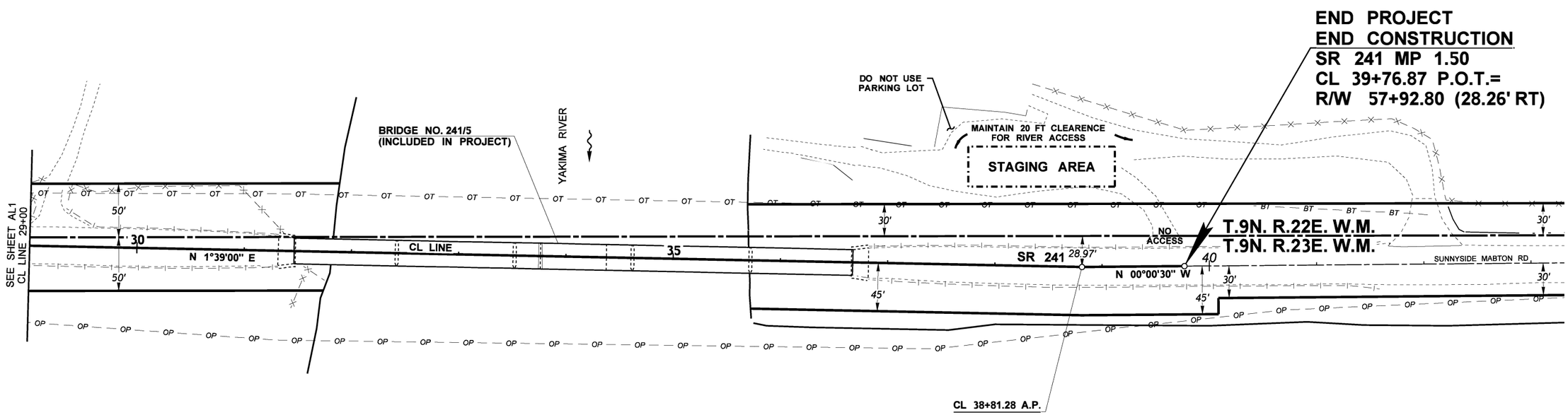

LEGEND

-X— —X—	EXISTING FENCE
-I— —I—	EXISTING GUARDRAIL
- OT — —	OVERHEAD TELEPHONE
- OP — —	OVERHEAD POWER
— · — · —	STAGING BOUNDARY

0 50 100
SCALE IN FEET

NOTES:

UTILITY LOCATIONS ARE APPROXIMATE.
CONTRACTOR TO VERIFY.

FILE NAME	K:\Review\21Y001 XL5661 SR 241 Mabton Vicinity - Retrofit Bridges\DGNs for renumbering\ContractPlans_Alt\080-AlignRWPlan\XL5661_PS_AL.dgn
TIME	7:26:11 AM
DATE	10/19/2022
PLOTTED BY	LHeureM
DESIGNED BY	M. WILHELM
ENTERED BY	K. McCOY
CHECKED BY	P. COOPER
PROJ. ENGR.	A. SANGUINO
REGIONAL ADM.	T. TREPANIER

REVISION | DATE | BY

REGION NO. 10 | STATE WASH | FED.AID PROJ.NO.

JOB NUMBER 21Y001

CONTRACT NO. | LOCATION NO.

ALEJANDRO SANGUINO STATE OF WASHINGTON 53221 REGISTERED PROFESSIONAL ENGINEER

SEE SHEET CT1
DATE
P.E. STAMP BOX

DATE
P.E. STAMP BOX

Washington State
Department of Transportation

SR 241
MABTON VICINITY -
RETROFIT BRIDGES

ALIGNMENT / SITE PREP / STAGING PLAN

Plot 2
PLAN REF NO
AL2
SHEET 10 OF 115 SHEETS

CURVE DATA					
P.I. STATION	DELTA	RADIUS	TANGENT	LENGTH	S
HC 11+76.83	89°59'58" LT	69.26'	69.26'	108.80'	

T.9N. R.23E. W.M.

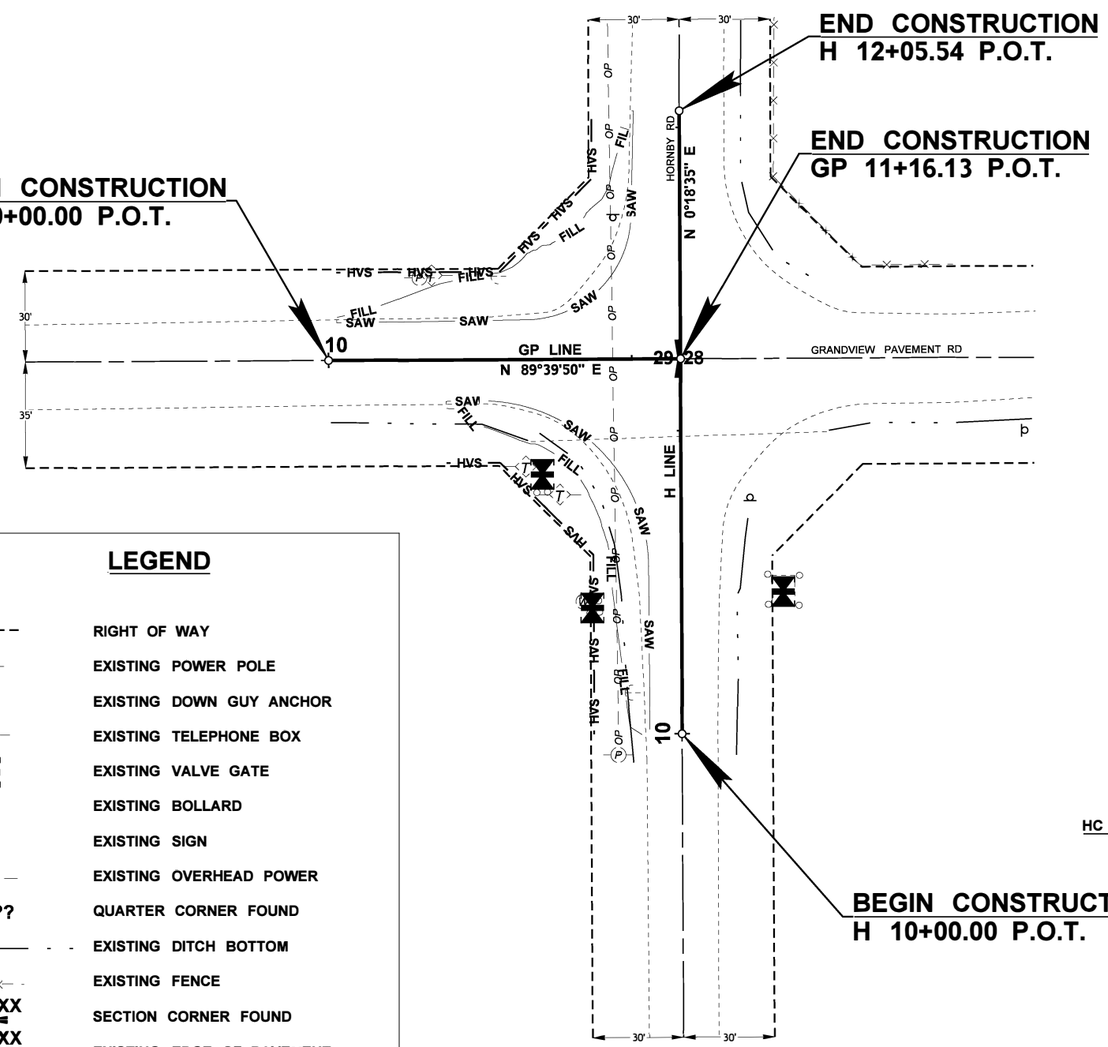

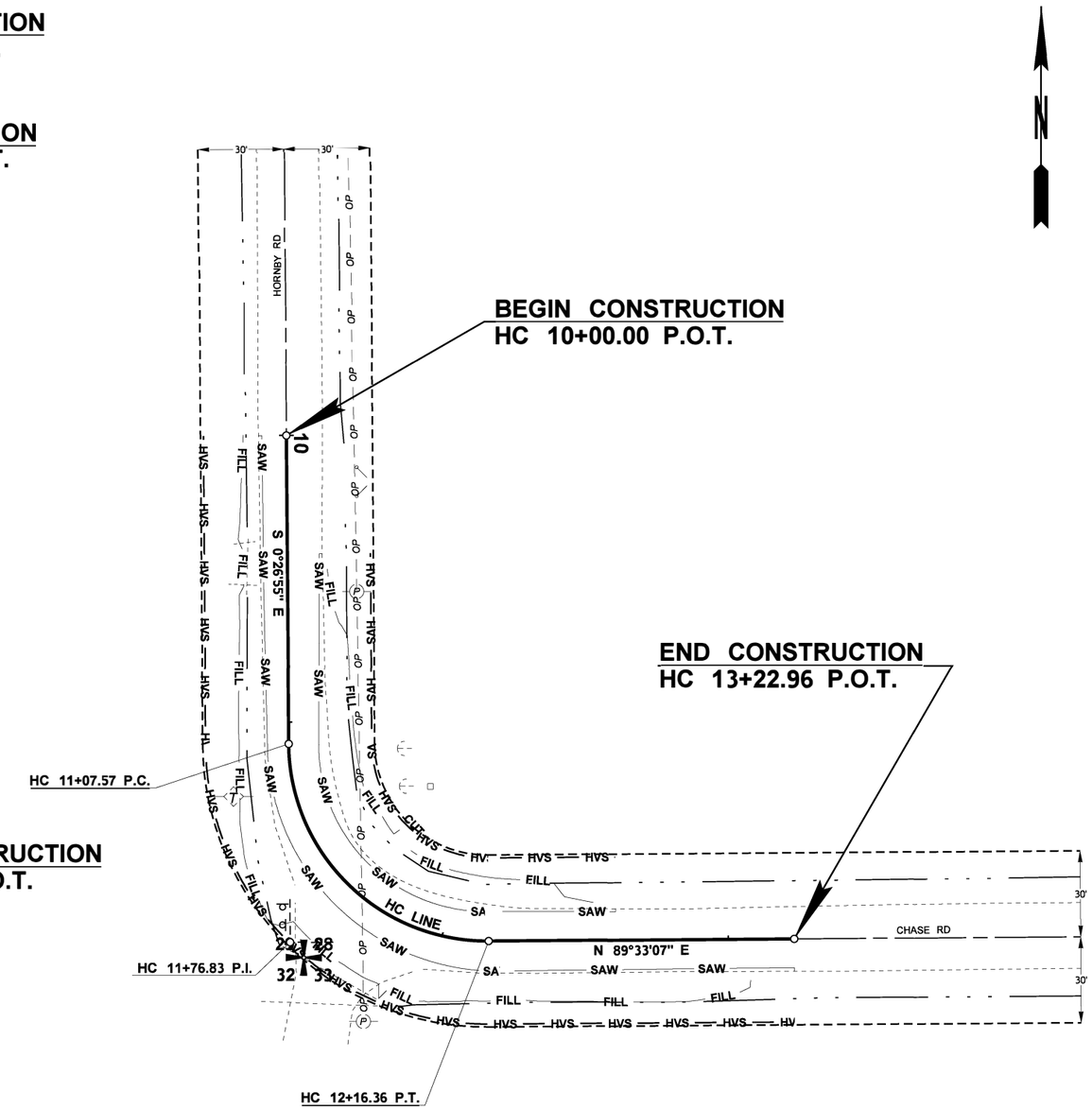

LEGEND

- - - - -	RIGHT OF WAY
(P)	EXISTING POWER POLE
	EXISTING DOWN GUY ANCHOR
(T)	EXISTING TELEPHONE BOX
	EXISTING VALVE GATE
○	EXISTING BOLLARD
d	EXISTING SIGN
- OP — —	EXISTING OVERHEAD POWER
??|??	QUARTER CORNER FOUND
——— - -	EXISTING DITCH BOTTOM
-X- -X-	EXISTING FENCE
XX|XX / XX|XX	SECTION CORNER FOUND
	EXISTING EDGE OF PAVEMENT
	EXISTING SHOULDER GRAVEL EDGE
	EXISTING GATE
□	EXISTING WOOD POST
– FILL ——	FILL LINE
– CUT ——	CUT LINE
- HVS ——	HIGH VISIBILITY SILT FENCE

0 25 50
SCALE IN FEET

NOTES:

UTILITY LOCATIONS ARE APPROXIMATE. CONTRACTOR TO VERIFY.

FILE NAME	K:\Review\21Y001 XL5661 SR 241 Mabton Vicinity - Retrofit Bridges\DGNs for renumbering\ContractPlans_Alt\080-AlignRWPlan\XL5661_PS_AL.dgn				REGION NO.	STATE	FED.AID PROJ.NO.
TIME	7:26:26 AM				10	WASH	
DATE	10/19/2022				JOB NUMBER		
PLOTTED BY	LHeureM				21Y001		
DESIGNED BY	M. WILHELM				CONTRACT NO.		LOCATION NO.
ENTERED BY	K. McCOY						
CHECKED BY	P. COOPER						
PROJ. ENGR.	A. SANGUINO						
REGIONAL ADM.	T. TREPANIER	REVISION	DATE	BY			

ALEJANDRO SANGUINO STATE OF WASHINGTON REGISTERED PROFESSIONAL ENGINEER 43221

SEE SHEET CT1
DATE
P.E. STAMP BOX

DATE
P.E. STAMP BOX

Washington State Department of Transportation

SR 241
MABTON VICINITY -
RETROFIT BRIDGES

ALIGNMENT / SITE PREP / STAGING PLAN

Plot 3
PLAN REF NO
AL3
SHEET 11 OF 115 SHEETS

T.9N. R.23E. W.M.

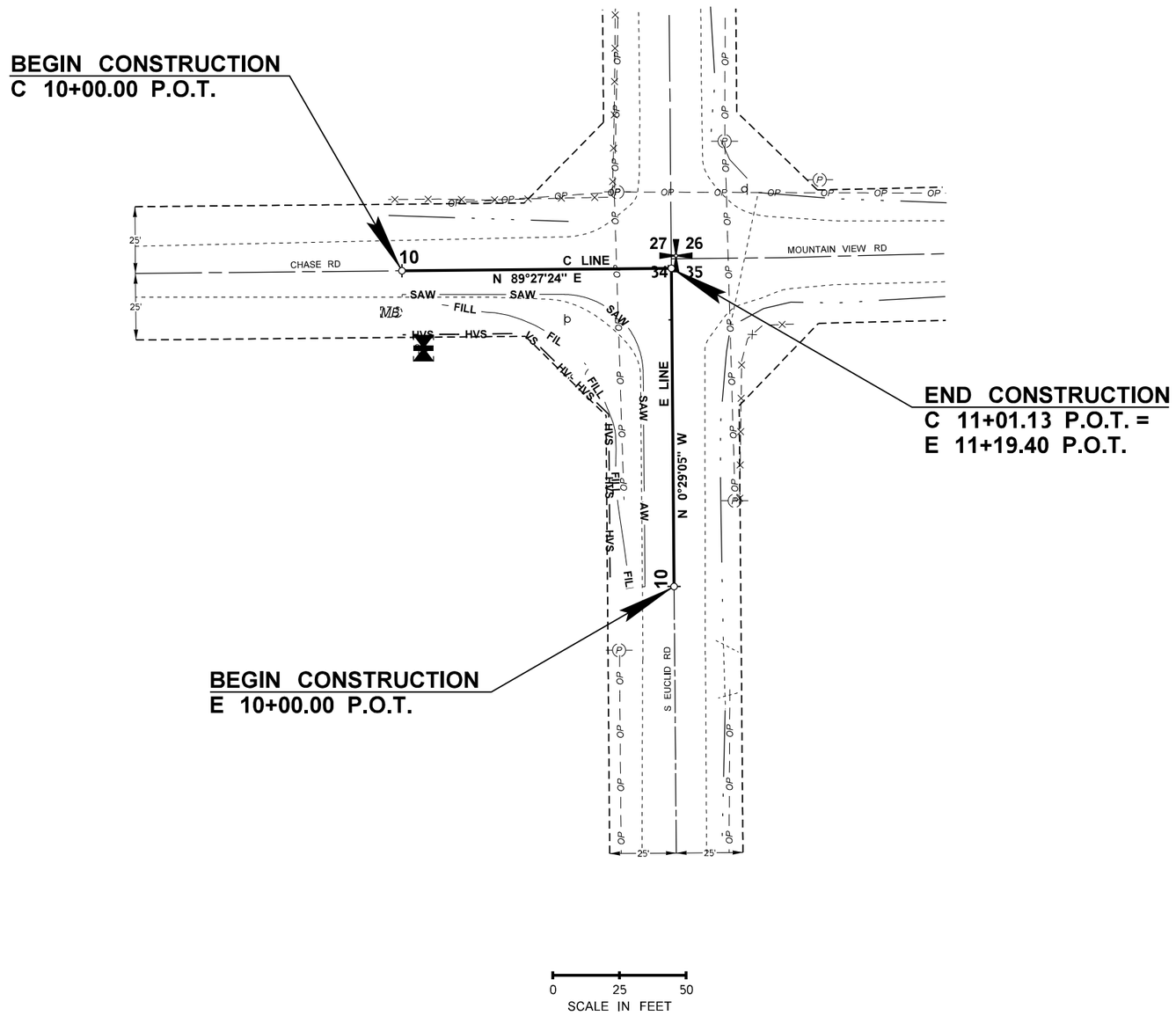

LEGEND

- - - - -	RIGHT OF WAY
-(P)-	EXISTING POWER POLE
-(T)-	EXISTING TELEPHONE BOX
	EXISTING VALVE GATE
o	EXISTING BOLLARD
q	EXISTING SIGN
- OP — —	EXISTING OVERHEAD POWER
- OT — —	EXISTING OVERHEAD TELEPHONE
——— - -	EXISTING DITCH BOTTOM
-X- -X- -	EXISTING FENCE
XX XX / XX XX	SECTION CORNER FOUND
- - - - - - -	EXISTING EDGE OF PAVEMENT
MB	EXISTING MAILBOX
- FILL ——	EXISTING SHOULDER GRAVEL EDGE
- HVS ——	HIGH VISIBILITY SILT FENCE

NOTES:

UTILITY LOCATIONS ARE APPROXIMATE.
CONTRACTOR TO VERIFY.

FILE NAME	C:\AAWork\Documents\C_Design Projects\XL5661 - SR 241 Mabton Vicinity - Retrofit Bridges\080-AlignRWPlan\XL5661_PS_AL.dgn						
TIME	1:19:11 PM				REGION NO. 10	STATE WASH	FED.AID PROJ.NO.
DATE	1/31/2023						
PLOTTED BY	McCoyK				JOB NUMBER 21Y001		
DESIGNED BY	M. WILHELM						
ENTERED BY	K. McCOY						
CHECKED BY	P. COOPER				CONTRACT NO.		LOCATION NO.
PROJ. ENGR.	A. SANGUINO						
REGIONAL ADM.	T. TREPANIER	REVISION	DATE	BY			

ALEJANDRO SANGUINO STATE OF WASHINGTON 43221 REGISTERED PROFESSIONAL ENGINEER

SEE SHEET CT1
DATE
P.E. STAMP BOX

DATE
P.E. STAMP BOX

Washington State
Department of Transportation

SR 241
MABTON VICINITY -
RETROFIT BRIDGES

ALIGNMENT / SITE PREP / STAGING PLAN

Plot 4
PLAN REF NO
AL4
SHEET 12 OF 115 SHEETS

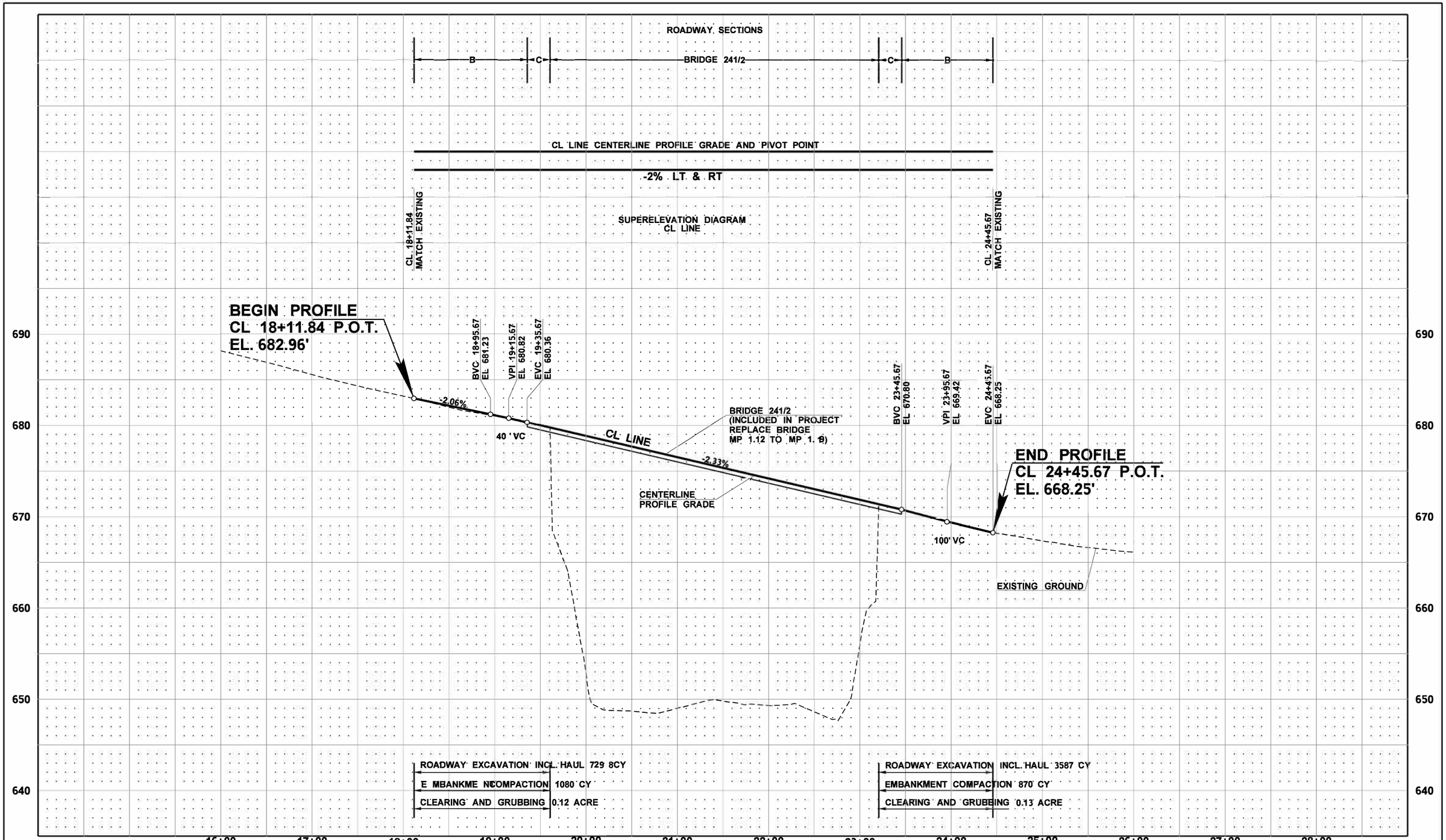

FILE NAME	K:\Review\21Y001 XL5661 SR 241 Mabton Vicinity - Retrofit Bridges\DGNs for renumbering\ContractPlans_Alt\120-RdwyProf\XL5661_PR_RD.dgn
TIME	7:27:48 AM
DATE	10/19/2022
PLOTTED BY	LHeureM
DESIGNED BY	M. WILHELM
ENTERED BY	M. MELTON
CHECKED BY	P. COOPER
PROJ. ENGR.	A. SANGUINO
REGIONAL ADM.	T. TREPANIER

REVISION	DATE	BY

REGION NO.	STATE	FED.AID PROJ.NO.
10	WASH	
JOB NUMBER 21Y001		
CONTRACT NO.		LOCATION NO.

ALEJANDRO SANGUINO
STATE OF WASHINGTON
43221
REGISTERED PROFESSIONAL ENGINEER

SEE SHEET CT1
DATE
P.E. STAMP BOX

DATE
P.E. STAMP BOX

Washington State
Department of Transportation

SR 241
MABTON VICINITY -
RETROFIT BRIDGES

ROADWAY PROFILE

Plot 1
PLAN REF. NO.
PR1

SHEET 13 OF 115 SHEETS

REMOVING GUARDRAIL				
STATION	TO	STATION		LF
CL 18+10	(16' LT)	CL 19+60	(16' LT)	150
CL 18+10	(16' RT)	CL 19+60	(16' RT)	150
CL 23+20	(16' LT)	CL 24+69	(16' LT)	150
CL 23+20	(16' RT)	CL 24+69	(16' RT)	150
			TOTAL	600

BEAM GUARDRAIL TRANSITION SECTION TYPE 21				
STATION	TO	STATION		EACH
CL 18+10	(16' LT)	CL 18+57	(16' LT)	1
CL 18+10	(16' RT)	CL 18+57	(16' RT)	1
CL 24+22	(16' LT)	CL 24+69	(16' LT)	1
CL 24+22	(16' RT)	CL 24+69	(16' RT)	1
			TOTAL	4

FLEXIBLE GUIDE POSTS			
STATION	TO	STATION	EACH
CL 16+77.00		CL 24+46.00	12
		TOTAL	12

BARRIER DELINEATOR STRIPS			
STATION	TO	STATION	EACH
CL 19+35.58		CL 23+45.54	12
		TOTAL	12

RAISING EXISTING BEAM GUARDRAIL			
STATION	TO	STATION	LF
CL 14+23 (RT)		CL 18+10 (RT)	387.5
		TOTAL	387.5

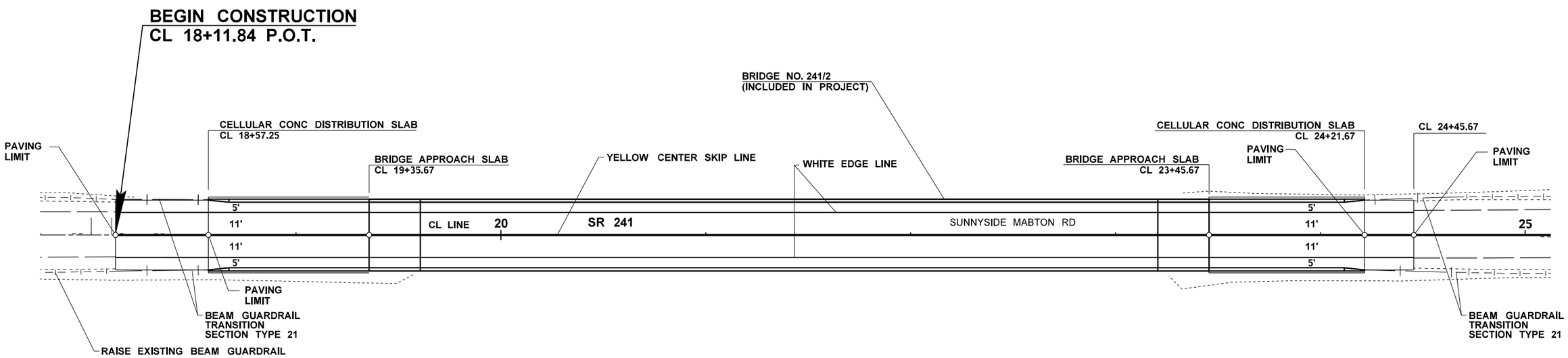

LEGEND

-I— —I— -	EXISTING GUARDRAIL
- - - - - - - -	EXISTING EDGE OF PAVED SHOULDER
-I——I—	BEAM GUARDRAIL TYPE 31
————	EDGE OF PAVED SHOULDER
⊕	GUIDE POST

0 25 50
SCALE IN FEET

NOTES:

1. SEE STANDARD PLAN F-10.40 & F-10.42 FOR EXTRUDED CURB PLACEMENT.
2. SEE STANDARD PLAN C-20.14 & C20.40 FOR BEAM GUARDRAIL TYPE 31 PLACEMENT.
3. SEE STANDARD PLAN C-25.20 FOR BEAM GUARDRAIL (TYPE 31) TRANSITION SECTION TYPE 21.
4. SEE STANDARD PLAN M-40.10 & M-40.50 FOR GUIDE POST PLACEMENT.
5. SEE SPECIAL PROVISIONS, 8-10 GUIDE POSTS, FOR BARRIER DELINEATOR STRIP PLACEMENT.

FILE NAME	C:\Users\LHeureM\AppData\Local\Microsoft\Windows\INetCache\Content.Outlook\RNAUIF0G\XL5661_PS_PV.dgn					
TIME	9:45:14 AM					
DATE	10/19/2022					
PLOTTED BY	LHeureM					
DESIGNED BY	M. WILHELM					
ENTERED BY	K. McCOY					
CHECKED BY	P. COOPER					
PROJ. ENGR.	A. SANGUINO					
REGIONAL ADM.	T. TREPANIER	REVISION	DATE	BY		

REGION NO.	STATE	FED.AID PROJ.NO.
10	WASH	
JOB NUMBER 21Y001		
CONTRACT NO.		LOCATION NO.

ALEJANDRO SANGUINO STATE OF WASHINGTON 45221 REGISTERED PROFESSIONAL ENGINEER

SEE SHEET CT1
DATE
P.E. STAMP BOX

DATE
P.E. STAMP BOX

Washington State Department of Transportation

SR 241
MABTON VICINITY -
RETROFIT BRIDGES

PAVING / PAVEMENT MARKING PLAN

Plot 1
PLAN REF NO
PV1
SHEET 14 OF 115 SHEETS

T.9N. R.23E. W.M.

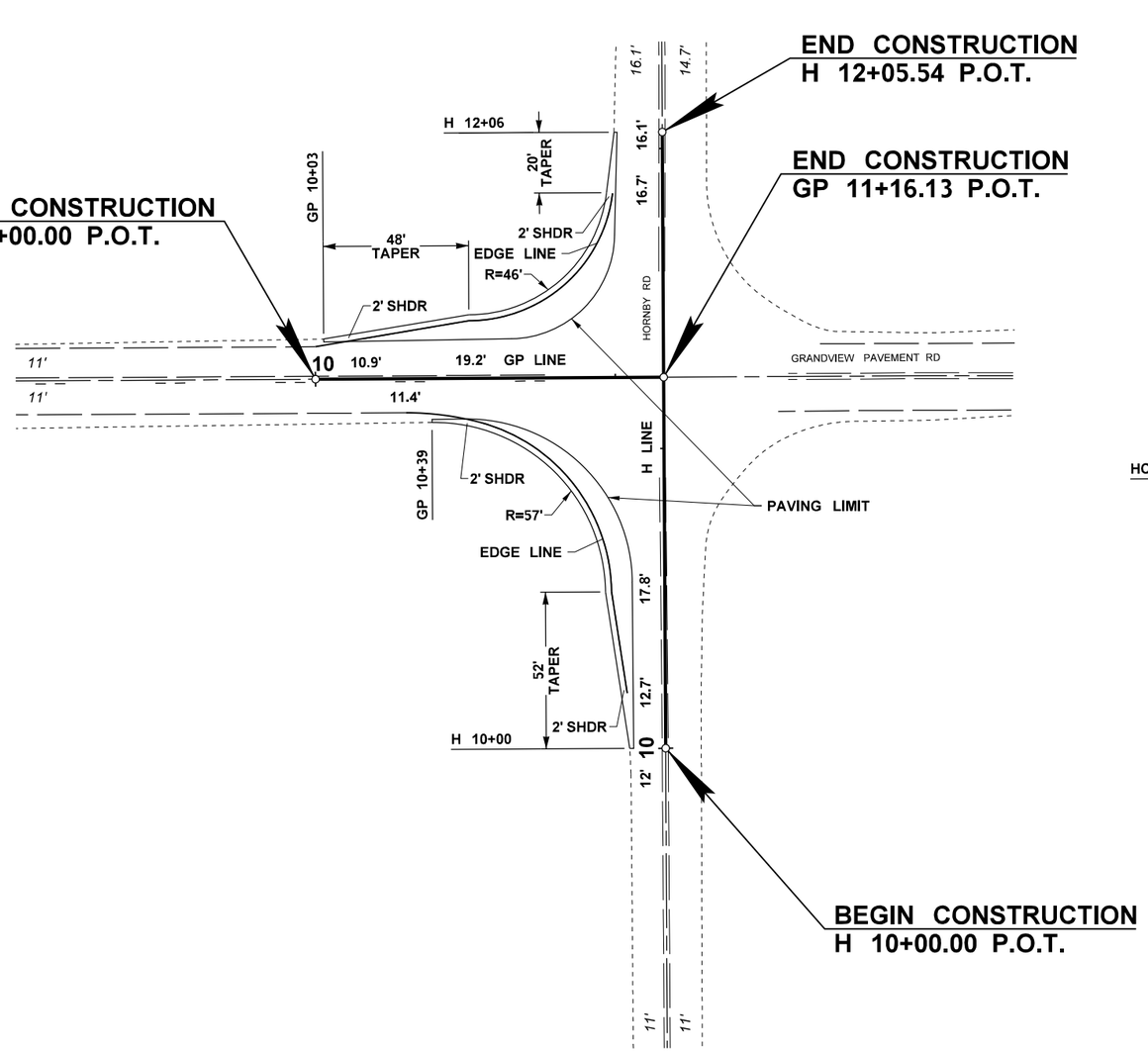

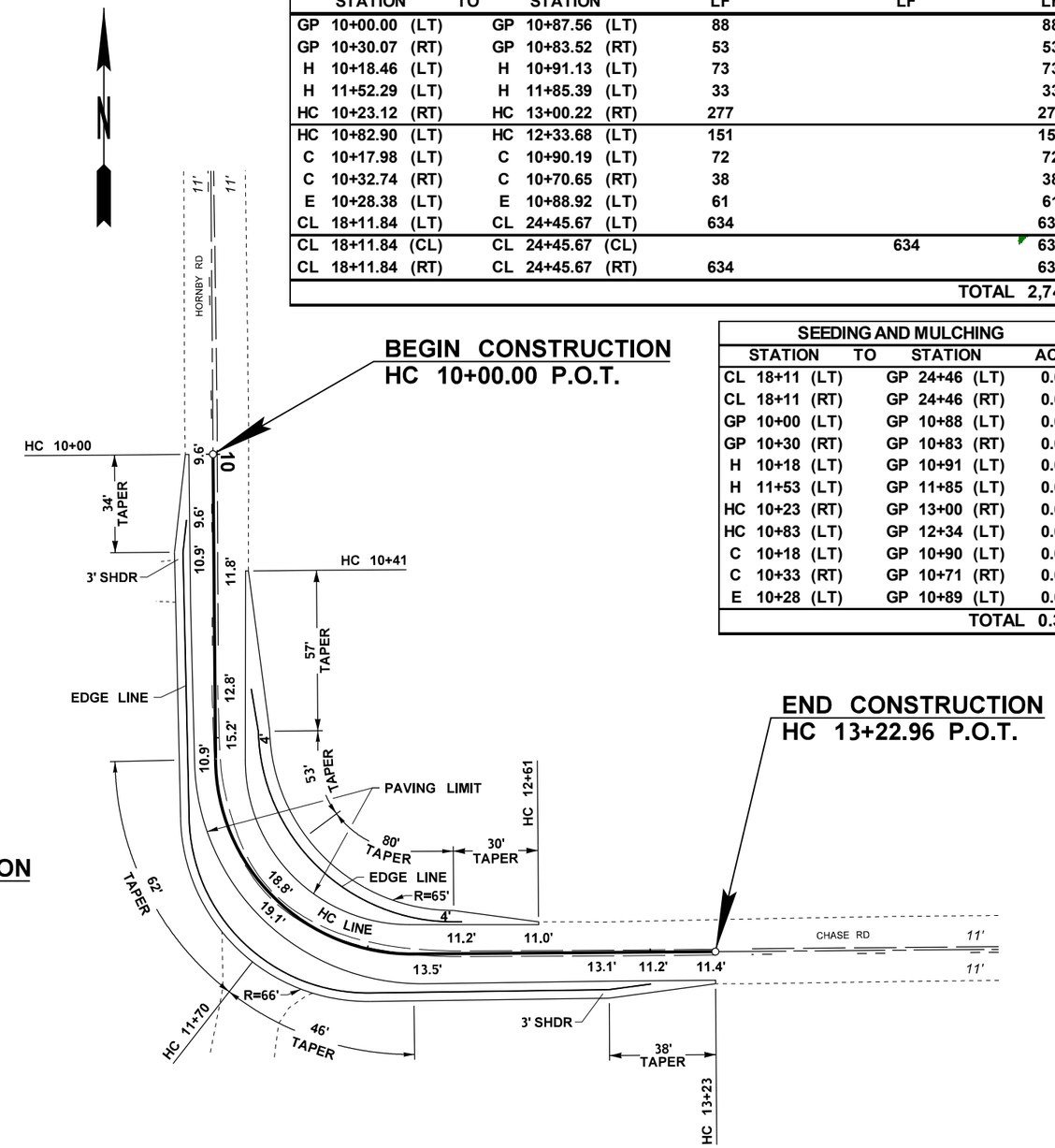

PAINT LINE								
	STATION	TO	STATION		WHITE EDGE LINE LF	YELLOW CENTER LINE LF	TOTAL LF
GP	10+00.00 (LT)	GP	10+87.56 (LT)		88		88
GP	10+30.07 (RT)	GP	10+83.52 (RT)		53		53
H	10+18.46 (LT)	H	10+91.13 (LT)		73		73
H	11+52.29 (LT)	H	11+85.39 (LT)		33		33
HC	10+23.12 (RT)	HC	13+00.22 (RT)		277		277
HC	10+82.90 (LT)	HC	12+33.68 (LT)		151		151
C	10+17.98 (LT)	C	10+90.19 (LT)		72		72
C	10+32.74 (RT)	C	10+70.65 (RT)		38		38
E	10+28.38 (LT)	E	10+88.92 (LT)		61		61
CL	18+11.84 (LT)	CL	24+45.67 (LT)		634		634
CL	18+11.84 (CL)	CL	24+45.67 (CL)			634	634
CL	18+11.84 (RT)	CL	24+45.67 (RT)		634		634
						TOTAL	2,748

SEEDING AND MULCHING					
STATION		TO	STATION		ACRE
CL	18+11 (LT)	GP	24+46 (LT)		0.09
CL	18+11 (RT)	GP	24+46 (RT)		0.09
GP	10+00 (LT)	GP	10+88 (LT)		0.01
GP	10+30 (RT)	GP	10+83 (RT)		0.01
H	10+18 (LT)	GP	10+91 (LT)		0.01
H	11+53 (LT)	GP	11+85 (LT)		0.01
HC	10+23 (RT)	GP	13+00 (RT)		0.04
HC	10+83 (LT)	GP	12+34 (LT)		0.01
C	10+18 (LT)	GP	10+90 (LT)		0.02
C	10+33 (RT)	GP	10+71 (RT)		0.01
E	10+28 (LT)	GP	10+89 (LT)		0.01
				TOTAL	0.31

LEGEND

- - - - - - - EXISTING EDGE OF PAVED SHOULDER

———— EDGE OF PAVED SHOULDER

0 25 50
SCALE IN FEET

NOTES:

1. SHOULDER WIDENING SHALL BE PERFORMED PRIOR TO IMPLEMENTING DETOUR PLAN.

FILE NAME	K:\Review\21Y001 XL5661 SR 241 Mabton Vicinity - Retrofit Bridges\DGNs for renumbering\ContractPlans_Alt\250-PavingPlan\XL5661_PS_PV.dgn				
TIME	7:29:10 AM				
DATE	10/19/2022				
PLOTTED BY	LHeureM				
DESIGNED BY	M. WILHELM				
ENTERED BY	K. McCOY				
CHECKED BY	P. COOPER				
PROJ. ENGR.	A. SANGUINO				
REGIONAL ADM.	T. TREPANIER	REVISION	DATE	BY	

REGION NO.	STATE	FED.AID PROJ.NO.
10	WASH	
JOB NUMBER 21Y001		
CONTRACT NO.		LOCATION NO.

ALEJANDRO SANGUINO STATE OF WASHINGTON 43221 REGISTERED PROFESSIONAL ENGINEER

SEE SHEET CT1
DATE
P.E. STAMP BOX

DATE
P.E. STAMP BOX

Washington State Department of Transportation

SR 241
MABTON VICINITY -
RETROFIT BRIDGES

PAVING / PAVEMENT MARKING PLAN

Plot 2
PLAN REF NO
PV2
SHEET 15 OF 115 SHEETS

T.9N. R.23E. W.M.

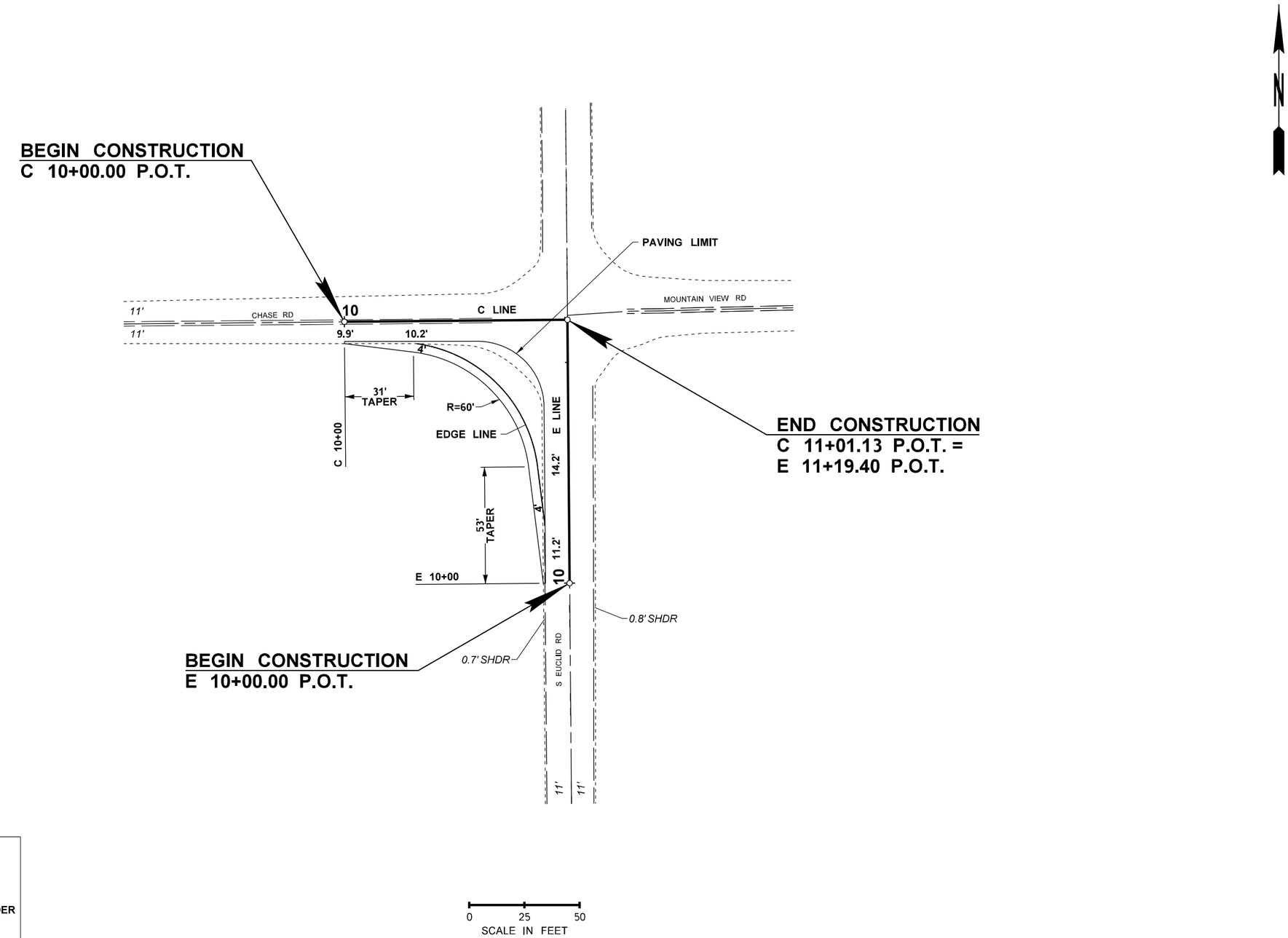

LEGEND

- - - - - - - - EXISTING EDGE OF PAVED SHOULDER

——— EDGE OF PAVED SHOULDER

FILE NAME	K:\454306\Projects\XL5661 - SR 241 Mabton Vicinity - Retrofit Bridges\CAD\ContractPlans_Alt\250-PavingPlan\XL5661_PS_PV.dgn			
TIME	1:40:46 PM			
DATE	1/31/2023			
PLOTTED BY	McCoyK			
DESIGNED BY	M. WILHELM			
ENTERED BY	K. McCOY			
CHECKED BY	P. COOPER			
PROJ. ENGR.	A. SANGUINO			
REGIONAL ADM.	T. TREPANIER	REVISION	DATE	BY

REGION NO.	STATE	FED.AID PROJ.NO.
10	WASH	
JOB NUMBER 21Y001		
CONTRACT NO.		LOCATION NO.

ALEJANDRO SANGUINO — STATE OF WASHINGTON — 45221 — REGISTERED PROFESSIONAL ENGINEER

SEE SHEET CT1

DATE

P.E. STAMP BOX

DATE

P.E. STAMP BOX

Washington State Department of Transportation

SR 241
MABTON VICINITY -
RETROFIT BRIDGES

PAVING / PAVEMENT MARKING PLAN

Plot 3

PLAN REF NO PV3

SHEET 16 OF 115 SHEETS

SEC. 31, T.9N., R.23E., W.M.
YAKIMA COUNTY

SR 241

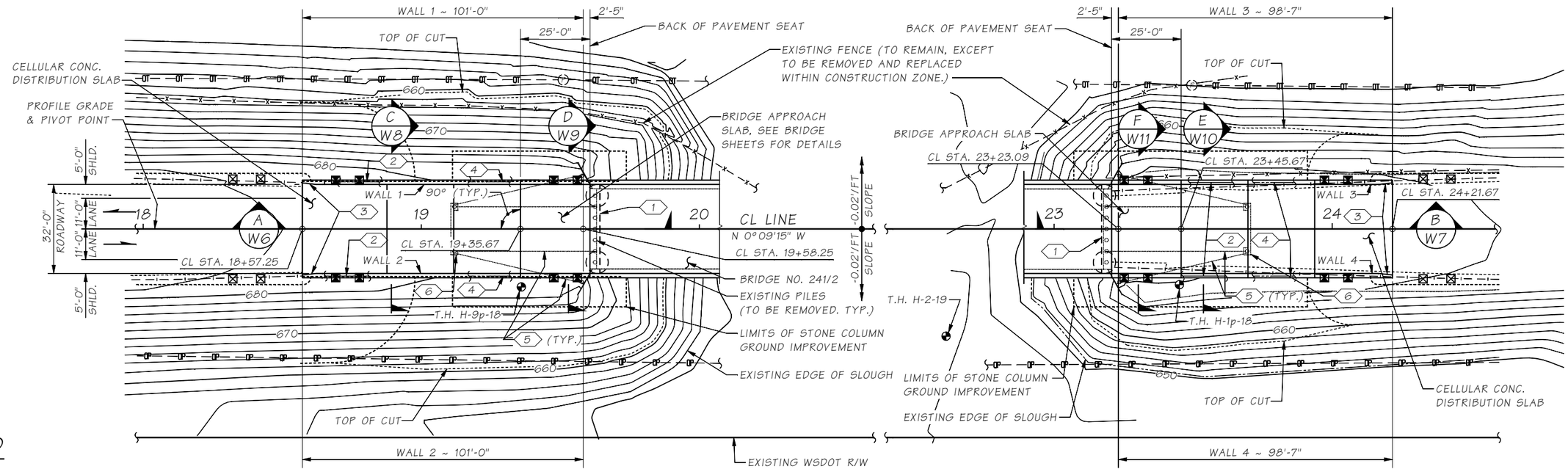

PLAN

LEGEND

- SOIL BORING LOCATIONS
- NEMA JUNCTION BOX
- TYPE 1 JUNCTION BOX
- EXIST. OVERHEAD TELEPHONE LINE (TO REMAIN)
- EXIST. OVERHEAD POWER LINE (TO REMAIN)
- EXIST. GUARDRAIL (TO BE REMOVED)
- EXIST. POWER POLE (TO REMAIN)

KEY NOTES:

1. FRONT FACE OF ABUTMENT WALL
2. BRIDGE RAILING TYPE BP-12
3. BEAM GUARDRAIL CONNECTION TYPE "D" (STD. PLAN C-24.10)
4. 2 ~ 2"ø CONDUIT PIPES IN TRAFFIC BARRIER FOR FULL LENGTH OF BARRIER
5. EXISTING WIRE ROPE (TO BE REMOVED)
6. EXISTING PILE AND ANCHOR CAP (TO BE REMOVED)

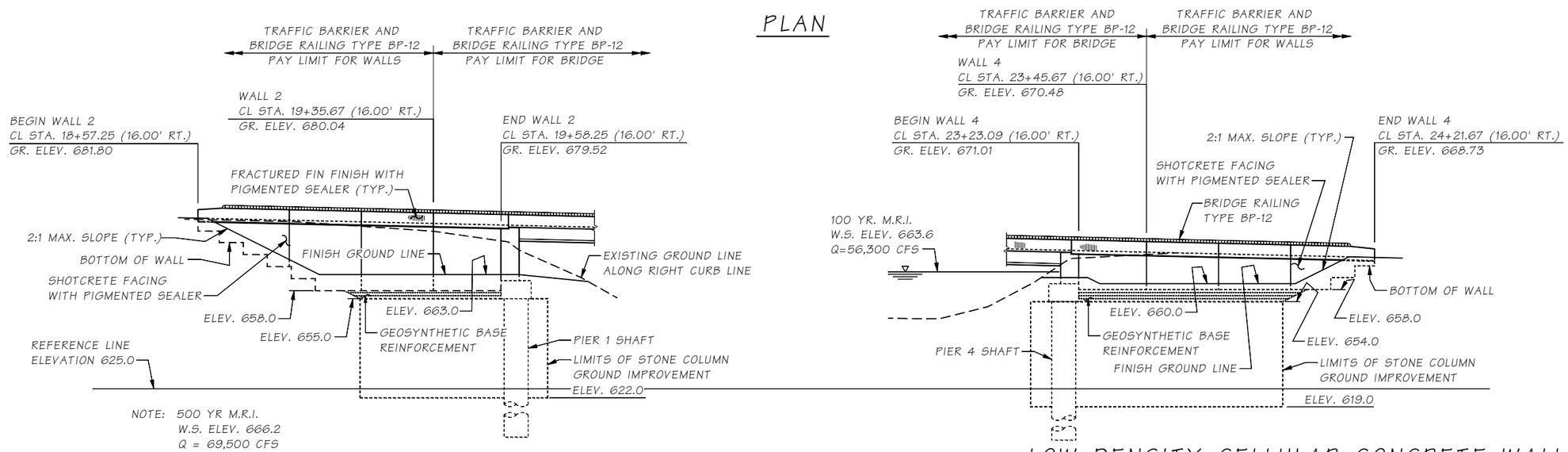

ELEVATION

LOW DENSITY CELLULAR CONCRETE WALL

LOADING: HL-93

SEISMIC OPERATIONAL CLASSIFICATION: ORDINARY

DATUM

NAVD 88

GRADE ELEVATIONS SHOWN ARE FINISH GRADES AT TOP OF CELLULAR CONC. DISTRIBUTION SLAB OR BRIDGE APPROACH SLAB AT THE CURB AND ARE BASED ON ℄ LINE PROFILE GRADE AND OFFSETS. WALLS 2 AND 4 SHOWN. WALLS 1 AND 3 SIMILAR WITH SAME STATION AND ELEVATIONS.

Bridge Design Engr.	Grimm, E	
Supervisor	Aldrich, BS	
Designed By	Schultz, E	05/21
Checked By	O'Neill, P	12/22
Detailed By	Bontemps, W	05/21
Bridge Projects Engr.		
Prelim. Plan By		
Architect/Specialist		

M:\X-Team\BR241-2_MABTON-SUNNYSIDE_REPL\MABTON WALLS LDCC\window files\LAYOUT.wnd

DATE	REVISION	BY	APP'D

REGION NO.	STATE	FED. AID PROJ. NO.	SHEET NO.	TOTAL SHEETS
10	WASH.			
JOB NUMBER 21Y001				
CONTRACT NO.				

P.E. STAMP BOX
SEE SHEET CT1
DATE:

BRIDGE AND STRUCTURES OFFICE

P.E. STAMP BOX
BRIAN S. ALDRICH
STATE OF WASHINGTON
37834
PROFESSIONAL ENGINEER
SEE SHEET CT1
DATE:

Washington State Department of Transportation
PRELIMINARY NOT FOR CONSTRUCTION

SR 241
MABTON VICINITY
RETROFIT BRIDGES
APPROACH RETAINING WALLS BRIDGE NO. 241/2

LAYOUT

BRIDGE SHEET NO. W1
SHEET 17 OF 115 SHEETS

SR 241 FILE NO. SHEET W1

Tue Dec 27 14:45:43 2022

GENERAL NOTES:

1. ALL MATERIAL AND WORKMANSHIP SHALL BE IN ACCORDANCE WITH THE REQUIREMENTS OF THE WASHINGTON STATE DEPARTMENT OF TRANSPORTATION STANDARD SPECIFICATIONS FOR ROAD, BRIDGE, AND MUNICIPAL CONSTRUCTION DATED 2023.

2. THIS STRUCTURE HAS BEEN DESIGNED IN ACCORDANCE WITH THE REQUIREMENTS OF THE AASHTO LRFD BRIDGE DESIGN SPECIFICATIONS 9TH EDITION 2020. DEAD LOAD INCLUDES ADDITIONAL FUTURE WEARING SURFACE OF 35 POUNDS PER SQUARE FOOT. THE TRAFFIC BARRIERS HAVE BEEN DESIGNED IN ACCORDANCE WITH THE REQUIREMENTS FOR TEST LEVEL 4 (TL-4) BARRIERS.

3. THE SEISMIC DESIGN OF THIS STRUCTURE HAS BEEN COMPLETED IN ACCORDANCE WITH THE REQUIREMENTS OF THE AASHTO GUIDE SPECIFICATIONS FOR LRFD SEISMIC BRIDGE DESIGN 2ND EDITION 2011 WITH INTERIM THROUGH 2022, USING SEISMIC DESIGN CATEGORY C, SITE CLASS E, A PEAK GROUND ACCELERATION OF 0.13, AND 0.2 SECOND AND 1.0 SECOND SPECTRAL ACCELERATION OF 0.28 AND 0.08, RESPECTIVELY, ON SITE CLASS B.

4. THE CONCRETE IN THE CELLULAR CONCRETE DISTRIBUTION SLABS SHALL BE CLASS 4000A. ALL OTHER CAST-IN-PLACE CONCRETE SHALL BE CLASS 4000, UNLESS OTHERWISE NOTED.

5. THE BACKFILL BEHIND THE ABUTMENTS MAY BE PLACED PRIOR TO PLACEMENT OF THE SUPERSTRUCTURE, IN ACCORDANCE WITH STD. SPEC. SECTION 2-09.3(1)E.

6. UNLESS OTHERWISE SHOWN IN THE PLANS, CONCRETE COVER MEASURED FROM THE FACE OF CONCRETE TO THE FACE OF ANY REINFORCING STEEL SHALL BE 2½" AT THE TOP OF THE CELLULAR CONCRETE DISTRIBUTION SLAB, AND 2" AT ALL OTHER LOCATIONS.

7. CONDUITS, JUNCTION BOXES, AND UTILITIES ARE SHOWN FOR REFERENCE ONLY. THE CONTRACTOR SHALL COORDINATE THESE PLANS WITH THE ELECTRICAL, I.T.S. AND OTHER CIVIL PLANS.

8. SEE BRIDGE SHEETS FOR DETAILS PERTAINING TO THE BRIDGE, THE BRIDGE APPROACH SLAB AND THE BARRIER ON THE BRIDGE APPROACH SLAB.

CONSTRUCTION SEQUENCE:

(WALLS 1 & 2 DESCRIBED, WALLS 3 & 4 SIMILAR)

1. EXCAVATE TO ELEV. 655.0 AND INSTALL STONE COLUMN GROUND IMPROVEMENT.
2. INSTALL PIER 1 SHAFTS.
3. CONSTRUCT SHAFT CAP, STEM WALL, AND CURTAIN WALLS FOR PIER 1 ABUTMENT.
4. INSTALL GEOSYTHETIC REINFORCING WITH BACKFILL MATERIAL WITHIN THE LIMITS SHOWN.
5. CONSTRUCT FIRST LAYER OF RETAINING WALL 1 AND 2.
6. COMPLETE CONSTRUCTION OF RETAINING WALL 1 AND 2 TO SUBGRADE ELEVATION.
7. CONSTRUCT BRIDGE SUPERSTRUCTURE INCLUSIVE OF END DIAPHRAGM PER BRIDGE SHEETS.
8. INSTALL SHOTCRETE FACING ON COMPLETED WALLS.
9. CONSTRUCT BRIDGE APPROACH SLAB.
10. CONSTRUCT CELLULAR CONCRETE DISTRIBUTION SLABS.
11. CONSTRUCT TRAFFIC BARRIER.
12. INSTALL BP RAILING ON TRAFFIC BARRIER.

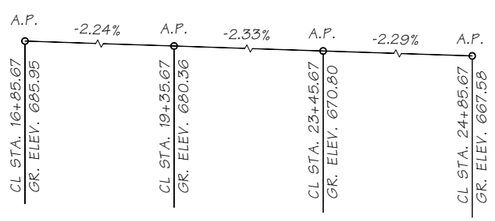

CL LINE PROFILE

LEGEND

B / W5 — IDENTIFIES SECTION OR VIEW
TAKEN OR SHOWN ON BRIDGE SHEET W5

1 / — IDENTIFIES DETAIL
TAKEN OR SHOWN ON THE SAME SHEET

99 — FLAGNOTE: IDENTIFIES NOTE REFERENCE ON THE SAME SHEET

SR 241 FILE NO. ____ SHEET W2

State Geotechnical Engr.	Fiske, A	
Supervisor	Heathman, C	
Designed By	Johnson, D	05/22
Checked By	Heathman, C	12/22
Detailed By	Bontemps, W	05/22
Bridge Projects Engr.		
Prelim. Plan By		
Architect/Specialist		

M:\X-Team\BR241-2_MABTOM-SUNNYSIDE_REPL\MABTON WALLS LDCC\window files\GEN NOTES&CONSTRUCTIONSEQU.wnd

DATE	REVISION	BY	APP'D

REGION NO.	STATE	FED. AID PROJ. NO.	SHEET NO.	TOTAL SHEETS
10	WASH.			

JOB NUMBER 21Y001

CONTRACT NO.

P.E. STAMP BOX
DAVID IKAIKA JOHNSON — STATE OF WASHINGTON — 55142 — PROFESSIONAL ENGINEER
SEE SHEET CT1
DATE:

GEO TECH-NICAL OFFICE

P.E. STAMP BOX
SEE SHEET CT1
DATE:

Washington State Department of Transportation

PRELIMINARY NOT FOR CONSTRUCTION

SR 241
MABTON VICINITY
RETROFIT BRIDGES
APPROACH RETAINING WALLS BRIDGE NO. 241/2

GENERAL NOTES, CONSTRUCTION SEQUEMCE

BRIDGE SHEET NO. W2

SHEET 18 OF 115 SHEETS

Tue Dec 27 14:45:45 2022

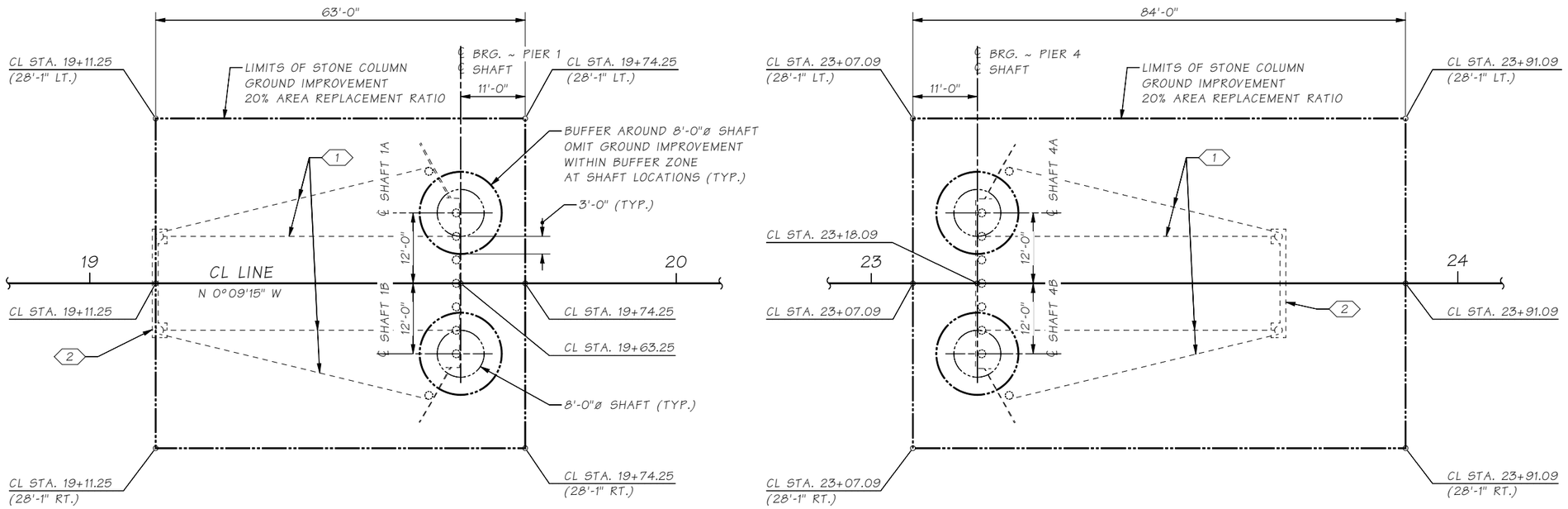

PLAN

KEY NOTES:

1. EXISTING WIRE ROPE (TO BE REMOVED)
2. EXISTING PILE AND ANCHOR CAP (TO BE REMOVED)

State Geotechnical Engr. Fiske, A			M:\X-Team\BR241-2_MABTON-SUNNYSIDE_REPL\MABTON WALLS LDCC\window files\GROUNDINPROVEMENTPLAN.wnd								
Supervisor	Heathman, C					REGION NO.	STATE	FED. AID PROJ. NO.	SHEET NO.	TOTAL SHEETS	
Designed By	Johnson, D	05/22				10	WASH.				
Checked By	Heathman, C	12/22									
Detailed By	Bontemps, W	05/22				JOB NUMBER 21Y001					
Bridge Projects Engr.											
Prelim. Plan By						CONTRACT NO.					
Architect/Specialist			DATE	REVISION	BY	APP'D					

P.E. STAMP BOX
DAVID IKAIKA JOHNSON
STATE OF WASHINGTON
58140
PROFESSIONAL ENGINEER
SEE SHEET CT1
DATE:

GEO TECH-NICAL OFFICE

P.E. STAMP BOX
SEE SHEET CT1
DATE:

Washington State
Department of Transportation
PRELIMINARY NOT FOR CONSTRUCTION

SR 241
MABTON VICINITY
RETROFIT BRIDGES
APPROACH RETAINING WALLS BRIDGE NO. 241/2

STONE COLUMN GROUND IMPROVEMENT PLAN

BRIDGE SHEET NO. W3

SHEET 19 OF 115 SHEETS

SR 241 FILE NO. ____ SHEET W3

Tue Dec 27 14:45:45 2022

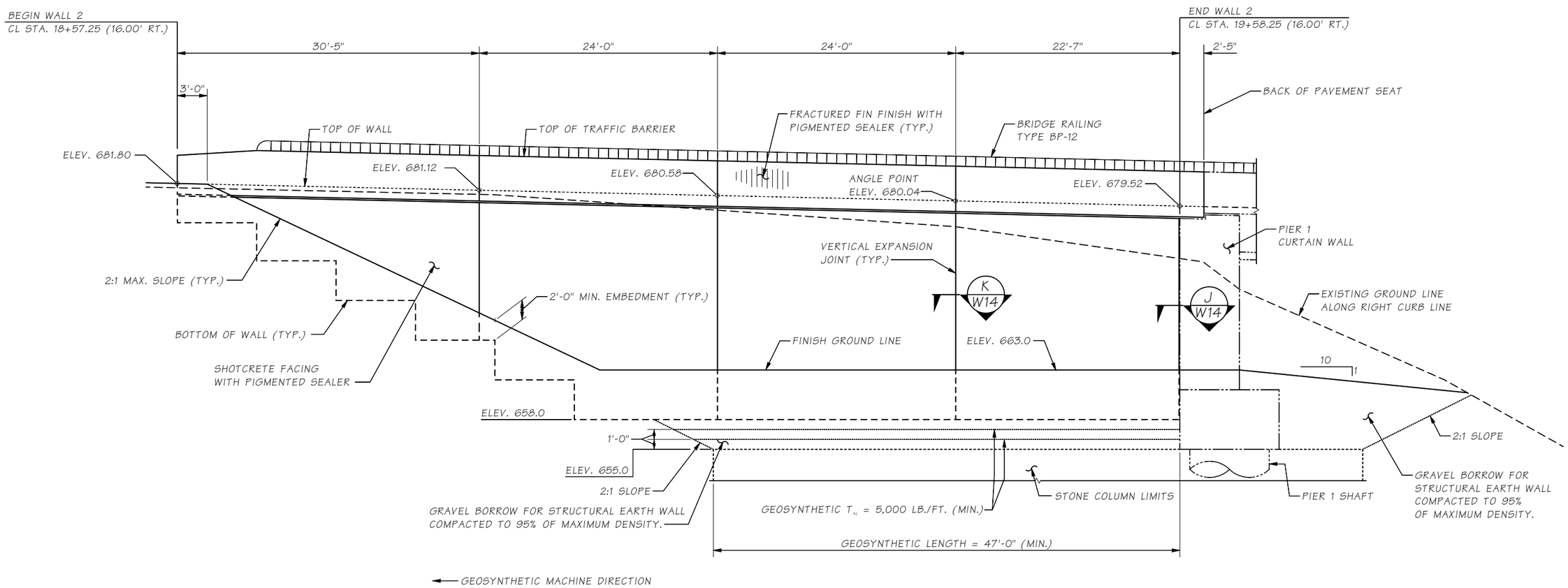

ELEVATION

WALL 2 SHOWN, WALL 1 SIMILAR.

GRADE ELEVATIONS SHOWN ARE FINISH GRADES AT TOP OF CELLULAR CONCRETE DISTRIBUTION SLAB OR APPROACH SLAB AT THE CURB LINE AND ARE BASED ON CL LINE PROFILE GRADE AND OFFSETS.

NOTES:

1. T_{AL} = LONG-TERM TENSILE STRENGTH.
2. ELEVATIONS SHOWN AT THE TOP OF WALL ARE LOCATED AT THE CURBLINE, AS SHOWN.

SR 241 FILE NO. ____ SHEET W4

State Geotechnical Engr.	Fiske, A.		M:\X-Team\BR241-2_MABTOM-SUNNYSIDE_REPL\MABTON WALLS LDCC\window files\WALL 2 ELEVATION.wnd								
Supervisor	Heathman, C					REGION NO.	STATE	FED. AID PROJ. NO.	SHEET NO.	TOTAL SHEETS	
Designed By	Johnson, D	05/22				10	WASH.				
Checked By	Heathman, C	12/22				JOB NUMBER 21Y001					
Detailed By	Bontemps, W	05/22									
Bridge Projects Engr.											
Prelim. Plan By						CONTRACT NO.					
Architect/Specialist			DATE	REVISION	BY	APP'D					

P.E. STAMP BOX

DAVID IKAIKA JOHNSON, STATE OF WASHINGTON, 55142, PROFESSIONAL ENGINEER

SEE SHEET CT1
DATE:

GEO TECH-NICAL OFFICE

P.E. STAMP BOX

SEE SHEET CT1
DATE:

Washington State Department of Transportation

PRELIMINARY NOT FOR CONSTRUCTION

SR 241
MABTON VICINITY
RETROFIT BRIDGES
APPROACH RETAINING WALLS BRIDGE NO. 241/2

WALL 2 ELEVATION

BRIDGE SHEET NO. W4

SHEET 20 OF 115 SHEETS

Tue Dec 27 14:45:45 2022

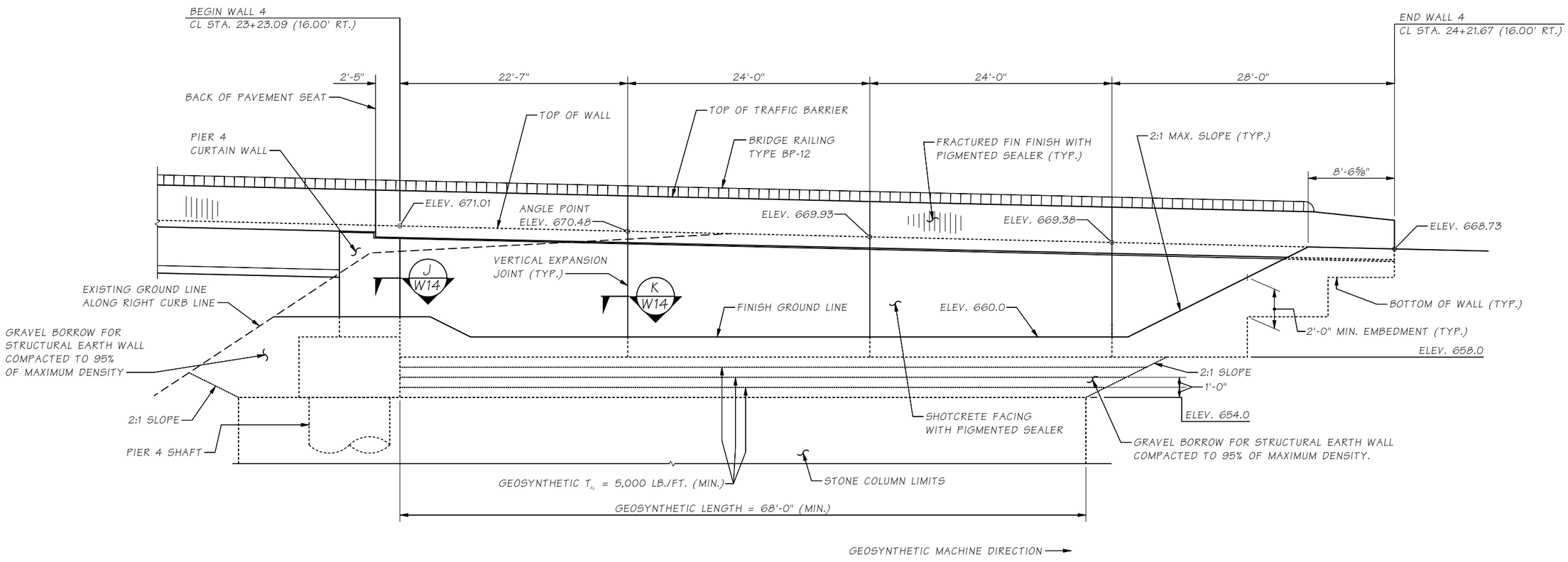

ELEVATION

WALL 4 SHOWN, WALL 3 SIMILAR.

GRADE ELEVATIONS SHOWN ARE FINISH GRADES AT TOP OF CELLULAR CONCRETE DISTRIBUTION SLAB OR APPROACH SLAB AT THE CURBLINE AND ARE BASED ON CL LINE PROFILE GRADE AND OFFSETS.

NOTES:

1. T_{AL} = LONG-TERM TENSILE STRENGTH.
2. ELEVATIONS SHOWN AT THE TOP OF WALL ARE LOCATED AT THE CURBLINE, AS SHOWN.

SR 241 FILE NO. ____ SHEET W5

State Geotechnical Engr.	Fiske, A.	
Supervisor	Heathman, C	
Designed By	Johnson, D	05/22
Checked By	Heathman, C	12/22
Detailed By	Bontemps, W	05/22
Bridge Projects Engr.		
Prelim. Plan By		
Architect/Specialist		

M:\X-Team\BR241-2_MABTOM-SUNNYSIDE_REPL\MABTON WALLS LDCC\window files\WALL 4 ELEVATION.wnd

DATE	REVISION	BY	APP'D

REGION NO.	STATE	FED. AID PROJ. NO.	SHEET NO.	TOTAL SHEETS
10	WASH.			

JOB NUMBER 21Y001

CONTRACT NO.

P.E. STAMP BOX

DAVID IKAIKA JOHNSON, STATE OF WASHINGTON, 55142, PROFESSIONAL ENGINEER

SEE SHEET CT1
DATE:

GEO TECH-NICAL OFFICE

P.E. STAMP BOX

SEE SHEET CT1
DATE:

Washington State Department of Transportation

PRELIMINARY NOT FOR CONSTRUCTION

SR 241
MABTON VICINITY
RETROFIT BRIDGES
APPROACH RETAINING WALLS BRIDGE NO. 241/2

WALL 4 ELEVATION

BRIDGE SHEET NO. W5

SHEET 21 OF 115 SHEETS

Tue Dec 27 14:45:46 2022

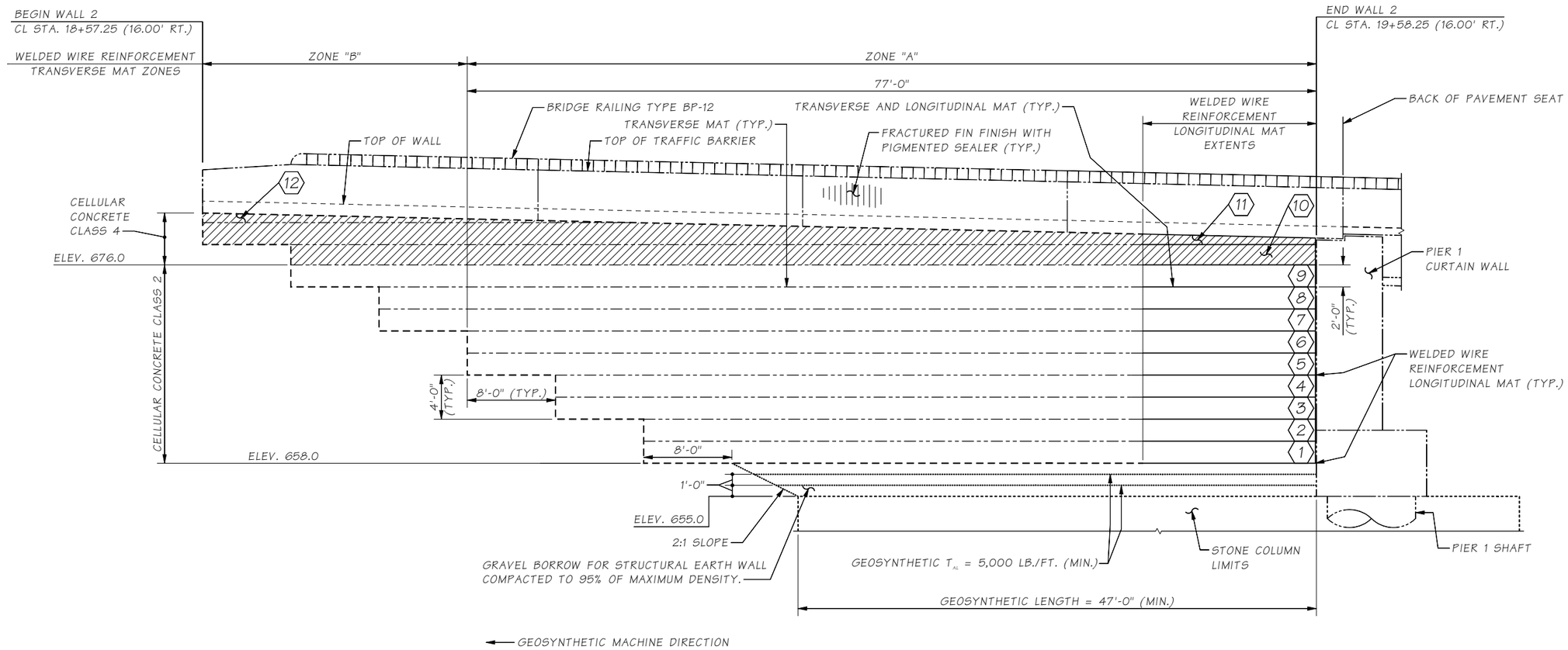

SECTION A/W1

WELDED WIRE REINFORCEMENT TRANSVERSE MAT NOT SHOWN.

RETAINING WALL NOTES:

1. FOR WELDED WIRE REINFORCEMENT REQUIREMENTS, SEE "WELDED WIRE REINFORCEMENT SCHEDULE" AND "WELDED WIRE REINFORCEMENT DETAIL" SHEET W12.
2. ⟨#⟩ DENOTES CELLULAR CONCRETE LAYER NUMBER FOR "WELDED WIRE REINFORCEMENT SCHEDULE".
3. SEE BR. SHT. W14 FOR RETAINING WALL DETAILS.
4. SEE FOR ROADWAY SECTIONS DETAILS.
5. T_{AL} = LONG-TERM TENSILE STRENGTH.
6. SUBGRADE ELEVATION IS THE BOTTOM OF THE APPROACH OR DISTRIBUTION SLAB TYP.

SR 241 FILE NO. ____ SHEET W6

State Geotechnical Engr.	Fiske, A		M:\X-Team\BR241-2_MABTOM-SUNNYSIDE_REPL\MABTON WALLS LDCC\window files\CELLULAR CONCR RETAIN WALL.wnd								
Supervisor	Heathman, C										
Designed By	Johnson, D	05/22									
Checked By	Heathman, C	12/22									
Detailed By	Bontemps, W	05/22									
Bridge Projects Engr.											
Prelim. Plan By											
Architect/Specialist			DATE	REVISION	BY	APP'D					

REGION NO.	STATE	FED. AID PROJ. NO.	SHEET NO.	TOTAL SHEETS
10	WASH.			
JOB NUMBER 21Y001				
CONTRACT NO.				

P.E. STAMP BOX

DAVID IKAIKA JOHNSON, STATE OF WASHINGTON, 55142, PROFESSIONAL ENGINEER

SEE SHEET CT1
DATE:

GEO TECH-NICAL OFFICE

P.E. STAMP BOX

SEE SHEET CT1
DATE:

Washington State Department of Transportation

PRELIMINARY NOT FOR CONSTRUCTION

SR 241
MABTON VICINITY
RETROFIT BRIDGES
APPROACH RETAINING WALLS BRIDGE NO. 241/2

CELLULAR CONC. RETAINING WALL DETAILS 1 OF 8

BRIDGE SHEET NO. W6

SHEET 22 OF 115 SHEETS

Tue Dec 27 14:45:47 2022

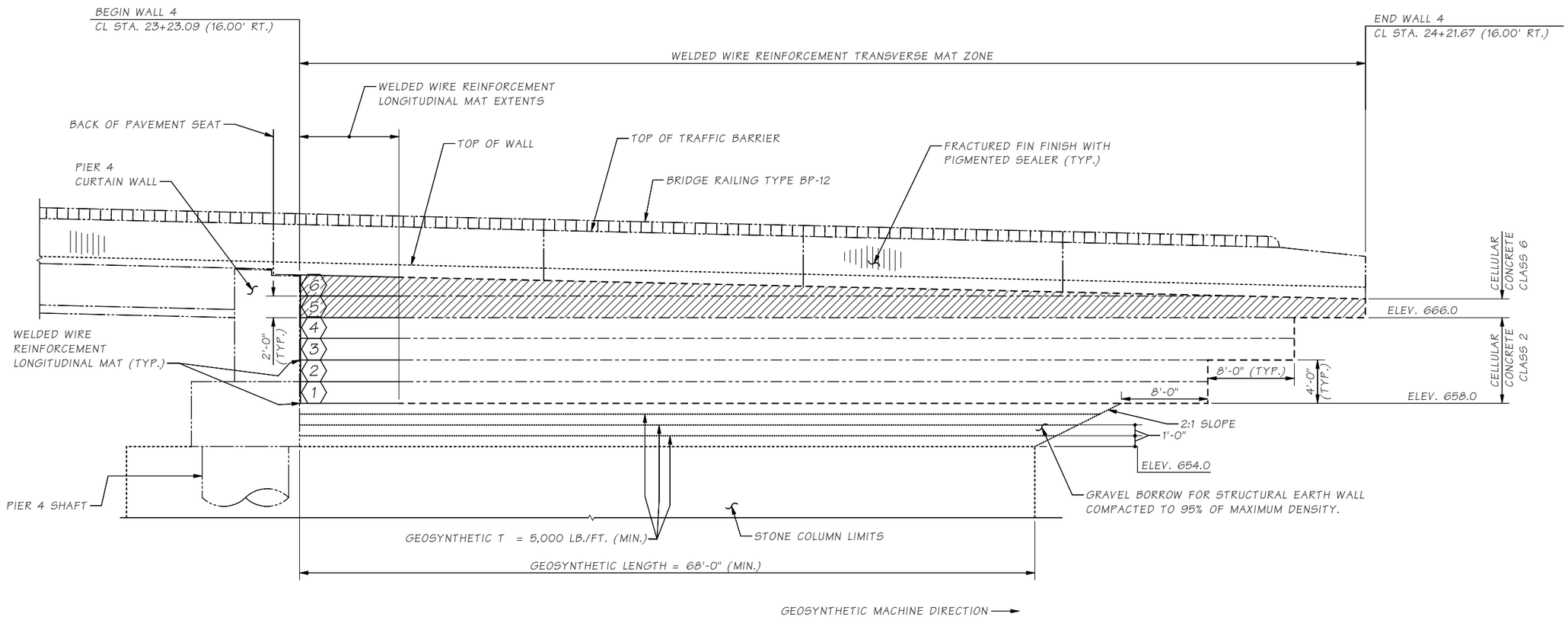

SECTION B / W1

WELDED WIRE REINFORCEMENT TRANSVERSE MAT NOT SHOWN.

RETAINING WALL NOTES:

1. FOR WELDED WIRE REINFORCEMENT REQUIREMENTS, SEE "WELDED WIRE REINFORCEMENT SCHEDULE" AND "WELDED WIRE REINFORCEMENT DETAIL" SHEET W12.
2. (#) DENOTES CELLULAR CONCRETE LAYER NUMBER FOR "WELDED WIRE REINFORCEMENT SCHEDULE".
3. SEE BR. SHT. W14 FOR RETAINING WALL DETAILS.
4. SEE FOR ROADWAY SECTIONS DETAILS.
5. T_{AL} = LONG-TERM TENSILE STRENGTH.
6. SUBGRADE ELEVATION IS THE BOTTOM OF THE APPROACH OR DISTRIBUTION SLAB (TYP.).

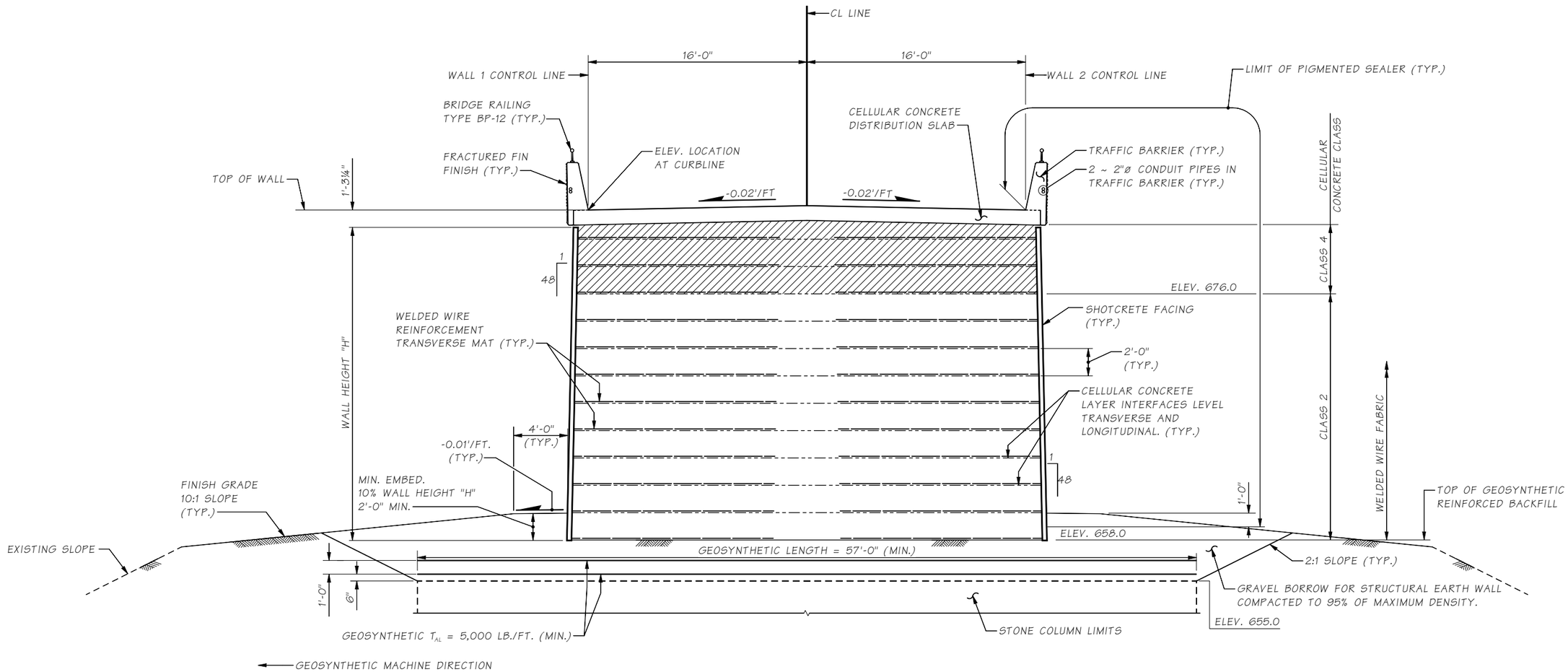

SECTION C/W1

RETAINING WALL NOTES:

1. WELDED WIRE REINFORCEMENT NOT SHOWN FOR CLARITY. SEE "WELDED WIRE REINFORCEMENT SCHEDULE" AND "WELDED WIRE REINFORCEMENT DETAIL" SHT. W12.
2. T_{AL} = LONG-TERM TENSILE STRENGTH.

SR 241 FILE NO. ____ SHEET W8

State Geotechnical Engr.	Fiske, A		M:\X-Team\BR241-2_MABTOM-SUNNYSIDE_REPL\MABTON WALLS LDCC\window files\TYPSECTION.wnd								
Supervisor	Heathman, C					REGION NO.	STATE	FED. AID PROJ. NO.	SHEET NO.	TOTAL SHEETS	
Designed By	Johnson, D	05/22				10	WASH.				
Checked By	Heathman, C	12/22				JOB NUMBER 21Y001					
Detailed By	Bontemps, W	05/22									
Bridge Projects Engr.											
Prelim. Plan By						CONTRACT NO.					
Architect/Specialist			DATE	REVISION	BY	APP'D					

P.E. STAMP BOX

DAVID IKAIKA JOHNSON
STATE OF WASHINGTON
55142
PROFESSIONAL ENGINEER

SEE SHEET CT1
DATE:

GEO TECH-NICAL OFFICE

P.E. STAMP BOX

SEE SHEET CT1
DATE:

Washington State Department of Transportation

PRELIMINARY NOT FOR CONSTRUCTION

SR 241
MABTON VICINITY
RETROFIT BRIDGES
APPROACH RETAINING WALLS BRIDGE NO. 241/2

CELLULAR CONC. RETAINING WALL
DETAILS 3 OF 8

BRIDGE SHEET NO. W8

SHEET 24 OF 115 SHEETS

Tue Dec 27 14:45:49 2022

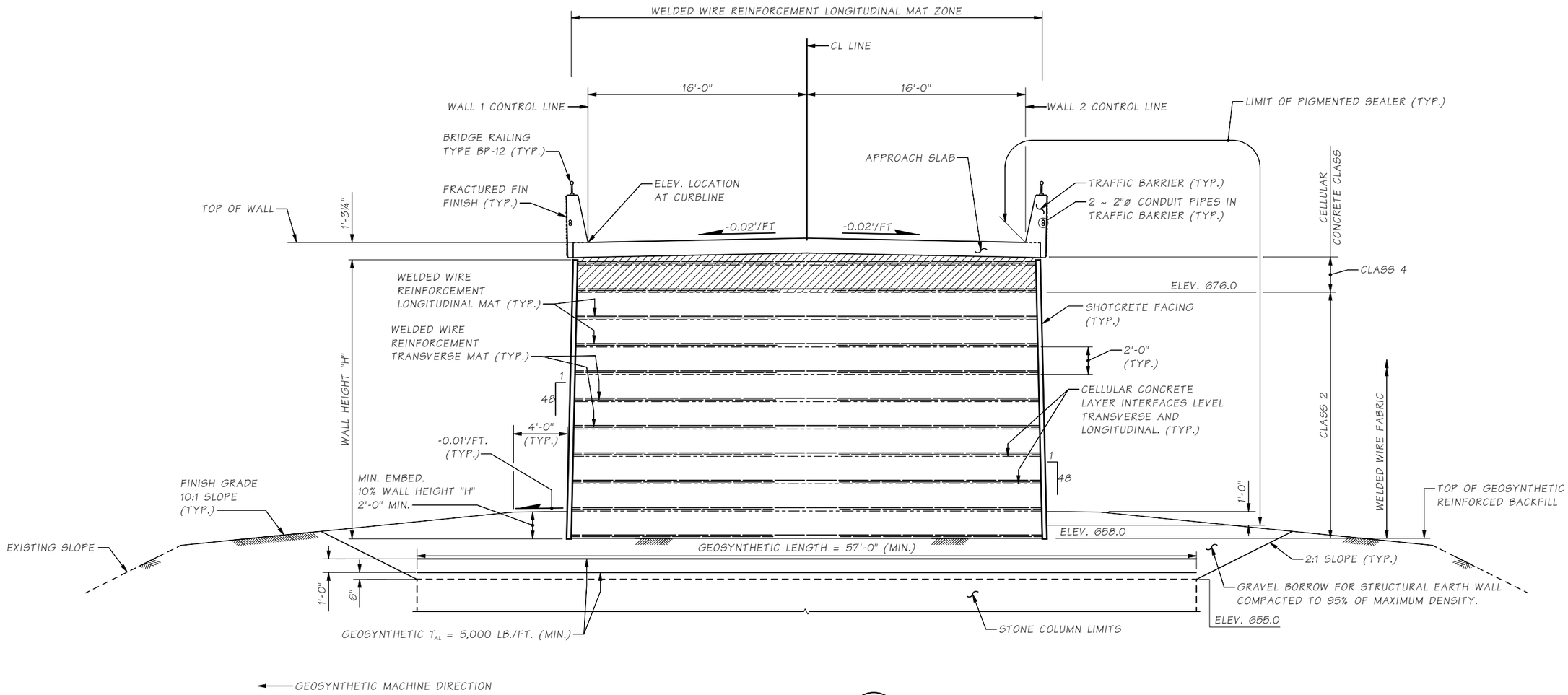

SECTION D/W1

RETAINING WALL NOTES:

1. WELDED WIRE REINFORCEMENT NOT SHOWN FOR CLARITY. SEE "WELDED WIRE REINFORCEMENT SCHEDULE" AND "WELDED WIRE REINFORCEMENT DETAIL" SHT. W12.
2. T_{AL}= LONG-TERM TENSILE STRENGTH.

SR 241 FILE NO. ____ SHEET W9

State Geotechnical Engr. Fiske,A			M:\X-Team\BR241-2_MABTOM-SUNNYSIDE_REPL\MABTON WALLS LDCC\window files\TYPSECTION C2.wnd								
Supervisor	Heathman, C					REGION NO.	STATE	FED. AID PROJ. NO.	SHEET NO.	TOTAL SHEETS	
Designed By	Johnson, DI	05/22				10	WASH.				
Checked By	Heathman, C	12/22									
Detailed By	Bontemps, W	05/22				JOB NUMBER 21Y001					
Bridge Projects Engr.											
Prelim. Plan By						CONTRACT NO.					
Architect/Specialist			DATE	REVISION	BY	APP'D					

P.E. STAMP BOX

DAVID IKAIKA JOHNSON, STATE OF WASHINGTON, 55142, PROFESSIONAL ENGINEER

SEE SHEET CT1
DATE:

GEO TECH-NICAL OFFICE

P.E. STAMP BOX

SEE SHEET CT1
DATE:

Washington State Department of Transportation

PRELIMINARY NOT FOR CONSTRUCTION

SR 241
MABTON VICINITY
RETROFIT BRIDGES
APPROACH RETAINING WALLS BRIDGE NO. 241/2

CELLULAR CONC. RETAINING WALL DETAILS 4 OF 8

BRIDGE SHEET NO. W9

SHEET 25 OF 115 SHEETS

Tue Dec 27 14:45:50 2022

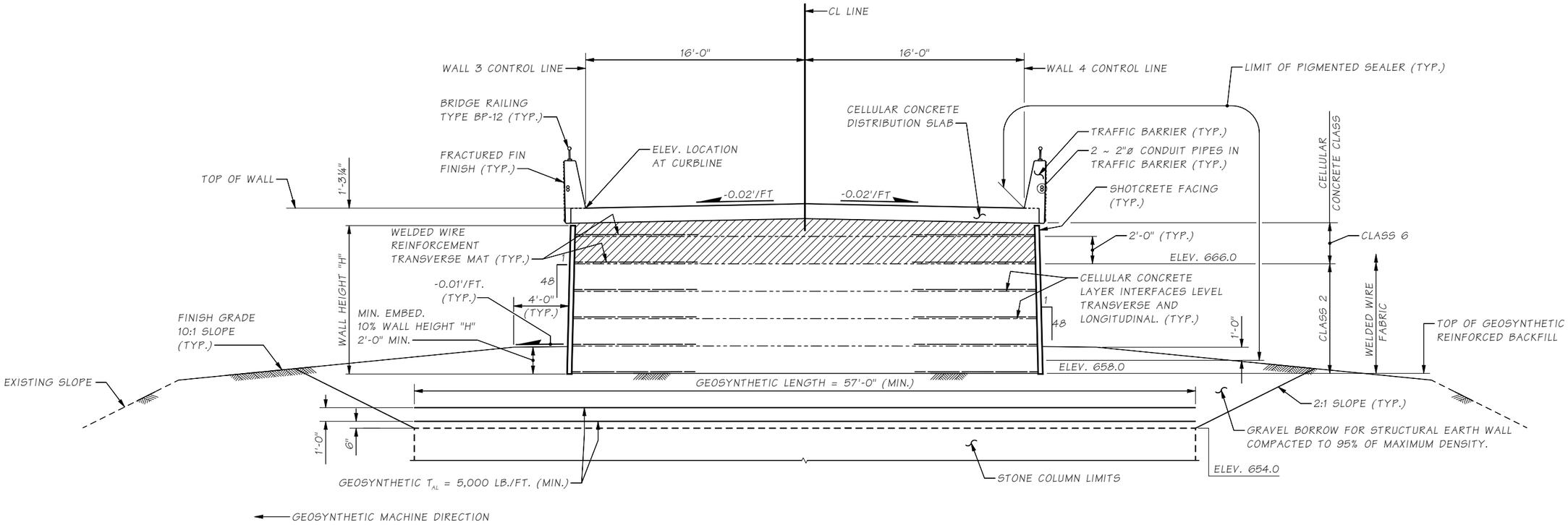

SECTION E/W1

NOTES:

1. WELDED WIRE REINFORCEMENT NOT SHOWN FOR CLARITY. SEE "WELDED WIRE REINFORCEMENT SCHEDULE" AND "WELDED WIRE REINFORCEMENT DETAIL" SHT. W12.
2. T_{AL} = LONG-TERM TENSILE STRENGTH.

SR 241 FILE NO. ____ SHEET W10

State Geotechnical Engr.	Fiske, A		M:\X-Team\BR241-2_MABTOM-SUNNYSIDE_REPL\MABTON WALLS LDCC\window files\TYPSECTION2.wnd								
Supervisor	Heathman, C										
Designed By	Johnson, D	05/22									
Checked By	Heathman, C	12/22									
Detailed By	Bontemps, W	05/22									
Bridge Projects Engr.											
Prelim. Plan By											
Architect/Specialist			DATE	REVISION	BY	APP'D					

REGION NO.	STATE	FED. AID PROJ. NO.	SHEET NO.	TOTAL SHEETS
10	WASH.			
JOB NUMBER 21Y001				
CONTRACT NO.				

P.E. STAMP BOX

DAVID IKAIKA JOHNSON, STATE OF WASHINGTON, 55142, PROFESSIONAL ENGINEER

SEE SHEET CT1
DATE:

GEO TECH-NICAL OFFICE

P.E. STAMP BOX

SEE SHEET CT1
DATE:

Washington State Department of Transportation

PRELIMINARY NOT FOR CONSTRUCTION

SR 241
MABTON VICINITY
RETROFIT BRIDGES
APPROACH RETAINING WALLS BRIDGE NO. 241/2

CELLULAR CONC. RETAINING WALL
DETAILS 5 OF 8

BRIDGE SHEET NO. W10

SHEET 26 OF 115 SHEETS

Tue Dec 27 14:45:51 2022

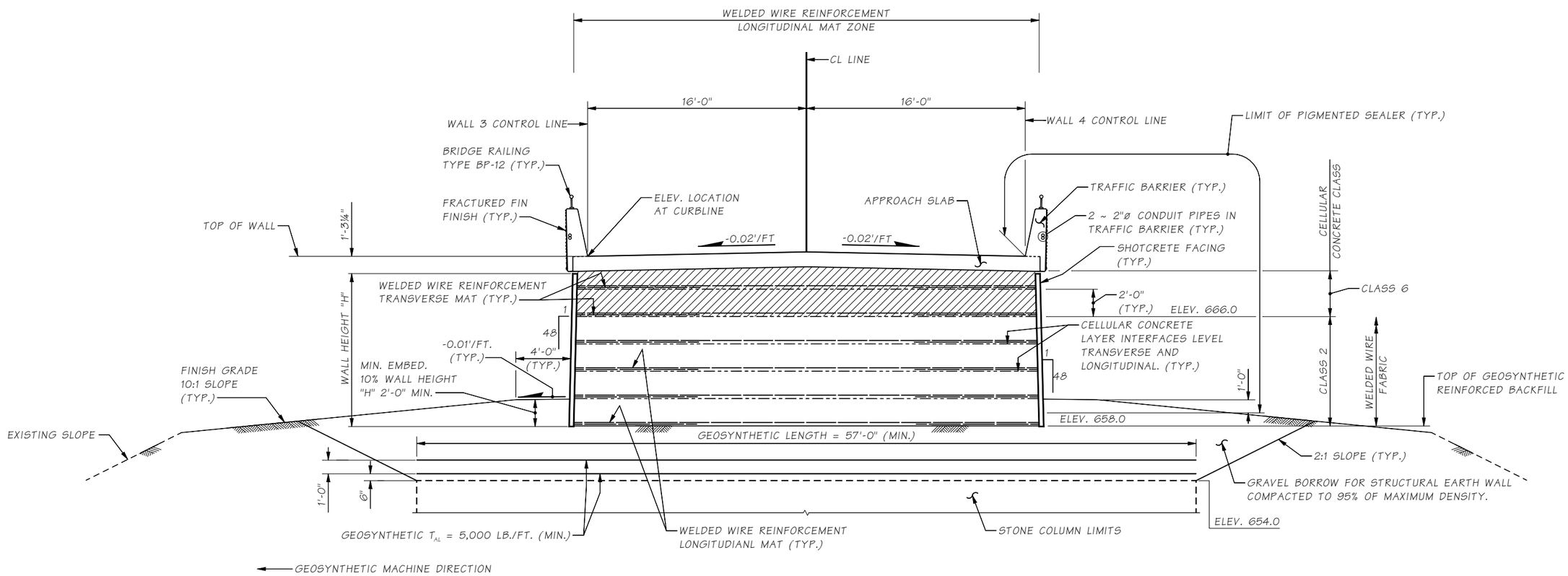

SECTION F/W1

NOTES:

1. WELDED WIRE REINFORCEMENT NOT SHOWN FOR CLARITY. SEE "WELDED WIRE REINFORCEMENT SCHEDULE" AND "WELDED WIRE REINFORCEMENT DETAIL" SHT. W12.
2. T_{AL} = LONG-TERM TENSILE STRENGTH.

SR 241 FILE NO. ____ SHEET W11

State Geotechnical Engr.	Fiske, A		M:\X-Team\BR241-2_MABTOM-SUNNYSIDE_REPL\MABTON WALLS LDCC\window files\TYPSECTION2 D2.wnd								
Supervisor	Heathman, C										
Designed By	Johnson, DI	05/22									
Checked By	Heathman, C	12/22									
Detailed By	Bontemps, W	05/22									
Bridge Projects Engr.											
Prelim. Plan By											
Architect/Specialist			DATE	REVISION	BY	APP'D					

REGION NO.	STATE	FED. AID PROJ. NO.	SHEET NO.	TOTAL SHEETS
10	WASH.			
JOB NUMBER 21Y001				
CONTRACT NO.				

P.E. STAMP BOX
DAVID IKAIKA JOHNSON
STATE OF WASHINGTON
55142
PROFESSIONAL ENGINEER
SEE SHEET CT1
DATE:

GEO TECH-NICAL OFFICE

P.E. STAMP BOX
SEE SHEET CT1
DATE:

Washington State Department of Transportation
PRELIMINARY NOT FOR CONSTRUCTION

SR 241
MABTON VICINITY
RETROFIT BRIDGES
APPROACH RETAINING WALLS BRIDGE NO. 241/2

CELLULAR CONC. RETAINING WALL
DETAILS 6 OF 8

BRIDGE SHEET NO. W11
SHEET 27 OF 115 SHEETS

Tue Dec 27 14:45:51 2022

WELDED WIRE REINFORCEMENT SCHEDULE

PIER	LOCATION	CELLULAR CONCRETE LAYER	STYLE	LENGTH "L"
1	LONGITUDINAL MAT	1 THRU 11	8 x 12 - W4.5 x W4.5	16'-0"
	TRANSVERSE MAT	1 THRU 12, ZONE "A"	8 x 12 - W4.5 x W4.5	16'-0"
		7 THRU 12 ZONE "B"	8 x 12 - W4.5 x W4.5	8'-0"
4	LONGITUDINAL MAT	1 THRU 6	8 x 12 - W4.5 x W4.5	9'-0"
	TRANSVERSE MAT	1 THRU 6	8 x 12 - W4.5 x W4.5	9'-0"

SCHEDULE NOTES:

1. PLACE LONGITUDINAL WIRES OF LONGITUDINAL MAT PARALLEL TO CENTERLINE OF ROADWAY.
2. PLACE LONGITUDINAL WIRES OF TRANSVERSE MAT NORMAL TO CENTERLINE OF ROADWAY.
3. WHERE LONGITUDINAL MATS AND TRANSVERSE MATS OVERLAP, USE SPACERS TO MAINTAIN A MINIMUM SEPARATION OF 2-INCHES BETWEEN MATS, EXCEPT AT THE FACE OF WALLS WHERE MINIMUM SEPARATION IS NOT POSSIBLE(I.E., LONGITUDINAL AND TRANSVERSE MATS COME INTO CONTACT).
4. WELDED WIRE REINFORCEMENT FOR BOTH LONGITUDINAL MATS AND TRANSVERSE MATS SHALL CONFORM TO AASHTO M 336.
5. LONGITUDINAL MATS AND TRANSVERSE MATS SHALL BE GALVANIZED AFTER FABRICATION IN ACCORDANCE WITH ASTM A641 OR AASHTO M 111 AS APPLICABLE. MINIMUM COATING THICKNESS SHALL BE TWO OUNCES PER SQUARE FOOT AND EQUIVALENT. ALL DAMAGE TO THE GALVANIZING SHALL BE REPAIRED WITH ONE COAT OF PAINT CONFORMING TO STD. SPEC. SECTION 9-08.1(2) B.

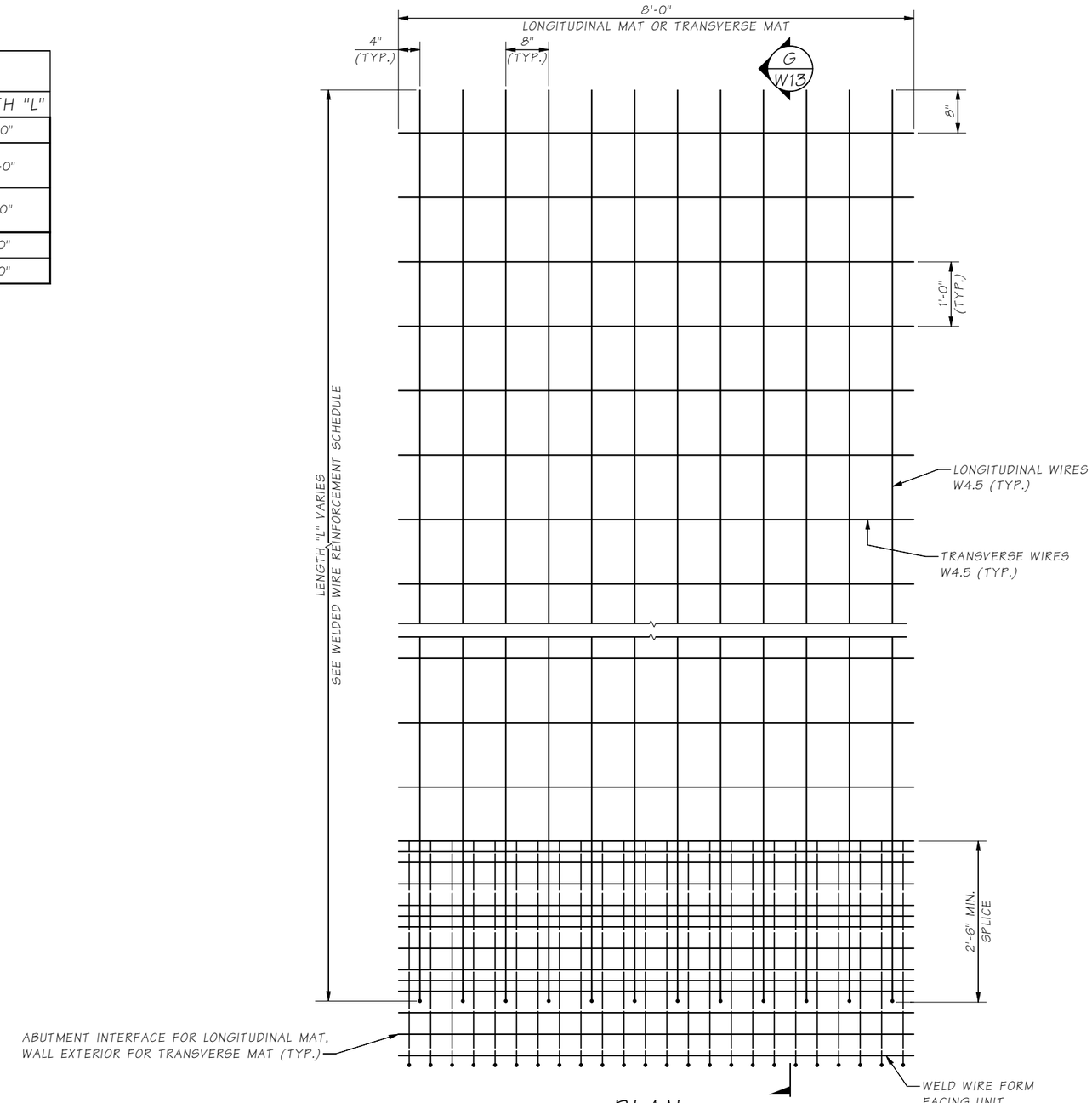

PLAN

WELDED WIRE REINFORCEMENT DETAIL

CONSTR. GEOTEXTILE NOT SHOWN FOR CLARITY.

RETAINING WALL NOTES:

1. FOR WELDED WIRE FORM FACING UNIT DETAILS SEE SHEET W13

SR 241 FILE NO. ____ SHEET W12

State Geotechnical Engr.	Fiske, A	
Supervisor	Heathman, C	
Designed By	Johnson, D	05/22
Checked By	Heathman, C	12/22
Detailed By	Bontemps, W	05/22
Bridge Projects Engr.		
Prelim. Plan By		
Architect/Specialist		

M:\X-Team\BR241-2_MABTOM-SUNNYSIDE_REPL\MABTON WALLS LDCC\window files\CELLULAR CONCR RETAIN WALL 3.wnd

DATE	REVISION	BY	APP'D

REGION NO.	STATE	FED. AID PROJ. NO.	SHEET NO.	TOTAL SHEETS
10	WASH.			

JOB NUMBER 21Y001

CONTRACT NO.

P.E. STAMP BOX

DAVID IKAIKA JOHNSON, STATE OF WASHINGTON, 55142, PROFESSIONAL ENGINEER

SEE SHEET CT1 DATE:

GEO TECH-NICAL OFFICE

P.E. STAMP BOX

SEE SHEET CT1 DATE:

Washington State Department of Transportation

PRELIMINARY NOT FOR CONSTRUCTION

SR 241
MABTON VICINITY
RETROFIT BRIDGES
APPROACH RETAINING WALLS BRIDGE NO. 241/2

CELLULAR CONC. RETAINING WALL DETAILS 7 OF 8

BRIDGE SHEET NO. W12

SHEET 28 OF 115 SHEETS

Tue Dec 27 14:45:51 2022

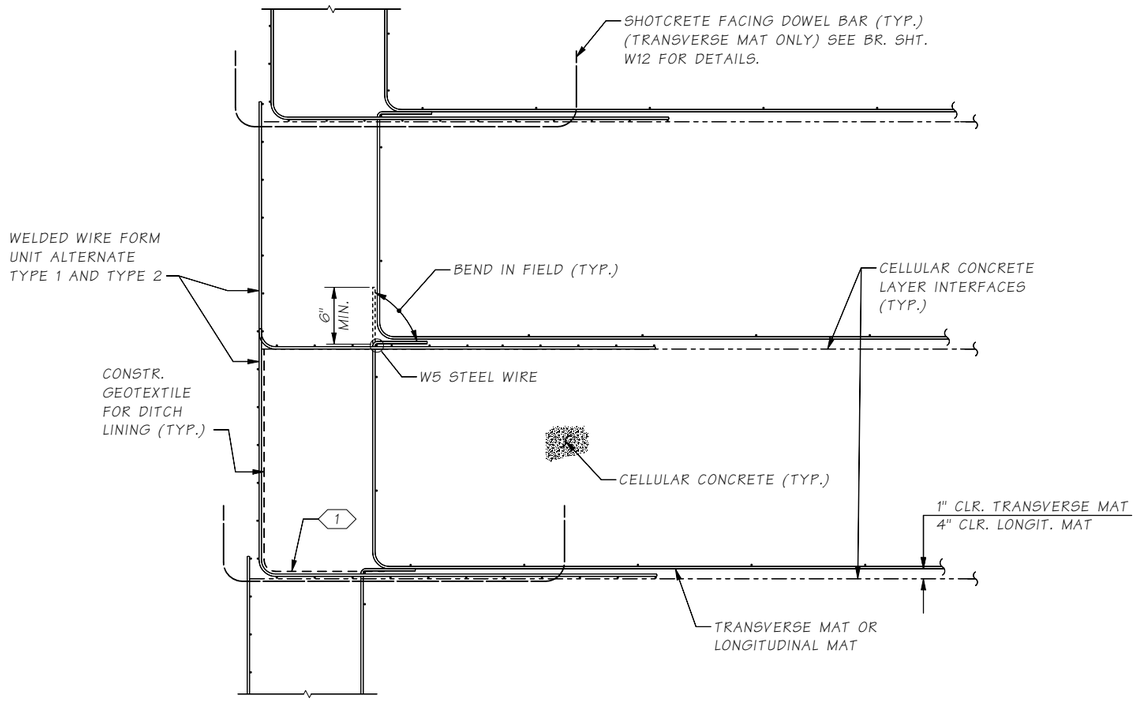

SECTION G / W12

BRACE WIRE AND SHOTCRETE FACING NOT SHOWN

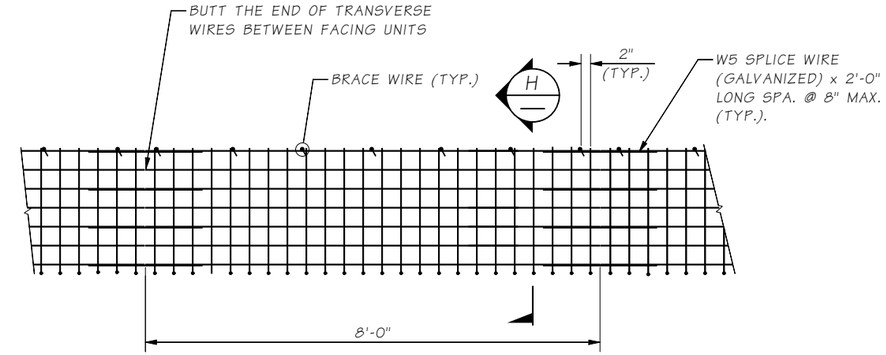

ELEVATION

WELDED WIRE FORM FACING UNIT

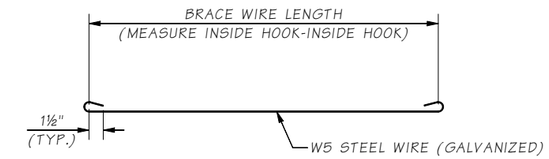

BRACE WIRE DETAIL

KEY NOTE:

1 LINING TO EXTEND A MINIMUM OF 6" BEYOND THE BEND.

RETAINING WALL NOTES:

1. THE WELDED WIRE FORM FACING UNIT HAS BEEN DESIGNED TO SUPPORT 2 FOOT LIFTS OF CELLULAR CONCRETE. THIS FORM FACING UNIT SYSTEM IS A PROPOSED SYSTEM. THE CONTRACTOR MAY PROPOSE AN ALTERNATE SYSTEM AS REQUIRED TO CONTAIN THE CELLULAR CONCRETE FOR PLACEMENT. ALTERNATE SYSTEMS SHALL BE ACCOMPANIED BY STD. SPEC. SECTION 1-05.3, TYPE 2E WORKING DRAWINGS.
2. WELDED WIRE FORM FACING UNITS, BRACE WIRES AND SPLICE WIRES SHALL CONFORM TO AASHTO M 336.
3. GALVANIZING SHALL BE IN ACCORDANCE WITH ASTM A641 OR AASHTO M 111 AS APPLICABLE. MINIMUM COATING THICKNESS SHALL BE TWO OUNCES PER SQUARE FOOT AND EQUIVALENT. ALL DAMAGE TO THE GALVANIZING SHALL BE REPAIRED WITH ONE COAT OF PAINT CONFORMING TO STD. SPEC. SECTION 9-08.1(2) B.
4. CONSTRUCTION GEOTEXTILE FOR DITCH LINING SHALL CONFORM TO THE PROPERTIES IN TABLE 4 WOVEN DITCH LINING IN STD. SPEC. SECTION 9-33.2(1).
5. SPLICE WIRES SHALL BE USED BETWEEN FACING UNITS AT EDGES AND CORNERS.

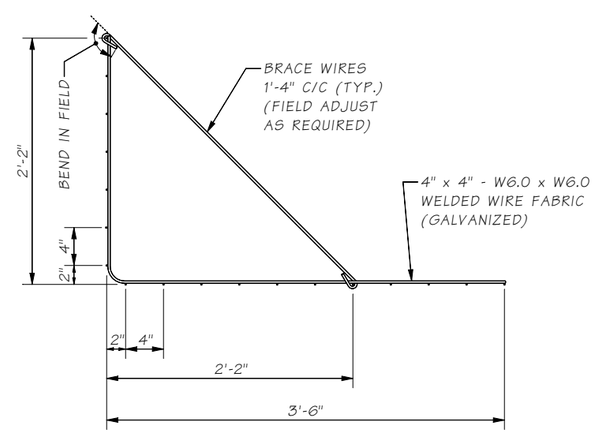

TYPE 1

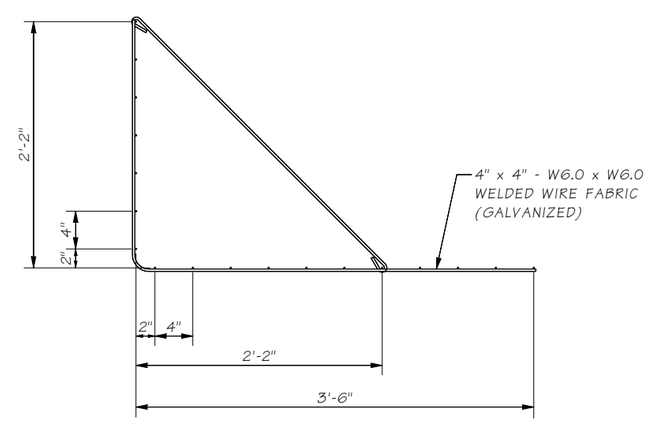

TYPE 2

SECTION H

State Geotechnical Engr. Fiske, A			M:\X-Team\BR241-2_MABTOM-SUNNYSIDE_REPL\MABTON WALLS LDCC\window files\CELLULAR CONCR RETAIN WALL 2.wnd							
Supervisor	Heathman, C					REGION NO.	STATE	FED. AID PROJ. NO.	SHEET NO.	TOTAL SHEETS
Designed By	Johnson, D	05/22				10	WASH.			
Checked By	Heathman, C	12/22								
Detailed By	Bontemps, W	05/22				JOB NUMBER 21Y001				
Bridge Projects Engr.										
Prelim. Plan By						CONTRACT NO.				
Architect/Specialist			DATE	REVISION	BY	APP'D				

P.E. STAMP BOX: DAVID TKAIKA JOHNSON, STATE OF WASHINGTON, 55142, PROFESSIONAL ENGINEER

SEE SHEET CT1

DATE:

GEO TECH-NICAL OFFICE

P.E. STAMP BOX

SEE SHEET CT1

DATE:

Washington State Department of Transportation

PRELIMINARY NOT FOR CONSTRUCTION

SR 241
MABTON VICINITY
RETROFIT BRIDGES
APPROACH RETAINING WALLS BRIDGE NO. 241/2

CELLULAR CONC. RETAINING WALL DETAILS 8 OF 8

BRIDGE SHEET NO. W13

SHEET 29 OF 115 SHEETS

SR 241 FILE NO. ____ SHEET w13

Tue Dec 27 14:45:52 2022

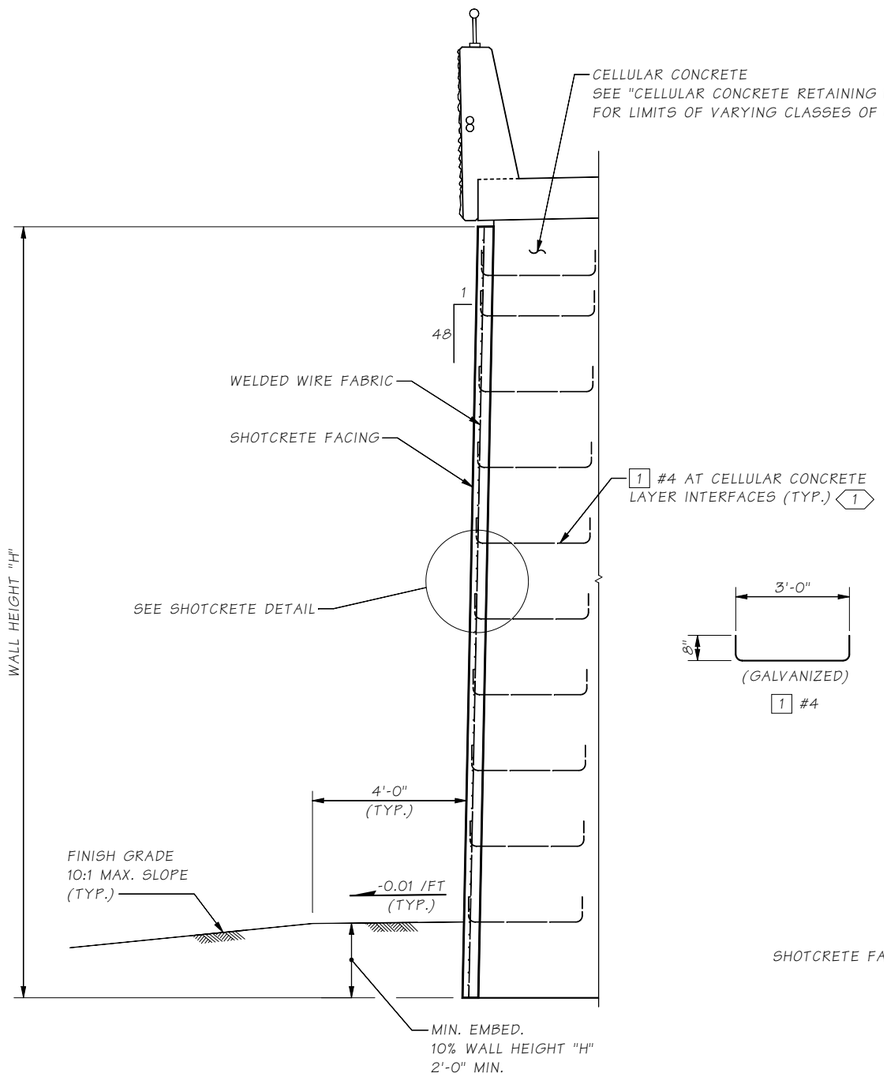

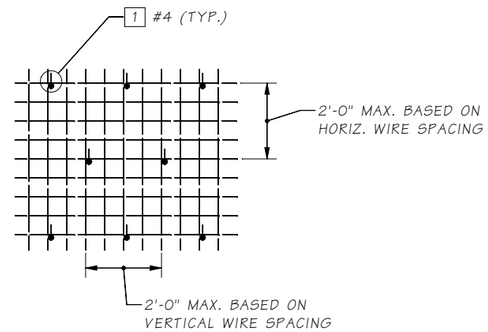

DOWEL BAR SPACING DETAIL

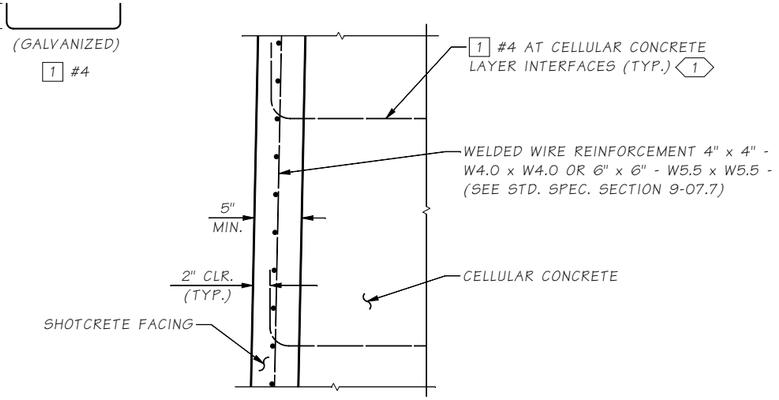

SHOTCRETE DETAIL

2

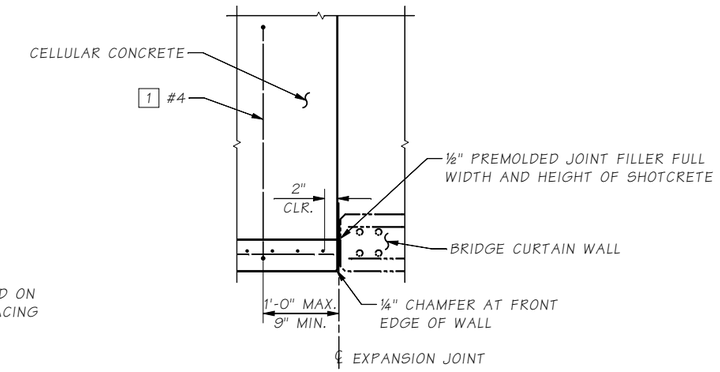

SECTION J
2
W4 AND W5

VERTICAL EXPANSION JOINT DETAIL
(BETWEEN SHOTCRETE AND CURTAIN WALL)

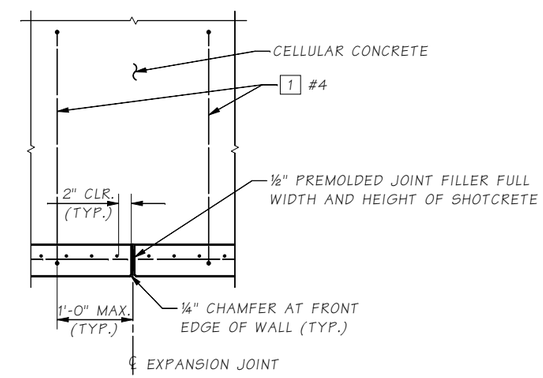

SECTION K
2
W4 AND W5

VERTICAL EXPANSION JOINT DETAIL
(BETWEEN SHOTCRETE SECTIONS)

TYPICAL SECTION CELLULAR CONCRETE RETAINING WALL WITH SHOTCRETE FACING

SECTION SHOWN NORMAL TO WALL ALIGNMENT. 2

KEY NOTES:

1 1 #4 DOWEL REINFORCEMENT PLACED BETWEEN CELLULAR CONCRETE LAYERS INTERFACES AT 2'-0" O.C. HORIZONTAL SPACING, SEE DOWEL BAR SPACING DETAIL.

2 CELLULAR CONCRETE RETAINING WALL WELDED WIRE REINFORCEMENT AND FORM FACING UNIT NOT SHOWN.

SHOTCRETE FACING NOTES:

1. WELDED WIRE REINFORCEMENT SHALL CONFORM TO AASHTO M 336
2. 1 #4 DOWEL BARS SHALL CONFORM TO STD. SPEC. SECTION 9-07.1 AND 9-07.2 AND SHALL BE GALVANIZED IN ACCORDANCE WITH ASTM A767, CLASS 2.
3. WELDED WIRE REINFORCEMENT SHALL BE GALVANIZED IN ACCORDANCE WITH ASTM A641 CLASS B.
4. THE SHOTCRETE FACING SHALL BE FINISHED IN ACCORDANCE WITH FINISH ALTERNATIVE B IN STD. SPEC. SECTION 6-18.3(8), SEE SPECIAL PROVISIONS.

SR 241 FILE NO. ____ SHEET W14

Bridge Design Engr.	Grimm, E	
Supervisor	Aldrich, BS	
Designed By	Schultz, E	05/22
Checked By	Heathman, C	12/22
Detailed By	Bontemps, W	05/22
Bridge Projects Engr.		
Prelim. Plan By		
Architect/Specialist		

M:\X-Team\BR241-2_MABTOM-SUNNYSIDE_REPL\MABTON WALLS LDCC\window files\SHOTCRETE FACING DETAILS.wnd

DATE	REVISION	BY	APP'D

REGION NO.	STATE	FED. AID PROJ. NO.	SHEET NO.	TOTAL SHEETS
10	WASH.			
JOB NUMBER 21Y001				
CONTRACT NO.				

P.E. STAMP BOX
ERIC HENRY SCHULTZ
STATE OF WASHINGTON
39910
PROFESSIONAL ENGINEER
SEE SHEET CT1
DATE:

BRIDGE AND STRUCTURES OFFICE

P.E. STAMP BOX
BRIAN S. ALDRICH
STATE OF WASHINGTON
37834
PROFESSIONAL ENGINEER
SEE SHEET CT1
DATE:

Washington State Department of Transportation

PRELIMINARY NOT FOR CONSTRUCTION

SR 241
MABTON VICINITY
RETROFIT BRIDGES
APPROACH RETAINING WALLS BRIDGE NO. 241/2

SHOTCRETE FACING DETAILS

BRIDGE SHEET NO. W14

SHEET 30 OF 115 SHEETS

Tue Dec 27 14:45:52 2022

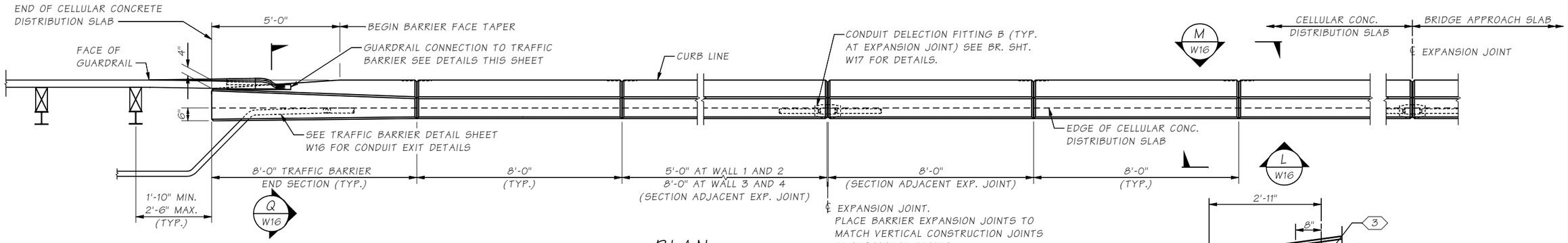

PLAN
TRAFFIC BARRIER
2

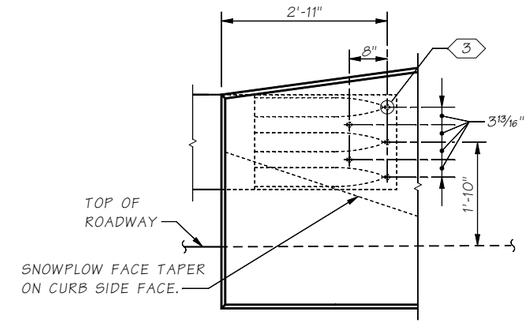

THRIE BEAM END SECTION DESIGN "F" (SEE STD. PLAN C-7a)

OUTSIDE ELEVATION
TRAFFIC BARRIER - GUARDRAIL CONNECTION
(WHERE SHOWN ON LAYOUT)

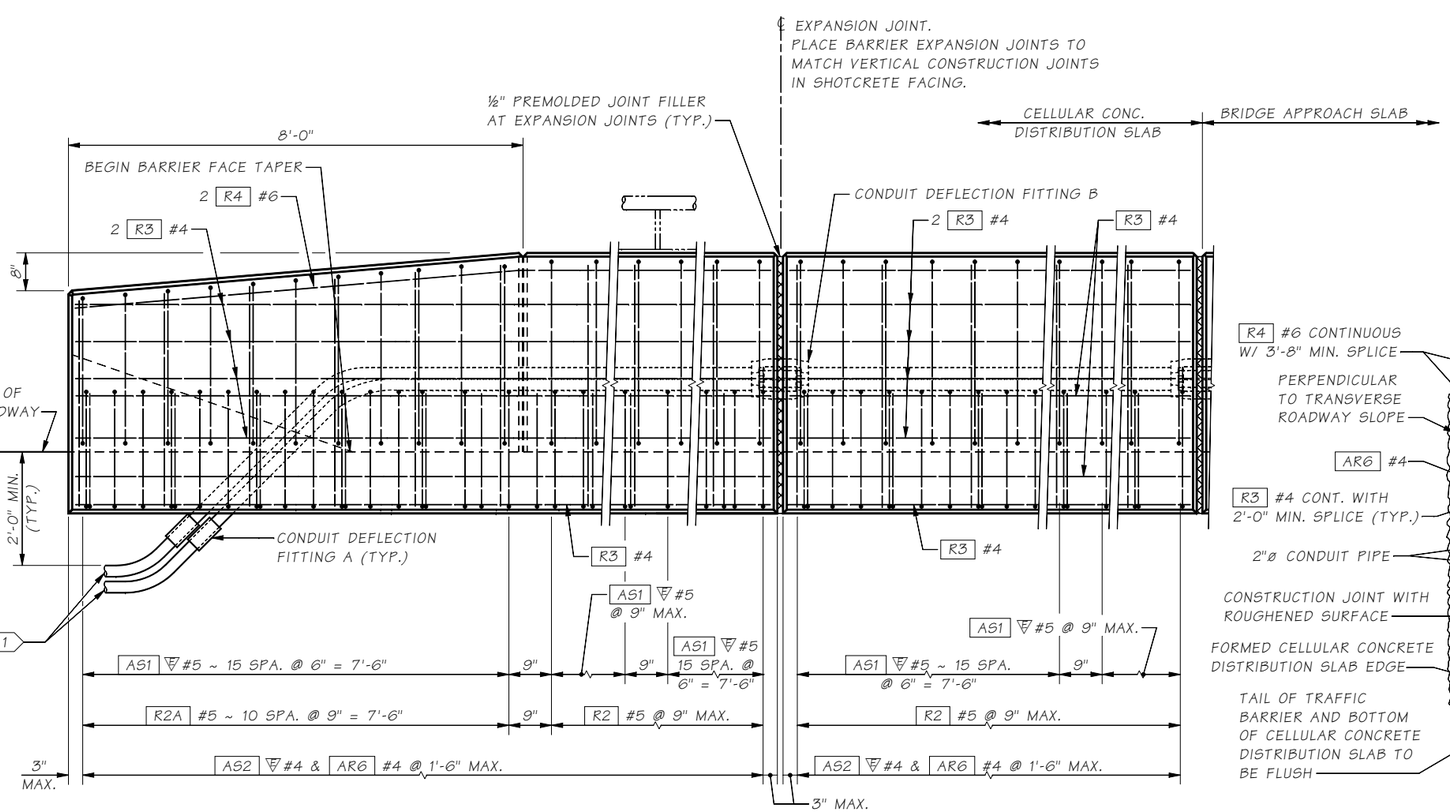

OUTSIDE ELEVATION
END OF TRAFFIC BARRIER

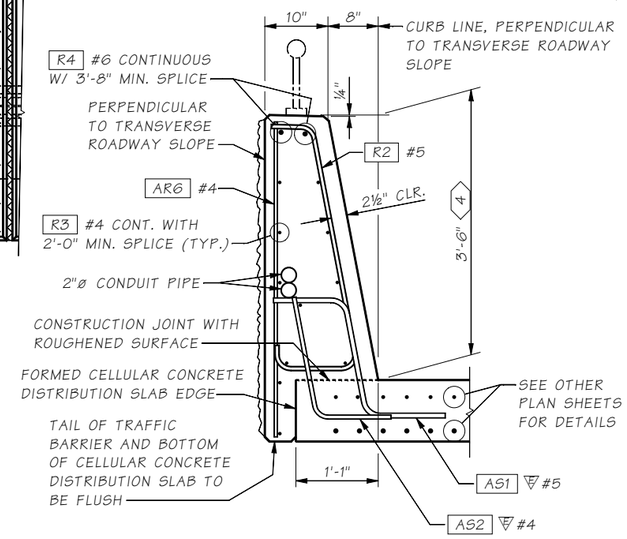

TYPICAL SECTION
TRAFFIC BARRIER
SHOWN ON CELLULAR CONC. DISTRIBUTION SLAB

KEY NOTES:

1. 2"ø RGS CONDUIT PIPES (TYP.)
2. BARRIER CONTINUOUS BETWEEN CELLULAR CONC. DISTRIBUTION SLAB EXPANSION JOINTS. CONSTRUCTION JOINTS WITH SHEAR KEYS ARE PERMISSIBLE AT DUMMY JOINT LOCATIONS. FORM JOINTS BETWEEN DUMMY JOINTS SHALL NOT BE PERMITTED.
3. ⅞"ø ROCKET/KOHLER F-50, LANCASTER MALLEABLE, OR DAYTON/RICHMOND F-62 FLARED THIN SLAB FERRULE INSERTS OR APPROVED EQUAL (TYP.). RESIN-BONDED ANCHORS MAY BE SUBSTITUTED.
4. HEIGHT MAY VARY IF REQUIRED TO PROVIDE A PROFILE PLEASING TO THE EYE.

Bridge Design Engr.	Grimm, E		M:\X-Team\BR241-2_MABTOM-SUNNYSIDE_REPL\MABTON WALLS LDCC\window files\TB1.wnd			REGION NO.	STATE	FED. AID PROJ. NO.	SHEET NO.	TOTAL SHEETS
Supervisor	Aldrich, BS					10	WASH.			
Designed By	Schultz, E	05/22				JOB NUMBER 21Y001				
Checked By	O'Neill, P	12/22								
Detailed By	Bontemps, W	05/22				CONTRACT NO.				
Bridge Projects Engr.										
Prelim. Plan By										
Architect/Specialist			DATE	REVISION	BY	APP'D				

Tue Dec 27 14:45:53 2022

P.E. STAMP BOX — ERIC HENRY SCHULTZ, STATE OF WASHINGTON, 39910, STRUCTURAL ENGINEER, PROFESSIONAL ENGINEER — SEE SHEET CT1 — DATE:

BRIDGE AND STRUCTURES OFFICE

P.E. STAMP BOX — BRIAN S. ALDRICH, STATE OF WASHINGTON, 37834, STRUCTURAL ENGINEER, PROFESSIONAL ENGINEER — SEE SHEET CT1 — DATE:

Washington State Department of Transportation

PRELIMINARY NOT FOR CONSTRUCTION

SR 241
MABTON VICINITY
RETROFIT BRIDGES
APPROACH RETAINING WALLS BRIDGE NO. 241/2

TRAFFIC BARRIER DETAILS 1 OF 3

BRIDGE SHEET NO. W15

SHEET 31 OF 115 SHEETS

SR 241 FILE NO. ____ SHEET W15

JUNCTION BOX LOCATIONS

TS = TRAFFIC SYSTEM LT = LIGHTING SYSTEM

CL STATION	OFFSET	"TS" OR "LT"
18+69.25	LEFT AND RIGHT	TS
18+75.75	LEFT AND RIGHT	LT
23+97.67	LEFT AND RIGHT	TS
24+05.67	LEFT AND RIGHT	LT

JUNCTION BOX NOTES:

1. JUNCTION BOX LOCATIONS SHOWN ARE APPROXIMATE. CENTER JUNCTION BOX INSTALLATION BETWEEN BARRIER DUMMY JOINTS.
2. INSTALL ALL CONDUIT RUNS TO DRAIN TO A BRIDGE END OR PROVIDE DRAIN AT ALL LOW POINTS IN CONDUIT RUN ON BRIDGE.

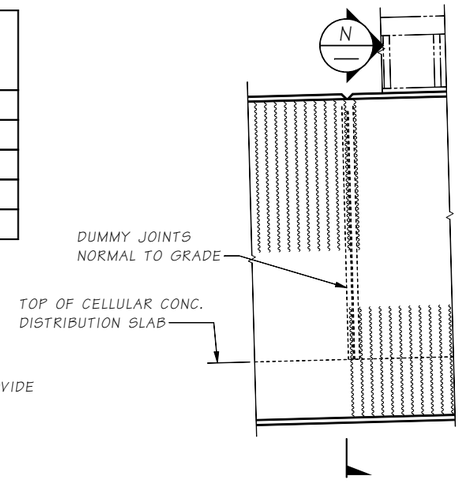

VIEW L W15

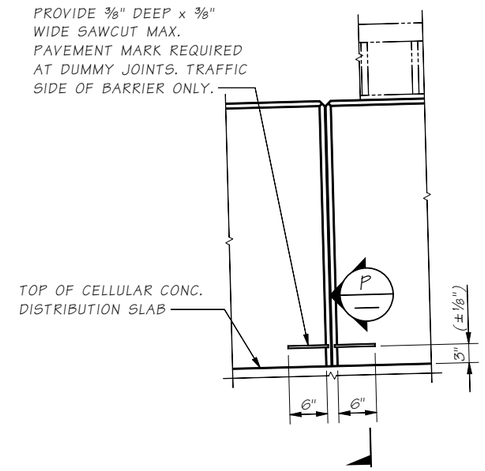

VIEW M W15

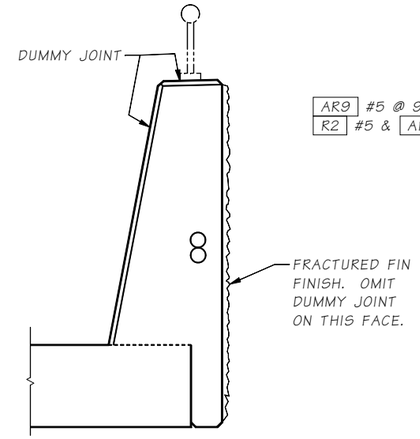

SECTION N

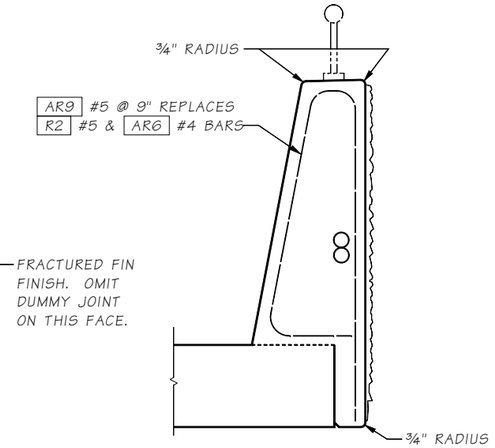

SLIPFORM ALTERNATE

SEE "TYPICAL SECTION - TRAFFIC BARRIER" FOR ADDITIONAL DETAILS.

THE CONTRACTOR IS ADVISED THAT THE SLIPFORM CONSTRUCTION METHOD IS A PATENTED PROPRIETARY PROCESS FOR BARRIERS WITH A FRACTURED FIN FINISH.

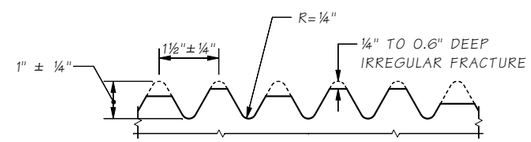

FRACTURED FIN FINISH

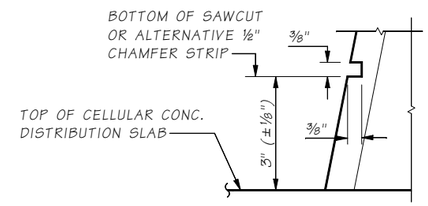

SECTION P
MAX. PAVEMENT MARK

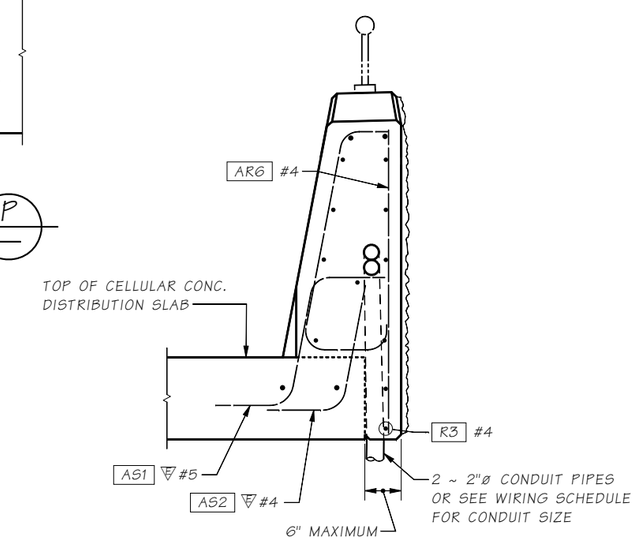

SECTION Q W15 CELLULAR CONC. DISTRIBUTION SLAB

FOR DETAILS NOT SHOWN SEE "OUTSIDE ELEVATION" AND "TYPICAL SECTION - TRAFFIC BARRIER"

BENDING DIAGRAM

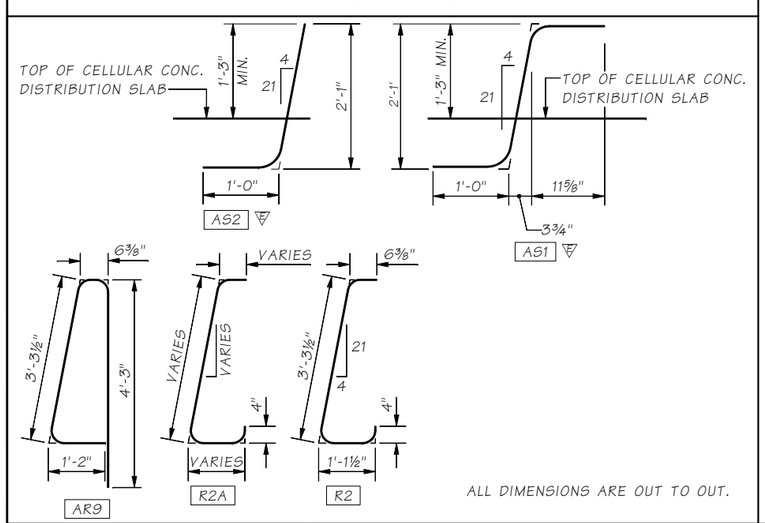

ALL DIMENSIONS ARE OUT TO OUT.

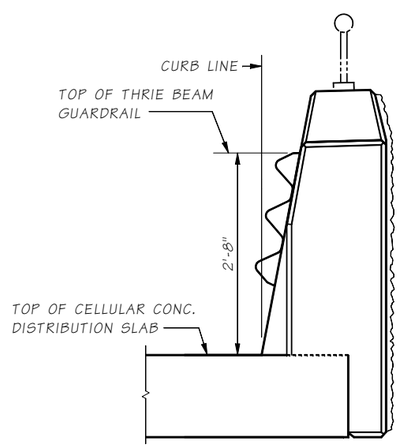

END VIEW

THRIE BEAM SHOWN WITH "D" CONNECTION OR "F" CONNECTION (SEE STD. PLAN C-7a)

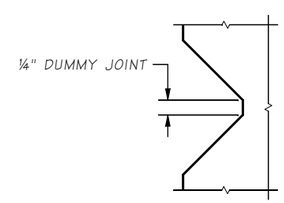

DUMMY JOINT DETAIL

Bridge Design Engr.	Grimm, E		
Supervisor	Aldrich, BS		
Designed By	Schultz, E	05/22	
Checked By	O'Neill, P	12/22	
Detailed By	Bontemps, W	05/22	
Bridge Projects Engr.			
Prelim. Plan By			
Architect/Specialist			

M:\X-Team\BR241-2_MABTOM-SUNNYSIDE_REPL\MABTON WALLS LDCC\window files\TB2.wnd

DATE	REVISION	BY	APP'D

REGION NO.	STATE	FED. AID PROJ. NO.	SHEET NO.	TOTAL SHEETS
10	WASH.			
JOB NUMBER 21Y001				
CONTRACT NO.				

P.E. STAMP BOX — ERIC HENRY SCHULTZ, STATE OF WASHINGTON, 38910, PROFESSIONAL ENGINEER — SEE SHEET CT1 — DATE:

BRIDGE AND STRUCTURES OFFICE

P.E. STAMP BOX — BRIAN S. ALDRICH, STATE OF WASHINGTON, 37834, PROFESSIONAL ENGINEER — SEE SHEET CT1 — DATE:

Washington State Department of Transportation

PRELIMINARY NOT FOR CONSTRUCTION

SR 241
MABTON VICINITY
RETROFIT BRIDGES
APPROACH RETAINING WALLS BRIDGE NO. 241/2

TRAFFIC BARRIER DETAILS 2 OF 3

BRIDGE SHEET NO. W16

SHEET 32 OF 115 SHEETS

SR 241 FILE NO. ____ SHEET w16

Tue Dec 27 14:45:53 2022

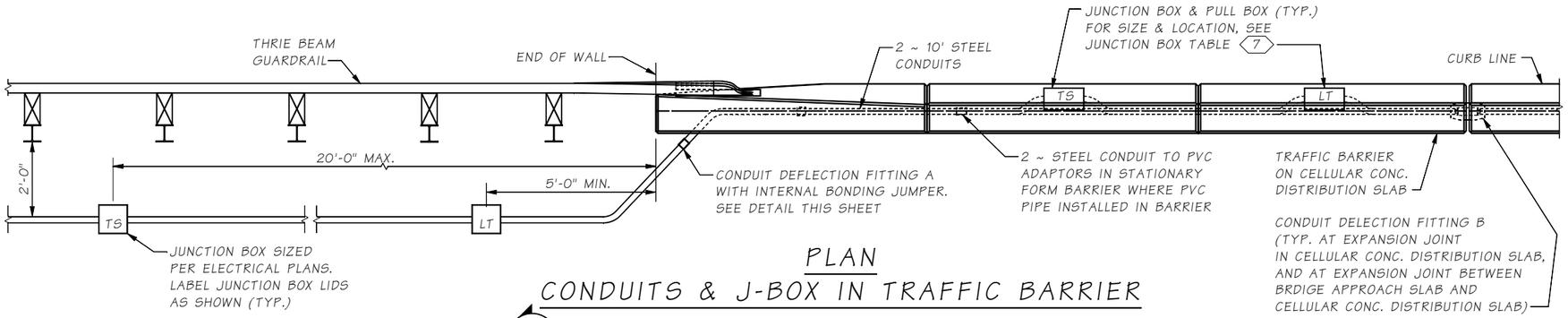

PLAN
CONDUITS & J-BOX IN TRAFFIC BARRIER

R

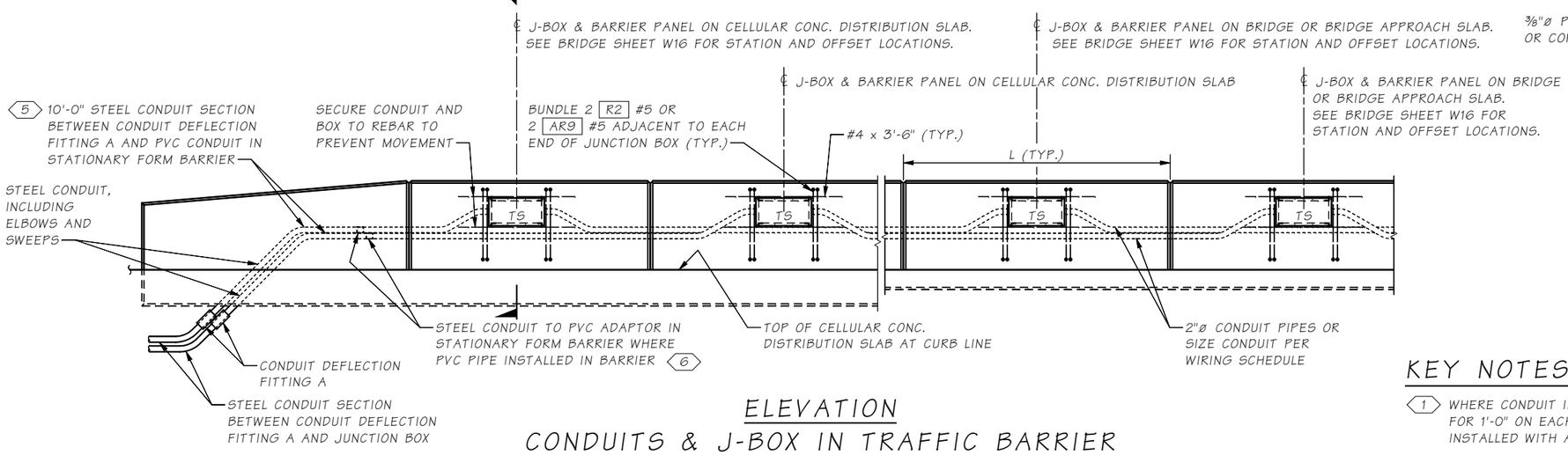

ELEVATION
CONDUITS & J-BOX IN TRAFFIC BARRIER

4

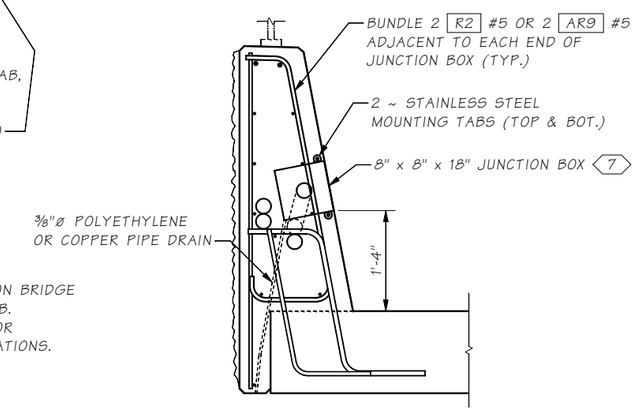

SECTION R

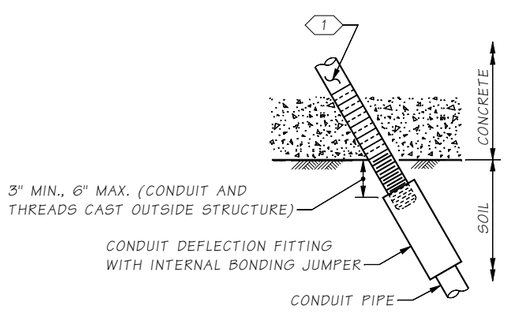

CONDUIT DEFLECTION FITTING A

CONDUIT FITTING - TYPE DX FOR DEFLECTION OF 30° AND ¾" MOVEMENT.

2

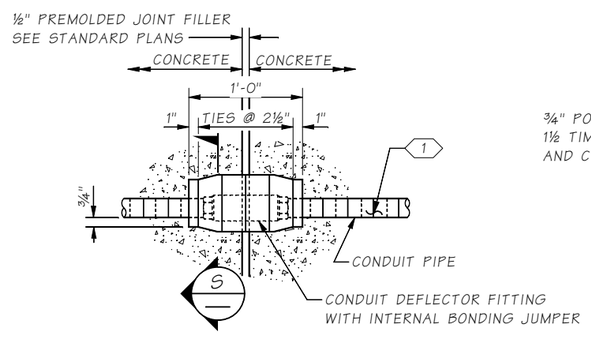

CONDUIT DEFLECTION FITTING B

CONDUIT FITTING - TYPE DX FOR DEFLECTION OF 30° AND ¾" MOVEMENT.

3

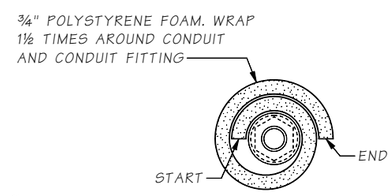

SECTION S

KEY NOTES:

1. WHERE CONDUIT IN A STRUCTURE IS ROUTED ACROSS A JOINT, WRAP STEEL CONDUIT PIPE FOR 1'-0" ON EACH SIDE OF JOINT. PIPE WRAP TAPE SHALL BE 2" WIDE, 20 MIL THICK, AND INSTALLED WITH A MINIMUM OF 1" OVERLAP.
2. PLACE AT CONDUIT PIPE EXIT FROM STRUCTURE AND SHALL BE IN NEUTRAL STATE AFTER INSTALLATION.
3. CONDUIT PIPES PLACED THROUGH TRAFFIC BARRIER SHALL BE FITTED WITH DEFLECTION FITTINGS AT CELLULAR CONC. DISTRIBUTION SLAB EXP. JOINTS. THE DEFLECTION FITTINGS SHALL BE PLACED AT THE TRAFFIC BARRIER OPEN JOINT THAT COINCIDES WITH THE SHOTCRETE FACING VERTICAL CONSTRUCTION JOINT.
4. LABEL JUNCTION BOX COVER IN ACCORDANCE WITH STANDARD SPECIFICATION SECTION 9-29.2(4). ADJACENT JUNCTION BOXES ARE SHOWN CENTERED BETWEEN ADJACENT DUMMY JOINTS. IF THE DISTANCE BETWEEN ADJACENT DUMMY JOINTS IS 16'-0" OR GREATER, PLACE ADJACENT JUNCTION BOXES SYMMETRICALLY ON EITHER SIDE OF THE CENTER OF ONE DUMMY PANEL WHILE MAINTAINING 8'-0" MINIMUM BETWEEN CENTER LINES OF THE JUNCTION BOXES.
5. TERMINATE STEEL CONDUIT IN JUNCTION BOX IF LESS THAN 10-'0" FROM ELBOW OR SWEEP.
6. INSTALL ONLY WHERE CONDUIT IS HORIZONTAL.
7. NEMA 4X IN STATIONARY FORM BARRIER, OR NEMA 3R IN SLIP FORM BARRIER. MOUNT JUNCTION BOX SO COVER IS FLUSH WITH BARRIER, CAN BE RECESSED UP TO ⅛".

Bridge Design Engr.	Grimm, E	
Supervisor	Aldrich, BS	
Designed By	Schultz, E	05/22
Checked By	O'Neill, P	12/22
Detailed By	Bontemps, W	05/22
Bridge Projects Engr.		
Prelim. Plan By		
Architect/Specialist		

M:\X-Team\BR241-2_MABTOM-SUNNYSIDE_REPL\MABTON WALLS LDCC\window files\TB3.wnd

DATE	REVISION	BY	APP'D

REGION NO.	STATE	FED. AID PROJ. NO.	SHEET NO.	TOTAL SHEETS
10	WASH.			
JOB NUMBER 21Y001				
CONTRACT NO.				

P.E. STAMP BOX — ERIC HENRY SCHULTZ, STATE OF WASHINGTON, 39910, SPECIAL STRUCTURAL ENGINEER, PROFESSIONAL ENGINEER — SEE SHEET CT1 — DATE:

BRIDGE AND STRUCTURES OFFICE

P.E. STAMP BOX — BRIAN S. ALDRICH, STATE OF WASHINGTON, 37834, STRUCTURAL ENGINEER, PROFESSIONAL ENGINEER — SEE SHEET CT1 — DATE:

Washington State Department of Transportation

PRELIMINARY NOT FOR CONFIRMATION

SR 241
MABTON VICINITY
RETROFIT BRIDGES
APPROACH RETAINING WALLS BRIDGE NO. 241/2

TRAFFIC BARRIER DETAILS 3 OF 3

BRIDGE SHEET NO. W17

SHEET 33 OF 115 SHEETS

SR 241 FILE NO. ____ SHEET W17

Tue Dec 27 14:45:54 2022

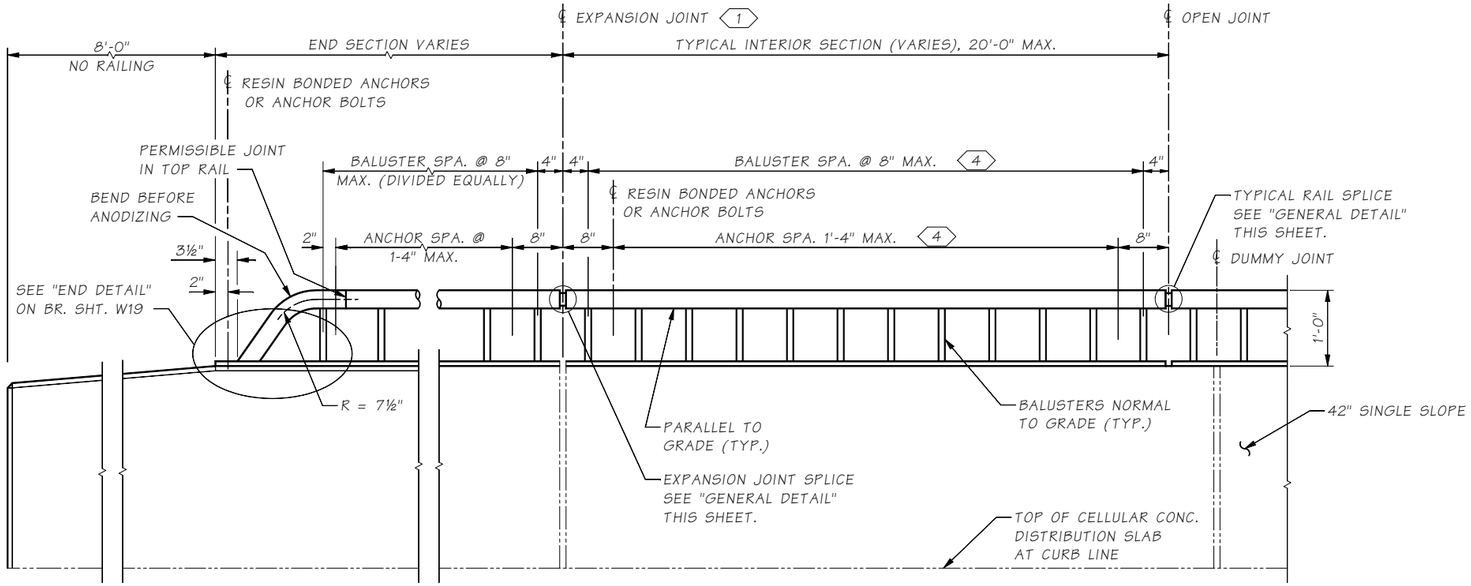

ELEVATION

BALUSTER AND GUARDRAIL SECTION
ATTACHMENT DETAILS NOT SHOWN.

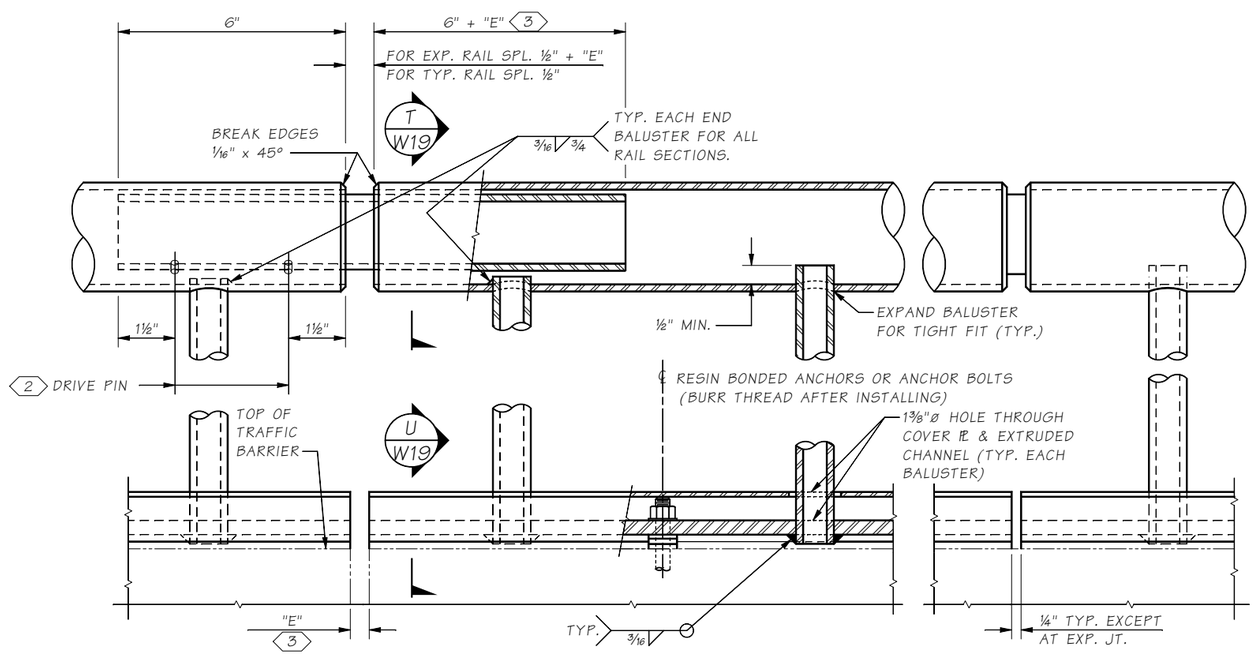

GENERAL DETAIL

RAILING NOTES:

1. PIPE RAILING, PIPE RAILING SPLICES, COVER PLATES AND BOTTOM EXTRUDED CHANNELS SHALL BE BENT TO THE HORIZONTAL CURVE WHERE THE RADIUS OF CURVATURE IS LESS THAN 200'. THESE ITEMS MAY BE HEATED TO NOT MORE THAN 400°F FOR A PERIOD NOT TO EXCEED 30 MINUTES TO FACILITATE FORMING OR BENDING TO HORIZONTAL CURVATURE.
2. SHOP DRAWINGS OF RAILING SHALL BE SUBMITTED AS A TYPE 2 WORKING DRAWING SHOWING COMPLETE DIMENSIONS AND DETAILS OF FABRICATION AND INCLUDING AN ERECTION DIAGRAM. MATERIAL SPECIFICATIONS SHALL BE PROVIDED IN THE SHOP DRAWINGS FOR ALL COMPONENTS.
3. CUTTING SHALL BE DONE BY SAWING OR MILLING AND ALL CUTS SHALL BE TRUE AND SMOOTH. FLAME CUTTING WILL NOT BE PERMITTED.
4. WELDING OF ALUMINUM SHALL CONFORM TO STD. SPEC. SECTION 9-28.14(3).
5. ALL ALUMINUM PARTS SHALL BE GIVEN A CLEAR ANODIC COATING OF AT LEAST 0.0006" THICK AND SEALED TO MEET THE REQUIREMENTS OF ASTM B 580 WITH A UNIFORM FINISH.
6. PIPE RAILING, PIPE BALUSTERS AND PIPE RAILING SPLICES SHALL BE ADEQUATELY WRAPPED TO INSURE SURFACE PROTECTION DURING HANDLING AND TRANSPORTATION TO THE JOB SITE.

KEY NOTES:

1. PROVIDE EXPANSION RAIL SPLICE AT TRAFFIC BARRIER EXPANSION JOINTS. RAIL SPLICE JOINTS ARE NOT REQUIRED AT TRAFFIC BARRIER DUMMY JOINTS.
2. LOCATE ON OPPOSITE SIDE OF TRAFFIC. DRIVE PINS SHALL BE DRIVEN FLUSH WITH THE OUTSIDE FACE OF THE RAILING.
3. "E" DIMENSION SHALL BE EQUAL TO OPENING OF TRAFFIC BARRIER EXPANSION JOINTS.
4. BALUSTER & ANCHOR SPACINGS SHOWN ARE MAXIMUM ALLOWABLE. VARY AS NECESSARY ADJACENT TO BRIDGE EXPANSION JOINTS.

SR 241 FILE NO. SHEET W18

Bridge Design Engr.	Grimm, E	
Supervisor	Aldrich, BS	
Designed By	Schultz, E	05/22
Checked By	O'Neill, P	12/22
Detailed By	Bontemps, W	05/22
Bridge Projects Engr.		
Prelim. Plan By		
Architect/Specialist		

M:\X-Team\BR241-2_MABTOM-SUNNYSIDE_REPL\MABTON WALLS LDCC\window files\BP1-12.wnd

DATE	REVISION	BY	APP'D

REGION NO.	STATE	FED. AID PROJ. NO.	SHEET NO.	TOTAL SHEETS
10	WASH.			
JOB NUMBER 21Y001				
CONTRACT NO.				

P.E. STAMP BOX
ERIC HENRY SCHULTZ, STATE OF WASHINGTON, 56910, REGISTERED PROFESSIONAL ENGINEER
SEE SHEET CT1
DATE:

BRIDGE AND STRUCTURES OFFICE

P.E. STAMP BOX
BRIAN S. ALDRICH, STATE OF WASHINGTON, 37834, REGISTERED PROFESSIONAL ENGINEER
SEE SHEET CT1
DATE:

Washington State Department of Transportation

PRELIMINARY NOT FOR CONSTRUCTION

SR 241
MABTON VICINITY
RETROFIT BRIDGES
APPROACH RETAINING WALLS BRIDGE NO. 241/2

BRIDGE RAILING TYPE BP-12
DETAILS 1 OF 2

BRIDGE SHEET NO. W18

SHEET 34 OF 115 SHEETS

Tue Dec 27 14:45:54 2022

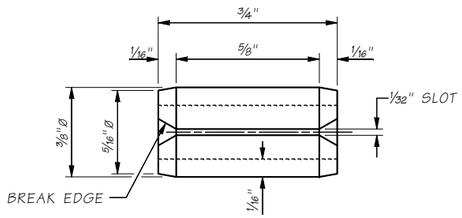

DRIVE PIN DETAIL

SLOTTED TYPE SPRING PIN (ANSI B18.8.2)

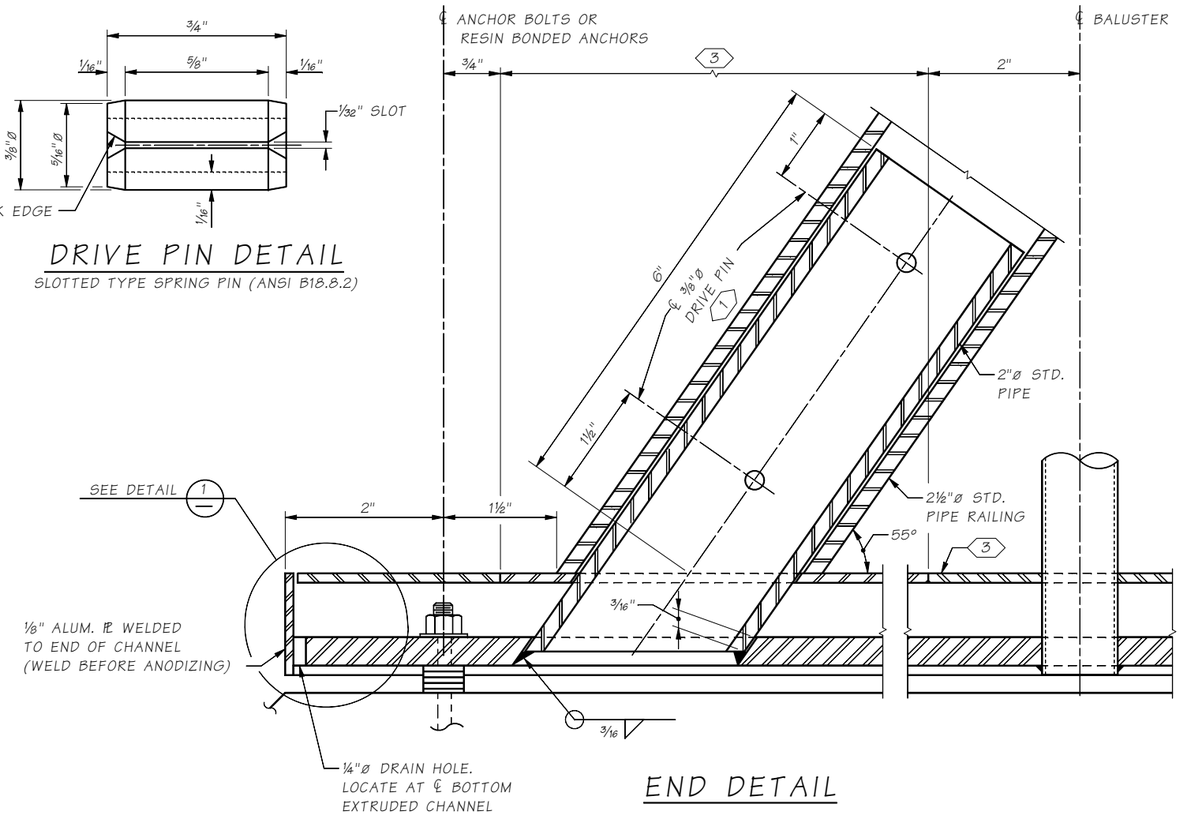

END DETAIL

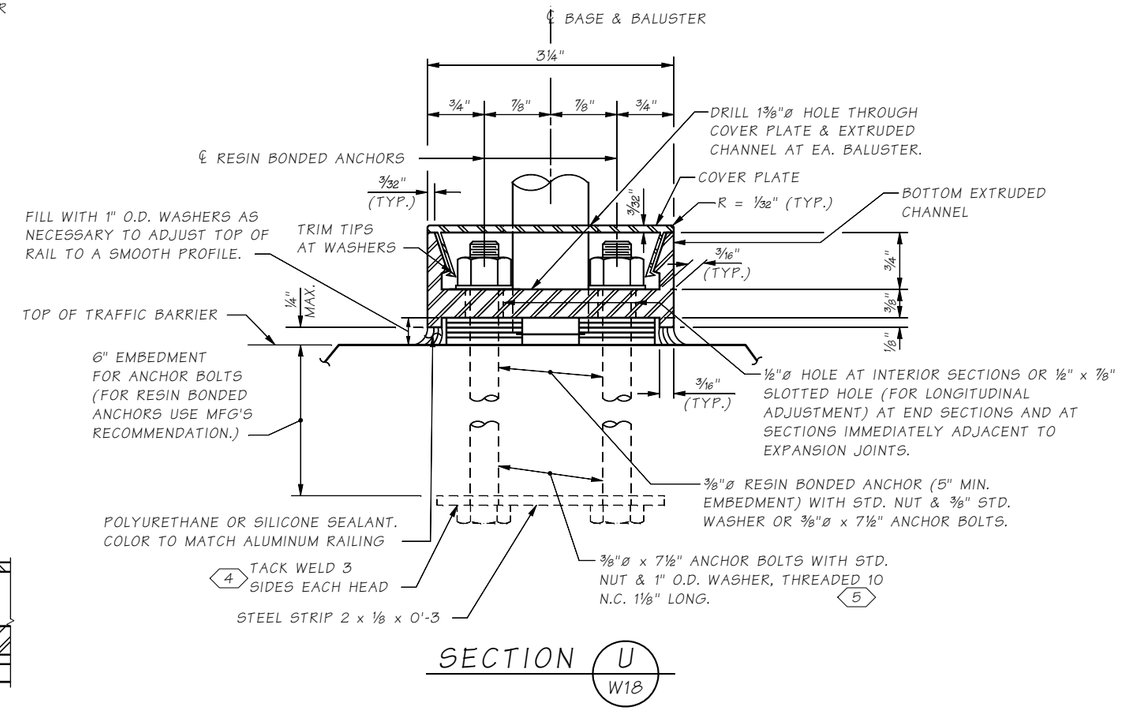

SECTION U / W18

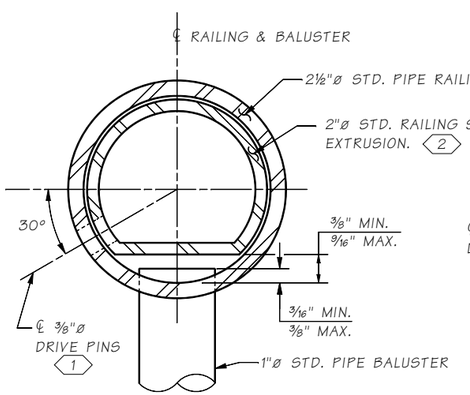

SECTION T / W18

OPTION #1

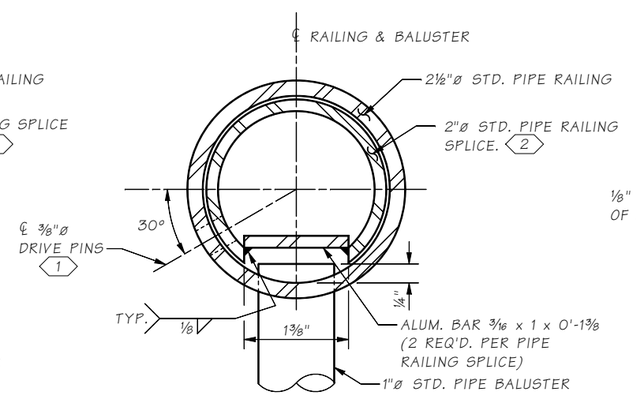

SECTION T / W18

OPTION #2

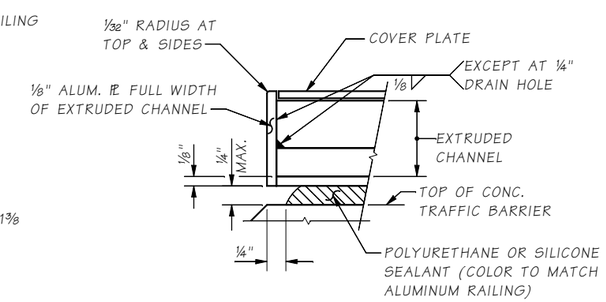

DETAIL 1

DRAIN HOLES NOT SHOWN

MATERIAL SPECIFICATION TABLE

MAT'L	PART	MATERIAL SPECIFICATION
ALUMINUM	RAILS & BALUSTERS	ASTM B221-6005-T5, 6005A-T5 OR ASTM B241-6061-T6
	EXTRUDED CHANNELS, COVER PLATES & BAR	ASTM B221-6005-T5 OR 6005A-T5
STEEL	STRIP	ASTM A 36
	ANCHOR BOLTS, NUTS & WASHERS	STANDARD SPECIFICATION SECTION 9-06.5(4) GR. 36 (GALVANIZE IN ACCORDANCE WITH AASHTO SPECIFICATION M 232)
	DRIVE PINS	ASTM A276 OR A240 TYPE 302 STAINLESS STEEL

NOTES:

1. LOCATE ON OPPOSITE SIDE OF TRAFFIC. DRIVE PINS SHALL BE DRIVEN FLUSH WITH THE OUTSIDE FACE OF THE RAILING.
2. DRILL 3/8"ø HOLE FOR 3/8"ø DRIVE PIN AT LOCATION SHOWN.
3. THIS COVER PLATE SECTION SHALL BE SNAPPED INTO POSITION AFTER 2"ø STD. PIPE HAS BEEN WELDED TO BOTTOM EXTRUDED CHANNEL.
4. ANCHOR BOLTS SHALL BE POSITIONED IN A JIG DURING WELDING.
5. ALTERNATE TO 3/8"ø RESIN BONDED ANCHORS

SR 241 FILE NO. ____ SHEET w19

Bridge Design Engr.	Grimm, E	
Supervisor	Aldrich, BS	
Designed By	Schultz, E	05/22
Checked By	O'Neill, P	12/22
Detailed By	Bontemps, W	05/22
Bridge Projects Engr.		
Prelim. Plan By		
Architect/Specialist		

M:\X-Team\BR241-2_MABTOM-SUNNYSIDE_REPL\MABTON WALLS LDCC\window files\BP2-12.wnd

DATE	REVISION	BY	APP'D

REGION NO.	STATE	FED. AID PROJ. NO.	SHEET NO.	TOTAL SHEETS
10	WASH.			
JOB NUMBER 21Y001				
CONTRACT NO.				

P.E. STAMP BOX — ERIC HENRY SCHULTZ, STATE OF WASHINGTON, 58910, STRUCTURAL ENGINEER, PROFESSIONAL ENGINEER — SEE SHEET CT1 — DATE:

BRIDGE AND STRUCTURES OFFICE

P.E. STAMP BOX — BRIAN S. ALDRICH, STATE OF WASHINGTON, 37834, STRUCTURAL ENGINEER, PROFESSIONAL ENGINEER — SEE SHEET CT1 — DATE:

Washington State Department of Transportation

PRELIMINARY NOT FOR CONSTRUCTION

SR 241
MABTON VICINITY
RETROFIT BRIDGES
APPROACH RETAINING WALLS BRIDGE NO. 241/2

BRIDGE RAILING TYPE BP-12
DETAILS 2 OF 2

BRIDGE SHEET NO. W19

SHEET 35 OF 115 SHEETS

Tue Dec 27 14:45:55 2022

GENERAL NOTES:

1. ALL EDGES OF CELLULAR CONC. DISTRIBUTION SLAB SHALL HAVE ½" RADIUS.
2. THE MINIMUM LAP SPLICE OF #5 IS 2'-0", ∇#5 IS 2'-6", ∇#6 IS 3'-0", AND #8 IS 3'-3". ALL LAP SPLICES SHALL BE STAGGERED SO THAT NO MORE THAN 50% OF REBAR IS SPLICED AT THE SAME LOCATION. LAP SPLICES SHALL BE LOCATED WITHIN THE MIDDLE HALF OF THE CELLULAR CONCRETE DISTRIBUTION SLAB. OPTIONAL SPLICES ARE ALLOWED FOR AP4 ∇#6.
3. FOR TRAFFIC BARRIER DETAILS, INCLUDING ANY CELLULAR CONCRETE DISTRIBUTION SLAB BLOCKOUT INFORMATION, SEE TRAFFIC BARRIER SHEETS.

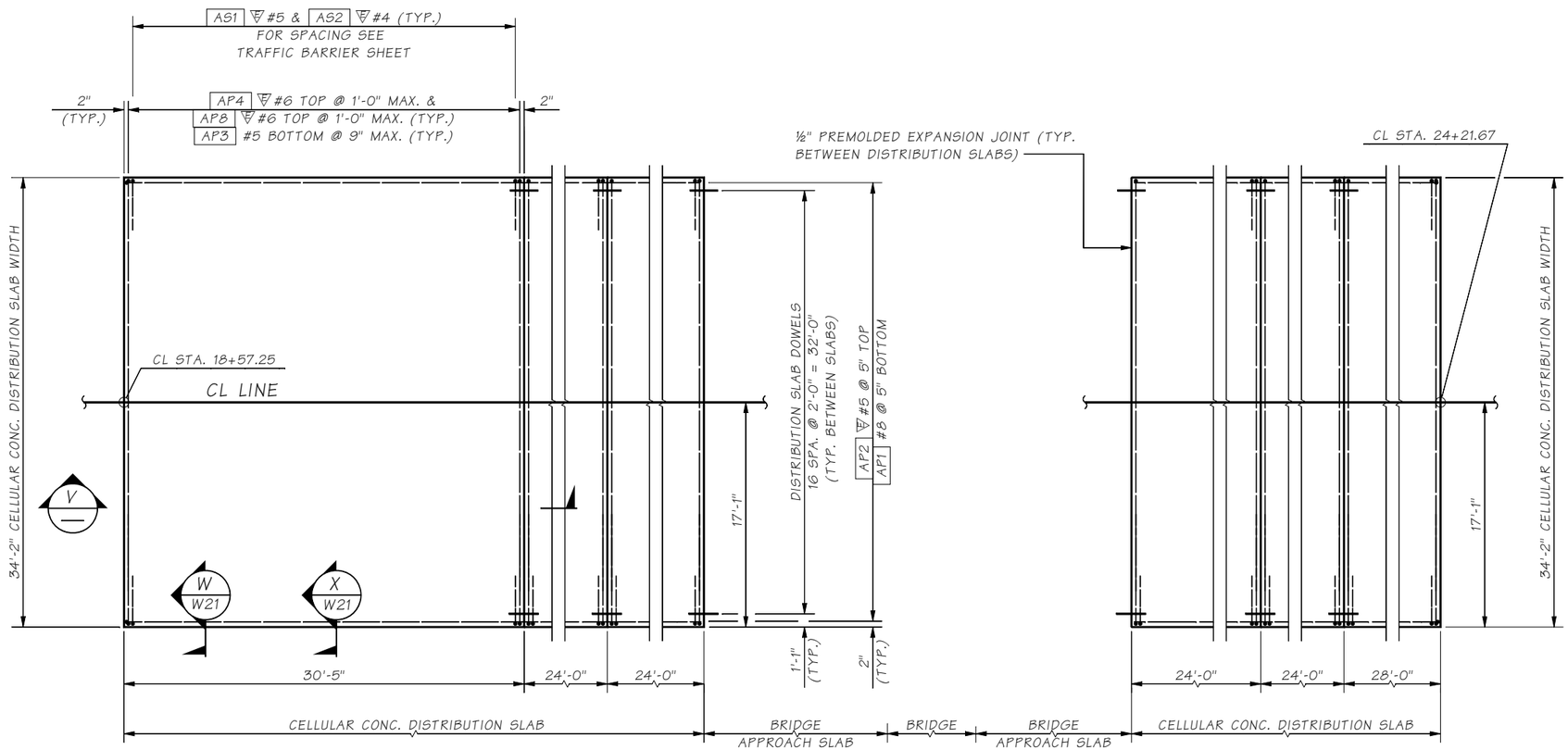

PLAN

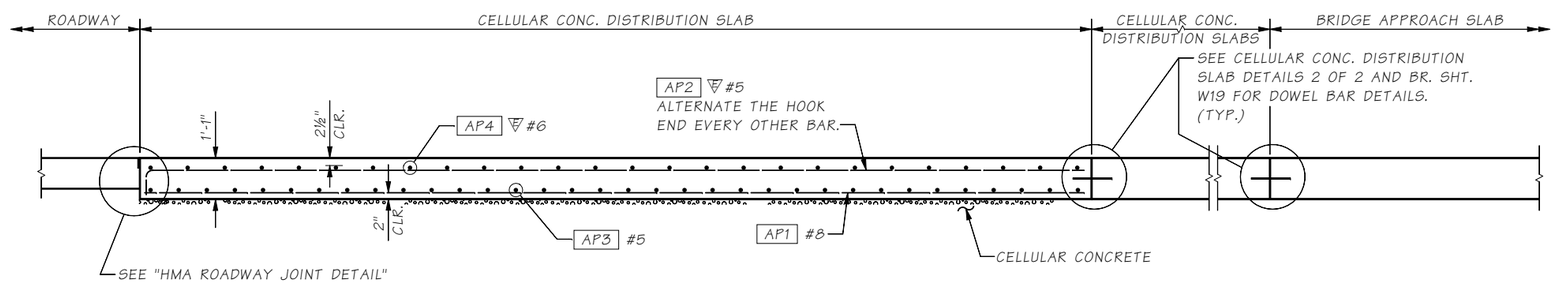

SECTION V

BENDING DIAGRAM

NOTE: ALL DIMENSIONS ARE OUT TO OUT

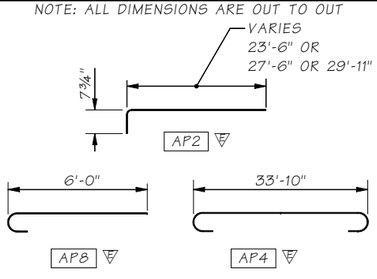

Bridge Design Engr.	Grimm, E	
Supervisor	Aldrich, BS	
Designed By	Schultz, E	05/22
Checked By	O'Neill, P	12/22
Detailed By	Bontemps, W	05/22
Bridge Projects Engr.		
Prelim. Plan By		
Architect/Specialist		

M:\X-Team\BR241-2_MABTOM-SUNNYSIDE_REPL\MABTON WALLS LDCC\window files\BR APPROACH SLAB 1.wnd

DATE	REVISION	BY	APP'D

REGION NO.	STATE	FED. AID PROJ. NO.	SHEET NO.	TOTAL SHEETS
10	WASH.			
JOB NUMBER 21YO01				
CONTRACT NO.				

P.E. STAMP BOX — ERIC HENRY SCHULTZ, STATE OF WASHINGTON, 59910, STRUCTURAL ENGINEER, PROFESSIONAL ENGINEER — SEE SHEET CT1 — DATE:

BRIDGE AND STRUCTURES OFFICE

P.E. STAMP BOX — BRIAN S. ALDRICH, STATE OF WASHINGTON, 37834, STRUCTURAL ENGINEER, PROFESSIONAL ENGINEER — SEE SHEET CT1 — DATE:

Washington State Department of Transportation

PRELIMINARY NOT FOR CONSTRUCTION

SR 241
MABTON VICINITY
RETROFIT BRIDGES
APPROACH RETAINING WALLS BRIDGE NO. 241/2

CELLULAR CONC. DISTRIBUTION SLAB DETAILS 1 OF 2

BRIDGE SHEET NO. W20

SHEET 36 OF 115 SHEETS

SR 241 FILE NO. ____ SHEET W20

Tue Dec 27 14:45:55 2022

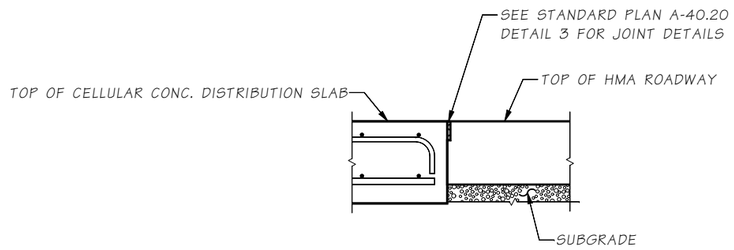

HMA ROADWAY JOINT DETAIL

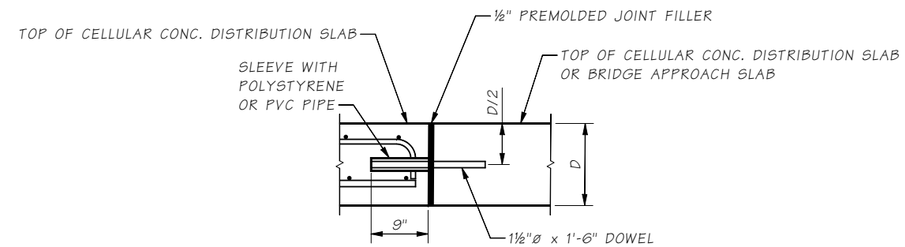

CELLULAR CONC. DISTRIBUTION SLAB DOWEL BAR DETAIL

CELLULAR CONC. DISTRIBUTION SLAB DOWELS SHALL BE INSTALLED
PARALLEL TO ROADWAY AND TO EACH OTHER.

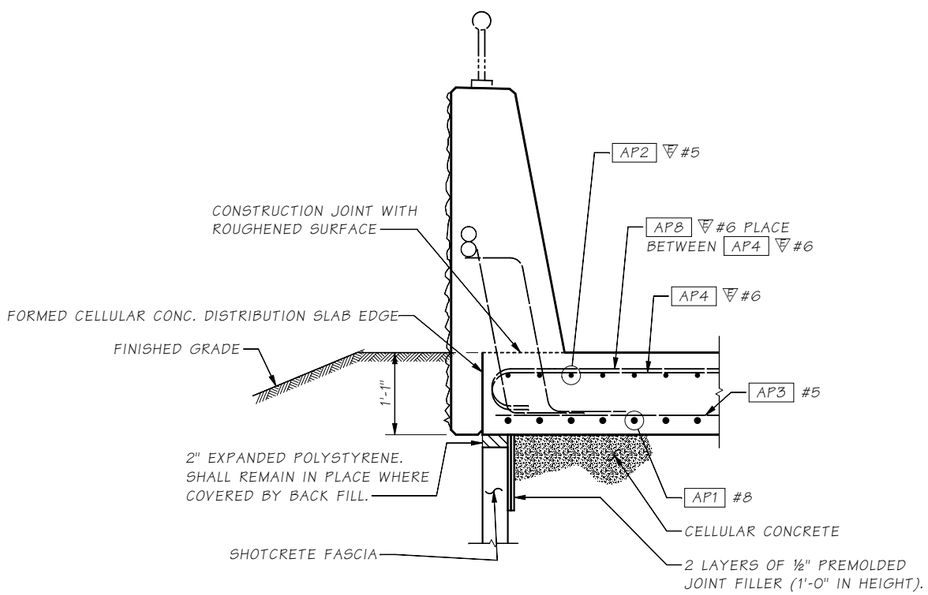

SECTION W / W20

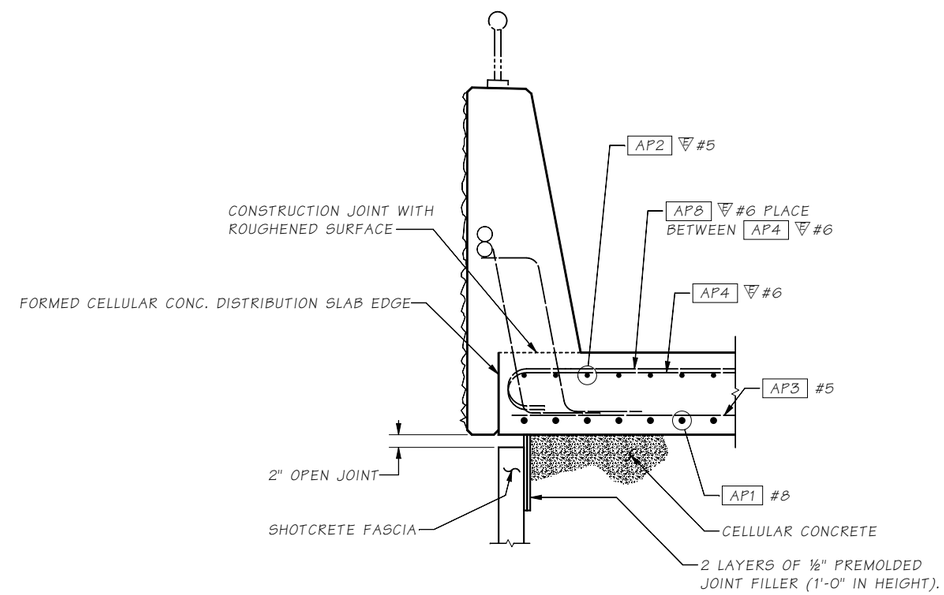

SECTION X / W20

SR 241 FILE NO. ____ SHEET W21

Bridge Design Engr.	Grimm, E		M:\X-Team\BR241-2_MABTOM-SUNNYSIDE_REPL\MABTON WALLS LDCC\window files\BR APPROACH SLAB 2.wnd								
Supervisor	Aldrich, BS										
Designed By	Schultz, E	05/22									
Checked By	O'Neill, P	12/22									
Detailed By	Bontemps, W	05/22									
Bridge Projects Engr.											
Prelim. Plan By											
Architect/Specialist			DATE	REVISION	BY	APP'D					

REGION NO.	STATE	FED. AID PROJ. NO.	SHEET NO.	TOTAL SHEETS
10	WASH.			
JOB NUMBER 21Y001				
CONTRACT NO.				

P.E. STAMP BOX
ERIC HENRY SCHULTZ
STATE OF WASHINGTON
39910
STRUCTURAL ENGINEER
PROFESSIONAL ENGINEER
SEE SHEET CT1
DATE:

BRIDGE AND STRUCTURES OFFICE

P.E. STAMP BOX
BRIAN S. ALDRICH
STATE OF WASHINGTON
37834
STRUCTURAL ENGINEER
PROFESSIONAL ENGINEER
SEE SHEET CT1
DATE:

Washington State Department of Transportation

PRELIMINARY NOT FOR CONSTRUCTION

SR 241
MABTON VICINITY
RETROFIT BRIDGES
APPROACH RETAINING WALLS BRIDGE NO. 241/2

CELLULAR CONC. DISTRIBUTION SLAB
DETAILS 2 OF 2

BRIDGE SHEET NO. W21
SHEET 37 OF 115 SHEETS

Tue Dec 27 14:45:56 2022

SEC. 31, T.9N., R.23E., W.M.
YAKIMA COUNTY

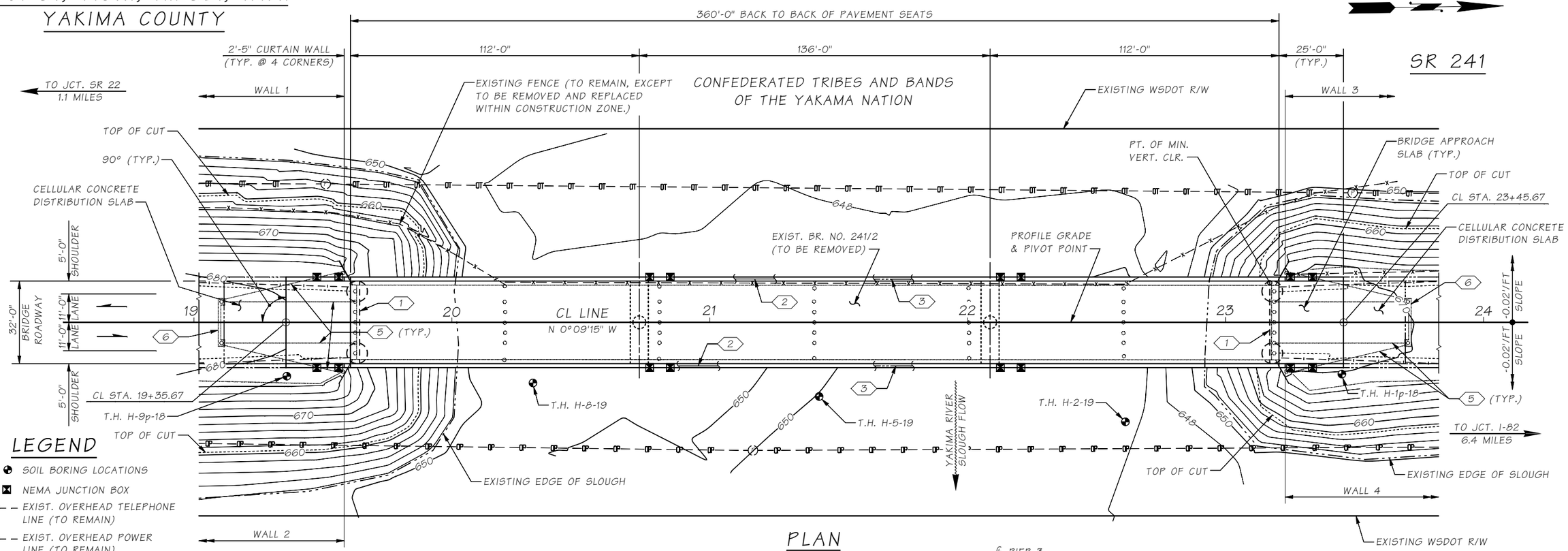

PLAN

BEARING OF PIERS ARE NORMAL TO CL LINE

LEGEND

- SOIL BORING LOCATIONS
- NEMA JUNCTION BOX
- EXIST. OVERHEAD TELEPHONE LINE (TO REMAIN)
- EXIST. OVERHEAD POWER LINE (TO REMAIN)
- EXIST. GUARDRAIL (TO BE REMOVED)
- EXISTING FENCE
- EXISTING PILES (TO BE REMOVED)
- EXIST. POWER POLE (TO REMAIN)
- F = FIXED
- E = EXPANSION BEARING

KEY NOTES:

1. FRONT FACE OF ABUTMENT WALL
2. BRIDGE RAILING TYPE BP-12
3. 2 ~ 2"Ø CONDUIT PIPES IN TRAFFIC BARRIER FOR FULL LENGTH OF BARRIER
4. STONE COLUMN GROUND IMPROVEMENT. SEE WALL PLANS FOR LIMITS AND DETAILS
5. EXISTING WIRE ROPE (TO BE REMOVED)
6. EXISTING PILE AND ANCHOR CAP (TO BE REMOVED)

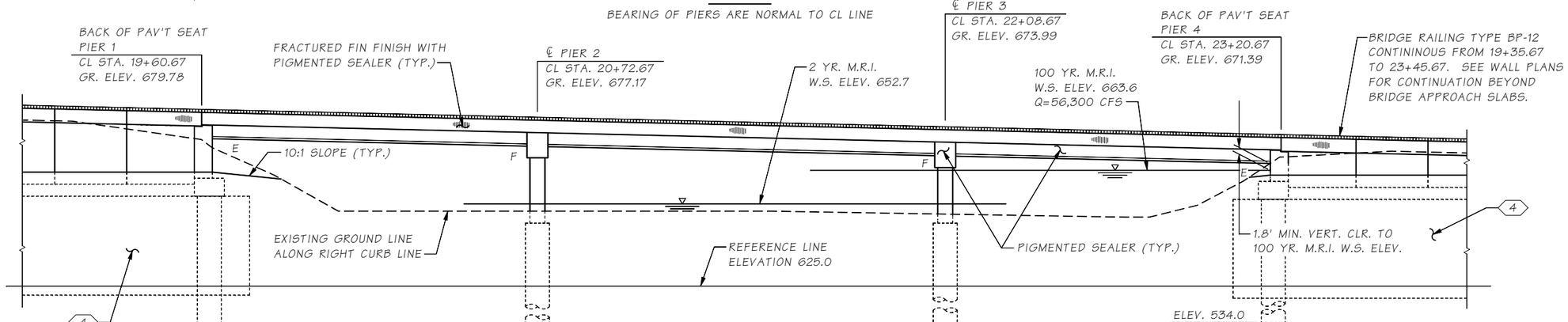

ELEVATION

GRADE ELEVATIONS SHOWN ARE FINISH GRADES AT TOP OF BRIDGE DECK ON CL LINE AND ARE EQUAL TO PROFILE GRADE.

DATUM

NAVD 88

P.C. GIRDERS (WF58TDG)
WITH 7" MIN. C-I-P DECK
LOADING: HL-93

SEISMIC OPERATIONAL CLASSIFICATION: ORDINARY

Bridge Design Engr.	Grimm, E		M:\X-Team\BR241-2_MABTOM-SUNNYSIDE_REPL\window files\LAYOUT.wnd			REGION NO.	STATE	FED. AID PROJ. NO.	SHEET NO.	TOTAL SHEETS	P.E. STAMP BOX
Supervisor	Aldrich, BS					10	WASH.				
Designed By	Feely, C	05/20				JOB NUMBER 21Y001					
Checked By	Schultz, E	12/22									
Detailed By	McCarthy, D	05/20				CONTRACT NO.					SEE SHEET CT1 DATE:
Bridge Projects Engr.											
Prelim. Plan By											
Architect/Specialist			DATE	REVISION	BY	APP'D					

BRIDGE AND STRUCTURES OFFICE

P.E. STAMP BOX
BRIAN S. ALDRICH
STATE OF WASHINGTON
37834
PROFESSIONAL ENGINEER
SEE SHEET CT1
DATE:

Washington State Department of Transportation
PRELIMINARY NOT FOR CONSTRUCTION

SR 241
MABTON VICINITY
RETROFIT BRIDGES
MABTON-SUNNYSIDE RD. BRIDGE NO. 241/2 REPLACEMENT
LAYOUT

BRIDGE SHEET NO. BA1
SHEET 38 OF 115 SHEETS

SR 241 FILE NO. SHEET BA1

Tue Dec 27 15:19:04 2022

GENERAL NOTES:

1. ALL MATERIAL AND WORKMANSHIP SHALL BE IN ACCORDANCE WITH THE REQUIREMENTS OF THE WASHINGTON STATE DEPARTMENT OF TRANSPORTATION STANDARD SPECIFICATIONS FOR ROAD, BRIDGE, AND MUNICIPAL CONSTRUCTION DATED 2023.

2. THIS STRUCTURE HAS BEEN DESIGNED IN ACCORDANCE WITH THE REQUIREMENTS OF THE AASHTO LRFD BRIDGE DESIGN SPECIFICATIONS 9TH EDITION 2020. DEAD LOAD INCLUDES ADDITIONAL FUTURE WEARING SURFACE OF 35 POUNDS PER SQUARE FOOT. THE BRIDGE TRAFFIC BARRIERS HAVE BEEN DESIGNED IN ACCORDANCE WITH THE REQUIREMENTS FOR TEST LEVEL 4 (TL-4) BARRIERS.

3. THE SEISMIC DESIGN OF THIS STRUCTURE HAS BEEN COMPETED IN ACCORDANCE WITH THE REQUIREMENTS OF THE AASHTO GUIDE SPECIFICATION FOR LRFD SEISMIC BRIDGE DESIGN 2ND EDITION 2011 WITH INTERIMS THROUGH 2022. THE BASELINE SITE CLASS B (ON ROCK) 0.2 SECOND AND 1.0 SECOND PERIOD SPECTRAL ACCELERATION COEFFICIENTS ARE 0.29 AND 0.8 RESPECTIVELY WITH A PEAK HORIZONTAL GROUND ACCELERATION OF 0.13. THE SOIL SITE CLASS IS E FOR THIS SITE WITH AN EFFECTIVE PEAK GROUND ACCELERATION COEFFICIENT A_S OF 0.29 AND A DESIGN EARTHQUAKE RESPONSE SPECTRAL ACCELERATION COEFFICIENT OF 0.65 AND 0.34 FOR THE 0.2 SECOND AND 1.0 SECOND PERIODS RESPECTIVELY. GIVEN THESE VALUES THE BRIDGE HAS BEEN DESIGNED FOR A SEISMIC DESIGN CATEGORY OF C (SDC = C).

4. THE CONCRETE IN BRIDGE DECKS SHALL BE CLASS 4000D. THE CONCRETE IN BRIDGE APPROACH SLABS SHALL BE CLASS 4000A. THE CONCRETE IN SHAFTS SHALL BE CLASS 5000P. ALL OTHER CAST-IN-PLACE CONCRETE SHALL BE CLASS 4000.

5. THE BACKFILL BEHIND THE ABUTMENTS MAY BE PLACED PRIOR TO PLACEMENT OF THE SUPERSTRUCTURE, IN ACCORDANCE WITH STD. SPEC. SECTION 2-09.3(1)E.

6. UNLESS OTHERWISE SHOWN IN THE PLANS, CONCRETE COVER MEASURED FROM THE FACE OF CONCRETE TO THE FACE OF ANY REINFORCING STEEL SHALL BE 2½" AT THE TOP OF THE BRIDGE DECK, 1" AT THE BOTTOM OF THE BRIDGE DECK, 3" AT THE BOTTOM OF SHAFT CAP AND 2" AT ALL OTHER LOCATIONS.

7. FALSEWORK SHALL BE CAREFULLY RELEASED TO PREVENT IMPACT OR UNDUE STRESS IN THE STRUCTURE.

8. CONDUITS, JUNCTION BOXES, AND UTILITIES ARE SHOWN FOR REFERENCE ONLY. THE CONTRACTOR SHALL COORDINATE THESE PLANS WITH THE ELECTRICAL, I.T.S. AND OTHER CIVIL PLANS.

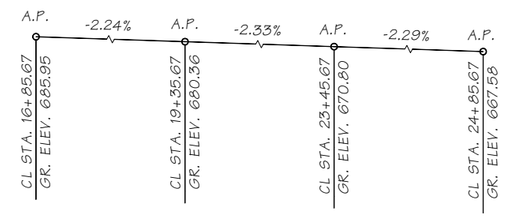

CL LINE PROFILE

LEGEND

B / BA5 — IDENTIFIES SECTION OR VIEW
TAKEN OR SHOWN ON BRIDGE SHEET BA5

1 / — IDENTIFIES DETAIL
TAKEN OR SHOWN ON THE SAME SHEET

99 — KEY NOTE: IDENTIFIES NOTE REFERENCE ON THE SAME SHEET

SR 241 FILE NO. ____ SHEET BA2

Bridge Design Engr.	Grimm, E	
Supervisor	Aldrich, BS	
Designed By	Schultz, E	11/22
Checked By	O'Neill, P	12/22
Detailed By	McCarthy, D	11/22
Bridge Projects Engr.		
Prelim. Plan By		
Architect/Specialist		

M:\X-Team\BR241-2_MABTON-SUNNYSIDE_REPL\window files\DATA.wnd

DATE	REVISION	BY	APP'D

REGION NO.	STATE	FED. AID PROJ. NO.	SHEET NO.	TOTAL SHEETS
10	WASH.			
JOB NUMBER 21Y001				
CONTRACT NO.				

P.E. STAMP BOX — ERIC HENRY SCHULTZ, STATE OF WASHINGTON, 39910, STRUCTURAL ENGINEER, PROFESSIONAL ENGINEER — SEE SHEET CT1 — DATE:

BRIDGE AND STRUCTURES OFFICE

P.E. STAMP BOX — BRIAN S. ALDRICH, STATE OF WASHINGTON, 37834, STRUCTURAL ENGINEER, PROFESSIONAL ENGINEER — SEE SHEET CT1 — DATE:

Washington State Department of Transportation

PRELIMINARY NOT FOR CONSTRUCTION

SR 241
MABTON VICINITY
RETROFIT BRIDGES
MABTON-SUNNYSIDE RD. BRIDGE NO. 241/2 REPLACEMENT

GENERAL NOTES & GEOMETRIC DATA

BRIDGE SHEET NO. BA2

SHEET 39 OF 115 SHEETS

Tue Dec 27 15:19:05 2022

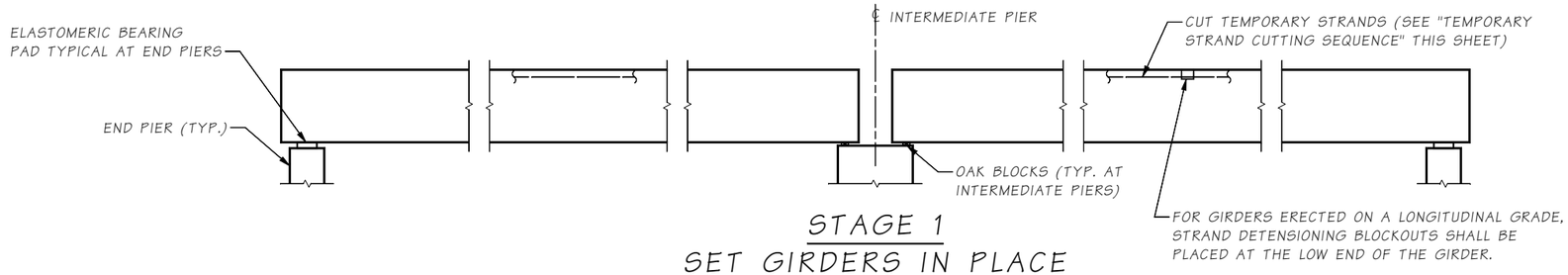

STAGE 1
SET GIRDERS IN PLACE

INSTALL TEMPORARY BRACING FOR ERECTION IN ACCORDANCE WITH STD. SPEC. SECTION 6-02.3(17)F4.

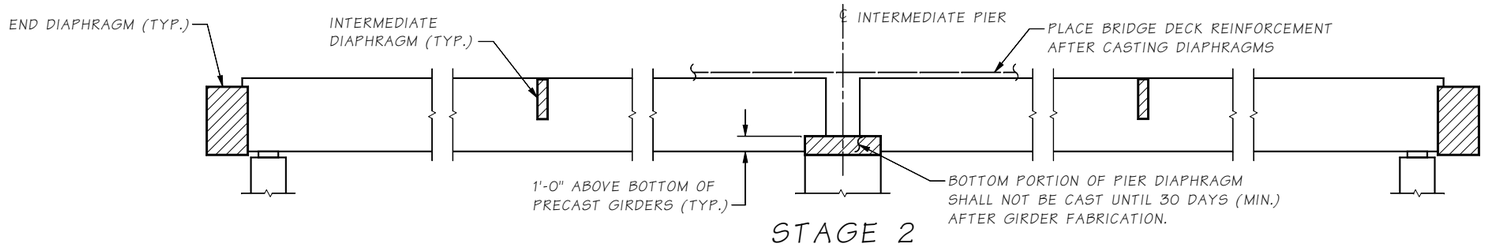

STAGE 2
CAST DIAPHRAGMS AND PLACE BRIDGE DECK REINFORCEMENT

INSTALL TEMPORARY BRACING FOR DIAPHRAGM AND DECK PLACEMENT IN ACCORDANCE WITH STD. SPEC. SECTION 6-02.3(17)F5.

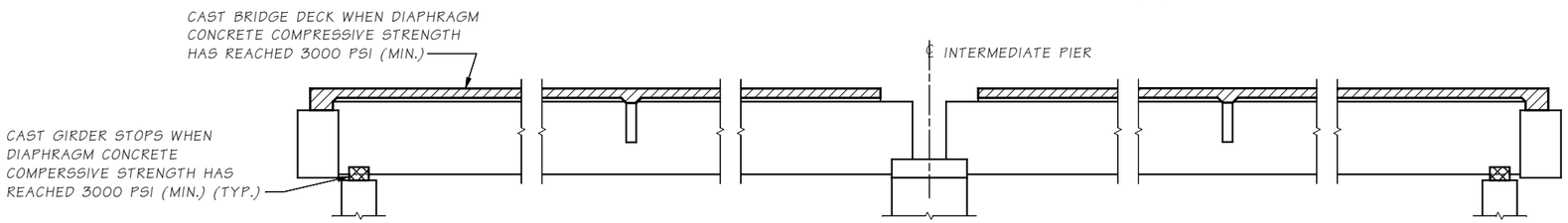

STAGE 3
CAST GIRDER STOPS AND BRIDGE DECK

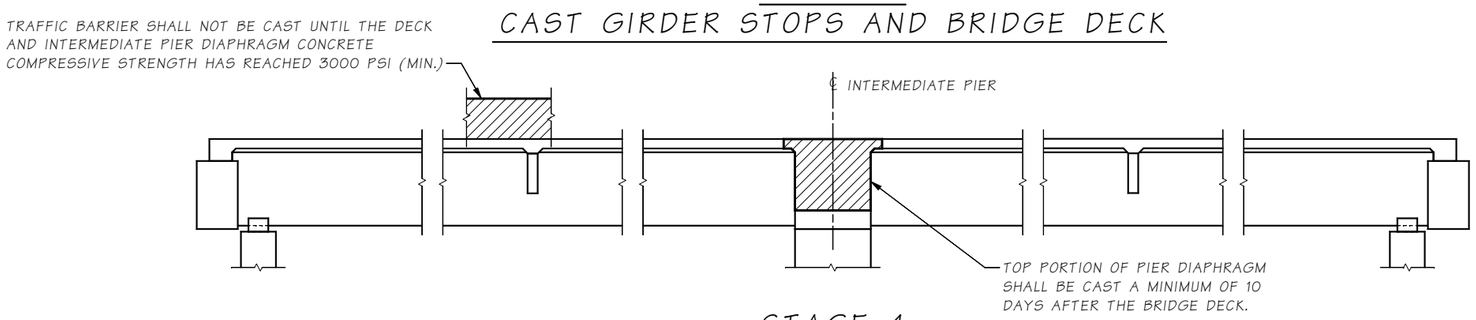

STAGE 4
COMPLETE DIAPHRAGMS

TEMPORARY STRAND CUTTING SEQUENCE

1. ERECT AND BRACE GIRDERS.
2. JUST PRIOR TO CUTTING THE TEMPORARY STRANDS, REMOVE EXPANDED POLYSTYRENE IN BLOCKOUTS IN TOP FLANGE OF GIRDERS. ONCE THE EXPANDED POLYSTYRENE HAS BEEN REMOVED FROM THE STRAND DETENSIONING BLOCKOUT, PREVENT MOISTURE FROM ENTERING THE BLOCKOUT UNTIL THE TEMPORARY TOP STRAND IS CUT AND THE BLOCKOUT FILLED WITH GROUT.
3. CUT STRANDS IN BLOCKOUTS. STRANDS MAY BE CUT BY USING A CUTTING TORCH AND MOVING THE FLAME BACK AND FORTH OVER THE LENGTH OF EXPOSED STRAND TO LET INDIVIDUAL WIRES BREAK ONE AT A TIME TO LESSEN THE SHOCK TO THE GIRDER. STRANDS SHALL BE RELEASED IN A SYMMETRICAL MANNER ABOUT THE GIRDER CENTERLINE STARTING WITH THOSE FURTHEST FROM THE CENTERLINE AND WORKING INWARDS. FOR POST-TENSIONED TEMPORARY TOP STRANDS, ACTIVELY RESTRAIN THE STRAND CHUCKS AT THE GIRDER ENDS DURING CUTTING.
4. WITHIN 24 HOURS OF CUTTING THE TEMPORARY STRANDS, FILL THE BLOCKOUTS WITH A GROUT CONFORMING TO STD. SPEC. 9-20.3(2). REMOVE ALL MOISTURE IN BLOCKOUTS PRIOR TO FILLING THEM WITH GROUT.

NOTE:

NO LIVE LOAD SHALL BE ALLOWED ON THE SPANS UNTIL THE COMPRESSIVE STRENGTH OF THE TOP PORTION OF THE PIER DIAPHRAGM HAS REACHED 3000 PSI (MIN.).

CONSTRUCTION SEQUENCE ~ SUPERSTRUCTURE

SR 241 FILE NO. ____ SHEET BA3

Bridge Design Engr.	Grimm, E		M:\X-Team\BR241-2_MABTOM-SUNNYSIDE_REPL\window files\CONSTRUCTION SEQ.wnd			REGION NO.	STATE	FED. AID PROJ. NO.	SHEET NO.	TOTAL SHEETS
Supervisor	Aldrich, BS					10	WASH.			
Designed By	Schultz, E	11/22				JOB NUMBER 21Y001				
Checked By	O'Neill, P	12/22								
Detailed By	McCarthy, D	11/22				CONTRACT NO.				
Bridge Projects Engr.										
Prelim. Plan By										
Architect/Specialist			DATE	REVISION	BY	APP'D				

Tue Dec 27 15:19:06 2022

P.E. STAMP BOX: ERIC HENRY SCHULTZ, STATE OF WASHINGTON, 39910, PROFESSIONAL ENGINEER, STRUCTURAL ENGINEER — SEE SHEET CT1 — DATE:

BRIDGE AND STRUCTURES OFFICE

P.E. STAMP BOX: BRIAN S. ALDRICH, STATE OF WASHINGTON, 37834, PROFESSIONAL ENGINEER, STRUCTURAL ENGINEER — SEE SHEET CT1 — DATE:

Washington State Department of Transportation

PRELIMINARY NOT FOR CONSTRUCTION

SR 241
MABTON VICINITY
RETROFIT BRIDGES
MABTON-SUNNYSIDE RD. BRIDGE NO. 241/2 REPLACEMENT

CONSTRUCTION SEQUENCE SUPERSTRUCTURE

BRIDGE SHEET NO. BA3

SHEET 40 OF 115 SHEETS

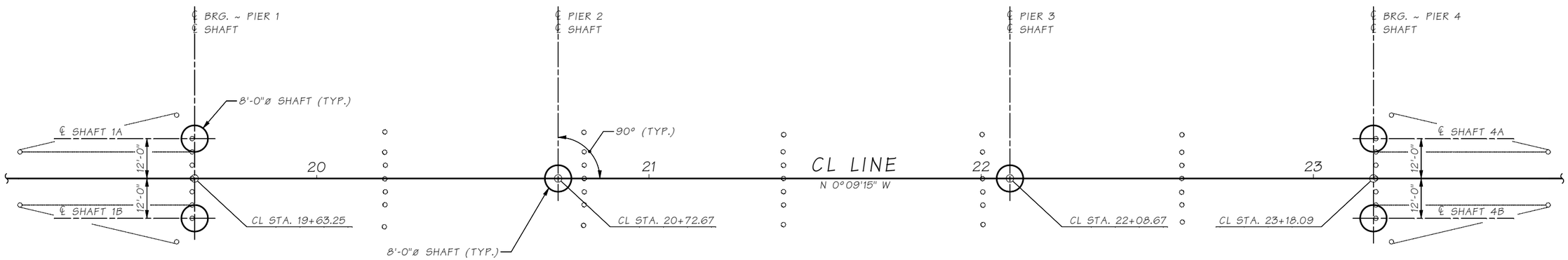

FOUNDATION LAYOUT

BEARING OF PIERS ARE NORMAL TO CL LINE

LEGEND

EXISTING WIRE ROPE (TO BE REMOVED)

EXISTING PILES (TO BE REMOVED)

SR 241 FILE NO. ____ SHEET BA4

Bridge Design Engr.	Grimm, E	M:\X-Team\BR241-2_MABTOM-SUNNYSIDE_REPL\window files\FOUNDATION LAYOUT.wnd									
Supervisor	Aldrich, BS										
Designed By	Schultz, E	11/22									
Checked By	O'Neill, P	12/22									
Detailed By	McCarthy, D	11/22									
Bridge Projects Engr.											
Prelim. Plan By											
Architect/Specialist			DATE	REVISION	BY	APP'D					

REGION NO.	STATE	FED. AID PROJ. NO.	SHEET NO.	TOTAL SHEETS
10	WASH.			
JOB NUMBER 21Y001				
CONTRACT NO.				

P.E. STAMP BOX

ERIC HENRY SCHULTZ, STATE OF WASHINGTON, 39910, STRUCTURAL ENGINEER, PROFESSIONAL ENGINEER

SEE SHEET CT1

DATE:

BRIDGE AND STRUCTURES OFFICE

P.E. STAMP BOX

BRIAN S. ALDRICH, STATE OF WASHINGTON, 37834, STRUCTURAL ENGINEER, PROFESSIONAL ENGINEER

SEE SHEET CT1

DATE:

Washington State Department of Transportation

PRELIMINARY NOT FOR CONSTRUCTION

SR 241
MABTON VICINITY
RETROFIT BRIDGES
MABTON-SUNNYSIDE RD. BRIDGE NO. 241/2 REPLACEMENT

FOUNDATION LAYOUT

BRIDGE SHEET NO. BA4

SHEET 41 OF 115 SHEETS

Tue Dec 27 15:19:06 2022

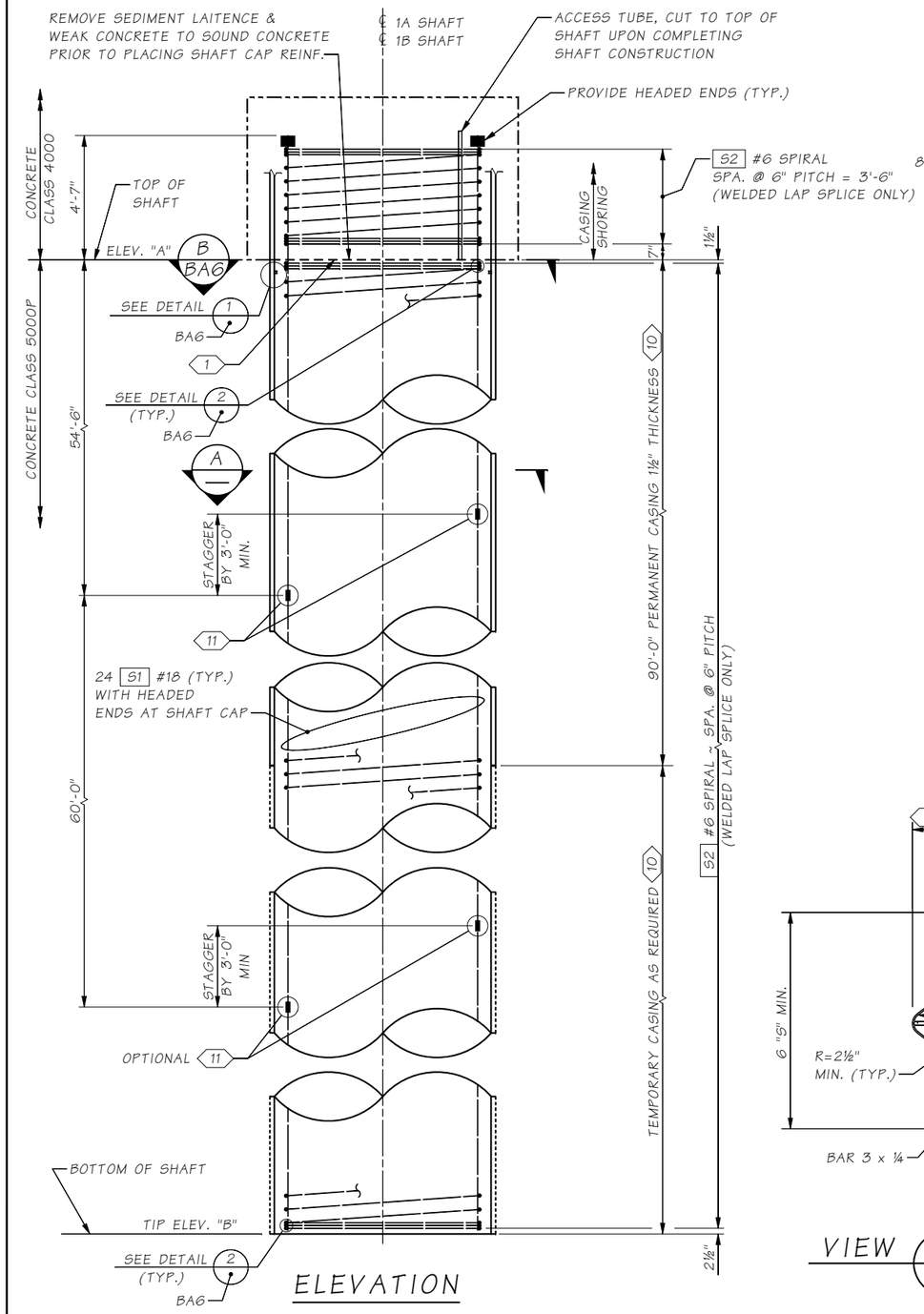

ELEVATION

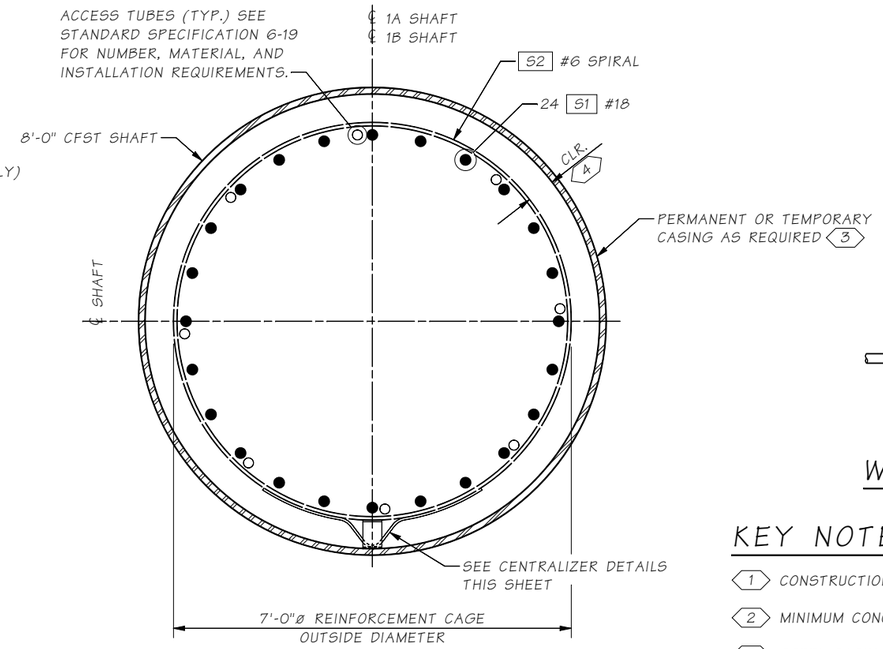

SECTION A

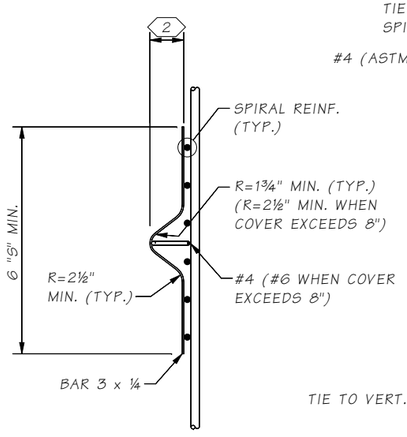

VIEW C

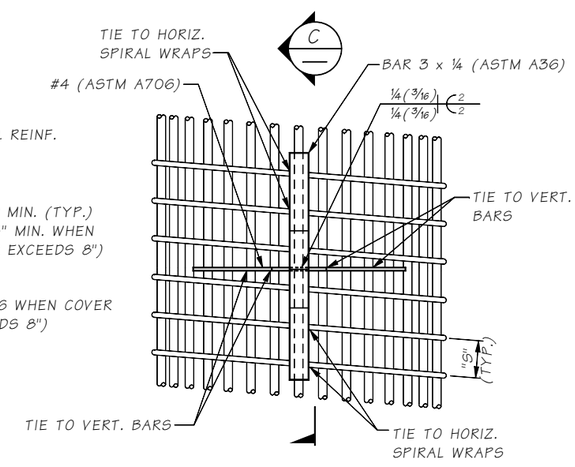

CENTRALIZER DETAIL

5 7 8 9

SHAFT SPIRAL

BAR SIZE	WELD DIMENSIONS (IN.)		
	S	E	LENGTH (L)
#6	3/8	3/16	6

SHAFT ELEVATION

SHAFT NO.	ELEV. "A"	TIP ELEV. "B"
1A	655.0	535.0
1B	655.0	535.0

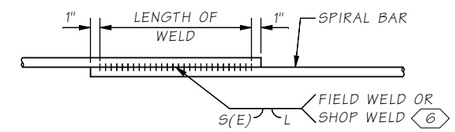

WELDED LAP SPLICE DETAIL

KEY NOTES:

1. CONSTRUCTION JOINT WITH ROUGHENED SURFACE.
2. MINIMUM CONCRETE COVER MINUS ½".
3. STEEL CASINGS SHALL CONFORM TO ONE OF THE FOLLOWING:
   - i. API 5L GRADE X52 FOR LONGITUDINAL SEAM WELDED OR HELICAL (SPIRAL) SEAM SUBMERGED-ARC WELDED STEEL PIPE PILES.
   - ii. ASTM A252 GRADE 3 FOR LONGITUDINAL SEAM WELDED OR HELICAL (SPIRAL) SEAM SUBMERGED-ARC WELDED STEEL PIPE PILES. MINIMUM YIELD STRENGTH SHALL BE 50 KSI.
   - iii. ASTM A572 GRADE 50 OR ASTM A588 FOR LONGITUDINAL SEAM WELDED STEEL PIPE PILES.
4. SEE STD. SPEC. 6-19.3(5)C. FOR MINIMUM CONCRETE COVER.
5. SEE STD. SPEC. 6-19.3(5)B FOR SPACING REQUIREMENTS.
6. WELDING SHALL MEET THE REQUIREMENTS OF STD. SPEC. 6-02.3(24)E FOR WELD DIMENSIONS, SEE SHAFT SPIRAL TABLE THIS SHEET.
7. CENTRALIZERS SHALL BE EPOXY COATED OR PAINTED WITH PAINT CONFORMING TO STANDARD SPECIFICATION 9-08.1(2)c OR 9-08.1(2)f AFTER FABRICATION.
8. EACH LEG SHALL BE TIED TO TWO (2) VERTICAL BARS OR TWO (2) SPIRAL WRAPS.
9. CAGECASTER® REBAR CAGE SPACERS BY FOUNDATION TECHNOLOGIES MAY BE USED IN LIEU OF DETAIL SHOWN. SPACING REQUIREMENTS SHALL BE PER MANUFACTURER'S RECOMMENDATIONS. EACH LEG SHALL BE TIED TO A MINIMUM OF TWO (2) SPIRAL WRAPS.
10. EXCAVATION IN ADVANCE OF THE CASING TIP SHALL NOT EXCEED ZERO FEET.
11. MECHANICAL SPLICE. STAGGER MECHANICAL SPLICE 3'-0" MIN. VERTICALLY BETWEEN ADJACENT REBARS. ALL SPLICES IN S1 #18 BARS SHALL BE MECHANICAL SPLICES LOWER SPLICES SHALL BE OPTIONAL WHEN BOTTOM BARS ARE SUPPLIED FULL LEGNTH.

Bridge Design Engr.	Grimm, E		
Supervisor	Aldrich, BS		
Designed By	Schultz, E	11/22	
Checked By	O'Neill, P	12/22	
Detailed By	McCarthy, D	11/22	
Bridge Projects Engr.			
Prelim. Plan By			
Architect/Specialist			

M:\X-Team\BR241-2_MABTOM-SUNNYSIDE_REPL\window files\PIER 1 SHAFT.wnd

DATE	REVISION	BY	APP'D

REGION NO.	STATE	FED. AID PROJ. NO.	SHEET NO.	TOTAL SHEETS
10	WASH.			

JOB NUMBER 21YO01

CONTRACT NO.

P.E. STAMP BOX — ERIC HENRY SCHULTZ, STATE OF WASHINGTON, 39910, PROFESSIONAL ENGINEER — SEE SHEET CT1 — DATE:

BRIDGE AND STRUCTURES OFFICE

P.E. STAMP BOX — BRIAN S. ALDRICH, STATE OF WASHINGTON, 37834, PROFESSIONAL ENGINEER — SEE SHEET CT1 — DATE:

Washington State Department of Transportation

PRELIMINARY NOT FOR CONSTRUCTION

SR 241
MABTON VICINITY
RETROFIT BRIDGES
MABTON-SUNNYSIDE RD. BRIDGE NO. 241/2 REPLACEMENT

PIER 1 SHAFT DETAILS 1 OF 2

BRIDGE SHEET NO. BA5

SHEET 42 OF 115 SHEETS

SR 241 FILE NO. ____ SHEET BA5

Tue Dec 27 15:19:07 2022

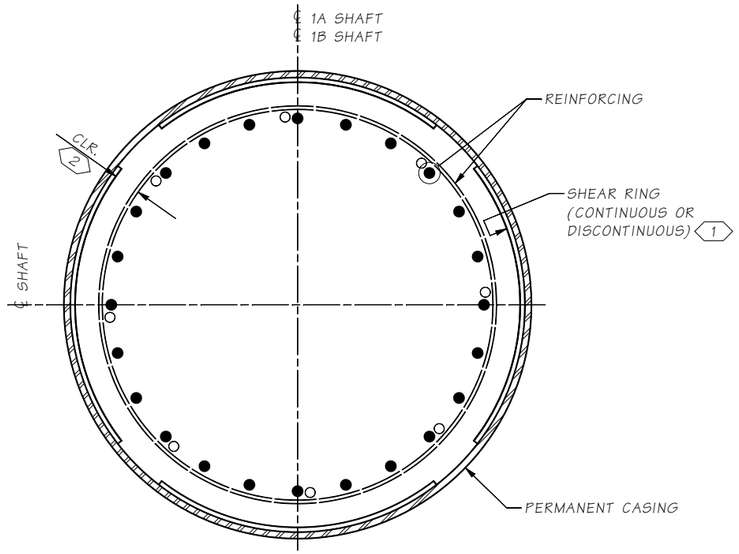

SECTION B / BA5

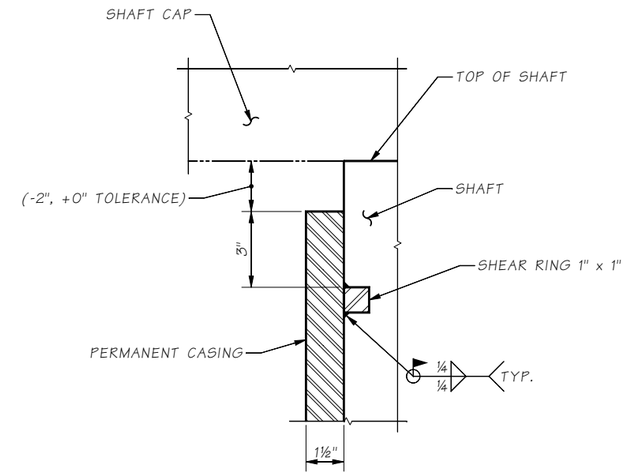

DETAIL 1 / BA5

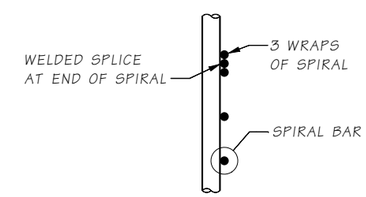

DETAIL 2 / BA5
SPIRAL TERMINATION

KEY NOTES:

1. IF SHEAR RING IS DISCONTINUOUS, ALL SEGMENTS SHALL BE OF EQUAL LENGTH AND EQUALLY SPACED WITH THE TOTAL LENGTH OF SHEAR RING PIECES NOT BEING LESS THAN 75% OF THE CASING CIRCUMFERENCE.
2. MINIMUM COVER MINUS 1". SEE STD. SPEC. 6-19.3(5)C. FOR MINIMUM CONCRETE COVER.

SR 241 FILE NO. ____ SHEET BA6

Bridge Design Engr.	Grimm, E	
Supervisor	Aldrich, BS	
Designed By	Schultz, E	11/22
Checked By	O'Neill, P	12/22
Detailed By	McCarthy, D	11/22
Bridge Projects Engr.		
Prelim. Plan By		
Architect/Specialist		

M:\X-Team\BR241-2_MABTOM-SUNNYSIDE_REPL\window files\PIER 1 SHAFT 2.wnd

DATE	REVISION	BY	APP'D

REGION NO.	STATE	FED. AID PROJ. NO.	SHEET NO.	TOTAL SHEETS
10	WASH.			
JOB NUMBER 21Y001				
CONTRACT NO.				

P.E. STAMP BOX
ERIC HENRY SCHULTZ — STATE OF WASHINGTON — 39010 — STRUCTURAL ENGINEER — PROFESSIONAL ENGINEER
SEE SHEET CT1
DATE:

BRIDGE AND STRUCTURES OFFICE

P.E. STAMP BOX
BRIAN S. ALDRICH — STATE OF WASHINGTON — 37834 — STRUCTURAL ENGINEER — PROFESSIONAL ENGINEER
SEE SHEET CT1
DATE:

Washington State Department of Transportation
PRELIMINARY NOT FOR CONSTRUCTION

SR 241
MABTON VICINITY
RETROFIT BRIDGES
MABTON-SUNNYSIDE RD. BRIDGE NO. 241/2 REPLACEMENT

PIER 1 SHAFT
DETAILS 2 OF 2

BRIDGE SHEET NO. BA6
SHEET 43 OF 115 SHEETS

Tue Dec 27 15:19:07 2022

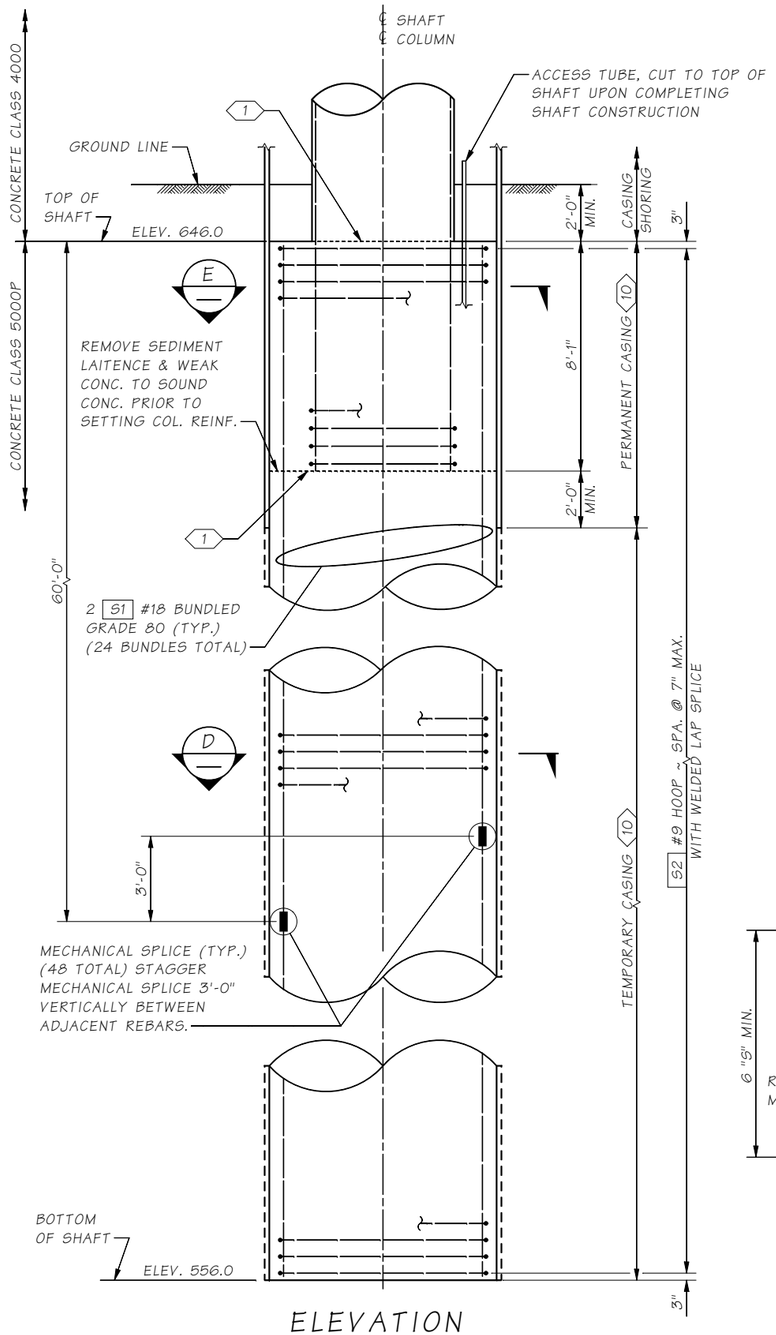

ELEVATION

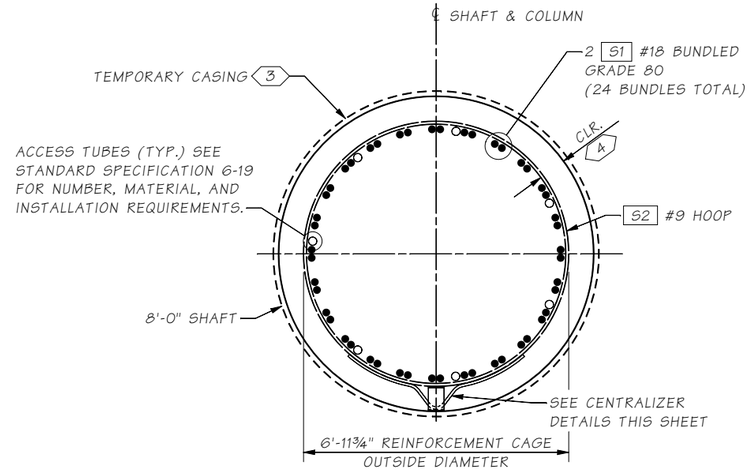

SECTION D

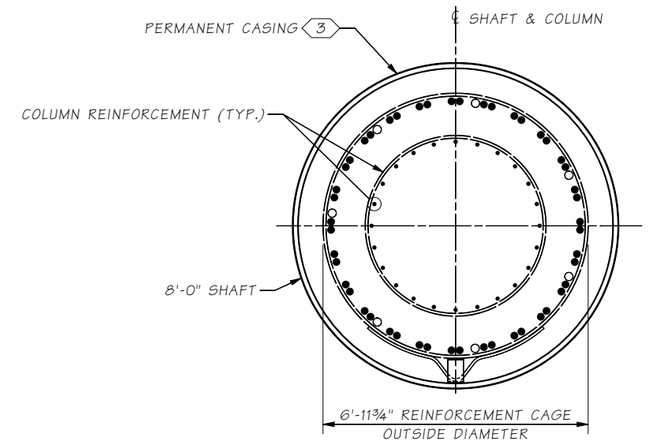

SECTION E

FOR DETAILS AND CALLOUTS NOT SHOWN SEE SECTION D

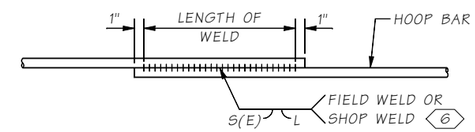

WELDED LAP SPLICE DETAIL

SHAFT HOOP			
DEFORMED BAR	WELD DIMENSIONS (IN.)		
	S	E	LENGTH (L)
#9	9/16	5/16	8

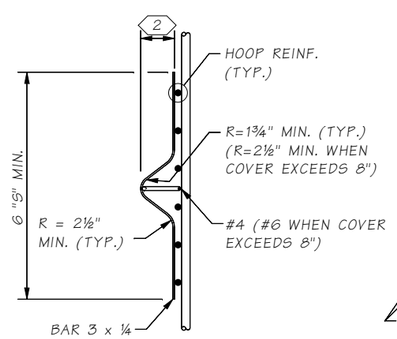

VIEW F

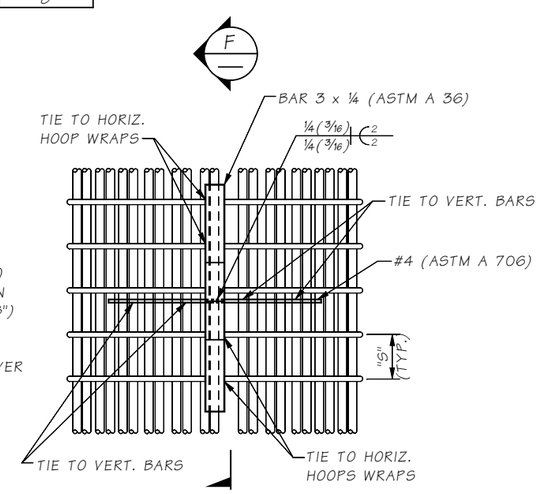

CENTRALIZER DETAIL

5 7 8 9

KEY NOTES:

1. CONSTRUCTION JOINT WITH ROUGHENED SURFACE.
2. MINIMUM CONCRETE COVER MINUS ½".
3. SEE STD. SPEC. 6-19.3(3)B5 FOR PERMANENT SLIP CASING.
4. SEE STD. SPEC. 6-19.3(5)C. FOR MINIMUM CONCRETE COVER.
5. SEE STD. SPEC. 6-19.3(5)B FOR SPACING REQUIREMENTS.
6. WELDING SHALL MEET THE REQUIREMENTS OF STD. SPEC. 6-02.3(24)E FOR WELD DIMENSIONS, SEE SHAFT HOOP TABLE ON THIS SHEET
7. CENTRALIZERS SHALL BE EPOXY COATED OR PAINTED WITH PAINT CONFORMING TO STANDARD SPECIFICATION 9-08.1(2)C OR 9-08.1(2)F AFTER FABRICATION.
8. EACH LEG SHALL BE TIED TO TWO (2) VERTICAL BARS OR (2) HOOPS.
9. CAGECASTER® REBAR CAGE SPACERS BY FOUNDATION TECHNOLOGIES MAY BE USED IN LIEU OF DETAIL SHOWN. SPACING REQUIREMENTS SHALL BE PER MANUFACTURER'S RECOMMENDATIONS. EACH LEG SHALL BE TIED TO A MINIMUM OF TWO HOOPS.
10. EXCAVATION IN ADVANCE OF THE CASING TIP SHALL NOT EXCEED ZERO FEET.

Bridge Design Engr.	Grimm, E		
Supervisor	Aldrich, BS		
Designed By	Schultz, E	11/22	
Checked By	O'Neill, P	12/22	
Detailed By	McCarthy, D	11/22	
Bridge Projects Engr.			
Prelim. Plan By			
Architect/Specialist			

M:\X-Team\BR241-2_MABTON-SUNNYSIDE_REPL\window files\PIER 2 SHAFT.wnd

DATE	REVISION	BY	APP'D

REGION NO.	STATE	FED. AID PROJ. NO.	SHEET NO.	TOTAL SHEETS
10	WASH.			
JOB NUMBER 21Y001				
CONTRACT NO.				

P.E. STAMP BOX — ERIC HENRY SCHULTZ, STATE OF WASHINGTON, 38910, STRUCTURAL ENGINEER, PROFESSIONAL ENGINEER — SEE SHEET CT1 — DATE:

BRIDGE AND STRUCTURES OFFICE

P.E. STAMP BOX — BRIAN S. ALDRICH, STATE OF WASHINGTON, 37834, STRUCTURAL ENGINEER, PROFESSIONAL ENGINEER — SEE SHEET CT1 — DATE:

Washington State Department of Transportation

PRELIMINARY NOT FOR CONSTRUCTION

SR 241
MABTON VICINITY
RETROFIT BRIDGES
MABTON-SUNNYSIDE RD. BRIDGE NO. 241/2 REPLACEMENT

PIER 2 SHAFT DETAILS

BRIDGE SHEET NO. BA7

SHEET 44 OF 115 SHEETS

SR 241 FILE NO. ____ SHEET BA7

Tue Dec 27 15:19:07 2022

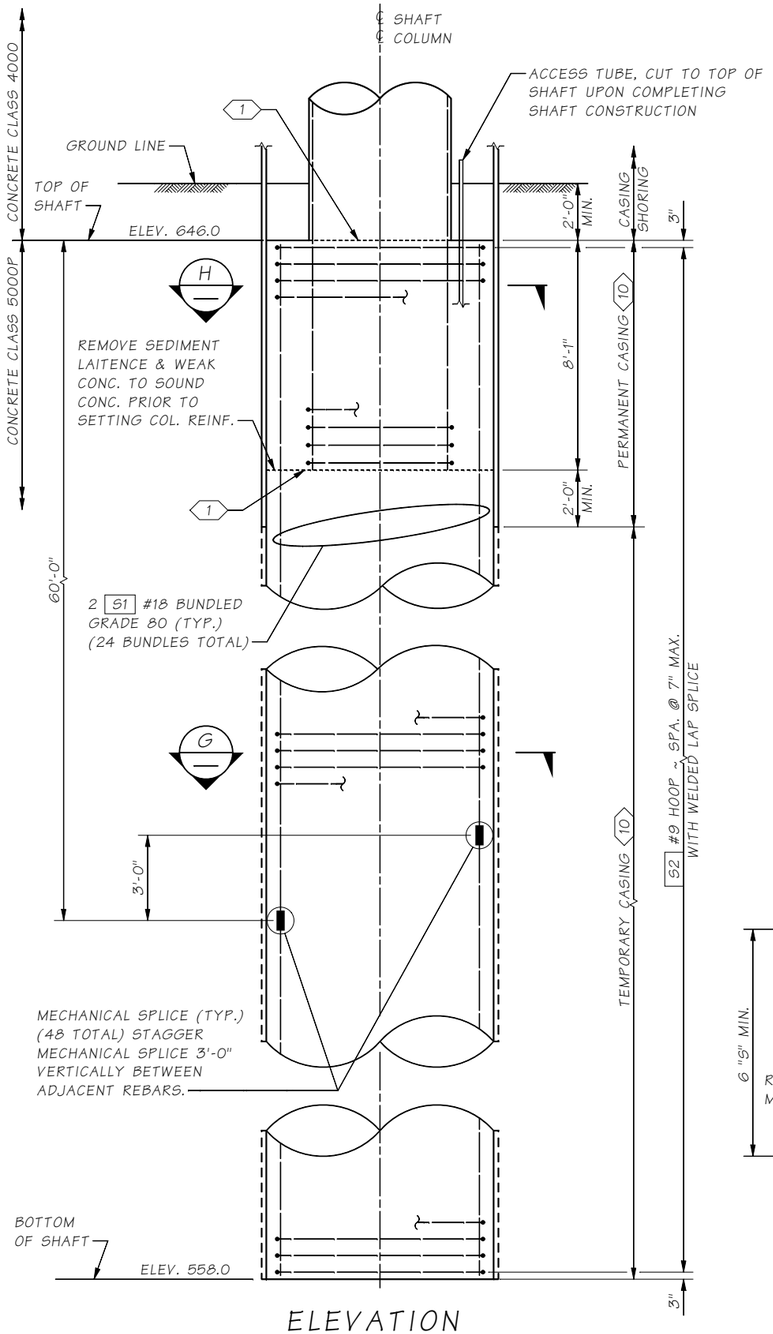

ELEVATION

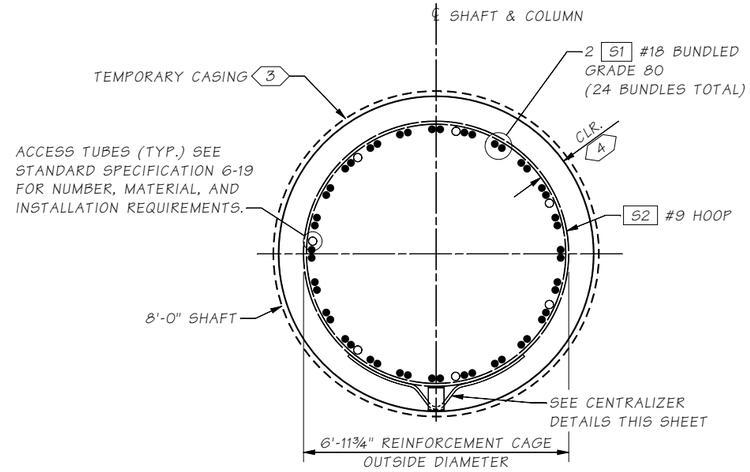

SECTION G

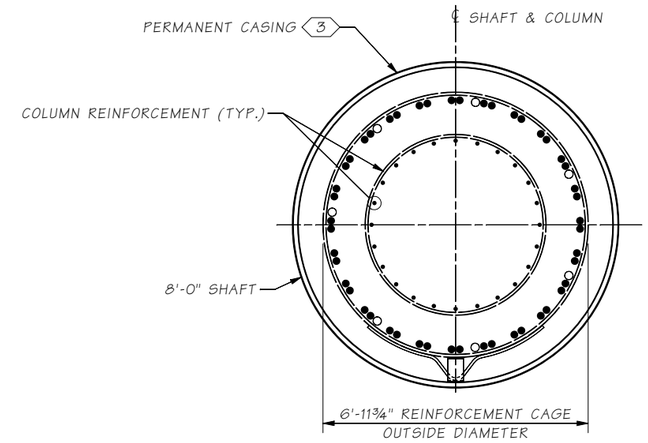

SECTION H

FOR DETAILS AND CALLOUTS NOT SHOWN SEE SECTION G

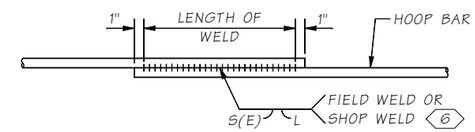

WELDED LAP SPLICE DETAIL

SHAFT HOOP			
DEFORMED BAR	WELD DIMENSIONS (IN.)		
	S	E	LENGTH (L)
#9	9/16	5/16	8

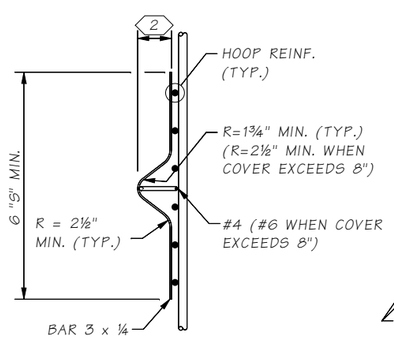

VIEW J

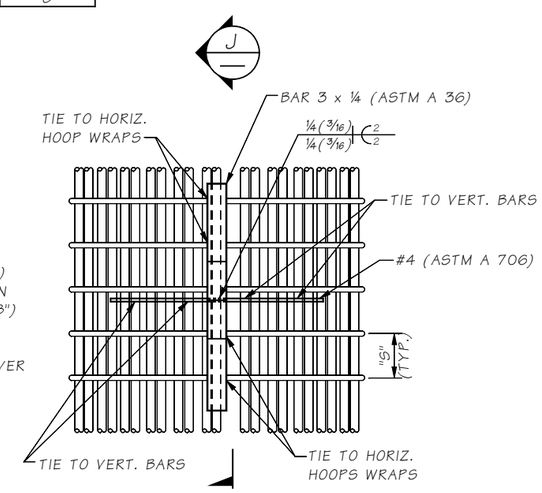

CENTRALIZER DETAIL

5 7 8 9

KEY NOTES:

1. CONSTRUCTION JOINT WITH ROUGHENED SURFACE.
2. MINIMUM CONCRETE COVER MINUS ½".
3. SEE STD. SPEC. 6-19.3(3)B5 FOR PERMANENT SLIP CASING.
4. SEE STD. SPEC. 6-19.3(5)C. FOR MINIMUM CONCRETE COVER.
5. SEE STD. SPEC. 6-19.3(5)B FOR SPACING REQUIREMENTS.
6. WELDING SHALL MEET THE REQUIREMENTS OF STD. SPEC. 6-02.3(24)E FOR WELD DIMENSIONS, SEE SHAFT HOOP TABLE ON THIS SHEET
7. CENTRALIZERS SHALL BE EPOXY COATED OR PAINTED WITH PAINT CONFORMING TO STANDARD SPECIFICATION 9-08.1(2)C OR 9-08.1(2)F AFTER FABRICATION.
8. EACH LEG SHALL BE TIED TO TWO (2) VERTICAL BARS OR (2) HOOPS.
9. CAGECASTER® REBAR CAGE SPACERS BY FOUNDATION TECHNOLOGIES MAY BE USED IN LIEU OF DETAIL SHOWN. SPACING REQUIREMENTS SHALL BE PER MANUFACTURER'S RECOMMENDATIONS. EACH LEG SHALL BE TIED TO A MINIMUM OF TWO (2) SPIRAL WRAPS OR HOOPS.
10. EXCAVATION IN ADVANCE OF THE CASING TIP SHALL NOT EXCEED ZERO FEET.

Bridge Design Engr.	Grimm, E		
Supervisor	Aldrich, BS		
Designed By	Schultz, E	11/22	
Checked By	O'Neill, P	12/22	
Detailed By	McCarthy, D	11/22	
Bridge Projects Engr.			
Prelim. Plan By			
Architect/Specialist			

M:\X-Team\BR241-2_MABTON-SUNNYSIDE_REPL\window files\PIER 3 SHAFT.wnd

DATE	REVISION	BY	APP'D

REGION NO.	STATE	FED. AID PROJ. NO.	SHEET NO.	TOTAL SHEETS
10	WASH.			
JOB NUMBER 21Y001				
CONTRACT NO.				

P.E. STAMP BOX — ERIC HENRY SCHULTZ, STATE OF WASHINGTON, 38910, STRUCTURAL ENGINEER, PROFESSIONAL ENGINEER — SEE SHEET CT1 — DATE:

BRIDGE AND STRUCTURES OFFICE

P.E. STAMP BOX — BRIAN S. ALDRICH, STATE OF WASHINGTON, 37834, STRUCTURAL ENGINEER, PROFESSIONAL ENGINEER — SEE SHEET CT1 — DATE:

Washington State Department of Transportation

PRELIMINARY NOT FOR CONSTRUCTION

SR 241
MABTON VICINITY
RETROFIT BRIDGES
MABTON-SUNNYSIDE RD. BRIDGE NO. 241/2 REPLACEMENT

PIER 3 SHAFT DETAILS

BRIDGE SHEET NO. BA8

SHEET 45 OF 115 SHEETS

SR 241 FILE NO. SHEET BA8

Tue Dec 27 15:19:08 2022

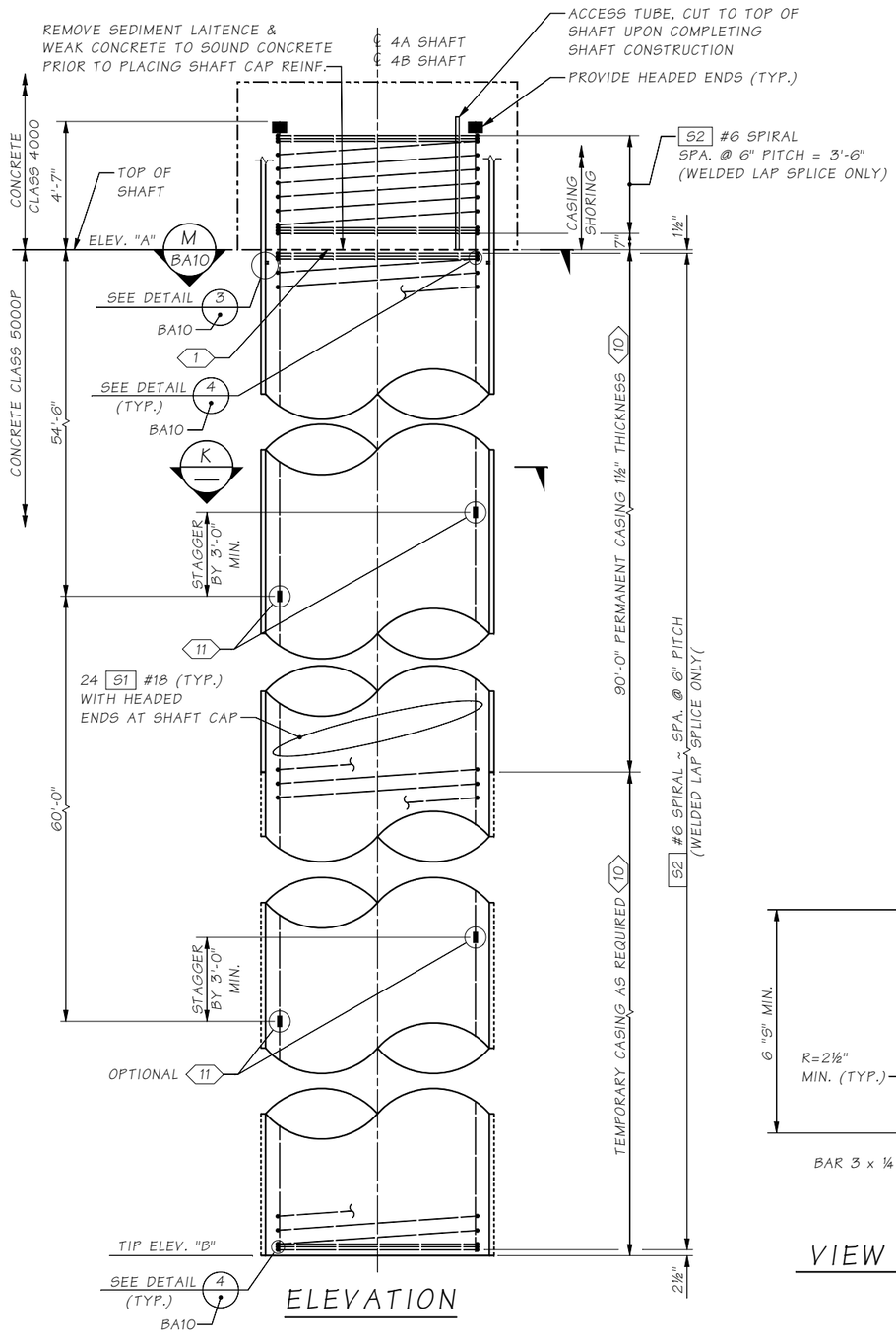

ELEVATION

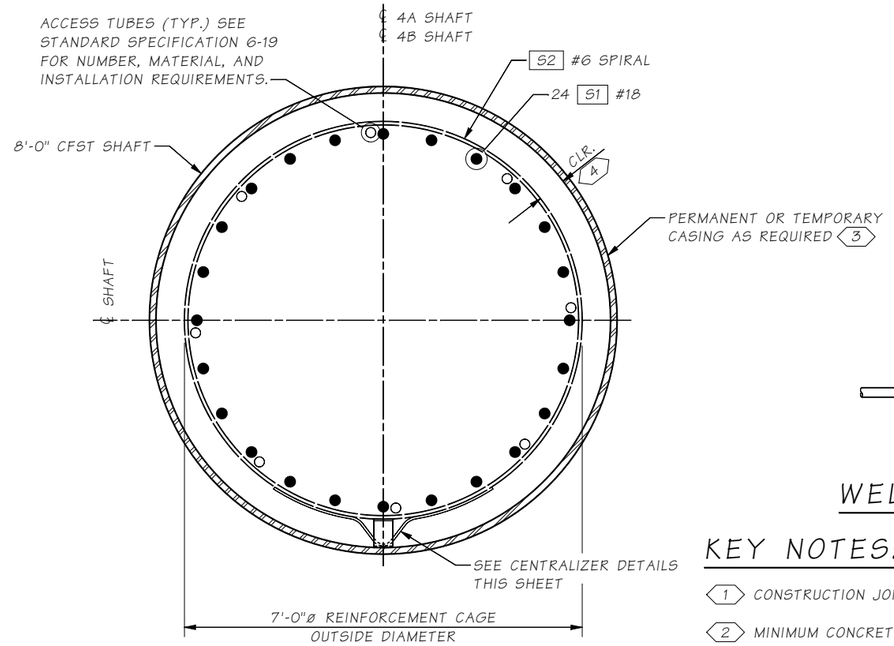

SECTION K

SHAFT SPIRAL OPTIONS

BAR SIZE	WELD DIMENSIONS (IN.)		
	S	E	LENGTH (L)
#6	3/8	3/16	6

SHAFT ELEVATION

SHAFT NO.	ELEV. "A"	TIP ELEV. "B"
4A	654.0	534.0
4B	654.0	534.0

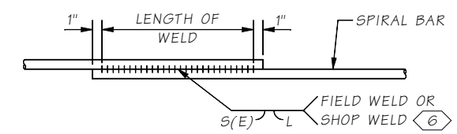

WELDED LAP SPLICE DETAIL

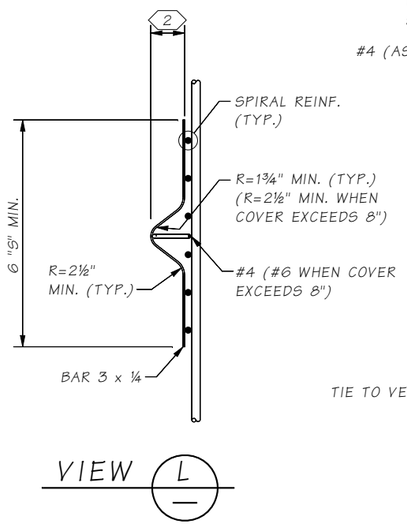

VIEW L

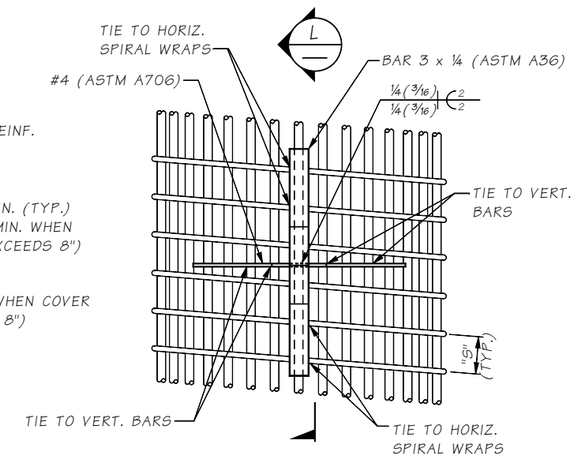

CENTRALIZER DETAIL

5 7 8 9

KEY NOTES:

1. CONSTRUCTION JOINT WITH ROUGHENED SURFACE.
2. MINIMUM CONCRETE COVER MINUS ½".
3. STEEL CASINGS SHALL CONFORM TO ONE OF THE FOLLOWING:
   - i. API 5L GRADE X52 FOR LONGITUDINAL SEAM WELDED OR HELICAL (SPIRAL) SEAM SUBMERGED-ARC WELDED STEEL PIPE PILES.
   - ii. ASTM A252 GRADE 3 FOR LONGITUDINAL SEAM WELDED OR HELICAL (SPIRAL) SEAM SUBMERGED-ARC WELDED STEEL PIPE PILES. MINIMUM YIELD STRENGTH SHALL BE 50 KSI.
   - iii. ASTM A572 GRADE 50 OR ASTM A588 FOR LONGITUDINAL SEAM WELDED STEEL PIPE PILES.
4. SEE STD. SPEC. 6-19.3(5)C. FOR MINIMUM CONCRETE COVER.
5. SEE STD. SPEC. 6-19.3(5)B FOR SPACING REQUIREMENTS.
6. WELDING SHALL MEET THE REQUIREMENTS OF STD. SPEC. 6-02.3(24)E FOR WELD DIMENSIONS, SEE SHAFT SPIRAL TABLE THIS SHEET.
7. CENTRALIZERS SHALL BE EPOXY COATED OR PAINTED WITH PAINT CONFORMING TO STANDARD SPECIFICATION 9-08.1(2)C OR 9-08.1(2)F AFTER FABRICATION.
8. EACH LEG SHALL BE TIED TO TWO (2) VERTICAL BARS OR TWO (2) SPIRAL WRAPS.
9. CAGECASTER® REBAR CAGE SPACERS BY FOUNDATION TECHNOLOGIES MAY BE USED IN LIEU OF DETAIL SHOWN. SPACING REQUIREMENTS SHALL BE PER MANUFACTURER'S RECOMMENDATIONS. EACH LEG SHALL BE TIED TO A MINIMUM OF TWO (2) SPIRAL WRAPS.
10. EXCAVATION IN ADVANCE OF THE CASING TIP SHALL NOT EXCEED ZERO FEET.
11. MECHANICAL SPLICE. STAGGER MECHANICAL SPLICE 3'-0" MIN. VERTICALLY BETWEEN ADJACENT REBARS. ALL SPLICES IN S1 #18 BARS SHALL BE MECHANICAL SPLICES LOWER SPLICES SHALL BE OPTIONAL WHEN BOTTOM BARS ARE SUPPLIED FULL LEGNTH.

SR 241 FILE NO. SHEET BA9

Bridge Design Engr.	Grimm, E	
Supervisor	Aldrich, BS	
Designed By	Schultz, E	11/22
Checked By	O'Neill, P	12/22
Detailed By	McCarthy, D	11/22
Bridge Projects Engr.		
Prelim. Plan By		
Architect/Specialist		

M:\X-Team\BR241-2_MABTOM-SUNNYSIDE_REPL\window files\PIER 4 SHAFT.wnd

DATE	REVISION	BY	APP'D

REGION NO.	STATE	FED. AID PROJ. NO.	SHEET NO.	TOTAL SHEETS
10	WASH.			
JOB NUMBER 21YO01				
CONTRACT NO.				

P.E. STAMP BOX — ERIC HENRY SCHULTZ, STATE OF WASHINGTON, 59910, PROFESSIONAL ENGINEER — SEE SHEET CT1 — DATE:

BRIDGE AND STRUCTURES OFFICE

P.E. STAMP BOX — BRIAN S. ALDRICH, STATE OF WASHINGTON, 37834, PROFESSIONAL ENGINEER — SEE SHEET CT1 — DATE:

Washington State Department of Transportation

PRELIMINARY NOT FOR CONSTRUCTION

SR 241
MABTON VICINITY
RETROFIT BRIDGES
MABTON-SUNNYSIDE RD. BRIDGE NO. 241/2 REPLACEMENT

PIER 4 SHAFT
DETAILS 1 OF 2

BRIDGE SHEET NO. BA9

SHEET 46 OF 115 SHEETS

Tue Dec 27 15:19:08 2022

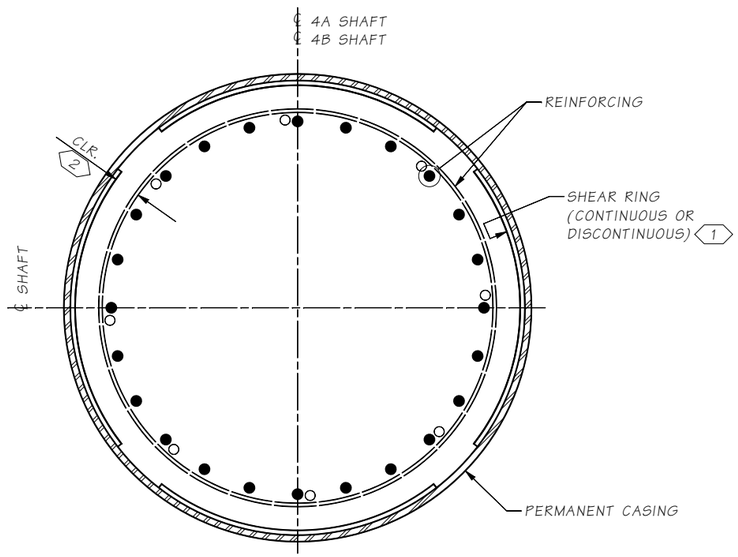

SECTION M / BA9

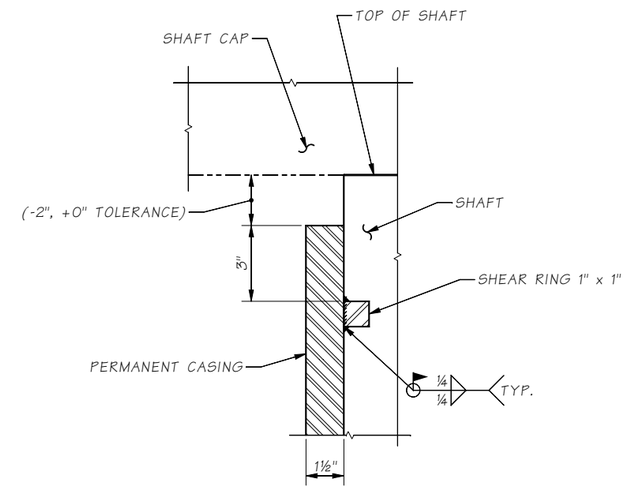

DETAIL 3 / BA9

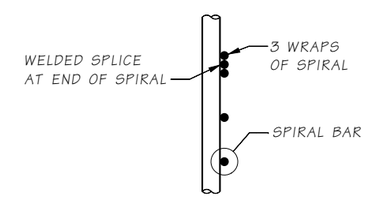

DETAIL 4 / BA9
SPIRAL TERMINATION

KEY NOTES:

1. IF SHEAR RING IS DISCONTINUOUS, ALL SEGMENTS SHALL BE OF EQUAL LENGTH AND EQUALLY SPACED WITH THE TOTAL LENGTH OF SHEAR RING PIECES NOT BEING LESS THAN 75% OF THE CASING CIRCUMFERENCE.
2. MINIMUM COVER MINUS 1". SEE STD. SPEC. 6-19.3(5)C. FOR MINIMUM CONCRETE COVER.

SR 241 FILE NO. ____ SHEET BA10

Bridge Design Engr.	Grimm, E	
Supervisor	Aldrich, BS	
Designed By	Schultz, E	11/22
Checked By	O'Neill, P	12/22
Detailed By	McCarthy, D	11/22
Bridge Projects Engr.		
Prelim. Plan By		
Architect/Specialist		

M:\X-Team\BR241-2_MABTOM-SUNNYSIDE_REPL\window files\PIER 4 SHAFT 2.wnd

DATE	REVISION	BY	APP'D

REGION NO.	STATE	FED. AID PROJ. NO.	SHEET NO.	TOTAL SHEETS
10	WASH.			
JOB NUMBER 21Y001				
CONTRACT NO.				

P.E. STAMP BOX
ERIC HENRY SCHULTZ — STATE OF WASHINGTON — 39910 — STRUCTURAL ENGINEER — PROFESSIONAL ENGINEER
SEE SHEET CT1
DATE:

BRIDGE AND STRUCTURES OFFICE

P.E. STAMP BOX
BRIAN S. ALDRICH — STATE OF WASHINGTON — 37834 — STRUCTURAL ENGINEER — PROFESSIONAL ENGINEER
SEE SHEET CT1
DATE:

Washington State Department of Transportation
PRELIMINARY NOT FOR CONSTRUCTION

SR 241
MABTON VICINITY
RETROFIT BRIDGES
MABTON-SUNNYSIDE RD. BRIDGE NO. 241/2 REPLACEMENT

PIER 4 SHAFT
DETAILS 2 OF 2

BRIDGE SHEET NO. BA10
SHEET 47 OF 115 SHEETS

Tue Dec 27 15:19:09 2022

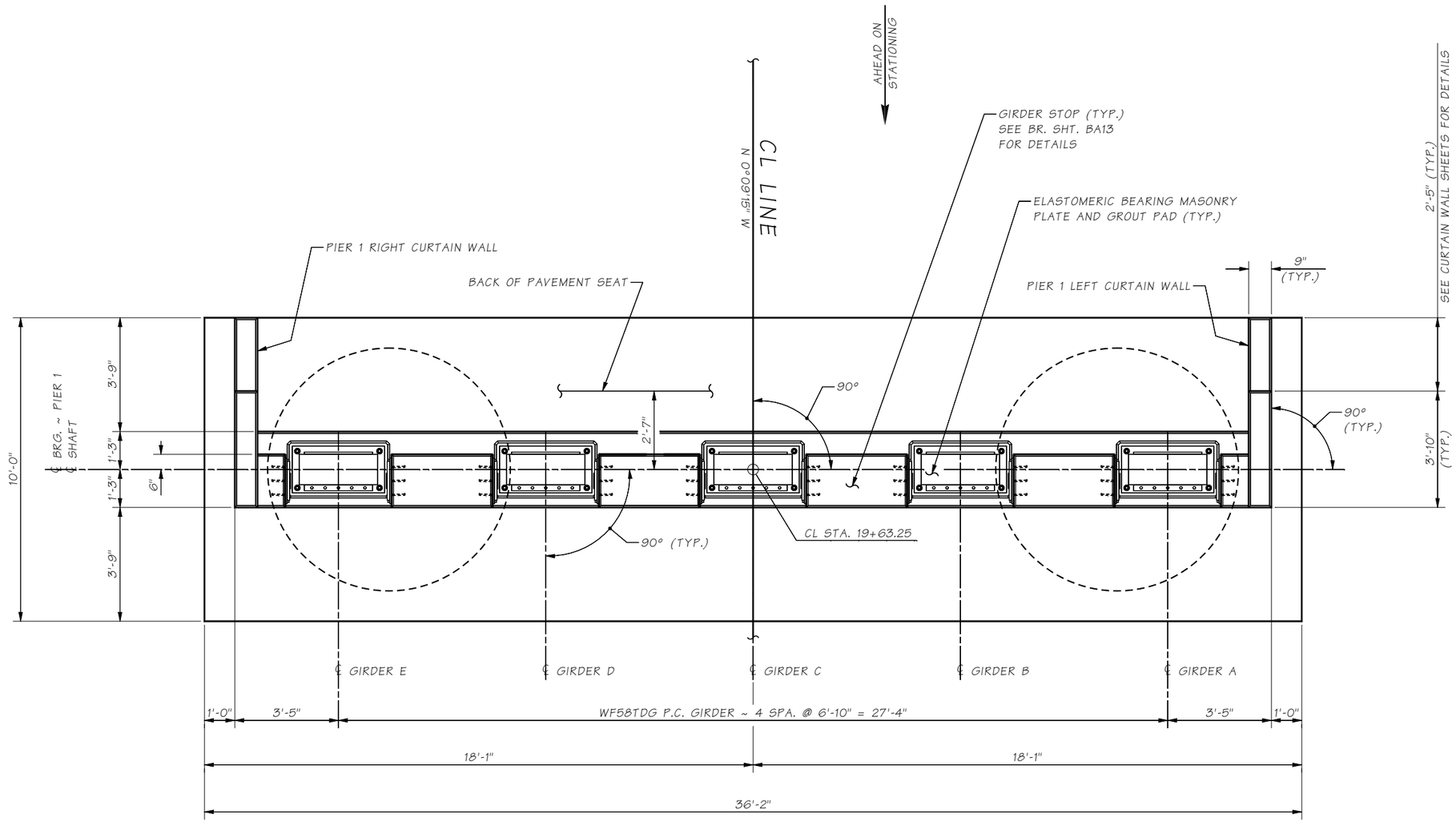

PLAN

SR 241 FILE NO. ____ SHEET BA11

Bridge Design Engr.	Grimm, E	
Supervisor	Aldrich, BS	
Designed By	Schultz, E	11/22
Checked By	O'Neill, P	12/22
Detailed By	McCarthy, D	11/22
Bridge Projects Engr.		
Prelim. Plan By		
Architect/Specialist		

M:\X-Team\BR241-2_MABTOM-SUNNYSIDE_REPL\window files\PIER 1 PLAN.wnd

DATE	REVISION	BY	APP'D

REGION NO.	STATE	FED. AID PROJ. NO.	SHEET NO.	TOTAL SHEETS
10	WASH.			

JOB NUMBER 21Y001

CONTRACT NO.

P.E. STAMP BOX

ERIC HENRY SCHULTZ — STATE OF WASHINGTON — 39910 — STRUCTURAL ENGINEER — PROFESSIONAL ENGINEER

SEE SHEET CT1

DATE:

BRIDGE AND STRUCTURES OFFICE

P.E. STAMP BOX

BRIAN S. ALDRICH — STATE OF WASHINGTON — 37834 — STRUCTURAL ENGINEER — PROFESSIONAL ENGINEER

SEE SHEET CT1

DATE:

Washington State Department of Transportation

PRELIMINARY NOT FOR CONSTRUCTION

SR 241
MABTON VICINITY
RETROFIT BRIDGES
MABTON-SUNNYSIDE RD. BRIDGE NO. 241/2 REPLACEMENT

PIER 1 PLAN

BRIDGE SHEET NO. BA11

SHEET 48 OF 115 SHEETS

Tue Dec 27 15:19:09 2022

TOP OF GROUT PAD ELEVATIONS

GIRDER	E	D	C	B	A
ELEV.	673.33	673.46	673.60	673.46	673.33

NOTES:

1. MIN. REBAR SPLICE LENGTH UNLESS NOTED OTHERWISE: #4 ~ 2'-0" ;#5 ~ 2'-6"; #6 ~ 3'-0"; #7 ~ 3'-6"; #8 ~ 4'-3" #11 ~ NO LAP SPLICE ALLOWED
2. DO NOT SPLICE MORE THAN 50% OF REBAR AT ANY ONE LOCATION UNLESS NOTED OTHERWISE. STAGGER SPLICES AT A MINIMUM OF 3'-6".

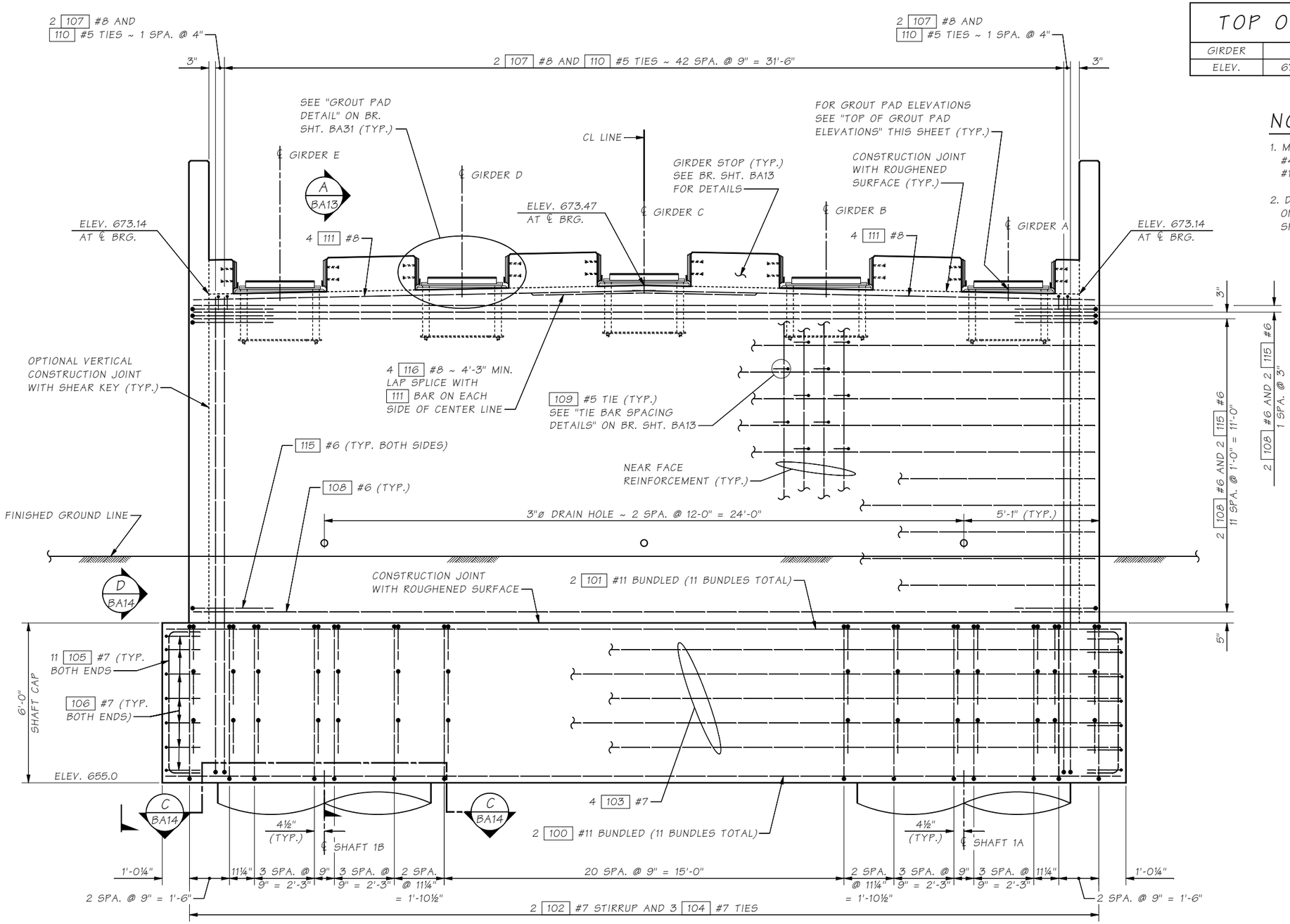

ELEVATION

LOOKING BACK ON STATIONING.
CURTAIN WALL AND SHAFT REINFORCEMENT NOT SHOWN FOR CLARITY.

Bridge Design Engr.	Grimm, E	
Supervisor	Aldrich, BS	
Designed By	Schultz, E	11/22
Checked By	O'Neill, P	12/22
Detailed By	McCarthy, D	11/22
Bridge Projects Engr.		
Prelim. Plan By		
Architect/Specialist		

M:\X-Team\BR241-2_MABTOM-SUNNYSIDE_REPL\window files\PIER 1 ELEV.wnd

DATE	REVISION	BY	APP'D

REGION NO.	STATE	FED. AID PROJ. NO.	SHEET NO.	TOTAL SHEETS
10	WASH.			
JOB NUMBER 21Y001				
CONTRACT NO.				

P.E. STAMP BOX — ERIC HENRY SCHULTZ, STATE OF WASHINGTON, 39910, PROFESSIONAL ENGINEER — SEE SHEET CT1 — DATE:

BRIDGE AND STRUCTURES OFFICE

P.E. STAMP BOX — BRIAN S. ALDRICH, STATE OF WASHINGTON, 37834, PROFESSIONAL ENGINEER — SEE SHEET CT1 — DATE:

Washington State Department of Transportation

PRELIMINARY NOT FOR CONSTRUCTION

SR 241
MABTON VICINITY
RETROFIT BRIDGES
MABTON-SUNNYSIDE RD. BRIDGE NO. 241/2 REPLACEMENT

PIER 1 ELEVATION

BRIDGE SHEET NO. BA12

SHEET 49 OF 115 SHEETS

SR 241 FILE NO. ____ SHEET BA12

Tue Dec 27 15:19:10 2022

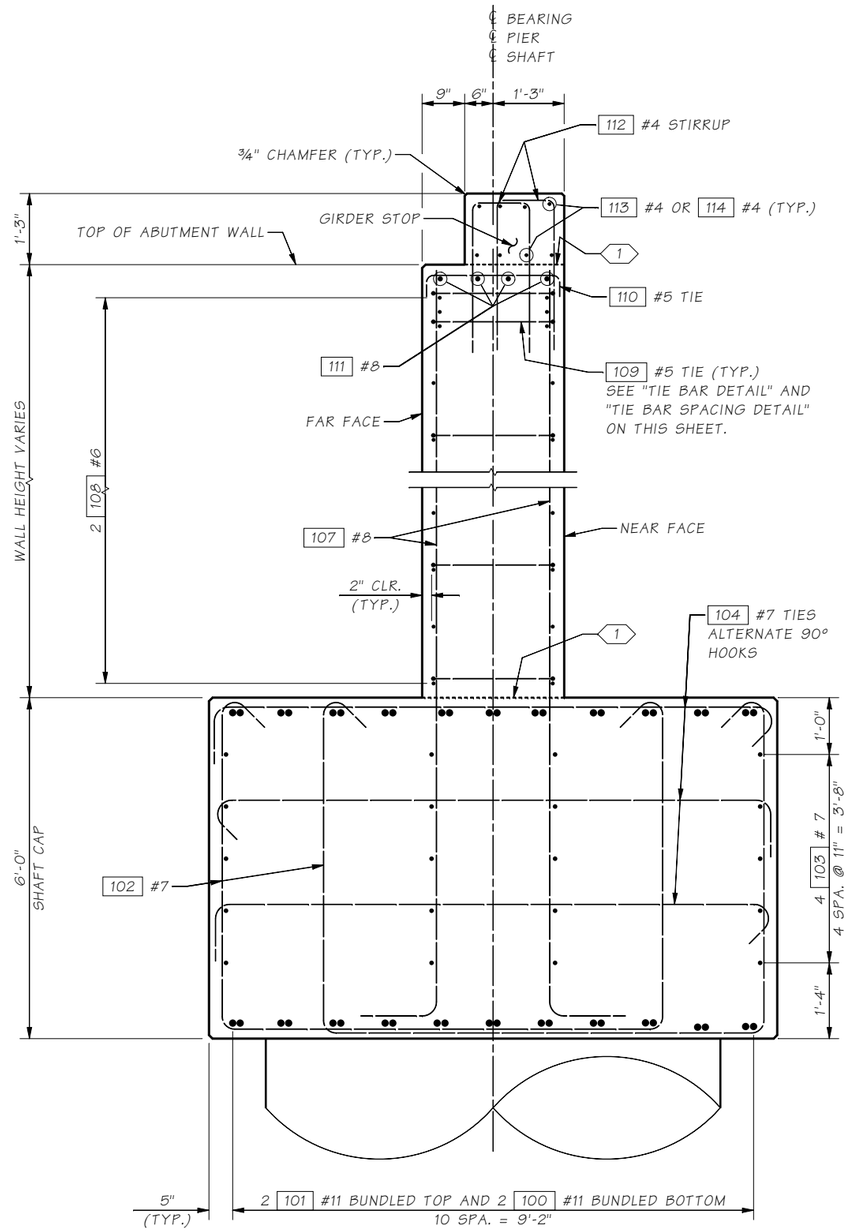

SECTION A / BA12

NOT ALL SHAFT REINFORCING IS SHOWN. SEE BR. SHT. BA5

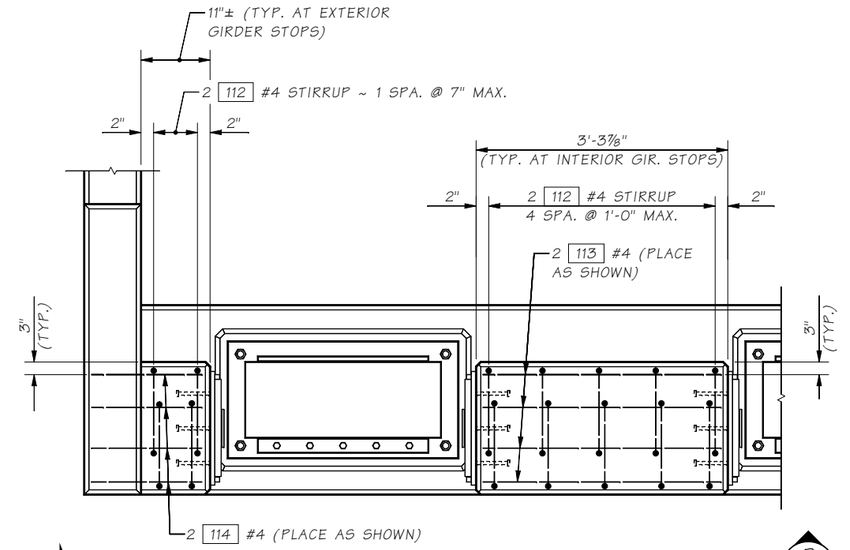

PLAN
GIRDER STOP DETAIL

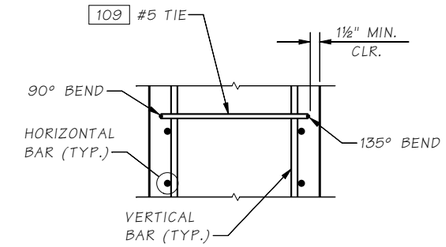

TIE BAR DETAIL

ALTERNATE 135 BEND EVERY OTHER TIE.

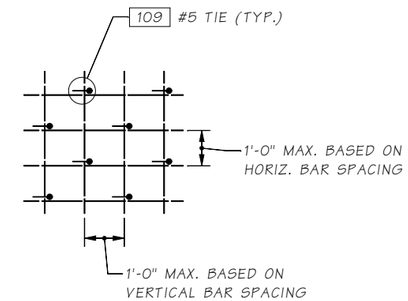

TIE BAR SPACING DETAIL

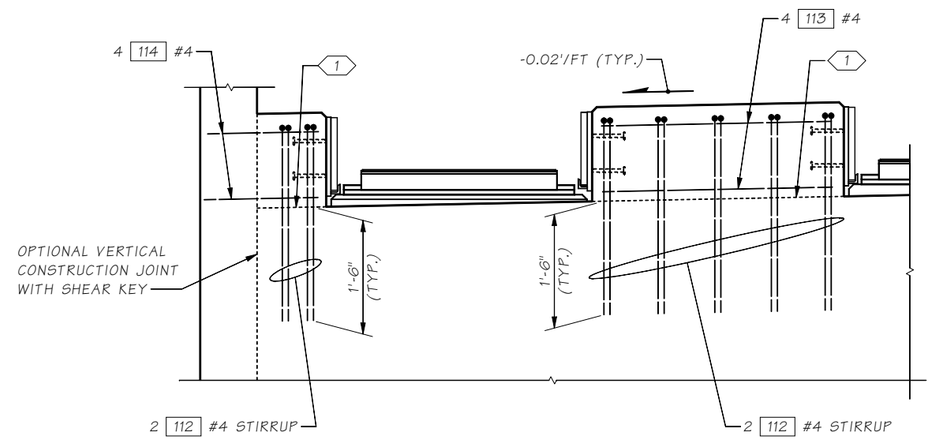

VIEW B

KEY NOTE:

1 CONSTRUCTION JOINT WITH ROUGHENED SURFACE

BENDING DIAGRAM

(ALL DIMENSIONS ARE OUT TO OUT)

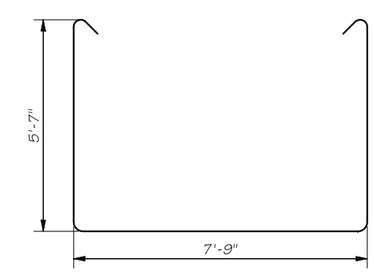

102 #7 STIRRUP

Bridge Design Engr.	Grimm, E	
Supervisor	Aldrich, BS	
Designed By	Schultz, E	11/22
Checked By	O'Neill, P	12/22
Detailed By	McCarthy, D	11/22
Bridge Projects Engr.		
Prelim. Plan By		
Architect/Specialist		

M:\X-Team\BR241-2_MABTOM-SUNNYSIDE_REPL\window files\PIER 1 DETAILS 1.wnd

DATE	REVISION	BY	APP'D

REGION NO.	STATE	FED. AID PROJ. NO.	SHEET NO.	TOTAL SHEETS
10	WASH.			
JOB NUMBER 21Y001				
CONTRACT NO.				

P.E. STAMP BOX — ERIC HENRY SCHULTZ, STATE OF WASHINGTON, 39910, PROFESSIONAL ENGINEER — SEE SHEET CT1 — DATE:

BRIDGE AND STRUCTURES OFFICE

P.E. STAMP BOX — BRIAN S. ALDRICH, STATE OF WASHINGTON, 37834, PROFESSIONAL ENGINEER — SEE SHEET CT1 — DATE:

Washington State Department of Transportation

PRELIMINARY NOT FOR CONSTRUCTION

SR 241
MABTON VICINITY
RETROFIT BRIDGES
MABTON-SUNNYSIDE RD. BRIDGE NO. 241/2 REPLACEMENT

PIER 1 DETAILS 1 OF 2

BRIDGE SHEET NO. BA13

SHEET 50 OF 115 SHEETS

SR 241 FILE NO. ____ SHEET BA13

Tue Dec 27 15:19:10 2022

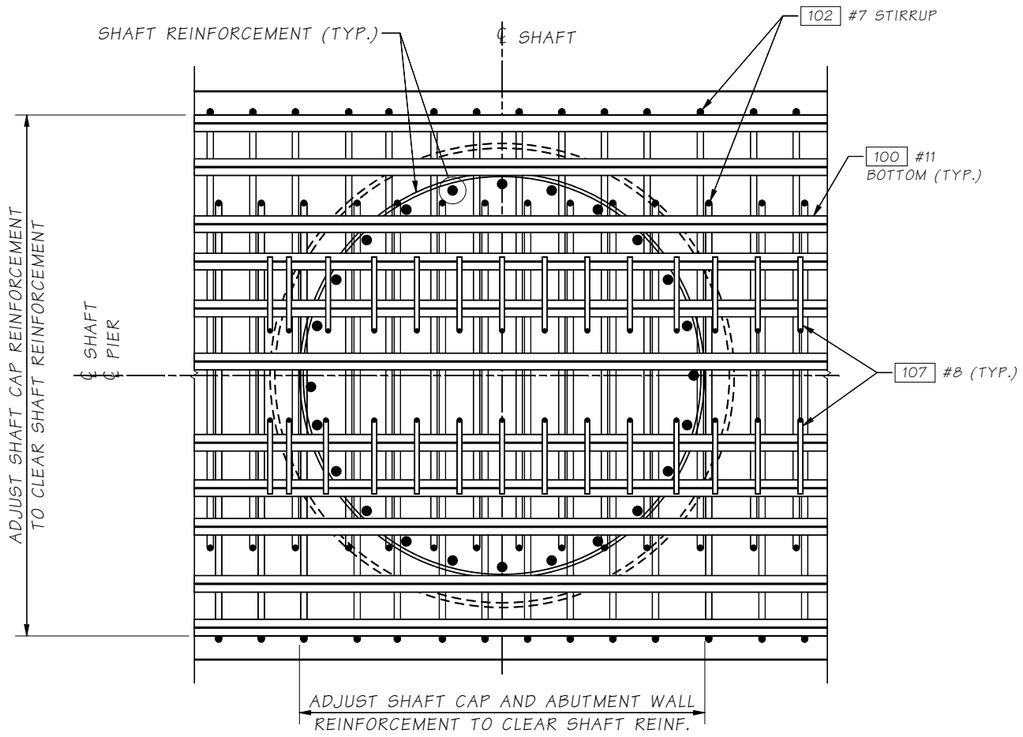

SECTION C / BA12

SHAFT 1B SHOWN, SHAFT 1A SIMILAR

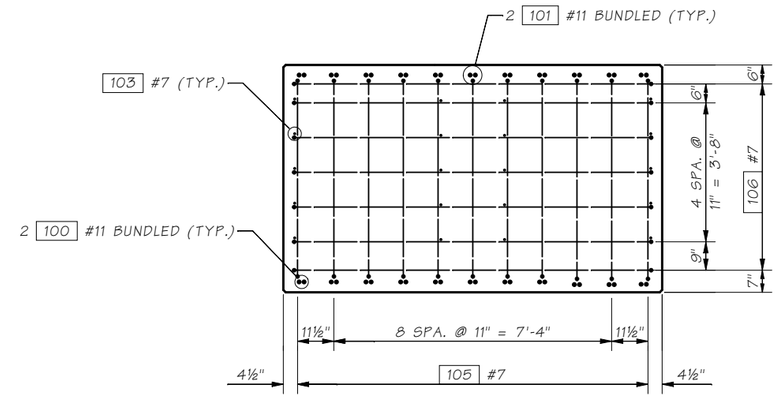

VIEW D / BA12

TYPICAL AT BOTH ENDS

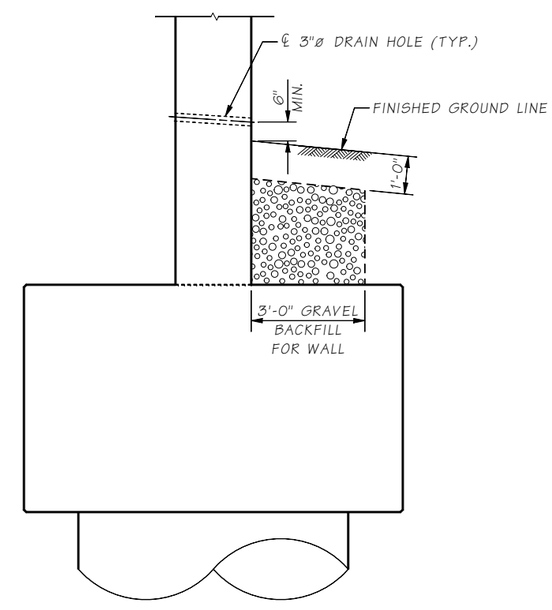

DRAINAGE DETAIL

SR 241 FILE NO. ____ SHEET BA14

Bridge Design Engr.	Grimm, E		M:\X-Team\BR241-2_MABTOM-SUNNYSIDE_REPL\window files\PIER 1 DETAILS 2.wnd								
Supervisor	Aldrich, BS										
Designed By	Schultz, E	11/22									
Checked By	O'Neill, P	12/22									
Detailed By	McCarthy, D	11/22									
Bridge Projects Engr.											
Prelim. Plan By											
Architect/Specialist			DATE	REVISION	BY	APP'D					

REGION NO.	STATE	FED. AID PROJ. NO.	SHEET NO.	TOTAL SHEETS
10	WASH.			
JOB NUMBER 21Y001				
CONTRACT NO.				

P.E. STAMP BOX — ERIC HENRY SCHULTZ, STATE OF WASHINGTON, 39910, PROFESSIONAL ENGINEER — SEE SHEET CT1 — DATE:

BRIDGE AND STRUCTURES OFFICE

P.E. STAMP BOX — BRIAN S. ALDRICH, STATE OF WASHINGTON, 37834, PROFESSIONAL ENGINEER — SEE SHEET CT1 — DATE:

Washington State Department of Transportation

PRELIMINARY NOT FOR CONSTRUCTION

SR 241
MABTON VICINITY
RETROFIT BRIDGES
MABTON-SUNNYSIDE RD. BRIDGE NO. 241/2 REPLACEMENT

PIER 1 DETAILS 2 OF 2

BRIDGE SHEET NO. BA14

SHEET 51 OF 115 SHEETS

Tue Dec 27 15:19:11 2022

CURTAIN WALL ELEVATIONS & DIMENSIONS

CURTAIN WALL LOCATION	ELEVATION POINT AT TOP OF NEAR FACE			
	Q	R	S	T
PIER 1 RIGHT	678.24	678.19	678.44	678.35
PIER 1 LEFT	678.24	678.19	678.44	678.35

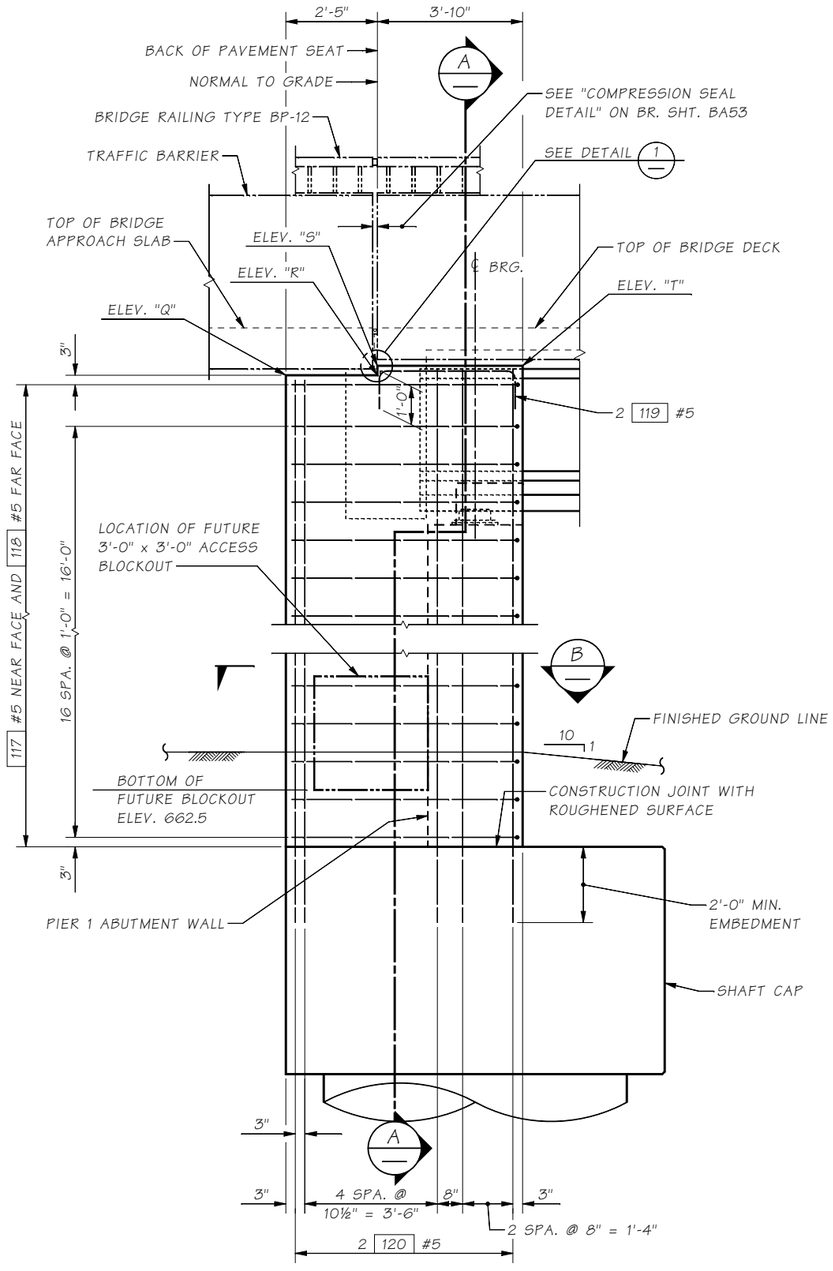

OUTSIDE ELEVATION CURTAIN WALL

PIER 1 RIGHT SHOWN, PIER 1 LEFT SIMILAR, FOR REINFORCEMENT NOT SHOWN SEE PIER PLANS.

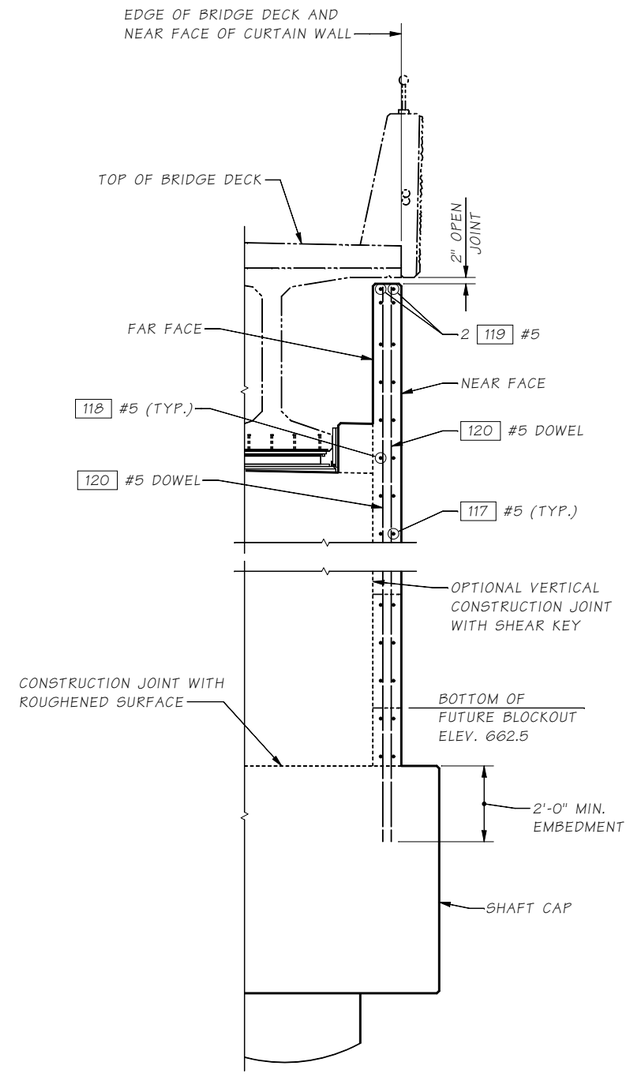

SECTION A

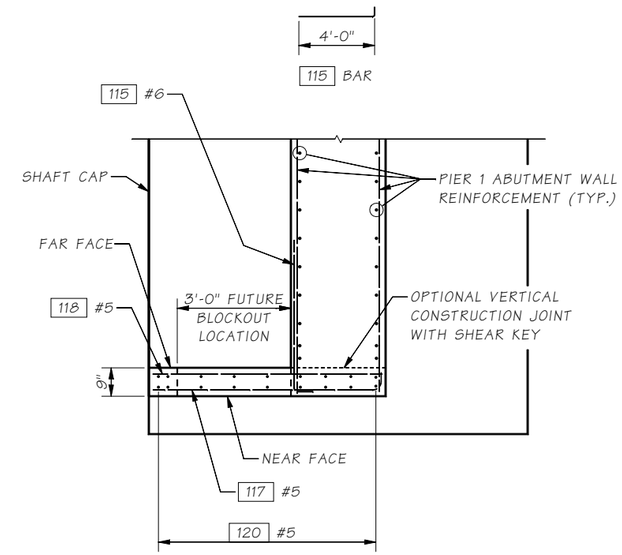

SECTION B

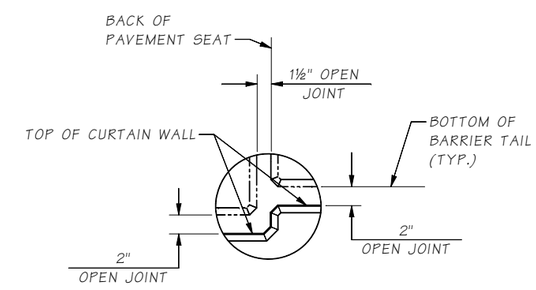

DETAIL 1

Bridge Design Engr.	Grimm, E		
Supervisor	Aldrich, BS		
Designed By	Schultz, E	11/22	
Checked By	O'Neill, P	12/22	
Detailed By	McCarthy, D	11/22	
Bridge Projects Engr.			
Prelim. Plan By			
Architect/Specialist			

M:\X-Team\BR241-2_MABTOM-SUNNYSIDE_REPL\window files\PIER 1 CURTAINWALL.wnd

DATE	REVISION	BY	APP'D

REGION NO.	STATE	FED. AID PROJ. NO.	SHEET NO.	TOTAL SHEETS
10	WASH.			
JOB NUMBER 21YO01				
CONTRACT NO.				

P.E. STAMP BOX — ERIC HENRY SCHULTZ, STATE OF WASHINGTON, 59910, PROFESSIONAL ENGINEER — SEE SHEET CT1 — DATE:

BRIDGE AND STRUCTURES OFFICE

P.E. STAMP BOX — BRIAN S. ALDRICH, STATE OF WASHINGTON, 37834, PROFESSIONAL ENGINEER — SEE SHEET CT1 — DATE:

Washington State Department of Transportation

PRELIMINARY NOT FOR CONSTRUCTION

SR 241
MABTON VICINITY
RETROFIT BRIDGES
MABTON-SUNNYSIDE RD. BRIDGE NO. 241/2 REPLACEMENT

PIER 1 CURTAIN WALL DETAILS

BRIDGE SHEET NO. BA15

SHEET 52 OF 115 SHEETS

SR 241 FILE NO. ____ SHEET BA15

Tue Dec 27 15:19:11 2022

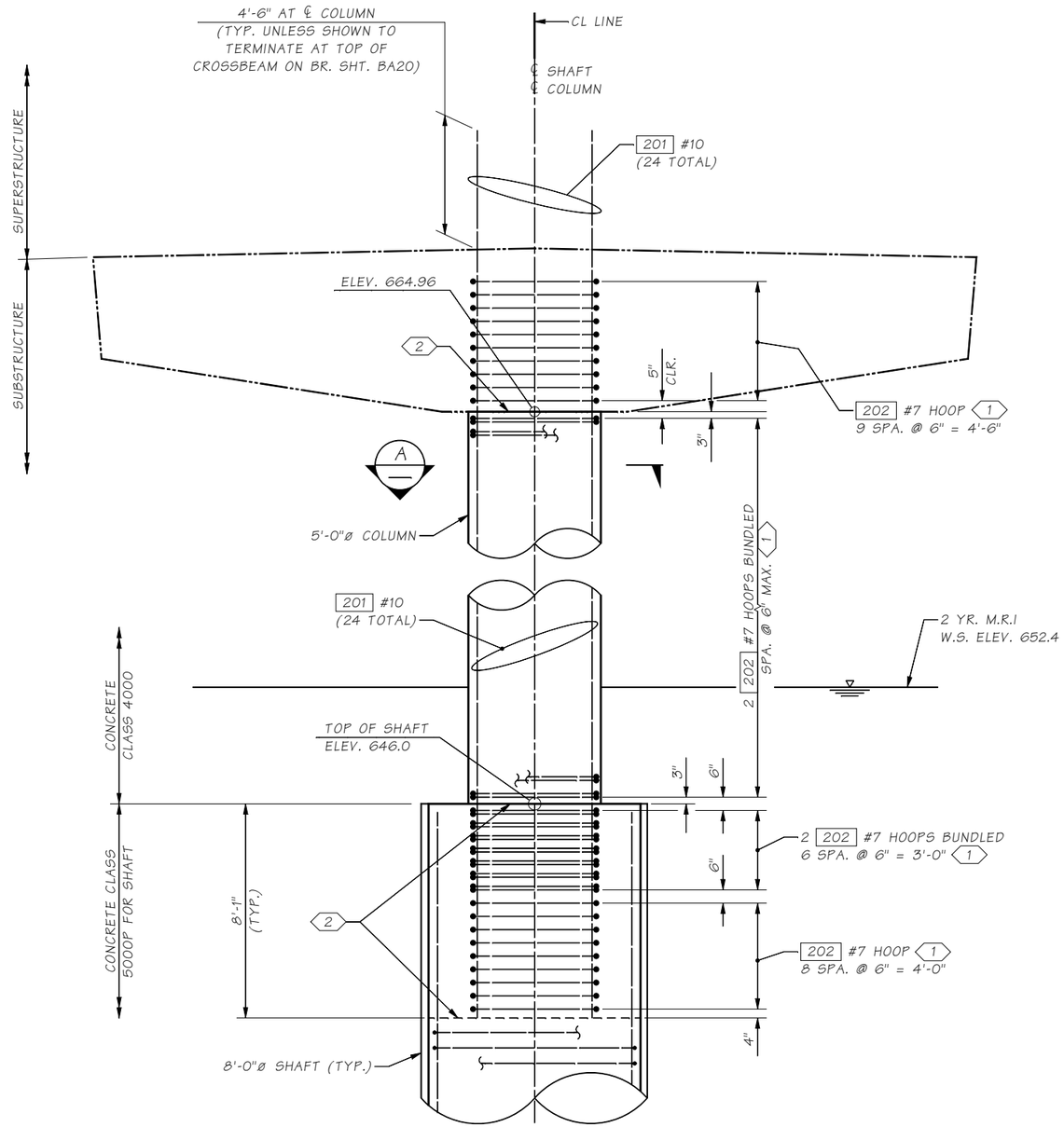

COLUMN ELEVATION

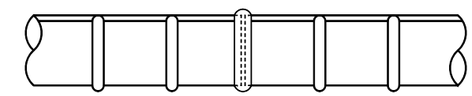

RESISTANCE BUTT JOINT DETAIL

SEE STD. SPEC. 6-02.3(24)I FOR RESISTANCE BUTT WELD SPLICING REQUIREMENTS

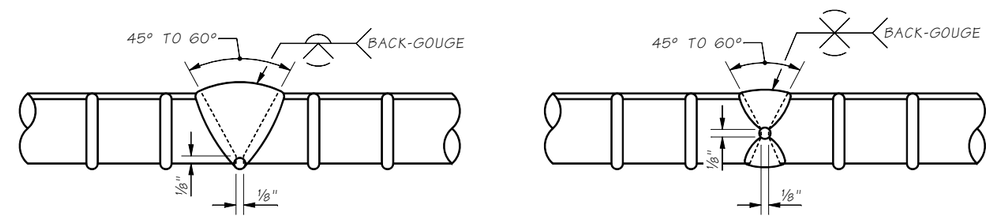

SINGLE V-GROOVE WELD
AWS D1.4 FIGURE 5.2(A)

DOUBLE V-GROOVE WELD
AWS D1.4 FIGURE 5.2(B)

MANUAL DIRECT BUTT JOINT DETAILS

ALL BACKING SHALL BE REMOVED.
SEE STD. SPEC. 6-02.3(24)J FOR WELDING REQUIREMENTS AND RT TESTING

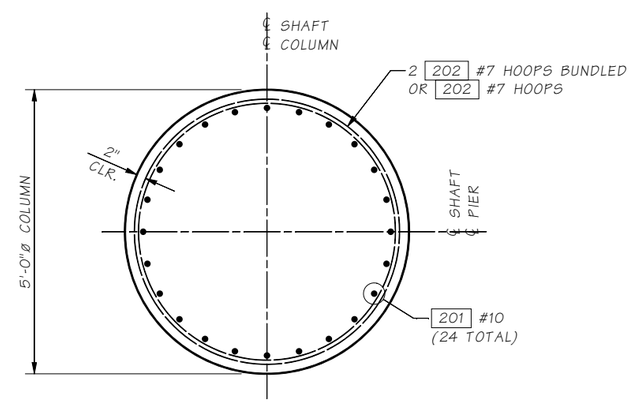

SECTION A

TYPICAL SECTION

KEY NOTES:

1. HOOPS SHALL BE SPLICED WITH EITHER A RESISTANCE BUTT WELD OR A DIRECT BUTT WELD. (SEE "RESISTANCE BUTT JOINT DETAIL" AND "MANUAL DIRECT BUTT JOINT DETAILS" ON THIS SHEET. HOOP WELD SPLICES ON ADJACENT HOOPS SHALL BE STAGGERED AROUND THE COLUMN BY A MINIMUM OF 4'-6".
2. CONSTRUCTION JOINT WITH ROUGHENED SURFACE.

Bridge Design Engr.	Grimm, E	
Supervisor	Aldrich, BS	
Designed By	Schultz, E	02/22
Checked By	O'Neill, P	12/22
Detailed By	McCarthy, D	05/22
Bridge Projects Engr.		
Prelim. Plan By		
Architect/Specialist		

M:\X-Team\BR241-2_MABTOM-SUNNYSIDE_REPL\window files\PIER 2 COLUMN DETAIL.wnd

DATE	REVISION	BY	APP'D

REGION NO.	STATE	FED. AID PROJ. NO.	SHEET NO.	TOTAL SHEETS
10	WASH.			
JOB NUMBER 21Y001				
CONTRACT NO.				

P.E. STAMP BOX — ERIC HENRY SCHULTZ, STATE OF WASHINGTON, 39910, STRUCTURAL ENGINEER, PROFESSIONAL ENGINEER — SEE SHEET CT1 — DATE:

BRIDGE AND STRUCTURES OFFICE

P.E. STAMP BOX — BRIAN S. ALDRICH, STATE OF WASHINGTON, 37834, STRUCTURAL ENGINEER, PROFESSIONAL ENGINEER — SEE SHEET CT1 — DATE:

Washington State Department of Transportation

PRELIMINARY NOT FOR CONSTRUCTION

SR 241
MABTON VICINITY
RETROFIT BRIDGES
MABTON-SUNNYSIDE RD. BRIDGE NO. 241/2 REPLACEMENT

PIER 2 COLUMN DETAILS

BRIDGE SHEET NO. BA16

SHEET 53 OF 115 SHEETS

SR 241 FILE NO. ____ SHEET BA16

Tue Dec 27 15:19:12 2022

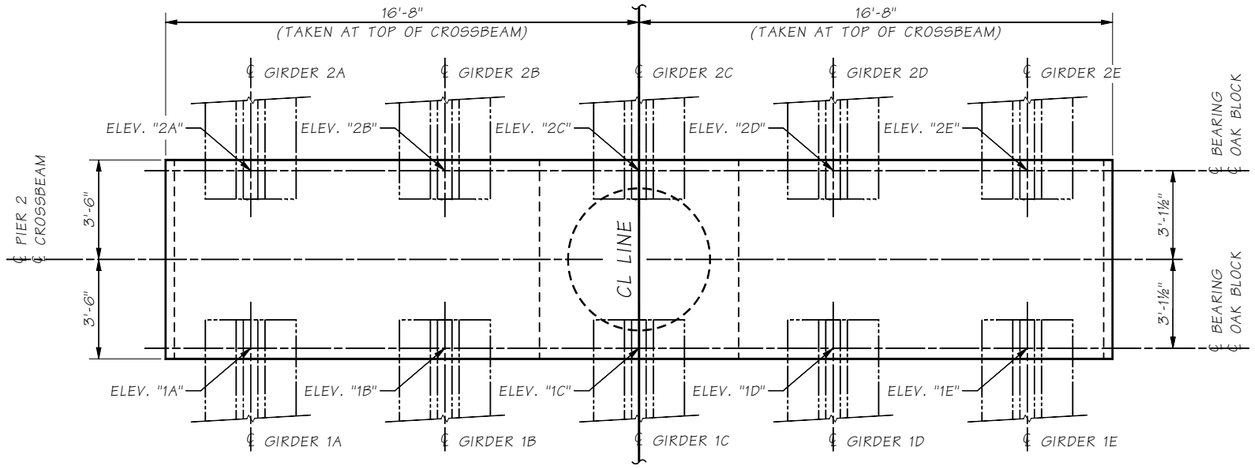

PLAN

SHOWN AT TOP OF CROSSBEAM, GIRDERS ARE SHOWN FOR CLARITY.
SEE "FRAMING PLAN" FOR GIRDER SPACING.

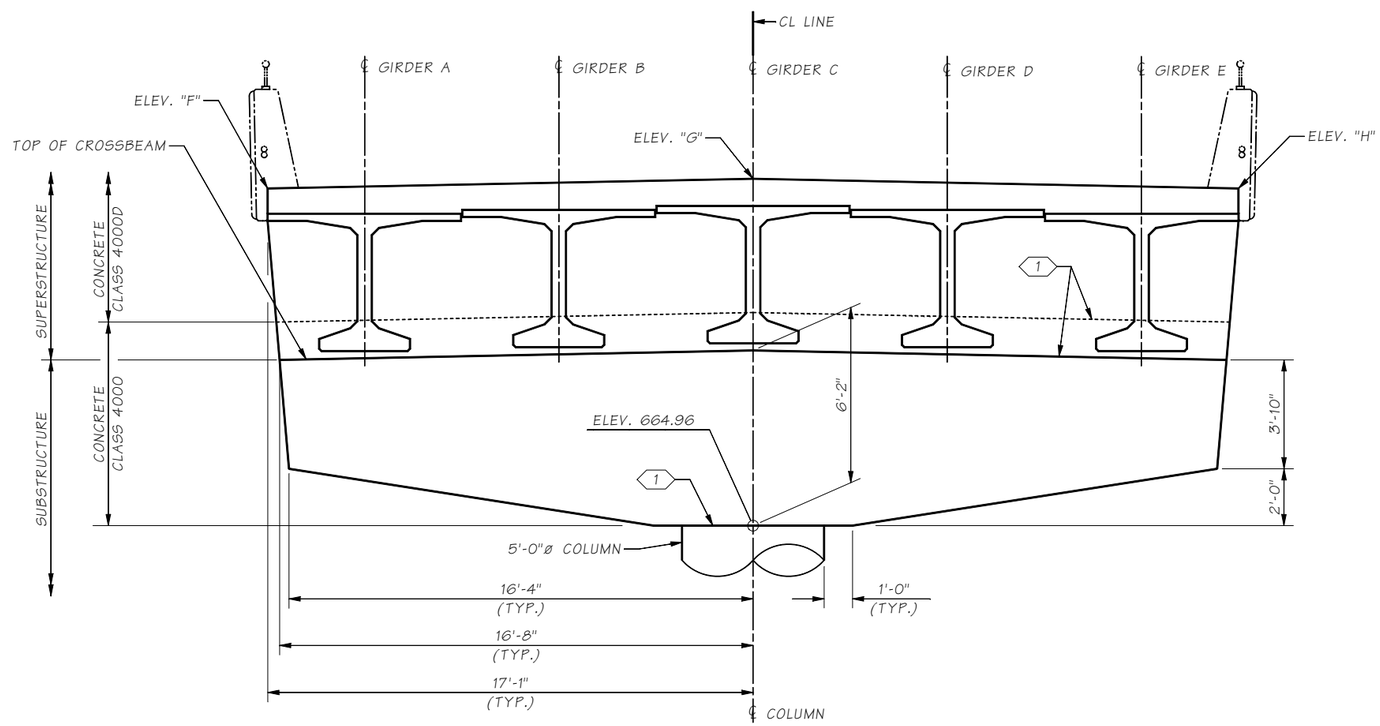

ELEVATION

DIMENSIONS MEASURED ALONG ℄ PIER

TABLE OF ELEVATIONS

ELEVATIONS AT TOP OF OAK BLOCK
(BOTTOM OF PRESTRESSED GIRDER)

SPAN 1	ELEVATION		SPAN 2	ELEVATION
"1A"	671.28		"2A"	671.03
"1B"	671.41		"2B"	671.16
"1C"	671.55		"2C"	671.30
"1D"	271.41		"2D"	671.16
"1E"	671.28		"2E"	671.03

TABLE OF ELEVATIONS

ELEVATIONS AT ℄ PIER

LOCATION	ELEVATION
"F"	676.82
"G"	677.17
"H"	676.82

KEY NOTE:

1 CONSTRUCTION JOINT WITH ROUGHENED SURFACE.

Bridge Design Engr.	Grimm, E	
Supervisor	Aldrich, BS	
Designed By	Schultz, E	02/22
Checked By	O'Neill, P	12/22
Detailed By	McCarthy, D	05/22
Bridge Projects Engr.		
Prelim. Plan By		
Architect/Specialist		

M:\X-Team\BR241-2_MABTOM-SUNNYSIDE_REPL\window files\PIER 2 CROSSBEAM DTL 1.wnd

DATE	REVISION	BY	APP'D

REGION NO.	STATE	FED. AID PROJ. NO.	SHEET NO.	TOTAL SHEETS
10	WASH.			
JOB NUMBER 21Y001				
CONTRACT NO.				

P.E. STAMP BOX — ERIC HENRY SCHULTZ, STATE OF WASHINGTON, 39910, PROFESSIONAL ENGINEER — SEE SHEET CT1 — DATE:

BRIDGE AND STRUCTURES OFFICE

P.E. STAMP BOX — BRIAN S. ALDRICH, STATE OF WASHINGTON, 37834, PROFESSIONAL ENGINEER — SEE SHEET CT1 — DATE:

Washington State Department of Transportation

PRELIMINARY NOT FOR CONSTRUCTION

SR 241
MABTON VICINITY
RETROFIT BRIDGES
MABTON-SUNNYSIDE RD. BRIDGE NO. 241/2 REPLACEMENT

PIER 2 CROSSBEAM
DETAILS 1 OF 4

BRIDGE SHEET NO. BA17

SHEET 54 OF 115 SHEETS

SR 241 FILE NO. ____ SHEET BA17

Tue Dec 27 15:19:12 2022

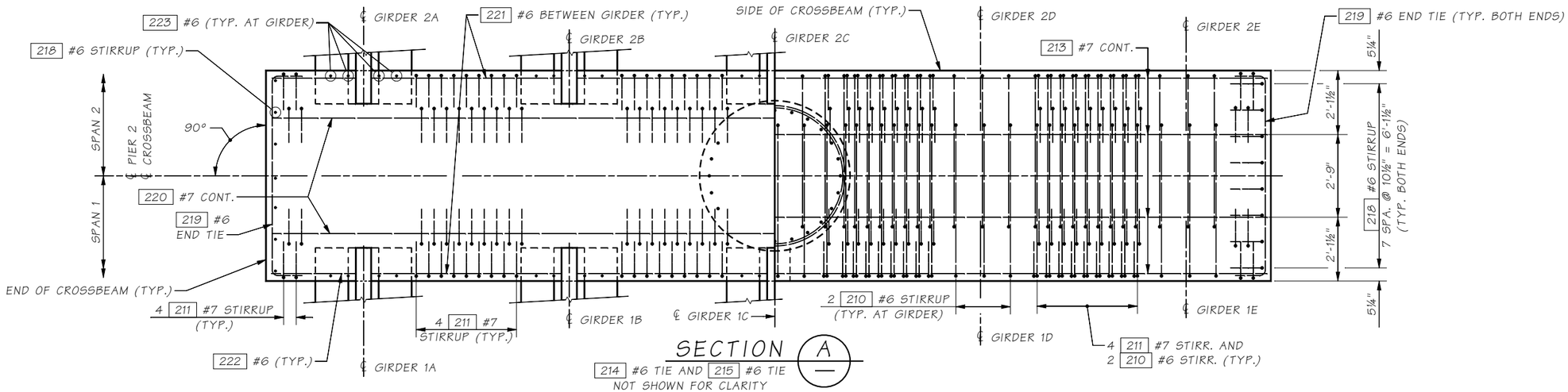

SECTION A

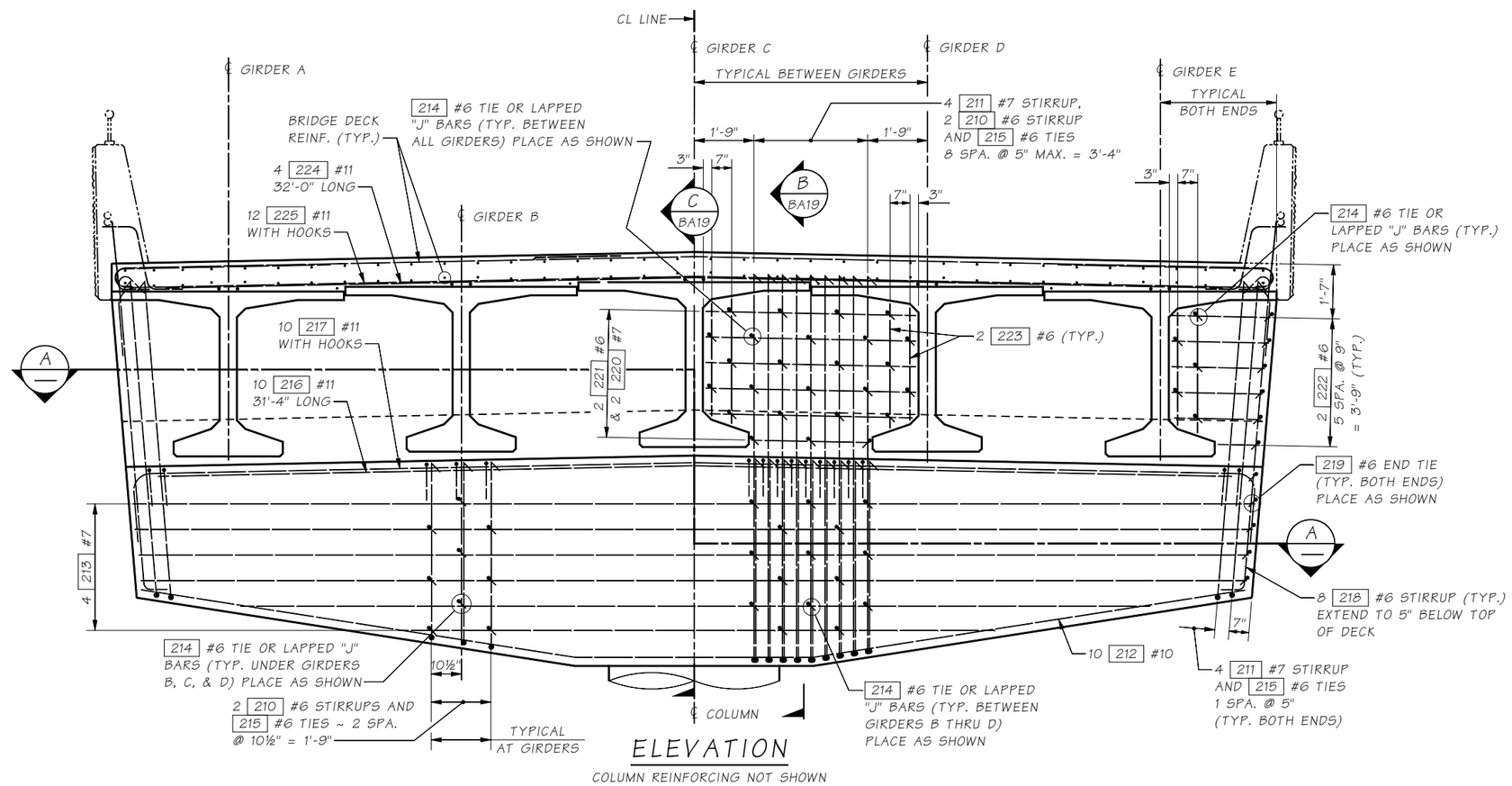

ELEVATION

COLUMN REINFORCING NOT SHOWN

SR 241 FILE NO. ____ SHEET BA18

Bridge Design Engr.	Grimm, E		
Supervisor	Aldrich, BS		
Designed By	Schultz, E	02/22	
Checked By	O'Neill, P	12/22	
Detailed By	McCarthy, D	05/22	
Bridge Projects Engr.			
Prelim. Plan By			
Architect/Specialist			

M:\X-Team\BR241-2_MABTOM-SUNNYSIDE_REPL\window files\PIER 2 CROSSBEAM DTL 2.wnd

DATE	REVISION	BY	APP'D

REGION NO.	STATE	FED. AID PROJ. NO.	SHEET NO.	TOTAL SHEETS
10	WASH.			
JOB NUMBER 21Y001				
CONTRACT NO.				

P.E. STAMP BOX — ERIC HENRY SCHULTZ, STATE OF WASHINGTON, 39910, STRUCTURAL ENGINEER, PROFESSIONAL ENGINEER — SEE SHEET CT1 — DATE:

BRIDGE AND STRUCTURES OFFICE

P.E. STAMP BOX — BRIAN S. ALDRICH, STATE OF WASHINGTON, 37834, STRUCTURAL ENGINEER, PROFESSIONAL ENGINEER — SEE SHEET CT1 — DATE:

Washington State Department of Transportation

PRELIMINARY NOT FOR CONSTRUCTION

SR 241
MABTON VICINITY
RETROFIT BRIDGES
MABTON-SUNNYSIDE RD. BRIDGE NO. 241/2 REPLACEMENT

PIER 2 CROSSBEAM DETAILS 2 OF 4

BRIDGE SHEET NO. BA18

SHEET 55 OF 115 SHEETS

Tue Dec 27 15:19:12 2022

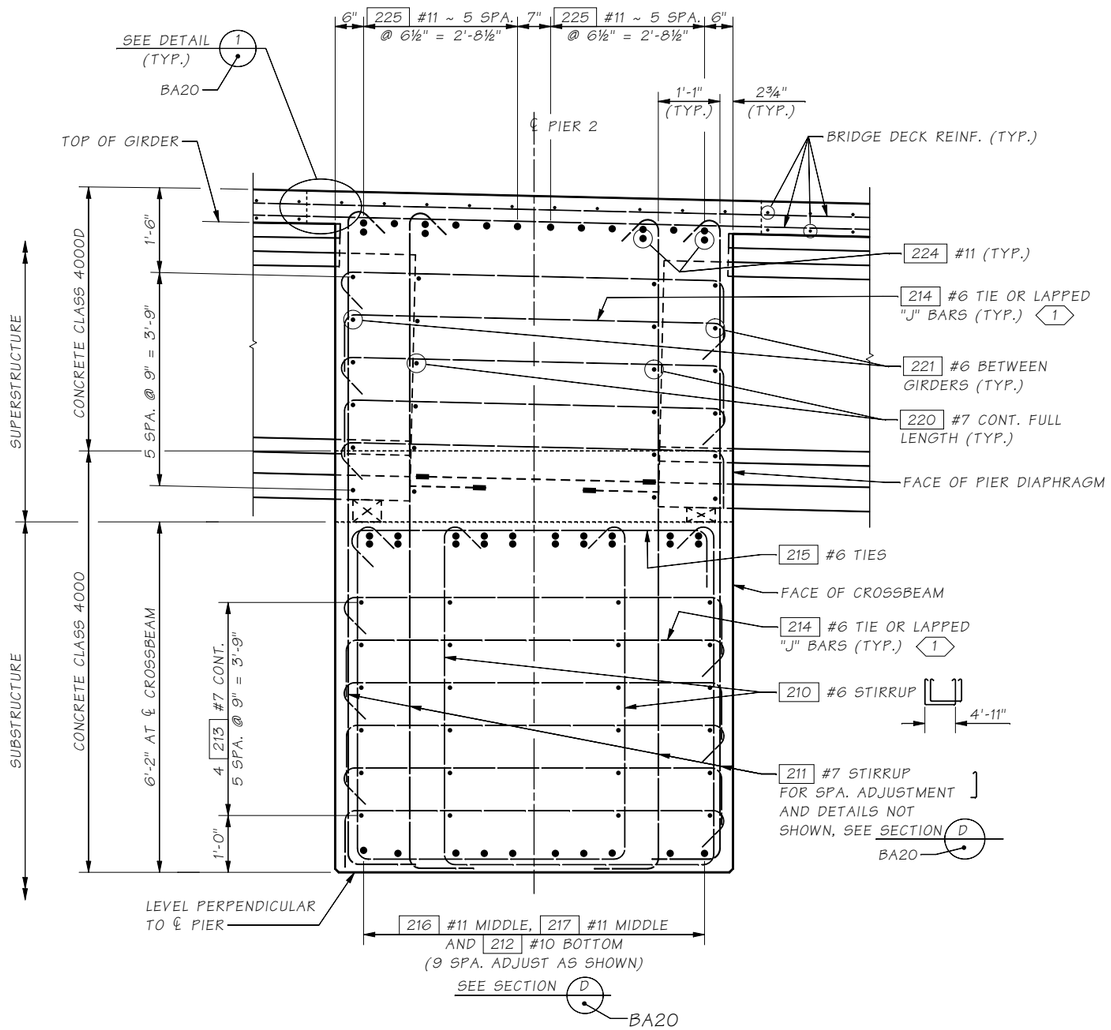

SECTION B / BA18

FOR DETAILS AND CALLOUTS NOT SHOWN SEE SECTION C

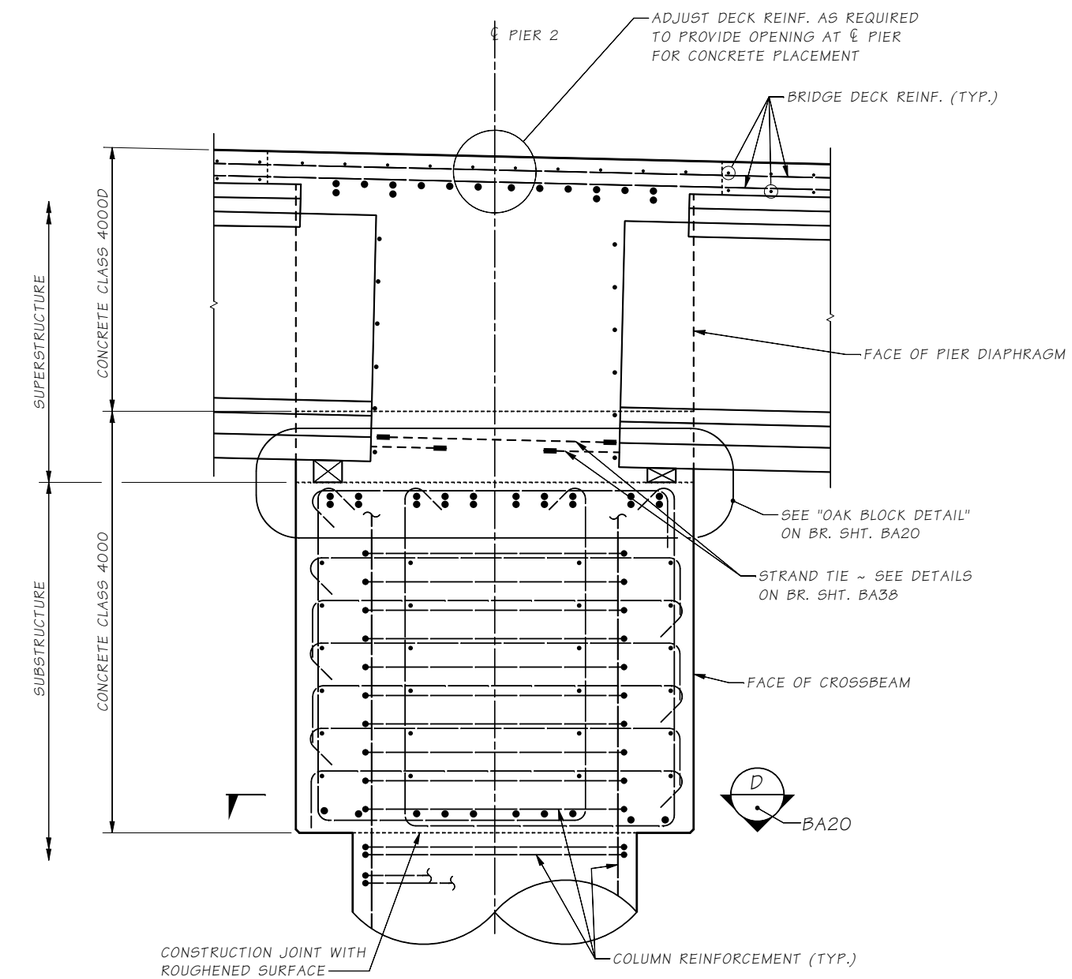

SECTION C / BA18

FOR DETAILS AND CALLOUTS NOT SHOWN SEE SECTION B

NOTES:

1. GIRDER REINFORCING NOT SHOWN FOR CLARITY.
2. LONGITUDINAL DIMENSIONS ARE NORMAL TO ℄ PIER.
3. FOR CONCRETE PLACEMENT PROCEDURE SEE "SUPERSTRUCTURE CONSTRUCTION SEQUENCE" SHEET.

KEY NOTE:

1 214 #6 TIE ALTERNATE 90° TAIL OR PROVIDE 2 214J #6 "J" BARS THAT HAVE A 5'-3" LAP SPLICE

SR 241 FILE NO. SHEET BA19

Bridge Design Engr.	Grimm, E	
Supervisor	Aldrich, BS	
Designed By	Schultz, E	02/22
Checked By	O'Neill, P	12/22
Detailed By	McCarthy, D	05/22
Bridge Projects Engr.		
Prelim. Plan By		
Architect/Specialist		

M:\X-Team\BR241-2_MABTOM-SUNNYSIDE_REPL\window files\PIER 2 CROSSBEAM DTL 3.wnd

DATE	REVISION	BY	APP'D

REGION NO.	STATE	FED. AID PROJ. NO.	SHEET NO.	TOTAL SHEETS
10	WASH.			

JOB NUMBER 21YO01

CONTRACT NO.

P.E. STAMP BOX — ERIC HENRY SCHULTZ, STATE OF WASHINGTON, 39910, PROFESSIONAL ENGINEER — SEE SHEET CT1 DATE:

BRIDGE AND STRUCTURES OFFICE

P.E. STAMP BOX — BRIAN S. ALDRICH, STATE OF WASHINGTON, 37834, PROFESSIONAL ENGINEER — SEE SHEET CT1 DATE:

Washington State Department of Transportation

PRELIMINARY NOT FOR CONSTRUCTION

SR 241
MABTON VICINITY
RETROFIT BRIDGES
MABTON-SUNNYSIDE RD. BRIDGE NO. 241/2 REPLACEMENT

PIER 2 CROSSBEAM
DETAILS 3 OF 4

BRIDGE SHEET NO. BA19

SHEET 56 OF 115 SHEETS

Tue Dec 27 15:19:13 2022

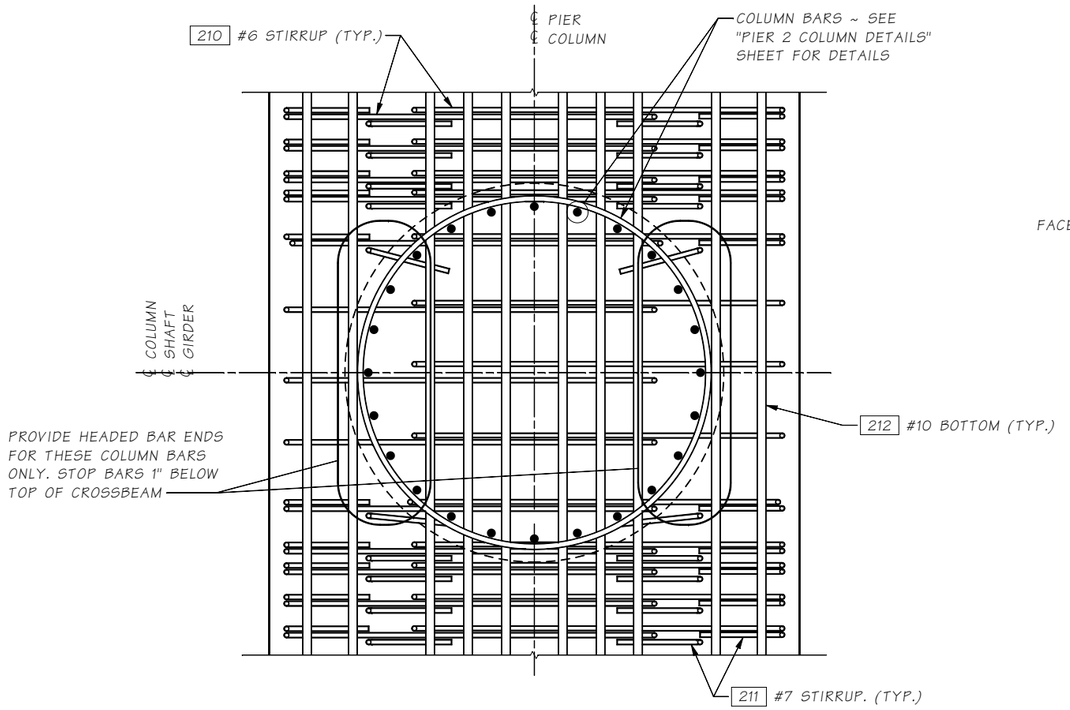

SECTION D BA19

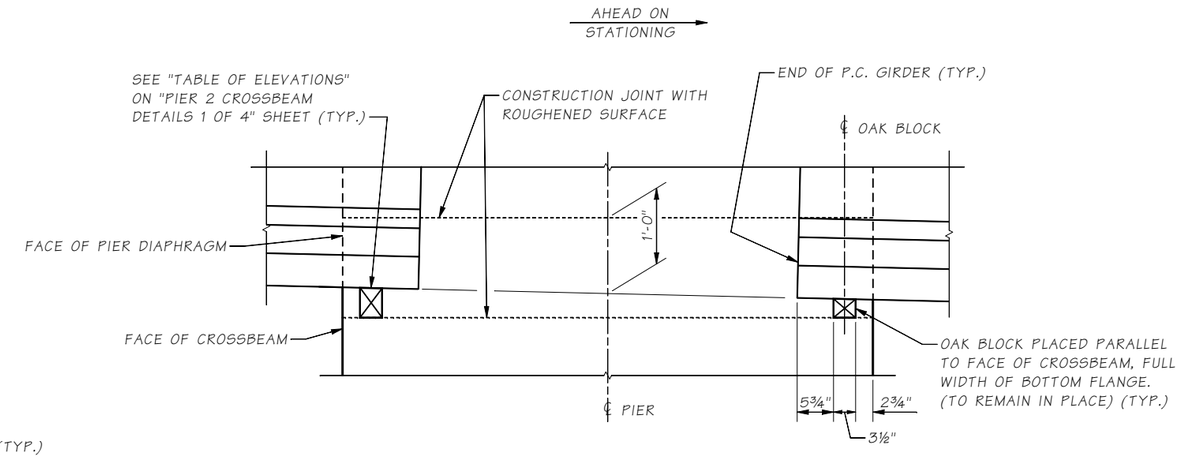

OAK BLOCK DETAIL

LONGITUDINAL DIMENSIONS ARE NORMAL TO PIER ℄

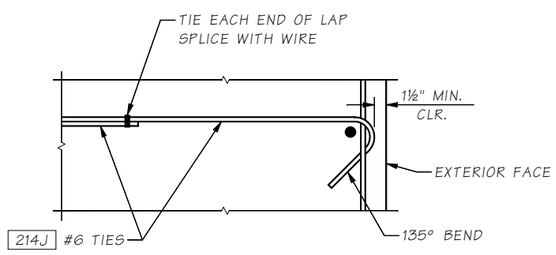

TIE BAR DETAIL

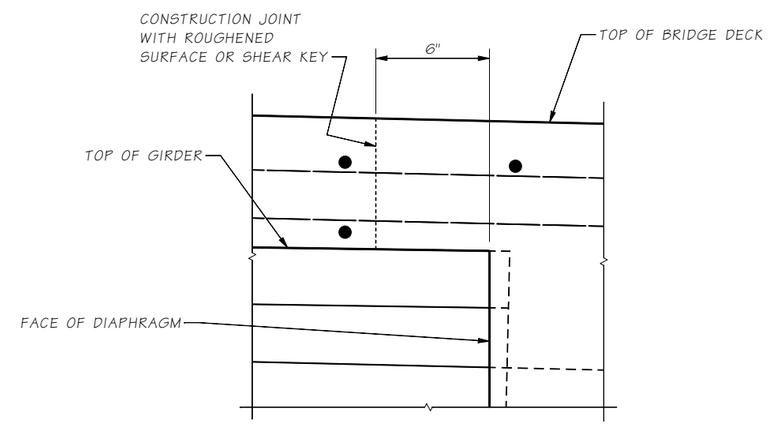

DETAIL 1 BA19

DIAPHRAGM REINFORCING NOT SHOWN FOR CLARITY

Bridge Design Engr.	Grimm, E		M:\X-Team\BR241-2_MABTOM-SUNNYSIDE_REPL\window files\PIER 2 CROSSBEAM DTL 4.wnd			REGION NO.	STATE	FED. AID PROJ. NO.	SHEET NO.	TOTAL SHEETS
Supervisor	Aldrich, BS					10	WASH.			
Designed By	Schultz, E	02/22				JOB NUMBER 21Y001				
Checked By	O'Neill, P	12/22								
Detailed By	McCarthy, D	05/22				CONTRACT NO.				
Bridge Projects Engr.										
Prelim. Plan By										
Architect/Specialist			DATE	REVISION	BY	APP'D				

Tue Dec 27 15:19:13 2022

P.E. STAMP BOX
ERIC HENRY SCHULTZ
STATE OF WASHINGTON
39910
PROFESSIONAL ENGINEER
SEE SHEET CT1
DATE:

BRIDGE AND STRUCTURES OFFICE

P.E. STAMP BOX
BRIAN S. ALDRICH
STATE OF WASHINGTON
37834
PROFESSIONAL ENGINEER
SEE SHEET CT1
DATE:

Washington State Department of Transportation

PRELIMINARY NOT FOR CONSTRUCTION

SR 241
MABTON VICINITY
RETROFIT BRIDGES
MABTON-SUNNYSIDE RD. BRIDGE NO. 241/2 REPLACEMENT

PIER 2 CROSSBEAM DETAILS 4 OF 4

BRIDGE SHEET NO. BA20

SHEET 57 OF 115 SHEETS

SR 241 FILE NO. ____ SHEET BA20

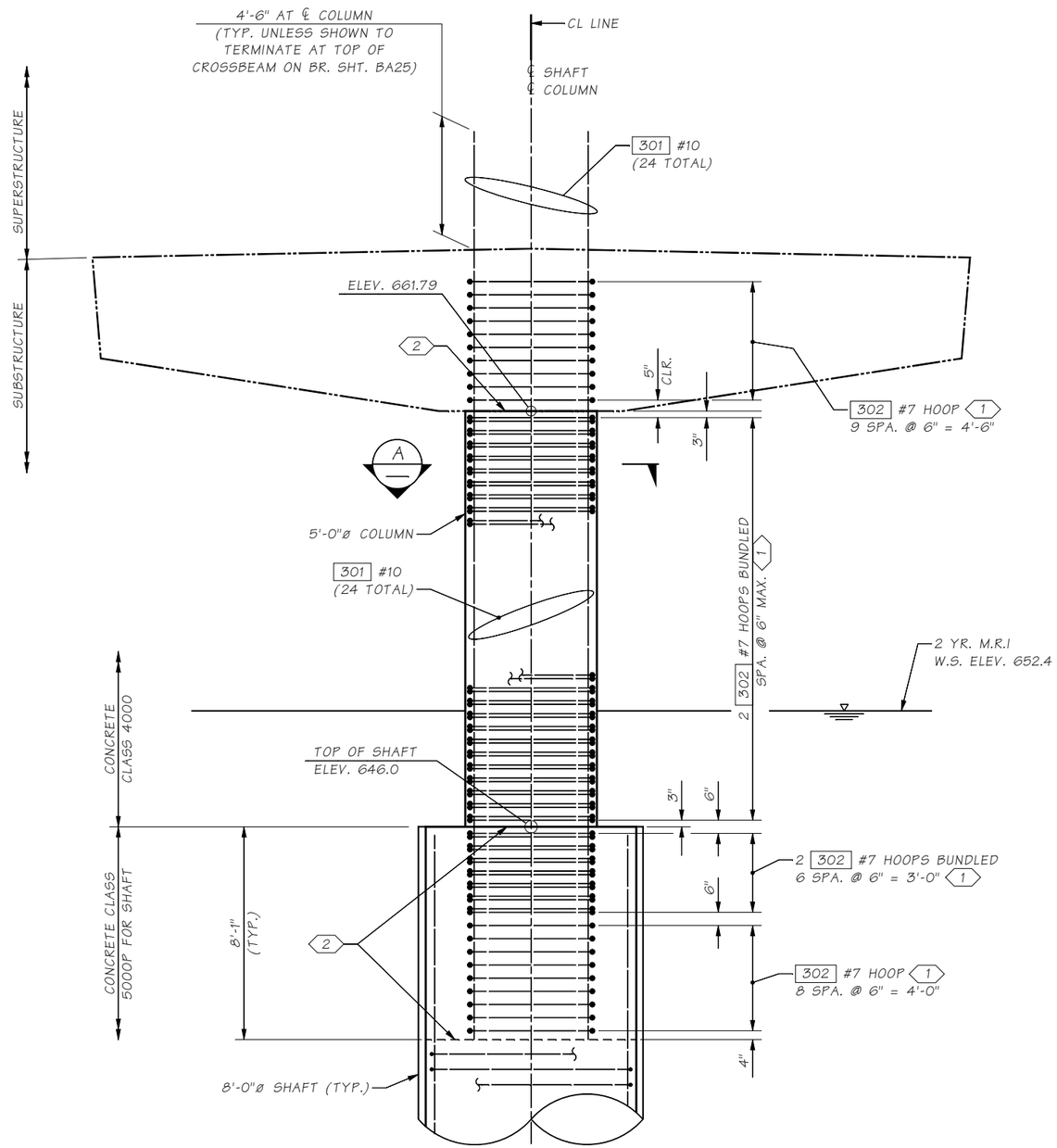

COLUMN ELEVATION

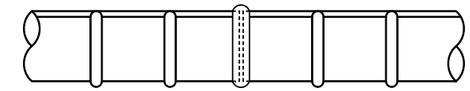

RESISTANCE BUTT JOINT DETAIL

SEE STD. SPEC. 6-02.3(24)I FOR RESISTANCE BUTT WELD SPLICING REQUIREMENTS

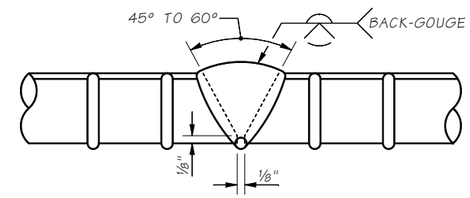

SINGLE V-GROOVE WELD
AWS D1.4 FIGURE 5.2(A)

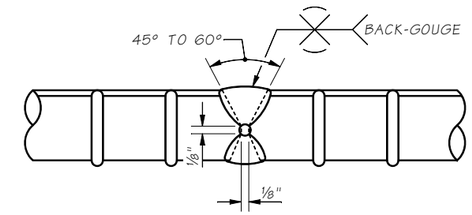

DOUBLE V-GROOVE WELD
AWS D1.4 FIGURE 5.2(B)

MANUAL DIRECT BUTT JOINT DETAILS

ALL BACKING SHALL BE REMOVED.
SEE STD. SPEC. 6-02.3(24)J FOR WELDING REQUIREMENTS AND RT TESTING

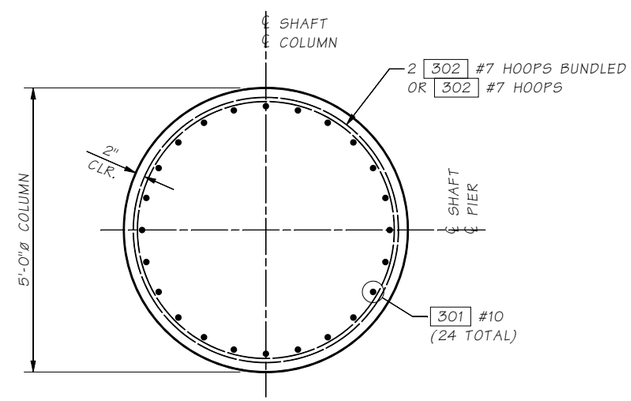

SECTION A

TYPICAL SECTION

KEY NOTES:

1. HOOPS SHALL BE SPLICED WITH EITHER A RESISTANCE BUTT WELD OR A DIRECT BUTT WELD. (SEE "RESISTANCE BUTT JOINT DETAIL" AND "MANUAL DIRECT BUTT JOINT DETAILS" ON THIS SHEET. HOOP WELD SPLICES ON ADJACENT HOOPS SHALL BE STAGGERED AROUND THE COLUMN BY A MINIMUM OF 4'-6".
2. CONSTRUCTION JOINT WITH ROUGHENED SURFACE.

Bridge Design Engr.	Grimm, E	
Supervisor	Aldrich, BS	
Designed By	Schultz, E	02/22
Checked By	O'Neill, P	12/22
Detailed By	McCarthy, D	05/22
Bridge Projects Engr.		
Prelim. Plan By		
Architect/Specialist		

M:\X-Team\BR241-2_MABTOM-SUNNYSIDE_REPL\window files\PIER 3 COLUMN DETAIL.wnd

DATE	REVISION	BY	APP'D

REGION NO.	STATE	FED. AID PROJ. NO.	SHEET NO.	TOTAL SHEETS
10	WASH.			
JOB NUMBER 21Y001				
CONTRACT NO.				

P.E. STAMP BOX
ERIC HENRY SCHULTZ
STATE OF WASHINGTON
39910
PROFESSIONAL ENGINEER
SEE SHEET CT1
DATE:

BRIDGE AND STRUCTURES OFFICE

P.E. STAMP BOX
BRIAN S. ALDRICH
STATE OF WASHINGTON
37834
PROFESSIONAL ENGINEER
SEE SHEET CT1
DATE:

Washington State Department of Transportation
PRELIMINARY NOT FOR CONSTRUCTION

SR 241
MABTON VICINITY
RETROFIT BRIDGES
MABTON-SUNNYSIDE RD. BRIDGE NO. 241/2 REPLACEMENT

PIER 3 COLUMN DETAILS

BRIDGE SHEET NO. BA21
SHEET 58 OF 115 SHEETS

SR 241 FILE NO. SHEET BA21

Tue Dec 27 15:19:14 2022

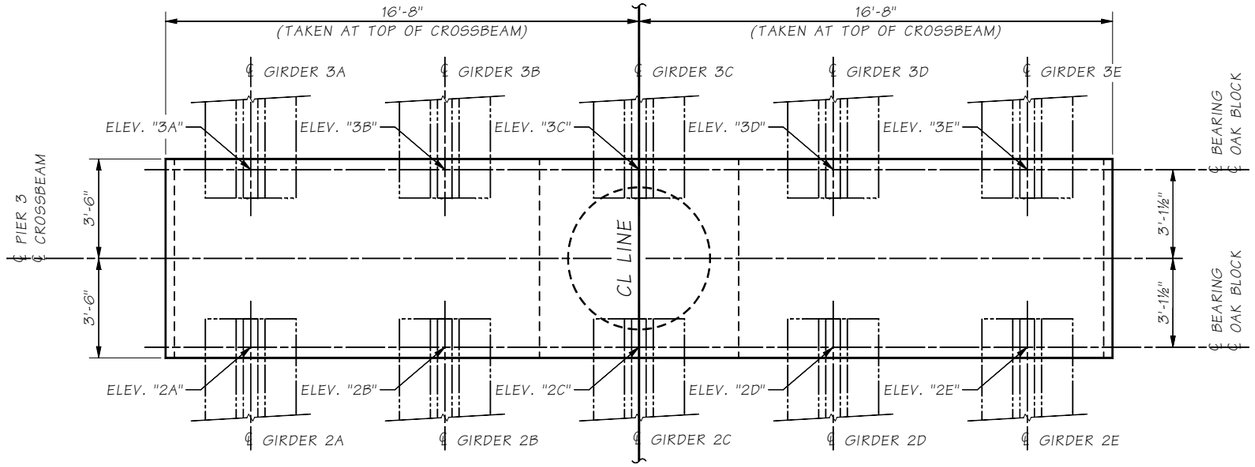

PLAN

SHOWN AT TOP OF CROSSBEAM, GIRDERS ARE SHOWN FOR CLARITY.
SEE "FRAMING PLAN" FOR GIRDER SPACING.

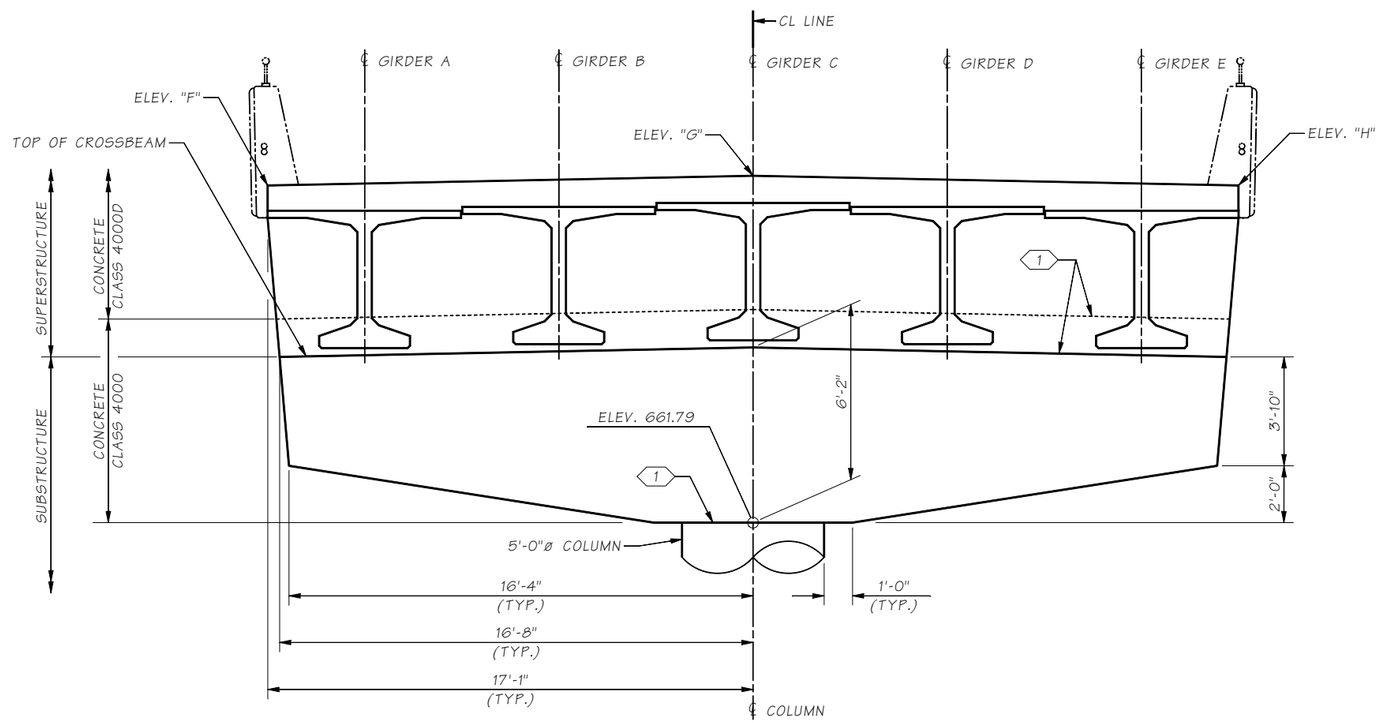

ELEVATION

DIMENSIONS MEASURED ALONG ℄ PIER

TABLE OF ELEVATIONS

ELEVATIONS AT TOP OF OAK BLOCK
(BOTTOM OF PRESTRESSED GIRDER)

SPAN 2	ELEVATION		SPAN 3	ELEVATION
"2A"	668.00		"3A"	667.96
"2B"	668.14		"3B"	668.10
"2C"	668.28		"3C"	668.23
"2D"	668.14		"3D"	668.10
"2E"	668.00		"3E"	667.96

TABLE OF ELEVATIONS

ELEVATIONS AT ℄ PIER

LOCATION	ELEVATION
"F"	673.65
"G"	673.99
"H"	673.65

KEY NOTE:

1 CONSTRUCTION JOINT WITH ROUGHENED SURFACE.

Bridge Design Engr.	Grimm, E		
Supervisor	Aldrich, BS		
Designed By	Schultz, E	02/22	
Checked By	O'Neill, P	12/22	
Detailed By	McCarthy, D	05/22	
Bridge Projects Engr.			
Prelim. Plan By			
Architect/Specialist			

M:\X-Team\BR241-2_MABTOM-SUNNYSIDE_REPL\window files\PIER 3 CROSSBEAM DTL 1.wnd

DATE	REVISION	BY	APP'D

REGION NO.	STATE	FED. AID PROJ. NO.	SHEET NO.	TOTAL SHEETS
10	WASH.			

JOB NUMBER 21Y001

CONTRACT NO.

P.E. STAMP BOX — ERIC HENRY SCHULTZ, STATE OF WASHINGTON, 39910, PROFESSIONAL ENGINEER — SEE SHEET CT1 — DATE:

BRIDGE AND STRUCTURES OFFICE

P.E. STAMP BOX — BRIAN S. ALDRICH, STATE OF WASHINGTON, 37834, PROFESSIONAL ENGINEER — SEE SHEET CT1 — DATE:

Washington State Department of Transportation

PRELIMINARY NOT FOR CONSTRUCTION

SR 241
MABTON VICINITY
RETROFIT BRIDGES
MABTON-SUNNYSIDE RD. BRIDGE NO. 241/2 REPLACEMENT

PIER 3 CROSSBEAM
DETAILS 1 OF 4

BRIDGE SHEET NO. BA22

SHEET 59 OF 115 SHEETS

SR 241 FILE NO. ____ SHEET BA22

Tue Dec 27 15:19:14 2022

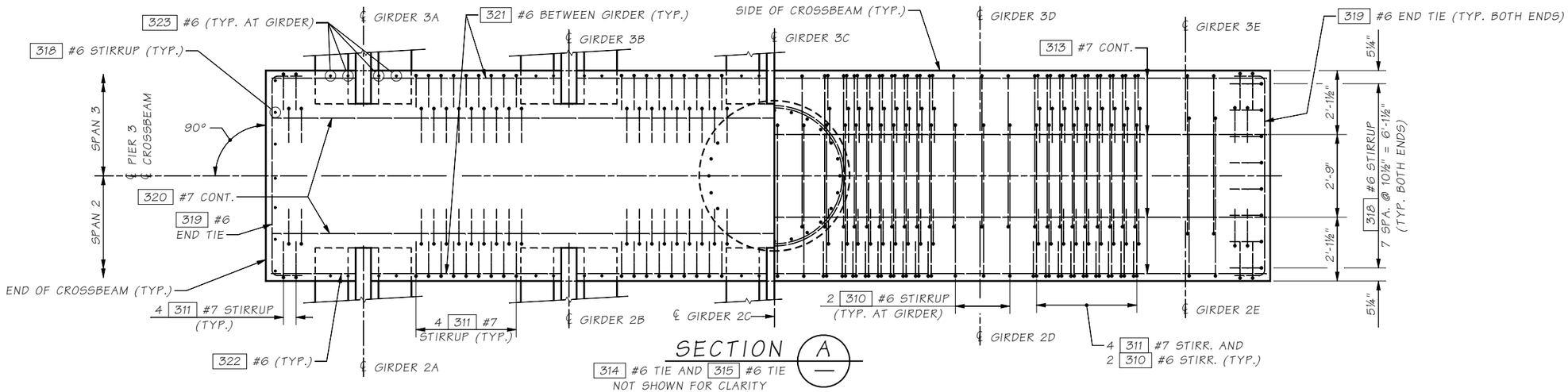

SECTION A

314 #6 TIE AND 315 #6 TIE NOT SHOWN FOR CLARITY

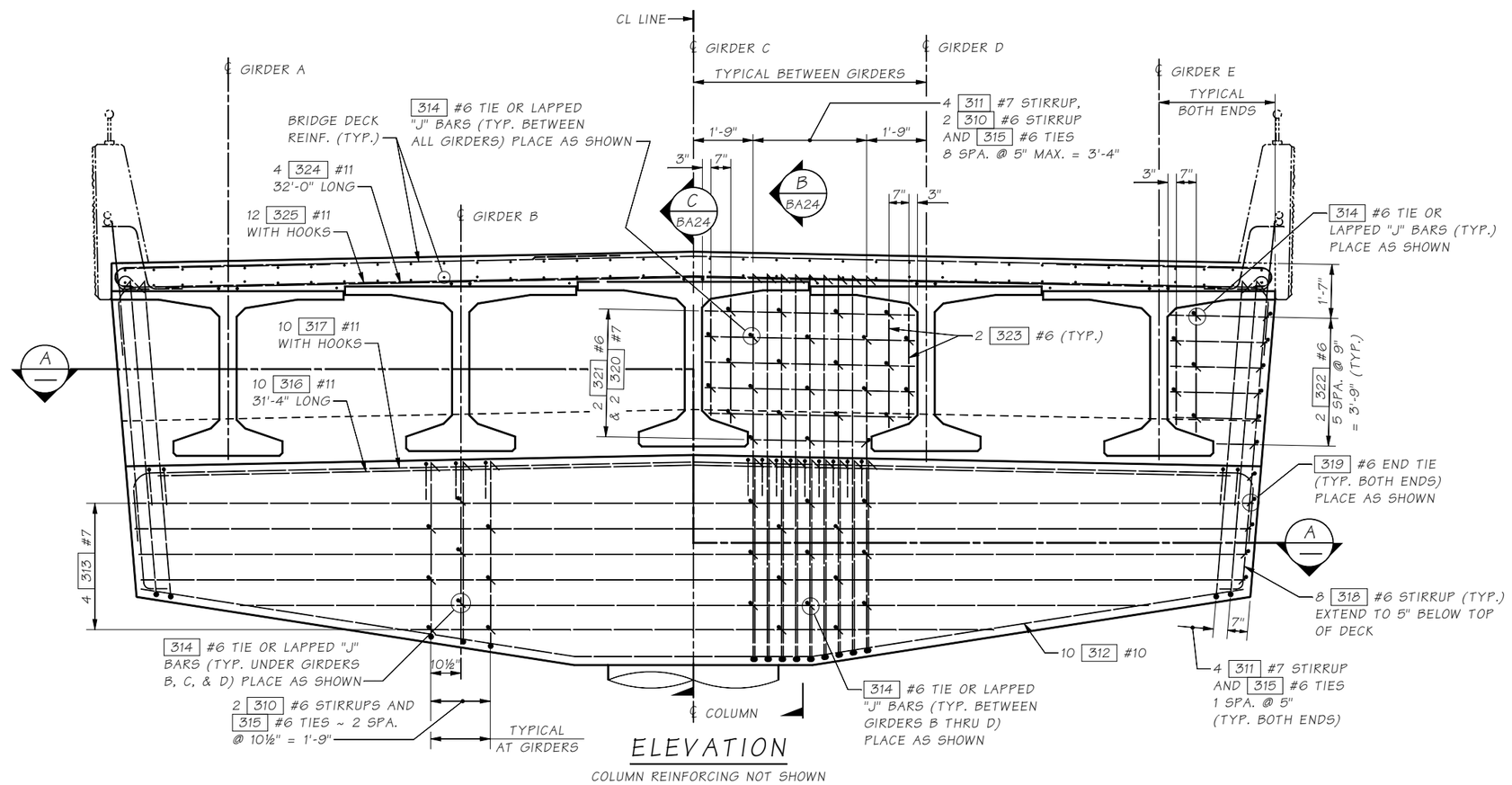

ELEVATION

COLUMN REINFORCING NOT SHOWN

Bridge Design Engr.	Grimm, E		
Supervisor	Aldrich, BS		
Designed By	Schultz, E	02/22	
Checked By	O'Neill, P	12/22	
Detailed By	McCarthy, D	05/22	
Bridge Projects Engr.			
Prelim. Plan By			
Architect/Specialist			

M:\X-Team\BR241-2_MABTOM-SUNNYSIDE_REPL\window files\PIER 3 CROSSBEAM DTL 2.wnd

DATE	REVISION	BY	APP'D

REGION NO.	STATE	FED. AID PROJ. NO.	SHEET NO.	TOTAL SHEETS
10	WASH.			
JOB NUMBER 21Y001				
CONTRACT NO.				

P.E. STAMP BOX — ERIC HENRY SCHULTZ, STATE OF WASHINGTON, 39910, STRUCTURAL ENGINEER, PROFESSIONAL ENGINEER — SEE SHEET CT1 — DATE:

BRIDGE AND STRUCTURES OFFICE

P.E. STAMP BOX — BRIAN S. ALDRICH, STATE OF WASHINGTON, 37834, STRUCTURAL ENGINEER, PROFESSIONAL ENGINEER — SEE SHEET CT1 — DATE:

Washington State Department of Transportation

PRELIMINARY NOT FOR CONSTRUCTION

SR 241
MABTON VICINITY
RETROFIT BRIDGES
MABTON-SUNNYSIDE RD. BRIDGE NO. 241/2 REPLACEMENT

PIER 3 CROSSBEAM DETAILS 2 OF 4

BRIDGE SHEET NO. BA23

SHEET 60 OF 115 SHEETS

SR 241 FILE NO. ____ SHEET BA23

Tue Dec 27 15:19:15 2022

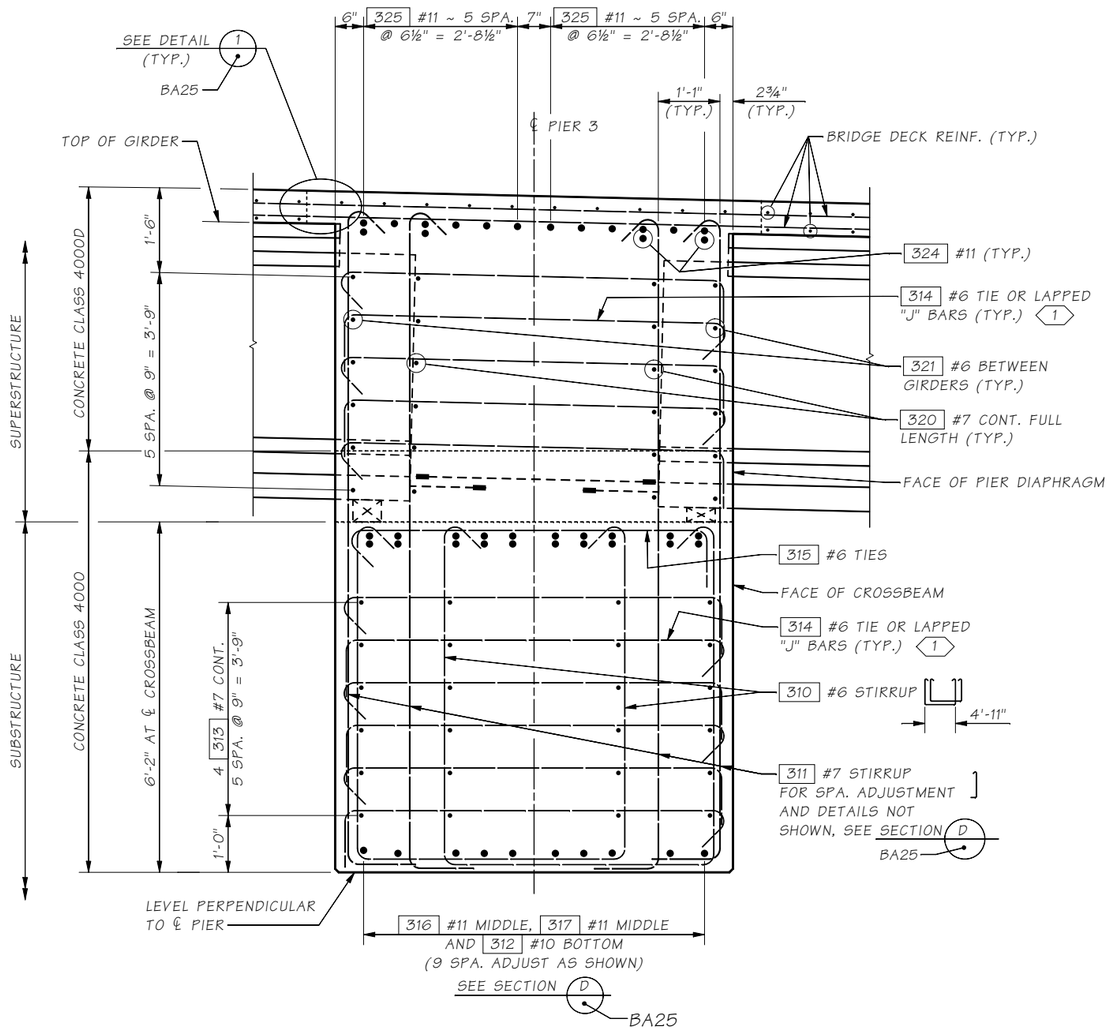

SECTION B BA23

FOR DETAILS AND CALLOUTS NOT SHOWN SEE SECTION C —

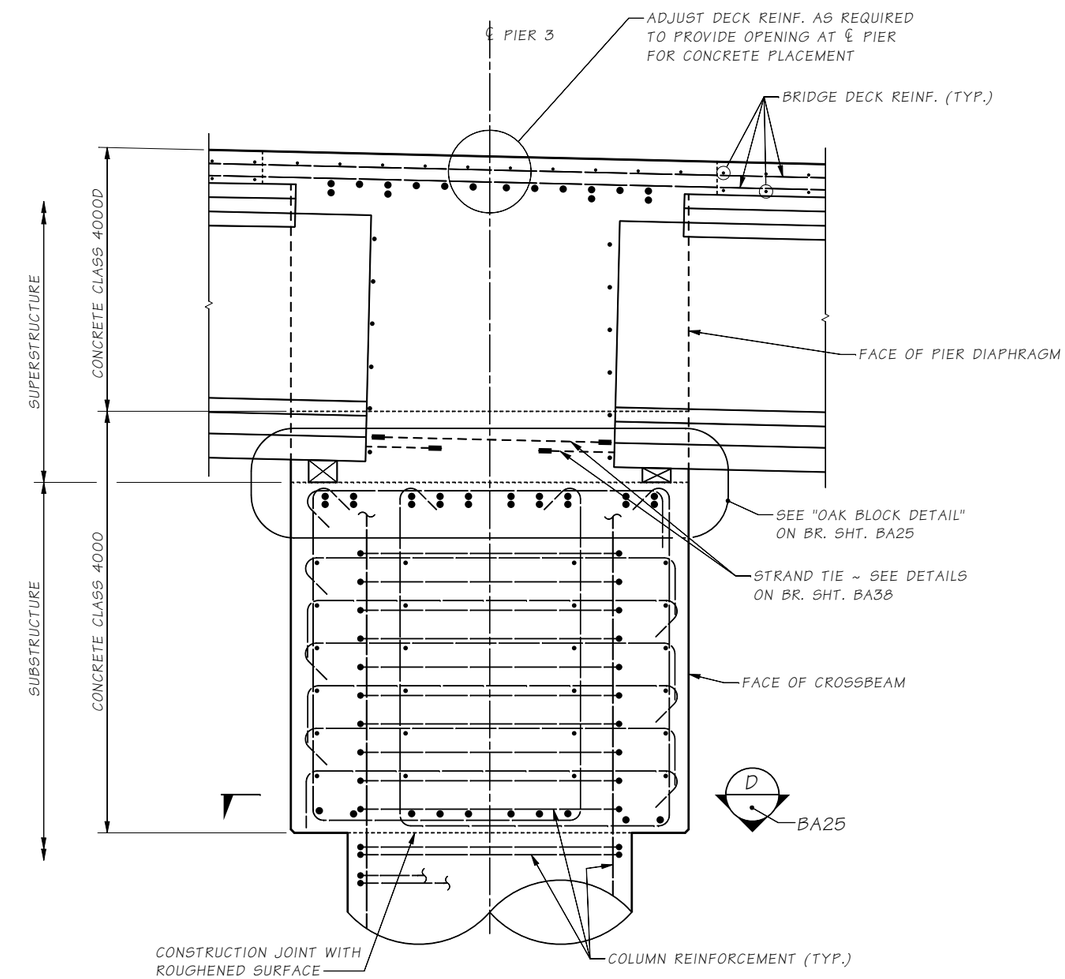

SECTION C BA23

FOR DETAILS AND CALLOUTS NOT SHOWN SEE SECTION B —

NOTES:

1. GIRDER REINFORCING NOT SHOWN FOR CLARITY.
2. LONGITUDINAL DIMENSIONS ARE NORMAL TO ℄ PIER.
3. FOR CONCRETE PLACEMENT PROCEDURE SEE "SUPERSTRUCTURE CONSTRUCTION SEQUENCE" SHEET.

KEY NOTE:

1 314 #6 TIE ALTERNATE 90° TAIL OR PROVIDE 2 314J #6 "J" BARS THAT HAVE A 5'-3" LAP SPLICE

SR 241 FILE NO. ____ SHEET BA24

Bridge Design Engr.	Grimm, E		
Supervisor	Aldrich, BS		
Designed By	Schultz, E	02/22	
Checked By	O'Neill, P	12/22	
Detailed By	McCarthy, D	05/22	
Bridge Projects Engr.			
Prelim. Plan By			
Architect/Specialist			

M:\X-Team\BR241-2_MABTOM-SUNNYSIDE_REPL\window files\PIER 3 CROSSBEAM DTL 3.wnd

DATE	REVISION	BY	APP'D

REGION NO.	STATE	FED. AID PROJ. NO.	SHEET NO.	TOTAL SHEETS
10	WASH.			
JOB NUMBER 21Y001				
CONTRACT NO.				

P.E. STAMP BOX — ERIC HENRY SCHULTZ, STATE OF WASHINGTON, 39910, PROFESSIONAL ENGINEER — SEE SHEET CT1 — DATE:

BRIDGE AND STRUCTURES OFFICE

P.E. STAMP BOX — BRIAN S. ALDRICH, STATE OF WASHINGTON, 37834, PROFESSIONAL ENGINEER — SEE SHEET CT1 — DATE:

Washington State Department of Transportation

PRELIMINARY NOT FOR CONSTRUCTION

SR 241
MABTON VICINITY
RETROFIT BRIDGES
MABTON-SUNNYSIDE RD. BRIDGE NO. 241/2 REPLACEMENT

PIER 3 CROSSBEAM DETAILS 3 OF 4

BRIDGE SHEET NO. BA24

SHEET 61 OF 115 SHEETS

Tue Dec 27 15:19:15 2022

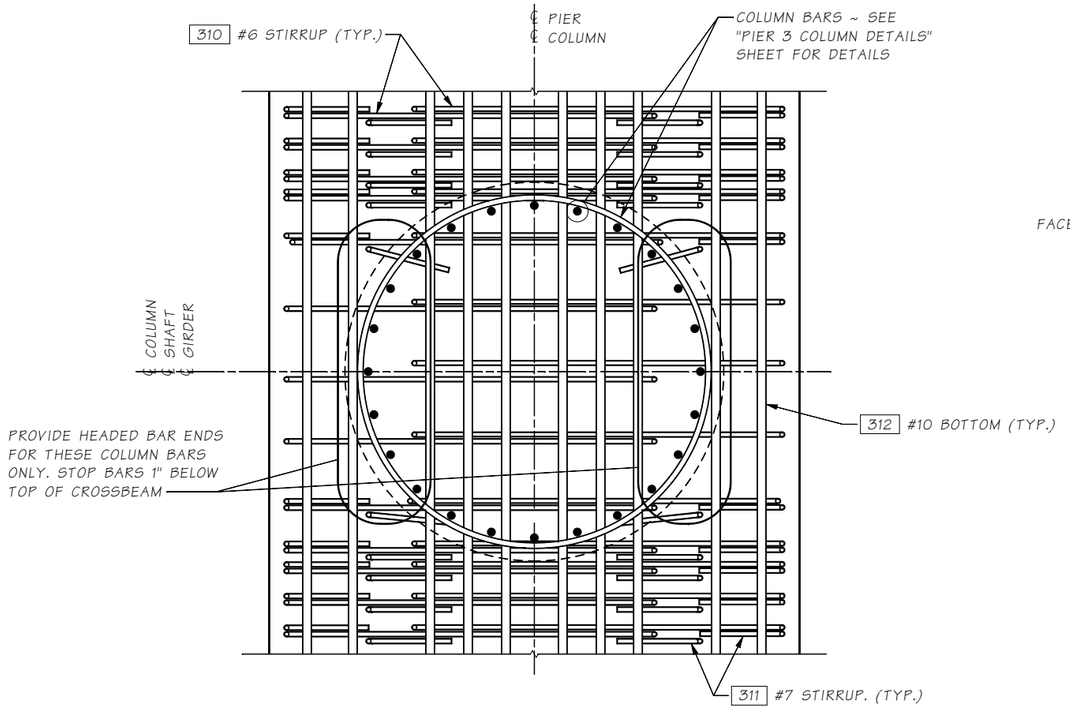

SECTION D
BA24

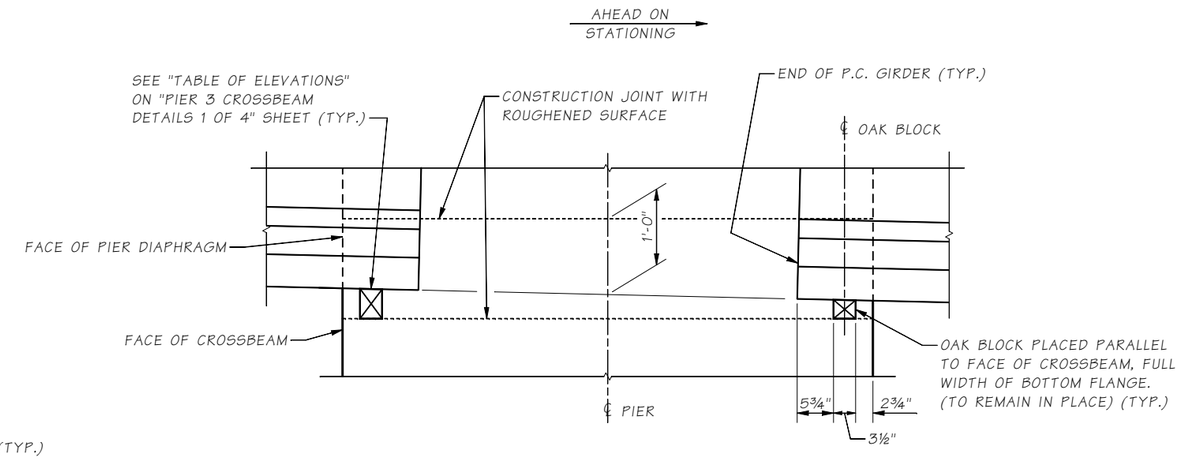

OAK BLOCK DETAIL

LONGITUDINAL DIMENSIONS ARE NORMAL TO PIER ℄

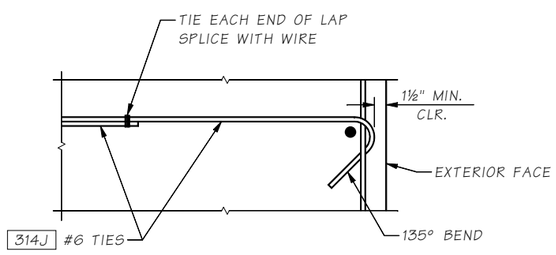

TIE BAR DETAIL

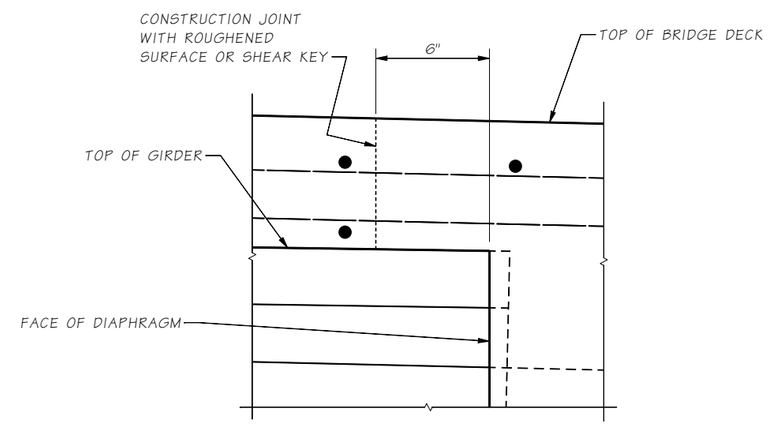

DETAIL 1
BA24

DIAPHRAGM REINFORCING NOT SHOWN FOR CLARITY

Bridge Design Engr.	Grimm, E		M:\X-Team\BR241-2_MABTOM-SUNNYSIDE_REPL\window files\PIER 3 CROSSBEAM DTL 4.wnd			REGION NO.	STATE	FED. AID PROJ. NO.	SHEET NO.	TOTAL SHEETS
Supervisor	Aldrich, BS					10	WASH.			
Designed By	Schultz, E	02/22				JOB NUMBER 21Y001				
Checked By	O'Neill, P	12/22								
Detailed By	McCarthy, D	05/22				CONTRACT NO.				
Bridge Projects Engr.										
Prelim. Plan By										
Architect/Specialist			DATE	REVISION	BY	APP'D				

Tue Dec 27 15:19:16 2022

P.E. STAMP BOX
ERIC HENRY SCHULTZ
STATE OF WASHINGTON
39910
PROFESSIONAL ENGINEER
SEE SHEET CT1
DATE:

BRIDGE AND STRUCTURES OFFICE

P.E. STAMP BOX
BERLIN S. ALDRICH
STATE OF WASHINGTON
37834
PROFESSIONAL ENGINEER
SEE SHEET CT1
DATE:

Washington State Department of Transportation

PRELIMINARY NOT FOR CONSTRUCTION

SR 241
MABTON VICINITY
RETROFIT BRIDGES
MABTON-SUNNYSIDE RD. BRIDGE NO. 241/2 REPLACEMENT

PIER 3 CROSSBEAM DETAILS 4 OF 4

BRIDGE SHEET NO. BA25

SHEET 62 OF 115 SHEETS

SR 241 FILE NO. ____ SHEET BA25

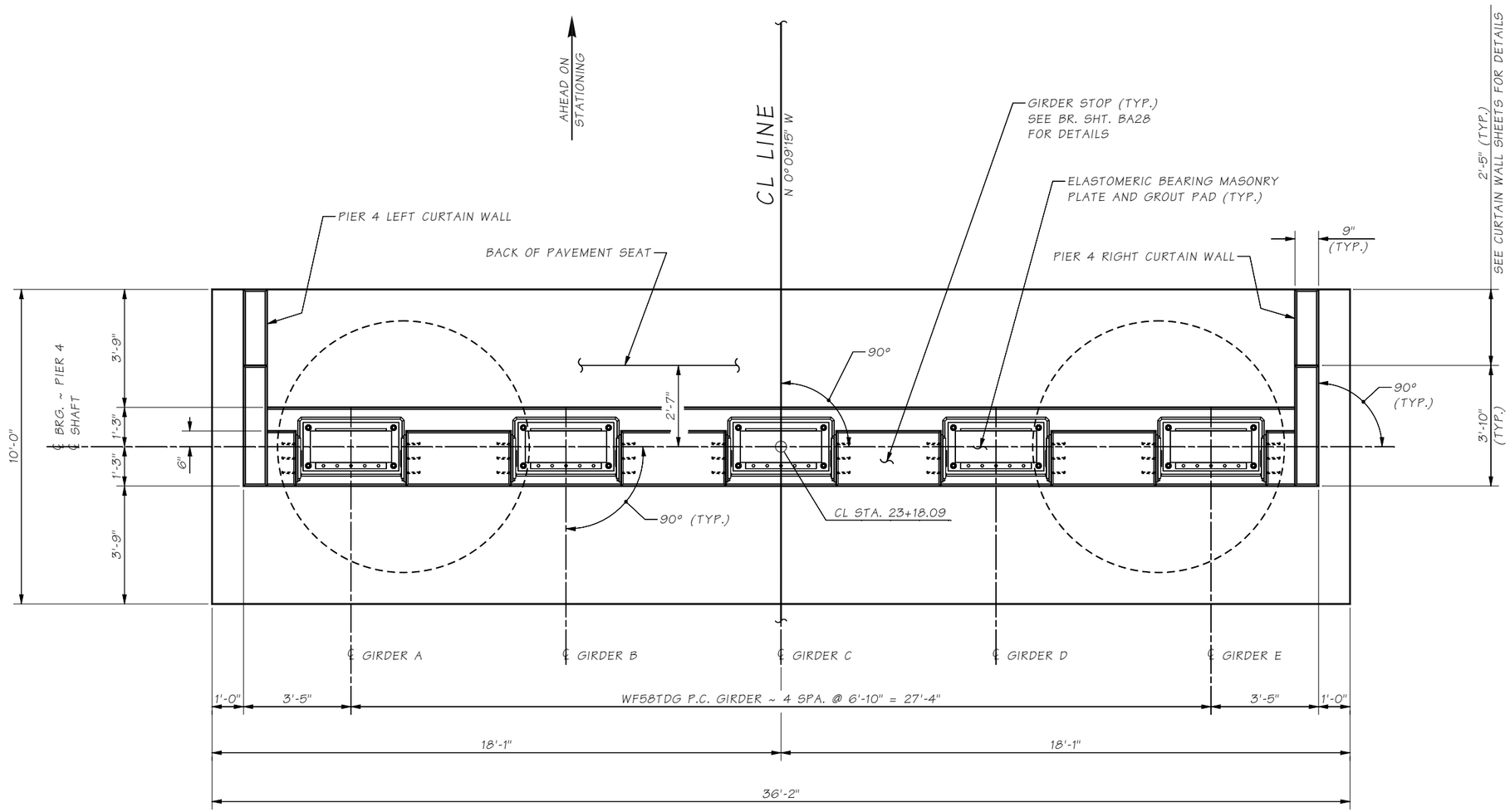

PLAN

SR 241 FILE NO. ____ SHEET BA26

Bridge Design Engr.	Grimm, E	M:\X-Team\BR241-2_MABTOM-SUNNYSIDE_REPL\window files\PIER 4 PLAN.wnd									
Supervisor	Aldrich, BS										
Designed By	Schultz, E	11/22									
Checked By	O'Neill, P	12/22									
Detailed By	McCarthy, D	11/22									
Bridge Projects Engr.											
Prelim. Plan By											
Architect/Specialist			DATE	REVISION	BY	APP'D					

REGION NO.	STATE	FED. AID PROJ. NO.	SHEET NO.	TOTAL SHEETS
10	WASH.			
JOB NUMBER 21Y001				
CONTRACT NO.				

P.E. STAMP BOX
ERIC HENRY SCHULTZ
STATE OF WASHINGTON
39910
STRUCTURAL ENGINEER
PROFESSIONAL ENGINEER
SEE SHEET CT1
DATE:

BRIDGE AND STRUCTURES OFFICE

P.E. STAMP BOX
BRIAN S. ALDRICH
STATE OF WASHINGTON
37834
STRUCTURAL ENGINEER
PROFESSIONAL ENGINEER
SEE SHEET CT1
DATE:

Washington State Department of Transportation

PRELIMINARY NOT FOR CONSTRUCTION

SR 241
MABTON VICINITY
RETROFIT BRIDGES
MABTON-SUNNYSIDE RD. BRIDGE NO. 241/2 REPLACEMENT

PIER 4 PLAN

BRIDGE SHEET NO. BA26

SHEET 63 OF 115 SHEETS

Tue Dec 27 15:19:16 2022

TOP OF GROUT PAD ELEVATIONS

GIRDER	A	B	C	D	E
ELEV.	665.05	665.19	665.33	665.19	665.05

NOTES:

1. MIN. REBAR SPLICE LENGTH UNLESS NOTED OTHERWISE: #4 ~ 2'-0" ;#5 ~ 2'-6"; #6 ~ 3'-0"; #7 ~ 3'-6"; #8 ~ 4'-3" #10 ~ NO LAP SPLICE ALLOWED
2. DO NOT SPLICE MORE THAN 50% OF REBAR AT ANY ONE LOCATION UNLESS NOTED OTHERWISE. STAGGER SPLICES AT A MINIMUM OF 3'-6".

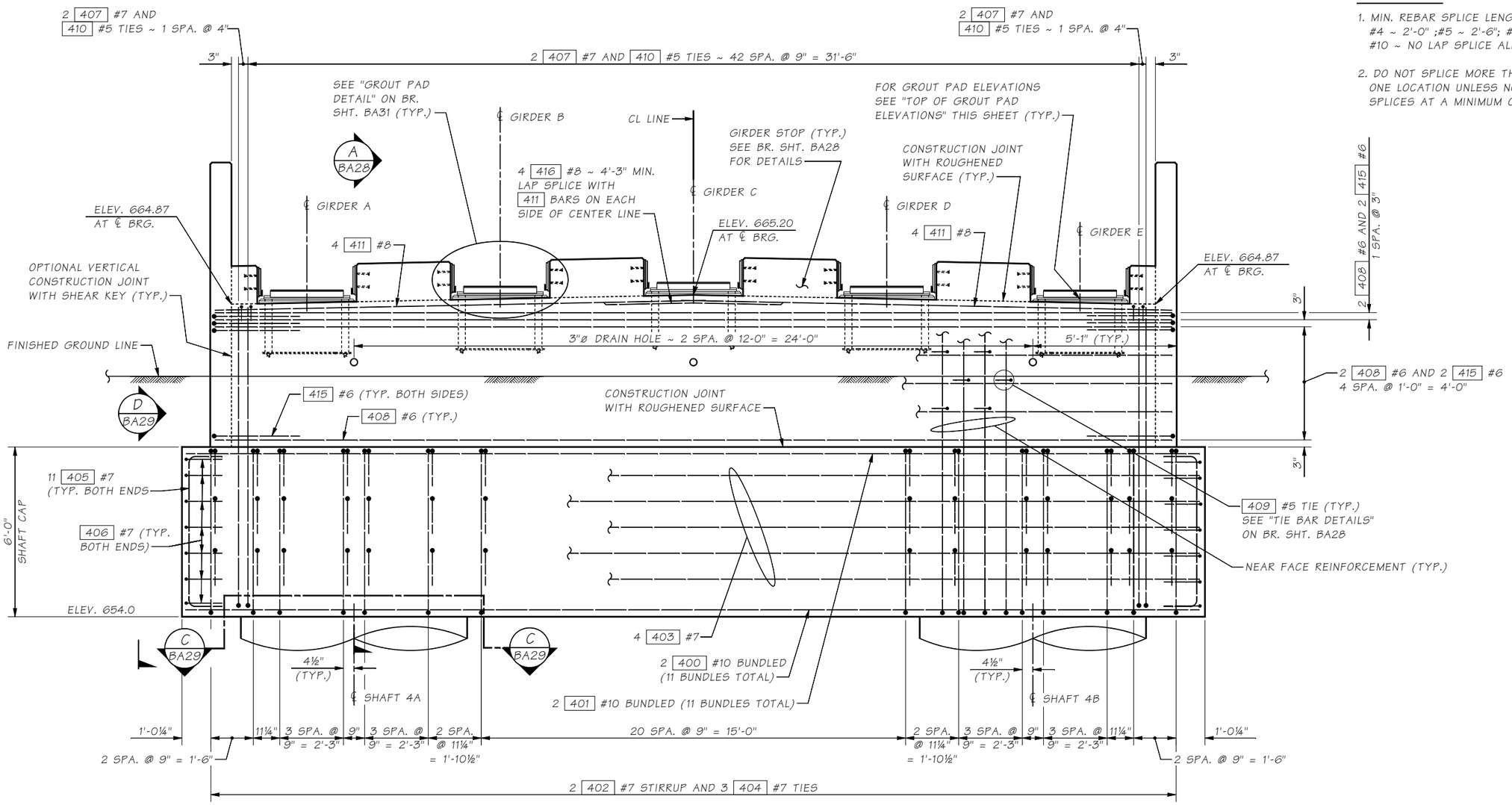

ELEVATION

CURTAIN WALL AND SHAFT REINFORCEMENT NOT SHOWN FOR CLARITY.

SR 241 FILE NO. ____ SHEET BA27

Bridge Design Engr.	Grimm, E	
Supervisor	Aldrich, BS	
Designed By	Schultz, E	11/22
Checked By	O'Neill, P	12/22
Detailed By	McCarthy, D	11/22
Bridge Projects Engr.		
Prelim. Plan By		
Architect/Specialist		

M:\X-Team\BR241-2_MABTOM-SUNNYSIDE_REPL\window files\PIER 4 ELEV.wnd

DATE	REVISION	BY	APP'D

REGION NO.	STATE	FED. AID PROJ. NO.	SHEET NO.	TOTAL SHEETS
10	WASH.			
JOB NUMBER 21Y001				
CONTRACT NO.				

P.E. STAMP BOX — ERIC HENRY SCHULTZ, STATE OF WASHINGTON, 59910, PROFESSIONAL ENGINEER — SEE SHEET CT1 — DATE:

BRIDGE AND STRUCTURES OFFICE

P.E. STAMP BOX — BRIAN S. ALDRICH, STATE OF WASHINGTON, 37834, PROFESSIONAL ENGINEER — SEE SHEET CT1 — DATE:

Washington State Department of Transportation

PRELIMINARY NOT FOR CONSTRUCTION

SR 241
MABTON VICINITY
RETROFIT BRIDGES
MABTON-SUNNYSIDE RD. BRIDGE NO. 241/2 REPLACEMENT

PIER 4 ELEVATION

BRIDGE SHEET NO. BA27

SHEET 64 OF 115 SHEETS

Tue Dec 27 15:19:16 2022

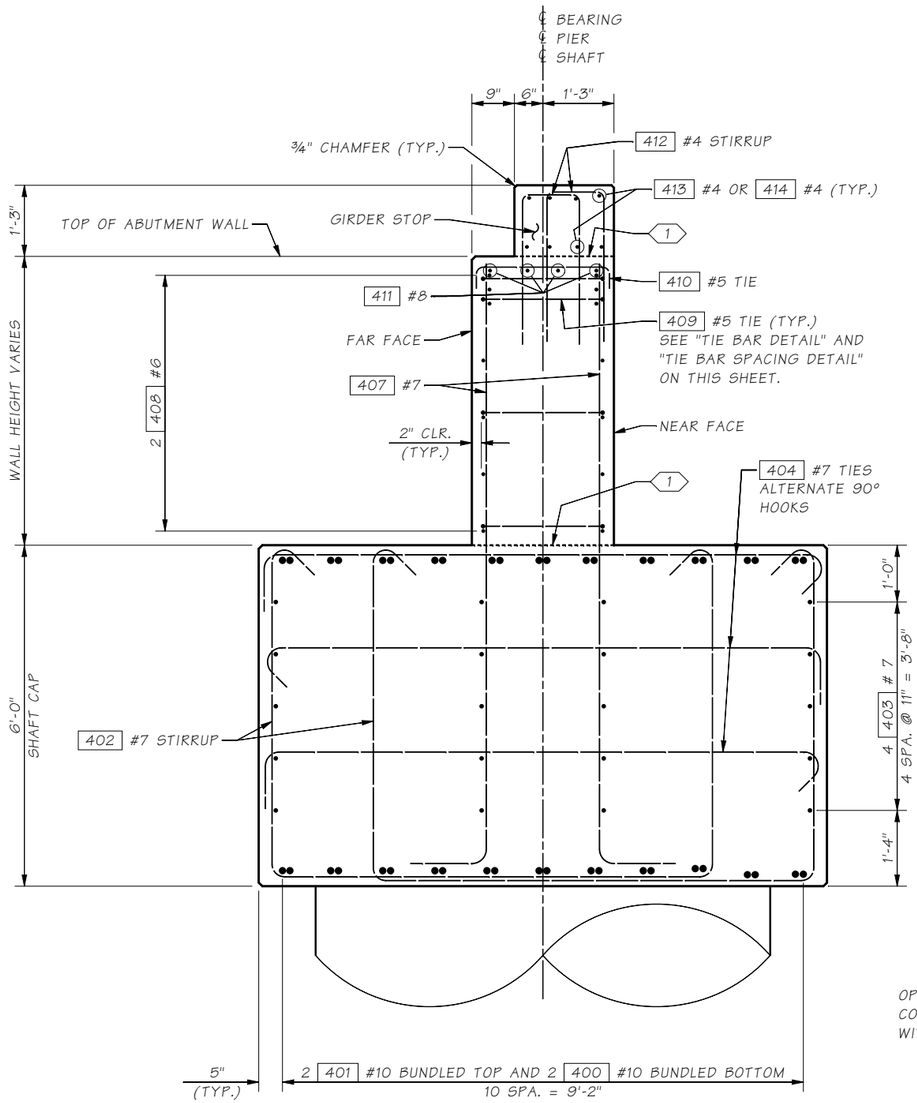

SECTION A

BA27

SHAFT REINFORCING NOT SHOWN. SEE BR. SHT. BA9

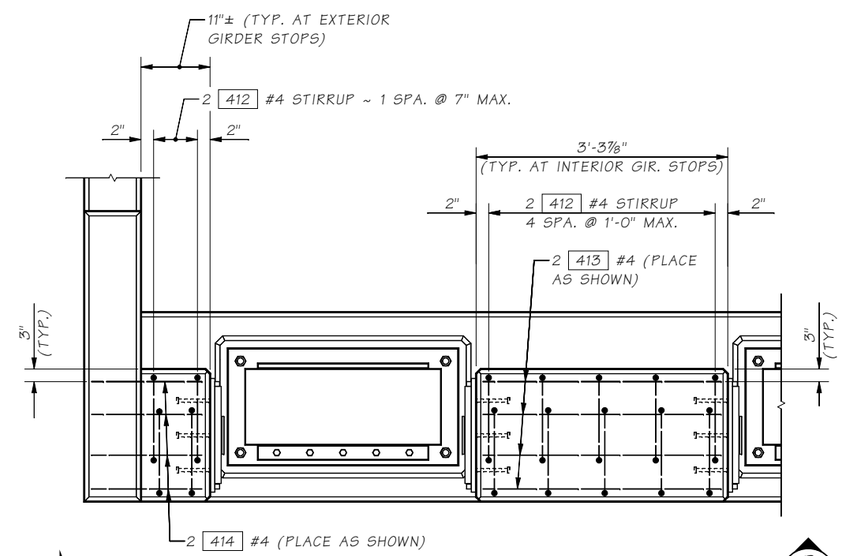

PLAN
GIRDER STOP DETAIL

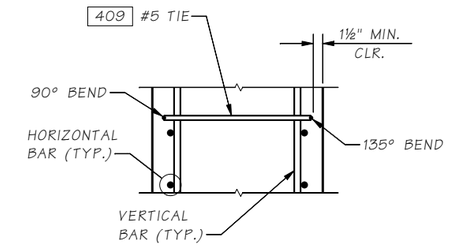

TIE BAR DETAIL

ALTERNATE 135 BEND EVERY OTHER TIE.

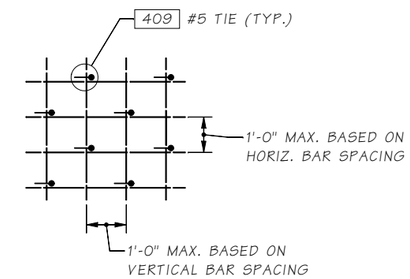

TIE BAR
SPACING DETAIL

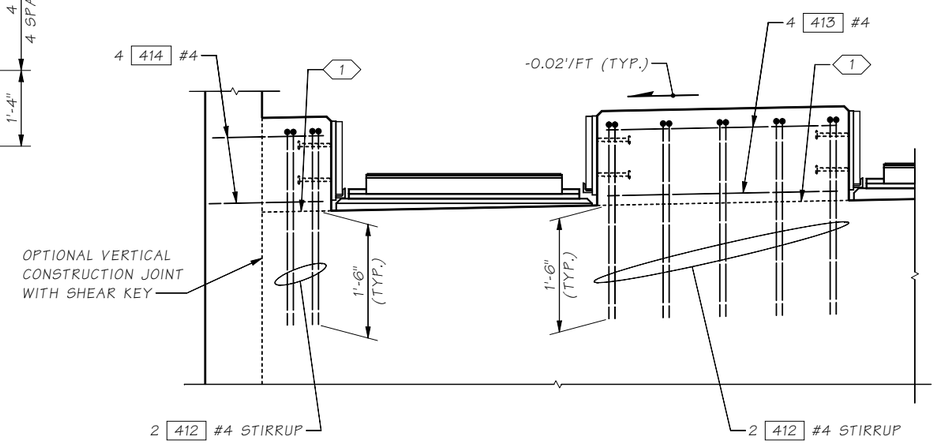

VIEW B

BENDING DIAGRAM

(ALL DIMENSIONS ARE OUT TO OUT)

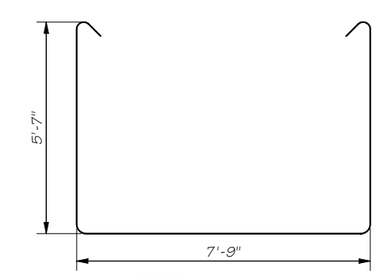

402 #7 STIRRUP

KEY NOTE:

1 CONSTRUCTION JOINT WITH ROUGHENED SURFACE

Bridge Design Engr.	Grimm, E		
Supervisor	Aldrich, BS		
Designed By	Schultz, E	11/22	
Checked By	O'Neill, P	12/22	
Detailed By	McCarthy, D	11/22	
Bridge Projects Engr.			
Prelim. Plan By			
Architect/Specialist			

M:\X-Team\BR241-2_MABTOM-SUNNYSIDE_REPL\window files\PIER 4 DETAILS 1.wnd

DATE	REVISION	BY	APP'D

REGION NO.	STATE	FED. AID PROJ. NO.	SHEET NO.	TOTAL SHEETS
10	WASH.			
JOB NUMBER 21Y001				
CONTRACT NO.				

P.E. STAMP BOX — ERIC HENRY SCHULTZ, STATE OF WASHINGTON, 39910, PROFESSIONAL ENGINEER — SEE SHEET CT1 — DATE:

BRIDGE AND STRUCTURES OFFICE

P.E. STAMP BOX — BRIAN S. ALDRICH, STATE OF WASHINGTON, 37834, PROFESSIONAL ENGINEER — SEE SHEET CT1 — DATE:

Washington State Department of Transportation

PRELIMINARY NOT FOR CONSTRUCTION

SR 241
MABTON VICINITY
RETROFIT BRIDGES
MABTON-SUNNYSIDE RD. BRIDGE NO. 241/2 REPLACEMENT

PIER 4 DETAILS 1 OF 2

BRIDGE SHEET NO. BA28

SHEET 65 OF 115 SHEETS

SR 241 FILE NO. ____ SHEET BA28

Tue Dec 27 15:19:17 2022

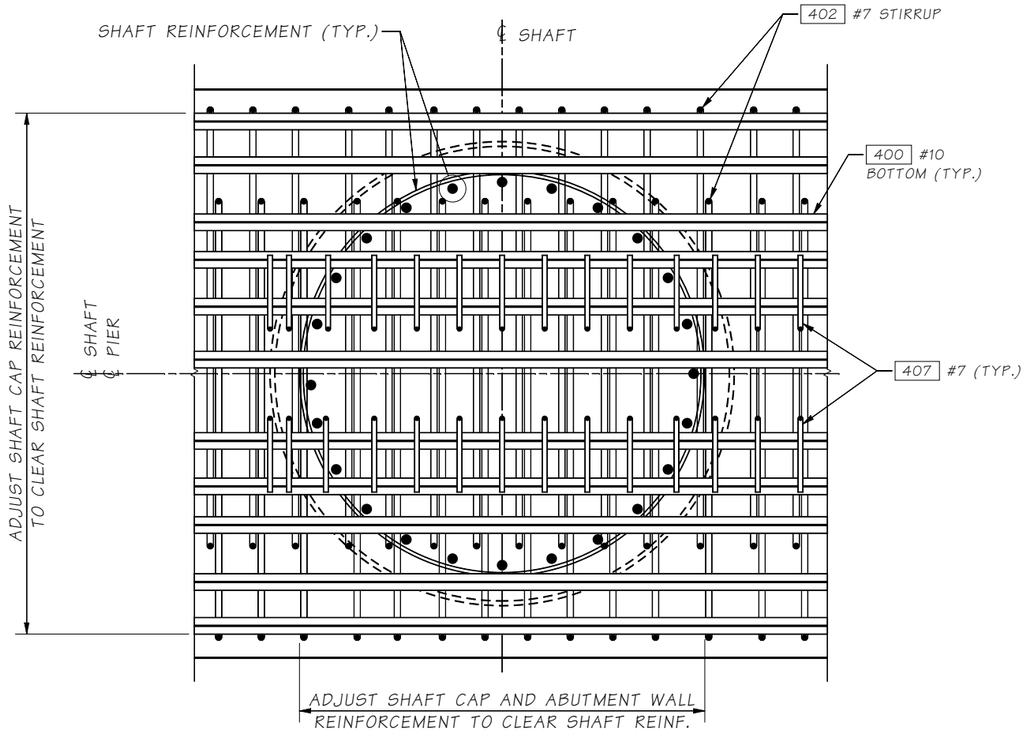

SECTION C BA27

SHAFT 4A SHOWN, SHAFT 4B SIMILAR

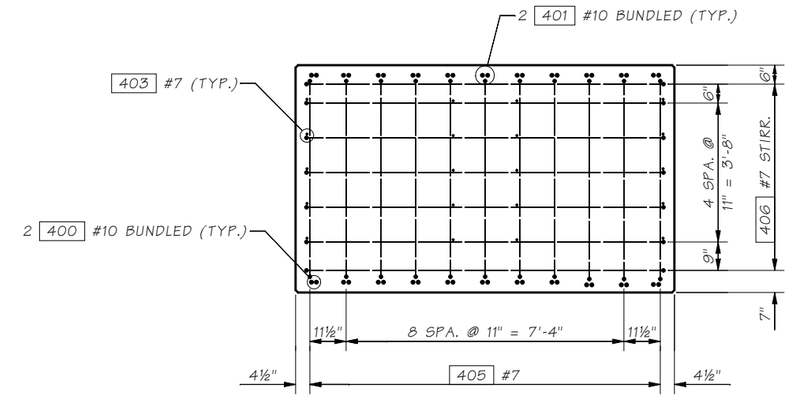

VIEW D BA27

TYPICAL AT BOTH ENDS

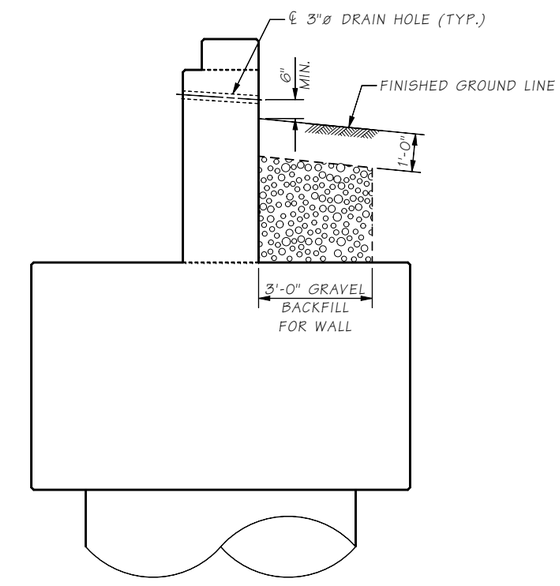

DRAINAGE DETAIL

Bridge Design Engr.	Grimm, E		
Supervisor	Aldrich, BS		
Designed By	Schultz, E	11/22	
Checked By	O'Neill, P	12/22	
Detailed By	McCarthy, D	11/22	
Bridge Projects Engr.			
Prelim. Plan By			
Architect/Specialist			

M:\X-Team\BR241-2_MABTOM-SUNNYSIDE_REPL\window files\PIER 4 DETAILS 2.wnd

DATE	REVISION	BY	APP'D

REGION NO.	STATE	FED. AID PROJ. NO.	SHEET NO.	TOTAL SHEETS
10	WASH.			
JOB NUMBER 21Y001				
CONTRACT NO.				

P.E. STAMP BOX
ERIC HENRY SCHULTZ, STATE OF WASHINGTON, 39910, PROFESSIONAL ENGINEER
SEE SHEET CT1
DATE:

BRIDGE AND STRUCTURES OFFICE

P.E. STAMP BOX
BRIAN S. ALDRICH, STATE OF WASHINGTON, 37834, PROFESSIONAL ENGINEER
SEE SHEET CT1
DATE:

Washington State Department of Transportation

PRELIMINARY NOT FOR CONSTRUCTION

SR 241
MABTON VICINITY
RETROFIT BRIDGES
MABTON-SUNNYSIDE RD. BRIDGE NO. 241/2 REPLACEMENT

PIER 4 DETAILS 2 OF 2

BRIDGE SHEET NO. BA29

SHEET 66 OF 115 SHEETS

SR 241 FILE NO. ____ SHEET BA29

Tue Dec 27 15:19:17 2022

CURTAIN WALL ELEVATIONS & DIMENSIONS

CURTAIN WALL LOCATION	ELEVATION POINT AT TOP OF NEAR FACE			
	Q	R	S	T
PIER 4 RIGHT	669.73	669.79	670.04	670.12
PIER 4 LEFT	669.73	669.79	670.04	670.12

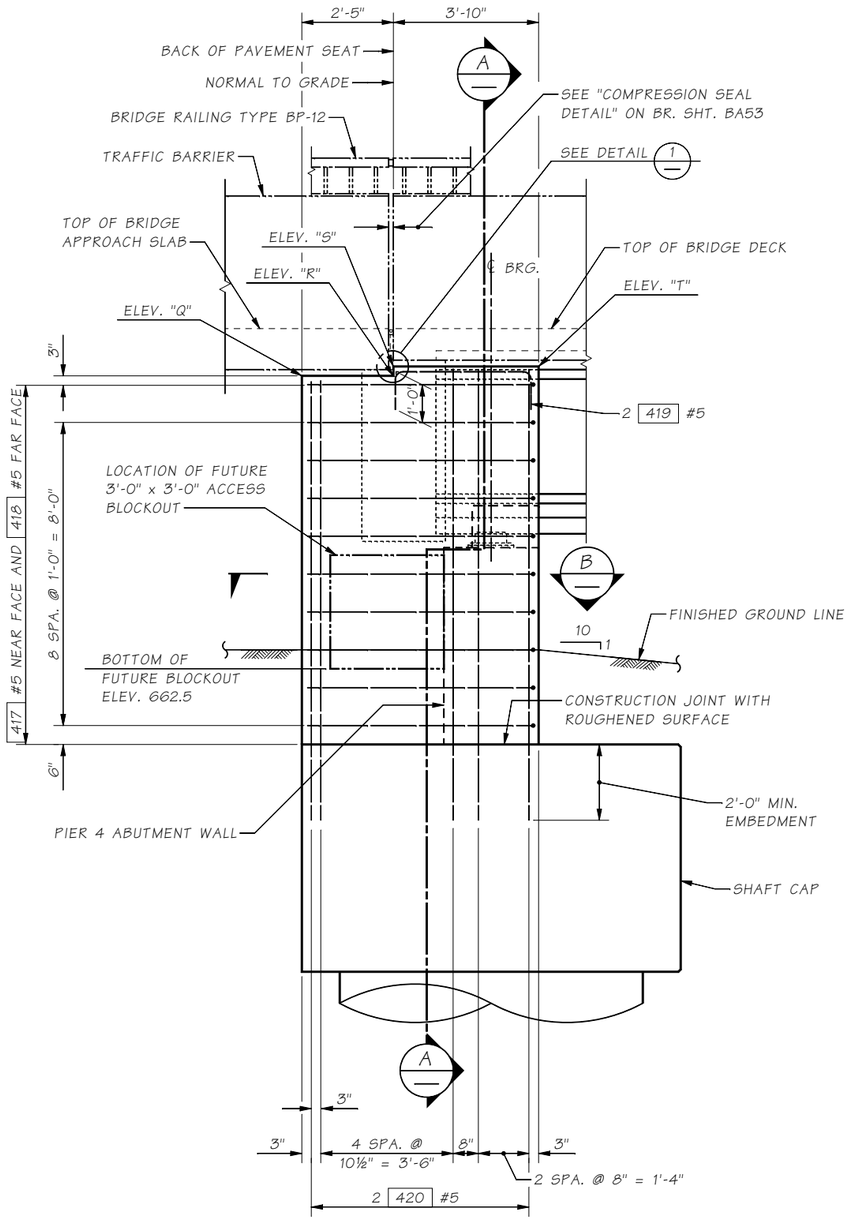

OUTSIDE ELEVATION CURTAIN WALL

PIER 4 LEFT SHOWN, PIER 4 RIGHT SIMILAR, FOR REINFORCEMENT NOT SHOWN SEE PIER PLANS.

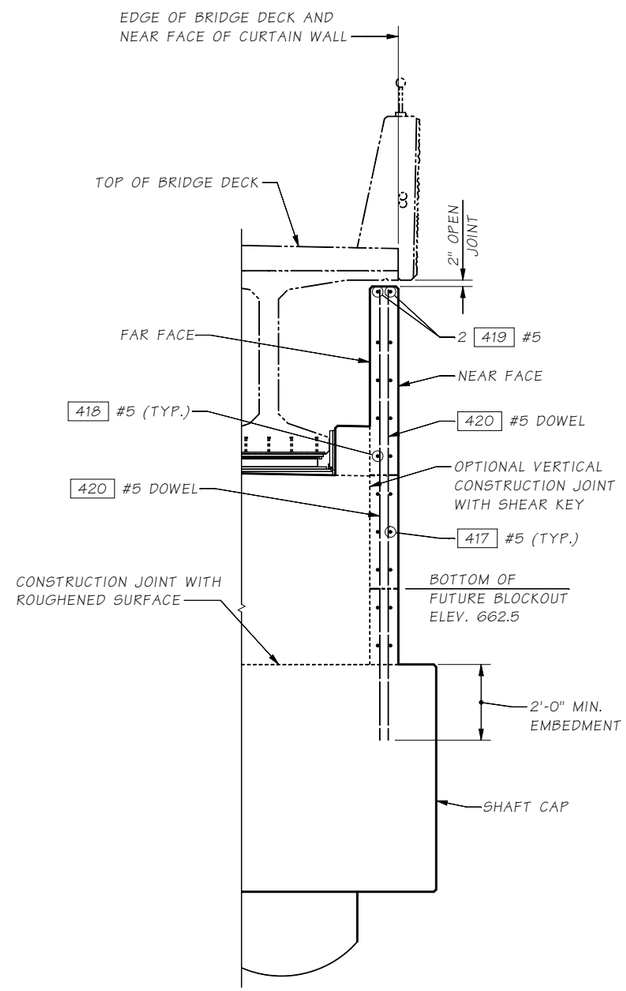

SECTION A

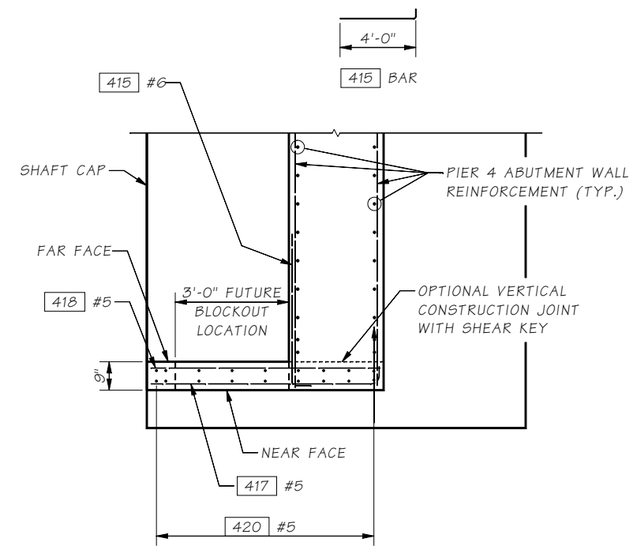

SECTION B

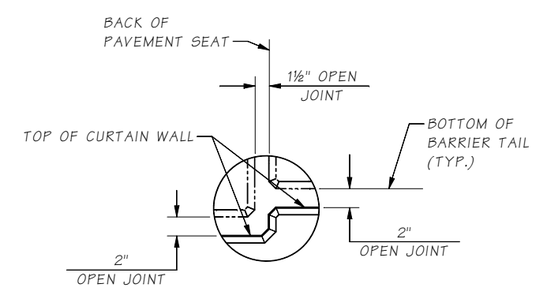

DETAIL 1

Bridge Design Engr.	Grimm, E		
Supervisor	Aldrich, BS		
Designed By	Schultz, E	11/22	
Checked By	O'Neill, P	12/22	
Detailed By	McCarthy, D	11/22	
Bridge Projects Engr.			
Prelim. Plan By			
Architect/Specialist			

M:\X-Team\BR241-2_MABTOM-SUNNYSIDE_REPL\window files\PIER 4 CURTAIN WALL.wnd

DATE	REVISION	BY	APP'D

REGION NO.	STATE	FED. AID PROJ. NO.	SHEET NO.	TOTAL SHEETS
10	WASH.			
JOB NUMBER 21Y001				
CONTRACT NO.				

P.E. STAMP BOX — SEE SHEET CT1 — DATE:

BRIDGE AND STRUCTURES OFFICE

P.E. STAMP BOX — SEE SHEET CT1 — DATE:

Washington State Department of Transportation

PRELIMINARY NOT FOR CONSTRUCTION

SR 241
MABTON VICINITY
RETROFIT BRIDGES
MABTON-SUNNYSIDE RD. BRIDGE NO. 241/2 REPLACEMENT

PIER 4 CURTAIN WALL DETAILS

BRIDGE SHEET NO. BA30

SHEET 67 OF 115 SHEETS

SR 241 FILE NO. ____ SHEET BA30

Tue Dec 27 15:19:18 2022

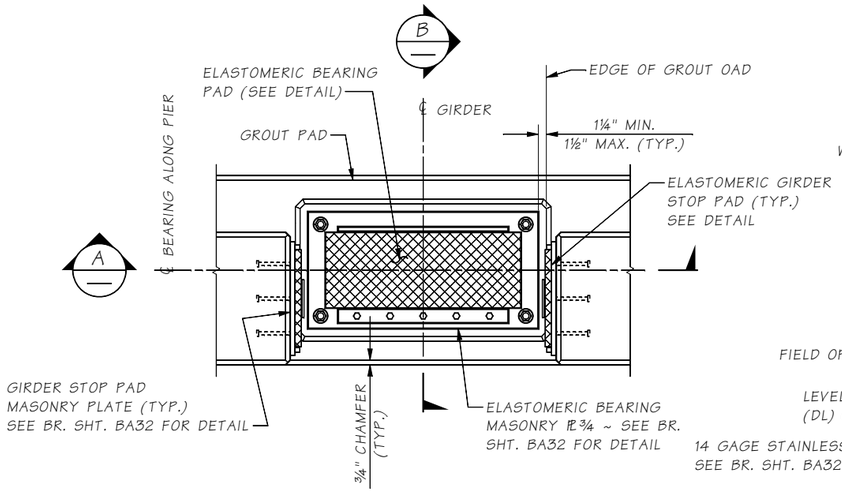

GROUT PAD DETAIL

GIRDER, BEARING PLATE AND SOLE PLATE NOT SHOWN FOR CLARITY

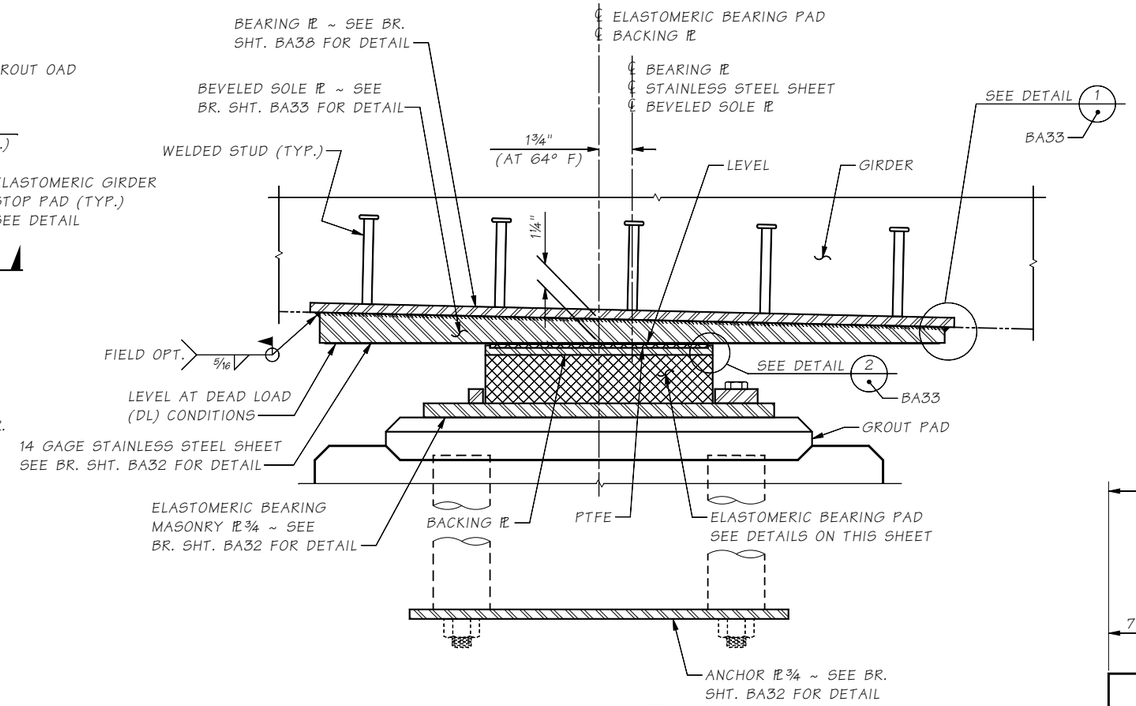

SECTION B

PIER 1 SHOWN, PIER 4 SIMILAR BUT OPPOSITE SLOPE.
ALL WELDING IN ACCORDANCE WITH AWS D1.1. AFTER WELDING, PAINT EXPOSED METAL WITH TWO COATS OF GALVANIZING REPAIR PAINT.

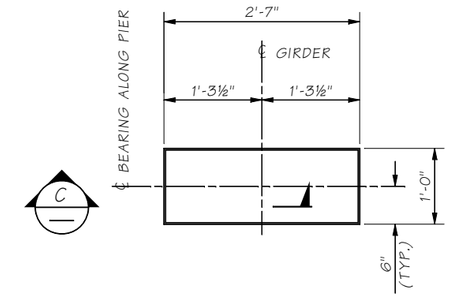

ELASTOMERIC BEARING PAD

LAMINATED ELASTOMERIC BEARING PAD (4 SHIMS, QUANITY: 10)

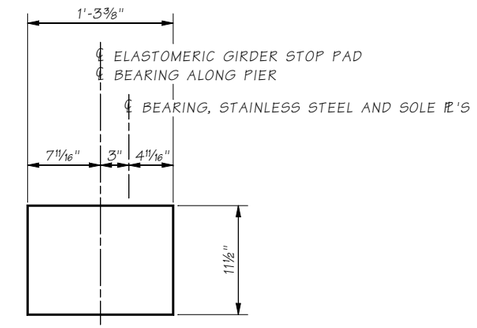

ELASTOMERIC GIRDER STOP PAD

SHEAR MODULUS = 165 PSI

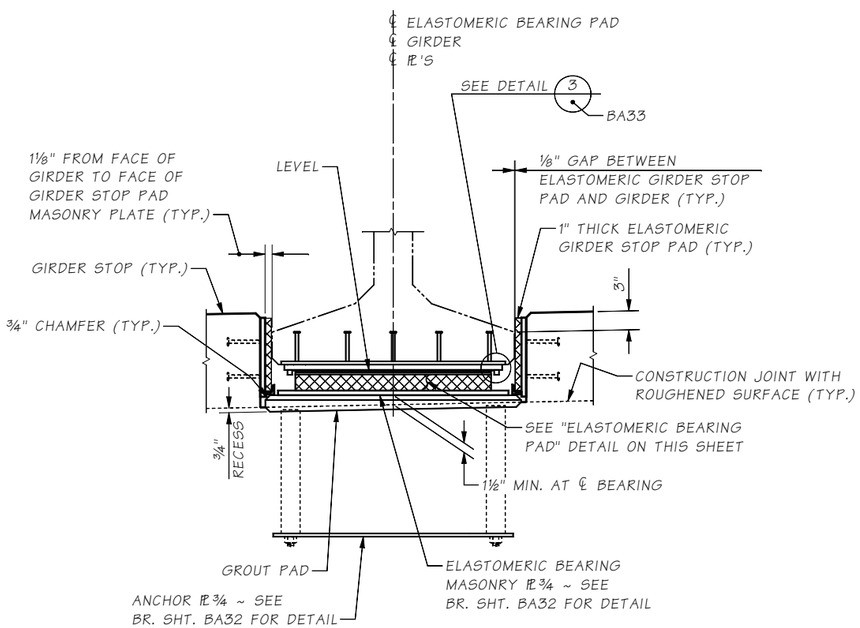

SECTION A

FOR CALLOUTS NOT SHOWN, SEE SECTION B

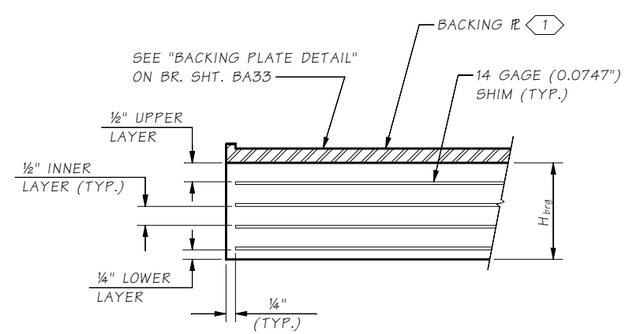

SECTION C

BEARING DESIGN TABLE AASHTO METHOD B DESIGN	
SERVICE - I LIMIT STATE	
DEAD LOAD (DL) REACTION	156 KIPS
LIVE LOAD REACTION (W/O IMPACT)	65 KIPS
H_{brg} UNLOADED HEIGHT	2.55 IN
H_{brg} LOADED HEIGHT (DL)	2.54 IN
SHEAR MODULUS	165 PSI

KEY NOTE:

1 VULCANIZE BACKING PLATE TO TOP ELASTOMERIC LAYER.

NOTES:

1. GIRDER STOPS SHALL BE CONSTRUCTED AFTER GIRDER PLACEMENT.
2. THE ELASTOMERIC GIRDER STOP PADS SHALL BE BONDED TO THE GIRDER STOP PAD MASONRY PLATE WITH AN APPROVED ADHESIVE.

SR 241 FILE NO. ____ SHEET BA31

Bridge Design Engr.	Grimm, E	
Supervisor	Aldrich, BS	
Designed By	Schultz, E	09/22
Checked By	Mizumori, A	12/22
Detailed By	McCarthy, D	09/22
Bridge Projects Engr.		
Prelim. Plan By		
Architect/Specialist		

M:\X-Team\BR241-2_MABTOM-SUNNYSIDE_REPL\window files\BEARING DETAILS.WND

DATE	REVISION	BY	APP'D

REGION NO.	STATE	FED. AID PROJ. NO.	SHEET NO.	TOTAL SHEETS
10	WASH.			
JOB NUMBER 21Y001				
CONTRACT NO.				

P.E. STAMP BOX — ERIC HENRY SCHULTZ, STATE OF WASHINGTON, 38010, PROFESSIONAL ENGINEER — SEE SHEET CT1 — DATE:

BRIDGE AND STRUCTURES OFFICE

P.E. STAMP BOX — BRIAN S. ALDRICH, STATE OF WASHINGTON, 37834, PROFESSIONAL ENGINEER — SEE SHEET CT1 — DATE:

Washington State Department of Transportation

PRELIMINARY NOT FOR CONSTRUCTION

SR 241
MABTON VICINITY
RETROFIT BRIDGES
MABTON-SUNNYSIDE RD. BRIDGE NO. 241/2 REPLACEMENT

BEARING DETAILS 1 OF 3

BRIDGE SHEET NO. BA31

SHEET 68 OF 115 SHEETS

Mon Feb 06 13:43:40 2023

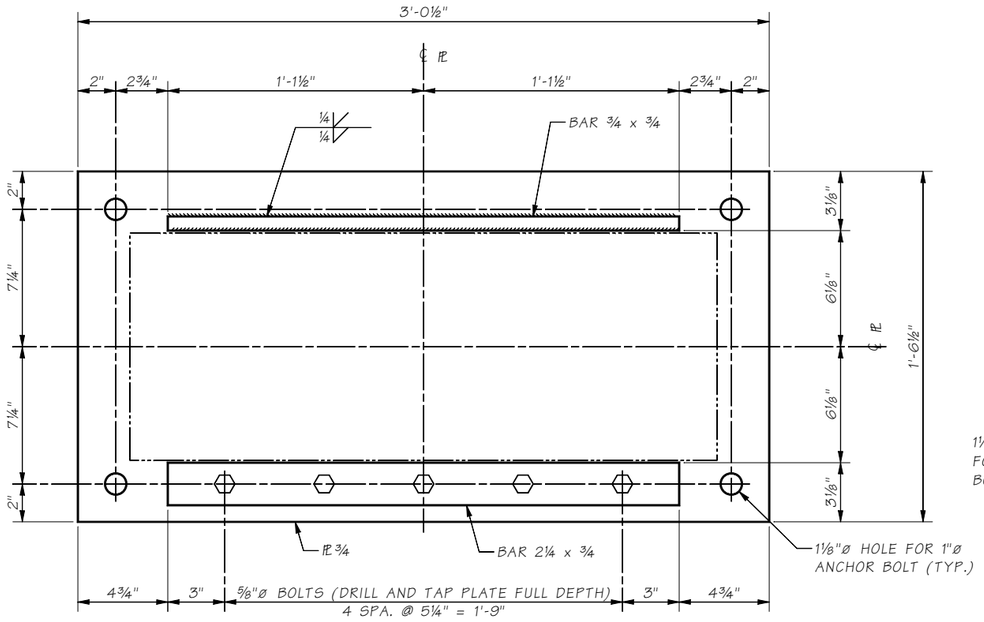

PLAN
ELASTOMERIC BEARING MASONRY PLATE

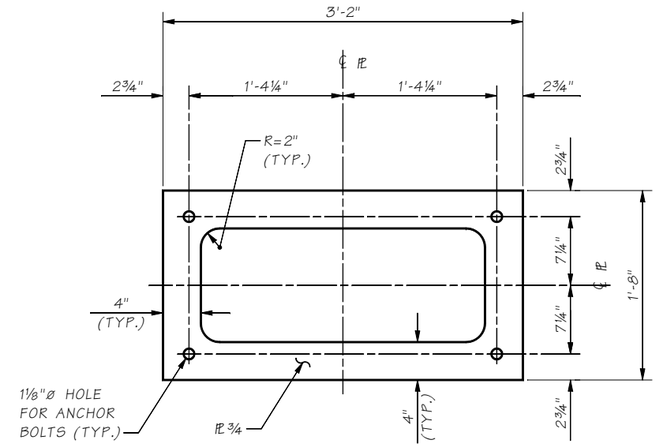

ANCHOR PLATE

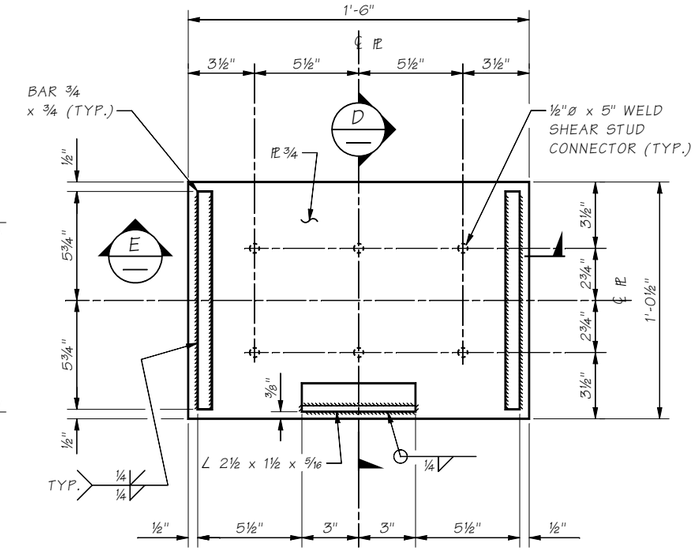

GIRDER STOP PAD
MASONRY PLATE
(20 TOTAL)

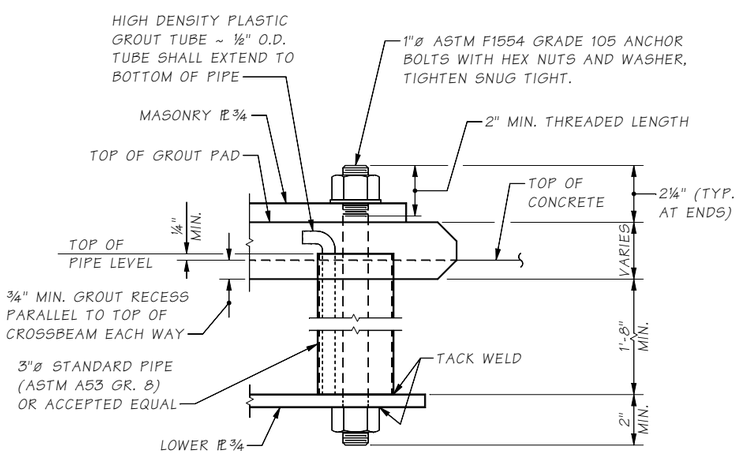

ANCHOR BOLT DETAIL
ANCHOR BOLTS SHALL BE HOT DIP GALVANIZED IN ACCORDANCE WITH ASTM F2329

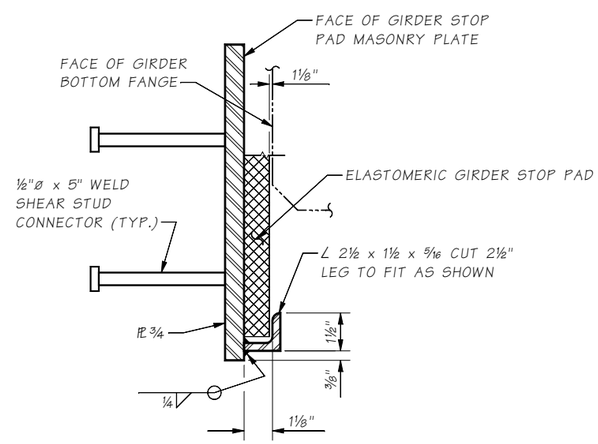

SECTION D

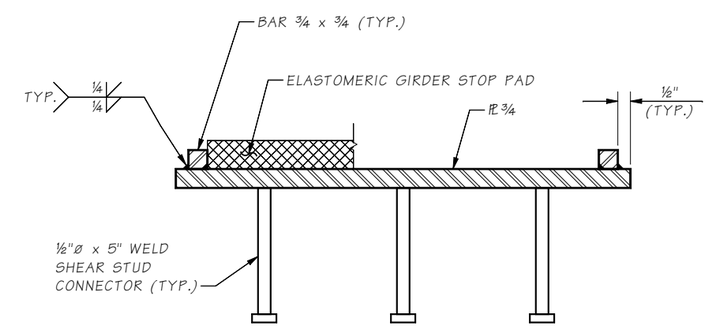

SECTION E

Bridge Design Engr.	Grimm, E		M:\X-Team\BR241-2_MABTOM-SUNNYSIDE_REPL\window files\BEARING DETAILS 2.wnd								
Supervisor	Aldrich, BS										
Designed By	Schultz, E	09/22									
Checked By	Mizumori, A	12/22									
Detailed By	McCarthy, D	09/22									
Bridge Projects Engr.											
Prelim. Plan By											
Architect/Specialist			DATE	REVISION	BY	APP'D					

REGION NO.	STATE	FED. AID PROJ. NO.	SHEET NO.	TOTAL SHEETS
10	WASH.			
JOB NUMBER 21Y001				
CONTRACT NO.				

P.E. STAMP BOX
ERIC HENRY SCHULTZ
STATE OF WASHINGTON
39910
PROFESSIONAL ENGINEER
SEE SHEET CT1
DATE:

BRIDGE AND STRUCTURES OFFICE

P.E. STAMP BOX
BRIAN S. ALDRICH
STATE OF WASHINGTON
37834
PROFESSIONAL ENGINEER
SEE SHEET CT1
DATE:

Washington State Department of Transportation
PRELIMINARY NOT FOR CONSTRUCTION

SR 241
MABTON VICINITY
RETROFIT BRIDGES
MABTON-SUNNYSIDE RD. BRIDGE NO. 241/2 REPLACEMENT
BEARING DETAILS 2 OF 3

BRIDGE SHEET NO. BA32
SHEET 69 OF 115 SHEETS

SR 241 FILE NO. ____ SHEET BA32

Tue Dec 27 15:19:19 2022

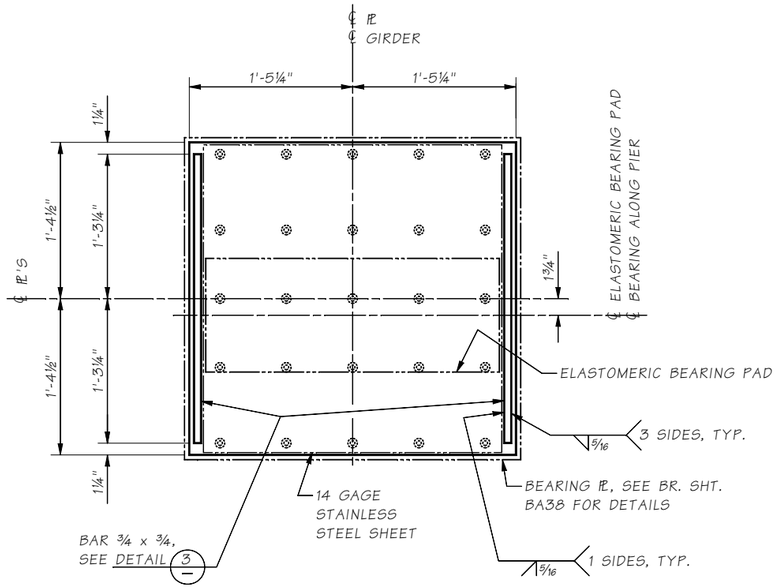

BEVELED SOLE PLATE DETAIL

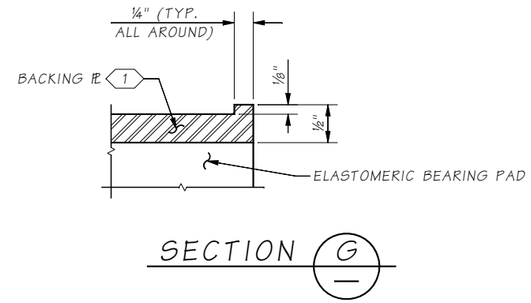

SECTION G

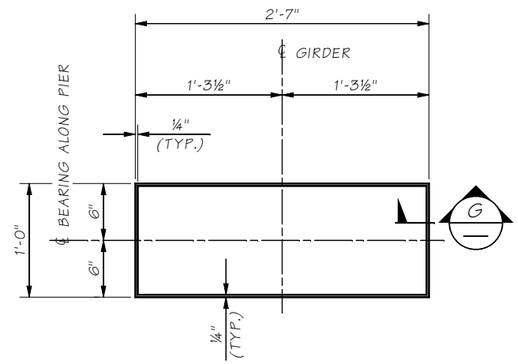

BACKING PLATE DETAIL

KEY NOTE:

1 VULCANIZE BACKING PLATE TO TOP ELASTOMERIC LAYER.

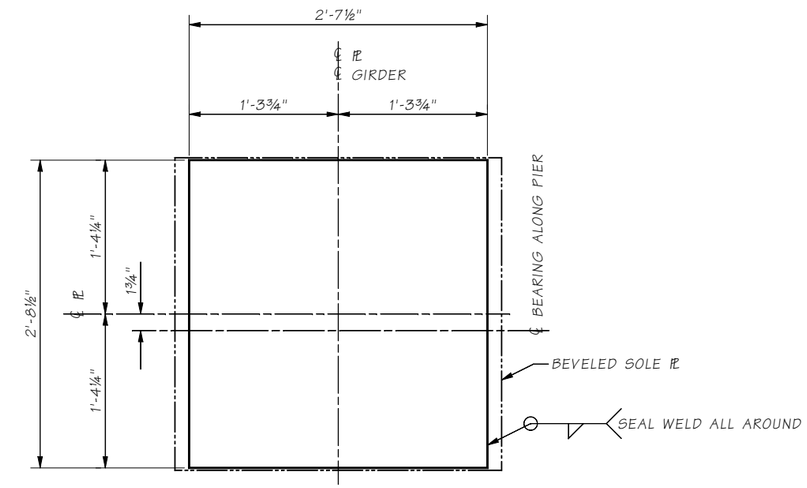

14 GAGE STAINLESS STEEL SHEET DETAIL

SEAL WELD STAINLESS STEEL SHEET TO BOTTOM OF BEVELED SOLE PLATE
(EXPOSED SURFACE SHALL HAVE FINISH 2B)

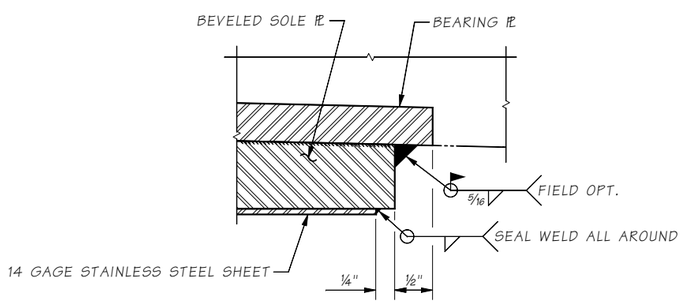

DETAIL 1 / BA31

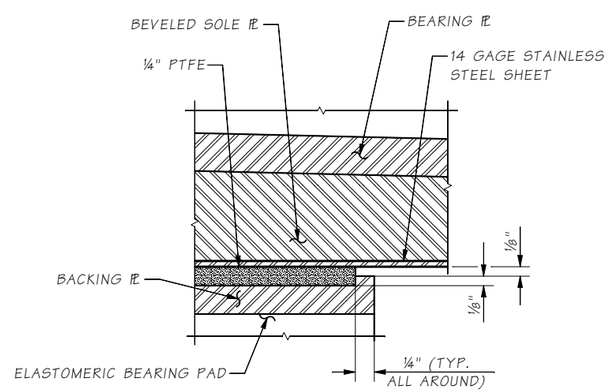

DETAIL 2 / BA31

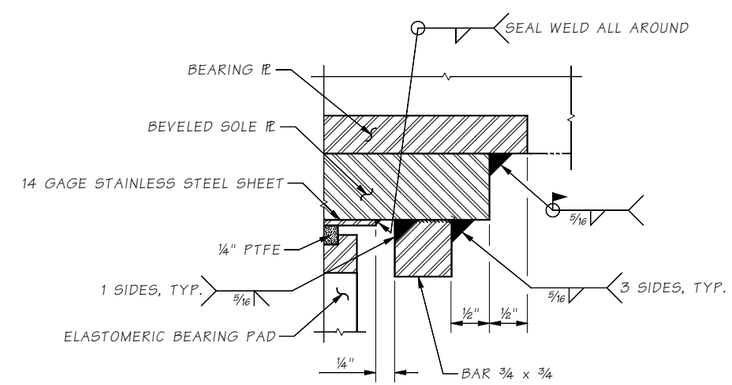

DETAIL 3 / BA31

Bridge Design Engr.	Grimm, E		M:\X-Team\BR241-2_MABTOM-SUNNYSIDE_REPL\window files\BEARING DETAILS 3.wnd			REGION NO.	STATE	FED. AID PROJ. NO.	SHEET NO.	TOTAL SHEETS
Supervisor	Aldrich, BS					10	WASH.			
Designed By	Schultz, E	11/22				JOB NUMBER 21Y001				
Checked By	Mizumori, A	12/22								
Detailed By	McCarthy, D	11/22				CONTRACT NO.				
Bridge Projects Engr.										
Prelim. Plan By										
Architect/Specialist			DATE	REVISION	BY	APP'D				

P.E. STAMP BOX: ERIC HENRY SCHULTZ, STATE OF WASHINGTON, 39910, STRUCTURAL ENGINEER, PROFESSIONAL ENGINEER — SEE SHEET CT1 — DATE:

BRIDGE AND STRUCTURES OFFICE

P.E. STAMP BOX: BRIAN S. ALDRICH, STATE OF WASHINGTON, 37834, STRUCTURAL ENGINEER, PROFESSIONAL ENGINEER — SEE SHEET CT1 — DATE:

Washington State Department of Transportation

PRELIMINARY NOT FOR CONSTRUCTION

SR 241
MABTON VICINITY
RETROFIT BRIDGES
MABTON-SUNNYSIDE RD. BRIDGE NO. 241/2 REPLACEMENT

BEARING DETAILS 3 OF 3

BRIDGE SHEET NO. BA33

SHEET 70 OF 115 SHEETS

SR 241 FILE NO. ____ SHEET BA33

Tue Dec 27 15:19:19 2022

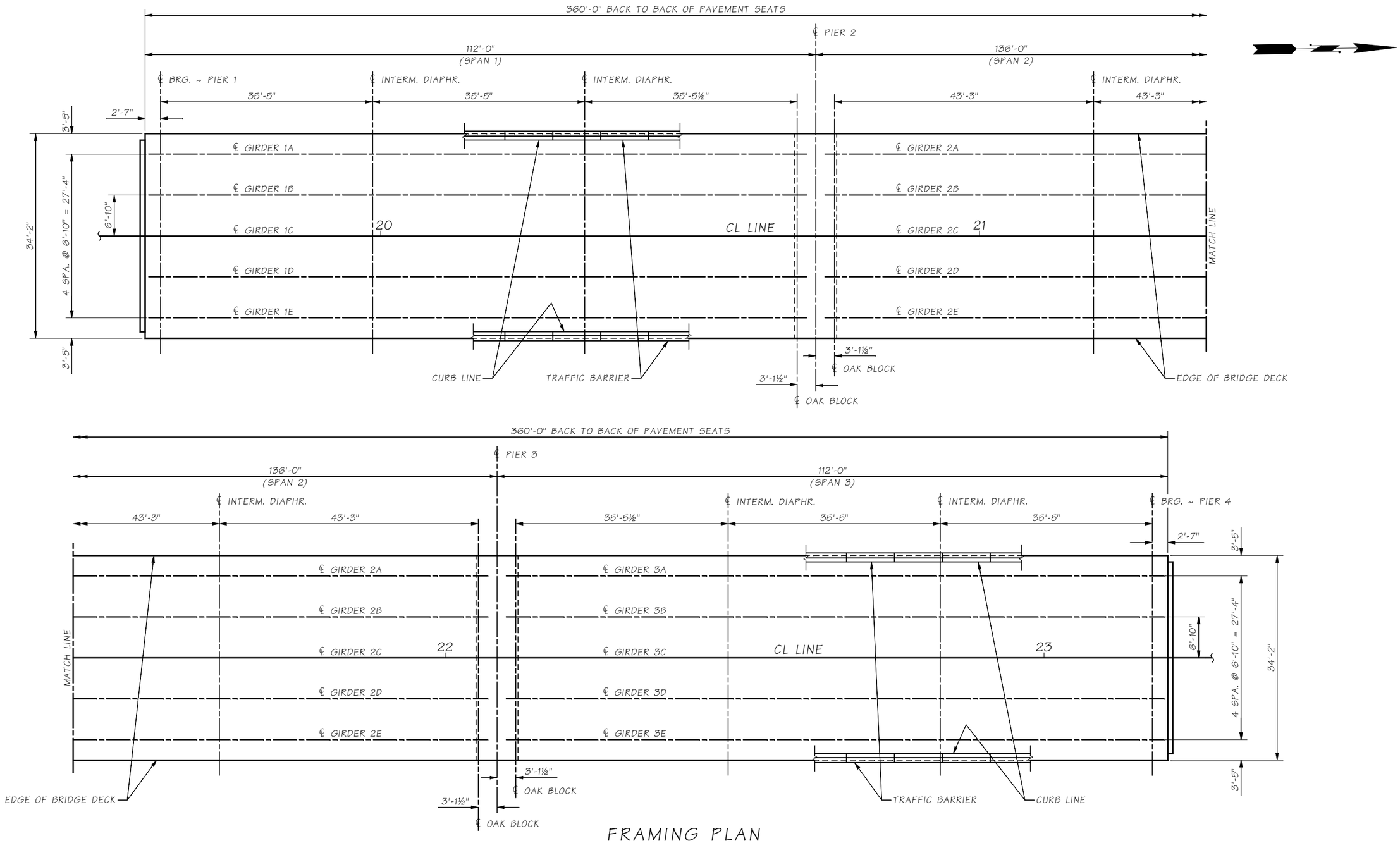

FRAMING PLAN

BEARING OF ALL GIRDERS IS N 00°09'15" W

Bridge Design Engr.	Grimm, E		
Supervisor	Aldrich, BS		
Designed By	Feely, C	05/20	
Checked By	Mizumori, A	12/22	
Detailed By	McCarthy, D	05/20	
Bridge Projects Engr.			
Prelim. Plan By			
Architect/Specialist			

M:\X-Team\BR241-2_MABTOM-SUNNYSIDE_REPL\window files\FRAMING PLAN.wnd

DATE	REVISION	BY	APP'D

REGION NO.	STATE	FED. AID PROJ. NO.	SHEET NO.	TOTAL SHEETS
10	WASH.			
JOB NUMBER 21Y001				
CONTRACT NO.				

P.E. STAMP BOX
J. CHRIS FEELY — STATE OF WASHINGTON — 52706 — REGISTERED PROFESSIONAL ENGINEER
SEE SHEET CT1
DATE:

BRIDGE AND STRUCTURES OFFICE

P.E. STAMP BOX
BRIAN S. ALDRICH — STATE OF WASHINGTON — 37834 — PROFESSIONAL ENGINEER
SEE SHEET CT1
DATE:

Washington State Department of Transportation

PRELIMINARY NOT FOR CONSTRUCTION

SR 241
MABTON VICINITY
RETROFIT BRIDGES
MABTON-SUNNYSIDE RD. BRIDGE NO. 241/2 REPLACEMENT

FRAMING PLAN

BRIDGE SHEET NO. BA34

SHEET 71 OF 115 SHEETS

SR 241 FILE NO. ____ SHEET BA34

Tue Dec 27 15:19:20 2022

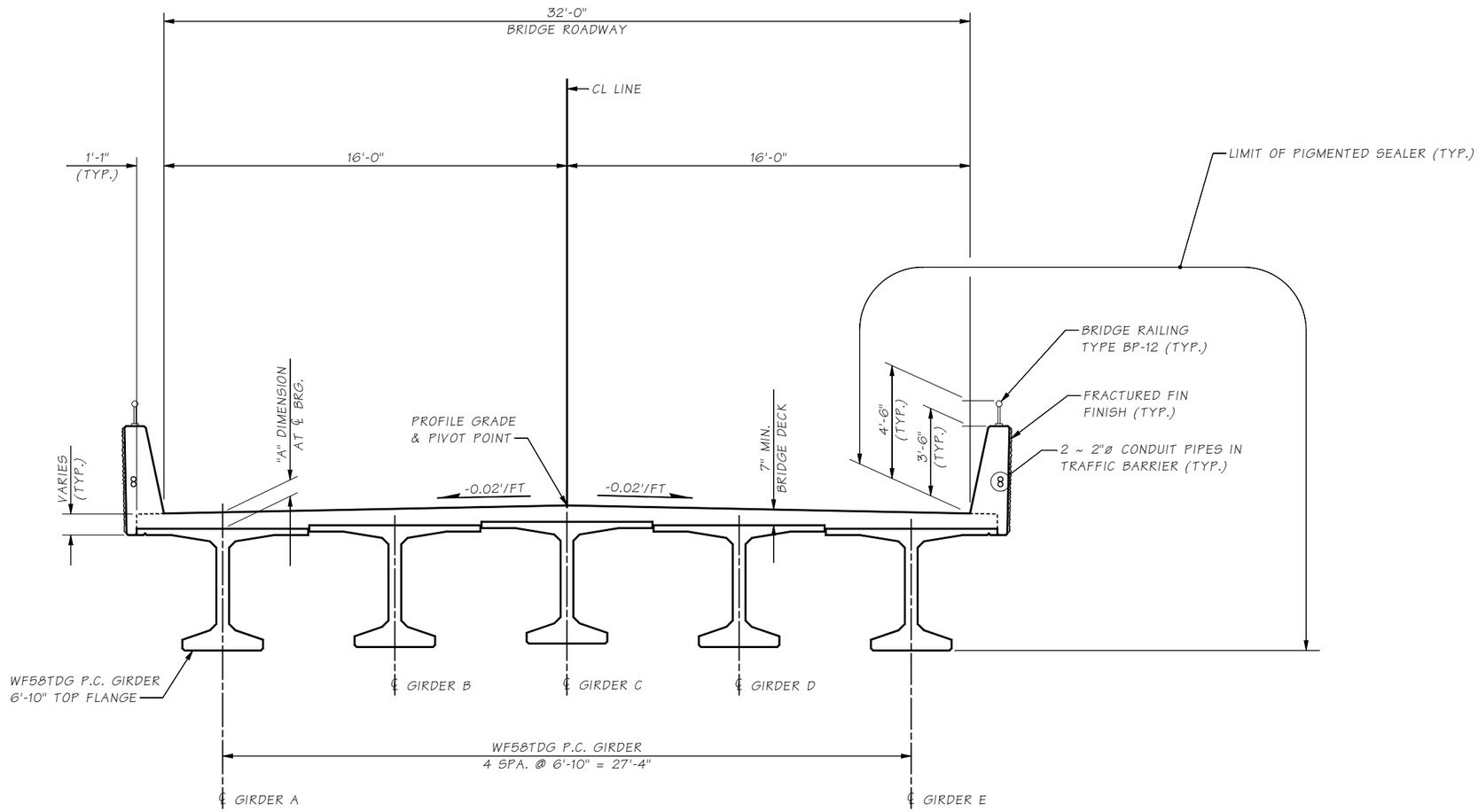

TYPICAL SECTION

SHOWN NORMAL TO THE CL LINE

SR 241 FILE NO. ____ SHEET BA35

Bridge Design Engr.	Grimm, E		
Supervisor	Aldrich, BS		
Designed By	Feely, C	05/20	
Checked By	Mizumori, A	12/22	
Detailed By	McCarthy, D	05/20	
Bridge Projects Engr.			
Prelim. Plan By			
Architect/Specialist			

M:\X-Team\BR241-2_MABTOM-SUNNYSIDE_REPL\window files\TYPICAL SECTION.wnd

DATE	REVISION	BY	APP'D

REGION NO.	STATE	FED. AID PROJ. NO.	SHEET NO.	TOTAL SHEETS
10	WASH.			
JOB NUMBER 21Y001				
CONTRACT NO.				

P.E. STAMP BOX
J. CHRIS FEELY
STATE OF WASHINGTON
52708
REGISTERED PROFESSIONAL ENGINEER
SEE SHEET CT1
DATE:

BRIDGE AND STRUCTURES OFFICE

P.E. STAMP BOX
BRIAN S. ALDRICH
STATE OF WASHINGTON
37834
REGISTERED PROFESSIONAL ENGINEER
SEE SHEET CT1
DATE:

Washington State
Department of Transportation
PRELIMINARY NOT FOR CONSTRUCTION

SR 241
MABTON VICINITY
RETROFIT BRIDGES
MABTON-SUNNYSIDE RD. BRIDGE NO. 241/2 REPLACEMENT

TYPICAL SECTION

BRIDGE SHEET NO. BA35

SHEET 72 OF 115 SHEETS

Tue Dec 27 15:19:20 2022

GIRDER SCHEDULE

SPAN	GIRDER	GIRDER SERIES	TOP FLANGE WIDTH W	PLAN LENGTH (ALONG GIRDER GRADE) (SEE GIRDER NOTE 1)	INT. DIAPHRAGM TYPE (FULL OR PARTIAL)	GIRDER END DETAILS							MIN. CONC. COMP. STRENGTH		NUMBER OF STRANDS (SEE GIRDER NOTE 2)			LOCATION OF C.G. STRANDS			STRAIGHT STRANDS TO EXTEND				"A" DIMENSION AT ℄ BEARINGS	DECK SCREED CAMBER C	MIDSPAN VERTICAL DEFLECTION D		REINFORCEMENT DETAILS								SHIPPING AND HANDLING DETAILS					
						END 1 TYPE	END 2 TYPE	L_d	θ_1	θ_2	P_1	P_2	@ 28-DAYS F'C (KSI)	@ RELEASE F'CI (KSI)	STRAIGHT	HARPED	TEMPORARY	E	F℄	Fo	END 1 STRANDS	END 1 EXTENSION LENGTH	END 2 STRANDS	END 2 EXTENSION LENGTH			LOWER BOUND @ 40 DAYS	UPPER BOUND @ 120 DAYS	ZONE 1 SPACING	ZONE 1 LENGTH	ZONE 2 SPACING	ZONE 2 LENGTH	ZONE 3 SPACING	ZONE 3 LENGTH	ZONE 4 SPACING	ZONE 4 LENGTH	MAXIMUM MIDSPAN VERTICAL DEFLECTION AT SHIPPING	L	L_1	L_2	K_θ MINIMUM SHIPPING SUPPORT ROTATIONAL SPRING CONSTANT (KIP - IN/RAD.)	W_{CC} MINIMUM SHIPPING SUPPORT CNTR.-TO-CNTR. WHEEL SPACING
1	A-E	WF58TDG	6'-10"	108'-6¼"	PARTIAL	A	D	-	90°	90°	1'-8⅛"	-	7.0	6.0	26	10	0	2¾"	4"	8"	1	-	2	-	10¼"	1¼"	1½"	3⅝	3"	1'-6"	6"	6'-0"	9"	6'-0"	-	-	4"	3'-0"	4'-10⅞"	4'-10⅞"	40,000	6'-0"
2	A-E	WF58TDG	6'-10"	131'-0⅜"	PARTIAL	D	D	-	90°	90°	-	-	9.0	7.0	38	16	4	3½"	4¾"	11"	3	-	3	-	11½"	2¾"	2¾"	6¼"	3"	1'-6"	6"	6'-0"	9"	6'-0"	-	-	6"	3'-0"	1'-10½"	1'-10½"	40,000	6'-0"
3	A-E	WF58TDG	6'-10"	108'-4⅞"	PARTIAL	D	A	-	90°	90°	-	1'-6¾"	7.0	6.0	26	10	0	2¾"	4"	8"	2	-	1	-	10¼"	1¼"	1½"	3⅝"	3"	1'-6"	6"	6'-0"	9"	6'-0"	-	-	4"	3'-0"	4'-10⅞"	4'-10⅞"	40,000	6'-0"

KEY NOTES:

1. STRANDS 1 TO 4, 25 AND 26
2. STRANDS 1 TO 6, 15 TO 18, 21, 22
3. STRANDS 9, 10, 23 TO 30, 33

GIRDER NOTES

1. PLAN LENGTH SHALL BE INCREASED AS NECESSARY TO COMPENSATE FOR SHORTENING DUE TO PRESTRESS AND SHRINKAGE.
2. ALL PRETENSIONED AND TEMPORARY STRANDS SHALL BE 0.6"ø AASHTO M203 GRADE 270 LOW RELAXATION STRANDS, JACKED TO 202.5 KSI (43.94 KIPS PER STRAND).

SR 241 FILE NO. ____ SHEET BA36

Bridge Design Engr.	Grimm, E	
Supervisor	Aldrich, BS	
Designed By	Feely, C	05/20
Checked By	Mizumori, A	12/22
Detailed By	McCarthy, D	05/20
Bridge Projects Engr.		
Prelim. Plan By		
Architect/Specialist		

M:\X-Team\BR241-2_MABTOM-SUNNYSIDE_REPL\window files\WF5858TDG 1.wnd

DATE	REVISION	BY	APP'D

REGION NO.	STATE	FED. AID PROJ. NO.	SHEET NO.	TOTAL SHEETS
10	WASH.			
JOB NUMBER 21Y001				
CONTRACT NO.				

P.E. STAMP BOX — J. CHRIS FEELY, STATE OF WASHINGTON, 52708, REGISTERED PROFESSIONAL ENGINEER — SEE SHEET CT1 — DATE:

BRIDGE AND STRUCTURES OFFICE

P.E. STAMP BOX — BRIAN S. ALDRICH, STATE OF WASHINGTON, 37634, PROFESSIONAL ENGINEER — SEE SHEET CT1 — DATE:

Washington State Department of Transportation

PRELIMINARY NOT FOR CONSTRUCTION

SR 241
MABTON VICINITY
RETROFIT BRIDGES
MABTON-SUNNYSIDE RD. BRIDGE NO. 241/2 REPLACEMENT

WF58TDG THIN DECK GIRDER DETAILS 1 OF 5

BRIDGE SHEET NO. BA36

SHEET 73 OF 115 SHEETS

Tue Dec 27 15:19:21 2022

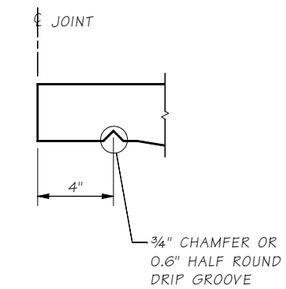

DETAIL 1
EXTERIOR EDGE OF EXTERIOR GIRDERS

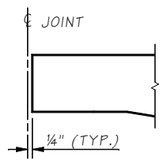

DETAIL 1
ALL OTHER LOCATIONS

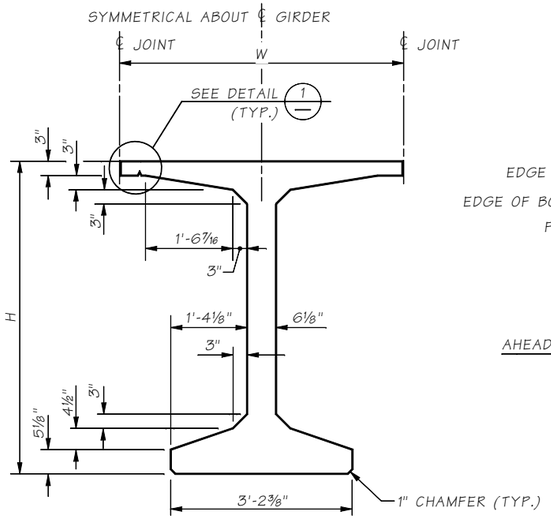

SECTION A
REINFORCEMENT AND STRANDS NOT SHOWN

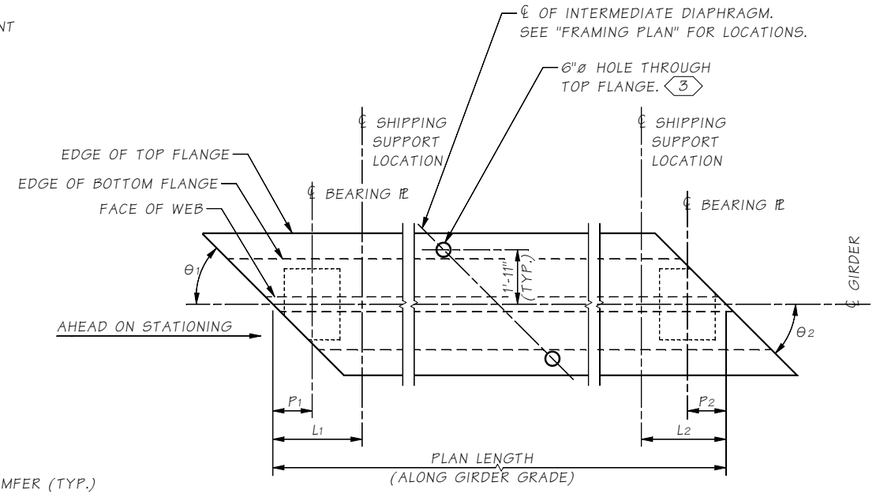

GIRDER PLAN

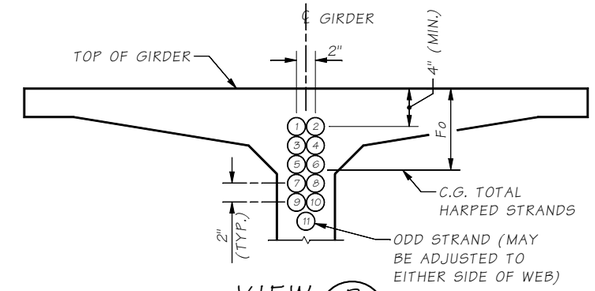

VIEW B

HARPED STRAND LOCATION SEQUENCE SHALL BE AS SHOWN 1, 2 ETC.

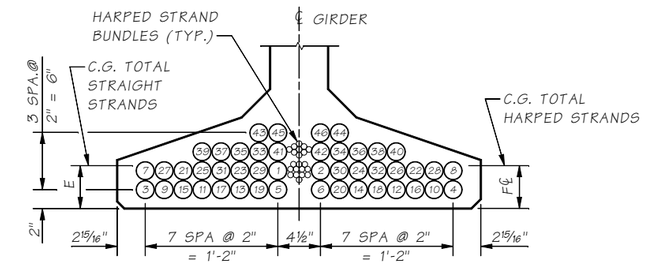

SECTION C

STRAIGHT STRAND LOCATION SEQUENCE SHALL BE AS SHOWN 1, 2 ETC.

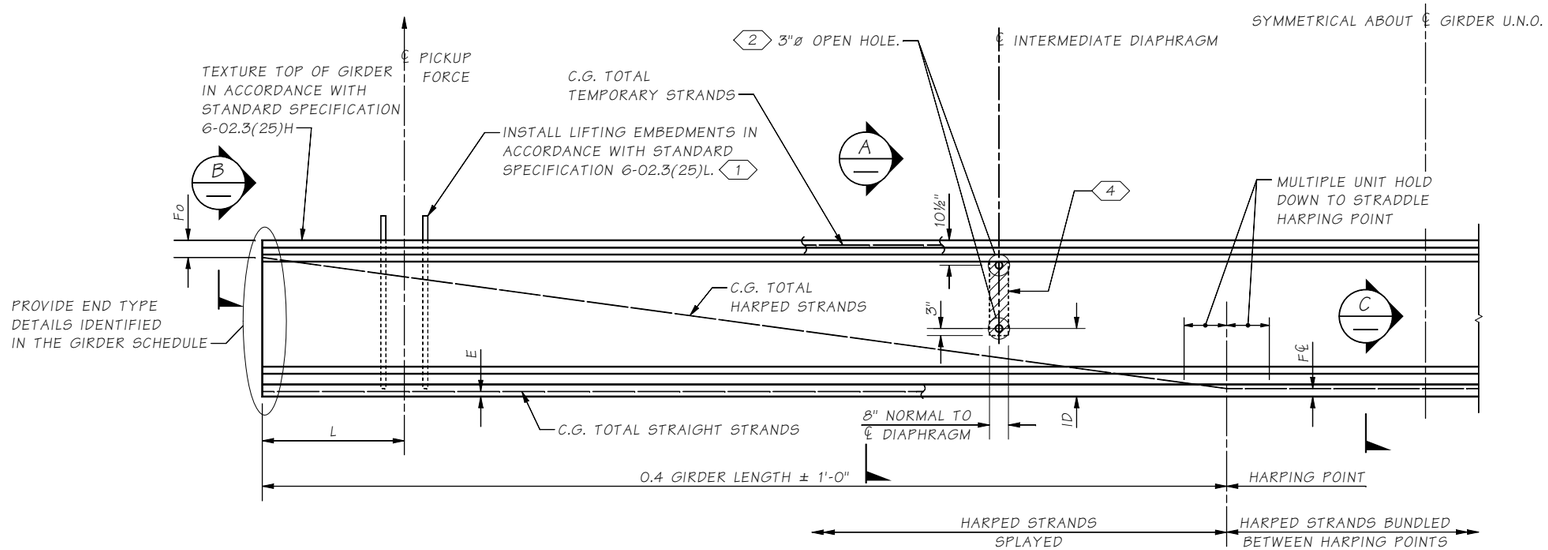

GIRDER ELEVATION

GIRDER SERIES	H GIRDER HEIGHT	ID PARTIAL DEPTH INT. DIAPHRAGM	ID FULL DEPTH INT. DIAPHRAGM
WF36TDG	3'-0"	1'-2⅛"	1'-2⅛"
WF42TDG	3'-6"	1'-6"	1'-2⅛"
WF50TDG	4'-2"	1'-9½"	1'-2⅛"
WF58TDG	4'-10"	2'-3"	1'-2⅛"
WF66TDG	5'-6"	2'-4¾"	1'-2⅛"
WF74TDG	6'-2"	2'-8"	1'-2⅛"
WF83TDG	6'-10⅝"	2'-1⅝"	1'-2⅛"
WF95TDG	7'-10½"	3'-1½"	1'-2⅛"
WF100TDG	8'-4"	2'-8"	1'-2⅛"

KEY NOTES:

1. REMOVE TO TOP OF GIRDER AFTER ERECTION.
2. ADJUST HOLE LOCATION VERTICALLY TO MISS HARPED STRANDS. OMIT HOLES AND PLACE INSERTS ON THE INTERIOR FACE OF EXTERIOR GIRDERS. PLACE HOLES AND INSERTS PARALLEL TO DIAPHRAGM CENTERLINE. INSERTS SHALL BE 1"ø MEADOWBURKE MX-3 HI-TENSILE, 1"ø MEADOWBURKE FX-19 FERRULE INSERT, 1"ø x 5½" WILLIAMS F22 OPEN FERRULE INSERT, 1"ø x 4⅝" DAYTON-SUPERIOR F-62 FLARED THIN SLAB FERRULE INSERT OR APPROVED EQUAL.
3. OMIT ON EXTERIOR SIDE OF EXTERIOR GIRDER. ADJUST REINFORCEMENT AS REQUIRED (TYP.)
4. APPLY APPROVED RETARDANT FOR ¼" ETCH TO SIDE FORMS OR ¼" ROUGHENED SURFACE TREATMENT BY APPROVED MECHANICAL METHOD. OMIT AT EXTERIOR FACE OF EXTERIOR GIRDERS.

SR 241 FILE NO. ____ SHEET BA37

Bridge Design Engr.	Grimm, E	
Supervisor	Aldrich, BS	
Designed By	Feely, C	05/20
Checked By	Mizumori, A	12/22
Detailed By	McCarthy, D	05/20
Bridge Projects Engr.		
Prelim. Plan By		
Architect/Specialist		

M:\X-Team\BR241-2_MABTOM-SUNNYSIDE_REPL\window files\WF5858TDG 2.wnd

DATE	REVISION	BY	APP'D

REGION NO.	STATE	FED. AID PROJ. NO.	SHEET NO.	TOTAL SHEETS
10	WASH.			
JOB NUMBER 21Y001				
CONTRACT NO.				

P.E. STAMP BOX — CHRIS FEELY, STATE OF WASHINGTON, 32708, REGISTERED PROFESSIONAL ENGINEER — SEE SHEET CT1 — DATE:

BRIDGE AND STRUCTURES OFFICE

P.E. STAMP BOX — BRIAN S. ALDRICH, STATE OF WASHINGTON, 37834, PROFESSIONAL ENGINEER — SEE SHEET CT1 — DATE:

Washington State Department of Transportation

PRELIMINARY NOT FOR CONSTRUCTION

SR 241
MABTON VICINITY
RETROFIT BRIDGES
MABTON-SUNNYSIDE RD. BRIDGE NO. 241/2 REPLACEMENT

WF58TDG THIN DECK GIRDER
DETAILS 2 OF 5

BRIDGE SHEET NO. BA37

SHEET 74 OF 115 SHEETS

Tue Dec 27 15:19:21 2022

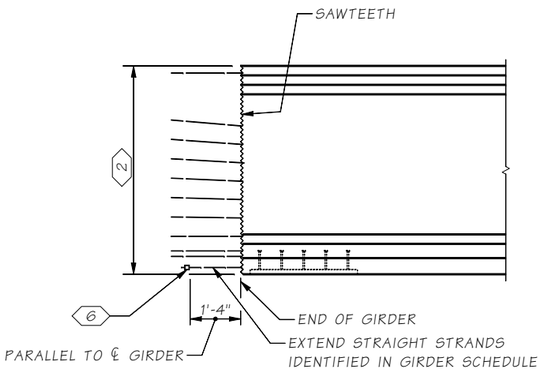

END TYPE A

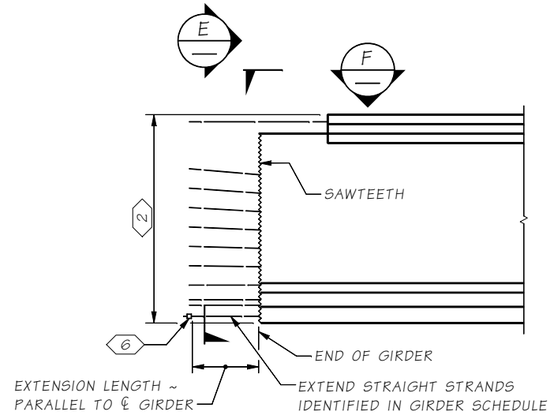

END TYPE D

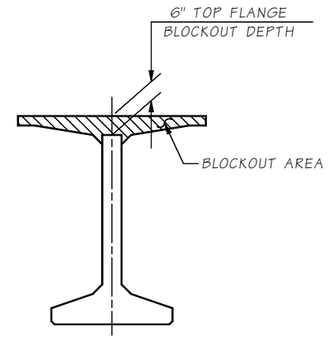

VIEW E

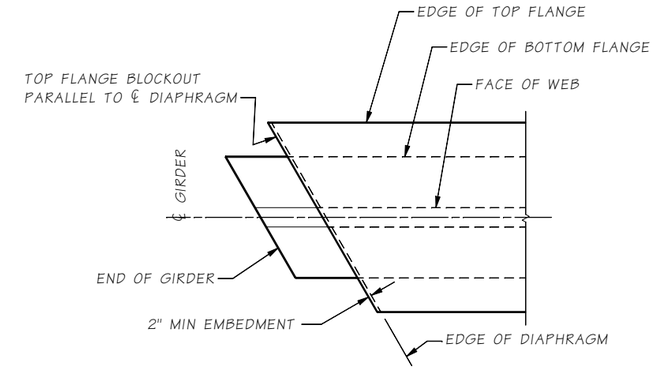

VIEW F

REINFORCING NOT SHOWN

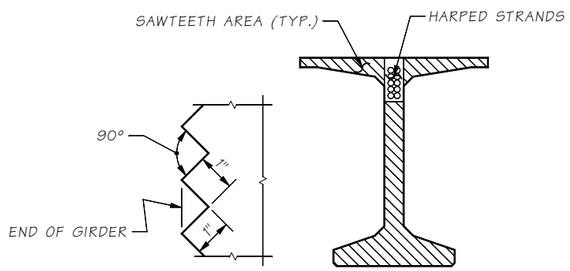

SAWTEETH DETAIL

SAWTEETH SHALL BE FULL WIDTH OVER AREA SHOWN

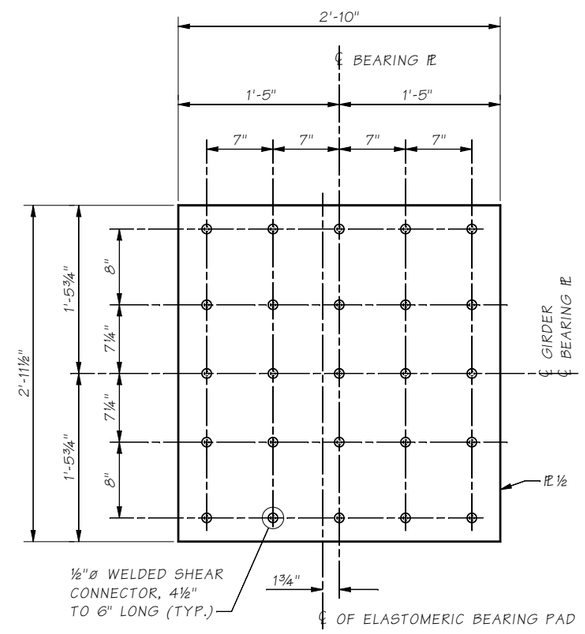

BEARING PLATE DETAIL

PLATE SHALL BE HOT DIP GALVANIZED OR PAINTED WITH GALVANIZING REPAIR PAINT OR A ZINC-RICH PRIMER.
SEE BEARING DETAILS SHEET FOR ADDITIONAL INFORMATION.

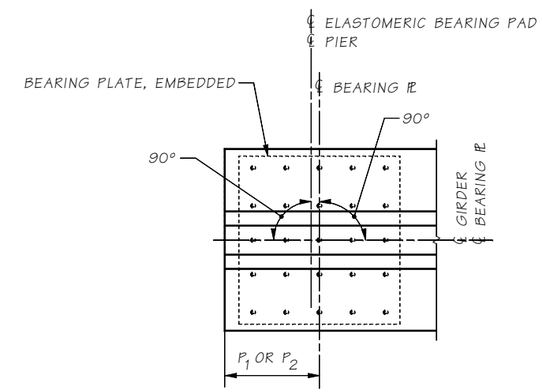

PLAN

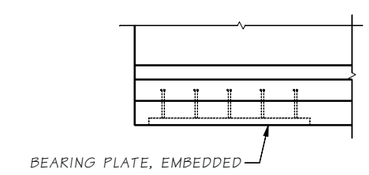

ELEVATION

BEARING PLATE POSITION DETAIL

BEARING PLATE SHALL BE FASTENED TO AVOID GIRDER DAMAGE DURING STRAND RELEASE.

KEY NOTES:

1. CUT ALL STRANDS 1" BELOW CONCRETE SURFACE AND GROUT WITH AN APPROVED EPOXY GROUT.
2. CUT ALL STRANDS FLUSH WITH THE GIRDER ENDS AND PAINT WITH AN APPROVED EPOXY RESIN, EXCEPT FOR EXTENDED STRANDS AS SHOWN.
3. MEASURED NORMAL TO ℄ DIAPHRAGM
4. APPLY APPROVED RETARDANT FOR ¼" ETCH TO SIDE FORMS OR ¼" ROUGHENED SURFACE TREATMENT BY APPROVED MECHANICAL METHOD. OMIT AT EXTERIOR FACE OF EXTERIOR GIRDERS.
5. ADJUST HOLE LOCATION VERTICALLY TO MISS HARPED STRANDS. OMIT HOLES AND PLACE INSERTS ON THE INTERIOR FACE OF EXTERIOR GIRDERS. PLACE HOLES AND INSERTS PARALLEL TO DIAPHRAGM CENTERLINE. INSERTS SHALL BE 1"ø MEADOWBURKE MX-3 HI-TENSILE, 1"ø MEADOWBURKE FX-19 FERRULE INSERT, 1"ø x 5½" WILLIAMS F22 OPEN FERRULE INSERT, 1"ø x 4⅝" DAYTON-SUPERIOR F-62 FLARED THIN SLAB FERRULE INSERT OR APPROVED EQUAL.
6. 1 11/16"ø MIN. STRAND CHUCK OR ASTM A108 2¾"ø x 1⅛" STRAND ANCHOR. ANCHOR STRAND WITH WEDGES BEFORE GIRDER ERECTION. VERIFY WEDGES ARE SEATED TIGHTLY IMMEDIATELY BEFORE PLACING DIAPHRAGM CONCRETE.

SR 241 FILE NO. ____ SHEET BA38

Bridge Design Engr.	Grimm, E	
Supervisor	Aldrich, BS	
Designed By	Feely, C	05/20
Checked By	Mizumori, A	12/22
Detailed By	McCarthy, D	05/20
Bridge Projects Engr.		
Prelim. Plan By		
Architect/Specialist		

M:\X-Team\BR241-2_MABTON-SUNNYSIDE_REPL\window files\WF5858TDG 3.wnd

DATE	REVISION	BY	APP'D

REGION NO.	STATE	FED. AID PROJ. NO.	SHEET NO.	TOTAL SHEETS
10	WASH.			
JOB NUMBER 21Y001				
CONTRACT NO.				

P.E. STAMP BOX — STATE OF WASHINGTON, J. CHRIS FEELY, 38208, REGISTERED PROFESSIONAL ENGINEER — SEE SHEET CT1 — DATE:

BRIDGE AND STRUCTURES OFFICE

P.E. STAMP BOX — STATE OF WASHINGTON, BRIAN S. ALDRICH, 37834, PROFESSIONAL ENGINEER — SEE SHEET CT1 — DATE:

Washington State Department of Transportation

PRELIMINARY NOT FOR CONSTRUCTION

SR 241
MABTON VICINITY
RETROFIT BRIDGES
MABTON-SUNNYSIDE RD. BRIDGE NO. 241/2 REPLACEMENT

WF58TDG THIN DECK GIRDER
DETAILS 3 OF 5

BRIDGE SHEET NO. BA38

SHEET 75 OF 115 SHEETS

Tue Dec 27 15:19:22 2022

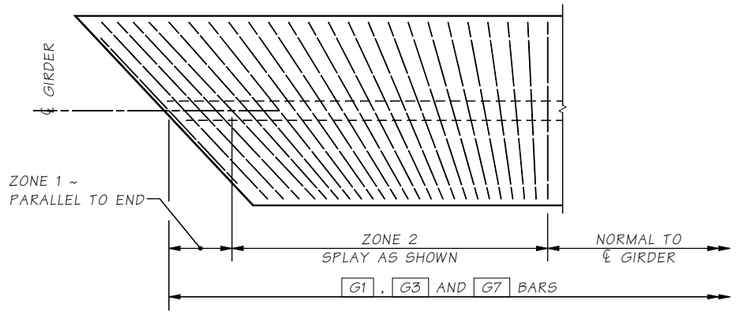

PLAN
TRANSVERSE REINFORCING AT SKEWED ENDS

LENGTHS OF G3 AND G7 VARY WITH SKEW.
ONLY TRANSVERSE REINFORCEMENT SHOWN.

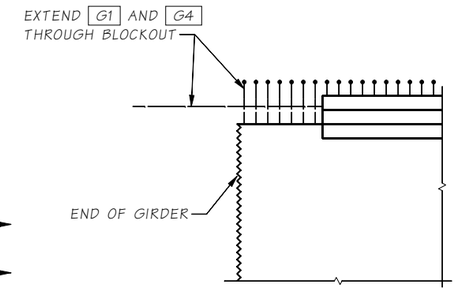

END TYPE B AND D BLOCKOUT

GIRDER SERIES	NO. OF G5 BARS
WF36TDG	3
WF42TDG	4
WF50TDG	5
WF58TDG	6
WF66TDG	7
WF74TDG	7
WF83TDG	8
WF95TDG	9
WF100TDG	10

GIRDER SERIES REINFORCEMENT TABLE

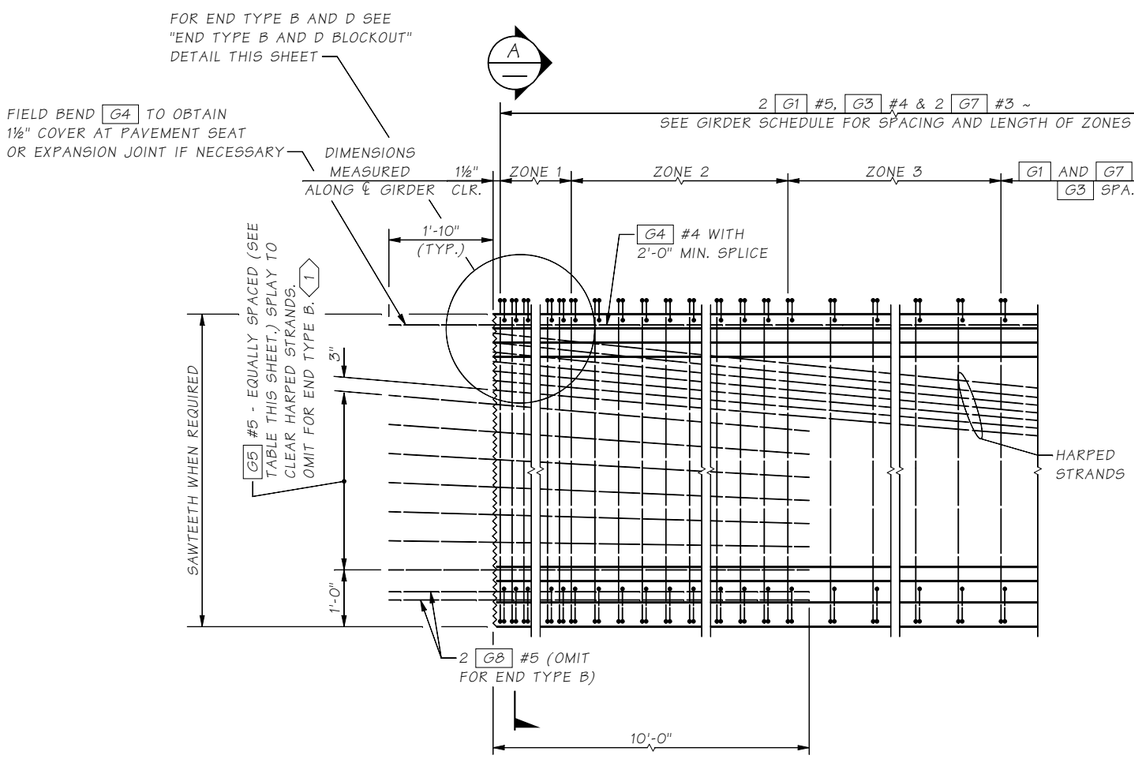

REINFORCEMENT END ELEVATION

STRAIGHT AND TEMPORARY STRANDS NOT SHOWN FOR CLARITY.
WF66TDG SHOWN, OTHERS SIMILAR

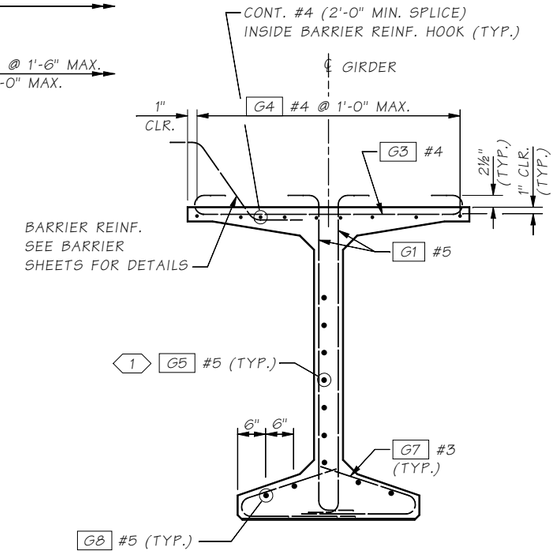

SECTION A

STRANDS
NOT SHOWN

REINFORCEMENT NOTES:

1. DEFORMED WELDED WIRE REINFORCEMENT MAY BE SUBSTITUTED FOR MILD REINFORCEMENT IN ACCORDANCE WITH STANDARD SPECIFICATION 6-02.3(25)A.

KEY NOTES:

1. SEE 'GIRDER SERIES REINFORCEMENT TABLE' ON THIS SHEET.
2. VARIES FOR SKEWED ENDS.
3. PAIRS OF G7 BARS, OR G9 AND G10 BARS, MAY BE USED INTERCHANGEABLY AS BOTTOM FLANGE TIES.
4. 1 G2 MAY BE SUBSTITUTED FOR 2 G1 WITHIN ZONE 1.

BENDING DIAGRAM

(ALL DIMENSIONS ARE OUT TO OUT)

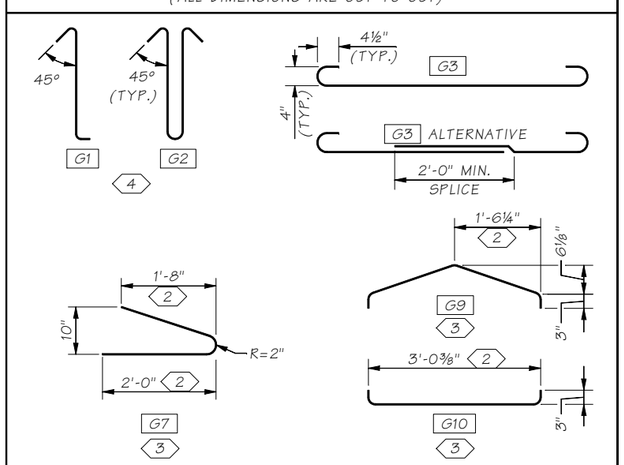

Bridge Design Engr.	Grimm, E		
Supervisor	Aldrich, BS		
Designed By	Feely, C	05/20	
Checked By	Mizumori, A	12/22	
Detailed By	McCarthy, D	05/20	
Bridge Projects Engr.			
Prelim. Plan By			
Architect/Specialist			

M:\X-Team\BR241-2_MABTOM-SUNNYSIDE_REPL\window files\WF5858TDG 4.wnd

DATE	REVISION	BY	APP'D

REGION NO.	STATE	FED. AID PROJ. NO.	SHEET NO.	TOTAL SHEETS
10	WASH.			
JOB NUMBER 21Y001				
CONTRACT NO.				

P.E. STAMP BOX
CHRIS FEELY
STATE OF WASHINGTON
32708
REGISTERED PROFESSIONAL ENGINEER
SEE SHEET CT1
DATE:

BRIDGE AND STRUCTURES OFFICE

P.E. STAMP BOX
BRIAN S. ALDRICH
STATE OF WASHINGTON
37834
REGISTERED PROFESSIONAL ENGINEER
SEE SHEET CT1
DATE:

Washington State
Department of Transportation
PRELIMINARY NOT FOR CONSTRUCTION

SR 241
MABTON VICINITY
RETROFIT BRIDGES
MABTON-SUNNYSIDE RD. BRIDGE NO. 241/2 REPLACEMENT

WF58TDG THIN DECK GIRDER
DETAILS 4 OF 5

BRIDGE SHEET NO. BA39

SHEET 76 OF 115 SHEETS

SR 241 FILE NO. ____ SHEET BA39

Tue Dec 27 15:19:22 2022

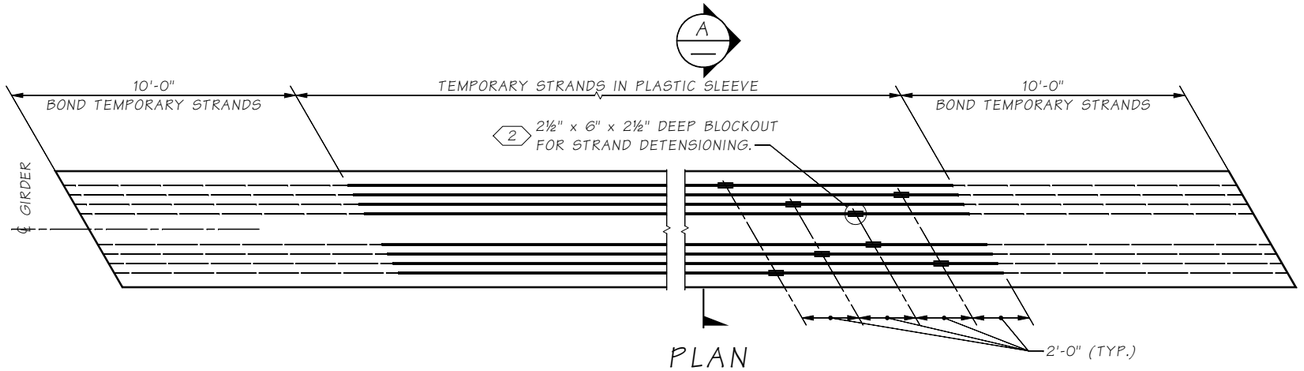

PLAN
PRETENSIONED TEMPORARY TOP STRANDS ALTERNATE

SEE GIRDER SCHEDULE FOR NUMBER OF TEMPORARY STRANDS REQUIRED.

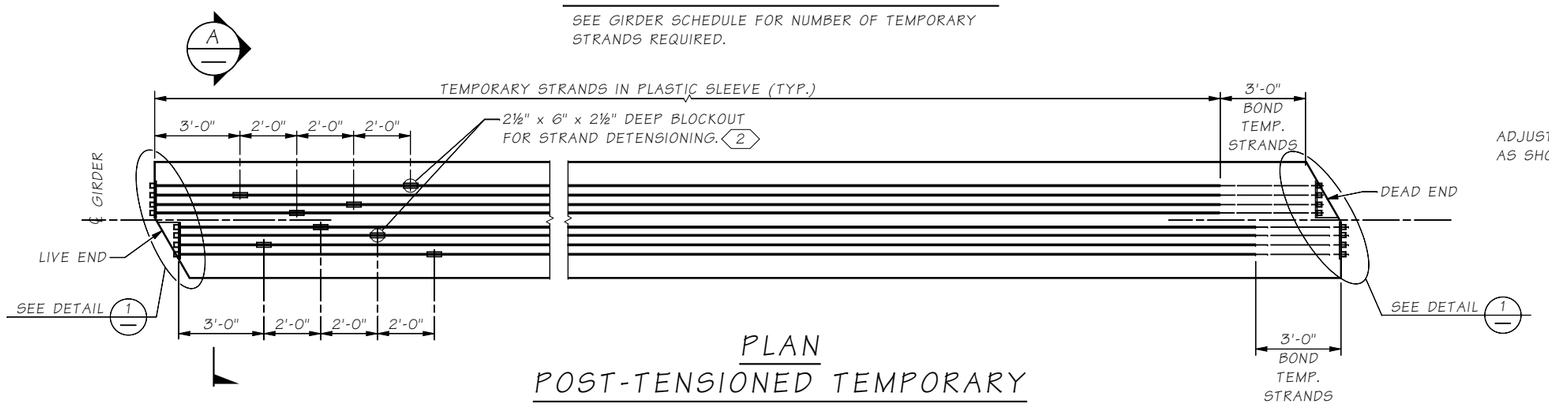

PLAN
POST-TENSIONED TEMPORARY TOP STRANDS ALTERNATE

SEE GIRDER SCHEDULE FOR NUMBER OF TEMPORARY STRANDS REQUIRED.

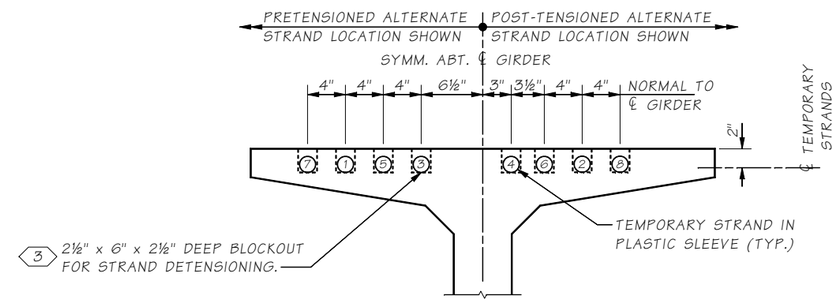

SECTION A

TEMPORARY STRAND LOCATION SEQUENCE SHALL BE AS SHOWN 1, 2 ETC.

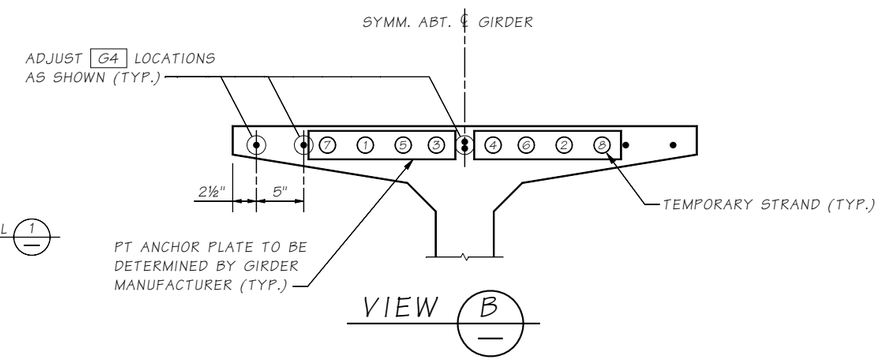

VIEW B

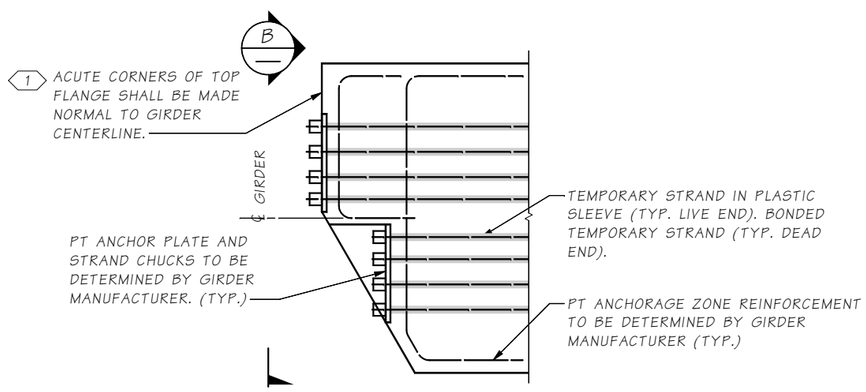

DETAIL 1

TEMPORARY STRAND NOTES:

1. TEMPORARY TOP STRANDS SHALL BE EITHER PRETENSIONED OR POST-TENSIONED IN ACCORDANCE WITH STANDARD SPECIFICATION SECTION 6-02.3(25)L.
2. FOR GIRDERS ERECTED ON A LONGITUDINAL GRADE, STRAND DETENSIONING BLOCKOUTS SHALL BE PLACED AT THE LOW END OF THE GIRDER.
3. SEE "TEMPORARY STRAND CUTTING SEQUENCE" ON CONSTRUCTION SEQUENCE SHEET FOR TEMPORARY STRAND DETENSIONING PROCEDURE.

KEY NOTES:

1 RECONFIGURE TOP FLANGE REINFORCEMENT ACCORDINGLY.

2 FORM WITH EXPANDED POLYSTYRENE (TYP.)

3 FORM WITH EXPANDED POLYSTYRENE. REMOVE POLYSTYRENE JUST PRIOR TO CUTTING THE TEMPORARY STRANDS AND PREVENT MOISTURE FROM ENTERING THE BLOCKOUT AS DESCRIBED IN THE TEMPORARY STRAND CUTTING SEQUENCE (TYP.).

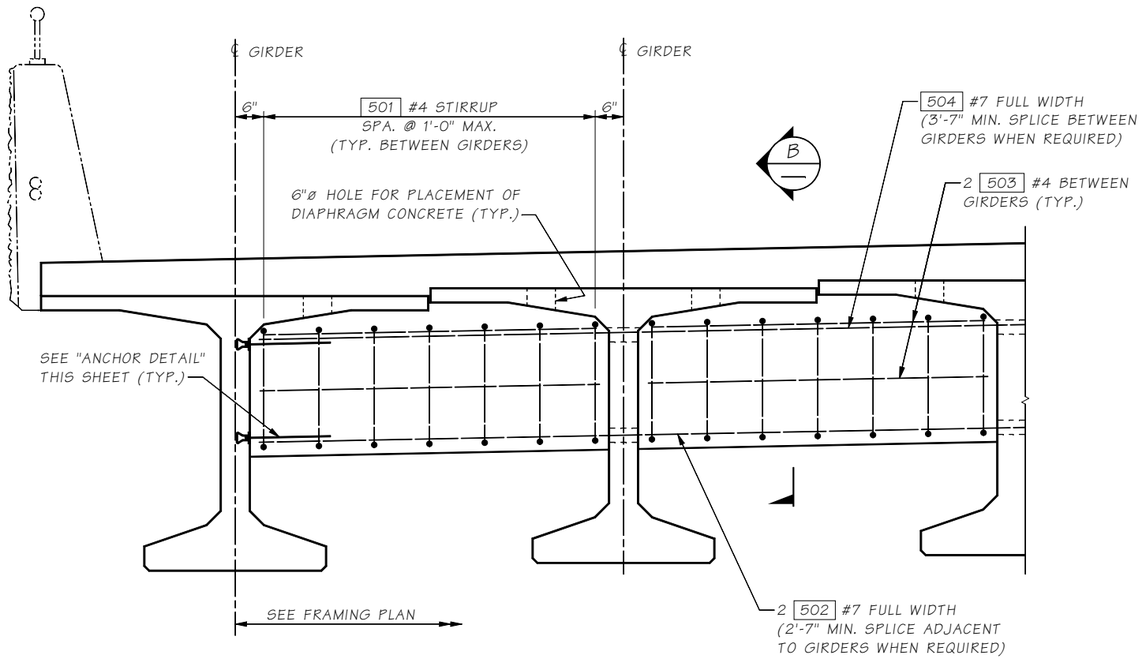

ELEVATION
PARTIAL DEPTH INTERMEDIATE DIAPHRAGM

DIMENSIONS ARE ALONG DIAPHRAGM

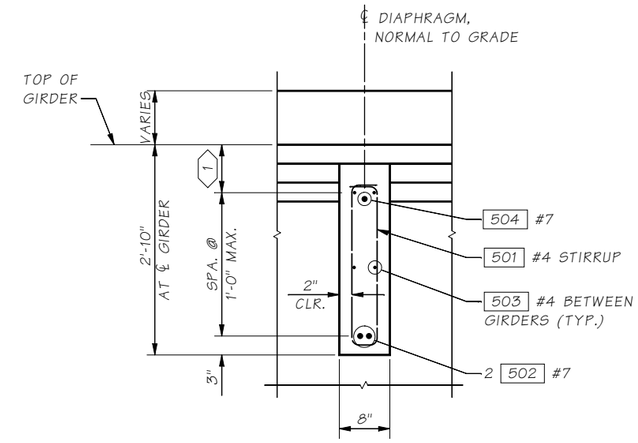

SECTION B

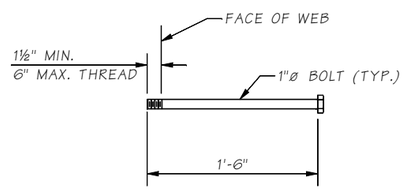

ANCHOR DETAIL

ASTM A-307

KEY NOTE:

1 9" AT ℄ GIRDER

DIAPHRAGM NOTES:

1. GIRDERS SHALL BE HELD RIGIDLY IN PLACE WHEN DIAPHRAGMS ARE PLACED.
2. IT MAY BE NECESSARY TO THREAD REINFORCING BARS THROUGH HOLES IN GIRDERS PRIOR TO PLACING EXTERIOR GIRDERS.
3. CUT/RELEASE GIRDER TEMPORARY STRANDS BEFORE CASTING DIAPHRAGM. SEE TEMPORARY STRAND CUTTING SEQUENCE.
4. FOR CONCRETE PLACEMENT PROCEDURE SEE "SUPERSTRUCTURE CONSTRUCTION SEQUENCE" SHEET.

SR 241 FILE NO. ____ SHEET BA41

Bridge Design Engr.	Grimm, E	
Supervisor	Aldrich, BS	
Designed By	Feely, C	05/20
Checked By	Mizumori, A	12/22
Detailed By	McCarthy, D	05/20
Bridge Projects Engr.		
Prelim. Plan By		
Architect/Specialist		

M:\X-Team\BR241-2_MABTOM-SUNNYSIDE_REPL\window files\INTERM DIAPH.wnd

DATE	REVISION	BY	APP'D

REGION NO.	STATE	FED. AID PROJ. NO.	SHEET NO.	TOTAL SHEETS
10	WASH.			
JOB NUMBER 21Y001				
CONTRACT NO.				

P.E. STAMP BOX
CHRIS FEELY, STATE OF WASHINGTON, 32708, REGISTERED PROFESSIONAL ENGINEER
SEE SHEET CT1
DATE:

BRIDGE AND STRUCTURES OFFICE

P.E. STAMP BOX
BRIAN S. ALDRICH, STATE OF WASHINGTON, 37834, PROFESSIONAL ENGINEER
SEE SHEET CT1
DATE:

Washington State Department of Transportation

PRELIMINARY NOT FOR CONSTRUCTION

SR 241
MABTON VICINITY
RETROFIT BRIDGES
MABTON-SUNNYSIDE RD. BRIDGE NO. 241/2 REPLACEMENT

INTERMEDIATE DIAPHRAGM

BRIDGE SHEET NO. BA41

SHEET 78 OF 115 SHEETS

Tue Dec 27 15:19:23 2022

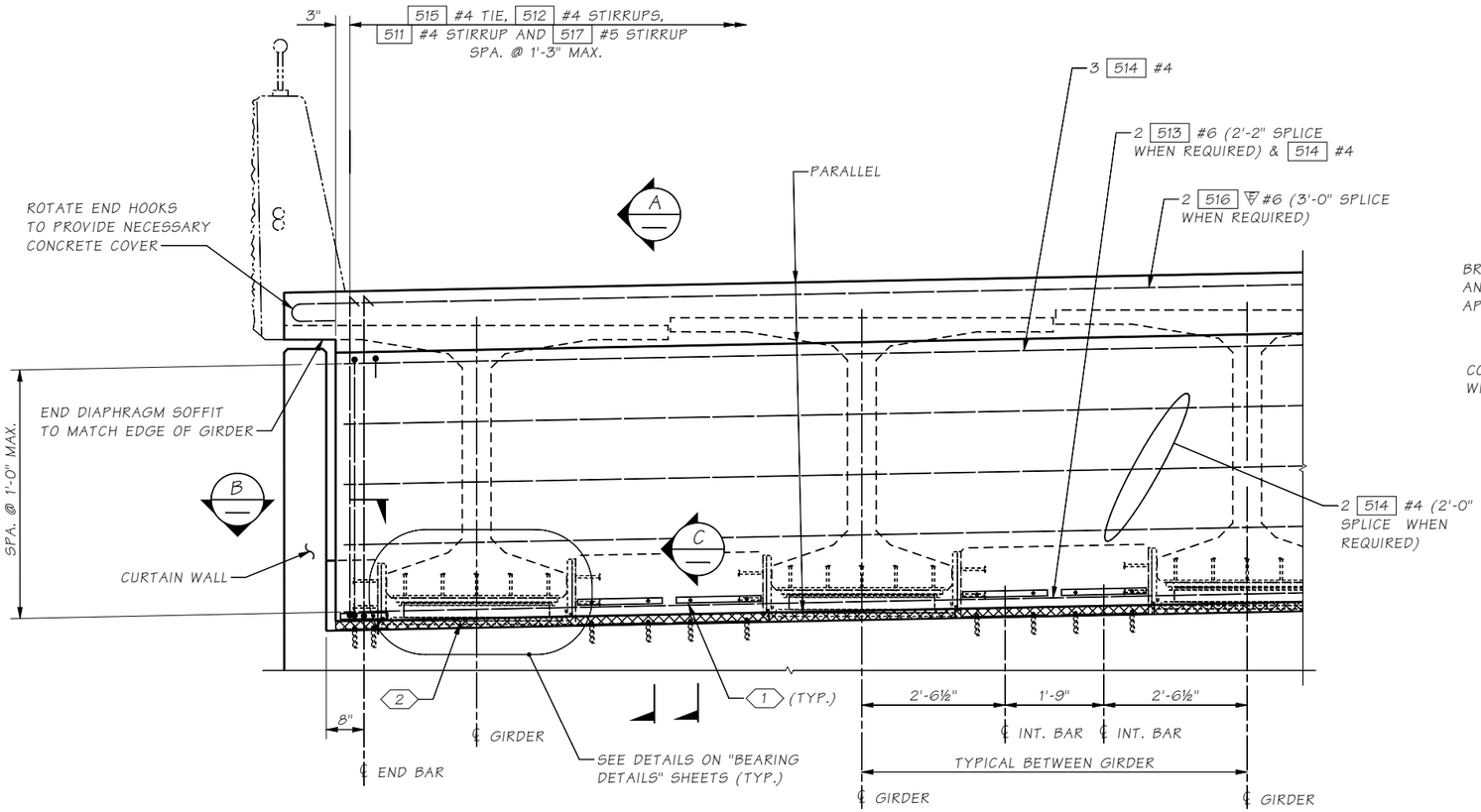

ELEVATION
END DIAPHRAGM

DIMENSIONS ARE ALONG ℄ DIAPHRAGM

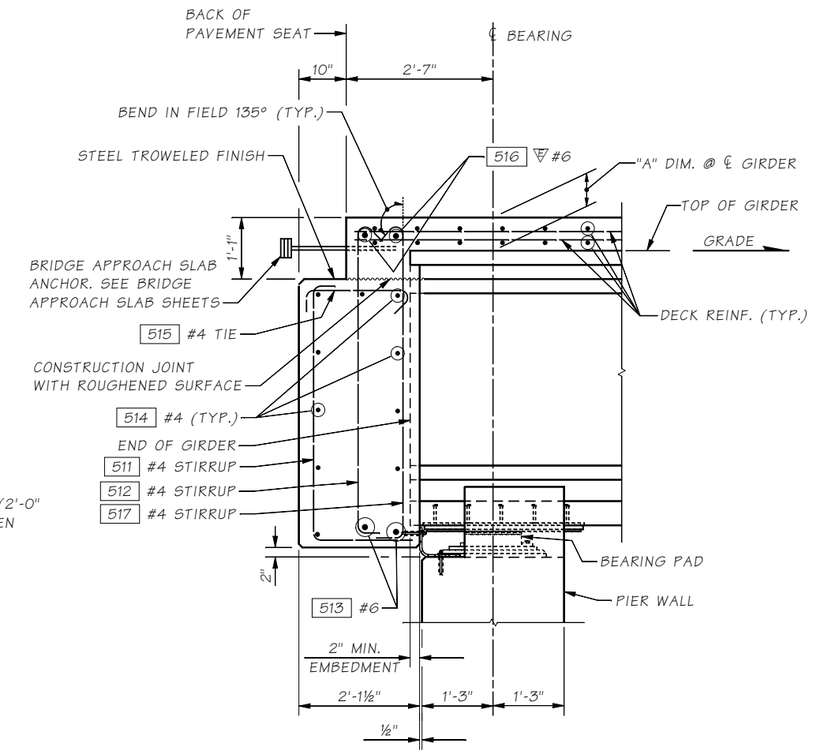

SECTION A

SEE GIRDER SHEETS FOR DIMENSION "A".
ALL LONGITUDINAL DIMENSIONS ARE NORMAL TO PIER WALL.

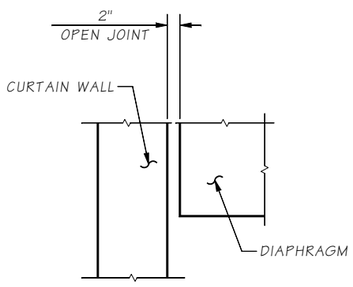

SECTION B

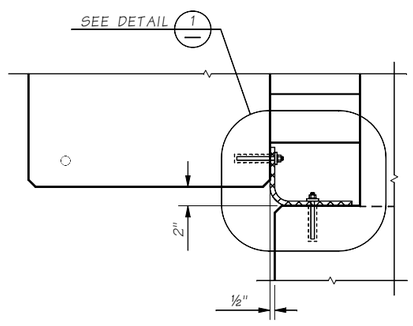

SECTION C

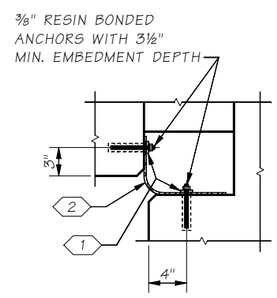

DETAIL 1

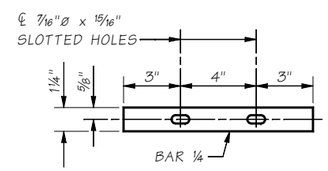

END BAR 1¼ x ¼ x 0'-10 DETAIL

BAR SHALL BE HOT DIP GALVANIZE AFTER FABRICATION

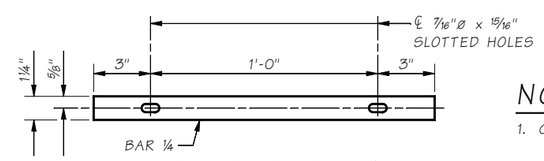

INTERIOR BAR 1¼ x ¼ x 1'-6 DETAIL

BAR SHALL BE HOT DIP GALVANIZE AFTER FABRICATION

KEY NOTES:

1. BAR 1¼ x ¼ x 1'-4 WITH 7/16"Ø LONG SLOTTED HOLES CENTERED 3" FROM ENDS OF BAR. BAR SHALL BE HOT DIP GALVANIZED AFTER FABRICATION IN ACCORDANCE WITH AASHTO M111.
2. ⅛" BUYTL RUBBER SHEETING 1'-2" WIDE. CONTINUOUS FOR FULL WIDTH OF END DIAPHRAGM.

NOTES:

1. GIRDERS SHALL BE HELD RIGIDLY IN PLACE WHEN DIAPHRAGMS ARE PLACED.
2. CUT/RELEASE GIRDER TEMPORARY STRANDS BEFORE CASTING DIAPHRAGM. SEE TEMPORARY STRAND CUTTING SEQUENCE.
3. EXTENDED STRANDS AND GIRDER REINFORCING NOT SHOWN FOR CLARITY.

Bridge Design Engr.	Grimm, E	
Supervisor	Aldrich, BS	
Designed By	Schultz, E	11/22
Checked By	O'Neill, P	12/22
Detailed By	McCarthy, D	11/22
Bridge Projects Engr.		
Prelim. Plan By		
Architect/Specialist		

M:\X-Team\BR241-2_MABTON-SUNNYSIDE_REPL\window files\END DIAPH.wnd

DATE	REVISION	BY	APP'D

REGION NO.	STATE	FED. AID PROJ. NO.	SHEET NO.	TOTAL SHEETS
10	WASH.			
JOB NUMBER 21Y001				
CONTRACT NO.				

P.E. STAMP BOX — ERIC HENRY SCHULTZ, STATE OF WASHINGTON, 38918, STRUCTURAL ENGINEER, PROFESSIONAL ENGINEER — SEE SHEET CT1 — DATE:

BRIDGE AND STRUCTURES OFFICE

P.E. STAMP BOX — BRIAN S. ALDRICH, STATE OF WASHINGTON, 37834, STRUCTURAL ENGINEER, PROFESSIONAL ENGINEER — SEE SHEET CT1 — DATE:

Washington State Department of Transportation

PRELIMINARY NOT FOR CONSTRUCTION

SR 241
MABTON VICINITY
RETROFIT BRIDGES
MABTON-SUNNYSIDE RD. BRIDGE NO. 241/2 REPLACEMENT

END DIAPHRAGM

BRIDGE SHEET NO. BA42

SHEET 79 OF 115 SHEETS

SR 241 FILE NO. ____ SHEET BA42

Tue Dec 27 15:19:23 2022

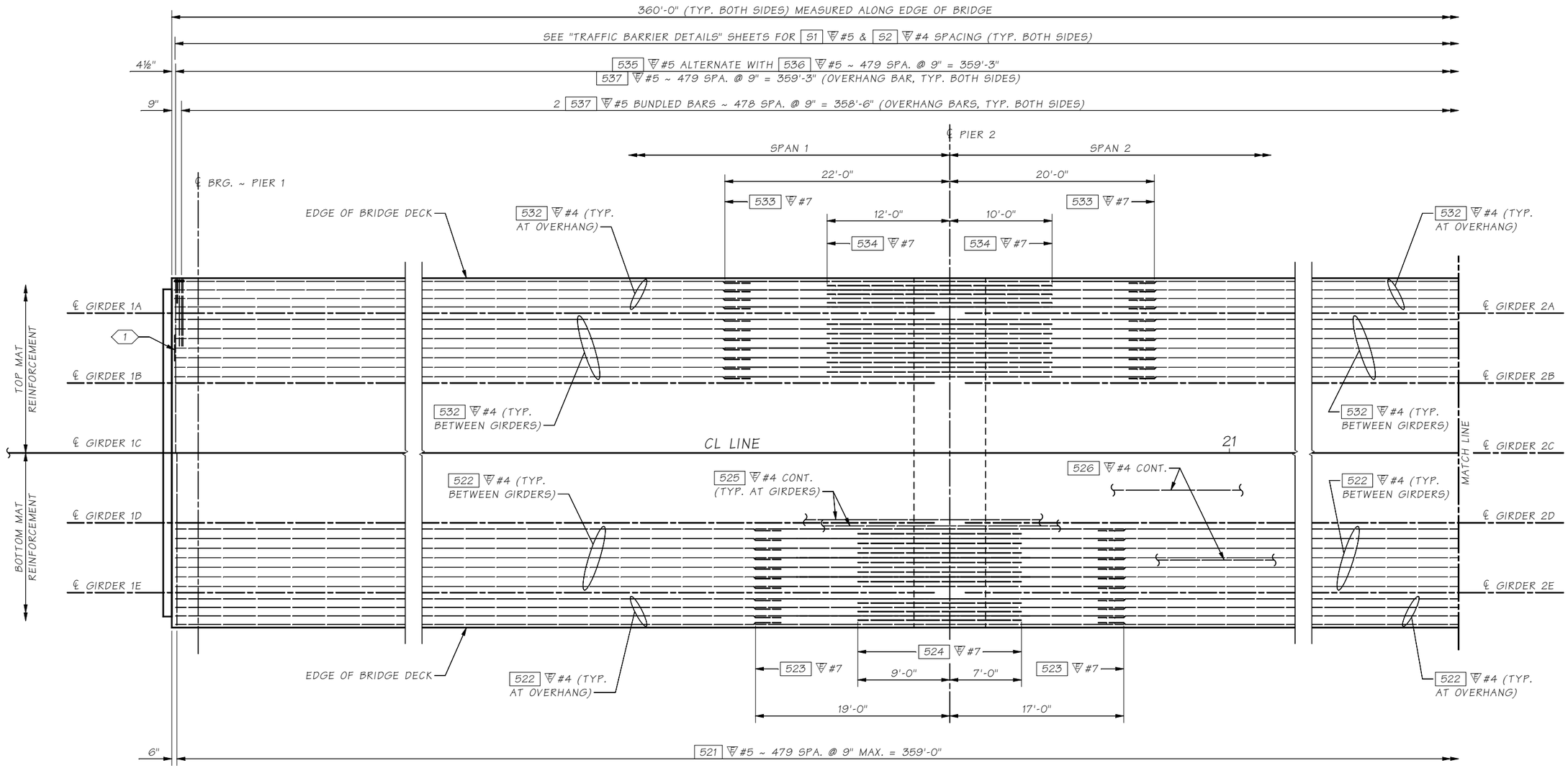

PLAN

SPAN 1 AND PARTIAL SPAN 2 BRIDGE DECK REINFORCEMENT

FOR REINFORCEMENT NOT SHOWN, SEE "END DIAPHRAGM" AND "INTERMEDIATE DIAPHRAGM" SHEETS.

BRIDGE DECK NOTES:

1. LOCATION OF REBAR SPLICES AT CONTRACTOR'S OPTION, UNLESS OTHERWISE NOTED.
2. MIN. REBAR SPLICE LENGTH UNLESS NOTED OTHERWISE SHALL BE:
   #4 = 2'-0"
   #5 = 2'-6"
   WHEN SPLICING DIFFERENT SIZE OF REBARS, THE MIN. SPLICE LENGTH OF THE SMALLER BAR MAY BE USED.
3. NO MORE THAN 50% OF REBAR SHALL BE SPLICED AT ANY ONE LOCATION UNLESS NOTED OTHERWISE. STAGGER SPLICES AT A MINIMUM OF 3'-0".

KEY NOTE:

1 PERMISSIBLE 2'-6" MIN. LAP SPLICE CENTERED BETWEEN GIRDERS ALTERNATE SPLICE LOCATION EVERY OTHER BAR.

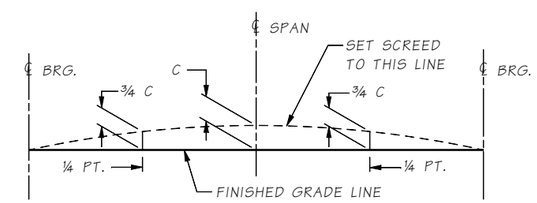

SCREED SETTING DIMENSIONS

FOR DIMENSION "C" SEE GIRDER SCHEDULE

SR 241 FILE NO. SHEET BA43

Bridge Design Engr.	Grimm, E	
Supervisor	Aldrich, BS	
Designed By	Feely, C	
Checked By	Mizumori, A	12/22
Detailed By	McCarthy, D	10/22
Bridge Projects Engr.		
Prelim. Plan By		
Architect/Specialist		

M:\X-Team\BR241-2_MABTOM-SUNNYSIDE_REPL\window files\DECK REINF PLAN 1.wnd

DATE	REVISION	BY	APP'D

REGION NO.	STATE	FED. AID PROJ. NO.	SHEET NO.	TOTAL SHEETS
10	WASH.			

JOB NUMBER 21Y001

CONTRACT NO.

P.E. STAMP BOX — J. CHRIS FEELY, STATE OF WASHINGTON, 32706, REGISTERED PROFESSIONAL ENGINEER — SEE SHEET CT1 — DATE:

BRIDGE AND STRUCTURES OFFICE

P.E. STAMP BOX — BRIAN S. ALDRICH, STATE OF WASHINGTON, 37834, STRUCTURAL ENGINEER, PROFESSIONAL ENGINEER — SEE SHEET CT1 — DATE:

Washington State Department of Transportation

PRELIMINARY NOT FOR CONSTRUCTION

SR 241
MABTON VICINITY
RETROFIT BRIDGES
MABTON-SUNNYSIDE RD. BRIDGE NO. 241/2 REPLACEMENT

BRIDGE DECK REINFORCEMENT PLAN
SPAN 1 AND PARTIAL SPAN 2

BRIDGE SHEET NO. BA43

SHEET 80 OF 115 SHEETS

Tue Dec 27 15:19:24 2022

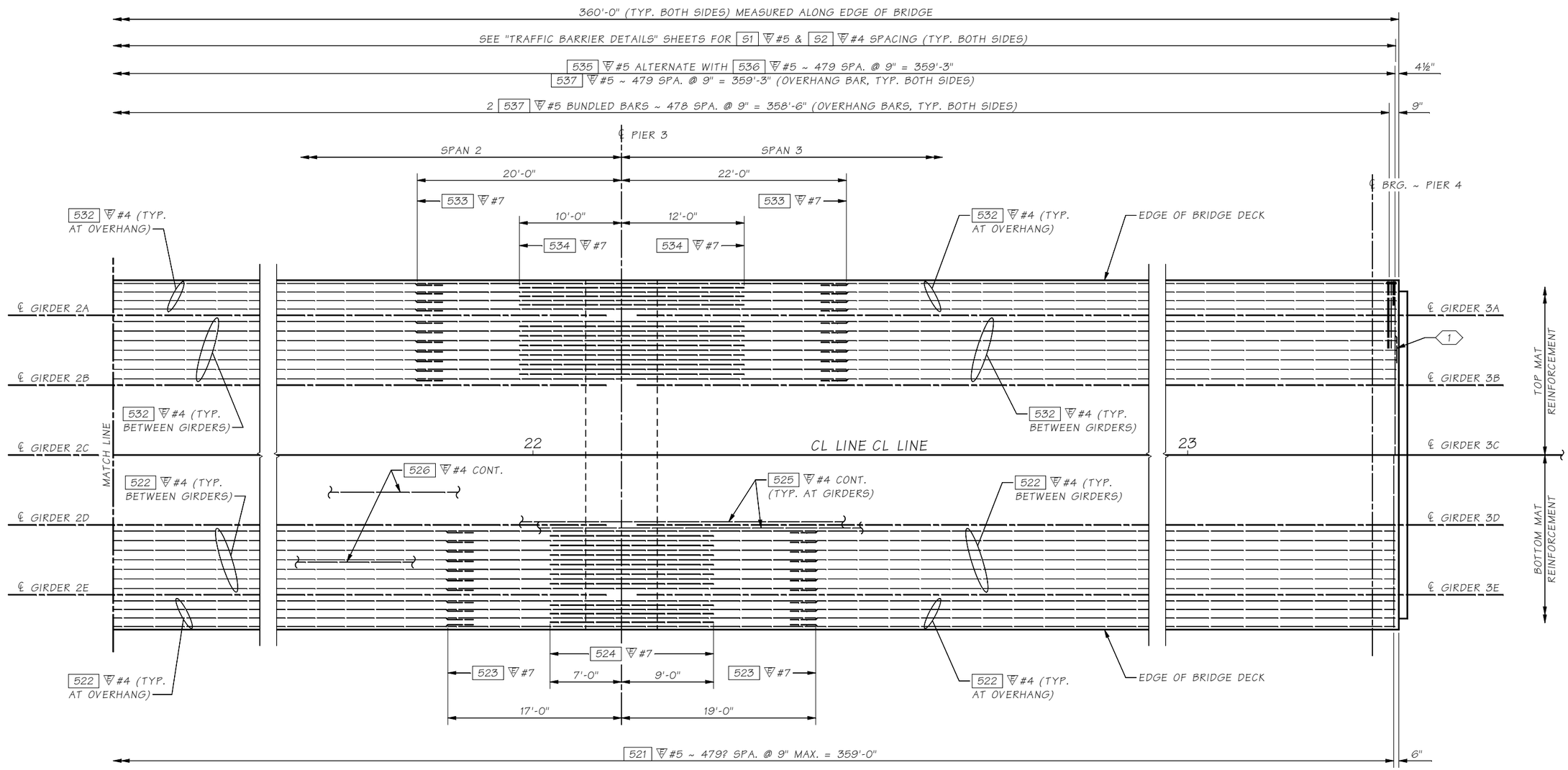

PLAN
PARTIAL SPAN 2 AND SPAN 3 BRIDGE DECK REINFORCEMENT

FOR REINFORCEMENT NOT SHOWN, SEE "END DIAPHRAGM" AND "INTERMEDIATE DIAPHRAGM" SHEETS.

BRIDGE DECK NOTES:

1. LOCATION OF REBAR SPLICES AT CONTRACTOR'S OPTION, UNLESS OTHERWISE NOTED.
2. MIN. REBAR SPLICE LENGTH UNLESS NOTED OTHERWISE SHALL BE:
   #4 = 2'-0"
   #5 = 2'-6"
   WHEN SPLICING DIFFERENT SIZE OF REBARS, THE MIN. SPLICE LENGTH OF THE SMALLER BAR MAY BE USED.
3. NO MORE THAN 50% OF REBAR SHALL BE SPLICED AT ANY ONE LOCATION UNLESS NOTED OTHERWISE. STAGGER SPLICES AT A MINIMUM OF 3'-0".

KEY NOTE:

1 PERMISSIBLE 2'-6" MIN. LAP SPLICE CENTERED BETWEEN GIRDERS ALTERNATE SPLICE LOCATION EVERY OTHER BAR.

SR 241 FILE NO. SHEET BA44

Bridge Design Engr.	Grimm, E	
Supervisor	Aldrich, BS	
Designed By	Feely, C	
Checked By	Mizumori, A	12/22
Detailed By	McCarthy, D	10/22
Bridge Projects Engr.		
Prelim. Plan By		
Architect/Specialist		

M:\X-Team\BR241-2_MABTOM-SUNNYSIDE_REPL\window files\DECK REINF PLAN 2.wnd

DATE	REVISION	BY	APP'D

REGION NO.	STATE	FED. AID PROJ. NO.	SHEET NO.	TOTAL SHEETS
10	WASH.			

JOB NUMBER 21Y001

CONTRACT NO.

P.E. STAMP BOX — J. CHRIS FEELY, STATE OF WASHINGTON, 32706, REGISTERED PROFESSIONAL ENGINEER — SEE SHEET CT1 — DATE:

BRIDGE AND STRUCTURES OFFICE

P.E. STAMP BOX — BRIAN S. ALDRICH, STATE OF WASHINGTON, 37834, STRUCTURAL ENGINEER, PROFESSIONAL ENGINEER — SEE SHEET CT1 — DATE:

Washington State Department of Transportation

PRELIMINARY NOT FOR CONSTRUCTION

SR 241
MABTON VICINITY
RETROFIT BRIDGES
MABTON-SUNNYSIDE RD. BRIDGE NO. 241/2 REPLACEMENT

BRIDGE DECK REINFORCEMENT PLAN
PARTIAL SPAN 2 AND SPAN 3

BRIDGE SHEET NO. BA44

SHEET 81 OF 115 SHEETS

Tue Dec 27 15:19:25 2022

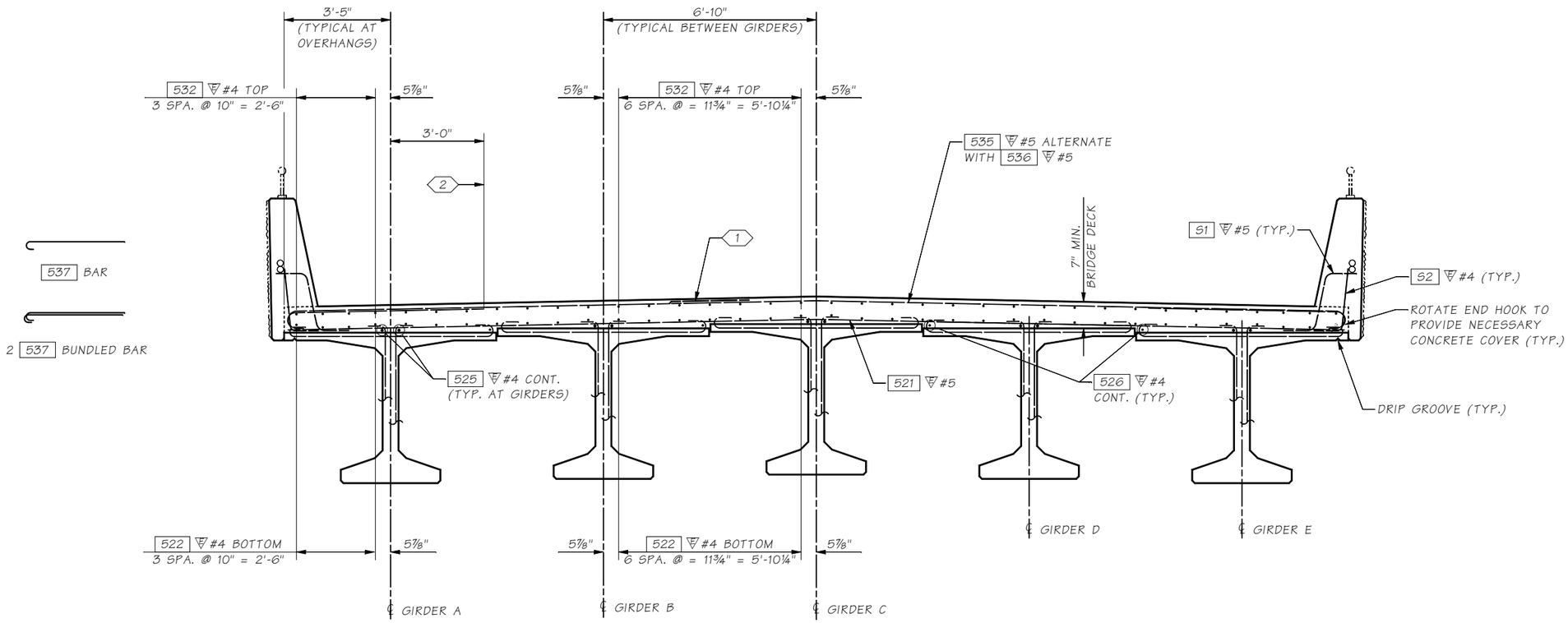

BRIDGE DECK REINFORCEMENT SECTION NEAR END PIERS AND MID-SPANS

KEY NOTES:

1. PERMISSIBLE 2'-6" MIN. LAP SPLICE CENTERED BETWEEN GIRDERS ALTERNATE SPLICE LOCATION EVERY OTHER BAR.
2. 537 #5 OR 2 537 #5 BUNDLED (OVERHANG BARS)

Bridge Design Engr.	Grimm, E	
Supervisor	Aldrich, BS	
Designed By	Feely, C	05/20
Checked By	Mizumori, A	12/22
Detailed By	McCarthy, D	10/22
Bridge Projects Engr.		
Prelim. Plan By		
Architect/Specialist		

M:\X-Team\BR241-2_MABTOM-SUNNYSIDE_REPL\window files\DECK REINF SECT 1.wnd

DATE	REVISION	BY	APP'D

REGION NO.	STATE	FED. AID PROJ. NO.	SHEET NO.	TOTAL SHEETS
10	WASH.			
JOB NUMBER 21Y001				
CONTRACT NO.				

P.E. STAMP BOX
J. CHRIS FEELY, STATE OF WASHINGTON, 32706, REGISTERED PROFESSIONAL ENGINEER
SEE SHEET CT1
DATE:

BRIDGE AND STRUCTURES OFFICE

P.E. STAMP BOX
BRIAN S. ALDRICH, STATE OF WASHINGTON, 37834, STRUCTURAL ENGINEER, PROFESSIONAL ENGINEER
SEE SHEET CT1
DATE:

Washington State Department of Transportation

PRELIMINARY NOT FOR CONSTRUCTION

SR 241
MABTON VICINITY
RETROFIT BRIDGES
MABTON-SUNNYSIDE RD. BRIDGE NO. 241/2 REPLACEMENT

BRIDGE DECK REINFORCEMENT SECTION NEAR END PIERS AND MID-SPANS

BRIDGE SHEET NO. BA45

SHEET 82 OF 115 SHEETS

SR 241 FILE NO. ____ SHEET BA45

Tue Dec 27 15:19:25 2022

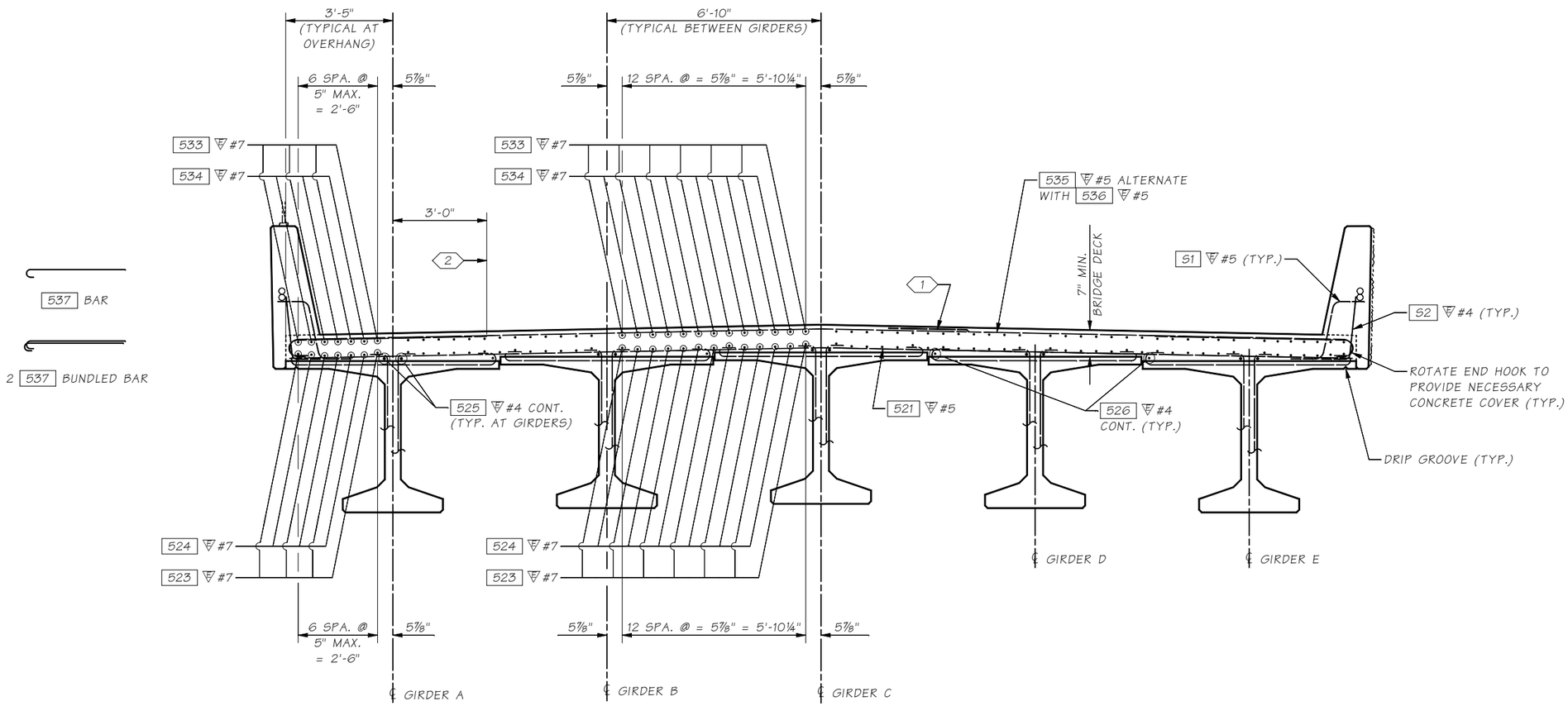

BRIDGE DECK REINFORCEMENT SECTION NEAR PIERS 2 AND 3

KEY NOTES:

1. PERMISSIBLE 2'-6" MIN. LAP SPLICE CENTERED BETWEEN GIRDERS ALTERNATE SPLICE LOCATION EVERY OTHER BAR.
2. 537 #5 OR 2 537 #5 BUNDLED (OVERHANG BARS)

Bridge Design Engr.	Grimm, E	
Supervisor	Aldrich, BS	
Designed By	Feely, C	05/20
Checked By	Mizumori, A	12/22
Detailed By	McCarthy, D	10/22
Bridge Projects Engr.		
Prelim. Plan By		
Architect/Specialist		

M:\X-Team\BR241-2_MABTOM-SUNNYSIDE_REPL\window files\DECK REINF SECT 2.wnd

DATE	REVISION	BY	APP'D

REGION NO.	STATE	FED. AID PROJ. NO.	SHEET NO.	TOTAL SHEETS
10	WASH.			
JOB NUMBER 21Y001				
CONTRACT NO.				

P.E. STAMP BOX — CHRIS FEELY, STATE OF WASHINGTON, 32708, REGISTERED PROFESSIONAL ENGINEER — SEE SHEET CT1 — DATE:

BRIDGE AND STRUCTURES OFFICE

P.E. STAMP BOX — BRIAN S. ALDRICH, STATE OF WASHINGTON, 37834, PROFESSIONAL ENGINEER — SEE SHEET CT1 — DATE:

Washington State Department of Transportation

PRELIMINARY NOT FOR CONSTRUCTION

SR 241
MABTON VICINITY
RETROFIT BRIDGES
MABTON-SUNNYSIDE RD. BRIDGE NO. 241/2 REPLACEMENT

BRIDGE DECK REINFORCEMENT SECTION NEAR PIER 2

BRIDGE SHEET NO. BA46

SHEET 83 OF 115 SHEETS

SR 241 FILE NO. ____ SHEET BA46

Tue Dec 27 15:19:25 2022

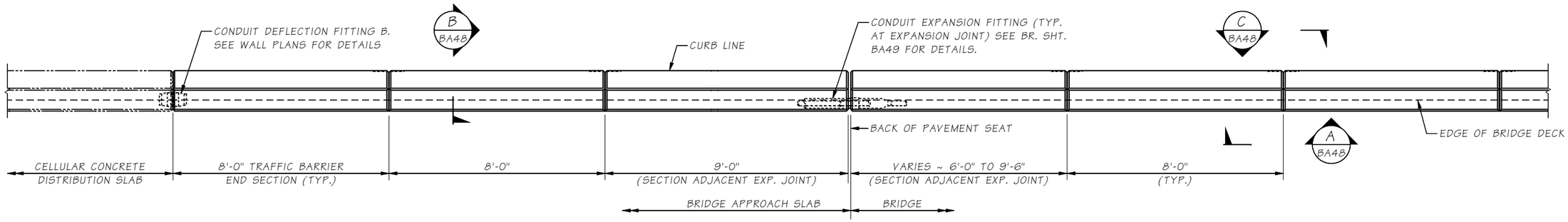

PLAN
TRAFFIC BARRIER
2

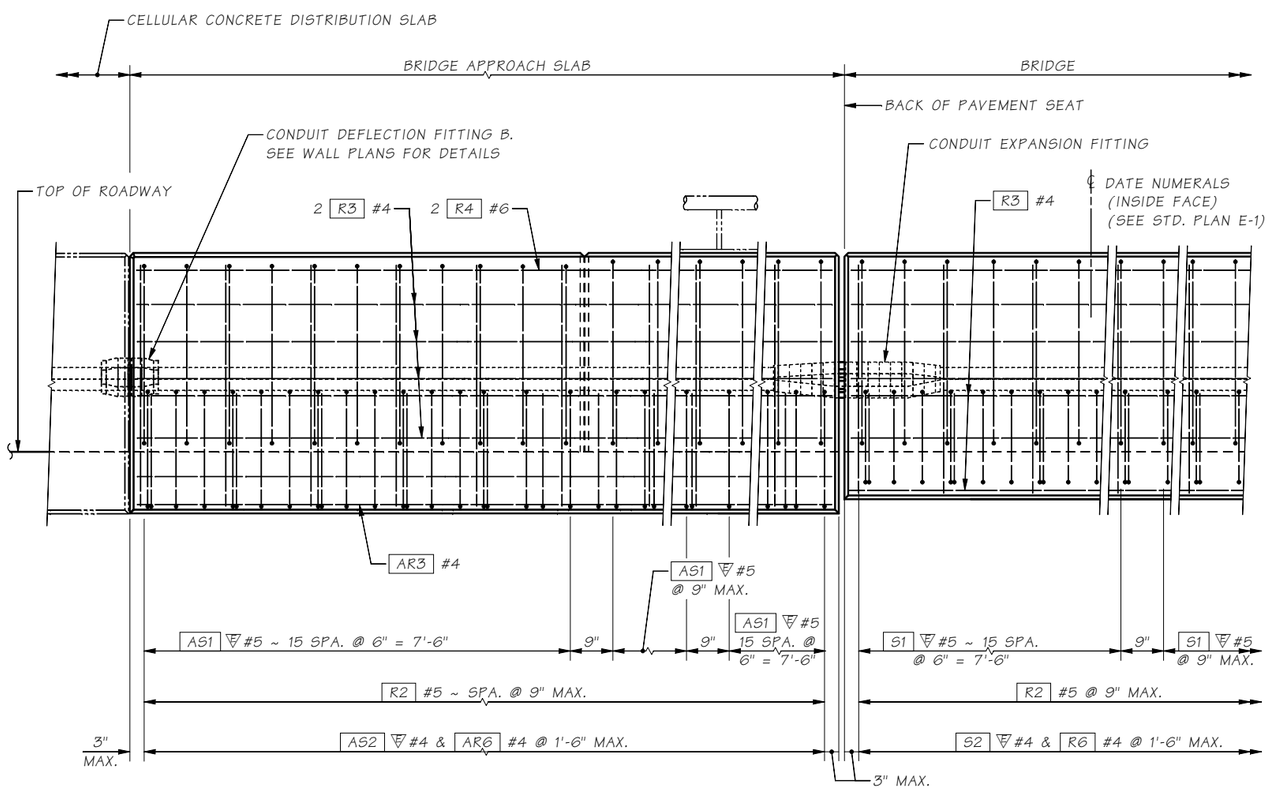

OUTSIDE ELEVATION
END OF TRAFFIC BARRIER

SHOWN WITH BRIDGE APPROACH SLAB

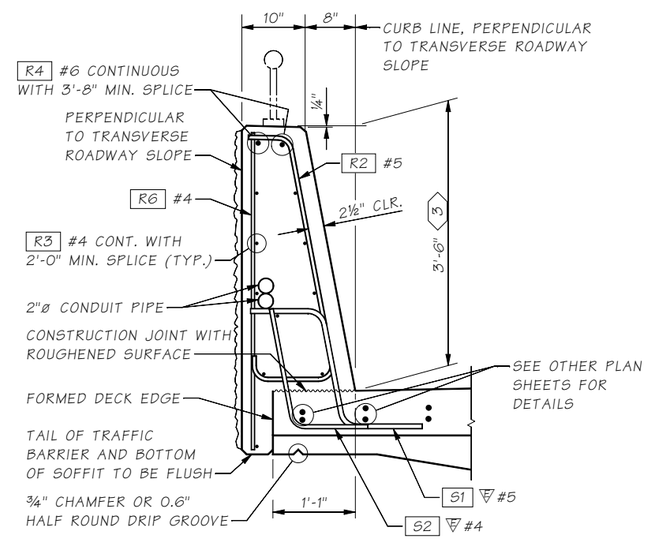

TYPICAL SECTION
TRAFFIC BARRIER

SHOWN ON BRIDGE

KEY NOTES:

1. 2"ø RGS CONDUIT PIPES (TYP.) OR SEE WIRING SCHEDULE FOR CONDUIT SIZE.
2. BARRIER CONTINUOUS BETWEEN BRIDGE DECK EXPANSION JOINTS. CONSTRUCTION JOINTS WITH SHEAR KEYS ARE PERMISSIBLE AT DUMMY JOINT LOCATIONS. FORM JOINTS BETWEEN DUMMY JOINTS SHALL NOT BE PERMITTED.
3. HEIGHT MAY VARY IF REQUIRED TO PROVIDE A PROFILE PLEASING TO THE EYE.

Bridge Design Engr.	Grimm, E	
Supervisor	Aldrich, BS	
Designed By	Schultz, E	11/22
Checked By	O'Neill, P	12/22
Detailed By	McCarthy, D	11/22
Bridge Projects Engr.		
Prelim. Plan By		
Architect/Specialist		

M:\X-Team\BR241-2_MABTOM-SUNNYSIDE_REPL\window files\TRAFFIC BARRIER 1.wnd

DATE	REVISION	BY	APP'D

REGION NO.	STATE	FED. AID PROJ. NO.	SHEET NO.	TOTAL SHEETS
10	WASH.			
JOB NUMBER 21Y001				
CONTRACT NO.				

P.E. STAMP BOX
ERIC HENRY SCHULTZ
STATE OF WASHINGTON
39910
PROFESSIONAL ENGINEER
SEE SHEET CT1
DATE:

BRIDGE AND STRUCTURES OFFICE

P.E. STAMP BOX
BRIAN S. ALDRICH
STATE OF WASHINGTON
37834
PROFESSIONAL ENGINEER
SEE SHEET CT1
DATE:

Washington State
Department of Transportation
PRELIMINARY NOT FOR CONSTRUCTION

SR 241
MABTON VICINITY
RETROFIT BRIDGES
MABTON-SUNNYSIDE RD. BRIDGE NO. 241/2 REPLACEMENT

TRAFFIC BARRIER DETAILS 1 OF 3

BRIDGE SHEET NO. BA47

SHEET 84 OF 115 SHEETS

SR 241 FILE NO. SHEET BA47

Tue Dec 27 15:19:26 2022

JUNCTION BOX LOCATIONS

TS = TRAFFIC SYSTEM LT = LIGHTING SYSTEM

CL STATION	OFFSET	"TS" OR "LT"
19+47.67	LEFT AND RIGHT	TS
19+56.17	LEFT AND RIGHT	LT
20+76.67	LEFT AND RIGHT	TS
20+84.67	LEFT AND RIGHT	LT
22+12.67	LEFT AND RIGHT	TS
22+20.67	LEFT AND RIGHT	LT
23+25.17	LEFT AND RIGHT	TS
23+33.67	LEFT AND RIGHT	LT

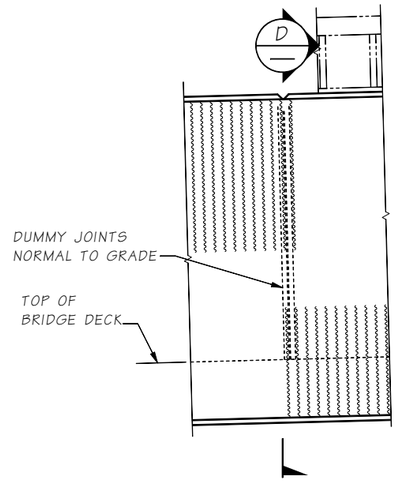

VIEW A BA47

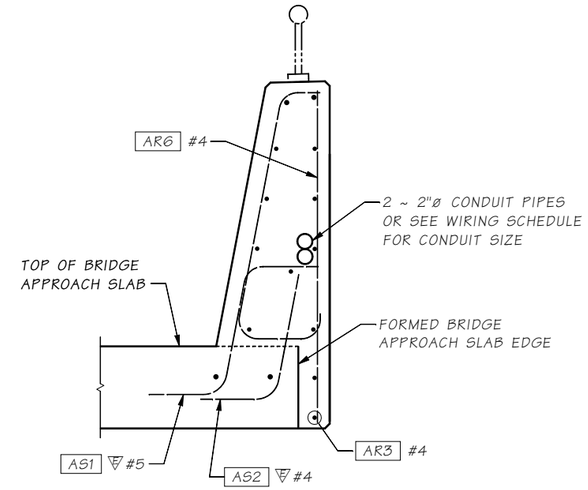

SECTION B BA47 BRIDGE APPROACH SLAB

FOR DETAILS NOT SHOWN SEE "OUTSIDE ELEVATION" AND "TYPICAL SECTION - TRAFFIC BARRIER"

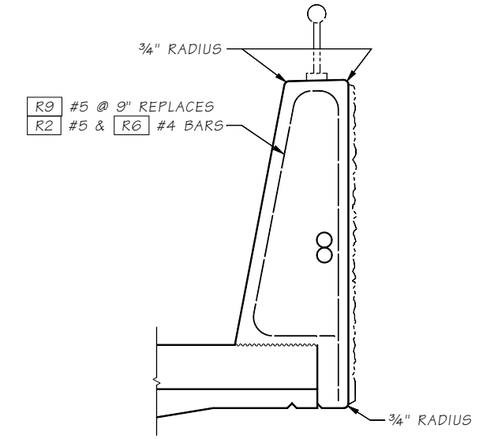

SLIPFORM ALTERNATE

SEE "TYPICAL SECTION - TRAFFIC BARRIER" FOR ADDITIONAL DETAILS.

THE CONTRACTOR IS ADVISED THAT THE SLIPFORM CONSTRUCTION METHOD IS A PATENTED PROPRIETARY PROCESS FOR BARRIERS WITH A FRACTURED FIN FINISH.

JUNCTION BOX NOTES:

1. JUNCTION BOX LOCATIONS SHOWN ARE APPROXIMATE. CENTER JUNCTION BOX INSTALLATION BETWEEN BARRIER DUMMY JOINTS.
2. INSTALL ALL CONDUIT RUNS TO DRAIN TO A BRIDGE END OR PROVIDE DRAIN AT ALL LOW POINTS IN CONDUIT RUN ON BRIDGE.

BENDING DIAGRAM

ALL DIMENSIONS ARE OUT TO OUT.

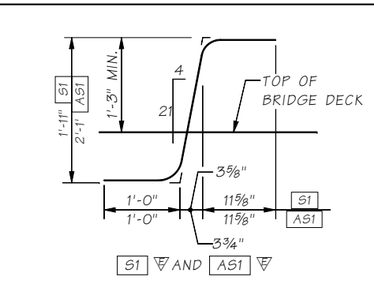

S1 AND AS1

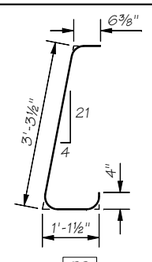

R2

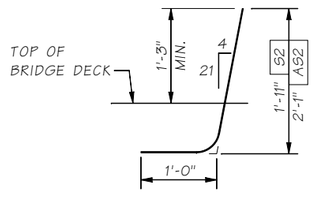

S2 AND AS2

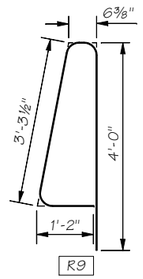

R9

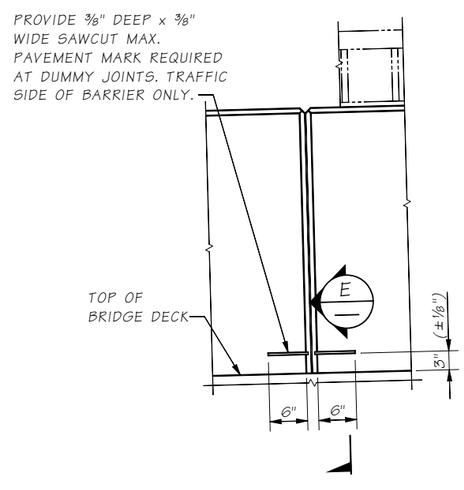

VIEW C BA47

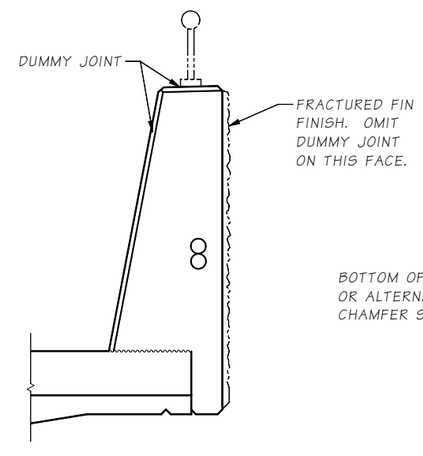

SECTION D

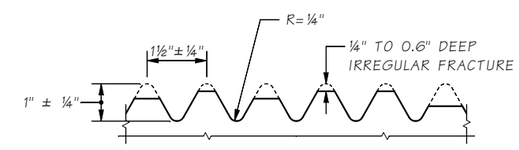

FRACTURED FIN FINISH

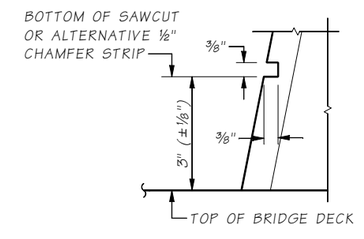

SECTION E

MAX. PAVEMENT MARK

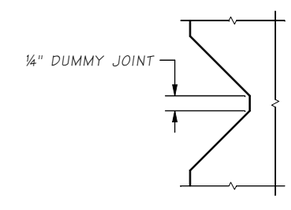

DUMMY JOINT DETAIL

Bridge Design Engr.	Grimm, E	
Supervisor	Aldrich, BS	
Designed By	Schultz, E	11/22
Checked By	O'Neill, P	12/22
Detailed By	McCarthy, D	11/22
Bridge Projects Engr.		
Prelim. Plan By		
Architect/Specialist		

M:\X-Team\BR241-2_MABTON-SUNNYSIDE_REPL\window files\TRAFFIC BARRIER 2.wnd

DATE	REVISION	BY	APP'D

REGION NO.	STATE	FED. AID PROJ. NO.	SHEET NO.	TOTAL SHEETS
10	WASH.			
JOB NUMBER 21Y001				
CONTRACT NO.				

P.E. STAMP BOX — ERIC HENRY SCHULTZ, STATE OF WASHINGTON, 38910, STRUCTURAL ENGINEER, PROFESSIONAL ENGINEER — SEE SHEET CT1 — DATE:

BRIDGE AND STRUCTURES OFFICE

P.E. STAMP BOX — BRIAN S. ALDRICH, STATE OF WASHINGTON, 37834, STRUCTURAL ENGINEER, PROFESSIONAL ENGINEER — SEE SHEET CT1 — DATE:

Washington State Department of Transportation

PRELIMINARY NOT FOR CONSTRUCTION

SR 241
MABTON VICINITY
RETROFIT BRIDGES
MABTON-SUNNYSIDE RD. BRIDGE NO. 241/2 REPLACEMENT

TRAFFIC BARRIER DETAILS 2 OF 3

BRIDGE SHEET NO. BA48

SHEET 85 OF 115 SHEETS

SR 241 FILE NO. SHEET BA48

Tue Dec 27 15:19:26 2022

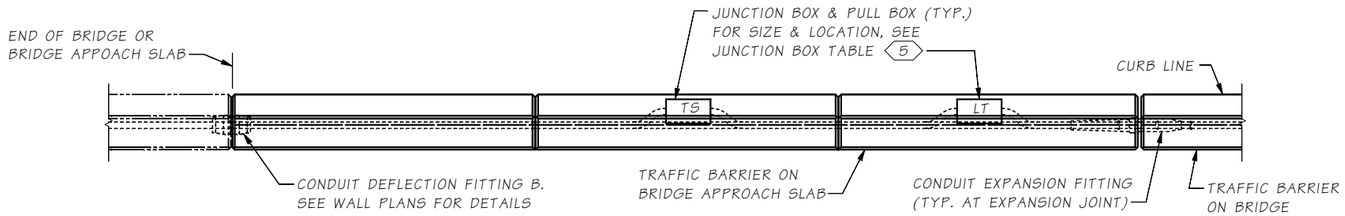

PLAN
CONDUITS & J-BOX IN TRAFFIC BARRIER

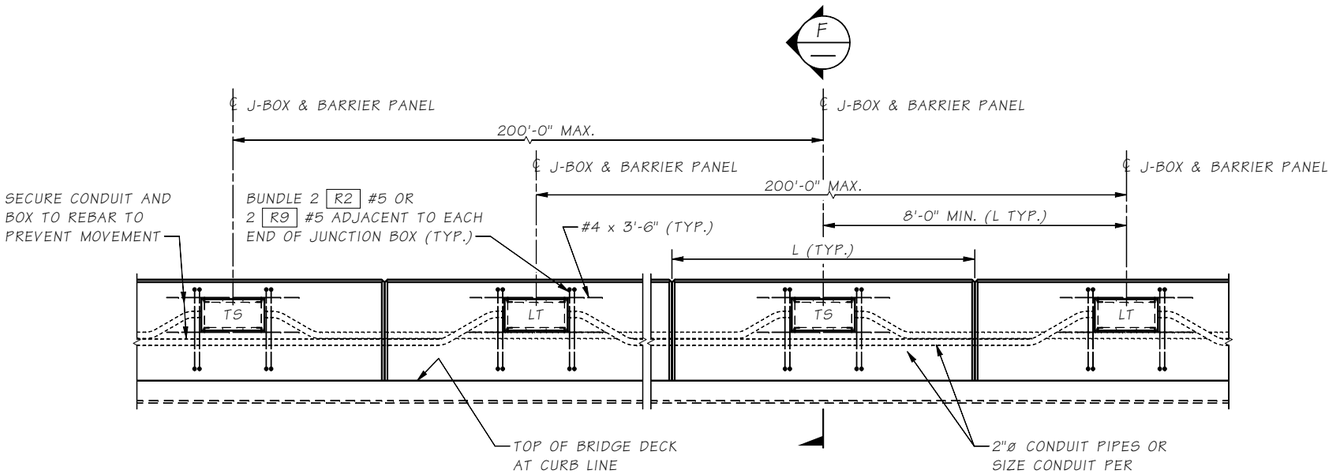

ELEVATION
CONDUITS & J-BOX IN TRAFFIC BARRIER
4

KEY NOTES:

1. WHERE CONDUIT IN IN THE BARRIER IS ROUTED ACROSS THE JOINT BETWEEN THE BRIDGE APPROACH SLAB AND THE CELLULAR CONC. DISTRIBUTION SLAB, WRAP STEEL CONDUIT PIPE FOR 1'-0" ON EACH SIDE OF JOINT. PIPE WRAP TAPE SHALL BE 2" WIDE, 20 MIL THICK, AND INSTALLED WITH A MINIMUM OF 1" OVERLAP.

2. 3'-0" LONG EXPANDED POLYSTYRENE SLEEVE AROUND CONDUIT. DUCT TAPE SEAMS AND ENDS TO SEAL AND PREVENT CONCRETE FROM BONDING WITH FITTING AND CONDUIT.

3. CONDUIT PIPES PLACED THROUGH RETAINING WALL TRAFFIC BARRIER SHALL BE FITTED WITH DEFLECTION FITTINGS AT A MAXIMUM SPACING OF 120'. THE DEFLECTION FITTINGS SHALL BE PLACED AT THE TRAFFIC BARRIER OPEN JOINT THAT COINCIDES WITH THE RETAINING WALL EXPANSION JOINT.

4. LABEL JUNCTION BOX COVER IN ACCORDANCE WITH STANDARD SPECIFICATION SECTION 9-29.2(4). ADJACENT JUNCTION BOXES ARE SHOWN CENTERED BETWEEN ADJACENT DUMMY JOINTS. IF THE DISTANCE BETWEEN ADJACENT DUMMY JOINTS IS 16'-0" OR GREATER, PLACE ADJACENT JUNCTION BOXES SYMMETRICALLY ON EITHER SIDE OF THE CENTER OF ONE DUMMY PANEL WHILE MAINTAINING 8'-0" MINIMUM BETWEEN CENTER LINES OF THE JUNCTION BOXES.

5. NEMA 4X IN STATIONARY FORM BARRIER, OR NEMA 3R IN SLIP FORM BARRIER. MOUNT JUNCTION BOX SO COVER IS FLUSH WITH BARRIER, CAN BE RECESSED UP TO ⅛".

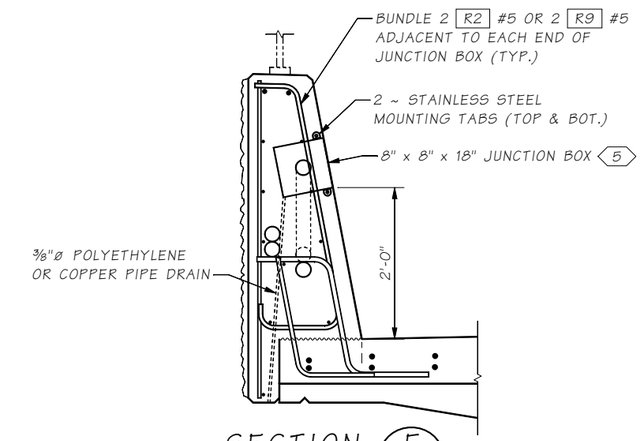

SECTION F

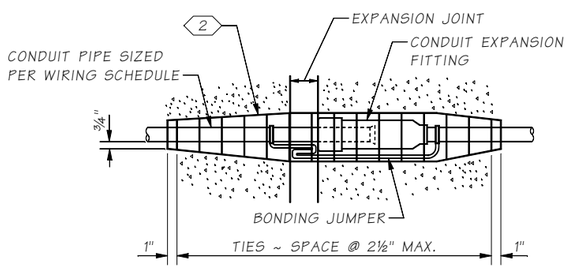

CONDUIT EXPANSION FITTING

CONDUIT FITTING - (TYPE AX FOR MOVEMENT OF ± 2")
AT BRIDGE EXPANSION JOINTS

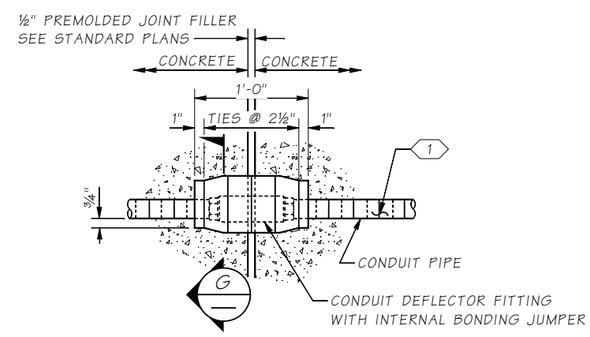

CONDUIT DEFLECTION FITTING B

CONDUIT FITTING - TYPE DX FOR DEFLECTION OF 30° AND ¾" MOVEMENT.
3

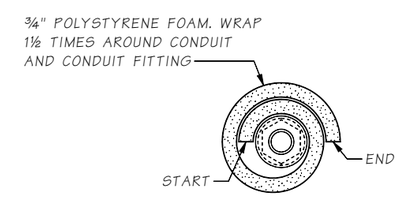

SECTION G

Bridge Design Engr.	Grimm, E		
Supervisor	Aldrich, BS		
Designed By	Schultz, E	11/22	
Checked By	O'Neill, P	12/22	
Detailed By	McCarthy, D	11/22	
Bridge Projects Engr.			
Prelim. Plan By			
Architect/Specialist			

M:\X-Team\BR241-2_MABTOM-SUNNYSIDE_REPL\window files\TRAFFIC BARRIER 3.wnd

DATE	REVISION	BY	APP'D

REGION NO.	STATE	FED. AID PROJ. NO.	SHEET NO.	TOTAL SHEETS
10	WASH.			
JOB NUMBER 21Y001				
CONTRACT NO.				

P.E. STAMP BOX
ERIC HENRY SCHULTZ, STATE OF WASHINGTON, 59910, PROFESSIONAL ENGINEER
SEE SHEET CT1
DATE:

BRIDGE AND STRUCTURES OFFICE

P.E. STAMP BOX
BRIAN S. ALDRICH, STATE OF WASHINGTON, 37834, PROFESSIONAL ENGINEER
SEE SHEET CT1
DATE:

Washington State
Department of Transportation
PRELIMINARY NOT FOR CONSTRUCTION

SR 241
MABTON VICINITY
RETROFIT BRIDGES
MABTON-SUNNYSIDE RD. BRIDGE NO. 241/2 REPLACEMENT

TRAFFIC BARRIER DETAILS 3 OF 3

BRIDGE SHEET NO. BA49
SHEET 86 OF 115 SHEETS

SR 241 FILE NO. ____ SHEET BA49

Tue Dec 27 15:19:27 2022

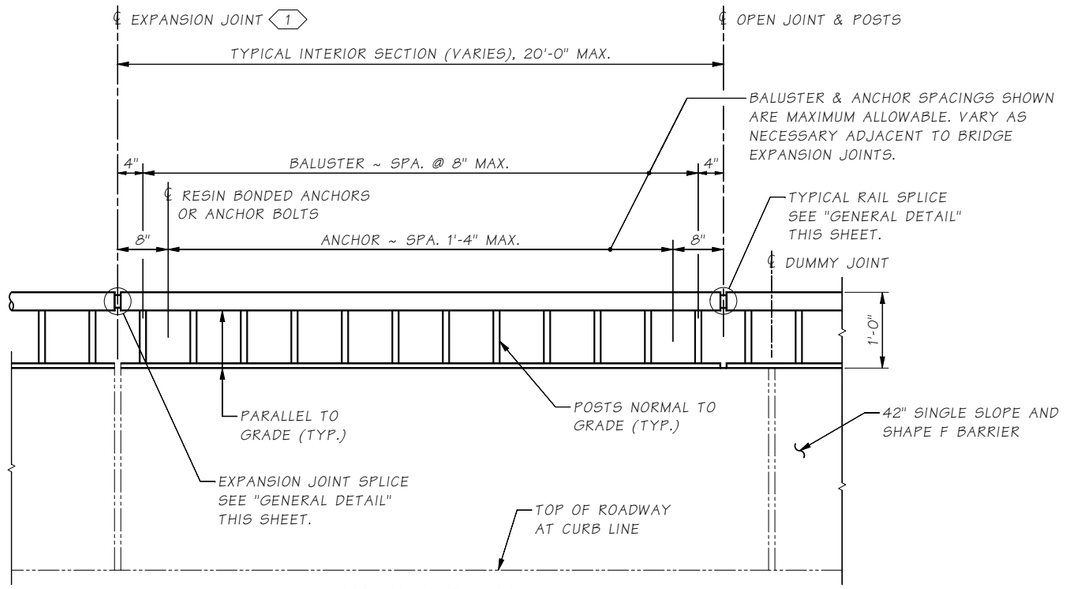

ELEVATION

BALUSTER AND GUARDRAIL SECTION ATTACHMENT DETAILS NOT SHOWN.

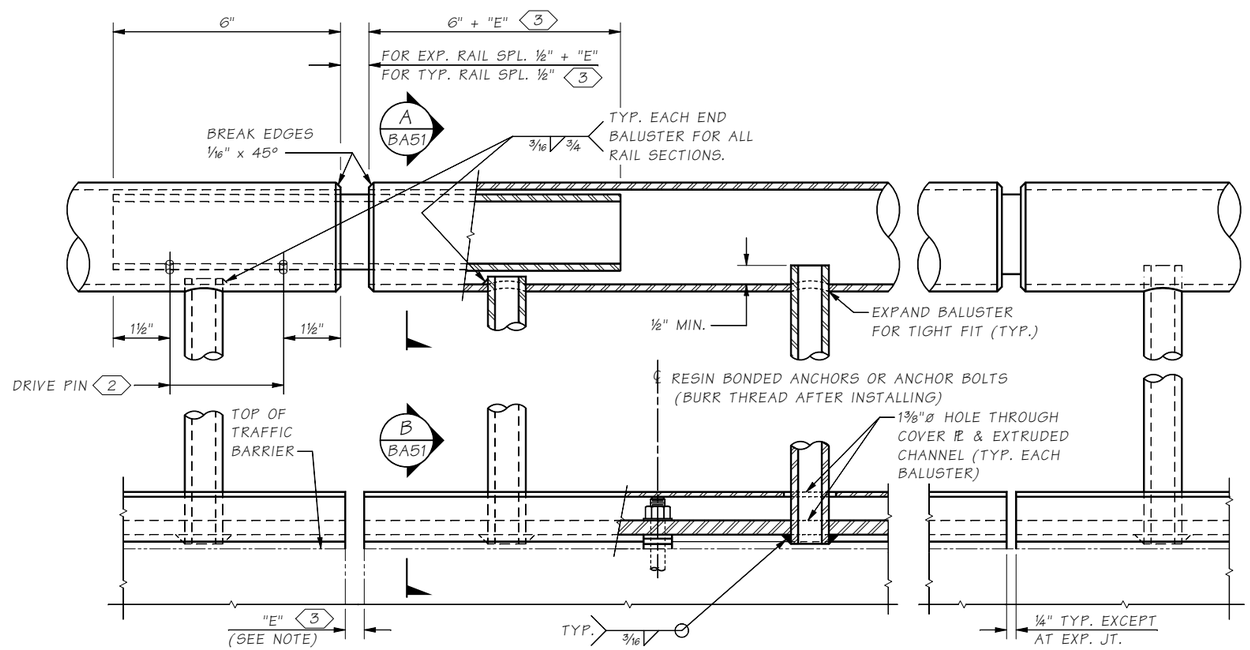

GENERAL DETAIL

RAILING NOTES

1. PIPE RAILING, PIPE RAILING SPLICES, COVER PLATES AND BOTTOM EXTRUDED CHANNELS SHALL BE BENT TO THE HORIZONTAL CURVE WHERE THE RADIUS OF CURVATURE IS LESS THAN 200'. THESE ITEMS MAY BE HEATED TO NOT MORE THAN 400°F FOR A PERIOD NOT TO EXCEED 30 MINUTES TO FACILITATE FORMING OR BENDING TO HORIZONTAL CURVATURE.
2. SHOP DRAWINGS OF RAILING SHALL BE SUBMITTED AS A TYPE 2 WORKING DRAWING SHOWING COMPLETE DIMENSIONS AND DETAILS OF FABRICATION AND INCLUDING AN ERECTION DIAGRAM. MATERIAL SPECIFICATIONS SHALL BE PROVIDED IN THE SHOP DRAWINGS FOR ALL COMPONENTS.
3. CUTTING SHALL BE DONE BY SAWING OR MILLING AND ALL CUTS SHALL BE TRUE AND SMOOTH. FLAME CUTTING WILL NOT BE PERMITTED.
4. WELDING OF ALUMINUM SHALL CONFORM TO STD. SPEC. SECTION 9-28.14(3).
5. ALL ALUMINUM PARTS SHALL BE GIVEN A CLEAR ANODIC COATING OF AT LEAST 0.0006" THICK AND SEALED TO MEET THE REQUIREMENTS OF ASTM B 580 WITH A UNIFORM FINISH.
6. PIPE RAILING, PIPE BALUSTERS AND PIPE RAILING SPLICES SHALL BE ADEQUATELY WRAPPED TO INSURE SURFACE PROTECTION DURING HANDLING AND TRANSPORTATION TO THE JOB SITE.

KEY NOTES:

1. PROVIDE EXPANSION RAIL SPLICE AT TRAFFIC BARRIER EXPANSION JOINTS. RAIL SPLICE JOINTS ARE NOT REQUIRED AT TRAFFIC BARRIER DUMMY JOINTS.
2. LOCATE ON OPPOSITE SIDE OF TRAFFIC. DRIVE PINS SHALL BE DRIVEN FLUSH WITH THE OUTSIDE FACE OF THE RAILING.
3. "E" DIMENSION SHALL BE EQUAL TO OPENING OF TRAFFIC BARRIER EXPANSION JOINTS.

SR 241 FILE NO. ____ SHEET BA50

Bridge Design Engr.	Grimm, E	
Supervisor	Aldrich, BS	
Designed By	Schultz, E	11/22
Checked By	O'Neill, P	12/22
Detailed By	McCarthy, D	11/22
Bridge Projects Engr.		
Prelim. Plan By		
Architect/Specialist		

M:\X-Team\BR241-2_MABTOM-SUNNYSIDE_REPL\window files\BP RAIL 1.wnd

DATE	REVISION	BY	APP'D

REGION NO.	STATE	FED. AID PROJ. NO.	SHEET NO.	TOTAL SHEETS
10	WASH.			
JOB NUMBER 21Y001				
CONTRACT NO.				

P.E. STAMP BOX — ERIC HENRY SCHULTZ, STATE OF WASHINGTON, 38918, STRUCTURAL ENGINEER, PROFESSIONAL ENGINEER — SEE SHEET CT1 — DATE:

BRIDGE AND STRUCTURES OFFICE

P.E. STAMP BOX — BRIAN S. ALDRICH, STATE OF WASHINGTON, 37834, STRUCTURAL ENGINEER, PROFESSIONAL ENGINEER — SEE SHEET CT1 — DATE:

Washington State Department of Transportation

PRELIMINARY NOT FOR CONSTRUCTION

SR 241
MABTON VICINITY
RETROFIT BRIDGES
MABTON-SUNNYSIDE RD. BRIDGE NO. 241/2 REPLACEMENT

BRIDGE RAILING TYPE BP-12
DETAILS 1 OF 2

BRIDGE SHEET NO. BA50

SHEET 87 OF 115 SHEETS

Tue Dec 27 15:19:27 2022

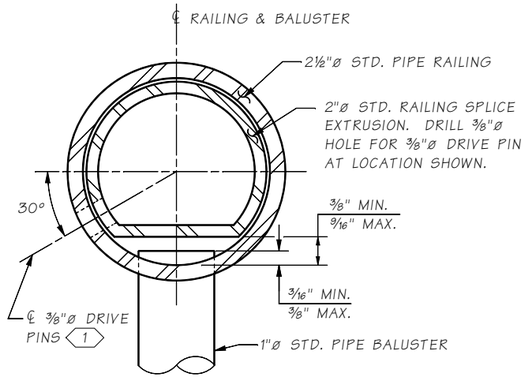

SECTION A / BA50

OPTION #1

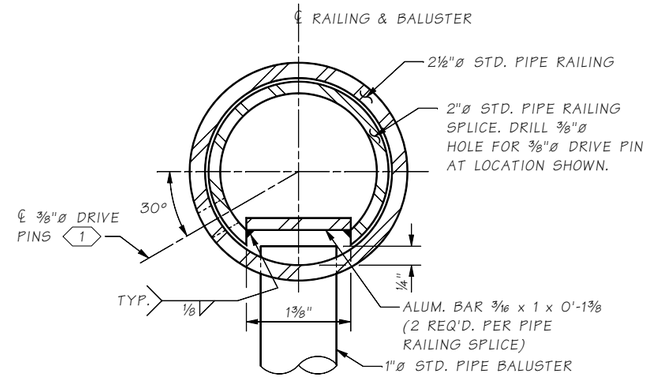

SECTION A / BA50

OPTION #2

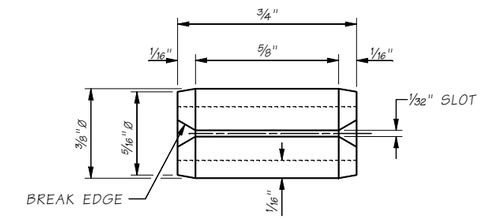

DRIVE PIN DETAIL

SLOTTED TYPE SPRING PIN (ANSI B18.8.2)

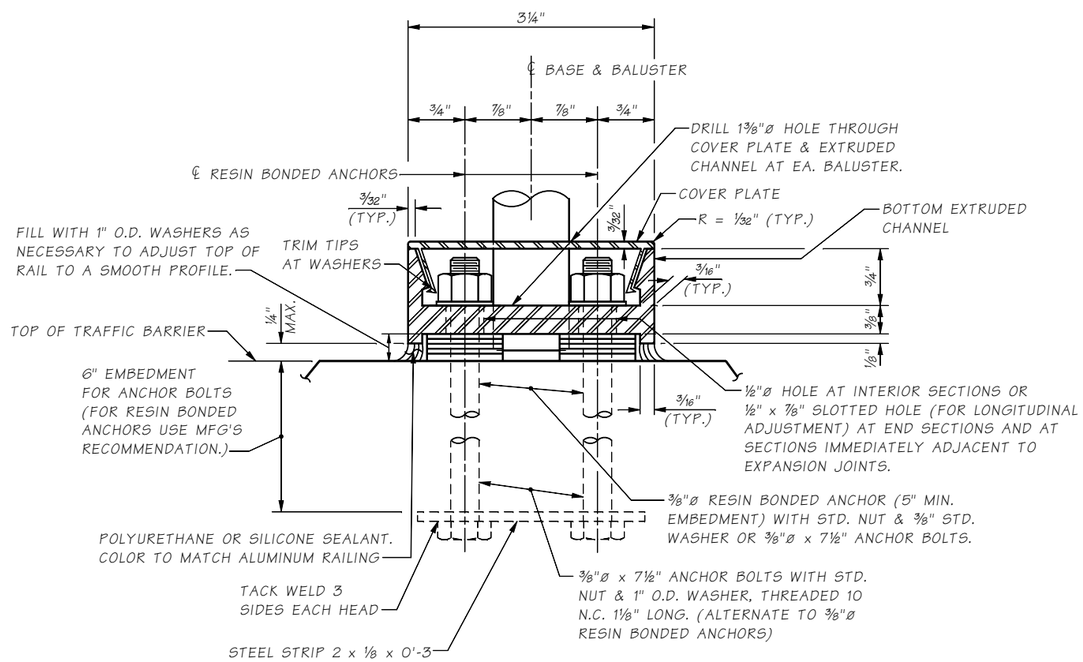

SECTION B / BA50

ANCHOR BOLTS SHALL BE POSITIONED IN A JIG DURING WELDING.

KEY NOTE:

1. LOCATE ON OPPOSITE SIDE OF TRAFFIC. DRIVE PINS SHALL BE DRIVEN FLUSH WITH THE OUTSIDE FACE OF THE RAILING.

MAT'L	PART	MATERIAL SPECIFICATION
ALUMINUM	PIPES	ASTM B221-6005-T5 OR 6005A-T5 ASTM B241-6061-T6 OR B429
ALUMINUM	EXTRUDED CHANNELS, COVER PLATES & BAR	ASTM B 221- 6005-T5 OR 6005A-T5
STEEL	ANCHOR BOLTS, NUTS & WASHERS	STANDARD SPECIFICATION SECTION 9-06.5(4) (GALVANIZE IN ACCORDANCE WITH AASHTO SPECIFICATION M 232)
STEEL	STRIP	ASTM A36
STEEL	DRIVE PINS	ASTM A276 OR A240 TYPE 302 STAINLESS STEEL

Bridge Design Engr.	Grimm, E	
Supervisor	Aldrich, BS	
Designed By	Schultz, E	11/22
Checked By	O'Neill, P	12/22
Detailed By	McCarthy, D	11/22
Bridge Projects Engr.		
Prelim. Plan By		
Architect/Specialist		

M:\X-Team\BR241-2_MABTOM-SUNNYSIDE_REPL\window files\BP RAIL 2.wnd

DATE	REVISION	BY	APP'D

REGION NO.	STATE	FED. AID PROJ. NO.	SHEET NO.	TOTAL SHEETS
10	WASH.			
JOB NUMBER 21Y001				
CONTRACT NO.				

P.E. STAMP BOX — ERIC HENRY SCHULTZ, STATE OF WASHINGTON, 56910, STRUCTURAL ENGINEER, PROFESSIONAL ENGINEER — SEE SHEET CT1 — DATE:

BRIDGE AND STRUCTURES OFFICE

P.E. STAMP BOX — BRIAN S. ALDRICH, STATE OF WASHINGTON, 37834, STRUCTURAL ENGINEER, PROFESSIONAL ENGINEER — SEE SHEET CT1 — DATE:

Washington State Department of Transportation

PRELIMINARY NOT FOR CONSTRUCTION

SR 241
MABTON VICINITY
RETROFIT BRIDGES
MABTON-SUNNYSIDE RD. BRIDGE NO. 241/2 REPLACEMENT

BRIDGE RAILING TYPE BP-12
DETAILS 2 OF 2

BRIDGE SHEET NO. BA51

SHEET 88 OF 115 SHEETS

SR 241 FILE NO. ____ SHEET BA51

Tue Dec 27 15:19:28 2022

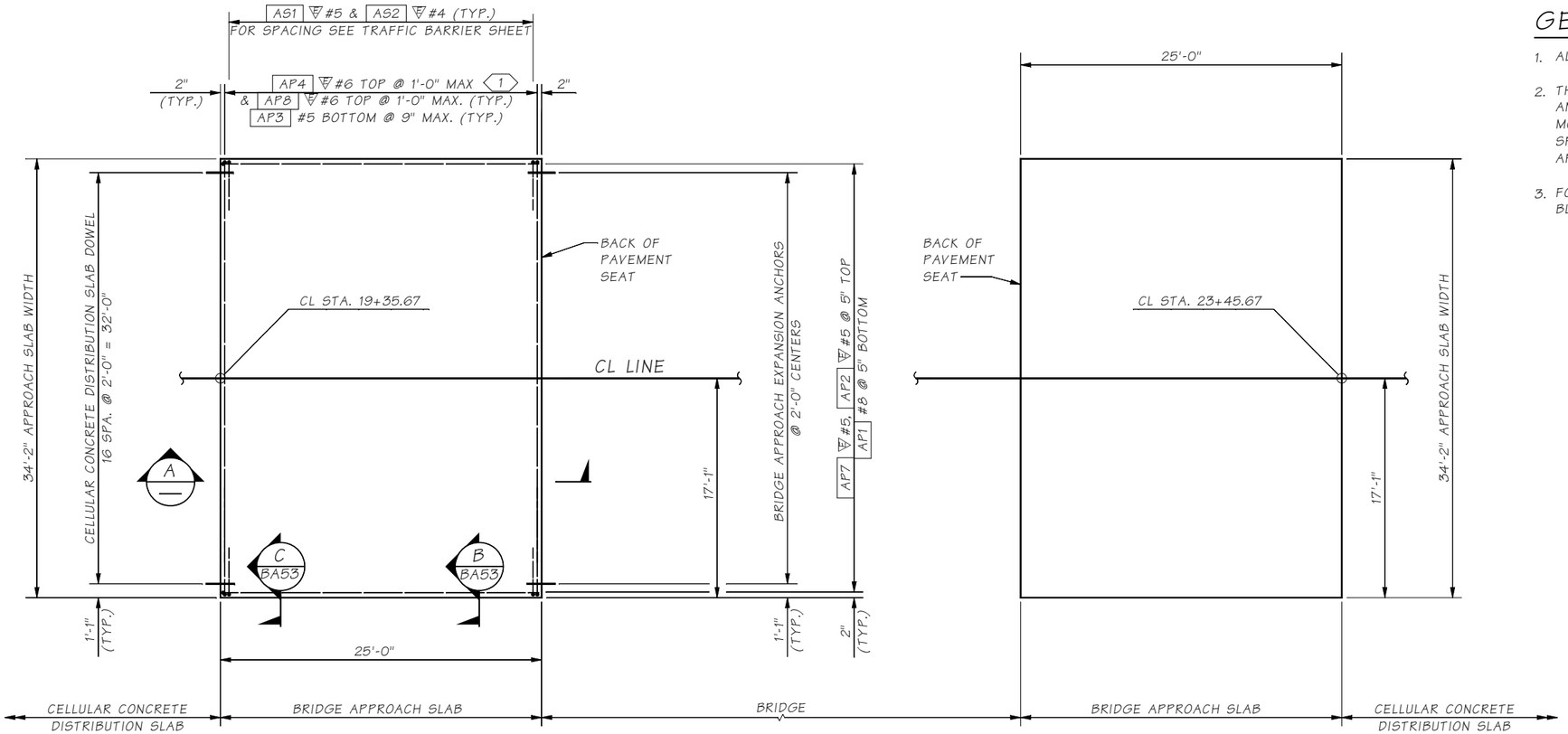

PLAN

REINFORCING IS TYPICAL FOR EACH APPROACH SLAB

GENERAL NOTES:

1. ALL EDGES OF BRIDGE APPROACH SLAB SHALL HAVE ½" RADIUS.
2. THE MINIMUM LAP SPLICE OF #5 IS 2'-0", #5 IS 2'-6", #6 IS 3'-0", AND #8 IS 3'-3". ALL LAP SPLICES SHALL BE STAGGERED SO THAT NO MORE THAN 50% OF REBAR IS SPLICED AT THE SAME LOCATION. LAP SPLICES SHALL BE LOCATED WITHIN THE MIDDLE HALF OF THE BRIDGE APPROACH SLAB. OPTIONAL SPLICES ARE ALLOWED FOR AP4 #6.
3. FOR TRAFFIC BARRIER DETAILS, INCLUDING ANY BRIDGE APPROACH SLAB BLOCKOUT INFORMATION, SEE TRAFFIC BARRIER SHEETS.

BENDING DIAGRAM

NOTE: ALL DIMENSIONS ARE OUT TO OUT

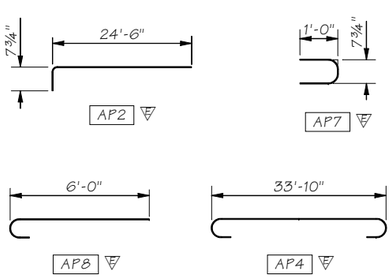

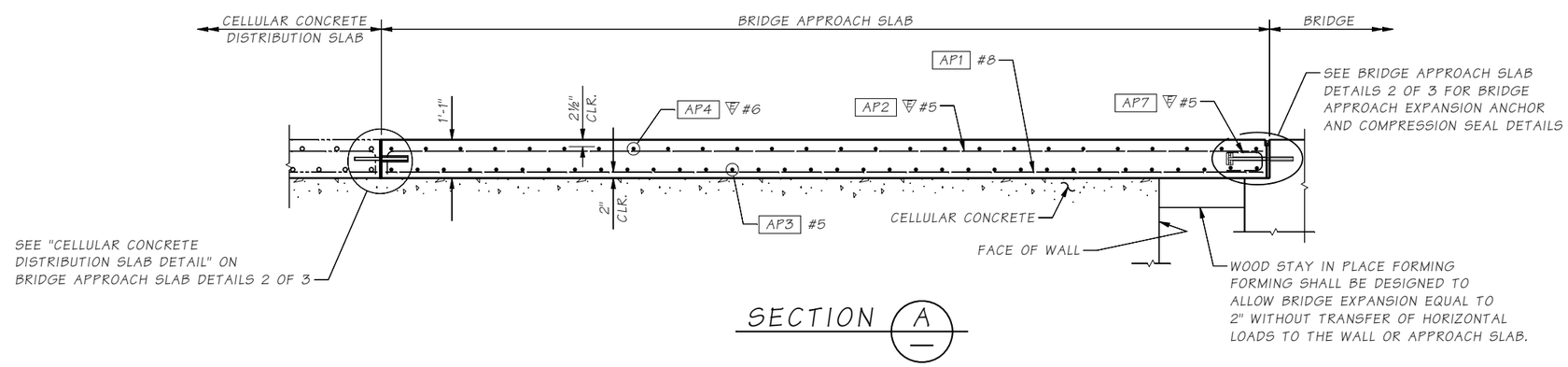

SECTION A

SR 241 FILE NO. ____ SHEET BA52

Bridge Design Engr.	Grimm, E	
Supervisor	Aldrich, BS	
Designed By	Schultz, E	11/22
Checked By	O'Neill, P	12/22
Detailed By	McCarthy, D	11/22
Bridge Projects Engr.		
Prelim. Plan By		
Architect/Specialist		

M:\X-Team\BR241-2_MABTOM-SUNNYSIDE_REPL\window files\APPROACH SLAB 1.wnd

DATE	REVISION	BY	APP'D

REGION NO.	STATE	FED. AID PROJ. NO.	SHEET NO.	TOTAL SHEETS
10	WASH.			

JOB NUMBER 21YO01

CONTRACT NO.

P.E. STAMP BOX — ERIC HENRY SCHULTZ, STATE OF WASHINGTON, 39910, PROFESSIONAL ENGINEER — SEE SHEET CT1 DATE:

BRIDGE AND STRUCTURES OFFICE

P.E. STAMP BOX — BRIAN S. ALDRICH, STATE OF WASHINGTON, 37834, PROFESSIONAL ENGINEER — SEE SHEET CT1 DATE:

Washington State Department of Transportation

PRELIMINARY NOT FOR CONSTRUCTION

SR 241
MABTON VICINITY
RETROFIT BRIDGES
MABTON-SUNNYSIDE RD. BRIDGE NO. 241/2 REPLACEMENT

BRIDGE APPROACH SLAB
DETAILS 1 OF 3

BRIDGE SHEET NO. BA52

SHEET 89 OF 115 SHEETS

Tue Dec 27 15:19:28 2022

GENERAL NOTES:

1. ALL METAL PARTS OF THE APPROACH EXPANSION ANCHOR SHALL RECEIVE ONE COAT OF PAINT CONFORMING TO STANDARD SPECIFICATION SECTION 9-08.1(2)F OR BE GALVANIZED IN ACCORDANCE WITH AASHTO M 232.
2. BRIDGE APPROACH SLAB ANCHORS SHALL BE INSTALLED PARALLEL TO ROADWAY AND TO EACH OTHER.

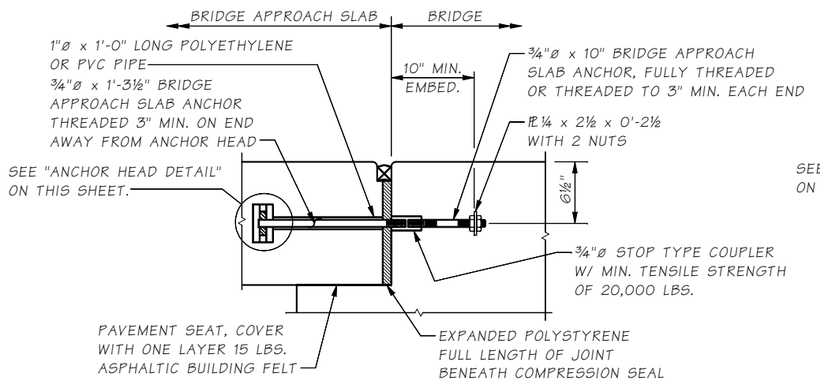

APPROACH EXPANSION ANCHOR - METHOD A

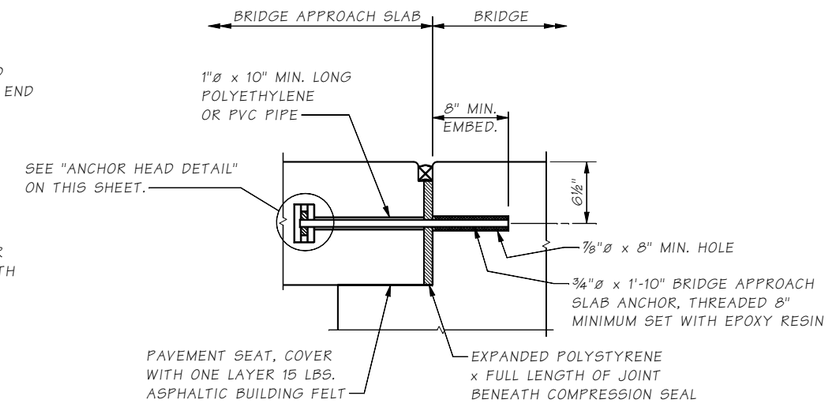

APPROACH EXPANSION ANCHOR - METHOD B

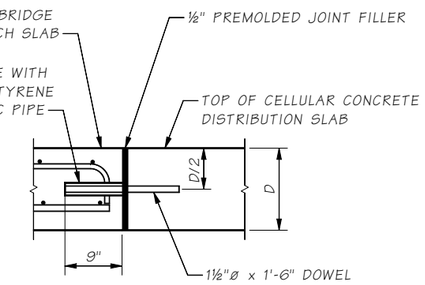

CELLULAR CONCRETE DISTRIBUTION SLAB DOWEL BAR DETAIL

WALL ROADWAY DOWELS SHALL BE INSTALLED PARALLEL TO ROADWAY AND TO EACH OTHER.

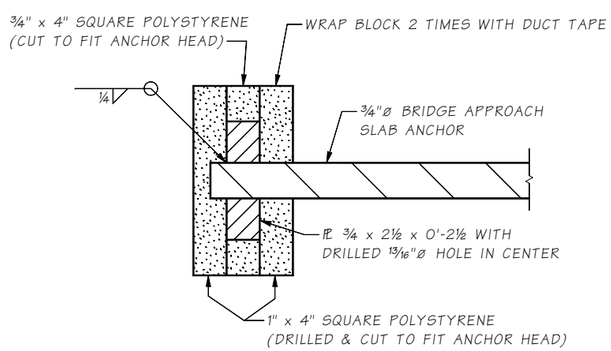

ANCHOR HEAD DETAIL

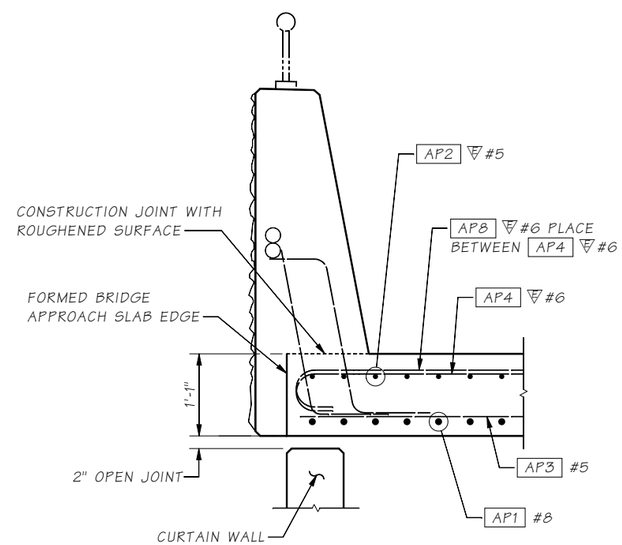

SECTION B / BA52

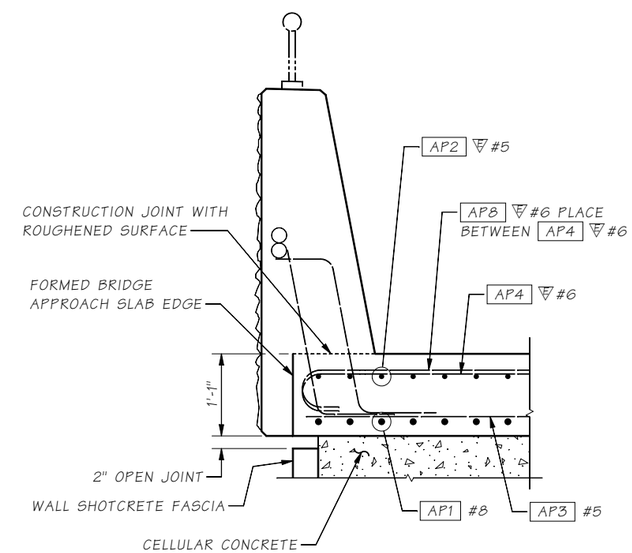

SECTION C / BA52

Bridge Design Engr.	Grimm, E		M:\X-Team\BR241-2_MABTOM-SUNNYSIDE_REPL\window files\APPROACH SLAB 2.wnd			REGION NO.	STATE	FED. AID PROJ. NO.	SHEET NO.	TOTAL SHEETS
Supervisor	Aldrich, BS					10	WASH.			
Designed By	Schultz, E	11/22				JOB NUMBER 21Y001				
Checked By	O'Neill, P	12/22								
Detailed By	McCarthy, D	11/22				CONTRACT NO.				
Bridge Projects Engr.										
Prelim. Plan By										
Architect/Specialist			DATE	REVISION	BY	APP'D				

P.E. STAMP BOX: ERIC HENRY SCHULTZ, STATE OF WASHINGTON, 39910, PROFESSIONAL ENGINEER — SEE SHEET CT1 — DATE:

BRIDGE AND STRUCTURES OFFICE

P.E. STAMP BOX: BRIAN S. ALDRICH, STATE OF WASHINGTON, 37834, PROFESSIONAL ENGINEER — SEE SHEET CT1 — DATE:

Washington State Department of Transportation

PRELIMINARY NOT FOR CONSTRUCTION

SR 241
MABTON VICINITY
RETROFIT BRIDGES
MABTON-SUNNYSIDE RD. BRIDGE NO. 241/2 REPLACEMENT

BRIDGE APPROACH SLAB DETAILS 2 OF 3

BRIDGE SHEET NO. BA53

SHEET 90 OF 115 SHEETS

SR 241 FILE NO. ____ SHEET BA53

Tue Dec 27 15:19:29 2022

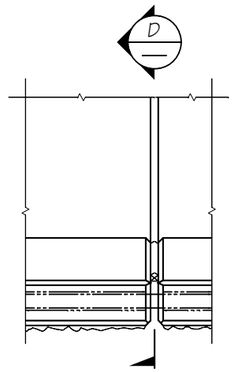

PLAN
EXPANSION JOINT

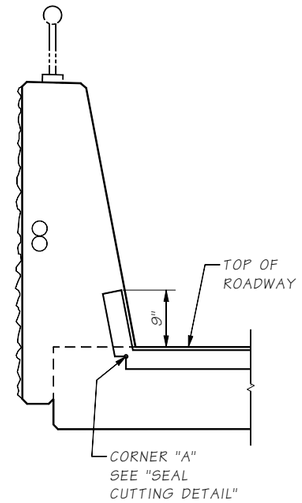

SECTION D

COMPRESSION SEAL TABLE

D.S. BROWN		WATSON BOWMAN ACME	
SEAL	WIDTH	SEAL	WIDTH
CV-2502	2½	WA-250	2½

TESTING SHALL BE PER ASTM D 2628 PRIOR TO USE.

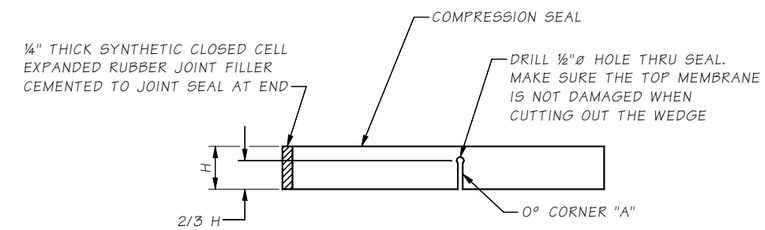

SEAL CUTTING DETAIL

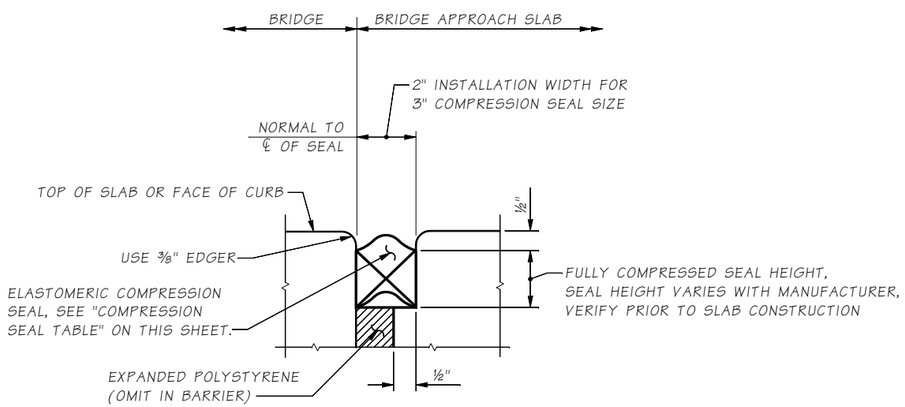

COMPRESSION SEAL DETAIL

EXPANSION JOINT AT BACK OF PAV'T SEAT

SR 241 FILE NO. ____ SHEET BA54

Bridge Design Engr.	Grimm, E		
Supervisor	Aldrich, BS		
Designed By	Schultz, E	11/22	
Checked By	O'Neill, P	12/22	
Detailed By	McCarthy, D	11/22	
Bridge Projects Engr.			
Prelim. Plan By			
Architect/Specialist			

M:\X-Team\BR241-2_MABTON-SUNNYSIDE_REPL\window files\APPROACH SLAB 3.wnd

DATE	REVISION	BY	APP'D

REGION NO.	STATE	FED. AID PROJ. NO.	SHEET NO.	TOTAL SHEETS
10	WASH.			
JOB NUMBER 21Y001				
CONTRACT NO.				

P.E. STAMP BOX
ERIC HENRY SCHULTZ, STATE OF WASHINGTON, 39910, STRUCTURAL ENGINEER, PROFESSIONAL ENGINEER
SEE SHEET CT1
DATE:

BRIDGE AND STRUCTURES OFFICE

P.E. STAMP BOX
BRIAN S. ALDRICH, STATE OF WASHINGTON, 37834, STRUCTURAL ENGINEER, PROFESSIONAL ENGINEER
SEE SHEET CT1
DATE:

Washington State
Department of Transportation
PRELIMINARY NOT FOR CONSTRUCTION

SR 241
MABTON VICINITY
RETROFIT BRIDGES
MABTON-SUNNYSIDE RD. BRIDGE NO. 241/2 REPLACEMENT

BRIDGE APPROACH SLAB
DETAILS 3 OF 3

BRIDGE SHEET NO. BA54
SHEET 91 OF 115 SHEETS

Tue Dec 27 15:19:29 2022

E = Bar is to be epoxy coated.
S = Bar is included in substructure quantities.
T = Transverse or S = Seismic
L = Lump sum quantity.
V = Bar dimensions vary between dimensions shown on this line and the following line.

MARK NO.	LOCATION	SIZE	NO REQ'D	BEND TYPE	TIE OR STIR.	SUBSTR.	EPOXY COAT	LUMP SUM	VARIES	NO. EACH	DIMENSIONS (Out to Out) U Ft.	U In.	W Ft.	W In.	X Ft.	X In.	Y Ft.	Y In.	Z Ft.	Z In.	θ_1 Deg.	θ_2 Deg.	LENGTH Ft.	LENGTH In.	WEIGHT Lbs.
	PIER 1 ABUTMENT																								
100	Shaft Cap Bot. Longit.	11	22	50		S					35	10.0											35	10	4188
101	Shaft Cap Top Longit.	11	22	50		S					35	10.0											35	10	4188
102	Shaft Cap Stirrup	7	90	72	T	S					7	9.0	5	7.0	5	7.0							20	1	3688
103	Shaft Cap Longit.	7	20	50		S					35	10.0											35	10	1465
104	Shaft Cap Tie	7	135	58	T	S					9	8.0											11	5	3145
105	Shaft Cap End Vert.	7	22	56	T	S					5	2.5											7	2	323
106	Shaft Cap End Horiz.	7	14	56	T	S					9	8.0											11	8	333
107	Stem Wall Vert.	8	90	54		S			V	2	17	7.0											18	8	4536
											17	11.0											19	0	
108	Stem Wall Horiz.	6	28	50		S					33	10.0											33	10	1423
109	Stem Wall Tie	5	258	58	T	S					2	3.0											3	1	827
110	Stem Wall Top Tie	5	45	56	T	S					2	2.0											2	11	136
111	Stem Wall Top Horiz.	8	8	50		S					16	11.0											16	11	361
112	Gir. Stop Tie	4	48	74	T	S					1	0.0	2	7.0	2	7.0							5	12	192
113	Gir. Stop Horiz.	4	32	50		S					2	11.9											2	12	64
114	Gir. Stop Horiz.	4	16	50		S					1	4.0											1	4	14
115	Stem Wall End	6	28	54	T	S					4	0.0											4	10	204
116	Stem Wall Top Lap	8	4	80		S					4	4.0	4	4.0	0	0.0	0	4.0	0	0.0	177	0	8	8	93
117	Curtain Wall Horiz. N.F.	5	36	54	T	S					5	11.0											6	3	236
118	Curtain Wall Horiz. F.F.	5	36	50	T	S					5	11.0											5	11	222
119	Curtain Wall Horiz.Top	5	4	56	T	S					3	6.0											4	3	18
120	Curtain Wall Vert. Dowel	5	36	50		S					19	3.3											19	3	724
	PIER 2 COLUMN																								
201	Column Vertical	10	10	50		S					37	8.5											37	9	1623
201	Column Vertical Headed	10	14	50		S					33	2.5											33	2	2001
202	Column Hoops	7	111	66		S					4	8.0	0	0.0									14	5	3274
	PIER 2 CROSSBEAM																								
210	Lower Stirr.	6	2	72	T	S					4	11.0	5	10.0	5	10.0							17	7	53
210	Lower Stirr.	6	20	72	T	S			V	4	4	11.0	5	9.8	5	9.8							17	6	525
											4	11.0	5	9.2	5	9.2							17	5	
210	Lower Stirr.	6	80	72	T	S			V	4	4	11.0	5	9.2	5	9.2							17	5	1861
											4	11.0	3	10.0	3	10.0							13	7	
211	Upper Stirr.	7	32	58	T	S					11	8.2											13	5	878
211	Upper Stirr.	7	40	58	T	S			V	8	11	8.2											13	5	1083
											11	4.1											13	1	
211	Upper Stirr.	7	88	58	T	S			V	8	10	7.0											12	4	2175
											10	1.7											11	10	
212	Bottom	10	10	80		S					7	0.0	13	0.0	13	0.0	0	9.0	0	9.0	172	172	32	12	1419
213	Lower Horizontal	7	8	50		S			V	4	17	0.0											17	0	352
											26	0.0											26	0	
213	Lower Horizontal	7	16	50		S			V	4	32	5.0											32	5	1066
											32	9.0											32	9	
214	Horizontal Ties	6	57	58	T	S					6	8.0											8	2	698
215	Top Tie	6	55	58	T	S					6	8.0											8	2	673
216	Top Longit.	11	10	80		S					15	8.0	15	8.0	0	0.0	0	9.0	0	0.0	177	0	31	4	1665
217	Top Longit.	11	10	56		S					32	10.0											36	2	1920
218	Upper End Stirr.	6	16	58	T	S					9	4.6											10	10	261
219	End Tie	6	10	58	T	S					6	8.0											8	2	122
	PIER 3 COLUMN																								
301	Column Vertical	10	10	50		S					34	6.5											34	6	1486
301	Column Vertical Headed	10	14	50		S					29	10.5											29	11	1800
302	Column Hoops	7	97	66		S					4	8.0	0	0.0									14	5	2861
	PIER 3 CROSSBEAM																								
310	Lower Stirr.	6	2	72	T	S					4	11.0	5	10.0	5	10.0							17	7	53
310	Lower Stirr.	6	20	72	T	S			V	4	4	11.0	5	9.8	5	9.8							17	6	525
											4	11.0	5	9.2	5	9.2							17	5	
310	Lower Stirr.	6	80	72	T	S			V	4	4	11.0	5	9.2	5	9.2							17	5	1861
											4	11.0	3	10.0	3	10.0							13	7	
311	Upper Stirr.	7	32	58	T	S					11	8.2											13	5	877
311	Upper Stirr.	7	40	58	T	S			V	8	11	8.2											13	5	1083
											11	4.1											13	1	
311	Upper Stirr.	7	88	58	T	S			V	8	10	7.0											12	4	2175
											10	1.7											11	10	
312	Bottom	10	10	80		S					7	0.0	13	0.0	13	0.0	0	9.0	0	9.0	172	172	32	12	1419
313	Lower Horizontal	7	8	50		S			V	4	17	0.0											17	0	352
											26	0.0											26	0	
313	Lower Horizontal	7	16	50		S			V	4	32	5.0											32	5	1066
											32	9.0											32	9	
314	Horizontal Ties	6	57	58	T	S					6	8.0											8	2	698
315	Top Tie	6	55	58	T	S					6	8.0											8	2	673
316	Top Longit.	11	10	80		S					15	8.0	15	8.0	0	0.0	0	9.0	0	0.0	177	0	31	4	1665
317	Top Longit.	11	10	56		S					32	10.0											36	2	1920
318	Upper End Stirr.	6	16	58	T	S					9	4.6											10	10	261
319	End Tie	6	10	58	T	S					6	8.0											8	2	122
	PIER 4 ABUTMENT																								
400	Shaft Cap Bot. Longit.	10	22	50		S					35	10.0											35	10	3392
401	Shaft Cap Top Longit.	10	22	50		S					35	10.0											35	10	3392
402	Shaft Cap Stirrup	7	90	72	T	S					7	9.0	5	7.0	5	7.0							20	1	3688

E = Bar is to be epoxy coated.
S = Bar is included in substructure quantities.
T = Transverse or S = Seismic
L = Lump sum quantity.
V = Bar dimensions vary between dimensions shown on this line and the following line.

MARK NO.	LOCATION	SIZE	NO REQ'D	BEND TYPE	TIE OR STIR.	SUBSTR.	EPOXY COAT	LUMP SUM	VARIES	NO. EACH	DIMENSIONS (Out to Out) U Ft.	U In.	W Ft.	W In.	X Ft.	X In.	Y Ft.	Y In.	Z Ft.	Z In.	θ_1 Deg.	θ_2 Deg.	LENGTH Ft.	LENGTH In.	WEIGHT Lbs.
	PIER 4 ABUTMENT																								
403	Shaft Cap Longit.	7	20	50		S					35	10.0											35	10	1465
404	Shaft Cap Tie	7	135	58	T	S					9	8.0											11	5	3145
405	Shaft Cap End Vert.	7	22	56	T	S					5	2.5											7	2	323
406	Shaft Cap End Horiz.	7	14	56	T	S					9	6.0											11	6	328
407	Stem Wall Vert.	7	90	54		S			V	2	10	5.5											11	5	2120
											10	7.5											11	7	
408	Stem Wall Horiz.	6	14	50		S					33	10.0											33	10	711
409	Stem Wall Tie	5	108	58	T	S					2	3.0											3	1	346
410	Stem Wall Top Tie	5	45	56	T	S					2	2.0											2	11	136
411	Stem Wall Top Horiz.	8	8	50		S					16	11.0											16	11	361
412	Gir. Stop Tie	4	48	74	T	S					1	0.0	2	7.0	2	7.0							5	12	192
413	Gir. Stop Horiz.	4	32	50		S					2	11.5											2	11	63
414	Gir. Stop Horiz.	4	16	50		S					1	4.0											1	4	14
415	Stem Wall End	6	14	54	T	S					4	0.0											4	10	102
416	Stem Wall Top Lap	8	4	80		S					4	4.0	4	4.0	0	0.0	0	4.0	0	0.0	177	0	8	8	93
417	Curtain Wall Horiz. N.F.	5	20	54	T	S					5	11.0											6	3	131
418	Curtain Wall Horiz. F.F.	5	20	50	T	S					5	11.0											5	11	123
419	Curtain Wall Horiz.Top	5	4	56	T	S					3	6.0											4	3	18
420	Curtain Wall Vert. Dowel	5	36	50		S					11	11.5											11	11	449
	SUPERSTRUCTURE INTERMEDIATE DIAPHRAGM																								
501	Stirrup	4	168	74	T						0	6.0	2	0.0	2	0.0							4	4	486
502	Longit. Thru Gir. Bott	7	12	50							26	5.9											26	6	650
503	Longit. Btwn. Gir.	4	96	50							5	2.9											5	3	336
504	Longit. Thru Gir. Top	7	6	50							26	5.9											26	6	325
	PIER 1 END DIAPHRAGM																								
511	Stirrup at face	4	26	74	T						4	6.5	0	9.0	1	10.5							6	12	121
512	Stirrup	4	27	54	T						6	0.0											6	3	113
513	Bottom Longit.	6	2	50							32	0.0											32	0	96
514	Longit.	4	10	50							32	0.0											32	0	214
515	Top Tie	4	27	58	T						1	8.5											2	4	43
516	Top Longit.	6	2	52			E				33	10.0											35	2	106
517	Stirrup	4	27	54	T						6	0.0											6	3	113
	PIER 4 END DIAPHRAGM																								
511	Stirrup at face	4	26	74	T						4	6.5	0	9.0	1	10.5							6	12	121
512	Stirrup	4	27	54	T						6	0.0											6	3	113
513	Bottom Longit.	6	2	50							32	0.0											32	0	96
514	Longit.	4	10	50							32	0.0											32	0	214
515	Top Tie	4	27	58	T						1	8.5											2	4	43
516	Top Longit.	6	2	52			E				33	10.0											35	2	106
517	Stirrup	4	27	54	T						6	0.0											6	3	113
	PIER 2 DIAPHRAGM																								
214	Horizontal Ties	6	110	58	T						6	9.0											8	3	1360
219	End Ties	6	12	56	T						6	8.0											8	4	151
220	Upper Horizontal	7	12	50					V	2	33	10.0											33	10	820
											33	0.0											33	0	
221	Face Horizontal	6	40	50							5	11.5											5	11	358
221	Face Horizontal	6	8	50							3	3.0											3	3	39
222	Face Horizontal End	6	20	50					V	4	2	6.0											2	6	79
											2	9.0											2	9	
222	Face Horizontal End	6	4	50							1	1.0											1	1	7
223	Face Vertical	6	40	50					V	20	3	2.0											3	2	198
											3	5.0											3	5	
224	Top Longit.	11	4	80							16	0.0	16	0.0	0	0.0	0	9.0	0	0.0	177	0	31	12	680
225	Top Longit.	11	12	56							33	9.0											37	1	2363
	PIER 3 DIAPHRAGM																								
314	Horizontal Ties	6	110	58	T						6	9.0											8	3	1360
319	End Ties	6	12	58	T						6	8.0											8	2	147
320	Upper Horizontal	7	12	50					V	2	33	10.0											33	10	820
											33	0.0											33	0	
321	Face Horizontal	6	40	50							5	11.5											5	11	358
321	Face Horizontal	6	8	50							3	3.0											3	3	39
322	Face Horizontal End	6	20	50					V	4	2	6.0											2	6	79
											2	9.0											2	9	
322	Face Horizontal End	6	4	50							1	1.0											1	1	7
323	Face Vertical	6	40	50					V	20	3	2.0											3	2	198
											3	5.0											3	5	
324	Top Longit.	11	4	80							16	0.0	16	0.0	0	0.0	0	9.0	0	0.0	177	0	31	12	680
325	Top Longit.	11	12	56							33	9.0											37	1	2363

STEEL REINFORCING BAR QUANTITIES NOT INCLUDED IN THIS BAR LIST

APPROACH SLAB
TRAFFIC BARRIER
BRIDGE GRATE INLETS
RETAINING WALL

BENDING DIAGRAMS

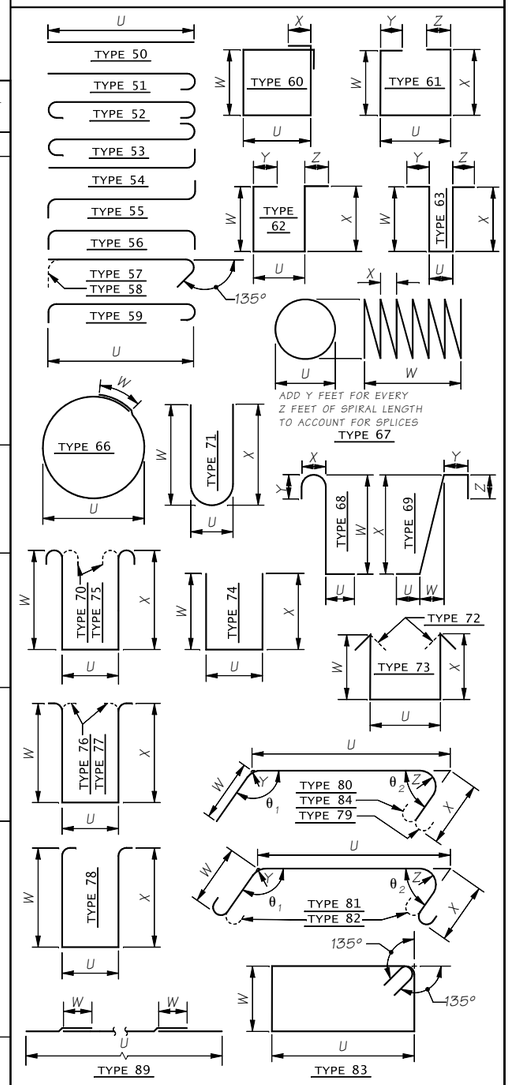

NOTES:

1. ALL REINFORCING BARS ON THIS SHEET SHALL BE ASTM A 706 UNLESS SHOWN OTHERWISE.
2. REINFORCING FOR TRAFFIC BARRIERS NOT SHOWN IN THE BAR LIST, SEE TRAFFIC BARRIER SHEET.
3. BEND FOR TRANSVERSE BARS DUE TO ROADWAY CROWN CONDITIONS HAS NOT BEEN SHOWN. THESE BARS SHALL BE BENT AS REQUIRED TO CONFORM TO THE CONFIGURATION OF THE STRUCTURE.
4. NUMBER AND LENGTH OF BARS TO BE DETERMINED BY THE CONTRACTOR FROM PLANS.

SR 241 FILE NO. ____ SHEET BA55

Bridge Design Engr.	Grimm, E	M:\X-Team\BR241-2_MABTON-SUNNYSIDE_REPL\window files\BARLIST.wnd	
Supervisor	Aldrich, BS		
Designed By	Schultz, E 08/22		
Checked By			
Detailed By			
Bridge Projects Engr.			
Prelim. Plan By			
Architect/Specialist		DATE / REVISION / BY / APP'D	

REGION NO.	STATE	FED. AID PROJ. NO.	SHEET NO.	TOTAL SHEETS
10	WASH.			
JOB NUMBER 21Y001				
CONTRACT NO.				

P.E. STAMP BOX
SEE SHEET CT1
DATE:

BRIDGE AND STRUCTURES OFFICE

P.E. STAMP BOX
SEE SHEET CT1
DATE:

Washington State Department of Transportation
PRELIMINARY NOT FOR CONSTRUCTION

SR 241
MABTON VICINITY
RETROFIT BRIDGES
MABTON-SUNNYSIDE RD. BRIDGE NO. 241/2 REPLACEMENT

BARLIST DETAILS 1 OF 2

BRIDGE SHEET NO. BA55

SHEET 92 OF 115 SHEETS

Tue Dec 27 15:19:29 2022

E = Bar is to be epoxy coated.
S = Bar is included in substructure quantities.
T = Transverse or S = Seismic
L = Lump sum quantity.
V = Bar dimensions vary between dimensions shown on this line and the following line.

MARK NO.	LOCATION	SIZE	NO REQ'D	BEND TYPE	TIE OR STIR.	SUBSTR.	EPOXY COAT	LUMP SUM	VARIES	NO. EACH	DIMENSIONS (Out to Out) U Ft.	U In.	W Ft.	W In.	X Ft.	X In.	Y Ft.	Y In.	Z Ft.	Z In.	θ_1 Deg.	θ_2 Deg.	LENGTH Ft.	LENGTH In.	WEIGHT Lbs.
	BRIDGE DECK BOTTOM MAT																								
521	Transverse	5	480	50			E				33	10.0											33	10	16938
522	Longit. Span 1	4	36	89			E				94	10.0	2	0.0									98	10	2377
522	Longit. Span 2	4	36	89			E				106	0.0	2	0.0									110	0	2645
522	Longit. Span 3	4	36	89			E				94	10.0	2	0.0									98	10	2377
523	Longit. At Int. Pier	7	72	50			E				36	0.0											36	0	5298
524	Longit. At Int. Pier	7	60	50			E				16	0.0											16	0	1962
525	Longit. Stirrup Hanger	4	10	89			E				359	8.0	2	0.0									375	8	2509
526	Longit. At Flange Edge	4	4	89			E				359	8.0	2	0.0									375	8	1004
	BRIDGE DECK TOP MAT																								
532	Longit. Span 1	4	36	89			E				91	10.0	2	0.0									95	10	2305
532	Longit. Span 2	4	36	89			E				100	0.0	2	0.0									104	0	2501
532	Longit. Span 3	4	36	89			E				91	10.0	2	0.0									95	10	2305
533	Longit. At Int. Pier	7	72	50			E				42	0.0											42	0	6181
534	Longit. At Int. Pier	7	60	50			E				22	0.0											22	0	2698
535	Transverse	5	480	51			E				18	1.9											18	9	9378
536	Transverse	5	480	51			E				25	0.0											25	7	12803
537	Transverse Overhang	5	2876	51			E				6	3.0											6	10	20466
S1	Deck to Barrier	5	984	69			E				1	0.0	0	3.6	1	11.0	0	11.6	0	0.0			3	9	3807
S2	Deck to Barrier	4	482	69			E				1	0.0	0	3.6	1	11.0	0	0.0	0	0.0			2	10	921

E = Bar is to be epoxy coated.
S = Bar is included in substructure quantities.
T = Transverse or S = Seismic
L = Lump sum quantity.
V = Bar dimensions vary between dimensions shown on this line and the following line.

MARK NO.	LOCATION	SIZE	NO REQ'D	BEND TYPE	TIE OR STIR.	SUBSTR.	EPOXY COAT	LUMP SUM	VARIES	NO. EACH	DIMENSIONS (Out to Out) U Ft.	U In.	W Ft.	W In.	X Ft.	X In.	Y Ft.	Y In.	Z Ft.	Z In.	θ_1 Deg.	θ_2 Deg.	LENGTH Ft.	LENGTH In.	WEIGHT Lbs.

STEEL REINFORCING BAR QUANTITIES NOT INCLUDED IN THIS BAR LIST

APPROACH SLAB
TRAFFIC BARRIER
BRIDGE GRATE INLETS
RETAINING WALL

BENDING DIAGRAMS

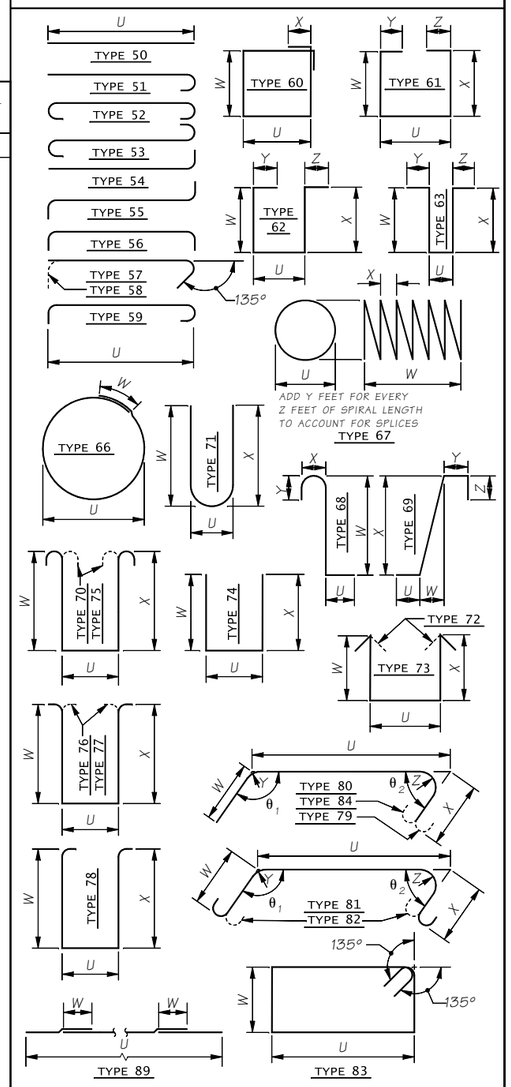

NOTES:

1. ALL REINFORCING BARS ON THIS SHEET SHALL BE ASTM A 706 UNLESS SHOWN OTHERWISE.
2. REINFORCING FOR TRAFFIC BARRIERS NOT SHOWN IN THE BAR LIST, SEE TRAFFIC BARRIER SHEET.
3. BEND FOR TRANSVERSE BARS DUE TO ROADWAY CROWN CONDITIONS HAS NOT BEEN SHOWN. THESE BARS SHALL BE BENT AS REQUIRED TO CONFORM TO THE CONFIGURATION OF THE STRUCTURE.
4. NUMBER AND LENGTH OF BARS TO BE DETERMINED BY THE CONTRACTOR FROM PLANS.

SR 241 FILE NO. ____ SHEET BA56

Bridge Design Engr.	Grimm, E	M:\X-Team\BR241-2_MABTOM-SUNNYSIDE_REPL\window files\BARLIST 02.wnd			
Supervisor	Aldrich, BS				
Designed By	Schultz, E 08/22				
Checked By					
Detailed By					
Bridge Projects Engr.					
Prelim. Plan By					
Architect/Specialist		DATE	REVISION	BY	APP'D

REGION NO.	STATE	FED. AID PROJ. NO.	SHEET NO.	TOTAL SHEETS
10	WASH.			
JOB NUMBER 21Y001				
CONTRACT NO.				

P.E. STAMP BOX
SEE SHEET CT1
DATE:

BRIDGE AND STRUCTURES OFFICE

P.E. STAMP BOX
SEE SHEET CT1
DATE:

Washington State Department of Transportation

PRELIMINARY NOT FOR CONSTRUCTION

SR 241
MABTON VICINITY
RETROFIT BRIDGES
MABTON-SUNNYSIDE RD. BRIDGE NO. 241/2 REPLACEMENT

BARLIST DETAILS 2 OF 2

BRIDGE SHEET NO. BA56

SHEET 93 OF 115 SHEETS

Tue Dec 27 15:19:31 2022

SEC. 25, T.9N., R.22E., W.M.
SEC. 30, T.9N., R.23E., W.M
YAKIMA COUNTY

SR 241

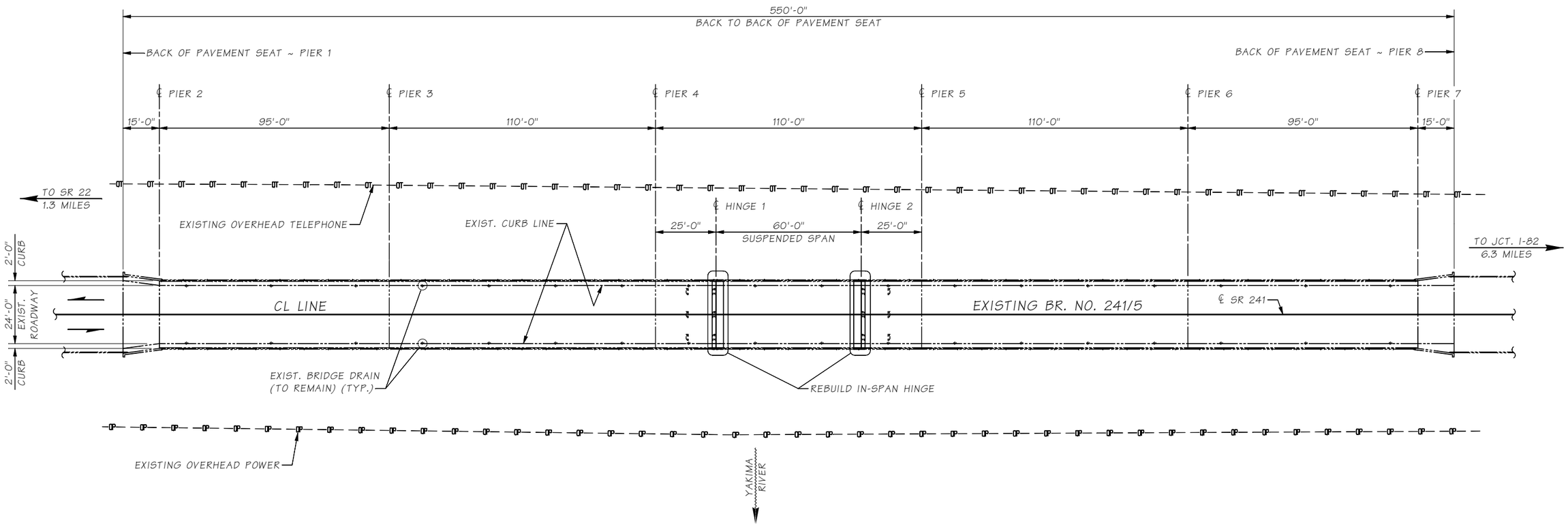

PLAN

LEGEND

B / BB5 — IDENTIFIES SECTION OR VIEW; TAKEN OR SHOWN ON BRIDGE SHEET BB5

1 / — IDENTIFIES DETAIL; TAKEN OR SHOWN ON THE SAME SHEET

99 — KEY NOTE: IDENTIFIES NOTE REFERENCE ON THE SAME SHEET

REHABILITATION: IN-SPAN HINGES

SR 241 FILE NO. ____ SHEET BB1

Bridge Design Engr.	Grimm, E	
Supervisor	Aldrich, BS	
Designed By	Mizumori, A	06/20
Checked By	Weeks, C	11/21
Detailed By	McCarthy, D	10/20
Bridge Projects Engr.		
Prelim. Plan By		
Architect/Specialist		

M:\X-Team\BR241-5_MABTON-SUNNYSIDE_RETROFIT\window files\LAYOUT.wnd

DATE	REVISION	BY	APP'D

REGION NO.	STATE	FED. AID PROJ. NO.	SHEET NO.	TOTAL SHEETS
10	WASH.			

JOB NUMBER 21Y001

CONTRACT NO.

P.E. STAMP BOX — SEE SHEET CT1 DATE:

BRIDGE AND STRUCTURES OFFICE

P.E. STAMP BOX — BRIAN S. ALDRICH, STATE OF WASHINGTON, 37834, PROFESSIONAL ENGINEER — SEE SHEET CT1 DATE:

Washington State Department of Transportation

PRELIMINARY NOT FOR CONSTRUCTION

SR 241
MABTON VICINITY
RETROFIT BRIDGES
MABTON-SUNNYSIDE BRIDGE NO. 241/5

LAYOUT

BRIDGE SHEET NO. BB1

SHEET 94 OF 115 SHEETS

Tue Dec 27 08:04:37 2022

GENERAL NOTES

1. ALL MATERIAL AND WORKMANSHIP SHALL BE IN ACCORDANCE WITH THE REQUIREMENTS OF THE WASHINGTON STATE DEPARTMENT OF TRANSPORTATION STANDARD SPECIFICATIONS FOR ROAD, BRIDGE, AND MUNICIPAL CONSTRUCTION DATED 2023.

2. NEW COMPONENTS OF THIS STRUCTURE HAVE BEEN DESIGNED IN ACCORDANCE WITH THE REQUIREMENTS OF THE AASHTO LRFD BRIDGE DESIGN SPECIFICATIONS 9TH EDITION 2020.

3. ALL CAST-IN-PLACE CONCRETE SHALL BE CLASS 4000.

4. UNLESS OTHERWISE SHOWN IN THE PLANS, CONCRETE COVER MEASURED FROM THE FACE OF CONCRETE TO THE FACE OF ANY REINFORCING STEEL SHALL BE 2" AT THE TOP OF THE BRIDGE DECK, 1" AT THE BOTTOM OF THE BRIDGE DECK (AND AT TOP AND BOTTOM OF BOTTOM SLAB), AND 1½" AT ALL OTHER LOCATIONS.

5. FALSEWORK SHALL BE CAREFULLY RELEASED TO PREVENT IMPACT OR UNDUE STRESS IN THE STRUCTURE.

6. CONDUITS, JUNCTION BOXES, AND UTILITIES ARE SHOWN FOR REFERENCE ONLY. THE CONTRACTOR SHALL COORDINATE THESE PLANS WITH THE ELECTRICAL, I.T.S. AND OTHER CIVIL PLANS.

7. EXISTING FEATURES AND DIMENSIONS ARE BASED ON INSPECTION REPORTS AND AS-BUILT PLANS. ALL DIMENSIONS SHALL BE FIELD MEASURED BY THE CONTRACTOR PRIOR TO ORDERING MATERIALS AND PROCEEDING WITH CONSTRUCTION.

8. THE EXISTING STRUCTURE MAY BE ASSUMED TO HAVE THE FOLLOWING PROPERTIES:
   - CONCRETE UNIT WEIGHT: 155 LBS/CF
   - CONCRETE COMPRESSIVE STRENGTH: 3,600 PSI
   - CONCRETE NOMINAL MAXIMUM AGGREGATE SIZE: 1 1/4"
   - REINFORCEMENT YIELD STRENGTH: 40 KSI

9. THE CONTRACTOR SHALL SUBMIT A CONSTRUCTION SEQUENCE PLAN AS FOR TYPE 2E WORKING DRAWINGS. THE CONSTRUCTION SEQUENCE PLAN SHALL:

   - DESCRIBE THE SEQUENCE OF WORK TO OCCUR, INCLUDING ACCESS, SHORING SYSTEMS, REMOVAL OF EXISTING ELEMENTS, FORMWORK, AND PLACEMENT OF CONCRETE.

   - DESCRIBE THE LOADING MAGNITUDE, ARRANGEMENT, MOVEMENT, AND POSITION OF ALL CONSTRUCTION LOADING AND EQUIPMENT ON THE BRIDGE DURING EACH STAGE OF WORK.

   - PROVIDE CONSTRUCTION LOAD RATING CALCULATIONS WITH THE LOAD FACTOR RATING (LFR) METHOD ACCORDING TO THE CRITERIA SPECIFIED IN THE LATEST EDITION OF THE WSDOT BRIDGE DESIGN MANUAL (CHAPTER 13) AND THE AASHTO MANUAL OF BRIDGE EVALUATION (MBE), INCLUDING AT A MINIMUM THE FOLLOWING:
     A. SUPPORTING CALCULATIONS SHOWING THAT THE LOAD RATINGS IN THE SUPERSTRUCTURE EXCEED 1.0;
     B. CONSTRUCTION LOADS SHALL INCLUDE AN IMPACT FACTOR OF AT LEAST 1.15 AND A LOAD FACTOR OF 1.5.

   - STATE THAT THE CONTRACTOR ASSUMES ALL RISK FOR DAMAGE.

10. THE BRIDGE DEMOLITION PLAN SHALL BE INCLUDED AS PART OF THE CONSTRUCTION SEQUENCE PLAN. SEE SPECIAL PROVISIONS FOR ADDITIONAL INFORMATION.

REMOVAL AND REPAIR NOTES

1. PRIOR TO ANY REMOVAL WORK, THE CONTRACTOR SHALL FIELD MEASURE THE EXISTING EXPANSION JOINT OPENING AT HINGE 1 AT THE TWO CURBLINES AND AT THE TWO BOTTOM CORNERS OF THE SUPERSTRUCTURE. FIELD MEASUREMENTS SHALL BE TAKEN AT A STABLE AMBIENT TEMPERATURE AND THE TEMPERATURE SHALL BE RECORDED. THESE MEASUREMENTS SHALL BE SUBMITTED AS A TYPE 1 WORKING DRAWING.

2. A ¾" SAWCUT SHALL BE PROVIDED AT ALL ACCESSIBLE FACES AND EDGES OF EXISTING CONCRETE REMOVAL LIMITS. ALL SURFACES EXPOSED BY REMOVAL SHALL BE TREATED AS CONSTRUCTION JOINTS WITH ROUGHENED SURFACES

3. EXISTING REINFORCEMENT THAT IS ENTIRELY WITHIN THE CONCRETE REMOVAL LIMITS SHALL BE REMOVED. ALL OTHER REINFORCEMENT SHALL REMAIN IN PLACE WITHOUT DAMAGE. SOME EXISTING REINFORCEMENT HAS BEEN SHOWN FOR THE CONTRACTOR'S INFORMATION, BUT THE CONTRACTOR SHALL BE RESPONSIBLE FOR IDENTIFYING ALL EXISTING REINFORCEMENT.

4. SOME EXISTING REINFORCEMENT HAS BEEN IDENTIFIED AS NEEDING PROTECTION. SOME EXISTING REINFORCEMENT HAS BEEN IDENTIFIED AS ABLE TO BE FIELD BENT TO PROVIDE ACCESS TO THE HINGES. MODIFICATIONS TO ANY OTHER EXISTING REINFORCEMENT THAT IS TO REMAIN SHALL REQUIRE THE APPROVAL OF THE ENGINEER.

CONSTRUCTION SEQUENCE

1. TEMPORARILY REMOVE RAILING AND GUARDRAIL AT HINGE LOCATIONS.
2. INSTALL SUSPENDED SPAN SHORING SYSTEM, AND TRANSFER DEAD LOAD.
3. REMOVE EXISTING SUPPORT BEAM SYSTEM.
4. REMOVE EXISTING CONCRETE AT IN-SPAN HINGE WITHIN SPECIFIED LIMITS.
5. PLACE CONCRETE AT LOWER HINGE SEAT.
6. PLACE BEARINGS AFTER LOWER HINGE SEAT CONCRETE HAS CURED.
7. PLACE CONCRETE AT UPPER HINGE SEAT AFTER LOWER HINGE SEAT CONCRETE HAS ACHIEVED A 3,000 PSI COMPRESSIVE STRENGTH.
8. PLACE EXPANSION JOINT HEADER CONCRETE, IF PRESENT, AFTER THE UPPER HINGE SEAT CONCRETE HAS CURED.
9. LOAD SHALL NOT BE TRANSFERRED FROM THE SHORING SYSTEM TO THE HINGE UNTIL ALL HINGE CONCRETE, INCLUDING THE EXPANSION JOINT HEADERS, HAS ACHIEVED A 4,000 PSI COMPRESSIVE STRENGTH.
10. REPAIR HOLES FROM EXISTING SUPPORT BEAM SYSTEM. REPAIR HMA.
11. REPEAT FOR OTHER IN-SPAN HINGE LOCATION. ALTERNATIVELY BOTH HINGES MAY BE WORKED CONCURRENTLY.
12. INSTALL EXPANSION JOINT ASSEMBLIES.
13. REPLACE RAILING AND GUARDRAIL AT HINGE LOCATIONS.

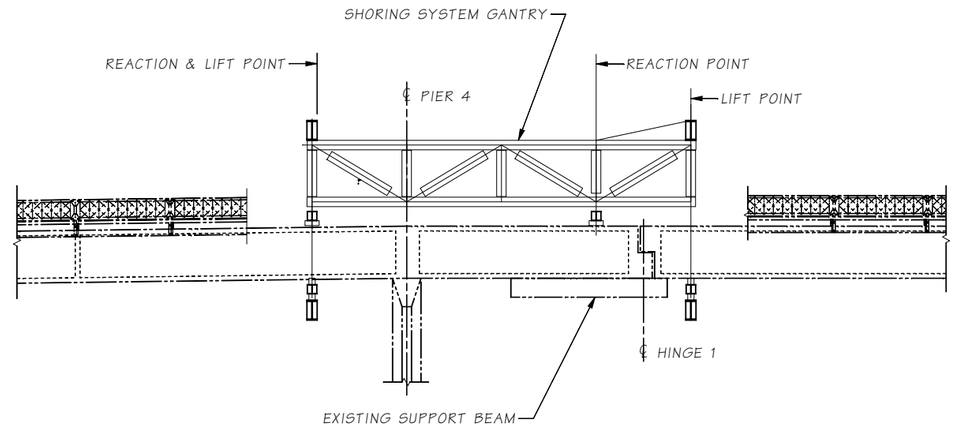

ELEVATION
SHORING SYSTEM

PIER 4 SHOWN, PIER 5 SIMILAR

SHORING SYSTEM NOTES

1. THE CONTRACTOR SHALL DESIGN A SHORING SYSTEM TO SUPPORT THE SUSPENDED SPAN WEIGHT AND ALL OTHER ASSOCIATED LOADS DURING EACH IN-SPAN HINGE REPLACEMENT. A SUGGESTED SHORING CONCEPT HAS BEEN SHOWN IN THE PLANS FOR CONVENIENCE ONLY.
2. THE SHORING SYSTEMS SHALL SUPPORT THE SUSPENDED SPAN WITHIN 6 FT OF THE CENTERLINE OF THE EXISTING HINGE.
3. THE SHORING SYSTEM SHALL UNIFORMLY SUPPORT THE SUSPENDED SPAN AND REACT AGAINST THE SUPPORTING SPANS IN THE TRANSVERSE DIRECTION. AT EACH SECTION OF THE BRIDGE, THE SHORING SYSTEM SUPPORT REACTION SHALL BE EQUALLY DISTRIBUTED TO THE WEBS +/-15%.
4. THE SHORING SYSTEM SHALL ACCOMODATE THERMAL EXPANSION AND CONTRACTION OF THE BRIDGE.
5. THE SHORING SYSTEM SHALL NOT RELY ON SUSTAINED OPERATION OF HYDRAULIC COMPONENTS EXCEPT DURING ACTIVE TRANSFER OF LOAD BETWEEN THE EXISTING BRIDGE AND THE SHORING SYSTEM. HYDRAULIC COMPONENTS OF THE SHORING SYSTEM SHALL BE SIZED FOR 2 TIMES THE MAXIMUM EXPECTED LOAD.

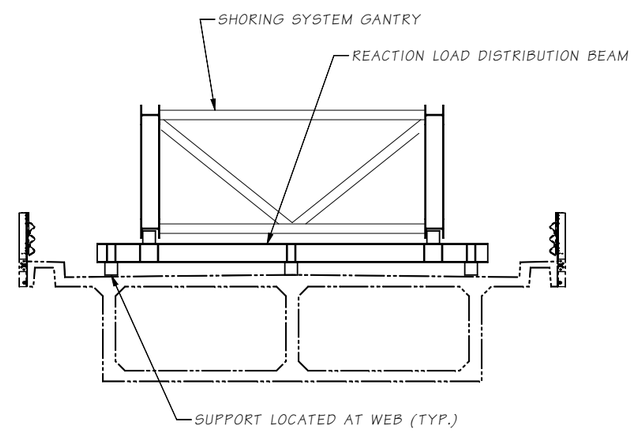

SECTION - SHORING SYSTEM

SHOWN AT REACTION POINT

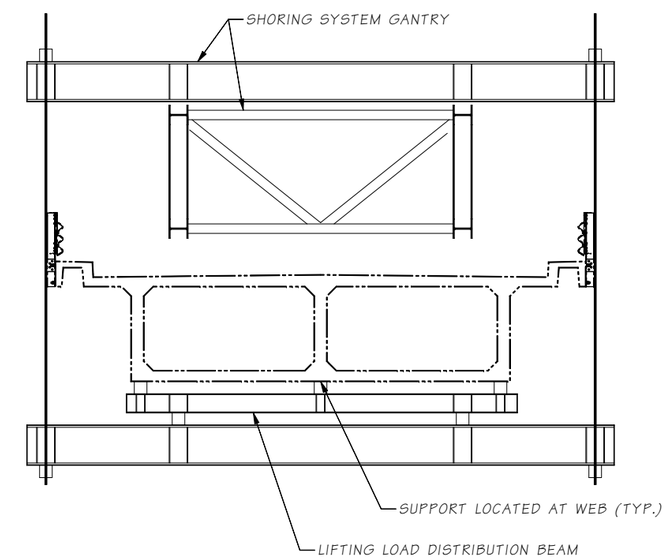

SECTION - SHORING SYSTEM

SHOWN AT LIFT POINT

SR 241 FILE NO. ____ SHEET BB3

Bridge Design Engr.	Grimm, E		
Supervisor	Aldrich, BS		
Designed By	Mizumori, A	10/20	
Checked By	Weeks, C	11/21	
Detailed By	McCarthy, D	10/20	
Bridge Projects Engr.			
Prelim. Plan By			
Architect/Specialist			

M:\X-Team\BR241-5_MABTON-SUNNYSIDE_RETROFIT\window files\CONSTRUCTION SEQ.wnd

DATE	REVISION	BY	APP'D

REGION NO.	STATE	FED. AID PROJ. NO.	SHEET NO.	TOTAL SHEETS
10	WASH.			

JOB NUMBER 21Y001

CONTRACT NO.

P.E. STAMP BOX — ANTHONY J. I. MIZUMORI — STATE OF WASHINGTON — 44357 — PROFESSIONAL ENGINEER — SEE SHEET CT1 — DATE:

BRIDGE AND STRUCTURES OFFICE

P.E. STAMP BOX — BRIAN S. ALDRICH — STATE OF WASHINGTON — 37834 — PROFESSIONAL ENGINEER — SEE SHEET CT1 — DATE:

Washington State Department of Transportation

PRELIMINARY NOT FOR CONSTRUCTION

SR 241
MABTON VICINITY
RETROFIT BRIDGES
MABTON-SUNNYSIDE BRIDGE NO. 241/5

CONSTRUCTION SEQUENCE

BRIDGE SHEET NO. BB3

SHEET 96 OF 115 SHEETS

Tue Dec 27 08:04:40 2022

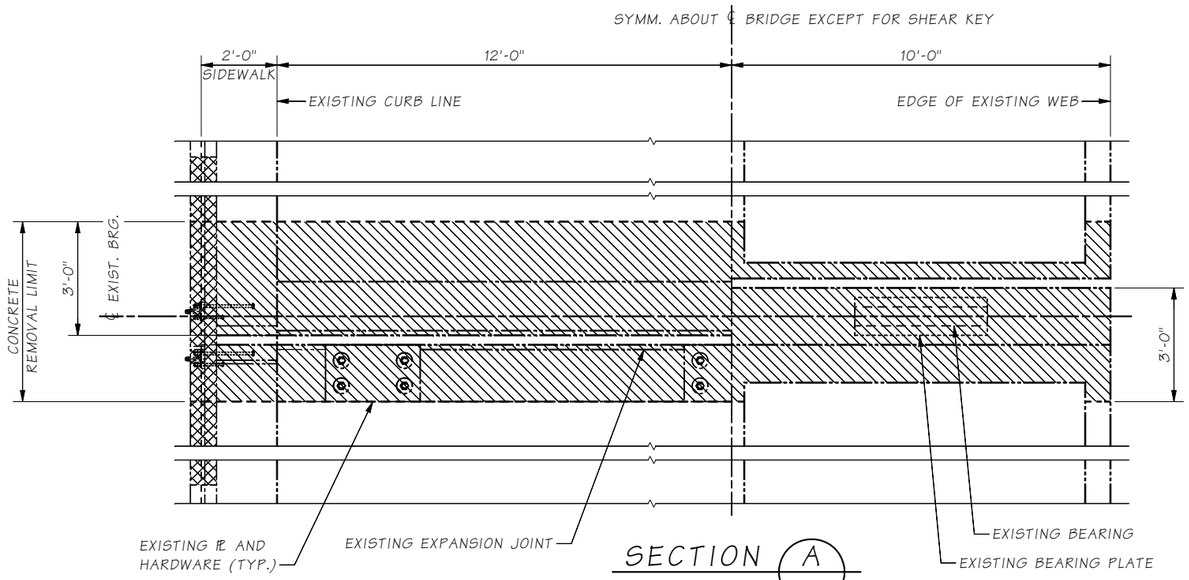

SECTION A

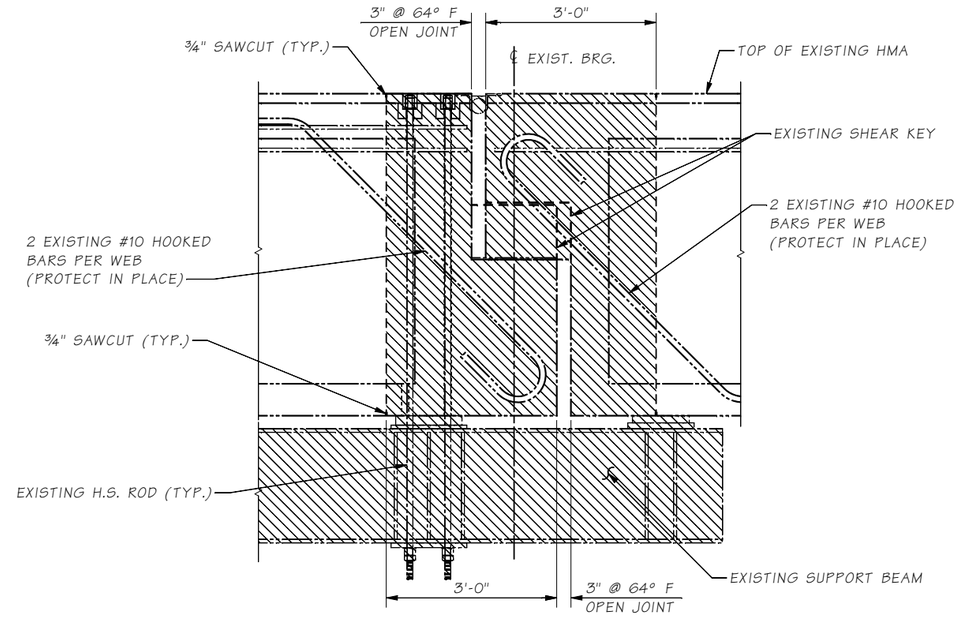

SECTION B

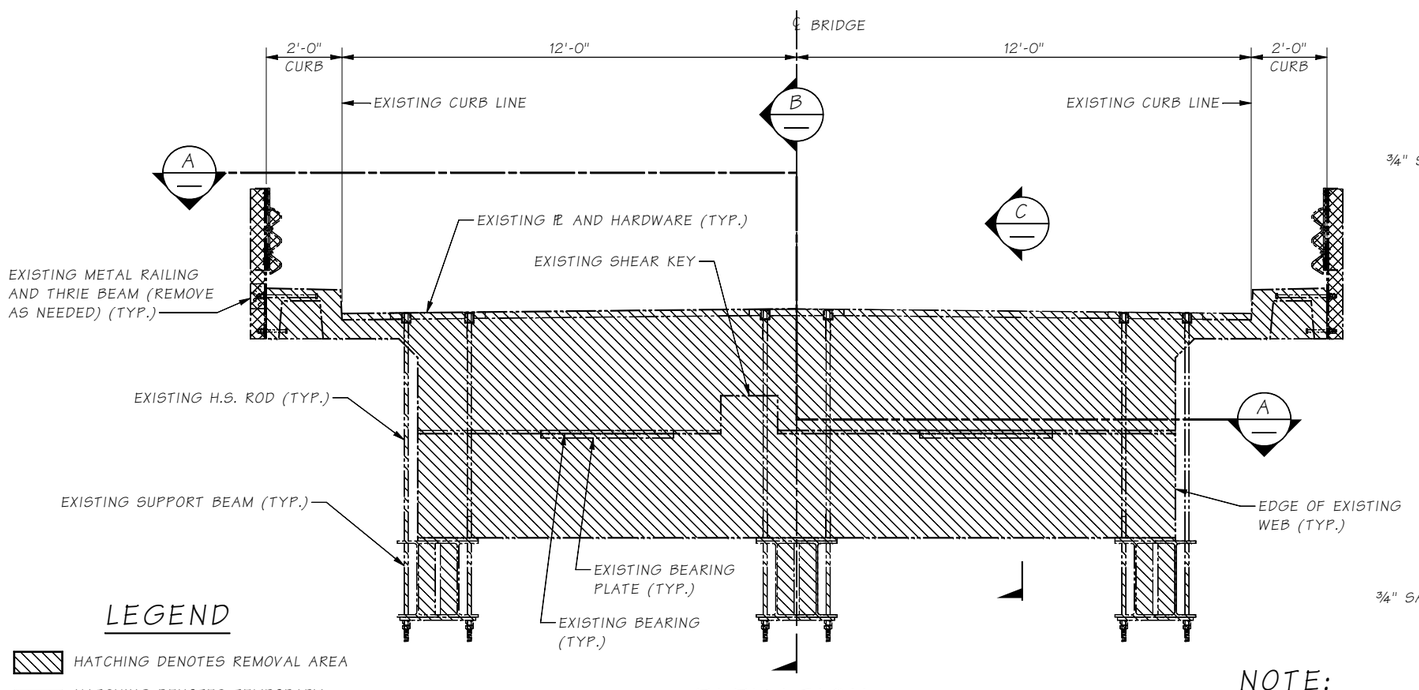

ELEVATION

SHOWN AT ℄ BEARING

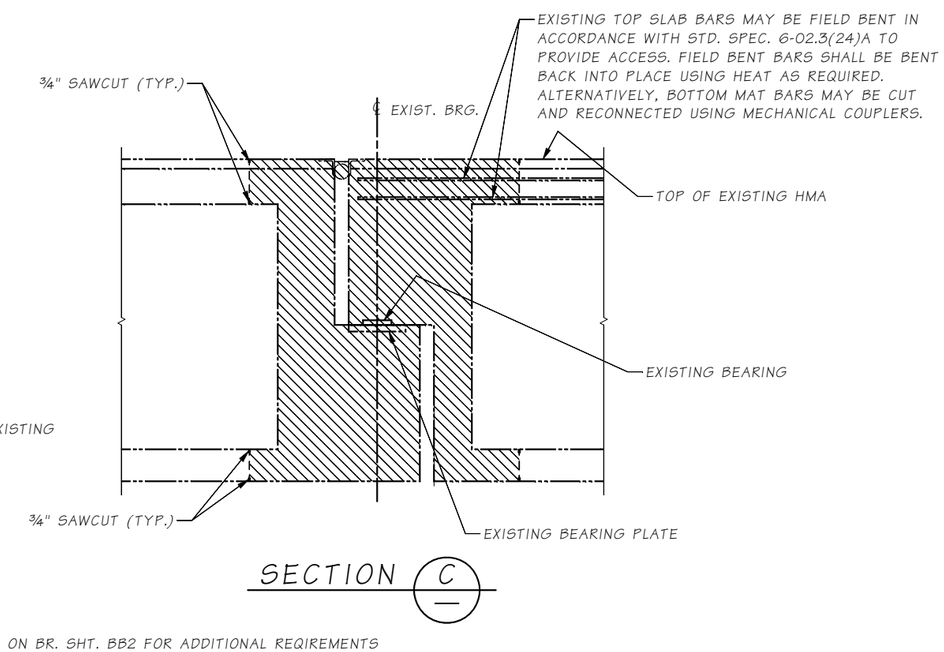

SECTION C

LEGEND

HATCHING DENOTES REMOVAL AREA

HATCHING DENOTES TEMPORARY REMOVAL ITEMS

NOTE:

1. SEE NOTES ON BR. SHT. BB2 FOR ADDITIONAL REQIREMENTS

SR 241 FILE NO. ____ SHEET BB4

Bridge Design Engr.	Grimm, E	
Supervisor	Aldrich, BS	
Designed By	Mizumori, A	10/20
Checked By	Weeks, C	11/21
Detailed By	McCarthy, D	10/20
Bridge Projects Engr.		
Prelim. Plan By		
Architect/Specialist		

M:\X-Team\BR241-5_MABTON-SUNNYSIDE_RETROFIT\window files\HINGE 1 REMOVAL DETAILS.wnd

DATE	REVISION	BY	APP'D

REGION NO.	STATE	FED. AID PROJ. NO.	SHEET NO.	TOTAL SHEETS
10	WASH.			

JOB NUMBER 21Y001

CONTRACT NO.

P.E. STAMP BOX

ANTHONY J. I. MIZUMORI, STATE OF WASHINGTON, 44257, STRUCTURAL ENGINEER, PROFESSIONAL ENGINEER

SEE SHEET CT1

DATE:

BRIDGE AND STRUCTURES OFFICE

P.E. STAMP BOX

BRIAN S. ALDRICH, STATE OF WASHINGTON, 37834, STRUCTURAL ENGINEER, PROFESSIONAL ENGINEER

SEE SHEET CT1

DATE:

Washington State Department of Transportation

PRELIMINARY NOT FOR CONSTRUCTION

SR 241
MABTON VICINITY
RETROFIT BRIDGES
MABTON-SUNNYSIDE BRIDGE NO. 241/5

HINGE 1 REMOVAL DETAILS

BRIDGE SHEET NO. BB4

SHEET 97 OF 115 SHEETS

Tue Dec 27 08:04:41 2022

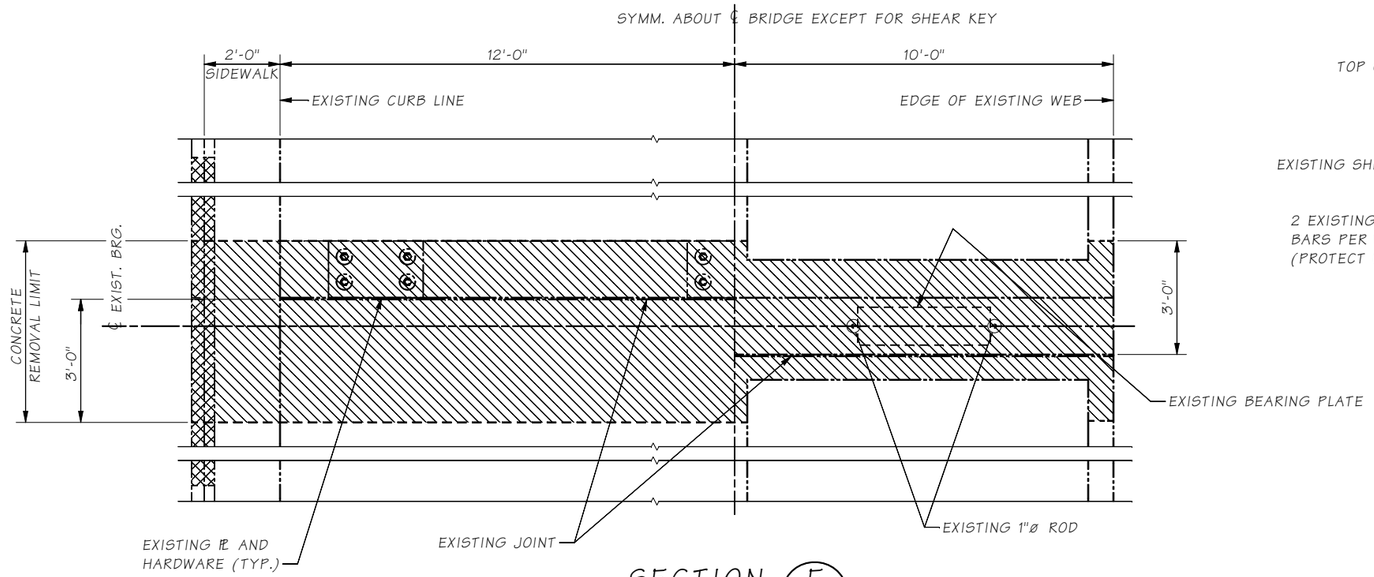

SECTION E

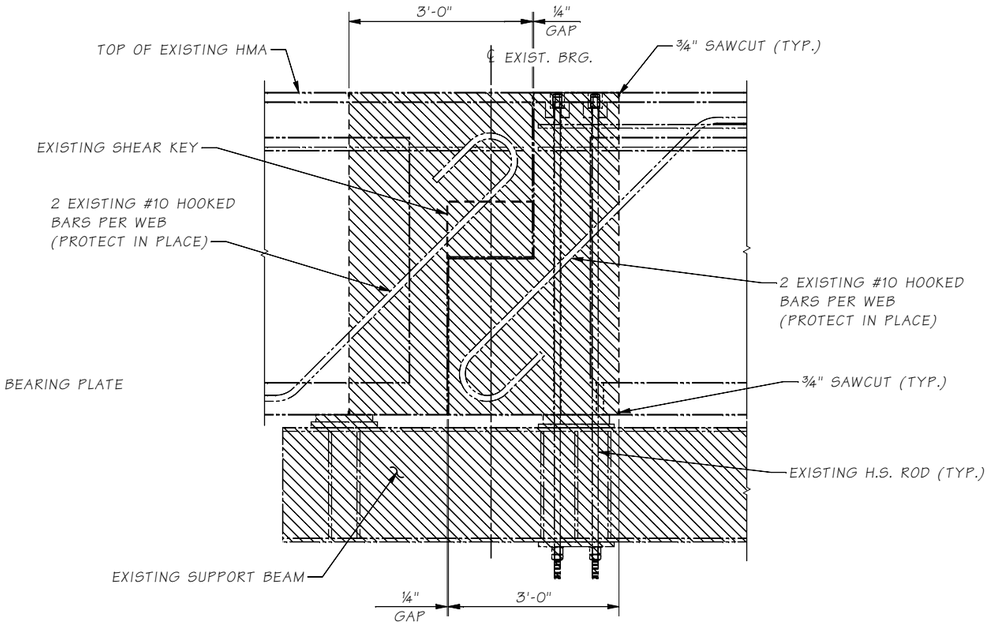

SECTION F

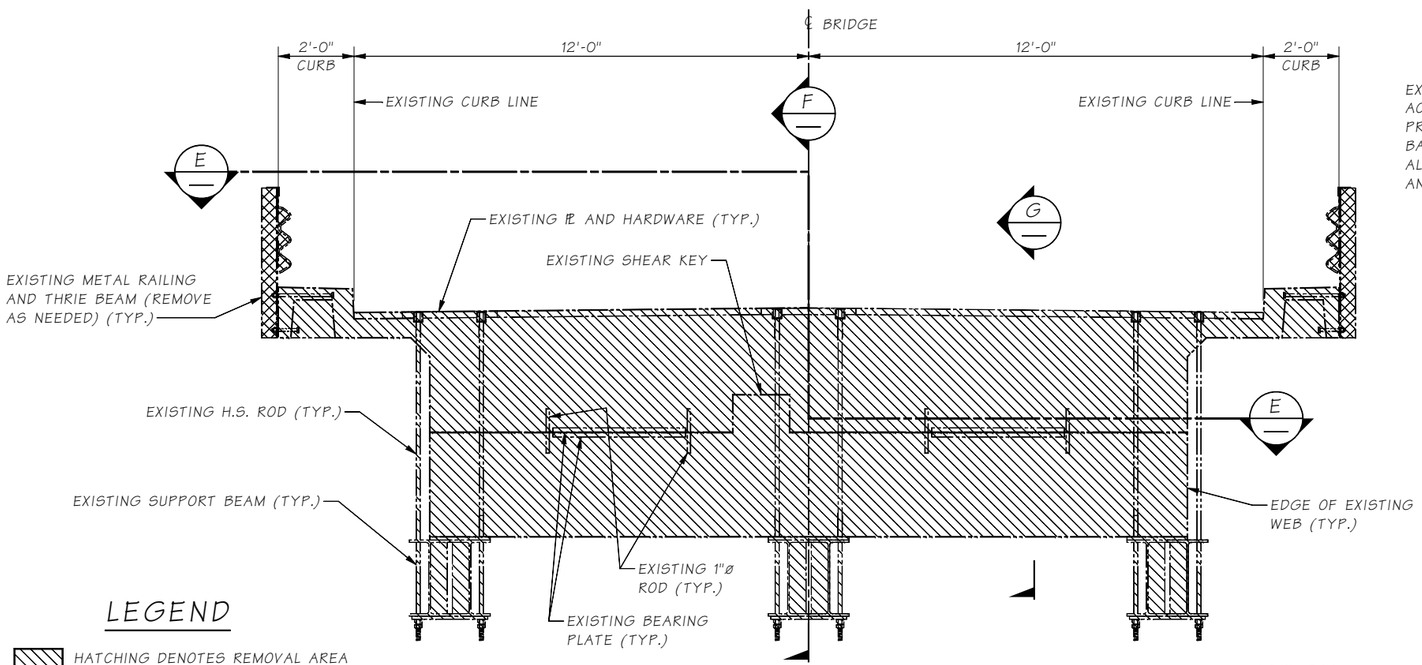

ELEVATION

SHOWN AT ℄ BEARING

EXISTING TOP SLAB BARS MAY BE FIELD BENT IN ACCORDANCE WITH STD. SPEC. 6-02.3(24)A TO PROVIDE ACCESS. FIELD BENT BARS SHALL BE BENT BACK INTO PLACE USING HEAT AS REQUIRED. ALTERNATIVELY, BOTTOM MAT BARS MAY BE CUT AND RECONNECTED USING MECHANICAL COUPLERS

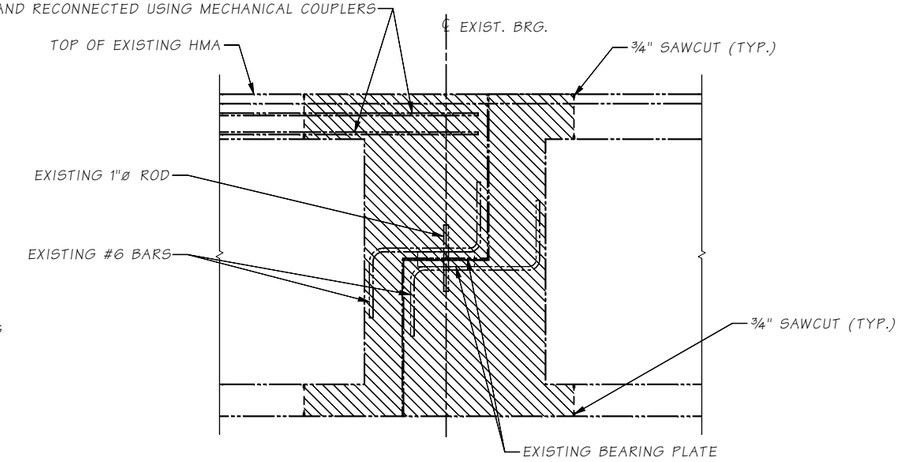

SECTION G

LEGEND

- HATCHING DENOTES REMOVAL AREA
- HATCHING DENOTES TEMPORARY REMOVAL ITEMS

NOTE:

1. SEE NOTES ON BR. SHT. BB2 FOR ADDITIONAL REQIREMENTS

Bridge Design Engr.	Grimm, E		
Supervisor	Aldrich, BS		
Designed By	Mizumori, A	10/20	
Checked By	Weeks, C	11/21	
Detailed By	McCarthy, D	10/20	
Bridge Projects Engr.			
Prelim. Plan By			
Architect/Specialist			

M:\X-Team\BR241-5_MABTON-SUNNYSIDE_RETROFIT\window files\HINGE 2 REMOVAL DETAILS.wnd

DATE	REVISION	BY	APP'D

REGION NO.	STATE	FED. AID PROJ. NO.	SHEET NO.	TOTAL SHEETS
10	WASH.			
JOB NUMBER 21Y001				
CONTRACT NO.				

P.E. STAMP BOX — ANTHONY J. I. MIZUMORI, STATE OF WASHINGTON, 44207, STRUCTURAL ENGINEER, PROFESSIONAL ENGINEER — SEE SHEET CT1 — DATE:

BRIDGE AND STRUCTURES OFFICE

P.E. STAMP BOX — BRIAN S. ALDRICH, STATE OF WASHINGTON, 37834, STRUCTURAL ENGINEER, PROFESSIONAL ENGINEER — SEE SHEET CT1 — DATE:

Washington State Department of Transportation

PRELIMINARY NOT FOR CONSTRUCTION

SR 241
MABTON VICINITY
RETROFIT BRIDGES
MABTON-SUNNYSIDE BRIDGE NO. 241/5

HINGE 2 REMOVAL DETAILS

BRIDGE SHEET NO. BB5

SHEET 98 OF 115 SHEETS

SR 241 FILE NO. ____ SHEET BB5

Tue Dec 27 08:04:43 2022

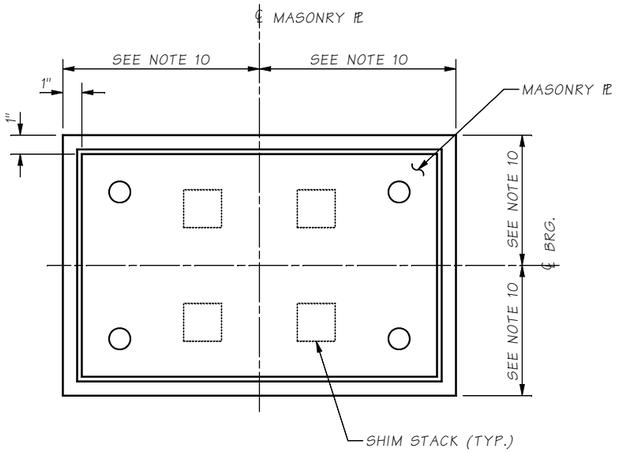

PLAN
GROUT PAD

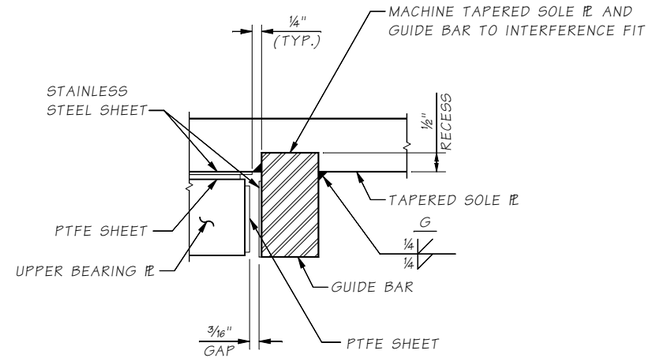

GUIDE BAR DETAIL

DISC BEARING NOTES:

1. BEARING DIMENSIONS ARE ASSUMED. BEARING ELEMENTS SHALL BE DESIGNED BY THE MANUFACTURER IN ACCORDANCE WITH THESE DETAILS AND THE SPECIAL PROVISIONS TO RESIST THE DESIGN SERVICE, STRENGTH AND EXTREME EVENT LOADS AND DEFORMATIONS GIVEN IN THE BEARING DESIGN TABLES.
2. BEARING ELEMENTS SHALL BE DESIGNED USING AASHTO LRFD BRIDGE DESIGN SPECIFICATIONS FOR HIGHWAY BRIDGES, 9TH EDITION.
3. SOLE PLATES, MASONRY PLATES AND GUIDE BARS SHALL BE AASHTO M270 GRADE 50 OR ASTM A572 GRADE 50 STEEL.
4. FOR MASONRY PLATES, THE FINAL MINIMUM PLATE DIMENSIONS ARE SHOWN. INCREASE THE THICKNESS AS REQUIRED FOR MACHINING TO FLATNESS TOLERANCE AFTER FABRICATION.
5. BOTTOM CIRCULAR LOWER BEARING PLATE AND MASONRY PLATE SHALL BE MACHINED TO PROVIDE A CLASS LC-6 FIT.
6. GUIDE BARS SHALL BE DESIGNED FOR AN ULTIMATE CONTACT STRESS BETWEEN STAINLESS STEEL AND PTFE OF 10 KSI FOR STRENGTH & EXTREME EVENT LIMIT STATES, AND 4.5 KSI FOR SERVICE LIMIT STATE.
7. BEARING COMPONENTS, OTHER THAN EMBEDDED SOLE PLATES, SHALL BE REMOVABLE AND REPLACEABLE.
8. THE COLOR OF PAINT SHALL BE WASHINGTON GRAY.
9. SHOP DRAWINGS AND DESIGN CALCULATIONS SHALL BE SUBMITTED TO THE ENGINEER FOR APPROVAL PRIOR TO THE MANUFACTURE OF THE BEARINGS.
10. GROUT PAD DIMENSION SHALL BE DETERMINED FROM APPROVED BEARING SHOP DRAWINGS.

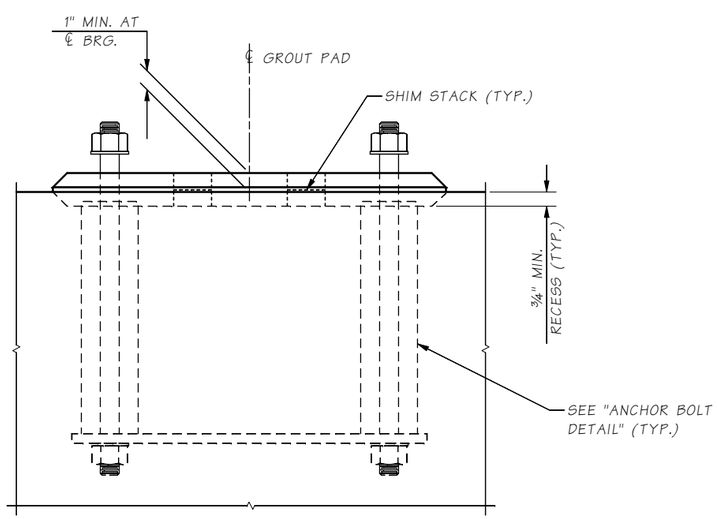

ELEVATION
GROUT PAD

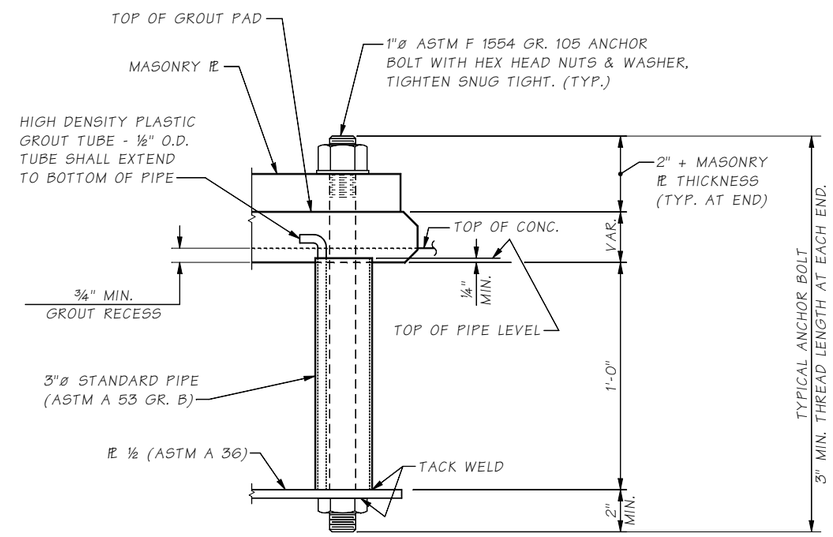

ANCHOR BOLT DETAIL

ANCHOR BOLTS AND HARDWARE SHALL BE HOT DIP GALVANIZED IN ACCORDANCE WITH ASTM F 2329

BEARING SCHEDULE		
HINGE	TYPE	QTY.
1	GUIDED DISC	3
2	FIXED DISC	3

Bridge Design Engr.	Grimm, E		M:\X-Team\BR241-5_MABTON-SUNNYSIDE_RETROFIT\window files\BEARING DTL 1.wnd							
Supervisor	Aldrich, BS									
Designed By	Mizumori, A	10/20								
Checked By	Weeks, C	11/21								
Detailed By	Wrenn, M	10/20								
Bridge Projects Engr.										
Prelim. Plan By										
Architect/Specialist			DATE	REVISION	BY	APP'D				

REGION NO.	STATE	FED. AID PROJ. NO.	SHEET NO.	TOTAL SHEETS
10	WASH.			
JOB NUMBER 21Y001				
CONTRACT NO.				

P.E. STAMP BOX
ANTHONY J. I. MIZUMORI
STATE OF WASHINGTON
44827
STRUCTURAL ENGINEER
PROFESSIONAL ENGINEER
SEE SHEET CT1
DATE:

BRIDGE AND STRUCTURES OFFICE

P.E. STAMP BOX
BRIAN S. ALDRICH
STATE OF WASHINGTON
37834
STRUCTURAL ENGINEER
PROFESSIONAL ENGINEER
SEE SHEET CT1
DATE:

Washington State
Department of Transportation
PRELIMINARY NOT FOR CONSTRUCTION

SR 241
MABTON VICINITY
RETROFIT BRIDGES
MABTON-SUNNYSIDE BRIDGE NO. 241/5

BEARING DETAILS

BRIDGE SHEET NO. BB6

SHEET 99 OF 115 SHEETS

SR 241 FILE NO. ____ SHEET BB6

Tue Dec 27 08:04:45 2022

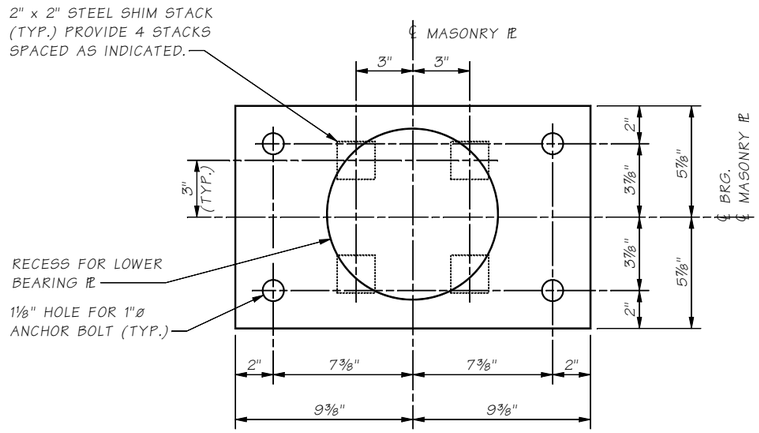

PLAN
MASONRY ⅊

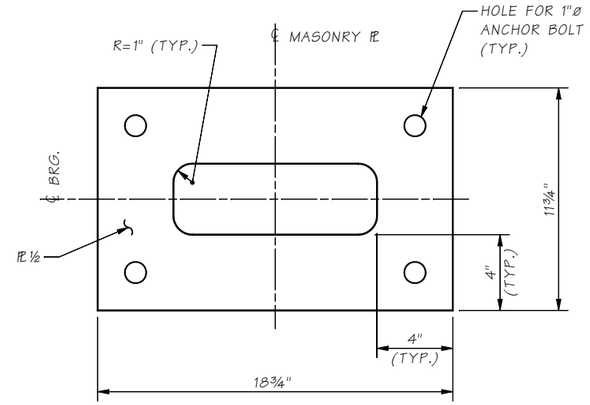

DETAIL 1

HOLE PATTERN SHALL MATCH THE MASONRY ⅊ HOLE PATTERN.

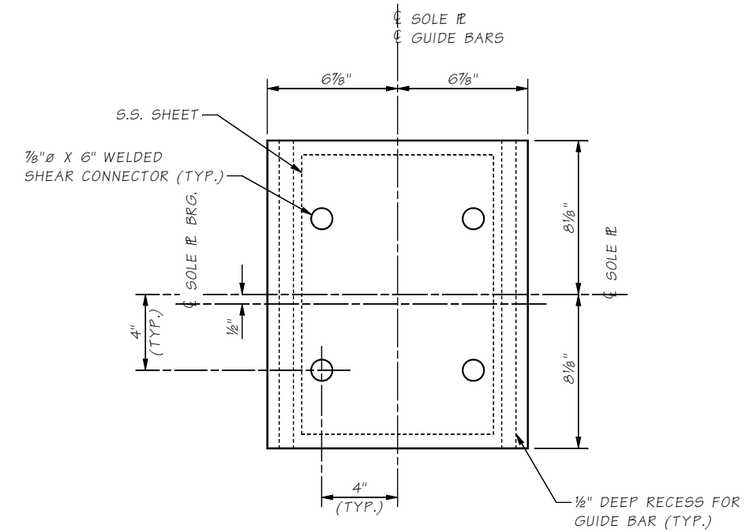

PLAN
SOLE PLATE

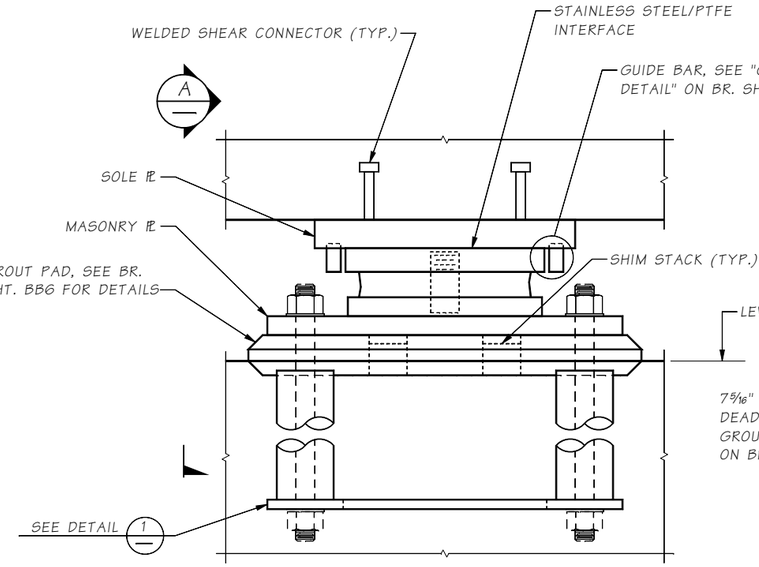

ELEVATION
HINGE 1 BEARING

LOOKING BACK ON STATIONING

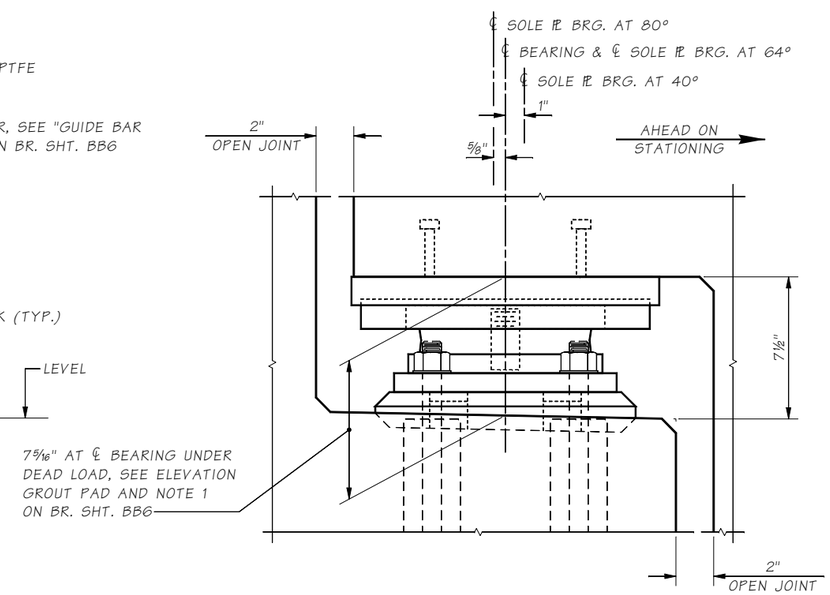

VIEW A

BEARING DESIGN TABLE - HINGE 1				
LIMIT STATE	AXIS DIRECTION	REACTION (KIP)	ROTATION (RAD)	DISPL. (IN)
DEAD (DC)	VERTICAL	81		
SERVICE	VERTICAL	161	0.005	
	LONGITUDINAL		0.021	+3"/-2"
	TRANSVERSE	1		
STRENGTH	VERTICAL	245		
	LONGITUDINAL		0.005	+3"/-2"
	TRANSVERSE	3	0.032	
EXTREME EVENT	VERTICAL	121		
	LONGITUDINAL		0.005	+3"/-2"
	TRANSVERSE	23	0.032	

- ALL ROTATIONS INCLUDE AN ALLOWANCE OF ± 0.005 RAD. FOR UNCERTAINTIES.
- TRANSVERSE REACTION AT THE SERVICE LIMIT STATE MAY BE CONSIDERED A SHORT TERM LOADING WHEN DESIGNING THE GUIDE BAR PTFE CONTACT STRESS.

SR 241 FILE NO. ____ SHEET BB7

Bridge Design Engr.	Grimm, E	
Supervisor	Aldrich, BS	
Designed By	Mizumori, A	10/20
Checked By	Weeks, C	11/21
Detailed By	Wrenn, M	10/20
Bridge Projects Engr.		
Prelim. Plan By		
Architect/Specialist		

M:\X-Team\BR241-5_MABTON-SUNNYSIDE_RETROFIT\window files\BEARING DTL 2.wnd

DATE	REVISION	BY	APP'D

REGION NO.	STATE	FED. AID PROJ. NO.	SHEET NO.	TOTAL SHEETS
10	WASH.			
JOB NUMBER 21Y001				
CONTRACT NO.				

P.E. STAMP BOX
ANTHONY J. I. MIZUMORI — STATE OF WASHINGTON — 44007 — PROFESSIONAL ENGINEER
SEE SHEET CT1
DATE:

BRIDGE AND STRUCTURES OFFICE

P.E. STAMP BOX
BRIAN S. ALDRICH — STATE OF WASHINGTON — 37834 — PROFESSIONAL ENGINEER
SEE SHEET CT1
DATE:

Washington State Department of Transportation

PRELIMINARY NOT FOR CONSTRUCTION

SR 241
MABTON VICINITY
RETROFIT BRIDGES
MABTON-SUNNYSIDE BRIDGE NO. 241/5

HINGE 1
BEARING DETAILS

BRIDGE SHEET NO. BB7

SHEET 100 OF 115 SHEETS

Tue Dec 27 08:04:46 2022

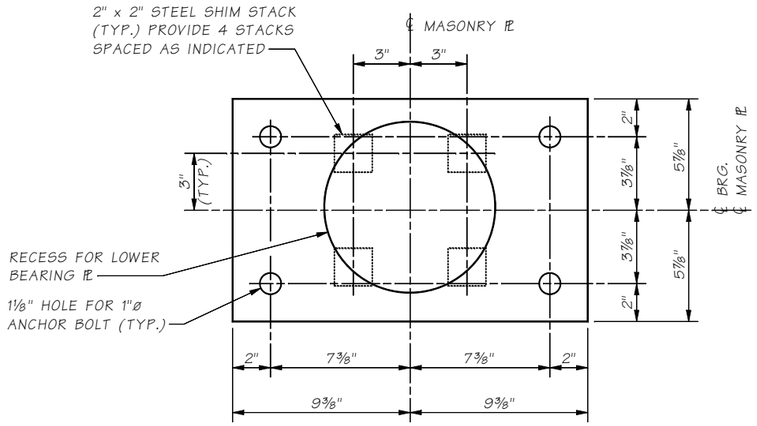

PLAN
MASONRY ℙ

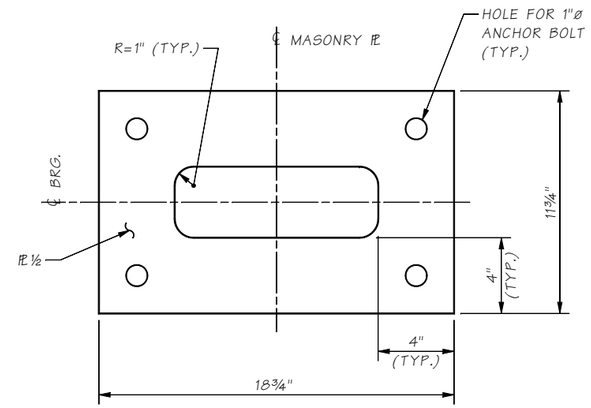

DETAIL 2

HOLE PATTERN SHALL MATCH THE MASONRY ℙ HOLE PATTERN.

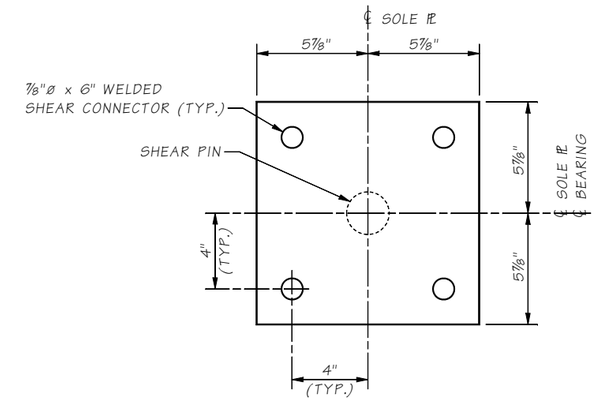

PLAN
SOLE PLATE

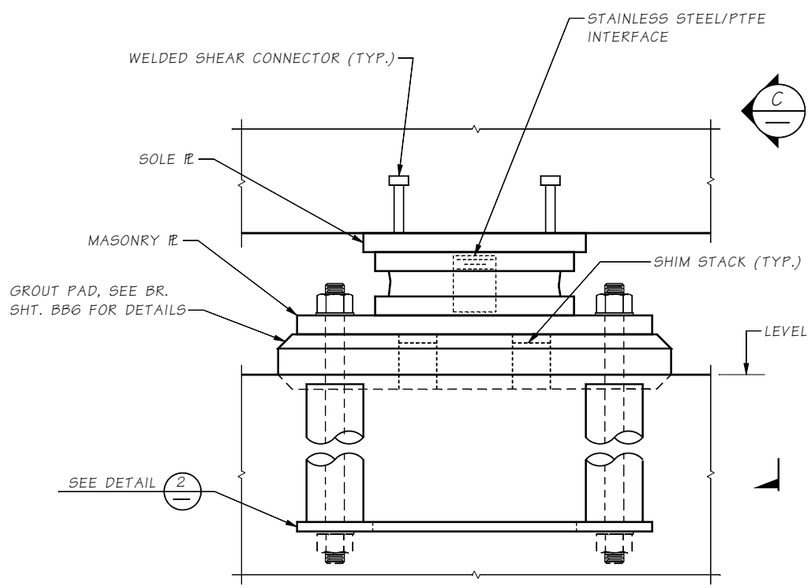

ELEVATION
HINGE 2 BEARING

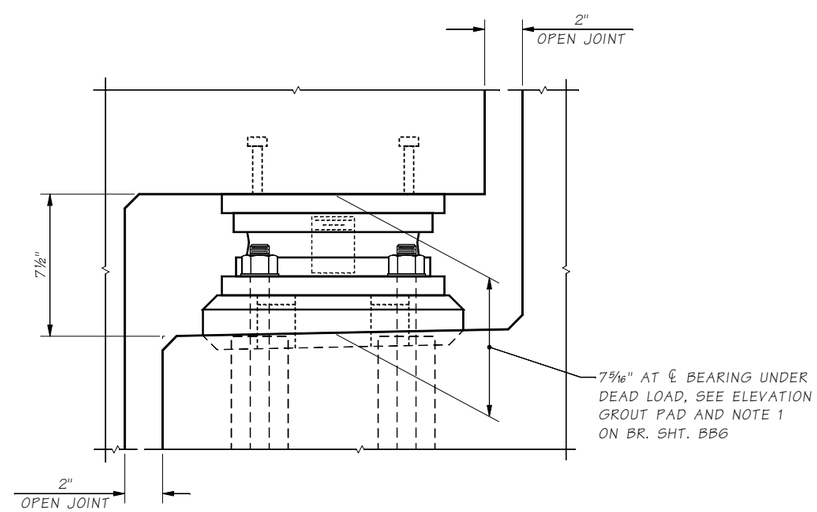

VIEW C

BEARING DESIGN TABLE - HINGE 2			
LIMIT STATE	AXIS DIRECTION	REACTION (KIP)	ROTATION (RAD)
DEAD (DC)	VERTICAL	81	
SERVICE	VERTICAL	161	
	LONGITUDINAL	12	0.005
	TRANSVERSE		0.021
STRENGTH	VERTICAL	245	
	LONGITUDINAL	21	0.005
	TRANSVERSE		0.032
EXTREME EVENT	VERTICAL	121	
	LONGITUDINAL	53	0.005
	TRANSVERSE		0.032

- ALL ROTATIONS INCLUDE AN ALLOWANCE OF ± 0.005 RAD. FOR UNCERTAINTIES.
- TOTAL HORIZONTAL REACTION AT SERVICE AND STRENGTH LIMIT STATES SHALL BE TAKEN AS THE SQUARE ROOT OF THE SUM OF THE SQUARES OF THE LONGITUDINAL AND TRANSVERSE REACTIONS IF BOTH ARE GIVEN.

SR 241 FILE NO. ____ SHEET BB8

Bridge Design Engr.	Grimm, E	
Supervisor	Aldrich, BS	
Designed By	Mizumori, A	10/20
Checked By	Weeks, C	11/21
Detailed By	Wrenn, M	10/20
Bridge Projects Engr.		
Prelim. Plan By		
Architect/Specialist		

M:\X-Team\BR241-5_MABTON-SUNNYSIDE_RETROFIT\window files\BEARING DTL 3.wnd

DATE	REVISION	BY	APP'D

REGION NO.	STATE	FED. AID PROJ. NO.	SHEET NO.	TOTAL SHEETS
10	WASH.			
JOB NUMBER 21Y001				
CONTRACT NO.				

P.E. STAMP BOX
ANTHONY J. I. MIZUMORI — STATE OF WASHINGTON — 44201 — PROFESSIONAL ENGINEER — STRUCTURAL ENGINEER
SEE SHEET CT1
DATE:

BRIDGE AND STRUCTURES OFFICE

P.E. STAMP BOX
BRIAN S. ALDRICH — STATE OF WASHINGTON — 37834 — PROFESSIONAL ENGINEER — STRUCTURAL ENGINEER
SEE SHEET CT1
DATE:

Washington State Department of Transportation

PRELIMINARY NOT FOR CONSTRUCTION

SR 241
MABTON VICINITY
RETROFIT BRIDGES
MABTON-SUNNYSIDE BRIDGE NO. 241/5

HINGE 2
BEARING DETAILS

BRIDGE SHEET NO. BB8

SHEET 101 OF 115 SHEETS

Tue Dec 27 08:04:48 2022

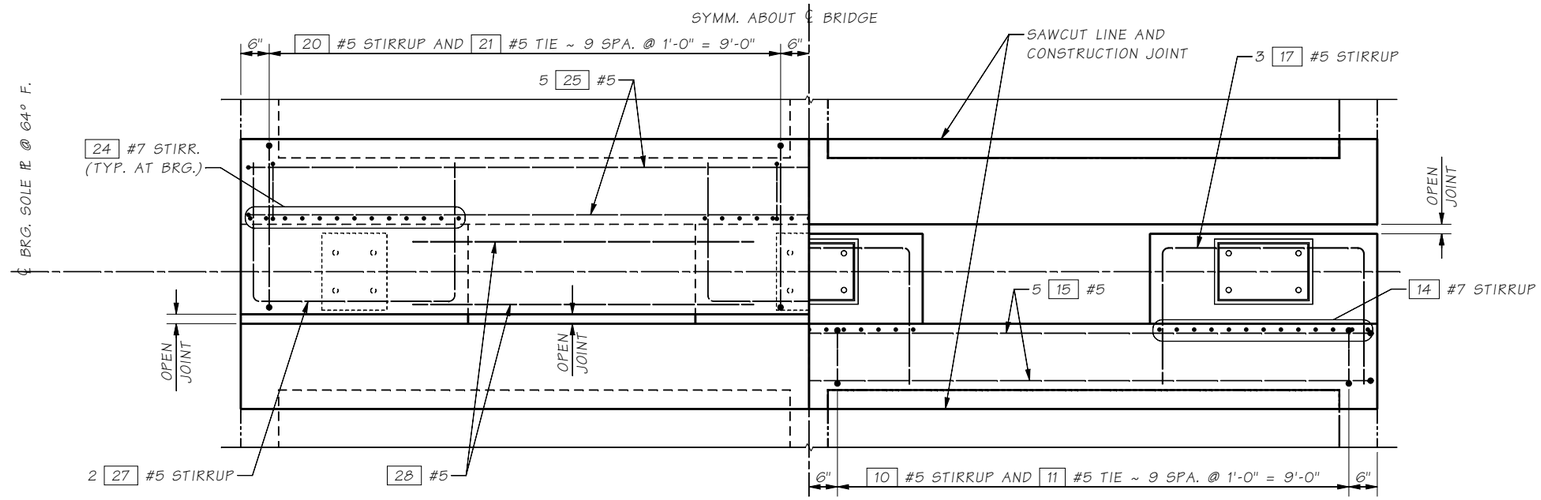

SECTION A

NOT ALL REINFORCEMENT IS SHOWN FOR CLARITY

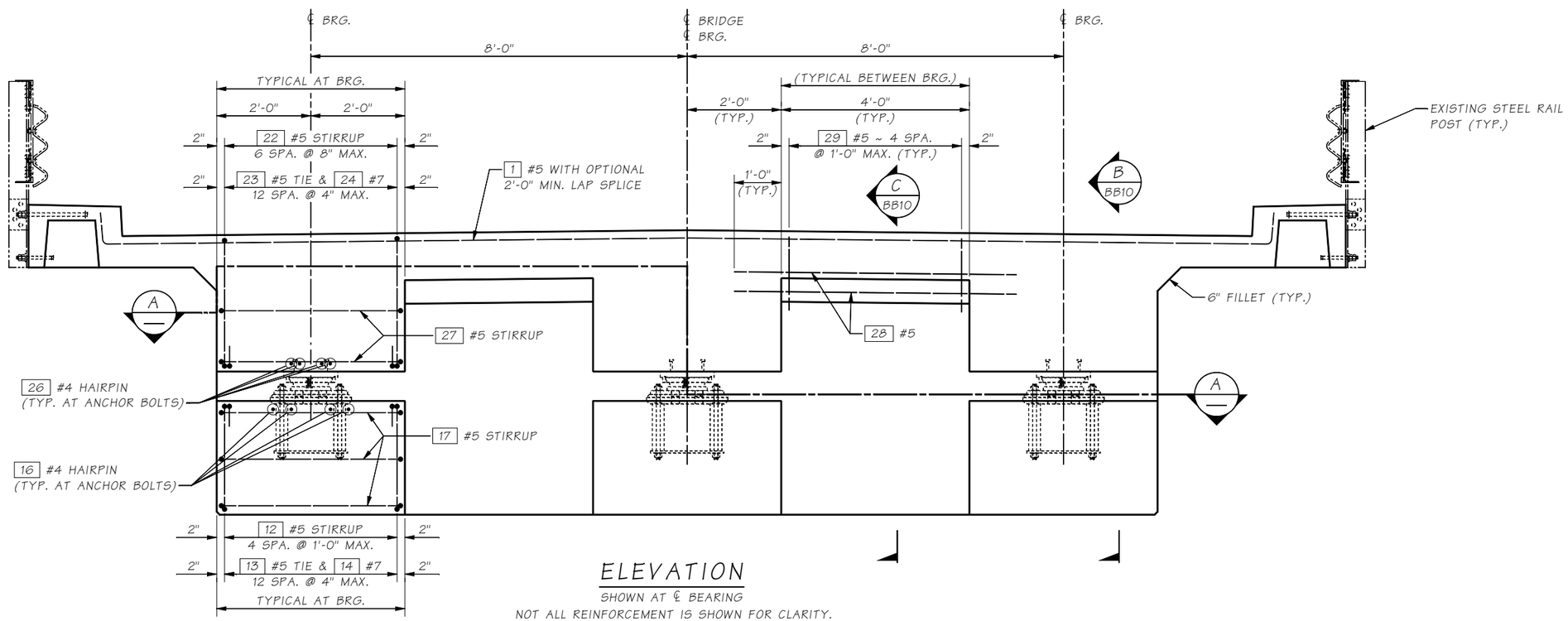

ELEVATION

SHOWN AT ℄ BEARING

NOT ALL REINFORCEMENT IS SHOWN FOR CLARITY.

SR 241 FILE NO. ____ SHEET BB9

Bridge Design Engr.	Grimm, E	M:\X-Team\BR241-5_MABTON-SUNNYSIDE_RETROFIT\window files\HINGE 1 ELEVATION.wnd									
Supervisor	Aldrich, BS										
Designed By	Mizumori, A	10/20									
Checked By	Weeks, C	11/21									
Detailed By	McCarthy, D	10/20									
Bridge Projects Engr.											
Prelim. Plan By											
Architect/Specialist			DATE	REVISION	BY	APP'D					

REGION NO.	STATE	FED. AID PROJ. NO.	SHEET NO.	TOTAL SHEETS
10	WASH.			
JOB NUMBER 21Y001				
CONTRACT NO.				

P.E. STAMP BOX
ANTHONY J. I. MIZUMORI
STATE OF WASHINGTON
44257
PROFESSIONAL ENGINEER
SEE SHEET CT1
DATE:

BRIDGE AND STRUCTURES OFFICE

P.E. STAMP BOX
BRIAN S. ALDRICH
STATE OF WASHINGTON
37834
PROFESSIONAL ENGINEER
SEE SHEET CT1
DATE:

Washington State Department of Transportation

PRELIMINARY NOT FOR CONSTRUCTION

SR 241
MABTON VICINITY
RETROFIT BRIDGES
MABTON-SUNNYSIDE BRIDGE NO. 241/5

ELEVATION AND SECTION
HINGE 1 DETAIL

BRIDGE SHEET NO. BB9

SHEET 102 OF 115 SHEETS

Tue Dec 27 08:04:50 2022

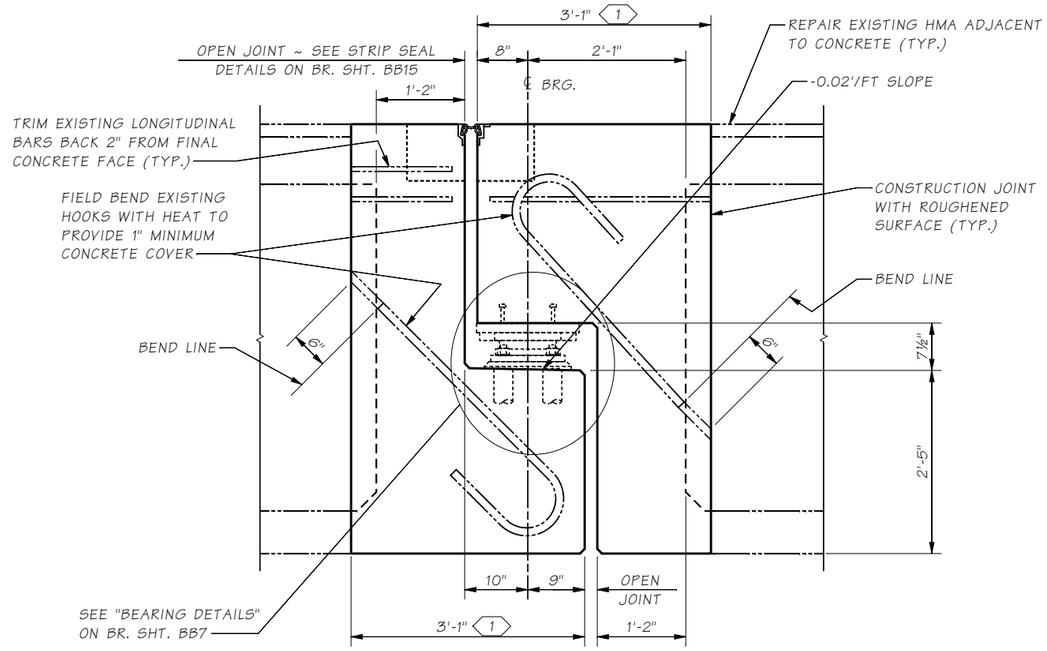

SECTION B / BB9

GEOMETRY

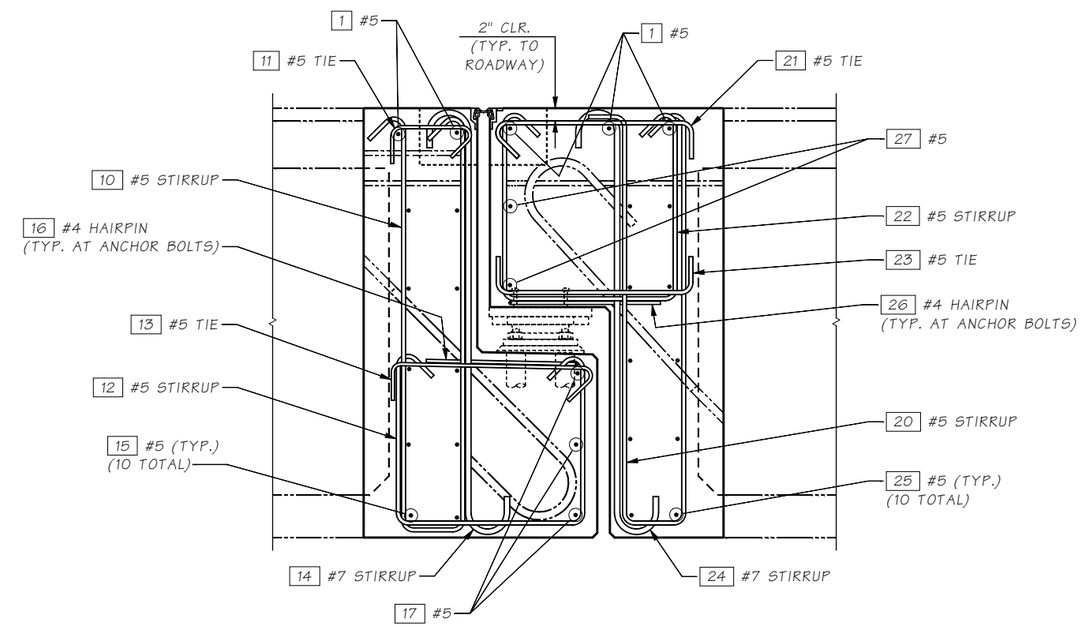

SECTION B / BB9

REINFORCEMENT

FOR CALLOUTS NOT SHOWN SEE SECTION C

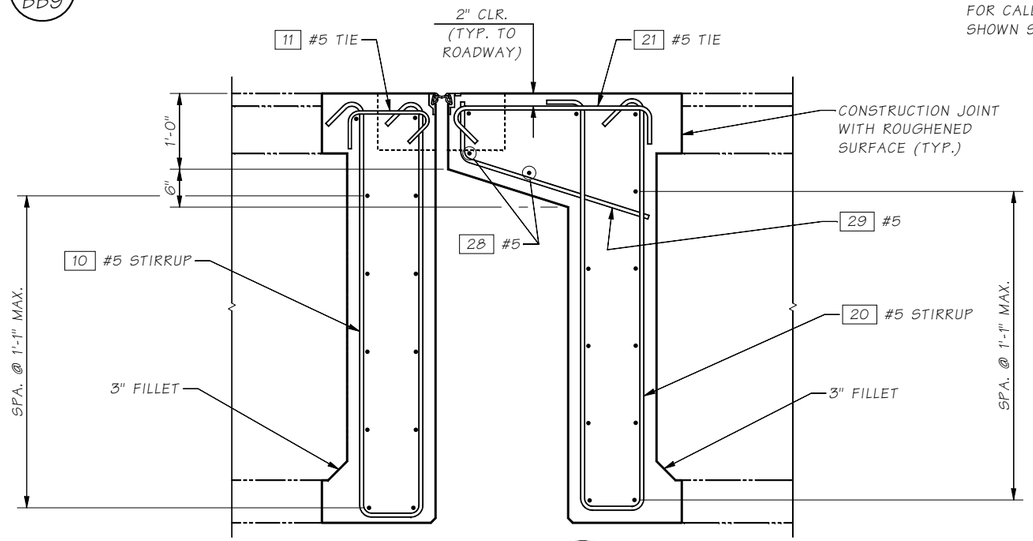

SECTION C / BB9

FOR CALLOUTS NOT SHOWN SEE SECTION B

NOTE:

1. DIMENSION SHALL BE ADJUSTED IN ORDER TO ACHIEVE THE SPECIFIED EXPANSION JOINT OPENING GAP "G". MATERIALS SHALL NOT BE INSTALLED UNTIL THE REVISED DIMENSION IS APPROVED BY THE ENGINEER.

BENDING DIAGRAM

DIMENSIONS ARE OUT TO OUT

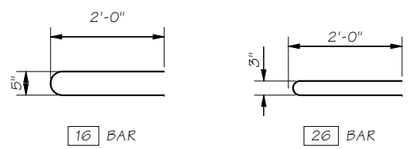

16 BAR

26 BAR

SR 241 FILE NO. ____ SHEET BB10

Bridge Design Engr.	Grimm, E	M:\X-Team\BR241-5_MABTON-SUNNYSIDE_RETROFIT\window files\HINGE 1 SECTION.wnd									
Supervisor	Aldrich, BS										
Designed By	Mizumori, A	10/20									
Checked By	Weeks, C	11/21									
Detailed By	McCarthy, D	10/20									
Bridge Projects Engr.											
Prelim. Plan By											
Architect/Specialist			DATE	REVISION	BY	APP'D					

REGION NO.	STATE	FED. AID PROJ. NO.	SHEET NO.	TOTAL SHEETS
10	WASH.			
JOB NUMBER 21Y001				
CONTRACT NO.				

P.E. STAMP BOX

ANTHONY J. I. MIZUMORI, STATE OF WASHINGTON, 44257, STRUCTURAL ENGINEER, PROFESSIONAL ENGINEER

SEE SHEET CT1

DATE:

BRIDGE AND STRUCTURES OFFICE

P.E. STAMP BOX

BRIAN S. ALDRICH, STATE OF WASHINGTON, 37834, STRUCTURAL ENGINEER, PROFESSIONAL ENGINEER

SEE SHEET CT1

DATE:

Washington State Department of Transportation

PRELIMINARY NOT FOR CONSTRUCTION

SR 241
MABTON VICINITY
RETROFIT BRIDGES
MABTON-SUNNYSIDE BRIDGE NO. 241/5

SECTIONS
HINGE 1 DETAIL

BRIDGE SHEET NO. BB10

SHEET 103 OF 115 SHEETS

Tue Dec 27 08:04:51 2022

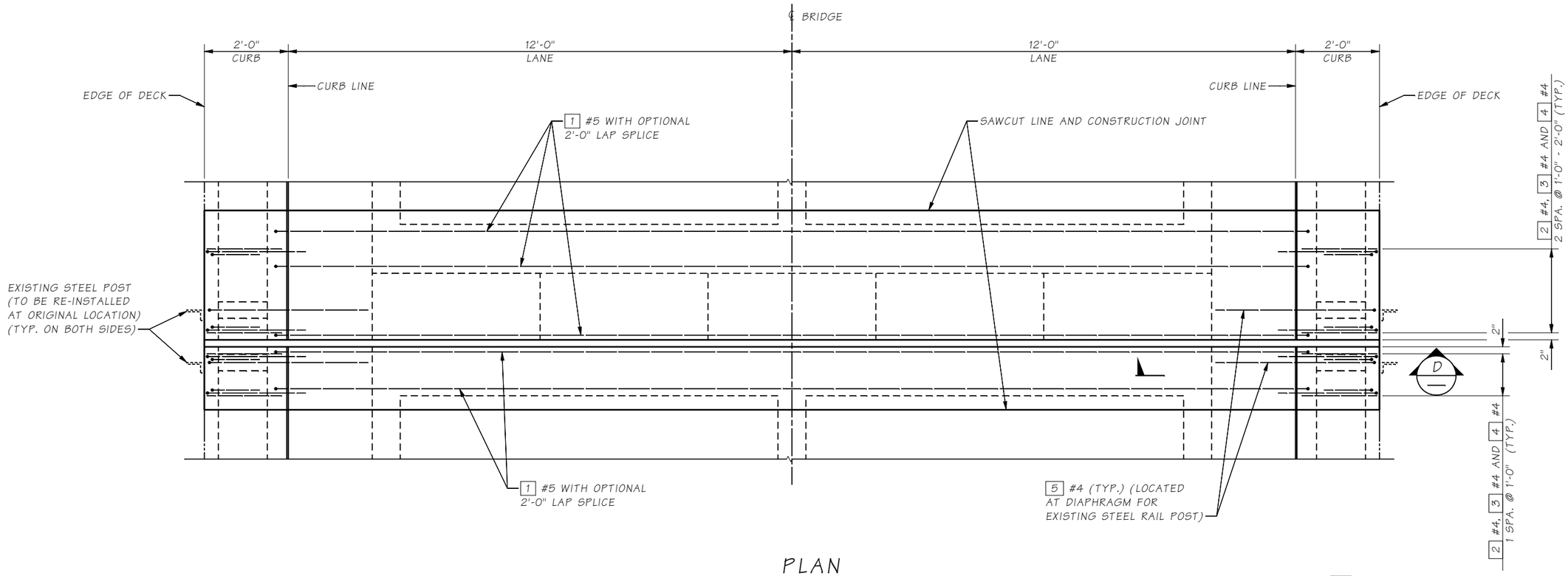

PLAN
BRIDGE DECK

EXISTING RAILING AND THRIE BEAM NOT SHOWN FOR CLARITY

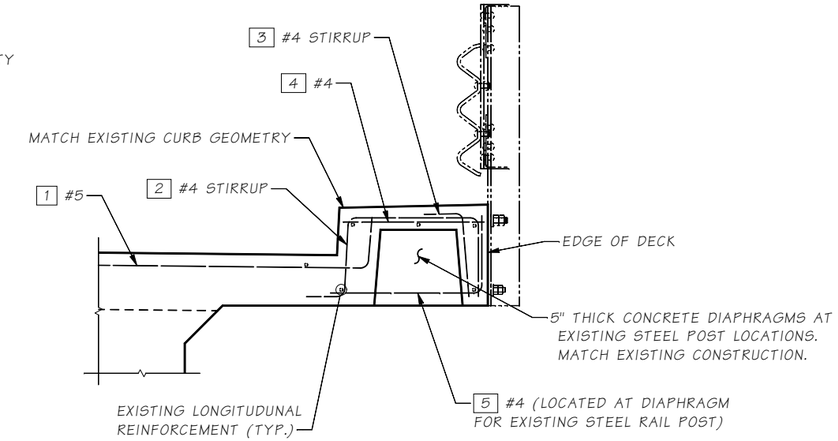

SECTION D

BENDING DIAGRAM

DIMENSIONS ARE OUT TO OUT

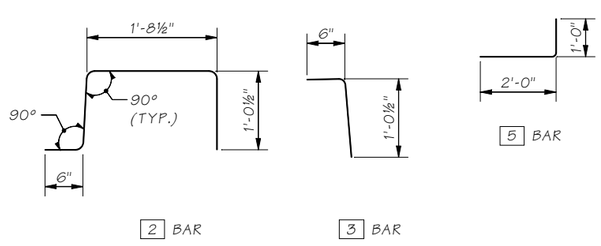

Bridge Design Engr.	Grimm, E	M:\X-Team\BR241-5_MABTON-SUNNYSIDE_RETROFIT\window files\HINGE 1 PLAN.wnd			REGION NO.	STATE	FED. AID PROJ. NO.	SHEET NO.	TOTAL SHEETS	P.E. STAMP BOX
Supervisor	Aldrich, BS				10	WASH.				SEE SHEET CT1
Designed By	Mizumori, A 10/20				JOB NUMBER 21Y001					DATE:
Checked By	Weeks, C 11/21									BRIDGE AND STRUCTURES OFFICE
Detailed By	McCarthy, D 10/20									P.E. STAMP BOX
Bridge Projects Engr.					CONTRACT NO.					SEE SHEET CT1
Prelim. Plan By										DATE:
Architect/Specialist		DATE	REVISION	BY	APP'D					

Washington State Department of Transportation

PRELIMINARY NOT FOR CONSTRUCTION

SR 241
MABTON VICINITY
RETROFIT BRIDGES
MABTON-SUNNYSIDE BRIDGE NO. 241/5

PLAN
HINGE 1 DETAIL

BRIDGE SHEET NO. BB11

SHEET 104 OF 115 SHEETS

SR 241 FILE NO. SHEET BB11

Tue Dec 27 08:04:52 2022

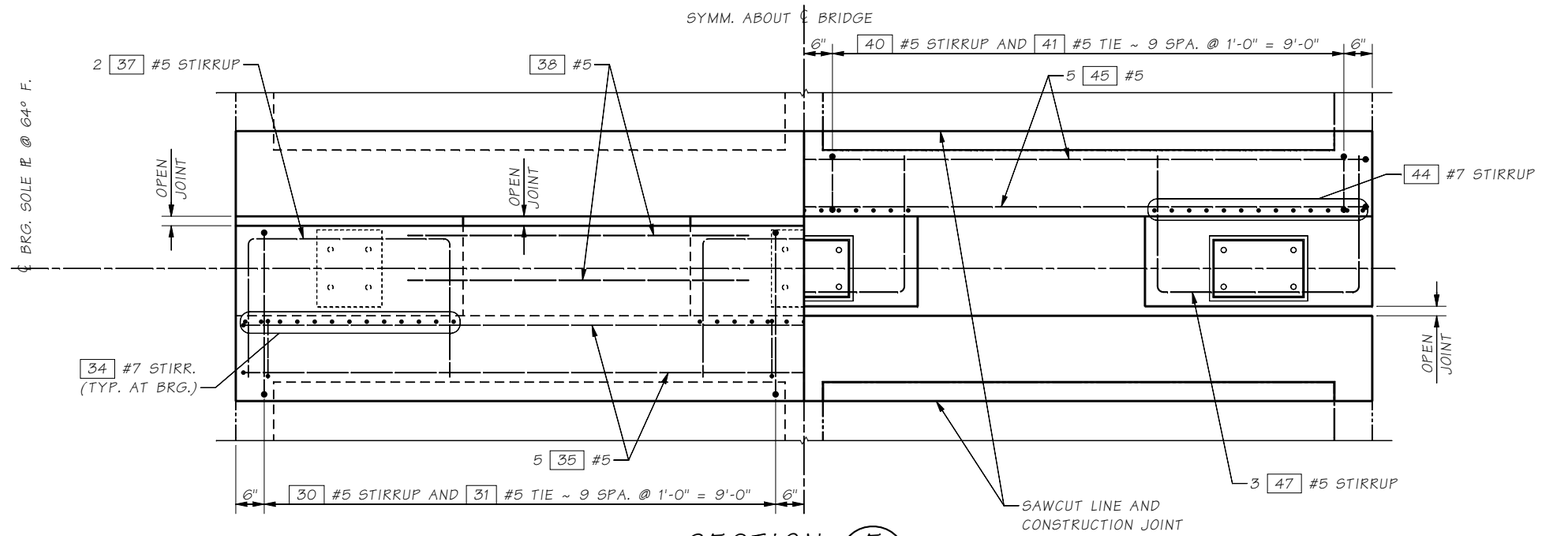

SECTION E

NOT ALL REINFORCEMENT IS SHOWN FOR CLARITY

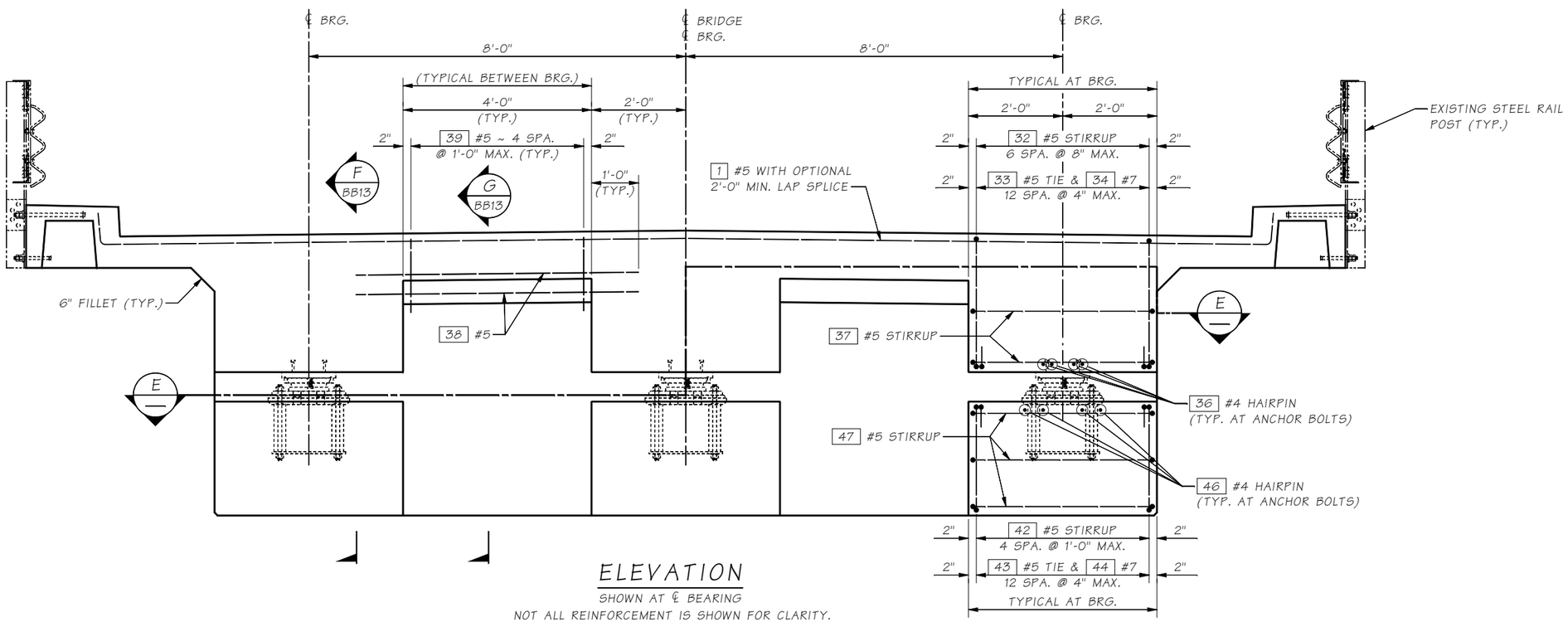

ELEVATION

SHOWN AT ℄ BEARING

NOT ALL REINFORCEMENT IS SHOWN FOR CLARITY.

SR 241 FILE NO. ____ SHEET BB12

Bridge Design Engr.	Grimm, E	M:\X-Team\BR241-5_MABTON-SUNNYSIDE_RETROFIT\window files\HINGE 2 ELEVATION.wnd									
Supervisor	Aldrich, BS										
Designed By	Mizumori, A	10/20									
Checked By	Weeks, C	11/21									
Detailed By	McCarthy, D	10/20									
Bridge Projects Engr.											
Prelim. Plan By											
Architect/Specialist			DATE	REVISION	BY	APP'D					

REGION NO.	STATE	FED. AID PROJ. NO.	SHEET NO.	TOTAL SHEETS
10	WASH.			
JOB NUMBER 21Y001				
CONTRACT NO.				

P.E. STAMP BOX

ANTHONY J. I. MIZUMORI, STATE OF WASHINGTON, 44257, PROFESSIONAL ENGINEER

SEE SHEET CT1

DATE:

BRIDGE AND STRUCTURES OFFICE

P.E. STAMP BOX

BRIAN S. ALDRICH, STATE OF WASHINGTON, 37834, PROFESSIONAL ENGINEER

SEE SHEET CT1

DATE:

Washington State Department of Transportation

PRELIMINARY NOT FOR CONSTRUCTION

SR 241
MABTON VICINITY
RETROFIT BRIDGES
MABTON-SUNNYSIDE BRIDGE NO. 241/5

ELEVATION
HINGE 2 DETAIL

BRIDGE SHEET NO. BB12

SHEET 105 OF 115 SHEETS

Tue Dec 27 08:04:54 2022

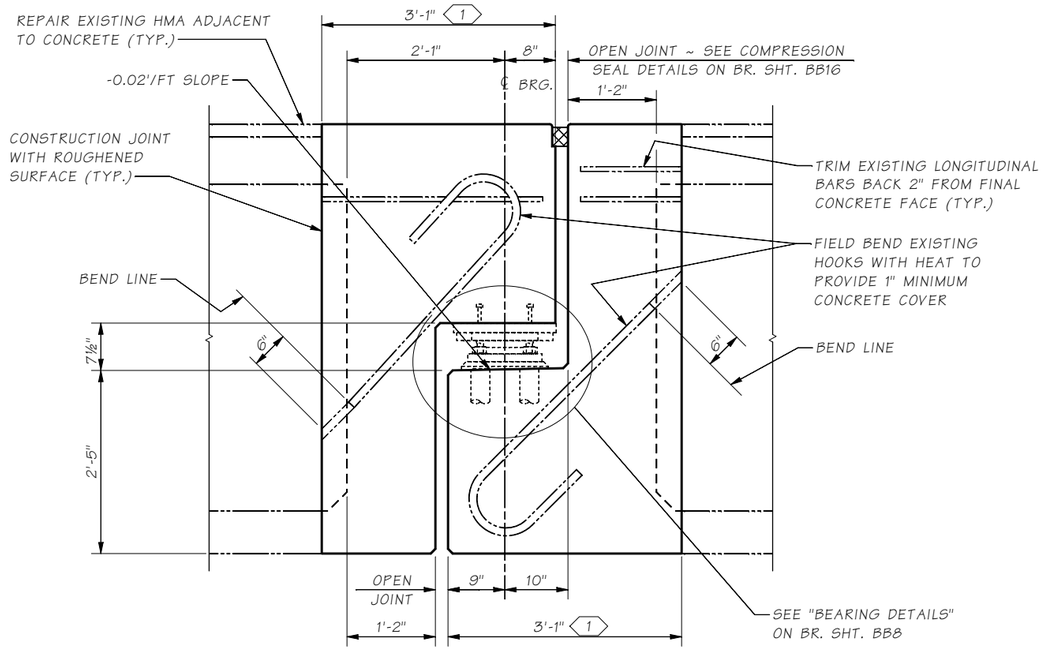

SECTION F BB12
GEOMETRY

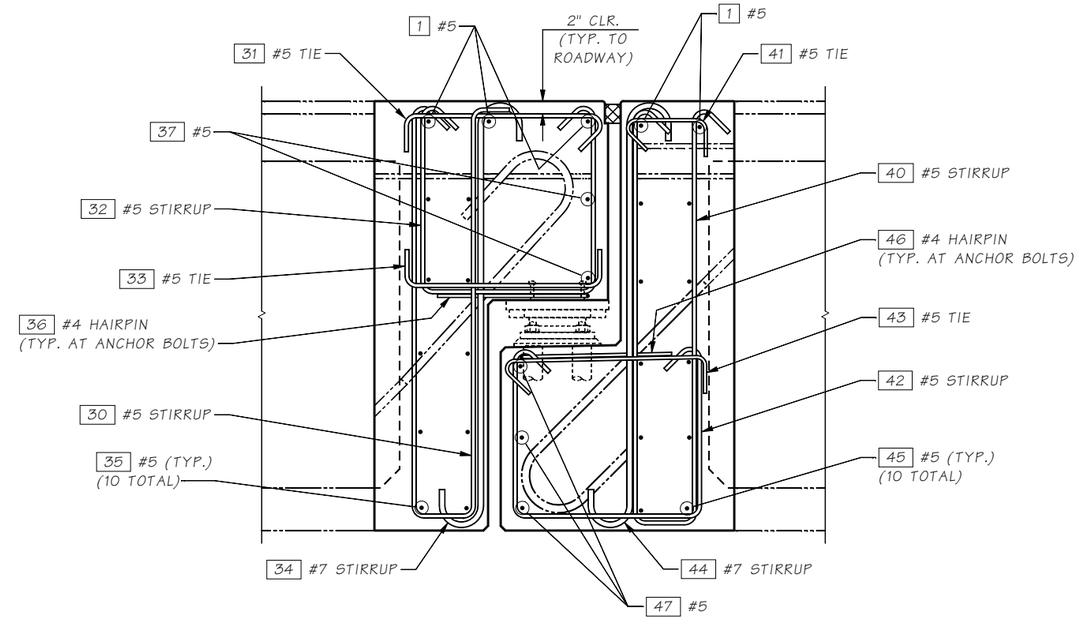

SECTION F BB12
REINFORCEMENT
FOR CALLOUTS NOT SHOWN SEE SECTION G

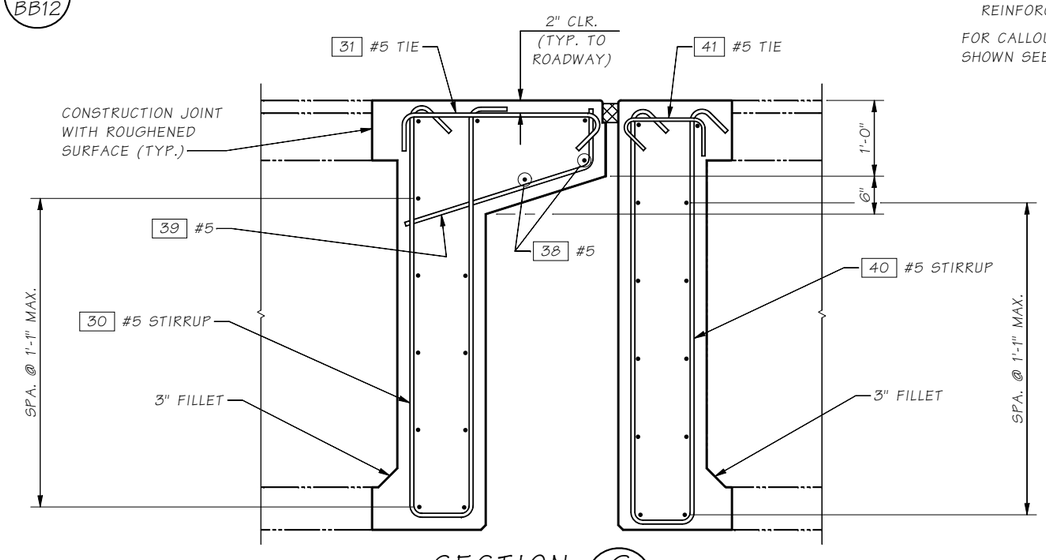

SECTION G BB12
FOR CALLOUTS NOT SHOWN SEE SECTION F

NOTE:

1 DIMENSION SHALL BE ADJUSTED IN ORDER TO ACHIEVE THE SPECIFIED EXPANSION JOINT OPENING GAP "G". MATERIALS SHALL NOT BE INSTALLED UNTIL THE REVISED DIMENSION IS APPROVED BY THE ENGINEER.

BENDING DIAGRAM

DIMENSIONS ARE OUT TO OUT

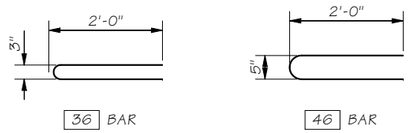

36 BAR

46 BAR

SR 241 FILE NO. ____ SHEET BB13

Bridge Design Engr.	Grimm, E	
Supervisor	Aldrich, BS	
Designed By	Mizumori, A	10/20
Checked By	Weeks, C	11/21
Detailed By	McCarthy, D	10/20
Bridge Projects Engr.		
Prelim. Plan By		
Architect/Specialist		

M:\X-Team\BR241-5_MABTON-SUNNYSIDE_RETROFIT\window files\HINGE 2 SECTION.wnd

DATE	REVISION	BY	APP'D

REGION NO.	STATE	FED. AID PROJ. NO.	SHEET NO.	TOTAL SHEETS
10	WASH.			

JOB NUMBER 21Y001

CONTRACT NO.

P.E. STAMP BOX
ANTHONY J. I. MIZUMORI, STATE OF WASHINGTON, 44257, PROFESSIONAL ENGINEER
SEE SHEET CT1
DATE:

BRIDGE AND STRUCTURES OFFICE

P.E. STAMP BOX
BRIAN S. ALDRICH, STATE OF WASHINGTON, 37834, PROFESSIONAL ENGINEER
SEE SHEET CT1
DATE:

Washington State Department of Transportation

PRELIMINARY NOT FOR CONSTRUCTION

SR 241
MABTON VICINITY
RETROFIT BRIDGES
MABTON-SUNNYSIDE BRIDGE NO. 241/5

SECTION
HINGE 2 DETAIL

BRIDGE SHEET NO. BB13

SHEET 106 OF 115 SHEETS

Tue Dec 27 08:04:56 2022

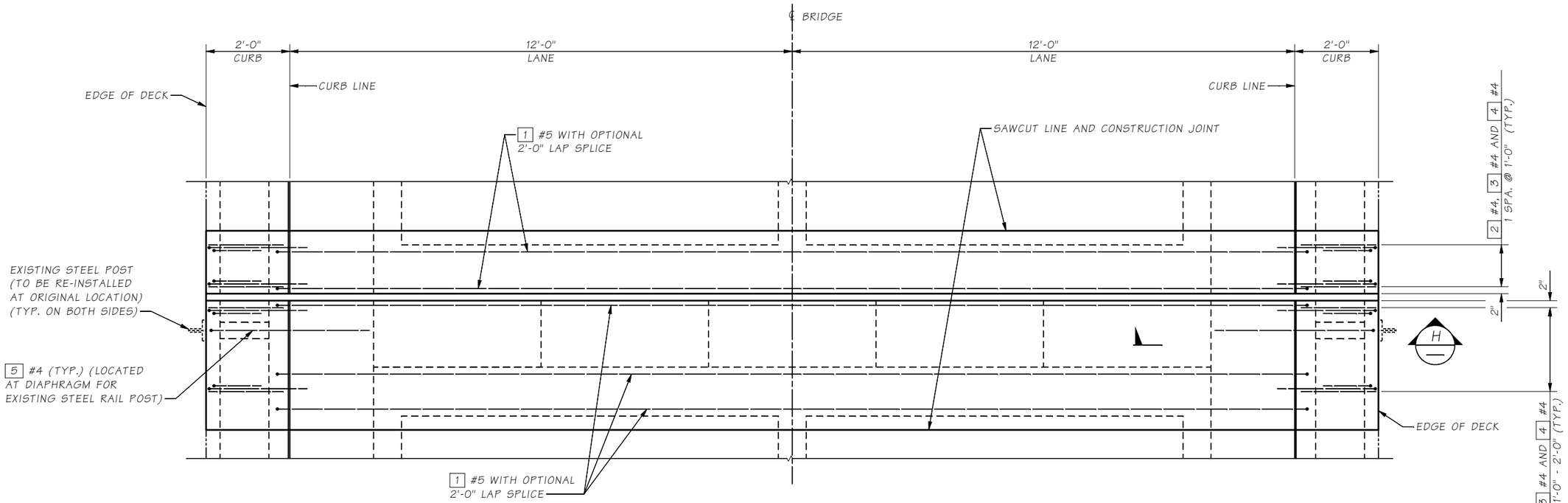

PLAN
BRIDGE DECK

EXISTING RAILING AND THRIE BEAM NOT SHOWN FOR CLARITY

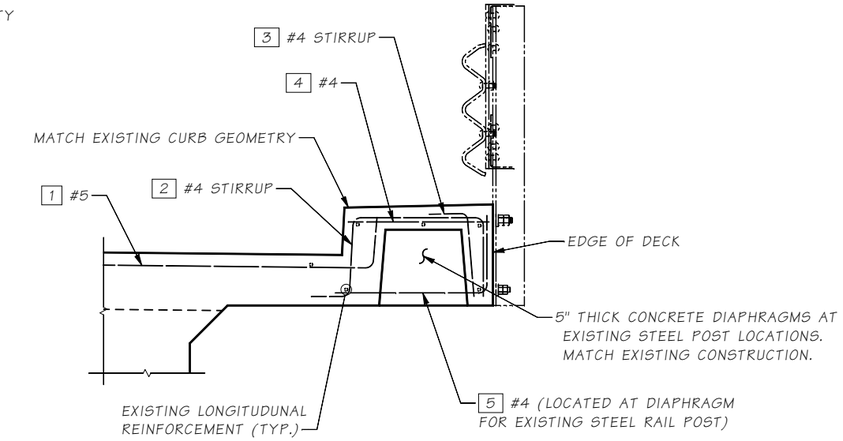

SECTION H

BENDING DIAGRAM

DIMENSIONS ARE OUT TO OUT

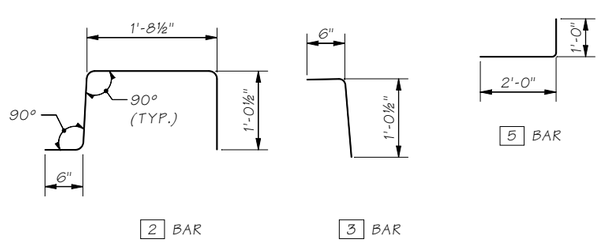

Bridge Design Engr.	Grimm, E		M:\X-Team\BR241-5_MABTON-SUNNYSIDE_RETROFIT\window files\HINGE 2 PLAN.wnd			REGION NO.	STATE	FED. AID PROJ. NO.	SHEET NO.	TOTAL SHEETS
Supervisor	Aldrich, BS					10	WASH.			
Designed By	Mizumori, A	10/20				JOB NUMBER 21Y001				
Checked By	Weeks, C	11/21								
Detailed By	McCarthy, D	10/20				CONTRACT NO.				
Bridge Projects Engr.										
Prelim. Plan By										
Architect/Specialist			DATE	REVISION	BY	APP'D				

P.E. STAMP BOX
ANTHONY J. I. MIZUMORI
STATE OF WASHINGTON
44357
PROFESSIONAL ENGINEER
SEE SHEET CT1
DATE:

BRIDGE AND STRUCTURES OFFICE

P.E. STAMP BOX
BRIAN S. ALDRICH
STATE OF WASHINGTON
37834
PROFESSIONAL ENGINEER
SEE SHEET CT1
DATE:

Washington State Department of Transportation

PRELIMINARY NOT FOR CONSTRUCTION

SR 241
MABTON VICINITY
RETROFIT BRIDGES
MABTON-SUNNYSIDE BRIDGE NO. 241/5

PLAN
HINGE 2 DETAILS

BRIDGE SHEET NO. BB14

SHEET 107 OF 115 SHEETS

SR 241 FILE NO. ____ SHEET BB14

Tue Dec 27 08:04:57 2022

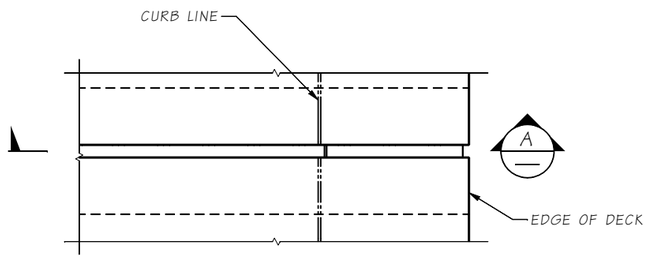

PLAN
EXPANSION JOINT

EXISTING STEEL RAILING AND THRIEBEAM NOT SHOWN FOR CLARITY

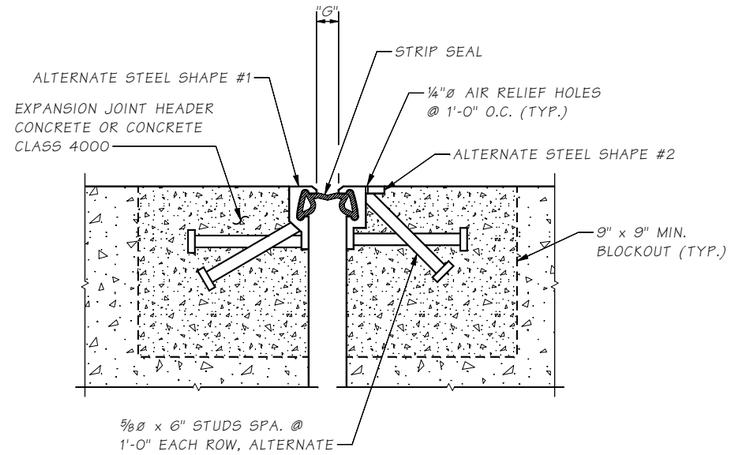

SECTION B

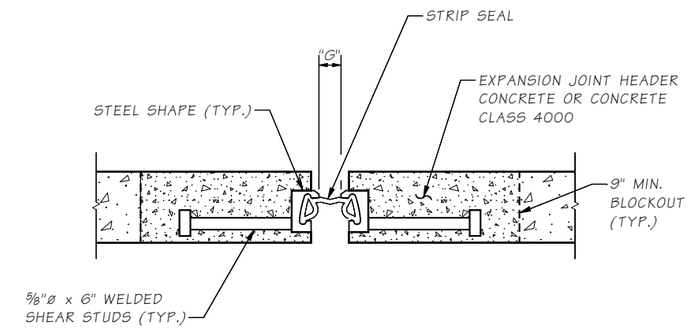

SECTION C

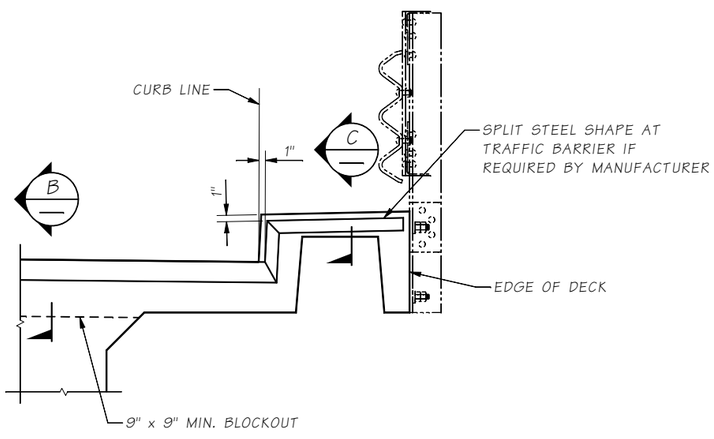

SECTION A

STRIP SEAL ~ 5" MOTION RANGE

MANUFACTURER	ITEM NAME	OPENING "G" NORMAL TO JT.		MIN. INSTALLATION WIDTH NORMAL TO JOINT	OPENING "G" NORMAL TO JT.		
		MIN.	MAX.		@40°F	@64°F	@80°F
D. S. BROWN	DSB STRIP SEAL A2R-XTRA	½"	5½"	2"	3"	2"	1⅜"
WATSON BOWMAN ACME	WABO STRIP SEAL SE-500	0"	5"	1½"	3"	2"	1⅜"
R.J. WATSON, INC.	R.J. STRIP SEAL 500	½"	5"	1½"	3"	2"	1⅜"

STEEL SHAPE TYPES

MANUFACTURER	ITEM NAME	BRIDGE DECK			TRAFFIC BARRIERS					
		TYPE	S	T	TYPE	V	W	TYPE	X	Y
D. S. BROWN	DSB STRIP SEAL	SSCM2	1¼"	3¾"	SSA2 (4)	1¼"	2"	SSE2M (4)	1"	1½"
WATSON BOWMAN ACME	WABO STRIP SEAL	R	1¼"	3¼"	A	1¼"	2"	E	1½"	1½"
R.J. WATSON, INC.	RJ STRIP SEAL	RJM	2¾"	3¼"	RJA	1¼"	2"	RJE	1¼"	1½"

NOTE:

(4) ALTERNATIVELY, TRIM VERTICAL LEG OF SSCM2 SHAPE FOR USE IN TRAFFIC BARRIER.

SR 241 FILE NO. ____ SHEET BB15

Bridge Design Engr.	Grimm, E	
Supervisor	Aldrich, BS	
Designed By	Mizumori, A	10/20
Checked By	Weeks, C	11/21
Detailed By	McCarthy, D	10/20
Bridge Projects Engr.		
Prelim. Plan By		
Architect/Specialist		

M:\X-Team\BR241-5_MABTON-SUNNYSIDE_RETROFIT\window files\STRIP SEAL DTL.wnd

DATE	REVISION	BY	APP'D

REGION NO.	STATE	FED. AID PROJ. NO.	SHEET NO.	TOTAL SHEETS
10	WASH.			
JOB NUMBER 21Y001				
CONTRACT NO.				

P.E. STAMP BOX
ANTHONY J. I. MIZUMORI
STATE OF WASHINGTON
44287
PROFESSIONAL ENGINEER
SEE SHEET CT1
DATE:

BRIDGE AND STRUCTURES OFFICE

P.E. STAMP BOX
BRIAN S. ALDRICH
STATE OF WASHINGTON
37834
PROFESSIONAL ENGINEER
SEE SHEET CT1
DATE:

Washington State
Department of Transportation

PRELIMINARY NOT FOR CONSTRUCTION

SR 241
MABTON VICINITY
RETROFIT BRIDGES
MABTON-SUNNYSIDE BRIDGE NO. 241/5

EXPANSION JOINT DETAILS
STRIP SEAL

BRIDGE SHEET NO. BB15

SHEET 108 OF 115 SHEETS

Tue Dec 27 08:04:58 2022

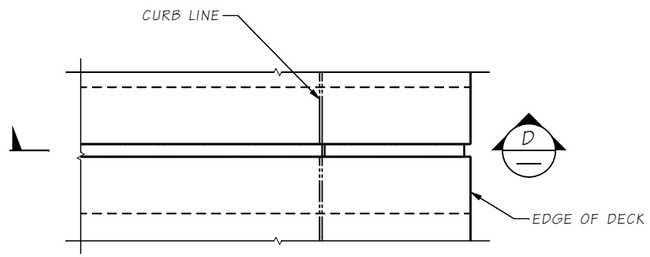

PLAN
EXPANSION JOINT

EXISTING STEEL RAILING AND THRIEBEAM NOT SHOWN FOR CLARITY

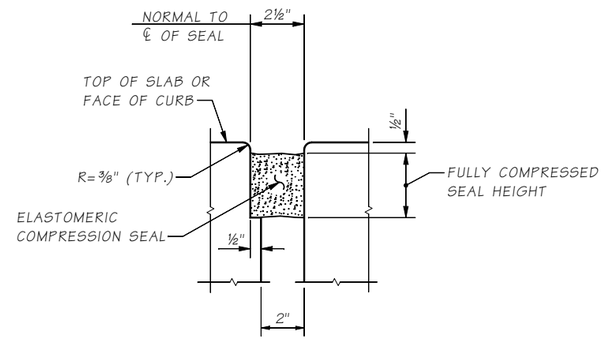

COMPRESSION SEAL

COMPRESSION SEAL TABLE

D.S. BROWN		WATSON BOWMAN ACME	
SEAL	WIDTH	SEAL	WIDTH
CV-4000	4"	WA-400	4"

NOTE:

1. TESTING SHALL BE PER ASTM D2628 PRIOR TO USE OF ANY COMPRESSION SEAL

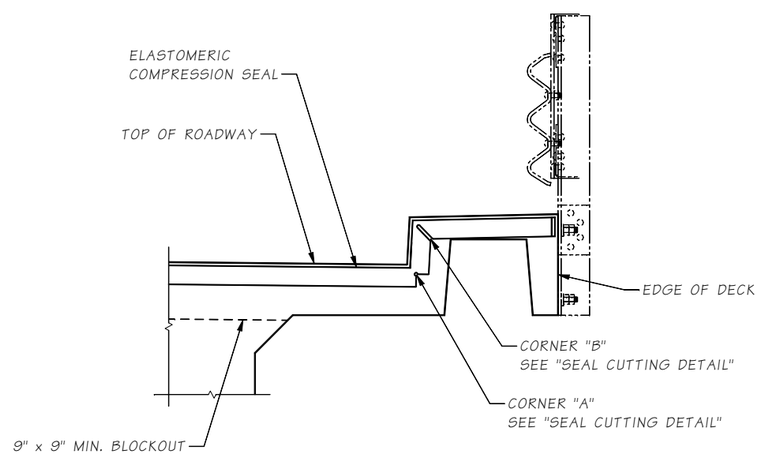

SECTION D

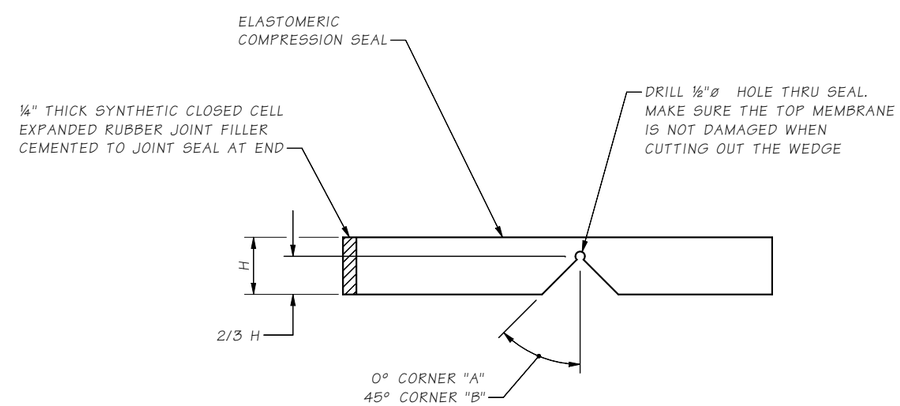

SEAL CUTTING DETAIL

SR 241 FILE NO. ____ SHEET BB16

Bridge Design Engr.	Grimm, E		M:\X-Team\BR241-5_MABTON-SUNNYSIDE_RETROFIT\window files\COMPRESSION SEAL DTL.wnd							
Supervisor	Aldrich, BS									
Designed By	Mizumori, A	10/20								
Checked By	Weeks, C	11/21								
Detailed By	McCarthy, D	10/20								
Bridge Projects Engr.										
Prelim. Plan By										
Architect/Specialist			DATE	REVISION	BY	APP'D				

REGION NO.	STATE	FED. AID PROJ. NO.	SHEET NO.	TOTAL SHEETS
10	WASH.			
JOB NUMBER 21Y001				
CONTRACT NO.				

P.E. STAMP BOX: ANTHONY J. I. MIZUMORI, STATE OF WASHINGTON, 44827, STRUCTURAL ENGINEER, PROFESSIONAL ENGINEER — SEE SHEET CT1 — DATE:

BRIDGE AND STRUCTURES OFFICE

P.E. STAMP BOX: BRIAN S. ALDRICH, STATE OF WASHINGTON, 37834, STRUCTURAL ENGINEER, PROFESSIONAL ENGINEER — SEE SHEET CT1 — DATE:

Washington State Department of Transportation

PRELIMINARY NOT FOR CONSTRUCTION

SR 241
MABTON VICINITY
RETROFIT BRIDGES
MABTON-SUNNYSIDE BRIDGE NO. 241/5

EXPANSION JOINT DETAILS
COMPRESSION SEAL

BRIDGE SHEET NO. BB16

SHEET 109 OF 115 SHEETS

Tue Dec 27 08:05:00 2022

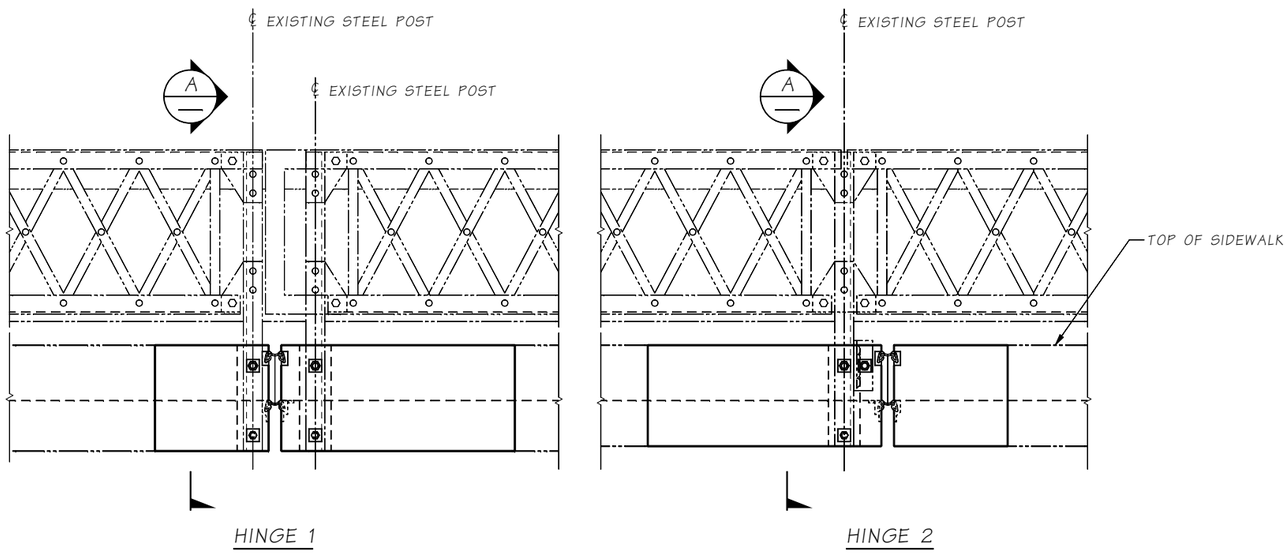

OUTSIDE ELEVATION AT CURB

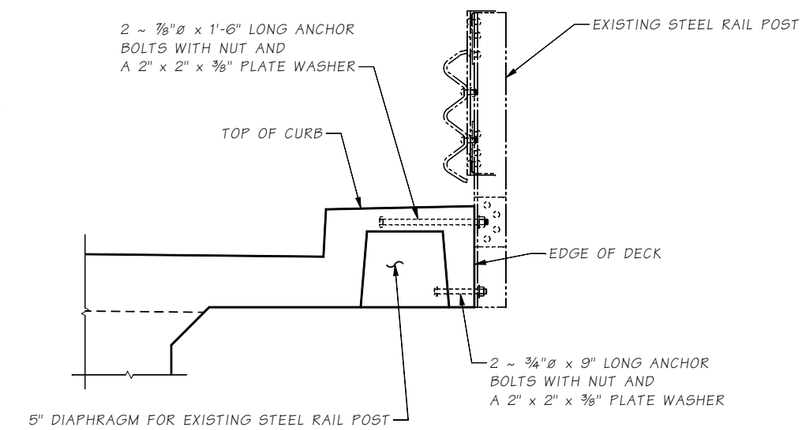

SECTION A

Bridge Design Engr.	Grimm, E		M:\X-Team\BR241-5_MABTON-SUNNYSIDE_RETROFIT\window files\SIDEWALK AND RAILING.wnd							
Supervisor	Aldrich, BS					REGION NO.	STATE	FED. AID PROJ. NO.	SHEET NO.	TOTAL SHEETS
Designed By	Mizumori, A	10/20				10	WASH.			
Checked By	Weeks, C	11/21				JOB NUMBER 21Y001				
Detailed By	McCarthy, D	10/20								
Bridge Projects Engr.						CONTRACT NO.				
Prelim. Plan By										
Architect/Specialist			DATE	REVISION	BY	APP'D				

P.E. STAMP BOX
ANTHONY J. J. MIZUMORI
STATE OF WASHINGTON
44357
PROFESSIONAL ENGINEER
SEE SHEET CT1
DATE:

BRIDGE AND STRUCTURES OFFICE

P.E. STAMP BOX
BRIAN S. ALDRICH
STATE OF WASHINGTON
37834
PROFESSIONAL ENGINEER
SEE SHEET CT1
DATE:

Washington State
Department of Transportation

PRELIMINARY NOT FOR CONSTRUCTION

SR 241
MABTON VICINITY
RETROFIT BRIDGES
MABTON-SUNNYSIDE BRIDGE NO. 241/5

SIDEWALK AND RAILING DETAILS

BRIDGE SHEET NO. BB17

SHEET 110 OF 115 SHEETS

SR 241 FILE NO. ____ SHEET BB17

Tue Dec 27 08:05:01 2022

S = Bar is included in substructure quantities.
L = Lump sum quantity.
T = Transverse or S = Seismic
E = Bar is to be epoxy coated.
V = Bar dimensions vary between dimensions shown on this line and the following line.

MARK NO.	LOCATION	SIZE	NO REQ'D	BEND TYPE	TIE OR STIR.	LUMP SUM	SUBSTR.	EPOXY COAT	VARIES	NO. EACH	DIMENSIONS (Out to Out) U Ft.	U In.	W Ft.	W In.	X Ft.	X In.	Y Ft.	Y In.	Z Ft.	Z In.	θ_1 Deg.	θ_2 Deg.	LENGTH Ft.	LENGTH In.	WEIGHT Lbs.
	DECK																								
1	Deck Transverse	5	10	56							24	9.0											26	2	273
2	Curb	4	20	62	T						1	8.5	1	0.5	1	0.5	0	0.0	0	6.0			4	0	54
3	Curb	4	20	74	T						0	6.0	1	0.5	0	0.0							1	5	19
4	Curb	4	20	50							1	8.5											1	9	23
5	Curb at Post	5	8	74	T						2	0.0	1	0.0	0	0.0							2	11	24
	HINGE 1 BOTTOM																								
10	Diaphragm Stirrup	5	20	78	T				V	2	0	11.0	5	4.5	5	4.5							12	2	256
											0	11.0	5	5.5	5	5.5							12	4	
11	Diaphragm Tie	5	20	57	T						1	0.5											1	6	31
12	Seat Stirrup	5	15	72	T						2	6.0	2	2.0	2	2.0							7	7	118
13	Seat Tie	5	39	58	T						2	6.0											3	4	135
14	Diaphragm Hanger	7	40	53					V	2	5	4.5											6	12	574
											5	5.5											7	1	
15	Diaphragm Longit	5	10	56							19	8.0											21	1	220
16	Anchor Hairpin	4	6	71							0	5.0	2	0.0	2	0.0							4	2	17
17	Seat Horiz	5	9	74							3	8.0	2	6.0	2	6.0							8	5	79
	HINGE 1 TOP																								
20	Diaphragm Stirrup	5	20	78	T				V	2	0	11.0	5	4.5	5	4.5							12	2	256
											0	11.0	5	5.5	5	5.5							12	4	
21	Diaphragm Tie	5	20	57	T						2	6.0											2	12	62
22	Seat Stirrup - Ext	5	14	72	T						2	6.0	2	4.0	2	4.0							7	11	115
22	Seat Stirrup - Int	5	7	72	T						2	6.0	2	4.5	2	4.5							7	12	58
23	Seat Tie	5	39	56	T						2	6.0											3	3	131
24	Diaphragm Hanger	7	40	53					V	2	5	4.5											6	12	574
											5	5.5											7	1	
25	Diaphragm Longit	5	11	56							19	8.0											21	1	242
26	Anchor Hairpin	4	6	71							0	3.0	2	0.0	2	0.0							4	1	16
27	Seat Horiz	5	6	74	T						3	8.0	2	6.0	2	6.0							8	5	53
28	Edgebeam Longit	5	4	50							6	0.0											6	0	25
29	Edgebeam Transv	5	10	69							0	8.5	0	6.0	2	6.0	0	0.0	0	0.0			3	2	33
	HINGE 2 TOP																								
30	Diaphragm Stirrup	5	20	78	T				V	2	0	11.0	5	4.5	5	4.5							12	2	256
											0	11.0	5	5.5	5	5.5							12	4	
31	Diaphragm Tie	5	20	57	T						2	6.0											2	12	62
32	Seat Stirrup - Ext	5	14	72	T						2	6.0	2	4.0	2	4.0							7	11	115
32	Seat Stirrup - Int	5	7	72	T						2	6.0	2	4.5	2	4.5							7	12	58
33	Seat Tie	5	39	56	T						2	6.0											3	3	131
34	Diaphragm Hanger	7	40	53					V	1	5	4.5											6	12	574
											5	5.5											7	1	
35	Diaphragm Longit	5	11	56							19	8.0											21	1	242
36	Anchor Hairpin	4	6	71							0	3.0	2	0.0	2	0.0							4	1	16
37	Seat Horiz	5	6	74	T						3	8.0	2	6.0	2	6.0							8	5	53
38	Endebeam Longit	5	4	50							6	0.0											6	0	25
39	Edgebeam Transv	5	10	69							0	8.5	0	6.0	2	6.0	0	0.0	0	0.0			3	2	33
	HINGE 2 BOTTOM																								
40	Diaphragm Stirrup	5	20	78	T				V	2	0	11.0	5	4.5	5	4.5							12	2	256
											0	11.0	5	5.5	5	5.5							12	4	
41	Diaphragm Tie	5	20	57	T						1	0.5											1	6	31
42	Seat Stirrup	5	15	72	T						2	6.0	2	2.0	2	2.0							7	7	118
43	Seat Tie	5	39	58	T						2	6.0											3	4	135
44	Diaphragm Hanger	7	40	53					V	2	5	4.5											6	12	574
											5	5.5											7	1	
45	Diaphragm Longit	5	10	56							19	8.0											21	1	220
46	Anchor Hairpin	4	6	71							0	5.0	2	0.0	2	0.0							4	2	17
47	Seat Horiz	5	9	74	T						3	8.0	2	6.0	2	6.0							8	5	79

S = Bar is included in substructure quantities.
L = Lump sum quantity.
T = Transverse or S = Seismic
E = Bar is to be epoxy coated.
V = Bar dimensions vary between dimensions shown on this line and the following line.

MARK NO.	LOCATION	SIZE	NO REQ'D	BEND TYPE	TIE OR STIR.	LUMP SUM	SUBSTR.	EPOXY COAT	VARIES	NO. EACH	DIMENSIONS (Out to Out) U Ft.	U In.	W Ft.	W In.	X Ft.	X In.	Y Ft.	Y In.	Z Ft.	Z In.	θ_1 Deg.	θ_2 Deg.	LENGTH Ft.	LENGTH In.	WEIGHT Lbs.

STEEL REINFORCING BAR QUANTITIES NOT INCLUDED IN THIS BAR LIST

APPROACH SLAB
TRAFFIC BARRIER
BRIDGE GRATE INLETS
RETAINING WALL

BENDING DIAGRAMS

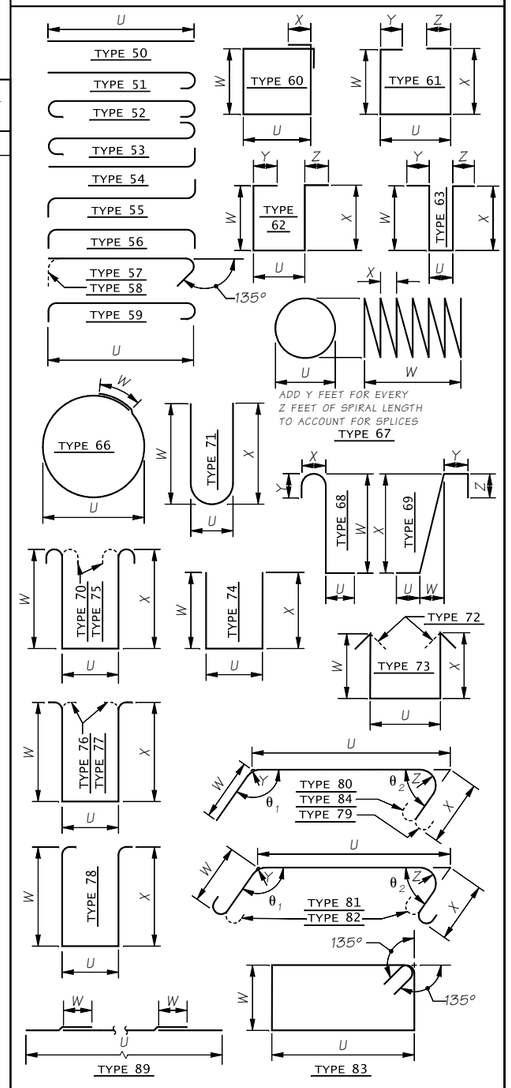

NOTES:

1. ALL REINFORCING BARS ON THIS SHEET SHALL BE ASTM A 706 UNLESS SHOWN OTHERWISE.
2. REINFORCING FOR TRAFFIC BARRIERS NOT SHOWN IN THE BAR LIST, SEE TRAFFIC BARRIER SHEET.
3. BEND FOR TRANSVERSE BARS DUE TO ROADWAY CROWN CONDITIONS HAS NOT BEEN SHOWN. THESE BARS SHALL BE BENT AS REQUIRED TO CONFORM TO THE CONFIGURATION OF THE STRUCTURE.
4. NUMBER AND LENGTH OF BARS TO BE DETERMINED BY THE CONTRACTOR FROM PLANS.

SR 241 FILE NO. ____ SHEET BB18

Bridge Design Engr.	Grimm, E	M:\X-Team\BR241-5_MABTON-SUNNYSIDE_RETROFIT\window files\BARLIST.wnd
Supervisor	Aldrich, BS	
Designed By	Mizumori,AJI 10/20	
Checked By		
Detailed By		
Bridge Projects Engr.		
Prelim. Plan By		
Architect/Specialist		

DATE | REVISION | BY | APP'D

REGION NO.	STATE	FED. AID PROJ. NO.	SHEET NO.	TOTAL SHEETS
10	WASH.			
JOB NUMBER 21Y001				
CONTRACT NO.				

P.E. STAMP BOX
SEE SHEET CT1
DATE:

BRIDGE AND STRUCTURES OFFICE

P.E. STAMP BOX
SEE SHEET CT1
DATE:

Washington State Department of Transportation
PRELIMINARY NOT FOR CONSTRUCTION

SR 241
MABTON VICINITY
RETROFIT BRIDGES
MABTON-SUNNYSIDE BRIDGE NO. 241/5

BARLIST

BRIDGE SHEET NO. BB18

SHEET 111 OF 115 SHEETS

Tue Dec 27 08:05:02 2022

BUFFER DATA

LONGITUDINAL BUFFER SPACE = B

SPEED (MPH)	25	30	35	40	45	50	55	60	65	70
LENGTH (feet)	155	200	250	305	360	425	495	570	645	730

TRANSPORTABLE ATTENUATOR ROLL AHEAD DISTANCE = R

HOST VEHICLE WEIGHT 9,900 TO 22,000 lbs.			HOST VEHICLE WEIGHT > 22,000 lbs.		
< 45 MPH	45-55 MPH	> 55 MPH	< 45 MPH	45-55 MPH	> 55 MPH
100'	123'	172'	74'	100'	150'

PROTECTIVE VEHICLE (WORK VEHICLE) = R

NO SPECIFIED DISTANCE REQUIRED

SIGN SPACING = X (1)

RURAL HIGHWAYS	60 / 65 MPH	800' ±
RURAL ROADS	45 / 55 MPH	500' ±
RURAL ROADS & URBAN ARTERIALS	35 / 40 MPH	350' ±
RURAL ROADS, URBAN ARTERIALS, RESIDENTIAL & BUSINESS DISTRICTS	25 / 30 MPH	200' ± (2)
URBAN STREETS	25 MPH OR LESS	100' ± (2)

(1) ALL SPACING MAY BE ADJUSTED TO ACCOMMODATE INTERSECTIONS AND DRIVEWAYS.
(2) THIS SPACING MAY BE REDUCED IN URBAN AREAS TO FIT ROADWAY CONDITIONS.

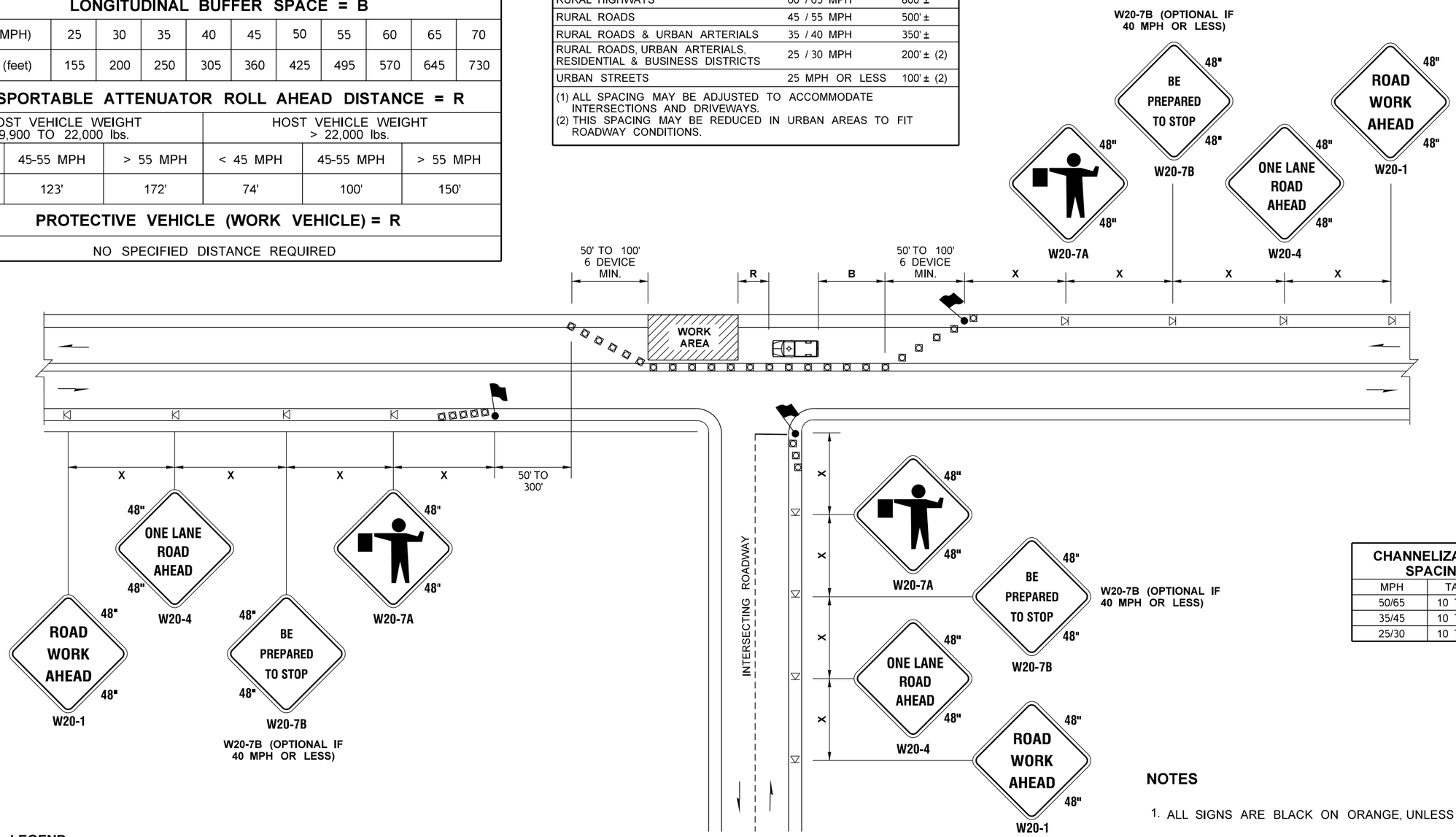

CHANNELIZATION DEVICE SPACING (FEET)

MPH	TAPER	TANGENT
50/65	10 TO 20	80
35/45	10 TO 20	60
25/30	10 TO 20	40

LEGEND

- FLAGGING STATION
- TEMPORARY SIGN LOCATION
- CHANNELIZING DEVICES
- PROTECTIVE VEHICLE

ONE-LANE, TWO-WAY TRAFFIC CONTROL WITH FLAGGERS

NOT TO SCALE

NOTES

1. ALL SIGNS ARE BLACK ON ORANGE, UNLESS OTHERWISE DESIGNATED.
2. EXTEND CHANNELIZING DEVICE TAPER ACROSS SHOULDER.
3. NIGHT WORK REQUIRES ADDITIONAL ROADWAY LIGHTING AT FLAGGING STATIONS. SEE THE **STANDARD SPECIFICATIONS** FOR ADDITIONAL DETAILS.
4. SEE **SPECIAL PROVISIONS** FOR WORK HOUR RESTRICTIONS.

FILE NAME	K:\454306\Projects\XL5661 - SR 241 Mabton Vicinity - Retrofit Bridges\CAD\ContractPlans_Alt\410-WZTCPlan\XL5661_PS_TC.dgn
TIME	6:20:50 AM
DATE	12/21/2022
PLOTTED BY	McCoyK
DESIGNED BY	M. WILHELM
ENTERED BY	K. MCCOY
CHECKED BY	P. COOPER
PROJ. ENGR.	A. SANGUINO
REGIONAL ADM.	T. TREPANIER

REVISION | DATE | BY

REGION NO. 10 | STATE WASH | FED.AID PROJ.NO.
JOB NUMBER 21Y001
CONTRACT NO. | LOCATION NO.

P.E. STAMP BOX DATE

P.E. STAMP BOX DATE

Washington State Department of Transportation

SR 241
MABTON VICINITY - RETROFIT BRIDGES

TRAFFIC CONTROL PLANS

Plot 1
PLAN REF NO TC1
SHEET 112 OF 115 SHEETS

MINIMUM TAPER LENGTH = L (feet)										
LANE WIDTH (feet)	Posted Speed (mph)									
	25	30	35	40	45	50	55	60	65	70
10	105	150	205	270	450	500	550	-	-	-
11	115	165	225	295	495	550	605	660	-	-
12	125	180	245	320	540	600	660	720	780	-

CHANNELIZATION DEVICE SPACING (feet)		
MPH	TAPER	TANGENT
50/65	40	80
35/45	30	60
25/30	20	40

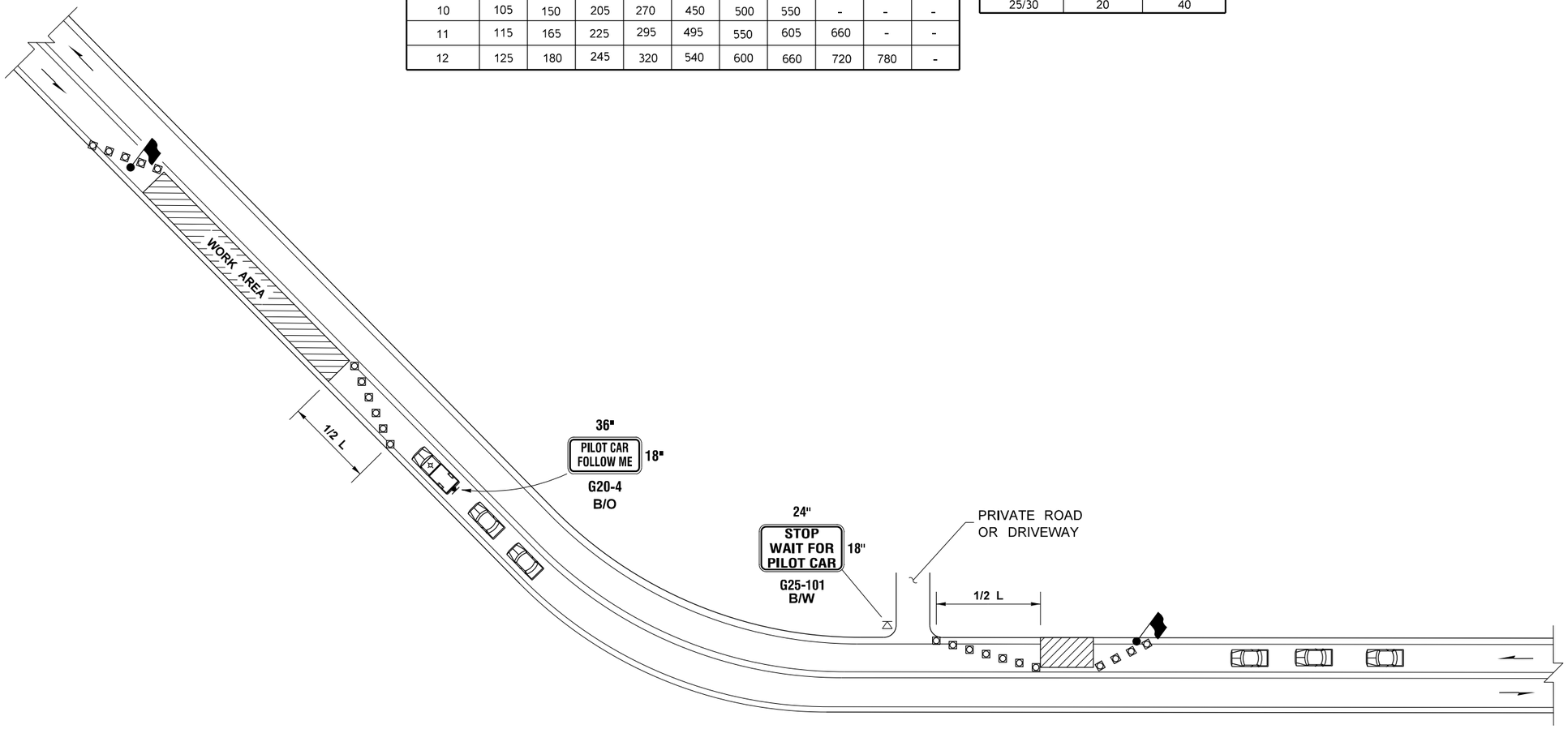

LEGEND

- FLAGGING STATION
- TEMPORARY SIGN LOCATION
- CHANNELIZING DEVICES
- PILOT VEHICLE
- MOTORIST VEHICLE

PILOT CAR OPERATION

NOT TO SCALE

NOTES

1. REFER TO SHEET TC1 FOR ADDITIONAL SIGNING AND FLAGGING DETAILS NOT SHOWN.
2. PLACE CHANNELIZING DEVICES ALONG CENTERLINE TO SEPARATE TRAFFIC FROM WORK OPERATION. DEVICES ARE REQUIRED AT TAPERS TO SHIFT TRAFFIC MOVEMENT BETWEEN LANES AND TO PROTECT FLAGGING STATIONS.
3. SIGN G25-101 SHALL BE UTILIZED FOR NON-STOP SIGN CONTROLLED APPROACHES SUCH AS PRIVATE ROADS AND DRIVEWAYS. THIS SIGN IS NOT REQUIRED TO BE ALUMINUM SUBSTRATE AND CAN BE MADE OF ALTERNATIVE MATERIALS.

FILE NAME	K:\454306\Projects\XL5661 - SR 241 Mabton Vicinity - Retrofit Bridges\CAD\ContractPlans_Alt\410-WZTCPlan\XL5661_PS_TC.dgn
TIME	6:20:50 AM
DATE	12/21/2022
PLOTTED BY	McCoyK
DESIGNED BY	M. WILHELM
ENTERED BY	K. MCCOY
CHECKED BY	P. COOPER
PROJ. ENGR.	A. SANGUINO
REGIONAL ADM.	T. TREPANIER

REVISION | DATE | BY

REGION NO. 10 | STATE WASH | FED.AID PROJ.NO.

JOB NUMBER 21Y001

CONTRACT NO. | LOCATION NO.

P.E. STAMP BOX DATE

P.E. STAMP BOX DATE

Washington State Department of Transportation

SR 241
MABTON VICINITY -
RETROFIT BRIDGES

TRAFFIC CONTROL PLANS

Plot 2

PLAN REF NO TC2

SHEET 113 OF 115 SHEETS

BUFFER DATA										
LONGITUDINAL BUFFER SPACE = B										
SPEED (MPH)	25	30	35	40	45	50	55	60	65	70
LENGTH (feet)	155	200	250	305	360	425	495	570	645	-

TRANSPORTABLE ATTENUATOR ROLL AHEAD DISTANCE = R					
HOST VEHICLE WEIGHT 9,900 TO 22,000 lbs.			HOST VEHICLE WEIGHT > 22,000 lbs.		
< 45 MPH	45-55 MPH	> 55 MPH	< 45 MPH	45-55 MPH	> 55 MPH
100'	123'	172'	74'	100'	150'

PROTECTIVE VEHICLE (WORK VEHICLE) = R
NO SPECIFIED DISTANCE REQUIRED

RUMBLE STRIP ARRAY SPACING (FEET)	
MPH	IDEAL SPACING
>35	10
≤35	5

CHANNELIZATION DEVICE SPACING (feet)		
MPH	TAPER	TANGENT
50/65	40	80
35/45	30	60
25/30	20	40

SIGN SPACING = X (1)		
RURAL HIGHWAYS	60 / 65 MPH	800' ±
RURAL ROADS	45 / 55 MPH	500' ±
RURAL ROADS & URBAN ARTERIALS	35 / 40 MPH	350' ±
RURAL ROADS, URBAN ARTERIALS, RESIDENTIAL & BUSINESS DISTRICTS	25 / 30 MPH	200' ± (2)
URBAN STREETS	25 MPH OR LESS	100' ± (2)

(1) ALL SPACING MAY BE ADJUSTED TO ACCOMMODATE INTERSECTIONS AND DRIVEWAYS.
(2) THIS SPACING MAY BE REDUCED IN URBAN AREAS TO FIT ROADWAY CONDITIONS.

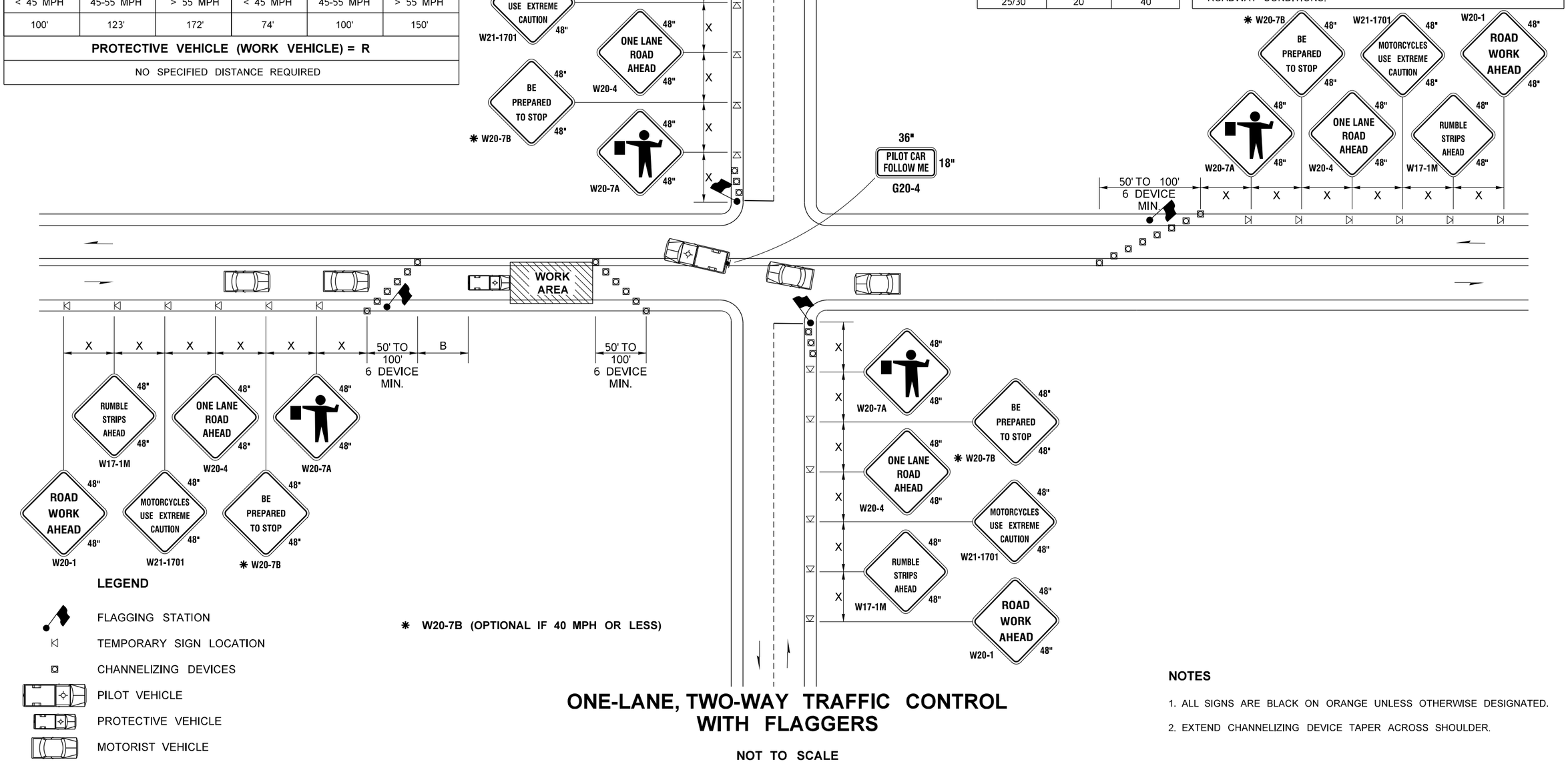

LEGEND

- FLAGGING STATION
- TEMPORARY SIGN LOCATION
- CHANNELIZING DEVICES
- PILOT VEHICLE
- PROTECTIVE VEHICLE
- MOTORIST VEHICLE

✱ W20-7B (OPTIONAL IF 40 MPH OR LESS)

ONE-LANE, TWO-WAY TRAFFIC CONTROL WITH FLAGGERS

NOT TO SCALE

NOTES

1. ALL SIGNS ARE BLACK ON ORANGE UNLESS OTHERWISE DESIGNATED.
2. EXTEND CHANNELIZING DEVICE TAPER ACROSS SHOULDER.

FILE NAME	K:\454306\Projects\XL5661 - SR 241 Mabton Vicinity - Retrofit Bridges\CAD\ContractPlans_Alt\410-WZTCPlan\XL5661_PS_TC.dgn						
TIME	6:20:51 AM				REGION NO. 10	STATE WASH	FED.AID PROJ.NO.
DATE	12/21/2022						
PLOTTED BY	McCoyK						
DESIGNED BY	M. WILHELM				JOB NUMBER 21Y001		
ENTERED BY	K. MCCOY						
CHECKED BY	P. COOPER				CONTRACT NO.		LOCATION NO.
PROJ. ENGR.	A. SANGUINO						
REGIONAL ADM.	T. TREPANIER	REVISION	DATE	BY			

P.E. STAMP BOX DATE

P.E. STAMP BOX DATE

Washington State Department of Transportation

SR 241
MABTON VICINITY - RETROFIT BRIDGES

TRAFFIC CONTROL PLANS

Plot 3

PLAN REF NO TC3

SHEET 114 OF 115 SHEETS

CLASS A DETOUR SIGN LEGEND

(A) 2 REQUIRED	(B) 2 REQUIRED	(C) 2 REQUIRED	(D) 2 REQUIRED
BRIDGE CLOSED AHEAD 48" 48" W20-3	DETOUR AHEAD 48" 48" W20-2	BRIDGE CLOSED 1000 FT 48" 48" W20-3	BRIDGE CLOSED 500 FT 48" 48" W20-3
(E) 2 REQUIRED	(F) 2 REQUIRED	(G) 9 REQUIRED	(H) 3 REQUIRED
48" BRIDGE CLOSED 30" R11-2	24" NEXT 11 MILES 18" W7-3A	30" DETOUR 15" M4-8	21" 15" M6-3
(I) 5 REQUIRED	(J) 4 REQUIRED	(K) 1 REQUIRED	(L) 2 REQUIRED
21" 15" M6-1(L)	21" 15" M6-1(R)	48" WHEELERS SMOKE N GAS OPEN 48" SPECIAL	48" WHEELERS SMOKE N GAS FOLLOW DETOUR 48" SPECIAL
(M) 2 REQUIRED	(N) 2 REQUIRED	* PCMS 2 REQUIRED	* AS APPROVED BY THE ENGINEER
60" ROAD CLOSED TO THRU TRAFFIC 30" R11-4 (B/W)	12" YOUR SPEED XX SPECIAL (B/W) LED DISPLAY (Y/B)	72" PORTABLE CHANGEABLE MESSAGE SIGN 60"	

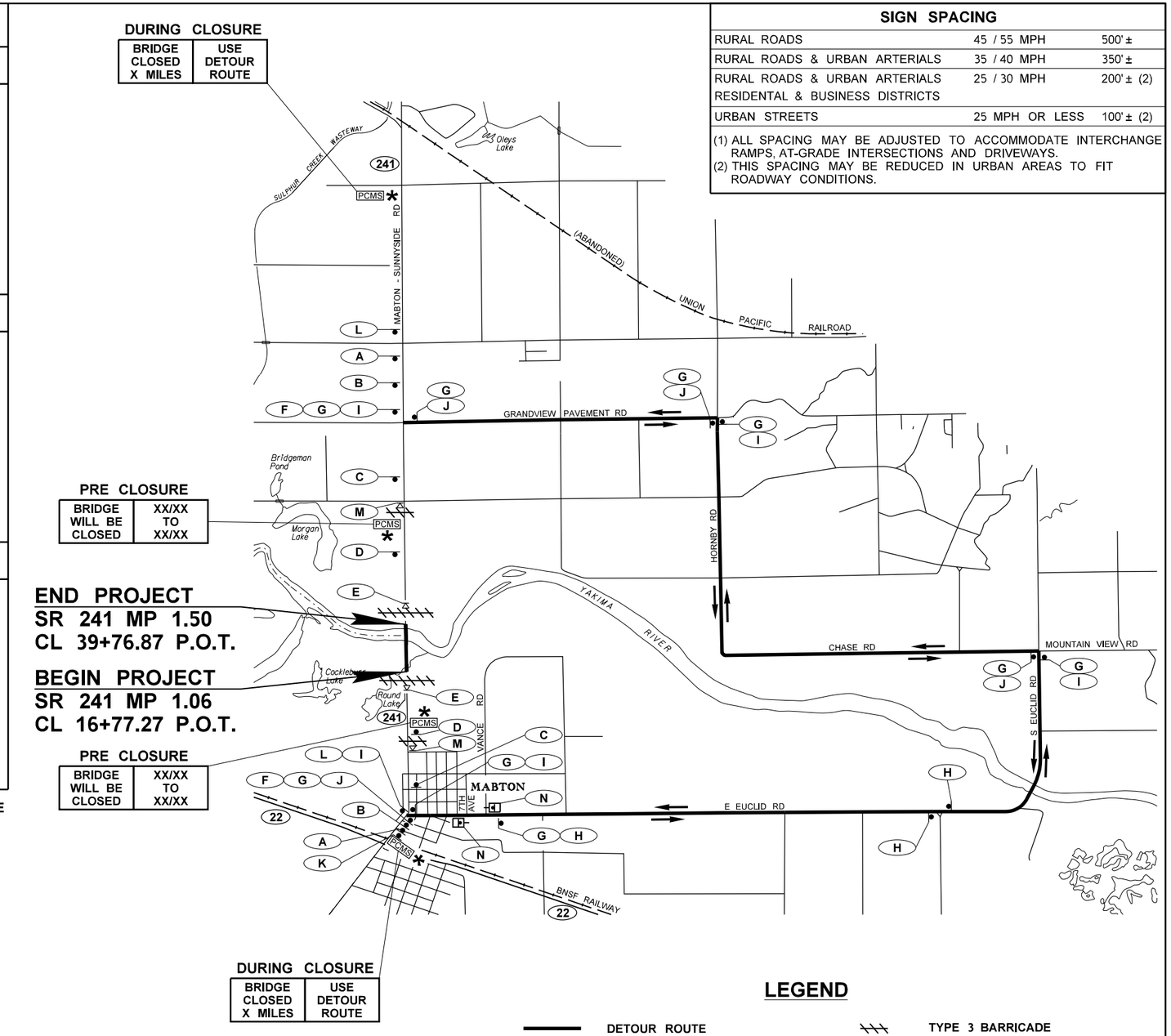

SIGN SPACING

RURAL ROADS	45 / 55 MPH	500' ±
RURAL ROADS & URBAN ARTERIALS	35 / 40 MPH	350' ±
RURAL ROADS & URBAN ARTERIALS RESIDENTAL & BUSINESS DISTRICTS	25 / 30 MPH	200' ± (2)
URBAN STREETS	25 MPH OR LESS	100' ± (2)

(1) ALL SPACING MAY BE ADJUSTED TO ACCOMMODATE INTERCHANGE RAMPS, AT-GRADE INTERSECTIONS AND DRIVEWAYS.
(2) THIS SPACING MAY BE REDUCED IN URBAN AREAS TO FIT ROADWAY CONDITIONS.

LEGEND

- DETOUR ROUTE
- DETOUR ROUTE DIRECTION
- PCMS — PORTABLE CHANGEABLE MESSAGE SIGN
- CLASS A SIGN
- TYPE 3 BARRICADE
- BARRICADE MOUNTED SIGN
- RADAR SPEED DISPLAY SIGN
- ? — SIGN NOTE FLAG

GENERAL NOTES:

1. ALL SIGNS ARE CLASS "A".
2. ALL SIGNS ARE BLACK ON ORANGE, UNLESS OTHERWISE NOTED.
3. PCMS MESSAGE CYCLE SHALL CONSIST OF NO MORE THAN TWO DISPLAYS IN A SEQUENCE AT 2 SECONDS PER DISPLAY.
4. PCMS SHALL DISPLAY CLOSURE NOTICES 3 DAYS IN ADVANCE OF THE CLOSURE.
5. TYPE 3 BARRICADE WILL BE SUPPLEMENTED WITH BARRELS TO EFFECTIVELY CLOSE ROAD.

FILE NAME	C:\AAWork\Documents\C_Design Projects\XL5661 - Mabton Vicinity - Retrofit Bridges\420-DetourPlan\XL5661_PS_DU.dgn
TIME	11:33:27 AM
DATE	1/4/2023
PLOTTED BY	McCoyK
DESIGNED BY	M. WILHELM
ENTERED BY	K. McCOY
CHECKED BY	P. COOPER
PROJ. ENGR.	A. SANGUINO
REGIONAL ADM.	T. TREPANIER

REVISION | DATE | BY

REGION NO. 10 | STATE WASH | FED.AID PROJ.NO.

JOB NUMBER 21Y001

CONTRACT NO. | LOCATION NO.

P.E. STAMP BOX DATE

P.E. STAMP BOX DATE

Washington State Department of Transportation

SR 241
MABTON VICINITY -
RETROFIT BRIDGES

DETOUR PLAN

Plot 1

PLAN REF NO DU1

SHEET 115 OF 115 SHEETS