INDEX

SHEET NO.	PLAN REFERENCE NO.	TITLE
		CROSSING E - SR 166 MP 4.52
	IN1-E	INDEX - CROSSING E
	RS1-E	ROADWAY SECTIONS
	AL1-E - AL2-E	ALIGNMENT & RIGHT OF WAY PLAN
	SP1-E - SP2-E	SITE PREPARATION PLAN
	RP1-E	ROADWAY PROFILE
	CR1-E	STREAM PLAN
	CP1-E	STREAM PROFILE
	CD1-E	STREAM DETAILS
	PV1-E - PV2-E	PAVING & PAVEMENT MARKING PLAN
	BE01	CONCEPTUAL BRIDGE PLAN
	BE02	CONCEPTUAL BRIDGE DETAILS

INDEX (CONTINUED)

SHEET NO.	PLAN REFERENCE NO.	TITLE

PLAN REFERENCE NO.

SHEET OF SHEETS

NOTE: ALL SHEET REFERENCES, FIRST NOS. OF STRUCTURE CODE DESIGNATIONS AND MATCH LINE SHEET REFERENCES, ETC., THROUGHOUT THE PLANS, REFER TO THE ENTRY IN THE PLAN REFERENCE NUMBER BOX.

CONCEPTUAL
NOT FOR CONSTRUCTION

SR 166 MP 4.52

FILE NAME	c:\d0539682\XL6547_E_PS_IN1.dgn
TIME	1:07:28 PM
DATE	10/6/2023
PLOTTED BY	wilsopau
DESIGNED BY	P. WILSON
ENTERED BY	P. WILSON
CHECKED BY	R. PARKER
PROJ. ENGR.	M. STEINGREBE
REGIONAL ADM.	S. ROARK

REVISION | DATE | BY

REGION NO. 10 | STATE WASH | FED.AID PROJ.NO.

JOB NUMBER

CONTRACT NO.

LOCATION NO. XL6547

P.E. STAMP BOX DATE

P.E. STAMP BOX DATE

Washington State Department of Transportation

Parametrix

SR3 / SR16 / SR166
GORST VICINITY -
REMOVE FISH BARRIERS

INDEX - CROSSING E

PLAN REF. NO. IN1-E

SHEET OF SHEETS

pw:\\projectstore.wsdot.wa.gov:WSDOT\Documents_HQ\Fish Passage\ORproj\000\XL6547-Gorst\Design_CAD_Sheets\E - 15.0201.90 SR 166 MP 4.52\010-Index\XL6547_E_PS_IN1.dgn

LEGEND

1. HMA CL. 1/2" PG 58H-22
2. CRUSHED SURFACING BASE COURSE
3. CRUSHED SURFACING TOP COURSE
4. CEMENT CONCRETE SIDEWALK PER WSDOT STANDARD PLAN F-30.10
5. REFER TO BRIDGE PLANS
6. PEDESTRIAN BARRIER
7. MODIFIED PEDESTRIAN BARRIER

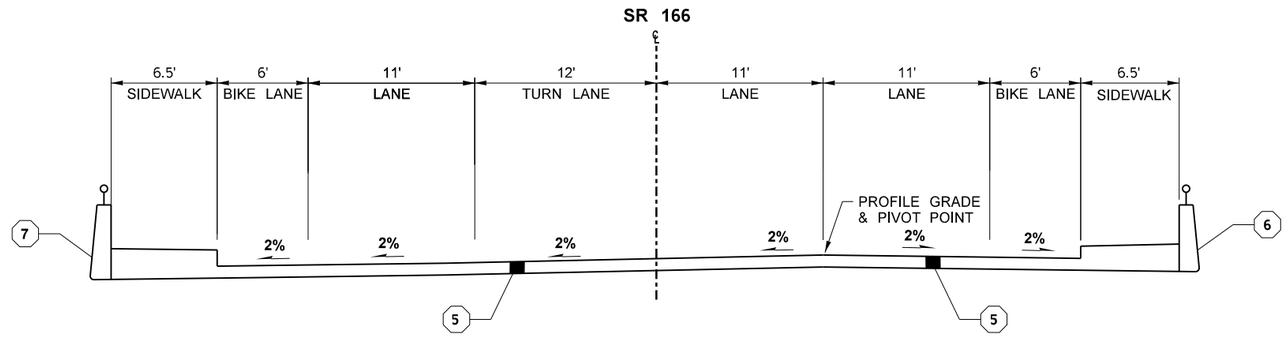

PROPOSED BRIDGE SECTION

SR166 RECONSTRUCTION

STA: 505+01.07 TO 507+34.22

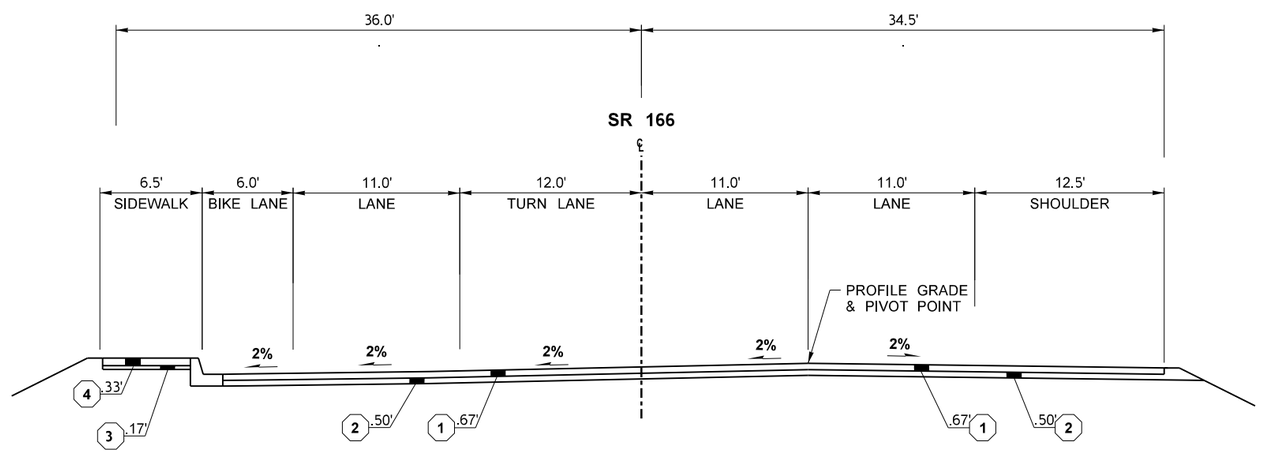

PROPOSED ROADWAY SECTION

SR166 RECONSTRUCTION

STA: 504+66.07 TO 505+01.07

STA: 507+34.22 TO 507+69.22

NOT TO SCALE

CONCEPTUAL

NOT FOR CONSTRUCTION

SR 166 MP 4.52

FILE NAME	c:\d0539603\XL6547_E_PS_RS1.dgn						
TIME	1:03:25 PM				REGION NO. 10	STATE WASH	FED.AID PROJ.NO.
DATE	10/6/2023						
PLOTTED BY	wilsopau				JOB NUMBER		
DESIGNED BY	M. HARRIS						
ENTERED BY	P. WILSON						
CHECKED BY	R. PARKER				CONTRACT NO.		LOCATION NO. XL6547
PROJ. ENGR.	M. STEINGREBE						
REGIONAL ADM.	S. ROARK	REVISION	DATE	BY			

P.E. STAMP BOX DATE

P.E. STAMP BOX DATE

Washington State Department of Transportation

Parametrix

SR3 / SR16 / SR166
GORST VICINITY -
REMOVE FISH BARRIERS

ROADWAY SECTIONS

PLAN REF NO **RS1-E**

SHEET OF SHEETS

pw:\\projectstore.wsdot.wa.gov:WSDOT\Documents_HQ\Fish Passage\ORproj\000\XL6547-Gorst\Design_CADI_Sheets\E - 15.0201.90 SR 166 MP 4.52\XL6547_E_PS_RS1.dgn

T.24N. R.1E W.M.

CREEK ALIGNMENT DATA - OC LINE

STATION	TANGENT LENGTH	TANGENT BEARING AHEAD	STATION	TANGENT LENGTH	TANGENT BEARING AHEAD
0+00.00 POB	24.10	S 7°28'03.0" E	6+86.31 PI	9.40	S 3°13'26.8" W
0+24.10 PI	24.76	S 27°44'32.4" E	6+95.71 PI	11.91	S 12°48'02.1" W
0+48.86 PI	17.38	S 22°43'31.5" E	7+07.63 PI	24.98	S 85°20'15.7" W
0+66.25 PI	3.15	S 5°39'32.3" W	7+32.60 PI	12.55	S 67°43'53.3" W
0+69.39 PI	25.92	S 29°48'41.1" W	7+45.16 PI	11.27	S 79°09'22.9" W
0+95.32 PI	39.62	S 26°23'54.6" W	7+56.43 PI	18.75	N 71°14'37.6" W
1+34.94 PI	43.79	S 19°56'32.7" W	7+75.18 PI	16.21	N 44°22'48.3" W
1+78.73 PI	24.73	S 42°42'56.3" E	7+91.39 PI	8.88	N 62°09'18.1" W
2+03.45 PI	46.67	S 25°38'26.0" W	8+00.28 PI	12.06	S 26°50'15.1" W
2+50.13 PI	30.70	S 45°49'08.1" W	8+12.34 PI	15.93	S 22°22'06.3" W
2+80.82 PI	28.45	S 34°17'32.7" W	8+28.26 PI	6.69	S 12°30'31.4" E
3+09.27 PI	10.58	S 77°19'47.6" W	8+34.96 PI	2.67	S 62°46'01.4" E
3+19.85 PI	5.81	S 57°01'41.6" W	8+37.62 PI	19.86	S 26°51'17.4" E
3+25.66 PC	*		8+57.48 PI	20.41	S 3°34'47.9" E
3+64.73 PT	208.26	S 22°35'16.2" W	8+77.90 PI	30.29	S 11°51'23.5" W
5+72.99 PC	*		9+08.19 PI	22.12	S 67°37'54.1" W
6+06.10 PT	16.11	S 6°35'59.8" E	9+30.31 PI	36.11	S 48°01'07.7" W
6+22.22 PI	28.87	S 6°49'22.0" E	9+66.42 PI	31.91	S 2°29'11.9" E
6+51.09 PI	17.56	S 76°24'38.5" W	9+98.33 PI	22.15	S 41°07'43.7" W
6+68.64 PI	17.67	S 47°49'35.8" W	10+20.48 PI	17.44	S 10°52'31.9" W
* SEE CURVE DATA TABLE			10+37.92 POE		

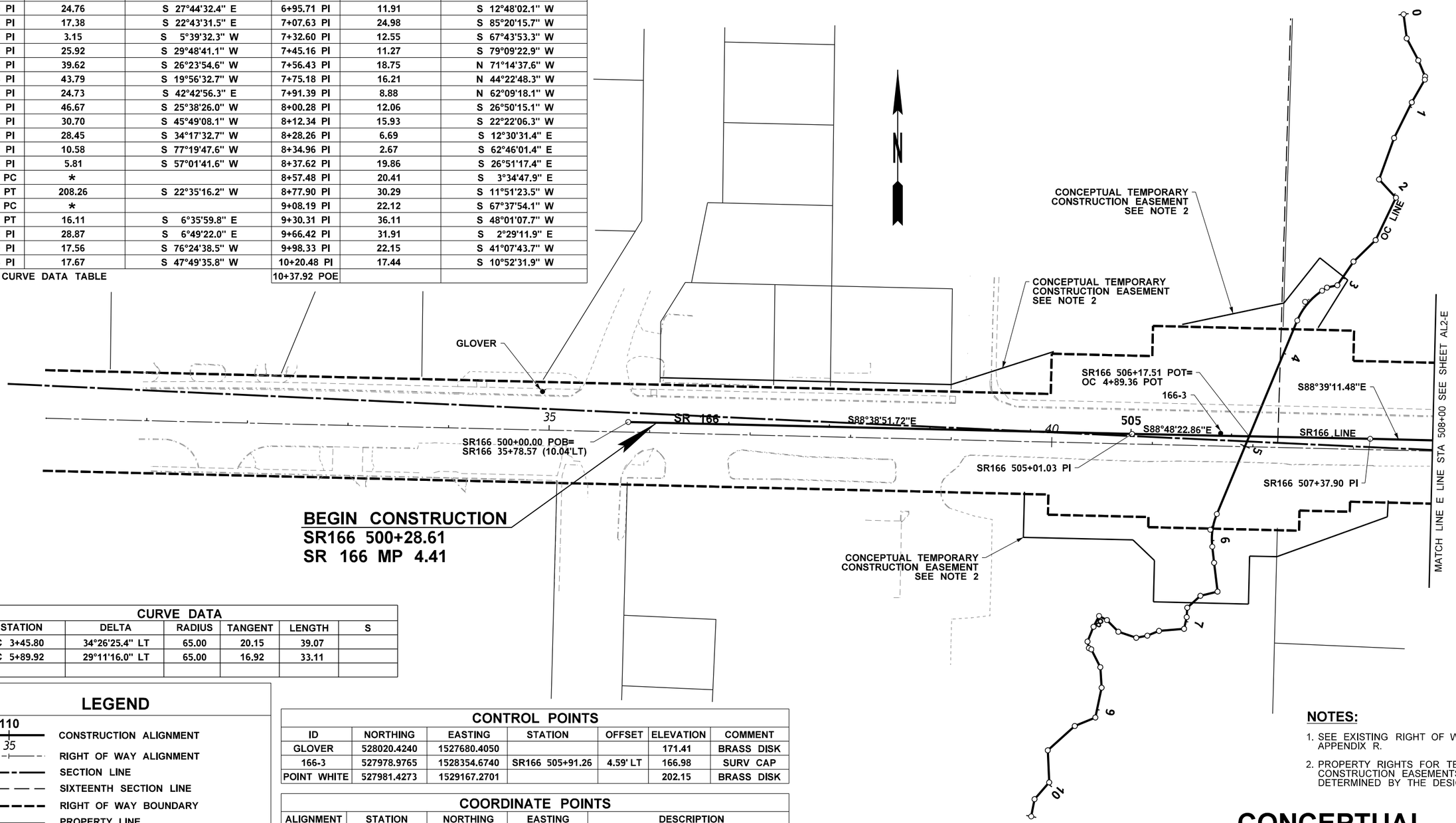

BEGIN CONSTRUCTION
SR166 500+28.61
SR 166 MP 4.41

CURVE DATA

P.I. STATION	DELTA	RADIUS	TANGENT	LENGTH	S
OC 3+45.80	34°26'25.4" LT	65.00	20.15	39.07	
OC 5+89.92	29°11'16.0" LT	65.00	16.92	33.11	

LEGEND

110
35
CONSTRUCTION ALIGNMENT
RIGHT OF WAY ALIGNMENT
SECTION LINE
SIXTEENTH SECTION LINE
RIGHT OF WAY BOUNDARY
PROPERTY LINE
TEMP. CONSTRUCTION EASEMENT (TCE)
GLOBAL POSITIONING POINT
FOUND MONUMENT

CONTROL POINTS

ID	NORTHING	EASTING	STATION	OFFSET	ELEVATION	COMMENT
GLOVER	528020.4240	1527680.4050			171.41	BRASS DISK
166-3	527978.9765	1528354.6740	SR166 505+91.26	4.59' LT	166.98	SURV CAP
POINT WHITE	527981.4273	1529167.2701			202.15	BRASS DISK

COORDINATE POINTS

ALIGNMENT	STATION	NORTHING	EASTING	DESCRIPTION
SR166	500+00.00	527988.0961	1527763.4821	SR 166 CONSTRUCTION CENTERLINE
OC	0+00.00	528393.2235	1528534.3716	STREAM ALIGNMENT
OC	10+37.92	527596.1388	1528164.1334	STREAM ALIGNMENT

0 50 100
SCALE IN FEET

NOTES:

1. SEE EXISTING RIGHT OF WAY PLANS, APPENDIX R.
2. PROPERTY RIGHTS FOR TEMPORARY CONSTRUCTION EASEMENTS TO BE DETERMINED BY THE DESIGN-BUILDER.

CONCEPTUAL
NOT FOR CONSTRUCTION

SR 166 MP 4.52

FILE NAME	c:\d0539603\XL6547_E_PS_AL1.dgn
TIME	12:56:42 PM
DATE	10/6/2023
PLOTTED BY	wilsopau
DESIGNED BY	M. HARRIS
ENTERED BY	P. WILSON
CHECKED BY	R. PARKER
PROJ. ENGR.	M. STEINGREBE
REGIONAL ADM.	S. ROARK

REVISION | DATE | BY

REGION NO. 10 | STATE WASH | FED.AID PROJ.NO.
JOB NUMBER
CONTRACT NO. | LOCATION NO. XL6547

P.E. STAMP BOX DATE
P.E. STAMP BOX DATE

Washington State Department of Transportation
Parametrix

SR3 / SR16 / SR166
GORST VICINITY -
REMOVE FISH BARRIERS

ALIGNMENT & RIGHT OF WAY PLAN

PLAN REF NO AL1-E
SHEET OF SHEETS

pw:\\projectstore.wsdot.wa.gov:WSDOT\Documents_HQ\Fish Passage\ORproj\000\XL6547-Gorst\Design_CAD_Sheets\E - 15.0201.90 SR 166 MP 4.52\XL6547_E_PS_AL1.dgn

T.24N. R.1E W.M.

COORDINATE POINTS				
ALIGNMENT	STATION	NORTHING	EASTING	DESCRIPTION
SR166	513+54.52	527956.8443	1529117.6410	SR 166 CONSTRUCTION CENTERLINE

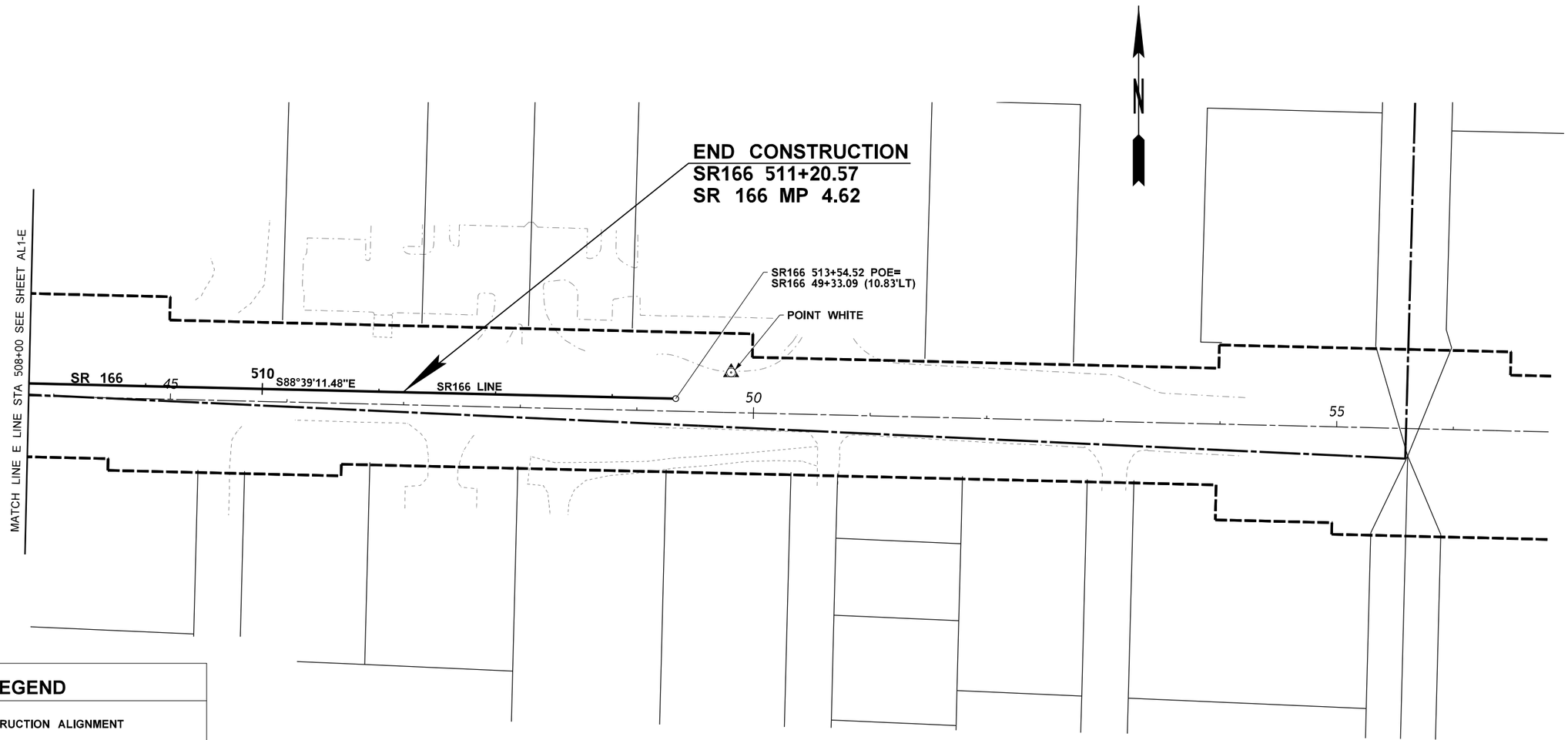

LEGEND

110 / 35	CONSTRUCTION ALIGNMENT
	RIGHT OF WAY ALIGNMENT
	SECTION LINE
	SIXTEENTH SECTION LINE
	RIGHT OF WAY BOUNDARY
	PROPERTY LINE
	TEMP. CONSTRUCTION EASEMENT (TCE)
	GLOBAL POSITIONING POINT
	FOUND MONUMENT

NOTES:

1. SEE EXISTING RIGHT OF WAY PLANS, APPENDIX R.

0 50 100
SCALE IN FEET

NOT FOR CONSTRUCTION

SR 166 MP 4.52

FILE NAME	c:\d0539603\XL6547_E_PS_AL2.dgn						
TIME	12:57:43 PM						
DATE	10/6/2023						
PLOTTED BY	wilsopau						
DESIGNED BY	M. HARRIS						
ENTERED BY	P. WILSON						
CHECKED BY	R. PARKER						
PROJ. ENGR.	M. STEINGREBE						
REGIONAL ADM.	S. ROARK	REVISION	DATE	BY			

REGION NO. 10 | STATE WASH | FED.AID PROJ.NO.

JOB NUMBER

CONTRACT NO.

LOCATION NO. XL6547

P.E. STAMP BOX DATE

P.E. STAMP BOX DATE

Washington State Department of Transportation

Parametrix

SR3 / SR16 / SR166
GORST VICINITY -
REMOVE FISH BARRIERS

ALIGNMENT & RIGHT OF WAY PLAN

PLAN REF NO AL2-E

SHEET OF SHEETS

pw:\\projectstore.wsdot.wa.gov:WSDOT\Documents_HQ\Fish Passage\ORproj\000\XL6547-Gorst\Design_CAD_Sheets\E - 15.0201.90 SR 166 MP 4.52\XL6547_E_PS_AL2.dgn

T.24N. R.1E W.M.

NOTES:

1. FOR LEGEND, SEE SHEET SP2-E.
2. IMPACT AREA LINE COINCIDENT WITH R/W OR TEMPORARY CONSTRUCTION EASEMENT LINE. SEE ALIGNMENT & RIGHT OF WAY PLAN, APPENDIX R.

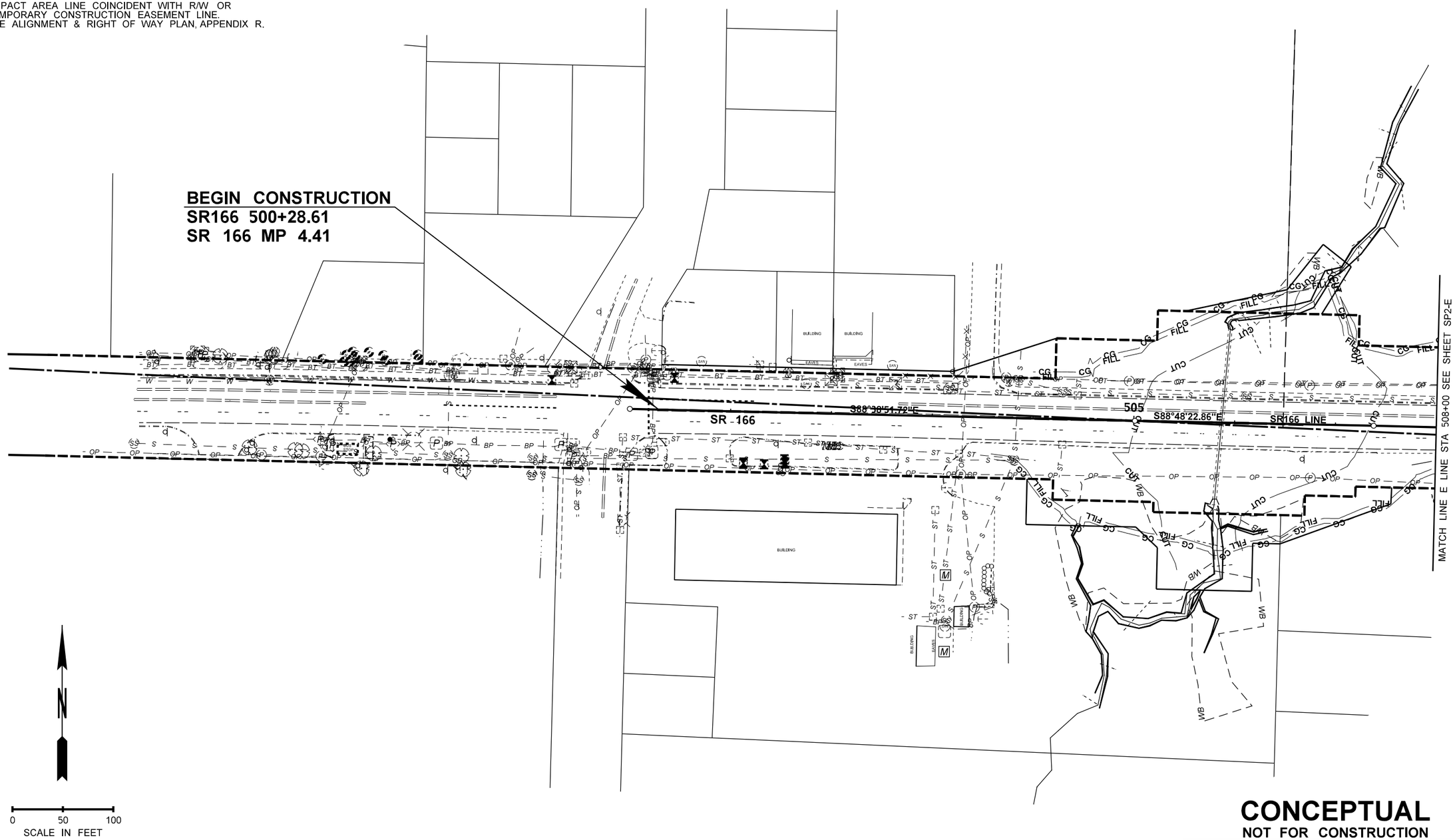

CONCEPTUAL
NOT FOR CONSTRUCTION

SR 166 MP 4.52

FILE NAME	c:\d0539603\XL6547_E_PS_SP1.dgn				REGION NO.	STATE	FED.AID PROJ.NO.
TIME	1:05:03 PM				10	WASH	
DATE	10/6/2023				JOB NUMBER		
PLOTTED BY	wilsopau						
DESIGNED BY	M. HARRIS				CONTRACT NO.		LOCATION NO.
ENTERED BY	P. WILSON						XL6547
CHECKED BY	R. PARKER						
PROJ. ENGR.	M. STEINGREBE						
REGIONAL ADM.	S. ROARK	REVISION	DATE	BY			

P.E. STAMP BOX DATE

P.E. STAMP BOX DATE

Washington State Department of Transportation

Parametrix

SR3 / SR16 / SR166
GORST VICINITY -
REMOVE FISH BARRIERS

SITE PREPARATION PLAN

PLAN REF NO
SP1-E

SHEET OF SHEETS

pw:\\projectstore.wsdot.wa.gov:WSDOT\Documents_HQ\Fish Passage\ORproj\000\XL6547-Gorst\Design_CAD_Sheets\E - 15.0201.90 SR 166 MP 4.52\XL6547_E_PS_SP1.dgn

NOTES:

1. IMPACT AREA LINE COINCIDENT WITH R/W OR TEMPORARY CONSTRUCTION EASEMENT LINE. SEE ALIGNMENT & RIGHT OF WAY PLAN, APPENDIX R.

T.24N. R.1E W.M.

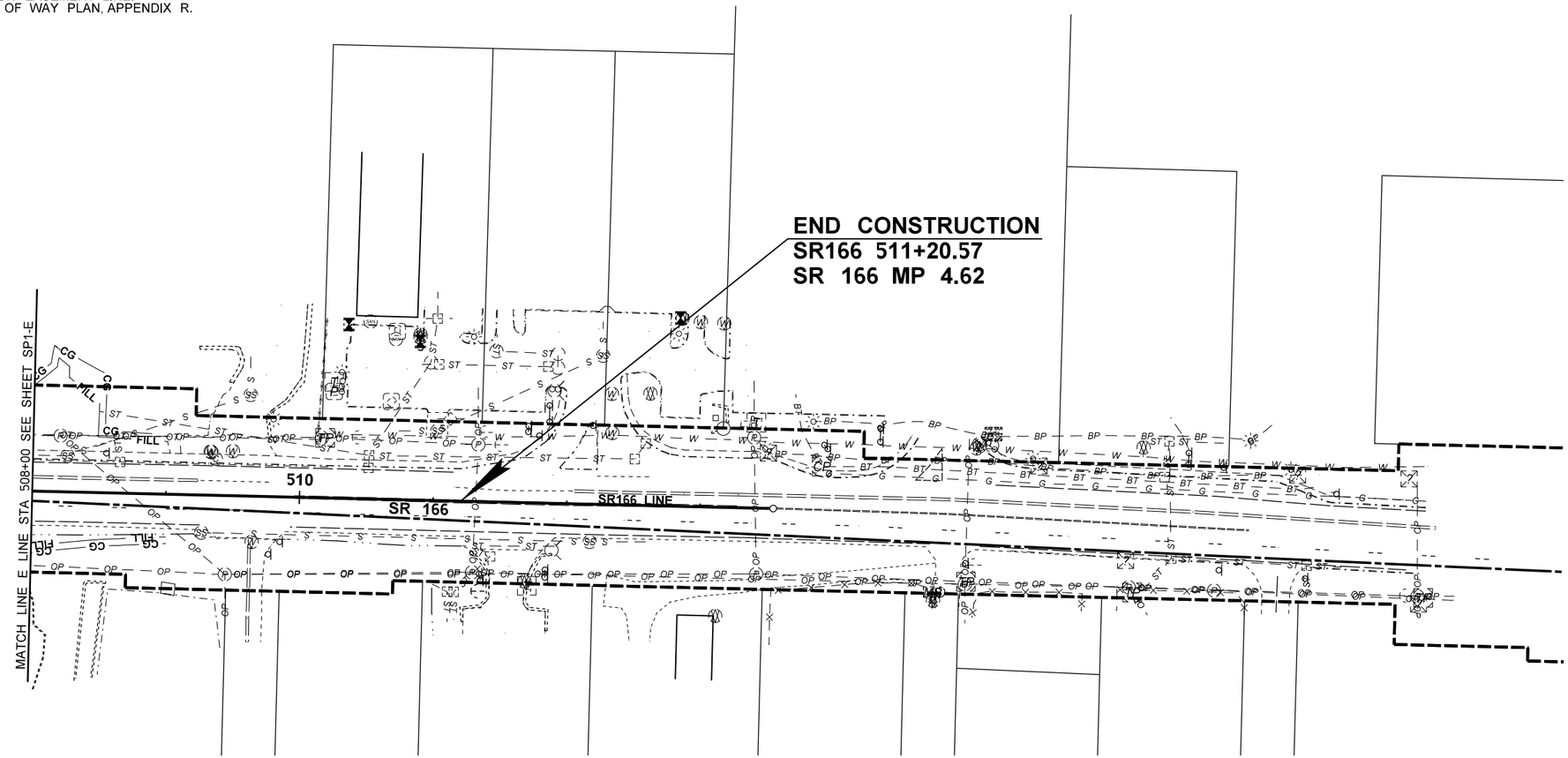

LEGEND

110	CONSTRUCTION ALIGNMENT		EXISTING CREEK		POWER VAULT
	SECTION LINE		EXISTING DITCH BOTTOM		UTILITY VAULT
	SIXTEENTH SECTION LINE		EXISTING CULVERT		GUY ANCHOR
	RIGHT OF WAY BOUNDARY	ST	STORM DRAIN LINE		FIRE HYDRANT
	TEMP. CONSTRUCTION EASEMENT	W	WATER LINE		STORM SEWER MANHOLE
	IMPACT AREA LINE (FUTURE DESIGN)	S	SANITARY SEWER LINE		CATCH BASIN
	IMPACT AREA LINE IN CRITICAL AREA (FUTURE DESIGN)	G	GAS LINE	M	IRRIGATION METER
CG	CONCEPTUAL CLEARING & GRUBBING	BT	BURIED TELEPHONE LINE		IRRIGATION VALVE
CUT	CONCEPTUAL CUT LIMITS	BP	BURIED POWER LINE		IRRIGATION CONTROLLER
FILL	CONCEPTUAL FILL LIMITS	OP	OVERHEAD POWER LINE		UNKNOWN UTILITY BOX
	EXISTING PAVED EDGE	SS	SANITARY SEWER MANHOLE	T	TRANSFORMER
	EXISTING GRAVEL EDGE	SAN	SANITARY SEWER CLEANOUT		EXISTING SIGN
	EXISTING CURB	C	COMMUNICATION VAULT	MB	EXISTING MAILBOX
	EXISTING PAVEMENT MARKING	SAN	SANITARY SEWER CLEANOUT		EXISTING TREE
	EXISTING FENCE		WATER METER BOX		EXISTING LIGHT POLE
	EXISTING GUARDRAIL	W	WATER VALVE		EXISTING BOLLARD
	EXISTING RETAINING WALL BOTTOM	TP	TELEPHONE PEDESTAL		EXISTING PED PUSH BUTTON
OHW	ORDINARY HIGH WATER (FUTURE DESIGN)	P	POWER POLE		
WB	WETLAND BOUNDARY	P	POWER BOX		

N

0 50 100
SCALE IN FEET

CONCEPTUAL
NOT FOR CONSTRUCTION

SR 166 MP 4.52

FILE NAME	c:\d0539603\XL6547_E_PS_SP2.dgn
TIME	1:06:24 PM
DATE	10/6/2023
PLOTTED BY	wilsopau
DESIGNED BY	M. HARRIS
ENTERED BY	P. WILSON
CHECKED BY	R. PARKER
PROJ. ENGR.	M. STEINGREBE
REGIONAL ADM.	S. ROARK

REVISION	DATE	BY

REGION NO.	STATE	FED.AID PROJ.NO.
10	WASH	
JOB NUMBER		
CONTRACT NO.		LOCATION NO. XL6547

P.E. STAMP BOX DATE

P.E. STAMP BOX DATE

Washington State Department of Transportation

Parametrix

SR3 / SR16 / SR166
GORST VICINITY -
REMOVE FISH BARRIERS

SITE PREPARATION PLAN

PLAN REF NO SP2-E

SHEET OF SHEETS

pw:\\projectstore.wsdot.wa.gov:WSDOT\Documents_HQ\Fish Passage\ORproj\000\XL6547-Gorst\Design_CAD_Sheets\E - 15.0201.90 SR 166 MP 4.52XL6547_E_PS_SP2.dgn

NOTES:

1. FINAL ROADWAY PROFILES SHALL ACCOMMODATE THE REQUIRED STRUCTURE STREAM CROSSING FREEBOARD, SEE SECTION 2.14.
2. ALL SIGHT DISTANCE REQUIREMENTS OVER NEW TRAFFIC BARRIER SHALL BE MET PER WSDOT DESIGN MANUAL DIVISION 12.
3. SEE SHEET CD1-E FOR STREAM SECTIONS.
4. FINAL TYPE, SIZE AND LOCATION OF THE STRUCTURE SHALL BE DETERMINED BY THE DESIGN-BUILDER.

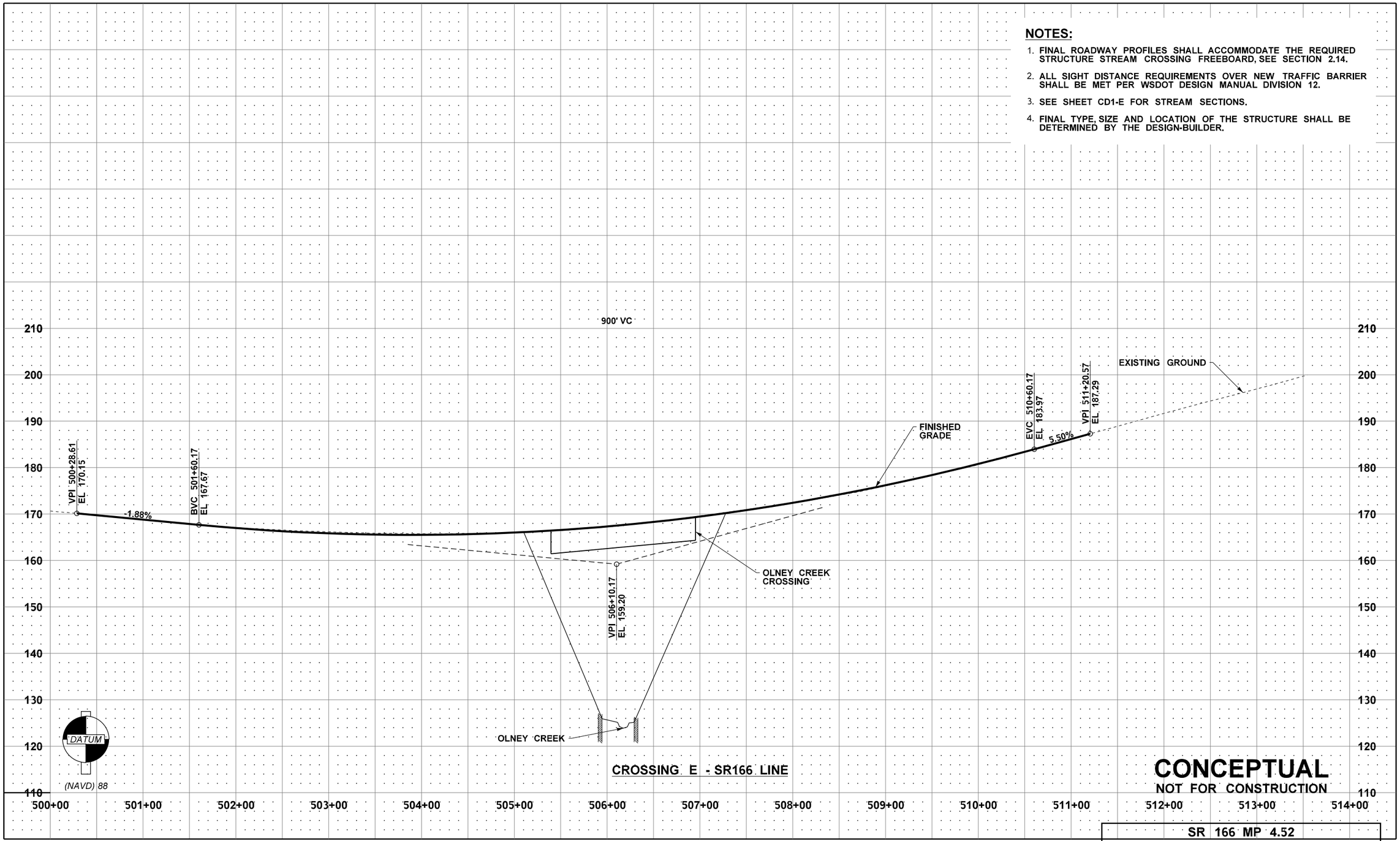

CONCEPTUAL
NOT FOR CONSTRUCTION

SR 166 MP 4.52

FILE NAME	c:\d0539603\XL6547_E_PS_RP1.dgn						
TIME	1:01:43 PM						
DATE	10/6/2023						
PLOTTED BY	wilsopau						
DESIGNED BY	M. HARRIS						
ENTERED BY	P. WILSON						
CHECKED BY	R. PARKER						
PROJ. ENGR.	M. STEINGREBE						
REGIONAL ADM.	S. ROARK	REVISION	DATE	BY			

REGION NO.	STATE	FED.AID PROJ.NO.
10	WASH	
JOB NUMBER		
CONTRACT NO.		LOCATION NO. XL6547

P.E. STAMP BOX DATE

P.E. STAMP BOX DATE

Washington State Department of Transportation

Parametrix

SR3 / SR16 / SR166
GORST VICINITY -
REMOVE FISH BARRIERS

ROADWAY PROFILE

PLAN REF. NO. RP1-E

SHEET OF SHEETS

pw:\\projectstore.wsdot.wa.gov:WSDOT\Documents_HQ\Fish Passage\ORproj\000\XL6547-Gorst\Design_CAD_Sheets\E - 15.0201.90 SR 166 MP 4.52\XL6547_E_PS_RP1.dgn

T.24N. R.1E. W.M.

LEGEND

PROPOSED STREAM ALIGNMENT	5+00
RIGHT OF WAY BOUNDARY	
TEMP. CONSTRUCTION EASEMENT	
EXISTING STREAM ALIGNMENT	
EXISTING INDEX CONTOUR	250
EXISTING INTERMEDIATE CONTOUR	
STREAM SCALABLE EDGE	
EXISTING EDGE OF PAVEMENT	
EXISTING DITCH	
EXISTING CULVERT	
EXISTING POWER POLE	P
EXISTING OVERHEAD POWER LINE	OP
EXISTING TELEPHONE POLE	T
EXISTING OVERHEAD TELEPHONE LINE	OT
EXISTING SEWER MANHOLE	SS
EXISTING FENCE	
CUT LINE	CUT
FILL LINE	FILL
MEANDER BAR	

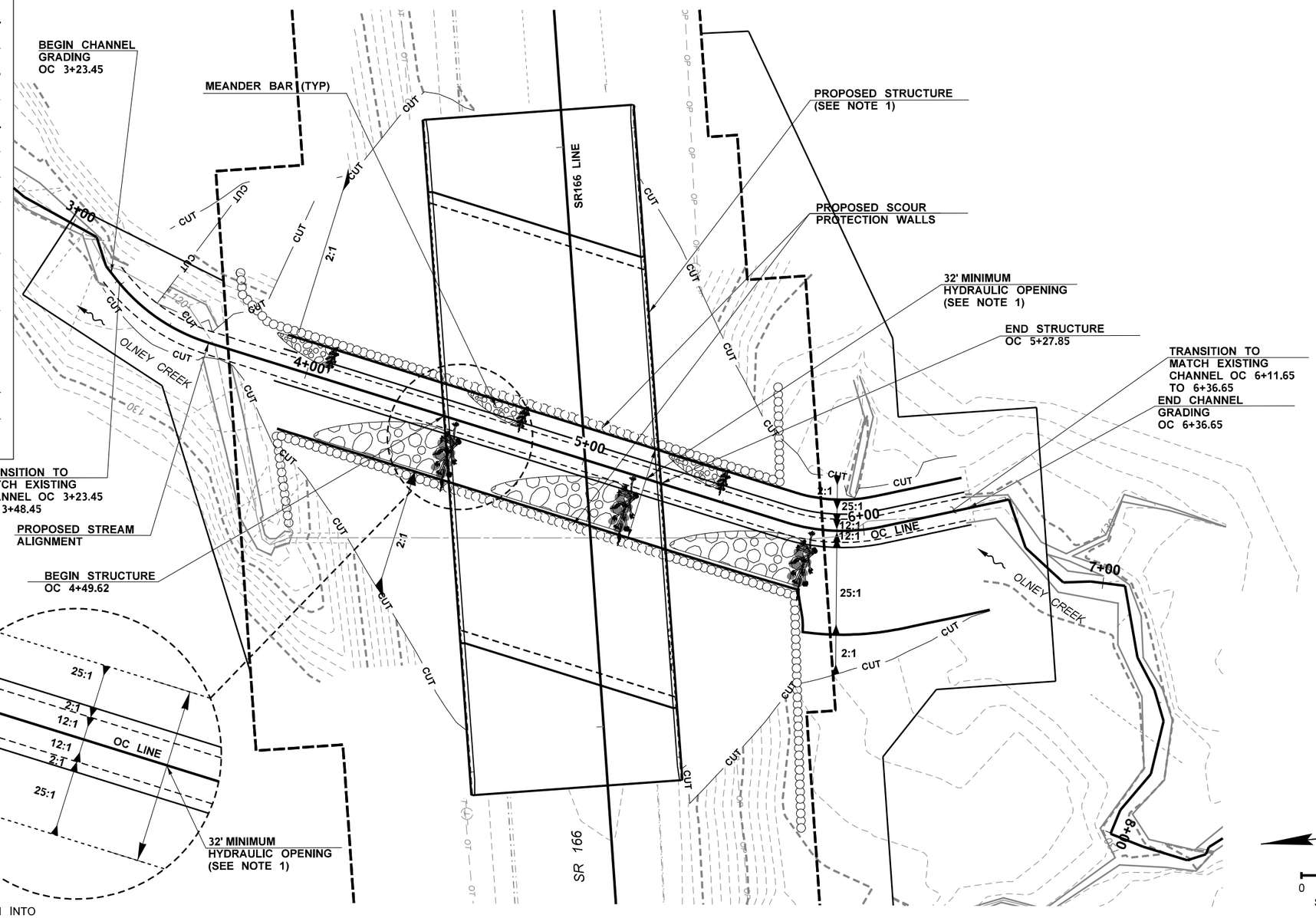

NOTES:

1. PROPOSED STRUCTURE SHALL NOT ENCROACH INTO HYDRAULIC OPENING SHOWN IN PLAN.

CONCEPTUAL DESIGN - NOT FOR CONSTRUCTION

FILE NAME	$$$$$$$$DESIGNFILENAME$$$$$$				
TIME	9:09:18 AM				
DATE	10/9/2023				
PLOTTED BY	RSALEH				
DESIGNED BY	S. BEVAN				
ENTERED BY	R. SALEH				
CHECKED BY	D. MINNER				
PROJ. ENGR.	M.STEINGREBE				
REGIONAL ADM.	S.ROARK	REVISION	DATE	BY	

REGION NO.	STATE	FED.AID PROJ.NO.
10	WASH	
JOB NUMBER XXXXX		
CONTRACT NO.		LOCATION NO. XL6547

P.E. STAMP BOX DATE

P.E. STAMP BOX DATE

Washington State Department of Transportation

HDR

SR 166 MP 4.52

SR3 / SR16 / SR166
GORST VICINITY -
REMOVE FISH BARRIERS

STREAM PLAN

PLAN REF NO CR1-E

SHEET OF SHEETS

pw:\\projectstore.wsdot.wa.gov:WSDOT\Documents_HQ\Fish Passage\ORproj\000\XL6547-Gorst\Design_CAD_Sheets\E - 15.0201.90 SR 166 MP 4.52\170-Stream\XL6547_E_PS_CR_001.dgn

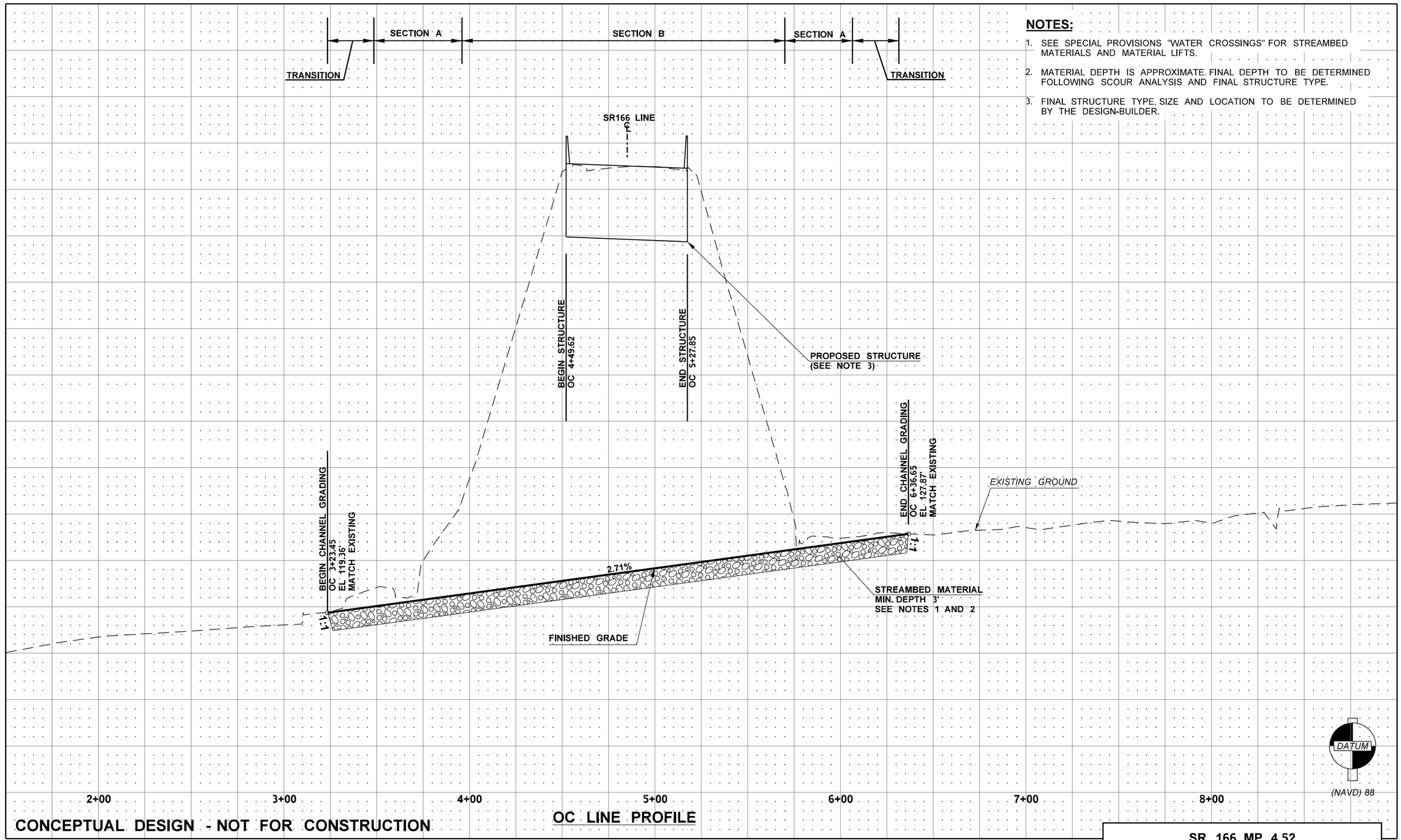

NOTES:

1. SEE SPECIAL PROVISIONS "WATER CROSSINGS" FOR STREAMBED MATERIALS AND MATERIAL LIFTS.
2. MATERIAL DEPTH IS APPROXIMATE. FINAL DEPTH TO BE DETERMINED FOLLOWING SCOUR ANALYSIS AND FINAL STRUCTURE TYPE.
3. FINAL STRUCTURE TYPE, SIZE AND LOCATION TO BE DETERMINED BY THE DESIGN-BUILDER.

CONCEPTUAL DESIGN - NOT FOR CONSTRUCTION

OC LINE PROFILE

SR 166 MP 4.52

FILE NAME	$$$$$$$$DESIGNFILENAME$$$$$$
TIME	9:09:46 AM
DATE	10/9/2023
PLOTTED BY	RSALEH
DESIGNED BY	S. BEVAN
ENTERED BY	R. SALEH
CHECKED BY	D. MINNER
PROJ. ENGR.	M.STEINGREBE
REGIONAL ADM.	S.ROARK

REVISION | DATE | BY

REGION NO.	STATE	FED.AID PROJ.NO.
10	WASH	
JOB NUMBER XXXXX		
CONTRACT NO.		LOCATION NO. XL6547

P.E. STAMP BOX DATE

P.E. STAMP BOX DATE

Washington State Department of Transportation

SR3 / SR16 / SR166
GORST VICINITY -
REMOVE FISH BARRIERS

STREAM PROFILE

PLAN REF. NO. CP1-E

SHEET OF SHEETS

pw:\\projectstore.wsdot.wa.gov:WSDOT\Documents_HQ\Fish Passage\ORproj\000\XL6547-Gorst\Design_CAD_Sheets\E - 15.0201.90 SR 166 MP 4.52\170-Stream\XL6547_E_PS_PR_CP_001.dgn

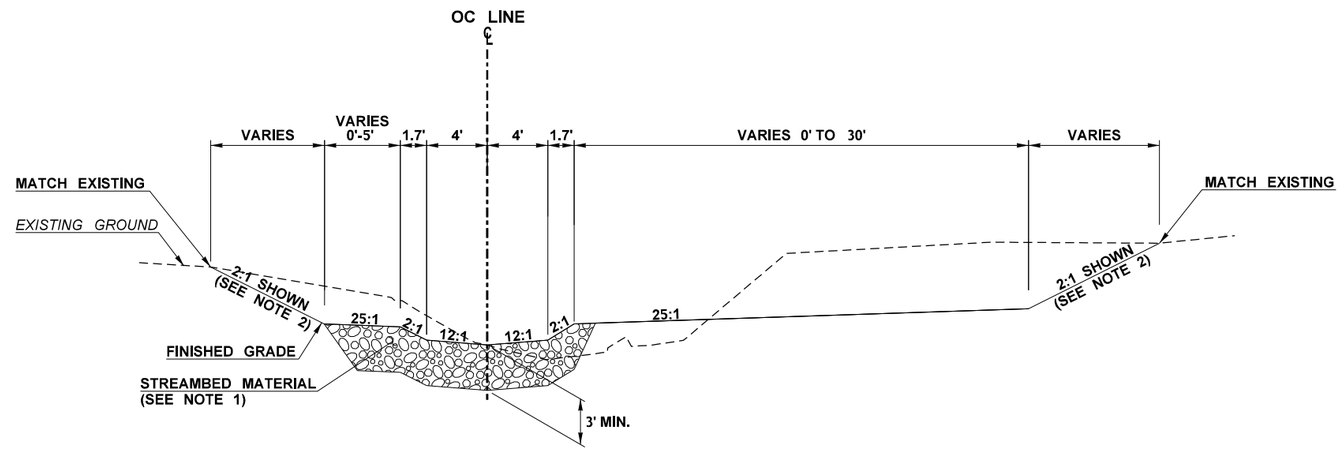

SECTION A

STATION
OC 5+70.00 TO 6+36.65
OC 3+23.45 TO 3+96.00

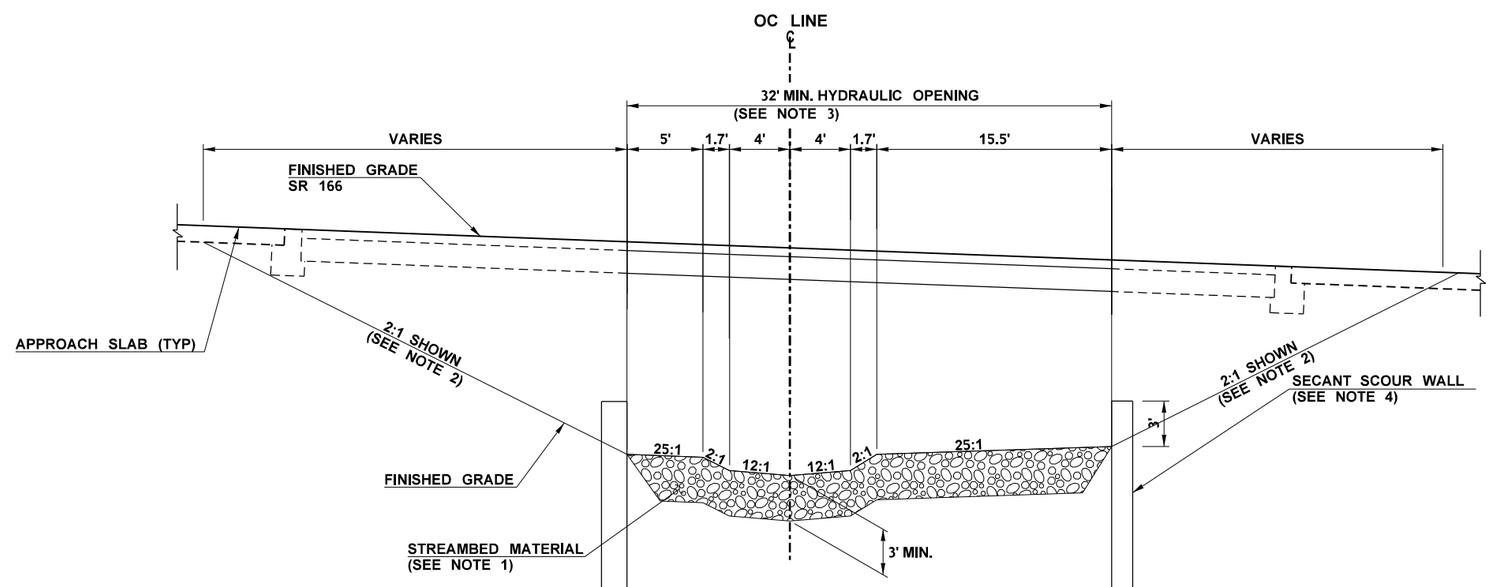

SECTION B

STATION
OC 3+96.00 TO 5+70.00

NOTES:

1. SEE SPECIAL PROVISIONS "WATER CROSSINGS" FOR STREAMBED MATERIAL. MATERIAL DEPTH IS APPROXIMATE. FINAL DEPTH TO BE DETERMINED FOLLOWING SCOUR ANALYSIS.
2. GRADING LIMITS ARE SHOWN FOR ILLUSTRATION PURPOSES ONLY TO DEPICT ESTIMATED AREA OF POTENTIAL IMPACT. FINAL GRADING LIMITS TO BE DETERMINED BY THE DESIGN-BUILDER.
3. FINAL STRUCTURE TYPE, SIZE AND LOCATION TO BE DETERMINED BY THE DESIGN-BUILDER.
4. SCOUR WALL LOCATION MUST BE OUTSIDE OF STRUCTURE FREE ZONE (SFZ), SEE PLAN SHEET FOR APPROXIMATE CONCEPTUAL EXTENTS.

CONCEPTUAL DESIGN - NOT FOR CONSTRUCTION

FILE NAME	$$$$$$$$DESIGNFILENAME$$$$$$				REGION NO. 10	STATE WASH	FED.AID PROJ.NO.
TIME	9:08:45 AM						
DATE	10/9/2023						
PLOTTED BY	RSALEH				JOB NUMBER XXXXX		
DESIGNED BY	S. BEVAN						
ENTERED BY	R. SALEH						
CHECKED BY	D. MINNER				CONTRACT NO.		LOCATION NO. XL6547
PROJ. ENGR.	M.STEINGREBE						
REGIONAL ADM.	S.ROARK	REVISION	DATE	BY			

P.E. STAMP BOX DATE

P.E. STAMP BOX DATE

Washington State Department of Transportation

HDR

SR 166 MP 4.52

SR3 / SR16 / SR166
GORST VICINITY -
REMOVE FISH BARRIERS

STREAM DETAILS

PLAN REF NO CD1-E

SHEET OF SHEETS

pw:\\projectstore.wsdot.wa.gov:WSDOT\Documents_HQ\Fish Passage\ORproj\000\XL6547-Gorst\Design_CAD_Sheets\E - 15.0201.90 SR 166 MP 4.52\170-Stream\XL6547_DE_CD_001.dgn

T.24N. R.1E W.M.

LEGEND

110

- CONSTRUCTION ALIGNMENT
- RIGHT OF WAY BOUNDARY
- TEMP. CONSTRUCTION EASEMENT
- PROPOSED WALL
- PROPOSED GUARDRAIL
- PROPOSED BARRIER
- PROPOSED LANE LINE
- PROPOSED EDGE LINE
- PROPOSED DOUBLE YELLOW CENTER LINE
- PROPOSED TWO-WAY LEFT TURN LINE
- HMA PAVING AREA
- CONCRETE SIDEWALK

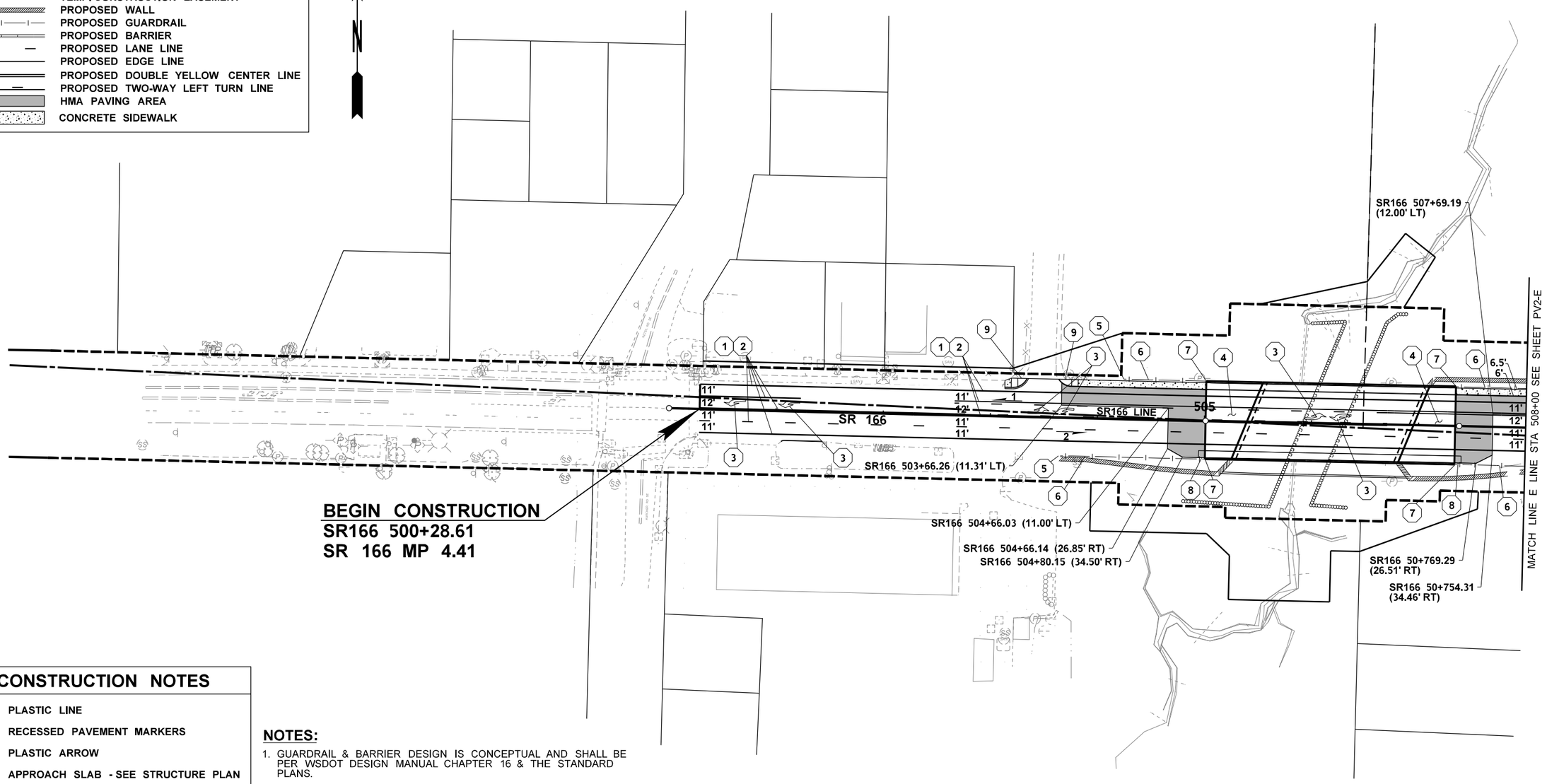

CONSTRUCTION NOTES

1. PLASTIC LINE
2. RECESSED PAVEMENT MARKERS
3. PLASTIC ARROW
4. APPROACH SLAB - SEE STRUCTURE PLAN
5. BEAM GUARDRAIL END SECTION TYPE 11
6. BEAM GUARDRAIL TYPE 31
7. GUARDRAIL TRANSITION SECTION TYPE 21
8. ASPHALT RAMP
9. SINGLE DIRECTION CURB RAMP

NOTES:

1. GUARDRAIL & BARRIER DESIGN IS CONCEPTUAL AND SHALL BE PER WSDOT DESIGN MANUAL CHAPTER 16 & THE STANDARD PLANS.
2. SEE SECTION TR2.19 FOR SIGNING REQUIREMENTS.
3. ALL SIGHT DISTANCE REQUIREMENTS OVER NEW TRAFFIC BARRIER SHALL BE MET PER WSDOT DESIGN MANUAL CHAPTER 12.
4. PAVEMENT MARKING DESIGN IS CONCEPTUAL. PAVEMENT MARKINGS SHALL FOLLOW THE WSDOT OLYMPIC REGION PAVEMENT MARKING POLICY IN APPENDIX TR2.20.
5. SEE CONCEPTUAL DRAINAGE PLAN FOR STORMWATER FACILITIES.

0 50 100
SCALE IN FEET

CONCEPTUAL
NOT FOR CONSTRUCTION

SR 166 MP 4.52

FILE NAME	c:\d0539603\XL6547_E_PS_PV1.dgn
TIME	12:59:14 PM
DATE	10/6/2023
PLOTTED BY	wilsopau
DESIGNED BY	M. HARRIS
ENTERED BY	P. WILSON
CHECKED BY	R. PARKER
PROJ. ENGR.	M. STEINGREBE
REGIONAL ADM.	S. ROARK

REVISION | DATE | BY

REGION NO. 10 | STATE WASH | FED.AID PROJ.NO.

JOB NUMBER

CONTRACT NO.

LOCATION NO. XL6547

P.E. STAMP BOX DATE

P.E. STAMP BOX DATE

Washington State Department of Transportation

Parametrix

SR3 / SR16 / SR166
GORST VICINITY -
REMOVE FISH BARRIERS

PAVING & PAVEMENT MARKING PLAN

PLAN REF NO PV1-E

SHEET OF SHEETS

pw:\\projectstore.wsdot.wa.gov:WSDOT\Documents_HQ\Fish Passage\ORproj\000\XL6547-Gorst\Design_CAD_Sheets\E - 15.0201.90 SR 166 MP 4.52\XL6547_E_PS_PV1.dgn

CONSTRUCTION NOTES

1. PLASTIC LINE
2. RECESSED PAVEMENT MARKERS
3. PLASTIC ARROW
5. BEAM GUARDRAIL END SECTION TYPE 11
6. BEAM GUARDRAIL TYPE 31

NOTES:

1. GUARDRAIL & BARRIER DESIGN IS CONCEPTUAL AND SHALL BE PER WSDOT DESIGN MANUAL CHAPTER 16 & THE STANDARD PLANS.
2. SEE SECTION TR2.19 FOR SIGNING REQUIREMENTS.
3. ALL SIGHT DISTANCE REQUIREMENTS OVER NEW TRAFFIC BARRIER SHALL BE MET PER WSDOT DESIGN MANUAL CHAPTER 12.
4. PAVEMENT MARKING DESIGN IS CONCEPTUAL. PAVEMENT MARKINGS SHALL FOLLOW THE WSDOT OLYMPIC REGION PAVEMENT MARKING POLICY IN APPENDIX TR2.20.
5. SEE CONCEPTUAL DRAINAGE PLAN FOR STORMWATER FACILITIES.

T.24N. R.1E W.M.

LEGEND

- 110 — CONSTRUCTION ALIGNMENT
- RIGHT OF WAY BOUNDARY
- TEMP. CONSTRUCTION EASEMENT
- PROPOSED WALL
- PROPOSED GUARDRAIL
- PROPOSED BARRIER
- PROPOSED LANE LINE
- PROPOSED EDGE LINE
- PROPOSED DOUBLE YELLOW CENTER LINE
- PROPOSED TWO-WAY LEFT TURN LINE
- HMA PAVING AREA
- CONCRETE SIDEWALK

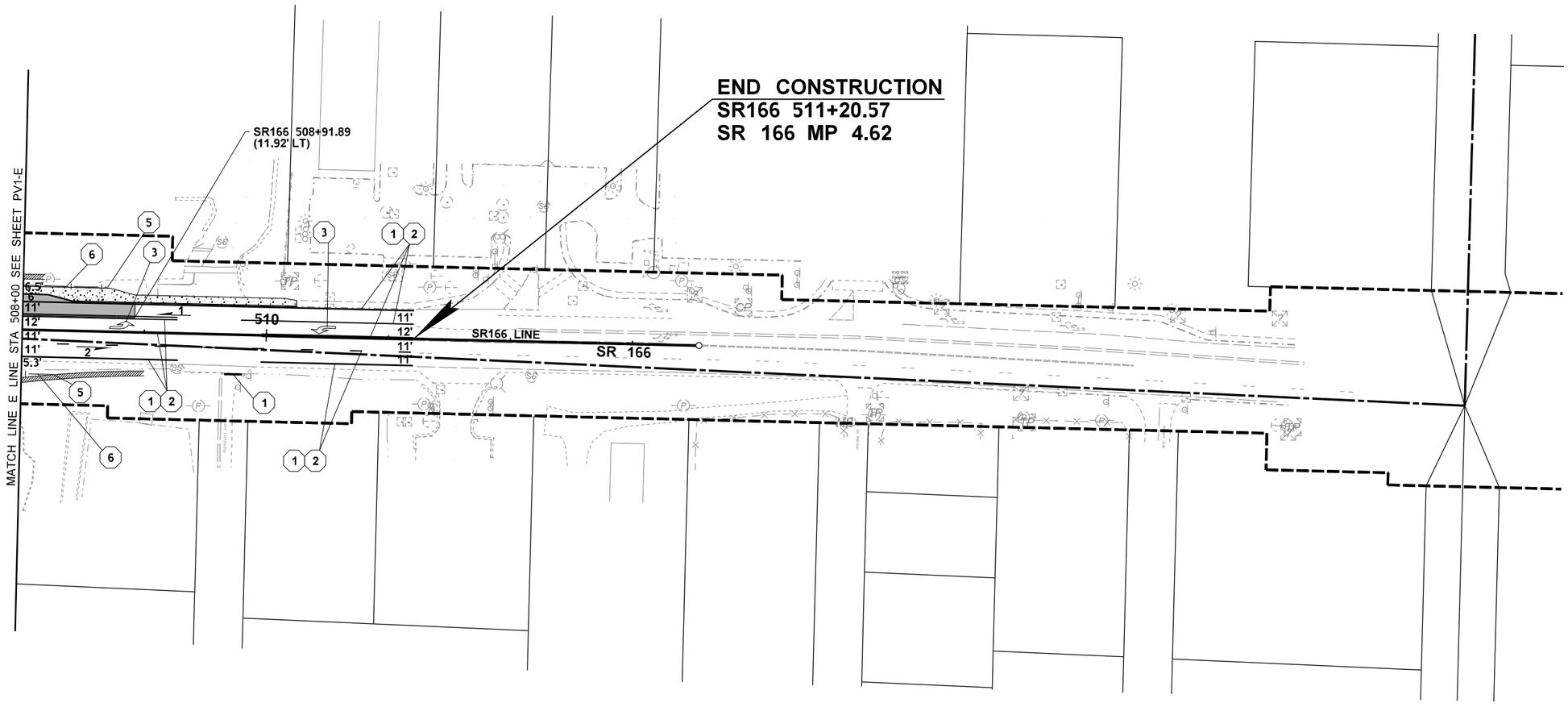

0 50 100
SCALE IN FEET

CONCEPTUAL
NOT FOR CONSTRUCTION

SR 166 MP 4.52

SR3 / SR16 / SR166
GORST VICINITY -
REMOVE FISH BARRIERS

PAVING & PAVEMENT MARKING PLAN

PLAN REF NO PV2-E

SHEET OF SHEETS

FILE NAME	c:\d0539603\XL6547_E_PS_PV2.dgn
TIME	1:00:29 PM
DATE	10/6/2023
PLOTTED BY	wilsopau
DESIGNED BY	M. HARRIS
ENTERED BY	P. WILSON
CHECKED BY	R. PARKER
PROJ. ENGR.	M. STEINGREBE
REGIONAL ADM.	S. ROARK

REVISION | DATE | BY

REGION NO. 10 | STATE WASH | FED.AID PROJ.NO.

JOB NUMBER

CONTRACT NO.

LOCATION NO. XL6547

P.E. STAMP BOX DATE

P.E. STAMP BOX DATE

Washington State Department of Transportation

Parametrix

pw:\\projectstore.wsdot.wa.gov:WSDOT\Documents_HQ\Fish Passage\ORproj\000\XL6547-Gorst\Design_CAD_Sheets\E - 15.0201.90 SR 166 MP 4.52\XL6547_E_PS_PV2.dgn

SEC. 25 & 36, T.24N., R.1E., W.M.
KITSAP COUNTY

SR 166

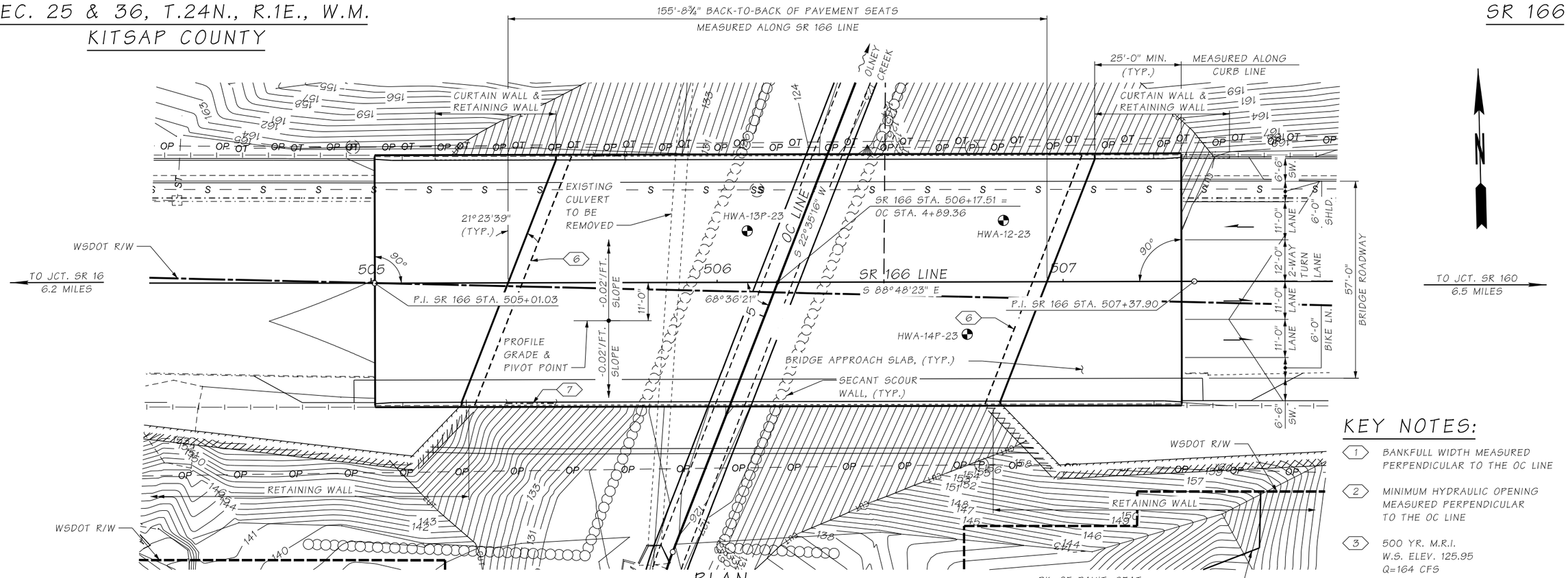

PLAN

BEARING OF ALL PIERS AND SECANT PILE WALLS ARE S 22°35'16" W

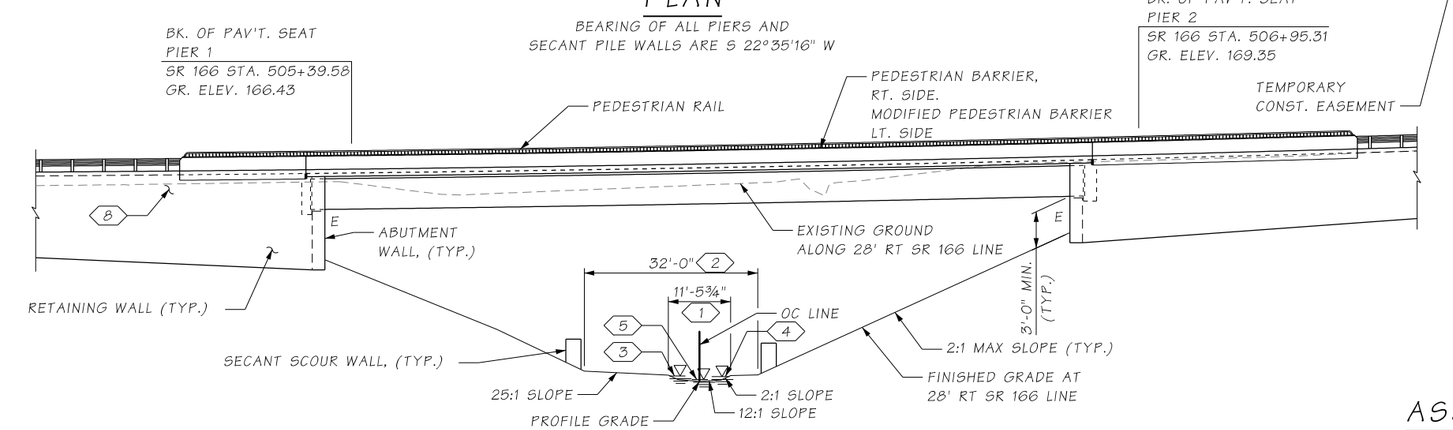

ELEVATION - SR 166 LINE

GRADE ELEVATIONS SHOWN ARE FINISH GRADES AT TOP OF ROADWAY ON SR 166 LINE AND ARE EQUAL TO PROFILE GRADE.
SEE STD. PLAN A-50.10 FOR EMBANKMENT DETAILS AT BRIDGE ENDS.

KEY NOTES:

1. BANKFULL WIDTH MEASURED PERPENDICULAR TO THE OC LINE
2. MINIMUM HYDRAULIC OPENING MEASURED PERPENDICULAR TO THE OC LINE
3. 500 YR. M.R.I. W.S. ELEV. 125.95 Q=164 CFS
4. 100 YR. M.R.I. W.S. ELEV. 125.81 Q=134 CFS
5. NORMAL HIGH WATER W.S. ELEV. 125.25
6. FRONT FACE OF ABUTMENT WALL
7. 2 ~ 2"ø CONDUIT PIPES IN PEDESTRIAN BARRIER FOR FULL LENGTH OF BARRIER (TYP.)
8. PROVIDE ADEQUATE DRAINAGE AND SLOPE PROTECTION MEASURES FOR RUNOFF AT THE DOWNSTREAM ENDS OF THE BRIDGE IN ACCORDANCE WITH THE BRIDGE DESIGN MANUAL AND HYDRAULIC MANUAL.

LEGEND

- EXISTING CULVERT
- EXISTING OVERHEAD TELEPHONE
- EXISTING OVERHEAD POWER
- LIMITS OF EARTH WORK
- EXISTING SANITARY SEWER
- EXISTING POWER POLE
- EXISTING CATCH BASIN
- EXISTING SIGN
- BOREHOLE
- E EXPANSION BEARING

DATUM

NAVD 1988

ASSUMED P.C. GIRDERS (WF74G)

LOADING: HL-93

SEISMIC OPERATIONAL IMPORTANCE CLASSIFICATION: ORDINARY

Bridge Design Engr.	$$$$$$$$DESIGNFILENAME$$$$$$				REGION NO.	STATE	FED. AID. PROJ. NO.	SHEET NO.	TOTAL SHEETS
Supervisor					10	WASH.			
Designed By Schwanz, D.					JOB NUMBER				
Checked By Clark, B.M.									
Detailed By deGuzman, A.									
Bridge Projects Engr.									
Prelim. Plan By									
Architect/Specialist	DATE	REVISION	BY	APP'D					

10/9/2023

HDR

CONCEPTUAL
Washington State Department of Transportation
NOT FOR CONSTRUCTION

SR 3/ SR 16/ SR 166
GORST VICINITY -
REMOVE FISH BARRIERS
SR 166 MP 4.52 - OLNEY CREEK

CONCEPTUAL BRIDGE PLAN

BRIDGE SHEET NO. BE01

SHEET OF SHEETS

SR ____ FILE NO. ____ SHEET ____

11' RIGHT OF SR 166 LINE SUPERELEVATION DIAGRAM

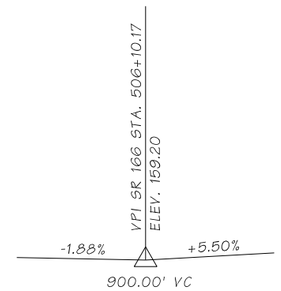

11' RIGHT OF SR 166 LINE PROFILE

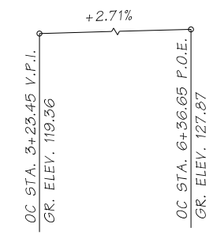

OC LINE PROFILE

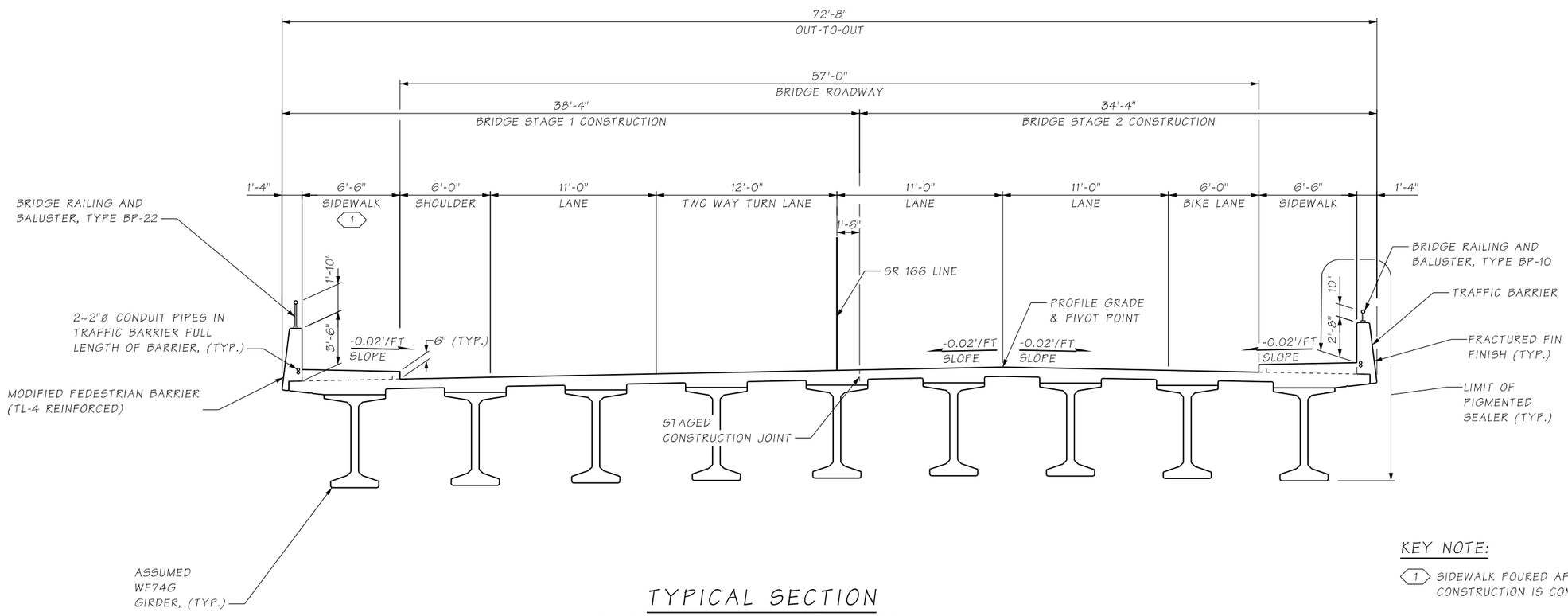

TYPICAL SECTION

DIMENSIONS ARE PERPENDICULAR TO THE SR 166 LINE

KEY NOTE:

1 SIDEWALK POURED AFTER BRIDGE STAGE 2 CONSTRUCTION IS COMPLETE.

Bridge Design Engr.		$$$$$$$$DESIGNFILENAME$$$$$$							
Supervisor					REGION NO.	STATE	FED. AID. PROJ. NO.	SHEET NO.	TOTAL SHEETS
Designed By	Schwanz, D.				10	WASH.			
Checked By	Clark, B.M.				JOB NUMBER				
Detailed By	deGuzman, A.								
Bridge Projects Engr.									
Prelim. Plan By									
Architect/Specialist		DATE	REVISION	BY	APP'D				

10/9/2023

HDR

CONCEPTUAL

Washington State Department of Transportation

NOT FOR CONSTRUCTION

SR 3/ SR 16/ SR 166
GORST VICINITY -
REMOVE FISH BARRIERS
SR 166 MP 4.52 - OLNEY CREEK

CONCEPTUAL BRIDGE DETAILS

BRIDGE SHEET NO. BE02

SHEET OF SHEETS

SR ___ FILE NO. ___ SHEET ___