INDEX

SHEET NO.	PLAN REFERENCE NO.	TITLE
		** VOLUME ONE **
1-3	IN01-IN03	INDEX
4	CT01	CERTIFICATION SHEET
5-9	SQ01-SQ05	SUMMARY OF QUANTITIES
10	VM01	VICINITY MAP
11-16	RS01-RS06	ROADWAY SECTION
17-20	RS07-RS10	TEMPORARY ROADWAY SECTION
21-37	SU01-SU17	STAGED CONSTRUCTION PLAN
38-43	AL01-AL06	ALIGNMENT AND RIGHT OF WAY PLAN
44-46	AL07-AL09	TEMPORARY ALIGNMENT PLAN
47-48	QTSP01-QTSP02	QUANITITY TABULATION - SITE PREPARATION
49-56	SP01-SP08	SITE PREPARATION PLAN
57	SD01	SITE PREPARATION DETAIL
58-62	EU01-EU05	EXISTING UTILITY PLAN
63-66	RP01-RP04	ROADWAY PROFILE
67-70	RP05-RP08	TEMPORARY ROADWAY PROFILE
71-75	EC01-EC05	TESC PLAN
76	ECD01	TESC DETAIL
77-82	NTDR01-NTDR06	STRUCTURE NOTES - DRAINAGE
83-87	DR01-DR05	DRAINAGE PLAN
88-92	DP01-DP05	DRAINAGE PROFILE
93-99	DD01-DD07	DRAINAGE DETAIL
100-105	DR06-DR11	TEMPORARY DRAINAGE PLAN

INDEX (CONTINUED)

SHEET NO.	PLAN REFERENCE NO.	TITLE
		** VOLUME ONE **
106-107	DP06-DP07	TEMPORARY DRAINAGE PROFILE
108-112	CG01-CG05	CONTOUR GRADING PLAN
113	CR01	STREAM PLAN
114	CR02	TEMPORARY STREAM DIVERSION CONCEPT PLAN
115	CP01	STREAM PROFILE
116	CD01	STREAM SECTIONS
117-118	LWM01-LWM02	LWM LAYOUT PLAN
119-121	CD02-CD04	LWM TABLE
122-124	CD05-CD07	LWM CROSS SECTIONS AND DETAILS
125-131	LS01-LS05	LANDSCAPE PLAN
132	LS06	LANDSCAPE NOTES
133-134	LS07-LS08	LANDSCAPE DETAILS
135	QTPV01	QUANTITY TABULATION - PAVING
136-140	PV01-PV05	PAVING PLAN
141	PD01	PAVING DETAIL
142-147	TP01-TP06	TEMPORARY PAVING PLAN
148-150	QTMK01-QTMK03	QUANTITY TABULATION - PAVEMENT MARKING
151-155	MK01-MK05	PAVEMENT MARKING PLAN

PLAN REFERENCE NO.

SHEET OF SHEETS

NOTE: ALL SHEET REFERENCES, FIRST NOS. OF STRUCTURE CODE DESIGNATIONS AND MATCH LINE SHEET REFERENCES, ETC., THROUGHOUT THE PLANS, REFER TO THE ENTRY IN THE PLAN REFERENCE NUMBER BOX.

FILE NAME	$$$$$$$$DESIGNFILENAME$$$$$$
TIME	$TIME$
DATE	$$$$DATE$$$
PLOTTED BY	$$USERNAME$$
DESIGNED BY	S.BABAEI
ENTERED BY	N.MAYFIELD
CHECKED BY	S.BABAEI
PROJ. ENGR.	B. ELLIOTT
REGIONAL ADM.	S. ROARK

REVISION | DATE | BY

REGION NO. 10 | STATE WASH | FED.AID PROJ.NO. ARPA001

JOB NUMBER 22C525

CONTRACT NO. 009902 | LOCATION NO. XL-6115

P.E. STAMP BOX DATE

P.E. STAMP BOX DATE

Washington State Department of Transportation

SCJ ALLIANCE CONSULTING SERVICES

SR 16 / SR 160 / KITSAP COUNTY
FISH PASSAGE BARRIERS
REMOVE FISH BARRIERS

INDEX

PLAN REF NO IN01

SHEET 325 OF 409 SHEETS

pw:\\HQOLYMAPPPW03P.WSDOT.LOC:WSDOT\Documents_HQ\Fish Passage\ORproj\160\2.29_Salmonberry\Design_CAD_Sheets\SR160MP2.29_Q_MC_IN_001.dgn

INDEX

SHEET NO.	PLAN REFERENCE NO.	TITLE
		** VOLUME ONE **
156-158	IL01-IL03	ILLUMINATION PLAN
159	IL04	ILLUMINATION DETAILS
160-171	IL05-IL16	TEMPORARY ILLUMINATION PLAN
172	IL17	TEMPORARY ILLUMINATION DETAILS
173	SS01	SIGN SPECIFICATIONS
174-175	SN01-SN02	SIGNING PLAN

INDEX (CONTINUED)

SHEET NO.	PLAN REFERENCE NO.	TITLE
		** VOLUME TWO **
176-178	IN01-IN03	INDEX
179	CT01	CERTIFICATION SHEET
180-229	BB01-BB50	BLACKJACK CREEK BRIDGE NO. 16/203W
230-277	BC01-BC48	BLACKJACK CREEK BRIDGE NO. 16/203E
278-279	W01-W02	CLOSURE WALL DETAILS
280-304	TC01-TC25	TRAFFIC CONTROL PLAN
305-320	TC26-TC41	SHORT TERM TRAFFIC CONTROL PLAN
321-324	DU01-DU04	DETOUR PLAN

PLAN REFERENCE NO.

SHEET OF SHEETS

NOTE: ALL SHEET REFERENCES, FIRST NOS. OF STRUCTURE CODE DESIGNATIONS AND MATCH LINE SHEET REFERENCES, ETC., THROUGHOUT THE PLANS, REFER TO THE ENTRY IN THE PLAN REFERENCE NUMBER BOX.

FILE NAME	$$$$$$$$DESIGNFILENAME$$$$$$
TIME	$TIME$
DATE	$$$$DATE$$$
PLOTTED BY	$$USERNAME$$
DESIGNED BY	S.BABAEI
ENTERED BY	N.MAYFIELD
CHECKED BY	S.BABAEI
PROJ. ENGR.	B. ELLIOTT
REGIONAL ADM.	S. ROARK

REVISION | DATE | BY

REGION NO. 10 | STATE WASH | FED.AID PROJ.NO. ARPA001

JOB NUMBER 22C525

CONTRACT NO. 009902 | LOCATION NO. XL-6115

P.E. STAMP BOX DATE

P.E. STAMP BOX DATE

Washington State Department of Transportation

SCJ ALLIANCE CONSULTING SERVICES

SR 16 / SR 160 / KITSAP COUNTY
FISH PASSAGE BARRIERS
REMOVE FISH BARRIERS

INDEX

PLAN REF NO IN02

SHEET 326 OF 409 SHEETS

pw:\\HQOLYMAPPPW03P.WSDOT.LOC:WSDOT\Documents_HQ\Fish Passage\ORproj\160\2.29_Salmonberry\Design_CAD_Sheets\SR160MP2.29_Q_MC_IN_002.dgn

INDEX

SHEET NO.	PLAN REFERENCE NO.	TITLE
		VOLUME THREE
325-327	IN01-IN03	INDEX
328	CT01	CERTIFICATION SHEET
329-330	RS01-R02	ROADWAY SECTIONS
331	RS03	TEMPORARY ROADWAY SECTIONS
332	SU01	STAGED CONSTRUCTION PLAN
333-335	AL01-AL03	ALIGNMENT AND RIGHT OF WAY PLAN
336-337	QTSP01-QTSP02	QUANITITY TABULATION - SITE PREPARATION
338-340	SP01-SP03	SITE PREPARATION PLAN
341	SD01	SITE PREPARATION DETAIL
342-343	EU01-EU02	EXISTING UTILITY PLAN
344	RP01	ROADWAY PROFILE
345-346	EC01-EC02	TESC PLAN
347	ECD01	TESC DETAIL
348	NTDR01	STRUCTURE NOTES - DRAINAGE
349-350	DR01-DR02	DRAINAGE PLAN
351-352	DP01-DP02	DRAINAGE PROFILE
353-354	DD01-DD02	DRAINAGE DETAIL
355	CG01	CONTOUR GRADING PLAN
356	CR01	STREAM PLAN
357	CP01	STREAM PROFILE
358	CD01	STREAM DETAILS
359	LWM01	LARGE WOODY MATERIAL DETAIL
360	LS01	LANDSCAPE PLAN

INDEX (CONTINUED)

SHEET NO.	PLAN REFERENCE NO.	TITLE
		VOLUME THREE
361	LS02	LANDSCAPE NOTES
362-364	LS03-LS05	LANDSCAPE DETAILS
365	QTPV01	QUANTITY TABULATION - PAVING
366	PV01	PAVING PLAN
367-368	QTMK01-QTMK02	QUANTITY TABULATION - PAVEMENT MARKING
369-371	MK01-MK03	PAVEMENT MARKING PLAN
372-373	TP01-TP02	TEMPORARY PAVING AND PAVEMENT MARKING PLAN
374-403	BA01-BA30	SALMONBERRY CREEK BR NO. 160/7
404-407	TC01-TC04	SHORT TERM TRAFFIC CONTROL PLAN
408-409	DU01-DU02	DETOUR PLAN

PLAN REFERENCE NO.

SHEET OF SHEETS

NOTE: ALL SHEET REFERENCES, FIRST NOS. OF STRUCTURE CODE DESIGNATIONS AND MATCH LINE SHEET REFERENCES, ETC., THROUGHOUT THE PLANS, REFER TO THE ENTRY IN THE PLAN REFERENCE NUMBER BOX.

FILE NAME	$$$$$$$$DESIGNFILENAME$$$$$$
TIME	$TIME$
DATE	$$$$DATE$$$
PLOTTED BY	$$USERNAME$$
DESIGNED BY	S.BABAEI
ENTERED BY	S.DUNN
CHECKED BY	S.BABAEI
PROJ. ENGR.	B. ELLIOTT
REGIONAL ADM.	S. ROARK

REVISION | DATE | BY

REGION NO.	STATE	FED.AID PROJ.NO.
10	WASH	ARPA001
JOB NUMBER 22C525		
CONTRACT NO. 009902		LOCATION NO. XL-6115

P.E. STAMP BOX DATE

P.E. STAMP BOX DATE

Washington State Department of Transportation

SCJ ALLIANCE CONSULTING SERVICES

SR 16 / SR 160 / KITSAP COUNTY
FISH PASSAGE BARRIERS
REMOVE FISH BARRIERS

INDEX

PLAN REF NO IN03

SHEET 327 OF 409 SHEETS

pw:\\HQOLYMAPPPW03P.WSDOT.LOC:WSDOT\Documents_HQ\Fish Passage\ORproj\160\2.29_Salmonberry\Design_CAD_Sheets\SR160MP2.29_Q_MC_IN_003.dgn

Scott Sawyer Apr 25, 2023 AS A LICENSED PROFESSIONAL IN DIRECT RESPONSIBLE CHARGE OF DEVELOPING THIS CONTRACT, I CERTIFY THAT ALL PLANS THAT CONTAIN MY STAMP HAVE BEEN DEVELOPED UNDER MY SUPERVISION.	Jeffrey B Glander Apr 25, 2023 AS A LICENSED PROFESSIONAL IN DIRECT RESPONSIBLE CHARGE OF DEVELOPING THIS CONTRACT, I CERTIFY THAT ALL PLANS THAT CONTAIN MY STAMP HAVE BEEN DEVELOPED UNDER MY SUPERVISION.	Elizabeth McGehee Clark Apr 25, 2023 AS A LICENSED PROFESSIONAL IN DIRECT RESPONSIBLE CHARGE OF DEVELOPING THIS CONTRACT, I CERTIFY THAT ALL PLANS THAT CONTAIN MY STAMP HAVE BEEN DEVELOPED UNDER MY SUPERVISION.	Kangval Jumpawong (Apr 25, 2023 08:44 PDT) Kangval Jumpawong Apr 25, 2023 AS A LICENSED PROFESSIONAL IN DIRECT RESPONSIBLE CHARGE OF DEVELOPING THIS CONTRACT, I CERTIFY THAT ALL PLANS THAT CONTAIN MY STAMP HAVE BEEN DEVELOPED UNDER MY SUPERVISION.
David J. Minner Apr 25, 2023 AS A LICENSED PROFESSIONAL IN DIRECT RESPONSIBLE CHARGE OF DEVELOPING THIS CONTRACT, I CERTIFY THAT ALL PLANS THAT CONTAIN MY STAMP HAVE BEEN DEVELOPED UNDER MY SUPERVISION.	AS A LICENSED PROFESSIONAL IN DIRECT RESPONSIBLE CHARGE OF DEVELOPING THIS CONTRACT, I CERTIFY THAT ALL PLANS THAT CONTAIN MY STAMP HAVE BEEN DEVELOPED UNDER MY SUPERVISION.	AS A LICENSED PROFESSIONAL IN DIRECT RESPONSIBLE CHARGE OF DEVELOPING THIS CONTRACT, I CERTIFY THAT ALL PLANS THAT CONTAIN MY STAMP HAVE BEEN DEVELOPED UNDER MY SUPERVISION.	AS A LICENSED PROFESSIONAL IN DIRECT RESPONSIBLE CHARGE OF DEVELOPING THIS CONTRACT, I CERTIFY THAT ALL PLANS THAT CONTAIN MY STAMP HAVE BEEN DEVELOPED UNDER MY SUPERVISION.
AS A LICENSED PROFESSIONAL IN DIRECT RESPONSIBLE CHARGE OF DEVELOPING THIS CONTRACT, I CERTIFY THAT ALL PLANS THAT CONTAIN MY STAMP HAVE BEEN DEVELOPED UNDER MY SUPERVISION.	AS A LICENSED PROFESSIONAL IN DIRECT RESPONSIBLE CHARGE OF DEVELOPING THIS CONTRACT, I CERTIFY THAT ALL PLANS THAT CONTAIN MY STAMP HAVE BEEN DEVELOPED UNDER MY SUPERVISION.	AS A LICENSED PROFESSIONAL IN DIRECT RESPONSIBLE CHARGE OF DEVELOPING THIS CONTRACT, I CERTIFY THAT ALL PLANS THAT CONTAIN MY STAMP HAVE BEEN DEVELOPED UNDER MY SUPERVISION.	AS A LICENSED PROFESSIONAL IN DIRECT RESPONSIBLE CHARGE OF DEVELOPING THIS CONTRACT, I CERTIFY THAT ALL PLANS THAT CONTAIN MY STAMP HAVE BEEN DEVELOPED UNDER MY SUPERVISION.

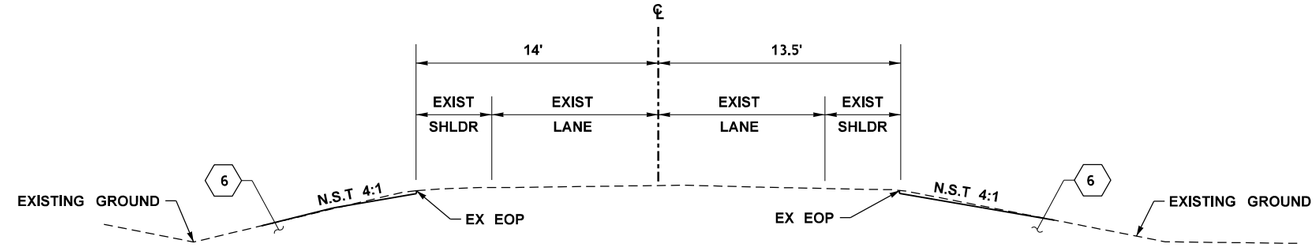

MFD LIMITS

Q LINE STA 212.76.5 TO STA 215+04.5

Q LINE STA 215+87.8 TO STA 216+70.4

ROADWAY SECTION Q-1

MFD LIMITS

Q LINE STA 215+90.9 TO STA 216+90.1

Q LINE STA 221+94.6 TO STA 222+58.0

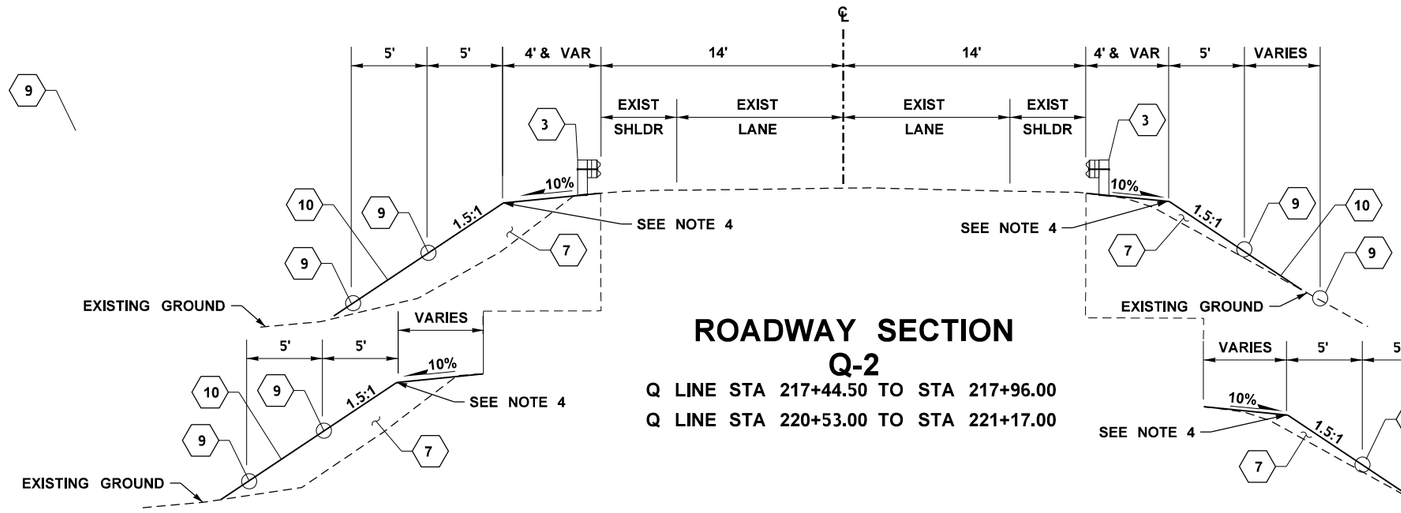

ROADWAY SECTION Q-2

Q LINE STA 217+44.50 TO STA 217+96.00

Q LINE STA 220+53.00 TO STA 221+17.00

Q LINE STA 217+44.50 TO STA 217+80.00

Q LINE STA 220+82.00 TO STA 221+17.00

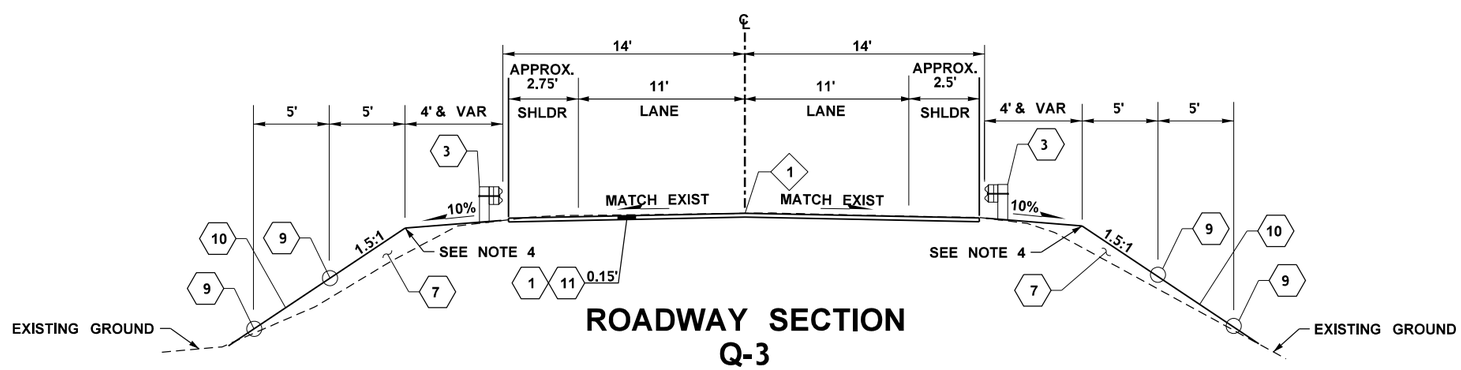

ROADWAY SECTION Q-3

Q LINE STA 217+96.00 TO STA 218+21.00

Q LINE STA 220+28.00 TO STA 220+53.00

LEGEND

1. HMA CL 1/2 IN. PG 58H-22
2. CRUSHED SURFACING BASE COURSE
3. BEAM GUARDRAIL TYPE 31 PER WSDOT STD. PLAN C-20.10-08. SEE PAVING PLANS FOR LOCATIONS AND DETAILS
4. TRAFFIC BARRIER WITH MOMENT SLAB PER SHEET BA26, BA27
5. BRIDGE RAILING TYPE BP-12 PER SHEETS BA28, BA29
6. MEDIA FILTER DRAIN (MFD), SEE DRAINAGE PLANS FOR LOCATIONS AND DETAILS
7. SELECT BORROW INCL. HAUL
8. SECANT PILE WALL, SEE BA SHEETS FOR DETAILS AND LIMITS.
9. TEMPORARY WATTLE PER WSDOT STD. PLAN I-30.30-02. SEE TESC PLANS FOR LOCATIONS AND DETAILS.
10. EROSION CONTROL BLANKET (SEE NOTE 6)
11. PLANING BITUMINOUS PAVEMENT

NOTES:

1. ALL SURFACING AND PAVING DEPTHS SHOWN ARE FINAL COMPACTED DEPTHS. SEE SECTION 5-04.3(7) FOR MAXIMUM LIFT PER MATERIAL DEPTH.
2. ALL DIMENSIONS ARE IN FEET UNLESS OTHERWISE SPECIFIED.
3. SEE PAVING PLANS FOR ADDITIONAL SHOULDER, BARRIER, GUARDRAIL, GUARDRAIL TERMINAL, WALL, AND BARRIER CONNECTION DETAILS AND LOCATIONS.
4. SEE CONTOUR GRADING PLAN FOR EMBANKMENT WIDENING AT GUARDRAIL TRANSITION SECTIONS AND TERMINAL SECTIONS.
5. ALL PAVEMENT JOINTS SHALL BE PLACED IN ACCORDANCE WITH STANDARD SPECIFICATION 5-04.3(12).
6. EROSION CONTROL BLANKET SHALL BE PLACED ON ALL SLOPES STEEPER THAN 2:1 WHERE PLANT ESTABLISHMENT IS NECESSARY. THIS INCLUDES ALL PORTIONS OF EXISTING SLOPES THAT ARE CLEARED AND GRUBBED BEFORE REPLANTING. EROSION CONTROL BLANKET SHALL BE PLACED FROM THE TOP OF SLOPE TO THE BOTTOM OF TOE.

CONSTRUCTION NOTES

1. PROFILE GRADE AND PIVOT POINT
2. SEE STREAM PLANS

pw:\\HQOLYMAPPPW03P.WSDOT.LOC:WSDOT\Documents_HQ\Fish Passage\ORproj\160\2.29_Salmonberry\Design_CAD_Sheets\SR160MP2.29_Q_DE_RS_001.dgn

FILE NAME	c:\users\danyal.ali\pw_wsdot\d0202980\SR160MP2.29_Q_DE_RS_001.dgn						
TIME	8:16:45 AM				REGION NO. 10	STATE WASH	FED.AID PROJ.NO. ARPA001
DATE	4/18/2023						
PLOTTED BY	danyal.ali						
DESIGNED BY	H. BROWN				JOB NUMBER 22C525		
ENTERED BY	S. DUNN						
CHECKED BY	H. BROWN				CONTRACT NO. 009902		LOCATION NO. XL-6115
PROJ. ENGR.	B. ELLIOTT						
REGIONAL ADM.	S. ROARK	REVISION	DATE	BY			

DATE
P.E. STAMP BOX

SCOTT A. SAWYER STATE OF WASHINGTON REGISTERED PROFESSIONAL ENGINEER

SEE SHEET CT01
DATE
P.E. STAMP BOX

Washington State Department of Transportation

SCJ ALLIANCE CONSULTING SERVICES

SR 160 MP 2.29 SALMONBERRY CREEK

SR 16 / SR 160 / KITSAP COUNTY
FISH PASSAGE BARRIERS
REMOVE FISH BARRIERS

ROADWAY SECTIONS

PLAN REF NO RS01

SHEET 329 OF 409 SHEETS

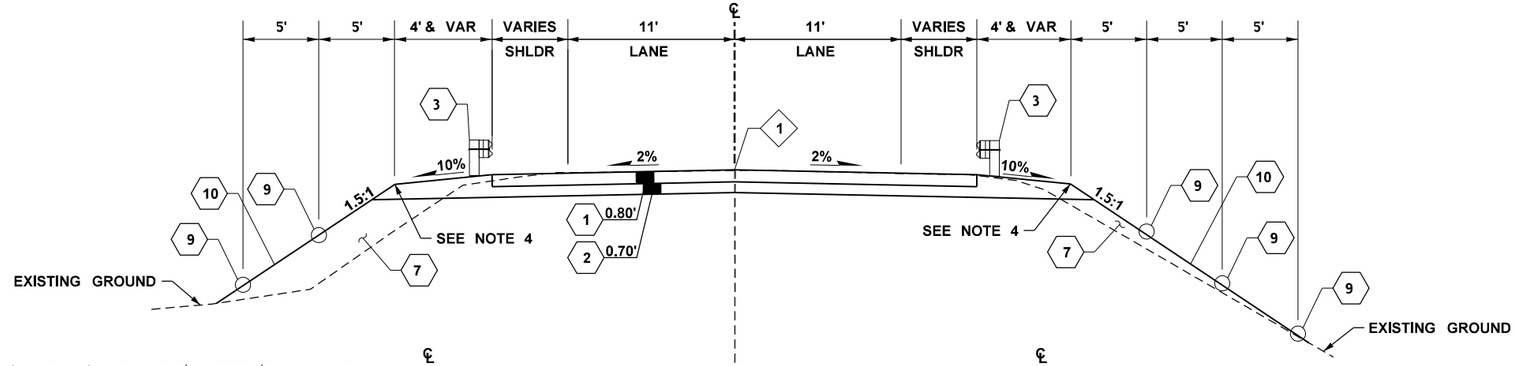

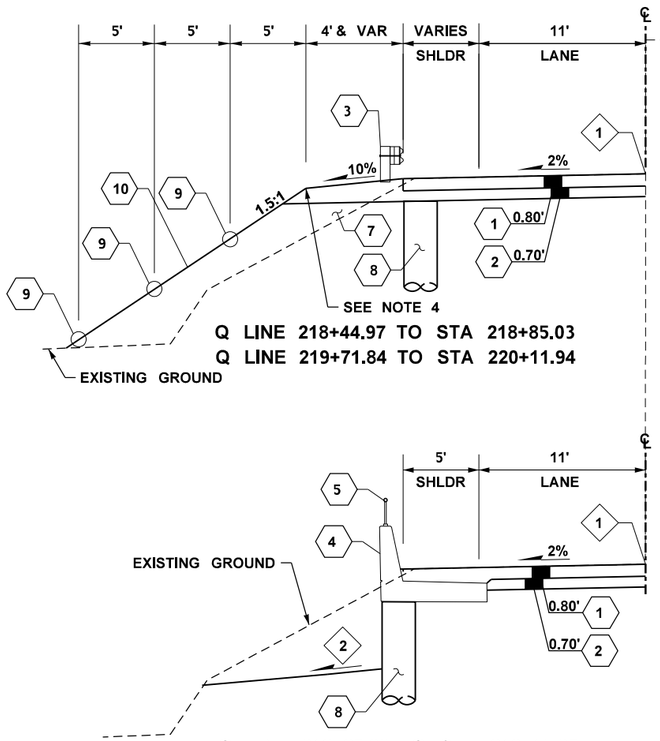

ROADWAY SECTION
Q-4

Q LINE STA 218+21.00 TO STA 219+16.95
Q LINE STA 219+42.01 TO STA 220+28.00

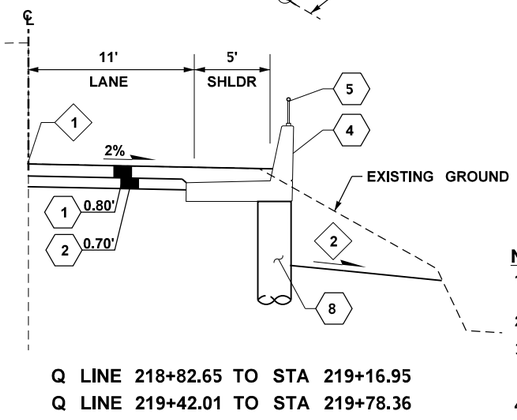

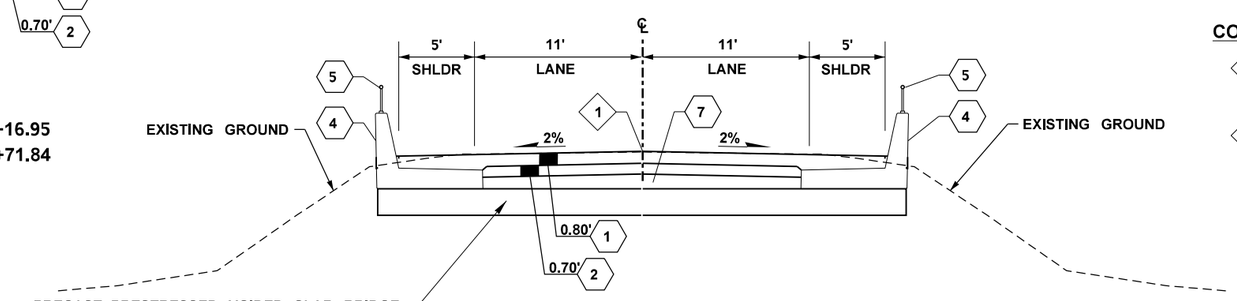

ROADWAY SECTION
Q-5

Q LINE STA 219+16.95 TO STA 219+42.01

LEGEND

1. HMA CL 1/2 IN. PG 58H-22
2. CRUSHED SURFACING BASE COURSE
3. BEAM GUARDRAIL TYPE 31 PER WSDOT STD. PLAN C-20.10-08. SEE PAVING PLANS FOR LOCATIONS AND DETAILS
4. TRAFFIC BARRIER WITH MOMENT SLAB PER SHEET BA26
5. BRIDGE RAILING TYPE BP-12 PER SHEETS BA27, BA28
6. MEDIA FILTER DRAIN (MFD), SEE DRAINAGE PLANS FOR LOCATIONS AND DETAILS
7. SELECT BORROW INCL. HAUL
8. SECANT PILE WALL, SEE BA SHEETS FOR DETAILS AND LIMITS.
9. TEMPORARY WATTLE PER WSDOT STD. PLAN I-30.30-02. SEE TESC PLANS FOR LOCATIONS AND DETAILS.
10. EROSION CONTROL BLANKET (SEE NOTE 6)

NOTES:

1. ALL SURFACING AND PAVING DEPTHS SHOWN ARE FINAL COMPACTED DEPTHS. SEE SECTION 5-04.3(7) FOR MAXIMUM LIFT PER MATERIAL DEPTH.
2. ALL DIMENSIONS ARE IN FEET UNLESS OTHERWISE SPECIFIED.
3. SEE PAVING PLANS FOR ADDITIONAL SHOULDER, BARRIER, GUARDRAIL, GUARDRAIL TERMINAL, WALL, AND BARRIER CONNECTION DETAILS AND LOCATIONS.
4. SEE CONTOUR GRADING PLAN FOR EMBANKMENT WIDENING AT GUARDRAIL TRANSITION SECTIONS AND TERMINAL SECTIONS.
5. ALL PAVEMENT JOINTS SHALL BE PLACED IN ACCORDANCE WITH STANDARD SPECIFICATION 5-04.3(12).
6. EROSION CONTROL BLANKET SHALL BE PLACED ON ALL SLOPES STEEPER THAN 2:1 WHERE PLANT ESTABLISHMENT IS NECESSARY. THIS INCLUDES ALL PORTIONS OF EXISTING SLOPES THAT ARE CLEARED AND GRUBBED BEFORE REPLANTING. EROSION CONTROL BLANKET SHALL BE PLACED FROM THE TOP OF SLOPE TO THE BOTTOM OF TOE.

CONSTRUCTION NOTES

1. PROFILE GRADE AND PIVOT POINT
2. SEE STREAM PLANS

SR 160 MP 2.29 SALMONBERRY CREEK

FILE NAME	c:\users\melissa.greenheck\pw_wsdot\d0202980\SR160MP2.29_Q_DE_RS_002.dgn
TIME	3:55:25 PM
DATE	4/7/2023
PLOTTED BY	melissa.greenheck
DESIGNED BY	H. BROWN
ENTERED BY	S. DUNN
CHECKED BY	H. BROWN
PROJ. ENGR.	B. ELLIOTT
REGIONAL ADM.	S. ROARK

REVISION | DATE | BY

REGION NO.	STATE	FED.AID PROJ.NO.
10	WASH	ARPA001
JOB NUMBER 22C525		
CONTRACT NO. 009902		LOCATION NO. XL-6115

P.E. STAMP BOX — DATE

SCOTT A. SAWYER, STATE OF WASHINGTON, 35872, REGISTERED PROFESSIONAL ENGINEER — SEE SHEET CT01 — DATE — P.E. STAMP BOX

Washington State Department of Transportation

SCJ ALLIANCE CONSULTING SERVICES

SR 16 / SR 160 / KITSAP COUNTY
FISH PASSAGE BARRIERS
REMOVE FISH BARRIERS

ROADWAY SECTIONS

PLAN REF NO RS02

SHEET 330 OF 409 SHEETS

pw:\\HQOLYMAPPPW03P.WSDOT.LOC:WSDOT\Documents_HQ\Fish Passage\ORproj\16012.29_Salmonberry\Design_CAD_Sheets\SR160MP2.29_Q_DE_RS_002.dgn

LEGEND

- (1) COMMERCIAL HMA (LIFTS AS SHOWN)
- (2) CRUSHED SURFACING BASE COURSE
- (7) SELECT BORROW INCL. HAUL
- (11) PLANING BITUMINOUS PAVEMENT

NOTES:

1. ALL SURFACING AND PAVING DEPTHS SHOWN ARE FINAL COMPACTED DEPTHS. SEE SECTION 5-04.3(7) FOR MAXIMUM LIFT PER MATERIAL DEPTH.
2. ALL DIMENSIONS ARE IN FEET UNLESS OTHERWISE SPECIFIED.

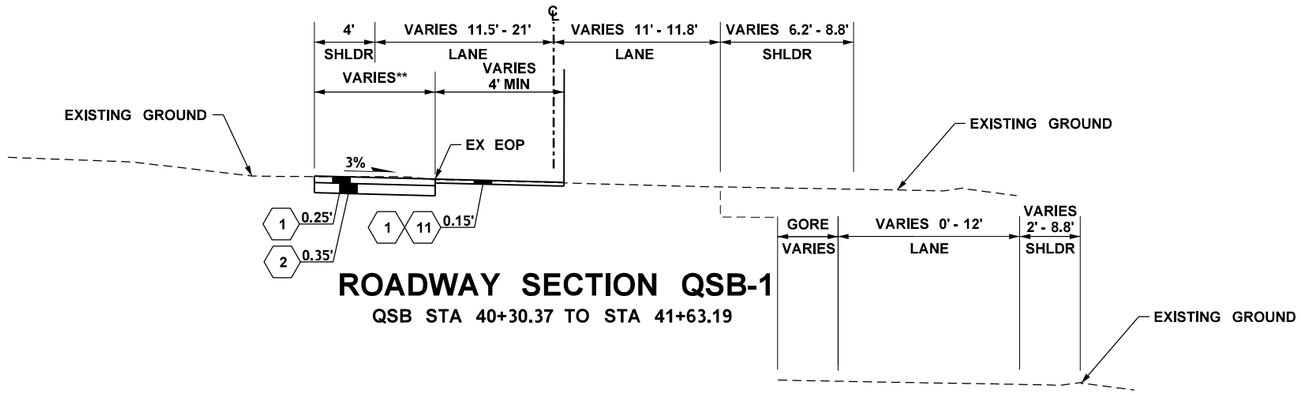

ROADWAY SECTION QSB-1

QSB STA 40+30.37 TO STA 41+63.19

QSB STA 40+47 TO STA 41+63.19

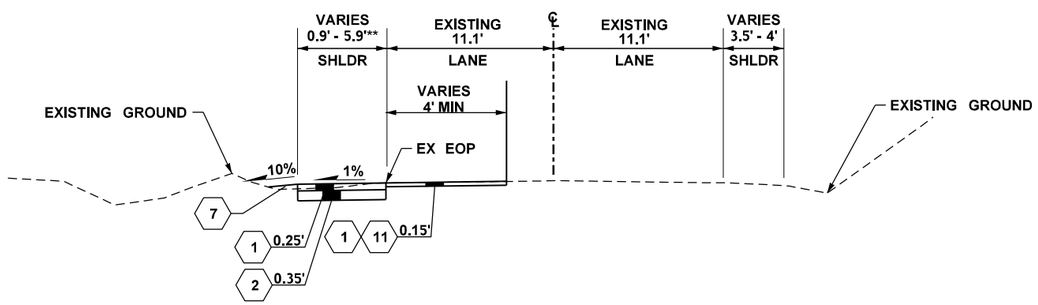

ROADWAY SECTION QLL-1

QLL STA 51+02.87 TO STA 51+44.80

SR 160 MP 2.29 SALMONBERRY CREEK

FILE NAME	c:\users\danyal.ali\pw_wsdot\d0202980\SR160MP2.29_Q_DE_RS_003.dgn				REGION NO. 10	STATE WASH	FED.AID PROJ.NO. ARPA001
TIME	8:16:47 AM						
DATE	4/18/2023						
PLOTTED BY	danyal.ali				JOB NUMBER 22C525		
DESIGNED BY	K. KOZAI						
ENTERED BY	K. KOZAI						
CHECKED BY	H. BROWN				CONTRACT NO. 009902		LOCATION NO. XL-6115
PROJ. ENGR.	B. ELLIOTT						
REGIONAL ADM.	S. ROARK	REVISION	DATE	BY			

P.E. STAMP BOX DATE

SCOTT A. SAWYER STATE OF WASHINGTON REGISTERED PROFESSIONAL ENGINEER

SEE SHEET CT01 DATE

P.E. STAMP BOX

Washington State Department of Transportation

SCJ ALLIANCE CONSULTING SERVICES

SR 16 / SR 160 / KITSAP COUNTY
FISH PASSAGE BARRIERS
REMOVE FISH BARRIERS

TEMPORARY ROADWAY SECTIONS

PLAN REF NO RS03

SHEET 331 OF 409 SHEETS

pw:\\HQOLYMAPPPW03P.WSDOT.LOC:WSDOT\Documents_HQ\Fish Passage\QRproj\160\2.29_Salmonberry\Design_CAD_Sheets\SR160MP2.29_Q_DE_RS_003.dgn

NOTES:

1. SEE TP SHEETS FOR TEMPORARY PAVEMENT MARKINGS AND TRAFFIC CONTROL DEVICES.

S. 6. T. 23N. R. 2E. W.M.

ELEMENTS OF WORK

STAGE 1:

1. INSTALL HIGH VISIBILITY SILT FENCE (HVS) AND EROSION CONTROL, SEE EC PLANS.
2. INSTALL HIGH VISIBILITY FENCE (HVF), SEE SP PLAN.
3. CLEAR AND GRUB WORK ZONE, SEE SP PLANS.
4. INSTALL CONTRACTOR DESIGNED TEMPORARY STREAM DIVERSION.
5. CONSTRUCT TEMPORARY CHANNELIZATION AND INTERSECTION IMPROVEMENTS.
6. INSTALL SIGNS FOR DETOUR, SEE DU AND TC PLANS.

STAGE 2:

1. IMPLEMENT DETOUR, SEE DU PLANS.
2. INITIATE CONTRACTOR DESIGNED TEMPORARY STREAM DIVERSION.
3. CONSTRUCT SECANT WALL AND BRIDGE STRUCTURES.
4. CONSTRUCT STREAM RESTORATION.
5. CONSTRUCT ROADSIDE SAFETY FEATURES(BARRIER AND BEAM GUARDRAIL).
6. CONSTRUCT PERMANENT PAVEMENT MARKINGS AND PERMANENT SIGNING, SEE MK01.
7. RECONFIGURE TEMPORARY STRIPING AT SR160/JACKSON AND SR160/PHILLIPS INTERSECTIONS; RESTORE TO ORIGINAL STRIPING. SEE MK SHEETS FOR STRIPING AND TC03 FOR TRAFFIC CONTROL.
8. RECONFIGURE SIGNAL TIMING AT SR160/JACKSON IF IT HAS BEEN ADJUSTED FOR THE DETOUR TRAFFIC FLOWS.
9. REMOVE DETOUR SIGNING AND REOPEN SEDGWICK TO THROUGH TRAFFIC.
10. REMOVE TEMPORARY INTERSECTION IMPROVEMENTS AT SALMONBERRY/LONG LAKE INTERSECTION.
11. COMPLETE ALL REMAINING WORK INCLUDING COMPLETING STREAM RESTORATION AND ROADSIDE PLANTING.

LEGEND

WORK ZONE AND STAGING AREA

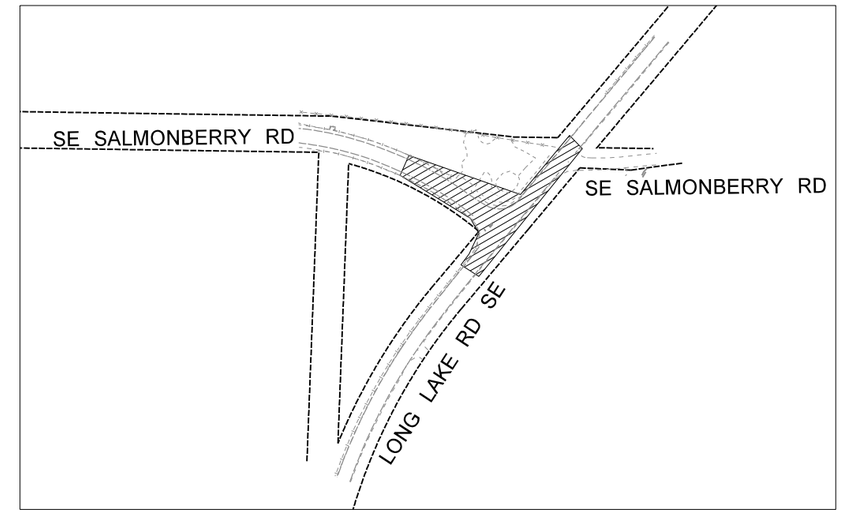

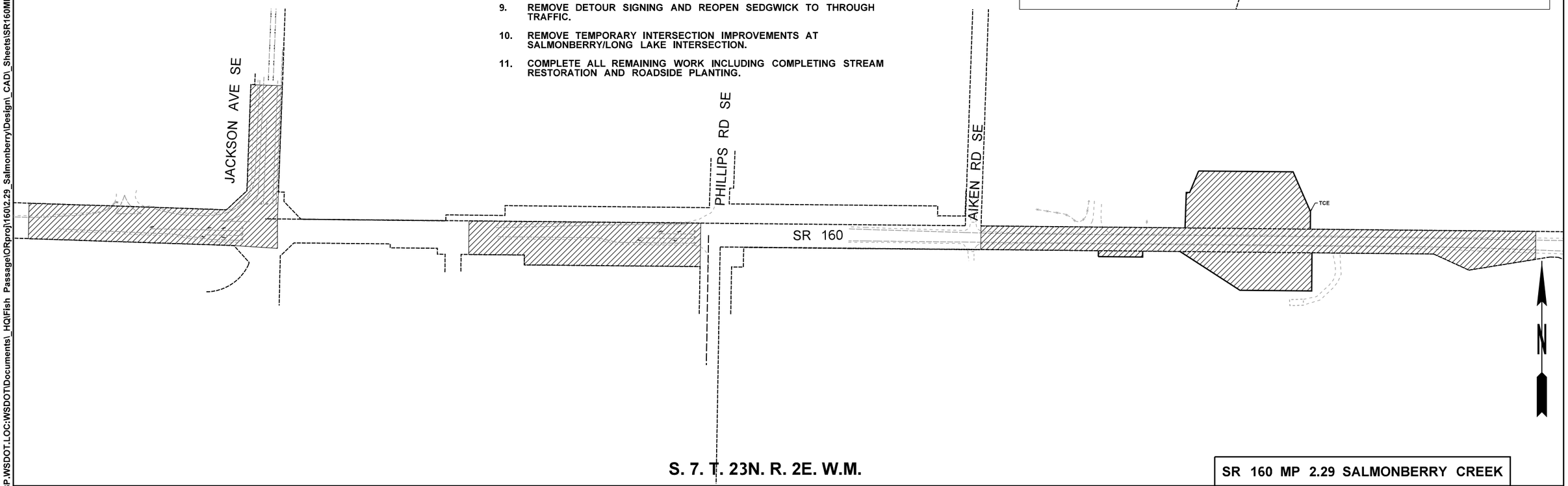

S. 7. T. 23N. R. 2E. W.M.

FILE NAME	c:\users\melissa.greenheck\pw_wsdot\d0202980\SR160MP2.29_Q_PS_SU_001.dgn				REGION NO. 10	STATE WASH	FED.AID PROJ.NO. ARPA001
TIME	3:55:29 PM						
DATE	4/7/2023				JOB NUMBER 22C525		
PLOTTED BY	melissa.greenheck						
DESIGNED BY	K. KOZAI						
ENTERED BY	K. KOZAI						
CHECKED BY	H. BROWN				CONTRACT NO. 009902		LOCATION NO. XL-6115
PROJ. ENGR.	B. ELLIOTT						
REGIONAL ADM.	S. ROARK	REVISION	DATE	BY			

P.E. STAMP BOX DATE

SCOTT A. SAWYER STATE OF WASHINGTON 36872 REGISTERED PROFESSIONAL ENGINEER

SEE SHEET CT01 DATE

P.E. STAMP BOX

Washington State Department of Transportation

SCJ ALLIANCE CONSULTING SERVICES

SR 160 MP 2.29 SALMONBERRY CREEK

SR 16 / SR 160 / KITSAP COUNTY
FISH PASSAGE BARRIERS
REMOVE FISH BARRIERS

STAGED CONSTRUCTION PLAN

PLAN REF NO SU01

SHEET 332 OF 409 SHEETS

pw:\\HQOLYMAPPPW03P.WSDOT.LOC:WSDOT\Documents_HQ\Fish Passage\ORproj\16012.29_Salmonberry\Design_CAD_Sheets\SR160MP2.29_Q_PS_SU_001.dgn

NOTES:

1. CONTRACTOR SHALL REPLACE THE GLO CORNER MONUMENT IN ACCORDANCE WITH SPECIAL PROVISION "LICENSED SURVEYORS." A MONUMENT CASE AND COVER (STANDARD PLAN A-10.30-00) WILL NOT FIT VERTICALLY AT THE CURRENT LOCATION DUE TO DEPTH OF BRIDGE GIRDERS. FOR THE PURPOSE OF RESETTING THE GLO CORNER WITH TWO REFERENCE TIES, TWO MONUMENT CASE AND COVERS HAVE BEEN INCLUDED (SEE PAVING PLANS). CONTRACTOR AND LICENSED SURVEYOR SHALL CONFIRM MONUMENT CASE AND COVER LOCATIONS.
2. THE BASIS OF THE BEARINGS AND DISTANCES ARE DETERMINED FROM WASHINGTON STATE PLANE COORDINATE SYSTEM NORTH ZONE (NAD 83/2011).
3. THE DISTANCES SHOWN ARE GROUND DIMENSIONS IN U.S. SURVEY FEET. TO OBTAIN THE GRID DIMENSIONS MULTIPLY THE GROUND DIMENSION BY THE COMBINED FACTOR OF 0.999992829396.
4. RIGHT OF WAY LINES SHOWN ON THIS PLAN SHEET ARE BASED UPON GIS DATA.

LEGEND

- EXISTING RIGHT-OF-WAY
- LIMITED ACCESS
- EXISTING RIGHT OF WAY ALIGNMENT
- TURNBACK LINE
- SECTION LINE
- ¼SECTION LINE
- 1/16SECTION LINE
- CONSTRUCTION ALIGNMENT
- TEMPORARY CONSTRUCTION EASEMENT
- PRIMARY CONTROL POINT
- MONUMENT

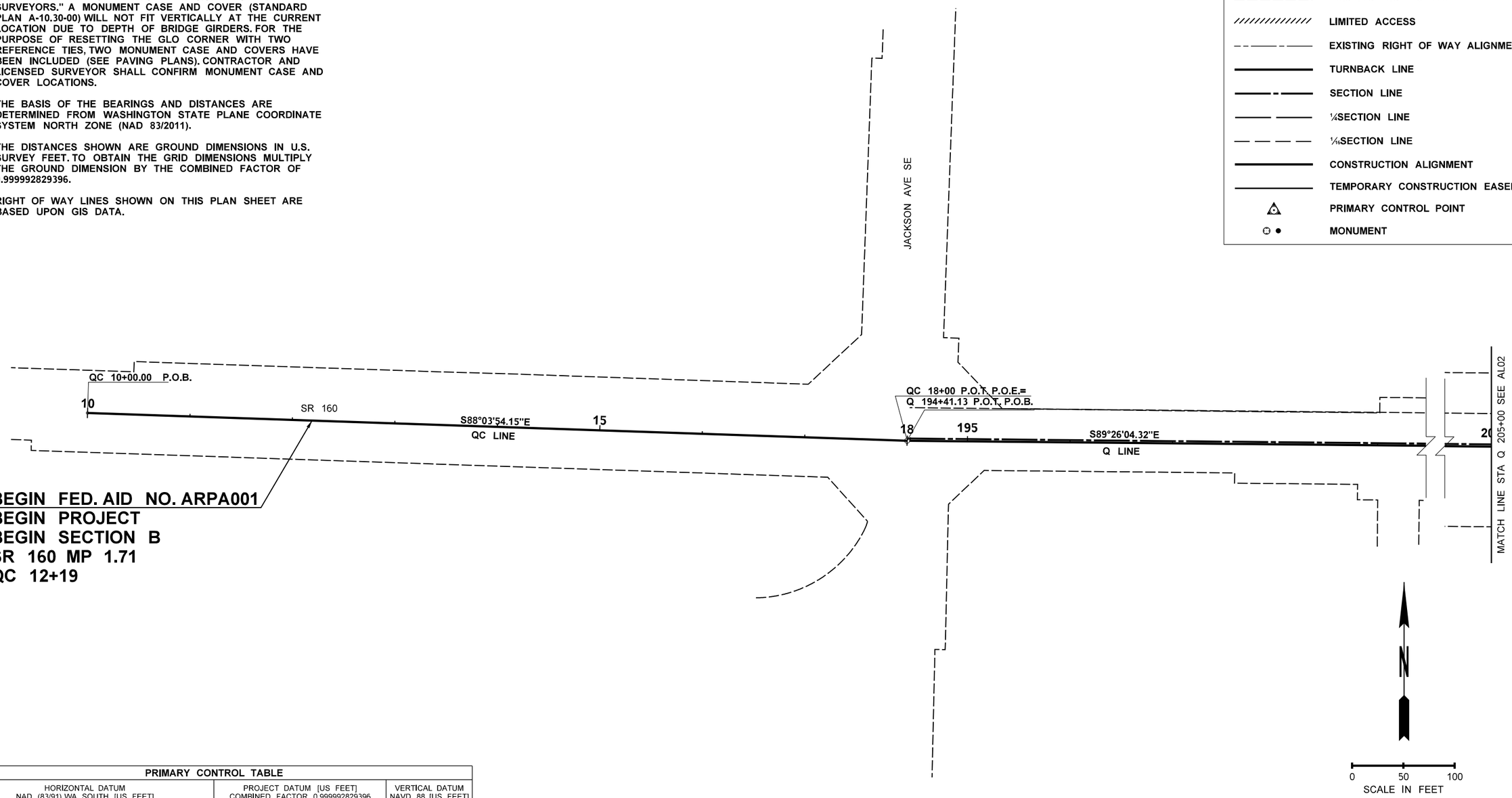

PRIMARY CONTROL TABLE

HORIZONTAL DATUM NAD (83/91) WA SOUTH [US FEET]			PROJECT DATUM [US FEET] COMBINED FACTOR 0.999992829396		VERTICAL DATUM NAVD 88 [US FEET]
DESIGNATION	NORTHING	EASTING	NORTHING	EASTING	ELEVATION
PHILLIPS RD	189218.083	1202367.395	517302.7730	1530459.3502	260.0290
HILL	189194.897	1203437.117	517279.5872	1531529.0802	178.9890
ALYVIA ANN	189117.949	1204842.006	517202.6380	1532933.9792	235.032
TO TRANSFORM FROM STATE PLANE COORDINATE SYSTEM TO PROJECT DATUM: SPC US FEET*(1/CF) + 100000 METERS					
TO TRANSFORM FROM PROJECT DATUM BACK TO STATE PLANE COORDINATE SYSTEM: [PD US FEET - 100000 METERS] *CF					

FEET = METERS MULTIPLIED BY (39.37/12)

FILE NAME	c:\users\melissa.greenheck\pw_wsdot\d0202980\SR160MP2.29_Q_PS_AL_001.dgn			
TIME	3:55:31 PM			
DATE	4/7/2023			
PLOTTED BY	melissa.greenheck			
DESIGNED BY	D. ROWLAND			
ENTERED BY	D. ROWLAND			
CHECKED BY	D. ROWLAND			
PROJ. ENGR.	B. ELLIOT			
REGIONAL ADM.	S. ROARK	REVISION	DATE	BY

REGION NO.	STATE	FED.AID PROJ.NO.
10	WASH	ARPA001
JOB NUMBER 22C525		
CONTRACT NO. 009902		LOCATION NO. XL-6115

P.E. STAMP BOX — DATE

SCOTT A. SAWYER, STATE OF WASHINGTON, REGISTERED PROFESSIONAL ENGINEER

SEE SHEET CT01 — DATE

P.E. STAMP BOX

Washington State Department of Transportation

SCJ ALLIANCE CONSULTING SERVICES

SR 160 MP 2.29 SALMONBERRY CREEK

SR 16 / SR 160 / KITSAP COUNTY
FISH PASSAGE BARRIERS
REMOVE FISH BARRIERS

ALIGNMENT AND RIGHT OF WAY PLAN

PLAN REF NO AL01

SHEET 333 OF 409 SHEETS

pw:\\HQOLYMAPPPW03P.WSDOT.LOC:WSDOT\Documents_HQ\Fish Passage\ORproj\160\2.29_Salmonberry\Design_CAD_Sheets\SR160MP2.29_Q_PS_AL_001.dgn

NOTES:

1. CONTRACTOR SHALL REPLACE THE GLO CORNER MONUMENT IN ACCORDANCE WITH SPECIAL PROVISION "LICENSED SURVEYORS." A MONUMENT CASE AND COVER (STANDARD PLAN A-10.30-00) WILL NOT FIT VERTICALLY AT THE CURRENT LOCATION DUE TO DEPTH OF BRIDGE GIRDERS. FOR THE PURPOSE OF RESETTING THE GLO CORNER WITH TWO REFERENCE TIES, TWO MONUMENT CASE AND COVERS HAVE BEEN INCLUDED (SEE PAVING PLANS). CONTRACTOR AND LICENSED SURVEYOR SHALL CONFIRM MONUMENT CASE AND COVER LOCATIONS.
2. THE BASIS OF THE BEARINGS AND DISTANCES ARE DETERMINED FROM WASHINGTON STATE PLANE COORDINATE SYSTEM NORTH ZONE (NAD 83/2011).
3. THE DISTANCES SHOWN ARE GROUND DIMENSIONS IN U.S. SURVEY FEET. TO OBTAIN THE GRID DIMENSIONS MULTIPLY THE GROUND DIMENSION BY THE COMBINED FACTOR OF 0.999992829396.
4. NOT USED
5. DO NOT DISTURB.

S. 6. T. 23N. R. 2E. W.M.

LEGEND

- EXISTING RIGHT-OF-WAY
- LIMITED ACCESS
- EXISTING RIGHT OF WAY ALIGNMENT
- TURNBACK LINE
- SECTION LINE
- ¼SECTION LINE
- 1/16SECTION LINE
- CONSTRUCTION ALIGNMENT
- TEMPORARY CONSTRUCTION EASEMENT
- PRIMARY CONTROL POINT
- MONUMENT

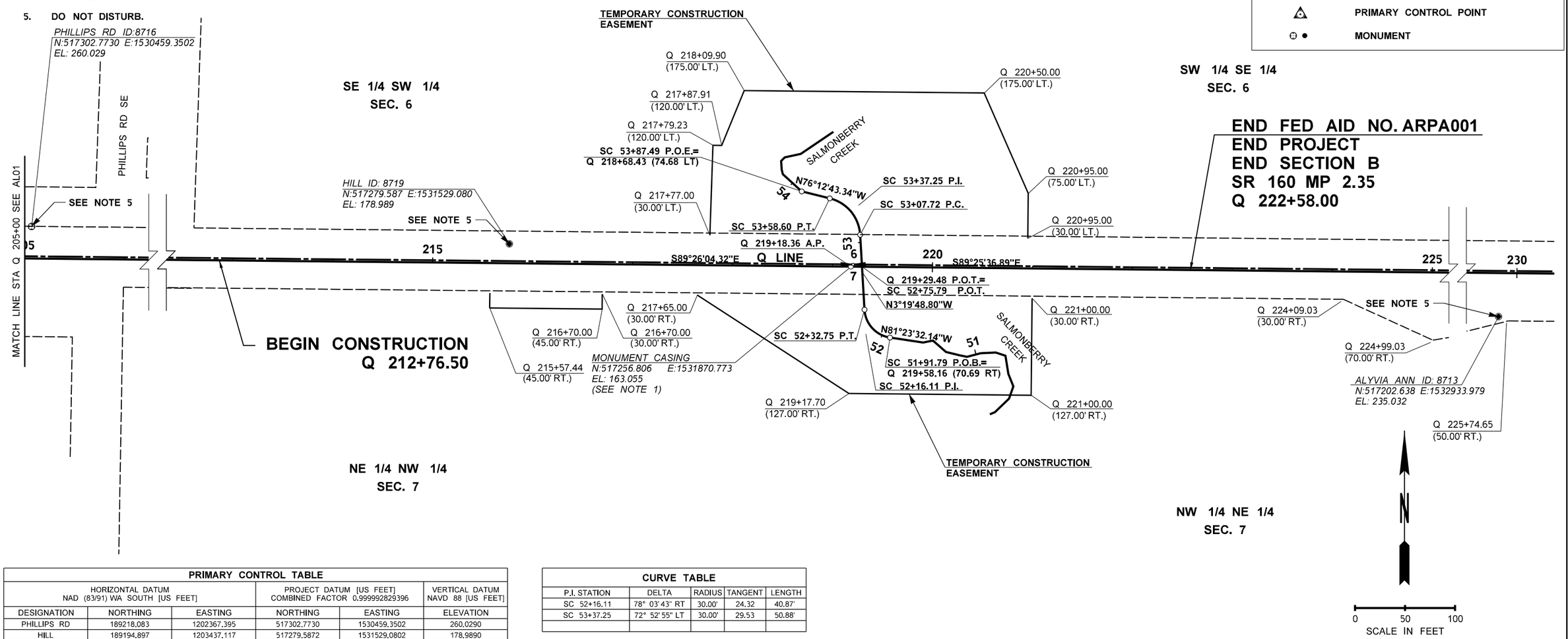

PRIMARY CONTROL TABLE

HORIZONTAL DATUM NAD (83/91) WA SOUTH [US FEET]			PROJECT DATUM [US FEET] COMBINED FACTOR 0.999992829396		VERTICAL DATUM NAVD 88 [US FEET]
DESIGNATION	NORTHING	EASTING	NORTHING	EASTING	ELEVATION
PHILLIPS RD	189218.083	1202367.395	517302.7730	1530459.3502	260.0290
HILL	189194.897	1203437.117	517279.5872	1531529.0802	178.9890
ALYVIA ANN	189117.949	1204842.006	517202.6380	1532933.9792	235.032

TO TRANSFORM FROM STATE PLANE COORDINATE SYSTEM TO PROJECT DATUM: SPC US FEET*(1/CF) + 100000 METERS
TO TRANSFORM FROM PROJECT DATUM BACK TO STATE PLANE COORDINATE SYSTEM: [PD US FEET - 100000 METERS] *CF
FEET = METERS MULTIPLIED BY (39.37/12)

CURVE TABLE

P.I. STATION	DELTA	RADIUS	TANGENT	LENGTH
SC 52+16.11	78° 03' 43" RT	30.00'	24.32	40.87'
SC 53+37.25	72° 52' 55" LT	30.00'	29.53	50.88'

S. 7. T. 23N. R. 2E. W.M.

SR 160 MP 2.29 SALMONBERRY CREEK

FILE NAME	c:\users\mellssa.greenheck\pw_wsdot\d0202980\SR160MP2.29_Q_PS_AL_002.dgn
TIME	3:55:33 PM
DATE	4/7/2023
PLOTTED BY	melissa.greenheck
DESIGNED BY	S.BABAEI
ENTERED BY	N.MAYFIELD
CHECKED BY	S.BABAEI
PROJ. ENGR.	B. ELLIOTT
REGIONAL ADM.	S. ROARK

REVISION | DATE | BY

REGION NO.	STATE	FED.AID PROJ.NO.
10	WASH	ARPA001
JOB NUMBER 22C525		
CONTRACT NO. 009902		LOCATION NO. XL-6115

P.E. STAMP BOX — DATE

SCOTT A. SANTEE, STATE OF WASHINGTON, 35874, REGISTERED PROFESSIONAL ENGINEER — SEE SHEET CT01 — DATE — P.E. STAMP BOX

Washington State Department of Transportation

SCJ ALLIANCE CONSULTING SERVICES

SR 16 / SR 160 / KITSAP COUNTY
FISH PASSAGE BARRIERS
REMOVE FISH BARRIERS

ALIGNMENT AND RIGHT OF WAY PLAN

PLAN REF NO AL02

SHEET 334 OF 409 SHEETS

pw:\\HQOLYMAPPPW03P.WSDOT.LOC:WSDOT\Documents_HQ\Fish Passage\ORproj\160\2.29_Salmonberry\Design_CAD_Sheets\SR160MP2.29_Q_PS_AL_002.dgn

NOTES:

1. CONTRACTOR SHALL REPLACE THE GLO CORNER MONUMENT IN ACCORDANCE WITH SPECIAL PROVISION "LICENSED SURVEYORS." A MONUMENT CASE AND COVER (STANDARD PLAN A-10.30-00) WILL NOT FIT VERTICALLY AT THE CURRENT LOCATION DUE TO DEPTH OF BRIDGE GIRDERS. FOR THE PURPOSE OF RESETTING THE GLO CORNER WITH TWO REFERENCE TIES, TWO MONUMENT CASE AND COVERS HAVE BEEN INCLUDED (SEE PAVING PLANS). CONTRACTOR AND LICENSED SURVEYOR SHALL CONFIRM MONUMENT CASE AND COVER LOCATIONS.

2. THE BASIS OF THE BEARINGS AND DISTANCES ARE DETERMINED FROM WASHINGTON STATE PLANE COORDINATE SYSTEM NORTH ZONE (NAD 83/2011).

3. THE DISTANCES SHOWN ARE GROUND DIMENSIONS IN U.S. SURVEY FEET. TO OBTAIN THE GRID DIMENSIONS MULTIPLY THE GROUND DIMENSION BY THE COMBINED FACTOR OF 0.999992829396.

4. RIGHT OF WAY LINES SHOWN ON THIS PLAN SHEET ARE BASED UPON GIS DATA.

S. 6. T. 23N. R. 2E. W.M.

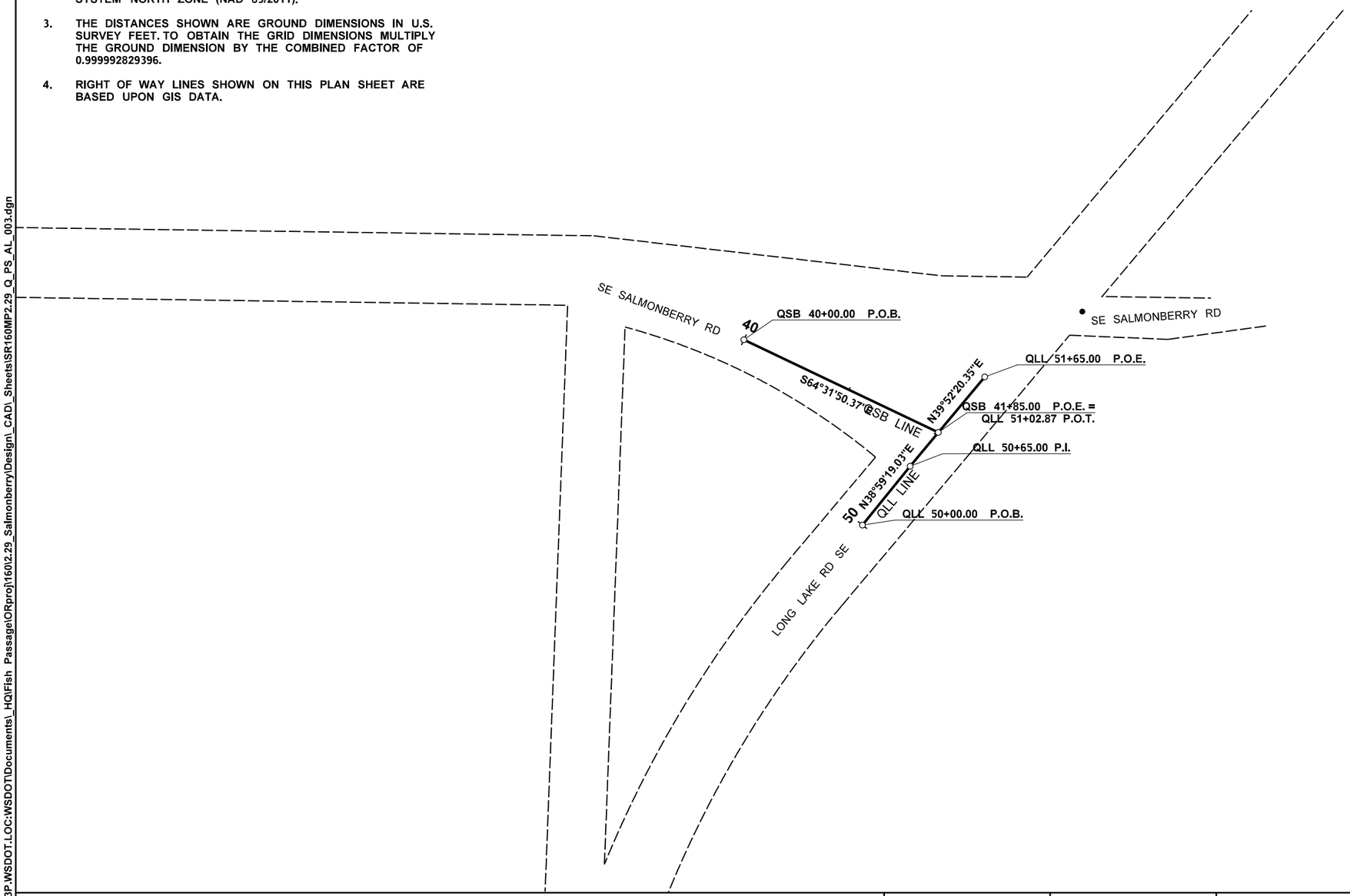

LEGEND

	EXISTING RIGHT-OF-WAY
	LIMITED ACCESS
	EXISTING RIGHT OF WAY ALIGNMENT
	TURNBACK LINE
	SECTION LINE
	¼SECTION LINE
	1/16SECTION LINE
	CONSTRUCTION ALIGNMENT
	TEMPORARY CONSTRUCTION EASEMENT
	PRIMARY CONTROL POINT
	MONUMENT

N

0 50 100
SCALE IN FEET

SR 160 MP 2.29 SALMONBERRY CREEK

FILE NAME	c:\users\melissa.greenheck\pw_wsdot\d0202980\SR160MP2.29_Q_PS_AL_003.dgn
TIME	3:55:35 PM
DATE	4/7/2023
PLOTTED BY	melissa.greenheck
DESIGNED BY	K. KOZAI
ENTERED BY	K. KOZAI
CHECKED BY	H. BROWN
PROJ. ENGR.	B. ELLIOTT
REGIONAL ADM.	S. ROARK

REVISION | DATE | BY

REGION NO.	STATE	FED.AID PROJ.NO.
10	WASH	ARPA001
JOB NUMBER 22C525		
CONTRACT NO. 009902		LOCATION NO. XL-6115

P.E. STAMP BOX — DATE

SCOTT A. SAWYER, STATE OF WASHINGTON, 35972, REGISTERED PROFESSIONAL ENGINEER

SEE SHEET CT01 — DATE

P.E. STAMP BOX

Washington State Department of Transportation

SCJ ALLIANCE CONSULTING SERVICES

SR 16 / SR 160 / KITSAP COUNTY
FISH PASSAGE BARRIERS
REMOVE FISH BARRIERS

ALIGNMENT AND RIGHT OF WAY PLAN

PLAN REF NO AL03

SHEET 335 OF 409 SHEETS

pw:\\HQOLYMAPPPW03P.WSDOT.LOC:WSDOT\Documents_HQ\Fish Passage\ORproj\160\2.29_Salmonberry\Design_CAD_Sheets\SR160MP2.29_Q_PS_AL_003.dgn

QUANTITY TABULATION - SITE PREPARATION

NOTE:
THE FIRST NUMBER OF THE "CODE" BELOW REFERS TO THE SHEET NO. OR THE SHEET REFERENCE NO. SHOWING THE CONSTRUCTION FEATURE

THE SECOND NUMBER REFERS TO THE CONSTRUCTION FEATURE FOUND ON THAT SHEET.

CODE	LOCATION ↓ / UNIT OF MEASURE →	CLEARING AND GRUBBING	REMOVING PAINT LINE	REMOVING PLASTIC LINE	REMOVING PLASTIC TRAFFIC MARKING		HIGH VISIBILITY FENCE										GENERAL NOTES
		ACRE	L.F.	EACH	EACH		L.F.										
SP01-1	Q 212+67.93 (16.5' LT) TO 215+32.10 (30' LT)	0.1															
SP01-2	Q 215+00.00 (13.6' RT) TO 220+07.67 (124.2' RT)	0.4															
SP01-3	Q 215+69.16 (30' LT) TO 219+16.01 (13.9' LT)	0.2															
SP01-4	Q 212+70.96 (16.2' LT) TO 215+29.64 (27.3' LT)						270										1
SP01-5	Q 218+92.11 (121' LT) TO 222+27.08 (13.5' LT)	0.2															
SP01-6	Q 219+42.93 (13.5' RT) TO 221+52.39 (13.5' RT)	0.1															
SP01-7	Q 221+75.00 (13.5' RT) TO 222+81.00 (13.8' RT)	0.1															
SP01-8	Q 220+07.09 (69.6' RT) TO 221+41.47 (13.5' RT)						170										1
SP01-9	Q 221+74.80 (53.1' RT) TO 222+85.25 (13.8' RT)						150										1
SP01-10	Q 218+92.52 (56.5' RT) TO 219+11.56 (73.5' RT)						60										1
SP01-11	Q 215+01.66 (26.8' RT) TO 220+71.97 (121.2' RT)						640										1
SP01-12	Q 219+30.70 (107.4' RT) TO 219+30.70 (120.8' RT)						40										1
SP01-13	Q 219+68.63 (102' RT) TO 220+06.38 (88.1' RT)						90										1
SP01-14	Q 218+90.03 (119.1' LT) TO 222+18.01 (24.1' LT)						370										1
SP01-15	Q 215+71.22 (27.2' LT) TO 218+33.53 (116.4' LT)						360										1
SP02-1	QSB 40+02.21 (11.1' LT) TO QLL 51+45.01 (11' LT)		210														
SP02-2	QSB 40+02.21 (0') TO 41+57.37 (19.5' RT)		160														
SP02-3	QSB 40+02.01 (11.9' RT) TO 41+24.55 (26.2' RT)		120														
SP02-4	QLL 50+20.00 (0') TO 50+63.03 (0')		50														
SP02-5	QLL 50+92.18 (0') TO 51+86.02 (0')		100														
SP02-6	QSB 41+51.62 (40.2' RT) TO 41+59.52 (21.0' RT)			20													
	SHEET TOTAL	1.1	640	20	0		2150										
	PROJECT TOTAL	1.1	3740	100	9		2150										

GENERAL NOTES

1. SEE WSDOT STD. PLAN I-10.10-01 FOR HIGH VISIBILITY FENCE.

SR 160 MP 2.29 SALMONBERRY CREEK

						REGION NO.	STATE	FED. AID PROJ. NO.
						10	WASH	ARPA001
Designed	M. GREENHECK							
Entered	A. ARMSTRONG							
Checked	M. GREENHECK					JOB NUMBER		
Proj.Eng.	B. ELLIOT					22C525		
Reg Admin	S. ROARK					CONTRACT NO.		LOCATION NO.
		DATE	DATE	REVISION	BY	9902		XL-6115

Washington State Department of Transportation

SCJ ALLIANCE CONSULTING SERVICES

SR 16 / SR 160 / KITSAP COUNTY
FISH PASSAGE BARRIERS
REMOVE FISH BARRIERS

QUANTITY TABULATION - SITE PREPARATION

PLAN REF NO: QTSP01

SHEET 336 OF 409 SHEETS

QUANTITY TABULATION - SITE PREPARATION

NOTE:
THE FIRST NUMBER OF THE "CODE" BELOW REFERS TO THE SHEET NO. OR THE SHEET REFERENCE NO. SHOWING THE CONSTRUCTION FEATURE

THE SECOND NUMBER REFERS TO THE CONSTRUCTION FEATURE FOUND ON THAT SHEET.

CODE	LOCATION ↓ / UNIT OF MEASURE →	CLEARING AND GRUBBING	REMOVING PAINT LINE	REMOVING PLASTIC LINE	REMOVING PLASTIC TRAFFIC MARKING		HIGH VISIBILITY FENCE										GENERAL NOTES
		ACRE	L.F.	EACH	EACH		L.F.										
SP03-1	QC 12+18.62 (0.9' LT) TO 17+41.72 (9.6' LT)		530														
SP03-2	QC 12+18.62 (0.9' LT) TO 14+16.80 (4.1' RT)		200														
SP03-3	QC 12+74.83 (13.3' RT) TO 17+42.13 (26.9' RT)		470														
SP03-4	QC 15+12.28 (0.4' LT)				1												
SP03-5	QC 15+06.77 (4.9' RT) TO 17+41.85 (2.4' RT)		240														
SP03-6	QC 16+42.76 (20.8' RT)				1												
SP03-7	QC 16+46.40 (15.9' RT) TO 17+41.99 (14.5' RT)		100														
SP03-8	QC 16+57.92 (2.9' LT)				1												
SP03-9	QC 16+94.29 (3.3' LT)				1												
SP03-10	QC 16+94.61 (21' RT)				1												
SP03-11	QC 17+41.72 (9.6' LT) TO 17+42.13 (26.8' RT)			40													
SP03-12	QC 200+27.29 (1.3' LT) TO 205+31.94 (11.7' LT)		510														
SP03-13	QC 200+27.29 (9.8' RT) TO 205+31.94 (21.3' RT)		510														
SP03-14	QC 200+27.29 (1.3' LT) TO 203+20.28 (1.8' LT)		300														
SP03-15	QC 203+91.62 (15.2' RT)				1												
SP03-16	QC 203+87.04 (9.0' RT) TO 205+31.94 (9.1' RT)		150														
SP03-17	QC 204+45.34 (8.4' LT)				1												
SP03-18	QC 204+40.99 (2.2' LT) TO 205+31.94 (2.2' LT)		90														
SP03-19	QC 204+92.62 (8.4' LT)				1												
SP03-20	QC 204+81.86 (15.2' RT)				1												
SP03-21	QC 205+31.94 (11.7' LT TO 21.3' RT)			40													
	SHEET TOTAL	0	3100	80	9		0										
	PROJECT TOTAL	1.1	3740	100	9		2150										

GENERAL NOTES

1. SEE WSDOT STD. PLAN I-10.10-01 FOR HIGH VISIBILITY FENCE.

SR 160 MP 2.29 SALMONBERRY CREEK

						REGION NO.	STATE	FED. AID PROJ. NO.
						10	WASH	ARPA001
Designed	M. GREENHECK							
Entered	A. ARMSTRONG							
Checked	M. GREENHECK					JOB NUMBER		
Proj.Eng.	B. ELLIOT					22C525		
Reg Admin	S. ROARK					CONTRACT NO.		LOCATION NO.
		DATE	DATE	REVISION	BY	9902		XL-6115

Washington State Department of Transportation

SCJ ALLIANCE CONSULTING SERVICES

SR 16 / SR 160 / KITSAP COUNTY
FISH PASSAGE BARRIERS
REMOVE FISH BARRIERS

QUANTITY TABULATION - SITE PREPARATION

PLAN REF NO
QTSP02

SHEET 337 OF 409 SHEETS

TREE REMOVAL SCHEDULE		
STATION	OFFSET (FT.)	DESCRIPTION (TYPE, DIAM. (IN.), DRIP (FT.))
Q 218+38.65	106.77 LT	DECIDUOUS, 14, 8
Q 218+74.03	94.80 LT	DECIDUOUS, 16, 15
Q 218+78.60	35.56 RT	DECIDUOUS, 12, 15
Q 218+82.13	40.28 RT	DECIDUOUS, 36, 15
Q 218+91.12	62.38 LT	DECIDUOUS, 20, 20
Q 220+01.67	56.16 RT	DECIDUOUS, 32, 25
Q 220+04.73	54.92 RT	DECIDUOUS, 16, 11

S. 6. T. 23N. R. 2E. W.M.

LEGEND	
#	QUANTITY TAB NOTE
# SPXX	QUANTITY TAB NOTE CONTINUED
CG	CLEARING AND GRUBBING
WB	WETLAND BOUNDARY
SAW	HMA SAWCUT AND SEAL
	CULVERT
220	CONSTRUCTION ALIGNMENT
	STREAM ALIGNMENT
	SOIL BORING PIT
	REMOVING ASPHALT CONC. PAVEMENT
	TREE TO BE REMOVED
	TREE
HVF	HIGH VISIBILITY FENCE
	EXISTING YELLOW DOUBLE CENTER LINE
	EXISTING WHITE STOP LINE
	EXISTING EDGE LINE
	EXISTING EDGE OF PAVEMENT
	RIGHT OF WAY LINE
	GUARDRAIL
	EXISTING EDGE OF PAVEMENT

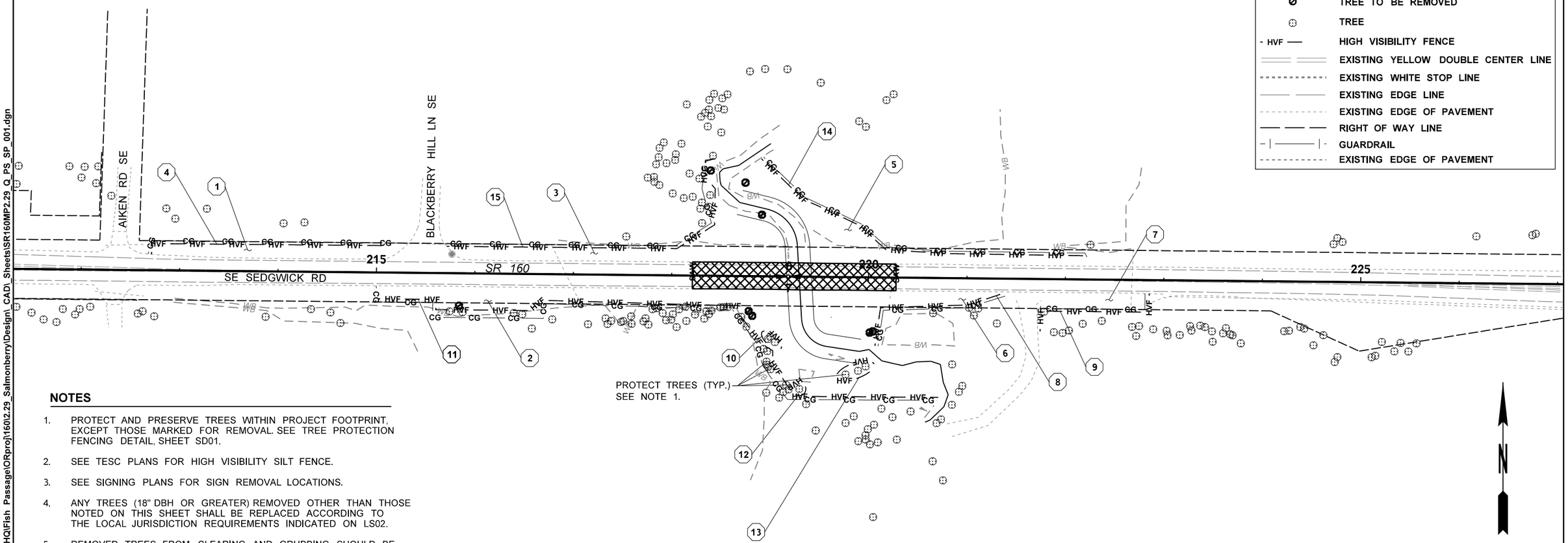

NOTES

1. PROTECT AND PRESERVE TREES WITHIN PROJECT FOOTPRINT, EXCEPT THOSE MARKED FOR REMOVAL. SEE TREE PROTECTION FENCING DETAIL, SHEET SD01.
2. SEE TESC PLANS FOR HIGH VISIBILITY SILT FENCE.
3. SEE SIGNING PLANS FOR SIGN REMOVAL LOCATIONS.
4. ANY TREES (18" DBH OR GREATER) REMOVED OTHER THAN THOSE NOTED ON THIS SHEET SHALL BE REPLACED ACCORDING TO THE LOCAL JURISDICTION REQUIREMENTS INDICATED ON LS02.
5. REMOVED TREES FROM CLEARING AND GRUBBING SHOULD BE SALVAGED FOR USE IN THE STREAM AS LWM, PROVIDING ADEQUATE ON-SITE STORAGE SPACE IS AVAILABLE.
6. CONTRACTOR SHALL MAINTAIN A MINIMUM OFFSET DISTANCE OF 5' BETWEEN TREE TRUNKS AND HVF IN LOCATIONS WHERE HVF IS INDICATED WITHIN THE CLEARING AND GRUBBING LIMITS, UNLESS OTHERWISE APPROVED BY THE ENGINEER.
7. SEE PAVING PLANS AND QTPV FOR PLANING BITUMINOUS PAVEMENT LIMITS.

S. 7. T. 23N. R. 2E. W.M.

SR 160 MP 2.29 SALMONBERRY CREEK

FILE NAME	c:\users\mellssa.greenheck\pw_wsdot\d0202980\SR160MP2.29_Q_PS_SP_001.dgn
TIME	3:55:37 PM
DATE	4/7/2023
PLOTTED BY	melissa.greenheck
DESIGNED BY	M. GREENHECK
ENTERED BY	M. GREENHECK
CHECKED BY	H. BROWN
PROJ. ENGR.	B. ELLIOTT
REGIONAL ADM.	S. ROARK

REVISION | DATE | BY

REGION NO.	STATE	FED.AID PROJ.NO.
10	WASH	ARPA001
JOB NUMBER 22C525		
CONTRACT NO. 009902		LOCATION NO. XL-6115

P.E. STAMP BOX — DATE

SCOTT A. SAWYER, STATE OF WASHINGTON, 38872, REGISTERED PROFESSIONAL ENGINEER

SEE SHEET CT01 — DATE

P.E. STAMP BOX

Washington State Department of Transportation

SCJ ALLIANCE CONSULTING SERVICES

SR 16 / SR 160 / KITSAP COUNTY
FISH PASSAGE BARRIERS
REMOVE FISH BARRIERS

SITE PREPARATION PLAN

PLAN REF NO SP01

SHEET 338 OF 409 SHEETS

pw:\\HQOLYMAPPPW03P.WSDOT.LOC:WSDOT\Documents_HQ\Fish Passage\ORproj\160\2.29_Salmonberry\Design_CAD_Sheets\SR160MP2.29_Q_PS_SP_001.dgn

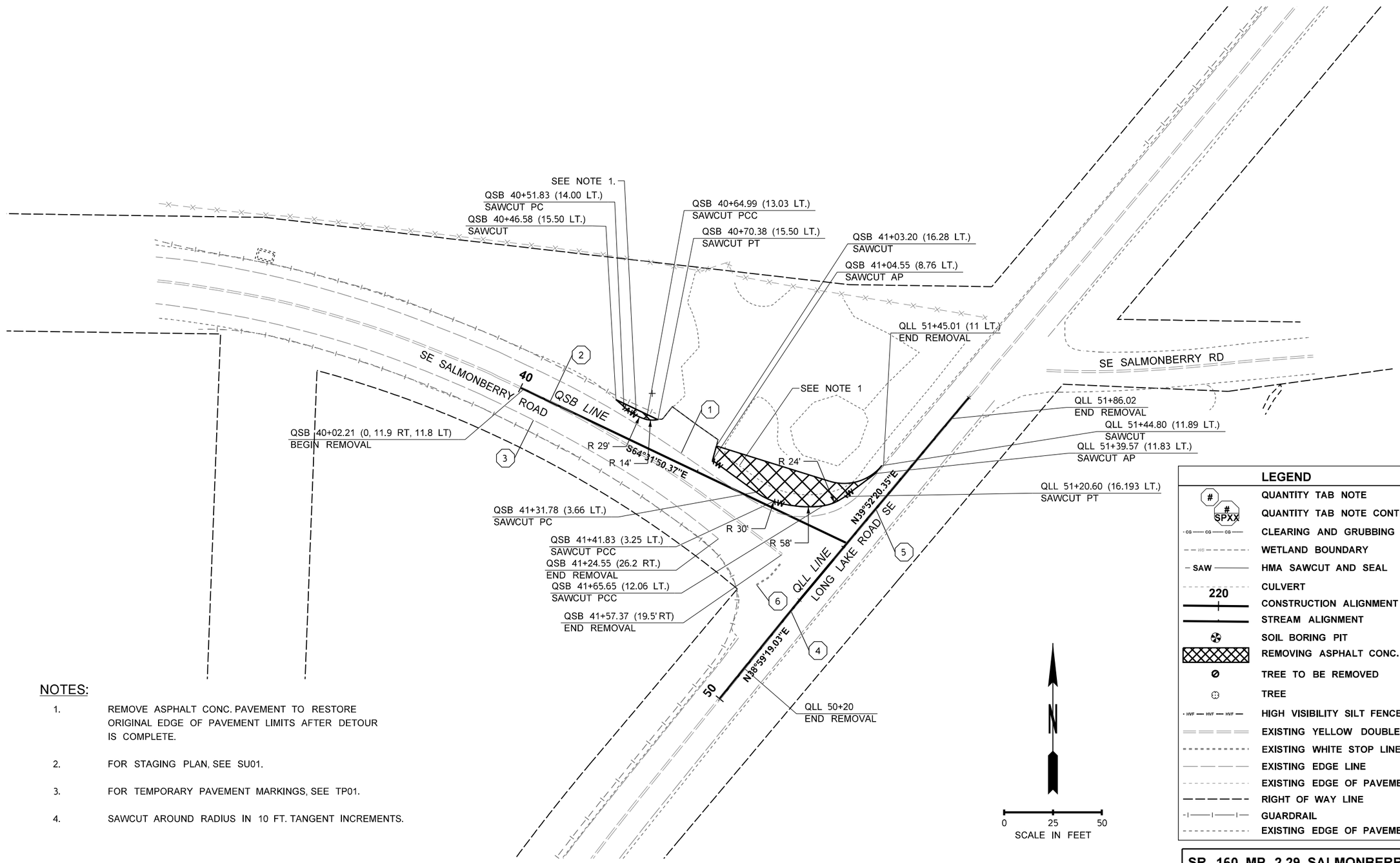

NOTES:

1. REMOVE ASPHALT CONC. PAVEMENT TO RESTORE ORIGINAL EDGE OF PAVEMENT LIMITS AFTER DETOUR IS COMPLETE.
2. FOR STAGING PLAN, SEE SU01.
3. FOR TEMPORARY PAVEMENT MARKINGS, SEE TP01.
4. SAWCUT AROUND RADIUS IN 10 FT. TANGENT INCREMENTS.

LEGEND

#	QUANTITY TAB NOTE
# SPXX	QUANTITY TAB NOTE CONTINUED
CG	CLEARING AND GRUBBING
WB	WETLAND BOUNDARY
SAW	HMA SAWCUT AND SEAL
	CULVERT
220	CONSTRUCTION ALIGNMENT
	STREAM ALIGNMENT
	SOIL BORING PIT
	REMOVING ASPHALT CONC. PAVEMENT
	TREE TO BE REMOVED
	TREE
HVF	HIGH VISIBILITY SILT FENCE
	EXISTING YELLOW DOUBLE CENTER LINE
	EXISTING WHITE STOP LINE
	EXISTING EDGE LINE
	EXISTING EDGE OF PAVEMENT
	RIGHT OF WAY LINE
	GUARDRAIL
	EXISTING EDGE OF PAVEMENT

SR 160 MP 2.29 SALMONBERRY CREEK

FILE NAME	c:\users\melissa.greenheck\pw_wsdot\d0202980\SR160MP2.29_Q_PS_SP_002.dgn
TIME	3:55:40 PM
DATE	4/7/2023
PLOTTED BY	melissa.greenheck
DESIGNED BY	M. GREENHECK
ENTERED BY	M. GREENHECK
CHECKED BY	H. BROWN
PROJ. ENGR.	B. ELLIOTT
REGIONAL ADM.	S. ROARK

REVISION | DATE | BY

REGION NO.	STATE	FED.AID PROJ.NO.
10	WASH	ARPA001
JOB NUMBER 22C525		
CONTRACT NO. 009902		LOCATION NO. XL-6115

P.E. STAMP BOX — DATE

SCOTT A. SAWYER, STATE OF WASHINGTON, 30817, REGISTERED PROFESSIONAL ENGINEER

SEE SHEET CT01 — DATE

P.E. STAMP BOX

Washington State Department of Transportation

SCJ ALLIANCE CONSULTING SERVICES

SR 16 / SR 160 / KITSAP COUNTY
FISH PASSAGE BARRIERS
REMOVE FISH BARRIERS

SITE PREPARATION PLAN

PLAN REF NO SP02

SHEET 339 OF 409 SHEETS

pw:\\HQOLYMAPPPW03P.WSDOT.LOC:WSDOT\Documents_HQ\Fish Passage\ORproj\160\2.29_Salmonberry\Design_CAD_Sheets\SR160MP2.29_Q_PS_SP_002.dgn

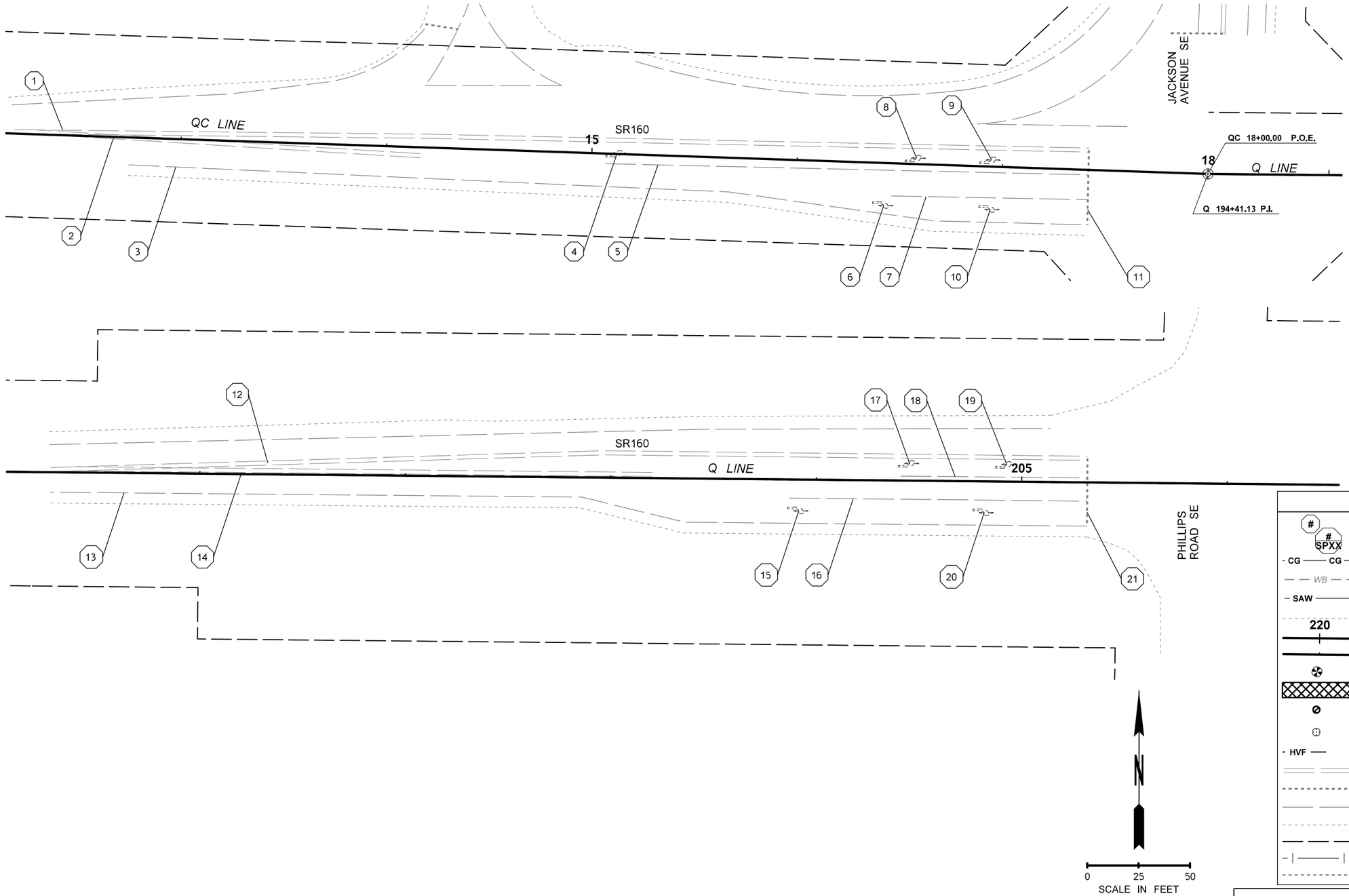

LEGEND

#	QUANTITY TAB NOTE
# SPXX	QUANTITY TAB NOTE CONTINUED
CG CG	CLEARING AND GRUBBING
WB	WETLAND BOUNDARY
SAW	HMA SAWCUT AND SEAL
	CULVERT
220	CONSTRUCTION ALIGNMENT
	STREAM ALIGNMENT
	SOIL BORING PIT
	REMOVING ASPHALT CONC. PAVEMENT
	TREE TO BE REMOVED
	TREE
HVF	HIGH VISIBILITY SILT FENCE
	EXISTING YELLOW DOUBLE CENTER LINE
	EXISTING WHITE STOP LINE
	EXISTING EDGE LINE
	EXISTING EDGE OF PAVEMENT
	RIGHT OF WAY LINE
	GUARDRAIL
	EXISTING EDGE OF PAVEMENT

SR 160 MP 2.29 SALMONBERRY CREEK

FILE NAME	c:\users\melissa.greenheck\pw_wsdot\d0202980\SR160MP2.29_Q_PS_SP_003.dgn
TIME	3:55:42 PM
DATE	4/7/2023
PLOTTED BY	melissa.greenheck
DESIGNED BY	M. GREENHECK
ENTERED BY	M. GREENHECK
CHECKED BY	H. BROWN
PROJ. ENGR.	B. ELLIOTT
REGIONAL ADM.	S. ROARK

REVISION | DATE | BY

REGION NO.	STATE	FED.AID PROJ.NO.
10	WASH	ARPA001
JOB NUMBER 22C525		
CONTRACT NO. 009902		LOCATION NO. XL-6115

P.E. STAMP BOX — DATE

SCOTT A. SAWYER, STATE OF WASHINGTON, 38872, REGISTERED PROFESSIONAL ENGINEER

SEE SHEET CT01 — DATE

P.E. STAMP BOX

Washington State Department of Transportation

SCJ ALLIANCE CONSULTING SERVICES

SR 16 / SR 160 / KITSAP COUNTY
FISH PASSAGE BARRIERS
REMOVE FISH BARRIERS

SITE PREPARATION PLAN

PLAN REF NO SP03

SHEET 340 OF 409 SHEETS

pw:\\HQOLYMAPPPW03P.WSDOT.LOC:WSDOT\Documents_HQ\Fish Passage\ORproj\16012.29_Salmonberry\Design_CAD_Sheets\SR160MP2.29_Q_PS_SP_003.dgn

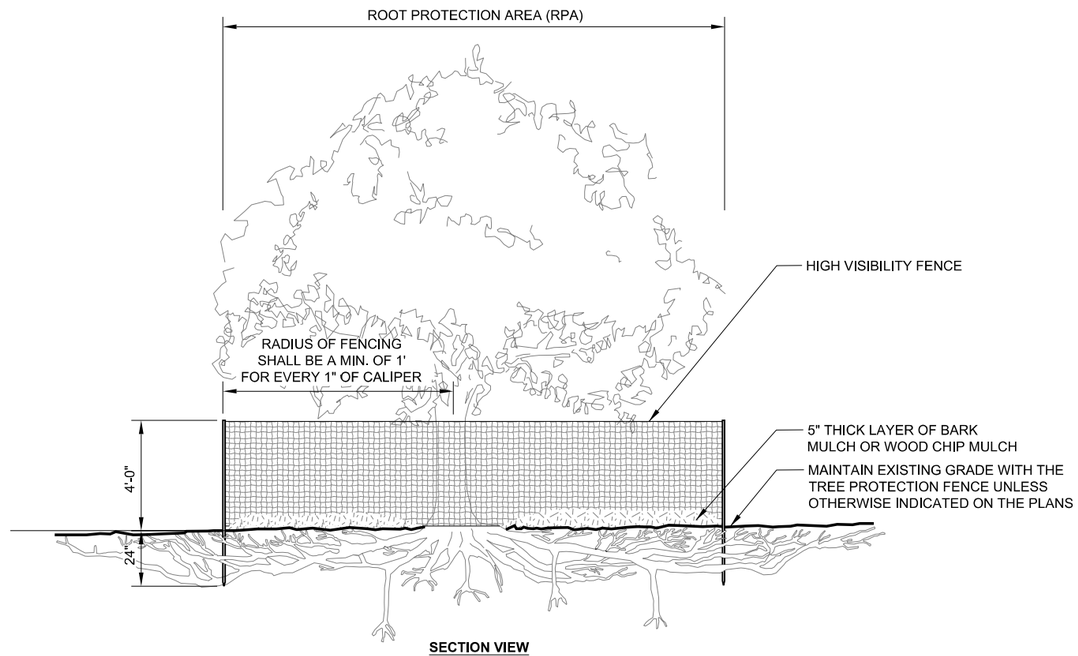

SECTION VIEW

TREE PROTECTION FENCING

NOT TO SCALE

FILE NAME	c:\users\melissa.greenheck\pw_wsdot\d0202980\SR160MP2.29_Q_DE_SD_001.dgn						
TIME	3:55:44 PM				REGION NO. 10	STATE WASH	FED.AID PROJ.NO. ARPA001
DATE	4/7/2023						
PLOTTED BY	melissa.greenheck				JOB NUMBER 22C525		
DESIGNED BY	C. OWEN						
ENTERED BY	N. MAYFIELD						
CHECKED BY	M. GREENHECK				CONTRACT NO. 009902		LOCATION NO. XL-6115
PROJ. ENGR.	B. ELLIOT						
REGIONAL ADM.	S. ROARK	REVISION	DATE	BY			

P.E. STAMP BOX — DATE

SCOTT A. SAWYER — STATE OF WASHINGTON — 35872 — REGISTERED PROFESSIONAL ENGINEER

SEE SHEET CT01 — DATE — P.E. STAMP BOX

Washington State Department of Transportation

SCJ ALLIANCE CONSULTING SERVICES

SR 160 MP 2.29 SALMONBERRY CREEK

SR 16 / SR 160 / KITSAP COUNTY
FISH PASSAGE BARRIERS
REMOVE FISH BARRIERS

SITE PREPARATION DETAIL

PLAN REF NO **SD01**

SHEET 341 OF 409 SHEETS

pw:\\HQOLYMAPPPW03P.WSDOT.LOC:WSDOT\Documents_HQ\Fish Passage\ORproj\16012.29_Salmonberry\Design_CAD_Sheets\SR160MP2.29_Q_DE_SD_001.dgn

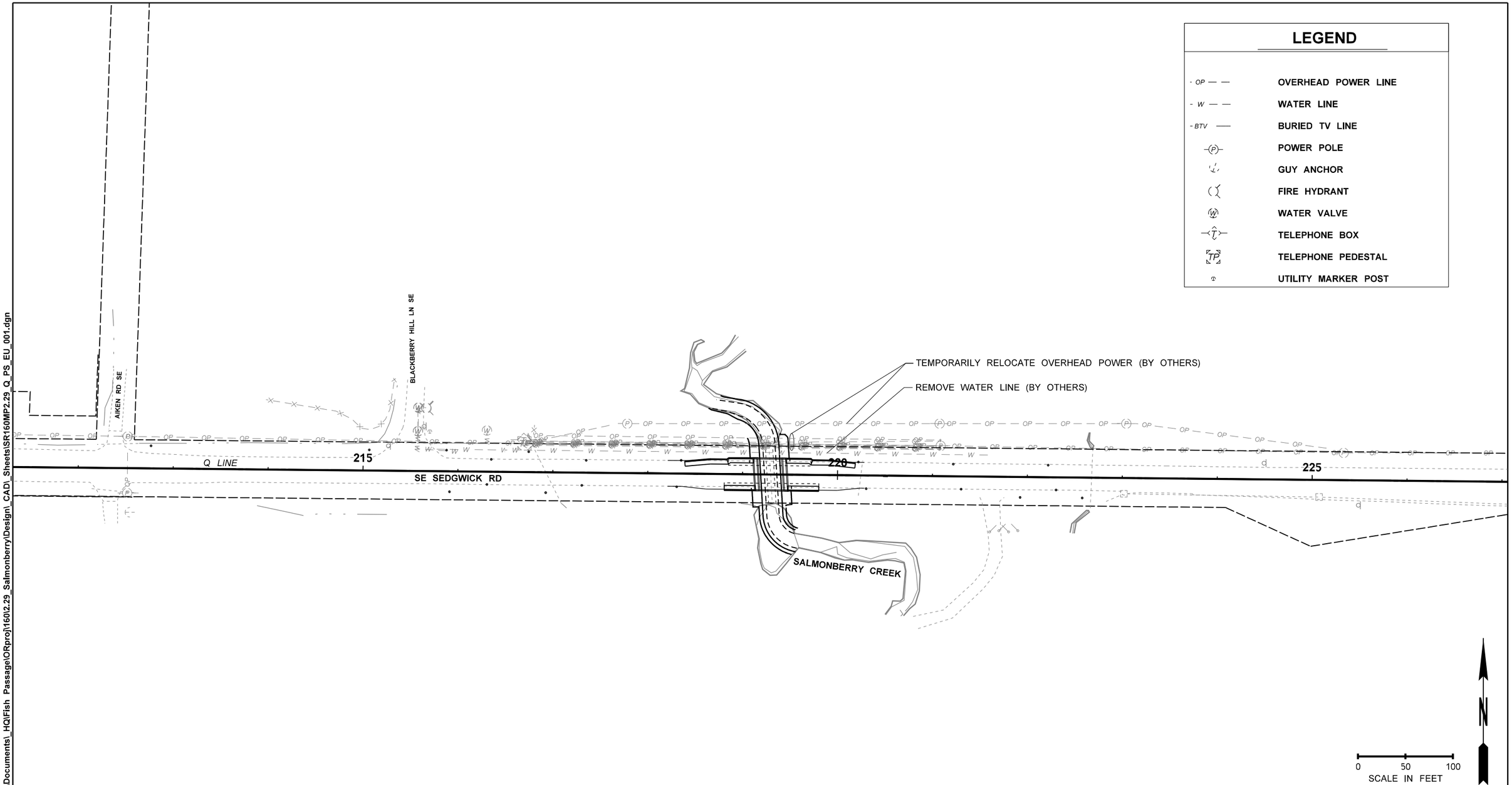

S. 7. T. 23N. R. 2E. W.M.

SR 160 MP 2.29 SALMONBERRY CREEK

FILE NAME	c:\users\melissa.greenheck\pw_wsdot\d0202980\SR160MP2.29_Q_PS_EU_001.dgn
TIME	3:55:47 PM
DATE	4/7/2023
PLOTTED BY	melissa.greenheck
DESIGNED BY	K. KOZAI
ENTERED BY	K. KOZAI
CHECKED BY	H. BROWN
PROJ. ENGR.	B. ELLIOTT
REGIONAL ADM.	S. ROARK

REVISION	DATE	BY

REGION NO.	STATE	FED.AID PROJ.NO.
10	WASH	ARPA001
JOB NUMBER 22C525		
CONTRACT NO. 009902		LOCATION NO. XL-6115

P.E. STAMP BOX — DATE

SCOTT A. SAWYER, STATE OF WASHINGTON, 38872, REGISTERED PROFESSIONAL ENGINEER

SEE SHEET CT01 — DATE

P.E. STAMP BOX

Washington State Department of Transportation

SCJ ALLIANCE CONSULTING SERVICES

SR 16 / SR 160 / KITSAP COUNTY
FISH PASSAGE BARRIERS
REMOVE FISH BARRIERS

EXISTING UTILITY PLAN

PLAN REF NO EU01

SHEET 342 OF 409 SHEETS

pw:\\HQOLYMAPPPW03P.WSDOT.LOC:WSDOT\Documents_HQ\Fish Passage\ORproj\160\2.29_Salmonberry\Design_CAD_Sheets\SR160MP2.29_Q_PS_EU_001.dgn

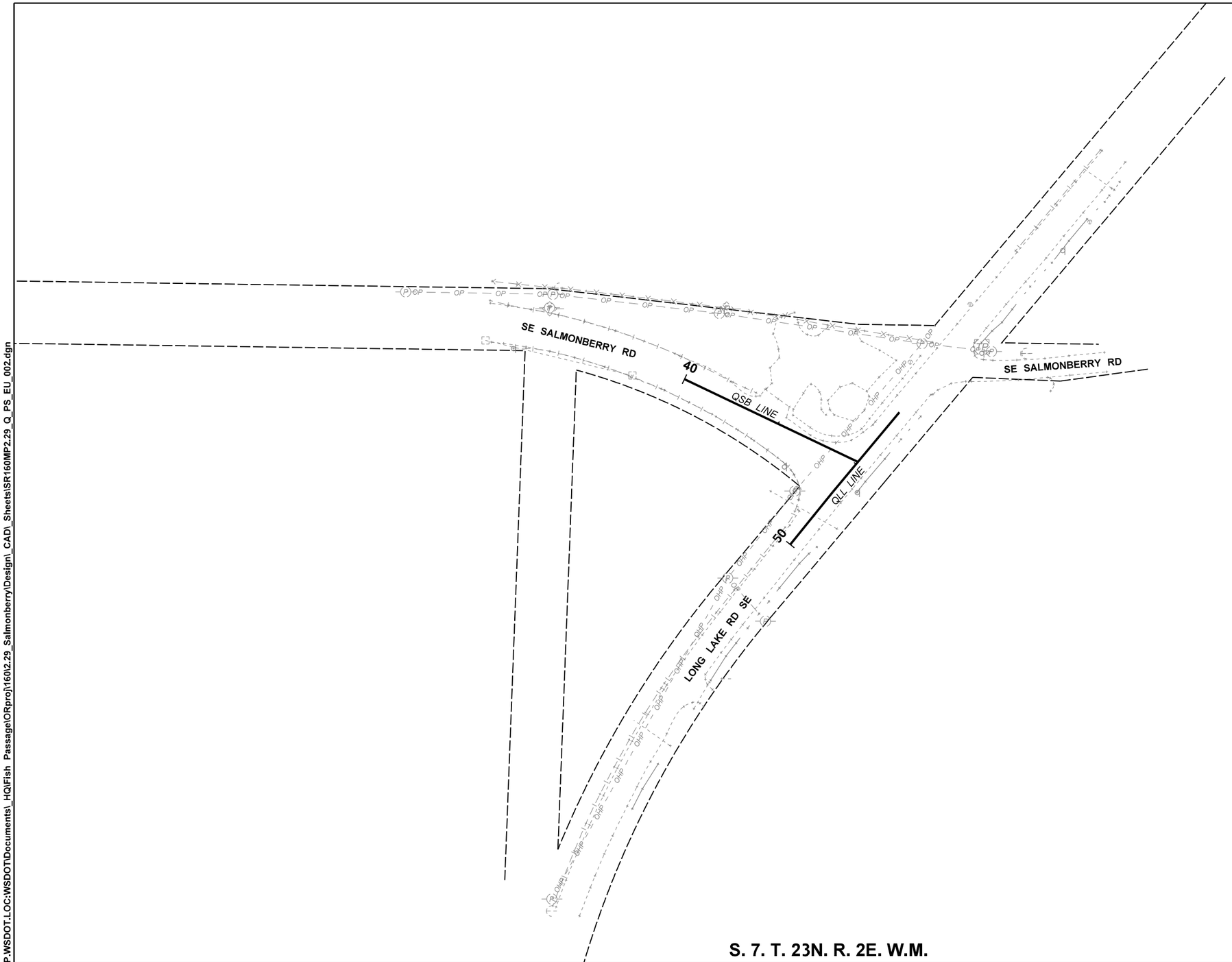

LEGEND

- OP — —	OVERHEAD POWER LINE
- W — —	WATER LINE
- BTV ——	BURIED TV LINE
-(P)-	POWER POLE
	GUY ANCHOR
	FIRE HYDRANT
(W)	WATER VALVE
-(T)-	TELEPHONE BOX
TP	TELEPHONE PEDESTAL
	UTILITY MARKER POST

0 50 100
SCALE IN FEET

N

S. 7. T. 23N. R. 2E. W.M.

SR 160 MP 2.29 SALMONBERRY CREEK

FILE NAME	c:\users\melissa.greenheck\pw_wsdot\d0202980\SR160MP2.29_Q_PS_EU_002.dgn
TIME	3:55:50 PM
DATE	4/7/2023
PLOTTED BY	melissa.greenheck
DESIGNED BY	K. KOZAI
ENTERED BY	K. KOZAI
CHECKED BY	H. BROWN
PROJ. ENGR.	B. ELLIOTT
REGIONAL ADM.	S. ROARK

REVISION	DATE	BY

REGION NO.	STATE	FED.AID PROJ.NO.
10	WASH	ARPA001
JOB NUMBER 22C525		
CONTRACT NO. 009902		LOCATION NO. XL-6115

P.E. STAMP BOX — DATE

SCOTT A. SAWYER — STATE OF WASHINGTON — 35872 — REGISTERED PROFESSIONAL ENGINEER

SEE SHEET CT01 — DATE

P.E. STAMP BOX

Washington State Department of Transportation

SCJ ALLIANCE CONSULTING SERVICES

SR 16 / SR 160 / KITSAP COUNTY
FISH PASSAGE BARRIERS
REMOVE FISH BARRIERS

EXISTING UTILITY PLAN

PLAN REF NO EU02

SHEET 343 OF 409 SHEETS

pw:\\HQOLYMAPPPW03P.WSDOT.LOC:WSDOT\Documents_HQ\Fish Passage\ORproj\160\2.29_Salmonberry\Design_CAD_Sheets\SR160MP2.29_Q_PS_EU_002.dgn

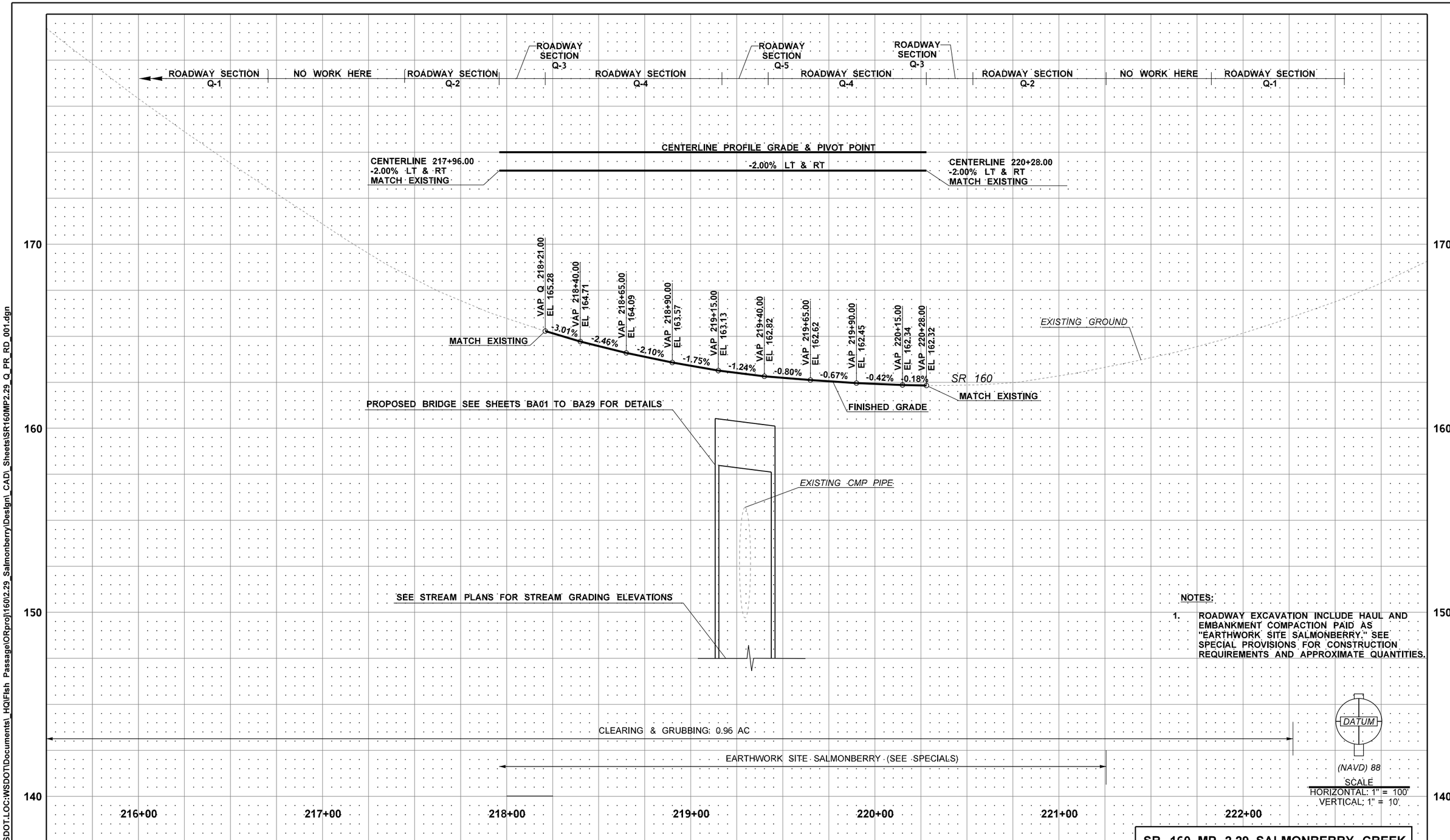

NOTES:

1. ROADWAY EXCAVATION INCLUDE HAUL AND EMBANKMENT COMPACTION PAID AS "EARTHWORK SITE SALMONBERRY." SEE SPECIAL PROVISIONS FOR CONSTRUCTION REQUIREMENTS AND APPROXIMATE QUANTITIES.

SR 160 MP 2.29 SALMONBERRY CREEK

FILE NAME	c:\users\melissa.greenheck\pw_wsdot\d0202980\SR160MP2.29_Q_PR_RD_001.dgn
TIME	3:55:54 PM
DATE	4/7/2023
PLOTTED BY	melissa.greenheck
DESIGNED BY	S.BABAEI
ENTERED BY	S.DUNN
CHECKED BY	S.BABAEI
PROJ. ENGR.	B. ELLIOTT
REGIONAL ADM.	S. ROARK

REVISION | DATE | BY

REGION NO.	STATE	FED.AID PROJ.NO.
10	WASH	ARPA001
JOB NUMBER 22C525		
CONTRACT NO. 009902		LOCATION NO. XL-6115

P.E. STAMP BOX — DATE

SCOTT A. SAWYER, STATE OF WASHINGTON, REGISTERED PROFESSIONAL ENGINEER

SEE SHEET CT01 — DATE

P.E. STAMP BOX

Washington State Department of Transportation

SCJ ALLIANCE CONSULTING SERVICES

SR 16 / SR 160 / KITSAP COUNTY
FISH PASSAGE BARRIERS
REMOVE FISH BARRIERS

ROADWAY PROFILE

PLAN REF. NO. RP01

SHEET 344 OF 409 SHEETS

pw:\\HQOLYMAPPPW03P.WSDOT.LOC:WSDOT\Documents_HQ\Fish Passage\ORproj\160\2.29_Salmonberry\Design_CAD_Sheets\SR160MP2.29_Q_PR_RD_001.dgn

S. 6. T. 23N. R. 2E. W.M.

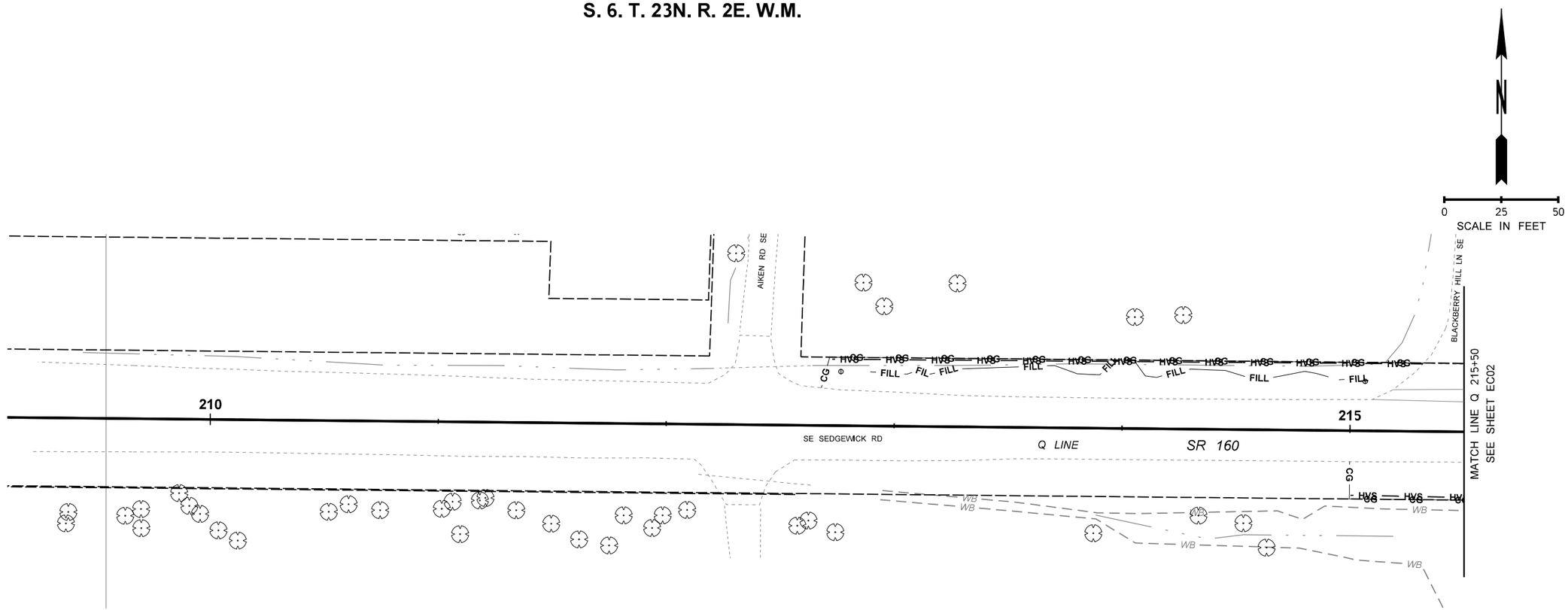

NOTES:

1. NO GRUBBING SHALL OCCUR IN TREE PROTECTION AREAS. MANUAL SELECTIVE CLEARING AND PRUNING ONLY TO AVOID DISTURBANCE TO TREE ROOTS.
2. LIMIT CLEARING AND GRUBBING TO THE AREA SHOWN.
3. MAINTAIN TESC BMPS UNTIL PERMANENT STABILIZATION IS IN PLACE.
4. CONSTRUCTION ENTRANCE LOCATIONS SHOWN AS POTENTIAL OPTIONS. FINAL LOCATION SHALL BE DETERMINED DURING CONSTRUCTION.

LEGEND

HVS — HVS	HIGH VISIBILITY SILT FENCE PER WSDOT STD PLAN I-30.17-01	CUT	CUT LINES
	EXISTING SURFACE FLOW DIRECTION	FILL	FILL LINES
180	EXISTING MAJOR CONTOUR		TEMPORARY CONSTRUCTION EASEMENT
	EXISTING MINOR CONTOUR		EXISTING DITCH
WB	WETLAND BOUNDARY		DITCH
OHW	ORDINARY HIGH WATER	CG — CG	CLEARING AND GRUBBING
	STABILIZED CONSTRUCTION ENTRANCE PER ECDT01		EXISTING CULVERT
			RIP RAP PROTECTED OUTLET
			TEMPORARY WATTLES PER WSDOT STD PLAN I-30.30-02
	BIODEGRADABLE EROSION CONTROL BLANKET PER WSDOT STD PLAN I-60.10-01		TREE
			TREE TO BE REMOVED

S. 7. T. 23N. R. 2E. W.M.

SR 160 MP 2.29 SALMONBERRY CREEK

FILE NAME	c:\users\melissa.greenheck\pw_wsdot\d0202980\SR160MP2.29_Q_PS_EC_001.dgn
TIME	3:55:59 PM
DATE	4/7/2023
PLOTTED BY	melissa.greenheck
DESIGNED BY	W.HOLM
ENTERED BY	M. GREENHECK
CHECKED BY	W. HOLM
PROJ. ENGR.	B. ELLIOTT
REGIONAL ADM.	S. ROARK

REVISION | DATE | BY

REGION NO.	STATE	FED.AID PROJ.NO.
10	WASH	ARPA001
JOB NUMBER 22C525		
CONTRACT NO. 009902		LOCATION NO. XL-6115

P.E. STAMP BOX — DATE

SCOTT A. SAWYER — STATE OF WASHINGTON — 18872 — REGISTERED PROFESSIONAL ENGINEER

SEE SHEET CT01 — DATE — P.E. STAMP BOX

Washington State Department of Transportation

SCJ ALLIANCE CONSULTING SERVICES

SR 16 / SR 160 / KITSAP COUNTY
FISH PASSAGE BARRIERS
REMOVE FISH BARRIERS

TESC PLAN

PLAN REF NO EC01

SHEET 345 OF 409 SHEETS

pw:\\HQOLYMAPPPW03P.WSDOT.LOC:WSDOT\Documents_HQ\Fish Passage\ORproj\160\2.29_Salmonberry\Design_CAD_Sheets\SR160MP2.29_Q_PS_EC_001.dgn

S. 6. T. 23N. R. 2E. W.M.

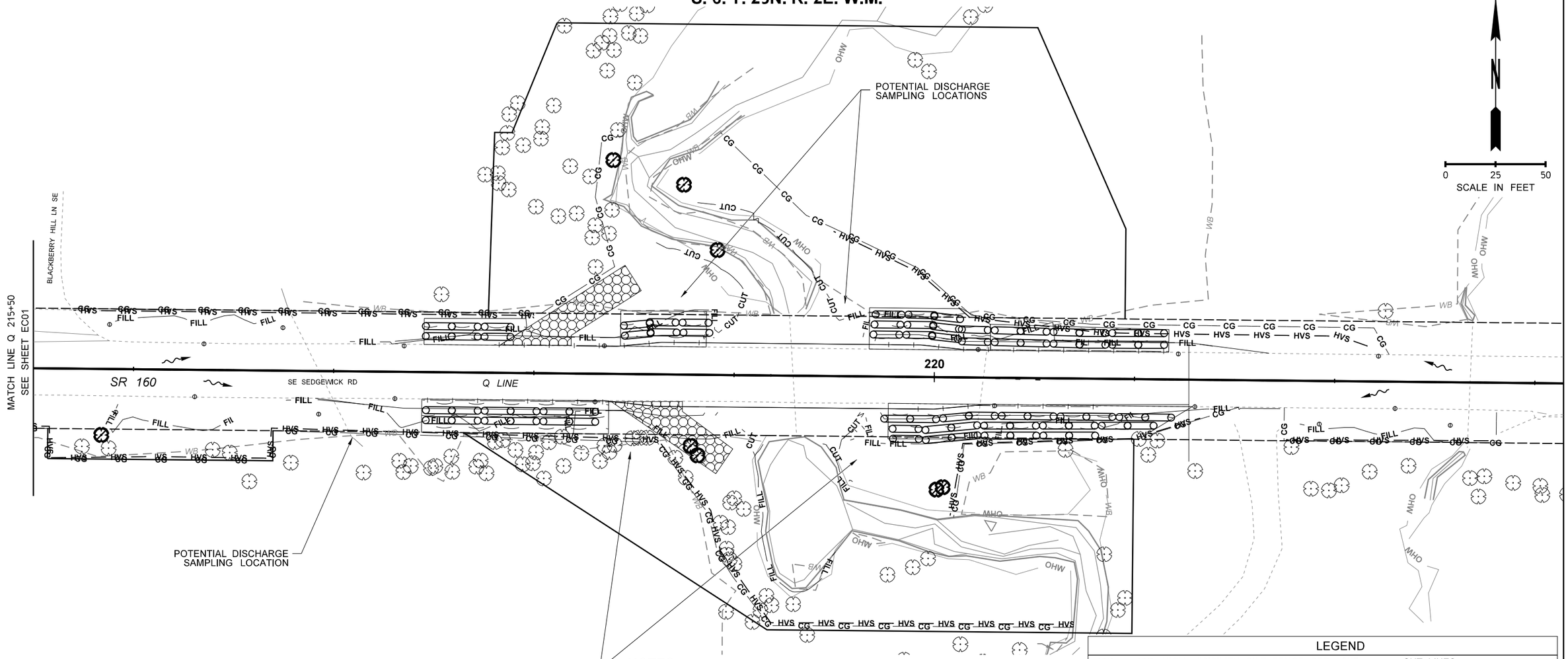

NOTES:

1. NO GRUBBING SHALL OCCUR IN TREE PROTECTION AREAS. MANUAL SELECTIVE CLEARING AND PRUNING ONLY TO AVOID DISTURBANCE TO TREE ROOTS.
2. LIMIT CLEARING AND GRUBBING TO THE AREA SHOWN.
3. MAINTAIN TESC BMPS UNTIL PERMANENT STABILIZATION IS IN PLACE.
4. CONSTRUCTION ENTRANCE LOCATIONS SHOWN AS POTENTIAL OPTIONS. FINAL LOCATION SHALL BE DETERMINED DURING CONSTRUCTION.

LEGEND

HVS — HVS	HIGH VISIBILITY SILT FENCE PER WSDOT STD PLAN I-30.17-01	CUT	CUT LINES
	EXISTING SURFACE FLOW DIRECTION	FILL	FILL LINES
180	EXISTING MAJOR CONTOUR		TEMPORARY CONSTRUCTION EASEMENT
	EXISTING MINOR CONTOUR		EXISTING DITCH
WB	WETLAND BOUNDARY		DITCH
OHW	ORDINARY HIGH WATER	CG — CG	CLEARING AND GRUBBING
	STABILIZED CONSTRUCTION ENTRANCE PER ECDT01		EXISTING CULVERT
			RIP RAP PROTECTED OUTLET
	BIODEGRADABLE EROSION CONTROL BLANKET PER WSDOT STD PLAN I-60.10-01		TEMPORARY WATTLES PER WSDOT STD PLAN I-30.30-02
			TREE
			TREE TO BE REMOVED

S. 7. T. 23N. R. 2E. W.M.

SR 160 MP 2.29 SALMONBERRY CREEK

FILE NAME	c:\users\melissa.greenheck\pw_wsdot\d0202980\SR160MP2.29_Q_PS_EC_002.dgn
TIME	3:56:02 PM
DATE	4/7/2023
PLOTTED BY	melissa.greenheck
DESIGNED BY	W.HOLM
ENTERED BY	M. GREENHECK
CHECKED BY	W. HOLM
PROJ. ENGR.	B. ELLIOTT
REGIONAL ADM.	S. ROARK

REVISION | DATE | BY

REGION NO.	STATE	FED.AID PROJ.NO.
10	WASH	ARPA001
JOB NUMBER 22C525		
CONTRACT NO. 009902		LOCATION NO. XL-6115

P.E. STAMP BOX — DATE

SCOTT A. SAWYER — STATE OF WASHINGTON — 38872 — REGISTERED PROFESSIONAL ENGINEER

SEE SHEET CT01 — DATE — P.E. STAMP BOX

Washington State Department of Transportation

SCJ ALLIANCE CONSULTING SERVICES

SR 16 / SR 160 / KITSAP COUNTY
FISH PASSAGE BARRIERS
REMOVE FISH BARRIERS

TESC PLAN

PLAN REF NO **EC02**

SHEET 346 OF 409 SHEETS

pw:\\HQOLYMAPPPW03P.WSDOT.LOC:WSDOT\Documents_HQ\Fish Passage\ORproj\160\2.29_Salmonberry\Design_CAD_Sheets\SR160MP2.29_Q_PS_EC_002.dgn

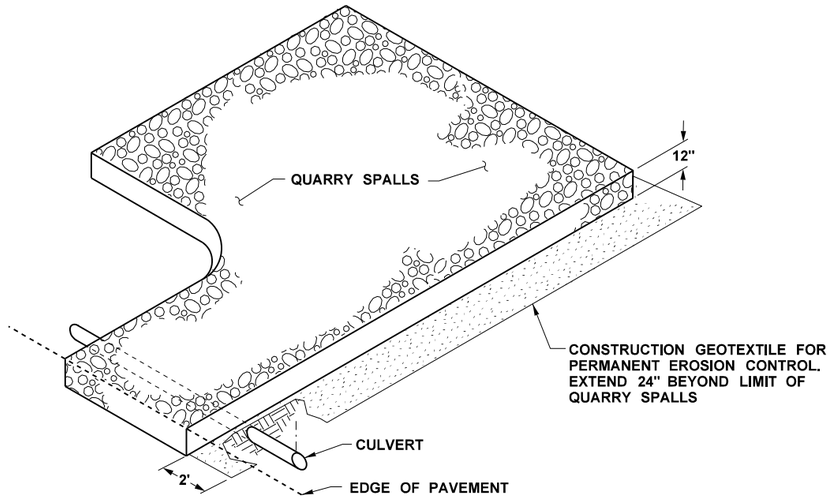

NOTE:
AFTER CONSTRUCTION, REPAIR RUTS AND APPLY 4" LAYER OF CRUSHED SURFACING TOPCOURSE. SHAPE VARIES - SEE PLAN.

STABILIZED CONSTRUCTION ENTRANCE

NOT TO SCALE

pw:\\HQOLYMAPPPW03P.WSDOT.LOC:WSDOT\Documents_HQ\Fish Passage\ORproj\160\2.29_Salmonberry\Design_CAD_Sheets\SR160MP2.29_Q_DE_EC_001.dgn

FILE NAME	c:\users\melissa.greenheck\pw_wsdot\d0202980\SR160MP2.29_Q_DE_EC_001.dgn
TIME	3:56:05 PM
DATE	4/7/2023
PLOTTED BY	melissa.greenheck
DESIGNED BY	K. KOZAI
ENTERED BY	K. KOZAI
CHECKED BY	W. HOLM
PROJ. ENGR.	B. ELLIOTT
REGIONAL ADM.	S. ROARK

REVISION | DATE | BY

REGION NO. 10 | STATE WASH | FED.AID PROJ.NO. ARPA001

JOB NUMBER 22C525

CONTRACT NO. 009902 | LOCATION NO. XL-6115

P.E. STAMP BOX — DATE

SCOTT A. SAWYER, STATE OF WASHINGTON, REGISTERED PROFESSIONAL ENGINEER

SEE SHEET CT01 — DATE

P.E. STAMP BOX

Washington State Department of Transportation

SCJ ALLIANCE CONSULTING SERVICES

SR 160 MP 2.29 SALMONBERRY CREEK

SR 16 / SR 160 / KITSAP COUNTY
FISH PASSAGE BARRIERS
REMOVE FISH BARRIERS

TESC DETAIL

PLAN REF NO ECD01

SHEET 347 OF 409 SHEETS

STRUCTURE NOTES - DRAINAGE

NOTE:
THE FIRST NUMBER OF THE "CODE" BELOW REFERS TO THE SHEET NO. OR THE SHEET REFERENCE NO. SHOWING THE CONSTRUCTION FEATURE

THE SECOND NUMBER REFERS TO THE CONSTRUCTION FEATURE FOUND ON THAT SHEET.

CODE	LOCATION ↓ / UNIT OF MEASURE →	QUARRY SPALLS	UNDERDRAIN PIPE 6 IN. DIAM	DRAIN PIPE 6 IN. DIAM.		MEDIA FILTER DRAIN TYPE 1		GRAVEL BACKFILL FOR DRAIN	CONSTRUCTION GEOTEXTILE FOR UNDERGROUND DRAINAGE	CONSTRUCTION GEOTEXTILE FOR SOIL STABILIZATION							GENERAL NOTES
		CY	LF	LF		SY		CY	SY	SY							
DR01-1	Q 212+76.5 (23.7' LT) TO 215+04.5 (21.7' LT)					330											1,2
DR01-2	Q 215+04.48 (20.7' LT) TO 215+12.17 (26.1' LT)	0.4		10						10							3
DR02-1	Q 216+70.42 (20.4' LT) TO 216+78.58 (26.3' LT)	0.4		10						10							3
DR02-2	Q 215+87.8 (22.2' LT) TO 216+70.4 (21.4' LT)					120											1,2
DR02-3	Q 215+90.9 (21.4' RT) TO 216+90.1 (21.6 RT)					143											1,2
DR02-4	Q 221+94.6 (21.5' RT) TO 222+58.0 (21.5'RT)					91											1,2
DR02-5	Q 218+85.03 (6.8' LT) TO 219+71.84 (6.8' LT)		87					3	40								4
DR02-6	Q 219+71.84 (6.8' LT) TO 220+24.00 (20.1' LT)	0.4		63						10							3
DR02-7	Q 218+82.65 (7.8' RT) TO 219+81.62 (7.8' RT)		101					4	50								4
DR02-8	Q 219+81.62 (7.8' RT) TO 219+85.86 (21.1' RT)	0.4		16						10							3
DR02-9	Q 219+73.02 (16.0' LT)	0.4								10							3
DR02-10	Q 219+81.55 (16.0' RT)	0.4								10							3
DR02-11	Q 216+90.07 (20.6' RT) TO 216+97.05 (25.2' RT)	0.4		9						10							3
DR02-12	Q 221+87.31 (25.5' RT) TO 221+94.53 (20.5' RT)	0.4		9						10							3
	SHEET TOTAL	3.2	188	117		684		7	90	80							
	PROJECT TOTAL	3.2	188	117		684		7	90	80							

GENERAL NOTES

1. SEE SPECIAL PROVISION "MEDIA FILTER DRAINS". SEE DETAILS ON SHEET DD01.
2. SEE PAVEMENT MARKING PLANS FOR BMP DELINEATION.
3. SEE OUTLET PROTECTION DETAIL, SHEET DD02.
4. SEE UNDERDRAIN BACKFILL DETAIL, SHEET DD02.

SR 160 MP 2.29 SALMONBERRY CREEK

		DATE	DATE	REVISION	BY
Designed	M. GREENHECK				
Entered	A. ARMSTRONG				
Checked	M. GREENHECK				
Proj.Eng.	B. ELLIOT				
Reg Admin	S. ROARK				

REGION NO.	STATE	FED. AID PROJ. NO.
10	WASH	ARPA001

JOB NUMBER: 22C525

CONTRACT NO.: 9902

LOCATION NO.: XL-6115

Washington State Department of Transportation

SCJ ALLIANCE CONSULTING SERVICES

SR 16 / SR 160 / KITSAP COUNTY
FISH PASSAGE BARRIERS
REMOVE FISH BARRIERS

STRUCTURE NOTES - DRAINAGE

PLAN REF NO: NTDR01

SHEET 348 OF 409 SHEETS

S. 6. T. 23N. R. 2E. W.M.

NOTES:

1. ALL STORM SEWER PIPES SHALL BE SCHEDULE A UNLESS OTHERWISE SPECIFIED.
2. FOR DRAINAGE PROFILES, SEE DP SHEETS.
3. FOR DRAINAGE DETAILS INCLUDING DRAINAGE DITCHES, MEDIA FILTER DRAINS (MFDs), SEE DRAINAGE DETAILS (DD) SHEETS.

N

0 25 50
SCALE IN FEET

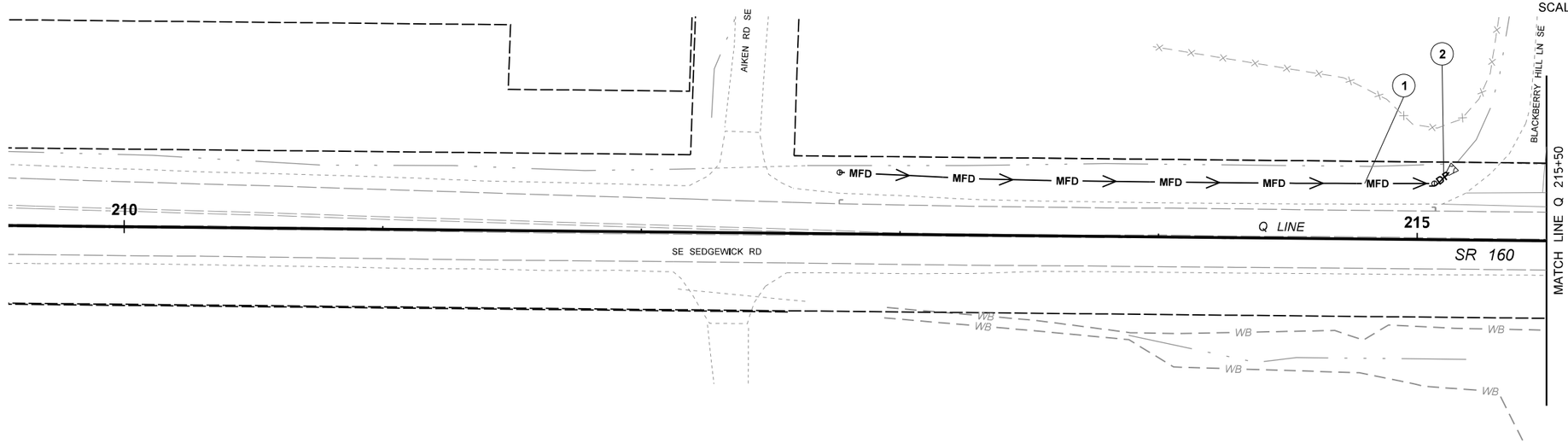

LEGEND

#	STRUCTURE NOTE CODE
# DRXX	STRUCTURE NOTE CODE CONTINUED
	EXISTING STREAM EDGE
WB	EXISTING WETLAND
OHW	EXISTING ORIDNARY HIGH WATER MARK
	EXISTING CULVERT
	EXISTING DITCH
UD UD	UNDERDRAIN
DP DP	DRAIN PIPE
MFD	MEDIA FILTER DRAIN TYPE 1 (SEE DD01 FOR DETAILS)
	OUTLET PROTECTION, SEE DETAIL ON DD02
	STORM SEWER CLEANOUT

S. 7. T. 23N. R. 2E. W.M.

FILE NAME	c:\users\melissa.greenheck\pw_wsdot\d0202980\SR160MP2.29_Q_PS_DR_001.dgn
TIME	3:56:09 PM
DATE	4/7/2023
PLOTTED BY	melissa.greenheck
DESIGNED BY	K. KOZAI
ENTERED BY	K. KOZAI
CHECKED BY	W. HOLM
PROJ. ENGR.	B. ELLIOTT
REGIONAL ADM.	S. ROARK

REVISION | DATE | BY

REGION NO.	STATE	FED.AID PROJ.NO.
10	WASH	ARPA001
JOB NUMBER 22C525		
CONTRACT NO. 009902		LOCATION NO. XL-6115

DATE
P.E. STAMP BOX

SCOTT A. SAWYER STATE OF WASHINGTON REGISTERED PROFESSIONAL ENGINEER
SEE SHEET CT01
DATE
P.E. STAMP BOX

Washington State Department of Transportation

SCJ ALLIANCE CONSULTING SERVICES

SR 160 MP 2.29 SALMONBERRY CREEK

SR 16 / SR 160 / KITSAP COUNTY
FISH PASSAGE BARRIERS
REMOVE FISH BARRIERS

DRAINAGE PLAN

PLAN REF NO DR01

SHEET 349 OF 409 SHEETS

pw:\\HQOLYMAPPPW03P.WSDOT.LOC:WSDOT\Documents_HQ\Fish Passage\ORproj\160\2.29_Salmonberry\Design_CAD_Sheets\SR160MP2.29_Q_PS_DR_001.dgn

S. 6. T. 23N. R. 2E. W.M.

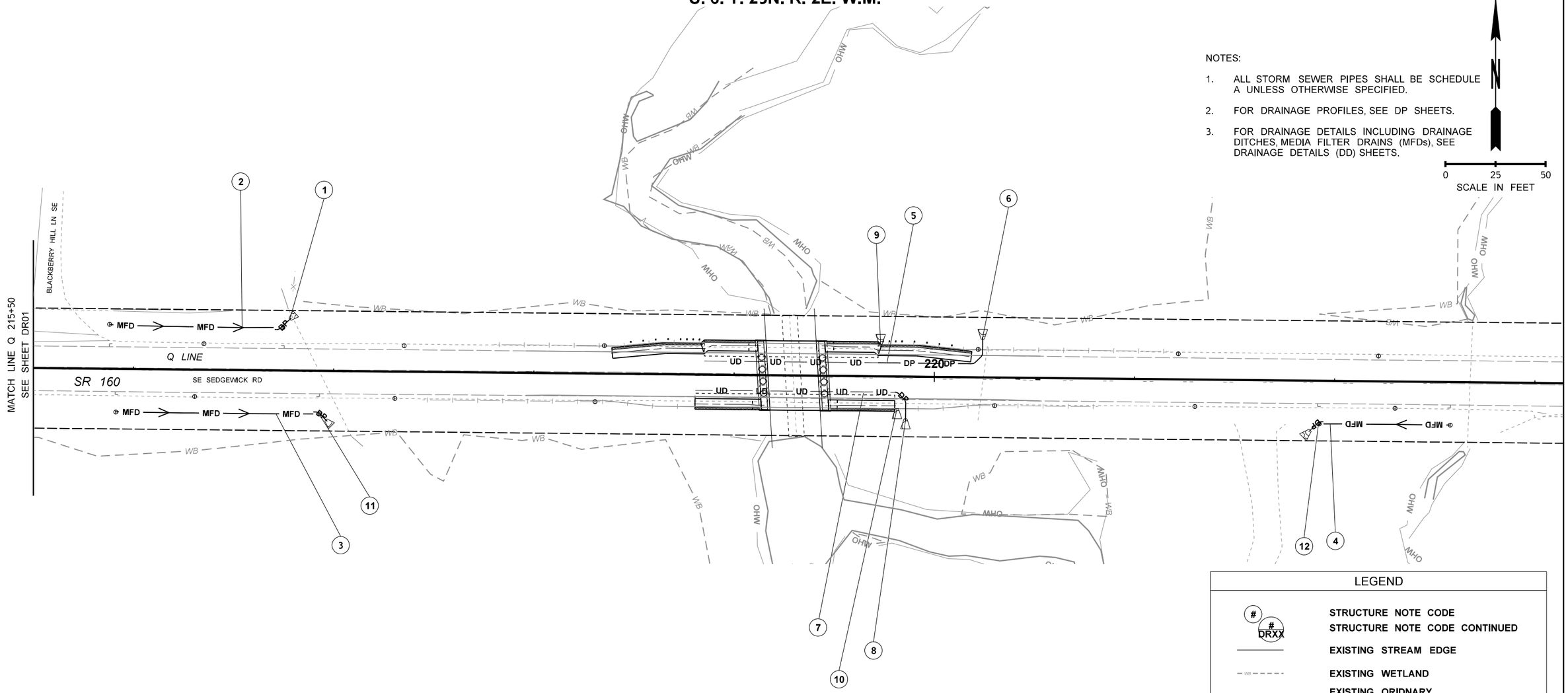

NOTES:

1. ALL STORM SEWER PIPES SHALL BE SCHEDULE A UNLESS OTHERWISE SPECIFIED.
2. FOR DRAINAGE PROFILES, SEE DP SHEETS.
3. FOR DRAINAGE DETAILS INCLUDING DRAINAGE DITCHES, MEDIA FILTER DRAINS (MFDs), SEE DRAINAGE DETAILS (DD) SHEETS.

N

0 25 50
SCALE IN FEET

LEGEND

#	STRUCTURE NOTE CODE
# DRXX	STRUCTURE NOTE CODE CONTINUED
	EXISTING STREAM EDGE
WB	EXISTING WETLAND
OHW	EXISTING ORIDNARY HIGH WATER MARK
	EXISTING CULVERT
	EXISTING DITCH
UD	UNDERDRAIN
DP	DRAIN PIPE
MFD	MEDIA FILTER DRAIN TYPE 1 (SEE DD01 FOR DETAILS)
	OUTLET PROTECTION, SEE DETAIL ON DD02
	STORM SEWER CLEANOUT

S. 7. T. 23N. R. 2E. W.M.

SR 160 MP 2.29 SALMONBERRY CREEK

FILE NAME	c:\users\melissa.greenheck\pw_wsdot\d0202980\SR160MP2.29_Q_PS_DR_002.dgn
TIME	3:56:12 PM
DATE	4/7/2023
PLOTTED BY	melissa.greenheck
DESIGNED BY	K. KOZAI
ENTERED BY	K. KOZAI
CHECKED BY	W. HOLM
PROJ. ENGR.	B. ELLIOTT
REGIONAL ADM.	S. ROARK

REVISION | DATE | BY

REGION NO.	STATE	FED.AID PROJ.NO.
10	WASH	ARPA001
JOB NUMBER 22C525		
CONTRACT NO. 009902		LOCATION NO. XL-6115

P.E. STAMP BOX — DATE

SCOTT A. SAWYER, STATE OF WASHINGTON, 18872, REGISTERED PROFESSIONAL ENGINEER

SEE SHEET CT01 DATE

P.E. STAMP BOX

Washington State Department of Transportation

SCJ ALLIANCE CONSULTING SERVICES

SR 16 / SR 160 / KITSAP COUNTY
FISH PASSAGE BARRIERS
REMOVE FISH BARRIERS

DRAINAGE PLAN

PLAN REF NO DR02

SHEET 350 OF 409 SHEETS

pw:\\HQOLYMAPPPW03P.WSDOT.LOC:WSDOT\Documents_HQ\Fish Passage\ORproj\160\2.29_Salmonberry\Design_CAD_Sheets\SR160MP2.29_Q_PS_DR_002.dgn

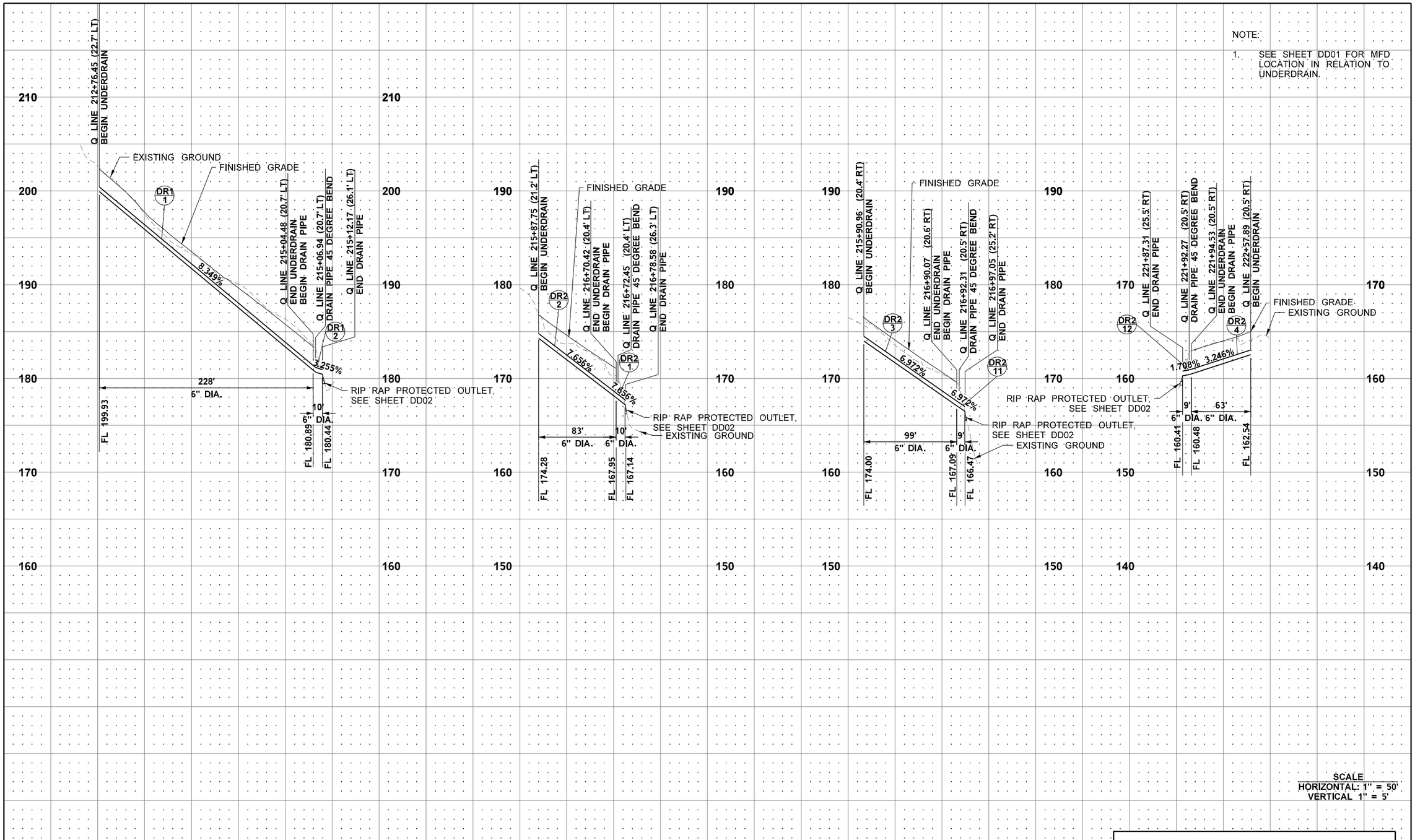

SR 160 MP 2.29 SALMONBERRY CREEK

FILE NAME	c:\users\mellssa.greenheck\pw_wsdot\d0202980\SR160MP2.29_Q_PR_DR_001.dgn
TIME	3:56:14 PM
DATE	4/7/2023
PLOTTED BY	melissa.greenheck
DESIGNED BY	K. KOZAI
ENTERED BY	K. KOZAI
CHECKED BY	W. HOLM
PROJ. ENGR.	B. ELLIOTT
REGIONAL ADM.	S. ROARK

REVISION | DATE | BY

REGION NO.	STATE	FED.AID PROJ.NO.
10	WASH	ARPA001
JOB NUMBER 22C525		
CONTRACT NO. 009902		LOCATION NO. XL-6115

P.E. STAMP BOX — DATE

SCOTT A. SANTEE, STATE OF WASHINGTON, 35874, REGISTERED PROFESSIONAL ENGINEER

SEE SHEET CT01 — DATE

P.E. STAMP BOX

Washington State Department of Transportation

SCJ ALLIANCE CONSULTING SERVICES

SR 16 / SR 160 / KITSAP COUNTY
FISH PASSAGE BARRIERS
REMOVE FISH BARRIERS

DRAINAGE PROFILE

PLAN REF. NO. DP01

SHEET 351 OF 409 SHEETS

pw:\\HQOLYMAPPPW03P.WSDOT.LOC:WSDOT\Documents_HQ\Fish Passage\ORproj\160\2.29_Salmonberry\Design_CAD_Sheets\SR160MP2.29_Q_PR_DR_001

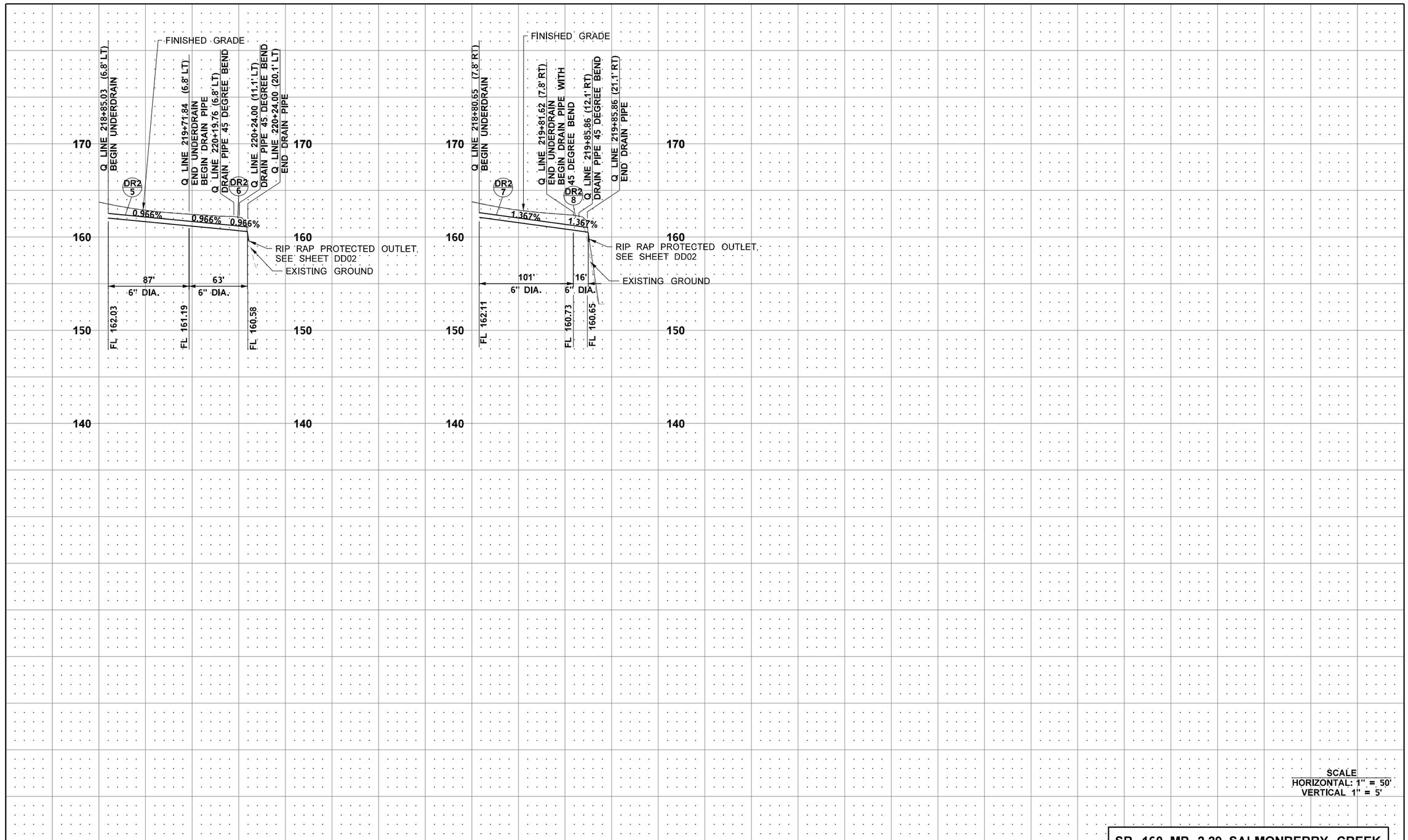

SR 160 MP 2.29 SALMONBERRY CREEK

FILE NAME	c:\users\melissa.greenheck\pw_wsdot\d0202980\SR160MP2.29_Q_PR_DR_002.dgn
TIME	3:56:16 PM
DATE	4/7/2023
PLOTTED BY	melissa.greenheck
DESIGNED BY	K. KOZAI
ENTERED BY	K. KOZAI
CHECKED BY	W. HOLM
PROJ. ENGR.	B. ELLIOTT
REGIONAL ADM.	S. ROARK

REVISION	DATE	BY

REGION NO.	STATE	FED.AID PROJ.NO.
10	WASH	ARPA001
JOB NUMBER 22C525		
CONTRACT NO. 009902		LOCATION NO. XL-6115

P.E. STAMP BOX — DATE

SCOTT A. SAWYER, STATE OF WASHINGTON, REGISTERED PROFESSIONAL ENGINEER

SEE SHEET CT01 — DATE

P.E. STAMP BOX

Washington State Department of Transportation

SCJ ALLIANCE CONSULTING SERVICES

SR 16 / SR 160 / KITSAP COUNTY
FISH PASSAGE BARRIERS
REMOVE FISH BARRIERS

DRAINAGE PROFILE

PLAN REF. NO. DP02

SHEET 352 OF 409 SHEETS

pw:\\HQOLYMAPPPW03P.WSDOT.LOC:WSDOT\Documents_HQ\Fish Passage\ORproj\160\2.29_Salmonberry\Design_CAD_Sheets\SR160MP2.29_Q_PR_DR_002.dgn

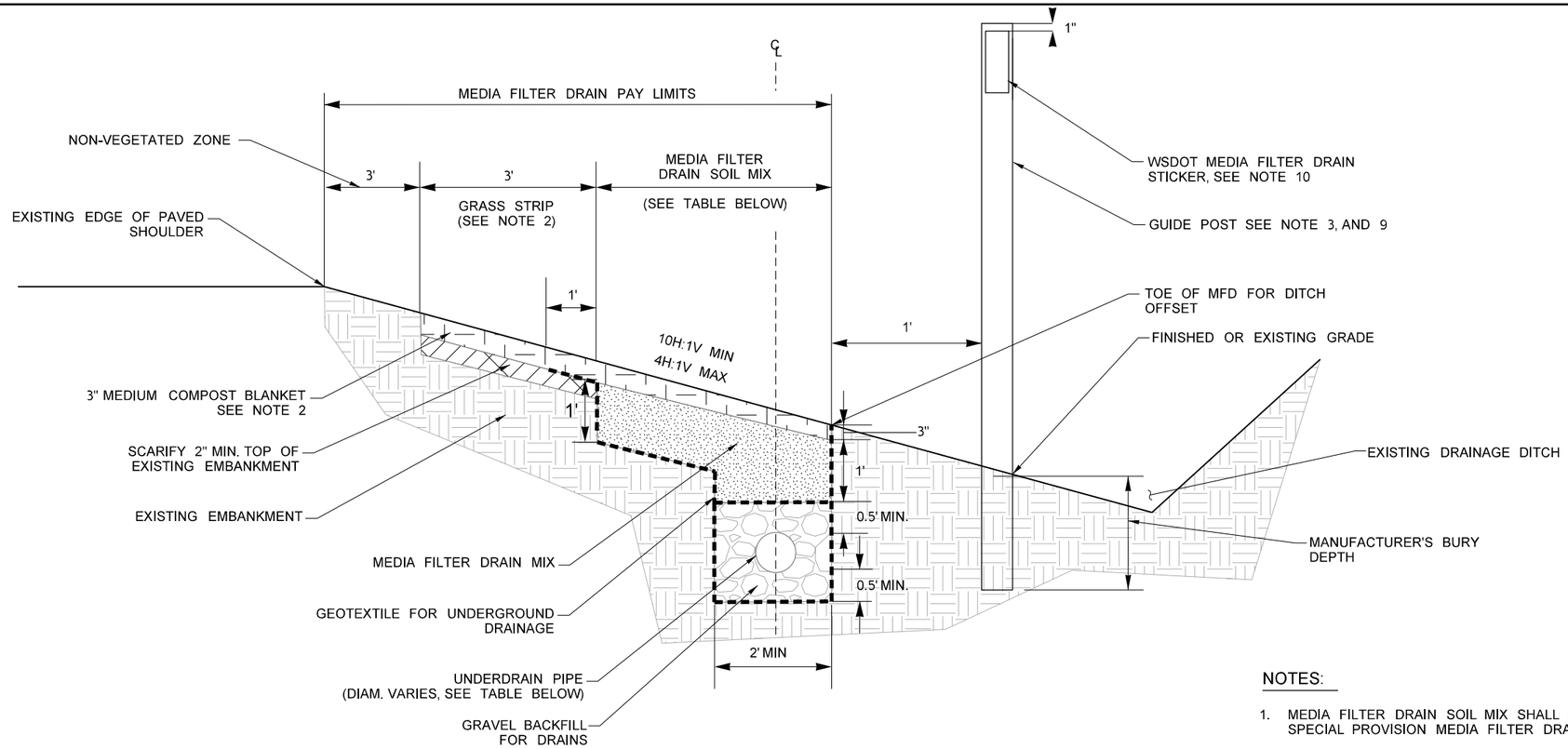

MFD LOCATION TABLE

STRUCTURE CODE	LOCATION	LENGTH	MEDIA FILTER DRAIN SOIL MIX WIDTH	NON-VEG ZONE	GRASS STRIP	UNDER-DRAIN DIAM.	PLASTIC DRAINAGE MARKING	FLEXIBLE GUIDE POST	SIDE SLOPE
	STATION	FEET	FEET	FEET	FEET	INCHES	EACH	EACH	
DR01-1	Q LINE STA. 212+76.5 (23.7' LT) TO Q LINE STA. 215+04.5 (21.7' LT)	228	2	3	3	6	2	2	4H:1V
DR02-2	Q LINE STA. 215+87.8 (22.2' LT) TO Q LINE STA. 216+70.4 (21.4' LT)	83	2	3	3	6	2	2	4H:1V
DR02-3	Q LINE STA. 215+90.9 (21.4' RT) TO Q LINE STA. 216+90.1 (21.6' RT)	99	2	3	3	6	2	2	4H:1V
DR02-4	Q LINE STA. 222+58.0 (21.5' RT) TO Q LINE STA. 221+94.6 (21.5' RT)	63	2	3	3	6	2	2	4H:1V

NOTES:

1. MEDIA FILTER DRAIN SOIL MIX SHALL BE PLACED IN ACCORDANCE WITH SPECIAL PROVISION MEDIA FILTER DRAINS.
2. SEE LANDSCAPE PLANS FOR NATIVE SEED.
3. FOR BEGIN AND END STATIONS FOR PLACEMENT OF GUIDE POST, SEE MFD LOCATION TABLE. INTERMEDIATE STATIONS NOT TO EXCEED 500-FT.
4. FOR FINISHED EMBANKMENT SLOPE, SEE ROADWAY SECTION (RS) PLANS. FOR EXISTING EMBANKMENT, INSTALL MFD ON EXISTING EMBANKMENT SLOPES - NOT TO EXCEED 4:1.
5. FOR INSTALLATION SEQUENCE OF MFDS, SEE SITE PREPARATION (SP) AND TESC PLAN (EC) PLANS.
6. SEE DRAINAGE PROFILES FOR MFD UNDERDRAIN SLOPES.
7. STORMWATER BMP MARKING IN ACCORDANCE WITH STD PLAN M-24.65, PAID AS PLASTIC DRAINAGE MARKING.
8. FLEXIBLE GUIDE POST SHALL BE FLEXIBLE, NON-REFLECTIVE AND BROWN IN COLOR. INSTALL GUIDE POST IN ACCORDANCE WITH STD PLAN M-24.65. SEE PAVEMENT MARKING PLANS FOR FLEXIBLE GUIDE POST LOCATIONS.
9. MOUNT REFLECTIVE SHEETING ON THE FLEXIBLE GUIDE POST PER STD. PLAN M-40.10, TYPE W. REFLECTIVE SHEETING SHALL BE TYPE II CONFORMING TO SPECIFICATION SECTION 9-28.12.
10. WSDOT MEDIA FILTER DRAIN STICKER TO BE PLACED ON FIRST FLEXIBLE GUIDEPOST ONLY.

MEDIA FILTER DRAIN TYPE 1

SIDE SLOPE APPLICATION WITH UNDERDRAIN
NOT TO SCALE

SR 160 MP 2.29 SALMONBERRY CREEK

FILE NAME	c:\users\melissa.greenheck\pw_wsdot\d0202980\SR160MP2.29_Q_DE_DR_001.dgn
TIME	3:56:17 PM
DATE	4/7/2023
PLOTTED BY	melissa.greenheck
DESIGNED BY	C. BLACKWELL
ENTERED BY	C. BLACKWELL
CHECKED BY	S. SRIDHARAN
PROJ. ENGR.	B. ELLIOTT
REGIONAL ADM.	S. ROARK

REVISION | DATE | BY

REGION NO. 10 | STATE WASH | FED.AID PROJ.NO. ARPA001

JOB NUMBER 22C525

CONTRACT NO. 009902 | LOCATION NO. XL-6115

P.E. STAMP BOX DATE

SCOTT A. SAWYER STATE OF WASHINGTON 38872 REGISTERED PROFESSIONAL ENGINEER

SEE SHEET CT01 DATE

P.E. STAMP BOX

Washington State Department of Transportation

SCJ ALLIANCE CONSULTING SERVICES

SR 16 / SR 160 / KITSAP COUNTY
FISH PASSAGE BARRIERS
REMOVE FISH BARRIERS

DRAINAGE DETAIL

PLAN REF NO DD01

SHEET 353 OF 409 SHEETS

pw:\\HQOLYMAPPPW03P.WSDOT.LOC:WSDOT\Documents_HQ\Fish Passage\ORproj\160\2.29_Salmonberry\Design_CAD_Sheets\SR160MP2.29_Q_DE_DR_001.dgn

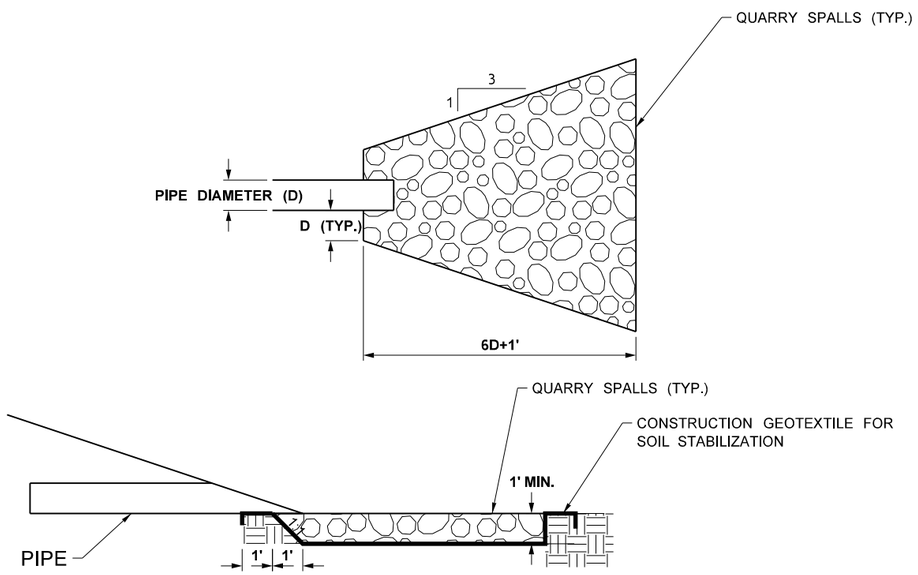

OUTLET PROTECTION DETAIL

NOT TO SCALE

NOTES:

1. SEE DRAINAGE PROFILES FOR PIPE INVERT. TOP OF RIP RAP TO MATCH DITCH INVERT OR FINAL GRADE WHERE APPLICABLE.
2. QUARRY SPALLS SHALL BE IN ACCORDANCE WITH WSDOT STANDARD SPECIFICATION 9-13.1(5).
3. FOR INSTANCES WHERE THERE IS NO PIPE, DIMENSION D SHALL BE 0.5 FEET.

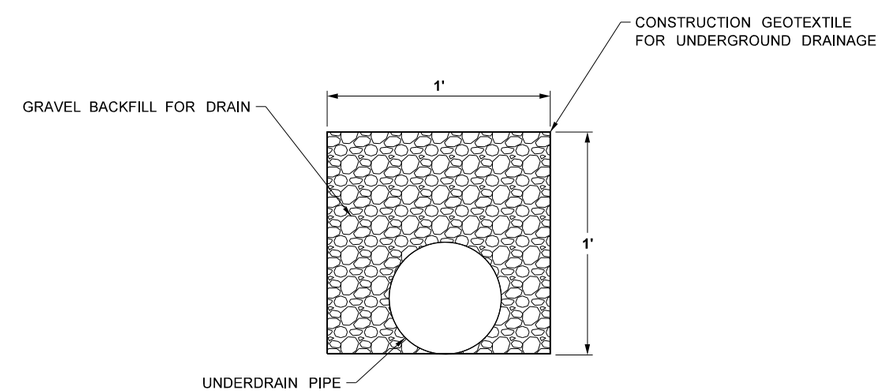

UNDERDRAIN BACKFILL DETAIL

NOT TO SCALE

SR 160 MP 2.29 SALMONBERRY CREEK

FILE NAME	c:\users\melissa.greenheck\pw_wsdot\d0202980\SR160MP2.29_Q_DE_DR_002.dgn			
TIME	3:56:20 PM			
DATE	4/7/2023			
PLOTTED BY	melissa.greenheck			
DESIGNED BY	K. KOZAI			
ENTERED BY	K. KOZAI			
CHECKED BY	W. HOLM			
PROJ. ENGR.	B. ELLIOTT			
REGIONAL ADM.	S. ROARK	REVISION	DATE	BY

REGION NO.	STATE	FED.AID PROJ.NO.
10	WASH	ARPA001
JOB NUMBER 22C525		
CONTRACT NO. 009902		LOCATION NO. XL-6115

P.E. STAMP BOX DATE

SCOTT A. SANTEE STATE OF WASHINGTON 36872 REGISTERED PROFESSIONAL ENGINEER

SEE SHEET CT01 DATE

P.E. STAMP BOX

Washington State Department of Transportation

SCJ ALLIANCE CONSULTING SERVICES

SR 16 / SR 160 / KITSAP COUNTY
FISH PASSAGE BARRIERS
REMOVE FISH BARRIERS

DRAINAGE DETAIL

PLAN REF NO DD02

SHEET 354 OF 409 SHEETS

pw:\\HQOLYMAPPPW03P.WSDOT.LOC:WSDOT\Documents_HQ\Fish Passage\ORproj\160\2.29_Salmonberry\Design_CAD_Sheets\SR160MP2.29_Q_DE_DR_002.dgn

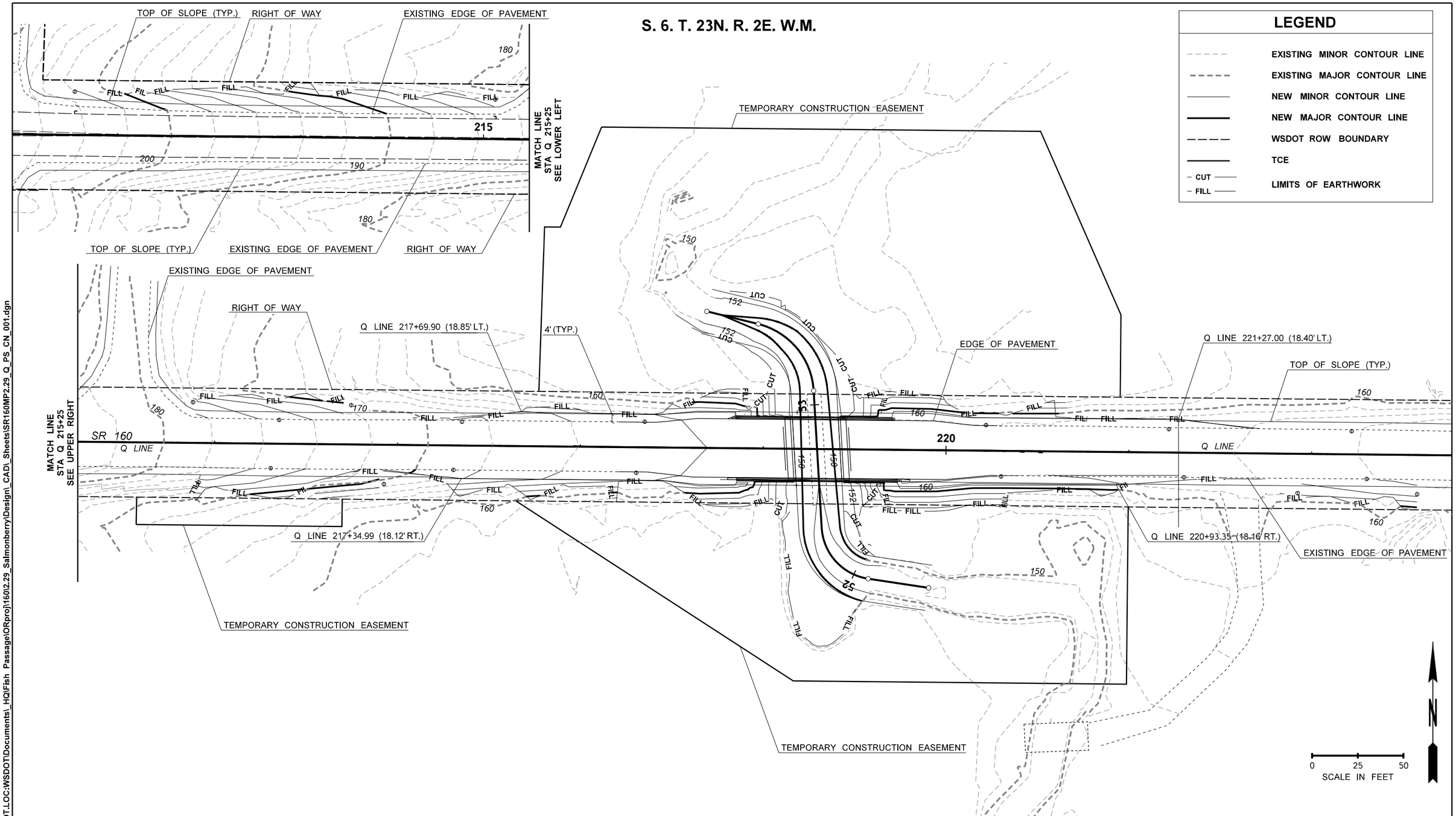

S. 7. T. 23N. R. 2E. W.M.

SR 160 MP 2.29 SALMONBERRY CREEK

FILE NAME	c:\users\mellssa.greenheck\pw_wsdot\d0202980\SR160MP2.29_Q_PS_CN_001.dgn
TIME	3:56:24 PM
DATE	4/7/2023
PLOTTED BY	mellssa.greenheck
DESIGNED BY	H. BROWN
ENTERED BY	S. DUNN
CHECKED BY	H. BROWN
PROJ. ENGR.	B. ELLIOTT
REGIONAL ADM.	S. ROARK

REVISION	DATE	BY

REGION NO.	STATE	FED.AID PROJ.NO.
10	WASH	ARPA001
JOB NUMBER 22C525		
CONTRACT NO. 009902		LOCATION NO. XL-6115

P.E. STAMP BOX DATE

SCOTT A. SANTEE STATE OF WASHINGTON 38872 REGISTERED PROFESSIONAL ENGINEER

SEE SHEET CT01 DATE

P.E. STAMP BOX

Washington State Department of Transportation

SCJ ALLIANCE CONSULTING SERVICES

SR 16 / SR 160 / KITSAP COUNTY
FISH PASSAGE BARRIERS
REMOVE FISH BARRIERS

CONTOUR GRADING PLAN

PLAN REF NO CG01

SHEET 355 OF 409 SHEETS

pw:\\HQOLYMAPPPW03P.WSDOT.LOC:WSDOT\Documents_HQ\Fish Passage\ORproj\160\2.29_Salmonberry\Design_CAD_Sheets\SR160MP2.29_Q_PS_CN_001.dgn

T.23N. R.2E. W.M.

LEGEND

NEW ROADWAY ALIGNMENT	SR 160 14 / 51
NEW STREAM ALIGNMENT	
EXISTING INDEX CONTOUR	2040
EXISTING INTERMEDIATE CONTOUR	
STREAM SURFACE BREAKLINE	
EXISTING EDGE OF PAVEMENT	
EXISTING TREE	
EXISTING WOOD	
EXISTING PROPERTY LINE	
LIMITS OF EARTHWORK	CUT FILL
ORDINARY HIGH WATER	OHW
WETLAND BOUNDARY	WB
RIGHT OF WAY BOUNDARY	
GUARDRAIL	
RETAINING WALL	
GUIDE POST	
NEW INDEX CONTOUR	2040
NEW INTERMEDIATE CONTOUR	
TEMPORARY CONSTRUCTION EASEMENT	
LOW FLOW CHANNEL	

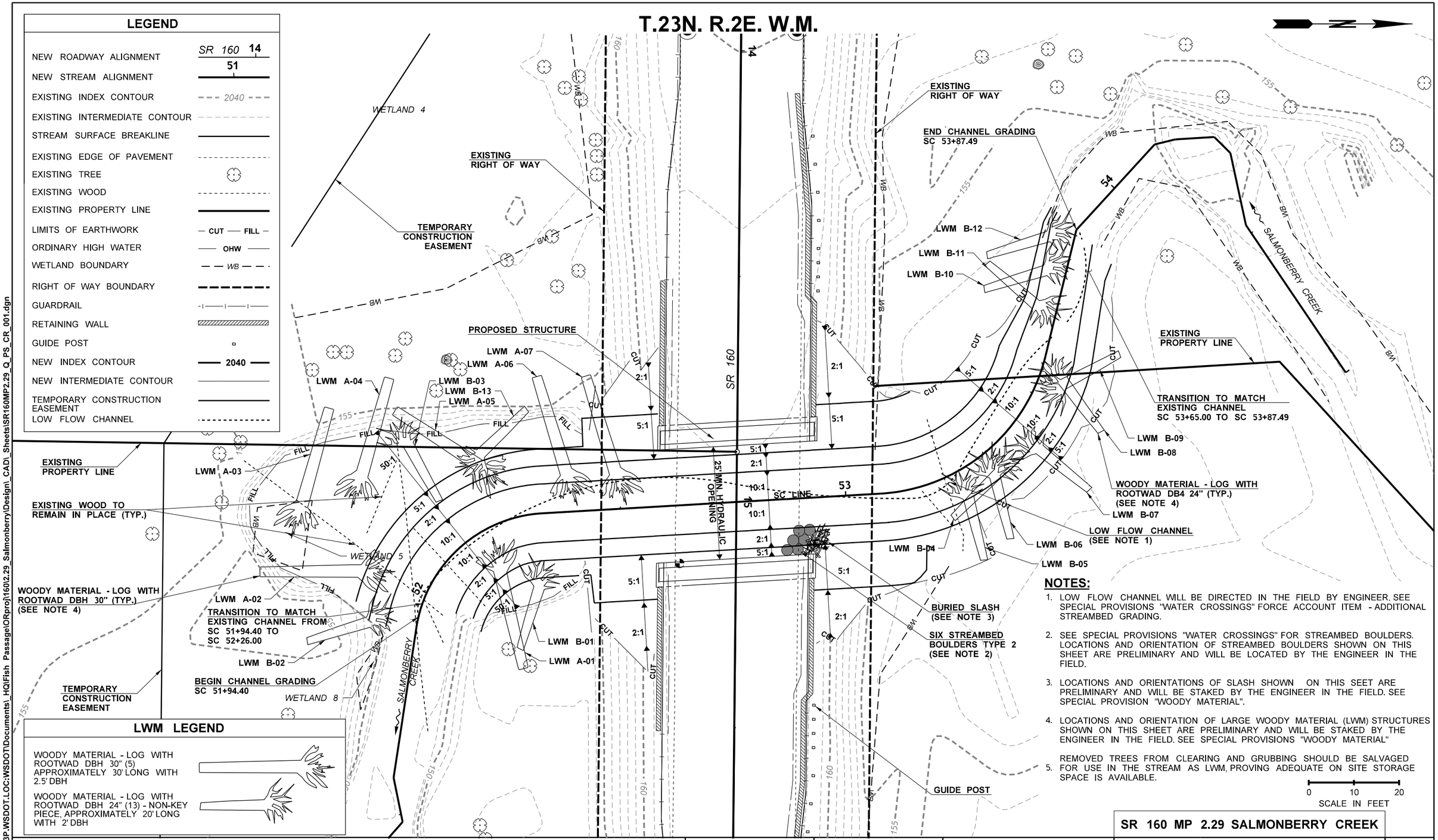

LWM LEGEND

WOODY MATERIAL - LOG WITH ROOTWAD DBH 30" (5) APPROXIMATELY 30' LONG WITH 2.5' DBH

WOODY MATERIAL - LOG WITH ROOTWAD DBH 24" (13) - NON-KEY PIECE, APPROXIMATELY 20' LONG WITH 2' DBH

NOTES:

1. LOW FLOW CHANNEL WILL BE DIRECTED IN THE FIELD BY ENGINEER. SEE SPECIAL PROVISIONS "WATER CROSSINGS" FORCE ACCOUNT ITEM - ADDITIONAL STREAMBED GRADING.
2. SEE SPECIAL PROVISIONS "WATER CROSSINGS" FOR STREAMBED BOULDERS. LOCATIONS AND ORIENTATION OF STREAMBED BOULDERS SHOWN ON THIS SHEET ARE PRELIMINARY AND WILL BE LOCATED BY THE ENGINEER IN THE FIELD.
3. LOCATIONS AND ORIENTATIONS OF SLASH SHOWN ON THIS SEET ARE PRELIMINARY AND WILL BE STAKED BY THE ENGINEER IN THE FIELD. SEE SPECIAL PROVISION "WOODY MATERIAL".
4. LOCATIONS AND ORIENTATION OF LARGE WOODY MATERIAL (LWM) STRUCTURES SHOWN ON THIS SHEET ARE PRELIMINARY AND WILL BE STAKED BY THE ENGINEER IN THE FIELD. SEE SPECIAL PROVISIONS "WOODY MATERIAL"
5. REMOVED TREES FROM CLEARING AND GRUBBING SHOULD BE SALVAGED FOR USE IN THE STREAM AS LWM, PROVING ADEQUATE ON SITE STORAGE SPACE IS AVAILABLE.

0 10 20
SCALE IN FEET

SR 160 MP 2.29 SALMONBERRY CREEK

FILE NAME	c:\pwworking\wsdot\d0202980\SR160MP2.29_Q_PS_CR_001.dgn
TIME	12:57:10 PM
DATE	3/17/2023
PLOTTED BY	KMELBY
DESIGNED BY	D. MINNER
ENTERED BY	C. SAXE
CHECKED BY	S. BEVAN
PROJ. ENGR.	B. ELLIOTT
REGIONAL ADM.	S. ROARK

REVISION | DATE | BY

REGION NO.	STATE	FED.AID PROJ.NO.
10	WASH	ARPA001
JOB NUMBER 22C525		
CONTRACT NO. 009902		LOCATION NO. XL-6115

P.E. STAMP BOX — SEE SHEET CT01 — DATE

P.E. STAMP BOX — DATE

Washington State Department of Transportation

HDR

SR 16 / SR 160 / KITSAP COUNTY
FISH PASSAGE BARRIERS
REMOVE FISH BARRIERS

STREAM PLAN

PLAN REF NO CR01

SHEET 356 OF 409 SHEETS

pw:\\HQOLYMAPPPW03P.WSDOT.LOC:WSDOT\Documents_HQ\Fish Passage\ORproj\160\2.29_Salmonberry\Design_CAD_Sheets\SR160MP2.29_Q_PS_CR_001.dgn

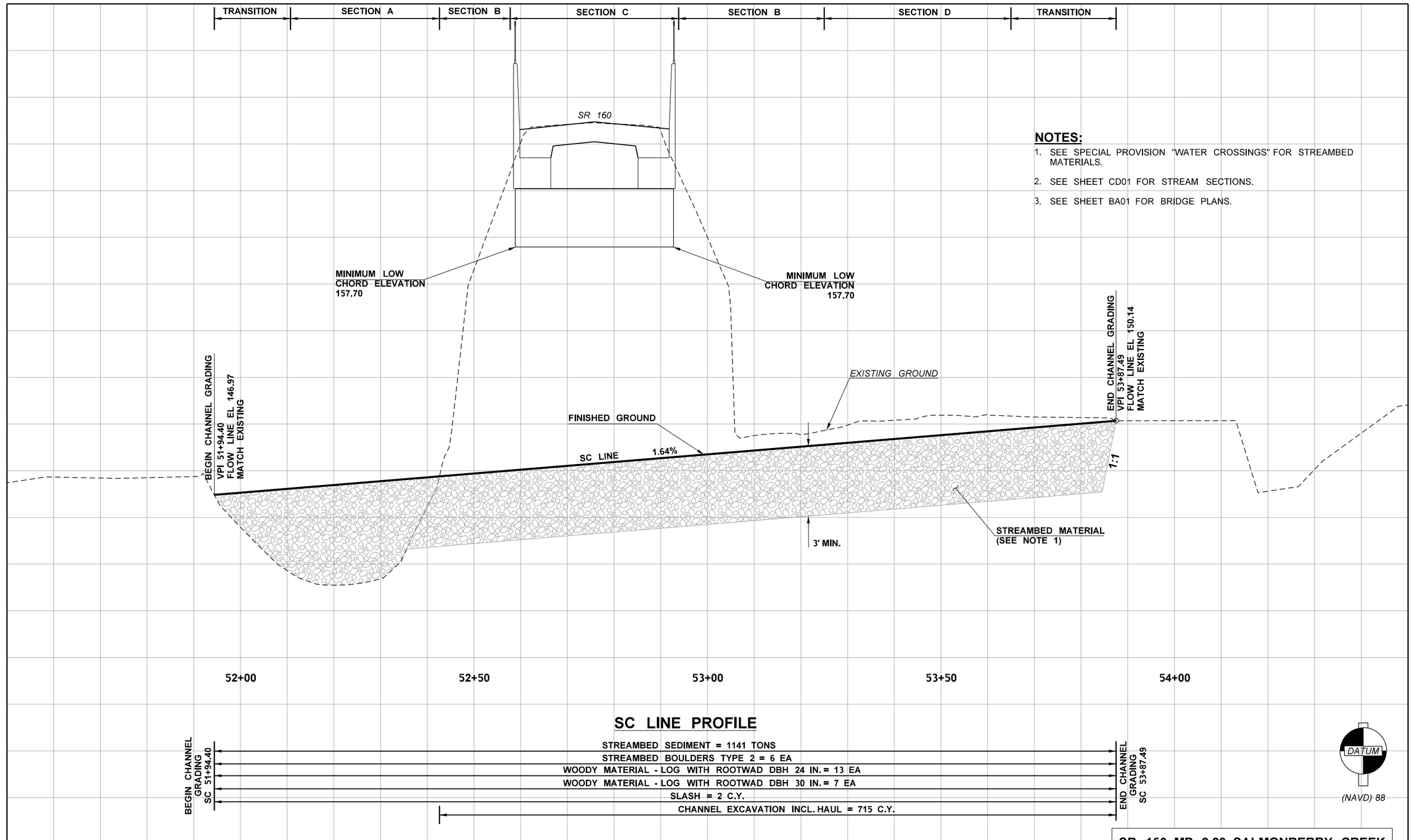

NOTES:

1. SEE SPECIAL PROVISION "WATER CROSSINGS" FOR STREAMBED MATERIALS.
2. SEE SHEET CD01 FOR STREAM SECTIONS.
3. SEE SHEET BA01 FOR BRIDGE PLANS.

SR 160 MP 2.29 SALMONBERRY CREEK

FILE NAME	c:\pwworking\wsdot\d0202980\SR160MP2.29_Q_PS_PR_CP_001.dgn
TIME	1:00:48 PM
DATE	3/17/2023
PLOTTED BY	KMELBY
DESIGNED BY	D. MINNER
ENTERED BY	C. SAXE
CHECKED BY	S. BEVAN
PROJ. ENGR.	B. ELLIOTT
REGIONAL ADM.	S. ROARK

REVISION | DATE | BY

REGION NO. 10 | STATE WASH | FED.AID PROJ.NO. ARPA001

JOB NUMBER 22C525

CONTRACT NO. 009902 | LOCATION NO. XL-6115

P.E. STAMP BOX — SEE SHEET CT01 — DATE

P.E. STAMP BOX — DATE

Washington State Department of Transportation

HDR

SR 16 / SR 160 / KITSAP COUNTY
FISH PASSAGE BARRIERS
REMOVE FISH BARRIERS

STREAM PROFILE

PLAN REF. NO. CP01

SHEET 357 OF 409 SHEETS

pw:\\HQOLYMAPPPW03P.WSDOT.LOC:WSDOT\Documents_HQ\Fish Passage\ORproj\160\2.29_Salmonberry\Design_CAD_Sheets\SR160MP2.29_Q_PS_PR_CP_001.dgn

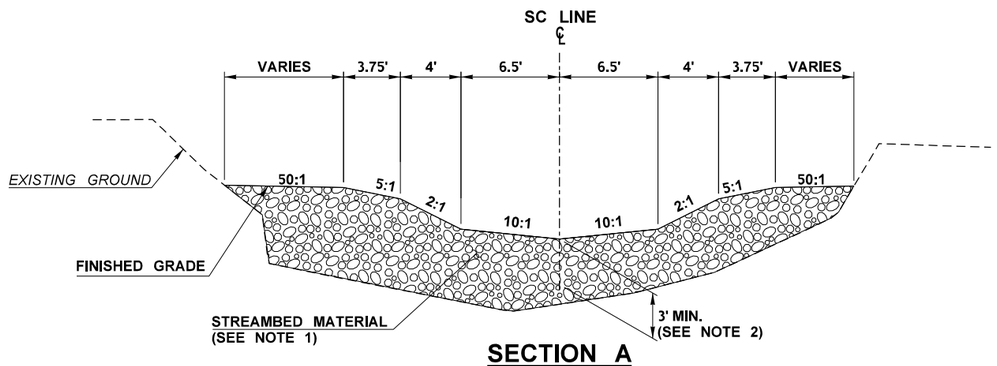

SECTION A

STATION
SC 51+94.40 TO 52+42.62 (SEE NOTE 4)

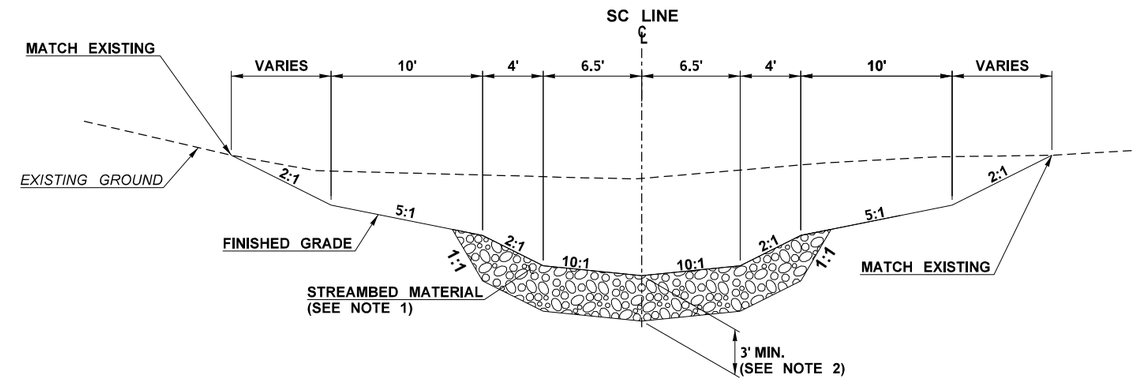

SECTION B

STATION
SC 52+42.62 TO 52+58.44
SC 52+93.15 TO 53+25.00

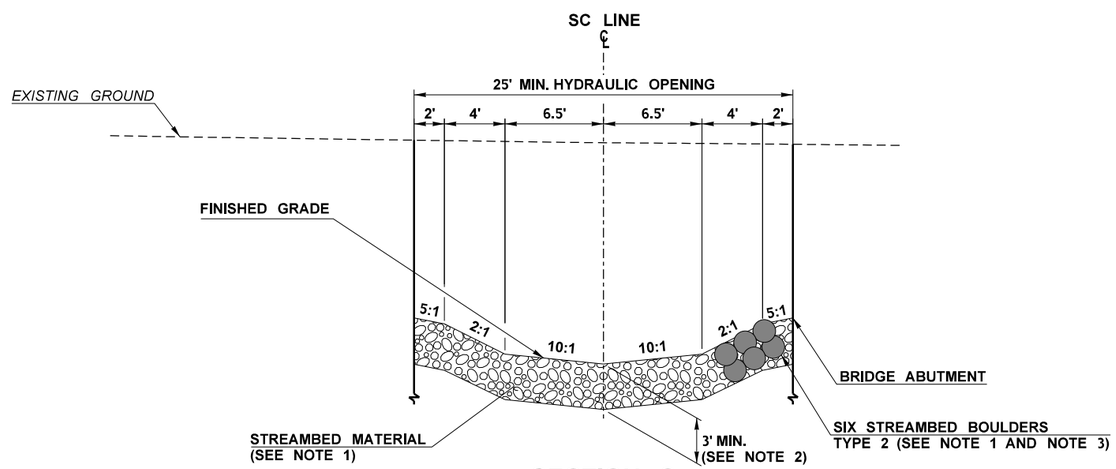

SECTION C

STATION
SC 52+58.44 TO 52+93.15

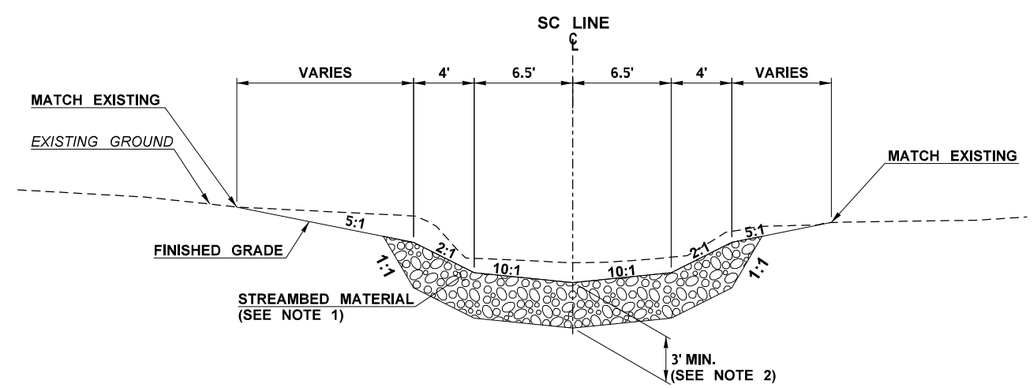

SECTION D

STATION
SC 53+25.00 TO 53+87.49 (SEE NOTE 5)

NOTES:

1. SEE SPECIAL PROVISION "WATER CROSSINGS" FOR STREAMBED MATERIAL. FINAL INSTALLATION WILL PROVIDE A WELL GRADED MIX OF STREAMBED SEDIMENT.
2. SEE SHEET CP01 FOR STREAM PROFILE.
3. INSTALL SIX STREAMBED BOULDERS TYPE 2 FROM STATION 52+85 TO STATION 52+93 AS LOCATED IN THE FIELD BY THE ENGINEER.
4. FROM SC 51+94.40 TO SC 52.26.00 EVENLY TAPER SECTION A TO MATCH EXISTING STREAM CHANNEL.
5. FROM SC 53+65.00 TO SC 53+87.49 EVENLY TAPER SECTION D TO MATCH EXISTING STREAM CHANNEL.

SR 160 MP 2.29 SALMONBERRY CREEK

FILE NAME	c:\pwworking\wsdot\d0202980\SR160MP2.29_Q_DE_CD_001.dgn				REGION NO. 10	STATE WASH	FED.AID PROJ.NO. ARPA001
TIME	12:57:13 PM						
DATE	3/17/2023						
PLOTTED BY	KMELBY				JOB NUMBER 22C525		
DESIGNED BY	D. MINNER						
ENTERED BY	C. SAXE						
CHECKED BY	S. BEVAN				CONTRACT NO. 009902		LOCATION NO. XL-6115
PROJ. ENGR.	B. ELLIOTT						
REGIONAL ADM.	S. ROARK	REVISION	DATE	BY			

P.E. STAMP BOX — SEE SHEET CT01 — DATE

P.E. STAMP BOX — DATE

Washington State Department of Transportation

HDR

SR 16 / SR 160 / KITSAP COUNTY
FISH PASSAGE BARRIERS
REMOVE FISH BARRIERS

STREAM DETAILS

PLAN REF NO CD01

SHEET 358 OF 409 SHEETS

pw:\\HQOLYMAPPPW03P.WSDOT.LOC:WSDOT\Documents_HQ\Fish Passage\ORproj\160\2.29_Salmonberry\Design_CAD_Sheets\SR160MP2.29_Q_DE_CD_001.dgn

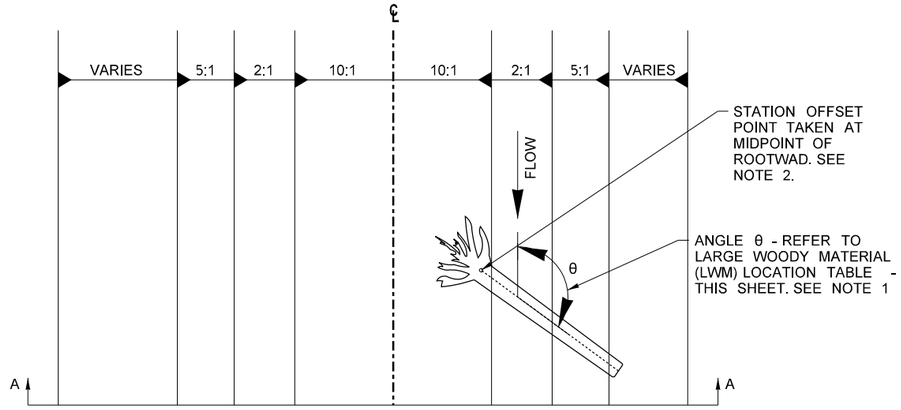

LARGE WOODY MATERIAL (LWM) SECTION A

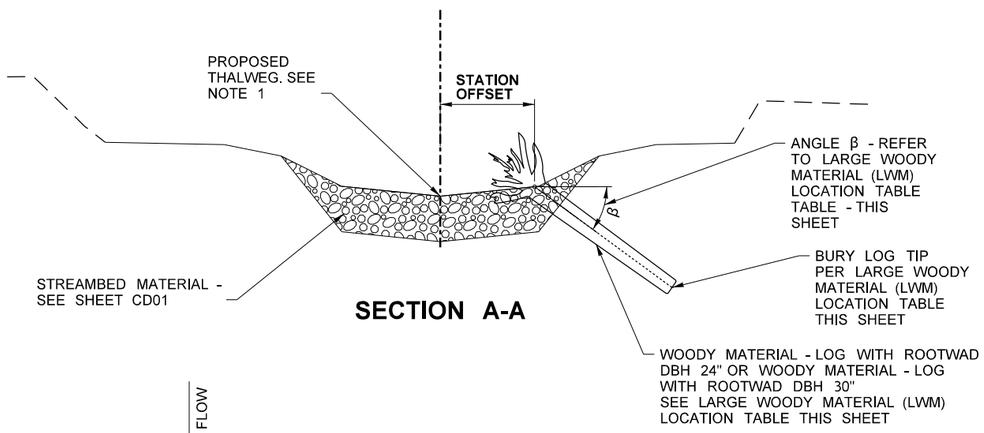

SECTION A-A

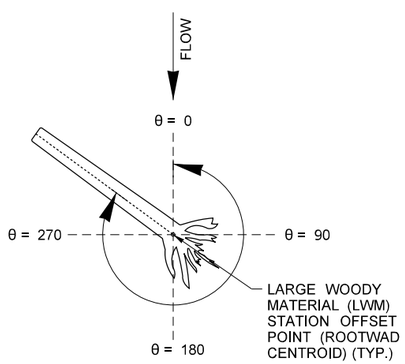

LOG ORIENTATION - PLANVIEW

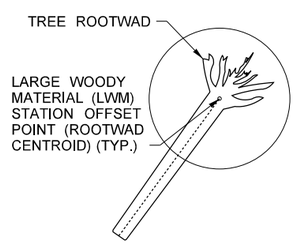

ROOTWAD CENTROID

NOTES:

1. FLOW DIRECTION TO BE MEASURED AS SHOWN IN LOG ORIENTATION - PLANVIEW.
2. FIELD MEASUREMENTS FOR θ AND β TO BE MEASURED FROM ROOTWAD CENTROID.
3. LOCATIONS AND ORIENTATION OF LARGE WOODY MATERIAL (LWM) STRUCTURES SHOWN ON THIS SHEET ARE PRELIMINARY AND WILL BE STAKED BY THE ENGINEER IN THE FIELD. SEE SPECIAL PROVISIONS "WOODY MATERIAL"

LARGE WOODY MATERIAL (LWM) LOCATION TABLE

LWM NO.	IN-CHANNEL STATION/OFFSET	DBH (MIN.)	ROOTWAD DIAMETER (MIN.)	LENGTH (MIN.) (SEE NOTE 1)	FLOW DEFLECTION ANGLE (θ)	HORIZONTAL TIPPING ANGLE (β)
B-01	52+29/16.1 RT	2.0'	6.0'	20'	100	-4
B-02	51+92/10.3 LT	2.0'	6.0'	20'	230	-6
B-03	52+16/25.1 LT	2.0'	6.0'	20'	90	0
B-04	53+33/5.3 RT	2.0'	6.0'	20'	175	-1
B-05	53+25/6.1 RT	2.0'	6.0'	20'	100	-3
B-06	53+32/5.1 RT	2.0'	6.0'	20'	100	-3
B-07	53+41/8.0 RT	2.0'	6.0'	20'	91	-3
B-08	53+55/5.1 RT	2.0'	6.0'	20'	130	-1
B-09	53+54/5.4 RT	2.0'	6.0'	20'	60	-5
B-10	53+69/4.6 LT	2.0'	6.0'	20'	230	-4
B-11	53+77/4.6 LT	2.0'	6.0'	20'	300	-1
B-12	53+85/5.7 LT	2.0'	6.0'	20'	230	-1
B-13	52+24/15.7 LT	2.0'	6.0'	20'	300	-9
A-01	52+17/9.7 RT	2.5'	7.5'	30'	92	-1
A-02	51+99/15.5 LT	2.5'	7.5'	30'	260	0
A-03	52+03/33.7 LT	2.5'	7.5'	30'	185	-1
A-04	52+10/26.9 LT	2.5'	7.5'	30'	300	-2
A-05	52+23/13.3 LT	2.5'	7.5'	30'	250	-1
A-06	52+39/8.9 LT	2.5'	7.5'	30'	250	-1
A-07	52+49/8.6 LT	2.5'	7.5'	30'	250	-1

SR 160 MP 2.29 SALMONBERRY CREEK

FILE NAME	c:\pwworking\wsdot\d0202980\SR160MP2.29_Q_PS_LWM_002.dgn
TIME	12:57:16 PM
DATE	3/17/2023
PLOTTED BY	KMELBY
DESIGNED BY	D. MINNER
ENTERED BY	C. SAXE
CHECKED BY	S. BEVAN
PROJ. ENGR.	B. ELLIOTT
REGIONAL ADM.	S. ROARK

REVISION | DATE | BY

REGION NO. 10 | STATE WASH | FED.AID PROJ.NO. ARPA001

JOB NUMBER 22C525

CONTRACT NO. 009902 | LOCATION NO. XL-6115

SEE SHEET CT01

P.E. STAMP BOX | DATE | P.E. STAMP BOX

Washington State Department of Transportation

SR 16 / SR 160 / KITSAP COUNTY
FISH PASSAGE BARRIERS
REMOVE FISH BARRIERS

LARGE WOODY MATERIAL DETAIL

PLAN REF NO LWM01

SHEET 359 OF 409 SHEETS

pw:\\HQOLYMAPPPW03P.WSDOT.LOC:WSDOT\Documents_HQ\Fish Passage\ORproj\160\2.29_Salmonberry\Design_CAD_Sheets\SR160MP2.29_Q_PS_LWM_002.dgn

S. 6. T. 23N. R. 2E. W.M.

NOTES:
1. SEE SHEETS LS02 AND LS03 FOR LANDSCAPE SCHEDULE, NOTES, AND DETAILS.
2. ALL TEMPORARY EROSION CONTROL SHALL BE REMOVED BEFORE FINAL PLANTING.
3. SEE SHEET CR01 FOR TYPICAL CREEK CHANNEL RECONSTRUCTION.
4. 18" SOIL DECOMPACTION SHALL OCCUR IN PLANTING AREAS IDENTIFIED ON SHEET LS03.
5. NO INCORPORATION OF SOIL AMENDMENTS SHALL OCCUR IN TREE PROTECTION AREAS.
6. ANY ADDITIONAL TREES (18" DBH OR GREATER) REMOVED OTHER THAN THOSE NOTED ON THE SITE PREPARATION SHEETS SHALL BE REPLACED AT A RATE OF ONE #2 CONT TREE PER EVERY 2-INCHES OF TREE DIAMETER AT BREAST HEIGHT (DBH) REMOVED. FIELD LOCATE ADDITIONAL TREES PER THE DIRECTION OF THE PROJECT ENGINEER.
7. REFER TO SPECIAL PROVISIONS "MEDIA FILTER DRAIN" FOR MFD MEDIA MIX AND DRAINAGE DETAIL (DD) SHEETS FOR BMP LOCATIONS.
8. CONTRACTOR TO VERIFY ALL QUANTITIES.
9. SEE SHEET LS04 FOR VEGETATION CLEARANCE REQUIREMENTS AT EDGES OF PAVEMENT.
10. REFER TO SPECIAL PROVISIONS SECTION 8-02.3(9)B FOR WET AND DRY SEED MIX INFORMATION.

QUANTITY TAB - THIS SHEET ONLY SYMBOL ITEM	QUANTITY					
ROADSIDE SEED MIX	E1	E2	E3	E4	E5	E6
DRY NATIVE SEED & FERTILIZER (ACRES)	0.05	0.08	0.04	0.16	0.06	0.03
3" DEPTH TOPSOIL "B" (ACRES)	0.05	0.08	0.04	0.16	0.06	0.03
SOIL DECOMPACTION, ACRES (SEE SHEET LS07 FOR DEPTH)	0.05	0.08	0.04	0.16	0.06	0.03

QUANTITY TAB - THIS SHEET ONLY SYMBOL ITEM	QUANTITY			
MFD SEED MIX	D1	D2	D3	D4
WET NATIVE SEED & FERTILIZER (ACRES)	0.05	0.02	0.03	0.02
3" DEPTH TOPSOIL "B" (ACRES)	0.05	0.02	0.03	0.02
SOIL DECOMPACTION, ACRES (SEE SHEET LS07 FOR DEPTH)	0.05	0.02	0.03	0.02

QUANTITY TAB - THIS SHEET ONLY SYMBOL ITEM	QUANTITY			
WETLAND PLANTING 36" O.C. LIVE STAKES	W1*	W2*	W3*	W4*
RED TWIG DOGWOOD	40	51	51	24
PACIFIC WILLOW	40	51	51	24
SCOULER'S WILLOW	40	51	51	24
3" DEPTH BARK OR WOOD CHIP MULCH (ACRES)	0.02	0.02	0.03	0.02
4" DEPTH TOPSOIL "B" (ACRES)	0.02	0.02	0.03	0.02
SOIL DECOMPACTION, ACRES (SEE SHEET LS07 FOR DEPTH)	0.02	0.02	0.03	0.02

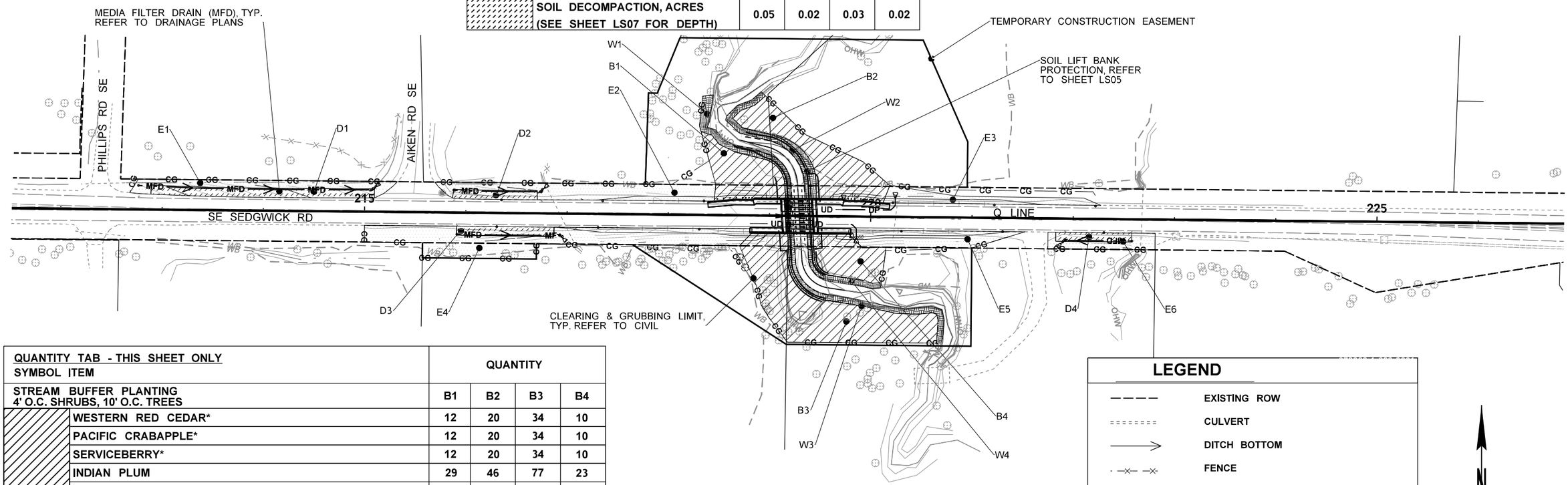

QUANTITY TAB - THIS SHEET ONLY SYMBOL ITEM	QUANTITY			
STREAM BUFFER PLANTING 4' O.C. SHRUBS, 10' O.C. TREES	B1	B2	B3	B4
WESTERN RED CEDAR*	12	20	34	10
PACIFIC CRABAPPLE*	12	20	34	10
SERVICEBERRY*	12	20	34	10
INDIAN PLUM	29	46	77	23
NINEBARK	29	46	77	23
NOOTKA ROSE	29	46	77	23
SALMONBERRY	29	46	77	23
RED ELDERBERRY	29	46	77	23
3" DEPTH BARK OR WOOD CHIP MULCH (ACRES)	0.08	0.12	0.20	0.06
4" DEPTH TOPSOIL "B" (ACRES)	0.08	0.12	0.20	0.06
SOIL DECOMPACTIOIN, ACRE (SEE SHEET LS03 FOR DEPTH)	0.08	0.12	0.20	0.06

* LOCATE ALL TREES OUTSIDE OF WSDOT ROW

LEGEND

	EXISTING ROW
	CULVERT
	DITCH BOTTOM
	FENCE
	GUARDRAIL
	GRAVEL EDGE
	PAVED EDGE
	BRIDGE
CG	LIMITS OF CLEARING AND GRUBBING
	EXISTING TREE TO REMAIN

N

0 50 100
SCALE IN FEET

S. 7. T. 23N. R. 2E. W.M.

SR 160 MP 2.29 SALMONBERRY CREEK

FILE NAME	c:\users\danyal.ali\pw_wsdot\d0202980\SR160MP2.29_Q_PS_LS_001.dgn
TIME	12:23:00 PM
DATE	4/6/2023
PLOTTED BY	danyal.ali
DESIGNED BY	C. OWEN
ENTERED BY	N. MAYFIELD
CHECKED BY	J. GLANDER
PROJ. ENGR.	B. ELLIOTT
REGIONAL ADM.	S. ROARK

REVISION | DATE | BY

REGION NO. 10 | STATE WASH | FED.AID PROJ.NO. ARPA001

JOB NUMBER 22C525

CONTRACT NO. 009902 | LOCATION NO. XL-6115

P.E. STAMP BOX — DATE

STATE OF WASHINGTON — JEFFREY B. GLANDER — NO. 405 — EXP. 02/06/2025 — LANDSCAPE ARCHITECT
SEE SHEET CT01 — DATE
P.E. STAMP BOX

Washington State Department of Transportation

SCJ ALLIANCE CONSULTING SERVICES

SR 16 / SR 160 / KITSAP COUNTY
FISH PASSAGE BARRIERS
REMOVE FISH BARRIERS

LANDSCAPE PLAN

PLAN REF NO LS01

SHEET 360 OF 409 SHEETS

pw:\\HQOLYMAPPPW03P.WSDOT.LOC:WSDOT\Documents_HQ\Fish Passage\ORproj\160\2.29_Salmonberry\Design_CAD_Sheets\SR160MP2.29_Q_PS_LS_001.dgn

LANDSCAPE SCHEDULE - ALL SHEETS

QTY.	BOTANICAL NAME	COMMON NAME	SIZE	ROOT CONDITION	REMARKS
TREES					
76	*Thuja plicata*	WESTERN RED CEDAR	24" HT. MIN.	#2 CONT.	SPACE TREES AT 10' MIN. O.C.
76	*Amelanchier alnifolia*	SERVICEBERRY	24" HT. MIN.	#2 CONT.	
76	*Malus fusca*	PACIFIC CRABAPPLE	24" HT. MIN.	#2 CONT.	
SHRUBS					
175	*Oemleria cerasiformis*	INDIAN PLUM	12" HT. MIN.	#1 CONT.	SPACE SHRUBS AT 4' MIN. O.C.
175	*Physocarpus opulifolius*	NINEBARK	12" HT. MIN.	#1 CONT.	
175	*Rosa nutkana*	NOOTKA ROSE	12" HT. MIN.	#1 CONT.	
175	*Rubus spectabilis*	SALMONBERRY	12" HT. MIN.	#1 CONT.	
175	*Sambucus racemosa*	RED ELDERBERRY	12" HT. MIN.	#1 CONT.	
LIVE STAKES					
166	*Cornus sericea*	RED TWIG DOGWOOD	36" LENGTH	LIVE STAKE	SPACE LIVE STAKES AT 3' MIN. O.C. DO NOT PLANT WITHIN 15' OF STRUCTURE INLET/OUTLET
166	*Salix lucida*	PACIFIC WILLOW	36" LENGTH	LIVE STAKE	
166	*Salix scouleriana*	SCOULER'S WILLOW	36" LENGTH	LIVE STAKE	
SEED MIXES					
0.41	DRY NATIVE SEED MIX (ACRES)				SEED THROUGHOUT DISTURBED AREAS WHERE NOTED ON PLANS
0.11	WET NATIVE SEED MIX (ACRES)				

NOTES:

1. SEE PLANTING NOTES, THIS SHEET.
2. CONTRACTOR TO VERIFY ALL QUANTITIES.
3. REFER TO SPECIAL PROVISIONS SECTION 8-02.3(9)B FOR SEEDING INFORMATION.

PLANTING SETBACK CHART

	GROUND-COVER*	SMALL SHRUB**	TALL SHRUB***	SMALL TREE****	DECIDUOUS TREE	EVERGREEN TREE
GUARDRAIL BARRIER	5'	5'	10'	10'	15'	15'
EDGE OF ROADWAY	5'	10'	15'	20'	20'	20'
WALLS	3'	5'	10'	10'	15'	15'
FENCE	1.5'	3'	3'	3'	10'	10'
SIGNS	1.5'	6'	6'	6'	15'	15'
EXISTING TREE TRUNK	5'	5'	10'	10'	15'	15'
EXISTING VEGETATION MASS	5'	5'	10'	10'	10'	10'
OVERHEAD POWER	N/A	N/A	10'	10'	20'	20'
DRAINAGE STRUCTURE	5'	5'	10'	10'	10'	10'
DRAINAGE ACCESS ROAD	5'	5'	15'	10'	15'	15'
CULVERT WALLS	3'	5'	10'	10'	15'	15'

1. THIS CHART SUPPLEMENTS SECTION 8.02.3(7) OF THE STANDARD SPECIFICATIONS. SETBACKS APPLY UNLESS OTHERWISE ADJUSTED BY ENGINEER DURING PLANT STAKING OR LAYOUT. DISTANCES BELOW ARE TO THE STEM OR TRUNK OF THE PLANT BEING INSTALLED.
2. *GROUNDCOVERS GROW NO TALLER THAN 1.5 FEET AT MATURITY.
3. **SMALL SHRUBS GROW NO TALLER THAN 3 FEET AT MATURITY.
4. ***TALL SHRUBS GROW TALLER THAN 3 FEET AT MATURITY.
5. ****SMALL TREES GROW NO TALLER THAN 25 FEET AT MATURITY.
6. REFER TO WSDOT DESIGN MANUAL M 22-01.16, PAGE 1600-15, EXHIBIT 1600-2 DESIGN CLEAR ZONE DISTANCE TABLE FOR TYPICAL REQUIRED CLEARANCES FOR EDGE OF ROADWAY SETBACKS.

PLANTING NOTES:

1. PLANTS SHALL BE RANDOMLY MIXED THROUGHOUT EACH PLANTING AREA. SPECIES SHALL BE PLANTED IN GROUPS OF 3-7.
2. SEE PLANT SETBACK CHART FOR SHRUB SETBACKS.
3. SAVE AND PROTECT EXISTING DESIRABLE VEGETATION PER SECTION 1-07.16(2) IN THE STANDARD SPECIFICATIONS.
4. ALL PLANTING AREAS SHALL BE SEEDED DURING THE APPLICATION DATES SPECIFIED IN SECTION 8-02.3(9)B OF THE STANDARD SPECIFICATIONS. ANY SEEDED AREAS THAT DON'T ADEQUATELY GERMINATE SHALL RECEIVE AN APPROVED TESC BMP UNTIL RESEEDING CAN OCCUR DURING THE NEXT APPLICATION DATE SPECIFIED.
5. CONTRACTOR SHALL REMOVE ALL STABILIZED CONSTRUCTION ENTRANCES, TEMPORARY ACCESS ROADS AND DE-COMPACT SOILS TO AN 18" DEPTH IN PLANTING AREAS. RESTORE OTHER TEMPORARILY DISTURBED AREAS AS DIRECTED BY PROJECT ENGINEER UPON COMPLETION OF WORK.
6. CONTRACTOR SHALL RESTORE ANY ADDITIONAL IMPACTS MADE TO STREAM BUFFER AREAS NOT SHOWN ON THESE PLANS.
7. MAINTAIN 2'-0" MINIMUM NON-VEGETATED CLEARANCE ZONE BETWEEN SEEDING/PLANTINGS AND EDGE OF PAVEMENT AND GUARDRAILS IN ALL LOCATIONS. REFER TO LS04 FOR MORE INFORMATION.
8. REFER TO SPECIAL PROVISIONS "ROADSIDE RESTORATION" FOR BIOFILTRATION MEDIA MIX AND DRAINAGE DETAIL (DD) SHEETS FOR BMP LOCATIONS.
9. NO COMPOST OR FERTILIZER OF ANY KIND SHALL BE APPLIED TO ANY LOCATION WITHIN 50' OF THE ORDINARY HIGH WATER (OHW) MARK OF SALMONBERRY CREEK.
10. CONTRACTOR SHALL PROVIDE TEMPORARY IRRIGATION FOR ALL NEW PLANTING AND SEEDING AREAS.

TREE REPLACEMENT NOTES:

1) TREES REMOVED WITHIN WSDOT ROW SHALL BE REPLACED AT THE FOLLOWING RATES:
CATEGORY 1 TREES (DBH 30" OR GREATER) SHALL BE REPLACED AT A RATIO OF 6:1. CATEGORY 2 TREES (DBH 4-30") SHALL BE REPLACED AT A RATIO OF 1:1. IF 2-GAL TREES ARE USED, REPLACEMENT RATIO IS REDUCED BY HALF. REFER TO WSDOT ROADSIDE POLICY MANUAL "APPENDIX D" FOR MORE INFORMATION.

2) TREES REMOVED WITHIN THE JURISDICTION OF THE KITSAP COUNTY SHALL BE REPLACED AT THE FOLLOWING RATES:
TREES 18" DBH OR LARGER SHALL BE REPLACED AT A RATIO OF 2:1 PER THE DIRECTION OF THE KITSAP COUNTY DEPARTMENT OF COMMUNITY DEVELOPMENT.

SR 160 MP 2.29 SALMONBERRY CREEK

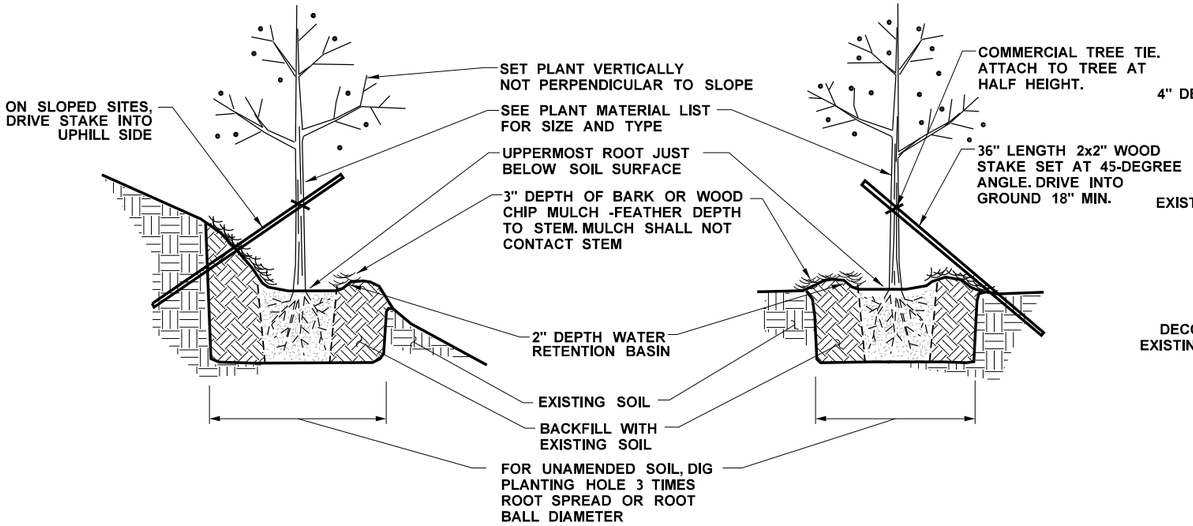

NOTE:
1. BARK OR WOOD CHIP MULCH SHALL BE PLACED IN 36" RADIUS AROUND EACH PLANT.
2. STAKE TREES OVER 30" IN HEIGHT.
3. CONTRACTOR SHALL REMOVE STAKES AFTER ONE FULL GROWING SEASON (NOT TO EXCEED ONE CALENDAR YEAR).

1 TREE & SHRUB PLANTING ON SLOPE
CONTAINER — NOT TO SCALE

2 TREE & SHRUB PLANTING
CONTAINER — NOT TO SCALE

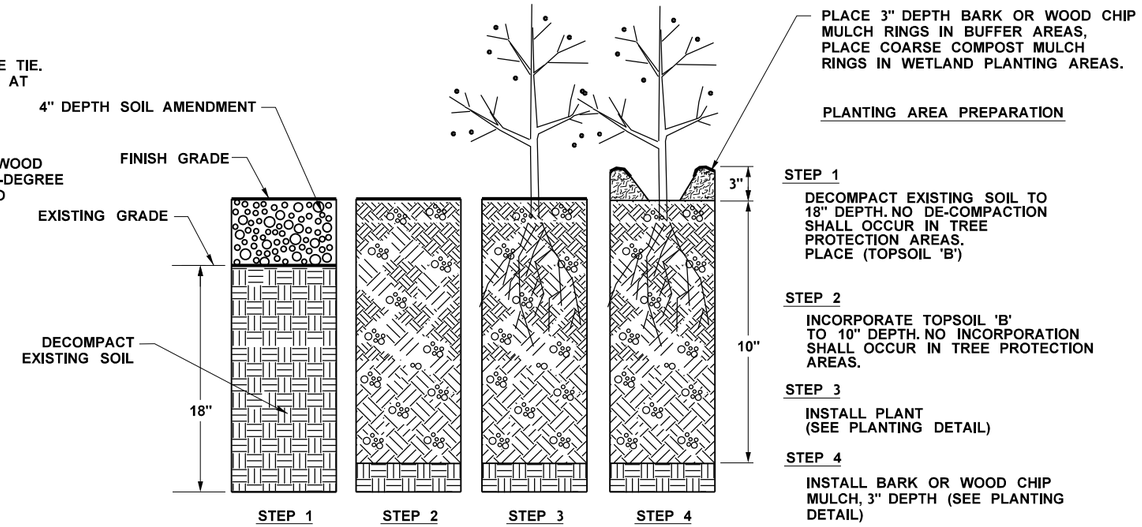

NOTE:
1. FOR MORE INFORMATION REGARDING SOIL DECOMPACTION, REFER TO SPECIAL PROVISIONS SECTION 8-02.3(5)D.

3 PLANTING AREA SOIL PREPARATION - SEQUENCE OF WORK
SECTION VIEW — NOT TO SCALE

INSTALL LIVE STAKES AT 3' O.C. WITHIN STAGGERED DOUBLE ROW IN WETLAND PLANTING AREAS

1. SEE PLANT MATERIAL LIST FOR SIZE AND TYPE OF LIVE STAKE
2. DO NOT PLANT WILLOW WITHIN 15' OF STRUCTURE INLETS OR OUTLETS.
3. DO NOT USE AXE OR SLEDGE FOR DRIVING OF LIVE STAKES.
4. IN HARD GROUND USE AN IRON BAR OR STAR DRILL TO PREPARE THE HOLES.
5. DO NOT STRIP BARK OR BRUISE DURING INSTALLATION.
6. FILL VOID AROUND STAKES WITH SOIL.

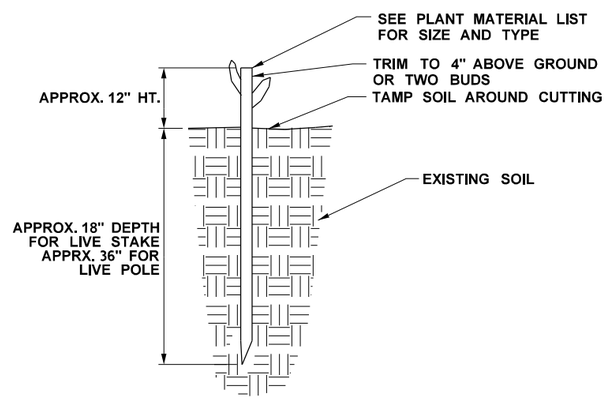

4 LIVE STAKE INSTALLATION
NOT TO SCALE

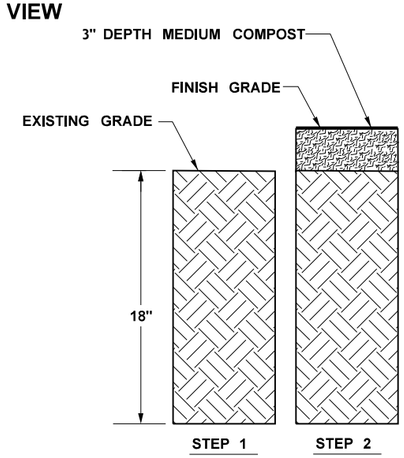

STEP 1
DECOMPACT SOIL TO 12" DEPTH

STEP 2
PLACE TOPSOIL 'B'

NOTE:
1. FOR MORE INFORMATION REGARDING SOIL DECOMPACTION, REFER TO SPECIAL PROVISIONS SECTION 8-02.3(5)D.

5 SEEDING AREA SOIL PREPARATION - SEQUENCE OF WORK
SECTION VIEW — NOT TO SCALE

SR 160 MP 2.29 SALMONBERRY CREEK

FILE NAME	c:\users\danyal.ali\pw_wsdot\d0202980\SR160MP2.29_Q_PS_LS_003.dgn				REGION NO. 10	STATE WASH	FED.AID PROJ.NO. ARPA001
TIME	12:23:04 PM						
DATE	4/6/2023						
PLOTTED BY	danyal.ali				JOB NUMBER 22C525		
DESIGNED BY	C. OWEN						
ENTERED BY	N. MAYFIELD						
CHECKED BY	J. GLANDER				CONTRACT NO. 009902		LOCATION NO. XL-6115
PROJ. ENGR.	B. ELLIOTT						
REGIONAL ADM.	S. ROARK	REVISION	DATE	BY			

P.E. STAMP BOX — DATE

STATE OF WASHINGTON — JEFFREY B. GLANDER — LANDSCAPE ARCHITECT — NO. 888 EXP. 03/06/2025

SEE SHEET CT01 — DATE — P.E. STAMP BOX

Washington State Department of Transportation

SCJ ALLIANCE CONSULTING SERVICES

SR 16 / SR 160 / KITSAP COUNTY
FISH PASSAGE BARRIERS
REMOVE FISH BARRIERS

LANDSCAPE DETAILS

PLAN REF NO LS03

SHEET 362 OF 409 SHEETS

pw:\\HQOLYMAPPPW03P.WSDOT.LOC:WSDOT\Documents_HQ\Fish Passage\ORproj\160\2.29_Salmonberry\Design_CAD_Sheets\SR160MP2.29_Q_PS_LS_003.dgn

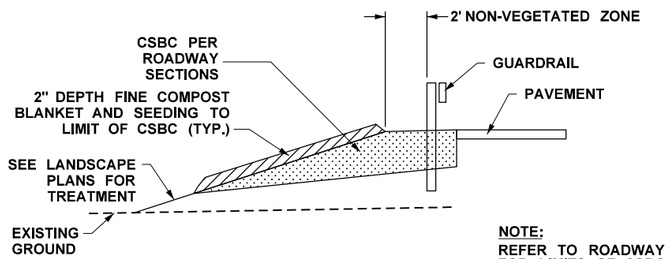

NOTE:
REFER TO ROADWAY SECTIONS FOR LIMITS OF CSBC.

1 NON-VEGETATED ZONE ADJACENT TO GUARDRAIL
NOT TO SCALE

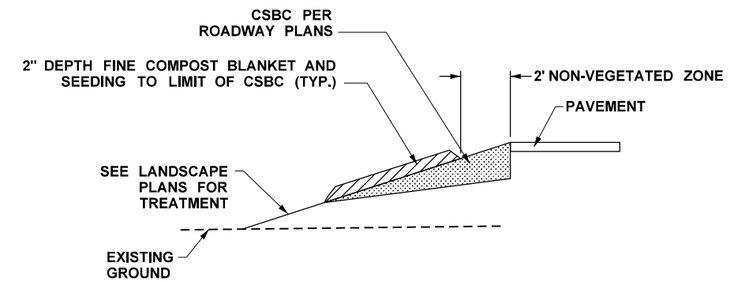

NOTE:
REFER TO ROADWAY SECTIONS FOR LIMITS OF CSBC.

2 NON-VEGETATED ZONE ADJACENT TO PAVEMENT
NOT TO SCALE

SR 160 MP 2.29 SALMONBERRY CREEK

FILE NAME	c:\users\danyal.ali\pw_wsdot\d0202980\SR160MP2.29_Q_PS_LS_004.dgn
TIME	12:23:04 PM
DATE	4/6/2023
PLOTTED BY	danyal.ali
DESIGNED BY	C. OWEN
ENTERED BY	N. MAYFIELD
CHECKED BY	J. GLANDER
PROJ. ENGR.	B. ELLIOTT
REGIONAL ADM.	S. ROARK

REVISION | DATE | BY

REGION NO.	STATE	FED.AID PROJ.NO.
10	WASH	ARPA001
JOB NUMBER 22C525		
CONTRACT NO. 009902		LOCATION NO. XL-6115

DATE
P.E. STAMP BOX

STATE OF WASHINGTON JEFFREY B. GLANDER NO. 2006 EXP. 02/06/2023 LANDSCAPE ARCHITECT
SEE SHEET CT01
DATE
P.E. STAMP BOX

Washington State Department of Transportation
SCJ ALLIANCE CONSULTING SERVICES

SR 16 / SR 160 / KITSAP COUNTY
FISH PASSAGE BARRIERS
REMOVE FISH BARRIERS

LANDSCAPE DETAILS

PLAN REF NO LS04

SHEET 363 OF 409 SHEETS

pw:\\HQOLYMAPPPW03P.WSDOT.LOC:WSDOT\Documents_HQ\Fish Passage\ORproj\160\2.29_Salmonberry\Design_CAD_Sheets\SR160MP2.29_Q_PS_LS_004.dgn

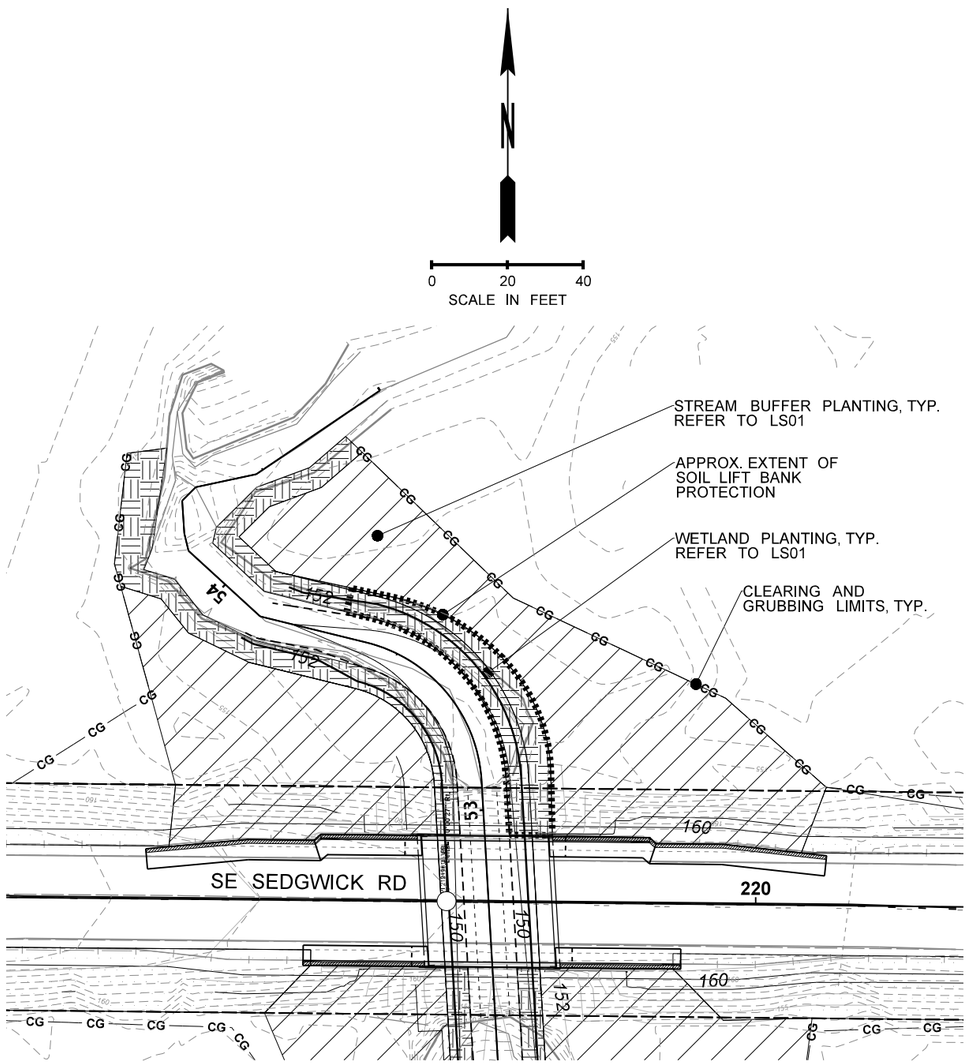

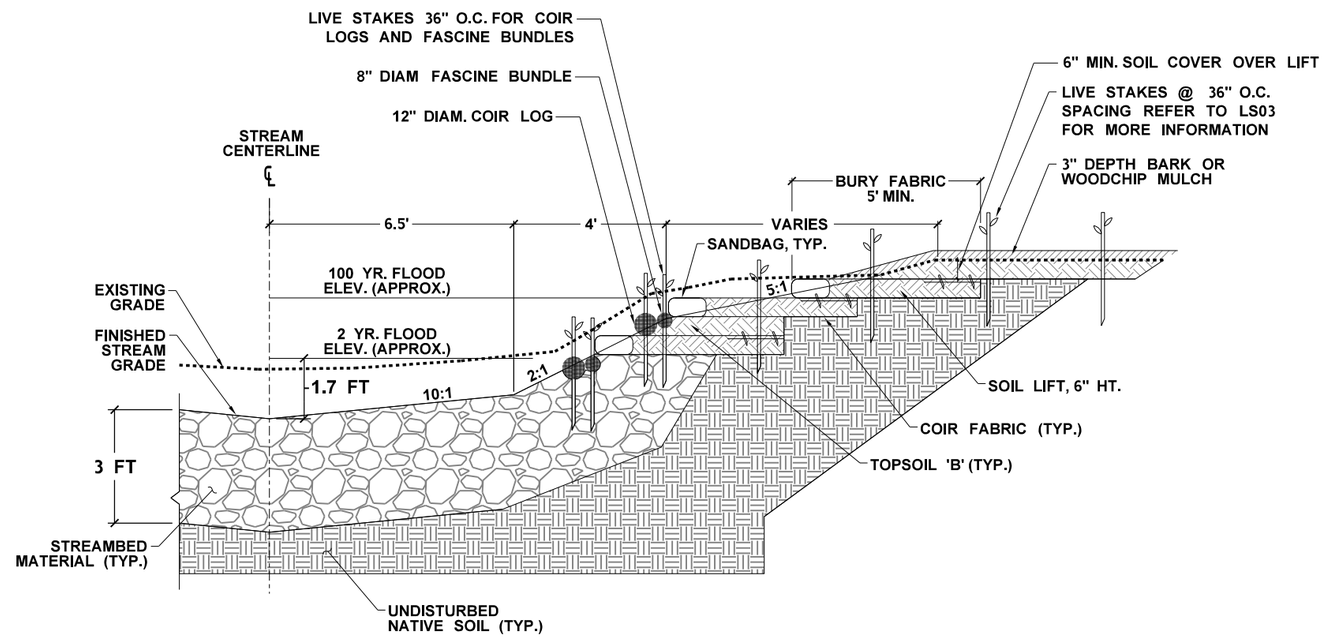

NOTE:

1. REFER TO LANDSCAPE PLANS FOR LIVE STAKE LOCATIONS.
2. REFER TO SHEET CD01 FOR ADDITIONAL STREAM CHANNEL DETAILS.

SOIL LIFT BANK PROTECTION

1"=2'

SR 160 MP 2.29 SALMONBERRY CREEK

FILE NAME	c:\users\danyal.ali\pw_wsdot\d0202980\SR160MP2.29_Q_PS_LS_005.dgn						
TIME	12:23:06 PM				REGION NO. 10	STATE WASH	FED.AID PROJ.NO. ARPA001
DATE	4/6/2023						
PLOTTED BY	danyal.ali				JOB NUMBER 22C525		
DESIGNED BY	C. OWEN						
ENTERED BY	N. MAYFIELD						
CHECKED BY	J. GLANDER				CONTRACT NO. 009902		LOCATION NO. XL-6115
PROJ. ENGR.	B. ELLIOTT						
REGIONAL ADM.	S. ROARK	REVISION	DATE	BY			

DATE
P.E. STAMP BOX

STATE OF WASHINGTON
JEFFREY B. GLANDER
LANDSCAPE ARCHITECT
NOT FOR USE EXP. 02/06/2025

SEE SHEET CT01
DATE
P.E. STAMP BOX

Washington State
Department of Transportation

SCJ ALLIANCE
CONSULTING SERVICES

SR 16 / SR 160 / KITSAP COUNTY
FISH PASSAGE BARRIERS
REMOVE FISH BARRIERS

LANDSCAPE DETAILS

PLAN REF NO
LS05

SHEET
364
OF
409
SHEETS

pw:\\HQOLYMAPPPW03P.WSDOT.LOC:WSDOT\Documents_HQ\Fish Passage\ORproj\160\2.29_Salmonberry\Design_CAD_Sheets\SR160MP2.29_Q_PS_LS_005.dgn

QUANTITY TABULATION - PAVING

NOTE:
THE FIRST NUMBER OF THE "CODE" BELOW REFERS TO THE SHEET NO. OR THE SHEET REFERENCE NO. SHOWING THE CONSTRUCTION FEATURE

THE SECOND NUMBER REFERS TO THE CONSTRUCTION FEATURE FOUND ON THAT SHEET.

CODE	LOCATION ↓ / UNIT OF MEASURE →	PLANING BITUMINOUS PAVEMENT		BEAM GUARDRAIL TRANSITION SECTION TYPE 24	BEAM GUARDRAIL TYPE 31 NON-FLARED TERMINAL	BEAM GUARDRAIL TYPE 31		MONUMENT CASE AND COVER									GENERAL NOTES
		S.Y.		EACH	EACH	L.F.		EACH									
PV01-1	Q 217+96.00 TO Q 218+21.00	76															
PV01-2	Q 217+80.00 (14' LT) TO Q 218+85 (16' LT)			1	1	50											1,2,3
PV01-3	Q 217+44.50 (14' RT) TO Q 218+82.65 (16' RT)			1	1	88											1,2,3
PV01-4	Q 219+71.84 (16' LT) TO Q 221+17.00 (14' LT)			1	1	88											1,2,3
PV01-5	Q 219+78.36 (16' RT) TO Q 220+82.00 (14' RT)			1	1	50											1,2,3
PV01-6	Q 220+28.00 TO Q 220+53.00	76															
PV01-7	Q 218+25.00 (12.32' LT)							1									4
PV01-8	Q 218+25.00 (11.95' RT)							1									4
	SHEET TOTAL	152		4	4	276		2									
	PROJECT TOTAL	152		4	4	276		2									

GENERAL NOTES

1. NON-FLARED TERMINAL (45 MPH AND BELOW) PER WSDOT STD. PLAN C-22.45-06.
2. TYPE 31 TRANSITION SECTION TYPE 24 PER WSDOT STD. PLAN C-25.30-01.
3. GUARDRAIL CONNECTION TYPE D PER WSDOT STD PLAN C-24.10-03.
4. MONUMENT CASE AND COVER PER WSDOT STD PLAN A-10.30-00.

SR 160 MP 2.29 SALMONBERRY CREEK

Designed	M. GREENHECK				
Entered	A. ARMSTRONG				
Checked	M. GREENHECK				
Proj.Eng.	B. ELLIOT				
Reg Admin	S. ROARK				
		DATE	DATE	REVISION	BY

REGION NO.	STATE	FED. AID PROJ. NO.
10	WASH	ARPA001
JOB NUMBER		
22C525		
CONTRACT NO.		LOCATION NO.
9902		XL-6115

Washington State Department of Transportation

SCJ ALLIANCE CONSULTING SERVICES

SR 16 / SR 160 / KITSAP COUNTY
FISH PASSAGE BARRIERS
REMOVE FISH BARRIERS

QUANTITY TABULATION - PAVING

PLAN REF NO QTPV01

SHEET 365 OF 409 SHEETS

S. 6. T. 23N. R. 2E. W.M.

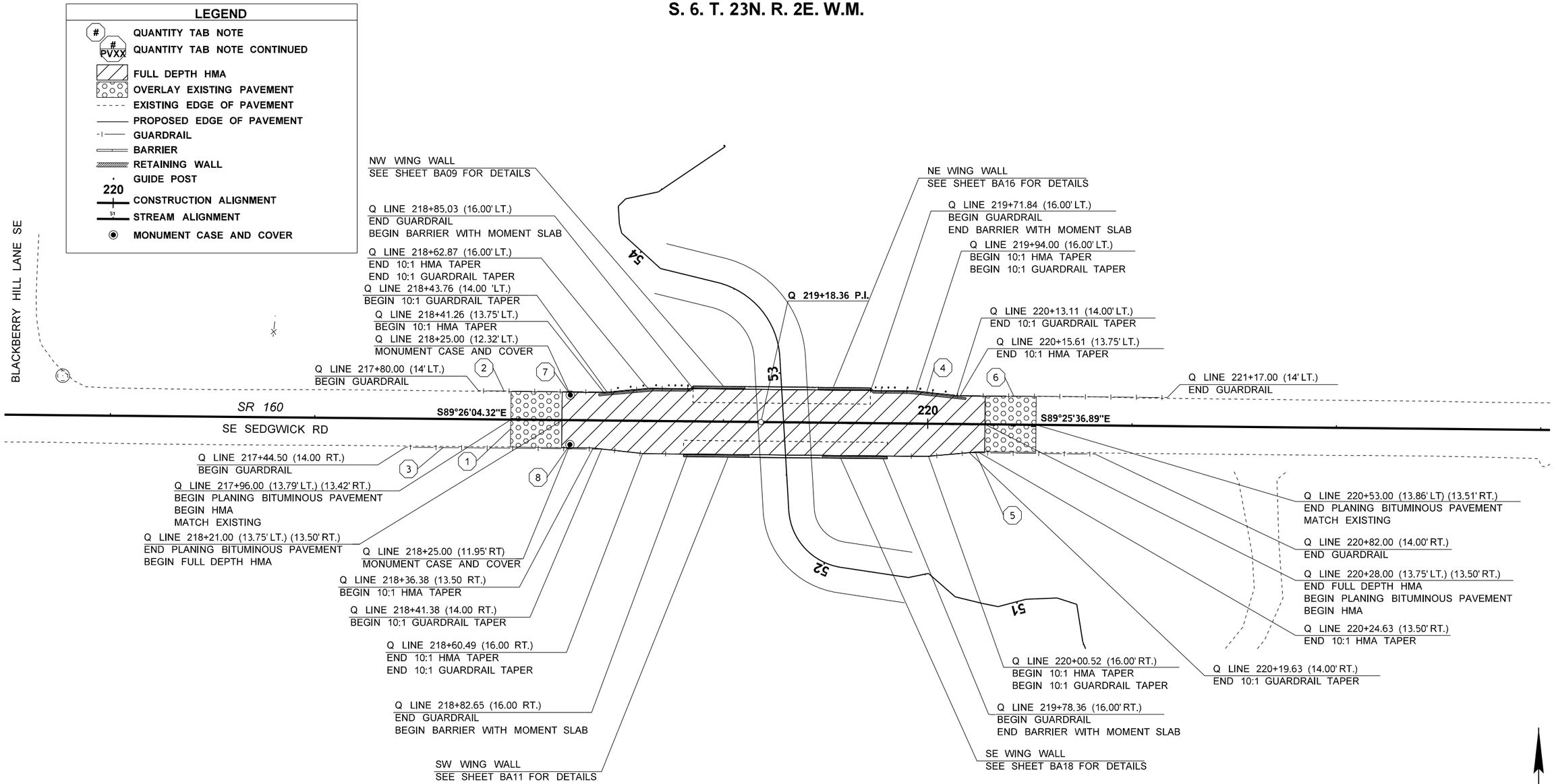

NOTES:

1. SEE BA PLANS FOR WALL PROFILES AND DETAILS.
2. SEE RS PLANS FOR BARRIER TYPES.
3. NON-FLARED TERMINAL PER WSDOT STD. PLAN C-22.45-06
4. TYPE 31 TRANSITION SECTION TYPE 24 PER WSDOT STD. PLAN C-25.30-01

S. 7. T. 23N. R. 2E. W.M.

SR 160 MP 2.29 SALMONBERRY CREEK

FILE NAME	c:\users\mellssa.greenheck\pw_wsdot\d0202980\SR160MP2.29_Q_PS_PV_001.dgn
TIME	3:56:57 PM
DATE	4/7/2023
PLOTTED BY	melissa.greenheck
DESIGNED BY	H.BROWN
ENTERED BY	S.DUNN
CHECKED BY	H.BROWN
PROJ. ENGR.	B. ELLIOTT
REGIONAL ADM.	S. ROARK

REVISION | DATE | BY

REGION NO.	STATE	FED.AID PROJ.NO.
10	WASH	ARPA001
JOB NUMBER 22C525		
CONTRACT NO. 009902		LOCATION NO. XL-6115

P.E. STAMP BOX — DATE

SCOTT A. SAWYER, STATE OF WASHINGTON, REGISTERED PROFESSIONAL ENGINEER — SEE SHEET CT01 — DATE — P.E. STAMP BOX

Washington State Department of Transportation

SCJ ALLIANCE CONSULTING SERVICES

SR 16 / SR 160 / KITSAP COUNTY
FISH PASSAGE BARRIERS
REMOVE FISH BARRIERS

PAVING PLAN

PLAN REF NO PV01

SHEET 366 OF 409 SHEETS

pw:\\HQOLYMAPPPW03P.WSDOT.LOC:WSDOT\Documents_HQ\Fish Passage\ORproj\160\2.29_Salmonberry\Design_CAD_Sheets\SR160MP2.29_Q_PS_PV_001.dgn

QUANTITY TABULATION - PAVEMENT MARKINGS

NOTE:
THE FIRST NUMBER OF THE "CODE" BELOW REFERS TO THE SHEET NO. OR THE SHEET REFERENCE NO. SHOWING THE CONSTRUCTION FEATURE

THE SECOND NUMBER REFERS TO THE CONSTRUCTION FEATURE FOUND ON THAT SHEET.

CODE	LOCATION ↓ / UNIT OF MEASURE →	PAINT LINE	PLASTIC LINE	FLEXIBLE GUIDE POST	PLASTIC TRAFFIC ARROW		PLASTIC STOP LINE	PLASTIC DRAINAGE MARKING	RAISED PAVEMENT MARKER TYPE 2	RECESSED PAVEMENT MARKER							GENERAL NOTES
		L.F.	EACH	EACH	EACH		L.F.	EACH	HUND	HUND							
MK01-1	Q 217+96.00 (11' LT) TO 220+53.00 (10.8' LT)		260														1
MK01-2	Q 217+96.00 (11.25' LT) TO 220+53.00 (11.45' RT)		260														1
MK01-3	Q 217+96.00 (0.3' LT) TO 220+53.00 (0.62' RT)		260						0.1	0.1							1,2,5
MK01-4	Q 216+35.07 (13.01' LT) TO 218+35.07 (14' LT)			3													3
MK01-5	Q 216+30.69 (13.44' RT) TO 218+30.69 (14' RT)			3													3
MK01-6	Q 220+21.80 (14' LT) TO 222+21.80 (12.67' LT)			3													3
MK01-7	Q 220+30.32 (14' RT) TO 222+30.32 (13.37' RT)			3													3
MK01-8	Q 212+76.45 (23.7' LT)			1													4
MK01-9	Q 212+76.45 (11.6' LT)							1									4
MK01-10	Q 215+06.47 (21.7' LT)			1													4
MK01-11	Q 215+07.00 (11.0' LT)							1									4
MK01-12	Q 215+87.84 (22.2' LT)			1													4
MK01-13	Q 215+87.85 (11.0' LT)							1									4
MK01-14	Q 216+74.43 (21.4' LT)			1													4
MK01-15	Q 216+75.17 (11.0' LT)							1									4
MK01-16	Q 215+91.00 (11.3' RT)							1									4
MK01-17	Q 215+91.36 (21.6' RT)			1													4
MK01-18	Q 216+92.70 (21.5' RT)			1													4
MK01-19	Q 216+93.01 (11.4' RT)							1									4
MK01-20	Q 221+92.54 (21.5' RT)			1													4
MK01-21	Q 221+91.66 (11.4' RT)							1									4
MK01-22	Q 222+57.97 (11.4' RT)							1									4
MK01-23	Q 222+57.97 (21.6' RT)			1													4
MK02-1	QSB 40+02.24 (11.8' LT) TO QLL 51+44.81 (11.03' LT)	220															1
MK02-2	QSB 40+02.11 (0) TO 41+57.33 (19.5' RT)	160							0.1								1,2
MK02-3	QSB 40+01.57 (11.89' RT) TO 41+24.55 (26.24' RT)	130															1
MK02-4	QSB 41+51.62 (40.2' RT) TO 41+59.52 (20.97' RT)						30										
MK02-5	QLL 50+19.93 (0.14' LT) TO 50+63.01 (0)	50							0.1								1,2
	SHEET TOTAL	560	780	20	0		30	8	0.3	0.1							
	PROJECT TOTAL	3740	780	20	9		110	8	0.8	0.1							

GENERAL NOTES

1. SEE STD. PLAN M-20.10 FOR LONGITUDINAL PAVEMENT MARKINGS
2. SEE STD. PLAN M-20.30, LONGITUDINAL MARKING SUPPLEMENT WITH RAISED PAVEMENT MARKERS.
3. SEE STD. PLAN M-40.50 FOR FLEXIBLE GUIDEPOST PLACEMENT AT BRIDGES.
4. SEE STANDARD PLAN M-24.65-00 FOR BMP DELINEATION DRAINAGE MARKINGS AND FLEXIBLE GUIDE POST PLACEMENT. SEE DRAINAGE PLANS AND DETAILS FOR BMP LOCATIONS AND DETAILS.
5. RAISED PAVEMENT MARKERS NOT PLACED ON BRIDGE.

SR 160 MP 2.29 SALMONBERRY CREEK

Designed	M. GREENHECK				REGION NO.	STATE	FED. AID PROJ. NO.
Entered	A. ARMSTRONG				10	WASH	ARPA001
Checked	M. GREENHECK				JOB NUMBER		
Proj.Eng.	B. ELLIOT				22C525		
Reg Admin	S. ROARK				CONTRACT NO.		LOCATION NO.
		DATE	DATE	REVISION	BY	9902	XL-6115

Washington State Department of Transportation

SCJ ALLIANCE CONSULTING SERVICES

SR 16 / SR 160 / KITSAP COUNTY
FISH PASSAGE BARRIERS
REMOVE FISH BARRIERS

QUANTITY TABULATION - PAVEMENT MARKINGS

PLAN REF NO QTMK01

SHEET 367 OF 409 SHEETS

QUANTITY TABULATION - PAVEMENT MARKINGS

NOTE:
THE FIRST NUMBER OF THE "CODE" BELOW REFERS TO THE SHEET NO. OR THE SHEET REFERENCE NO. SHOWING THE CONSTRUCTION FEATURE

THE SECOND NUMBER REFERS TO THE CONSTRUCTION FEATURE FOUND ON THAT SHEET.

CODE	LOCATION ↓ / UNIT OF MEASURE →	PAINT LINE	PLASTIC LINE	FLEXIBLE GUIDE POST	PLASTIC TRAFFIC ARROW		PLASTIC STOP LINE	PLASTIC DRAINAGE MARKING	RAISED PAVEMENT MARKER TYPE 2	RECESSED PAVEMENT MARKER							GENERAL NOTES
		L.F.	EACH	EACH	EACH		L.F.	EACH	HUND	HUND							
MK02-6	QLL 50+92.18 (0) TO 51+86.16 (0.03' LT)	100							0.1								1,2
MK03-1	QC 12+18.64 (0.06' LT) TO 17+41.73 (8.64' LT)	530							0.1								1,2
MK03-2	QC 12+18.64 (0.06' LT) TO 14+16.80 (4.10' RT)	200							0.1								1,2
MK03-3	QC 12+74.83 (13.34' RT) TO 17+42.13 (26.81' RT)	470															1
MK03-4	QC 15+12.28 (0.37' LT)				1												
MK03-5	QC 15+06.77 (4.89' RT) TO 17+41.85 (2.44' RT)	240															1
MK03-6	QC 16+42.76 (20.81' RT)				1												
MK03-7	QC 16+46.40 (15.90' RT) TO 17+41.99 (14.50' RT)	100															1
MK03-8	QC 16+57.92 (2.92' LT)				1												
MK03-9	QC 16+94.29 (3.28' LT)				1												
MK03-10	QC 16+94.61 (21' RT)				1												
MK03-11	QC 17+41.72 (9.63' LT) TO 17+42.13 (26.81' RT)						40										
MK03-12	Q 200+40.43 (1.25' LT.) TO 205+06.06 (10.74' LT.)	510							0.1								1,2
MK03-13	Q 200+27.29 (9.76' RT) TO 205+31.94 (21.30' RT)	510															1
MK03-14	Q 200+40.43 (1.78' LT) TO 203+20.28 (1.78' LT)	280							0.1								1,2
MK03-15	Q 203+91.62 (15.23' RT)				1												
MK03-16	Q 203+62.06 (9.04') TO 205+06.06 (9.13' RT.)	150															1
MK03-17	Q 204+45.34 (8.42' LT)				1												1
MK03-18	Q 204+40.99 (2.16' LT) TO 205+31.94 (2.16' LT)	90															1
MK03-19	Q 204+92.62 (8.42' LT)				1												
MK03-20	Q 204+81.86 (15.23' RT)				1												
MK03-21	Q 205+06.06 (11.74' LT) TO 205+06.06 (21.30' RT)						40										
	SHEET TOTAL	3180	0	0	9		80	0	0.5	0							
	PROJECT TOTAL	3740	780	20	9		110	8	0.8	0.1							

GENERAL NOTES

1. SEE STD. PLAN M-20.10 FOR LONGITUDINAL PAVEMENT MARKINGS
2. SEE STD. PLAN M-20.30, LONGITUDINAL MARKING SUPPLEMENT WITH RAISED PAVEMENT MARKERS.
3. SEE STD. PLAN M-40.50 FOR FLEXIBLE GUIDEPOST PLACEMENT AT BRIDGES.
4. SEE STANDARD PLAN M-24.65-00 FOR BMP DELINEATION DRAINAGE MARKINGS AND FLEXIBLE GUIDE POST PLACEMENT. SEE DRAINAGE PLANS AND DETAILS FOR BMP LOCATIONS AND DETAILS.

SR 160 MP 2.29 SALMONBERRY CREEK

Designed	M. GREENHECK					
Entered	A. ARMSTRONG					
Checked	M. GREENHECK					
Proj.Eng.	B. ELLIOT					
Reg Admin	S. ROARK					
		DATE	DATE	REVISION	BY	

REGION NO.	STATE	FED. AID PROJ. NO.
10	WASH	ARPA001
JOB NUMBER		
22C525		
CONTRACT NO.		LOCATION NO.
9902		XL-6115

Washington State Department of Transportation

SCJ ALLIANCE CONSULTING SERVICES

SR 16 / SR 160 / KITSAP COUNTY
FISH PASSAGE BARRIERS
REMOVE FISH BARRIERS

QUANTITY TABULATION - PAVEMENT MARKINGS

PLAN REF NO: QTMK02

SHEET 368 OF 409 SHEETS

S. 6. T. 23N. R. 2E. W.M.

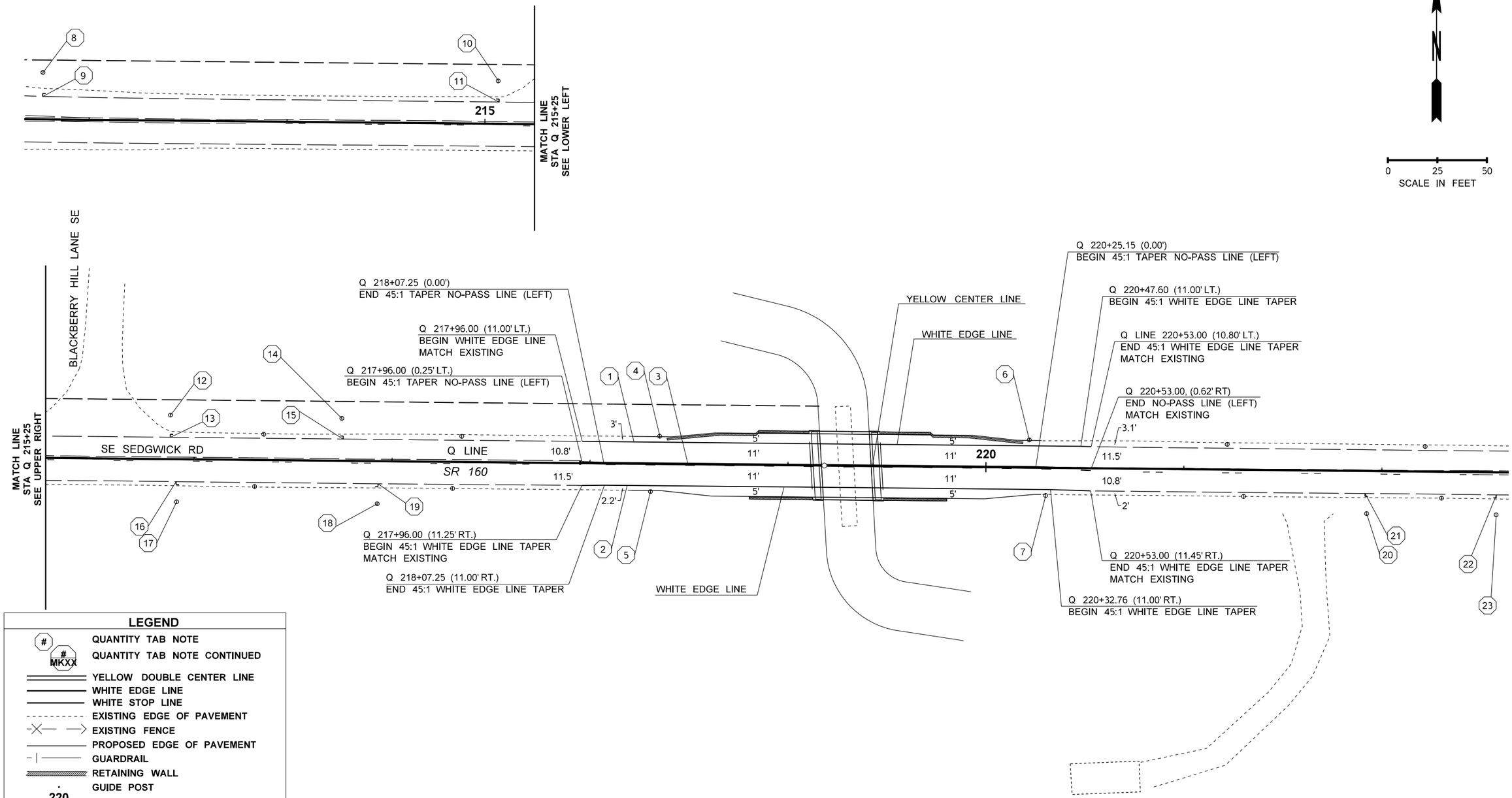

LEGEND

- QUANTITY TAB NOTE
- QUANTITY TAB NOTE CONTINUED
- YELLOW DOUBLE CENTER LINE
- WHITE EDGE LINE
- WHITE STOP LINE
- EXISTING EDGE OF PAVEMENT
- EXISTING FENCE
- PROPOSED EDGE OF PAVEMENT
- GUARDRAIL
- RETAINING WALL
- GUIDE POST
- CONSTRUCTION ALIGNMENT
- STREAM ALIGNMENT
- PLASTIC DRAINAGE MARKING

S. 7. T. 23N. R. 2E. W.M.

SR 160 MP 2.29 SALMONBERRY CREEK

FILE NAME	c:\users\melissa.greenheck\pw_wsdot\d0202980\SR160MP2.29_Q_PS_MK_001.dgn
TIME	3:57:13 PM
DATE	4/7/2023
PLOTTED BY	melissa.greenheck
DESIGNED BY	S.BABAEI
ENTERED BY	S.DUNN
CHECKED BY	S.BABAEI
PROJ. ENGR.	B. ELLIOTT
REGIONAL ADM.	S. ROARK

REVISION | DATE | BY

REGION NO.	STATE	FED.AID PROJ.NO.
10	WASH	ARPA001
JOB NUMBER 22C525		
CONTRACT NO. 009902		LOCATION NO. XL-6115

P.E. STAMP BOX — DATE

SCOTT A. SAWYER, STATE OF WASHINGTON, REGISTERED PROFESSIONAL ENGINEER — SEE SHEET CT01 — DATE — P.E. STAMP BOX

Washington State Department of Transportation

SCJ ALLIANCE CONSULTING SERVICES

SR 16 / SR 160 / KITSAP COUNTY
FISH PASSAGE BARRIERS
REMOVE FISH BARRIERS

PAVEMENT MARKING PLAN

PLAN REF NO MK01

SHEET 369 OF 409 SHEETS

pw:\\HQOLYMAPPPW03P.WSDOT.LOC:WSDOT\Documents_HQ\Fish Passage\ORproj\16012.29_Salmonberry\Design_CAD_Sheets\SR160MP2.29_Q_PS_MK_001.dgn

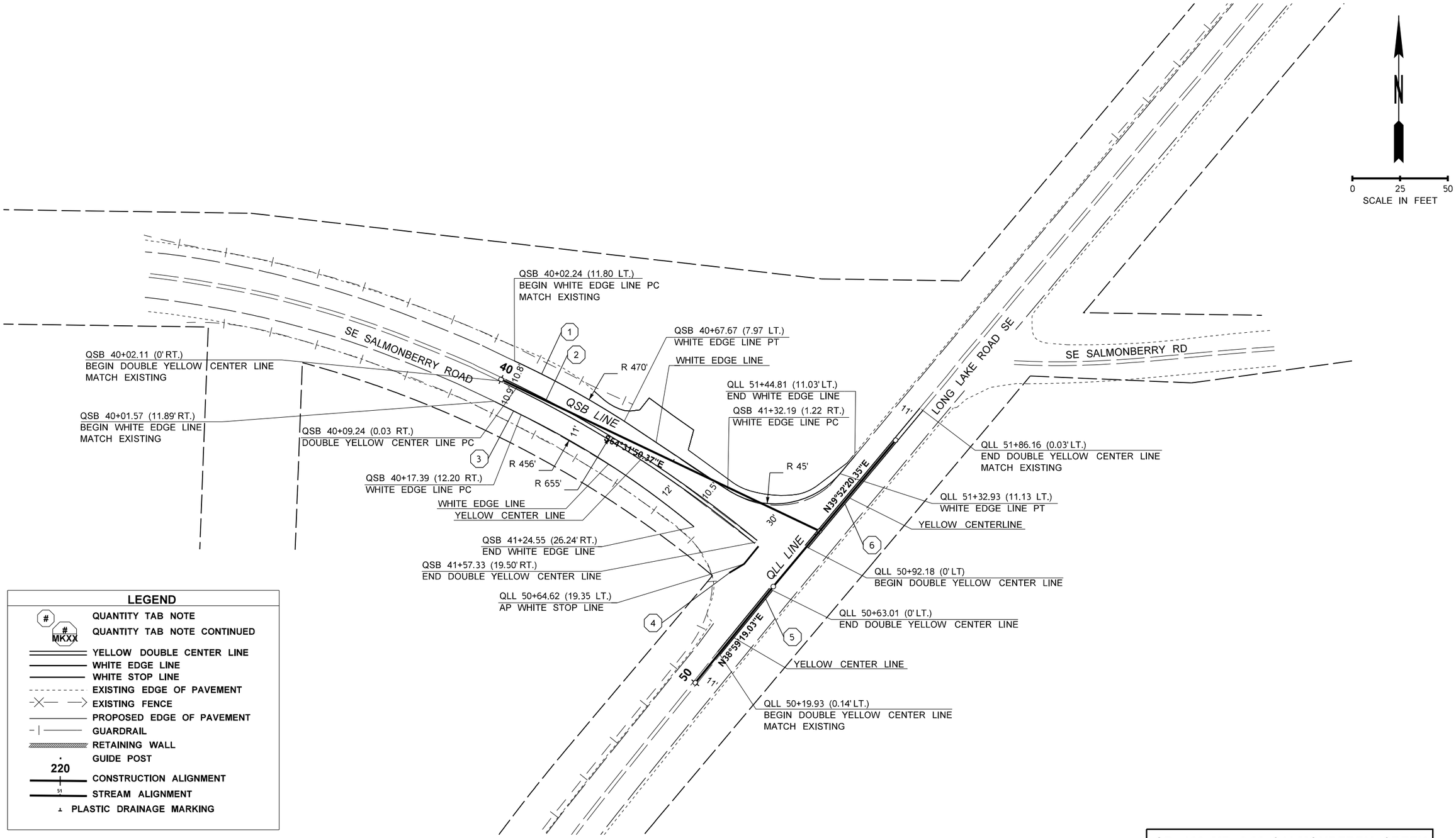

pw:\\HQOLYMAPPPW03P.WSDOT.LOC:WSDOT\Documents_HQ\Fish Passage\ORproj\160\2.29_Salmonberry\Design_CAD_Sheets\SR160MP2.29_Q_PS_MK_002.dgn

SR 160 MP 2.29 SALMONBERRY CREEK

FILE NAME	c:\users\melissa.greenheck\pw_wsdot\d0202980\SR160MP2.29_Q_PS_MK_002.dgn
TIME	3:57:17 PM
DATE	4/7/2023
PLOTTED BY	melissa.greenheck
DESIGNED BY	S.BABAEI
ENTERED BY	S.DUNN
CHECKED BY	S.BABAEI
PROJ. ENGR.	B. ELLIOTT
REGIONAL ADM.	S. ROARK

REVISION	DATE	BY

REGION NO.	STATE	FED.AID PROJ.NO.
10	WASH	ARPA001
JOB NUMBER 22C525		
CONTRACT NO. 009902		LOCATION NO. XL-6115

P.E. STAMP BOX — DATE

SCOTT A. SAWYER — STATE OF WASHINGTON — 38872 — REGISTERED PROFESSIONAL ENGINEER

SEE SHEET CT01 — DATE

P.E. STAMP BOX

Washington State Department of Transportation

SCJ ALLIANCE CONSULTING SERVICES

SR 16 / SR 160 / KITSAP COUNTY
FISH PASSAGE BARRIERS
REMOVE FISH BARRIERS

PAVEMENT MARKING PLAN

PLAN REF NO MK02

SHEET 370 OF 409 SHEETS

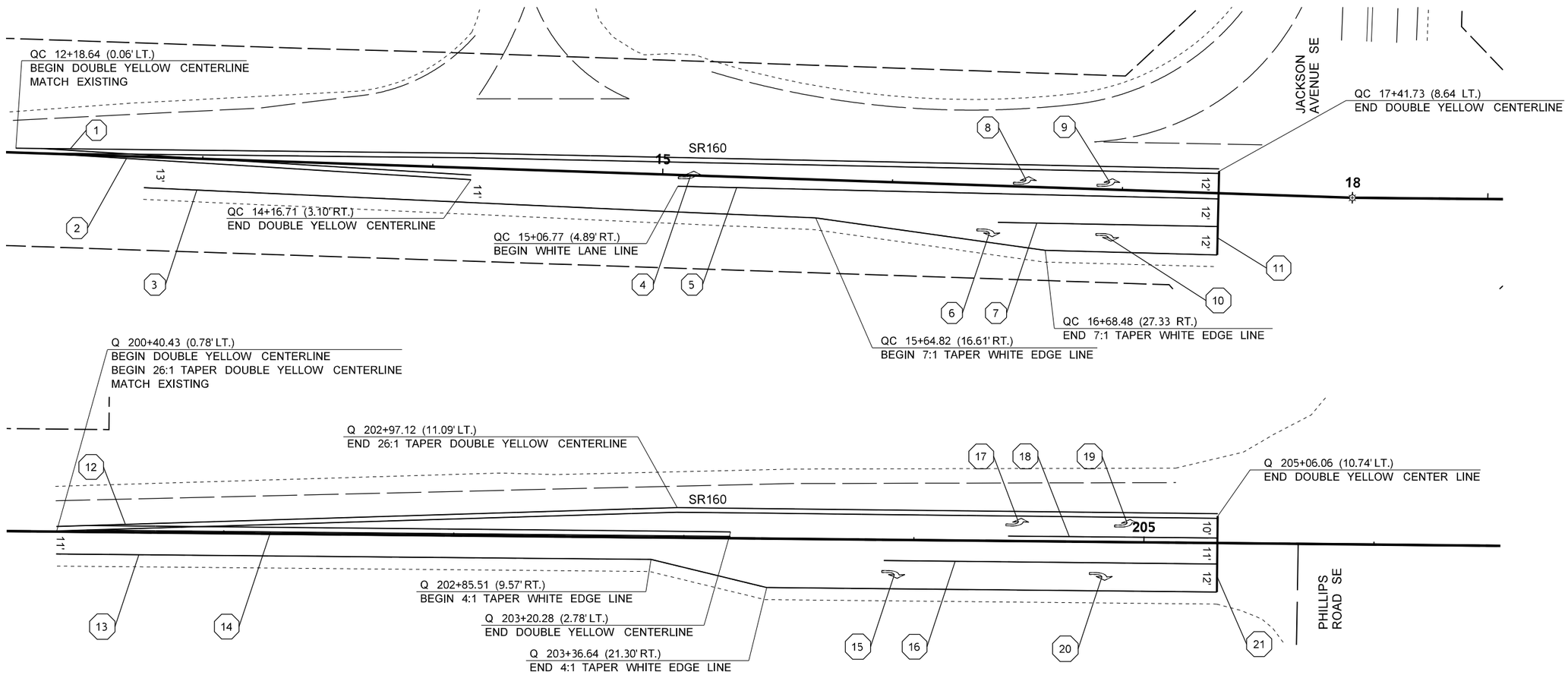

LEGEND

- # — QUANTITY TAB NOTE
- # MKXX — QUANTITY TAB NOTE CONTINUED
- YELLOW DOUBLE CENTER LINE
- WHITE EDGE LINE
- WHITE STOP LINE
- EXISTING EDGE OF PAVEMENT
- EXISTING FENCE
- PROPOSED EDGE OF PAVEMENT
- GUARDRAIL
- RETAINING WALL
- 220 — GUIDE POST
- CONSTRUCTION ALIGNMENT
- 51 — STREAM ALIGNMENT
- PLASTIC DRAINAGE MARKING

N

0 25 50
SCALE IN FEET

SR 160 MP 2.29 SALMONBERRY CREEK

FILE NAME	$$$$$$$$DESIGNFILENAME$$$$$$
TIME	$TIME$
DATE	$$$$DATE$$$
PLOTTED BY	$$USERNAME$$
DESIGNED BY	M.GREENHECK
ENTERED BY	M.GREENHECK
CHECKED BY	H.BROWN
PROJ. ENGR.	B. ELLIOTT
REGIONAL ADM.	S. ROARK

REVISION	DATE	BY

REGION NO.	STATE	FED.AID PROJ.NO.
10	WASH	ARPA001
JOB NUMBER 22C525		
CONTRACT NO. 009902		LOCATION NO. XL-6115

P.E. STAMP BOX — DATE

SCOTT A. SANTEE — STATE OF WASHINGTON — 35872 — REGISTERED PROFESSIONAL ENGINEER

SEE SHEET CT01 — DATE

P.E. STAMP BOX

Washington State Department of Transportation

SCJ ALLIANCE CONSULTING SERVICES

SR 16 / SR 160 / KITSAP COUNTY
FISH PASSAGE BARRIERS
REMOVE FISH BARRIERS

PAVEMENT MARKING PLAN

PLAN REF NO MK03

SHEET 371 OF 409 SHEETS

pw:\\HQOLYMAPPPW03P.WSDOT.LOC:WSDOT\Documents_HQ\Fish Passage\ORproj\160\2.29_Salmonberry\Design_CAD_Sheets\SR160MP2.29_Q_PS_MK_003.dgn

NOTES:

1. TEMPORARY PAVEMENT MARKING - LONG DURATION IS PLASTIC.
2. SEE WSDOT STANDARD PLAN M-20.30, LONGITUDINAL MARKING SUPPLEMENT WITH RAISED PAVEMENT MARKERS (RPM) FOR PLACEMENT OF RPM ALONG TEMPORARY PAVEMENT MARKING.
3. SEE WSDOT STANDARD PLAN M-2.20 FOR CHEVRON PAVEMENT MARKINGS LAYOUT.
4. SEE TRAFFIC CONTROL PLAN TC03 TO PERFORM TEMPORARY PAVEMENT MARKINGS.

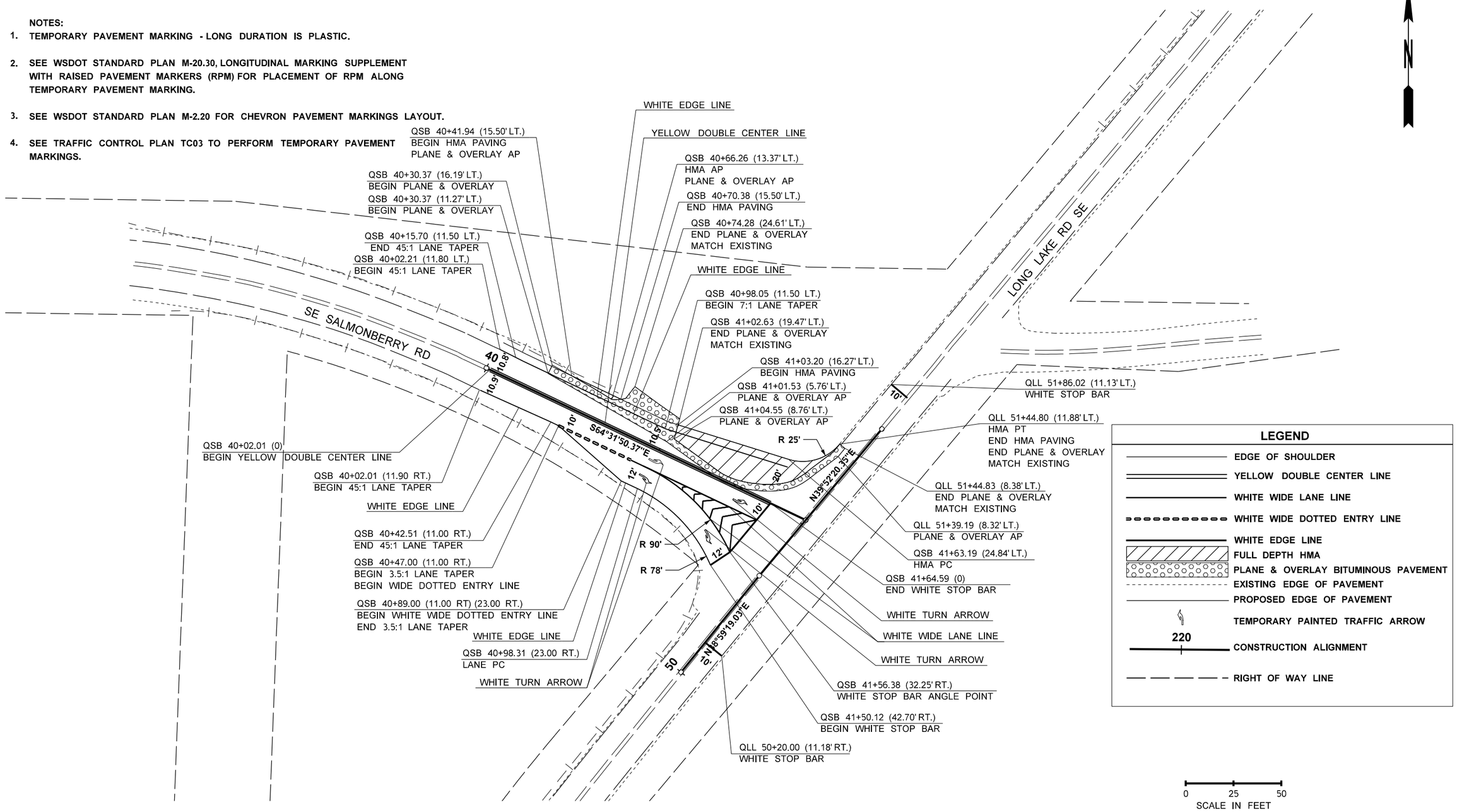

SR 160 MP 2.29 SALMONBERRY CREEK

FILE NAME	c:\users\danyal.ali\pw_wsdot\d0202980\SR160MP2.29_Q_PS_TP_001.dgn						
TIME	8:41:36 AM				REGION NO. 10	STATE WASH	FED.AID PROJ.NO. ARPA001
DATE	4/19/2023						
PLOTTED BY	danyal.ali				JOB NUMBER 22C525		
DESIGNED BY	M.GREENHECK						
ENTERED BY	M.GREENHECK						
CHECKED BY	H.BROWN				CONTRACT NO. 009902		LOCATION NO. XL-6115
PROJ. ENGR.	B. ELLIOTT						
REGIONAL ADM.	S. ROARK	REVISION	DATE	BY			

P.E. STAMP BOX — DATE

SCOTT A. SANTEE — STATE OF WASHINGTON — 43872 — REGISTERED PROFESSIONAL ENGINEER

SEE SHEET CT01 — DATE — P.E. STAMP BOX

Washington State Department of Transportation

SCJ ALLIANCE CONSULTING SERVICES

SR 16 / SR 160 / KITSAP COUNTY
FISH PASSAGE BARRIERS
REMOVE FISH BARRIERS

TEMP PAVING & PVMT MARKING PLAN

PLAN REF NO TP01

SHEET 372 OF 409 SHEETS

pw:\\HQOLYMAPPPW03P.WSDOT.LOC:WSDOT\Documents_HQ\Fish Passage\ORproj\160\2.29_Salmonberry\Design_CAD_Sheets\SR160MP2.29_Q_PS_TP_001.dgn

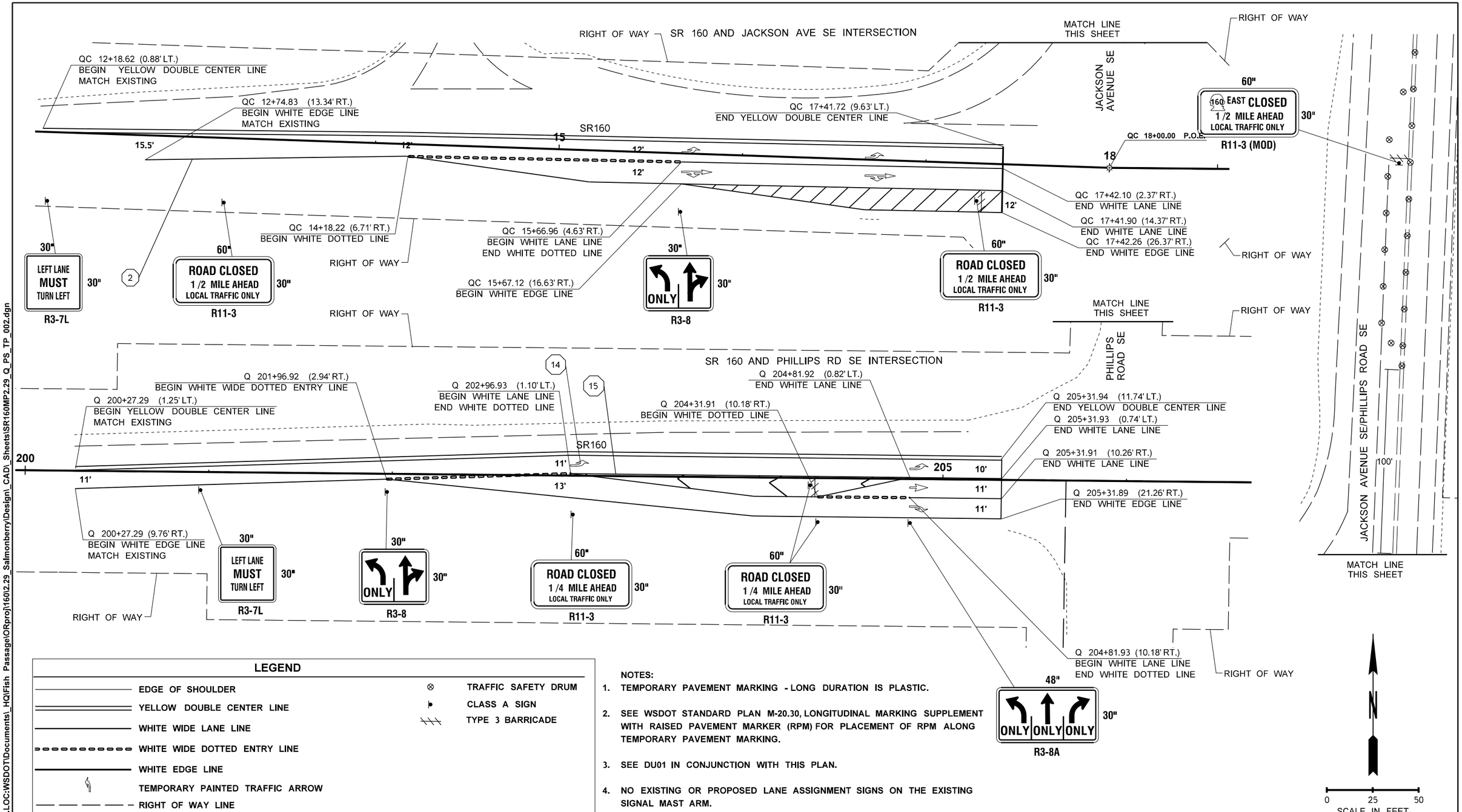

LEGEND

- EDGE OF SHOULDER
- YELLOW DOUBLE CENTER LINE
- WHITE WIDE LANE LINE
- WHITE WIDE DOTTED ENTRY LINE
- WHITE EDGE LINE
- TEMPORARY PAINTED TRAFFIC ARROW
- RIGHT OF WAY LINE
- 220 CONSTRUCTION ALIGNMENT
- TRAFFIC SAFETY DRUM
- CLASS A SIGN
- TYPE 3 BARRICADE

NOTES:

1. TEMPORARY PAVEMENT MARKING - LONG DURATION IS PLASTIC.
2. SEE WSDOT STANDARD PLAN M-20.30, LONGITUDINAL MARKING SUPPLEMENT WITH RAISED PAVEMENT MARKER (RPM) FOR PLACEMENT OF RPM ALONG TEMPORARY PAVEMENT MARKING.
3. SEE DU01 IN CONJUNCTION WITH THIS PLAN.
4. NO EXISTING OR PROPOSED LANE ASSIGNMENT SIGNS ON THE EXISTING SIGNAL MAST ARM.
5. SEE TRAFFIC CONTROL PLAN TC03 TO PERFORM TEMPORARY PAVEMENT MARKINGS.

FILE NAME	c:\users\melissa.greenheck\pw_wsdot\d0202980\SR160MP2.29_Q_PS_TP_002.dgn
TIME	3:57:24 PM
DATE	4/7/2023
PLOTTED BY	melissa.greenheck
DESIGNED BY	M.GREENHECK
ENTERED BY	M.GREENHECK
CHECKED BY	H.BROWN
PROJ. ENGR.	B. ELLIOTT
REGIONAL ADM.	S. ROARK

REVISION | DATE | BY

REGION NO.	STATE	FED.AID PROJ.NO.
10	WASH	ARPA001
JOB NUMBER 22C525		
CONTRACT NO. 009902		LOCATION NO. XL-6115

P.E. STAMP BOX — DATE

SCOTT A. SAWYER, STATE OF WASHINGTON, 35872, REGISTERED PROFESSIONAL ENGINEER — SEE SHEET CT01 — DATE — P.E. STAMP BOX

Washington State Department of Transportation

SCJ ALLIANCE CONSULTING SERVICES

SR 160 MP 2.29 SALMONBERRY CREEK

SR 16 / SR 160 / KITSAP COUNTY
FISH PASSAGE BARRIERS
REMOVE FISH BARRIERS

TEMP PAVING & PVMT MARKING PLAN

PLAN REF NO TP02

SHEET 373 OF 409 SHEETS

pw:\\HQOLYMAPPPW03P.WSDOT.LOC:WSDOT\Documents_HQ\Fish Passage\ORproj\160\2.29_Salmonberry\Design_CAD_Sheets\SR160MP2.29_Q_PS_TP_002.dgn

SEC.6 & 7, T.23N. R.2E. W.M.
KITSAP COUNTY

SR 160

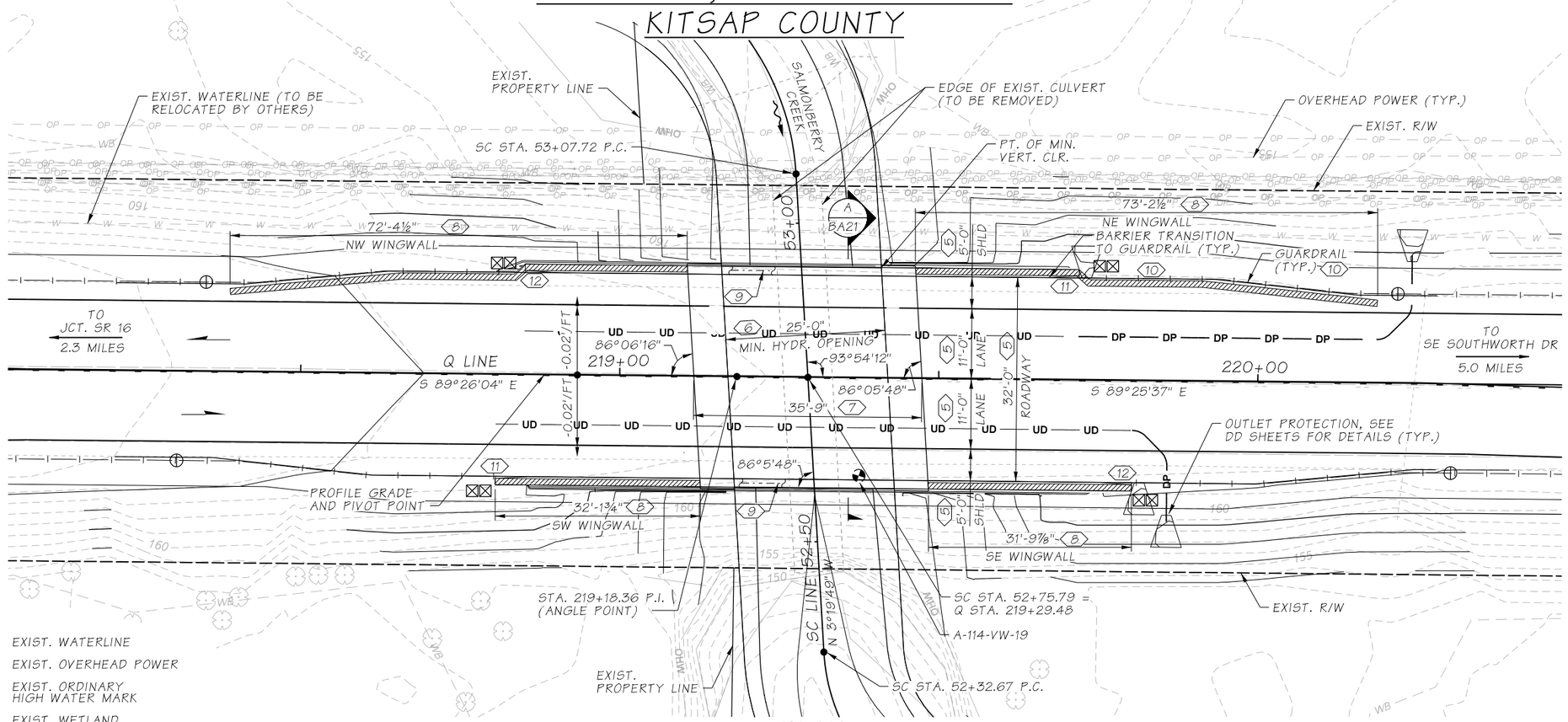

PLAN

BEARINGS OF PIERS IS N 03°19'49" W

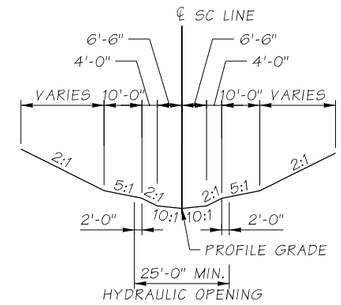

STREAM SECTION

SC STA. 52+42.62 TO 53+25.00

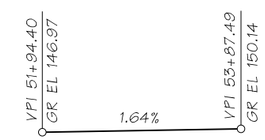

SC LINE PROFILE

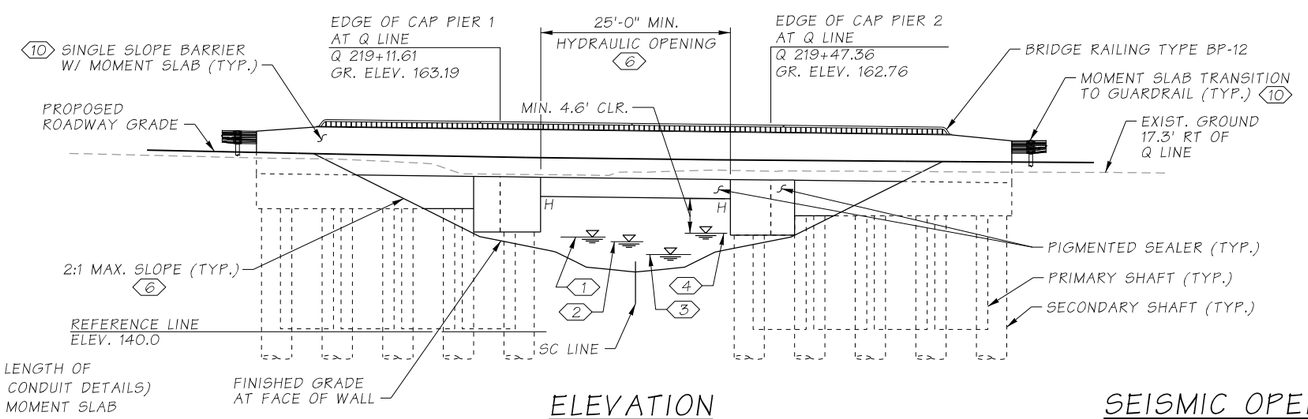

ELEVATION

GRADE ELEVATIONS SHOWN ARE FINISH GRADES AT TOP OF ROADWAY ON Q LINE AND ARE EQUAL TO PROFILE GRADE

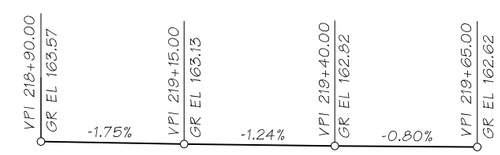

Q LINE PROFILE

LEGEND

- EXIST. WATERLINE
- EXIST. OVERHEAD POWER
- EXIST. ORDINARY HIGH WATER MARK
- EXIST. WETLAND
- UNDERDRAIN
- GUARDRAIL
- RETAINING WALL
- SOIL BORING LOCATION
- PROPOSED JUNCTION BOX, TYPE 1 (STD. PLAN J-40.01-00, J-40.10-04)

NOTES

1. 500 YR MRI W.S. ELEV. 152.7, Q=347 CFS
2. 100 YR MRI W.S. ELEV. 151.9, Q=267 CFS
3. NORMAL HIGH WATER W.S. ELEV. 150.4
4. FUTURE YEAR 2080 W.S. ELEV. 153.1, Q=404 CFS
5. MEASURED PERPENDICULAR TO Q LINE
6. MEASURED PERPENDICULAR TO SC LINE
7. EDGE OF PILE CAP TO EDGE OF PILE CAP MEASURED ALONG Q LINE
8. MEASURED ALONG FACE OF WALL; SEE FOUNDATION LAYOUT AND WINGWALL LAYOUT PLANS FOR WINGWALL GEOMETRY
9. 2~2"ø CONDUIT PIPES IN TRAFFIC BARRIER (FULL LENGTH OF BARRIER, SEE SHEET BA27 FOR TRAFFIC BARRIER CONDUIT DETAILS)
10. SEE PAVING PLANS FOR LIMITS OF BARRIER WITH MOMENT SLAB AND GUARDRAIL
11. BEAM GUARDRAIL CONNECTION TYPE "D" (STD. PLAN C-24.10-03)
12. BEAM GUARDRAIL CONNECTION TYPE "F" (STD. PLAN C-24.10-03)

DATUM
NAVD 88

PRECAST PRESTRESSED CONCRETE VOIDED SLAB - 2'-6" DEEP LOADING: HL-93

SEISMIC OPERATIONAL CLASSIFICATION: ORDINARY

SR 160 MP 2.29 SALMONBERRY CREEK

SR 16 / SR 160 / KITSAP COUNTY FISH PASSAGE BARRIERS REMOVE FISH BARRIERS

LAYOUT

Bridge Design Engr.		c:\pwworking\wsdot.pw.2\d0202980\SR160MP2.29_0.PS.BG.01.dgn							
Supervisor	B. CLARK				REGION NO.	STATE	FED. AID. PROJ. NO.	SHEET NO.	TOTAL SHEETS
Designed By	K. VASQUEZ				10	WASH.	ARPA001		
Checked By	K. JUMPAWONG				JOB NUMBER				
Detailed By	M. VYPLEL				22C525				
Bridge Projects Engr.									
Prelim. Plan By	K. VASQUEZ				009902				
Architect/Specialist		DATE	REVISION	BY	APP'D				

SEE SHEET CT01 DATE P.E. STAMP BOX

SEE SHEET CT01 DATE P.E. STAMP BOX

Washington State Department of Transportation

BRIDGE SHEET NO. BA01

SHEET 374 OF 409 SHEETS

3/17/2023 4:30:09 AM

SR 160 FILE NO. ____ SHEET ____

C.S. 1808 ~ PROJ. NO. XL6115 ~ OLYMPIC REGION ~ SR 160 ~ MP 2.29 ~ SALMONBERRY CREEK BRIDGE NO. 160/7

GENERAL NOTES

1. ALL MATERIAL AND WORKMANSHIP SHALL BE IN ACCORDANCE WITH THE REQUIREMENTS OF THE WASHINGTON STATE DEPARTMENT OF TRANSPORTATION STANDARD SPECIFICATIONS FOR ROAD, BRIDGE, AND MUNICIPAL CONSTRUCTION DATED 2023.
2. THIS STRUCTURE HAS BEEN DESIGNED IN ACCORDANCE WITH THE REQUIREMENTS OF THE AASHTO LRFD BRIDGE DESIGN SPECIFICATIONS 9TH EDITION 2020. DEAD LOAD INCLUDES AN ADDITIONAL 35 POUNDS PER SQUARE FOOT FOR FUTURE SURFACE OVERLAY. MOMENT SLAB FOR SINGLE SLOPE BARRIER HAS BEEN DESIGNED IN ACCORDANCE WITH THE WSDOT BDM FOR TL-4 IMPULSE LOAD OF 10 KIPS.
3. THE SEISMIC DESIGN OF THIS STRUCTURE HAS BEEN COMPLETED IN ACCORDANCE WITH THE REQUIREMENTS OF THE AASHTO GUIDE SPECIFICATIONS FOR LRFD SEISMIC BRIDGE DESIGN 2ND EDITION 2011 WITH INTERIM THROUGH 2015 USING SEISMIC DESIGN CATEGORY D, SITE CLASS D, A PEAK BEDROCK ACCELERATION OF 0.52g, AND 0.2 SECOND AND 1.0 SECOND SPECTRAL ACCELERATION OF 1.19g AND 0.32g, RESPECTIVELY, ON SITE CLASS B.
4. THE CONCRETE IN PIER 1 AND PIER 2 SECONDARY REINFORCED CONCRETE SHAFTS SHALL BE CLASS 5000P. THE CONCRETE IN THE PRIMARY SHAFTS SHALL CONFORM TO STANDARD SPECIFICATIONS SECTION 6-02.3(2) FOR CLASS 3000. ALL OTHER CAST-IN-PLACE CONCRETE SHALL BE CLASS 4000. SEE GIRDER SCHEDULE FOR GIRDERS MINIMUM CONCRETE COMPRESSIVE STRENGTH.
5. UNLESS OTHERWISE SHOWN IN THE PLANS, CONCRETE COVER MEASURED FROM THE FACE OF CONCRETE TO THE FACE OF ANY REINFORCING STEEL SHALL BE 3" AT THE BOTTOM OF FOOTING (SHAFT CAP), AND 2" AT ALL OTHER LOCATIONS.
6. FALSEWORK SHALL BE CAREFULLY RELEASED TO PREVENT IMPACT OR UNDUE STRESS IN THE STRUCTURE.
7. NOMINAL SHAFT RESISTANCE SHALL BE TAKEN AS FOLLOWS:

SERVICE LIMIT STATE	
PIER NO.	SKIN FRICTION RESISTANCE
1	700 KIPS
2	700 KIPS

STRENGTH LIMIT STATE	
PIER NO.	SKIN FRICTION RESISTANCE
1	400 KIPS
2	400 KIPS

EXTREME LIMIT STATE	
PIER NO.	SKIN FRICTION RESISTANCE
1	725 KIPS
2	725 KIPS

LEGEND

B / B15 — IDENTIFIES SECTION OR VIEW; TAKEN OR SHOWN ON BRIDGE SHEET B15

1 / - — IDENTIFIES DETAIL; TAKEN OR SHOWN ON THE SAME SHEET

SUPERSTRUCTURE CONSTRUCTION SEQUENCE

SHAFT AND SHAFT CAP CONCRETE SHALL REACH 80% OF THE DESIGN STRENGTH PRIOR TO BEGINNING SUPERSTRUCTURE CONSTRUCTION WORK

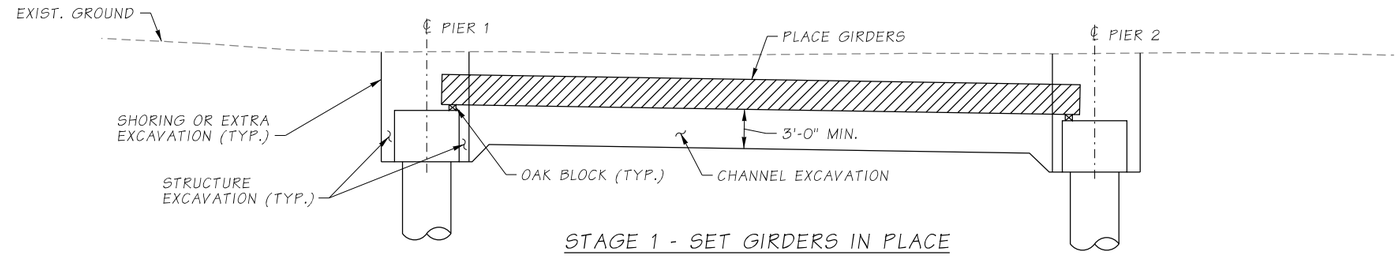

STAGE 1 - SET GIRDERS IN PLACE

INSTALL TEMPORARY BRACING FOR ERECTION IN ACCORDANCE WITH STD. SPEC. SECTION 6-02.3(17)F4

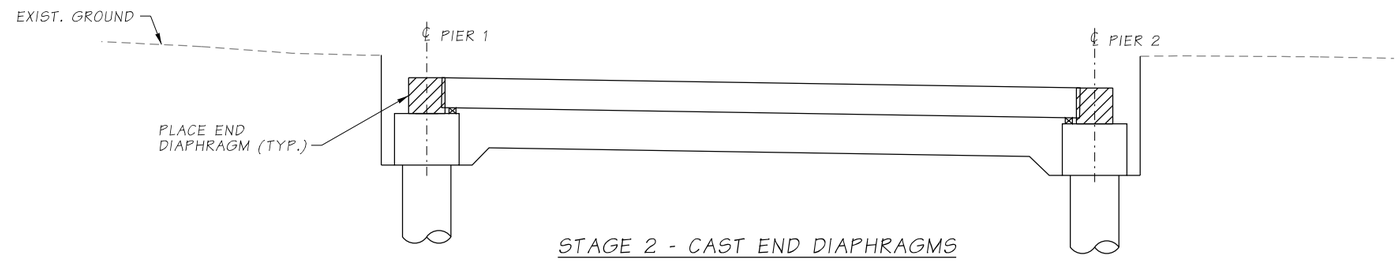

STAGE 2 - CAST END DIAPHRAGMS

NOTE: NO ADDITIONAL EXCAVATION BETWEEN BRIDGE PIERS SHALL OCCUR DURING STAGE 2

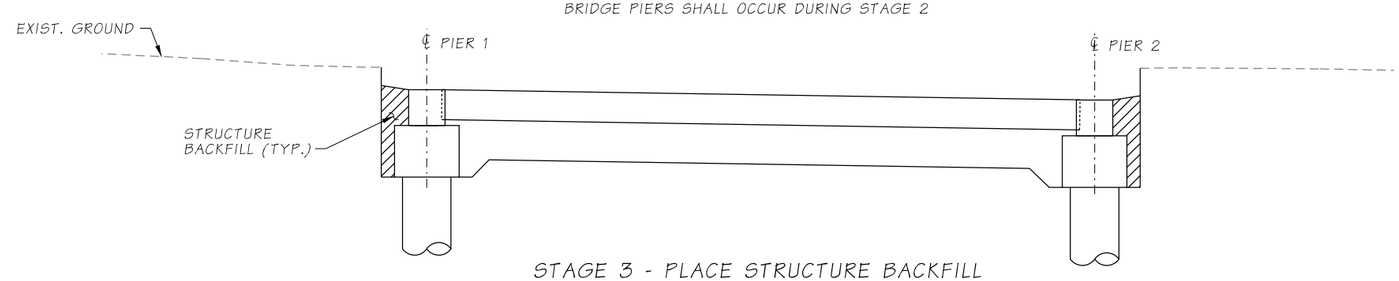

STAGE 3 - PLACE STRUCTURE BACKFILL

NOTE: NO ADDITIONAL EXCAVATION BETWEEN BRIDGE PIERS SHALL OCCUR DURING STAGE 3

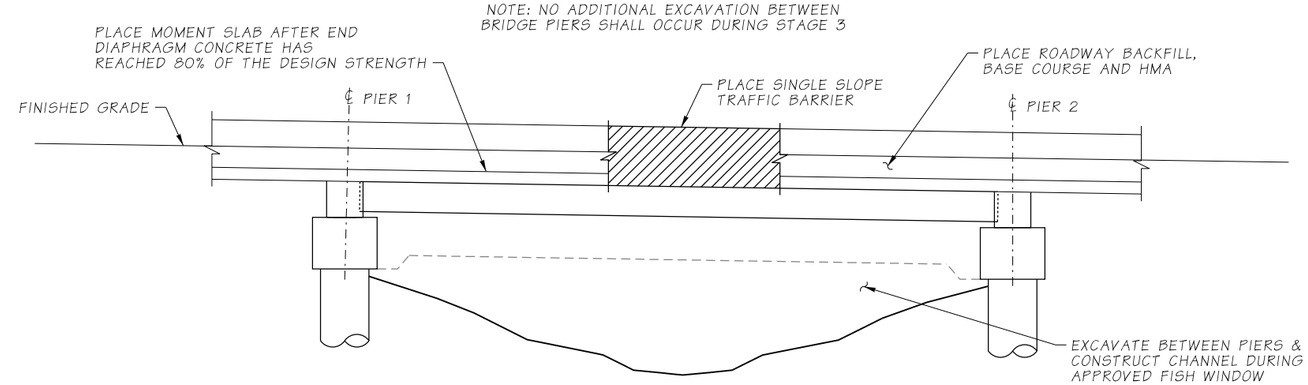

STAGE 4 - PLACE BARRIER W/ MOMENT SLABS AND ROADWAY

SR 160 MP 2.29 SALMONBERRY CREEK

Bridge Design Engr.		c:\pwworking\wsdot_pw_2\d0202980\SR160MP2.29_Q_PS_BG_02.dgn							
Supervisor	B. CLARK				REGION NO.	STATE	FED. AID. PROJ. NO.	SHEET NO.	TOTAL SHEETS
Designed By	K. VASQUEZ				10	WASH.	ARPA001		
Checked By	K. JUMPAWONG				JOB NUMBER 22C525				
Detailed By	M. VYPLEL								
Bridge Projects Engr.									
Prelim. Plan By					009902				
Architect/Specialist		DATE	REVISION	BY	APP'D				

3/16/2023 2:28:58 PM

SEE SHEET CT01 DATE P.E. STAMP BOX

SEE SHEET CT01 DATE P.E. STAMP BOX

Washington State Department of Transportation

SR 16 / SR 160 / KITSAP COUNTY
FISH PASSAGE BARRIERS
REMOVE FISH BARRIERS

GENERAL NOTES AND SUPERSTRUCTURE CONSTR. SEQUENCE

BRIDGE SHEET NO. BA02

SHEET 375 OF 409 SHEETS

SR 160 FILE NO.____ SHEET____

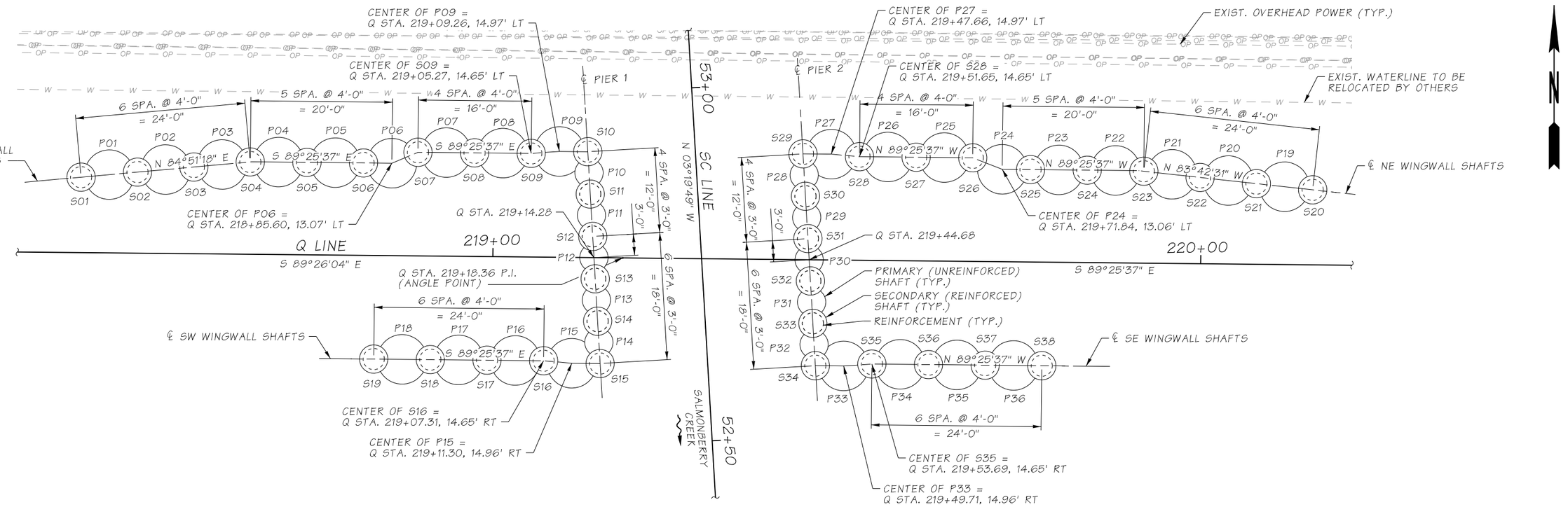

FOUNDATION LAYOUT

BEARINGS OF PIERS IS N 03°19'49" W

SECANT PILE WALLS PRIMARY SHAFT SCHEDULE

	SHAFT NUMBER	SHAFT DIAMETER	TOP OF SHAFT EL. (FT)	BOTTOM OF SHAFT EL. (FT)	SHAFT LENGTH		SHAFT NUMBER	SHAFT DIAMETER	TOP OF SHAFT EL. (FT)	BOTTOM OF SHAFT EL. (FT)	SHAFT LENGTH
NW WW	P01	7'-0"	156.4	140.5	15'-11"	NE WW	P19	7'-0"	155.6	140.5	15'-1"
	P02	7'-0"	156.4	140.5	15'-11"		P20	7'-0"	155.6	140.5	15'-1"
	P03	7'-0"	156.4	140.5	15'-11"		P21	7'-0"	155.6	140.5	15'-1"
	P04	7'-0"	156.4	140.5	15'-11"		P22	7'-0"	155.6	140.5	15'-1"
	P05	7'-0"	156.4	140.5	15'-11"		P23	7'-0"	155.6	140.5	15'-1"
	P06	7'-0"	156.4	140.5	15'-11"		P24	7'-0"	155.6	140.5	15'-1"
	P07	7'-0"	156.4	140.5	15'-11"		P25	7'-0"	155.6	140.5	15'-1"
	P08	7'-0"	156.4	140.5	15'-11"		P26	7'-0"	155.6	140.5	15'-1"
	P09	7'-0"	153.4	140.5	12'-11"		P27	7'-0"	153.0	140.5	12'-6"
PIER 1	P10	4'-0"	153.6	140.5	13'-2"	PIER 2	P28	4'-0"	153.2	140.5	12'-9"
	P11	4'-0"	153.6	140.5	13'-2"		P29	4'-0"	153.2	140.5	12'-9"
	P12	4'-0"	153.6	140.5	13'-2"		P30	4'-0"	153.2	140.5	12'-9"
	P13	4'-0"	153.6	140.5	13'-2"		P31	4'-0"	153.2	140.5	12'-9"
	P14	4'-0"	153.6	140.5	13'-2"		P32	4'-0"	153.2	140.5	12'-9"
SW WW	P15	7'-0"	153.4	140.5	12'-11"	SE WW	P33	7'-0"	153.0	140.5	12'-6"
	P16	7'-0"	156.4	140.5	15'-11"		P34	7'-0"	155.5	140.5	15'-1"
	P17	7'-0"	156.4	140.5	15'-11"		P35	7'-0"	155.5	140.5	15'-1"
	P18	7'-0"	156.4	140.5	15'-11"		P36	7'-0"	155.5	140.5	15'-1"

SECANT PILE WALLS SECONDARY SHAFT SCHEDULE

	SHAFT NUMBER	TOP OF SHAFT EL. (FT)	BOTTOM OF SHAFT EL. (FT)	SHAFT LENGTH		SHAFT NUMBER	TOP OF SHAFT EL. (FT)	BOTTOM OF SHAFT EL. (FT)	SHAFT LENGTH
NW WW	S01	156.6	109.0	47'-8"	NE WW	S20	155.8	109.0	46'-10"
	S02	156.6	109.0	47'-8"		S21	155.8	109.0	46'-10"
	S03	156.6	109.0	47'-8"		S22	155.8	109.0	46'-10"
	S04	156.6	109.0	47'-8"		S23	155.8	109.0	46'-10"
	S05	156.6	109.0	47'-8"		S24	155.8	109.0	46'-10"
	S06	156.6	109.0	47'-8"		S25	155.8	109.0	46'-10"
	S07	156.6	109.0	47'-8"		S26	155.8	109.0	46'-10"
	S08	156.6	125.0	31'-8"		S27	155.8	125.0	30'-10"
	S09	156.6	125.0	31'-8"		S28	155.8	125.0	30'-10"
PIER 1	S10	153.6	114.0	39'-8"	PIER 2	S29	153.2	114.0	39'-3"
	S11	153.6	114.0	39'-8"		S30	153.2	114.0	39'-3"
	S12	153.6	114.0	39'-8"		S31	153.2	114.0	39'-3"
	S13	153.6	114.0	39'-8"		S32	153.2	114.0	39'-3"
	S14	153.6	114.0	39'-8"		S33	153.2	114.0	39'-3"
	S15	153.6	114.0	39'-8"		S34	153.2	114.0	39'-3"
SW WW	S16	156.6	125.0	31'-8"	SE WW	S35	155.8	125.0	30'-10"
	S17	156.6	125.0	31'-8"		S36	155.8	125.0	30'-10"
	S18	156.6	109.0	47'-8"		S37	155.8	109.0	46'-10"
	S19	156.6	109.0	47'-8"		S38	155.8	109.0	46'-10"

NOTE: ALL SECONDARY SHAFTS ARE 4'-0" DIAMETER SHAFTS.

NOTES

1. CONTRACTOR SHALL ACCOUNT FOR THE DURATION BETWEEN PRIMARY AND SECONDARY SHAFT PLACEMENT IN THE SHAFT INSTALLATION PLAN.
2. IT IS EXPECTED THAT THE SHAFTS MAY EXTEND INTO ARTESIAN GROUND WATER. REFER TO THE REQUIREMENTS OF THE SPECIAL PROVISIONS "SHAFTS", THE SPECIFICATIONS AND THE GEOTECHNICAL REPORT FOR ADDITIONAL REQUIREMENTS AND DETAILS OF ANTICIPATED ARTESIAN GROUND WATER ELEVATIONS.

LEGEND

P## - PRIMARY SHAFTS
S## - SECONDARY SHAFTS
WW - WINGWALL

SR 160 FILE NO.____ SHEET____

Bridge Design Engr.		c:\pwworking\wsdot_pw_2\d0202980\SR160MP2.29_Q_PS_BG_03.dgn						
Supervisor	B. CLARK				REGION NO.	STATE	FED. AID. PROJ. NO.	SHEET NO. / TOTAL SHEETS
Designed By	E. BORDER/ K. MA				10	WASH.	ARPA001	
Checked By	K. JUMPAWONG				JOB NUMBER 22C525			
Detailed By	M. VYPLEL							
Bridge Projects Engr.								
Prelim. Plan By					009902			
Architect/Specialist		DATE	REVISION	BY	APP'D			

3/17/2023 10:27:59 AM

SEE SHEET CT01 DATE P.E. STAMP BOX

HDR

SEE SHEET CT01 DATE P.E. STAMP BOX

Washington State Department of Transportation

SR 160 MP 2.29 SALMONBERRY CREEK

SR 16 / SR 160 / KITSAP COUNTY FISH PASSAGE BARRIERS REMOVE FISH BARRIERS

FOUNDATION LAYOUT

BRIDGE SHEET NO. BA03

SHEET 376 OF 409 SHEETS

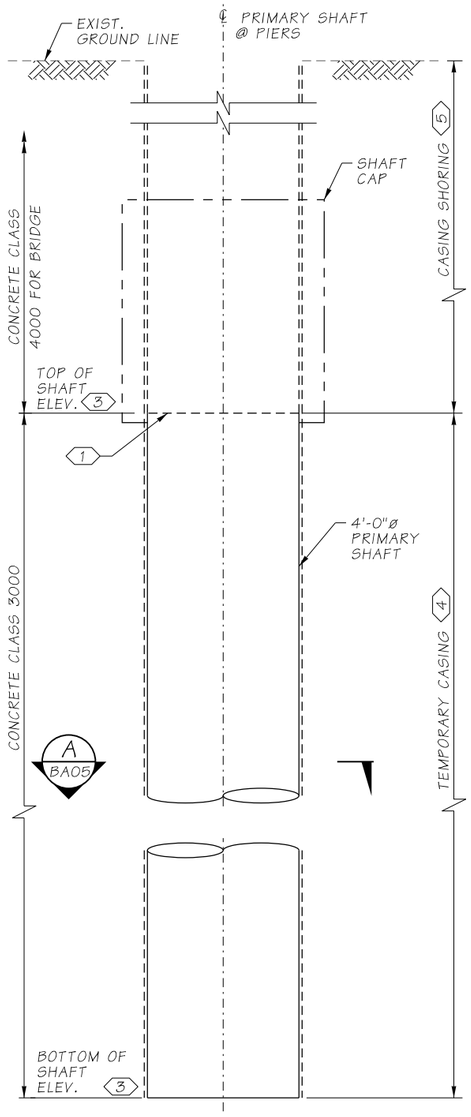

ELEVATION

PRIMARY SHAFT - PIERS 1 & 2
(SEE SHAFT SCHEDULE ON SHEET BA03
FOR APPLICABLE SHAFTS)

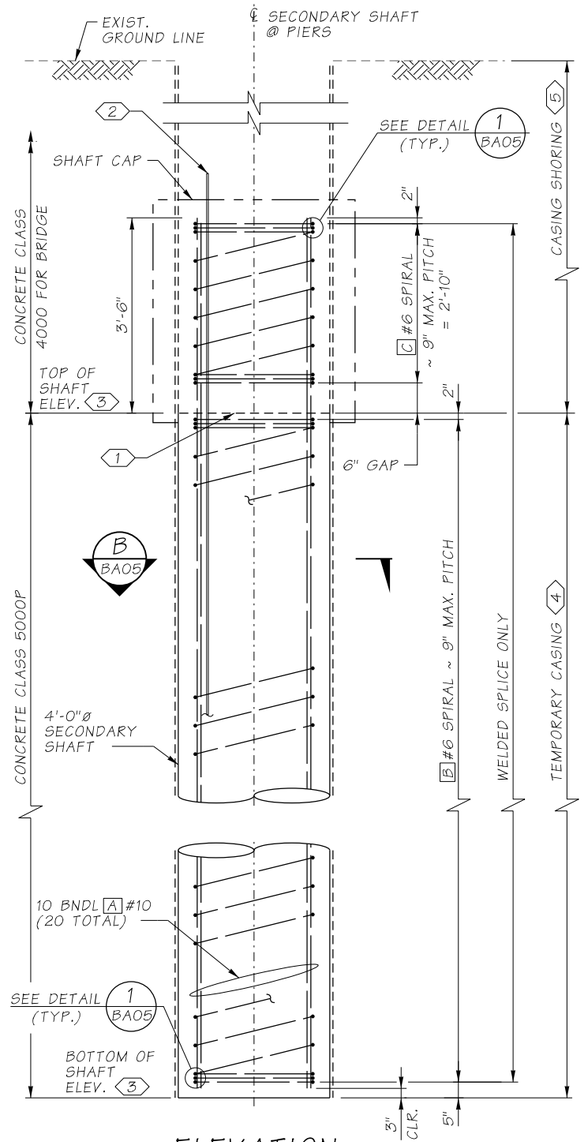

ELEVATION

SECONDARY SHAFT - PIERS 1 & 2
(SEE SHAFT SCHEDULE ON SHEET BA03
FOR APPLICABLE SHAFTS)

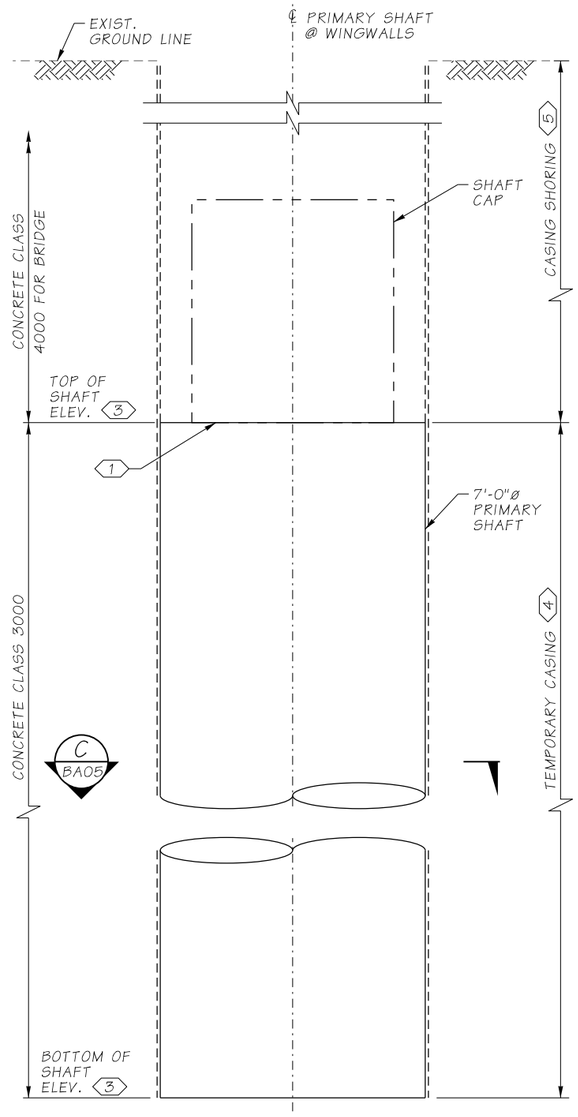

ELEVATION

PRIMARY SHAFT - WINGWALLS
(SEE SHAFT SCHEDULE ON SHEET BA03
FOR APPLICABLE SHAFTS)

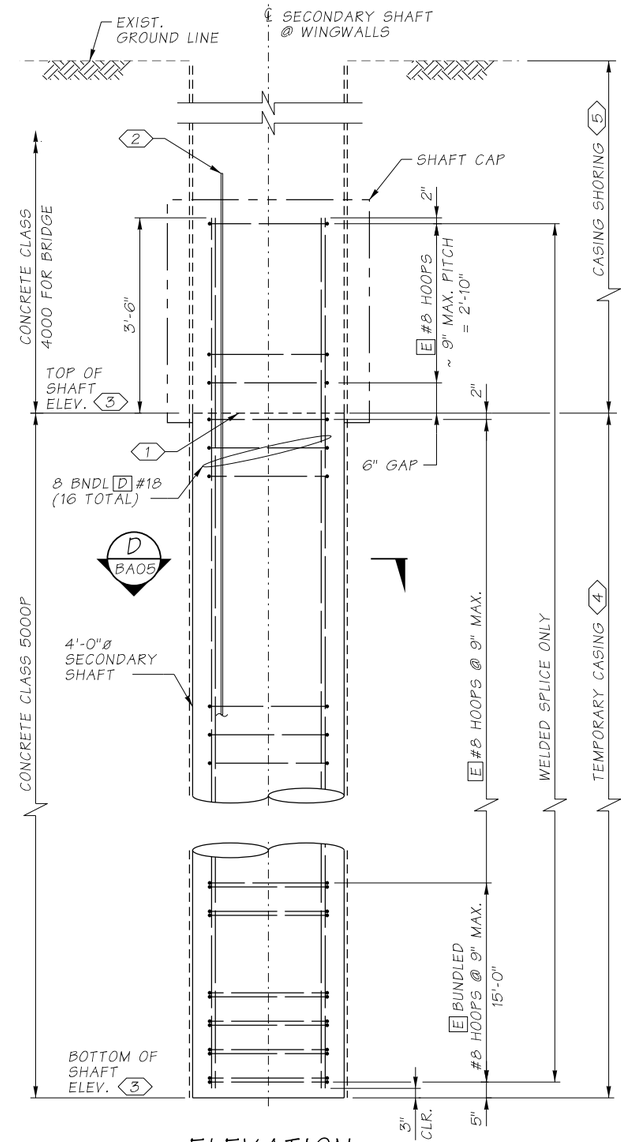

ELEVATION

SECONDARY SHAFT - WINGWALLS
(SEE SHAFT SCHEDULE ON SHEET BA03
FOR APPLICABLE SHAFTS)

NOTES

1. CONSTRUCTION JOINT WITH INTENTIONALLY ROUGHENED SURFACE. REMOVE SEDIMENT LAITANCE AND WEAK CONCRETE TO SOUND CONCRETE PRIOR TO SETTING SHAFT CAP REINFORCEMENT.
2. ACCESS TUBE. SEE STD. SPEC. SECTION 6-19.3(6) FOR NUMBER, MATERIAL AND INSTALLATION REQUIREMENTS. CUT TO TOP OF SHAFT UPON COMPLETING SHAFT CONSTRUCTION.
3. FOR TOP AND BOTTOM ELEVATION OF SHAFTS, SEE FOUNDATION LAYOUT ON SHEET BA03.
4. EXCAVATION IN ADVANCE OF THE TEMPORARY CASING TIP SHALL NOT BE ALLOWED.
5. CONTRACTOR WILL NEED TO DETERMINE HOW MUCH CASING WILL NEED TO EXTEND ABOVE THE GROUND LINE IN ORDER TO MAINTAIN PROPER HEAD IN THE SHAFT.

SR 160 MP 2.29 SALMONBERRY CREEK

Bridge Design Engr.		c:\pwworking\wsdot_pw_2\d0202980\SR160MP2.29_Q_PS_BG_04.dgn			REGION NO.	STATE	FED. AID. PROJ. NO.	SHEET NO.	TOTAL SHEETS
Supervisor	B. CLARK				10	WASH.	ARPA001		
Designed By	K. MA				JOB NUMBER				
Checked By	K. JUMPAWONG				22C525				
Detailed By	M. VYPLEL								
Bridge Projects Engr.					009902				
Prelim. Plan By									
Architect/Specialist		DATE	REVISION	BY	APP'D				

SEE SHEET CT01 DATE P.E. STAMP BOX

HDR

SEE SHEET CT01 DATE P.E. STAMP BOX

Washington State Department of Transportation

SR 16 / SR 160 / KITSAP COUNTY FISH PASSAGE BARRIERS REMOVE FISH BARRIERS

SHAFT DETAILS 1 OF 2

BRIDGE SHEET NO. BA04

SHEET 377 OF 409 SHEETS

SR 160 FILE NO. ____ SHEET ____

3/16/2023 2:29:05 PM

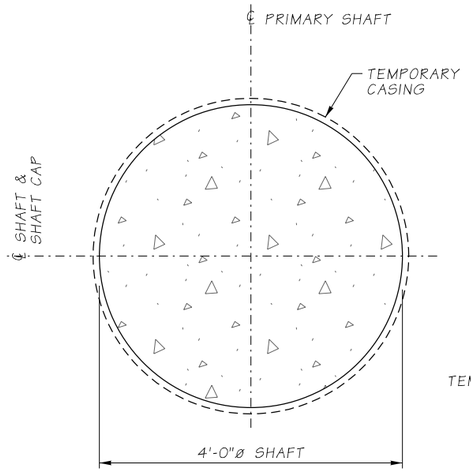

SECTION A BA04

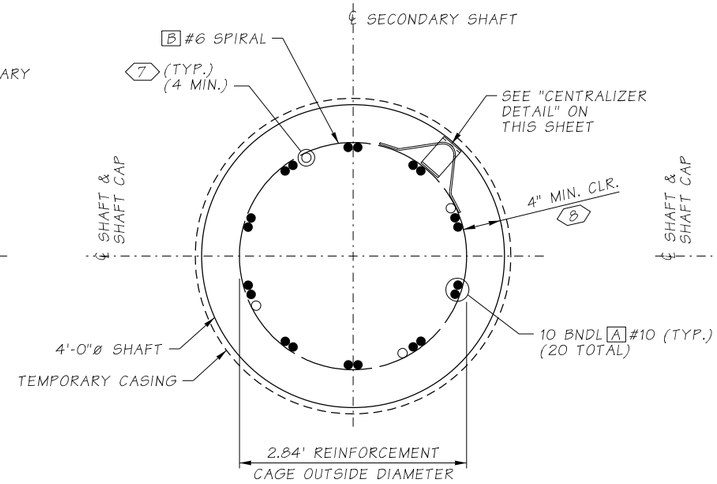

SECTION B BA04

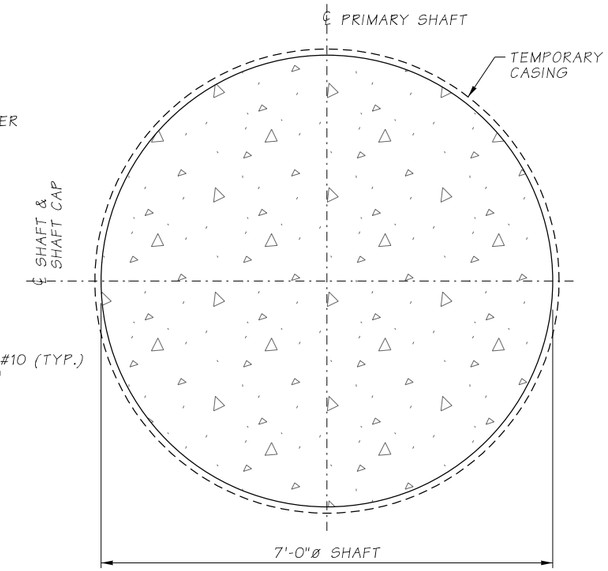

SECTION C BA04

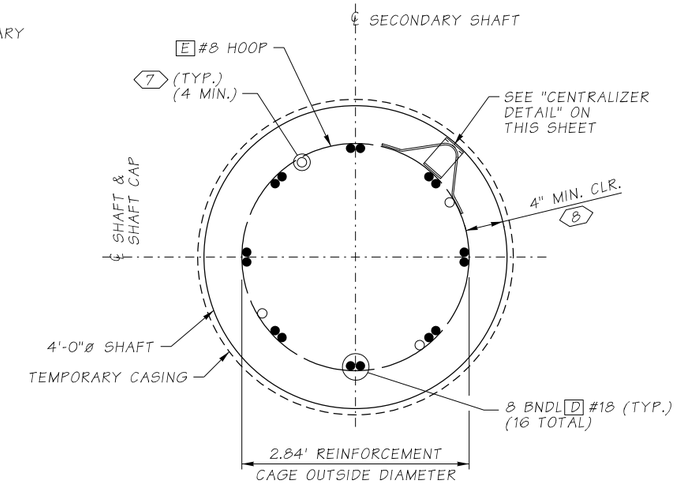

SECTION D BA04

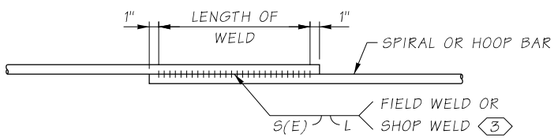

WELDED LAP SPLICE DETAIL

SHAFT SPIRAL & HOOP			
DEFORMED BAR SIZE	WELD DIMENSIONS (IN.)		
	S	E	LENGTH (L)
#6	3/8	3/16	6
#8	1/2	1/4	8

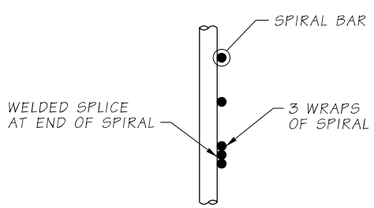

DETAIL 1
SPIRAL TERMINATION BA04

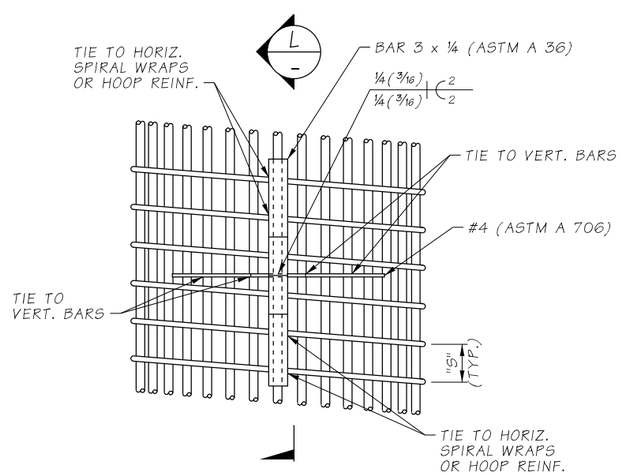

CENTRALIZER DETAIL
2 4 5 6
SPIRALS SHOWN, HOOPS SIMILAR
BUNDLED BARS NOT SHOWN FOR CLARITY

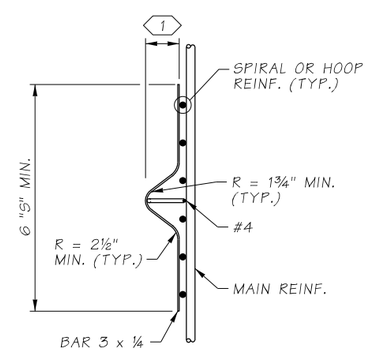

VIEW L

NOTES

1. MINIMUM CONCRETE COVER MINUS ½".
2. SEE STD. SPEC. 6-19.3(5)B FOR SPACING REQUIREMENTS.
3. WELDING SHALL MEET THE REQUIREMENTS OF STD. SPEC. 6-02.3(24)E FOR WELD DIMENSIONS, SEE SHAFT SPIRAL & HOOP TABLE ON THIS SHEET.
4. CENTRALIZERS SHALL BE EPOXY COATED OR PAINTED WITH PAINT CONFORMING TO STANDARD SPECIFICATION 9-08.1(2)C OR 9-08.1(2)F AFTER FABRICATION.
5. EACH LEG SHALL BE TIED TO TWO (2) VERTICAL BAR AND TWO (2) SPIRAL WRAPS OR HOOPS.
6. CAGECASTER® REBAR CAGE SPACERS BY FOUNDATION TECHNOLOGIES MAY BE USED IN LIEU OF DETAIL SHOWN. SPACING REQUIREMENTS SHALL BE PER MANUFACTURER'S RECOMMENDATIONS. EACH LEG SHALL BE TIED TO A MINIMUM OF TWO (2) SPIRAL WRAPS OR HOOPS.
7. ACCESS TUBE. SEE STD. SPEC. SECTION 6-19.3(6) FOR NUMBER, MATERIAL AND INSTALLATION REQUIREMENTS. CUT TO TOP OF SHAFT UPON COMPLETING SHAFT CONSTRUCTION.
8. SEE STD. SPEC. 6-19.3(5)C FOR MINIMUM CONCRETE COVER AND TOLERANCES.

SR 160 MP 2.29 SALMONBERRY CREEK

SR 16 / SR 160 / KITSAP COUNTY
FISH PASSAGE BARRIERS
REMOVE FISH BARRIERS

SHAFT DETAILS 2 OF 2

BRIDGE SHEET NO. BA05

SHEET 378 OF 409 SHEETS

Bridge Design Engr.		c:\pwworking\wsdot_pw_2\d0202980\SR160MP2.29_Q_PS_BG_05.dgn							
Supervisor	B. CLARK				REGION NO.	STATE	FED. AID. PROJ. NO.	SHEET NO.	TOTAL SHEETS
Designed By	K. MA				10	WASH.	ARPA001		
Checked By	K. JUMPAWONG				JOB NUMBER				
Detailed By	M. VYPLEL				22C525				
Bridge Projects Engr.									
Prelim. Plan By					009902				
Architect/Specialist		DATE	REVISION	BY	APP'D				

SEE SHEET CT01 DATE P.E. STAMP BOX

SEE SHEET CT01 DATE P.E. STAMP BOX

Washington State Department of Transportation

SR 160 FILE NO. ____ SHEET ____

3/16/2023 2:29:08 PM

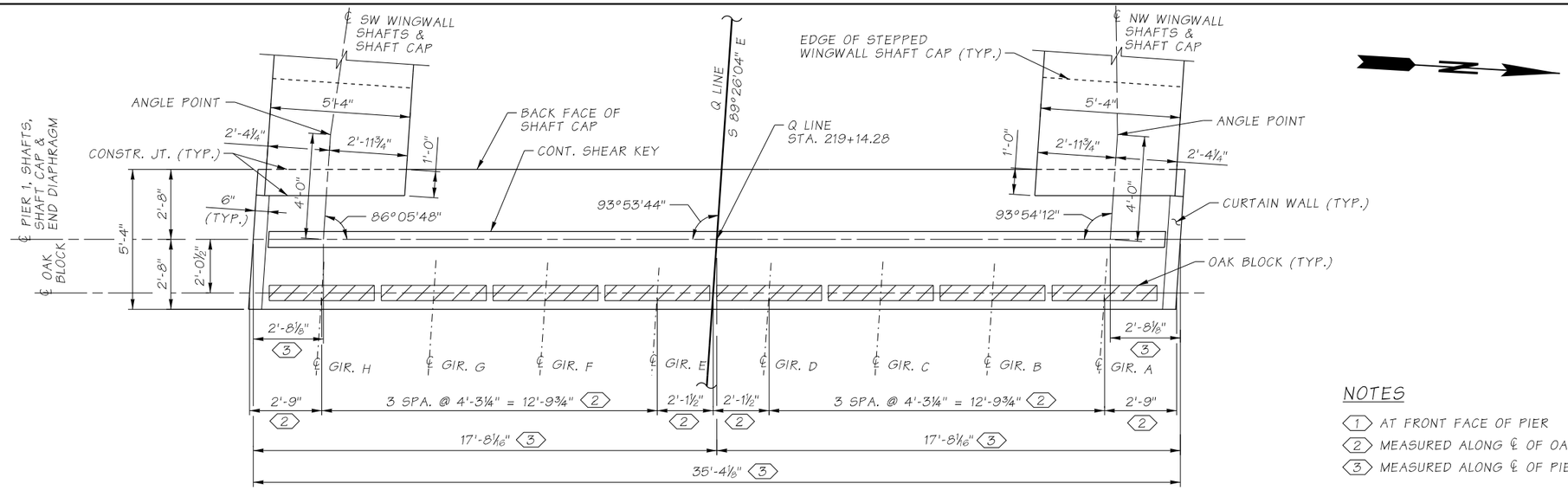

PIER 1 PLAN

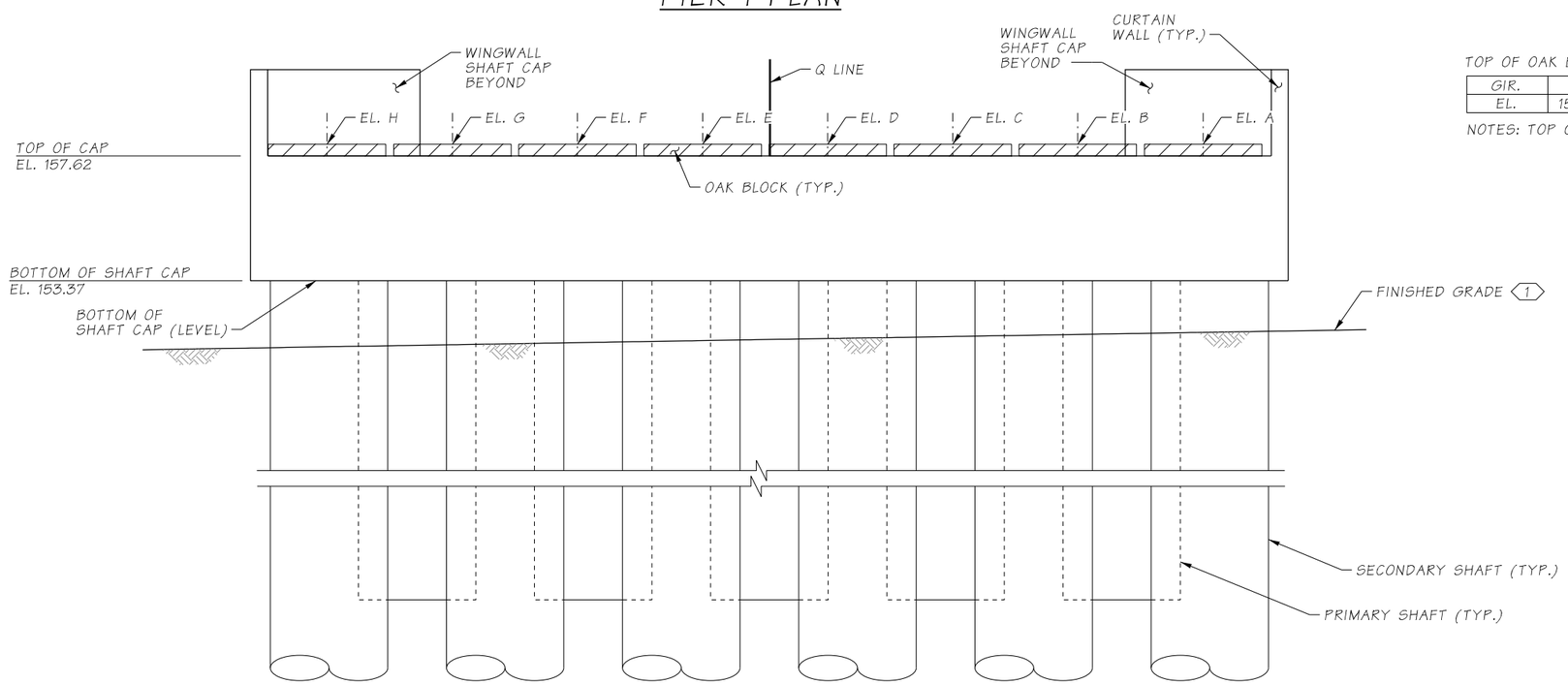

PIER 1 ELEVATION

ELEVATIONS ARE TAKEN AT THE ℄ OF PIER, SHAFTS, AND SHAFT CAP LOOKING BACK ON STATION

NOTES

1. AT FRONT FACE OF PIER
2. MEASURED ALONG ℄ OF OAK BLOCK
3. MEASURED ALONG ℄ OF PIER

TOP OF OAK BLOCK ELEVATIONS AT ℄ OF GIRDER AND ℄ OF OAK BLOCK

GIR.	A	B	C	D	E	F	G	H
EL.	158.02	158.02	158.02	158.02	158.02	158.02	158.02	158.02

NOTES: TOP OF OAK BLOCK SHALL BE LEVEL.

SR 160 MP 2.29 SALMONBERRY CREEK

Bridge Design Engr.		c:\pwworking\wsdot_pw_2\d0202980\SR160MP2.29_Q_PS_BG_06.dgn							
Supervisor	B. CLARK				REGION NO.	STATE	FED. AID. PROJ. NO.	SHEET NO.	TOTAL SHEETS
Designed By	K. VASQUEZ/ A. JAIN				10	WASH.	ARPA001		
Checked By	K. JUMPAWONG				JOB NUMBER				
Detailed By	M. VYPLEL				22C525				
Bridge Projects Engr.									
Prelim. Plan By					009902				
Architect/Specialist		DATE	REVISION	BY	APP'D				

SEE SHEET CT01 DATE P.E. STAMP BOX

SEE SHEET CT01 DATE P.E. STAMP BOX

Washington State Department of Transportation

SR 16 / SR 160 / KITSAP COUNTY FISH PASSAGE BARRIERS REMOVE FISH BARRIERS

PIER 1 PLAN AND ELEVATION

BRIDGE SHEET NO. BA06

SHEET 379 OF 409 SHEETS

SR 160 FILE NO. ____ SHEET ____

3/16/2023 2:29:12 PM

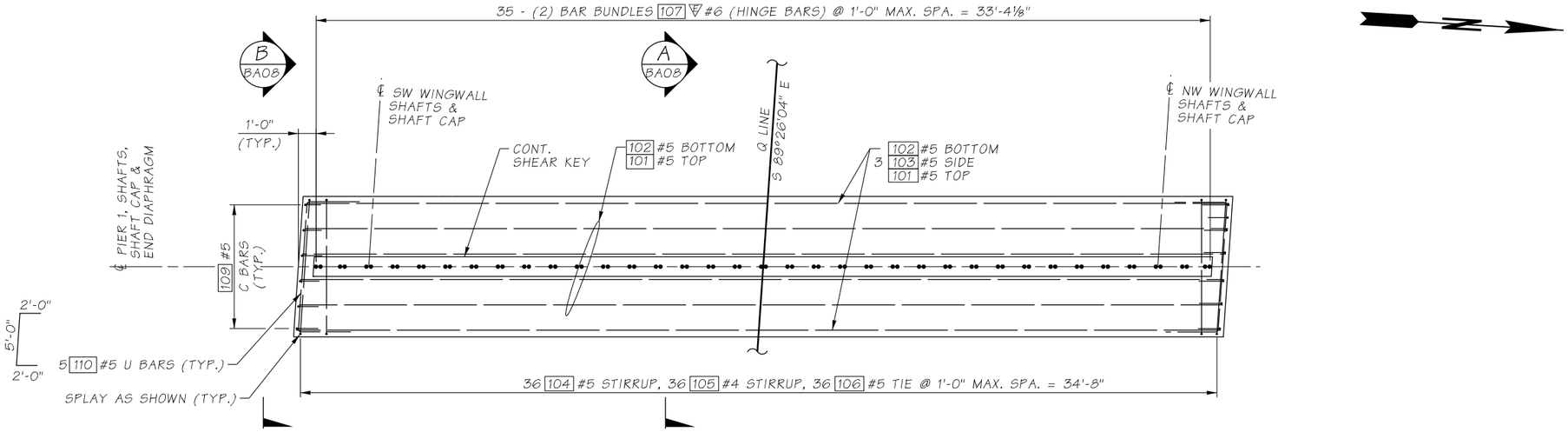

PIER 1 SHAFT CAP REINFORCEMENT PLAN

(SHAFT REINFORCEMENT NOT SHOWN FOR CLARITY)
(ADJUST THE STIRRUPS AND HINGE BARS AS REQUIRED TO CLEAR SHAFT REINFORCEMENT)
(END DIAPHRAGM NOT SHOWN FOR CLARITY)

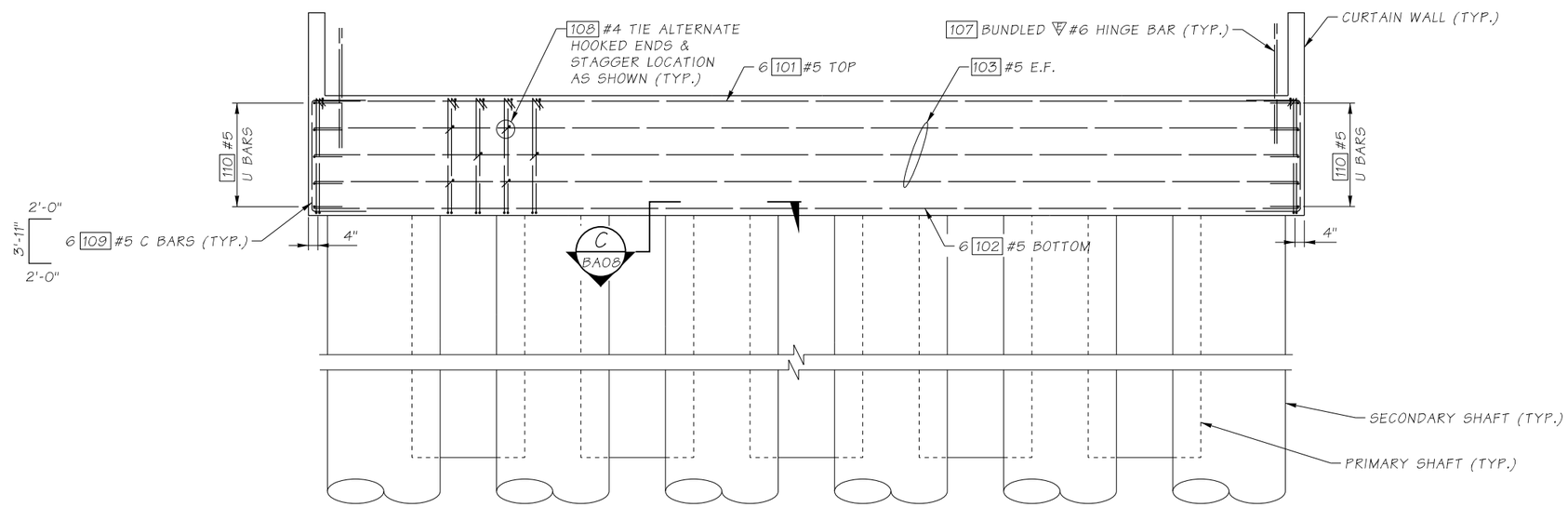

PIER 1 SHAFT CAP REINFORCEMENT ELEVATION

(SHAFT REINFORCEMENT NOT SHOWN FOR CLARITY)
(ADJUST THE STIRRUPS AND HINGE BARS AS REQUIRED TO CLEAR SHAFT REINFORCEMENT)
(END DIAPHRAGM NOT SHOWN FOR CLARITY)

SR 160 MP 2.29 SALMONBERRY CREEK

Bridge Design Engr.		c:\pwworking\wsdot_pw_2\d0202980\SR160MP2.29_Q_PS_BG_07.dgn							
Supervisor	B. CLARK				REGION NO.	STATE	FED. AID. PROJ. NO.	SHEET NO.	TOTAL SHEETS
Designed By	A. JAIN/ K. MA				10	WASH.	ARPA001		
Checked By	K. JUMPAWONG				JOB NUMBER 22C525				
Detailed By	M. VYPLEL								
Bridge Projects Engr.									
Prelim. Plan By					009902				
Architect/Specialist		DATE	REVISION	BY	APP'D				

SEE SHEET CT01 DATE P.E. STAMP BOX

SEE SHEET CT01 DATE P.E. STAMP BOX

Washington State Department of Transportation

SR 16 / SR 160 / KITSAP COUNTY
FISH PASSAGE BARRIERS
REMOVE FISH BARRIERS

PIER 1 DETAILS 1 OF 2

BRIDGE SHEET NO. BA07

SHEET 380 OF 409 SHEETS

SR 160 FILE NO.____ SHEET____

3/16/2023 2:29:15 PM

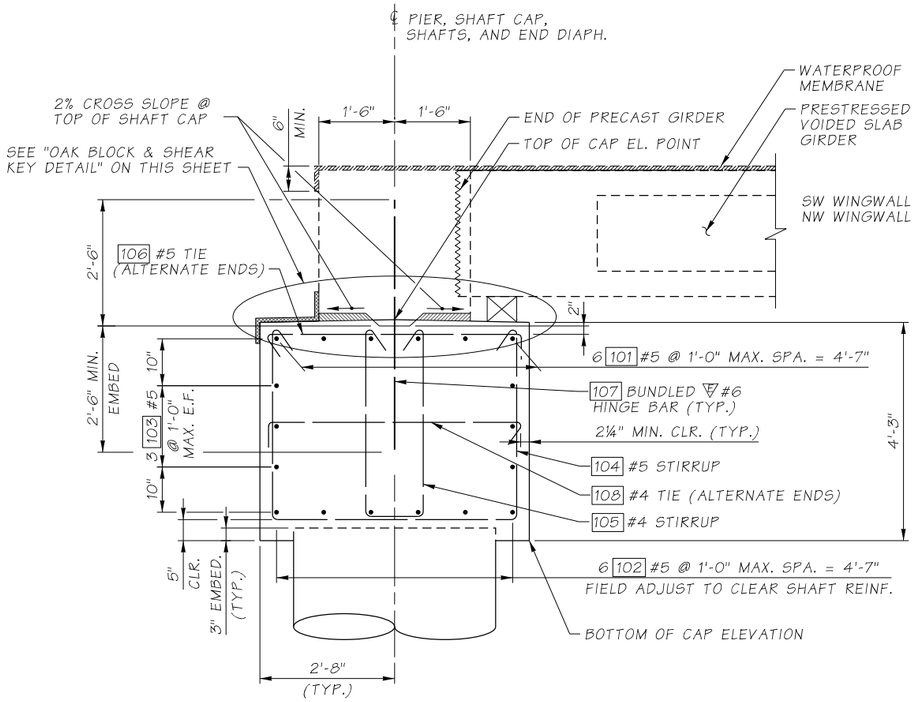

SECTION A BA07

SHAFT REINFORCEMENT AND END DIAPHRAGM DETAILS NOT SHOWN FOR CLARITY

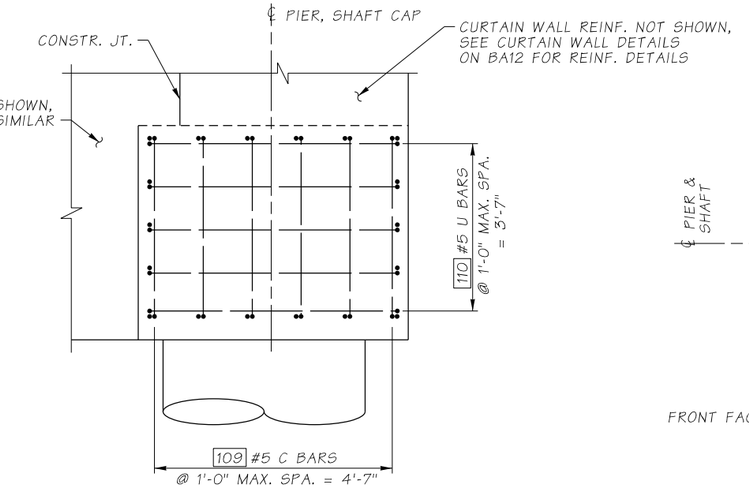

END VIEW B BA07

SW END SHOWN, OPPOSITE END SIMILAR

SHAFT REINFORCEMENT AND END DIAPHRAGM DETAILS NOT SHOWN. FOR REINF. DETAILS NOT SHOWN, SEE SECTION A THIS SHEET. PIER 1 SOUTH CURTAIN WALL SHOWN, NORTH CURTAIN WALL SIMILAR.

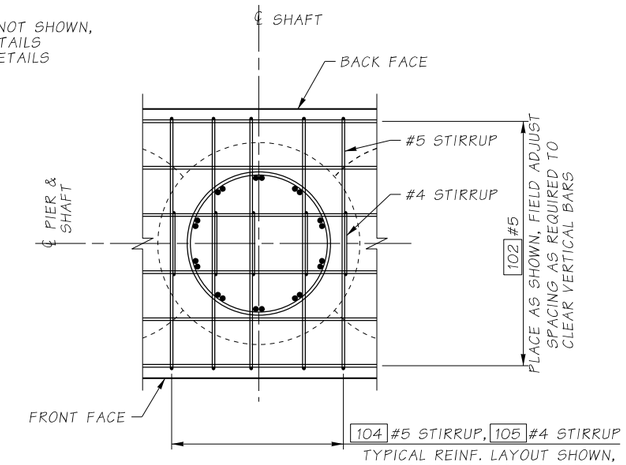

TYPICAL REINF. LAYOUT SHOWN, FIELD ADJUST TO FIT AROUND SHAFT VERTICAL BARS

SECTION C BA07

TYPICAL FOR ALL PIER SHAFTS S10-S15 (SEE FOUNDATION LAYOUT)

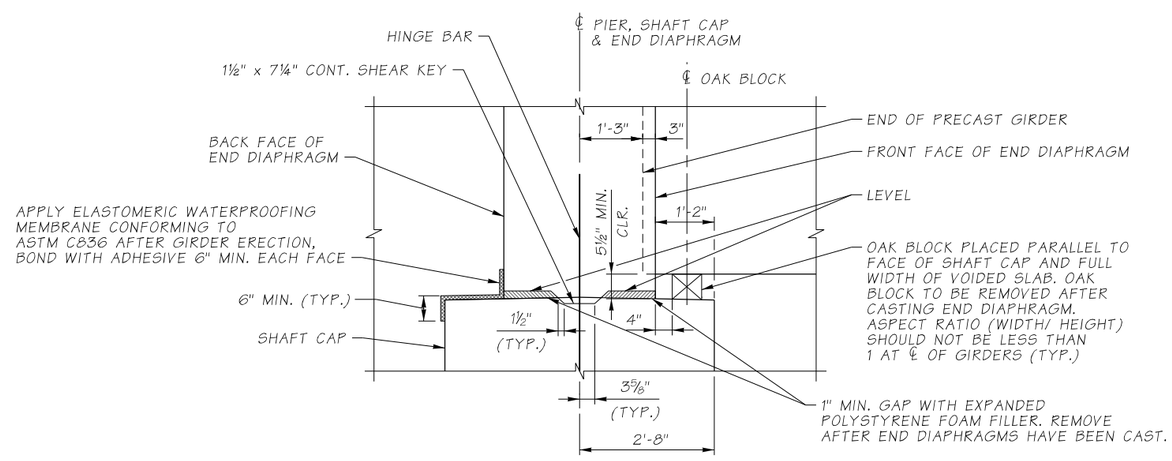

OAK BLOCK & SHEAR KEY DETAIL

SR 160 MP 2.29 SALMONBERRY CREEK

Bridge Design Engr.		c:\pwworking\wsdot_pw_2\d0202980\SR160MP2.29_Q_PS_BG_08.dgn							
Supervisor	B. CLARK				REGION NO.	STATE	FED. AID. PROJ. NO.	SHEET NO.	TOTAL SHEETS
Designed By	A. JAIN/ K. MA				10	WASH.	ARPA001		
Checked By	K. JUMPAWONG				JOB NUMBER				
Detailed By	M. VYPLEL				22C525				
Bridge Projects Engr.									
Prelim. Plan By					009902				
Architect/Specialist		DATE	REVISION	BY	APP'D				

3/16/2023 2:29:18 PM

SR 160 FILE NO.____ SHEET____

SEE SHEET CT01 DATE P.E. STAMP BOX

SEE SHEET CT01 DATE P.E. STAMP BOX

Washington State Department of Transportation

SR 16 / SR 160 / KITSAP COUNTY
FISH PASSAGE BARRIERS
REMOVE FISH BARRIERS

PIER 1 DETAILS 2 OF 2

BRIDGE SHEET NO. BA08

SHEET 381 OF 409 SHEETS

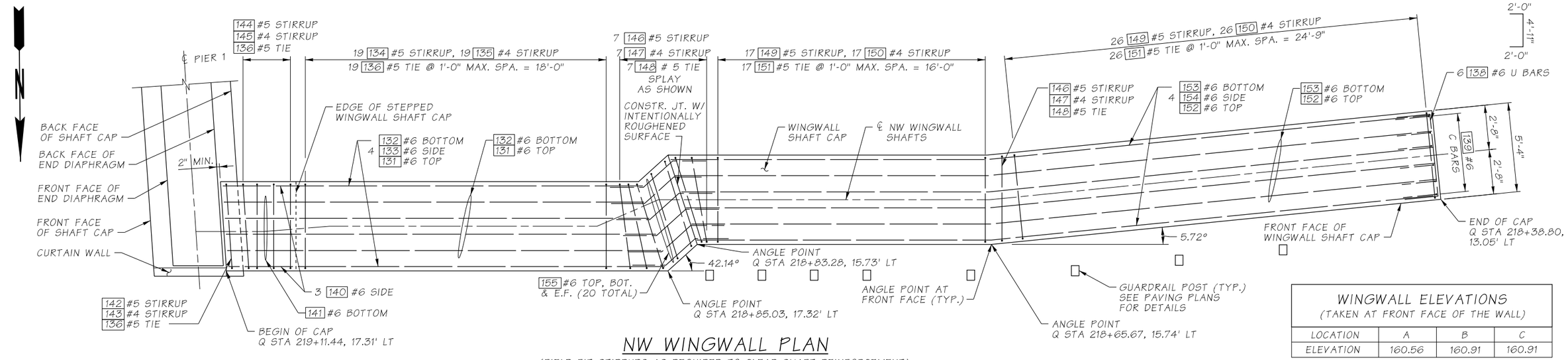

NW WINGWALL PLAN

(FIELD FIT STIRRUPS AS REQUIRED TO CLEAR SHAFT REINFORCEMENT)

WINGWALL ELEVATIONS

(TAKEN AT FRONT FACE OF THE WALL)

LOCATION	A	B	C
ELEVATION	160.56	160.91	160.91

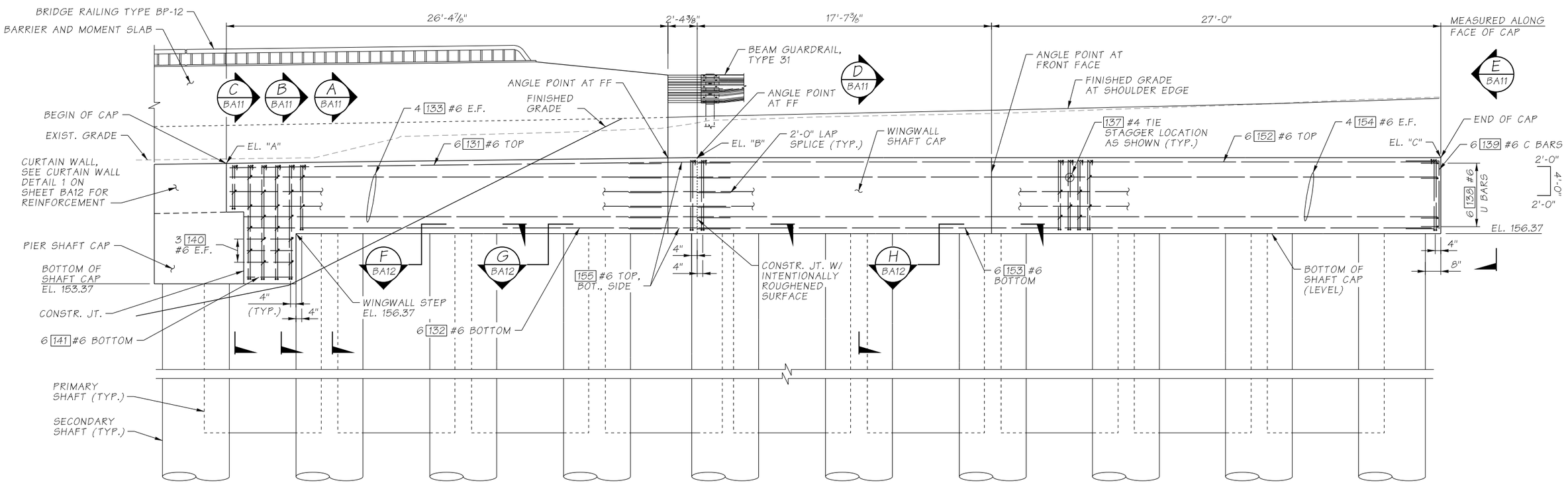

NW WINGWALL ELEVATION

SHOWN AT FRONT FACE OF CAP UNLESS NOTED OTHERWISE

SR 160 MP 2.29 SALMONBERRY CREEK

Bridge Design Engr.		c:\pwworking\wsdot_pw_2\d0202980\SR160MP2.29_Q_PS_BG_09.dgn			REGION NO.	STATE	FED. AID. PROJ. NO.	SHEET NO. / TOTAL SHEETS
Supervisor	B. CLARK				10	WASH.	ARPA001	
Designed By	A. JAIN/ E. BORDER				JOB NUMBER 22C525			
Checked By	K. JUMPAWONG							
Detailed By	M. VYPLEL							
Bridge Projects Engr.					009902			
Prelim. Plan By								
Architect/Specialist		DATE	REVISION	BY	APP'D			

SEE SHEET CT01 DATE P.E. STAMP BOX

SEE SHEET CT01 DATE P.E. STAMP BOX

Washington State Department of Transportation

SR 16 / SR 160 / KITSAP COUNTY FISH PASSAGE BARRIERS REMOVE FISH BARRIERS

NW WINGWALL LAYOUT

BRIDGE SHEET NO. BA09

SHEET 382 OF 409 SHEETS

SR 160 FILE NO. ___ SHEET ___

3/16/2023 2:29:21 PM

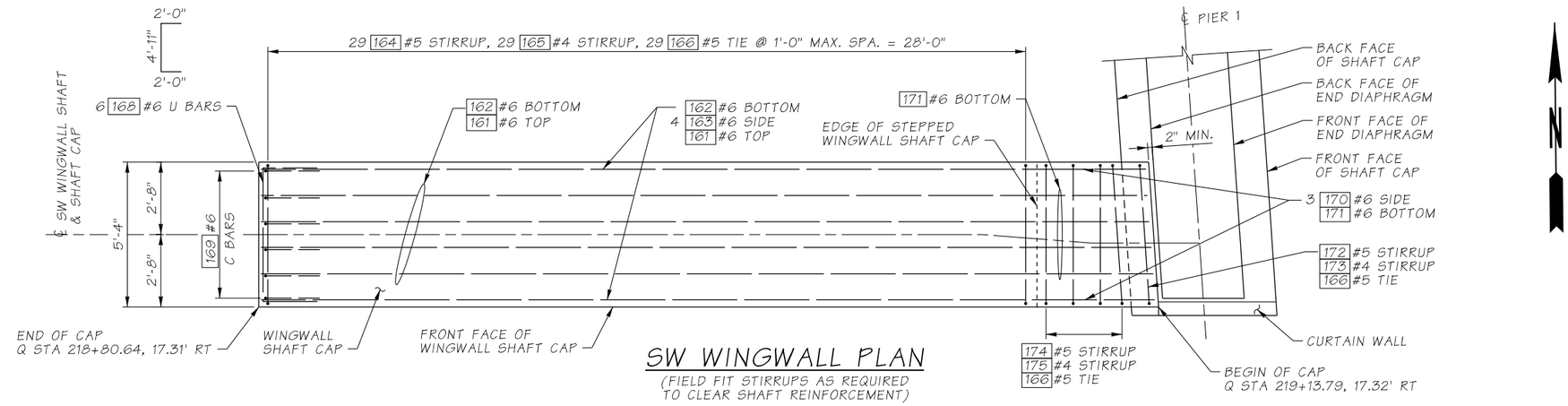

SW WINGWALL PLAN

(FIELD FIT STIRRUPS AS REQUIRED TO CLEAR SHAFT REINFORCEMENT)

WINGWALL ELEVATIONS (TAKEN AT FRONT FACE OF THE WALL)		
LOCATION	A	B
ELEVATION	160.56	160.99

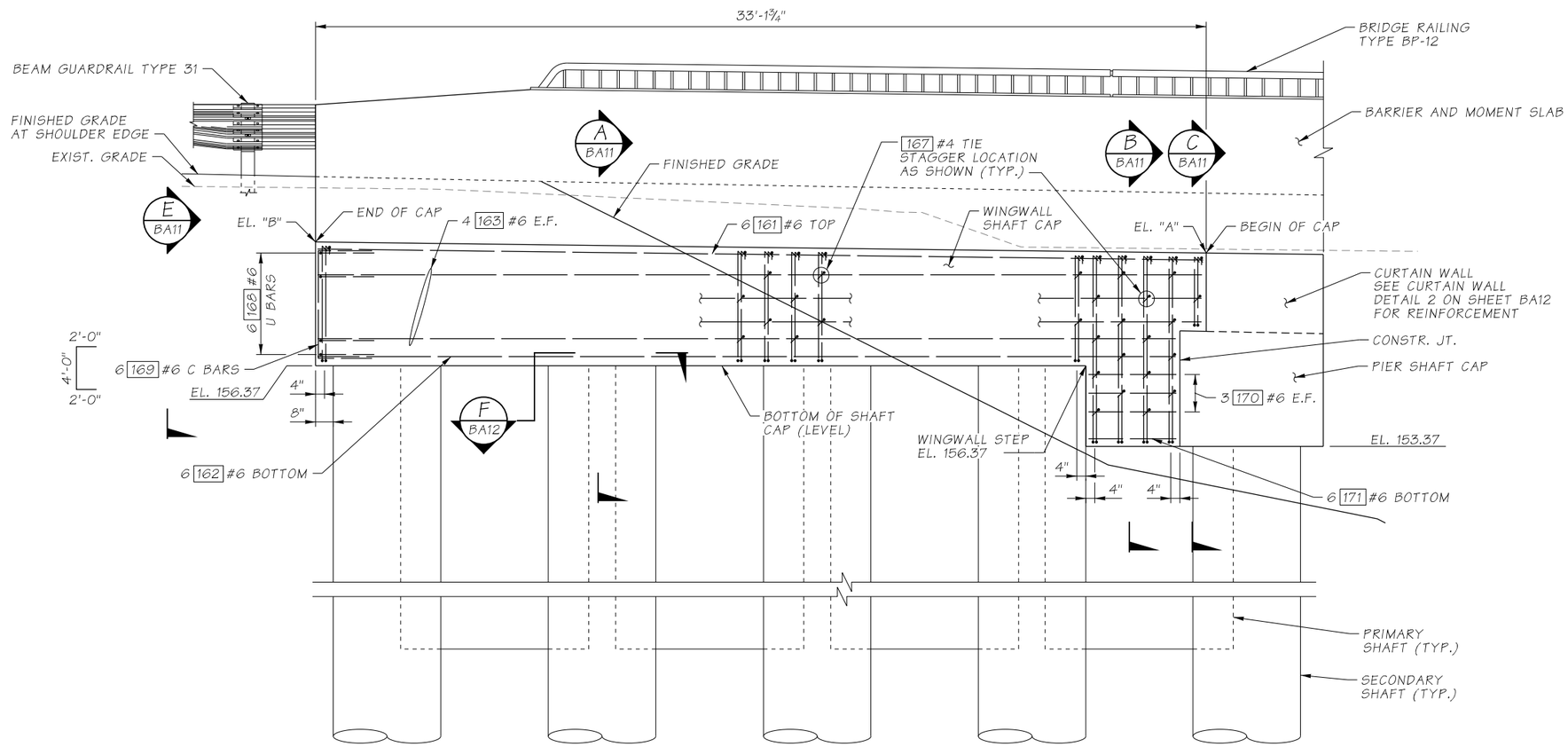

SW WINGWALL ELEVATION

SHOWN AT FRONT FACE OF CAP UNLESS NOTED OTHERWISE

SR 160 MP 2.29 SALMONBERRY CREEK

Bridge Design Engr.		c:\pwworking\wsdot_pw_2\d0202980\SR160MP2.29_Q_PS_BG_10.dgn							
Supervisor	B. CLARK				REGION NO.	STATE	FED. AID. PROJ. NO.	SHEET NO.	TOTAL SHEETS
Designed By	A. JAIN/ E. BORDER				10	WASH.	ARPA001		
Checked By	K. JUMPAWONG				JOB NUMBER 22C525				
Detailed By	M. VYPLEL								
Bridge Projects Engr.					009902				
Prelim. Plan By									
Architect/Specialist		DATE	REVISION	BY	APP'D				

3/16/2023 2:29:24 PM

SR 160 FILE NO. ____ SHEET ____

ELIZABETH J. CLARK — STATE OF WASHINGTON — 46846 — REGISTERED PROFESSIONAL ENGINEER
SEE SHEET CT01
DATE
P.E. STAMP BOX

HDR

MANUAL JUMPAWONG — STATE OF WASHINGTON — 38178 — REGISTERED PROFESSIONAL ENGINEER
SEE SHEET CT01
DATE
P.E. STAMP BOX

Washington State Department of Transportation

SR 16 / SR 160 / KITSAP COUNTY
FISH PASSAGE BARRIERS
REMOVE FISH BARRIERS

SW WINGWALL LAYOUT

BRIDGE SHEET NO. BA10

SHEET 383 OF 409 SHEETS

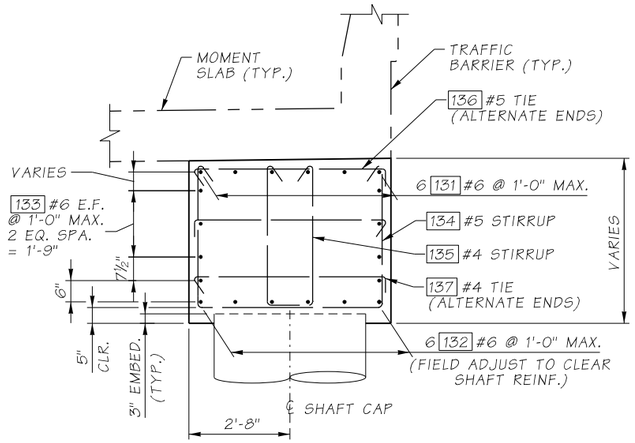

SECTION A

BA09 & BA10

SHAFT REINFORCEMENT NOT SHOWN FOR CLARITY, NW WINGWALL SHOWN, SW WINGWALL SIMILAR. REBAR AT SW WINGWALL SIMILAR BUT 16X SERIES.

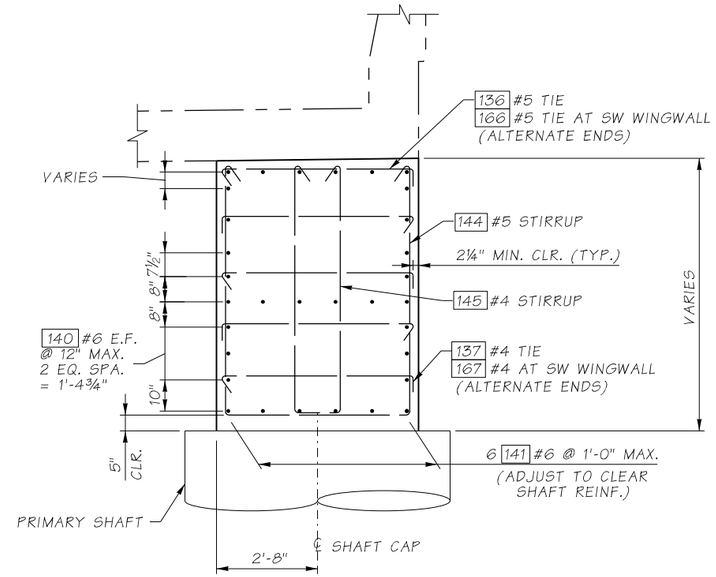

SECTION B

BA09 & BA10

SHAFT REINFORCEMENT NOT SHOWN FOR CLARITY, NW WINGWALL SHOWN, SW WINGWALL SIMILAR. REBAR AT SW WINGWALL SIMILAR BUT 17X SERIES EXCEPT AS NOTED.

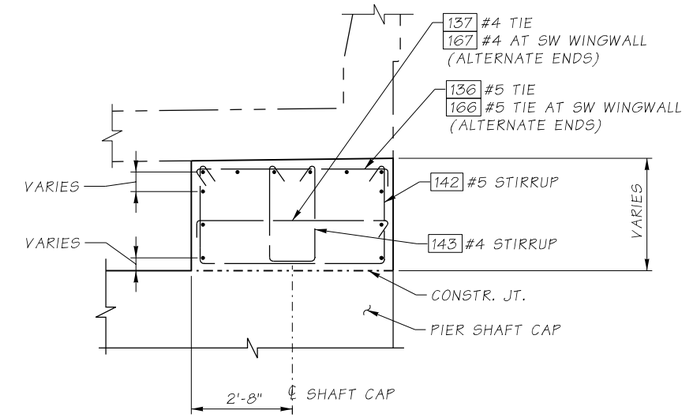

SECTION C

BA09 & BA10

SHAFT REINFORCEMENT NOT SHOWN FOR CLARITY, NW WINGWALL SHOWN, SW WINGWALL SIMILAR. REBAR AT SW WINGWALL SIMILAR BUT 17X SERIES EXCEPT AS NOTED.

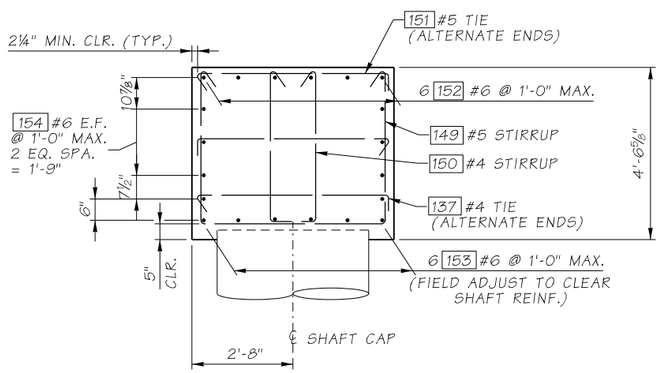

SECTION D

BA09

SHAFT REINFORCEMENT NOT SHOWN FOR CLARITY

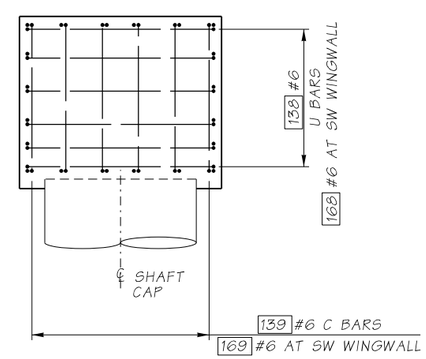

END VIEW E

BA09 & BA10

SHAFT REINFORCEMENT NOT SHOWN FOR CLARITY, NW WINGWALL SHOWN, SW WINGWALL SIMILAR

SR 160 MP 2.29 SALMONBERRY CREEK

Bridge Design Engr.		c:\pwworking\wsdot_pw_2\d0202980\SR160MP2.29_Q_PS_BG_11.dgn							
Supervisor	B. CLARK				REGION NO.	STATE	FED. AID. PROJ. NO.	SHEET NO.	TOTAL SHEETS
Designed By	A. JAIN/ K. MA				10	WASH.	ARPA001		
Checked By	K. JUMPAWONG				JOB NUMBER 22C525				
Detailed By	M. VYPLEL								
Bridge Projects Engr.									
Prelim. Plan By					009902				
Architect/Specialist		DATE	REVISION	BY	APP'D				

SEE SHEET CT01 DATE P.E. STAMP BOX

SEE SHEET CT01 DATE P.E. STAMP BOX

HDR

Washington State Department of Transportation

SR 16 / SR 160 / KITSAP COUNTY
FISH PASSAGE BARRIERS
REMOVE FISH BARRIERS

NW & SW WINGWALL DETAILS 1 OF 2

BRIDGE SHEET NO. BA11

SHEET 384 OF 409 SHEETS

SR 160 FILE NO. ____ SHEET ____

3/16/2023 2:29:27 PM

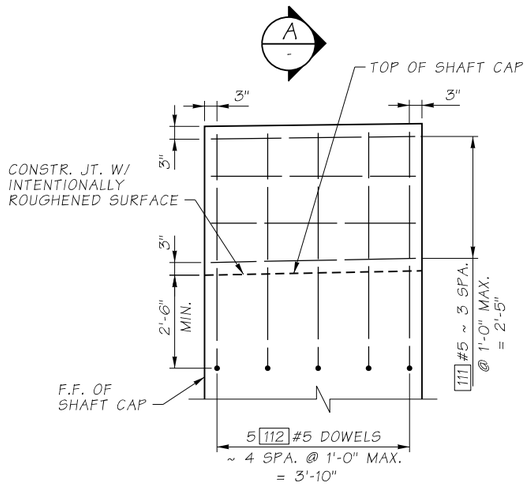

CURTAIN WALL DETAIL 1 BA09

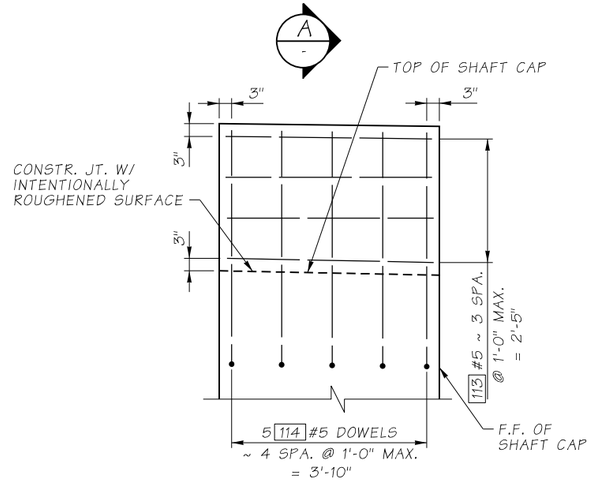

CURTAIN WALL DETAIL 2 BA10

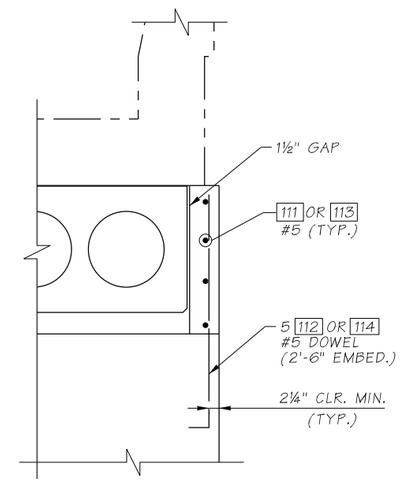

SECTION A -

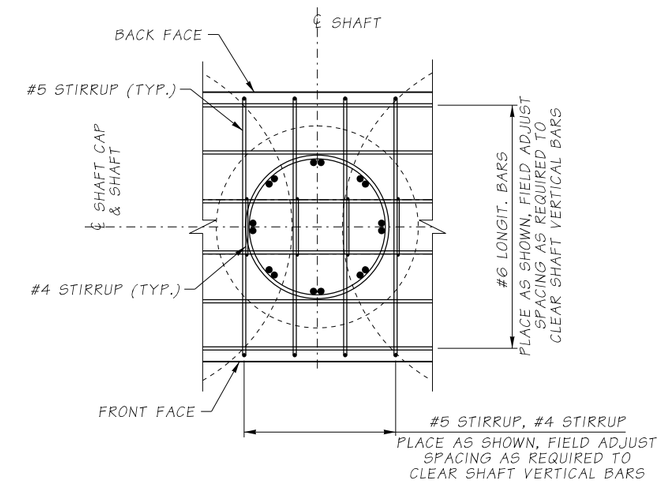

SECTION F

TYPICAL FOR SHAFTS
S01-S03, S05, S08
S09, S16-S19
(SEE FOUNDATION LAYOUT)

BA09 & BA10

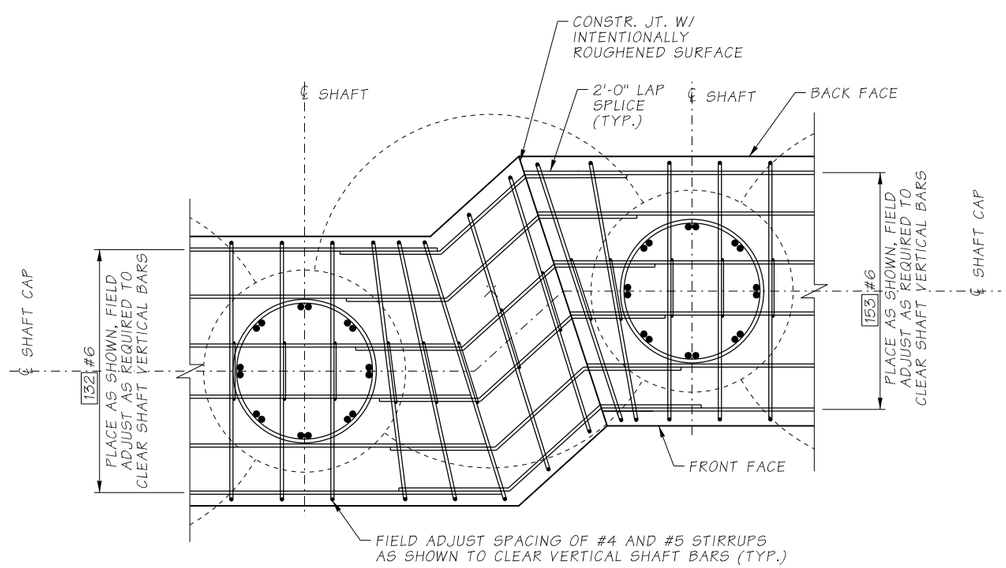

SECTION G BA09

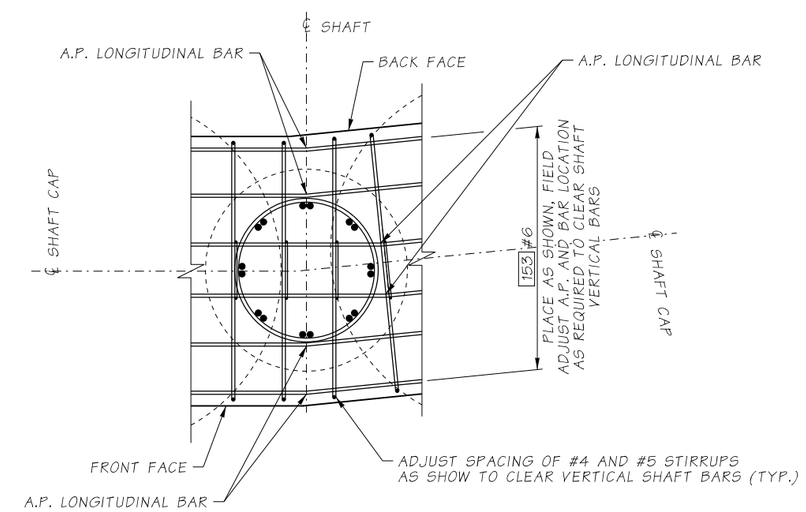

SECTION H BA09

SR 160 MP 2.29 SALMONBERRY CREEK

SR 16 / SR 160 / KITSAP COUNTY
FISH PASSAGE BARRIERS
REMOVE FISH BARRIERS

NW & SW WINGWALL DETAILS 2 OF 2

BRIDGE SHEET NO. BA12

SHEET 385 OF 409 SHEETS

Bridge Design Engr.		c:\pwworking\wsdot_pw_2\d0202980\SR160MP2.29_Q_PS_BG_12.dgn							
Supervisor	B. CLARK				REGION NO.	STATE	FED. AID. PROJ. NO.	SHEET NO.	TOTAL SHEETS
Designed By	A. JAIN/ K. MA				10	WASH.	ARPA001		
Checked By	K. JUMPAWONG				JOB NUMBER				
Detailed By	M. VYPLEL				22C525				
Bridge Projects Engr.									
Prelim. Plan By					009902				
Architect/Specialist		DATE	REVISION	BY	APP'D				

SEE SHEET CT01 DATE P.E. STAMP BOX

HDR

SEE SHEET CT01 DATE P.E. STAMP BOX

Washington State
Department of Transportation

SR 160 FILE NO.____ SHEET____

3/16/2023 2:29:30 PM

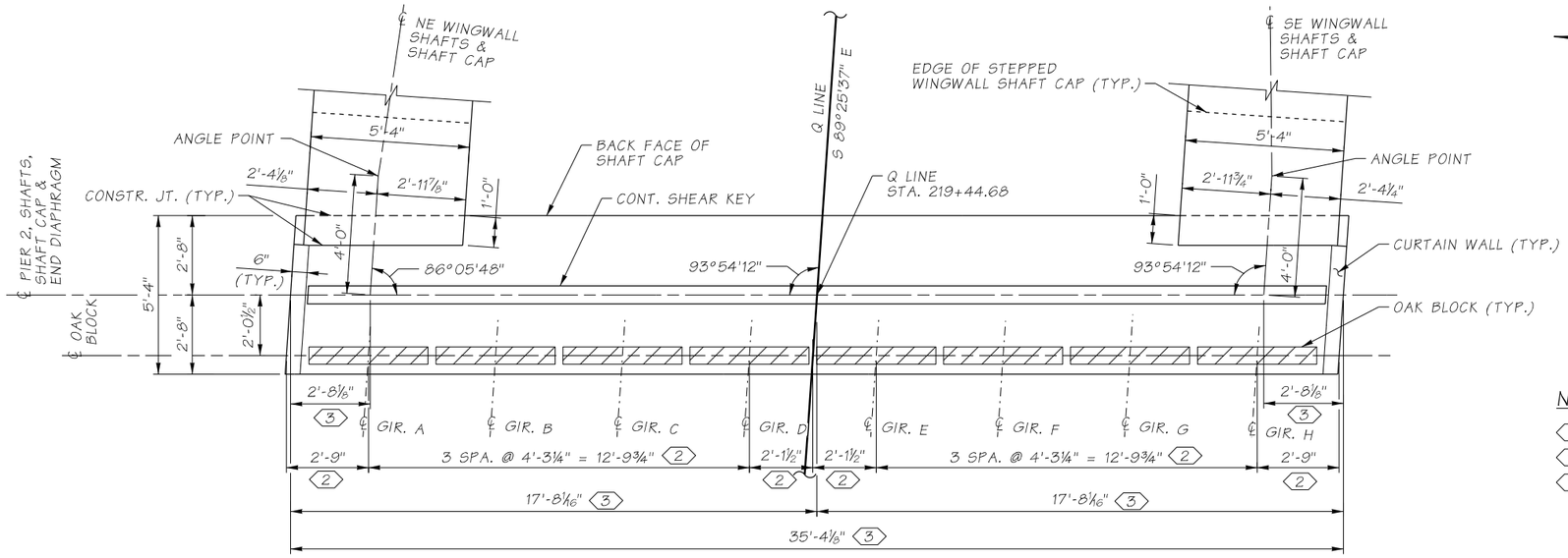

PIER 2 PLAN

NOTES

1. AT FRONT FACE OF PIER
2. MEASURED ALONG ℄ OF OAK BLOCK
3. MEASURED ALONG ℄ OF PIER

TOP OF OAK BLOCK ELEVATIONS AT ℄ OF GIRDER AND ℄ OF OAK BLOCK

GIR.	A	B	C	D	E	F	G	H
EL.	157.69	157.69	157.69	157.69	157.69	157.69	157.69	157.69

NOTES: TOP OF OAK BLOCK SHALL BE LEVEL.

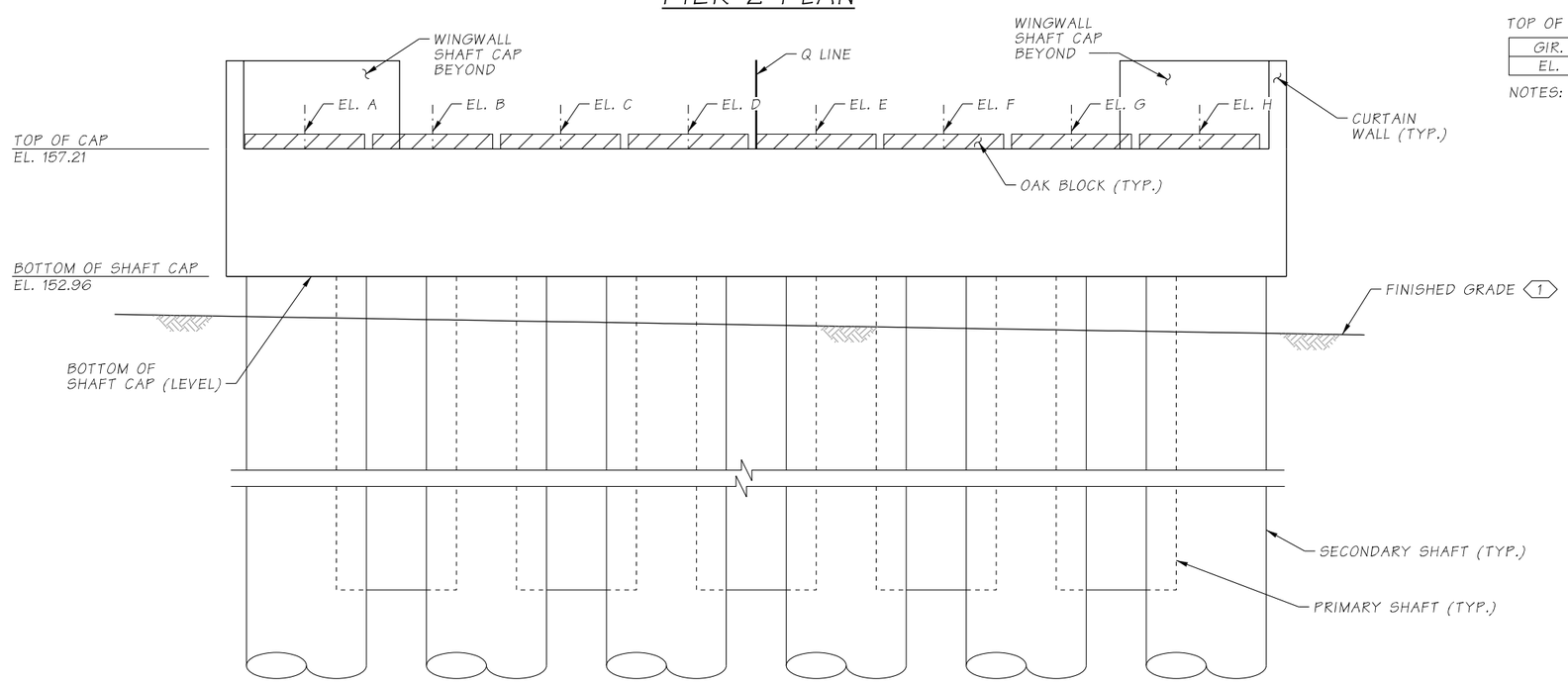

PIER 2 ELEVATION

ELEVATIONS ARE TAKEN AT THE ℄ OF PIER, SHAFTS, AND SHAFT CAP LOOKING AHEAD ON STATION

SR 160 MP 2.29 SALMONBERRY CREEK

SR 16 / SR 160 / KITSAP COUNTY
FISH PASSAGE BARRIERS
REMOVE FISH BARRIERS

PIER 2 PLAN AND ELEVATION

BRIDGE SHEET NO. BA13

SHEET 386 OF 409 SHEETS

Bridge Design Engr.		c:\pwworking\wsdot_pw_2\d0202980\SR160MP2.29_Q_PS_BG_13.dgn							
Supervisor	B. CLARK				REGION NO.	STATE	FED. AID. PROJ. NO.	SHEET NO.	TOTAL SHEETS
Designed By	K. VASQUEZ/ A. JAIN				10	WASH.	ARPA001		
Checked By	K. JUMPAWONG				JOB NUMBER 22C525				
Detailed By	M. VYPLEL								
Bridge Projects Engr.									
Prelim. Plan By	K. VASQUEZ				009902				
Architect/Specialist		DATE	REVISION	BY	APP'D				

SEE SHEET CT01 DATE P.E. STAMP BOX

SEE SHEET CT01 DATE P.E. STAMP BOX

Washington State Department of Transportation

SR 160 FILE NO.____ SHEET____

3/16/2023 2:29:33 PM

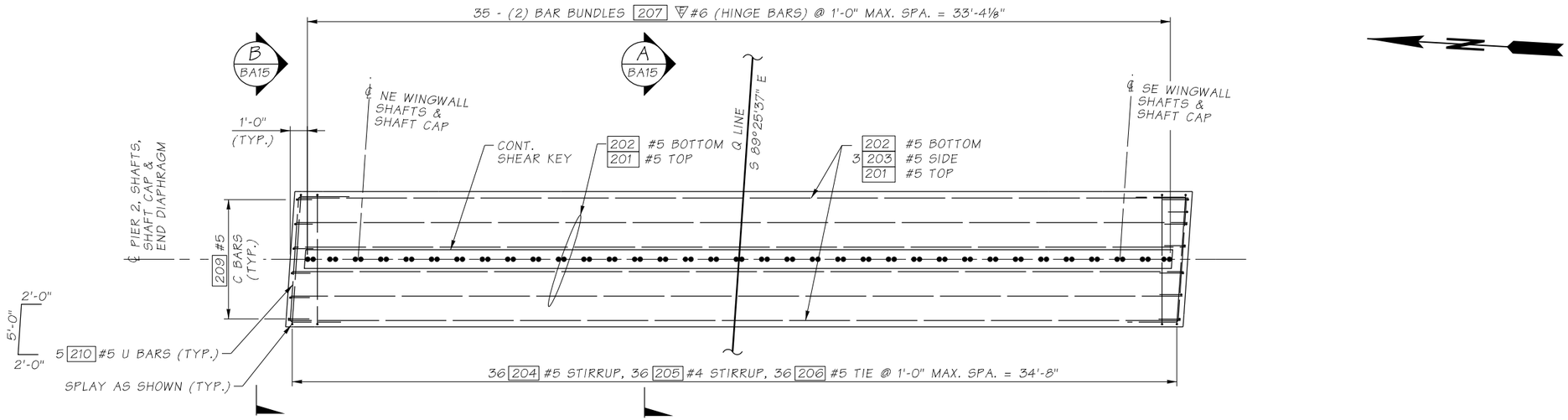

PIER 2 SHAFT CAP REINFORCEMENT PLAN

(SHAFT REINFORCEMENT NOT SHOWN FOR CLARITY)
(ADJUST THE STIRRUPS AND HINGE BARS AS REQUIRED TO CLEAR SHAFT REINFORCEMENT)
(END DIAPHRAGM NOT SHOWN FOR CLARITY)

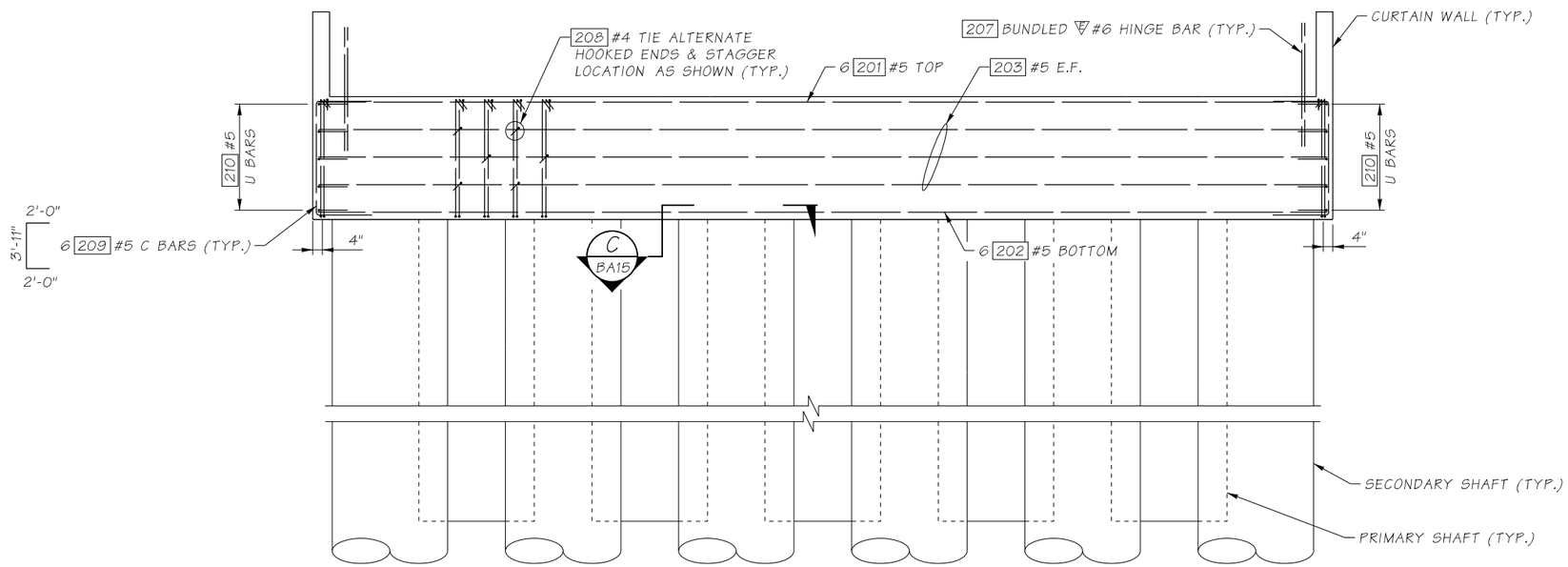

PIER 2 SHAFT CAP REINFORCEMENT ELEVATION

(SHAFT REINFORCEMENT NOT SHOWN FOR CLARITY)
(ADJUST THE STIRRUPS AND HINGE BARS AS REQUIRED TO CLEAR SHAFT REINFORCEMENT)
(END DIAPHRAGM NOT SHOWN FOR CLARITY)

SR 160 MP 2.29 SALMONBERRY CREEK

Bridge Design Engr.		c:\pwworking\wsdot_pw_2\d0202980\SR160MP2.29_Q_PS_BG_14.dgn							
Supervisor	B. CLARK				REGION NO.	STATE	FED. AID. PROJ. NO.	SHEET NO.	TOTAL SHEETS
Designed By	A. JAIN/ K. MA				10	WASH.	ARPA001		
Checked By	K. JUMPAWONG				JOB NUMBER				
Detailed By	M. VYPLEL				22C525				
Bridge Projects Engr.									
Prelim. Plan By	K. VASQUEZ				009902				
Architect/Specialist		DATE	REVISION	BY	APP'D				

SEE SHEET CT01 DATE P.E. STAMP BOX

SEE SHEET CT01 DATE P.E. STAMP BOX

Washington State Department of Transportation

SR 16 / SR 160 / KITSAP COUNTY
FISH PASSAGE BARRIERS
REMOVE FISH BARRIERS

PIER 2 DETAILS 1 OF 2

BRIDGE SHEET NO. BA14

SHEET 387 OF 409 SHEETS

SR 160 FILE NO. ____ SHEET ____

3/16/2023 2:29:36 PM

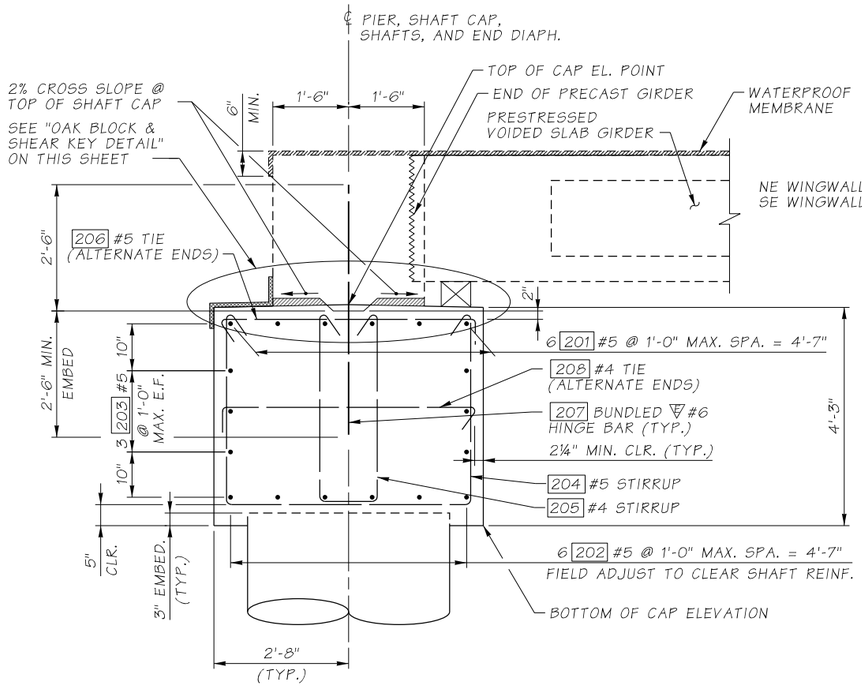

SECTION A BA14

SHAFT REINFORCEMENT AND END DIAPHRAGM DETAILS NOT SHOWN FOR CLARITY

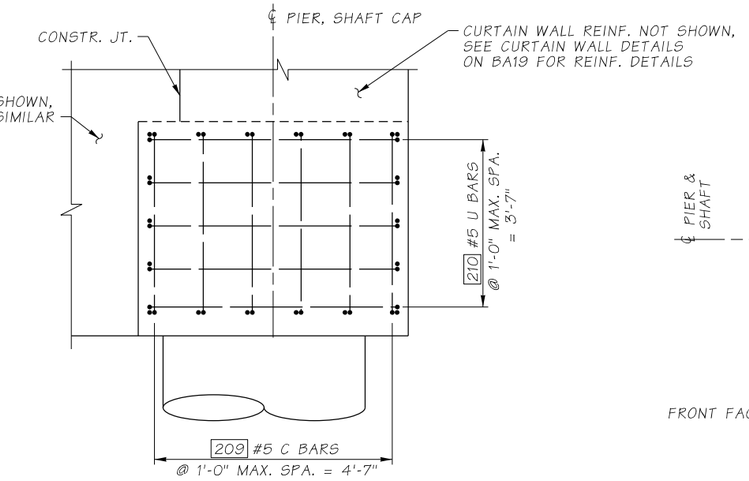

END VIEW B BA14

SW END SHOWN, OPPOSITE END SIMILAR

SHAFT REINFORCEMENT AND END DIAPHRAGM DETAILS NOT SHOWN FOR CLARITY.
FOR REINF. DETAILS NOT SHOWN, SEE SECTION A THIS SHEET.
PIER 2 NORTH CURTAIN WALL SHOWN, SOUTH CURTAIN WALL SIMILAR

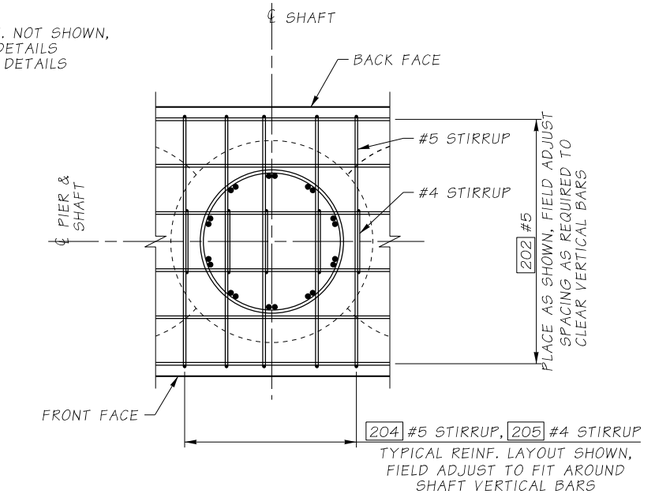

SECTION C BA14

TYPICAL FOR ALL PIER SHAFTS S29-S34 (SEE FOUNDATION LAYOUT)

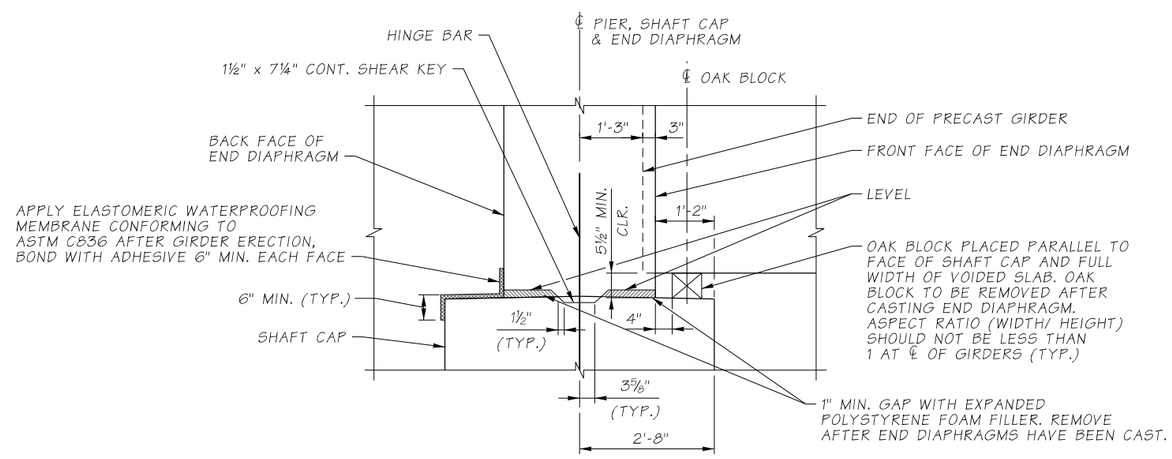

OAK BLOCK & SHEAR KEY DETAIL

SR 160 MP 2.29 SALMONBERRY CREEK

SR 16 / SR 160 / KITSAP COUNTY
FISH PASSAGE BARRIERS
REMOVE FISH BARRIERS

PIER 2 DETAILS 2 OF 2

BRIDGE SHEET NO. BA15

SHEET 388 OF 409 SHEETS

Bridge Design Engr.		c:\pwworking\wsdot_pw_2\d0202980\SR160MP2.29_Q_PS_BG_15.dgn							
Supervisor	B. CLARK				REGION NO.	STATE	FED. AID. PROJ. NO.	SHEET NO.	TOTAL SHEETS
Designed By	A. JAIN/ K. MA				10	WASH.	ARPA001		
Checked By	K. JUMPAWONG				JOB NUMBER				
Detailed By	M. VYPLEL				22C525				
Bridge Projects Engr.									
Prelim. Plan By					009902				
Architect/Specialist		DATE	REVISION	BY	APP'D				

SEE SHEET CT01 DATE P.E. STAMP BOX

SEE SHEET CT01 DATE P.E. STAMP BOX

Washington State Department of Transportation

3/16/2023 2:29:39 PM

SR 160 FILE NO. ____ SHEET ____

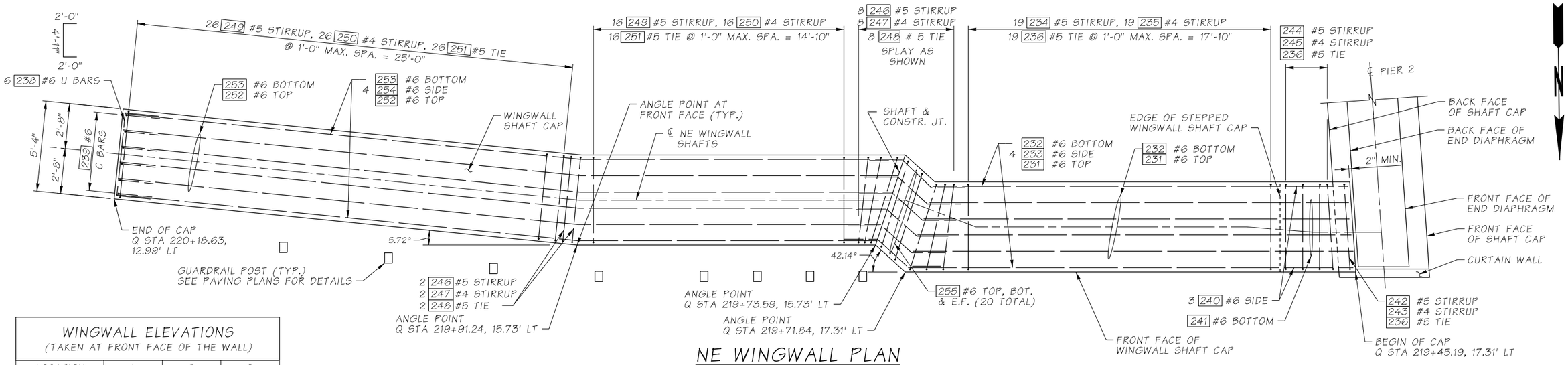

WINGWALL ELEVATIONS (TAKEN AT FRONT FACE OF THE WALL)			
LOCATION	A	B	C
ELEVATION	160.15	159.79	159.79

NE WINGWALL PLAN

(FIELD FIT STIRRUPS AS REQUIRED TO CLEAR SHAFT REINFORCEMENT)

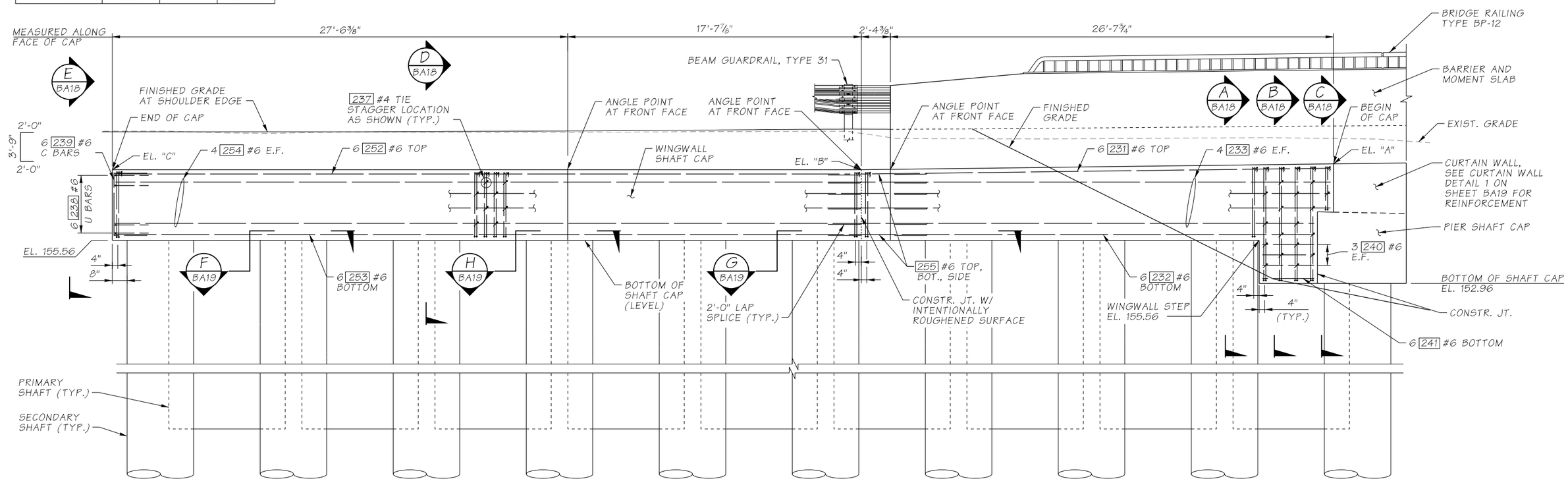

NE WINGWALL ELEVATION

SHOWN AT FRONT FACE OF CAP UNLESS NOTED OTHERWISE

SR 160 MP 2.29 SALMONBERRY CREEK

SR 16 / SR 160 / KITSAP COUNTY
FISH PASSAGE BARRIERS
REMOVE FISH BARRIERS

NE WINGWALL LAYOUT

Bridge Design Engr.		c:\pwworking\wsdot_pw_2\d0202980\SR160MP2.29_Q_PS_BG_16.dgn			REGION NO.	STATE	FED. AID. PROJ. NO.	SHEET NO. / TOTAL SHEETS
Supervisor	B. CLARK				10	WASH.	ARPA001	
Designed By	A. JAIN/ E. BORDER				JOB NUMBER 22C525			
Checked By	K. JUMPAWONG							
Detailed By	M. VYPLEL							
Bridge Projects Engr.								
Prelim. Plan By								
Architect/Specialist		DATE	REVISION	BY	APP'D	009902		

SEE SHEET CT01 DATE P.E. STAMP BOX

SEE SHEET CT01 DATE P.E. STAMP BOX

Washington State Department of Transportation

BRIDGE SHEET NO. BA16

SHEET 389 OF 409 SHEETS

FILE NO. ____ SHEET ____

SR 160

3/16/2023 2:29:42 PM

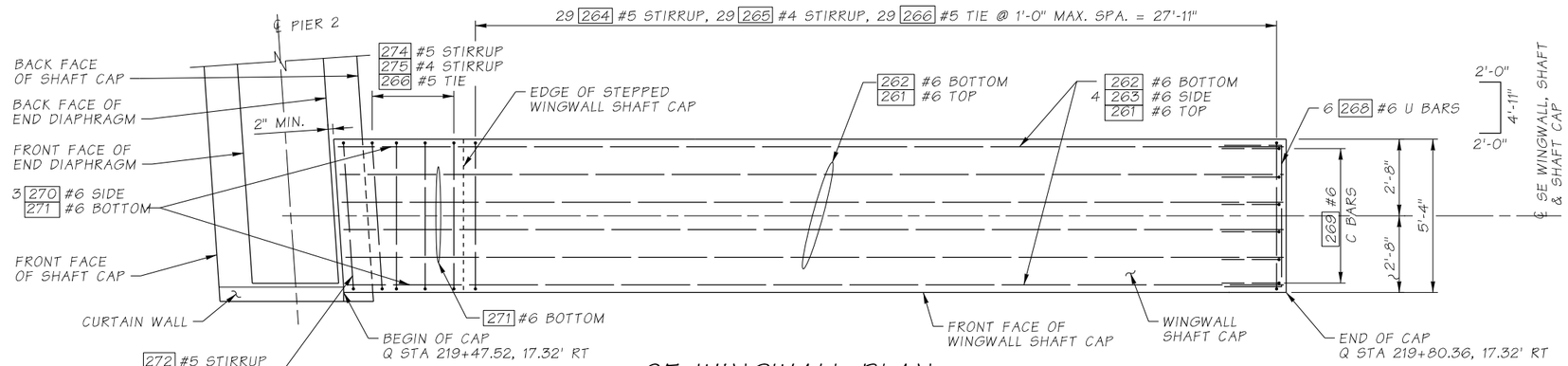

SE WINGWALL PLAN

(FIELD FIT STIRRUPS AS REQUIRED TO CLEAR SHAFT REINFORCEMENT)

WINGWALL ELEVATIONS (TAKEN AT FRONT FACE OF THE WALL)		
LOCATION	A	B
ELEVATION	160.15	159.74

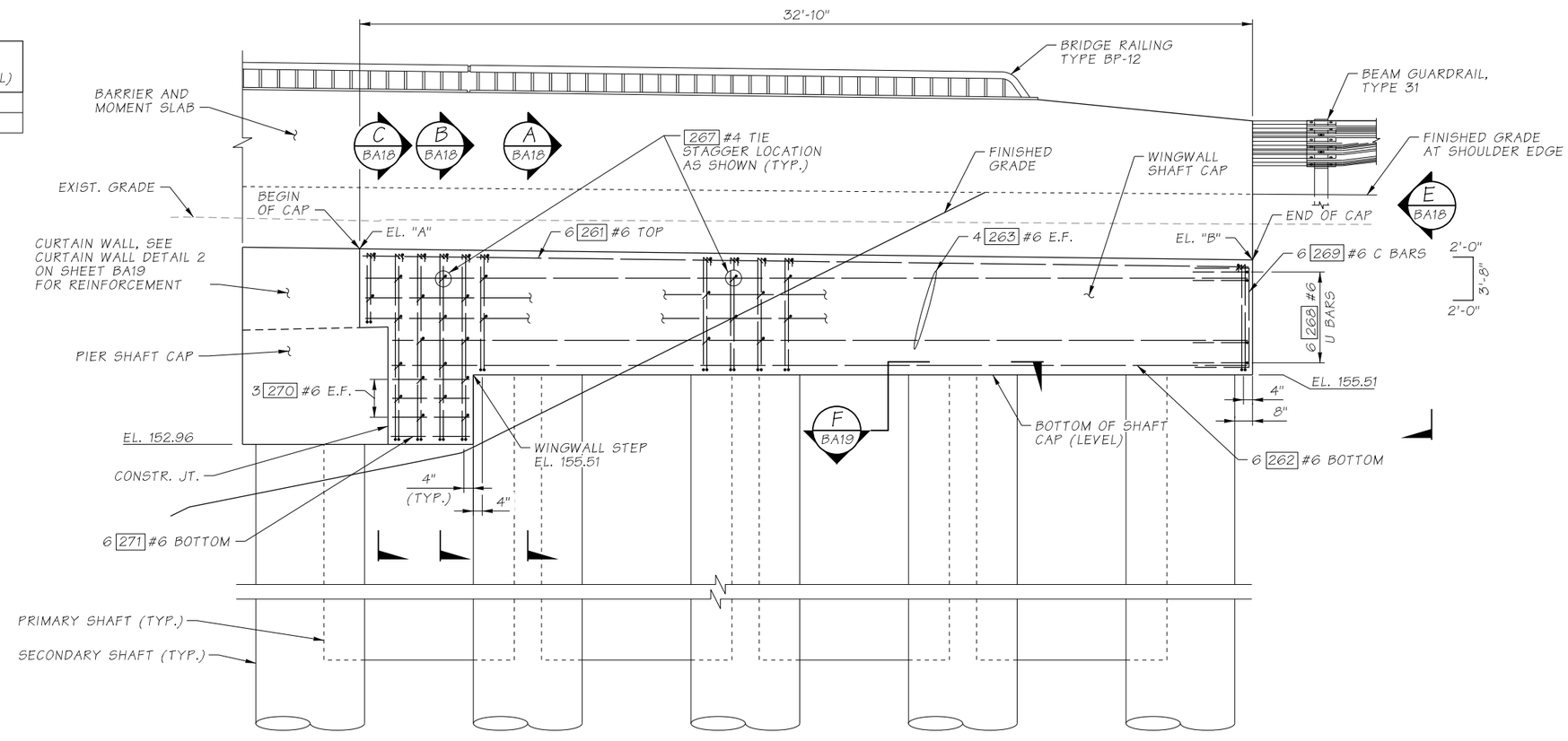

SE WINGWALL ELEVATION

SHOWN AT FRONT FACE OF CAP UNLESS NOTED OTHERWISE

SR 160 MP 2.29 SALMONBERRY CREEK

SR 16 / SR 160 / KITSAP COUNTY
FISH PASSAGE BARRIERS
REMOVE FISH BARRIERS

SE WINGWALL LAYOUT

BRIDGE SHEET NO. BA17

SHEET 390 OF 409 SHEETS

Bridge Design Engr.		c:\pwworking\wsdot_pw_2\d0202980\SR160MP2.29_Q_PS_BG_17.dgn			REGION NO.	STATE	FED. AID. PROJ. NO.	SHEET NO.	TOTAL SHEETS
Supervisor	B. CLARK				10	WASH.	ARPA001		
Designed By	A. JAIN/ E. BORDER				JOB NUMBER 22C525				
Checked By	K. JUMPAWONG								
Detailed By	M. VYPLEL								
Bridge Projects Engr.									
Prelim. Plan By									
Architect/Specialist		DATE	REVISION	BY	APP'D	009902			

ELIZABETH M. CLARK, STATE OF WASHINGTON, 46846, REGISTERED PROFESSIONAL ENGINEER
SEE SHEET CT01
DATE
P.E. STAMP BOX

HDR

RAMAL JUMPAWONG, STATE OF WASHINGTON, 46846, REGISTERED PROFESSIONAL ENGINEER
SEE SHEET CT01
DATE
P.E. STAMP BOX

Washington State Department of Transportation

SR 160 FILE NO. ____ SHEET ____

3/17/2023 11:46:54 AM

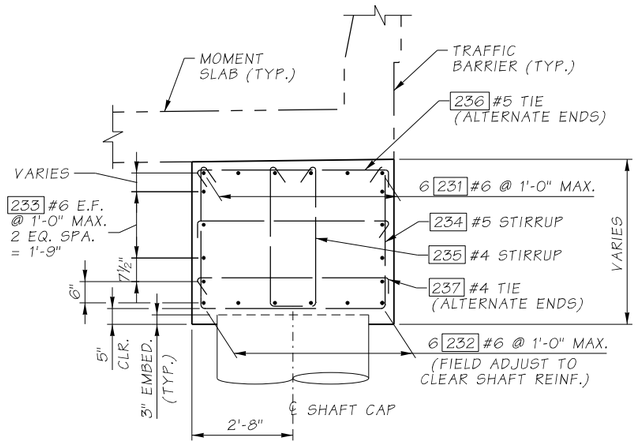

SECTION A

SHAFT REINFORCEMENT NOT SHOWN FOR CLARITY, NE WINGWALL SHOWN, SE WINGWALL SIMILAR. REBAR AT SE WINGWALL SIMILAR BUT 26X SERIES.

BA16 & BA17

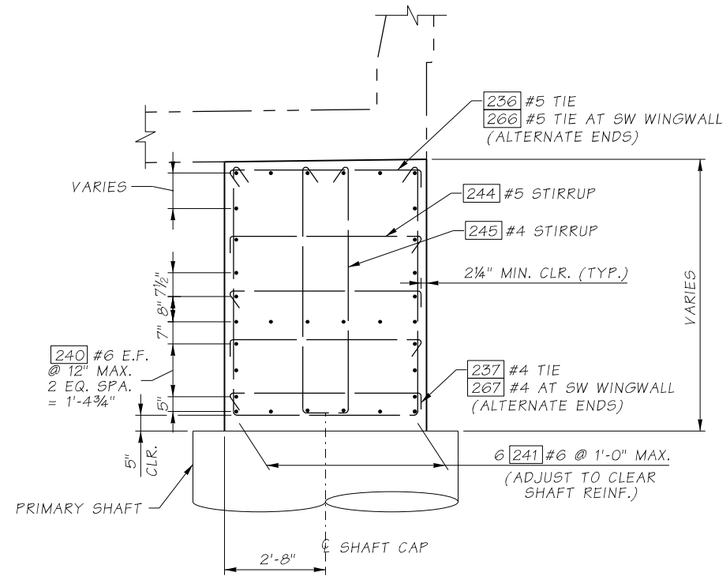

SECTION B

SHAFT REINFORCEMENT NOT SHOWN FOR CLARITY, NE WINGWALL SHOWN, SE WINGWALL SIMILAR. REBAR AT SE WINGWALL SIMILAR BUT 27X SERIES EXCEPT AS NOTED.

BA16 & BA17

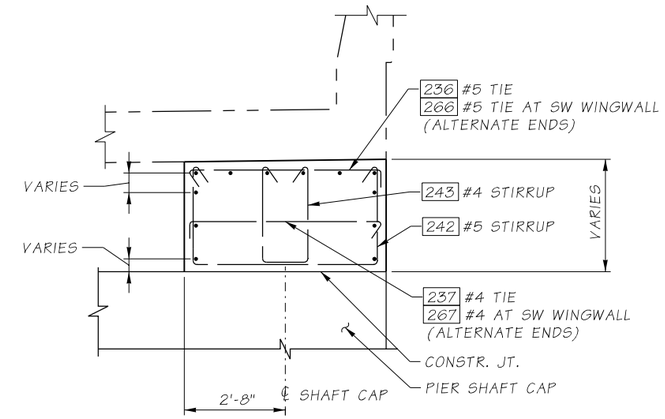

SECTION C

SHAFT REINFORCEMENT NOT SHOWN FOR CLARITY, NE WINGWALL SHOWN, SE WINGWALL SIMILAR. REBAR AT SE WINGWALL SIMILAR BUT 27X SERIES EXCEPT AS NOTED.

BA16 & BA17

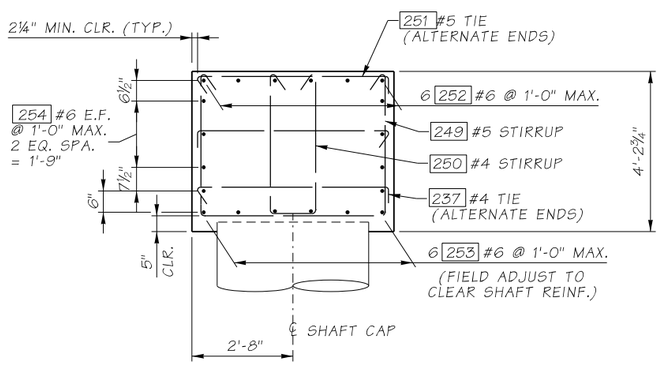

SECTION D

SHAFT REINFORCEMENT NOT SHOWN FOR CLARITY

BA16

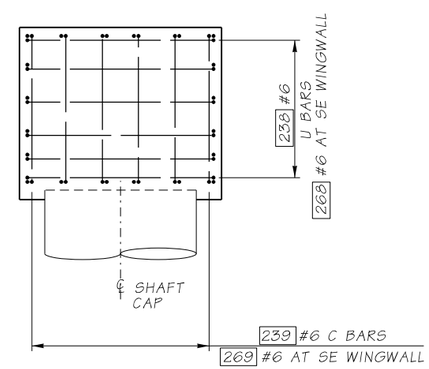

END VIEW E

SHAFT REINFORCEMENT NOT SHOWN FOR CLARITY, NE WINGWALL SHOWN, SE WINGWALL SIMILAR

BA16 & BA17

SR 160 MP 2.29 SALMONBERRY CREEK

Bridge Design Engr.		c:\pwworking\wsdot_pw_2\d0202980\SR160MP2.29_Q_PS_BG_18.dgn							
Supervisor	B. CLARK				REGION NO.	STATE	FED. AID. PROJ. NO.	SHEET NO.	TOTAL SHEETS
Designed By	A. JAIN/ K. MA				10	WASH.	ARPA001		
Checked By	K. JUMPAWONG				JOB NUMBER 22C525				
Detailed By	M. VYPLEL								
Bridge Projects Engr.									
Prelim. Plan By					009902				
Architect/Specialist		DATE	REVISION	BY	APP'D				

SEE SHEET CT01 DATE P.E. STAMP BOX

HDR

SEE SHEET CT01 DATE P.E. STAMP BOX

Washington State Department of Transportation

SR 16 / SR 160 / KITSAP COUNTY
FISH PASSAGE BARRIERS
REMOVE FISH BARRIERS

NE & SE WINGWALL DETAILS 1 OF 2

BRIDGE SHEET NO. BA18

SHEET 391 OF 409 SHEETS

SR 160 FILE NO. ____ SHEET ____

3/16/2023 2:29:48 PM

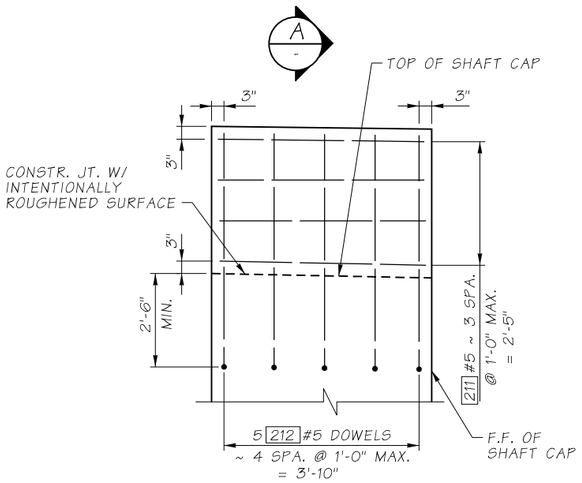

CURTAIN WALL DETAIL 1 / BA16

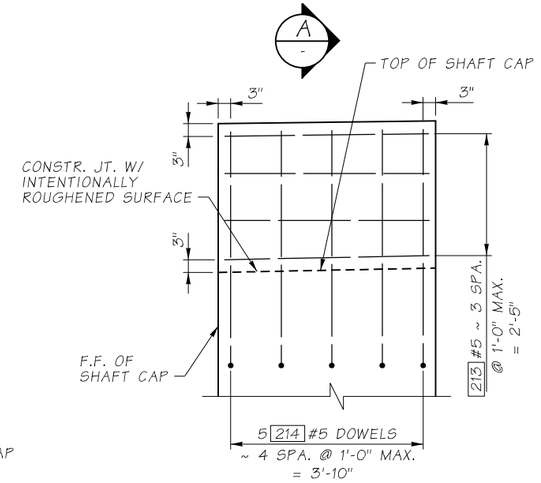

CURTAIN WALL DETAIL 2 / BA17

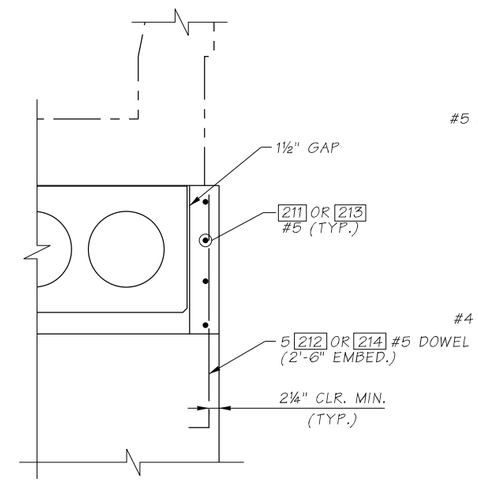

SECTION A / -

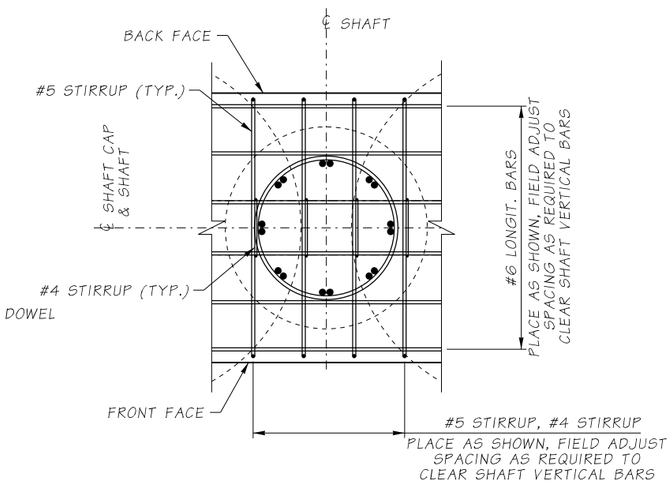

SECTION F / BA16 & BA17

TYPICAL FOR SHAFTS
S20-S22, S24,
S27, S28, S35-S38
(SEE FOUNDATION LAYOUT)

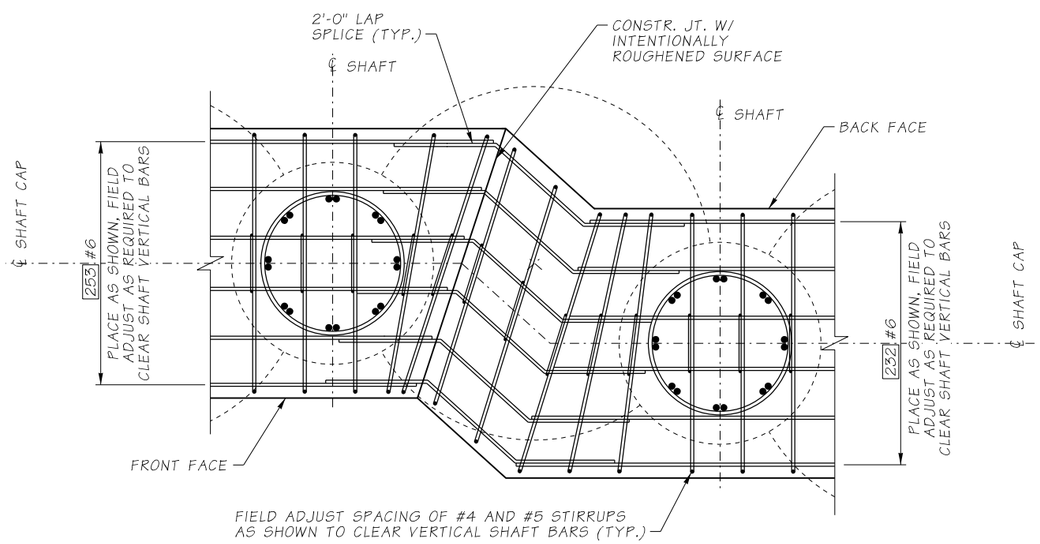

SECTION G / BA16

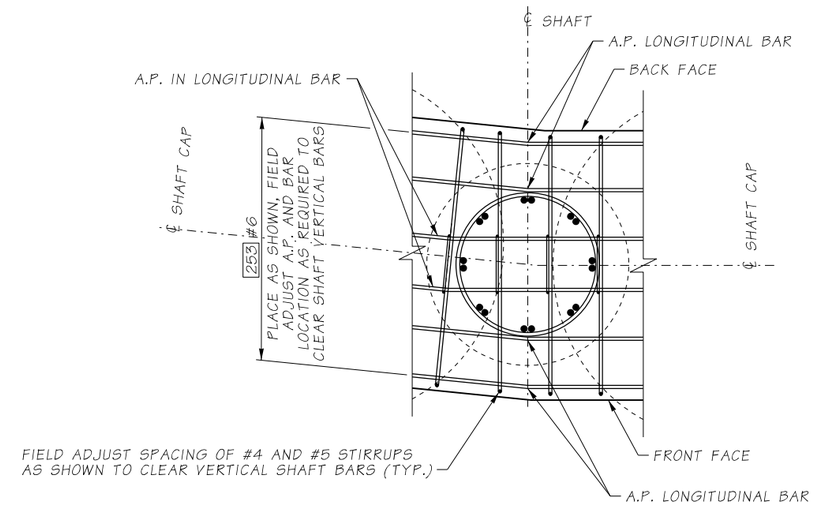

SECTION H / BA16

SR 160 MP 2.29 SALMONBERRY CREEK

SR 16 / SR 160 / KITSAP COUNTY
FISH PASSAGE BARRIERS
REMOVE FISH BARRIERS

NE & SE WINGWALL DETAILS 2 OF 2

BRIDGE SHEET NO. BA19

SHEET 392 OF 409 SHEETS

Bridge Design Engr.		c:\pwworking\wsdot_pw_2\d0202980\SR160MP2.29_Q_PS_BG_19.dgn						
Supervisor	B. CLARK				REGION NO.	STATE	FED. AID. PROJ. NO.	SHEET NO. / TOTAL SHEETS
Designed By	A. JAIN/ K. MA				10	WASH.	ARPA001	
Checked By	K. JUMPAWONG				JOB NUMBER			
Detailed By	M. VYPLEL				22C525			
Bridge Projects Engr.								
Prelim. Plan By					009902			
Architect/Specialist		DATE	REVISION	BY	APP'D			

SEE SHEET CT01 DATE P.E. STAMP BOX

SEE SHEET CT01 DATE P.E. STAMP BOX

Washington State Department of Transportation

SR 160 FILE NO.____ SHEET____

3/16/2023 2:29:51 PM

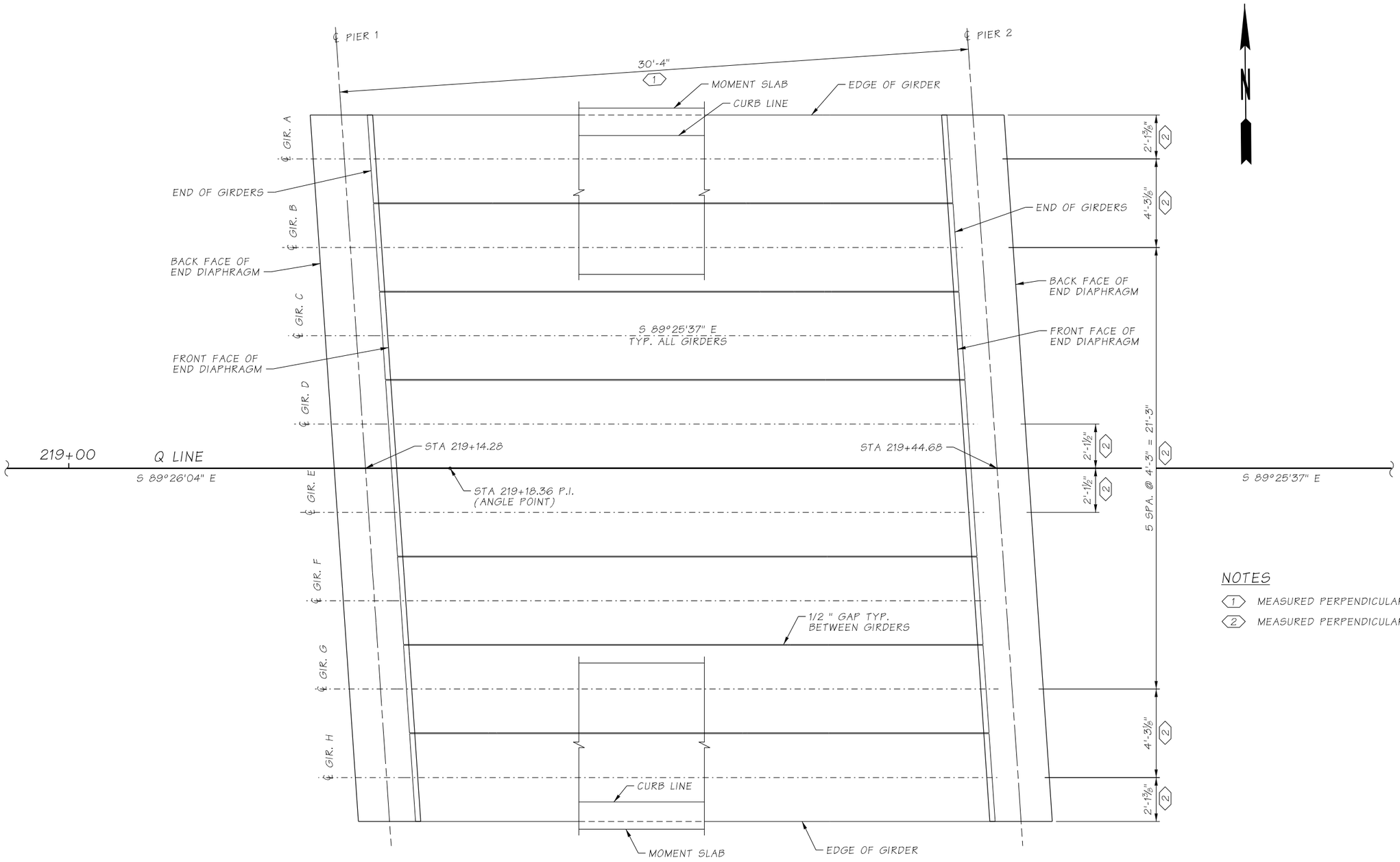

NOTES

1. MEASURED PERPENDICULAR TO ℄ PIER
2. MEASURED PERPENDICULAR TO Q LINE

FRAMING PLAN

BEARING OF PIERS IS N 03°19'49" W

SR 160 MP 2.29 SALMONBERRY CREEK

SR 16 / SR 160 / KITSAP COUNTY
FISH PASSAGE BARRIERS
REMOVE FISH BARRIERS

FRAMING PLAN

Bridge Design Engr.		c:\pwworking\wsdot_pw_2\d0202980\SR160MP2.29_Q_PS_BG_20.dgn			
Supervisor	B. CLARK				
Designed By	K. VASQUEZ				
Checked By	K. JUMPAWONG				
Detailed By	M. VYPLEL				
Bridge Projects Engr.					
Prelim. Plan By					
Architect/Specialist		DATE	REVISION	BY	APP'D

REGION NO.	STATE	FED. AID. PROJ. NO.	SHEET NO.	TOTAL SHEETS
10	WASH.	ARPA001		
JOB NUMBER 22C525				
009902				

ELIZABETH M. CLARK — STATE OF WASHINGTON — 46846 — REGISTERED PROFESSIONAL ENGINEER
SEE SHEET CT01
DATE
P.E. STAMP BOX

HDR

MANIVAL JUMPAWONG — STATE OF WASHINGTON — 49811 — REGISTERED PROFESSIONAL ENGINEER
SEE SHEET CT01
DATE
P.E. STAMP BOX

Washington State
Department of Transportation

BRIDGE SHEET NO. BA20

SHEET 393 OF 409 SHEETS

SR 160 FILE NO.____ SHEET____

3/16/2023 2:29:54 PM

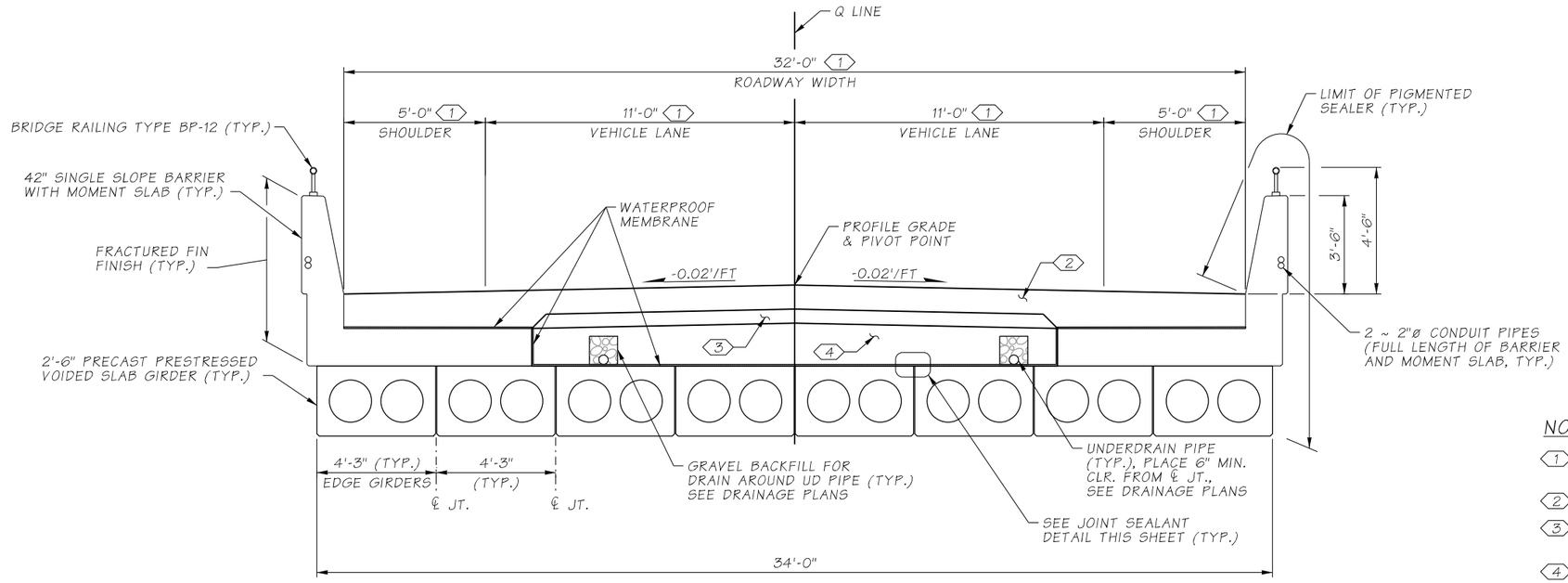

SECTION A
SHOWN NEAR MID-SPAN BA01

NOTES

1. MEASURED PERPENDICULAR TO Q LINE
2. HMA
3. CRUSHED SURFACING BASE COURSE
4. SELECT BORROW INCL. HAUL

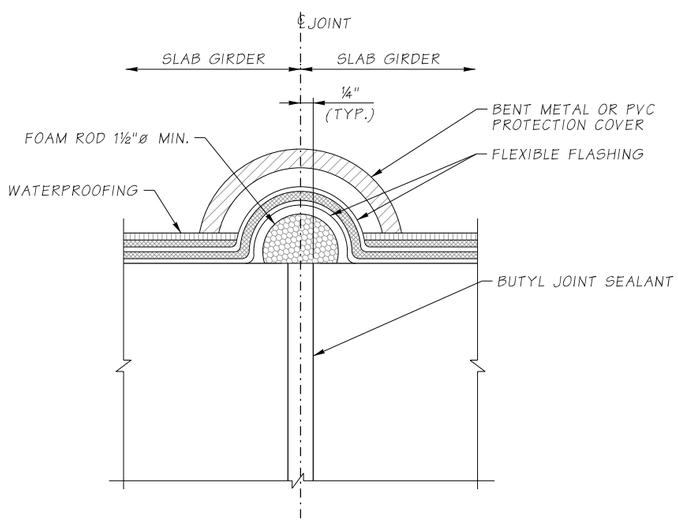

JOINT SEALANT

SR 160 MP 2.29 SALMONBERRY CREEK

Bridge Design Engr.		c:\pwworking\wsdot_pw_2\d0202980\SR160MP2.29_Q_PS_BG_21.dgn							
Supervisor	B. CLARK				REGION NO.	STATE	FED. AID. PROJ. NO.	SHEET NO.	TOTAL SHEETS
Designed By	K. VASQUEZ/ A. JAIN				10	WASH.	ARPA001		
Checked By	K. JUMPAWONG				JOB NUMBER				
Detailed By	M. VYPLEL				22C525				
Bridge Projects Engr.									
Prelim. Plan By					009902				
Architect/Specialist		DATE	REVISION	BY	APP'D				

SEE SHEET CT01 DATE P.E. STAMP BOX

SEE SHEET CT01 DATE P.E. STAMP BOX

Washington State Department of Transportation

SR 16 / SR 160 / KITSAP COUNTY
FISH PASSAGE BARRIERS
REMOVE FISH BARRIERS

TYPICAL SECTION

BRIDGE SHEET NO. BA21

SHEET 394 OF 409 SHEETS

SR 160 FILE NO. ____ SHEET ____

4/7/2023 4:09:05 PM

GIRDER SCHEDULE

SPAN	GIRDER	GIRDER HEIGHT H	GIRDER WIDTH W	PLAN LENGTH (ALONG GIRDER GRADE) (SEE GIRDER NOTE 1)	VOIDS		GIRDER END DETAILS		MIN. CONC. COMP. STRENGTH		PRESTRESSING STRANDS (SEE GIRDER NOTES 2-4)								MIDSPAN VERTICAL DEFLECTION D		TRANSVERSE REINFORCEMENT									LONGITUDINAL REINFORCEMENT				SHIPPING AND HANDLING DETAILS					
											ROW 1			ROW 2			TOP ROW				ZONE 1			ZONE 2			ZONE 3			G1		G2						
					NUMBER	DIAMETER	$\Theta 1$	$\Theta 2$	@ 28 DAYS F'C (KSI)	@ RELEASE F'CI (KSI)	PERMANENT STRANDS	EXTENDED NUMBER AND LENGTH	DEBONDED NUMBER AND LENGTH	PERMANENT STRANDS	EXTENDED NUMBER AND LENGTH	DEBONDED NUMBER AND LENGTH	PERMANENT STRANDS	TEMPORARY STRANDS	LOWER BOUND @40 DAYS	UPPER BOUND @ 120 DAYS	BAR SIZE	SPACING	LENGTH	BAR SIZE	SPACING	LENGTH	BAR SIZE	SPACING	LENGTH	BAR SIZE	NO. OF BARS	BAR SIZE	NO. OF BARS	MAXIMUM MIDSPAN VERTICAL DEFLECTION AT SHIPPING	L	L1	L2	K_Θ MINIMUM SHIPPING SUPPORT ROTATIONAL SPRING CONSTANT (KIP-IN/RAD)	W_{cc} MINIMUM SHIPPING SUPPORT CNTR.-TO-CNTR. WHEEL SPACING
1	A & H	2'-6"	4'-2¾"	27'-10¾"	2	18"	86.10°	86.10°	5.0	4.0	9	4 @ 2'-3"	-	-	-	-	2	-	⅛"	¼"	5	3"	1'-0"	5	5"	5'-0"	5	6"	6'-0"	6	5	6	5	¼"	3'-0"	2'-6"	2'-6"	40000	6'-0"
1	B - G	2'-6"	4'-2½"	27'-10¾"	2	18"	86.10°	86.10°	5.0	4.0	9	4 @ 2'-3"	-	-	-	-	2	-	⅛"	¼"	5	3"	1'-0"	5	5"	5'-0"	5	6"	6'-0"	6	5	6	5	¼"	3'-0"	2'-6"	2'-6"	40000	6'-0"

GIRDER NOTES

1. PLAN LENGTH SHALL BE INCREASED AS NECESSARY TO COMPENSATE FOR SHORTENING DUE TO PRESTRESS AND SHRINKAGE.
2. ALL STRANDS SHALL BE 0.6"ø AASHTO M203 GRADE 270 LOW RELAXATION STRANDS, JACKED TO 202.5 KSI (43.94 KIPS PER STRAND). STRANDS SHALL BE SYMMETRICAL ABOUT THE GIRDER CENTERLINE. EXTERIOR STRANDS IN EACH ROW SHALL BE FULLY BONDED.
3. SPACE EXTENDED STRANDS SYMMETRICALLY AND EVENLY ACROSS GIRDER WIDTH.
4. DEBONDED STRANDS SHALL BE DEBONDED AT EACH GIRDER END FOR THE INDICATED LENGTH PARALLEL TO THE GIRDER CENTERLINE. DEBONDED STRANDS SHALL NOT BE EXTENDED PAST GIRDER ENDS. DEBONDED STRANDS SHALL BE SYMMETRICALLY PLACED ABOUT THE GIRDER CENTERLINE. DEBONDED LENGTHS OF PAIRS OF STRANDS THAT ARE SYMMETRICALLY POSITIONED ABOUT THE GIRDER CENTERLINE SHALL BE EQUAL.

SR 160 FILE NO.____ SHEET____

Bridge Design Engr.		c:\pwworking\wsdot_pw_2\d0202980\SR160MP2.29_Q_PS_BG_22.dgn							
Supervisor	B. CLARK				REGION NO.	STATE	FED. AID. PROJ. NO.	SHEET NO.	TOTAL SHEETS
Designed By	K. VASQUEZ				10	WASH.	ARPA001		
Checked By	K. JUMPAWONG				JOB NUMBER 22C525				
Detailed By	M. VYPLEL								
Bridge Projects Engr.					009902				
Prelim. Plan By									
Architect/Specialist		DATE	REVISION	BY	APP'D				

3/16/2023 2:30:01 PM

SEE SHEET CT01 DATE P.E. STAMP BOX

HDR

SEE SHEET CT01 DATE P.E. STAMP BOX

Washington State Department of Transportation

SR 160 MP 2.29 SALMONBERRY CREEK

SR 16 / SR 160 / KITSAP COUNTY FISH PASSAGE BARRIERS REMOVE FISH BARRIERS

SLAB GIRDER SCHEDULE & NOTES

BRIDGE SHEET NO. BA22

SHEET 395 OF 409 SHEETS

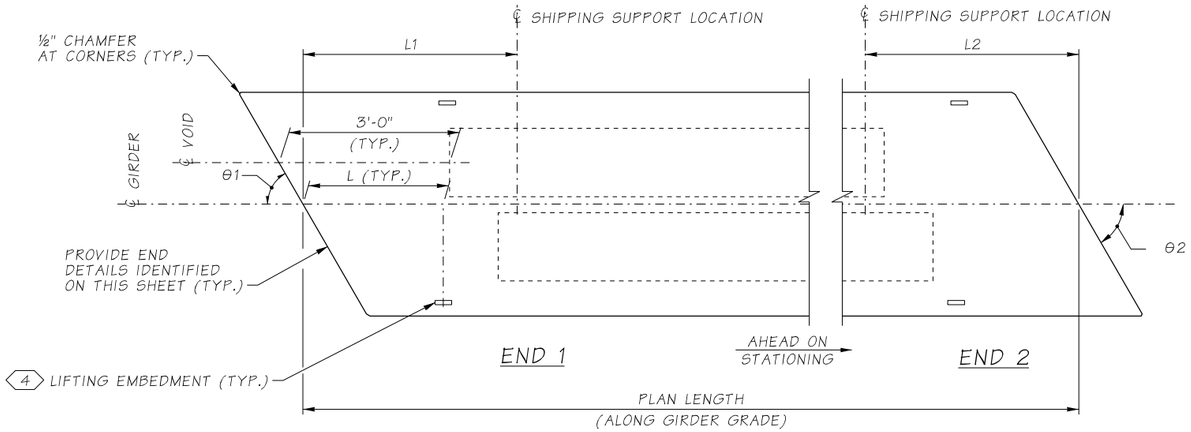

PLAN

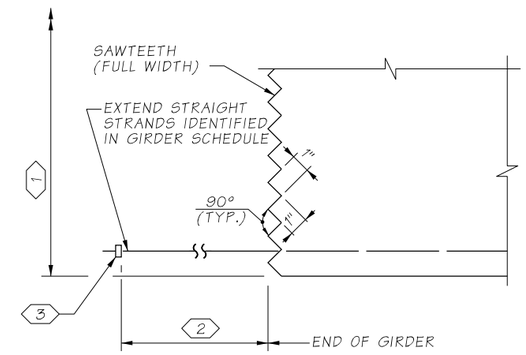

END DETAIL

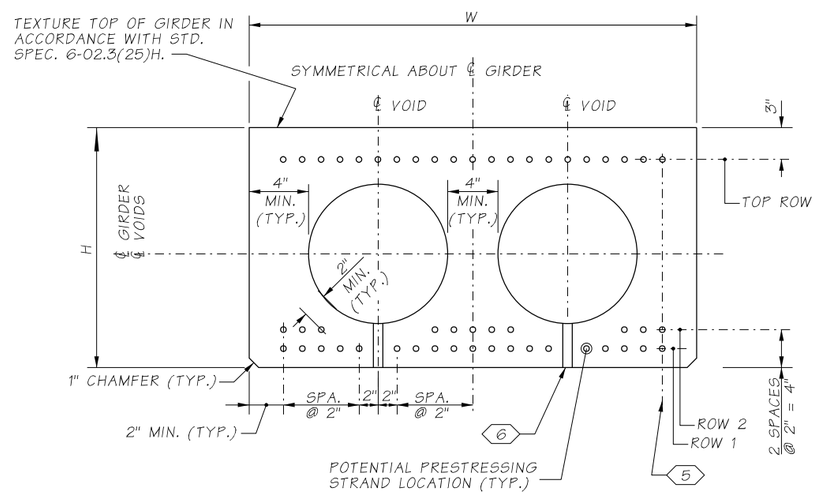

TYPICAL GIRDER SECTION

GIRDER NOTES

1. SEE GIRDER SCHEDULE FOR REQUIRED NUMBER OF TEMPORARY STRANDS. TEMPORARY STRANDS SHALL BE PLACED IN THE TOP ROW.
2. FOR GIRDERS ERECTED ON A LONGITUDINAL GRADE, STRAND DETENSIONING BLOCKOUTS SHALL BE PLACED AT THE LOW END OF THE GIRDER.

NOTES

1. CUT ALL STRANDS FLUSH WITH THE GIRDER END AND PAINT WITH AN APPROVED EPOXY RESIN, EXCEPT FOR EXTENDED STRANDS AS SHOWN.
2. EXTENSION LENGTH PARALLEL TO ℄ GIRDER. SEE GIRDER SCHEDULE ON SHEET BA22.
3. 1 11/16"ø MIN. STRAND CHUCK OR ASTM A108 2¾"ø x 1⅛" STRAND ANCHOR. ANCHOR STRAND WITH WEDGES BEFORE GIRDER ERECTION. VERIFY WEDGES ARE SEATED TIGHTLY IMMEDIATELY BEFORE PLACING DIAPHRAGM CONCRETE.
4. INSTALL LIFTING EMBEDMENTS IN ACCORDANCE WITH STD. SPEC. 6-02.3(25)L. REMOVE TO TOP OF GIRDER AFTER ERECTION.
5. EXTERIOR STRAND POSITIONS IN EACH ROW SHALL BE FILLED FIRST AND SHALL BE PERMANENT AND FULLY BONDED.
6. 1"ø POLYETHYLENE PIPE DRAIN AT BOTH ENDS OF EACH VOID. ENSURE WATER WITHIN VOID WILL DRAIN AFTER CASTING GIRDER.

SR 160 FILE NO. ____ SHEET ____

Bridge Design Engr.		c:\pwworking\wsdot_pw_2\d0202980\SR160MP2.29_Q_PS_BG_23.dgn							
Supervisor	B. CLARK				REGION NO.	STATE	FED. AID. PROJ. NO.	SHEET NO.	TOTAL SHEETS
Designed By	K. VASQUEZ				10	WASH.	ARPA001		
Checked By	K. JUMPAWONG				JOB NUMBER				
Detailed By	M. VYPLEL				22C525				
Bridge Projects Engr.									
Prelim. Plan By					009902				
Architect/Specialist		DATE	REVISION	BY	APP'D				

3/16/2023 2:30:05 PM

ELIZABETH M. CLARK — STATE OF WASHINGTON — 46846 — 4/07/1992 — PROFESSIONAL ENGINEER
SEE SHEET CT01
DATE
P.E. STAMP BOX

HDR

MANUAL JUMPAWONG — STATE OF WASHINGTON — 38411 — PROFESSIONAL ENGINEER
SEE SHEET CT01
DATE
P.E. STAMP BOX

Washington State
Department of Transportation

SR 160 MP 2.29 SALMONBERRY CREEK

SR 16 / SR 160 / KITSAP COUNTY
FISH PASSAGE BARRIERS
REMOVE FISH BARRIERS

SLAB GIRDER DETAILS 1 OF 2

BRIDGE SHEET NO. BA23

SHEET 396 OF 409 SHEETS

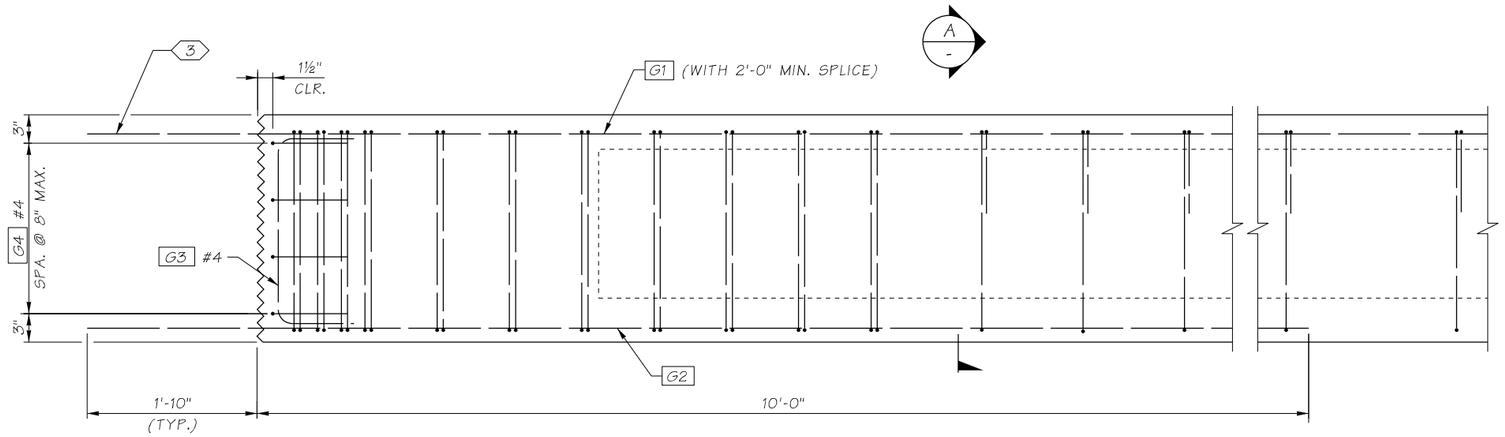

ELEVATION

STRANDS NOT SHOWN

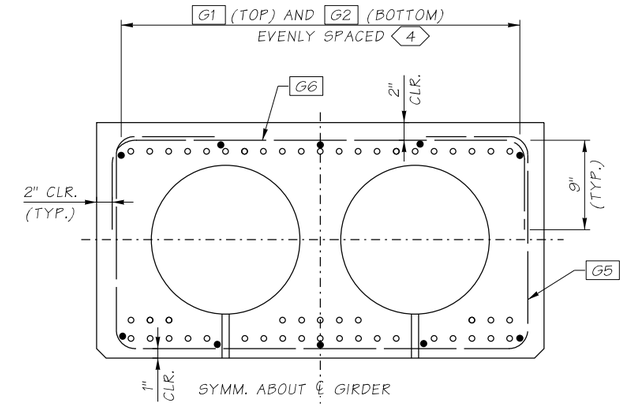

SECTION A -

G5 AND G6 SHOWN, 2 G7 SIMILAR

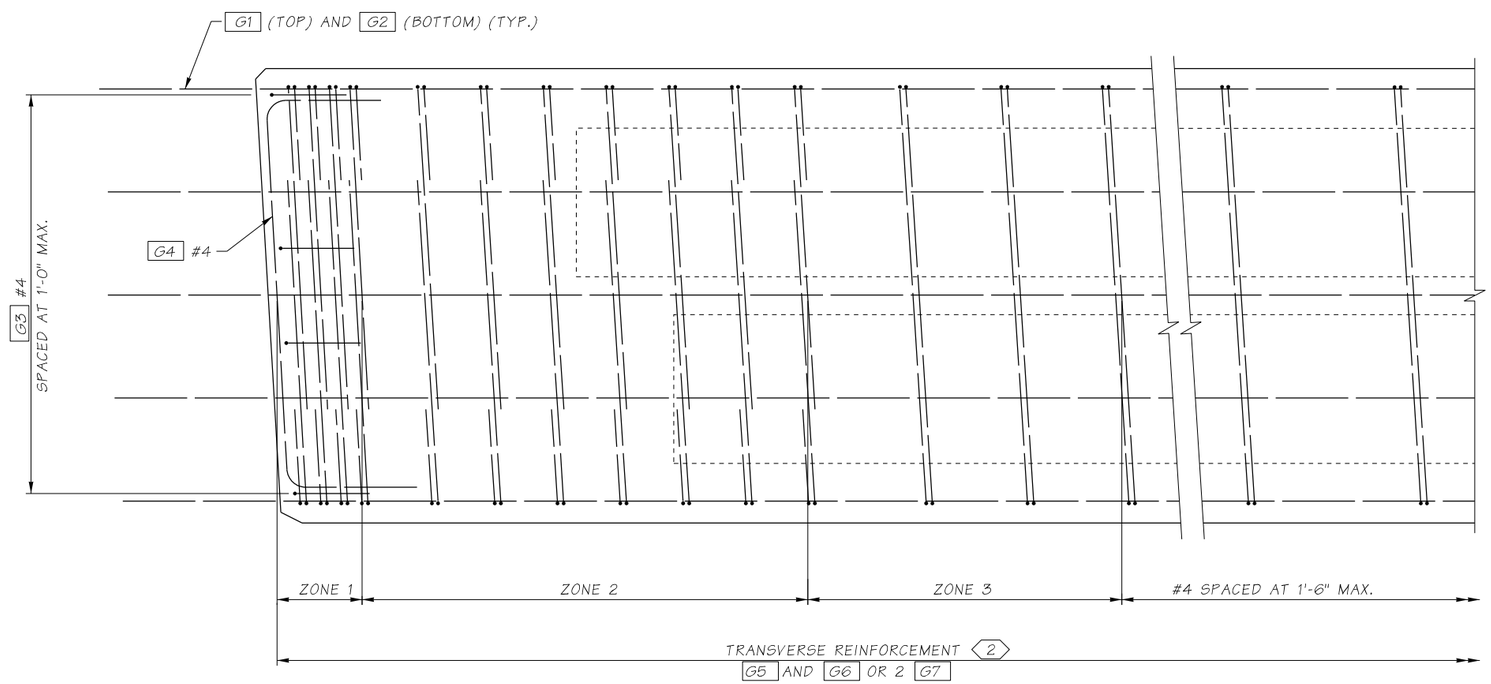

PLAN

1

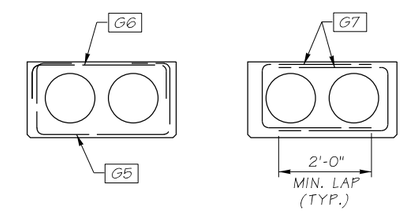

TRANSVERSE REINFORCEMENT OPTIONS

REINFORCING NOTES

1. DEFORMED WELDED WIRE REINFORCEMENT MAY BE SUBSTITUTED FOR MILD REINFORCEMENT IN ACCORDANCE WITH STANDARD SPECIFICATION 6-02.3(25)A.

NOTES

1. BARRIER AND MOMENT SLAB BARS NOT SHOWN FOR CLARITY. SEE BARRIER AND MOMENT SLAB SHEETS FOR DETAILS AND LOCATIONS. OTHER END SIMILAR. STRANDS NOT SHOWN.
2. SEE GIRDER SCHEDULE FOR BAR SIZE AND SPACING AND LENGTH OF ZONES.
3. FIELD BEND G1 TO OBTAIN 1½" COVER AT DIAPHRAGM END IF NECESSARY.
4. MAY BE BUNDLED IF SPACING DOES NOT EXCEED 1'-0". SEE GIRDER SCHEDULE.

SR 160 MP 2.29 SALMONBERRY CREEK

Bridge Design Engr.		c:\pwworking\wsdot_pw_2\d0202980\SR160MP2.29_Q_PS_BG_24.dgn							
Supervisor	B. CLARK				REGION NO.	STATE	FED. AID. PROJ. NO.	SHEET NO.	TOTAL SHEETS
Designed By	K. VASQUEZ				10	WASH.	ARPA001		
Checked By	K. JUMPAWONG				JOB NUMBER 22C525				
Detailed By	M. VYPLEL								
Bridge Projects Engr.									
Prelim. Plan By					009902				
Architect/Specialist		DATE	REVISION	BY	APP'D				

3/16/2023 2:30:07 PM

SR 160 FILE NO. ____ SHEET ____

ELIZABETH M. CLARK — STATE OF WASHINGTON — 46846 — REGISTERED PROFESSIONAL ENGINEER
SEE SHEET CT01
DATE
P.E. STAMP BOX

HDR

KANYAL JUMPAWONG — STATE OF WASHINGTON — 49181 — REGISTERED PROFESSIONAL ENGINEER
SEE SHEET CT01
DATE
P.E. STAMP BOX

Washington State Department of Transportation

SR 16 / SR 160 / KITSAP COUNTY
FISH PASSAGE BARRIERS
REMOVE FISH BARRIERS

SLAB GIRDER DETAILS 2 OF 2

BRIDGE SHEET NO. BA24

SHEET 397 OF 409 SHEETS

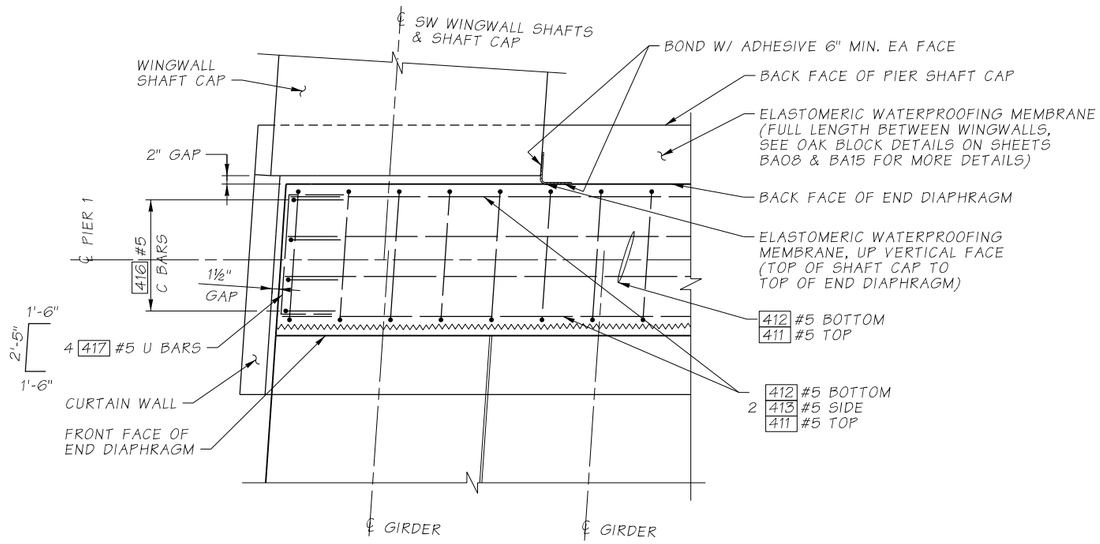

PLAN - END DIAPHRAGM

PIER 1 SHOWN, PIER 2 SIMILAR
REBAR AT PIER 2 SIMILAR BUT 42X SERIES

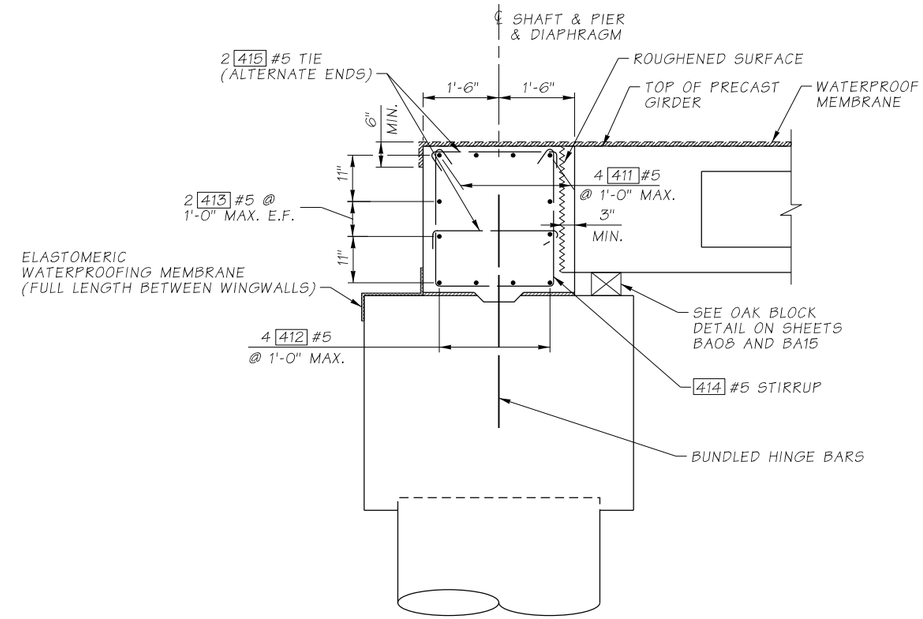

SECTION A

SHAFT REINFORCEMENT NOT SHOWN FOR CLARITY
PIER 1 SHOWN, PIER 2 SIMILAR
REBAR AT PIER 2 SIMILAR BUT 42X SERIES

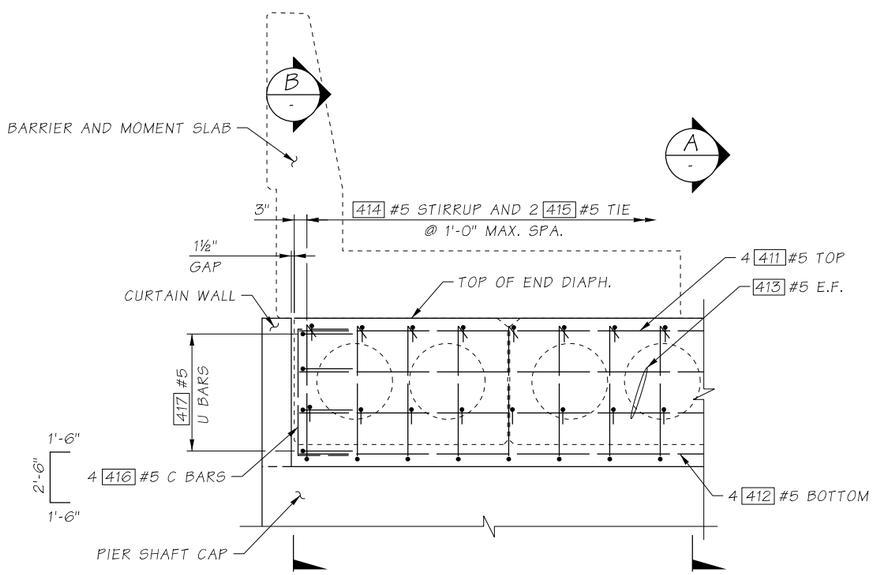

ELEVATION - END DIAPHRAGM

PIER 1 SHOWN, PIER 2 SIMILAR
REBAR AT PIER 2 SIMILAR BUT 42X SERIES

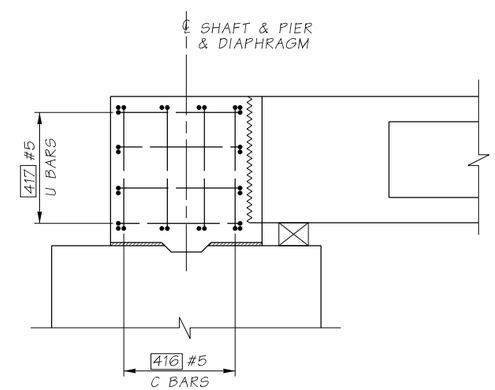

END VIEW B

PIER 1 SHOWN, PIER 2 SIMILAR

SR 160 MP 2.29 SALMONBERRY CREEK

Bridge Design Engr.		c:\pwworking\wsdot_pw_2\d0202980\SR160MP2.29_Q_PS_BG_25.dgn						
Supervisor	B. CLARK							
Designed By	A. JAIN							
Checked By	K. JUMPAWONG							
Detailed By	M. VYPLEL							
Bridge Projects Engr.								
Prelim. Plan By								
Architect/Specialist		DATE	REVISION	BY	APP'D			

REGION NO.	STATE	FED. AID. PROJ. NO.	SHEET NO.	TOTAL SHEETS
10	WASH.	ARPA001		
JOB NUMBER 22C525				
009902				

ELIZABETH M. CLARK — STATE OF WASHINGTON — 46846 — REGISTERED PROFESSIONAL ENGINEER
SEE SHEET CT01
DATE
P.E. STAMP BOX

HDR

MANUAL JUMPAWONG — STATE OF WASHINGTON — 38111 — REGISTERED PROFESSIONAL ENGINEER
SEE SHEET CT01
DATE
P.E. STAMP BOX

Washington State Department of Transportation

SR 16 / SR 160 / KITSAP COUNTY
FISH PASSAGE BARRIERS
REMOVE FISH BARRIERS

END DIAPHRAGM DETAILS

BRIDGE SHEET NO. BA25

SHEET 398 OF 409 SHEETS

SR 160 FILE NO. ___ SHEET ___

3/16/2023 2:30:10 PM

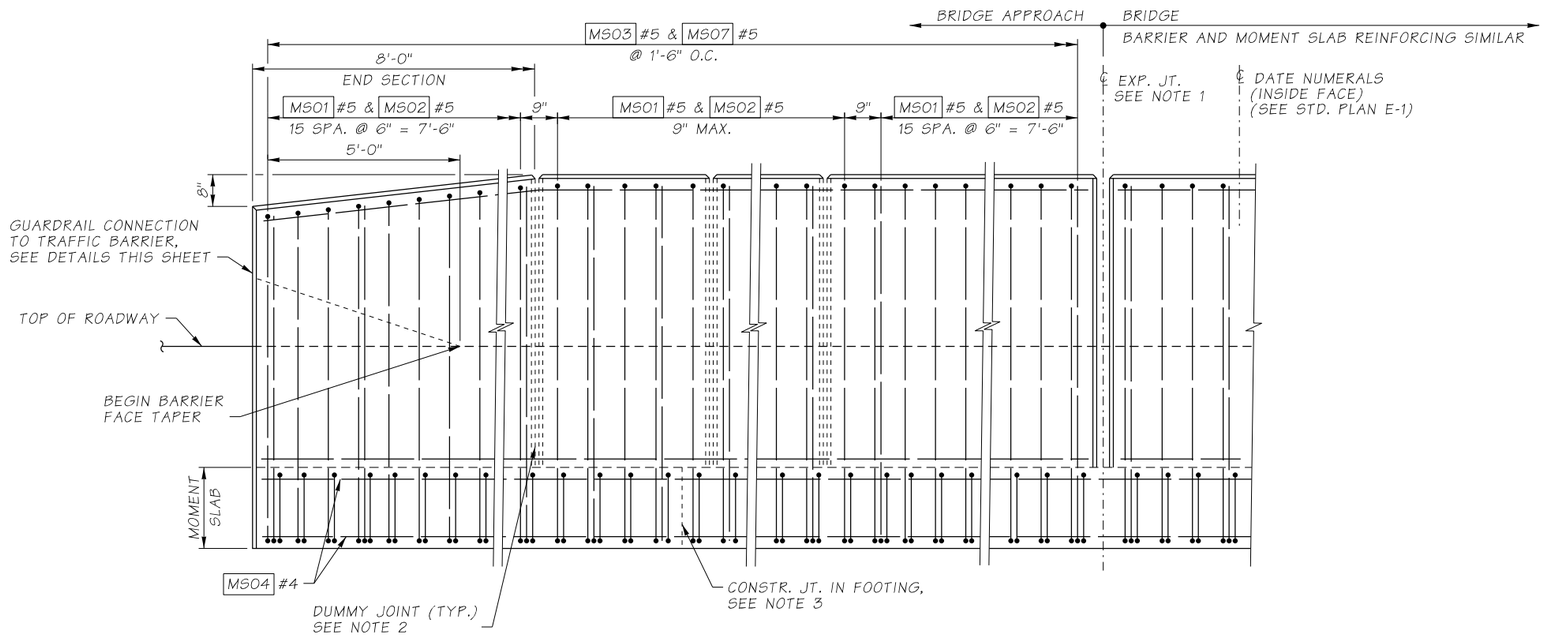

OUTSIDE ELEVATION

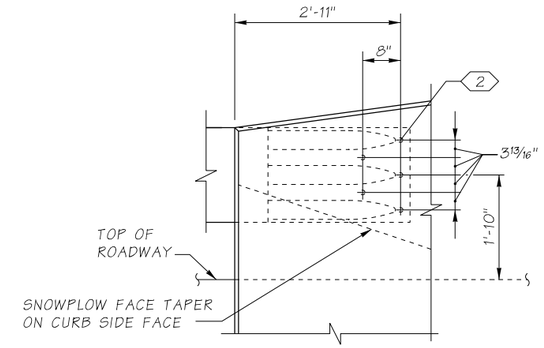

THRIE BEAM END SECTION DESIGN
"F" (SEE STD. PLAN C-7a)

OUTSIDE ELEVATION
TRAFFIC BARRIER - GUARDRAIL CONNECTION

(WHERE SHOWN ON LAYOUT)

BAR BENDING DIAGRAM

ALL DIMENSIONS ARE OUT TO OUT

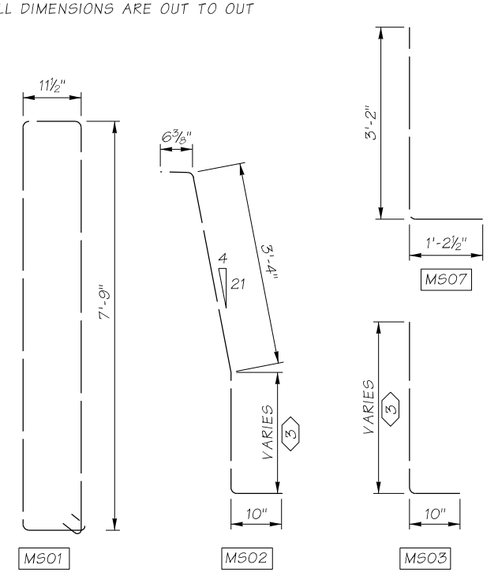

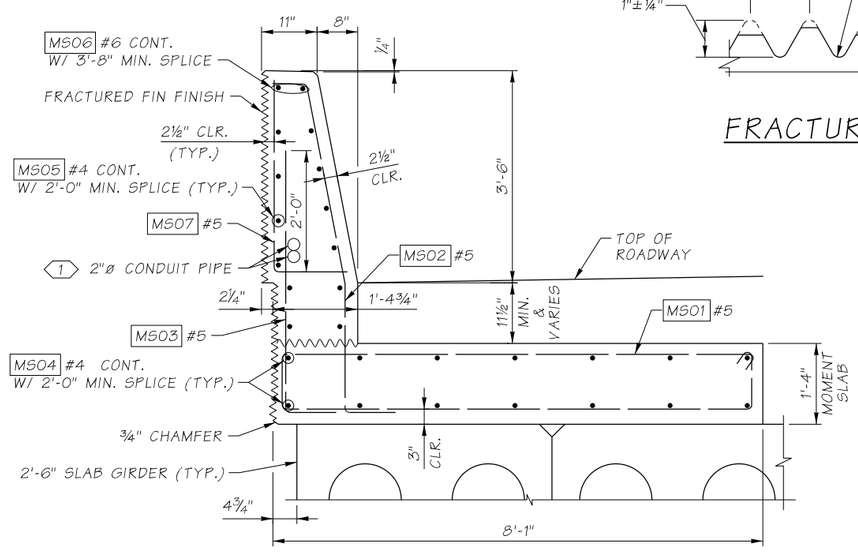

BARRIER & MOMENT SLAB
TYPICAL SECTION

BRIDGE RAIL NOT SHOWN

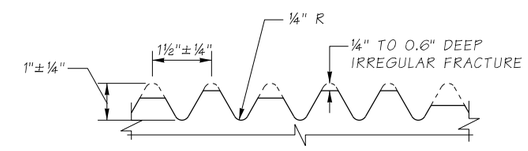

FRACTURED FIN FINISH

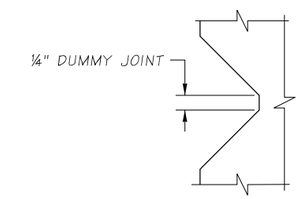

DUMMY JOINT DETAIL

NOTES

1. BARRIER EXPANSION JOINTS SHALL BE SPACED AT A MINIMUM OF 60 FEET BUT NO MORE THAN 120 FEET.
2. BARRIER DUMMY JOINTS SHALL BE PLACED AT 8 FEET ON CENTER. FIRST DUMMY JOINT MAY BE LESS THAN 8 FEET FROM THE END OF THE BARRIER. SEE THIS SHEET FOR DUMMY JOINT DETAIL.
3. CONSTRUCTION JOINTS SHALL BE PLACED IN MOMENT SLAB AT A MAXIMUM SPACING OF 120 FEET.
4. ALL CONCRETE SHALL BE CLASS 4000, EXCEPT AS NOTED.

1 2"ø RGS CONDUIT PIPES (TYP.). CONDUITS PROVIDED IN NORTH AND SOUTH BARRIER. SEE SHEET BA27 FOR TRAFFIC BARRIER CONDUIT DETAILS.

2 ⅞"ø ROCKET/KOHLER F-50, LANCASTER MALLEABLE, OR DAYTON/RICHMOND F-62 FLARED THIN SLAB FERRULE INSERTS OR APPROVED EQUAL (TYP.). RESIN-BONDED ANCHORS MAY BE SUBSTITUTED.

3 CONTRACTOR TO FIELD BEND.

SR 160 MP 2.29 SALMONBERRY CREEK

SR 16 / SR 160 / KITSAP COUNTY
FISH PASSAGE BARRIERS
REMOVE FISH BARRIERS

BARRIER & MOMENT SLAB DETAILS 1 OF 2

BRIDGE SHEET NO. BA26

SHEET 399 OF 409 SHEETS

Bridge Design Engr.		c:\pwworking\wsdot_pw_2\d0202980\SR160MP2.29_Q_PS_BG_26.dgn						
Supervisor	B. CLARK				REGION NO.	STATE	FED. AID. PROJ. NO.	SHEET NO. / TOTAL SHEETS
Designed By	E. BORDER				10	WASH.	ARPA001	
Checked By	K. JUMPAWONG				JOB NUMBER			
Detailed By	M. VYPLEL				22C525			
Bridge Projects Engr.								
Prelim. Plan By					009902			
Architect/Specialist		DATE	REVISION	BY	APP'D			

SR 160 FILE NO. ____ SHEET ____

3/17/2023 4:10:08 AM

ELIZABETH M. CLARK — STATE OF WASHINGTON — 46646 — REGISTERED PROFESSIONAL ENGINEER
SEE SHEET CT01
DATE
P.E. STAMP BOX

HDR

MANIVAL JUMPAWONG — STATE OF WASHINGTON — 46911 — REGISTERED PROFESSIONAL ENGINEER
SEE SHEET CT01
DATE
P.E. STAMP BOX

Washington State
Department of Transportation

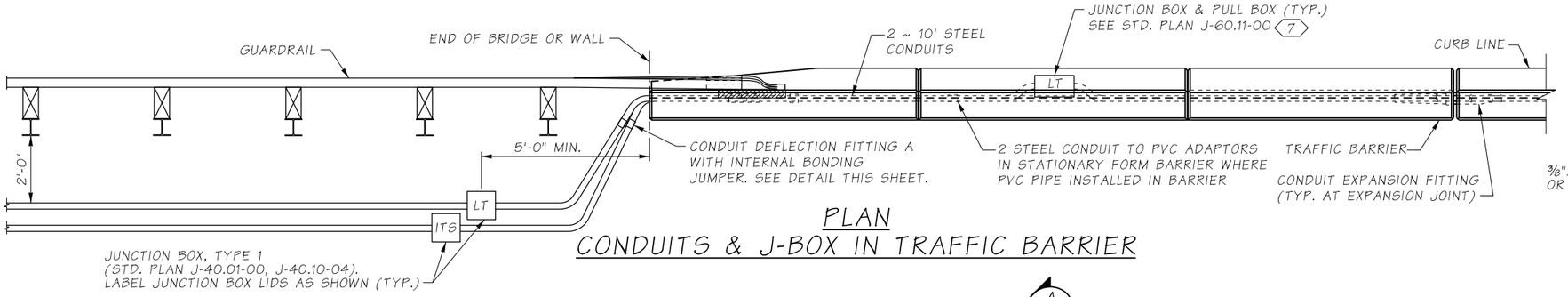

PLAN
CONDUITS & J-BOX IN TRAFFIC BARRIER

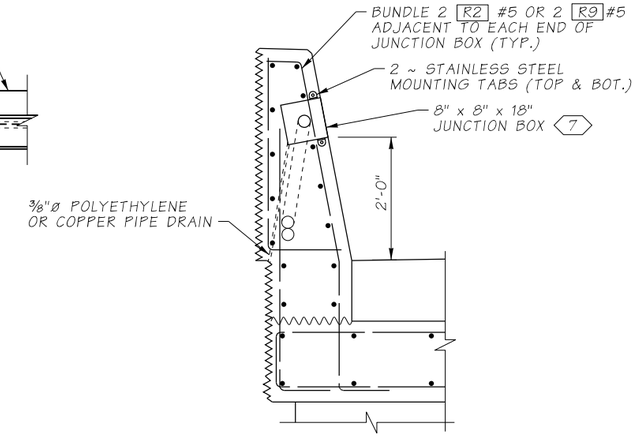

SECTION A

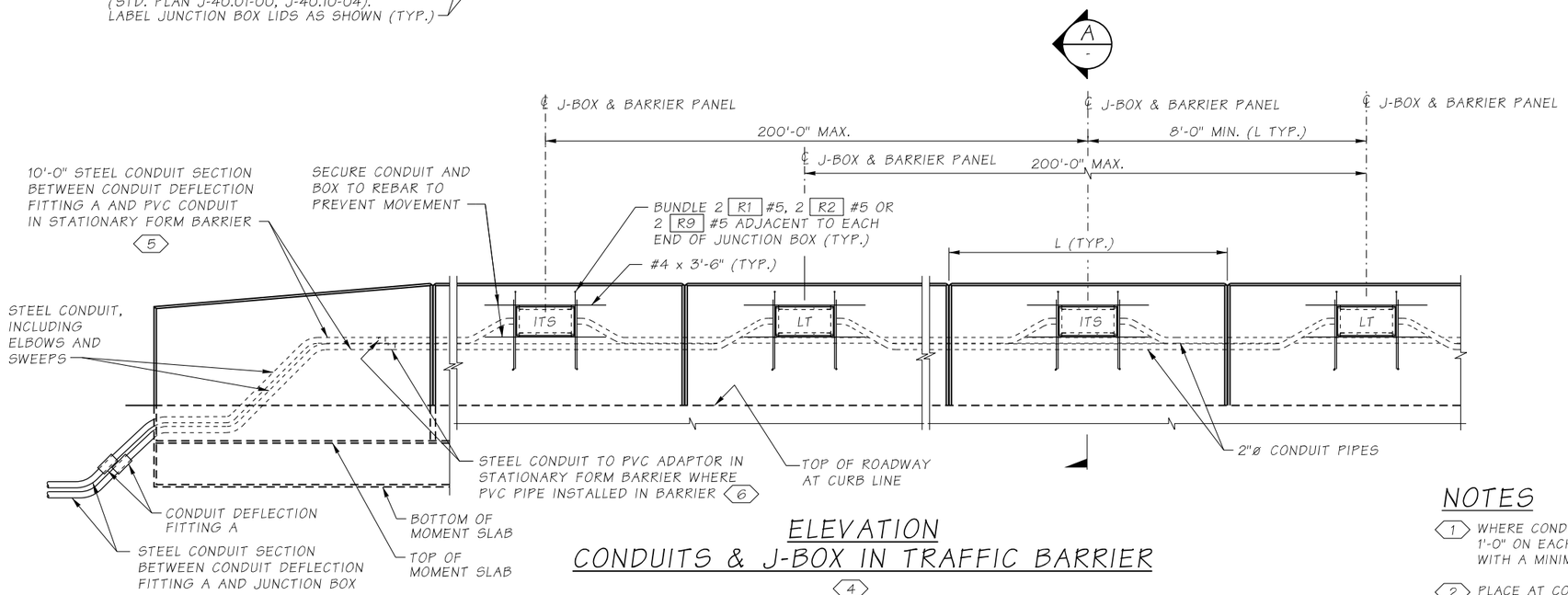

ELEVATION
CONDUITS & J-BOX IN TRAFFIC BARRIER
4

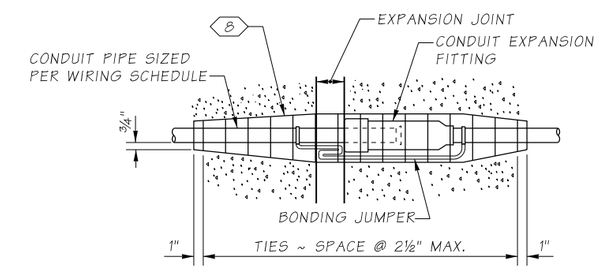

CONDUIT EXPANSION FITTING

CONDUIT FITTING - (TYPE AX FOR MOVEMENT OF +/- 2") AT BRIDGE EXPANSION JOINTS

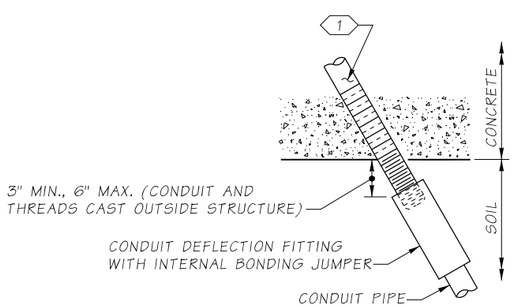

CONDUIT DEFLECTION FITTING A

CONDUIT FITTING - TYPE DX FOR DEFLECTION OF 30° AND ¾" MOVEMENT.
2

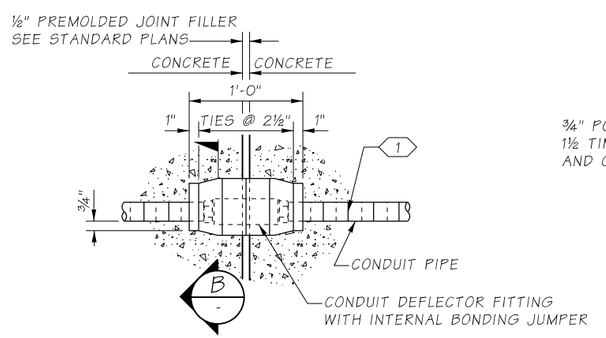

CONDUIT DEFLECTION FITTING B

CONDUIT FITTING - TYPE DX FOR DEFLECTION OF 30° AND ¾" MOVEMENT.
3

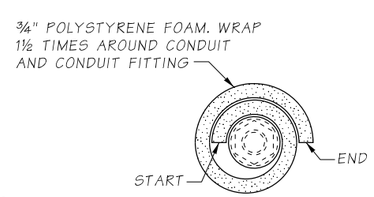

SECTION B

NOTES

1. WHERE CONDUIT IN A STRUCTURE IS ROUTED ACROSS A JOINT, WRAP STEEL CONDUIT PIPE FOR 1'-0" ON EACH SIDE OF JOINT. PIPE WRAP TAPE SHALL BE 2" WIDE, 20 MIL THICK, AND INSTALLED WITH A MINIMUM OF 1" OVERLAP.
2. PLACE AT CONDUIT PIPE EXIT FROM STRUCTURE AND SHALL BE IN NEUTRAL STATE AFTER INSTALLATION.
3. CONDUIT PIPES PLACED THROUGH RETAINING WALL TRAFFIC BARRIER SHALL BE FITTED WITH DEFLECTION FITTINGS AT A MAXIMUM SPACING OF 120'. THE DEFLECTION FITTINGS SHALL BE PLACED AT THE TRAFFIC BARRIER OPEN JOINT THAT COINCIDES WITH THE RETAINING WALL EXPANSION JOINT.
4. LABEL JUNCTION BOX COVER IN ACCORDANCE WITH STANDARD SPECIFICATION SECTION 9-29.2(4). ADJACENT JUNCTION BOXES ARE SHOWN CENTERED BETWEEN ADJACENT DUMMY JOINTS. IF THE DISTANCE BETWEEN ADJACENT DUMMY JOINTS IS 16'-0" OR GREATER, PLACE ADJACENT JUNCTION BOXES SYMMETRICALLY ON EITHER SIDE OF THE CENTER OF ONE DUMMY PANEL WHILE MAINTAINING 8'-0" MINIMUM BETWEEN CENTER LINES OF THE JUNCTION BOXES.
5. TERMINATE STEEL CONDUIT IN JUNCTION BOX IF LESS THAN 10-'0" FROM ELBOW OR SWEEP.
6. INSTALL ONLY WHERE CONDUIT IS HORIZONTAL.
7. NEMA 4X IN STATIONARY FORM BARRIER, OR NEMA 3R IN SLIP FORM BARRIER. MOUNT JUNCTION BOX SO COVER IS FLUSH WITH BARRIER, CAN BE RECESSED UP TO ⅛".
8. 3'-0" LONG EXPANDED POLYSTYRENE SLEEVE AROUND CONDUIT. DUCT TAPE SEAMS AND ENDS TO SEAL AND PREVENT CONCRETE FROM BONDING WITH FITTING AND CONDUIT.

SR 160 MP 2.29 SALMONBERRY CREEK

SR 16 / SR 160 / KITSAP COUNTY
FISH PASSAGE BARRIERS
REMOVE FISH BARRIERS

BARRIER & MOMENT SLAB DETAILS 2 OF 2

BRIDGE SHEET NO. BA27

SHEET 400 OF 409 SHEETS

Bridge Design Engr.		c:\pwworking\wsdot_pw_2\d0202980\SR160MP2.29_Q_PS_BG_27.dgn			REGION NO.	STATE	FED. AID. PROJ. NO.	SHEET NO.	TOTAL SHEETS
Supervisor	B. CLARK				10	WASH.	ARPA001		
Designed By	K. MA				JOB NUMBER				
Checked By	K. JUMPAWONG				22C525				
Detailed By	M. VYPLEL								
Bridge Projects Engr.									
Prelim. Plan By					009902				
Architect/Specialist		DATE	REVISION	BY	APP'D				

SEE SHEET CT01 DATE P.E. STAMP BOX

SEE SHEET CT01 DATE P.E. STAMP BOX

Washington State Department of Transportation

3/16/2023 2:30:16 PM

SR 160 FILE NO. ____ SHEET ____

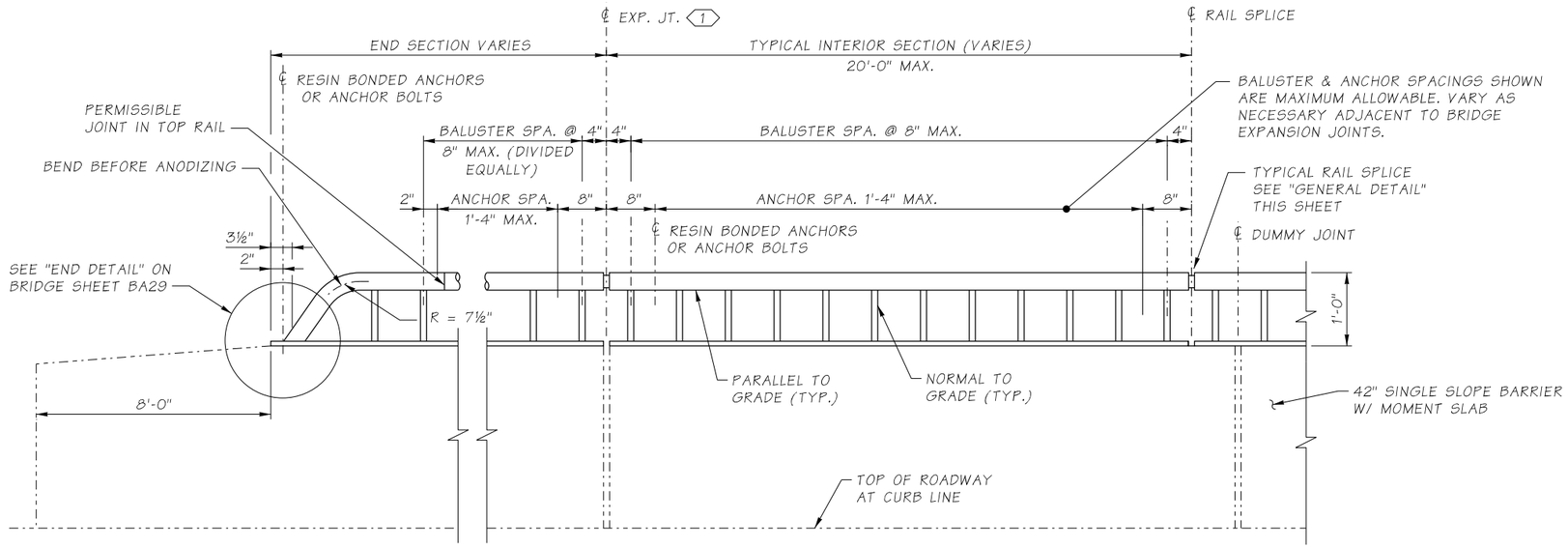

ELEVATION

BALUSTER AND GUARDRAIL SECTION
ATTACHMENT DETAILS NOT SHOWN

RAILING NOTES

1. PIPE RAILING, PIPE RAILING SPLICES, COVER PLATES AND BOTTOM EXTRUDED CHANNELS SHALL BE BENT TO THE HORIZONTAL CURVE WHERE THE RADIUS OF CURVATURE IS LESS THAN 200'. THESE ITEMS MAY BE HEATED TO NOT MORE THAN 400° FOR A PERIOD NOT TO EXCEED 30 MINUTES TO FACILITATE FORMING OR BENDING TO HORIZONTAL CURVATURE.
2. SHOP DRAWINGS OF RAILING SHALL BE SUBMITTED AS A TYPE 2 WORKING DRAWING SHOWING COMPLETE DIMENSIONS AND DETAILS OF FABRICATION AND INCLUDING AN ERECTION DIAGRAM. MATERIAL SPECIFICATIONS SHALL BE PROVIDED IN THE SHOP DRAWINGS FOR ALL COMPONENTS.
3. CUTTING SHALL BE DONE BY SAWING OR MILLING AND ALL CUTS SHALL BE TRUE AND SMOOTH. FLAME CUTTING WILL NOT BE PERMITTED.
4. WELDING OF ALUMINUM SHALL CONFORM TO STD. SPEC. SECTION 9-28.14(3).
5. ALL ALUMINUM PARTS SHALL BE GIVEN A CLEAR ANODIC COATING OF AT LEAST 0.0006" THICK AND SEALED TO MEET THE REQUIREMENTS OF ASTM B 580 WITH A UNIFORM FINISH.
6. PIPE RAILING, PIPE BALUSTERS AND PIPE RAILING SPLICES SHALL BE ADEQUATELY WRAPPED TO INSURE SURFACE PROTECTION DURING HANDLING AND TRANSPORTATION TO THE JOB SITE.

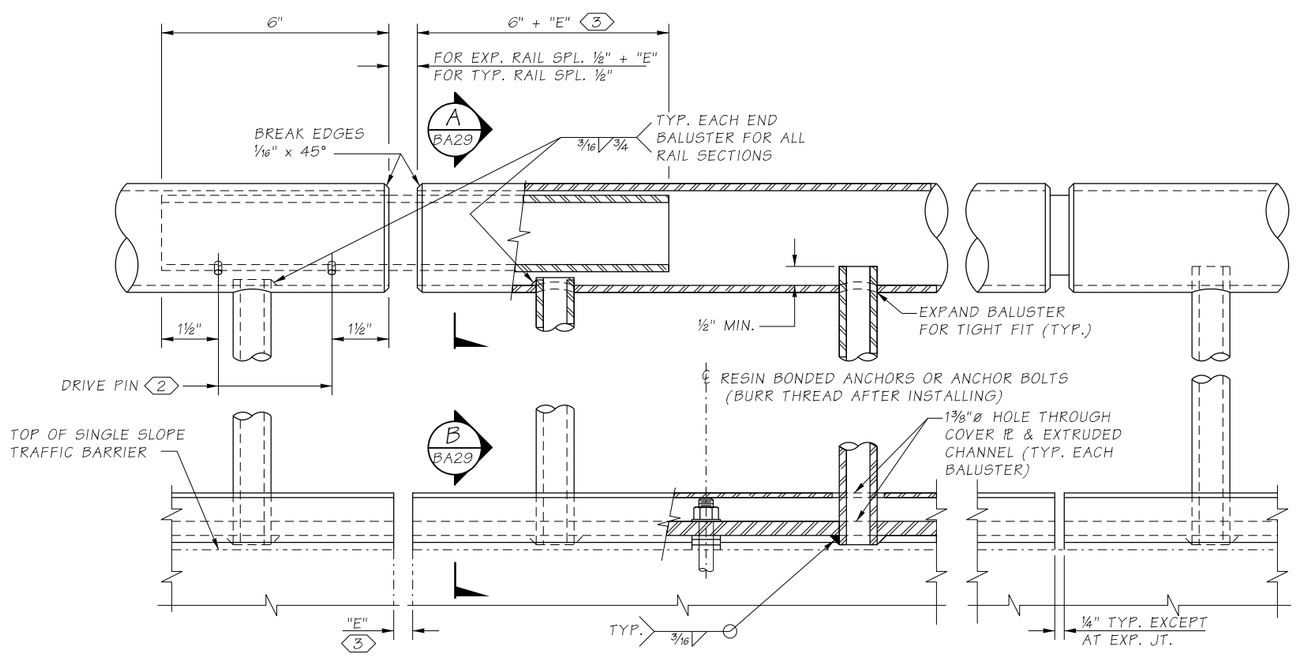

GENERAL DETAIL

NOTES

1. PROVIDE EXPANSION RAIL SPLICE AT MOMENT SLAB EXPANSION JOINTS. RAIL SPLICE JOINTS ARE NOT REQUIRED AT TRAFFIC BARRIER DUMMY JOINTS.
2. LOCATE ON OPPOSITE SIDE OF TRAFFIC. DRIVE PINS SHALL BE DRIVEN FLUSH WITH THE OUTSIDE FACE OF THE RAILING.
3. "E" DIMENSION SHALL BE EQUAL TO OPENING OF TRAFFIC BARRIER EXPANSION JOINTS.

SR 160 FILE NO.____ SHEET____

Bridge Design Engr.		c:\pwworking\wsdot_pw_2\d0202980\SR160MP2.29_Q_PS_BG_28.dgn							
Supervisor	B. CLARK				REGION NO.	STATE	FED. AID. PROJ. NO.	SHEET NO.	TOTAL SHEETS
Designed By	K. VASQUEZ/ A. JAIN				10	WASH.	ARPA001		
Checked By	K. JUMPAWONG				JOB NUMBER				
Detailed By	M. VYPLEL				22C525				
Bridge Projects Engr.									
Prelim. Plan By					009902				
Architect/Specialist		DATE	REVISION	BY	APP'D				

3/16/2023 2:30:19 PM

ELIZABETH M. CLARK, STATE OF WASHINGTON, 46546, REGISTERED PROFESSIONAL ENGINEER
SEE SHEET CT01
DATE
P.E. STAMP BOX

HDR

RAMIAL JUMPAWONG, STATE OF WASHINGTON, 48711, REGISTERED PROFESSIONAL ENGINEER
SEE SHEET CT01
DATE
P.E. STAMP BOX

Washington State Department of Transportation

SR 160 MP 2.29 SALMONBERRY CREEK

SR 16 / SR 160 / KITSAP COUNTY
FISH PASSAGE BARRIERS
REMOVE FISH BARRIERS

BRIDGE RAILING TYPE BP-12 DETAILS 1 OF 2

BRIDGE SHEET NO. BA28

SHEET 401 OF 409 SHEETS

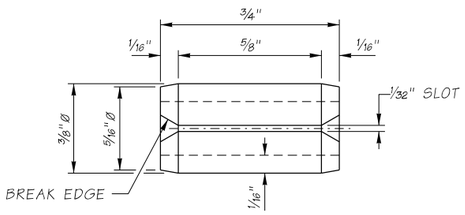

DRIVE PIN DETAIL

SLOTTED TYPE SPRING PIN (ANSI B18.8.2)

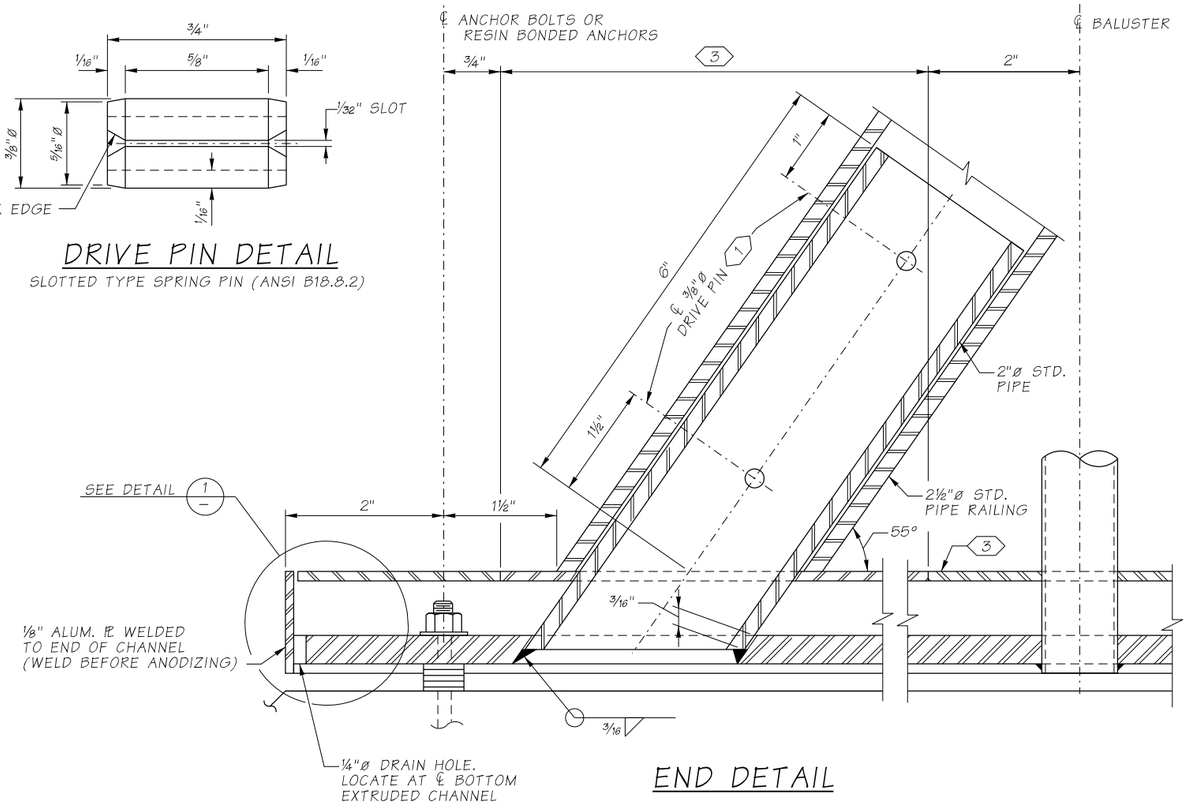

END DETAIL

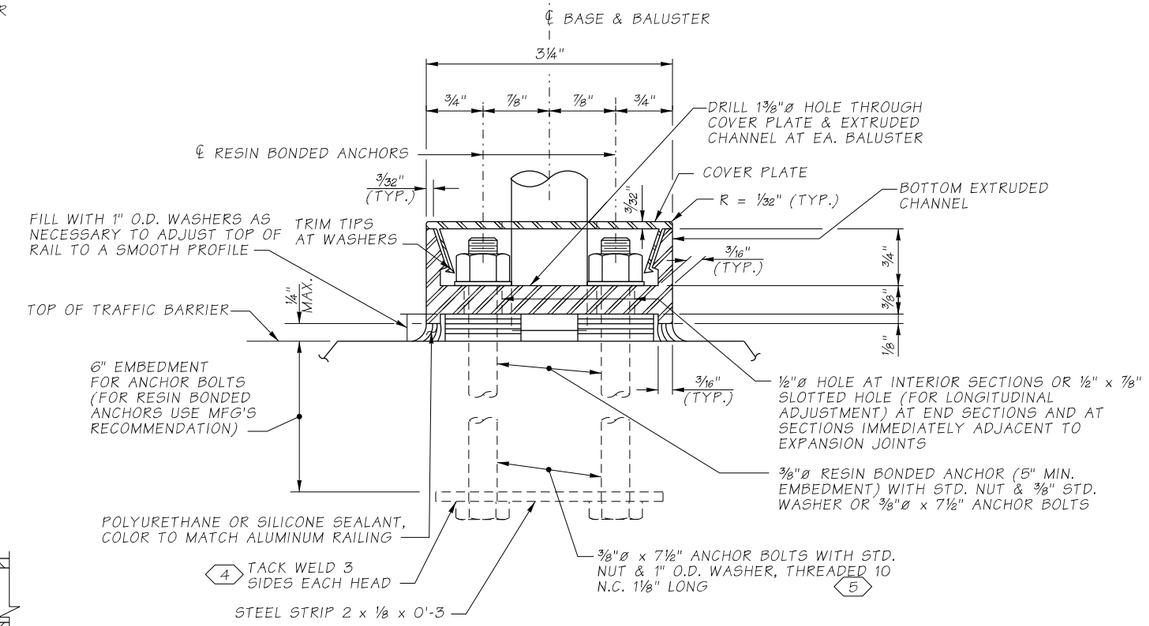

SECTION B / BA28

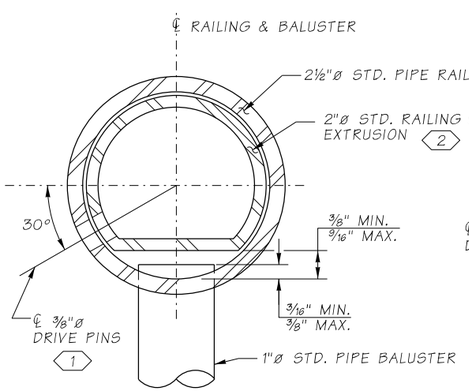

SECTION A / BA28

OPTION #1

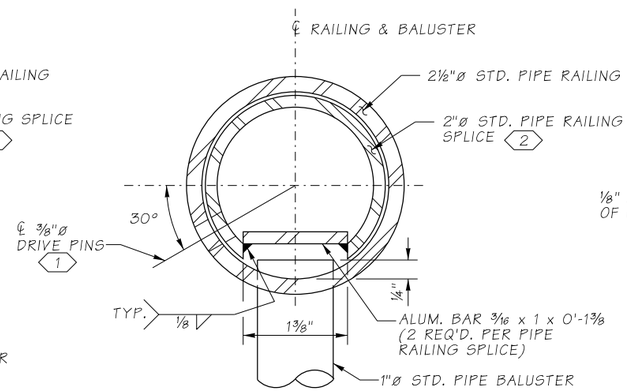

SECTION A / BA28

OPTION #2

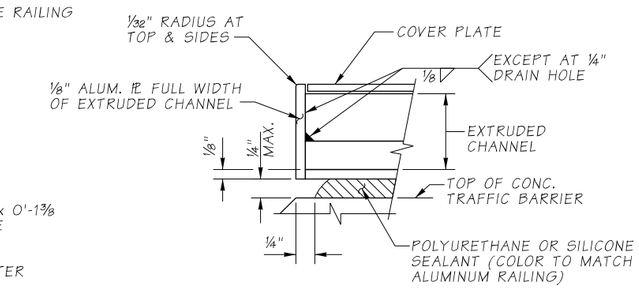

DETAIL 1 / -

DRAIN HOLES NOT SHOWN

MATERIAL SPECIFICATION TABLE

MAT'L	PART	MATERIAL SPECIFICATION
ALUMINUM	RAILS & BALUSTERS	ASTM B221-6005-T5, 6005A-T5 OR ASTM B241-6061-T6
	EXTRUDED CHANNELS, COVER PLATES & BAR	ASTM B221-6005-T5 OR 6005A-T5
STEEL	STRIP	ASTM A 36
	ANCHOR BOLTS, NUTS & WASHERS	STANDARD SPECIFICATION SECTION 9-06.5(4) GR. 36 (GALVANIZE IN ACCORDANCE WITH AASHTO SPECIFICATION M 232)
	DRIVE PINS	ASTM A276 OR A240 TYPE 302 STAINLESS STEEL

NOTES

1. LOCATE ON OPPOSITE SIDE OF TRAFFIC. DRIVE PINS SHALL BE DRIVEN FLUSH WITH THE OUTSIDE FACE OF THE RAILING.
2. DRILL 3/8"Ø HOLE FOR 3/8"Ø DRIVE PIN AT LOCATION SHOWN.
3. THIS COVER PLATE SECTION SHALL BE SNAPPED INTO POSITION AFTER 2"Ø STD. PIPE HAS BEEN WELDED TO BOTTOM EXTRUDED CHANNEL.
4. ANCHOR BOLTS SHALL BE POSITIONED IN A JIG DURING WELDING.
5. ALTERNATE TO 3/8"Ø RESIN BONDED ANCHORS.

SR 160 MP 2.29 SALMONBERRY CREEK

SR 16 / SR 160 / KITSAP COUNTY
FISH PASSAGE BARRIERS
REMOVE FISH BARRIERS

BRIDGE RAILING TYPE BP-12 DETAILS 2 OF 2

BRIDGE SHEET NO. BA29

SHEET 402 OF 409 SHEETS

Bridge Design Engr.		c:\pwworking\wsdot_pw_2\d0202980\SR160MP2.29_Q_PS_BG_29.dgn							
Supervisor	B. CLARK				REGION NO.	STATE	FED. AID. PROJ. NO.	SHEET NO.	TOTAL SHEETS
Designed By	K. VASQUEZ/ A. JAIN				10	WASH.	ARPA001		
Checked By	K. JUMPAWONG				JOB NUMBER				
Detailed By	M. VYPLEL				22C525				
Bridge Projects Engr.									
Prelim. Plan By					009902				
Architect/Specialist		DATE	REVISION	BY	APP'D				

SR 160 FILE NO.____ SHEET____

3/16/2023 2:30:21 PM

ELIZABETH M. CLARK — STATE OF WASHINGTON — 46646 — REGISTERED PROFESSIONAL ENGINEER
SEE SHEET CT01
DATE
P.E. STAMP BOX

HDR

MANUAL JUMPAWONG — STATE OF WASHINGTON — 49711 — REGISTERED PROFESSIONAL ENGINEER
SEE SHEET CT01
DATE
P.E. STAMP BOX

Washington State Department of Transportation

S = Bar is included in substructure quantities.
L = Lump sum quantity.
T = Transverse or S = Seismic
E = Bar is to be epoxy coated.
V = Bar dimesnions vary between dimensions shown on this line and the following line.

MARK NO.	LOCATION	SIZE	NO. REQ'D.	BEND TYPE	TIE OR STIR.	LUMP SUM	SUBSTR.	EPOXY COAT	VARIES	NO. EACH	U Ft.	U In.	W Ft.	W In.	X Ft.	X In.	Y Ft.	Y In.	Z Ft.	Z In.	θ_1 Deg.	θ_2 Deg.	LENGTH Ft.	LENGTH In.	WEIGHT Lbs.
	PIER 1																								
101	Top Longitudinal	5	6	50			S				35	0.0											35	0	219
102	Bott Longitudinal	5	6	50			S				35	0.0											35	0	219
103	E.F. Longitudinal	5	6	50			S				35	0.0											35	0	219
104	Main Stirrup	5	36	72	T		S				4	11.8	3	10.0	3	10.0							13	4	502
105	Interior Stirrup	4	36	72	T		S				1	0.0	3	10.0	3	10.0							9	3	222
106	Top Tie	5	36	58	T		S				4	11.7											5	10	218
107	Hinge	6	70	50	S		S	E			5	0.0											5	0	526
108	Ties	4	53	58	T		S				4	11.8											5	8	200
109	C Bars	5	12	74	T		S				3	11.0	2	0.0	2	0.0							7	8	96
110	U Bars	5	10	74	T		S				5	0.0	2	0.0	2	0.0							8	9	92
111	Curtain Wall Horiz	5	4	50			S				4	0.0											4	0	17
112	Curtain Wall Vert	5	5	54	T		S				5	3.0											5	7	29
113	Curtain Wall Horiz	5	4	50			S				4	0.0											4	0	17
114	Curtain Wall Vert	5	5	54	T		S				5	3.0											5	7	29
	NW WINGWALL																								
131	Top Longitudinal	6	6	50			S	V	1	26	0.0												26	0	233
										25	8.0												25	8	
132	Bott Longitudinal	6	6	50			S	V	1	25	0.0												25	0	224
										24	8.0												24	8	
133	E.F. Longitudinal	6	8	50			S	V	1	26	0.0												26	0	310
										25	8.0												25	8	
134	Main Stirrup	5	19	72	T		S	V	1	4	11.8	3	10.0	3	10.0								13	4	271
										4	11.7	4	2.0	4	2.0								14	0	
135	Interior Stirrup	4	19	72	T		S			1	0.0	3	10.0	3	10.0								9	3	117
136	Top Tie	5	24	58	T		S			4	11.7												5	10	145
137	Ties	4	150	58	T		S			4	11.8												5	8	565
138	U Bars	6	6	74	T		S			4	11.0	2	0.0	2	0.0								8	7	78
139	C Bars	6	6	74	T		S			4	0.0	2	0.0	2	0.0								7	8	69
140	E.F. Longit Deep Cap	6	6	50			S	V	1	3	1.8												3	2	27
										2	9.3												2	9	
141	Bott Longit Deep Cap	6	6	50			S	V	1	3	1.8												3	2	27
										2	9.3												2	9	
142	Short Stirrup	5	1	72	T		S			4	11.8	2	7.0	2	7.0								10	10	11
143	Interior Short Stirrup	4	1	72	T		S			1	0.0	2	7.0	2	7.0								6	9	4
144	Deep Stirrup	5	4	72	T		S			4	11.8	6	10.0	6	10.0								19	4	81
145	Interior Deep Stirrup	4	4	72	T		S			1	0.0	6	10.0	6	10.0								15	3	41
146	Splayed Main Stirrup	5	8	72	T		S	V	1	4	11.8	4	2.0	4	2.0								14	0	118
										5	3.4	4	2.0	4	2.0								14	4	
147	Splayed Interior Stirrup	4	8	72	T		S	V	1	1	0.0	4	2.0	4	2.0								9	11	53
										1	1.0	4	2.0	4	2.0								9	12	
148	Splayed Top Tie	5	8	58	T		S	V	1	4	11.7												5	10	50
										5	3.0												6	1	
149	Main Stirrup	5	43	72	T		S			4	11.8	4	2.5	4	2.5								14	1	633
150	Interior Stirrup	4	43	72	T		S			1	0.0	4	2.5	4	2.5								9	12	287
151	Top Tie	5	43	58	T		S			4	11.7												5	10	260
152	Top Longit	6	6	50			S	V	1	45	6.0												45	6	405
										44	3.5												44	3	
153	Bottom Longit	6	6	50			S	V	1	45	6.0												45	6	405
										44	3.5												44	3	
154	E.F. Longit	6	8	50			S	V	1	45	6.0												45	6	539
										44	3.5												44	3	
155	Splayed Longit	6	20	50			S			6	10.0												6	10	205
	SW WINGWALL																								
161	Top Longitudinal	6	6	50			S	V	1	32	9.8												32	10	296
										32	11.3												32	11	
162	Bott Longitudinal	6	6	50			S	V	1	31	9.8												31	10	287
										31	11.7												31	12	
163	E.F. Longitudinal	6	8	50			S	V	1	32	9.8												32	10	388
										31	9.8												31	10	
164	Main Stirrup	5	29	72	T		S	V	1	4	11.8	3	10.0	3	10.0								13	4	417
										4	11.8	4	3.0	4	3.0								14	2	
165	Interior Stirrup	4	29	72	T		S	V	1	1	0.0	3	10.0	3	10.0								9	3	187
										1	0.0	4	3.0	4	3.0								10	1	
166	Top Tie	5	34	58	T		S			4	11.7												5	10	206
167	Ties	4	78	58	T		S			4	11.8												5	8	294
168	U Bars	6	6	74	T		S			4	11.0	2	0.0	2	0.0								8	7	78
169	C Bars	6	6	74	T		S			4	0.0	2	0.0	2	0.0								7	8	69
170	E.F. Longit Deep Cap	6	6	50			S	V	1	3	1.8												3	2	27
										2	9.3												2	9	
171	Bott Longit Deep Cap	6	6	50			S	V	1	3	1.8												3	2	27
										2	9.3												2	9	
172	Short Stirrup	5	1	72	T		S			4	11.8	2	7.0	2	7.0								10	10	11
173	Interior Short Stirrup	4	1	72	T		S			1	0.0	2	7.0	2	7.0								6	9	4
174	Deep Stirrup	5	4	72	T		S			4	11.8	6	10.0	6	10.0								19	4	81
175	Interior Deep Stirrup	4	4	72	T		S			1	0.0	6	10.0	6	10.0								15	3	41
	PIER 1 END DIAPHRAGM																								
411	Top Longit	5	4	50						33	8.0												33	8	140
412	Bottom Longit	5	4	50						33	8.0												33	8	140
413	E.F. Longit	5	4	50						33	8.0												33	8	140
414	Stirrup	5	35	72	T					3	2.0	2	7.0	2	7.0								9	1	330
415	Ties	5	70	58	T					3	2.0												3	12	291
416	C Bars	5	8	74	T					2	6.0	1	6.0	1	6.0								5	3	44
417	U Bars	5	8	74	T					2	5.0	1	6.0	1	6.0								5	2	43
	PIER 2																								
201	Top Longitudinal	5	6	50			S			35	0.0												35	0	219
202	Bott Longitudinal	5	6	50			S			35	0.0												35	0	219
203	E.F. Longitudinal	5	6	50			S			35	0.0												35	0	219
204	Main Stirrup	5	36	72	T		S			4	11.8	3	10.0	3	10.0								13	4	502
205	Interior Stirrup	4	36	72	T		S			1	0.0	3	10.0	3	10.0								9	3	222
206	Top Tie	5	36	58	T		S			4	11.7												5	10	218
207	Hinge	6	70	50	S		S	E		5	0.0												5	0	526
208	Ties	4	53	58	T		S			4	11.8												5	8	200
209	C Bars	5	12	74	T		S			3	11.0	2	0.0	2	0.0								7	8	96
210	U Bars	5	10	74	T		S			5	0.0	2	0.0	2	0.0								8	9	92

S = Bar is included in substructure quantities.
L = Lump sum quantity.
T = Transverse or S = Seismic
E = Bar is to be epoxy coated.
V = Bar dimesnions vary between dimensions shown on this line and the following line.

MARK NO.	LOCATION	SIZE	NO. REQ'D.	BEND TYPE	TIE OR STIR.	LUMP SUM	SUBSTR.	EPOXY COAT	VARIES	NO. EACH	U Ft.	U In.	W Ft.	W In.	X Ft.	X In.	Y Ft.	Y In.	Z Ft.	Z In.	θ_1 Deg.	θ_2 Deg.	LENGTH Ft.	LENGTH In.	WEIGHT Lbs.
211	Curtain Wall Horiz	5	4	50			S				4	0.0											4	0	17
212	Curtain Wall Vert	5	5	54	T		S				5	3.0											5	7	29
213	Curtain Wall Horiz	5	4	50			S				4	0.0											4	0	17
214	Curtain Wall Vert	5	5	54	T		S				5	3.0											5	7	29
	NE WINGWALL																								
231	Top Longitudinal	6	6	50			S		V	1	24	2.5											24	2	228
											26	4.0											26	4	
232	Bott Longitudinal	6	6	50			S		V	1	23	2.5											23	2	219
											25	4.0											25	4	
233	E.F. Longitudinal	6	8	50			S		V	1	23	2.5											23	2	292
											25	4.0											25	4	
234	Main Stirrup	5	19	72	T		S		V	1	4	11.8	3	11.0	3	11.0							13	6	273
											4	11.7	4	2.0	4	2.0							14	0	
235	Interior Stirrup	4	19	72	T		S				1	0.0	3	11.0	3	11.0							9	5	119
236	Top Tie	5	24	58	T		S				4	11.7											5	10	145
237	Ties	4	154	58	T		S				4	11.8											5	8	580
238	U Bars	6	6	74	T		S				4	11.0	2	0.0	2	0.0							8	7	78
239	C Bars	6	6	74	T		S				3	9.0	2	0.0	2	0.0							7	5	67
240	E.F. Longit Deep Cap	6	6	50			S		V	1	3	1.8											3	2	27
											2	9.3											2	9	
241	Bott Longit Deep Cap	6	6	50			S		V	1	3	1.8											3	2	27
											2	9.3											2	9	
242	Short Stirrup	5	1	72	T		S				4	11.8	2	7.0	2	7.0							10	10	11
243	Interior Short Stirrup	4	1	72	T		S				1	0.0	2	7.0	2	7.0							6	9	4
244	Deep Stirrup	5	4	72	T		S				4	11.8	6	10.0	6	10.0							19	4	81
245	Interior Deep Stirrup	4	4	72	T		S				1	0.0	6	10.0	6	10.0							15	3	41
246	Splayed Main Stirrup	5	10	72	T		S		V	1	4	11.8	3	11.0	3	11.0							13	6	143
											5	3.4	3	11.0	3	11.0							13	10	
247	Splayed Interior Stirrup	4	10	72	T		S		V	1	1	0.0	3	11.0	3	11.0							9	5	63
											1	1.0	3	11.0	3	11.0							9	6	
248	Splayed Top Tie	5	10	58	T		S		V	1	4	11.7											5	10	62
											5	3.0											6	1	
249	Main Stirrup	5	42	72	T		S				4	11.8	3	11.0	3	11.0							13	6	593
250	Interior Stirrup	4	42	72	T		S				1	0.0	3	11.0	3	11.0							9	5	264
251	Top Tie	5	42	58	T		S				4	11.7											5	10	254
252	Top Longit	6	6	50			S		V	1	44	10.0											44	10	410
											46	1.0											46	1	
253	Bottom Longit	6	6	50			S		V	1	44	10.0											44	10	410
											46	1.0											46	1	
254	E.F. Longit	6	8	50			S		V	1	44	10.0											44	10	546
											46	1.0											46	1	
255	Splayed Longit	6	20	50			S				6	10.0											6	10	205
	SE WINGWALL																								
261	Top Longitudinal	6	6	50			S		V	1	32	9.8											32	10	296
											32	10.8											32	11	
262	Bott Longitudinal	6	6	50			S		V	1	31	9.8											31	10	287
											31	11.7											31	12	
263	E.F. Longitudinal	6	8	50			S		V	1	31	9.8											31	10	383
											31	11.7											31	12	
264	Main Stirrup	5	29	72	T		S		V	1	4	11.8	3	10.0	3	10.0							13	4	417
											4	11.7	4	3.0	4	3.0							14	2	
265	Interior Stirrup	4	29	72	T		S		V	1	1	0.0	3	10.0	3	10.0							9	3	187
											1	0.0	4	3.0	4	3.0							10	1	
266	Top Tie	5	34	58	T		S				4	11.7											5	10	206
267	Ties	4	76	58	T		S				4	11.8											5	8	286
268	U Bars	6	6	74	T		S				4	11.0	2	0.0	2	0.0							8	7	78
269	C Bars	6	6	74	T		S				3	8.0	2	0.0	2	0.0							7	4	66
270	E.F. Longit Deep Cap	6	6	50			S		V	1	3	1.8											3	2	27
											2	9.3											2	9	
271	Bott Longit Deep Cap	6	6	50			S		V	1	3	1.8											3	2	27
											2	9.3											2	9	
272	Short Stirrup	5	1	72	T		S				4	11.8	2	7.0	2	7.0							10	10	11
273	Interior Short Stirrup	4	1	72	T		S				1	0.0	2	7.0	2	7.0							6	9	4
274	Deep Stirrup	5	4	72	T		S				4	11.8	6	10.0	6	10.0							19	4	81
275	Interior Deep Stirrup	4	4	72	T		S				1	0.0	6	10.0	6	10.0							15	3	41
	PIER 2 END DIAPHRAGM																								
421	Top Longit	5	4	50							33	8.0											33	8	140
422	Bottom Longit	5	4	50							33	8.0											33	8	140
423	E.F. Longit	5	4	50							33	8.0											33	8	140
424	Stirrup	5	35	72	T						3	2.0	2	7.0	2	7.0							9	1	330
425	Ties	5	70	58	T						3	2.0											3	12	291
426	C Bars	5	8	74	T						2	6.0	1	6.0	1	6.0							5	3	44
427	U Bars	5	8	74	T						2	5.0	1	6.0	1	6.0							5	2	43

BENDING DIAGRAMS

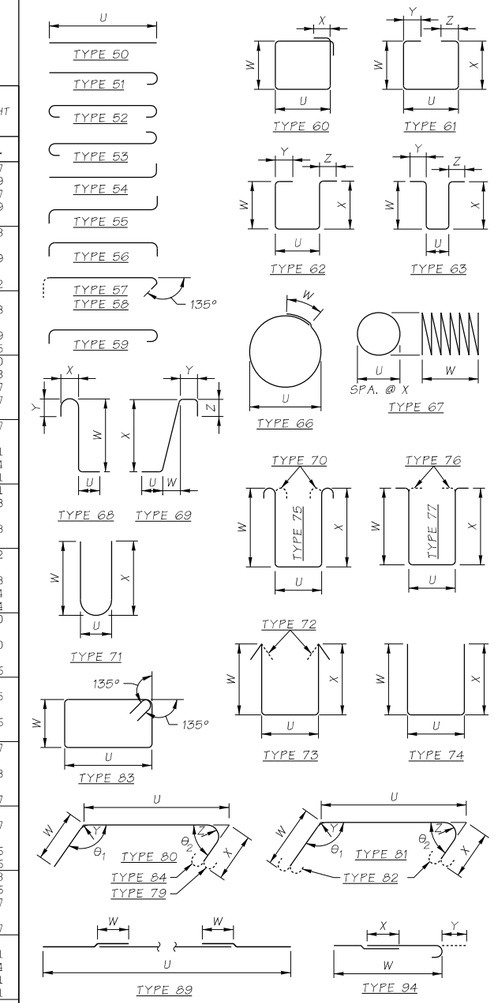

NOTES
1. ALL REINFORCING BARS ON THIS SHEET SHALL BE ASTM A 706 UNLESS SHOWN OTHERWISE.

SR 160 MP 2.29 SALMONBERRY CREEK

SR 16 / SR 160 / KITSAP COUNTY
FISH PASSAGE BARRIERS
REMOVE FISH BARRIERS

BARLIST

BRIDGE SHEET NO. BA30

SHEET 403 OF 409 SHEETS

Washington State Department of Transportation

Bridge Design Engr.	c:\pwworking\wsdot_pw_2\d0202980\SR160MP2.29_Q_PS_BG_30.dgn				
Supervisor B. CLARK					
Designed By K. MA					
Checked By K. JUMPAWONG					
Detailed By M. VYPLEL					
Bridge Projects Engr.					
Prelim. Plan By					
Architect/Specialist	DATE	REVISION	BY	APP'D	

REGION NO.	STATE	FED. AID. PROJ. NO.	SHEET NO.	TOTAL SHEETS
10	WASH.	ARPA001		

JOB NUMBER 22C525

009902

3/16/2023 2:30:25 PM

SR 160 FILE NO. ____ SHEET ____

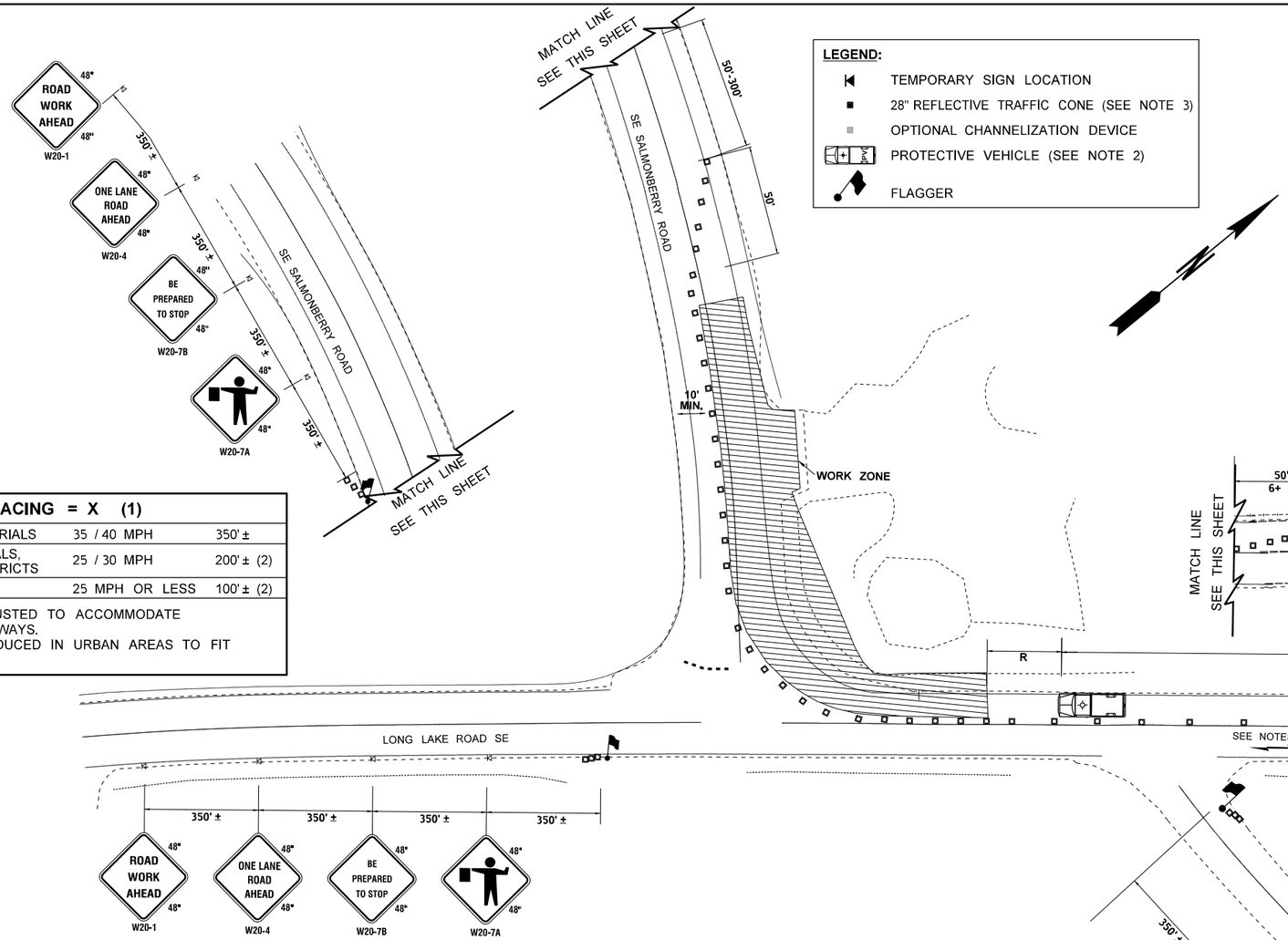

LEGEND:

- TEMPORARY SIGN LOCATION
- 28" REFLECTIVE TRAFFIC CONE (SEE NOTE 3)
- OPTIONAL CHANNELIZATION DEVICE
- PROTECTIVE VEHICLE (SEE NOTE 2)
- FLAGGER

BUFFER DATA										
LONGITUDINAL BUFFER SPACE = B										
SPEED (MPH)	25	30	35	40	45	50	55	60	65	70
LENGTH (feet)	155	200	250	305	360	425	495	570	645	730

TRANSPORTABLE ATTENUATOR ROLL AHEAD DISTANCE = R					
HOST VEHICLE WEIGHT 9,900 TO 22,000 lbs.			HOST VEHICLE WEIGHT > 22,000 lbs.		
< 45 MPH	45-55 MPH	> 55 MPH	< 45 MPH	45-55 MPH	> 55 MPH
100'	123'	172'	74'	100'	150'

PROTECTIVE VEHICLE (WORK VEHICLE) = R
NO SPECIFIED DISTANCE REQUIRED

SIGN SPACING = X (1)		
RURAL ROADS & URBAN ARTERIALS	35 / 40 MPH	350' ±
RURAL ROADS, URBAN ARTERIALS, RESIDENTIAL & BUSINESS DISTRICTS	25 / 30 MPH	200' ± (2)
URBAN STREETS	25 MPH OR LESS	100' ± (2)

(1) ALL SPACING MAY BE ADJUSTED TO ACCOMMODATE INTERSECTIONS AND DRIVEWAYS.
(2) THIS SPACING MAY BE REDUCED IN URBAN AREAS TO FIT ROADWAY CONDITIONS.

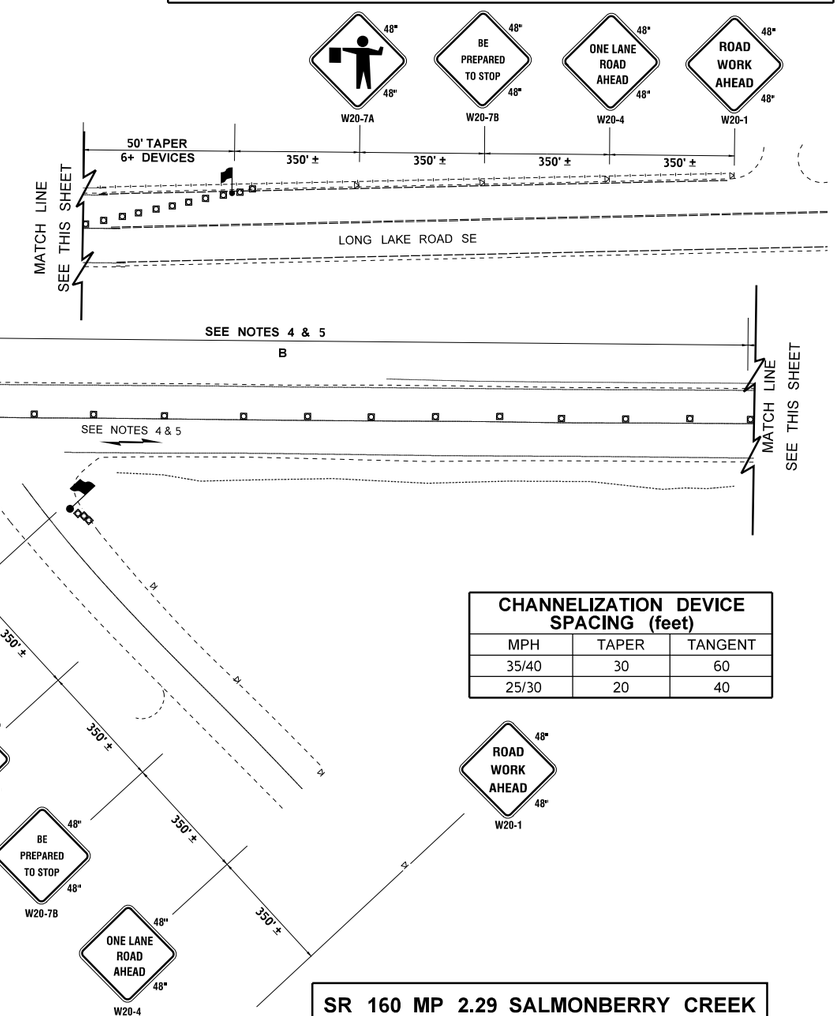

CHANNELIZATION DEVICE SPACING (feet)		
MPH	TAPER	TANGENT
35/40	30	60
25/30	20	40

NOTES:

1. AVOID PLACING LANE CLOSURE TAPERS WITHIN OR IMMEDIATELY FOLLOWING HORIZONTAL & VERTICAL CURVES BY ADJUSTING LONGITUDINAL BUFFER SPACE.
2. IF LONGITUDINAL BUFFER SPACE IS REDUCED FROM DISTANCES LISTED IN TABLE, UPGRADE PROTECTIVE VEHICLE TO A TRANSPORTABLE ATTENUATOR.
3. 36" TRAFFIC CONES, 42" TALL CHANNELIZATION DEVICES, OR TRAFFIC SAFETY DRUMS ARE ALSO ACCEPTABLE.
4. BICYCLISTS MAY BE COMBINED WITH ALTERNATING VEHICULAR TRAFFIC. BIKES TO CLEAR PRIOR TO FLAGGERS RELEASING ONCOMING TRAFFIC.
5. PEDESTRIANS SHALL CROSS AT FLAGGER STATIONS.
6. SEE STANDARD SPECIFICATIONS FOR ADDITIONAL REQUIREMENTS:
   1-07.8(1) HIGH-VISIBILITY APPAREL
   1-10.3(1)A FLAGGERS AND NIGHTTIME ILLUMINATION
   1-10.3(2)A TRAFFIC CONTROL PROCEDURES
   9-35.124-INCH STOP/SLOW PADDLE SIZE
7. FOR PROJECT-SPECIFIC REQUIREMENTS, SEE SPECIAL PROVISIONS.
8. SIGNS ARE BLACK ON ORANGE UNLESS OTHERWISE INDICATED.
9. ACTUAL CENTERLINE PAVEMENT MARKINGS MAY VARY.

ALTERNATING 1-LANE, 2-WAY TRAFFIC FLAGGER-CONTROLLED TEMPORARY SIGNAL INSTALLATION

NOT TO SCALE

S. 7. T. 23N. R. 2E. W.M.

SR 160 MP 2.29 SALMONBERRY CREEK

FILE NAME	c:\users\melissa.greenheck\pw_wsdot\d0202980\SR160MP2.29_Q_PS_TC_001.dgn					
TIME	3:57:27 PM					
DATE	4/7/2023					
PLOTTED BY	melissa.greenheck					
DESIGNED BY	M.GREENHECK					
ENTERED BY	M.GREENHECK					
CHECKED BY	H.BROWN					
PROJ. ENGR.	B.ELLIOTT					
REGIONAL ADM.	S.ROARK	REVISION	DATE	BY		

REGION NO.	STATE	FED.AID PROJ.NO.
10	WASH	ARPA001
JOB NUMBER 22C525		
CONTRACT NO. 009902		LOCATION NO. XL-6115

P.E. STAMP BOX — DATE

SCOTT A. SAWYER, STATE OF WASHINGTON, 38872, REGISTERED PROFESSIONAL ENGINEER

SEE SHEET CT01 — DATE — P.E. STAMP BOX

Washington State Department of Transportation

SCJ ALLIANCE CONSULTING SERVICES

SR 16 / SR 160 / KITSAP COUNTY
FISH PASSAGE BARRIERS
REMOVE FISH BARRIERS

SHORT TERM TRAFFIC CONTROL PLAN

PLAN REF NO TC01

SHEET 404 OF 409 SHEETS

pw:\\HQOLYMAPPPW03P.WSDOT.LOC:WSDOT\Documents_HQ\Fish Passage\ORproj\160\2.29_Salmonberry\Design_CAD_Sheets\SR160MP2.29_Q_PS_TC_001.dgn

SIGN SPACING = X (1)		
RURAL ROADS & URBAN ARTERIALS	35 / 40 MPH	350' ±
RURAL ROADS, URBAN ARTERIALS, RESIDENTIAL & BUSINESS DISTRICTS	25 / 30 MPH	200' ± (2)
URBAN STREETS	25 MPH OR LESS	100' ± (2)

(1) ALL SPACING MAY BE ADJUSTED TO ACCOMMODATE INTERSECTIONS AND DRIVEWAYS.
(2) THIS SPACING MAY BE REDUCED IN URBAN AREAS TO FIT ROADWAY CONDITIONS.

CHANNELIZATION DEVICE SPACING (feet)		
MPH	TAPER	TANGENT
35/40	30	60
25/30	20	40

BUFFER DATA										
LONGITUDINAL BUFFER SPACE = B										
SPEED (MPH)	25	30	35	40	45	50	55	60	65	70
LENGTH (feet)	155	200	250	305	360	425	495	570	645	730

TRANSPORTABLE ATTENUATOR ROLL AHEAD DISTANCE = R					
HOST VEHICLE WEIGHT 9,900 TO 22,000 lbs.			HOST VEHICLE WEIGHT > 22,000 lbs.		
< 45 MPH	45-55 MPH	> 55 MPH	< 45 MPH	45-55 MPH	> 55 MPH
100'	123'	172'	74'	100'	150'

PROTECTIVE VEHICLE (WORK VEHICLE) = R
NO SPECIFIED DISTANCE REQUIRED

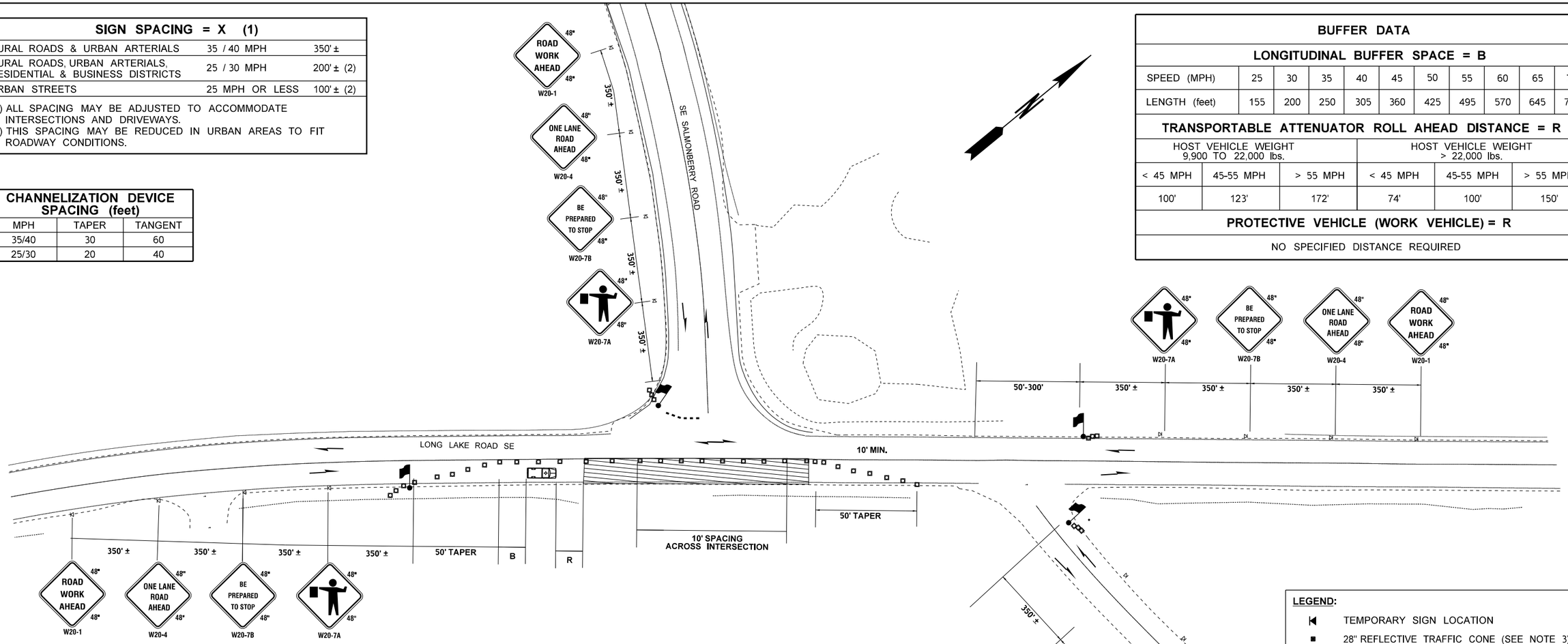

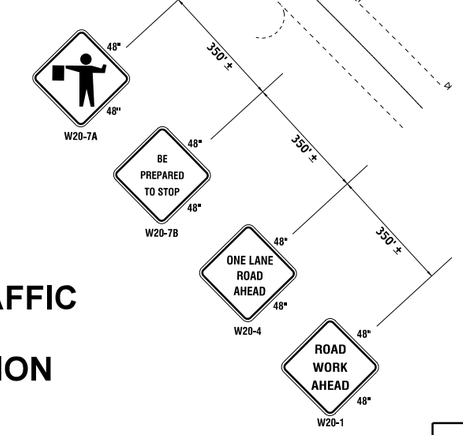

LEGEND:

- TEMPORARY SIGN LOCATION
- 28" REFLECTIVE TRAFFIC CONE (SEE NOTE 3)
- OPTIONAL CHANNELIZATION DEVICE
- PROTECTIVE VEHICLE (SEE NOTE 2)
- FLAGGER

NOTES:

1. AVOID PLACING LANE CLOSURE TAPERS WITHIN OR IMMEDIATELY FOLLOWING HORIZONTAL & VERTICAL CURVES BY ADJUSTING LONGITUDINAL BUFFER SPACE.
2. IF LONGITUDINAL BUFFER SPACE IS REDUCED FROM DISTANCES LISTED IN TABLE, UPGRADE PROTECTIVE VEHICLE TO A TRANSPORTABLE ATTENUATOR.
3. 36" TRAFFIC CONES, 42" TALL CHANNELIZATION DEVICES, OR TRAFFIC SAFETY DRUMS ARE ALSO ACCEPTABLE.
4. BICYCLISTS MAY BE COMBINED WITH ALTERNATING VEHICULAR TRAFFIC. BIKES TO CLEAR PRIOR TO FLAGGERS RELEASING ONCOMING TRAFFIC.
5. PEDESTRIANS SHALL CROSS AT FLAGGER STATIONS.
6. SEE STANDARD SPECIFICATIONS FOR ADDITIONAL REQUIREMENTS:
   1-07.8(1) HIGH-VISIBILITY APPAREL
   1-10.3(1)A FLAGGERS AND NIGHTTIME ILLUMINATION
   1-10.3(2)A TRAFFIC CONTROL PROCEDURES
   9-35.124-INCH STOP/SLOW PADDLE SIZE
7. FOR PROJECT-SPECIFIC REQUIREMENTS, SEE SPECIAL PROVISIONS.
8. SIGNS ARE BLACK ON ORANGE UNLESS OTHERWISE INDICATED.
9. ACTUAL CENTERLINE PAVEMENT MARKINGS MAY VARY.

ALTERNATING 1-LANE, 2-WAY TRAFFIC FLAGGER-CONTROLLED TEMPORARY SIGNAL INSTALLATION

NOT TO SCALE

S. 7. T. 23N. R. 2E. W.M.

SR 160 MP 2.29 SALMONBERRY CREEK

FILE NAME	c:\users\melissa.greenheck\pw_wsdot\d0202980\SR160MP2.29_Q_PS_TC_002.dgn				
TIME	3:57:33 PM				
DATE	4/7/2023				
PLOTTED BY	melissa.greenheck				
DESIGNED BY	M.GREENHECK				
ENTERED BY	M.GREENHECK				
CHECKED BY	H.BROWN				
PROJ. ENGR.	B. ELLIOTT				
REGIONAL ADM.	S. ROARK	REVISION	DATE	BY	

REGION NO.	STATE	FED.AID PROJ.NO.
10	WASH	ARPA001
JOB NUMBER 22C525		
CONTRACT NO. 009902		LOCATION NO. XL-6115

P.E. STAMP BOX — DATE

SCOTT A. SAWYER, STATE OF WASHINGTON, REGISTERED PROFESSIONAL ENGINEER

SEE SHEET CT01 — DATE — P.E. STAMP BOX

Washington State Department of Transportation

SCJ ALLIANCE CONSULTING SERVICES

SR 16 / SR 160 / KITSAP COUNTY
FISH PASSAGE BARRIERS
REMOVE FISH BARRIERS

SHORT TERM TRAFFIC CONTROL PLAN

PLAN REF NO TC02

SHEET 405 OF 409 SHEETS

pw:\\HQOLYMAPPPW03P.WSDOT.LOC:WSDOT\Documents_HQ\Fish Passage\ORproj\160\2.29_Salmonberry\Design_CADD_Sheets\SR160MP2.29_Q_PS_TC_002.dgn

PROTECTIVE VEHICLE ROLL AHEAD DISTANCE = R
NO SPECIFIED DISTANCE REQUIRED. STRATEGICALLY POSITION WORK VEHICLE TO PROTECT WORK CREW.

MAXIMUM CHANNELIZATION DEVICE SPACING (feet)		
MPH	TAPER	TANGENT
35-40	30	60
25-30	20	40

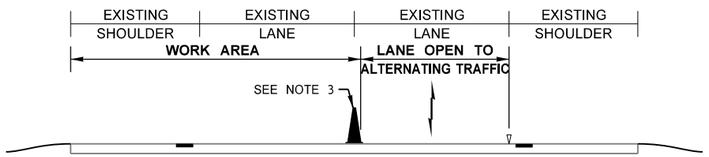

SECTION (A-A)

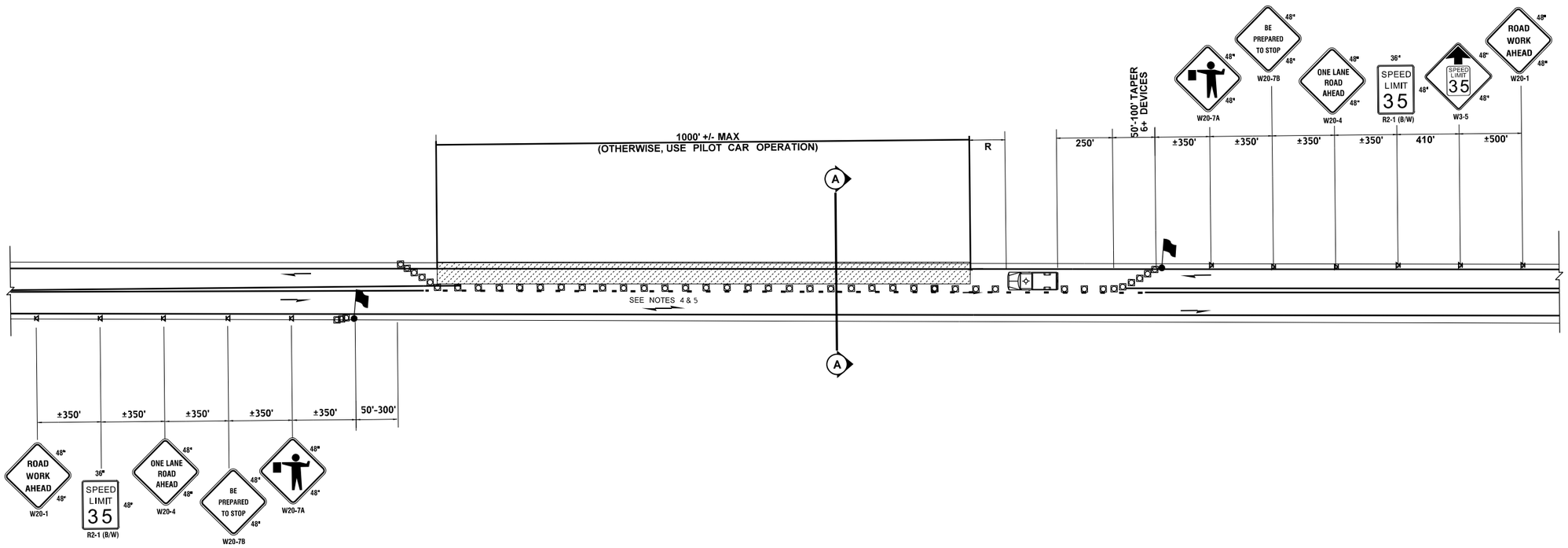

NOTES:

AVOID PLACING LANE CLOSURE TAPERS WITHIN OR IMMEDIATELY FOLLOWING HORIZONTAL & VERTICAL CURVES BY ADJUSTING LONGITUDINAL BUFFER SPACE.

IF LONGITUDINAL BUFFER SPACE IS REDUCED FROM DISTANCES LISTED IN TABLE, UPGRADE PROTECTIVE VEHICLE TO A TRANSPORTABLE ATTENUATOR.

36" TRAFFIC CONES, 42" TALL CHANNELIZATION DEVICES, OR TRAFFIC SAFETY DRUMS ARE ALSO ACCEPTABLE.

BICYCLISTS MAY BE COMBINED WITH ALTERNATING VEHICULAR TRAFFIC. BIKES TO CLEAR PRIOR TO FLAGGERS RELEASING ONCOMING TRAFFIC.

ACCOMMODATE PEDESTRIANS VIA SHUTTLE THROUGH LANE CLOSURE, USING THE PAVED SHOULDER OPPOSITE THE WORK AREA, OR ANOTHER METHOD THE ENGINEER ACCEPTS.

SEE STANDARD SPECIFICATIONS FOR ADDITIONAL REQUIREMENTS:
1-07.8(1) HIGH-VISIBILITY APPAREL
1-10.3(1)A FLAGGERS AND NIGHTTIME ILLUMINATION
1-10.3(2)A TRAFFIC CONTROL PROCEDURES
9-35.124-INCH STOP/SLOW PADDLE SIZE

7. FOR PROJECT-SPECIFIC REQUIREMENTS, SEE SPECIAL PROVISIONS.

8. SIGNS ARE BLACK ON ORANGE UNLESS OTHERWISE INDICATED.

9. ACTUAL CENTERLINE PAVEMENT MARKINGS MAY VARY.

10. COVER EXISTING 45 MPH SIGN EAST OF PHILLIPS RD INTERSECTION.

LEGEND:

- TEMPORARY SIGN LOCATION
- 28" REFLECTIVE TRAFFIC CONE (SEE NOTE 3)
- OPTIONAL CHANNELIZATION DEVICE
- PROTECTIVE VEHICLE (SEE NOTE 2)
- FLAGGER

ALTERNATING 1-LANE, 2-WAY TRAFFIC FLAGGER-CONTROLLED (35 MPH WORK ZONE SPEED LIMIT)

NOT TO SCALE

S. 7. T. 23N. R. 2E. W.M.

SR 160 MP 2.29 SALMONBERRY CREEK

FILE NAME	c:\users\mellssa.greenheck\pw_wsdot\d0202980\SR160MP2.29_Q_PS_TC_003.dgn				REGION NO. 10	STATE WASH	FED.AID PROJ.NO. ARPA001
TIME	3:57:36 PM						
DATE	4/7/2023						
PLOTTED BY	melissa.greenheck				JOB NUMBER 22C525		
DESIGNED BY	M.GREENHECK						
ENTERED BY	M.GREENHECK						
CHECKED BY	H.BROWN				CONTRACT NO. 009902		LOCATION NO. XL-6115
PROJ. ENGR.	B.ELLIOTT						
REGIONAL ADM.	S.ROARK	REVISION	DATE	BY			

P.E. STAMP BOX DATE

SCOTT A. SAWYER STATE OF WASHINGTON 38872 REGISTERED PROFESSIONAL ENGINEER

SEE SHEET CT01

P.E. STAMP BOX DATE

Washington State Department of Transportation

SCJ ALLIANCE CONSULTING SERVICES

SR 16 / SR 160 / KITSAP COUNTY
FISH PASSAGE BARRIERS
REMOVE FISH BARRIERS

SHORT TERM TRAFFIC CONTROL PLAN

PLAN REF NO TC03

SHEET 406 OF 409 SHEETS

pw:\\HQOLYMAPPPW03P.WSDOT.LOC:WSDOT\Documents_HQ\Fish Passage\ORproj\160\2.29_Salmonberry\Design_CAD_Sheets\SR160MP2.29_Q_PS_TC_003.dgn

PCMS		
1	2	3
15 MINUTE DELAYS POSSIBLE	XX/XX-XX DAILY 9AM-2PM	AT SR160 & BLACKBERRY HILL LN SE
1.5 SEC	1.5 SEC	1.5 SEC

DISPLAY AT LEAST 3 DAYS IN ADVANCE OF TRAFFIC HOLD

AND

PCMS	
1	2
15 MINUTE TRAFFIC HOLDS	BE PREPARED TO STOP
2.0 SEC	2.0 SEC

PCMS MAY BE TRUCK MOUNTED

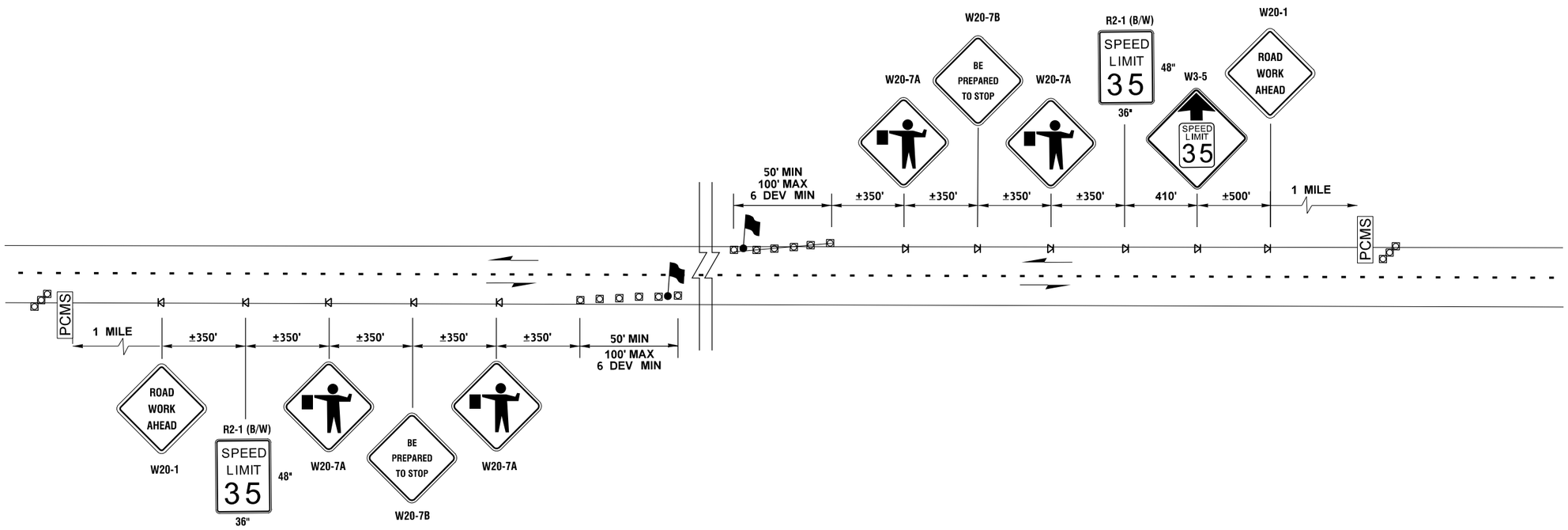

NOTES

1. SEE SPECIAL PROVISION "PUBLIC CONVENIENCE AND SAFETY - CONSTRUCTION UNDER TRAFFIC" FOR WORK HOUR RESTRICTIONS.
2. DURING TREE FALLING OPERATION, FLAGGERS SHALL BE PLACED AT ALL ACCESS POINTS TO CONTROL VEHICLES FROM ENTERING THE AREA.
3. AT NO TIME SHALL TRAFFIC ON ROADWAY BE STOPPED FOR LONGER THAN 15 MINUTES.
4. ALL SIGNS SHALL BE 48" X 48", UNLESS OTHERWISE SHOWN. ALL SIGNS SHALL BE BLACK ON ORANGE, UNLESS OTHERWISE SHOWN.
5. COVER EXISTING 45 MPH SIGN EAST OF PHILLIPS RD INTERSECTION.

LEGEND:

- TEMPORARY SIGN LOCATION
- 28" REFLECTIVE TRAFFIC CONE
- PCMS — PORTABLE CHANGEABLE MESSAGE SIGN
- FLAGGER

SHORT TERM TRAFFIC STOP FOR TREE FALLING OPERATION (35 MPH WORK ZONE SPEED LIMIT)

NOT TO SCALE

S. 7. T. 23N. R. 2E. W.M.

SR 160 MP 2.29 SALMONBERRY CREEK

FILE NAME	c:\users\melissa.greenheck\pw_wsdot\d0202980\SR160MP2.29_Q_PS_TC_004.dgn
TIME	3:57:41 PM
DATE	4/7/2023
PLOTTED BY	melissa.greenheck
DESIGNED BY	M. GREENHECK
ENTERED BY	M. GREENHECK
CHECKED BY	H. BROWN
PROJ. ENGR.	B. ELLIOTT
REGIONAL ADM.	S. ROARK

REVISION | DATE | BY

REGION NO.	STATE	FED.AID PROJ.NO.
10	WASH	ARPA001
JOB NUMBER 22C525		
CONTRACT NO. 009902		LOCATION NO. XL-6115

P.E. STAMP BOX — DATE

SCOTT A. SAWYER, STATE OF WASHINGTON, 38872, REGISTERED PROFESSIONAL ENGINEER

SEE SHEET CT01 — DATE

P.E. STAMP BOX

Washington State Department of Transportation

SCJ ALLIANCE CONSULTING SERVICES

SR 16 / SR 160 / KITSAP COUNTY
FISH PASSAGE BARRIERS
REMOVE FISH BARRIERS

SHORT TERM TRAFFIC CONTROL PLAN

PLAN REF NO TC04

SHEET 407 OF 409 SHEETS

pw:\\HQOLYMAPPPW03P.WSDOT.LOC:WSDOT\Documents_HQ\Fish Passage\ORproj\160\2.29_Salmonberry\Design_CAD_Sheets\SR160MP2.29_Q_PS_TC_004.dgn

NOTES:

1. ALL SIGNS MUST BE POST MOUNTED. TEMPORARY SIGN POSTS MAY BE WOOD. SEE STANDARD PLAN G-22.10-04. SEE WSDOT STANDARD SPECIFICATIONS M41-10, SECTION 9-35.3 FOR POST SIZING.
2. DETOUR ROUTE SIGN PLACEMENT SHALL NOT BLOCK THE VIEW OF OTHER ROADWAY SIGNING.
3. ALL DETOUR SIGNS MUST BE IN PLACE BEFORE THE DETOUR IS OPENED TO TRAFFIC. IF DETOUR SIGNS ARE IN PLACE BUT THE DETOUR IS NOT OPEN YET, THE SIGNS NEED TO BE COVERED.
4. SEE TP01, TP02 IN CONJUNCTION WITH THIS PLAN.
5. BARRICADE SHALL BE PLACED ON THE RIGHT SHOULDER, LEAVE MINIMUM 10' LANE WIDTH.
6. RELOCATE RSDS AS WORK AREA MOVES DOWNSTREAM. ENGINEER MAY ORDER ADDITIONAL RSDS (WITH R2-1) PRIOR TO EACH WORK CREW WITHIN WORK AREA.
7. REPLACE EXISTING YELLOW OVERHEAD FLASHING BEACON DISPLAYS WITH RED DISPLAYS. MATCH EXISTING DIAMETER. CONTRACTOR SHALL PROVIDE ALL REQUIRED MODIFICATIONS TO COMPLETE FOUR-WAY RED FLASHING OPERATIONS.

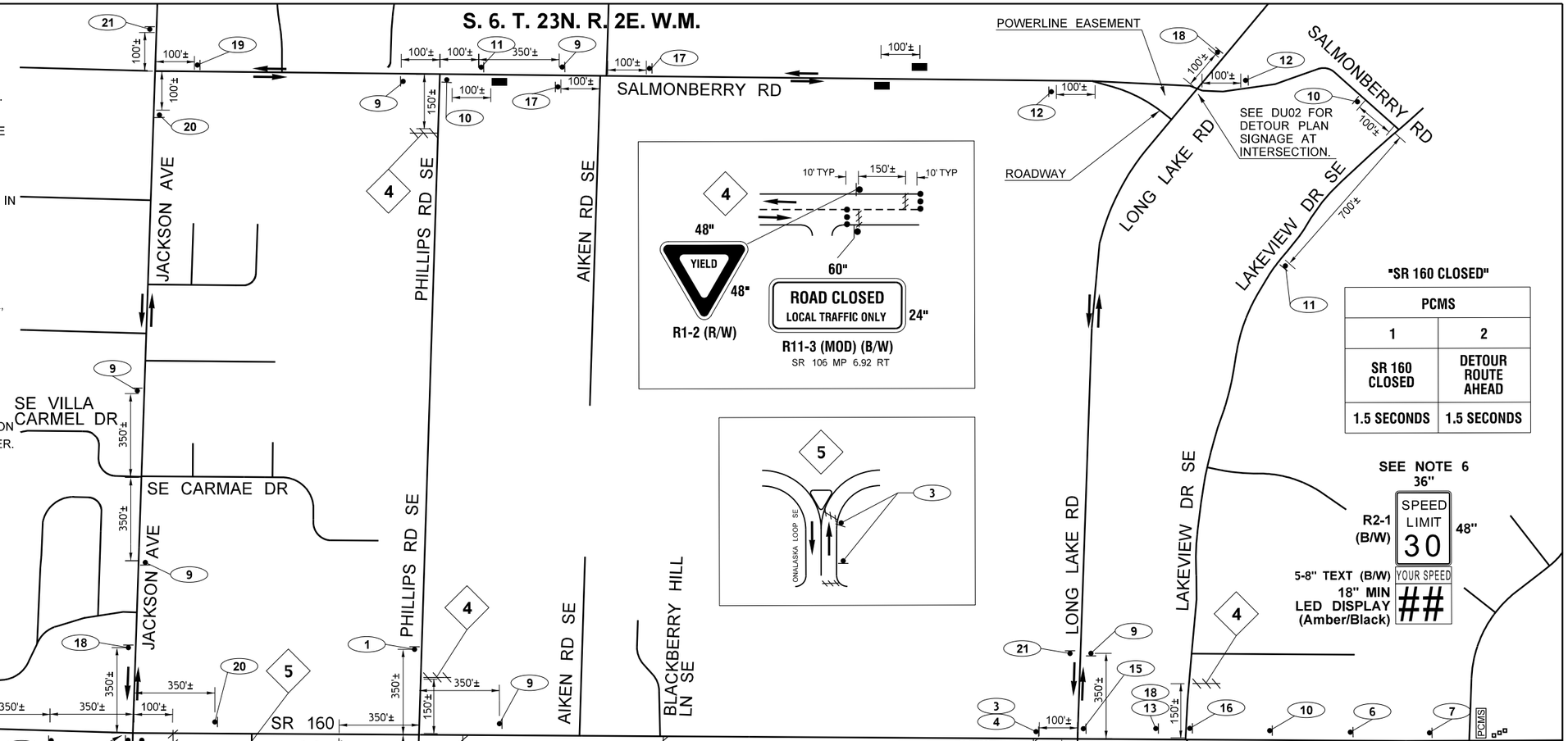

FILE NAME	c:\users\mellssa.greenheck\pw_wsdot\d0202980\SR160MP2.29_Q_PS_DU_001.dgn
TIME	3:57:44 PM
DATE	4/7/2023
PLOTTED BY	melissa.greenheck
DESIGNED BY	S.BABAEI
ENTERED BY	S.DUNN
CHECKED BY	S.BABAEI
PROJ. ENGR.	B. ELLIOTT
REGIONAL ADM.	S. ROARK

REVISION | DATE | BY

REGION NO.	STATE	FED.AID PROJ.NO.
10	WASH	ARPA001
JOB NUMBER 22C525		
CONTRACT NO. 009902		LOCATION NO. XL-6115

P.E. STAMP BOX — DATE

SCOTT A. SANTEE, STATE OF WASHINGTON, 35874, REGISTERED PROFESSIONAL ENGINEER — SEE SHEET CT01 — DATE — P.E. STAMP BOX

Washington State Department of Transportation

SCJ ALLIANCE CONSULTING SERVICES

SR 160 MP 2.29 SALMONBERRY CREEK

SR 16 / SR 160 / KITSAP COUNTY FISH PASSAGE BARRIERS REMOVE FISH BARRIERS

DETOUR PLAN

PLAN REF NO DU01

SHEET 408 OF 409 SHEETS

pw:\\HQOLY\MAPPPW03P.WSDOT.LOC:WSDOT\Documents_HQ\Fish Passage\ORproj\160L2.29_Salmonberry\Design_CAD_Sheets\SR160MP2.29_Q_PS_DU_001.dgn

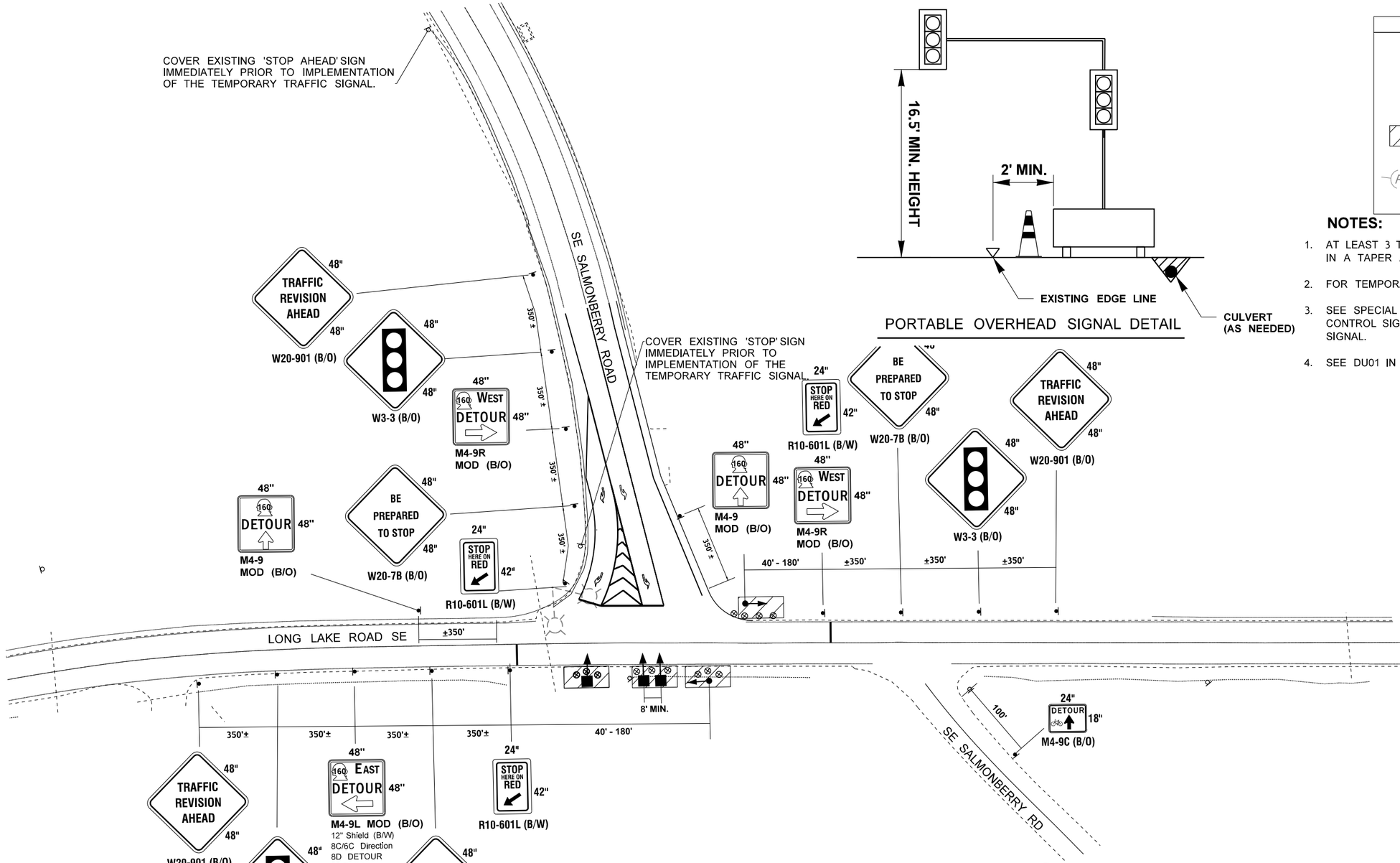

PORTABLE OVERHEAD SIGNAL DETAIL

LEGEND

- SIGN LOCATION - CLASS A POST MOUNT
- TRAFFIC SAFETY DRUM
- PORTABLE SIGNAL (OVERHEAD)
- PORTABLE SIGNAL (GROUND MOUNT)
- TEMPORARY SIGNAL LANDING
- PAINTED STOP LINE 24"
- EXISTING TIMBER POLE WITH LUMINAIRE
- EXISTING SIGN

NOTES:

1. AT LEAST 3 TRAFFIC SAFETY DRUMS SHALL BE INSTALLED IN A TAPER AHEAD OF THE TEMPORARY TRAFFIC SIGNAL.
2. FOR TEMPORARY PAVEMENT MARKINGS SEE SHEET TP01.
3. SEE SPECIAL PROVISION: "PORTABLE TEMPORARY TRAFFIC CONTROL SIGNAL" FOR PORTABLE TEMPORARY TRAFFIC CONTROL SIGNAL.
4. SEE DU01 IN CONJUNCTION WITH THIS PLAN.

TEMPORARY SIGNAL CONFIGURATION AND ADVANCE SIGN PLAN SE SALMONBERRY RD & LONG LAKE ROAD SE

NOT TO SCALE

S. 7. T. 23N. R. 2E. W.M.

SR 160 MP 2.29 SALMONBERRY CREEK

FILE NAME	c:\users\danyal.ali\pw_wsdot\d0202980\SR160MP2.29_Q_PS_DU_002.dgn
TIME	8:14:22 AM
DATE	4/18/2023
PLOTTED BY	danyal.ali
DESIGNED BY	M.GREENHECK
ENTERED BY	M.GREENHECK
CHECKED BY	H. BROWN
PROJ. ENGR.	B. ELLIOTT
REGIONAL ADM.	S. ROARK

REVISION | DATE | BY

REGION NO.	STATE	FED.AID PROJ.NO.
10	WASH	ARPA001
JOB NUMBER 22C525		
CONTRACT NO. 009902		LOCATION NO. XL-6115

P.E. STAMP BOX — DATE

SCOTT A. SANTEE, STATE OF WASHINGTON, 36872, REGISTERED PROFESSIONAL ENGINEER

SEE SHEET CT01 — DATE — P.E. STAMP BOX

Washington State Department of Transportation

SCJ ALLIANCE CONSULTING SERVICES

SR 16 / SR 160 / KITSAP COUNTY
FISH PASSAGE BARRIERS
REMOVE FISH BARRIERS

DETOUR PLAN

PLAN REF NO DU02

SHEET 409 OF 409 SHEETS

pw:\\HQOLYMAPPPW03P.WSDOT.LOC:WSDOT\Documents_HQ\Fish Passage\ORproj\160\2.29_Salmonberry\Design_CAD_Sheets\SR160MP2.29_Q_PS_DU_002.dgn