INDEX

SHEET NO.	PLAN REFERENCE NO.	TITLE
		VOLUME 4
450	15	VOLUME 4 INDEX
451-474	1-23	BRIDGE 167/121 E&W
475-495	1-20	BRIDGE 167/122
496-526	1-30	BRIDGE 167/123
527-546	1-18	BRIDGE 167/124
547	19	PROTECTIVE SCREENING BR. NO.'S 167/121, 167/122, 167/123, 167/124
548-575	1-28	UPRR O'XING BRIDGE NO. 167/125 E&W
576-595	1-20	4TH ST. O'XING BRIDGE NO. 167/126
596-625	1-30	BNRR O'XING BRIDGE NO. 167/127
626-644	1-19	84TH AVE. O'XING BRIDGE NO. 167/128
645-657	1-13	SIGN BRACKET DETAILS BRIDGE NO.'S 167/116, 167/117, 167/119
658-659	14&15	MEDIAN BARRIER FOUNDATION DETAILS
660	16	CANTILEVER SIGN FOUNDATION DETAILS
661-663	1-3	NOISE WALL DETAILS

INDEX (CONTINUED)

SHEET NO.	PLAN REFERENCE NO.	TITLE

PLAN REFERENCE NO.
SHEET OF SHEETS

NOTE: ALL SHEET REFERENCES, FIRST NOS. OF STRUCTURE CODE DESIGNATIONS AND MATCH LINE SHEET REFERENCES, ETC., THROUGHOUT THE PLANS, REFER TO THE ENTRY IN THE PLAN REFERENCE NUMBER BOX.

	DATE	DATE	REVISION	BY
DESIGNED BY				
ENTERED BY				
CHECKED BY				
PROJ. ENGR.				
REGIONAL ADM.				

REGION NO. 10 | STATE WASH | FED.AID PROJ.NO.
JOB NUMBER 95W036
CONTRACT NO.

ENVIRONMENTAL AND ENGINEERING SERVICE CENTER

Washington State Department of Transportation

SR 167
15TH NW TO 84TH AVE SO.
HOV AND SC&DI - STAGE 2

VOLUME 4 INDEX

I5

SHEET 450 OF 663 SHEETS

C:\USERS\HCK\W95036\REV036.DGN
$$USERNAME$$

POINT OF MIN.VERT.CLEARANCE.
℄ LINE STA.771+36 (56' RT)

PLOTTED: 03AUG95 13:16:18 (08:00:21, 1)

BRIDGE WIDENING WITH APPROACH FILLS
REINFORCED CONCRETE BOX ±54" DEEP W586 P.C. GIRDER
"A" DIMENSION - NOT PRELIMINARY NOT FOR DESIGN
DECK PROTECTIVE SYSTEM (EPOXY COATED REBAR)

SR167/121 JOB NO. 7011 SHEET 1

SEC.25,T.22 N.,R.4 E.,W.M.

CITY OF KENT

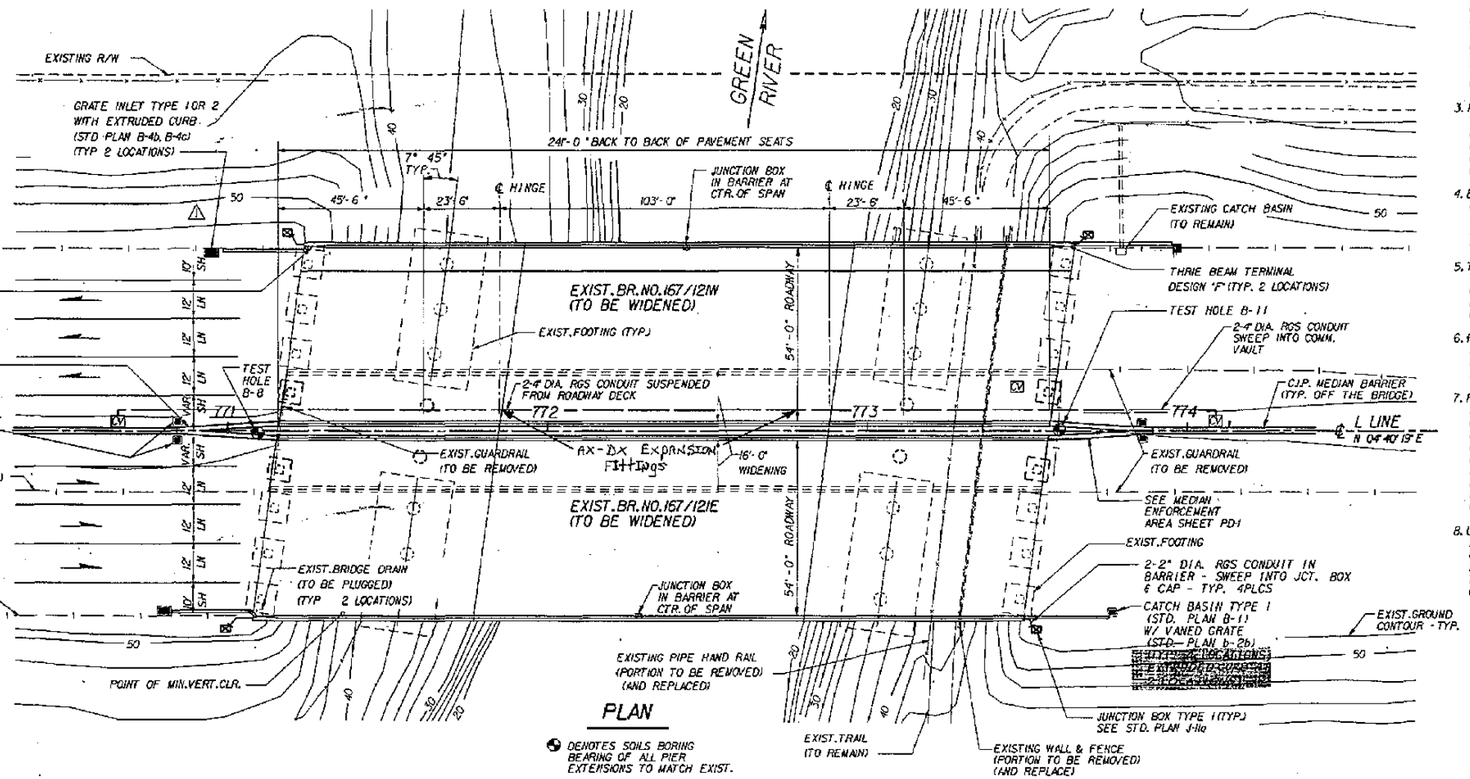

PLAN

DENOTES SOILS BORING BEARING OF ALL PIER EXTENSIONS TO MATCH EXIST.

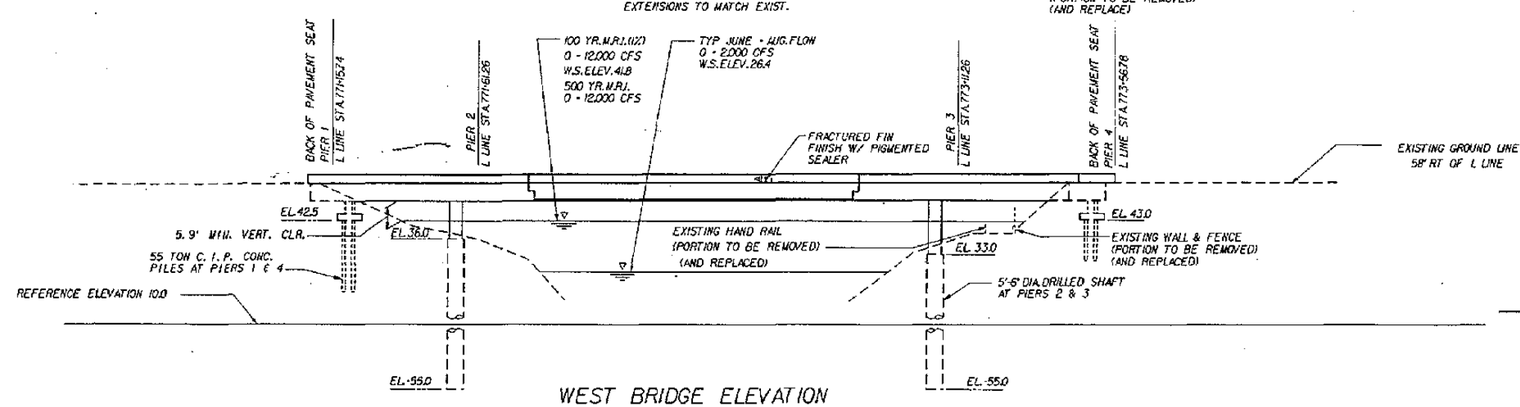

WEST BRIDGE ELEVATION

EAST BRIDGE - SIMILAR

DATUM
NAT'L GEOD. VERT. ADJ. DATUM OF 1978

GENERAL NOTES

1. ALL MATERIAL AND WORKMANSHIP SHALL BE IN ACCORDANCE WITH THE REQUIREMENTS OF THE STATE OF WASHINGTON, DEPARTMENT OF TRANSPORTATION'S "STANDARD SPECIFICATIONS FOR ROAD, BRIDGE AND MUNICIPAL CONSTRUCTION", DATED 1994, AND AMENDMENTS.
2. THE WIDENED PORTION OF THIS STRUCTURE HAS BEEN DESIGNED IN ACCORDANCE WITH THE REQUIREMENTS OF SERVICE LOAD, 1992 AASHTO DESIGN SPECIFICATIONS WITH INTERIM SPECIFICATIONS THROUGH 1993. ALL PRESTRESSED CONCRETE ELEMENTS HAVE BEEN DESIGNED FOR SERVICE LOAD STRESSES AND CHECKED FOR THE REQUIREMENTS OF LOAD FACTOR DESIGN. SEISMIC DESIGN FOR THIS STRUCTURE HAS BEEN DONE USING AN ACCELERATION COEFFICIENT OF 0.25 AND SOIL PROFILE TYPE II.
3. FOOTING ELEVATIONS AND SUBSTRUCTURE DETAILS ARE SUBJECT TO CHANGE DEPENDING UPON FOUNDATION MATERIAL ENCOUNTERED. REINFORCING STEEL FOR THE SUBSTRUCTURE SHALL NOT BE CUT UNTIL FINAL FOOTING ELEVATIONS HAVE BEEN DETERMINED IN THE FIELD AND SUBSTRUCTURE DETAILS HAVE BEEN MODIFIED AS REQUIRED.
4. ELEVATIONS SHOWN ON THE PLANS ARE BASED ON RECORD INFORMATION OF ORIGINAL CONSTRUCTION TOGETHER WITH FIELD SURVEY DATA. THE NEW STRUCTURE IS INTENDED TO MATCH THE EXISTING STRUCTURE. THEREFORE, ELEVATIONS GIVEN ON THE PLANS SHALL BE VERIFIED IN THE FIELD BY THE CONTRACTOR FOR COMPATIBILITY.
5. THE CONCRETE IN THE SHAFTS SHALL BE CLASS 4000M. THE THE CONCRETE IN PIERS 1 & 4 SHALL BE CLASS 4000. THE CONCRETE IN THE PILES SHALL BE CLASS 4000P. THE CONCRETE IN THE CLOSURE POURS SHALL BE CLASS 5000 LS. ALL OTHER CAST-IN-PLACE CONCRETE SHALL BE CLASS 5000.
6. PILES SHALL BE DRIVEN TO A LOAD BEARING CAPACITY OF 55 TONS AT PIERS 1 & 4. SEE SPECIAL PROVISIONS FOR MINIMUM PILE TIP ELEVATIONS. THE MAXIMUM ULTIMATE LOAD FOR PIERS 2 & 3 SHAFTS IS 705 TONS EACH.
7. FALSEWORK SHALL NOT BE RELEASED UNTIL ALL CONCRETE BEING SUPPORTED HAS MET THE AGE AND STRENGTH REQUIREMENTS OF THE STANDARD SPECIFICATIONS. FALSEWORK SHALL BE CAREFULLY RELEASED TO PREVENT IMPACT OR UNDUE STRESS IN THE STRUCTURE. FALSEWORK SUPPORTING THE CROSS BEAMS AT ALL PIERS SHALL NOT BE RELEASED UNTIL CROSS BEAM CLOSURE POURS HAVE BEEN MADE AND CURED. FALSEWORK SHALL BE RELEASED BEFORE PLACING PRESTRESSED CONCRETE GIRDERS IN THE SUSPENDED SPAN. BARRIERS FOR ALL SPANS SHALL NOT BE PLACED UNTIL ALL CONCRETE IN THE SUSPENDED SPAN HAS BEEN POURED & CURED.
8. UNLESS OTHERWISE SHOWN ON THE PLANS, THE CONCRETE COVER MEASURED FROM THE FACE OF THE CONCRETE TO THE FACE OF ANY REINFORCING BAR SHALL BE 2½ INCHES AT THE TOP OF THE ROADWAY SLAB, ONE INCH AT THE BOTTOM OF THE ROADWAY SLAB, 7½ INCHES AT THE BOTTOM OF FOOTINGS AND ½ INCHES AT ALL OTHER LOCATIONS UNLESS OTHERWISE SHOWN ON THE PLANS.

FOR "AS CONSTRUCTED PLANS" ONLY

REINFORCED CONCRETE BOX
P.C. GIRDERS (W58G)
LOADING: HS-25
OR
TWO 24K AXLES 4' C'TRS.

Bridge Design Engr.					REGION NO.	STATE	FED. AID PROJ. NO.	SHEET NO.	TOTAL SHEETS
Supervisor					10	WASH			
Designed By D. S. OPPENHEIM 4/94					JOB NUMBER				
Checked By C. A. ARNOLD 4/94					95W036				
Detailed By D. S. OPPENHEIM 4/94									
Bridge Projects Engr.									
Prelim Plan By									
Architect/Specialist	DATE	REVISION	BY	APP'D	4771				

CECIL A. ARNOLD, STATE OF WASHINGTON, 13990, REGISTERED PROFESSIONAL ENGINEER
EXPIRES 4/14/97

Washington State Department of Transportation

ANDERSEN BJORNSTAD KANE JACOBS • INC
CONSULTING ENGINEERS

SR 167
15TH NW TO 84TH AVE. SO.
HOV AND SC&DI - STAGE 2
BRIDGE 167/121-E & W

LAYOUT

BRIDGE SHEET NO. 1

SHEET 451 OF 663 SHEETS

SR 167/91

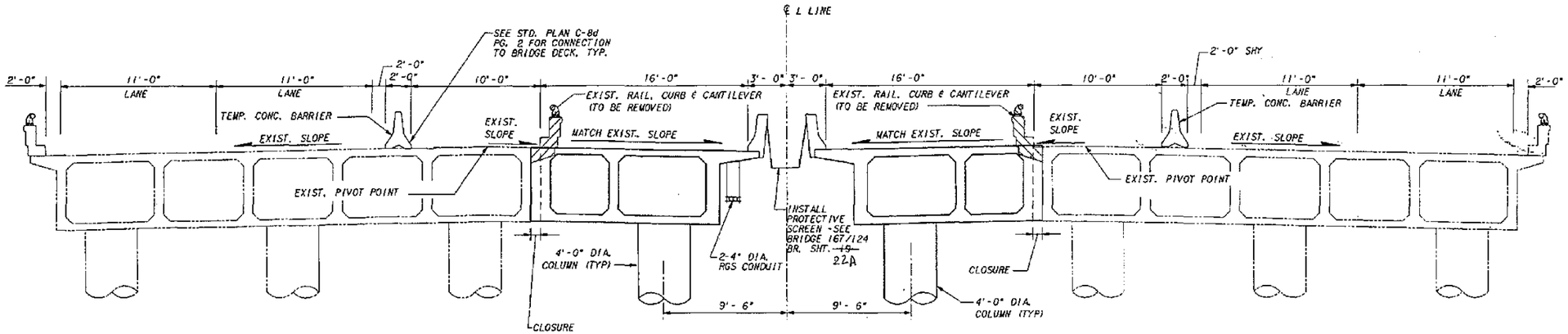

TYPICAL SECTION STAGE 1

SHOWN NEAR INTERMEDIATE PIERS
ALL DIMENSIONS SHOWN ARE NORMAL TO L-LINE

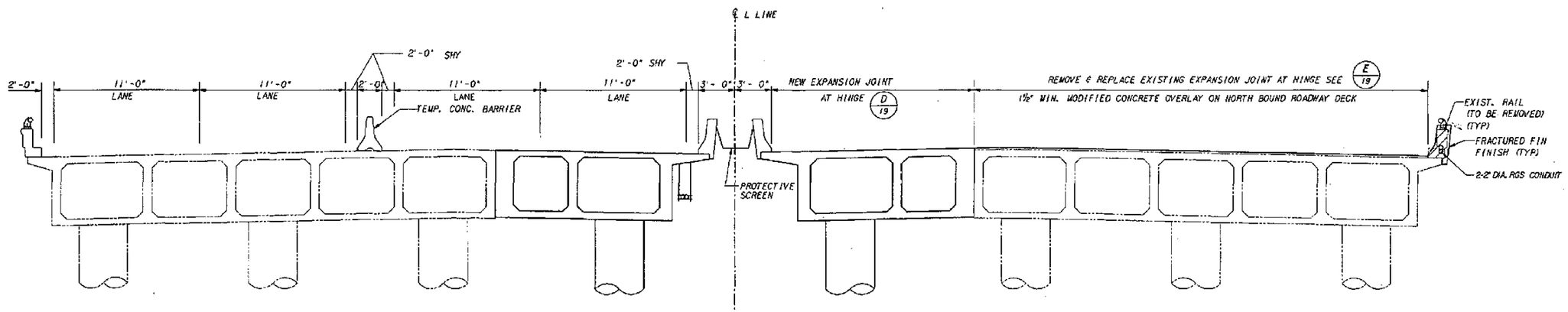

TYPICAL SECTION STAGE 2

SHOWN NEAR INTERMEDIATE PIERS

FOR "AS CONSTRUCTED PLANS" ONLY

Engr.					REGION NO.	STATE	FED. AID PROJ. NO.	SHEET NO.	TOTAL SHEETS
D. S. OPPENHEIM 4/94					10	WASH			
A. ARNOLD 4/94					JOB NUMBER				
S. OPPENHEIM 4/94					95W036				
	DATE	REVISION	BY	APP'D	4771				

CECIL A. ARNOLD, STATE OF WASHINGTON, REGISTERED PROFESSIONAL ENGINEER, 1953
EXPIRES 4/14/95

Washington State Department of Transportation

ANDERSEN BJORNSTAD KANE JACOBS • INC
CONSULTING ENGINEERS

SR 167
15TH NW TO 84TH AVE. SO.
HOV AND SC&DI - STAGE 2
BRIDGE 167/121 E & W

CONST. SEQUENCE SPANS 1 & 3

BRIDGE SHEET NO. 2
SHEET 452 OF 663 SHEETS

SR 167/91

PLOTTED: 03AUG95 13:09:18 (01:50:15.00)

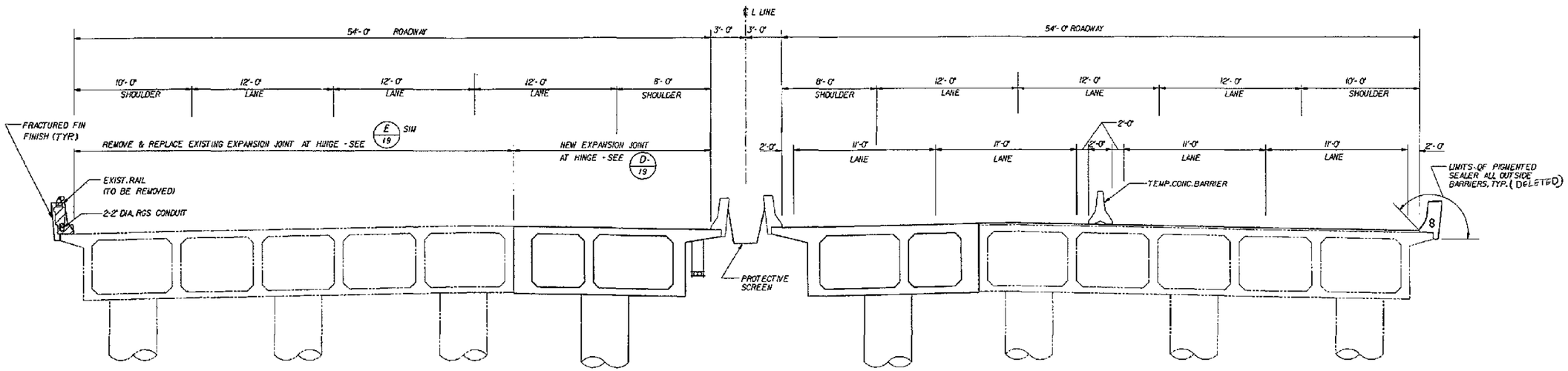

TYPICAL SECTION STAGE 3

SHOWN NEAR INTERMEDIATE PIERS

STATION	ELEVATION LEFT CURB LINE	ELEVATION RIGHT CURB LINE	STATION	ELEVATION LEFT CURB LINE	ELEVATION RIGHT CURB LINE	STATION	ELEVATION LEFT CURB LINE	ELEVATION RIGHT CURB LINE
771+18.42	—	53.55	771+98.42	—	54.02	772+88.21	53.59	—
771+23.53	52.99	—	772+08.21	53.44	—	772+88.42	—	54.08
771+28.21	52.98	—	772+08.42	—	54.06	772+98.21	53.55	—
771+28.42	—	53.58	772+18.21	53.51	—	772+98.42	—	54.05
771+38.21	53.05	—	772+18.41	—	54.10	773+08.21	53.51	—
771+38.42	—	53.56	772+28.21	53.58	—	773+08.42	—	54.04
771+48.21	53.09	—	772+28.42	—	54.11	773+18.21	53.49	—
771+48.42	—	53.69	772+38.21	53.58	—	773+18.42	—	54.04
771+58.21	53.11	—	772+38.42	—	54.10*	773+28.21	53.45	—
771+58.42	—	53.75	772+48.21	53.59	—	773+28.42	—	53.97
771+68.21	53.22	—	772+48.42	—	54.12	773+38.21	53.40	—
771+68.42	—	53.80	772+58.21	53.62	—	773+38.42	—	53.94
771+78.21	53.28	—	772+58.42	—	54.14	773+48.21	53.36	—
771+78.42	—	53.86	772+68.21	53.63	—	773+48.42	—	53.93
771+88.21	53.33	—	772+68.42	—	54.15	773+58.21	53.35	—
771+88.42	—	53.93	772+78.21	53.60	—	773+59.39	—	53.91
771+98.21	53.39	—	772+78.42	—	54.09	773+64.57	53.33	—

SR 167 SOUTH BOUND
EXISTING ELEVATIONS

BRIDGE NO. 167/121 W

STATION	ELEVATION LEFT CURB LINE	ELEVATION RIGHT CURB LINE	STATION	ELEVATION LEFT CURB LINE	ELEVATION RIGHT CURB LINE	STATION	ELEVATION LEFT CURB LINE	ELEVATION RIGHT CURB LINE
771+07.99	—	52.94	771+87.99	—	53.31	772+77.84	54.08	—
771+13.16	53.53	—	771+97.84	53.88	—	772+77.99	—	53.50
771+17.84	53.37	—	771+97.99	—	53.35	772+87.84	54.08	—
771+17.99	—	53.00	772+07.84	53.94	—	772+87.99	—	53.48
771+27.84	53.56	—	772+07.99	—	53.42	772+97.84	54.06	—
771+27.99	—	53.04	772+17.84	53.96	—	772+97.99	—	53.45
771+37.84	53.62	—	772+17.99	—	53.44	773+07.84	54.05	—
771+37.99	—	53.09	772+27.84	54.00	—	773+07.99	—	53.45
771+47.84	53.67	—	772+27.99	—	53.45	773+17.84	54.01	—
771+47.99	—	53.13	772+37.84	54.01	—	773+17.99	—	53.41
771+57.84	53.72	—	772+37.99	—	53.47	773+27.84	53.99	—
771+57.99	—	53.17	772+47.84	54.03	—	773+27.99	—	53.37
771+67.84	53.74	—	772+47.99	—	53.5	773+37.84	53.96	—
771+67.99	—	53.21	772+57.84	54.08	—	773+37.99	—	53.35
771+77.84	53.80	—	772+57.99	—	53.51	773+47.84	53.94	—
771+77.99	—	53.27	772+67.84	54.09	—	773+47.99	—	53.32
771+87.84	53.83	—	772+67.99	—	53.48	773+54.26	53.90	—
						773+49.10	—	53.32

SR 167 NORTH BOUND
EXISTING ELEVATIONS

BRIDGE NO. 167/121 E

FOR "AS CONSTRUCTED PLANS" ONLY

Bridge Design Engr.					REGION NO.	STATE	FED. AID PROJ. NO.	SHEET NO. / TOTAL SHEETS
Supervisor					10	WASH		
Designed By D.S. OPPENHEIM 4/94					JOB NUMBER			
Checked By C.A. ARNOLD 4/94					95W036			
Quantities By D.S. OPPENHEIM 4/94					4771			
Project Engr.								
Plan By								
Detail/Specialist	DATE	REVISION	BY	APP'D				

JOB NO. 70N SHEET 3

CECIL A. ARNOLD STATE OF WASHINGTON 7358 REGISTERED PROFESSIONAL ENGINEER
EXPIRES 4/14/97

Washington State Department of Transportation

ANDERSEN BJORNSTAD KANE JACOBS • INC CONSULTING ENGINEERS

SR 167
15TH NW TO 84TH AVE. SO.
HOV AND SC&DI - STAGE 2
BRIDGE 167/121 E & W

CONST. SEQUENCE SPANS 1 & 3 & EXIST. ELEVATIONS

BRIDGE SHEET NO. 3

SHEET 453 OF 663 SHEETS

SR 167/91

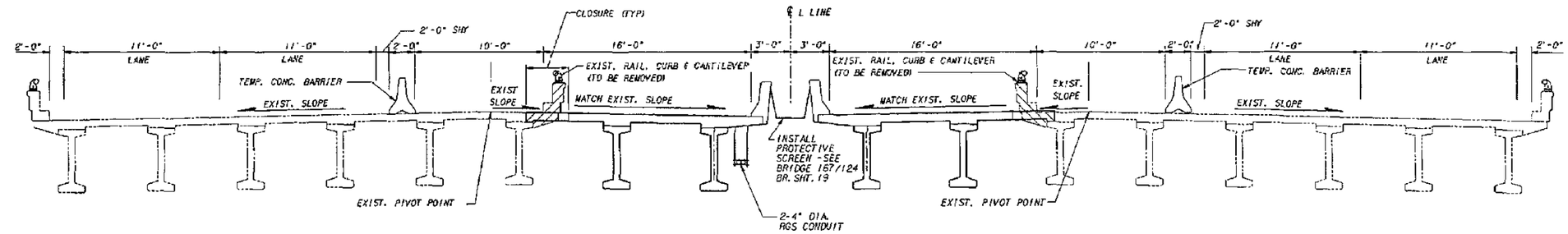

TYPICAL SECTION STAGE 1

SHOWN NEAR MID SPAN OF SPAN 2

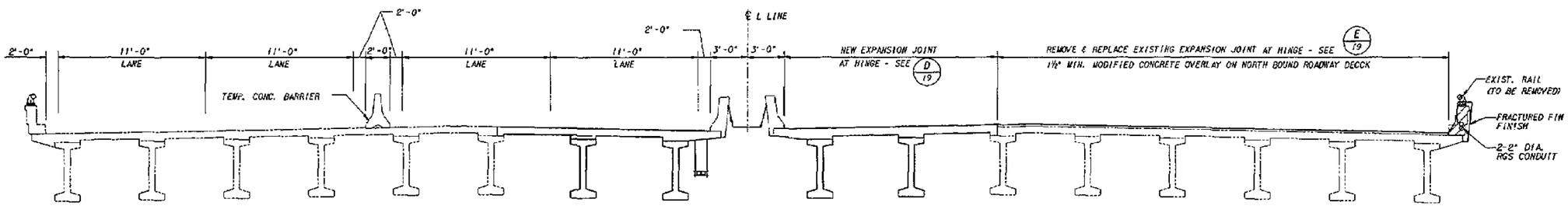

TYPICAL SECTION STAGE 2

SHOWN NEAR MID SPAN OF SPAN 2

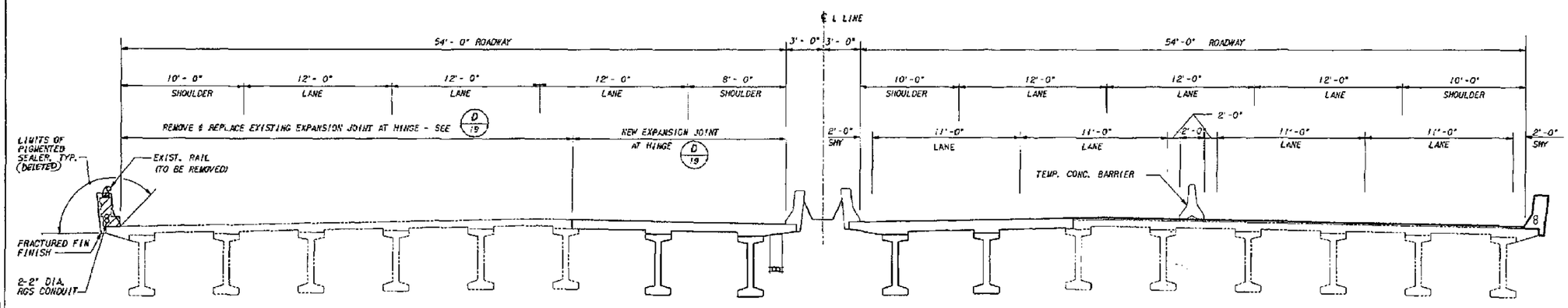

TYPICAL SECTION STAGE 3

SHOWN NEAR MID SPAN OF SPAN 2

FOR "AS CONSTRUCTED PLANS" ONLY

Bridge Design Engr.					REGION NO.	STATE	FED. AID PROJ. NO.	SHEET NO.	TOTAL SHEETS	
Supervisor					10	WASH				
Designed By D. S. OPPENHEIM 4/94					JOB NUMBER					
Checked By C. A. ARNOLD 4/94					95W036					
Detailed By D. S. OPPENHEIM 4/94					4771					
Bridge Projects Engr.										
Prelim Plan By										
Architect/Specialist	DATE	REVISION	BY	APP'D						

CECIL A. ARNOLD, STATE OF WASHINGTON, 1959, REGISTERED PROFESSIONAL ENGINEER
EXPIRES 4/14/97

Washington State Department of Transportation

ANDERSEN BJORNSTAD KANE JACOBS • INC
CONSULTING ENGINEERS

SR 167
15TH NW TO 84TH AVE. SO.
HOV AND SC&DI - STAGE 2
BRIDGE 167/121 E & W

CONST. SEQUENCE SPAN 2

BRIDGE SHEET NO. 4
SHEET 454 OF 663 SHEETS

SR167/91

SR167/121 JOB NO. 7011 SHEET 4

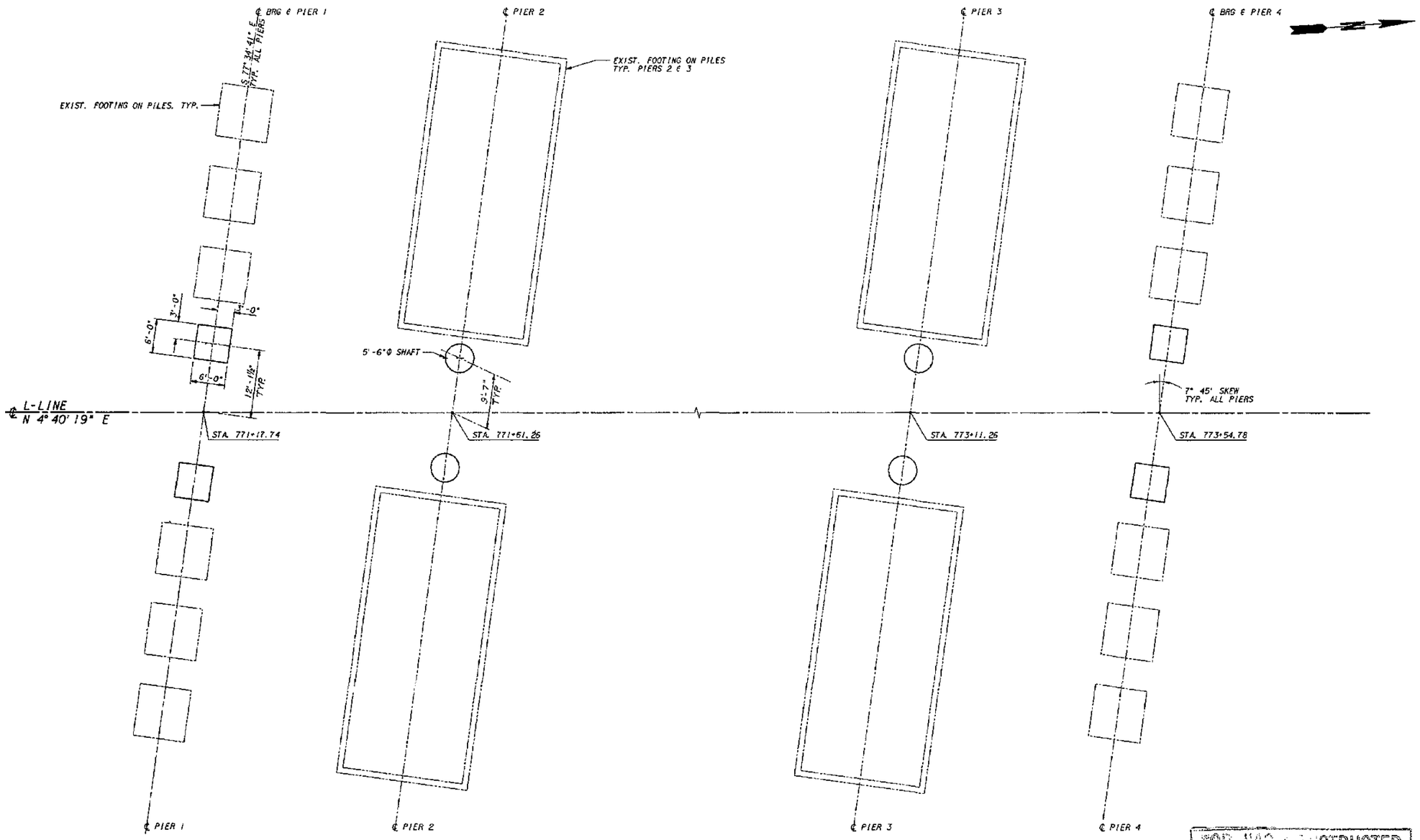

FOOTING LAYOUT

FOR "AS CONSTRUCTED PLANS" ONLY

Bridge Design Engr.					REGION NO.	STATE	FED. AID PROJ. NO.	SHEET NO.	TOTAL SHEETS	
Supervisor					10	WASH				
Designed By E.W. THOMAS 4/94					JOB NUMBER					
Checked By C.A. ARNOLD 4/94					95W036					
Detailed By E.W. THOMAS 4/94					4771					
Bridge Projects Engr.										
Preliminary Plan By										
Architect/Specialist	DATE	REVISION	BY	APP'D						

CECIL A. ARNOLD STATE OF WASHINGTON 13958 REGISTERED PROFESSIONAL ENGINEER
EXPIRES 4/14/77

Washington State Department of Transportation

ABKJ ANDERSEN BJORNSTAD KANE JACOBS • NO CONSULTING ENGINEERS

SR 167
15TH NW TO 84TH AVE. SO.
HOV AND SC&DI - STAGE 2
BRIDGE 167/121 E & W

FOOTING LAYOUT

BRIDGE SHEET NO. 5

SHEET 455 OF 663 SHEETS

SR167/121 JOB NO. 70N SHEET 5

PLOTTED: 03/08/95 13:09:18 OPENL..DGN

SR 167/91

STEP 1 - FORM & CAST CONCRETE BOX-GIRDER.

STEP 2 - 1. RELEASE FALSEWORK UNDER SPANS. FALSEWORK UNDER PIERS REMAINS.
2. PLACE BOX-GIRDER CLOSURE.

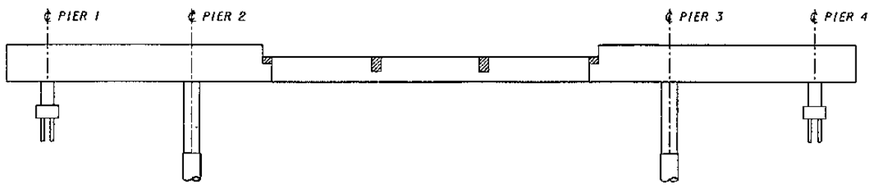

STEP 3 - 1. RELEASE FALSEWORK UNDER PIERS
2. ERECT PRESTRESSED GIRDERS WHEN BOX-GIRDER CONCRETE HAS REACHED ITS 28 DAY STRENGTH.
3. CAST END DIAPHRAGMS, AND INTERMEDIATE DIAPHRAGMS TO CLOSURE.

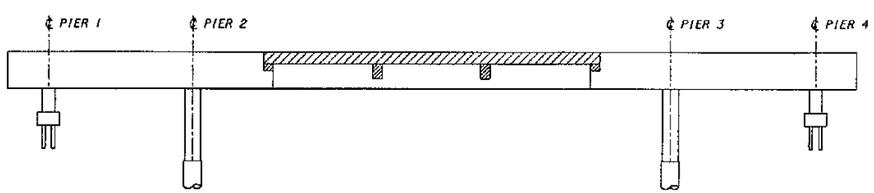

STEP 4 - FORM & PLACE ROADWAY DECK AND INTERMEDIATE DIAPHRAGM CLOSURES.

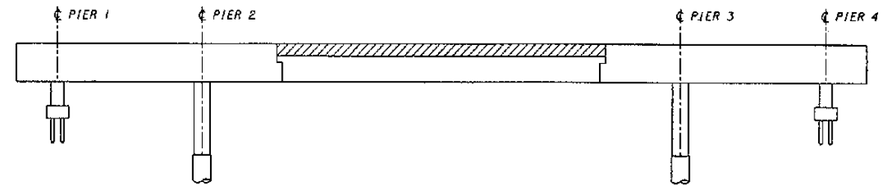

STEP 5 - PLACE ROADAY CLOSURE.

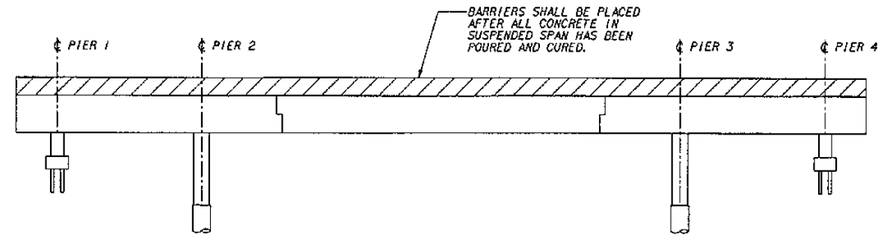

STEP 6 - PLACE 1½" MODIFIED CONCRETE OVERLAY ON EXISTING EAST STRUCTURE. CONSTRUCT BARRIERS.

NOTE:

1. WORK THIS SHEET WITH THE STAGING REQUIREMENTS SHOWN ON BRIDGE SHEETS 2-4.

FOR "AS CONSTRUCTED PLANS" ONLY

SUPERSTRUCTURE CONSTRUCTION SEQUENCE

SCALE: H = 1"=20'
V = 1"=30'

Bridge Design Engr.					REGION NO.	STATE	FED. AID PROJ. NO.	SHEET NO.	TOTAL SHEETS
Supervisor					10	WASH			
Designed By Y. POLYAKOV 4/94					JOB NUMBER				
Checked By J. J. MORRIS 4/94					95W036				
Detailed By Y. POLYAKOV 4/94									
Bridge Projects Engr.									
Prelim Plan By									
Architect/Specialist	DATE	REVISION	BY	APP'D	4771				

STATE OF WASHINGTON CECIL A. ARNOLD 13958 REGISTERED PROFESSIONAL ENGINEER
EXPIRES 4/14/97

Washington State Department of Transportation

ANDERSEN BJORNSTAD KANE JACOBS INC CONSULTING ENGINEERS

SR 167
15TH NW TO 84TH AVE. SO.
HOV AND SC&DI - STAGE 2
BRIDGE 167/121 E & W

SUPERSTRUCTURE CONSTRUCTION SEQUENCE

BRIDGE SHEET NO. 5A

SHEET 456 OF 663 SHEETS

SR 167/121 JOB NO. 7011 SHEET 5A

PLOTTED: 03MAY95 10:19:17 BY CSMOD .DGN

SR 167/91

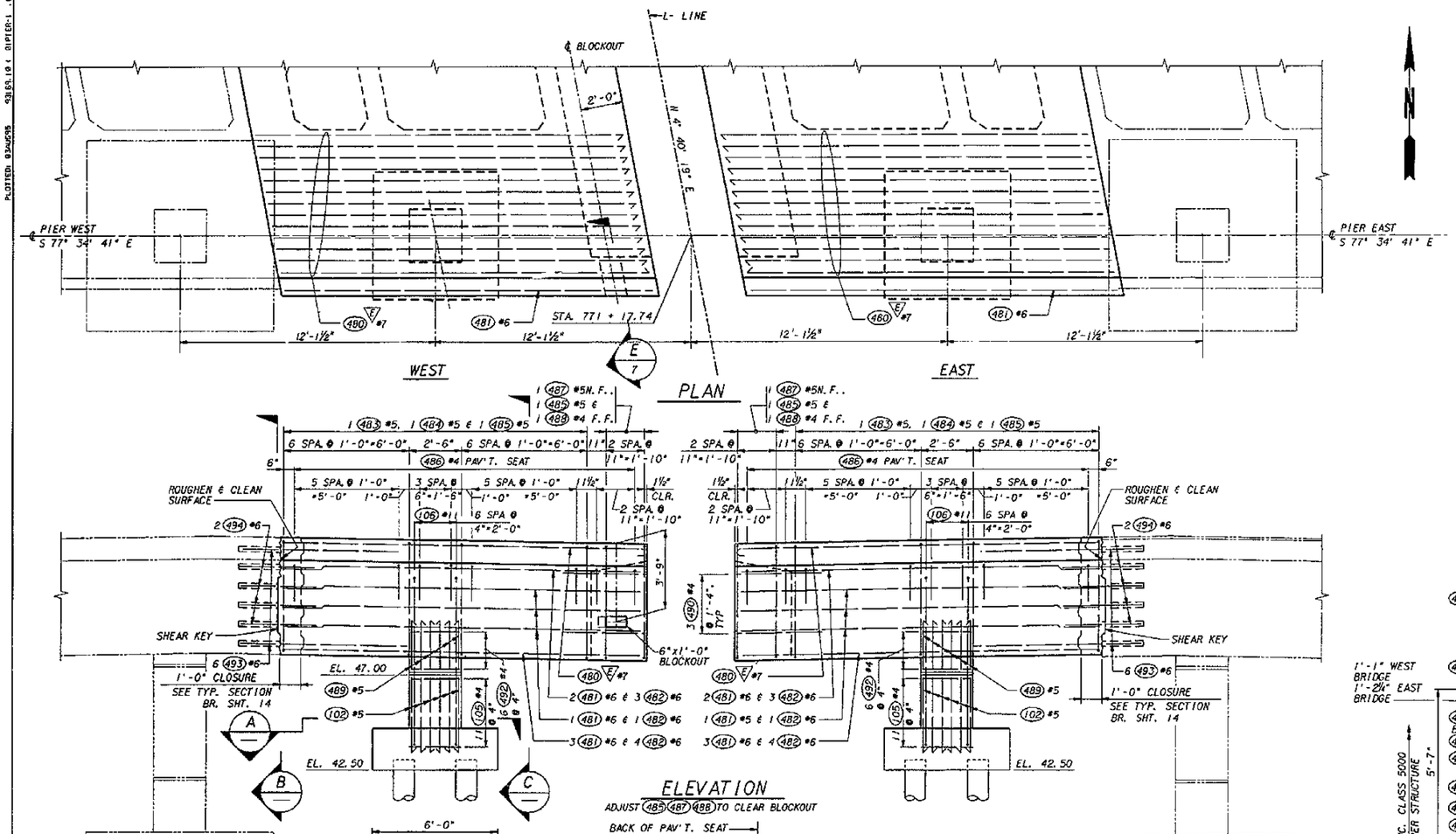

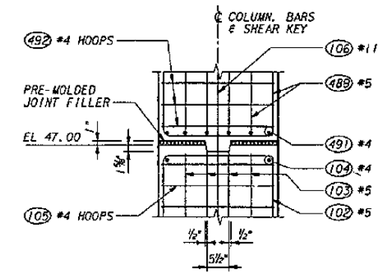

COLUMN HINGE DETAIL

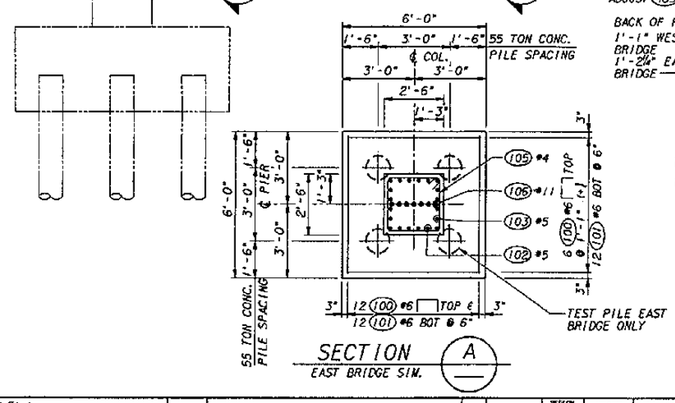

SECTION A
EAST BRIDGE SIM.

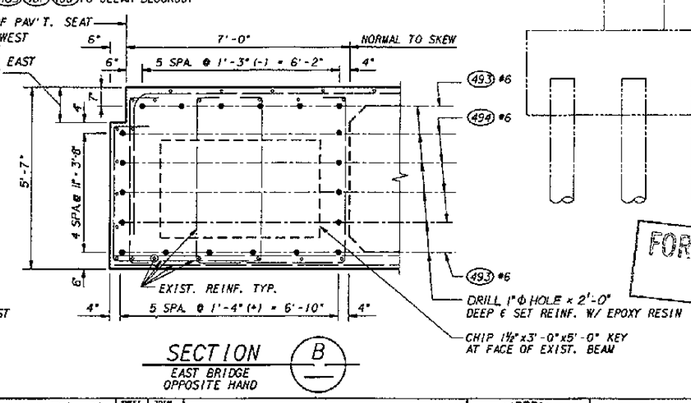

SECTION B
EAST BRIDGE OPPOSITE HAND

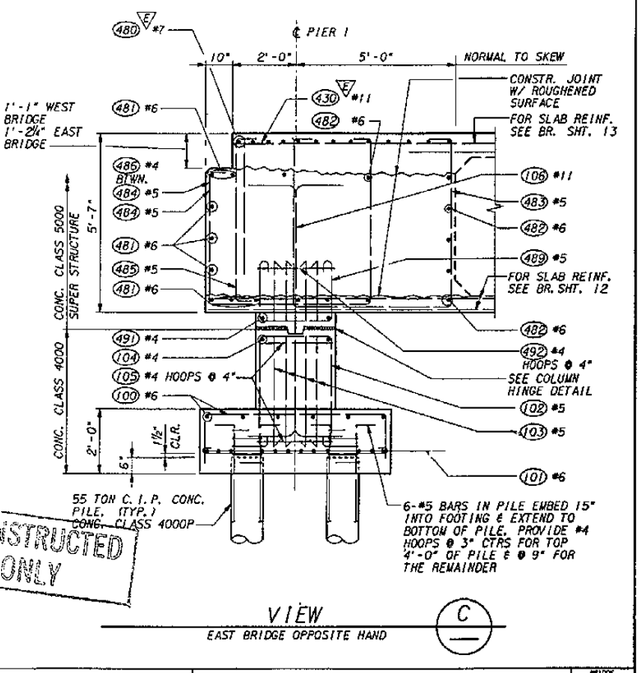

VIEW C
EAST BRIDGE OPPOSITE HAND

FOR "AS CONSTRUCTED PLANS" ONLY

Bridge Design Engr.			REGION NO.	STATE	FED. AID PROJ. NO.
Supervisor			10	WASH	
Designed By E. W. THOMAS 4/94			JOB NUMBER		
Checked By C. A. ARNOLD 4/94			95W036		
Detailed By E. W. THOMAS 4/94					
Bridge Projects Engr.					
Prelim Plan By					
Architect/Specialist	DATE	REVISION	BY	APP'D	

SHEET NO. 4771 | TOTAL SHEETS

CECIL A. ARNOLD STATE OF WASHINGTON 13359 REGISTERED PROFESSIONAL ENGINEER
EXPIRES 4/14/97

Washington State Department of Transportation

ANDERSEN BJORNSTAD KANE JACOBS • INC CONSULTING ENGINEERS

SR 167
15TH NW TO 84TH AVE. SO.
HOV AND SC&DI - STAGE 2
BRIDGE 167/121 E & W

PIER 1

BRIDGE SHEET NO. 6

SHEET 457 OF 663 SHEETS

SR167/121 JOB NO. 701 SHEET 6

SR 167/91

PLOTTED: 03/02/95 43:69.10 t BIPIER-1 .BDM

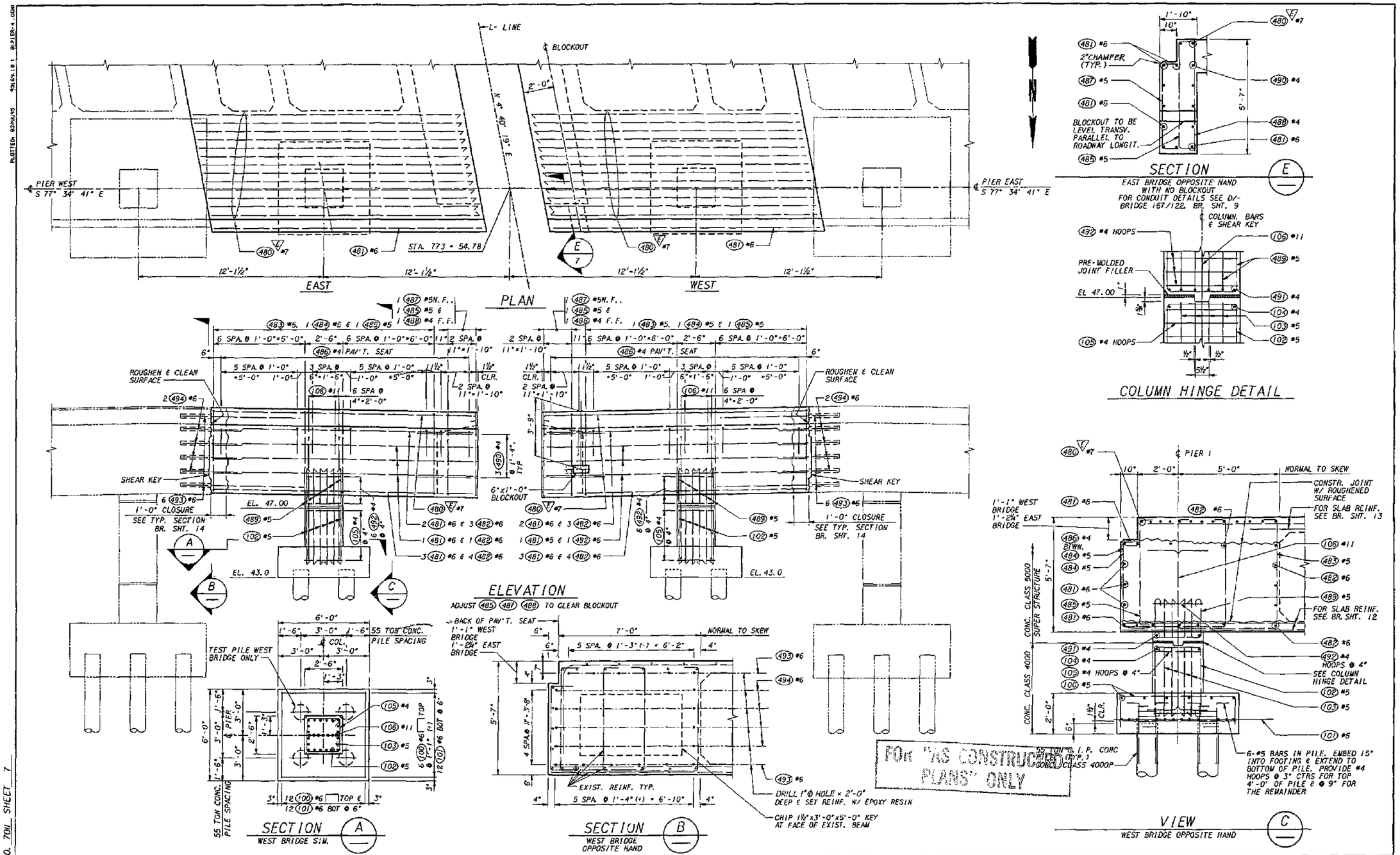

Bridge Design Engr.					REGION NO.	STATE	FED. AID PROJ. NO.	SHEET NO.	TOTAL SHEETS
Supervisor					10	WASH			
Designed By E.W. THOMAS 4/94					JOB NUMBER				
Checked By C.A. ARNOLD 4/94					95W036				
Detailed By E.W. THOMAS 4/94									
Bridge Projects Engr.									
Prelim Plan By					4771				
Architect/Specialist	DATE	REVISION	BY	APP'D					

CECIL A. ARNOLD, STATE OF WASHINGTON, REGISTERED PROFESSIONAL ENGINEER, 13958, EXPIRES 4/14/97

Washington State Department of Transportation

ANDERSEN BJORNSTAD KANE JACOBS • INC CONSULTING ENGINEERS

SR 167
15TH NW TO 84TH AVE. SO.
HOV AND SC&DI - STAGE 2
BRIDGE 167/121 E & W

PIER 4

BRIDGE SHEET NO. 7

SHEET 458 OF 663 SHEETS

SR167/121 JOB NO. 7011 SHEET 7

SR 167/91

PLOTTED: 03AUG95 #3169.101 @PIER4.DGN

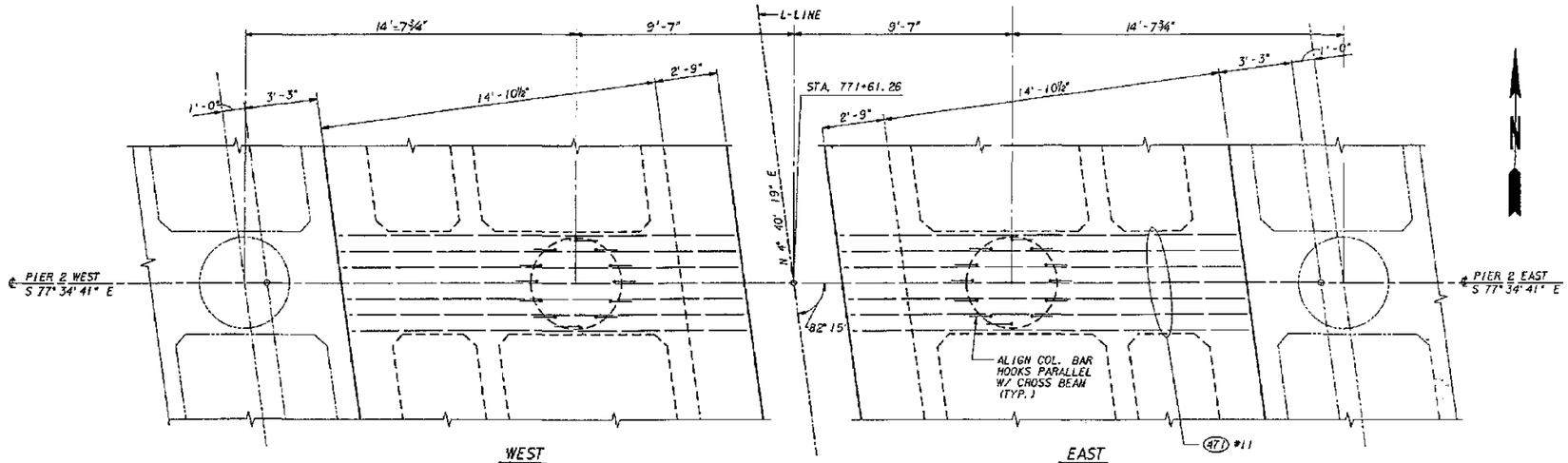

WEST

EAST

PLAN

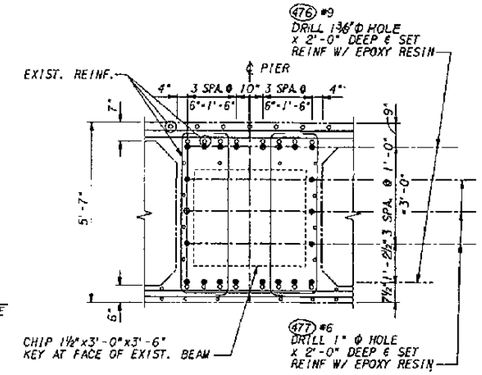

SECTION A
EAST BRIDGE SIMILAR

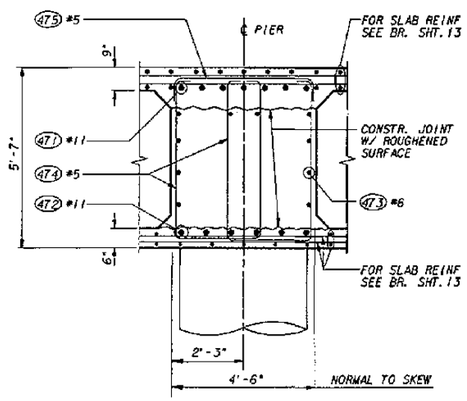

SECTION B

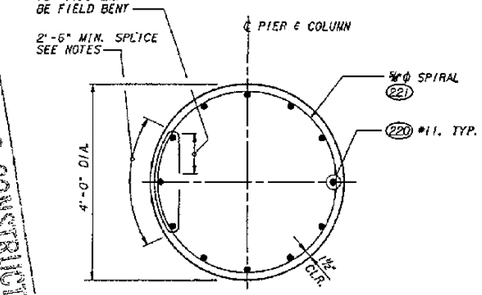

SECTION C

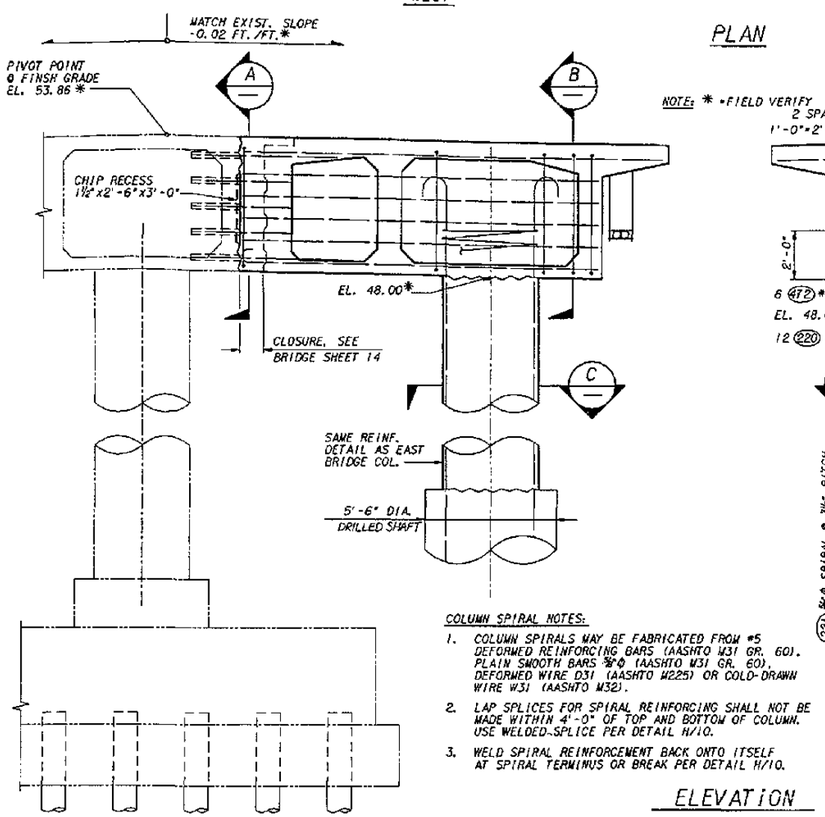

COLUMN SPIRAL NOTES:

1. COLUMN SPIRALS MAY BE FABRICATED FROM #5 DEFORMED REINFORCING BARS (AASHTO M31 GR. 60). PLAIN SMOOTH BARS ⅜"Φ (AASHTO M31 GR. 60), DEFORMED WIRE D31 (AASHTO M225) OR COLD-DRAWN WIRE W31 (AASHTO M32).
2. LAP SPLICES FOR SPIRAL REINFORCING SHALL NOT BE MADE WITHIN 4'-0" OF TOP AND BOTTOM OF COLUMN. USE WELDED-SPLICE PER DETAIL H/10.
3. WELD SPIRAL REINFORCEMENT BACK ONTO ITSELF AT SPIRAL TERMINUS OR BREAK PER DETAIL H/10.

ELEVATION

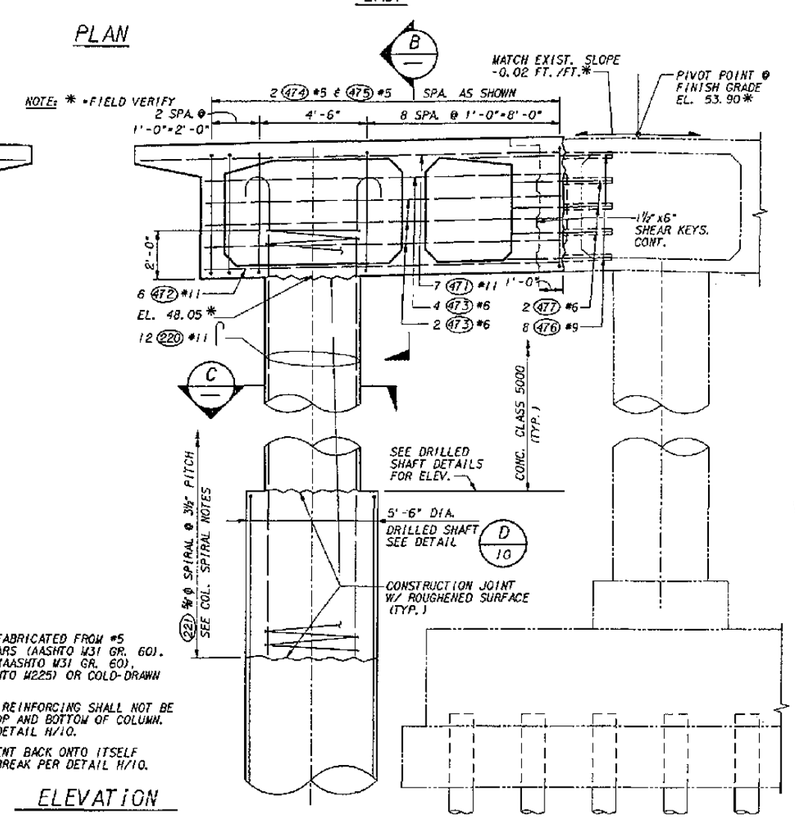

FOR "AS CONSTRUCTED PLANS" ONLY

Bridge Design Engr.					REGION NO.	STATE	FED. AID PROJ. NO.	SHEET NO.	TOTAL SHEETS	
Supervisor					10	WASH				
Designed By J. J. MORRIS/E. W. THOMAS					JOB NUMBER					
Checked By					95W036					
Detailed By T. SILBERNAGEL					4771					
Bridge Projects Engr.										
Prelim Plan By										
Architect/Specialist	DATE	REVISION	BY	APP'D						

CECIL A. ARNOLD — STATE OF WASHINGTON — 1958 — REGISTERED PROFESSIONAL ENGINEER — EXPIRES 4/14/97

Washington State Department of Transportation

ANDERSEN BJORNSTAD KANE JACOBS • INC
CONSULTING ENGINEERS

SR 167
15TH NW TO 84TH AVE. SO.
HOV AND SC&DI - STAGE 2
BRIDGE 167/121 E & W

PIER 2

BRIDGE SHEET NO. 8

SHEET 459 OF 663 SHEETS

SR167/121 JOB NO. 701 SHEET 8

PLOTTED: 03AUG95 9:36:18 E DIPIER-2 DGN

SR167/91

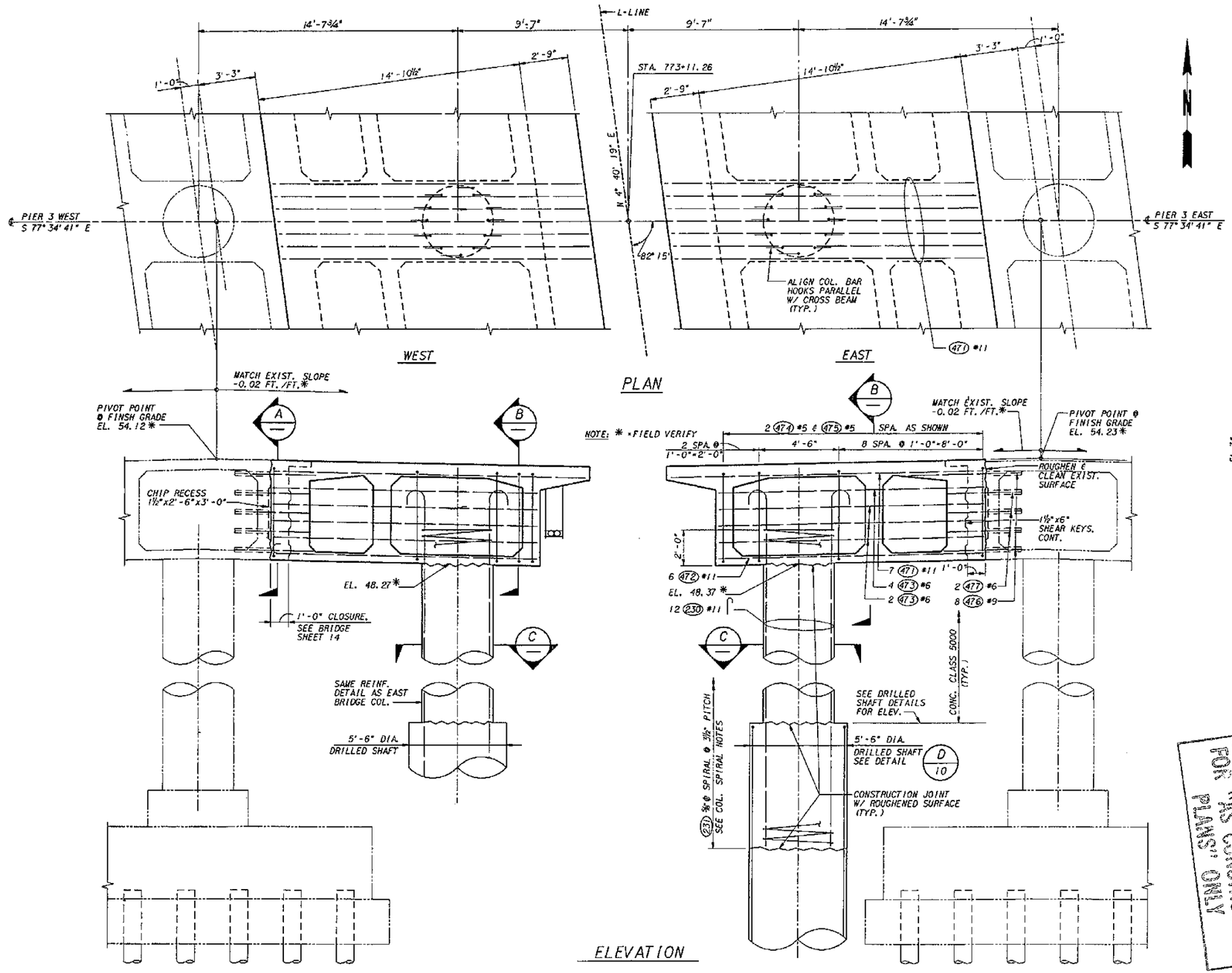

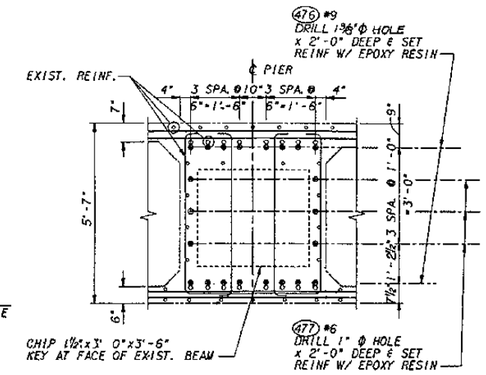

SECTION A
EAST BRIDGE SIMILAR

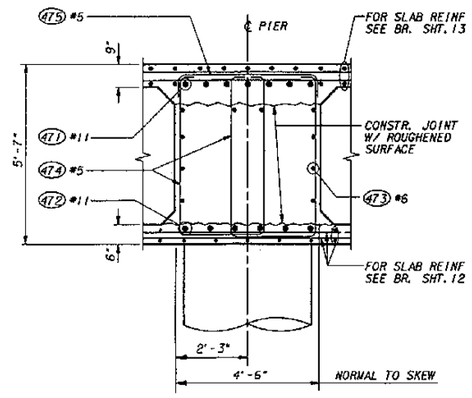

SECTION B

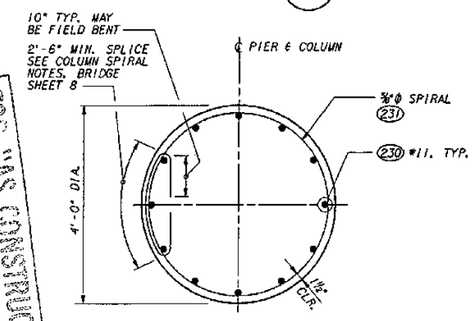

SECTION C

FOR "AS CONSTRUCTED PLANS" ONLY

Bridge Design Engr.					REGION NO.	STATE	FED. AID PROJ. NO.	SHEET NO.	TOTAL SHEETS
Supervisor					10	WASH			
Designed By J. J. MORRIS/E. W. THOMAS					JOB NUMBER				
Checked By					95W036				
Detailed By T. SILBERNAGEL									
Bridge Projects Engr.									
Prelim Plan-By									
Architect/Specialist	DATE	REVISION	BY	APP'D	4771				

CECIL A. ARNOLD STATE OF WASHINGTON 12345 REGISTERED PROFESSIONAL ENGINEER
EXPIRES 4/14/97

Washington State Department of Transportation

ANDERSEN BUDRNSTAD KANE JACOBS • INC CONSULTING ENGINEERS

SR 167
15TH NW TO 84TH AVE. SO.
HOV AND SC&DI - STAGE 2
BRIDGE 167/121 E & W

PIER 3

BRIDGE SHEET NO. 9

SHEET 460 OF 663 SHEETS

SR167/121 JOB NO. 701 SHEET 9

PLOTTED: 03/06/96 10:18 c:\PIER-3.DGN

SR 167/91

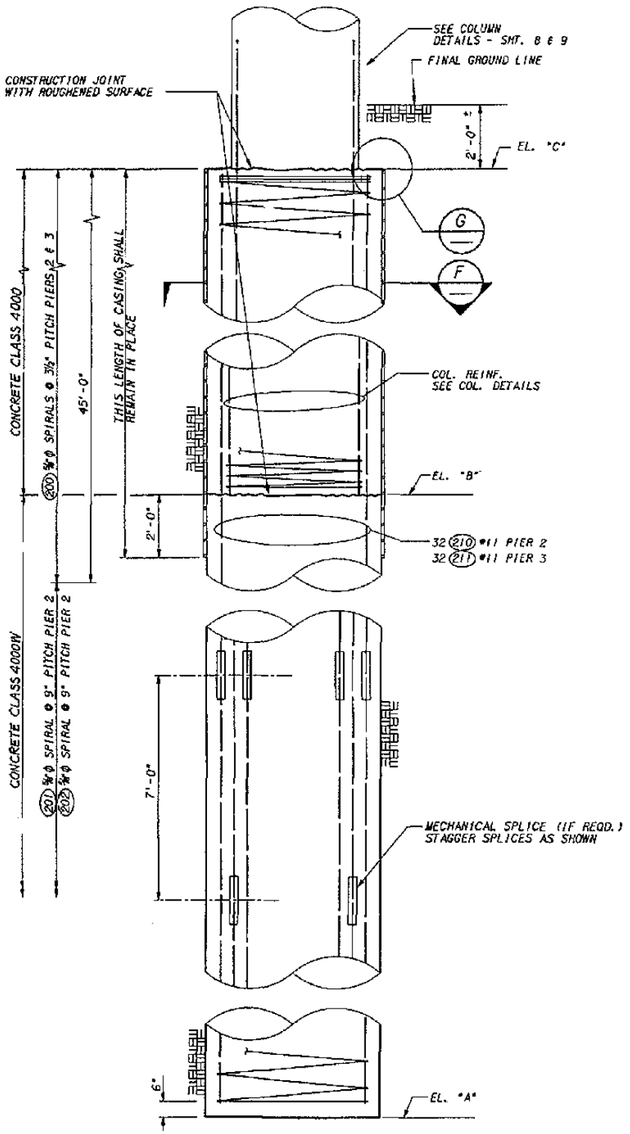

PIERS - 2 & 3

ELEVATION - 5'-6" DRILLED SHAFT (D) 8, 9

NOTES FOR DRILLED SHAFT

1. TEMPORARY STEEL CASINGS SHALL BE REQUIRED FOR A MINIMUM DEPTH OF 75 FT.
2. CONCRETE SHALL BE POURED IN THE DRY ABOVE EL. "B".
3. SPLICE LOCATIONS:
   SPLICES IN VERTICAL REINFORCEMENT WILL NOT BE ALLOWED WITHIN 45'-0" OF EL. "C".
   LAP SPLICES FOR SPIRAL REINF. WILL NOT BE ALLOWED IN THE TOP 20'-0" OF THE SHAFT. USE A WELDED SPLICE PER DETAIL H.
4. SHAFT SPIRALS MAY BE FABRICATED FROM #5 DEFORMED REINFORCING BARS (AASHTO M31GR 60), PLAIN SMOOTH BARS ⅝" Ø (AASHTO M31 GR 60), DEFORMED WIRE D31 (AASHTO M225), OR COLD DRAWN WIRE W31 (AASHTO M32).
5. WELD SPIRAL REINFORCEMENT BACK ONTO ITSELF AT SPIRAL TERMINUS OR BREAK PER DETAIL G/-.

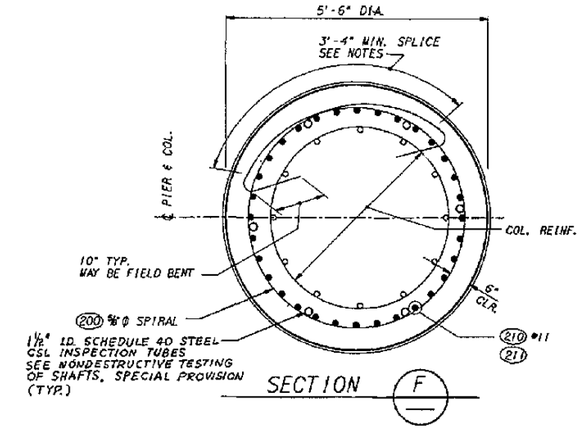

SECTION (F)

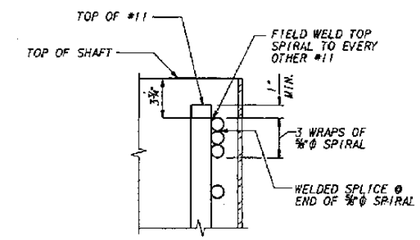

DETAIL (G)

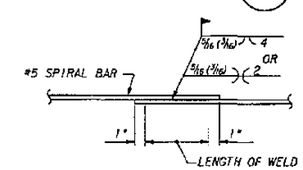

SPIRAL SPLICE WELD DETAIL (H)

TABLE OF ELEVATIONS - 5'-6" DIA. SHAFT

LOCATION	EL. "A"	EL. "B"	EL. "C"
PIER 2	-55.00	26.00	36.00
PIER 3	-55.00	23.00	33.00

FOR "AS CONSTRUCTED PLANS" ONLY

Bridge Design Engr.					
Supervisor					
Designed By J. J. MORRIS 4/94					
Checked By C. A. ARNOLD 4/94					
Detailed By B. J. BIRK 4/94					
Bridge Projects Engr.					
Prelim Plan By					
Architect/Specialist	DATE	REVISION	BY	APP'D	

REGION NO.	STATE	FED. AID PROJ. NO.	SHEET NO.	TOTAL SHEETS
10	WASH			

JOB NUMBER 95W036

4771

CECIL A. ARNOLD STATE OF WASHINGTON 7058 REGISTERED PROFESSIONAL ENGINEER EXPIRES 4/14/97

Washington State Department of Transportation

ANDERSEN BJORNSTAD KANE JACOBS • INC

SR 167
15TH NW TO 84TH AVE. SO.
HOV AND SC&DI - STAGE 2
BRIDGE 167/121 E & W

5'-6" DIA. SHAFT DETAILS

BRIDGE SHEET NO. 10

SHEET 461 OF 663 SHEETS

SR167/91

SR167/121 JOB NO. 7011 SHEET 10

PLOTTED: 05AUG95 931695.10 (61SHAFT.DGN

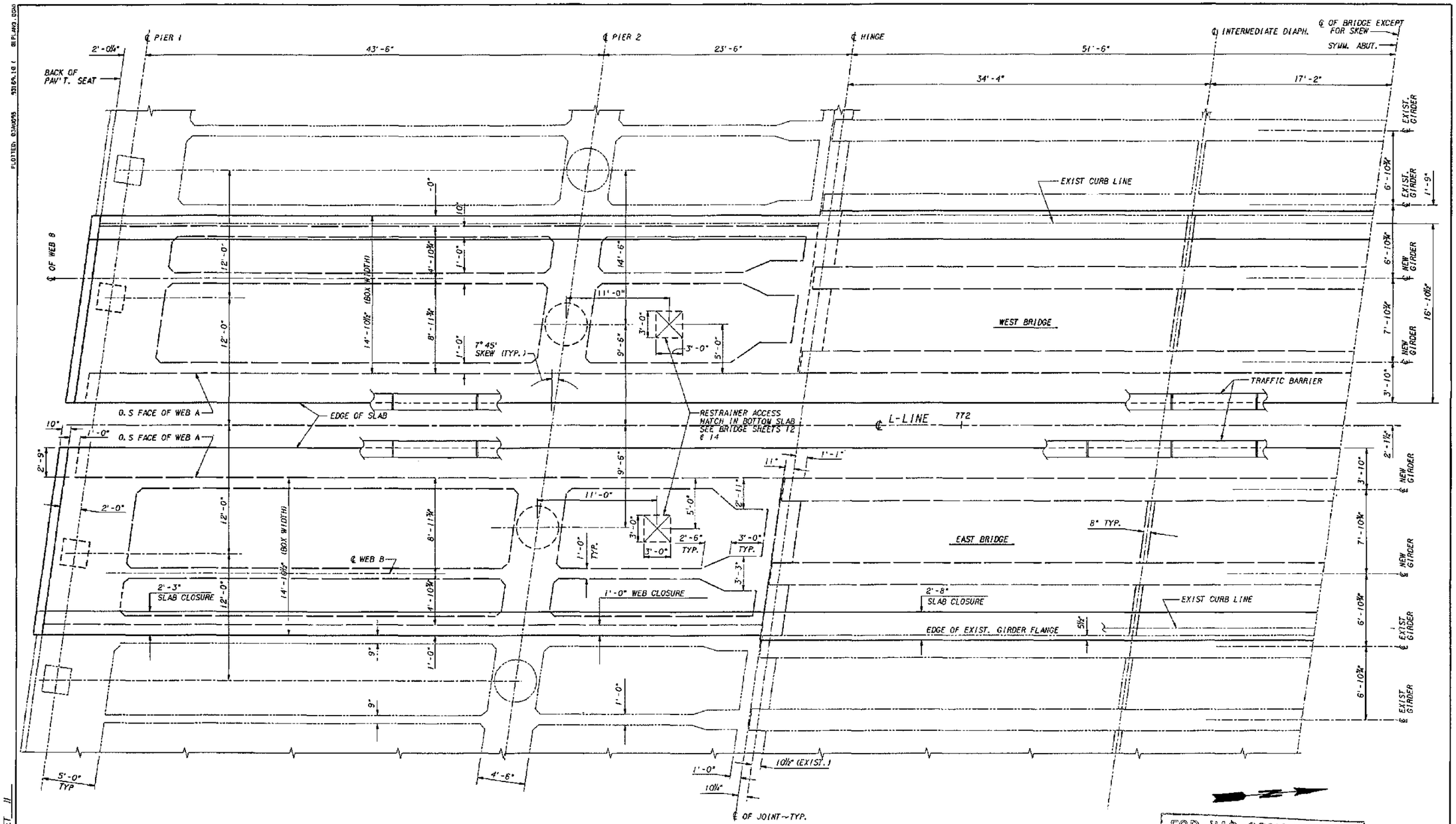

BRIDGE FRAMING PLAN

FOR "AS CONSTRUCTED PLANS" ONLY

Bridge Design Engr.					REGION NO.	STATE	FED. AID PROJ. NO.	SHEET NO.	TOTAL SHEETS
Supervisor					10	WASH			
Designed By D. S. OPPENHEIM 4/94					JOB NUMBER				
Checked By C. A. ARNOLD 4/94					95W036				
Detailed By D. S. OPPENHEIM 4/94					4771				
Bridge Projects Engr.									
Prelim Plan By									
Architect/Specialist	DATE	REVISION	BY	APP'D					

CECIL A. ARNOLD STATE OF WASHINGTON 13576 REGISTERED PROFESSIONAL ENGINEER
EXPIRES 4/14/97

Washington State Department of Transportation

ANDERSEN BJORNSTAD KANE JACOBS • INC CONSULTING ENGINEERS

SR 167
15TH NW TO 84TH AVE. SO.
HOV AND SC&DI - STAGE 2
BRIDGE 167/121 E & W

BRIDGE FRAMING PLAN

BRIDGE SHEET NO. 11

SHEET 462 OF 663 SHEETS

SR167/91

PLOTTED: 03/30/95 9:16A 18 1 @LPLANS.DGN

SR167/121 JOB NO. 7011 SHEET 11

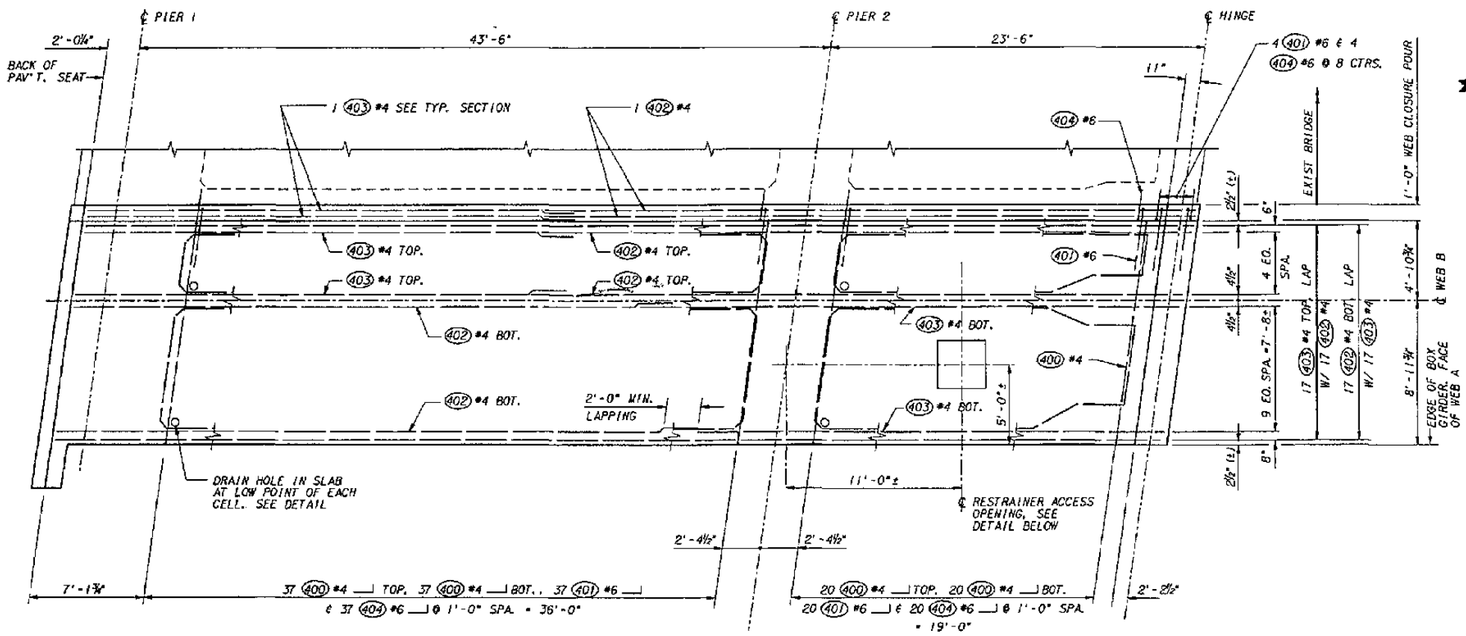

BOX GIRDER BOTTOM SLAB REINF.

WEST BRIDGE SHOWN, EAST BRIDGE SIMILAR

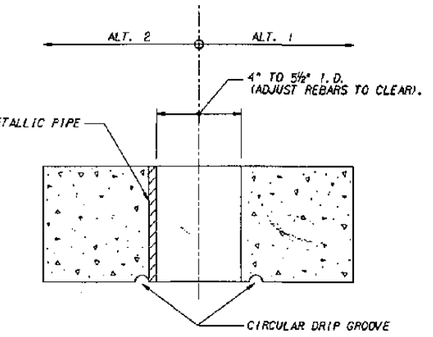

BOTTOM SLAB DRAIN HOLE DETAIL

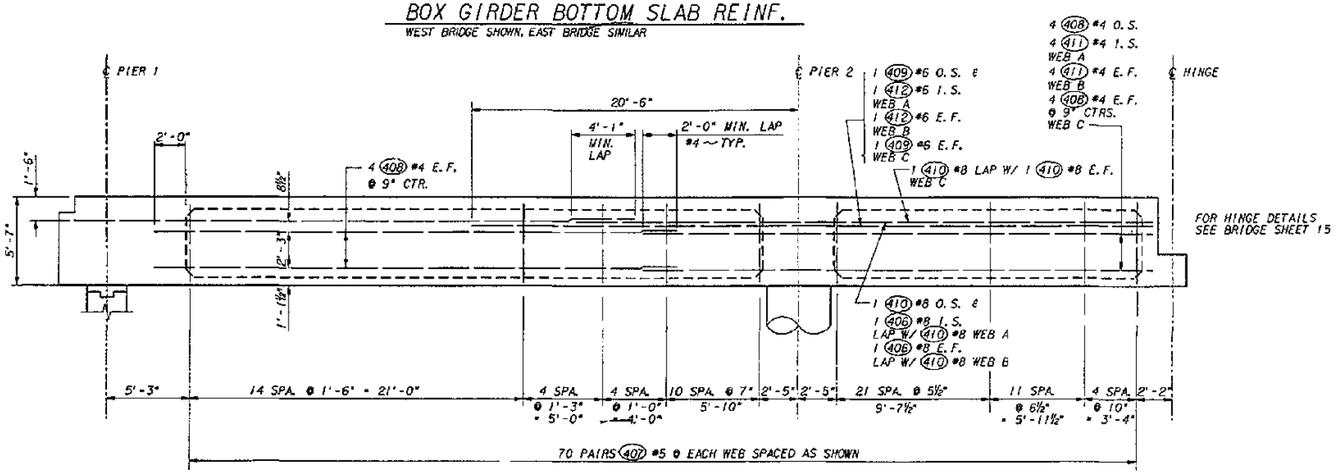

LONGITUDINAL SECTION

TYPICAL ALL WEBS

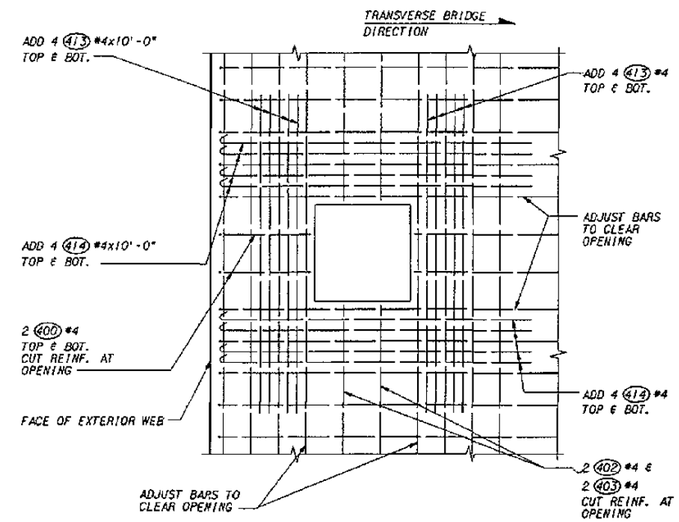

RESTRAINER ACCESS OPENING DETAIL IN BOTTOM SLAB REINFORCING

FOR "AS CONSTRUCTED PLANS" ONLY

Bridge Design Engr.					REGION NO.	STATE	FED. AID PROJ. NO.	SHEET NO.	TOTAL SHEETS	
Supervisor					10	WASH				
Designed By D. S. OPPENHEIM 4/94					JOB NUMBER					
Checked By C. A. ARNOLD 4/94					95W036					
Detailed By D. S. OPPENHEIM 4/94										
Bridge Projects Engr.										
Prelim Plan By			DW	KK						
Architect/Specialist	DATE	REVISION	BY	APP'D	4771					

CECIL A. ARNOLD, STATE OF WASHINGTON, REGISTERED PROFESSIONAL ENGINEER 1958 — EXPIRES 4/14/97

Washington State Department of Transportation

ANDERSEN BJORNSTAD KANE JACOBS • INC CONSULTING ENGINEERS

SR 167
15TH NW TO 84TH AVE. SO.
HOV AND SC&DI - STAGE 2
BRIDGE 167/121 E & W

BOX GIRDER BOT. SLAB & LONGIT. BM. REINF.

BRIDGE SHEET NO. 12

SHEET 463 OF 663 SHEETS

SR167/121 JOB NO. 70IL SHEET 12

SR 167/91

PLOTTED: 03AUG95 9:18:11 BI PLAN2.DGN

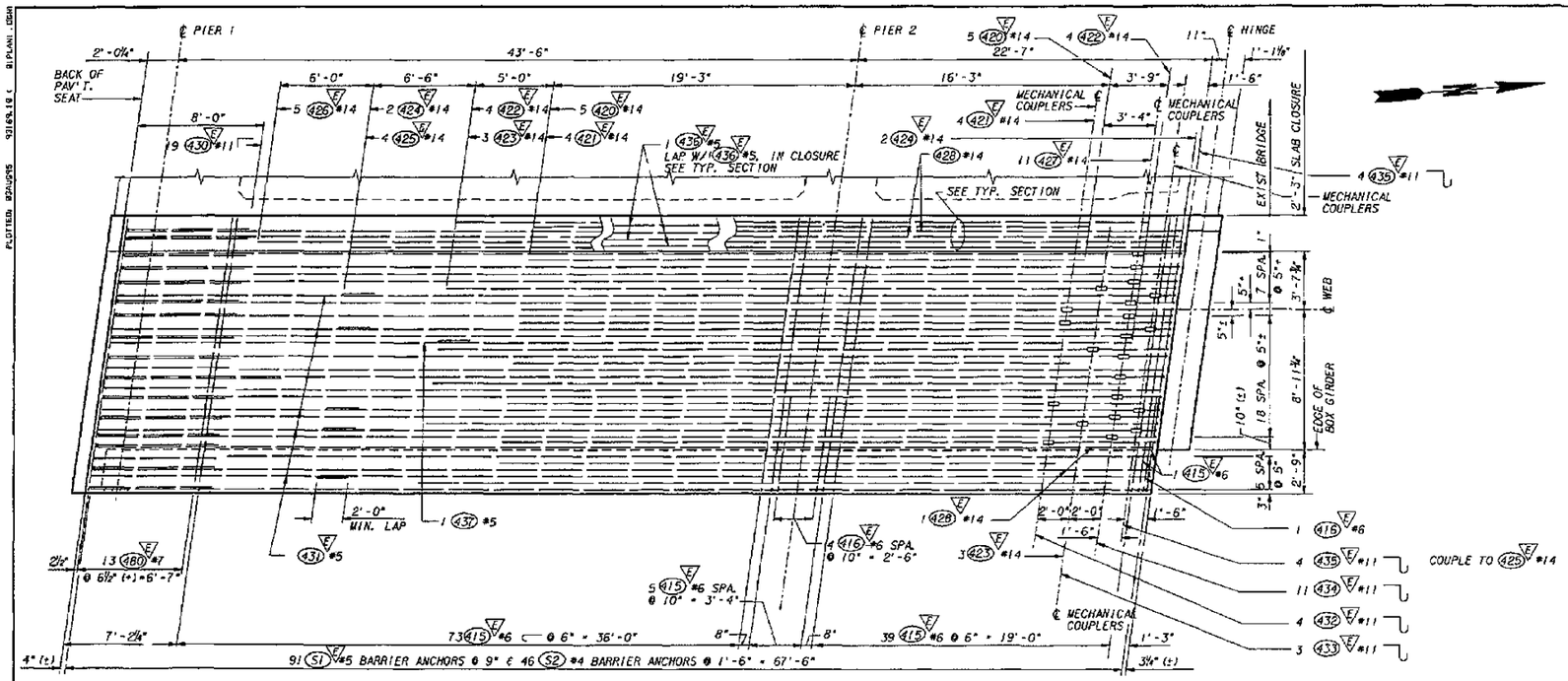

BOX GIRDER ROADWAY SLAB - TOP MAT REINF.

WEST BRIDGE SHOWN, EAST BRIDGE SIMILAR
DENOTES MECHANICAL SPLICES REQUIRED

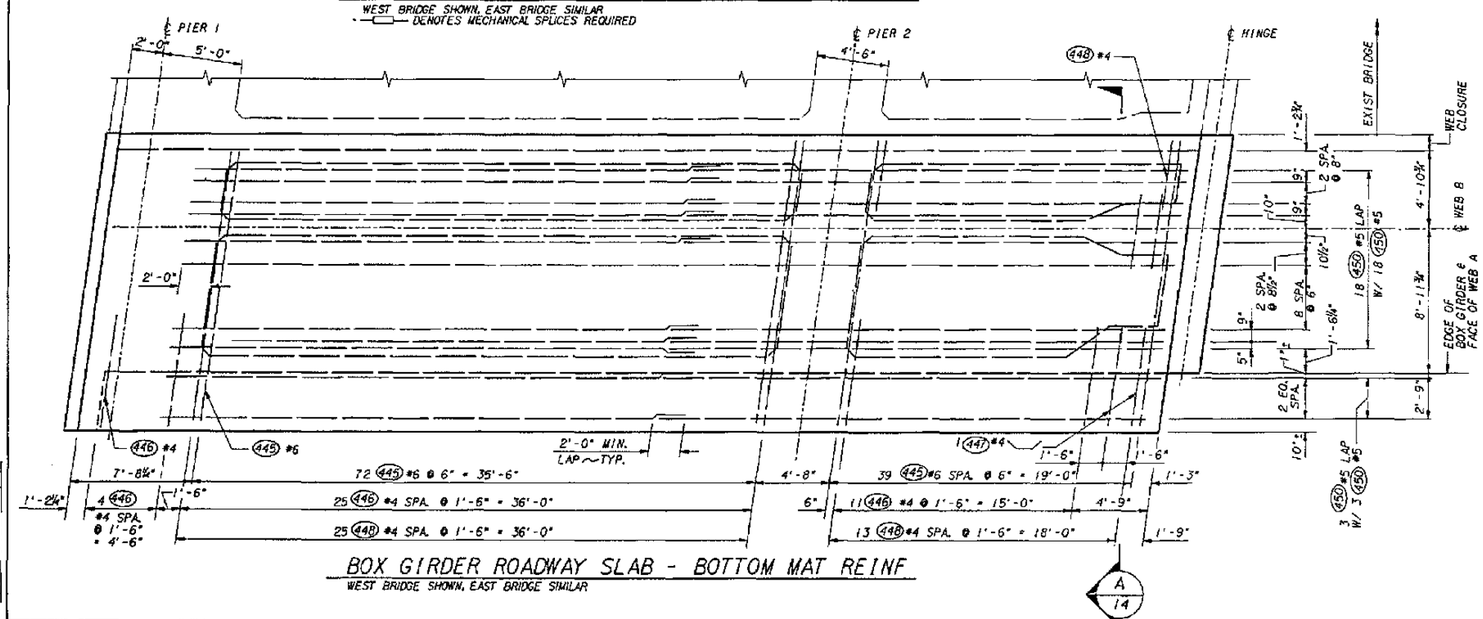

BOX GIRDER ROADWAY SLAB - BOTTOM MAT REINF

WEST BRIDGE SHOWN, EAST BRIDGE SIMILAR

A / 14

FOR "AS CONSTRUCTED PLANS" ONLY

Bridge Design Engr.					REGION NO.	STATE	FED. AID PROJ. NO.	SHEET NO.	TOTAL SHEETS
Supervisor					10	WASH			
Designed By D. S. OPPENHEIM 4/94					JOB NUMBER				
Checked By C. A. ARNOLD 4/94					95W036				
Detailed By D. S. OPPENHEIM 4/94									
Bridge Projects Engr.									
Prelim Plan By									
Architect/Specialist	DATE	REVISION	BY	APP'D	4771				

CHARLES A. ARNOLD, STATE OF WASHINGTON, 19559, REGISTERED PROFESSIONAL ENGINEER, EXPIRES 4/14/97

Washington State Department of Transportation

ANDERSEN BJORNSTAD KANE JACOBS • INC CONSULTING ENGINEERS

SR 167
15TH NW TO 84TH AVE. SO.
HOV AND SC&DI - STAGE 2
BRIDGE 167/121 E & W

BOX GIRDER ROADWAY SLAB REINF.

SPECIAL SHEET NO. 13
SHEET 464 OF 663 SHEETS

SR 167/91

SR167/121 JOB NO. TOW SHEET 13

PLOTTED: 8/24/95 9:21:49 AM BY: PLANI.DGN

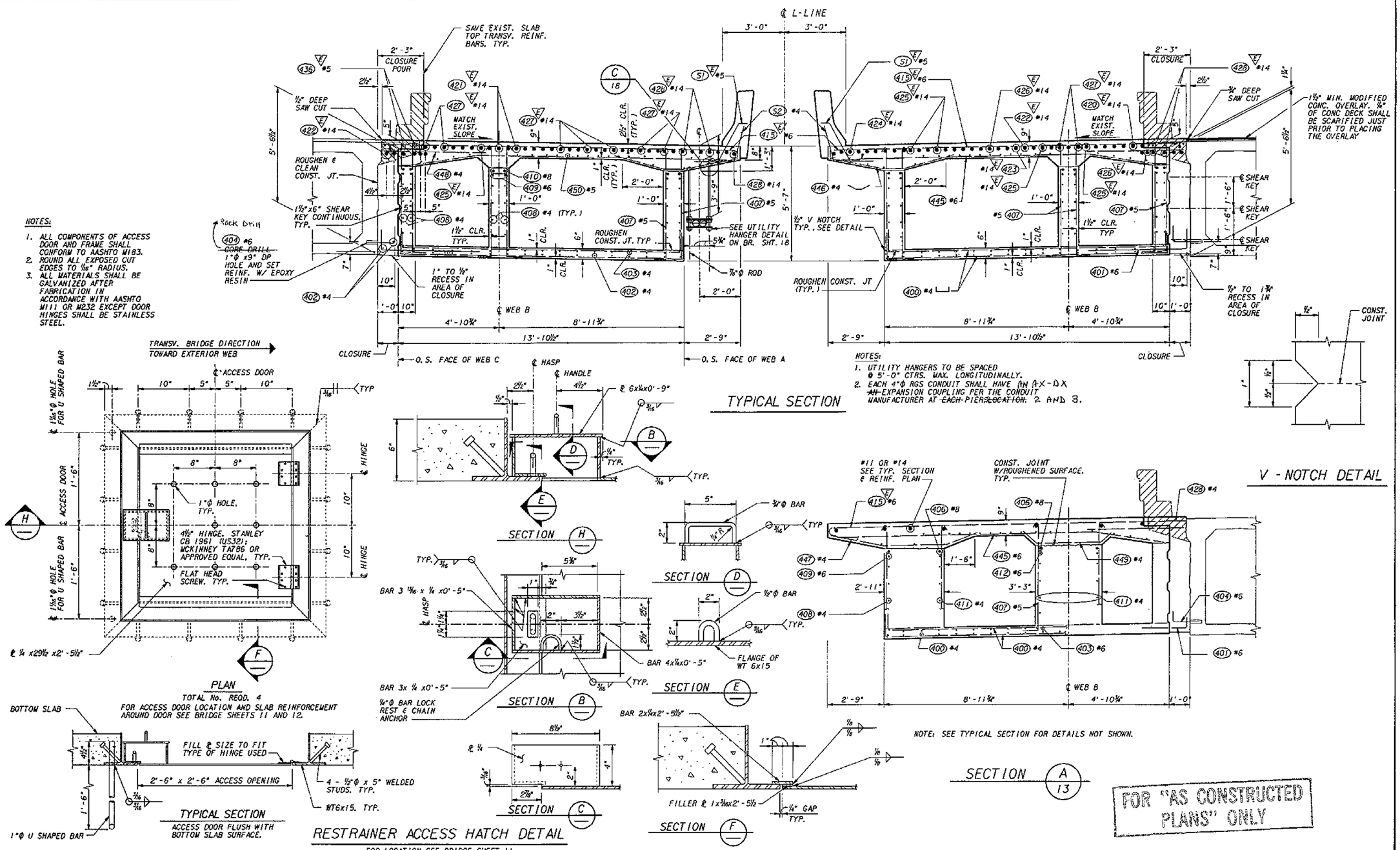

NOTES:

1. ALL COMPONENTS OF ACCESS DOOR AND FRAME SHALL CONFORM TO AASHTO M183.
2. ROUND ALL EXPOSED CUT EDGES TO 1/16" RADIUS.
3. ALL MATERIALS SHALL BE GALVANIZED AFTER FABRICATION IN ACCORDANCE WITH AASHTO M111 OR M232 EXCEPT DOOR HINGES SHALL BE STAINLESS STEEL.

NOTES:

1. UTILITY HANGERS TO BE SPACED @ 5'-0" CTRS. MAX. LONGITUDINALLY.
2. EACH 4"Φ RGS CONDUIT SHALL HAVE AN A-X-D X ~~AN EXPANSION COUPLING PER THE CONDUIT MANUFACTURER AT EACH PIER LOCATION.~~ 2 AND 3.

FOR "AS CONSTRUCTED PLANS" ONLY

Bridge Design Engr.					REGION NO.	STATE	FED. AID PROJ. NO.	SHEET NO. / TOTAL SHEETS
Supervisor					10	WASH		
Designed By Y. POLYAKOV 4/94					JOB NUMBER			
Checked By C. A. ARNOLD 4/94					95W036			
Detailed By Y. POLYAKOV 4/94					4771			
Bridge Projects Engr.								
Prelim Plan By								
Architect/Specialist	DATE	REVISION	BY	APP'D				

CECIL A. ARNOLD, STATE OF WASHINGTON, 1958, REGISTERED PROFESSIONAL ENGINEER, EXPIRES 4/18/94

Washington State Department of Transportation

ANDERSEN BJERNSTAD KANE JACOBS • INC CONSULTING ENGINEERS

SR 167
15TH NW TO 84TH AVE. SO.
HOV AND SC&DI - STAGE 2
BRIDGE 167/121 E & W

BOX GIRDER SECTIONS

BRIDGE SHEET NO. 14

SHEET 465 OF 663 SHEETS

SR167/121 JOB NO. 7011 SHEET 14

PLOTTED: 03MAY95 9:15:51 AM DISC1 .DGN

SR167/91

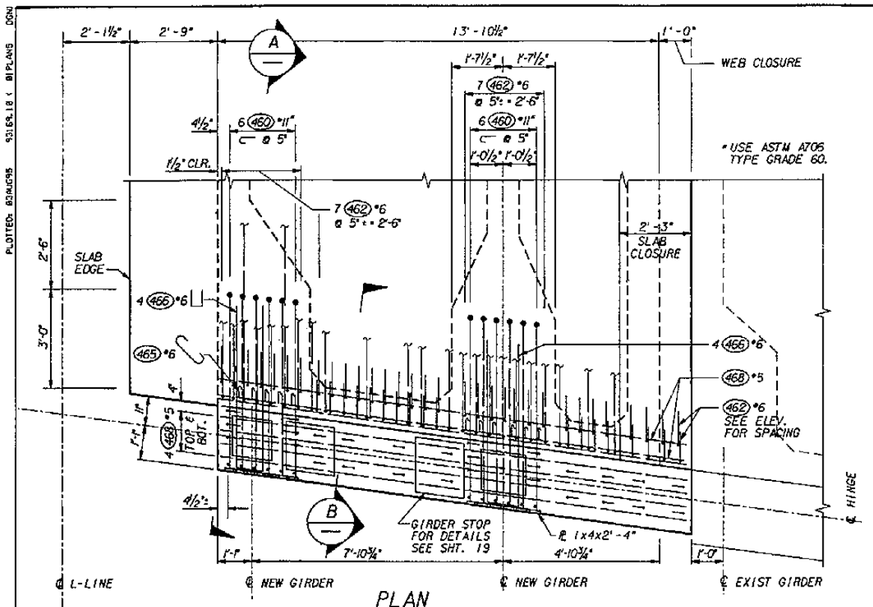

PLAN
SLAB BARS NOT SHOWN

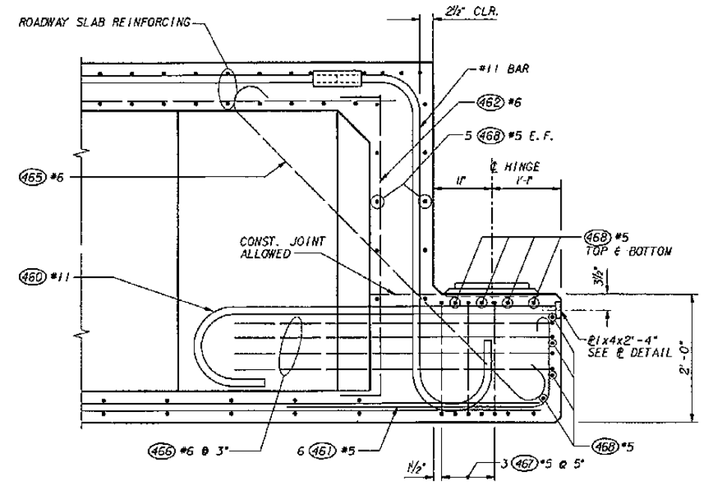

SECTION A

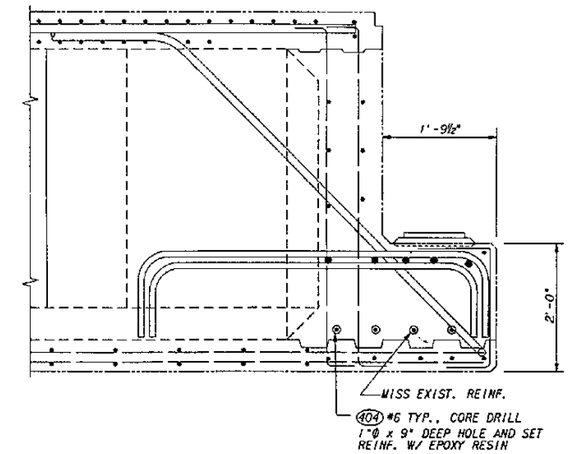

EXIST. HINGE SUPPORT DETAIL

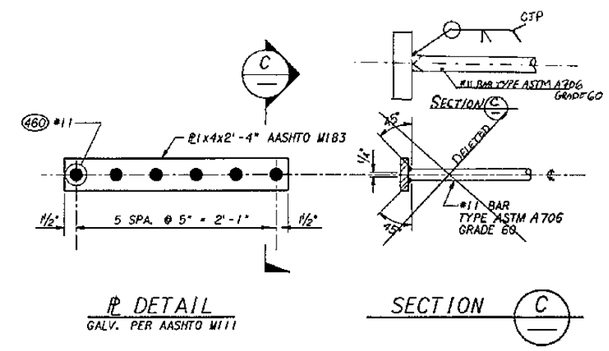

℄ DETAIL
GALV. PER AASHTO M111

SECTION C

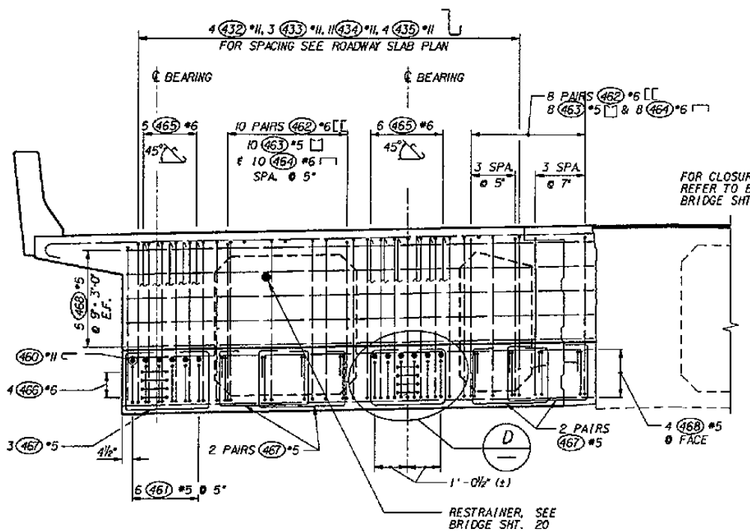

ELEVATION
FOLLOWING ITEMS ARE NOT SHOWN:
GIRDER STOPS SEE BRIDGE SHT. 19
STEEL ℄ AND ALL SLAB REINFORCING

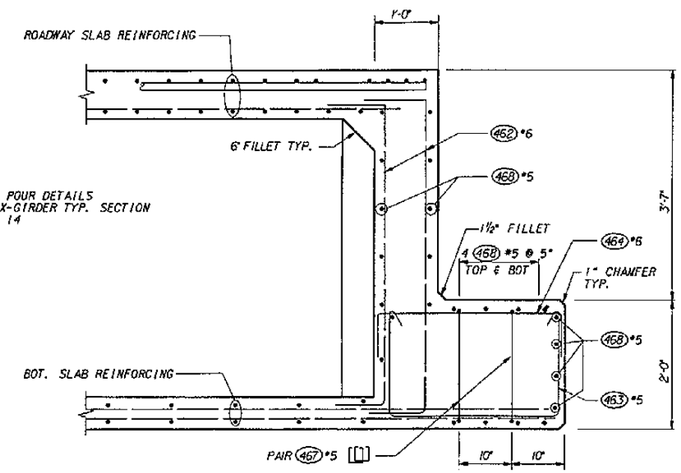

SECTION B
MEASURING ALONG SKEW

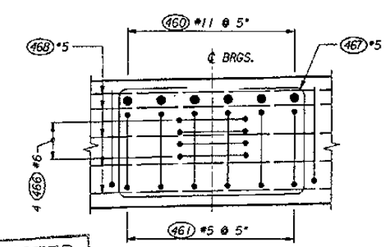

NOTE: ONLY LEDGE REINFORCEMENT IS SHOWN.

DETAIL D
ELEVATION @ BEARINGS

FOR "AS CONSTRUCTED PLANS" ONLY

Bridge Design Engr.					REGION NO.	STATE	FED. AID PROJ. NO.	SHEET NO.	TOTAL SHEETS
Supervisor					10	WASH			
Designed By D.S. OPPENHEIM					JOB NUMBER				
Checked By C.A. ARNOLD					95W036				
Detailed By Y. POLYAKOV					4771				
Bridge Projects Engr.									
Preliminary Plan By									
Architect/Specialist	DATE	REVISION	BY	APP'D					

CECIL A. ARNOLD STATE OF WASHINGTON 1958 REGISTERED PROFESSIONAL ENGINEER
EXPIRES 4/24/97

Washington State Department of Transportation
ANDERSON BJORNSTAD KANE JACOBS • INC CONSULTING ENGINEERS

SR 167
15TH NW TO 84TH AVE. SO.
HOV AND SC&DI - STAGE 2
BRIDGE 167/121 E & W

BOX-GIRDER HINGE DETAIL

BRIDGE SHEET NO. 15
SHEET 466 OF 663 SHEETS

SR167/121 JOB NO. 70N1 SHEET 15

PLOTTED: 02/12/96 93:06:18 (81PLANS DGN

SR167/91

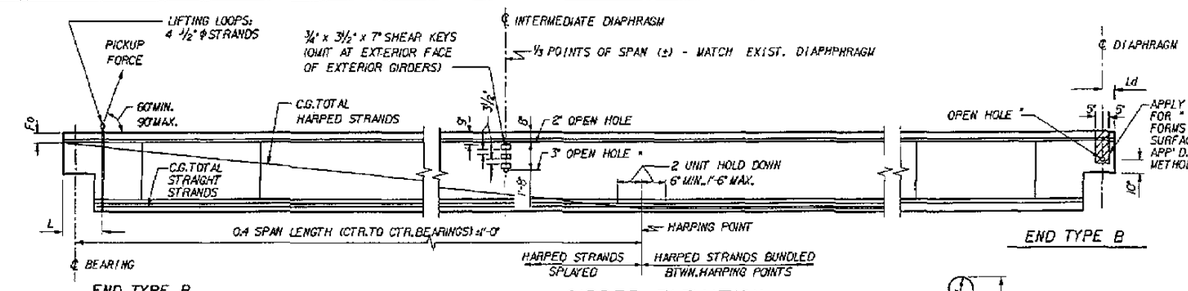

GIRDER ELEVATION

* OMIT HOLES AND PLACE INSERTS ON THE INTERIOR FACE OF EXTERIOR GIRDERS. PLACE HOLES AND INSERTS PARALLEL TO SKEW. INSERTS SHALL BE "RICHMOND ROCKET, BURKE HI-TENSILE, LANCASTER MALLEABLE OR APPROVED EQUAL.

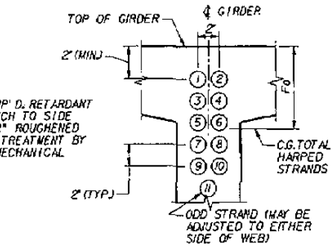

STRAND PATTERN AT GIRDER END

HARPED STRAND LOCATION SEQUENCE SHALL BE AS SHOWN ①, ② ETC.

NOTES:
ALL DETAILS ON THIS SHEET ARE FOR PRETENSIONED DESIGN ONLY.

PLAN LENGTH SHALL BE INCREASED AS NECESSARY TO COMPENSATE FOR SHORTENING DUE TO PRESTRESS AND SHRINKAGE.

EXTRA CAUTION MUST BE EXERCISED IN HANDLING AND PLACING ALL GIRDERS.

ALL GIRDERS SHALL BE BRACED LATERALLY TO PREVENT TIPPING OR BUCKLING.

THE TOP SURFACE OF THE GIRDER FLANGE SHALL BE ROUGHENED IN ACCORDANCE WITH SECTION 6-02.3(25)H OF THE STANDARD SPECIFICATIONS.

IF THE LIFTING LOOPS EXTEND WITHIN 3" OF THE TOP OF THE ROADWAY SLAB THEY SHALL BE CUT OFF PRIOR TO POURING THE ROADWAY SLAB. ALL LIFTING STRANDS SHALL BE OF THE SAME MATERIAL AND STRENGTH AS THE PRESTRESSING STRANDS. WRAP THE LIFTING LOOPS SO THAT EACH STRAND WILL CARRY ITS SHARE OF THE TOTAL LOAD. EXTEND LIFTING LOOPS ENDING WITH A 9" LONG 90° HOOK TO WITHIN 3" CLEAR OF THE BOTTOM OF THE GIRDER.

CUT ALL STRANDS FLUSH WITH THE GIRDER ENDS AND PAINT WITH AN APPROVED EPOXY RESIN EXCEPT FOR EXTENDED STRANDS AS SHOWN.

FORMS FOR BEARING PAD RECESSES SHALL BE CONSTRUCTED AND FASTENED IN SUCH A MANNER AS NOT TO CAUSE DAMAGE TO THE GIRDER DURING THE STRAND RELEASE OPERATION.

ALL STRANDS ARE 1/2" LOW RELAXATION STRANDS (AASHTO M203 GRADE 270).

EXTENDED STRANDS AND BARS ARE PARALLEL TO GIRDER.

REFER TO CAMBER DIAGRAM ON BRIDGE SHEET 17.

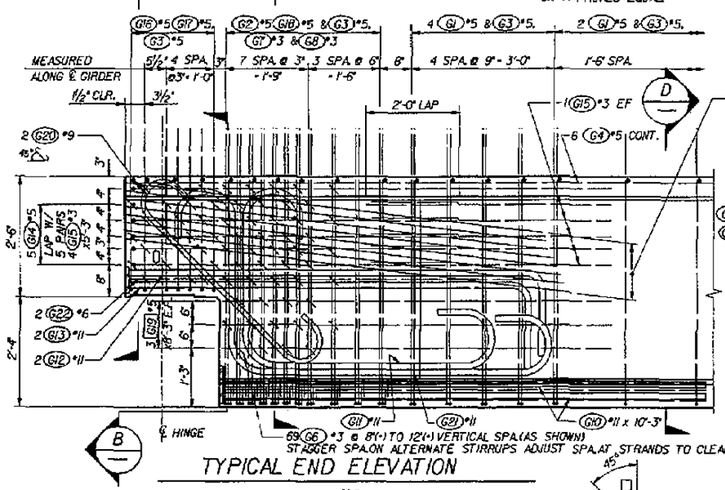

TYPICAL END ELEVATION

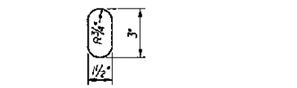

OPEN HOLE

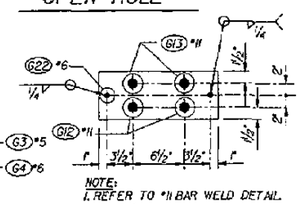

NOTE:
1. REFER TO *11 BAR WELD DETAIL.

℄ DETAIL

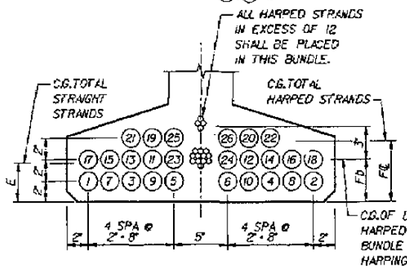

STRAND PATTERN AT SPAN

STRAND LOCATION SEQUENCE SHALL BE AS SHOWN ①, ② ETC.

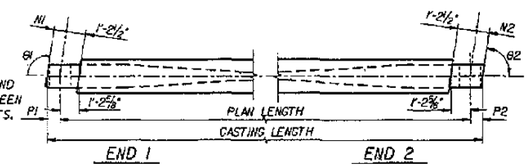

GIRDER SCHEDULE

DIMENSION A AT ℄ BEARINGS = 11"

BASED ON GIRDER DEFLECTION = D AT TIME OF SLAB POUR (120 DAYS)

SPAN	GIRDER END 1 TYPE	GIRDER END 2 TYPE	L	B1	B2	N1	N2	P1	P2	PLAN LENGTH	MIN. CONC. COMPL. STRENGTH 28 DAYS F'c KSI	MIN. CONC. COMPL. STRENGTH RELEASE F'ci KSI	S (IN.)	LS (FT.)	HARPED NO. OF STRANDS	HARPED JACKING FORCE (KIPS)	STRAIGHT NO. OF STRANDS	STRAIGHT JACKING FORCE (KIPS)	LOCATION OF C.G. STRANDS (IN.) E	FG	Fb	Fa	C (IN.)	D (IN.)	LT (IN.)
2	1	B	B	2'-6"	97.75	82.25	9½	9½	9⅝	9⅝	103'-0"	7.2	6.8	N/A	N/A	17	528	26	806	3 11/16	3⅛	3	9½	1⅝	4⅛	8

*3 OR *4 MAY BE SUBSTITUTED FOR W12.
FIELD BENDING IS OPTIONAL.

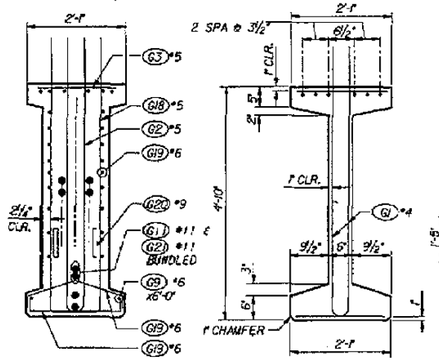

SECTION C

SECTION D

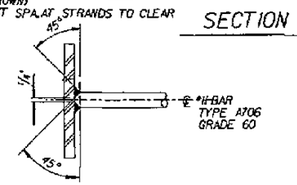

*11 BAR WELD DETAIL

SECTION A

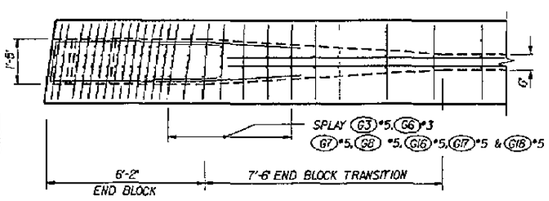

TRANSVERSE REINFORCING SKEWED ENDS

(NOT ALL REINFORCING BARS SHOWN)

NOTE:
1. REFER TO *11 BAR WELD DETAIL.

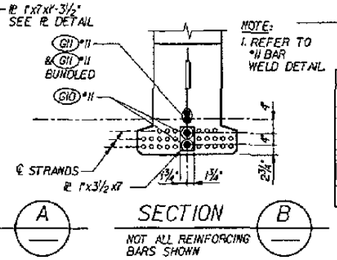

SECTION B

NOT ALL REINFORCING BARS SHOWN

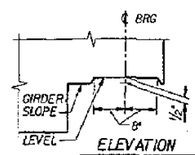

ELEVATION

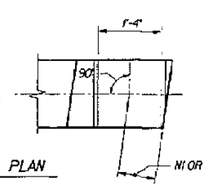

PLAN

BEARING RECESS DETAIL

MARK	LOCATION	SIZE	
G1	GIRDER STIRRUPS	4	
G2	GIRDER END STIRRUPS	5	
G3	GIRDER TOP FLANGE	5	STR.
G4	GIRDER LONGIT. FULL LENGTH	6	STR.
G5	GIRDER END LONGIT	7	STR.
G6	GIRDER END TIES	3	
G7	GIRDER END TIES	3	
G8	GIRDER END TIES	3	
G9	GIRDER LONGIT.	6	STR.
G10	GIRDER LONGIT.	11**	STR.
G11	GIRDER LONGIT.	11**	STR.
G12	GIRDER LONGIT.	11**	
G13	GIRDER LONGIT.	11**	
G14	GIRDER END BLOCK HORIZ. STIRRUPS	5	
G15	GIRDER END BLOCK HORIZ.	3	STR.
G16	GIRDER END BLOCK STIRRUPS	5	
G17	GIRDER END BLOCK STIRRUPS	5	
G18	GIRDER END BLOCK STIRRUPS	5	
G19	GIRDER END BLOCK HORIZ	6**	
G20	GIRDER END BLOCK HORIZ	9	
G21	GIRDER LONGIT	11	
G22	GIRDER END BLOCK	6	

NOTE: FOR DIMENSION A SEE 'GIRDER SCHEDULE'

BENDING DIAGRAM (ALL DIMENSIONS ARE OUT TO OUT)

* VARIES FOR SKEWED SPANS
** USE TYPE A706 GRADE 60
*** ADJUST FOR ACTUAL END BLOCK DIMENSION

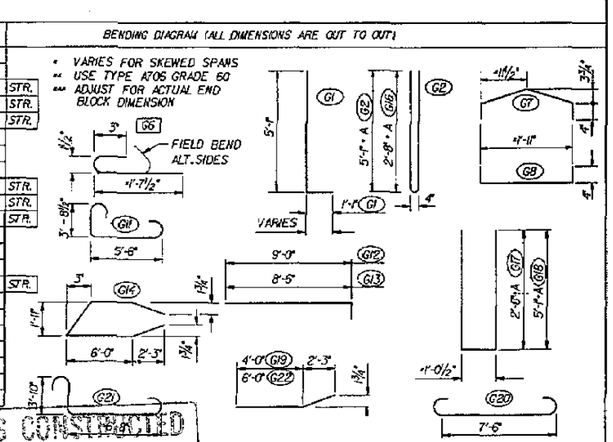

FOR "AS CONSTRUCTED PLANS" ONLY

Bridge Design Engr.				REGION NO.	STATE	FED. AID PROJ. NO.	SHEET NO. / TOTAL SHEETS
Supervisor				10	WASH		
Designed By	D. S. OPPENHEIM			JOB NUMBER			
Checked By	Y. POLYAKOV			95W036			
Detailed By	D. S. OPPENHEIM						
Bridge Projects Engr.							
Prelim Plan By							
Architect/Specialist	DATE	REVISION	BY	APP'D			

SPECIAL ABNOR... STATE OF WASHINGTON REGISTERED PROFESSIONAL ENGINEER 1958 EXPIRES 4/14/97

Washington State Department of Transportation

ANDERSEN BJORNSTAD KANE JACOBS • INC CONSULTING ENGINEERS

SR 167
15TH NW TO 84TH AVE. SO.
HOV AND SC&DI - STAGE 2
BRIDGE 167/121 E & W

PRESTRESSED GIRDER

BRIDGE DOC. SHEET NO. 16

SHEET 467 OF 663 SHEETS

SR 167/91

SR167/121 JOB NO. 70H SHEET 16

PLOTTED: 03MAR95 9:31:65.18 1 01.SEC2 .DGN

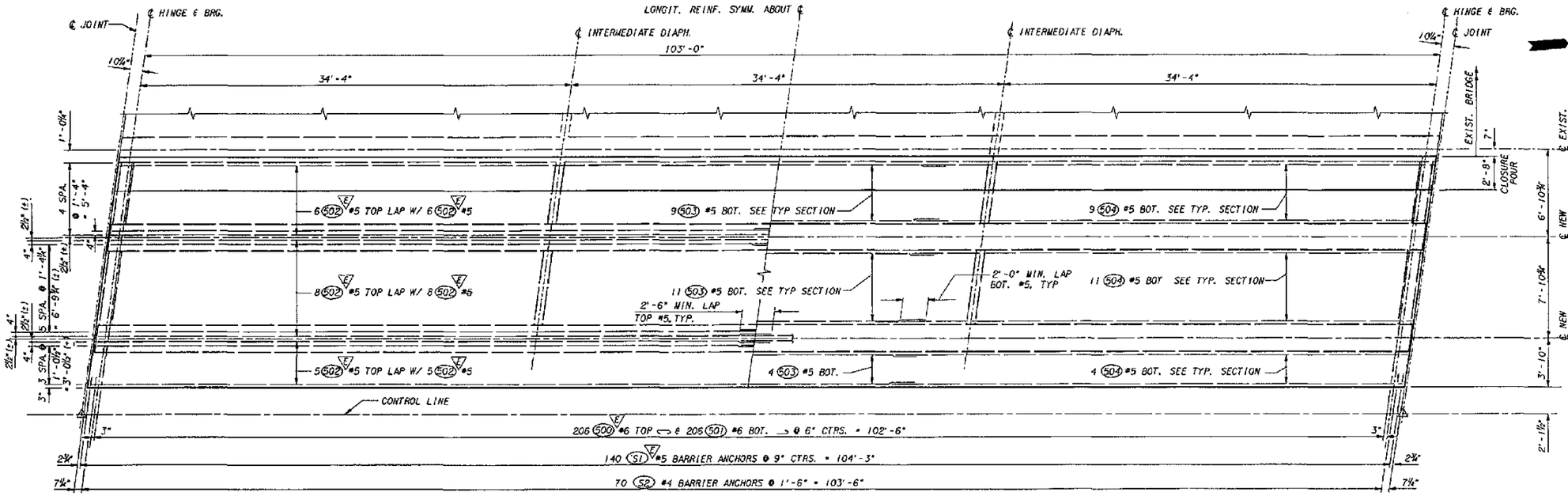

PRESTRESS GIRDER SLAB REINFORCING PLAN

WEST BRIDGE SHOWN, EAST BRIDGE SIMILAR

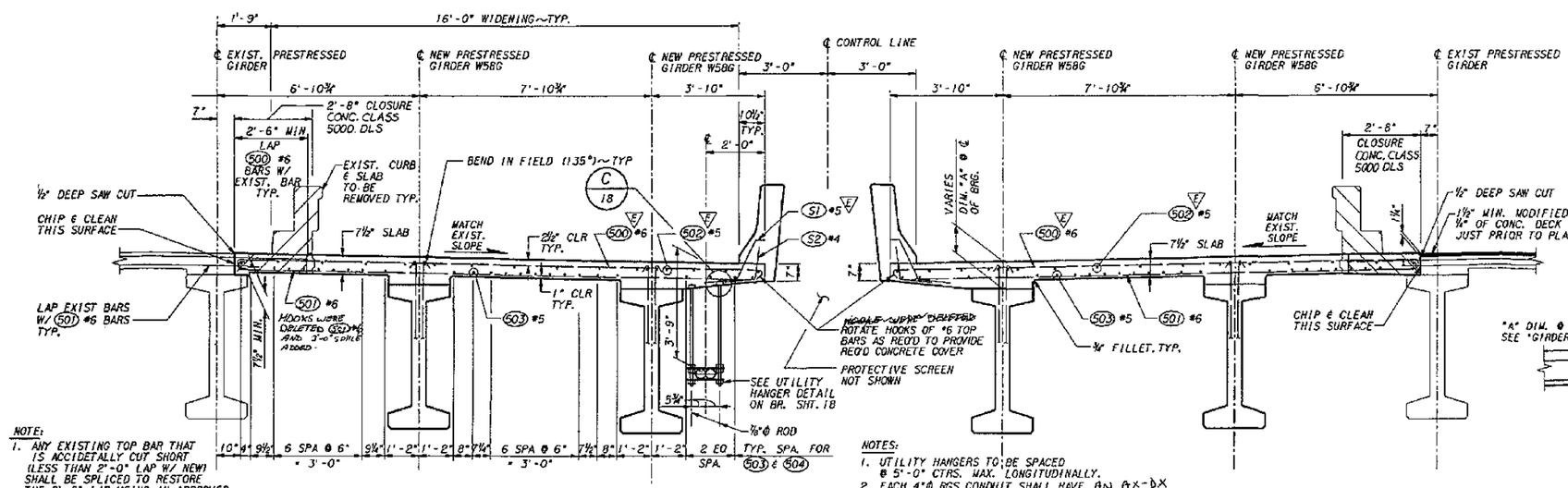

NOTE:
1. ANY EXISTING TOP BAR THAT IS ACCIDENTALLY CUT SHORT (LESS THAN 2'-0" LAP W/ NEW) SHALL BE SPLICED TO RESTORE THE 2'-6" LAP USING AN APPROVED MECHANICAL TENSION BUTT SPLICE.

WEST BRIDGE

NOTES:
1. UTILITY HANGERS TO BE SPACED @ 5'-0" CTRS. MAX. LONGITUDINALLY.
2. EACH 4"Φ RGS CONDUIT SHALL HAVE AN AX-DX ~~AN~~ EXPANSION COUPLING PER THE CONDUIT MANUFACTURER AT ~~EACH PIER LOCATION~~ 2 And 3.

EAST BRIDGE

TYPICAL SECTION NEAR MID SPAN OF SPAN 2

PROTECTIVE SCREEN NOT SHOWN

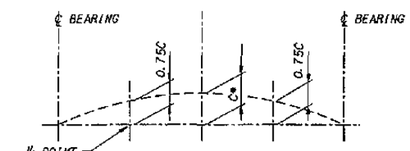

SCREED CAMBER

*DIMENSION "C" EQUALS 1⅜"

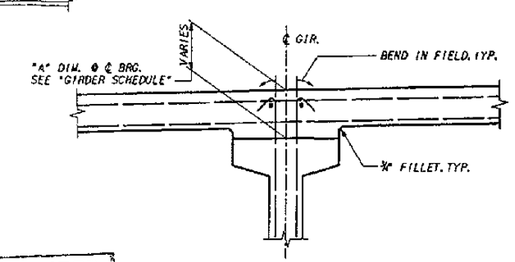

TYPICAL SECTION THRU GIRDER

SHOWING METHOD OF ADJUSTING ROADWAY ELEVATIONS FOR VERTICAL CURVES, CAMBER OR SUPERELEVATIONS

FOR "AS CONSTRUCTED PLANS" ONLY

Bridge Design Engr.					REGION NO.	STATE	FED. AID PROJ. NO.	SHEET NO.	TOTAL SHEETS
Supervisor									
Designed By D. S. OPPENHEIM 4/94					10	WASH			
Checked By C. A. ARNOLD 4/94					JOB NUMBER				
Detailed By D. S. OPPENHEIM 4/94					95W036				
Bridge Projects Engr.									
Prelim Plan By									
Architect/Specialist	DATE	REVISION	BY	APP'D	4771				

C. A. ARNOLD, STATE OF WASHINGTON, 1958, REGISTERED PROFESSIONAL ENGINEER — EXPIRES 4/14/97

Washington State Department of Transportation

ANDERSEN BJORNSTAD KANE JACOBS • INC CONSULTING ENGINEERS

SR 167
15TH NW TO 84TH AVE. SO.
HOV AND SC&DI - STAGE 2
BRIDGE 167/121 E & W

PRESTRESS GIRDER SLAB REINF PLAN

BRIDGE SHEET NO. 17

SHEET 468 OF 663 SHEETS

SR167/121 JOB NO. 70N SHEET 17

PLOTTED 03/16/95 93169.1B1 01PLAN4.DGN

SR 167/91

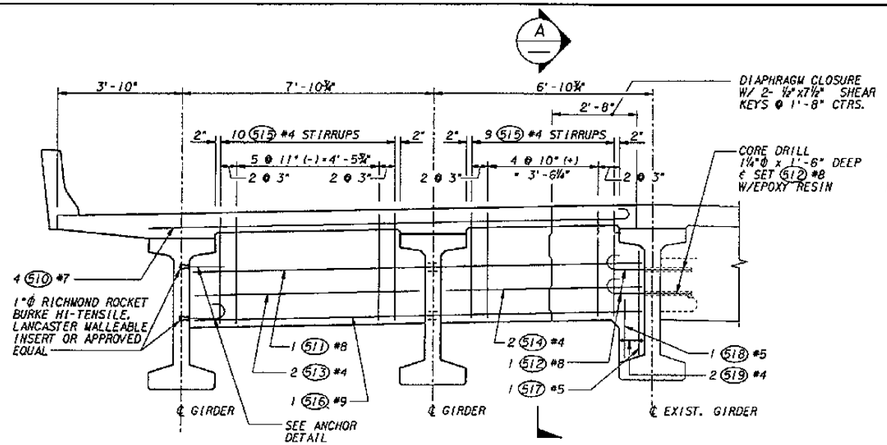

TYPICAL INTERMEDIATE DIAPHRAGM

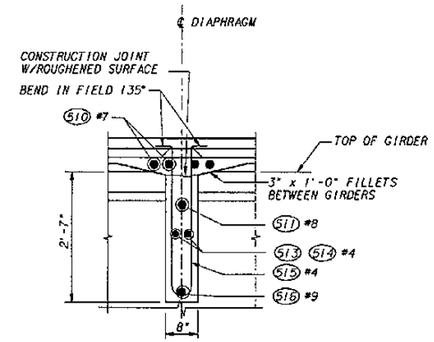

SECTION A

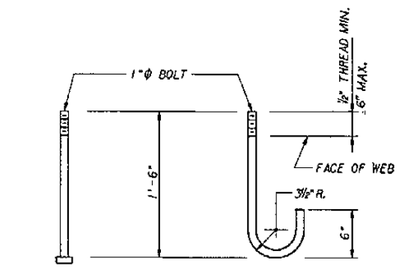

TOP ANCHOR BOTTOM ANCHOR

ANCHOR DETAIL

ASTM A307

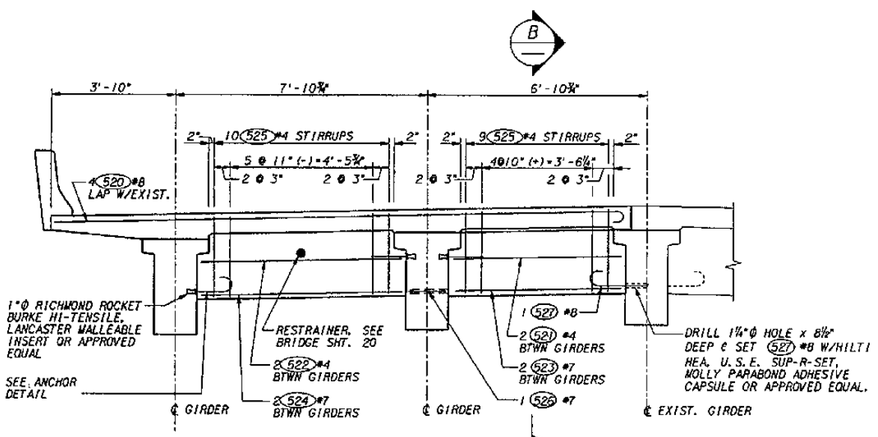

TYPICAL END DIAPHRAGM

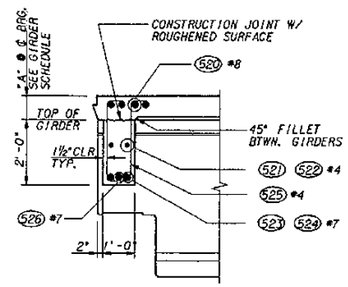

SECTION B

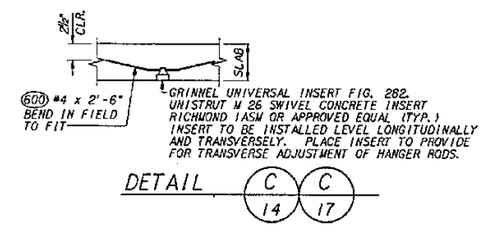

DETAIL C 14 / C 17

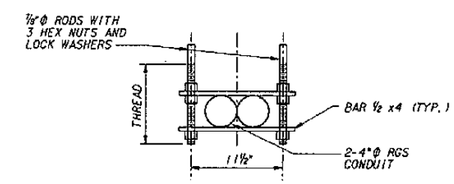

UTILITY HANGER DETAIL

NOTES:

1. CONTRACTOR TO VERIFY THE LOCATION OF PRESTRESSING STRANDS PRIOR TO DRILLING ANY HOLES IN THE EXISTING GIRDERS TO INSURE THAT STRANDS ARE NOT TO BE DAMAGED.
2. ADJUST THE LOCATION OF DRILL HOLES SLIGHTLY TO MISS THE P/S STRANDS IN EXISTING GIRDER AS REQUIRED.

FOR "AS CONSTRUCTED PLANS" ONLY

Bridge Design Engr.					
Supervisor					
Designed By E.W. THOMAS					
Checked By C.A. ARNOLD					
Detailed By E.W. THOMAS					
Bridge Projects Engr.					
Prelim Plan By					
Architect/Specialist	DATE	REVISION	BY	APP'D	

REGION NO.	STATE	FED. AID PROJ. NO.	SHEET NO.	TOTAL SHEETS
10	WASH			
JOB NUMBER 95W036				
4771				

CECIL A. ARNOLD STATE OF WASHINGTON 13958 REGISTERED PROFESSIONAL ENGINEER
EXPIRES 4/14/97

Washington State Department of Transportation

ANDERSEN BJORNSTAD KANE JACOBS • INC CONSULTING ENGINEERS

SR 167
15TH NW TO 84TH AVE. SO.
HOV AND SC&DI - STAGE 2
BRIDGE 167/121 E & W

DIAPHRAGM DETAILS

BRIDGE SHEET NO. 18

SHEET 469 OF 663 SHEETS

SR167/121 JOB NO. 7011 SHEET 18

PLOTTED: 03MAR95 9:16:19 1 BI01APH.DGN

SR167/91

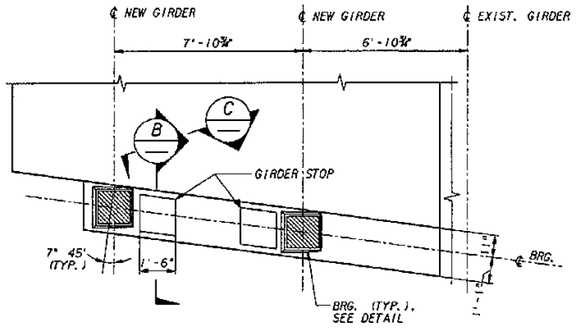

PLAN @ HINGE SEAT

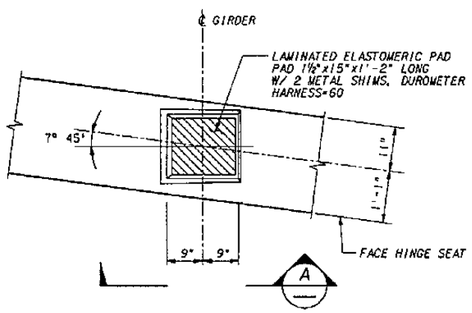

BEARING DETAIL

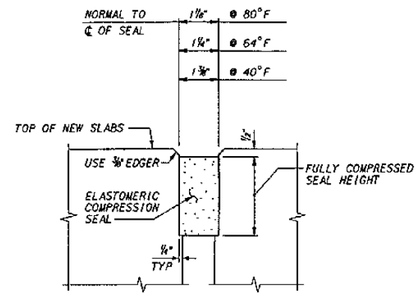

COMPRESSION SEAL
AT WIDENING

DETAIL D 19

COMPRESSION SEAL TABLE *

D. S. BROWN		WATSON BOWMAN ACME		ELASTOMER SEALS		STRUCTURAL ACCESSORIES	
SEAL	W (IN.)	SEAL	W (IN.)	SEAL	W (IN.)	SEAL	W (IN.)
CV-2000	2	WA-200	2	X 2000	2	SA 2000	2

NOTES:
1. * TESTING SHALL BE PER AASHTO M-220 PRIOR TO USE. SEAL IS TO BE CONTINUOUS ACROSS THE ENTIRE ROADWAY WIDTH AND UP INTO BARRIERS.
2. W DENOTES WIDTH OF COMPRESSION SEAL.

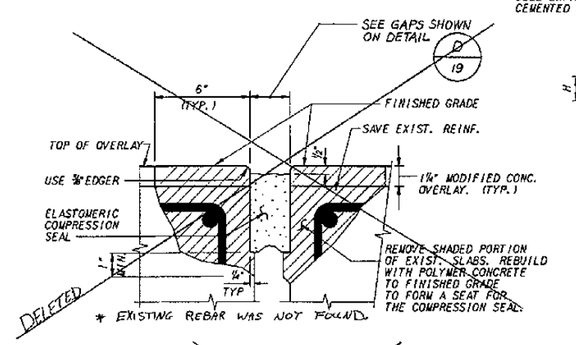

EXPANSION JOINT
EXISTING PART OF EAST BRIDGE. EXISTING PART OF WEST BRIDGE SIMILAR EXCEPT FOR OVERLAY.

DETAIL E 19

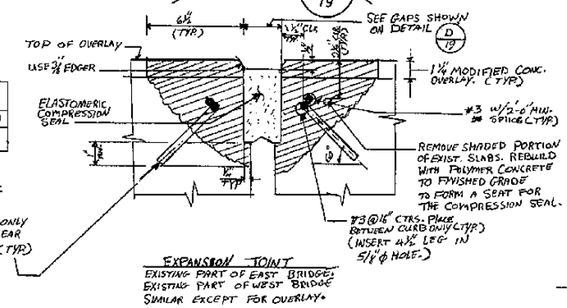

EXPANSION JOINT
EXISTING PART OF EAST BRIDGE. EXISTING PART OF WEST BRIDGE SIMILAR EXCEPT FOR OVERLAY.

DETAIL E 19

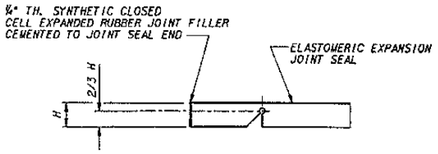

SEAL CUTTING DETAIL

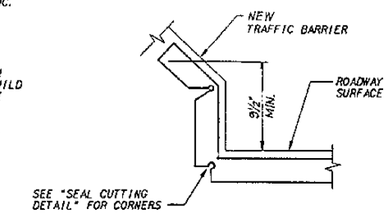

DETAIL AT CURB

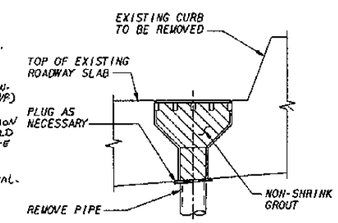

BRIDGE DRAIN PLUG DETAIL
REMOVE DRAIN GRATING & GALV. STEEL CHAIN. FILL DRAIN WITH NON-SHRINK GROUT AFTER PLUGGING.

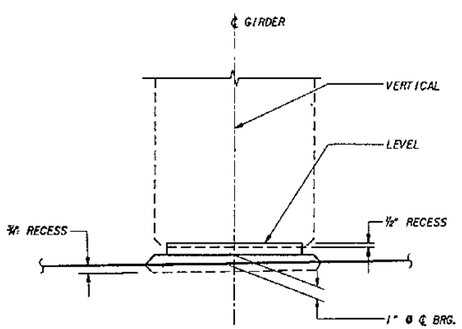

VIEW A

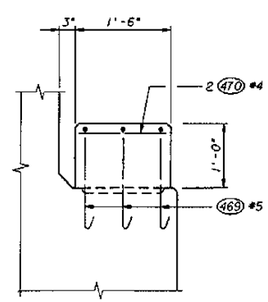

GIRDER STOP B
DETAIL

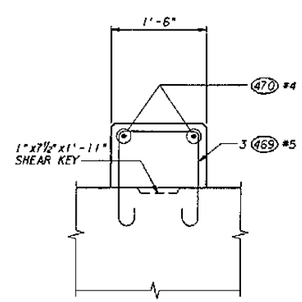

GIRDER STOP C
DETAIL

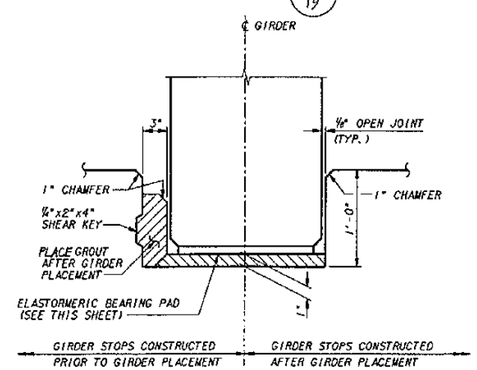

GIRDER STOP INSTALLATION

FOR "AS CONSTRUCTED PLANS" ONLY

Bridge Design Engr.					REGION NO.	STATE	FED. AID PROJ. NO.	SHEET NO. / TOTAL SHEETS
Supervisor					10	WASH		
Designed By D. S. OPPENHEIM 4/94					JOB NUMBER			
Checked By C. A. ARNOLD 4/94					95W036			
Detailed By D. S. OPPENHEIM 4/94					4771			
Bridge Projects Engr.								
Prelim Plan By								
Architect/Specialist	DATE	REVISION	BY	APP'D				

CECIL A. ARNOLD STATE OF WASHINGTON 15958 REGISTERED PROFESSIONAL ENGINEER
EXPIRES 4/14/97

Washington State Department of Transportation
ANDERSEN BUCHANAN KANE JACOBS • INC CONSULTING ENGINEERS

SR 167
15TH NW TO 84TH AVE. SO.
HOV AND SC&DI - STAGE 2
BRIDGE 167/121 E & W

EXP. JT. & MISC. DETAILS

BRIDGE DWG. SHEET NO. 19
SHEET 470 OF 663 SHEETS

SR167/121 JOB NO. 7011 SHEET 19

SR167/91

PLOTTED: 03/MAR/95 01:14:30 PM

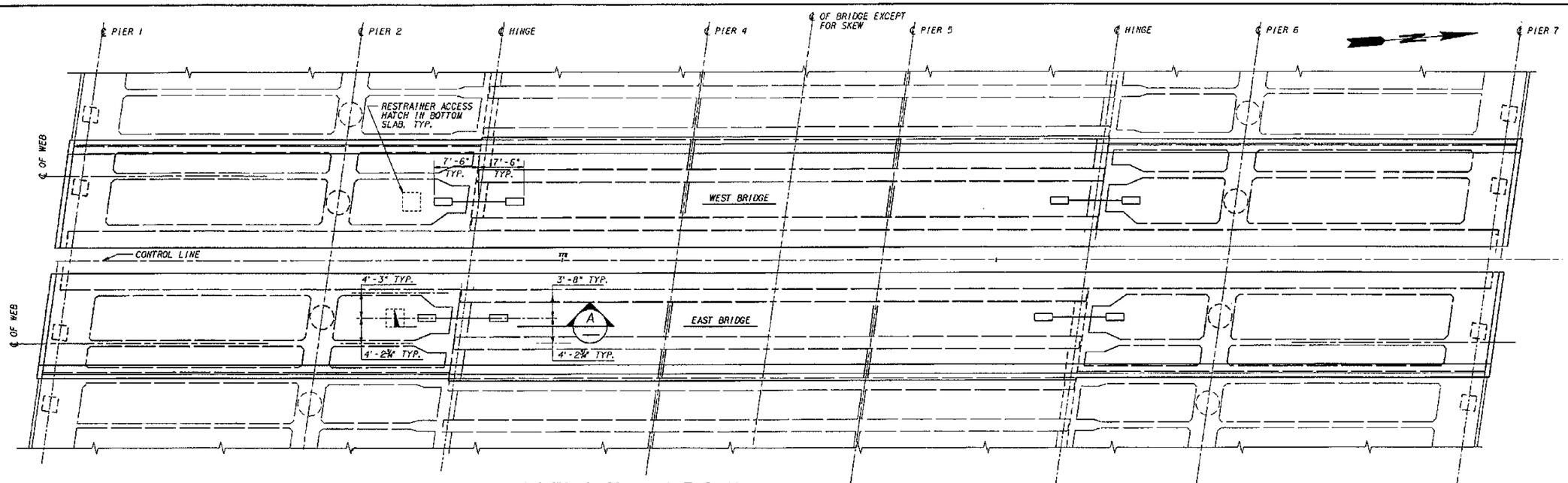

RESTRAINER LAYOUT PLAN

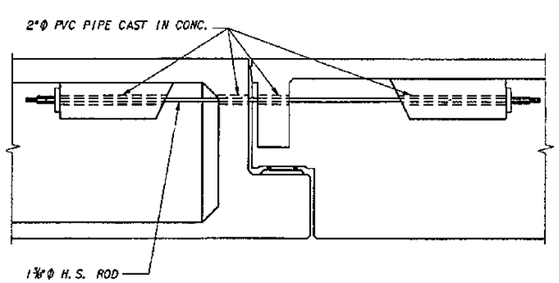

HINGE SECTION A

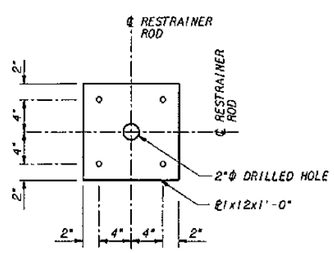

DETAIL

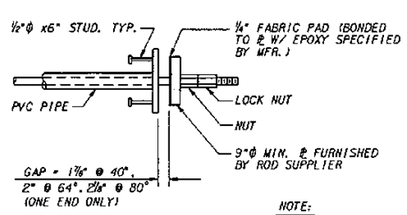

DETAIL

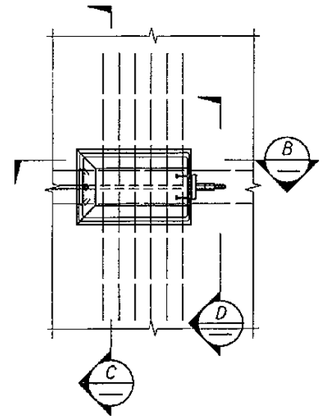

REFLECTED PLAN

NOTE:

1. ALL STRUCTURAL STEEL PLATES AND HARDWARE SHALL BE AASHTO M183 AND SHALL BE HOT-DIPPED GALVANIZED PER AASHTO M111.

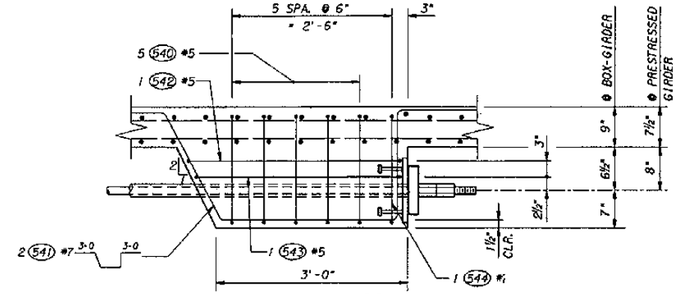

SECTION B

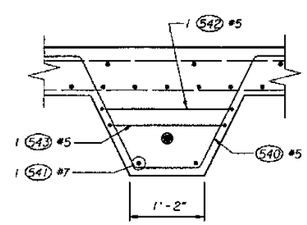

SECTION C

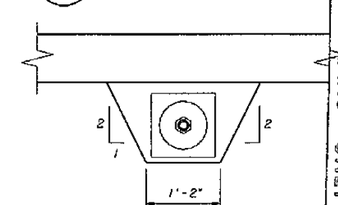

SECTION D

FOR "AS CONSTRUCTED PLANS" ONLY

Bridge Design Engr.					
Supervisor					
Designed By	B. C. DANIELSON				
Checked By	C. A. ARNOLD				
Detailed By	G. O. BISNAR				
Bridge Projects Engr.					
Prelim Plan By					
Architect/Specialist		DATE	REVISION	BY	APP'D

REGION NO.	STATE	FED. AID PROJ. NO.	SHEET NO.	TOTAL SHEETS
10	WASH			

JOB NUMBER 95W036

4771

CECIL A. ARNOLD, STATE OF WASHINGTON, 1958, REGISTERED PROFESSIONAL ENGINEER

EXPIRES 4/14/97

Washington State Department of Transportation

ANDERSEN BJORNSTAD KANE JACOBS • INC

CONSULTING ENGINEERS

SR 167
15TH NW TO 84TH AVE. SO.
HOV AND SC&DI - STAGE 2
BRIDGE 167/121 E & W

RESTRAINER LAYOUT PLAN

BRIDGE SHEET NO. 20

SHEET 471 OF 663 SHEETS

SR167/121 JOB NO. 7011 SHEET 20

SR167/91

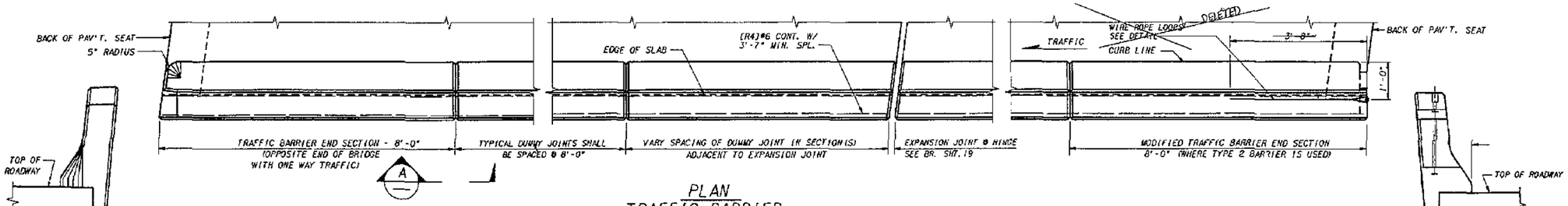

PLAN
TRAFFIC BARRIER

EAST SIDE OF WEST BRIDGE AND WEST SIDE OF EAST BRIDGE BARRIER CONTINUOUS BETWEEN ROADWAY EXPANSION JOINTS. CONSTRUCTION JOINTS WITH SHEAR KEYS ARE PERMISSIBLE AT DUMMY JOINTS LOCATIONS. FORM JOINTS BETWEEN DUMMY JOINTS SHALL NOT BE PERMITTED.

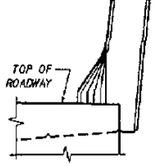

END VIEW

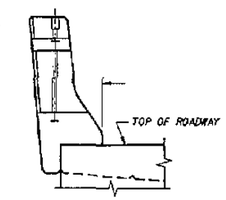

END VIEW

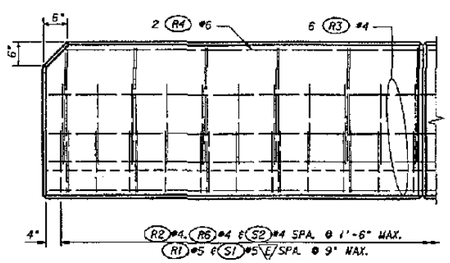

OUTSIDE ELEVATION
END OF TRAFFIC BARRIER

WING WALL NOT SHOWN.

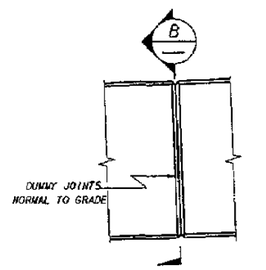

VIEW A

ALL CHAMFERS ¾".

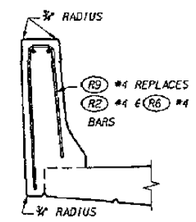

SLIPFORM ALTERNATE

SEE TYPICAL SECTION - TRAFFIC BARRIER FOR ADDITIONAL DETAILS.

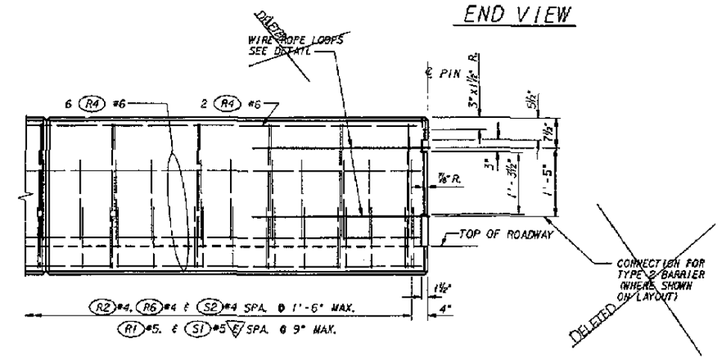

OUTSIDE ELEVATION
END OF MODIFIED TRAFFIC BARRIER
FOR TYPE 2 BARRIER ANCHORAGE

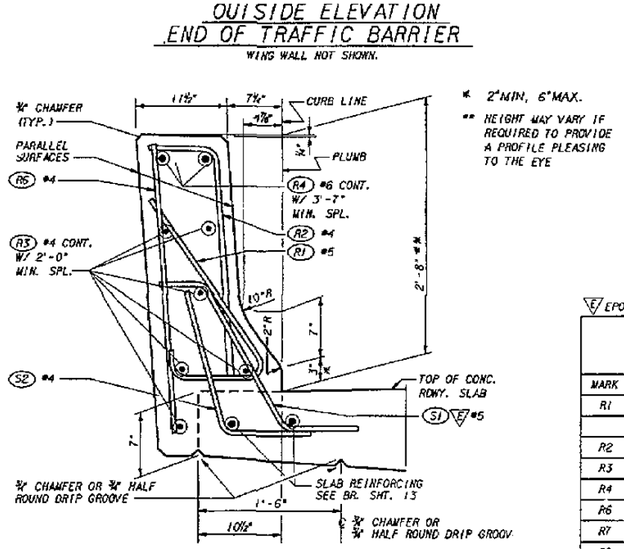

* 2" MIN, 6" MAX.

** HEIGHT MAY VARY IF REQUIRED TO PROVIDE A PROFILE PLEASING TO THE EYE

TYPICAL SECTION - TRAFFIC BARRIER

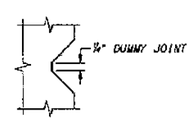

SECTION 2-2

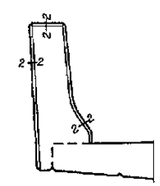

SECTION B

E EPOXY COATED

DIMENSIONS TO POINTS OF INTERSECTION.

TRAFFIC BARRIER BAR LIST

ALL REINFORCING SHALL BE AASHTO M31, GR. 60.

MARK	SIZE	LENGTH	BENDING DIAGRAM (ALL DIMENSIONS ARE OUT TO OUT)
R1	5	2'-11"	
R2	4	3'-3"	
R3	4	(A)	STR.
R4	6	(A)	STR.
R6	4	3'-0"	STR.
R7	9	14'-0"	STR.
R9	4	6'-1"	
			(A) DETERMINE FROM PLANS

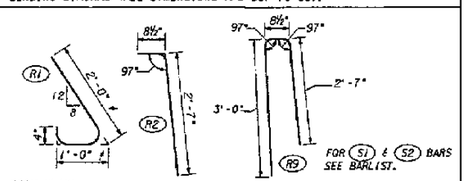

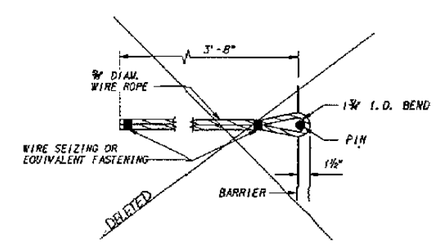

WIRE ROPE DETAIL

FOR PIN DETAIL SEE STD. PLAN C-8

FOR "AS CONSTRUCTED PLANS" ONLY

Bridge Design Engr.					
Supervisor					
Designed By	E.W. THOMAS	4/94			
Checked By	C.A. ARNOLD	4/94			
Detailed By	E.W. THOMAS	4/94			
Bridge Projects Engr.					
Prelim Plan By					
Architect/Specialist			DATE	REVISION	BY / APP'D

REGION NO.	STATE	FED. AID PROJ. NO.	SHEET NO.	TOTAL SHEETS
10	WASH			

JOB NUMBER 95W036

4771

STATE OF WASHINGTON — CHARLES A. ARNOLD — 13356 — REGISTERED PROFESSIONAL ENGINEER — EXPIRES 4/24/97

Washington State Department of Transportation

ANDERSEN BJORNSTAD KANE JACOBS + INC CONSULTING ENGINEERS

SR 167
15TH NW TO 84TH AVE. SO.
HOV AND SC&DI - STAGE 2
BRIDGE 167/121 E & W

TRAFFIC BARRIER - MEDIAN

BRIDGE SHEET NO. 21

SHEET 472 OF 663 SHEETS

SR 167/121 JOB NO. 7011 SHEET 21

PLOTTED: 03AUG95 13:59:18 I:\TBRF3.DGN

SR 167/91

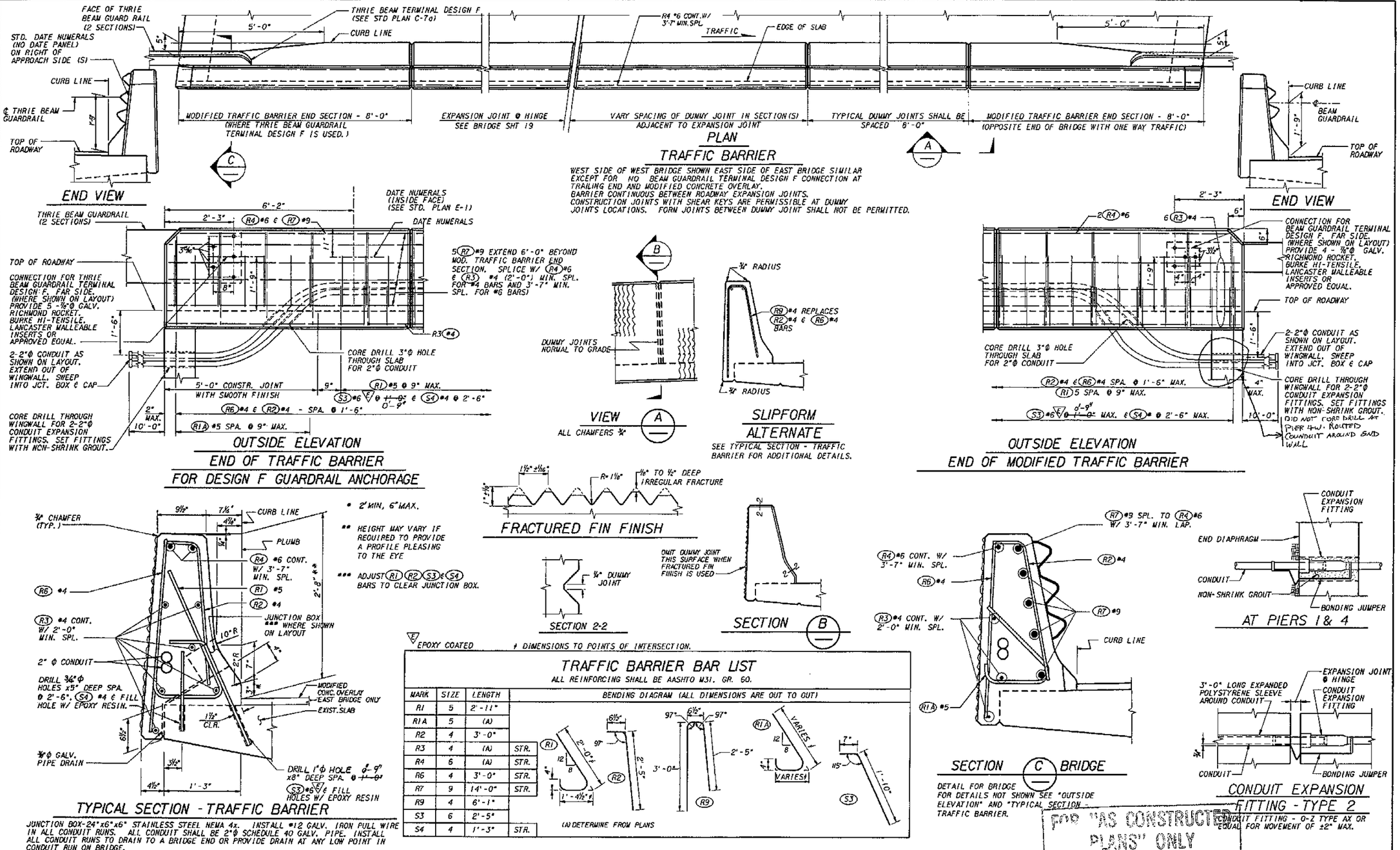

E EPOXY COATED

DIMENSIONS TO POINTS OF INTERSECTION.

TRAFFIC BARRIER BAR LIST

ALL REINFORCING SHALL BE AASHTO M31, GR. 60.

MARK	SIZE	LENGTH	BENDING DIAGRAM (ALL DIMENSIONS ARE OUT TO OUT)
R1	5	2'-11"	
R1A	5	(A)	
R2	4	3'-0"	
R3	4	(A)	STR.
R4	6	(A)	STR.
R6	4	3'-0"	STR.
R7	9	14'-0"	STR.
R9	4	6'-1"	
S3	6	2'-5"	
S4	4	1'-3"	STR.

(A) DETERMINE FROM PLANS

Bridge Design Engr.				
Supervisor				
Designed By E.W. THOMAS 4/94				
Checked By C.A. ARNOLD 4/94				
Detailed By E.W. THOMAS 4/94				
Bridge Projects Engr.				
Prelim Plan By				
Architect/Specialist	DATE	REVISION	BY	APP'D

REGION NO.	STATE	FED. AID PROJ. NO.	SHEET NO.	TOTAL SHEETS
10	WASH			
JOB NUMBER 95W036				
4771				

CECIL A. ARNOLD — STATE OF WASHINGTON — 1958 — REGISTERED PROFESSIONAL ENGINEER — EXPIRES 4/14/97

Washington State Department of Transportation

ABKJ ANDERSEN BJORNSTAD KANE JACOBS • INC CONSULTING ENGINEERS

SR 167
15TH NW TO 84TH AVE. SO.
HOV AND SC&DI - STAGE 2
BRIDGE 167/121 E & W

TRAFFIC BARRIER OUTSIDE

BRIDGE SHEET NO. 22

SHEET 473 OF 663 SHEETS

SR 167/121 JOB NO. 7011 SHEET 22

SR 167/91

PLOTTED: 03/24/95 9:16:18 AM 01TBFF1.DGN

PLAN SHEETS AFFECTED:

547
552
579
599
643

NOTES:

1. ALL PARTS SHALL BE GALVANIZED IN ACCORDANCE WITH AASHTO M 111 AFTER FABRICATION.
2. ADJUST 3/8" CABLE TENSION TO PRODUCE 3% VERTICAL SAG BETWEEN INTERMEDIATE BEAMS.

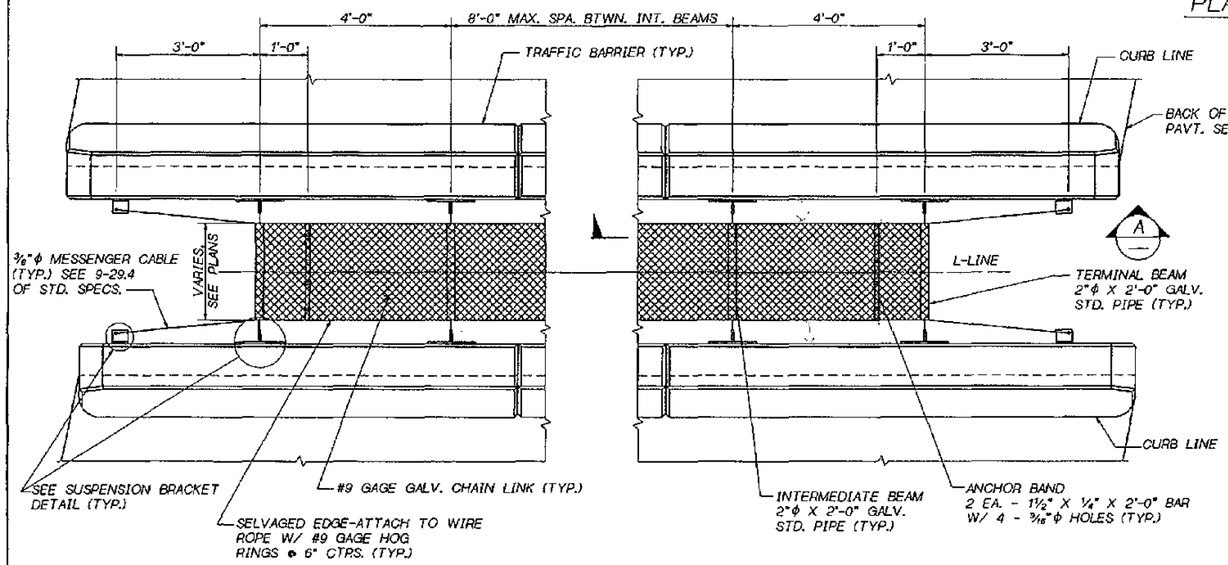

PLAN

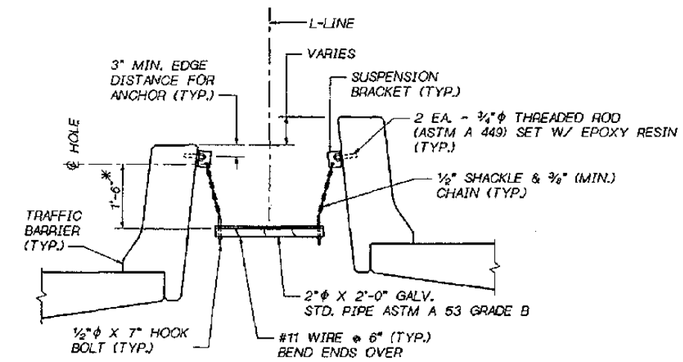

* CHAIN LENGTH MAY VARY TO LEVEL SCREEN

TYPICAL SECTION

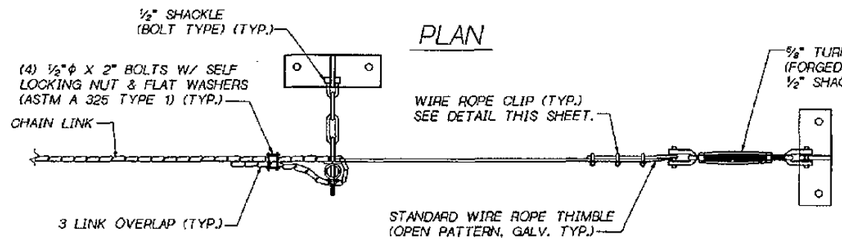

VIEW A

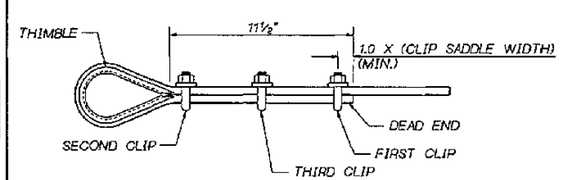

WIRE ROPE CLIP DETAIL

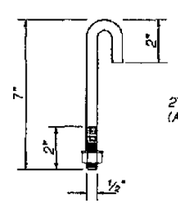

HOOK BOLT

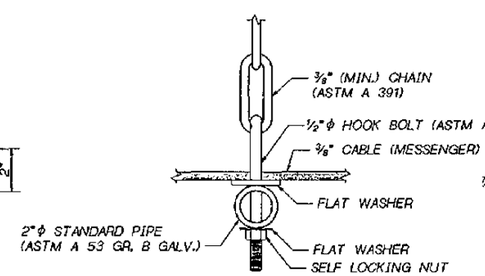

HOOK BOLT DETAIL

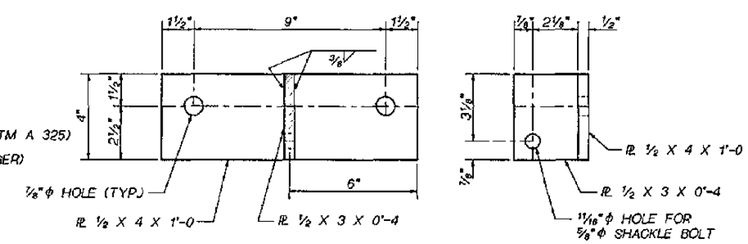

SUSPENSION BRACKET

AASHTO M 183

NOTE:
GAS-CUT OR SAW-CUT ONLY FOR PL ½ X 3 X 0'-4

1 ADDED BR. SHT. 19A

Bridge Design Engr. C. C. RUTH					
Supervisor R. T. SHAEFER					
Designed By					
Checked By					
Detailed By					
Bridge Projects Engr.					
Prelim. Plan By	1 ADDED BR. SHT. 19A		MA		
Architect/Specialist	DATE	REVISION	BY	APP'D	

REGION NO.	STATE	FED. AID PROJ. NO.	SHEET NO.	TOTAL SHEETS
10	WASH.			
JOB NUMBER				

BRIDGE AND STRUCTURES OFFICE

RAYMOND T. SHAEFER — STATE OF WASHINGTON — 13270 — REGISTERED PROFESSIONAL ENGINEER — EXPIRES 1/22/96
SUPERVISING BRIDGE ENGINEER

CHARLES C. RUTH — STATE OF WASHINGTON — 22822 — REGISTERED PROFESSIONAL ENGINEER — EXPIRES 8/3/96
BRIDGE DESIGN ENGINEER

Washington State Department of Transportation

SR 167
15TH NW TO 84TH AVE. SO.
HOV AND SC & DI - STAGE 2

PROTECTIVE SCREEN

BRIDGE SHEET NO. ~~19A~~ 19A-2 SHEET
~~547A~~ 493A OF 663 SHEETS

25-MAR-96

ANDERSONROOT:[FGB]SR167_PRO.FGB;1

SR ____ JOB NO. ____ SHEET ____

S=BAR IS INCLUDED IN SUBSTRUCTURE QUANITIES
F=BAR TO BE FIELD WELDED
T=TIE OR STIRRUP
E=BAR IS TO BE EPOXY COATED
V=BAR DIMENSIONS VARY BETWEEN DIMENSIONS SHOWN ON THIS LINE AND THE FOLLOWING LINE

MARK NO	LOCATION	SIZE	No REQD	BEND TYPE	TIE OR STIR	FIELD WELD	SUBSTR	EPOXY COAT	VARIES	No EACH	U FT	U IN	W FT	W IN	X FT	X IN	Y FT	Y IN	Z FT	Z IN	F1 DEG	F2 DEG	LENGTH FT	LENGTH IN	WEIGHT LBS
	PIER 1 & 4																								
100	FTG TOP LONG & TRANSV.	6	48	61			S				5	9.0	1	6.0	1	6.0							8	5.0	607
101	FTG BOT LONG & TRANSV.	6	96	52			S				5	9.0											7	1.0	1021
102	COL VERT	5	24	70			S				2	2.0	3	6.0	3	6.0							10	1.0	252
103	COL VERT	5	32	51			S				3	6.0											4	1.0	136
104	COL	4	8	50			S				2	2.0											2	2.0	12
105	COL HOOPS	4	44	83			S				2	3.0	2	3.0									10	6.5	310
106	COL HINGES	11	28	56			S				8	0.0											11	4.0	1686
	5 FEET 6 INCHES DIA SHAFTS PIER 2 E&W 2 SHAFTS																								
200	SPIRAL TOP	5	2	67			S				4	6.0	0	3.5							155		2166	4.4	4519
201	SPIRAL BOT	5	2	67			S				4	6.0	0	9.0							158		2211	0.0	4612
210	VERTICALS	11	64	50			S				90	6.0											90	6.0	30773
	PIER 3 E&W 2 SHAFTS																								
200	SPIRAL TOP	5	2	67			S				4	6.0	0	3.5							155		2166	4.4	4519
202	SPIRAL BOT	5	2	67			S				4	6.0	0	9.0							147		2057	0.8	4291
211	VERTICALS	11	64	50			S				87	6.0											87	6.0	29753
	PIER 2 E&W																								
220	VERTICAL COL	11	24	51			S				26	2.0											27	9.0	3538
221	SPIRAL	5	2	67			S				3	9.0	0	3.5							82		952	11.1	1988
	PIER 3 E&W																								
230	VERTICAL COL	11	24	51			S				29	6.0											31	1.0	3963
231	SPIRAL	5	2	67			S				3	9.0	0	3.5							94		1092	4.5	2279
	BOX GIRDER BOTTOM SLAB																								
400	TRANSV	4	456	64							1	6.0	13	8.0	1	6.0							16	5.0	5001
401	TRANSV AT CLOSURE	6	244	65							1	6.0	5	0.0									6	4.0	2321
402	LONGIT	4	144	50							40	0.0											40	0.0	3848
403	LONGIT	4	144	50							32	0.0											32	0.0	3078
404	TRANSV AT CLOSURE	6	244	66							1	0.0	1	7.0									2	5.0	886
	WEB																								
406	LONGIT AT HINGE	8	24	93							36	0.0											36	0.0	2307
407	STIRRUPS	5	1680	65							1	0.0	5	3.0									6	1.5	10732
408	LONGIT	4	144	50							32	9.0											32	9.0	3150
409	LONGIT	6	12	50							43	0.0											43	0.0	775
410	LONGIT	8	24	50							36	0.0											36	0.0	2307
411	LONGIT AT HINGE	4	48	93							32	9.0											32	9.0	1050
412	LONGIT AT HINGE	6	12	93							43	0.0											43	0.0	775
413	BOT SLAB AT OPENING	4	32	50							10	0.0											10	0.0	214
414	BOT SLAB AT OPENING	4	32	51							10	0.0											10	6.0	224
	ROADWAY SLAB TOP MAT																								
415	TRANSV	6	476	51				E			17	7.0											18	3.0	13048
416	TRANSV AT OVERHANG	6	20	51				E			6	0.0											6	8.0	200
420	LONGIT	14	20	50				E			35	6.0											35	6.0	5432
421	LONGIT	14	16	50				E			34	10.0											34	10.0	4264
422	LONGIT	14	16	50				E			44	3.0											44	3.0	5416
423	LONGIT	14	12	50				E			41	10.0											41	10.0	3840
424	LONGIT	14	8	50				E			53	3.0											53	3.0	3259
425	LONGIT	14	16	50				E			51	10.0											51	10.0	6344
426	LONGIT	14	20	50				E			59	3.0											59	3.0	9065
427	LONGIT	14	44	50				E			64	9.0											64	9.0	21795
428	LONGIT	14	20	50				E			67	6.0											67	6.0	10328
430	LONGIT AT END PIERS	11	76	65				E			5	0.0	7	8.0									12	4.0	4980
431	LONGIT AT END PIERS	5	20	50				E			16	9.0											16	9.0	349
432	LONGIT AT HINGE	11	16	68				E			6	9.0	5	1.5	1	2.5	1	1.0					13	1.6	1136
433	LONGIT AT HINGE	11	12	68				E			4	9.0	5	1.5	1	2.5	1	1.0					11	1.6	710
434	LONGIT AT HINGE	11	44	68				E			2	9.0	5	1.5	1	2.5	1	1.0					9	1.6	2134
435	LONGIT AT HINGE	11	16	68				E			1	6.0	5	1.5	1	2.5	1	1.0					7	10.6	670
436	LONGIT AT CLOSURE	5	32	50				E			35	0.0											35	0.0	1168
437	LONGIT END PIERS	5	4	50				E			23	0.0											23	0.0	96
	BOTTOM MAT																								
445	TRANSV	6	444	80							11	9.0	3	6.0							170		15	2.9	10166
446	TRANSV AT OVERHANG	4	160	90							5	10.0											5	10.0	623
447	TRANSV AT OVERHANG	4	8	91							7	8.0											7	8.0	41
448	TRANSV AT CLOSURE POUR	4	152	50							4	6.0											4	6.0	457
449	TRANSV AT END	4	8	92							5	0.0											5	0.0	27
450	LONGIT	5	168	50							32	6.0											32	6.0	5695
460	LEDGE BEAM HORIZONTAL	11	48	51		F					5	9.0											7	4.0	1870
461	LEDGE BEAM BOTTOM	5	48	70							4	0.0	1	6.0									6	6.5	328
462	LEDGE BEAM VERTICAL	6	200	56							4	11.0											6	7.0	1978
463	LEDGE BEAM STIRRUP BTWN BRG	5	72	70	T						2	9.0	1	7.0	1	7.0							6	10.5	516
464	LEDGE BEAM STIRRUP HAT	6	72	56							2	9.0											4	5.0	478
465	LEDGE BEAM DIAGONAL	6	48	52							6	9.0											8	1.0	583
466	LEDGE BEAM SHEAR FRICTION	6	32	64							5	0.0	0	11.0	5	0.0							10	7.0	509
467	LEDGE BEAM HOOP AROUND #11	5	56	61							3	0.0	1	8.5	1	8.5	0	10.0	0	10.0			7	7.0	443
468	LEDGE BEAM FACE BAR	5	88	50							14	10.0											14	10.0	1361
469	GIRDER STOP	5	24	70							1	3.0	2	2.0	2	2.0							6	6.0	163
470	GIRDER STOP	4	16	50							1	3.0												3.0	13
	PIERS 2 & 3																								
471	CROSSBEAM TOP	11	28	50							17	3.0											17	3.0	2566
472	CROSS BEAM BOT	11	24	50							14	9.0											14	9.0	1881
473	CROSSBEAM	6	40	50							14	9.0											14	9.0	886
474	STIRRUP	5	96	61							2	11.0	4	8.5	4	8.5	0	9.0	0	9.0			13	4.0	1335

MARK NO	LOCATION	SIZE	No REQD	BEND TYPE	TIE OR STIR	FIELD WELD	SUBSTR	EPOXY COAT	VARIES	No EACH	U FT	U IN	W FT	W IN	X FT	X IN	Y FT	Y IN	Z FT	Z IN	F1 DEG	F2 DEG	LENGTH FT	LENGTH IN	WEIGHT LBS
475	TIE	5	48	56							4	3.0											5	8.0	284
476	ANCHOR TOP & BOT	9	64	50							6	0.0											6	0.0	1306
477	ANCHOR	6	24	50							4	0.0											4	0.0	144
	PIERS 1 & 4 END SECTION																								
480	TRANSV TOP ROADWAY SLAB	7	52	51				E			17	6.0											18	4.0	1949
481	TRANSV	6	32	50							17	6.0											17	6.0	841
482	TRANSV	6	40	50							14	9.0											14	9.0	886
483	STIRRUP	5	56	61							4	9.0	5	4.0	5	4.0	0	9.0	0	9.0			16	5.0	959
484	STIRRUP	5	56	61							5	7.0	4	3.0	5	4.0	1	0.0	0	9.0			16	5.0	959
485	STIRRUP	6	68	61							5	4.0	0	9.0	0	9.0							6	7.0	467
486	PAVT SEAT TIE	4	76	65							1	0.0	1	6.0									2	4.5	121
487	STIRRUP WALL - PAVT SEAT	6	12	61							4	3.0	1	0.0	1	0.0							6	0.0	75
488	VERT WALL	4	12	50							5	4.0											5	4.0	43
489	COL BASE VERT	5	40	70							2	2.0	2	6.0	2	6.0							8	1.0	337
490	END WALL OHANG HORIZ	4	12	50							4	6.0											4	6.0	36
491	COL BASE	4	8	50							2	2.0											2	2.0	12
492	COL BASE HOOPS	4	24	83							2	3.0	2	3.0									10	6.5	169
493	ANCHORS TOP & BOT	6	48	50							10	0.0											10	0.0	721
494	ANCHORS	6	32	50							5	0.0											5	0.0	240
	PRESTRESSED GIRDER SPAN																								
500	TRANSV TOP	6	412	52				E			17	8.0											19	0.0	11758
501	TRANSV BOT	6	412	51							17	2.0											17	10.0	11036
502	LONG TOP	5	60	50							53	9.0											53	9.0	3364
503	LONG BOT	5	48	50							30	0.0											30	0.0	1502
504	LONG BOTTOM	5	96	50							40	0.0											40	0.0	4005
	INT DIAPHRAGM																								
510	TOP HORIZ	7	6	51							15	0.0											15	10.0	194
511	HORIZ	8	4	50							14	0.0											14	0.0	150
512	HORIZ	8	8	51							3	0.0											3	11.0	84
513	HORIZ BTWN GIRDERS	4	8	50							7	1.0											7	1.0	38
514	HORIZ BTWN GIRDERS	4	8	50							6	10.0											6	10.0	37
515	STIRRUPS	4	76	71							0	5.0	3	6.0	3	6.0							7	2.1	364
516	BOTT HORIZ	9	4	50							14	0.0											14	0.0	190
517	VERT	5	4	63							0	5.0	3	2.0	3	2.0							6	6.0	27
518	VERT	5	4	63							0	5.0	2	0.0	2	0.0							4	2.0	17
519	HORIZ TIE	4	8	65							0	4.0	0	6.0									0	8.5	4
	END DIAPHRAGM																								
520	TOP HORIZ	8	16	51							17	6.0											18	5.0	787
521	HORIZ BTWN GIRDERS	4	8	50							5	3.0											5	3.0	28
522	HORIZ BTWN GIRDERS	4	8	50							6	3.0											6	3.0	33
523	HORIZ BOT BTWN GIRDERS	7	8	50							5	3.0											5	3.0	86
524	HORIZ BOT BTWN GIRDERS	7	8	50							6	3.0											6	3.0	102
525	STIRRUP	4	76	62							0	9.0	2	6.0	2	6.0	0	5.0	0	5.0			6	1.0	309
526	HORIZ BOT	7	4	50							13	2.0											13	2.0	108
527	ANCHOR	8	4	51							2	3.0											3	2.0	34
	RESTRAINERS																								
540	STIRRUPS TRANSV	5	20	94																			0	0.0	0
541	LONG	7	8	95																			0	0.0	0
542	TIES HORIZ	5	4	60							1	9.0	3	1.5									9	4.5	39
543	TIES HORIZ	5	4	60							1	6.0	3	0.0									8	7.5	36
544	TRANSV	7	4	94																			0	0.0	0
S1	SLAB TO BARRIER VERT	5	644	69				E			0	6.0	0	9.0	1	6.0	0	6.0					2	6.8	1723
S2	SLAB TO BARRIER VERT	4	324	80							2	0.0	1	6.0			0	2.0			96		3	5.0	739
S2	EXIST SLAB TO BARRIER	6	482	69									0	4.5	1	9.0	0	7.0					2	4.5	1719
S4	EXIST SLAB TO BARRIER	4	190	50							1	3.0											1	3.0	159
600	UTILITY HANGER BARS	4	96	50							2	6.0											2	6.0	160

STEEL REINFORCING BAR QUANTITIES NOT INCLUDED IN THIS BAR LIST

TRAFFIC BARRIER (SUPERSTRUCTURE)	14,845

BENDING DIAGRAMS

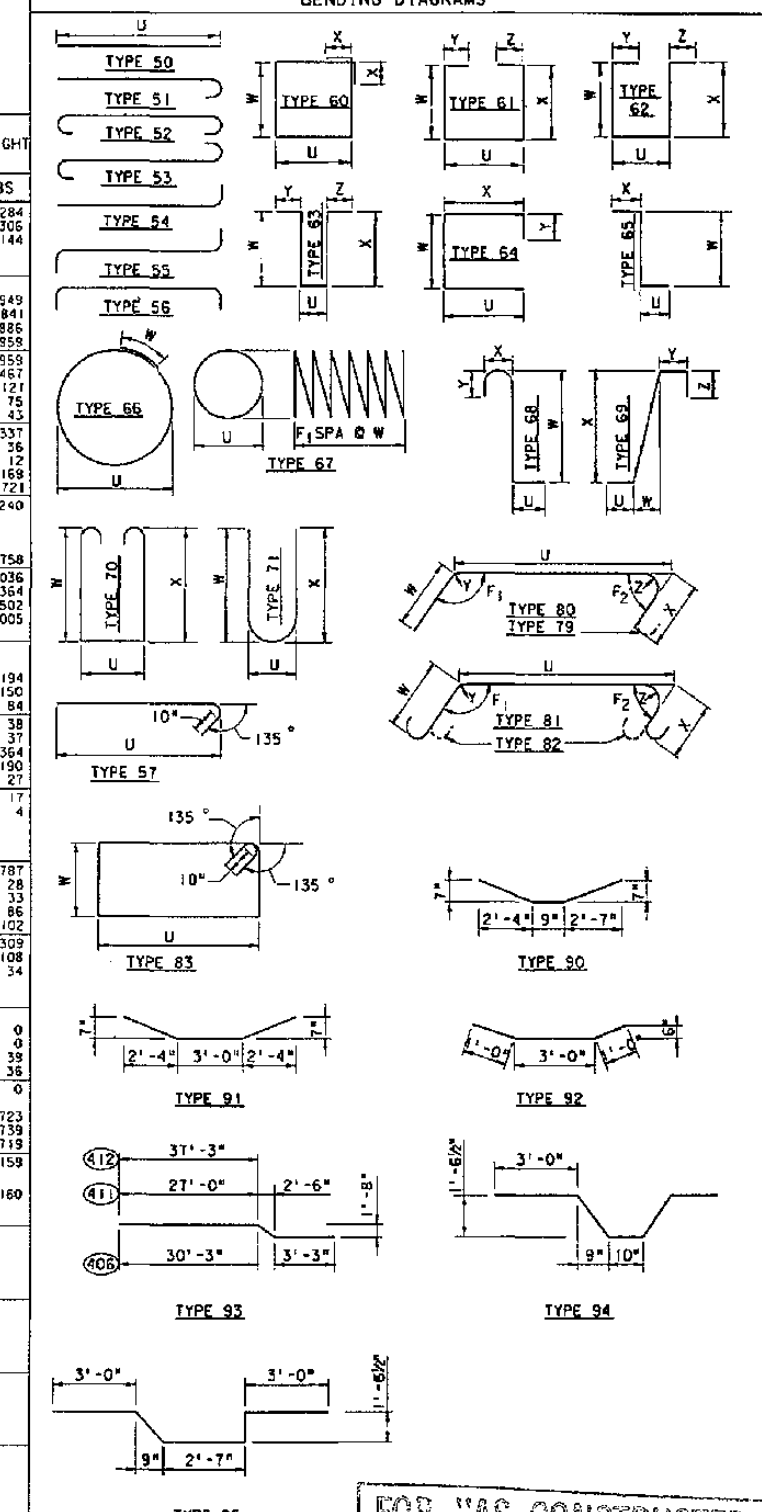

FOR "AS CONSTRUCTED PLANS" ONLY

NOTES:
1. ALL REINFORCING BARS ON THIS SHEET SHALL BE AASHTO M-31, GRADE 60 UNLESS SHOWN OTHERWISE.
2. REINFORCING FOR TRAFFIC BARRIERS NOT SHOWN IN THIS BARRIER SHEET.

Bridge Design Engr.				
Supervisor				
Designed By	C.A. ARNOLD			
Checked By	C.A. ARNOLD			
Detailed By	C.S. YU			
Bridge Projects Engr.				
Prelim Plan By		11-3-95	NOTED TRAFF. BARR. REINF.	WB
Architect/Specialist		DATE	REVISION	BY / APP'D

REGION NO. 10 | STATE WASH | FED. AID PROJ. NO. | SHEET NO. | TOTAL SHEETS

JOB NUMBER 95W036

4771

CECIL A. ARNOLD — STATE OF WASHINGTON — REGISTERED PROFESSIONAL ENGINEER — EXPIRES 4/14/97

Washington State Department of Transportation

Andersen Bjornstad Kane Jacobs • Inc — Consulting Engineers

SR 167
15TH NW TO 84TH AVE. SO.
HOV AND SC&DI - STAGE 2
BRIDGE 167/121 E & W

BAR LIST

BRIDGE SHEET NO. 23
SHEET 474 OF 663 SHEETS

SR167/91

SR167/121 JOB NO. 7011 SHEET 23

CURVE DATA				
P.I. STATION	Δ	RADIUS	TANGENT	LENGTH
L STA.805+95.86	3° 25' 30" RT.	11000'	328.87'	657.55'

SEC. 24, T. 22 N., R. 4 E., W.M.
CITY OF KENT

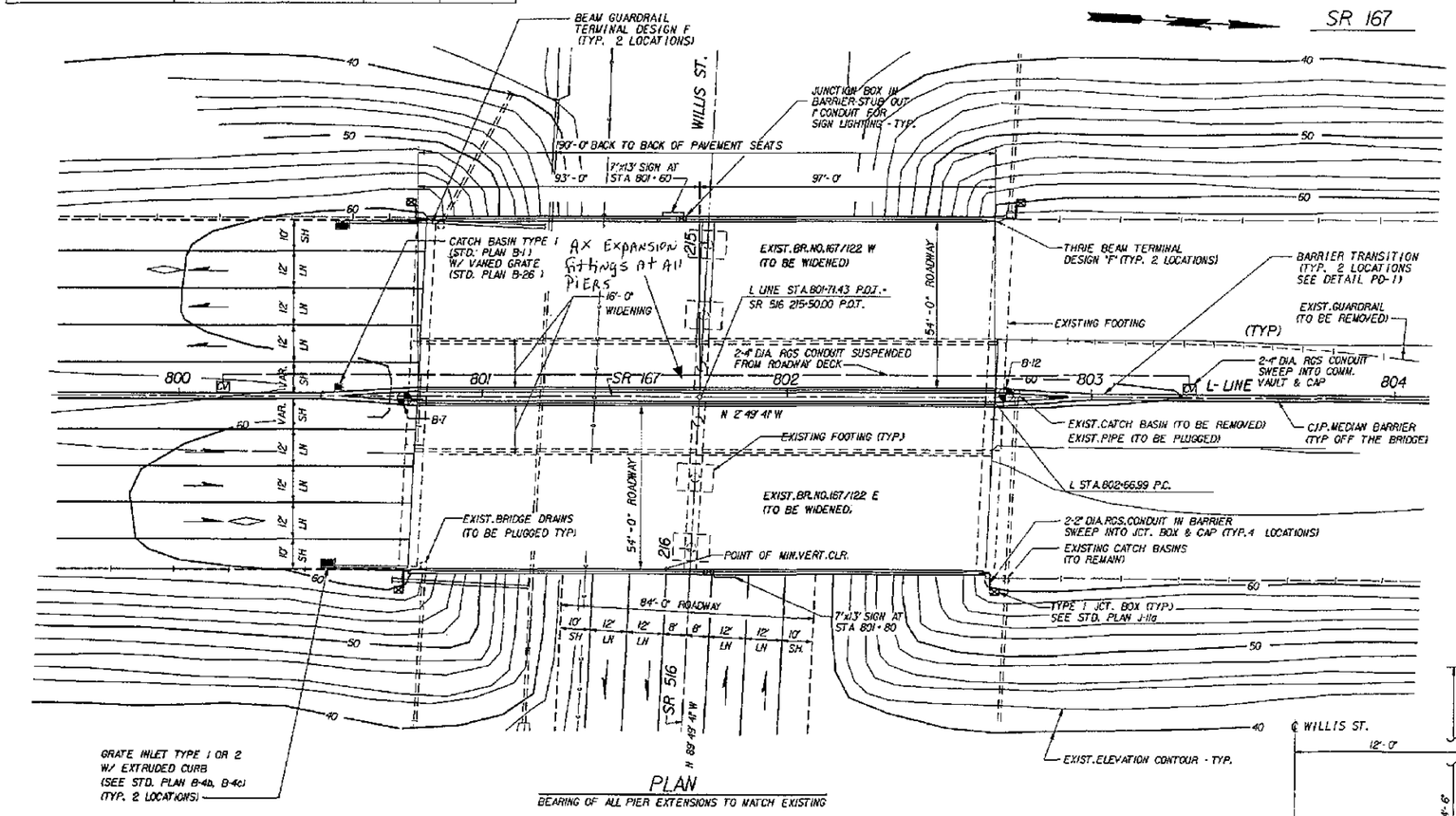

PLAN
BEARING OF ALL PIER EXTENSIONS TO MATCH EXISTING

GENERAL NOTES

1. ALL MATERIAL AND WORKMANSHIP SHALL BE IN ACCORDANCE WITH THE REQUIREMENTS OF THE WASHINGTON STATE DEPARTMENT OF TRANSPORTATION STANDARD SPECIFICATIONS FOR ROAD, BRIDGE AND MUNICIPAL CONSTRUCTION DATED 1994, AND AMENDMENTS.
2. THIS STRUCTURE HAS BEEN DESIGNED IN ACCORDANCE WITH THE REQUIREMENTS OF THE AASHTO STANDARD SPECIFICATIONS FOR HIGHWAY BRIDGES FIFTEENTH EDITION - 1992 WITH INTERIM SPECIFICATIONS THROUGH 1993. ALL PRESTRESSED CONCRETE ELEMENTS HAVE BEEN DESIGNED FOR SERVICE LOAD STRESSES AND CHECKED FOR THE REQUIREMENTS OF LOAD FACTOR DESIGN. ALL OTHER STRUCTURAL ELEMENTS ARE DESIGNED IN ACCORDANCE WITH THE REQUIREMENTS FOR LOAD FACTOR DESIGN. SEISMIC DESIGN OF THIS STRUCTURE HAS BEEN DONE USING AN ACCELERATION COEFFICIENT OF 0.25 AND SOIL PROFILE TYPE II.
3. FOOTING ELEVATIONS AND SUBSTRUCTURE DETAILS ARE SUBJECT TO CHANGE, DEPENDING UPON FOUNDATION MATERIAL ENCOUNTERED. REINFORCING STEEL FOR FOOTINGS, ABUTMENT WALLS AND COLUMNS SHALL NOT BE CUT UNTIL FINAL FOOTING ELEVATIONS HAVE BEEN DETERMINED AND SUBSTRUCTURE DETAILS HAVE BEEN MODIFIED IF NECESSARY.
4. ELEVATIONS SHOWN ON THE PLANS ARE BASED ON RECORD INFORMATION OF ORIGINAL CONSTRUCTION TOGETHER WITH FIELD SURVEY DATA. THE NEW STRUCTURE IS INTENDED TO MATCH THE EXISTING STRUCTURE. THEREFORE, ELEVATIONS GIVEN ON THE PLANS SHALL BE VERIFIED IN THE FIELD BY THE CONTRACTOR FOR COMPATIBILITY.
5. THE CONCRETE IN THE SHAFTS SHALL BE CLASS 4000W OR 4000. THE CONCRETE IN THE ROADWAY DECK SHALL BE CLASS 5000D. THE CONCRETE IN THE CAST-IN-PLACE PILES SHALL BE CLASS 4000P. THE CONCRETE IN THE CLOSURES SHALL BE CLASS 5000LS OR CLASS 5000DLS FOR THE ROADWAY DECK. ALL OTHER CAST-IN-PLACE CONCRETE SHALL BE CLASS 4000.
6. PILES SHALL BE DRIVEN TO A LOAD BEARING CAPACITY OF 55 TONS AT PIERS 1 & 3. SEE SPECIAL PROVISIONS FOR MINIMUM PILE TIP ELEVATIONS. THE MAXIMUM ULTIMATE LOAD FOR PIER 2 SHAFTS ARE 500 TONS EACH.
7. FALSEWORK SHALL NOT BE RELEASED UNTIL ALL CONCRETE BEING SUPPORTED HAS MET THE AGE AND STRENGTH REQUIREMENTS OF THE STANDARD SPECIFICATIONS. FALSEWORK SHALL BE CAREFULLY RELEASED TO PREVENT IMPACT OR UNDUE STRESS IN THE STRUCTURE. CLOSURES SHALL BE MADE AFTER FALSEWORK IS RELEASED BUT BEFORE PLACEMENT OF BARRIERS.
8. UNLESS OTHERWISE SHOWN IN THE PLANS, THE CONCRETE COVER MEASURED FROM THE FACE OF ANY REINFORCING STEEL SHALL BE 2½" AT THE TOP OF THE ROADWAY SLAB, 1" AT THE BOTTOM OF THE ROADWAY SLAB, 7½" AT THE BOTTOM OF FOOTING, 2" AT THE TOP OF FOOTINGS AND 1½" AT ALL OTHER LOCATIONS.

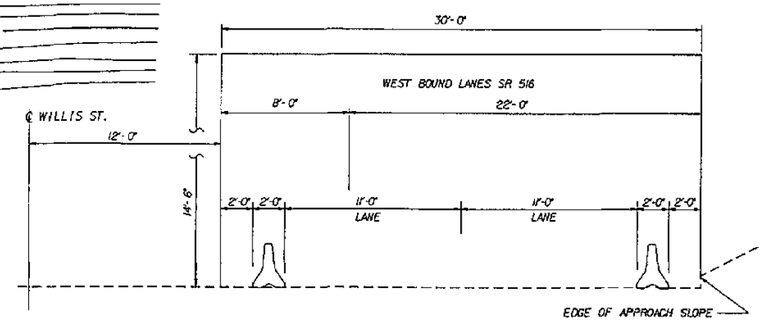

CONSTRUCTION OPENING DIAGRAM
WEST BOUND LANES NORMAL TO WILLIS ST.
EAST BOUND LANES SIMILAR

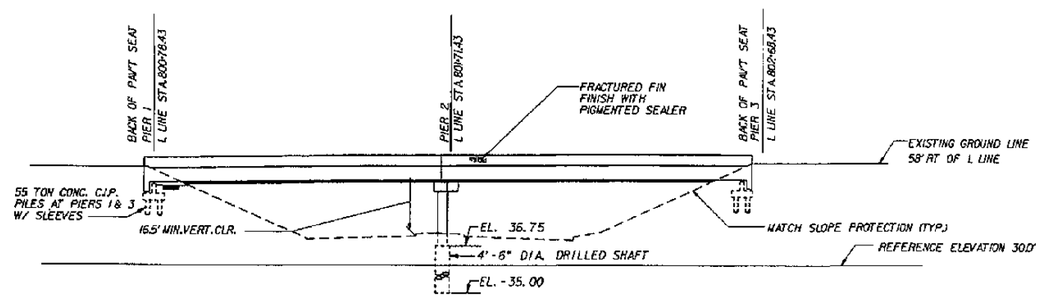

WEST BRIDGE ELEVATION
EAST BRIDGE SIMILAR

DATUM
NAT'L. GEOD. VERT. ADJ. DATUM OF 1978

FOR "AS CONSTRUCTED PLANS" ONLY

P.C. GRIDERS (W58G)
LOADING: HS-25
OR
TWO 24 KIP AXLES 4' C'TRS.

Bridge Design Engr.					REGION NO.	STATE	FED. AID PROJ. NO.	SHEET NO.	TOTAL SHEETS
Supervisor					10	WASH			
Designed By	C. A. ARNOLD 4/94				JOB NUMBER				
Checked By	J. J. MORRIS 4/94				95W036				
Detailed By	K. A. MUELLER 4/94								
Bridge Projects Engr.									
Prelim Plan By									
Architect/Specialist	DATE	REVISION	BY	APP'D	4771				

CERTIFICATE OF REGISTRATION — STATE OF WASHINGTON — REGISTERED PROFESSIONAL ENGINEER — EXPIRES 4/14/97

Washington State Department of Transportation

ANDERSEN SUGIMITAD KANE JACOBS - INC

SR 167
15TH NW TO 84TH AVE. SO.
HOV AND SC&DI - STAGE 2
BRIDGE 167/122

LAYOUT

BRIDGE SHEET NO. 1

SHEET 475 OF 663

SR167/91

SR167/122 JOB NO. 7012 SHEET 1

PLOTTED 04/06/95 9:56AM C:\DGN\02 .DGN

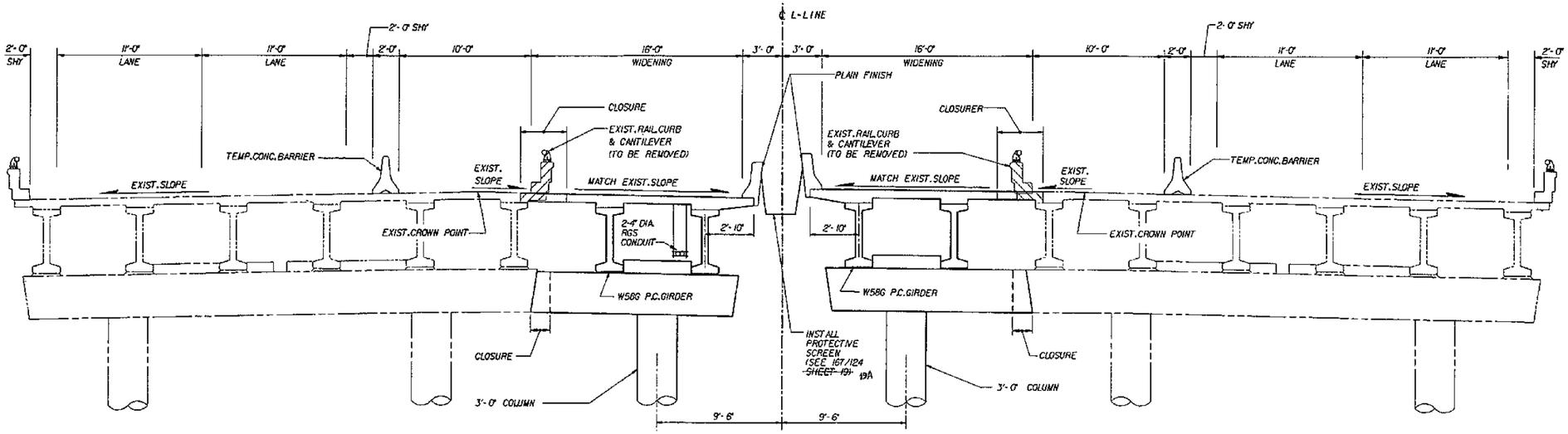

TYPICAL SECTION STAGE 1

SHOWN NEAR INTERMEDIATE PIER

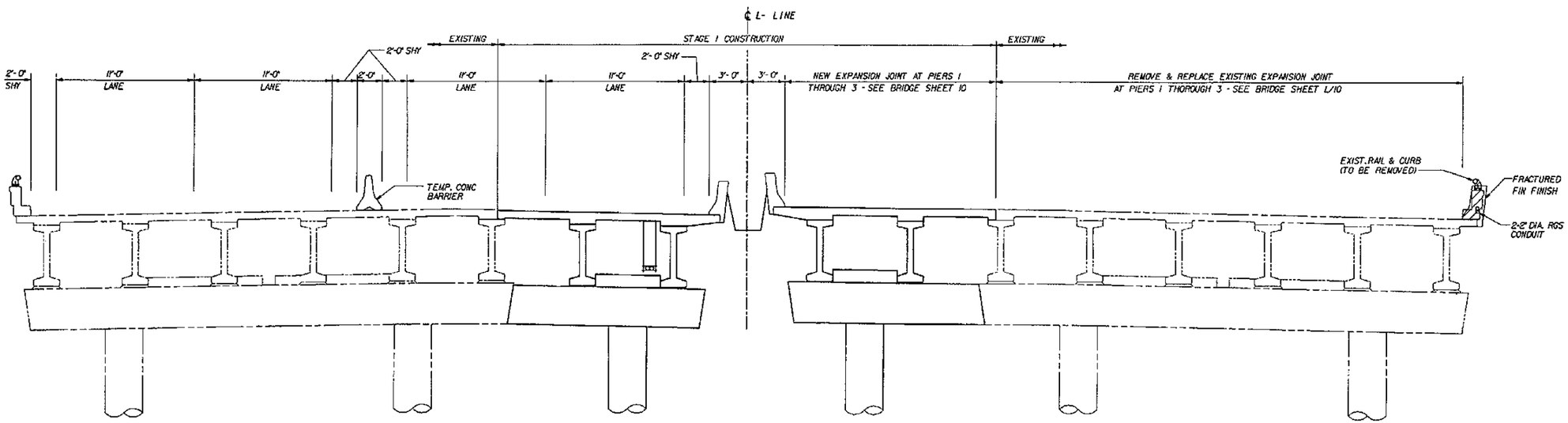

TYPICAL SECTION STAGE 2

SHOWN NEAR INTERMEDIATE PIER

FOR "AS CONSTRUCTED PLANS" ONLY

Bridge Design Engr.					REGION NO.	STATE	FED. AID PROJ. NO.	SHEET NO.	TOTAL SHEETS
Supervisor					10	WASH			
Designed By C. A. ARNOLD 4/94					JOB NUMBER				
Checked By J. J. MORRIS 4/94					95W036				
Detailed By C. A. ARNOLD 4/94									
Bridge Projects Engr.									
Prelim Plan By									
Architect/Specialist	DATE	REVISION	BY	APP'D	4771				

CECIL A. ARNOLD — STATE OF WASHINGTON — 13558 — REGISTERED PROFESSIONAL ENGINEER — EXPIRES 4/14/97

Washington State Department of Transportation

ANDERSEN BJORNSTAD KANE JACOBS • INC CONSULTING ENGINEERS

SR 167
15TH NW TO 84TH AVE. SO.
HOV AND SC&DI - STAGE 2
BRIDGE 167/122

CONSTRUCTION SEQUENCE

BRIDGE SHEET NO. 2

SHEET 476 OF 663 SHEETS

SR167/91

PLOTTED: 04JUL95 93K3J0 (0250ZTS.DGN)

SR167/122 JOB NO. 7012 SHEET 2

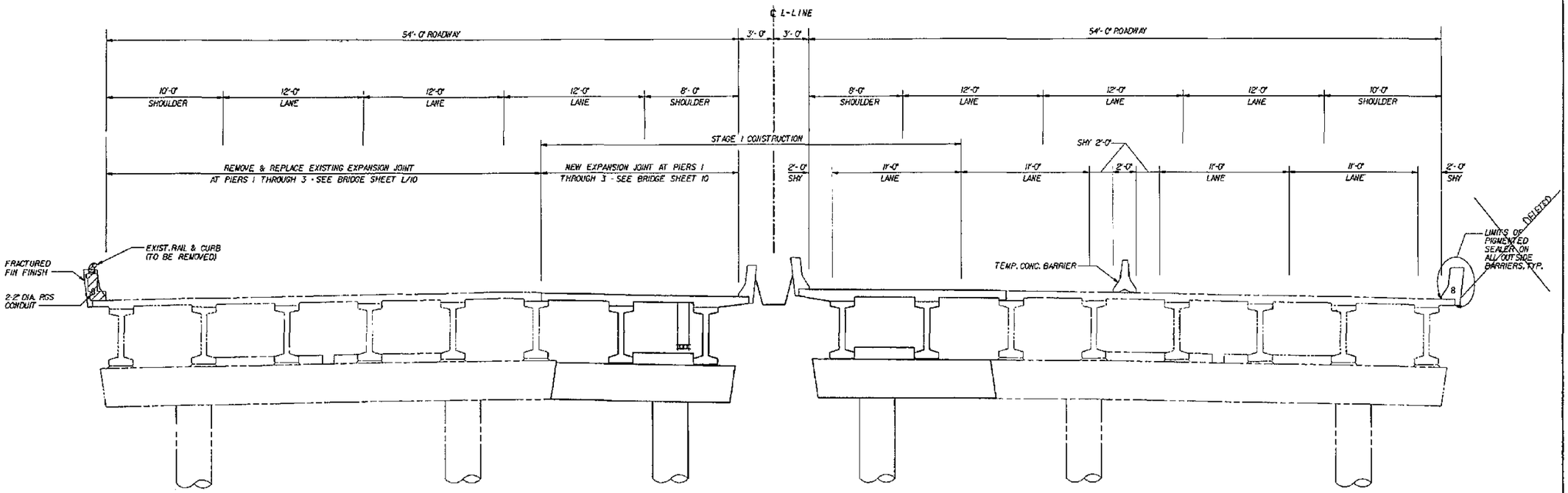

TYPICAL SECTION STAGE 3

SHOWN NEAR INTERMIDATE PIER

STATION	ELEVATION LEFT CURB LINE	ELEVATION RIGHT CURB LINE	STATION	ELEVATION LEFT CURB LINE	ELEVATION RIGHT CURB LINE
800+79.43	—	60.79	801+79.38	—	61.85
800+81.30	60.50	—	801+89.37	62.00	—
800+89.38	—	60.92	801+89.38	—	61.89
800+89.50	60.63	—	801+99.37	62.10	—
800+99.37	60.81	—	801+99.38	—	61.92
800+99.38	—	61.05	802+09.37	62.20	—
801+09.37	60.97	—	802+09.38	—	61.93
801+09.38	—	61.20	802+19.37	62.30	—
801+19.37	61.11	—	802+19.38	—	61.95
801+19.38	—	61.31	802+29.34	62.37	—
801+29.35	—	61.42	802+19.38	—	61.97
801+29.37	61.28	—	802+39.37	62.46	—
801+39.37	61.40	—	802+39.38	—	61.98
801+39.38	—	61.52	802+49.22	62.53	—
801+49.37	61.54	—	802+49.38	—	61.99
801+49.44	—	61.60	802+59.37	62.57	—
801+59.32	—	61.70	802+59.38	—	61.99
801+59.37	61.64	—	802+69.20	—	62.03
801+69.37	61.77	—	802+69.23	62.62	—
801+69.38	—	61.79	802+71.24	62.62	—
801+79.34	61.89	—	—	—	—

SR 167 SOUTH BOUND EXISTING ELEVATIONS

BRIDGE NO.167/122W

STATION	OFFSET	ELEVATION	OFFSET	ELEVATION
214+85.78	6.77' LT	38.85	—	—
214+86.14	0.38' LT	39.72	—	—
214+86.45	43.50' LT	37.72	—	—
214+87.30	—	—	6.62' RT	38.82
214+88.83	—	—	41.92' RT	37.59
215+50.09	43.03' LT	37.63	—	—
215+50.46	7.07' LT	38.74	—	—
215+51.16	—	—	0.47' RT	39.66
215+51.97	—	—	7.01' RT	38.73
215+55.20	—	—	42.04' RT	37.76
216+13.12	—	—	6.60' RT	38.81
216+13.89	42.79' LT	37.62	—	—
216+14.32	6.62' LT	38.80	—	—
216+14.56	—	—	0.46' RT	39.75
216+15.44	—	—	42.48' RT	37.61

SR 516 ~ WILLIS STREET EXISTING ELEVATIONS

STATION	ELEVATION LEFT CURB LINE	ELEVATION RIGHT CURB LINE	STATION	ELEVATION LEFT CURB LINE	ELEVATION RIGHT CURB LINE
800+75.60	—	60.12	801+75.64	61.69	—
800+77.54	60.85	—	801+85.63	—	61.10
800+85.63	—	60.30	801+85.64	61.77	—
800+85.64	60.98	—	801+95.63	—	61.12
800+95.63	—	60.40	801+95.64	61.81	—
800+95.64	61.05	—	802+05.58	61.84	—
801+05.63	—	60.51	802+05.63	—	61.16
801+05.64	61.17	—	802+15.63	—	61.19
801+15.62	61.25	—	802+15.64	61.89	—
801+15.63	—	60.60	802+25.63	—	61.20
801+25.57	61.35	—	802+25.64	61.93	—
801+25.63	—	60.65	802+35.63	—	61.20
801+35.63	—	60.78	802+35.64	61.94	—
801+35.64	61.42	—	802+45.63	—	61.22
801+45.63	—	60.86	802+45.64	61.94	—
801+45.64	61.50	—	802+55.63	—	61.21
801+55.63	—	60.92	802+55.64	61.96	—
801+55.64	61.57	—	802+65.63	—	61.21
801+65.63	—	60.98	802+65.64	61.95	—
801+65.64	61.64	—	802+67.40	61.94	—
801+75.63	—	61.05	—	—	—

SR 167 NORTH BOUND EXISTING ELEVATIONS

BRIDGE NO.167/122 E

FOR "AS CONSTRUCTED PLANS" ONLY

Bridge Design Engr.					
Supervisor					
Designed By C. A. ARNOLD 4/94					
Checked By J. J. MORRIS 4/94					
Detailed By C. A. ARNOLD 4/94					
Bridge Projects Engr.					
Prelim Plan By					
Architect/Specialist	DATE	REVISION	BY	APP'D	

REGION NO.	STATE	FED. AID PROJ. NO.	SHEET NO.	TOTAL SHEETS
10	WASH			

JOB NUMBER 95W036

4771

CECIL A. ARNOLD STATE OF WASHINGTON 12261 REGISTERED PROFESSIONAL ENGINEER EXPIRES 4/14/97

Washington State Department of Transportation

ANDERSEN BUDRINSTAD KANE JACOBS • INC CONSULTING ENGINEERS

SR 167
15TH NW TO 84TH AVE. SO.
HOV AND SC&DI - STAGE 2
BRIDGE 167/122

CONST. SEQUENCE & EXIST. ELEV.

BRIDGE SHEET NO. 3

SHEET 471 OF 663 SHEETS

SR167/91

PLOTTED: 04AUG95 9:59:10 1 02502TA.DGN

SR167/122 JOB NO. 7012 SHEET 3

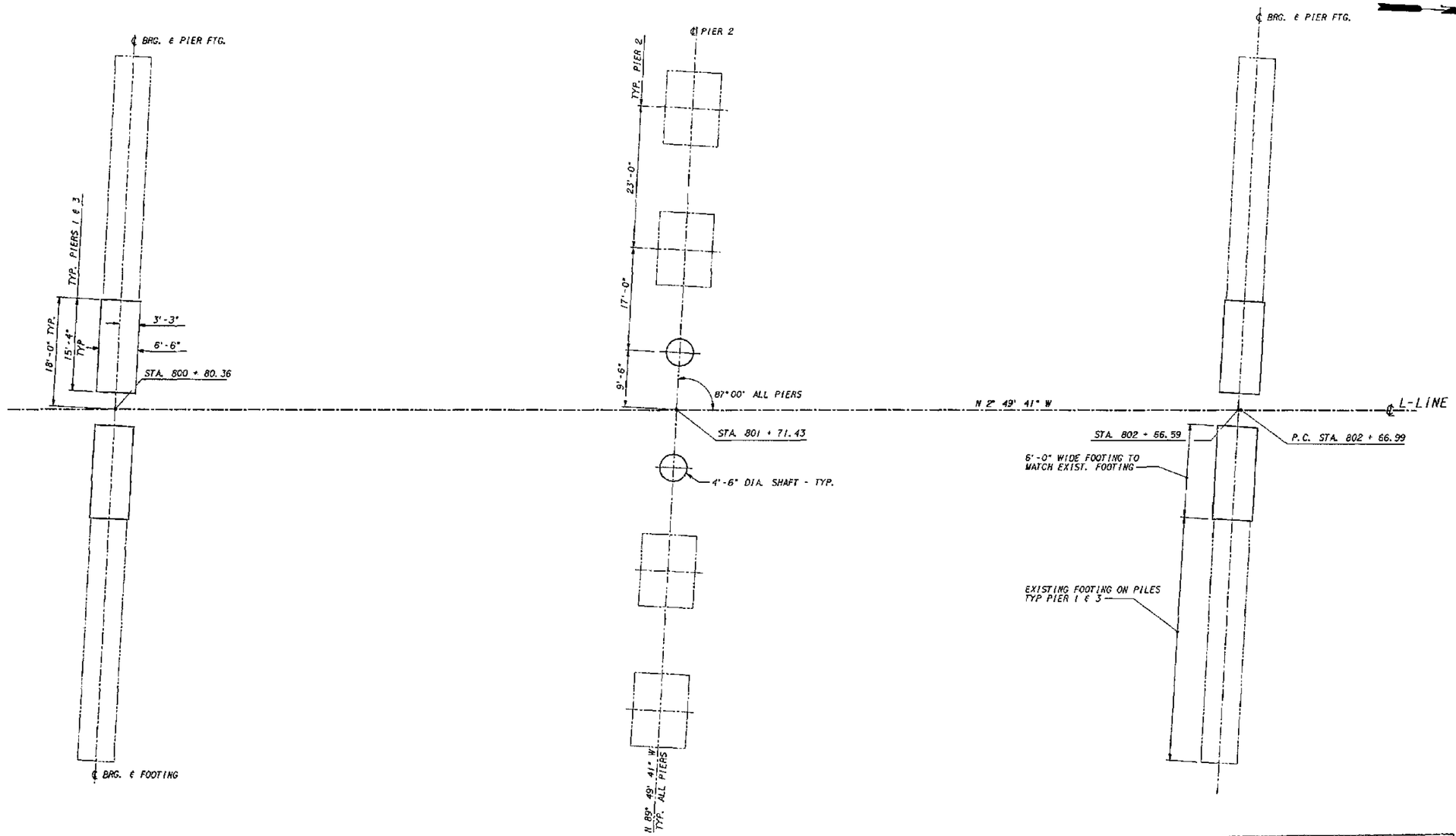

FOR "AS CONSTRUCTED PLANS" ONLY

FOOTING LAYOUT

Bridge Design Engr.					REGION NO.	STATE	FED. AID PROJ. NO.	SHEET NO.	TOTAL SHEETS	
Supervisor					10	WASH				
Designed By C. S. YU 4/94					JOB NUMBER					
Checked By C. A. ARNOLD 4/94					95W036					
Detailed By C. S. YU 4/94										
Bridge Projects Engr.										
Prelim Plan By										
Architect/Specialist	DATE	REVISION	BY	APP'D	4571					

CECIL A. ARNOLD — STATE OF WASHINGTON — 13508 — REGISTERED PROFESSIONAL ENGINEER — EXPIRES 4/14/97

Washington State Department of Transportation

ANDERSEN BUCHHEIDAD KANE JACOBS • INC CONSULTING ENGINEERS

SR 167
15TH NW TO 84TH AVE. SO.
HOV AND SC&DI - STAGE 2
BRIDGE 167/122

FOOTING LAYOUT

BRIDGE SHEET NO. 4

SHEET 478 OF 663 SHEETS

SR167/122 JOB NO. 7012 SHEET 4

SR 167/91

TEDA DALCSS 93169.0 (DZFDN JOB)

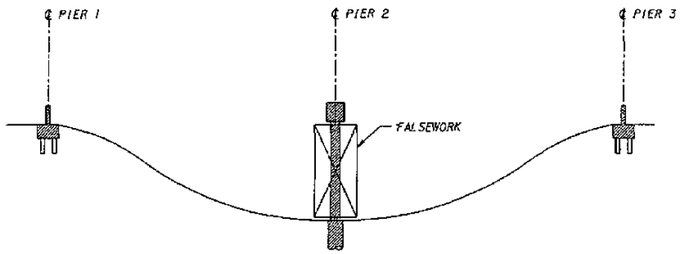

STEP 1 - CONSTRUCT FOUNDATIONS, CAST CROSSBEAMS AND ABUTMENTS.

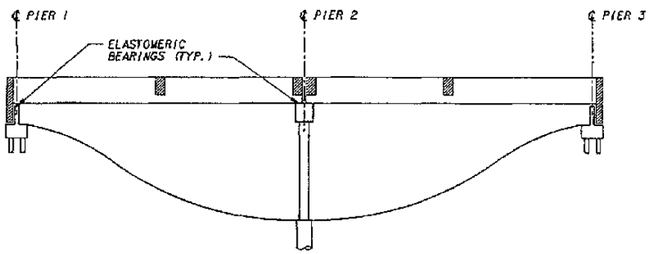

STEP 2 - RELEASE FALSEWORK. ERECT PRESTRESSED GIRDERS WHEN CROSSBEAM CONCRETE HAS REACHED 28 DAY STRENGTH. CAST END DIAPHRAGMS. AND INTERMEDIATE DIAPHRAGMS TO CLOSURES.

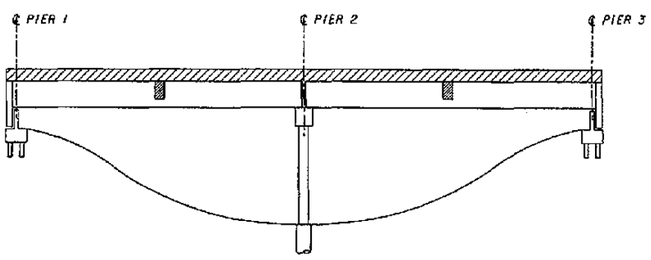

STEP 3 - PLACE ROADWAY DECK CONCRETE AND INTERMEDIATE DIAPHRAGM CLOSURES.

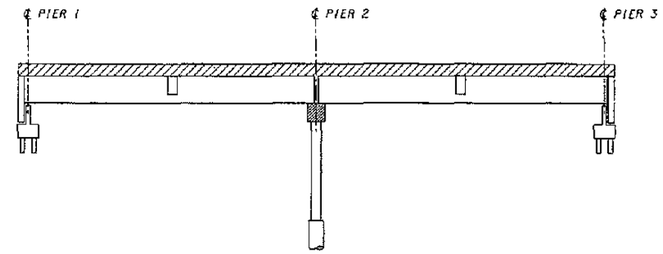

STEP 4 - PLACE CROSSBEAM AND ROADWAY CLOSURES.

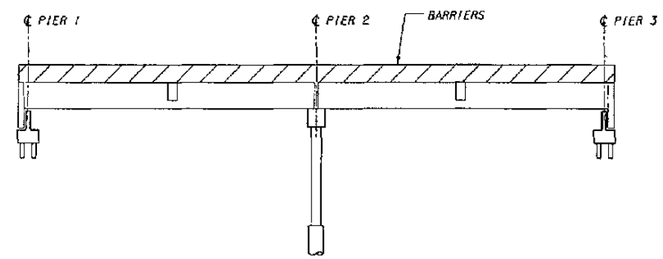

STEP 5 - PLACE TRAFFIC BARRIERS AFTER ALL CONCRETE IN SPANS HAS BEEN POURED AND CURED.

NOTE:

1. WORK THIS SHEET WITH THE STAGING REQUIREMENTS SHOWN ON BRIDGE SHEETS 2 AND 3.

SUPERSTRUCTURE CONSTRUCTION SEQUENCE

FOR "AS CONSTRUCTED PLANS" ONLY

Bridge Design Engr.										
Supervisor										
Designed By Y. POLYAKOV 4/94										
Checked By J. J. MORRIS 4/94										
Detailed By Y. POLYAKOV 4/94										
Bridge Projects Engr.										
Prelim Plan By										
Architect/Specialist	DATE	REVISION	BY	APP'D						

REGION NO.	STATE	FED. AID PROJ. NO.	SHEET NO.	TOTAL SHEETS
10	WASH			

JOB NUMBER 95W036

4771

CECIL A. ARNOLD, STATE OF WASHINGTON, REGISTERED PROFESSIONAL ENGINEER

EXPIRES 4/14/97

Washington State Department of Transportation

ANDERSEN BUORNSTAD KANE JACOBS • INC CONSULTING ENGINEERS

SR 167
15TH NW TO 84TH AVE. SO.
HOV AND SC&DI - STAGE 2
BRIDGE 167/122

SUPERSTRUCTURE CONSTRUCTION SEQUENCE

BRIDGE SHEET NO. 4A

SHEET 479 OF 663 SHEETS

SR167/91

SR167/122 JOB NO. 7012 SHEET 4A

PLOTTED: 01AUG95 93169.0 (02CONSEQ.DGN)

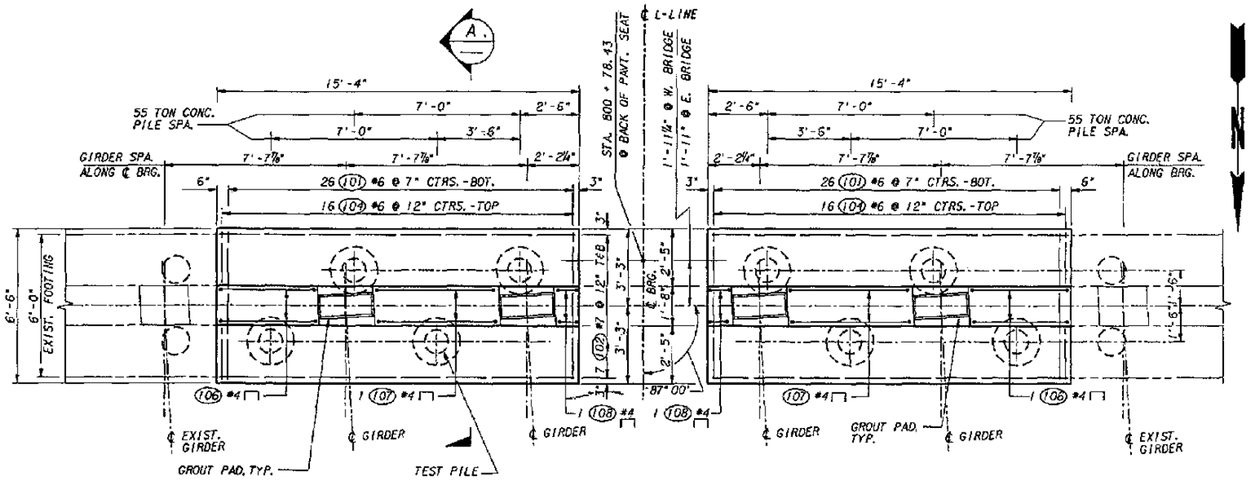

PLAN - PIER 1

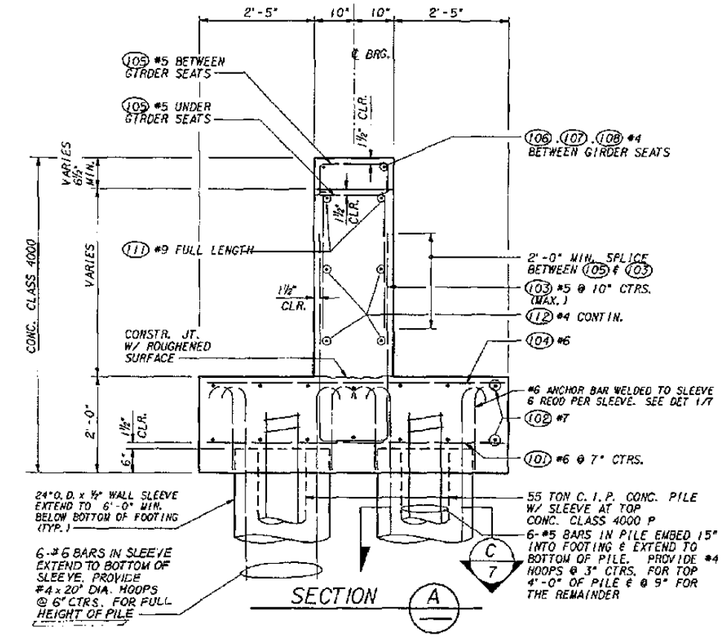

SECTION A

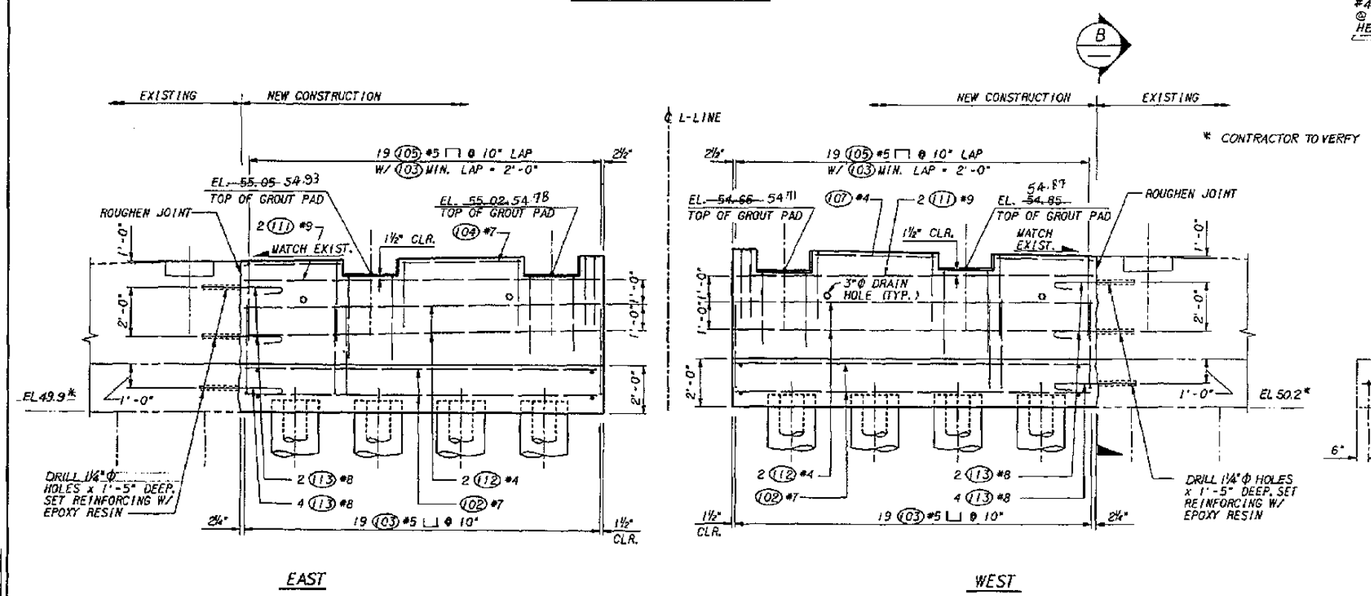

EAST

WEST

ELEVATION

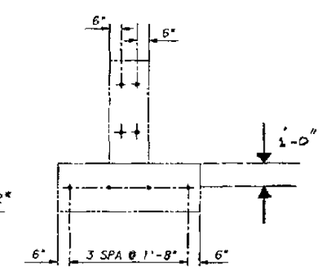

SECTION B

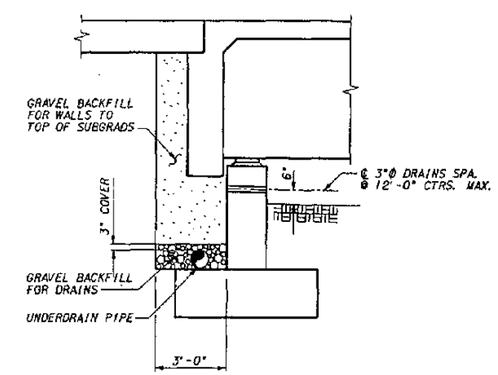

FOR "AS CONSTRUCTED PLANS" ONLY

DRAINAGE DETAIL
TYPICAL AT PIERS 1 AND 3.

Bridge Design Engr.					REGION NO.	STATE	FED. AID PROJ. NO.	SHEET NO.	TOTAL SHEETS
Supervisor					10	WASH			
Designed By C. S. YU 4/94					JOB NUMBER				
Checked By C. A. ARNOLD 4/94					95W036				
Detailed By M. H. CAMP 4/94									
Bridge Projects Engr.									
Prelim Plan By									
Architect/Specialist	DATE	REVISION	BY	APP'D	4771				

CECIL A. ARNOLD STATE OF WASHINGTON 19756 REGISTERED PROFESSIONAL ENGINEER
EXPIRES 4/14/97

Washington State Department of Transportation

ANDERSEN BJORNSTAD KANE JADDOU • INC CONSULTING ENGINEERS

SR 167
15TH NW TO 84TH AVE. SO.
HOV AND SC&DI - STAGE 2
BRIDGE 167/122

PIER 1

BRIDGE SHEET NO. 5
SHEET 480 OF 663 SHEETS

SR167/91

PLOTTED: DAUG95 9/26/93 ℄ 02PIER-1.DGN

SR167/122 JOB NO. 7012 SHEET 5

PLOTTED: 05/10/95 9:36:10 (02SHAFT.DGN

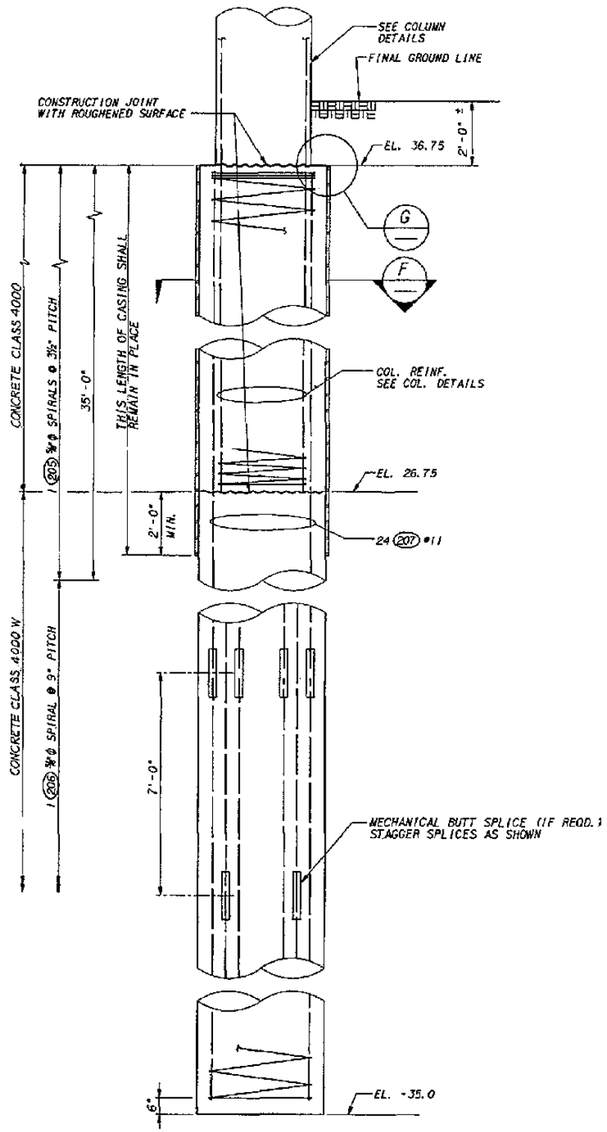

ELEVATION - 4'-6" DIA. SHAFT (E)

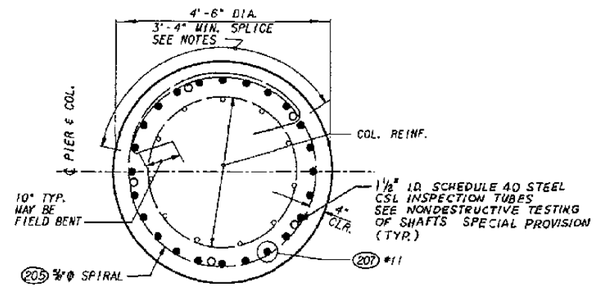

SECTION (F)

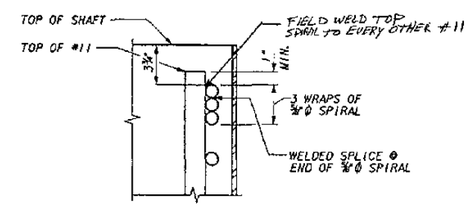

DETAIL (G)

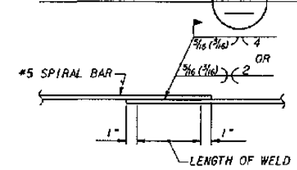

SPIRAL SPLICE WELD DETAIL (H)

NOTES FOR DRILLED SHAFT

1. TEMPORARY STEEL CASINGS SHALL BE REQUIRED FOR A MINIMUM DEPTH OF 50 FT. FOR THE SHAFTS AT PIER 2.
2. CONCRETE SHALL BE POURED IN THE DRY ABOVE EL. 26.75.
3. SPLICE LOCATIONS:
   SPLICES IN VERTICAL REINFORCEMENT SHALL NOT BE MADE ABOVE EL. -5.0.
   LAP SPLICES FOR SPIRAL REINF. SHALL NOT BE MADE IN THE TOP 20'-0" OF THE SHAFT. USE A WELDED SPLICE PER DETAIL H/-.
4. SHAFT SPIRALS MAY BE FABRICATED FROM #5 DEFORMED REINFORCING BARS (AASHTO M31 GR. 60). PLAIN SMOOTH BARS ⅝" Φ (AASHTO M31 GR. 60). DEFORMED WIRE D31 (AASHTO M225). OR COLD DRAWN WIRE W31 (AASHTO M32).
5. WELD SPIRAL REINFORCEMENT BACK ONTO ITSELF AT SPIRAL TERMINUS OR BREAK PER DETAIL G/-.

~~6. WELD TOP SPIRAL TO EVERY OTHER #11~~

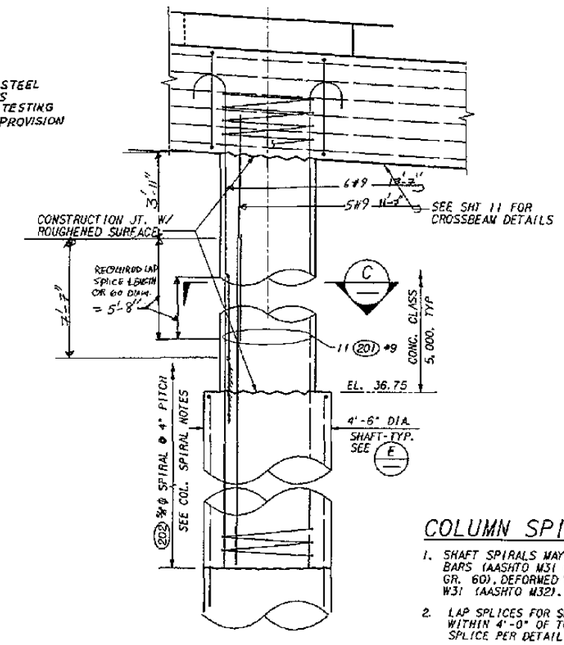

COLUMN

COLUMN SPIRAL NOTES:

1. SHAFT SPIRALS MAY BE FABRICATED FROM #5 DEFORMED REINFORCING BARS (AASHTO M31 GR. 60). PLAIN SMOOTH BARS ⅝" Φ (AASHTO M31 GR. 60). DEFORMED WIRE D31 (AASHTO M225). OR COLD DRAWN WIRE W31 (AASHTO M32).
2. LAP SPLICES FOR SPIRAL REINFORCING SHALL NOT BE MADE WITHIN 4'-0" OF TOP AND BOTTOM OF COLUMN. USE WELDED SPLICE PER DETAIL H/-.
3. WELD SPIRAL REINFORCEMENT BACK ONTO ITSELF AT SPIRAL TERMINUS OR BREAK PER DETAIL G/-.

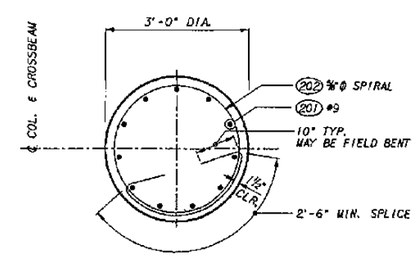

SECTION (C)

FOR "AS CONSTRUCTED PLANS" ONLY

Bridge Design Engr.					REGION NO.	STATE	FED. AID PROJ. NO.	SHEET NO.	TOTAL SHEETS
Supervisor					10	WASH			
Designed By	C. S. YU	4/94			JOB NUMBER				
Checked By	C. A. ARNOLD	4/94			95W036				
Detailed By	C. S. YU	4/94							
Bridge Projects Engr.									
Prelim Plan By									
Architect/Specialist		DATE	REVISION	BY	APP'D	9/97			

CECIL A. ARNOLD STATE OF WASHINGTON 17958 REGISTERED PROFESSIONAL ENGINEER
EXPIRES 4/14/97

Washington State Department of Transportation

ANDERSEN BUCHSTAD KANE JACOBS • INC CONSULTING ENGINEERS

SR 167
15TH NW TO 84TH AVE. SO.
HOV AND SC&DI - STAGE 2
BRIDGE 167/122

PIER 2 COLUMN & SHAFT

BRIDGE SHEET NO. 6

SHEET 481 OF 663 SHEETS

SR167/122 JOB NO. 7012 SHEET 6

SR167/91

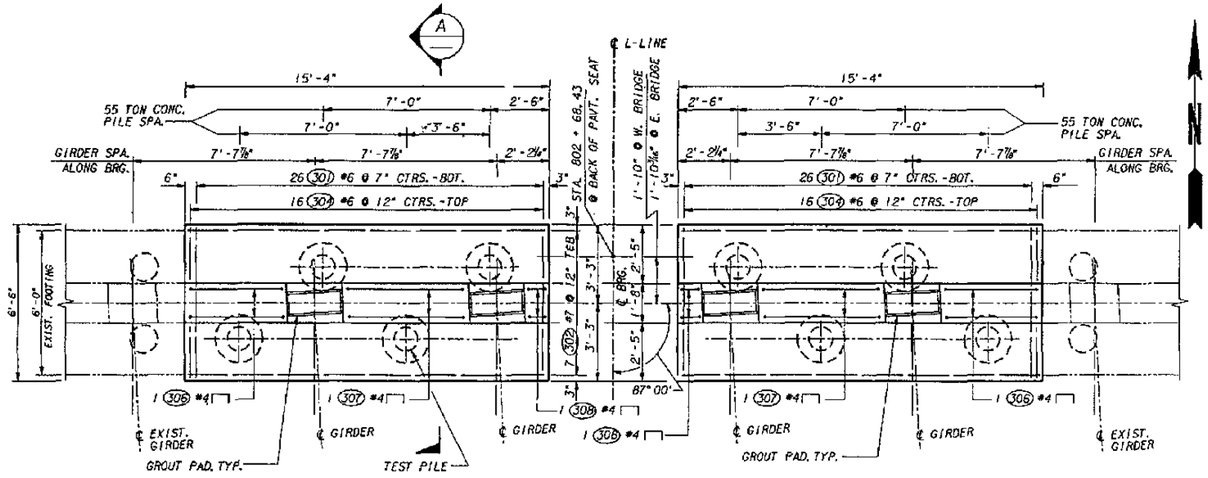

PLAN - PIER 3

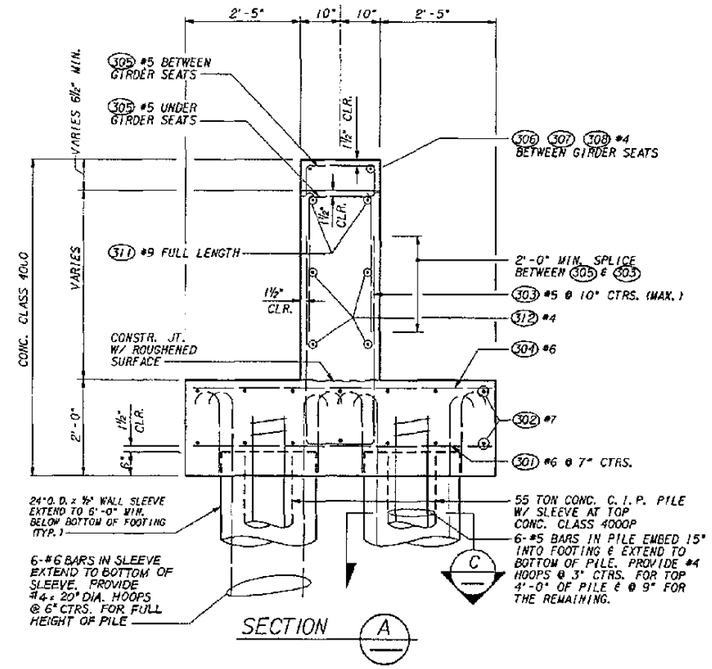

SECTION A

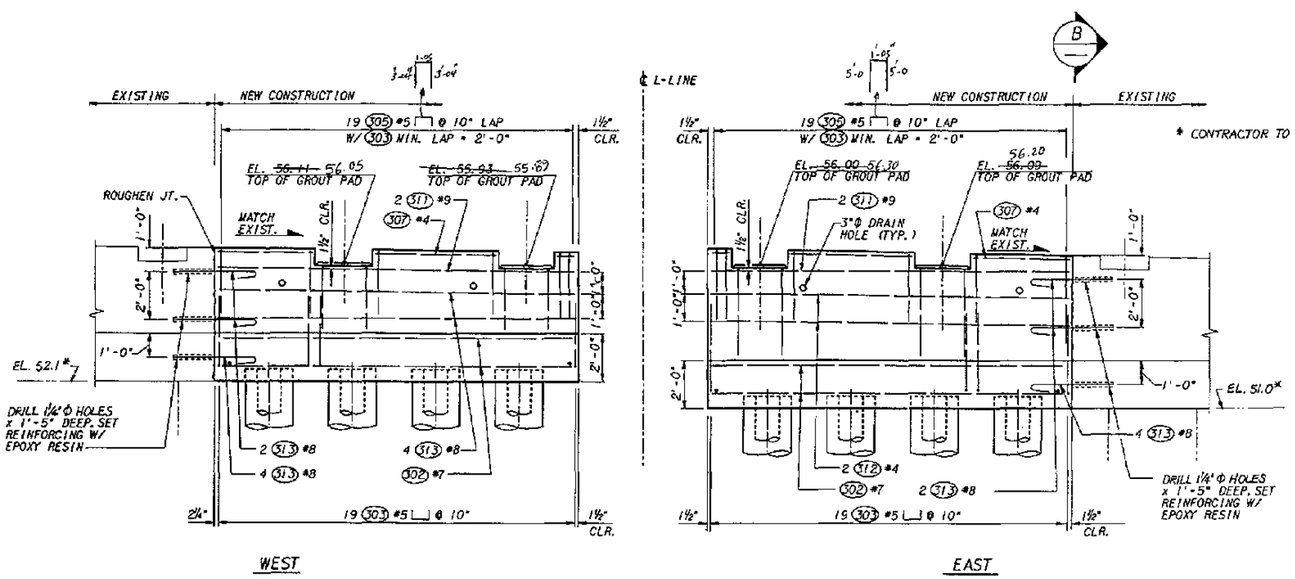

ELEVATION

* CONTRACTOR TO VERIFY

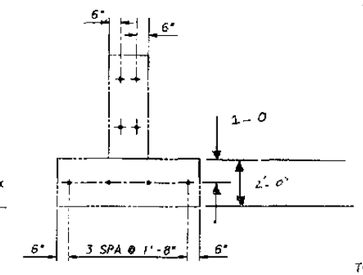

SECTION B

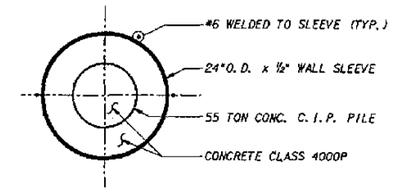

SECTION C / 7

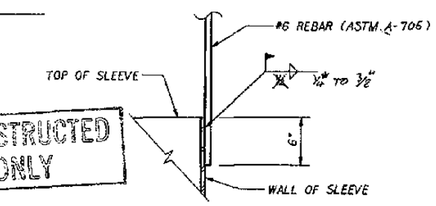

DETAIL 1 / 7

FOR "AS CONSTRUCTED PLANS" ONLY

Bridge Design Engr.					RECEIPT NO.	STATE
Supervisor					10	WASH
Designed By C.S. YU 4/94					JOB NUMBER	
Checked By C.A. ARNOLD 4/94					95W036	
Detailed By M.H. CAMP 4/94						
Bridge Projects Engr.						
Prelim Plan By						
Architect/Specialist	DATE	REVISION	BY	APP'D	4/771	

FED. AID PROJ. NO. | SHEET NO. | TOTAL SHEETS

CECIL A. ARNOLD — STATE OF WASHINGTON — 15158 — REGISTERED PROFESSIONAL ENGINEER — EXPIRES 4/14/94

Washington State Department of Transportation

ANDERSEN BUCHSTAC KANE JACOBS • INC CONSULTING ENGINEERS

SR 167
15TH NW TO 84TH AVE. SO.
HOV AND SC&DI - STAGE 2
BRIDGE 167/122

PIER 3

BRIDGE SHEET NO. 7

SHEET 482 OF 663 SHEETS

SR167/122 JOB NO. 7012 SHEET 7

PLOTTED: 04/06/95 9:36:30 1 02PER-3.DGN

SR167/91

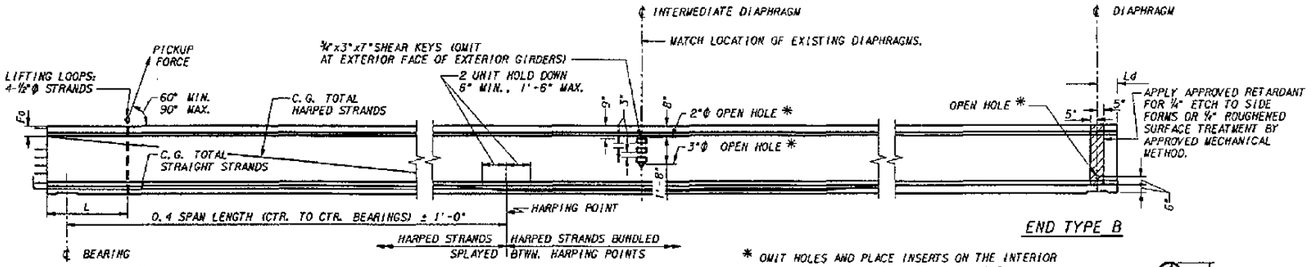

GIRDER ELEVATION

* OMIT HOLES AND PLACE INSERTS ON THE INTERIOR FACE OF EXTERIOR GIRDERS. PLACE HOLES AND INSERTS PARALLEL TO SKEW. INSERTS SHALL BE 1" RICHMOND ROCKET, BURKE HI-TENSILE, LANCASTER MALLEABLE OR APPROVED EQUAL.

OPEN HOLE

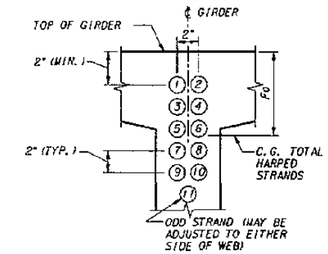

STRAND PATTERN AT GIRDER END

HARPED STRAND LOCATION SEQUENCE SHALL BE AS SHOWN (1), (2) ETC.

NOTES:

ALL DETAILS ON THIS SHEET ARE FOR PRETENSIONED DESIGN ONLY.

PLAN LENGTH SHALL BE INCREASED AS NECESSARY TO COMPENSATE FOR SHORTENING DUE TO PRESTRESS AND SHRINKAGE.

EXTRA CAUTION MUST BE EXERCISED IN HANDLING AND PLACING ALL GIRDERS.

THE TOP SURFACE OF THE GIRDER FLANGE SHALL BE ROUGHENED IN ACCORDANCE WITH SECTION 6-02.3(25)H OF THE STANDARD SPECIFICATIONS.

IF THE LIFTING LOOPS EXTEND WITHIN 3" OF THE TOP OF THE ROADWAY SLAB THEY SHALL BE CUT OFF PRIOR TO POURING THE ROADWAY SLAB. ALL LIFTING STRANDS SHALL BE OF THE SAME MATERIAL AND STRENGTH AS THE PRESTRESSING STRANDS. WRAP THE LIFTING LOOPS SO THAT EACH STRAND WILL CARRY ITS SHARE OF THE TOTAL LOAD. EXTEND LIFTING LOOPS ENDING WITH A 9" LONG 90° HOOK TO WITHIN 3" CLEAR OF THE BOTTOM OF THE GIRDER.

CUT ALL STRANDS FLUSH WITH THE GIRDER ENDS AND PAINT WITH AN APPROVED EPOXY RESIN EXCEPT FOR EXTENDED STRANDS AS SHOWN.

FORMS FOR BEARING PAD RECESSES SHALL BE CONSTRUCTED AND FASTENED IN SUCH A MANNER AS NOT TO CAUSE DAMAGE TO THE GIRDER DURING THE STRAND RELEASE OPERATION.

ALL STRANDS ARE ½" Φ LOW RELAXATION STRANDS (AASHTO M203 GRADE 270).

EXTENDED STRANDS AND BARS ARE PARALLEL TO GIRDER.

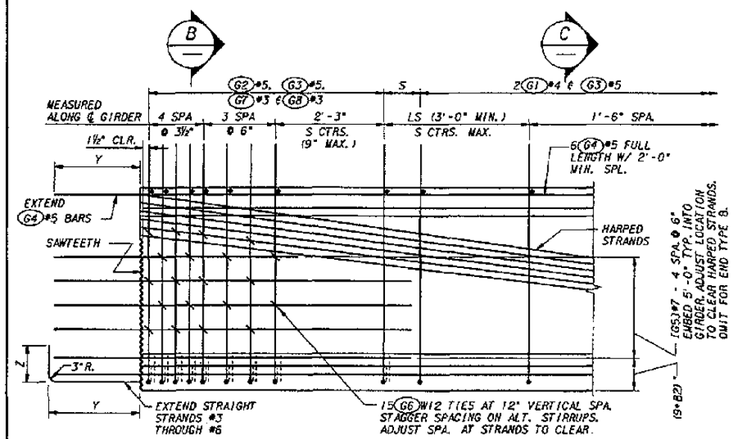

TYPICAL END ELEVATION

END TYPE C SHOWN. OTHER ENDS SIMILAR.

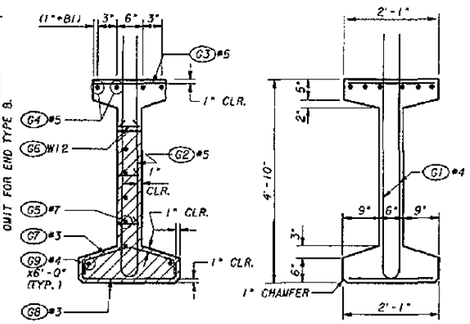

SECTION B

SAWTEETH SHOWN BY SHADED AREA.

SECTION C

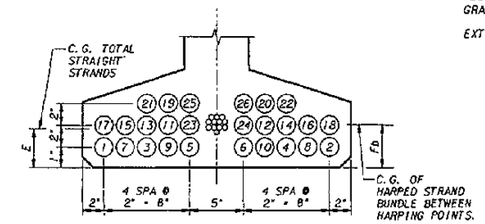

STRAND PATTERN AT ℄ SPAN

STRAND LOCATION SEQUENCE SHALL BE AS SHOWN (1), (2) ETC.

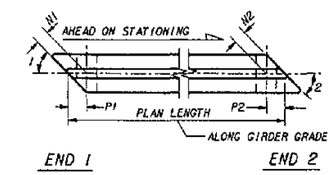

GIRDER SCHEDULE

BRIDGE	SPAN	GIRDER	END 1 TYPE	END 2 TYPE	L	G1	G2	N1	N2	P1	P2	PLAN LENGTH	MIN. CONC. COMPR. STRENGTH 28 DAYS F'c KSI	MIN. CONC. COMPR. STRENGTH RELEASE F'ci KSI	S (IN.)	LS (FT.)	HARPED NO. OF STRANDS	HARPED JACKING FORCE (KIPS)	STRAIGHT NO. OF STRANDS	STRAIGHT JACKING FORCE (KIPS)	LOCATION OF C.G. STRANDS (IN.) E	Fd	Fo	C (IN.)	D (IN.)	LD (IN.)
WEST BRIDGE	1	INT	A	B	2'-1¼"	93	93	11¾"	11¾"	11¾"	11¾"	92'-0½"	7.0	5.1	9	3	6	186	26	806	3 9/16	3	4	5/16	2 1/16	8
		EXT	A	B	2'-1¼"	93	93	11¾"	11¾"	11¾"	11¾"	92'-0½"	7.0	5.1	9	3	6	186	26	806	3 9/16	3	4	5/16	2 1/16	10¼
	2	INT	B	A	2'-1¾"	93	93	11¾"	11¾"	11¾"	11¾"	96'-0½"	7.0	5.1	9	3	8	248	26	806	3 9/16	3	5	1 1/16	3	8
		EXT	B	A	2'-1¾"	93	93	11¾"	11¾"	11¾"	11¾"	96'-0½"	7.0	5.1	9	3	8	248	26	806	3 9/16	3	5	1 1/16	3	10¼
EAST BRIDGE	1	INT	A	B	2'-1¼"	93	93	11¾"	11¾"	11¾"	11¾"	92'-0½"	7.0	5.1	9	3	6	186	26	806	3 9/16	3	4	5/16	2 1/16	8
		EXT	A	B	2'-1¼"	93	93	11¾"	11¾"	11¾"	11¾"	92'-0½"	7.0	5.1	9	3	6	186	26	806	3 9/16	3	4	5/16	2 1/16	10¼
	2	INT	B	A	2'-1¾"	93	93	11¾"	11¾"	11¾"	11¾"	96'-0½"	7.0	5.1	9	3	8	248	26	806	3 9/16	3	5	1 1/16	3	8
		EXT	B	A	2'-1¾"	93	93	11¾"	11¾"	11¾"	11¾"	96'-0½"	7.0	5.1	9	3	8	248	26	806	3 9/16	3	5	1 1/16	3	10¼

DIMENSION A AT ℄ BEARINGS = 10¼"

BASED ON GIRDER DEFLECTION = D AT TIME OF SLAB POUR (120 DAYS)

*3 OR *4 MAY BE SUBSTITUTED FOR W12. FIELD BENDING IS OPTIONAL

FOR "AS CONSTRUCTED PLANS" ONLY

END TYPE	BEARING RECESS	Y	Z	SAWTEETH
A	YES		1'-6"	YES.
B	YES	0"	0"	NO
C	NO	1'-10"	9"	YES

ENDS AHEAD ON STATION
(G5) BARS LEFT OF ℄
B1 = 0"
B2 = 0"
ENDS BACK ON STATION
(G5) BARS RIGHT OF ℄
B1 = 1½"
B2 = 3"

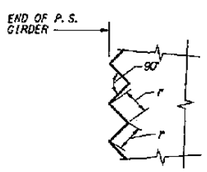

SAWTOOTH DETAILS

SAWTEETH ARE FULL WIDTH - USE SAWTOOTH KEYS FROM BOTTOM OF BOTTOM FLANGE TO BOTTOM OF LOWEST HARPED STRAND AS WELL AS TOP FLANGE ADJACENT TO HARPED STRANDS AS SHOWN IN SECTION B.

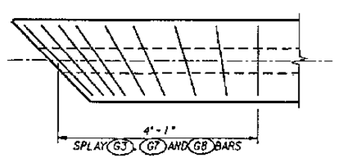

TRANSVERSE REINFORCING SKEWED ENDS

ONLY TRANSVERSE REINF. SHOWN

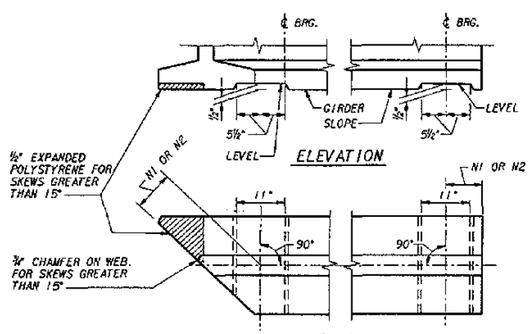

ELEVATION

PLAN

BEARING RECESS DETAIL

MARK	LOCATION	SIZE	
G1	GIRDER STIRRUPS	4	
G2	GIRDER END STIRRUPS	5	
G3	GIRDER TOP FLANGE	5	STR.
G4	GIRDER LONGIT. FULL LENGTH	5	STR.
G5	GIRDER END LONGIT.	7	STR.
G6	GIRDER END TIES	W12	
G7	GIRDER END TIES	3	
G8	GIRDER END TIES	3	
G9	GIRDER LONGIT.	4	STR.

NOTE: FOR DIMENSION A, SEE "GIRDER SCHEDULE"

BENDING DIAGRAM (ALL DIMENSIONS ARE OUT TO OUT)

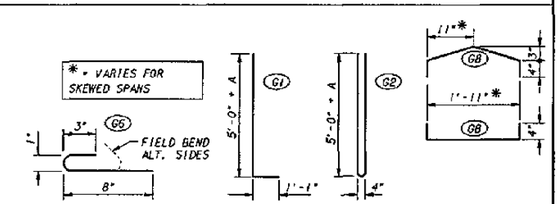

Bridge Design Engr.					REGION NO.	STATE	FED. AID PROJ. NO.
Supervisor					10	WASH	
Designed By S. SOMMERFELD 4/94					JOB NUMBER		
Checked By					95W036		
Detailed By S. SOMMERFELD 4/94							
Bridge Projects Engr.							
Prelim. Plan By							
Architect/Specialist	DATE	REVISION	BY	APP'D	4371		

SHEET NO. / TOTAL SHEETS

Washington State Department of Transportation

ECHELON ENGINEERING, INC. Consulting Engineers

SR 167
15TH NW TO 84TH AVE. SO.
HOV AND SC&DI - STAGE 2
BRIDGE 167/122

W58G GIRDER DETAILS

BRIDGE SHEET NO. 8

SHEET 483 OF 663 SHEETS

SR 167/122 JOB NO. 7012 SHEET 8

PLOTTED: 04/06/95 9:36:20 I:\DGN\95\

SR 167/91

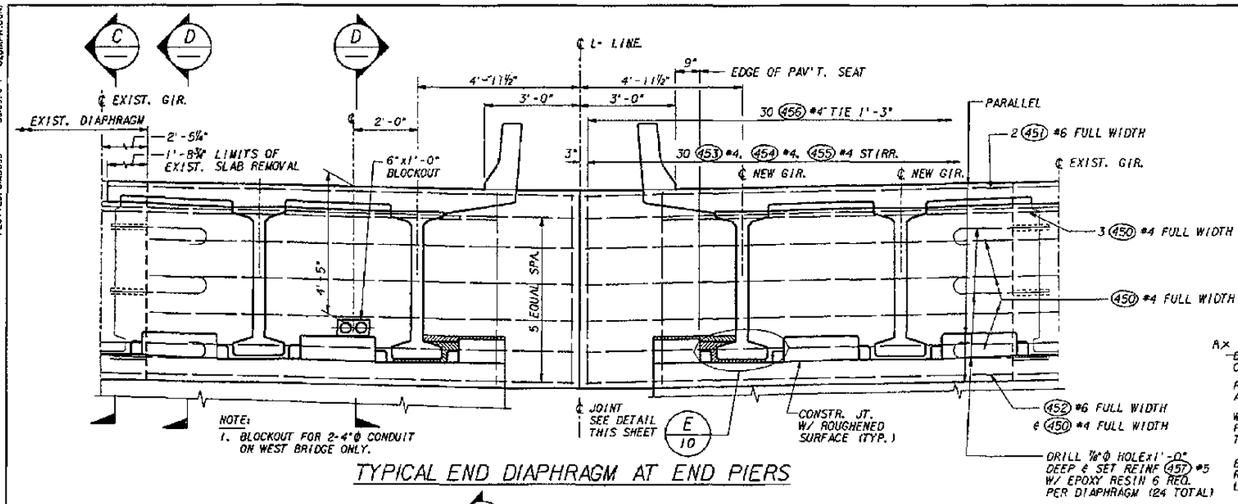

TYPICAL END DIAPHRAGM AT END PIERS

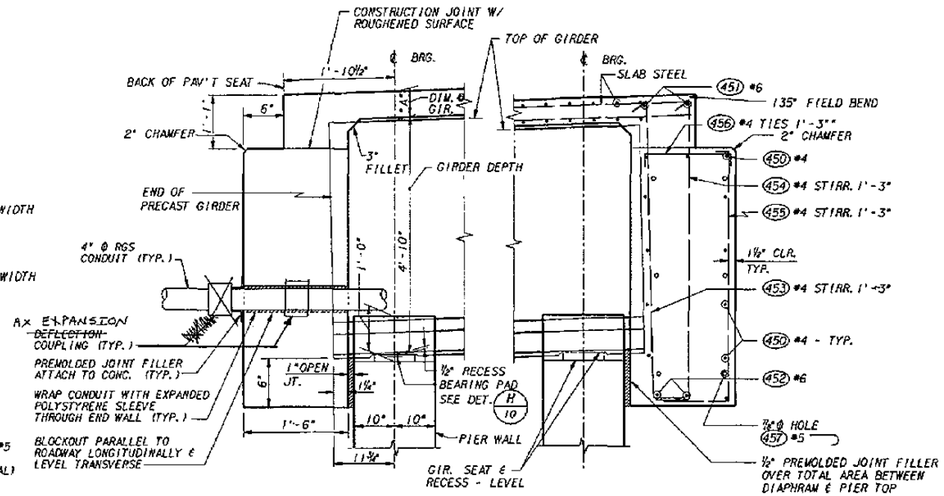

SECTION D

SECTIONS THRU END DIAPHRAGMS AT END PIERS
SEE "GIRDER DETAILS" SHEET FOR DIMENSION "A".
ALL LONGITUDINAL DIMENSIONS ARE NORMAL TO SKEW.

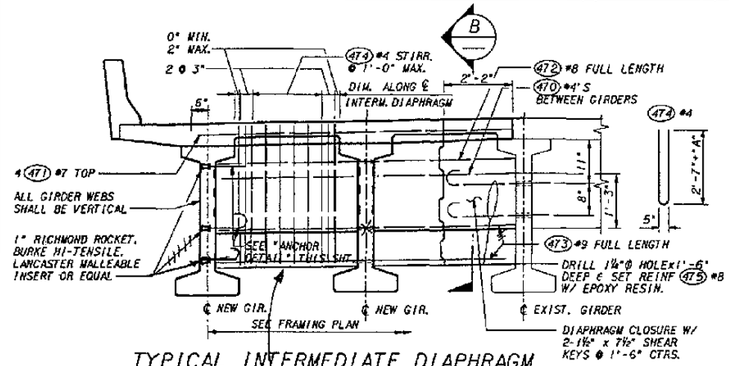

TYPICAL INTERMEDIATE DIAPHRAGM

Change. Was made to all spans

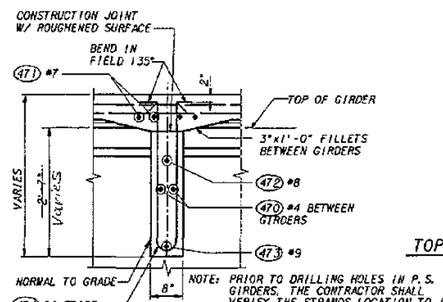

SECTION B

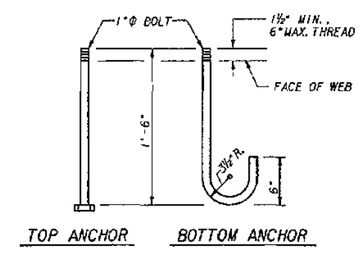

ANCHOR DETAILS
A.S.T.M. A-307

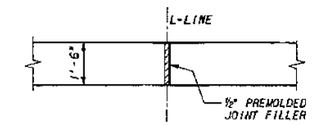

JOINT DETAIL AT END DIAPHRAM

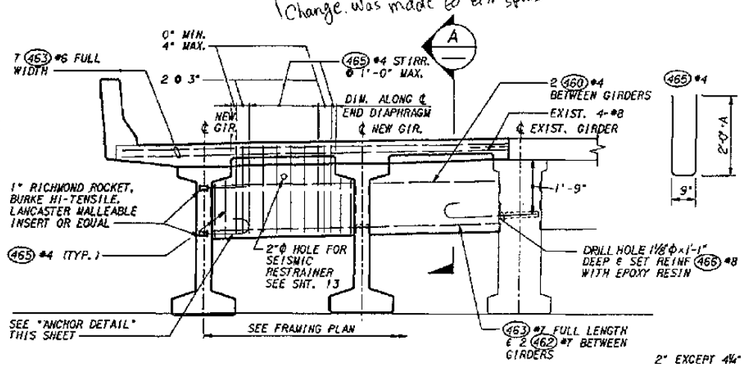

TYPICAL END DIAPHRAGM AT INTERMEDIATE PIERS

NOTE:
GIRDERS SHALL BE HELD RIGIDLY IN PLACE WHEN DIAPHRAMS ARE POURED.
REDINFORCING BARS SHALL BE THREADED THROUGH HOLES IN GIRDERS PRIOR TO PLACING OF EXTERIOR GIRDERS. SEE PLANS FOR "TRAFFIC BARRIER" DIMENSIONS AND LOCATION.
SEE "GIRDER DETAILS" SHEET FOR DIMENSION "A".

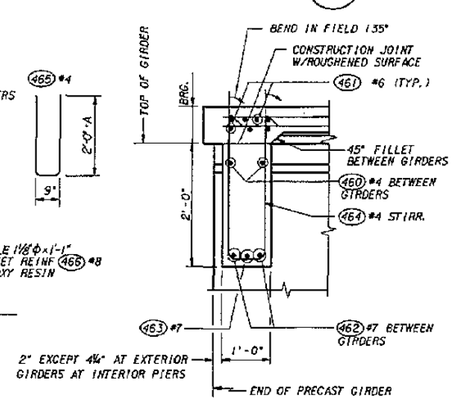

SECTION A

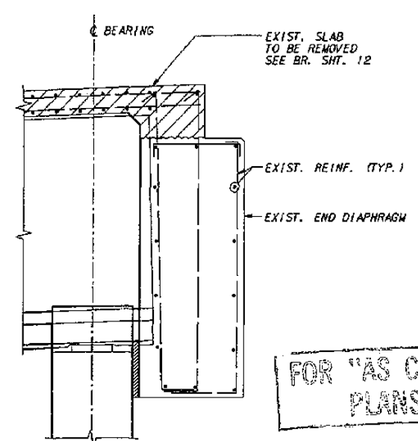

SECTION C

FOR "AS CONSTRUCTED PLANS" ONLY

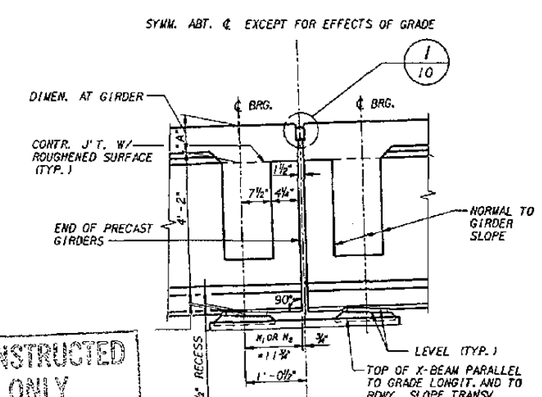

SECTION THRU END DIAPHRAGM - AT INTERMEDIATE PIERS

LONGIT. DIMENSIONS ARE NORMAL TO SKEW.
SEE "GIRDER DETAILS SHEET FOR DIMEN. "A"

Bridge Design Engr.					
Supervisor					
Designed By S. SOMMERFELD 4/94					
Checked By					
Detailed By S. SOMMERFELD 4/94					
Bridge Projects Engr.					
Prelim Plan By					
Architect/Specialist	DATE	REVISION	BY	APP'D	

REGION NO.	STATE	FED. AID PROJ. NO.	SHEET NO.	TOTAL SHEETS
10	WASH			

JOB NUMBER 95W036

4771

Washington State Department of Transportation
ECHELON ENGINEERING, INC. Consulting Engineers

SR 167
15TH NW TO 84TH AVE. SO.
HOV AND SC&DI - STAGE 2
BRIDGE 167/122

PRESTRESSED GIRDER DIAPHRAGM

BRIDGE SHEET NO. 9
SHEET 484 OF 663 SHEETS

SR167/122 JOB NO. 7012 SHEET 9

PLOTTED: 04/JUN/95 93569/0 (02QUAPH.DGN)

SR 167/91

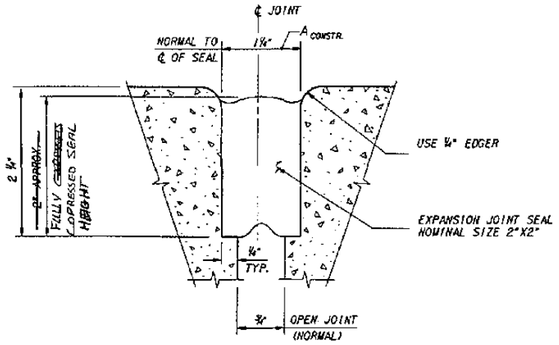

DETAIL 1 / 9, 10

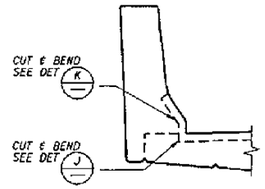

COMPRESSION SEAL AT BARRIER PIERS 2

COMPRESSION SEAL TABLE *

D. S. BROWN		WATSON BOWMAN ACME		ELASTOMER SEALS		STRUCTURAL ACCESSORIES	
SEAL	W (IN.)	SEAL	W (IN.)	SEAL	W (IN.)	SEAL	W (IN.)
CV-2000	2	WA-200	2	X 2000	2	SA 2000	2

NOTES:
1. * TESTING SHALL BE PER AASHTO M-220 PRIOR TO USE.
2. W DENOTES WIDTH OF COMPRESSION SEAL.

COMPRESSION SEAL TABLE

PIER NO.	$A_{CONSTR.}$ 40° F	$A_{CONSTR.}$ 64° F	$A_{CONSTR.}$ 80° F
PIER 2	1 3/16	1¼	1⅛

COMPRESSION SEAL USED
WATSON BOWMAN ⇒ PIER 2E - WA200
PIER 2W - WA275 ⇒ A = 1½ @ 64°F

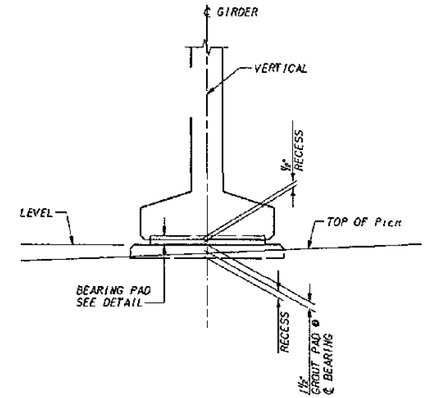

VIEW G

DRILL ½"Φ HOLES THRU. SEAL W/ STANDARD TWIST DRILL MAKING SURE THE TOP IS NOT DAMAGED. CUT OUT WEDGE W/ SHARP LONG BLADE KNIFE.

DETAIL J

DRILL ½"Φ HOLES THRU. SEAL W/ STANDARD TWIST DRILL MAKING SURE THE TOP IS NOT DAMAGED. CUT OUT WEDGE W/ SHARP LONG BLADE KNIFE.

DETAIL K

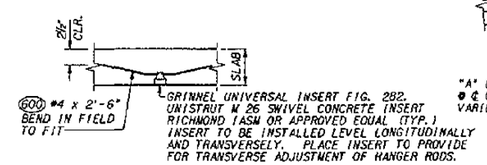

DETAIL M / 12

COMPRESSION SEAL DETAILS

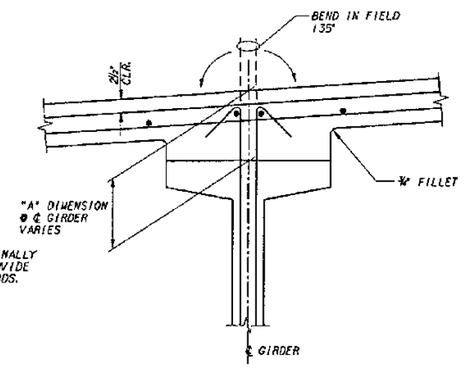

TYPICAL SECTION THROUGH GIRDER

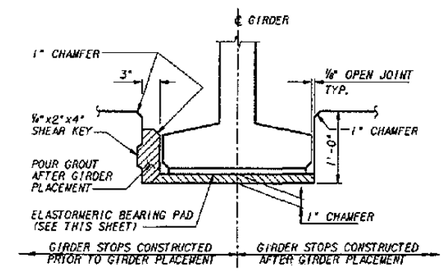

DETAIL E / 9

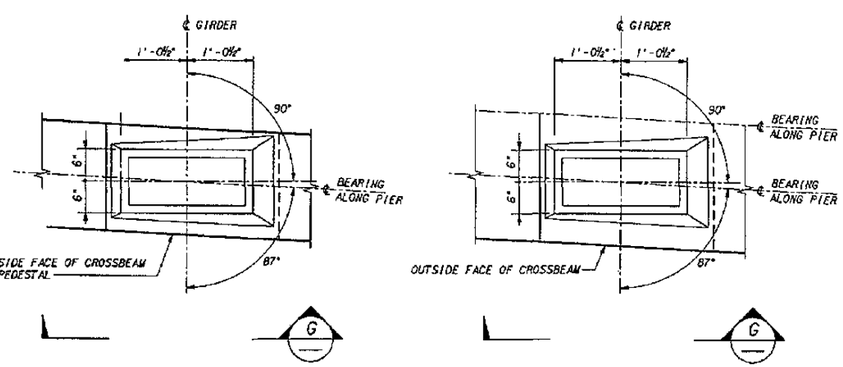

GROUT PAD DETAIL F / 11

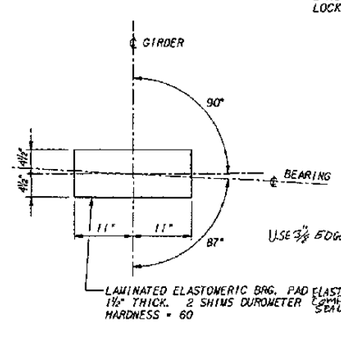

DETAIL H / 9

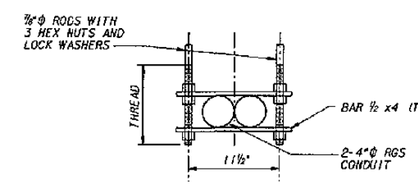

UTILITY HANGER DETAIL

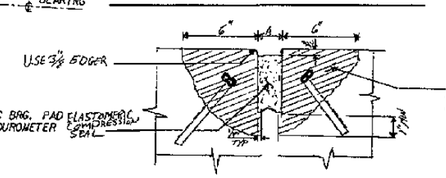

DETAIL L / 2, 3

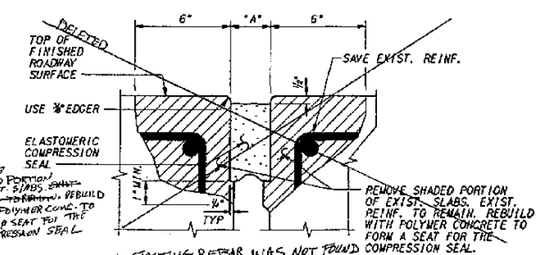

DETAIL L / 2, 3

FOR "AS CONSTRUCTED PLANS" ONLY

Bridge Design Engr.					REGION NO.	STATE	FED. AID PROJ. NO.	SHEET NO.	TOTAL SHEETS
Supervisor					10	WASH			
Designed By S. SOMMERFELD 4/94					JOB NUMBER				
Checked By					95W036				
Detailed By S. SOMMERFELD 4/94									
Bridge Projects Engr.									
Prelim Plan By									
Architect/Specialist	DATE	REVISION	BY	APP'D	4751				

EXPIRES 6/30/1997

Washington State Department of Transportation
ECHELON ENGINEERING, INC. Consulting Engineers

SR 167
15TH NW TO 84TH AVE. SO.
HOV AND SC&DI - STAGE 2
BRIDGE 167/122

DIAPHRAGM & MISC. DETAILS

BRIDGE SHEET NO. 10
SHEET 485 OF 663 SHEETS

SR167/122 JOB NO. 7012 SHEET 10

PLOTTED: 04/30/95 9:36:10 AM DGN: 0200ADET.DGN

SR167/91

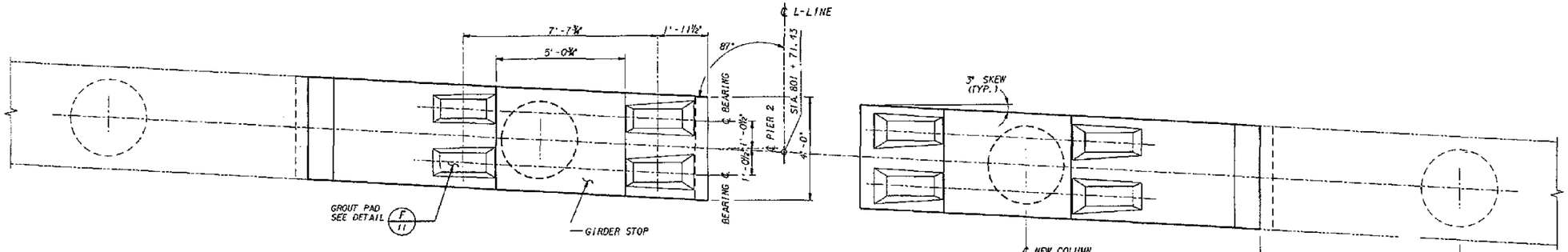

PLAN - PIER 2

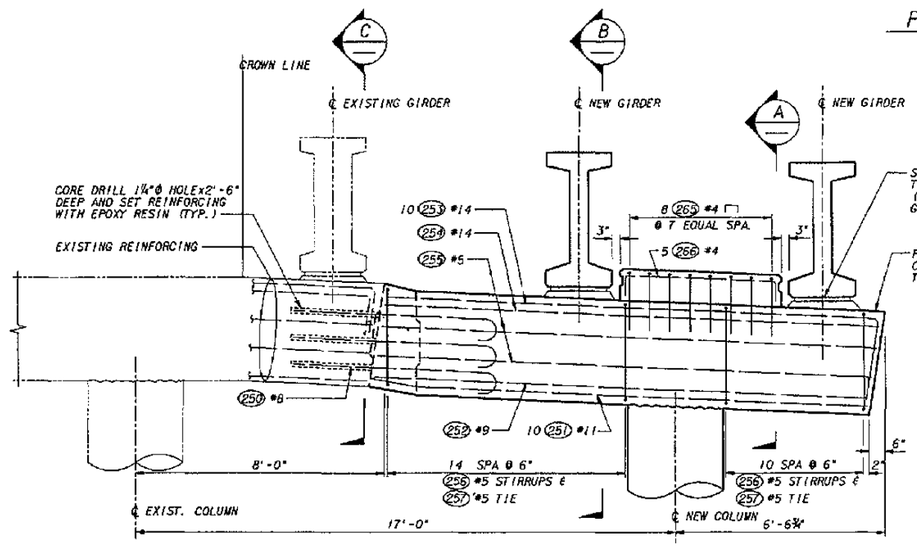

WEST BRIDGE (SOUTH BOUND)

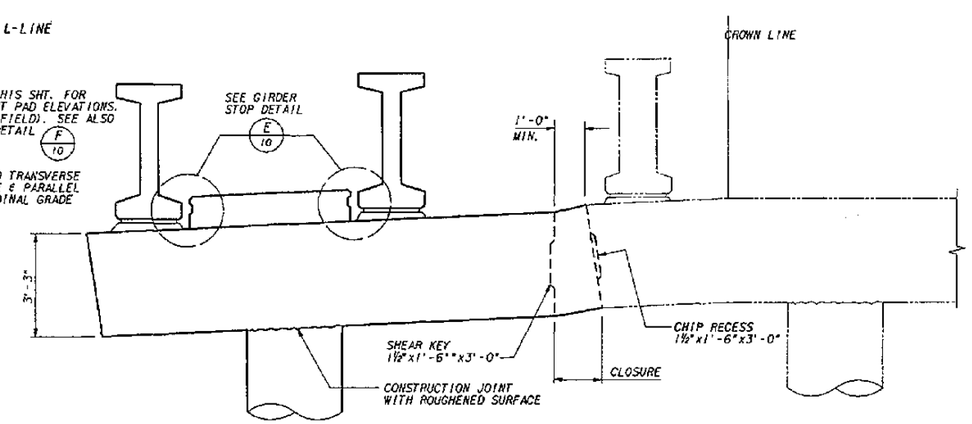

EAST BRIDGE (NORTH BOUND)

ELEVATION - PIER 2

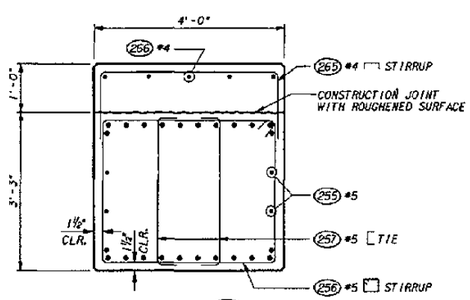

SECTION A

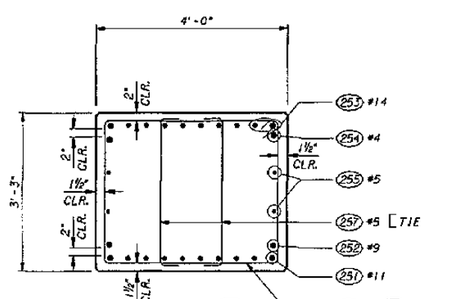

SECTION B

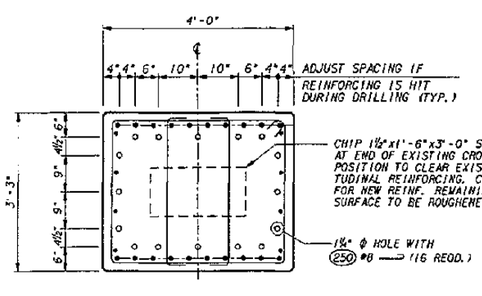

SECTION C

VERIFY IN FIELD

GROUT PAD ELEVATIONS
EAST BRIDGE (SPAN 1 & 2) INTERIOR GIR. EL 55.92 EXTERIOR GIR. EL 55.96
WEST BRIDGE (SPAN 1 & 2) INTERIOR GIR. EL 55.91 EXTERIOR GIR. EL 55.75

FOR "AS CONSTRUCTED PLANS" ONLY

Bridge Design Engr.						REGION NO.	STATE	FED. AID PROJ. NO.	SHEET NO.	TOTAL SHEETS
Supervisor						10	WASH			
Designed By S. SOMMERFELD 4/94						JOB NUMBER				
Checked By						95W036				
Detailed By S. SOMMERFELD 4/94										
Bridge Projects Engr.										
Prelim Plan By										
Architect/Specialist	DATE	REVISION	BY	APP'D		4771				

SHELBY D. SOMMERFELD, STATE OF WASHINGTON, 25922, REGISTERED PROFESSIONAL ENGINEER, 4/15/95

EDWES.97A/ 1997

Washington State Department of Transportation

ECHELON ENGINEERING, INC. Consulting Engineers

SR 167
15TH NW TO 84TH AVE. SO.
HOV AND SC&DI - STAGE 2
BRIDGE 167/122

PIER 2 DETAILS

BRIDGE SHEET NO. 11

SHEET 486 OF 663 SHEETS

SR 167/91

PLOTTED: 01JAN95 9:36:30 | 02P-DETL.DGN

SR167/122 JOB NO. 7012 SHEET 11

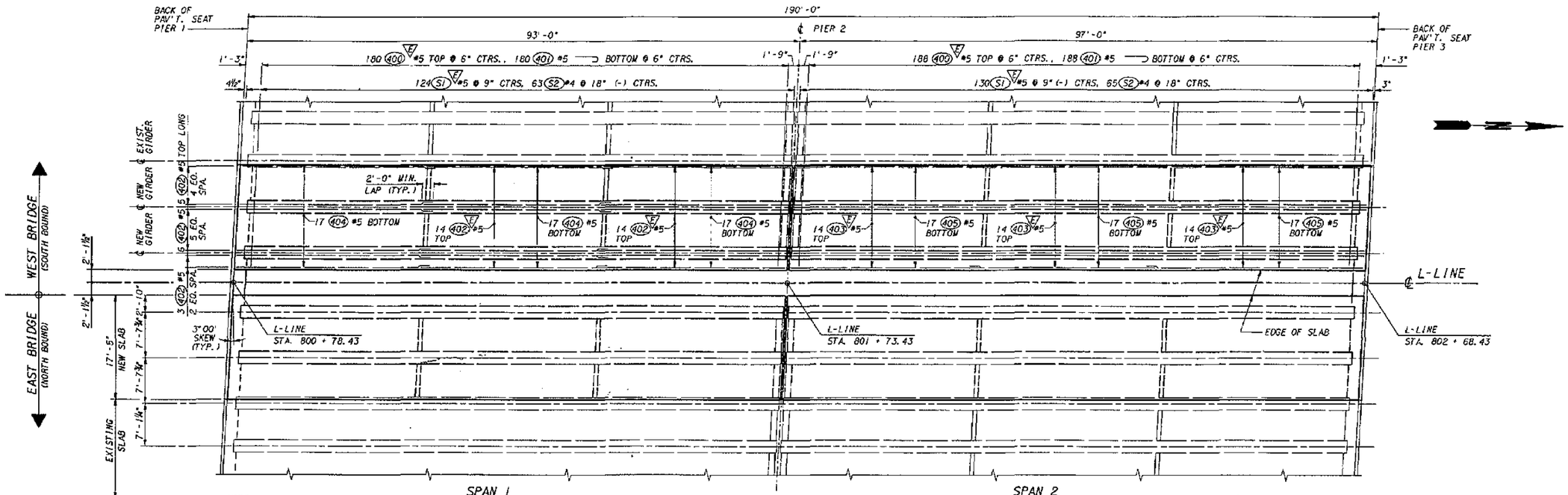

NOTE:
1. LAP #5 LONGITUDINAL BARS 2'-0" MIN. LOCATION OF BAR SPLICES AT CONCTRACTOR'S OPTION. STAGGER SPLICE BETWEEN ADJACENT BARS.
2. SEE TYP. SECTION FOR BAR SPACING.
2. ⓔ DENOTES EPOXY COATED BARS.

FRAMING PLAN

ROADWAY SLAB REINFORCING FOR EAST BRIDGE SIMILAR TO WEST BRIDGE

NOTE: GEOMETRY AND LAYOUT SHOWN IS BASED ON RECORD INFORMATION AND SHALL BE VERIFIED IN THE FIELD.

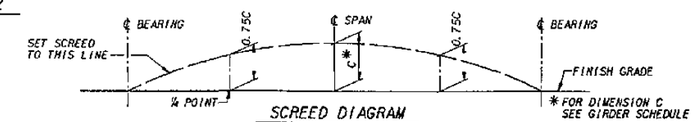

SCREED DIAGRAM

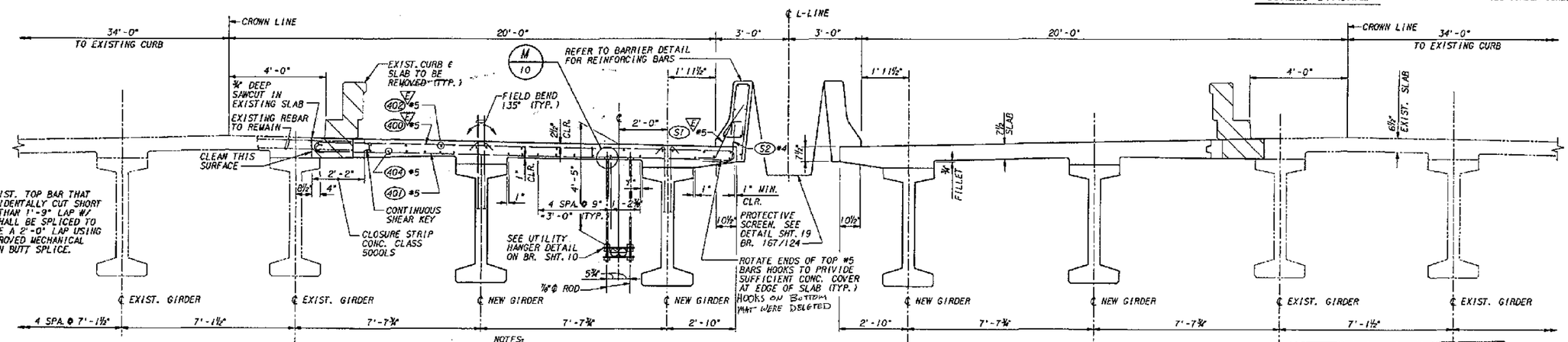

NOTE:
ANY EXIST. TOP BAR THAT IS ACCIDENTALLY CUT SHORT (LESS THAN 1'-9" LAP W/ NEW) SHALL BE SPLICED TO RESTORE A 2'-0" LAP USING AN APPROVED MECHANICAL TENSION BUTT SPLICE.

WEST BRIDGE (S. BOUND)

NOTES:
1. UTILITY HANGERS TO BE SPACED @ 5'-0" CTRS. MAX. LONGITUDINALLY.
2. EACH 4"Φ RGS CONDUIT SHALL HAVE AN EXPANSION COUPLING PER THE CONDUIT MANUFACTURER AT EACH PIER LOCATION.

PARTIAL ROADWAY ELEVATION

EAST BRIDGE (N. BOUND)
REINFORCING SIMILAR TO WEST BRIDGE

FOR "AS CONSTRUCTED PLANS" ONLY

Bridge Design Engr.					REGION NO.	STATE	FED. AID PROJ. NO.	SHEET NO.	TOTAL SHEETS
Supervisor					10	WASH			
Designed By S. SOMMERFELD 4/94					JOB NUMBER				
Checked By					95W036				
Detailed By S. SOMMERFELD 4/94									
Bridge Projects Engr.									
Prelim Plan By									
Architect/Specialist	DATE	REVISION	BY	APP'D	4751				

Washington State Department of Transportation
ECHELON ENGINEERING, INC. Consulting Engineers

SR 167
15TH NW TO 84TH AVE. SO.
HOV AND SC&DI - STAGE 2
BRIDGE 167/122

FRAMING PLAN & SLAB REINF.

BRIDGE SHEET NO. 12
SHEET 487 OF 663 SHEETS

SR167/122 JOB NO. 7012 SHEET 12

PLOTTED: DAUG95 93169.IC (93PARLY.DGN)

SR 167/91

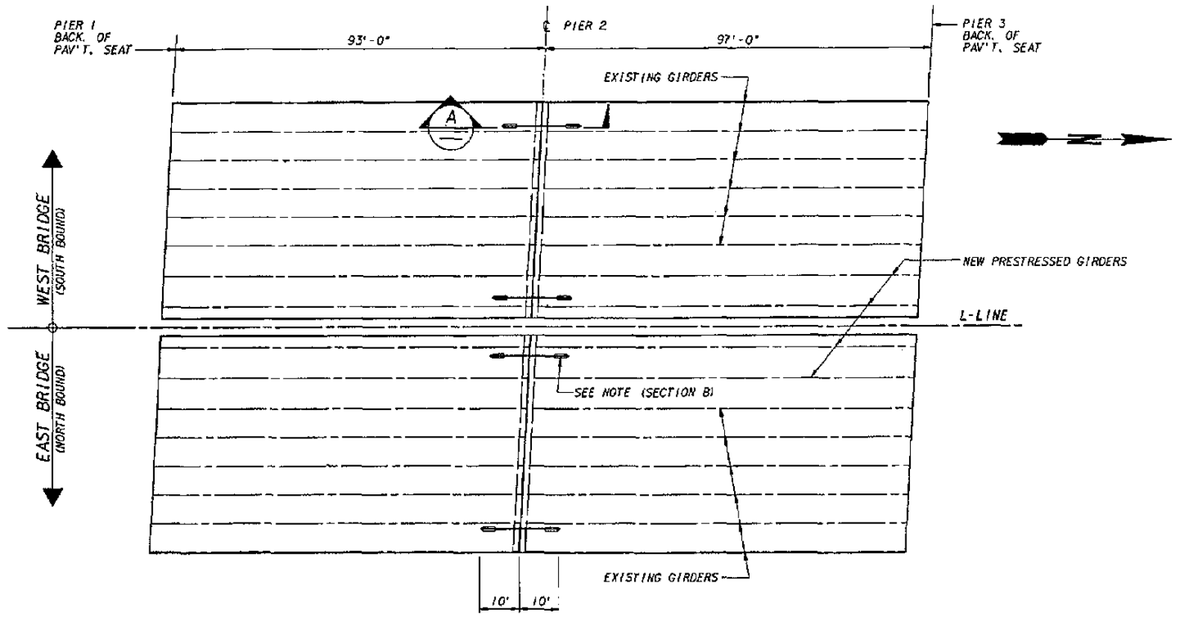

PLAN - SEISMIC RESTRAINER LOCATIONS

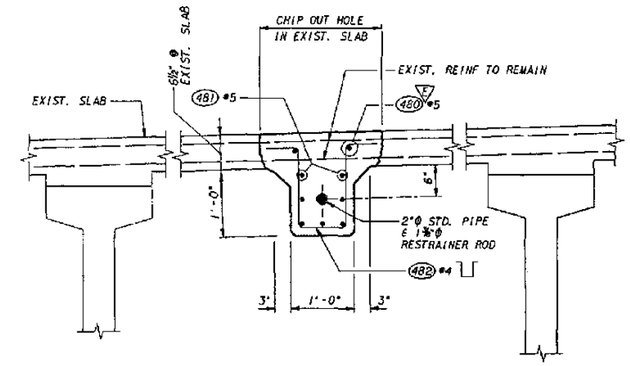

NOTE:
1. NEW SLAB, 7½" THK. SIMILAR; CAST RESTRAINER BLOCKS WITH NEW SLAB.

SECTION B

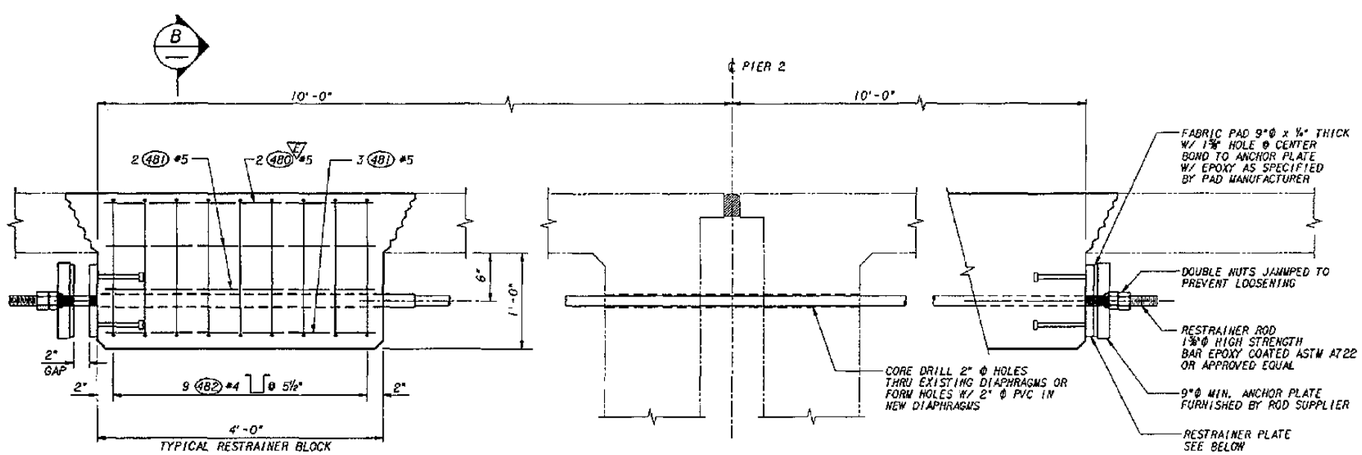

SECTION A

NOTE:
1. ALL STRUCTURAL STEEL Φ'S AND HARDWARE SHALL BE AASHTO M183 AND SHALL BE HOT-DIPPED GALVANIZED PER AASHTO M111.

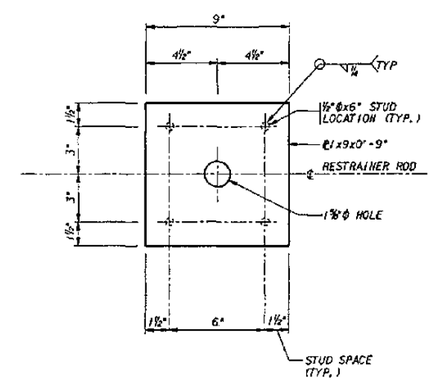

PLATE ASSEMBLY

PLAN - RESTRAINER PLATE

FOR "AS CONSTRUCTED PLANS" ONLY

Bridge Design Engr.					REGION NO.	STATE	FED. AID PROJ. NO.	SHEET NO.	TOTAL SHEETS	
Supervisor					10	WASH				
Designed By S. SOMMERFELD 4/94										
Checked By C. A. ARNOLD 4/94					JOB NUMBER					
Detailed By S. SOMMERFELD 4/94					95W036					
Bridge Projects Engr.										
Prelim Plan By										
Architect/Specialist	DATE	REVISION	BY	APP'D	4771					

Washington State Department of Transportation
ECHELON ENGINEERING, INC. Consulting Engineers

SR 167
15TH NW TO 84TH AVE. SO.
HOV AND SC&DI - STAGE 2
BRIDGE 167/122

SEISMIC RESTRAINERS

BRIDGE SHEET NO. 13
SHEET 488 OF 663 SHEETS

SR167/122 JOB NO. 7012 SHEET 13

PLOTTED: DMK635 9/13/95 K:\025-REST.DGN

SR167/91

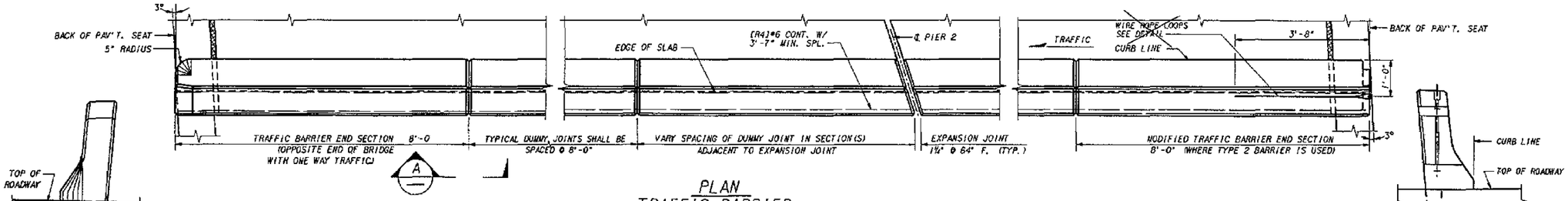

PLAN
TRAFFIC BARRIER

EAST SIDE OF WEST BRIDGE AND WEST SIDE OF EAST BRIDGE BARRIER CONTINUOUS BETWEEN ROADWAY EXPANSION JOINTS. CONSTRUCTION JOINTS WITH SHEAR KEYS ARE PERMISSIBLE AT DUMMY JOINTS LOCATIONS. FORM JOINTS BETWEEN DUMMY JOINTS SHALL NOT BE PERMITTED.

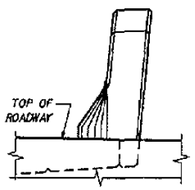

END VIEW

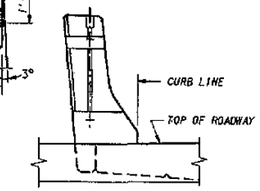

END VIEW

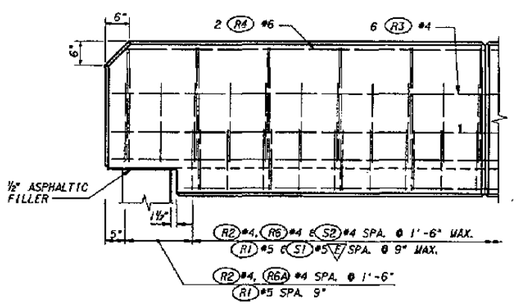

OUTSIDE ELEVATION
END OF TRAFFIC BARRIER

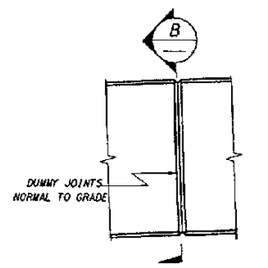

VIEW A
ALL CHAMFERS

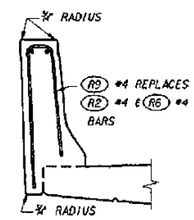

SLIPFORM ALTERNATE
SEE TYPICAL SECTION - TRAFFIC BARRIER FOR ADDITIONAL DETAILS.

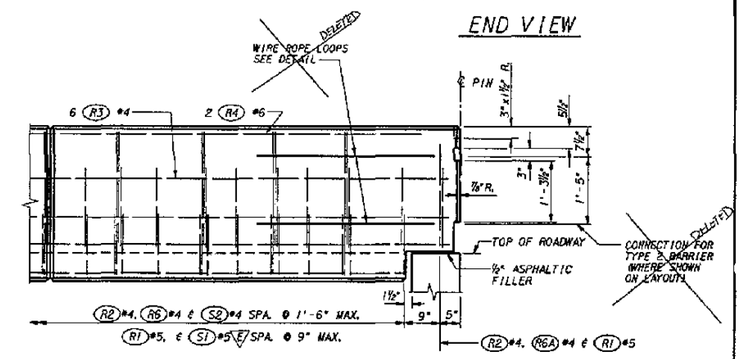

OUTSIDE ELEVATION
END OF MODIFIED TRAFFIC BARRIER
FOR TYPE 2 BARRIER ANCHORAGE

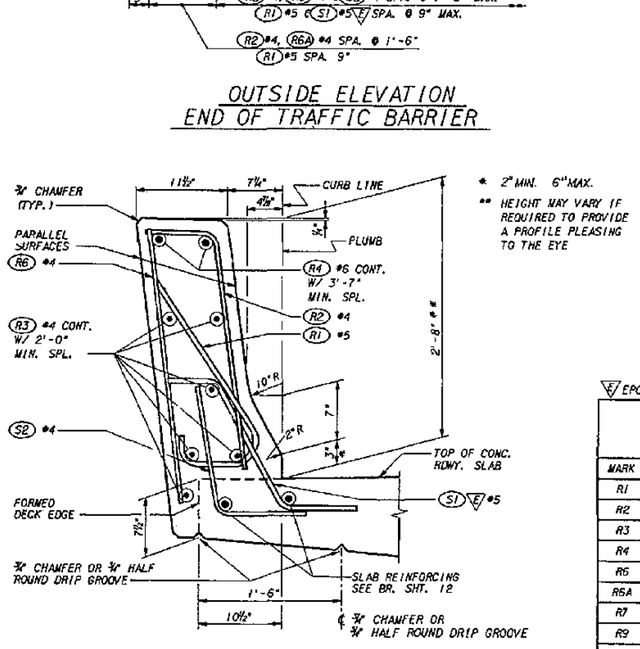

* 2" MIN. 6" MAX.

** HEIGHT MAY VARY IF REQUIRED TO PROVIDE A PROFILE PLEASING TO THE EYE

TYPICAL SECTION - TRAFFIC BARRIER

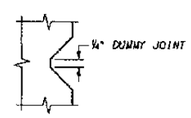

SECTION 2-2

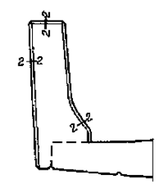

SECTION B

E EPOXY COATED

DIMENSIONS TO POINTS OF INTERSECTION.

TRAFFIC BARRIER BAR LIST
ALL REINFORCING SHALL BE AASHTO M31, GR. 60.

MARK	SIZE	LENGTH	BENDING DIAGRAM (ALL DIMENSIONS ARE OUT TO OUT)
R1	5	2'-11"	
R2	4	3'-0"	
R3	4	(A)	STR.
R4	6	(A)	STR.
R6	4	3'-0"	STR.
R6A	4	2'-5"	STR.
R7	9	14'-0"	STR.
R9	4	6'-1"	
			(A) DETERMINE FROM PLANS

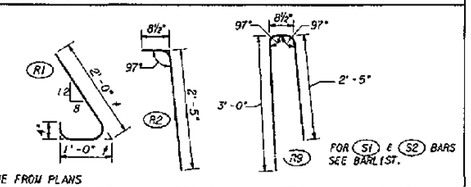

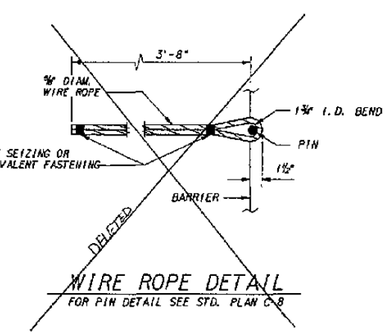

WIRE ROPE DETAIL
FOR PIN DETAIL SEE STD. PLAN C-8

FOR "AS CONSTRUCTED PLANS" ONLY

Bridge Design Engr.					
Supervisor					
Designed By C. S. YU					
Checked By C. A. ARNOLD					
Detailed By C. S. YU					
Bridge Projects Engr.					
Prelim Plan By					
Architect/Specialist	DATE	REVISION	BY	APP'D	

REGION NO.	STATE	FED. AID PROJ. NO.	SHEET NO.	TOTAL SHEETS
10	WASH			

JOB NUMBER 95W036

4/7/91

CECIL A. ARNOLD STATE OF WASHINGTON REGISTERED PROFESSIONAL ENGINEER 13598

EXPIRES 4/14/91

Washington State Department of Transportation

ANDERSEN BJORNSTAD KANE JACOBS + INC CONSULTING ENGINEERS

SR 167
15TH NW TO 84TH AVE. SO.
HOV AND SC&DI - STAGE 2
BRIDGE 167/122

TRAFFIC BARRIER - MEDIAN

BRIDGE SHEET NO. 14

SHEET 489 OF 663 SHEETS

SR167/122 JOB NO. 7012 SHEET 14

PLOTTED: 04/04/95 9:16:10 (02108-142.DGN)

SR167/91

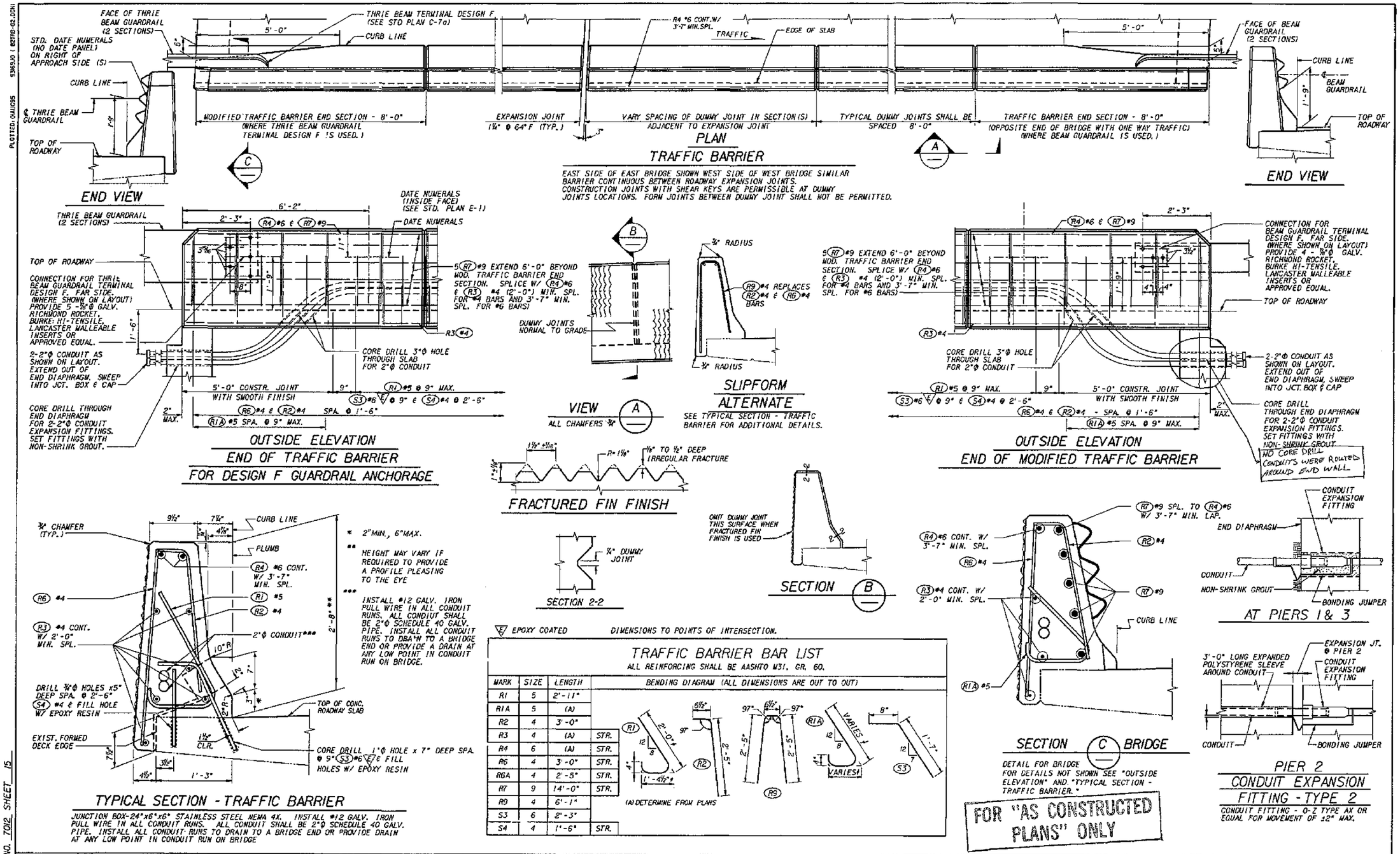

E EPOXY COATED

DIMENSIONS TO POINTS OF INTERSECTION.

TRAFFIC BARRIER BAR LIST

ALL REINFORCING SHALL BE AASHTO M31, GR. 60.

MARK	SIZE	LENGTH	BENDING DIAGRAM (ALL DIMENSIONS ARE OUT TO OUT)
R1	5	2'-11"	
R1A	5	(A)	
R2	4	3'-0"	
R3	4	(A)	STR.
R4	6	(A)	STR.
R6	4	3'-0"	STR.
R6A	4	2'-5"	STR.
R7	9	14'-0"	STR.
R9	4	6'-1"	
S3	6	2'-3"	
S4	4	1'-6"	STR.

(A) DETERMINE FROM PLANS

Bridge Design Engr.					
Supervisor					
Designed By C. S. YU 4/94					
Checked By C. A. ARNOLD 4/94					
Detailed By C. S. YU 4/94					
Bridge Projects Engr.					
Prelim Plan By					
Architect/Specialist	DATE	REVISION	BY	APP'D	

REGION NO.	STATE	FED. AID PROJ. NO.	SHEET NO.	TOTAL SHEETS
10	WASH			

JOB NUMBER 95W036

4771

CECIL A. ARNOLD, STATE OF WASHINGTON, 19558, REGISTERED PROFESSIONAL ENGINEER. EXPIRES 4/14/97

Washington State Department of Transportation

ANDERSEN BJORNSTAD KANE JADDOU + INC CONSULTING ENGINEERS

SR 167
15TH NW TO 84TH AVE. SO.
HOV AND SC&DI - STAGE 2
BRIDGE 167/122

TRAFFIC BARRIER TYPE F -OUTSIDE

BRIDGE SHEET NO. 15

SHEET 490 OF 663 SHEETS

SR 167/91

PLOTTED: 04/06/95 93695J0 (02768-02.DGN)

SR167/122 JOB NO. 7012 SHEET 15

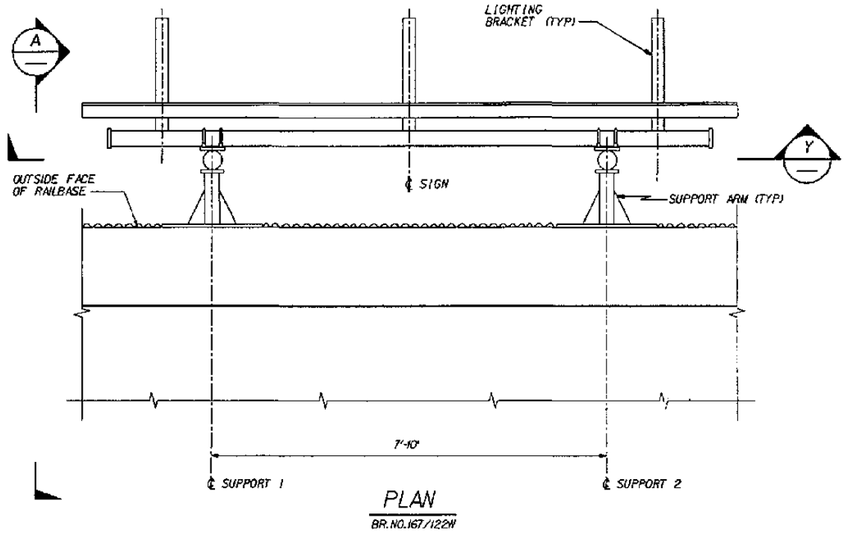

PLAN
BR.NO.167/122N

TABLE OF DIMENSIONS

LOCATION (STA. AT ℄ SIGN)	SIGN SKEW	SIGN LENGTH	SIGN HEIGHT
SR 167 801+60 (58' RT.)	0°	13'-0"	7'-0"

PIPE SIZE	TOP ARM LENGTHS		BOT. ARM LENGTHS	
	A1	A2	B1	B2
3"Φ	1'-0"	1'-0"	2'-6"	2'-6"

CANTILEVER LENGTHS				C	D	G
E1	F1	E2	F2			
2'-1"	9"	2'-1"	9"	5'-6"	6'-2⅛"	2'-5⅛"

GENERAL NOTES

1. ALL MATERIAL AND WORK SHALL BE DONE IN ACCORDANCE WITH THE REQUIREMENTS OF THE STATE OF WASHINGTON, DEPARTMENT OF TRANSPORTATION, STANDARD SPECIFICATIONS FOR ROAD, BRIDGE AND MUNICIPAL CONSTRUCTION DATED 1993 AND AMENDMENTS.
2. MATERIALS SPECIFICATIONS:

PLATES & BARS	AASHTO M 183
PIPES	ASTM A 53 ± GRADE B OR ASTM A 500 GRADE B
BOLTS, NUTS & WASHERS UNLESS OTHERWISE NOTED	ASTM A 307

3. ALL PARTS SHALL BE GALVANIZED IN ACCORDANCE WITH AASHTO M 111 AFTER FABRICATION. BOLTS AND HARDWARE SHALL BE GALVANIZED IN ACCORDANCE WITH AASHTO M 232.
4. ALL U-BOLTS SHALL BE FABRICATED HOT BEFORE GALVANIZING.
5. ¼" FILLET WELDS MINIMUM EXCEPT WHERE NOTED ON PLANS.
6. D AND G DIMENSIONS ARE BASED ON AS-BUILTS PLANS. ACTUAL RELATIVE HORIZONTAL DISTANCES FROM ℄ OF THE PRESTRESSED GIRDER TO THE EDGE OF SLAB AND THE VERTICAL DISTANCE FROM THE TOP OF BARRIER TO THE BOTTOM OF THE PRESTRESSED GIRDER SHALL BE FIELD MEASURED PRIOR TO FABRICATION OF BRACKET ARMS.

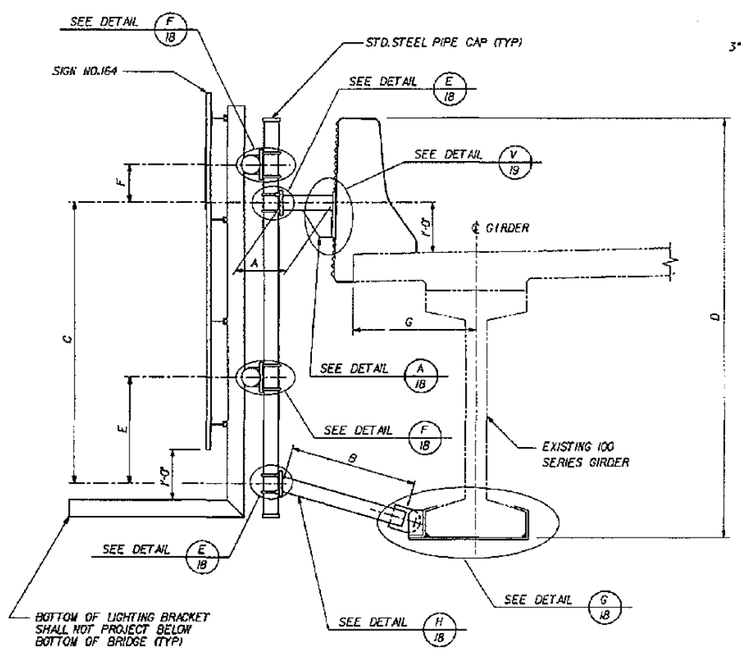

SECTION X

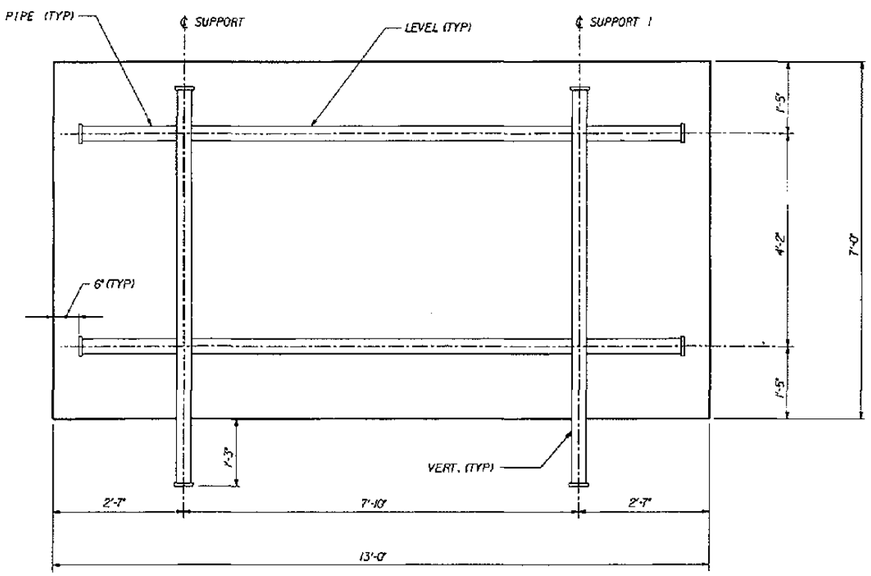

VIEW Y

SIGN BRACKET NO.1 ~ WEST BRIDGE

LEGEND

B / 15 — IDENTIFIES SECTION, VIEW OR DETAIL; TAKEN OR SHOWN ON BRIDGE SHEET 15

B / — TAKEN OR SHOWN ON THE SAME SHEET

FOR "AS CONSTRUCTED PLANS" ONLY

Bridge Design Engr.					REGION NO.	STATE	FED. AID PROJ. NO.	SHEET NO.	TOTAL SHEETS
Supervisor					10	WASH			
Designed By WSDOT					JOB NUMBER 95W036				
Checked By Y. POLYAKOV 4/94									
Detailed By									
Bridge Projects Engr.									
Prelim Plan By									
Architect/Specialist	DATE	REVISION	BY	APP'D	4/94				

CECIL A. ARNOLD, STATE OF WASHINGTON, 13338, REGISTERED PROFESSIONAL ENGINEER, EXPIRES 4/14/97

Washington State Department of Transportation

ANDERSEN BJORNSTAD KANE JACOBSS • INC CONSULTING ENGINEERS

SR 167
15TH NW TO 84TH AVE. SO.
HOV AND SC&DI - STAGE 2
BRIDGE 167/122

SIGN BRACKET W. BRIDGE

BRIDGE SHEET NO. 16

SHEET 491 OF 663 SHEETS

SR167/122 JOB NO. 70N2 SHEET 16

PLOTTED: 04/06/96) 07:59:16) 025IGH-1.DGN

SR 167/91

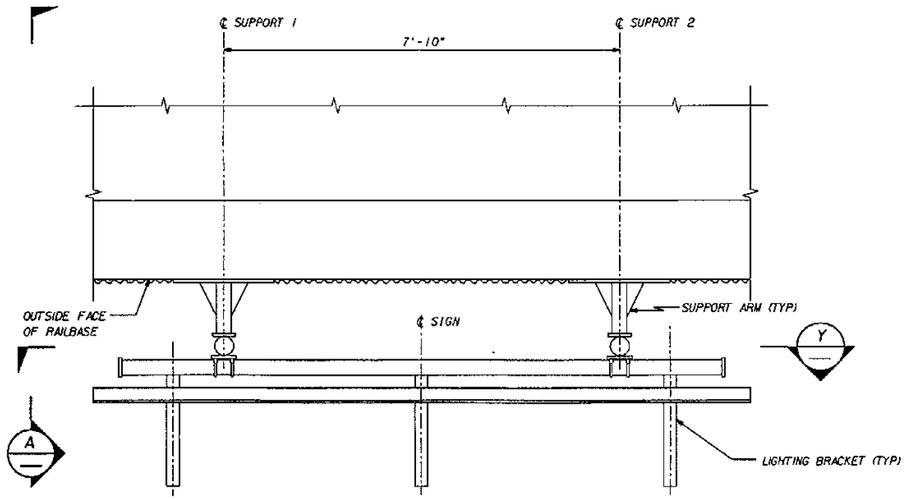

PLAN
BR. NO. 167/122E

TABLE OF DIMENSIONS

LOCATION (STA. AT ℄ SIGN)	SIGN SKEW	SIGN LENGTH	SIGN HEIGHT
SR 167 801+80 (58' LT.)	0°	13'-0"	7'-0"

PIPE SIZE	TOP ARM LENGTHS		BOT. ARM LENGTHS	
	A1	A2	B1	B2
3"Φ	1'-0"	1'-0"	2'-6"	2'-6"

CANTILEVER LENGTHS				C	D	G
E1	F1	E2	F2			
2'-1"	9"	2'-1"	9"	5'-6"	8'-2½"	2'-5¼"

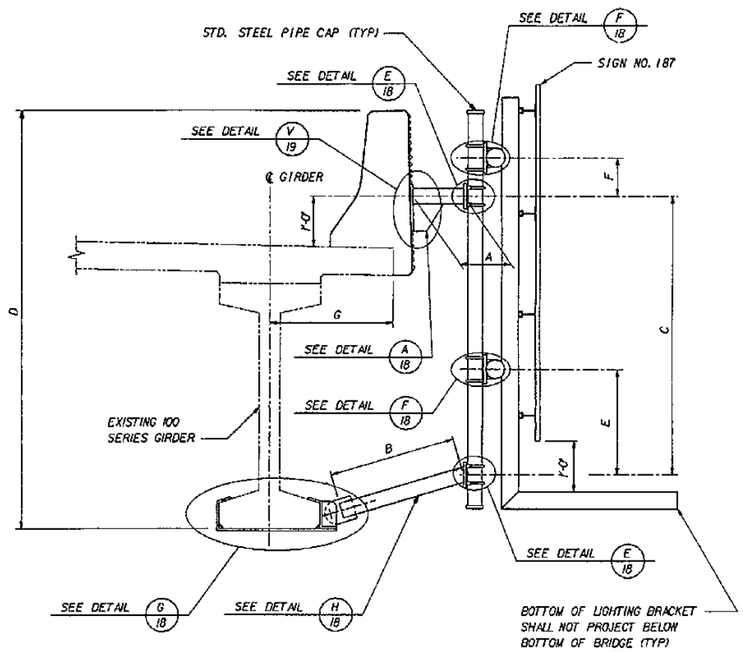

SECTION X

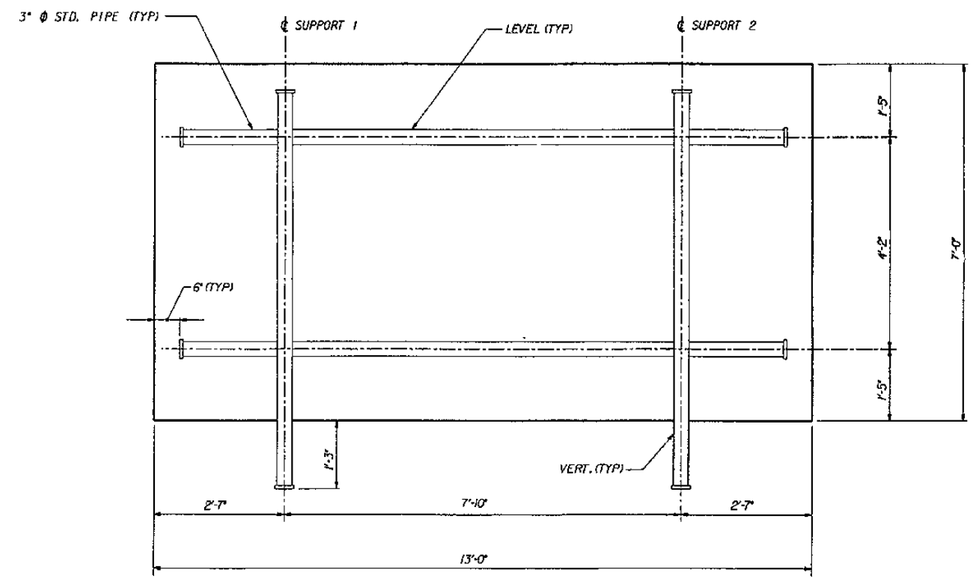

VIEW Y

SIGN BRACKET NO.2 ~ EAST BRIDGE

FOR "AS CONSTRUCTED PLANS" ONLY

Bridge Design Engr.					REGION NO.	STATE	FED. AID PROJ. NO.	SHEET NO.	TOTAL SHEETS	
Supervisor					10	WASH				
Designed By WSDOT					JOB NUMBER 95W036					
Checked By Y. POLYAKOV 4/94										
Detailed By										
Bridge Projects Engr.										
Prelim Plan By										
Architect/Specialist	DATE	REVISION	BY	APP'D	4771					

CECIL A. ARNOLD, STATE OF WASHINGTON, 1958, REGISTERED PROFESSIONAL ENGINEER
EXPIRES 4/14/97

Washington State Department of Transportation
ANDERSEN BJORNSTAD KANE JACOBS • INC
CONSULTING ENGINEERS

SR 167
15TH NW TO 84TH AVE. SO.
HOV AND SC&DI - STAGE 2
BRIDGE 167/122

SIGN BRACKET E. BRIDGE

BRIDGE SHEET NO. 17
SHEET 492 OF 663 SHEETS

SR167/91

SR167/122 JOB NO. 7012 SHEET 17

PLOTTED: 04/14/95 93169.10 (02SIGN-2 .DGN)

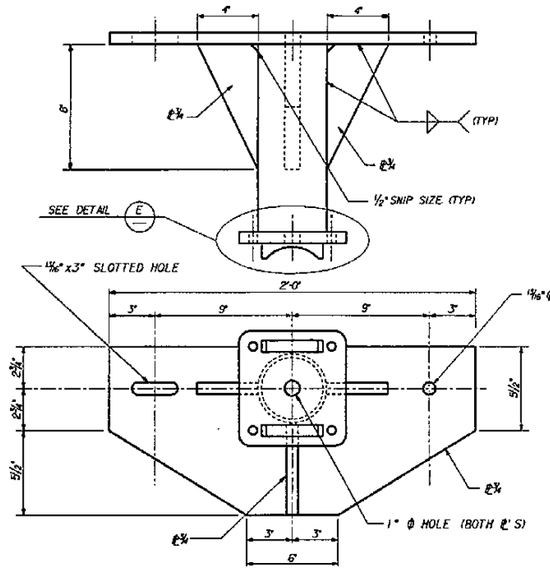

SUPPORT ARM ~ TOP DETAIL (A/16) (A/17)

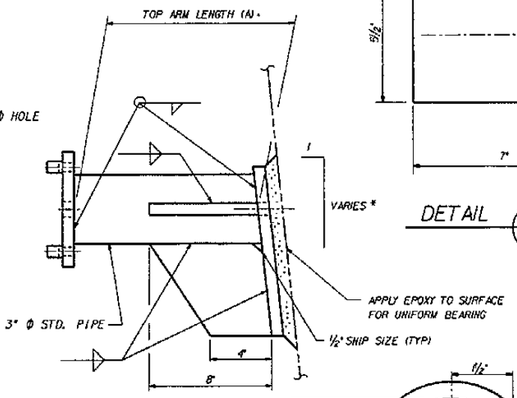

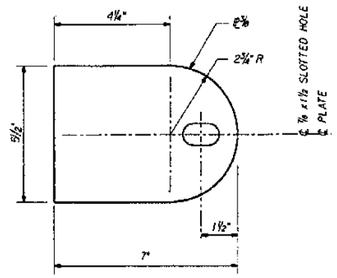

DETAIL (L)

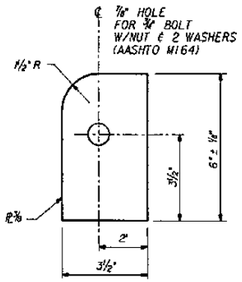

DETAIL (M)

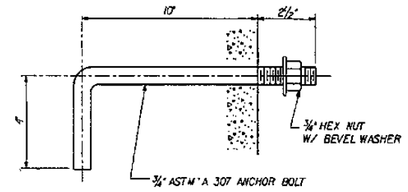

ANCHOR BOLT DETAIL

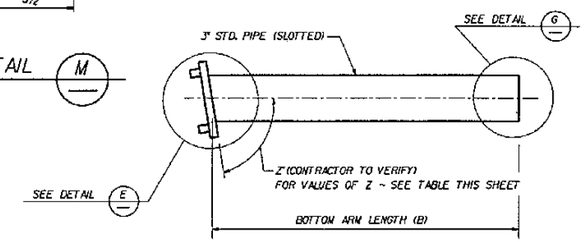

SUPPORT ARM ~ BOTTOM DETAIL (H/16) (H/17)

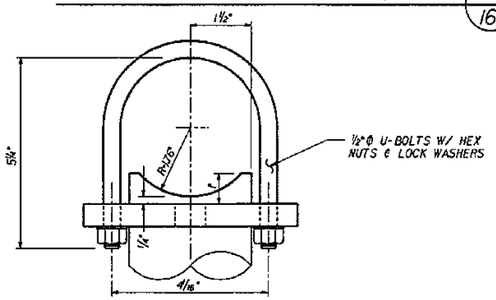

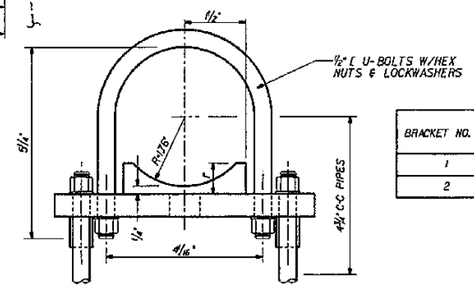

BRACKET NO.	Z	
	SUPPORT #1	SUPPORT #2
1	74"	74"
2	74"	74"

℄ 2 - ⅞" x 1½" SLOTTED HOLES (BOT. PLATE)
2 - ⅞" Φ HOLES (TOP PLATE)
2 - ¾" Φ BOLTS W/WASHER (ASTM A 325)
TOP AND 2⅛" x ⅜" x 2½" WASHER BOTTOM.
PLACE BOLT W/NUT ON UNDERSIDE.

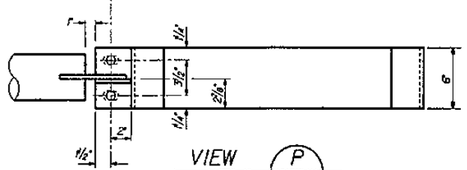

VIEW (P)

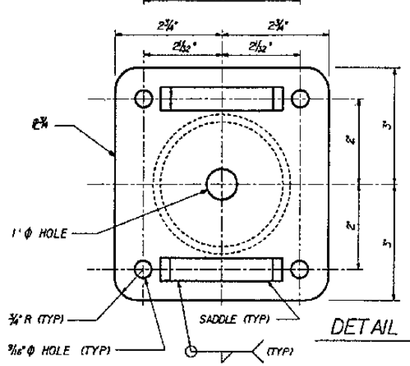

DETAIL (E/16) (E/17)

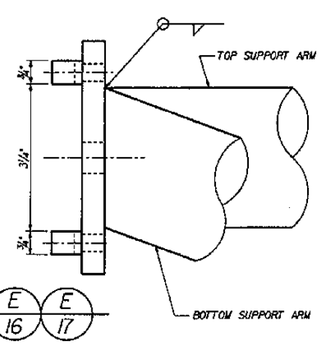

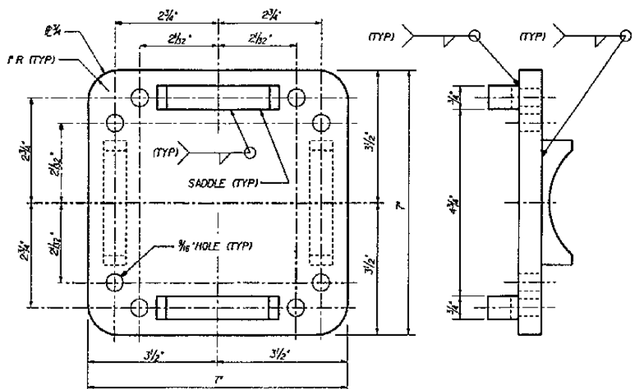

DETAIL (F/16) (F/17)

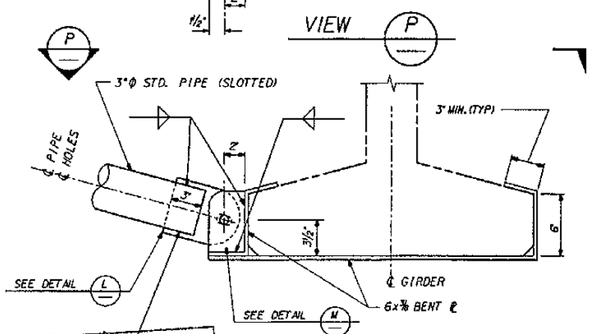

DETAIL (G/16) (G/17)

FOR "AS CONSTRUCTED PLANS" ONLY

Bridge Design Engr.					REGION NO.	STATE	FED. AID PROJ. NO.	SHEET NO.	TOTAL SHEETS
Supervisor					10	WASH			
Designed By WSDOT					JOB NUMBER				
Checked By Y. POLYAKOV 4/94					95W036				
Detailed By									
Bridge Projects Engr.									
Prelim Plan By									
Architect/Specialist	DATE	REVISION	BY	APP'D	4771				

CECIL A. ARNOLD STATE OF WASHINGTON 7955 REGISTERED PROFESSIONAL ENGINEER
EXPIRES 4/14/97

Washington State Department of Transportation

ANDERSEN BJORNSTAD KANE JACOBS • INC CONSULTING ENGINEERS

SR 167
15TH NW TO 84TH AVE. SO.
HOV AND SC&DI - STAGE 2
BRIDGE 167/122

SIGN BRACKET DETAILS

BRIDGE SHEET NO. 18

SHEET 493 OF 663 SHEETS

SR167/122 JOB NO. 7012 SHEET 18

PLOTTED: D-AUG85 3/30/10 1 02SIGN-3.DGN

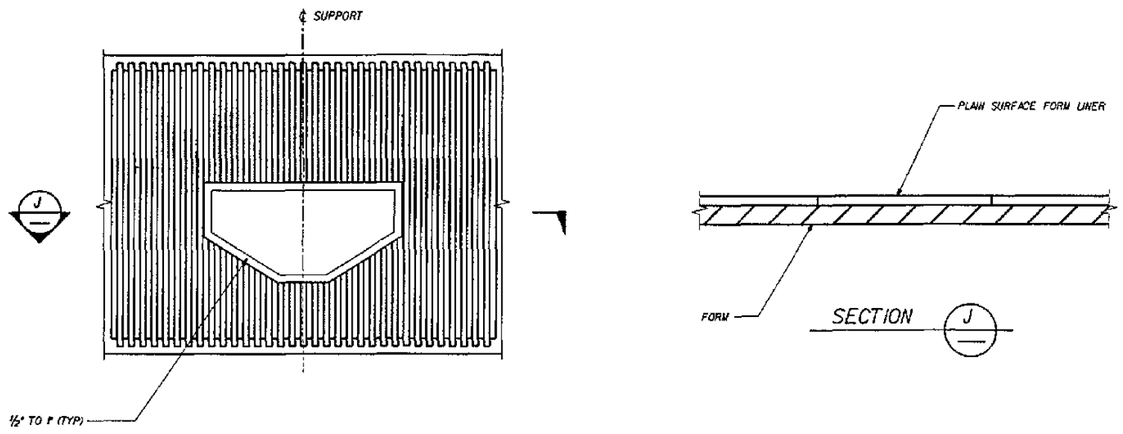

ANCHORAGE IN FRACTURED FIN AREA

FOR "AS CONSTRUCTED PLANS" ONLY

Bridge Design Engr.					REGION NO.	STATE	FED. AID PROJ. NO.	SHEET NO.	TOTAL SHEETS		
Supervisor					10	WASH					
Designed By WSDOT											
Checked By Y. POLYAKOV 4/94					JOB NUMBER						
Detailed By					95W036						
Bridge Projects Engr.											
Prelim Plan By											
Architect/Specialist	DATE	REVISION	BY	APP'D	4771						

SECIL A. ARNOLD, STATE OF WASHINGTON, 19956, REGISTERED PROFESSIONAL ENGINEER
EXPIRES 4/14/97

Washington State Department of Transportation
ANDERSEN BJORNSTAD KANE JACOBS + INC
CONSULTING ENGINEERS

SR 167
15TH NW TO 84TH AVE. SO.
HOV AND SC&DI - STAGE 2
BRIDGE 167/122

SIGN BRACKET DETAILS

BRIDGE SHEET NO. 19
SHEET 494 OF 663 SHEETS

SR167/91

PLOTTED: 04/06/95 93169.10 I 02SIGN-4.DGN

SR167/122 JOB NO. 7012 SHEET 19

93169.10.1 828ARLST.DGN PLOTTED: 01AUG95

S=BAR IS INCLUDED IN SUBSTRUCTURE QUANITIES
F=BAR TO BE FIELD WELDED
T=TIE OR STIRRUP
E=BAR IS TO BE EPOXY COATED
V=BAR DIMENSIONS VARY BETWEEN DIMENSIONS SHOWN ON THIS LINE AND THE FOLLOWING LINE

MARK No	LOCATION	SIZE	No REQD	BEND TYPE	TIE OR STIR	FIELD WELD	SUBSTR	EPOXY COAT	VARIES	No EACH	U FT	U IN	W FT	W IN	X FT	X IN	Y FT	Y IN	Z FT	Z IN	F1 DEG	F2 DEG	LENGTH FT	LENGTH IN	WEIGHT LBS
	PIER 1																								
101	FOOTING TRANSV BOT	6	52	50			S			1	6	2.0											6	2.0	482
102	FOOTING LONG	7	28	50			S			1	15	0.0											15	0.0	858
103	FOOTING STIRRUP	5	38	61	T		S			1	1	5.0	4	3.0	4	3.0							9	8.5	385
104	FOOTING TRANSV TOP	6	32	50			S			1	6	2.0											6	2.0	296
105	STUB WALL VERTICAL	5	38	61			S			1	1	5.0	3	6.0	3	6.0							8	2.0	324
106	GIRDER STOP	4	4	61			S			1	4	1.0	2	6.0	2	6.0							8	10.0	24
107	GIRDER STOP	4	4	61			S			1	5	2.0	2	6.0	2	6.0							9	11.0	26
108	GIRDER STOP	4	4	61			S			1	0	10.0	2	6.0	2	6.0							5	7.0	15
111	STUB WALL HORIZ	9	4	50			S			1	15	0.0											15	0.0	204
112	STUB WALL HORIZ	4	8	50			S			1	15	0.0											15	0.0	80
113	ANCHOR	8	16	51			S			1	3	0.0											3	11.0	167
	PIER 2																								
201	COLUMN VERTICAL	9	22	51			S			1	26	7.0											27	10.0	2082
202	COLUMN SPIRAL	5	2	67	T		S			1	2	8.3	0	4.0							79		655	7.6	1368
205	SHAFT SPIRAL TOP	5	2	67	T		S			1	3	5.4	0	3.5							120		281	5.5	2673
206	SHAFT SPIRAL BOTTOM	5	2	67	T		S			1	3	5.4	0	9.0							49		524	4.3	1094
207	SHAFT VERTICAL	11	48	50			S			1	71	3.0											71	3.0	18170
250	CROSS BEAM ANCHORS	8	32	51			S			1	5	0.0											5	11.0	506
251	CROSS BEAM BOTTOM	11	20	50			S			1	15	2.0											15	2.0	1612
252	CROSS BEAM BOTTOM	9	4	50			S			1	15	2.0											15	2.0	206
253	CROSS BEAM TOP	14	20	80			S			1	15	2.0			3	0.0				5.0		81	12	10.5	1970
254	CROSS BEAM TOP	14	4	50			S			1	15	2.0											15	2.0	464
255	CROSS BEAM SIDES	5	8	50			S			1	15	2.0											15	2.0	127
256	CROSS BEAM STIRRUP	5	48	83	T		S			1	3	9.0	2	11.0									15	0.3	752
257	CROSS BEAM TIE	5	48	56	T		S			1	2	11.0											3	8.0	184
265	GIRDER STOP - STIRRUP	4	16	61	T		S			1	3	9.0	2	0.0	2	0.0							7	7.0	81
266	GIRDER STOP	4	10	61			S			1	4	9.0	0	8.0	0	8.0							5	10.0	39
	PIER 3																								
301	FOOTING TRANSV BOT	6	52	50			S			1	5	6.0											5	6.0	430
302	FOOTING LONGIT	7	28	50			S			1	15	0.0											15	0.0	858
303	FOOTING STIRRUP	5	38	61	T		S			1	1	5.0	4	0.0	4	0.0							9	2.5	365
304	FOOTING TRANSV TOP	6	32	50			S			1	6	2.0											6	2.0	296
305	STUB WALL VERTICAL	5	38	61			S			1	1	5.0	2	6.0	2	6.0							6	2.0	244
306	GIRDER STOP	4	4	61			S			1	4	1.0	2	6.0	2	6.0							8	10.0	24
307	GIRDER STOP	4	4	61			S			1	5	2.0	2	6.0	2	6.0							9	11.0	26
308	GIRDER STOP	4	4	61			S			1	0	10.0	2	6.0	2	6.0							5	7.0	15
311	STUB WALL HORIZ	9	4	50			S			1	15	0.0											15	0.0	204
312	STUB WALL HORIZ	4	8	50			S			1	15	0.0											15	0.0	80
313	ANCHOR	8	16	51			S			1	3	0.0											3	11.0	167
	SLAB																								
400	TOP TRANSVERSE	5	728	52				E		1	17	1.0											18	3.0	13857
401	BOTTOM TRANSVERSE	5	728	51						1	17	1.0											17	8.0	13414
402	TOP LONGIT - SPAN 1	5	84	50				E		1	32	4.0											32	4.0	2833
403	TOP LONGIT - SPAN 2	5	84	50				E		1	33	8.0											33	8.0	2950
404	BOTTOM LONGIT - SPAN 1	5	102	50						1	32	4.0											32	4.0	3440
405	BOTTOM LONGIT - SPAN 2	5	102	50						1	33	8.0											33	8.0	3582
	DIAPHRAGM																								
	END DIAPHRAGMS - PIER 1 & 3																								
450	LONGIT	4	48	50						1	17	5.0											17	5.0	558
451	LONGIT - TOP	6	8	50						1	17	5.0											17	5.0	209
452	LONGIT - BOTTOM	6	8	50						1	17	5.0											17	5.0	209
453	STIRRUP	4	60	54	T					1	6	9.0											7	0.5	282
454	STIRRUP	4	60	54	T					1	6	9.0											7	0.5	282
455	STIRRUP	4	60	64	T					1	1	0.0	4	11.0	0	4.0							6	1.0	244
456	TIE	4	60	56	T					1	1	3.0											1	10.0	73
457	ANCHOR	5	24	51						1	3	0.0											3	7.0	90
	END DIAPHRAGMS - PIER 2																								
460	LONGIT	4	16	50						1	6	6.0											6	6.0	69
461	LONGIT - TOP	6	8	50						1	17	1.0											17	1.0	205
462	LONGIT - BOTTOM	7	16	50						1	6	6.0											6	6.0	213
463	LONGIT - BOTTOM	7	8	50						1	13	7.0											13	7.0	222
464	STIRRUP	4	40	63	T					1	0	9.0	2	10.0	2	10.0							6	3.0	167
465	VERT	4	32	63	T					1	0	9.0	2	2.0	2	2.0							4	11.0	105
466	ANCHOR	8	4	51						1	2	7.0											3	6.0	37
	INTERMEDIATE PIERS																								
470	LONGIT	4	32	50						1	6	6.0											6	6.0	139
471	LONGIT - TOP	7	16	50						1	15	1.0											15	1.0	493
472	LONGIT	8	8	50						1	13	7.0											13	7.0	290
473	LONGIT - BOTTOM	9	8	50						1	13	7.0											13	7.0	369
474	STIRRUP	4	80	71						1	0	5.0	3	5.0	3	5.0							7	0.1	374
475	ANCHOR	8	16	51						1	3	0.0											3	11.0	167
	RESTRAINER BLOCKS																								
480	LONGIT TOP	5	16	50				E		1	2	9.0											2	9.0	46
481	LONGIT SIDE & BOT	5	56	50						1	2	9.0											2	9.0	161
482	STIRRUP	4	72	63	T					1	0	8.0	1	3.0	1	3.0	0	4.0	0	4.0			3	6.0	168
S1	SLAB TO BARRIER VERT	5	508	69				E		1	0	6.0	0	9.0	1	6.0	0	6.0					2	6.8	1359
S2	SLAB TO BARRIER VERT	4	256	80						1	2	0.0	1	6.0			0	6.0			96		3	3.6	565
S3	EXIST SLAB TO BARRIER	6	508	69				E		1	0	8.0	0	9.5	1	4.0							2	1.2	1603
S4	EXIST SLAB TO BARRIER	4	154	50						1	1	6.0											1	6.0	154
600	EXIST SLAB TO BARRIER	4	74	50						1	2	6.0											2	6.0	124

STEEL REINFORCING BAR QUANTITIES NOT INCLUDED IN THIS BAR LIST

TRAFFIC BARRIER (SUPERSTRUCTURE) 14,845

BENDING DIAGRAMS

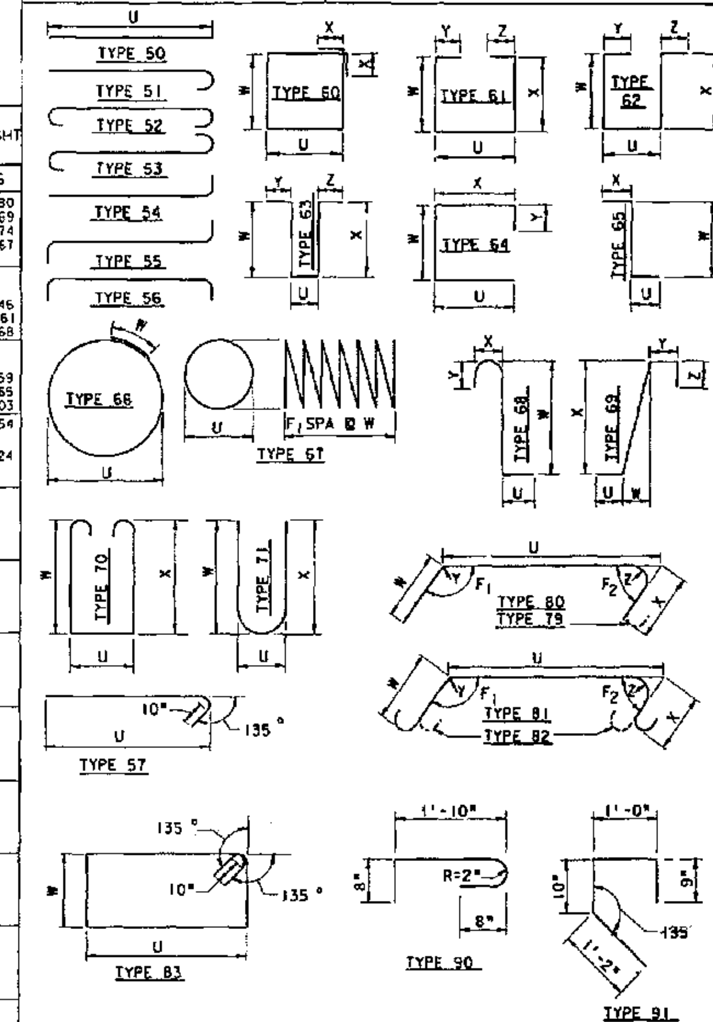

NOTES:
1. ALL REINFORCING BARS ON THIS SHEET SHALL BE AASHTO M-31, GRADE 60 UNLESS SHOWN OTHERWISE.
2. REINFORCING FOR TRAFFIC BARRIERS NOT SHOWN IN THIS BARRIER SHEET.

FOR "AS CONSTRUCTED PLANS" ONLY

Bridge Design Engr.				
Supervisor				
Designed By	C. S. YU			
Checked By	JJM, SDS 4/94			
Detailed By	C. S. YU			
Bridge Projects Engr.				
Prelim Plan By	1-3-95	NOTED TRAFF. BARR. REINF.	WB	
Architect/Specialist	DATE	REVISION	BY	APP'D

REGION NO. 10 | STATE WASH | FED. AID PROJ. NO. | SHEET NO. | TOTAL SHEETS

JOB NUMBER 95W036

4771

CECIL A. ARNOLD — STATE OF WASHINGTON — REGISTERED PROFESSIONAL ENGINEER — 7958 — EXPIRES 4/14/97

Washington State Department of Transportation

ANDERSEN BJORNSTAD KANE JACOBS • INC CONSULTING ENGINEERS

SR 167
15TH NW TO 84TH AVE. SO.
HOV AND SC&DI - STAGE 2
BRIDGE 167/122

BARLIST

BRIDGE SHEET NO. 20

SHEET 495 OF 663 SHEETS

SR167/122 JOB NO. 7012 SHEET 20

SR167/91

POINT OF MIN. VERT. CLEARANCE:
L LINE STA. 813+8.70 ~ 65' RT

PLOTTED: 31 JULY95 931695.1 19/981.23X 835801.23 .DGN

BRIDGE WIDENING WITH APPROACH FILLS
WIDEN BRIDGE WITH W42G PRESTRESSED CONCRETE GIRDERS
"H" DIMENSION = 10"
DECK PROTECTIVE SYSTEM 1 (EPOXY COATED REBARS)

CURVE DATA

P.I. STATION	Δ	RADIUS	TANGENT	LENGTH
LINCOLN AVE. STA. 5+23.73	88° 58' 44" RT.	140'	137.53'	217.42'

SEC. 24, T. 22 N., R. 4 E., W.M.
CITY OF KENT

SR 167

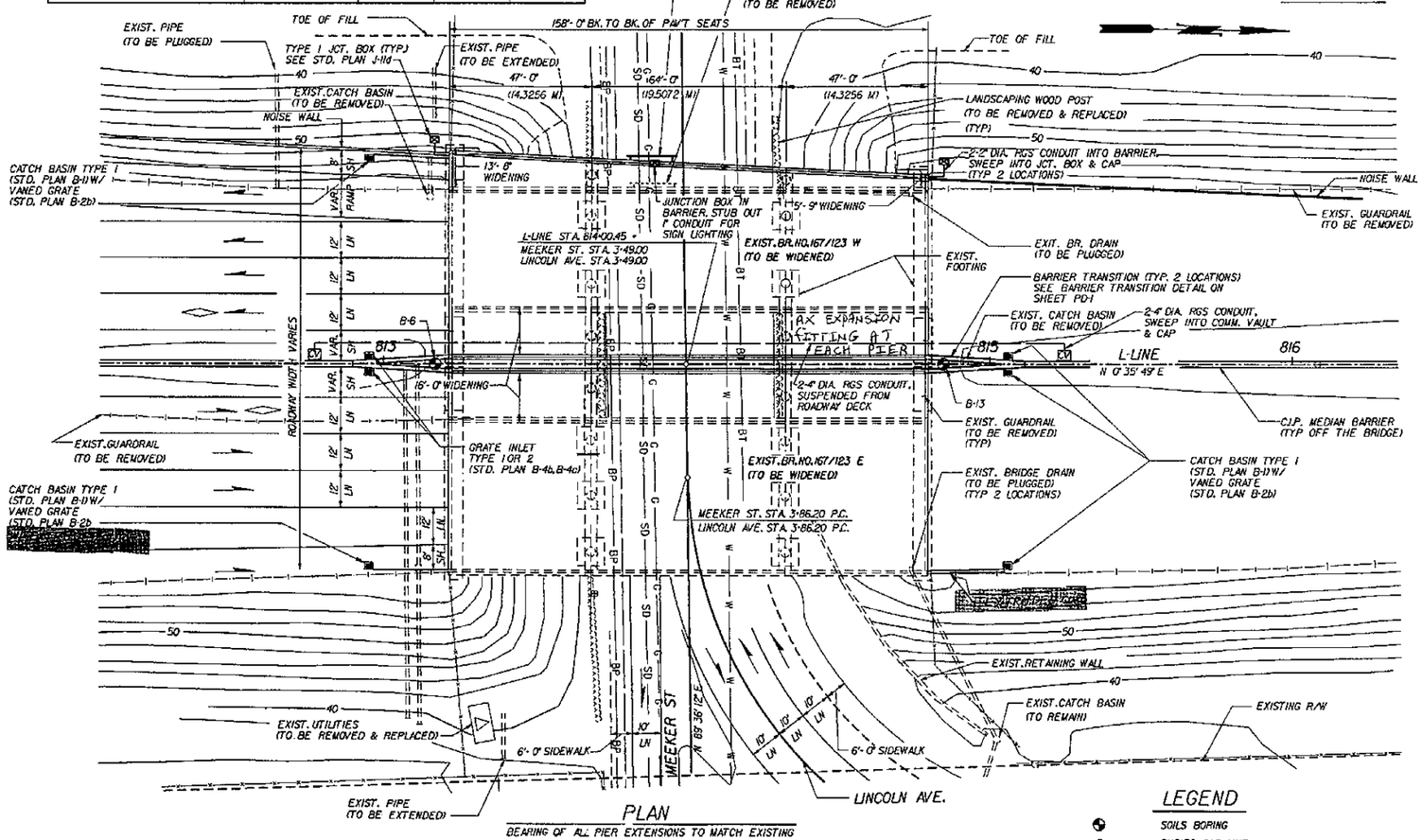

PLAN

BEARING OF ALL PIER EXTENSIONS TO MATCH EXISTING

LEGEND

	SOILS BORING
G	BURIED GAS LINE
W	BURIED WATER LINE
S	BURIED SEWER LINE
BT	BURIED TELEPHONE LINE
BP	BURIED POWER LINE

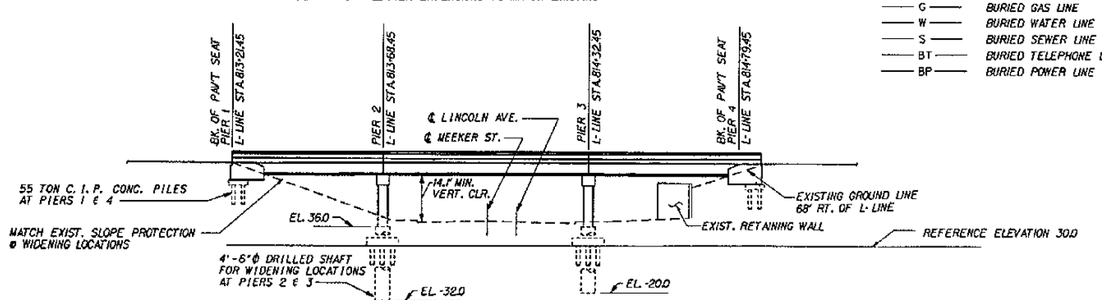

ELEVATION

DATUM

NAT'L. GEOD. VERT. ADJ. DATUM OF 1978

NOTE: FOR EMBANKMENT DETAILS AT BRIDGE ENDS, SEE STANDARD PLAN H-9.

FOR "AS CONSTRUCTED PLANS" ONLY

GENERAL NOTES

1. ALL MATERIAL AND WORKMANSHIP SHALL BE IN ACCORDANCE WITH THE REQUIREMENTS OF THE WASHINGTON STATE DEPARTMENT OF TRANSPORTATION STANDARD SPECIFICATIONS FOR ROAD, BRIDGE AND MUNICIPAL CONSTRUCTION DATED 1994, AND AMENDMENTS.
2. THIS STRUCTURE HAS BEEN DESIGNED IN ACCORDANCE WITH THE REQUIREMENTS OF THE AASHTO STANDARD SPECIFICATIONS FOR HIGHWAY BRIDGES FIFTEENTH EDITION - 1992 WITH INTERIM SPECIFICATIONS THROUGH 1993. ALL PRESTRESSED CONCRETE ELEMENTS HAVE BEEN DESIGNED FOR SERVICE LOAD STRESSES AND CHECKED FOR THE REQUIREMENTS OF LOAD FACTOR DESIGN. ALL OTHER STRUCTURAL ELEMENTS ARE DESIGNED IN ACCORDANCE WITH THE REQUIREMENTS FOR LOAD FACTOR DESIGN. SEISMIC DESIGN OF THIS STRUCTURE HAS BEEN DONE USING AN ACCELERATION COEFFICIENT OF 0.25 AND SOIL PROFILE TYPE II.
3. FOOTING ELEVATIONS AND SUBSTRUCTURE DETAILS ARE SUBJECT TO CHANGE, DEPENDING UPON FOUNDATION MATERIAL ENCOUNTERED. REINFORCING STEEL FOR FOOTINGS, ABUTMENT WALLS AND COLUMNS SHALL NOT BE CUT UNTIL FINAL FOOTING ELEVATIONS HAVE BEEN DETERMINED AND SUBSTRUCTURE DETAILS HAVE BEEN MODIFIED IF NECESSARY.
4. ELEVATIONS SHOWN ON THE PLANS ARE BASED ON RECORD INFORMATION OF ORIGINAL CONSTRUCTION TOGETHER WITH FIELD SURVEY DATA. THE NEW STRUCTURE IS INTENDED TO MATCH THE EXISTING STRUCTURE. THEREFORE, ELEVATIONS GIVEN ON THE PLANS SHALL BE VERIFIED IN THE FIELD BY THE CONTRACTOR FOR COMPATIBILITY.
5. THE CONCRETE IN THE SHAFTS SHALL BE CLASS 4000W. THE CONCRETE IN THE ROADWAY DECK SHALL BE CLASS 5000D. THE CONCRETE IN THE CAST-IN-PLACE PILES SHALL BE CLASS 4000P. THE CONCRETE IN THE CLOSURES SHALL BE CLASS 5000LS OR CLASS 5000DLS FOR THE ROADWAY DECK. ALL OTHER CAST-IN-PLACE CONCRETE SHALL BE CLASS 4000.
6. PILES SHALL BE DRIVEN TO A LOAD BEARING CAPACITY OF 55 TONS AT PIERS 1 & 4. SEE SPECIAL PROVISIONS FOR MINIMUM PILE TIP ELEVATIONS. THE MAXIMUM ULTIMATE LOAD FOR PIERS 2 & 3 SHAFTS IS 420 TONS EACH.
7. FALSEWORK SHALL NOT BE RELEASED UNTIL ALL CONCRETE BEING SUPPORTED HAS MET THE AGE AND STRENGTH REQUIREMENTS OF THE STANDARD SPECIFICATIONS. FALSEWORK SHALL BE CAREFULLY RELEASED TO PREVENT IMPACT OR UNDUE STRESS IN THE STRUCTURE. CLOSURES SHALL BE MADE AFTER FALSEWORK IS RELEASED BUT BEFORE PLACEMENT OF OVERLAY AND BARRIERS.
8. UNLESS OTHERWISE SHOWN IN THE PLANS, THE CONCRETE COVER MEASURED FROM THE FACE OF ANY REINFORCING STEEL SHALL BE 2½" AT THE TOP OF THE ROADWAY SLAB, 1" AT THE BOTTOM OF THE ROADWAY SLAB, 7½" AT THE BOTTOM OF FOOTINGS, 2" AT THE TOP OF FOOTINGS AND 1½" AT ALL OTHER LOCATIONS.

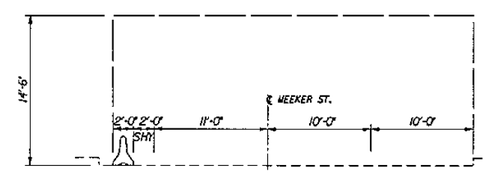

PIER 2 CONSTRUCTION

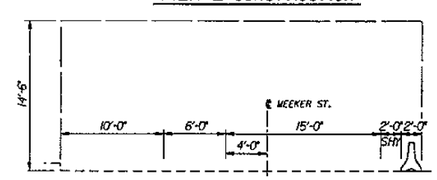

PIER 3 CONSTRUCTION

CONSTRUCTION OPENING DIAGRAM

LOOKING WEST

P.C. GIRDERS (W42G)
LOADING: HS-25
OR
TWO 24 KIP AXLES 4' CTRS.

Bridge Design Engr.					
Supervisor					
Designed By	J. J. WORRIS	4/94			
Checked By	Y. P. BERI	4/94			
Detailed By	K. A. WUELLER	4/94			
Bridge Projects Engr.					
Prelim Plan By					
Architect/Specialist					

DATE | REVISION | BY | APP'D

REGION NO.	STATE	FED. AID PROJ. NO.	SHEET NO.	TOTAL SHEETS
0	WASH			

JOB NUMBER 95W036

4771

CECILIA ARNOLD, STATE OF WASHINGTON, 25258, REGISTERED PROFESSIONAL ENGINEER — EXPIRES 4/16/97

Washington State Department of Transportation

ABK ANDERSEN BUCKSTAD KANE JACOBS • INC. CONSULTING ENGINEERS

SR 167
15TH NW TO 84TH AVE. SO.
HOV AND SC&DI - STAGE 2
BRIDGE 167/123

LAYOUT

BRIDGE SHEET NO. 1

SHEET 496 OF 663 SHEETS

SR167/123 JOB NO. 7019 SHEET 1

SR167/91

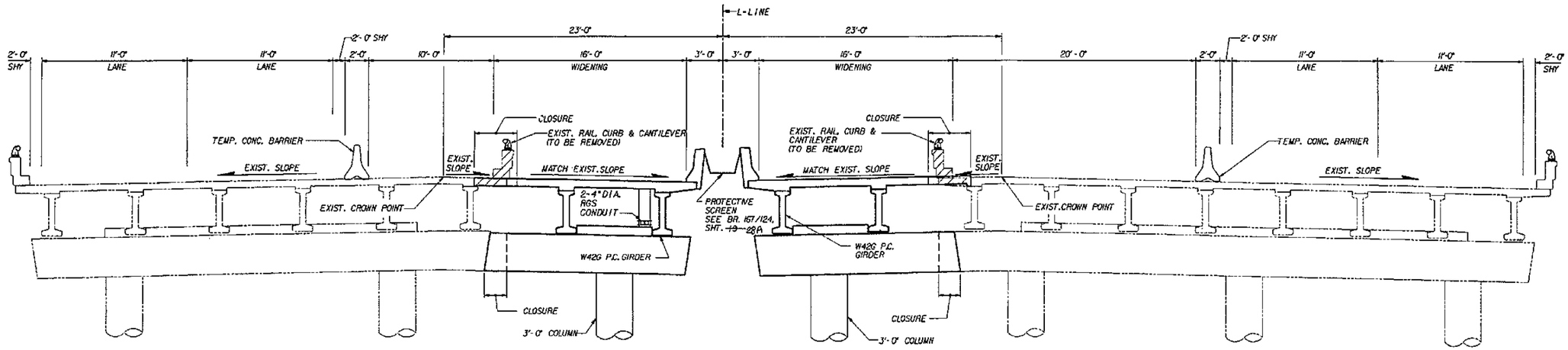

WEST BRIDGE

EAST BRIDGE

NOTE:
1. PROVIDE TYPE 2 ANCHOR ASSEMBLIES FOR ALL TEMPORARY CONC. BARRIERS. SEE STD PLAN C-8d. (TYP.)

TYPICAL SECTION STAGE 1

SHOWN NEAR INTERIOR PIER

STATION	ELEVATION LEFT CURB LINE	ELEVATION RIGHT CURB LINE
813+22.34	56.86	57.36
813+32.34	56.89	57.40
813+42.34	56.89	57.44
813+52.34	56.89	57.41
813+62.34	56.91	57.52
813+68.14	—	57.50
813+68.25	56.94	—
813+72.34	56.95	57.53
813+82.34	56.97	57.51
813+92.34	56.93	57.51
814+02.34	56.94	57.52
814+12.34	56.90	57.50
814+22.34	56.92	57.50
814+32.10	—	57.51
814+32.32	56.94	—
814+42.34	56.90	57.44
814+52.34	56.78	57.39
814+62.34	56.78	57.35
814+72.34	56.73	57.32
814+78.55	56.78	—
814+78.65	—	57.38

SR 167 WEST BRIDGE EXISTING ELEVATIONS

BRIDGE NO. 167/123 W

STATION	OFFSET	ELEVATION	OFFSET	ELEVATION
4+07.72	20.20' LT	37.12	—	—
4+07.44	—	—	19.90' RT	37.24
3+47.08	20.18' LT	37.63	—	—
3+45.88	0.40' LT	37.60	—	—
3+44.16	—	—	19.81' RT	37.14
2+82.04	20.20' LT	38.14	—	—
2+79.23	—	—	0.41' RT	37.62

MEEKER STREET/LINCOLN AVE. EXISTING ELEVATIONS

STATION	ELEVATION LEFT CURB LINE	ELEVATION RIGHT CURB LINE	STATION	ELEVATION LEFT CURB LINE	ELEVATION RIGHT CURB LINE
813+22.47	57.56	—	814+12.51	—	56.80
813+22.51	—	56.80	814+22.47	57.56	—
813+32.47	57.50	—	814+22.51	—	56.79
813+32.51	—	56.75	814+32.47	57.55	—
813+42.47	57.53	—	814+32.48	—	56.76
813+42.51	—	56.77	814+42.47	57.48	—
813+52.47	57.56	—	814+42.51	—	56.68
813+52.51	—	56.82	814+52.47	57.41	—
813+62.47	57.57	—	814+52.51	—	56.61
813+62.51	—	56.89	814+62.47	57.36	—
813+68.49	57.60	—	814+62.51	—	56.58
813+68.51	—	56.92	814+72.47	57.36	—
813+72.47	57.59	—	814+72.51	—	56.33
813+72.51	—	56.91	814+78.47	—	56.57
813+82.47	57.59	—	814+78.51	57.36	—
813+82.51	—	56.88	—	—	—
813+92.47	57.59	—	—	—	—
813+92.51	—	56.85	—	—	—
814+02.47	57.57	—	—	—	—
814+02.51	—	56.81	—	—	—
814+12.47	57.58	—	—	—	—

SR 167 EAST BRIDGE EXISTING ELEVATIONS

BRIDGE NO. 167/123 E

FOR "AS CONSTRUCTED PLANS" ONLY

Bridge Design Engr.					REGION NO.	STATE	FED. AID PROJ. NO.	SHEET NO.	TOTAL SHEETS
Supervisor					10	WASH			
Designed By J. J. MORRIS 4/94					JOB NUMBER				
Checked By Y. P. BERI 4/94					95W036				
Detailed By K. A. WUELLER 4/94									
Bridge Projects Engr.									
Prelim Plan By									
Architect/Specialist	DATE	REVISION	BY	APP'D	4771				

SCILLA ARNOLD STATE OF WASHINGTON 19254 REGISTERED PROFESSIONAL ENGINEER 4/14/94 EXPIRES 4/14/97

Washington State Department of Transportation

ABKJ Andersen Bjornstad Kane Jacobs • Inc Consulting Engineers

SR 167
15TH NW TO 84TH AVE. SO.
HOV AND SC&DI - STAGE 2
BRIDGE 167/123

CONSTRUCTION SEQUENCE - 1

BRIDGE SHEET NO. 2

SHEET 497 OF 663 SHEETS

SR167/91

SR167/123 JOB NO. 7019 SHEET 2

PLOTTED: 3:31 JUL 1995 13:55:10/BM123X 035037A.DGN

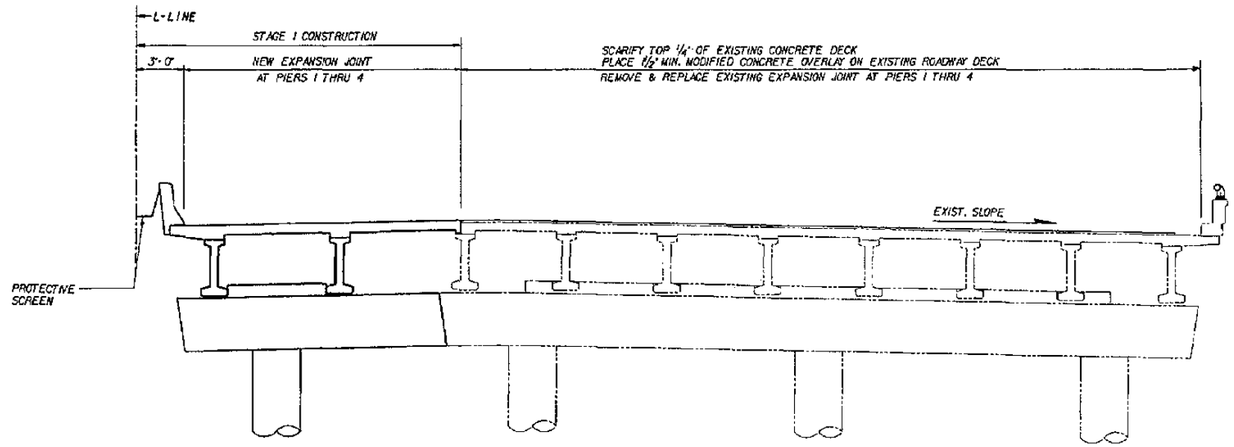

TYPICAL SECTION STAGE 2 - EAST BRIDGE

SHOWN NEAR INTERIOR PIER

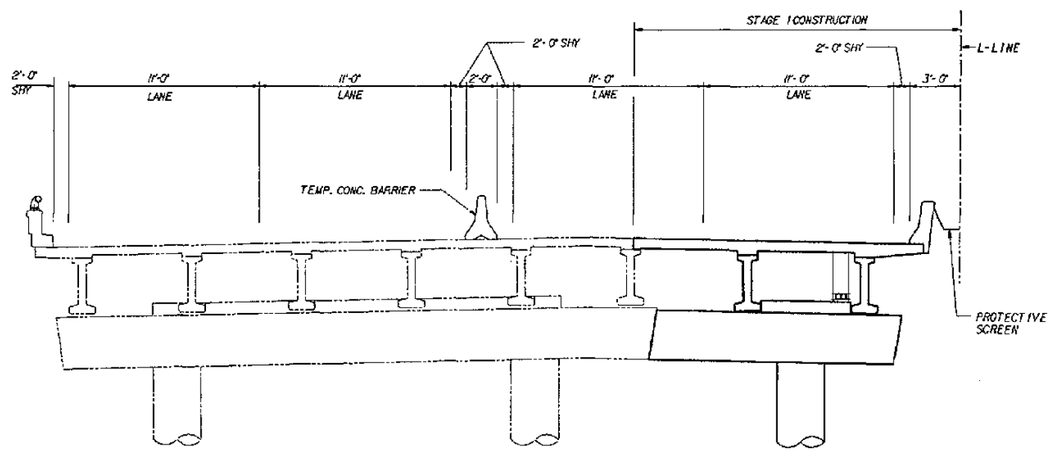

TYPICAL SECTION STAGE 2 - WEST BRIDGE

SHOWN NEAR INTERIOR PIER

FOR "AS CONSTRUCTED PLANS" ONLY

Bridge Design Engr.						REGION NO.	STATE	FED. AID PROJ. NO.	SHEET NO.	TOTAL SHEETS
Supervisor						10	WASH			
Designed By J. J. MORRIS 4/94						JOB NUMBER				
Checked By Y. P. BERI 4/94						95W036				
Detailed By K. A. MUELLER 4/94										
Bridge Projects Engr.										
Prelim Plan By										
Architect/Specialist	DATE	REVISION	BY	APP'D		4771				

CECIL A. ARNOLD — STATE OF WASHINGTON — 7206 — REGISTERED PROFESSIONAL ENGINEER — EXPIRES 4/14/94

Washington State Department of Transportation

ABK Andersen Bjornstad Kane Jacobs • Inc — Consulting Engineers

SR 167
15TH NW TO 84TH AVE. SO.
HOV AND SC&DI - STAGE 2
BRIDGE 167/123

CONSTRUCTION SEQUENCE - 2

BRIDGE SHEET NO. 3

SHEET 498 OF 663 SHEETS

SR167/91

P.DITEDh 31 JUL'95 93:59.19 PDF232 6350375.DGN

SR167/123 JOB NO. 7009 SHEET 3

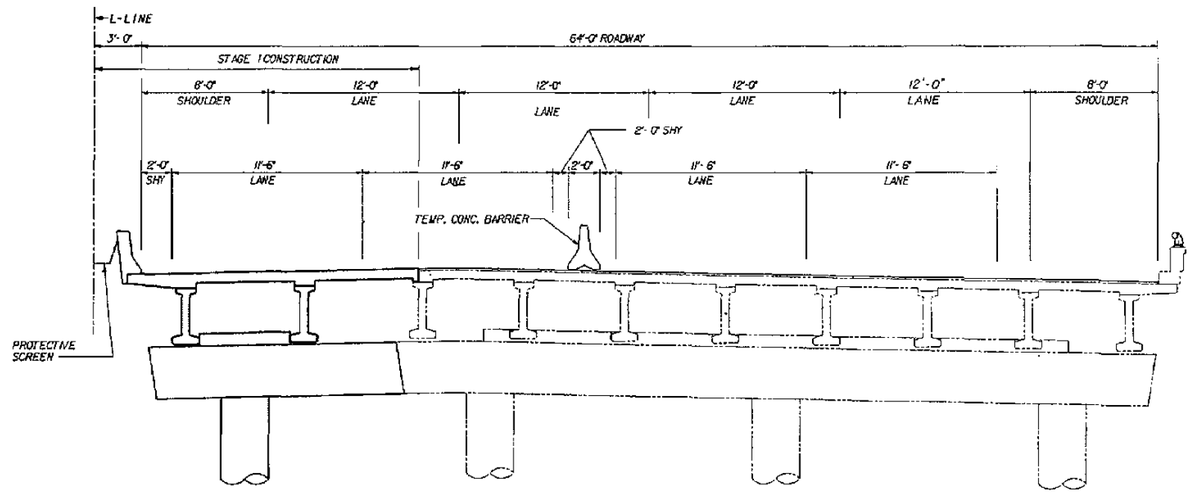

NOTE:

1. PROVIDE TYPE 2 ANCHOR ASSEMBLIES FOR ALL TEMPORARY CONCRETE BARRIERS. SEE STD PLAN C-8d.

TYPICAL SECTION STAGE 3 - EAST BRIDGE

SHOWN NEAR INTERIOR PIER

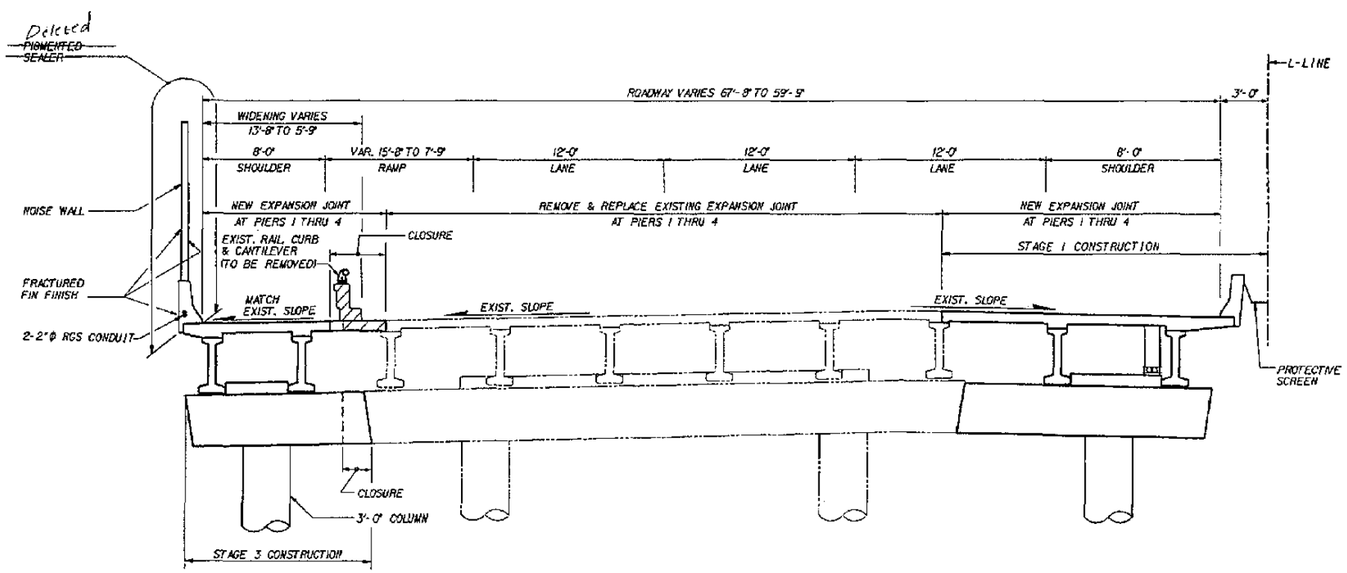

TYPICAL SECTION STAGE 3 - WEST BRIDGE

SHOWN NEAR INTERIOR PIER

FOR "AS CONSTRUCTED PLANS" ONLY

Bridge Design Engr.					REGION NO.	STATE	FED. AID PROJ. NO.	SHEET NO.	TOTAL SHEETS		
Supervisor					10	WASH					
Designed By J. J. MORRIS 4/94											
Checked By Y. P. BERI 4/94					JOB NUMBER						
Detailed By K. A. WUELLER 4/94					95W036						
Bridge Projects Engr.											
Prelim Plan By											
Architect/Specialist	DATE	REVISION	BY	APP'D	4771						

CECIL A. ARNOLD, STATE OF WASHINGTON, REGISTERED PROFESSIONAL ENGINEER — EXPIRES 4/14/97

Washington State Department of Transportation

ANDERSEN BUDRNETAD KANE JACOBS + INC CONSULTING ENGINEERS

SR 167
15TH NW TO 84TH AVE. SO.
HOV AND SC&DI - STAGE 2
BRIDGE 167/123

CONSTRUCTION SEQUENCE - 3

BRIDGE SHEET NO. 4

SHEET 499 OF 663 SHEETS

SR167/91

PLOTTED: 31 JULY'95 4:31 PM, 10/91/23K 0350246.DGN

SR167/123 JOB NO. 7019 SHEET 4

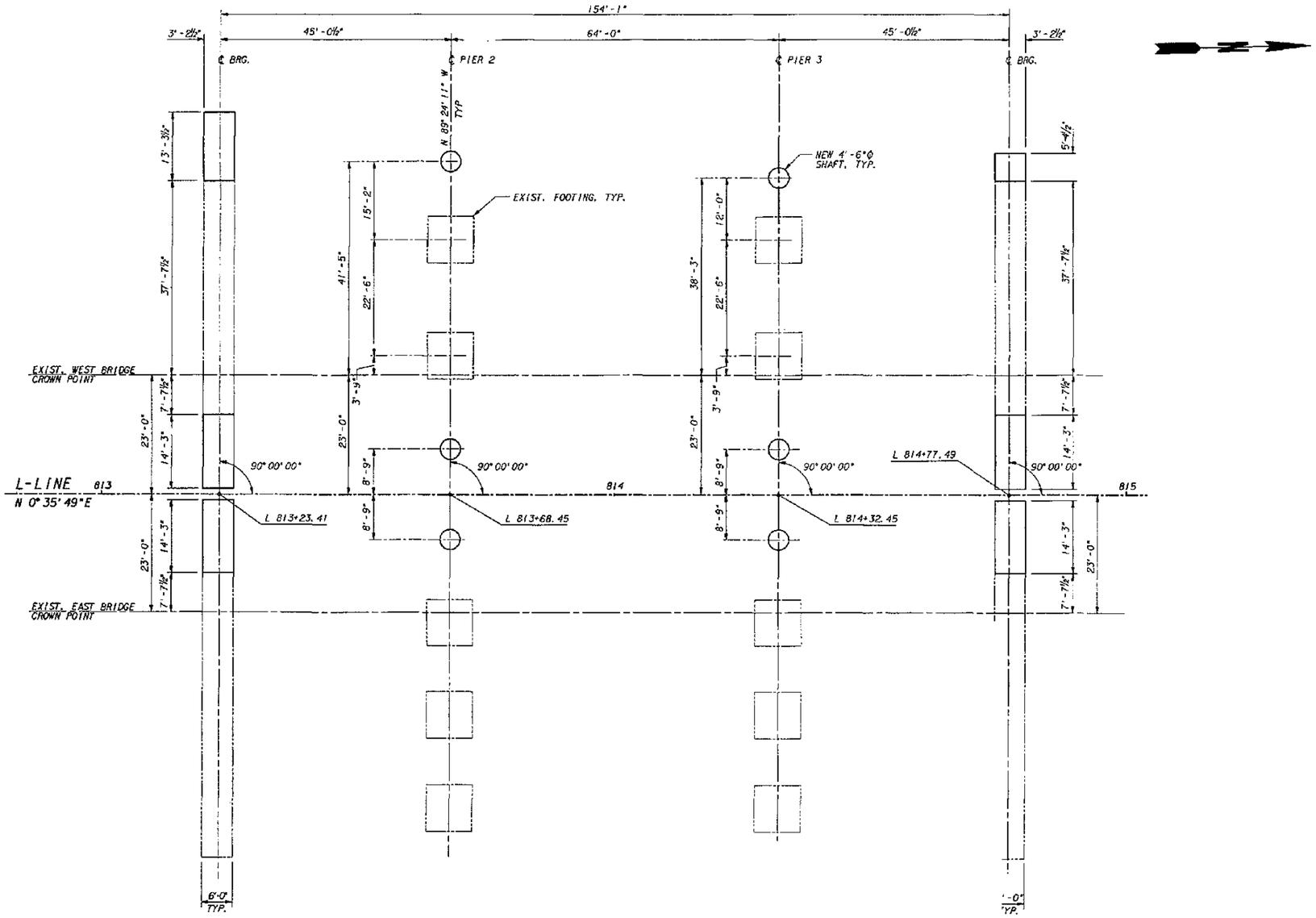

FOOTING LAYOUT

NOTE: ALL ℄ PIERS ARE PERPENDICULAR TO L-LINE.

FOR "AS CONSTRUCTED PLANS" ONLY

Bridge Design Engr.						REGION NO.	STATE	FED. AID PROJ. NO.	SHEET NO.	TOTAL SHEETS	
Supervisor						10	WASH				
Designed By J. J. MORRIS 4/94						JOB NUMBER					
Checked By Y. P. BERI 4/94						95W036					
Detailed By G. BISNAR 4/94											
Bridge Projects Engr.											
Prelim Plan By											
Architect/Specialist	DATE	REVISION	BY	APP'D		4771					

CECIL A. ARNOLD — STATE OF WASHINGTON — 19396 — REGISTERED PROFESSIONAL ENGINEER — EXPIRES 4/14/97

Washington State Department of Transportation

ABKJ Anderson Bjornstad Kane Jacobs • Inc — Consulting Engineers

SR 167
15TH NW TO 84TH AVE. SO.
HOV AND SC&DI - STAGE 2
BRIDGE 167/123

FOOTING LAYOUT

BRIDGE SHEET NO. 5

SHEET 500 OF 663 SHEETS

SR167/123 JOB NO. 7019 SHEET 5

PLOTTED: 31 JUL'95 93:54 10/08/2121 03:CHL_BDA3

SR167/91

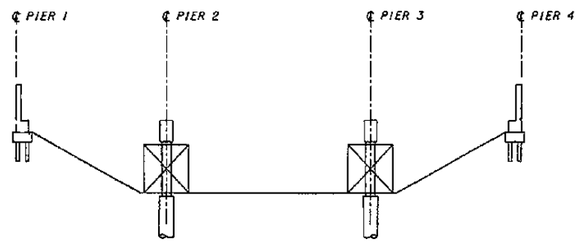

STEP 1 - CONSTRUCT FOUNDATIONS. CAST CROSSBEAMS & ABUTMENTS.

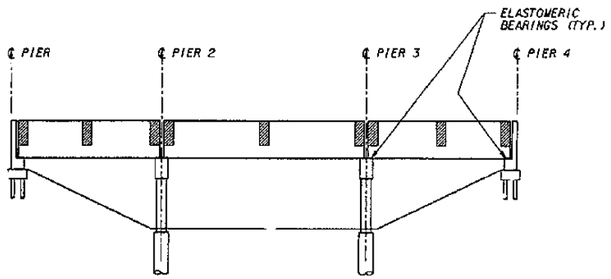

STEP 2 - RELEASE FALSEWORK. ERECT PRESTRESSED GIRDERS WHEN CROSSBEAM CONCRETE HAS REACHED 28 DAY STRENGTH.

STEP 3 - CAST END DIAPHRAGMS AND INTERMEDIATE DIAPHRAGMS TO EDGE OF CLOSURE.

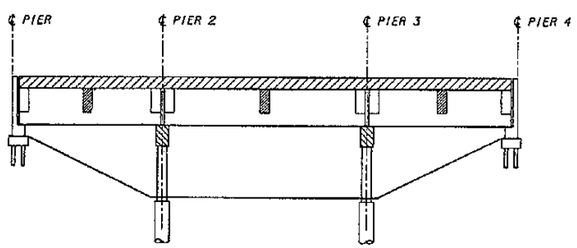

STEP 4 - CAST ROADWAY DECK CONCRETE.

STEP 5 - PLACE CROSSBEAM CLOSURES.

STEP 6 - PLACE DIAPHRAGM CLOSURES.

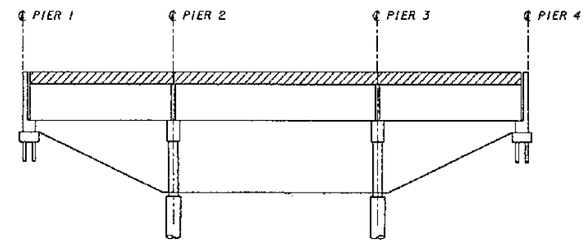

STEP 7 - PLACE SLAB CLOSURE.

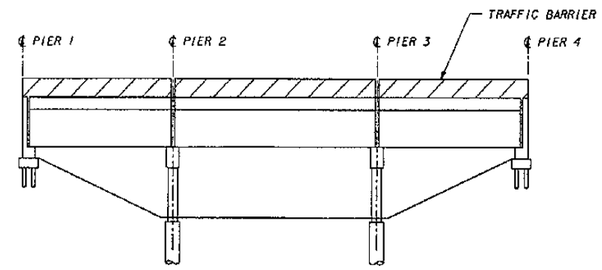

STEP 8 - PLACE TRAFFIC BARRIERS AFTER ALL CONCRETE IN SPANS HAS BEEN PLACED AND CURED.

NOTE:

1. WORK THIS SHEET WITH THE STAGING REQUIREMENTS SHOWN ON BRIDGE SHEETS 2-4.

SUPERSTRUCTURE CONSTRUCTION SEQUENCE

FOR "AS CONSTRUCTED PLANS" ONLY

Bridge Design Engr.					REGION NO.	STATE	FED. AID PROJ. NO.	SHEET NO.	TOTAL SHEETS	
Supervisor					10	WASH				
Designed By Y. POLYAKOV 4/94					JOB NUMBER					
Checked By J. J. MORRIS 4/94					95W036					
Detailed By K. A. MUELLER 4/94										
Bridge Projects Engr.										
Prelim Plan By										
Architect/Specialist	DATE	REVISION	BY	APP'D	4771					

DEOLA A. ARNOLD, STATE OF WASHINGTON, 1968, REGISTERED PROFESSIONAL ENGINEER — EXPIRES 6/24/97

Washington State Department of Transportation

ANDERSEN BJORNSTAD KANE JACOBS • INC CONSULTING ENGINEERS

SR 167
15TH NW TO 84TH AVE. SO.
HOV AND SC&DI - STAGE 2
BRIDGE 167/123

SUPERSTRUCTURE CONSTRUCTION SEQUENCE

BRIDGE SHEET NO. 5A

SHEET 501 OF 663 SHEETS

SR167/123 JOB NO. 7019 SHEET 5A

PLOTTED: 31 JUL 95 9:16:16 PM PST OSCWEB.DGN

SR167/91

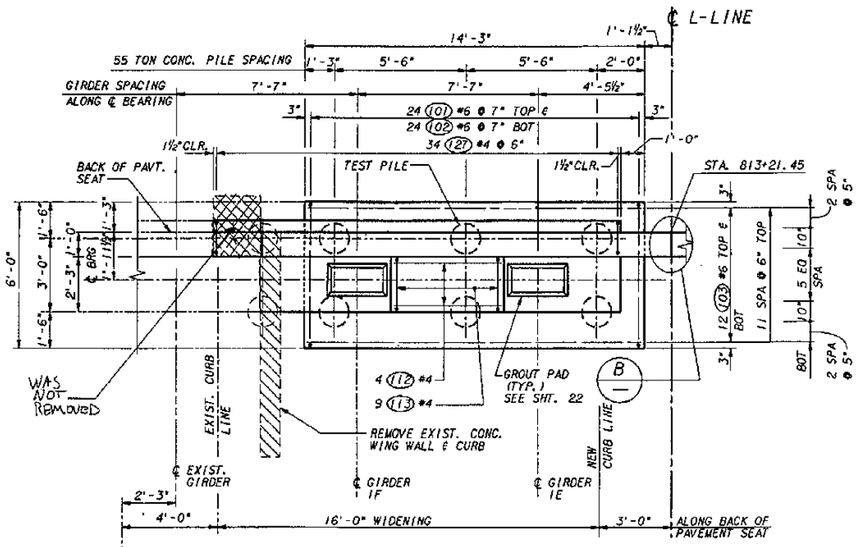

PLAN - EAST BRIDGE - PIER 1

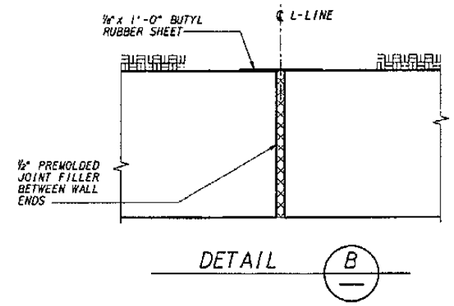

DETAIL B

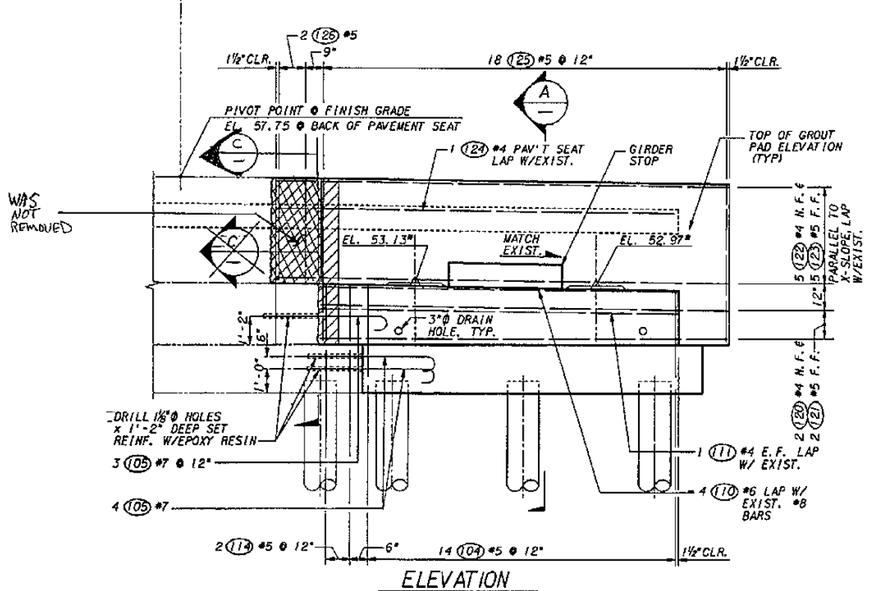

ELEVATION

NOTE:
1. "#" INDICATES FIELD VERIFY (TYP.).
2. SPACE (105) #7 TO CLEAR REINF. IN NEW PILES.

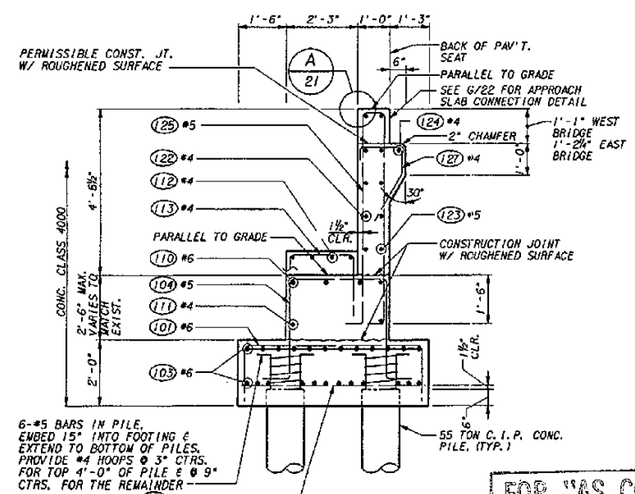

SECTION A 6,7

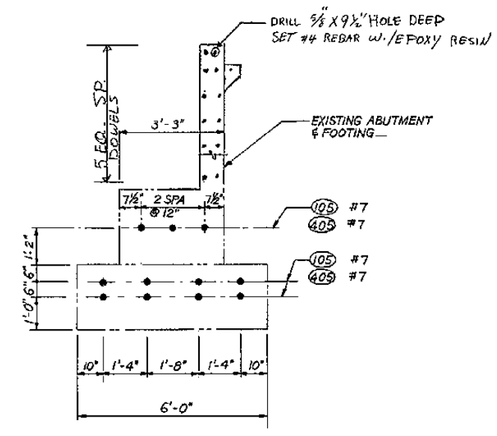

SECTION C 6,7,8,9

FOR "AS CONSTRUCTED PLANS" ONLY

Bridge Design Engr.					REGION NO.	STATE	FED. AID PROJ. NO.	SHEET NO.	TOTAL SHEETS
Supervisor					10	WASH			
Designed By C. S. YU 4/94					JOB NUMBER				
Checked By Y. P. BERT 4/94					9EW036				
Detailed By K. A. MUELLER 4/94									
Bridge Projects Engr.									
Prelim Plan By									
Architect/Specialist	DATE	REVISION	BY	APP'D	5771				

CECILIA ARNOLD STATE OF WASHINGTON 19958 REGISTERED PROFESSIONAL ENGINEER
EXPIRES 4/14/97

Washington State Department of Transportation

ANDERSEN BUCHSTEAD KANE JACOBS • INC CONSULTING ENGINEERS

SR 167
15TH NW TO 84TH AVE. SO.
HOV AND SC&DI - STAGE 2
BRIDGE 167/123

EAST BRIDGE - PIER 1

BRIDGE SHEET NO. 6

SHEET 502 OF 663 SHEETS

SR167/91

PLOTTED: 31 JUL'95 9:16:51 18/BR:2K:BSP-1:EB.DGN

SR167/123 JOB NO. T019 SHEET 6

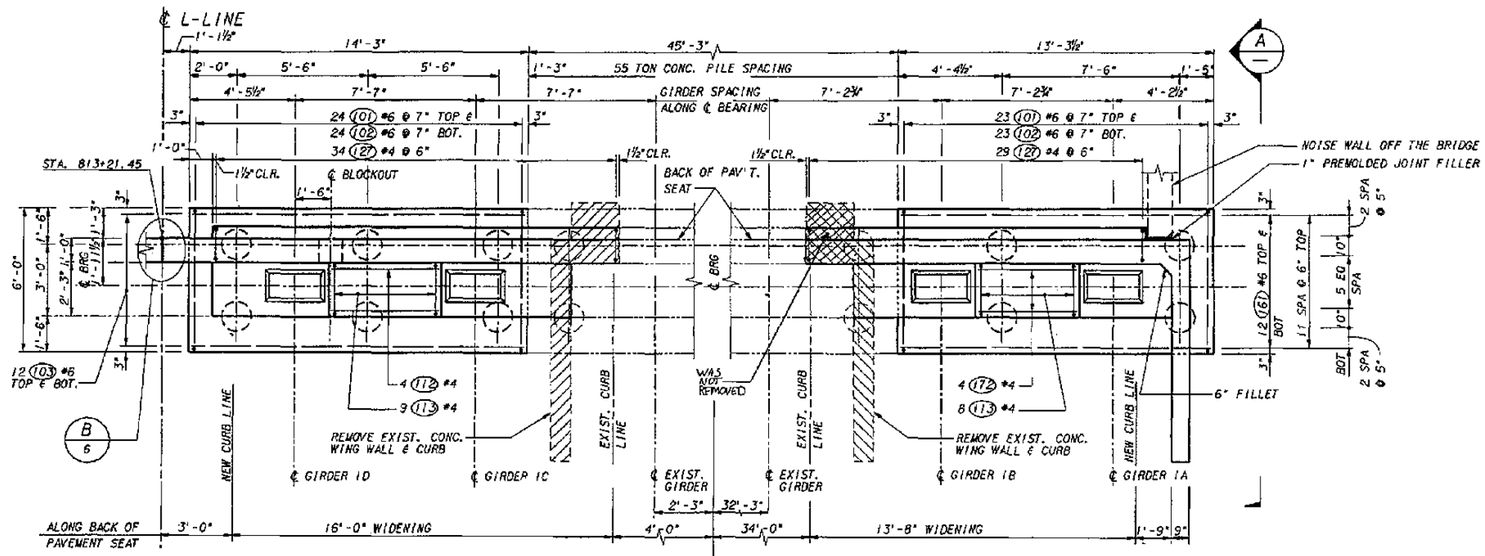

PLAN - WEST BRIDGE - PIER 1

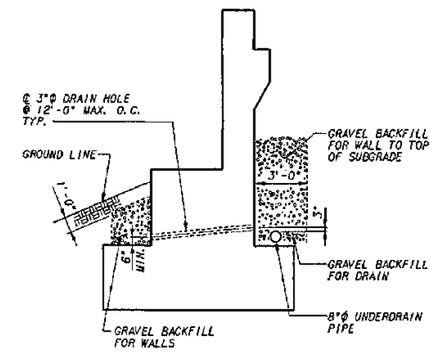

DRAINAGE DETAIL

TYPICAL FOR ALL END PIERS

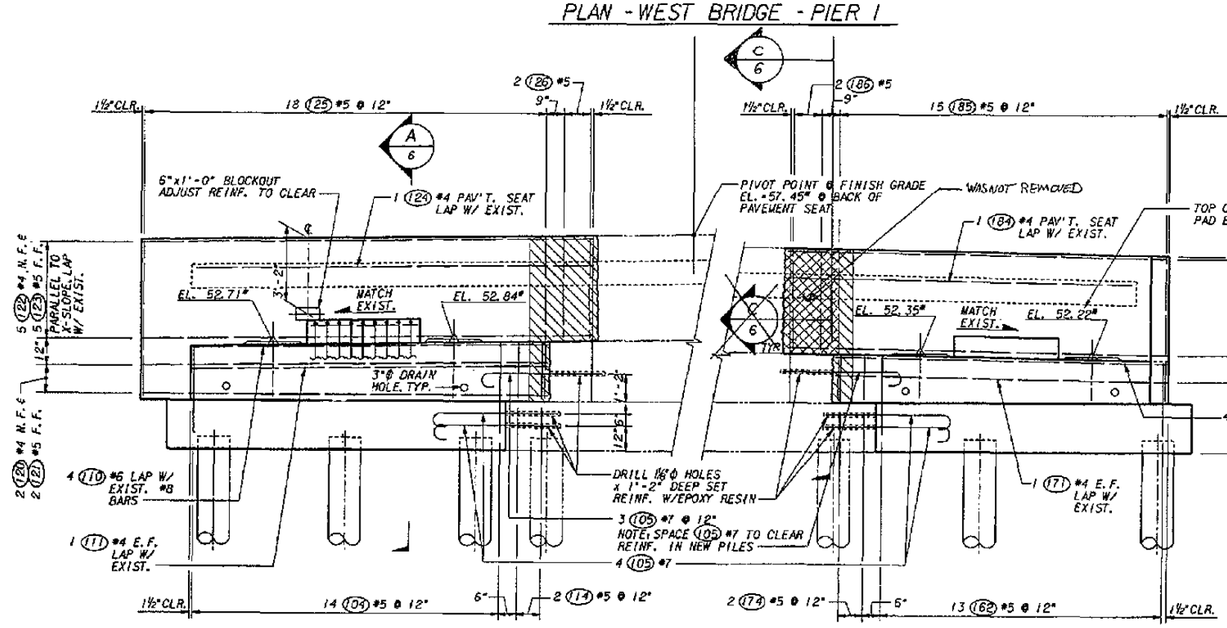

ELEVATION

NOTE: "*" INDICATES FIELD VERIFY.

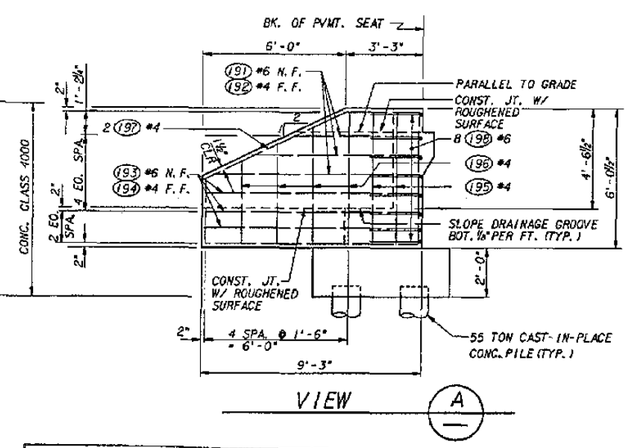

VIEW A

FOR "AS CONSTRUCTED PLANS" ONLY

Bridge Design Engr.					REGION NO.	STATE	FED. AID PROJ. NO.	SHEET NO.	TOTAL SHEETS
Supervisor					10	WASH			
Designed By	C. S. YU	4/94			JOB NUMBER				
Checked By	Y. P. BERI	4/94			95W036				
Detailed By	K. A. WUELLER	4/94			4771				
Bridge Projects Engr.									
Prelim Plan By									
Architect/Specialist		DATE	REVISION	BY	APP'D				

CECIL A. ARNOLD — STATE OF WASHINGTON — 7956 — REGISTERED PROFESSIONAL ENGINEER — EXPIRES 4/14/94

Washington State Department of Transportation

ABKJ ANDERSEN BJORNSTAD KANE JACOBS • INC CONSULTING ENGINEERS

SR 167
15TH NW TO 84TH AVE. SO.
HOV AND SC&DI - STAGE 2
BRIDGE 167/123

WEST BRIDGE - PIER 1

BRIDGE SHEET NO. 7

SHEET 503 OF 663 SHEETS

SR167/123 JOB NO. 7019 SHEET 7

PLOTTED: 31 JULY95 TIME: 13:18 DATE: 22-JUL-94 USER: 0009

SR167/91

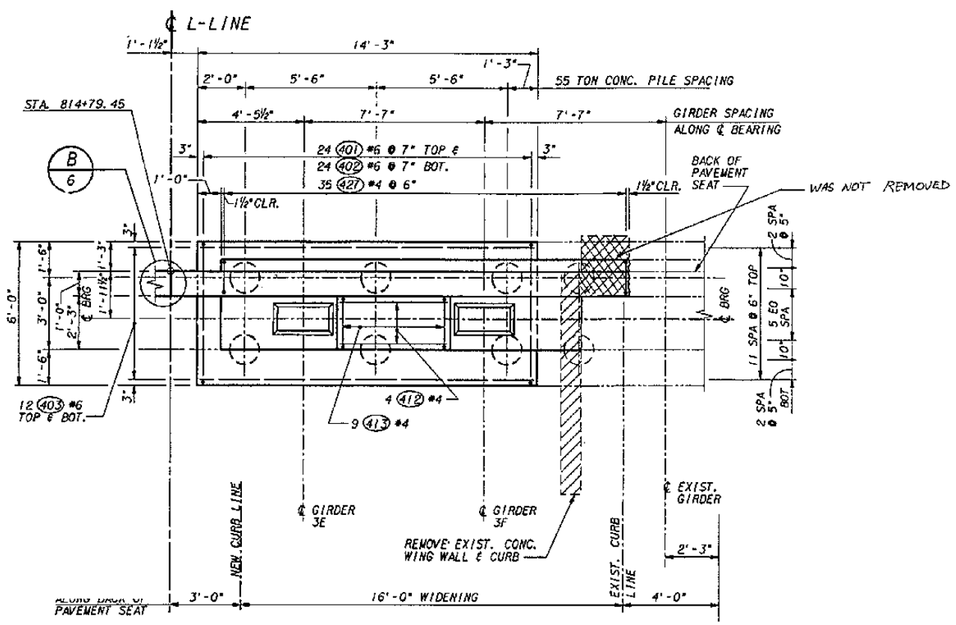

PLAN - EAST BRIDGE - PIER 4

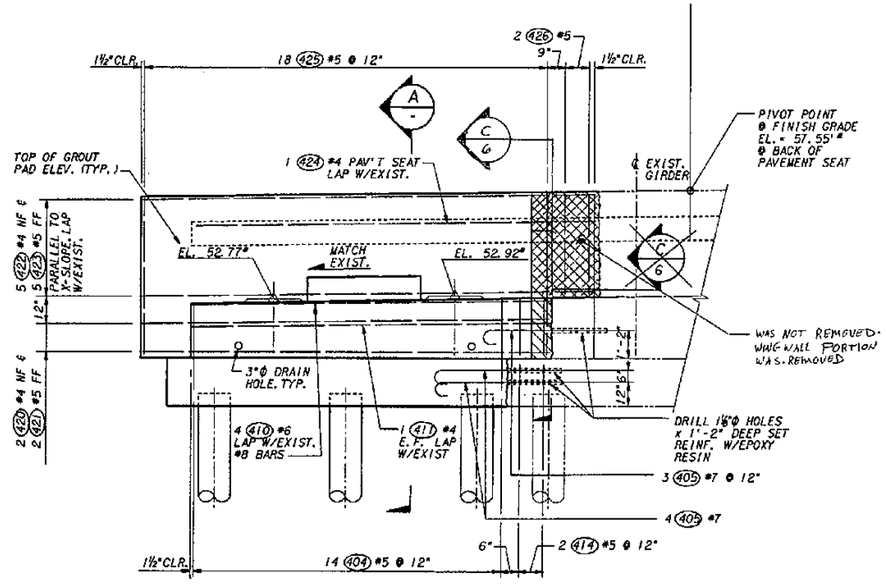

ELEVATION

NOTES:
1. ± = FIELD VERIFY.
2. SPA (405) #7 TO CLEAR REINF. IN NEW PILES.

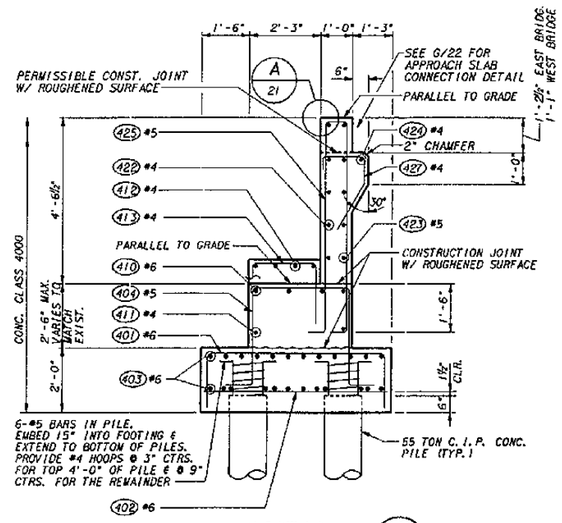

SECTION A 8.9
TYP. FOR EAST & WEST BRIDGE

FOR "AS CONSTRUCTED PLANS" ONLY

Bridge Design Engr.										
Supervisor										
Designed By C. S. YU 4/94										
Checked By J. J. MORRIS 4/94										
Detailed By T. SILBERNAGEL 4/94										
Bridge Projects Engr.										
Prelim Plan By										
Architect/Specialist	DATE	REVISION	BY	APP'D						

REGION NO.	STATE	FED. AID PROJ. NO.	SHEET NO.	TOTAL SHEETS
10	WASH			

JOB NUMBER 95W036

4771

CECIL A. ARNOLD, STATE OF WASHINGTON, 1958, REGISTERED PROFESSIONAL ENGINEER, EXPIRES 4/14/97

Washington State Department of Transportation

ANDERSEN BJORNSTAD KANE JACOBS + INC CONSULTING ENGINEERS

SR 167
15TH NW TO 84TH AVE. SO.
HOV AND SC&DI - STAGE 2
BRIDGE 167/123

EAST BRIDGE - PIER 4

BRIDGE SHEET NO. 8
SHEET 504 OF 663 SHEETS

SR167/123 JOB NO. 7019 SHEET 8

SR167/91

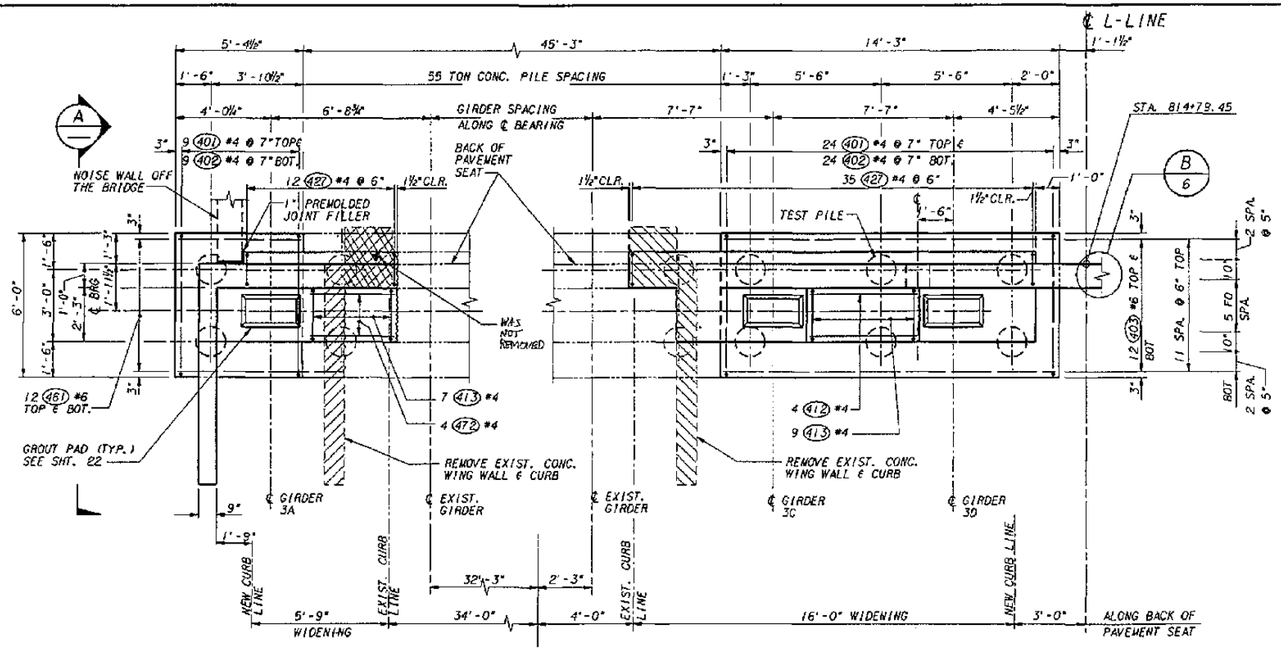

PLAN - WEST BRIDGE - PIER 4

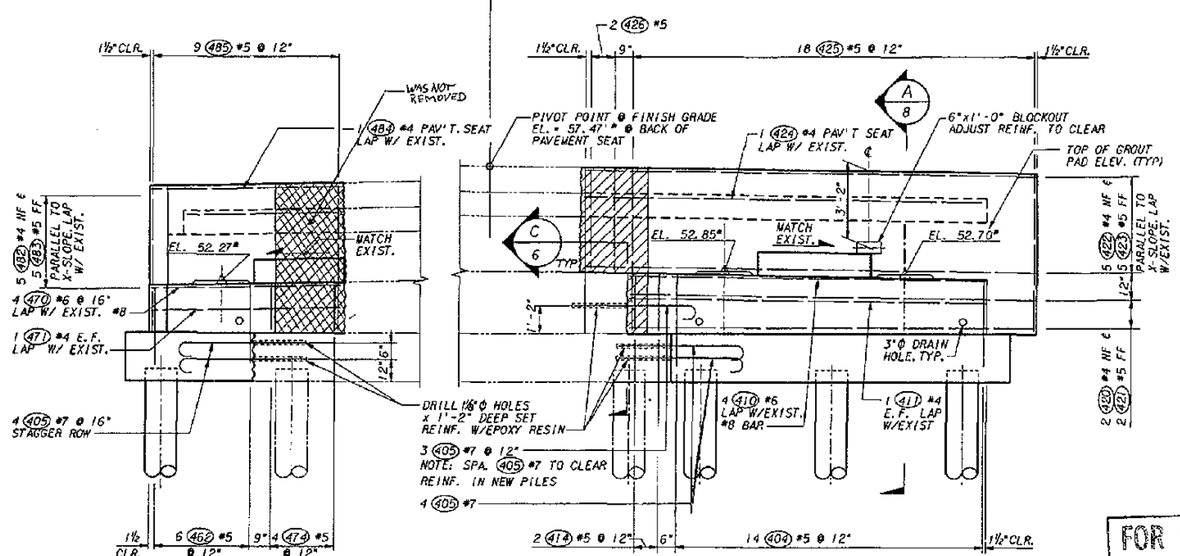

ELEVATION

NOTE:
1. "*" INDICATES FIELD VERIFY

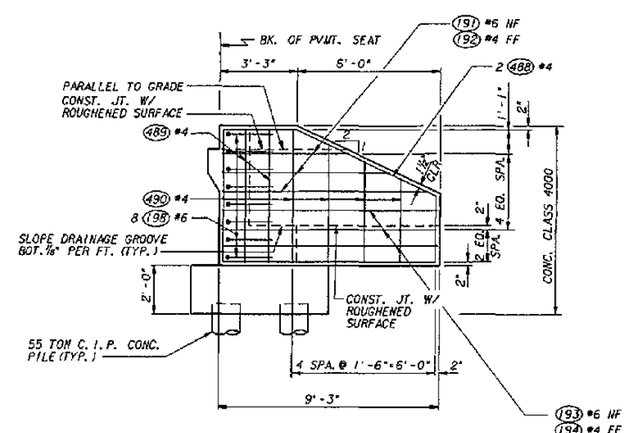

VIEW A

FOR "AS CONSTRUCTED PLANS" ONLY

Bridge Design Engr.					REGION NO.	STATE	FED. AID PROJ. NO.	SHEET NO.	TOTAL SHEETS	
Supervisor					10	WASH				
Designed By C. S. YU 4/94					JOB NUMBER 95W036					
Checked By J. J. MORRIS 4/94										
Detailed By T. SILBERNAGEL 4/94										
Bridge Projects Engr.										
Profile Plan By										
Architect/Specialist	DATE	REVISION	BY	APP'D	4771					

Washington State Department of Transportation

ANDERSEN BJORNSTAD KANE JACOBS • INC CONSULTING ENGINEERS

SR 167
15TH NW TO 84TH AVE. SO.
HOV AND SC&DI - STAGE 2
BRIDGE 167/123

WEST BRIDGE - PIER 4

BRIDGE SHEET NO. 9

SHEET 505 OF 663 SHEETS

SR167/123 JOB NO. 7019, SHEET 9

PLOTTED: 31 JUL 95 9:31:29 10/BRI 2:\BIP-148.DGN

SR167/91

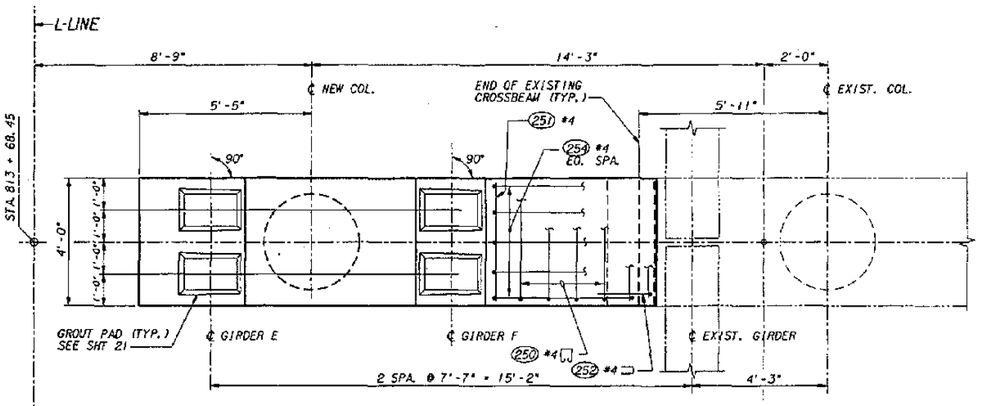

PLAN - EAST BRIDGE - PIER 2

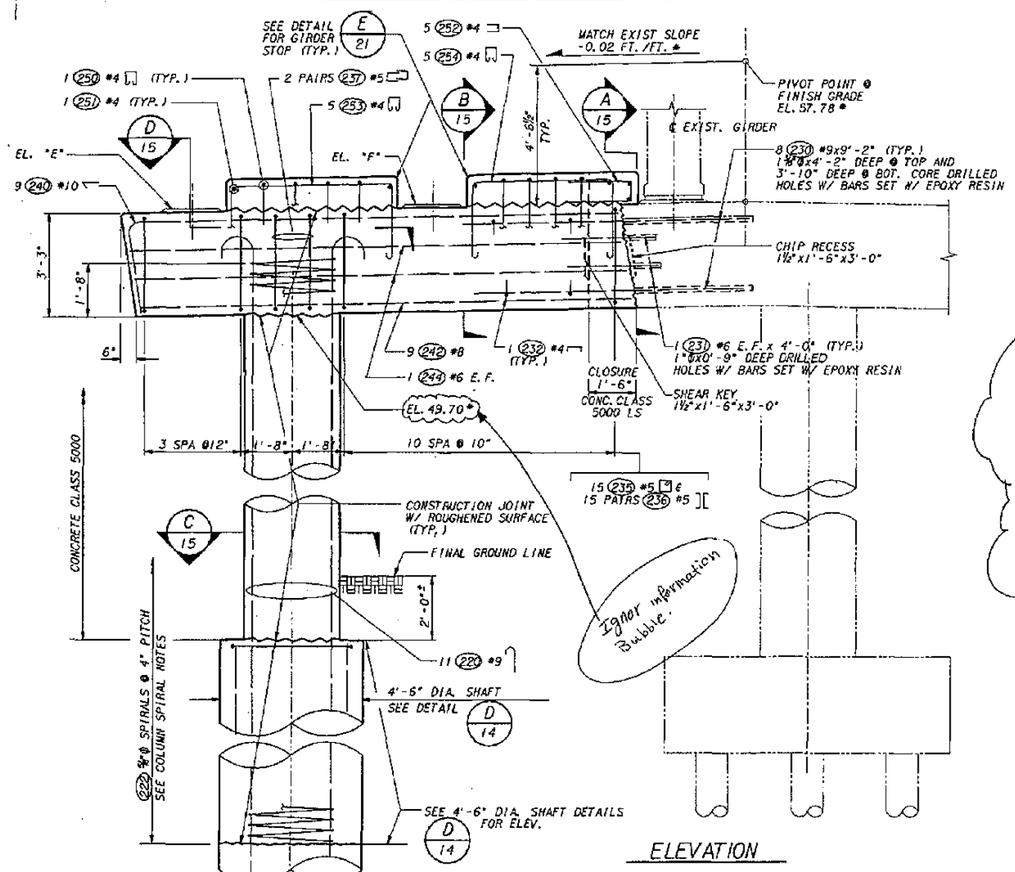

ELEVATION

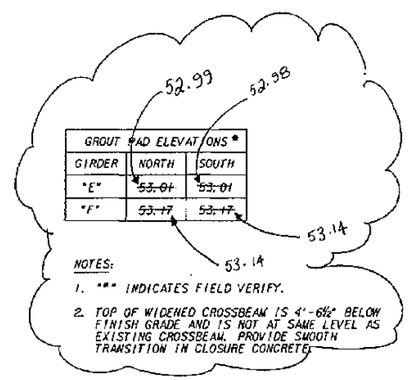

GROUT PAD ELEVATIONS *		
GIRDER	NORTH	SOUTH
"E"	~~53.01~~	~~53.01~~
"F"	~~53.17~~	~~53.17~~

NOTES:

1. "*" INDICATES FIELD VERIFY.
2. TOP OF WIDENED CROSSBEAM IS 4'-6½" BELOW FINISH GRADE AND IS NOT AT SAME LEVEL AS EXISTING CROSSBEAM. PROVIDE SMOOTH TRANSITION IN CLOSURE CONCRETE.

COLUMN SPIRAL NOTES:

1) COLUMN SPIRALS MAY BE FABRICATED FROM #5 DEFORMED REINFORCING BARS (AASHTO M31 GR. 60). PLAIN SMOOTH BARS ⅜"Ø (AASHTO M31 GR. 60). DEFORMED WIRE D31 (AASHTO M225) OR COLD DRAWN WIRE W31 (AASHTO M32).

2) LAP SPLICES FOR SPIRAL REINFORCING SHALL NOT BE MADE WITHIN 4'-0" OF TOP AND BOTTOM OF COLUMN. USE WELDED SPLICE PER DETAIL H/14.

3) WELD SPIRAL REINFORCEMENT BACK ONTO ITSELF AT SPIRAL TERMINUS OR BREAK PER DETAIL G/14.

FOR "AS CONSTRUCTED PLANS" ONLY

Bridge Design Engr.					REGION NO.	STATE	FED. AID PROJ. NO.	SHEET NO. / TOTAL SHEETS
Supervisor					10	WASH		
Designed By J. J. MORRIS 4/94					JOB NUMBER 95W036			
Checked By Y. P. BERI 4/94								
Detailed By J. J. MORRIS 4/94								
Bridge Projects Engr.								
Preltm Plan By								
Architect/Specialist	DATE	REVISION	BY	APP'D	4777			

CECILA ARNOLD, STATE OF WASHINGTON, REGISTERED PROFESSIONAL ENGINEER — EXPIRES 4/11/97

Washington State Department of Transportation

ANDERSON BUCHNER AND KANE JACOBS + INC CONSULTING ENGINEERS

SR 167
15TH NW TO 84TH AVE. SO.
HOV AND SC&DI - STAGE 2
BRIDGE 167/123

EAST BRIDGE - PIER 2

BRIDGE SHEET NO. 10

SHEET 506 OF 663 SHEETS

SR167/123 JOB NO. 7019 SHEET 10

PLOTTED: 31 JUL'95 193.ES.18/691.23.03P2E4ST.DGN

SR167/91

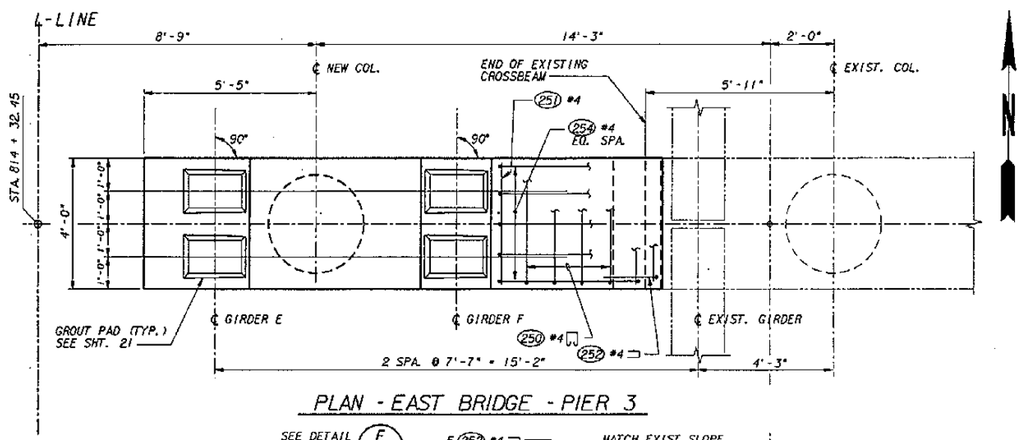

PLAN - EAST BRIDGE - PIER 3

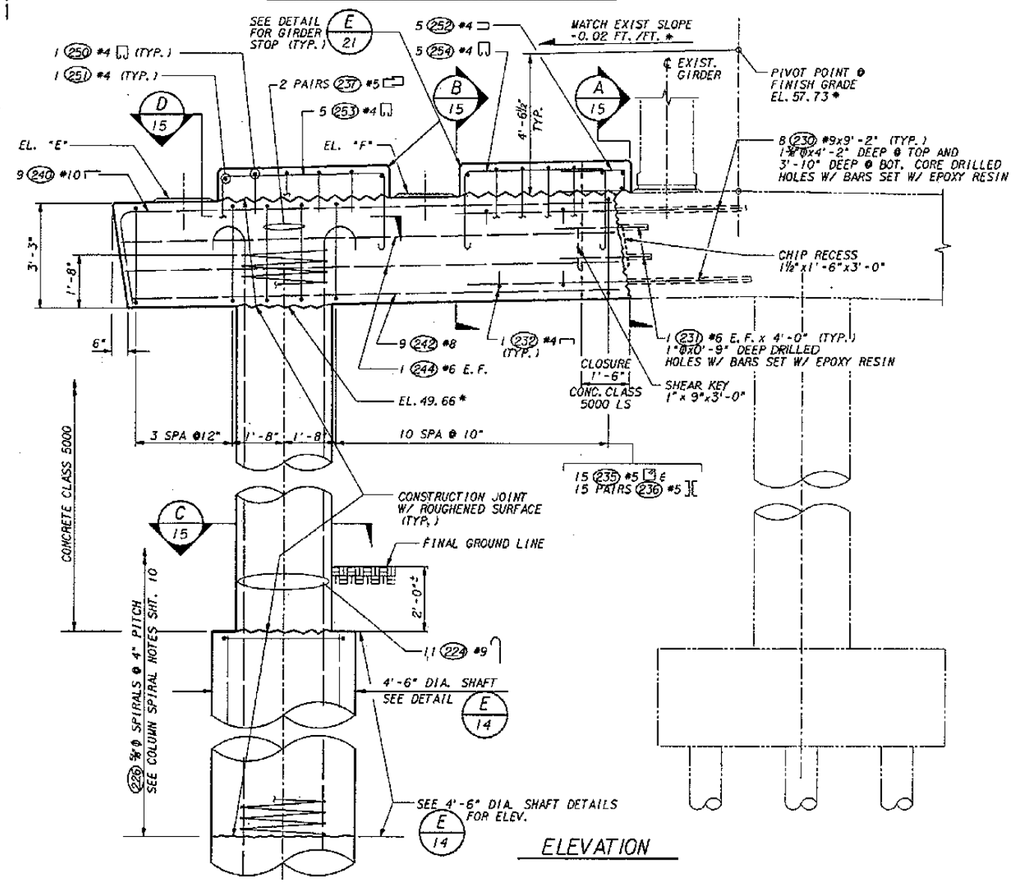

ELEVATION

GROUT PAD ELEVATIONS *		
GIRDER	NORTH	SOUTH
"E"	52.96	52.96
"F"	53.12	53.12

NOTES:

1. "*" INDICATES FIELD VERIFY.
2. TOP OF WIDENED CROSSBEAM IS 4'-6½" BELOW FINISH GRADE AND IS NOT AT SAME LEVEL AS EXISTING CROSSBEAM. PROVIDE SMOOTH TRANSITION IN CLOSURE CONCRETE.

FOR "AS CONSTRUCTED PLANS" ONLY

Bridge Design Engr.					
Supervisor					
Designed By J. J. MORRIS 4/94					
Checked By Y. P. BERI 4/94					
Detailed By J. J. MORRIS 4/94					
Bridge Projects Engr.					
Prelim Plan By					
Architect/Specialist	DATE	REVISION	BY	APP'D	

REGION NO.	STATE	FED. AID PROJ. NO.	SHEET NO.	TOTAL SHEETS
10	WASH			
JOB NUMBER 95W036				
4771				

Washington State Department of Transportation

ANDERSEN BJORNSTAD KANE JACOBS + INC CONSULTING ENGINEERS

SR 167
15TH NW TO 84TH AVE. SO.
HOV AND SC&DI - STAGE 2
BRIDGE 167/123

EAST BRIDGE - PIER 3

BRIDGE SHEET NO. 11

SHEET 507 OF 663 SHEETS

SR167/123 JOB NO. 7019 SHEET 11

PLOTTED: 31 JUL 1995 123.65,1.0/BR1231.B97EPDSE.DGN

SR167/21

PLOTTED: 31 JUL'95 531.67.119/0R1 22:03 P:\NCS1.DGN

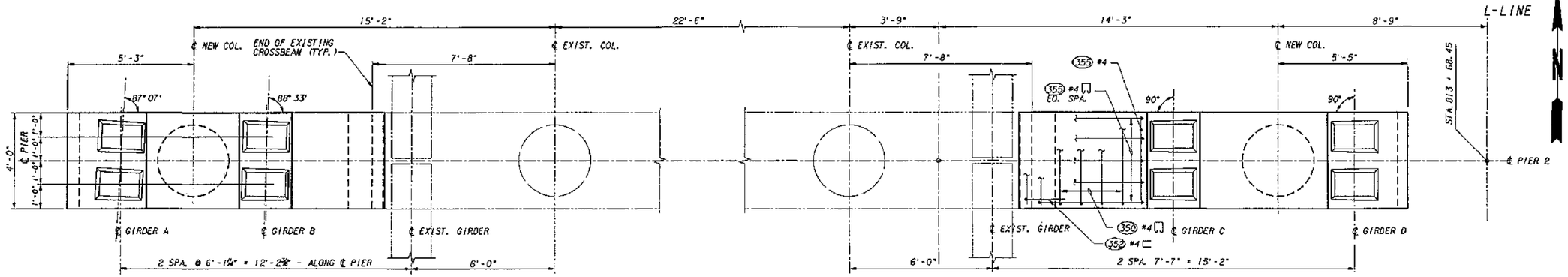

PLAN - WEST BRIDGE - PIER 2

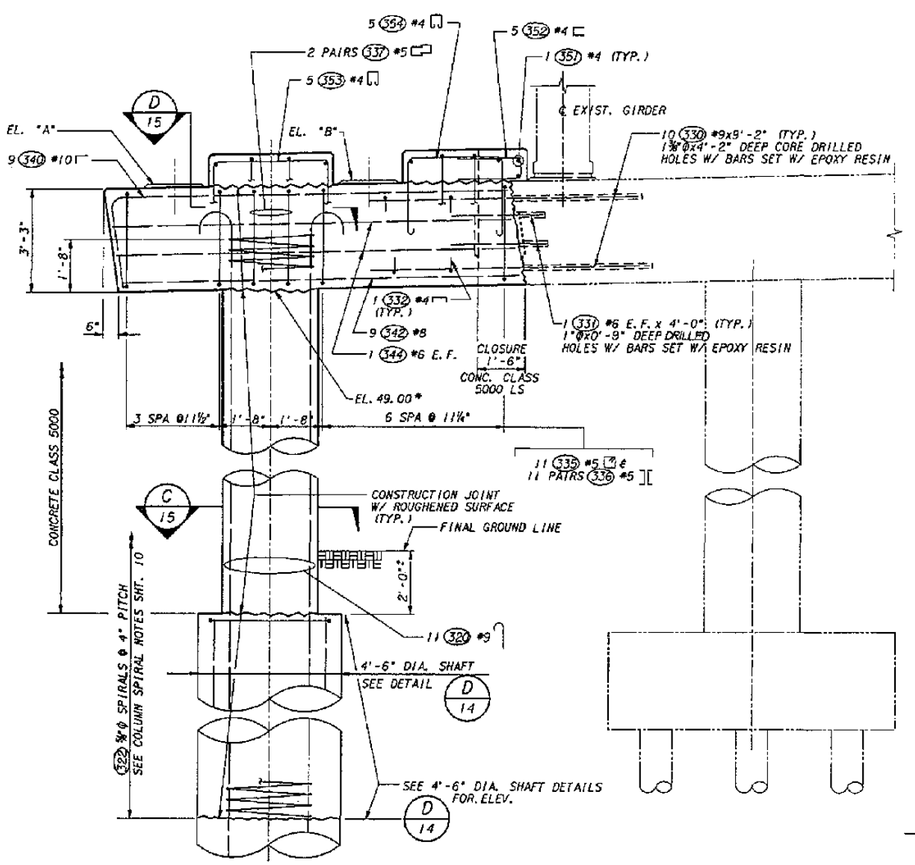

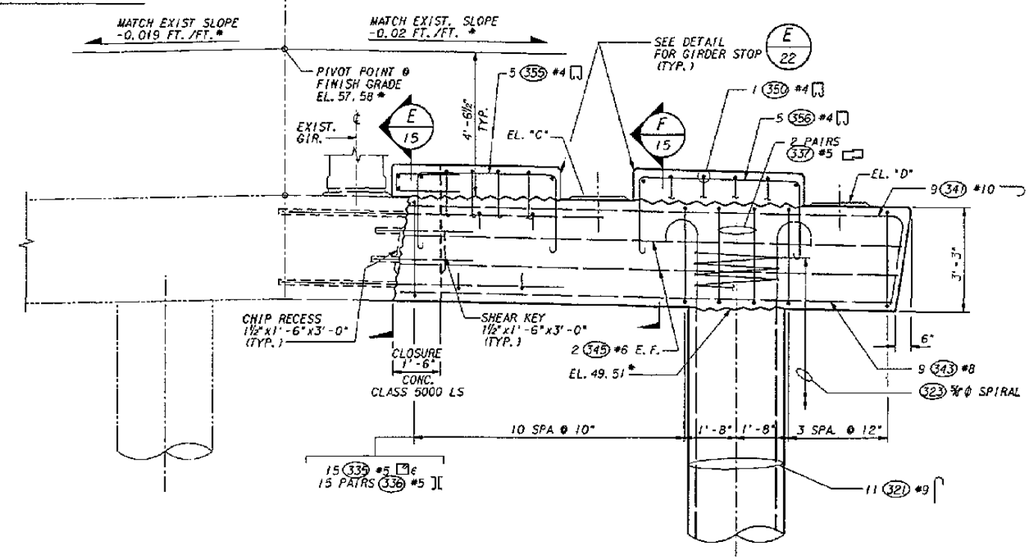

ELEVATION

GROUT PAD ELEVATIONS*		
GIRDER	NORTH	SOUTH
"A"	52.39	52.39
"B"	52.51	52.51
"C"	52.97	52.97
"D"	52.81	52.81

NOTES:

1. "*" INDICATES FIELD VERIFY.
2. TOP OF WIDENED CROSSBEAM IS 4'-6½" BELOW FINISH GRADE AND IS NOT AT SAME LEVEL AS EXISTING CROSSBEAM. PROVIDE SMOOTH TRANSITION IN CLOSURE CONCRETE.

FOR "AS CONSTRUCTED PLANS" ONLY

Bridge Design Engr.					REGION NO.	STATE	FED. AID PROJ. NO.	SHEET NO.	TOTAL SHEETS
Supervisor					10	WASH			
Designed By J. J. MORRIS 4/94					JOB NUMBER				
Checked By Y. P. BERI 4/94					95W036				
Detailed By J. J. MORRIS 4/94									
Bridge Projects Engr.									
Prelim Plan By									
Architect/Specialist	DATE	REVISION	BY	APP'D	4771				

CECIL A. ARNOLD STATE OF WASHINGTON 19908 REGISTERED PROFESSIONAL ENGINEER
COPIES 4/14/97

Washington State Department of Transportation

ABKJ ANDERSEN BJORNSTAD KANE JACOBS • INC CONSULTING ENGINEERS

SR 167
15TH NW TO 84TH AVE. SO.
HOV AND SC&DI - STAGE 2
BRIDGE 167/123

WEST BRIDGE - PIER 2

BRIDGE SHEET NO. 12
SHEET 508 OF 663 SHEETS

SR167/123 JOB NO. 7019 SHEET 12

SR167/91

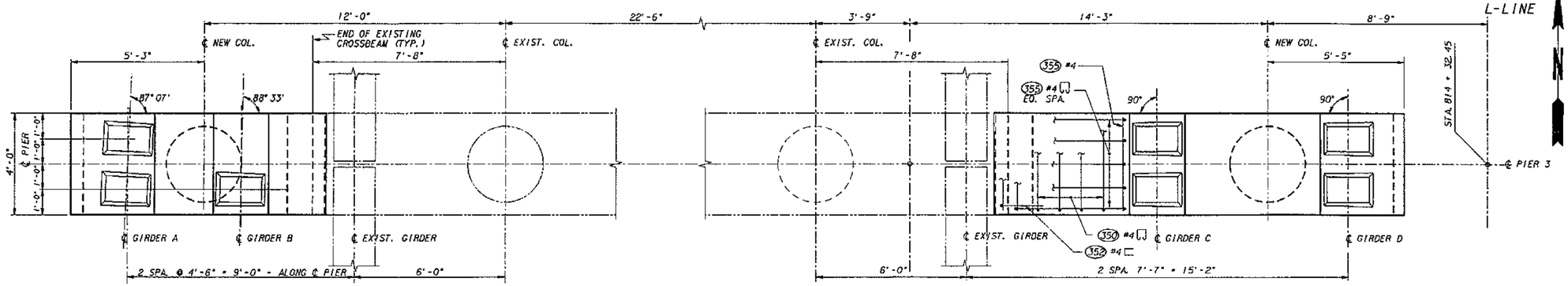

PLAN - WEST BRIDGE - PIER 3

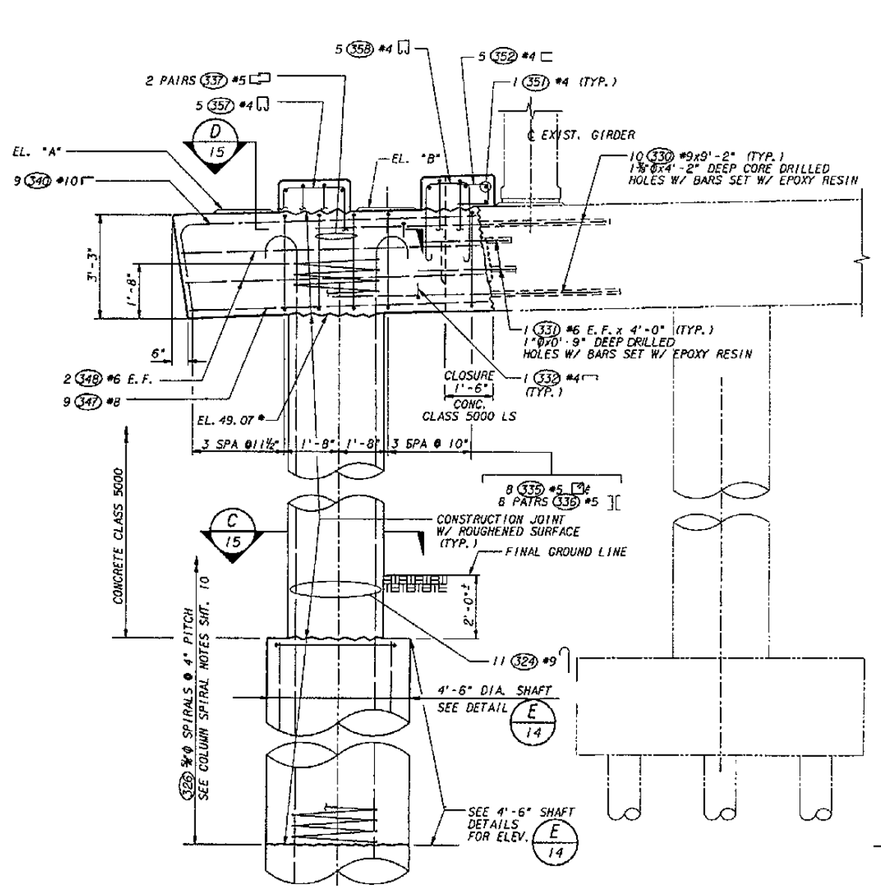

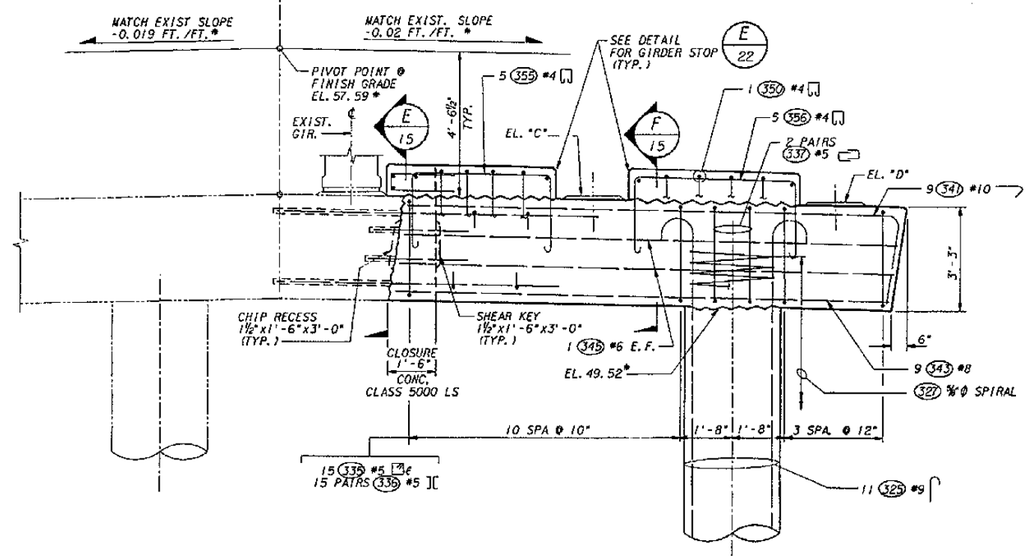

ELEVATION

GROUT PAD ELEVATIONS *		
GIRDER	NORTH	SOUTH
"A"	52.46	52.46
"B"	—	52.55
"C"	52.98	52.98
"D"	52.82	52.82

NOTES:

1. "*" INDICATES FIELD VERIFY.
2. TOP OF WIDENED CROSSBEAM IS 4'-6½" BELOW FINISH GRADE AND IS NOT AT SAME LEVEL AS EXISTING CROSSBEAM. PROVIDE SMOOTH TRANSITION IN CLOSURE CONCRETE.

FOR "AS CONSTRUCTED PLANS" ONLY

Bridge Design Engr.					
Supervisor					
Designed By	J. J. MORRIS 4/94				
Checked By	Y. BERI 4/94				
Detailed By	G. BISHAR 4/94				
Bridge Projects Engr.					
Prelim Plan By					
Architect/Specialist					

DATE	REVISION	BY	APP'D

REGION NO.	STATE	FED. AID PROJ. NO.	SHEET NO.	TOTAL SHEETS
10	WASH			
JOB NUMBER 95W036				
4731				

REGINA ARNOLD STATE OF WASHINGTON 19868 REGISTERED PROFESSIONAL ENGINEER
EXPIRES 4/14/94

Washington State Department of Transportation

ABKJ ANDERSEN BUDRISTAD KANE JACOBS • INC CONSULTING ENGINEERS

SR 167
15TH NW TO 84TH AVE. SO.
HOV AND SC&DI - STAGE 2
BRIDGE 167/123

WEST BRIDGE - PIER 3

BRIDGE SHEET NO. 13

SHEET 509 OF 663 SHEETS

SR167/123 JOB NO. 7019 SHEET 13

PLOTTED: 31 JUL 1995 93169.10/BRI23103PIER3N.DGN

SR167/91

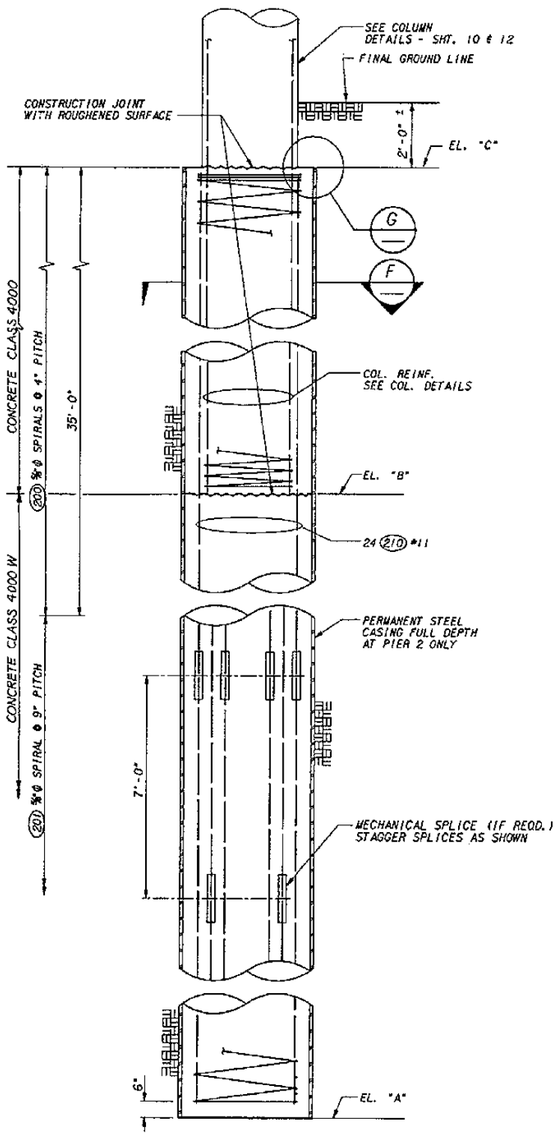

PIER - 2

ELEVATION - 4'-6" DIA. SHAFT (D) 10, 12

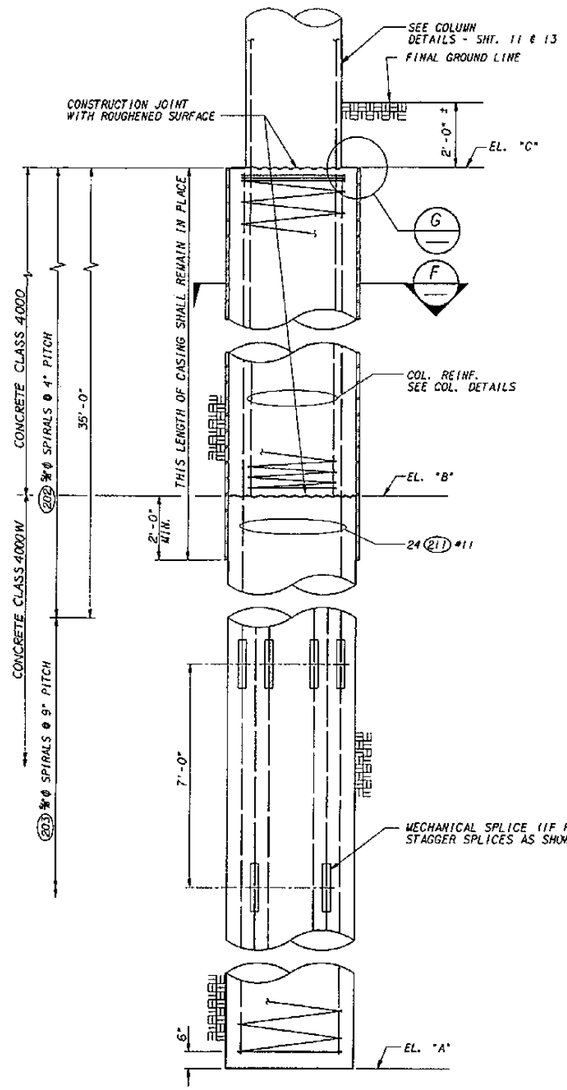

PIER - 3

ELEVATION - 4'-6" DIA. SHAFT (E) 11, 13

NOTES FOR DRILLED SHAFT

1. PERMANENT STEEL CASINGS SHALL BE REQUIRED FULL DEPTH FOR THE SHAFTS AT PIER 2.
   TEMPORARY STEEL CASINGS SHALL BE REQUIRED FOR A MINIMUM DEPTH OF 25 FT. FOR THE SHAFTS AT PIER 3.
2. CONCRETE SHALL BE POURED IN THE DRY ABOVE EL. "B".
3. SPLICE LOCATIONS:
   SPLICES IN VERTICAL REINFORCEMENT SHALL NOT BE MADE WITHIN 45'-0" OF EL. "C".
   LAP SPLICES FOR SPIRAL REINF. SHALL NOT BE MADE IN THE TOP 20'-0" OF THE SHAFT. USE A WELDED SPLICE PER DETAIL H/-
4. SHAFT SPIRALS MAY BE FABRICATED FROM #5 DEFORMED REINFORCING BARS (AASHTO M31 GR. 60), PLAIN SMOOTH BARS 5/8"Ø (AASHTO M31 GR. 60), DEFORMED WIRE D31 (AASHTO M225), OR COLD DRAWN WIRE W31 (AASHTO M32)
5. WELD SPIRAL REINFORCEMENT BACK ONTO ITSELF AT SPIRAL TERMINUS OR BREAK PER DETAIL G/-.

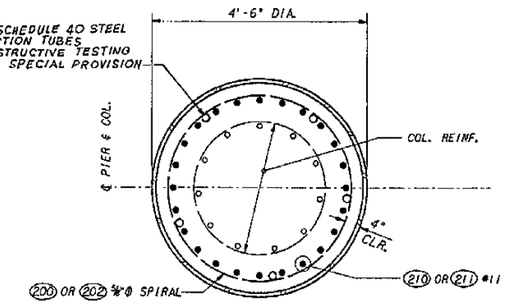

SECTION (F)

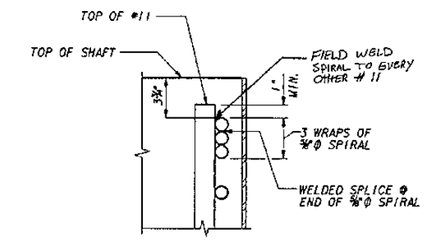

DETAIL (G)

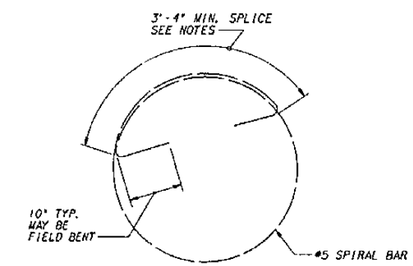

SPIRAL LAP SPLICE DETAIL

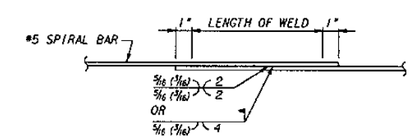

SPIRAL SPLICE WELD DETAIL (H)

TABLE OF ELEVATIONS - 4'-6" DIA. SHAFT

LOCATION	EL. "A"	EL. "B"	EL. "C"
EAST BRIDGE			
PIER 2 W. COL.	-32.00	26.00	36.00
PIER 3 W. COL.	-20.00	26.00	36.00
WEST BRIDGE			
PIER 2 W. COL.	-32.00	26.00	36.00
PIER 2 E. COL.	-32.00	26.00	36.00
PIER 3 W. COL.	-20.00	26.00	36.00
PIER 3 E. COL.	-20.00	26.00	36.00

FOR "AS CONSTRUCTED PLANS" ONLY

Bridge Design Engr.					REGION NO.	STATE	FED. AID PROJ. NO.	SHEET NO.	TOTAL SHEETS
Supervisor					10	WASH			
Designed By J. J. MORRIS 4/94					JOB NUMBER				
Checked By Y. BERI 4/94					95W036				
Detailed By J. J. MORRIS 4/94									
Bridge Projects Engr.									
Prelim. Plan By									
Architect/Specialist	DATE	REVISION	BY	APP'D					

CECIL A. ARNOLD, STATE OF WASHINGTON, 7200, REGISTERED PROFESSIONAL ENGINEER, EXPIRES 4/10/97

Washington State Department of Transportation

ANDERSEN BJORNSTAD KANE JACOBS • INC CONSULTING ENGINEERS

SR 167
15TH NW TO 84TH AVE. SO.
HOV AND SC&DI - STAGE 2
BRIDGE 167/123

4'-6" DIA. SHAFT DETAILS

BRIDGE SHEET NO. 14

SHEET 510 OF 663 SHEETS

SR167/123 JOB NO. 7019 SHEET 14

PLOTTED: 31 JUL'95 93169.18/BR123 B3SHAFT.DGN

SR167/91

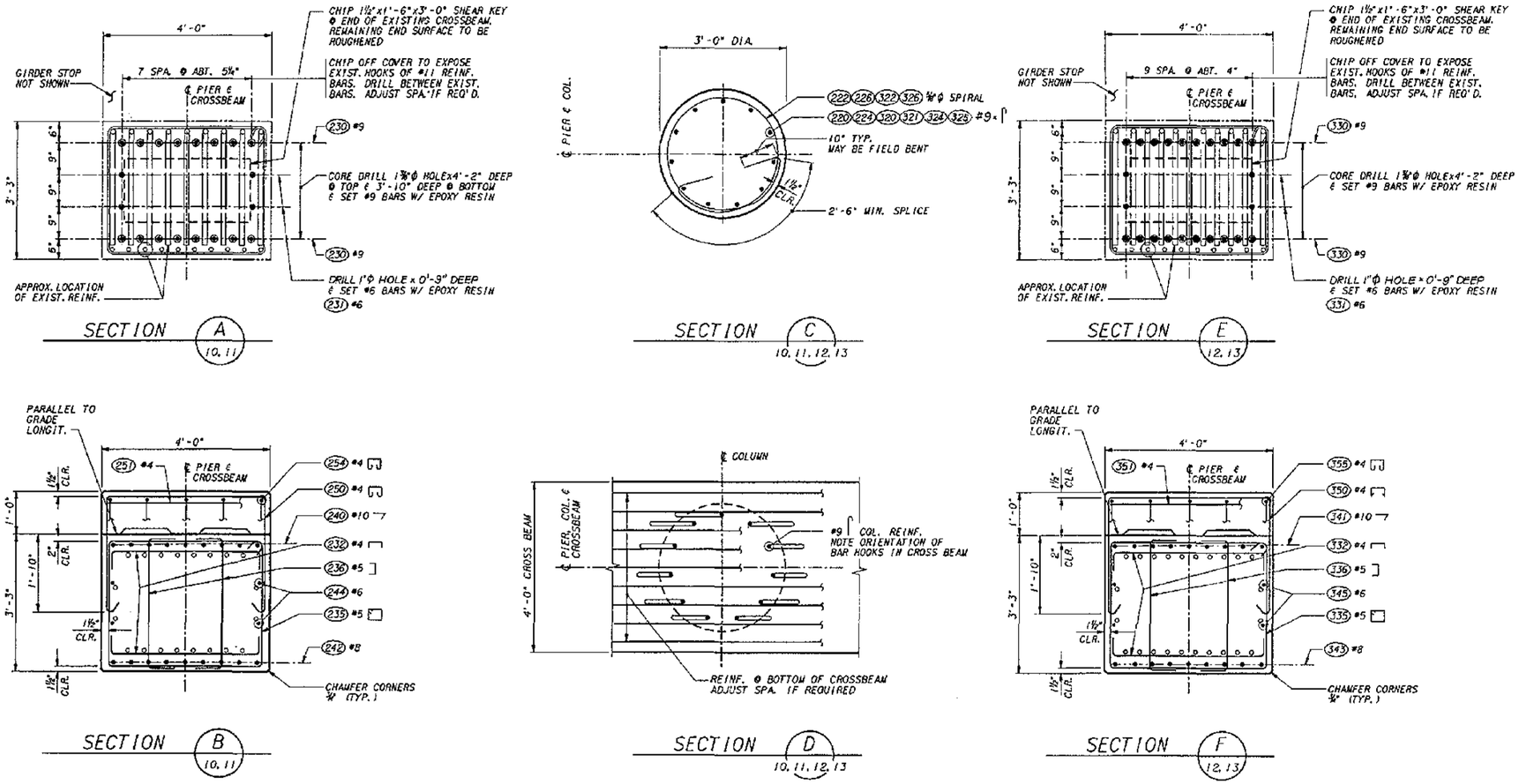

FOR "AS CONSTRUCTED PLANS" ONLY

Bridge Design Engr.					REGION NO.	STATE	FED. AID PROJ. NO.	SHEET NO.	TOTAL SHEETS		
Supervisor											
Designed By	J. J. MORRIS 4/94				10	WASH					
Checked By	Y. BERI 4/94				JOB NUMBER						
Detailed By	G. BISNAR 4/94				95W036						
Bridge Projects Engr.											
Prelim Plan By											
Architect/Specialist		DATE	REVISION	BY	APP'D	4771					

CECIL A. ARNOLD, STATE OF WASHINGTON, 1938, REGISTERED PROFESSIONAL ENGINEER
EXPIRES 4/14/97

Washington State Department of Transportation

ANDERSEN BJORNSTAD KANE JACOBS • INC
CONSULTING ENGINEERS

SR 167
15TH NW TO 84TH AVE. SQ.
HOV AND SC&DI - STAGE 2
BRIDGE 167/123

PIER 2 & 3 DETAILS

BRIDGE SHEET NO. 15
SHEET 511 OF 663 SHEETS

SR167/91

SR167/123 JOB NO. 7019 SHEET 15

PLOTTED: 31 JULY95 93169.18/BR123103P-DETL.DGN

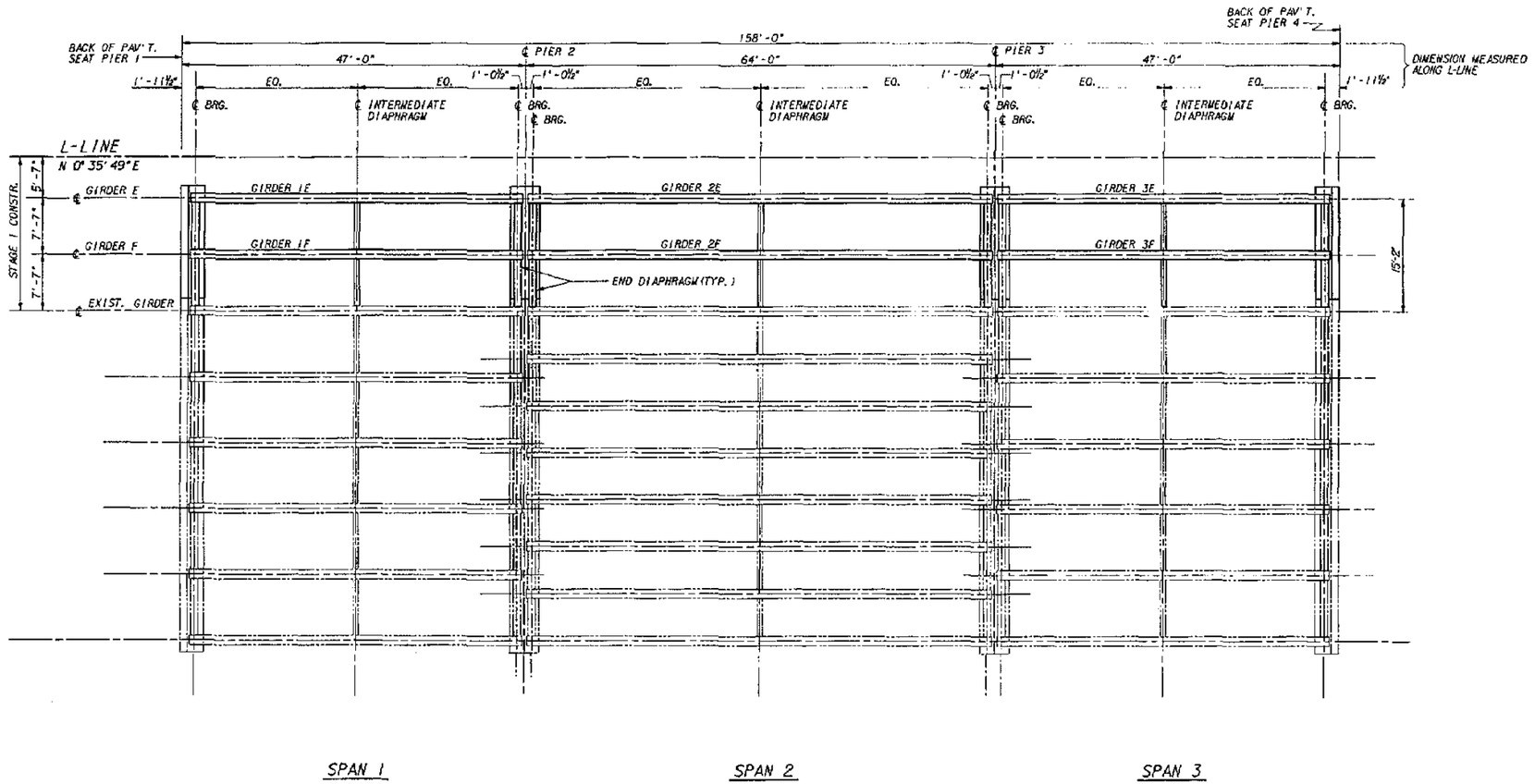

EAST BRIDGE FRAMING PLAN

NOTE:
INTERMEDIATE & END DIAPHRAGMS SHALL LINE UP WITH EXIST. DIAPHRAGM.

FOR "AS CONSTRUCTED PLANS" ONLY

Bridge Design Engr.					REGION NO.	STATE	FED. AID PROJ. NO.	SHEET NO.	TOTAL SHEETS
Supervisor					10	WASH			
Designed By Y. J. HUANG 4/94					JOB NUMBER				
Checked By Y. P. BERI 4/94					95W036				
Detailed By M. H. CAMP 4/94					4771				
Bridge Projects Engr.									
Prelim Plan By									
Architect/Specialist	DATE	REVISION	BY	APP'D					

CAROLLA ARNOLD, STATE OF WASHINGTON, 1989, REGISTERED PROFESSIONAL ENGINEER
EXPIRES 4/14/97

Washington State Department of Transportation

ANDERSEN BUCHSTAD KANE JACOBS + INC CONSULTING ENGINEERS

SR 167
16TH NW TO 84TH AVE. SO.
HOV AND SC&DI - STAGE 2
BRIDGE 167/123

EAST BRIDGE FRAMING PLAN

BRIDGE SHEET NO. 16
SHEET 512 OF 663 SHEETS

SR167/91

SR167/123 JOB NO. 7019 SHEET 16

PLOTTED: 21 JULY'95 9:21:43 AM 03:24:16 DGN

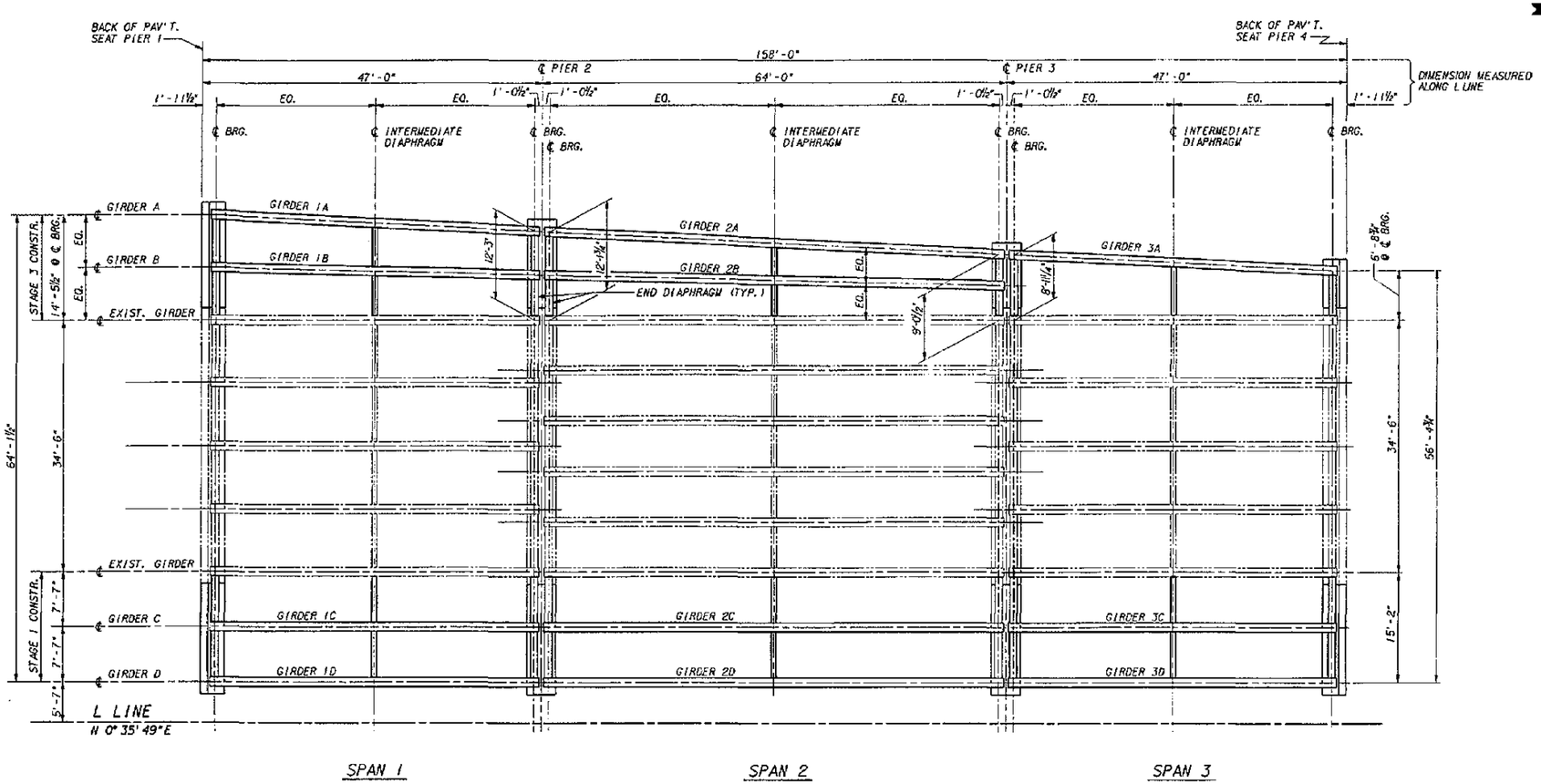

WEST BRIDGE FRAMING PLAN

NOTE: INTERMEDIATE & END DIAPHRAGMS SHALL LINE UP WITH EXIST. DIAPHRAGM.

FOR "AS CONSTRUCTED PLANS" ONLY

Bridge Design Engr.					REGION NO.	STATE	FED. AID PROJ. NO.	SHEET NO.	TOTAL SHEETS	
Supervisor					10	WASH				
Designed By Y. J. HAUNG 4/94					JOB NUMBER					
Checked By Y. P. BERI 4/94					95W036					
Detailed By K. A. WUELLER 4/94										
Bridge Projects Engr.										
Preliminary Plan By										
Architect/Specialist	DATE	REVISION	BY	APP'D	4771					

CECIL A. ARNOLD — STATE OF WASHINGTON — 7108 — REGISTERED PROFESSIONAL ENGINEER — EXPIRES 4/14/97

Washington State Department of Transportation

ABKJ Andersen Budinstad Kane Jacobs • INC CONSULTING ENGINEERS

SR 167
15TH NW TO 84TH AVE. SO.
HOV AND SC&DI - STAGE 2
BRIDGE 167/123

WEST BRIDGE FRAMING PLAN

BRIDGE SHEET NO. 17

SHEET 513 OF 663

SR167/123 JOB NO. 7019 SHEET 17

SR167/91

PLOTTED: 31 JUL 1995 931.09.18/GRI 23X 07PLN1.DGN

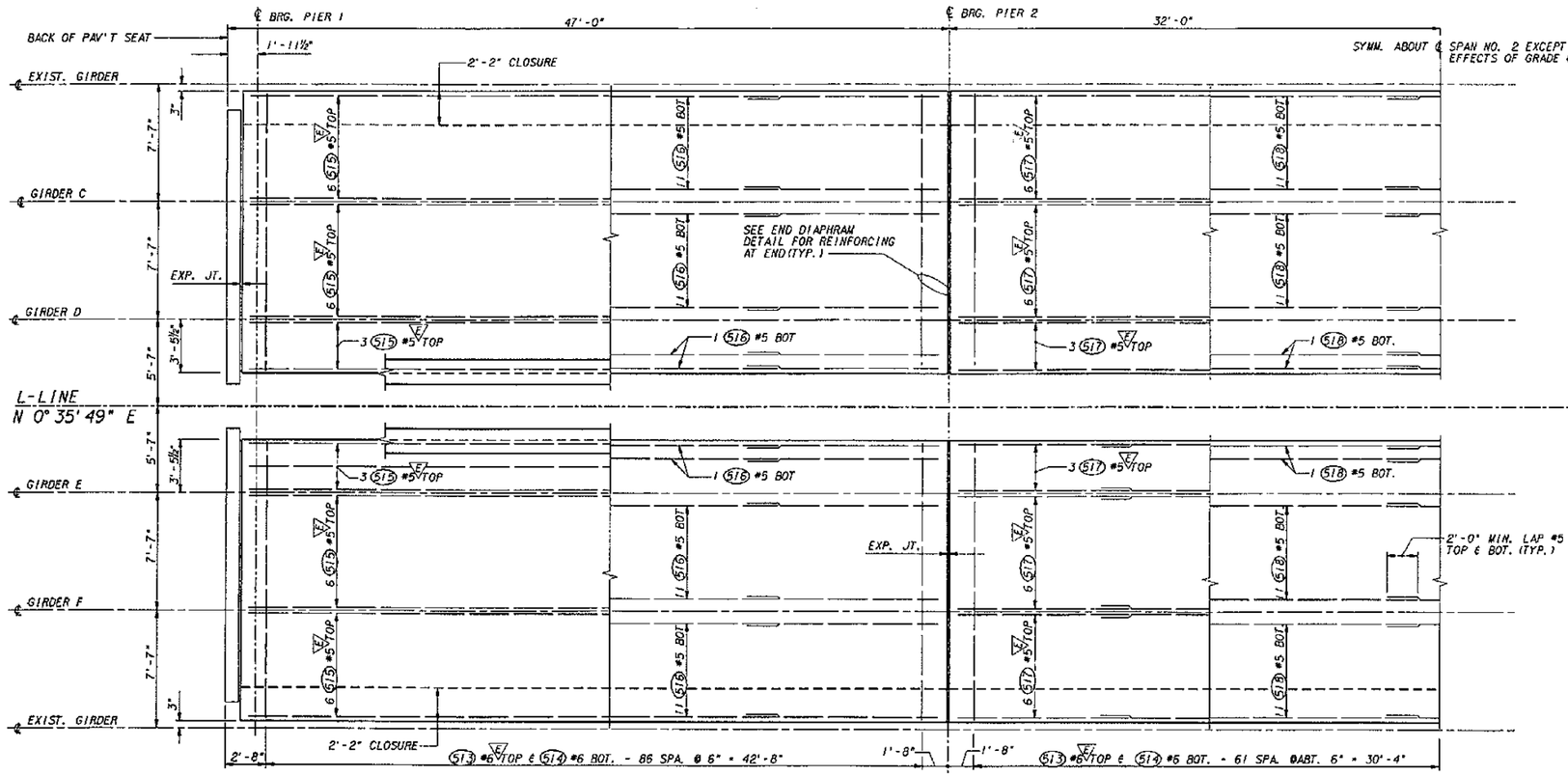

NOTE:
1. SPLICE #5 LONGIT. BARS @ 2'-0" MIN. LAP. LOCATION OF BAR SPLICES AT CONTRACTOR'S OPTION. STAGGER SPLICES BETWEEN ADJACENT BARS.
2. SEE TYP. SECTION FOR BAR SPACING.
3. ▽ DENOTES EPOXY COATED BARS.

FOR "AS CONSTRUCTED PLANS" ONLY

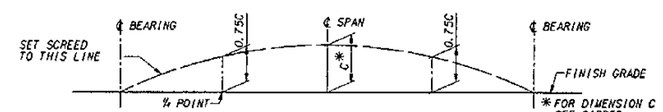

SCREED SETTING DIAGRAM

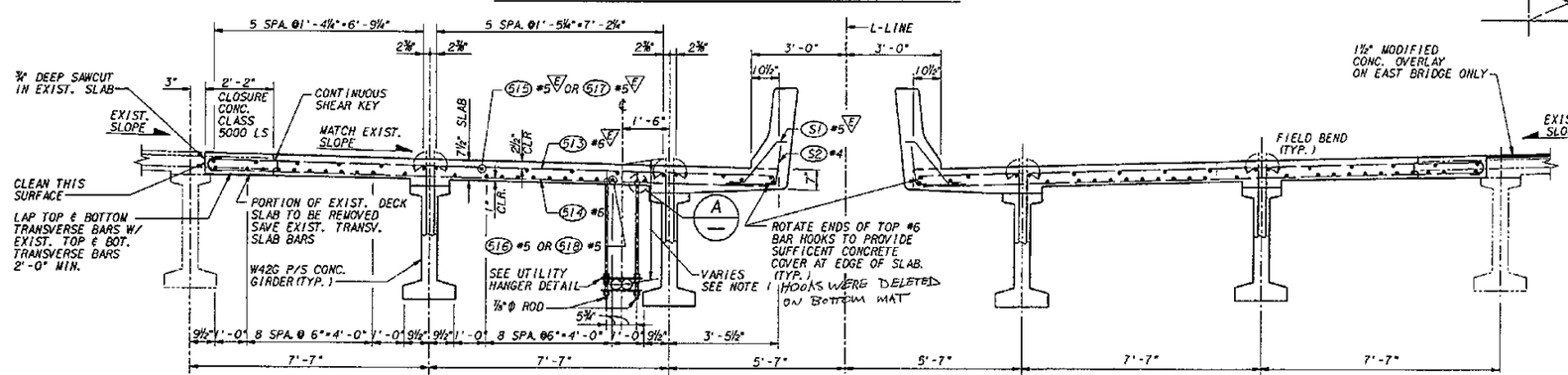

NOTES:
1. HEIGHT FROM TOP OF ROADWAY TO ℄ OF CONDUIT SHALL BE 3'-2" @ END DIAPHRAGMS AND 3'-9" @ INT. DIAPHRAGMS.
2. UTILITY HANGERS SHALL BE SPACED @ 5'-0" CTRS. MAX. LONGITUDINALLY.
3. EACH 4" Φ RGS CONDUIT SHALL HAVE AN EXPANSION COUPLING PER CONDUIT MANUFACTURER @ EACH PIER LOCATION ~~AND A DEFLECTION COUPLING PER CONDUIT MANUFACTURER @ EACH INT. DIAPHRAGM.~~

TYPICAL SECTION

SEE WEST BRIDGE FOR DIMENSIONS AND CALLOUTS NOT SHOWN

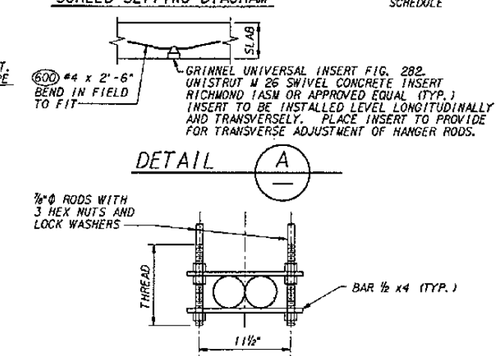

UTILITY HANGER DETAIL

Bridge Design Engr.					REGION NO.	STATE	FED. AID PROJ. NO.	SHEET NO.	TOTAL SHEETS	
Supervisor					10	WASH				
Designed By Y. J. HUANG 4/94					JOB NUMBER					
Checked By Y. P. BERI 4/94					95W036					
Detailed By M. H. CAMP 4/94										
Bridge Projects Engr.										
Prelim Plan By										
Architect/Specialist	GATE	REVISION	BY	APP'D	4771					

DEGLA ARNOLD STATE OF WASHINGTON 19258 REGISTERED PROFESSIONAL ENGINEER
EXPIRES 4/14/97

Washington State Department of Transportation
ANDERSEN BUCHHEITER KANE JACOBS • NO CONSULTING ENGINEERS

SR 167
15TH NW TO 84TH AVE. SO.
HOV AND SC&DI - STAGE 2
BRIDGE 167/123

SLAB REINF. W & E INSIDE

BRIDGE SHEET NO. 18

SHEET 514 OF 663 SHEETS

SR167/123 JOB NO. 7019 SHEET 18

PLOTTED: 31 JUL'95 *0169-18/DBI123; 635R-1N.DGN

SR 167/91

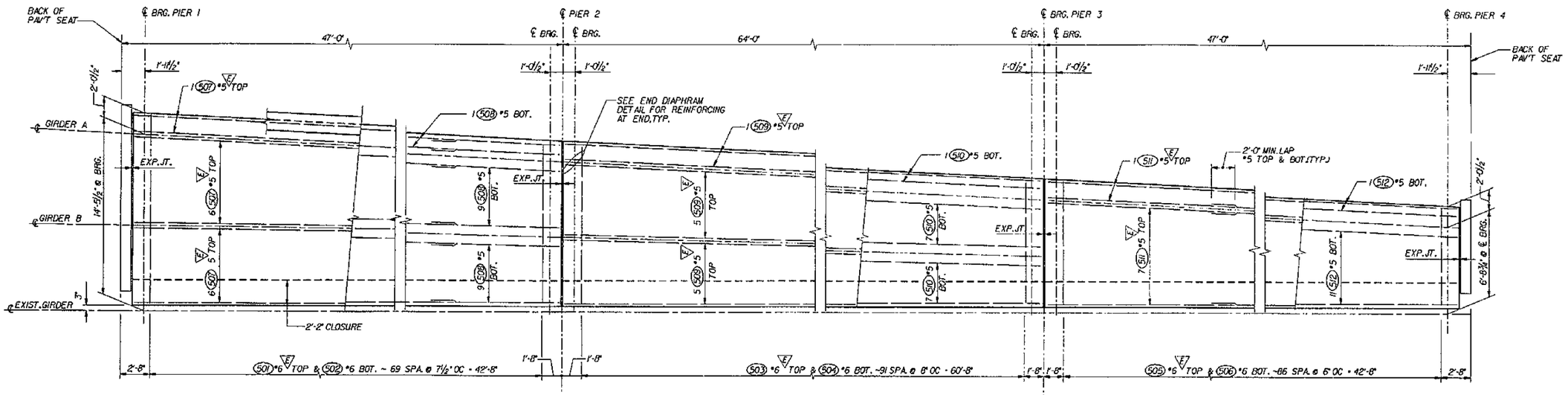

SLAB REINFORCING

WEST BRIDGE OUTSIDE

NOTE:

1. SPLICE #5 LONGITUDINAL BARS @ 2'-0" MIN. LAP. LOCATION OF BAR SPLICES AT CONTRACTOR'S OPTION. STAGGER SPLICES BETWEEN ADJACENT BARS.
2. SEE TYP. SECTION FOR BAR SPACING.
3. E DENOTES EPOXY COVERED BARS.
4. SEE BRIDGE SHEET 18 FOR SCREED SETTING DIAGRAM.

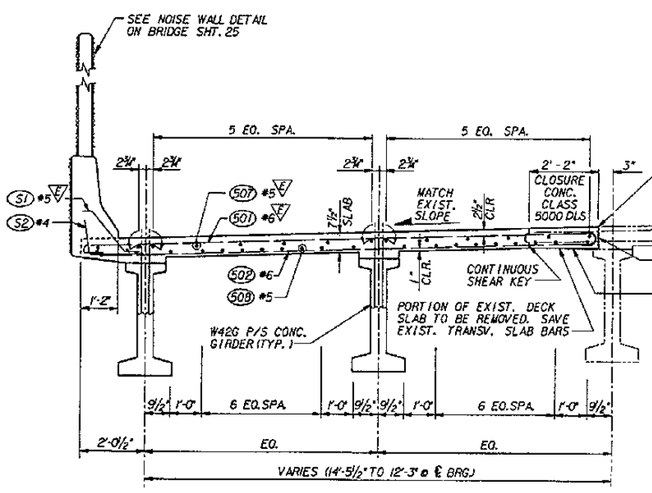

SPAN 1 SECTION

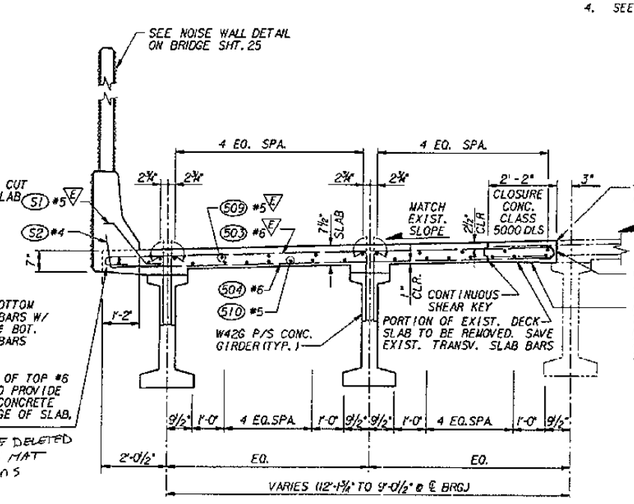

SPAN 2 SECTION

NOTE: SEE BRIDGE SHT. 18 FOR CALLOUTS NOT SHOWN.

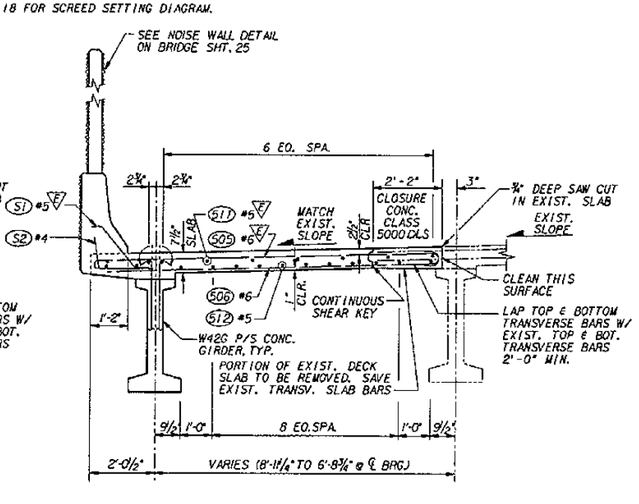

SPAN 3 SECTION

FOR "AS CONSTRUCTED PLANS" ONLY

Bridge Design Engr.					REGION NO.	STATE	FED. AID PROJ. NO.	SHEET NO.	TOTAL SHEETS
Supervisor					10	WASH			
Designed By Y. J. HUANG 4/94					JOB NUMBER				
Checked By Y. P. BERI 4/94					95W036				
Detailed By M. H. CAMP 4/94					4771				
Bridge Projects Engr.									
Prelim Plan By									
Architect/Specialist	DATE	REVISION	BY	APP'D					

REGISTERED PROFESSIONAL ENGINEER — EXPIRES 4/14/97

Washington State Department of Transportation

ANDERSEN BLOMSTEDT KANE JACOBS + INC

SR 167
15TH NW TO 84TH AVE. SO.
HOV AND SC&DI - STAGE 2
BRIDGE 167/123

SLAB REINF. W BRIDGE OUTSIDE

BRIDGE SHEET NO. 19

SHEET 515 OF 663 SHEETS

SR167/123 JOB NO. T019 SHEET 19

PLOTTED: 31 JUL'96 \3169.19\DP1.21\B35W40.DGN

SR167/91

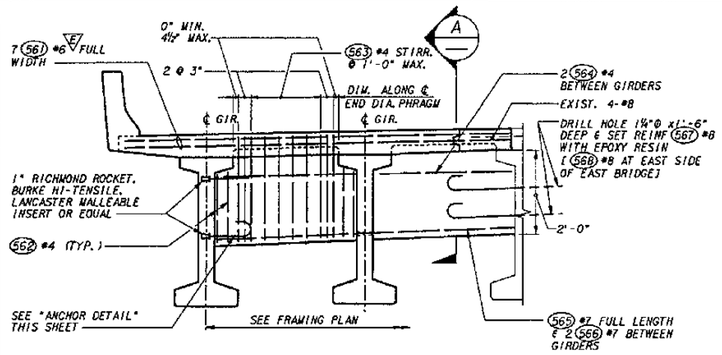

TYPICAL END DIAPHRAGM

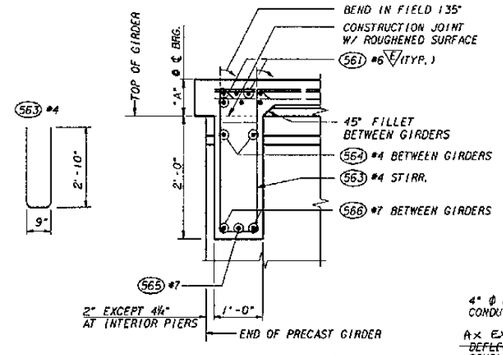

SECTION A

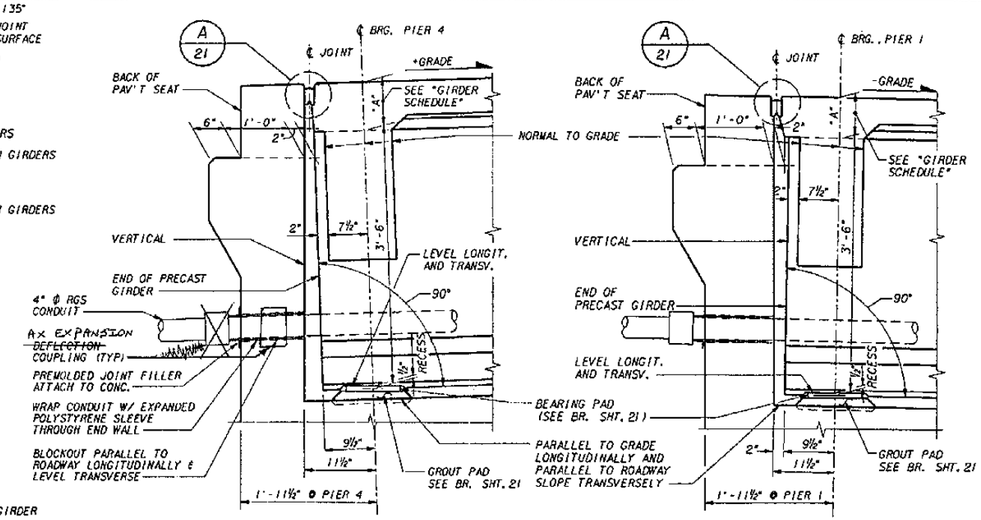

ROADWAY EXPANSION JOINT AT END PIERS

LONGITUDINAL DIMENSIONS ARE NORMAL TO SKEW.

SEE G/21 FOR EXPANSION JOINT MODIFICATION AT EXISTING ABUTMENTS.

BLOCKOUT AND CONDUIT ON WEST BRIDGE ONLY

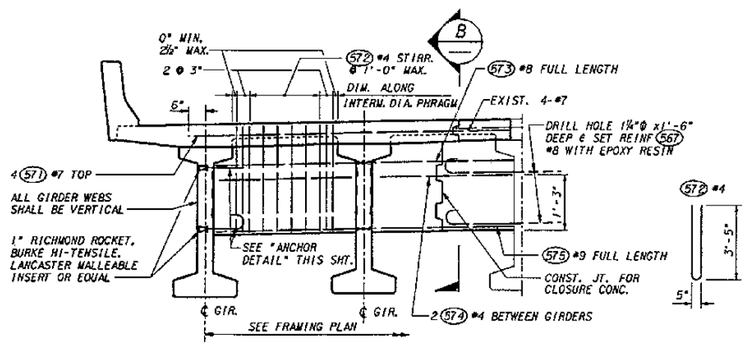

TYPICAL INTERMEDIATE DIAPHRAGM

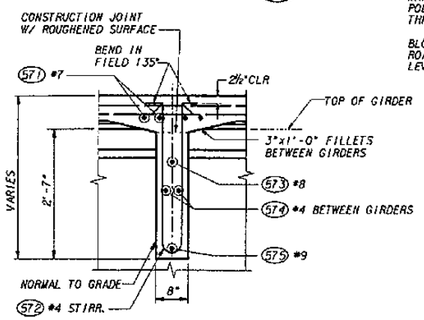

SECTION B

NOTE:
GIRDERS SHALL BE HELD RIGIDLY IN PLACE WHEN DIAPHRAGMS ARE POURED. REINFORCING BARS SHALL BE THREADED THROUGH HOLES IN GIRDERS PRIOR TO PLACING OF EXTERIOR GIRDERS. SEE PLANS FOR "TRAFFIC BARRIER" DIMENSIONS AND LOCATION. SEE "GIRDER DETAILS" SHEET FOR DIMENSION "A".

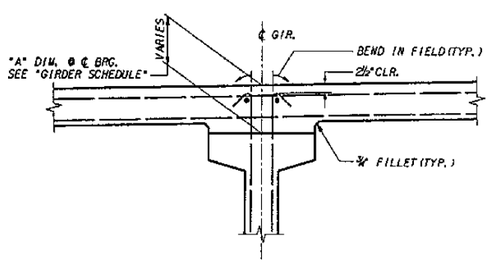

TYPICAL SECTION THRU GIRDER

SHOWING METHOD OF ADJUSTING ROADWAY ELEVATIONS FOR VERTICAL CURVES, CAMBER OR SUPERELEVATIONS

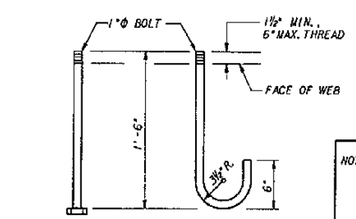

TOP ANCHOR BOTTOM ANCHOR

ANCHOR DETAILS

A.S.T.M. A-307

NOTE: 1. CONTRACTOR SHALL VERIFY THE LOCATION OF PRESTRESSING STRANDS PRIOR TO DRILLING ANY HOLES IN THE EXISTING GIRDERS TO ENSURE THAT STRANDS WILL NOT BE DAMAGED.

2. ADJUST THE LOCATION OF DRILL HOLES SLIGHTLY TO MISS THE P/S STRANDS IN EXISTING GIRDER AS REQ'D.

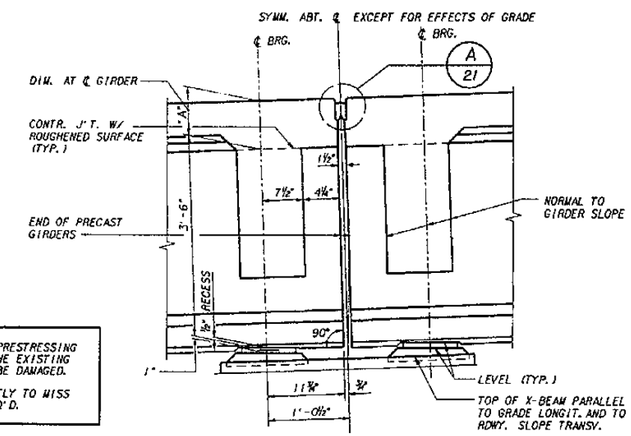

SECTION THRU END DIAPHRAGM - GIRDERS AT INTERMEDIATE PIERS

LONGIT. DIMENSIONS ARE NORMAL TO SKEW.
SEE "GIRDER DETAILS SHEET FOR DIM. "A"

SEE H/21 FOR EXPANSION JOINT MODIFICATION AT EXISTING INTERMEDIATE PIRES.

FOR "AS CONSTRUCTED PLANS" ONLY

Bridge Design Engr.					REGION NO.	STATE	FED. AID PROJ. NO.	SHEET NO.	TOTAL SHEETS
Supervisor					10	WASH			
Designed By	Y. J. HUANG 4/94				JOB NUMBER				
Checked By	J. J. MORRIS 4/94				95W036				
Detailed By	G. BISNAR 4/94								
Bridge Projects Engr.									
Prelim Plan By									
Architect/Specialist		DATE	REVISION	BY	APP'D	4771			

CECILA ARNOLD STATE OF WASHINGTON 19966 REGISTERED PROFESSIONAL ENGINEER
EXPIRES 4/24/97

Washington State Department of Transportation

ANDERSEN BJORNSTAD KANE JACOBS • INC
CONSULTING ENGINEERS

SR 167
15TH NW TO 84TH AVE. SO.
HOV AND SC&DI - STAGE 2
BRIDGE 167/123

PRESTRESSED GIRDER DIAPH.

BRIDGE SHEET NO. 20

SHEET 516 OF 663 SHEETS

SR167/123 JOB NO. 7019 SHEET 20

SR167/91

PLOTTED: 31 JUL,'95 9:01:59.10/08:23 8201APH.DGN

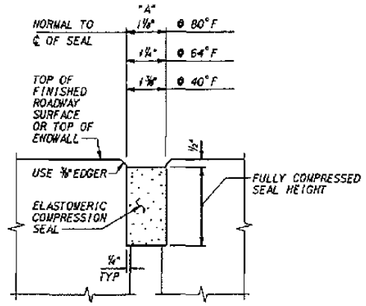

COMPRESSION SEAL

DETAIL (A) 6, 8, 20

COMPRESSION SEAL TABLE *

D. S. BROWN		WATSON BOWMAN ACME		ELASTOMER SEALS		STRUCTURAL ACCESSORIES	
SEAL	W (IN.)	SEAL	W (IN.)	SEAL	W (IN.)	SEAL	W (IN.)
CV-2000	2	WA-200	2	X 2000	2	SA 2000	2

NOTES:
1. * TESTING SHALL BE PER AASHTO M-220 PRIOR TO USE.
2. W DENOTES WIDTH OF COMPRESSION SEAL.

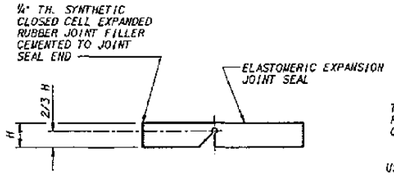

SEAL CUTTING DETAIL

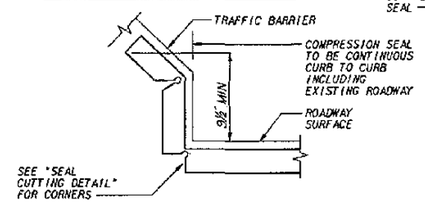

DETAIL AT CURB

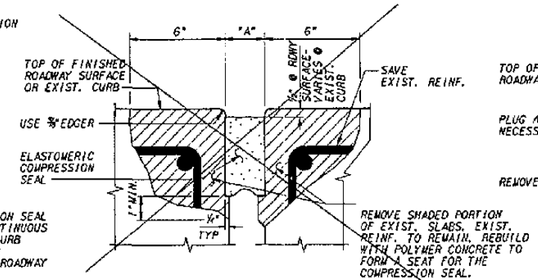

EXISTING REINF. ~~BARS~~ STEEL WAS NOT FOUND WITHIN REMOVAL ZONE
SEE CHANGE

SECTION (H)

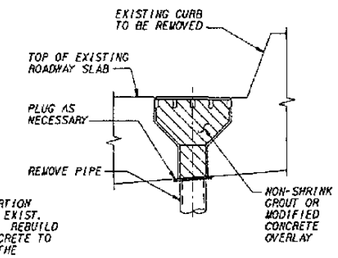

BRIDGE DRAIN PLUG DETAIL

REMOVE DRAIN GRATING & GALV. STEEL CHAIN. FILL DRAIN WITH NON-SHRINK GROUT OR MODIFIED CONCRETE OVERLAY AFTER PLUGGING.

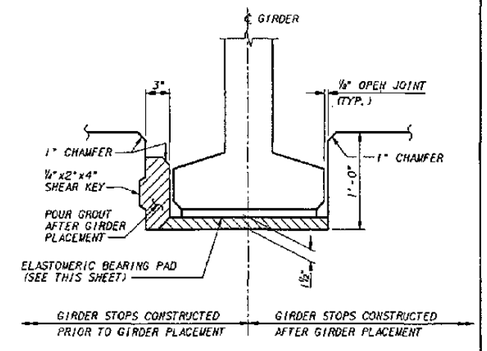

DETAIL (E) 10, 11, 12, 13

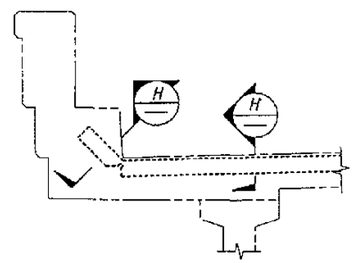

EXP. JT. DETAIL AT EXIST. CURB

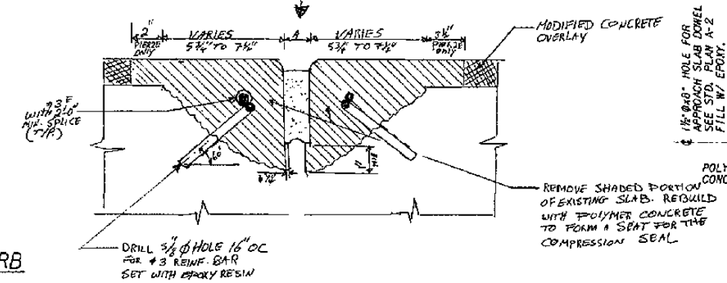

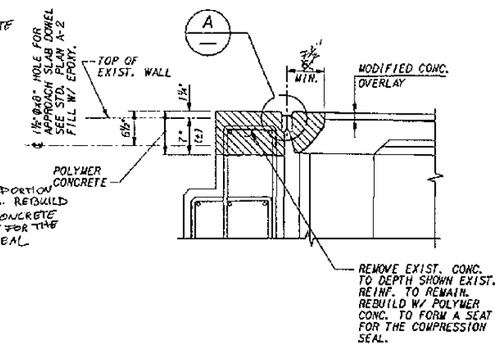

SECTION (G) 6, 8

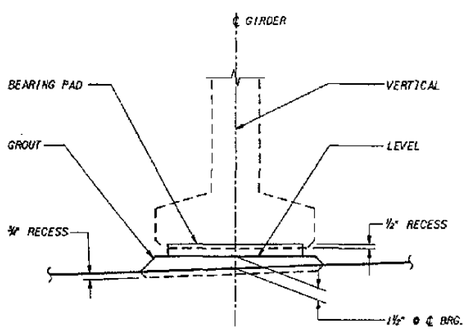

VIEW (F)

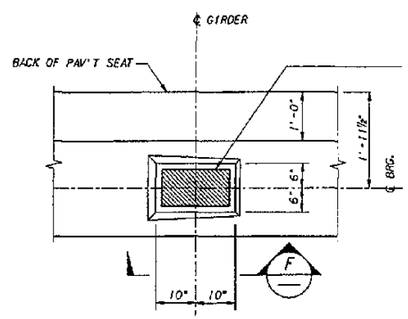

AT END PIERS

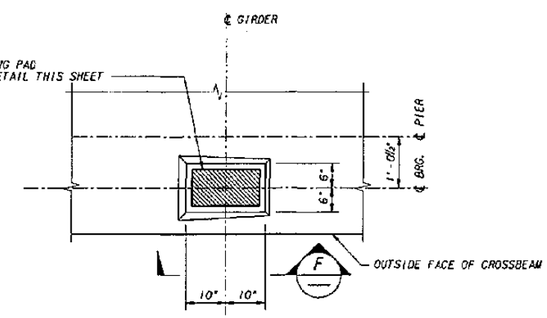

AT INTERMEDIATE PIERS

GROUT PAD

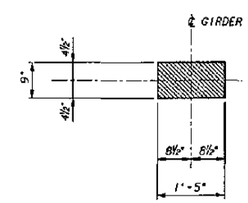

BEARING PAD

LAMINATED ELASTOMERIC PAD 1½" THICK W/ 2 METAL SHIMS DUROMETER HARDNESS = 60

FOR "AS CONSTRUCTED PLANS" ONLY

Bridge Design Engr.					REGION NO.	STATE	FED. AID PROJ. NO.	SHEET NO.	TOTAL SHEETS
Supervisor					10	WASH			
Designed By Y. J. HUANG 4/94					JOB NUMBER				
Checked By Y. P. BERI 4/94					95W036				
Detailed By M. H. CAMP 4/94									
Bridge Projects Engr.									
Prelim Plan By									
Architect/Specialist	DATE	REVISION	BY	APP'D	4771				

Washington State Department of Transportation

ANDERSEN BJORNSTAD KANE JACOBS • INC

SR 167
15TH NW TO 84TH AVE. SO.
HOV AND SC&DI - STAGE 2
BRIDGE 167/123

MISCELLANEOUS DETAILS

BRIDGE DRAWING SHEET NO. 21

SHEET 517 OF 663 SHEETS

SR167/123 JOB NO. 7019 SHEET 21

PLOTTED: 31 JUL 1996 9:26:51, 1.0/0.01129, 0.20/0.2175, DGN

SR 167/91

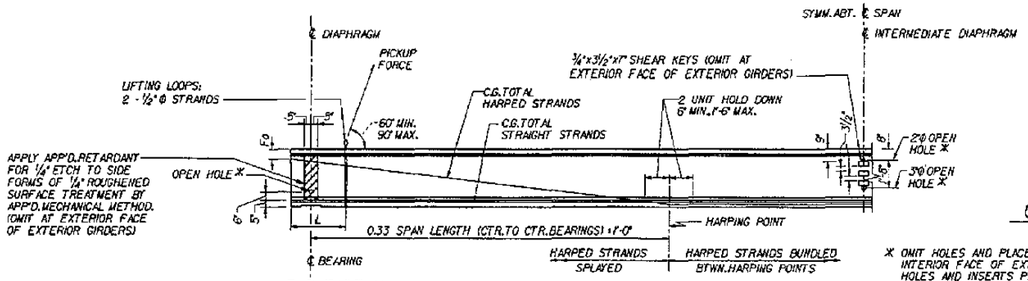

END TYPE B

GIRDER ELEVATION

OPEN HOLE

* OMIT HOLES AND PLACE INSERTS ON THE INTERIOR FACE OF EXTERIOR GIRDERS. PLACE HOLES AND INSERTS PARALLEL TO SKEW. INSERTS SHALL BE RICHMOND ROCKET, BURKE HI-TENSILE, LANCASTER MALLEABLE OR APPROVED EQUAL.

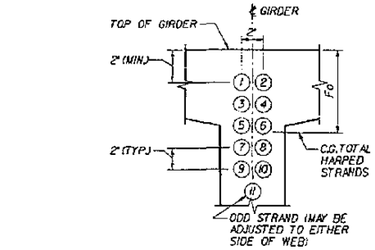

STRAND PATTERN AT GIRDER END

HARPED STRAND LOCATION SEQUENCE SHALL BE AS SHOWN (1)(2) ETC.

GENERAL NOTES

ALL DETAILS ON THIS SHEET ARE FOR PRETENSIONED DESIGN ONLY.

PLAN LENGTH SHALL BE INCREASED AS NECESSARY TO COMPENSATE FOR SHORTENING DUE TO PRESTRESS AND SHRINKAGE.

EXTRA CAUTION MUST BE EXERCISED IN HANDLING AND PLACING ALL GIRDERS.

THE TOP SURFACE OF THE GIRDER FLANGE SHALL BE ROUGHENED IN ACCORDANCE WITH SECTION 6-02.3(25)H OF THE STANDARD SPECIFICATIONS.

IF THE LIFTING LOOPS EXTEND WITHIN 3" OF THE TOP OF THE ROADWAY SLAB THEY SHALL BE CUT OFF PRIOR TO POURING THE ROADWAY SLAB. ALL LIFTING STRANDS SHALL BE OF THE SAME MATERIAL AND STRENGTH AS THE PRESTRESSING STRANDS. WRAP THE LIFTING LOOPS SO THAT EACH STRAND WILL CARRY IT'S SHARE OF THE TOTAL LOAD. EXTEND LIFTING LOOPS ENDING WITH A 9" LONG 90° HOOK TO WITHIN 3" CLEAR OF THE BOTTOM OF THE GIRDER.

CUT ALL STRANDS FLUSH WITH THE GIRDER ENDS AND PAINT WITH AN APPROVED EPOXY RESIN EXCEPT FOR EXTENDED STRANDS AS SHOWN.

FORMS FOR BEARING PAD RECESSES SHALL BE CONSTRUCTED AND FASTENED IN SUCH A MANNER AS NOT TO CAUSE DAMAGE TO THE GIRDER DURING THE STRAND RELEASE OPERATION.

ALL STRANDS ARE 1/2"Ø LOW RELAXATION STRANDS (AASHTO M203 GRADE 270).

EXTENDED STRANDS AND BARS ARE PARALLEL TO GIRDER.

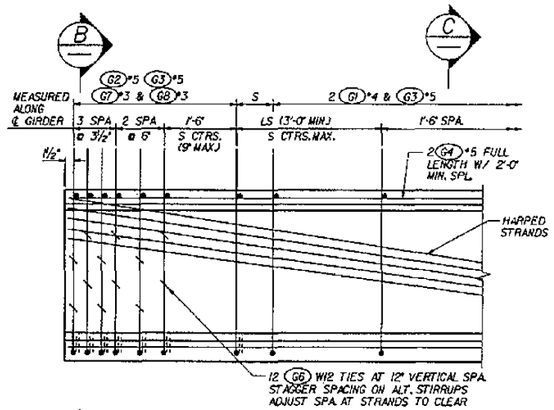

TYPICAL END ELEVATION

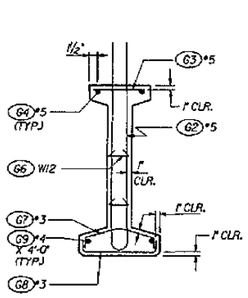

SECTION B

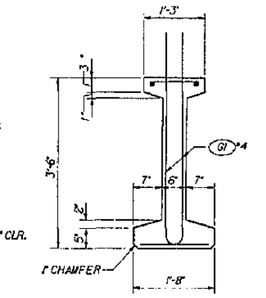

SECTION C

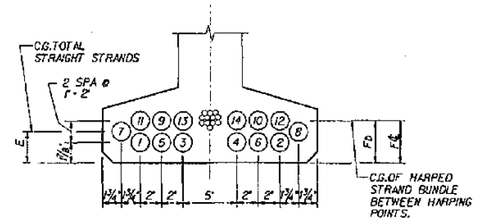

STRAND PATTERN AT ℄ SPAN

STRAND LOCATION SEQUENCE SHALL BE AS SHOWN (1)(2) ETC.

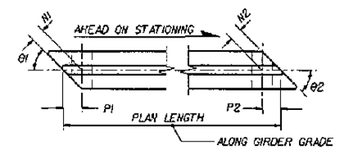

END 1 END 2

GIRDER SCHEDULE

DIMENSION A AT ℄ BEARINGS = 10'

BASED ON GIRDER DEFLECTION = D AT TIME OF SLAB POUR (120 DAYS)

	SPAN	GIRDER	END 1 TYPE	END 2 TYPE	L	θ1	θ2	N1	N2	P1	P2	PLAN LENGTH ALONG GIRDER GRADE	MIN. CONC. COMPA. STRENGTH 28 DAYS F'c (ksi)	MIN. CONC. COMPA. STRENGTH RELEASE F'ci (ksi)	S (IN.)	LS (FT.)	HARPED NO. OF STRANDS	HARPED JACKING FORCE (KIPS)	STRAIGHT NO. OF STRANDS	STRAIGHT JACKING FORCE (KIPS)	LOCATION OF C.G. STRANDS (IN.) E	Fc	Fb	Fo	C (IN.)	D (IN.)
WEST BRIDGE	1&3	1A,3A	B	B	2'-0"	87.13	87.13	P1	P2	9 1/2"	11 3/4"	45'-10"	7.0	5.0	12	4	4	124	10	310	2 1/2	17	17	3	1/4	5/8
	1	1B	B	B	2'-0"	88.56	88.56	P1	P2	9 1/2"	11 3/4"	45'-9 1/2"	7.0	5.0	12	4	4	124	10	310	2 1/2	17	17	3	1/8	5/8
	1&3	1C,3C 1D,3D	B	B	2'-0"	90	90	P1	P2	9 1/2"	11 3/4"	45'-9 3/4"	7.0	5.0	12	4	4	124	10	310	2 1/2	17	17	3	1/8	5/8
	2	2A	B	B	2'-0"	87.13	87.13	P1	P2	11 3/4"	11 3/4"	63'-11 1/2"	7.0	5.3	12	4	10	310	12	372	2 3/4	10	10	6	5/8	1 3/4
	2	2B	B	B	2'-0"	88.56	88.56	P1	P2	11 3/4"	11 3/4"	63'-10 3/8"	7.0	5.3	12	4	10	310	12	372	2 3/4	10	10	6	5/8	1 3/4
	2	2C,2D	B	B	1'-0"	90	90	P1	P2	11 3/4"	11 3/4"	63'-10 1/2"	7.0	6.2	12	4	12	372	14	434	2 1/8	10	10	7	3/4	2 1/8
EAST BRIDGE	1&3	1E,3E 1F,3F	B	B	2'-0"	90	90	P1	P2	9 1/2" 11 3/8"	11 3/4" 9 1/2"	45'-9 1/4"	7.0	5.0	12	4	4	124	10	310	2 1/2	17	17	3	1/8	5/8
	2	2E,2F	B	B	1'-0"	90	90	P1	P2	11 3/4"	11 3/4"	63'-10 1/2"	7.0	6.2	12	4	12	372	14	434	2 1/8	10	10	7	3/4	2 1/8

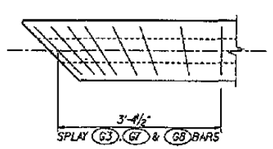

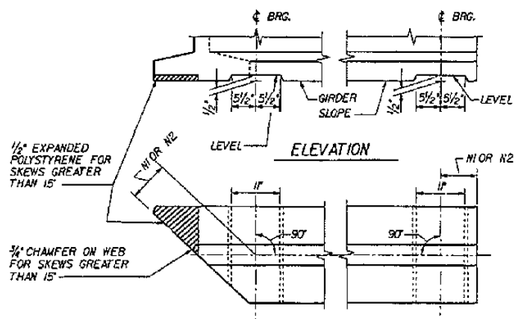

TRANSVERSE REINFORCING - SKEWED ENDS

ONLY TRANSVERSE REINF. SHOWN

MARK	LOCATION	SIZE	BENDING DIAGRAM (ALL DIMENSIONS ARE OUT TO OUT)
G1	GIRDER STIRRUPS	4	NOTE: FOR DIMENSION A SEE "GIRDER SCHEDULE"
G2	GIRDER END STIRRUPS	5	
G3	GIRDER TOP FLANGE	5	STR.
G4	GIRDER LONGIT. FULL LENGTH	5	STR.
G5	GIRDER END LONGIT.	7	STR.
G6	GIRDER END TIES	W12	≠
G7	GIRDER END TIES	3	
G8	GIRDER END TIES	3	
G9	GIRDER LONGIT.	4	STR.

≠ #3 OR #4 MAY BE SUBSTITUTED. FIELD BEND IS OPTIONAL

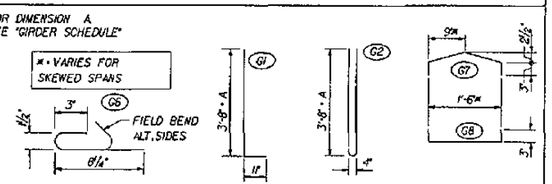

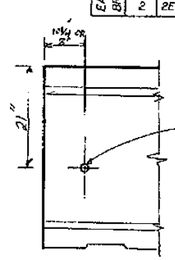

DETAIL AT END INTERIOR GIRDER

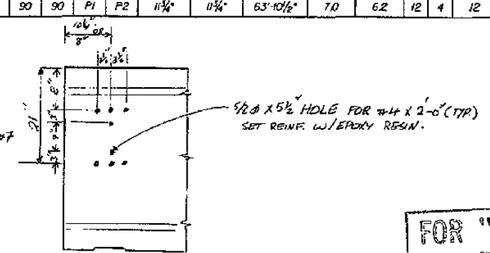

DETAIL AT END EXTERIOR GIRDER

FOR "AS CONSTRUCTED PLANS" ONLY

Bridge Design Engr.					
Supervisor					
Designed By Y. J. HUANG 4/94					
Checked By J. J. MORRIS 4/94					
Detailed By M. S. CAMP 4/94					
Bridge Projects Engr.					
Prelim Plan By					
Architect/Specialist	DATE	REVISION	BY	APP'D	

REGION NO.	STATE	FED. AID PROJ. NO.	SHEET NO.	TOTAL SHEETS
10	WASH			
JOB NUMBER 95W036				
4771				

CECIL A. ARNOLD STATE OF WASHINGTON 13958 REGISTERED PROFESSIONAL ENGINEER EXPIRES 4/14/97

Washington State Department of Transportation

ANDERSEN ELDERSTAD KANE JACOBS • INC CONSULTING ENGINEERS

SR 167
15TH NW TO 84TH AVE. SO.
HOV AND SC&DI - STAGE 2
BRIDGE 167/123

W42G GIRDER DETAILS

BRIDGE SHEET NO. 22

SHEET 518 OF 663 SHEETS

SR167/123 JOB NO. 7019 SHEET 22

PLOTTED: 31 JUL '95 931679.1(8/9/91.2) 038625.DGN

SR167/91

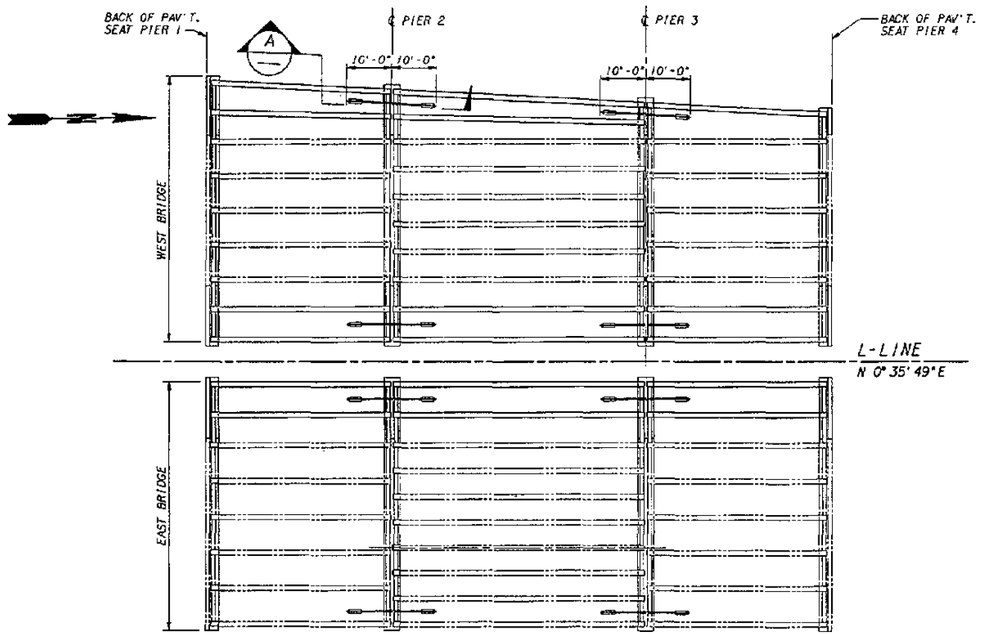

SEISMIC RESTRAINER LOCATION PLAN

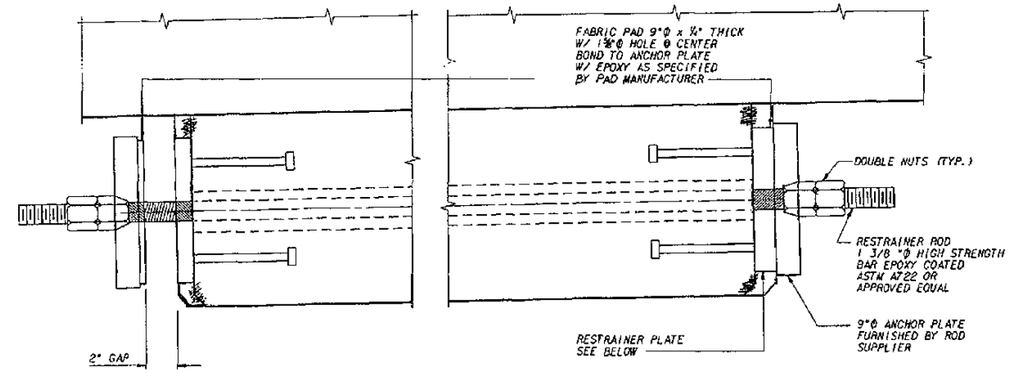

ELEVATION

NOTE:

ALL STRUCTURAL STEEL PLATES AND HARDWARE SHALL BE AASHTO M183 AND SHALL BE HOT-DIPPED GALVANIZED PER AASHTO M111.

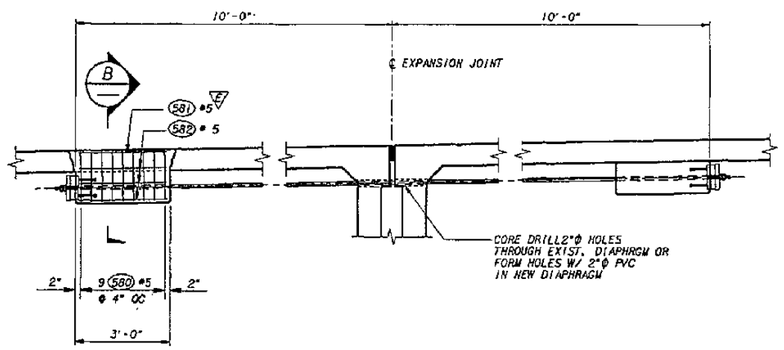

SECTION A

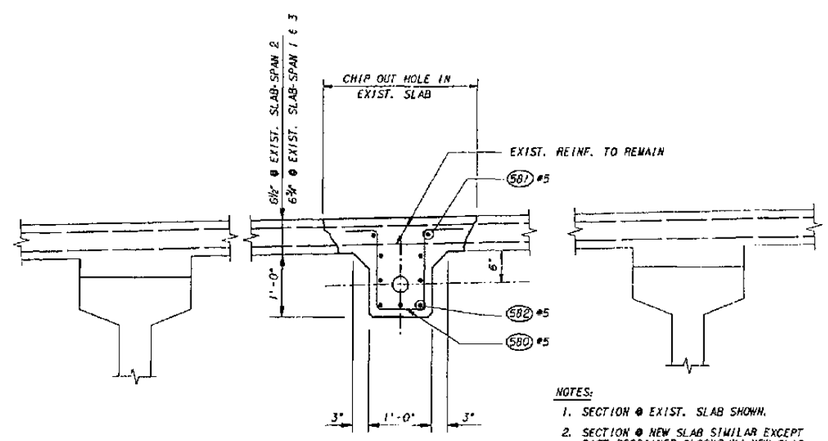

NOTES:

1. SECTION @ EXIST. SLAB SHOWN.
2. SECTION @ NEW SLAB SIMILAR EXCEPT CAST RESRAINER BLOCKS W/ NEW SLAB.

SECTION B

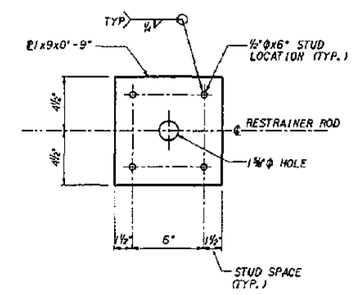

RESTRAINER PLATE

FOR "AS CONSTRUCTED PLANS" ONLY

Bridge Design Engr.					REGION NO.	STATE	FED. AID PROJ. NO.	SHEET NO.	TOTAL SHEETS	
Supervisor					10	WASH				
Designed By B. C. DANIELSON 4/94					JOB NUMBER					
Checked By J. J. MORRIS 4/94					95W036					
Detailed By C. S. YU 4/94										
Bridge Projects Engr.										
Prelim Plan By										
Architect/Specialist	DATE	REVISION	BY	APP'D	4771					

STATE OF WASHINGTON REGISTERED PROFESSIONAL ENGINEER — EXPIRES 4/14/97

Washington State Department of Transportation

ANDERSEN BJORNSTAD KANE JACOBS • INC CONSULTING ENGINEERS

SR 167
15TH NW TO 84TH AVE. SO.
HOV AND SC&DI - STAGE 2
BRIDGE 167/123

RESTRAINER PLAN & DETAILS

BRIDGE SHEET NO. 23

SHEET 519 OF 663

SR167/123 JOB NO. 7089 SHEET 23

SR167/91

PLOTTED: 31 JUL'96 93:49:18 (BB1:29 BSHEEPS).DGN

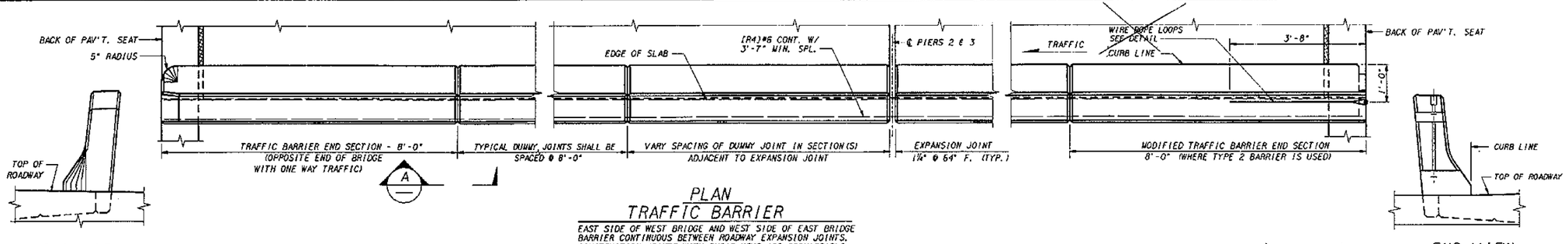

PLAN
TRAFFIC BARRIER

EAST SIDE OF WEST BRIDGE AND WEST SIDE OF EAST BRIDGE BARRIER CONTINUOUS BETWEEN ROADWAY EXPANSION JOINTS. CONSTRUCTION JOINTS WITH SHEAR KEYS ARE PERMISSIBLE AT DUMMY JOINTS LOCATIONS. FORM JOINTS BETWEEN DUMMY JOINTS SHALL NOT BE PERMITTED.

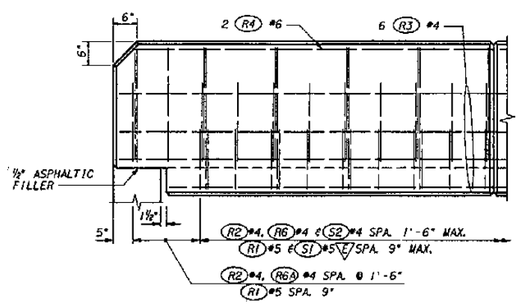

OUTSIDE ELEVATION
END OF TRAFFIC BARRIER

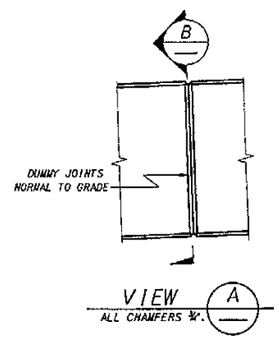

VIEW A
ALL CHAMFERS ¾".

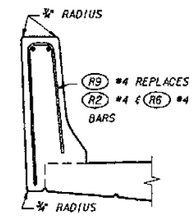

SLIPFORM ALTERNATE

SEE TYPICAL SECTION - TRAFFIC BARRIER FOR ADDITIONAL DETAILS.

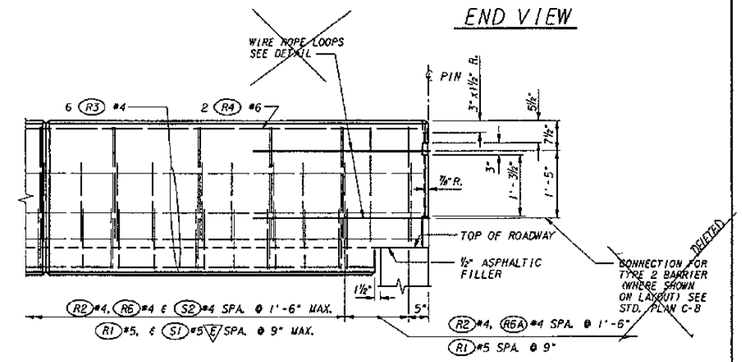

OUTSIDE ELEVATION
END OF MODIFIED TRAFFIC BARRIER
FOR TYPE 2 BARRIER ANCHORAGE

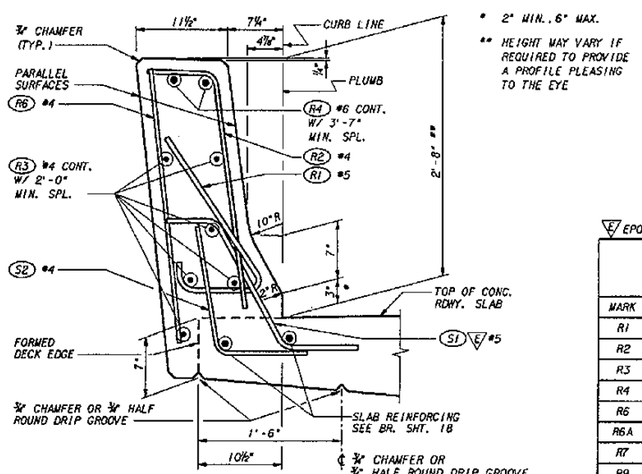

* 2" MIN., 6" MAX.

** HEIGHT MAY VARY IF REQUIRED TO PROVIDE A PROFILE PLEASING TO THE EYE

TYPICAL SECTION - TRAFFIC BARRIER

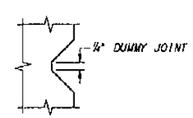

SECTION 2-2

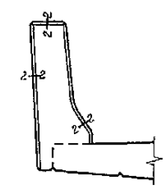

SECTION B

E EPOXY COATED

DIMENSIONS TO POINTS OF INTERSECTION.

TRAFFIC BARRIER BAR LIST

ALL REINFORCING SHALL BE AASHTO M31, GR. 60.

MARK	SIZE	LENGTH	BENDING DIAGRAM (ALL DIMENSIONS ARE OUT TO OUT)
R1	5	2'-11"	
R2	4	3'-0"	
R3	4	(A)	STR.
R4	6	(A)	STR.
R6	4	3'-0"	STR.
R6A	4	2'-5"	STR.
R7	9	14'-0"	STR.
R9	4	6'-1"	
			(A) DETERMINE FROM PLANS

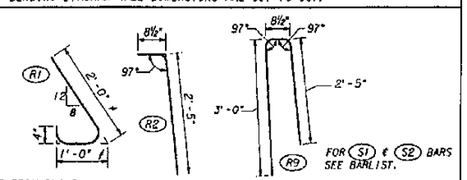

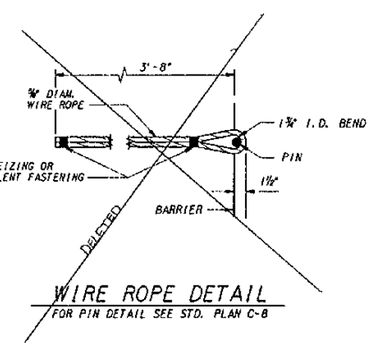

WIRE ROPE DETAIL
FOR PIN DETAIL SEE STD. PLAN C-8

FOR "AS CONSTRUCTED PLANS" ONLY

Bridge Design Engr.					REGION NO.	STATE	FED. AID PROJ. NO.	SHEET NO.	TOTAL SHEETS	
Supervisor					10	WASH				
Designed By E.W. THOMAS 4/94					JOB NUMBER					
Checked By Y.P. BERI 4/94					95W036					
Detailed By E.W. THOMAS 4/94										
Bridge Projects Engr.										
Prelim Plan By										
Architect/Specialist	DATE	REVISION	BY	APP'D	4771					

CECIL A. ARNOLD, STATE OF WASHINGTON, 13706, REGISTERED PROFESSIONAL ENGINEER, EXPIRES 4/14/95

Washington State Department of Transportation

ANDERSEN BUCHSTAD KANE JACOBS + INC CONSULTING ENGINEERS

SR 167
15TH NW TO 84TH AVE. SO.
HOV AND SC&DI - STAGE 2
BRIDGE 167/123

TRAFFIC BARRIER - MEDIAN

BRIDGE SHEET NO. 24

SHEET 520 OF 663 SHEETS

SR167/91

SR167/123 JOB NO. 7019 SHEET 24

PLOTTED: 31 JUL'95 9:21:05 18/BRI 29/03TRB-H2.DGN

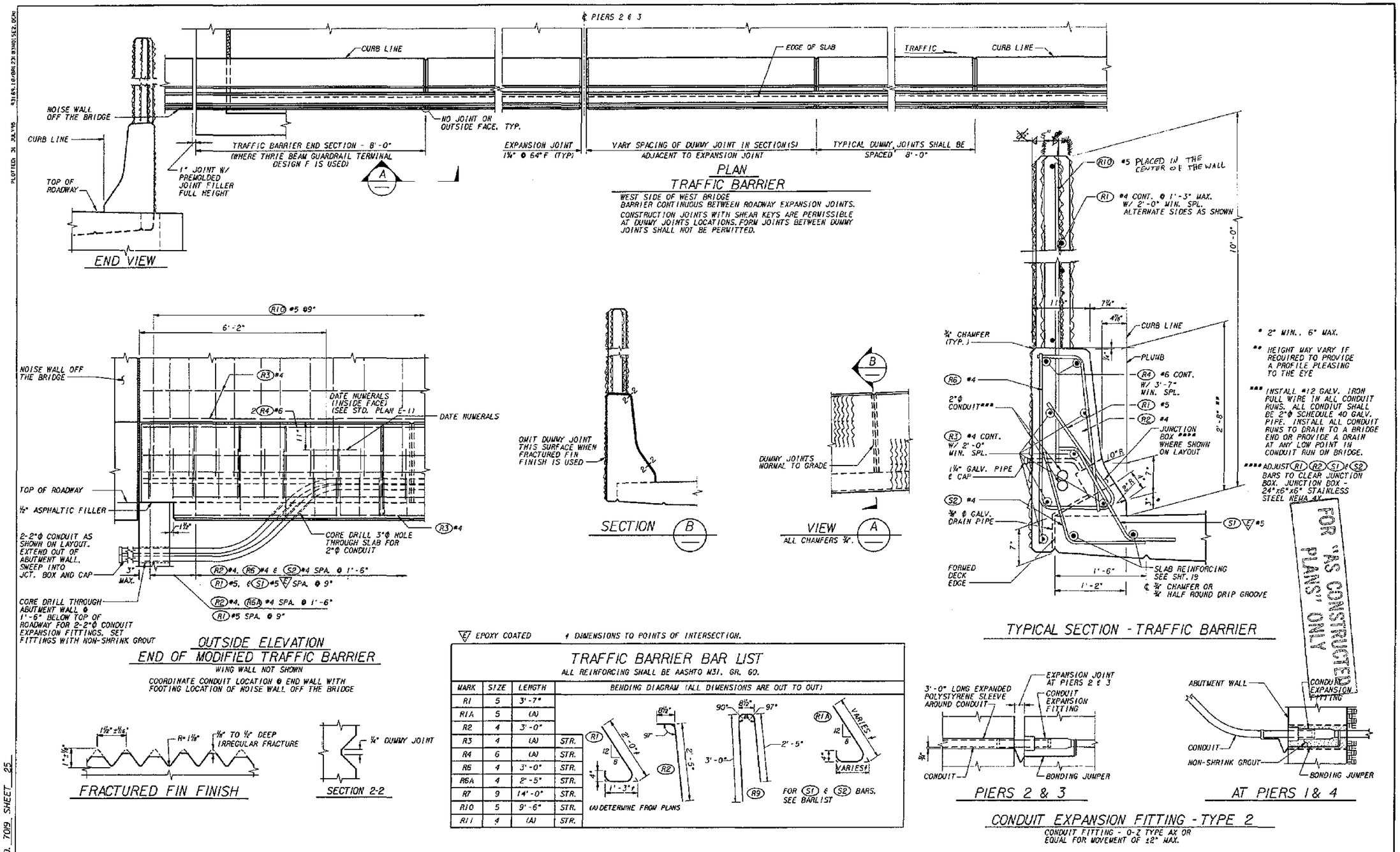

E EPOXY COATED 4 DIMENSIONS TO POINTS OF INTERSECTION.

TRAFFIC BARRIER BAR LIST

ALL REINFORCING SHALL BE AASHTO M31, GR. 60.

MARK	SIZE	LENGTH	BENDING DIAGRAM (ALL DIMENSIONS ARE OUT TO OUT)
R1	5	3'-7"	
R1A	5	(A)	
R2	4	3'-0"	
R3	4	(A)	STR.
R4	6	(A)	STR.
R6	4	3'-0"	STR.
R6A	4	2'-5"	STR.
R7	9	14'-0"	STR.
R10	5	9'-6"	STR.
R11	4	(A)	STR.

(A) DETERMINE FROM PLANS

FOR S1 & S2 BARS, SEE BARLIST

Bridge Design Engr.						REGION NO.	STATE	FED. AID PROJ. NO.	SHEET NO. / TOTAL SHEETS
Supervisor						10	WASH		
Designed By E.W. THOMAS 4/94						JOB NUMBER			
Checked By Y.P. BERI 4/94						95W036			
Detailed By E.W. THOMAS 4/94									
Bridge Projects Engr.									
Freitm Plan By									
Architect/Specialist	DATE	REVISION	BY	APP'D		4771			

CECIL D. ANDRUS STATE OF WASHINGTON 7788 REGISTERED PROFESSIONAL ENGINEER
EXPIRES 4/14/97

Washington State Department of Transportation

ABKJ ANDERSEN BJORNSTAD KANE JACOBS • INC CONSULTING ENGINEERS

SR 167
15TH NW TO 84TH AVE. SO.
HOV AND SC&DI - STAGE 2
BRIDGE 167/123

TRAFFIC BARRIER NOISE WALL

BRIDGE SHEET NO. 25
SHEET 521 OF 663 SHEETS

SR167/91

PLOTTED: 31 JUL'95 431.85,10/BRI.25 BSWO1SE2.DGN

SR167/123 JOB NO. 7019 SHEET 25

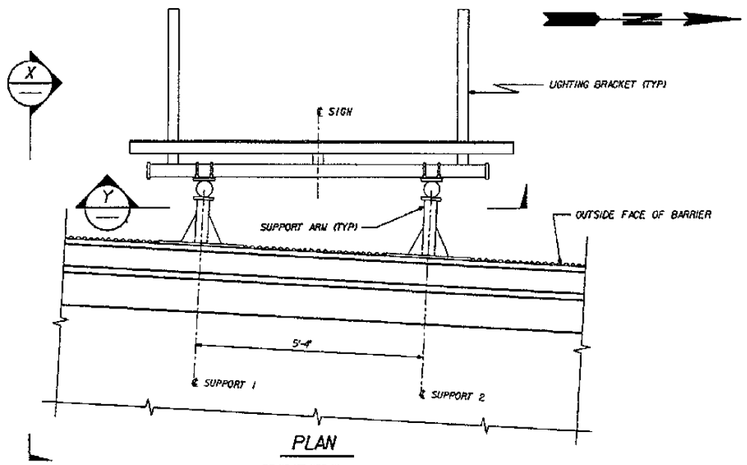

PLAN

BR. NO. 167/123 W

TABLE OF DIMENSIONS

LOCATION (STA. AT ℄ SIGN)	SIGN SKEW	SIGN LENGTH	SIGN HEIGHT
MEEKER ST. L 813 + 89.27 (69' LT)	0°	9'-0"	7'-0"

PIPE SIZE	TOP ARM LENGTHS		BOT. ARM LENGTHS	
	A1	A2	B1	B2
3" Φ	1'-0"	1'-3"	2'-3"	2'-6"

CANTILEVER LENGTHS				C	G
E1	F1	E2	F2		
1'-11 1/4"	1'-11 1/4"	1'-6"	1'-6"	4'-7"	2'-0 1/2"

GENERAL NOTES

1. ALL MATERIAL AND WORK SHALL BE DONE IN ACCORDANCE WITH THE REQUIREMENTS OF THE STATE OF WASHINGTON, DEPARTMENT OF TRANSPORTATION, STANDARD SPECIFICATIONS FOR ROAD, BRIDGE AND MUNICIPAL CONSTRUCTION DATED 1993 AND AMENDMENTS.
2. MATERIALS SPECIFICATIONS:

PLATES & BARS	AASHTO M 183
PIPES	ASTM A 53 - GRADE B OR ASTM A 500 GRADE B
BOLTS, NUTS & WASHERS UNLESS OTHERWISE NOTED	ASTM A 307

3. ALL PARTS SHALL BE GALVANIZED IN ACCORDANCE WITH AASHTO M 111 AFTER FABRICATION. BOLTS AND HARDWARE SHALL BE GALVANIZED IN ACCORDANCE WITH AASHTO M 232.
4. ALL U-BOLTS SHALL BE FABRICATED HOT BEFORE GALVANIZING.
5. 1/4" FILLET WELDS MINIMUM EXCEPT WHERE NOTED ON PLANS.
6. "C" DIMENSION IS BASED ON THE CONTRACT PLANS. ACTUAL RELATIVE HORIZONTAL DISTANCE FROM ℄ OF THE PRESTRESSED GIRDER TO THE EDGE OF SLAB SHALL BE FIELD MEASURED PRIOR TO FABRICATION OF BRACKET ARMS.

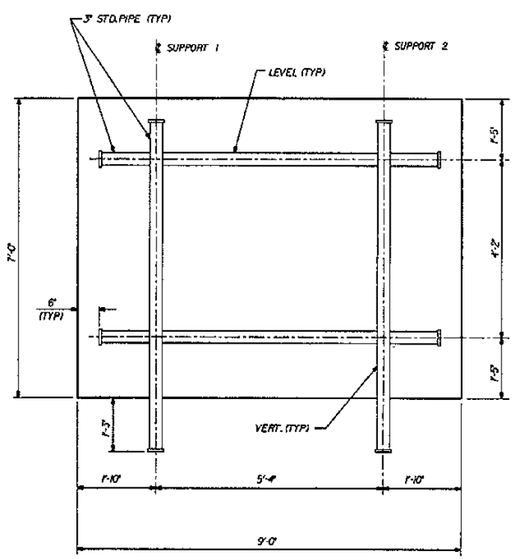

VIEW Y

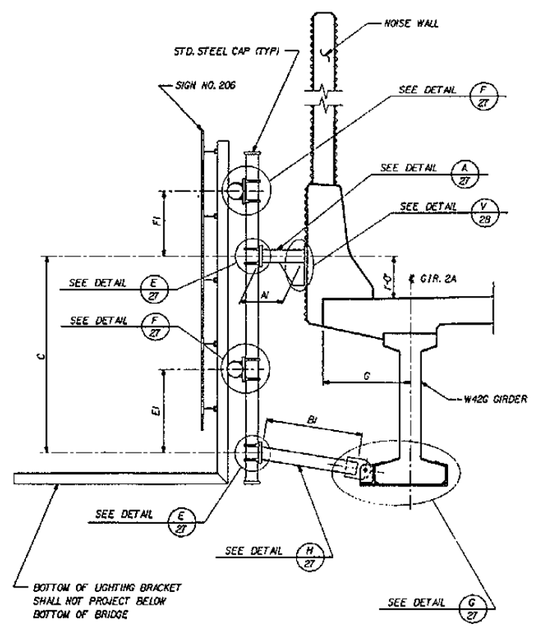

VIEW X

(SUPPORT 1)

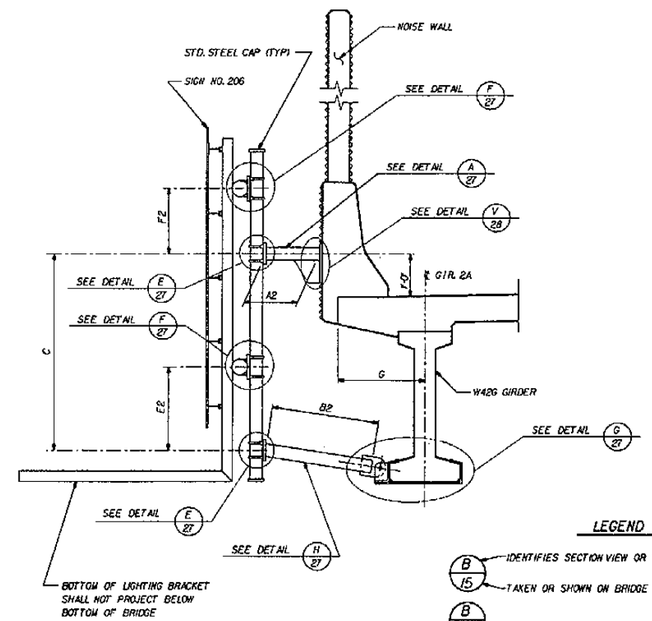

VIEW X

(SUPPORT 2)

LEGEND

B/15 — IDENTIFIES SECTION VIEW OR DETAIL TAKEN OR SHOWN ON BRIDGE SHEET 15

B/— — TAKEN OR SHOWN ON THE SAME SHEET

FOR "AS CONSTRUCTED PLANS" ONLY

Bridge Design Engr.					REGION NO.	STATE	FED. AID PROJ. NO.	SHEET NO.	TOTAL SHEETS
Supervisor					10	WASH			
Designed By WSDOT					JOB NUMBER				
Checked By Y. POLYAKOV 4/94					95W036				
Detailed By									
Bridge Projects Engr.									
Prelim Plan By									
Architect/Specialist	DATE	REVISION	BY	APP'D	4771				

CECIL A. ABBOTT, STATE OF WASHINGTON, REGISTERED PROFESSIONAL ENGINEER — EXPIRES 4/14/97

Washington State Department of Transportation

ANDERSEN BJORNSTAD KANE JACOBS • INC CONSULTING ENGINEERS

SR 167
15TH NW TO 84TH AVE. SO.
HOV AND SC&DI - STAGE 2
BRIDGE 167/123

SIGN BRACKET

BRIDGE SHEET NO. 26

SHEET 522 OF 663 SHEETS

SR167/91

SR167/123 JOB NO. 7019 SHEET 26

P:\DTEG. 31 JULY98 "2168", 18/BR1231.BSIGN-1.DGN

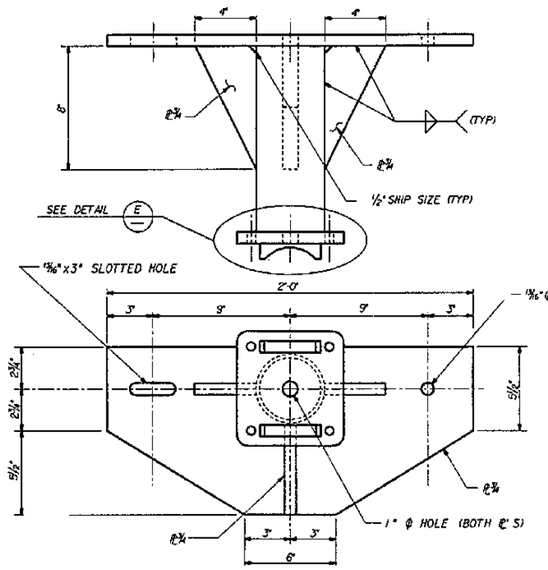

SUPPORT ARM ~ TOP DETAIL (A/26)

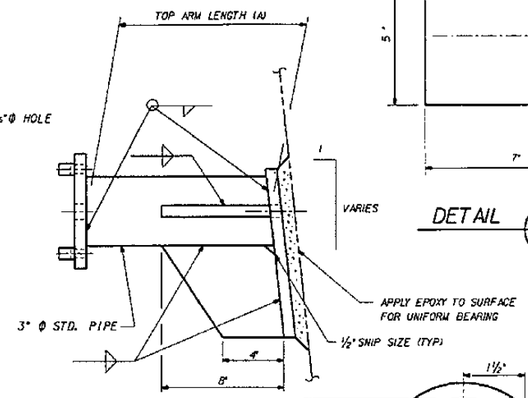

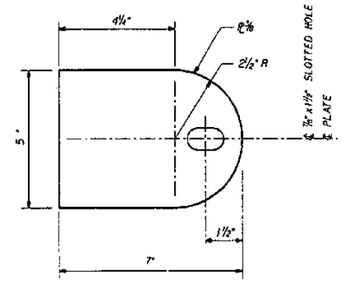

DETAIL L

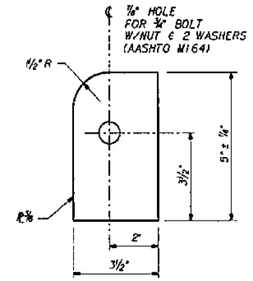

DETAIL M

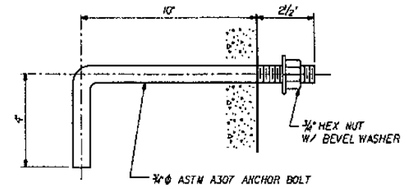

ANCHOR BOLT DETAIL

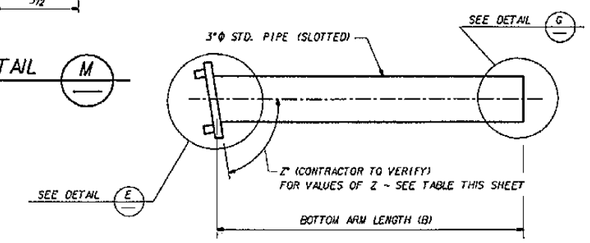

SUPPORT ARM ~ BOTTOM DETAIL (H/26)

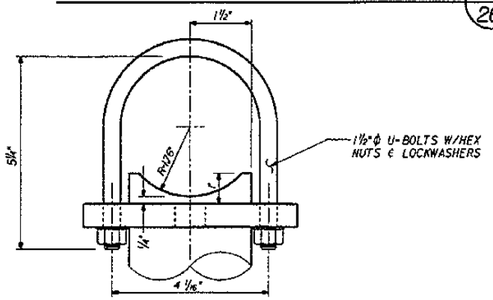

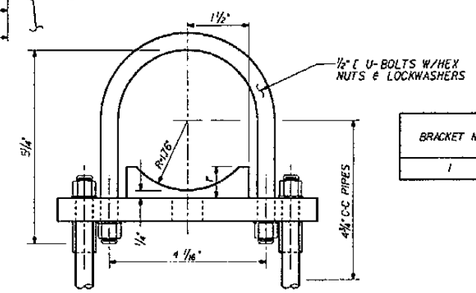

BRACKET NO.	Z"	
	SUPPORT #1	SUPPORT #2
1	79"	81"

℄ 2-⅞"x1½" SLOTTED HOLES (BOT. PLATE)
℄ 2-⅞"Φ HOLES (TOP PLATE)
2-¾"Φ BOLTS W/ WASHER (ASTM A325) TOP AND 2½"x⅜"x2½" WASHER BOTTOM. PLACE BOLT W/ NUT ON UNDERSIDE.

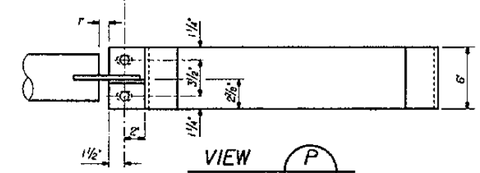

VIEW P

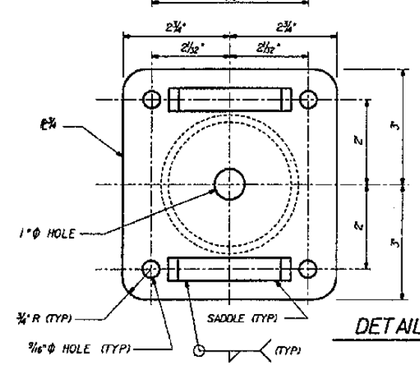

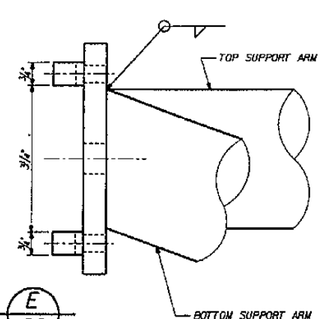

DETAIL E (26)

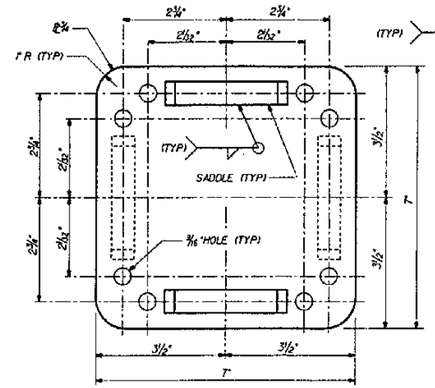

DETAIL F (26)

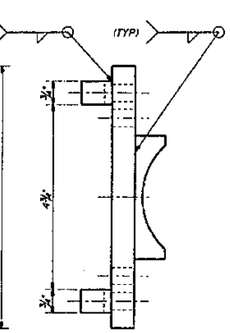

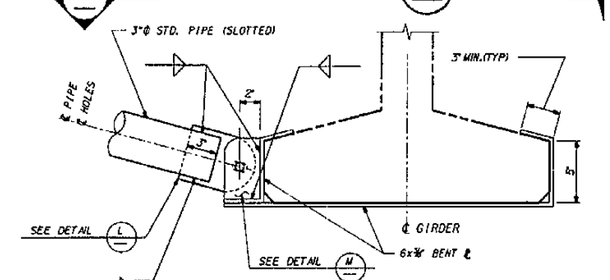

DETAIL G (26)

FOR "AS CONSTRUCTED PLANS" ONLY

Bridge Design Engr.					REGION NO.	STATE	FED. AID PROJ. NO.	SHEET NO.	TOTAL SHEETS
Supervisor					10	WASH			
Designed By WSDOT					JOB NUMBER				
Checked By Y. POLYAKOV 4/94					95W036				
Detailed By									
Bridge Projects Engr.									
Prelim Plan By									
Architect/Specialist	DATE	REVISION	BY	APP'D	5/77/				

CECIL A. ANDERSON STATE OF WASHINGTON 17958 REGISTERED PROFESSIONAL ENGINEER
EXPIRES 4/14/97

Washington State Department of Transportation
ANDERSEN BJORNSTAD KANE JACOBS • INC CONSULTING ENGINEERS

SR 167
15TH NW TO 84TH AVE. SO.
HOV AND SC&DI - STAGE 2
BRIDGE 167/123

SIGN BRACKET DETAILS I

BRIDGE SHEET NO. 27
SHEET 523 OF 663 SHEETS

SR167/91

PLOTTED: 21 JULY95 931.67A.16/BR123 03SIGN-2.DGN

SR167/123 JOB NO. 7019 SHEET 27

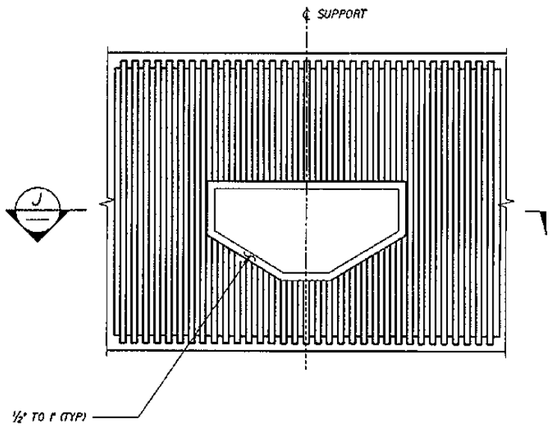

DETAIL V/26

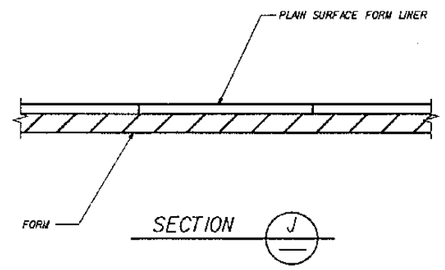

SECTION J

ANCHORAGE IN FRACTURED FIN AREA

FOR "AS CONSTRUCTED PLANS" ONLY

Bridge Design Engr.					REGION NO.	STATE	FED. AID PROJ. NO.	SHEET NO.	TOTAL SHEETS	
Supervisor					10	WASH				
Designed By WSDOT										
Checked By Y. POLYAKOV 4/94					JOB NUMBER 95W036					
Detailed By										
Bridge Projects Engr.										
Prelim Plan By										
Architect/Specialist	DATE	REVISION	BY	APP'D	4771					

CECIL A. ARNOLD, STATE OF WASHINGTON, 19508, REGISTERED PROFESSIONAL ENGINEER, EXPIRES 4/14/97

Washington State Department of Transportation

ANDERSEN BJORNSTAD KANE JACOBS + INC CONSULTING ENGINEERS

SR 167
15TH NW TO 84TH AVE. SO.
HOV AND SC&DI - STAGE 2
BRIDGE 167/123

SIGN BRACKET DETAILS 2

BRIDGE SHEET NO. 28
SHEET 524 OF 663 SHEETS

SR167/123 JOB NO. 7019 SHEET 28

SR167/91

PLOTTED: 31 JUL'95 93169.10/BRI23\03SIGN-3.DGN

PLAN SHEETS AFFECTED:

547
552
579
599
643

NOTES:

1. ALL PARTS SHALL BE GALVANIZED IN ACCORDANCE WITH AASHTO M 111 AFTER FABRICATION.
2. ADJUST ⅜" CABLE TENSION TO PRODUCE 3% VERTICAL SAG BETWEEN INTERMEDIATE BEAMS.

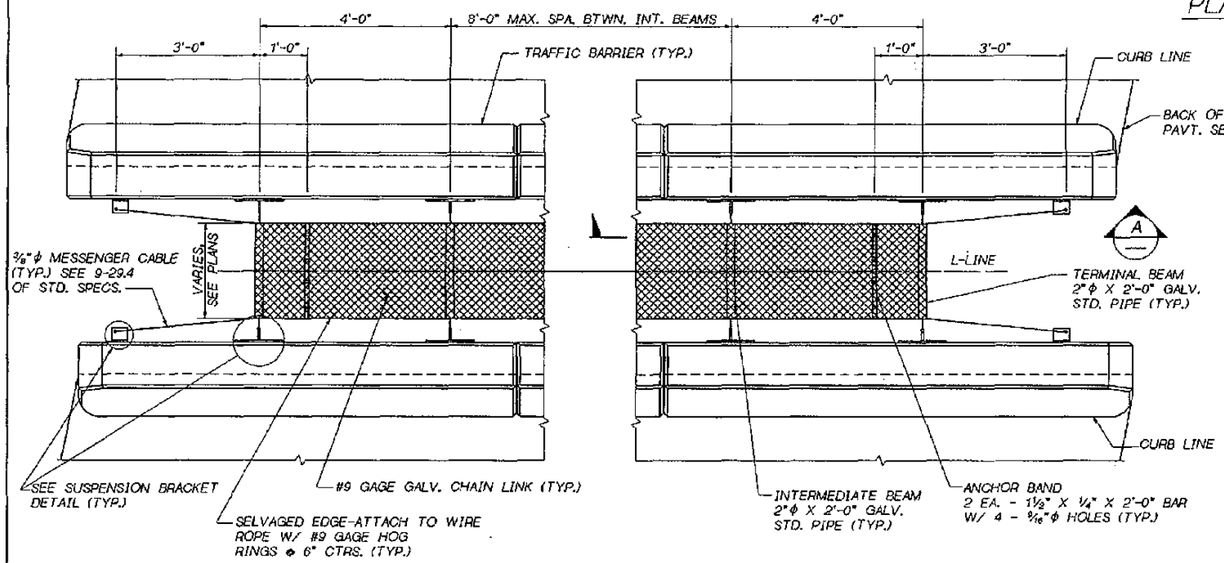

PLAN

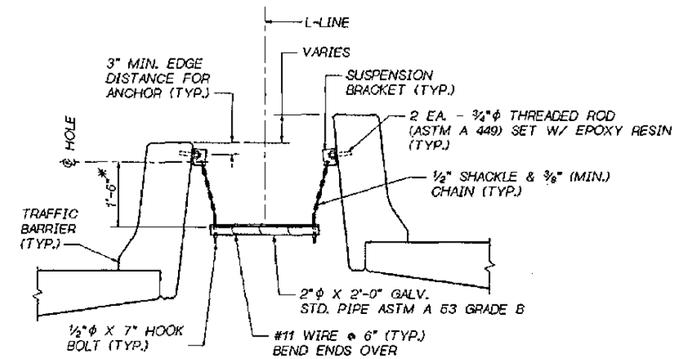

* CHAIN LENGTH MAY VARY TO LEVEL SCREEN

TYPICAL SECTION

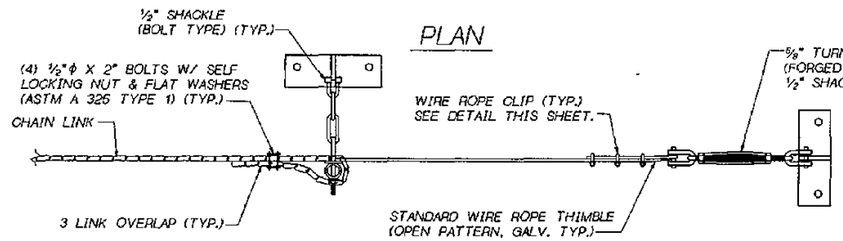

VIEW A

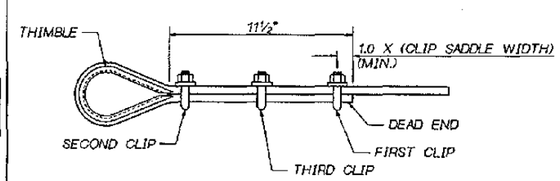

WIRE ROPE CLIP DETAIL

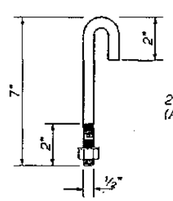

HOOK BOLT

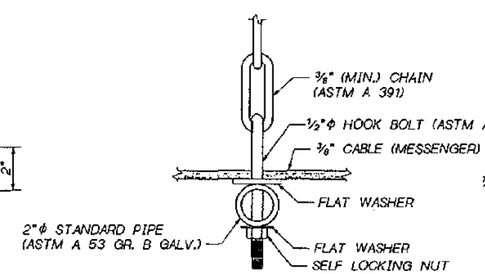

HOOK BOLT DETAIL

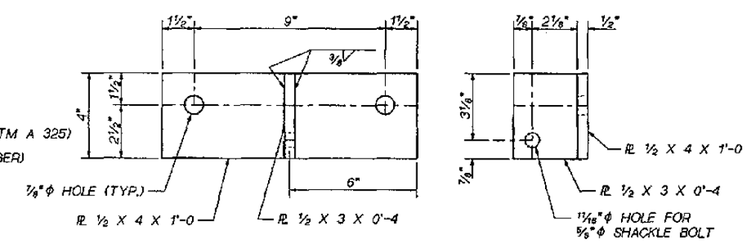

SUSPENSION BRACKET

AASHTO M 183

NOTE:
GAS-CUT OR SAW-CUT ONLY FOR PL ½ X 3 X 0'-4

1 ADDED BR. SHT. 19A

Bridge Design Engr. C. C. RUTH					
Supervisor R. T. SHAEFER					
Designed By					
Checked By					
Detailed By					
Bridge Projects Engr.					
Prelim. Plan By		1 ADDED BR. SHT. 19A	MA		
Architect/Specialist	DATE	REVISION	BY	APP'D	

REGION NO.	STATE	FED. AID PROJ. NO.	SHEET NO.	TOTAL SHEETS
10	WASH.			
JOB NUMBER				

BRIDGE AND STRUCTURES OFFICE

RAYMOND T. SHAEFER — STATE OF WASHINGTON — 11279 — REGISTERED PROFESSIONAL ENGINEER — EXPIRES 1/23/96 — SUPERVISING BRIDGE ENGINEER

CHARLES C. RUTH — STATE OF WASHINGTON — 19603 — REGISTERED PROFESSIONAL ENGINEER — EXPIRES 3/2/96 — BRIDGE DESIGN ENGINEER

Washington State Department of Transportation

SR 167
15TH NW TO 84TH AVE. SO.
HOV AND SC & DI - STAGE 2

PROTECTIVE SCREEN

BRIDGE SHEET NO. 20A ~~19A~~

SHEET 54A ~~53A~~ OF 663 SHEETS

SR ___ JOB NO. ___ SHEET ___

25-MAR-96

ANDERSONROOT:(FGB)SR167_PRO.FGB; 1

S=BAR IS INCLUDED IN SUBSTRUCTURE QUANITIES
F=BAR TO BE FIELD WELDED
T=TIE OR STIRRUP
E=BAR IS TO BE EPOXY COATED
V=BAR DIMENSIONS VARY BETWEEN DIMENSIONS SHOWN ON THIS LINE AND THE FOLLOWING LINE

MARK NO	LOCATION	SIZE	NO REQD	BEND TYPE	TIE OR STIR	FIELD WELD	SUBSTR	EPOXY COAT	VARIES	NO EACH	U FT	U IN	W FT	W IN	X FT	X IN	Y FT	Y IN	Z FT	Z IN	F1 DEG	F2 DEG	LENGTH FT	LENGTH IN	WEIGHT LBS
	PIER 1 - EAST BRIDGE																								
101	FTG TOP TRANSV	6	24	61			S			1	5	9.0	1	6.0	1	6.0							8	5.0	303
102	FTG BOT TRANSV	6	24	50			S			1	5	9.0											5	9.0	207
103	FTG TOP & BOT LONGIT	6	12	50			S			1	13	9.0											13	9.0	248
104	FTG STIRRUP	5	14	63	T		S			1	3	0.0	2	8.0	2	8.0	0	10.0	0	10.0			9	7.0	140
105	FTG DOWEL	7	11	51			S			1	3	6.0											4	4.0	97
110	SEAT TOP LONGIT	6	4	50			S			1	14	9.0											14	9.0	89
111	SEAT MID LONGIT	4	2	50			S			1	14	9.0											14	9.0	20
112	GIRDER STOP LONGIT	4	4	62			S			1	4	9.0	2	0.0	2	0.0							8	6.0	23
113	GIRDER STOP TRANSV	4	9	62			S			1	2	0.0	2	0.0	2	0.0							5	9.0	35
114	SEAT STIRRUP	5	2	61	T		S			1	3	0.0	2	2.0	2	2.0	0	10.0	0	10.0			8	7.0	18
120	WALL HORIZ N F	4	2	50			S			1	16	2.0											16	2.0	22
121	WALL HORIZ F F	5	2	50			S			1	16	2.0											16	2.0	34
122	WALL HORIZ N F	4	5	50			S			1	18	9.0											18	9.0	63
123	WALL HORIZ F F	5	5	50			S			1	18	9.0											18	9.0	98
124	PAVEMENT SEAT LONGIT	4	1	50			S			1	16	7.5											16	7.5	11
125	WALL VERT	5	18	62			S			1	0	9.0	5	8.0	5	8.0	0	10.0	0	10.0			13	3.0	249
126	WALL VERT	5	2	70			S			1	0	9.0	4	1.0	4	1.0							9	10.0	21
127	PAVEMENT SEAT TRANSV	4	34	90			S			1	4	0.0											4	0.0	91
	PIER 1 - WEST BRIDGE																								
101	FTG TOP TRANSV	6	47	61			S			1	5	9.0	1	6.0	1	6.0							8	5.0	594
102	FTG BOT TRANSV	6	47	50			S			1	5	9.0											5	9.0	406
103	FTG TOP & BOT LONGIT	6	12	50			S			1	13	9.0											13	9.0	248
104	FTG STIRRUP	5	14	63	T		S			1	3	0.0	2	8.0	2	8.0	0	10.0	0	10.0			9	7.0	140
105	FTG DOWEL	7	22	51			S			1	3	6.0											4	4.0	195
110	SEAT TOP LONGIT	6	4	50			S			1	14	9.0											14	9.0	89
111	SEAT MID LONGIT	4	2	50			S			1	14	9.0											14	9.0	20
112	GIRDER STOP LONGIT	4	4	62			S			1	4	9.0	2	0.0	2	0.0							8	6.0	23
113	GIRDER STOP TRANSV	4	17	62			S			1	2	0.0	2	0.0	2	0.0							5	9.0	65
114	SEAT STIRRUP	5	2	61	T		S			1	3	0.0	2	2.0	2	2.0	0	10.0	0	10.0			8	7.0	18
120	WALL HORIZ N F	4	2	50			S			1	16	2.0											16	2.0	22
121	WALL HORIZ F F	5	2	50			S			1	16	2.0											16	2.0	34
122	WALL HORIZ N F	4	5	50			S			1	18	9.0											18	9.0	63
123	WALL HORIZ F F	5	5	50			S			1	18	9.0											18	9.0	98
124	PAVEMENT SEAT LONGIT	4	1	50			S			1	16	7.5											16	7.5	11
125	WALL VERT	5	18	62			S			1	0	9.0	5	8.0	5	8.0	0	10.0	0	10.0			13	3.0	249
126	WALL VERT	5	2	70			S			1	0	9.0	4	1.0	4	1.0							9	10.0	21
127	PAVEMENT SEAT TRANSV	4	64	90			S			1	4	0.0											4	0.0	171
161	FTG TOP & BOT LONGIT	6	12	50			S			1	12	9.5											12	9.5	231
162	FTG STIRRUP	5	13	63	T		S			1	3	0.0	2	5.0	2	5.0	0	10.0	0	10.0			9	1.0	123
170	SEAT TOP LONGIT	6	4	50			S			1	13	9.5											13	9.5	83
171	SEAT MID LONGIT	4	2	50			S			1	13	9.5											13	9.5	18
172	GIRDER STOP LONGIT	4	4	62			S			1	4	4.5	2	0.0	2	0.0							8	1.5	22
174	SEAT STIRRUP	5	2	61	T		S			1	3	0.0	1	8.0	1	8.0	0	10.0	0	10.0			7	7.0	16
182	WALL HORIZ N F	4	5	50			S			1	15	8.0											15	8.0	52
183	WALL HORIZ F F	5	5	50			S			1	15	8.0											15	8.0	82
184	PAVEMENT SEAT LONGIT	4	1	50			S			1	14	3.5											14	3.5	10
185	WALL VERT	5	15	62			S			1	0	9.0	5	8.0	5	8.0	0	10.0	0	10.0			13	3.0	207
186	WALL VERT	5	2	70			S			1	0	9.0	4	1.0	4	1.0							9	10.0	21
191	WING WALL HORIZ	6	3	50			S		V	1	5 8	3.0 7.0											5 8	3.0 7.0	31
192	WING WALL HORIZ	4	3	50			S		V	1	5 8	3.0 7.0											5 8	3.0 7.0	14
193	WING WALL HORIZ	6	3	50			S			1	9	0.0											9	0.0	41
194	WING WALL HORIZ	4	3	50			S			1	9	0.0											9	0.0	18
195	WING WALL VERT	4	2	60			S			1	0	6.0	5	8.0	0	6.0							12	8.5	17
196	WING WALL VERT	4	4	60			S		V	1	0	6.0	3 5	5.0 8.0	0 0	6.0 6.0							8 11	2.5 8.5	27
197	WING WALL AROUND	4	2	92			S			1	27	8.0											27	8.0	37
198	WING WALL DOWEL	6	8	65			S			1	2	7.0	2	7.0									5	0.0	60
	43 FT DIA SHAFTS PIER 2 E & W BR 3 SHAFTS																								
200	SPIRAL TOP	5	3	67			S			1	3	10.0	0	4.0							105		247	9.6	3904
201	SPIRAL BOT	5	3	67			S			1	3	10.0	0	9.0							44		523	8.7	1639
210	VERTICALS	11	72	50			S			1	67	6.0											67	6.0	25821
	PIER 3 E & W BR 8 SHAFTS																								
202	SPIRAL	5	3	67			S			1	3	10.0	0	4.0							105		247	9.6	3904
203	SPIRAL	5	3	67			S			1	3	10.0	0	9.0							28		333	3.3	1043
211	VERTICALS	11	72	50			S			1	55	6.0											55	6.0	21231
	EAST BRIDGE PIER 2																								
220	COLUMN VERT	9	11	51			S			1	26	2.0											27	5.0	1025
222	COLUMN SPIRAL	5	1	67			S			1	2	9.0	0	4.0							76		644	7.9	672
230	CROSSBEAM DOWELS	9	16	50			S			1	9	2.0											9	2.0	499
231	CROSSBEAM DOWELS	6	4	50			S			1	4	0.0											4	0.0	24
232	CROSSBEAM SUPPORT BARS	4	4	56			S			1	3	9.0											4	10.0	13
235	CROSSBEAM STIRRUPS	5	15	83			S			1	3	9.0	2	11.5									15	0.5	235
236	CROSSBEAM STIRRUPS	5	30	56			S			1	2	11.5											4	4.5	137
237	CROSSBEAM STIRRUPS	5	4	61			S			1	2	11.5	2	5.0	2	5.0							7	6.5	31

MARK NO	LOCATION	SIZE	NO REQD	BEND TYPE	TIE OR STIR	FIELD WELD	SUBSTR	EPOXY COAT	VARIES	NO EACH	U FT	U IN	W FT	W IN	X FT	X IN	Y FT	Y IN	Z FT	Z IN	F1 DEG	F2 DEG	LENGTH FT	LENGTH IN	WEIGHT LBS
	EAST BRIDGE PIER 2 (CONT.)																								
240	CROSSBEAM TOP	10	9	80			S			1	15	5.0	2	5.0			0	5.0			81		17	5.8	677
242	CROSSBEAM BOT	8	9	50			S			1	15	5.0											15	5.0	370
244	CROSSBEAM SIDES	6	4	50			S			1	15	5.0											15	5.0	93
250	CROSSBEAM GIRDER STOPS	4	8	70			S			1	3	9.0	2	8.0	2	8.0							9	10.0	53
251	CROSSBEAM GIRDER STOPS	4	6	50			S			1	3	9.0											3	9.0	15
252	CROSSBEAM GIRDER STOPS	4	5	61			S			1	0	8.0	1	6.0	1	6.0							3	5.0	11
253	CROSSBEAM GIRDER STOPS	4	5	70			S			1	5	1.0	2	8.0	2	8.0							11	2.0	37
254	CROSSBEAM GIRDER STOPS	4	5	70			S			1	4	5.0	2	8.0	2	8.0							10	6.0	35
	EAST BRIDGE PIER 3																								
224	COLUMN VERT	9	11	51			S			1	26	2.0											27	5.0	1025
226	COLUMN SPIRAL	5	1	67			S			1	2	9.0	0	4.0							76		644	7.9	672
230	CROSSBEAM DOWELS	9	16	50			S			1	9	2.0											9	2.0	499
231	CROSSBEAM DOWELS	6	4	50			S			1	4	0.0											4	0.0	24
232	CROSSBEAM SUPPORT BARS	4	4	56			S			1	3	9.0											4	10.0	13
235	CROSSBEAM STIRRUPS	5	15	83			S			1	3	9.0	2	11.5									15	0.5	235
236	CROSSBEAM STIRRUPS	5	30	56			S			1	2	11.5											4	4.5	137
237	CROSSBEAM STIRRUPS	5	4	61			S			1	2	11.5	2	5.0	2	5.0							7	6.5	31
240	CROSSBEAM TOP	10	9	80			S			1	15	5.0	2	5.0			0	5.0			81		17	5.8	677
242	CROSSBEAM BOT	8	9	50			S			1	15	5.0											15	5.0	370
244	CROSSBEAM SIDES	6	4	50			S			1	15	5.0											15	5.0	93
250	CROSSBEAM GIRDER STOPS	4	8	70			S			1	3	9.0	2	8.0	2	8.0							9	10.0	53
251	CROSSBEAM GIRDER STOPS	4	6	50			S			1	3	9.0											3	9.0	15
252	CROSSBEAM GIRDER STOPS	4	5	61			S			1	0	6.0	1	6.0	1	6.0							3	5.0	11
253	CROSSBEAM GIRDER STOPS	4	5	70			S			1	5	1.0	2	8.0	2	8.0							11	2.0	37
254	CROSSBEAM GIRDER STOPS	4	5	70			S			1	4	5.0	2	8.0	2	8.0							10	6.0	35
	WEST BRIDGE PIER 2																								
320	COLUMN VERT	9	11	51			S			1	25	6.0											26	9.0	1000
321	COLUMN VERT	9	11	51			S			1	26	0.0											27	3.0	1019
322	COLUMN SPIRAL	5	1	67			S			1	2	9.0	0	4.0							74		627	8.3	655
323	COLUMN SPIRAL	5	1	67			S			1	2	9.0	0	4.0							76		644	7.9	672
330	CROSSBEAM DOWELS	9	40	50			S			1	9	2.0											9	2.0	1247
331	CROSSBEAM DOWELS	6	8	50			S			1	4	0.0											4	0.0	48
332	CROSSBEAM SUPPORT BARS	4	8	56			S			1	3	9.0											4	10.0	26
335	CROSSBEAM STIRRUPS	5	26	83			S			1	3	9.0	2	11.5									15	0.5	408
336	CROSSBEAM STIRRUPS	5	52	56			S			1	2	11.5											4	4.5	237
337	CROSSBEAM STIRRUPS	5	8	61			S			1	2	11.5	2	5.0	2	5.0							7	6.5	63
340	CROSSBEAM TOP	10	9	80			S			1	12	5.0	2	5.0			0	5.0			81		14	5.8	561
341	CROSSBEAM TOP	10	9	80			S			1	15	5.0	2	5.0			0	5.0			81		17	5.8	677
342	CROSSBEAM BOT	8	9	50			S			1	12	5.0											12	5.0	298
343	CROSSBEAM BOT	8	9	50			S			1	15	5.0											15	5.0	370
344	CROSSBEAM SIDES	6	4	50			S			1	12	5.0											12	5.0	75
345	CROSSBEAM SIDES	6	4	50			S			1	15	5.0											15	5.0	93
350	CROSSBEAM GIRDER STOPS	4	12	70			S			1	3	9.0	2	8.0	2	8.0							9	10.0	79
351	CROSSBEAM GIRDER STOPS	4	12	50			S			1	3	9.0											3	9.0	30
352	CROSSBEAM GIRDER STOPS	4	10	61			S			1	0	8.0	1	6.0	1	6.0							3	5.0	23
353	CROSSBEAM GIRDER STOPS	4	5	70			S			1	3	7.0	2	8.0	2	8.0							9	8.0	32
354	CROSSBEAM GIRDER STOPS	4	5	70			S			1	3	0.0	2	8.0	2	8.0							9	1.0	30
355	CROSSBEAM GIRDER STOPS	4	5	70			S			1	4	3.0	2	8.0	2	8.0							10	4.0	35
356	CROSSBEAM GIRDER STOPS	4	5	70			S			1	5	1.0	2	8.0	2	8.0							11	2.0	37
	WEST BRIDGE PIER 3																								
324	COLUMN VERT	9	11	51			S			1	25	6.0											26	9.0	1000
325	COLUMN VERT	9	11	51			S			1	26	6.0											27	9.0	1038
326	COLUMN SPIRAL	5	1	67			S			1	2	9.0	0	4.0							74		627	8.3	655
327	COLUMN SPIRAL	5	1	67			S			1	2	9.0	0	4.0							76		644	7.9	672
330	CROSSBEAM DOWELS	9	40	50			S			1	9	2.0											9	2.0	1247
331	CROSSBEAM DOWELS	6	8	50			S			1	4	0.0											4	0.0	48
332	CROSSBEAM SUPPORT BARS	4	6	56			S			1	3	9.0											4	10.0	19
335	CROSSBEAM STIRRUPS	5	23	83			S			1	3	9.0	2	11.5									15	0.5	361
336	CROSSBEAM STIRRUPS	5	46	56			S			1	2	11.5											4	4.5	210
337	CROSSBEAM STIRRUPS	5	8	61			S			1	2	11.5	2	5.0	2	5.0							7	6.5	63
341	CROSSBEAM TOP	10	9	80			S			1	15	5.0	2	5.0			0	5.0			81		17	5.8	677
343	CROSSBEAM BOT	8	9	50			S			1	15	5.0											15	5.0	370
345	CROSSBEAM SIDES	6	4	50			S			1	15	5.0											15	5.0	93
346	CROSSBEAM TOP	10	9	80			S			1	9	3.0	2	5.0			0	5.0			81		11	3.8	438
347	CROSSBEAM BOT	8	9	50			S			1	9	3.0											9	3.0	222
348	CROSSBEAM SIDES	6	4	50			S			1	9	3.0											9	3.0	56
350	CROSSBEAM GIRDER STOPS	4	12	70			S			1	3	9.0	2	8.0	2	8.0							9	10.0	79
351	CROSSBEAM GIRDER STOPS	4	12	50			S			1	3	9.0											3	9.0	30
352	CROSSBEAM GIRDER STOPS	4	10	61			S			1	0	8.0	1	6.0	1	6.0							3	5.0	23
355	CROSSBEAM GIRDER STOPS	4	5	70			S			1	4	3.0	2	8.0	2	8.0							10	4.0	35
356	CROSSBEAM GIRDER STOPS	4	5	70			S			1	5	1.0	2	8.0	2	8.0							11	2.0	37
357	CROSSBEAM GIRDER STOPS	4	5	70			S			1	2	0.0	2	8.0	2	8.0							8	1.0	27
358	CROSSBEAM GIRDER STOPS	4	5	70			S			1	1	5.0	2	8.0	2	8.0							7	6.0	25

STEEL REINFORCING BAR QUANTITIES NOT INCLUDED IN THIS BAR LIST

TRAFFIC BARRIER (SUPERSTRUCTURE)	7,260
NOISE WALL (SUPERSTRUCTURE)	2,863

BENDING DIAGRAMS

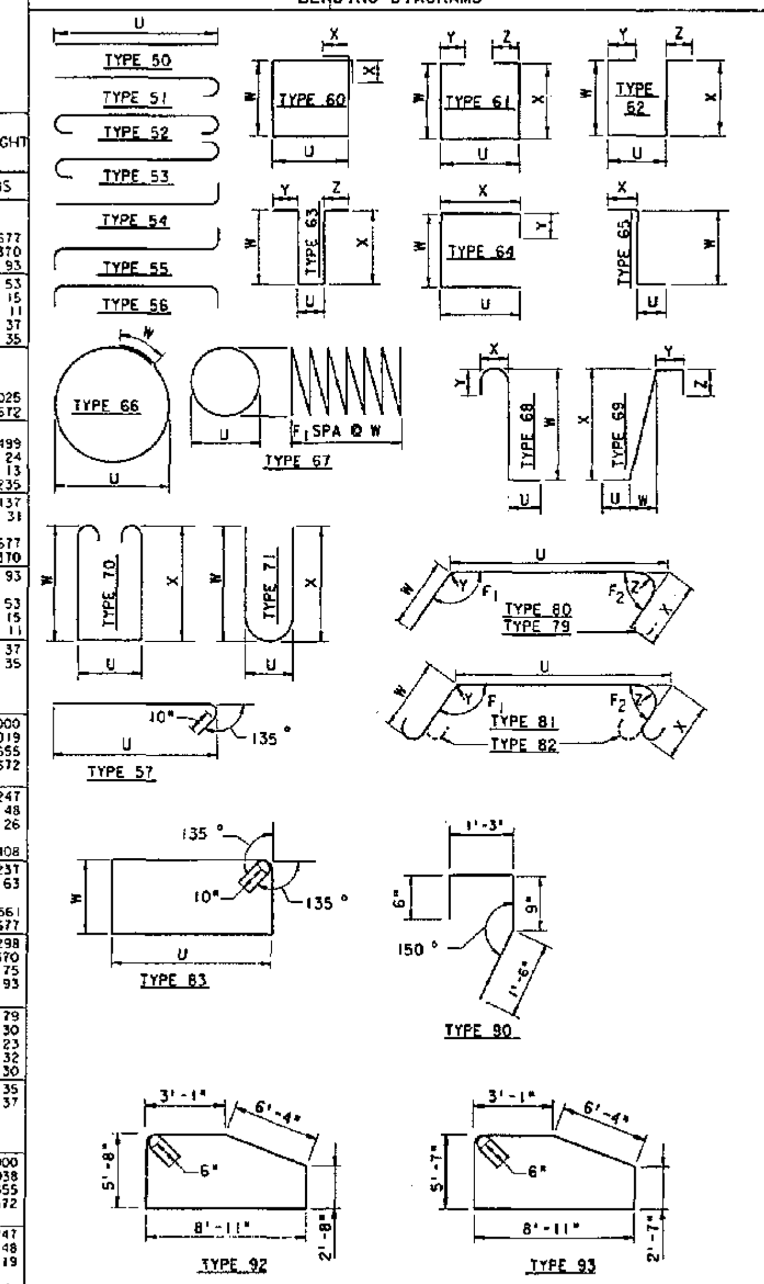

NOTES:
1. ALL REINFORCING BARS ON THIS SHEET SHALL BE AASHTO M-31, GRADE 60 UNLESS SHOWN OTHERWISE.
2. REINFORCING FOR TRAFFIC BARRIERS NOT SHOWN IN THIS BARRIER SHEET. SEE TRAFFIC BARRIER SHEETS.
3. $ = NUMBER & LENGTH OF BARS TO BE DETERMINED BY CONTRACTOR FROM THE PLANS.

FOR "AS CONSTRUCTED PLANS" ONLY

Bridge Design Engr.				
Supervisor				
Designed By	C.S. YU / J.J. MORRIS			
Checked By	Y.J. HUANG			
Detailed By	C.S. YU			
Bridge Projects Engr.				
Prelim Plan By	11-3-95	NOTED TRAFF. BARR. & NOISE WALL REINF.	WB	
Architect/Specialist	DATE	REVISION	BY	APP'D

REGION NO. 10 | STATE WASH | FED. AID PROJ. NO. | SHEET NO. | TOTAL SHEETS
JOB NUMBER 95W036
4771

CECIL A. ARNOLD — STATE OF WASHINGTON — REGISTERED PROFESSIONAL ENGINEER — EXPIRES 4/14/97

Washington State Department of Transportation
ANDERSEN BJORNSTAD KANE JACOBS • INC CONSULTING ENGINEERS

SR 167
16TH NW TO 84TH AVE. SO.
HOV AND SC&DI - STAGE 2
BRIDGE 167/123

BAR LIST

BRIDGE SHEET NO. 29
SHEET 525 OF 663 SHEETS

SR167/91

SR167/123 JOB NO. 7019 SHEET 29

93169.10/BR123\03BARL29.DGN PLOTTED: 31 JUL 95

S=BAR IS INCLUDED IN SUBSTRUCTURE QUANITIES
F=BAR TO BE FIELD WELDED
T=TIE OR STIRRUP
E=BAR IS TO BE EPOXY COATED
V=BAR DIMENSIONS VARY BETWEEN DIMENSIONS SHOWN ON THIS LINE AND THE FOLLOWING LINE

MARK No	LOCATION	SIZE	No REQD	BEND TYPE	TIE OR STIR	FIELD WELD	SUBSTR	EPOXY COAT	VARIES	No EACH	U FT	U IN	W FT	W IN	X FT	X IN	Y FT	Y IN	Z FT	Z IN	F1 DEG	F2 DEG	LENGTH FT	LENGTH IN	WEIGHT LBS
	EAST BRIDGE PIER 4																								
401	FTG TOP TRANSV	6	24	61			S			1	5	9.0	1	6.0	1	6.0							8	5.0	303
402	FTG BOT TRANSV	6	24	50			S			1	5	9.0											5	9.0	207
403	FTG TOP & BOT LONGIT	6	12	50			S			1	13	9.0											13	9.0	248
404	FTG STIRRUP	5	14	63	T		S			1	3	0.0	2	8.0	2	8.0	0	10.0	0	10.0			9	7.0	140
405	FTG DOWEL	7	11	51			S			1	3	6.0											4	4.0	97
410	SEAT TOP LONGIT	6	4	50			S			1	14	9.0											14	9.0	89
411	SEAT MID LONGIT	4	2	50			S			1	14	9.0											14	9.0	20
412	GIRDER STOP LONGIT	4	4	62			S			1	4	9.0	2	0.0	2	0.0							8	6.0	23
413	GIRDER STOP TRANSV	4	9	62			S			1	2	0.0	2	0.0	2	0.0							5	9.0	35
414	SEAT STIRRUP	5	2	61	T		S			1	3	0.0	2	2.0	2	2.0	0	10.0	0	10.0			8	7.0	18
420	WALL HORIZ N F	4	2	50			S			1	16	2.0											16	2.0	22
421	WALL HORIZ F F	5	2	50			S			1	16	2.0											16	2.0	34
422	WALL HORIZ N F	4	5	50			S			1	18	9.0											18	9.0	63
423	WALL HORIZ F F	5	5	50			S			1	18	9.0											18	9.0	98
424	PAVEMENT SEAT LONGIT	4	1	50			S			1	16	7.5											16	7.5	11
425	WALL VERT	5	18	62			S			1	0	9.0	5	8.0	5	8.0	0	10.0	0	10.0			13	3.0	249
426	WALL VERT	5	2	70			S			1	0	9.0	4	1.0	4	1.0							9	10.0	21
427	PAVEMENT SEAT TRANSV	4	35	90			S			1	4	0.0											4	0.0	94
	WEST BRIDGE PIER 4																								
401	FTG TOP TRANSV	6	33	61			S			1	5	9.0	1	6.0	1	6.0							8	5.0	417
402	FTG BOT TRANSV	6	33	50			S			1	5	9.0											5	9.0	285
403	FTG TOP & BOT LONGIT	6	12	50			S			1	13	9.0											13	9.0	248
404	FTG STIRRUP	5	14	63	T		S			1	3	0.0	2	8.0	2	8.0	0	10.0	0	10.0			9	7.0	140
405	FTG DOWEL	7	19	51			S			1	3	6.0											4	4.0	168
410	SEAT TOP LONGIT	6	4	50			S			1	14	9.0											14	9.0	89
411	SEAT MID LONGIT	4	2	50			S			1	14	9.0											14	9.0	20
412	GIRDER STOP LONGIT	4	4	62			S			1	4	9.0	2	0.0	2	0.0							8	6.0	23
413	GIRDER STOP TRANSV	4	16	62			S			1	2	0.0	2	0.0	2	0.0							5	9.0	61
414	SEAT STIRRUP	5	2	61	T		S			1	3	0.0	2	2.0	2	2.0	0	10.0	0	10.0			8	7.0	18
420	WALL HORIZ N F	4	2	50			S			1	16	2.0											16	2.0	22
421	WALL HORIZ F F	5	2	50			S			1	16	2.0											16	2.0	34
422	WALL HORIZ N F	4	5	50			S			1	18	9.0											18	9.0	63
423	WALL HORIZ F F	5	5	50			S			1	18	9.0											18	9.0	98
424	PAVEMENT SEAT LONGIT	4	1	50			S			1	16	7.5											16	7.5	11
425	WALL VERT	5	18	62			S			1	0	9.0	5	8.0	5	8.0	0	10.0	0	10.0			13	3.0	249
426	WALL VERT	5	2	70			S			1	0	9.0	4	1.0	4	1.0							9	10.0	21
427	PAVEMENT SEAT TRANSV	4	48	90			S			1	4	0.0											4	0.0	128
461	FTG TOP & BOT LONGIT	6	12	50			S			1	4	10.5											4	10.5	88
462	FTG STIRRUP	5	6	63			S			1	3	0.0	3	0.0	3	0.0	0	10.0	0	10.0			10	2.0	64
470	SEAT TOP LONGIT	6	4	50			S			1	7	9.0											7	9.0	47
471	SEAT MID LONGIT	4	2	50			S			1	7	9.0											7	9.0	10
472	GIRDER STOP LONGIT	4	4	62			S			1	3	10.5	2	0.0	2	0.0							7	7.5	20
474	SEAT STIRRUP	5	2	61	T		S			1	3	0.0	1	9.0	1	9.0	0	10.0	0	10.0			7	9.0	32
482	WALL HORIZ N F	4	5	50			S			1	7	9.0											7	9.0	26
483	WALL HORIZ F F	5	5	50			S			1	7	9.0											7	9.0	40
484	PAVEMENT SEAT LONGIT	4	1	50			S			1	7	9.0											7	9.0	5
485	WALL VERT	5	15	62			S			1	0	9.0	5	3.0	5	8.0	0	10.0	0	10.0			13	3.0	124
191	WING WALL HORIZ	6	3	50			S		V	1	5	3.0											5	3.0	
192	WING WALL HORIZ	4	3	50			S		V	1	8	7.0											8	7.0	31
											5	3.0											5	3.0	
											8	7.0											8	7.0	14
193	WING WALL HORIZ	6	3	50			S			1	9	0.0											9	0.0	41
194	WING WALL HORIZ	4	3	50			S			1	9	0.0											9	0.0	18
198	WING WALL DOWEL	6	8	65			S			1	2	7.0	2	7.0									5	0.0	60
488	WING WALL AROUND	4	2	94			S			1	28	0.0											28	0.0	37
489	WING WALL VERT.	4	2	60			S			1	0	6.0	5	10.0	0	6.0							13	0.5	17
490	WING WALL VERT.	4	4	60			S		V	1	0	6.0	3	7.0	0	6.0							8	6.5	
											0	6.0	5	10.0	0	6.0							13	0.5	29

MARK No	LOCATION	SIZE	No REQD	BEND TYPE	TIE OR STIR	FIELD WELD	SUBSTR	EPOXY COAT	VARIES	No EACH	U FT	U IN	W FT	W IN	X FT	X IN	Y FT	Y IN	Z FT	Z IN	F1 DEG	F2 DEG	LENGTH FT	LENGTH IN	WEIGHT LBS
	SLAB																								
501	SLAB TOP TRANSV SPAN 1	6	70	52				E	V	1	15	9.0											17	1.0	
											13	6.0											14	10.0	1678
502	SLAB BOT TRANSV SPAN 1	6	70	51					V	1	15	9.0											16	5.0	
											13	6.0											14	2.0	1608
503	SLAB TOP TRANSV SPAN 2	6	92	52				E	V	1	13	6.0											14	10.0	
											10	5.0											11	9.0	1837
504	SLAB BOT TRANSV SPAN 2	6	92	51					V	1	13	6.0											14	2.0	
											10	5.0											11	1.0	1745
505	SLAB TOP TRANSV SPAN 3	6	87	52				E	V	1	10	4.0											11	8.0	
											8	1.0											9	5.0	1378
506	SLAB BOT TRANSV SPAN 3	6	87	51					V	1	10	4.0											11	0.0	
											8	1.0											8	9.0	1290
507	SLAB TOP LONGIT SPAN 1	5	14	50				E		1	47	6.0											47	6.0	694
508	SLAB BOT LONGIT SPAN 1	5	20	50						1	47	6.0											47	6.0	991
509	SLAB TOP LONGIT SPAN 2	5	12	50				E		1	65	6.0											65	6.0	820
510	SLAB BOT LONGIT SPAN 2	5	16	50						1	65	6.0											65	6.0	1093
511	SLAB TOP LONGIT SPAN 3	5	9	50				E		1	47	6.0											47	6.0	446
512	SLAB BOT LONGIT SPAN 3	5	13	50						1	47	6.0											47	6.0	644
513	SLAB TOP TRANSV SPAN 1 2 3	6	596	52				E		1	18	0.0											19	4.0	17307
514	SLAB BOT TRANSV SPAN 1 2 3	6	596	51						1	18	0.0											18	8.0	16710
515	SLAB TOP LONGIT SPAN 1 3	5	60	50				E		1	47	6.0											47	6.0	2973
516	SLAB BOT LONGIT SPAN 1 3	5	96	50						1	47	6.0											47	6.0	4756
517	SLAB TOP LONGIT SPAN 2	5	30	50				E		1	65	6.0											65	6.0	2049
518	SLAB BOT LONGIT SPAN 2	5	48	50						1	65	6.0											65	6.0	3279
51	TRAFFIC BARRIER ANCHOR	5	645	69				E		1	0	6.0	0	9.0	1	6.0	0	6.0					2	6.8	1726
52	TRAFFIC BARRIER ANCHOR	4	330	80						1	2	0.0	1	6.0			0	2.0			96		3	5.0	753
	END DIAPHRAGM																								
561	W BRIDGE OUTSIDE PIER 1 TOP	6	7	50				E		1	15	9.0											15	9.0	166
561	W BRIDGE OUTSIDE PIER 2 TOP	6	14	50				E		1	13	6.0											13	6.0	284
561	W BRIDGE OUTSIDE PIER 3 TOP	6	14	50				E		1	10	5.0											10	5.0	219
561	W BRIDGE OUTSIDE PIER 4 TOP	6	7	50				E		1	8	1.0											8	1.0	85
561	W ¢ EBRIDGE INSIDE TOP	6	84	50				E		1	18	0.0											18	0.0	2271
562	VERTICAL AT FACE	4	136	71	S					1	0	9.0	1	6.0	1	6.0							3	4.4	305
563	VERTICAL STIRR	4	341	71	S					1	0	9.0	2	10.0	2	10.0							6	0.4	1373
564	W BRIDGE OUTSIDE PIER 1 MID	4	4	50						1	6	7.0											6	7.0	18
564	W BRIDGE OUTSIDE PIER 2 MID	4	8	50						1	5	5.0											5	5.0	29
564	W BRIDGE OUTSIDE PIER 3 MID	4	4	50						1	3	10.0											3	10.0	10
564	W BRIDGE OUTSIDE PIER 3 MID	4	2	50						1	8	3.0											8	3.0	11
564	W BRIDGE OUTSIDE PIER 4 MID	4	2	50						1	6	1.0											6	1.0	8
564	W ¢ E BRIDGE INSIDE MID	4	48	50						1	6	11.0											6	11.0	222
565	W BRIDGE OUTSIDE PIER 1 BOT	7	1	50						1	13	9.0											13	9.0	28
565	W BRIDGE OUTSIDE PIER 2 BOT	7	2	50						1	11	6.0											11	6.0	47
565	W BRIDGE OUTSIDE PIER 3 BOT	7	2	50						1	8	3.0											8	3.0	34
565	W BRIDGE OUTSIDE PIER 4 BOT	7	1	50						1	6	1.0											6	1.0	12
565	W ¢ E BRIDGE INSIDE BOT	7	12	50						1	14	6.0											14	6.0	356
566	W BRIDGE OUTSIDE PIER 1 BOT	7	4	50						1	6	7.0											6	7.0	54
566	W BRIDGE OUTSIDE PIER 2 BOT	7	8	50						1	5	5.0											5	5.0	89
566	W BRIDGE OUTSIDE PIER 3 BOT	7	4	50						1	3	10.0												10.0	31
566	W BRIDGE OUTSIDE PIER 3 BOT	7	2	50						1	8	3.0											8	3.0	34
566	W BRIDGE OUTSIDE PIER 4 BOT	7	2	50						1	6	1.0											6	1.0	25
566	W ¢ E BRIDGE INSIDE BOT	7	48	50						1	6	11.0											6	11.0	679
567	DOWEL TO EXIST DIAPH	8	36	51						1	5	0.0											5	11.0	569
	WEST BRIDGE PIER 3																								
571	W BRIDGE OUTSIDE SPAN 1	7	4	50						1	13	4.0											13	4.0	109
571	W BRIDGE OUTSIDE SPAN 2	7	4	50						1	10	7.0											10	7.0	87
571	W BRIDGE OUTSIDE SPAN 3	7	4	50						1	7	10.0											7	10.0	64
571	W ¢ E BRIDGE INSIDE	7	24	50						1	15	2.0											15	2.0	744
572	VERTICAL STIRR	4	175	71	T					1	0	5.0	3	5.0	3	5.0							7	0.1	819
573	W BRIDGE OUTSIDE SPAN 1	8	1	50						1	12	8.0											12	8.0	34
573	W BRIDGE OUTSIDE SPAN 2	8	1	50						1	9	11.0											9	11.0	26
573	W BRIDGE OUTSIDE SPAN 3	8	1	50						1	7	2.0											7	2.0	19
573	W ¢ E BRIDGE INSIDE	8	6	50						1	14	6.0											14	6.0	232
574	W BRIDGE OUTSIDE SPAN 1	4	4	50						1	6	0.0											6	0.0	16
574	W BRIDGE OUTSIDE SPAN 2	4	4	50						1	4	8.0											4	8.0	12
574	W BRIDGE OUTSIDE SPAN 3	4	2	50						1	7	2.0											7	2.0	10
574	W ¢ E BRIDGE INSIDE	4	24	50						1	6	11.0											6	11.0	111
575	W BRIDGE OUTSIDE SPAN 1	9	1	50						1	12	8.0											12	8.0	43
575	W BRIDGE OUTSIDE SPAN 2	9	1	50						1	9	11.0											9	11.0	34
575	W BRIDGE OUTSIDE SPAN 3	9	1	50						1	7	2.0											7	2.0	24
575	W ¢ E BRIDGE INSIDE	9	6	50						1	14	6.0											14	6.0	296
567	DOWEL TO EXIT DIAPH	8	18	51						1	5	0.0											5	11.0	284
	RESTRAINER BLOCKS																								
580	SEISMIC RESTRAINER STIRRUP	5	144	63	T					1	0	9.0	1	3.0	1	3.0	0	9.0	0	9.0			4	4.0	651
581	SEISMIC RESTR TOP (LONGIT)	5	32	50				E		1	3	0.0											2	12.0	100
582	SEISMIC RESTRAINER LONGIT	5	112	50						1	2	9.0											2	9.0	321
600	UTILITY HANGER BARS	4	70	50							2	6.0											2	6.0	117

BENDING DIAGRAMS

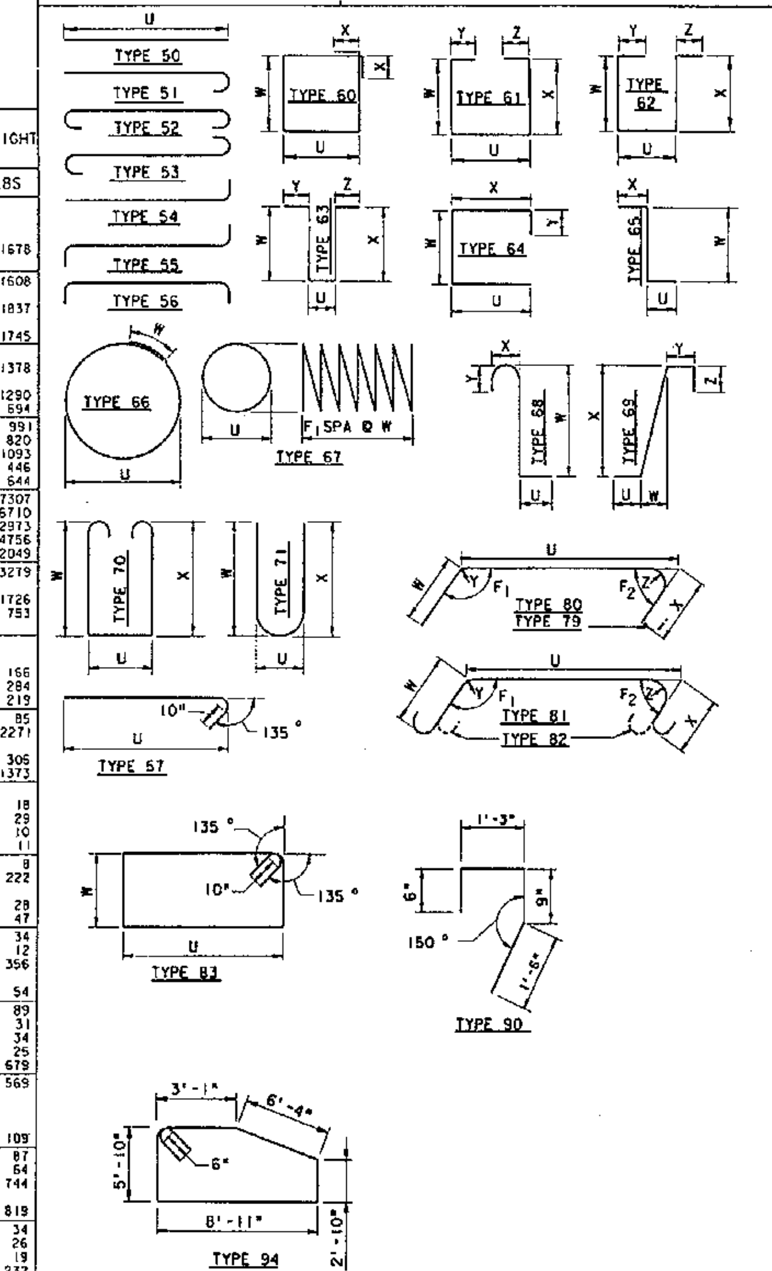

NOTES:

1. ALL REINFORCING BARS ON THIS SHEET SHALL BE AASHTO M-31, GRADE 60 UNLESS SHOWN OTHERWISE.
2. REINFORCING FOR TRAFFIC BARRIERS NOT SHOWN IN THIS BARRIER SHEET. SEE TRAFFIC BARRIER SHEETS.
3. $ = NUMBER & LENGTH OF BARS TO BE DETERMINED BY CONTRACTOR FROM THE PLANS.

FOR "AS CONSTRUCTED PLANS" ONLY

STEEL REINFORCING BAR QUANTITIES NOT INCLUDED IN THIS BAR LIST

TRAFFIC BARRIER (SUPERSTRUCTURE)
NOISE WALL (SUPERSTRUCTURE)

Bridge Design Engr.					
Supervisor					
Designed By	C.S. YU / J.J. MORRIS				
Checked By	Y.J. HUANG				
Detailed By	K. A. MULLER				
Bridge Projects Engr.					
Prelim Plan By					
Architect/Specialist		DATE	REVISION	BY	APP'D

REGION NO. 10 | STATE WASH | FED. AID PROJ. NO. | SHEET NO. | TOTAL SHEETS
JOB NUMBER 95W036
4771

CECIL A. ARNOLD — STATE OF WASHINGTON — 7958 — REGISTERED PROFESSIONAL ENGINEER — EXPIRES 4/14/97

Washington State Department of Transportation
ANDERSEN BJORNSTAD KANE JACOBS + INC CONSULTING ENGINEERS

SR 167
15TH NW TO 84TH AVE. SO.
HOV AND SC&DI - STAGE 2
BRIDGE 167/123

BAR LIST

BRIDGE SHEET NO. 30
SHEET 526 OF 663 SHEETS

SR167/123 JOB NO. 7019 SHEET 30

93L69.10/BRL23(03BARL30.DGN)
PLOTTED: 31 JULY95

SR 167/91

CURVE DATA				
P.I. STATION	Δ	RADIUS	TANGENT	LENGTH
SR 167 STA. 835+81.87	45° 44' 00" RT.	2900'	1223.02'	2314.77'

LEGEND

- SOILS BORING
- G — BURIED GAS LINE
- W — BURIED WATER LINE
- S — BURIED SEWER LINE
- BT — BURIED TELEPHONE LINE
- BP — BURIED POWER LINE

T.22 N., R.4 E., W.M.
CITY OF KENT

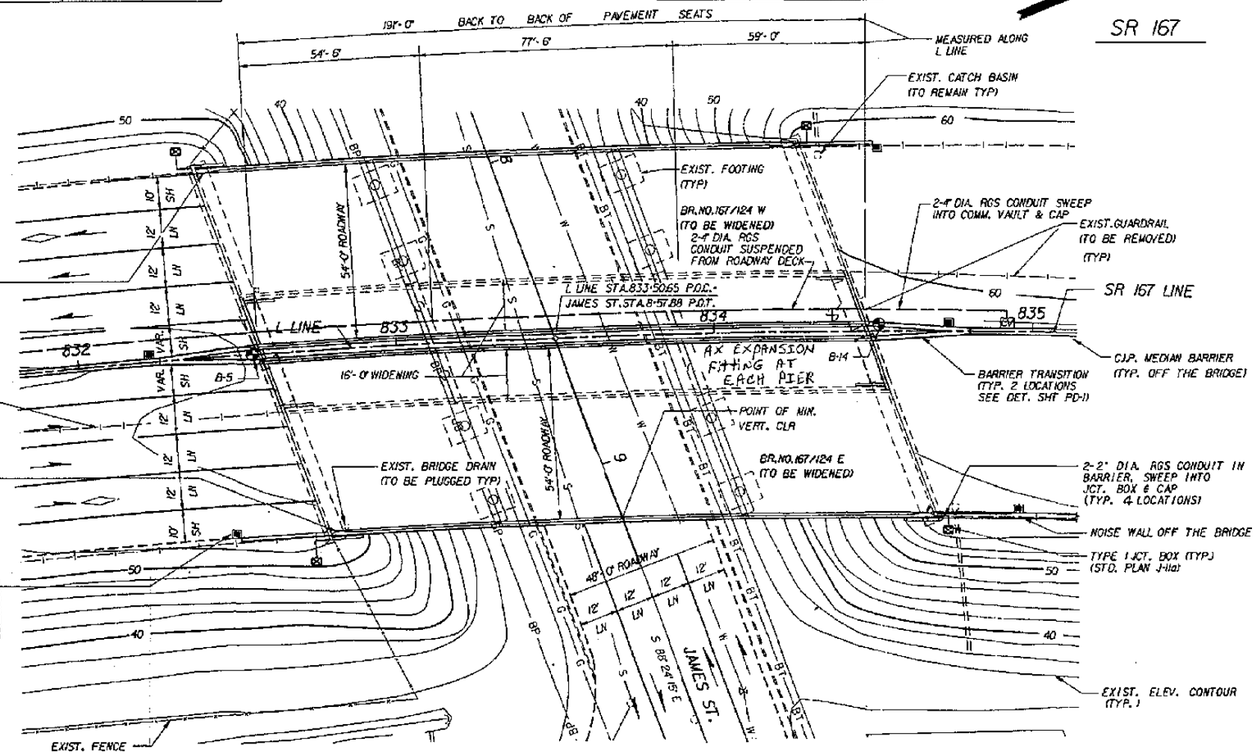

PLAN

BEARING OF ALL PIER EXTENSIONS TO MATCH EXISTING

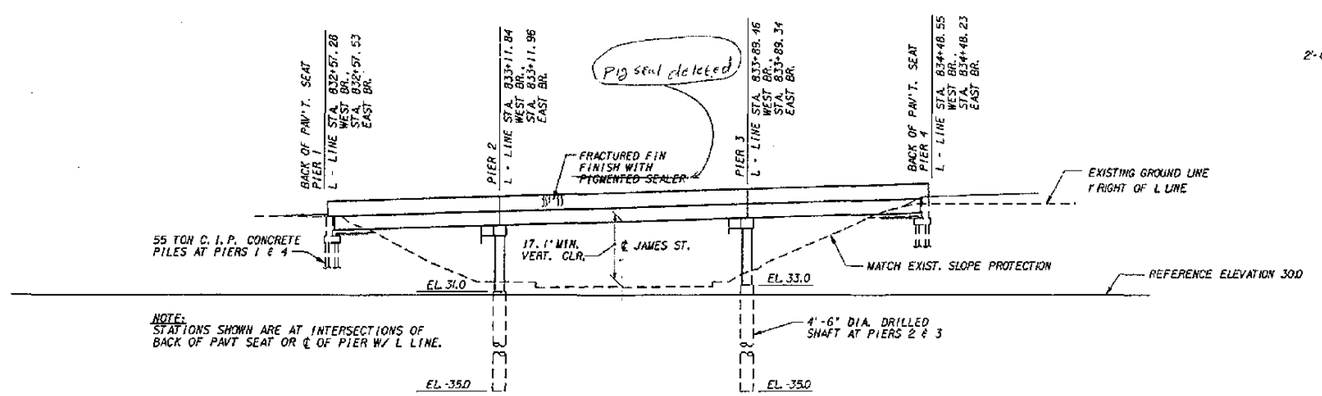

ELEVATION - WEST BRIDGE

EAST BRIDGE - SIMILAR

DATUM

NAT'L. GEOD. VERT. ADJ. DATUM OF 1978

NOTE:
STATIONS SHOWN ARE AT INTERSECTIONS OF BACK OF PAVT SEAT OR ℄ OF PIER W/ L LINE.

GENERAL NOTES

1. ALL MATERIAL AND WORKMANSHIP SHALL BE IN ACCORDANCE WITH THE REQUIREMENTS OF THE WASHINGTON STATE DEPARTMENT OF TRANSPORTATION STANDARD SPECIFICATIONS FOR ROAD, BRIDGE AND MUNICIPAL CONSTRUCTION DATED 1994, AND AMENDMENTS.
2. THIS STRUCTURE HAS BEEN DESIGNED IN ACCORDANCE WITH THE REQUIREMENTS OF THE AASHTO STANDARD SPECIFICATIONS FOR HIGHWAY BRIDGES FIFTEENTH EDITION - 1992 WITH INTERIM SPECIFICATIONS THROUGH 1993. ALL PRESTRESSED CONCRETE ELEMENTS HAVE BEEN DESIGNED FOR SERVICE LOAD STRESSES AND CHECKED FOR THE REQUIREMENTS OF LOAD FACTOR DESIGN. ALL OTHER STRUCTURAL ELEMENTS ARE DESIGNED IN ACCORDANCE WITH THE REQUIREMENTS FOR LOAD FACTOR DESIGN. SEISMIC DESIGN OF THIS STRUCTURE HAS BEEN DONE USING AN ACCELERATION COEFFICIENT OF 0.25 AND SOIL PROFILE TYPE II.
3. FOOTING ELEVATIONS AND SUBSTRUCTURE DETAILS ARE SUBJECT TO CHANGE DEPENDING UPON FOUNDATION MATERIAL ENCOUNTERED. REINFORCING STEEL FOR FOOTINGS, ABUTMENT WALLS AND COLUMNS SHALL NOT BE CUT UNTIL FINAL FOOTING ELEVATIONS HAVE BEEN DETERMINED AND SUBSTRUCTURE DETAILS HAVE BEEN MODIFIED IF NECESSARY.
4. ELEVATIONS SHOWN ON THE PLANS ARE BASED ON RECORD INFORMATION OF ORIGINAL CONSTRUCTION TOGETHER WITH FIELD SURVEY DATA. THE NEW STRUCTURE IS INTENDED TO MATCH THE EXISTING STRUCTURE. THEREFORE, ELEVATIONS GIVEN ON THE PLANS SHALL BE VERIFIED IN THE FIELD BY THE CONTRACTOR FOR COMPATIBILITY.
5. THE CONCRETE IN THE SHAFTS SHALL BE CLASS 4000W. THE CONCRETE IN THE ROADWAY DECK SHALL BE CLASS 5000D. THE CONCRETE IN THE CAST-IN-PLACE PILES SHALL BE CLASS 4000P. THE CONCRETE IN THE CLOSURES SHALL BE CLASS 5000LS OR CLASS 5000DLS FOR THE ROADWAY DECK. ALL OTHER CAST-IN-PLACE CONCRETE SHALL BE CLASS 4000.
6. PILES SHALL BE DRIVEN TO A LOAD BEARING CAPACITY OF 55 TONS AT PIERS 1 & 4. SEE SPECIAL PROVISIONS FOR MINIMUM PILE TIP ELEVATIONS. THE MAXIMUM ULTIMATE LOAD FOR PIERS 2 & 3 SHAFTS ARE 360 TONS EACH.
7. FALSEWORK SHALL NOT BE RELEASED UNTIL ALL CONCRETE BEING SUPPORTED HAS MET THE AGE AND STRENGTH REQUIREMENTS OF THE STANDARD SPECIFICATIONS. FALSEWORK SHALL BE CAREFULLY RELEASED TO PREVENT IMPACT OR UNDUE STRESS IN THE STRUCTURE. CLOSURES SHALL BE MADE AFTER FALSEWORK IS RELEASED BUT BEFORE PLACEMENT OF OVERLAY AND BARRIERS.
8. UNLESS OTHERWISE SHOWN IN THE PLANS, THE CONCRETE COVER MEASURED FROM THE FACE OF ANY REINFORCING STEEL SHALL BE 2½" AT THE TOP OF THE ROADWAY SLAB, 1" AT THE BOTTOM OF THE ROADWAY SLAB, 7½" AT THE BOTTOM OF FOOTING, 2" AT THE TOP OF FOOTINGS AND 1½" AT ALL OTHER LOCATIONS.

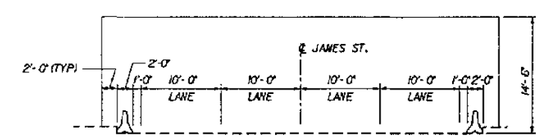

CONSTRUCTION OPENING DIAGRAM

NORMAL TO JAMES ST.

FOR "AS CONSTRUCTED PLANS" ONLY

P.C. GIRDER (W50G)
WIDENING
LOADING: HS-25
OR
TWO 24 KIP AXLES AT 4' CTRS.

Bridge Design Engr.					REG'N NO.	STATE	FED. AID PROJ. NO.	SHEET NO.	TOTAL SHEETS
Supervisor					10	WASH			
Designed By C. S. YU, J. J. MORRIS 4/94					JOB NUMBER				
Checked By C. A. ARNOLD 4/94					95W036				
Detailed By C. S. YU, C. A. ARNOLD 4/94									
Bridge Projects Engr.									
Prelim Plan By									
Architect/Specialist	DATE	REVISION	BY	APP'D	4771				

C. A. ARNOLD, STATE OF WASHINGTON, 13908, REGISTERED PROFESSIONAL ENGINEER — EXPIRES 4/14/97

Washington State Department of Transportation

ANDERSEN BUCHNEREAU KANE JACOBS + INC. CONSULTING ENGINEERS

SR 167
15TH NW TO 84TH AVE. SO.
HOV AND SC&DI - STAGE 2
BRIDGE 167/124

LAYOUT

BRIDGE SHEET NO. 1

SHEET 527 OF 663 SHEETS

SR167/124 JOB NO. 7014 SHEET 1

PLOTTED: 02AUG95 93:68:XX 04/24-LOGO

SR167/91

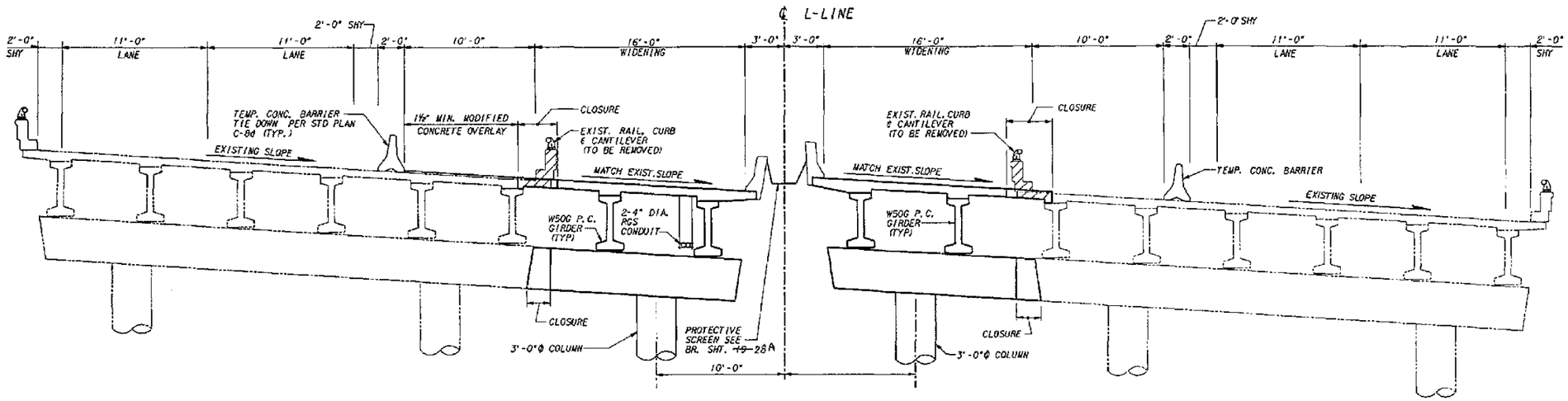

TYPICAL SECTION STAGE 1
SHOWN NEAR INTERMEDIATE PIERS

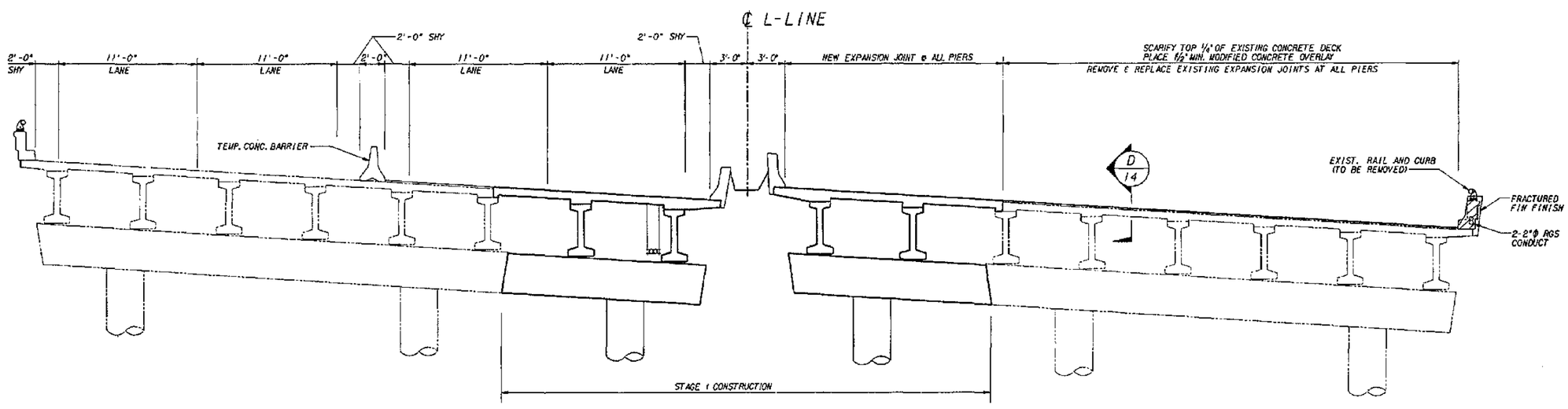

TYPICAL SECTION STAGE 2
SHOWN NEAR INTERMEDIATE PIERS

FOR "AS CONSTRUCTED PLANS" ONLY

Bridge Design Engr.					REGION NO.	STATE	FED. AID PROJ. NO.	SHEET NO.	TOTAL SHEETS	
Supervisor					10	WASH				
Designed By	C. A. ARNOLD 4/94				JOB NUMBER					
Checked By	C. A. ARNOLD 4/94				95W036					
Detailed By	C. S. YU 4/94									
Bridge Projects Engr.										
Prelim Plan By										
Architect/Specialist		DATE	REVISION	BY	APP'D					

CECIL A. ARNOLD, STATE OF WASHINGTON, 1958, REGISTERED PROFESSIONAL ENGINEER
EXPIRES 4/14/97

Washington State Department of Transportation
ANDERSEN BJORNSTAD KANE JACOBS • INC
CONSULTING ENGINEERS

SR 167
15TH NW TO 84TH AVE. SQ.
HOV AND SC&DI - STAGE 2
BRIDGE 167/124

CONSTRUCTION SEQUENCE

BRIDGE SHEET NO. 2
SHEET 52B OF 663 SHEETS

SR167/124 JOB NO. 7014 SHEET 2

SR 167/91

PLOTTED: 02AUG95 93:69:10 04D4TS-2.DGN

PLOTTED: 02AUG95 93655.DX 04047A-3.DGN

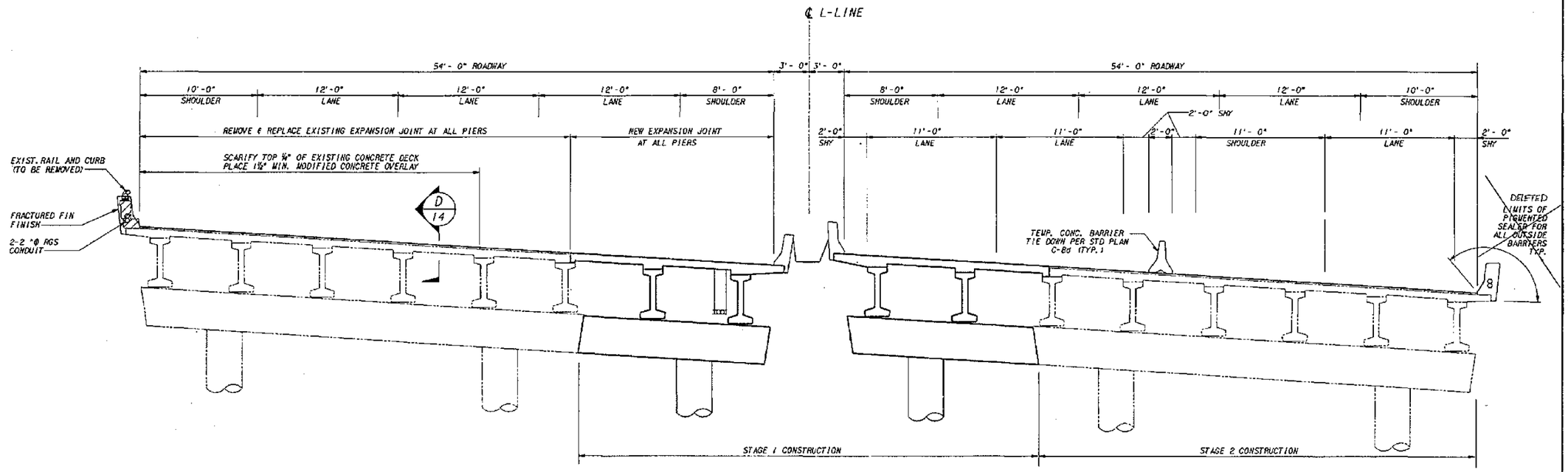

TYPICAL SECTION STAGE 3

SHOWN NEAR INTERMEDIATE PIERS

STATION	ELEVATION LEFT CURB LINE	ELEVATION RIGHT CURB LINE	STATION	ELEVATION LEFT CURB LINE	ELEVATION RIGHT CURB LINE
832+40.52	57.70	—	833+39.74	59.86	—
832+51.10	57.86	—	833+42.44	—	57.71
832+51.68	—	55.74	833+49.54	60.07	—
832+61.11	58.07	—	833+52.44	—	57.89
832+62.80	—	55.99	833+59.35	60.26	—
832+70.87	58.34	—	833+62.44	—	58.07
832+72.74	—	56.21	833+69.72	60.46	—
832+80.65	58.56	—	833+72.38	—	58.27
832+82.65	—	56.45	833+79.05	60.55	—
832+90.57	58.83	—	833+82.64	—	58.45
832+92.53	—	56.67	833+88.79	60.66	—
832+93.60	58.91	—	833+92.37	—	58.57
833+00.45	59.04	—	833+98.63	60.78	—
833+02.60	—	56.93	834+02.37	—	58.69
833+05.57	—	56.99	834+08.32	60.94	—
833+10.24	59.25	—	834+12.37	—	58.83
833+12.55	—	57.12	834+18.14	61.10	—
833+20.15	59.47	—	834+22.34	—	58.99
833+22.51	—	57.30	834+27.66	61.25	—
833+29.95	59.65	—	834+32.20	—	59.17
833+32.54	—	57.48	834+41.55	—	59.26

SR 167 SOUTH BOUND EXISTING ELEVATIONS

BRIDGE NO. 167/124W

STATION	OFFSET	ELEVATION	OFFSET	ELEVATION
7+90.22	—	—	21.02' RT	32.30
7+96.02	1.96' LT	32.99	—	—
8+04.01	24.49' LT	32.83	—	—
8+50.72	—	—	21.01' RT	32.25
8+61.49	1.89' LT	32.98	—	—
8+68.14	24.53' LT	32.24	—	—
9+11.50	—	—	21.06' RT	32.45
9+20.32	1.95' LT	33.21	—	—
9+28.46	24.58' LT	32.57	—	—

JAMES STREET EXISTING ELEVATIONS

STATION	ELEVATION LEFT CURB LINE	ELEVATION RIGHT CURB LINE	STATION	ELEVATION LEFT CURB LINE	ELEVATION RIGHT CURB LINE
832+63.31	55.11	—	833+64.94	57.14	—
832+74.63	55.28	—	833+68.74	—	55.08
832+74.87	—	53.06	833+74.69	57.32	—
832+84.70	55.49	—	833+79.03	—	55.27
832+86.44	—	53.33	833+84.55	57.50	—
832+94.75	55.72	—	833+89.39	—	55.47
832+96.67	—	53.59	833+95.86	57.74	—
833+04.82	55.91	—	833+99.76	—	55.66
833+06.94	—	53.81	834+05.44	57.91	—
833+14.87	56.14	—	834+09.58	—	55.85
833+17.29	—	54.03	834+15.21	58.05	—
833+17.98	56.21	—	834+20.23	—	56.02
833+25.05	56.36	—	834+25.18	58.20	—
833+27.49	—	54.27	834+30.46	—	56.15
833+30.48	—	54.33	834+35.19	58.35	—
833+35.00	56.55	—	834+40.81	—	56.29
833+37.81	—	54.49	834+45.17	58.53	—
833+45.01	55.73	—	834+51.12	—	56.46
833+48.17	—	54.71	834+55.36	58.80	—
833+54.95	56.93	—	834+61.43	—	56.62
833+58.41	—	54.90	834+70.07	—	56.80

SR 167 NORTH BOUND EXISTING ELEVATIONS

BRIDGE NO. 167/124E

FOR "AS CONSTRUCTED PLANS" ONLY

SR167/124 JOB NO. 7014 SHEET 3

Bridge Design Engr.					
Supervisor					
Designed By C. A. ARNOLD 4/94					
Checked By C. A. ARNOLD 4/94					
Detailed By C. S. YU 4/94					
Bridge Projects Engr.					
Prelim Plan By					
Architect/Specialist	DATE	REVISION	BY	APP'D	

REGION NO.	STATE	FED. AID PROJ. NO.	SHEET NO.	TOTAL SHEETS
10	WASH			
JOB NUMBER 95W036				
4771				

CECIL A. ARNOLD STATE OF WASHINGTON 11958 REGISTERED PROFESSIONAL ENGINEER EXPIRES 4/14/97

Washington State Department of Transportation

ANDERSEN BJORNSTAD KANE JACOBS • INC CONSULTING ENGINEERS

SR 167
15TH NW TO 84TH AVE. SO.
HOV AND SC&DI - STAGE 2
BRIDGE 167/124

CONST. SEQUENCE & EXIST. ELEV.

BRIDGE SHEET NO. 3

SHEET 529 OF 663 SHEETS

SR 167/91

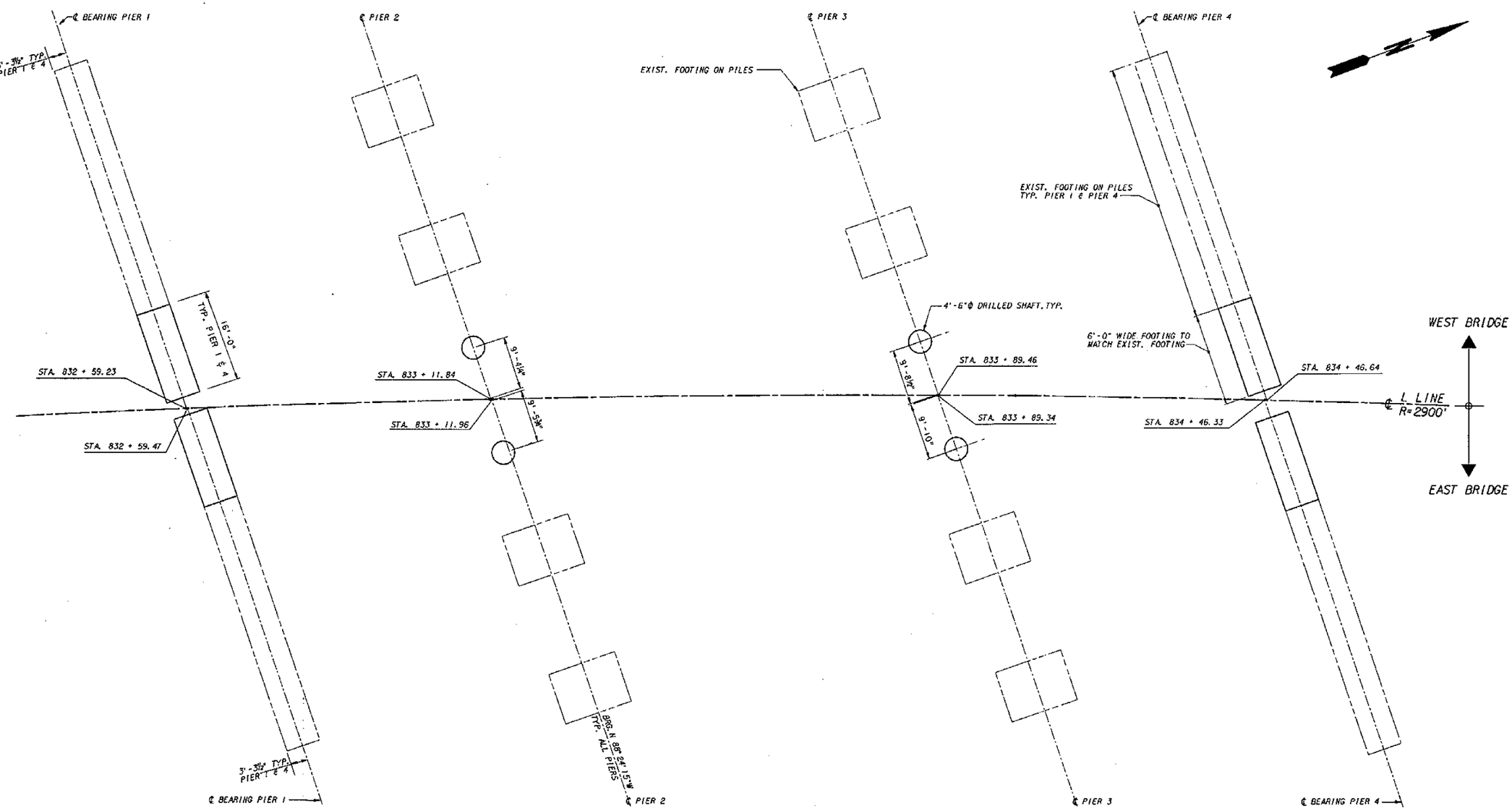

FOOTING LAYOUT

FOR "AS CONSTRUCTED PLANS" ONLY

Bridge Design Engr.					REGION NO.	STATE	FED. AID PROJ. NO.	SHEET NO.	TOTAL SHEETS	
Supervisor					10	WASH				
Designed By	C.S. YU 4/94									
Checked By	J.J. MORRIS 4/94				JOB NUMBER 95W036					
Detailed By	C.S. YU 4/94									
Bridge Projects Engr.										
Prelim Plan By										
Architect/Specialist		DATE	REVISION	BY	APP'D	4771				

CECIL A. ARNDT, STATE OF WASHINGTON, 17558, REGISTERED PROFESSIONAL ENGINEER, EXPIRES 4/14/97

Washington State Department of Transportation

ANDERSEN BJORNSTAD KANE JACOBS • INC CONSULTING ENGINEERS

SR 167
15TH NW TO 84TH AVE. SO.
HOV AND SC&DI - STAGE 2
BRIDGE 167/124

FOOTING LAYOUT

BRIDGE SHEET NO. 4
SHEET 530 OF 663 SHEETS

SR167/124 JOB NO. 7014 SHEET 4

SR167/91

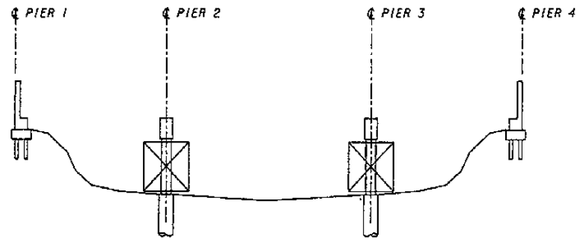

STEP 1 - CONSTRUCT FOUNDATIONS, CAST CROSS BEAMS AND ABUTMENTS.

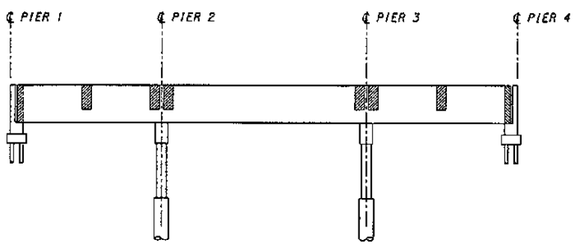

STEP 2 - 1. RELEASE FALSE WORK; ERECT PRESTRESSED GIRDERS, WHEN CROSS BEAM CONCRETE HAS REACHED 28 DAY STRENGTH.
2. CAST END DIAPHRAGMS, AND INTERMEDIATE DIAPHRAGMS TO CLOSURES.

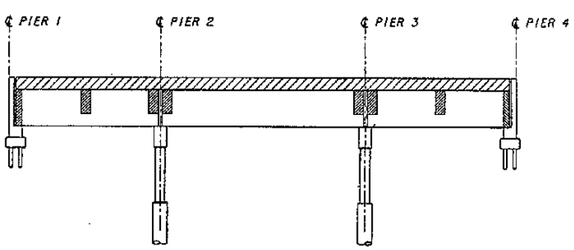

STEP 3 - PLACE ROADWAY DECK CONCRETE AND INTERMEDIATE DIAPHRAGM CLOSURES.

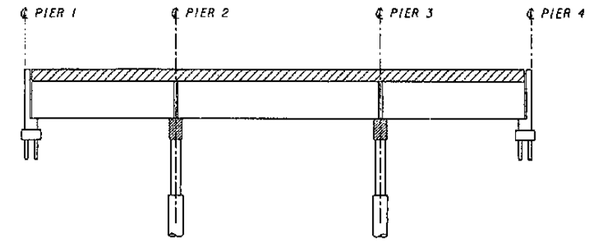

STEP 4 - PLACE CROSS BEAM AND ROADWAY CLOSURES.

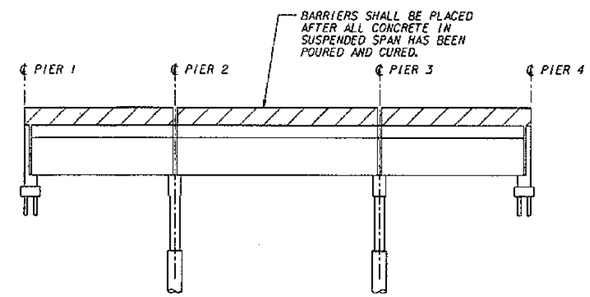

STEP 5 - PLACE TRAFFIC BARRIERS AFTER ALL CONCRETE IN SPANS HAS BEEN POURED AND CURED.

NOTE:
1. WORK THIS SHEET WITH THE STAGING REQUIREMENTS SHOWN ON BRIDGE SHEETS 2-3.

SUPERSTRUCTURE CONSTRUCTION SEQUENCE

FOR "AS CONSTRUCTED PLANS" ONLY

Bridge Design Engr.					REGION NO.	STATE	FED. AID PROJ. NO.	SHEET NO.	TOTAL SHEETS	
Supervisor					10	WASH				
Designed By Y. POLYAKOV 4/94					JOB NUMBER 95W036					
Checked By J. J. MORRIS 4/94										
Detailed By Y. POLYAKOV 4/94										
Bridge Projects Engr.										
Prelim Plan By										
Architect/Specialist	DATE	REVISION	BY	APP'D	4551					

CECIL A. ARNOLD, STATE OF WASHINGTON, 1958, REGISTERED PROFESSIONAL ENGINEER, EXPIRES 4/14/87

Washington State Department of Transportation

ANDERSEN BJORNSTAD KANE JACOBS • INC
CONSULTING ENGINEERS

SR 167
15TH NW TO 84TH AVE. SO.
HOV AND SC&DI - STAGE 2
BRIDGE 167/124

SUPERSTRUCTURE CONSTRUCTION SEQUENCE

BRIDGE SHEET NO. 4A
SHEET 531 OF 663 SHEETS

SR167/91

SR167/124 JOB NO. 7014 SHEET 4A

PLOTTED: 02AUG95 93169.01 04CONSEQ.DGN

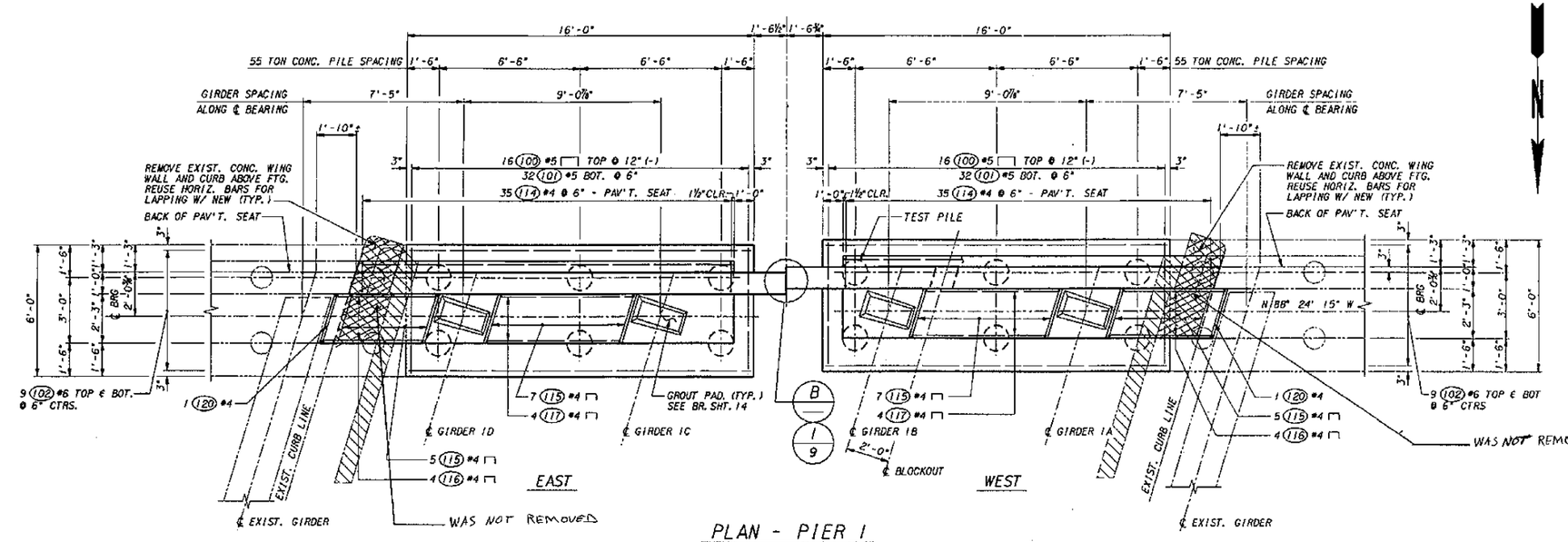

PLAN - PIER 1

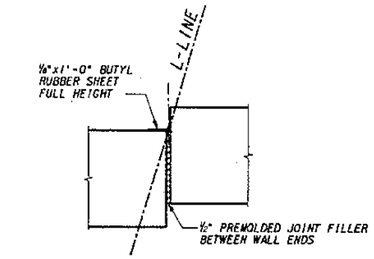

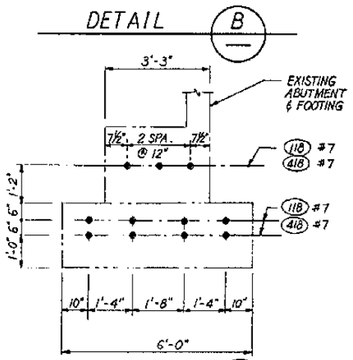

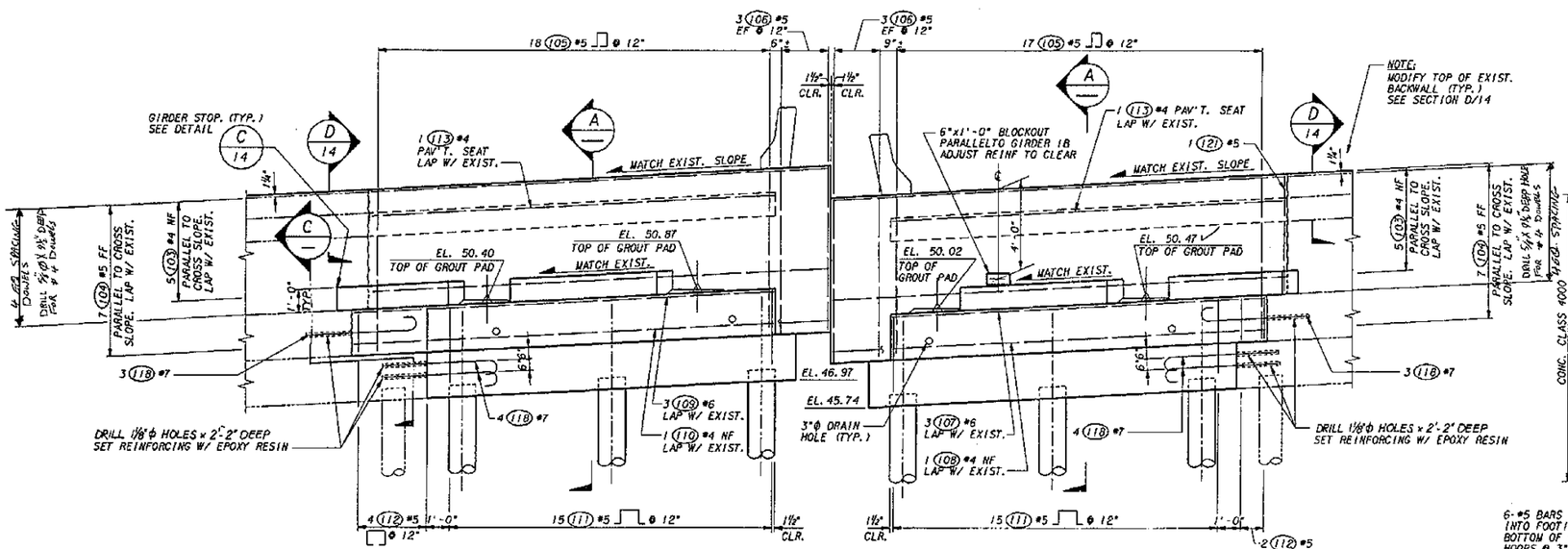

ELEVATION - PIER 1

LOOKING BACK ON STATIONING

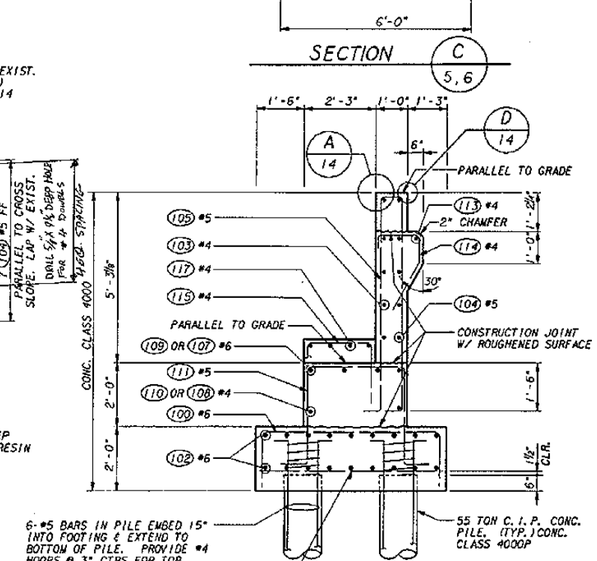

FOR "AS CONSTRUCTED" PLANS" ONLY

Bridge Design Engr.					REGION NO.	STATE	FED. AID PROJ. NO.	SHEET NO.	TOTAL SHEETS
Supervisor					10	WASH			
Designed By E. W. THOMAS 4/94					JOB NUMBER				
Checked By C. A. ARNOLD 4/94					95W036				
Detailed By K. A. MUELLER 4/94					4771				
Bridge Projects Engr.									
Prelim Plan By									
Architect/Specialist	DATE	REVISION	BY	APP'D					

CECIL A. ARNOLD — STATE OF WASHINGTON — 9350 — REGISTERED PROFESSIONAL ENGINEER — EXPIRES 4/14/97

Washington State Department of Transportation

ANDERSEN BJORNSTAD KANE JACOBS • INC CONSULTING ENGINEERS

SR 167
15TH NW TO 84TH AVE. SO.
HOV AND SC&DI - STAGE 2
BRIDGE 167/124

PIER 1

BRIDGE SHEET NO. 5

SHEET 532 OF 663 SHEETS

SR167/124 JOB NO. 7014 SHEET 5

PLOTTED: 02/21/95 3:56 PM BAFER-1.DGN

SR 167/91

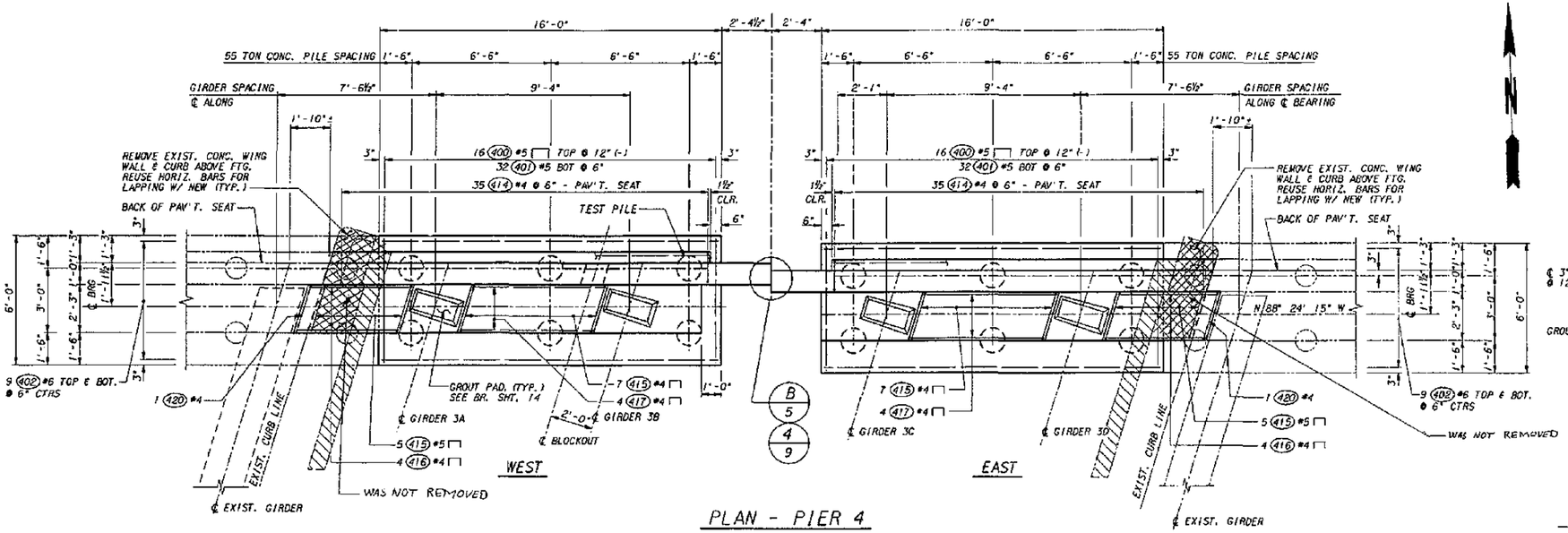

PLAN - PIER 4

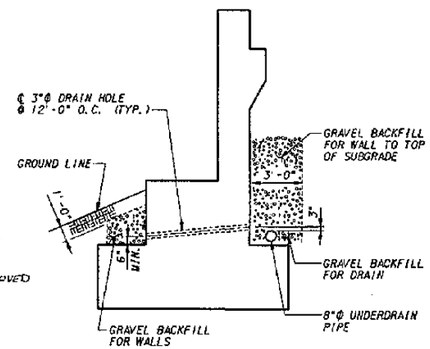

DRAINAGE DETAIL B

TYP. AT PIER 1 & 4

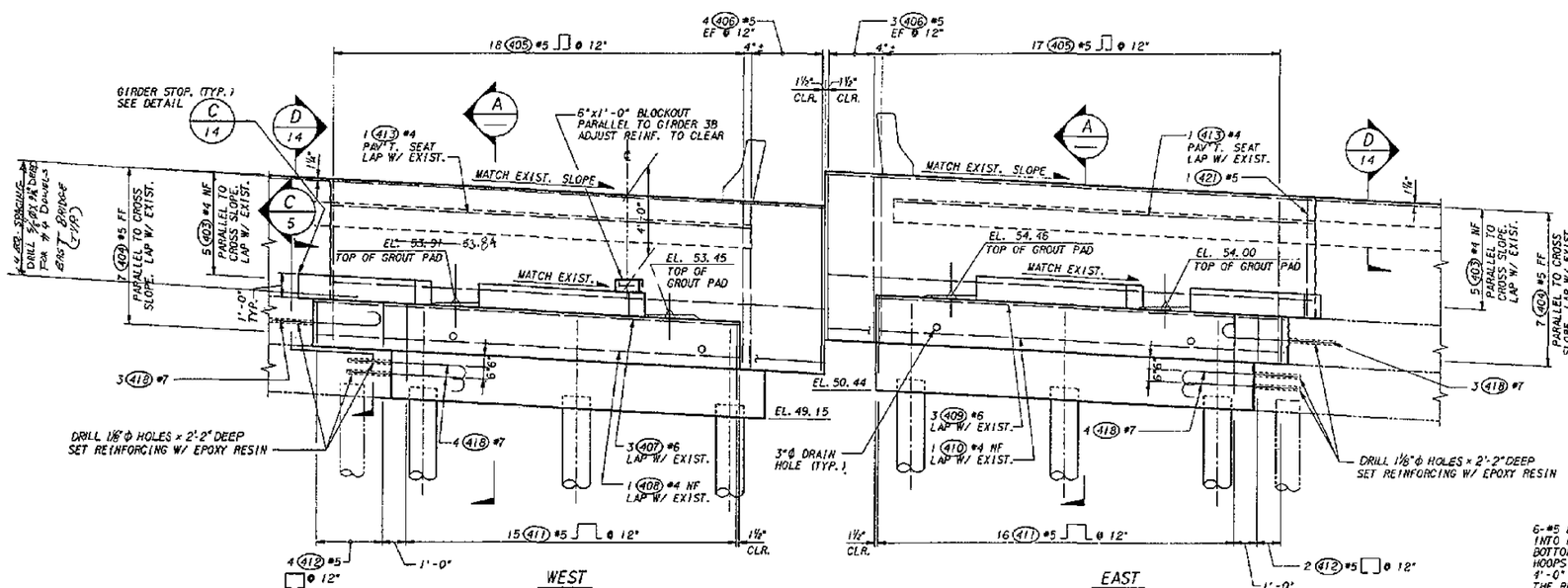

ELEVATION - PIER 4

LOOKING AHEAD ON STATIONING

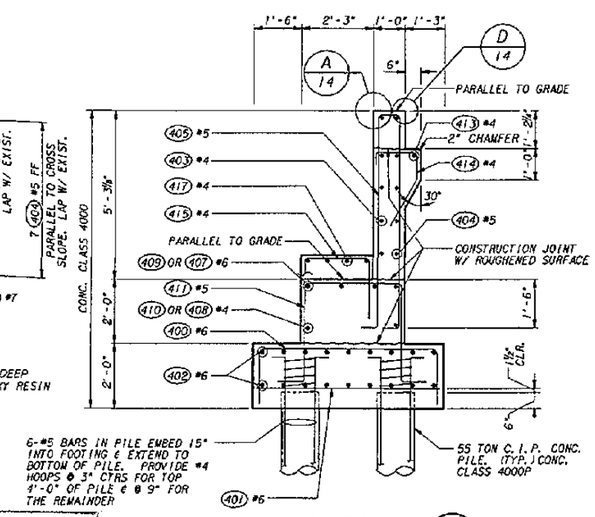

SECTION A

FOR "AS CONSTRUCTED PLANS" ONLY

Bridge Design Engr.					REGION NO.	STATE	FED. AID PROJ. NO.	SHEET NO.	TOTAL SHEETS
Supervisor					10	WASH			
Designed By E.W. THOMAS 4/94					JOB NUMBER				
Checked By C.A. ARNOLD 4/94					95W036				
Detailed By E.W. THOMAS 4/94									
Bridge Projects Engr.									
Preliim Plan By									
Architect/Specialist	DATE	REVISION	BY	APP'D	4771				

CECIL A. ARNOLD — STATE OF WASHINGTON — 9358 — REGISTERED PROFESSIONAL ENGINEER — EXPIRES 4/12/94

Washington State Department of Transportation

ABKJ Andersen Buonstad Kane Jacobs • INC CONSULTING ENGINEERS

SR 167
15TH NW TO 84TH AVE. SO.
HOV AND SC&DI - STAGE 2
BRIDGE 167/124

PIER 4

BRIDGE SHEET NO. 6

SHEET 533 OF 663 SHEETS

SR167/91

PLOTTED: 02JUL95 9:36AM XOI OXPER-4.DGN

SR167/124 JOB NO. 7014 SHEET 6

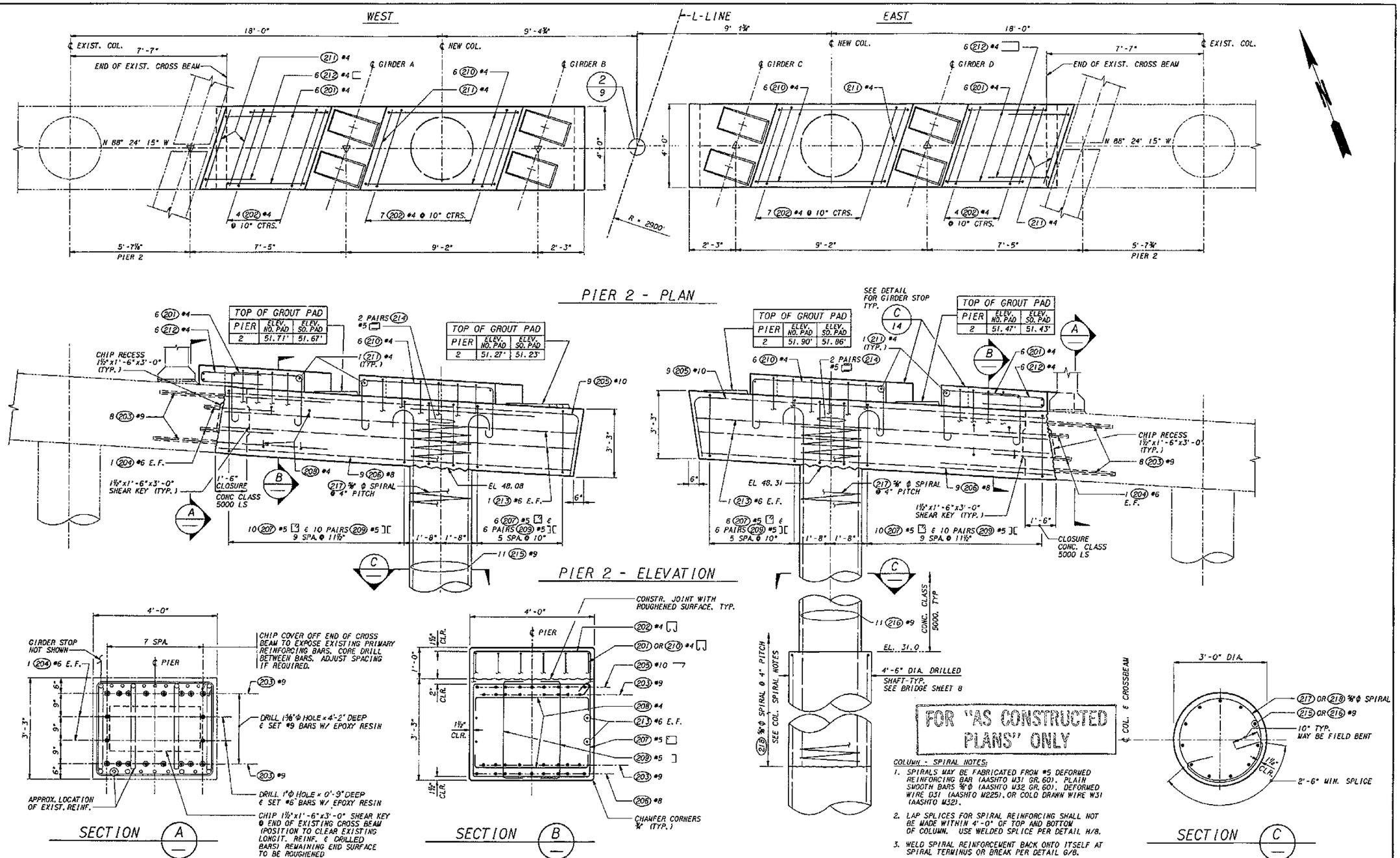

FOR "AS CONSTRUCTED PLANS" ONLY

COLUMN - SPIRAL NOTES:

1. SPIRALS MAY BE FABRICATED FROM #5 DEFORMED REINFORCING BAR (AASHTO M31 GR. 60). PLAIN SMOOTH BARS ⅝"ϕ (AASHTO M32 GR. 60). DEFORMED WIRE D31 (AASHTO M225), OR COLD DRAWN WIRE W31 (AASHTO M32).
2. LAP SPLICES FOR SPIRAL REINFORCING SHALL NOT BE MADE WITHIN 4'-0" OF TOP AND BOTTOM OF COLUMN. USE WELDED SPLICE PER DETAIL H/8.
3. WELD SPIRAL REINFORCEMENT BACK ONTO ITSELF AT SPIRAL TERMINUS OR BREAK PER DETAIL G/8.

Bridge Design Engr.					
Supervisor					
Designed By	C. S. YU				
Checked By	Y. POLYAKOV				
Detailed By	C. S. YU				
Bridge Projects Engr.					
Prelim Plan By					
Architect/Specialist		DATE	REVISION	BY	APP'D

REGION NO.	STATE	FED. AID PROJ. NO.	SHEET NO.	TOTAL SHEETS
10	WASH			

JOB NUMBER 95W036

4771

CECIL A. ARNOLD, STATE OF WASHINGTON, 1958, REGISTERED PROFESSIONAL ENGINEER

EXPIRES 4/14/97

Washington State Department of Transportation

ANDERSEN BJORNSTAD KANE JACOBS • INC CONSULTING ENGINEERS

SR 167
15TH NW TO 84TH AVE. SO.
HOV AND SC&DI - STAGE 2
BRIDGE 167/124

PIER 2 - PLAN & ELEV

BRIDGE SHEET NO. 7A

SHEET 534 OF 663 SHEETS

SR167/91

SR167/124 JOB NO. 7014 SHEET 7A

PLOTTED: 02AUG95 93169.KK 04PIER-2.DGN

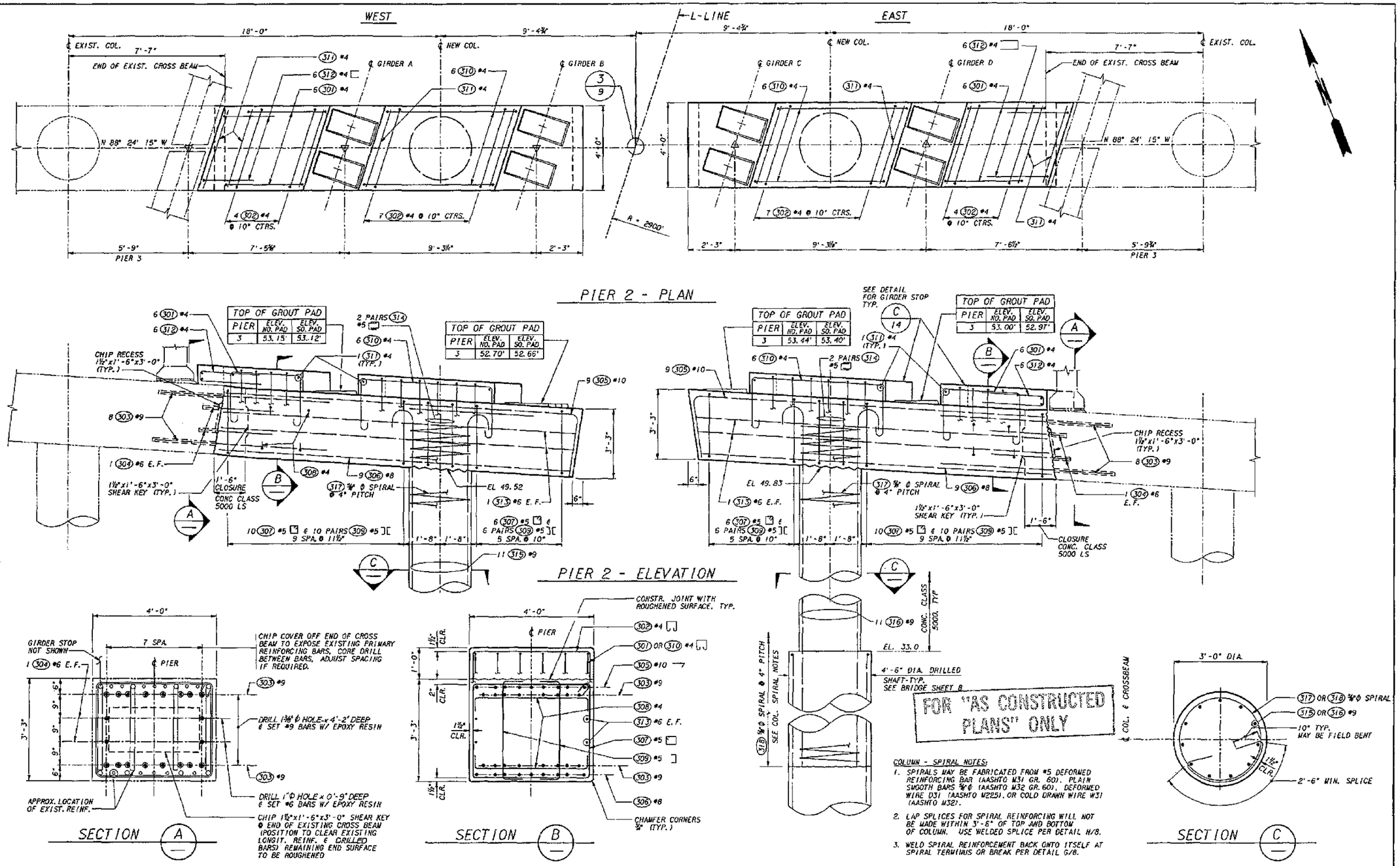

COLUMN - SPIRAL NOTES:

1. SPIRALS MAY BE FABRICATED FROM #5 DEFORMED REINFORCING BAR (AASHTO M31 GR. 60). PLAIN SMOOTH BARS ⅝"Φ (AASHTO M32 GR. 60), DEFORMED WIRE D31 (AASHTO M225), OR COLD DRAWN WIRE W31 (AASHTO M32).
2. LAP SPLICES FOR SPIRAL REINFORCING WILL NOT BE MADE WITHIN 3'-6" OF TOP AND BOTTOM OF COLUMN. USE WELDED SPLICE PER DETAIL H/8.
3. WELD SPIRAL REINFORCEMENT BACK ONTO ITSELF AT SPIRAL TERMINUS OR BREAK PER DETAIL G/8.

Bridge Design Engr.						REGION NO.	STATE	FED. AID PROJ. NO.	SHEET NO.	TOTAL SHEETS
Supervisor						10	WASH			
Designed By	C. S. YU					JOB NUMBER				
Checked By	Y. POLYAKOV					95W036				
Detailed By	C. S. YU									
Bridge Projects Engr.										
Prelim Plan By										
Architect/Specialist		DATE	REVISION	BY	APP'D	4771				

CECIL A. ARNOLD, STATE OF WASHINGTON, 19258, REGISTERED PROFESSIONAL ENGINEER, EXPIRES 4/14/97

Washington State Department of Transportation

ANDERSEN BJORNSTAD KANE JACOBS • INC
CONSULTING ENGINEERS

SR 167
15TH NW TO 84TH AVE. SO.
HOV AND SC&DI - STAGE 2
BRIDGE 167/124

PIER 3 - PLAN & ELEV

BRIDGE SHEET NO. 7B
SHEET 535 OF 663 SHEETS

SR167/124 JOB NO. 7014 SHEET 7B

SR167/91

PLOTTED: 02AUG95 9:36:01 04SHAFT.DGN

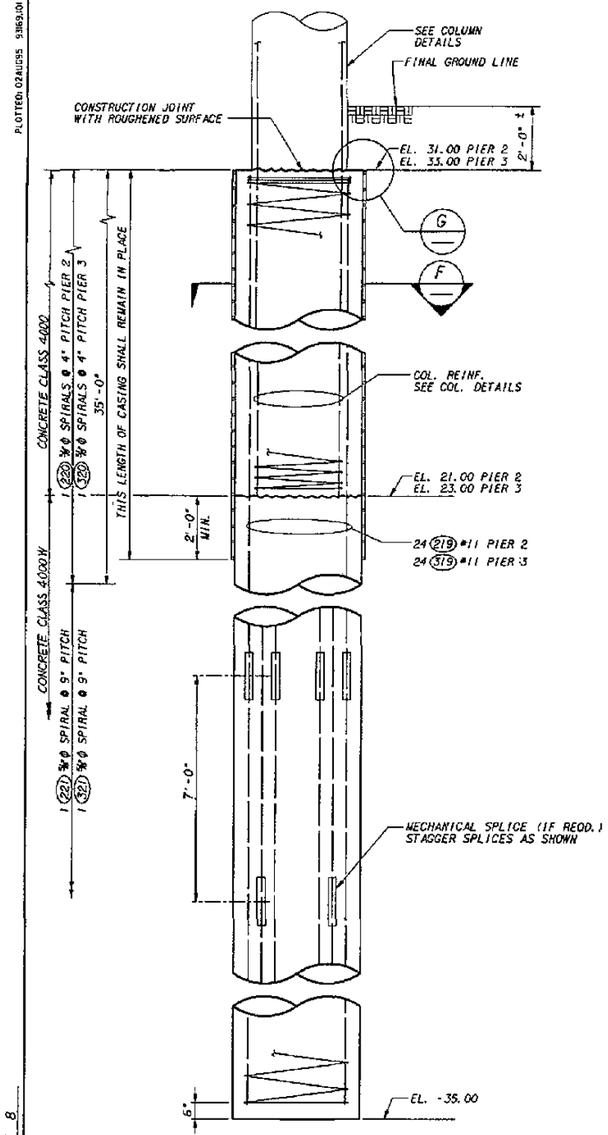

PIER - 2 & 3

ELEVATION - 4'-6" DRILLED SHAFT

NOTES FOR DRILLED SHAFT

1. TEMPORARY STEEL CASINGS SHALL BE REQUIRED FOR A MINIMUM DEPTH OF 30 FT.
2. CONCRETE SHALL BE POURED IN THE DRY ABOVE EL. 21.0 FOR PIER 2 AND EL. 23.0 FOR PIER 3.
3. SPLICE LOCATIONS:
   SPLICES IN VERTICAL REINFORCEMENT SHALL BE MADE AS SHOWN LAP SPLICES FOR SPIRAL REINF. SHALL NOT BE MADE IN THE TOP 20'-0" OF THE SHAFT. USE A WELDED SPLICE PER DETAIL H.
4. SHAFT SPIRALS MAY BE FABRICATED FROM #5 DEFORMED REINFORCING BARS (AASHTO M31 GR 60), PLAIN SMOOTH BARS 5/8"Ø (AASHTO M31 GR 60), DEFORMED WIRE D31 (AASHTO M225), OR COLD DRAWN WIRE W31 (AASHTO M32)
5. WELD SPIRAL REINFORCEMENT BACK ONTO ITSELF AT SPIRAL TERMINUS OR BREAK PER DETAIL G

40 FT LONG X 4" DIAM. TREMI WAS LEFT IN THE BOTTOM OF PIER 3W DRILLED SHAFT

Steel

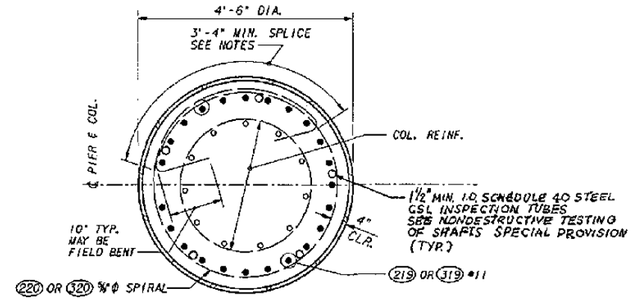

SECTION F

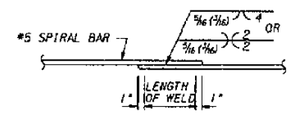

SPIRAL WELD LAP SPLICE DETAIL H

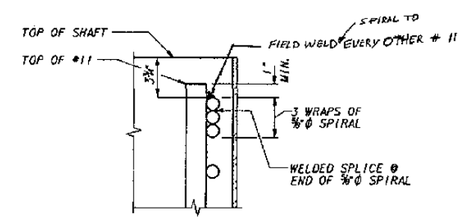

DETAIL G

FOR "AS CONSTRUCTED PLANS" ONLY

SR167/124 JOB NO. 7014 SHEET 8

Bridge Design Engr.					REGION NO.	STATE	FED. AID PROJ. NO.	SHEET NO.	TOTAL SHEETS	
Supervisor					10	WASH				
Designed By J. J. MORRIS 4/94					JOB NUMBER					
Checked By					95W036					
Detailed By J. J. MORRIS 4/94										
Bridge Projects Engr.										
Prelim Plan By										
Architect/Specialist	DATE	REVISION	BY	APP'D	4771					

CECIL A. ARNOLD, STATE OF WASHINGTON, REGISTERED PROFESSIONAL ENGINEER, 1958, EXPIRES 4/14/97

Washington State Department of Transportation

ANDERSEN BJORNSTAD KANE JACOBS + INC CONSULTING ENGINEERS

SR 167
15TH NW TO 84TH AVE. SO.
HOV AND SC&DI - STAGE 2
BRIDGE 167/124

4'-6" SHAFT DETAILS

BRIDGE SHEET NO. 8
SHEET 536 OF 663 SHEETS

SR167/91

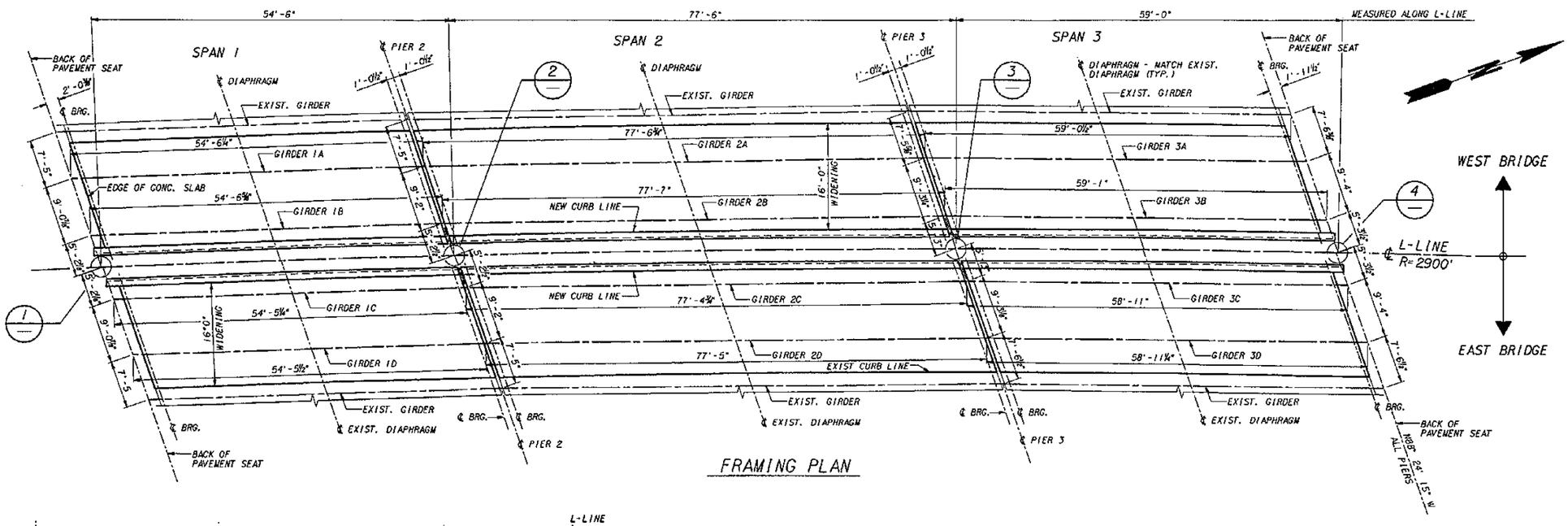

FRAMING PLAN

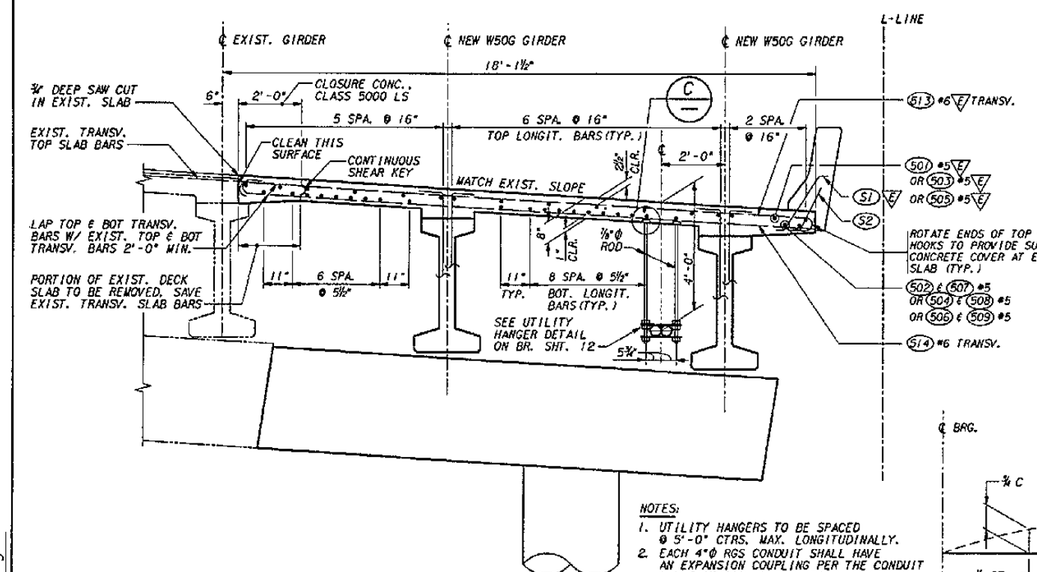

NOTES:
1. UTILITY HANGERS TO BE SPACED @ 5'-0" CTRS. MAX. LONGITUDINALLY.
2. EACH 4"Ø RGS CONDUIT SHALL HAVE AN EXPANSION COUPLING PER THE CONDUIT MANUFACTURER AT EACH PIER LOCATION.

TYPICAL SECTION - WEST BRIDGE

ALL DIMENSIONS ARE MEASURED NORMAL TO L-LINE.
EAST BRIDGE SIMILAR EXCEPT FOR SUPERELEVATION & CONDUIT.

(E) DENOTES EPOXY COATED BARS

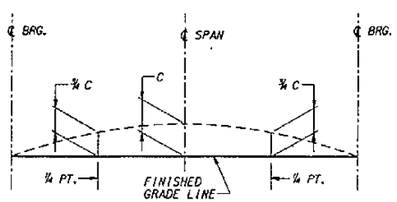

SCREED SETTING DIMENSIONS

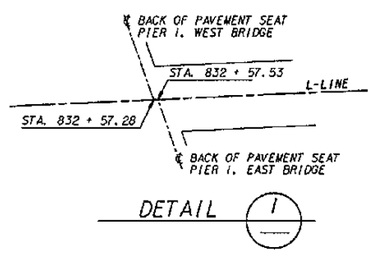

DETAIL 1

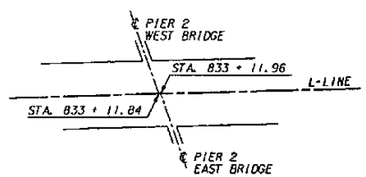

DETAIL 2

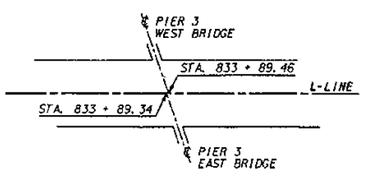

DETAIL 3

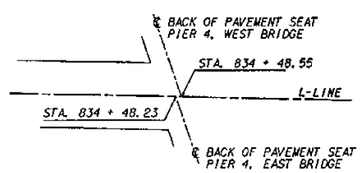

DETAIL 4

FOR "AS CONSTRUCTED PLANS" ONLY

Bridge Design Engr.					REGION NO.	STATE	FED. AID PROJ. NO.	SHEET NO.	TOTAL SHEETS
Supervisor					10	WASH			
Designed By C. S. YU 4/94					JOB NUMBER				
Checked By E. W. THOMAS, C. A. ARNOLD					95W036				
Detailed By C. S. YU 4/94									
Bridge Projects Engr.									
Prelim Plan By									
Architect/Specialist	DATE	REVISION	BY	APP'D	4771				

CECIL A. ARNOLD — STATE OF WASHINGTON — 1956 — REGISTERED PROFESSIONAL ENGINEER — EXPIRES 4/14/97

Washington State Department of Transportation

ANDERSEN BJORNSTAD KANE JACOBS + INC CONSULTING ENGINEERS

SR 167
15TH NW TO 84TH AVE. SO.
HOV AND SC&DI - STAGE 2
BRIDGE 167/124

FRAMING PLAN

BRIDGE SHEET NO. 9

SHEET 537 OF 663 SHEETS

SR167/124 JOB NO. T014 SHEET 9

PLOTTED: 02AUG95 9:36:30 AM D:\FRAME.DGN

SR167/91

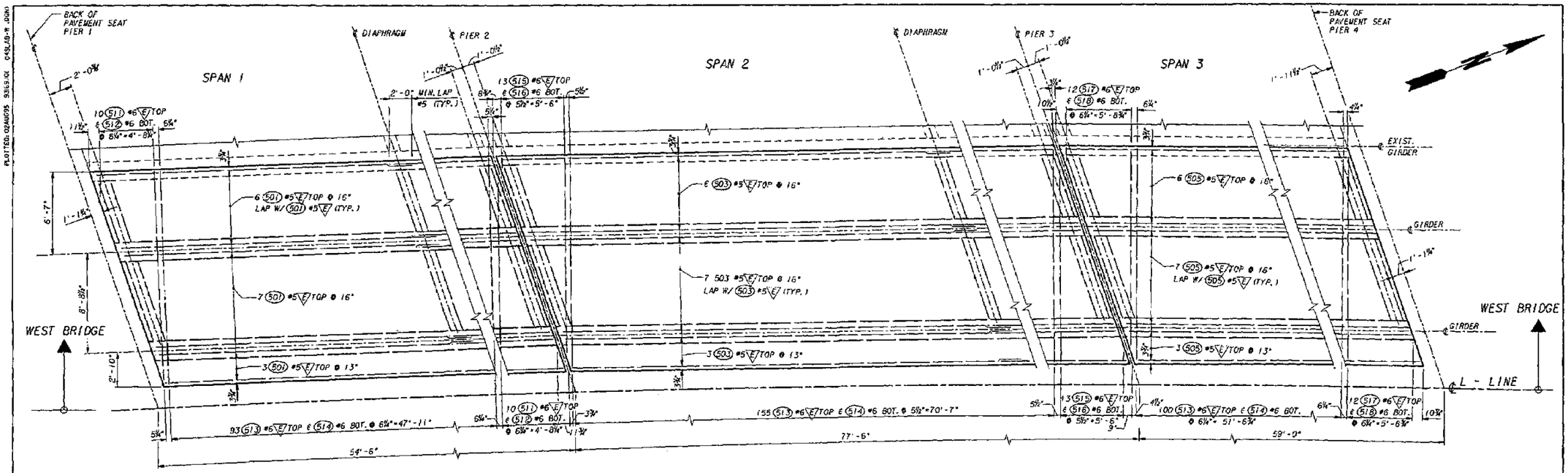

SLAB REINFORCING PLAN - WEST BRIDGE

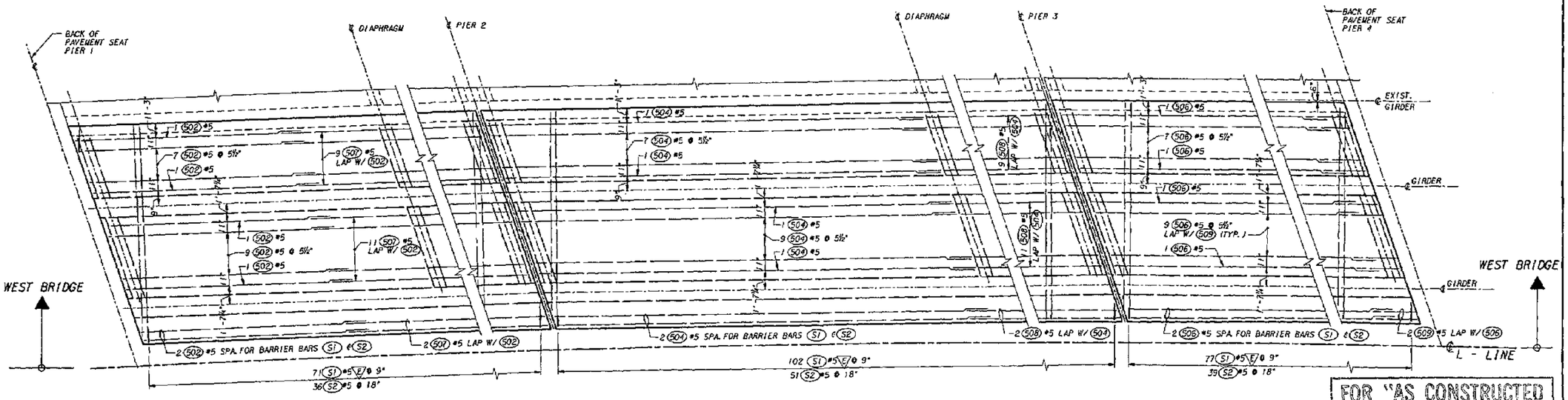

SLAB REINFORCING PLAN - BOTTOM LONGIT. REINF.

E DENOTES EPOXY COATED BARS

FOR "AS CONSTRUCTED PLANS" ONLY

Bridge Design Engr.						REGION NO.	STATE	FED. AID PROJ. NO.	SHEET NO.	TOTAL SHEETS	
Supervisor						10	WASH				
Designed By	C. S. YU 4/94					JOB NUMBER					
Checked By	C. A. ARNOLD 4/94					95W036					
Detailed By	C. S. YU 4/94										
Bridge Projects Engr.											
Prelim Plan By											
Architect/Specialist		DATE	REVISION	BY	APP'D	4771					

CECIL A. ARNOLD STATE OF WASHINGTON REGISTERED PROFESSIONAL ENGINEER 1968 EXPIRES 4/14/97

Washington State Department of Transportation

ANDERSEN BJORNSTAD KANE JACOBS + INC CONSULTING ENGINEERS

SR 167
15TH NW TO 84TH AVE. SO.
HOV AND SC&DI - STAGE 2
BRIDGE 167/124

SLAB REINFORCING - WEST BRIDGE

BRIDGE SHEET NO. 10

SHEET 538 OF 663 SHEETS

SR167/124 JOB NO. 7014 SHEET 10

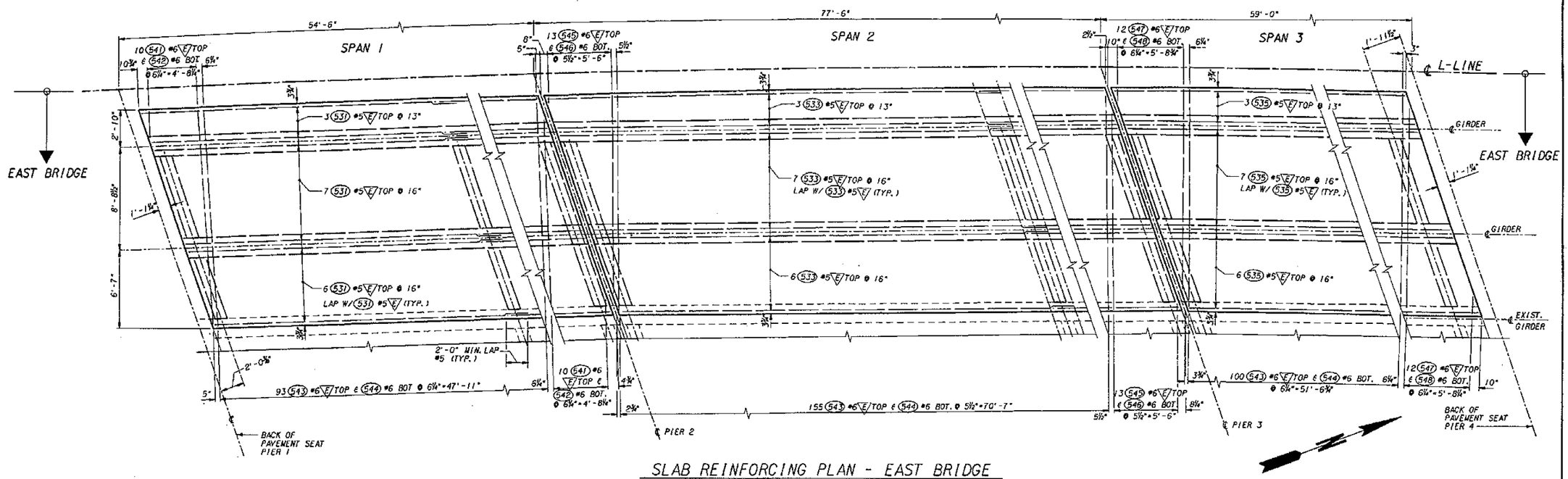

SLAB REINFORCING PLAN - EAST BRIDGE

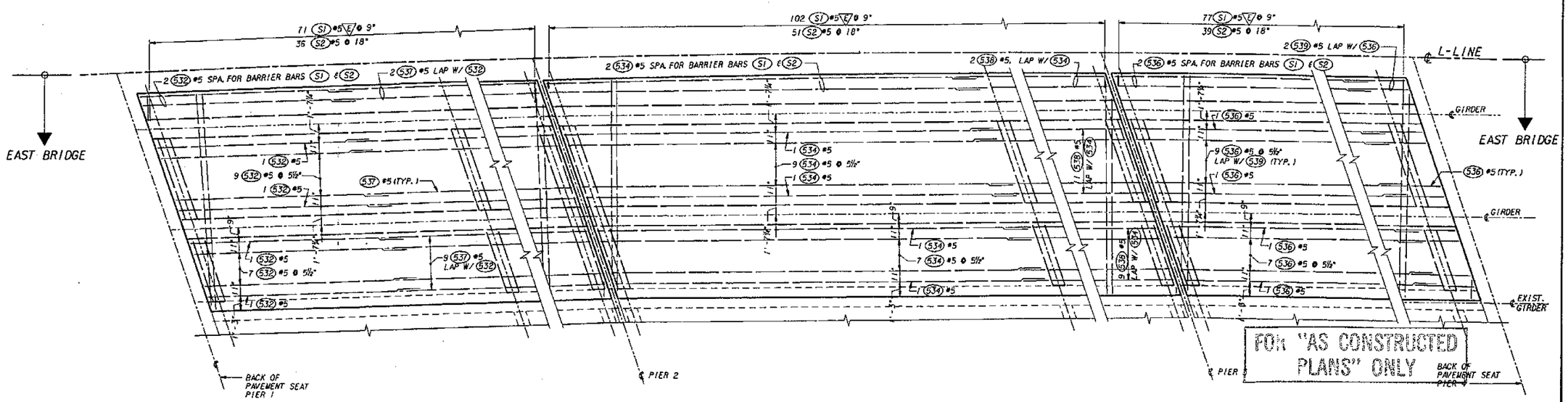

FOR "AS CONSTRUCTED PLANS" ONLY

SLAB REINFORCING PLAN - BOTTOM LONGIT. REINF.

E/ DENOTES EPOXY COATED BARS

Bridge Design Engr.					REGION NO.	STATE	FED. AID PROJ. NO.	SHEET NO.	TOTAL SHEETS	
Supervisor					10	WASH				
Designed By C. S. YU 4/94					JOB NUMBER					
Checked By C. A. ARNOLD 4/94					95W036					
Detailed By C. S. YU 4/94										
Bridge Projects Engr.										
Prelim Plan By										
Architect/Specialist	DATE	REVISION	BY	APP'D	4771					

CECIL A. ARNOLD — STATE OF WASHINGTON — 11958 — REGISTERED PROFESSIONAL ENGINEER — EXPIRES 4/14/94

Washington State Department of Transportation

ABKJ ANDERSEN BJORNSTAD KANE JACOBS • INC CONSULTING ENGINEERS

SR 167
15TH NW TO 84TH AVE. SO.
HOV AND SC&DI - STAGE 2
BRIDGE 167/124

SLAB REINFORCING - EAST BRIDGE

BRIDGE SHEET NO. 11

SHEET 539 OF 663 SHEETS

SR167/124 JOB NO. 7014 SHEET 11

PLOTTED: 02AUG95 9:36:30 AM PBLAB-E.DGN

SR167/91

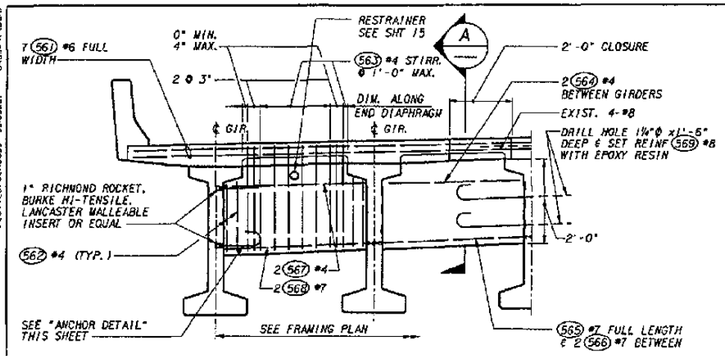

TYPICAL END DIAPHRAGM

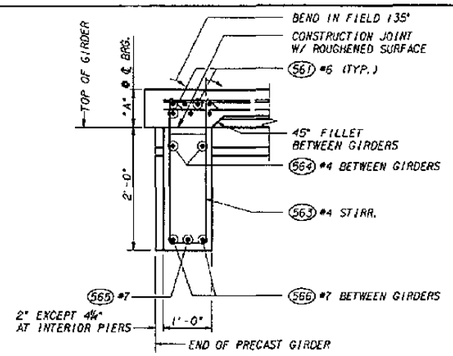

SECTION A

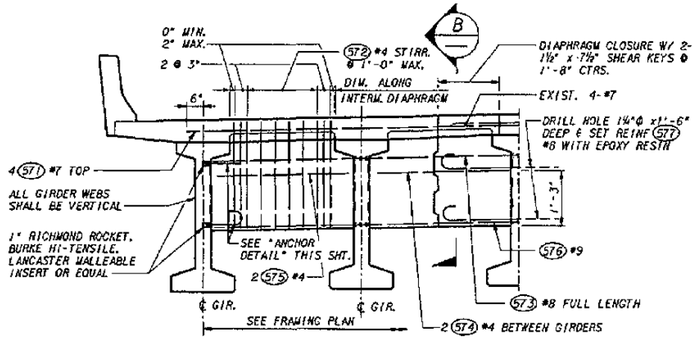

TYPICAL INTERMEDIATE DIAPHRAGM

NOTE:

1. GIRDERS SHALL BE HELD RIGIDLY IN PLACE WHEN DIAPHRAGMS ARE POURED. REINFORCING BARS SHALL BE THREADED THROUGH HOLES IN GIRDERS PRIOR TO PLACING OF EXTERIOR GIRDERS. SEE PLANS FOR "TRAFFIC BARRIER" DIMENSIONS AND LOCATION. SEE "GIRDER DETAILS" SHEET FOR DIMENSION "A".
2. CONTRACTOR TO VERIFY THE LOCATION OF PRESTRESSING STRANDS PRIOR TO DRILLING ANY HOLES IN THE EXISTING GIRDERS TO INSURE THAT STRANDS WILL NOT BE DAMAGED WHEN DRILLING HOLES.
3. ADJUST THE LOCATION OF DRILL HOLES SLIGHTLY TO MISS THE PRESTRESSING STRANDS IN EXISTING GIRDER AS REQUIRED.

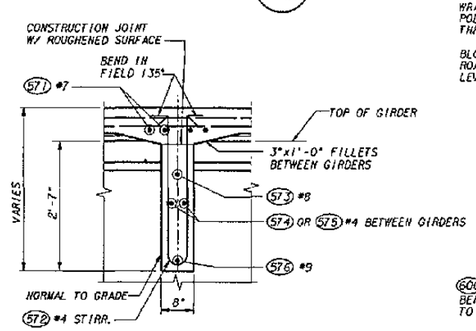

SECTION B

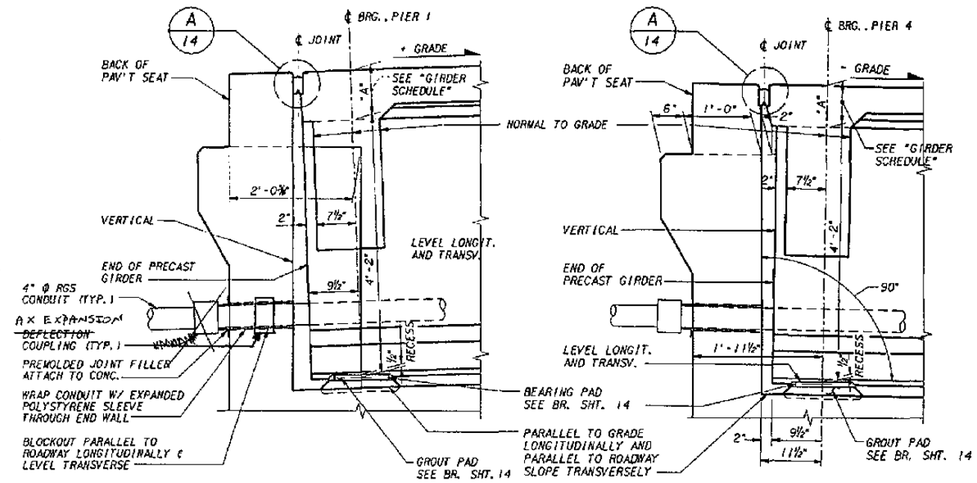

ROADWAY EXPANSION JOINT AT END PIERS

LONGITUDINAL DIMENSIONS ARE NORMAL TO SKEW.

SEE D/14 FOR EXPANSION JOINT MODIFICATION AT EXISTING ABUTMENTS.

BLOCKOUT & CONDUIT ON WEST BRIDGE ONLY

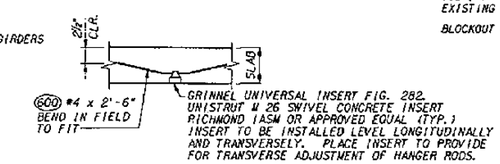

DETAIL C/9

NOTE: 1. CONTRACTOR SHALL VERIFY THE LOCATION OF PRESTRESSING STRANDS PRIOR TO DRILLING ANY HOLES IN THE EXISTING GIRDERS TO ENSURE THAT STRANDS WILL NOT BE DAMAGED.
2. ADJUST THE LOCATION OF DRILL HOLES SLIGHTLY TO MISS THE P/S STRANDS IN EXISTING GIRDER AS REQ'D.

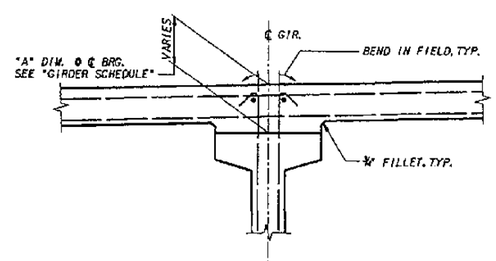

TYPICAL SECTION THRU GIRDER

SHOWING METHOD OF ADJUSTING ROADWAY ELEVATIONS FOR VERTICAL CURVES, CAMBER OR SUPERELEVATIONS

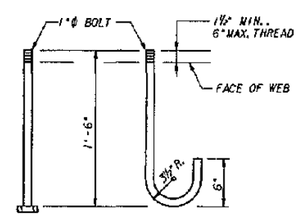

TOP ANCHOR BOTTOM ANCHOR

ANCHOR DETAILS

A.S.T.M. A-307

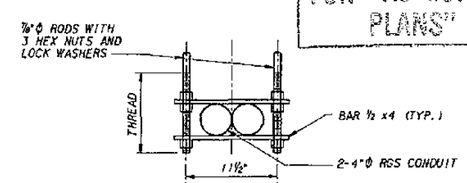

UTILITY HANGER DETAIL

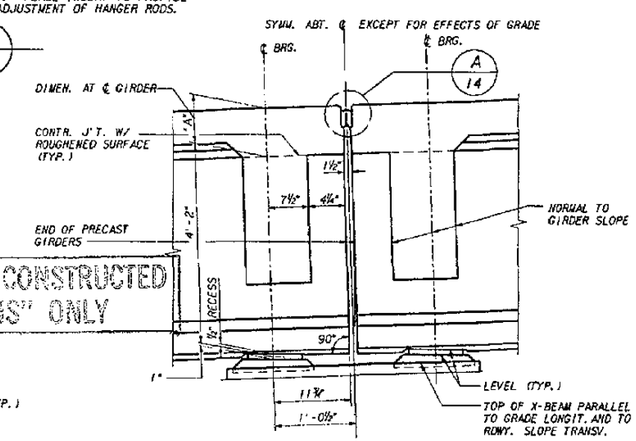

FOR "AS CONSTRUCTED PLANS" ONLY

SECTION THRU END DIAPHRAGM - GIRDERS AT INTERMEDIATE PIERS

LONGIT. DIMENSIONS ARE NORMAL TO SKEW.
SEE "GIRDER DETAILS SHEET FOR DIMEN. "A"

Bridge Design Engr.					REGION NO.	STATE	FED. AID PROJ. NO.	SHEET NO.	TOTAL SHEETS
Supervisor					10	WASH			
Designed By C. A. ARNOLD 4/94					JOB NUMBER				
Checked By C. A. ARNOLD 4/94					95W036				
Detailed By C. A. ARNOLD 4/94									
Bridge Projects Engr.									
Prelim Plan By									
Architect/Specialist	DATE	REVISION	BY	APP'D	4771				

CECIL A. ARNOLD, STATE OF WASHINGTON, REGISTERED PROFESSIONAL ENGINEER — EXPIRES 4/14/97

Washington State Department of Transportation

ANDERSEN BJORNSTAD KANE JACOBS • INC CONSULTING ENGINEERS

SR 167
15TH NW TO 84TH AVE. SO.
HOV AND SC&DI - STAGE 2
BRIDGE 167/124

PRESTRESSED GIRDER DIAPHRAGM

BRIDGE SHEET NO. 12

SHEET 540 OF 663 SHEETS

SR167/91

SR167/124 JOB NO. 7014 SHEET 12

PLOTTER: 02A0055 93/05/06 04:04PM JCN

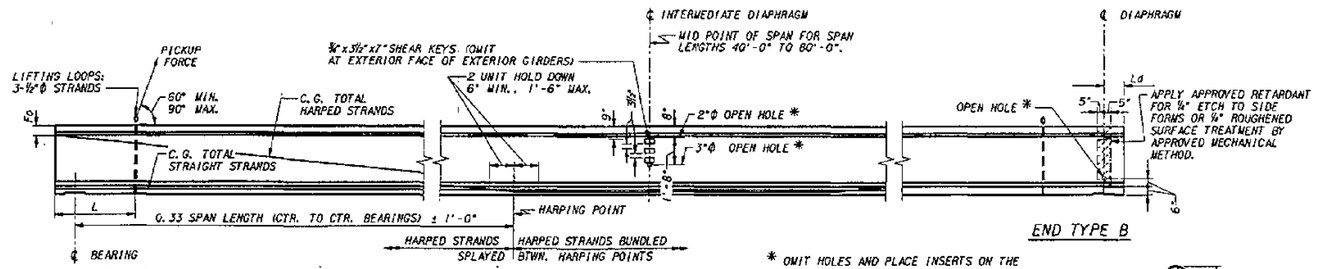

GIRDER ELEVATION

* OMIT HOLES AND PLACE INSERTS ON THE INTERIOR FACE OF EXTERIOR GIRDERS. PLACE HOLES AND INSERTS PARALLEL TO SKEW. INSERTS SHALL BE 1" RICHMOND ROCKET, BURKE HI-TENSILE, LANCASTER MALLEABLE OR APPROVED EQUAL.

OPEN HOLE

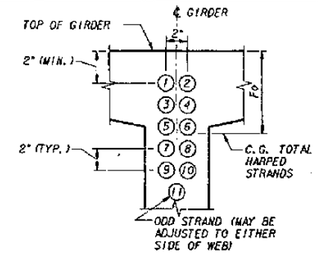

STRAND PATTERN AT GIRDER END

HARPED STRAND LOCATION SEQUENCE SHALL BE AS SHOWN (1), (2) ETC.

NOTES:

ALL DETAILS ON THIS SHEET ARE FOR PRETENSIONED DESIGN ONLY.

PLAN LENGTH SHALL BE INCREASED AS NECESSARY TO COMPENSATE FOR SHORTENING DUE TO PRESTRESS AND SHRINKAGE.

EXTRA CAUTION MUST BE EXERCISED IN HANDLING AND PLACING ALL GIRDERS.

ALL GIRDERS OVER 100' LONG SHALL BE BRACED LATERALLY TO PREVENT TIPPING OR BUCKLING.

THE TOP SURFACE OF THE GIRDER FLANGE SHALL BE ROUGHENED IN ACCORDANCE WITH SECTION 6-02.3(25)H OF THE STANDARD SPECIFICATIONS.

IF THE LIFTING LOOPS EXTEND WITHIN 3" OF THE TOP OF THE ROADWAY SLAB THEY SHALL BE CUT OFF PRIOR TO POURING THE ROADWAY SLAB. ALL LIFTING STRANDS SHALL BE OF THE SAME MATERIAL AND STRENGTH AS THE PRESTRESSING STRANDS. WRAP THE LIFTING LOOPS SO THAT EACH STRAND WILL CARRY ITS SHARE OF THE TOTAL LOAD. EXTEND LIFTING LOOPS ENDING WITH A 9" LONG 90° HOOK TO WITHIN 3" CLEAR OF THE BOTTOM OF THE GIRDER.

CUT ALL STRANDS FLUSH WITH THE GIRDER ENDS AND PAINT WITH AN APPROVED EPOXY RESIN EXCEPT FOR EXTENDED STRANDS AS SHOWN.

FORMS FOR BEARING PAD RECESSES SHALL BE CONSTRUCTED AND FASTENED IN SUCH A MANNER AS NOT TO CAUSE DAMAGE TO THE GIRDER DURING THE STRAND RELEASE OPERATION.

ALL STRANDS ARE ½" ϕ LOW RELAXATION STRANDS (AASHTO M203 GRADE 270).

EXTENDED STRANDS AND BARS ARE PARALLEL TO GIRDER.

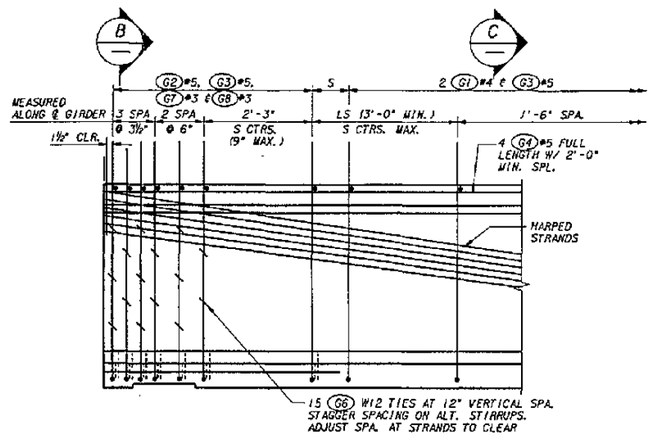

TYPICAL END ELEVATION

END TYPE	BEARING RECESS	Y	Z	SAWTEETH
B	YES	0"	0"	NO

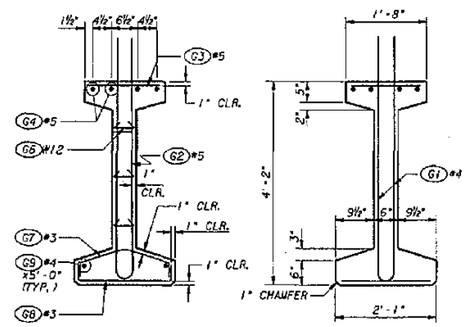

SECTION (B) SECTION (C)

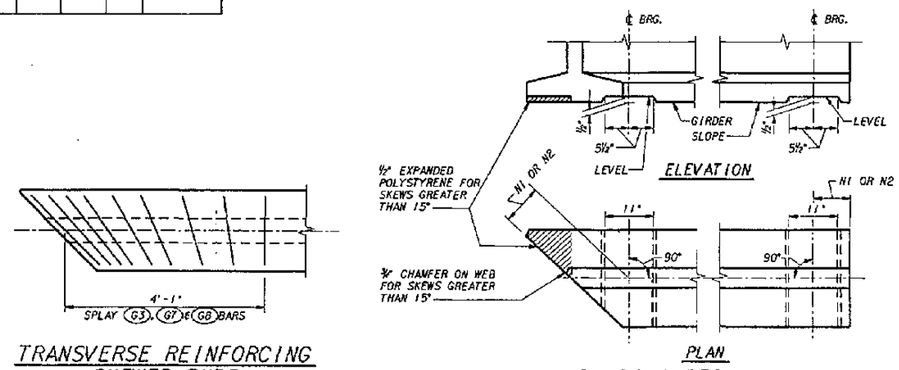

BEARING RECESS DETAIL

TRANSVERSE REINFORCING SKEWED ENDS

ONLY TRANSVERSE REINF. SHOWN

FOR AS CONSTRUCTED PLANS ONLY

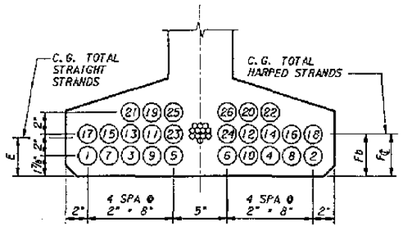

STRAND PATTERN AT ℄ SPAN

STRAND LOCATION SEQUENCE SHALL BE AS SHOWN (1), (2) ETC.

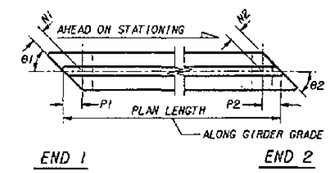

GIRDER SCHEDULE

DIMENSION A AT ℄ BEARINGS = 10¾" — BASED ON GIRDER DEFLECTION = D AT TIME OF SLAB POUR (120 DAYS)

SPAN	GIRDER	END 1 TYPE	END 2 TYPE	L	B1	B2	H1	N2	P1	P2	PLAN LENGTH	MIN. CONC. COMPR. STRENGTH 28 DAYS f'c KSI	MIN. CONC. COMPR. STRENGTH RELEASE f'ci KSI	S (IN.)	LS (FT.)	HARPED NO. OF STRANDS	HARPED JACKING FORCE (KIPS)	STRAIGHT NO. OF STRANDS	STRAIGHT JACKING FORCE (KIPS)	LOCATION OF C.G. STRANDS (IN.) E	Fc	Fb	Fa	C (IN.)	D (IN.)	Ld1 (IN.)	Ld2 (IN.)
1	1A	B	B	1'-6"	75	75	9½"	11¾"	9⅞"	1'-0¼"	53'-1⅜"	7	5.0	12	3	4	124	10	310	1⅞	7	7	14	⅛	⅜	8⅝	10¾
1	1B	B	B	1'-6"	75	75	9½"	11¾"	9⅞"	1'-0¼"	53'-2⅛"	7	5.0	12	3	4	124	10	310	1⅞	7	7	14	⅛	⅜	8⅝	10¾
1	1C	B	B	1'-6"	75	75	9½"	11¾"	9⅞"	1'-0¼"	53'-0⅞"	7	5.0	12	3	4	124	10	310	1⅞	7	7	14	⅛	⅜	8⅝	10¾
1	1D	B	B	1'-6"	75	75	9½"	11¾"	9⅞"	1'-0¼"	53'-1"	7	5.0	12	3	4	124	10	310	1⅞	7	7	14	⅛	⅜	8⅝	10¾
2	2A	B	B	1'-6"	70	70	11⅜"	11¾"	1'-0⅜"	1'-0⅜"	77'-5⅛"	7	5.2	12	10	4	124	26	806	3½	12	12	3	¾	2⅜	10⅞	10⅞
2	2B	B	B	1'-6"	70	70	11⅜"	11¾"	1'-0⅜"	1'-0⅜"	77'-5⅜"	7	5.2	12	10	4	124	26	806	3½	12	12	3	¾	2⅜	10⅞	10⅞
2	2C	B	B	1'-6"	70	70	11⅜"	11¾"	1'-0⅜"	1'-0⅜"	77'-3⅞"	7	5.2	12	10	4	124	26	806	3½	12	12	3	¾	2⅜	10⅞	10⅞
2	2D	B	B	1'-6"	70	70	11⅜"	11¾"	1'-0⅜"	1'-0⅜"	77'-3⅜"	7	5.2	12	10	4	124	26	806	3½	12	12	3	¾	2⅜	10⅞	10⅞
3	3A	B	B	1'-6"	70	70	11¾"	9½"	1'-0½"	1'-10⅛"	57'-8¾"	7	5.0	12	4	3	93	14	434	2½	11	11	7⅝	¼	¾	10⅞	8⅝
3	3B	B	B	1'-6"	70	70	11¾"	9½"	1'-0½"	1'-10⅛"	57'-9⅛"	7	5.0	12	4	3	93	14	434	2½	11	11	7⅝	¼	¾	10⅞	8⅝
3	3C	B	B	1'-6"	70	70	11¾"	9½"	1'-0½"	1'-10⅛"	57'-7⅛"	7	5.0	12	4	3	93	14	434	2½	11	11	7⅝	¼	¾	10⅞	8⅝
3	3D	B	B	1'-6"	70	70	11¾"	9½"	1'-0½"	1'-10⅛"	57'-7½"	7	5.0	12	4	3	93	14	434	2½	11	11	7⅝	¼	¾	10⅞	8⅝

MARK	LOCATION	SIZE	
G1	GIRDER STIRRUPS	4	
G2	GIRDER END STIRRUPS	5	
G3	GIRDER TOP FLANGE	5	STR.
G4	GIRDER LONGIT. FULL LENGTH	5	STR.
G6	GIRDER END TIES	W12	≠
G7	GIRDER END TIES	3	
G8	GIRDER END TIES	3	
G9	GIRDER LONGIT.	4	STR.

≠ #3 OR #4 MAY BE SUBSTITUTED. FIELD BEND IS OPTIONAL

BENDING DIAGRAM (ALL DIMENSIONS ARE OUT TO OUT)

NOTE: FOR DIMENSION A, SEE "GIRDER SCHEDULE"

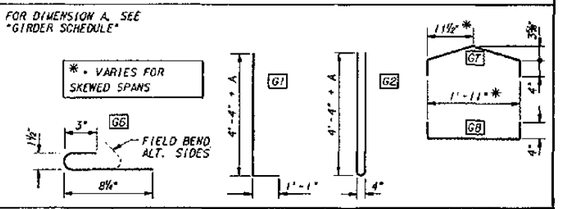

Bridge Design Engr.					REGION NO.	STATE	FED. AID PROJ. NO.	SHEET NO.	TOTAL SHEETS
Supervisor					10	WASH			
Designed By C.S. YU 4/94					JOB NUMBER				
Checked By E.W. THOMAS 4/94					95W036				
Detailed By C.S. YU 4/94					4771				
Bridge Projects Engr.									
Prelim Plan By									
Architect/Specialist	DATE	REVISION	BY	APP'D					

STATE OF WASHINGTON — CECIL A. ARMSTRONG — REGISTERED PROFESSIONAL ENGINEER — EXPIRES 4/14/97

Washington State Department of Transportation

ANDERSEN BUDRNSTAD KANE JACOBS • INC CONSULTING ENGINEERS

SR 167
15TH NW TO 84TH AVE. SO.
HOV AND SC&DI - STAGE 2
BRIDGE 167/124

W50G GIRDER DETAILS

BRIDGE SHEET NO. 13

SHEET 541 OF 663 SHEETS

SR167/124 JOB NO. 7014 SHEET 13

PLOTTED: 02AUG95 9:36AM

SR167/91

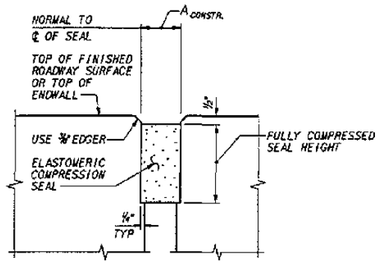

COMPRESSION SEAL

SEE EXPANSION JOINT MODIFICATION DETAIL THIS SHEET FOR EXISTING SLAB

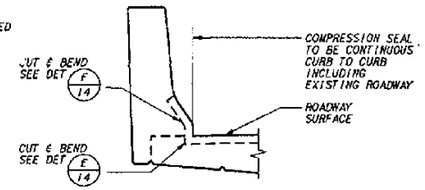

COMPRESSION SEAL AT BARRIER PIERS 2 & 3

DETAIL A/12, 14

COMPRESSION SEAL TABLE *

D. S. BROWN		WATSON BOWMAN ACME		ELASTOMER SEALS		STRUCTURAL ACCESSORIES	
SEAL	W (IN.)	SEAL	W (IN.)	SEAL	W (IN.)	SEAL	W (IN.)
CV-2000	2	WA-200	2	X 2000	2	SA 2000	2

* TESTING SHALL BE PER AASHTO M-220 PRIOR TO USE.

COMPRESSION SEAL TABLE

PIER NO.	A CONSTR. 40° F	A CONSTR. 64° F	A CONSTR. 80° F
PIER 1	1¼	1¼	1 3/16
PIER 2	1 3/16	1⅛	1⅛
PIER 3	1 3/16	1¼	1⅛
PIER 4	1¼	1¼	1 3/16

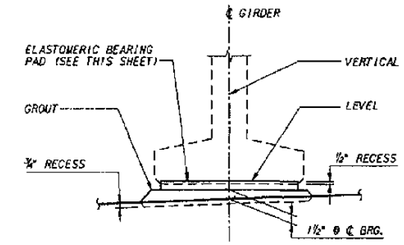

VIEW B

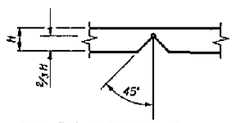

DRILL ⅛"Φ HOLES THRU. SEAL W/ STANDARD TWIST DRILL MAKING SURE THE TOP IS NOT DAMAGED. CUT OUT WEDGE W/ SHARP LONG BLADE KNIFE.

DETAIL F/14

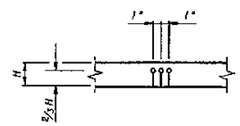

DRILL ½"Φ HOLES THRU. SEAL W/ STANDARD TWIST DRILL MAKING SURE THE TOP IS NOT DAMAGED. CUT OUT WEDGE W/ SHARP LONG BLADE KNIFE.

DETAIL E/14

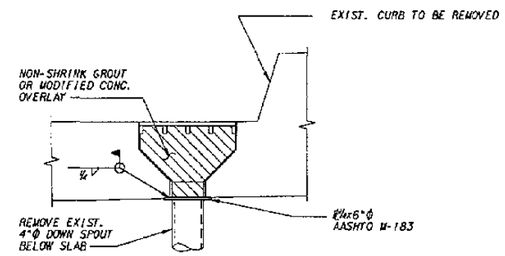

EXIST. TYPE I DRAIN PLUG DETAIL-WEST BRIDGE

REMOVE DRAIN GRATE AND CHAIN. COMPLETELY REMOVE ALL RUST AND SCALE FROM THE SURFACE OF THE DRAIN BASIN. INSTALL PLATE AND FILL TO TOP OF EXIST. SLAB W/ NON-SHRINK GROUT OR MODIFIED CONCRETE OVERLAY

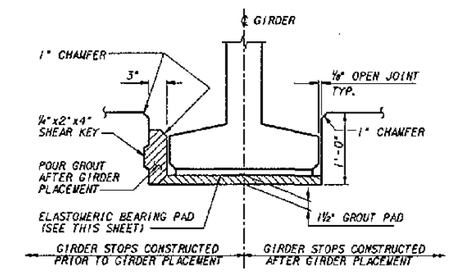

DETAIL C/14

COMPRESSION SEAL DETAILS

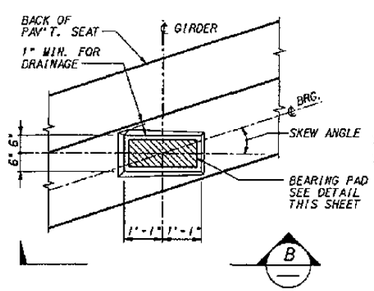

AT END PIERS

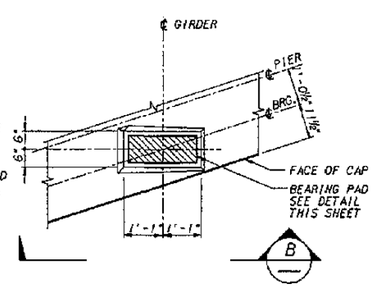

AT INTERMEDIATE PIERS

GROUT PAD

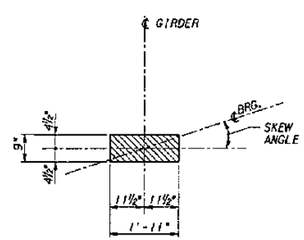

BEARING PAD

LAMINATED ELASTOMERIC PAD 1½" THICK W/ 2 METAL SHIMS DUROMETER HARDNESS = 60

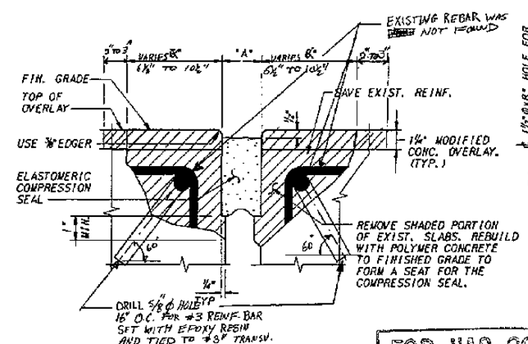

EXPANSION JOINT MODIFICATION DETAIL

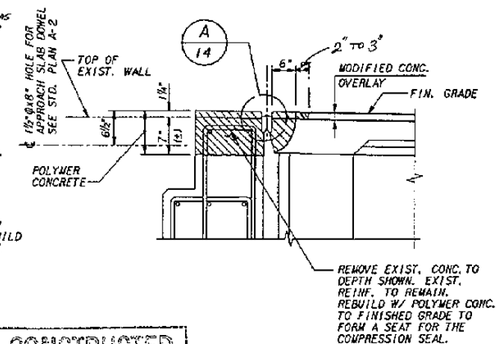

SECTION D/2, 3, 5, 6, 12

FOR "AS CONSTRUCTED PLANS" ONLY

Bridge Design Engr.					REGION NO.	STATE	FED. AID PROJ. NO.	SHEET NO. / TOTAL SHEETS
Supervisor					10	WASH		
Designed By C. S. YU 4/94					JOB NUMBER			
Checked By C. A. ARNOLD 4/94					95W036			
Detailed By C. S. YU 4/94								
Bridge Projects Engr.								
Prelim Plan By								
Architect/Specialist	DATE	REVISION	BY	APP'D	9/22/			

CECIL A. ARNOLD — STATE OF WASHINGTON — 19350 — REGISTERED PROFESSIONAL ENGINEER — EXPIRES 4/14/97

Washington State Department of Transportation

ANDERSEN BJORNSTAD KANE JACOBS • INC — CONSULTING ENGINEERS

SR 167
15TH NW TO 84TH AVE. SO.
HOV AND SC&DI - STAGE 2
BRIDGE 167/124

ROADWAY JOINTS & MISC. DETAILS

BRIDGE SHEET NO. 14

SHEET 542 OF 663 SHEETS

SR167/1124 JOB NO. 7014 SHEET 14

PLOTTED: 02JUL095 9:36A JDK 04RDJT5.DGN

SR 167/91

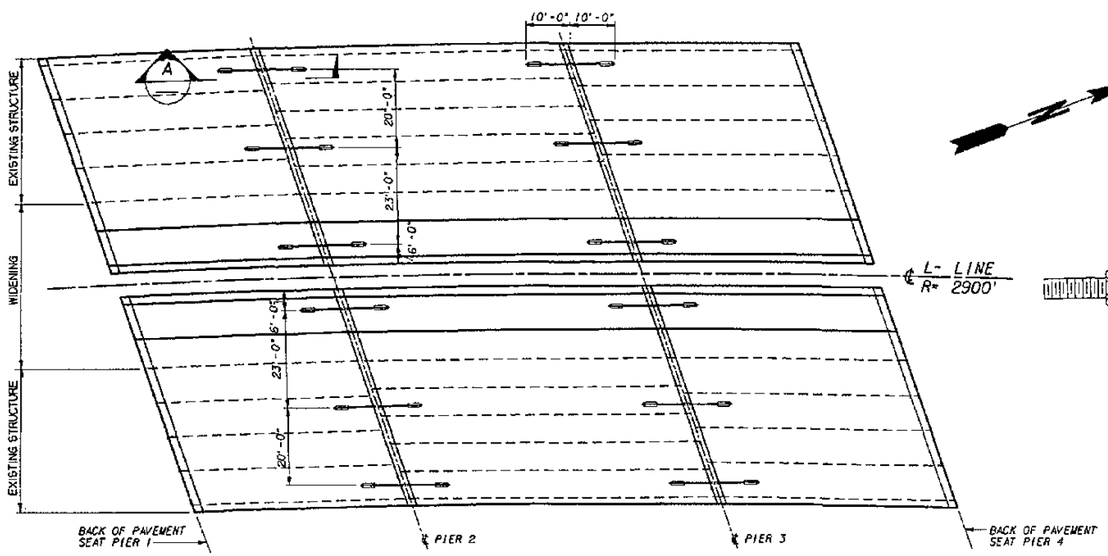

SEISMIC RESTRAINER LOCATION PLAN

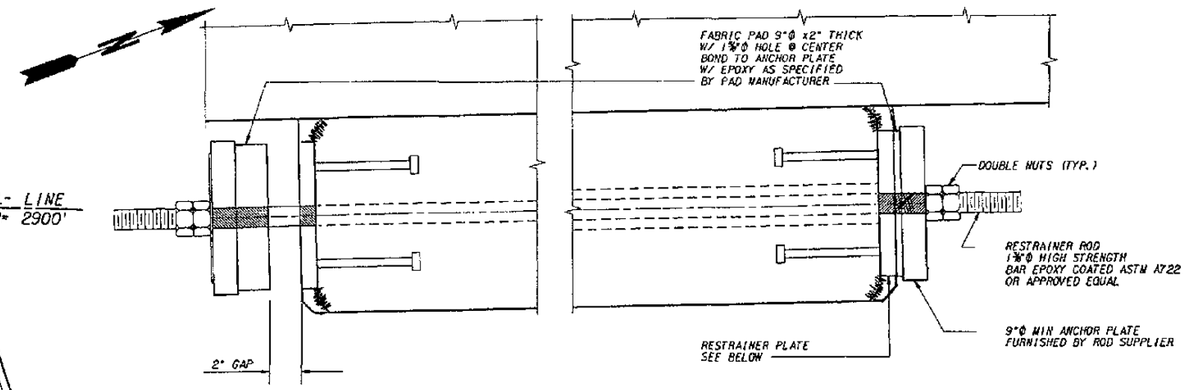

ELEVATION

NOTE:

ALL STRUCTURAL STEEL PLATES AND HARDWARE SHALL BE AASHTO M183 AND SHALL BE HOT-DIPPED GALVANIZED PER AASHTO M111

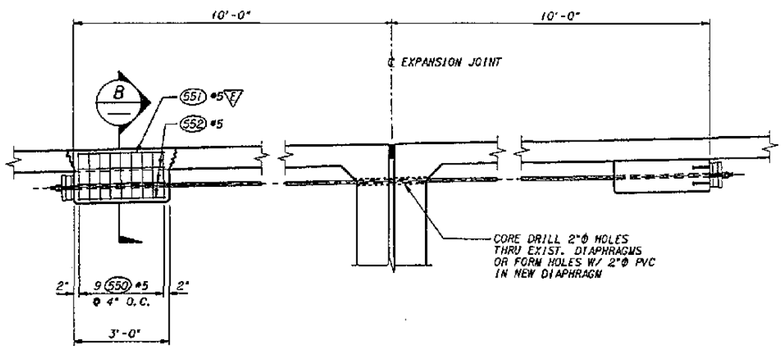

SECTION A

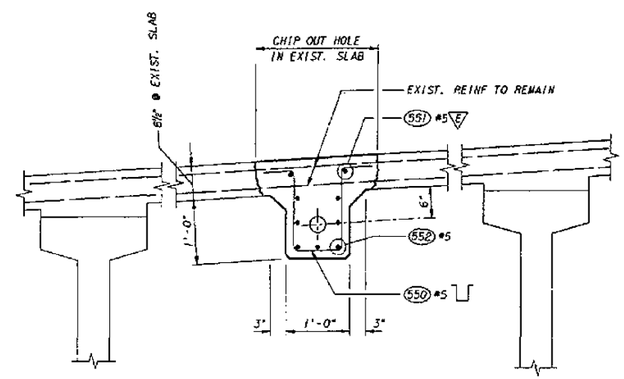

NOTE:

1. SECTION @ EXIST. SLAB SHOWN.
2. SECTION @ NEW SLAB SIMILAR EXCEPT CAST RESTRAINER BLOCKS WITH NEW SLAB.

SECTION B

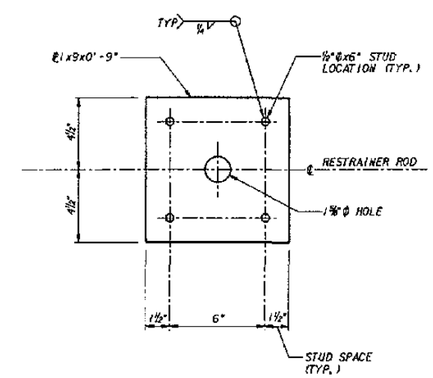

RESTRAINER PLATE

FOR "AS CONSTRUCTED PLANS" ONLY

Bridge Design Engr.					REGION NO.	STATE	FED. AID PROJ. NO.	SHEET NO.	TOTAL SHEETS
Supervisor					10	WASH			
Designed By C.S. YU 4/94					JOB NUMBER				
Checked By					95W036				
Detailed By C.S. YU 4/94									
Bridge Projects Engr.									
Prelim Plan By									
Architect/Specialist	DATE	REVISION	BY	APP'D	4/97				

STATE OF WASHINGTON CECIL A. LANDON 1958 REGISTERED PROFESSIONAL ENGINEER
EXPIRES 4/14/97

Washington State Department of Transportation

ANDERSEN BUDNSTAD KANE JACOBS • INC CONSULTING ENGINEERS

SR 167
15TH NW TO 84TH AVE. SO.
HOV AND SC&DI - STAGE 2
BRIDGE 167/124

RESTRAINER PLAN & DETAILS

BRIDGE SHEET NO. 15

SHEET 543 OF 663 SHEETS

SR167/124 JOB NO. 7014 SHEET 15

PLOTTED: 02AUG95 9:36:30 AM 04SEISMC.DGN

SR167/91

PLOTTED: 02AUG95 93G3JOK 04TRFBR3.DGN

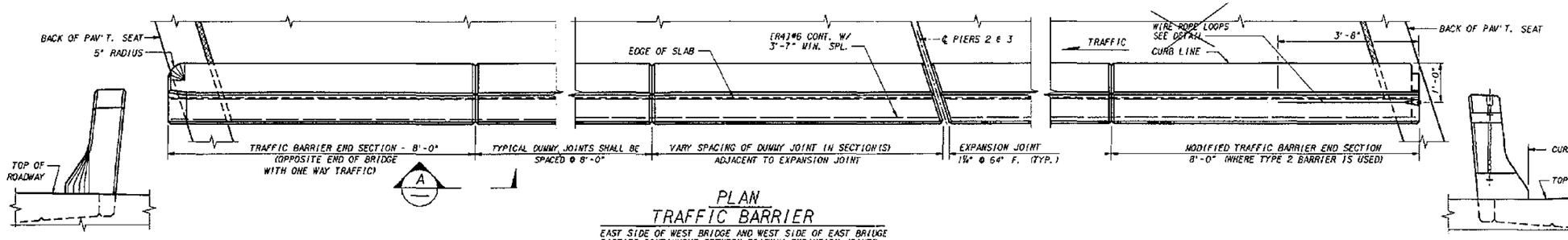

END VIEW

PLAN
TRAFFIC BARRIER

EAST SIDE OF WEST BRIDGE AND WEST SIDE OF EAST BRIDGE BARRIER CONTINUOUS BETWEEN ROADWAY EXPANSION JOINTS. CONSTRUCTION JOINTS WITH SHEAR KEYS ARE PERMISSIBLE AT DUMMY JOINTS LOCATIONS. FORM JOINTS BETWEEN DUMMY JOINTS SHALL NOT BE PERMITTED.

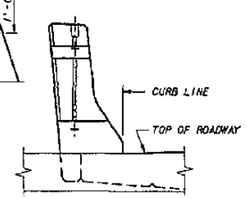

END VIEW

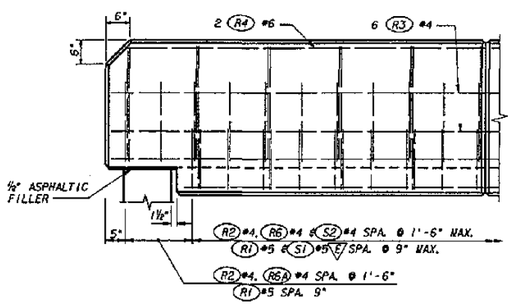

OUTSIDE ELEVATION
END OF TRAFFIC BARRIER

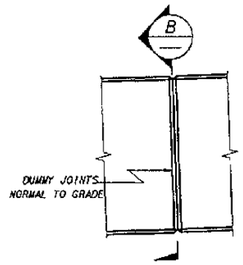

VIEW A

ALL CHAMFERS ¾".

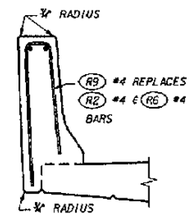

SLIPFORM ALTERNATE

SEE TYPICAL SECTION - TRAFFIC BARRIER FOR ADDITIONAL DETAILS.

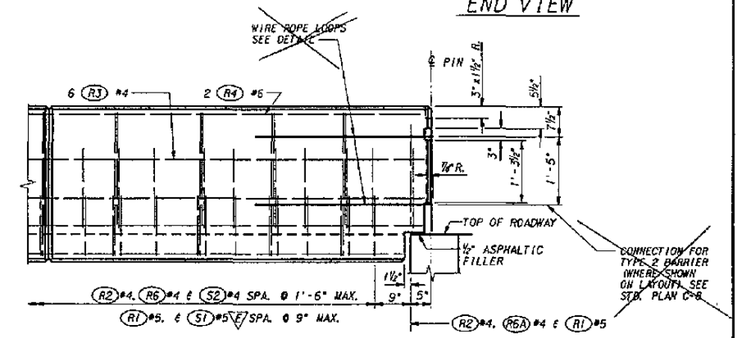

OUTSIDE ELEVATION
END OF MODIFIED TRAFFIC BARRIER
FOR TYPE 2 BARRIER ANCHORAGE

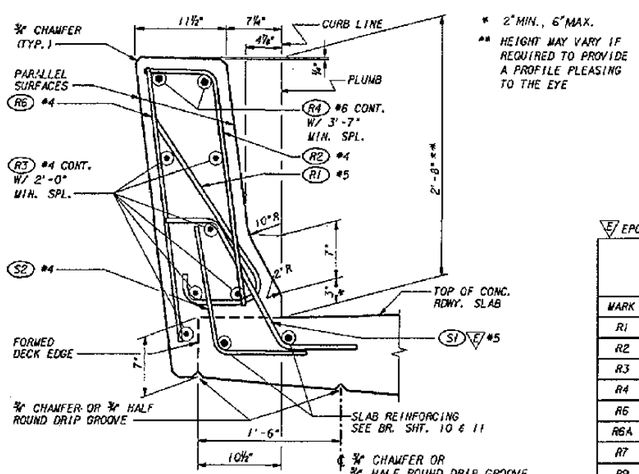

* 2" MIN., 6" MAX.

** HEIGHT MAY VARY IF REQUIRED TO PROVIDE A PROFILE PLEASING TO THE EYE

TYPICAL SECTION - TRAFFIC BARRIER

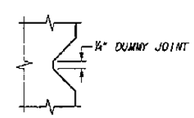

SECTION 2-2

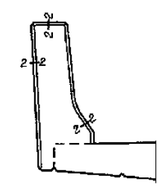

SECTION B

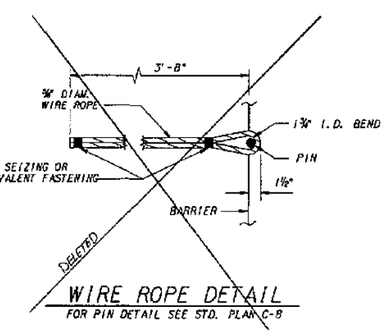

WIRE ROPE DETAIL

FOR PIN DETAIL SEE STD. PLAN C-8

E EPOXY COATED

DIMENSIONS TO POINTS OF INTERSECTION.

TRAFFIC BARRIER BAR LIST

ALL REINFORCING SHALL BE AASHTO M31, GR. 60.

MARK	SIZE	LENGTH	BENDING DIAGRAM (ALL DIMENSIONS ARE OUT TO OUT)
R1	5	2'-11"	
R2	4	3'-0"	
R3	4	(A)	STR.
R4	6	(A)	STR.
R6	4	3'-0"	STR.
R6A	4	2'-5"	STR.
R7	9	14'-0"	STR.
R9	4	6'-1"	

(A) DETERMINE FROM PLANS

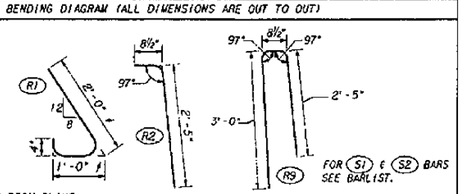

FOR "AS CONSTRUCTED PLANS" ONLY

Bridge Design Engr.					
Supervisor					
Designed By	E.W. THOMAS	4/94			
Checked By	C.A. ARNOLD	4/94			
Detailed By	E.W. THOMAS	4/94			
Bridge Projects Engr.					
Prelim Plan By					
Architect/Specialist			DATE	REVISION	BY / APP'D

REGION NO.	STATE	FED. AID PROJ. NO.	SHEET NO.	TOTAL SHEETS
10	WASH			

JOB NUMBER 95W036

4771

EXPIRES 4/14/97

Washington State Department of Transportation

ANDERSEN BJORNSTAD KANE JACOBS • INC CONSULTING ENGINEERS

SR 167
15TH NW TO 84TH AVE. SO.
HOV AND SC&DI - STAGE 2
BRIDGE 167/124

TRAFFIC BARRIER - MEDIAN

BRIDGE SHEET NO. 16

SHEET 544 OF 663 SHEETS

SR167/124 JOB NO. 7014 SHEET 16

SR167/91

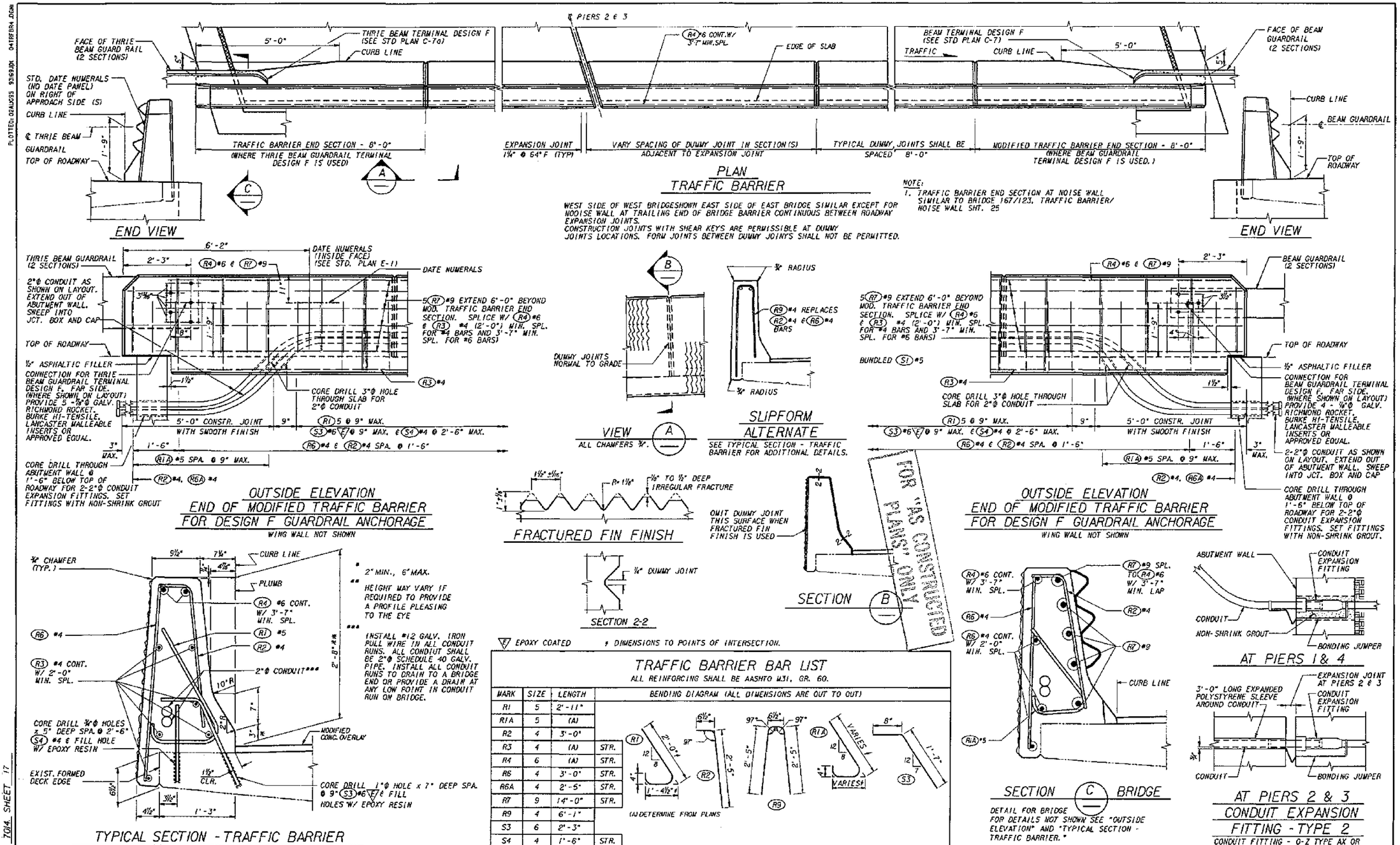

TRAFFIC BARRIER BAR LIST

ALL REINFORCING SHALL BE AASHTO M31, GR. 60.

MARK	SIZE	LENGTH	BENDING DIAGRAM (ALL DIMENSIONS ARE OUT TO OUT)
R1	5	2'-11"	
R1A	5	(A)	
R2	4	3'-0"	
R3	4	(A)	STR.
R4	6	(A)	STR.
R6	4	3'-0"	STR.
R6A	4	2'-5"	STR.
R7	9	14'-0"	STR.
R9	4	6'-1"	
S3	6	2'-3"	
S4	4	1'-6"	STR.

(A) DETERMINE FROM PLANS

Bridge Design Engr.					REGION NO.	STATE	FED. AID PROJ. NO.	SHEET NO. / TOTAL SHEETS
Supervisor					10	WASH		
Designed By E.W. THOMAS 4/94					JOB NUMBER 95W036			
Checked By C.A. ARNOLD 4/94								
Detailed By E.W. THOMAS 4/94								
Bridge Projects Engr.								
Prelim Plan By								
Architect/Specialist	DATE	REVISION	BY	APP'D	4571			

CECIL A. ARNOLD, STATE OF WASHINGTON, 19958, REGISTERED PROFESSIONAL ENGINEER, EXPIRES 4/14/97

Washington State Department of Transportation

ANDERSEN BJORNSTAD KANE JACOBS • INC CONSULTING ENGINEERS

SR 167
15TH NW TO 84TH AVE. SO.
HOV AND SC&DI - STAGE 2
BRIDGE 167/124

TRAFFIC BARRIER - OUTSIDE

BRIDGE SHEET NO. 17

SHEET 545 OF 663 SHEETS

SR167/124 JOB NO. 7014 SHEET 17

SR167/91

PLOTTED: 02AUG95 9:19:49AM 04TRFBR4.DGN

04B-LIST.DGN 93169.IXX PLOTTED: 02AUG95

S=BAR IS INCLUDED IN SUBSTRUCTURE QUANITIES
F=BAR TO BE FIELD WELDED
T=TIE OR STIRRUP
E=BAR IS TO BE EPOXY COATED
V=BAR DIMENSIONS VARY BETWEEN DIMENSIONS SHOWN ON THIS LINE AND THE FOLLOWING LINE

MARK No	LOCATION	SIZE	No REQD	BEND TYPE	TIE OR STIR	FIELD WELD	SUBSTR	EPOXY COAT	VARIES	No EACH	U FT	U IN	W FT	W IN	X FT	X IN	Y FT	Y IN	Z FT	Z IN	F1 DEG	F2 DEG	LENGTH FT	LENGTH IN	WEIGHT LBS
	PIER 1																								
100	FTNG TOP TRANSV W&E	6	32	61			S			1	5	9.0	1	6.0	1	6.0							8	5.0	405
101	FTNG BOT TRANSV W&E	6	64	50			S			1	5	9.0											5	9.0	553
102	FTNG TOP ₵ BOT LOGIT W ₵ E	6	36	50			S			1	15	9.0											15	9.0	852
103	WALL LONGIT W ₵ E NF	4	10	50			S			1	19	6.0											19	6.0	130
104	WALL LONGIT W ₵ E FF	5	14	50			S			1	19	6.0											19	6.0	285
105	WALL VERT W ₵ E	5	35	62			S			1	0	9.0	6	6.0	6	6.0	0	6.0	0	6.0			14	3.0	520
106	WALL VERT W ₵ E	5	12	50			S			1	6	11.0											6	11.0	87
107	SEAT LONGIT WEST	6	3	50			S			1	15	9.0											15	9.0	71
108	SEAT LOINGIT WEST	4	1	50			S			1	15	9.0											15	9.0	11
109	SEAT LONGIT EAST	6	3	50			S			1	17	6.0											17	6.0	79
110	SEAT LONGIT EAST	4	1	50			S			1	17	6.0											17	6.0	12
111	SEAT VERT W ₵ E	5	30	63			S			1	3	0.0	3	0.0	3	0.0	0	9.0	0	9.0			10	0.0	313
112	SEAT VERT W ₵ E	5	6	61			S			1	3	0.0	1	9.0	1	9.0	0	9.0	0	9.0			7	6.0	47
113	PAVMT SEAT LONG W ₵ E	4	2	50			S			1	17	0.0											17	0.0	23
114	PAVMT SEAT TIE W ₵ E	4	70	90			S			1	4	0.0											4	0.0	187
115	GIRDER STOP W ₵ E	4	24	61			S			1	2	1.0	2	0.0	2	0.0							5	10.0	94
116	GIRDER STOP W ₵ E	4	8	61			S			1	4	6.0	2	0.0	0	9.0							7	0.0	37
117	GIRDER STOP W ₵ E	4	8	61			S			1	6	0.0	2	0.0	2	0.0							9	9.0	52
118	ANCHORS W ₵ E	7	22	51			S			1	5	0.0											5	10.0	262
120	GIRDER STOP W ₵ E	4	2	61			S			1	2	1.0	0	9.0	0	9.0							3	4.0	4
121	WALL VERT	5	1	61			S			1	0	9.0	5	0.0	5	0.0							10	6.0	11
	PIER 2																								
201	GIRDER STOP LONGIT	4	12	70			S			1	3	9.0	2	8.0	2	8.0							9	10.0	79
202	GIRDER STOP TRANS	4	22	70			S			1	3	11.0	2	8.0	2	8.0							10	0.0	147
203	X-BEAM DOWEL	9	32	50			S			1	9	2.0											9	2.0	997
204	X-BEAM SIDE DOWEL	6	8	50			S			1	4	0.0											4	0.0	48
205	X-BEAM TOP LONG	10	18	80			S			1	16	7.0	2	11.0			0	6.0			84		19	1.7	1482
206	X-BEAM BOT LONG	8	18	50			S			1	16	7.0											16	7.0	797
207	X-BEAM STIRRUP	5	32	83	T		S			1	3	9.0	2	11.5									15	1.3	504
208	X-BEAM TOP ₵ BOT TIE	4	8	56			S			1	3	9.0											4	10.0	26
209	X-BEAM TIE	5	64	56	T		S			1	2	11.5											3	8.5	248
210	GIRDER STOP LONGIT	4	12	70			S			1	6	4.0	2	8.0	2	8.0							12	5.0	100
211	GIRDER STOP TRANS	4	12	50			S			1	3	11.0											3	11.0	31
212	GIRDER STOP CANTILEVER	4	12	61			S			1	0	9.0	3	0.0	3	0.0							6	6.0	52
213	X-BEAM SIDE LONG	6	8	50			S			1	16	7.0											16	7.0	199
214	X-BEAM TIE AT COLUMN	5	8	61			S			1	2	11.5	3	6.0	3	6.0							9	8.5	81
215	COL VERT WEST	9	11	51			S			1	29	9.0											31	0.0	1159
216	COL VERT EAST	9	11	51			S			1	30	0.0											31	3.0	1169
217	COL SPIRAL WEST	5	1	67			S			1	2	9.0	0	4.0							90		763	4.9	796
218	COL SPIRAL EAST	5	1	67			S			1	2	9.0	0	4.0							91		771	10.7	805
219	SHAFT VERT E ₵ W	11	48	50			S			1	65	3.0											65	3.0	16640
220	SHAFT SPIRAL E ₵ W	5	2	67			S			1	3	10.0	0	4.0							105		247	9.6	2603
221	SHAFT SPIRAL E ₵ W	5	2	67			S			1	3	10.0	0	9.0							42		499	11.0	1043
	PIER 3																								
301	GIRDER STOP LONGIT	4	12	70			S			1	3	10.0	2	9.0									7	5.5	60
302	GIRDER STOP TRANS	4	22	70			S			1	3	11.0	2	8.0	2	8.0							10	0.0	147
303	X-BEAM DOWEL	9	32	50			S			1	9	2.0											9	2.0	997
304	X-BEAM SIDE DOWEL	6	8	50			S			1	4	0.0											4	0.0	48
305	X-BEAM TOP LONG	10	18	80			S			1	16	9.0	2	11.0			0	6.0			84		19	3.7	1495
306	X-BEAM BOT LONG	8	18	51			S			1	16	9.0											17	8.0	849
307	X-BEAM STIRRUP	5	32	83	T		S			1	3	9.0	2	11.5									15	1.3	504
308	X-BEAM TOP ₵ BOT TIE	4	8	56			S			1	3	9.0											4	10.0	26
309	X-BEAM TIE	5	64	56	T		S			1	2	11.5											3	8.5	248
310	GIRDER STOP LONGIT	4	12	70			S			1	6	5.0	2	8.0									9	11.5	80
311	GIRDER STOP TRANS	4	12	50			S			1	3	11.0											3	11.0	31
312	GIRDER STOP CANTILEVER	4	12	61			S			1	0	9.0	3	0.0	3	0.0							6	6.0	52
313	X-BEAM SIDE LONG	6	8	50			S			1	16	9.0											16	9.0	201
314	X-BEAM TIE AT COLUMN	5	8	61			S			1	2	11.5	3	6.0	3	6.0							9	8.5	81
315	COL VERT WEST	9	11	51			S			1	29	0.0											30	3.0	1131
316	COL VERT EAST	9	11	51			S			1	29	6.0											30	9.0	1150
317	COL SPIRAL WEST	5	1	67			S			1	2	9.0	0	4.0							85		721	0.0	752
318	COL SPIRAL EAST	5	1	67			S			1	2	9.0	0	4.0							86		729	5.7	761
319	SHAFT VERT E ₵ W	11	48	50			S			1	67	3.0											67	3.0	17150
320	SHAFT SPIRAL E ₵ W	5	2	67			S			1	3	10.0	0	4.0							105		247	9.6	2603
321	SHAFT SPIRAL E ₵ W	5	2	67			S			1	3	10.0	0	9.0							44		523	8.7	1092
	41ER 4																								
400	FTNG TOP TRANSV W₵E	6	32	61			S			1	5	9.0	1	6.0	1	6.0							8	5.0	405
401	FTNG BOT TRANSV W₵E	6	64	50			S			1	5	9.0											5	9.0	553
402	FTNG TOP ₵ BOT LOGIT W ₵ E	6	36	50			S			1	15	9.0											15	9.0	852
403	WALL LONGIT W ₵ NF	4	10	50			S			1	20	3.0											20	3.0	135
404	WALL LONGIT W ₵ FF	5	14	50			S			1	20	3.0											20	3.0	296
405	WALL VERT W ₵ E	5	35	62			S			1	0	9.0	6	6.0	6	6.0	0	6.0	0	6.0			14	3.0	520
406	WALL VERT W ₵ E	5	14	50			S			1	7	0.0											7	0.0	102
407	SEAT LONGIT WEST	6	3	50			S			1	17	6.0											17	6.0	79
408	SEAT LONGIT WEST	4	1	50			S			1	17	6.0											17	6.0	12
409	SEAT LONGIT EAST	6	3	50			S			1	16	9.0											16	9.0	75
410	SEAT LONGIT EAST	4	1	50			S			1	16	9.0											16	9.0	11
411	SEAT VERT W ₵ E	5	31	63			S			1	3	0.0	3	0.0	3	0.0	0	9.0	0	9.0			10	0.0	323
412	SEAT VERT W ₵ E	5	6	61			S			1	3	0.0	1	9.0	1	9.0	0	9.0	0	9.0			7	6.0	47
413	PAVMT SEAT LONG W ₵ E	4	2	50			S			1	17	3.0											17	3.0	23
414	PAVMT SEAT TIE W ₵ E	4	70	90			S			1	4	0.0											4	0.0	187
415	GIRDER STOP W ₵ E	4	24	61			S			1	2	1.0	2	0.0	2	0.0							5	10.0	94
416	GIRDER STOP W ₵ E	4	8	61			S			1	4	6.0	2	0.0	2	0.0							8	3.0	44
417	GIRDER STOP W ₵ E	4	8	61			S			1	6	3.0	2	0.0	2	0.0							10	0.0	53
418	ANCHORS W ₵ E	7	22	51			S			1	5	0.0											5	10.0	262
420	GIRDER STOP W ₵ E	4	2	61			S			1	2	1.0	0	9.0	0	9.0							3	4.0	4
421	WALL VERT	5	1	61			S			1	0	9.0	5	0.0	5	0.0							10	6.0	11

S=BAR IS INCLUDED IN SUBSTRUCTURE QUANITIES
F=BAR TO BE FIELD WELDED
T=TIE OR STIRRUP
E=BAR IS TO BE EPOXY COATED
V=BAR DIMENSIONS VARY BETWEEN DIMENSIONS SHOWN ON THIS LINE AND THE FOLLOWING LINE

MARK No	LOCATION	SIZE	No REQD	BEND TYPE	TIE OR STIR	FIELD WELD	SUBSTR	EPOXY COAT	VARIES	No EACH	U FT	U IN	W FT	W IN	X FT	X IN	Y FT	Y IN	Z FT	Z IN	F1 DEG	F2 DEG	LENGTH FT	LENGTH IN	WEIGHT LBS
	WEST ROADWAY SLAB																								
501	WEST SPAN 1 LONGIT TOP	5	32	50				E		1	28	0.0											28	0.0	935
502	WEST SPAN 1 LONGIT BOT	5	22	50						1	20	0.0											20	0.0	459
503	WEST SPAN 2 LONGIT TOP	5	32	50				E		1	39	8.0											39	8.0	1324
504	WEST SPAN 2 LONGIT BOT	5	22	50						1	37	0.0											37	0.0	849
505	WEST SPAN 3 LONGIT TOP	5	32	50				E		1	29	9.0											29	9.0	993
506	WEST SPAN 3 LONGIT BOT	5	22	50						1	20	0.0											20	0.0	459
507	WEST SPAN 1 LONGIT BOT	5	22	50						1	35	0.0											35	0.0	803
508	WEST SPAN 2 LINGIT BOT	5	22	50						1	40	0.0											40	0.0	918
509	WEST SPAN 3 LONGIT BOT	5	22	50						1	40	0.0											40	0.0	918
511	WEST SPAN 1 TRAN END TOP	6	20	51				E	V	2	17	9.0											18	5.0	
											1	9.0											2	5.0	313
512	WEST SPAN 1 TRAN END BOT	6	20	50					V	2	17	9.0											17	9.0	
											1	9.0											1	9.0	293
513	WEST ALL SPAN TRAN TOP	6	348	52				E		1	18	4.5											19	8.5	10301
514	WEST ALL SPAN TRAN BOT	6	348	51						1	18	4.5											19	0.5	9953
515	WEST SPAN 2 TRAN END TOP	6	26	51				E	V	2	17	2.0											17	10.0	
											1	0.0											1	8.0	381
516	WEST SPAN 2 TRAN END BOT	6	26	50					V	2	17	2.0											17	2.0	
											1	0.0											1	0.0	355
517	WEST SPAN 3 TRAN END TOP	6	24	51				E	V	2	17	0.0											17	8.0	
											1	9.0											2	5.0	362
518	WEST SPAN 3 TRAN END BOT	6	24	50					V	2	17	0.0											17	0.0	
											1	9.0											1	9.0	338
	EAST ROADWAY SLAB																								
531	EAST SPAN 1 LONGIT TOP	5	32	50				E		1	28	0.0											28	0.0	935
532	EAST SPAN 1 LONGIT BOT	5	22	50						1	20	0.0											20	0.0	459
533	EAST SPAN 2 LONGIT TOP	5	32	50				E		1	39	8.0											39	8.0	1324
534	EAST SPAN 2 LONGIT BOT	5	22	50						1	37	0.0											37	0.0	849
535	EAST SPAN 3 LONGIT TOP	5	32	50				E		1	29	9.0											29	9.0	993
536	EAST SPAN 3 LONGIT BOT	5	22	50						1	20	0.0											20	0.0	459
537	EAST SPAN 1 LONGIT BOT	5	22	50						1	35	0.0											35	0.0	803
538	EAST SPAN 2 LONGIT BOT	5	22	50						1	40	0.0											40	0.0	918
539	EAST SPAN 3 LONGIT BOT	5	22	50						1	40	0.0											40	0.0	918
541	EAST SPAN 1 TRAN END TOP	6	20	51				E	V	2	17	9.0											18	5.0	
											1	9.0											2	5.0	313
542	EAST SPAN 1 TRAN END BOT	6	20	50					V	2	17	9.0											17	9.0	
											1	9.0											1	9.0	293
543	EAST ALL SPAN TRAN TOP	6	348	52				E		1	18	4.5											19	8.5	10301
544	EAST ALL SPAN TRAN BOT	6	348	51						1	18	4.5											19	0.5	9953
545	EAST SPAN 2 TRAN END TOP	6	26	51				E	V	2	17	2.0											17	10.0	
											3	0.0											3	8.0	420
546	EAST SPAN 2 TRAN END BOT	6	26	50					V	2	17	2.0											17	2.0	
											3	0.0											3	0.0	394
547	EAST SPAN 3 TRAN END TOP	6	24	51				E	V	2	17	0.0											17	8.0	
											1	9.0											2	5.0	362
548	EAST SPAN 3 TRAN END BOT	6	24	50					V	2	17	0.0											17	0.0	
											1	9.0											1	9.0	338
550	SEISMIC RESTRAINER STIRRUP	4	216	63	T					1	0	9.0	1	3.0	1	3.0	0	4.0 (9.0 struck)	0	4.0 (9.0 struck)			4	5.0	637
551	SEISMIC REST TOP (LONGIT)	5	48	50				E		1	3	0.0											3	0.0	150
552	SEISMIC RESTRAINER LONGIT	5	168	50						1	2	9.0											2	9.0	482
S1	TRAFFIC BARRIER ANCHOR MED	5	500	69				E		1	0	6.0	0	9.0	1	6.0	0	6.0					2	6.8	1338
S2	TRAFFIC BARRIER ANCHOR MED	4	252	80						1	2	0.0	0	6.0			0	2.0			96		2	5.0	406
S3	TRAFFIC BARRIER OS	6	510	69				E		1	0	8.0	0	9.5	1	4.3							2	1.4	1624
S4	TRAFFIC BARRIER OS	4	154	50						1	1	6.0											1	6.0	154
	END DIAPHRAGMS																								
561	HORIZ TOP	6	28	50						1	18	6.0											18	6.0	778
562	STIRRUPS	4	32	71	T					1	0	9.0	1	3.0	1	3.0							2	10.4	61
563	STIRRUPS	4	76	71	T					1	0	9.0	2	10.6	2	10.6							6	1.6	311
564	HORIZ BTWN GIRDERS	4	8	50						1	6	7.0											6	7.0	35
565	HORIZ BOT	7	4	50						1	15	9.0											15	9.0	129
566	HORIZ BOT	7	8	50						1	6	0.0											6	0.0	98
567	HORIZ BTWN GIRDERS	4	8	50						1	7	8.0											7	8.0	41
568	HORIZ BOT	7	8	50						1	7	8.0											7	8.0	125
569	HORIZ ANCHOR	8	8	51						1	3	6.0											4	5.0	94
	INTERMEDIATE DIAPHRAGMS																								
571	HORIZ TOP	7	24	50						1	17	0.0											17	0.0	834
572	STIRRUPS	4	114	71	T					1	0	5.0	3	5.6	3	5.6							7	1.3	541
573	HORIZ	8	6	50						1	15	9.0											15	9.0	252
574	HORIZ BTWN GIRDERS	4	12	50						1	6	7.0											6	7.0	53
575	HORIZ BTWN GIRDERS	4	12	50						1	8	3.0											8	3.0	66
576	HORIZ BOT	9	6	50						1	15	9.0											15	9.0	321
577	HORIZ ANCHOR	8	12	51						1	3	6.0											4	5.0	142
600	UTILITY HANGER BARS	4	74	50							2	6.0											2	6.0	124

STEEL REINFORCING BAR QUANTITIES NOT INCLUDED IN THIS BAR LIST

TRAFFIC BARRIER (SUPERSTRUCTURE) 11,765

12-10-93
AS NOTED

BENDING DIAGRAMS

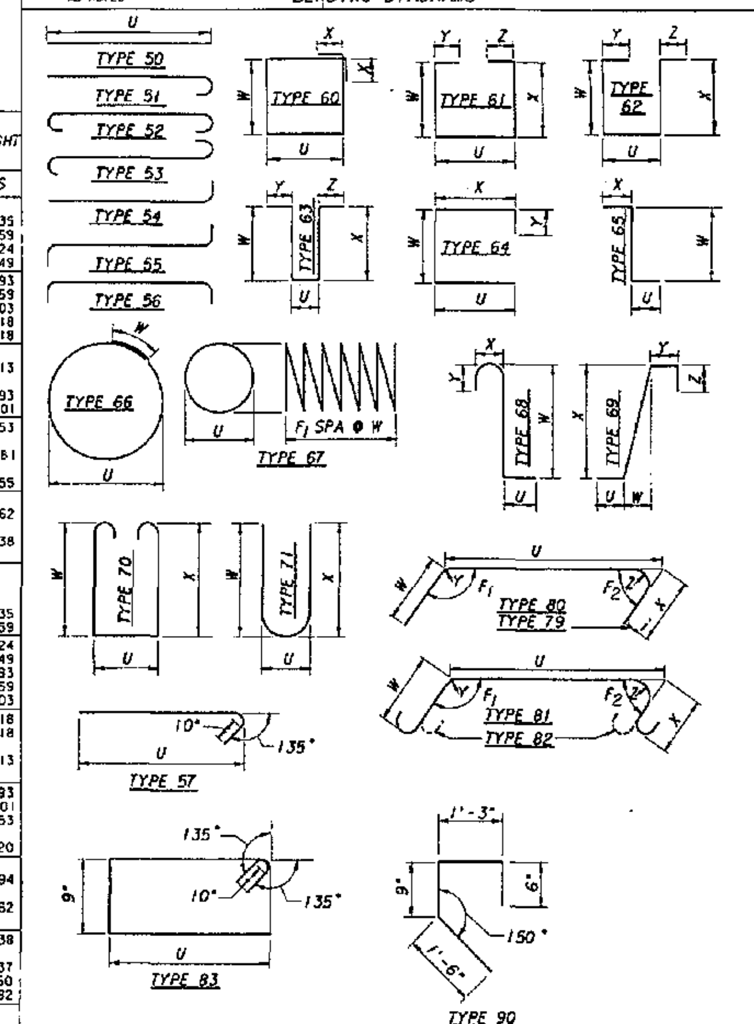

FOR "AS CONSTRUCTED PLANS" ONLY

NOTES:

1. ALL REINFORCING BARS ON THIS SHEET SHALL BE AASHTO M-31. GRADE 60 UNLESS SHOWN OTHERWISE.
2. REINFORCING FOR TRAFFIC BARRIERS NOT SHOWN. SEE BRIDGE SHEETS 16 & 17.

Bridge Design Engr.				
Supervisor				
Designed By	C. S. YU			
Checked By	Y. POLYAKOV/C. A. ARNOLD			
Detailed By	M. H. CAMP			
Bridge Projects Engr.				
Prelim Plan By	11-3-95	NOTED TRAFFIC BARR. REINF. AND REV. NOTE 2	WB	
Architect/Specialist	DATE	REVISION	BY	APP'D

REGION NO. 10 | STATE WASH | FED. AID PROJ. NO. | SHEET NO. | TOTAL SHEETS

JOB NUMBER 95W036

4771

CECIL A. ARNO[...] STATE OF WASHINGTON 1956 REGISTERED PROFESSIONAL ENGINEER EXPIRES 4/14/97

Washington State Department of Transportation

ANDERSEN BJORNSTAD KANE JACOBS • INC CONSULTING ENGINEERS

SR 167
15TH NW TO 84TH AVE. SO.
HOV AND SC&DI - STAGE 2
BRIDGE 167/124

BAR LIST

BRIDGE SHEET NO. 18
SHEET 546 OF 663 SHEETS

SR167/124 JOB NO. 7014 SHEET 18

SR 167/91

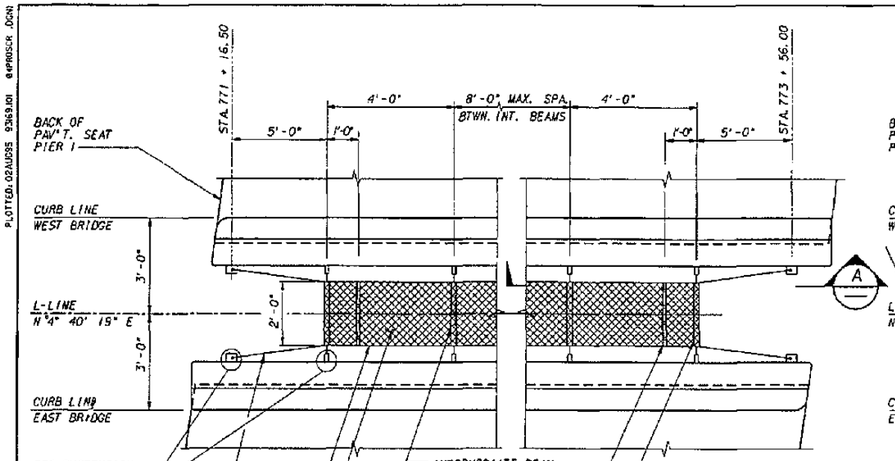

PLAN - BRIDGE 167/121 W & E

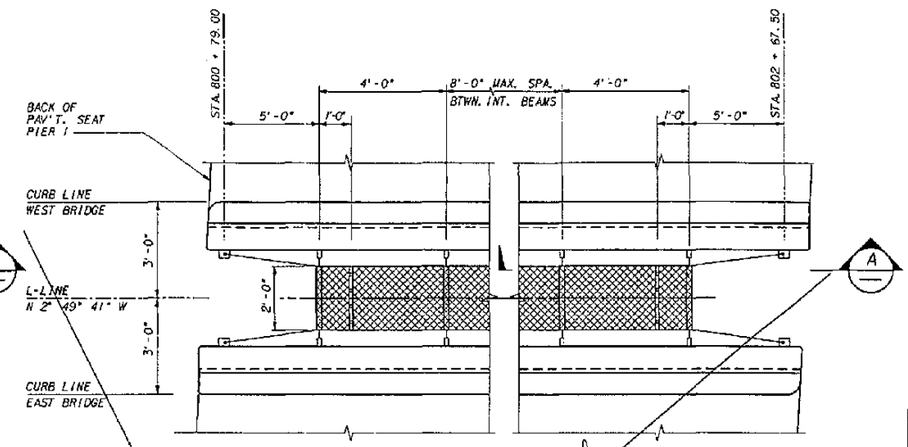

Deleted

PLAN - BRIDGE 167/122 W & E

FOR INFORMATION NOT SHOWN SEE "PLAN - BRIDGES 167/121 W & E"

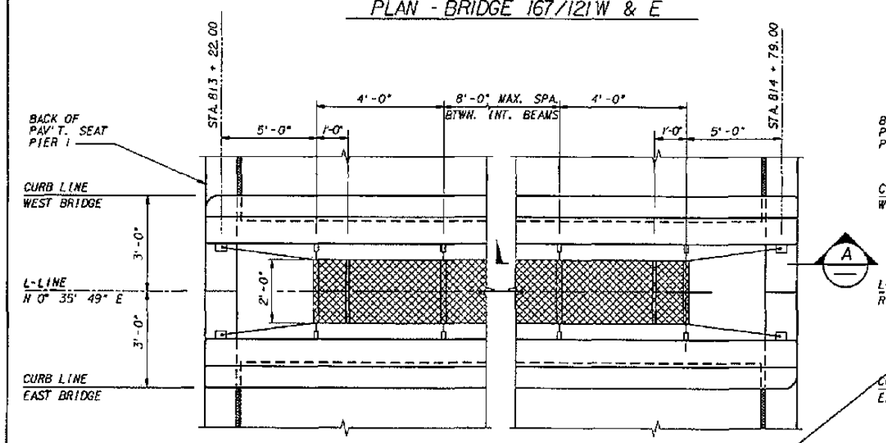

PLAN - BRIDGE 167/123 W & E

FOR INFORMATION NOT SHOWN SEE "PLAN - BRIDGES 167/121 W & E"

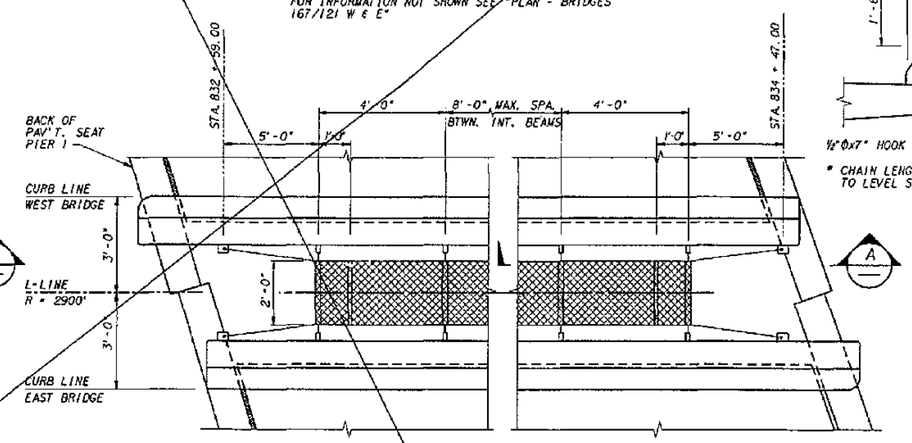

PLAN - BRIDGE 167/124 W & E

FOR INFORMATION NOT SHOWN SEE "PLAN - BRIDGES 167/121 W & E"

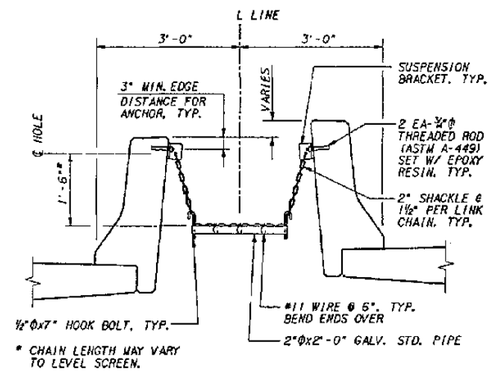

TYPICAL SECTION

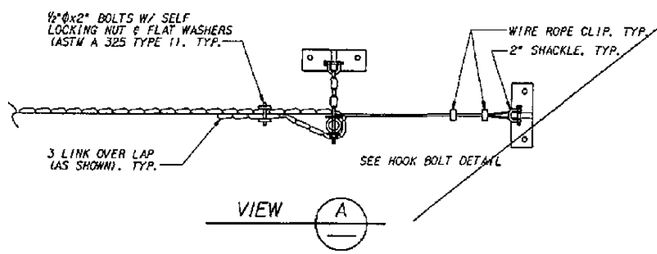

VIEW A

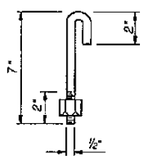

HOOK BOLT

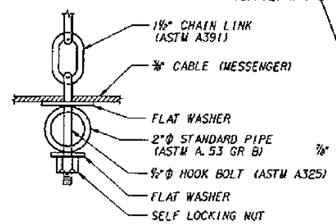

HOOK BOLT DETAIL

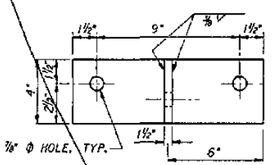

FRONT VIEW
SUSPENSION BRACKET
ASTM - A36

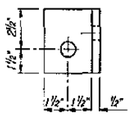

SIDE VIEW

FOR "AS CONSTRUCTED PLANS" ONLY

Bridge Design Engr.					REGION NO.	STATE	FED. AID PROJ. NO.	SHEET NO.	TOTAL SHEETS	
Supervisor					10	WASH				
Designed By E.W. THOMAS 4/94					JOB NUMBER					
Checked By					95W036					
Detailed By E.W. THOMAS 4/94										
Bridge Projects Engr.										
Prelim Plan By										
Architect/Specialist	DATE	REVISION	BY	APP'D	4771					

STATE OF WASHINGTON REGISTERED PROFESSIONAL ENGINEER — EXPIRES 4/14/97

Washington State Department of Transportation

ANDERSEN BJORNSTAD KANE JACOBS • NO CONSULTING ENGINEERS

SR 167
15TH NW TO 84TH AVE. SO.
HOV AND SC&DI - STAGE 2
BRIDGES 167/121, 167/122, 167/123, & 167/124

PROTECTIVE SCREEN

BRIDGE SHEET NO. 19

SHEET 547 OF 663 SHEETS

SR167/191

PLOTTED: 02AUG95 93:59:01 @PROSCR.DGN

SR167/124 JOB NO. 70A SHEET 19

SR167/191

PLAN SHEETS AFFECTED:

547
552
579
599
643

NOTES:

1. ALL PARTS SHALL BE GALVANIZED IN ACCORDANCE WITH AASHTO M 111 AFTER FABRICATION.
2. ADJUST ⅜" CABLE TENSION TO PRODUCE 3% VERTICAL SAG BETWEEN INTERMEDIATE BEAMS.

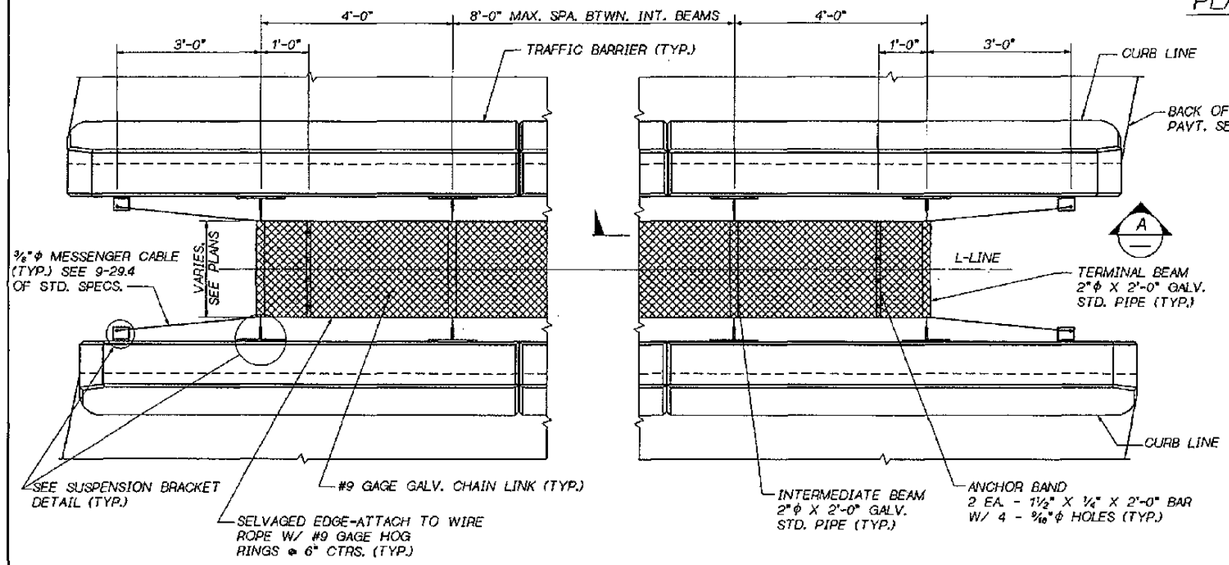

PLAN

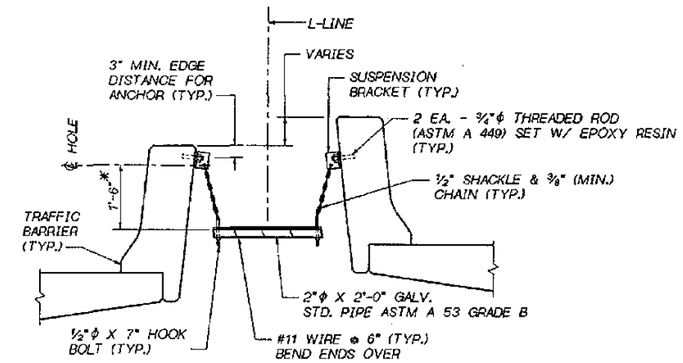

* CHAIN LENGTH MAY VARY TO LEVEL SCREEN

TYPICAL SECTION

FOR "AS CONSTRUCTED PLANS" ONLY

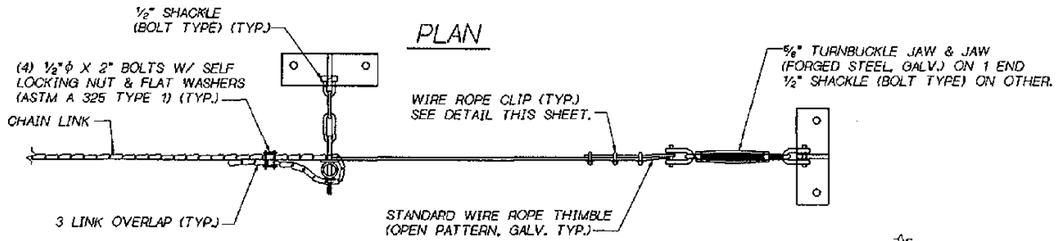

VIEW A

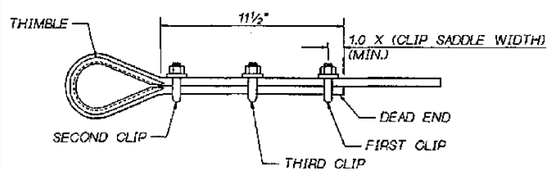

WIRE ROPE CLIP DETAIL

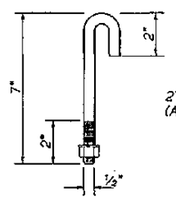

HOOK BOLT

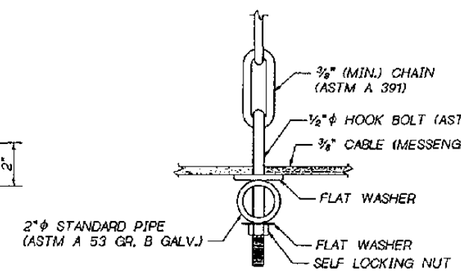

HOOK BOLT DETAIL

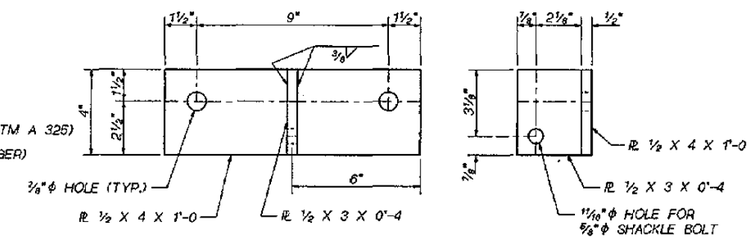

SUSPENSION BRACKET

AASHTO M 183

NOTE:
GAS-CUT OR SAW-CUT ONLY FOR PL ½ X 3 X 0'-4

1 ADDED BR. SHT. 19A

Bridge Design Engr. C. C. RUTH					REGION NO.	STATE	FED. AID PROJ. NO.	SHEET NO.	TOTAL SHEETS
Supervisor R. T. SHAFER					10	WASH.			
Designed By									
Checked By					JOB NUMBER				
Detailed By									
Bridge Projects Engr.									
Prelim. Plan By		1 ADDED BR. SHT. 19A	MA						
Architect/Specialist	DATE	REVISION	BY	APP'D					

BRIDGE AND STRUCTURES OFFICE

RAYMOND T. SHAFER — STATE OF WASHINGTON — REGISTERED PROFESSIONAL ENGINEER — EXPIRES 7/20/96 — SUPERVISING BRIDGE ENGINEER

CHARLES C. RUTH — STATE OF WASHINGTON — REGISTERED PROFESSIONAL ENGINEER — EXPIRES 6/30/96 — BRIDGE DESIGN ENGINEER

Washington State Department of Transportation

SR 167
15TH NW TO 84TH AVE. SO.
HOV AND SC & DI - STAGE 2

PROTECTIVE SCREEN

BRIDGE SHEET NO. 19A

SHEET 547A OF 663

25-MAR-96

ANDERSONROOT:\FGB\SR167_PRO.FGB: 1

SR ___ JOB NO. ___ SHEET ___

CURVE DATA					
P.I. STATION	Δ	RADIUS	TANGENT	LENGTH	BK. TANGENT
L STA.835+81.87	45° 44' RT	2900.00	1223.02	2314.77	N 00° 35' 49" E

SEC. 13, T. 22 N., R. 4 E., W.M.

CITY OF KENT

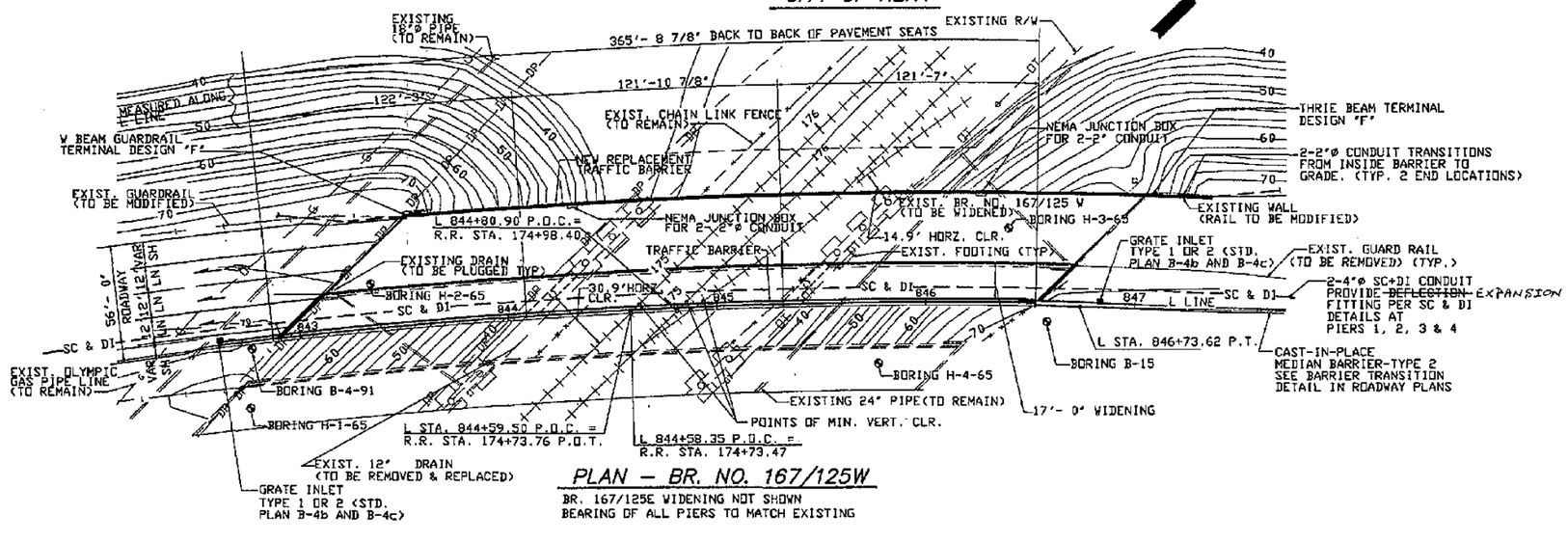

PLAN – BR. NO. 167/125W

BR. 167/125E WIDENING NOT SHOWN
BEARING OF ALL PIERS TO MATCH EXISTING

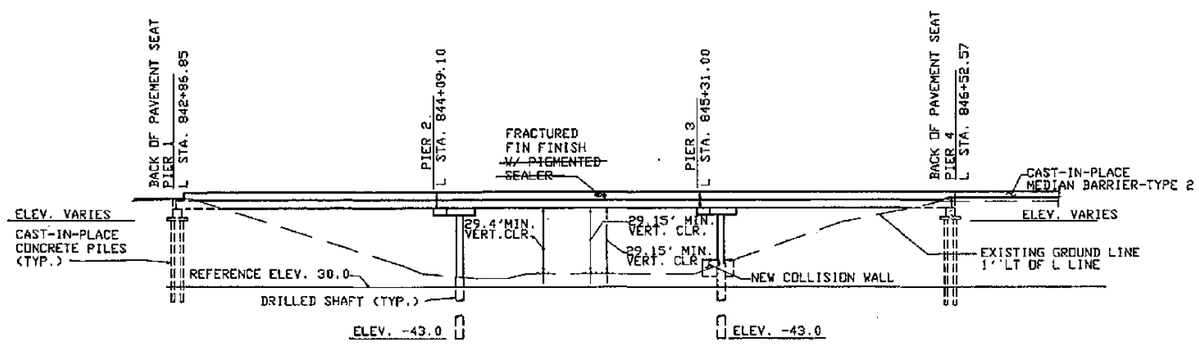

ELEVATION BR. NO. 167/125W

FOR EMBANKMENT DETAILS AT BRIDGE ENDS SEE STANDARD PLAN H-9.

GENERAL NOTES:

1. ALL MATERIAL AND WORKMANSHIP SHALL BE IN ACCORDANCE WITH THE REQUIREMENTS OF THE STATE OF WASHINGTON DEPARTMENT OF TRANSPORTATION STANDARD SPECIFICATIONS FOR ROAD, BRIDGE AND MUNICIPAL CONSTRUCTION DATED 1994, AND AMENDMENTS.
2. THIS STRUCTURE HAS BEEN DESIGNED IN ACCORDANCE WITH THE REQUIREMENTS OF AASHTO STANDARD SPECIFICATIONS FOR HIGHWAY BRIDGES FIFTEENTH EDITION–1992, WITH INTERIM SPECIFICATIONS THROUGH 1993. ALL PRESTRESSED CONCRETE ELEMENTS HAVE BEEN DESIGNED FOR SERVICE LOAD STRESSES AND CHECKED FOR THE REQUIREMENTS OF LOAD FACTOR DESIGN. ALL OTHER STRUCTURAL ELEMENTS ARE DESIGNED IN ACCORDANCE WITH THE REQUIREMENTS FOR LOAD FACTOR DESIGN. SEISMIC DESIGN OF THIS STRUCTURE HAS BEEN DONE USING AN ACCELERATION COEFFICIENT OF 0.25 AND SOIL PROFILE TYPE II.
3. FOOTING ELEVATIONS AND SUBSTRUCTURE DETAILS ARE SUBJECT TO CHANGE DEPENDING UPON FOUNDATION MATERIAL ENCOUNTERED. REINFORCING STEEL FOR ABUTMENTS, DRILLED SHAFTS, COLUMNS AND PILES SHALL NOT BE CUT UNTIL FINAL FOOTING ELEVATIONS HAVE BEEN DETERMINED IN THE FIELD AND SUBSTRUCTURE DETAILS HAVE BEEN MODIFIED, IF REQUIRED.
4. DIMENSIONS TO THE EXISTING BRIDGE AND ALL ELEVATIONS SHOWN ON THE PLANS ARE BASED ON RECORD INFORMATION OF ORIGINAL CONSTRUCTION TOGETHER WITH FIELD SURVEY DATA. THE NEW STRUCTURE IS INTENDED TO MATCH THE EXISTING STRUCTURE. THEREFORE, DIMENSIONS TO THE EXISTING BRIDGE AND ALL ELEVATIONS GIVEN ON THE PLANS SHALL BE VERIFIED IN THE FIELD BY THE CONTRACTOR FOR COMPATIBILITY.
5. THE CONCRETE IN THE SHAFTS SHALL BE CLASS 4000W OR 4000. THE CONCRETE IN THE ROADWAY DECK SHALL BE CLASS 5000D. THE CONCRETE IN THE CAST-IN-PLACE PILES SHALL BE CLASS 4000P. THE CONCRETE IN THE CLOSURES SHALL BE CLASS 5000LS OR CLASS 5000DLS FOR THE ROADWAY DECK. ALL OTHER CAST-IN-PLACE CONCRETE SHALL BE CLASS 4000.
6. PILES SHALL BE DRIVEN TO A LOAD BEARING CAPACITY OF 70 TONS AT PIERS 1 & 4. SEE SPECIAL PROVISIONS FOR MINIMUM PILE TIP ELEVATIONS. THE MAXIMUM DESIGN LOAD FOR PIERS 2&3 SHAFTS ARE 480 TONS EACH.
7. FALSEWORK SHALL NOT BE RELEASED UNTIL ALL CONCRETE BEING SUPPORTED HAS MET THE AGE AND STRENGTH REQUIREMENTS OF THE STANDARD SPECIFICATIONS. FALSEWORK SHALL BE CAREFULLY RELEASED TO PREVENT IMPACT OR UNDUE STRESS IN THE STRUCTURE. CLOSURES SHALL BE MADE AFTER FALSEWORK IS RELEASED BUT BEFORE PLACEMENT OF OVERLAY AND BARRIERS.
8. UNLESS OTHERWISE SHOWN IN THE PLANS, THE CONCRETE COVER MEASURED FROM THE FACE OF ANY REINFORCING STEEL SHALL BE 2 1/2" AT THE TOP OF THE ROADWAY SLAB, 1" AT THE BOTTOM OF THE ROADWAY SLAB, 7 1/2" AT THE BOTTOM OF THE FOOTINGS AND 1 1/2" AT ALL OTHER LOCATIONS.
9. THE CONDUITS AND JUNCTION BOXES ARE SHOWN FOR REFERENCE ONLY. THE CONTRACTOR SHALL BE RESPONSIBLE TO COORDINATE WITH THE ELECTRICAL AND SC & DI DRAWINGS.

LEGEND

A — IDENTIFIES SECTION, VIEW, OR DETAIL
12 — TAKEN OR SHOWN ON BRIDGE SHEET 12
D — DASH INDICATES THAT SECTION, VIEW, OR DETAIL IS TAKEN AND SHOWN ON THE SAME SHEET.

P.C. GIRDERS (W58G)

LOADING: HS–25

OR

TWO 24^{K} AXLES 4' C'TRS.

DATUM

NATIONAL GEOD. VERTICAL ADJUSTED DATUM OF 1978

FOR "AS CONSTRUCTED PLANS" ONLY

Bridge Design Engineer					
Supervisor					
Designed By O.B.					
Checked By J.R.K.					
Detailed By G.W.S.					
Bridge Projects Engineer K.N.K.					
Prelim. Plan By D.M.J.					
Architect/Specialist R.MAYS	DATE	REVISION	BY	APP'D	

BRIDGE NO.	STATE	FED. AID. PROJ. NO.	SHEET NO.	TOTAL SHEETS
10	WASH			

JOB NUMBER 95W036

CONTRACT NO. 4771

JOHN R. KATTELE, STATE OF WASHINGTON, REGISTERED PROFESSIONAL ENGINEER — 9/1/95 — EXPIRES: 06/10/97

WASHINGTON STATE DEPARTMENT OF TRANSPORTATION

Sverdrup CIVIL INC.

SR167
15TH NW TO 84TH AVE. SO.
HOV SC & DI – STAGE 2
UPRR OVERCROSSING BR. NO. 167/125W

LAYOUT – SHEET 1

BRIDGE SHEET NO. 1

SHEET 548 OF 663 SHEETS

B7300001 SR VUD NO. SHEET

SR167/91

CURVE DATA					
P.I. STATION	Δ	RADIUS	TANGENT	LENGTH	BK. TANGENT
L STA. 805481.97	45° 44' RT.	8900.00	1223.02	2314.77	N 69° 35' 49" E

SEC. 13, T. 22 N., R. 4 E., W.M.

CITY OF KENT

SR 167

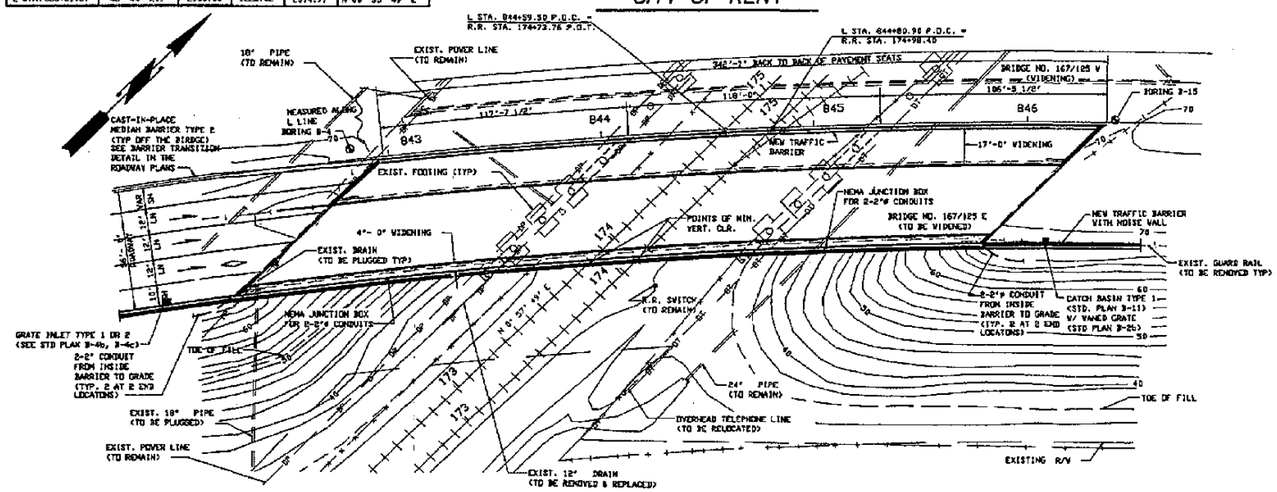

PLAN – BR. 167/125E

BR. 167/125V WIDENING NOT SHOWN
BEARING OF ALL PIERS TO MATCH EXISTING

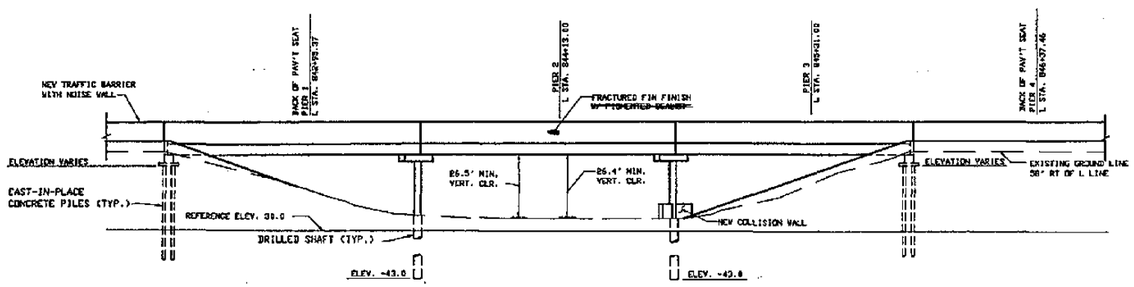

ELEVATION BR. NO. 167/125E

FOR EMBANKMENT DETAILS AT BRIDGE ENDS SEE STANDARD PLAN H-9

FOR "AS CONSTRUCTED PLANS" ONLY

DATUM
NATIONAL GEOD. VERTICAL
ADJUSTED DATUM OF 1978

Bridge Design Engineer					
Supervisor					
Designed By Q.B.					
Checked By J.R.K.					
Detailed By G.W.S.					
Bridge Projects Engineer K.N.K.					
Prelim. Plan By D.M.J.					
Architect/Specialist R.MAYS	DATE	REVISION	BY	APP'D	

REGION NO.	STATE	FED. AID. PROJ. NO.	SHEET NO.	TOTAL SHEETS
10	WASH			

JOB NUMBER 95W036
CONTRACT NO. 4771

STATE OF WASHINGTON JOHN R. KATTER 19001 REGISTERED PROFESSIONAL ENGINEER 9/1/95
EXPIRES: 06/10/97

WASHINGTON STATE DEPARTMENT OF TRANSPORTATION

Sverdrup CIVIL INC.

SR167
15TH N.W. TO 84TH AVE. SO.
HOV SC & DI – STAGE 2
UPRR OVERCROSSING BR. NO. 167/125E

LAYOUT – SHEET 2

BRIDGE SHEET NO. 2

SHEET 549 OF 663 SHEETS

SR 167/91

B7300002 SR NB NO. SHEET

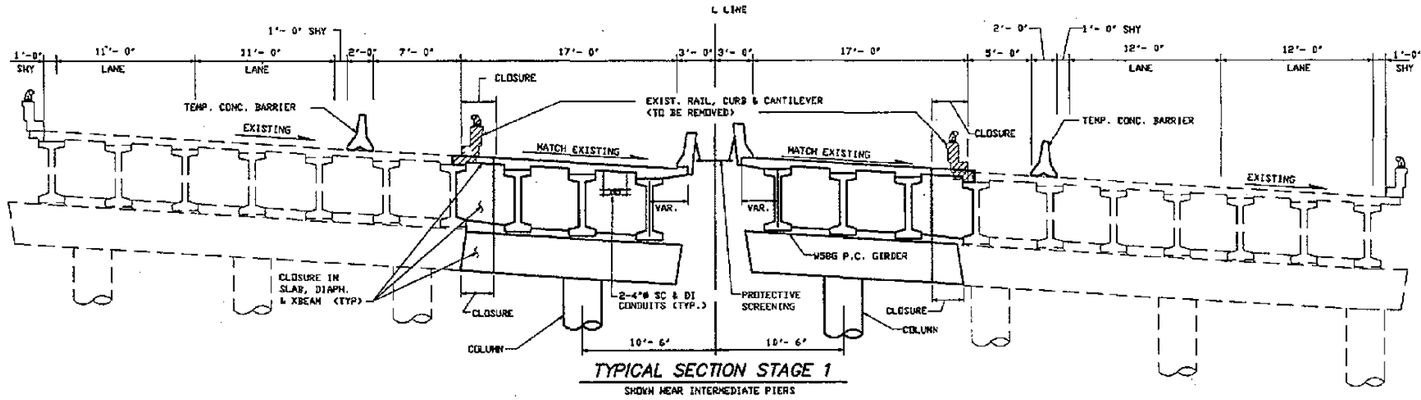

TYPICAL SECTION STAGE 1

SHOWN NEAR INTERMEDIATE PIERS

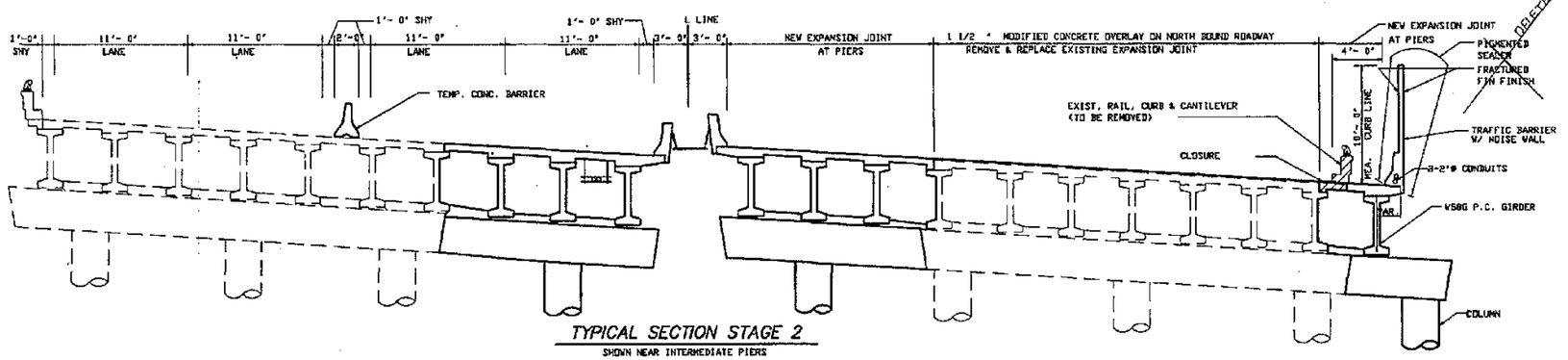

TYPICAL SECTION STAGE 2

SHOWN NEAR INTERMEDIATE PIERS

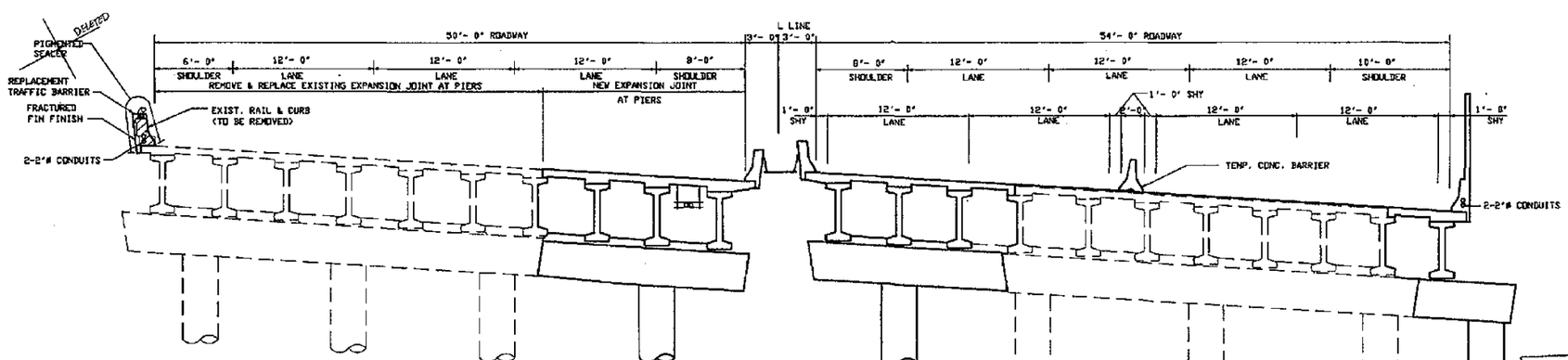

TYPICAL SECTION STAGE 3

SHOWN NEAR INTERMEDIATE PIERS

FOR "AS CONSTRUCTED PLANS" ONLY

Bridge Design Engineer					REGION NO.	STATE	FED. AID. PROJ. NO.	SHEET NO.	TOTAL SHEETS
Supervisor					10	WASH			
Designed By Q.B.					JOB NUMBER 95W036				
Checked By J.R.K.									
Detailed By G.W.S.									
Bridge Projects Engineer					CONTRACT NO. 4771				
Prelim. Plan By									
Architect/Specialist	DATE	REVISION	BY	APP'D					

JOHN R. KATTELL, STATE OF WASHINGTON, 14411, REGISTERED PROFESSIONAL ENGINEER, 5/1/96, EXPIRES: 06/10/97

WASHINGTON STATE DEPARTMENT OF TRANSPORTATION

Sverdrup CIVIL INC.

SR167
15TH N.W. TO 84TH AVE. SO.
HOV SC & DI – STAGE 2
UPRR OVERCROSSING BR. NO. 167/125

STAGE CONSTRUCTION

BRIDGE SHEET NO. 3

SHEET 550 OF 663 SHEETS

SR 167 JOB NO. 88300005 SHEET

SR167/91

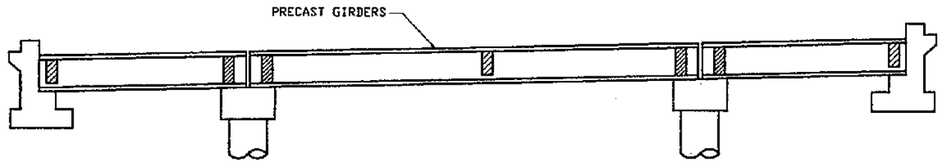

SET GIRDERS & CAST DIAPHRAGMS

1. CONSTRUCT PIER 1 & 4, SHAFTS, COLUMNS AND X-BEAMS AT PIERS 2 & 3.
2. RELEASE ALL FALSEWORK UNDER PIERS 2 & 3 X-BEAMS.
3. SET PS GIRDERS IN PLACE. CAST INTERMEDIATE AND END DIAPHRAGMS. ALLOW 3 DAYS FOR CURING AND 3000 PSI MIN. STRENGTH BEFORE CASTING OF ROADWAY SLAB (STAGE 2)

NOTES:

1. SHIMS MAY BE REQUIRED TO FIT BRACKET TO THE CONCRETE BARRIERS AND ROADWAY SURFACE.
2. LOCATION OF ANCHORS IS TO BE ADJUSTED TO MISS THE MAIN REINFORCING IN THE DECK WHEN DRILLING HOLES.
3. PROVIDE TWO (2) ANCHOR ASSEMBILIES FOR EACH SECTION OF THE CONCRETE BARRIERS ON THE ROADWAY SURFACE.
4. FOR DETAILS NOT SHOWN, SEE STANDARD PLAN C-8.
5. LOCATE ANCHORS APPROX. 2'-6" FROM BOTH ENDS OF EACH SECTION.
6. AFTER REMOVING THE TEMPORARY CONCRETE BARRIER, CLEAN AND FILL BOLT HOLES WITH 2:1 SAND/CEMENT GROUT BY VOLUME.

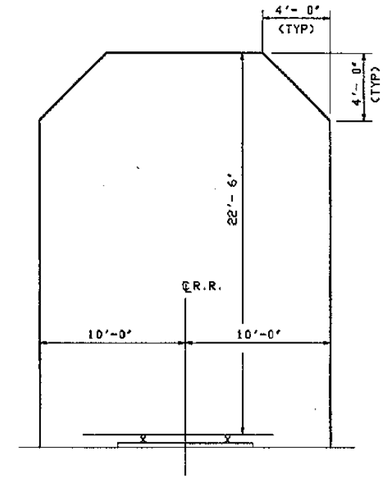

TYPICAL CONSTRUCTION OPENING DIAGRAM

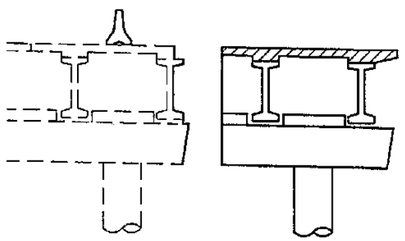

2 - CAST ROADWAY SLAB

1. CAST ROADWAY SLAB. ALLOW 10 DAYS AND 3000 PSI COMPRESSION STRENGTH BEFORE STRIPPING DECK FORMS.

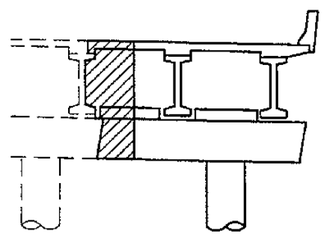

3 - CLOSURE

1. CAST X-BEAM AND DIAPHRAGM CLOSURE. ALLOW 24 HOURS FOR CURING BEFORE SLAB CLOSURE IS COMPLETED. ALLOW 24 HOURS FOR CURING BEFORE IS COMPLETED.
2. ALLOW 10 DAYS & 4000 PSI PRIOR TO CASTING THE TRAFFIC BARRIER.
3. INSTALL EXPANSION JOINTS AND OVERLAY.
4. ON 167/125 E EXTERIOR WIDENING (SINGLE GIRDER WIDENING). NO DIAPHRAGM CLOSURE IS REQUIRED.
5. DIAPHRAGMS SHALL BE CONSTRUCTED AND GAIN A MINIMUM COMPRESSIVE STRENGTH OF 3000 PSI BEFORE THE DECK CONCRETE CAN BE PLACED.

NOTE: TRAFFIC BARRIER END SECTIONS SHALL BE PLACED AFTER EXPANSION JOINT INSTALLATION AT PIERS 1 & 4

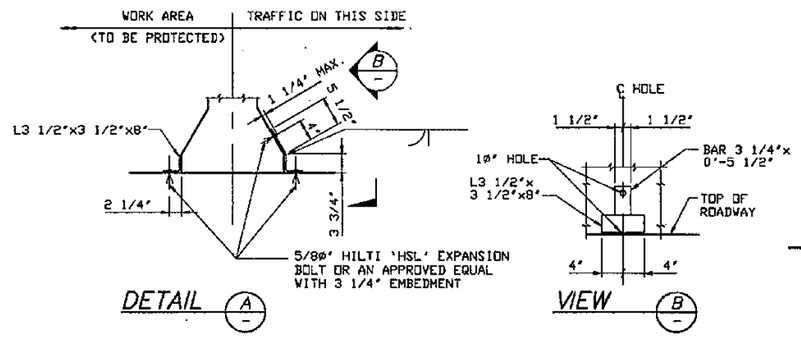

TEMPORARY BARRIER ANCHOR

(FOR USE ON BRIDGE DECK)

FOR "AS CONSTRUCTED PLANS" ONLY

Bridge Design Engineer					REGION NO.	STATE	FED. AID. PROJ. NO.	SHEET NO.	TOTAL SHEETS	
Supervisor					10	WASH				
Designed By Q.B.					JOB NUMBER 95W036					
Checked By J.R.K.										
Detailed By G.W.S.										
Bridge Projects Engineer					CONTRACT NO. 4771					
Prelim. Plan By										
Architect/Specialist	DATE	REVISION	BY	APP'D						

JOHN R. KATTELL, STATE OF WASHINGTON, REGISTERED PROFESSIONAL ENGINEER, 9/1/96, EXPIRES: 06/10/97

WASHINGTON STATE DEPARTMENT OF TRANSPORTATION

Sverdrup CIVIL INC.

SR167
15TH N.W. TO 84TH AVE. SO.
HOV SC & DI - STAGE 2
UPRR OVERCROSSING BR. NO. 167/125

CONSTRUCTION SEQUENCE & CONSTRUCTION OPENING

BRIDGE SHEET NO. 4

SHEET 551 OF 663 SHEETS

SR 167/91

B8300006 SR JOB NO. SHEET

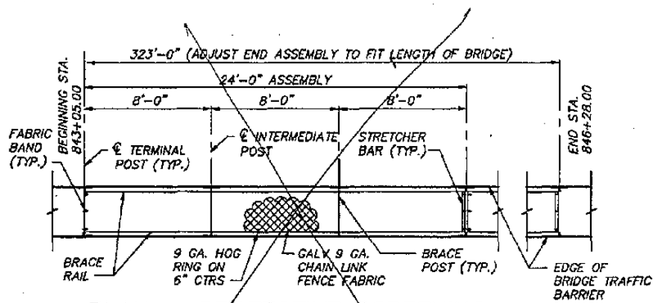

PLAN – PROTECTIVE SCREENING

1. SEE STANDARD PLANS – TYPE 1 FENCE.
2. BRACE RAIL CONNECTED TO BRACE POST WITH FITTING.

Deleted. Refer to sheet 5A

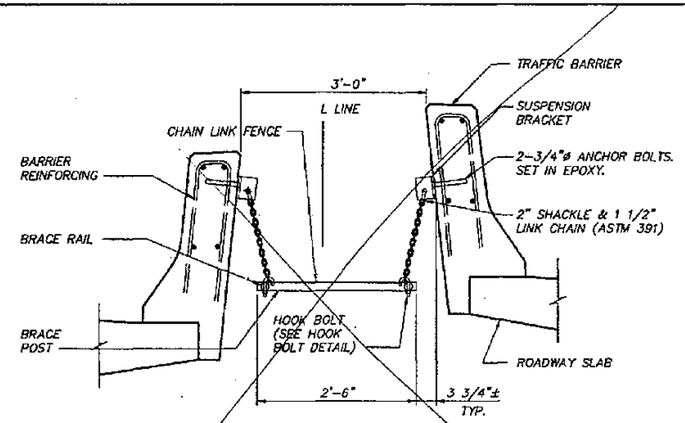

SECTION – SAFETY FENCE

Deleted Refer to sheet 5A

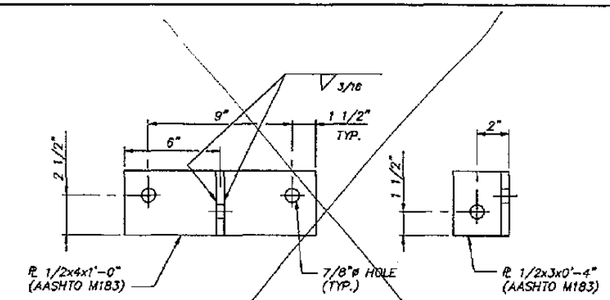

DETAIL – SUSPENSION BRACKET

Deleted. Refer to sheet 5A

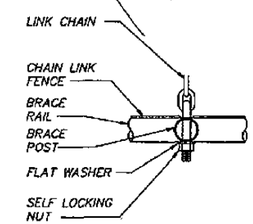

DETAIL – HOOK BOLT

NOTE: FITTING NOT SHOWN

STATION	ELEVATION LEFT CURB LINE	ELEVATION RIGHT CURB LINE	STATION	ELEVATION LEFT CURB LINE	ELEVATION RIGHT CURB LINE	STATION	ELEVATION LEFT CURB LINE	ELEVATION RIGHT CURB LINE
843+12.39	—	71.55	844+43.41	74.46	—	845+72.48	—	72.40
843+14.27	—	71.62	844+53.19	74.48	—	845+80.95	74.19	—
843+17.93	—	71.62	844+53.27	—	72.59	845+82.37	—	72.36
843+24.12	—	71.60	844+63.05	74.48	—	845+86.71	74.15	—
843+33.98	—	71.91	844+63.19	—	72.59	845+90.65	74.06	—
843+44.01	—	72.00	844+69.95	74.54	—	845+92.3	—	72.32
843+53.19	73.79	—	844+72.83	74.51	—	846+00.61	74.01	—
843+53.97	—	72.06	844+73.16	—	72.60	846+02.19	—	72.25
843+55.00	73.82	—	844+82.66	74.54	—	846+10.43	73.92	—
843+63.77	—	72.14	844+83.04	—	72.60	846+12.20	—	72.17
843+64.92	73.96	—	844+92.44	74.57	—	846+20.22	73.81	—
843+73.82	—	72.20	844+92.99	—	72.58	846+22.12	—	72.10
843+74.57	74.04	—	845+02.29	74.56	—	846+30.04	73.70	—
843+83.67	—	72.23	845+02.85	—	72.55	846+32.06	—	72.03
843+84.47	74.11	—	845+12.13	74.56	—	846+39.91	73.58	—
843+93.63	—	72.30	845+12.92	—	72.55	846+42.02	—	71.96
843+94.19	74.18	—	845+21.90	74.53	—	846+49.78	73.45	—
844+03.60	—	72.35	845+22.74	—	72.52	846+51.93	—	74.86
844+04.02	74.27	—	845+31.69	74.51	—	846+59.56	73.34	—
844+13.51	—	72.38	845+32.66	—	72.49	846+61.88	—	71.75
844+13.93	74.30	—	845+41.56	74.50	—	846+69.32	73.21	—
844+23.44	—	72.42	845+42.63	—	72.44	846+72.01	—	71.63
844+23.72	74.35	—	845+51.43	74.46	—	846+79.26	73.05	—
844+32.24	—	72.47	845+52.71	—	72.41	846+89.26	73.90	—
844+33.40	—	72.46	845+61.25	74.42	—	846+99.32	72.78	—
844+33.54	74.40	—	845+62.55	—	72.44	847+03.36	72.70	—
844+43.31	—	72.52	845+71.13	74.31	—	847+05.04	72.62	—

BRIDGE NO. 167/125W
EXISTING ELEVATIONS

WEST TRACK STATION	ELEVATION
173+68.50	36.88
174+72.12	36.66
175+70.40	36.52

EAST TRACK STATION	ELEVATION
173+79.83	36.99
174+82.08	36.93
175+81.08	36.85

SPUR STATION	ELEVATION
174+93.09	36.97
176+03.72	36.97

STATION	ELEVATION LEFT CURB LINE	ELEVATION RIGHT CURB LINE	STATION	ELEVATION LEFT CURB LINE	ELEVATION RIGHT CURB LINE	STATION	ELEVATION LEFT CURB LINE	ELEVATION RIGHT CURB LINE
842+25.16	—	67.83	843+71.86	70.91	—	845+02.78	71.21	—
842+26.78	—	67.83	843+79.56	—	69.04	845+09.00	71.23	—
842+36.97	—	67.97	843+81.69	70.95	—	845+12.02	—	69.26
842+47.15	—	68.07	843+89.62	—	69.10	845+12.90	71.21	—
842+57.32	—	68.19	843+89.78	71.02	—	845+22.21	—	69.25
842+67.54	—	68.28	843+91.95	71.01	—	845+22.95	71.22	—
842+69.47	70.15	—	843+99.96	—	69.17	845+32.37	—	69.23
842+71.17	70.17	—	844+02.08	71.07	—	845+32.98	71.23	—
842+77.72	—	68.38	844+10.12	—	69.16	845+42.57	—	69.21
842+81.21	70.27	—	844+12.20	71.11	—	845+43.06	71.20	—
842+87.94	—	68.49	844+20.27	—	69.20	845+52.75	—	69.18
842+91.27	70.39	—	844+22.19	71.16	—	845+53.10	71.18	—
842+98.09	—	68.54	844+30.48	—	69.24	845+62.92	—	69.10
843+01.32	70.49	—	844+32.21	71.18	—	845+63.20	71.14	—
843+08.35	—	68.63	844+40.75	—	69.27	845+73.16	—	69.09
843+11.45	70.57	—	844+42.39	71.22	—	845+73.25	71.18	—
843+18.46	—	68.69	844+50.93	—	69.27	845+80.68	—	69.15
843+21.58	70.68	—	844+52.41	71.22	—	845+81.95	—	69.16
843+28.66	—	68.70	844+61.17	—	69.27	845+83.29	71.07	—
843+31.54	70.69	—	844+62.51	71.22	—	845+93.42	71.03	
843+38.80	—	68.82	844+71.31	—	69.26	846+03.49	70.98	—
843+41.69	70.75	—	844+72.59	71.22	—	846+13.54	70.94	—
843+49.06	—	68.86	844+81.48	—	69.24	846+15.35	70.92	—
843+51.72	70.80	—	844+82.63	71.22	—	846+16.89	70.97	—
843+59.09	—	68.92	844+91.67	—	69.27	—	—	—
843+61.76	70.86	—	844+92.87	71.23	—	—	—	—
843+69.35	—	69.00	845+01.87	—	69.28	—	—	—

BRIDGE NO. 167/125E
EXISTING ELEVATIONS

FOR "AS CONSTRUCTED PLANS" ONLY

Bridge Design Engineer				
Supervisor				
Designed By A.L.K.				
Checked By J.R.K.				
Detailed By G.W.S.				
Bridge Projects Engineer				
Prelim. Plan By				
Architect/Specialist	DATE	REVISION	BY	APP'D

REGION NO.	STATE	FED. AID. PROJ. NO.	SHEET NO.	TOTAL SHEETS
10	WASH			

JOB NUMBER 95W036

CONTRACT NO. 4771

JOHN R. KAISER, STATE OF WASHINGTON, REGISTERED PROFESSIONAL ENGINEER — 9/11/96

EXPIRES: 06/10/97

WASHINGTON STATE DEPARTMENT OF TRANSPORTATION

Swerdrup CIVIL INC.

SR167
15TH N.W. TO 84TH AVE. SO.
HOV SC & DI – STAGE 2
UPRR OVERCROSSING BR. NO. 167/125

ELEVATIONS AND PROTECTIVE SCREENING DETAILS

BRIDGE SHEET NO. 5

SHEET 552 OF 663 SHEETS

SR 167/91

B83000229 SR 708 NO. SHEET

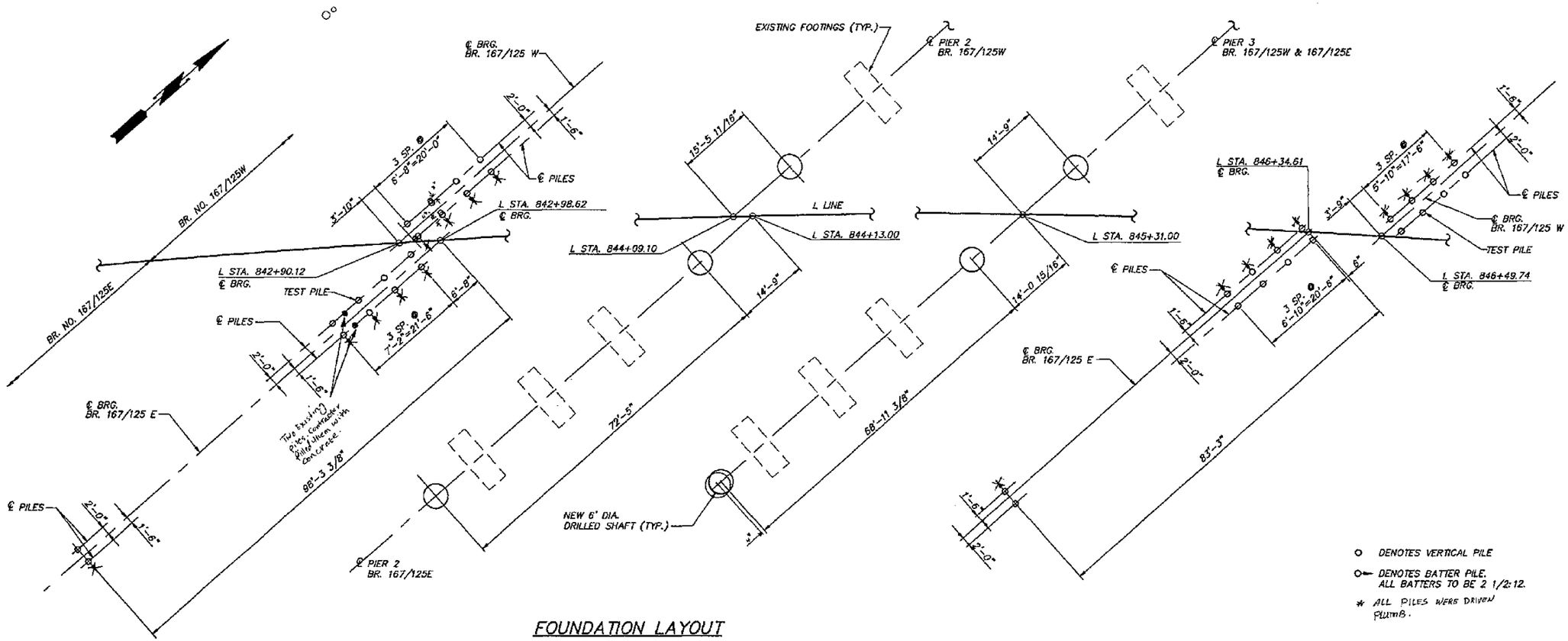

○ DENOTES VERTICAL PILE

○— DENOTES BATTER PILE. ALL BATTERS TO BE 2 1/2:12.

* ALL PILES WERE DRIVEN PLUMB.

FOUNDATION LAYOUT

BRIDGE NOS. 167/125 E & 167/125 W
BEARING OF ALL PIERS – N 00°57'49" E

FOR "AS CONSTRUCTED PLANS" ONLY

B5300004 SR ___ JOB NO. ___ SHEET ___

Bridge Design Engineer					REGION NO.	STATE	FED. AID. PROJ. NO.	SHEET NO.	TOTAL SHEETS	
Supervisor					10	WASH				
Designed By Q.B./W.G.D.					JOB NUMBER 95W036					
Checked By J.R.K.										
Detailed By B.L.P.					CONTRACT NO. 4771					
Bridge Projects Engineer										
Prelim. Plan By										
Architect/Specialist	DATE	REVISION	BY	APP'D						

JOHN R. KATTELL, STATE OF WASHINGTON, REGISTERED PROFESSIONAL ENGINEER, 9/1/96
EXPIRES: 06/10/97

WASHINGTON STATE DEPARTMENT OF TRANSPORTATION

Sverdrup CIVIL INC.

SR167
15TH N.W. TO 84TH AVE. SO.
HOV SC & DI – STAGE 2
UPRR OVERCROSSING BR. NO. 167/125

FOUNDATION LAYOUT

BRIDGE SHEET NO. 6

SHEET 553 OF 663 SHEETS

SR167/91

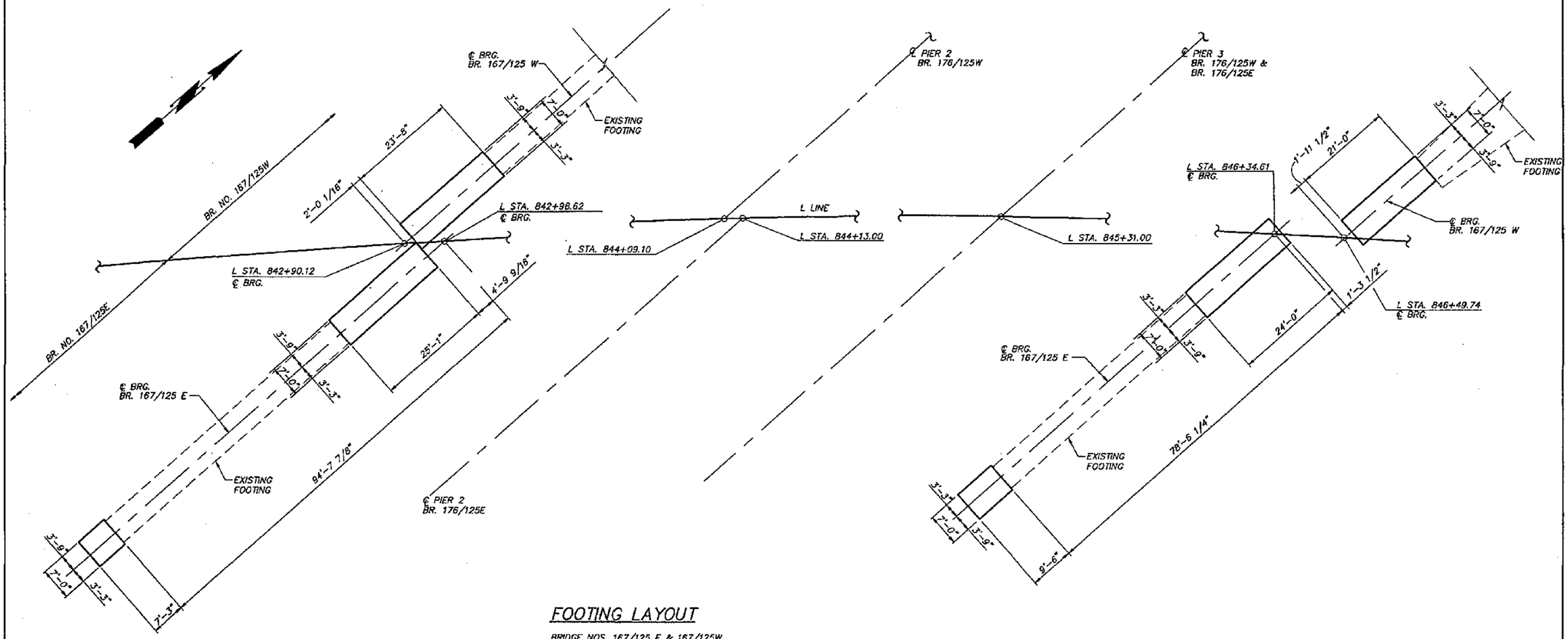

FOOTING LAYOUT

BRIDGE NOS. 167/125 E & 167/125W
BEARING OF ALL PIERS – N 00°57'49" E

FOR "AS CONSTRUCTED PLANS" ONLY

Bridge Design Engineer					REGION NO.	STATE	FED. AID. PROJ. NO.	SHEET NO.	TOTAL SHEETS	
Supervisor					10	WASH				
Designed By Q.B./W.G.D.					JOB NUMBER 95W036					
Checked By J.R.K.										
Detailed By B.L.P.										
Bridge Projects Engineer					CONTRACT NO. 9771					
Prelim. Plan By										
Architect/Specialist	DATE	REVISION	BY	APP'D						

JOHN R. KATTELL, STATE OF WASHINGTON, REGISTERED PROFESSIONAL ENGINEER — EXPIRES: 06/10/97

WASHINGTON STATE DEPARTMENT OF TRANSPORTATION

Sverdrup CIVIL INC.

SR167
15TH N.W. TO 84TH AVE. SO.
HOV SC & DI – STAGE 2
UPRR OVERCROSSING BR. NO. 167/125

FOOTING LAYOUT

BRIDGE SHEET NO. 7

SHEET 554 OF 663 SHEETS

B5300027 SR 708 NO. Sfin.s.1

SR167/91

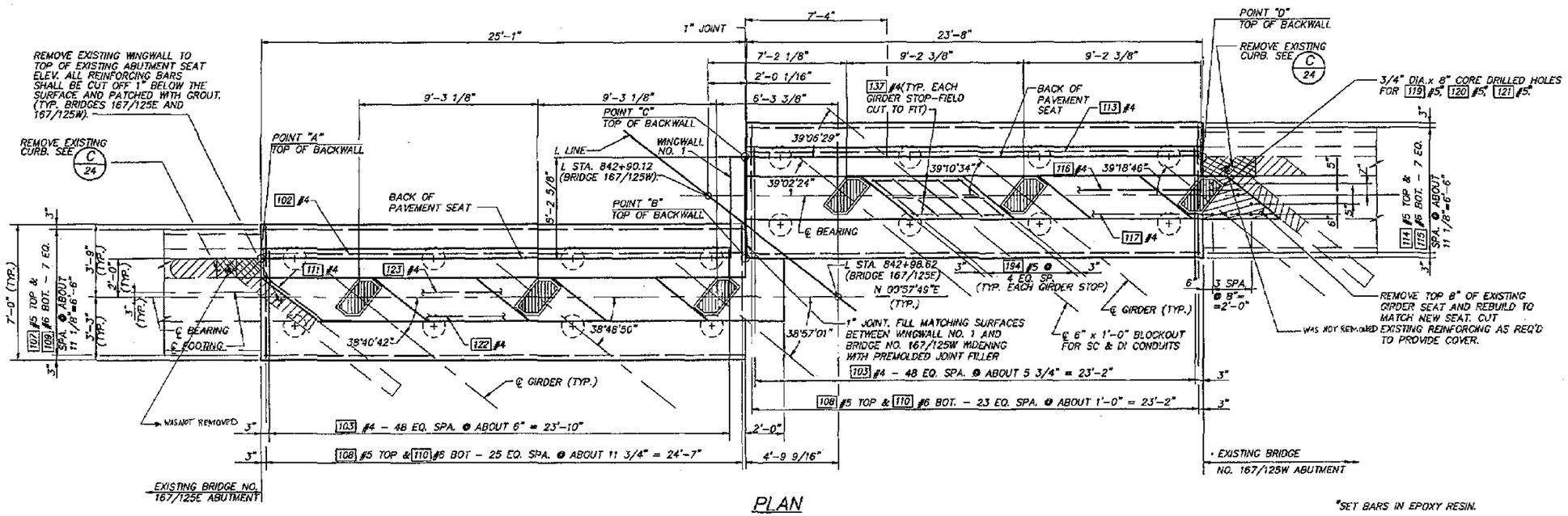

PLAN

SHOWN LOOKING BACK ON STATION

*SET BARS IN EPOXY RESIN.

"E" INDICATES EPOXY COATED REBAR

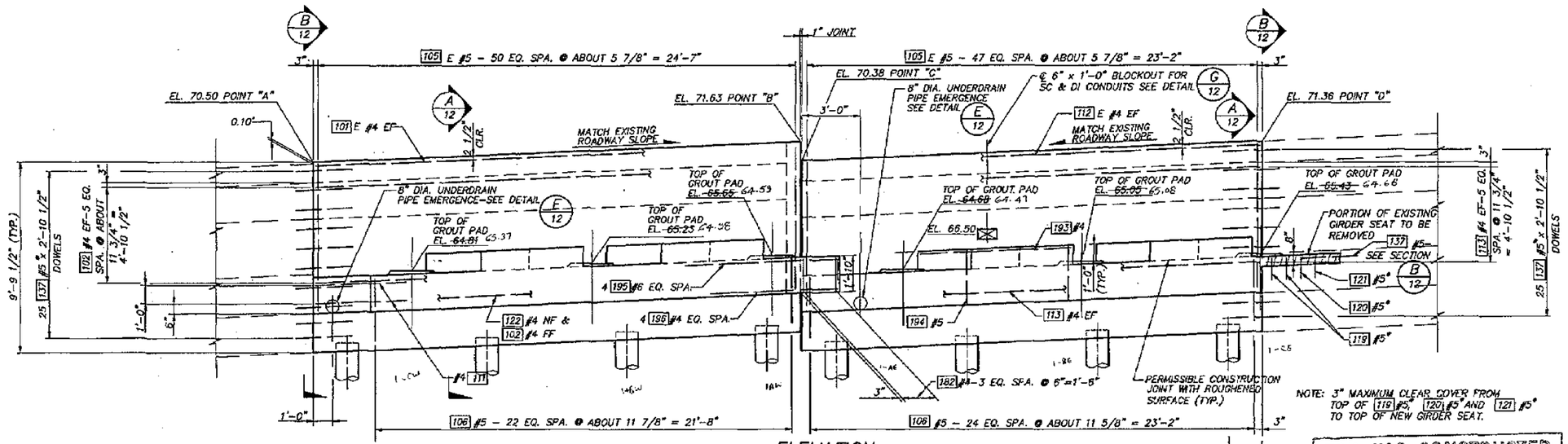

NOTE: 3" MAXIMUM CLEAR COVER FROM TOP OF 119 #5, 120 #5* AND 121 #5* TO TOP OF NEW GIRDER SEAT.

ELEVATION

EXISTING WINGWALLS NOT SHOWN FOR CLARITY

FOR "AS CONSTRUCTED PLANS" ONLY

Bridge Design Engineer					REGION NO.	STATE	FED. AID. PROJ. NO.	SHEET NO.	TOTAL SHEETS
Supervisor					10	WASH			
Designed By W.G.D.					JOB NUMBER 95W036				
Checked By D.W.K.									
Detailed By G.W.S.									
Bridge Projects Engineer					CONTRACT NO. 5771				
Prelim. Plan By									
Architect/Specialist	DATE	REVISION	BY	APP'D					

BB300008 SR ___ JOB NO. ___ SHEET ___

JOHN A. KATTES, STATE OF WASHINGTON, REGISTERED PROFESSIONAL ENGINEER, 13400. 7/1/96. EXPIRES: 06/10/97

WASHINGTON STATE DEPARTMENT OF TRANSPORTATION

Sverdrup CIVIL INC.

SR167
15HT N.W. TO 84TH AVE. SO.
HOV SC & DI - STAGE 2
UPRR OVERCROSSING BR. NO. 167/125

PIER 1 - PLAN & ELEVATION - SHEET 1

BRIDGE SHEET NO. 8

SHEET 555 OF 663 SHEETS

SR167/91

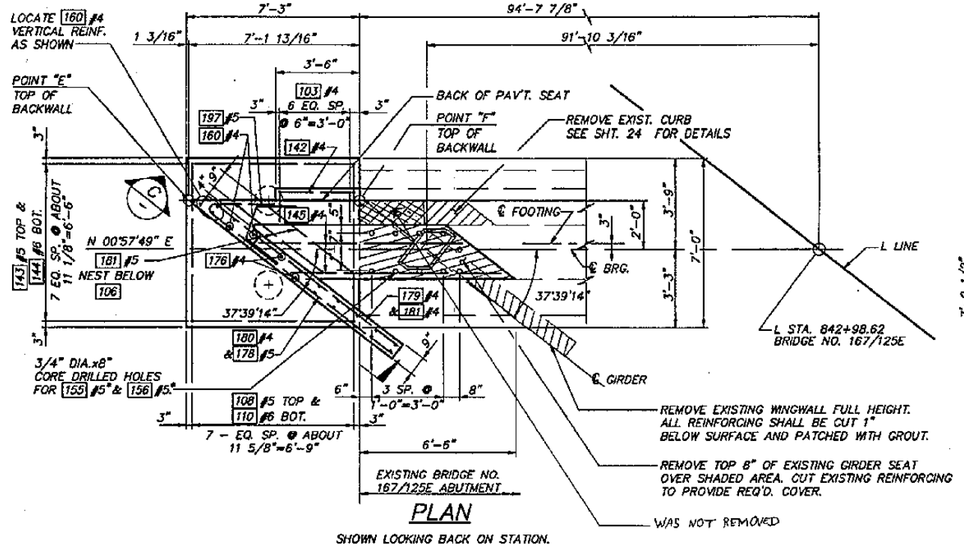

PLAN

SHOWN LOOKING BACK ON STATION.

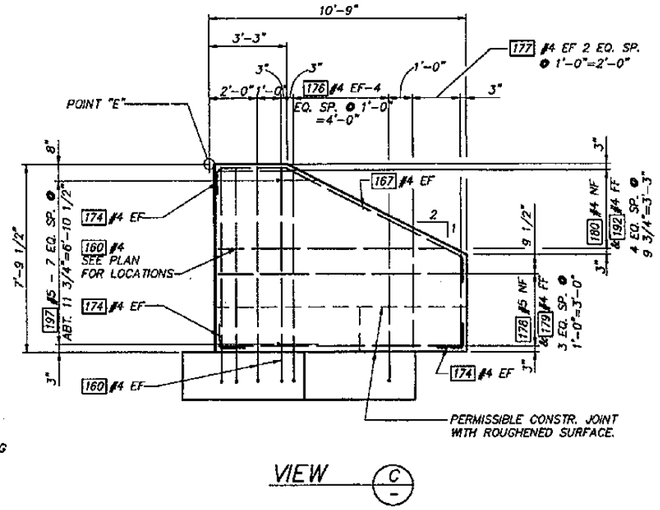

VIEW C

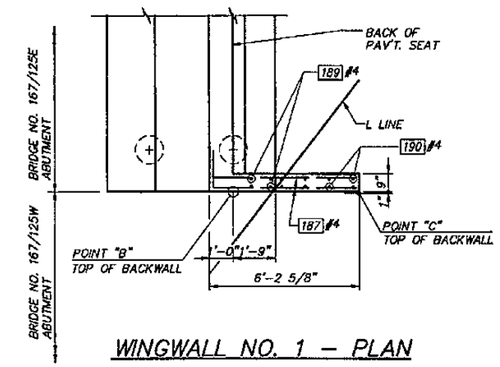

WINGWALL NO. 1 – PLAN

* SET BARS IN EPOXY RESIN.

"E" INDICATES EPOXY COATED REBAR.

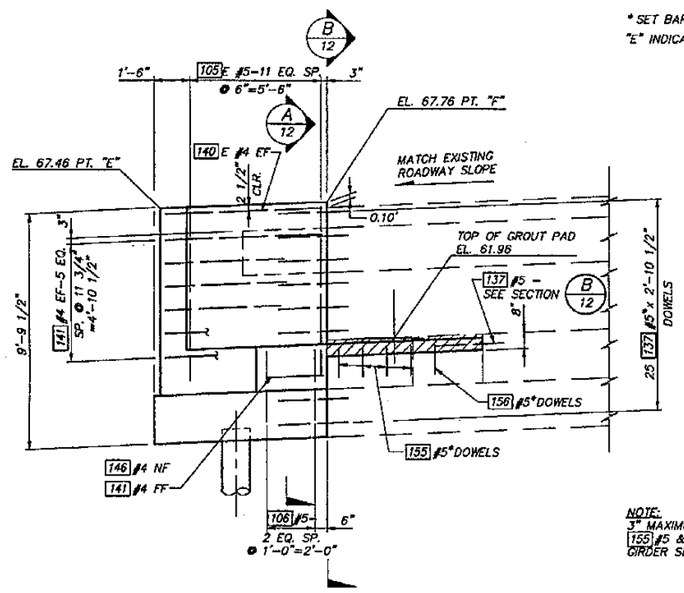

ELEVATION

WINGWALLS NOT SHOWN FOR CLARITY.

NOTE:
3" MAXIMUM COVER FROM TOP OF 155 #5 & 156 #5 TO TOP OF NEW GIRDER SEAT.

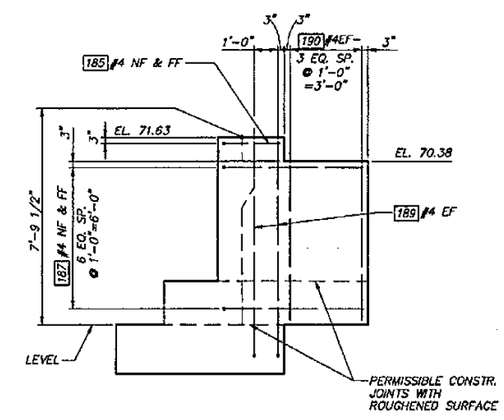

WINGWALL NO. 1 – ELEVATION

FOR "AS CONSTRUCTED PLANS" ONLY

Bridge Design Engineer					REGION NO.	STATE	FED. AID. PROJ. NO.	SHEET NO.	TOTAL SHEETS
Supervisor					10	WASH			
Designed By W.G.D.					JOB NUMBER 95W036				
Checked By D.W.K./R.S.E.									
Detailed By A.J.D.					CONTRACT NO. 4771				
Bridge Projects Engineer									
Prelim. Plan By									
Architect/Specialist	DATE	REVISION	BY	APP'D					

BB300007 SR ___ JOB NO. ___ SHEET ___

STATE OF WASHINGTON — JOHN A. KATTES — 14871 REGISTERED PROFESSIONAL ENGINEER — 3/6/96 — EXPIRES: 06/10/97

WASHINGTON STATE DEPARTMENT OF TRANSPORTATION

Sverdrup CIVIL INC.

SR167
15TH N.W. TO 84TH AVE. SO.
HOV SC & DI – STAGE 2
UPRR OVERCROSSING BR. NO. 167/125

PIER 1 – PLAN & ELEVATION – SHEET 2

BRIDGE SHEET NO. 9

SHEET 556 OF 663 SHEETS

SR167/91

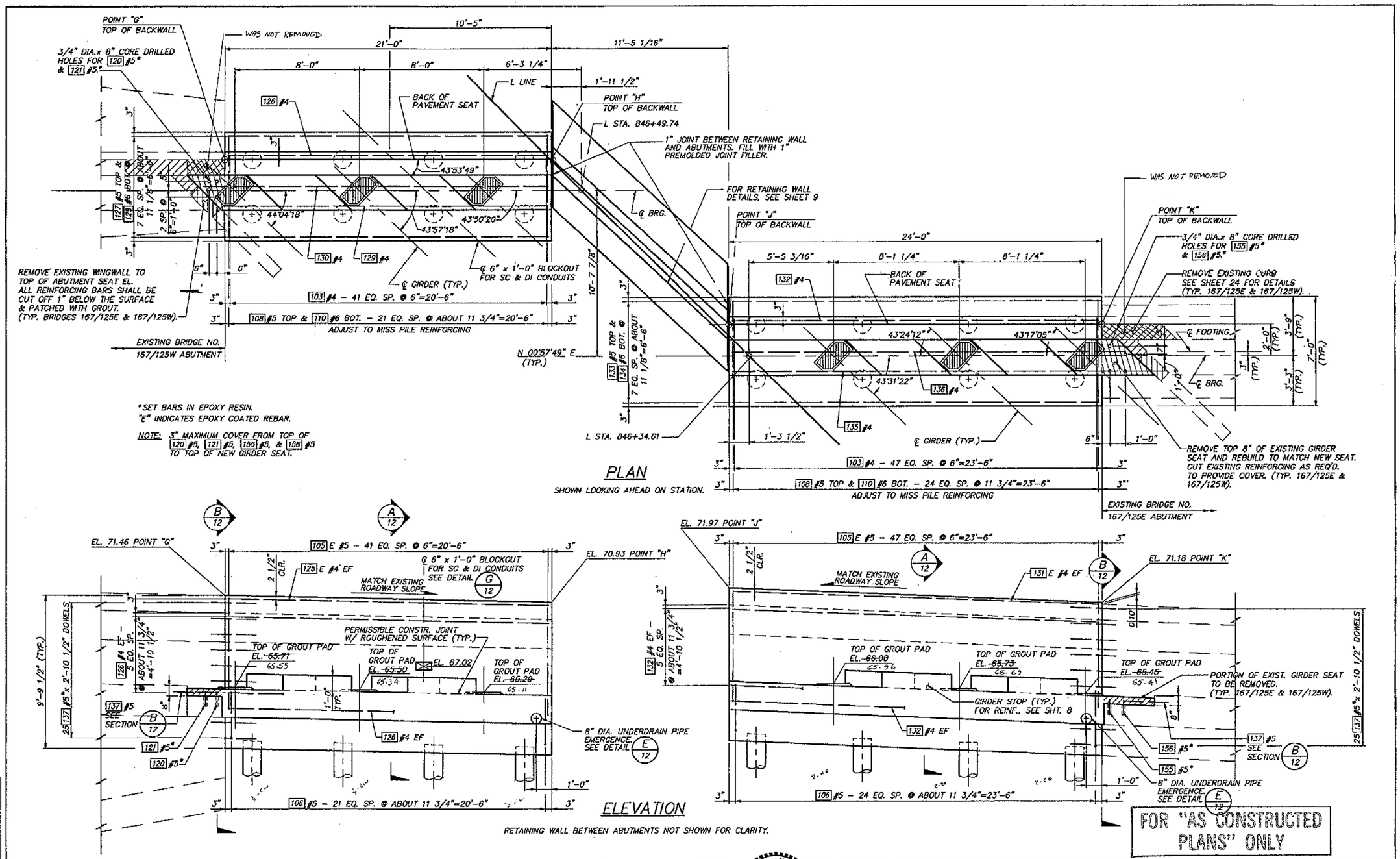

Bridge Design Engineer				REGION NO.	STATE	FED. AID. PROJ. NO.	SHEET NO.	TOTAL SHEETS	
Supervisor				10	WASH				
Designed By W.G.D.				JOB NUMBER 95W036					
Checked By R.S.E./D.W.K.				CONTRACT NO. 5771					
Detailed By A.J.D.									
Bridge Projects Engineer									
Prelim. Plan By									
Architect/Specialist	DATE	REVISION	BY	APP'D					

STATE OF WASHINGTON REGISTERED PROFESSIONAL ENGINEER — EXPIRES: 06/10/97 — 5/1/96

WASHINGTON STATE DEPARTMENT OF TRANSPORTATION

Everdrup CIVIL INC.

SR167
15TH N.W. TO 84TH AVE. SO.
HOV SC & DI - STAGE 2
UPRR OVERCROSSING BR. NO. 167/125

PIER 4 - PLAN & ELEVATION - SHEET 1

BRIDGE SHEET NO. 10

SHEET 557 OF 663 SHEETS

B6300009 SR 09 NO. SHEET

SR167/91

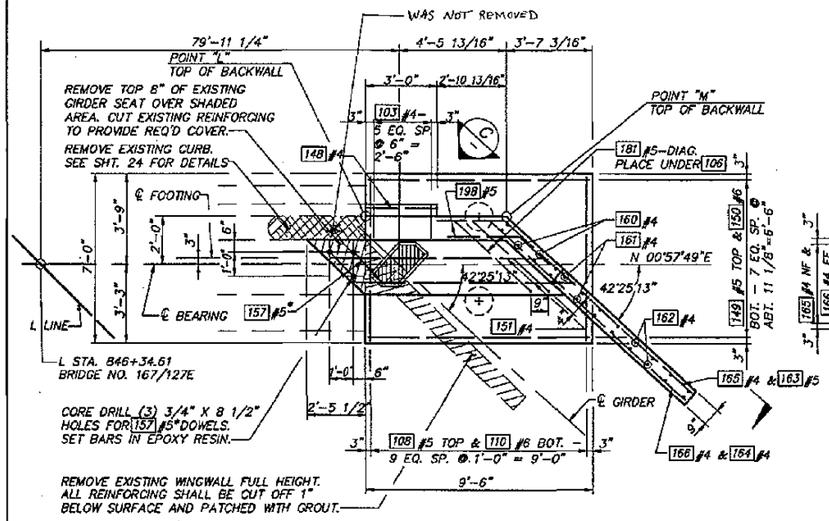

PLAN

SHOWN LOOKING AHEAD ON STATION.

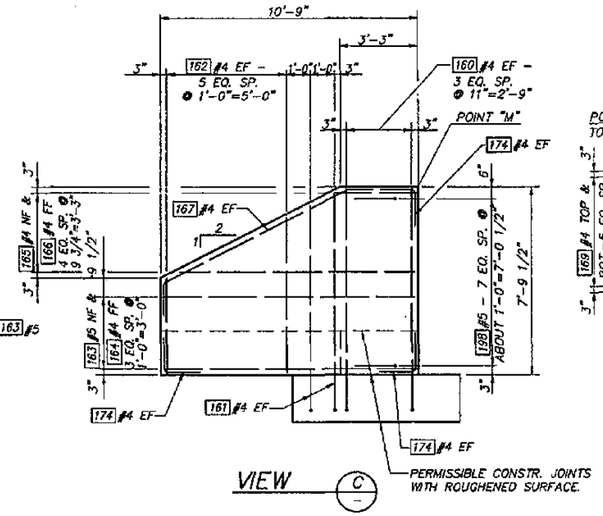

VIEW C

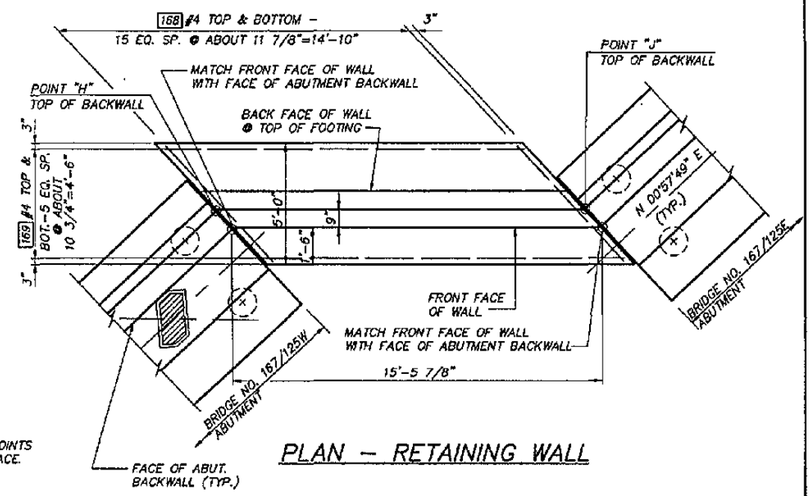

PLAN – RETAINING WALL

* SET BARS IN EPOXY RESIN.
"E" INDICATES EPOXY COATED REBAR.

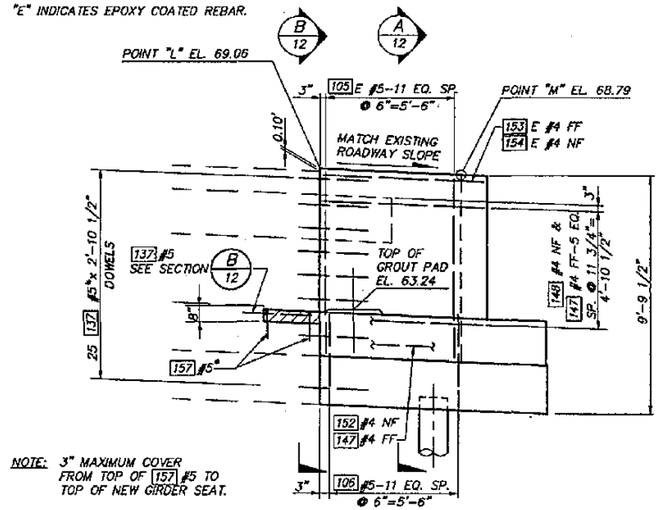

NOTE: 3" MAXIMUM COVER FROM TOP OF 157 #5 TO TOP OF NEW GIRDER SEAT.

ELEVATION

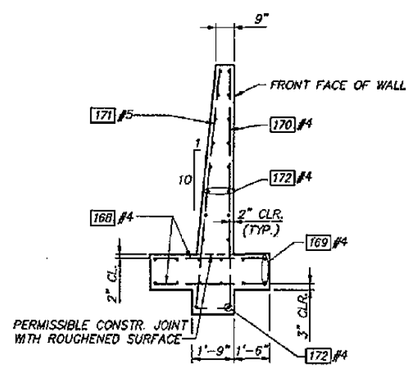

SECTION D

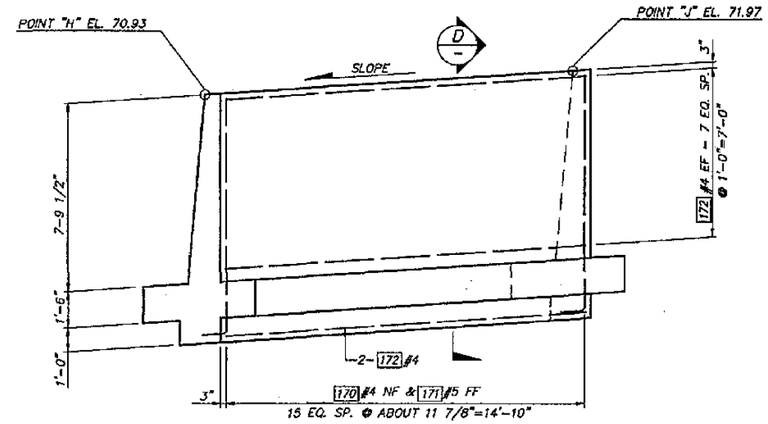

ELEVATION – RETAINING WALL

BRIDGE NOS. 167/125W & 167/125E
ABUTMENT NOT SHOWN FOR CLARITY.

FOR "AS CONSTRUCTED PLANS" ONLY

Bridge Design Engineer					
Supervisor					
Designed By W.G.D.					
Checked By R.S.E./D.W.K.					
Detailed By B.L.P.					
Bridge Projects Engineer					
Prelim. Plan By					
Architect/Specialist	DATE	REVISION	BY	APP'D	

REGION NO.	STATE	FED. AID. PROJ. NO.	SHEET NO.	TOTAL SHEETS
10	WASH			

JOB NUMBER 95W036
CONTRACT NO. 4771

JOHN A. KATHERINE, STATE OF WASHINGTON, REGISTERED PROFESSIONAL ENGINEER
7/1/96
EXPIRES: 06/10/97

WASHINGTON STATE DEPARTMENT OF TRANSPORTATION
Overdrup CIVIL INC.

SR167
15TH N.W. TO 84TH AVE. SO.
HOV SC & DI – STAGE 2
UPRR OVERCROSSING BR. NO. 167/125

PIER 4 – PLAN & ELEVATION – SHEET 2

BRIDGE SHEET NO. 11
SHEET 558 OF 663

B8300010 SR JOB NO. SHEET

SR167/91

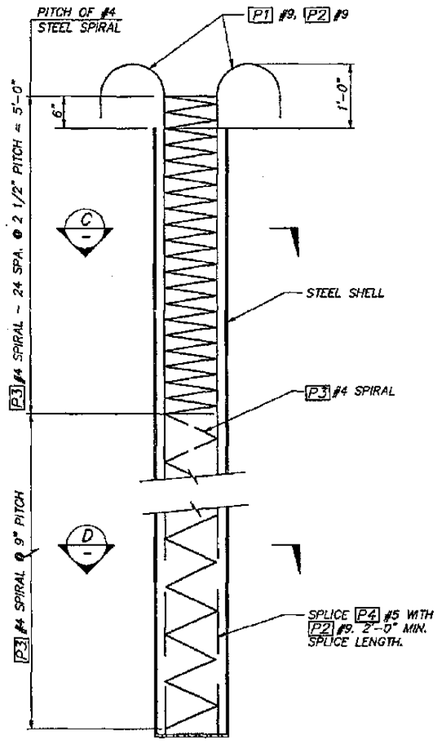

CAST-IN-PLACE CONCRETE PILE

BAR LIST					
MARK	LOCATION	SIZE	NO REQ'D. PER PILE	LENGTH	BENDING DIAGRAM
P1	LONGITUDINAL	9	4	–	
P2	LONGITUDINAL	9	4	–	
P3	SPIRAL	4	1	300'-0"	
P4	LONGITUDINAL	5	4	11'-6"	STR.

NOTE: LENGTHS OF BARS P3 AND P4 ARE BASED ON MINIMUM TIP ELEVATION. ACTUAL LENGTHS WILL DEPEND ON FINAL TIP ELEVATION.

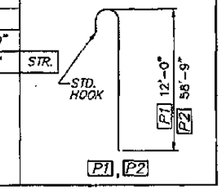

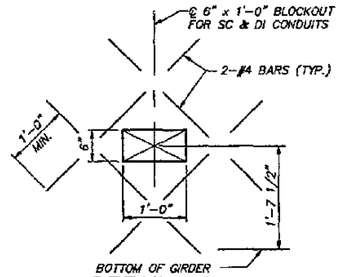

DETAIL G 8,10

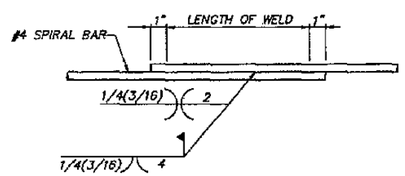

WELDED LAP SPLICE DETAIL

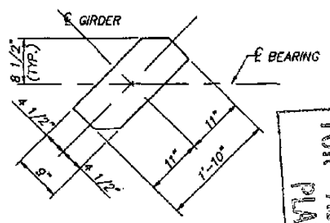

BEARING PAD

LAMINATED ELASTOMERIC BEARING PAD 1 1/2" THICK (2 SHIMS). DUROMETER HARDNESS = 60.

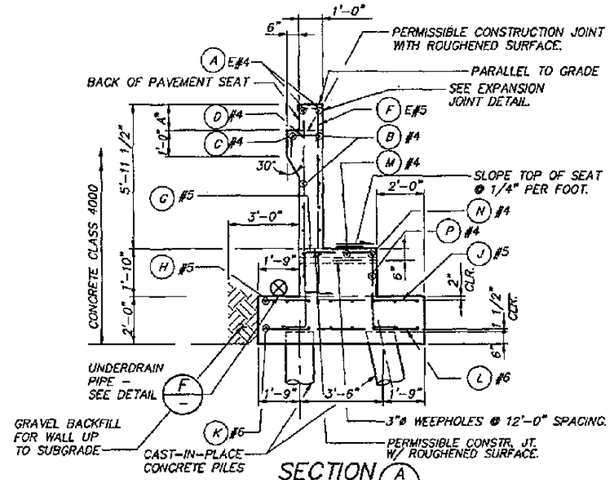

SECTION A B 9,10,11

NOTE: GIRDER STOPS NOT SHOWN.
*DIM. A = 1'-1" FOR BRIDGE 167/125W
DIM. A = 1'-2 1/4" FOR BRIDGE 167/125E

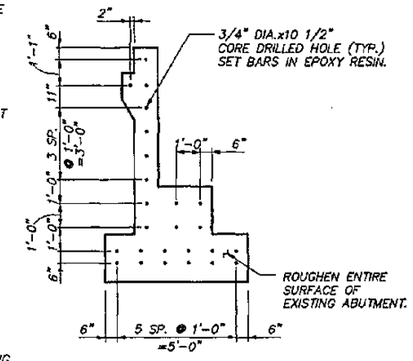

SECTION B B 9,10,11

"E" INDICATES EPOXY COATED REBAR.

SECTION A BAR REFERENCE	PIER 1 INTERIOR WIDENING		PIER 4 INTERIOR WIDENING		EXTERIOR WIDENING BRIDGE NO. 167/125E	
	BRIDGE NO. 167/125 E	BRIDGE NO. 167/125 W	BRIDGE NO. 167/125 E	BRIDGE NO. 167/125 W	PIER 1	PIER 4
A	101 E	112 E	131 E	125 E	140 E	153, 154 E
B	102	113	132	126	141	147
C	102	113	132	126	142	148
D	103	103	103	103	103	103
F	105 E	105 E	105 E	105 E	105 E	105 E
G	106	106	106	106	106	106, 181
H	107	114	133	127	143	149
J	108	108	108	108	108	108
K	109	115	134	128	144	150
L	110	110	110	110	110	110
M	123	118	136	130	145	151
N	122	117	135	129	145	151
P	122	113	132	126	146	152

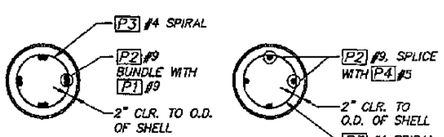

SECTION C — SECTION D

NOTES ON SPIRALS:
1. SPIRALS MAY BE FABRICATED FROM #4 DEFORMED REINFORCING BARS (AASHTO M31 GR. 60), PLAIN SMOOTH BARS 1/2"ø (AASHTO M31 GR. 60), DEFORMED WIRE D20 (AASHTO M225), OR COLD DRAWN WIRE W20 (AASHTO M32).
2. WELDED SPLICES ONLY.

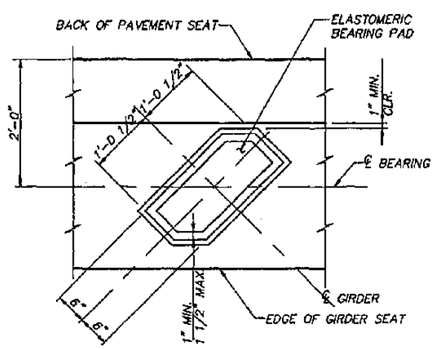

PLAN

GIRDER STOP NOT SHOWN

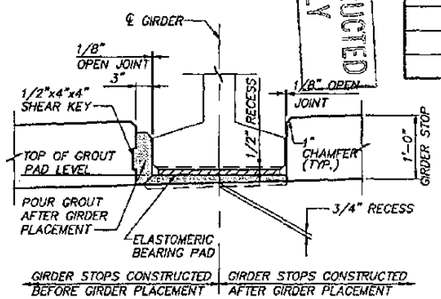

SECTION

GIRDER STOPS MAY BE CONSTRUCTED BEFORE OR AFTER GIRDER PLACEMENT. THE SAME METHOD SHALL BE USED AT EACH ABUTMENT

GROUT PAD & GIRDER STOP DETAILS

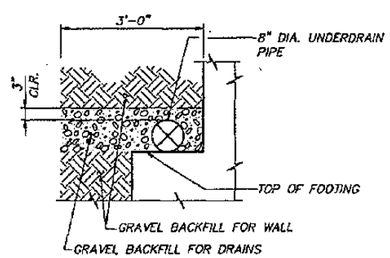

DETAIL F

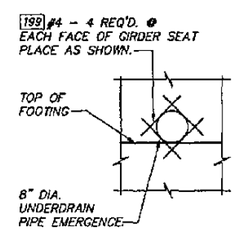

DETAIL E 8,10

FOR "AS CONSTRUCTED" PLANS ONLY

Bridge Design Engineer					REGION NO.	STATE	FED. AID. PROJ. NO.	SHEET NO	TOTAL SHEETS
Supervisor					10	WASH			
Designed By W.G.D.					JOB NUMBER 95W036				
Checked By R.S.E./A.T.L.									
Detailed By B.L.P.									
Bridge Projects Engineer									
Prelim. Plan By		DELETED APPROACH SLAB & CORS W/ MA RKS			CONTRACT NO.				
Architect/Specialist	DATE	REVISION	BY	APP'D	4771				

EXPIRES: 06/10/97

WASHINGTON STATE DEPARTMENT OF TRANSPORTATION

Sverdrup CIVIL INC.

SR167
15TH N.W. TO 84TH AVE. SO.
HOV SC & DI - STAGE 2
UPRR OVERCROSSING BR. NO. 167/125

PIERS 1 & 4 - DETAILS

BRIDGE SHEET NO. 12

SHEET 559 OF 663 SHEETS

B8300011 JOB NO. SR SHEET

5A167/91

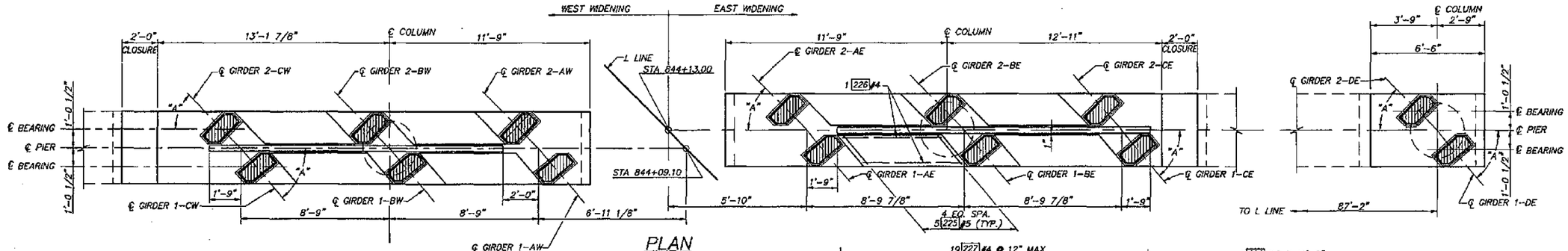

PLAN

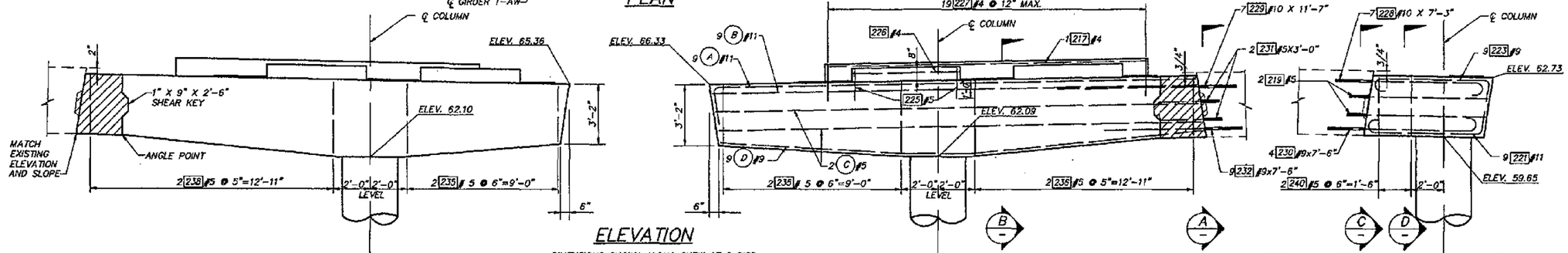

ELEVATION

DIMENSIONS SHOWN ALONG SKEW AT ℄ PIER.
ELEVATION GIVEN AT ℄ PIER.
SHOWN LOOKING AHEAD STATION.
REINFORCEMENT NOT SHOWN ON WEST WIDENING, SIMILAR TO EAST WIDENING.

167/125 WEST			167/125 EAST		
GIRDER	ELEV.	"A"	GIRDER	ELEV.	"A"
1-AW	65.62	39°02'24"	1-AE	66.33	38°57'01"
2-AW	65.63	41°26'28"	2-AE	66.34	41°17'45"
1-BW	65.99	39°10'34"	1-BE	65.96	38°48'50"
2-BW	65.99	41°34'05"	2-BE	65.97	41°09'58"
1-CW	66.36	39°18'46"	1-CE	65.59	38°40'42"
2-CW	66.37	41°41'45"	2-CE	65.59	41°02'14"
–	–	–	1-DE	62.96	37°39'17"
–	–	–	2-DE	62.97	40°05'21"

ELEVATION GIVEN @ TOP OF GROUT PAD ℄ BEARING

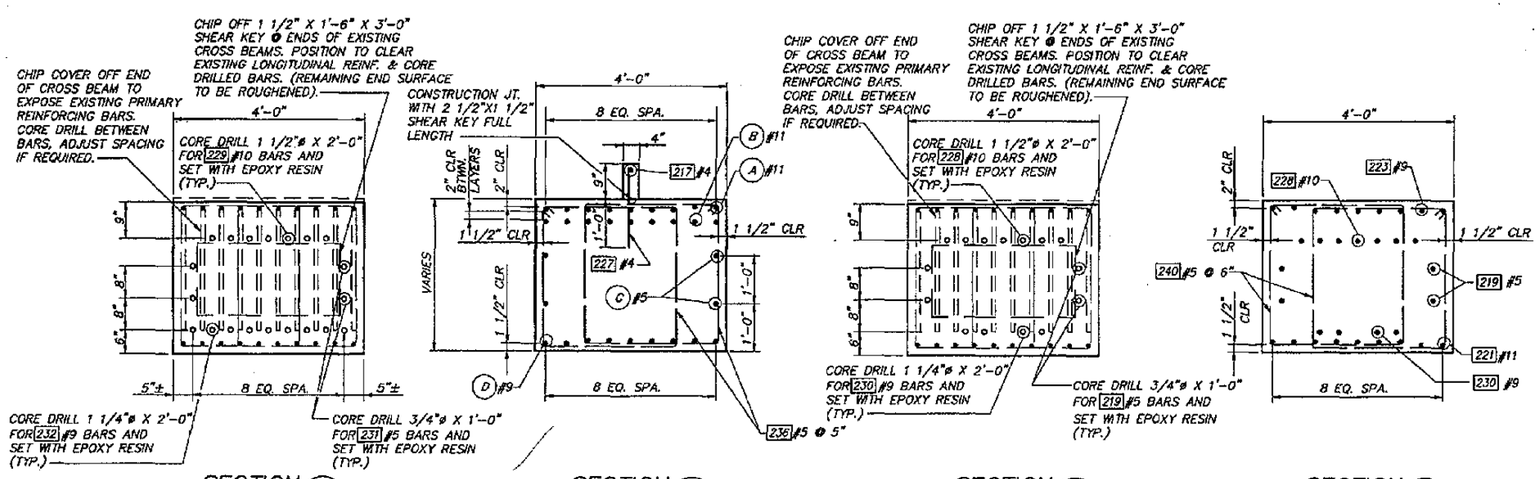

BAR REFERENCE	167/125 W	167/125 E
A	201	203
B	205	207
C	209	211
D	213	215

FOR "AS CONSTRUCTED PLANS" ONLY

Bridge Design Engineer					
Supervisor					
Designed By A.L.K.					
Checked By P.R.B.					
Detailed By G.W.S.					
Bridge Projects Engineer					
Prelim. Plan By					
Architect/Specialist	DATE	REVISION	BY	APP'D	

REGION NO.	STATE	FED. AID. PROJ. NO.	SHEET NO.	TOTAL SHEETS
10	WASH			

JOB NUMBER

CONTRACT NO. 5/771

EXPIRES: 06/10/97

WASHINGTON STATE DEPARTMENT OF TRANSPORTATION

Sverdrup CIVIL INC.

SR167
MAIN STREET TO 84TH AVE. SO.
HOV SC & DI – STAGE 2
UPRR OVERCROSSING BR. NO. 167/125

PIER 2 – CROSS BEAM DETAILS

BRIDGE SHEET NO. 13

SHEET 560 OF 663 SHEETS

B8300012 SR ___ JOB NO. ___ SHEET ___

SR167/91

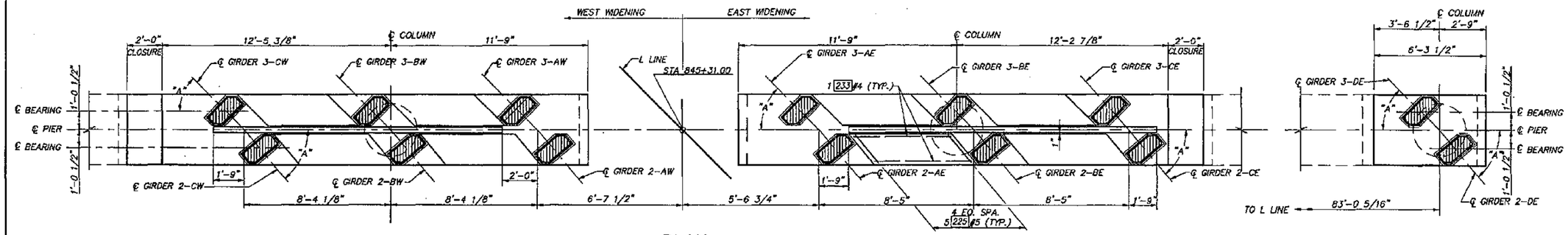

PLAN

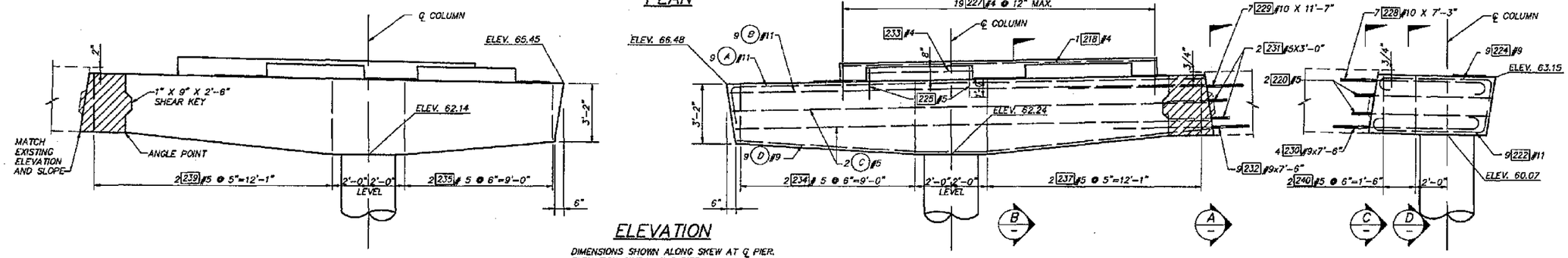

ELEVATION

DIMENSIONS SHOWN ALONG SKEW AT ℄ PIER.
ELEVATION GIVEN AT ℄ PIER.
SHOWN LOOKING AHEAD STATION.
REINFORCEMENT NOT SHOWN ON WEST WIDENING, SIMILAR TO EAST WIDENING.

167/125 WEST			167/125 EAST		
GIRDER	ELEV.	"A"	GIRDER	ELEV.	"A"
2-AW	65.72	41°26'28"	2-AE	66.47	41°17'45"
3-AW	65.71	43°50'20"	3-AE	66.47	43°31'22"
2-BW	66.03	41°34'05"	2-BE	66.12	41°09'58"
3-BW	66.02	43°57'18"	3-BE	66.12	43°24'12"
2-CW	66.35	41°41'45"	2-CE	65.78	41°02'14"
3-CW	66.34	44°04'18"	3-CE	65.78	43°17'05"
–	–	–	2-DE	63.38	40°05'21"
–	–	–	3-DE	63.38	42°25'13"

ELEVATION GIVEN @ TOP OF GROUT PAD ℄ BEARING

BAR REFERENCE	167/125 W	167/125 E
A	202	204
B	206	208
C	210	212
D	214	216

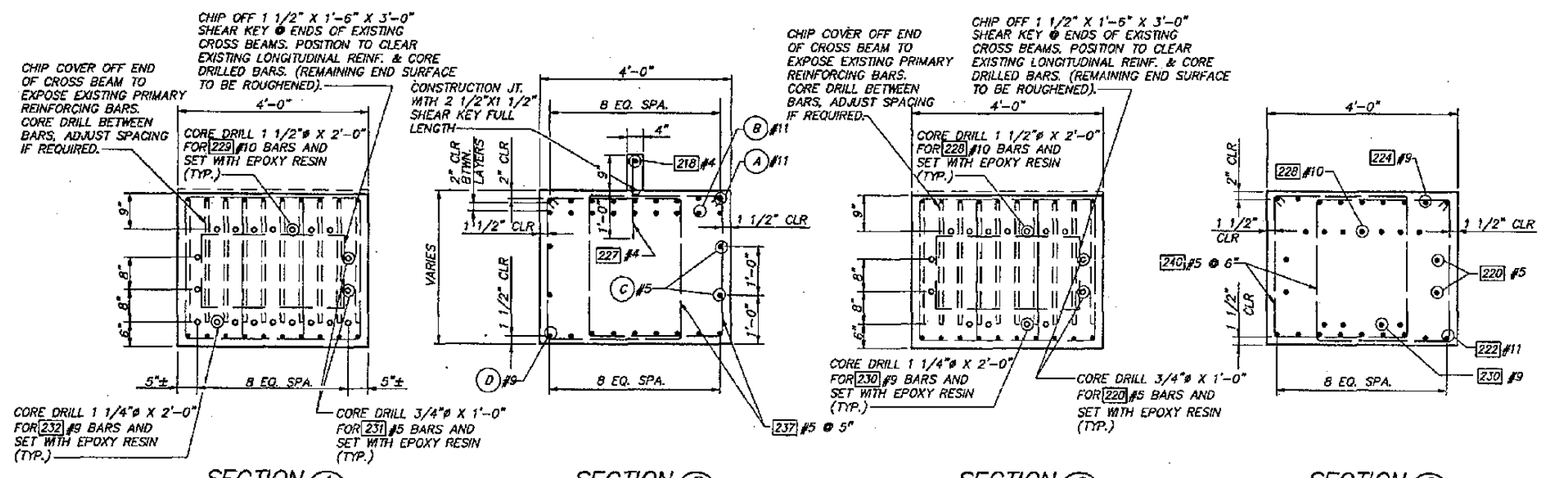

SECTION A — SECTION B — SECTION C — SECTION D

FOR "AS CONSTRUCTED PLANS" ONLY

Bridge Design Engineer					
Supervisor					
Designed By A.L.K.					
Checked By P.R.B.					
Detailed By G.W.S.					
Bridge Projects Engineer					
Prelim. Plan By					
Architect/Specialist	DATE	REVISION	BY	APP'D	

REGION NO.	STATE	FED. AID. PROJ. NO.	SHEET NO.	TOTAL SHEETS
10	WASH			

JOB NUMBER 95W036
CONTRACT NO. 5771

JOHN A. HAYELL — STATE OF WASHINGTON — 24011 REGISTERED PROFESSIONAL ENGINEER — 1/1/97 — EXPIRES: 06/10/97

WASHINGTON STATE DEPARTMENT OF TRANSPORTATION

Everdrup CIVIL INC.

SR167
15TH N.W. TO 84TH AVE. SO.
HOV SC & DI – STAGE 2
UPRR OVERCROSSING BR. NO. 167/125

PIER 3 – CROSS BEAM DETAILS

BRIDGE SHEET NO. 14

SHEET 561 OF 663 SHEETS

B8300028 SR ___ JOB NO. ___ SHEET ___

5/21/97/91

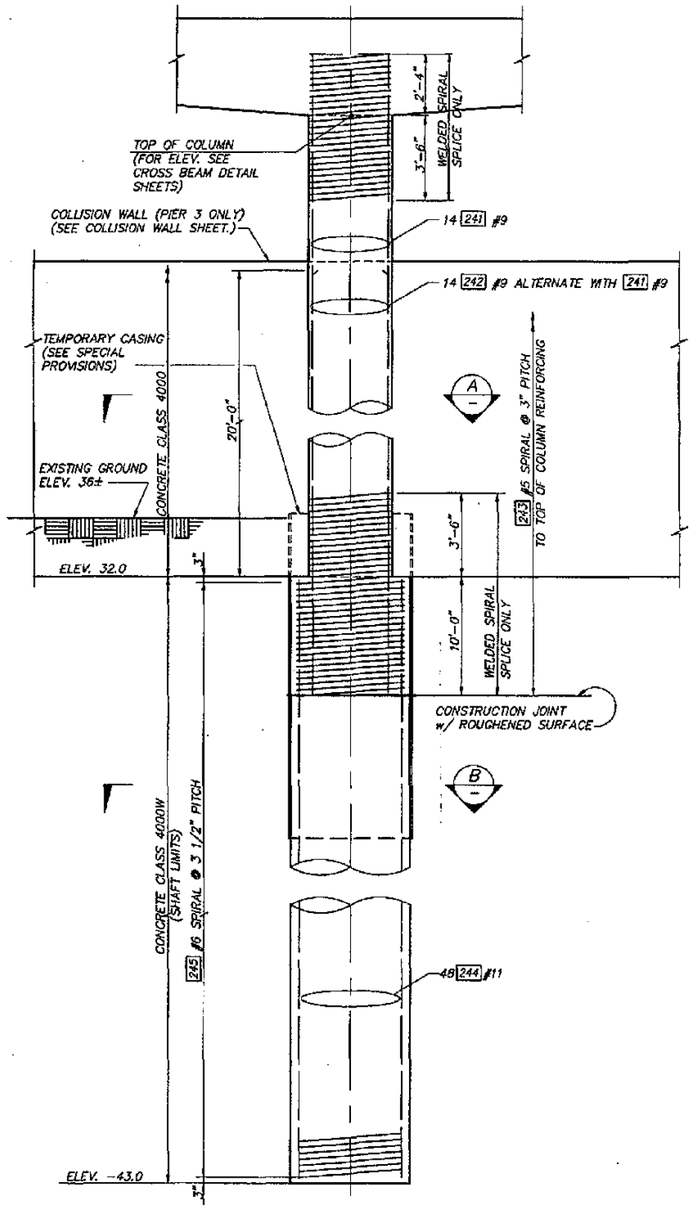

ELEVATION

~~(6 TOTAL)~~

(PIER 3)

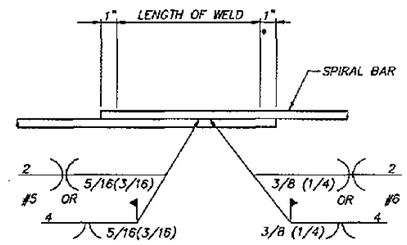

ALTERNATE WELD SPLICE

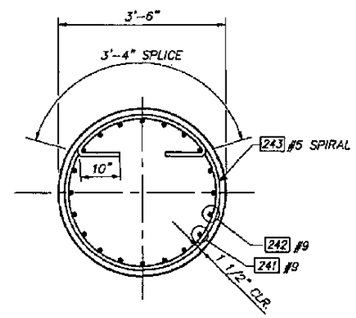

SECTION (A)

NOTE: HOOKS SHALL BE PLACED TO AVOID VERTICAL REINFORCING.

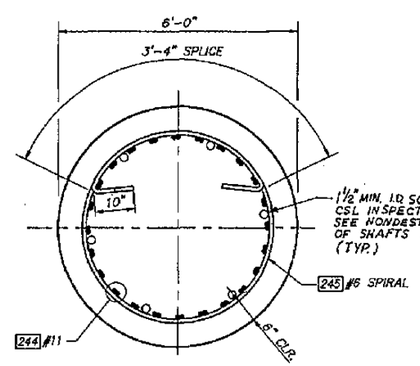

SECTION (B)

NOTE: HOOKS SHALL BE PLACED TO AVOID VERTICAL REINFORCING.

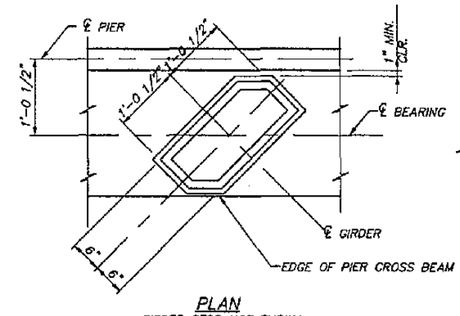

PLAN

GIRDER STOP NOT SHOWN

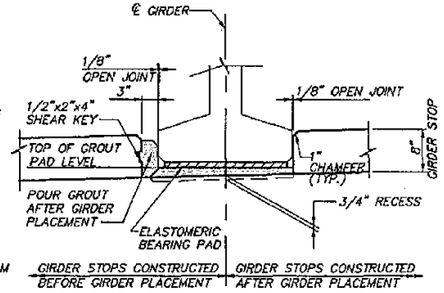

SECTION

GIRDER STOPS MAY BE CONSTRUCTED BEFORE OR AFTER GIRDER PLACEMENT. THE SAME METHOD SHALL BE USED AT EACH PIER

GROUT PAD DETAILS

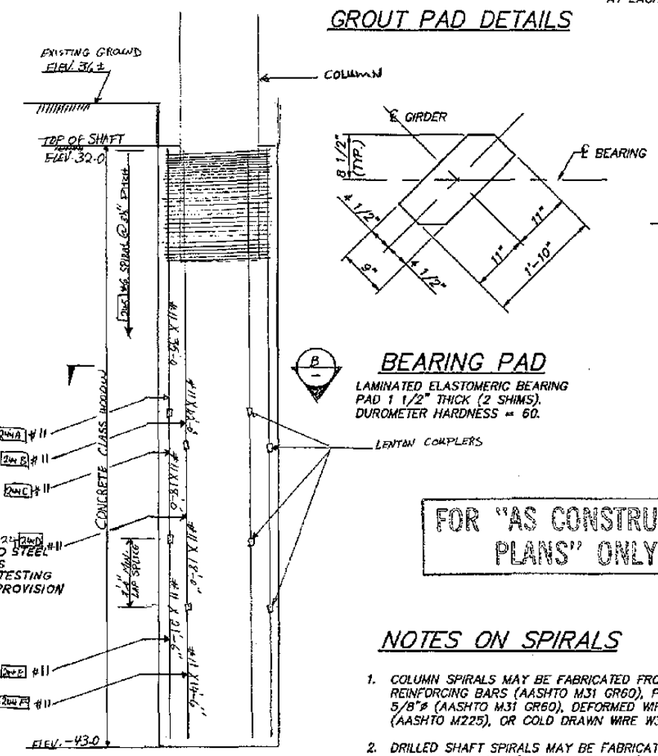

(PIER 2)

BEARING PAD

LAMINATED ELASTOMERIC BEARING PAD 1 1/2" THICK (2 SHIMS). DUROMETER HARDNESS = 60.

DRILLED SHAFT NOTES

~~PIER 2E & PIER 2 (EXTERIOR~~

- PIER 2E (EXT.) & PIER 2E (EXT.) HAVE FULL HIEGHT PERMANENT STEEL CASING.
- PIER 3W (INTERIOR) HAS 20FT OF STEEL CASING LEFT IN THE BOTTOM OF THE DRILLED SHAFT AND 40FT TREMI

FOR "AS CONSTRUCTED PLANS" ONLY

NOTES ON SPIRALS

1. COLUMN SPIRALS MAY BE FABRICATED FROM #5 DEFORMED REINFORCING BARS (AASHTO M31 GR60), PLAIN SMOOTH BARS 5/8"ø (AASHTO M31 GR60), DEFORMED WIRE D31 (AASHTO M225), OR COLD DRAWN WIRE W31 (AASHTO M32).
2. DRILLED SHAFT SPIRALS MAY BE FABRICATED FROM #6 DEFORMED REINFORCING BARS (AASHTO M31 GR60), PLAIN SMOOTH BARS 3/4"ø (AASHTO M31 GR60), DEFORMED WIRE D44 (AASHTO M225), OR COLD DRAWN WIRE W44 (AASHTO M32).

Bridge Design Engineer					REGION NO.	STATE	FED. AID. PROJ. NO.	SHEET NO.	TOTAL SHEETS
Supervisor					10	WASH			
Designed By A.L.K.					JOB NUMBER 95W036				
Checked By P.R.B.									
Detailed By B.L.P.									
Bridge Projects Engineer									
Prelim. Plan By					CONTRACT NO. 4771				
Architect/Specialist	DATE	REVISION	BY	APP'D					

JOHN A. KATTELL — STATE OF WASHINGTON — 24342 REGISTERED PROFESSIONAL ENGINEER — 6/6/95 — EXPIRES: 06/10/97

WASHINGTON STATE DEPARTMENT OF TRANSPORTATION

Sverdrup CIVIL INC.

SR167
15TH N.W. TO 84TH AVE. SO.
HOV SC & DI – STAGE 2
UPRR OVERCROSSING BR. NO. 167/125

PIERS 2 & 3 – SHAFT AND COLUMN DETAILS

BRIDGE SHEET NO. 15

SHEET 562 OF 663 SHEETS

SR 167/91

B8300013 SR ___ JOB NO. ___ SHEET ___

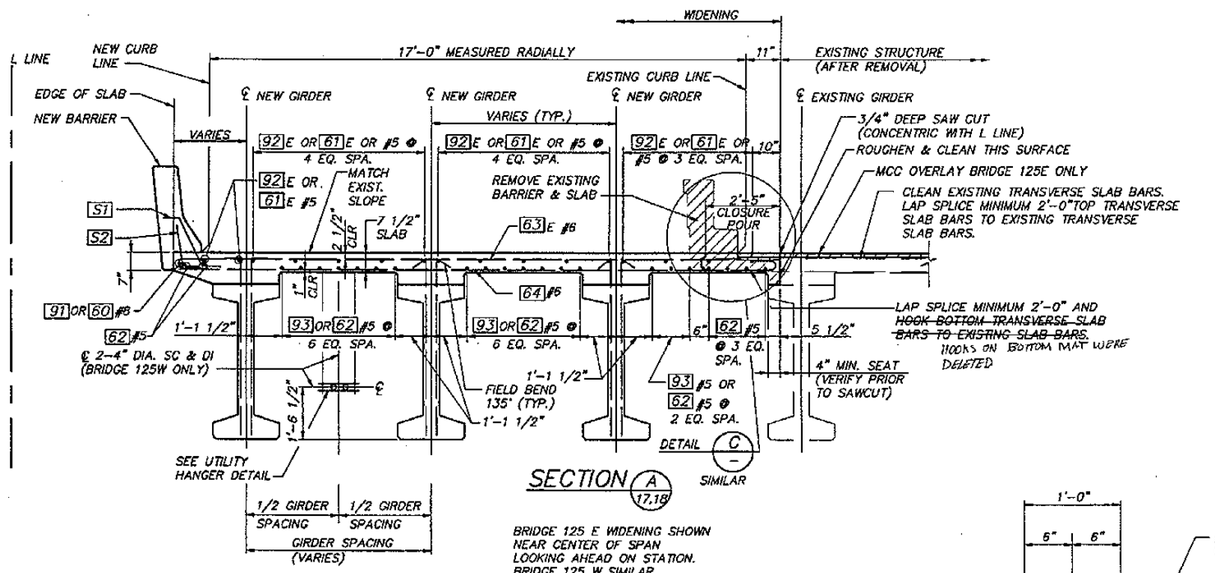

SECTION A 17,18

BRIDGE 125 E WIDENING SHOWN NEAR CENTER OF SPAN LOOKING AHEAD ON STATION. BRIDGE 125 W SIMILAR, LOOKING BACK ON STATION

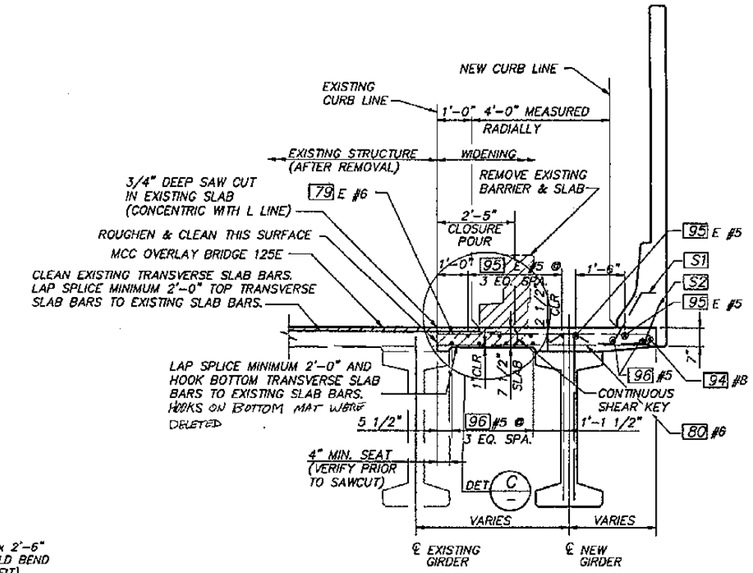

SECTION B 19

BRIDGE 125 E EXTERIOR WIDENING SHOWN NEAR CENTER OF SPAN LOOKING AHEAD ON STATION

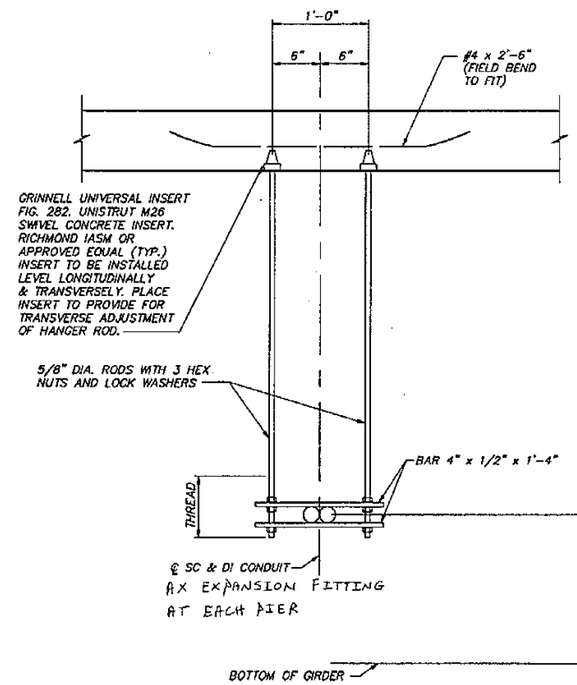

TYPICAL UTILITY HANGER DETAIL

NOTE: SPACE AT 15'-0" MAX.

ALL MATERIAL SHALL BE GALVANIZED AFTER FABRICATION PER AASHTO M 111 OR AASHTO M 232.

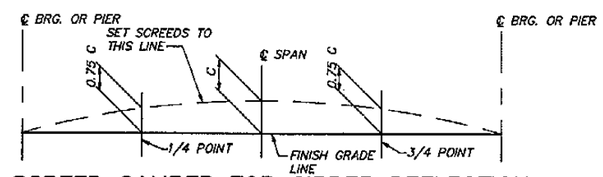

SCREED CAMBER FOR GIRDER DEFLECTION

FOR CAMBER "C" SEE GIRDER SCHEDULE

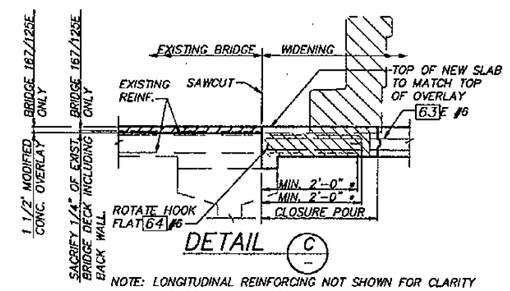

DETAIL C

NOTE: LONGITUDINAL REINFORCING NOT SHOWN FOR CLARITY

* IF EXISTING TRANSVERSE SLAB REINFORCEMENT IS TOO SHORT TO LAP SPLICE, BUTT SPLICE DOWEL (SIZE TO MATCH EXIST. REINF. AND ACHIEVE MIN. SPLICE LENGTH) WITH A MECHANICAL COUPLER BUTT SPLICE IN ACCORDANCE WITH STD. SPEC. SECTION 6-023(24)F.

FOR "AS CONSTRUCTED PLANS" ONLY

Bridge Design Engineer					REGION NO.	STATE	FED. AID. PROJ. NO.	SHEET NO. / TOTAL SHEETS
Supervisor					10	WASH		
Designed By A.L.K.					JOB NUMBER 95W036			
Checked By R.L.F.								
Detailed By B.L.P.								
Bridge Projects Engineer					CONTRACT NO. 9771			
Prelim. Plan By								
Architect/Specialist	DATE	REVISION	BY	APP'D				

JOHN R. KATTERJOHN, STATE OF WASHINGTON, REGISTERED PROFESSIONAL ENGINEER — 9/1/96 — EXPIRES: 06/10/97

WASHINGTON STATE DEPARTMENT OF TRANSPORTATION

Sverdrup CIVIL INC.

SR167
15TH N.W. TO 84TH AVE. SO.
HOV SC & DI - STAGE 2
UPRR OVERCROSSING BR. NO. 167/125

SLAB TYPICAL SECTIONS

BRIDGE SHEET NO. 16

SHEET 563 OF 663 SHEETS

B6300014 SR ___ JOB NO. ___ SHEET ___

SR167/91

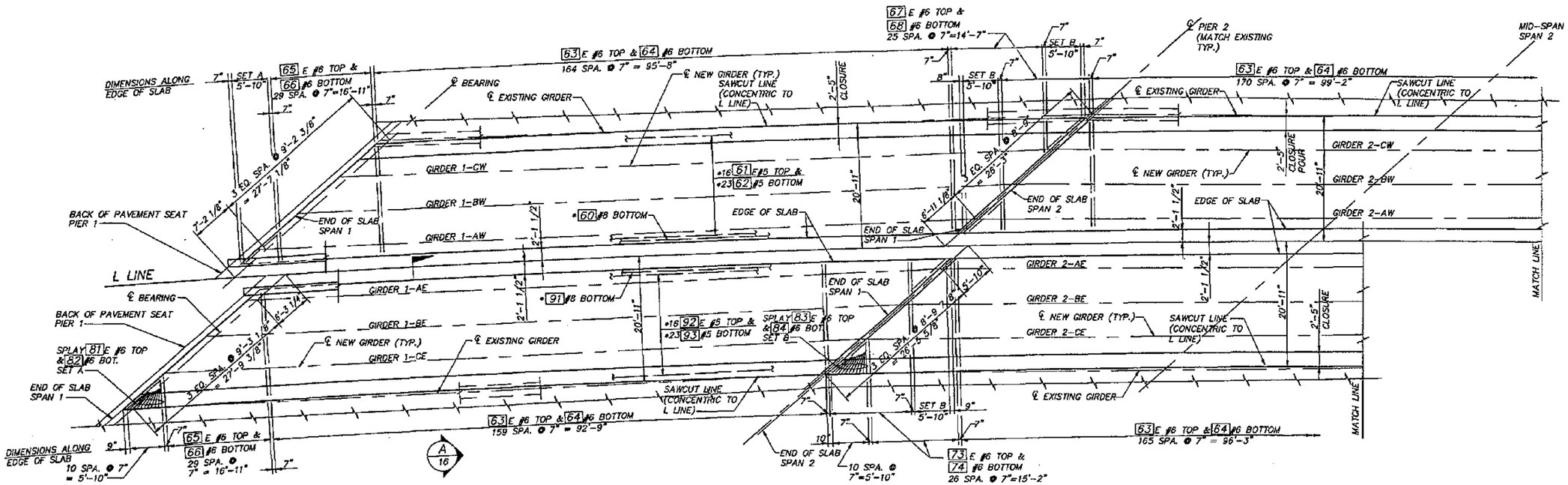

* INDICATES CONTINUOUS BAR WITH 2'-0" MINIMUM SPLICE (EXCEPT 60 #8 BARS SHALL HAVE 3'-6" MINIMUM SPLICE). NUMBER AND LENGTH OF BARS TO BE DETERMINED BY CONTRACTOR.
E INDICATES EPOXY COATED

SLAB PLAN & GIRDER LAYOUT – BR. 125E & W INTERIOR WIDENINGS
SPANS 1 & 2

FOR "AS CONSTRUCTED PLANS" ONLY

Bridge Design Engineer					
Supervisor					
Designed By A.L.K.					
Checked By R.L.F.					
Detailed By B.L.P.					
Bridge Projects Engineer					
Prelim. Plan By					
Architect/Specialist	DATE	REVISION	BY	APP'D	

REGION NO.	STATE	FED. AID. PROJ. NO.	SHEET NO.	TOTAL SHEETS
10	WASH			
JOB NUMBER 95W036				
CONTRACT NO. 4771				

JOHN R. BATTEY, STATE OF WASHINGTON, REGISTERED PROFESSIONAL ENGINEER — EXPIRES: 06/10/97

WASHINGTON STATE DEPARTMENT OF TRANSPORTATION

Sverdrup CIVIL INC.

SR167
15TH N.W. TO 84TH AVE. SO.
HOV SC & DI – STAGE 2
UPRR OVERCROSSING BR. NO. 167/125

SLAB PLAN & GIRDER LAYOUT – SHEET 1

BRIDGE SHEET NO. 17

SHEET 564 OF 663 SHEETS

B5300016 SR ___ JOB NO. ___ SHEET ___

SR167/91

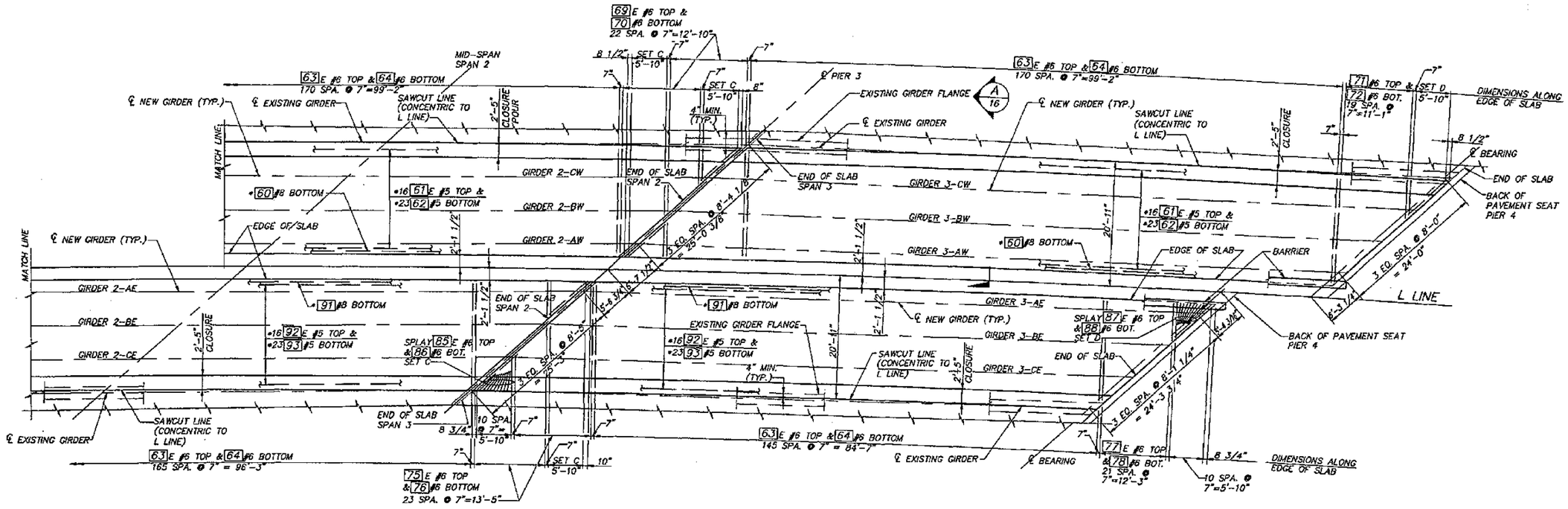

SLAB PLAN & GIRDER LAYOUT – BR. 125E & W INTERIOR WIDENINGS
SPANS 2 & 3

* INDICATES CONTINUOUS BAR WITH 2'-0" MINIMUM SPLICE (EXCEPT 60 #8 BARS SHALL HAVE 3'-6" MINIMUM SPLICE). NUMBER AND LENGTH OF BARS TO BE DETERMINED BY CONTRACTOR.
E INDICATES EPOXY COATED

FOR "AS CONSTRUCTED PLANS" ONLY

Bridge Design Engineer				
Supervisor				
Designed By A.L.K.				
Checked By R.L.F.				
Detailed By G.W.S.				
Bridge Projects Engineer				
Prelim. Plan By				
Architect/Specialist	DATE	REVISION	BY	APP'D

REGION NO.	STATE	FED. AID. PROJ. NO.	SHEET NO.	TOTAL SHEETS
10	WASH			

JOB NUMBER 95W036
CONTRACT NO. 4771

EXPIRES: 06/10/97

WASHINGTON STATE DEPARTMENT OF TRANSPORTATION

Sverdrup CIVIL INC.

SR167
15TH N.W. TO 84TH AVE. SO.
HOV SC & DI – STAGE 2
UPRR OVERCROSSING BR. NO. 167/125

SLAB PLAN & GIRDER LAYOUT – SHEET 2

BRIDGE SHEET NO. 18

SHEET 565 OF 663 SHEETS

B5300030 SR ___ JOB NO. ___ SHEET ___

SR167/91

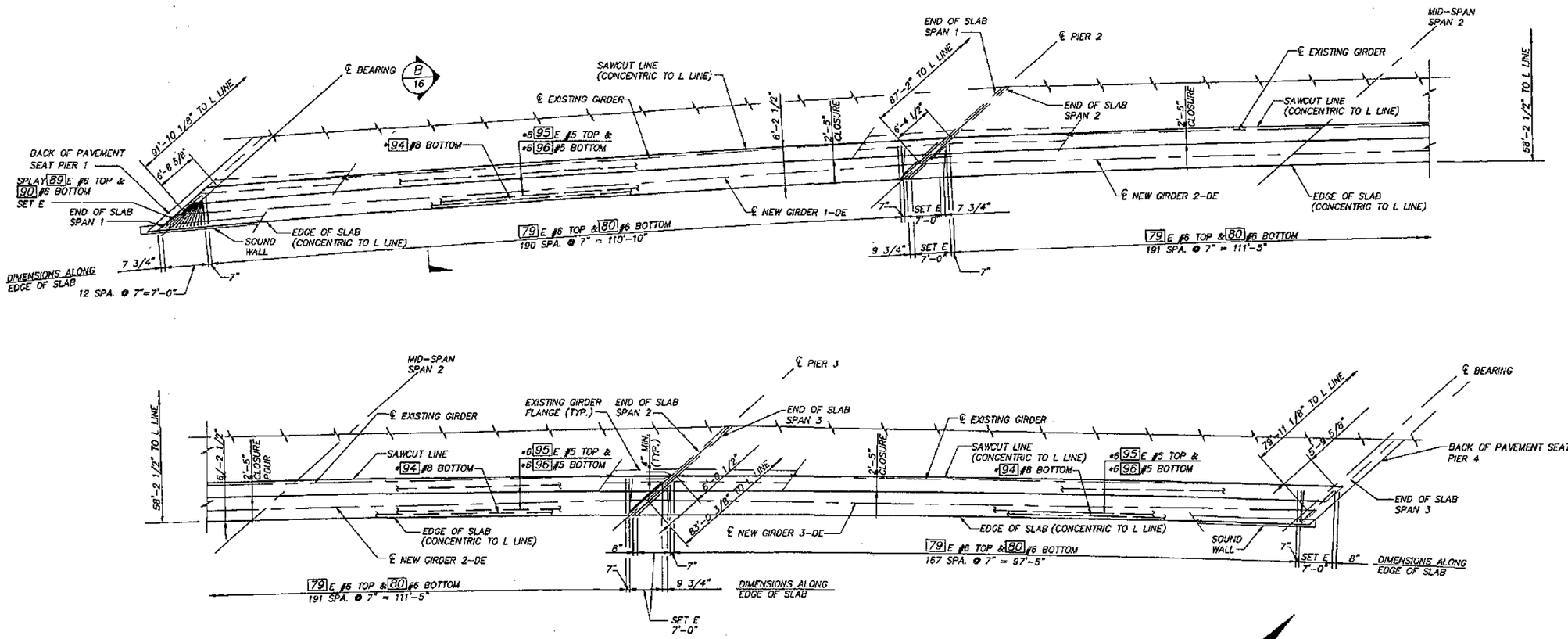

SLAB PLAN & GIRDER LAYOUT – BR. 125 E EXTERIOR WIDENING
SPANS 1 – 3

* INDICATES CONTINUOUS BAR WITH 2'-0" MINIMUM SPLICE. NUMBER AND LENGTH OF BARS TO BE DETERMINED BY CONTRACTOR.
E INDICATES EPOXY COATING

FOR "AS CONSTRUCTED PLANS" ONLY

Bridge Design Engineer					REGION NO.	STATE	FED. AID. PROJ. NO.	SHEET NO.	TOTAL SHEETS	
Supervisor					10	WASH				
Designed By I.B.C.					JOB NUMBER 95W036					
Checked By R.L.F.										
Detailed By B.L.P.										
Bridge Projects Engineer										
Prelim. Plan By										
Architect/Specialist	DATE	REVISION	BY	APP'D	CONTRACT NO. 4771					

JOHN R. KATTELA, STATE OF WASHINGTON, REGISTERED PROFESSIONAL ENGINEER — EXPIRES: 05/10/97

WASHINGTON STATE DEPARTMENT OF TRANSPORTATION

Sverdrup CIVIL INC.

SR167
15TH N.W. TO 84TH AVE. SO.
HOV SC & DI – STAGE 2
UPRR OVERCROSSING BR. NO. 167/125

SLAB PLAN & GIRDER LAYOUT – SHEET 3

BRIDGE SHEET NO. 19

SHEET 566 OF 663 SHEETS

B5300017

SA167/91

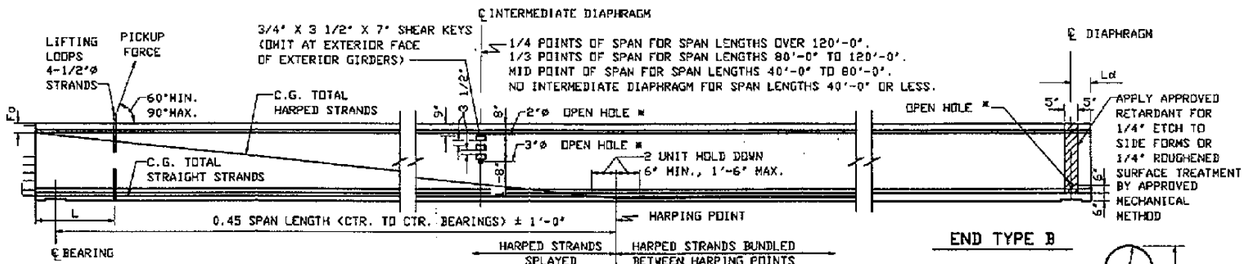

GIRDER ELEVATION

* OMIT HOLES AND PLACE INSERTS ON THE INTERIOR FACE OF EXTERIOR GIRDERS. PLACE HOLES AND INSERTS PARALLEL TO SKEW. INSERTS SHALL BE 1" RICHMOND ROCKET, BURKE HI-TENSILE, LANCASTER MALLEABLE OR APPROVED EQUAL.

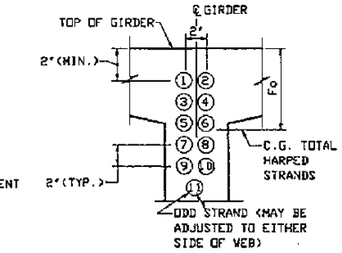

STRAND PATTERN AT GIRDER END

HARPED STRAND LOCATION SEQUENCE SHALL BE AS SHOWN ①, ② ETC.

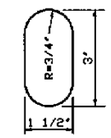

OPEN HOLE

AT END TYPE B ONLY

NOTES

ALL DETAILS ON THIS SHEET ARE FOR PRETENSIONED DESIGN ONLY.

PLAN LENGTH SHALL BE INCREASED AS NECESSARY TO COMPENSATE FOR SHORTENING DUE TO PRESTRESS AND SHRINKAGE.

EXTRA CAUTION MUST BE EXERCISED IN HANDLING AND PLACING ALL GIRDERS.

ALL GIRDERS OVER 105' LONG SHALL BE BRACED LATERALLY TO PREVENT TIPPING OR BUCKLING.

THE TOP SURFACE OF THE GIRDER FLANGE SHALL BE ROUGHENED IN ACCORDANCE WITH SECTION 6-02.3(25)H OF THE STANDARD SPECIFICATIONS.

IF THE LIFTING LOOPS EXTEND WITHIN 3" OF THE TOP OF THE ROADWAY SLAB THEY SHALL BE CUT OFF PRIOR TO POURING THE ROADWAY SLAB. ALL LIFTING STRANDS SHALL BE OF THE SAME MATERIAL AND STRENGTH AS THE PRESTRESSING STRANDS. WRAP THE LIFTING LOOPS SO THAT EACH STRAND WILL CARRY ITS SHARE OF THE TOTAL LOAD. EXTEND LIFTING LOOPS ENDING WITH A 9" LONG 90° HOOK TO WITHIN 3" CLEAR OF THE BOTTOM OF THE GIRDER.

CUT ALL STRANDS FLUSH WITH THE GIRDER ENDS AND PAINT WITH AN APPROVED EPOXY RESIN EXCEPT FOR EXTENDED STRANDS AS SHOWN.

FORMS FOR BEARING PAD RECESSES SHALL BE CONSTRUCTED AND FASTENED IN SUCH A MANNER AS NOT TO CAUSE DAMAGE TO THE GIRDER DURING THE STRAND RELEASE OPERATION.

ALL STRAND ARE 1/2"Ø LOW RELAXATION STRANDS (AASHTO M203 GRADE 270).

EXTENDED STRANDS AND BARS ARE PARALLEL TO GIRDER.

FOR GIRDER SCHEDULE, SEE GIRDER DETAILS-SHEET 2

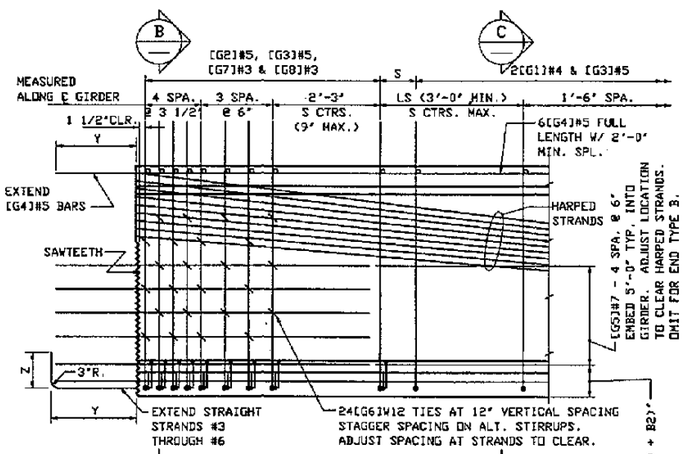

TYPICAL END ELEVATION

END TYPE C SHOWN. OTHER ENDS SIMILAR.

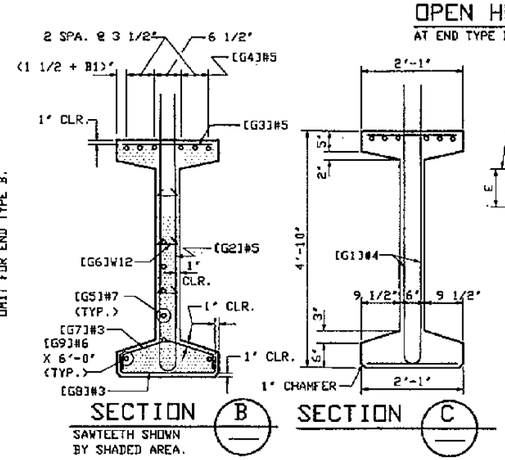

SECTION B

SAWTEETH SHOWN BY SHADED AREA.

SECTION C

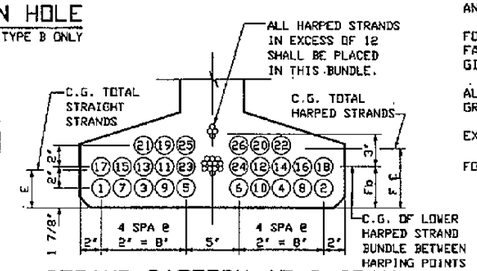

STRAND PATTERN AT ℄ SPAN

STRAND LOCATION SEQUENCE SHALL BE AS SHOWN ①, ② ETC.

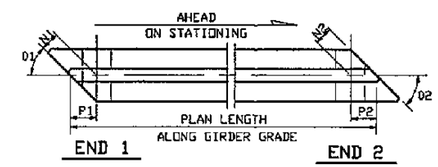

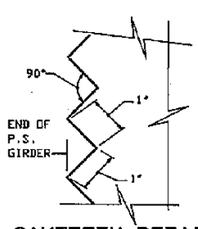

SAWTOOTH DETAILS

SAWTOOTH ARE FULL WIDTH - USE SAWTOOTH KEYS FROM BOTTOM OF BOTTOM FLANGE TO BOTTOM OF LOWEST HARPED STRAND AS WELL AS TOP FLANGE ADJACENT TO HARPED STRANDS AS SHOWN IN SECTION B.

END TYPE	BEARING RECESS	Y	Z	SAWTEETH
A	YES	9"	1'-6"	YES
B	YES	0"	0"	NO
C	NO	1'-10"	9"	YES

ENDS AHEAD ON STATION
[G5] BARS LEFT OF ℄
B1 = 0"
B2 = 0"
ENDS BACK ON STATION
[G5] BARS RIGHT OF ℄
B1 = 1 1/2"
B2 = 3"

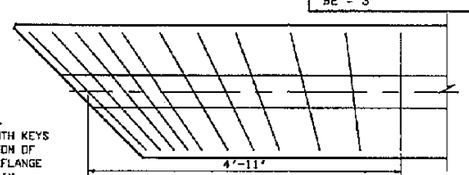

SPLAY [G3], [G7] AND [G8] BARS

TRANSVERSE REINFORCING SKEWED ENDS

ONLY TRANSVERSE REINF. SHOWN

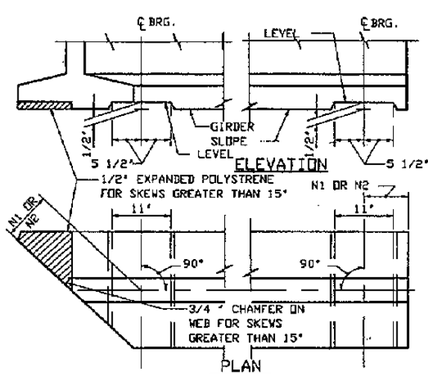

BEARING RECESS DETAIL

#3 OR #4 MAY BE SUBSTITUTED FOR W12, FIELD BENDING IS OPTIONAL.

MARK	LOCATION	SIZE	
G1	GIRDER STIRRUPS	4	
G2	GIRDER END STIRRUPS	5	
G3	GIRDER TOP FLANGE	5	STR.
G4	GIRDER LONGIT. FULL LENGTH	5	STR.
G5	GIRDER END LONGIT.	7	STR.
G6	GIRDER END TIES	W12	#
G7	GIRDER END TIES	3	
G8	GIRDER END TIES	3	
G9	GIRDER LONGIT.	6	STR.

NOTE: FOR DIMENSION A, SEE 'GIRDER SCHEDULE' ON GIRDER DETAILS SHEET 2

BENDING DIAGRAM (ALL DIMENSIONS ARE OUT TO OUT)

* = VARIES FOR SKEWED SPANS

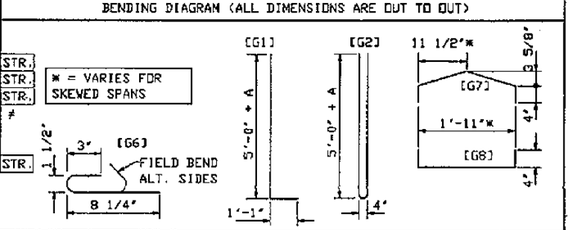

FOR "AS CONSTRUCTED PLANS" ONLY

Bridge Design Engineer					FEDER. NO.	STATE	FED. AID. PROJ. NO.	SHEET NO.	TOTAL SHEETS
Supervisor					10	WASH			
Designed By Q.B.					JOB NUMBER 95W036				
Checked By J.R.K.									
Detailed By G.W.S.									
Bridge Projects Engineer									
Prelim. Plan By					CONTRACT NO.				
Architect/Specialist	DATE	REVISION	BY	APP'D	4771				

JOHN R. KATAYAMA, STATE OF WASHINGTON, REGISTERED PROFESSIONAL ENGINEER — EXPIRES: 06/10/97

WASHINGTON STATE DEPARTMENT OF TRANSPORTATION

Sverdrup CIVIL INC.

SR167
15TH N.W. TO 84TH AVE. SO.
HOV SC & DI - STAGE 2
UPRR OVERCROSSING BR. NO. 167/125

GIRDER DETAILS - SHEET 1

BRIDGE SHEET NO. 20

SHEET 567 OF 663 SHEETS

SR 167/91

B8300015 SR ___ JOB NO. ___ SHEET ___

GIRDER SCHEDULE

DIMENSION A AT ℄ BEARINGS = 11"

BASED ON GIRDER DEFLECTION = D AT TIME OF SLAB POUR (120 DAYS)

SPAN	GIRDER	END 1 TYPE	END 2 TYPE	L (FT.)	θ1	θ2	N1	N2	P1	P2	PLAN LENGTH ALONG GIRDER GRADE	MIN. CONC. COMPR. STRENGTH 28 DAYS F'C KSI	MIN. CONC. COMPR. STRENGTH @ RELEASE F'CI KSI	S (IN.)	LS (FT.)	HARPED NO. OF STRANDS	HARPED JACKING FORCE (KIPS)	STRAIGHT NO. OF STRANDS	STRAIGHT JACKING FORCE (KIPS)	LOCATION OF C.G. STRANDS (IN.) E	FCL	Fb	Fo	C (IN.)	D (IN.)	Ld (IN.) END 1	Ld (IN.) END 2
1	1-AW	B	B	2	141°	141°	9 1/2"	9 1/2"	1'-1 3/8"	1'-3 1/8"	118'-11 3/8"	7.5	6.1	18	3	18	558	26	806	3 5/8"	4"	3"	10"	2 1/8"	4 3/8"	1'-0 3/4"	1'-0 3/4"
1	1-BW	B	B	2	141°	141°	9 1/2"	9 1/2"	1'-1 3/8"	1'-3 1/8"	119'-3 5/8"	7.5	6.1	18	3	18	558	26	806	3 5/8"	4"	3"	10"	2 1/8"	4 3/8"	1'-0 3/4"	1'-0 3/4"
1	1-CW	B	B	2	141°	141°	9 1/2"	11 3/4"	1'-1 3/8"	1'-6 5/8"	119'-11 3/8"	7.5	6.1	18	3	18	558	26	806	3 5/8"	4"	3"	10"	2 1/8"	4 3/8"	1'-0 3/4"	1'-4 1/4"
1	1-AE	B	B	1.5	141°	141°	9 1/2"	11 3/4"	1'-1 3/8"	1'-6 5/8"	115'-10 1/2"	7.0	6.0	18	3	16	496	26	806	3 5/8"	3 3/4"	3"	9"	2"	4"	1'-0 3/4"	1'-4 1/4"
1	1-BE	B	B	1.5	141°	141°	9 1/2"	9 1/2"	1'-1 3/8"	1'-3 1/8"	115'-11"	7.0	6.0	18	3	16	496	26	806	3 5/8"	3 3/4"	3"	9"	2"	4"	1'-0 3/4"	1'-0 3/4"
1	1-CE	B	B	1.5	141°	141°	9 1/2"	9 1/2"	1'-1 3/8"	1'-3 1/8"	116'-3 1/8"	7.0	6.0	18	3	16	496	26	806	3 5/8"	3 3/4"	3"	9"	2"	4"	1'-0 3/4"	1'-0 3/4"
1	1-DE	B	B	2	142°	142°	9 1/2"	11 3/4"	1'-3 3/8"	1'-7 1/8"	119'-2 3/4"	7.0	5.7	18	3	15	465	26	806	3 5/8"	3 5/8"	3"	8 1/2"	1 7/8"	4 1/8"	1'-1"	1'-4 5/8"
2	2-AW	B	B	2	139°	139°	9 1/2"	9 1/2"	1'-2 1/2"	1'-2 1/2"	120'-3 3/4"	7.5	6.1	18	3	18	558	26	806	3 5/8"	4"	3"	10"	2 1/8"	4 3/8"	1'-0 1/4"	1'-0 1/4"
2	2-BW	B	B	2	139°	139°	9 1/2"	9 1/2"	1'-2 1/2"	1'-2 1/2"	120'-7 1/4"	7.5	6.1	18	3	18	558	26	806	3 5/8"	4"	3"	10"	2 1/8"	4 3/8"	1'-0 1/4"	1'-0 1/4"
2	2-CW	B	B	2	139°	139°	11 3/4"	11 3/4"	1'-5 7/8"	1'-5 7/8"	121'-5 5/8"	7.5	6.1	18	3	18	558	26	806	3 5/8"	4"	3"	10"	2 1/8"	4 3/8"	1'-3 5/8"	1'-3 5/8"
2	2-AE	B	B	1.5	139°	139°	11 3/4"	11 3/4"	1'-5 7/8"	1'-5 7/8"	118'-0 1/8"	7.0	6.0	18	3	16	496	26	806	3 5/8"	3 3/4"	3"	9"	2"	4"	1'-3 5/8"	1'-3 5/8"
2	2-BE	B	B	1.5	139°	139°	9 1/2"	9 1/2"	1'-2 1/2"	1'-2 1/2"	117'-8 7/8"	7.0	6.0	18	3	16	496	26	806	3 5/8"	3 3/4"	3"	9"	2"	4"	1'-0 1/4"	1'-0 1/4"
2	2-CE	B	B	1.5	139°	139°	9 1/2"	9 1/2"	1'-2 1/2"	1'-2 1/2"	118'-0 1/2"	7.0	6.0	18	3	16	496	26	806	3 5/8"	3 3/4"	3"	9"	2"	4"	1'-0 1/4"	1'-0 1/4"
2	2-DE	B	B	2	140°	140°	11 3/4"	11 3/4"	1'-6 1/4"	1'-6 1/4"	120'-11 1/8"	7.0	5.7	18	3	15	465	26	806	3 5/8"	3 5/8"	3"	8 1/2"	1 7/8"	4 1/8"	1'-3 7/8"	1'-3 7/8"
3	3-AW	B	B	2	136°	136°	9 1/2"	9 1/2"	1'-1 5/8"	1'-1 5/8"	118'-9"	7.5	6.1	18	3	18	558	26	806	3 5/8"	4"	3"	10"	2 1/8"	4 3/8"	11 1/2"	11 1/2"
3	3-BW	B	B	2	136°	136°	9 1/2"	9 1/2"	1'-1 5/8"	1'-1 5/8"	119'-0"	7.5	6.1	18	3	18	558	26	806	3 5/8"	4"	3"	10"	2 1/8"	4 3/8"	11 1/2"	11 1/2"
3	3-CW	B	B	2	136°	136°	11 3/4"	9 1/2"	1'-4 7/8"	1'-1 5/8"	119'-6 1/4"	7.5	6.1	18	3	18	558	26	806	3 5/8"	4"	3"	10"	2 1/8"	4 3/8"	1'-2 3/4"	11 1/2"
3	3-AE	B	B	2	136°	136°	11 3/4"	9 1/2"	1'-4 7/8"	1'-1 5/8"	104'-9"	7.0	5.0	18	3	8	248	26	806	3 5/8"	3"	3"	5"	1 1/4"	3 1/8"	1'-2 3/4"	11 1/2"
3	3-BE	B	B	2	136°	136°	9 1/2"	9 1/2"	1'-1 5/8"	1'-1 5/8"	104'-8 1/2"	7.0	5.0	18	3	8	248	26	806	3 5/8"	3"	3"	5"	1 1/4"	3 1/8"	11 1/2"	11 1/2"
3	3-CE	B	B	2	136°	136°	9 1/2"	9 1/2"	1'-1 5/8"	1'-1 5/8"	104'-11 1/4"	7.0	5.0	18	3	8	248	26	806	3 5/8"	3"	3"	5"	1 1/4"	3 1/8"	11 1/2"	11 1/2"
3	3-DE	B	B	2	138°	138°	11 3/4"	9 1/2"	1'-5 1/2"	1'-2 1/4"	106'-11 1/4"	7.0	4.8	18	3	7	217	26	806	3 5/8"	3"	3"	4 5/8"	1 1/8"	3"	1'-3 3/8"	1'-0"

FOR "AS CONSTRUCTED PLANS" ONLY

Bridge Design Engineer					
Supervisor					
Designed By Q.B.					
Checked By J.R.K.					
Detailed By G.W.S.					
Bridge Projects Engineer					
Prelim. Plan By					
Architect/Specialist	DATE	REVISION	BY	APP'D	

REGION NO.	STATE	FED. AID. PROJ. NO.	SHEET NO.	TOTAL SHEETS
10	WASH			

JOB NUMBER 95W038

CONTRACT NO. 4771

JOHN R. KATTE STATE OF WASHINGTON REGISTERED PROFESSIONAL ENGINEER 9/1/95

EXPIRES 06/10/97

WASHINGTON STATE DEPARTMENT OF TRANSPORTATION

Sverdrup CIVIL INC.

SR167
15TH N.W. TO 84TH AVE. SO.
HOV SC & DI – STAGE 2
UPRR OVERCROSSING BR. NO. 167/125

GIRDER DETAILS – SHEET 2

BRIDGE SHEET NO. 21

SHEET 568 OF 663 SHEETS

SR167/91

B8300025 SR ____ JOB NO. ____ SHEET ____

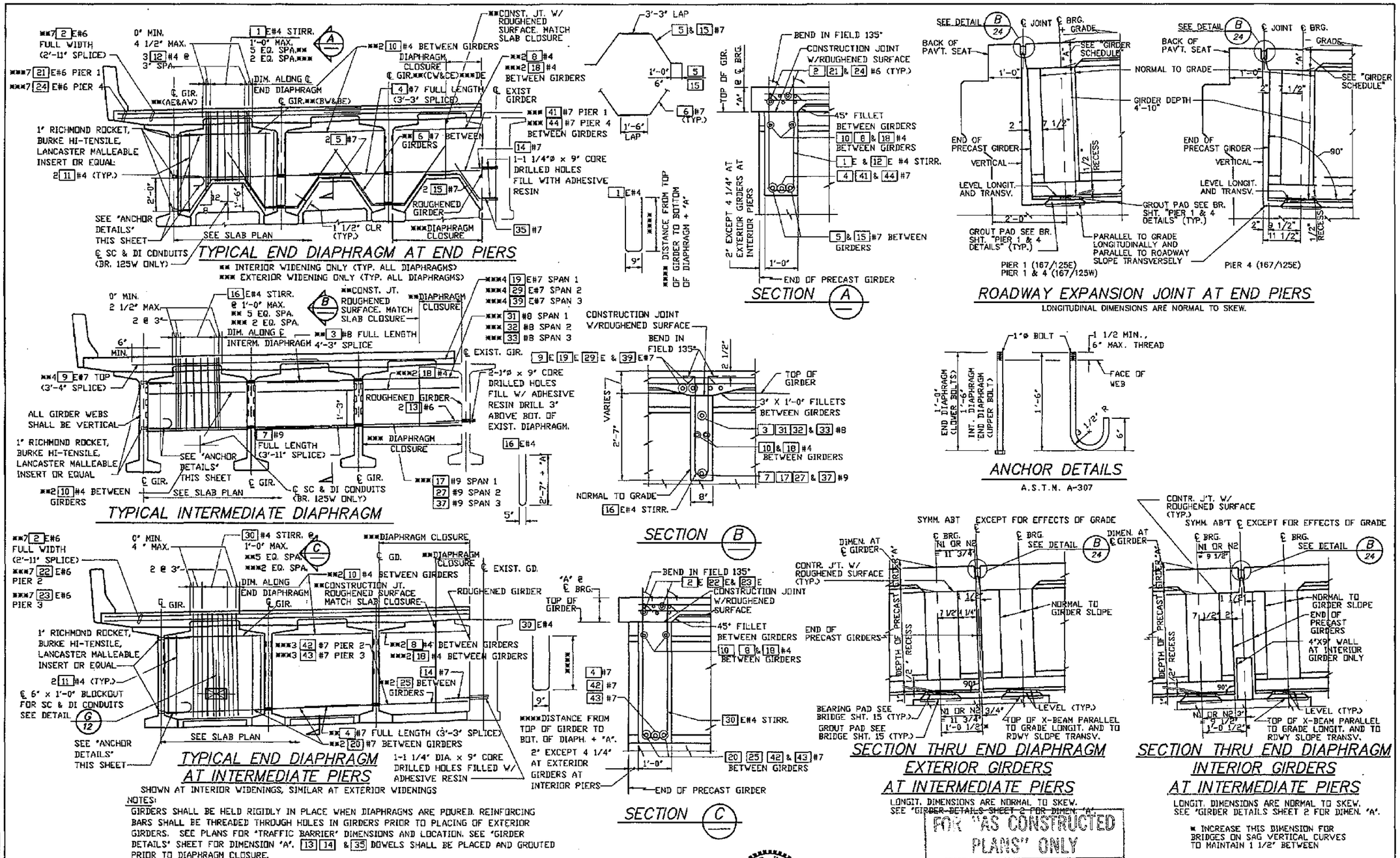

NOTES:

GIRDERS SHALL BE HELD RIGIDLY IN PLACE WHEN DIAPHRAGMS ARE POURED. REINFORCING BARS SHALL BE THREADED THROUGH HOLES IN GIRDERS PRIOR TO PLACING OF EXTERIOR GIRDERS. SEE PLANS FOR "TRAFFIC BARRIER" DIMENSIONS AND LOCATION. SEE "GIRDER DETAILS" SHEET FOR DIMENSION "A". 13 14 & 35 DOWELS SHALL BE PLACED AND GROUTED PRIOR TO DIAPHRAGM CLOSURE.

Bridge Design Engineer					DESIGN NO.	STATE	FED. AID. PROJ. NO.	SHEET NO.	TOTAL SHEETS
Supervisor					10	WASH			
Designed By Q.B.					JOB NUMBER 95W036				
Checked By R.L.F.									
Detailed By G.W.S.									
Bridge Projects Engineer					CONTRACT NO. 4771				
Prelim. Plan By									
Architect/Specialist	DATE	REVISION	BY	APP'D					

JOHN R. KATTELL, STATE OF WASHINGTON, REGISTERED PROFESSIONAL ENGINEER — EXPIRES: 06/10/97

WASHINGTON STATE DEPARTMENT OF TRANSPORTATION

Sverdrup CIVIL INC.

SR167
15TH N.W. TO 84TH AVE. SO.
HOV SC & DI – STAGE 2
UPRR OVERCROSSING BR. NO. 167/125

DIAPHRAGM DETAILS

BRIDGE SHEET NO. 22

SHEET 569 OF 663 SHEETS

B8300018 SR ___ JOB NO. ___ SHEET ___

SR167/91

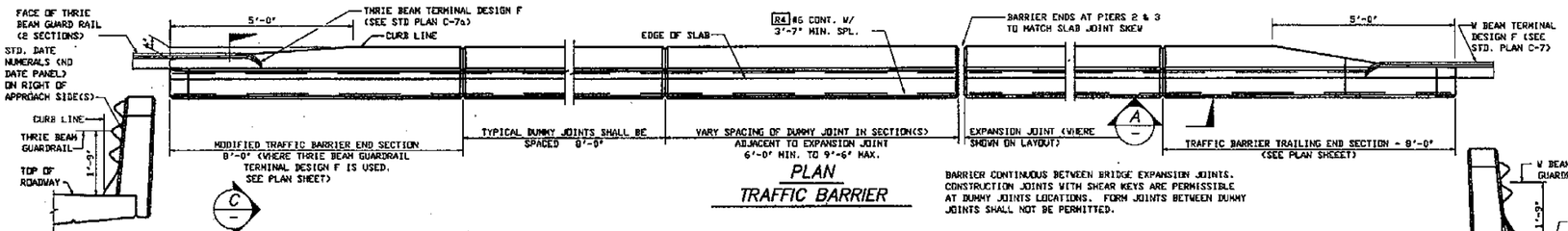

PLAN
TRAFFIC BARRIER

BARRIER CONTINUOUS BETWEEN BRIDGE EXPANSION JOINTS. CONSTRUCTION JOINTS WITH SHEAR KEYS ARE PERMISSIBLE AT DUMMY JOINTS LOCATIONS. FORM JOINTS BETWEEN DUMMY JOINTS SHALL NOT BE PERMITTED.

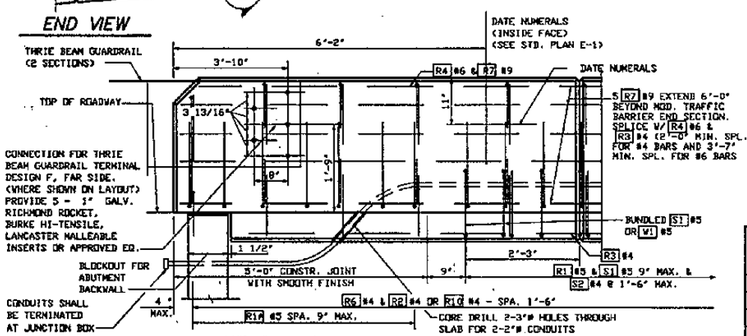

OUTSIDE ELEVATION
END OF MODIFIED TRAFFIC BARRIER FOR DESIGN F GUARDRAIL ANCHORAGE THRIE BEAM CONNECTION

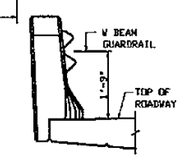

END VIEW

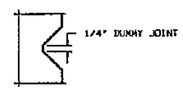

SECTION 2-2

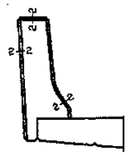

SECTION B

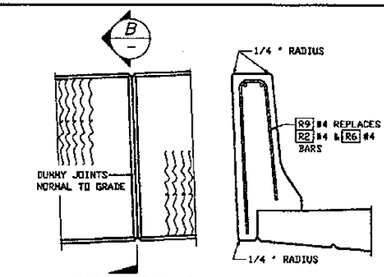

SECTION A

ALL CHAMFERS 1/4".

SEE 'LAYOUT' FOR APPLICABLE SURFACE FINISH.

SLIPFORM ALTERNATE

SEE TYPICAL SECTION - TRAFFIC BARRIER FOR ADDITIONAL DETAILS.

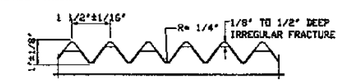

FRACTURED FIN FINISH

TRAFFIC BARRIER BAR LIST

ALL REINFORCING SHALL BE AASHTO M31, GR. 60.

MARK	SIZE	LENGTH	BENDING DIAGRAM (ALL DIMENSIONS ARE OUT TO OUT)
R1	5	3'-2"	
R1A	5	(A)	
R2	4	3'-0" 2'-10"(R)	
R3	4	(A)	STR.
R4	5	(A)	STR.
R6	4	3'-0"	STR.
R7	9	14'-0"	STR.
R9	4	5'-11", 5'-8"(R)	

(A) DETERMINE FROM PLANS (R) REPLACEMENT BARRIER

FOR S1 S2 S3 & S4 BARS SEE BARLIST.

NOTE: ø DIMENSIONS TO POINTS OF INTERSECTION.

DETAILS ARE FOR TYPICAL BARRIER SIMILAR FOR REPLACEMENT TRAFFIC BARRIER AND TRAFFIC BARRIER WITH NOISE WALL.

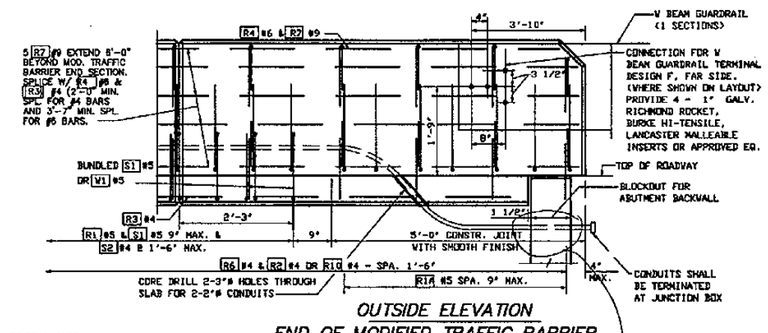

OUTSIDE ELEVATION
END OF MODIFIED TRAFFIC BARRIER FOR DESIGN F GUARDRAIL ANCHORAGE W BEAM CONNECTION

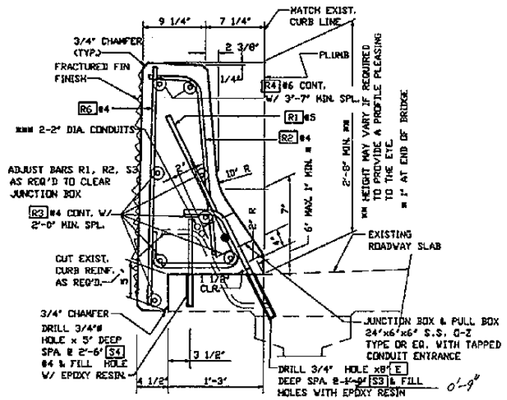

TYPICAL SECTION
REPLACEMENT TRAFFIC BARRIER

INSTALL #12 GALVANIZED IRON PULL WIRE IN ALL ACTIVE CONDUIT RUNS.
ALL CONDUIT SHALL BE 2" DIA. SCHEDULE 40 GALVANIZED PIPE.
INSTALL ALL CONDUIT RUNS TO DRAIN TO A BRIDGE END OR PROVIDE A DRAIN TO A BRIDGE END OR PROVIDE A DRAIN AT ANY LOW POINT IN CONDUIT RUN ON THE BRIDGE

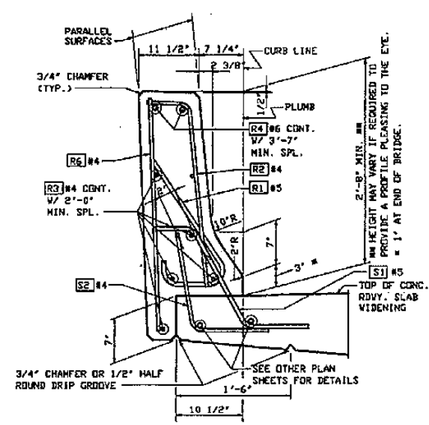

TYPICAL SECTION
TRAFFIC BARRIER

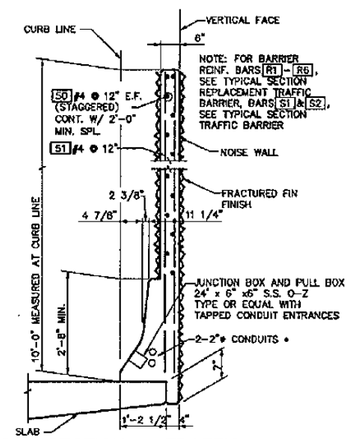

TYPICAL SECTION - TRAFFIC BARRIER WITH NOISE WALL

SEE TRAFFIC BARRIER FOR DETAILS NOT SHOWN.
* (SEE REPLACEMENT BARRIER)

FOR "AS CONSTRUCTED" PLANS, ONLY

Conduit was not drilled through wall, it was surface mounted on retaining wall.

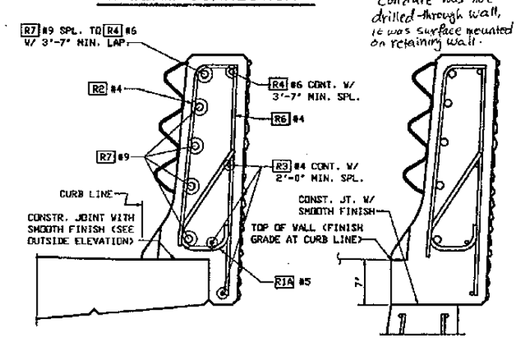

SECTION C BRIDGE

DETAIL FOR BRIDGE. FOR DETAILS NOT SHOWN SEE 'OUTSIDE ELEVATION' AND 'TYPICAL SECTION - TRAFFIC BARRIER.'

SECTION C WALL

DETAILS FOR RETAINING WALL OR WINGWALL. FOR REINFORCING NOT SHOWN SEE STD. PLAN D-1a & D-1b OR WINGWALL PLAN. FOR DETAILS NOT SHOWN SEE SECTION C BRIDGE.

Bridge Design Engineer					PROJECT NO.	STATE	FED. AID. PROJ. NO.	SHEET NO. / TOTAL SHEETS
Supervisor					10	WASH		
Designed By J.R.K.					JOB NUMBER 95W036			
Checked By Q.B.								
Detailed By G.W.S.								
Bridge Projects Engineer					CONTRACT NO. 4771			
Preliim. Plan By								
Architect/Specialist	DATE	REVISION	BY	APP'D				

JOHN R. KATTELL, STATE OF WASHINGTON, REGISTERED PROFESSIONAL ENGINEER — EXPIRES: 06/10/95

WASHINGTON STATE DEPARTMENT OF TRANSPORTATION

Sverdrup CIVIL INC.

SR167
15TH N.W. TO 84TH AVE. SO.
HOV SC & DI - STAGE 2
UPRR OVERCROSSING BR. NO. 167/125

TRAFFIC BARRIER

BRIDGE SHEET NO. 23

SHEET 570 OF 663 SHEETS

SR ___ JOB NO. ___ SHEET ___

B8300019

5R167/91

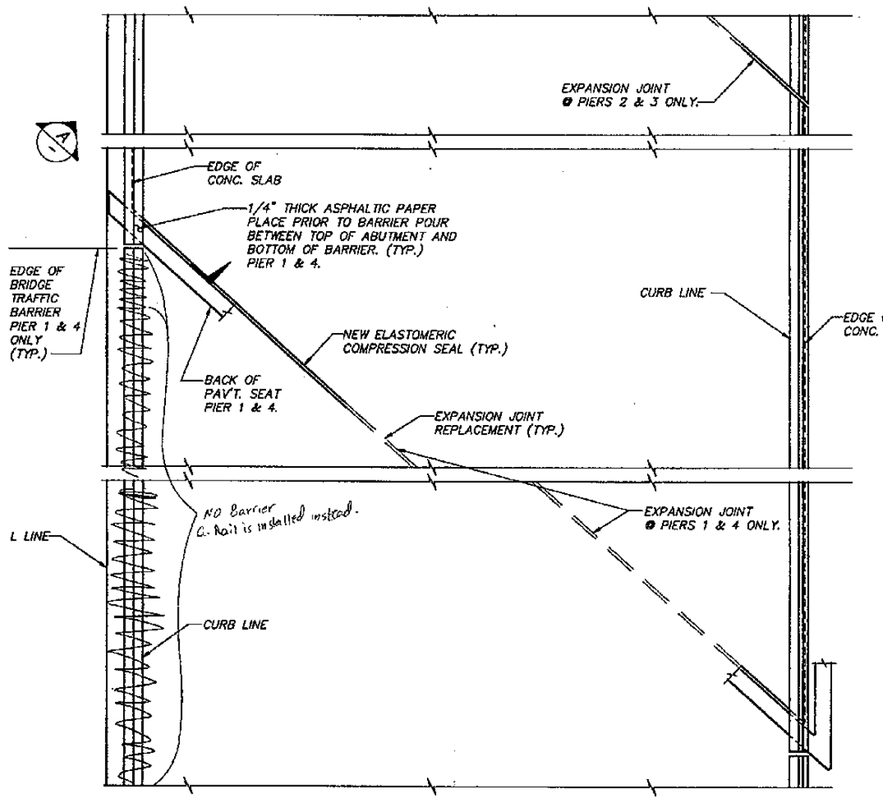

PLAN AT EXPANSION JOINT

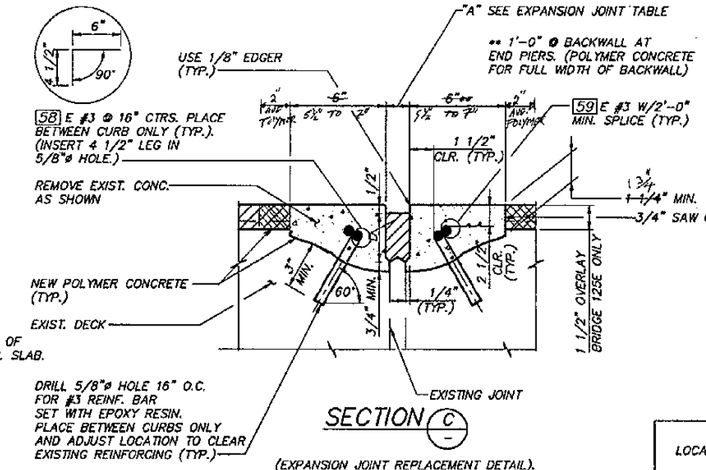

SECTION C

(EXPANSION JOINT REPLACEMENT DETAIL).

NOTE: MEASUREMENTS NORMAL TO JOINT "D" COMPRESSED DEPTH PER SEAL MANUFACTURER'S DIMENSION.

CARE SHALL BE TAKEN TO AVOID DAMAGING EXISTING REINF. DURING REMOVAL OF EXISTING CONCRETE.

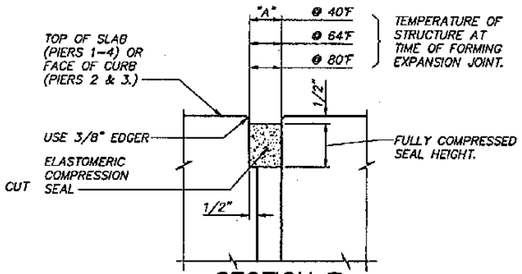

SECTION B

CONC. OPENING

REINFORCING NOT SHOWN.

EXPANSION JOINT TABLE

LOCATION	OPENING "A" (NORMAL TO JOINT)			EXPANSION JOINT TYPE
	@ 40°F	@ 64°F	@ 80°F	
ALL PIERS	1 1/4"	1 1/4"	1 1/8"	COMPRESSION SEAL D.S. BROWN CV-2000 WATSON BOWMAN ACME WA-200 ELASTOMER SEALS X 2000 STRUCTURAL ACCESSORIES SA 2000

NOTE: PIER 2E & PIER 3W EXPANSION JOINT OVERHANG HAD DELAMINATED CONCRETE REMOVED AND REPLACED WITH POLYMER CONCRETE

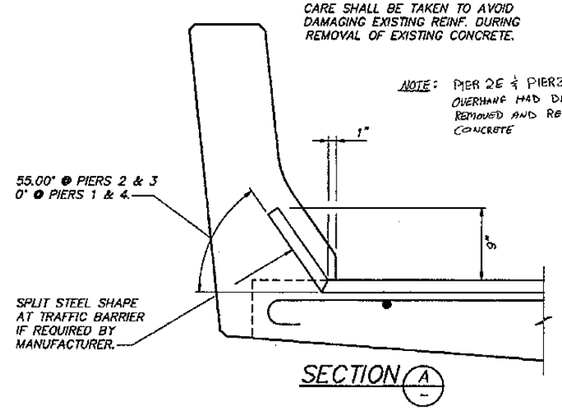

SECTION A

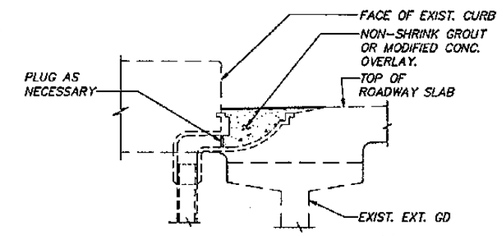

BRIDGE DRAIN PLUG DETAIL

(SEE EXISTING BRG. DRAWING FOR DRAIN LOCATIONS). REMOVE DRAIN GRATING & GALV. STEEL CHAIN. FILL DRAIN WITH NON-SHRINK GROUT AFTER PLUGGING.

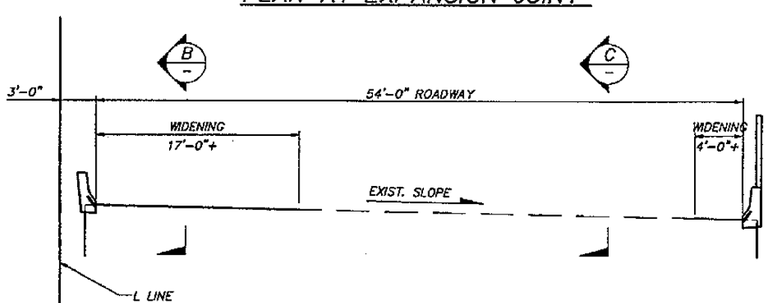

TYP. ROADWAY SECTION AT EXPANSION JOINT

ALL DIMENSIONS ARE NORMAL TO L LINE.
167/125E BRIDGE SHOWN.
167/125W BRIDGE SIMMILAR.

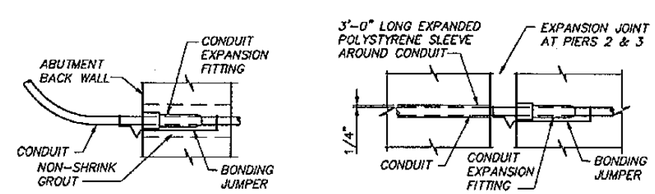

AT PIERS 1 & 4 — AT PIERS 2 & 3

CONDUIT PIER EXPANSION JOINT

SECOND CONDUIT NOT SHOWN FOR CLARITY

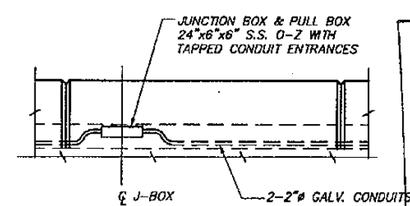

ELEVATION TRAFFIC BARRIER WITH CONDUIT & J-BOX

SEE LAYOUT SHEET FOR LOCATIONS

FOR "AS CONSTRUCTED PLANS" ONLY

Bridge Design Engineer					REGION NO.	STATE	FED. AID. PROJ. NO.	SHEET NO.	TOTAL SHEETS
Supervisor					10	WASH			
Designed By Q.B.					JOB NUMBER 95W036				
Checked By R.L.F.									
Detailed By A.J.D.									
Bridge Projects Engineer									
Prelim. Plan By					CONTRACT NO. 4771				
Architect/Specialist	DATE	REVISION	BY	APP'D					

JOHN P. KATTELA, STATE OF WASHINGTON, REGISTERED PROFESSIONAL ENGINEER — 9/1/95 — EXPIRES: 06/10/97

WASHINGTON STATE DEPARTMENT OF TRANSPORTATION

Sverdrup CIVIL INC.

SR167
15TH N.W. TO 84TH AVE. SO.
HOV SC & DI - STAGE 2
UPRR OVERCROSSING BR. NO. 167/125

MISCELLANEOUS DETAILS

BRIDGE SHEET NO. 24

SHEET 571 OF 663 SHEETS

B8300021 SR ___ JOB NO. ___ SHEET ___

SR167/91

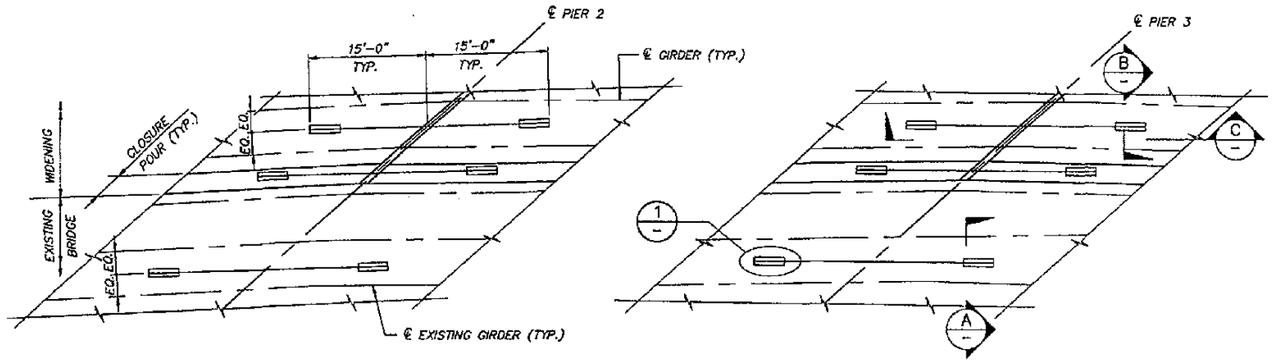

PLAN – SEISMIC RESTRAINER LAYOUT

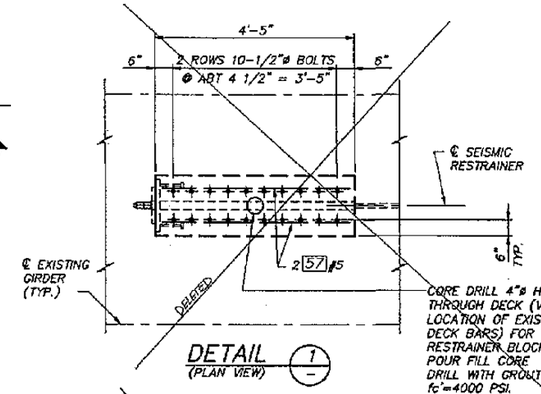

DETAIL 1 (PLAN VIEW)

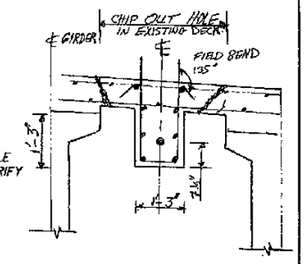

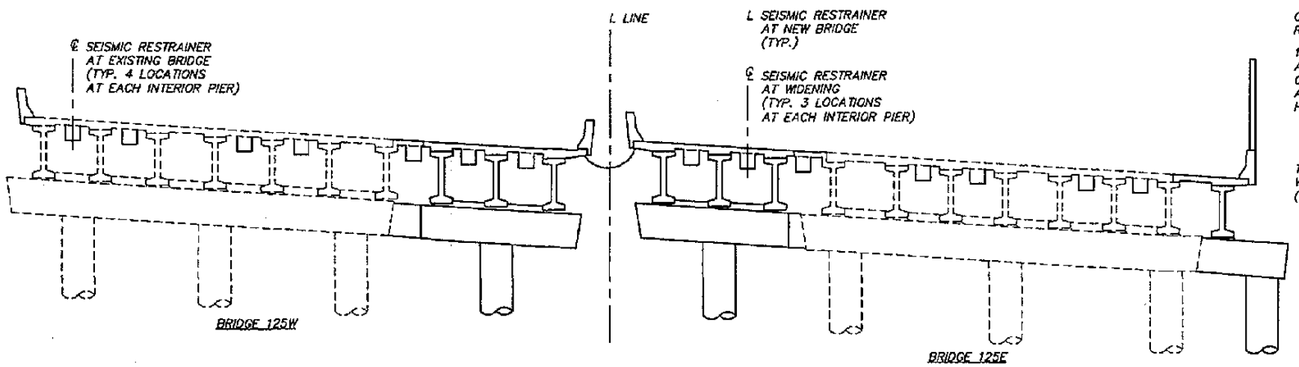

TYPICAL PIER CROSS SECTION PIERS 2 AND 3

(FOR RESTRAINER LOCATIONS)

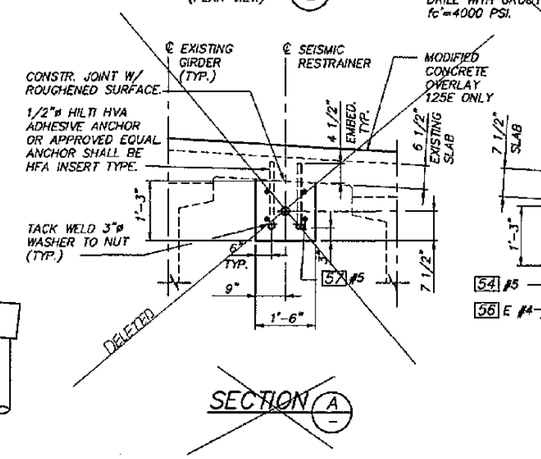

SECTION A

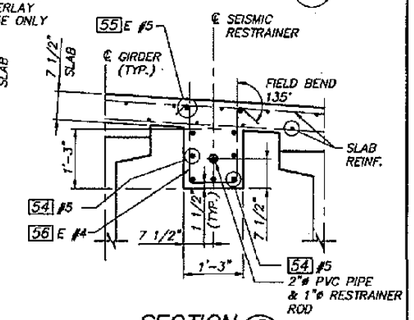

SECTION B

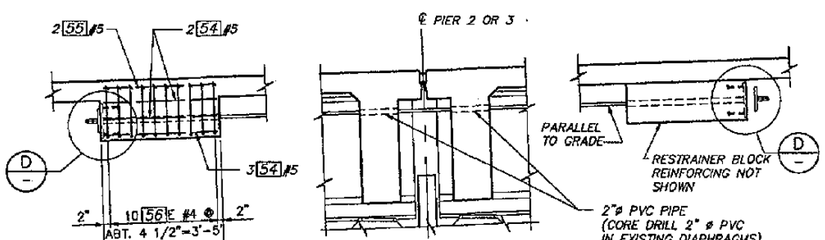

SECTION C

NOTE: WIDENING SHOWN, EXISTING BRIDGE AS NOTED.

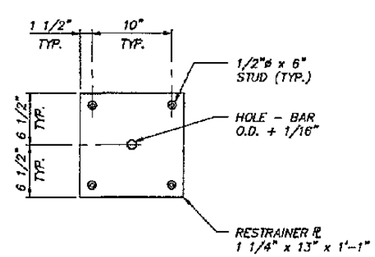

RESTRAINER PLATE DETAIL

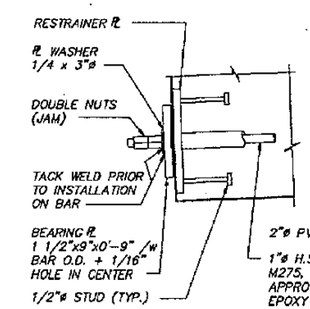

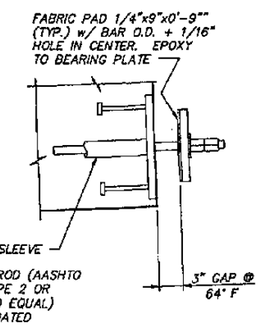

SECTION D

NOTE:
ALL STEEL EXCEPT 1"ø H.S. RODS SHALL BE AASHTO M183 AND GALVANIZED ACCORDING TO AASHTO M111.
"E" INDICATES EPOXY COATED.

FOR "AS CONSTRUCTED PLANS" ONLY

Bridge Design Engineer					REGION NO.	STATE	FED. AID. PROJ. NO.	SHEET NO.	TOTAL SHEETS
Supervisor					10	WASH			
Designed By J.R.K./Q.B.					JOB NUMBER 95W036				
Checked By R.L.F.									
Detailed By W.H.H.									
Bridge Projects Engineer					CONTRACT NO. 5777				
Prelim. Plan By									
Architect/Specialist	DATE	REVISION	BY	APP'D					

JOHN R. KATHAN, STATE OF WASHINGTON, REGISTERED PROFESSIONAL ENGINEER, 23825 — EXPIRES: 06/10/97

WASHINGTON STATE DEPARTMENT OF TRANSPORTATION

Sverdrup CIVIL INC.

SR167
15TH N.W. TO 84TH AVE. SO.
HOV SC & DI – STAGE 2
UPRR OVERCROSSING BR. NO. 167/125

SEISMIC RESTRAINER DETAILS

BRIDGE SHEET NO. 25

SHEET 572 OF 663 SHEETS

SR 167 JOB NO. 8B3000022 SHEET

SR167/91

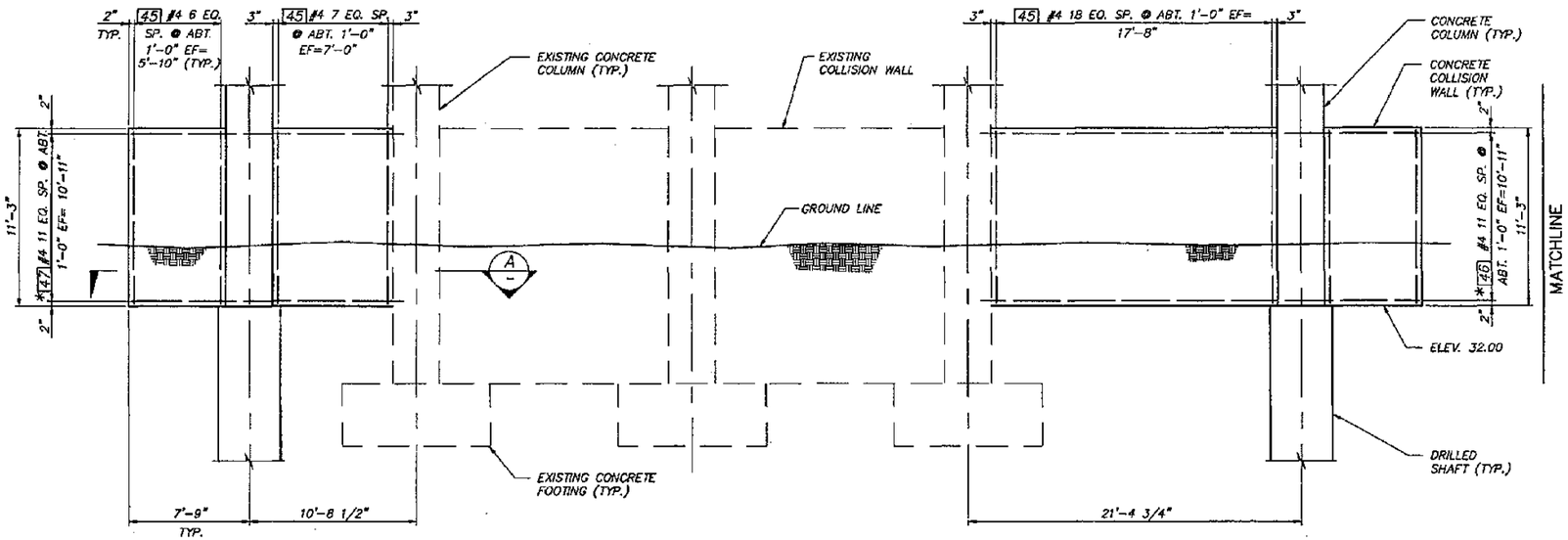

ELEVATION – PIER 3 CRASH WALL

* INDICATES CONTINUOUS BAR WITH 2'-0" MIN. SPLICE.
NUMBER AND LENGTH OF BARS TO BE DETERMINED BY THE CONTRACTOR.

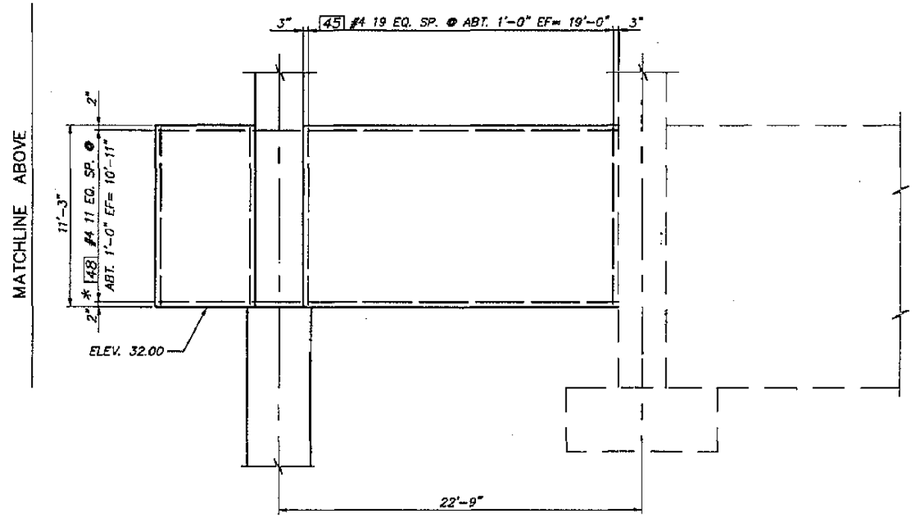

ELEVATION – PIER 3 CRASH WALL (CONT'D)

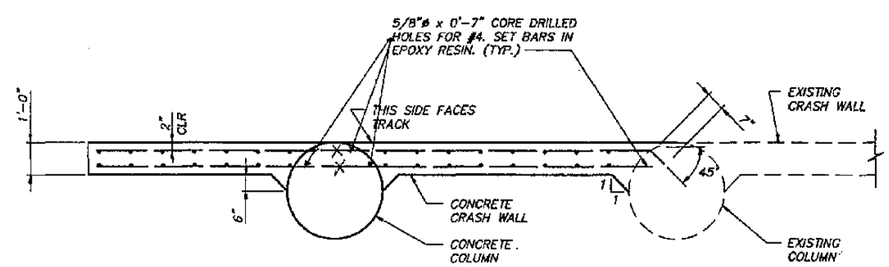

SECTION A

FOR "AS CONSTRUCTED PLANS" ONLY

Bridge Design Engineer				
Supervisor				
Designed By D.A.K.				
Checked By A.T.L.				
Detailed By W.H.H.				
Bridge Projects Engineer				
Prelim. Plan By				
Architect/Specialist	DATE	REVISION	BY	APP'D

REGION NO.	STATE	FED. AID. PROJ. NO.	SHEET NO.	TOTAL SHEETS
10	WASH			
JOB NUMBER 95W036				
CONTRACT NO. 4771				

EXPIRES: 06/10/97

WASHINGTON STATE DEPARTMENT OF TRANSPORTATION

Sverdrup CIVIL INC.

SR167
15TH N.W. TO 84TH AVE. SO.
HOV SC & DI – STAGE 2
UPRR OVERCROSSING BR. NO. 167/125

COLLISION WALL

BRIDGE SHEET NO. 26

SHEET 573 OF 663 SHEETS

SR 167/91

B8300028 SR ___ JOB NO. ___ SHEET ___

PLAN SHEETS AFFECTED:

547
552
579
599
643

NOTES:

1. ALL PARTS SHALL BE GALVANIZED IN ACCORDANCE WITH AASHTO M 111 AFTER FABRICATION.
2. ADJUST 3/8" CABLE TENSION TO PRODUCE 3% VERTICAL SAG BETWEEN INTERMEDIATE BEAMS.

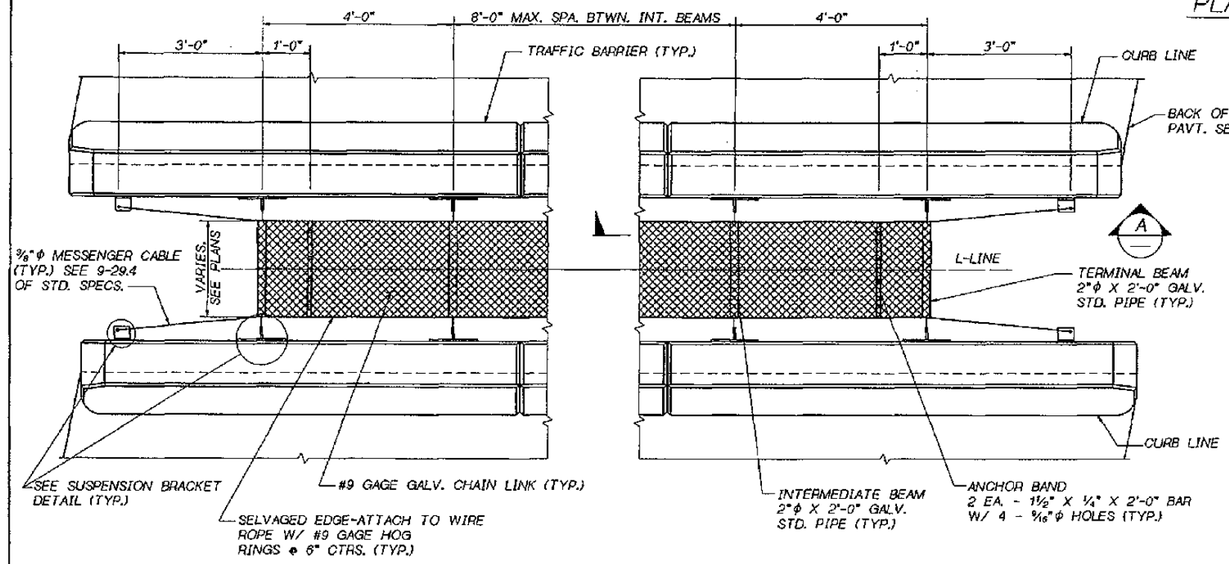

PLAN

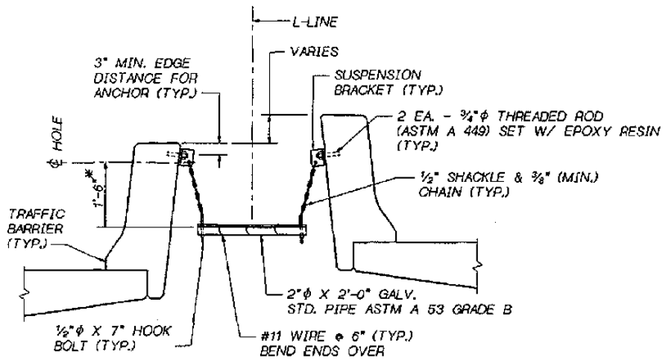

* CHAIN LENGTH MAY VARY TO LEVEL SCREEN

TYPICAL SECTION

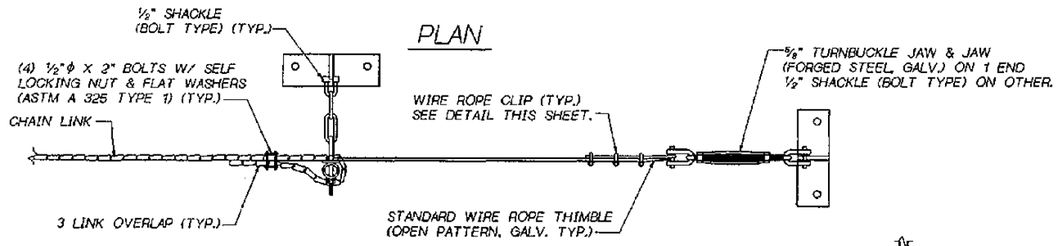

VIEW A

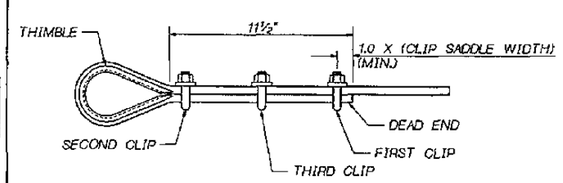

WIRE ROPE CLIP DETAIL

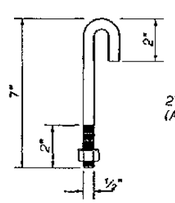

HOOK BOLT

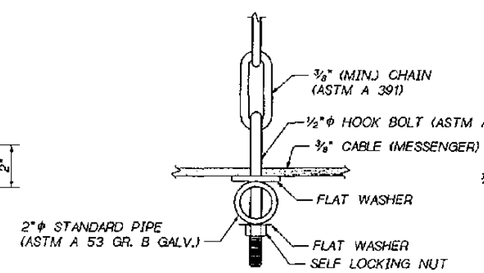

HOOK BOLT DETAIL

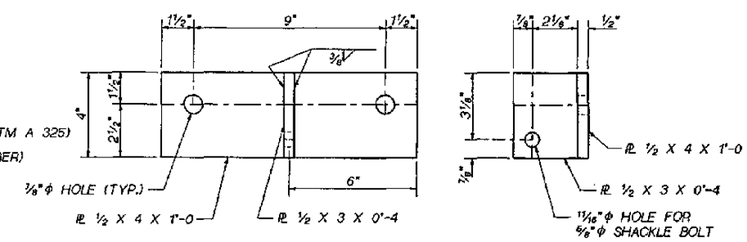

SUSPENSION BRACKET

AASHTO M 183

NOTE:
GAS-CUT OR SAW-CUT ONLY FOR PL 1/2 X 3 X 0'-4

1 ADDED BR. SHT. 19A

Bridge Design Engr. C. C. RUTH				
Supervisor R. T. SHAFER				
Designed By				
Checked By				
Detailed By				
Bridge Projects Engr.				
Prelim. Plan By		1 ADDED BR. SHT. 19A	MA	
Architect/Specialist	DATE	REVISION	BY	APP'D

REGION NO.	STATE	FED. AID PROJ. NO.	SHEET NO.	TOTAL SHEETS
10	WASH.			
JOB NUMBER				

BRIDGE AND STRUCTURES OFFICE

SUPERVISING BRIDGE ENGINEER — BRIDGE DESIGN ENGINEER

Washington State Department of Transportation

SR 167
15TH NW TO 84TH AVE. SO.
HOV AND SC & DI - STAGE 2

PROTECTIVE SCREEN

BRIDGE SHEET NO. ~~20A~~ 19A
SHEET ~~547A~~ ~~579A~~ 663 SHEETS

SR ___ JOB NO. ___ SHEET ___

25-MAR-96

ANDERSONROOT:(FGB) SR167_PRO.FGB; 1

S = Bar is included in substructure quantities
F = Bar to be field welded
T = Tie or Stirrup
E = Bar to be Epoxy Coated
V = Bar dimensions vary between dimensions shown on this line and the following line.

MARK NO.	LOCATION	SIZE	NO. REQ'D.	BEND TYPE	TIE or STIR.	FLD. WELD	SUBSTR.	EPX-COAT	VARIES	NO. EACH	U Ft.	U In.	W Ft.	W In.	X Ft.	X In.	Y Ft.	Y In.	Z Ft.	Z In.	θ1 Deg.	θ2 Deg.	LENGTH Ft.	LENGTH In.	WEIGHT Lbs.
	PIERS 1 & 4																								
101	BACKWALL TOP LONG, PIER 1 INT	4	2	50			S	E			24	9.0											24	9.	33
102	ABUTMENT LONG, PIER 1 INT	4	14	50			S				24	9.0											*24	9.	231
103	PAVT SEAT TIE	4	201	90	T		S				1	4.0	0	9.0	0	6.5	0	1.0	0	1.0	90	45	2	5.	324
105	BACKWALL VERT	5	213	62	T		S	E			0	7.0	7	5.0	7	6.0	0	10.0	0	10.0	0	0	16	10.	3740
106	GIRDER SEAT VERT	5	110	63	T		S				2	10.0	2	11.0	2	11.0	0	10.0	0	10.0	0	0	9	11.	1138
107	FTG- LONG TOP, PIER 1 INT	5	6	50			S				24	9.0											24	9.	207
108	FOOTING- TRAN TOP	5	115	50			S				8	8.0											8	8.	800
109	FTG- LONG BOT, PIER 1 INT	6	6	50			S				24	9.0											24	9.	297
110	FOOTING- TRAN BOT	6	115	50			S				8	8.0											8	8.	1152
111	GIRDER SEAT TOP, PIER 1 INT	4	2	80	T		S				3	4.0	0	10.0	1	8.0	0	1.0	0	1.0	129	141	5	10.	8
112	BACKWALL TOP LONG, PIER 1 INT	4	2	50			S	E			23	4.0											23	4.	31
113	ABUTMENT LONG, PIER 1 INT	4	15	50			S				23	4.0											23	4.	234
114	FTG- LONG TOP, PIER 1 INT	5	8	50			S				23	4.0											23	4.	195
115	FTG- LONG BOT, PIER 1 INT	6	8	50			S				23	4.0											23	4.	280
116	GIRDER SEAT LONG, PIER 1 INT	4	1	50			S				25	5.0											25	5.	17
117	GIRDER SEAT LONG, PIER 1 INT	4	1	50			S				26	10.0											26	10.	18
119	VERT GIRDER SEAT DOWEL	5	2	61	T		S				1	6.0	0	11.0	0	11.0	0	0.0	0	0.0	0	0	3	1.	6
120	VERT GIRDER SEAT DOWEL	5	3	61	T		S				0	11.0	0	11.0	0	11.0	0	0.0	0	0.0	0	0	2	6.	8
121	VERT GIRDER SEAT DOWEL	5	2	61	T		S				0	6.0	0	11.0	0	11.0	0	0.0	0	0.0	0	0	2	2.	5
122	GIRDER SEAT LONG, PIER 1 INT	4	2	50			S				21	9.0											21	9.	29
123	GIRDER SEAT LONG, PIER 1 INT	4	1	50			S				23	8.0											23	8.	16
125	BACKWALL TOP LONG, PIER 4 INT	4	2	50			S	E			20	8.0											20	8.	28
126	ABUTMENT LONG, PIER 4 INT	4	15	50			S				20	8.0											20	8.	207
127	FTG- LONG TOP, PIER 4 INT	5	8	50			S				20	8.0											20	8.	172
128	FTG- LONG BOT, PIER 4 INT	6	8	50			S				20	8.0											20	8.	248
129	GIRDER SEAT LONG, PIER 4 INT	4	1	50			S				21	0.0											21	0.	14
130	GIRDER SEAT LONG, PIER 4 INT	4	1	50			S				22	3.0											22	3.	15
131	BACKWALL TOP LONG, PIER 4 INT	4	2	50			S	E			23	8.0											23	8.	32
132	ABUTMENT LONG, PIER 4 INT	4	15	50			S				23	8.0											23	8.	237
133	FTG- LONG TOP, PIER 4 INT	5	8	50			S				23	8.0											23	8.	187
134	FTG- LONG BOT, PIER 4 INT	6	8	50			S				23	8.0											23	8.	264
135	GIRDER SEAT LONG, PIER 4 INT	4	1	50			S				26	6.0											26	6.	18
136	GIRDER SEAT LONG, PIER 4 INT	4	1	50			S				25	0.0											25	0.	17
137	ABUTMENT DOWELS	5	150	50			S				2	10.5											2	11.	456
140	BACKWALL TOP LONG, PIER 1 EXT	4	2	50			S	E			5	7.5											5	8.	8
141	ABUTMENT LONG, PIER 1 EXT	4	13	50			S				5	7.5											5	8.	49
142	PAVT SEAT LONG, PIER 1 EXT	4	1	50			S				3	2.0											3	2.	2
143	FTG- LONG TOP, PIER 1 EXT	5	8	50			S				6	11.0											6	11.	58
144	FTG- LONG BOT, PIER 1 EXT	6	8	50			S				6	11.0											6	11.	83
145	GIRDER SEAT LONG, PIER 1 EXT	4	2	50			S				8	10.0											8	10.	12
146	ABUTMENT LONG, PIER 1 EXT	4	1	50			S				2	4.0											2	4.	2
147	ABUTMENT LONG FF, PIER 4 EXT	4	7	50			S				5	6.5											5	7.	26
148	ABUTMENT LONG NF, PIER 4 EXT	4	7	50			S				2	8.0											2	8.	12
149	FTG- LONG TOP, PIER 4 EXT	5	8	50			S				9	2.0											9	2.	76
150	FTG- LONG BOT, PIER 4 EXT	6	8	50			S				9	2.0											9	2.	110
151	GIRDER SEAT LONG, PIER 4 EXT	4	2	50			S				9	1.0											9	1.	12
152	ABUTMENT LONG NF, PIER 4 EXT	4	1	50			S				8	6.0											8	6.	6
153	BACKWALL TOP LONG, PIER 4 EXT	4	1	50			S	E			5	6.5											5	7.	4
154	BACKWALL TOP LONG, PIER 4 EXT	4	1	50			S	E			6	6.0											6	6.	4
155	VERT DOWEL, PIER 1 EXT	5	5	63	T		S				1	7.5	1	1.0	1	1.0	0	0.0	0	0.0	0	0	3	7.	19
156	VERT DOWEL, PIER 1 EXT	5	2	63	T		S				1	0.5	1	1.0	1	1.0	0	0.0	0	0.0	0	0	3	0.	8
157	VERT DOWEL, PIER 4 EXT	5	2	63	T		S				1	5.5	1	0.0	1	0.0	0	0.0	0	0.0	0	0	3	3.	7
160	WINGWALL PIER 1 & 4, VERT EF	4	15	54			S				8	10.0											9	5.	94
161	WINGWALL PIER 4, VERT EF	4	4	54			S		V	2	8	8.0											9	3.	
											8	2.0											8	9.	24
162	WINGWALL PIER 4, VERT EF	4	12	50			S		V	2	6	2.0											6	2.	
											3	8.0											3	8.	39
163	WINGWALL PIER 4, HORZ NF	5	4	80	T		S				10	5.0	3	0.0	0	0.0	0	1.3	0	0.0	137	0	13	5.	56
164	WINGWALL PIER 4, HORZ FF	4	4	50			S				11	1.0											11	1.	30
165	WINGWALL PIER 4, HORZ NF	4	5	80	T		S		V	1	9	8.0	3	0.0	0	0.0	0	1.0	0	0.0	137	0	12	8.	
											3	2.0	3	0.0	0	0.0	0	1.0	0	0.0	137	0	6	2.	31
166	WINGWALL PIER 4, HORZ FF	4	5	50			S		V	1	10	4.0											10	4.	
											3	10.0											3	10.	24
167	WINGWALL PIER 4, HORZ TOP	4	4	80	T		S				7	9.0	2	0.0	2	0.0	0	0.0	0	0.0	117	153	11	9.	31
168	WALL PIER 4 INT, FTG- TRAN	4	32	50			S				6	11.0											6	11.	148
169	WALL PIER 4 INT, FTG- LONG	4	12	50			S				15	0.0											15	0.	120
170	WALL PIER 4 INT, VERT NF	4	16	65	T		S				0	8.0	9	10.5	0	0.0							10	6.	112
171	WALL PIER 4 INT, VERT FF	5	16	65	T		S				0	8.0	9	11.0	0	0.0							10	6.	175
172	WALL PIER 4 INT, HORZ EF	4	18	50			S				15	0.0											15	0.	180
174	WINGWALL CORNER TIE	4	12	65	T		S				2	0.0	2	0.0	0	0.0							3	11.	31
176	WINGWALL PIER 1, VERT EF	4	10	54			S		V	2	8	8.0											9	3.	
											6	8.0											7	2.	55
177	WINGWALL PIER 1, VERT EF	4	6	50			S		V	2	4	10.0											4	10.	
											3	10.0											3	10.	17
178	WINGWALL PIER 1, HORZ NF	5	4	80			S				10	0.0	3	6.0	0	0.0	0	2.0	0	0.0	37	0	12	11.	54
179	WINGWALL PIER 1, HORZ FF	4	4	50			S				9	4.0											9	4.	25
180	WINGWALL PIER 1, HORZ NF	5	6	63	T		S		V	1	9	3.0	3	6.0	0	0.0	0	1.5	0	0.0	37	0	12	7.	
											2	9.0	0	0.0	0	0.0	0	0.0	0	0.0	0	0	2	6.	47
181	GIRDER SEAT VERT	5	4	63	T		S				3	11.0	2	10.0	2	10.0	0	10.0	0	10.0	0	0	10	10.	45
182	GIRDER SEAT STIRRUP	4	4	83			S				2	10.0	1	6.0	0	0.0	0	0.0	0	0.0	0	0	9	9.	26
185	WINGWALL PIER 1, HORZ EF	4	2	65	T		S				2	5.0	2	5.0	0	0.0							4	9.	6
187	WALL PIER 1 INT, HORZ EF	4	14	65	T		S				2	0.0	5	10.5	0	0.0							7	9.	72
189	WALL PIER 1 INT, VERT EF	4	4	54			S				8	10.0											9	5.	25
190	WALL PIER 1 INT, VERT EF	4	8	50			S				6	2.0											6	2.	33
192	WINGWALL PIER 1, HORZ FF	4	5	50			S		V	1	8	7.0											8	7.	
											2	1.0											2	1.	18
193	GIRDER STOP LONG	4	24	50			S				4	8.0											4	8.	75
194	GIRDER STOP STIRRUP	5	40	61	T		S				3	0.0	2	6.0	2	6.0	0	0.0	0	0.0	0	0	7	10.	327
195	GIRDER SEAT TOP, PIER 1 INT	6	4	65			S				1	6.0	8	0.0	0	0.0							9	4.	58
196	GIRDER SEAT BOT, PIER 1 INT	4	4	50			S				6	0.0											6	0.	16
197	WINGWALL TIE	5	8	80	T		S				1	6.0	1	8.0	1	8.0	0	1.3	0	1.3	109	109	4	10.	40
198	WINGWALL TIE	5	8	80	T		S				1	6.0	1	8.0	0	0.0	0	1.3	0	0.0	137	0	3	2.	26
199	ABUTMENT DRAIN HOLE	4	16	50			S				1	8.0											1	8.	18
	PIERS 2 & 3																								
201	X-BEAM TOP, PIER 2W INT	11	9	80			S				26	7.0	2	0.0	0	0.0	0	7.1	0	0.0	78	0	28	2.	1347
202	X-BEAM TOP, PIER 3W INT	11	9	80			S				25	10.0	2	0.0	0	0.0	0	7.1	0	0.0	78	0	27	5.	1311
203	X-BEAM TOP, PIER 2E INT	11	9	80			S				26	4.0	2	0.0	0	0.0	0	7.1	0	0.0	78	0	27	11.	1335
204	X-BEAM TOP, PIER 3E INT	11	9	80			S				25	8.0	2	0.0	0	0.0	0	7.1	0	0.0	78	0	27	3.	1303

S = Bar is included in substructure quantities
F = Bar to be field welded
T = Tie or Stirrup
E = Bar to be Epoxy Coated
V = Bar dimensions vary between dimensions shown on this line and the following line.

MARK NO.	LOCATION	SIZE	NO. REQ'D.	BEND TYPE	TIE or STIR.	FLD. WELD	SUBSTR.	EPX-COAT	VARIES	NO. EACH	U Ft.	U In.	W Ft.	W In.	X Ft.	X In.	Y Ft.	Y In.	Z Ft.	Z In.	θ1 Deg.	θ2 Deg.	LENGTH Ft.	LENGTH In.	WEIGHT Lbs.
205	X-BEAM TOP, PIER 2W INT	11	9	50			S				26	7.0											26	7.	1271
206	X-BEAM TOP, PIER 3W INT	11	9	50			S				25	10.0											25	10.	1235
207	X-BEAM TOP, PIER 2E INT	11	9	50			S				26	4.0											26	4.	1259
208	X-BEAM TOP, PIER 3E INT	11	9	50			S				25	8.0											25	8.	1227
209	X-BEAM PIER 2W INT	5	4	50			S				26	7.0											26	7.	111
210	X-BEAM PIER 3W INT	5	4	50			S				25	10.0											25	10.	108
211	X-BEAM PIER 2E INT	5	4	50			S				26	4.0											26	4.	110
212	X-BEAM PIER 3E INT	5	4	50			S				25	8.0											25	8.	107
213	X-BEAM BOT, PIER 2W INT	9	9	80			S				4	0.0	9	1.0	13	6.0	0	5.6	0	5.6	179	174	26	7.	813
214	X-BEAM BOT, PIER 3W INT	9	9	80			S				4	0.0	9	1.0	12	9.0	0	5.6	0	5.6	179	174	25	10.	790
215	X-BEAM BOT, PIER 2E INT	9	9	80			S				4	0.0	9	1.0	13	3.0	0	5.6	0	5.6	173	179	26	4.	806
216	X-BEAM BOT, PIER 3E INT	9	9	80			S				4	0.0	9	1.0	12	7.0	0	5.6	0	5.6	173	179	25	8.	785
217	GIRDER STOP, PIER 2	4	2	50			S				17	0.0											17	0.	23
218	GIRDER STOP, PIER 3	4	2	50			S				16	3.0											16	3.	22
219	X-BEAM PIER 2 EXT	5	4	50			S				7	4.0											7	4.	31
220	X-BEAM PIER 3 EXT	5	4	50			S				7	1.0											7	1.	30
221	X-BEAM BOT, PIER 2 EXT	11	9	58			S				6	2.0											9	5.	450
222	X-BEAM BOT, PIER 3 EXT	11	9	58			S				5	11.0											9	2.	438
223	X-BEAM TOP, PIER 2 EXT	9	9	58			S				6	2.0											8	9.	268
224	X-BEAM TOP, PIER 3 EXT	9	9	58			S				5	11.0											8	6.	260
225	GIRDER STOP, VERT	5	80	61			S				2	5.0	1	6.5	1	6.5	0	0.0	0	0.0	0	0	5	3.	438
226	GIRDER STOP, PIER 2	4	16	50			S				5	0.0											5	0.	53
227	GIRDER STOP, VERT DOWELS	4	76	50			S				1	7.0											1	7.	80
228	X-BEAM TOP, EXT	10	14	51			S				7	3.0											8	8.	522
229	X-BEAM TOP, INT	10	28	50			S				11	7.0											11	7.	1396
230	X-BEAM TOP, EXT	9	8	51			S				7	6.0											8	9.	238
231	PIER 2 & 3 INT	5	16	50			S				3	0.0											3	0.	50
232	X-BEAM BOT, INT	9	36	50			S				7	6.0											7	6.	918
233	GIRDER STOP, PIER 3	4	16	50			S				4	10.0											4	10.	52
234	X-BEAM STIRRUP E INT	5	76	83	T		S		V	4	2	10.0	3	6.5	0	0.0	0	0.0	0	0.0	0	0	13	7.	
											2	10.0	2	10.5	0	0.0	0	0.0	0	0.0	0	0	12	3.	1024
235	X-BEAM STIRRUP W INT	5	76	83	T		S		V	4	2	10.0	3	4.5	0	0.0	0	0.0	0	0.0	0	0	13	3.	
											2	10.0	2	10.5	0	0.0	0	0.0	0	0.0	0	0	12	3.	1011
236	X-BEAM STIRRUP PIER 2 E INT	5	64	83	T		S		V	2	2	10.0	3	4.5	0	0.0	0	0.0	0	0.0	0	0	13	3.	
											2	10.0	2	9.5	0	0.0	0	0.0	0	0.0	0	0	12	1.	846
237	X-BEAM STIRRUP PIER 3 E INT	5	60	83	T		S		V	2	2	10.0	3	4.5	0	0.0	0	0.0	0	0.0	0	0	13	3.	
											2	10.0	2	9.5	0	0.0	0	0.0	0	0.0	0	0	12	1.	793
238	X-BEAM STIRRUP PIER 2 W INT	5	64	83	T		S		V	2	2	10.0	3	6.5	0	0.0	0	0.0	0	0.0	0	0	13	7.	
											2	10.0	2	6.5	0	0.0	0	0.0	0	0.0	0	0	11	11.	851
239	X-BEAM STIRRUP PIER 3 W INT	5	60	83	T		S		V	2	2	10.0	3	6.5	0	0.0	0	0.0	0	0.0	0	0	13	7.	
											2	10.0	2	8.5	0	0.0	0	0.0	0	0.0	0	0	11	11.	798
240	X-BEAM STIRRUP E EXT	5	16	83	T		S				2	10.0	2	10.8	0	0.0	0	0.0	0	0.0	0	0	12	4.	206
241	PIER COLUMN VERT	9	84	50			S				42	8.0											42	8.	12186
242	PIER COLUMN VERT	9	84	50			S				30	0.0											30	0.	8568
243	PIER COLUMN SPIRAL	5	6	67			S				3	3.0	0	3.0	0	0.0					170		1725	6.	10798
244	PIER SHAFT VERT PIER 3	11	288	50			S				74	6.0											74	6.	~~13395~~ 56,977.5
245	PIER SHAFT SPIRAL	6	6	67			S				5	0.0	0	3.5	0	0.0					256		4001	2.	36059
246	PIER SHAFT VERT PIER 2	#11	72#	50			S				25	0.0											35	0.0	13,398
246B	" " " "	11	72#	50			S				42	0.0											42	0.0	16,067
246C	" " " "	11	72#	50			S				18	0.0											18	0.0	6,886
246D	" " " "	11	72#	50			S				18	0.0											18	0.0	6,886
246E	" " " "	11	72#	50			S				21	6.0											21	6.0	8,225
246F	" " " "	11	72#	50			S				14	6.0											14	6.0	5,346

STEEL REINFORCING BAR QUANTITIES NOT INCLUDED IN THIS BAR LIST

REINFORCEMENT BENDING DIAGRAMS

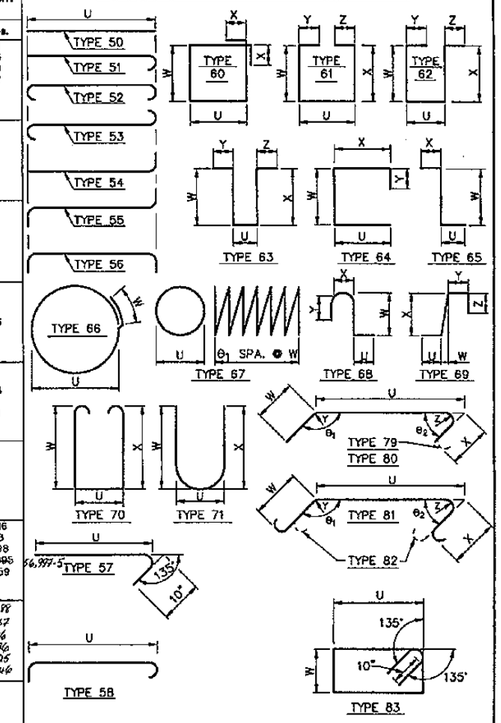

NOTES

1. All reinforcing bars on this sheet shall be A.S.T.M. A-615 Grade 60 unless shown otherwise.
2. Reinforcing for traffic barriers and sidewalks not shown in this Bar List. See Traffic Barrier sheet.
3. Bend for transverse bars due to roadway crown conditions have not been shown. These bars shall be bent as required to conform to the configuration of the structure.

FOR "AS CONSTRUCTED PLANS" ONLY

Bridge Design Engineer			
Supervisor			
Designed By A.L.K.			
Checked By K.T.F.			
Detailed By P.R.B.			
Bridge Projects Engineer			
Prelim. Plan By			
Architect/Specialist	DATE	REVISION	BY / APP'D

REGION NO. 10 | STATE WASH | FED. AID. PROJ. NO. | SHEET NO. | TOTAL SHEETS
JOB NUMBER
CONTRACT NO. 4771

WASHINGTON STATE DEPARTMENT OF TRANSPORTATION
Sverdrup CIVIL INC.

SR167
15TH NW TO 84TH AVE. SO.
HOV SC & DI - STAGE 2
UPRR OVERCROSSING BR. NO. 167/125

BAR LIST - SHEET 1

BRIDGE SHEET NO. 27
SHEET 574 OF 663 SHEETS

BA300023 JOB NO. SR SHEET

SR167/91

S = Bar is included in substructure quantities
F = Bar to be field welded
T = Tie or Stirrup
E = Bar to be Epoxy Coated
V = Bar dimensions vary between dimensions shown on this line and the following line.

MARK NO.	LOCATION	SIZE	NO. REQ'D.	BEND TYPE	TIE or STIR	FLD. WELD	SUBSTR.	EPX-COAT	VARIES	NO. EACH	U Ft.	U In.	W Ft.	W In.	X Ft.	X In.	Y Ft.	Y In.	Z Ft.	Z In.	θ1 Deg.	θ2 Deg.	LENGTH Ft.	LENGTH In.	WEIGHT Lbs.
	BRIDGE SLAB																								
60	LONG BOT INT W	8	1	50							383	0.0											383	0.	1023
61	LONG TOP INT W	5	16	50				E			380	0.0											380	0.	6341
62	LONG BOT INT W	6	23	50							380	0.0											380	0.	9116
63	TRAN TOP INT	6	979	51				E			18	6.0											19	2.	28184
64	TRAN BOT INT	6	979	51							18	6.0											19	2.	28184
65	TRAN TOP INT	6	60	51				E	V	2	5	2.0											5	10.	
											18	3.0											18	11.	1115
66	TRAN BOT INT	6	60	51					V	2	5	2.0											5	10.	
											18	3.0											18	11.	1115
67	TRAN TOP INT W	6	52	51				E	V	2	5	7.0											6	3.	
											17	11.0											18	7.	970
68	TRAN BOT INT W	6	52	51					V	2	5	7.0											6	3.	
											17	11.0											18	7.	970
69	TRAN TOP INT W	6	46	51				E	V	2	6	2.0											6	10.	
											18	0.0											18	8.	881
70	TRAN BOT INT W	6	46	51				E	V	2	6	2.0											6	10.	
											18	0.0											18	8.	881
71	TRAN TOP INT W	6	20	51				E	V	1	6	10.0											7	6.	
											17	11.0											18	7.	392
72	TRAN BOT INT W	6	20	51					V	1	6	10.0											7	6.	
											17	11.0											18	7.	392
73	TRAN TOP INT E	6	54	51				E	V	2	5	9.0											6	5.	
											18	3.0											18	11.	1027
74	TRAN BOT INT E	6	54	51					V	2	5	9.0											6	5.	
											18	3.0											18	11.	1027
75	TRAN TOP INT E	6	48	51				E	V	2	6	3.0											6	11.	
											18	3.0											18	11.	931
76	TRAN BOT INT E	6	48	51					V	2	6	3.0											6	11.	
											18	3.0											18	11.	931
77	TRAN TOP INT E	6	22	51				E	V	1	6	9.0											7	5.	
											18	3.0											18	11.	435
78	TRAN BOT INT E	6	22	51					V	1	6	9.0											7	5.	
											18	3.0											18	11.	435
79	TRAN TOP EXT E	6	551	51				E			5	11.0											6	7.	5448
80	TRAN BOT EXT E	6	551	51							5	11.0											6	7.	5448
81	TRAN TOP INT CORNER	6	22	51				E			4	8.0											5	4.	175
82	TRAN BOT INT CORNER	6	22	50							4	8.0											4	8.	154
83	TRAN TOP INT CORNER	6	44	51				E			5	2.0											5	10.	386
84	TRAN BOT INT CORNER	6	44	50							5	2.0											5	2.	341
85	TRAN TOP INT CORNER	6	44	51				E			5	8.0											6	4.	419
86	TRAN BOT INT CORNER	6	44	50							5	8.0											5	8.	374
87	TRAN TOP INT CORNER	6	22	51				E			6	2.0											6	10.	226
88	TRAN BOT INT CORNER	6	22	50							6	2.0											6	2.	204
89	TRAN TOP EXT E CORNER	6	78	51				E			5	8.0											6	4.	742
90	TRAN BOT EXT E CORNER	6	78	50							5	8.0											5	8.	664
91	LONG BOT INT E	8	1	50							360	0.0											360	0.	961
92	LONG TOP INT E	5	18	50				E			358	0.0											358	0.	5974
93	LONG BOT INT E	5	23	50							358	0.0											358	0.	8588
94	LONG BOT EXT E	8	1	50							368	0.0											368	0.	983
95	LONG TOP EXT E	5	6	50				E			364	0.0											364	0.	2278
96	LONG BOT EXT E	5	6	50							364	0.0											364	0.	2278
S1	BARRIER	5	1396	69				E			0	6.0	0	7.0	1	6.0	0	6.0	0	0.0	0	0	2	7.	3761
S2	BARRIER	4	698	69							1	6.0	0	2.0	1	6.0	0	0.0	0	0.0	0	0	3	0.	1399
S3	BARRIER	5	480	69				E			0	0.0	0	8.0	1	8.0	0	6.0	0	0.0	0	0	2	4.	1168
S4	BARRIER	4	240	50							1	8.0											1	8.	267
	END DIAPHRAGMS																								
1	PIERS 1 & 4	4	50	61				E			0	9.0	3	5.0	3	5.0	0	0.0	0	0.0	0	0	7	4.	245
2	PIERS 1–4 INT	6	168	50				E			16	9.0											16	9.	4227
4	PIERS 1–4 INT	7	24	50							14	11.0											14	11.	732
5	PIERS 1 & 4	7	44	69							1	0.0	1	0.0	1	6.0	3	8.0	0	0.0	0	0	6	6.	585
6	PIERS 1 & 4	7	16	69							2	5.0	1	8.0	2	6.0	0	0.0	0	0.0	0	0	5	5.	177
8	PIERS 1–4 INT	4	24	50							6	4.0											6	4.	102
10	PIERS 1–4	4	48	50							7	0.0											7	0.	224
11	PIERS 1–4	4	264	50							3	4.0											3	4.	588
12	PIERS 1 & 4	4	84	61				E	V	3	0	9.0	3	8.0	3	8.0	0	0.0	0	0.0	0	0	7	10.	
											0	9.0	4	5.0	4	5.0	0	0.0	0	0.0	0	0	9	4.	482
14	PIERS 1–4	7	18	50							3	11.0											3	11.	144
15	PIERS 1 & 4	7	12	69							0	6.0	1	0.0	1	6.0	3	8.0	0	0.0	0	0	6	0.	147
18	PIERS 1–4 EXT	4	12	50							4	2.0											4	2.	33
20	PIERS 2 & 3 INT	7	16	50							7	3.0											7	3.	237
21	PIER 1 EXT	6	7	50				E			10	2.0											10	2.	107
22	PIER 2 EXT	6	14	50				E			9	7.0											9	7.	202
23	PIER 3 EXT	6	14	50				E			9	1.0											9	1.	191
24	PIER 4 EXT	6	7	50				E			8	9.0											8	9.	82
25	PIERS 2 & 3 INT	7	8	50							6	7.0											6	7.	108
30	PIERS 2 & 3	4	268	61				E			0	9.0	5	3.0	5	3.0	0	0.0	0	0.0	0	0	11	0.	1969
35	PIERS 1–4	7	6	69							1	0.0	1	1.0	1	8.0	0	0.0	0	0.0	0	0	3	0.	37
41	PIER 1 EXT	7	1	50							5	1.0											5	1.	10
42	PIER 2 EXT	7	6	50							4	9.0											4	9.	58
43	PIER 3 EXT	7	6	50							4	4.0											4	4.	53
44	PIER 4 EXT	7	1	50							4	2.0											4	2.	9
	NOISE WALL																								
50	HORZ EF	4	16	50							375	9.0											375	9.	4016
51	VERT EF	4	674	50							9	7.5											6571	6.0	4390
58	EXPANSION JOINT	3	640	65				E			0	4.5	0	6.0	0	0.0							0	10.	201
59	EXPANSION JOINT	3	32	50				E			28	0.0											28	0.	337
	INTERMEDIATE DIAPHRAGMS																								
3	INT	8	24	50							15	10.0											15	10.	1015
7	INT	9	24	50							15	3.0											15	3.	1244
9	INT	7	96	50				E			3	4.0											3	4.	654
10	INT	4	72	50							7	0.0											7	0.	337
13	INT & EXT	6	72	50							4	6.0											4	6.	487
16	INT & EXT	4	420	71							0	5.0	3	6.0	3	6.0							7	3.	2034.
17	SPAN 1 EXT	9	2	50							5	7.0											5	7.	38

S = Bar is included in substructure quantities
F = Bar to be field welded
T = Tie or Stirrup
E = Bar to be Epoxy Coated
V = Bar dimensions vary between dimensions shown on this line and the following line.

MARK NO.	LOCATION	SIZE	NO. REQ'D.	BEND TYPE	TIE or STIR	FLD. WELD	SUBSTR.	EPX-COAT	VARIES	NO. EACH	U Ft.	U In.	W Ft.	W In.	X Ft.	X In.	Y Ft.	Y In.	Z Ft.	Z In.	θ1 Deg.	θ2 Deg.	LENGTH Ft.	LENGTH In.	WEIGHT Lbs.
18	EXT	4	12	50							4	2.0											4	2.	33
19	SPAN 1 EXT	7	8	50				E			7	0.0											7	0.	114
27	SPAN 2 EXT	9	2	50							5	2.0											5	2.	35
29	SPAN 2 EXT	7	8	50				E			6	8.0											6	8.	109
31	SPAN 1 EXT	8	2	50							5	7.0											5	7.	30
32	SPAN 2 EXT	8	2	50							5	2.0											5	2.	28
33	SPAN 3 EXT	8	2	50							4	11.0											4	11.	26
37	SPAN 3 EXT	9	2	50							4	11.0											4	11.	33
39	SPAN 3 EXT	7	8	50				E			6	5.0											6	5.	105
	COLLISION WALL																								
45	VERT	4	136	50			S				10	11.0											10	11.	992
46	HORZ	4	26	50			S				17	5.0											17	5.	302
47	HORZ	4	26	50			S				28	1.0											28	1.	488
48	HORZ	4	26	50			S				29	5.0											29	5.	511
54	SEISMIC RESTRAINERS	5	168	50							3	5.0											3	5.	598
55	SEISMIC RESTRAINERS	5	48	50				E			3	6.0											3	6.	175
56	SEISMIC RESTRAINERS	4	240	61				E			1	0.0	2	2.0	2	3.0	0	0.0	0	0.0	0	0	5	2.	828
57	SEISMIC RESTRAINERS	5	128	50							4	0.0											4	0.	534

STEEL REINFORCING BAR QUANTITIES NOT INCLUDED IN THIS BAR LIST

	TRAFFIC BARRIER	21510

REINFORCEMENT BENDING DIAGRAMS

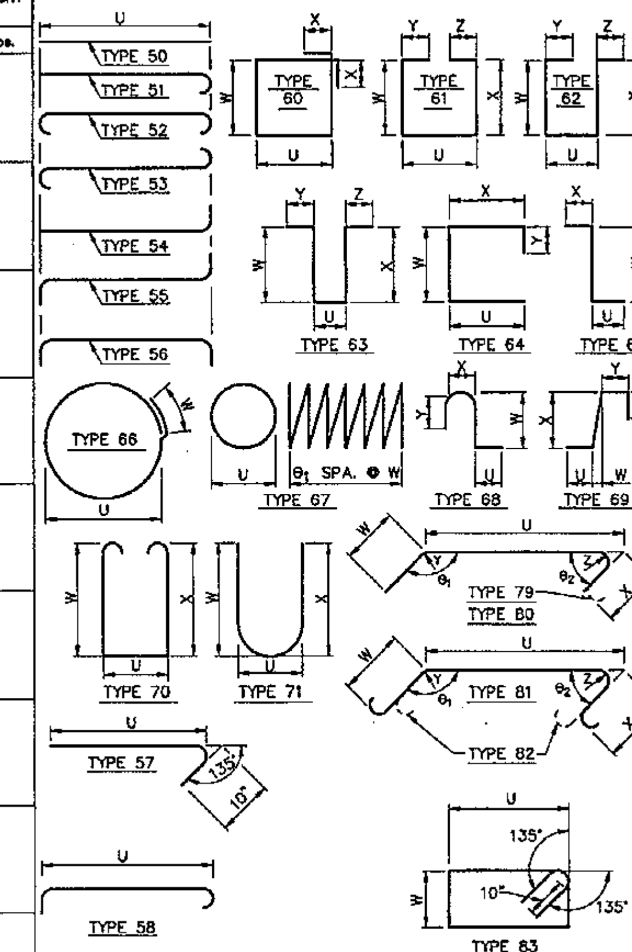

NOTES

1. *All reinforcing bars on this sheet shall be A.S.T.M. A-615 Grade 60 unless shown otherwise.*
2. *Reinforcing for traffic barriers and sidewalks not shown in this Bar List. See Traffic Barrier sheet.*
3. *Bend for transverse bars due to roadway crown conditions have not been shown. These bars shall be bent as required to conform to the configuration of the structure.*

FOR "AS CONSTRUCTED PLANS" ONLY

Bridge Design Engineer				
Supervisor				
Designed By	A.L.K.			
Checked By	K.T.F.			
Detailed By	P.R.B.			
Bridge Proj Engineer				
Prelim.		11-3-95	REVISED MARK 51	WB
Arch		DATE	REVISION	BY / APP'D

REGION NO.	STATE	FED. AID. PROJ. NO.	SHEET NO.	TOTAL SHEETS
10	WASH			
JOB NUMBER 95W036				
CONTRACT NO. 4771				

WASHINGTON STATE DEPARTMENT OF TRANSPORTATION

Sverdrup CIVIL INC.

SR167
15TH NW TO 84TH AVE. SO.
HOV SC & DI – STAGE 2
UPRR OVERCROSSING BR. NO. 167/125

BAR LIST – SHEET 2

BRIDGE SHEET NO. 28
SHEET 575 OF 663 SHEETS

BA3Q0024 SR___ JOB NO.___ SHEET___

SR 167/91

SEC. 13, T. 22 N., R. 4 E., W.M. SR 167

CITY OF KENT

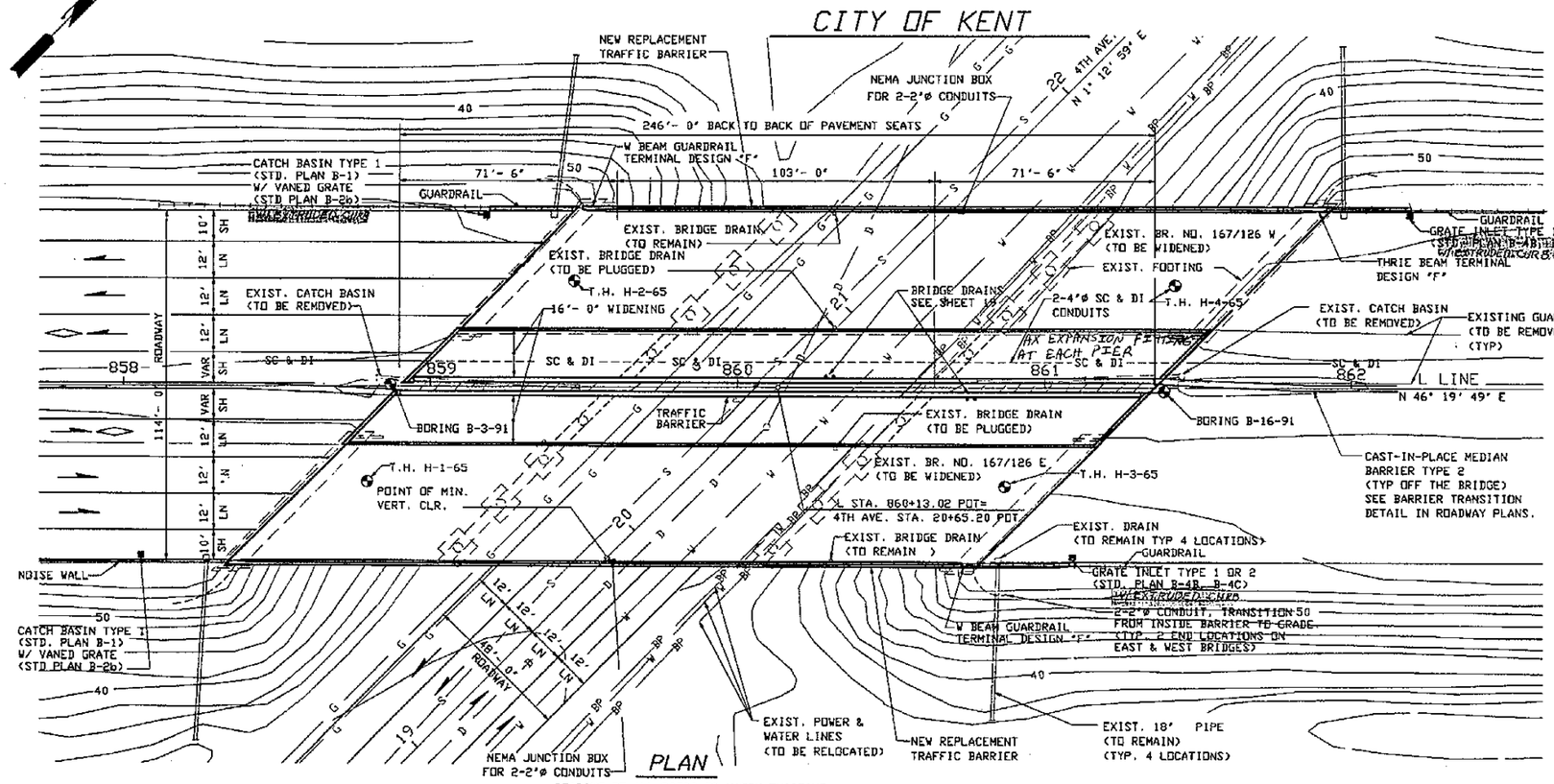

PLAN

BEARING OF ALL PIERS TO MATCH EXISTING

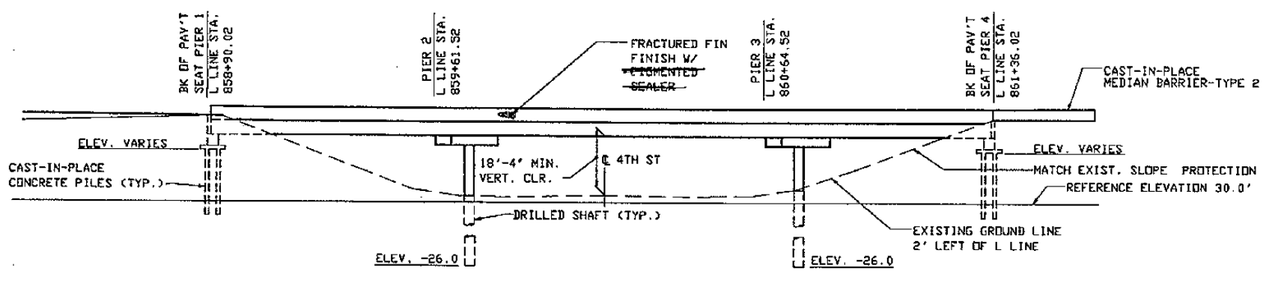

ELEVATION

FOR EMBANKMENT DETAILS AT BRIDGE ENDS SEE STD PLAN H-9.

GENERAL NOTES:

1. ALL MATERIAL AND WORKMANSHIP SHALL BE IN ACCORDANCE WITH THE REQUIREMENTS OF THE STATE OF WASHINGTON DEPARTMENT OF TRANSPORTATION STANDARD SPECIFICATIONS FOR ROAD, BRIDGE AND MUNICIPAL CONSTRUCTION DATED 1994, AND AMENDMENTS.
2. THIS STRUCTURE HAS BEEN DESIGNED IN ACCORDANCE WITH THE REQUIREMENTS OF AASHTO STANDARD SPECIFICATIONS FOR HIGHWAY BRIDGES FIFTEENTH EDITION-1992, WITH INTERIM SPECIFICATIONS THROUGH 1993. ALL PRESTRESSED CONCRETE ELEMENTS HAVE BEEN DESIGNED FOR SERVICE LOAD STRESSES AND CHECKED FOR THE REQUIREMENTS OF LOAD FACTOR DESIGN. ALL OTHER STRUCTURAL ELEMENTS ARE DESIGNED IN ACCORDANCE WITH THE REQUIREMENTS FOR LOAD FACTOR DESIGN. SEISMIC DESIGN OF THIS STRUCTURE HAS BEEN DONE USING AN ACCELERATION COEFFICIENT OF 0.25 AND SOIL PROFILE TYPE II.
3. FOOTING ELEVATIONS AND SUBSTRUCTURE DETAILS ARE SUBJECT TO CHANGE DEPENDING UPON FOUNDATION MATERIAL ENCOUNTERED. REINFORCING STEEL FOR ABUTMENTS, DRILLED SHAFTS, COLUMNS AND PILES SHALL NOT BE CUT UNTIL FINAL FOOTING ELEVATIONS HAVE BEEN DETERMINED IN THE FIELD AND SUBSTRUCTURE DETAILS HAVE BEEN MODIFIED, IF REQUIRED.
4. DIMENSIONS TO THE EXISTING BRIDGE AND ALL ELEVATIONS SHOWN ON THE PLANS ARE BASED ON RECORD INFORMATION OF ORIGINAL CONSTRUCTION TOGETHER WITH FIELD SURVEY DATA. THE NEW STRUCTURE IS INTENDED TO MATCH THE EXISTING STRUCTURE. THEREFORE, DIMENSIONS TO THE EXISTING BRIDGE AND ALL ELEVATIONS GIVEN ON THE PLANS SHALL BE VERIFIED IN THE FIELD BY THE CONTRACTOR FOR COMPATIBILITY.
5. THE CONCRETE IN THE SHAFTS SHALL BE CLASS 4000W OR 4000. THE CONCRETE IN THE ROADWAY DECK SHALL BE CLASS 5000D. THE CONCRETE IN THE CAST-IN-PLACE PILES SHALL BE CLASS 4000P. THE CONCRETE IN THE CLOSURES SHALL BE CLASS 5000LS OR CLASS 5000DLS FOR THE ROADWAY DECK. ALL OTHER CAST-IN-PLACE CONCRETE SHALL BE CLASS 4000.
6. PILES SHALL BE DRIVEN TO A LOAD BEARING CAPACITY OF 70 TONS AT PIERS 1 & 4. SEE SPECIAL PROVISIONS FOR MINIMUM PILE TIP ELEVATIONS. THE MAXIMUM DESIGN LOAD FOR PIERS 2&3 SHAFTS ARE 350 TONS EACH.
7. FALSEWORK SHALL NOT BE RELEASED UNTIL ALL CONCRETE BEING SUPPORTED HAS MET THE AGE AND STRENGTH REQUIREMENTS OF THE STANDARD SPECIFICATIONS. FALSEWORK SHALL BE CAREFULLY RELEASED TO PREVENT IMPACT OR UNDUE STRESS IN THE STRUCTURE. CLOSURES SHALL BE MADE AFTER FALSEWORK IS RELEASED BUT BEFORE PLACEMENT OF OVERLAY AND BARRIERS.
8. UNLESS OTHERWISE SHOWN IN THE PLANS, THE CONCRETE COVER MEASURED FROM THE FACE OF ANY REINFORCING STEEL SHALL BE 2 1/2" AT THE TOP OF THE ROADWAY SLAB, 1" AT THE BOTTOM OF THE ROADWAY SLAB, 7 1/2" AT THE BOTTOM OF THE FOOTINGS AND 1 1/2" AT ALL OTHER LOCATIONS.

LEGEND

(A / 12) — IDENTIFIES SECTION, VIEW, OR DETAIL — TAKEN OR SHOWN ON BRIDGE SHEET 12

(D / –) — DASH INDICATES THAT SECTION, VIEW, OR DETAIL IS TAKEN AND SHOWN ON THE SAME SHEET.

P.C. GIRDERS (W58G)

CONTINUOUS FOR LIVE LOAD

LOADING: HS-25

OR

TWO 24K AXLES 4' C'TRS.

DATUM

NATIONAL GEOD. VERTICAL ADJUSTED DATUM OF 1978

FOR "AS CONSTRUCTED PLANS" ONLY

Bridge Design Engineer					REGION NO.	STATE	FED. AID. PROJ. NO.	SHEET NO. / TOTAL SHEETS
Supervisor					10	WASH		
Designed By A.L.K.					JOB NUMBER 95W036			
Checked By J.R.K.								
Detailed By G.W.S.								
Bridge Projects Engineer K.N.K.								
Prelim. Plan By D.M.J.					CONTRACT NO. 4771			
Architect/Specialist R.MAYS	DATE	REVISION	BY	APP'D				

JOHN R. KATTELE, STATE OF WASHINGTON, REGISTERED PROFESSIONAL ENGINEER — EXPIRES: 06/10/97

WASHINGTON STATE DEPARTMENT OF TRANSPORTATION

Sverdrup CIVIL INC.

SR167
15TH N.W. TO 84TH AVE. SO.
HOV SC & DI - STAGE 2
4TH ST OVERCROSSING BR. NO. 167/126

LAYOUT

BRIDGE SHEET NO. 1

SHEET 576 OF 663 SHEETS

B7100001 SR SHEET JOB NO.

SR167/91

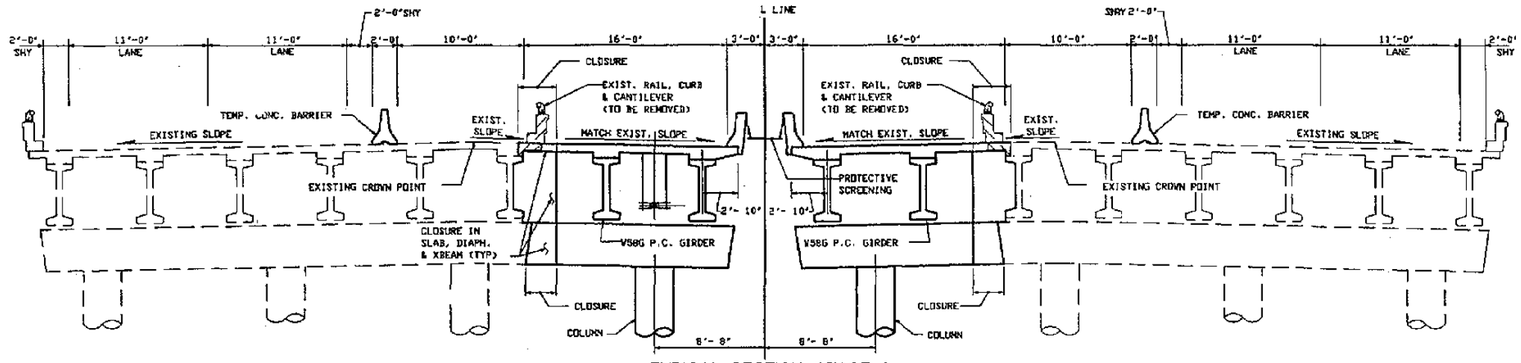

TYPICAL SECTION STAGE 1

SHOWN NEAR INTERMEDIATE PIER

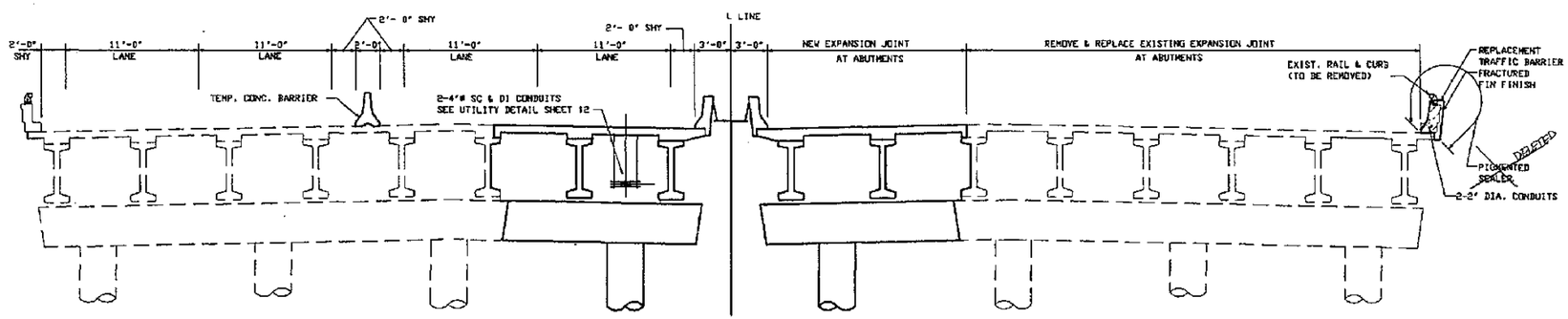

TYPICAL SECTION STAGE 2

SHOWN NEAR INTERMEDIATE PIER

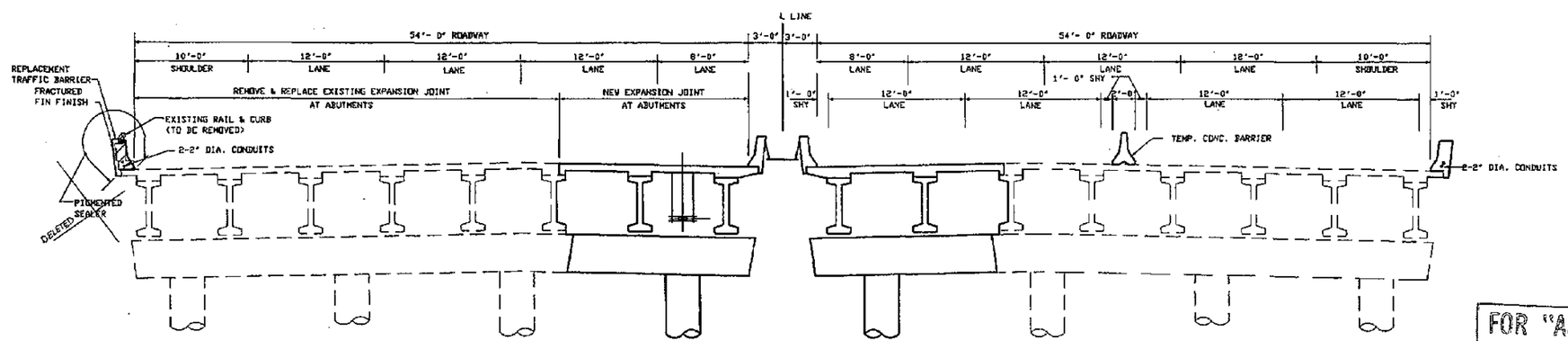

TYPICAL SECTION STAGE 3

SHOWN NEAR INTERMEDIATE PIER

FOR "AS CONSTRUCTED PLANS" ONLY

Bridge Design Engineer					
Supervisor					
Designed By	A.L.K.				
Checked By	J.R.K.				
Detailed By	G.W.S.				
Bridge Projects Engineer					
Prelim. Plan By					
Architect/Specialist		DATE	REVISION	BY	APP'D

REGION NO.	STATE	FED. AID. PROJ. NO.	SHEET NO.	TOTAL SHEETS
10	WASH			

JOB NUMBER 95W036

CONTRACT NO. 4771

EXPIRES: 06/10/97

WASHINGTON STATE DEPARTMENT OF TRANSPORTATION

Sverdrup CIVIL INC.

SR167
15TH N.W. TO 84TH AVE. SO.
HOV SC & DI – STAGE 2
4TH ST OVERCROSSING BR. NO. 167/126

STAGE CONSTRUCTION

BRIDGE SHEET NO. 2

SHEET 577 OF 663 SHEETS

SR167/91

B8100016 SR___ JOB NO. ___ SHEET ___

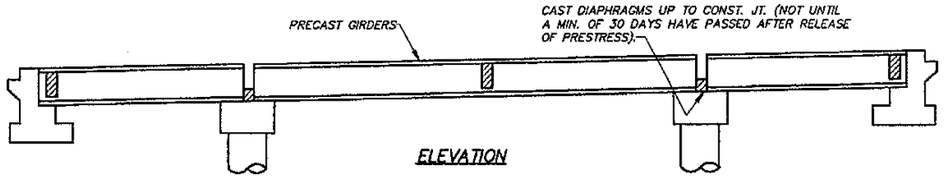

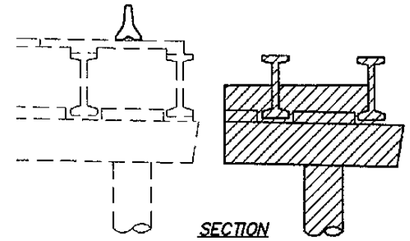

1 – SET GIRDERS AND PLACE DIAPHRAGMS

1. CONSTRUCT PIER 1 & 4, SHAFTS, COLUMNS AND X–BEAMS AT PIERS 2 & 3.
2. RELEASE ALL FALSEWORK UNDER PIERS 2 & 3 X–BEAMS.
3. SET PS GIRDERS IN PLACE. CAST INTERMEDIATE AND END DIAPHRAGMS. ALLOW 3 DAYS FOR CURING AND 3000 PSI MIN. STRENGTH BEFORE CASTING OF ROADWAY SLAB.

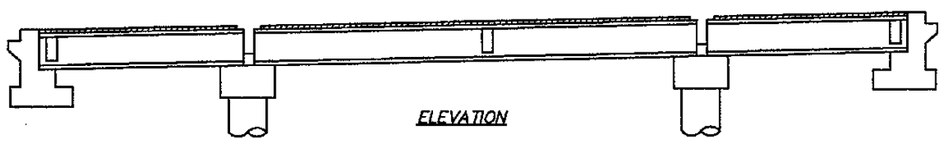

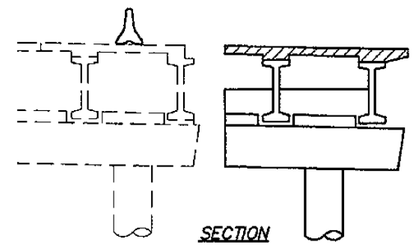

2 – PLACE ROADWAY SLAB

1. PLACE ROADWAY SLAB. ALLOW 10 DAYS AND 3000 PSI COMPRESSION STRENGTH BEFORE STRIPPING DECK FORMS.

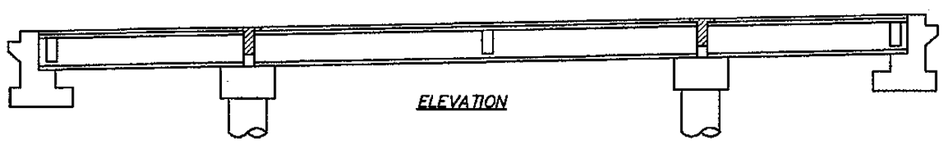

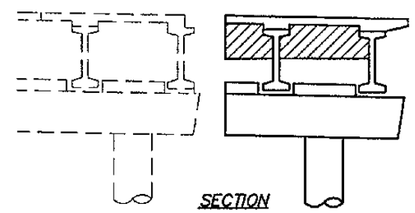

3 – CAST UPPER PORTION OF INTERMEDIATE DIAPHRAGM

1. DIAPHRAGM TOP PLACEMENT TO BE MADE A MINIMUM OF 2 DAYS AFTER ROADWAY SLAB PLACEMENT.

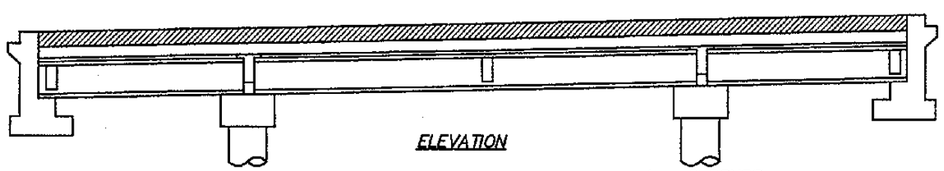

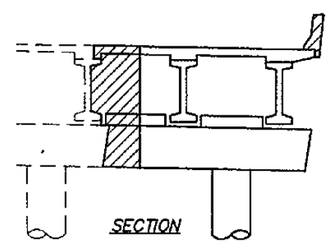

4 – CLOSURE

1. PLACE X–BEAM AND DIAPHRAGM CLOSURE. ALLOW 24 HOURS FOR CURING BEFORE SLAB CLOSURE IS COMPLETED.
2. ALLOW 10 DAYS & 4000 PSI PRIOR TO CASTING THE TRAFFIC BARRIER.
3. INSTALL EXPANSION JOINTS AND OVERLAY.

NOTE: TRAFFIC BARRIER END SECTIONS SHALL BE PLACED AFTER EXPANSION JOINT INSTALLATION AT PIERS 1 & 4.

CONSTRUCTION SEQUENCE

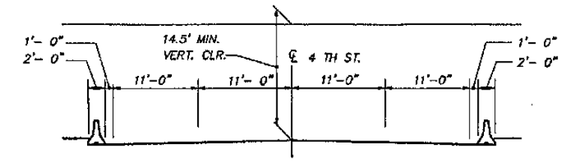

CONSTRUCTION OPENING DIAGRAM

NORMAL TO CENTER LINE OF 4 TH ST.

NOTES:

1. SHIMS MAY BE REQUIRED TO FIT BRACKET TO THE CONCRETE BARRIERS AND ROADWAY SURFACE.
2. LOCATION OF ANCHORS IS TO BE ADJUSTED TO MISS THE MAIN REINFORCING IN THE DECK WHEN DRILLING HOLES.
3. PROVIDE TWO (2) ANCHOR ASSEMBLIES FOR EACH SECTION OF THE CONCRETE BARRIERS ON THE ROADWAY SURFACE.
4. FOR DETAILS NOT SHOWN, SEE STANDARD PLAN C–8.
5. LOCATE ANCHORS APPROX. 2'–6" FROM BOTH ENDS OF EACH SECTION.
6. AFTER REMOVING THE TEMPORARY CONCRETE BARRIER, CLEAN AND FILL BOLT HOLES WITH 2:1 SAND/CEMENT GROUT BY VOLUME.

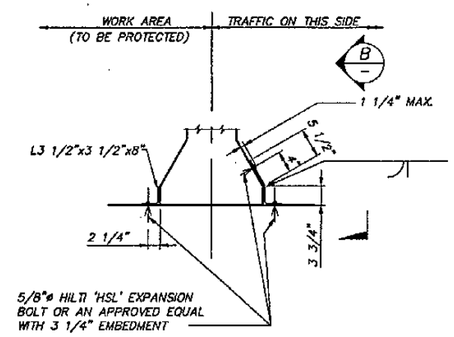

DETAIL A

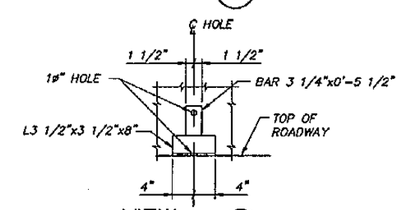

VIEW B

TEMPORARY BARRIER ANCHOR

(FOR USE ON 4TH ST. AND BRIDGE DECK)

FOR "AS CONSTRUCTED PLANS" ONLY

Bridge Design Engineer					
Supervisor					
Designed By A.L.K.					
Checked By J.R.K.					
Detailed By G.W.S.					
Bridge Projects Engineer					
Prelim. Plan By					
Architect/Specialist	DATE	REVISION	BY	APP'D	

REDGN NO.	STATE	FED. AID. PROJ. NO.	SHEET NO	TOTAL SHEETS
10	WASH			
JOB NUMBER 95W036				
CONTRACT NO. 4771				

JOHN R. KATELL — STATE OF WASHINGTON — 14401 REGISTERED PROFESSIONAL ENGINEER — 5/11/97 — EXPIRES: 06/10/97

WASHINGTON STATE DEPARTMENT OF TRANSPORTATION

Sverdrup CIVIL INC.

SR167
15TH N.W. TO 84TH AVE. SO.
HOV SC & DI – STAGE 2
4TH ST OVERCROSSING BR. NO. 167/126

CONSTRUCTION SEQUENCE & CONSTRUCTION OPENING

BRIDGE SHEET NO. 3

SHEET 578 OF 663 SHEETS

B6100005 SR. JOB NO. SHEET

SR167/91

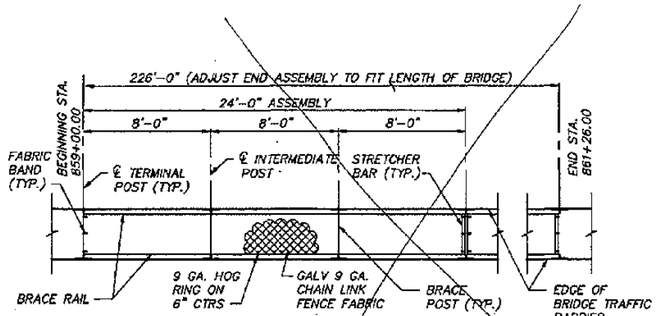

PLAN – PROTECTIVE SCREENING

1. SEE STANDARD PLANS – TYPE 1 FENCE.
2. BRACE RAIL CONNECTED TO BRACE POST WITH FITTING.

Deleted

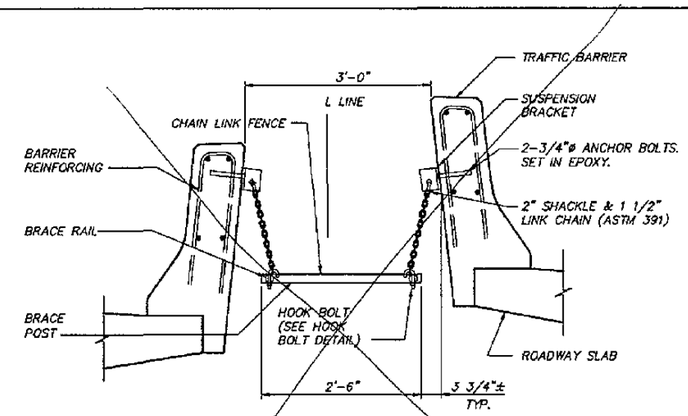

SECTION – SAFETY FENCE

Deleted

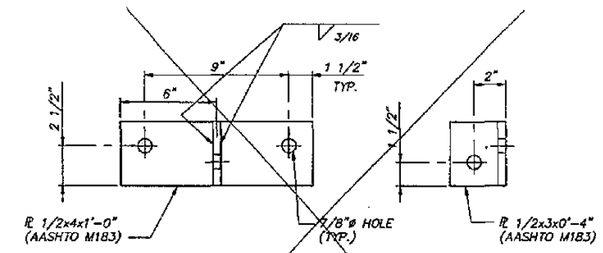

DETAIL – SUSPENSION BRACKET

Deleted

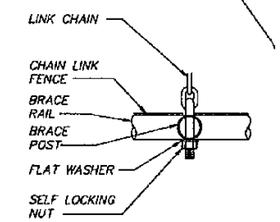

DETAIL – HOOK BOLT

NOTE: FITTINGS NOT SHOWN

STATION	ELEVATION LEFT CURB LINE	ELEVATION RIGHT CURB LINE	STATION	ELEVATION LEFT CURB LINE	ELEVATION RIGHT CURB LINE	STATION	ELEVATION LEFT CURB LINE	ELEVATION RIGHT CURB LINE
859+08.92	—	56.92	860+37.39	56.08	—	861+54.92	—	56.81
859+16.62	—	56.85	860+46.62	—	56.63	861+57.39	56.29	—
859+26.62	—	56.84	860+47.39	56.09	—	861+67.39	56.32	—
859+36.62	—	56.83	860+56.62	—	56.65	861+77.39	56.35	—
859+46.62	—	56.80	860+57.39	56.09	—	861+87.39	56.44	—
859+46.79	56.17	—	860+66.62	—	56.66	861+92.78	56.45	—
859+56.62	—	56.77	860+67.39	56.11	—	—	—	—
859+57.30	56.14	—	860+76.62	—	56.68	—	—	—
859+66.62	—	56.76	860+77.39	56.11	—	—	—	—
859+67.27	56.13	—	860+86.62	—	56.67	—	—	—
859+76.62	—	56.74	860+87.39	56.12	—	—	—	—
859+77.40	56.12	—	860+96.62	—	56.68	—	—	—
859+86.62	—	56.73	860+97.39	56.16	—	—	—	—
859+87.39	56.11	—	861+06.62	—	56.69	—	—	—
859+96.62	—	56.71	861+07.39	56.18	—	—	—	—
859+97.39	56.11	—	861+16.62	—	56.72	—	—	—
860+06.62	—	56.69	861+17.39	56.22	—	—	—	—
860+07.39	56.11	—	861+26.62	—	56.73	—	—	—
860+16.62	—	56.66	861+27.39	56.22	—	—	—	—
860+17.39	56.11	—	861+36.62	—	56.75	—	—	—
860+26.62	—	56.63	861+37.39	56.25	—	—	—	—
860+27.39	56.07	—	861+46.62	—	56.78	—	—	—
860+36.62	—	56.62	861+47.39	56.27	—	—	—	—

BRIDGE NO. 167/126W
EXISTING ELEVATIONS

STATION	OFFSET LEFT	ELEVATION	OFFSET RIGHT	ELEVATION
19+48.83	24.77'	31.97	—	—
19+77.95	0.20'	32.39	—	—
20+06.10	—	—	25.00'	31.93
20+43.28	25.49'	31.55	—	—
20+65.97	0.59'	32.15	—	—
20+90.04	—	—	24.40'	31.69
21+23.51	24.74'	31.37	—	—
21+57.56	—	—	0.13'	31.71
21+77.26	—	—	25.04'	31.17

4 TH STREET
EXISTING ELEVATIONS

STATION	ELEVATION LEFT CURB LINE	ELEVATION RIGHT CURB LINE	STATION	ELEVATION LEFT CURB LINE	ELEVATION RIGHT CURB LINE	STATION	ELEVATION LEFT CURB LINE	ELEVATION RIGHT CURB LINE
858+33.29	—	56.74	859+64.23	—	56.27	860+74.40	56.62	—
858+44.23	—	56.69	859+64.40	56.80	—	860+79.38	—	56.02
858+54.23	—	56.64	859+74.23	—	56.24	860+84.41	56.61	—
858+64.21	—	56.58	859+74.40	56.76	—	860+94.40	56.63	—
858+71.28	57.08	—	859+84.23	—	56.23	861+04.40	56.67	—
858+74.23	—	56.53	859+84.40	56.74	—	861+17.06	56.68	—
858+74.40	57.06	—	859+94.23	—	56.21	—	—	—
858+84.23	—	56.50	859+94.40	56.74	—	—	—	—
858+84.40	57.00	—	860+04.23	—	56.17	—	—	—
858+94.23	—	56.46	860+04.40	56.71	—	—	—	—
858+94.40	56.97	—	860+14.23	—	56.15	—	—	—
859+04.23	—	56.42	860+14.40	56.70	—	—	—	—
859+04.40	56.96	—	860+24.23	—	56.11	—	—	—
859+14.23	—	56.39	860+24.40	56.68	—	—	—	—
859+14.40	56.93	—	860+34.23	—	56.09	—	—	—
859+24.23	—	56.36	860+34.40	56.67	—	—	—	—
859+24.40	56.88	—	860+44.23	—	56.07	—	—	—
859+34.23	—	56.34	860+44.40	56.67	—	—	—	—
859+34.40	56.89	—	860+54.23	—	56.07	—	—	—
859+44.23	—	56.31	860+54.40	56.65	—	—	—	—
859+44.40	56.84	—	860+64.23	—	56.03	—	—	—
859+54.23	—	56.31	860+64.40	56.64	—	—	—	—
859+54.41	56.80	—	860+74.37	—	56.03	—	—	—

BRIDGE NO. 167/126E
EXISTING ELEVATIONS

FOR "AS CONSTRUCTED PLANS" ONLY

Bridge Design Engineer			
Supervisor			
Designed By A.L.K.			
Checked By J.R.K.			
Detailed By G.W.S.			
Bridge Projects Engineer			
Prelim. Plan By			
Architect/Specialist	DATE	REVISION	BY / APP'D

REGION NO. 10 | STATE WASH | FED. AID. PROJ. NO. | SHEET NO. | TOTAL SHEETS
JOB NUMBER 95W036
CONTRACT NO. 4771

JOHN R. KATTELL, STATE OF WASHINGTON, REGISTERED PROFESSIONAL ENGINEER — 9/11/95 — EXPIRES: 06/10/97

WASHINGTON STATE DEPARTMENT OF TRANSPORTATION

Sverdrup CIVIL INC.

SR167
15TH N.W. TO 84TH AVE. SO.
HOV SC & DI – STAGE 2
4TH ST OVERCROSSING BR. NO. 167/126

ELEVATIONS AND PROTECTIVE SCREENING DETAILS

BRIDGE SHEET NO. 4
SHEET 579 OF 663 SHEETS

SR 167/91

B91000322 SR ___ JOB NO. ___ SHEET ___

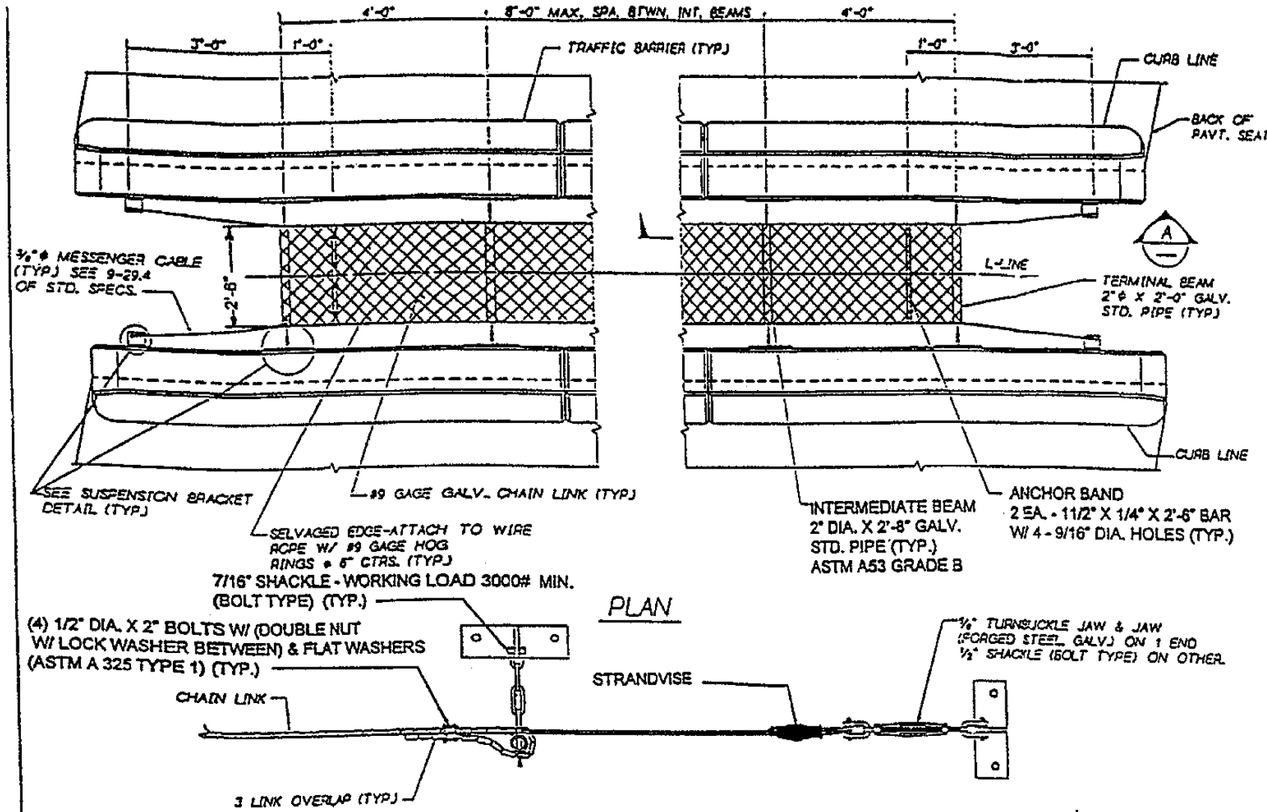

PLAN

NOTES:

1. ALL PARTS SHALL BE GALVANIZED IN ACCORDANCE WITH AASHTO M 111 AFTER FABRICATION.
2. ADJUST 3/8" CABLE TENSION TO PRODUCE 3% VERTICAL SAG BETWEEN INTERMEDIATE BEAMS.

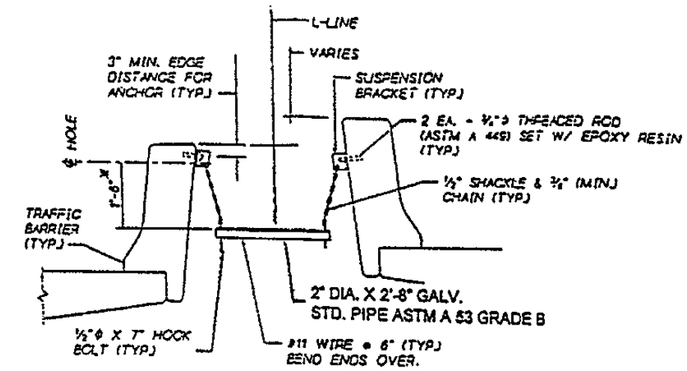

* CHAIN LENGTH MAY VARY TO LEVEL SCREEN

TYPICAL SECTION

VIEW (A)

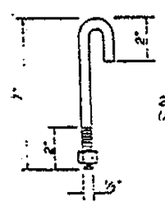

HOOK BOLT

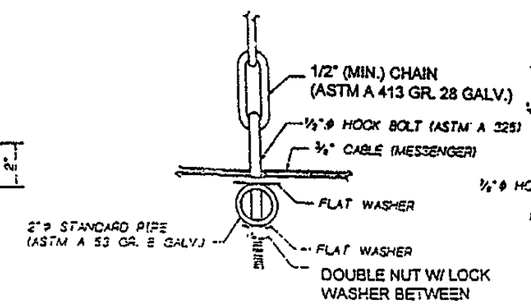

HOOK BOLT DETAIL

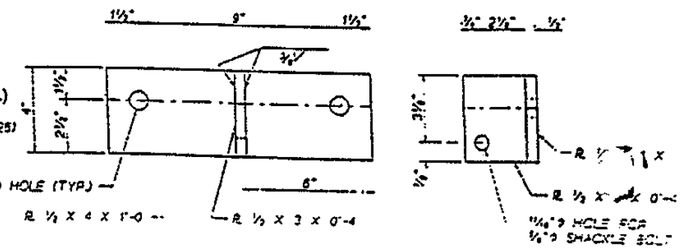

SUSPENSION BRACKET

AASHTO M 183

NOTE:
GAS-CUT OR SAW-CUT ONLY FOR R 1/2 X 3 X 0'-4

△ ADDED BR. SH.

CONTRACT 4771
CHANGE ORDER 17
SHEET 7 **OF** 7

SR ___ JOB NO. ___ SHEET ___

Bridge Design Engr. C. C. RUTH							
Supervisor R. T. SHAFFER							
Designed By							
Checked By							
Detailed By							
Bridge Projects Engr.							
Plans Plan By		△	ADDED BR. SHT. 194	MAI			
Architect/Specialist	DATE		REVISION	BY	APP'D		

STATE FED. AID PROJ. NO. | TOTAL SHEETS | SHEET NO.

10 | WASH

JOB NUMBER

BRIDGE AND STRUCTURES OFFICE

SUPERVISING BRIDGE ENGINEER — RICHARD T. SHAFFER, STATE OF WASHINGTON, PROFESSIONAL ENGINEER

BRIDGE DESIGN ENGINEER — CHARLES C. RUTH, STATE OF WASHINGTON, PROFESSIONAL ENGINEER

Washington State Department of Transportation

SR 167
15TH NW TO 84TH AVE. SO.
HOV AND SC & DI - STAGE 2

PROTECTIVE SCREEN

SHEET 579A of 663 SHEETS

21-MAR-96

MKP5DM701 J:\GS\SP161.PM

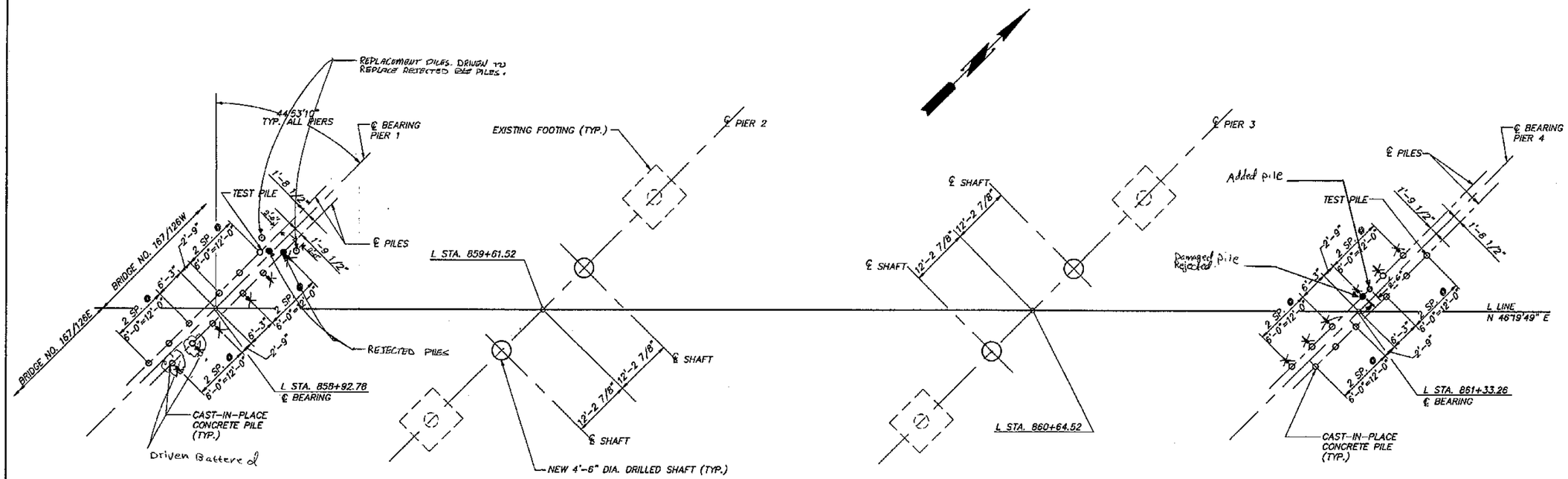

FOUNDATION LAYOUT

BRIDGE NOS. 167/126E & 167/126W

○ DENOTES VERTICAL PILE.

~~DENOTES BATTER PILE. ALL BATTERS TO BE 3 1/4:12.~~

* ALL PILES WERE DRIVEN PLUMB. (VERTICAL) ~~[illegible]~~ As Noted

FOR "AS CONSTRUCTED PLANS" ONLY

Bridge Design Engineer					
Supervisor					
Designed By A.L.K./W.G.D.					
Checked By J.R.K.					
Detailed By B.L.P.					
Bridge Projects Engineer					
Prelim. Plan By					
Architect/Specialist	DATE	REVISION	BY	APP'D	

REGION NO.	STATE	FED. AID. PROJ. NO.	SHEET NO.	TOTAL SHEETS
10	WASH			
JOB NUMBER 95W036				
CONTRACT NO. 4771				

JOHN R. KATTA — STATE OF WASHINGTON — REGISTERED PROFESSIONAL ENGINEER — 4/11/95 — EXPIRES: 06/10/97

WASHINGTON STATE DEPARTMENT OF TRANSPORTATION

Sverdrup CIVIL INC.

SR167
15TH N.W. STREET TO 84TH AVE. SO.
HOV SC & DI – STAGE 2
4TH ST OVERCROSSING BR. NO. 167/126

FOUNDATION LAYOUT

PROJECT SHEET NO. 5

SHEET 580 OF 663 SHEETS

B5100003 SR ___ JOB NO. ___ SHEET ___

SR167/91

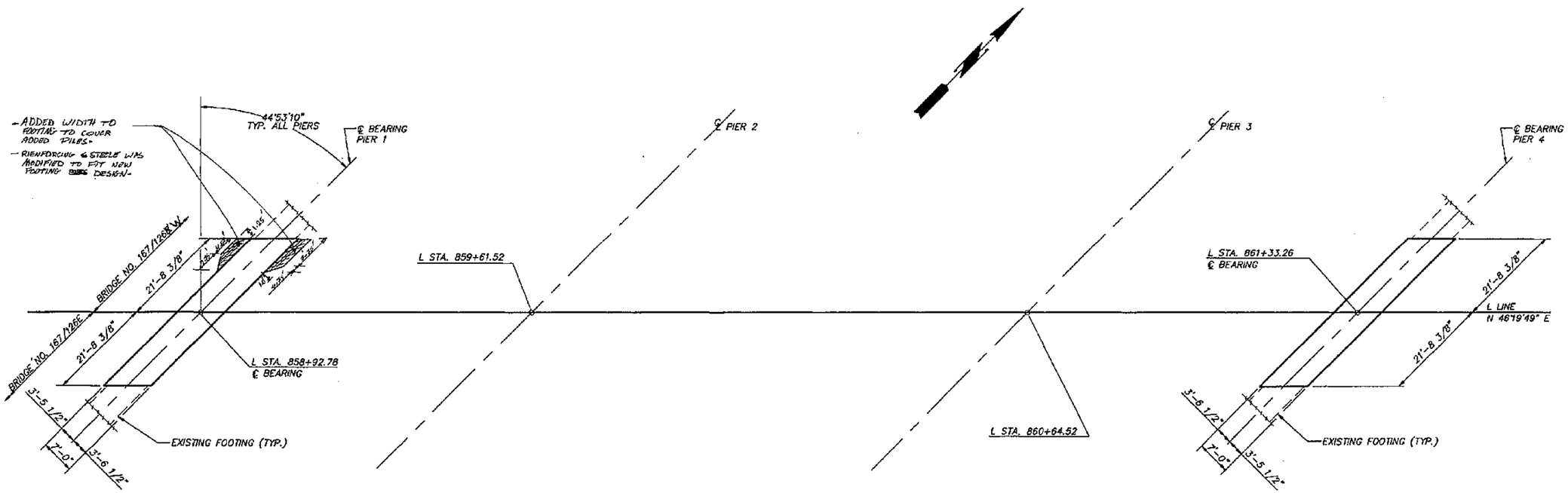

FOOTING LAYOUT

BRIDGE NOS. 167/126E & 167/126W

FOR "AS CONSTRUCTED PLANS" ONLY

Bridge Design Engineer					REGION NO.	STATE	FED. AID. PROJ. NO.	SHEET NO.	TOTAL SHEETS	
Supervisor					10	WASH				
Designed By A.L.K./W.G.D.					JOB NUMBER 95W036					
Checked By J.R.K.										
Detailed By B.L.P.										
Bridge Projects Engineer										
Prelim. Plan By										
Architect/Specialist	DATE	REVISION	BY	APP'D	CONTRACT NO. 4771					

JOHN R. KATTELL, STATE OF WASHINGTON, REGISTERED PROFESSIONAL ENGINEER, 9/1/96, EXPIRES: 06/10/97

WASHINGTON STATE DEPARTMENT OF TRANSPORTATION

Sverdrup CIVIL INC.

SR167
15TH N.W. STREET TO 84TH AVE. SO.
HOV SC & DI – STAGE 2
4TH ST OVERCROSSING BR. NO. 167/126

FOOTING LAYOUT

BRIDGE SHEET NO. 6

SHEET 581 OF 663 SHEETS

B5100019 SR ___ JOB NO. ___ SHEET ___

SR167/91

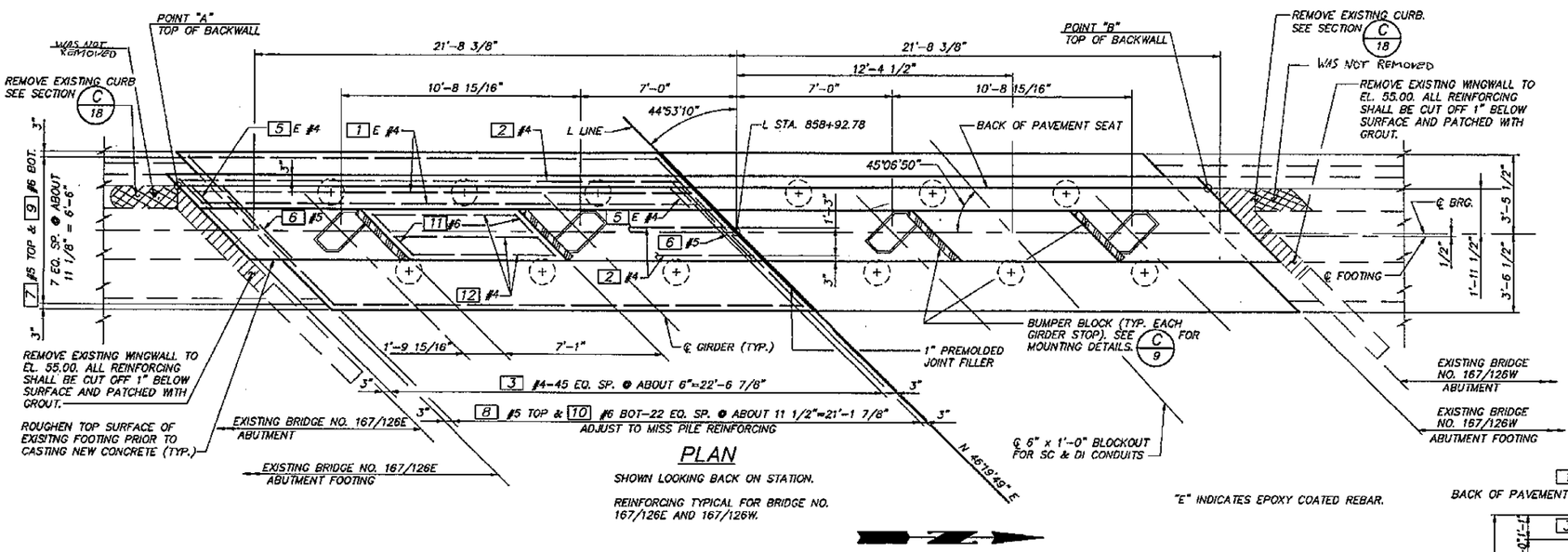

PLAN

SHOWN LOOKING BACK ON STATION.

REINFORCING TYPICAL FOR BRIDGE NO. 167/126E AND 167/126W.

"E" INDICATES EPOXY COATED REBAR.

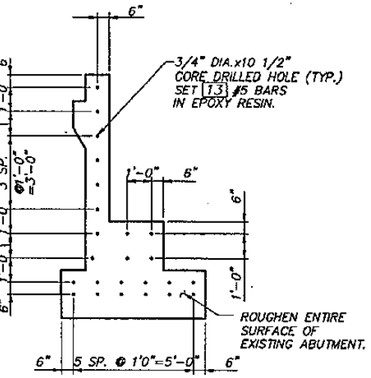

SECTION B/–

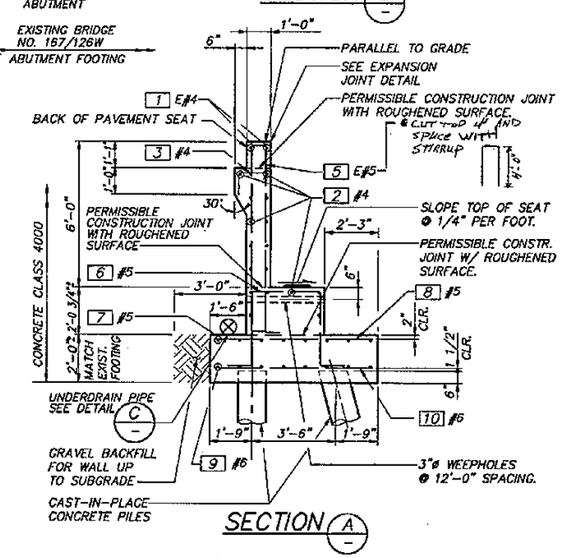

SECTION A/–

NOTE: GIRDER STOPS NOT SHOWN.

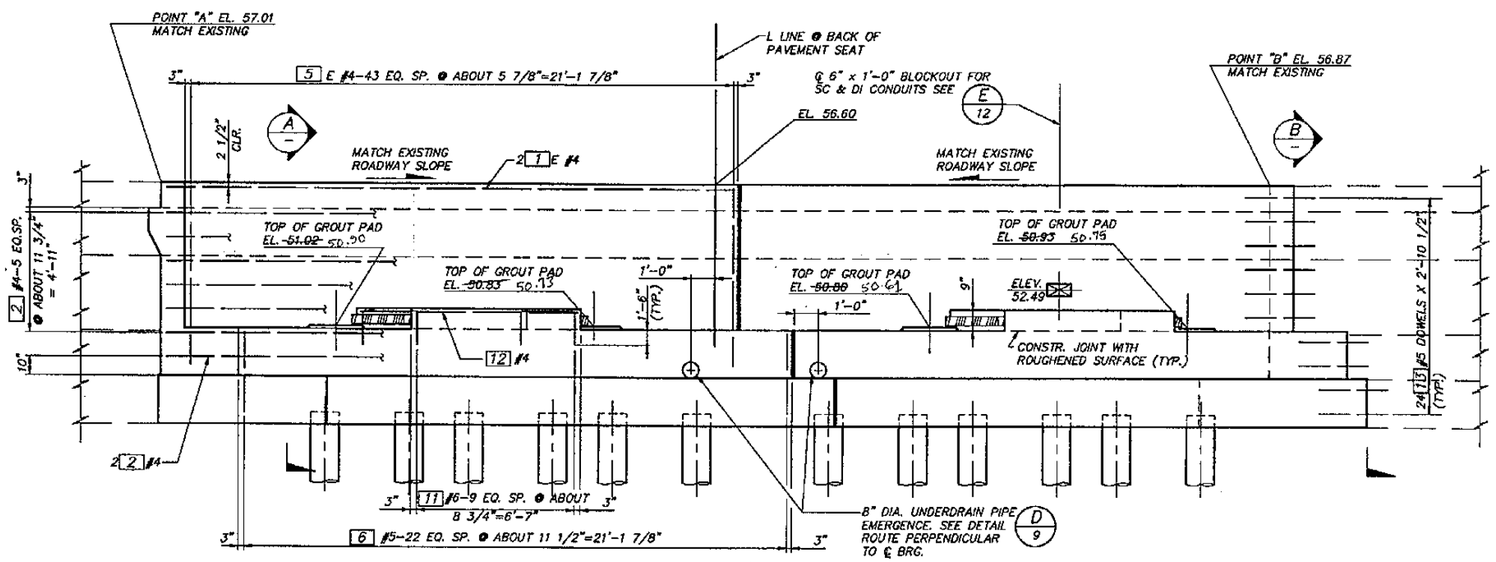

ELEVATION

SHOWN LOOKING BACK ON STATION.

EXISTING WINGWALLS NOT SHOWN FOR CLARITY.

FOR "AS CONSTRUCTED PLANS" ONLY

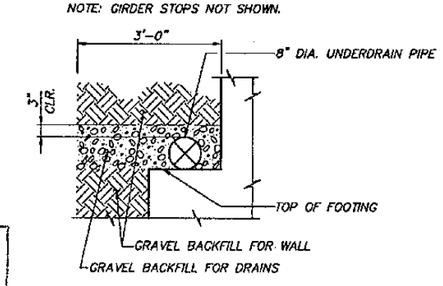

DETAIL C/–

Bridge Design Engineer					REGION NO.	STATE	FED. AID. PROJ. NO.	SHEET NO.	TOTAL SHEETS
Supervisor					10	WASH			
Designed By W.G.D.					JOB NUMBER 95W036				
Checked By A.T.L.									
Detailed By A.J.D.									
Bridge Projects Engineer									
Prelim. Plan By		DELETED APPROACH SLAB LANGUAGE		MK	CONTRACT NO. 4771				
Architect/Specialist	DATE	REVISION	BY	APP'D					

JOHN A. TATTLE — STATE OF WASHINGTON — 24931 — REGISTERED PROFESSIONAL ENGINEER — 9/11/95 — EXPIRES: 06/10/97

WASHINGTON STATE DEPARTMENT OF TRANSPORTATION

Sverdrup CIVIL INC.

SR167
15TH N.W. TO 84TH AVE. SO.
HOV SC & DI – STAGE 2
4TH ST OVERCROSSING BR. NO. 167/126

PIER 1 – PLAN & ELEVATION

BRIDGE SHEET NO. 7

SHEET 582 OF 663 SHEETS

B8100008 SR ___ JOB NO. ___ SHEET

SR167/91

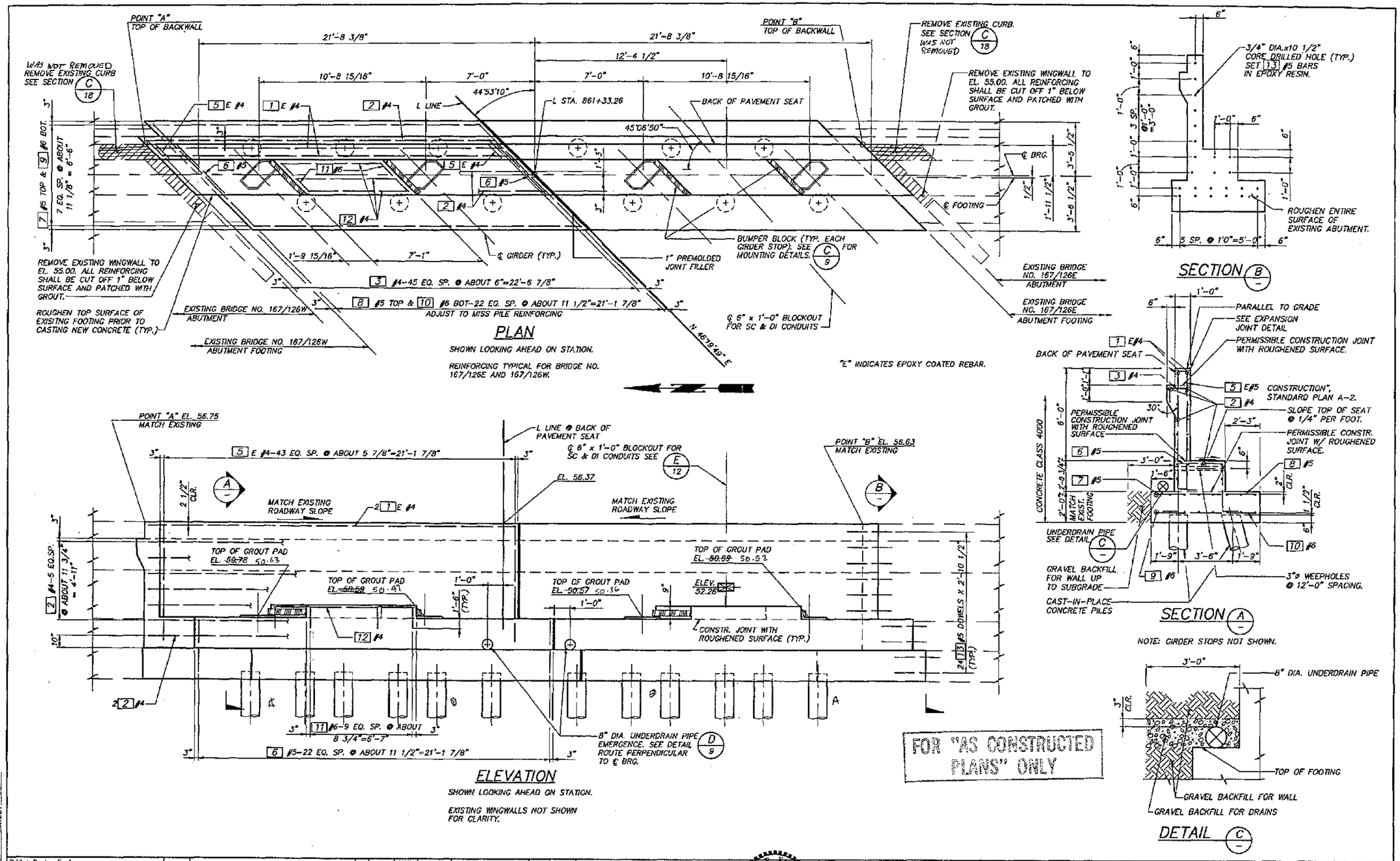

Bridge Design Engineer					REGION NO.	STATE	FED. AID. PROJ. NO.	SHEET NO.	TOTAL SHEETS
Supervisor					10	WASH			
Designed By W.G.D.					JOB NUMBER 95W036				
Checked By A.T.L.									
Detailed By A.J.D.									
Bridge Projects Engineer									
Prelim. Plan By					CONTRACT NO.				
Architect/Specialist	DATE	REVISION	BY	APP'D	4771				

BB100020 SR ___ JOB NO. ___ SHEET ___

EXPIRES 06/10/97

WASHINGTON STATE DEPARTMENT OF TRANSPORTATION

Sverdrup CIVIL INC.

SR167
15TH N.W. TO 84TH AVE. SO.
HOV SC & DI – STAGE 2
4TH ST OVERCROSSING BR. NO. 167/126

PIER 4 – PLAN & ELEVATION

BRIDGE SHEET NO. 8

SHEET 583 OF 663 SHEETS

SR167/91

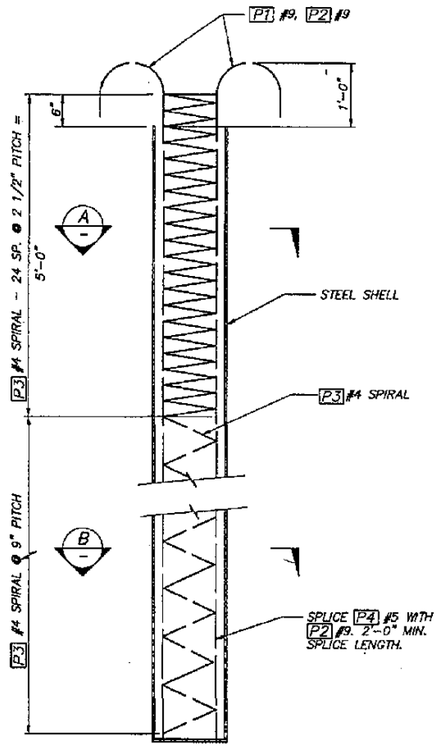

CAST-IN-PLACE CONCRETE PILE

BAR LIST					
MARK	LOCATION	SIZE	NO REQ'D. PER PILE	LENGTH	BENDING DIAGRAM
P1	LONGITUDINAL	9	4	–	
P2	LONGITUDINAL	9	4	–	
P3	SPIRAL	4	1	335'-6"	
P4	LONGITUDINAL	5	4	21'-9"	STR.

NOTE: LENGTHS OF BARS P3 AND P4 ARE BASED ON MINIMUM TIP ELEVATION. ACTUAL LENGTHS WILL DEPEND ON FINAL TIP ELEVATION.

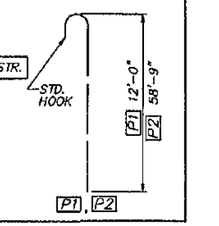

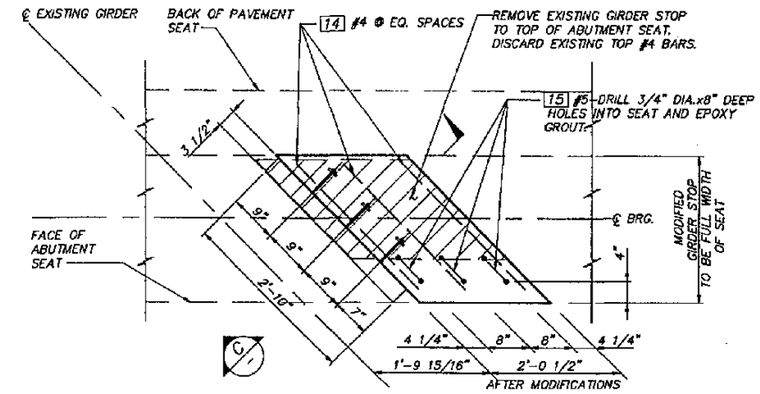

PLAN

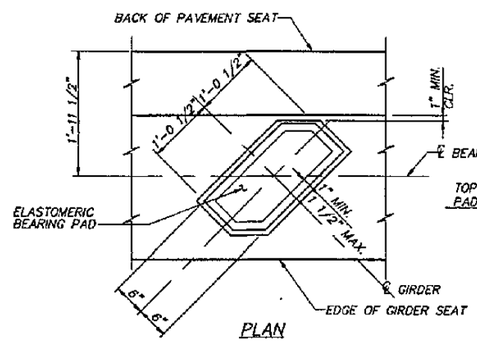

PLAN

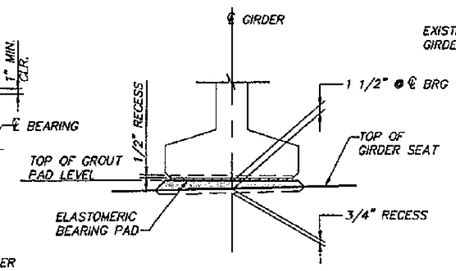

SECTION

GROUT PAD DETAILS

GIRDER STOP NOT SHOWN

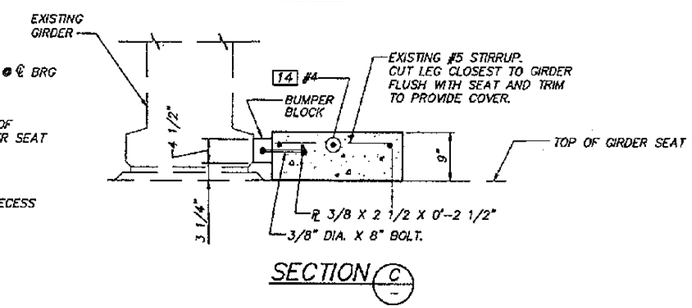

SECTION

MODIFICATIONS TO EXISTING GIRDER STOPS

TYP. EACH EXISTING GIRDER STOP.
ALL BOLTS SHALL BE ASTM A307.

BUMPER BLOCK SHALL BE A GOODYEAR RECTANGULAR RUBBER MARINE FENDER 3 1/2" HIGH BY 4 1/2" WIDE WITH A 1" BORE, OR EQUAL. THE BUMPER BLOCK SHALL DEFLECT 2" UNDER A LOAD OF 90000 LB. PER LINEAR FOOT.

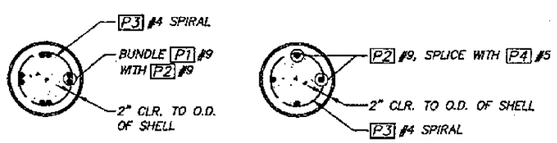

SECTION A SECTION B

NOTES ON SPIRALS:

1. SPIRALS MAY BE FABRICATED FROM #4 DEFORMED REINFORCING BARS (AASHTO M31 GR. 60). PLAIN SMOOTH BARS 1/2 IN. DIA. (AASHTO M31 GR. 60), DEFORMED WIRE D20 (AASHTO M225), OR COLD DRAWN WIRE W20 (AASHTO M32).
2. WELDED SPLICES ONLY.

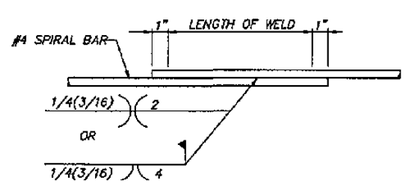

WELDED LAP SPLICE DETAIL

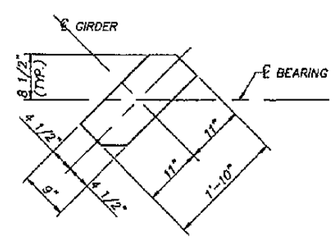

BEARING PAD

LAMINATED ELASTOMERIC BEARING PAD 1 1/2" THICK (2 SHIMS). DUROMETER HARDNESS = 60.

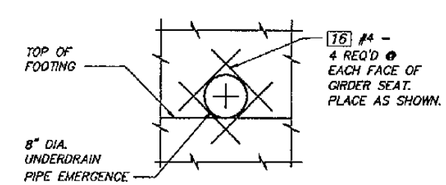

DETAIL D 7,8

FOR "AS CONSTRUCTED PLANS" ONLY

Bridge Design Engineer				
Supervisor				
Designed By W.G.D.				
Checked By A.T.L.				
Detailed By A.J.D.				
Bridge Projects Engineer				
Prelim. Plan By				
Architect/Specialist	DATE	REVISION -	BY	APP'D

REGION NO.	STATE	FED. AID. PROJ. NO.	SHEET NO.	TOTAL SHEETS
10	WASH			
JOB NUMBER 95W036				
CONTRACT NO. 4771				

JOHN A. KATHER, STATE OF WASHINGTON, REGISTERED PROFESSIONAL ENGINEER — EXPIRES: 06/10/97

WASHINGTON STATE DEPARTMENT OF TRANSPORTATION

Sverdrup CIVIL INC.

SR167
15TH N.W. TO 84TH AVE. SO.
HOV SC & DI - STAGE 2
4TH ST OVERCROSSING BR. NO. 167/126

PIERS 1 & 4 - DETAILS

BRIDGE SHEET NO. 9

SHEET 584 OF 663 SHEETS

BB100007 SR ___ JOB NO. ___ SHEET ___

SR167/9 1

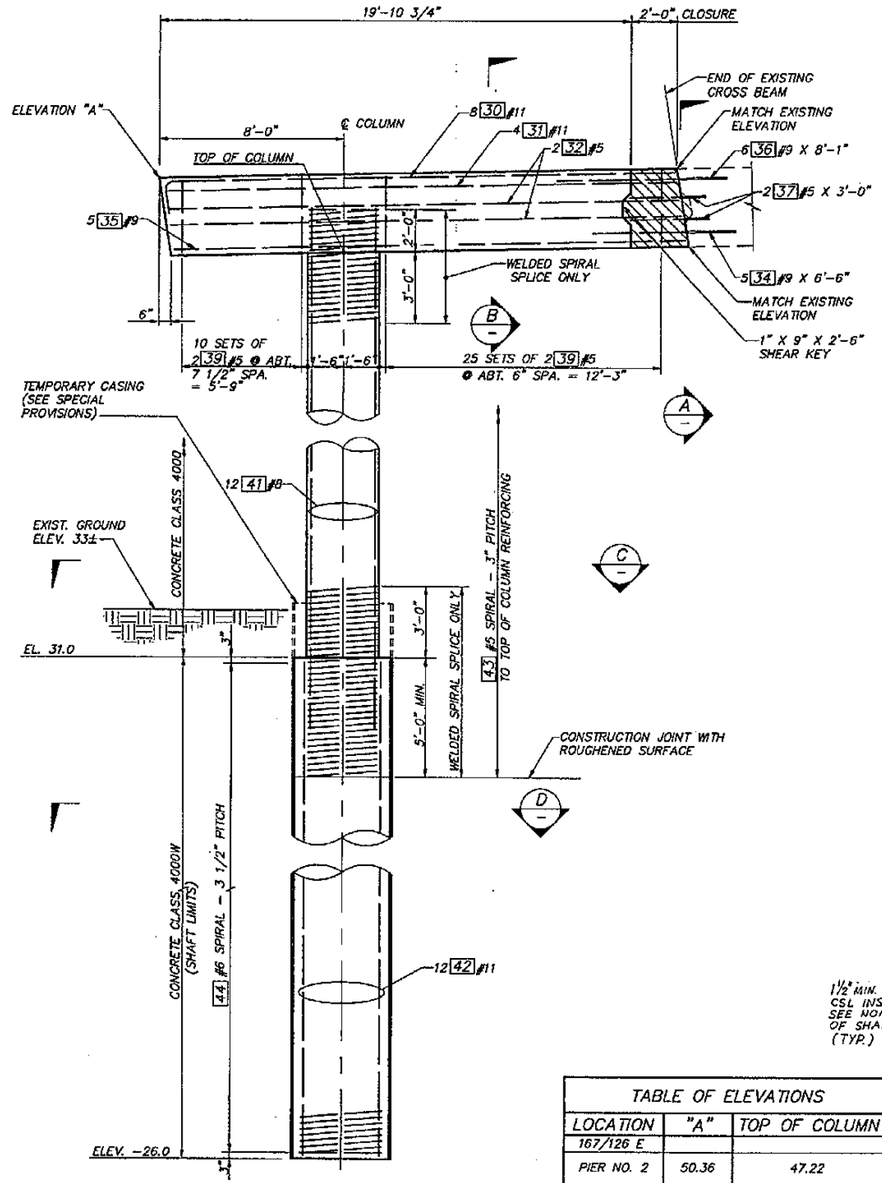

ELEVATION

BR. 167/126 E SHOWN.
BR. 167/126 W SIMILAR.
DIMENSIONS SHOWN ALONG SKEW AT ℄ PIER

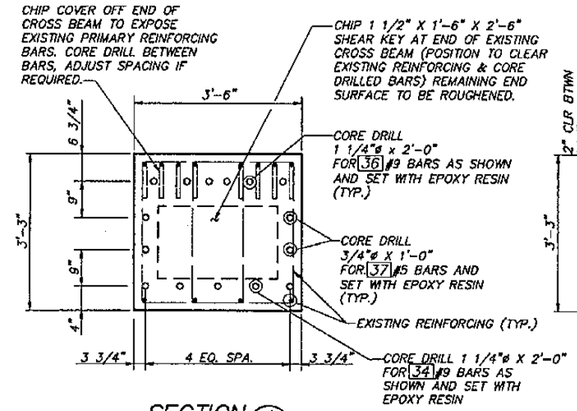

SECTION A

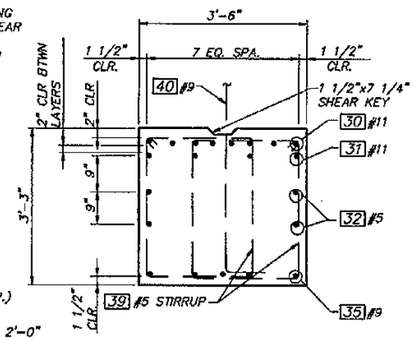

SECTION B

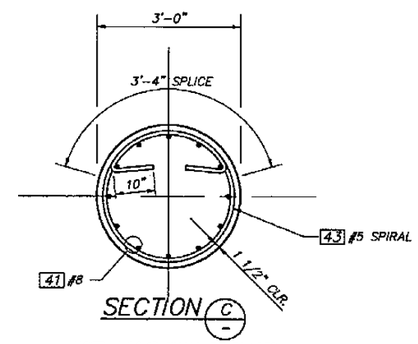

SECTION C

NOTE: HOOKS SHALL BE PLACED TO AVOID VERTICAL REINFORCING.

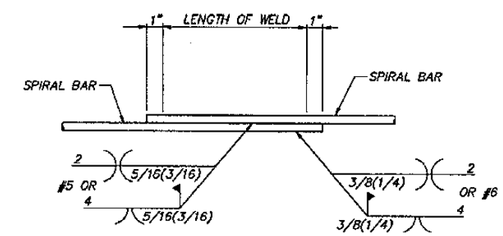

ALTERNATE WELD SPLICE

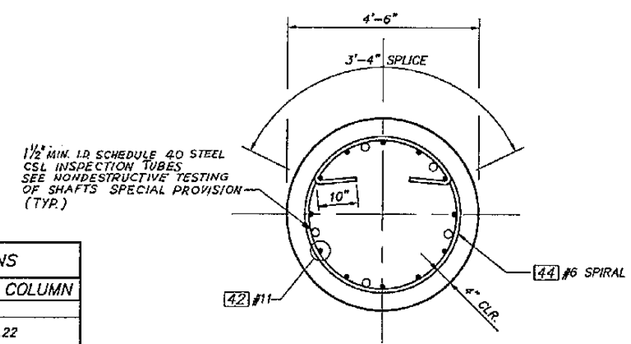

SECTION D

NOTE: HOOKS SHALL BE PLACED TO AVOID VERTICAL REINFORCING.

TABLE OF ELEVATIONS		
LOCATION	"A"	TOP OF COLUMN
167/126 E		
PIER NO. 2	50.36	47.22
167/126 W		
PIER NO. 2	50.32	47.17

NOTE: ALL ELEVATIONS @ ℄ PIER.

NOTES ON SPIRALS

1. COLUMN SPIRALS MAY BE FABRICATED FROM #5 DEFORMED REINFORCING BARS (AASHTO M31 GR. 60), PLAIN SMOOTH BARS 5/8ø (AASHTO M31 GR. 60), DEFORMED WIRE D31 (AASHTO M225), OR COLD DRAWN WIRE W31 (AASHTO M32).
2. DRILLED SHAFT SPIRALS MAY BE FABRICATED FROM #6 DEFORMED REINFORCING BARS (AASHTO M31 GR.60), OR PLAIN SMOOTH BARS 3/4"ø (AASHTO M31 GR. 60), DEFORMED WIRE D44 (AASHTO M225), OR COLD DRAWN WIRE W44 (AASHTO M32).

FOR "AS CONSTRUCTED PLANS" ONLY

Bridge Design Engineer					REGION NO.	STATE	FED. AID. PROJ. NO.	SHEET NO.	TOTAL SHEETS
Supervisor					10	WASH			
Designed By A.L.K.					JOB NUMBER 95W036				
Checked By P.R.S.									
Detailed By B.L.P.									
Bridge Projects Engineer					CONTRACT NO. 9771				
Prelim. Plan By									
Architect/Specialist	DATE	REVISION	BY	APP'D					

JOHN N. SATTELBERG, STATE OF WASHINGTON, REGISTERED PROFESSIONAL ENGINEER — 9/1/95 — EXPIRES: 06/10/97

WASHINGTON STATE DEPARTMENT OF TRANSPORTATION

Sverdrup CIVIL INC.

SR167
15TH N.W. TO 84TH AVE. SO.
HOV SC & DI - STAGE 2
4TH ST OVERCROSSING BR. NO. 167/126

PIER 2 - DETAILS

BRIDGE SHEET NO. 10

SHEET 585 OF 663 SHEETS

B6100017 JOB NO. SR SHEET

SR 167/91

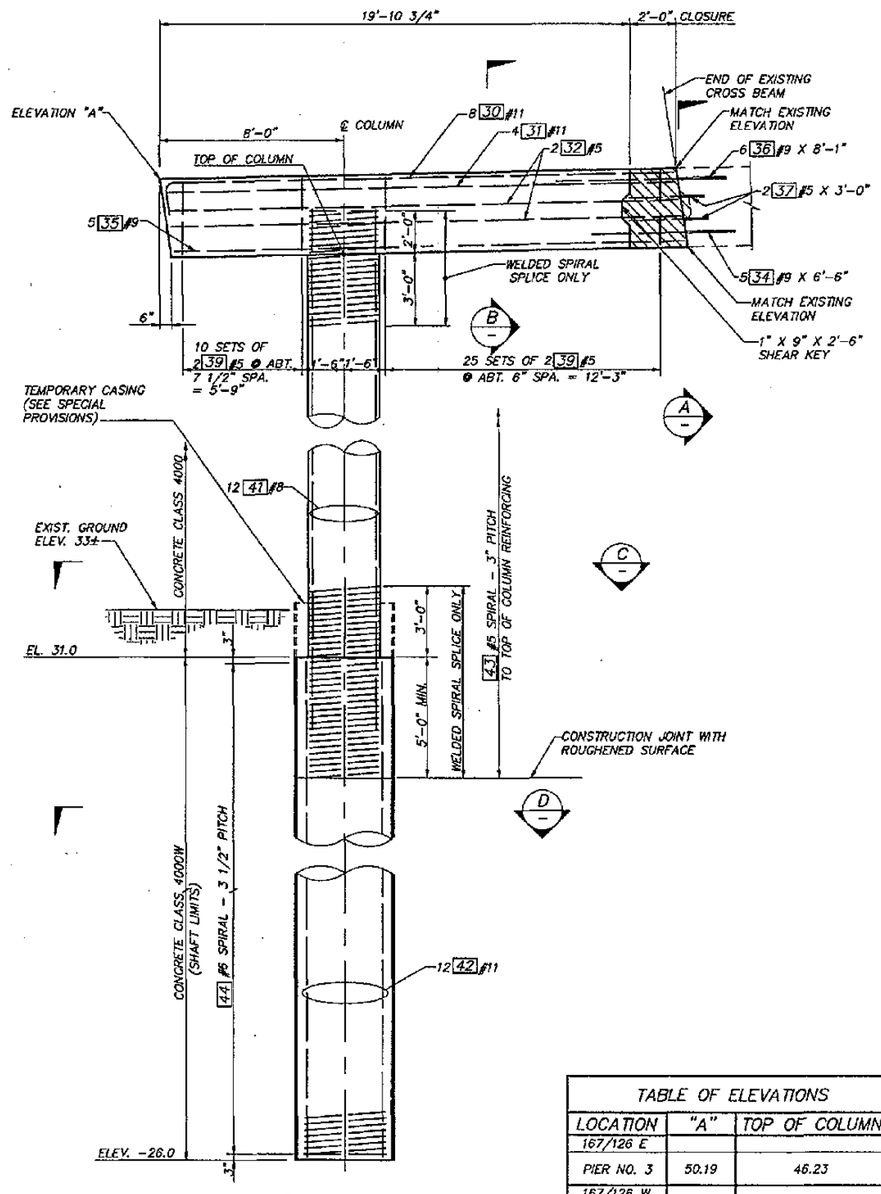

ELEVATION

BR. 167/126 E SHOWN.
BR. 167/126 W SIMILAR.
DIMENSIONS SHOWN ALONG SKEW AT ℄ PIER

TABLE OF ELEVATIONS		
LOCATION	"A"	TOP OF COLUMN
167/126 E		
PIER NO. 3	50.19	46.23
167/126 W		
PIER NO. 3	50.22	47.08

NOTE: ALL ELEVATIONS @ ℄ PIER.

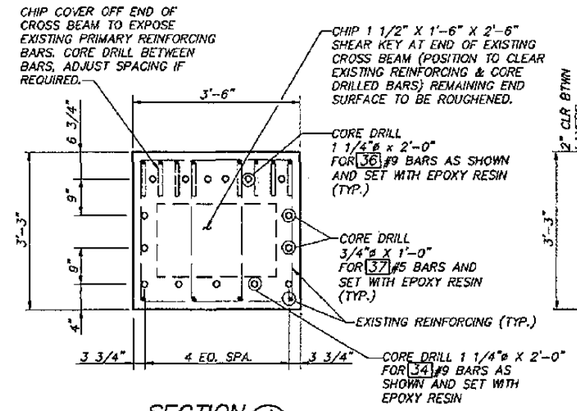

SECTION A

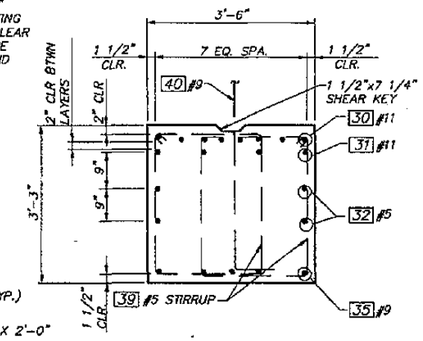

SECTION B

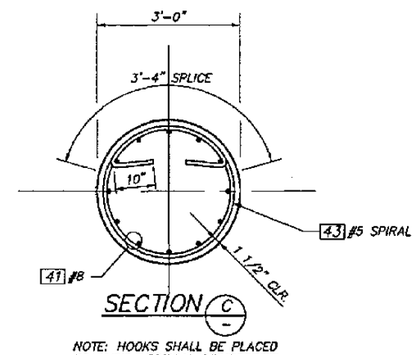

SECTION C

NOTE: HOOKS SHALL BE PLACED TO AVOID VERTICAL REINFORCING.

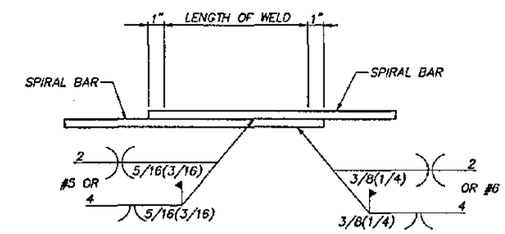

ALTERNATE WELD SPLICE

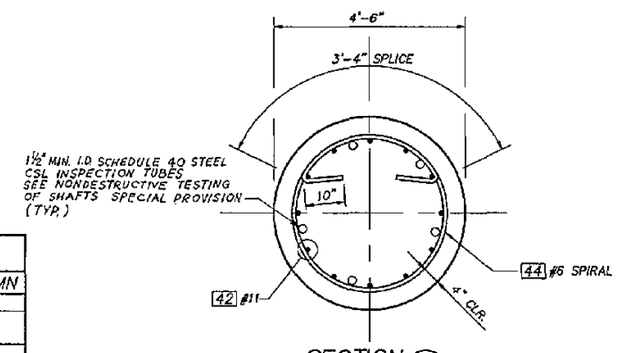

SECTION D

NOTE: HOOKS SHALL BE PLACED TO AVOID VERTICAL REINFORCING.

NOTES ON SPIRALS

1. COLUMN SPIRALS MAY BE FABRICATED FROM #5 DEFORMED REINFORCING BARS (AASHTO M31 GR. 60), PLAIN SMOOTH BARS 5/8ø (AASHTO M31 GR. 60), DEFORMED WIRE D31 (AASHTO M225), OR COLD DRAWN WIRE W31 (AASHTO M32).
2. DRILLED SHAFT SPIRALS MAY BE FABRICATED FROM #6 DEFORMED REINFORCING BARS (AASHTO M31 GR.60), OR PLAIN SMOOTH BARS 3/4"ø (AASHTO M31 GR. 60), DEFORMED WIRE D44 (AASHTO M225), OR COLD DRAWN WIRE W44 (AASHTO M32).

FOR "AS CONSTRUCTED PLANS" ONLY

Bridge Design Engineer				
Supervisor				
Designed By A.L.K.				
Checked By P.R.B.				
Detailed By B.L.P.				
Bridge Projects Engineer				
Prelim. Plan By				
Architect/Specialist	DATE	REVISION	BY	APP'D

REGION NO.	STATE	FED. AID PROJ. NO.	SHEET NO.	TOTAL SHEETS
10	WASH			
JOB NUMBER 9SW036				
CONTRACT NO. 4791				

JOHN R. KATTELL, STATE OF WASHINGTON, REGISTERED PROFESSIONAL ENGINEER
EXPIRES: 06/10/97
9/1/97

WASHINGTON STATE DEPARTMENT OF TRANSPORTATION

Sverdrup CIVIL INC.

SR167
15TH N.W. TO 84TH AVE. SO.
HOV SC & DI - STAGE 2
4TH ST OVERCROSSING BR. NO. 167/126

PIER 3 - DETAILS

BRIDGE SHEET NO. 11

SHEET 586 OF 663 SHEETS

SR 167 JOB NO. 8B100021 SHEET

SR167/91

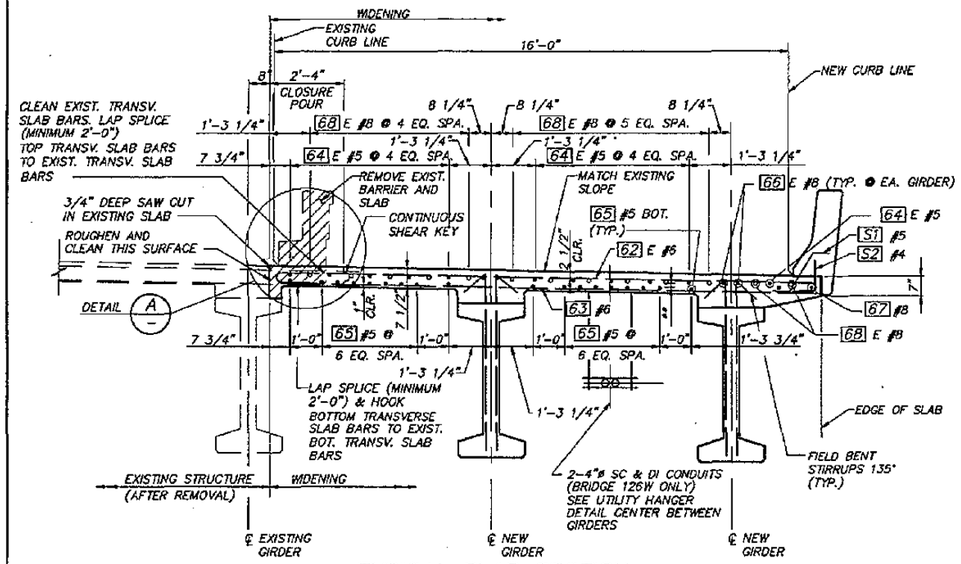

TYPICAL SLAB SECTION

BRIDGE 126 W SHOWN LOOKING AHEAD ON STATION. BRIDGE 126 E SIMILAR.
○ DENOTES ADDITIONAL #8 BAR NEAR PIER 2 & 3.
● INDICATES CONTINUOUS BAR WITH 2'-0" MINIMUM SPLICE. (EXCEPT #8 BARS TO HAVE 3'-6" MINIMUM SPLICE). NUMBER AND LENGTH OF BARS TO BE DETERMINED BY CONTRACTOR
** 1" MIN. ADJUST REINF. LOCATION AS REQUIRED.

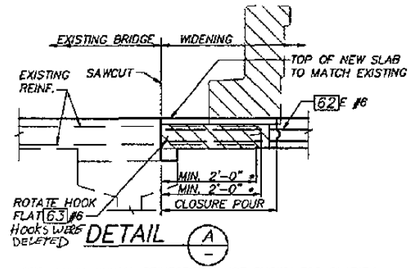

NOTE: LONGITUDINAL REINFORCING NOT SHOWN FOR CLARITY
* IF EXISTING TRANSVERSE SLAB REINFORCEMENT IS TOO SHORT TO LAP SPLICE, BUTT SPLICE DOWEL (SIZE TO MATCH EXIST. REINF. AND ACHIEVE MIN. SPLICE LENGTH) WITH A MECHANICAL COUPLER BUTT SPLICE IN ACCORDANCE WITH STD. SPEC. SECTION 6-023(24)F.

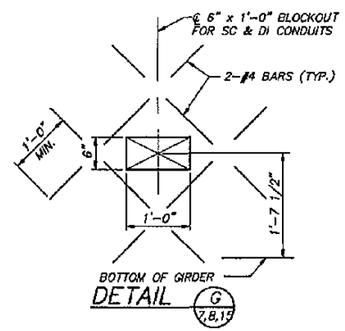

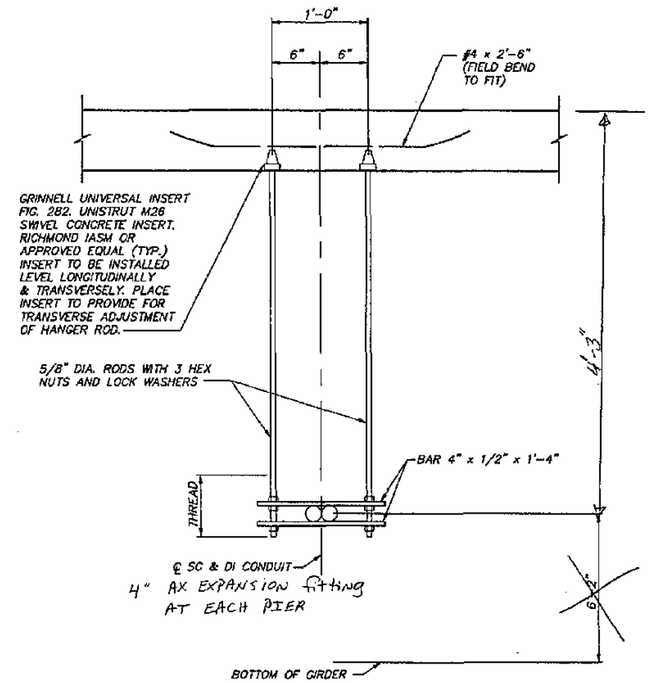

TYPICAL UTILITY HANGER DETAIL

NOTE: SPACE AT ~~15'-0"~~ 2'-6" MAX.
ALL MATERIAL SHALL BE GALVANIZED AFTER FABRICATION PER AASHTO M 111 OR AASHTO M 232.

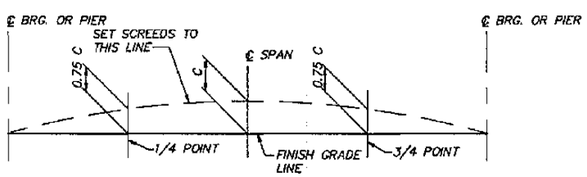

SCREED CAMBER FOR GIRDER DEFLECTION

FOR CAMBER "C" SEE GIRDER SCHEDULE

FOR "AS CONSTRUCTED PLANS" ONLY

Bridge Design Engineer					REGION NO.	STATE	FED. AID PROJ. NO.	SHEET NO.	TOTAL SHEETS
Supervisor					10	WASH			
Designed By A.L.K.					JOB NUMBER 95W036				
Checked By R.L.F.									
Detailed By G.W.S.									
Bridge Projects Engineer									
Prelim. Plan By					CONTRACT NO. 4771				
Architect/Specialist	DATE	REVISION	BY	APP'D					

EXPIRES: 06/10/97

WASHINGTON STATE DEPARTMENT OF TRANSPORTATION

Sverdrup CIVIL INC.

SR167
15TH N.W. TO 84TH AVE. SO.
HOV SC & DI – STAGE 2
4TH ST OVERCROSSING BR. NO. 167/126

SLAB TYPICAL SECTION

BRIDGE SHEET NO. 12

SHEET 587 OF 663 SHEETS

SR167/91

BB1C0004 SR JOB NO. SHEET

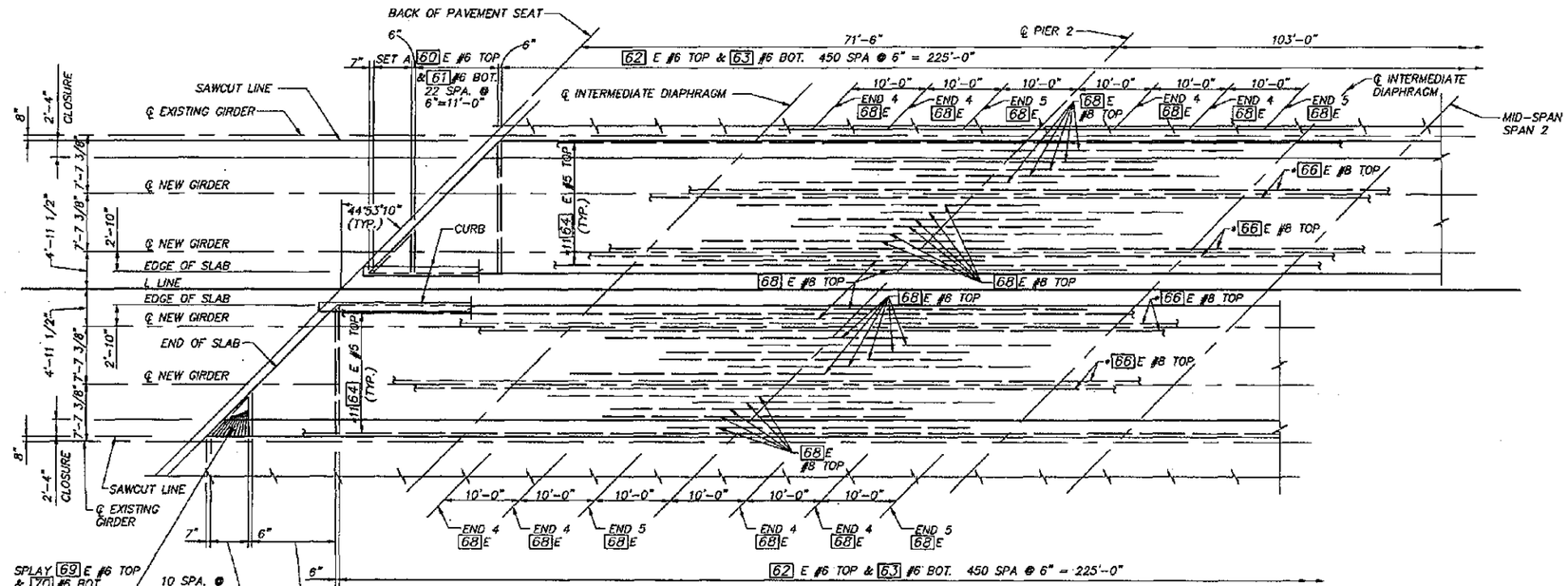

FRAMING AND SLAB PLAN

SLAB TOP LONGITUDINAL REINFORCING SHOWN SYMMETRICAL ABOUT MID-SPAN 2

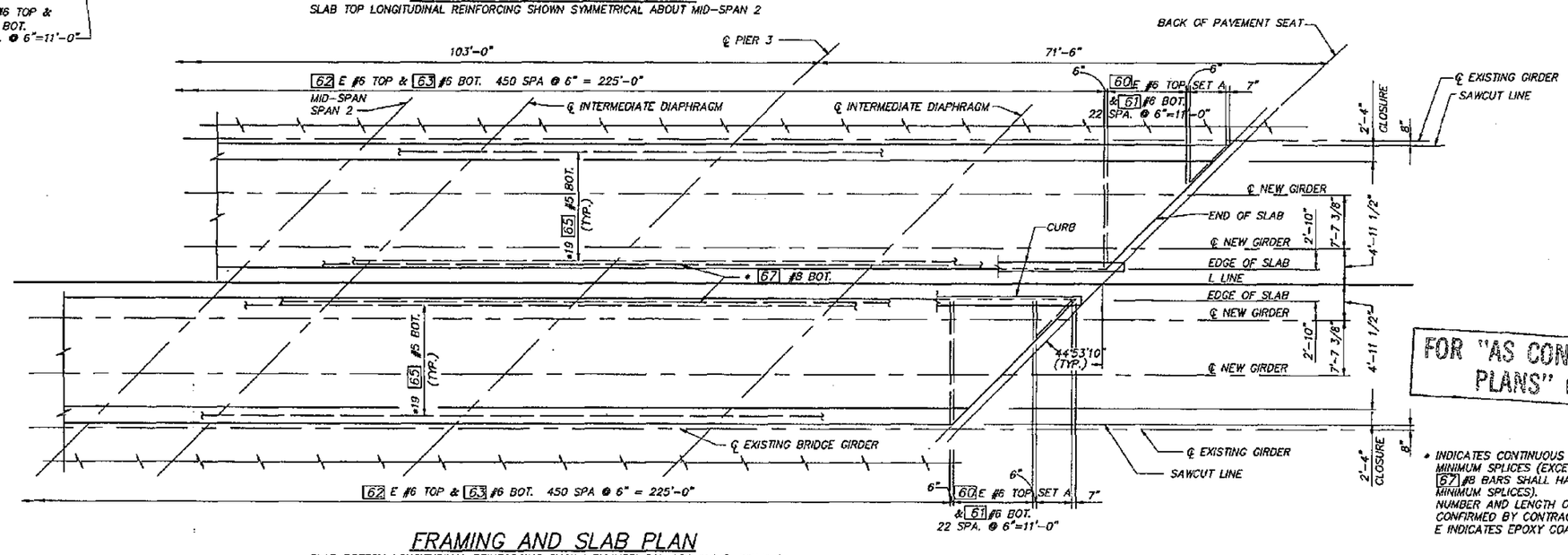

FRAMING AND SLAB PLAN

SLAB BOTTOM LONGITUDINAL REINFORCING SHOWN SYMMETRICAL ABOUT MID-SPAN 2

FOR "AS CONSTRUCTED PLANS" ONLY

* INDICATES CONTINUOUS BAR WITH 2'-0" MINIMUM SPLICES (EXCEPT 66 E #8 AND 67 #8 BARS SHALL HAVE 3'-6" MINIMUM SPLICES).
NUMBER AND LENGTH OF BARS TO BE CONFIRMED BY CONTRACTOR.
E INDICATES EPOXY COATED

Bridge Design Engineer					
Supervisor					
Designed By	A.L.K.				
Checked By	R.L.F.				
Detailed By	G.W.S.				
Bridge Projects Engineer					
Prelim. Plan By					
Architect/Specialist		DATE	REVISION	BY	APP'D

REGION NO.	STATE	FED. AID. PROJ. NO.	SHEET NO.	TOTAL SHEETS
10	WASH			

JOB NUMBER 95W036

CONTRACT NO. 4771

JOHN R. KATTELL, STATE OF WASHINGTON, 34813, REGISTERED PROFESSIONAL ENGINEER
EXPIRES: 06/10/97

WASHINGTON STATE DEPARTMENT OF TRANSPORTATION

Sverdrup CIVIL INC.

SR167
15TH N.W. TO 84TH AVE. SO.
HOV SC & DI – STAGE 2
4TH ST OVERCROSSING BR. NO. 167/126

FRAMING AND SLAB PLAN

BRIDGE SHEET NO. 13

SHEET 588 OF 663 SHEETS

SR167/91

B8100009 SR JOB NO. SHEET

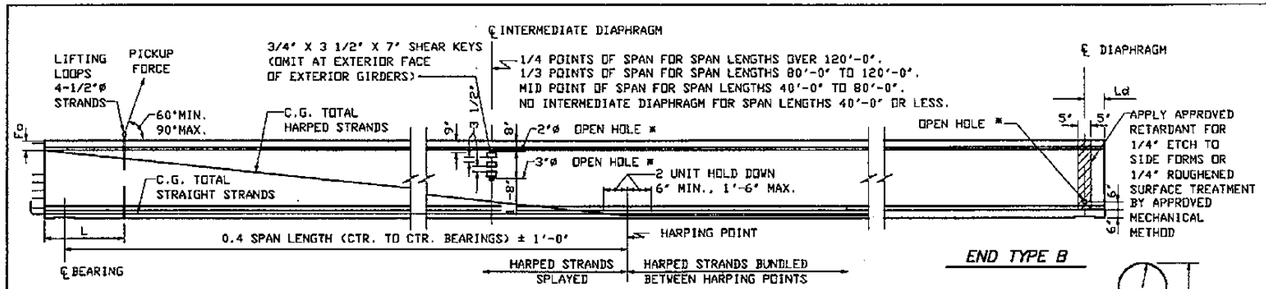

GIRDER ELEVATION

* OMIT HOLES AND PLACE INSERTS ON THE INTERIOR FACE OF EXTERIOR GIRDERS. PLACE HOLES AND INSERTS PARALLEL TO SKEW. INSERTS SHALL BE 1" RICHMOND ROCKET, BURKE HI-TENSILE, LANCASTER MALLEABLE OR APPROVED EQUAL.

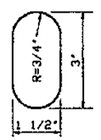

OPEN HOLE

AT END TYPE B ONLY

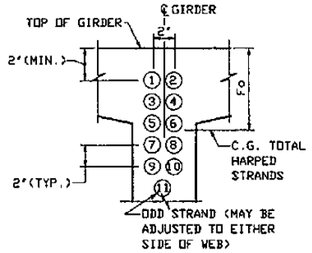

STRAND PATTERN AT GIRDER END

HARPED STRAND LOCATION SEQUENCE SHALL BE AS SHOWN ①, ② ETC.

NOTES

ALL DETAILS ON THIS SHEET ARE FOR PRETENSIONED DESIGN ONLY.

PLAN LENGTH SHALL BE INCREASED AS NECESSARY TO COMPENSATE FOR SHORTENING DUE TO PRESTRESS AND SHRINKAGE.

EXTRA CAUTION MUST BE EXERCISED IN HANDLING AND PLACING ALL GIRDERS.

ALL GIRDERS OVER 105' LONG SHALL BE BRACED LATERALLY TO PREVENT TIPPING OR BUCKLING.

THE TOP SURFACE OF THE GIRDER FLANGE SHALL BE ROUGHENED IN ACCORDANCE WITH SECTION 6-02.3(25)H OF THE STANDARD SPECIFICATIONS.

IF THE LIFTING LOOPS EXTEND WITHIN 3" OF THE TOP OF THE ROADWAY SLAB THEY SHALL BE CUT OFF PRIOR TO POURING THE ROADWAY SLAB. ALL LIFTING STRANDS SHALL BE OF THE SAME MATERIAL AND STRENGTH AS THE PRESTRESSING STRANDS. WRAP THE LIFTING LOOPS SO THAT EACH STRAND WILL CARRY ITS SHARE OF THE TOTAL LOAD. EXTEND LIFTING LOOPS ENDING WITH A 9" LONG 90° HOOK TO WITHIN 3" CLEAR OF THE BOTTOM OF THE GIRDER.

CUT ALL STRANDS FLUSH WITH THE GIRDER ENDS AND PAINT WITH AN APPROVED EPOXY RESIN EXCEPT FOR EXTENDED STRANDS AS SHOWN.

FORMS FOR BEARING PAD RECESSES SHALL BE CONSTRUCTED AND FASTENED IN SUCH A MANNER AS NOT TO CAUSE DAMAGE TO THE GIRDER DURING THE STRAND RELEASE OPERATION.

ALL STRAND ARE 1/2"ø LOW RELAXATION STRANDS (AASHTO M203 GRADE 270).

EXTENDED STRANDS AND BARS ARE PARALLEL TO GIRDER.

FOR GIRDER SCHEDULE, SEE 'GIRDER SCHEDULE AND HINGE DIAPHRAGM DETAILS' SHEET.

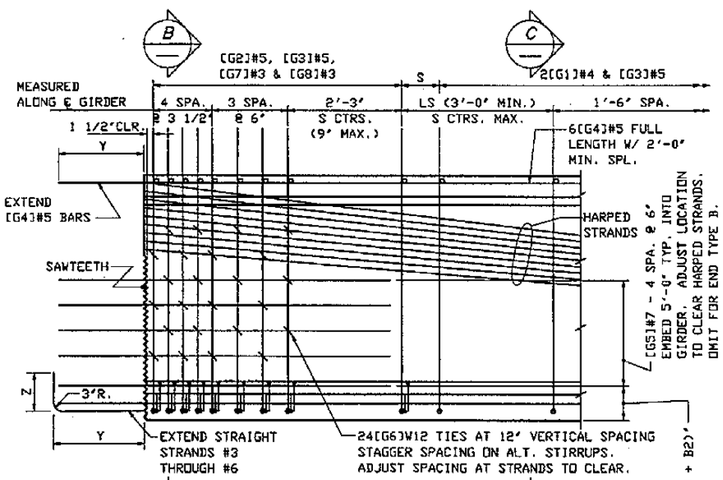

TYPICAL END ELEVATION

END TYPE C SHOWN. OTHER ENDS SIMILAR.

END TYPE	BEARING RECESS	Y	Z	SAWTEETH
A	YES	9"	1'-6"	YES
B	YES	0"	0"	NO
C	NO	2'-6"	0"	YES

ENDS AHEAD ON STATION
[G5] BARS LEFT OF ℄
B1 = 0"
B2 = 0"
ENDS BACK ON STATION
[G5] BARS RIGHT OF ℄
B1 = 1 1/2"
B2 = 3"

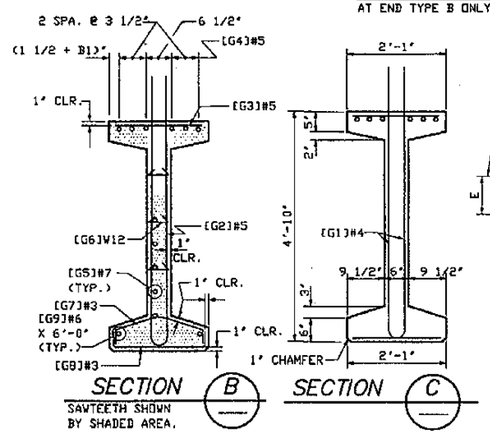

SECTION B

SAWTEETH SHOWN BY SHADED AREA.

SECTION C

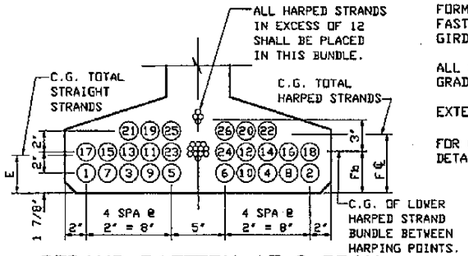

STRAND PATTERN AT ℄ SPAN

STRAND LOCATION SEQUENCE SHALL BE AS SHOWN ①, ② ETC.

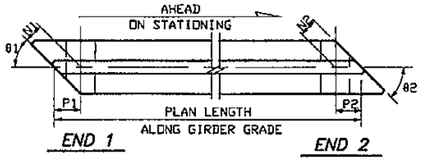

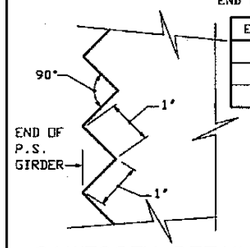

SAWTOOTH DETAILS

SAWTOOTH ARE FULL WIDTH - USE SAWTOOTH KEYS FROM BOTTOM OF BOTTOM FLANGE TO BOTTOM OF LOWEST HARPED STRAND AS WELL AS TOP FLANGE ADJACENT TO HARPED STRANDS AS SHOWN IN SECTION B.

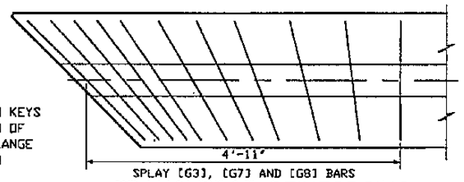

SPLAY [G3], [G7] AND [G8] BARS

TRANSVERSE REINFORCING SKEWED ENDS

ONLY TRANSVERSE REINF. SHOWN

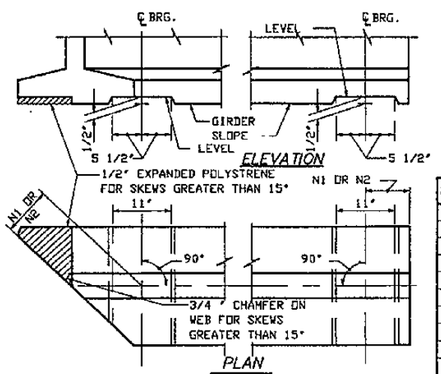

ELEVATION

PLAN

BEARING RECESS DETAIL

FOR "AS CONSTRUCTED PLANS" ONLY

* #3 OR #4 MAY BE SUBSTITUTED FOR W12
FIELD BENDING IS OPTIONAL.

MARK	LOCATION	SIZE	
G1	GIRDER STIRRUPS	4	
G2	GIRDER END STIRRUPS	5	
G3	GIRDER TOP FLANGE	5	STR.
G4	GIRDER LONGIT. FULL LENGTH	5	STR.
G5	GIRDER END LONGIT.	7	STR.
G6	GIRDER END TIES	W12	*
G7	GIRDER END TIES	3	
G8	GIRDER END TIES	3	
G9	GIRDER LONGIT.	6	STR.

NOTE: FOR DIMENSION A, SEE 'GIRDER SCHEDULE' ON GIRDER DETAILS SHEET 2

BENDING DIAGRAM (ALL DIMENSIONS ARE OUT TO OUT)

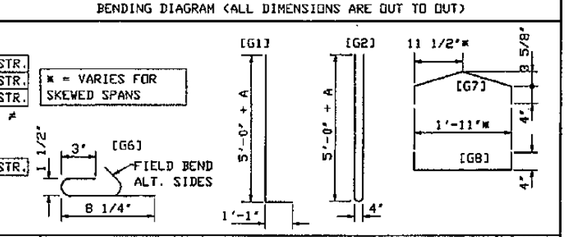

Bridge Design Engineer					REGION NO.	STATE	FED. AID. PROJ. NO.	SHEET NO.	TOTAL SHEETS
Supervisor					10	WASH			
Designed By Q.B.					JOB NUMBER 95W036				
Checked By R.L.F.					CONTRACT NO. 4771				
Detailed By G.W.S.									
Bridge Projects Engineer									
Prelim. Plan By									
Architect/Specialist	DATE	REVISION	BY	APP'D					

SR 167 JOB NO. 88100010 SHEET

JOHN R. RATTEL — STATE OF WASHINGTON — 14455 REGISTERED PROFESSIONAL ENGINEER — 5/14/96 — EXPIRES: 06/10/97

WASHINGTON STATE DEPARTMENT OF TRANSPORTATION

Berdrup CIVIL INC.

SR167
15TH N.W. TO 84TH AVE. SO.
HOV SC & DI - STAGE 2
4TH ST OVERCROSSING BR. NO. 167/126

GIRDER DETAILS

BRIDGE SHEET NO. 14

SHEET 589 OF 663 SHEETS

SR 167/91

GIRDER SCHEDULE

DIMENSION A AT ℄ BEARINGS = 11 1/2"

BASED ON GIRDER DEFLECTION = D AT TIME OF SLAB POUR (120 DAYS)

SPAN	GIRDER	END 1 TYPE	END 2 TYPE	L (FT.)	θ1	θ2	N1	N2	P1	P2	PLAN LENGTH ALONG GIRDER GRADE	MIN. CONC. COMPR. STRENGTH 28 DAYS F'C KSI	MIN. CONC. COMPR. STRENGTH RELEASE F'CI KSI	S (IN.)	LS (FT.)	HARPED NO. OF STRANDS	HARPED JACKING FORCE (KIPS)	STRAIGHT NO. OF STRANDS	STRAIGHT JACKING FORCE (KIPS)	LOCATION OF C.G. STRANDS (IN.) E	FC℄	Fb	Fo	C (IN.)	D (IN.)	Ld (IN.) END 1	Ld (IN.) END 2
1	AW	B	C	4	135°	135°	9 1/2"	NONE	1'-1 3/8"	NONE	68'-5 1/4"	7	4.5	18	3	8	248	10	310	1 7/8"	3"	3"	8"	3/8"	3/4"	11 3/8"	0
2	BW	C	C	4	135°	135°	NONE	NONE	NONE	NONE	100'-2 1/8"	7	5.3	16.5	16.2	14	434	22	682	3 3/8"	3 3/8"	3"	8"	1 5/8"	3 1/8"	0	0
3	CW	C	B	4	135°	135°	NONE	9 1/2"	NONE	1'-1 3/8"	68'-5 1/4"	7	4.5	18	3	8	248	10	310	1 7/8"	3"	3"	8"	3/8"	3/4"	0	11 3/8"

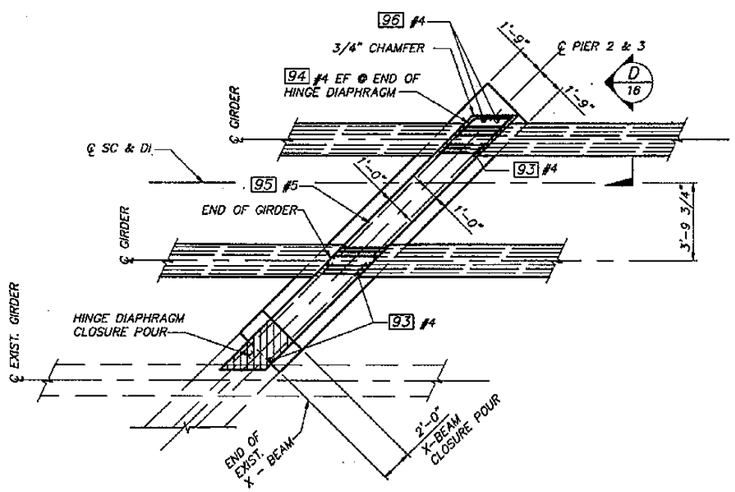

PLAN – HINGE DIAPHRAGM

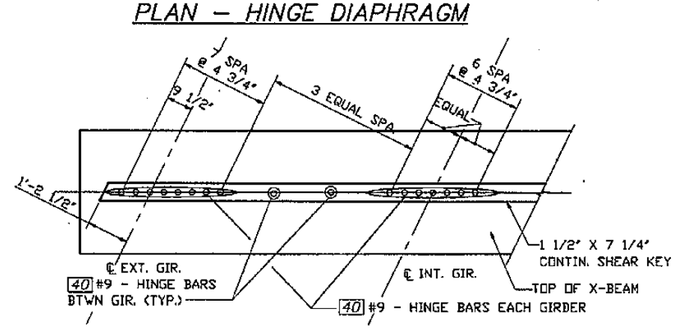

HINGE BAR PLAN

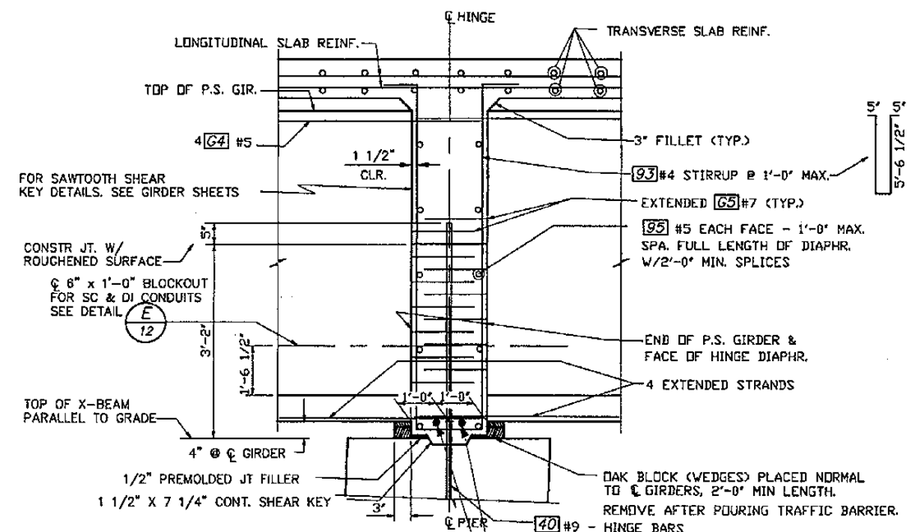

TYPICAL HINGE SECTION

FOR "AS CONSTRUCTED PLANS" ONLY

Bridge Design Engineer					REGION NO.	STATE	FED. AID. PROJ. NO.	SHEET NO.	TOTAL SHEETS
Supervisor					10	WASH			
Designed By Q.B.					JOB NUMBER 95W036				
Checked By R.L.F.					CONTRACT NO. 4771				
Detailed By G.W.S.									
Bridge Projects Engineer									
Prelim. Plan By									
Architect/Specialist	DATE	REVISION	BY	APP'D					

JOHN R. KATTEL, STATE OF WASHINGTON, REGISTERED PROFESSIONAL ENGINEER — EXPIRES: 06/10/97

WASHINGTON STATE DEPARTMENT OF TRANSPORTATION

Sverdrup CIVIL INC.

SR167
15TH N.W. TO 84TH AVE. SO.
HOV SC & DI – STAGE 2
4TH ST OVERCROSSING BR. NO. 167/126

GIRDER SCHEDULE & HINGE DIAPHRAGM DETAILS

BRIDGE SHEET NO. 15

SHEET 590 OF 663 SHEETS

SR 167/91

SR B3100018 JOB NO. SHEET

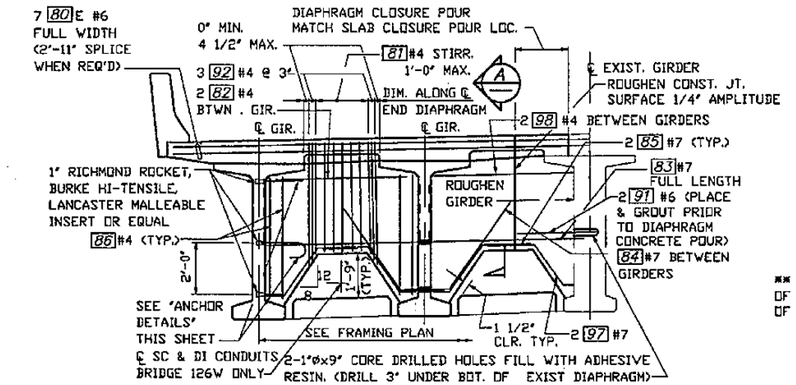

TYPICAL END DIAPHRAGM AT END PIERS

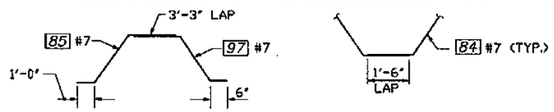

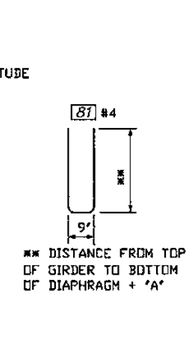

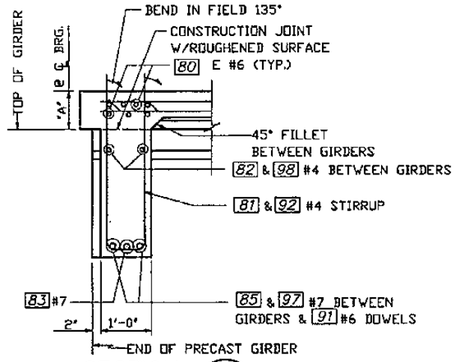

SECTION A

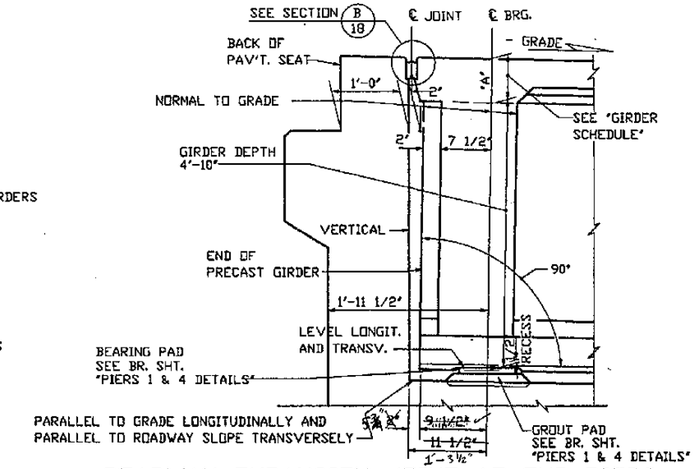

ROADWAY EXPANSION JOINT AT END PIERS

LONGITUDINAL DIMENSIONS ARE NORMAL TO SKEW.

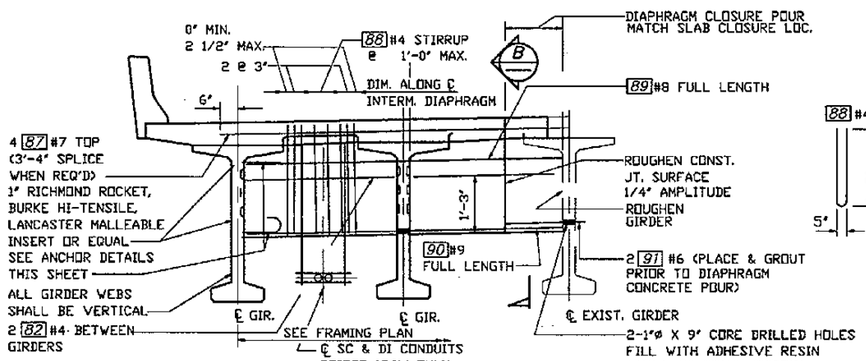

TYPICAL INTERMEDIATE DIAPHRAGM

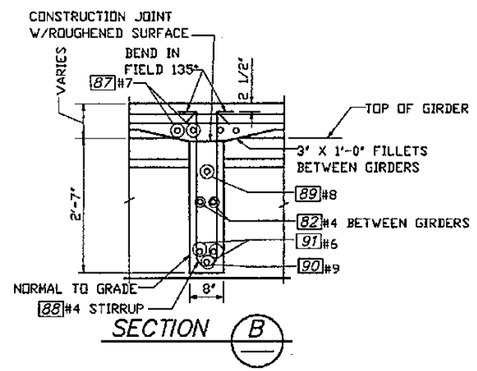

SECTION B

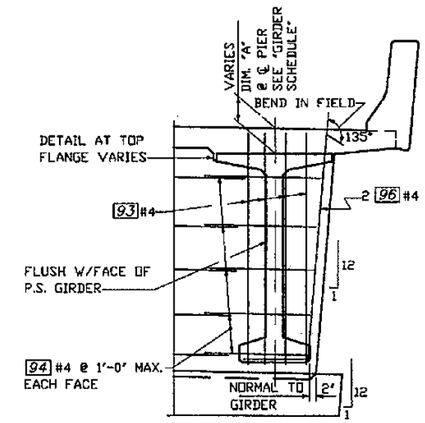

SECTION D

15

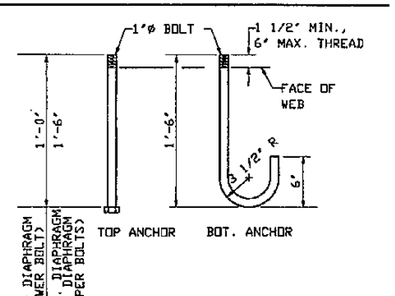

ANCHOR DETAILS

A.S.T.M. A-307

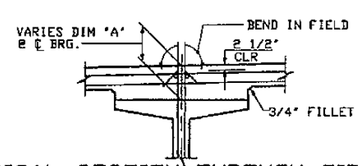

TYPICAL SECTION THROUGH GIRDER

SHOWING METHOD OF ADJUSTING ROADWAY ELEVATIONS
FOR VERTICAL CURVES, CAMBER OR SUPERELEVATION.

FOR "AS CONSTRUCTED PLANS" ONLY

Bridge Design Engineer					REGION NO.	STATE	FED. AID. PROJ. NO.	SHEET NO.	TOTAL SHEETS
Supervisor					10	WASH			
Designed By Q.B.					JOB NUMBER 95W036				
Checked By R.L.F.									
Detailed By G.W.S.									
Bridge Projects Engineer					CONTRACT NO. 4771				
Prelim. Plan By									
Architect/Specialist	DATE	REVISION	BY	APP'D					

JOHN R. KATTELA — STATE OF WASHINGTON — 14411 — REGISTERED PROFESSIONAL ENGINEER — 5/1/96 — EXPIRES: 06/10/97

WASHINGTON STATE
DEPARTMENT OF TRANSPORTATION

Berdrup
CIVIL INC.

SR167
15TH N.W. TO 84TH AVE. SO.
HOV SC & DI – STAGE 2
4TH ST OVERCROSSING BR. NO. 167/126

END DIAPHRAGM DETAILS

BRIDGE SHEET NO. 16

SHEET 591 OF 663 SHEETS

SR 167/91

SR ___ JOB NO. B8190011 SHEET ___

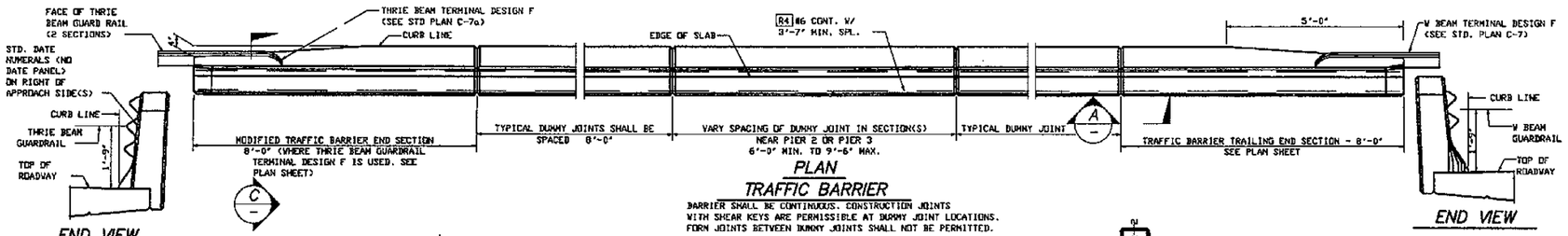

END VIEW

PLAN

TRAFFIC BARRIER

BARRIER SHALL BE CONTINUOUS. CONSTRUCTION JOINTS WITH SHEAR KEYS ARE PERMISSIBLE AT DUMMY JOINT LOCATIONS. FORM JOINTS BETWEEN DUMMY JOINTS SHALL NOT BE PERMITTED.

END VIEW

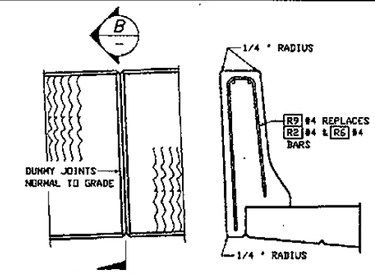

SECTION A

ALL CHAMFERS 1/4".

SEE "LAYOUT" FOR APPLICABLE SURFACE FINISH.

SLIPFORM ALTERNATE

SEE TYPICAL SECTION - TRAFFIC BARRIER FOR ADDITIONAL DETAILS.

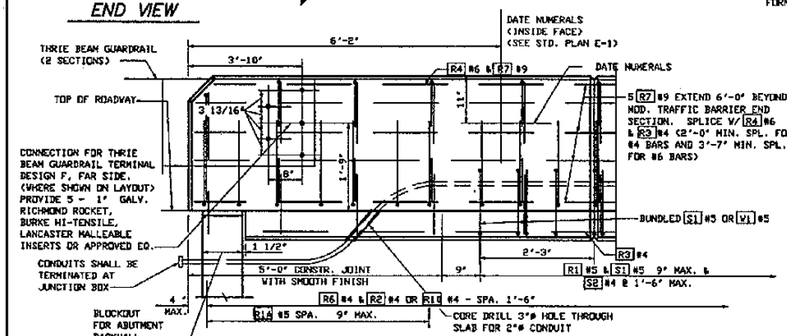

OUTSIDE ELEVATION

END OF MODIFIED TRAFFIC BARRIER

FOR DESIGN F GUARDRAIL ANCHORAGE

THRIE BEAM CONNECTION

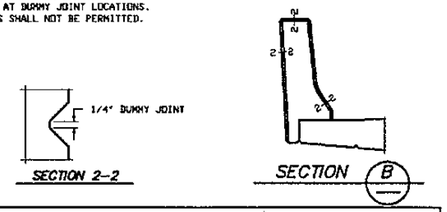

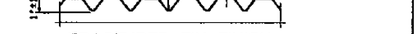

FRACTURED FIN FINISH

TRAFFIC BARRIER BAR LIST

ALL REINFORCING SHALL BE AASHTO M31, GR. 60.

MARK	SIZE	LENGTH	BENDING DIAGRAM (ALL DIMENSIONS ARE OUT TO OUT)
R1	5	3'-2"	
R1A	5	(A)	
R2	4	3'-0" 2'-10" (R)	
R3	4	(A) STR.	
R4	6	(A) STR.	
R6	4	3'-0" STR.	
R7	9	14'-0" STR.	
R9	4	8'-11" 5'-8" (R)	

(A) DETERMINE FROM PLANS (R) REPLACEMENT BARRIER

FOR S1 S2 S3 & S4 BARS SEE BARLIST.

NOTE: # DIMENSIONS TO POINTS OF INTERSECTION.

DETAILS ARE FOR TYPICAL BARRIER SIMILAR FOR REPLACEMENT TRAFFIC BARRIER AND TRAFFIC BARRIER WITH NOISE WALL.

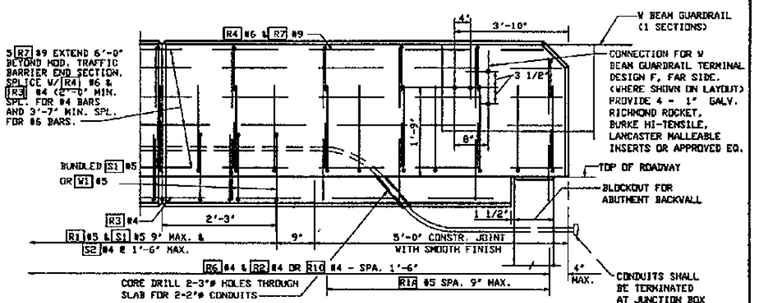

OUTSIDE ELEVATION

END OF MODIFIED TRAFFIC BARRIER

FOR DESIGN F GUARDRAIL ANCHORAGE

W BEAM CONNECTION

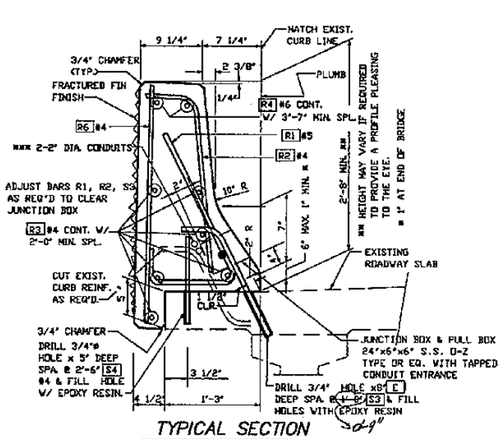

TYPICAL SECTION

REPLACEMENT TRAFFIC BARRIER

*** INSTALL #12 GALVANIZED IRON PULL WIRE IN ALL ACTIVE CONDUIT RUNS. ALL CONDUIT SHALL BE 2" DIA. SCHEDULE 40 GALVANIZED PIPE. INSTALL ALL CONDUIT RUNS TO DRAIN TO A BRIDGE END OR PROVIDE A DRAIN TO A BRIDGE END OR PROVIDE A DRAIN AT ANY LOW POINT IN CONDUIT RUN ON THE BRIDGE

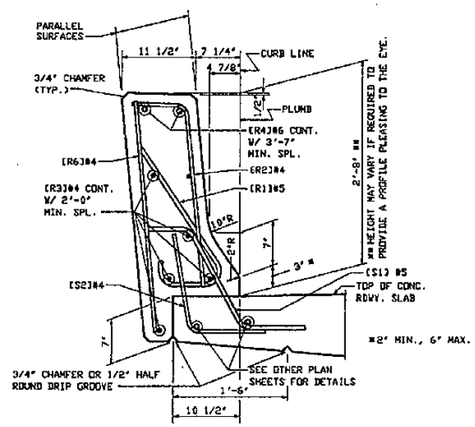

TYPICAL SECTION

TRAFFIC BARRIER

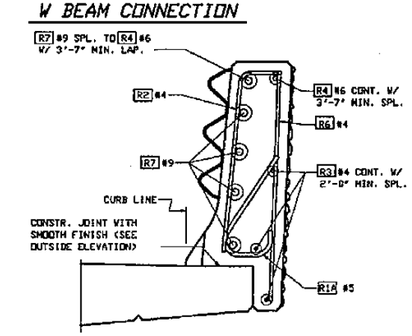

SECTION C BRIDGE

DETAIL FOR BRIDGE

FOR DETAILS NOT SHOWN SEE 'OUTSIDE ELEVATION' AND 'TYPICAL SECTION - TRAFFIC BARRIER.'

FOR "AS CONSTRUCTED PLANS" ONLY

Bridge Design Engineer					REGION NO.	STATE	FED. AID. PROJ. NO.	SHEET NO.	TOTAL SHEETS
Supervisor					10	WASH			
Designed By J.R.K.					JOB NUMBER 95W036				
Checked By R.L.F.									
Detailed By G.W.S					CONTRACT NO. 4771				
Bridge Projects Engineer									
Prelim. Plan By									
Architect/Specialist	DATE	REVISION	BY	APP'D					

JOHN E. KATTELA — STATE OF WASHINGTON — 24415 — REGISTERED PROFESSIONAL ENGINEER — 7/1/94 — EXPIRES: 06/10/95

WASHINGTON STATE DEPARTMENT OF TRANSPORTATION

Sverdrup CIVIL INC.

SR167
15TH N.W. TO 84TH AVE. SO.
HOV SC & DI - STAGE 2
4TH ST OVERCROSSING BR. NO. 167/126

TRAFFIC BARRIER

BRIDGE SHEET NO. 17

SHEET 592 OF 663 SHEETS

B8100012 JOB NO. SR SHEET

SR167/91

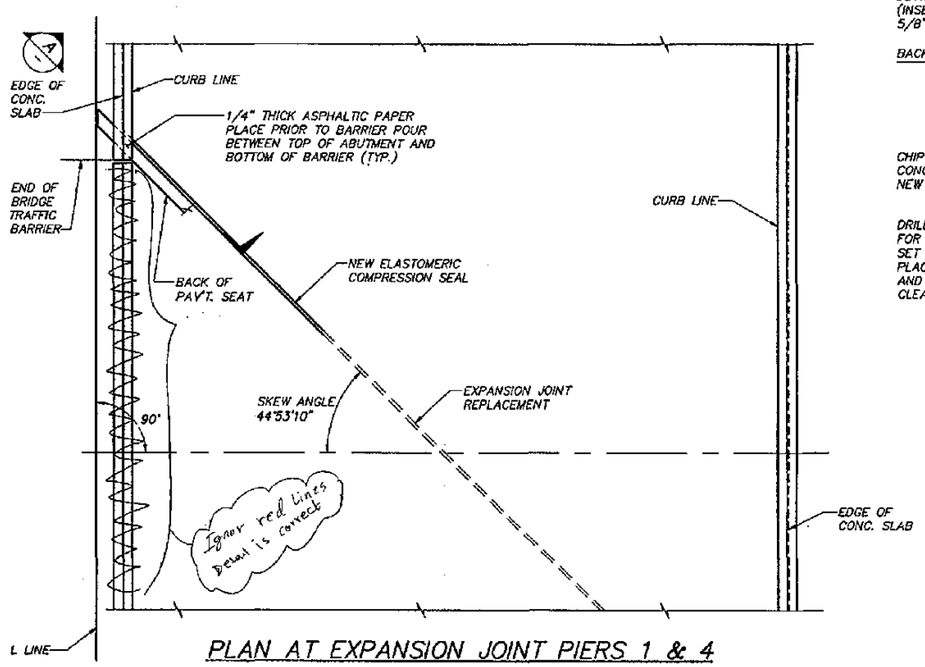

PLAN AT EXPANSION JOINT PIERS 1 & 4

TYPICAL 2 LOCATIONS BRIDGE 126E & 126W.

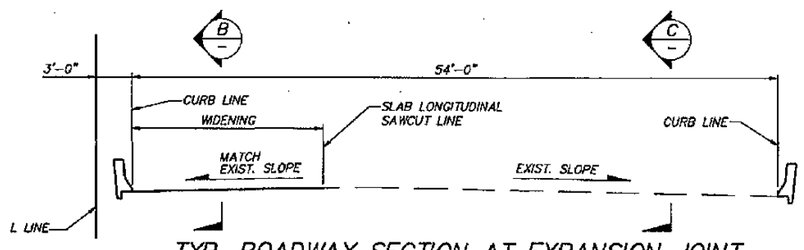

TYP. ROADWAY SECTION AT EXPANSION JOINT

ALL DIMENSIONS ARE NORMAL TO L LINE.

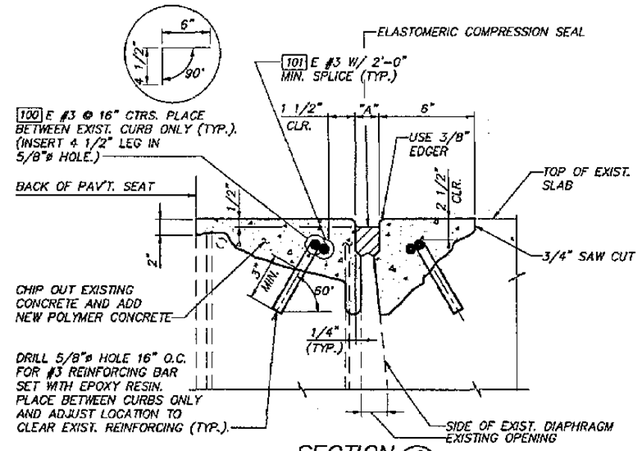

SECTION C

EXPANSION JOINT REPLACEMENT DETAIL. DIMENSIONS NORMAL TO JOINT.

NOTE: SAVE EXIST. REINFORCING BARS IN CONCRETE DECK AND ABUTMENT DURING REMOVAL OF EXIST. CONCRETE.

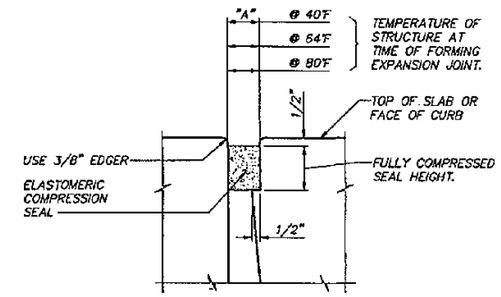

SECTION B

CONC. OPENING

DIMENSIONS NORMAL TO JOINT. REINFORCING NOT SHOWN.

EXPANSION JOINT TABLE

LOCATION	OPENING "A" (NORMAL TO JOINT)			EXPANSION JOINT TYPE
	@ 40°F	@ 64°F	@ 80°F	
PIERS 1 & 4	2"	1 7/8"	1 3/4"	COMPRESSION SEAL D.S. BROWN CV-3000 WATSON BOWMAN ACME WA-300 ELASTOMER SEALS X 3000 STRUCTURAL ACCESSORIES SA-3000

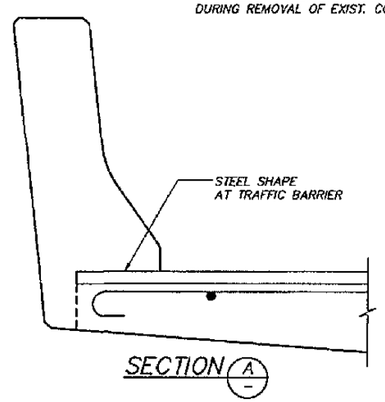

SECTION A

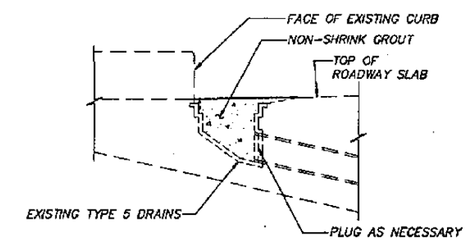

BRIDGE DRAIN PLUG DETAIL

REMOVE DRAIN GRATING & GALV. STEEL CHAIN. FILL DRAIN WITH NON-SHRINK GROUT AFTER PLUGGING.

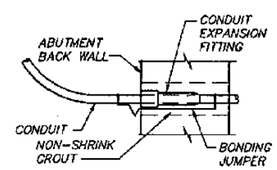

(SECOND CONDUIT NOT SHOWN FOR CLARITY)

CONDUIT PIER EXPANSION JOINT

AT PIERS 1 & 4

FOR "AS CONSTRUCTED PLANS" ONLY

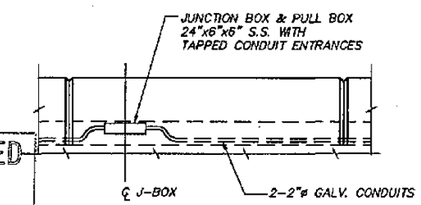

ELEVATION TRAFFIC BARRIER WITH CONDUIT & J-BOX

SEE LAYOUT SHEET FOR LOCATIONS

Bridge Design Engineer					REGION NO.	STATE	FED. AID. PROJ. NO.	SHEET NO.	TOTAL SHEETS
Supervisor					10	WASH			
Designed By Q.B.					JOB NUMBER 95W036				
Checked By R.L.F.									
Detailed By A.J.D.					CONTRACT NO. 4771				
Bridge Projects Engineer									
Prelim. Plan By									
Architect/Specialist	DATE	REVISION	BY	APP'D					

JOHN R. KATTELA, STATE OF WASHINGTON, REGISTERED PROFESSIONAL ARCHITECT — EXPIRES: 06/10/97 — 5/1/95

WASHINGTON STATE DEPARTMENT OF TRANSPORTATION

Sverdrup CIVIL INC.

SR167
15TH N.W. TO 84TH AVE. SO.
HOV SC & DI – STAGE 2
4TH ST OVERCROSSING BR. NO. 167/126

MISCELLANEOUS DETAILS

BRIDGE SHEET NO. 18

SHEET 593 OF 663 SHEETS

B8100013 SR ____ JOB NO. ____ SHEET ____

SR167/91

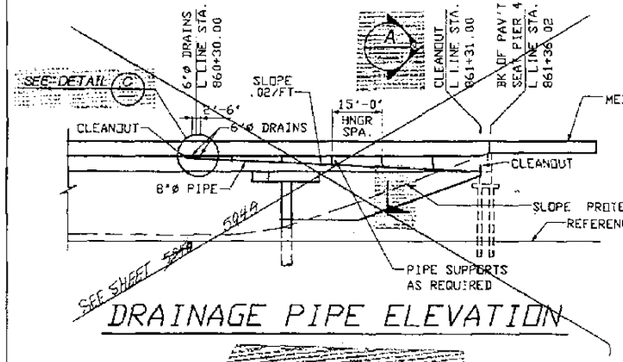

DRAINAGE PIPE ELEVATION

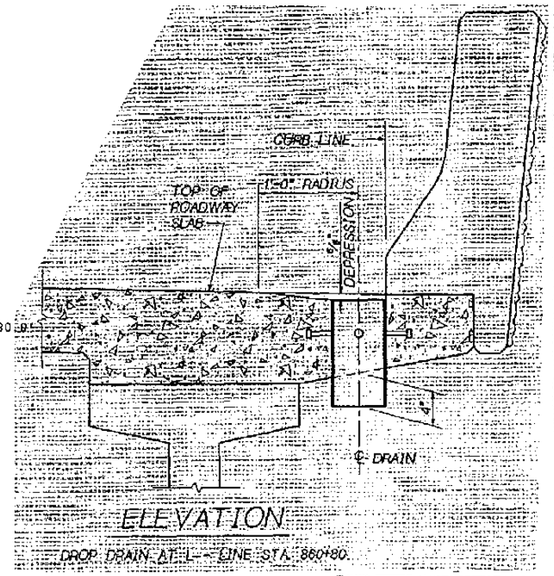

ELEVATION

DROP DRAIN AT L-- LINE STA. 860+80.

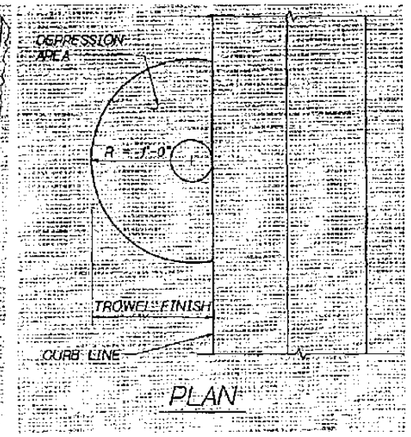

PLAN

DRAIN DEPRESSION DETAIL

DRAINAGE ASSEMBLY NOTES:

1. ALL PARTS IN DRAINAGE ASSEMBLY SHALL BE GALVANIZED, PER AASHTO M111 EXCEPT RODS, BOLTS, NUTS AND WASHERS GALVANIZED, PER AASHTO M232. 8"ø EXPANSION JOINT, VICTAULIC COUPLINGS AND GRINNEL PIPE ROLL ARE NOT TO BE GALVANIZED.
2. DRAIN PIPE SHALL BE STANDARD STEEL PIPE CONFORMING TO ASTM A-53, BOLTS SHALL CONFORM TO ASTM A 307.
3. ALL EXPOSED DRAINAGE TO BE PAINTED.
4. THE CONTRACTOR SHALL SUBMIT FABRICATION DRAWINGS FOR APPROVAL BY THE ENGINEER.
5. ALL STRAIGHT PIPE COUPLINGS SHALL BE VICTAULIC STYLE 99 AND ELBOW JOINTS SHALL USE VICTAULIC STYLE 77 OR APPROVED EQUAL. ALL BENDS SHALL HAVE A 1'-6" MINIMUM RADIUS.

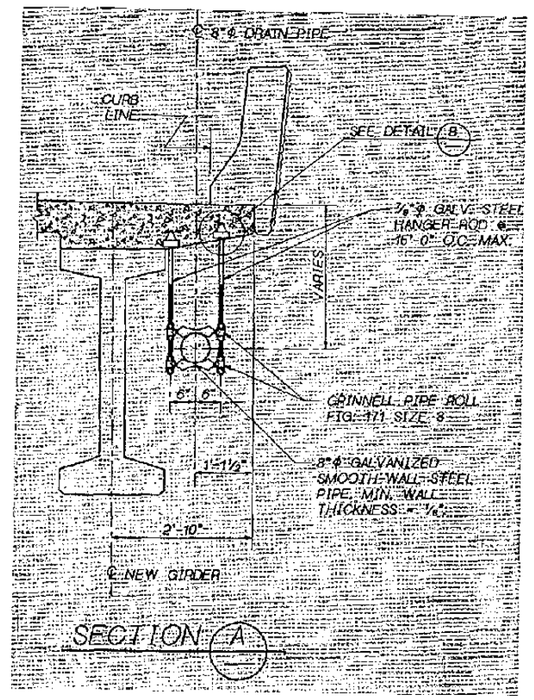

SECTION A

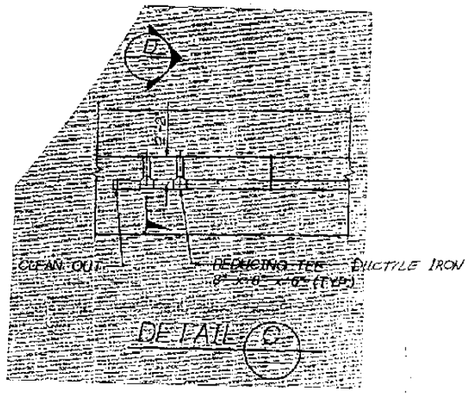

DETAIL C

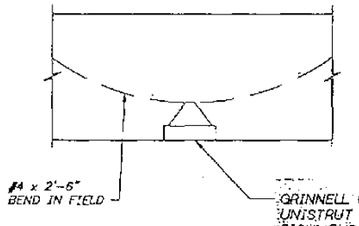

DETAIL B

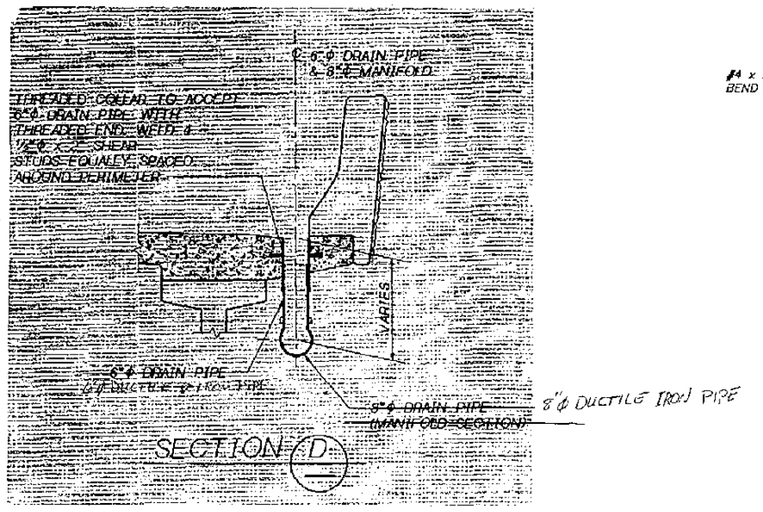

SECTION D

FOR "AS CONSTRUCTED PLANS" ONLY

Bridge Design Engineer					REGION NO.	STATE	FED. AID. PROJ. NO.	SHEET NO.	TOTAL SHEETS
Supervisor					10	WASH			
Designed By R.E.S.					JOB NUMBER				
Checked By P.R.B.					95W036				
Detailed By G.W.S.									
Bridge Projects Engineer TRENT MILLER									
Prelim. Plan By		REVISED DRAINAGE DETAILS	MA	RES	CONTRACT NO.				
Architect/Specialist	DATE	REVISION	BY	APP'D	4771				

JOHN R. KATTELL, STATE OF WASHINGTON, REGISTERED PROFESSIONAL ENGINEER — 2/1/95 — EXPIRES: 05/10/97

WASHINGTON STATE DEPARTMENT OF TRANSPORTATION

Sverdrup CIVIL INC.

SR167
15TH N.W. TO 84TH AVE. SO.
HOV SC & DI - STAGE 2
4TH ST OVERCROSSING BR. NO. 167/126

ELEVATION AND UTILITY HANGER DETAILS

BRIDGE SHEET NO. 19

SHEET 594 OF 663 SHEETS

SR 167/91

SR ____ JOB NO. 8510025 ____ SHEET ____

Bridge 126 E Drainage Pipe Elevation

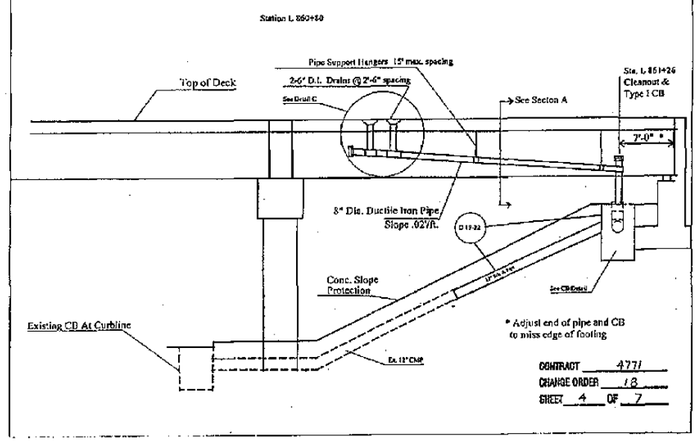

Bridge 126 W Drainage Pipe Elevation

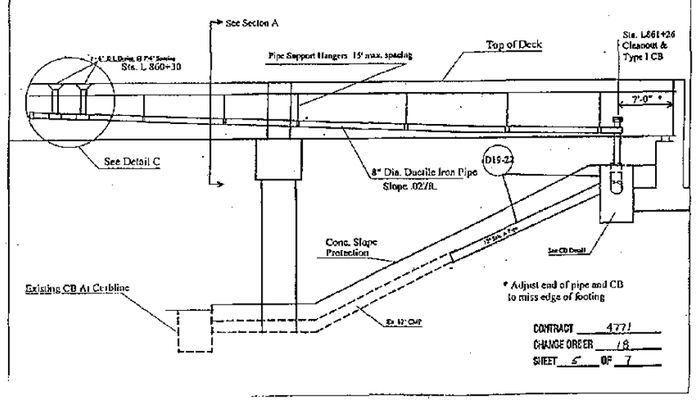

Str. Note D-19-22

Catch Basin Type I Detail

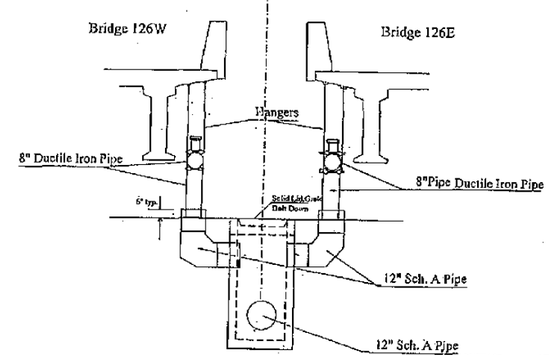

CONTRACT 4771
CHANGE ORDER 18
SHEET 6 OF 7

FOR "AS CONSTRUCTED PLANS" ONLY

DRAWN					REGION NO. 10	STATE WASH	FED. AID PROJ. NO.	SHEET NO.	TOTAL SHEETS
CHECKED					JOB NUMBER				
PROJ. ENGR.					CONTRACT NO.				
DIST. ADM.									
	DATE	REVISION	BY	APP'D					

DOT FORM 221-011
Revised 9/82

HIGHWAY DIVISION

Washington State Department of Transportation

SR167
15TH N.W. TO 24TH AVE. SO.
HOV SC & DI - STAGE 2
4th ST OVERCROSSING Br. No. 167/126

BRIDGE SHEET NO. 19A

SHEET 594A OF 663 SHEETS

PLAN SHEETS AFFECTED:

547
552
579
599
643

NOTES:

1. ALL PARTS SHALL BE GALVANIZED IN ACCORDANCE WITH AASHTO M 111 AFTER FABRICATION.
2. ADJUST ⅜" CABLE TENSION TO PRODUCE 3% VERTICAL SAG BETWEEN INTERMEDIATE BEAMS.

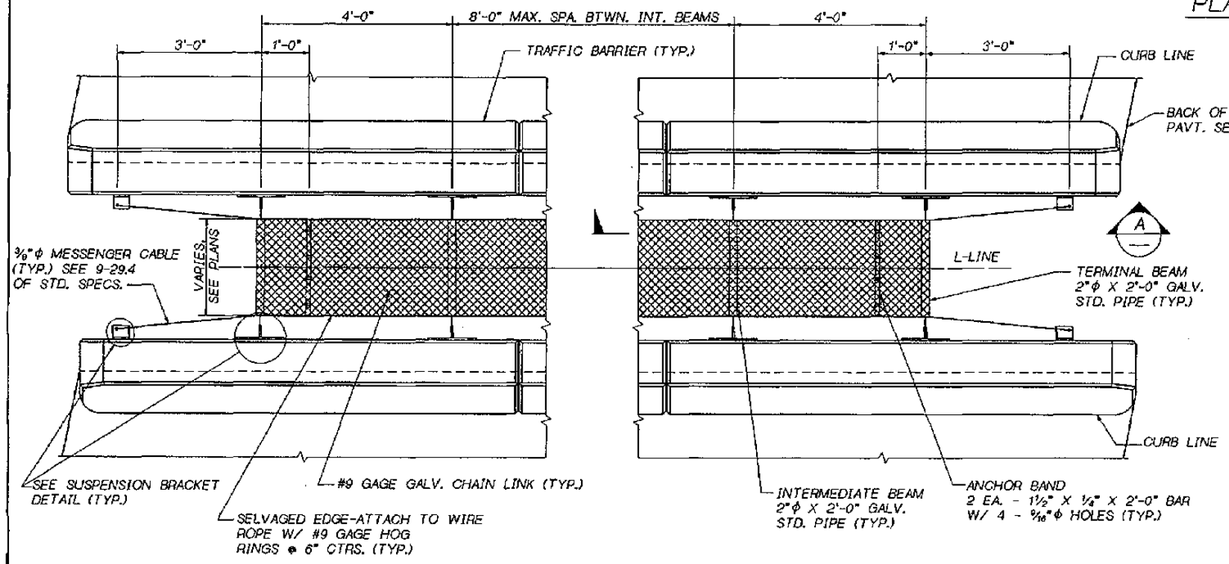

PLAN

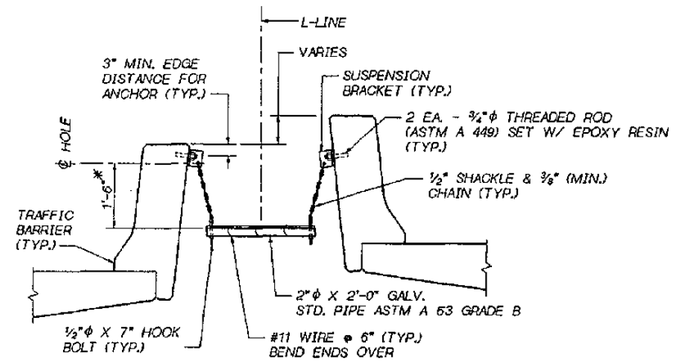

* CHAIN LENGTH MAY VARY TO LEVEL SCREEN

TYPICAL SECTION

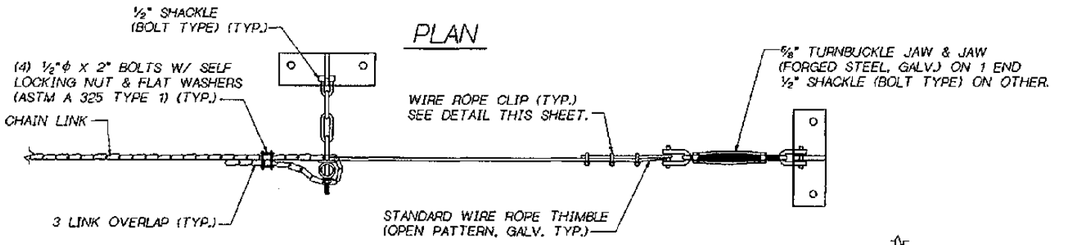

VIEW A

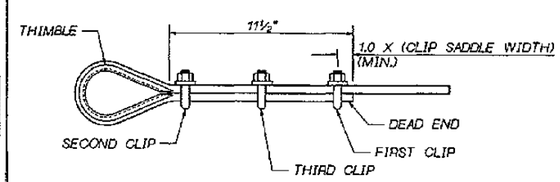

WIRE ROPE CLIP DETAIL

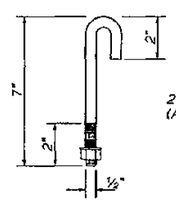

HOOK BOLT

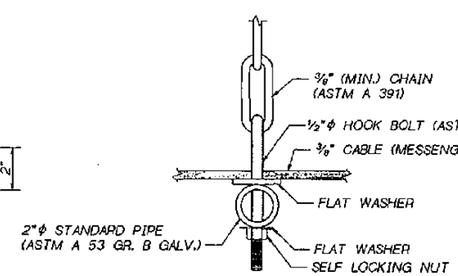

HOOK BOLT DETAIL

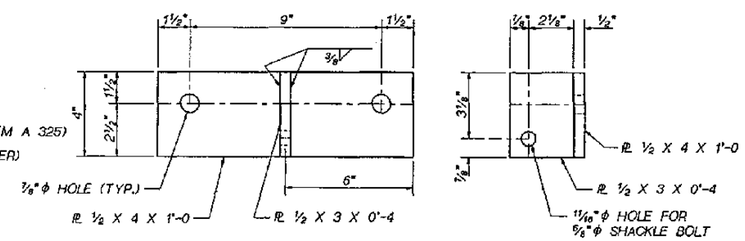

SUSPENSION BRACKET

AASHTO M 183

NOTE:
GAS-CUT OR SAW-CUT ONLY FOR PL ½ X 3 X 0'-4

FOR "AS CONSTRUCTED PLANS" ONLY

7 ADDED BR. SHT. 19A

Bridge Design Engr. C. C. RUTH					REGION NO.	STATE	FED. AID PROJ. NO.	SHEET NO.	TOTAL SHEETS	
Supervisor R. T. SHAEFER					10	WASH.				
Designed By										
Checked By					JOB NUMBER					
Detailed By										
Bridge Projects Engr.										
Prelim. Plan By		7 ADDED BR. SHT. 19A	MA							
Architect/Specialist	DATE	REVISION	BY	APP'D						

BRIDGE AND STRUCTURES OFFICE

RAYMOND T. SHAEFER — STATE OF WASHINGTON — 14378 — REGISTERED PROFESSIONAL ENGINEER — EXPIRES 1/23/96
SUPERVISING BRIDGE ENGINEER

CHARLES C. RUTH — STATE OF WASHINGTON — 13962 — REGISTERED PROFESSIONAL ENGINEER — EXPIRES 6/3/96
BRIDGE DESIGN ENGINEER

Washington State Department of Transportation

SR 167
15TH NW TO 84TH AVE SO.
HOV AND SC & DI - STAGE 2

PROTECTIVE SCREEN

BRIDGE SHEET NO. 19A
SHEET ~~547A~~ 547B
SHEETS 663

SR ___ JOB NO. ___ SHEET ___

25-MAR-96

ANDERSONROOT:\FGB\SR167_PRO.FGB: 1

S = Bar is included in substructure quantities
F = Bar to be field welded
T = Tie or Stirrup
E = Bar to be Epoxy Coated
V = Bar dimensions vary between dimensions shown on this line and the following line.

MARK NO.	LOCATION	SIZE	NO. REQ'D.	BEND TYPE	TIE or STIR	FLD. WELD	SUBSTR.	EPX-COAT	VARIES	NO. EACH	U Ft.	U In.	W Ft.	W In.	X Ft.	X In.	Y Ft.	Y In.	Z Ft.	Z In.	θ_1 Deg.	θ_2 Deg.	LENGTH Ft.	LENGTH In.	WEIGHT Lbs.
	PIERS 1 & 4																								
1	BACKWALL TOP LONG	4	8	50			S	E			22	9.0											22	9.	122
2	ABUTMENT LONG	4	68	50			S				22	9.0											22	9.	1033
3	PAVT SEAT TIE	4	184	80	T		S				1	10.0	0	9.0	0	8.0	0	1.0	0	1.0	90	45	3	0.	369
5	BACKWALL VERT	4	176	62			S	E			0	10.0	7	9.5	7	9.5	0	10.0	0	10.0	0	0	17	7.	2067
6	GIRDER SEAT VERT	5	92	63			S				4	0.5	3	1.5	3	1.5	0	10.0	0	10.0	0	0	11	6.	1103
7	FOOTING- LONG TOP	5	32	50			S				21	4.0											21	4.	712
8	FOOTING- TRAN TOP	5	92	50			S				9	5.0											9	5.	904
9	FOOTING- LONG BOT	6	32	50			S				21	4.0											21	4.	1025
10	FOOTING- TRAN BOT	6	92	50			S				9	5.0											9	5.	1301
11	GIRDER STOP STIRRUP	6	40	61			S				2	8.5	2	1.0	2	1.0	0	0.0	0	0.0	0	0	6	7.	396
12	GIRDER STOP LONG	4	12	50			S				6	9.0											6	9.	54
13	ABUTMENT DOWELS	5	96	50			S				2	10.5											2	11.	292
14	GIRDER STOP TRAN	4	24	50			S				2	9.0											2	9.	44
15	GIRDER STOP DOWEL	5	24	61			S				0	6.0	1	3.0	1	3.0	0	0.0	0	0.0	0	0	2	9.	69
16	ABUTMENT DRAIN HOLE	4	16	50			S				1	6.0											1	8.	18
	PIERS 2 & 3																								
30	X-BEAM TOP	11	32	80			S				21	7.0	2	0.0	0	0.0	0	7.1	0	0.0	81	0	23	3.	3953
31	X-BEAM TOP	11	16	50			S				21	7.0											21	7.	1835
32	X-BEAM EF	5	16	50			S				21	7.0											21	7.	360
34	X-BEAM BOT	9	20	50			S				6	6.0											6	6.	442
35	X-BEAM BOT	9	20	50			S				21	7.0											21	7.	1468
36	X-BEAM CLOSURE DOWEL	9	24	50			S				8	1.0											8	1.	660
37	X-BEAM CLOSURE DOWEL	5	16	50			S				3	0.0											3	0.	50
39	X-BEAM STIRRUP	5	260	83	T		S				2	5.0	2	11.5	0	0.0	0	0.0	0	0.0	0	0	11	7.	3383
40	HINGE DIAPHRAGM DOWEL	9	76	54			S				6	6.0											7	10.	2024
41	PIER COLUMN VERT	8	48	50			S				23	3.0											23	3.	2980
42	PIER SHAFT VERT	11	48	50			S				56	6.0											56	6.	14409
43	PIER COLUMN SPIRAL	5	4	67			S				2	9.0	0	3.0	0	0.0					93		794	10.	3316
44	PIER SHAFT SPIRAL	6	4	67			S				3	10.0	0	3.5	0	0.0					194		2324	3.	13964
	BRIDGE SLAB																								
60	TRAN TOP	6	88	51				E	V	4	5	9.0											6	5.	
											16	9.0											17	5.	1575
61	TRAN BOT	6	68	50					V	4	5	9.0											5	9.	
											16	9.0											16	9.	1487
62	TRAN TOP	6	902	51				E			17	1.0											17	9.	24048
63	TRAN BOT	6	902	51							17	1.0											17	9.	24048
64	LONG TOP	5	22	50				E			259	0.0											259	0.	5943
65	LONG BOT	5	36	50							259	0.0											259	0.	10265
66	LONG TOP	8	6	50				E			258	0.0											258	0.	5511
67	LONG EDGE	8	2	50							258	0.0											258	0.	1378
68	LONG TOP	8	52	50				E			40	0.0											40	0.	5554
69	TRAN TOP CORNER	6	44	51				E			5	3.0											5	11.	391
70	TRAN BOT CORNER	6	44	50							5	3.0											5	3.	347
S1	TRAFFIC BARRIER TIE	5	315	69				E			0	6.0	0	7.0	1	6.0	0	6.0	0	0.0	0	0	2	7.	849
S2	TRAFFIC BARRIER TIE	4	160	69							1	6.0	0	2.0	1	6.0	0	0.0	0	0.0	0	0	3	0.	321
S3	TRAFFIC BARRIER DOWEL	5	315	69				E			0	6.0	0	7.0	1	8.0	0	0.0	0	0.0	0	0	2	3.	739
S4	TRAFFIC BARRIER DOWEL	4	160	50							1	6.0											1	6.	160
	DIAPHRAGMS																								
80	END DIAPHRAGM	6	28	50				E			24	3.0											24	3.	1020
81	END DIAPHRAGM	4	40	61							0	9.0	3	6.0	3	6.0	0	0.0	0	0.0	0	0	7	6.	200
82	END & INTER DIAPHRAGM	4	40	50							9	9.0											9	9.	251
83	END DIAPHRAGM	7	4	50							19	11.0											19	11.	163
84	END DIAPHRAGM	7	8	69							2	3.0	1	8.0	2	6.0	0	0.0	0	0.0	0	0	5	3.	86
85	END DIAPHRAGM	7	24	69							1	0.0	1	0.0	1	6.0	4	3.0	0	0.0	0	0	7	1.	347
86	END DIAPHRAGM	4	28	50							3	4.0											3	4.	82
87	INTERMEDIATE DIAPHRAGM	7	32	50							20	10.0											20	10.	1363
88	INTERMEDIATE DIAPHRAGM	4	176	68							0	0.0	3	7.0	0	5.0	3	7.0					7	5.	872
89	INTERMEDIATE DIAPHRAGM	8	16	50							20	6.0											20	6.	878
90	INTERMEDIATE DIAPHRAGM	9	8	50							20	6.0											20	6.	558
91	END & INTER DIAPHRAGM	6	24	50							3	9.0											3	9.	135
92	END DIAPHRAGM	4	48	61					V	16	0	9.0	4	9.0	4	9.0	0	0.0	0	0.0	0	0	10	0.	
											0	9.0	4	0.0	4	0.0	0	0.0	0	0.0	0	0	8	6.	297
93	HINGE DIAPHRAGM	4	72	63							2	6.0	5	7.0	5	7.0	0	5.0	0	5.0	0	0	14	0.	673
94	HINGE DIAPHRAGM	4	40	65							2	6.0	3	0.0	0	0.0							5	5.	145
95	HINGE DIAPHRAGM	5	40	50							20	3.0											20	3.	845
96	HINGE DIAPHRAGM	4	8	65							5	7.0	0	6.0	0	0.0							5	11.	32
97	END DIAPHRAGM	7	8	69							0	6.0	1	0.0	1	6.0	4	3.0	0	0.0	0	0	6	7.	108
98	END DIAPHRAGM	4	8	50							9	2.0											9	2.	49
100	EXPANSION JOINT	3	336	65				E			0	4.5	0	6.0	0	0.0							0	10.	105
101	EXPANSION JOINT	3	16	50				E			28	0.0											28	0.	168

S = Bar is included in substructure quantities
F = Bar to be field welded
T = Tie or Stirrup
E = Bar to be Epoxy Coated
V = Bar dimensions vary between dimensions shown on this line and the following line.

MARK NO.	LOCATION	SIZE	NO. REQ'D.	BEND TYPE	TIE or STIR	FLD. WELD	SUBSTR.	EPX-COAT	VARIES	NO. EACH	U Ft.	U In.	W Ft.	W In.	X Ft.	X In.	Y Ft.	Y In.	Z Ft.	Z In.	θ_1 Deg.	θ_2 Deg.	LENGTH Ft.	LENGTH In.	WEIGHT Lbs.

STEEL REINFORCING BAR QUANTITIES NOT INCLUDED IN THIS BAR LIST

TRAFFIC BARRIER 14960

REINFORCEMENT BENDING DIAGRAMS

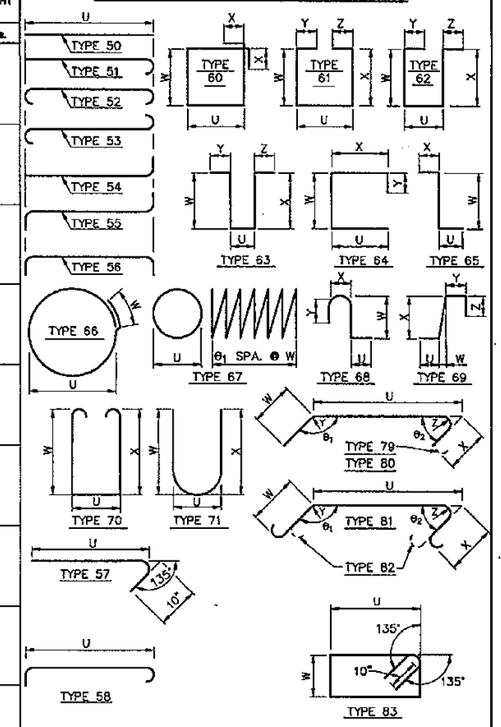

NOTES

1. All reinforcing bars on this sheet shall be A.S.T.M. A-615 Grade 60 unless shown otherwise.
2. Reinforcing for traffic barriers and sidewalks not shown in this Bar List. See Traffic Barrier sheet.
3. Bend for transverse bars due to roadway crown conditions have not been shown. These bars shall be bent as required to conform to the configuration of the structure.

FOR "AS CONSTRUCTED PLANS" ONLY

Bridge Design Engineer		REGION NO.	STATE	FED. AID. PROJ. NO.	SHEET NO. / TOTAL SHEETS
Supervisor		10	WASH		
Designed By K.T.F.		JOB NUMBER 95W036			
Checked By A.L.K.					
Detailed By P.R.B.		CONTRACT NO. 4771			
Bridge Projects Engineer					
Prelim. Plan By					
Architect/Specialist	DATE REVISION BY APP'D				

WASHINGTON STATE DEPARTMENT OF TRANSPORTATION

Sverdrup CIVIL INC.

SR167
15TH N.W. TO 84TH AVE. SO.
HOV SC & DI – STAGE 2
4TH ST OVERCROSSING BR. NO. 167/126

BAR LIST

BRIDGE SHEET NO. 20

SHEET 595 OF 663 SHEETS

SR167/91

BA100015 SR JOB NO. SHEET

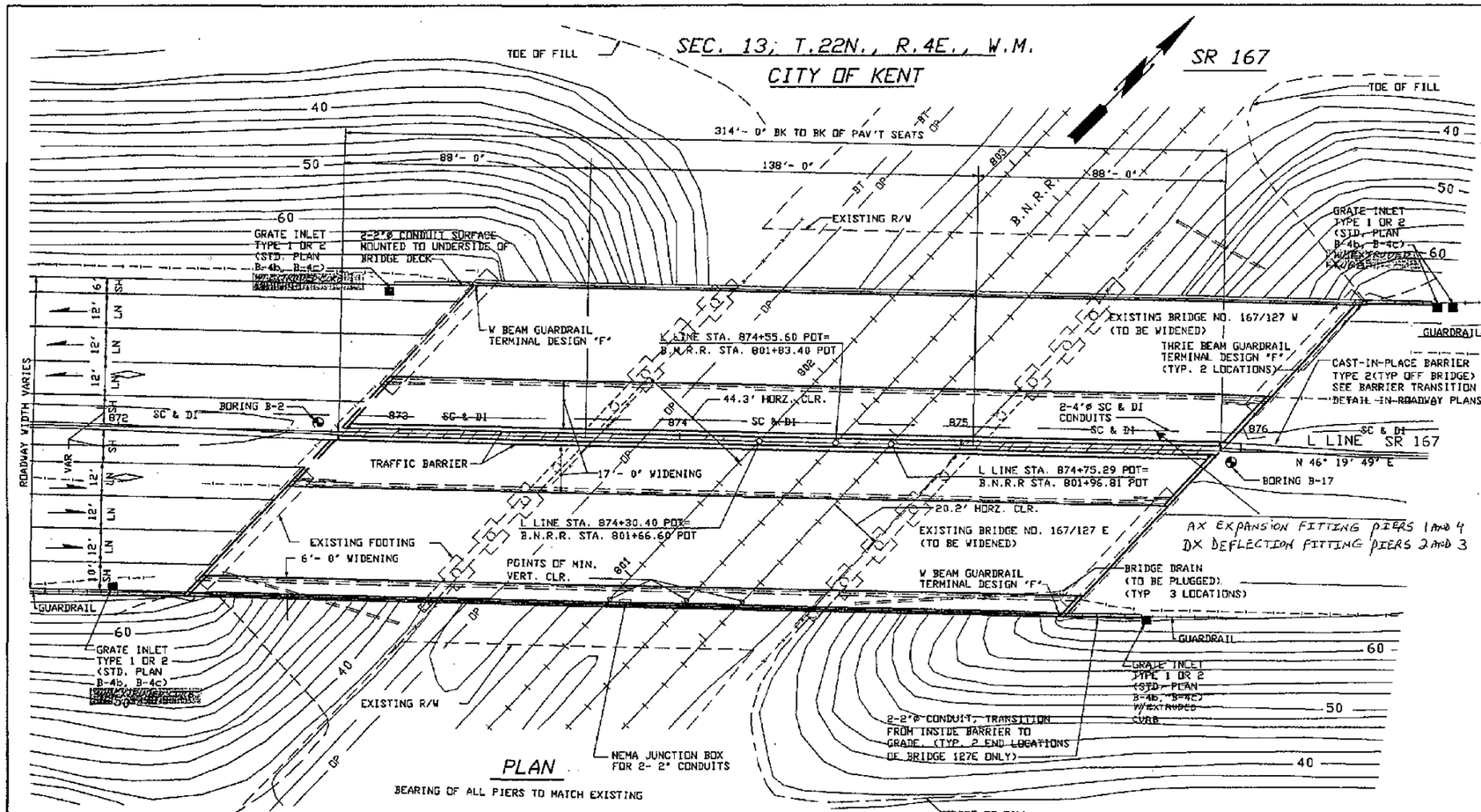

PLAN

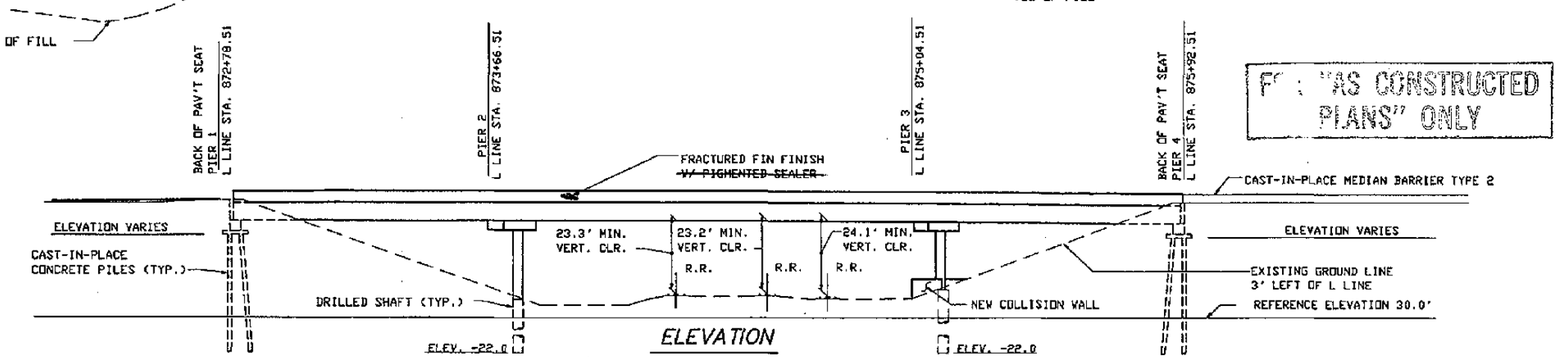

ELEVATION

FOR EMBANKMENT DETAILS AT BRIDGE ENDS SEE STD PLAN H-9

GENERAL NOTES:

1. ALL MATERIAL AND WORKMANSHIP SHALL BE IN ACCORDANCE WITH THE REQUIREMENTS OF THE STATE OF WASHINGTON DEPARTMENT OF TRANSPORTATION STANDARD SPECIFICATIONS FOR ROAD, BRIDGE AND MUNICIPAL CONSTRUCTION DATED 1994, AND AMENDMENTS.
2. THIS STRUCTURE HAS BEEN DESIGNED IN ACCORDANCE WITH THE REQUIREMENTS OF AASHTO STANDARD SPECIFICATIONS FOR HIGHWAY BRIDGES FIFTEENTH EDITION-1992, WITH INTERIM SPECIFICATIONS THROUGH 1993. ALL PRESTRESSED CONCRETE ELEMENTS HAVE BEEN DESIGNED FOR SERVICE LOAD STRESSES AND CHECKED FOR THE REQUIREMENTS OF LOAD FACTOR DESIGN. ALL OTHER STRUCTURAL ELEMENTS ARE DESIGNED IN ACCORDANCE WITH THE REQUIREMENTS FOR LOAD FACTOR DESIGN. SEISMIC DESIGN OF THIS STRUCTURE HAS BEEN DONE USING AN ACCELERATION COEFFICIENT OF 0.25 AND SOIL PROFILE TYPE II.
3. FOOTING ELEVATIONS AND SUBSTRUCTURE DETAILS ARE SUBJECT TO CHANGE DEPENDING UPON FOUNDATION MATERIAL ENCOUNTERED. REINFORCING STEEL FOR ABUTMENTS, DRILLED SHAFTS, COLUMNS AND PILES SHALL NOT BE CUT UNTIL FINAL FOOTING ELEVATIONS HAVE BEEN DETERMINED IN THE FIELD AND SUBSTRUCTURE DETAILS HAVE BEEN MODIFIED, IF REQUIRED.
4. DIMENSIONS TO THE EXISTING BRIDGE AND ALL ELEVATIONS SHOWN ON THE PLANS ARE BASED ON RECORD INFORMATION OF ORIGINAL CONSTRUCTION TOGETHER WITH FIELD SURVEY DATA. THE NEW STRUCTURE IS INTENDED TO MATCH THE EXISTING STRUCTURE. THEREFORE, DIMENSIONS TO THE EXISTING BRIDGE AND ALL ELEVATIONS GIVEN ON THE PLANS SHALL BE VERIFIED IN THE FIELD BY THE CONTRACTOR FOR COMPATIBILITY.
5. THE CONCRETE IN THE SHAFTS SHALL BE CLASS 4000W OR 4000. THE CONCRETE IN THE ROADWAY DECK SHALL BE CLASS 5000D. THE CONCRETE IN THE CAST-IN-PLACE PILES SHALL BE CLASS 4000P. THE CONCRETE IN THE CLOSURES SHALL BE CLASS 5000LS OR CLASS 5000DLS FOR THE ROADWAY DECK. ALL OTHER CAST-IN-PLACE CONCRETE SHALL BE CLASS 4000.
6. PILES SHALL BE DRIVEN TO A LOAD BEARING CAPACITY OF 70 TONS AT PIERS 1 & 4. SEE SPECIAL PROVISIONS FOR MINIMUM PILE TIP ELEVATIONS. THE MAXIMUM DESIGN LOAD FOR PIERS 2&3 SHAFTS ARE 390 TONS EACH.
7. FALSEWORK SHALL NOT BE RELEASED UNTIL ALL CONCRETE BEING SUPPORTED HAS MET THE AGE AND STRENGTH REQUIREMENTS OF THE STANDARD SPECIFICATIONS. FALSEWORK SHALL BE CAREFULLY RELEASED TO PREVENT IMPACT OR UNDUE STRESS IN THE STRUCTURE. CLOSURES SHALL BE MADE AFTER FALSEWORK IS RELEASED BUT BEFORE PLACEMENT OF OVERLAY AND BARRIERS.
8. UNLESS OTHERWISE SHOWN IN THE PLANS, THE CONCRETE COVER MEASURED FROM THE FACE OF ANY REINFORCING STEEL SHALL BE 2 1/2" AT THE TOP OF THE ROADWAY SLAB, 1" AT THE BOTTOM OF THE ROADWAY SLAB, 7 1/2" AT THE BOTTOM OF THE FOOTINGS AND 1 1/2" AT ALL OTHER LOCATIONS.

LEGEND

A/12 — IDENTIFIES SECTION, VIEW, OR DETAIL TAKEN OR SHOWN ON BRIDGE SHEET 12

D/– — DASH INDICATES THAT SECTION, VIEW, OR DETAIL IS TAKEN AND SHOWN ON THE SAME SHEET.

"AS CONSTRUCTED PLANS" ONLY

STEEL PLATE GIRDER

LOADING: HS-25

OR

TWO 24K AXLES 4' C'TRS.

DATUM

NATIONAL GEOD. VERTICAL ADJUSTED DATUM OF 1978

Bridge Design Engineer				PROJ. NO.	STATE	FED. AID. PROJ. NO.	SHEET NO.	TOTAL SHEETS
Supervisor				10	WASH			
Designed By Q.B.				JOB NUMBER 95W036				
Checked By J.R.K.								
Detailed By G.W.S.								
Bridge Projects Engineer K.N.K.								
Prelim. Plan By D.M.J.				CONTRACT NO. 4771				
Architect/Specialist R. MAYS	DATE	REVISION	BY	APP'D				

JOHN E. KATTELA, STATE OF WASHINGTON, REGISTERED PROFESSIONAL ENGINEER — 7/1/95 — EXPIRES: 06/10/96

WASHINGTON STATE DEPARTMENT OF TRANSPORTATION

Everdrup BINL INC.

SR167
15TH N.W. TO 84TH AVE. SO.
HOV SC & DI – STAGE 2
BNRR OVERCROSSING BR. NO. 167/127

LAYOUT

BRIDGE SHEET NO. 1

SHEET 596 OF 663 SHEETS

B7200001 SR JOB NO. SHEET

SR167/91

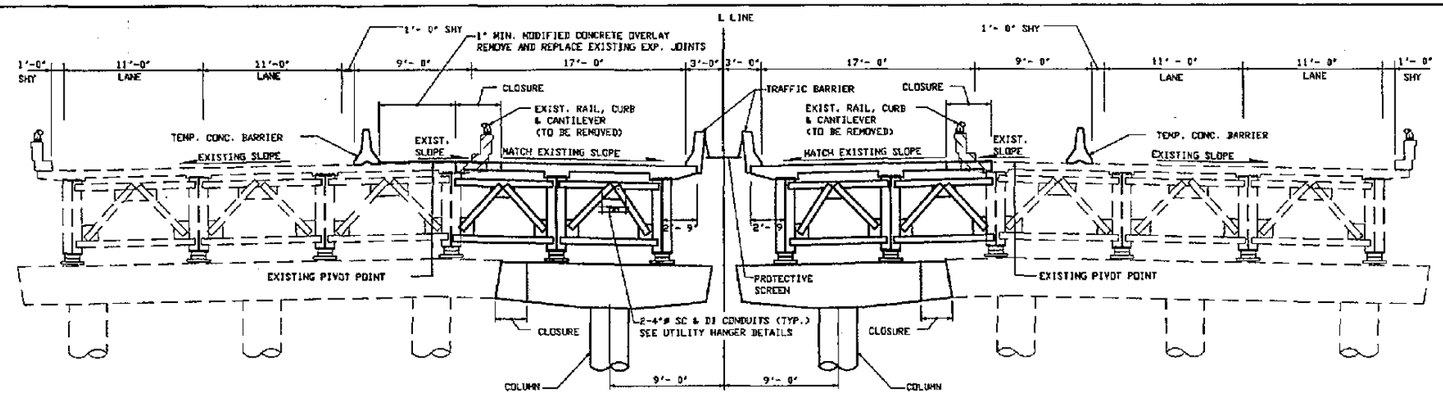

TYPICAL SECTION STAGE 1

SHOWN NEAR INTERMEDIATE PIER

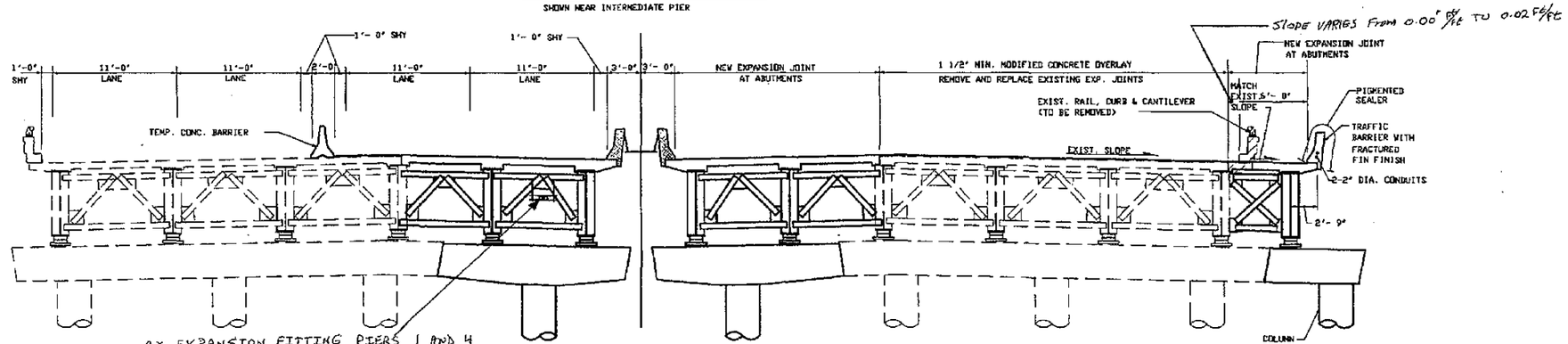

AX EXPANSION FITTING PIERS 1 AND 4
AX DEFLECTION FITTING PIERS 2 AND 3

TYPICAL SECTION STAGE 2

SHOWN NEAR INTERMEDIATE PIER

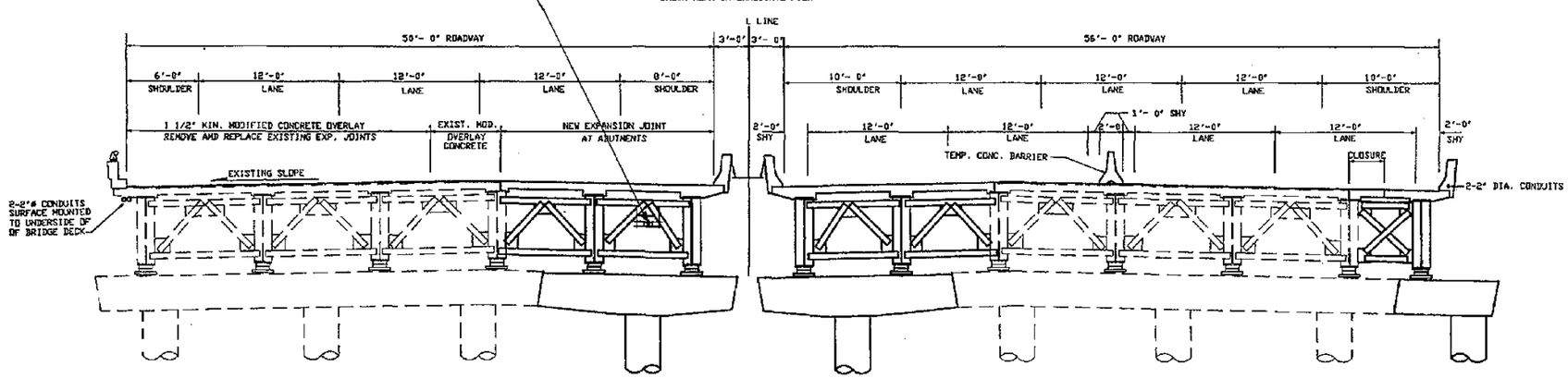

TYPICAL SECTION STAGE 3

SHOWN NEAR INTERMEDIATE PIER

FOR "AS CONSTRUCTED PLANS" ONLY

Bridge Design Engineer					REGION NO.	STATE	FED. AID. PROJ. NO.	SHEET NO.	TOTAL SHEETS
Supervisor					10	WASH			
Designed By Q.B.					JOB NUMBER				
Checked By J.R.K.					95W036				
Detailed By G.W.S.					CONTRACT NO.				
Bridge Projects Engineer					4771				
Prelim. Plan By									
Architect/Specialist	DATE	REVISION	BY	APP'D					

JOHN R. KATTELL — STATE OF WASHINGTON — REGISTERED PROFESSIONAL ENGINEER
EXPIRES: 06/10/98

WASHINGTON STATE DEPARTMENT OF TRANSPORTATION

Berendrup CIVIL INC.

SR167
15TH N.W. TO 84TH AVE. SO.
HOV SC & DI – STAGE 2
BNRR OVERCROSSING BR. NO. 167/127

STAGE CONSTRUCTION

BRIDGE SHEET NO. 2

SHEET 597 OF 663 SHEETS

B8200004 SR ___ JOB NO. ___ SHEET ___

SR167/91

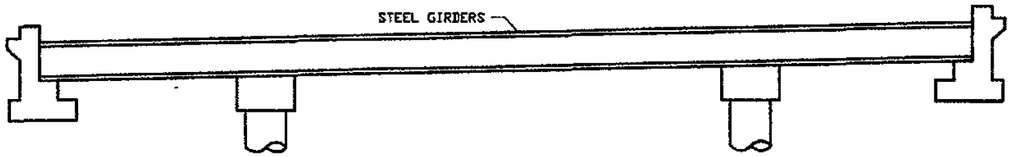

1 – ERECT STEEL GIRDERS

1. CONSTRUCT PIER 1 & 4, SHAFTS, COLUMNS AND X-BEAMS AT PIERS 2 & 3.
2. RELEASE ALL FALSEWORK UNDER PIERS 2 & 3 X-BEAMS.
3. ERECT STEEL GIRDERS AND INSTALL BOTTOM LATERALS & CROSS FRAMES BETWEEN NEW GIRDERS W1, W2, E1, & E2.
   FOR GIRDER E3, INSTALL BOTTOM LATERALS AND TOP AND BOTTOM STRUTS OF CROSS FRAMES ONLY BETWEEN NEW GIRDER AND EXISTING.

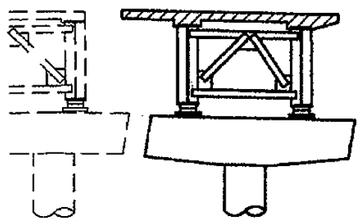

GIRDERS W1, W2, E1, & E2

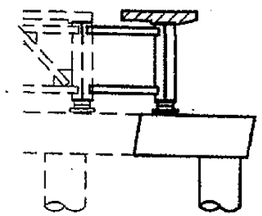

GIRDER E3
NOTE: CROSSBEAM DOES NOT HAVE A CLOSURE.

2 – CAST ROADWAY SLAB

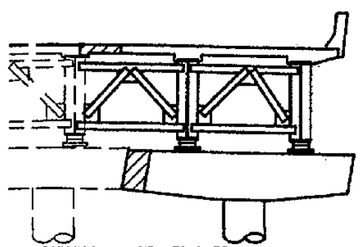

GIRDERS W1, W2, E1 & E2

1. INSTALL CROSS FRAMES BETWEEN EXISTING GIRDERS AND NEW GIRDERS.
2. PLACE CROSS BEAM CLOSURE. ALLOW 24 HOURS OF CURING BEFORE CLOSURE IS COMPLETE.
3. ALLOW 10 DAYS AND 4000 PSI PRIOR TO CASTING TRAFFIC BARRIER.

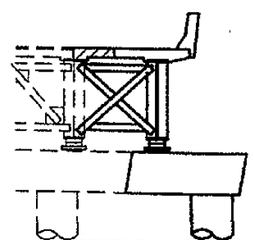

GIRDER E1

1. INSTALL CROSS FRAME DIAGONALS.
2. PLACE SLAB CLOSURE.
3. ALLOW 10 DAYS AND 4000 PSI PRIOR TO CASTING TRAFFIC BARRIER.

3 – CLOSURE

CONSTRUCTION SEQUENCE

NOTES:

1. SHIMS MAY BE REQUIRED TO FIT BRACKET TO THE CONCRETE BARRIERS AND ROADWAY SURFACE.
2. LOCATION OF ANCHORS IS TO BE ADJUSTED TO MISS THE MAIN REINFORCING IN THE DECK WHEN DRILLING HOLES.
3. PROVIDE TWO (2) ANCHOR ASSEMBILIES FOR EACH SECTION OF THE CONCRETE BARRIERS ON THE ROADWAY SURFACE.
4. FOR DETAILS NOT SHOWN, SEE STANDARD PLAN C-8.
5. LOCATE ANCHORS APPROX. 2'-6" FROM BOTH ENDS OF EACH SECTION.
6. AFTER REMOVING THE TEMPORARY CONCRETE BARRIER, CLEAN AND FILL BOLT HOLES WITH 2:1 SAND/CEMENT GROUT BY VOLUME.

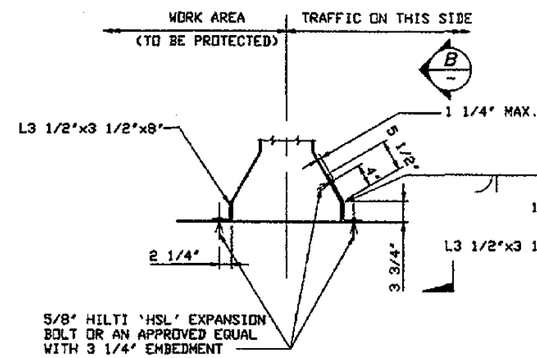

DETAIL A

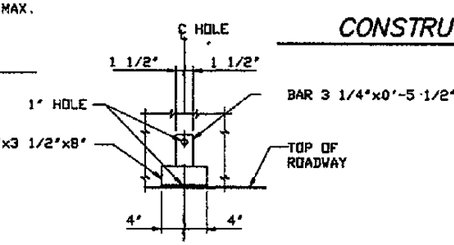

VIEW B

TEMPORARY BARRIER ANCHOR

(FOR USE ON BRIDGE DECK)

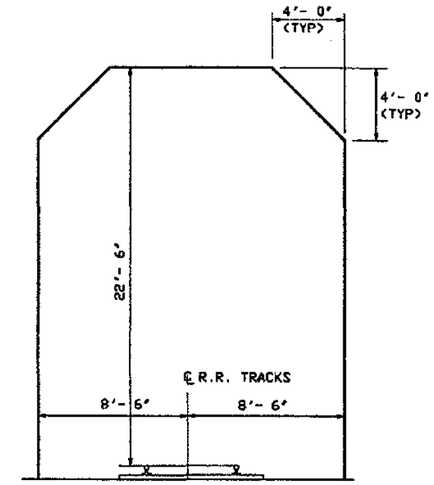

CONSTRUCTION OPENING

Bridge Design Engineer					
Supervisor					
Designed By	Q.B.				
Checked By	J.R.K.				
Detailed By	G.W.S.				
Bridge Projects Engineer					
Prelim. Plan By					
Architect/Specialist		DATE	REVISION	BY	APP'D

REGION NO.	STATE	FED. AID. PROJ. NO.	SHEET NO.	TOTAL SHEETS
10	WASH			

JOB NUMBER 95W036

CONTRACT NO.

JOHN R. KATTELL, STATE OF WASHINGTON, REGISTERED PROFESSIONAL ENGINEER, EXPIRES: 08/10/97

WASHINGTON STATE DEPARTMENT OF TRANSPORTATION

Sverdrup CIVIL INC.

SR167
15TH N.W. TO 84TH AVE. SO.
HOV SC & DI – STAGE 2
BNRR OVERCROSSING BR. NO. 167/127

CONSTRUCTION SEQUENCE & CONSTRUCTION OPENING

BRIDGE SHEET NO. 3

SHEET 598 OF 663 SHEETS

B8200005 SR JOB NO.

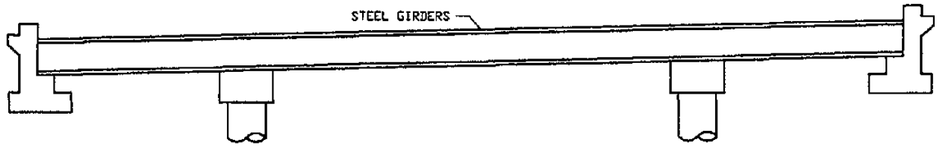

1 – ERECT STEEL GIRDERS

1. CONSTRUCT PIER 1 & 4, SHAFTS, COLUMNS AND X-BEAMS AT PIERS 2 & 3.
2. RELEASE ALL FALSEWORK UNDER PIERS 2 & 3 X-BEAMS.
3. ERECT STEEL GIRDERS AND INSTALL BOTTOM LATERALS & CROSS FRAMES BETWEEN NEW GIRDERS W1, W2, E1 & E2. INSTALL BOTTOM LATERALS AND TOP AND BOTTOM STRUTS OF CROSS FRAMES ONLY BETWEEN NEW GIRDER AND EXISTING AT W1, E1 AND E3. ATTACH TOP AND BOTTOM STRUTS TO STIFFNERS WITH ONE BOLT.

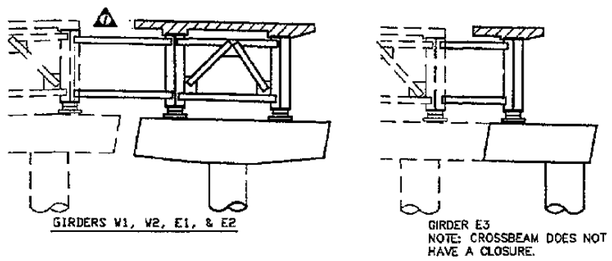

2 – CAST ROADWAY SLAB

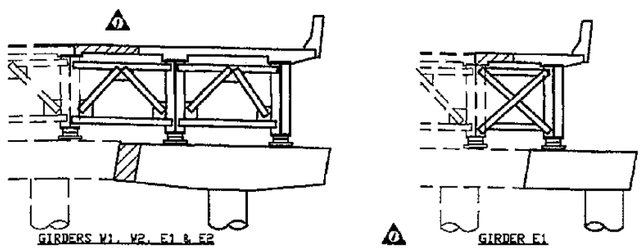

1. INSTALL CROSS FRAME DIAGONALS BETWEEN EXISTING GIRDERS AND NEW GIRDERS. COMPLETE INSTALLATION OF TOP & BOTTOM STRUTS.
2. PLACE CROSS BEAM CLOSURE. ALLOW 24 HOURS OF CURING BEFORE CLOSURE IS COMPLETE.
3. ALLOW 10 DAYS AND 4000 PSI PRIOR TO CASTING TRAFFIC BARRIER.

1. INSTALL CROSS FRAME DIAGONALS. COMPLETE INSTALLATION OF TOP & BOTTOM STRUTS.
2. PLACE SLAB CLOSURE.
3. ALLOW 10 DAYS AND 4000 PSI PRIOR TO CASTING TRAFFIC BARRIER.

3 ~ CLOSURE

CONSTRUCTION SEQUENCE

NOTES:

1. SHIMS MAY BE REQUIRED TO FIT BRACKET TO THE CONCRETE BARRIERS AND ROADWAY SURFACE.
2. LOCATION OF ANCHORS IS TO BE ADJUSTED TO MISS THE MAIN REINFORCING IN THE DECK WHEN DRILLING HOLES.
3. PROVIDE TWO (2) ANCHOR ASSEMBLIES FOR EACH SECTION OF THE CONCRETE BARRIERS ON THE ROADWAY SURFACE.
4. FOR DETAILS NOT SHOWN, SEE STANDARD PLAN C-8.
5. LOCATE ANCHORS APPROX. 2'-6" FROM BOTH ENDS OF EACH SECTION.
6. AFTER REMOVING THE TEMPORARY CONCRETE BARRIER, CLEAN AND FILL BOLT HOLES WITH 2:1 SAND/CEMENT GROUT BY VOLUME.

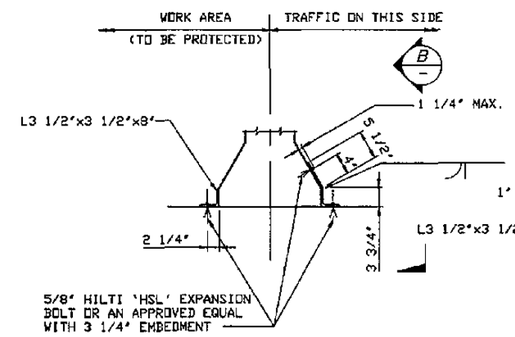

DETAIL A

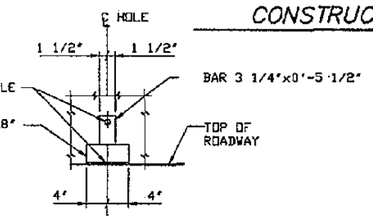

VIEW B

TEMPORARY BARRIER ANCHOR

(FOR USE ON BRIDGE DECK)

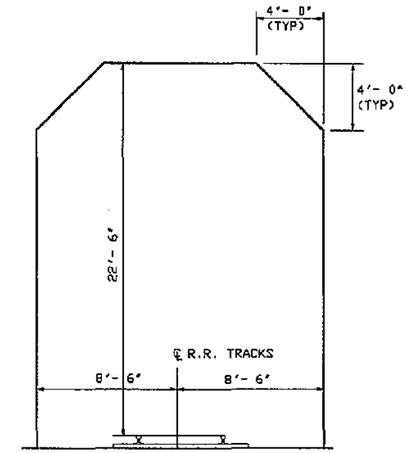

CONSTRUCTION OPENING

FOR "AS CONSTRUCTED" PLANS ONLY

Bridge Design Engineer						BRIDGE NO.	STATE	FED. AID. PROJ. NO.	SHEET NO.	TOTAL SHEETS
Supervisor										
Designed By Q.B.						10	WASH			
Checked By J.R.K.						JOB NUMBER 95W036				
Detailed By G.W.S.										
Bridge Projects Engineer										
Prelim. Plan By	1/96	1 REVISED CONSTR. SEQ.	MA	RJS		CONTRACT NO. 4771				
Architect/Specialist	DATE	REVISION	BY	APP'D						

JOHN R. KATTER, STATE OF WASHINGTON, REGISTERED PROFESSIONAL ENGINEER — EXPIRES: 06/10/97

WASHINGTON STATE DEPARTMENT OF TRANSPORTATION

Sverdrup CIVIL INC.

SR167
15TH N.W. TO 84TH AVE. SO.
HOV SC & DI – STAGE 2
BNRR OVERCROSSING BR. NO. 167/127

CONSTRUCTION SEQUENCE & CONSTRUCTION OPENING

BRIDGE SHEET NO. 3

SHEET 598A OF 663 SHEETS

SR 167/91

SR ___ JOB NO. 88200005 SHEET ___

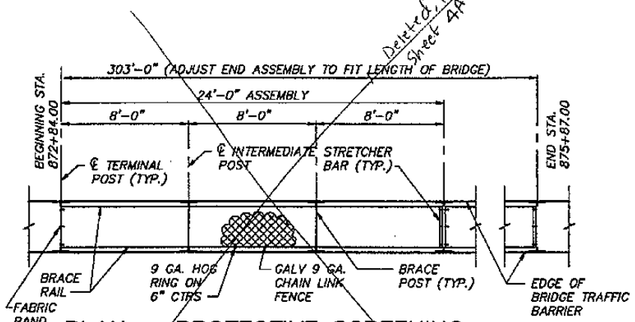

PLAN – PROTECTIVE SCREENING

1. SEE STANDARD PLANS – TYPE 1 FENCE.
2. BRACE RAIL CONNECTED TO BRACE POST WITH FITTING.

Deleted, Refer to Sheet 4A

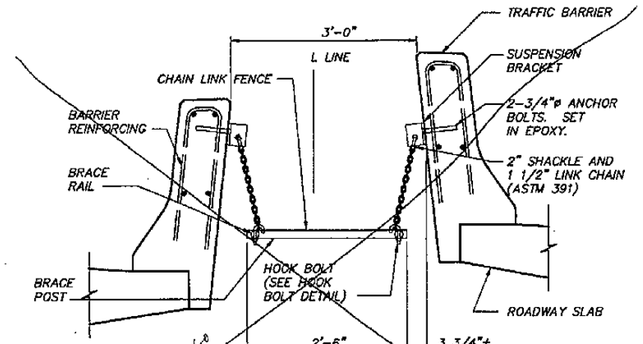

SECTION – SAFETY FENCE

Deleted, Refer to Sheet 4A

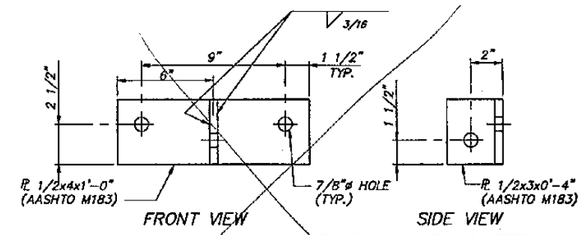

DETAIL – SUSPENSION BRACKET

Deleted, Refer to Sheet 4A

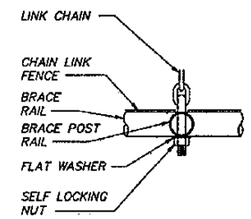

DETAIL – HOOK BOLT

NOTE: FITTINGS NOT SHOWN

STATION	ELEVATION LEFT CURB LINE	ELEVATION RIGHT CURB LINE	STATION	ELEVATION LEFT CURB LINE	ELEVATION RIGHT CURB LINE	STATION	ELEVATION LEFT CURB LINE	ELEVATION RIGHT CURB LINE
872+96.32	—	68.32	874+26.22	67.98	—	875+36.42	—	67.96
873+06.42	—	68.40	874+26.42	—	68.49	875+46.22	67.37	—
873+16.42	—	68.50	874+36.22	67.96	—	875+46.42	—	67.88
873+26.40	67.91	—	874+36.42	—	68.47	875+56.22	67.28	—
873+26.42	—	68.47	874+46.22	67.95	—	875+56.42	—	67.80
873+36.22	67.89	—	874+46.42	—	68.45	875+66.22	67.21	—
873+36.42	—	68.47	874+56.22	67.88	—	875+66.42	—	67.71
873+46.22	67.91	—	874+56.42	—	68.41	875+76.22	67.10	—
873+46.42	—	68.49	874+66.22	67.85	—	875+76.42	—	67.61
873+56.22	67.96	—	874+66.42	—	68.37	875+86.22	67.04	—
873+56.42	—	68.50	874+76.22	67.82	—	875+86.42	—	67.51
873+66.22	67.96	—	874+76.42	—	68.32	875+96.22	66.98	—
873+66.42	—	68.51	874+86.22	67.79	—	875+96.42	—	67.39
873+76.22	67.98	—	874+86.42	—	68.28	876+06.22	—	67.35
873+76.42	—	68.54	874+96.22	67.73	—	876+05.78	66.72	—
873+86.22	68.01	—	874+96.42	—	68.22	876+10.60	66.99	—
873+86.42	—	68.56	875+06.22	67.66	—	876+16.22	66.72	—
873+96.22	68.00	—	875+06.42	—	68.18	876+26.22	66.53	—
873+96.42	—	68.55	875+16.22	67.60	—	876+36.22	66.49	—
874+06.22	68.00	—	875+16.42	—	68.11	876+40.32	67.58	—
874+06.42	—	68.54	875+26.22	67.53	—	—	—	—
874+16.22	67.99	—	875+26.42	—	68.03	—	—	—
874+16.42	—	68.52	875+36.22	67.45	—	—	—	—

BRIDGE NO. 167/127W
EXISTING ELEVATIONS

WEST TRACK STATION	WEST TRACK ELEVATION	EAST TRACK STATION	EAST TRACK ELEVATION	SPUR TRACK STATION	SPUR TRACK ELEVATION
799+14.28	37.49	799+14.28	36.60	799+14.28	37.42
799+64.28	37.41	799+64.28	37.53	799+64.28	37.50
800+14.28	37.43	800+14.28	37.43	800+14.28	37.44
800+64.04	37.42	800+64.04	37.41	800+64.04	37.21
800+88.27	37.50	800+89.70	37.45	800+89.06	37.18
801+64.28	37.41	801+64.28	37.40	801+14.27	36.97
802+35.98	37.47	802+14.28	37.41	801+64.28	36.73
802+64.28	37.40	802+37.43	37.43	802+14.28	36.49
803+14.28	37.41	802+64.28	37.39	802+37.75	36.46
803+64.28	37.43	803+14.28	37.39	802+64.28	36.34
804+14.28	37.44	803+64.28	37.44	803+14.28	36.19
804+64.28	37.46	804+14.28	37.46	803+64.28	36.13
		804+64.28	37.48	804+14.28	36.10
				804+64.28	36.06

B.N.R.R. EXISTING ELEVATIONS

STATION	ELEVATION LEFT CURB LINE	ELEVATION RIGHT CURB LINE	STATION	ELEVATION LEFT CURB LINE	ELEVATION RIGHT CURB LINE	STATION	ELEVATION LEFT CURB LINE	ELEVATION RIGHT CURB LINE
872+30.94	—	67.57	873+60.64	68.49	—	874+71.00	—	67.67
872+41.00	—	67.58	873+61.00	—	67.99	874+80.64	68.16	—
872+51.00	—	67.62	873+70.64	68.47	—	874+81.00	—	67.64
872+60.71	68.15	—	873+71.00	—	67.99	874+90.64	68.14	—
872+61.00	—	67.69	873+80.64	68.46	—	874+91.00	—	67.57
872+70.64	68.17	—	873+81.00	—	67.99	875+00.64	68.09	—
872+71.00	—	67.75	873+90.64	68.45	—	875+01.00	—	67.50
872+80.64	68.21	—	873+91.00	—	67.98	875+10.64	68.02	—
872+81.00	—	67.82	874+00.64	68.49	—	875+11.00	—	67.42
872+90.64	68.27	—	874+01.00	—	67.96	875+20.64	67.95	—
872+91.00	—	67.82	874+10.64	68.46	—	875+21.00	—	67.34
873+00.64	68.31	—	874+11.00	—	67.93	875+30.64	67.87	—
873+01.00	—	67.87	874+2064	68.43	—	875+31.00	—	67.23
873+10.64	68.36	—	874+21.00	—	67.90	875+40.64	67.77	—
873+11.00	—	67.92	874+30.64	68.40	—	875+44.66	—	67.18
873+20.64	68.39	—	874+31.00	—	67.88	875+50.64	67.67	—
873+21.00	—	67.92	874+40.64	68.37	—	875+60.64	67.59	—
873+30.64	68.40	—	874+41.00	—	67.83	875+70.64	67.49	—
873+31.00	—	67.93	874+50.64	68.32	—	875+74.60	67.58	—
873+40.64	68.44	—	874+51.00	—	67.81	—	—	—
873+41.00	—	67.97	874+60.64	68.28	—	—	—	—
873+50.64	68.46	—	874+61.00	—	67.75	—	—	—
873+51.00	—	67.96	874+70.64	68.23	—	—	—	—

BRIDGE NO. 167/127E
EXISTING ELEVATIONS

FOR "AS CONSTRUCTED" PLANS ONLY

Bridge Design Engineer				REGION NO.	STATE	FED. AID. PROJ. NO.
Supervisor				10	WASH	
Designed By Q.B.				JOB NUMBER 95W036		
Checked By J.R.K.						
Detailed By G.W.S.						
Bridge Projects Engineer				CONTRACT NO. 4771		
Prelim. Plan By						
Architect/Specialist	DATE	REVISION	BY	APP'D		

SHEET NO. | TOTAL SHEETS

JOHN R. KATTELLE, STATE OF WASHINGTON, 21145, REGISTERED PROFESSIONAL ENGINEER — EXPIRES: 06/10/98

WASHINGTON STATE DEPARTMENT OF TRANSPORTATION

Sverdrup CIVIL INC.

SR167
15TH N.W. TO 84TH AVE. SO.
HOV SC & DI – STAGE 2
BNRR OVERCROSSING BR. NO. 167/127

ELEVATIONS AND PROTECTIVE SCREENING DETAILS

BRIDGE SHEET NO. 4

SHEET 599 OF 663 SHEETS

B8200033 SR JOB NO. SHEET

SR 167/91

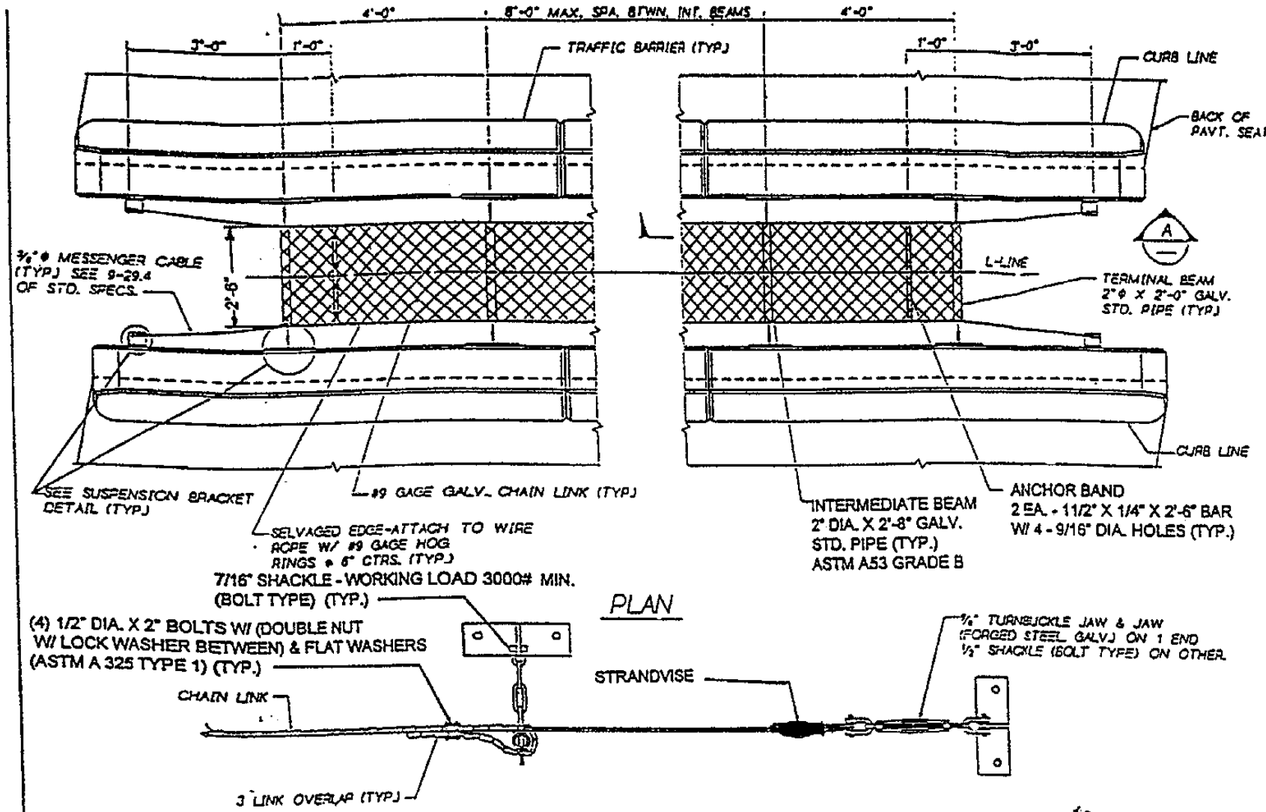

PLAN

NOTES:

1. ALL PARTS SHALL BE GALVANIZED IN ACCORDANCE WITH AASHTO M 111 AFTER FABRICATION.
2. ADJUST 3/8" CABLE TENSION TO PRODUCE 3% VERTICAL SAG BETWEEN INTERMEDIATE BEAMS.

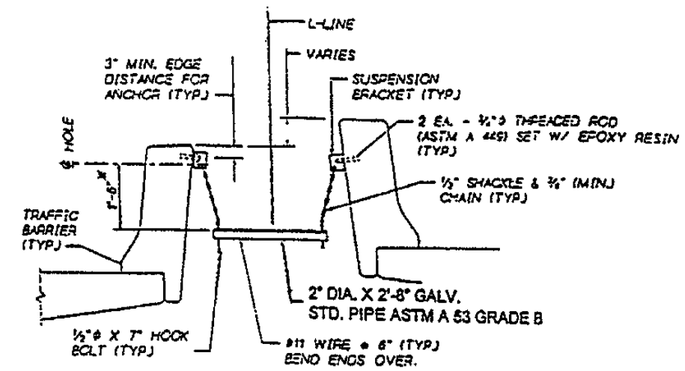

* CHAIN LENGTH MAY VARY TO LEVEL SCREEN

TYPICAL SECTION

VIEW A

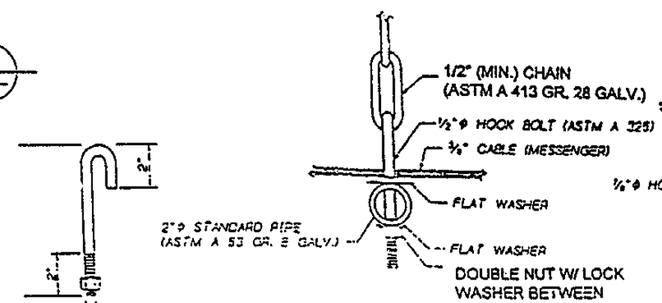

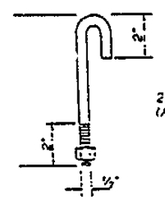

HOOK BOLT

HOOK BOLT DETAIL

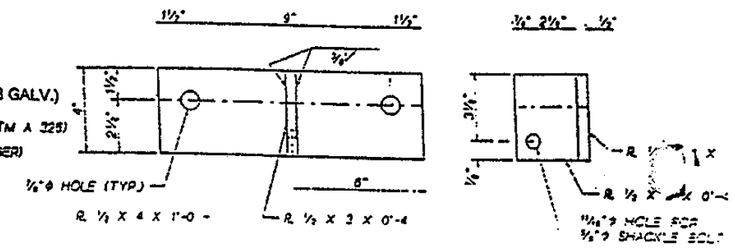

SUSPENSION BRACKET

AASHTO M 183

NOTE:
GAS-CUT OR SAW-CUT ONLY FOR R 1/2 X 3 X 0'-4

FOR "AS CONSTRUCTED PLANS" ONLY

1 ADDED BR. SH.

CONTRACT 4771
CHANGE ORDER 17
SHEET 7 **OF** 7

SR ___ JOB NO. ___ SHEET ___

Bridge Design Engr. C. C. RUTH					
Supervisor R. T. SHAEFER					
Designed By					
Checked By					
Detailed By					
Bridge Projects Engr.					
Prepm. Plan By		1 ADDED BR. SHT. 19A			
Architect/Specialist	DATE	REVISION	BY	APP'D	

10 WASH

JOB NUMBER

BRIDGE AND STRUCTURES OFFICE

SUPERVISING BRIDGE ENGINEER

BRIDGE DESIGN ENGINEER

Washington State Department of Transportation

SR 167
15TH NW TO 84TH AVE. SO.
HOV AND SC & DI - STAGE 2

PROTECTIVE SCREEN

BRIDGE SHEET 4A

SHEET 599A OF 663

71-MAR-96

ANNCPSDNMOD1 LFGR SR167.PRP

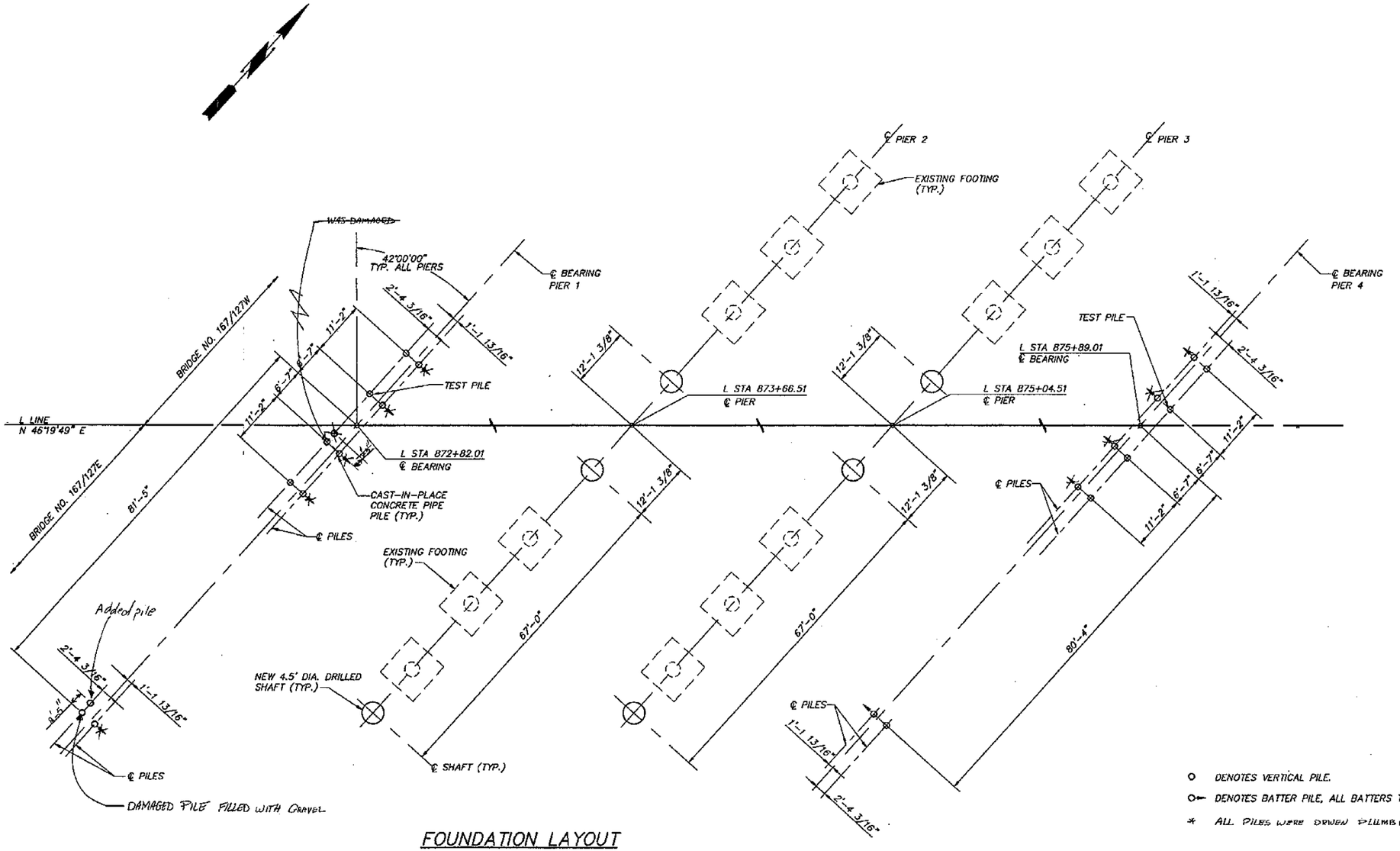

O DENOTES VERTICAL PILE.

O— DENOTES BATTER PILE, ALL BATTERS TO BE 4:12.

* ALL PILES WERE DRIVEN PLUMB (VERTICAL)

FOUNDATION LAYOUT

BRIDGE NOS. 167/127E & 167/127W

FOR "AS CONSTRUCTED PLANS" ONLY

Bridge Design Engineer					REGION NO.	STATE	FED. AID. PROJ. NO.	SHEET NO.	TOTAL SHEETS	
Supervisor					10	WASH				
Designed By	Q.B. W.G.D.				JOB NUMBER 95W036					
Checked By	J.R.K.									
Detailed By	B.L.P.									
Bridge Projects Engineer					CONTRACT NO. 4771					
Prelim. Plan By										
Architect/Specialist		DATE	REVISION	BY	APP'D					

JOHN R. KATTELLE, STATE OF WASHINGTON, REGISTERED PROFESSIONAL ENGINEER 9/1/95 EXPIRES: 06/10/97

WASHINGTON STATE DEPARTMENT OF TRANSPORTATION

Sverdrup CIVIL INC.

SR167
15TH N.W. TO 84TH AVE. SO.
HOV SC & DI – STAGE 2
BNRR OVERCROSSING BR. NO. 167/127

FOUNDATION LAYOUT

BRIDGE SHEET NO. 5

SHEET 600 OF 663 SHEETS

B5200003 SR___ JOB NO.___ SHEET___

SR167/91

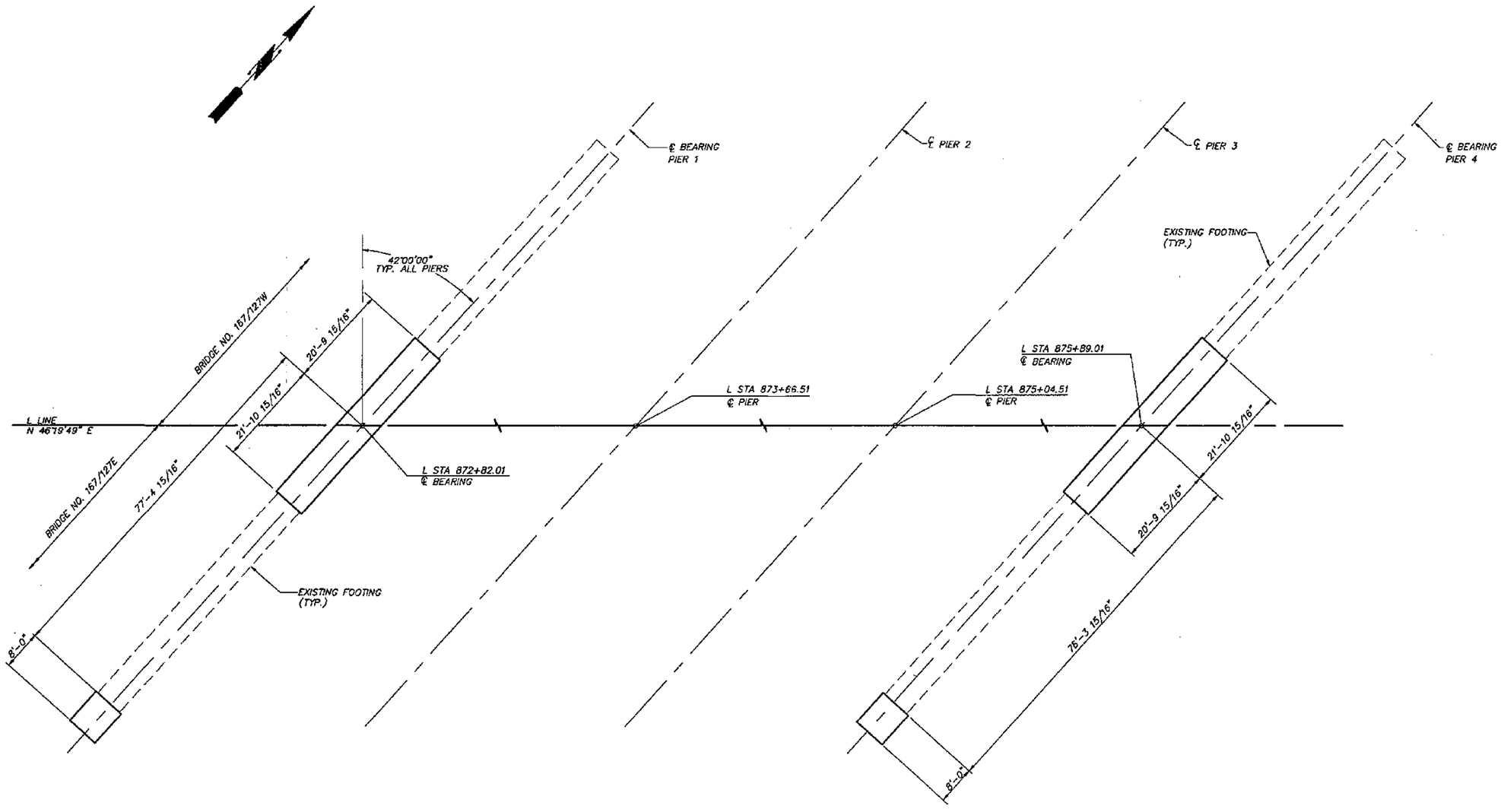

FOOTING LAYOUT

BRIDGE NOS. 167/127E & 167/127W

FOR "AS CONSTRUCTED PLANS" ONLY

Bridge Design Engineer					REGION NO.	STATE	FED. AID. PROJ. NO.	SHEET NO.	TOTAL SHEETS
Supervisor					10	WASH			
Designed By Q.B. / W.C.D.					JOB NUMBER 95W038				
Checked By J.R.K.									
Detailed By B.L.P.									
Bridge Projects Engineer					CONTRACT NO. 4771				
Prelim. Plan By									
Architect/Specialist	DATE	REVISION	BY	APP'D					

JOHN R. KATTERJOHN — STATE OF WASHINGTON — REGISTERED PROFESSIONAL ENGINEER — 9/1/95 — EXPIRES: 06/10/97

WASHINGTON STATE DEPARTMENT OF TRANSPORTATION

Sverdrup CIVIL INC.

SR167
15TH N.W. TO 84TH AVE. SO.
HOV SC & DI – STAGE 2
BNRR OVERCROSSING BR. NO. 167/127

FOOTING LAYOUT

BRIDGE SHEET NO. 6

SHEET 601 OF 663 SHEETS

B5200029 SR ____ JOB NO. ____ SHEET ____

SR 167/91

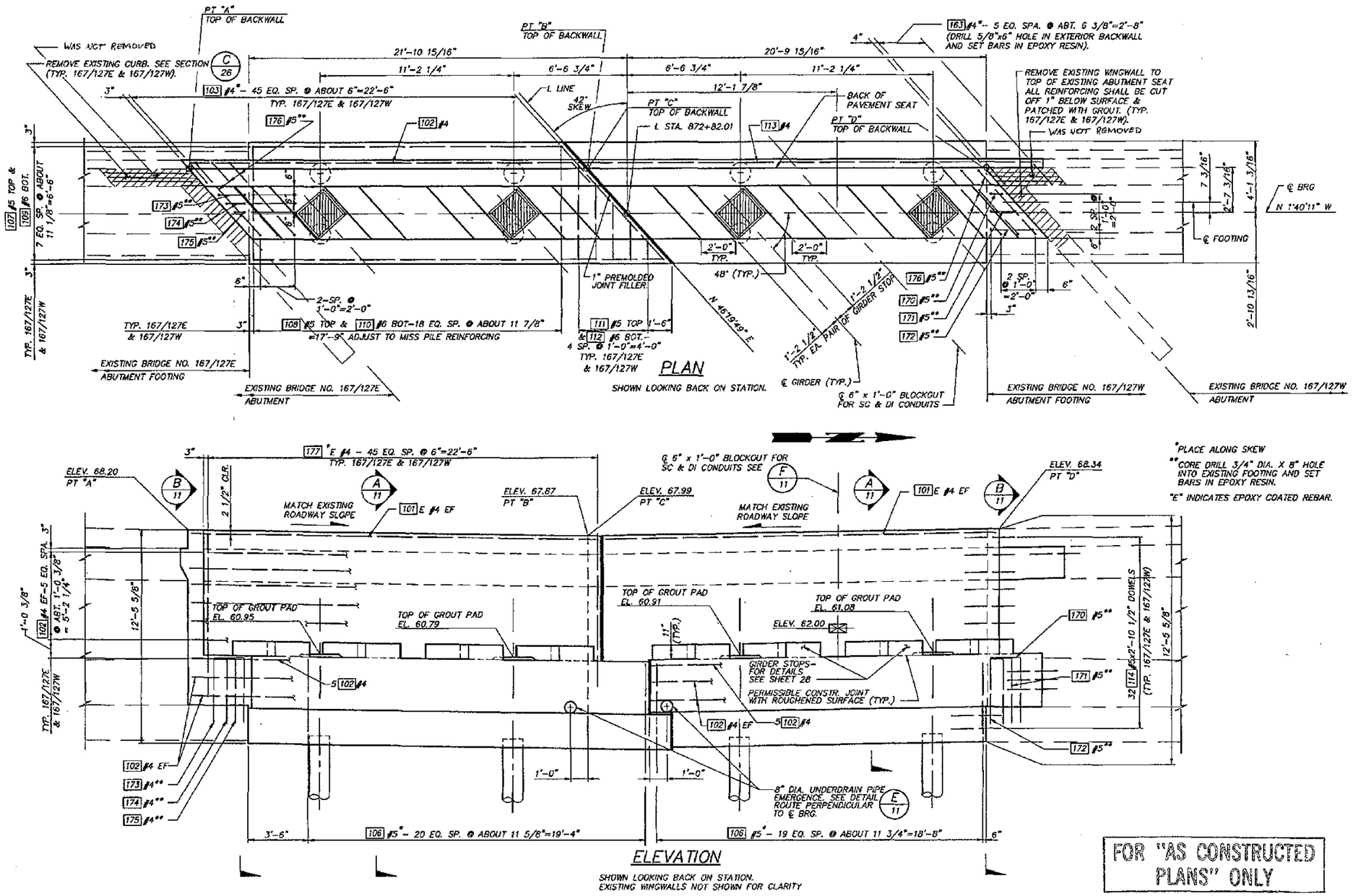

FOR "AS CONSTRUCTED PLANS" ONLY

Bridge Design Engineer					REGION NO.	STATE	FED. AID. PROJ. NO.	SHEET NO.	TOTAL SHEETS
Supervisor					10	WASH			
Designed By W.G.D.					JOB NUMBER 95W036				
Checked By D.W.K.					CONTRACT NO. 4771				
Detailed By A.J.D.									
Bridge Projects Engineer									
Prelim. Plan By									
Architect/Specialist	DATE	REVISION	BY	APP'D					

JOHN R. KATHLENE, STATE OF WASHINGTON, REGISTERED PROFESSIONAL ENGINEER, 21420 — 3/1/91 — EXPIRES: 06/10/91

WASHINGTON STATE DEPARTMENT OF TRANSPORTATION

Sverdrup CIVIL INC.

SR167
15TH N.W. TO 84TH AVE. SO.
HOV SC & DI - STAGE 2
BNRR OVERCROSSING BR. NO. 167/127

PIER 1 - PLAN & ELEVATION - INTERIOR WIDENING

BRIDGE SHEET NO. 7

SHEET 602 OF 663 SHEETS

SR 167/91

B8200006 SR ___ JOB NO. ___ SHEET ___

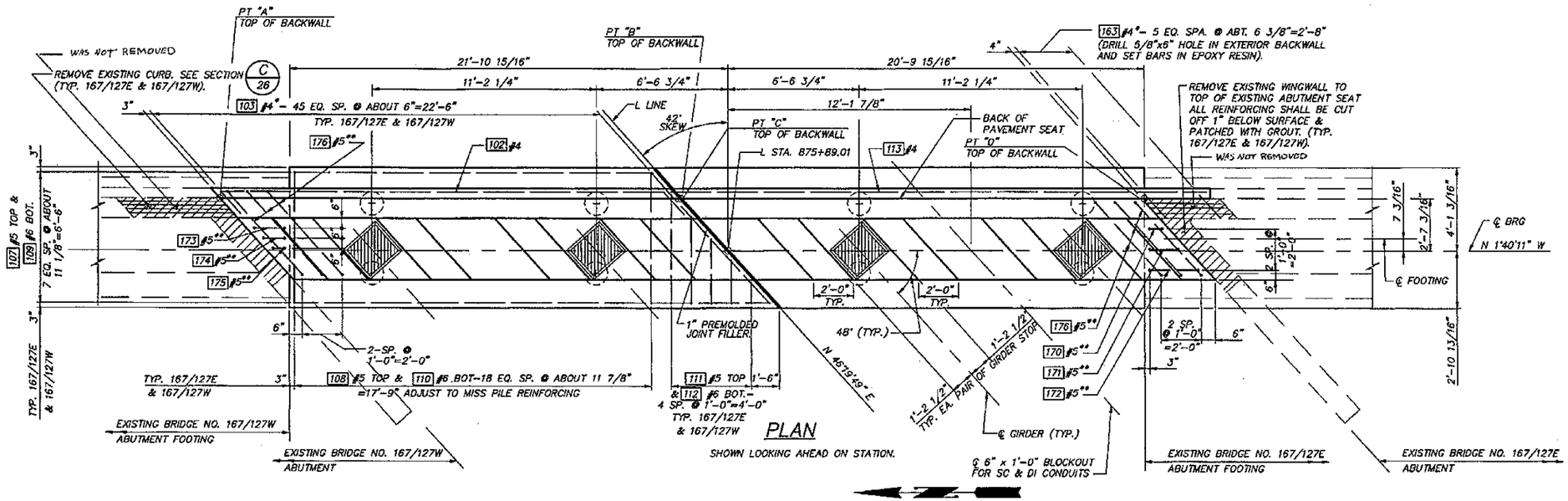

PLAN

SHOWN LOOKING AHEAD ON STATION.

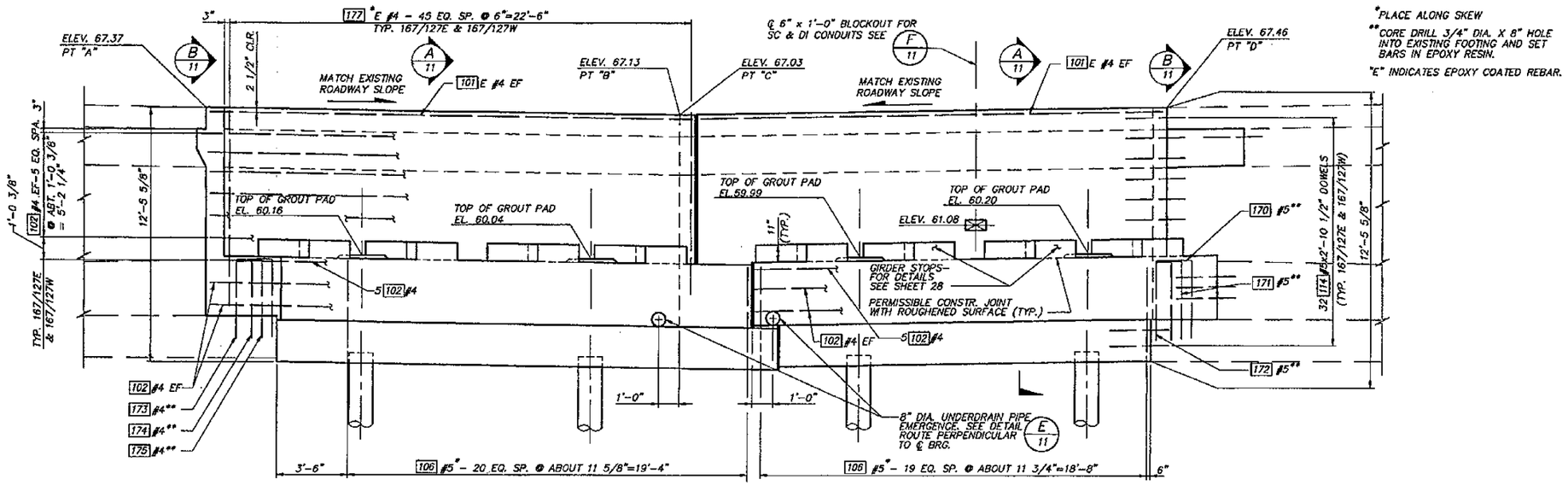

ELEVATION

SHOWN LOOKING AHEAD ON STATION.
EXISTING WINGWALLS NOT SHOWN FOR CLARITY.

FOR "AS CONSTRUCTED" PLANS ONLY

Bridge Design Engineer					REGION NO.	STATE	FED. AID. PROJ. NO.	SHEET NO.	TOTAL SHEETS	
Supervisor					10	WASH				
Designed By W.G.D.					JOB NUMBER 95W036					
Checked By D.W.K.					CONTRACT NO. 4771					
Detailed By A.J.D.										
Bridge Projects Engineer										
Prelim. Plan By										
Architect/Specialist	DATE	REVISION	BY	APP'D						

B8200030 SR ___ JOB NO. ___ SHEET ___

JOHN R. KATTELL, STATE OF WASHINGTON, REGISTERED PROFESSIONAL ENGINEER — EXPIRES: 06/10/97

WASHINGTON STATE DEPARTMENT OF TRANSPORTATION

Berdrup CIVIL INC.

SR167
15TH N.W. TO 84TH AVE. SO.
HOV SC & DI - STAGE 2
BNRR OVERCROSSING BR. NO. 167/127

PIER 4 - PLAN & ELEVATION - INTERIOR WIDENING

BRIDGE SHEET NO. 8

SHEET 603 OF 663 SHEETS

SR 167/91

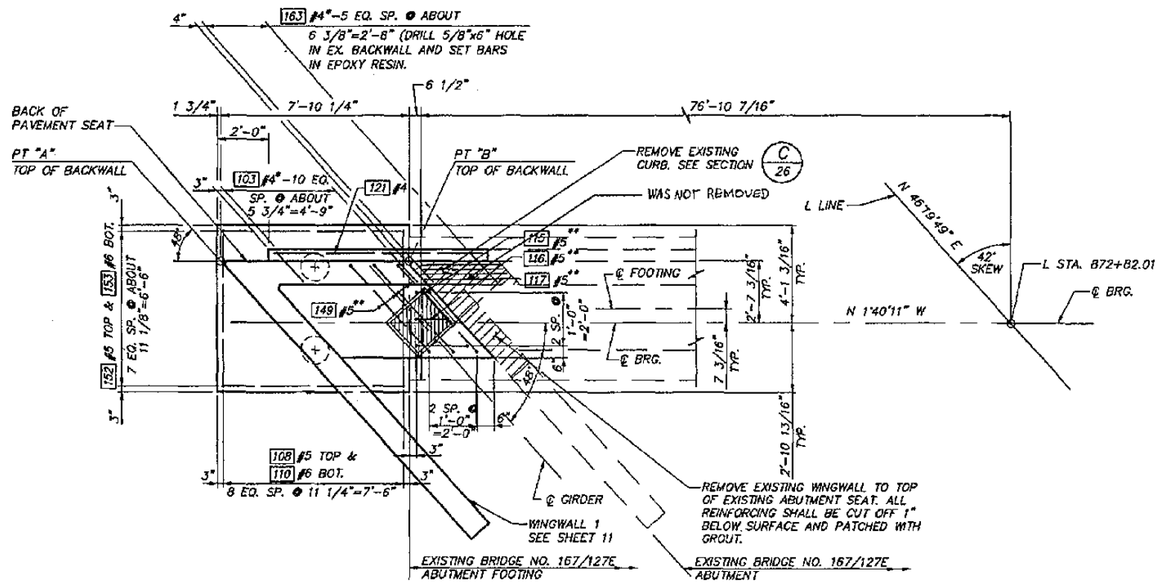

PLAN

SHOWN LOOKING BACK ON STATION.

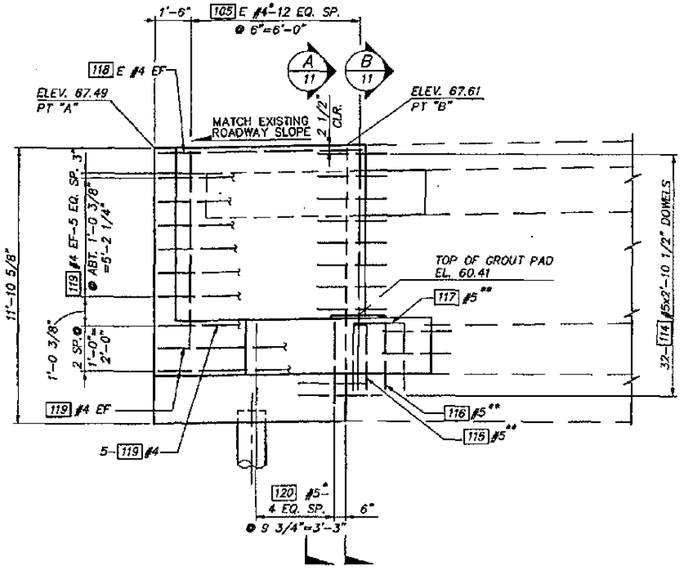

ELEVATION

WINGWALLS NOT SHOWN FOR CLARITY

*PLACE ALONG SKEW

**CORE DRILL 3/4" DIA. X 8" HOLE INTO EXISTING FOOTING AND SET BARS IN EPOXY RESIN.

"E" INDICATES EPOXY COATED REBAR.

FOR "AS CONSTRUCTED PLANS" ONLY

Bridge Design Engineer					REGION NO.	STATE	FED. AID. PROJ. NO.	SHEET NO.	TOTAL SHEETS	
Supervisor					10	WASH				
Designed By W.G.D.					JOB NUMBER 95W036					
Checked By D.W.K.										
Detailed By A.J.D.										
Bridge Projects Engineer										
Prelim. Plan By										
Architect/Specialist	DATE	REVISION	BY	APP'D	CONTRACT NO. 4771					

BB2000007 SR ___ JOB NO. ___ SHEET ___

ALLEN R. KATTELL, STATE OF WASHINGTON, REGISTERED PROFESSIONAL ENGINEER — 9/1/95 — EXPIRES: 06/10/1997

WASHINGTON STATE DEPARTMENT OF TRANSPORTATION

Sverdrup CIVIL INC.

SR167
15TH N.W. TO 84TH AVE. SO.
HOV SC & DI – STAGE 2
BNRR OVERCROSSING BR. NO. 167/127

PIER 1 – PLAN & ELEVATION – EXTERIOR WIDENING

BRIDGE SHEET NO. 9

SHEET 604 OF 663 SHEETS

SR167/91

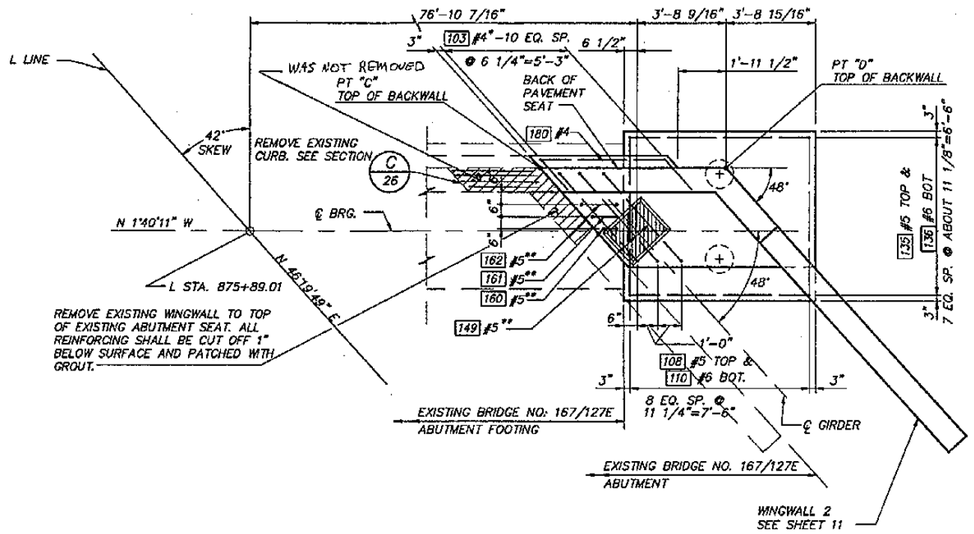

PLAN

SHOWN LOOKING AHEAD ON STATION.

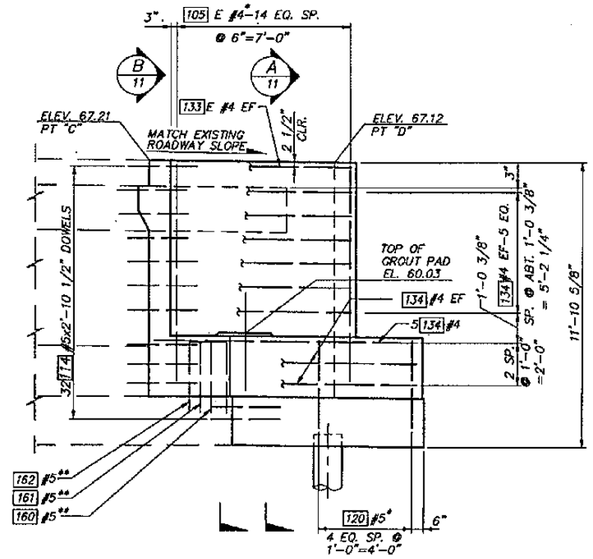

ELEVATION

WINGWALLS NOT SHOWN FOR CLARITY

*PLACE ALONG SKEW

**CORE DRILL 3/4" DIA. X 8" HOLE INTO EXISTING FOOTING AND SET BARS IN EPOXY RESIN.

"E" INDICATES EPOXY COATED REBAR.

OR "AS CONSTRUCTED PLANS" ONLY

Bridge Design Engineer					REGION NO.	STATE	FED. AID. PROJ. NO.	SHEET NO.	TOTAL SHEETS	
Supervisor					10	WASH				
Designed By W.G.D.					JOB NUMBER 95W036					
Checked By D.W.K.										
Detailed By A.J.D.										
Bridge Projects Engineer					CONTRACT NO. 4771					
Prelim. Plan By										
Architect/Specialist	DATE	REVISION	BY	APP'D						

JOHN R. KATTELL, STATE OF WASHINGTON, REGISTERED PROFESSIONAL ENGINEER
EXPIRES: 06/10/98

WASHINGTON STATE DEPARTMENT OF TRANSPORTATION

Sverdrup CIVIL INC.

SR167
15TH N.W. TO 84TH AVE. SO.
HOV SC & DI – STAGE 2
BNRR OVERCROSSING BR. NO. 167/127

PIER 4 – PLAN & ELEVATION – EXTERIOR WIDENING

BRIDGE SHEET NO. 10

SHEET 605 OF 663 SHEETS

B8200008 SR___ JOB NO.___ SHEET___

SR167/91

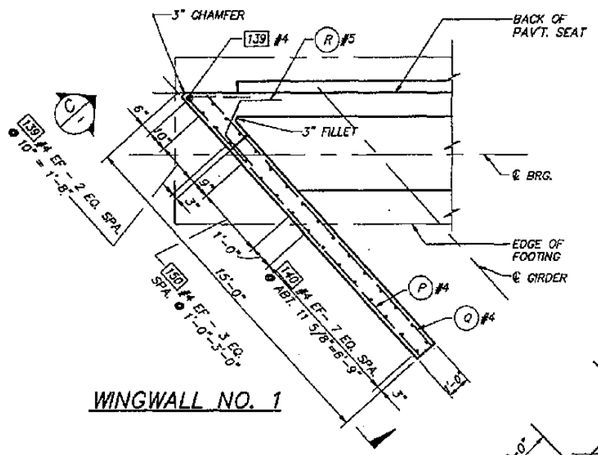

WINGWALL NO. 1

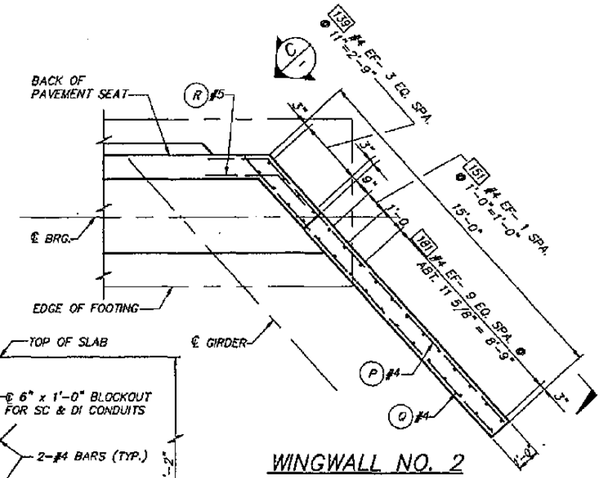

WINGWALL NO. 2

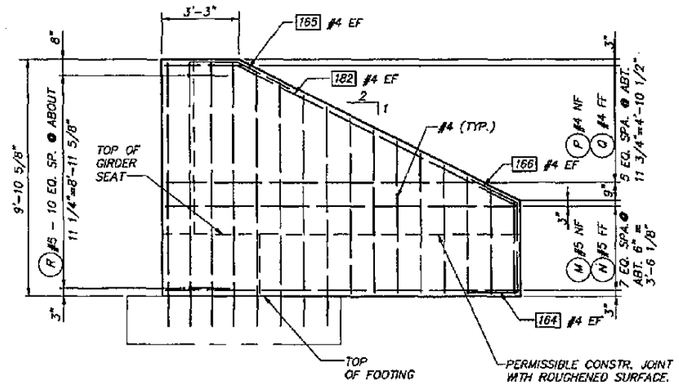

VIEW C

WINGWALL 1 SHOWN
WINGWALL 2 SIMILAR

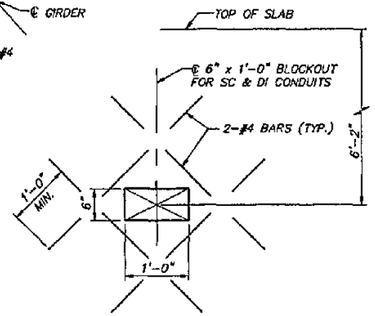

DETAIL F 7,8

BAR REFERENCE	WINGWALL 1	WINGWALL 2
M	145	141
N	146	142
P	147	143
Q	148	144
R	186	185

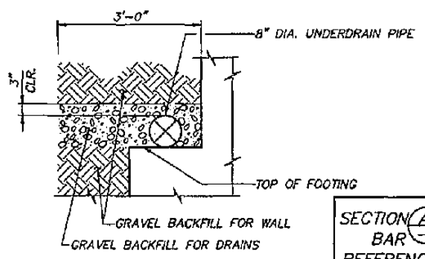

DETAIL D

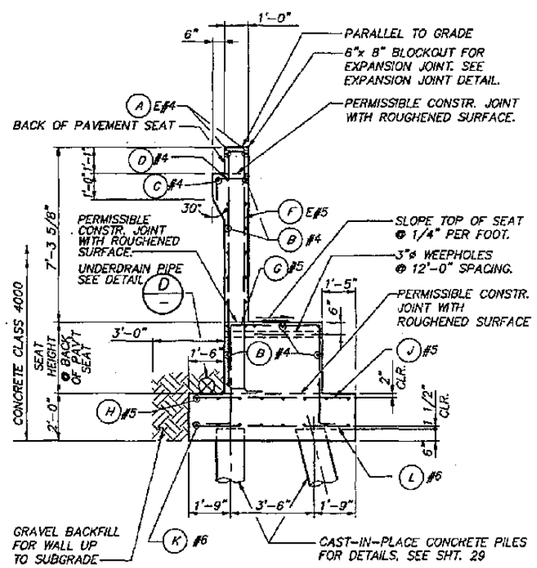

SECTION A 7 8,9,10

NOTE: GIRDER STOPS NOT SHOWN.

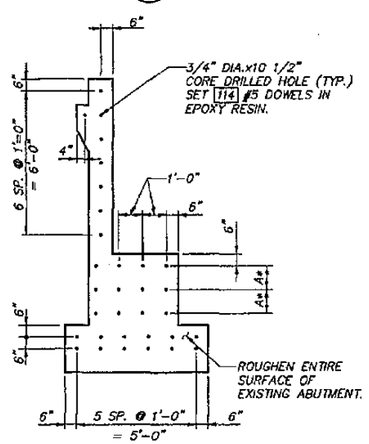

* DIM. A = 1'-0" AT INTERIOR WIDENINGS.
* DIM. A = 8" AT EXTERIOR WIDENINGS.

SECTION B 7 8,9,10

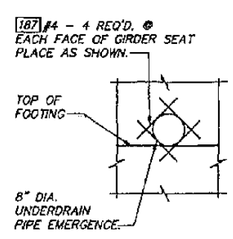

DETAIL E 7,8

SECTION A / BAR REFERENCE	PIER 1 & 4 INTERIOR WIDENING BRIDGE NO. 167/127 E	PIER 1 & 4 INTERIOR WIDENING BRIDGE NO. 167/127 W	PIER 1 EXTERIOR WIDENING BRIDGE NO. 167/127 E	PIER 4 EXTERIOR WIDENING BRIDGE NO. 167/127 E
A	101 E	101 E	118 E	133 E
B	102	102	119	134
C	102, 113	113, 102	121	180
D	103	103	103	103
F	177 E	177 E	105 E	105 E
G	106	106	120	120
H	107	107	152	135
J	108	108	108	108
K	109	109	153	136
L	110	110	110	110
SEAT HEIGHT	3'-2"	3'-2"	2'-7"	2'-7"

E INDICATES EPOXY COATED REBAR

FOR "AS CONSTRUCTED" PLANS" ONLY

Bridge Design Engineer				REGION NO.	STATE	FED. AID. PROJ. NO.	SHEET NO. / TOTAL SHEETS
Supervisor				10	WASH		
Designed By W.G.D.				JOB NUMBER 95W036			
Checked By D.W.K.							
Detailed By B.L.P.							
Bridge Projects Engineer							
Prelim. Plan By		DELETED NON-PRESTRESSED ANCHORS		CONTRACT NO. 4771			
Architect/Specialist	DATE	REVISION	BY / APP'D				

JOHN R. KATTELL, STATE OF WASHINGTON, REGISTERED PROFESSIONAL ENGINEER — EXPIRES: 06/10/94

WASHINGTON STATE DEPARTMENT OF TRANSPORTATION

Sverdrup CIVIL INC.

SR167
15TH N.W. TO 84TH AVE. SO.
HOV SC & DI - STAGE 2
BNRR OVERCROSSING BR. NO. 167/127

PIERS 1 & 4 - DETAILS

BRIDGE SHEET NO. 11

SHEET 606 OF 663 SHEETS

SR167/91

B8200009 SR ___ JOB NO. ___ SHEET ___

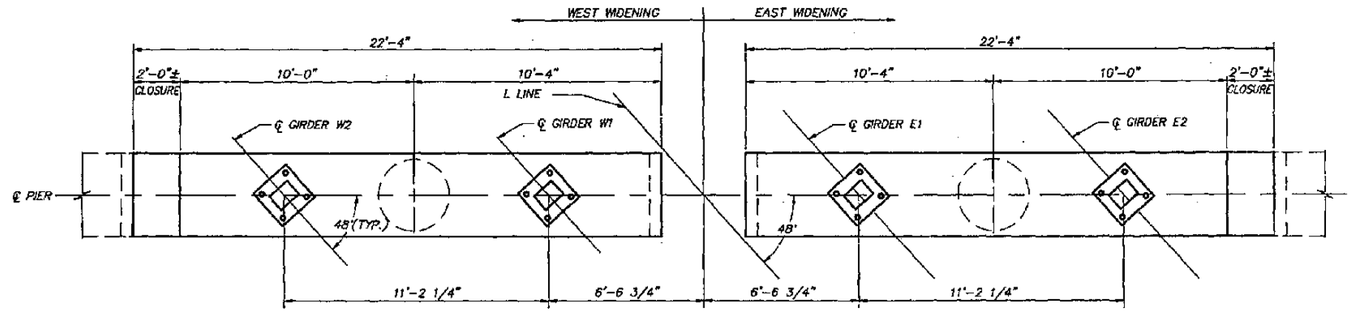

PLAN

DIMENSIONS SHOWN ALONG SKEW AT ℄ PIER

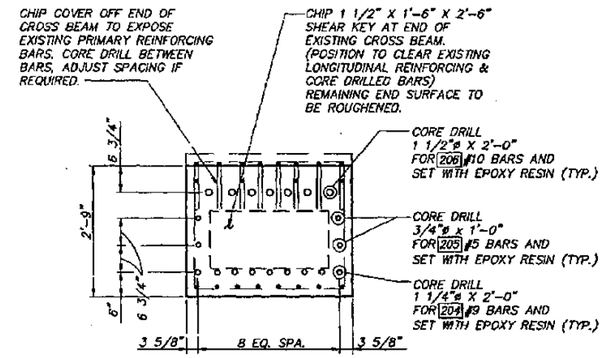

SECTION A

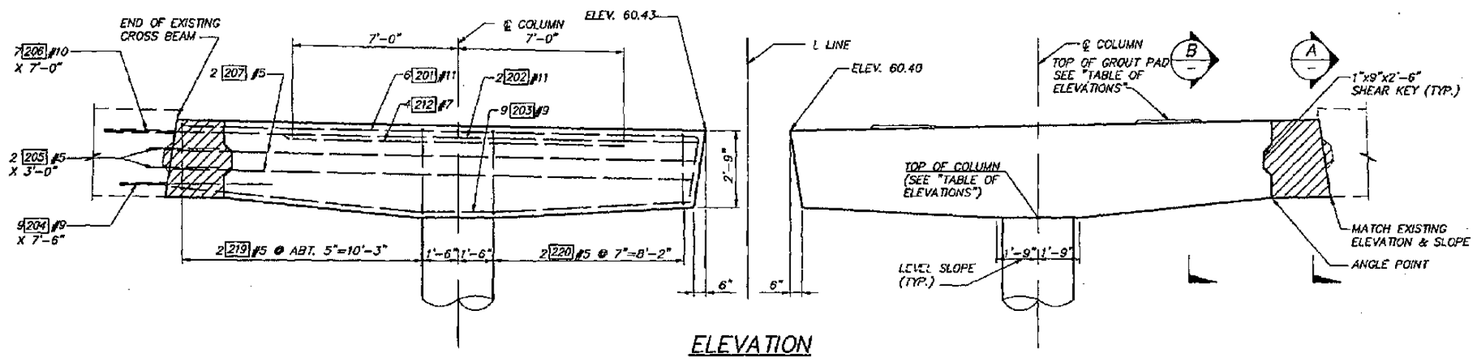

ELEVATION

ELEVATION GIVEN AT ℄ PIER SHOWN LOOKING AHEAD ON STATION.

REINFORCING SYMMETRICAL ABOUT L LINE.

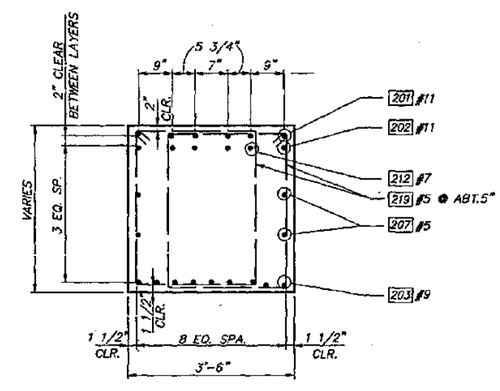

SECTION B

TABLE OF ELEVATIONS					
167/127 WEST			167/127 EAST		
TOP OF COLUMN	GIRDER	TOP OF GROUT PAD	TOP OF COLUMN	GIRDER	TOP OF GROUT PAD
56.86	W1	60.64	56.80	E1	60.60
	W2	60.82		E2	60.75

NOTE: FOR GROUT PAD AND ANCHOR BOLT DETAILS SEE BEARINGS-PIERS 2 & 3 SHEET

FOR "AS CONSTRUCTED PLANS" ONLY

Bridge Design Engineer					
Supervisor					
Designed By	A.L.K.				
Checked By	P.R.B.				
Detailed By	G.W.S.				
Bridge Projects Engineer					
Prelim. Plan By					
Architect/Specialist		DATE	REVISION	BY	APP'D

REGION NO.	STATE	FED. AID. PROJ. NO.	SHEET NO.	TOTAL SHEETS
10	WASH			

JOB NUMBER 95W036

CONTRACT NO. 4771

JOHN R. KATTELL, STATE OF WASHINGTON, 21671, REGISTERED PROFESSIONAL ENGINEER, 9/11/95

EXPIRES: 06/10/97

WASHINGTON STATE DEPARTMENT OF TRANSPORTATION

Sverdrup CIVIL INC.

SR167
15TH N.W. TO 84TH AVE. SO.
HOV SC & DI – STAGE 2
BNRR OVERCROSSING BR. NO. 167/127

PIER 2 – CROSS BEAM DETAILS – INTERIOR WIDENING

BRIDGE SHEET NO. 12

SHEET 607 OF 663 SHEETS

SR 167/91

88200015 SR JOB NO. SHEET

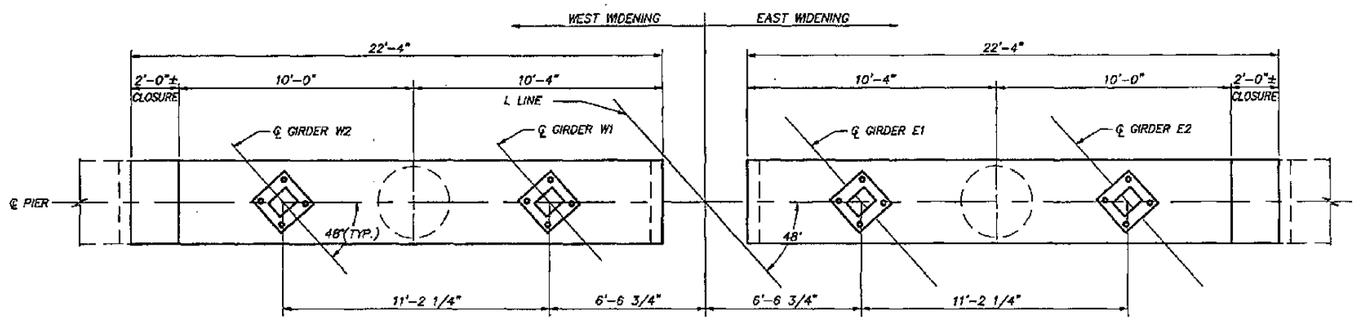

PLAN

DIMENSIONS SHOWN ALONG SKEW AT ℄ PIER

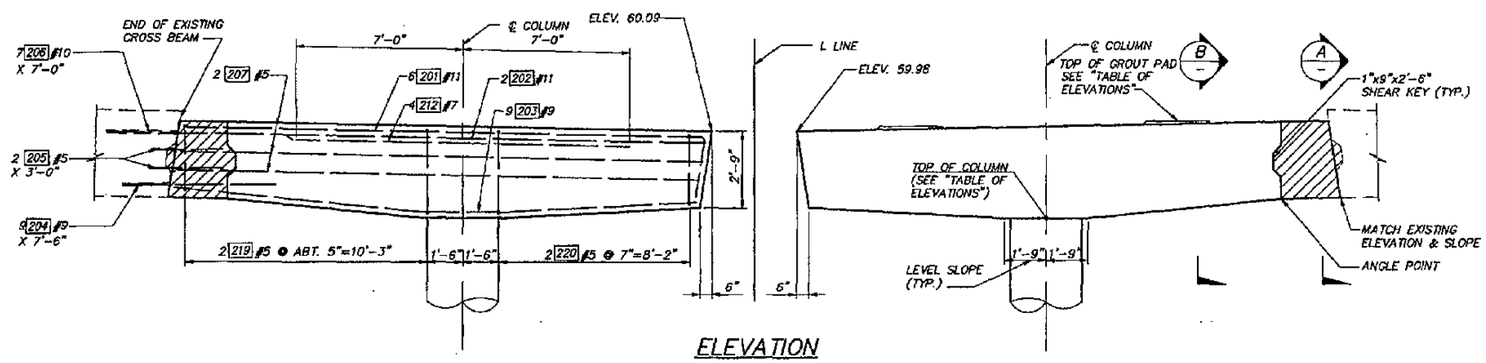

ELEVATION

ELEVATION GIVEN AT ℄ PIER SHOWN LOOKING AHEAD ON STATION.

REINFORCING SYMMETRICAL ABOUT L LINE.

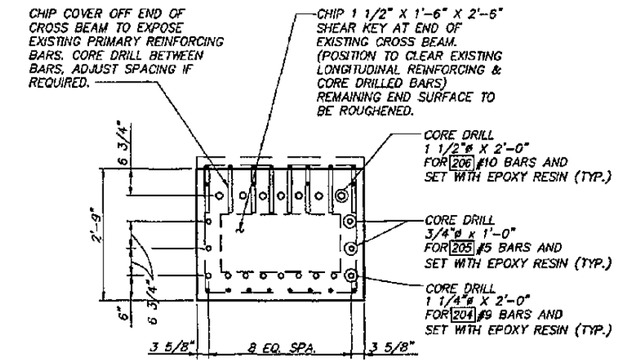

SECTION A

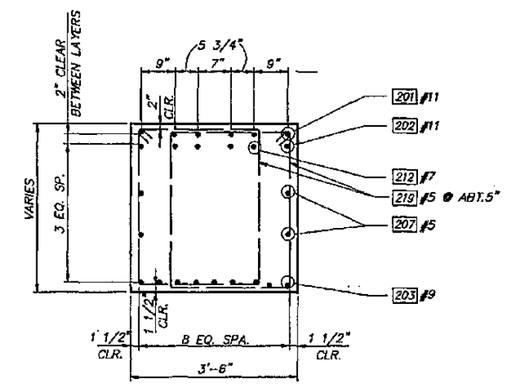

SECTION B

TABLE OF ELEVATIONS					
167/127 WEST			167/127 EAST		
TOP OF COLUMN	GIRDER	TOP OF GROUT PAD	TOP OF COLUMN	GIRDER	TOP OF GROUT PAD
56.45	W1	60.27	56.42	E1	60.20
	W2	60.38		E2	60.40

NOTE: FOR GROUT PAD AND ANCHOR BOLT DETAILS SEE BEARINGS–PIERS 2 & 3 SHEET

FOR "AS CONSTRUCTED PLANS" ONLY

B8200031 SR___ JOB NO.___ SHEET___

Bridge Design Engineer					
Supervisor					
Designed By A.L.K.					
Checked By P.R.B.					
Detailed By G.W.S.					
Bridge Projects Engineer					
Prelim. Plan By					
Architect/Specialist	DATE	REVISION	BY	APP'D	

REGION NO.	STATE	FED. AID. PROJ. NO.	SHEET NO.	TOTAL SHEETS
10	WASH			
JOB NUMBER 95W038				
CONTRACT NO. 4771				

JOHN R. KATTELL, STATE OF WASHINGTON, REGISTERED PROFESSIONAL ENGINEER, 9/1/95, EXPIRES: 06/10/97

WASHINGTON STATE DEPARTMENT OF TRANSPORTATION

Sverdrup CIVIL INC.

SR167
15TH N.W. TO 84TH AVE. SO.
HOV SC & DI – STAGE 2
BNRR OVERCROSSING BR. NO. 167/127

PIER 3 – CROSS BEAM DETAILS – INTERIOR WIDENING

BRIDGE SHEET NO. 13

SHEET 608 OF 663 SHEETS

SR167/91

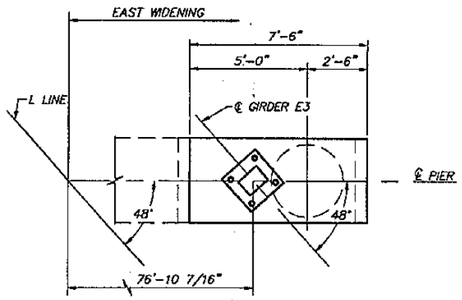

PLAN

DIMENSIONS SHOWN ALONG SKEW @ ℄ PIER

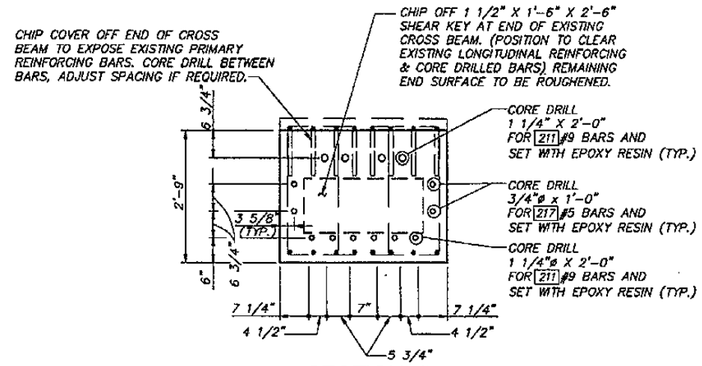

SECTION A

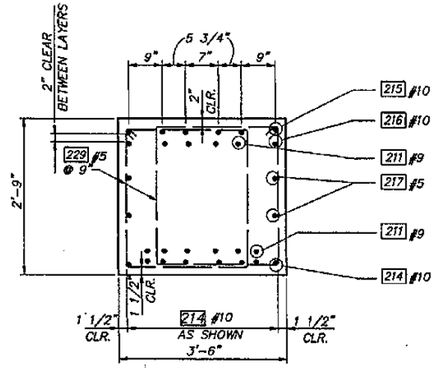

SECTION B

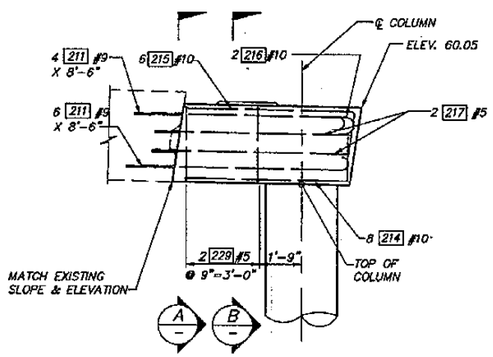

ELEVATION

SHOWN LOOKING AHEAD ON STATION.

TABLE OF ELEVATIONS		
167/127 EAST		
TOP OF COLUMN	GIRDER	TOP OF GROUT PAD
57.35	E3	60.25
–	–	–

NOTE: FOR GROUT PAD AND ANCHOR BOLT DETAILS, SEE BEARINGS – PIERS 2 & 3 SHEET.

FOR "AS CONSTRUCTED PLANS" ONLY

B8200026 SR ___ JOB NO. ___ SHEET ___

Bridge Design Engineer				
Supervisor				
Designed By A.L.K.				
Checked By P.R.B.				
Detailed By G.W.S.				
Bridge Projects Engineer				
Prelim. Plan By				
Architect/Specialist	DATE	REVISION	BY	APP'D

REGION NO.	STATE	FED. AID. PROJ. NO.	SHEET NO.	TOTAL SHEETS
10	WASH			
JOB NUMBER 95W036				
CONTRACT NO. 4771				

JOHN R. KATTELL, STATE OF WASHINGTON, 34111, REGISTERED PROFESSIONAL ENGINEER, 9/1/95, EXPIRES: 06/10/95

WASHINGTON STATE DEPARTMENT OF TRANSPORTATION

Sverdrup CIVIL INC.

SR167
15TH N.W. TO 84TH AVE. SO.
HOV SC & DI – STAGE 2
BNRR OVERCROSSING BR. NO. 167/127

PIER 2 – CROSS BEAM DETAILS – EXTERIOR WIDENING

BRIDGE SHEET NO. 14

SHEET 609 OF 663 SHEETS

SR167/91

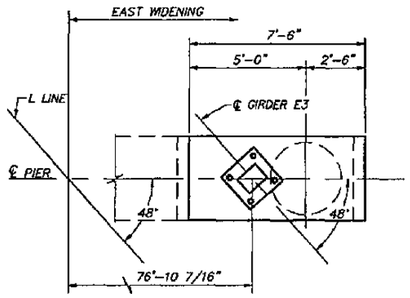

PLAN

DIMENSIONS SHOWN ALONG SKEW @ ℄ PIER

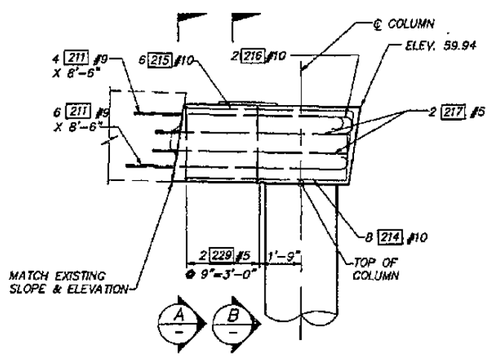

ELEVATION

SHOWN LOOKING AHEAD ON STATION.

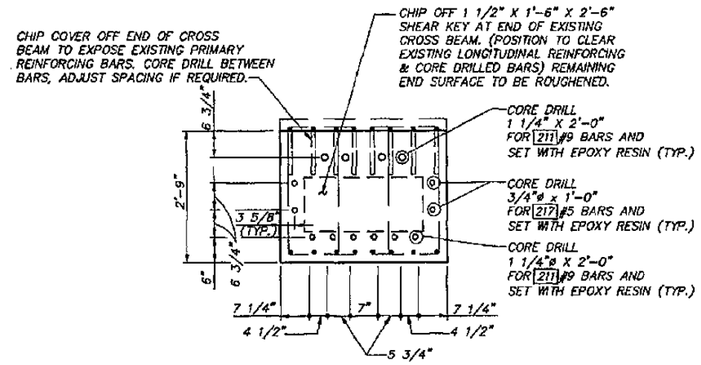

SECTION A

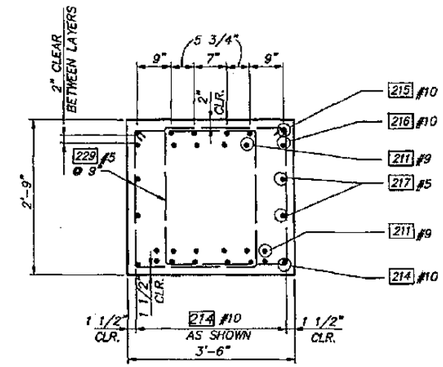

SECTION B

TABLE OF ELEVATIONS		
167/127 EAST		
TOP OF COLUMN	GIRDER	TOP OF GROUT PAD
57.22	E3	60.12
--	--	--

NOTE: FOR GROUT PAD AND ANCHOR BOLT DETAILS, SEE BEARINGS – PIER 2 & 3 SHEET.

FOR "AS CONSTRUCTED PLANS" ONLY

B8200032 SR___ JOB NO.___ SHEET___

Bridge Design Engineer					REGION NO.	STATE	FED. AID. PROJ. NO.	SHEET NO.	TOTAL SHEETS	
Supervisor					10	WASH				
Designed By A.L.K.					JOB NUMBER 95W036					
Checked By P.R.B.										
Detailed By G.W.S.										
Bridge Projects Engineer					CONTRACT NO. 4771					
Prelim. Plan By										
Architect/Specialist	DATE	REVISION	BY	APP'D						

JOHN R. KATTELL, STATE OF WASHINGTON, REGISTERED PROFESSIONAL ENGINEER, 9/1/95, EXPIRES: 06/10/97

WASHINGTON STATE DEPARTMENT OF TRANSPORTATION

Sverdrup CIVIL INC.

SR167
15TH N.W. TO 84TH AVE. SO.
HOV SC & DI – STAGE 2
BNRR OVERCROSSING BR. NO. 167/127

PIER 3 – CROSS BEAM DETAILS – EXTERIOR WIDENING

BRIDGE SHEET NO. 15

SHEET 610 OF 663 SHEETS

SR167/91

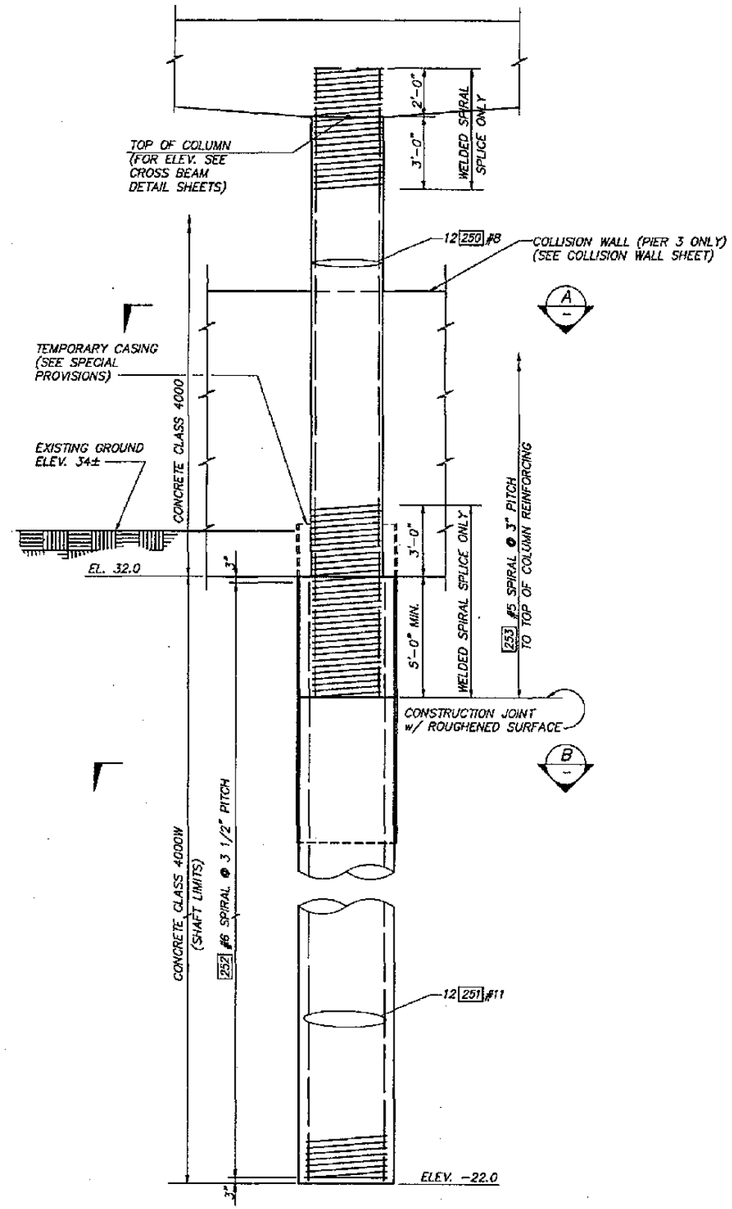

ELEVATION

(6 TOTAL)

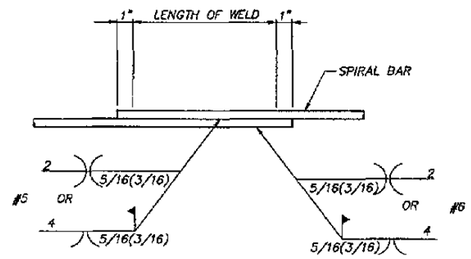

ALTERNATE WELD SPLICE

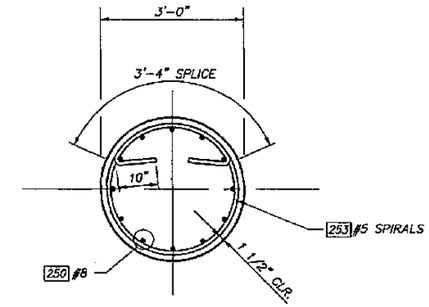

SECTION A

HOOKS SHALL BE PLACED TO AVOID VERTICAL REINFORCING.

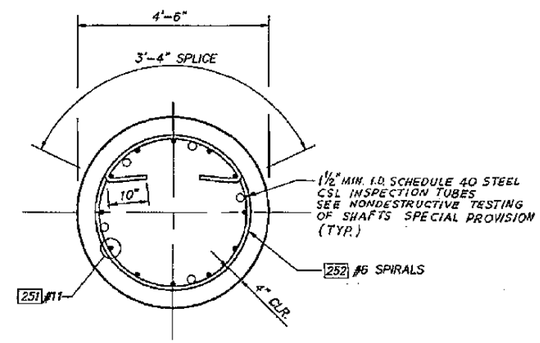

SECTION B

HOOKS SHALL BE PLACED TO AVOID VERTICAL REINFORCING.

NOTES ON SPIRALS

1. COLUMN SPIRALS MAY BE FABRICATED FROM #5 DEFORMED REINFORCING BARS (AASHTO M31 GR60), PLAIN SMOOTH BARS 5/8"ø (AASHTO M31 GR60), DEFORMED WIRE D31 (AASHTO M225), OR COLD DRAWN WIRE W31 (AASHTO M32).
2. DRILLED SHAFT SPIRALS MAY BE FABRICATED FROM #6 DEFORMED REINFORCING BARS (AASHTO M31 GR60), PLAIN SMOOTH BARS 3/4"ø (AASHTO M31 GR60), DEFORMED WIRE D44 (AASHTO M225), OR COLD DRAWN WIRE W44 (AASHTO M32).

FOR "AS CONSTRUCTED PLANS" ONLY

Bridge Design Engineer					REGION NO.	STATE	FED. AID. PROJ. NO.	SHEET NO.	TOTAL SHEETS	
Supervisor					10	WASH				
Designed By A.L.K.					JOB NUMBER 95W036					
Checked By P.R.B.										
Detailed By B.L.P.					CONTRACT NO. 4771					
Bridge Projects Engineer										
Prelim. Plan By										
Architect/Specialist	DATE	REVISION	BY	APP'D						

JOHN R. KATTELL, STATE OF WASHINGTON, REGISTERED PROFESSIONAL ENGINEER, 9/1/95, EXPIRES: 06/10/97

WASHINGTON STATE DEPARTMENT OF TRANSPORTATION

Sverdrup CIVIL INC.

SR167
15TH N.W. TO 84TH AVE. SO.
HOV SC & DI – STAGE 2
BNRR OVERCROSSING BR. NO. 167/127

PIERS 2 & 3 – SHAFT AND COLUMN DETAILS

BRIDGE SHEET NO. 16

SHEET 611 OF 663 SHEETS

B8200011 SR___ JOB NO.___ SHEET___

SR167/91

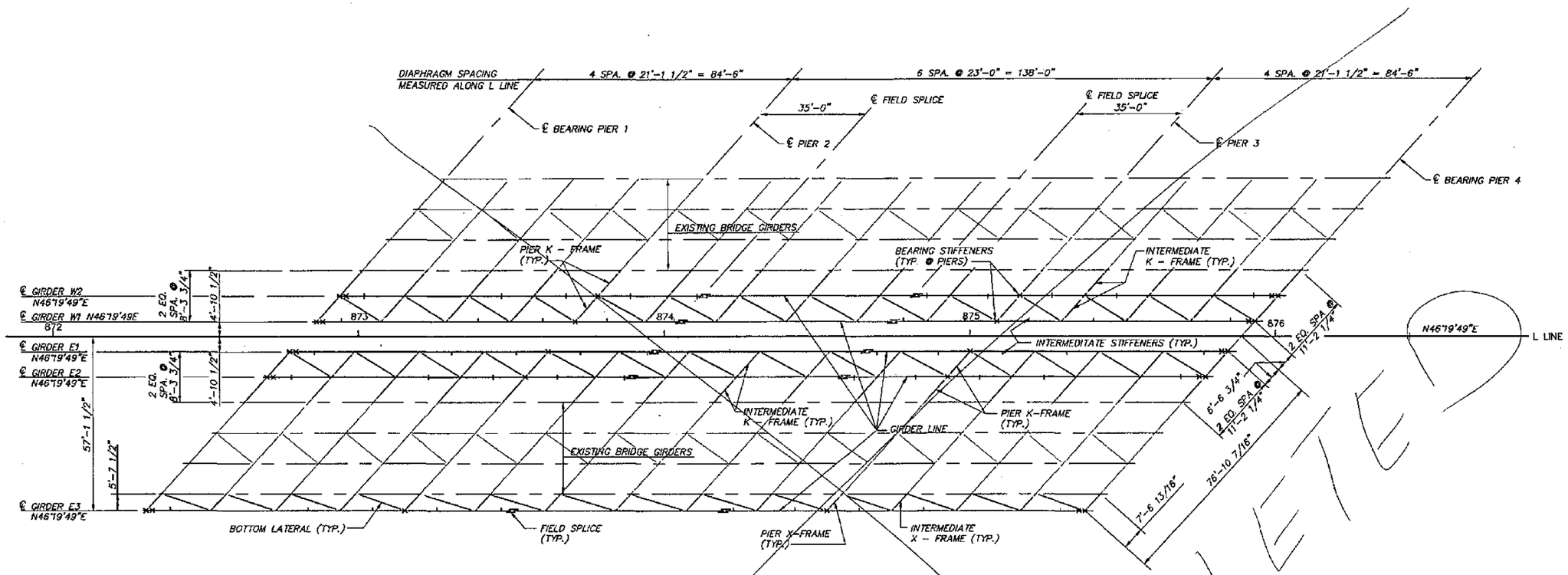

GIRDER FRAMING PLAN

DELETED

STRUCTURAL STEEL NOTES

1. ALL STRUCTURAL STEEL SHALL BE STRUCTURAL LOW ALLOY STEEL AASHTO M222 EXCEPT MEMBERS MARKED (e) MAY BE FABRICATED FROM AASHTO M183 STEEL.

2. ALL FIELD AND SHOP CONNECTIONS SHALL BE MADE WITH HIGH STRENGTH BOLTS, WITH THE BOLT HEADS TOWARD THE OUTSIDE AND UNDERSIDE OF THE BRIDGE. HIGH STRENGTH BOLTS SHALL BE 7/8"IN DIA. AND AASHTO M164. NUTS AND WASHERS SHALL CONFORM TO STANDARD SPECIFICATIONS SECTION 9-06.5(3). THE MINIMUN CENTER-TO-CENTER DIMENSION SHALL BE 3" UNLESS SHOWN OTHERWISE. ALL CONNECTIONS SHOWN ARE FOR FIELD BOLTING. SHOP BOLTING MAY BE USED WHERE APPROVED IN THE SHOP PLANS.

3. ALL WELDING SHALL BE DONE TO MINIMIZE DISTORTION. THE WELDING SEQUENCES AND PROCEDURES TO BE USED SHALL BE SUBMITTED TO THE ENGINEER FOR APPROVAL PRIOR TO THE START OF WELDING. TOP FLANGES, BOTTOM FLANGES AND WEBS SHALL BE FABRICATED TO FULL LENGTH BETWEEN FIELD SPLICES PRIOR TO WELDING FLANGES TO WEBS. GENERAL WELDING SEQUENCE: (1) FLANGE AND WEB SPLICES, (2) FLANGES TO WEB, (3) STIFFENERS TO WEBS AND FLANGES, (4) GUSSET PLATES TO WEBS, AND (5) SHEAR CONNECTORS TO TOP FLANGE.

4. ONE BUTT SPLICE WILL BE PERMITTED FOR FLANGE AND WEB PLATES EXCEEDING 60 FEET IN LENGTH. ANY PROPOSED BUTT SPLICE SHALL BE SHOWN ON THE SHOP DRAWING SUBMITTED FOR APPROVAL.

5. ALL WELDED SHEAR STUDS SHALL BE 7/8 INCH DIAMETER. SHEAR STUDS MAY BE PLACED IN THE FIELD OR IN THE SHOP.

6. MEMBER MARKED (v) ARE MAIN LOAD CARRYING TENSILE MEMBERS OR TENSION COMPONENTS OF FLEXURAL MEMBERS AND SHALL MEET THE LONGITUDINAL CHARPY V-NOTCH TESTS AS DESCRIBED IN THE SPECIAL PROVISIONS.

7. INTERMEDIATE TRANSVERSE STIFFENERS, INTERMEDIATE DIAPHRAGMS, AND WEB SPLICES SHALL BE NORMAL TO PROFILE GRADE. BEARING STIFFENERS AND END DIAPHRAGMS SHALL BE VERTICAL UNLESS OTHERWISE NOTED.

8. ALL DIMENSIONS ARE HORIZONTAL AND VERTICAL UNLESS OTHERWISE NOTED.

9. GIRDERS SHALL BE CAMBERED FOR FULL DEAD LOAD DEFLECTION AND FOR THE VERTICAL CURVE (ROADWAY PROFILE).

10. FIELD SPLICE LOCATIONS SHOWN ON THE PLANS MAY BE ELIMINATED AT THE CONTRACTOR'S OPTION, SUBJECT TO THE APPROVAL OF THE ENGINEER. WHERE ELIMINATED, FLANGE AND WEB SHOP CONNECTION LOCATIONS SHALL BE STAGGERED A MINIMUM OF 1'-0".

11. AFTER FABRICATION, GIRDERS SHALL REMAIN UPRIGHT DURING SHIPMENT, HANDLING, AND STORAGE, UNLESS OTHERWISE APPROVED IN WRITING BY THE ENGINEER.

12. GIRDERS SHALL BE LATERALLY SUPPORTED DURING SHIPMENT BY BLOCKING, REMOVABLE FLANGE BRACING, BOLTING IN PAIRS, OR OTHER APPROVED METHODS. METHOD OF SHIPPING AND SUPPORT SHALL BE SHOWN ON THE SHOP DRAWINGS.

13. TO PREVENT THE POSSIBILITY OF BUCKLING OF COMPRESSION FLANGES DURING ERECTION OF GIRDERS, THE CONTRACTOR SHALL DETERMINE THE NECESSITY OF USING STRONGBACKS OR ERECTING THE GIRDERS IN PAIRS WITH CORSS FRAMES INSTALLED.

14. THE CONTRACTOR SHALL PROVIDE, AS REQUIRED, TEMPORARY BRACING AND/OR WEB STIFFENING AT LOCATIONS WHERE SLAB FORMS ARE ATTACHED TO UNBRACED OR UNSTIFFENED WEBS.

15. BOLT HOLES REMAINING IN GIRDER WEBS UPON REMOVAL OF DECK FORMWORK AND TEMPORARY BRACING SHALL BE TREATED IN ACCORDANCE WITH THE STANDARD SPECIFICATIONS 6-02.3(17)K.

16. ALL STRUCTURAL STEEL SHALL BE PAINTED.

17. DIAPHRAGMS BETWEEN NEW AND EXISTING GIRDERS SHOULD NOT BE CONNECTED UNTIL CONCRETE CLOSURE POUR. SEE "CONSTRUCTION SEQUENCE" SHEET.

18. ALL TRANSVERSE AND LONGITUDINAL STIFFENERS, EXCEPT BEARING AND JACKING STIFFENERS, SHALL BE PLACED ON THE INSIDE OF EXTERIOR GIRDERS.

FOR "AS CONSTRUCTED PLANS" ONLY

Bridge Design Engineer				
Supervisor				
Designed By J.R.K. / Q.B.				
Checked By A.T.L.				
Detailed By B.L.P.				
Bridge Projects Engineer				
Prelim. Plan By				
Architect/Specialist	DATE	REVISION	BY	APP'D

REGION NO.	STATE	FED. AID. PROJ. NO.	SHEET NO.	TOTAL SHEETS
10	WASH			

JOB NUMBER 95W036

CONTRACT NO. 4771

JOHN R. KATZER, STATE OF WASHINGTON, REGISTERED PROFESSIONAL ENGINEER — 7/1/96 — EXPIRES: 06/10/97

WASHINGTON STATE DEPARTMENT OF TRANSPORTATION

Sverdrup CIVIL INC.

SR167
15TH N.W. TO 84TH AVE. SO.
HOV SC & DI - STAGE 2
BNRR OVERCROSSING BR. NO. 167/127

GIRDER FRAMIMG PLAN

BRIDGE SHEET NO. 17

SHEET 612 OF 663 SHEETS

SR 167/91

05200012 SR ___ JOB NO. ___ SHEET ___

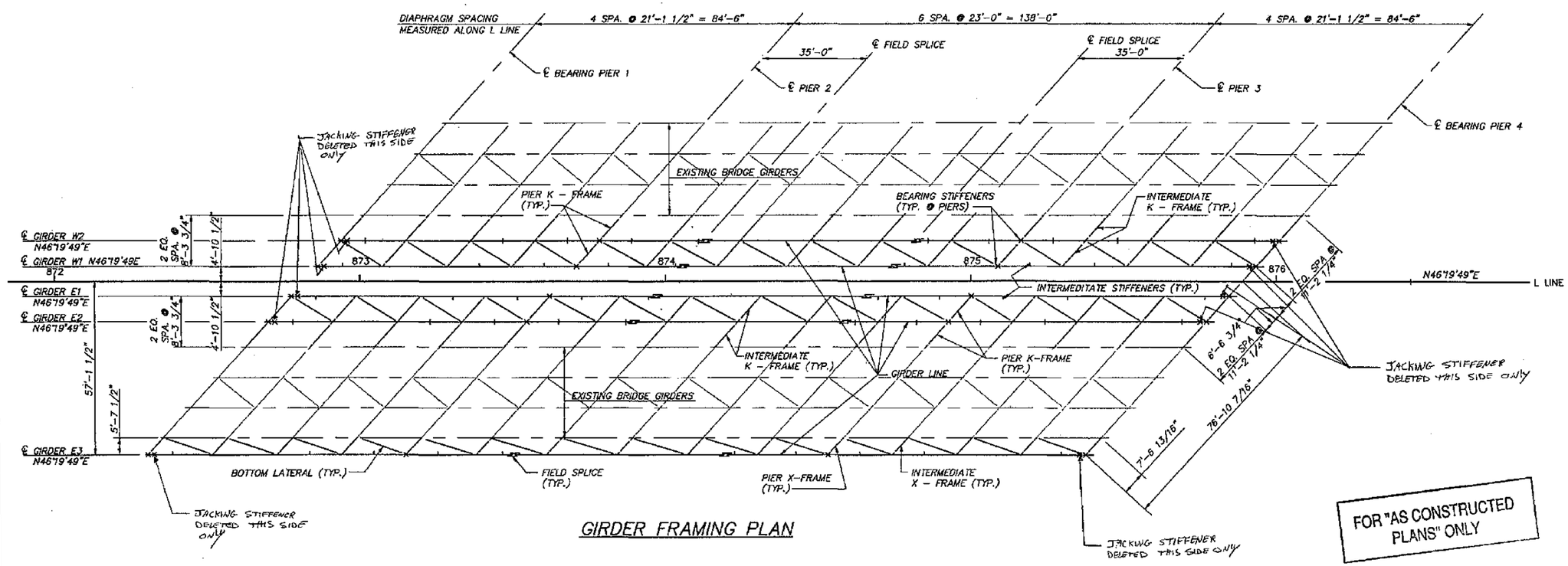

GIRDER FRAMING PLAN

FOR "AS CONSTRUCTED PLANS" ONLY

STRUCTURAL STEEL NOTES

1. ALL STRUCTURAL STEEL SHALL BE STRUCTURAL LOW ALLOY STEEL AASHTO M222 EXCEPT MEMBERS MARKED (E) MAY BE FABRICATED FROM AASHTO M183 STEEL.

2. ALL FIELD AND SHOP CONNECTIONS SHALL BE MADE WITH HIGH STRENGTH BOLTS, WITH THE BOLT HEADS TOWARD THE OUTSIDE AND UNDERSIDE OF THE BRIDGE. HIGH STRENGTH BOLTS SHALL BE 7/8"IN DIA. AND AASHTO M164. NUTS AND WASHERS SHALL CONFORM TO STANDARD SPECIFICATIONS SECTION 9-06.5(3). THE MINIMUN CENTER-TO-CENTER DIMENSION SHALL BE 3" UNLESS SHOWN OTHERWISE. ALL CONNECTIONS SHOWN ARE FOR FIELD BOLTING. SHOP BOLTING MAY BE USED WHERE APPROVED IN THE SHOP PLANS.

3. ALL WELDING SHALL BE DONE TO MINIMIZE DISTORTION. THE WELDING SEQUENCES AND PROCEDURES TO BE USED SHALL BE SUBMITTED TO THE ENGINEER FOR APPROVAL PRIOR TO THE START OF WELDING. TOP FLANGES, BOTTOM FLANGES AND WEBS SHALL BE FABRICATED TO FULL LENGTH BETWEEN FIELD SPLICES PRIOR TO WELDING FLANGES TO WEBS. GENERAL WELDING SEQUENCE: (1) FLANGE AND WEB SPLICES, (2) FLANGES TO WEB, (3) STIFFENERS TO WEBS AND FLANGES, (4) GUSSET PLATES TO WEBS, AND (5) SHEAR CONNECTORS TO TOP FLANGE.

4. ONE BUTT SPLICE WILL BE PERMITTED FOR FLANGE AND WEB PLATES EXCEEDING 60 FEET IN LENGTH. ANY PROPOSED BUTT SPLICE SHALL BE SHOWN ON THE SHOP DRAWING SUBMITTED FOR APPROVAL.

5. ALL WELDED SHEAR STUDS SHALL BE 7/8 INCH DIAMETER. SHEAR STUDS MAY BE PLACED IN THE FIELD OR IN THE SHOP.

6. MEMBER MARKED (V) ARE MAIN LOAD CARRYING TENSILE MEMBERS OR TENSION COMPONENTS OF FLEXURAL MEMBERS AND SHALL MEET THE LONGITUDINAL CHARPY V-NOTCH TESTS AS DESCRIBED IN THE SPECIAL PROVISIONS.

7. INTERMEDIATE TRANSVERSE STIFFENERS, INTERMEDIATE DIAPHRAGMS, AND WEB SPLICES SHALL BE NORMAL TO PROFILE GRADE. BEARING STIFFENERS AND END DIAPHRAGMS SHALL BE VERTICAL UNLESS OTHERWISE NOTED.

8. ALL DIMENSIONS ARE HORIZONTAL AND VERTICAL UNLESS OTHERWISE NOTED.

9. GIRDERS SHALL BE CAMBERED FOR FULL DEAD LOAD DEFLECTION AND FOR THE VERTICAL CURVE (ROADWAY PROFILE).

10. FIELD SPLICE LOCATIONS SHOWN ON THE PLANS MAY BE ELIMINATED AT THE CONTRACTOR'S OPTION, SUBJECT TO THE APPROVAL OF THE ENGINEER. WHERE ELIMINATED, FLANGE AND WEB SHOP CONNECTION LOCATIONS SHALL BE STAGGERED A MINIMUM OF 1'-0".

11. AFTER FABRICATION, GIRDERS SHALL REMAIN UPRIGHT DURING SHIPMENT, HANDLING, AND STORAGE, UNLESS OTHERWISE APPROVED IN WRITING BY THE ENGINEER.

12. GIRDERS SHALL BE LATERALLY SUPPORTED DURING SHIPMENT BY BLOCKING, REMOVABLE FLANGE BRACING, BOLTING IN PAIRS, OR OTHER APPROVED METHODS. METHOD OF SHIPPING AND SUPPORT SHALL BE SHOWN ON THE SHOP DRAWINGS.

13. TO PREVENT THE POSSIBILITY OF BUCKLING OF COMPRESSION FLANGES DURING ERECTION OF GIRDERS, THE CONTRACTOR SHALL DETERMINE THE NECESSITY OF USING STRONGBACKS OR ERECTING THE GIRDERS IN PAIRS WITH CROSS FRAMES INSTALLED.

14. THE CONTRACTOR SHALL PROVIDE, AS REQUIRED, TEMPORARY BRACING AND/OR WEB STIFFENING AT LOCATIONS WHERE SLAB FORMS ARE ATTACHED TO UNBRACED OR UNSTIFFENED WEBS.

15. BOLT HOLES REMAINING IN GIRDER WEBS UPON REMOVAL OF DECK FORMWORK AND TEMPORARY BRACING SHALL BE TREATED IN ACCORDANCE WITH THE STANDARD SPECIFICATIONS 6-02.3(17)K.

16. ALL STRUCTURAL STEEL SHALL BE PAINTED.

17. DIAPHRAGMS BETWEEN NEW AND EXISTING GIRDERS SHOULD NOT BE CONNECTED UNTIL CONCRETE CLOSURE POUR. SEE "CONSTRUCTION SEQUENCE" SHEET.

18. ALL TRANSVERSE AND LONGITUDINAL STIFFENERS, EXCEPT BEARING AND JACKING STIFFENERS, SHALL BE PLACED ON THE INSIDE OF EXTERIOR GIRDERS.

19. (3) FIELD VERIFY SIZE AND LOCATION OF EXISTING STIFFENERS (TOP & BOT.) AT CROSS FRAME AND K-FRAME LOCATIONS.

20. BOLT HOLES DRILLED IN EXISTING GIRDERS AND IN STIFFENERS WELDED TO EXISTING GIRDERS MAY BE OVERSIZED BY UP TO 1/8".

Bridge Design Engineer					
Supervisor					
Designed By J.R.K. / Q.B.					
Checked By A.T.L.					
Detailed By B.L.P.					
Bridge Projects Engineer					
Prelim. Plan By	1/96	(4) ADDED NOTES 19 & 20	MJ	RS	
Architect/Specialist	DATE	REVISION	BY	APP'D	

REGION NO.	STATE	FED. AID. PROJ. NO.	SHEET NO.	TOTAL SHEETS
10	WASH			
JOB NUMBER 95W036				
CONTRACT NO. 4771				

JOHN R. KATRICH, STATE OF WASHINGTON, 14401, REGISTERED PROFESSIONAL ENGINEER — 7/1/96 — EXPIRES 06/10/1997

WASHINGTON STATE DEPARTMENT OF TRANSPORTATION

Sverdrup CIVIL INC.

SR167
15TH N.W. TO 84TH AVE. SO.
HOV SC & DI - STAGE 2
BNRR OVERCROSSING BR. NO. 167/127

GIRDER FRAMIMG PLAN

BRIDGE SHEET NO. 17

SHEET 612A OF 663 SHEETS

SR167/91

SR 85200012 JOB NO. SHEET

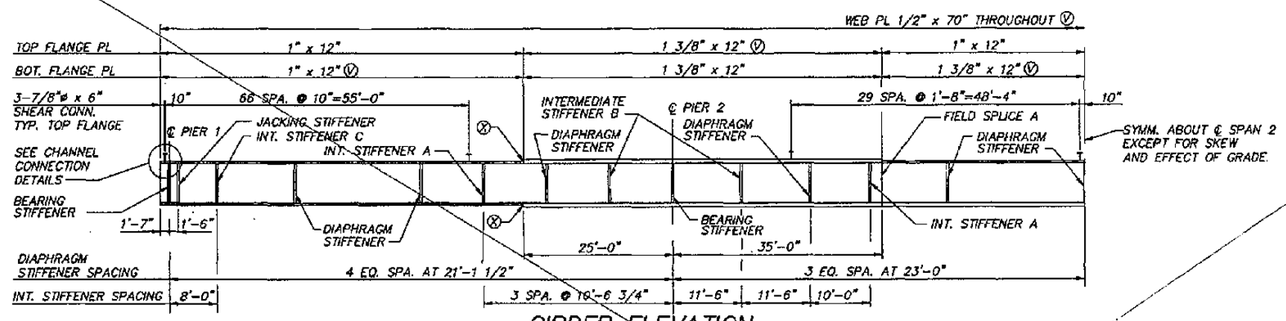

GIRDER ELEVATION

(ALL DIMENSIONS ARE MEASURED ALONG GIRDER LINE.)
(FOR GIRDER W1, W2, E1, E2 & E3, SEE FRAMING PLAN FOR LOCATION.)

DELETED

CAMBER DIAGRAM TABLE

SPAN	GIRDER W1,W2,E1,E2			GIRDER E3		
LOCATION	ΔX	ΔC	ΔS	ΔX	ΔC	ΔS
1.0	0.83	0.00	0.00	0.35	0.00	0.00
1.1	0.89	0.08	0.02	0.37	0.08	0.02
1.2	0.94	0.13	0.03	0.40	0.13	0.03
1.3	1.00	0.15	0.03	0.45	0.15	0.03
1.4	1.02	0.13	0.03	0.50	0.13	0.03
1.5	1.03	0.08	0.02	0.56	0.08	0.02
1.6	1.04	0.00	0.00	0.61	0.00	0.00
1.7	1.06	-0.07	-0.02	0.61	-0.07	-0.02
1.8	1.08	-0.11	-0.02	0.65	-0.11	-0.02
1.9	1.09	-0.11	-0.02	0.69	-0.11	-0.02
2.0	1.11	0.00	0.00	0.71	0.00	0.00
2.1	1.12	0.42	0.08	0.74	0.42	0.08
2.2	1.11	0.98	0.19	0.76	0.98	0.19
2.3	1.10	1.51	0.29	0.77	1.51	0.29
2.4	1.07	1.90	0.37	0.78	1.90	0.37
2.5	1.04	2.02	0.40	0.78	2.02	0.40
2.6	0.99	1.90	0.37	0.76	1.90	0.37
2.7	0.93	1.51	0.29	0.72	1.51	0.29
2.8	0.87	0.98	0.19	0.69	0.98	0.19
2.9	0.76	0.42	0.08	0.63	0.42	0.08
3.0	0.73	0.00	0.00	0.59	0.00	0.00
3.1	0.67	-0.11	-0.02	0.54	-0.11	-0.02
3.2	0.61	-0.11	-0.02	0.47	-0.11	-0.02
3.3	0.55	-0.07	-0.02	0.44	-0.07	-0.02
3.4	0.48	0.00	0.00	0.39	0.00	0.00
3.5	0.41	0.08	0.02	0.33	0.08	0.02
3.6	0.33	0.13	0.03	0.27	0.13	0.03
3.7	0.25	0.15	0.03	0.20	0.15	0.03
3.8	0.17	0.13	0.03	0.14	0.13	0.03
3.9	0.08	0.08	0.02	0.04	0.08	0.02
4.0	0.00	0.00	0.00	0.00	0.00	0.00

NOTE: ΔX – IN FEET
ΔC, ΔS – IN INCHES

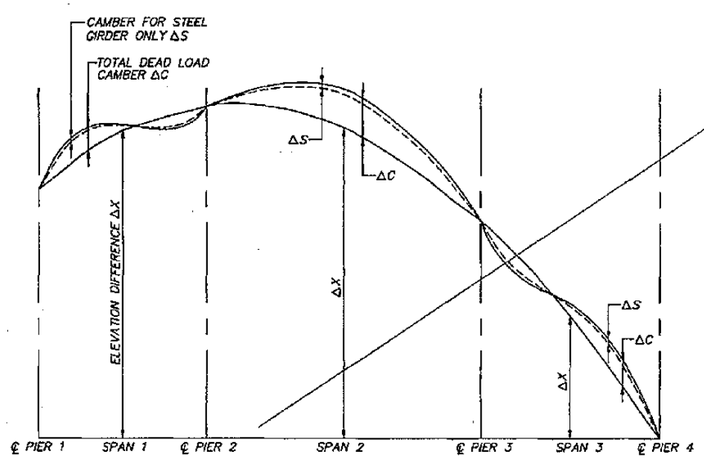

CAMBER DIAGRAM

(FOR VALUES OF ΔX, ΔC, ΔS, SEE CAMBER DIAGRAM TABLE THIS SHEET.)

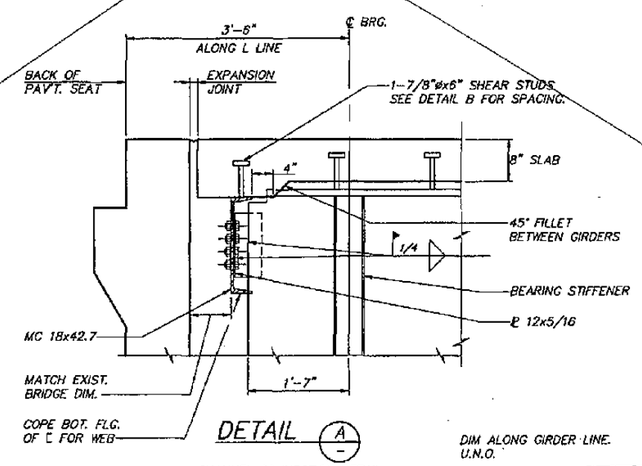

DETAIL A

CHANNEL CONNECTION DETAIL.

DIM ALONG GIRDER LINE. U.N.O.

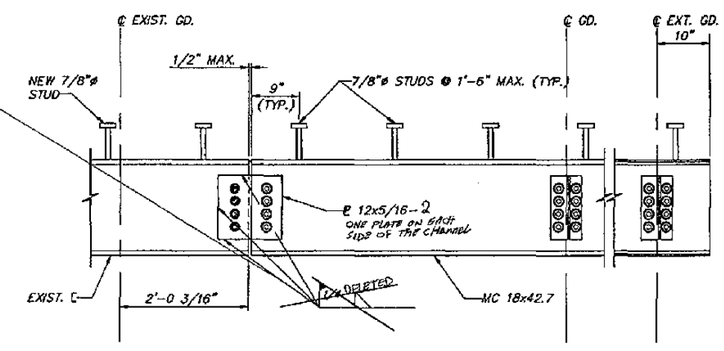

DETAIL B

CHANNEL CONNECTION DETAIL.

(DIM ALONG SKEW).

FOR "AS CONSTRUCTED PLANS" ONLY

Bridge Design Engineer					REGION NO.	STATE	FED. AID PROJ. NO.	SHEET NO.	TOTAL SHEETS
Supervisor					10	WASH			
Designed By D.B.					JOB NUMBER 95W036				
Checked By A.T.L.									
Detailed By A.J.D.					CONTRACT NO. 4771				
Bridge Projects Engineer									
Prelim. Plan By									
Architect/Specialist	DATE	REVISION	BY	APP'D					

B8200013 SR ___ JOB NO. ___ SHEET ___

JOHN R. KATTELL, STATE OF WASHINGTON, 21487, REGISTERED PROFESSIONAL ENGINEER — 8/1/95 — EXPIRES: 06/10/95

WASHINGTON STATE DEPARTMENT OF TRANSPORTATION

Sverdrup CIVIL INC.

SR167
15TH N.W. TO 84TH AVE. SO.
HOV SC & DI – STAGE 2
BNRR OVERCROSSING BR. NO. 167/127

GIRDER ELEVATION

BRIDGE SHEET NO. 18

SHEET 613 OF 663 SHEETS

SR 167/91

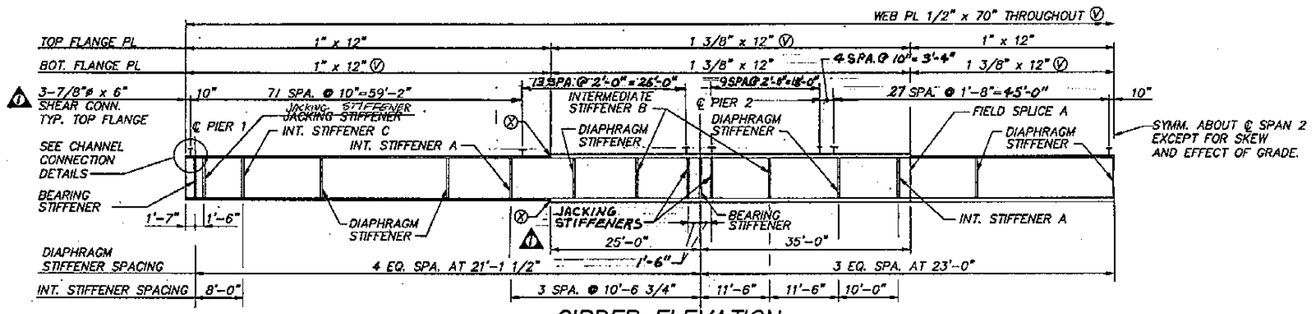

GIRDER ELEVATION

(ALL DIMENSIONS ARE MEASURED ALONG GIRDER LINE.)
(FOR GIRDER W1, W2, E1, E2 & E3. SEE FRAMING PLAN FOR LOCATION.)

CAMBER DIAGRAM TABLE

SPAN	GIRDER W1,W2,E1,E2			GIRDER E3		
LOCATION	ΔX	ΔC	ΔS	ΔX	ΔC	ΔS
1.0	0.83	0.00	0.00	0.36	0.00	0.00
1.1	0.89	0.08	0.02	0.37	0.08	0.02
1.2	0.94	0.13	0.03	0.40	0.13	0.03
1.3	1.00	0.15	0.03	0.45	0.15	0.03
1.4	1.02	0.13	0.03	0.50	0.13	0.03
1.5	1.03	0.08	0.02	0.56	0.08	0.02
1.6	1.04	0.00	0.00	0.61	0.00	0.00
1.7	1.06	−0.07	−0.02	0.61	−0.07	−0.02
1.8	1.08	−0.11	−0.02	0.65	−0.11	−0.02
1.9	1.09	−0.11	−0.02	0.69	−0.11	−0.02
2.0	1.11	0.00	0.00	0.71	0.00	0.00
2.1	1.12	0.42	0.08	0.74	0.42	0.08
2.2	1.11	0.98	0.19	0.76	0.98	0.19
2.3	1.10	1.51	0.29	0.77	1.51	0.29
2.4	1.07	1.90	0.37	0.78	1.90	0.37
2.5	1.04	2.02	0.40	0.78	2.02	0.40
2.6	0.99	1.90	0.37	0.76	1.90	0.37
2.7	0.93	1.51	0.29	0.72	1.51	0.29
2.8	0.87	0.98	0.19	0.69	0.98	0.19
2.9	0.79	0.42	0.08	0.63	0.42	0.08
3.0	0.73	0.00	0.00	0.59	0.00	0.00
3.1	0.67	−0.11	−0.02	0.54	−0.11	−0.02
3.2	0.61	−0.11	−0.02	0.47	−0.11	−0.02
3.3	0.55	−0.07	−0.02	0.44	−0.07	−0.02
3.4	0.48	0.00	0.00	0.39	0.00	0.00
3.5	0.41	0.08	0.02	0.33	0.08	0.02
3.6	0.33	0.13	0.03	0.27	0.13	0.03
3.7	0.25	0.15	0.03	0.20	0.15	0.03
3.8	0.17	0.13	0.03	0.14	0.13	0.03
3.9	0.08	0.08	0.02	0.04	0.08	0.02
4.0	0.00	0.00	0.00	0.00	0.00	0.00

NOTE: ΔX – IN FEET
ΔC, ΔS – IN INCHES

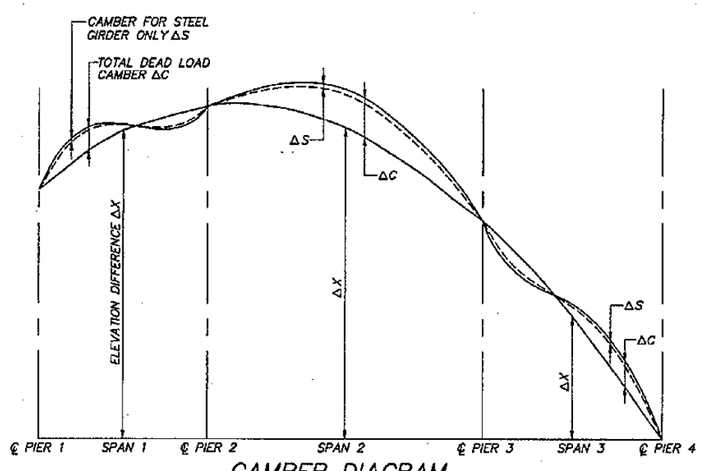

CAMBER DIAGRAM

(FOR VALUES OF ΔX, ΔC, ΔS, SEE CAMBER DIAGRAM TABLE THIS SHEET.)

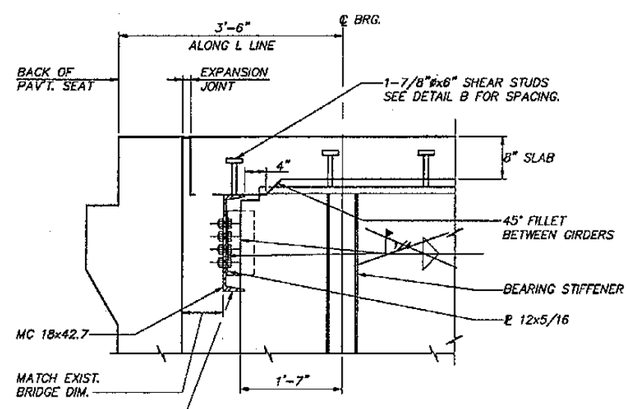

DETAIL A

CHANNEL CONNECTION DETAIL.

DIM ALONG GIRDER LINE. U.N.O.

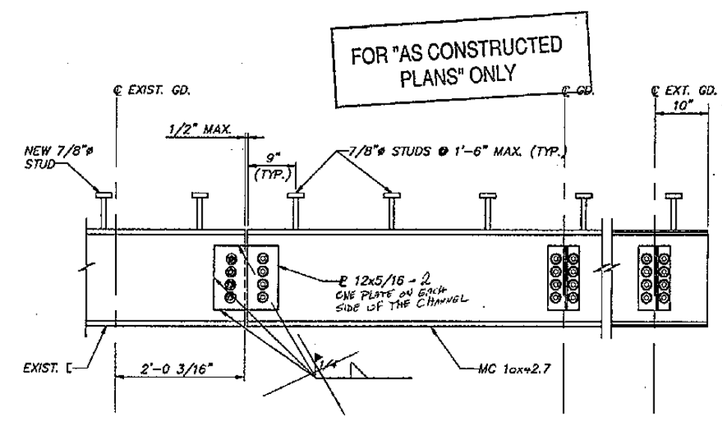

DETAIL B

CHANNEL CONNECTION DETAIL.

(DIM ALONG SKEW).

Bridge Design Engineer					REGION NO.	STATE	FED. AID. PROJ. NO.	SHEET NO. / TOTAL SHEETS
Supervisor					10	WASH		
Designed By Q.B.					JOB NUMBER 95W036			
Checked By A.T.L.								
Detailed By A.J.D.								
Bridge Projects Engineer	1/96	Ⓓ ADDED JACKING STIFFENERS,			CONTRACT NO. 4771			
Prelim. Plan By		REVISED SHEAR CONN.	MA	RS				
Architect/Specialist	DATE	REVISION	BY	APP'D				

JOHN R. KATTER, STATE OF WASHINGTON, REGISTERED PROFESSIONAL ENGINEER — 9/1/95 — EXPIRES: 06/10/96

WASHINGTON STATE DEPARTMENT OF TRANSPORTATION

Swerdrup CIVIL INC.

SR167
15TH N.W. TO 84TH AVE. SO.
HOV SC & DI – STAGE 2
BNRR OVERCROSSING BR. NO. 167/127

GIRDER ELEVATION

BRIDGE SHEET NO. 18

SHEET 613A OF 663 SHEETS

SR 167/91

B8200013 SR ___ JOB NO. ___ SHEET ___

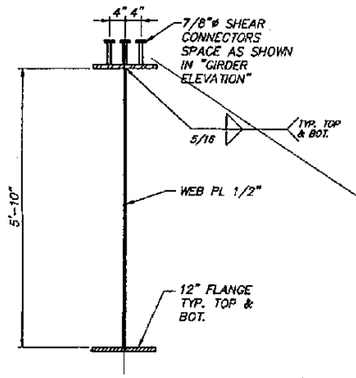

TYPICAL GIRDER SECTION

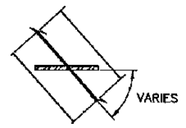

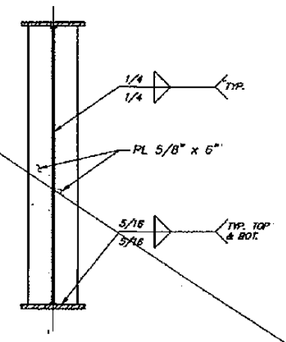

DIAPHRAGM STIFFENER

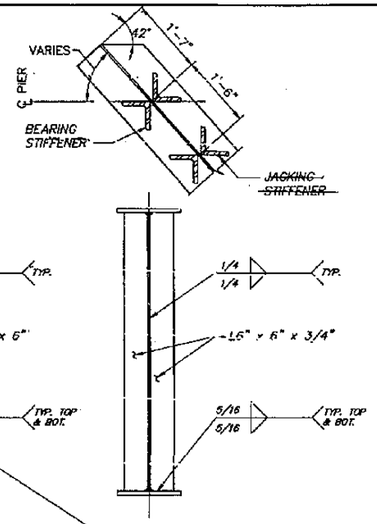

BEARING & JACKING STIFFENER
(END PIER SHOWN, INTERIOR PIER SIMILAR)

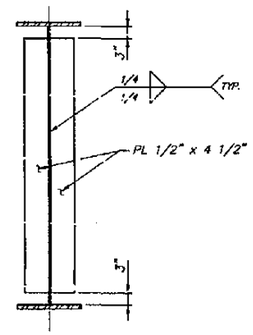

TYPE A

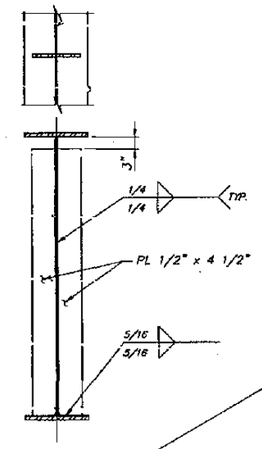

TYPE B

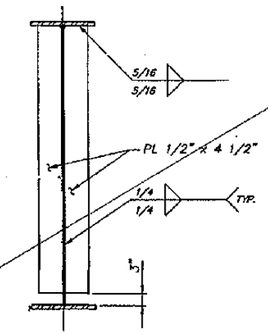

TYPE C

INTERMEDIATE STIFFENER DETAILS

FOR LOCATIONS SEE FRAMING PLAN SHEET & GIRDER ELEVATION SHEET

Deleted

FILL PLATE		
FIELD SPLICE	TOP FLANGE	BOTTOM FLANGE
A	3/8" x 12"	–

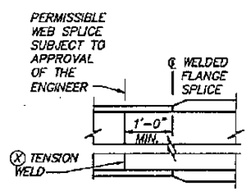

OPTIONAL WEB SPLICE

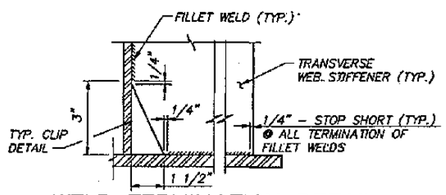

WELD TERMINATION DETAIL

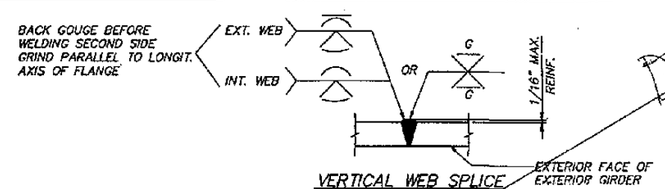

VERTICAL WEB SPLICE

Deleted

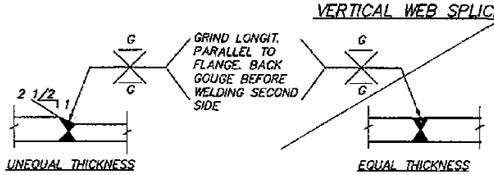

TENSION OR COMPRESSION FLANGE SPLICE

WELDED GIRDER SPLICE DETAILS

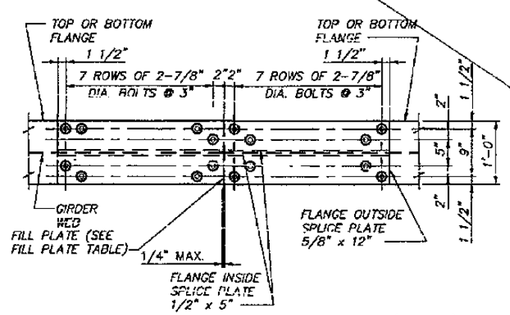

PLAN – FLANGE FEILD SPLICE (TYP.)

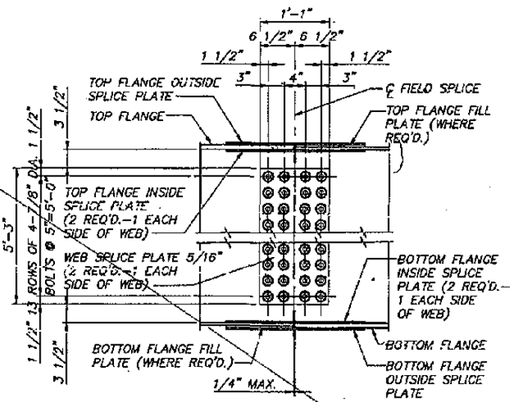

ELEVATION – WEB FIELD SPLICE (TYP.)

FOR "AS CONSTRUCTED PLANS" ONLY

Bridge Design Engineer					REGION NO.	STATE	FED. AID. PROJ. NO.	SHEET NO.	TOTAL SHEETS
Supervisor					10	WASH			
Designed By Q.B.					JOB NUMBER 95W036				
Checked By A.T.L.									
Detailed By G.W.S.					CONTRACT NO. 4771				
Bridge Projects Engineer									
Prelim. Plan By									
Architect/Specialist	DATE	REVISION	BY	APP'D					

JOHN R. KATTERJOHN — STATE OF WASHINGTON — REGISTERED PROFESSIONAL ENGINEER — 9/1/95 — EXPIRES: 09/10/95

WASHINGTON STATE DEPARTMENT OF TRANSPORTATION

Sverdrup CIVIL INC.

SR167
15TH N.W. TO 84TH AVE. SO.
HOV SC & DI – STAGE 2
BNRR OVERCROSSING BR. NO. 167/127

GIRDER DETAILS

BRIDGE SHEET NO. 19

SHEET 614 OF 663 SHEETS

B8206027 SR ___ JOB NO. ___ SHEET ___

SR 167/91

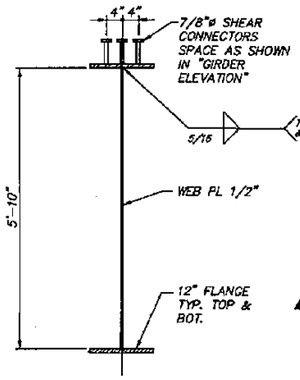

TYPICAL GIRDER SECTION

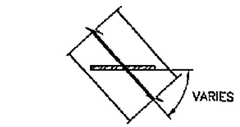

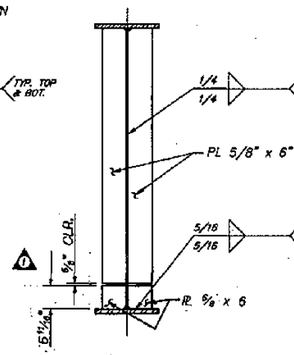

DIAPHRAGM STIFFENER

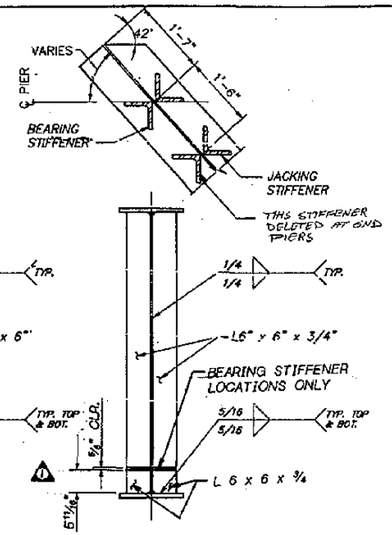

BEARING & JACKING STIFFENER
(END PIER SHOWN, INTERIOR PIER SIMILAR)

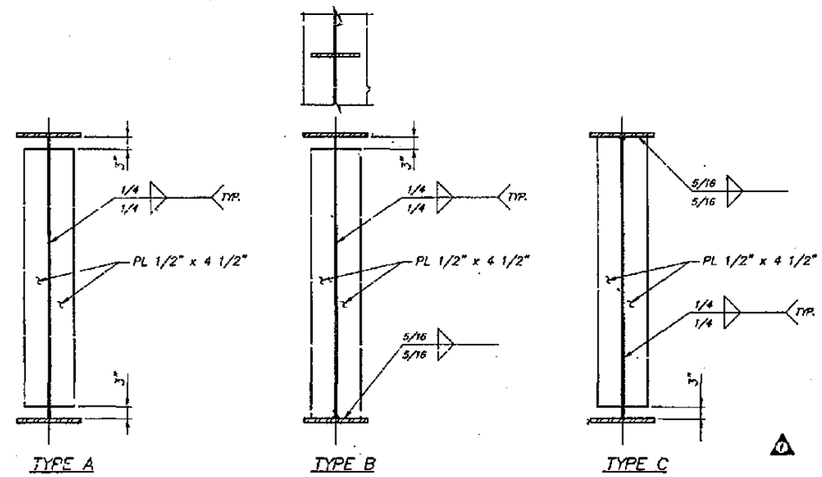

INTERMEDIATE STIFFENER DETAILS
FOR LOCATIONS, SEE FRAMING PLAN SHEET & GIRDER ELEVATION SHEET

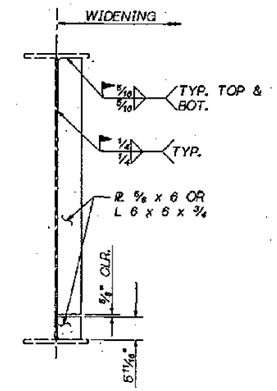

BEARING & DIAPHRAGM STIFFENER AT EXISTING GIRDER

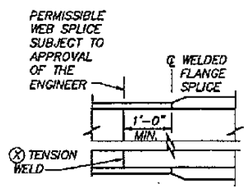

OPTIONAL WEB SPLICE

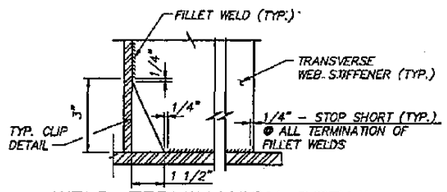

WELD TERMINATION DETAIL

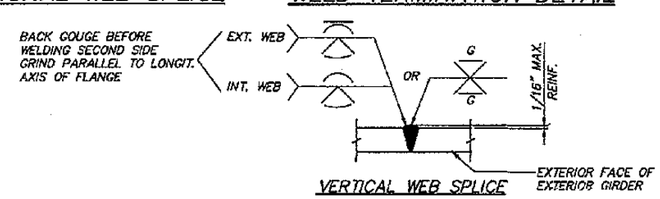

VERTICAL WEB SPLICE

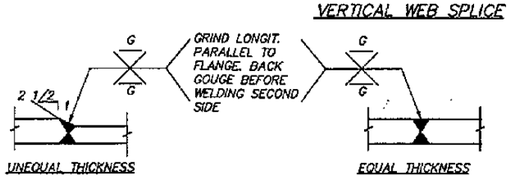

TENSION OR COMPRESSION FLANGE SPLICE

WELDED GIRDER SPLICE DETAILS

FILL PLATE		
FIELD SPLICE	TOP FLANGE	BOTTOM FLANGE
A	3/8" x 12"	–

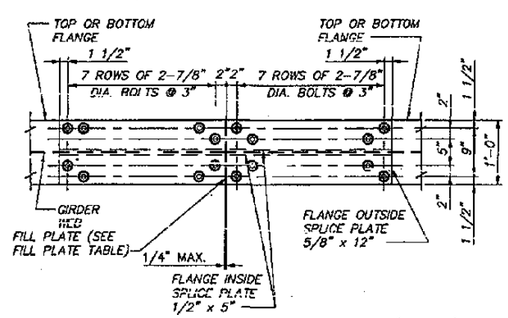

PLAN – FLANGE FEILD SPLICE (TYP.)

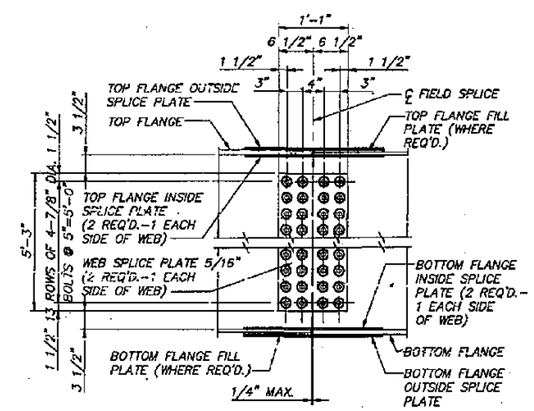

ELEVATION – WEB FIELD SPLICE (TYP.)

FOR "AS CONSTRUCTED PLANS" ONLY

Bridge Design Engineer					
Supervisor					
Designed By Q.B.					
Checked By A.T.L.					
Detailed By G.W.S.					
Bridge Projects Engineer	11/96	① REVISED STIFFENER DETAILS,			
Prelim. Plan By		ADDED STIFFENER DETAIL	NA	Rcs	
Architect/Specialist	DATE	REVISION	BY	APP'D	

REGION NO.	STATE	FED. AID. PROJ. NO.	SHEET NO.	TOTAL SHEETS
10	WASH			
JOB NUMBER 95W036				
CONTRACT NO. 4771				

JOHN R. KATRAK, STATE OF WASHINGTON, REGISTERED PROFESSIONAL ENGINEER — 9/1/95 — EXPIRES: 06/10/96

WASHINGTON STATE DEPARTMENT OF TRANSPORTATION

Sverdrup CIVIL INC.

SR167
15TH N.W. TO 84TH AVE. SO.
HOV SC & DI – STAGE 2
BNRR OVERCROSSING BR. NO. 167/127

GIRDER DETAILS

BRIDGE SHEET NO. 19

SHEET 614A OF 663 SHEETS

JOB NO. ___ SHEET ___

SR 167/91

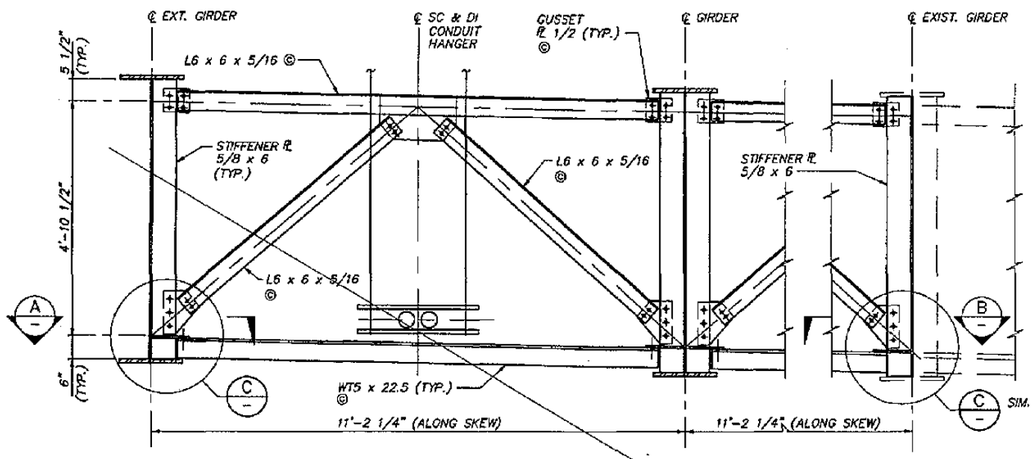

INTERMEDIATE K-FRAME CONFIGURATION

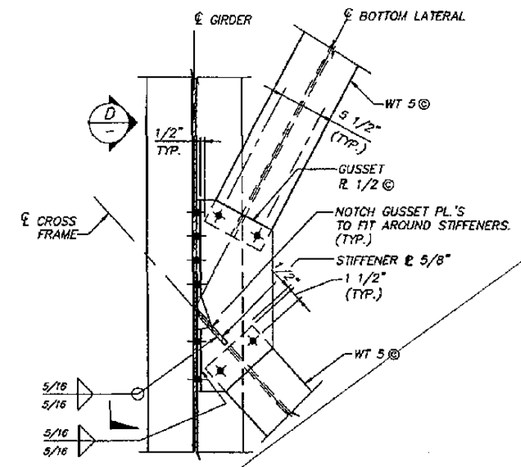

SECTION A

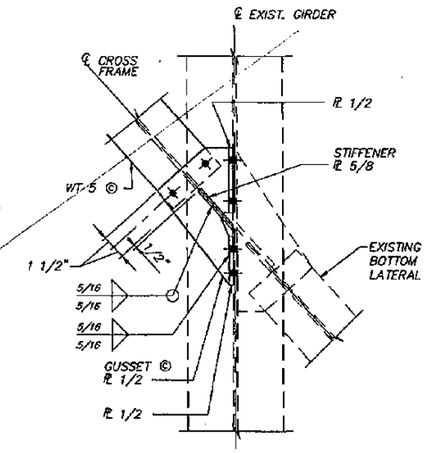

SECTION B

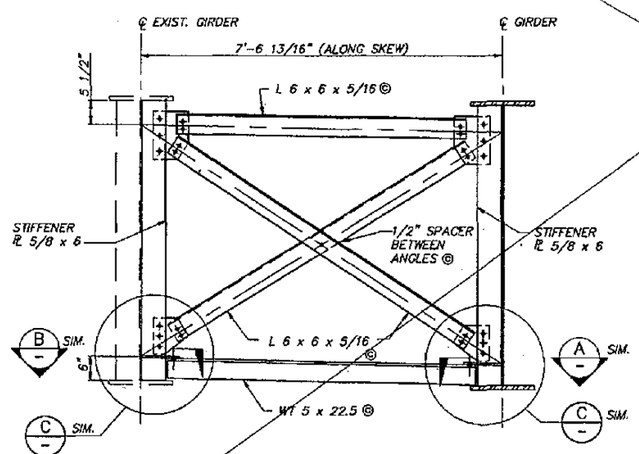

INTERMEDIATE CROSS FRAME CONFIGURATION

DELETED

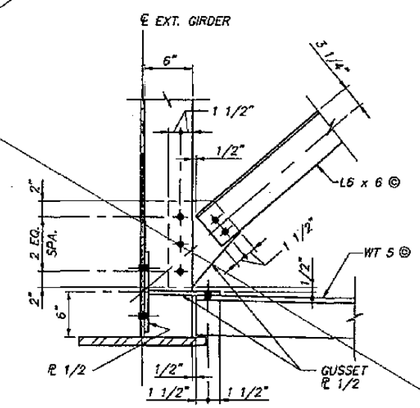

TYPICAL CONNECTION DIMENSIONS

DETAIL C

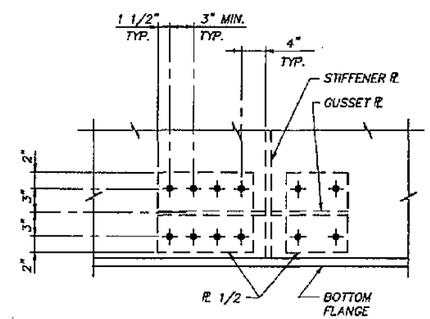

TYPICAL BOLT LAYOUT

VIEW D

FOR "AS CONSTRUCTED PLANS" ONLY

Bridge Design Engineer					REGION NO.	STATE	FED. AID. PROJ. NO.	SHEET NO.	TOTAL SHEETS	
Supervisor					10	WASH				
Designed By J.R.K. / Q.B.					JOB NUMBER 95W036					
Checked By A.T.L.										
Detailed By W.H.H.										
Bridge Projects Engineer										
Prelim. Plan By					CONTRACT NO. 4771					
Architect/Specialist	DATE	REVISION	BY	APP'D						

JOHN R. KATTELL — STATE OF WASHINGTON — REGISTERED PROFESSIONAL ENGINEER — 9/1/95 — EXPIRES: 06/10/1997

WASHINGTON STATE DEPARTMENT OF TRANSPORTATION

Sverdrup

SR167
15TH N.W. TO 84TH AVE. SO.
HOV SC & DI - STAGE 2
BNRR OVERCROSSING BR. NO. 167/127

CROSS FRAMES/LATERALS DETAILS - SHEET 1

BRIDGE SHEET NO. 20

SHEET 615 OF 663 SHEETS

B8200010 SR___ JOB NO. ___ SHEET ___

SR167/91

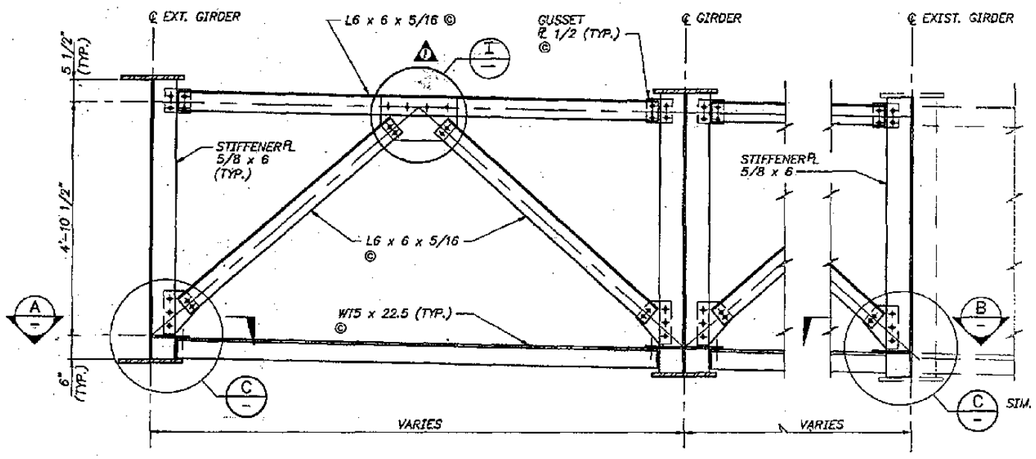

INTERMEDIATE K-FRAME CONFIGURATION

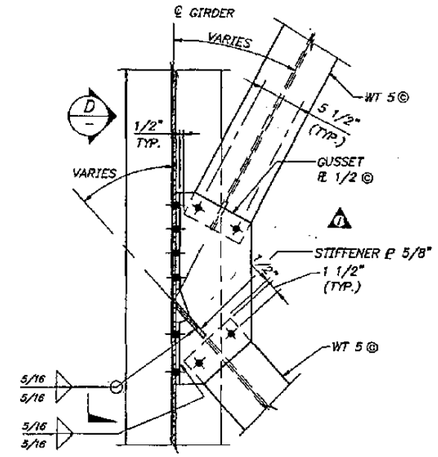

SECTION A

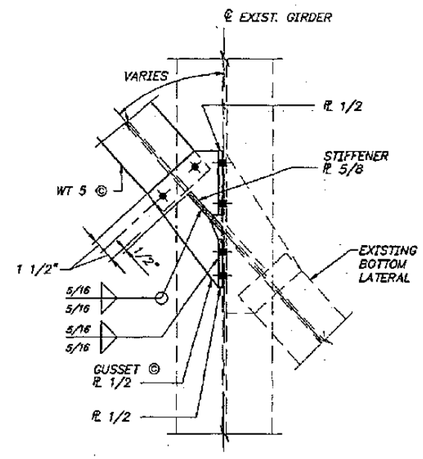

SECTION B

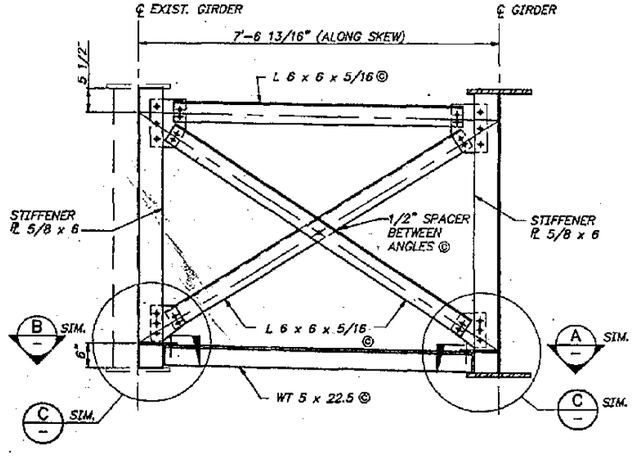

INTERMEDIATE CROSS FRAME CONFIGURATION

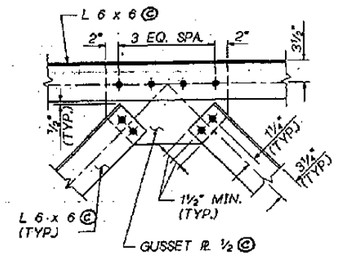

DETAIL I

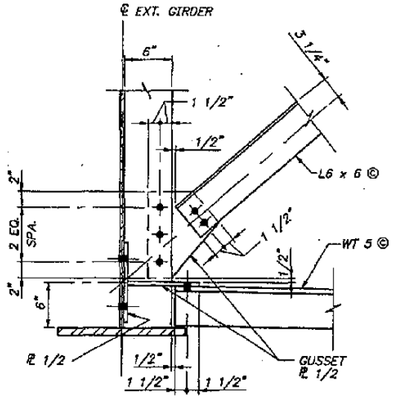

TYPICAL CONNECTION DIMENSIONS

DETAIL C

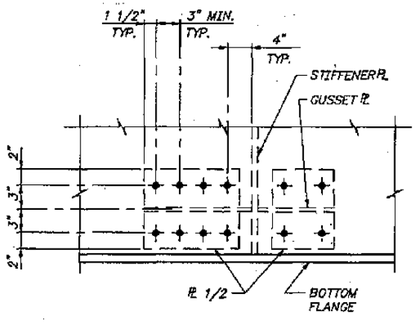

TYPICAL BOLT LAYOUT

VIEW D

FOR "AS CONSTRUCTED PLANS" ONLY

PAUL H. BOTT
STATE OF WASHINGTON
REGISTERED PROFESSIONAL ENGINEER
EXPIRES: 10/7/97

Bridge Design Engineer						REGION NO.	STATE	FED. AID. PROJ. NO.	SHEET NO.	TOTAL SHEETS
Supervisor						10	WASH			
Designed By J.R.K. / Q.B.						JOB NUMBER 95W036				
Checked By A.T.L.										
Detailed By W.H.H.										
Bridge Projects Engineer						CONTRACT NO. 4771				
Prelim. Plan By	1/96	1 ADDED DETAIL I, REM. NOTE	MA	RTS						
Architect/Specialist	DATE	REVISION	BY	APP'D						

WASHINGTON STATE DEPARTMENT OF TRANSPORTATION

Sverdrup DEVEL INC.

SR167
MAIN STREET TO 84TH AVE. SO.
HOV SC & DI - STAGE 2
BNRR OVERCROSSING BR. NO. 167/127

CROSS FRAMES/LATERALS DETAILS - SHEET 1

BRIDGE SHEET NO. 20

SHEET 615A OF 663 SHEETS

B8200010 SR JOB NO. SHEET

SR 167/91

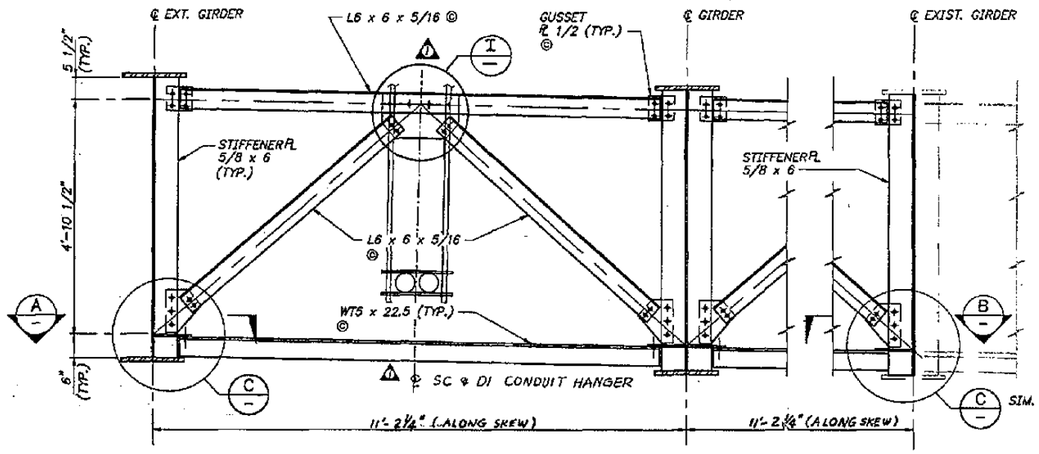

INTERMEDIATE K-FRAME CONFIGURATION

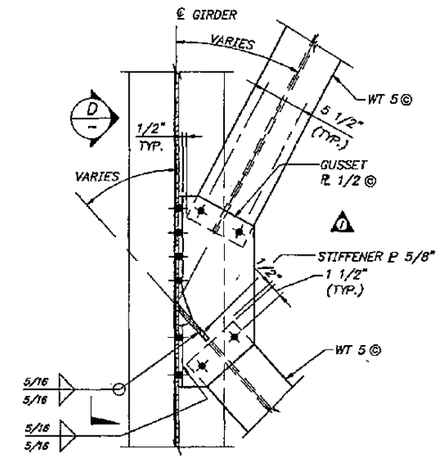

SECTION A

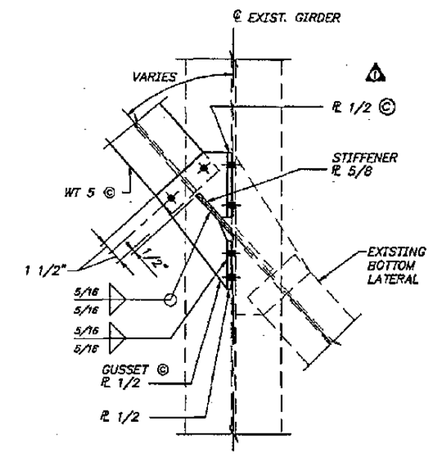

SECTION B

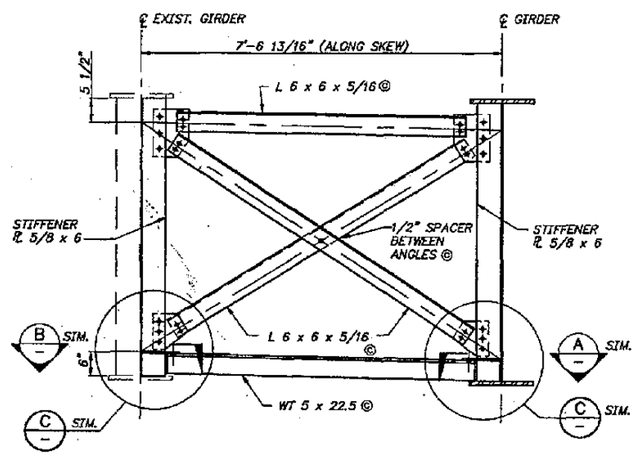

INTERMEDIATE CROSS FRAME CONFIGURATION

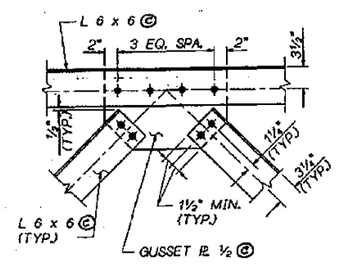

DETAIL I

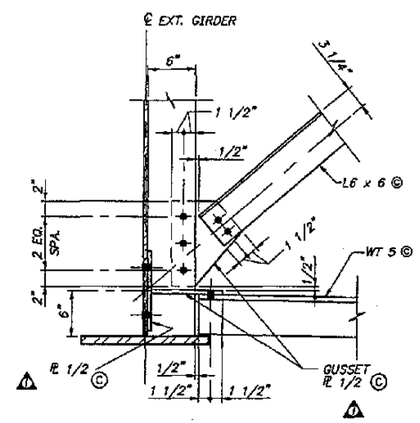

TYPICAL CONNECTION DIMENSIONS

DETAIL C

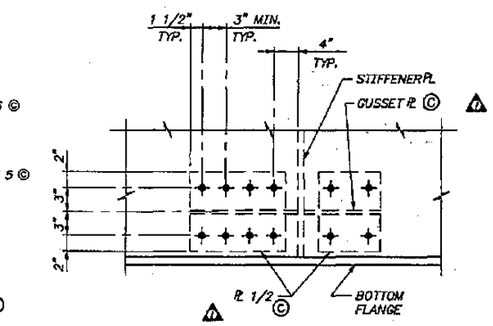

TYPICAL BOLT LAYOUT

VIEW D

FOR "AS CONSTRUCTED PLANS" ONLY

EXPIRES: 10/7/97

Bridge Design Engineer					REGION NO.	STATE	FED. AID. PROJ. NO.	SHEET NO.	TOTAL SHEETS
Supervisor					10	WASH			
Designed By J.R.K. / Q.B.					JOB NUMBER 95W036				
Checked By A.T.L.									
Detailed By W.H.H.									
Bridge Projects Engineer									
Prelim. Plan By	1/96	1 ADDED DETAIL I, REM. NOTE	WH	RTS	CONTRACT NO. 4771				
Architect/Specialist	DATE	REVISION	BY	APP'D					

WASHINGTON STATE DEPARTMENT OF TRANSPORTATION

Sverdrup CIVIL INC.

SR167
MAIN STREET TO 84TH AVE. SO.
HOV SC & DI - STAGE 2
BNRR OVERCROSSING BR. NO. 167/127

CROSS FRAMES/LATERALS DETAILS - SHEET 1

BRIDGE SHEET NO. 20

SHEET 615B OF 663 SHEETS

SR 167/91

B8200010 SR ___ JOB NO. ___ SHEET ___

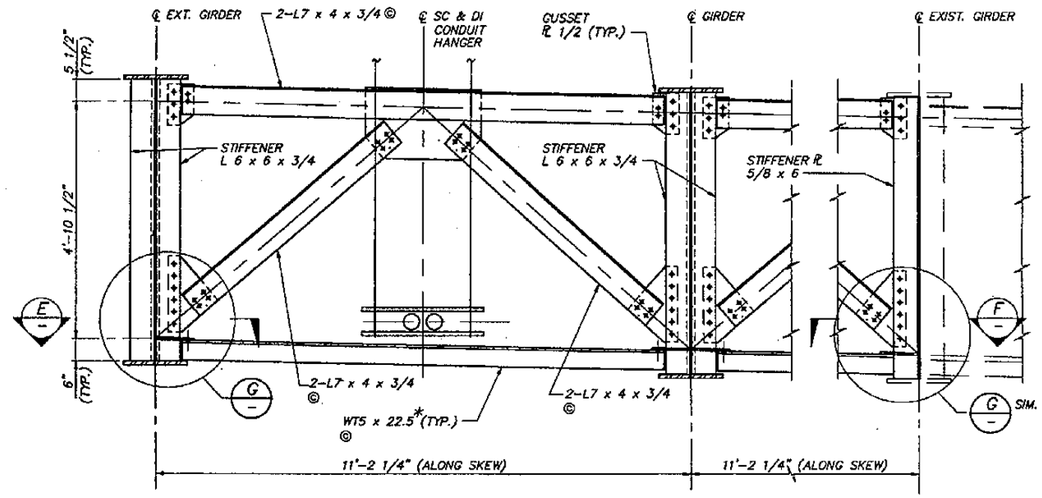

PIER K-FRAME CONFIGURATION

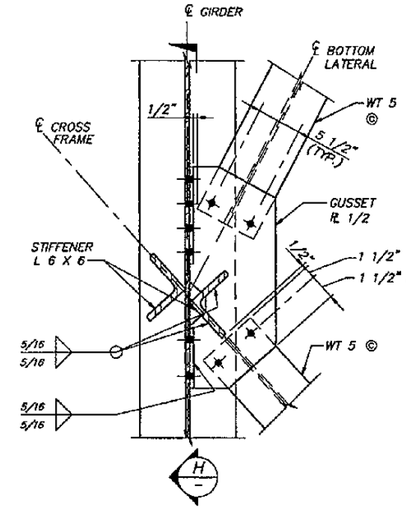

SECTION E

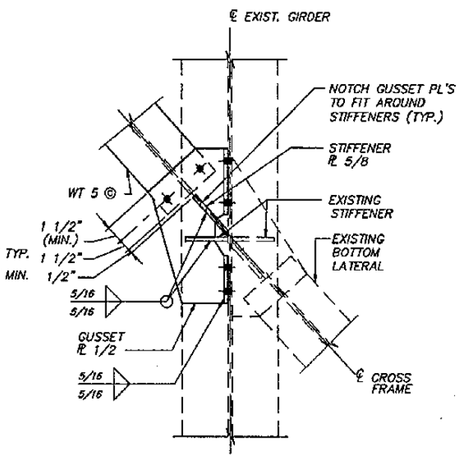

SECTION F

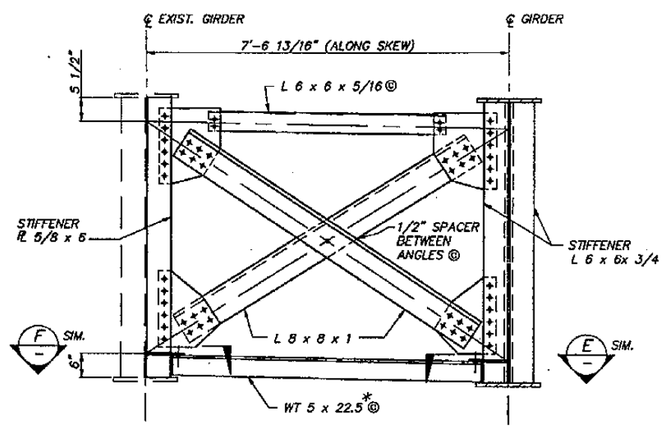

PIER CROSS FRAME CONFIGURATION

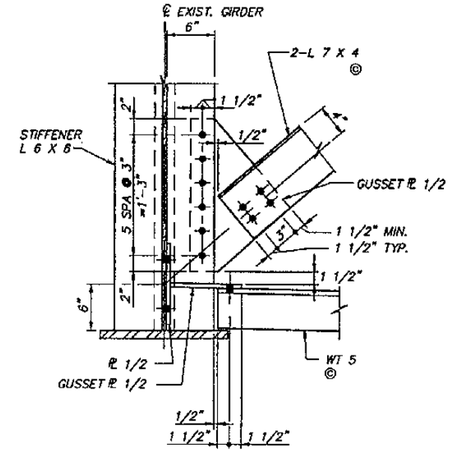

TYPICAL CONNECTION DIMENSONS

DETAIL G

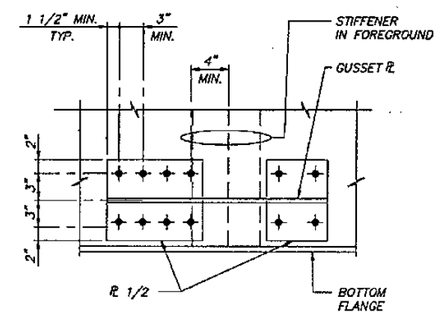

TYPICAL BOLT LAYOUT

VIEW H

FOR "AS CONSTRUCTED PLANS" ONLY

* TURN WT 5 X 22.5 TEE STEM UPWARD AT PIER 1 AND 4. COPE TEE STEM IF NECESSARY.

Bridge Design Engineer					
Supervisor					
Designed By J.R.K. / Q.B.					
Checked By A.T.L.					
Detailed By W.H.H.					
Bridge Projects Engineer					
Prelim. Plan By					
Architect/Specialist	DATE	REVISION	BY	APP'D	

REGION NO.	STATE	FED. AID. PROJ. NO.	SHEET NO.	TOTAL SHEETS
10	WASH			
JOB NUMBER 95W036				
CONTRACT NO. 4771				

JOHN R. KATTELL, STATE OF WASHINGTON, REGISTERED PROFESSIONAL ENGINEER 9/1/95
EXPIRES: 06/10/97

WASHINGTON STATE DEPARTMENT OF TRANSPORTATION

Sverdrup CIVIL INC.

SR167
15TH N.W. TO 84TH AVE. SO.
HOV SC & DI – STAGE 2
BNRR OVERCROSSING BR. NO. 167/127

CROSS FRAMES/LATERALS DETAILS – SHEET 2

BRIDGE SHEET NO. 21

SHEET 616 OF 663 SHEETS

SR 167/91

B8200014 SR ___ JOB NO. ___ SHEET ___

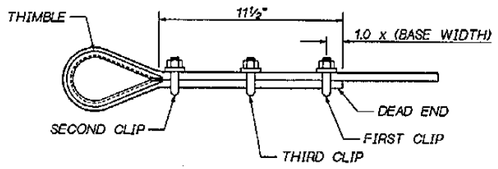

WIRE ROPE CLIP

ATTACH FIRST CLIP ONE BASE WIDTH FROM DEAD END OF ROPE. CAUTION: U-BOLT OVER DEAD END OF ROPE-SADDLE OR BASE BEARS ON LIVE END. TIGHTEN NUTS TO RECOMMENDED TORQUE.
ATTACH SECOND CLIP AS CLOSE TO THIMBLE AS POSSIBLE. TIGHTEN NUTS FIRMLY, BUT NOT COMPLETELY TIGHT.
ATTACH THIRD CLIP EQUALLY SPACED BETWEEN THE TWO CLIPS APPLIED PREVIOUSLY. TIGHTEN NUTS - TAKE UP ANY ROPE SLACK - UNIFORMLY TIGHTEN ALL NUTS TO 65 FOOT POUND TORQUE.

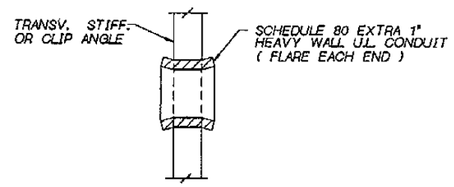

DETAIL A

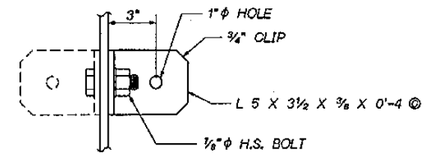

SECTION A

USE CLIP ANGLES MIDWAY BETWEEN X-FRAMES. OMIT WHERE STIFFENERS EXIST OR WHERE X-FRAME SPACING IS LESS THAN 12'-0". PLACE CLIP ANGLES AT APPROXIMATELY 12'-0" O.C. ON OUTSIDE FACE OF EXTERIOR GIRDERS.

NOTES:

1. ADJUST TURNBUCKLE TAKE UP BODY LENGTH AS REQUIRED TO PRODUCE A TAUT SAFETY CABLE TO MINIMIZE CABLE DEFLECTION.
2. REGULARLY CHECK WIRE ROPE FOR TAUTNESS, AND WIRE ROPE CLIP ATTACHMENTS FOR SLIPPAGE. TIGHTEN WIRE ROPE CLIPS AND/OR TURNBUCKLE AS REQUIRED.

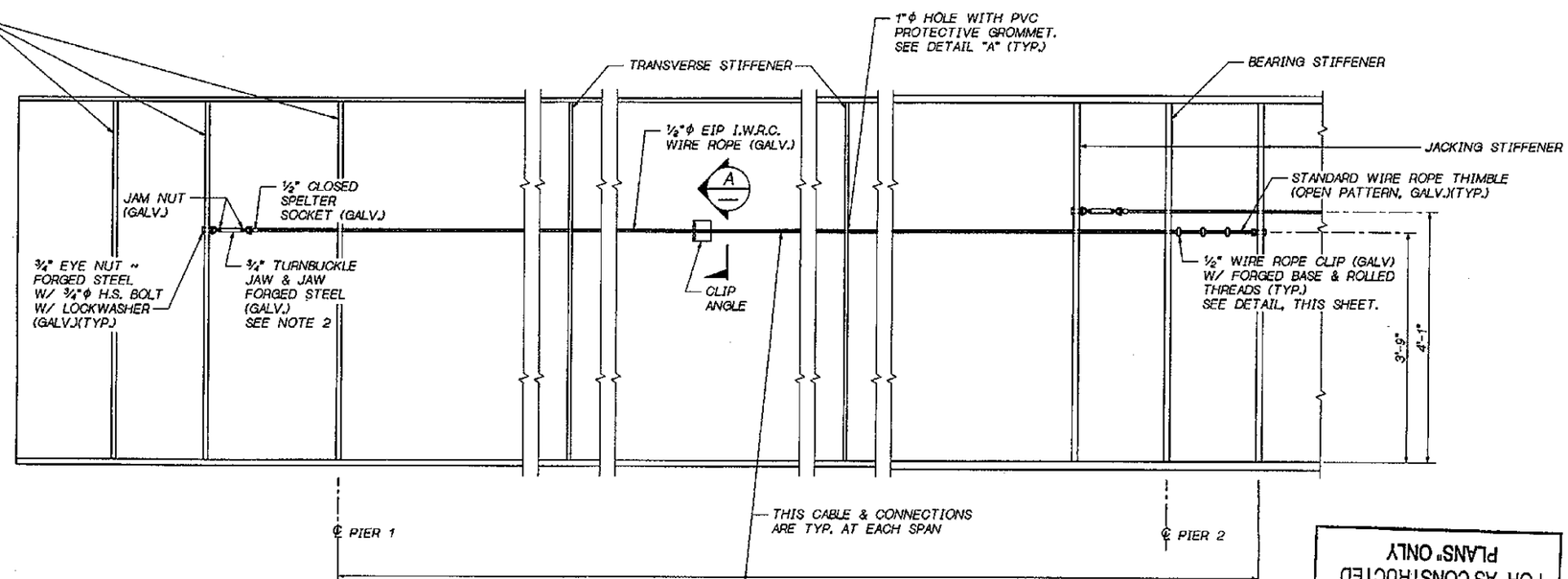

FOR "AS CONSTRUCTED PLANS" ONLY

ELEVATION

CABLES REQUIRED ON BOTH SIDES OF ALL GIRDERS.
INSTALL SPELTER SOCKETS AT WEST END OF SPANS.

Bridge Design Engr.					RECON NO.	STATE	FED. AID PROJ. NO.	SHEET NO.	TOTAL SHEETS
Supervisor					10	WASH.			
Designed By									
Checked By									
Detailed By					JOB NUMBER 95W036				
Bridge Projects Engr.									
Prelim. Plan By	1/96	1 ADDED BR. SHT. 21A	MA	RJS	4771				
Architect/Specialist	DATE	REVISION	BY	APP'D					

WASHINGTON STATE DEPARTMENT OF TRANSPORTATION

Everdrup

SR167
15TH N.W. TO 84TH AVE. SO.
HOV SC & DI - STAGE 2
BNRR OVERCROSSING BR. NO. 167/127

SAFETY CABLES

BRIDGE SHEET NO. 21A

SHEET 616A OF 663 SHEETS

SR ___ JOB NO. ___ SHEET ___

25-JAN-96

SMALL_JOBROOT:[FGB]SR167_SAFE.FGB;1

SR167/91

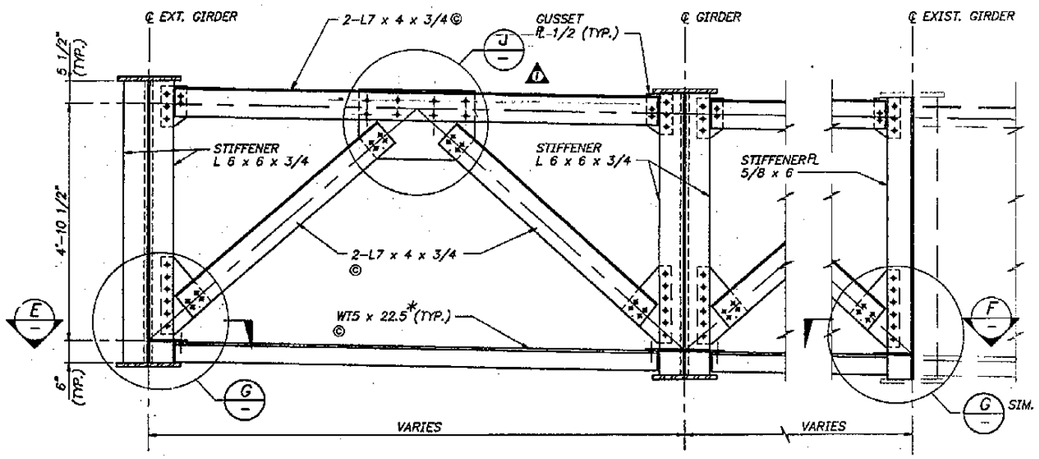

PIER K-FRAME CONFIGURATION

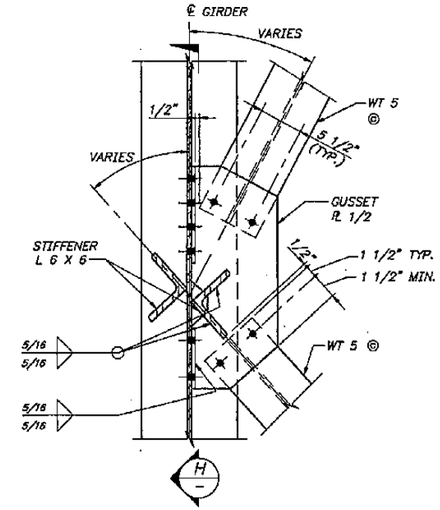

SECTION E

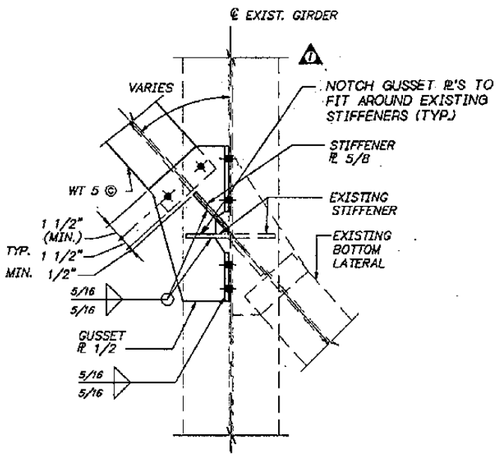

SECTION F

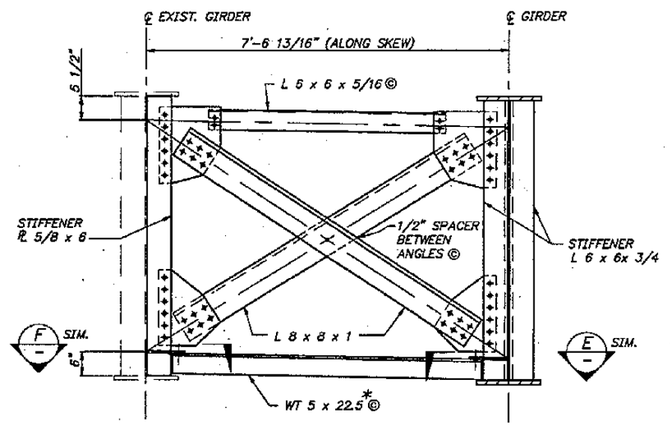

PIER CROSS FRAME CONFIGURATION

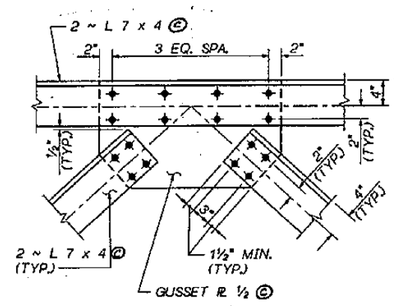

DETAIL J

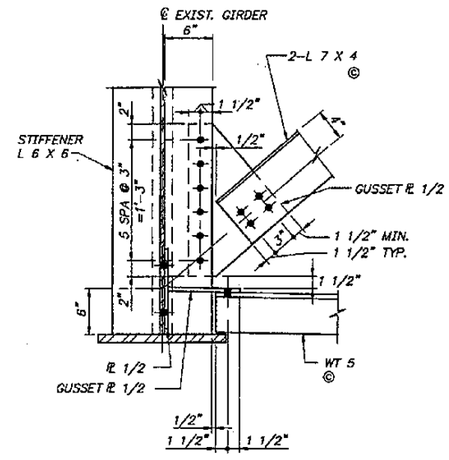

TYPICAL CONNECTION DIMENSONS

DETAIL G

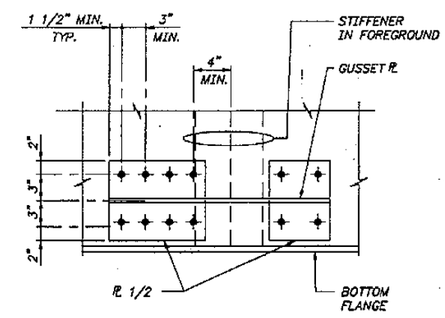

TYPICAL BOLT LAYOUT

VIEW H

"AS CONSTRUCTED PLANS" ONLY

PAUL H. BUTZ — STATE OF WASHINGTON — REGISTERED PROFESSIONAL ENGINEER — EXPIRES: 10/7/97

* TURN WT 5 X 22.5 TEE STEM UPWARD AT PIER 1 AND 4. COPE TEE STEM IF NECESSARY.

Bridge Design Engineer					
Supervisor					
Designed By J.R.K. / Q.B.					
Checked By A.T.L.					
Detailed By W.H.H.					
Bridge Projects Engineer					
Prelim. Plan By	1/96	1 ADDED DETAIL J, REV. NOTE	NA		
Architect/Specialist	DATE	REVISION	BY	APP'D	

REGION NO.	STATE	FED. AID. PROJ. NO.	SHEET NO.	TOTAL SHEETS
10	WASH			

JOB NUMBER 95W036

CONTRACT NO. 4771

WASHINGTON STATE DEPARTMENT OF TRANSPORTATION

Sverdrup CIVIL INC.

SR167
MAIN STREET TO 84TH AVE. SO.
HOV SC & DI – STAGE 2
BNRR OVERCROSSING BR. NO. 167/127

CROSS FRAMES/LATERALS DETAILS – SHEET 2

BRIDGE SHEET NO. 21

SHEET 616 OF 663 SHEETS

SR 167/91

B8200014 SR JOB NO. SHEET

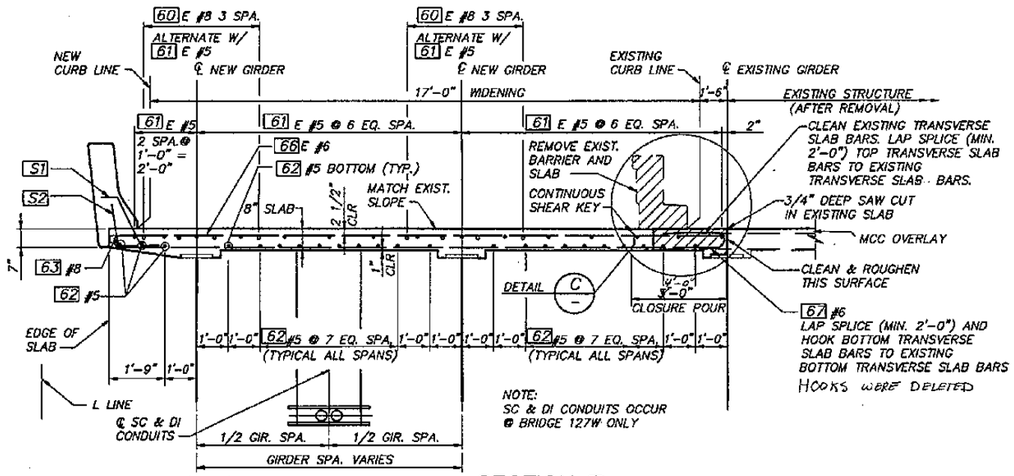

BRIDGE 127 E INTERIOR WIDENING SHOWN LOOKING AHEAD ON STATION NEAR MID-SPAN SPAN 2.
BRIDGE 127 W (LOOKING BACK ON STATION) SIMILAR.

* DENOTES 60 E #8

SECTION A / 23

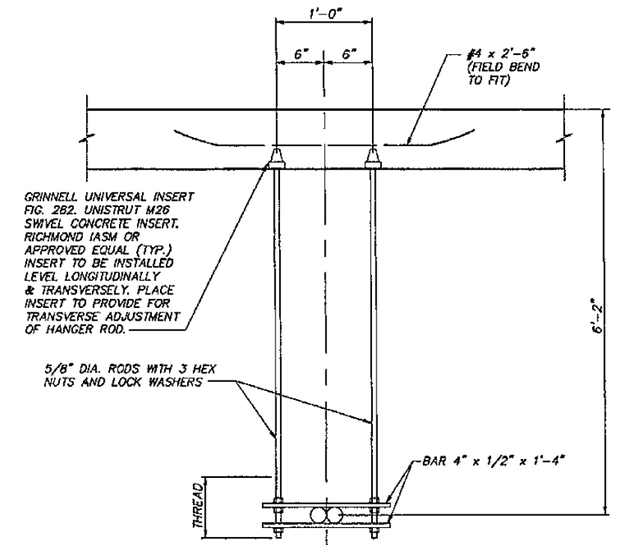

AX EXPANSION FITTING PIER 1 AND ~~2~~ 4
ΔX ~~EXPANSION~~ FITTING PIER 2 AND 3
DEFLECTION

TYPICAL UTILITY HANGER DETAIL

NOTE: SPACE AT 15'-0" MAX.

ALL MATERIAL SHALL BE GALVANIZED AFTER FABRICATION PER AASHTO M 111 OR AASHTO M 232.

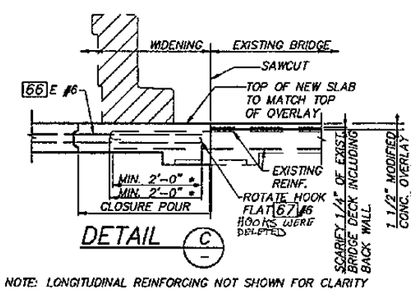

DETAIL C

NOTE: LONGITUDINAL REINFORCING NOT SHOWN FOR CLARITY

* IF EXISTING TRANSVERSE SLAB REINFORCEMENT IS TOO SHORT TO LAP SPLICE, BUTT SPLICE DOWEL (SIZE TO MATCH EXIST. REINF. AND ACHIEVE MIN. SPLICE LENGTH) WITH A MECHANICAL COUPLER BUTT SPLICE IN ACCORDANCE WITH STD. SPEC. SECTION 6-023(24)F.

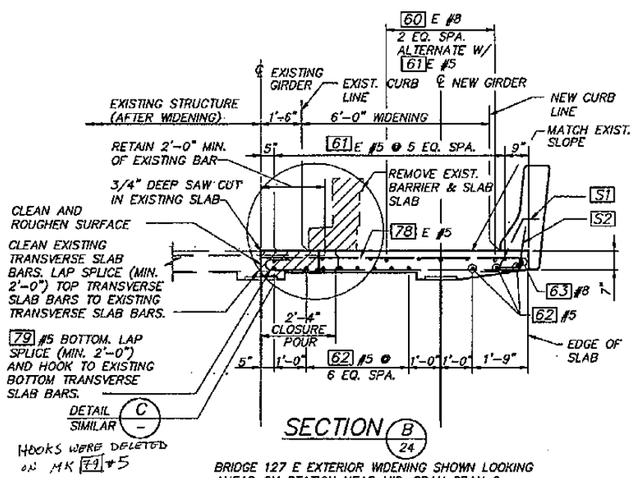

SECTION B / 24

BRIDGE 127 E EXTERIOR WIDENING SHOWN LOOKING AHEAD ON STATION NEAR MID-SPAN SPAN 2.

* DENOTES 60 E #8

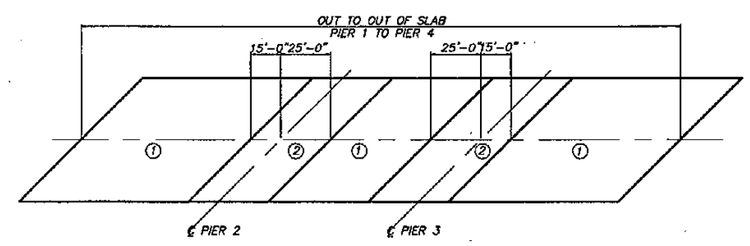

SLAB PLACING SEQUENCE

SLAB PLACING SEQUENCE SHALL BE AS SHOWN ABOVE, AREAS MARKED (1) SHALL BE PLACED BEFORE AREAS MARKED (2), BUT AREAS OF THE SAME NUMBER NEED NOT BE PLACED SIMULTANEOUSLY. PLACEMENT OF AREAS MARKED (2) SHALL NOT COMMENCE UNTIL AT LEAST 48 HOURS HAVE ELASPED AFTER COMPLETION OF PLACEMENT OF AREAS MARKED (1)

FOR "AS CONSTRUCTED PLANS" ONLY

BB200025 SR 167 JOB NO. ___ SHEET ___

Bridge Design Engineer					REGION NO.	STATE	FED. AID. PROJ. NO.	SHEET NO.	TOTAL SHEETS
Supervisor					10	WASH			
Designed By A.L.K.					JOB NUMBER 95W036				
Checked By R.L.F.									
Detailed By B.L.P.					CONTRACT NO. 4771				
Bridge Projects Engineer									
Prelim. Plan By									
Architect/Specialist	DATE	REVISION	BY	APP'D					

JOHN R. KATTELL, STATE OF WASHINGTON, REGISTERED PROFESSIONAL ENGINEER — 9/1/95 — EXPIRES: 06/10/97

WASHINGTON STATE DEPARTMENT OF TRANSPORTATION

Sverdrup CIVIL INC.

SR167
15TH N.W. TO 84TH AVE. SO.
HOV SC & DI – STAGE 2
BNRR OVERCROSSING BR. NO. 167/127

SLAB TYPICAL SECTIONS

BRIDGE SHEET NO. 22

SHEET 617 OF 663 SHEETS

SR 167/91

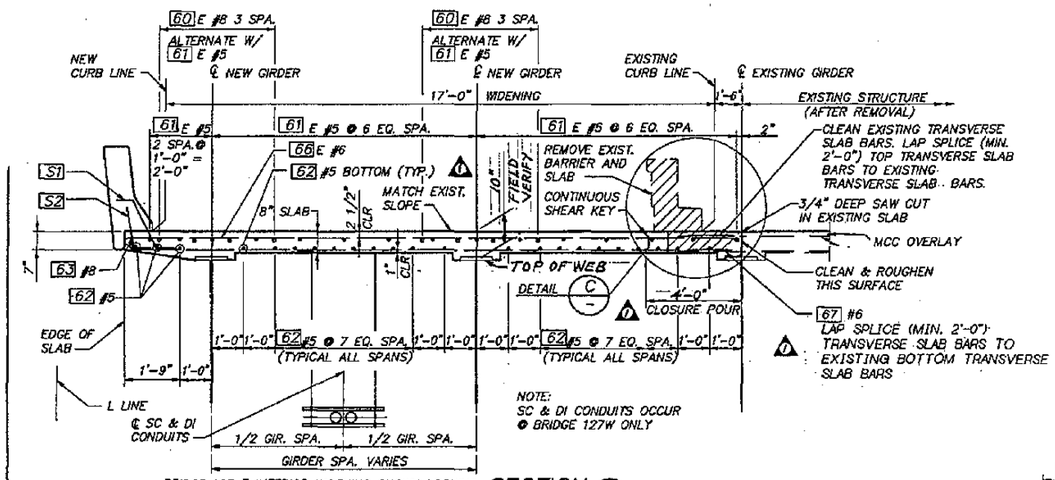

BRIDGE 127 E INTERIOR WIDENING SHOWN LOOKING AHEAD ON STATION NEAR MID-SPAN SPAN 2.
BRIDGE 127 W (LOOKING BACK ON STATION) SIMILAR.

SECTION A / 23

• DENOTES 60 E #8

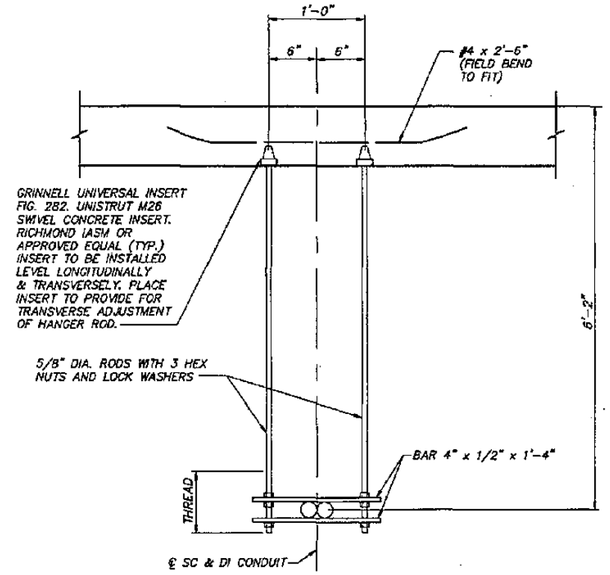

TYPICAL UTILITY HANGER DETAIL

NOTE: SPACE AT 15'-0" MAX.
ALL MATERIAL SHALL BE GALVANIZED AFTER FABRICATION PER AASHTO M 111 OR AASHTO M 232.

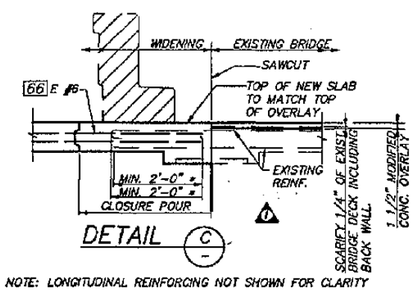

DETAIL C

NOTE: LONGITUDINAL REINFORCING NOT SHOWN FOR CLARITY
* IF EXISTING TRANSVERSE SLAB REINFORCEMENT IS TOO SHORT TO LAP SPLICE, BUTT SPLICE DOWEL (SIZE TO MATCH EXIST. REINF. AND ACHIEVE MIN. SPLICE LENGTH) WITH A MECHANICAL COUPLER BUTT SPLICE IN ACCORDANCE WITH STD. SPEC. SECTION 6-023(24)F.

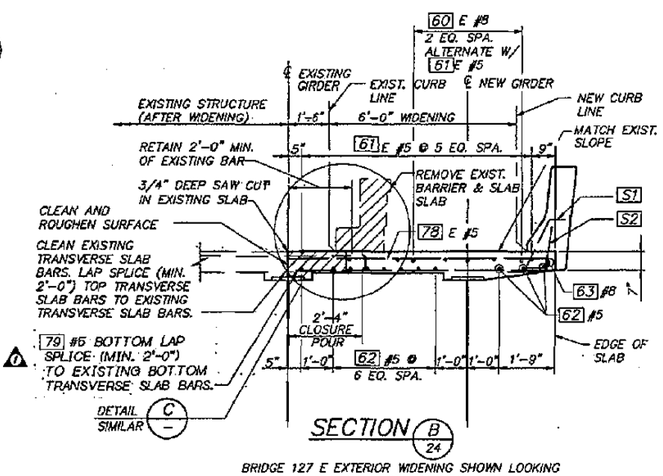

SECTION B / 24

BRIDGE 127 E EXTERIOR WIDENING SHOWN LOOKING AHEAD ON STATION NEAR MID-SPAN SPAN 2.
* DENOTES 60 E #8

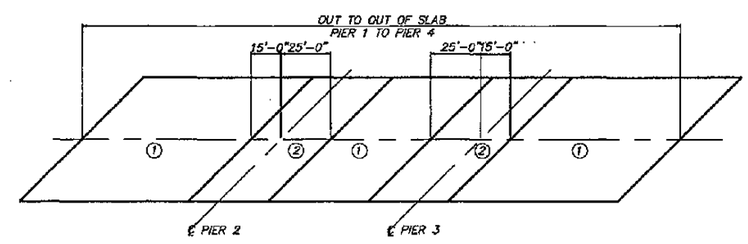

SLAB PLACING SEQUENCE

SLAB PLACING SEQUENCE SHALL BE AS SHOWN ABOVE, AREAS MARKED 1 SHALL BE PLACED BEFORE AREAS MARKED 2, BUT AREAS OF THE SAME NUMBER NEED NOT BE PLACED SIMULTANEOUSLY. PLACEMENT OF AREAS MARKED 2 SHALL NOT COMMENCE UNTIL AT LEAST 48 HOURS HAVE ELASPED AFTER COMPLETION OF PLACEMENT OF AREAS MARKED 1

FOR "AS CONSTRUCTED PLANS" ONLY

Bridge Design Engineer					REGION NO.	STATE	FED. AID. PROJ. NO.	SHEET NO.	TOTAL SHEETS		SR167
Supervisor											15TH N.W. TO 84TH AVE. SO.
Designed By A.L.K.					10	WASH					HOV SC & DI – STAGE 2
Checked By R.L.F.					JOB NUMBER						BNRR OVERCROSSING BR. NO. 167/127
Detailed By B.L.P.					95W036						
Bridge Projects Engineer	1196	1 ADDED DIMENSION; REVISED									SLAB TYPICAL SECTIONS
Prelim. Plan By		CLOSURE POUR, NOTES; REM. NOTE	MA		CONTRACT NO. 4771						
Architect/Specialist	DATE	REVISION	BY	APP'D							

JOHN R. EATZEL, STATE OF WASHINGTON, REGISTERED PROFESSIONAL ENGINEER — 9/1/95 — EXPIRES: 06/10/1997

WASHINGTON STATE DEPARTMENT OF TRANSPORTATION

Sverdrup CIVIL INC.

BRIDGE SHEET NO. 22

SHEET 617A OF 663 SHEETS

SR 167/91

B8200025 JOB NO. ____ SHEET ____ SR ____

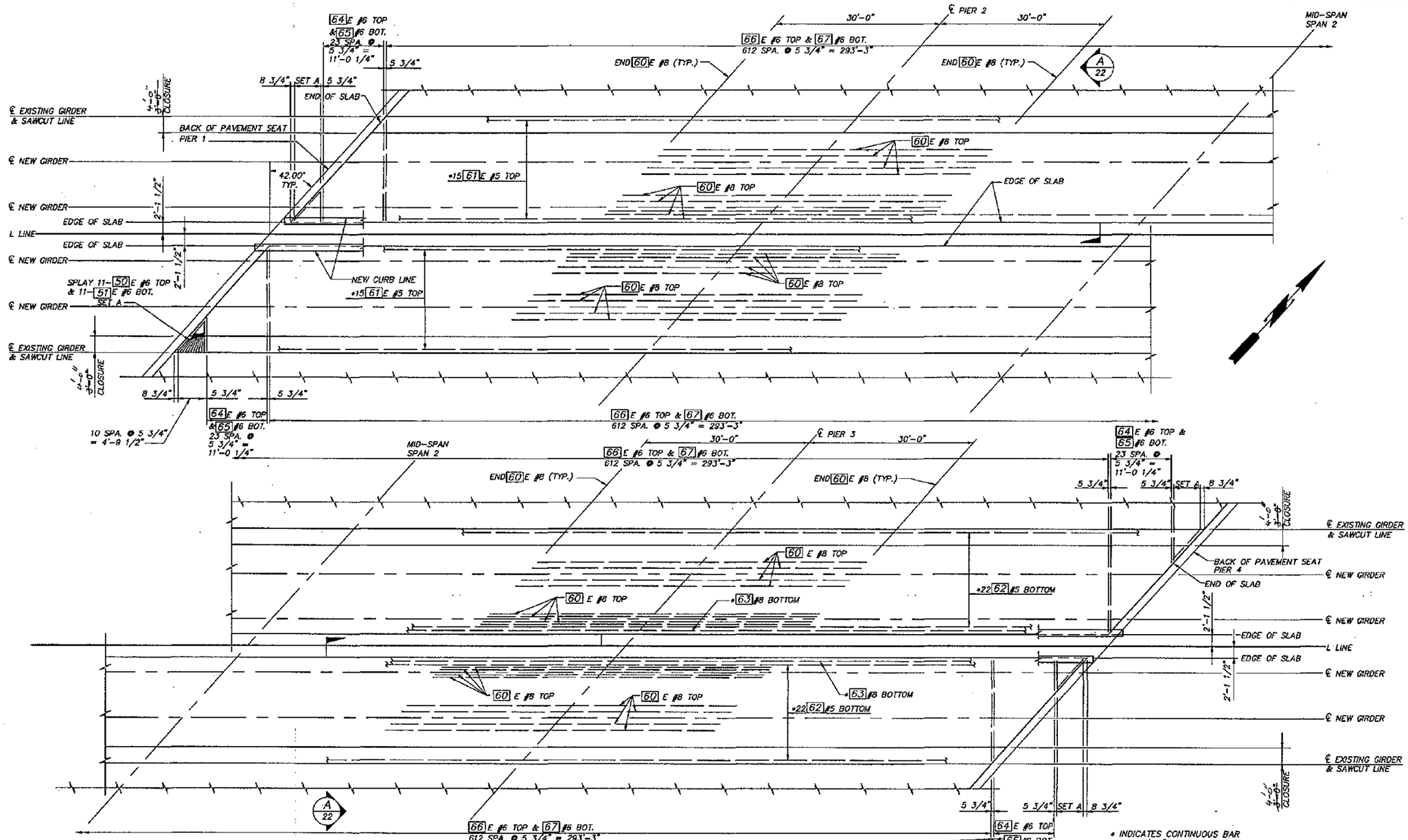

SLAB PLAN – INTERIOR WIDENING

NOTE: SEE GIRDER FRAMING PLAN FOR GIRDER LOCATIONS.
TOP AND BOTTOM LONGITUDINAL REINFORCING SYMMETRICAL ABOUT MID-SPAN 2.

FOR "AS CONSTRUCTED PLANS" ONLY

Bridge Design Engineer			
Supervisor			
Designed By	A.L.K./I.B.C.		
Checked By	R.L.F.		
Detailed By	B.L.P.		
Bridge Projects Engineer			
Prelim. Plan By			
Architect/Specialist			

DATE | REVISION | BY | APP'D

REGION NO.	STATE	FED. AID. PROJ. NO.	SHEET NO.	TOTAL SHEETS
10	WASH			

JOB NUMBER 95W036
CONTRACT NO. 4771

JOHN R. KATHERINE, STATE OF WASHINGTON, REGISTERED PROFESSIONAL ENGINEER — 9/1/95
EXPIRES: 06/10/96

WASHINGTON STATE DEPARTMENT OF TRANSPORTATION
Sverdrup CIVIL INC.

SR167
15TH N.W. TO 84TH AVE. SO.
HOV SC & DI – STAGE 2
BNRR OVERCROSSING BR. NO. 167/127

SLAB PLAN – SHEET 1

BRIDGE SHEET NO. 23
SHEET 618 OF 663 SHEETS

B5200016 SR ___ JOB NO. ___ SHEET ___

SR167/91

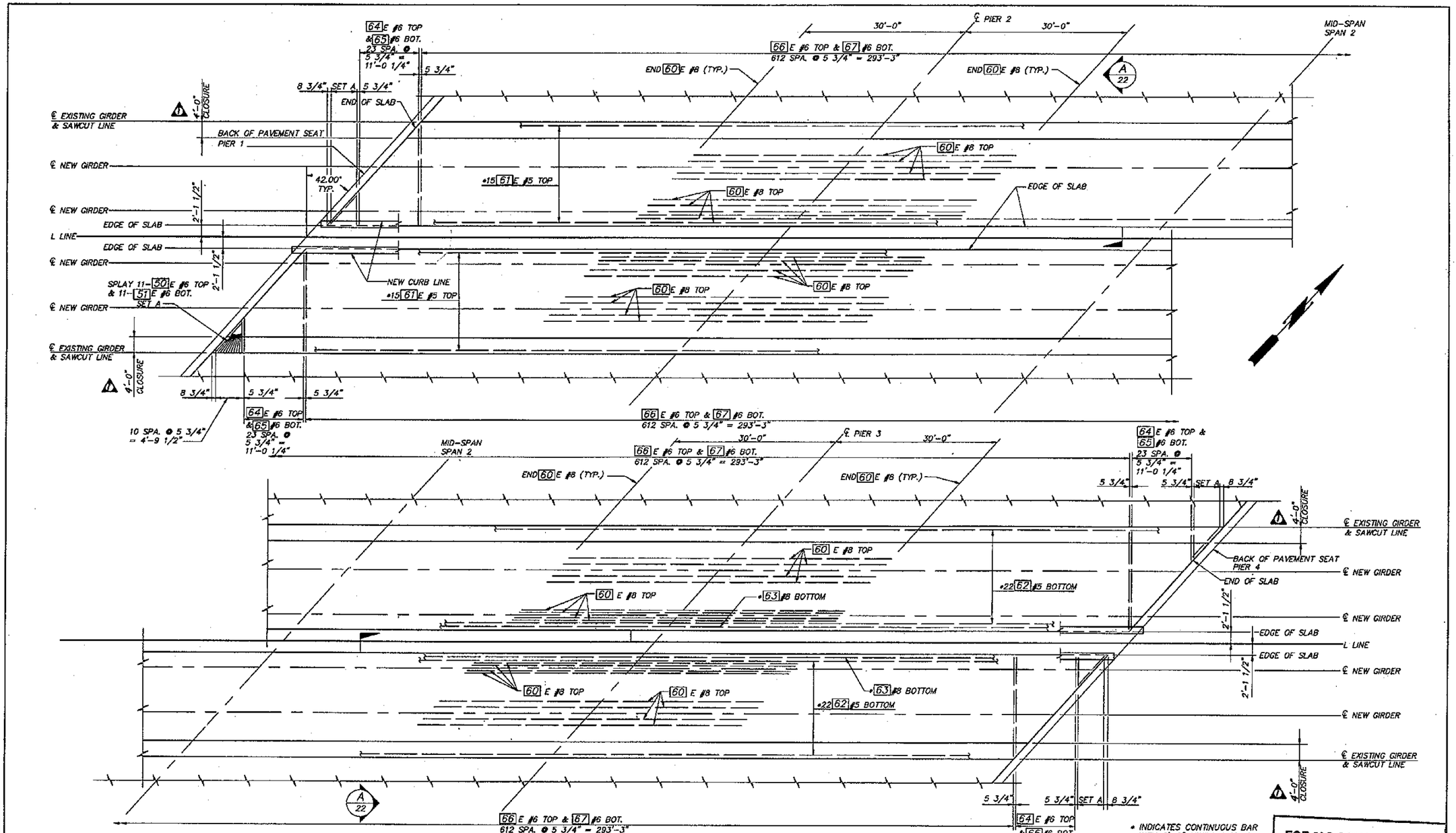

SLAB PLAN – INTERIOR WIDENING

NOTE: SEE GIRDER FRAMING PLAN FOR GIRDER LOCATIONS.
TOP AND BOTTOM LONGITUDINAL REINFORCING SYMMETRICAL ABOUT MID-SPAN 2.

* INDICATES CONTINUOUS BAR WITH 2'-0" MINIMUM SPLICE (EXCEPT BAR 63 #8 TO HAVE 3'-0" MINIMUM SPLICE). NUMBER AND LENGTH OF BARS TO BE DETERMINED BY CONTRACTOR.
E INDICATES EPOXY COATED

FOR "AS CONSTRUCTED PLANS" ONLY

Bridge Design Engineer					
Supervisor					
Designed By A.L.K./I.B.C.					
Checked By R.L.F.					
Detailed By B.L.P.					
Bridge Projects Engineer					
Prelim. Plan By	1/96	1 REVISED CLOSURE DIM.	MJ	BG	
Architect/Specialist	DATE	REVISION	BY	APP'D	

REGION NO.	STATE	FED. AID PROJ. NO.	SHEET NO.	TOTAL SHEETS
10	WASH			
JOB NUMBER 95W036				
CONTRACT NO. 4771				

JOHN R. KATRICH, STATE OF WASHINGTON, REGISTERED PROFESSIONAL ENGINEER — 7/1/95
EXPIRES: 06/10/97

WASHINGTON STATE DEPARTMENT OF TRANSPORTATION

Sverdrup CIVIL INC.

SR167
15TH N.W. TO 84TH AVE. SO.
HOV SC & DI – STAGE 2
BNRR OVERCROSSING BR. NO. 167/127

SLAB PLAN – SHEET 1

BRIDGE SHEET NO. 23

SHEET 618A OF 663 SHEETS

SR 167/91

B5203016 SR JOB NO. SHEET

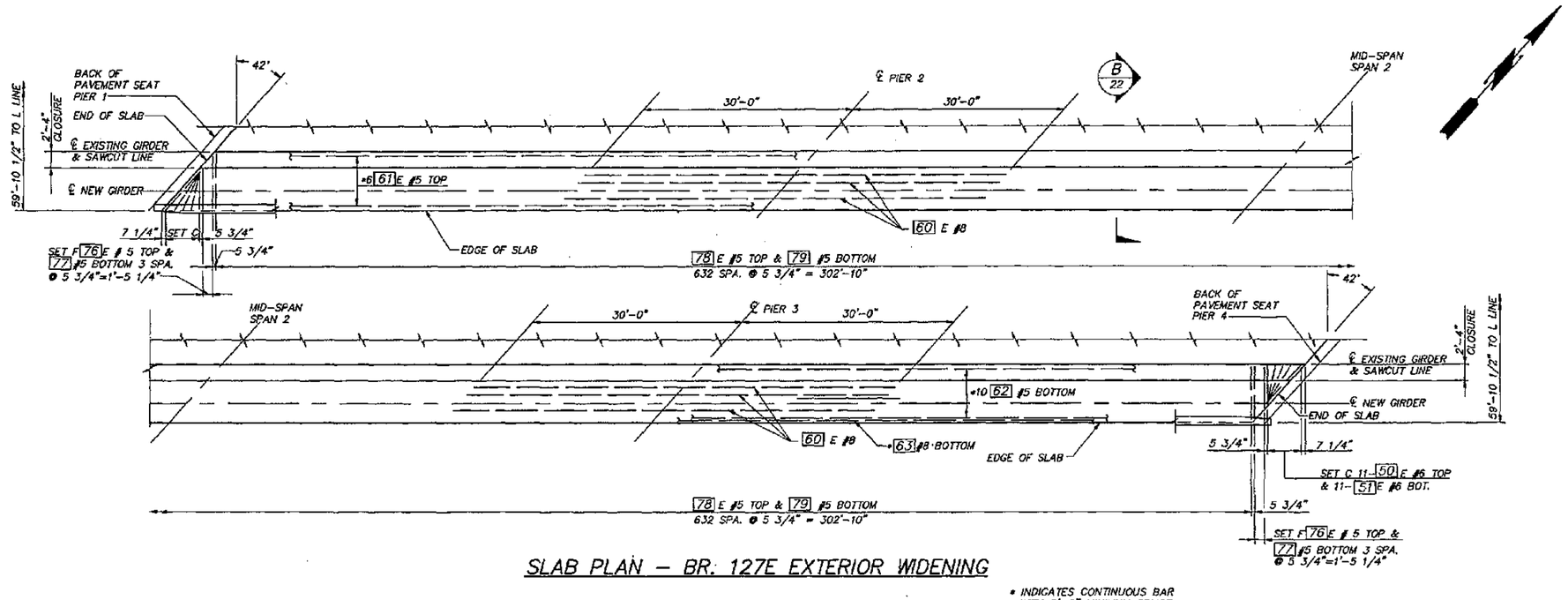

SLAB PLAN – BR. 127E EXTERIOR WIDENING

* INDICATES CONTINUOUS BAR WITH 2'-0" MINIMUM SPLICE (EXCEPT BAR 63 #8 SHALL HAVE 3'-6" MINIMUM SPLICE). NUMBER AND LENGTH OF BARS TO BE DETERMINED BY CONTRACTOR.
E INDICATES EPOXT COATED

FOR "AS CONSTRUCTED PLANS" ONLY

Bridge Design Engineer					REGION NO.	STATE	FED. AID. PROJ. NO.	SHEET NO.	TOTAL SHEETS	
Supervisor					10	WASH				
Designed By A.T.L.					JOB NUMBER 95W036					
Checked By R.L.F.										
Detailed By B.L.P.										
Bridge Projects Engineer										
Prelim. Plan By					CONTRACT NO. 4771					
Architect/Specialist	DATE	REVISION	BY	APP'D						

JOHN R. KATTELLE, STATE OF WASHINGTON, REGISTERED PROFESSIONAL ENGINEER
9/1/95
EXPIRES: 06/10/97

WASHINGTON STATE DEPARTMENT OF TRANSPORTATION

Sverdrup CIVIL INC.

SR167
15TH N.W. TO 84TH AVE. SO.
HOV SC & DI – STAGE 2
BNRR OVERCROSSING BR. NO. 167/127

SLAB PLAN – SHEET 2

BRIDGE SHEET NO. 24

SHEET 619 OF 663 SHEETS

B5200017 SR___ JOB NO.___ SHEET___

SR167/91

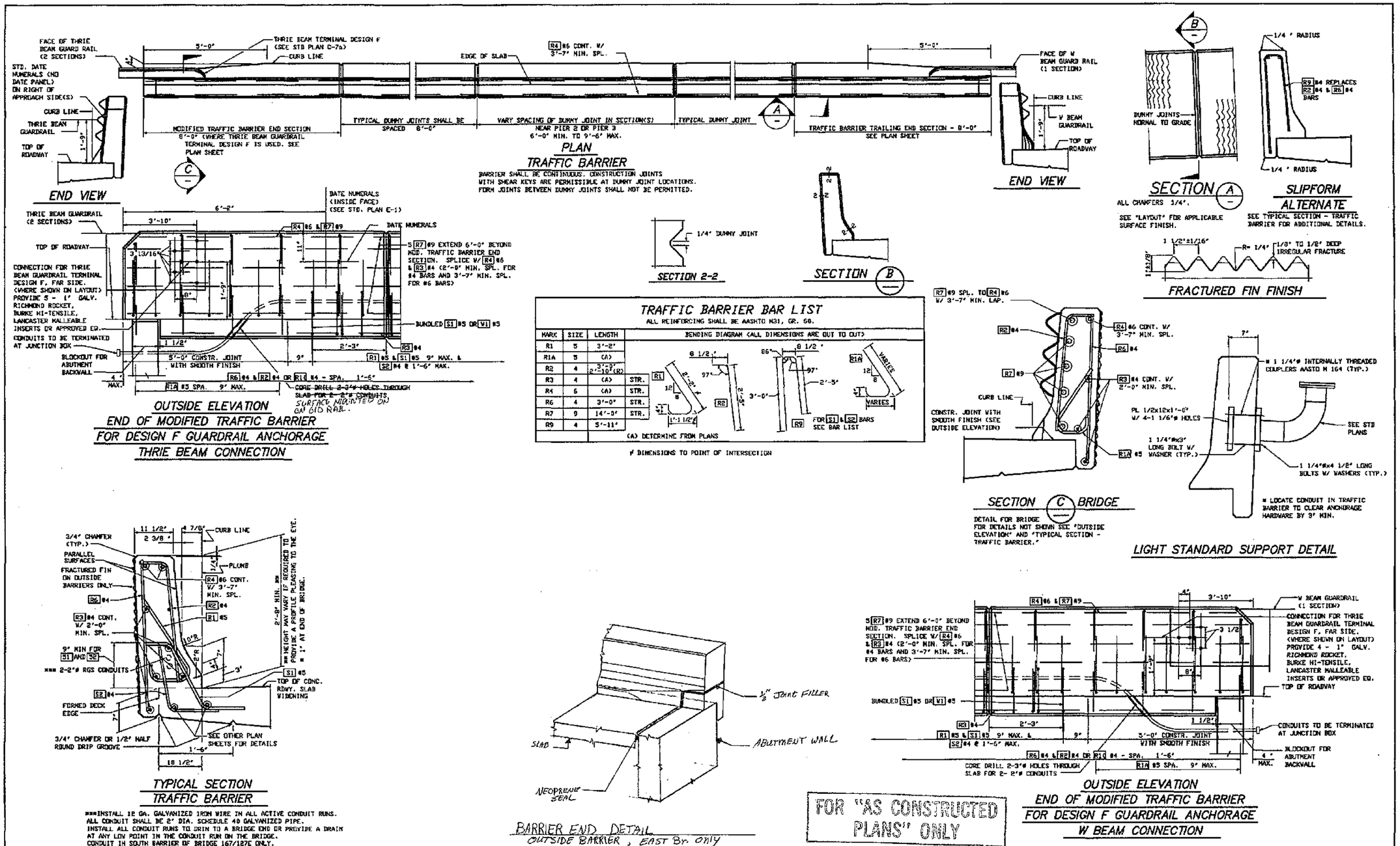

TRAFFIC BARRIER BAR LIST

ALL REINFORCING SHALL BE AASHTO M31, GR. 60.

MARK	SIZE	LENGTH	BENDING DIAGRAM (ALL DIMENSIONS ARE OUT TO OUT)
R1	5	3'-2"	
R1A	5	(A)	
R2	4	3'-9" 2'-10"(R)	
R3	4	(A)	STR.
R4	6	(A)	STR.
R6	4	3'-0"	STR.
R7	9	14'-0"	STR.
R9	4	5'-11"	

(A) DETERMINE FROM PLANS

DIMENSIONS TO POINT OF INTERSECTION

FOR "AS CONSTRUCTED PLANS" ONLY

Bridge Design Engineer				
Supervisor				
Designed By J.R.K.				
Checked By R.L.F.				
Detailed By G.W.S.				
Bridge Projects Engineer				
Prelim. Plan By				
Architect/Specialist	DATE	REVISION	BY	APP'D

REGION NO. 10 | STATE WASH | FED. AID. PROJ. NO. | SHEET NO. | TOTAL SHEETS

JOB NUMBER 95W036

CONTRACT NO. 4771

EXPIRES: 06/10/97 — 9/1/96

WASHINGTON STATE DEPARTMENT OF TRANSPORTATION

Sverdrup CIVIL INC.

SR167
15TH N.W. TO 84TH AVE. SO.
HOV SC & DI - STAGE 2
BNRR OVERCROSSING BR. NO. 167/127

TRAFFIC BARRIER

BRIDGE SHEET NO. 25

SHEET 620 OF 663 SHEETS

B8200019 SR JOB NO. SHEET

SR167/91

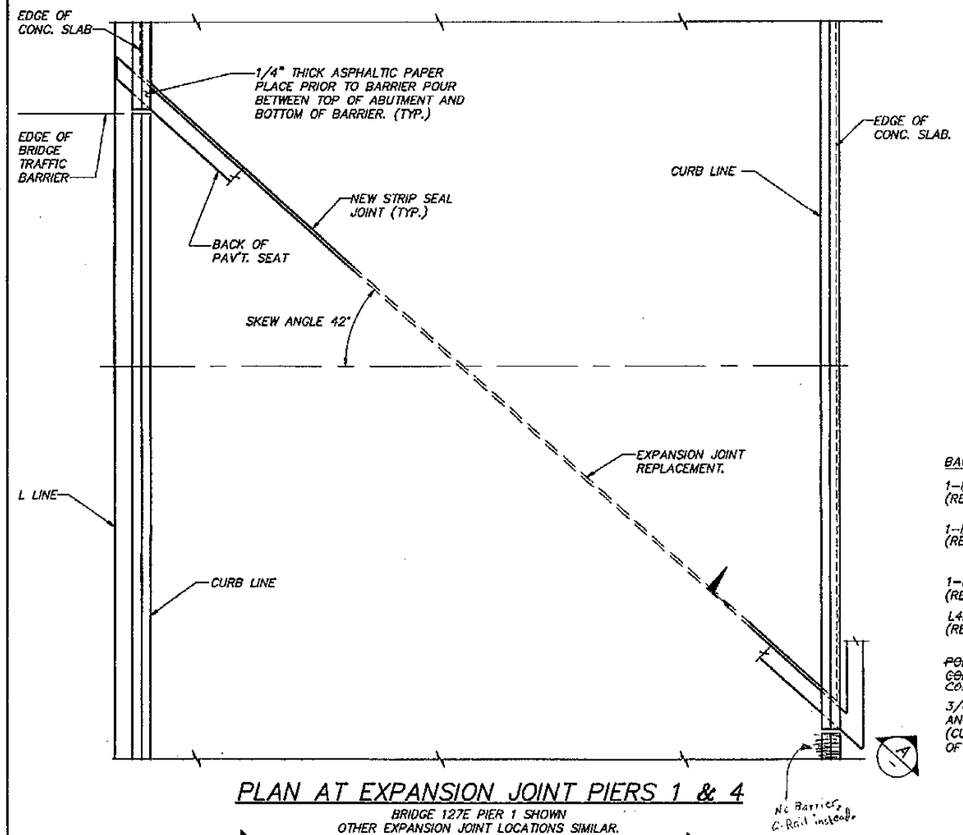

PLAN AT EXPANSION JOINT PIERS 1 & 4

BRIDGE 127E PIER 1 SHOWN
OTHER EXPANSION JOINT LOCATIONS SIMILAR.

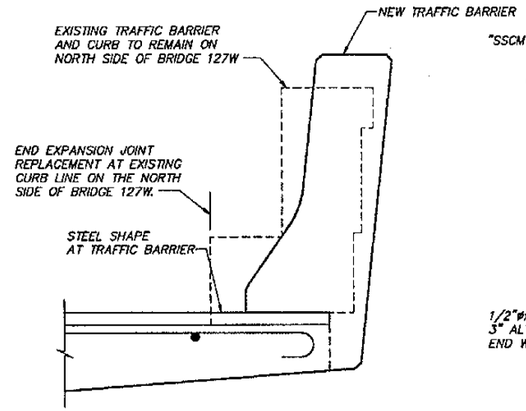

SECTION A

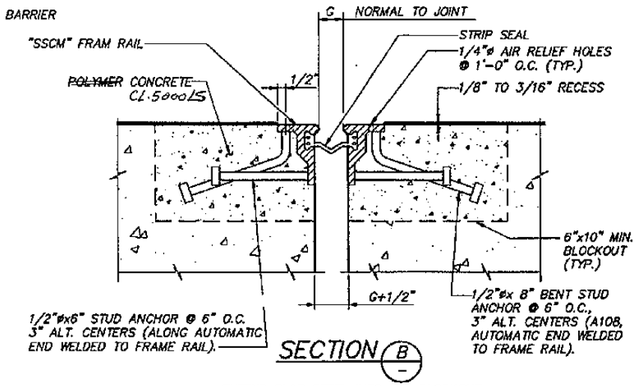

SECTION B

EXTEND SLAB STEEL INTO THE BLOCKOUT.
(ENTIRE STEEL SURFACES OF EXP. JT. INCLUDING ANCHORAGE SHALL BE GALVANIZED A-123 MIN. 3 OZ/SQ. FT.)

EXPANSION JOINT TABLE

LOCATION	OPENING "G" (NORMAL TO JOINT)			EXPANSION JOINT TYPE
	@ 40°F	@ 64°F	@ 80°F	
PIERS 1 & 4	1 3/4"	1 1/2"	1 3/8"	STRIP SEAL D.S. BROWN STEEL FLEX - SSCM 400 OR APPROVED EQUAL

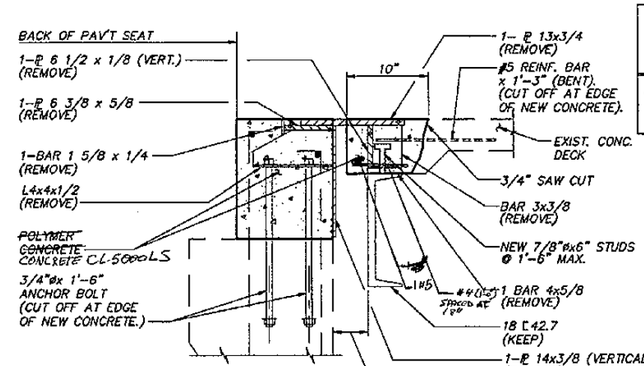

SECTION C

(EXISTING EXPANSION JOINT REMOVAL DETAIL)
(SEE EXISTING BRG. DRAWING "EXPANSION DAM AND BEARING DETAILS" FOR DETAILS NOT SHOWN).
(SEE SECTION B FOR NEW STRIP SEAL EXPANSION JOINT DETAIL).

(SAVE EXISTING REINFORCING IN CONC. DECK AND ABUTMENT DURING EXISTING CONC. REMOVAL.)

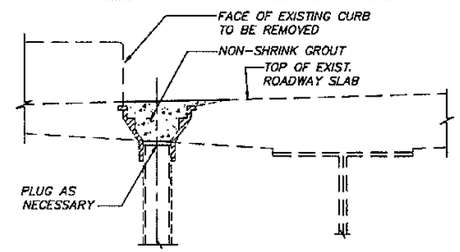

BRIDGE DRAIN PLUG DETAIL

(SEE EXISTING BRG. DRAWING FOR DRAIN LOCATIONS.)
REMOVE DRAIN GRATING & GALV. STEEL CHAIN.
FILL DRAIN WITH NON-SHRINK GROUT AFTER PLUGGING.

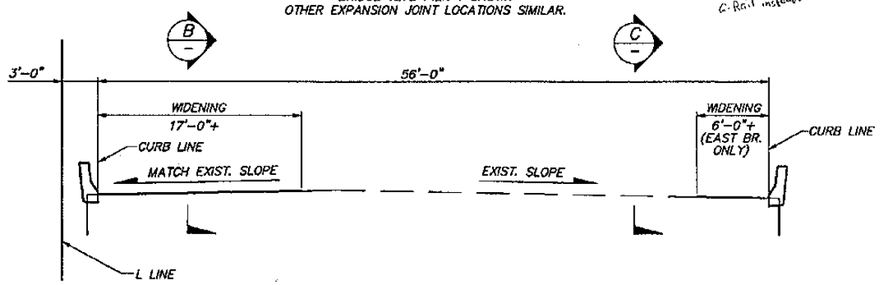

TYP. ROADWAY SECTION AT EXPANSION JOINT

ALL DIMENSIONS ARE NORMAL TO L LINE.
167/127E BRIDGE SHOWN.
167/127W BRIDGE SIMILAR.

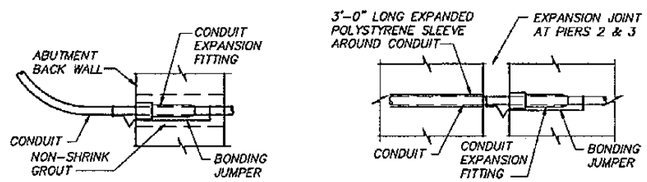

AT PIERS 1 & 4 — AT PIERS 2 & 3

CONDUIT PIER EXPANSION JOINT

SECOND CONDUIT NOT SHOWN FOR CLARITY

FOR "AS CONSTRUCTED PLANS" ONLY

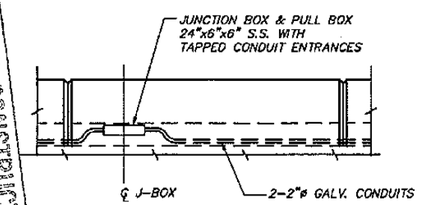

ELEVATION TRAFFIC BARRIER WITH CONDUIT & J-BOX

SEE LAYOUT SHEET FOR LOCATIONS

Bridge Design Engineer					REGION NO.	STATE	FED. AID. PROJ. NO.	SHEET NO.	TOTAL SHEETS
Supervisor					10	WASH			
Designed By Q.B.					JOB NUMBER 95W036				
Checked By R.L.F.									
Detailed By A.J.D.									
Bridge Projects Engineer					CONTRACT NO. 4771				
Preliim. Plan By									
Architect/Specialist	DATE	REVISION	BY	APP'D					

JOHN R. KATTELL, STATE OF WASHINGTON, REGISTERED PROFESSIONAL ENGINEER — 9/1/95 — EXPIRES: 06/10/97

WASHINGTON STATE DEPARTMENT OF TRANSPORTATION

Sverdrup CIVIL INC.

SR167
15TH N.W. TO 84TH AVE. SO.
HOV SC & DI - STAGE 2
BNRR OVERCROSSING BR. NO. 167/127

MISCELLANEOUS DETAILS

BRIDGE SHEET NO. 26

SHEET 621 OF 663 SHEETS

B8200020 SR JOB NO. SHEET

SR 167/91

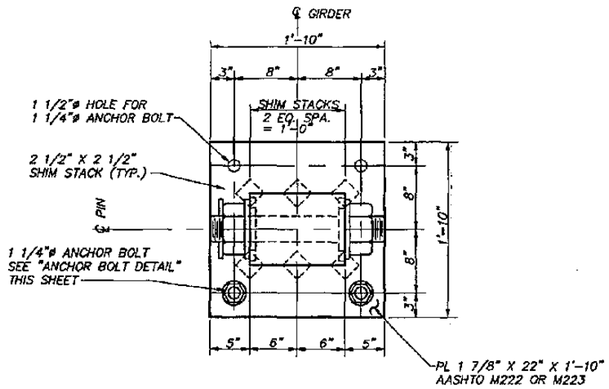

PLAN – BEARING PIER 2 & 3

10 REQUIRED

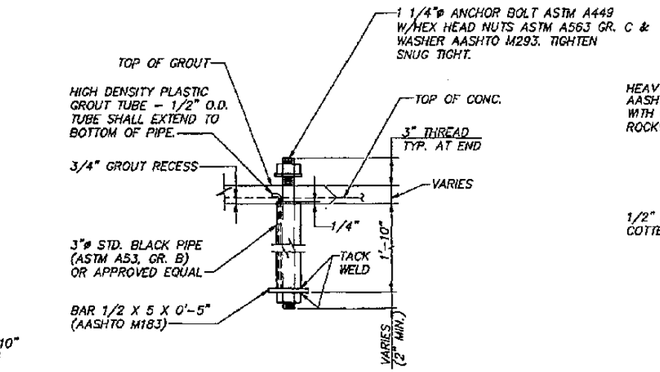

ANCHOR BOLT DETAIL

PAINT ANCHOR BOLTS WITH ONE SHOP COAT IN ACCORDANCE WITH "APPLICATION OF PAINT" SPECIAL PROVISION TO 6" BELOW CONCRETE SURFACE.

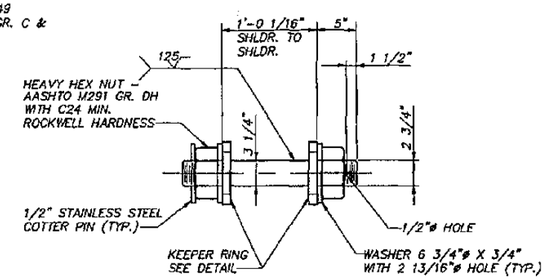

PIN DETAIL

PIN AND NUT ASTM A434
MIN. YIELD POINT 70,000 PSI.

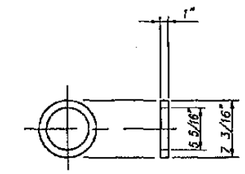

KEEPER RING

AASHTO M102 GR. H. YIELD POINT 58,000 PSI

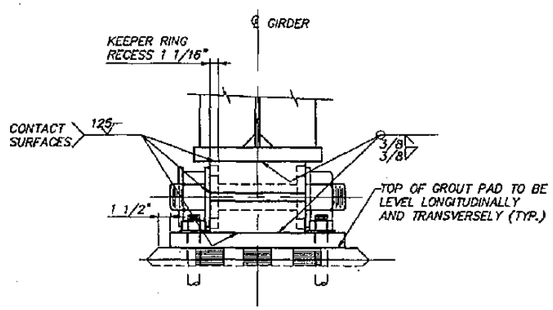

ELEVATION – BEARING PIER 2 & 3

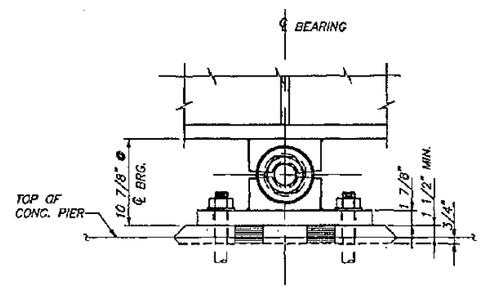

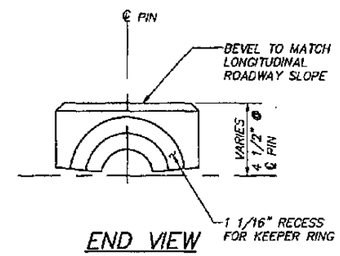

END VIEW TOP BEARING BLOCK

SEE BOTTOM BEARING BLOCK FOR DETAILS AND DIMENSIONS NOT SHOWN.
AASHTO M102 GR. F MIN. YIELD POINT 50,000 PSI AS MODIFIED BY SUPPLEMENTAL REQUIREMENT S-4.

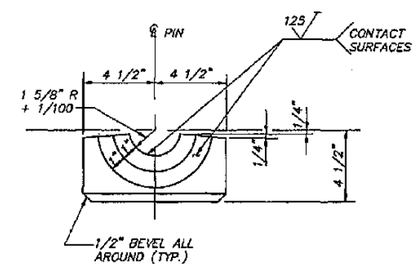

END VIEW BOTTOM BEARING BLOCK

AASHTO M102 GR. F MIN. YIELD POINT 50,000 PSI AS MODIFIED BY SUPPLEMENTAL REQUIREMENT S-4.

BEARING NOTES

1. DO NOT PAINT SLIDING SURFACES AND BEARING PIN MATED SURFACES.
2. THE MACHINED CURVED SURFACES OF THE BEARING BLOCKS WHICH CONTACT THE PIN, AND THE ENTIRE PIN & NUT THREADS SHALL BE COATED WITH #2 EP (EXTREME PRESSURE) GREASE.
3. PRESSURE GROUT BOTTOM PLATE AFTER THE STRUCTURAL STEEL HAS BEEN ERECTED AND PRIOR TO PLACEMENT OF THE ROADWAY SLAB. GROUT BEARINGS FROM THE CENTER TO OUTSIDE EDGES OF THE PLATE THROUGH THE GROUTING TUBE.

FOR "AS CONSTRUCTED PLANS" ONLY

Bridge Design Engineer					REGION NO.	STATE	FED. AID. PROJ. NO.	SHEET NO.	TOTAL SHEETS	
Supervisor					10	WASH				
Designed By Q.B.					JOB NUMBER 95W036					
Checked By A.T.L.										
Detailed By B.L.P.					CONTRACT NO. 4771					
Bridge Projects Engineer										
Prelim. Plan By										
Architect/Specialist	DATE	REVISION	BY	APP'D						

JOHN R. KATTELA, STATE OF WASHINGTON, REGISTERED PROFESSIONAL ENGINEER — EXPIRES: 06/10/97

WASHINGTON STATE DEPARTMENT OF TRANSPORTATION

Sverdrup CIVIL INC.

SR167
15TH N.W. TO 84TH AVE. SO.
HOV SC & DI – STAGE 2
BNRR OVERCROSSING BR. NO. 167/127

BEARINGS – PIERS 2 & 3

BRIDGE SHEET NO. 27

SHEET 622 OF 663 SHEETS

SR167/91

SR ___ JOB NO. ___ SHEET ___

B8200021

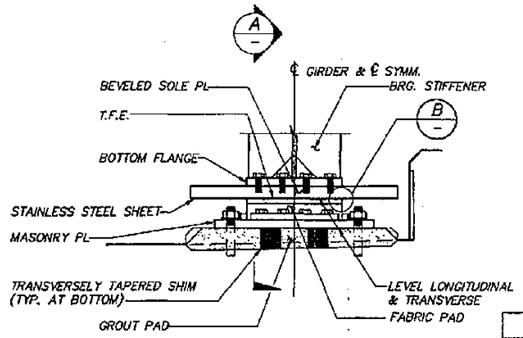

FABRIC PAD BEARING

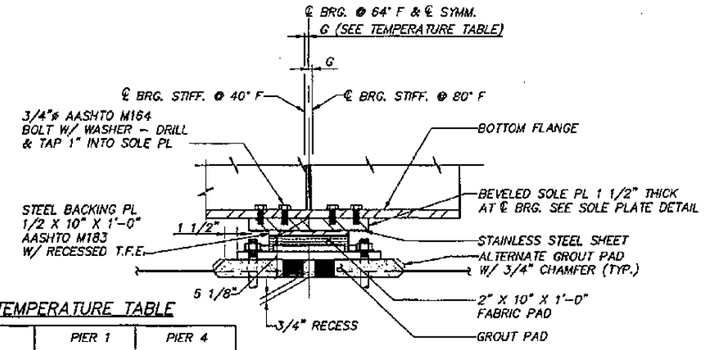

TEMPERATURE TABLE

	PIER 1		PIER 4	
TEMPERATURE	40°	80°	40°	80°
G	5/16"	3/16"	5/16"	3/16"

SECTION A

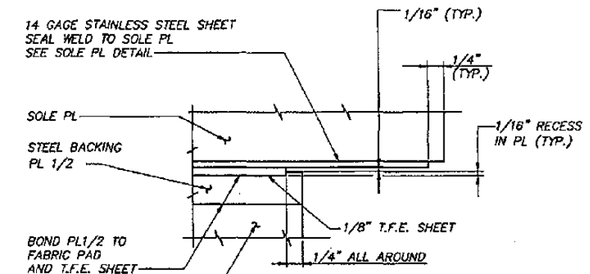

DETAIL B

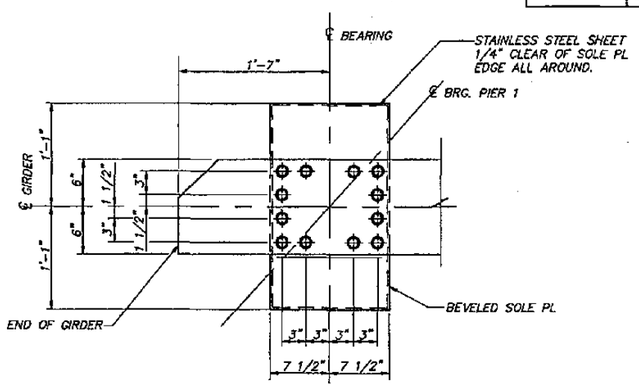

PIER 1

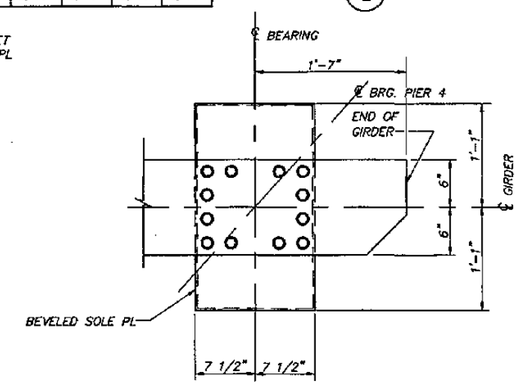

PIER 4

SOLE PLATE DETAIL

BEVEL SOLE PL TO MATCH LONGITUDINAL ROADWAY GRADE.
(SEE CAMBER DIAGRAM AND TABLE)
AASHTO M183 STEEL

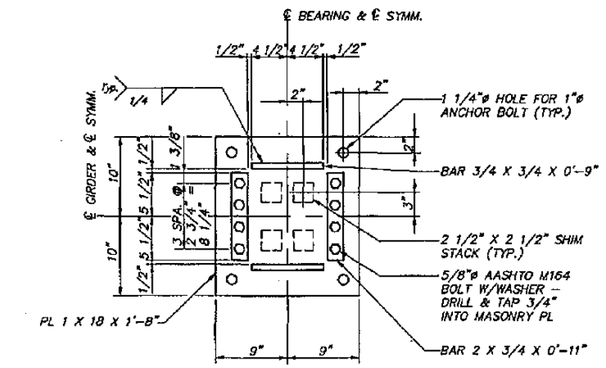

MASONRY PLATE DETAIL

AASHTO M183 STEEL

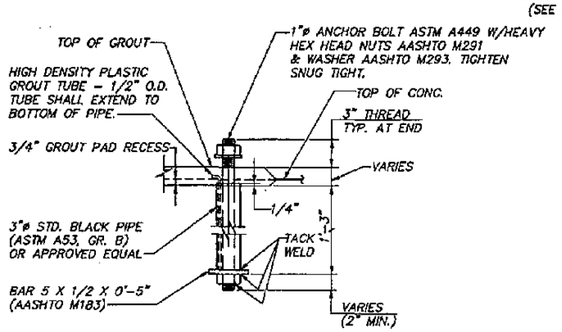

ANCHOR BOLT DETAIL

PAINT ANCHOR BOLTS WITH ONE SHOP COAT IN ACCORDANCE WITH "APPLICATION OF PAINT" SPECIAL PROVISION TO 6" BELOW CONCRETE SURFACE.

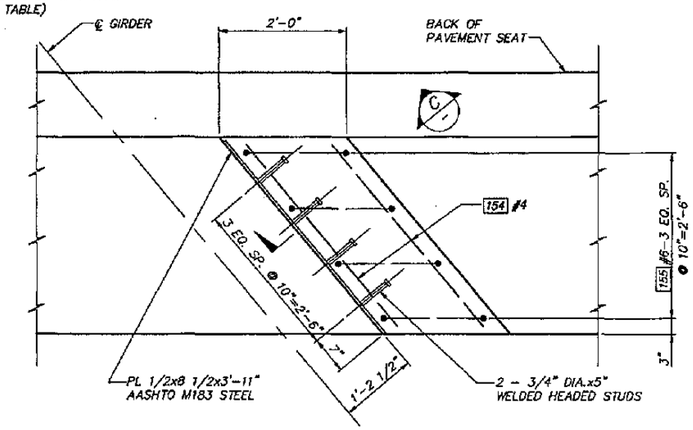

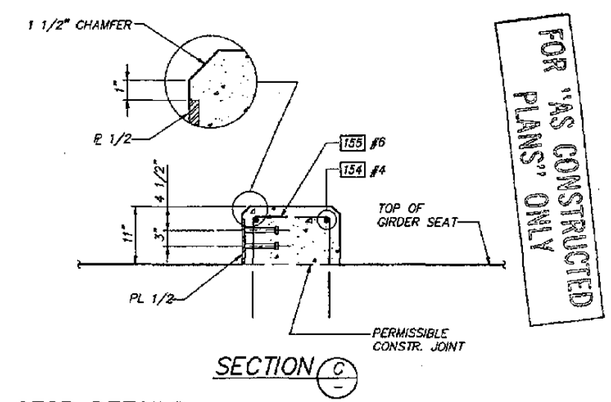

SECTION C

FOR "AS CONSTRUCTED PLANS" ONLY

GIRDER STOP DETAILS

Bridge Design Engineer					REGION NO.	STATE	FED. AID. PROJ. NO.	SHEET NO.	TOTAL SHEETS
Supervisor					10	WASH			
Designed By W.G.D.					JOB NUMBER 95W038				
Checked By D.W.K.									
Detailed By B.L.P.									
Bridge Projects Engineer					CONTRACT NO. 4771				
Prelim. Plan By									
Architect/Specialist	DATE	REVISION	BY	APP'D					

JOHN R. KATRELL, STATE OF WASHINGTON, REGISTERED PROFESSIONAL ENGINEER — 7/1/98 — EXPIRES: 06/10/98

WASHINGTON STATE DEPARTMENT OF TRANSPORTATION

Sverdrup CIVIL INC.

SR167
15TH N.W. TO 84TH AVE. SO.
HOV SC & DI – STAGE 2
BNRR OVERCROSSING BR. NO. 167/127

BEARINGS – PIERS 1 & 4

EPOXIDE SHEET NO. 28

SHEET 623 OF 663 SHEETS

SR 167 JOB NO. B8200022 SHEET

SR167/91

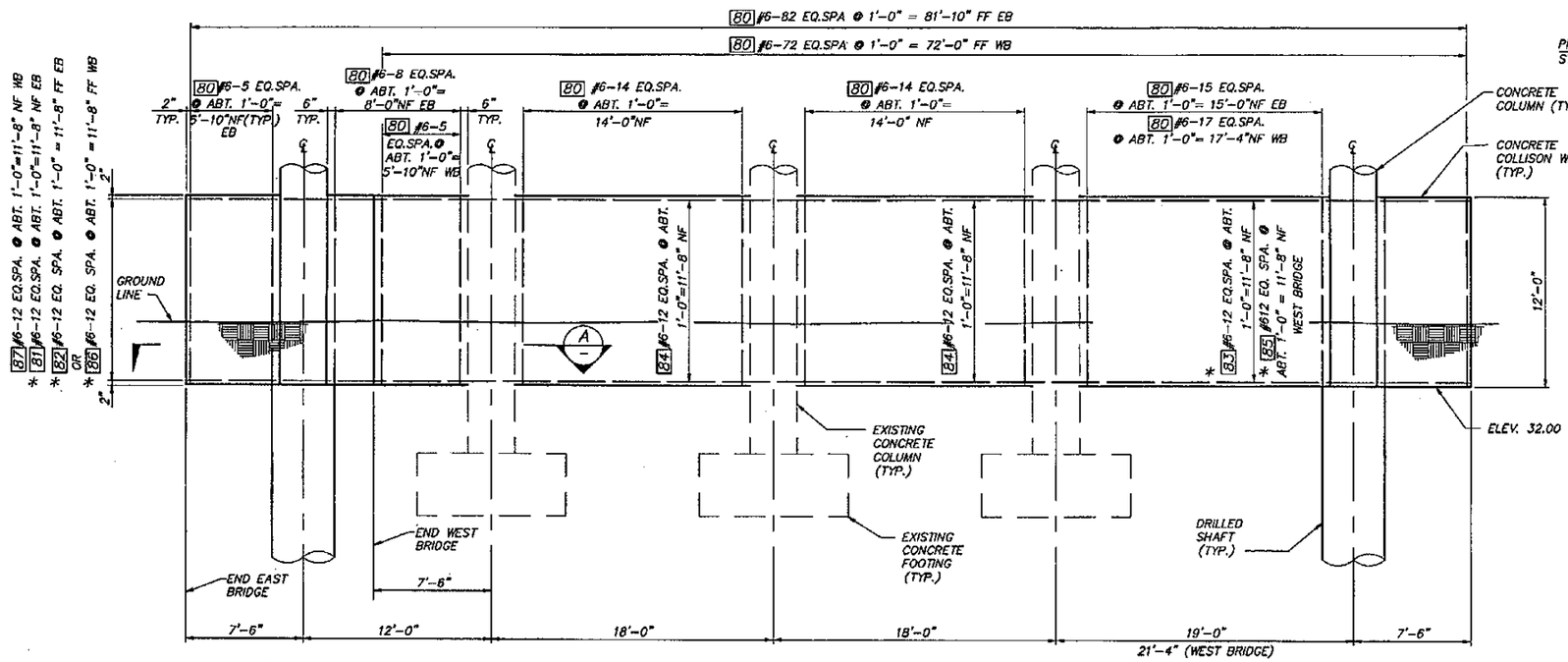

* INDICATES CONTINUOUS BAR WITH 2'-7" MIN. SPLICE. NUMBER AND LENGTH OF BARS TO BE DETERMINED BY THE CONTRACTOR.

ELEVATON – PIER 3 CRASH WALL

NOTE: EAST BRIDGE (EB) SHOWN.
WEST BRIDGE (WB) AS NOTED.

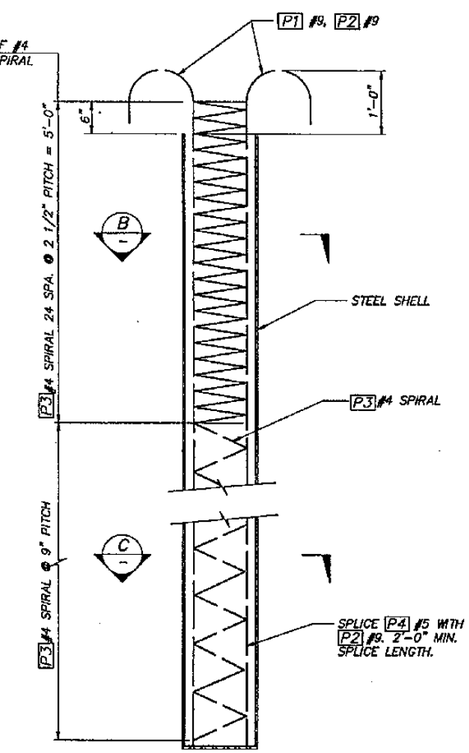

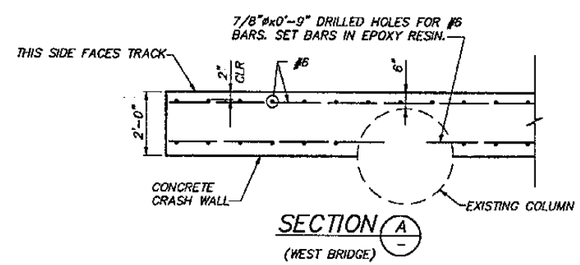

SECTION A (WEST BRIDGE)

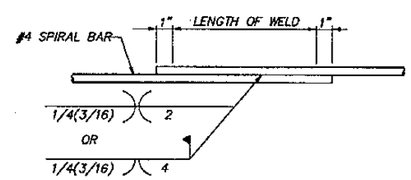

WELDED LAP SPLICE DETAIL

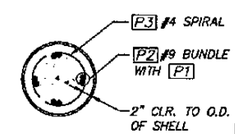

SECTION B

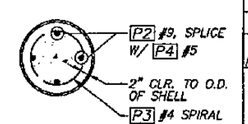

SECTION C

CAST-IN-PLACE CONCRETE PILE

FOR "AS CONSTRUCTED PLANS" ONLY

BAR LIST

MARK	LOCATION	SIZE	NO REQ'D. PER PILE	LENGTH	BENDING DIAGRAM
P1	LONGITUDINAL	9	4	–	
P2	LONGITUDINAL	9	4	–	
P3	SPIRAL	4	1	319'-0"	
P4	LONGITUDINAL	5	4	19'-9" STR.	

NOTE: LENGTHS OF BARS P3 AND P4 ARE BASED ON MINIMUM TIP ELEVATION. ACTUAL LENGTHS WILL DEPEND ON FINAL TIP ELEVATION.

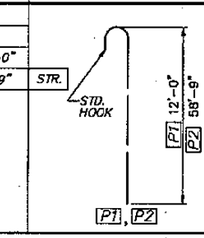

NOTES ON SPIRALS

1. SPIRALS MAY BE FABRICATED FROM #4 DEFORMED REINFORCING BARS (AASHTO M31 GR. 60), PLAIN SMOOTH BARS 1/2"ø (AASHTO M31 GR. 60), DEFORMED WIRE D20 (AASHTO M225), OR COLD DRAWN WIRE W20 (AASHTO M32).
2. WELDED SPLICES ONLY.

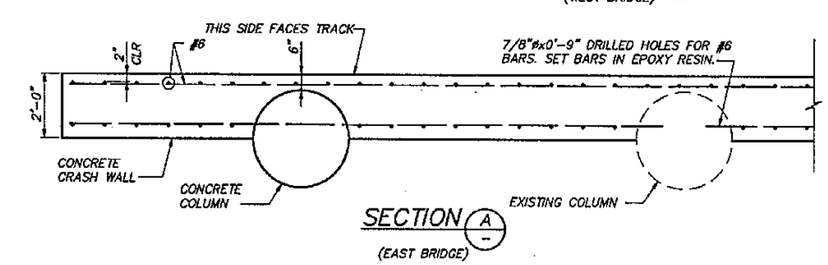

SECTION A (EAST BRIDGE)

Bridge Design Engineer					REGION NO.	STATE	FED. AID. PROJ. NO.	SHEET NO.	TOTAL SHEETS
Supervisor					10	WASH			
Designed By D.A.K.					JOB NUMBER 95W036				
Checked By A.T.L.									
Detailed By W.H.H.									
Bridge Projects Engineer									
Prelim. Plan By					CONTRACT NO. 4771				
Architect/Specialist	DATE	REVISION	BY	APP'D					

JOHN R. KATTELA, STATE OF WASHINGTON, REGISTERED PROFESSIONAL ENGINEER — 9/1/95 — EXPIRES: 06/10/97

WASHINGTON STATE DEPARTMENT OF TRANSPORTATION

Sverdrup CIVIL INC.

SR167
15TH N.W. TO 84TH AVE. SO.
HOV SC & DI – STAGE 2
BNRR OVERCROSSING BR. NO. 167/127

COLLISION WALL AND PILE DETAIL

BRIDGE SHEET NO. 29

SHEET 624 OF 663 SHEETS

SR 167/91

B82000028 SR JOB NO. SHEET

S = Bar is included in substructure quantities
F = Bar to be field welded
T = Tie or Stirrup
E = Bar to be Epoxy Coated
V = Bar dimensions vary between dimensions shown on this line and the following line.

MARK NO.	LOCATION	SIZE	NO. REQ'D.	BEND TYPE	TIE or STIR	FLD. WELD	SUBSTRL	EPX-COAT	VARIES	NO. EACH	U Ft.	U In.	W Ft.	W In.	X Ft.	X In.	Y Ft.	Y In.	Z Ft.	Z In.	θ1 Deg.	θ2 Deg.	LENGTH Ft.	LENGTH In.	WEIGHT Lbs.
	PIERS 1 & 4																								
101	BACKWALL TOP LONG, INT	4	8	50			S	E			22	8.0											22	8.	121
102	ABUTMENT LONG, INT	4	86	50			S				22	8.0											22	8.	1302
103	PAV'T SEAT TIE	4	206	80	T		S				1	10.0	0	9.0	0	8.0	0	1.0	0	1.0	90	45	3	0.	413
105	BACKWALL VERT, EXT	4	28	62	T		S	E			0	9.5	9	5.0	9	6.0	0	10.0	0	10.0	0	0	21	2.	396
106	GIRDER SEAT VERT, INT	5	82	63	T		S				4	11.0	4	2.0	4	2.0	0	10.0	0	10.0	0	0	14	6.	1240
107	FOOTING- LONG TOP, INT	5	32	50			S		V	4	18	1.0											18	1.	
											23	11.0											23	11.	701
108	FOOTING- TRAN TOP	5	94	50			S				6	8.0											6	8.	654
109	FOOTING- LONG BOT, INT	6	32	50			S		V	4	18	1.0											18	1.	
											23	11.0											23	11.	1009
110	FOOTING- TRAN BOT	6	94	50			S				6	8.0											6	8.	941
111	FOOTING- TRAN TOP, INT CORNER	5	20	50			S		V	4	1	3.0											1	3.	
											5	8.0											5	8.	72
112	FOOTING- TRAN BOT, INT CORNER	6	20	50			S		V	4	1	3.0											1	3.	
											5	8.0											5	8.	104
113	PAV'T SEAT LONG, INT	4	2	50			S				26	0.0											26	0.	35
114	ABUTMENT DOWELS	5	156	50			S				2	10.5											2	11.	475
115	VERT FTG DOWEL, PIER 4 EXT	5	1	63	T		S				1	0.0	3	1.0	3	1.0	0	0.0	0	0.0	0	0	7	0.	7
116	VERT FTG DOWEL, PIER 4 EXT	5	1	63	T		S				1	10.0	3	1.0	3	1.0	0	0.0	0	0.0	0	0	7	10.	8
117	VERT FTG DOWEL, PIER 4 EXT	5	1	63	T		S				2	9.0	3	1.0	3	1.0	0	0.0	0	0.0	0	0	8	8.	9
118	BACKWALL TOP LONG, PIER 1 EXT	4	2	50			S	E			7	6.0											7	6.	10
119	ABUTMENT LONG, PIER 1 EXT	4	21	50			S				7	6.0											7	6.	105
120	GIRDER SEAT VERT, EXT	5	10	63	T		S				4	11.0	3	7.0	3	7.0	0	10.0	0	10.0	0	0	13	4.	139
121	PAV'T SEAT LONG, PIER 1 EXT	4	1	50			S				8	8.0											8	8.	6
133	BACKWALL TOP LONG, PIER 4 EXT	4	2	50			S	E			7	2.0											7	2.	10
134	ABUTMENT LONG, PIER 4 EXT	4	21	50			S				7	2.0											7	2.	101
135	FTG- LONG TOP, PIER 4 EXT	5	8	50			S				7	8.0											7	8.	64
138	FTG- LONG BOT, PIER 4 EXT	6	8	50			S				7	8.0											7	8.	92
139	WINGWALL VERT EF	4	15	50			S				11	0.0											11	0.	110
140	WINGWALLS 2 & 3 VERT EF	4	16	50			S		V	4	7	2.0											7	2.	
											3	9.0											3	9.	58
141	WINGWALLS 1 & 4 HORZ NF	5	8	80	T		S				14	8.0	2	0.0	0	0.0	0	1.3	0	0.0	132	0	16	8.	139
142	WINGWALLS 1 & 4 HORZ FF	5	8	50			S				15	3.0											15	3.	127
143	WINGWALLS 1 & 4 HORZ NF	4	6	80	T		S		V	2	3	3.0	2	0.0	0	0.0	0	1.0	0	0.0	132	0	5	3.	
											13	0.0	2	0.0	0	0.0	0	1.0	0	0.0	132	0	15	0.	41
144	WINGWALLS 1 & 4 HORZ FF	4	6	50			S		V	2	3	10.0											3	10.	
											13	7.0											13	7.	35
145	WINGWALLS 2 & 3 HORZ NF	5	8	80	T		S				14	8.0	2	0.0	0	0.0	0	1.3	0	0.0	48	0	16	5.	137
146	WINGWALLS 2 & 3 HORZ FF	5	8	50			S				14	1.0											14	1.	118
147	WINGWALLS 2 & 3 HORZ NF	4	6	80	T		S		V	2	3	3.0	2	0.0	0	0.0	0	1.0	0	0.0	48	0	5	1.	
											13	0.0	2	0.0	0	0.0	0	1.0	0	0.0	48	0	14	10.	40
148	WINGWALLS 2 & 3 HORZ FF	4	6	50			S		V	2	2	8.0											2	8.	
											12	5.0											12	5.	30
149	VERT FTG DOWEL, PIER 4 EXT	5	8	63	T		S				5	0.0	3	7.0	3	0.0	0	10.0	0	0.0	0	0	12	1.	76
150	WINGWALLS 2 & 3 VERT EF	4	8	50			S		V	4	10	8.0											10	8.	
											9	2.0											9	2.	53
151	WINGWALLS 1 & 4 VERT EF	4	4	50			S		V	4	10	8.0											10	8.	
											10	2.0											10	2.	28
152	FTG- LONG TOP, PIER 1 EXT	5	8	50			S				7	8.0											7	8.	64
153	FTG- LONG BOT, PIER 1 EXT	6	8	50			S				7	8.0											7	8.	92
154	GIRDER STOP LONG	4	32	50			S				3	8.0											3	8.	78
155	GIRDER STOP STIRRUP	6	64	81	T		S				1	6.0	3	2.0	3	2.0	0	0.0	0	0.0	0	0	7	6.	721
160	VERT FTG DOWEL, PIER 4 EXT	5	1	63	T		S				0	8.0	3	1.0	3	1.0	0	0.0	0	0.0	0	0	6	8.	7
161	VERT FTG DOWEL, PIER 4 EXT	5	1	63	T		S				1	2.0	3	1.0	3	1.0	0	0.0	0	0.0	0	0	7	2.	7
162	VERT FTG DOWEL, PIER 4 EXT	5	1	63	T		S				1	7.0	3	1.0	3	1.0	0	0.0	0	0.0	0	0	7	7.	8
163	PAV'T SEAT DOWEL	4	16	80	T		S				0	11.0	0	9.0	0	0.0	0	1.0	0	0.0	90	0	1	8.	20
164	WINGWALL CORNER TIE EF	4	4	80	T		S				2	0.0	2	0.0	0	0.0	0	1.0	0	0.0	90	0	4	0.	11
165	WINGWALL CORNER TIE EF	4	4	80	T		S				2	0.0	2	0.0	0	0.0	0	1.0	0	0.0	153	0	4	0.	11
166	WINGWALL CORNER TIE EF	4	4	80	T		S				2	0.0	2	0.0	0	0.0	0	1.0	0	0.0	117	0	4	0.	11
170	VERT FOOTING DOWEL, INT	5	2	63	T		S				2	9.0	3	8.0	3	8.0	0	0.0	0	0.0	0	0	9	10.	21
171	VERT FOOTING DOWEL, INT	5	2	63	T		S				1	10.0	3	8.0	3	8.0	0	0.0	0	0.0	0	0	8	11.	19
172	VERT FOOTING DOWEL, INT	5	2	63	T		S				1	0.0	3	8.0	3	8.0	0	0.0	0	0.0	0	0	8	2.	17
173	VERT FOOTING DOWEL, INT	5	2	63	T		S				1	8.0	3	8.0	3	8.0	0	0.0	0	0.0	0	0	8	9.	18
174	VERT FOOTING DOWEL, INT	5	2	63	T		S				1	2.0	3	8.0	3	8.0	0	0.0	0	0.0	0	0	8	3.	17
175	VERT FOOTING DOWEL, INT	5	2	63	T		S				0	9.0	3	8.0	3	8.0	0	0.0	0	0.0	0	0	7	11.	17
176	VERT FOOTING DOWEL, INT	5	12	63	T		S				5	0.0	4	2.0	3	8.0	0	0.0	0	0.0	0	0	13	4.	167
177	BACKWALL VERT, INT	4	184	62	T		S	E			0	11.0	10	1.0	10	1.0	0	0.0	0	0.0	0	0	22	5.	2755
180	PAV'T SEAT LONG, PIER 4 EXT	4	1	50			S				5	5.0											5	5.	4
181	WINGWALLS 1 & 4 VERT EF	4	20	50			S		V	4	8	1.0											8	1.	
											3	9.0											3	9.	79
182	WINGWALL HORZ EDGE EF	4	4	50			S				13	0.0											13	0.	35
185	WINGWALL TIE	4	11	80			S				1	9.0	1	8.0	1	8.0	0	1.3	0	1.3	114	114	5	1.	37
186	WINGWALL TIE	4	11	80			S				3	0.0	1	8.0	0	0.0	0	1.3	0	0.0	132	0	4	8.	34
187	ABUTMENT DRAIN HOLE	4	16	50			S				1	8.0											1	8.	18
	PIERS 2 & 3																								
201	X-BEAM TOP, INT	11	24	80			S				22	0.0	2	0.0	0	0.0	0	7.1	0	0.0	80	0	23	7.	3007
202	X-BEAM TOP, INT	11	8	50			S				22	0.0											22	0.	935
203	X-BEAM BOT, INT	9	36	80			S				3	6.0	10	8.0	7	11.0	0	5.6	0	5.6	172	174	22	1.	2703
204	X-BEAM BOT, INT	9	36	50			S				7	6.0											7	6.	918
205	X-BEAM	5	15	50			S				3	0.0											3	0.	50
206	X-BEAM TOP	10	28	50			S				7	0.0											7	0.	843
207	X-BEAM, INT	5	15	50			S				22	0.0											22	0.	367
211	X-BEAM, E EXT	9	20	51			S				8	6.0											9	9.	663
212	X-BEAM TOP	7	15	50			S				14	0.0											14	0.	458
214	X-BEAM BOT, E EXT	10	16	54			S				7	2.0											8	9.	602
215	X-BEAM TOP, E EXT	10	12	80			S				7	2.0	2	0.0	0	0.0	0	7.1	0	0.0	80	0	8	9.	452
216	X-BEAM TOP, E EXT	10	4	51			S				7	2.0											8	7.	148
217	X-BEAM, E EXT	5	8	50			S				8	4.0											8	4.	70
219	X-BEAM STIRRUP, INT	5	208	83	T		S		V	8	2	6.0	3	6.0	0	0.0	0	0.0	0	0.0	0	0	12	10.	
											2	6.0	2	5.0	0	0.0	0	0.0	0	0.0	0	0	10	8.	2549
220	X-BEAM STIRRUP, INT	5	120	83	T		S		V	8	2	6.0	3	6.0	0	0.0	0	0.0	0	0.0	0	0	12	10.	
											2	6.0	2	5.5	0	0.0	0	0.0	0	0.0	0	0	10	9.	1476
229	X-BEAM STIRRUP, E EXT	5	20	83	T		S				2	6.0	2	5.5	0	0.0	0	0.0	0	0.0	0	0	10	9.	224
250	PIER COLUMN VERT	8	72	50			S				32	0.0											32	0.	6152
251	PIER SHAFT VERT	11	72	50			S				53	6.0											53	6.	20465
252	PIER SHAFT SPIRAL	6	6	67			S				3	10.0	0	3.5	0	0.0					183		%219	9.	19752
253	PIER COLUMN SPIRAL	5	6	67			S				2	9.0	0	3.0	0	0.0					128		%109	2.	6866

S = Bar is included in substructure quantities
F = Bar to be field welded
T = Tie or Stirrup
E = Bar to be Epoxy Coated
V = Bar dimensions vary between dimensions shown on this line and the following line.

MARK NO.	LOCATION	SIZE	NO. REQ'D.	BEND TYPE	TIE or STIR	FLD. WELD	SUBSTRL	EPX-COAT	VARIES	NO. EACH	U Ft.	U In.	W Ft.	W In.	X Ft.	X In.	Y Ft.	Y In.	Z Ft.	Z In.	θ1 Deg.	θ2 Deg.	LENGTH Ft.	LENGTH In.	WEIGHT Lbs.
	BRIDGE SLAB																								
50	TRAN TOP, EXT CORNER	6	68	51				E			5	9.0											6	5.	636
51	TRAN BOT, EXT CORNER	6	68	50				E			5	9.0											5	9.	570
60	LONG TOP	8	38	50				E			80	0.0											60	0.	6088
61	LONG TOP	5	38	50				E			329	0.0											329	0.	12353
62	LONG BOT	5	54	50							329	0.0											329	0.	18530
63	LONG, EDGE	8	3	50							327	0.0											327	0.	2619
64	TRAN TOP, INT CORNER	6	95	51				E	V	4	6	4.0											7	0.	
											18	7.0											19	3.	1893
65	TRAN BOT, INT CORNER	6	95	50					V	4	6	4.0											6	4.	
											18	7.0											18	7.	1796
66	TRAN TOP, INT	6	1224	51				E			19	1.0											19	9.	36309
67	TRAN BOT, INT	6	1224	51							19	1.0											19	9.	36309
76	TRAN TOP, EXT EAST	6	8	51				E	V	2	6	2.0											6	10.	
											7	9.0											8	5.	92
77	TRAN BOT, EXT EAST	6	8	50					V	2	6	2.0											6	2.	
											7	9.0											7	9.	84
78	TRAN TOP, EXT EAST	6	633	51				E			8	1.0											8	9.	6319
79	TRAN BOT, EXT EAST	6	633	51							8	1.0											8	9.	6319
S1	TRAFFIC BARRIER TIE	5	1620	69				E			0	6.0	0	7.0	1	6.0	0	6.0	0	0.0	0	0	2	7.	4365
S2	TRAFFIC BARRIER TIE	4	810	69							1	6.0	0	2.0	1	6.0	0	0.0	0	0.0	0	0	3	0.	1623
	COLLISION WALL																								
80	VERTICAL EF	6	283	50			S				11	8.0											11	8.	4959
81	HORIZONTAL NF	6	13	50			S				18	7.0											18	7.	363
82	HORIZONTAL FF	6	13	50			S				81	8.0											81	8.	1595
83	HORIZONTAL NF	6	13	50			S				25	7.0											25	7.	500
84	HORIZONTAL NF	6	52	50			S				16	6.0											16	6.	1289
85	HORIZONTAL NF	6	13	50			S				27	11.0											27	11.	545
86	HORIZONTAL FF	6	13	50			S				72	0.0											72	0.	1406
87	HORIZONTAL FF	6	13	50			S				6	7.0											6	7.	129

STEEL REINFORCEMENT BAR QUANTITIES NOT INCLUDED IN THIS BAR LIST

TRAFFIC BARRIER		14300

REINFORCEMENT BENDING DIAGRAMS

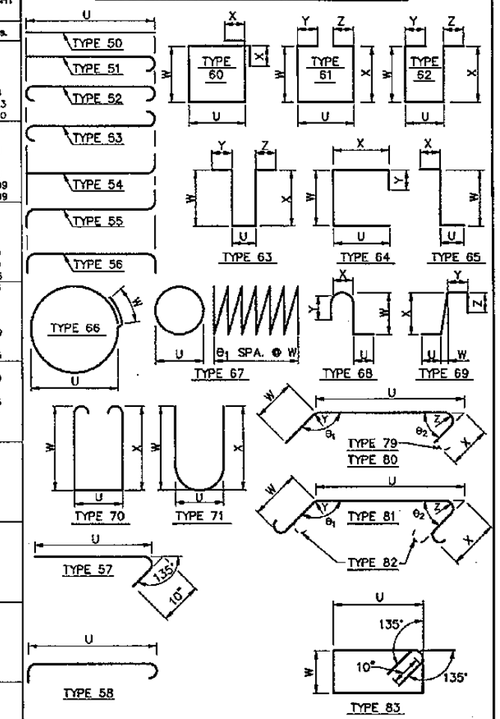

NOTES

1. All reinforcing bars on this sheet shall be A.S.T.M. A-615 Grade 60 unless shown otherwise.
2. Reinforcing for traffic barriers and sidewalks not shown in this Bar List. See Traffic Barrier sheet.
3. Bend for transverse bars due to roadway crown conditions have not been shown. These bars shall be bent as required to conform to the configuration of the structure.

FOR "AS CONSTRUCTED PLANS" ONLY

Bridge Design Engineer					
Supervisor					
Designed By K.T.F.					
Checked By A.L.K.					
Detailed By P.R.B.					
Bridge Projects Engineer					
Prelim. Plan By					
Architect/Specialist	DATE	REVISION	BY	APP'D	

REGION NO.	STATE	FED. AID. PROJ. NO.	SHEET NO.	TOTAL SHEETS
10	WASH			

JOB NUMBER 95W036
CONTRACT NO. 4771

JOHN R. KATTELL, STATE OF WASHINGTON, REGISTERED PROFESSIONAL ENGINEER — 9/1/95
EXPIRES: 06/10/97

WASHINGTON STATE DEPARTMENT OF TRANSPORTATION
Sverdrup CIVIL INC.

SR167
15TH N.W. TO 84TH AVE. SO.
HOV SC & DI - STAGE 2
BNRR OVERCROSSING BR. NO. 167/127

BAR LIST

BRIDGE SHEET NO. 30
SHEET 625 OF 663 SHEETS

BA200024 SR ___ JOB NO. ___ SHEET ___

SR167/91

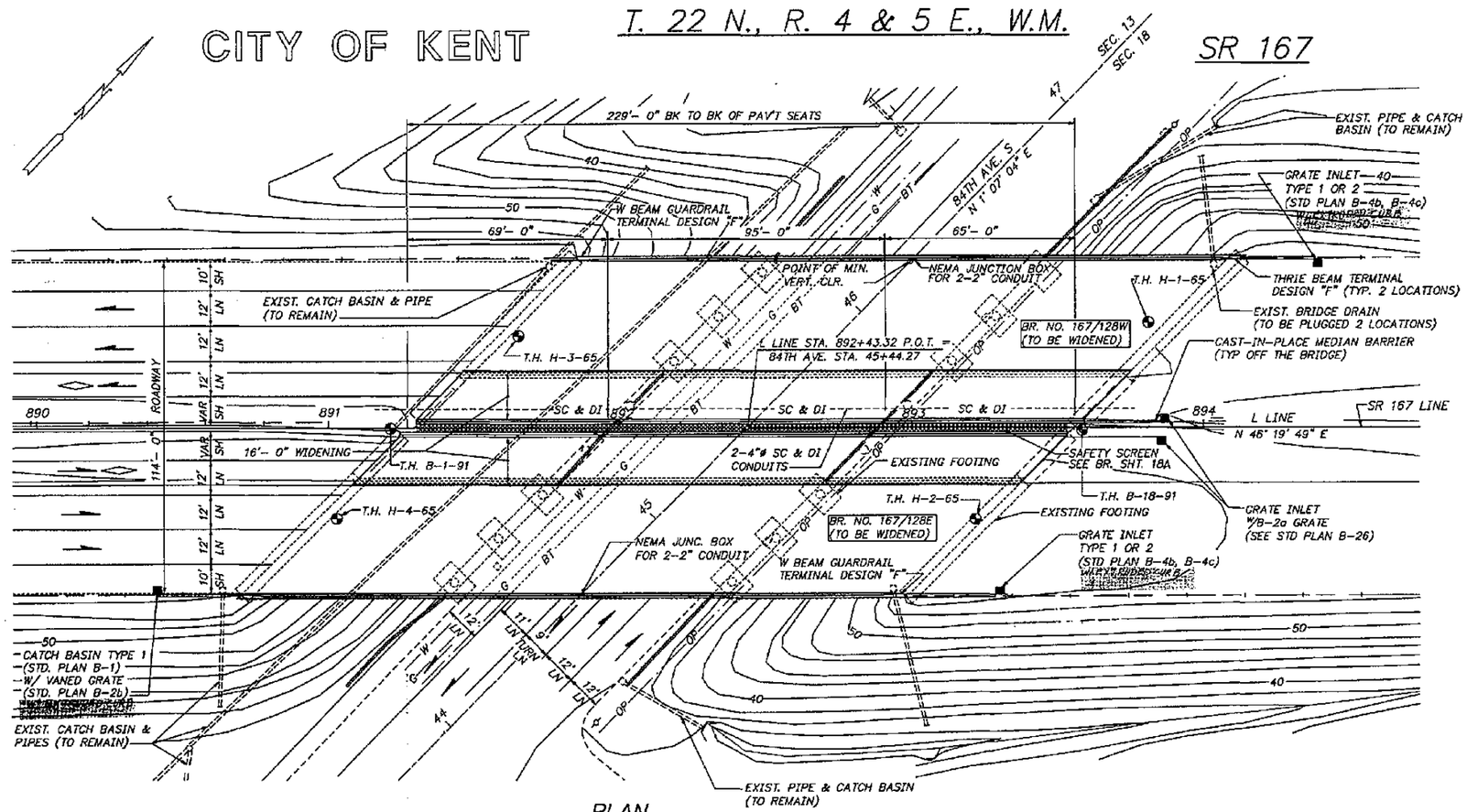

PLAN

(BEARING OF ALL PIERS TO MATCH EXISTING)

GENERAL NOTES:

1. ALL MATERIAL AND WORKMANSHIP SHALL BE IN ACCORDANCE WITH THE REQUIREMENTS OF THE STATE OF WASHINGTON DEPARTMENT OF TRANSPORTATION STANDARD SPECIFICATIONS FOR ROAD, BRIDGE AND MUNICIPAL CONSTRUCTION DATED 1994, AND AMENDMENTS.
2. THIS STRUCTURE HAS BEEN DESIGNED IN ACCORDANCE WITH THE REQUIREMENTS OF THE 1992 AASHTO SPECIFICATIONS FOR HIGHWAY BRIDGES, WITH INTERIM SPECIFICATIONS THROUGH 1993. ALL PRE-STRESSED CONCRETE ELEMENTS HAVE BEEN DESIGNED FOR SERVICE LOAD STRESSES AND CHECKED FOR THE REQUIREMENTS OF LOAD FACTOR DESIGN. ALL OTHER STRUCTURAL ELEMENTS ARE DESIGNED IN ACCORDANCE WITH THE REQUIREMENTS FOR LOAD FACTOR DESIGN. SEISMIC DESIGN OF THIS STRUCTURE HAS BEEN DONE USING AN ACCELERATION COEFFICIENT OF 0.25 AND SOIL PROFILE TYPE II.
3. FOOTING ELEVATIONS AND SUBSTRUCTURE DETAILS ARE SUBJECT TO CHANGE DEPENDING UPON FOUNDATION MATERIAL ENCOUNTERED. REINFORCING STEEL FOR FOOTINGS, ABUTMENT WALLS, AND COLUMNS SHALL NOT BE CUT UNTIL FINAL FOOTING ELEVATIONS HAVE BEEN DETERMINED AND SUBSTRUCTURE DETAILS HAVE BEEN MODIFIED AS NECESSARY.
4. ELEVATIONS SHOWN ON THE PLANS ARE BASED ON RECORD INFORMATION OF ORIGINAL CONSTRUCTION TOGETHER WITH FIELD SURVEY DATA. THE NEW STRUCTURE IS INTENDED TO MATCH THE EXISTING STRUCTURE. THEREFORE, ELEVATIONS GIVEN ON THE PLANS SHALL BE VERIFIED IN THE FIELD BY THE CONTRACTOR FOR COMPATIBILITY.
5. THE CONCRETE IN THE SHAFTS SHALL BE CLASS 4000W OR 4000. THE CONCRETE IN THE ROADWAY DECK SHALL BE CLASS 5000D. THE CONCRETE IN THE CAST-IN-PLACE PILES SHALL BE CLASS 4000P. THE CONCRETE IN THE CLOSURES SHALL BE CLASS 4000LS OR CLASS 5000LS FOR THE ROADWAY DECK. ALL OTHER CAST-IN-PLACE CONCRETE SHALL BE CLASS 4000.
6. PILES SHALL BE DRIVEN TO A LOAD BEARING CAPACITY OF 70 TONS AT PIERS 1 AND 4. SEE SPECIAL PROVISIONS FOR MINIMUM PILE TIP ELEVATIONS. THE MAXIMUMN DESIGN LOAD FOR PIERS 2 AND 3 SHAFTS ARE 440 TONS EACH.
7. FALSEWORK SHALL NOT BE RELEASED UNTIL ALL CONCRETE BEING SUPPORTED HAS MET THE AGE AND STRENGTH REQUIREMENTS OF THE STANDARD SPECIFICATIONS. FALSEWORK SHALL BE CAREFULLY RELEASED TO PREVENT IMPACT OR UNDUE STRESS IN THE STRUCTURE. CLOSURES SHALL BE MADE AFTER FALSEWORK IS RELEASED BUT BEFORE PLACEMENT OF OVERLAY AND BARRIERS.
8. UNLESS OTHERWISE SHOWN ON THE PLANS, THE CONCRETE COVER MEASURED FROM THE FACE OF ANY REINFORCING STEEL SHALL BE 2½" AT THE TOP OF ROADWAY SLAB, 1" AT THE BOTTOM OF ROADWAY SLAB, 7½" AT THE BOTTOM OF FOOTING, 2" AT THE TOP OF FOOTINGS, AND 1½" AT ALL OTHER LOCATIONS.
9. THE CONDUITS AND JUNCTION BOXES ARE SHOWN FOR REFERENCE ONLY. THE CONTRACTOR SHALL BE RESPONSIBLE TO COORDINATE WITH THE ELECTRICAL AND SC & DI DRAWINGS.
10. AX EXPANSION FITTING AT EACH PIER FOR 4" SC+DI CONDUIT.

LEGEND:

- (D/12) — IDENTIFIES SECTION, VIEW, OR DETAIL; TAKEN OR SHOWN ON BRIDGE SHEET 12
- (D/–) — DASH INDICATES THAT SECTION, VIEW, OR DETAIL IS TAKEN AND SHOWN ON THE SAME SHEET
- DENOTES BORING LOCATION

FOR "AS CONSTRUCTED PLANS" ONLY

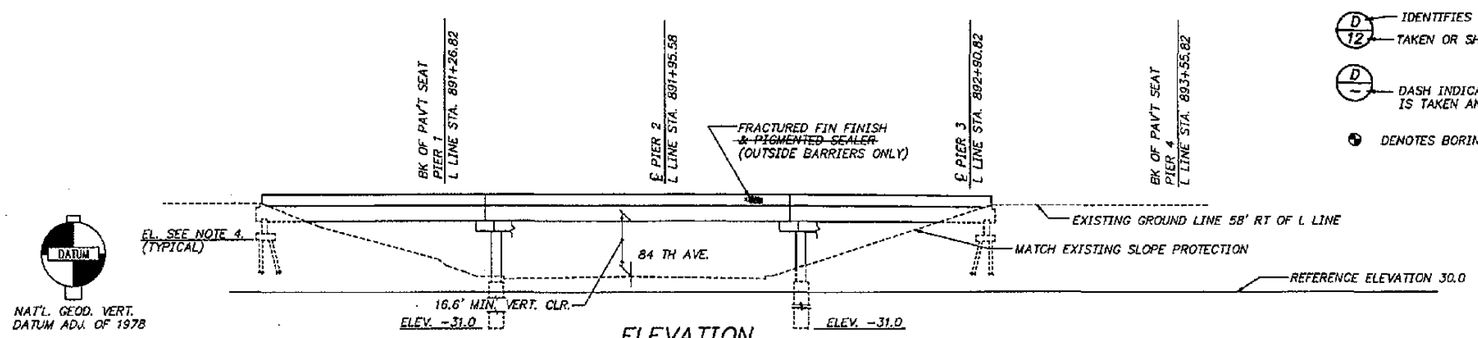

ELEVATION

(FOR EMBANKMENT DETAILS AT BRIDGE ENDS SEE STANDARD PLAN H-9)

P.C. GIRDER (W58G) WIDENING

LOADING: HS-25

OR

TWO 24k AXLES @ 4' C'TRS.

Bridge Design Engr. R.T. SHAEFER 11/93				REGION NO.	STATE	FED.AID PROJ. NO.	SHEET NO.	TOTAL SHEETS
Supervisor R. K. MOY 3/94				10	WASH.			
Designed By C. F. WRIGHT 3/94								
Checked By I. LIOU 3/94								
Detailed By K. M. WILSON 3/94				JOB NUMBER				
Bridge Planning Engr. K.N. KIRKER 11/93				95W036				
Preliminary Plan By D.M. JONES 9/93								
Architect/Specialist R. MAYS 11/93	DATE	REVISION	BY	APP'D	4771			

APPROVED

Washington State Department of Transportation

LIN & ASSOCIATES, INC. Consulting Engineers Seattle, Washington

SR 167
15TH N.W. TO 84TH AVE. SO.
HOV SC & DI – STAGE 2
BR. NO. 167/128 OVER 84TH AVE. SO.

LAYOUT

BRIDGE SHEET NO. 1

SHEET 626 OF 663 SHEETS

SR167/91

STATION	EXISTING ELEVATION LEFT CURB LINE	EXISTING ELEVATION RIGHT CURB LINE	ELEVATION WIDENED RIGHT CURB LINE	STATION	EXISTING ELEVATION LEFT CURB LINE	EXISTING ELEVATION RIGHT CURB LINE	ELEVATION WIDENED RIGHT CURB LINE
891+45.56	—	57.86	57.54	892+75.56	—	57.47	57.15
891+55.56	—	57.87	57.55	892+85.54	56.84	—	—
891+65.56	—	57.86	57.54	892+85.56	—	57.42	57.10
891+75.56	—	57.88	57.56	892+95.54	56.78	—	—
891+83.54	57.20	—	—	892+95.56	—	57.32	57.00
891+85.54	57.22	—	—	893+05.54	56.66	—	—
891+85.56	—	57.85	57.53	893+05.56	—	57.20	56.88
891+95.54	57.18	—	—	893+09.58	—	57.19	56.87
891+95.56	—	57.83	57.51	893+15.54	56.54	—	—
892+05.54	57.17	—	—	893+15.56	—	57.08	56.76
892+05.56	—	57.84	57.52	893+25.54	56.47	—	—
892+14.51	—	57.86	57.54	893+25.56	—	56.95	56.63
892+15.54	57.15	—	—	893+35.54	56.38	—	—
892+15.56	—	57.82	57.50	893+35.56	—	56.82	56.50
892+25.54	57.13	—	—	893+45.54	56.26	—	—
892+25.56	—	57.77	57.45	893+45.56	—	56.67	56.35
892+35.54	57.10	—	—	893+47.21	56.29	—	—
892+35.56	—	57.73	57.41	893+55.54	56.12	—	—
892+45.54	57.07	—	—	893+55.56	—	56.56	56.24
892+45.56	—	57.66	57.24	893+65.54	56.12	—	—
892+52.54	57.11	—	—	893+65.56	—	56.40	56.08
892+55.54	57.05	—	—	893+75.54	55.96	—	—
892+55.56	—	57.60	57.28	893+75.56	—	56.27	55.95
892+65.54	56.97	—	—	893+85.54	55.65	—	—
892+65.56	—	57.56	57.24	893+95.54	55.50	—	—
892+75.54	56.93	—	—	894+05.54	55.32	—	—
				894+12.65	55.23	—	—

SR 167 SOUTH BOUND
EXISTING & PROPOSED ELEVATIONS

BRIDGE NO. 167/128W

STATION	EXISTING ELEVATION LEFT CURB LINE	ELEVATION WIDENED LEFT CURB LINE	EXISTING ELEVATION RIGHT CURB LINE	STATION	EXISTING ELEVATION LEFT CURB LINE	ELEVATION WIDENED LEFT CURB LINE	EXISTING ELEVATION RIGHT CURB LINE
890+70.20	—	—	57.33	892+00.52	57.92	57.60	—
890+80.20	—	—	57.32	892+10.20	—	—	57.34
890+90.20	—	—	57.35	892+10.52	57.86	57.54	—
891+00.20	—	—	57.39	892+20.20	—	—	57.32
891+08.52	57.87	57.55	—	892+20.52	57.83	57.51	—
891+10.20	—	—	57.42	892+30.52	57.78	57.46	—
891+10.52	57.88	57.56	—	892+34.51	—	—	57.28
891+20.20	—	—	57.44	892+40.20	—	—	57.23
891+20.52	57.87	57.55	—	892+40.52	57.72	57.40	—
891+30.20	—	—	57.45	892+50.20	—	—	57.08
891+30.52	57.87	57.55	—	892+50.52	57.70	57.38	—
891+39.53	—	—	57.51	892+60.20	—	—	56.98
891+40.52	57.92	57.60	—	892+60.52	57.62	57.30	—
891+40.20	—	—	57.48	892+70.20	—	—	56.85
891+50.20	—	—	57.48	892+70.52	57.57	57.25	—
891+50.52	57.95	57.63	—	892+71.75	57.59	57.27	—
891+60.20	—	—	57.48	892+80.20	—	—	56.77
891+60.52	57.96	57.64	—	892+80.52	57.43	57.11	—
891+70.20	—	—	57.47	892+90.20	—	—	56.65
891+70.52	57.98	57.66	—	892+90.52	57.30	56.98	—
891+76.79	58.01	57.69	—	892+99.19	—	—	56.52
891+80.20	—	—	57.45	893+00.52	57.18	56.86	—
891+80.52	57.98	57.66	—	893+10.52	57.07	56.75	—
891+90.20	—	—	57.45	893+20.52	56.91	56.59	—
891+90.52	57.95	57.63	—	893+30.52	56.78	56.46	—
892+00.20	—	—	57.41	893+37.01	56.68	56.36	—

SR 167 NORTH BOUND
EXISTING & PROPOSED ELEVATIONS

BRIDGE NO. 167/128E

STATION	OFFSET	ELEVATION	STATION	OFFSET	ELEVATION
43+84.53	34.69 LT	29.11	45+78.24	33.09 RT	29.55
43+85.61	35.66 LT	29.78	45+80.96	31.52 RT	28.74
44+04.94	36.71 LT	30.32	45+91.44	32.18 LT	28.92
44+05.90	35.09 LT	28.97	45+92.99	33.45 LT	29.95
44+29.82	31.96 LT	28.90	46+03.25	31.36 RT	28.98
44+30.17	33.55 LT	29.72	46+03.64	32.58 RT	29.65
44+52.31	32.57 RT	28.86	46+03.75	36.81 LT	30.01
44+53.36	34.48 RT	29.68	46+05.54	35.48 LT	28.94
44+74.43	33.37 RT	29.84	46+26.50	37.34 LT	29.94
44+74.86	32.12 RT	28.81	46+28.50	36.06 LT	29.00
44+84.59	31.66 LT	29.11	46+57.10	31.34 RT	28.74
44+84.99	33.06 LT	29.76	46+57.74	32.27 RT	29.55
44+94.64	31.71 RT	28.90	46+95.39	32.56 RT	29.74
44+94.94	32.93 RT	29.81	46+95.93	31.27 RT	28.71
45+02.98	32.55 LT	28.89	47+18.25	32.35 RT	29.21
45+05.39	33.81 LT	29.90	47+19.00	31.55 RT	28.79
45+05.69	30.52 RT	28.75	—	—	—
45+36.79	33.91 LT	33.91	—	—	—
45+37.79	33.00 LT	29.07	—	—	—
45+49.26	31.55 RT	28.77	—	—	—
45+50.73	33.40 RT	29.82	—	—	—

84TH AVENUE
EXISTING ELEVATIONS

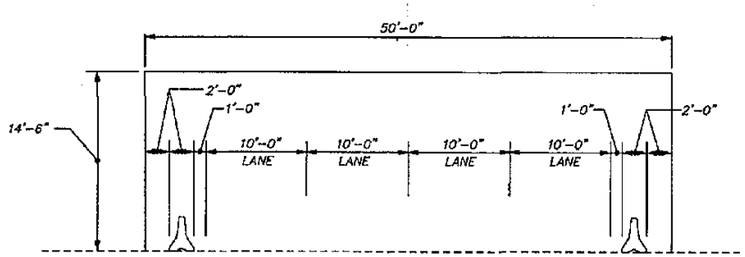

CONSTRUCTION OPENING DIAGRAM

NORMAL TO ℄ 84TH AVE. S.

REFER TO TRAFFIC CONTROL PLANS FOR LOCATION WITH RESPECT TO 84TH AVE. S.

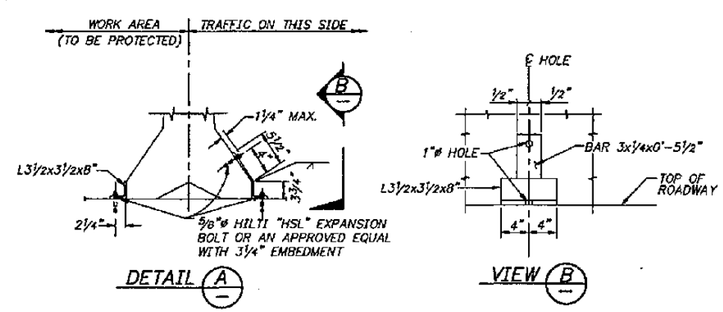

TEMPORARY BARRIER ANCHOR

(FOR USE ON 84TH AVE. S. AND BRIDGE DECK)

FOR "AS CONSTRUCTED PLANS" ONLY

NOTES:

1. SHIMS MAY BE REQUIRED TO FIT THE BRACKET TO THE CONCRETE BARRIERS AND ROADWAY SURFACE.
2. LOCATION OF ANCHORS IS TO BE ADJUSTED TO MISS THE MAIN REINFORCING IN THE DECK WHEN DRILLING HOLES.
3. PROVIDE TWO (2) ANCHOR ASSEMBLIES FOR EACH SECTION OF THE CONCRETE BARRIERS ON THE ROADWAY SURFACE.
4. FOR DETAILS NOT SHOWN, SEE STANDARD PLAN C-8.
5. LOCATE ANCHORS APPROX. 2'-6" FROM BOTH ENDS OF EACH SECTION.
6. AFTER REMOVING THE TEMP. CONC. BARRIER, CLEAN AND FILL BOLT HOLES WITH A 2:1 SAND/CEMENT GROUT BY VOLUME.

Bridge Design Engr.					
Supervisor R.K. MOY 3/94					
Designed By C.F. WRIGHT 3/94					
Checked By K.M. WILSON 3/94					
Detailed By K. L. WILLEY 3/94					
Bridge Planning Engr.					
Preliminary Plan By					
Architect/Specialist	DATE	REVISION	BY	APP'D	

REGION NO.	STATE	FED.AID PROJ. NO.	SHEET NO.	TOTAL SHEETS
10	WASH.			
JOB NUMBER 95W036				
4771				

APPROVED

RAYMOND K. MOY — STATE OF WASHINGTON — 16778 — REGISTERED PROFESSIONAL ENGINEER

DATE 11/16/95

Washington State Department of Transportation

L & A — LIN & ASSOCIATES, INC. Consulting Engineers Seattle, Washington

SR 167
15TH N.W. TO 84TH AVE. SO.
HOV SC & DI – STAGE 2
BR. NO. 167/128 OVER 84TH AVE. SO.

ELEVATIONS & CONST. OPENING

BRIDGE SHEET NO. 2

SHEET 627 OF 663 SHEETS

SR167/91

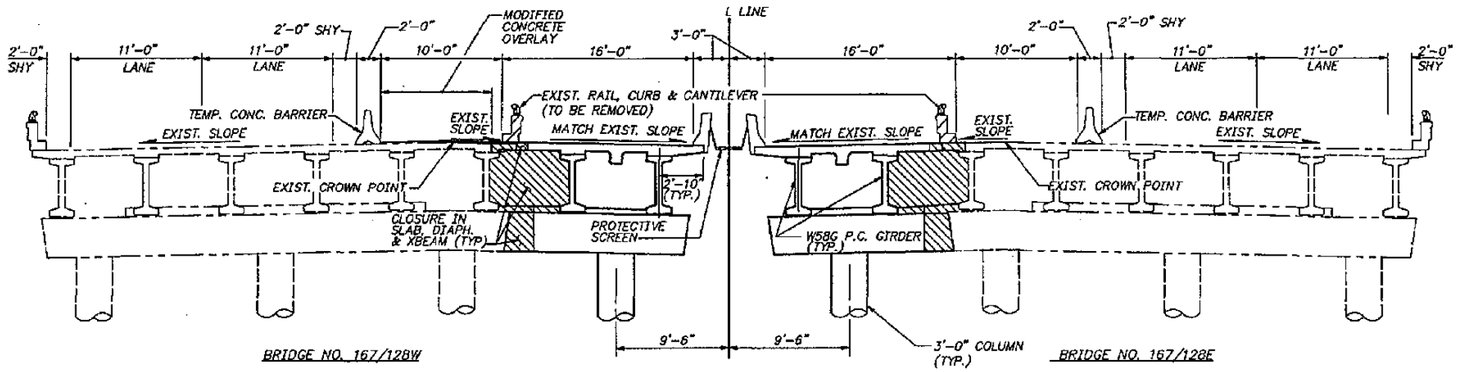

TYPICAL SECTION STAGE 1

SHOWN NEAR INTERMEDIATE PIER

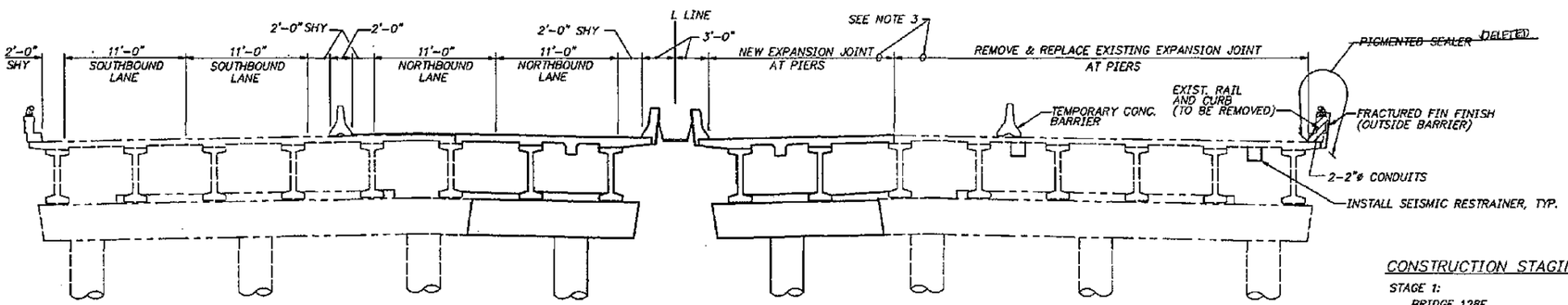

TYPICAL SECTION STAGE 2

SHOWN NEAR INTERMEDIATE PIER

FOR "AS CONSTRUCTED PLANS" ONLY

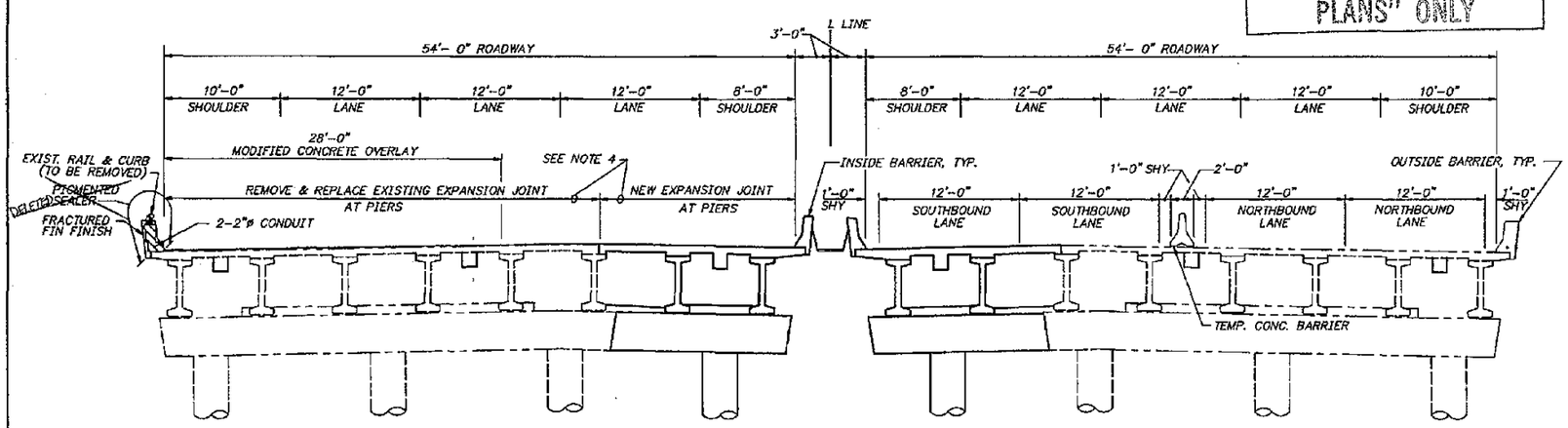

TYPICAL SECTION STAGE 3

CONSTRUCTION STAGING NOTES:

STAGE 1:

BRIDGE 128E

1. SHIFT TWO LANES OF TRAFFIC TO RIGHT SIDE OF BRIDGE DECK WITH TEMPORARY CONCRETE BARRIER ON LEFT.
2. REMOVE EXISTING TRAFFIC BARRIER AND SLAB OVERHANG AT LEFT.
3. CONSTRUCT PROPOSED WIDENING OF BRIDGE WITH SEISMIC RESTRAINER BLOCK.

BRIDGE 128W

SIMILAR TO 128E (IN DIRECTION OF TRAFFIC) EXCEPT SCARIFY (1/4") AND OVERLAY EXISTING DECK IN WORK AREA WITH MODIFIED CONCRETE OVERLAY.

STAGE 2:

BRIDGE 128E

1. SHIFT TWO LANES OF TRAFFIC (NORTHBOUND) TO BRIDGE 128W.
2. REMOVE EXISTING OUTSIDE TRAFFIC BARRIER, AND EXISTING BRIDGE EXPANSION JOINTS.
3. CONSTRUCT NEW BARRIER TO OUTSIDE AND NEW BRIDGE EXPANSION JOINTS (EXPANSION JOINT TO BE CONTINUOUS OVER ENTIRE WIDTH OF BRIDGE).
4. CONSTRUCT SEISMIC RESTRAINER BLOCKS TO EXISTING DECK.

STAGE 3:

BRIDGE 128W

1. SHIFT ALL TRAFFIC (NORTHBOUND AND SOUTHBOUND) TO BRIDGE 128E.
2. REMOVE TEMP. CONC. BARRIER AND BRIDGE DECK EXPANSION JOINTS AND SCARIFY (1/4") OLD BRIDGE DECK.
3. CONSTRUCT OUTSIDE TRAFFIC BARRIER.
4. INSTALL NEW BRIDGE EXPANSION JOINTS (EXPANSION JOINT TO BE CONTINUOUS OVER ENTIRE WIDTH OF BRIDGE), AND SEISMIC RESTRAINER BLOCKS, THEN OVERLAY OLD DECK WITH MODIFIED CONCRETE OVERLAY.

STAGE 4: (NOT SHOWN)

1. REMOVE TEMPORARY CONCRETE BARRIER ON BRIDGE 128E AND RESUME PROPOSED TRAFFIC LANE LAYOUT ON BOTH BRIDGES.

Bridge Design Engr.						REGION NO.	STATE	FED.AID PROJ. NO.	SHEET NO.	TOTAL SHEETS
Supervisor R. K. MOY 3/94						10	WASH.			
Designed By C. F. WRIGHT 3/94						JOB NUMBER				
Checked By I. LIOU 3/94						95W036				
Detailed By K. L. WILLEY 3/94						4771				
Bridge Planning Engr.										
Preliminary Plan By										
Architect/Specialist	DATE	REVISION	BY	APP'D						

APPROVED

RAYMOND A. LIOU — STATE OF WASHINGTON — 18793 — REGISTERED PROFESSIONAL ENGINEER — EXPIRES 11/05/95

Washington State Department of Transportation

L & A — LIN & ASSOCIATES, INC. Consulting Engineers Seattle, Washington

SR 167
15TH N.W. TO 84TH AVE. SO.
HOV SC & DI – STAGE 2
BR. NO. 167/128 OVER 84TH AVE. SO.

CONSTRUCTION STAGING

BRIDGE SHEET NO. 3

SHEET 628 OF 663 SHEETS

SR167/91

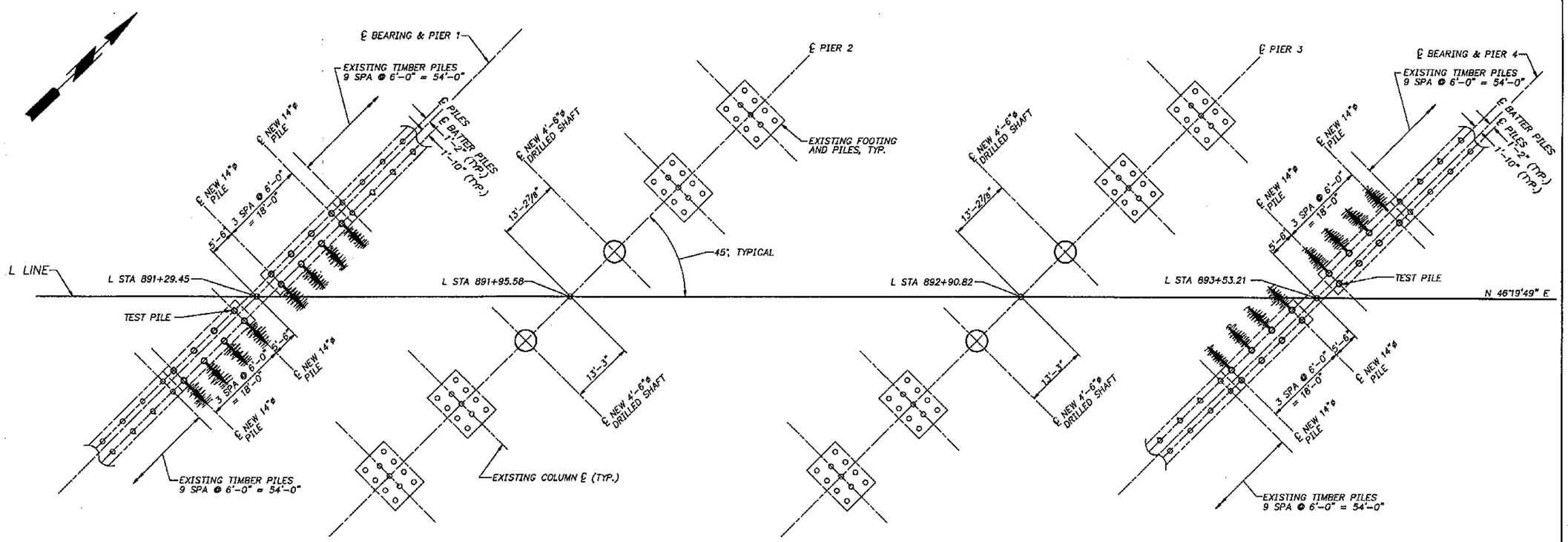

PILE & DRILLED SHAFT LAYOUT

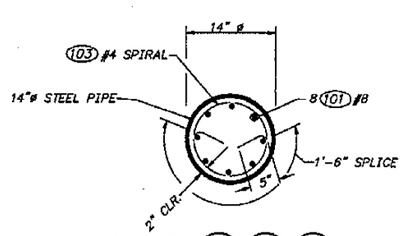

SECTION A/– A/6 A/9

NOTE: STEEL PIPE WALL THICKNESS SHOULD BE BASED ON ANTICIPATED DRIVING STRESS AND MAY BE SELECTED BY THE CONTRACTOR.

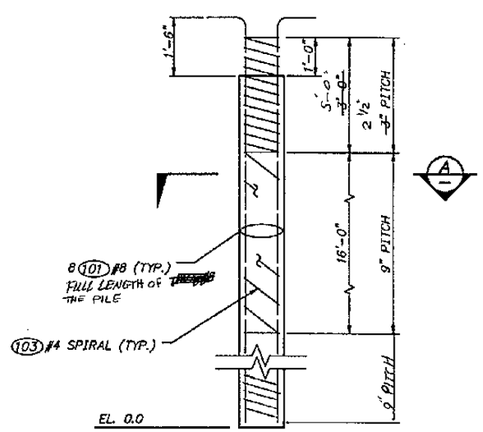

PILE DETAIL

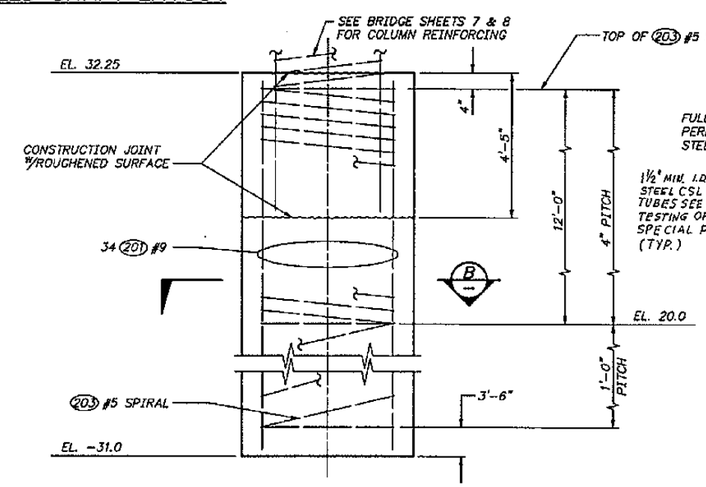

DRILLED SHAFT DETAIL

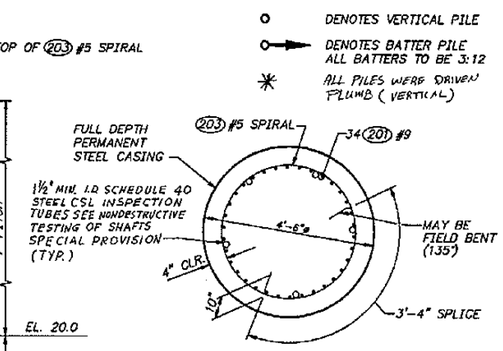

SECTION B/– B/7 B/8

○ DENOTES VERTICAL PILE

DENOTES BATTER PILE ALL BATTERS TO BE 3:12

✳ ALL PILES WERE DRIVEN PLUMB (VERTICAL)

FOR "AS CONSTRUCTED PLANS" ONLY

Bridge Design Engr.					REGION NO.	STATE	FED.AID PROJ. NO.	SHEET NO.	TOTAL SHEETS	
Supervisor R. K. MOY	3/94				10	WASH.				
Designed By C. F. WRIGHT	3/94									
Checked By I. LIOU	3/94				JOB NUMBER					
Detailed By K. L. WILLEY	3/94				95W036					
Bridge Planning Engr.										
Preliminary Plan By										
Architect/Specialist		DATE	REVISION	BY	APP'D	4771				

APPROVED

RAYMOND K. MOY, STATE OF WASHINGTON, REGISTERED PROFESSIONAL ENGINEER, 18793

EXPIRES 11/10/95

Washington State Department of Transportation

L & A LIN & ASSOCIATES, INC. Consulting Engineers Seattle, Washington

SR 167
15TH N.W. TO 84TH AVE. SO.
HOV SC & DI – STAGE 2
BR. NO. 167/128 OVER 84TH AVE. SO.

PILE LAYOUT

BRIDGE SHEET NO. 4

SHEET 629 OF 663 SHEETS

SR167/91

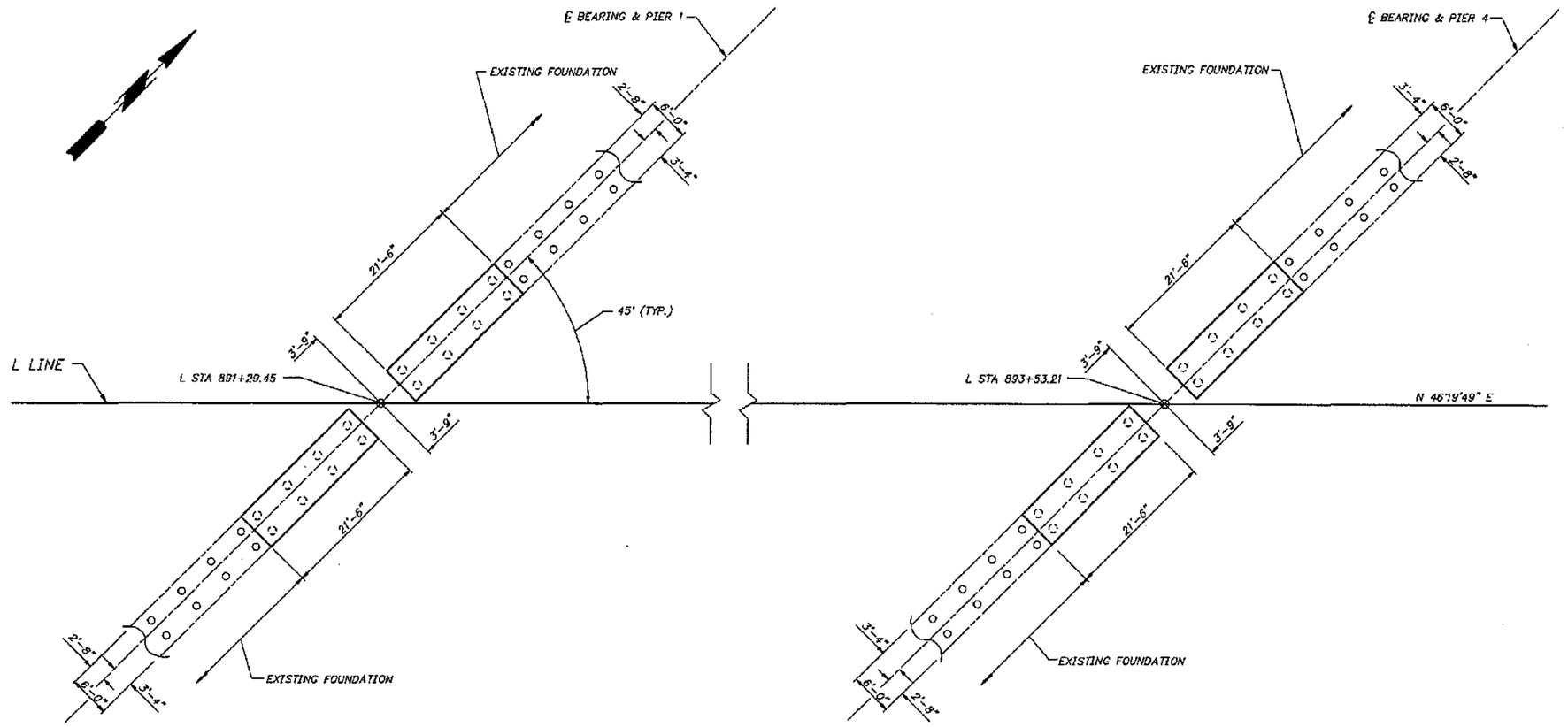

FOUNDATION LAYOUT

(PIERS 2 AND 3 DRILLED SHAFTS NOT SHOWN)

FOR "AS CONSTRUCTED PLANS" ONLY

Bridge Design Engr.					REGION NO.	STATE	FED.AID PROJ. NO.	SHEET NO.	TOTAL SHEETS		
Supervisor R. K. MOY 3/94					10	WASH.					
Designed By C. F. WRIGHT 3/94											
Checked By I. LIOU 3/94					JOB NUMBER						
Detailed By K. L. WILLEY 3/94					95W036						
Bridge Planning Engr.											
Preliminary Plan By											
Architect/Specialist	DATE	REVISION	BY	APP'D	4771						

APPROVED

RAYMOND K. MOY — STATE OF WASHINGTON — 16745 — REGISTERED PROFESSIONAL ENGINEER

EXPIRES 11/14/95

Washington State Department of Transportation

L & A LIN & ASSOCIATES, INC. Consulting Engineers Seattle, Washington

SR 167
15TH N.W. TO 84TH AVE. SO.
HOV SC & DI - STAGE 2
BR. NO. 167/128 OVER 84TH AVE. SO.

FOUNDATION LAYOUT

BRIDGE SHEET NO. 5

SHEET 630 OF 663 SHEETS

SR167/91

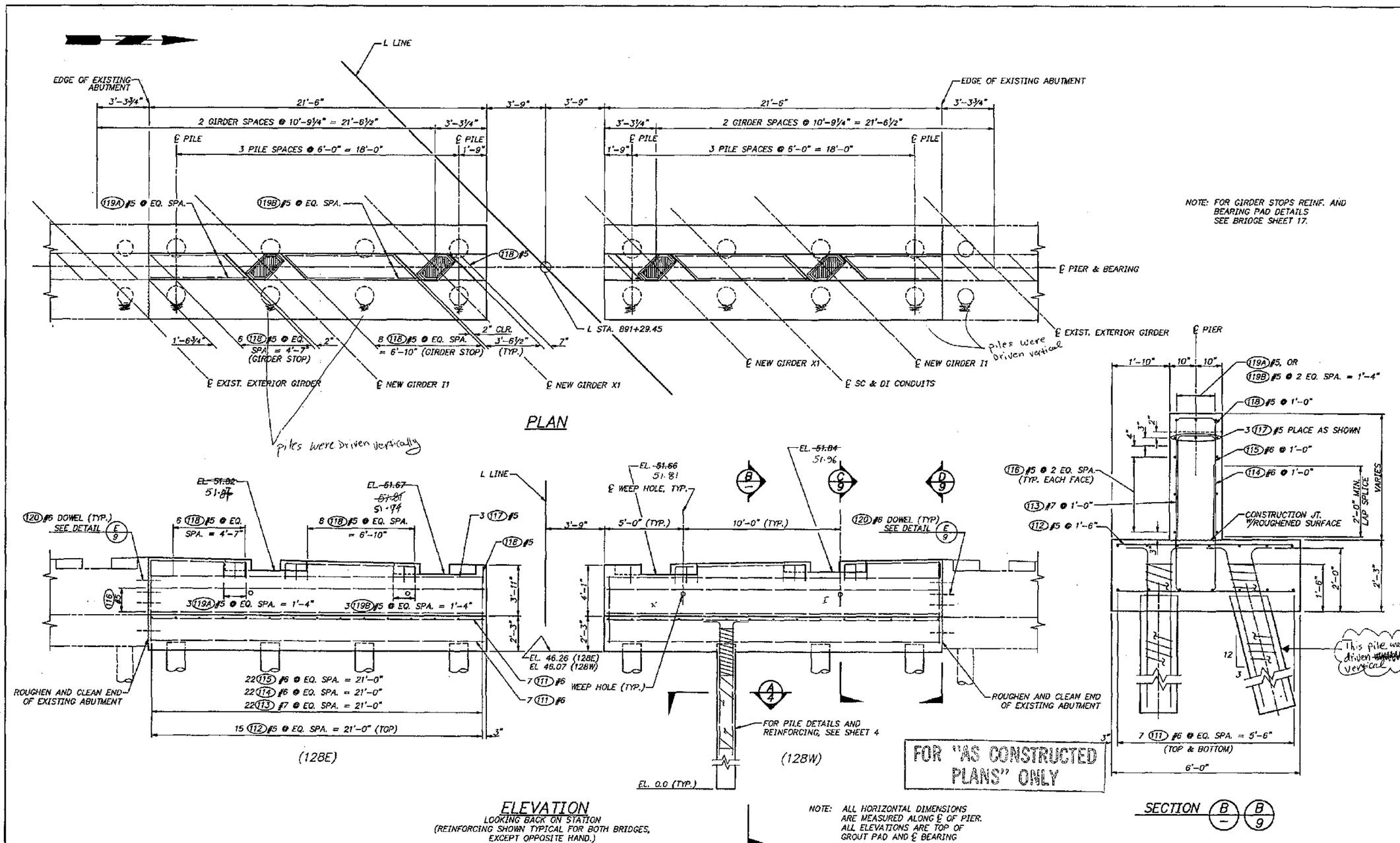

FOR "AS CONSTRUCTED PLANS" ONLY

Bridge Design Engr.					REGION NO.	STATE	FED.AID PROJ. NO.	SHEET NO.	TOTAL SHEETS	
Supervisor R. K. MOY	3/94				10	WASH.				
Designed By K. L. WILLEY	3/94				JOB NUMBER 95W036					
Checked By I. LIOU	3/94									
Detailed By K. L. WILLEY	3/94									
Bridge Planning Engr.										
Preliminary Plan By										
Architect/Specialist		DATE	REVISION	BY	APP'D	4771				

APPROVED

RAYMOND K. MOY, STATE OF WASHINGTON, 18795, REGISTERED PROFESSIONAL ENGINEER, EXPIRES 11/13/95

Washington State Department of Transportation

L & A LIN & ASSOCIATES, INC. Consulting Engineers Seattle, Washington

SR 167
15TH N.W. TO 84TH AVE. SO.
HOV SC & DI - STAGE 2
BR. NO. 167/128 OVER 84TH AVE. SO.

PIER 1

BRIDGE SHEET NO. 6

SHEET 631 OF 663 SHEETS

SR 167/91

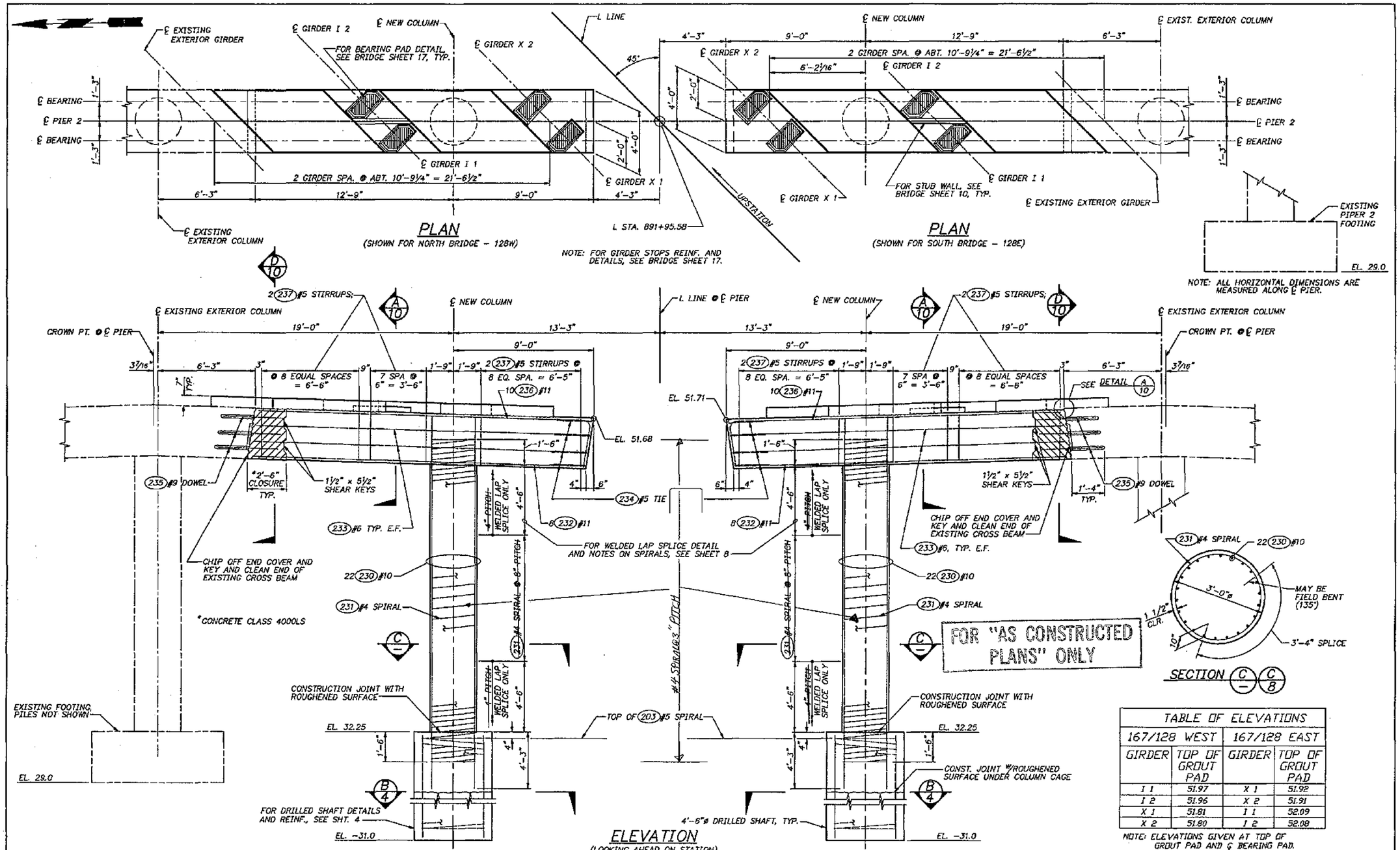

TABLE OF ELEVATIONS			
167/128 WEST		167/128 EAST	
GIRDER	TOP OF GROUT PAD	GIRDER	TOP OF GROUT PAD
I 1	51.97	X 1	51.92
I 2	51.96	X 2	51.91
X 1	51.81	I 1	52.09
X 2	51.80	I 2	52.08

NOTE: ELEVATIONS GIVEN AT TOP OF GROUT PAD AND ℄ BEARING PAD.

Bridge Design Engr.				
Supervisor R. K. MOY 3/94				
Designed By C. F. WRIGHT 3/94				
Checked By I. LIOU, K. WILSON 3/94				
Detailed By C. F. WRIGHT 3/94				
Bridge Planning Engr.				
Preliminary Plan By				
Architect/Specialist	DATE	REVISION	BY	APP'D

REGION NO.	STATE	FED.AID PROJ. NO.	SHEET NO.	TOTAL SHEETS
10	WASH.			

JOB NUMBER 95W036

4771

APPROVED

RAYMOND K. MOY, STATE OF WASHINGTON, 19795, REGISTERED PROFESSIONAL ENGINEER, EXPIRES 11/13/95

Washington State Department of Transportation

L & A LIN & ASSOCIATES, INC. Consulting Engineers Seattle, Washington

SR 167
15TH N.W. TO 84TH AVE. SO.
HOV SC & DI - STAGE 2
BR. NO. 167/128 OVER 84TH AVE. SO.

PIER 2

BRIDGE SHEET NO. 7

SHEET 632 OF 663 SHEETS

SR167/91

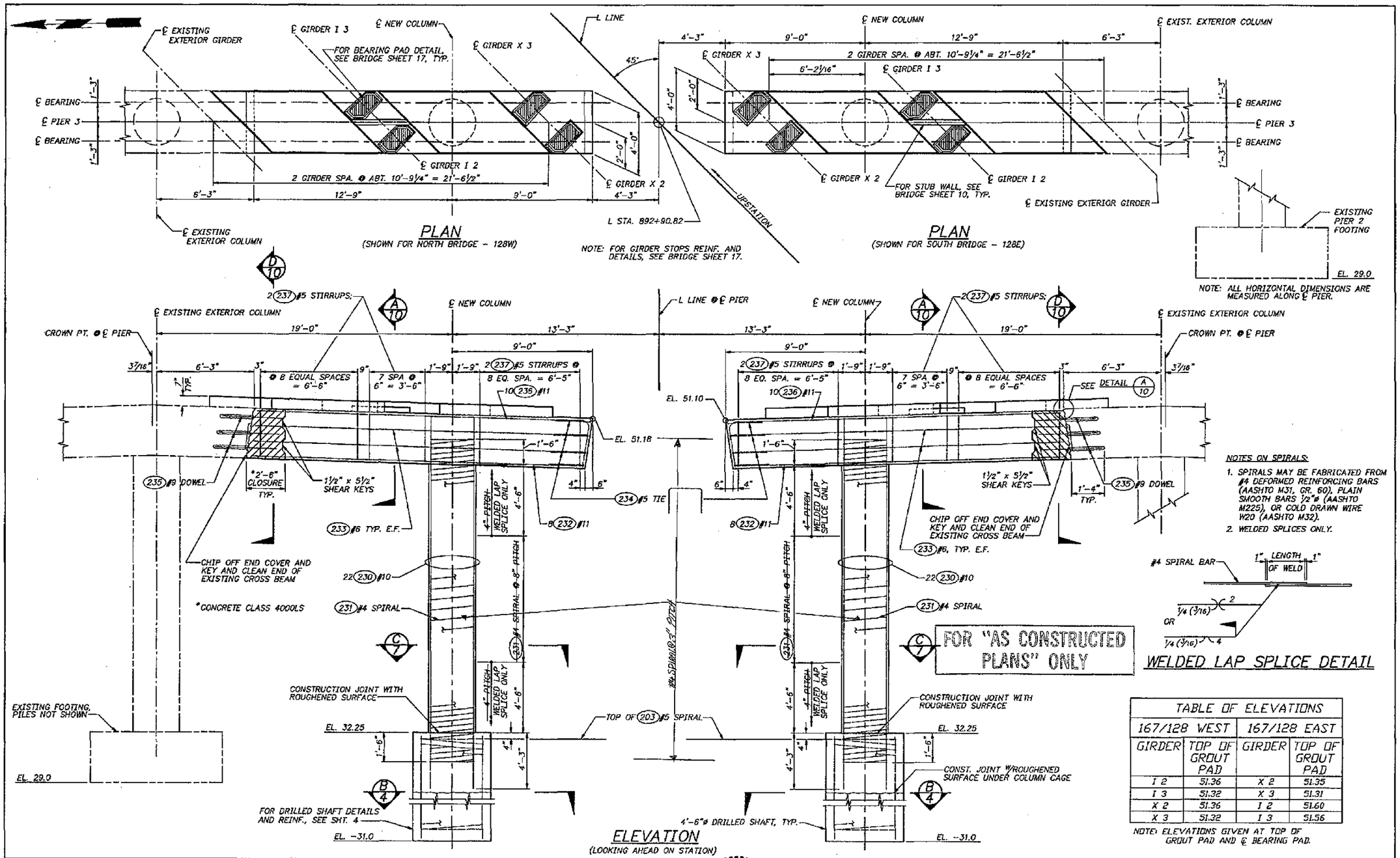

TABLE OF ELEVATIONS			
167/128 WEST		167/128 EAST	
GIRDER	TOP OF GROUT PAD	GIRDER	TOP OF GROUT PAD
I 2	51.36	X 2	51.35
I 3	51.32	X 3	51.31
X 2	51.36	I 2	51.60
X 3	51.32	I 3	51.56

NOTE: ELEVATIONS GIVEN AT TOP OF GROUT PAD AND ℄ BEARING PAD.

Bridge Design Engr.				
Supervisor R. K. MOY 3/94				
Designed By C. F. WRIGHT 3/94				
Checked By I. LIOU, K. WILSON 3/94				
Detailed By C. F. WRIGHT 3/94				
Bridge Planning Engr.				
Preliminary Plan By				
Architect/Specialist	DATE	REVISION	BY	APP'D

REGION NO.	STATE	FED. AID PROJ. NO.	SHEET NO.	TOTAL SHEETS
10	WASH.			
JOB NUMBER 95W036				
4771				

APPROVED

RAYMOND K. MOY, STATE OF WASHINGTON, 18795, REGISTERED PROFESSIONAL ENGINEER, EXPIRES 11/24/95

Washington State Department of Transportation

L & A LIN & ASSOCIATES, INC. Consulting Engineers Seattle, Washington

SR 167
15TH N.W. TO 84TH AVE. SO.
HOV SC & DI - STAGE 2
BR. NO. 167/128 OVER 84TH AVE. SO.

PIER 3

BRIDGE SHEET NO. 8

SHEET 633 OF 663 SHEETS

SR167/91

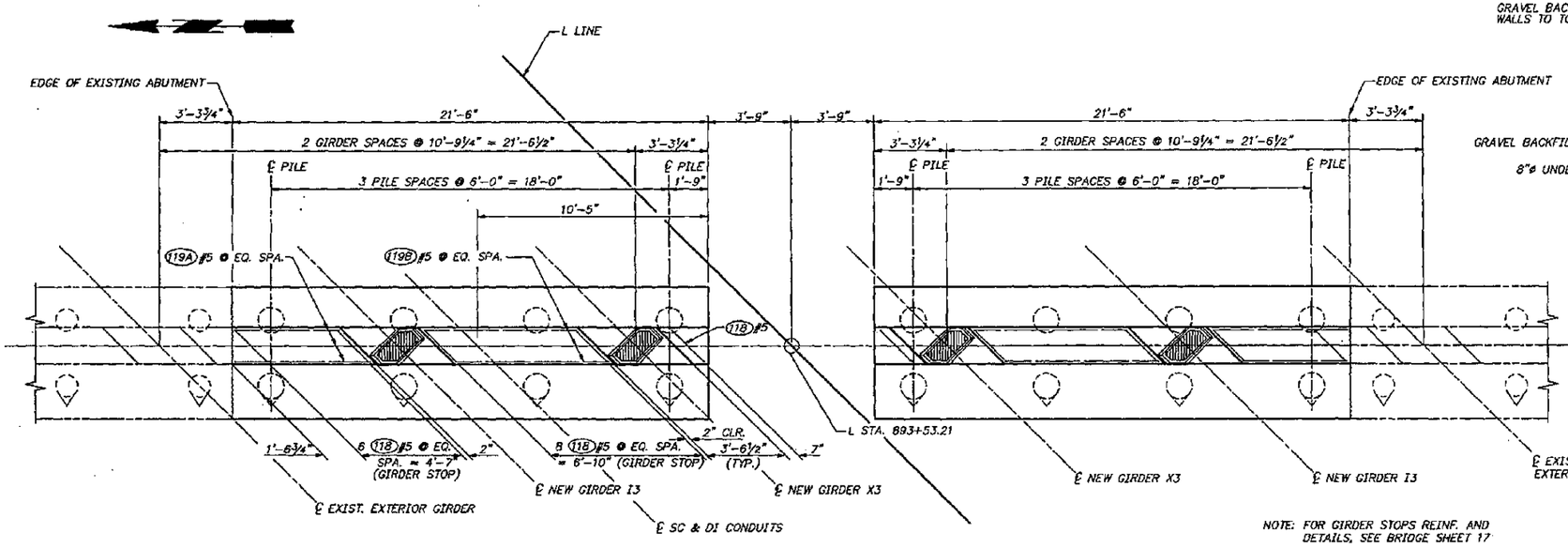

NOTE: FOR GIRDER STOPS REINF. AND DETAILS, SEE BRIDGE SHEET 17

PLAN

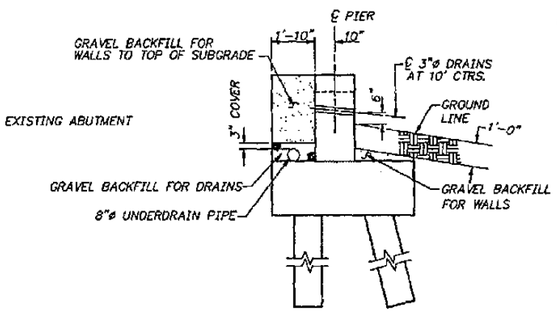

SECTION C/– C/6 (SHOWING DRAINAGE DETAILS)

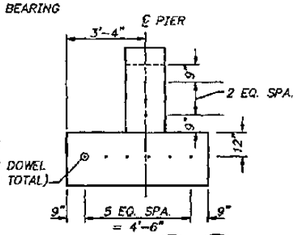

SECTION D/– D/6

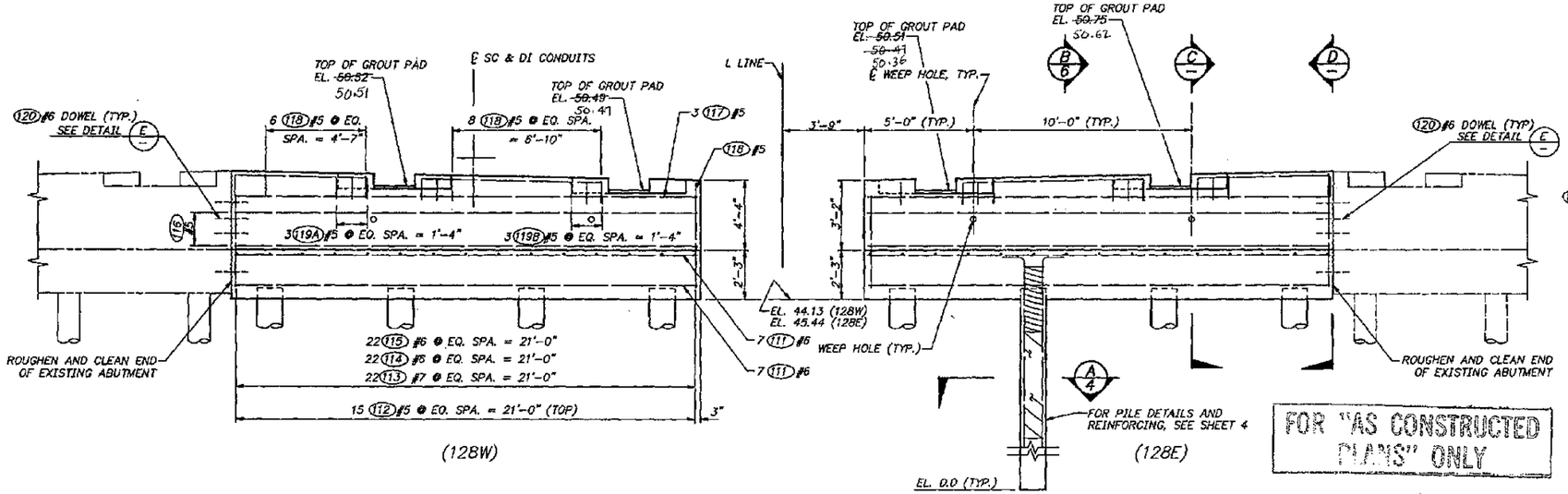

FOR "AS CONSTRUCTED PLANS" ONLY

ELEVATION

LOOKING AHEAD ON STATION
(REINFORCING SHOWN TYPICAL FOR BOTH BRIDGES, EXCEPT OPPOSITE HAND.)

NOTE: ALL HORIZONTAL DIMENSIONS ARE MEASURED ALONG ℄ OF PIER. ALL ELEVATIONS ARE TOP OF GROUT PAD AND ℄ BEARING

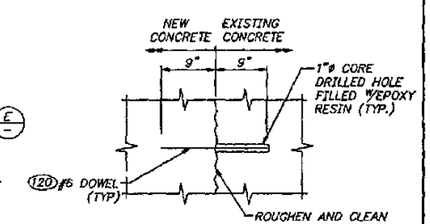

DETAIL E/– E/6

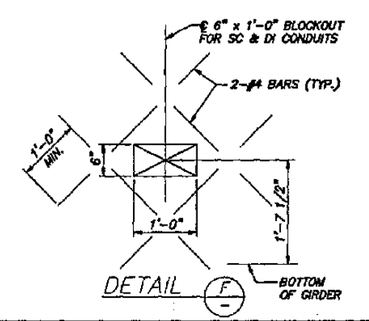

DETAIL F/–

Bridge Design Engr.						REGION NO.	STATE	FED.AID PROJ. NO.	SHEET NO.	TOTAL SHEETS	
Supervisor R. K. MOY	3/94					10	WASH.				
Designed By K. L. WILLEY	3/94					JOB NUMBER					
Checked By I. LIGU	3/94					95W036					
Detailed By K. L. WILLEY	3/94										
Bridge Planning Engr.											
Preliminary Plan By											
Architect/Specialist		DATE	REVISION	BY	APP'D	4771					

APPROVED

RAYMOND L. MOY, STATE OF WASHINGTON, 18792, REGISTERED PROFESSIONAL ENGINEER — EXPIRES 11/15/95

Washington State Department of Transportation

L & A LIN & ASSOCIATES, INC. Consulting Engineers Seattle, Washington

SR 167
15TH N.W. TO 84TH AVE. SO.
HOV SC & DI – STAGE 2
BR. NO. 167/128 OVER 84TH AVE. SO.

PIER 4

BRIDGE SHEET NO. 9

SHEET 634 OF 663 SHEETS

SR 167/91

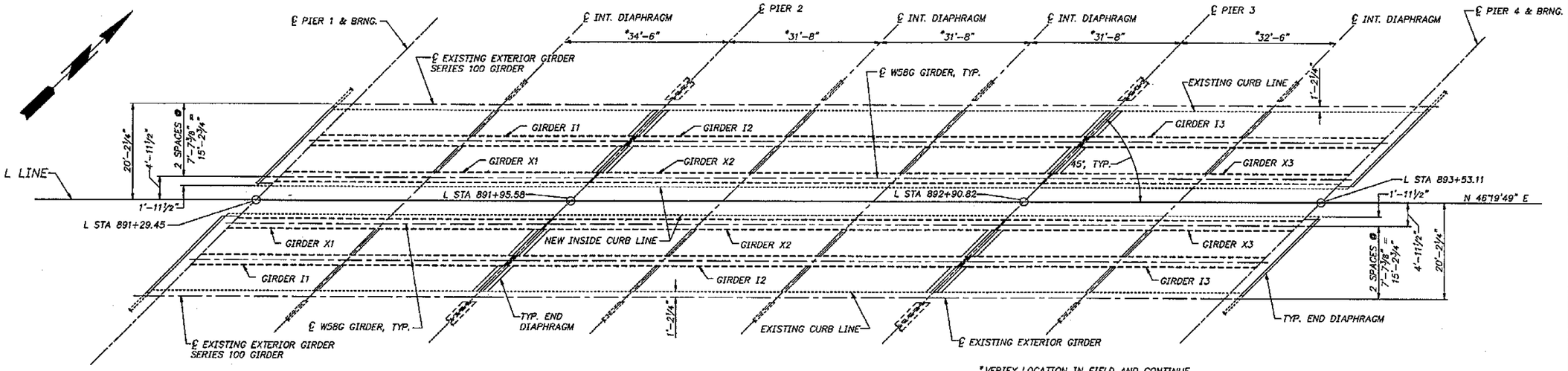

GIRDER FRAMING PLAN

*VERIFY LOCATION IN FIELD AND CONTINUE NEW DIAPHRAGMS ALONG EXISTING LINE.

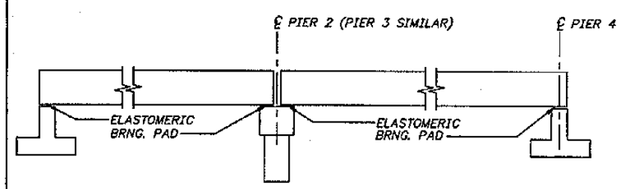

STAGE 1 – SET GIRDERS IN PLACE

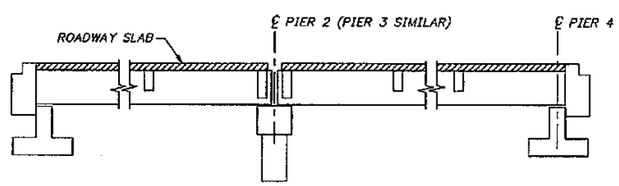

STAGE 3 – PLACE ROADWAY SLAB

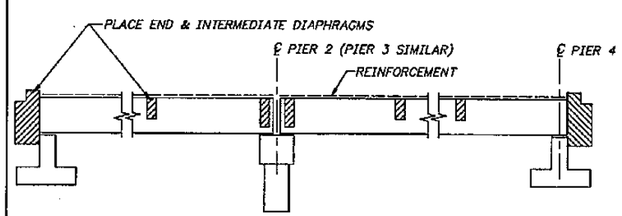

STAGE 2 – PLACE DIAPHRAGMS AND PLACE REINFORCEMENT

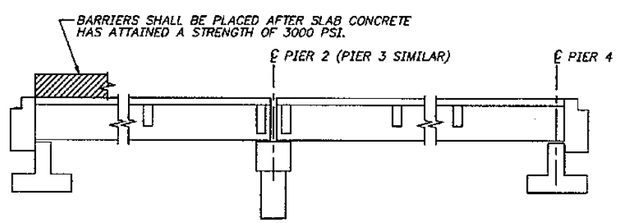

STAGE 4 PLACE BARRIERS

CONSTRUCTION SEQUENCE SPANS 1 – 3

NOTE: ALL CLOSURE POURS ARE TO BE MADE AFTER PLACEMENT OF SLAB AND BARRIER.

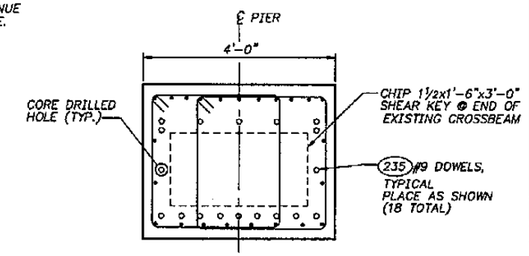

SECTION D7 D8

CHIP COVER OFF END OF EXIST. CROSSBEAM TO EXPOSE EXIST. PRIMARY REINFORCING BARS. CORE DRILL BETWEEN BARS, ADJUST SPACING IF REQUIRED.

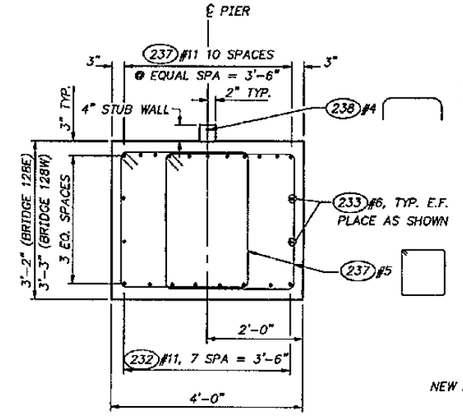

SECTION A7 A8

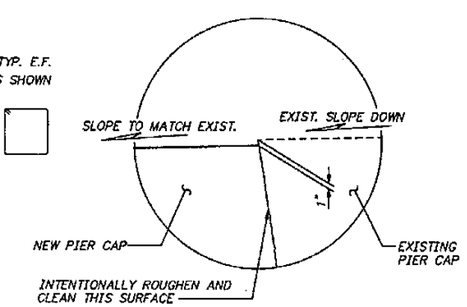

BRIDGE 128E DETAIL A7 A8

(LOOKING PERP. TO ℄ PIER)

FOR "AS CONSTRUCTED PLANS" ONLY

Bridge Design Engr.				
Supervisor R. K. MOY 3/94				
Designed By C. F. WRIGHT 3/94				
Checked By I. LIOU 3/94				
Detailed By K. M. WILSON 3/94				
Bridge Planning Engr.				
Preliminary Plan By				
Architect/Specialist	DATE	REVISION	BY	APP'D

REGION NO.	STATE	FED.AID PROJ. NO.	SHEET NO.	TOTAL SHEETS
10	WASH.			
JOB NUMBER 95W036				
4771				

APPROVED

RAYMOND K. MOY — STATE OF WASHINGTON — 16743 — REGISTERED PROFESSIONAL ENGINEER — 11/15/95

Washington State Department of Transportation

L & A — Lin & Associates, Inc. Consulting Engineers Seattle, Washington

SR 167
15TH N.W. TO 84TH AVE. SO.
HOV SC & DI – STAGE 2
BR. NO. 167/128 OVER 84TH AVE. SO.

FRAMING PLAN

BRIDGE SHEET NO. 10

SHEET 635 OF 663 SHEETS

SR 167/91

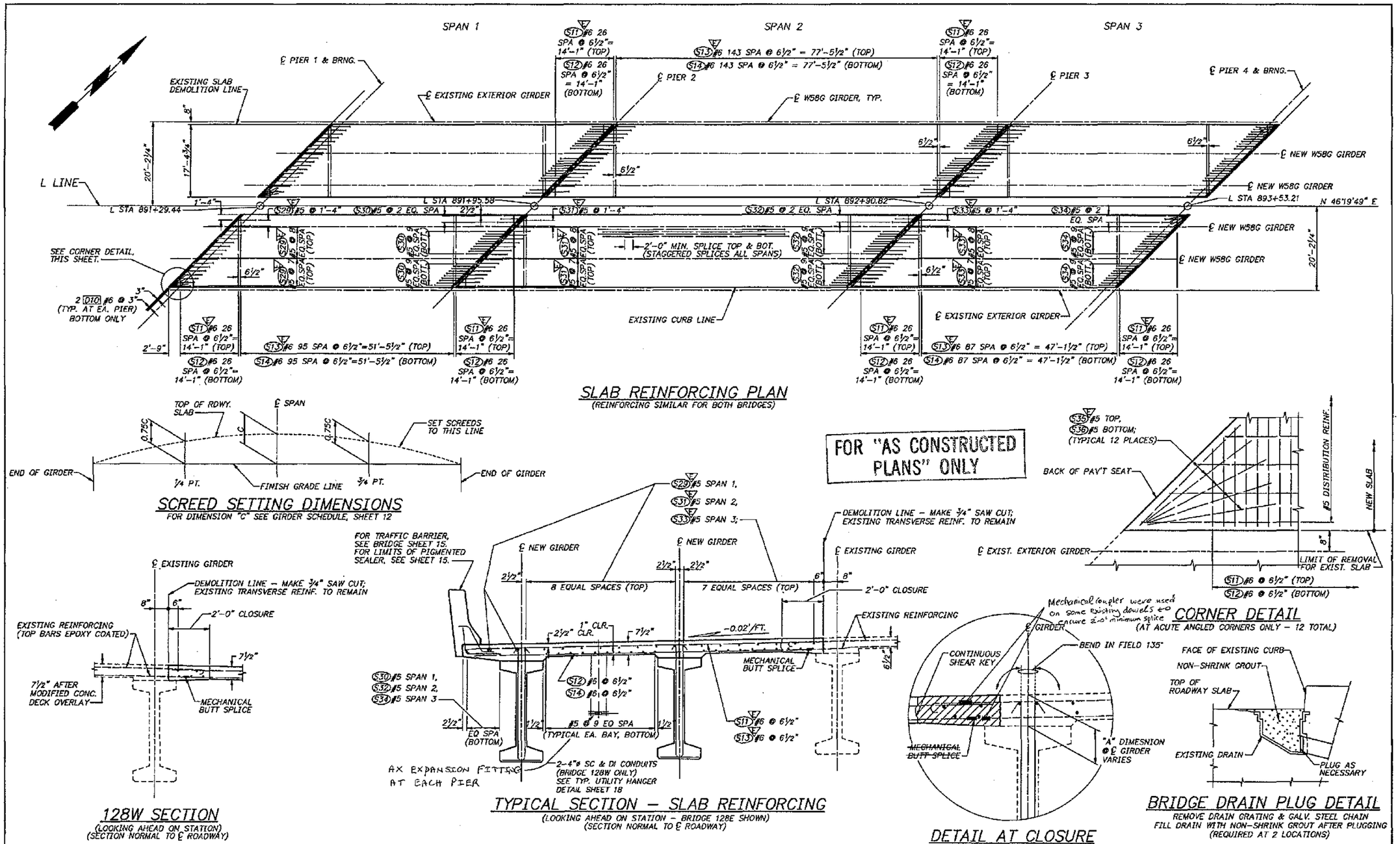

SLAB REINFORCING PLAN
(REINFORCING SIMILAR FOR BOTH BRIDGES)

SCREED SETTING DIMENSIONS
FOR DIMENSION "C" SEE GIRDER SCHEDULE, SHEET 12

FOR "AS CONSTRUCTED PLANS" ONLY

CORNER DETAIL
(AT ACUTE ANGLED CORNERS ONLY – 12 TOTAL)

128W SECTION
(LOOKING AHEAD ON STATION)
(SECTION NORMAL TO ℄ ROADWAY)

TYPICAL SECTION – SLAB REINFORCING
(LOOKING AHEAD ON STATION – BRIDGE 128E SHOWN)
(SECTION NORMAL TO ℄ ROADWAY)

DETAIL AT CLOSURE

BRIDGE DRAIN PLUG DETAIL
REMOVE DRAIN GRATING & GALV. STEEL CHAIN
FILL DRAIN WITH NON-SHRINK GROUT AFTER PLUGGING
(REQUIRED AT 2 LOCATIONS)

Bridge Design Engr.						REGION NO.	STATE	FED.AID PROJ. NO.	SHEET NO.	TOTAL SHEETS	
Supervisor R. K. MOY 3/94						10	WASH.				
Designed By C.WRIGHT, K.WILSON 3/94											
Checked By I. LIOU 3/94						JOB NUMBER					
Detailed By K. L. WILLEY 3/94						95W036					
Bridge Planning Engr.											
Preliminary Plan By											
Architect/Specialist	DATE	REVISION	BY	APP'D		4771					

APPROVED

RAYMOND K. MOY, STATE OF WASHINGTON, 18788, REGISTERED PROFESSIONAL ENGINEER, EXPIRES 11/12/96

Washington State Department of Transportation

L & A Lin & Associates, Inc. Consulting Engineers Seattle, Washington

SR 167
15TH N.W.TO 84TH AVE. SO.
HOV SC & DI – STAGE 2
BR. NO. 167/128 OVER 84TH AVE. SO.

SLAB REINFORCING PLAN

BRIDGE SHEET NO. 11

SHEET 636 OF 663 SHEETS

SR167/91

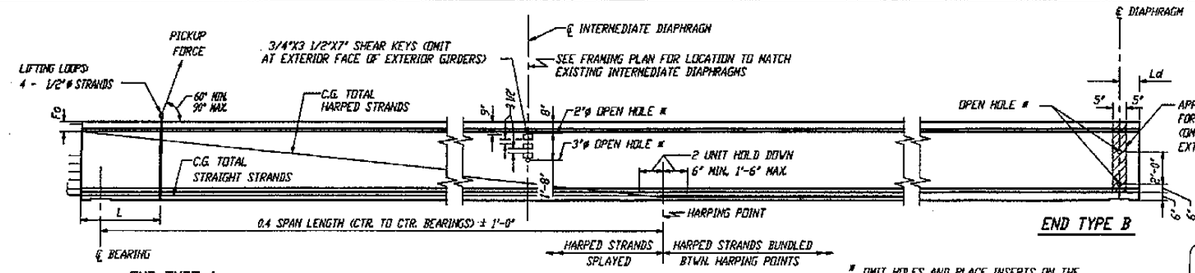

* OMIT HOLES AND PLACE INSERTS ON THE INTERIOR FACE OF EXTERIOR GIRDERS. PLACE HOLES AND INSERTS PARALLEL TO SKEW. INSERTS SHALL BE 1" RICHMOND ROCKET, BURKE HI-TENSILE, LANCASTER MALLEABLE OR APPROVED EQUAL.

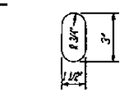

OPEN HOLE

(AT END TYPE B ONLY)

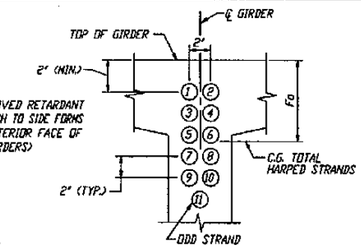

STRAND PATTERN AT GIRDER END

HARPED STRAND LOCATION SEQUENCE SHALL BE AS SHOWN ①, ② ETC.

NOTES:

ALL DETAILS ON THIS SHEET ARE FOR PRETENSIONED DESIGN ONLY.

PLAN LENGTH SHALL BE INCREASED AS NECESSARY TO COMPENSATE FOR SHORTENING DUE TO PRESTRESS AND SHRINKAGE.

EXTRA CAUTION MUST BE EXERCISED IN HANDLING AND PLACING ALL GIRDERS.

ALL GIRDERS OVER 105' LONG SHALL BE BRACED LATERALLY TO PREVENT TIPPING OR BUCKLING.

THE TOP SURFACE OF THE GIRDER FLANGE SHALL BE ROUGHENED IN ACCORDANCE WITH SECTION 6-02.3(25)H OF THE STANDARD SPECIFICATIONS.

IF THE LIFTING LOOPS EXTEND WITHIN 3" OF THE TOP OF THE ROADWAY SLAB THEY SHALL BE CUT OFF PRIOR TO POURING THE ROADWAY SLAB. ALL LIFTING STRANDS SHALL BE OF THE SAME MATERIAL AND STRENGTH AS THE PRESTRESSING STRANDS. WRAP THE LIFTING LOOPS SO THAT EACH STRAND WILL CARRY ITS SHARE OF THE TOTAL LOAD. EXTEND LIFTING LOOPS ENDING WITH A 9" LONG 90° HOOK TO WITHIN 3" CLEAR OF THE BOTTOM OF THE GIRDER.

CUT ALL STRANDS FLUSH WITH THE GIRDER ENDS AND PAINT WITH AN APPROVED EPOXY RESIN EXCEPT FOR EXTENDED STRANDS AS SHOWN.

FORMS FOR BEARING PAD RECESSES SHALL BE CONSTRUCTED AND FASTENED IN SUCH A MANNER AS NOT TO CAUSE DAMAGE TO THE GIRDER DURING THE STRAND RELEASE OPERATION.

ALL STRANDS ARE 1/2"ø LOW RELAXATION STRANDS (AASHTO M203 GRADE 270).

EXTENDED STRANDS AND BARS ARE PARALLEL TO GIRDER.

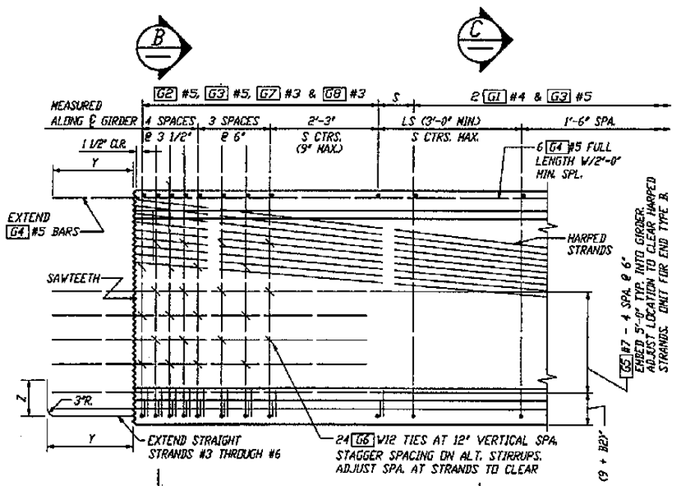

TYPICAL END ELEVATION

END TYPE C SHOWN. OTHER ENDS SIMILAR

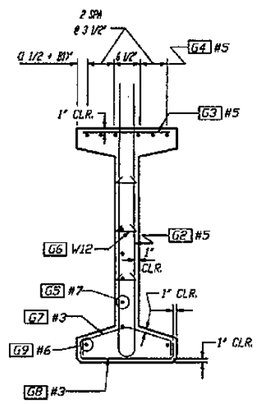

SECTION B

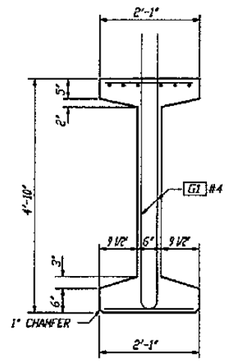

SECTION C

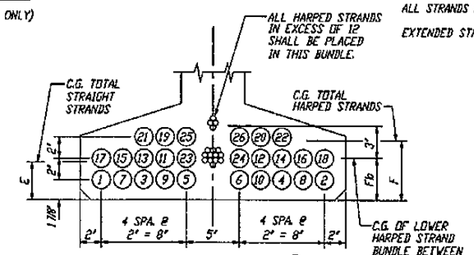

STRAND PATERN AT ℄ SPAN

STRAND LOCATION SEQUENCE SHALL BE AS SHOWN ①, ② ETC.

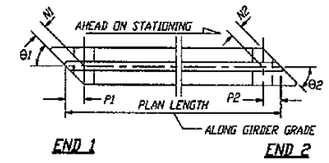

GIRDER SCHEDULE

DIMENSION A AT BEARINGS = 10" — BASED ON GIRDER DEFLECTION = D AT TIME OF SLAB POUR (120 DAYS)

SPAN	GIRDER	END 1 TYPE / END 2 TYPE	L	θ1	θ2	N1	N2	P1	P2	PLAN LENGTH*	MIN. CONC. COMPR. STRENGTH @ 28 DAYS F'c (KSI)	MIN. CONC. COMPR. STRENGTH @ RELEASE F'ci (KSI)	S (IN.)	LS (FT.)	HARPED NO. OF STRANDS	HARPED JACKING FORCE (KIPS)	STRAIGHT NO. OF STRANDS	STRAIGHT JACKING FORCE (KIPS)	LOCATION OF C.G. STRANDS (IN.) E	F	Fb	Fo	C (IN.)**	D (IN.)	Ld (IN.)
1	X1	A / B	~~40'~~ 40.0	~~49°~~ 45°	~~45~~ 135	~~45~~ 135	11 3/4"	14 1/4"	1'-4 5/8"	1'-8 1/8"	67'-5 1/8"	7	6	18.0	3.0	4	124	14	434	2 7/16	3.0	3.0	11.0	1/4	7/8	18
1	I1	A / B	4.0	13 5/16	13 5/16	46	11 3/4"	12"	1'-4 5/8"	1'-5"	67'-2"	7	6	18.0	3.0	4	124	14	434	2 7/16	3.0	3.0	11.0	1/4	7/8	14 7/8
2	X2	B / B	4.0	13 3/16	13 3/16	14 1/4"	14 1/4"	1'-8 1/8"	1'-8 1/8"	95'-0 3/4"	7	6	18.0	3.0	8	248	26	806	3 9/16	3.0	3.0	5.0	1	2 15/16	18
2	I2	B / B	4.0	13 3/16	13 3/16	12"	12"	1'-5"	1'-5"	94'-6 1/2"	7	6	18.0	3.0	8	248	26	806	3 9/16	3.0	3.0	5.0	1	2 15/16	14 7/8
3	X3	B / A	4.0	13 3/16	13 3/16	14 1/4"	11 3/4"	1'-8 1/8"	1'-4 5/8"	63'-8 1/4"	7	6	18.0	3.0	4	124	12	372	2 7/16	3.0	3.0	14.0	3/16	11/16	18
3	I3	B / A	4.0	13 3/16	13 3/16	12"	11 3/4"	1'-5"	1'-4 5/8"	63'-5 1/8"	7	6	18.0	3.0	4	124	12	372	2 7/16	3.0	3.0	14.0	3/16	11/16	14 7/8

* TO BE VERIFIED IN THE FIELD

$\theta_1 + \theta_2 = 135°$

** FOR SCREED SETTING DIMENSIONS SEE SLAB REINFORCING PLAN SHEET 11.

FOR "AS CONSTRUCTED PLANS" ONLY

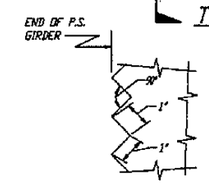

END TYPE	BEARING RECESS	Y	Z	SAWTEETH
A	YES	9"	1'-6"	YES
B	YES	0"	0"	NO
C	NO	1'-10"	9"	YES

SAWTOOTH DETAILS

SAWTEETH ARE FULL WIDTH. USE SAWTOOTH KEYS FROM BOTTOM OF BOTTOM FLANGE TO BOTTOM OF LOWEST HARPED STRANDS AS WELL AS TOP FLANGE ADJACENT TO HARPED STRANDS AS SHOWN IN SECTION B.

ENDS AHEAD ON STATION
G5 BARS LEFT OF ℄
B1 = 0"
B2 = 0"
ENDS BACK ON STATION
G5 BARS RIGHT OF ℄
B1 = 1 1/2"
B2 = 3"

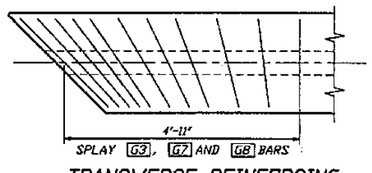

TRANSVERSE REINFORCING SKEWED ENDS

ONLY TRANSVERSE REINF. SHOWN

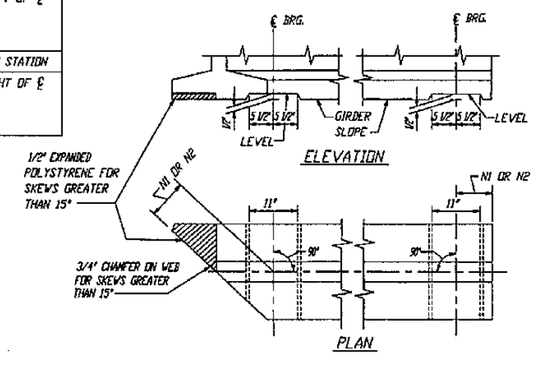

BEARING RECESS DETAIL

† #3 OR #4 MAY BE SUBSTITUTED FOR W12. FIELD BENDING IS OPTIONAL.

MARK	LOCATION	SIZE	
G1	GIRDER STIRRUPS	4	
G2	GIRDER END STIRRUPS	5	
G3	GIRDER TOP FLANGE	5	STR.
G4	GIRDER LONGIT. FULL LENGTH	5	STR.
G5	GIRDER END LONGIT.	7	STR.
G6	GIRDER END TIES	W12	†
G7	GIRDER END TIES	3	
G8	GIRDER END TIES	3	
G9	GIRDER LONGIT. FULL LENGTH	6	STR.

NOTE: FOR DIMENSION A SEE "GIRDER SCHEDULE"

BENDING DIAGRAM (ALL DIMENSIONS ARE OUT TO OUT)

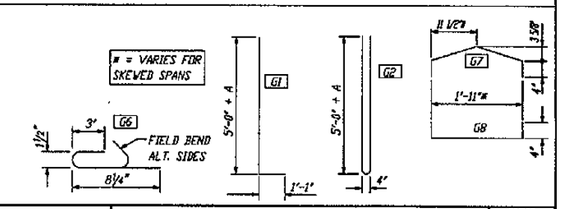

Bridge Design Engr.							
Supervisor R. K. MOY 3/94							
Designed By C. F. WRIGHT 3/94							
Checked By K. M. WILSON 3/94							
Detailed By C. F. WRIGHT 3/94							
Bridge Planning Engr.							
Preliminary Plan By							
Architect/Specialist	DATE	REVISION	BY	APP'D			

REGION NO.	STATE	FED.AID PROJ. NO.	SHEET NO.	TOTAL SHEETS
10	WASH.			

JOB NUMBER 95W036

4771

APPROVED

RAYMOND A. MOY — STATE OF WASHINGTON — 13729 — REGISTERED PROFESSIONAL ENGINEER — EXPIRES 11/06/95

Washington State Department of Transportation

L & A — LIN & ASSOCIATES, INC. Consulting Engineers Seattle, Washington

SR 167
15TH N.W. TO 84TH AVE. SO.
HOV SC & DI – STAGE 2
BR. NO. 167/128 OVER 84TH AVE. SO.

W58G GIRDER DETAILS

BRIDGE SHEET NO. 12

SHEET 657 OF 663 SHEETS

SR 167/91

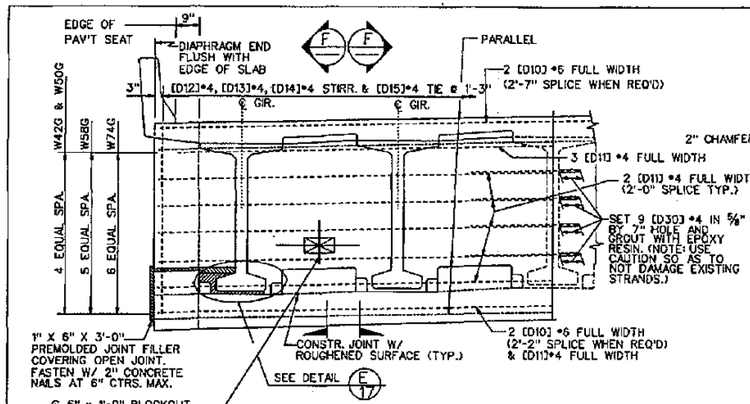

TYPICAL END DIAPHRAGM
AT END PIERS
W74 GIRDER SHOWN OTHER GIRDERS SIMILAR.

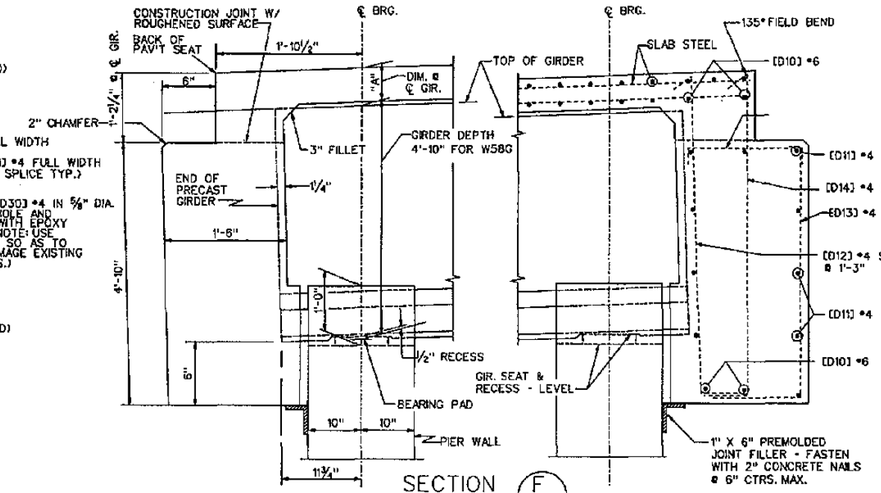

SECTION F

SECTIONS THRU END DIAPHRAGMS AT END PIERS
SEE "GIRDER DETAILS" SHEET FOR DIMENSION "A".
ALL LONGITUDINAL DIMENSIONS ARE NORMAL TO SKEW.
CONSTRUCT END DIAPHRAGMS TO MATCH EXISTING.

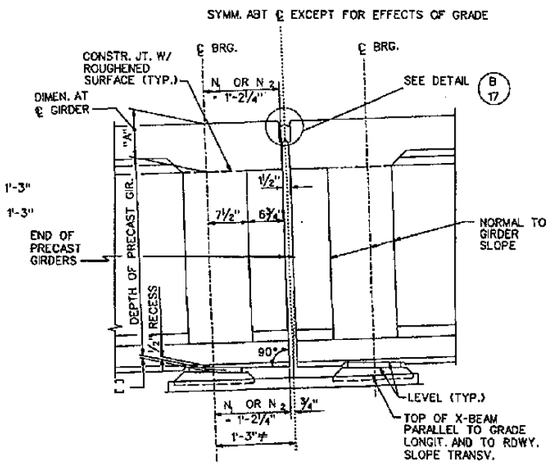

SECTION THRU END DIAPHRAGM
EXTERIOR GIRDER
AT INTERMEDIATE PIERS
LONGIT. DIMENSIONS ARE NORMAL TO SKEW.
SEE "GIRDER DETAILS SHEET FOR DIMEN. "A".

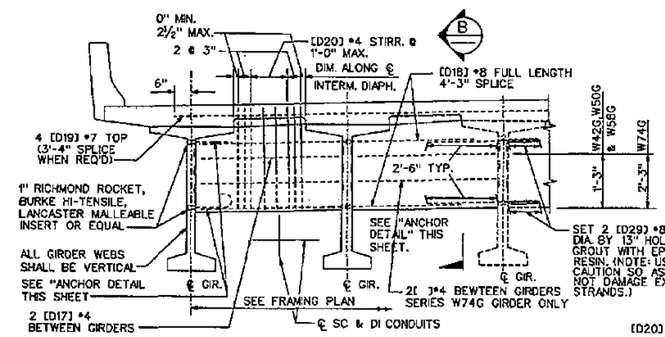

TYPICAL INTERMEDIATE DIAPHRAGM
W74 GIRDER SHOWN OTHER GIRDERS SIMILAR

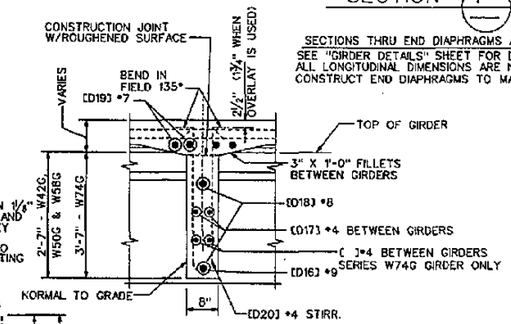

SECTION B

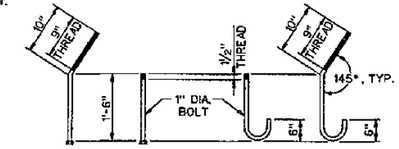

ANCHOR DETAILS

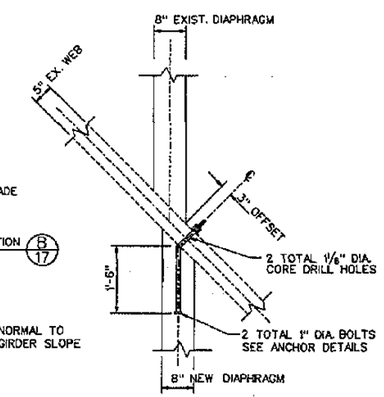

ALTERNATIVE INTERMEDIATE
DIAPHRAGM CONNECTION

FOR "AS CONSTRUCTED PLANS" ONLY

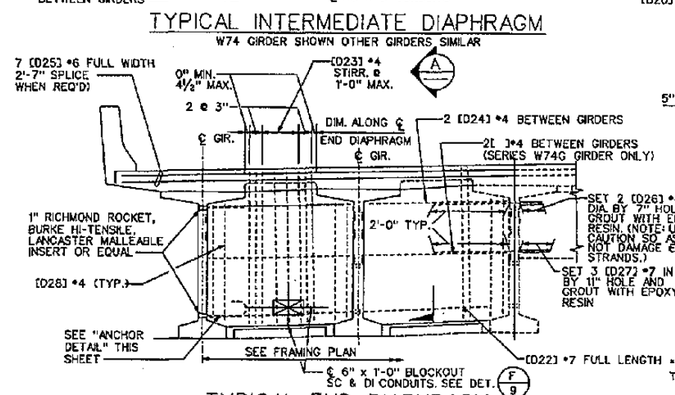

TYPICAL END DIAPHRAGM
AT INTERMEDIATE PIERS
W74 GIRDER SHOWN OTHER GIRDERS SIMILAR

NOTE:
GIRDERS SHALL BE HELD RIGIDLY IN PLACE WHEN DIAPHRAGMS ARE POURED. REINFORCING BARS SHALL BE THREADED THROUGH HOLES IN GIRDERS PRIOR TO PLACING OF EXTERIOR GIRDERS. SEE PLANS FOR "TRAFFIC BARRIER" DIMENSIONS AND LOCATION. SEE "GIRDER DETAILS" SHEET FOR DIMENSION "A".

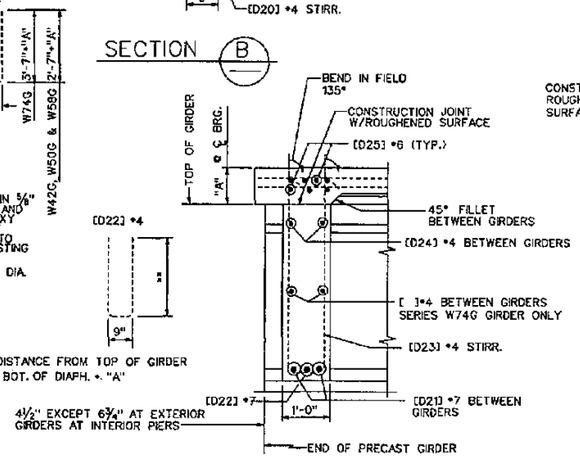

* DISTANCE FROM TOP OF GIRDER TO BOT. OF DIAPH. + "A"

SECTION A

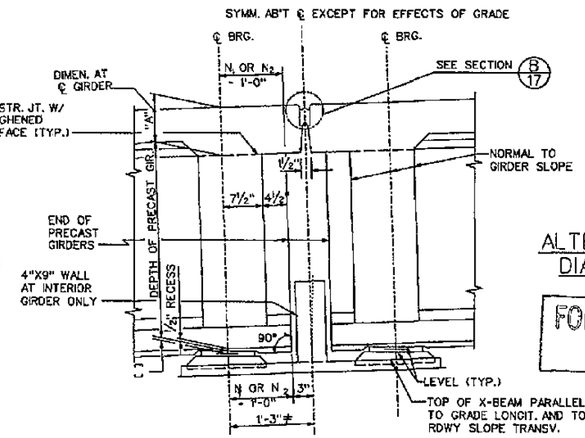

SECTION THRU END DIAPHRAGM - INTERIOR GIR.
AT INTERMEDIATE PIERS
LONGIT. DIMENSIONS ARE NORMAL TO SKEW.
SEE GIRDER DETAILS SHEET FOR DIMEN. "A".

INCREASE THIS DIMENSION FOR BRIDGES ON SAG VERTICAL CURVES TO MAINTAIN 1/2" BETWEEN GIRDER ENDS.

Bridge Design Engr.					REGION NO.	STATE	FED. AID PROJ. NO.	SHEET NO.	TOTAL SHEETS
Supervisor R. K. MOY 3/94					10	WASH.			
Designed By C. WRIGHT, K. WILSON 3/94					JOB NUMBER				
Checked By I. LIOU 3/94					95W036				
Detailed By C. WRIGHT, K. WILSON 3/94									
Bridge Planning Engr.									
Preliminary Plan By									
Architect/Specialist	DATE	REVISION	BY	APP'D	4771				

APPROVED

RAYMOND K. MOY — STATE OF WASHINGTON — REGISTERED PROFESSIONAL ENGINEER — EXPIRES 11/01/95

Washington State Department of Transportation

L & A — LIN & ASSOCIATES, INC. Consulting Engineers Seattle, Washington

SR 167
15TH N.W. TO 84TH AVE. SO.
HOV SC & DI - STAGE 2
BR. NO. 167/128 OVER 84TH AV. S.

PRESTRESSED GIRDER DIAPHRAGM

BRIDGE SHEET NO. 13

SHEET 638 OF 663

SR167/91

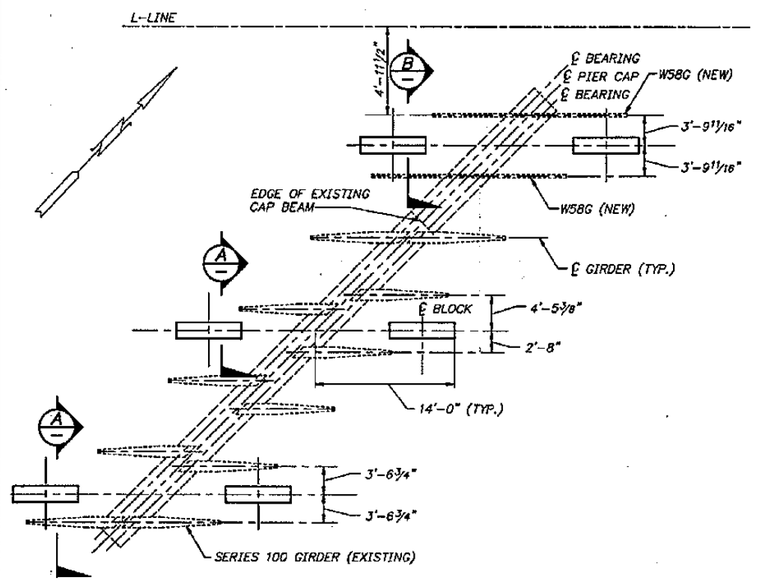

SEISMIC RESTRAINER LAYOUT

PIER 2. 128E SHOWN, SIMILAR FOR OTHER 3 LOCATIONS AT PIERS 2. & 3. BRIDGE 128E & 128W. (BRIDGE DECK REMOVED FOR CLARITY.)

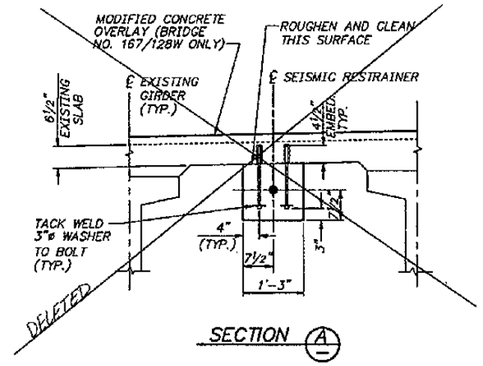

SECTION A

(FOR LOCATIONS UNDER EXISTING DECK)

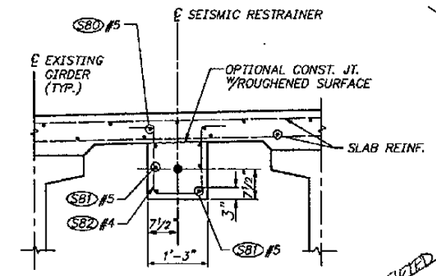

SECTION B

(FOR LOCATION UNDER WIDENED DECK)

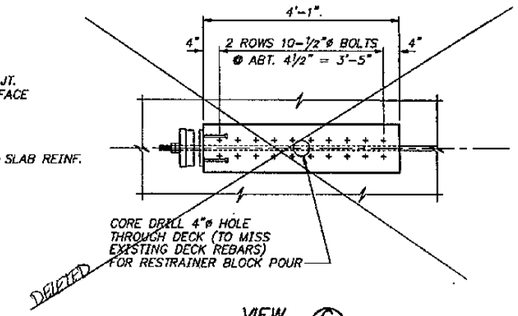

VIEW C

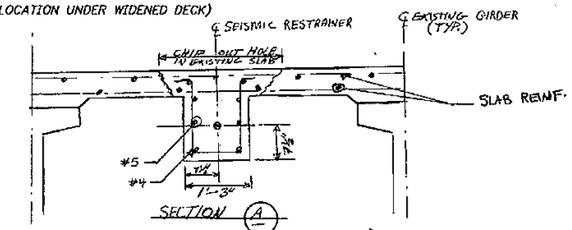

SECTION A

(FOR LOCATIONS UNDER EXISTING DECK)

NOTES:

1. ROD SHALL BE 1⅛ INCH DIAMETER HIGH STRENGTH STEEL ASTM A722 150 KSI ULTIMATE STRENGTH OR AN APPROVED EQUAL.

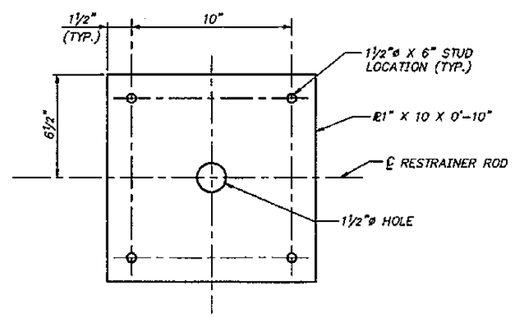

DETAIL A

FOR "AS CONSTRUCTED PLANS" ONLY

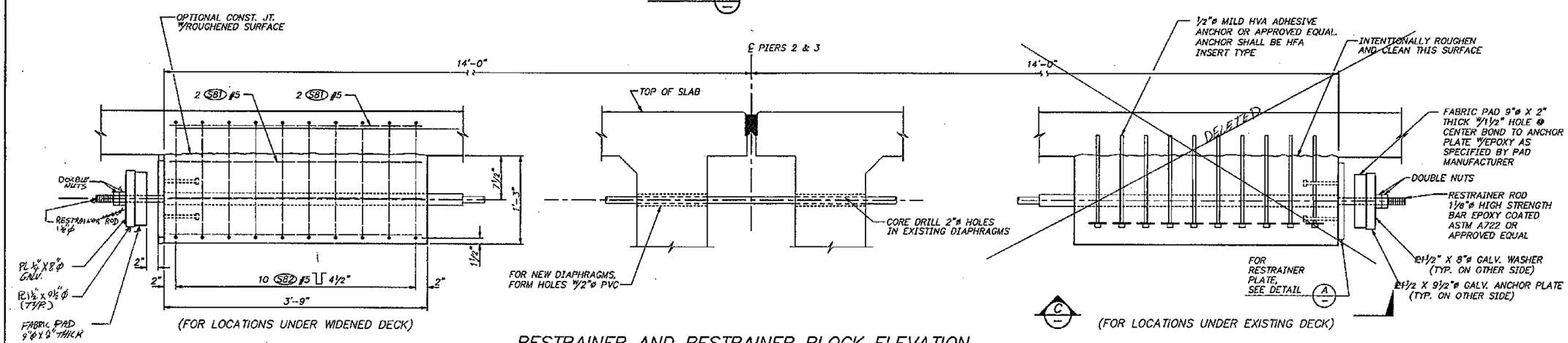

(FOR LOCATIONS UNDER WIDENED DECK)

(FOR LOCATIONS UNDER EXISTING DECK)

RESTRAINER AND RESTRAINER BLOCK ELEVATION

Bridge Design Engr.					REGION NO.	STATE	FED.AID PROJ. NO.	SHEET NO.	TOTAL SHEETS		
Supervisor R. K. MOY 3/94					10	WASH.					
Designed By K. M. WILSON 3/94					JOB NUMBER						
Checked By I. LIOU 3/94					95W036						
Detailed By K. M. WILSON 3/94					4771						
Bridge Planning Engr.											
Preliminary Plan By											
Architect/Specialist	DATE	REVISION	BY	APP'D							

APPROVED

RAYMOND K. MOY — STATE OF WASHINGTON — 10715 — REGISTERED PROFESSIONAL ENGINEER — EXPIRES 11/15/95

Washington State Department of Transportation

L & A — LIN & ASSOCIATES, INC. Consulting Engineers Seattle, Washington

SR 167
15TH N.W. TO 84TH AVE. SO.
HOV SC & DI – STAGE 2
BR. NO. 167/128 OVER 84TH AVE. SO.

RESTRAINER DETAILS

BRIDGE SHEET NO. 14

SHEET 639 OF 663 SHEETS

SR 167/91

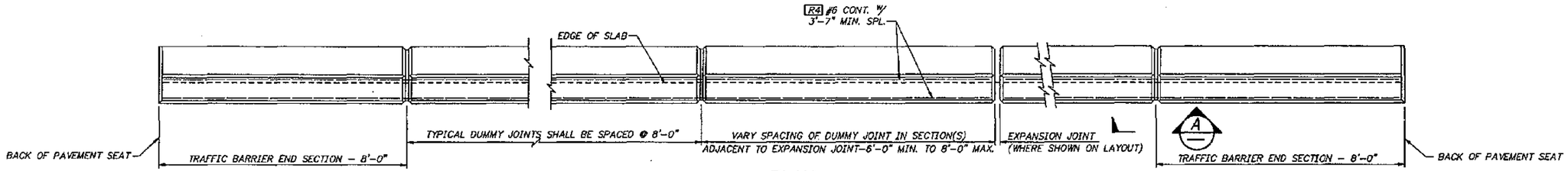

PLAN
TRAFFIC BARRIER – NORTH SIDE OF BR. 167/128E & SOUTH SIDE OF BR. 167/128W

BARRIER CONTINUOUS BETWEEN ROADWAY EXPANSION JOINTS. CONSTRUCTION JOINTS WITH SHEAR KEYS ARE PERMISSIBLE AT DUMMY JOINT LOCATIONS. FORM JOINTS BETWEEN DUMMY JOINTS SHALL NOT BE PERMITTED.

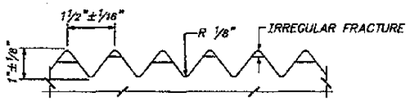

FRACTURED FIN FINISH
(OUTSIDE BARRIER ONLY)

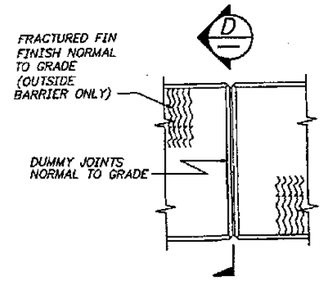

VIEW B/16
ALL CHAMFERS 3/4"

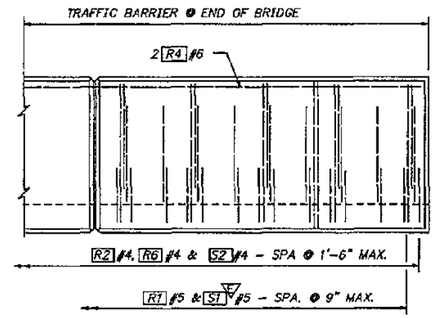

OUTSIDE ELEVATION END OF TRAFFIC BARRIER

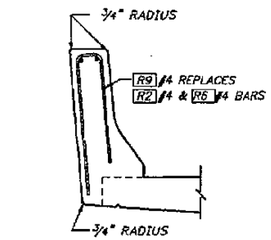

SLIPFORM ALTERNATE
(INSIDE BARRIER)
SEE TYPICAL SECTION – TRAFFIC BARRIER FOR ADDITIONAL DETAILS

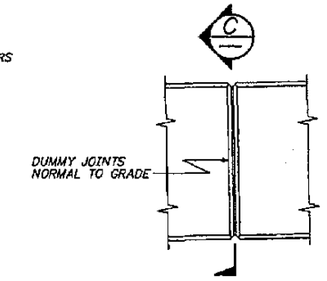

VIEW A
ALL CHAMFERS 3/4"

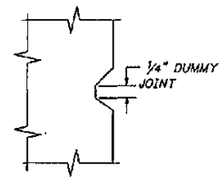

SECTION 2–2

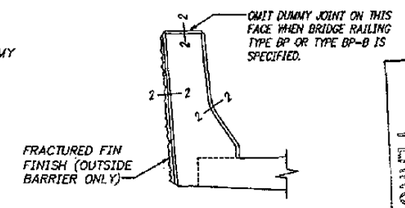

SECTION C D

FOR AS CONSTRUCTED PLANS ONLY

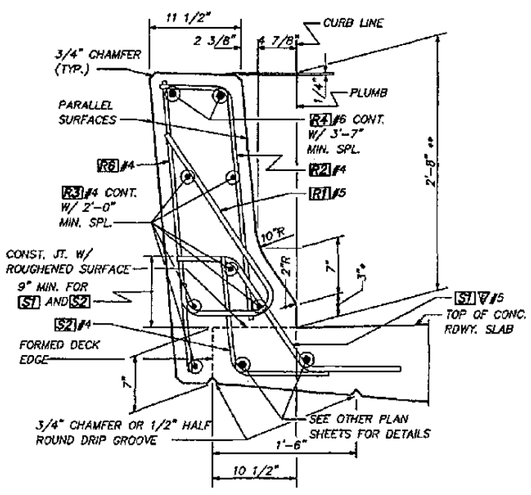

TYPICAL SECTION – TRAFFIC BARRIER
* TOE HEIGHT MAY VARY, 2" MIN. TO 6" MAX.
** HEIGHT MAY VARY IF REQUIRED TO PRODUCE A PROFILE PLEASING TO THE EYE

▽ = EPOXY COATED ≠ DIMENSIONS TO POINTS OF INTERSECTION

TRAFFIC BARRIER BAR LIST
ALL REINFORCING SHALL BE AASHTO M31, GR. 60.

MARK	SIZE	LENGTH		BENDING DIAGRAM (ALL DIMENSIONS ARE OUT TO OUT)
R1	5	3'-2"		
R2	4	3'-0"		
R3	4	(A)	STR.	
R4	6	(A)	STR.	
R6	4	3'-0"	STR.	
R9	4	5'-11"		

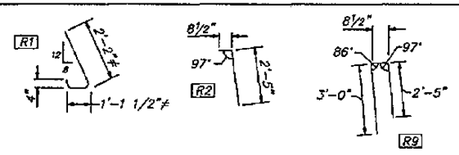

(A) DETERMINE FROM PLANS FOR S1 ▽ & S2 BARS SEE BARLIST

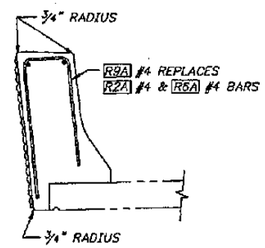

SLIPFORM ALTERNATE
(OUTSIDE BARRIER)
SEE TYPICAL SECTION – TRAFFIC BARRIER FOR ADDITIONAL DETAILS

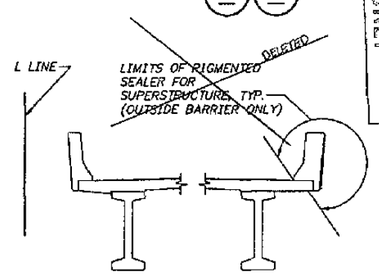

PIGMENTED SEALER DETAIL
(LOOKING UPSTATION; BRIDGE 128W SHOWN)

Bridge Design Engr.						REGION NO.	STATE	FED.AID PROJ. NO.	SHEET NO.	TOTAL SHEETS	
Supervisor	R. K. MOY	3/94				10	WASH.				
Designed By	K. L. WILLEY	3/94				JOB NUMBER					
Checked By	C. F. WRIGHT	3/94				95W036					
Detailed By	K. L. WILLEY	3/94									
Bridge Planning Engr.											
Preliminary Plan By											
Architect/Specialist			DATE	REVISION	BY	APP'D	4771				

APPROVED

RAYMOND K. MOY, STATE OF WASHINGTON, REGISTERED PROFESSIONAL ENGINEER, 16783
EXPIRES 11/15/95

Washington State Department of Transportation

L & A Lin & Associates, Inc. Consulting Engineers Seattle, Washington

SR 167
15TH N.W. TO 84TH AVE. SO.
HOV SC & DI – STAGE 2
BR. NO. 167/128 OVER 84TH AVE. SO.

INSIDE BARRIER DETAILS

BRIDGE SHEET NO. 15

SHEET 640 OF 663 SHEETS

SR167/91

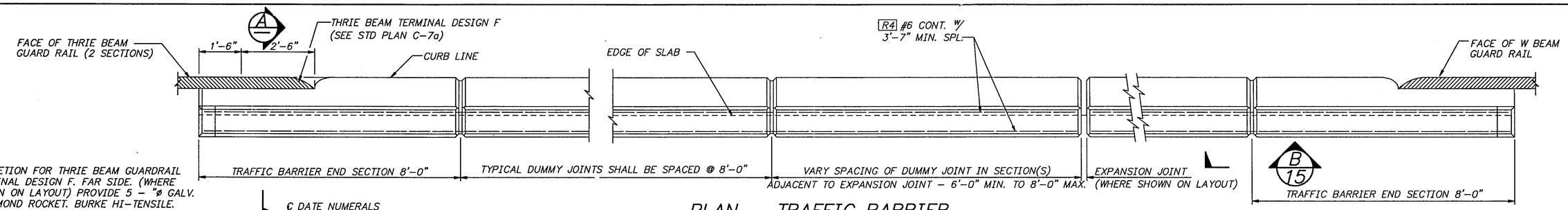

PLAN – TRAFFIC BARRIER
SOUTH SIDE OF BR. 167/128E & NORTH SIDE OF BR. 167/128W

BARRIER CONTINUOUS BETWEEN ROADWAY EXPANSION JOINTS. CONSTRUCTION JOINTS WITH SHEAR KEYS ARE PERMISSIBLE AT DUMMY JOINT LOCATIONS. FORM JOINTS BETWEEN DUMMY JOINTS SHALL NOT BE PERMITTED.

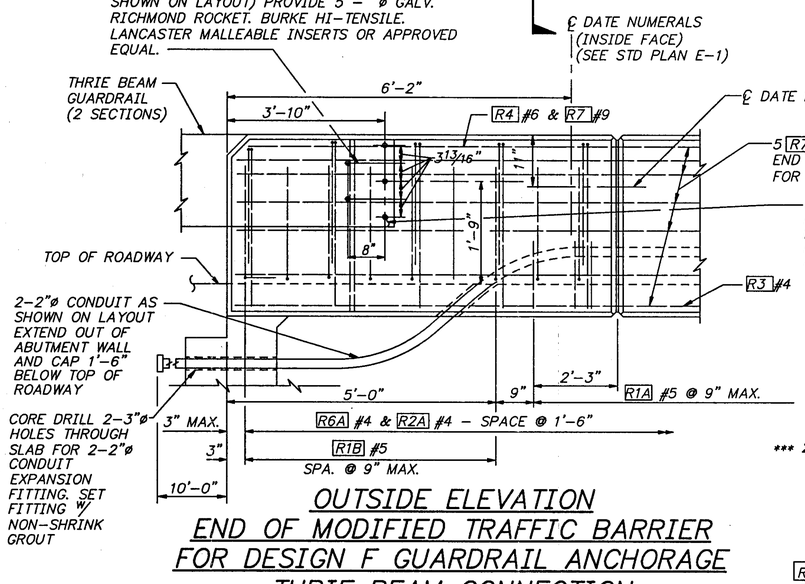

OUTSIDE ELEVATION
END OF MODIFIED TRAFFIC BARRIER FOR DESIGN F GUARDRAIL ANCHORAGE THRIE BEAM CONNECTION

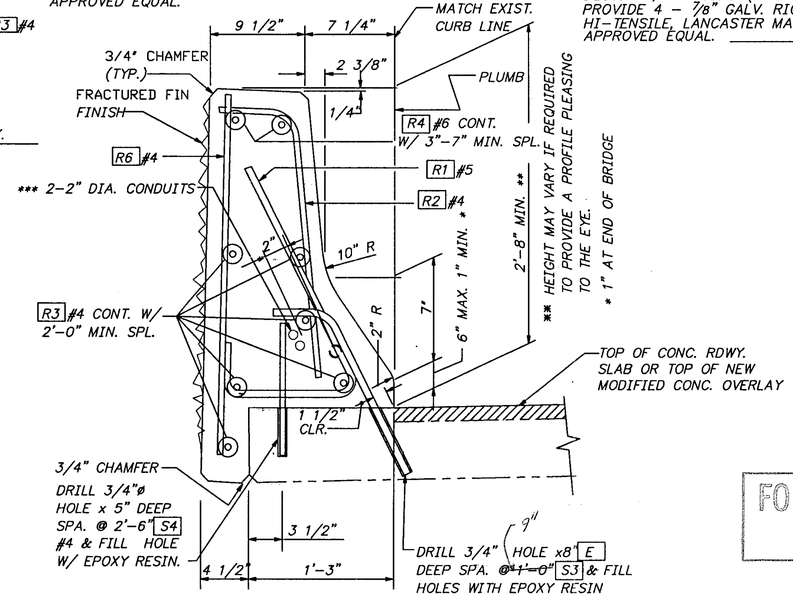

TYPICAL SECTION – TRAFFIC BARRIER

5 R7 #9 EXTEND 6'-0" BEYOND MOD. TRAFFIC BARRIER END SECTION. SPLICE W/ R4 #6 & R3 #4 (2'-0" MIN. SPL. FOR #4 BARS AND 3'-7" MIN. SPL. FOR #6 BARS)

CONNECTION FOR W BEAM GUARDRAIL TERMINAL DESIGN F, FAR SIDE. (WHERE SHOWN ON LAYOUT) PROVIDE 4 – 7/8" GALV. RICHMOND ROCKET, BURKE HI-TENSILE, LANCASTER MALLEABLE INSERTS OR APPROVED EQUAL.

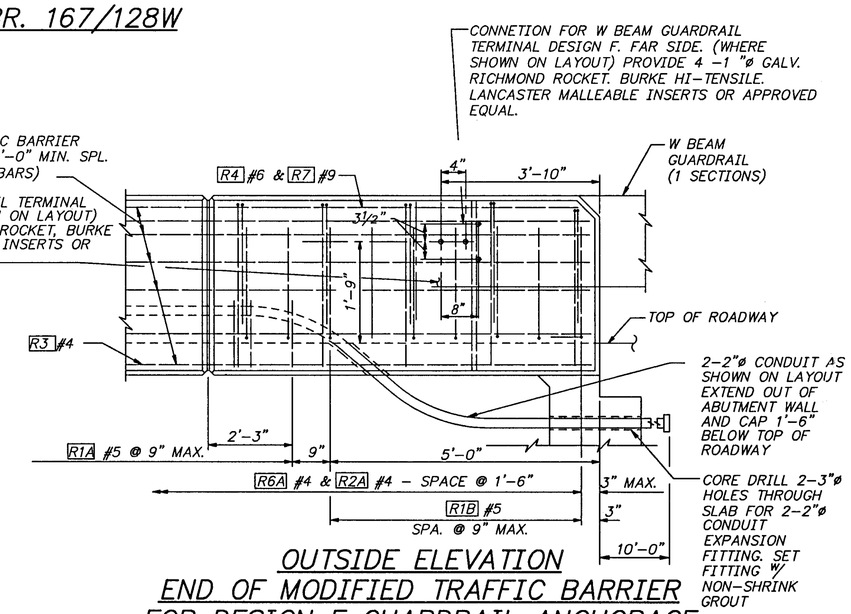

OUTSIDE ELEVATION
END OF MODIFIED TRAFFIC BARRIER FOR DESIGN F GUARDRAIL ANCHORAGE W BEAM CONNECTION

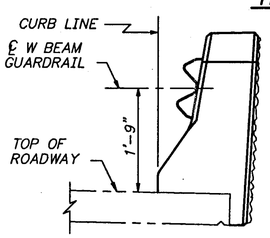

END VIEW
(AT W BEAM SECTION)

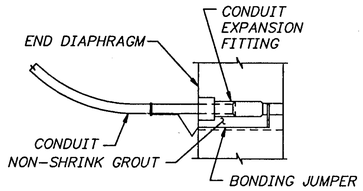

AT PIERS 1 & 4

NOTE: FOR SLIPFORM ALTERNATE, SEE SHEET 15.

FOR "AS CONSTRUCTED PLANS" ONLY

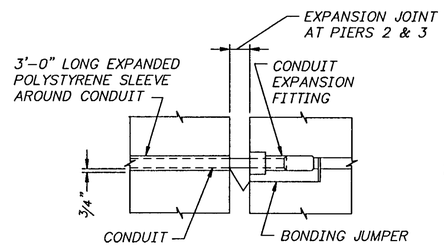

AT PIERS 2 & 3
CONDUIT EXPANSION FITTING – TYPE 2

CONDUIT FITTING – 0-2 TYPE AX OR EQUAL FOR MOVEMENT OF ±2" MAX.

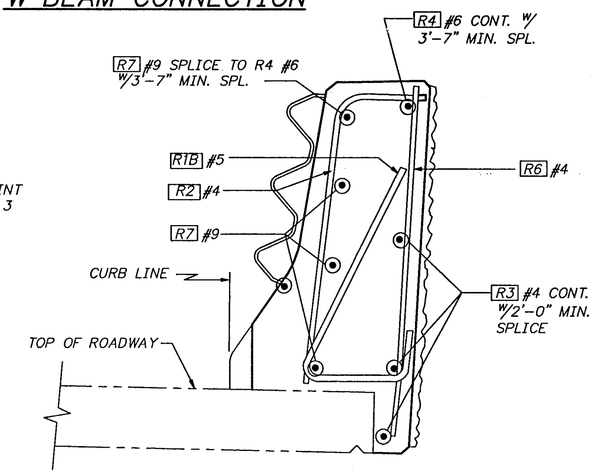

SECTION A

FOR DETAILS NOT SHOWN SEE "OUTSIDE ELEVATION" AND "TYPICAL SECTION – TRAFFIC BARRIER"

* TOE MAY VARY, 2" MIN. TO 6" MAX.

*** INSTALL #12 GALVANIZED IRON PULL WIRE IN ALL ACTIVE CONDUIT RUNS. ALL CONDUIT SHALL BE 2"ø SCHEDULE 40 GALVANIZED PIPE.
INSTALL ALL CONDUIT RUNS TO DRAIN TO A BRIDGE END OR PROVIDE A DRAIN AT ANY LOW POINT IN THE CONDUIT RUN ON THE BRIDGE.

E = EPOXY COATED

TRAFFIC BARRIER BAR LIST

ALL REINFORCING SHALL BE AASHTO M31, GR. 60.

MARK	SIZE	LENGTH	
R1A	5	3'-2"	
R2A	4	3'-0"	
R3	4	(A)	STR.
R4	6	(A)	STR.
R5	4	3'-0"	STR.
R6A	4	3'-1"	STR.
R7	9	12'-6"	
R1B	5	(A)	
R9A	4	5'-11"	
R10	4	4'-0"	

BENDING DIAGRAM (ALL DIMENSIONS ARE OUT TO OUT)

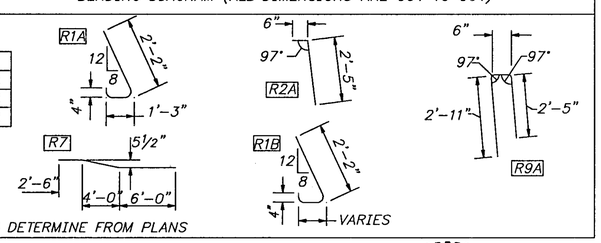

(A) DETERMINE FROM PLANS

Bridge Design Engr.				
Supervisor R. K. MOY 3/94				
Designed By K. L. WILLEY 3/94				
Checked By C. F. WRIGHT 3/94				
Detailed By K. L. WILLEY 3/94				
Bridge Planning Engr.				
Preliminary Plan By				
Architect/Specialist	DATE	REVISION	BY	APP'D

REGION NO.	STATE	FED.AID PROJ. NO.	SHEET NO.	TOTAL SHEETS
10	WASH.			
JOB NUMBER				
4771				

APPROVED

RAYMOND K. MOY, STATE OF WASHINGTON, 18795, REGISTERED PROFESSIONAL ENGINEER
EXPIRES 11/15/95

Washington State Department of Transportation

L & A Lin & Associates, Inc. Consulting Engineers Seattle, Washington

SR 167
15TH N.W. TO 84TH AVE. SO.
HOV SC & DI – STAGE 2
BR. NO. 167/128 OVER 84TH AVE. SO.

OUTSIDE BARRIER DETAILS

BRIDGE SHEET NO. 16

SHEET 641 OF 663 SHEETS

SR167/91

D. S. BROWN		WATSON BOWMAN ACME		ELASTOMER SEALS		STRUCTURAL ACCESSORIES	
SEAL	W (IN)	SEAL	W (IN)	SEAL	W (IN)	SEAL	W (IN)
CV-3500	3½"	WA-350	3½"	X-3500	3½"	SA 350	3½"

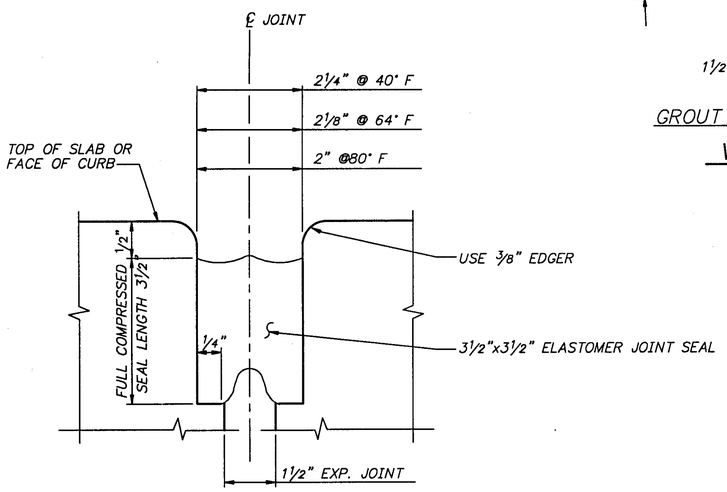

SECTION B

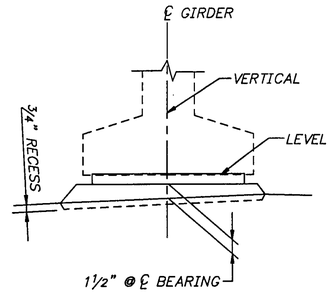

GROUT PAD ELEVATION

VIEW A

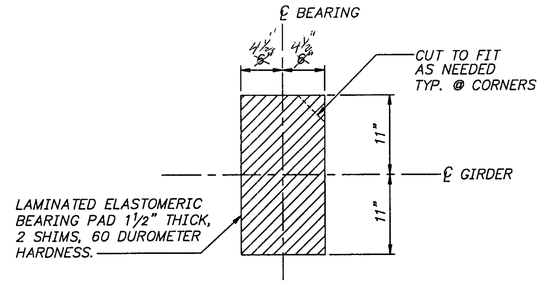

BEARING PAD DETAIL

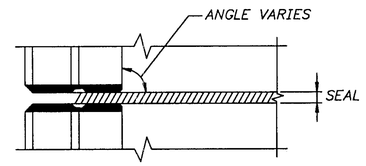

PLAN

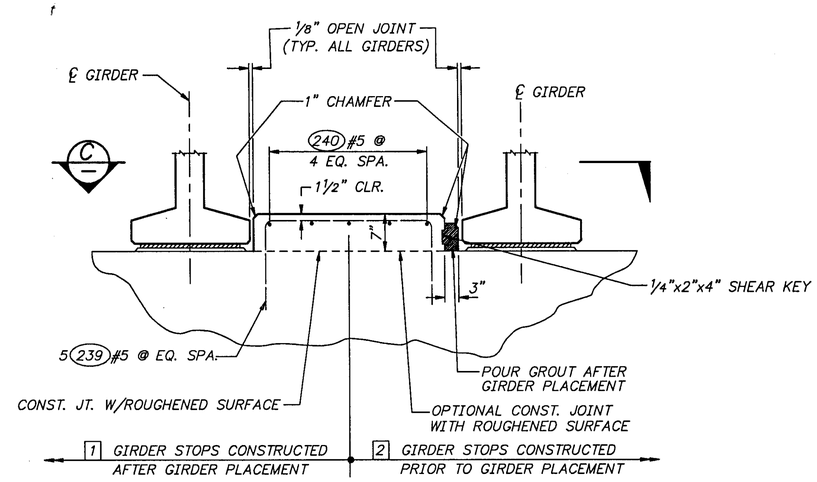

GIRDER STOP DETAIL E / 13

NOTE: GIRDER STOPS MAY BE CONSTRUCTED AFTER GIRDER PLACEMENT 1 OR CONSTRUCTED PRIOR TO GIRDER PLACEMENT 2 THE SAME METHOD SHALL BE USED FOR EACH PIER.

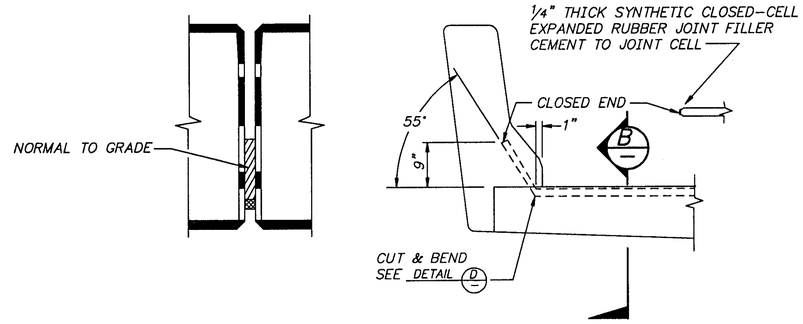

EXPANSION JOINT DETAIL

JOINT AT PIERS 2 AND 3 SHOWN

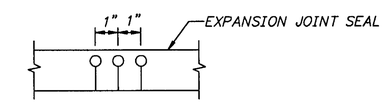

DRILL ½"ø HOLES THROUGH SEAL WITH STANDARD TWIST DRILL MAKING SURE THE TOP MEMBRANE IS NOT DAMAGED. CUT HOLE WITH SHARP LONG BLADE KNIFE.

DETAIL D

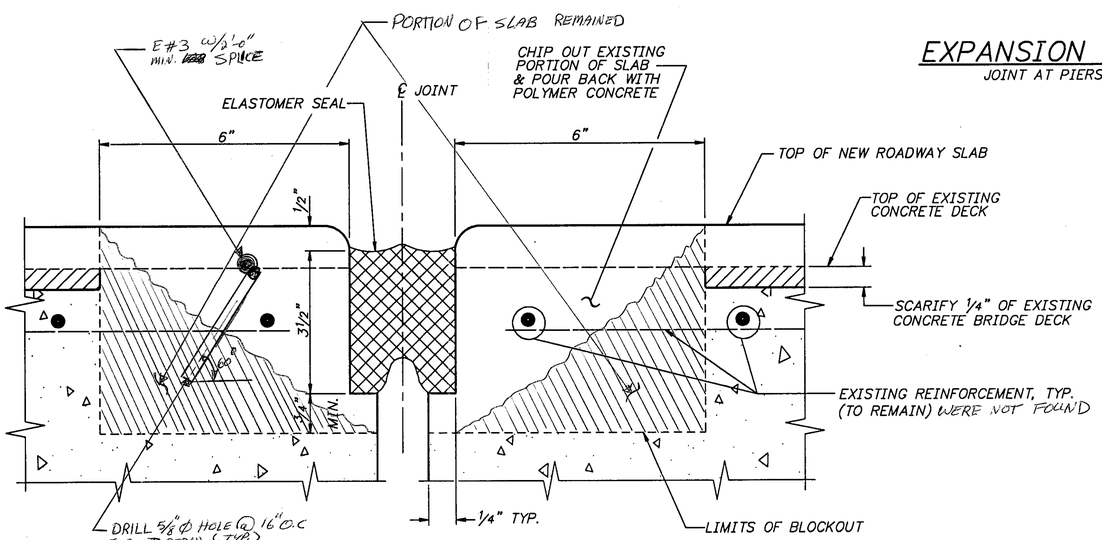

JOINT RECONSTRUCTION DETAIL

EXISTING JOINTS AT PIERS 2 AND 3 FOR BRIDGE 128W ONLY

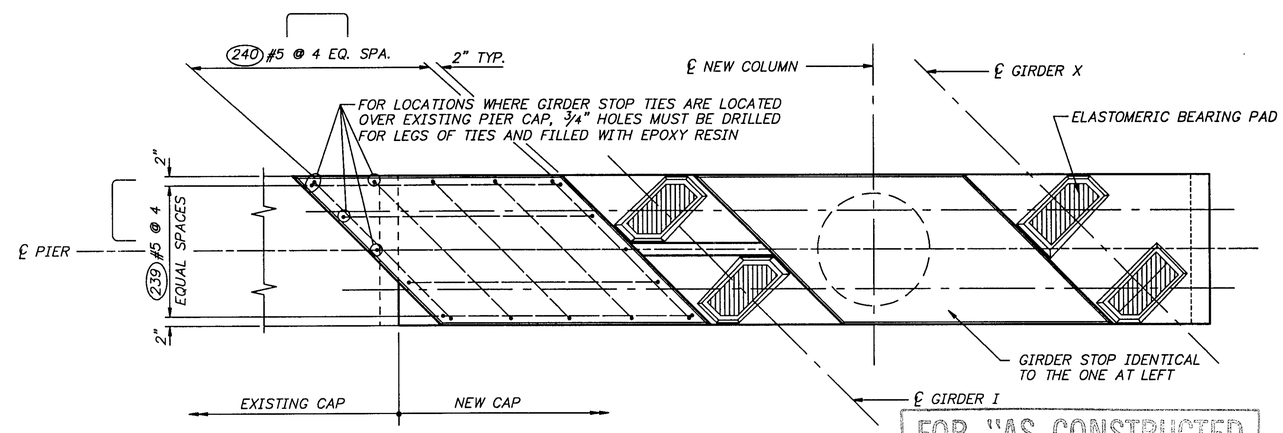

VIEW C

FOR "AS CONSTRUCTED PLANS" ONLY

Bridge Design Engr.						REGION NO.	STATE	FED.AID PROJ. NO.	SHEET NO. / TOTAL SHEETS
Supervisor R. K. MOY 3/94						10	WASH.		
Designed By K. M. WILSON 3/94						JOB NUMBER			
Checked By I. LIOU 3/94						95W036			
Detailed By C. F. WRIGHT 3/94									
Bridge Planning Engr.									
Preliminary Plan By									
Architect/Specialist	DATE	REVISION	BY	APP'D		4771			

APPROVED

RAYMOND K. MOY — STATE OF WASHINGTON — 18795 — REGISTERED PROFESSIONAL ENGINEER — EXPIRES 11/15/95

Washington State Department of Transportation

L & A LIN & ASSOCIATES, INC. Consulting Engineers Seattle, Washington

SR 167
15TH N.W. TO 84TH AVE. SO.
HOV SC & DI - STAGE 2
BR. NO. 167/128 OVER 84TH AVE. SO.

EXPANSION JOINT DETAILS

BRIDGE SHEET NO. 17

SHEET 642 OF 663 SHEETS

SR 167/91

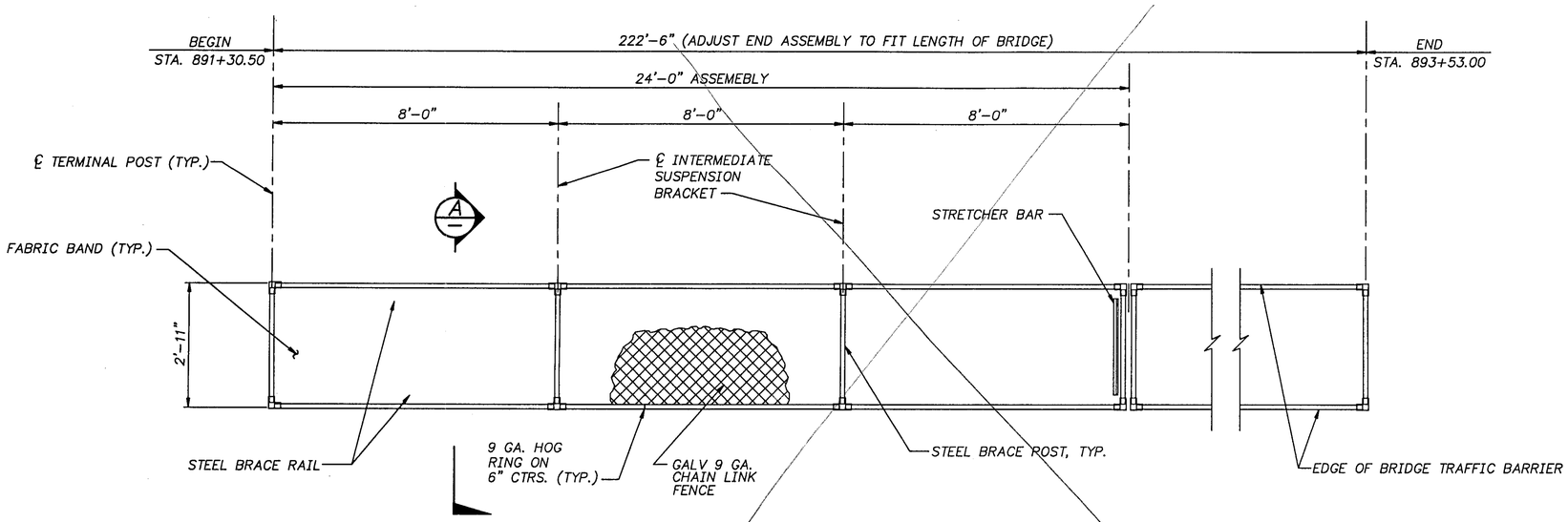

PLAN – PROTECTIVE SCREENING

1. SEE STANDARD PLANS – TYPE 1 FENCE
2. BRACE RAIL CONNECTED TO BRACE POST WITH FITTING

Deleted

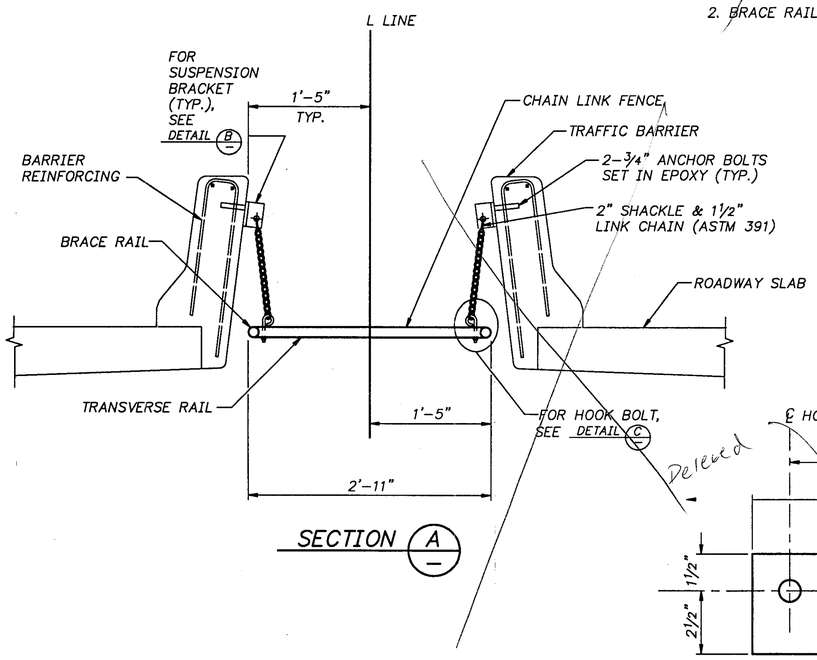

SECTION A

Deleted

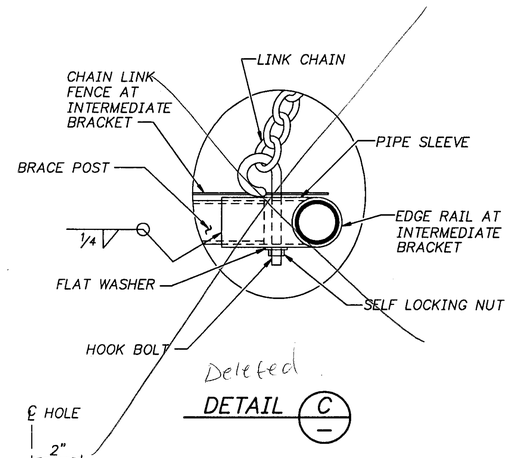

Deleted

DETAIL C

Deleted

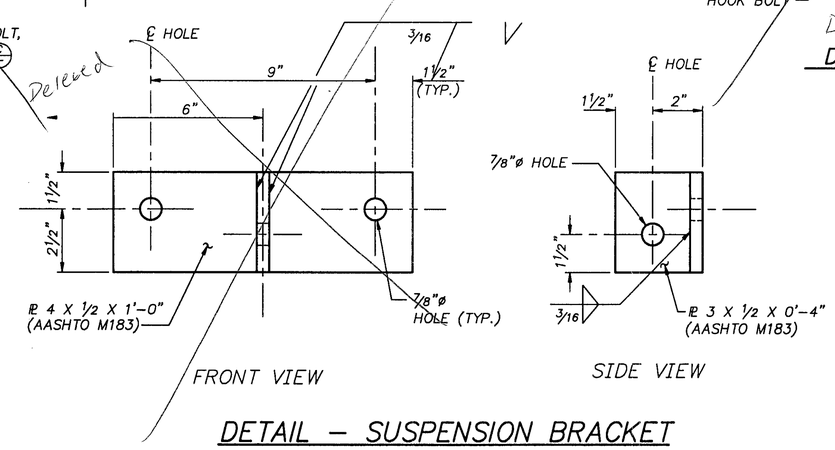

DETAIL – SUSPENSION BRACKET

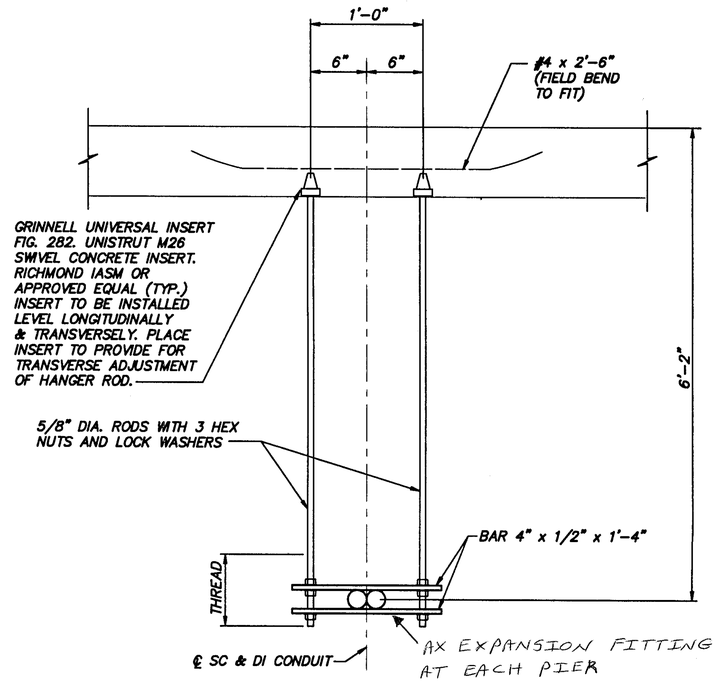

TYPICAL UTILITY HANGER DETAIL

NOTE: SPACE AT 15'-0" MAX.

ALL MATERIAL SHALL BE GALVANIZED AFTER FABRICATION PER AASHTO M 111 OR AASHTO M 232.

FOR "AS CONSTRUCTED PLANS" ONLY

Bridge Design Engr.					
Supervisor R. K. MOY 3/94					
Designed By X 3/94					
Checked By I. LIOU 3/94					
Detailed By P. W. CHU 3/94					
Bridge Planning Engr.					
Preliminary Plan By					
Architect/Specialist	DATE	REVISION	BY	APP'D	

REGION NO.	STATE	FED.AID PROJ. NO.	SHEET NO.	TOTAL SHEETS
10	WASH.			
JOB NUMBER				
4771				

APPROVED

RAYMOND K. MOY — STATE OF WASHINGTON — 16795 — REGISTERED PROFESSIONAL ENGINEER — EXPIRES 11/15/95

Washington State Department of Transportation

L & A — LIN & ASSOCIATES, INC. Consulting Engineers Seattle, Washington

SR 167
15TH N.W. TO 84TH AVE. SO.
HOV SC & DI – STAGE 2
BR. NO. 167/128 OVER 84TH AVE. SO.

SAFETY SCREEN DETAILS

BRIDGE SHEET NO. 18

SHEET 643 OF 663 SHEET

SR 167/91

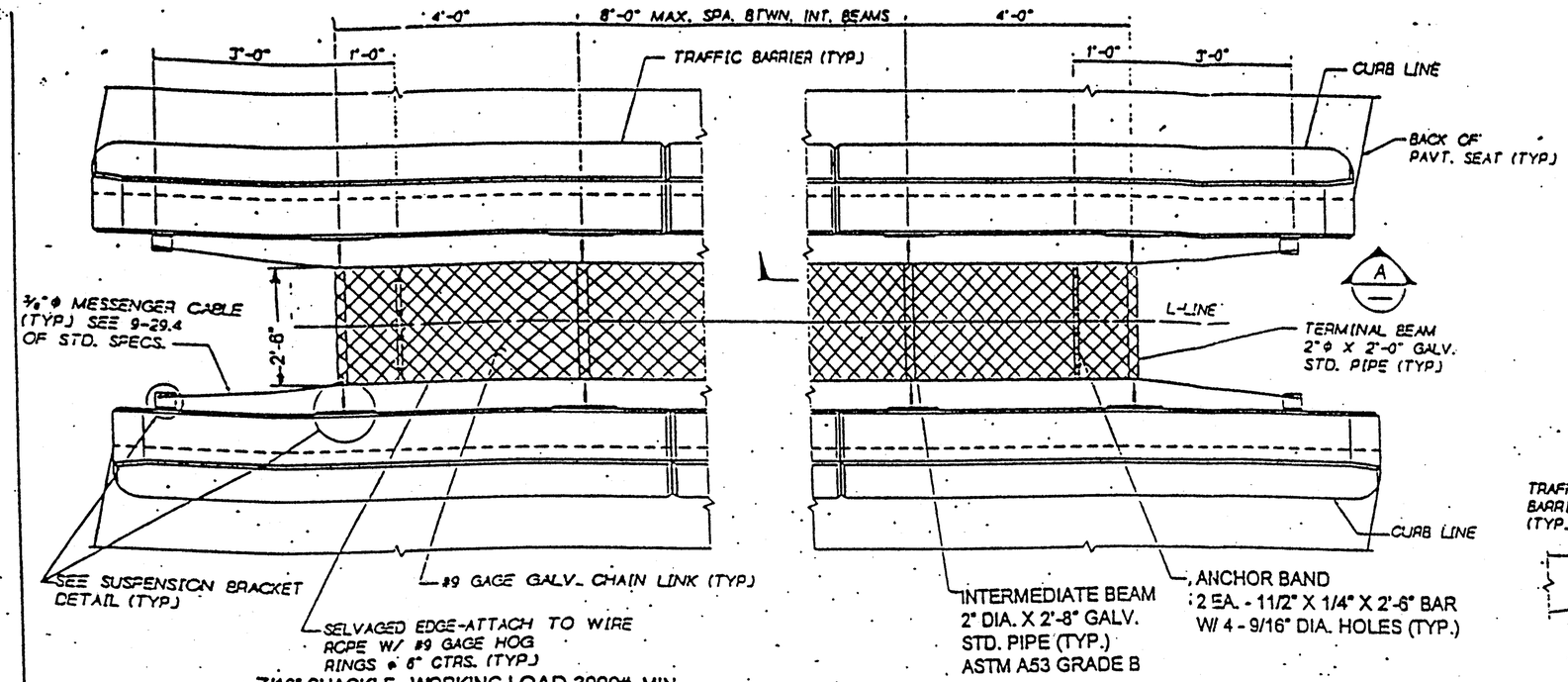

PLAN

NOTES:

1. ALL PARTS SHALL BE GALVANIZED IN ACCORDANCE WITH AASHTO M 111 AFTER FABRICATION.
2. ADJUST 3/8" CABLE TENSION TO PRODUCE 3% VERTICAL SAG BETWEEN INTERMEDIATE BEAMS.

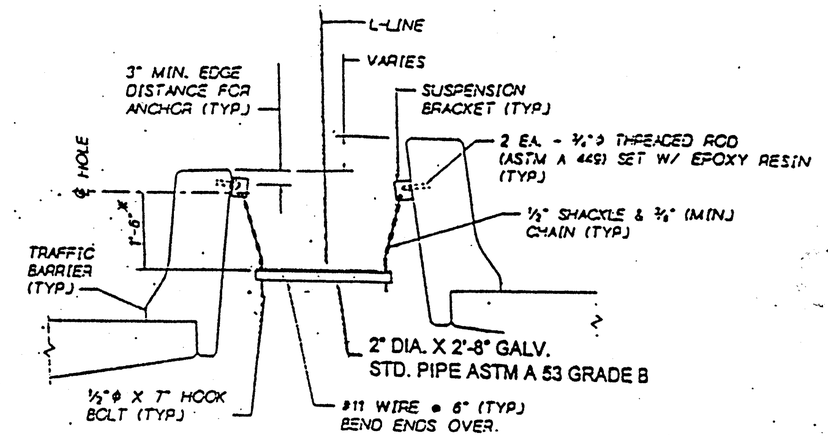

* CHAIN LENGTH MAY VARY TO LEVEL SCREEN

TYPICAL SECTION

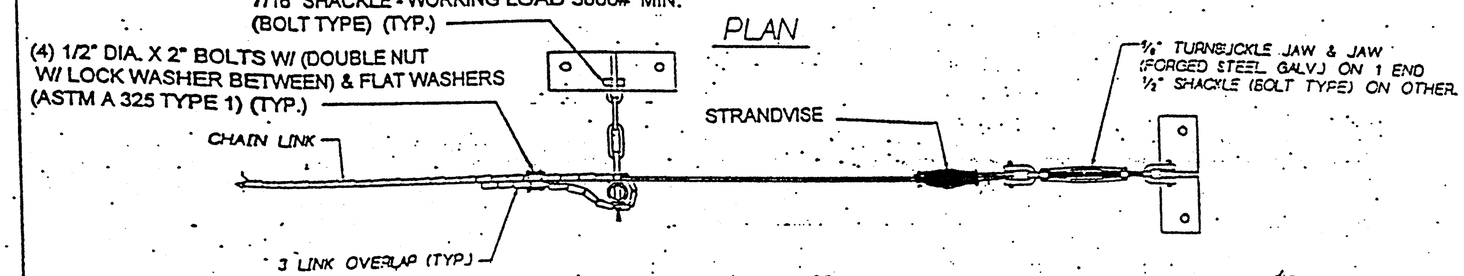

VIEW (A)

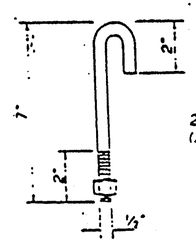

HOOK BOLT

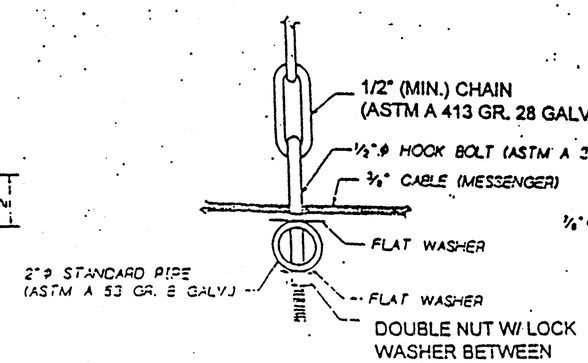

HOOK BOLT DETAIL

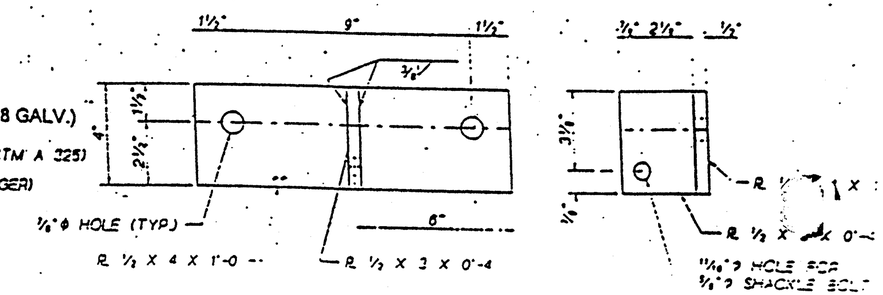

SUSPENSION BRACKET

AASHTO M 183

NOTE:
GAS-CUT OR SAW-CUT ONLY FOR R 1/2 X 3 X 0'-4

CONTRACT 4771
CHANGE ORDER 17
SHEET 7 **OF** 7

FOR "AS CONSTRUCTED PLANS" ONLY

1 ADDED BR. SHT. 18A

Bridge Design Engr	C. C. RUTH										
Supervisor	R. T. SHAEFER										
Designed By											
Checked By											
Detailed By											
Bridge Projects Engr											
Drawn Plan By		1	ADDED BR. SHT. 18A	MAI							
Architect/Specialist		DATE	REVISION	BY	APP'D						

STATE | FED AID PROJ. NO. | TOTAL SHTS.
10 WASH
JOB NUMBER

BRIDGE AND STRUCTURES OFFICE

RICHARD T. SHAEFER — STATE OF WASHINGTON — PROFESSIONAL ENGINEER
SUPERVISING BRIDGE ENGINEER

CHARLES C. RUTH — STATE OF WASHINGTON — PROFESSIONAL ENGINEER
BRIDGE DESIGN ENGINEER

Washington State Department of Transportation

SR 167
15TH NW TO 84TH AVE. SO.
HOV AND SC & DI - STAGE 2

PROTECTIVE SCREEN

Bridge Sheet 18A
Sheet 643A of 663 Sheets

21-MAR-96

SHEET ___ JOB NO. ___ SR ___

S = Bar is included in substructure quantities.
F = Bar to be field welded.
T = Tie or Stirrup.
E = Bar is to be epoxy coated.
V = Bar dimensions vary between dimensions shown on this line and the following line.

NO. MARK	LOCATION	SIZE	NO REQ'D	BEND TYPE	TIE OR STIR.	FLD. WELD	SUBSTR.	EPOXY COAT	VARIES	NO. EACH	U Ft.	U In.	W Ft.	W In.	X Ft.	X In.	Y Ft.	Y In.	Z Ft.	Z In.	θ_1 Deg.	θ_2 Deg.	LENGTH Ft.	LENGTH In.	WT. Lbs.
	PIERS 1 AND 4																								
101	CIP PILES LONG. PIER 4	8	128	54			S				47	6.0											48	8	16618
101	CIP PILES LONG. PIER 1	8	128	54			S				48	3.0											49	5	16874
103	CIP PILES SPIRAL TOP	4	32	67	S		S				0	0.0	3	0.0	0	3.0							7	6	160
103	CIP PILES SPIRAL	4	32	67	S		S				0	0.0	16	0.0	0	9.0							41	7	888
111	FTGS. LONG.	6	56	50			S				21	0.0											21	0	1766
112	FTGS. TOP TRANS.	5	60	50			S				5	6.0											5	6	344
113	FTGS. DOWEL PIER 1. 128E	7	22	68			S				3	9.0	5	0.0									8	5	380
113	FTGS. DOWEL PIER 4. 128E	7	22	68			S				3	9.0	4	3.0									7	8	346
113	FTGS. DOWEL PIER 1. 128W	7	22	68			S				3	9.0	5	2.0									8	7	387
113	FTGS. DOWEL PIER 4. 128W	7	22	68			S				3	9.0	5	6.0									8	11	402
114	FTGS. DOWELS	6	88	68			S				3	9.0	3	8.0									7	2	947
115	ABUT. STIRRUPS PIER 1. 128E	6	22	61	S		S				1	4.0	2	10.0	2	10.0							6	8	221
115	ABUT. STIRRUPS PIER 4. 128E	6	22	61	S		S				1	4.0	2	1.0	2	1.0							5	2	171
115	ABUT. STIRRUPS PIER 1. 128W	6	22	61	S		S				1	4.0	3	0.0	3	0.0							7	0	232
115	ABUT. STIRRUPS PIER 4. 128W	6	22	61	S		S				1	4.0	3	5.0	3	5.0							7	10	260
116	ABUT. LONG.	5	24	50			S				21	2.0											21	2	530
117	ABUT. TOP LONG.	5	12	50			S				21	2.0											21	2	265
118	ABUT. GIRDER STOP LONG.	5	60	61	S						2	1.0	1	0.0	1	0.0							3	11	242
119A	ABUT. GIRDER STOP LONG.	5	12	61				V			4	7.0	1	0.0	1	0.0							6	4	
											6	0.0	1	0.0	1	0.0							7	9	88
119B	ABUT. GIRDER STOP LONG.	5	12	61							6	0.0	1	0.0	1	0.0							8	7	107
120	ABUT. DOWELS TO EXISTING	6	36	50			S				1	6.0											1	6	81
201	DRILLED SHAFT LONGIT.	9	136	50			S				60	0.0											60	0	27744
203	DRILLED SHAFT SPIRAL @ TOP	5	4	67	S		S				3	6.0	37	0.0	0	4.0							401	0	1673
203	DRILLED SHAFT SPIRAL BELOW	5	4	67	S		S				3	6.0	47	0.0	1	0.0							511	3	2133
230	COLUMN LONGIT.	10	88	50			S				23	0.6											23	1	8728
231	COLUMN SPIRAL @ ENDS	4	8	67	S		S				2	9.0	18	0.0	0	4.0							153	3	819
231	COLUMN SPIRAL IN MIDDLE	4	4	67	S		S				2	9.0	11	0.0	0	8.0							93	11	251
232	CAP BOTTOM	11	32	50			S				21	0.5											21	1	3577
233	CAP SIDES	6	16	50			S				21	0.5											21	1	506
234	CAP ENDS	5	16	61	T		S				3	0.9	2	0.6	2	0.6							7	0	116
235	CAP DOWEL	9	72	50			S				3	0.2											3	0	738
236	CAP TOP	11	44	80			S				21	0.5	2	1.0			0	7.1			82		22	8	5301
237	CAP STIRRUPS 128W	5	104	83	S		S				3	0.9	3	0.0									12	9	1383
237	CAP STIRRUPS 128E	5	104	83	S		S				3	0.9	2	1.1									10	11	1186
238	STUB WALL	4	4	61			S				3	0.4	1	0.3	1	0.3							4	11	13
239	GIRDER STOP TRANSV.	5	40	61			S				7	0.0	1	0.6	1	0.6							8	10	369
240	GIRDER STOP LONGIT.	5	40	61			S				5	0.3	1	0.6	1	0.6							6	11	287
	DIAPHRAGM REINFORCING																								
D10	LONG. BAR END ABUT.	6	16	50							24	3.0											24	3	583
D11	LONG. BAR END ABUT.	4	48	50							24	3.0											24	3	778
D12	VERT. TIE END ABUT.	4	80	54	T						5	4.0											5	8	301
D13	VERT. TIE END ABUT.	4	80	68	T						1	2.0	4	6.0									5	6	295
D14	VERT. TIE END ABUT.	4	80	68	T						0	6.0	6	1.0									6	5	344
D15	HORZ. TIE END ABUT.	4	80	56	T						1	3.0											1	10	98
D16	LONG. INTER. DIAPH.	9	8	50							21	3.0											21	3	578
D17	LONG. INTER. DIAPH. BETW.	4	32	50							10	0.0											10	0	214
D18	LONG. INTER. DIAPH.	8	8	50							21	3.0											21	3	454
D19	LONG. INTER. DIAPH.	7	32	50							21	9.0											21	9	1423
D20	STIRRUPS INTER. DIAPH.	4	208	71	S						0	5.0	3	5.0	3	5.0							7	0	973
D21	LONG. BAR IN END PIER DIA.	7	32	50							10	0.0											10	0	654
D22	LONG. BAR IN END PIER DIA.	7	8	50							20	6.0											20	6	335
D23	STIRRUPS INTER. DIAPH. BETW.	4	208	71	S						0	9.0	5	3.0	5	3.0							10	10	1509
D24	LONG. END PIER DIAPH.	4	32	50							10	0.0											10	0	214
D25	LONG TOP INTER. PIER	6	56	50							24	4.0											24	4	2047
D26	SHORT STIR. UNDER FLANGE	4	64	71	S						0	9.0	3	6.0	3	6.0							7	4	315
D27	DOWEL BAR END PIER DIA.	4	16	50							2	7.0											2	7	28
D28	DOWEL BAR END PIER DIA.	7	24	50							2	11.0											2	11	143
D29	DOWEL BAR INTER. DIAPH.	8	16	50							3	7.0											3	7	153
D30	DOWEL BAR END ABUT.	4	36	50							2	7.0											2	7	62

S = Bar is included in substructure quantities.
F = Bar to be field welded.
T = Tie or Stirrup.
E = Bar is to be epoxy coated.
V = Bar dimensions vary between dimensions shown on this line and the following line.

NO. MARK	LOCATION	SIZE	NO REQ'D	BEND TYPE	TIE OR STIR.	FLD. WELD	SUBSTR.	EPOXY COAT	VARIES	NO. EACH	U Ft.	U In.	W Ft.	W In.	X Ft.	X In.	Y Ft.	Y In.	Z Ft.	Z In.	θ_1 Deg.	θ_2 Deg.	LENGTH Ft.	LENGTH In.	WT. Lbs.
	SLAB REINFORCEMENT																								
S1	BARRIER SLAB CONNECT. BARS	5	612	80				E			1	2.5	0	6.5	0	5.0	0	2.5	0	2.5	125	235	2	1	1330
S2	BARRIER SLAB CONNECT. BARS	4	306	68							1	7.0	1	3.0									2	8	544
S3	DOWEL BARS AT OUTSIDE BARR.	4	188	50							1	0.0											1	0	126
S4	DOWEL BARS AT OUTSIDE BARR.	6	460	80				E			2	0.0	0	1.0			0	3.0			125		2	0	1405
S11	TOP SLAB TRANS. @ JOINT	6	324	51				E	V		17	2.0											17	10	
											2	7.0											3	3	5140
S12	BOT. SLAB TRANS. @ JOINT	6	324	50					V		17	0.0											17	0	
											2	7.0											2	7	4765
S13	TOP SLAB TRANS.	6	656	51				E			17	2.0											17	10	17592
S14	BOT. SLAB TRANS.	6	656	50							17	0.0											17	0	16750
S29	LONG. TOP BAR SPAN 1.	5	76	50				E			35	6.0											35	6	2814
S30	LONG. BOT. BAR SPAN 1.	5	92	50							35	6.0											35	6	3406
S31	LONG. TOP BAR SPAN 2.	5	114	50				E			33	0.0											33	0	3924
S32	LONG. BOT. BAR SPAN 2.	5	138	50							33	0.0											33	0	4750
S33	LONG. TOP BAR SPAN 3.	5	76	50				E			33	6.0											33	6	2655
S34	LONG. BOT. BAR SPAN 3.	5	92	50							33	6.0											33	6	3215
S35	SPLAYED COURNER BAR TOP	5	60	50				E			3	6.0											3	6	219
S36	SPLAYED COURNER BAR BOT.	5	60	50							3	6.0											3	6	219
S81	RESTRAINER BLOCK LONGIT.	5	64	50							3	6.0											3	6	237
S82	RESTRAINER BLOCK STIRRUPS	4	80	63	S						1	0.0	1	6.0	1	6.0	0	6.0	0	6.0			4	2	225

STEEL REINFORCING BAR QUANTITIES NOT INCLUDED IN THIS BAR LIST

TRAFFIC BARRIER	
BRIDGE GRATE INLETS	
RETAINING WALL	12220

BENDING DIAGRAMS

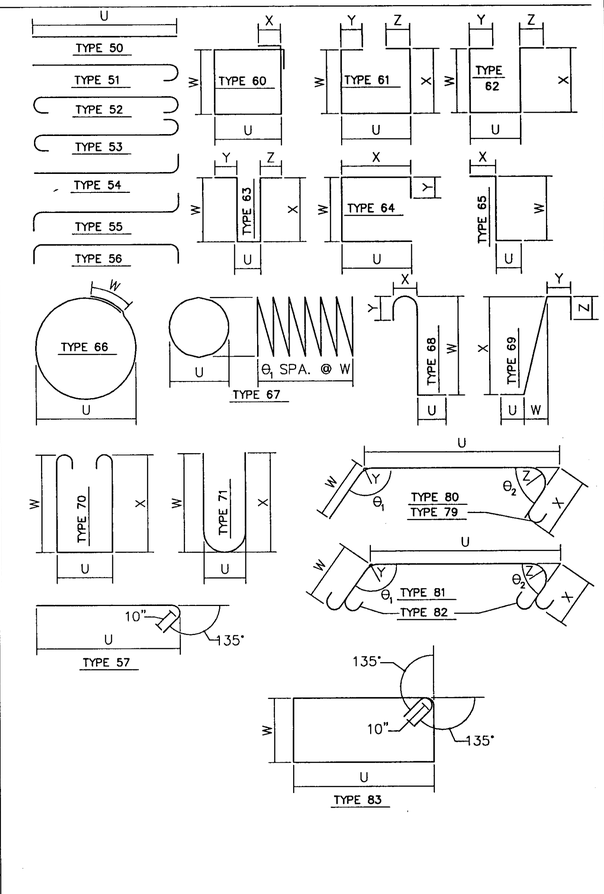

FOR "AS CONSTRUCTED PLANS" ONLY

NOTE:

1. ALL REINFORCING BARS ON THIS SHEET SHALL BE ASSHTO M-31 UNLESS SHOWN OTHERWISE.
2. REINFORCING FOR TRAFFIC BARRIERS NOT SHOWN IN THIS BAR LIST. SEE TRAFFIC BARRIER SHEET.
3. BEND FOR TRANSVERSE BARS DUE TO ROADWAY CROWN CONDITIONS HAVE NOT BEEN SHOWN. THESE BARS SHALL BE BENT AS REQUIRED TO CONFORM TO THE CONFIGURATION OF THE STRUCTURE.
4. NUMBER AND LENGTH OF BARS TO BE DETERMINED BY THE CONTRACTOR . FROM PLANS.

Bridge Design Engr.		
Supervisor R. K. MOY 3/94		
Designed By C. F. WRIGHT 3/94		
Checked By K. M. WILSON 3/94		
Detailed By K. L. WILLEY 3/94		
Bridge Planning Engr.		
Preliminary Plan By		
Architect/Specialist	DATE	REVISION BY APP'D

REGION NO.	STATE	FED.AID PROJ. NO.	SHEET NO.	TOTAL SHEETS
10	WASH.			
JOB NUMBER 95W036				
4771				

APPROVED

RAYMOND K. MOY, STATE OF WASHINGTON, 18795, REGISTERED PROFESSIONAL ENGINEER
EXPIRES 11/15/96

Washington State Department of Transportation

L & A LIN & ASSOCIATES, INC. Consulting Engineers Seattle, Washington

SR 167
15TH N.W. TO 84TH AVE. SO.
HOV SC & DI – STAGE 2
BR. NO. 167/128 OVER 84TH AVE. SO.

BAR LIST

BRIDGE SHEET NO. 19

SHEET 644 OF 663 SHEETS

SR 167/91

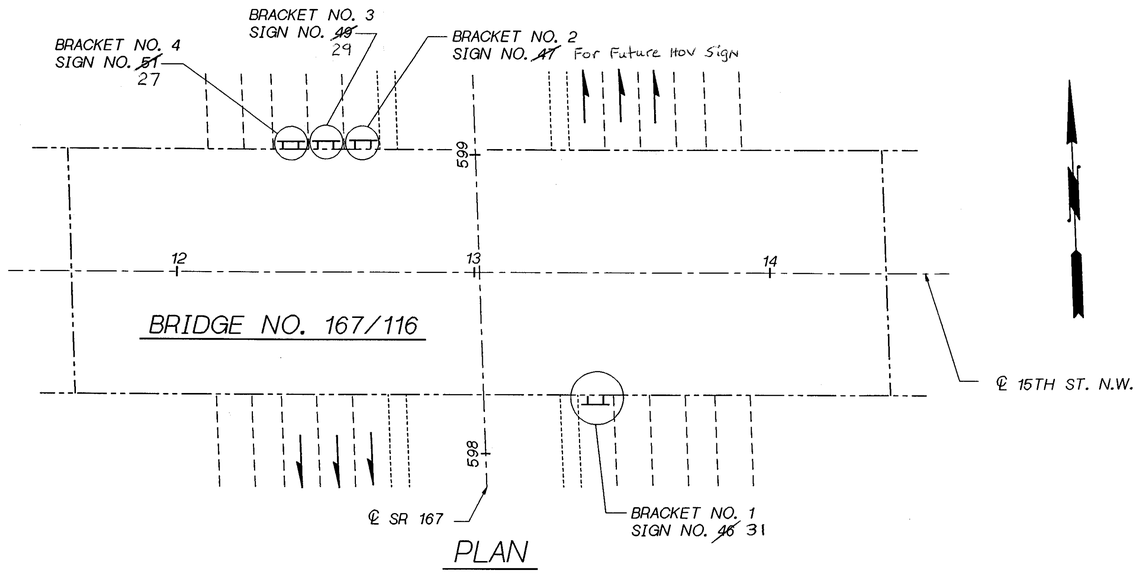

PLAN

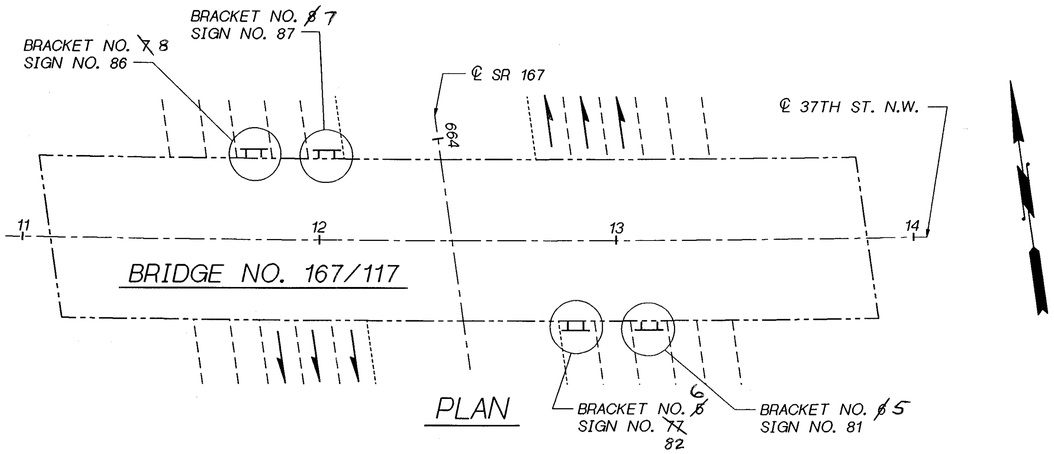

PLAN

GENERAL NOTES

1. ALL MATERIAL AND WORK SHALL BE DONE IN ACCORDANCE WITH THE REQUIREMENTS OF THE STATE OF WASHINGTON, DEPARTMENT OF TRANSPORTATION, STANDARD SPECIFICATIONS FOR ROAD, BRIDGE AND MUNICPAL CONSTRUCTION DATED 1994 AND AMENDMENTS.
2. MATERIALS SPECIFICATIONS:

PLATES & BARS	AASHTO M 183
PIPES	ASTM A 53 ~ GRADE B OR ASTM A 500 GRADE B
BOLTS, NUTS & WASHERS UNLESS OTHERWISE NOTED	ASTM A 307

3. ALL PARTS SHALL BE GALVANIZED IN ACCORDANCE WITH AASHTO M 111 AFTER FABRICATION. BOLTS AND HARDWARE SHALL BE GALVANIZED IN ACCORDANCE WITH AASHTO M 232.
4. ALL U-BOLTS SHALL BE FABRICATED HOT BEFORE GALVANIZING.
5. ¼" FILLET WELDS MINIMUM EXCEPT WHERE NOTED ON PLANS.
6. D AND G DIMENSIONS ARE BASED ON AS-BUILTS PLANS. AND SHALL BE FIELD MEASURED PRIOR TO FABRICATION OF BRACKET ARMS.

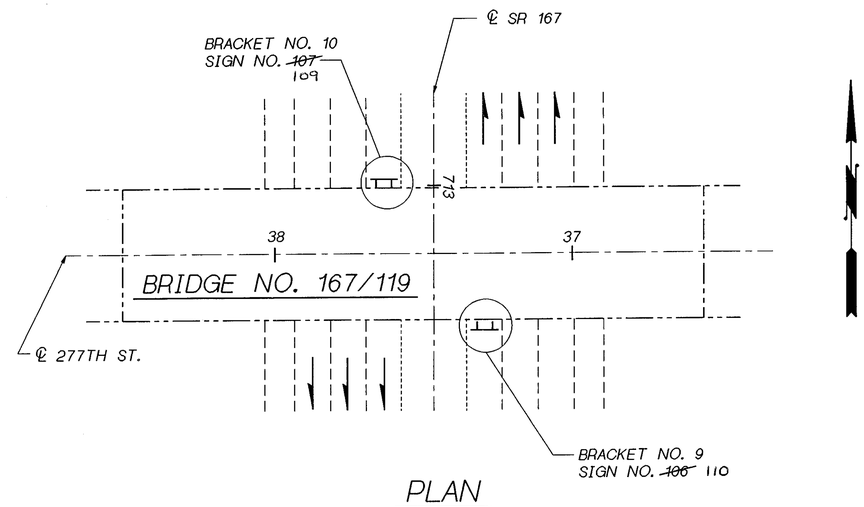

PLAN

LEGEND

B/15 — IDENTIFIES SECTION, VIEW OR DETAIL
TAKEN OR SHOWN ON BRIDGE SHEET 15

B/— TAKEN OR SHOWN ON THE SAME SHEET

FOR "AS CONSTRUCTED PLANS" ONLY

SR 167 JOB NO. ____ SHEET 1

Bridge Design Engr. C. C. RUTH					REGION NO.	STATE	FED. AID PROJ. NO.	SHEET NO.	TOTAL SHEETS	BRIDGE AND STRUCTURES OFFICE
Supervisor R. T. SHAEFER					10	WASH.				
Designed By G. A. T. WALDRON 4/94					JOB NUMBER 95W036					
Checked By P. M. NASH 4/94										
Detailed By G. A. T. WALDRON 4/94										
Bridge Projects Engr.										
Prelim. Plan By										
Architect/Specialist	DATE	REVISION	BY	APP'D	4771					

RAYMOND T. SHAEFER — STATE OF WASHINGTON — 14278 — REGISTERED PROFESSIONAL ENGINEER — EXPIRES 6/23/96 — SUPERVISING BRIDGE ENGINEER

CHARLES C. RUTH — STATE OF WASHINGTON — 19825 — REGISTERED PROFESSIONAL ENGINEER — EXPIRES 6/3/96 — BRIDGE DESIGN ENGINEER — 9-15-95

SMALL_JOBROOT:[000000.FGB]L1511_LOC_PLAN.FGB;1 15-SEP-95

Washington State Department of Transportation

SR 167
15TH ST. N.W. TO 84TH AVE. SO.
HOV AND SC&DI ~ STAGE 2

SIGN BRACKET LOCATION PLAN

BRIDGE SHEET NO. 1

SHEET 645 OF 663 SHEETS

SR 167/91

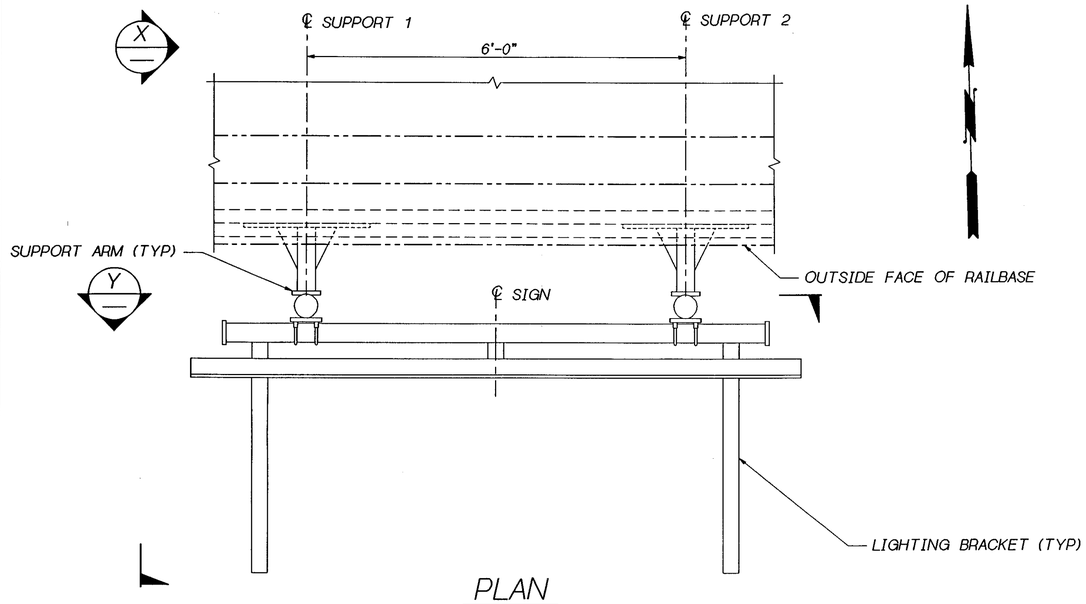

PLAN

BR. NO. 167/116

TABLE OF DIMENSIONS

BRACKET NO.	LOCATION (STA. AT ℄ SIGN)	SIGN SKEW	SIGN LENGTH	SIGN HEIGHT
#1	SR 167 598+15 (37' RT.)	0°	10'-0"	7'-0"

PIPE SIZE	TOP ARM LENGTHS		BOT. ARM LENGTHS	
	A1	A2	B1	B2
3"ϕ	1'-0"	1'-0"	3'-0"	3'-0"

CANTILEVER LENGTHS				C	D	G
E1	F1	E2	F2			
1'-3¼"	8½"	1'-3¼"	8½"	6'-0"	9'-1⅜"	2'-9½"

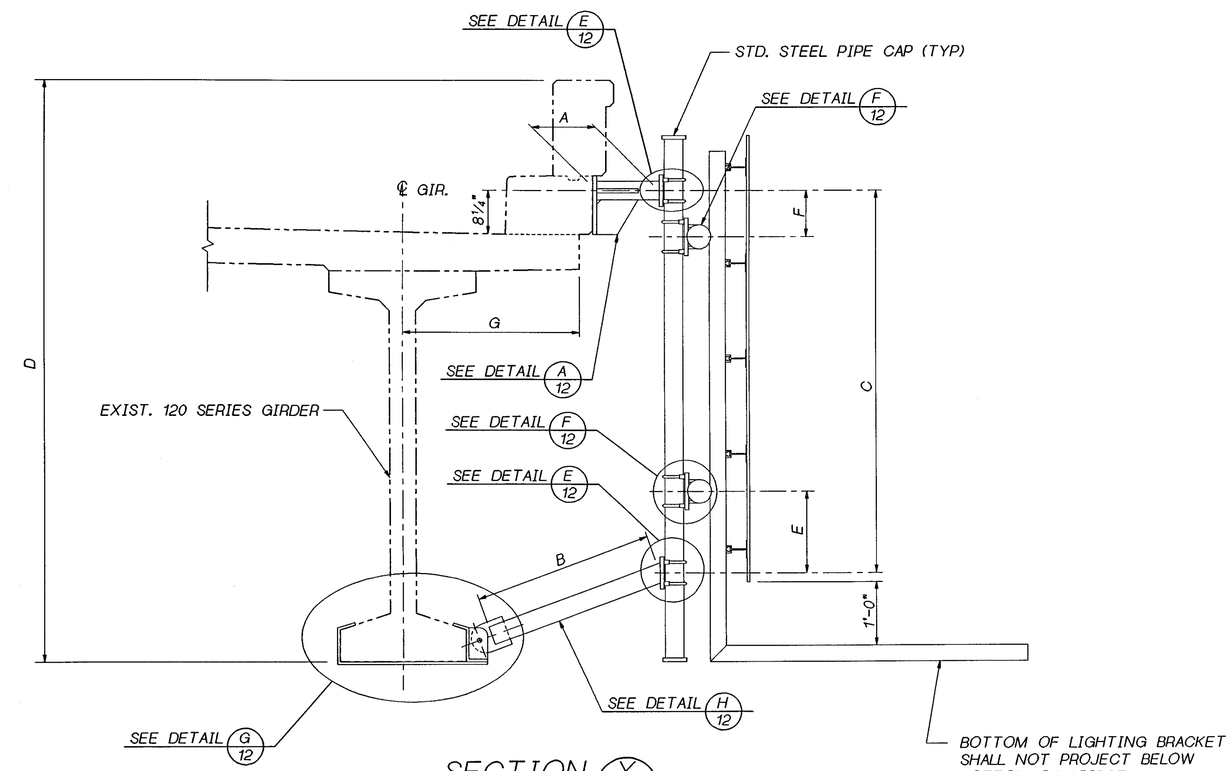

SECTION X

(SUPPORT 1 SHOWN ~ SUPPORT 2 SIMILIAR)

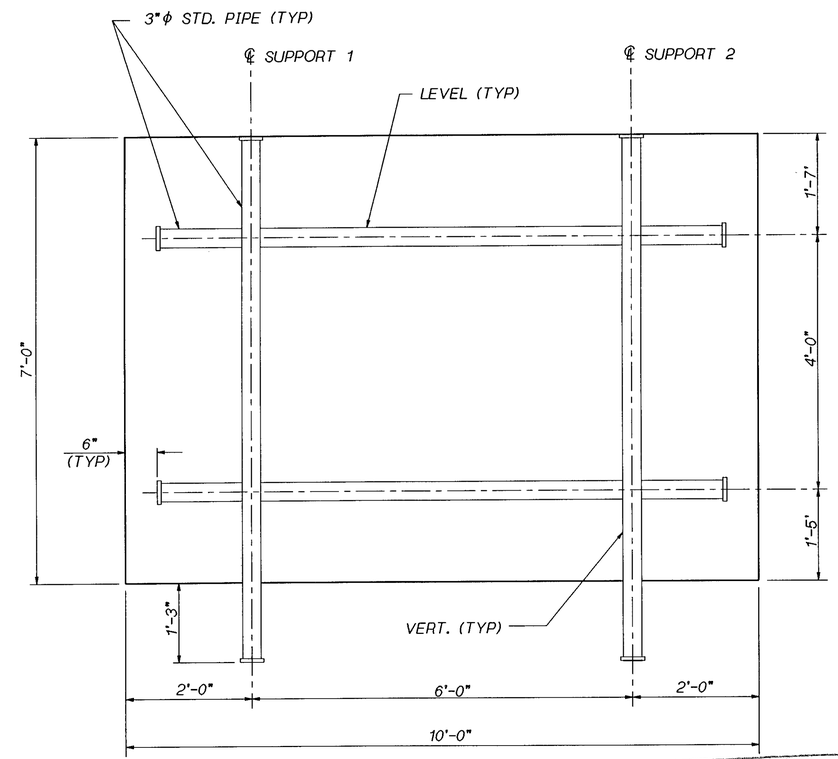

VIEW Y

FOR "AS CONSTRUCTED PLANS" ONLY

Bridge Design Engr. C. C. RUTH						REGION NO.	STATE	FED. AID PROJ. NO.	SHEET NO. / TOTAL SHEETS
Supervisor R. T. SHAEFER						10	WASH.		
Designed By P. M. NASH 4/94						JOB NUMBER 95W036			
Checked By G. A. T. WALDRON 4/94									
Detailed By G. A. T. WALDRON 4/94									
Bridge Projects Engr.									
Prelim. Plan By						4771			
Architect/Specialist	DATE	REVISION	BY	APP'D					

BRIDGE AND STRUCTURES OFFICE

RAYMOND T. SHAEFER — STATE OF WASHINGTON — 14378 — REGISTERED PROFESSIONAL ENGINEER — EXPIRES 4/23/96 — 9-21-95 — SUPERVISING BRIDGE ENGINEER

CHARLES C. RUTH — STATE OF WASHINGTON — 12902 — REGISTERED PROFESSIONAL ENGINEER — EXPIRES 5/3/96 — 9-21-95 — BRIDGE DESIGN ENGINEER

SMALL_JOBROOT:L000000.FGB1L1511_15TH_ST_6_LAYOUT.FGB20-SEP-95

Washington State Department of Transportation

SR 167
15TH ST. N.W. TO 84TH AVE. SO.
HOV AND SC&DI ~ STAGE 2

BRIDGE MOUNTED SIGN
BRACKET NO. 1 ~ LAYOUT

BRIDGE SHEET NO. 2

SHEET 646 OF 663 SHEETS

SR 167 JOB NO. ____ SHEET 2

SR 167/91

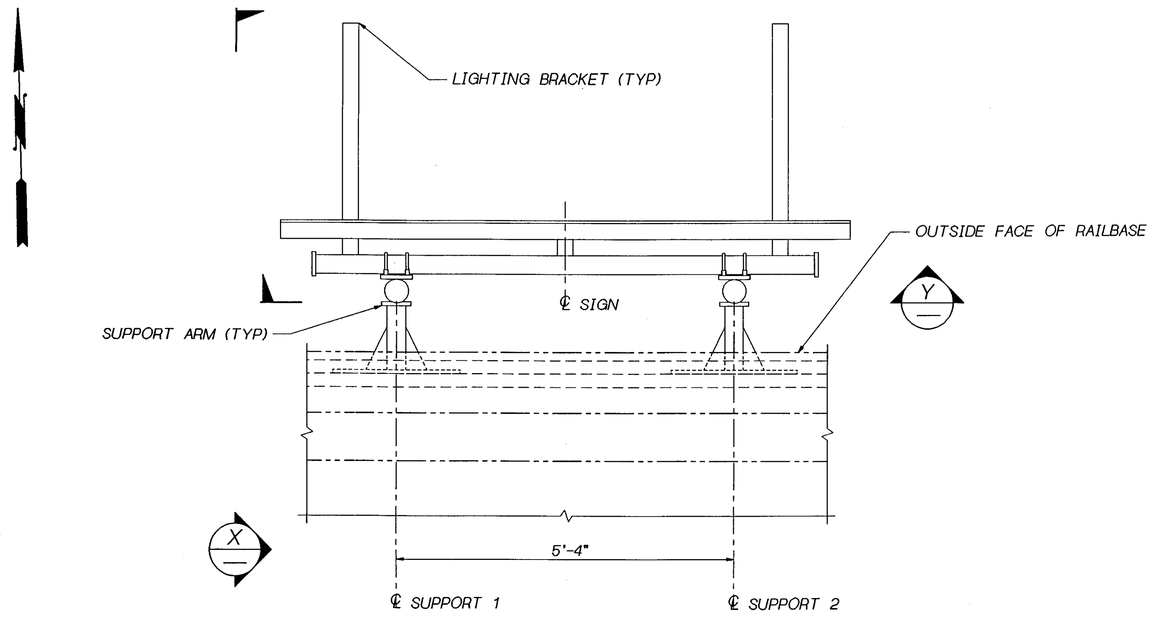

PLAN

BR. NO. 167/116

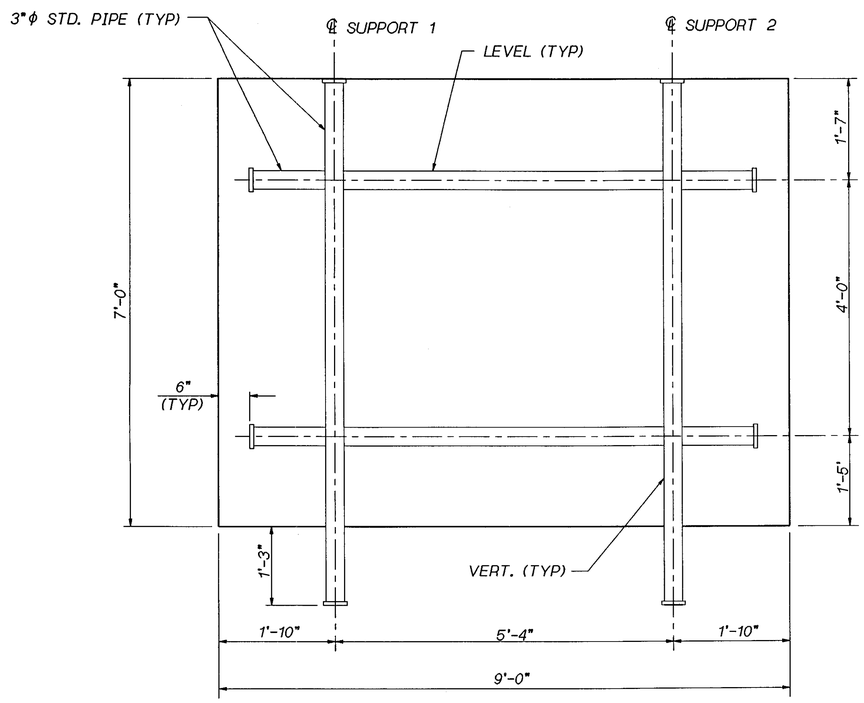

VIEW Y

TABLE OF DIMENSIONS

BRACKET NO.	LOCATION (STA. AT ℄ SIGN)	SIGN SKEW	SIGN LENGTH	SIGN HEIGHT
#2	SR 167 599+04 (37' ~~RT.~~) Lt.	0°	9'-0"	7'-0"

PIPE SIZE	TOP ARM LENGTHS		BOT. ARM LENGTHS	
	A1	A2	B1	B2
3"ϕ	1'-0"	1'-0"	3'-0"	3'-0"

CANTILEVER LENGTHS				C	D	G
E1	F1	E2	F2			
1'-3¼"	8½"	1'-3¼"	8½"	6'-0"	9'-1⅜"	2'-9½"

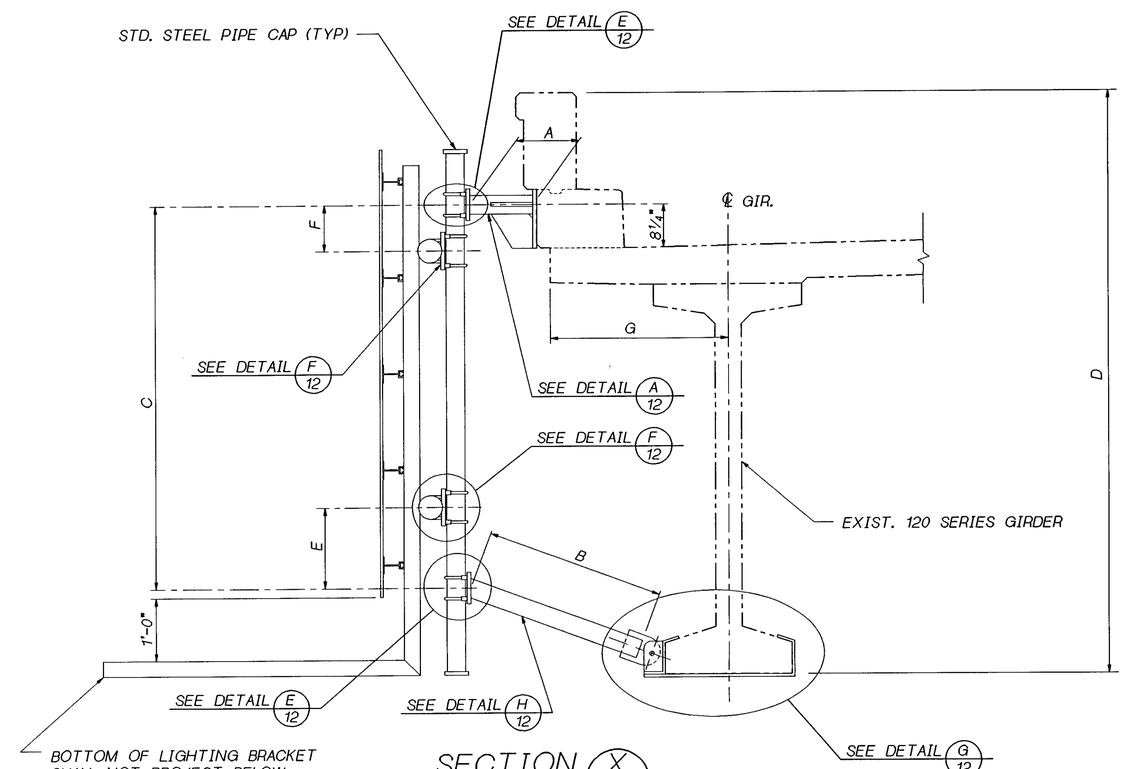

SECTION X

(SUPPORT 1 SHOWN ~ SUPPORT 2 SIMILIAR)

FOR "AS CONSTRUCTED PLANS" ONLY

Bridge Design Engr. C. C. RUTH					REGION NO.	STATE	FED. AID PROJ. NO.	SHEET NO.	TOTAL SHEETS
Supervisor R. T. SHAEFER					10	WASH.			
Designed By P. M. NASH	4/94								
Checked By G. A. T. WALDRON	4/94				JOB NUMBER 95W036				
Detailed By G. A. T. WALDRON	4/94								
Bridge Projects Engr.									
Prelim. Plan By					4771				
Architect/Specialist	DATE	REVISION	BY	APP'D					

BRIDGE AND STRUCTURES OFFICE

RAYMOND T. SHAEFER — STATE OF WASHINGTON — 14378 — REGISTERED PROFESSIONAL ENGINEER — EXPIRES 4/23/96 — SUPERVISING BRIDGE ENGINEER

9-15-95 BRIDGE DESIGN ENGINEER — CHARLES C. RUTH — STATE OF WASHINGTON — 13962 — REGISTERED PROFESSIONAL ENGINEER — EXPIRES 5/3/96

SMALL_JOBROOT:\000000.FGB1\L1511_15TH_ST_7_LAYOUT.FGB151-SEP-95

Washington State Department of Transportation

SR 167
15TH ST. N.W. TO 84TH AVE. SO.
HOV AND SC&DI ~ STAGE 2

BRIDGE MOUNTED SIGN
BRACKET NO. 2 ~ LAYOUT

BRIDGE SHEET NO. 3

SHEET 647 OF 663 SHEETS

SR 167 JOB NO. ____ SHEET 3

SR167/91

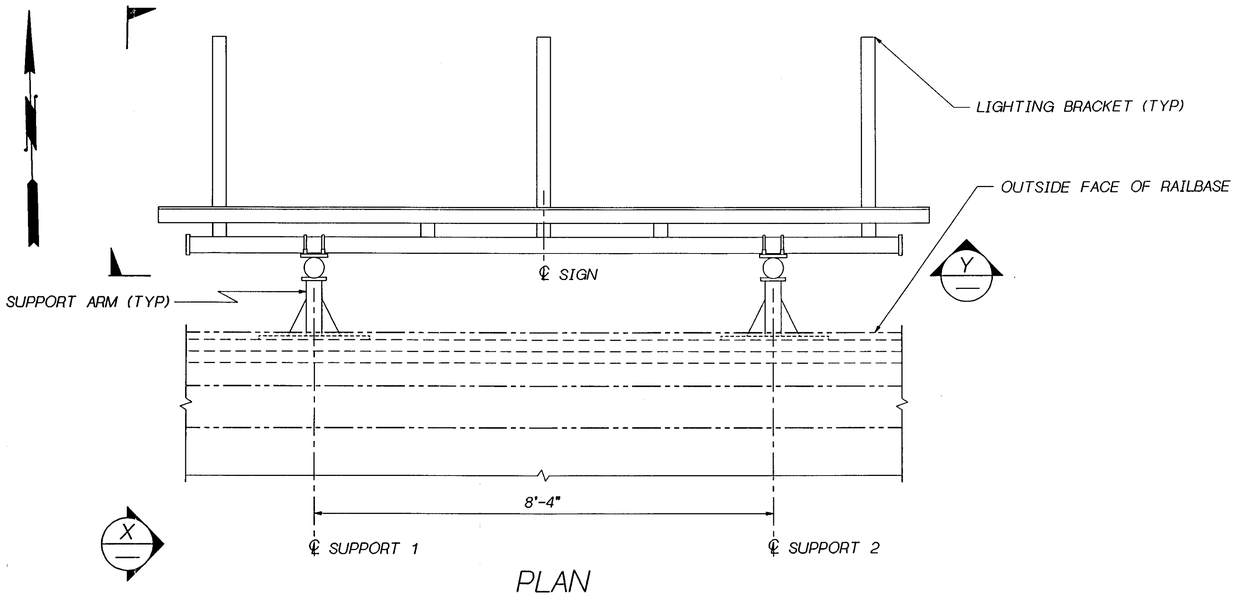

PLAN

BR. NO. 167/116

TABLE OF DIMENSIONS

BRACKET NO.	LOCATION (STA. AT ℄ SIGN)	SIGN SKEW	SIGN LENGTH	SIGN HEIGHT
#3	SR 167 599+05 (41' LT.)	0°	14'-0"	10'-0"

PIPE SIZE	TOP ARM LENGTHS		BOT. ARM LENGTHS	
	A1	A2	B1	B2
4"ϕ	1'-0"	1'-0"	3'-0¼"	3'-0¼"

CANTILEVER LENGTHS				C	D	G
E1	F1	E2	F2			
1'-10¾"	10¾"	1'-10¾"	10¾"	7'-0"	9'-1⅜"	2'-9½"

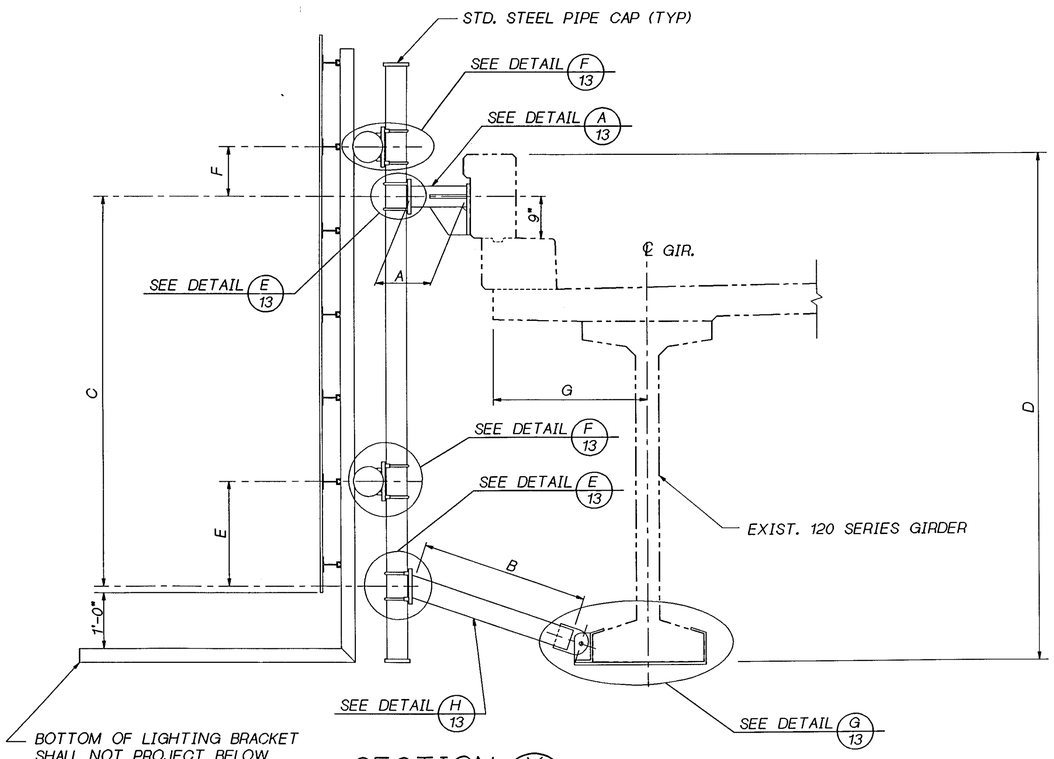

SECTION X

(SUPPORT 1 SHOWN ~ SUPPORT 2 SIMILIAR)

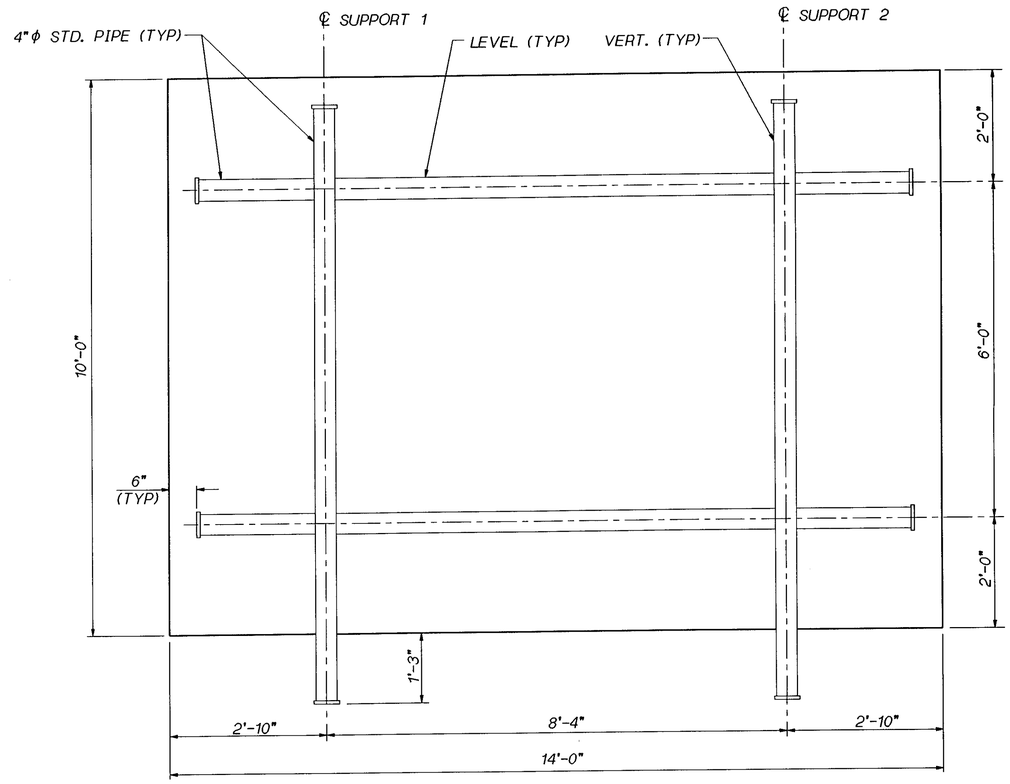

VIEW Y

FOR "AS CONSTRUCTED PLANS" ONLY

SR 167 JOB NO. ____ SHEET 4

Bridge Design Engr. C. C. RUTH					REGION NO.	STATE	FED. AID PROJ. NO.	SHEET NO.	TOTAL SHEETS
Supervisor R. T. SHAEFER					10	WASH.			
Designed By P. M. NASH 4/94					JOB NUMBER 95W036				
Checked By G. A. T. WALDRON 4/94									
Detailed By G. A. T. WALDRON 4/94									
Bridge Projects Engr.									
Prelim. Plan By									
Architect/Specialist	DATE	REVISION	BY	APP'D	4771				

BRIDGE AND STRUCTURES OFFICE

RAYMOND T. SHAEFER — STATE OF WASHINGTON — 14378 — REGISTERED PROFESSIONAL ENGINEER — EXPIRES 4/23/96 — 5-21-95 — SUPERVISING BRIDGE ENGINEER

CHARLES C. RUTH — STATE OF WASHINGTON — 19825 — REGISTERED PROFESSIONAL ENGINEER — EXPIRES 5/3/96 — 9-26-95 — BRIDGE DESIGN ENGINEER

SMALL_JOBROOT:[000000.FGB]L1511_15TH_ST_8_LAYOUT.FGB 20-SEP-95

Washington State Department of Transportation

SR 167
15TH ST. N.W. TO 84TH AVE. SO.
HOV AND SC&DI ~ STAGE 2

BRIDGE MOUNTED SIGN BRACKET NO.3 ~ LAYOUT

BRIDGE SHEET NO. 4

SHEET 648 OF 663 SHEETS

SR 167/91

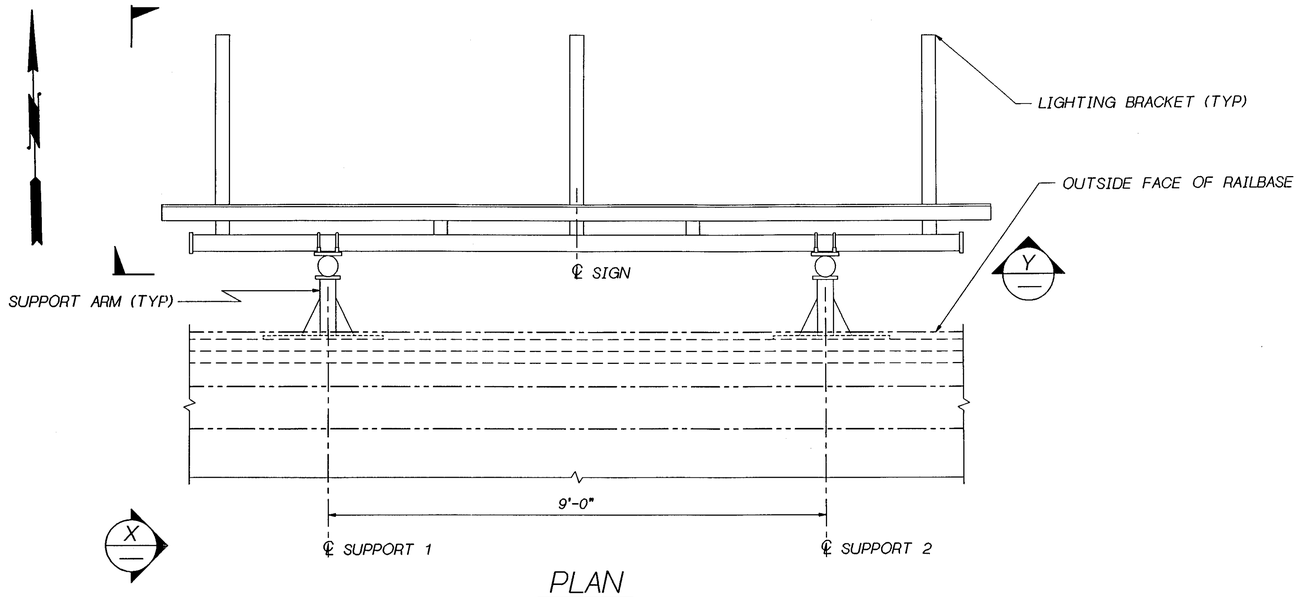

PLAN

BR. NO. 167/116

TABLE OF DIMENSIONS

BRACKET NO.	LOCATION (STA. AT ℄ SIGN)	SIGN SKEW	SIGN LENGTH	SIGN HEIGHT
#4	SR 167 599+05 (63' LT.)	0°	15'-0"	10'-0"

PIPE SIZE	TOP ARM LENGTHS		BOT. ARM LENGTHS	
	A1	A2	B1	B2
4"ϕ	1'-0"	1'-0"	3'-0¼"	3'-0¼"

CANTILEVER LENGTHS				C	D	G
E1	F1	E2	F2			
1'-10¾"	10¾"	1'-10¾"	10¾"	7'-0"	9'-1⅜"	2'-9½"

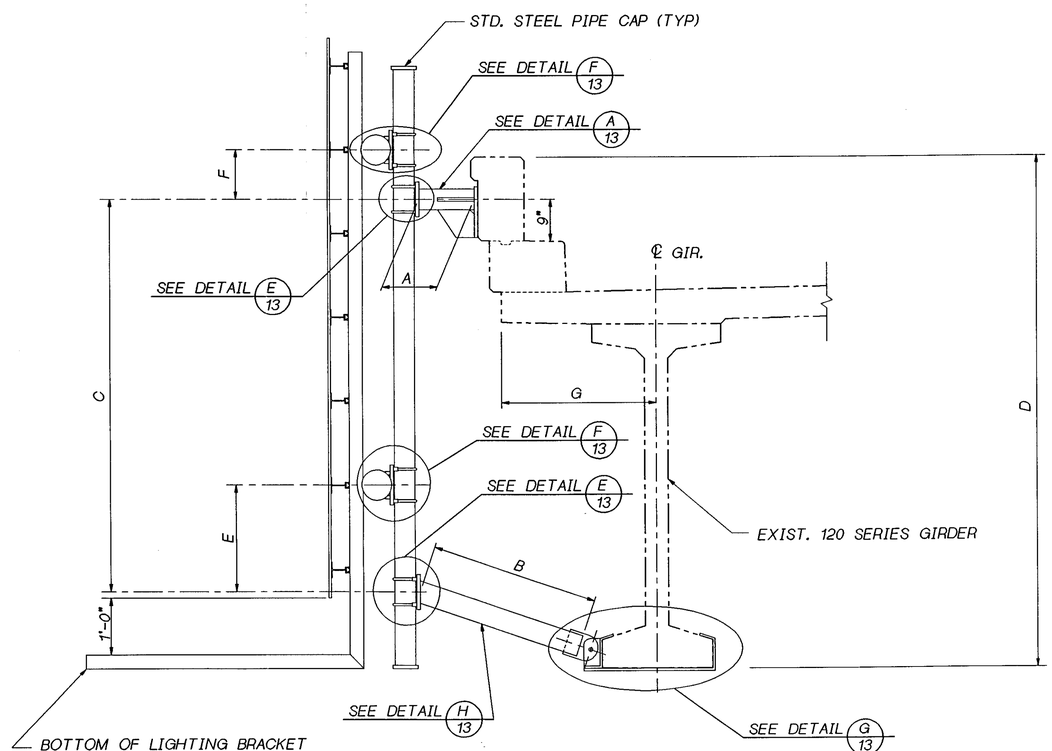

SECTION X

(SUPPORT 1 SHOWN ~ SUPPORT 2 SIMILIAR)

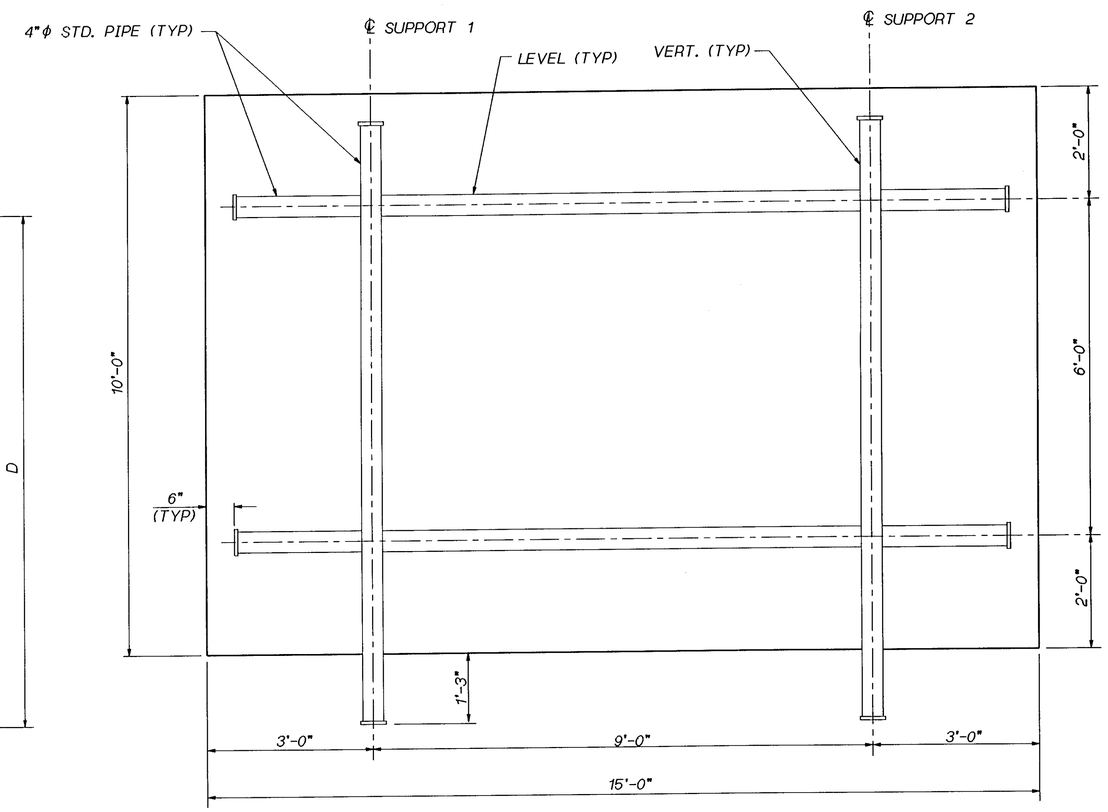

VIEW Y

Bridge Design Engr. C. C. RUTH					REGION NO.	STATE	FED. AID PROJ. NO.	SHEET NO.	TOTAL SHEETS
Supervisor R. T. SHAEFER					10	WASH.			
Designed By P. M. NASH 4/94					JOB NUMBER 95W036				
Checked By G. A. T. WALDRON 4/94									
Detailed By G. A. T. WALDRON 4/94									
Bridge Projects Engr.									
Prelim. Plan By									
Architect/Specialist	DATE	REVISION	BY	APP'D	4771				

BRIDGE AND STRUCTURES OFFICE

RAYMOND T. SHAEFER — STATE OF WASHINGTON — 14378 — REGISTERED PROFESSIONAL ENGINEER — 9-21-95 — EXPIRES 4/23/96 — SUPERVISING BRIDGE ENGINEER

CHARLES C. RUTH — STATE OF WASHINGTON — 13862 — REGISTERED PROFESSIONAL ENGINEER — 9-21-95 — EXPIRES 5/3/96 — BRIDGE DESIGN ENGINEER

SMALL_JOBROOT:[000000.FGB]L1511_15TH_ST_9_LAYOUT.FGB20-SEP-95

Washington State Department of Transportation

SR 167
15TH ST. N.W. TO 84TH AVE. SO.
HOV AND SC&DI ~ STAGE 2

BRIDGE MOUNTED SIGN
BRACKET NO. 4 ~ LAYOUT

BRIDGE SHEET NO. 5

SHEET 649 OF 663 SHEETS

SR 167 JOB NO. ____ SHEET 5

SR167/91

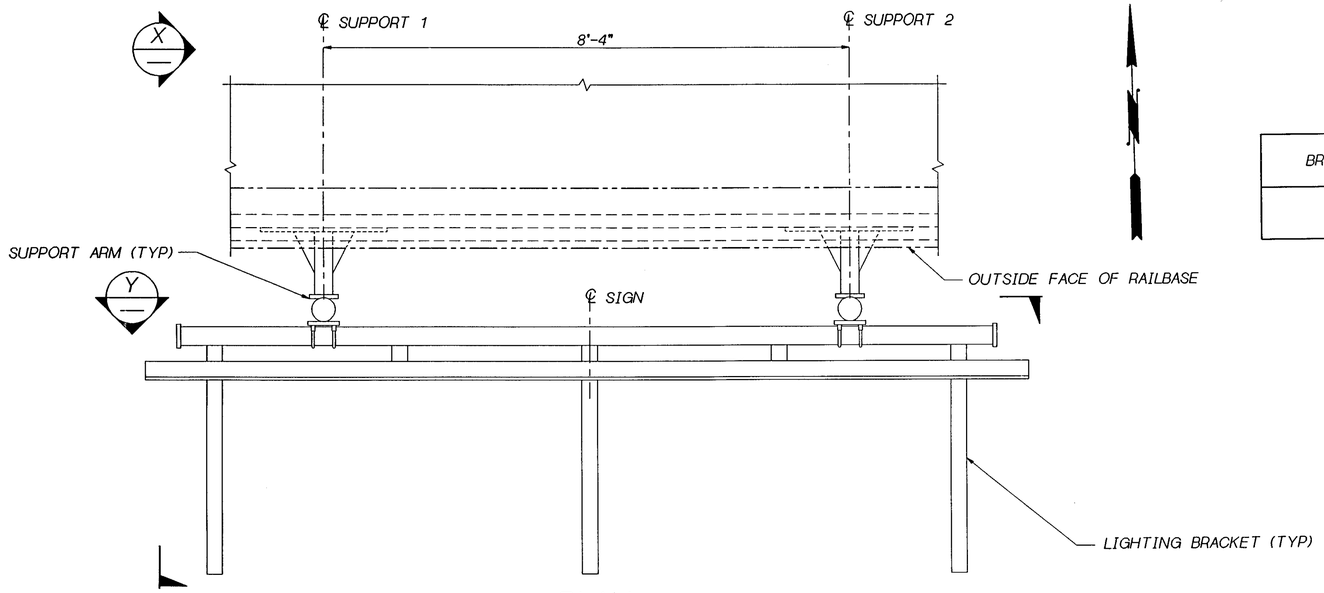

PLAN

BR. NO. 167/117

TABLE OF DIMENSIONS

BRACKET NO.	LOCATION (STA. AT ℄ SIGN)	SIGN SKEW	SIGN LENGTH	SIGN HEIGHT
#5	SR 167 663+27 (62' RT.)	0°	14'-0"	7'-0"

PIPE SIZE	TOP ARM LENGTHS		BOT. ARM LENGTHS	
	A1	A2	B1	B2
3"ϕ	1'-0"	1'-0"	2'-7"	2'-7"

CANTILEVER LENGTHS				C	D	G
E1	F1	E2	F2			
1'-3¼"	8½"	1'-3¼"	8½"	6'-0"	9'-3"	2'-3½"

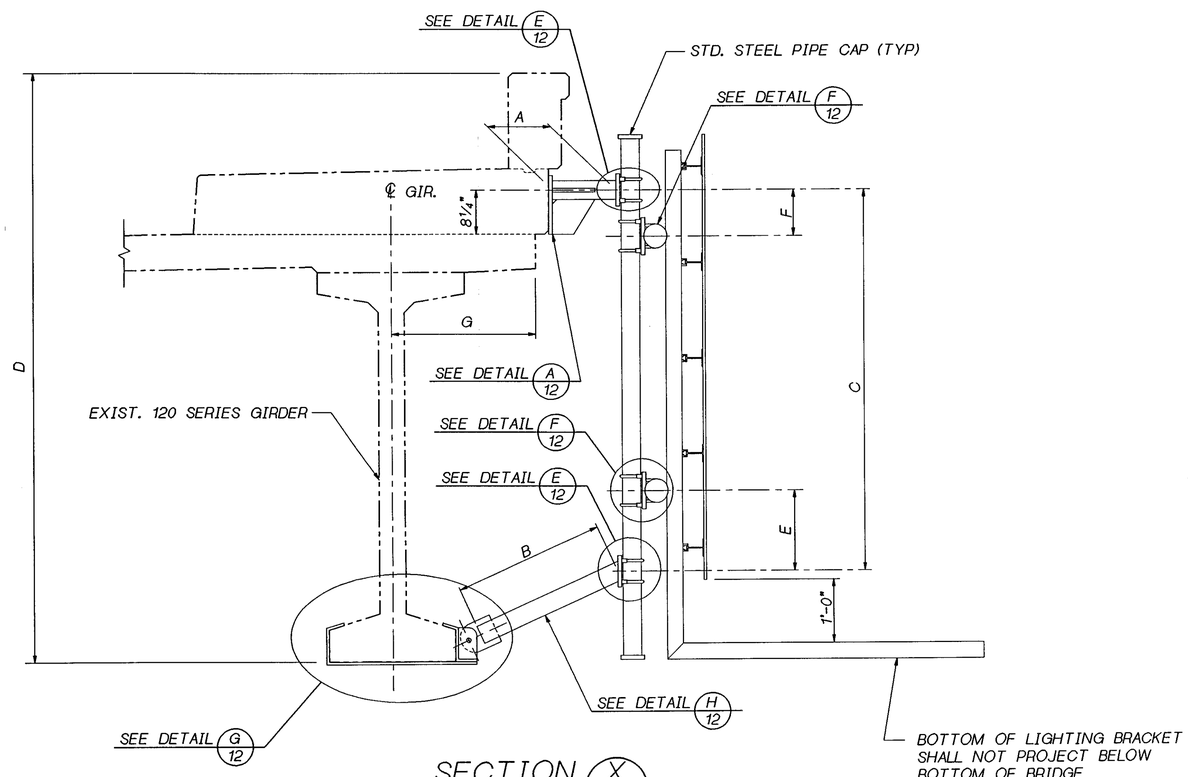

SECTION X

(SUPPORT 1 SHOWN ~ SUPPORT 2 SIMILIAR)

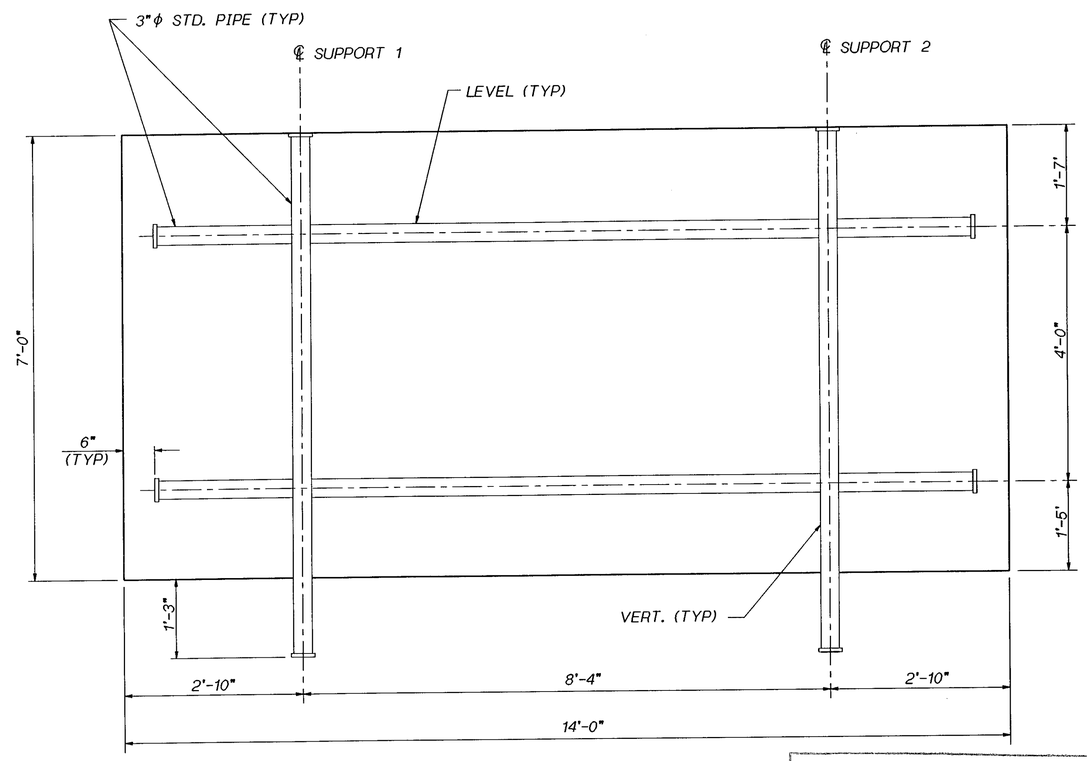

VIEW Y

FOR "AS CONSTRUCTED PLANS" ONLY

Bridge Design Engr. C. C. RUTH					REGION NO.	STATE	FED. AID PROJ. NO.	SHEET NO.	TOTAL SHEETS
Supervisor R. T. SHAEFER					10	WASH.			
Designed By P. M. NASH 4/94					JOB NUMBER 95W036				
Checked By G. A. T. WALDRON 4/94									
Detailed By G. A. T. WALDRON 4/94									
Bridge Projects Engr.									
Prelim. Plan By					4771				
Architect/Specialist	DATE	REVISION	BY	APP'D					

BRIDGE AND STRUCTURES OFFICE

RAYMOND T. SHAEFER — STATE OF WASHINGTON — 14375 — REGISTERED PROFESSIONAL ENGINEER — 9-21-95 — EXPIRES 4/23/96 — SUPERVISING BRIDGE ENGINEER

CHARLES C. RUTH — STATE OF WASHINGTON — 15822 — REGISTERED PROFESSIONAL ENGINEER — 09-21-95 — EXPIRES 5/3/96 — BRIDGE DESIGN ENGINEER

SMALL_JOBROOT:[000000.FGB]L1511_37TH_ST_11_LAYOUT.FGB 20-SEP-95

Washington State Department of Transportation

SR 167
15TH ST. N.W. TO 84TH AVE. SO.
HOV AND SC&DI ~ STAGE 2

BRIDGE MOUNTED SIGN
BRACKET NO. 5 ~ LAYOUT

BRIDGE SHEET NO. 6

SHEET 650 OF 663 SHEETS

SR 167 JOB NO. ____ SHEET 6

SR 167/91

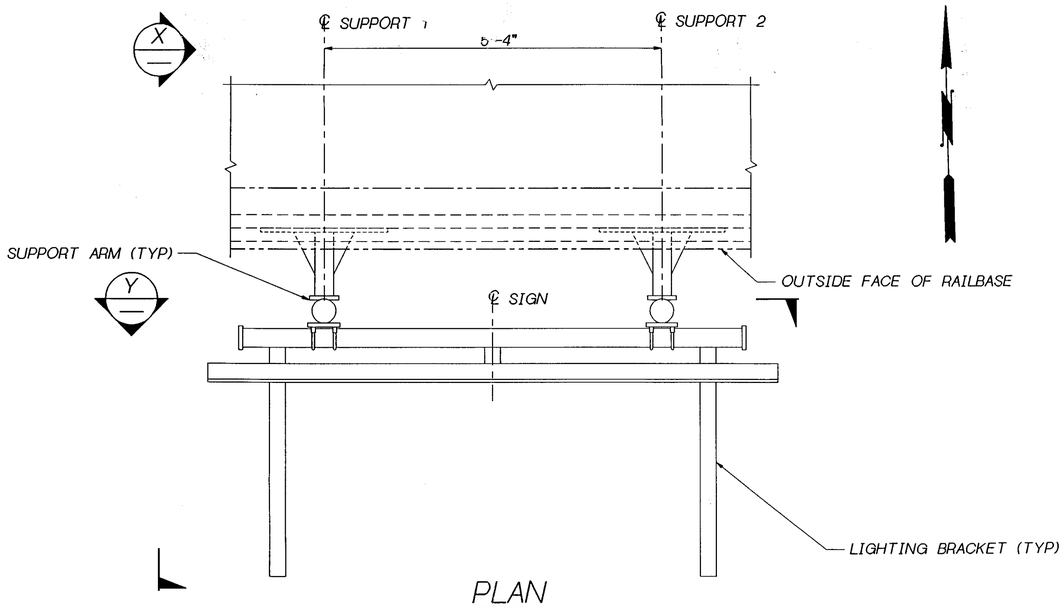

PLAN

BR. NO. 167/117

TABLE OF DIMENSIONS

BRACKET NO.	LOCATION (STA. AT ℄ SIGN)	SIGN SKEW	SIGN LENGTH	SIGN HEIGHT
#6	SR 167 663+31 (37' RT.)	0°	9'-0"	7'-0"

PIPE SIZE	TOP ARM LENGTHS		BOT. ARM LENGTHS	
	A1	A2	B1	B2
3"ϕ	1'-0"	1'-0"	2'-7"	2'-7"

CANTILEVER LENGTHS				C	D	G
E1	F1	E2	F2			
1'-3¼"	8½"	1'-3¼"	8½"	6'-0"	9'-3"	2'-3½"

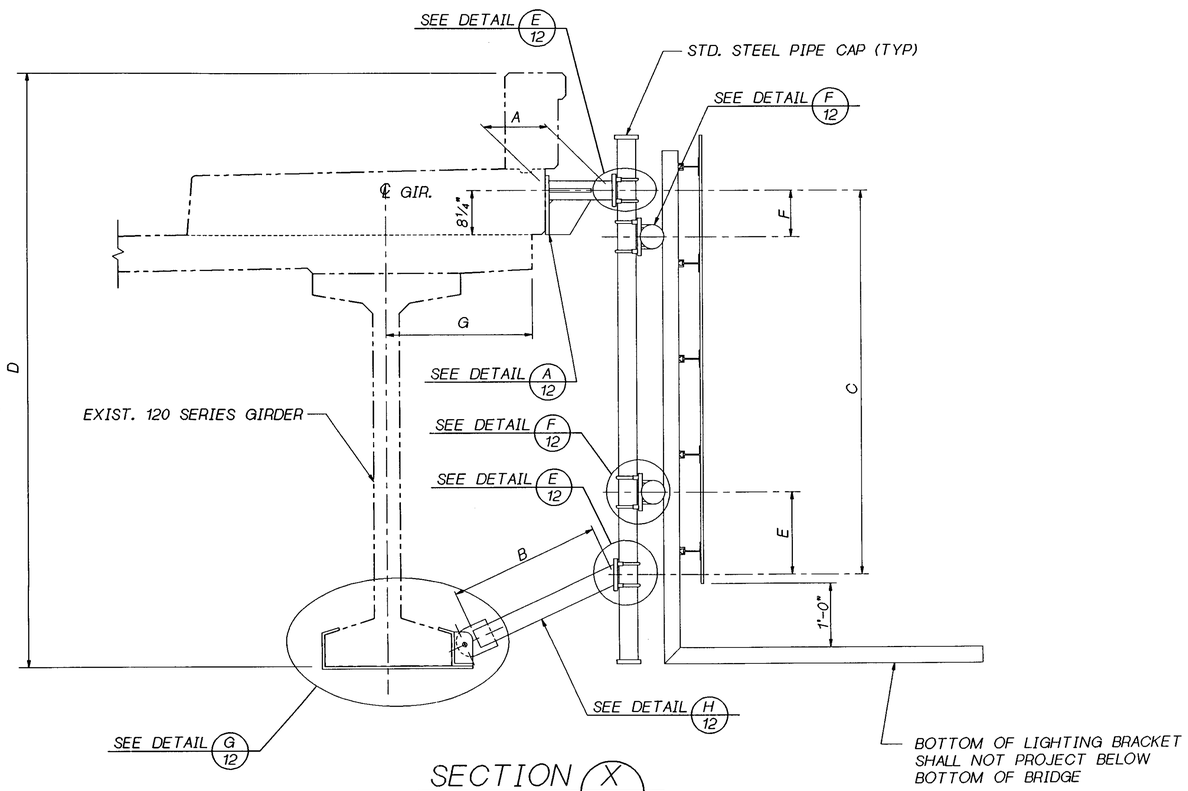

SECTION X

(SUPPORT 1 SHOWN ~ SUPPORT 2 SIMILIAR)

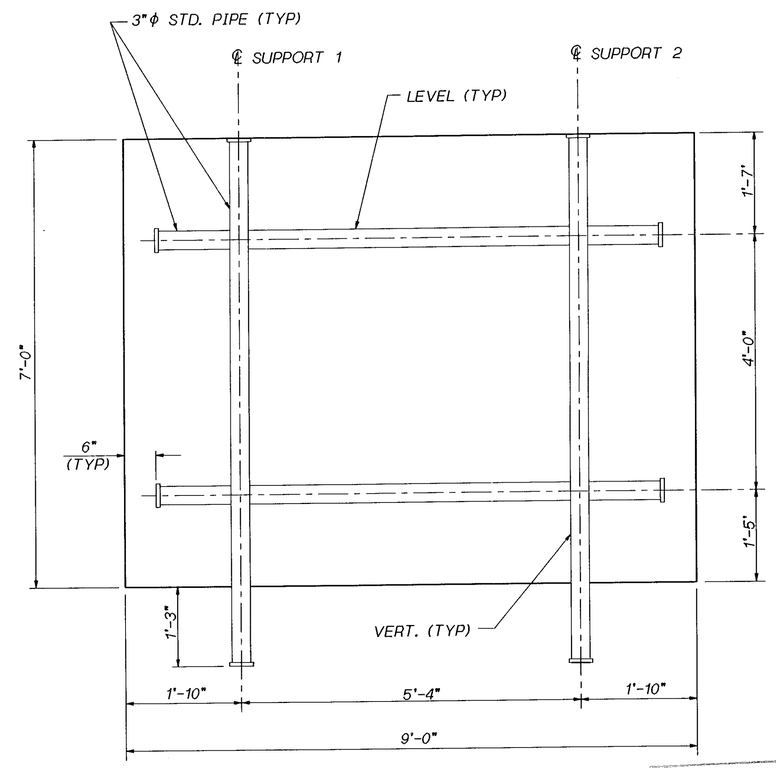

VIEW Y

FOR "AS CONSTRUCTED PLANS" ONLY

Bridge Design Engr. C. C. RUTH					
Supervisor R. T. SHAEFER					
Designed By P. M. NASH 4/94					
Checked By G. A. T. WALDRON 4/94					
Detailed By G. A. T. WALDRON 4/94					
Bridge Projects Engr.					
Prelim. Plan By					
Architect/Specialist	DATE	REVISION	BY	APP'D	

REGION NO.	STATE	FED. AID PROJ. NO.	SHEET NO.	TOTAL SHEETS
10	WASH.			
JOB NUMBER 95W036				
4771				

BRIDGE AND STRUCTURES OFFICE

RAYMOND T. SHAEFER — STATE OF WASHINGTON — 14378 — REGISTERED PROFESSIONAL ENGINEER — EXPIRES 6/23/96 — 9-21-95 SUPERVISING BRIDGE ENGINEER

9-21-95 BRIDGE DESIGN ENGINEER — CHARLES C. RUTH — STATE OF WASHINGTON — 19622 — REGISTERED PROFESSIONAL ENGINEER — EXPIRES 5/3/96

SMALL_JOBROOT:L000000.FGB1L1511_37TH_ST_10_LAYOUT.FGB0-5EP-95

Washington State Department of Transportation

SR 167
15TH ST. N.W. TO 84TH AVE. SO.
HOV AND SC&DI ~ STAGE 2

BRIDGE MOUNTED SIGN BRACKET NO. 6 ~ LAYOUT

BRIDGE SHEET NO. 7

SHEET 651 OF 663 SHEETS

SR 167 JOB NO. ____ SHEET 7

SR 167/91

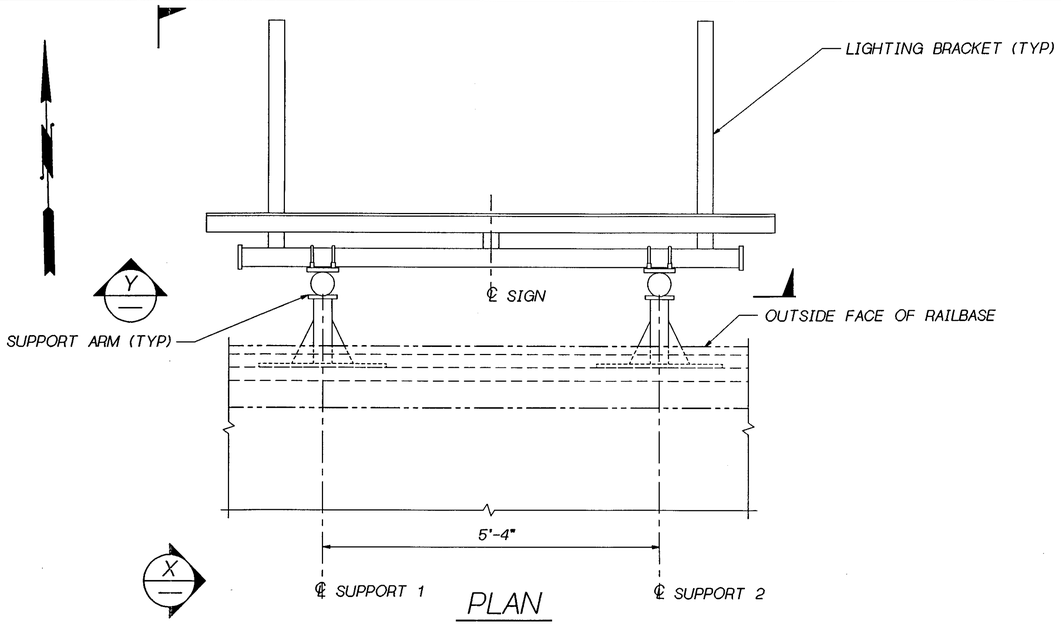

PLAN

BR. NO. 167/117

TABLE OF DIMENSIONS

BRACKET NO.	LOCATION (STA. AT ℄ SIGN)	SIGN SKEW	SIGN LENGTH	SIGN HEIGHT
#7	SR 167 664+00 (39' LT.)	0°	9'-0"	7'-0"

PIPE SIZE	TOP ARM LENGTHS		BOT. ARM LENGTHS	
	A1	A2	B1	B2
3"ϕ	1'-0"	1'-0"	2'-7"	2'-7"

CANTILEVER LENGTHS				C	D	G
E1	F1	E2	F2			
1'-3¼"	8½"	1'-3¼"	8½"	6'-0"	9'-3"	2'-3½"

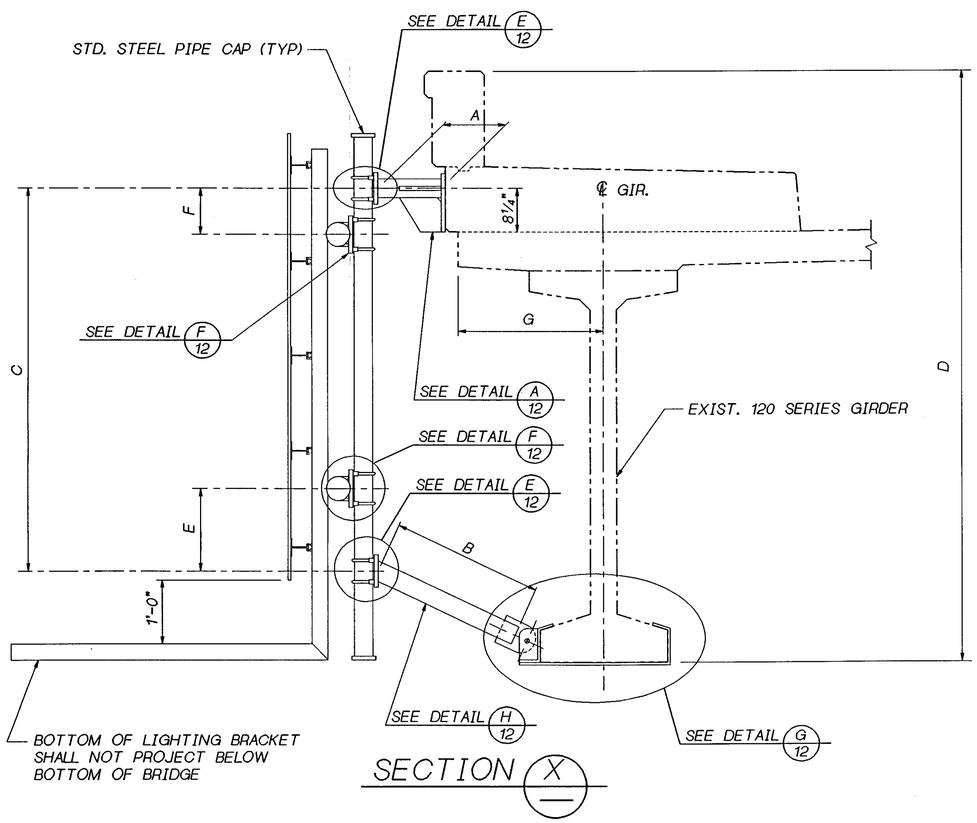

SECTION X

(SUPPORT 1 SHOWN ~ SUPPORT 2 SIMILIAR)

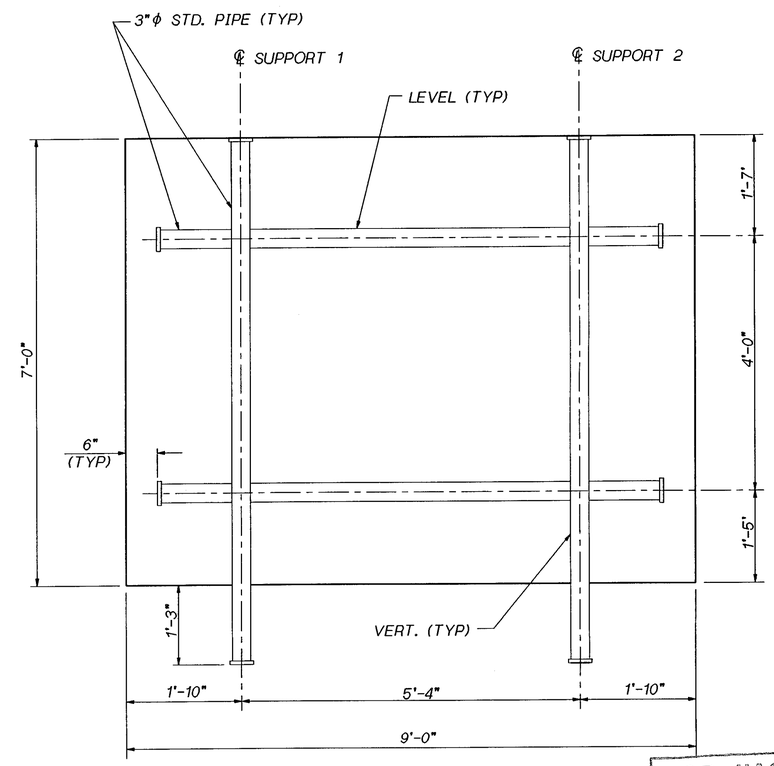

VIEW Y

FOR "AS CONSTRUCTED PLANS" ONLY

Bridge Design Engr. C. C. RUTH					
Supervisor R. T. SHAEFER					
Designed By P. M. NASH	4/94				
Checked By G. A. T. WALDRON	4/94				
Detailed By G. A. T. WALDRON	4/94				
Bridge Projects Engr.					
Prelim. Plan By					
Architect/Specialist		DATE	REVISION	BY	APP'D

REGION NO.	STATE	FED. AID PROJ. NO.	SHEET NO.	TOTAL SHEETS
10	WASH.			
JOB NUMBER 95W036				
4771				

BRIDGE AND STRUCTURES OFFICE

RAYMOND T. SHAEFER, STATE OF WASHINGTON, 14378, REGISTERED PROFESSIONAL ENGINEER — EXPIRES 4/23/96 — 9-21-95 — SUPERVISING BRIDGE ENGINEER

CHARLES C. RUTH, STATE OF WASHINGTON, 13622, REGISTERED PROFESSIONAL ENGINEER — EXPIRES 5/3/96 — 9-21-95 — BRIDGE DESIGN ENGINEER

SMALL_JOBROOT:[000000.FGB]L1511_37TH_ST_13_LAYOUT.FGB 10-SEP-95

Washington State Department of Transportation

SR 167
15TH ST. N.W. TO 84TH AVE. SO.
HOV AND SC&DI ~ STAGE 2

BRIDGE MOUNTED SIGN
BRACKET NO. 7 ~ LAYOUT

BRIDGE SHEET NO. 8

SHEET 652 OF 663 SHEETS

SR 167 JOB NO. ____ SHEET 8

SR 167/91

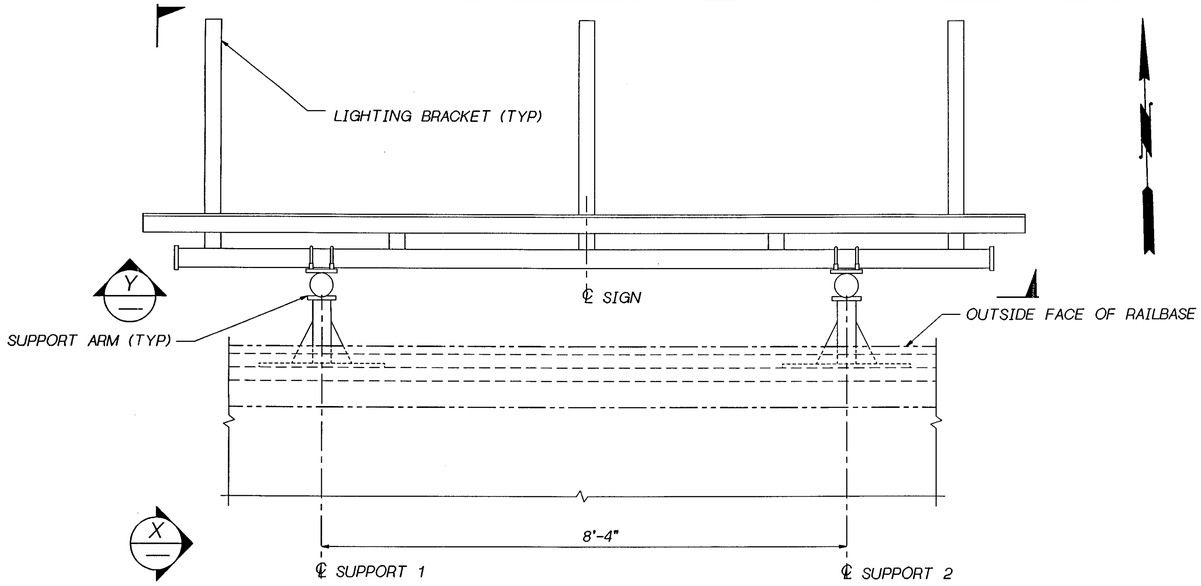

PLAN

BR. NO. 167/117

TABLE OF DIMENSIONS

BRACKET NO.	LOCATION (STA. AT ℄ SIGN)	SIGN SKEW	SIGN LENGTH	SIGN HEIGHT
#8	SR 167 664+03 (61' LT.)	0°	14'-0"	7'-0"

PIPE SIZE	TOP ARM LENGTHS		BOT. ARM LENGTHS	
	A1	A2	B1	B2
3"ϕ	1'-0"	1'-0"	2'-7"	2'-7"

CANTILEVER LENGTHS				C	D	G
E1	F1	E2	F2			
1'-3¼"	8½"	1'-3¼"	8½"	6'-0"	9'-3"	2'-3½"

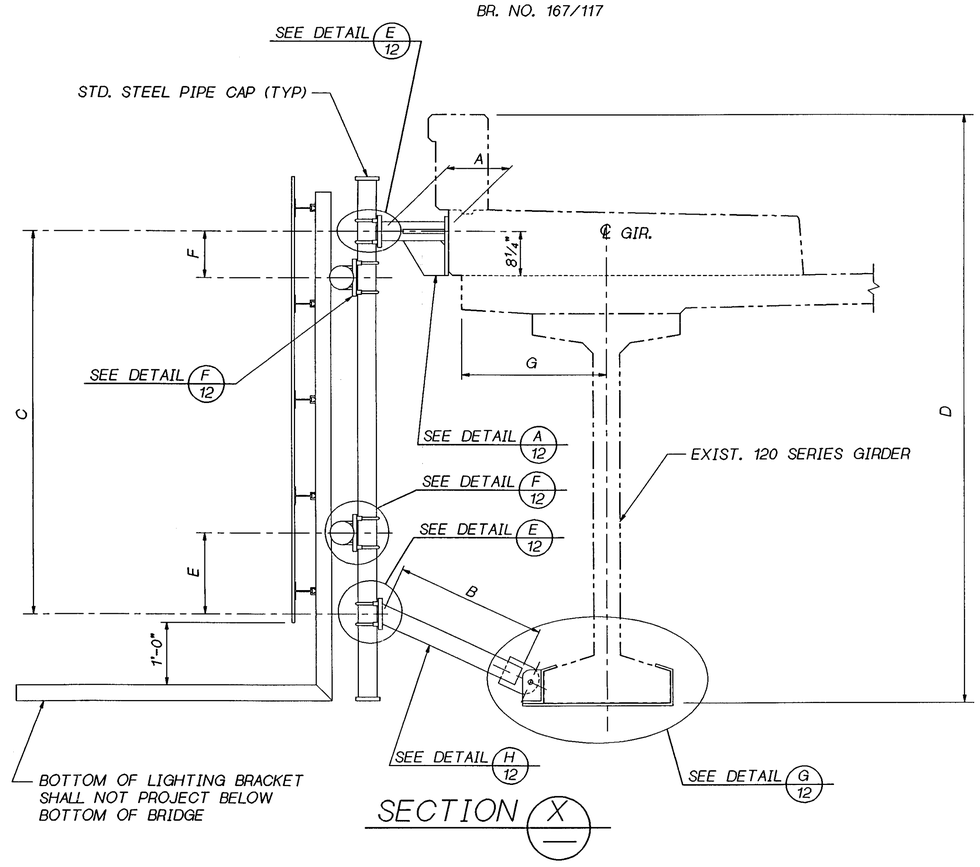

SECTION X

(SUPPORT 1 SHOWN ~ SUPPORT 2 SIMILIAR)

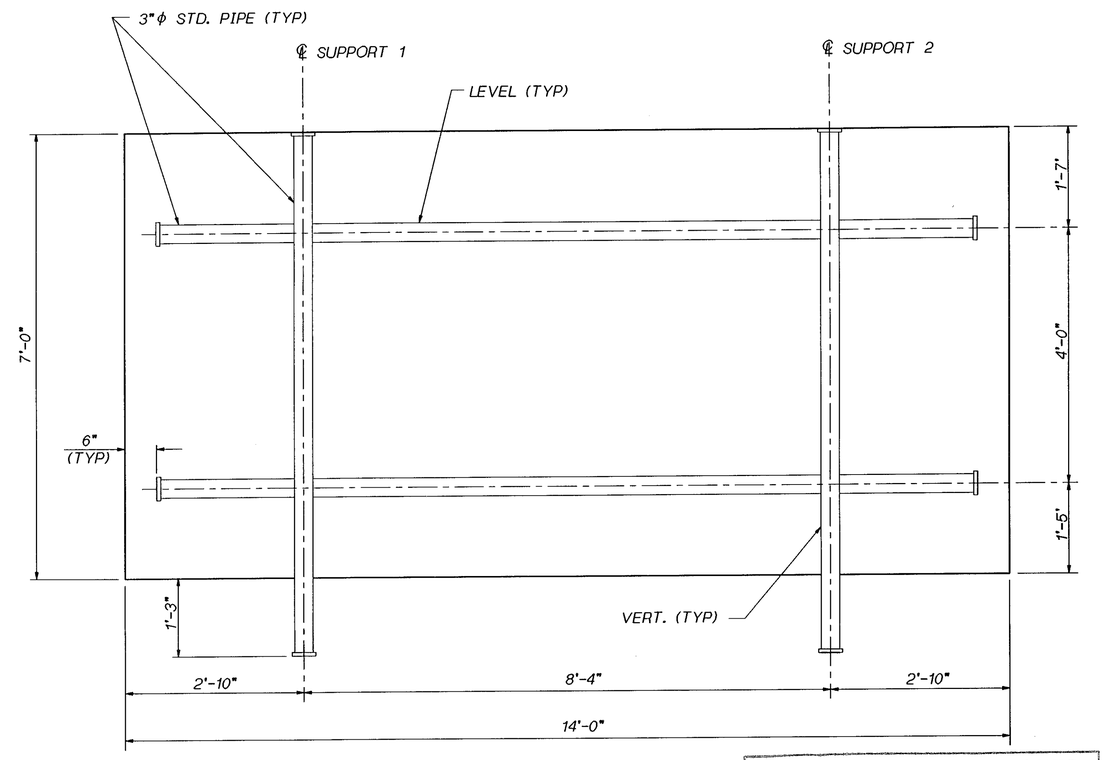

VIEW Y

FOR "AS CONSTRUCTED PLANS" ONLY

Bridge Design Engr. C. C. RUTH					REGION NO.	STATE	FED. AID PROJ. NO.	SHEET NO.	TOTAL SHEETS
Supervisor R. T. SHAEFER					10	WASH.			
Designed By P. M. NASH 4/94					JOB NUMBER 95W036				
Checked By G. A. T. WALDRON 4/94									
Detailed By G. A. T. WALDRON 4/94									
Bridge Projects Engr.									
Prelim. Plan By									
Architect/Specialist	DATE	REVISION	BY	APP'D	4771				

BRIDGE AND STRUCTURES OFFICE

RAYMOND T. SHAEFER — STATE OF WASHINGTON — 14376 — REGISTERED PROFESSIONAL ENGINEER — EXPIRES 4/23/96 — 6-21-95 — SUPERVISING BRIDGE ENGINEER

CHARLES C. RUTH — STATE OF WASHINGTON — 19862 — REGISTERED PROFESSIONAL ENGINEER — EXPIRES 5/3/96 — 9-21-095 — BRIDGE DESIGN ENGINEER

SMALL_JOBROOT:[000000.FGB]L1511_37TH_ST_12_LAYOUT.FGB0-SEP-95

Washington State Department of Transportation

SR 167
15TH ST. N.W. TO 84TH AVE. SO.
HOV AND SC&DI ~ STAGE 2

BRIDGE MOUNTED SIGN
BRACKET NO. 8 ~ LAYOUT

BRIDGE SHEET NO. 9

SHEET 653 OF 663 SHEETS

SR 167 JOB NO. ____ SHEET 9

SR 167/91

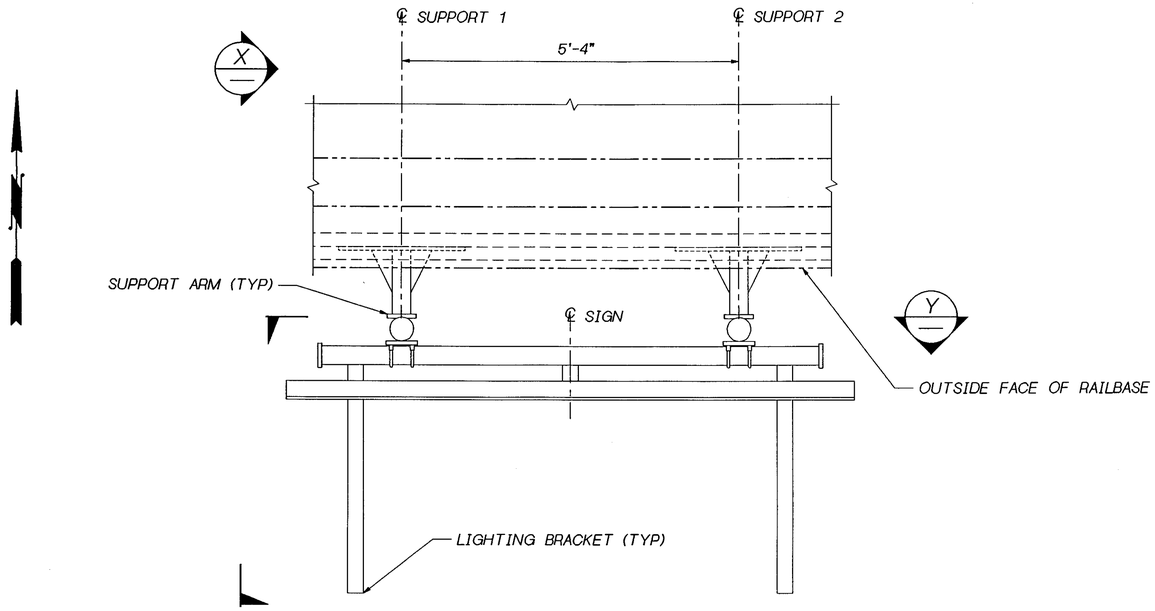

PLAN

BR. NO. 167/119

TABLE OF DIMENSIONS

BRACKET NO.	LOCATION (STA. AT ℄ SIGN)	SIGN SKEW	SIGN LENGTH	SIGN HEIGHT
#9	SR 167 712+53 (16' RT.)	0°	9'-0"	7'-0"

PIPE SIZE	TOP ARM LENGTHS		BOT. ARM LENGTHS	
	A1	A2	B1	B2
3"ϕ	1'-0"	1'-0"	3'-1¾"	3'-1¾"

CANTILEVER LENGTHS				C	D	G
E1	F1	E2	F2			
1'-5¼"	8"	1'-5¼"	8"	5'-0"	7'-11¾"	3'-2"

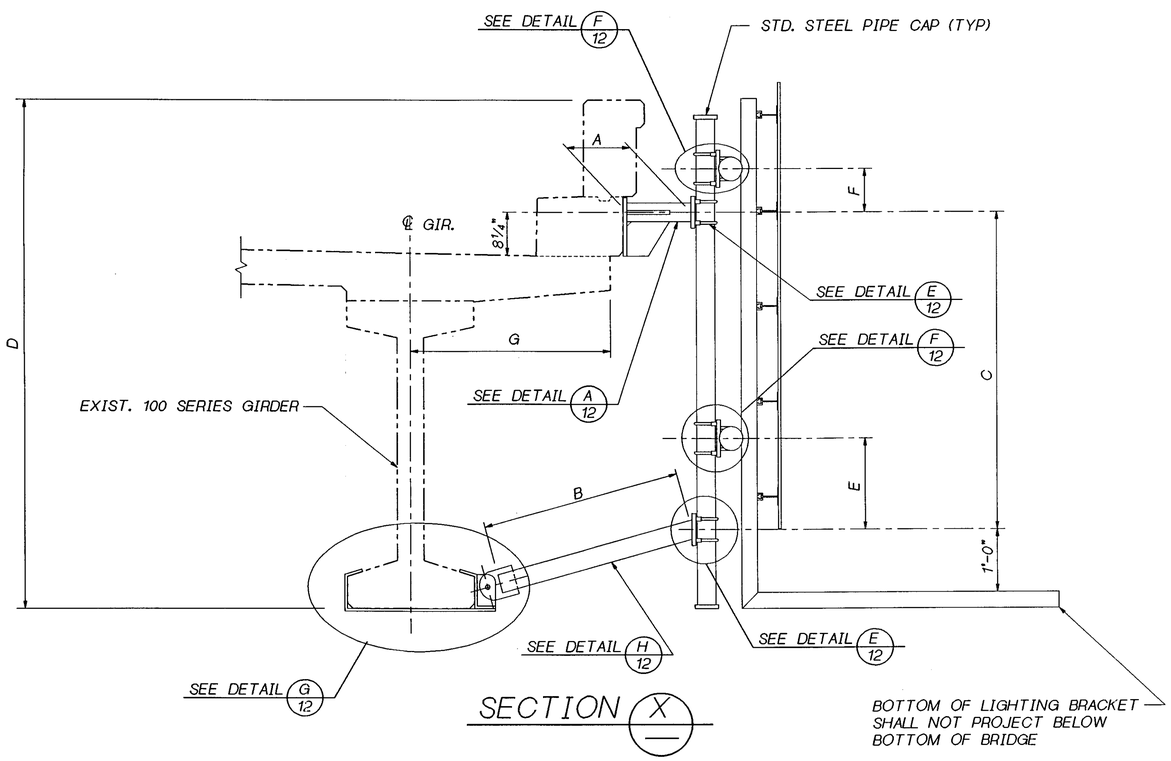

SECTION X

(SUPPORT 1 SHOWN ~ SUPPORT 2 SIMILIAR)

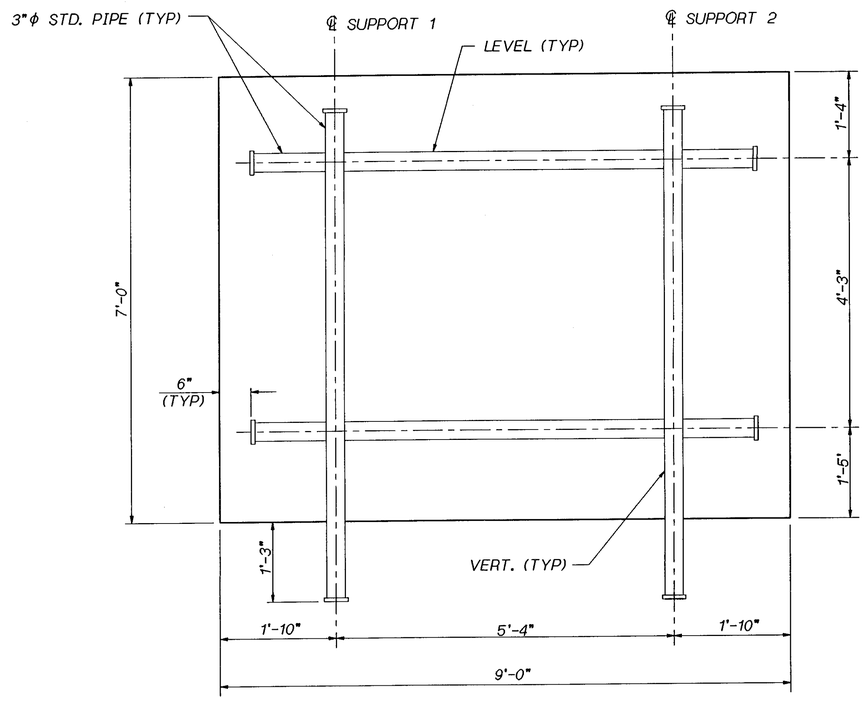

VIEW Y

FOR "AS CONSTRUCTED" PLANS ONLY

Bridge Design Engr. C. C. RUTH					REGION NO.	STATE	FED. AID PROJ. NO.	SHEET NO.	TOTAL SHEETS
Supervisor R. T. SHAEFER					10	WASH.			
Designed By P. M. NASH 4/94					JOB NUMBER 95W036				
Checked By G. A. T. WALDRON 4/94									
Detailed By G. A. T. WALDRON 4/94									
Bridge Projects Engr.									
Prelim. Plan By					4771				
Architect/Specialist	DATE	REVISION	BY	APP'D					

BRIDGE AND STRUCTURES OFFICE

RAYMOND T. SHAEFER — STATE OF WASHINGTON — 14278 — REGISTERED PROFESSIONAL ENGINEER — EXPIRES 4/23/96 — 9-21-95 — SUPERVISING BRIDGE ENGINEER

CHARLES C. RUTH — STATE OF WASHINGTON — 13652 — REGISTERED PROFESSIONAL ENGINEER — EXPIRES 5/3/96 — 9-21-95 — BRIDGE DESIGN ENGINEER

SMALL_JOBROOT:L000000.FGB\L1511_277TH_ST_14_LAYOUT.FGB-SEP-95

Washington State Department of Transportation

SR 167
15TH ST. N.W. TO 84TH AVE. SO.
HOV AND SC&DI ~ STAGE 2

BRIDGE MOUNTED SIGN
BRACKET NO. 9 ~ LAYOUT

BRIDGE SHEET NO. 10

SHEET 654 OF 663 SHEETS

SR 167 JOB NO. ___ SHEET 10

SR 167/91

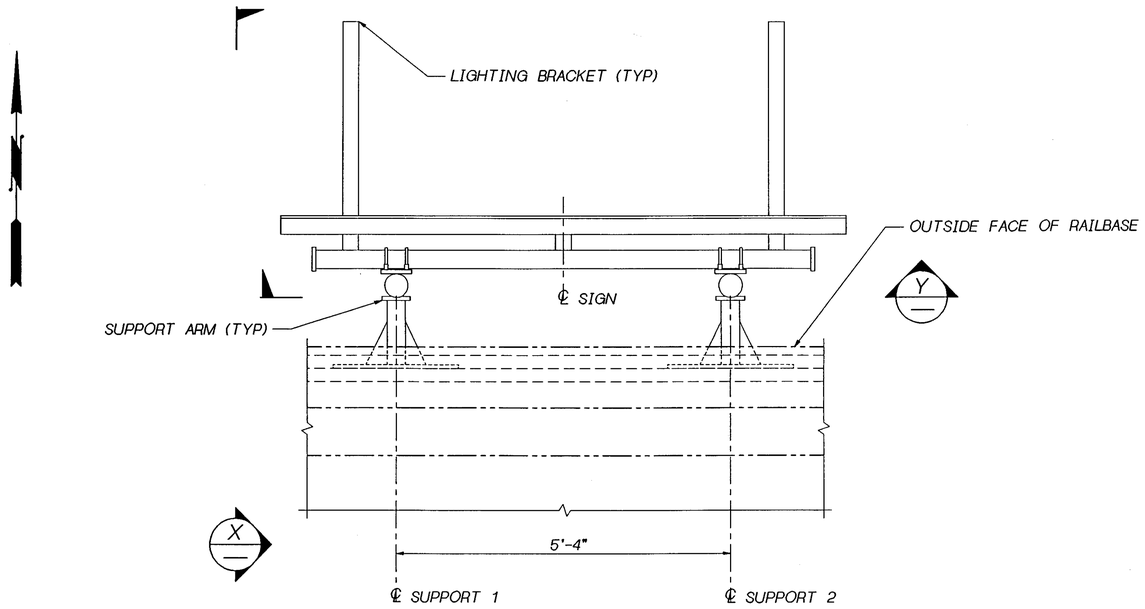

PLAN

BR. NO. 167/119

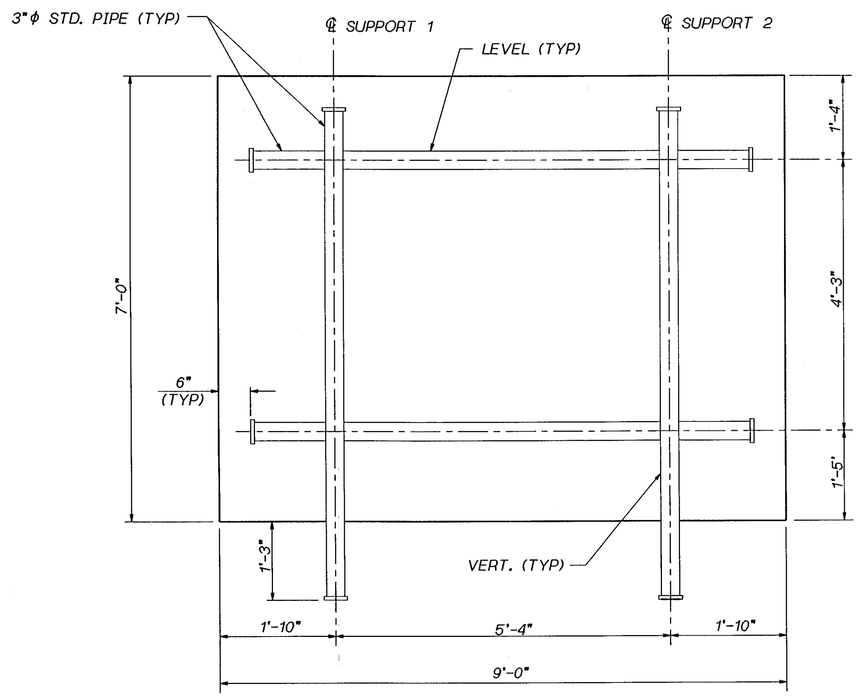

VIEW Y

TABLE OF DIMENSIONS

BRACKET NO.	LOCATION (STA. AT ℄ SIGN)	SIGN SKEW	SIGN LENGTH	SIGN HEIGHT
#10	SR 167 713+01 (16' LT.)	0°	9'-0"	7'-0"

PIPE SIZE	TOP ARM LENGTHS		BOT. ARM LENGTHS	
	A1	A2	B1	B2
3"ϕ	1'-0"	1'-0"	3'-1¾"	3'-1¾"

CANTILEVER LENGTHS				C	D	G
E1	F1	E2	F2			
1'-5¼"	8"	1'-5¼"	8"	5'-0"	7'-11¾"	3'-2"

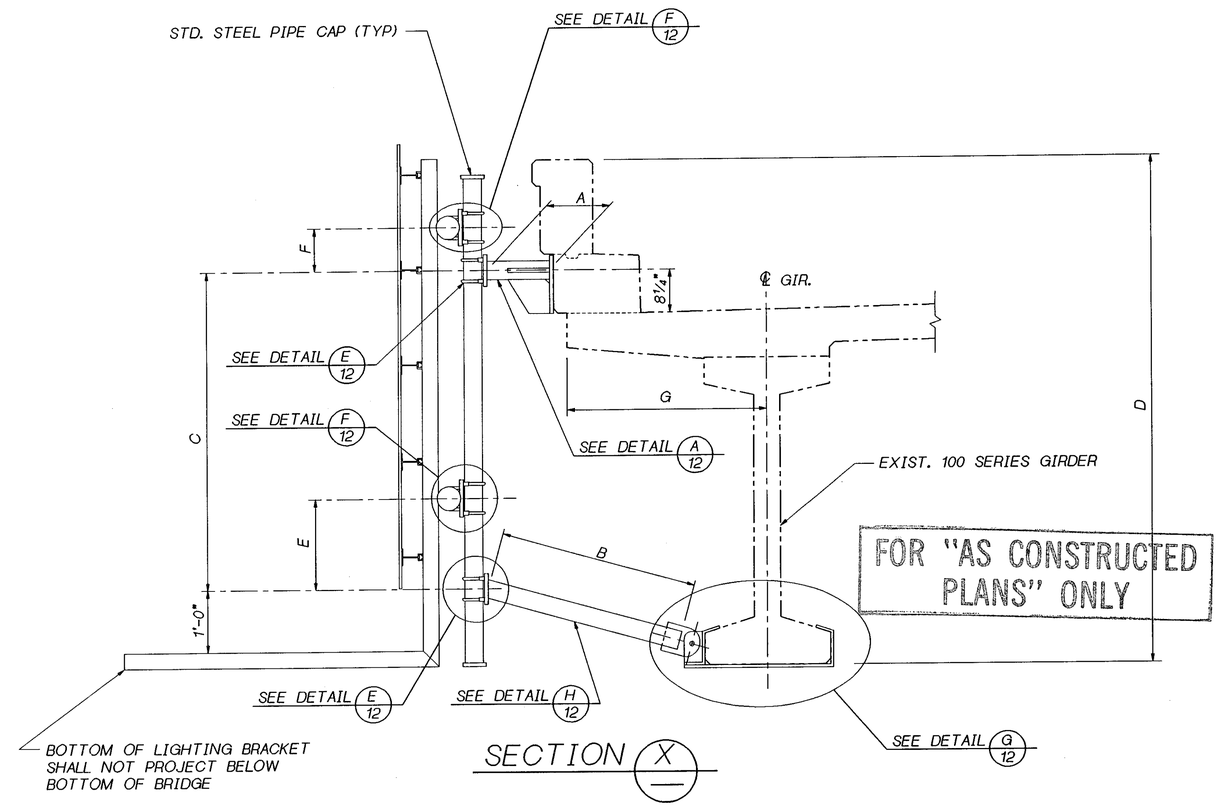

FOR "AS CONSTRUCTED PLANS" ONLY

SECTION X

(SUPPORT 1 SHOWN ~ SUPPORT 2 SIMILIAR)

SR 167 JOB NO. ____ SHEET 11

Bridge Design Engr. C. C. RUTH					
Supervisor R. T. SHAEFER					
Designed By P. M. NASH 4/94					
Checked By G. A. T. WALDRON 4/94					
Detailed By G. A. T. WALDRON 4/94					
Bridge Projects Engr.					
Prelim. Plan By					
Architect/Specialist	DATE	REVISION	BY	APP'D	

REGION NO.	STATE	FED. AID PROJ. NO.	SHEET NO.	TOTAL SHEETS
10	WASH.			
JOB NUMBER 95W036				
4771				

BRIDGE AND STRUCTURES OFFICE

RAYMOND T. SHAEFER — STATE OF WASHINGTON — 14379 — REGISTERED PROFESSIONAL ENGINEER — EXPIRES 6/23/96 — 6-21-95 — SUPERVISING BRIDGE ENGINEER

CHARLES C. RUTH — STATE OF WASHINGTON — 13622 — REGISTERED PROFESSIONAL ENGINEER — EXPIRES 5/3/96 — 6-21-95 — BRIDGE DESIGN ENGINEER

SMALL_JOBROOT:L000000.FGB1L1511_277TH_ST_15_LAYOUT.FGB 20-SEP-95

Washington State Department of Transportation

SR 167
15TH ST. N.W. TO 84TH AVE. SO.
HOV AND SC&DI ~ STAGE 2

BRIDGE MOUNTED SIGN
BRACKET NO. 10 ~ LAYOUT

BRIDGE SHEET NO. 11

SHEET 655 OF 663 SHEETS

SR 167/91

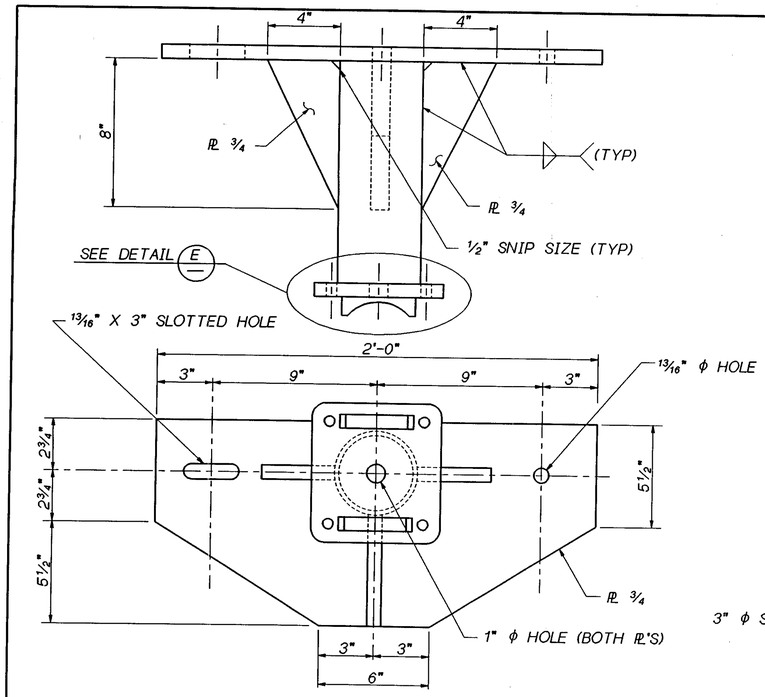

DETAIL A 2|3 A 6|7 A 8|9 A 10|11

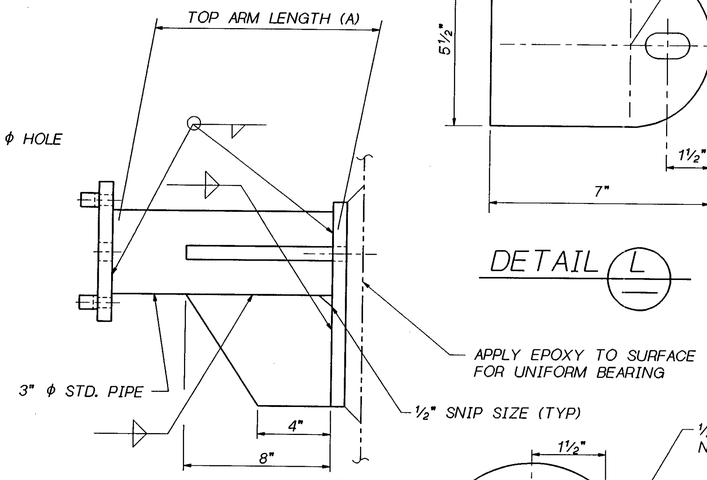

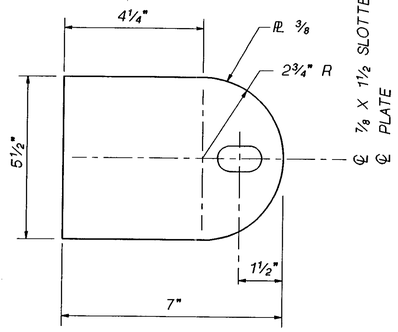

DETAIL L

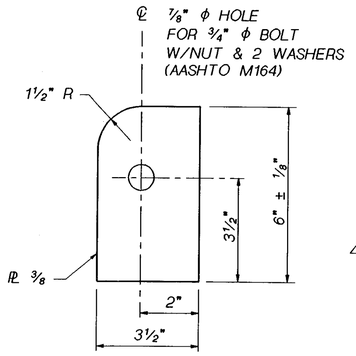

DETAIL M

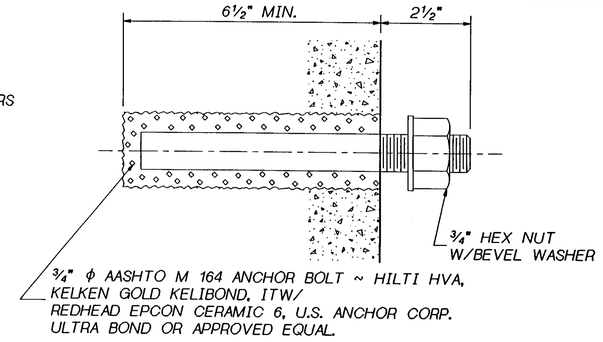

ANCHOR BOLT DETAIL

FOR "AS CONSTRUCTED PLANS" ONLY

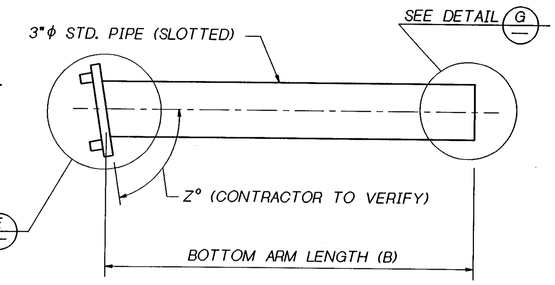

DETAIL H 2|3 H 6|7 H 8|9 H 10|11

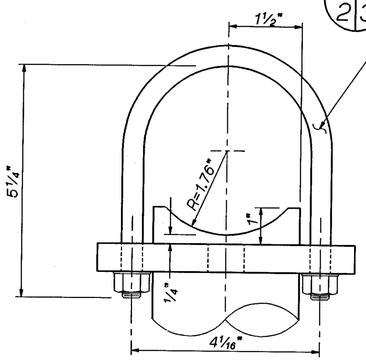

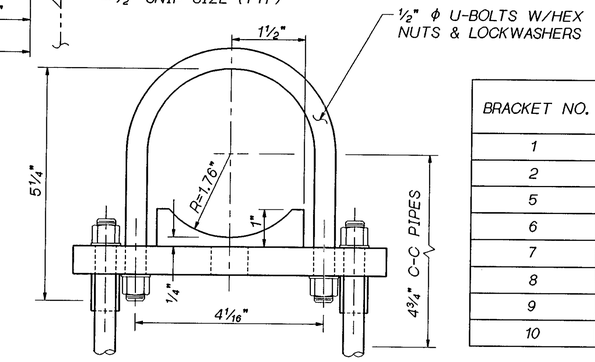

BRACKET NO.	Z°	
	SUPPORT #1	SUPPORT #2
1	70°	70°
2	66°	66°
5	63°	63°
6	63°	63°
7	63°	63°
8	64°	64°
9	74°	74°
10	74°	74°

2 ~ 7/8" X 1 1/2" SLOTTED HOLES (BOT. PLATE)
2 ~ 7/8" ϕ HOLES (TOP PLATE)
2 ~ 3/4" ϕ BOLTS W/WASHER (AASHTO M 164)
TOP AND 2 1/2" X 3/8" X 2 1/2" WASHER BOTTOM.
PLACE BOLT W/NUT ON UNDERSIDE.

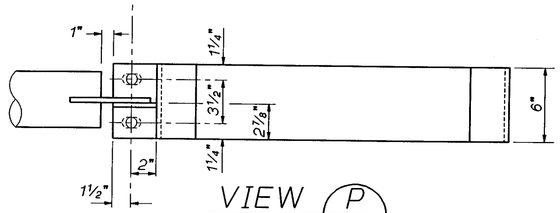

VIEW P

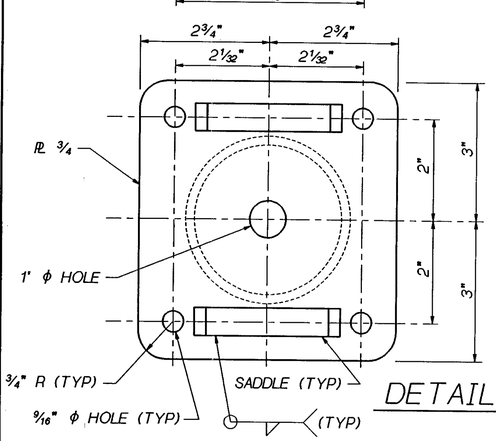

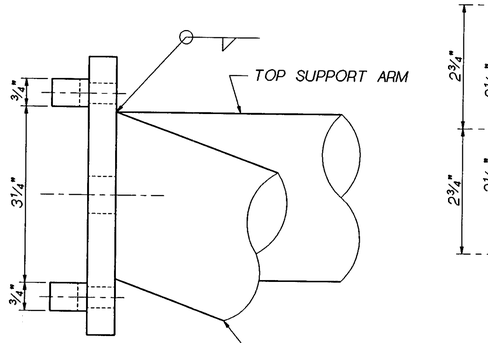

DETAIL E 2|3 E 6|7 E 8|9 E 10|11

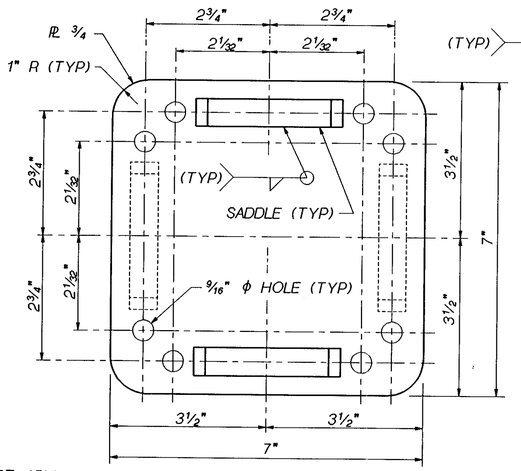

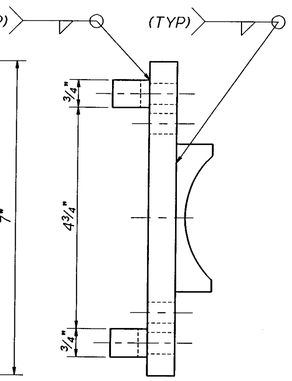

DETAIL F 2|3 F 6|7 F 8|9 F 10|11

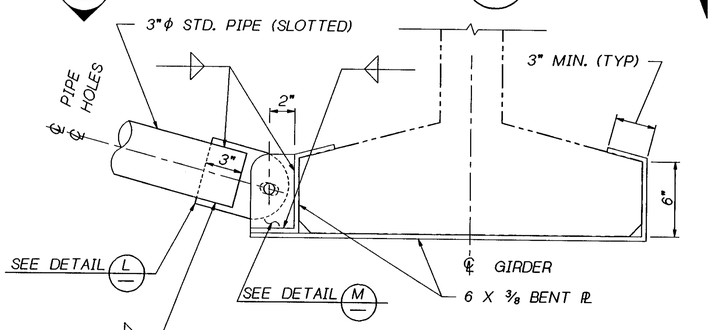

DETAIL G 2|3 G 6|7 G 8|9 G 10|11

Bridge Design Engr. C. C. RUTH				
Supervisor R. T. SHAEFER				
Designed By P. M. NASH 4/94				
Checked By G. A. T. WALDRON 4/94				
Detailed By G. A. T. WALDRON 4/94				
Bridge Projects Engr.				
Prelim. Plan By				
Architect/Specialist	DATE	REVISION	BY	APP'D

REGION NO.	STATE	FED. AID PROJ. NO.	SHEET NO.	TOTAL SHEETS
10	WASH.			
JOB NUMBER 95W036				
4771				

BRIDGE AND STRUCTURES OFFICE

RAYMOND T. SHAEFER — STATE OF WASHINGTON — 14378 — REGISTERED PROFESSIONAL ENGINEER — EXPIRES 4/23/96
SUPERVISING BRIDGE ENGINEER

CHARLES C. RUTH — STATE OF WASHINGTON — 13622 — REGISTERED PROFESSIONAL ENGINEER — EXPIRES 5/3/96
9-15-95
BRIDGE DESIGN ENGINEER

SMALL_JOBROOT:\000000.FGB\L1511_BRKT_DETAILS_A.FGB; 15-SEP-95

Washington State Department of Transportation

SR 167
15TH ST. N.W. TO 84TH AVE. SO.
HOV AND SC&DI ~ STAGE 2

BRIDGE MOUNTED SIGN BRACKETS
NO. 1, 2, 5, 6 THRU 10 ~ DETAILS

BRIDGE SHEET NO. 12
SHEET 656 OF 663 SHEETS

SR 167 JOB NO. ____ SHEET 12

SR167/91

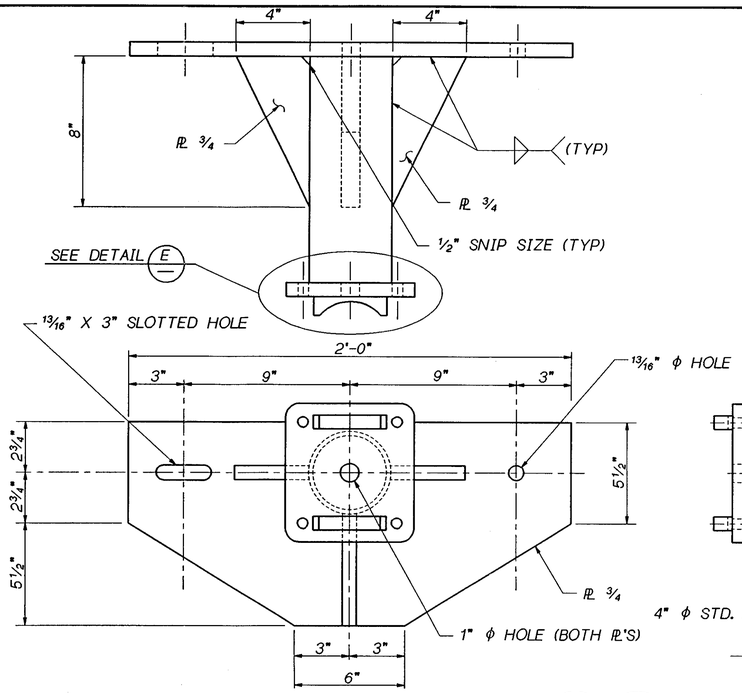

DETAIL A/4 A/5

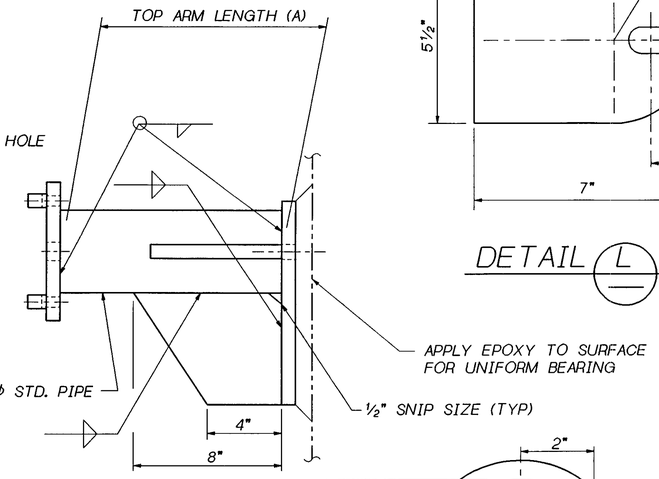

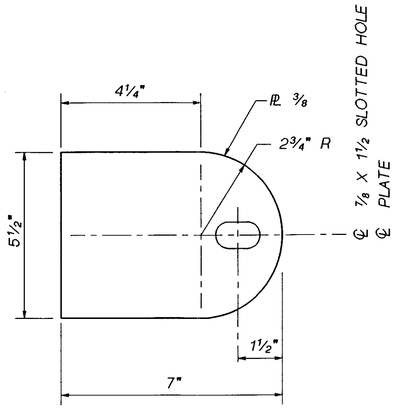

DETAIL L

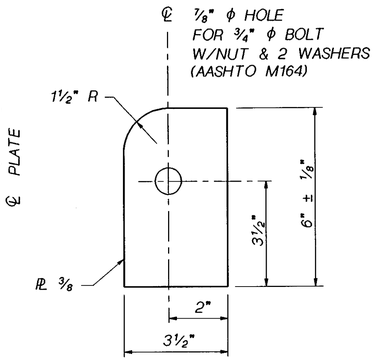

DETAIL M

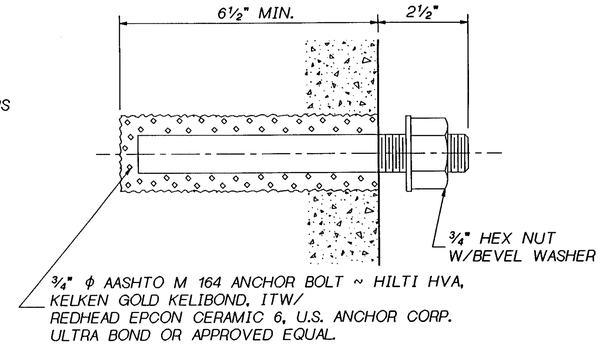

ANCHOR BOLT DETAIL

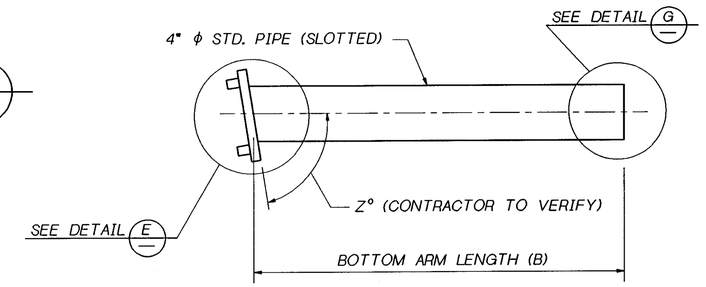

DETAIL H/4 H/5

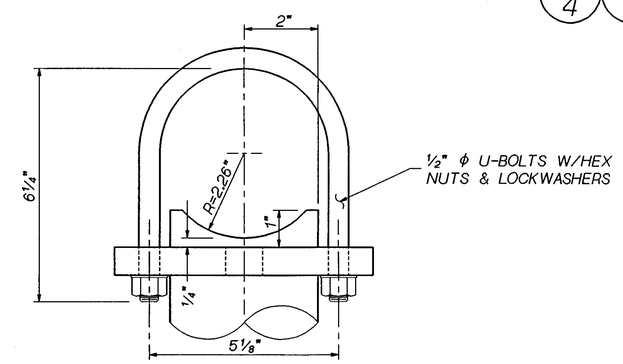

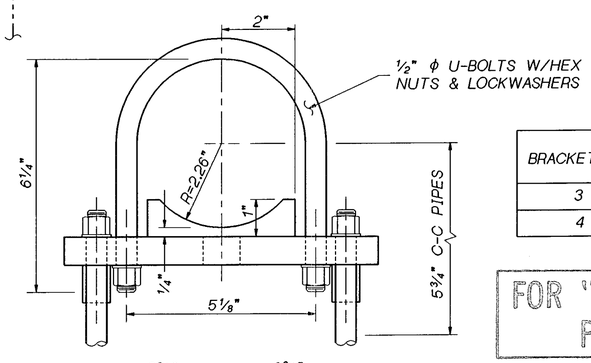

BRACKET NO.	Z°	
	SUPPORT #1	SUPPORT #2
3	72°	72°
4	72°	72°

FOR "AS CONSTRUCTED PLANS" ONLY

℄ 2 ~ 7/8" X 1 1/2" SLOTTED HOLES (BOT. PLATE)
℄ 2 ~ 7/8" ϕ HOLES (TOP PLATE)
2 ~ 3/4" ϕ BOLTS W/WASHER (ASTM A 325)
TOP AND 2 1/2" X 3/8" X 2 1/2" WASHER BOTTOM.
PLACE BOLT W/NUT ON UNDERSIDE.

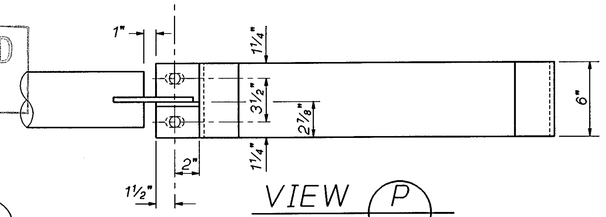

VIEW P

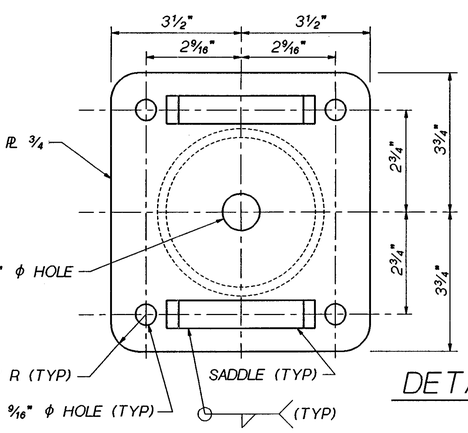

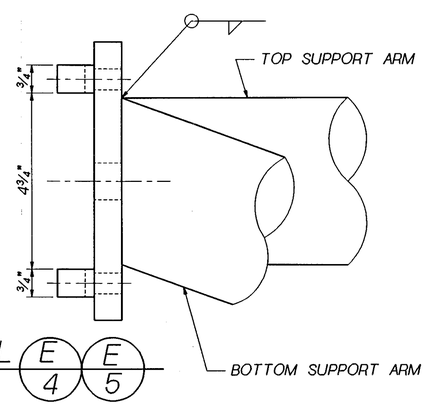

DETAIL E/4 E/5

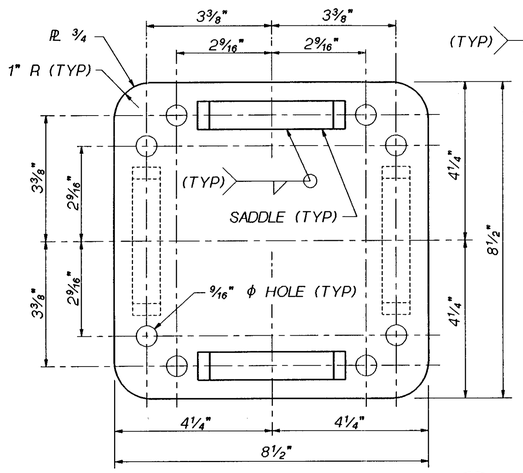

DETAIL F/4 F/5

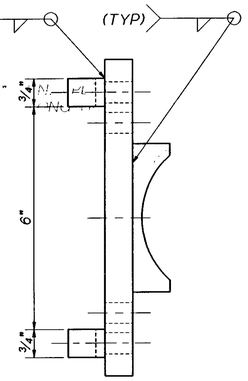

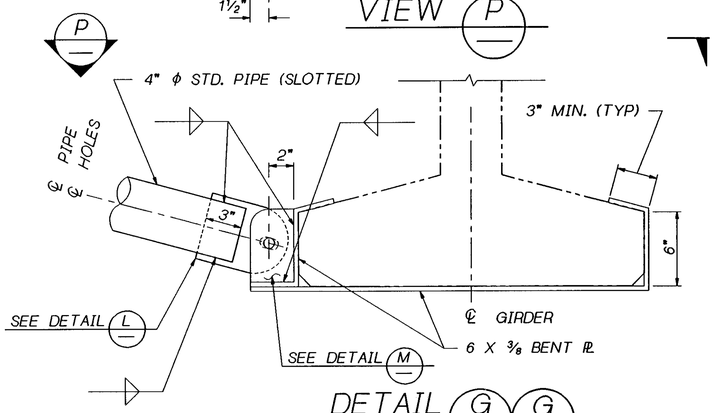

DETAIL G/4 G/5

Bridge Design Engr. C. C. RUTH				
Supervisor R. T. SHAEFER				
Designed By P. M. NASH 4/94				
Checked By G. A. T. WALDRON 4/94				
Detailed By G. A. T. WALDRON 4/94				
Bridge Projects Engr.				
Prelim. Plan By				
Architect/Specialist	DATE	REVISION	BY	APP'D

REGION NO.	STATE	FED. AID PROJ. NO.	SHEET NO.	TOTAL SHEETS
10	WASH.			
JOB NUMBER 95W036				
4771				

BRIDGE AND STRUCTURES OFFICE

RAYMOND T. SHAEFER — STATE OF WASHINGTON — 14378 — REGISTERED PROFESSIONAL ENGINEER — EXPIRES 4/23/96
SUPERVISING BRIDGE ENGINEER

9-15-95
CHARLES C. RUTH — STATE OF WASHINGTON — 13622 — REGISTERED PROFESSIONAL ENGINEER — EXPIRES 5/3/96
BRIDGE DESIGN ENGINEER

SMALL_JOBROOT:[000000.FGB]L1511_BRKT_DETAILS_B.FGB; 15-SEP-95

Washington State Department of Transportation

SR 167
15TH ST. NW. TO 84TH AVE. SO.
HOV AND SC&DI ~ STAGE 2

BRIDGE MOUNTED SIGN BRACKETS
NO. 3 & 4 ~ DETAILS

BRIDGE SHEET NO. 13

SHEET 657 OF 663 SHEETS

SR 167 JOB NO. ____ SHEET 13

SR167/91

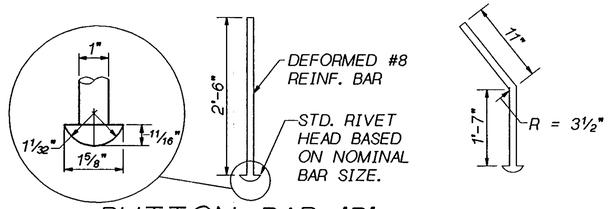

BUTTON BAR 'B'

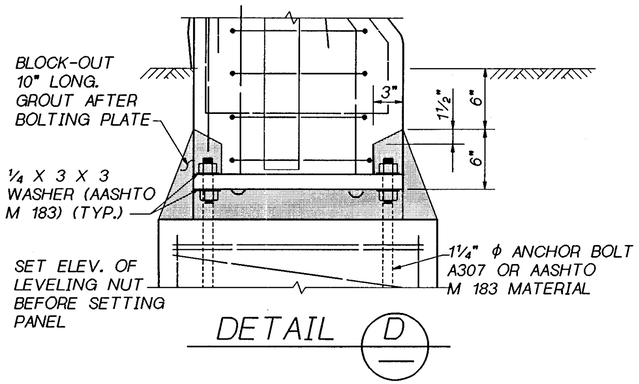

DETAIL D

NOTE: ANCHOR BOLTS, NUTS, WASHERS, PLATE & BAR 'B' SHALL HAVE A PROTECTIVE COATING OF ONE OF THE FOLLOWING COATINGS:
HOT DIPPED GALVANIZING AASHTO M 232 FOR HARDWARE,
AASHTO M 111 FOR PLATES,
MECHANICAL GALVANIZING AASHTO M 298 CL 55
ZINC RICH PAINT, PAINT THREADS & NUTS AFTER INSTALLATION.

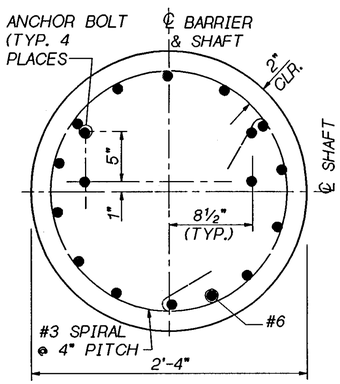

SECTION C

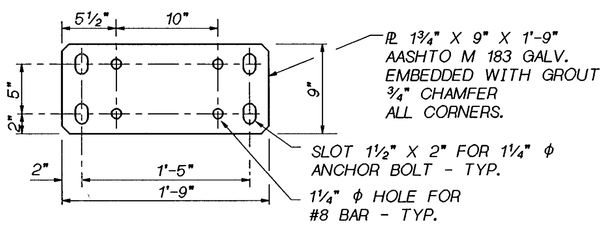

BASEPLATE DETAIL

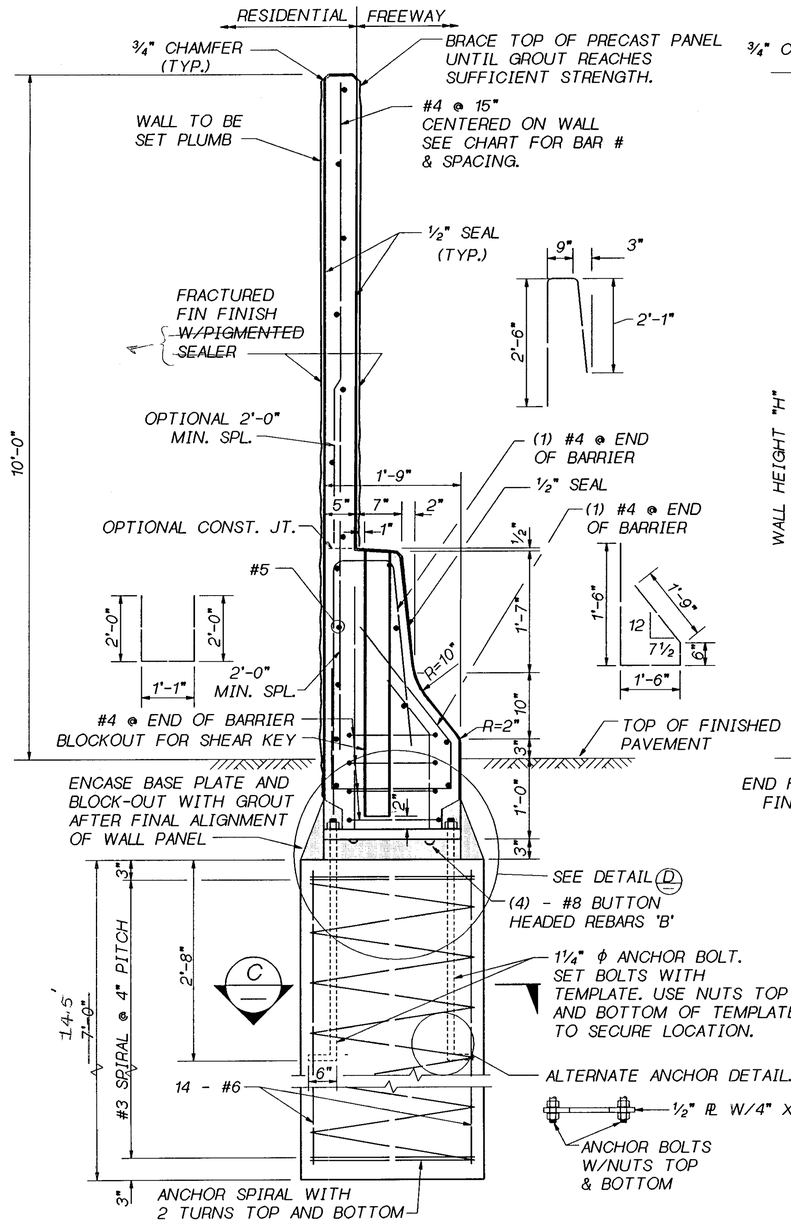

SECTION @ SHAFT SUPPORT

*per Co. #20, all shafts (noise walls 1 & 2) were driven @ 14.5 ft deep. (C-4771)

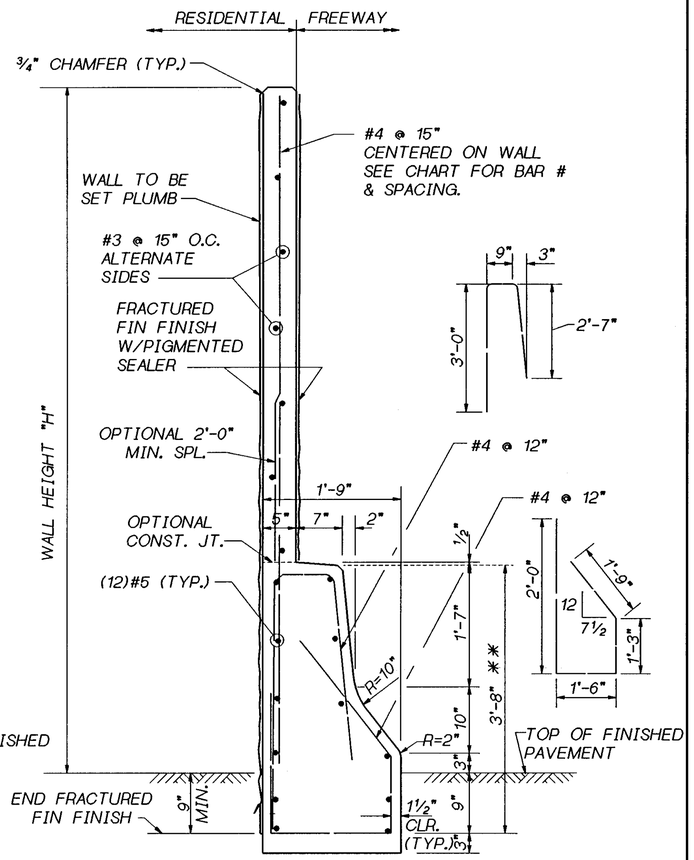

TYPICAL SECTION

** HEIGHT MAY VARY IF REQUIRED TO PROVIDE A SMOOTH PROFILE CONSISTENT WITH THE ROADWAY PROFILE.

FOR "AS CONSTRUCTED PLANS" ONLY

OPTION #1

PRECAST CONCRETE ACOUSTICAL ATTENUATOR WALL WITH TRAFFIC BARRIER ON SHAFT ~ SHEET 2 OF 2

SR ___ JOB NO. ___ SHEET ___

Bridge Design Engr. C. C. RUTH					REGION NO.	STATE	FED. AID PROJ. NO.	SHEET NO.	TOTAL SHEETS
Supervisor R. T. SHAEFER					10	WASH.			
Designed By B. KHALEGHI 7-95					JOB NUMBER 95W036				
Checked By									
Detailed By V. S. NGUYEN 7-95									
Bridge Projects Engr.									
Prelim. Plan By									
Architect/Specialist	DATE	REVISION	BY	APP'D	4771				

BRIDGE AND STRUCTURES OFFICE

RAYMOND T. SHAEFER — STATE OF WASHINGTON — 14378 — REGISTERED PROFESSIONAL ENGINEER — EXPIRES 4/23/96 — 7-24-95 — SUPERVISING BRIDGE ENGINEER

CHARLES C. RUTH — STATE OF WASHINGTON — 18624 — REGISTERED PROFESSIONAL ENGINEER — EXPIRES 5/3/96 — 7-24-95 — BRIDGE DESIGN ENGINEER

Washington State Department of Transportation

SR 167
15TH NW TO 84TH AVE SO.
HOV SC & DI - STAGE 2
BRIDGE 167/121 E&W

NOISE WALL DETAILS

BRIDGE SHEET NO. 1

SHEET 661 OF 663 SHEETS

20-JLY-95

SMALL_JOBROOT:[FGB]NW_SR167_S.FGB;1

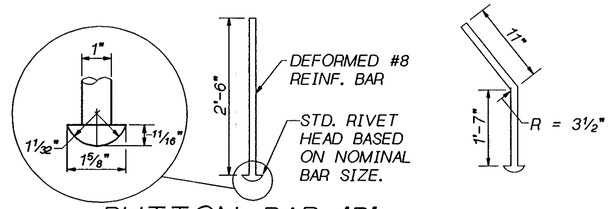

BUTTON BAR 'B'

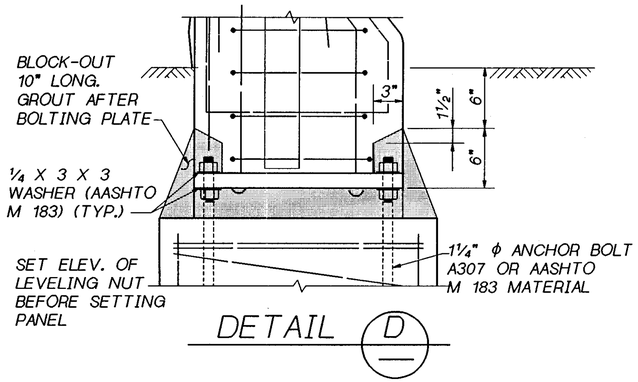

DETAIL D

NOTE: ANCHOR BOLTS, NUTS, WASHERS, PLATE & BAR 'B' SHALL HAVE A PROTECTIVE COATING OF ONE OF THE FOLLOWING COATINGS:
HOT DIPPED GALVANIZING AASHTO M 232 FOR HARDWARE,
AASHTO M 111 FOR PLATES,
MECHANICAL GALVANIZING AASHTO M 298 CL 55
ZINC RICH PAINT, PAINT THREADS & NUTS AFTER INSTALLATION.

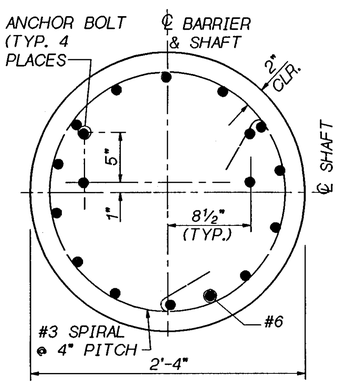

SECTION C

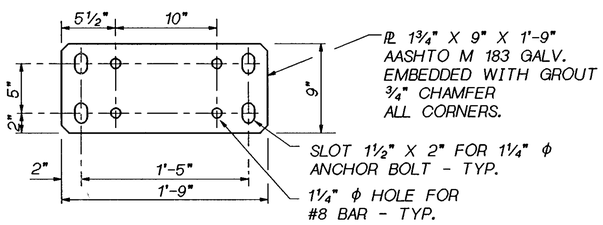

BASEPLATE DETAIL

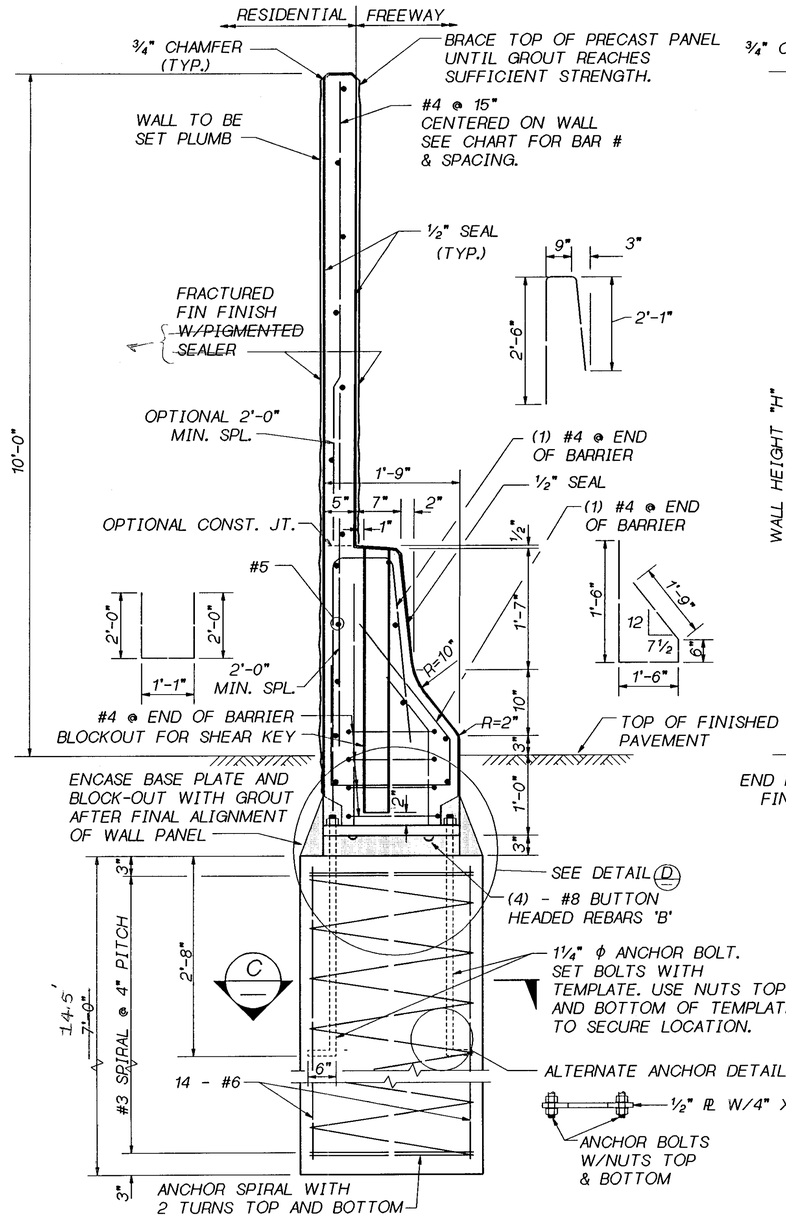

SECTION @ SHAFT SUPPORT

*per Co. #20, all shafts (noise walls 1 & 2) were driven @ 14.5 ft deep. (C-4771)

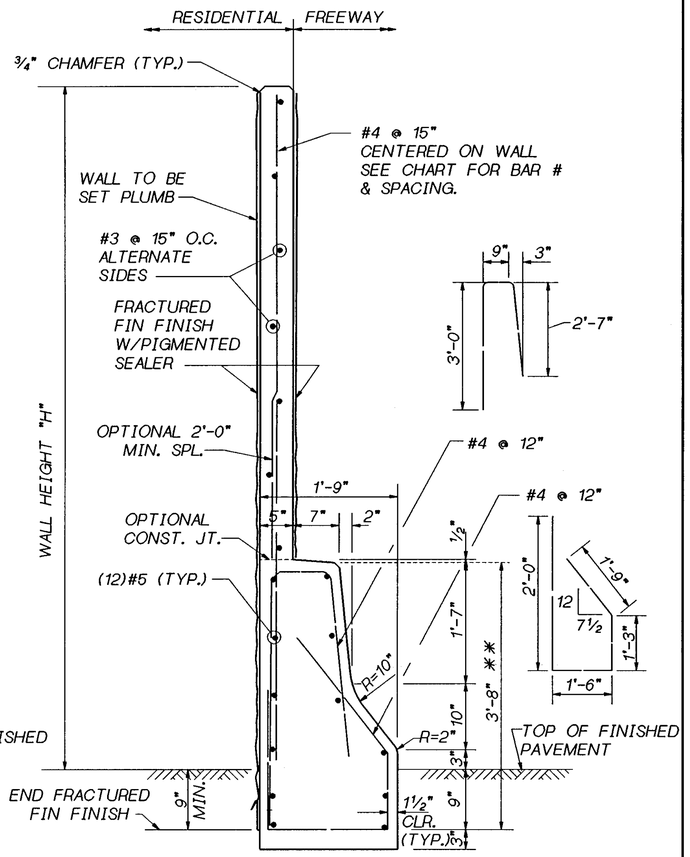

TYPICAL SECTION

** HEIGHT MAY VARY IF REQUIRED TO PROVIDE A SMOOTH PROFILE CONSISTENT WITH THE ROADWAY PROFILE.

FOR "AS CONSTRUCTED PLANS" ONLY

OPTION #1

PRECAST CONCRETE ACOUSTICAL ATTENUATOR WALL WITH TRAFFIC BARRIER ON SHAFT ~ SHEET 2 OF 2

Bridge Design Engr. C. C. RUTH					REGION NO.	STATE	FED. AID PROJ. NO.	SHEET NO.	TOTAL SHEETS
Supervisor R. T. SHAEFER					10	WASH.			
Designed By B. KHALEGHI 7-95									
Checked By					JOB NUMBER				
Detailed By V. S. NGUYEN 7-95					95W036				
Bridge Projects Engr.									
Prelim. Plan By									
Architect/Specialist	DATE	REVISION	BY	APP'D	4771				

BRIDGE AND STRUCTURES OFFICE

RAYMOND T. SHAEFER — STATE OF WASHINGTON — 14378 — REGISTERED PROFESSIONAL ENGINEER — EXPIRES 2/23/96 — 7-24-95 SUPERVISING BRIDGE ENGINEER

CHARLES C. RUTH — STATE OF WASHINGTON — 18224 — REGISTERED PROFESSIONAL ENGINEER — EXPIRES 5/3/96 — 7-24-95 BRIDGE DESIGN ENGINEER

Washington State Department of Transportation

SR 167
15TH NW TO 84TH AVE SO.
HOV SC & DI - STAGE 2
BRIDGE 167/121 E&W

NOISE WALL DETAILS

BRIDGE SHEET NO. 1

SHEET 661 OF 663 SHEETS

SR ____ JOB NO. ____ SHEET ____

20-JLY-95

SMALL_JOBROOT:[FGB]MW_SR167_S.FGB;1

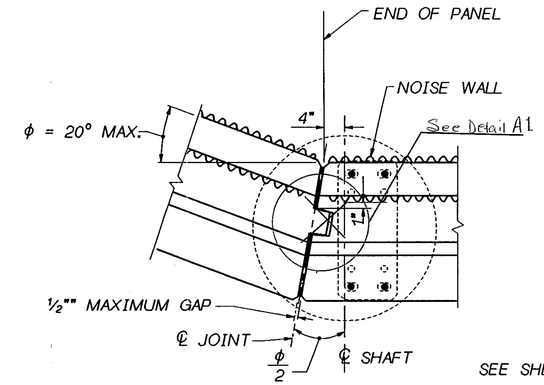

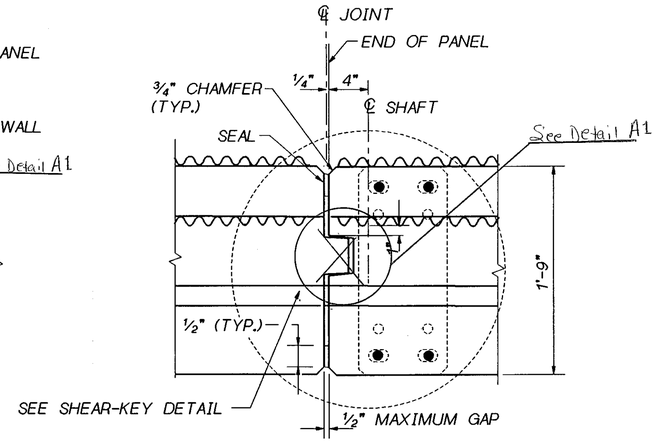

DETAIL (A)

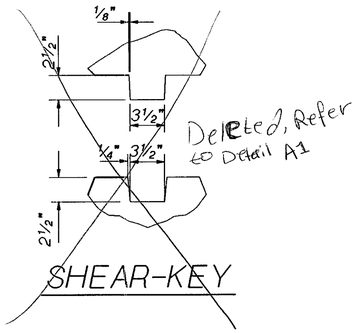

SHEAR-KEY

GENERAL NOTES

1. ALL MATERIAL AND WORKMANSHIP SHALL BE IN ACCORDANCE WITH THE REQUIREMENTS OF THE STATE OF WASHINGTON DEPARTMENT OF TRANSPORTATION CURRENT STANDARD SPECIFICATIONS FOR ROAD, BRIDGE AND MUNICIPAL CONSTRUCTION.
2. THIS WALL HAS BEEN DESIGNED IN ACCORDANCE WITH THE REQUIREMENTS OF THE 1989 AASHTO STANDARD SPECIFICATIONS FOR STRUCTURAL DESIGN OF THE SOUND BARRIERS, 1992 AASHTO STANDARD SPECIFICATIONS FOR HIGHWAY BRIDGES AND INTERIMS TO 1993, AND BUILDING CODE REQUIREMENTS FOR REINFORCED CONCRETE (ACI-318-89).
3. SEISMIC DESIGN OF THIS WALL CONFORMS TO THE PROVISIONS OF THE AASHTO GUIDE SPECIFICATIONS FOR STRUCTURAL DESIGN OF SOUND BARRIERS, DATED 1989. AN ACCELERATION COEFFICIENT OF 0.25 HAS BEEN USED.
4. THE CONTRACTOR SHALL CONSIDER SUFFICIENT SUPPORTS DURING SHIPPING AND INSTALLATION OF PRECAST PANELS TO PREVENT UNDUE STRESS.

MATERIAL
REINFORCING BAR AASHTO M31 GR 60
CONCRETE CL. 4000 FOR PANEL AND SHAFTS.
GROUT 4000 @ 28 DAYS.

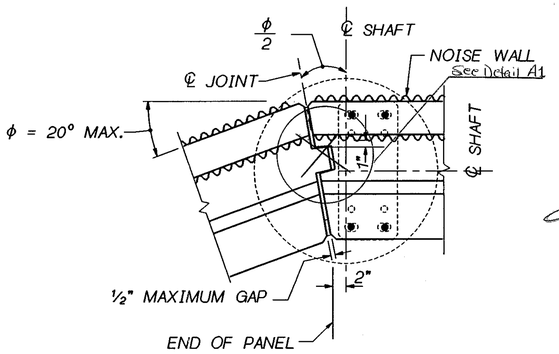

ANGLE POINT PLAN

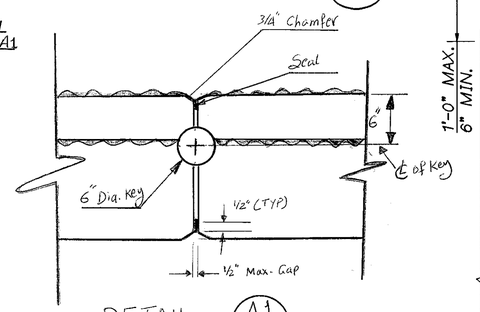

DETAIL (A1)

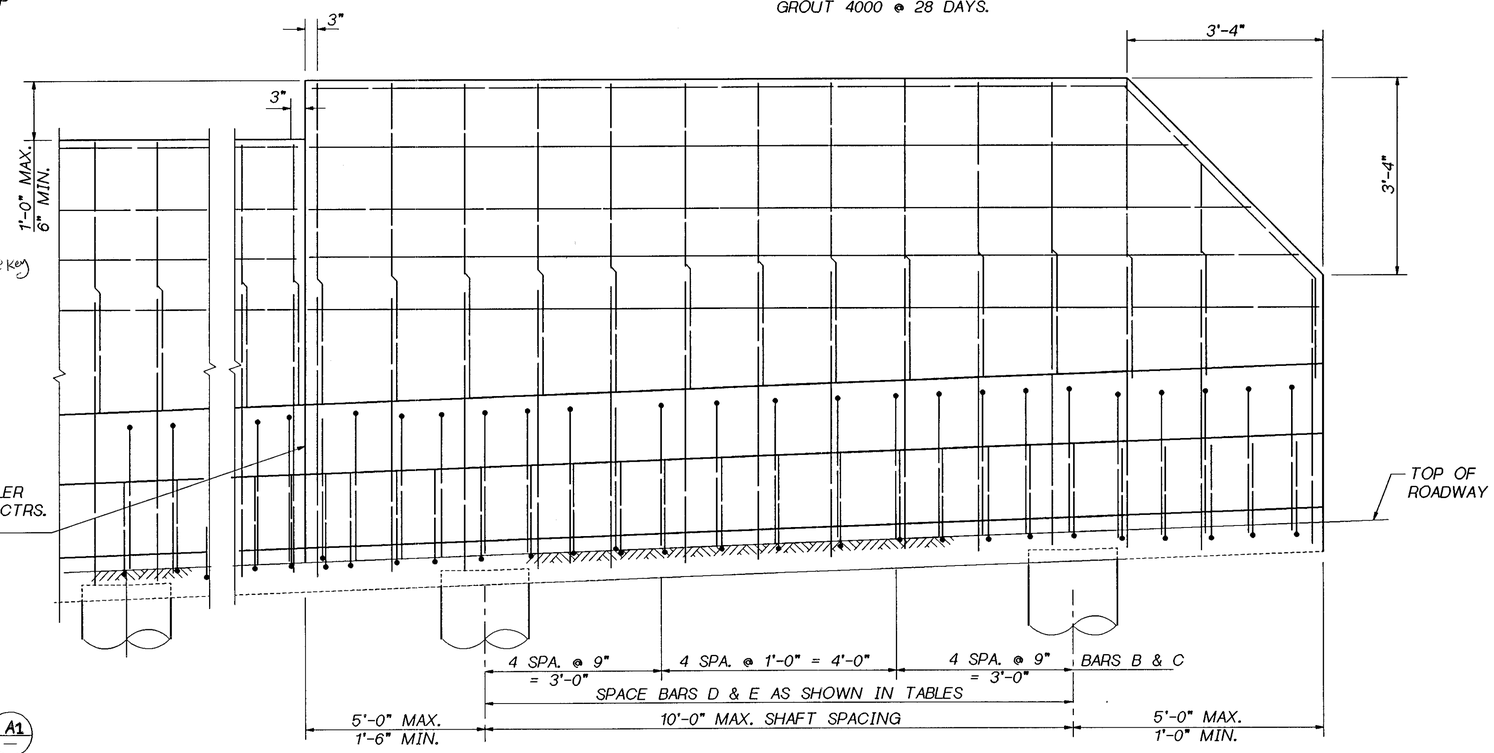

ELEVATION

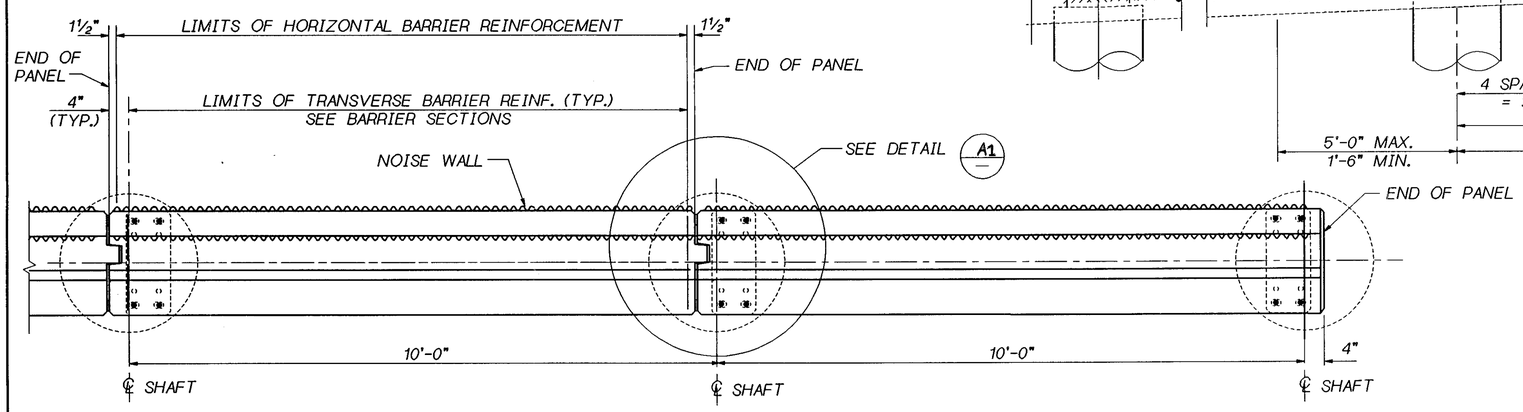

TYPICAL INERMEDIATE & END PANEL

FOR "AS CONSTRUCTED PLANS" ONLY

OPTION #1

PRECAST CONCRETE ACOUSTICAL ATTENUATOR WALL WITH TRAFFIC BARRIER ON SHAFT ~ SHEET 1 OF 2

Bridge Design Engr. C. C. RUTH					REGION NO.	STATE	FED. AID PROJ. NO.	SHEET NO.	TOTAL SHEETS
Supervisor R. T. SHAEFER					10	WASH.			
Designed By B. KHALEGHI 7-95					JOB NUMBER				
Checked By					95W036				
Detailed By V. S. NGUYEN 7-95									
Bridge Projects Engr.									
Prelim. Plan By									
Architect/Specialist	DATE	REVISION	BY	APP'D	4771				

BRIDGE AND STRUCTURES OFFICE

RAYMOND T. SHAEFER — STATE OF WASHINGTON — 14376 — REGISTERED PROFESSIONAL ENGINEER — EXPIRES 6/23/96 — 7-24-95 — SUPERVISING BRIDGE ENGINEER

CHARLES C. RUTH — STATE OF WASHINGTON — 18629 — REGISTERED PROFESSIONAL ENGINEER — EXPIRES 5/3/96 — 7-24-95 — BRIDGE DESIGN ENGINEER

Washington State Department of Transportation

SR 167
15TH NW TO 84TH AVE SO.
HOV SC & DI - STAGE 2
BRIDGE 167/121 E&W

NOISE WALL DETAILS

BRIDGE SHEET NO. 2

SHEET 662 OF 663 SHEETS

SR ___ JOB NO. ___ SHEET ___

20-JLY-95

SMALL_JOBROOT:(FGB)NW_SR167_D.FGB: 1

GENERAL NOTES

1. ALL MATERIAL AND WORKMANSHIP SHALL BE IN ACCORDANCE WITH THE REQUIREMENTS OF THE STATE OF WASHINGTON, DEPARTMENT OF TRANSPORTATION STANDARD SPECIFICATIONS FOR ROAD, BRIDGE AND MUNICIPAL CONSTRUCTION.
2. THIS WALL HAS BE DESIGNED IN ACCORDANCE WITH THE REQUIREMENTS OF THE 1989 AASHTO STANDARD SPECIFICATIONS FOR STRUCTURAL DESIGN OF SOUND BARRIERS. 1989 AASHTO STANDARD SPECIFCATIONS FOR HIGHWAY BRIDGES AND INTERIMS TO 1991 AND BUILDING CODE REQUIREMENTS FOR REINFORCED CONCRETE (ACI-318-89).
3. SEISMIC DESIGN OF THIS WALL CONFORMS TO THE PROVISIONS OF THE AASHTO GUIDE SPECIFICATIONS FOR STRUCTURAL DESIGN OF SOUND BARRIERS, DATED 1989. AN ACCELERATION COEFFICIENT OF 0.25 HAS BEEN USED.

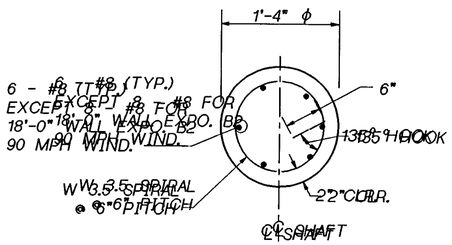

SECTION A

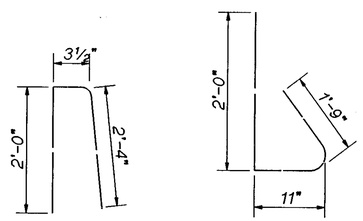

BAR "B" - #4 BAR "C" - #4

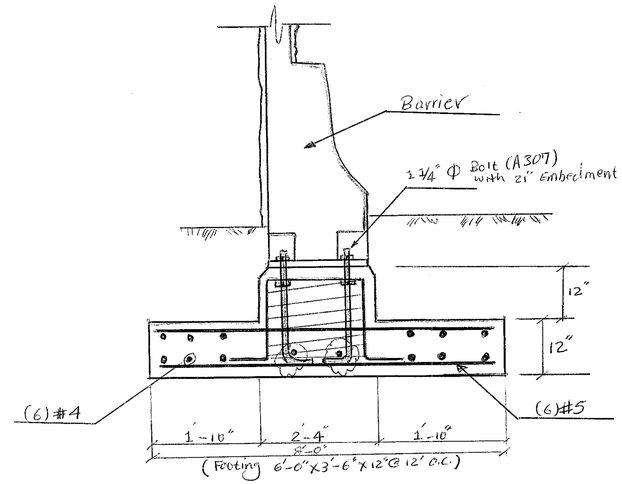

Noise Wall #2

Shaft #	Station
59	16+36.33
66	21+10.17
167	33+22.17
168	33+28.17
169	33+33.55

MATERIAL
REINFORCING BAR AASHTO M31 GR 60
CONCRETE CL. 4000 FOR PANEL AND SHAFTS.

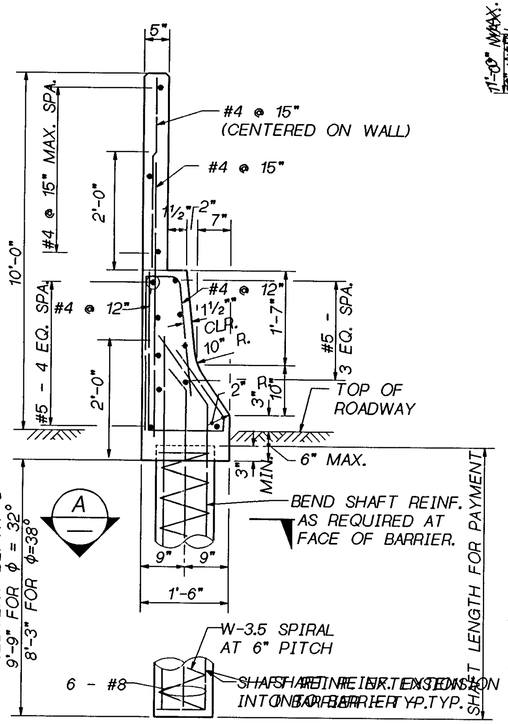

TYPICAL SECTION

Per Co. #42, spread footings constructed @ shafts # 59, 66, 167, 168 and 169. (Noise wall 2)
Also, at shaft 29 of Noise wall #1, @ sta. 14+83.59

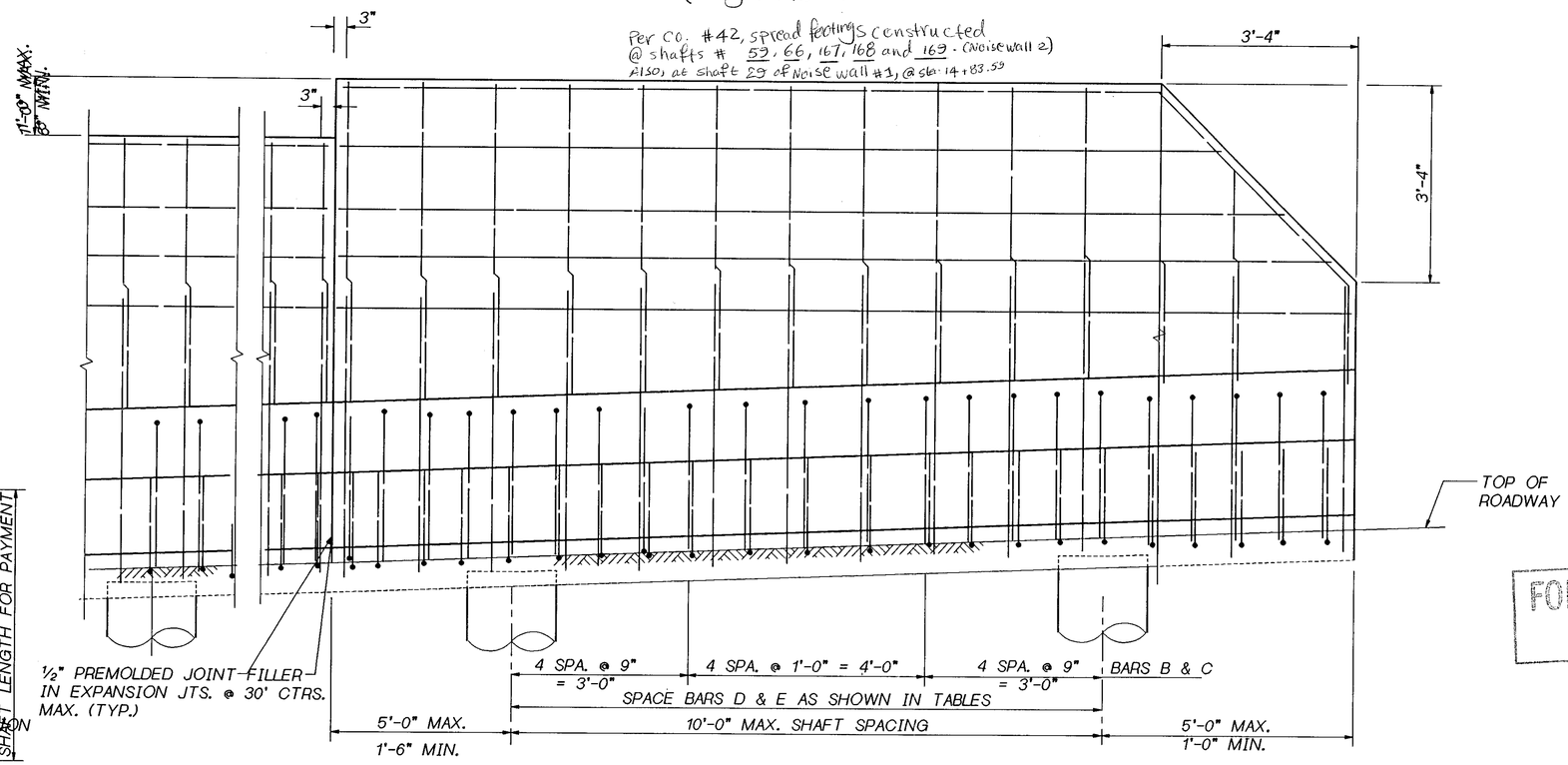

ELEVATION

FOR "AS CONSTRUCTED PLANS" ONLY

OPTION #2

CAST-IN-PLACE ACOUSTICAL ATTENUATOR WALL WITH TRAFFIC BARRIER ON SHAFT FOOTING

Bridge Design Engr. C. C. RUTH				
Supervisor R. T. SHAEFER				
Designed By B. KHALEGHI 7-95				
Checked By				
Detailed By V. S. NGUYEN 7-95				
Bridge Projects Engr.				
Prelim. Plan By				
Architect/Specialist	DATE	REVISION	BY	APP'D

REGION NO.	STATE	FED. AID PROJ. NO.	SHEET NO.	TOTAL SHEETS
10	WASH.			
JOB NUMBER 95W036				
4771				

BRIDGE AND STRUCTURES OFFICE

RAYMOND T. SHAEFER — STATE OF WASHINGTON — 14378 — REGISTERED PROFESSIONAL ENGINEER — EXPIRES 4/23/96 — 7-24-95 — SUPERVISING BRIDGE ENGINEER

CHARLES C. RUTH — STATE OF WASHINGTON — 13862 — REGISTERED PROFESSIONAL ENGINEER — EXPIRES 5/3/96 — 7-24-95 — BRIDGE DESIGN ENGINEER

Washington State Department of Transportation

SR 167
15TH NW TO 84TH AVE SO.
HOV SC & DI - STAGE 2
BRIDGE 167/121 E&W

NOISE WALL DETAILS

BRIDGE SHEET NO. 3

SHEET 663 OF 663 SHEETS

SR ___ JOB NO. ___ SHEET ___

20-JLY-95

SMALL_JOBROOT:[FGB]NW_SR167_E.FGB;1