INDEX

SHEET NO.	PLAN REFERENCE NO.	TITLE
1 - 2	IN1 - IN2	INDEX
3	CT1	CERTIFICATION SHEET
4 - 7	VM1 - VM4	VICINITY MAP
8 - 13	SQ1 - SQ6	SUMMARY OF QUANTITIES
14 - 21	AL1 - AL8	ALIGNMENT PLAN
22 - 23	ROW1 - ROW2	ROW PLAN
24 - 29	EXUT1 - EXUT6	EXISTING UTILITIES PLAN
30 - 31	QTSP1 - QTSP2	QUANTITY TABULATION - SITE PREP AND TESC
32 - 37	SP1 - SP6	SITE PREP AND TESC
38	NTS1	NO TRESPASSING SIGN
39	QTPV1	QUANTITY TABULATION - PAVING PLAN
40 - 45	PV1 - PV6	PAVING PLAN
46 - 47	PD1 - PD2	PAVING DETAILS
48	QTMK1	QUANTITY TABULATION - PAVEMENT MARKINGS
49 - 53	MK1 - MK5	PAVEMENT MARKING PLAN
54	EL1	ELECTRICAL NOTES
55 - 60	EL2 - EL7	ELECTRICAL PLANS
61 - 63	ITS1 - ITS3	TEMPORARY ITS PLAN
64	ITS4	ITS DETAILS
65	BB1	GENERAL NOTES
66	BB2	LAYOUT
67	BB3	CROSSBEAM BOLSTER AND GIRDER STOPS - PLAN AND ELEVATION 1
68	BB4	CROSSBEAM BOLSTER AND GIRDER STOPS - PLAN AND ELEVATION 2
69	BB5	CROSSBEAM BOLSTER AND GIRDER STOPS - DIMENSIONS LIST
70	BB6	CROSSBEAM BOLSTER AND GIRDER STOPS - DETAILS
71	BB7	CROSSBEAM BOLSTER AND GIRDER STOPS - BAR LIST 1
72	BB8	CROSSBEAM BOLSTER AND GIRDER STOPS - BAR LIST 2
73	BB9	END PIER GIRDER STOPS PLAN AND ELEVATION
74	BB10	STEEL COLUMN JACKETS ELEVATIONS AND DETAILS
75	BB11	STEEL COLUMN JACKETS DIMENSIONS LIST
76	BB12	STEEL COLUMN JACKETS & COLLISION WALL ELEV.
77	BB13	STEEL COLUMN JACKETS & COLLISION WALL DETAILS
78	BB14	RAILROAD SHORING SITE PLAN & TRACK PROFILE
79	BB15	RAILROAD SHORING AND MONITORING REQUIREMENTS
80	BB16	RAILROAD SHORING GENERAL NOTES
81	BB17	PIER 2 RAILROAD SHORING BRACED CONDITION DETAILS
82	BB18	RAILROAD SHORING DETAILS
83	BB19	RAILROAD SHORING FALL PROTECTION RAIL DETAILS

INDEX (CONTINUED)

SHEET NO.	PLAN REFERENCE NO.	TITLE
84	BC1	LAYOUT
85	BC2	CROSSBEAM BOLSTER AND GIRDER STOPS - PLAN AND ELEVATION
86	BC3	CROSSBEAM BOLSTER AND GIRDER STOPS - DETAILS
87	BC4	CROSSBEAM BOLSTER AND GIRDER STOPS - BAR LIST
88	BC5	END PIER GIRDER STOPS PLAN AND ELEVATION
89	BC6	STEEL COLUMN JACKETS ELEVATIONS AND DETAILS
90	BD1	LAYOUT
91	BD2	CROSSBEAM BOLSTER AND GIRDER STOPS - PLAN AND ELEVATION
92	BD3	CROSSBEAM BOLSTER AND GIRDER STOPS - DETAILS
93	BD4	CROSSBEAM BOLSTER AND GIRDER STOPS - BAR LIST
94	BD5	END PIER GIRDER STOPS PLAN AND ELEVATION
95	BD6	STEEL COLUMN JACKETS ELEVATIONS AND DETAILS
96	BE1	LAYOUT
97	BE2	CROSSBEAM BOLSTER AND GIRDER STOPS - PLAN AND ELEVATION
98	BE3	CROSSBEAM BOLSTER AND GIRDER STOPS - DETAILS
99	BE4	CROSSBEAM BOLSTER AND GIRDER STOPS - BAR LIST
100	BE5	END PIER GIRDER STOPS PLAN AND ELEVATION
101	BE6	STEEL COLUMN JACKETS ELEVATIONS AND DETAILS
102	BF1	LAYOUT
103	BF2	CROSSBEAM BOLSTER AND GIRDER STOPS - PLAN AND ELEVATION
104	BF3	CROSSBEAM BOLSTER AND GIRDER STOPS - BAR LIST
105	BF4	END PIER GIRDER STOPS PLAN AND ELEVATION
106	BF5	STEEL COLUMN JACKETS ELEVATIONS AND DETAILS
107	BG1	LAYOUT
108	BG2	CROSSBEAM BOLSTER AND GIRDER STOPS - PLAN AND ELEVATION
109	BG3	CROSSBEAM BOLSTER AND GIRDER STOPS - BAR LIST
110	BG4	END PIER GIRDER STOPS PLAN AND ELEVATION
111	BG5	STEEL COLUMN JACKETS ELEVATIONS AND DETAILS

PLAN REFERENCE NO.

SHEET OF SHEETS

NOTE: ALL SHEET REFERENCES, FIRST NOS. OF STRUCTURE CODE DESIGNATIONS AND MATCH LINE SHEET REFERENCES, ETC., THROUGHOUT THE PLANS, REFER TO THE ENTRY IN THE PLAN REFERENCE NUMBER BOX.

INDEX

SHEET NO.	PLAN REFERENCE NO.	TITLE
112	BH1	LAYOUT
113	BH2	CROSSBEAM BOLSTER AND GIRDER STOPS - PLAN AND ELEVATION
114	BH3	CROSSBEAM BOLSTER AND GIRDER STOPS - BAR LIST
115	BH4	END PIER GIRDER STOPS PLAN AND ELEVATION
116	BH5	STEEL COLUMN JACKETS ELEVATIONS AND DETAILS
117	BH6	PIER 2 COLLISION WALL REMOVAL ELEVATION
118	BH7	PIER 2 COLLISION WALL REMOVAL DETAILS
119	BJ1	LAYOUT
120	BJ2	PIERS 2 & 3 INFILL WALLS PLAN, ELEVATION & SECTION
121	BJ3	PIERS 2 & 3 INFILL WALLS REINFORCING DETAILS & BAR LIST
122	BJ4	PIERS 2 & 3 INFILL WALLS FOOTING REINFORCING DETAILS & BAR LIST
123	BJ5	STEEL COLUMN JACKETS ELEVATIONS AND DETAILS
124	BJ6	GIRDER FRP - PLAN, ELEVATION AND DETAILS
125	BK1	LAYOUT
126	BK2	PIERS 2 & 3 INFILL WALLS PLAN, ELEVATION & SECTION
127	BK3	PIERS 2 & 3 INFILL WALLS REINFORCING DETAILS
128	BK4	PIERS 2 & 3 INFILL WALLS REINFORCING BAR LIST
129	BK5	PIERS 2 & 3 INFILL WALLS FOOTING REINFORCING DETAILS & BAR LIST
130	BK6	GIRDER FRP - PLAN, ELEVATION AND DETAILS
131	BK7	PIERS 2 & 3 COLLSION WALL REMOVAL ELEVATION AND DETAILS
132	BL1	LAYOUT
133	BL2	CROSSBEAM BOLSTER AND GIRDER STOPS - PLAN AND ELEVATION
134	BL3	CROSSBEAM BOLSTER AND GIRDER STOPS - DETAILS
135	BL4	CROSSBEAM BOLSTER AND GIRDER STOPS - BAR LIST
136	BL5	STEEL COLUMN JACKETS ELEVATIONS AND DETAILS
137	BL6	PIERS 2 & 3 COLLSION WALL REMOVAL ELEVATION AND DETAILS
138 - 167	TC1 - TC30	TRAFFIC CONTROL PLANS
168 - 169	PTC1 - PTC2	PEDESTRIAN TRAFFIC CONTROL
170 - 176	DU1 - DU7	DETOUR PLAN

INDEX (CONTINUED)

SHEET NO.	PLAN REFERENCE	TITLE

PLAN REFERENCE NO.

SHEET OF SHEETS

NOTE: ALL SHEET REFERENCES, FIRST NOS. OF STRUCTURE CODE DESIGNATIONS AND MATCH LINE SHEET REFERENCES, ETC., THROUGHOUT THE PLANS, REFER TO THE ENTRY IN THE PLAN REFERENCE NUMBER BOX.

FILE NAME	T:\412348\XL5937\CAD\ContractPlans\XL5937_PS_IN.dgn			
TIME				
DATE				
PLOTTED BY				
DESIGNED BY	B. BASSERI			
ENTERED BY	B. BASSERI			
CHECKED BY	M. O'NEIL			
PROJ. ENGR.	C. ANDERSON			
REGIONAL ADM.	M. COTTEN	REVISION	DATE	BY

REGION NO.	STATE	FED.AID PROJ.NO.
10	WASH	
JOB NUMBER 20A039		
CONTRACT NO.		LOCATION NO.

P.E. STAMP BOX DATE

P.E. STAMP BOX DATE

Washington State Department of Transportation

I-405
BN RR BRIDGE TO PED TRAIL BRIDGE
SEISMIC RETROFIT

INDEX

PLAN REF. NO. IN2

SHEET 2 OF 176 SHEETS

PROJECT LICENSED PROFESSIONAL CERTIFICATES

Cullen Anderson Cullen Anderson May 31, 2022 AS A LICENSED PROFESSIONAL IN DIRECT RESPONSIBLE CHARGE OF DEVELOPING THIS CONTRACT, I CERTIFY THAT ALL PLANS THAT CONTAIN MY STAMP HAVE BEEN DEVELOPED UNDER MY SUPERVISION.	Duke Do Duke Do May 31, 2022 AS A LICENSED PROFESSIONAL IN DIRECT RESPONSIBLE CHARGE OF DEVELOPING THIS CONTRACT, I CERTIFY THAT ALL PLANS THAT CONTAIN MY STAMP HAVE BEEN DEVELOPED UNDER MY SUPERVISION.	Michael Forbis Michael Forbis (May 31, 2022 13:22 PDT) Michael Forbis May 31, 2022 AS A LICENSED PROFESSIONAL IN DIRECT RESPONSIBLE CHARGE OF DEVELOPING THIS CONTRACT, I CERTIFY THAT ALL PLANS THAT CONTAIN MY STAMP HAVE BEEN DEVELOPED UNDER MY SUPERVISION.	Lee Andrews Lee Andrews (May 31, 2022 11:39 PDT) Lee Andrews May 31, 2022 AS A LICENSED PROFESSIONAL IN DIRECT RESPONSIBLE CHARGE OF DEVELOPING THIS CONTRACT, I CERTIFY THAT ALL PLANS THAT CONTAIN MY STAMP HAVE BEEN DEVELOPED UNDER MY SUPERVISION.
AS A LICENSED PROFESSIONAL IN DIRECT RESPONSIBLE CHARGE OF DEVELOPING THIS CONTRACT, I CERTIFY THAT ALL PLANS THAT CONTAIN MY STAMP HAVE BEEN DEVELOPED UNDER MY SUPERVISION.	AS A LICENSED PROFESSIONAL IN DIRECT RESPONSIBLE CHARGE OF DEVELOPING THIS CONTRACT, I CERTIFY THAT ALL PLANS THAT CONTAIN MY STAMP HAVE BEEN DEVELOPED UNDER MY SUPERVISION.	AS A LICENSED PROFESSIONAL IN DIRECT RESPONSIBLE CHARGE OF DEVELOPING THIS CONTRACT, I CERTIFY THAT ALL PLANS THAT CONTAIN MY STAMP HAVE BEEN DEVELOPED UNDER MY SUPERVISION.	AS A LICENSED PROFESSIONAL IN DIRECT RESPONSIBLE CHARGE OF DEVELOPING THIS CONTRACT, I CERTIFY THAT ALL PLANS THAT CONTAIN MY STAMP HAVE BEEN DEVELOPED UNDER MY SUPERVISION.
AS A LICENSED PROFESSIONAL IN DIRECT RESPONSIBLE CHARGE OF DEVELOPING THIS CONTRACT, I CERTIFY THAT ALL PLANS THAT CONTAIN MY STAMP HAVE BEEN DEVELOPED UNDER MY SUPERVISION.	AS A LICENSED PROFESSIONAL IN DIRECT RESPONSIBLE CHARGE OF DEVELOPING THIS CONTRACT, I CERTIFY THAT ALL PLANS THAT CONTAIN MY STAMP HAVE BEEN DEVELOPED UNDER MY SUPERVISION.	AS A LICENSED PROFESSIONAL IN DIRECT RESPONSIBLE CHARGE OF DEVELOPING THIS CONTRACT, I CERTIFY THAT ALL PLANS THAT CONTAIN MY STAMP HAVE BEEN DEVELOPED UNDER MY SUPERVISION.	AS A LICENSED PROFESSIONAL IN DIRECT RESPONSIBLE CHARGE OF DEVELOPING THIS CONTRACT, I CERTIFY THAT ALL PLANS THAT CONTAIN MY STAMP HAVE BEEN DEVELOPED UNDER MY SUPERVISION.

NOTES:

THIS PLAN SET WAS DEVELOPED ELECTRONICALLY UNDER THE DIRECT SUPERVISION OF THE LICENSED PROFESSIONALS THAT HAVE AFFIXED THEIR SIGNATURE TO THIS PAGE.

THIS SHEET SERVES AS THE CERTIFICATION BY THE ABOVE LICENSED PROFESSIONALS OF ALL SHEETS IN THIS PLAN SET WHERE THEIR STAMPS AND SIGNATURES APPEAR.

NOTES:

1. SEE DETOUR PLAN SHEETS DU1-DU7.
2. SEE CONSTRUCTION ALIGNMENTS ON SHEETS VM2-VM4.
3. SEE SHEETS VM2-VM4 FOR MORE DETAILS.

T.23N. R.4E. W.M., SECTION 24
T.25N. R.5E. W.M., SECTIONS 20 AND 29
T.26N. R.5E. W.M., SECTION 28

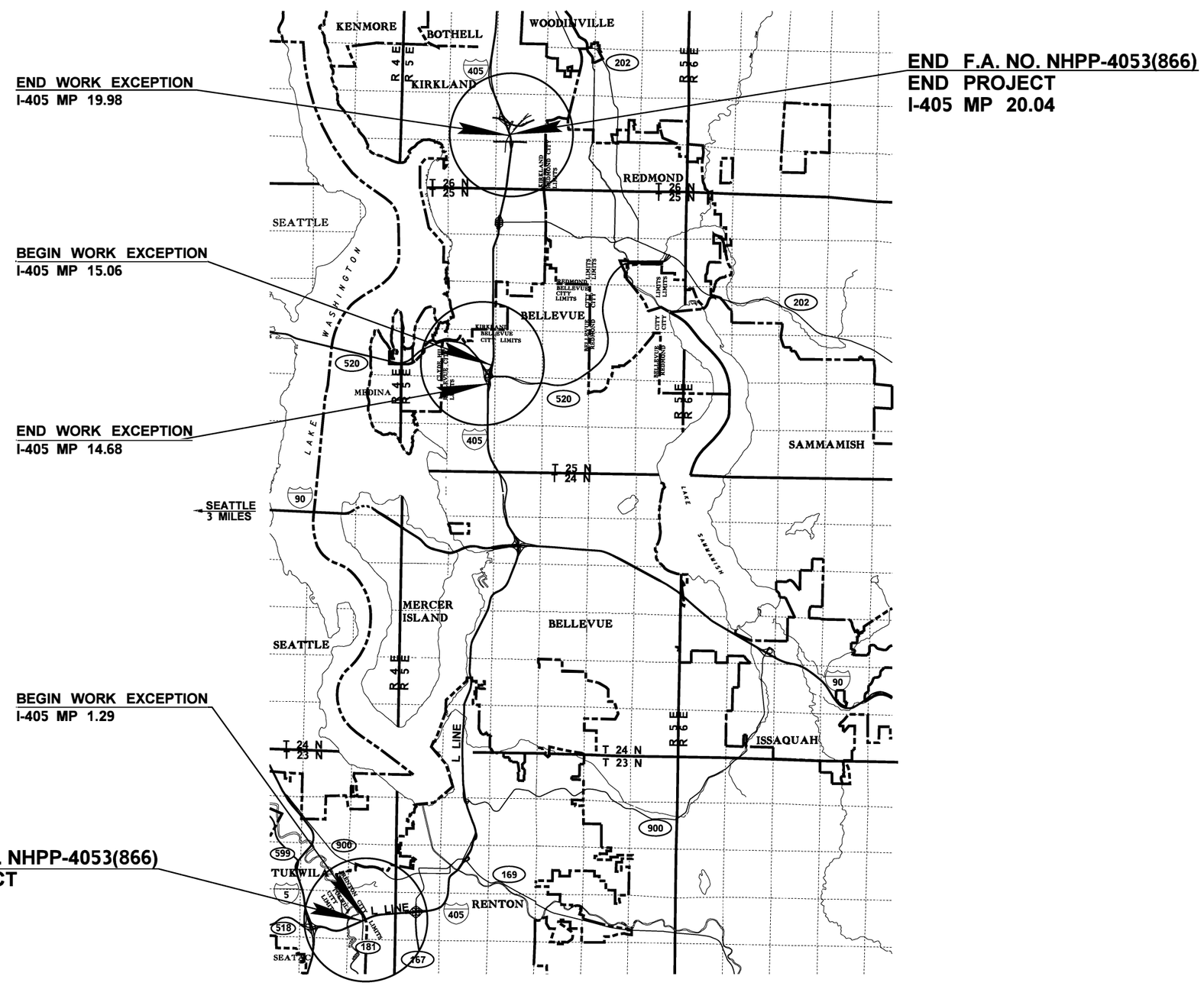

0 6500 13000
SCALE IN FEET

FILE NAME	T:\412348\XL5937\CAD\ContractPlans\XL5937_PS_VM.dgn						
TIME	10:27:19 AM				REGION NO. 10	STATE WASH	FED.AID PROJ.NO.
DATE	5/20/2022						
PLOTTED BY	oneilma						
DESIGNED BY	B. BASSERI				JOB NUMBER 20A039		
ENTERED BY	B. BASSERI						
CHECKED BY	M. O'NEIL				CONTRACT NO.		LOCATION NO.
PROJ. ENGR.	C. ANDERSON						
REGIONAL ADM.	M. COTTEN	REVISION	DATE	BY			

P.E. STAMP BOX DATE

P.E. STAMP BOX DATE

Washington State Department of Transportation

I-405
BN RR BRIDGE TO PED TRAIL BRIDGE SEISMIC RETROFIT

VICINITY MAP

Plot 1
PLAN REF NO **VM1**
SHEET 4 OF 176 SHEETS

T.23N. W.M.

NOTES:

1. SEE SHEETS DU1 AND DU2 FOR DETOUR PLAN.
2. SEE SHEETS AL1 - AL6 FOR ALIGNMENTS.

INCLUDED IN PROJECT ADDITIONAL ALIGNMENTS		
ALIGNMENT	BEGIN CONSTRUCTION	END CONSTRUCTION
A LINE	10+00.0	14+59.1
B LINE	10+00.0	12+84.4

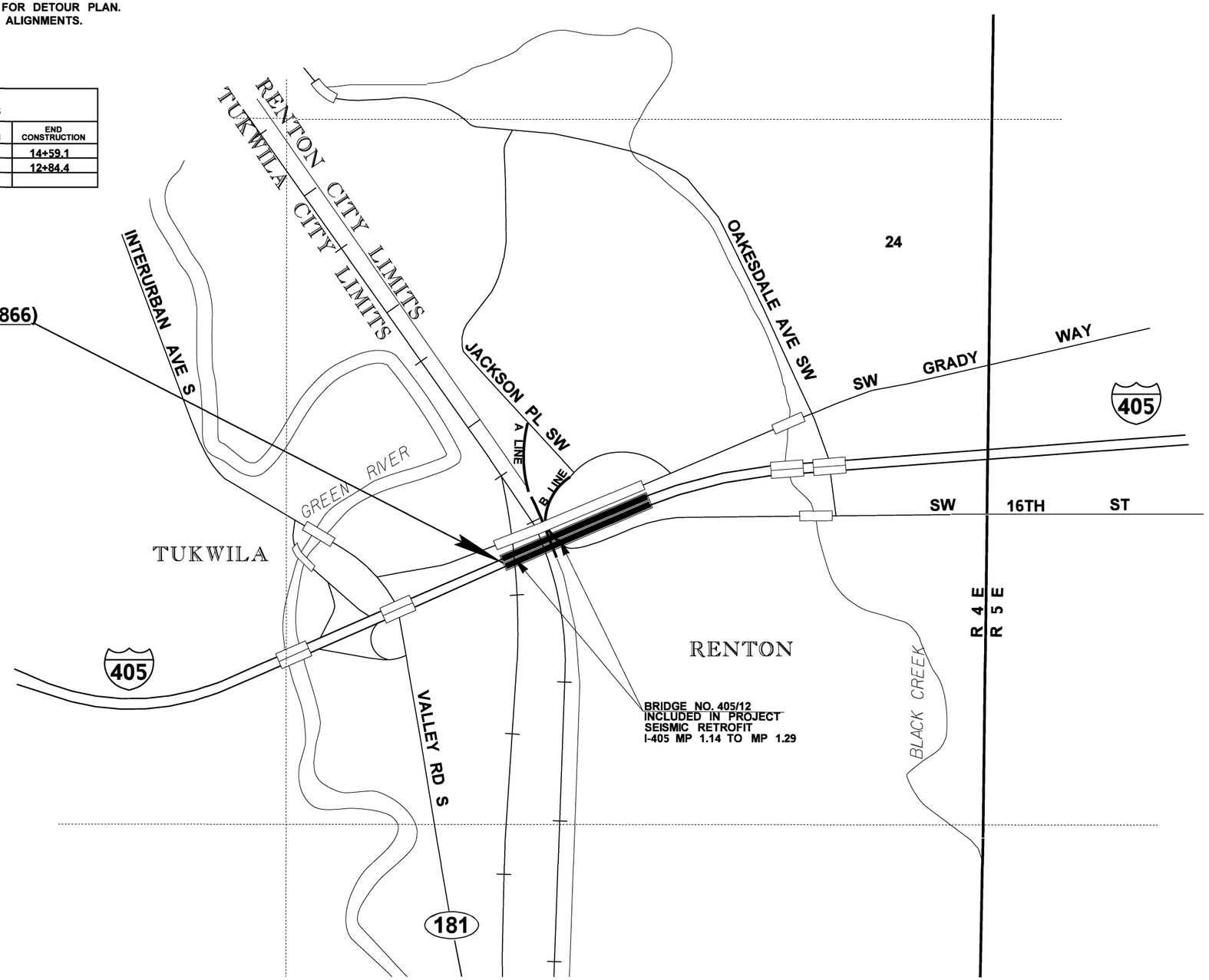

FILE NAME	T:\412348\XL5937\CAD\ContractPlans\XL5937_PS_VM.dgn					
TIME	10:27:20 AM				REGION NO. 10	STATE WASH	FED.AID PROJ.NO.
DATE	5/20/2022					
PLOTTED BY	oneilma					
DESIGNED BY	B. BASSERI				JOB NUMBER 20A039	
ENTERED BY	B. BASSERI					
CHECKED BY	M. O'NEIL				CONTRACT NO.	LOCATION NO.
PROJ. ENGR.	C. ANDERSON					
REGIONAL ADM.	M. COTTEN	REVISION	DATE	BY		

P.E. STAMP BOX DATE

P.E. STAMP BOX DATE

Washington State Department of Transportation

I-405
BN RR BRIDGE TO PED TRAIL BRIDGE
SEISMIC RETROFIT

VICINITY MAP

Plot 2
PLAN REF NO VM2
SHEET 5 OF 176 SHEETS

NOTES:

1. SEE SHEETS DU3 THRU DU7 FOR DETOUR PLAN.
2. SEE SHEETS AL1 - AL6 FOR ALIGNMENTS.

INCLUDED IN PROJECT ADDITIONAL ALIGNMENTS		
ALIGNMENT	BEGIN CONSTRUCTION	END CONSTRUCTION
C LINE	100+00.0	104+36.5
D LINE	10+00.00	15+58.2
E LINE	9+83.5	13+50.0
F LINE	10+00.0	14+80.5
CB	30+00.0	39+45.1

T.25N. R.5E. W.M.

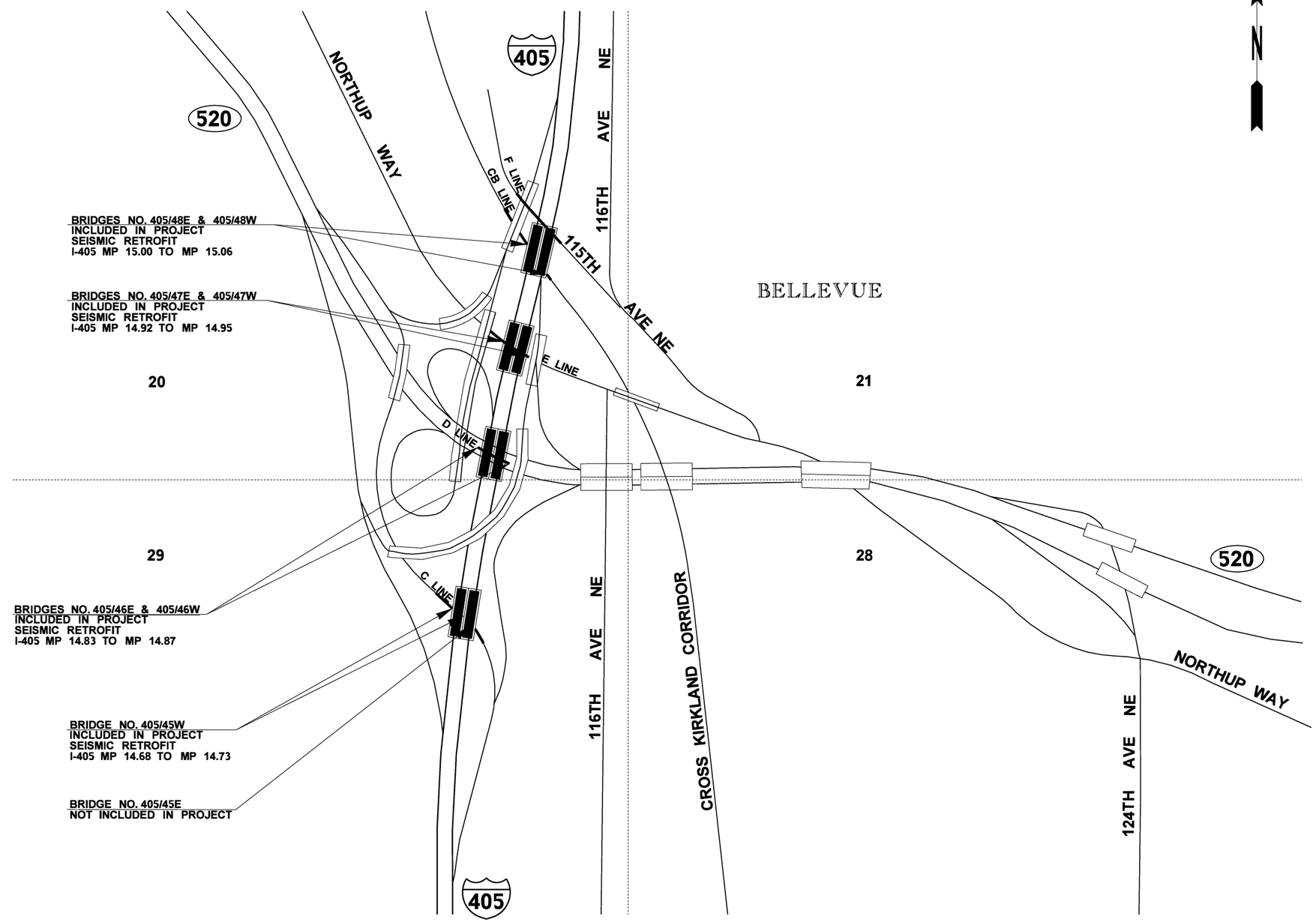

0 1750 3500
SCALE IN FEET

FILE NAME	T:\412348\XL5937\CAD\ContractPlans\XL5937_PS_VM.dgn						
TIME	10:27:21 AM				REGION NO. 10	STATE WASH	FED.AID PROJ.NO.
DATE	5/20/2022						
PLOTTED BY	oneilma				JOB NUMBER 20A039		
DESIGNED BY	B. BASSERI						
ENTERED BY	B. BASSERI						
CHECKED BY	M. O'NEIL				CONTRACT NO.		LOCATION NO.
PROJ. ENGR.	C. ANDERSON						
REGIONAL ADM.	M. COTTEN	REVISION	DATE	BY			

P.E. STAMP BOX DATE

P.E. STAMP BOX DATE

Washington State Department of Transportation

I-405
BN RR BRIDGE TO PED TRAIL BRIDGE
SEISMIC RETROFIT

VICINITY MAP

Plot 3
PLAN REF NO VM3
SHEET 6 OF 176 SHEETS

NOTES:

2. SEE SHEETS AL1 - AL6 FOR ALIGNMENTS.

INCLUDED IN PROJECT ADDITIONAL ALIGNMENTS		
ALIGNMENT	BEGIN CONSTRUCTION	END CONSTRUCTION
CKC LINE	48+84.4	56+98.7

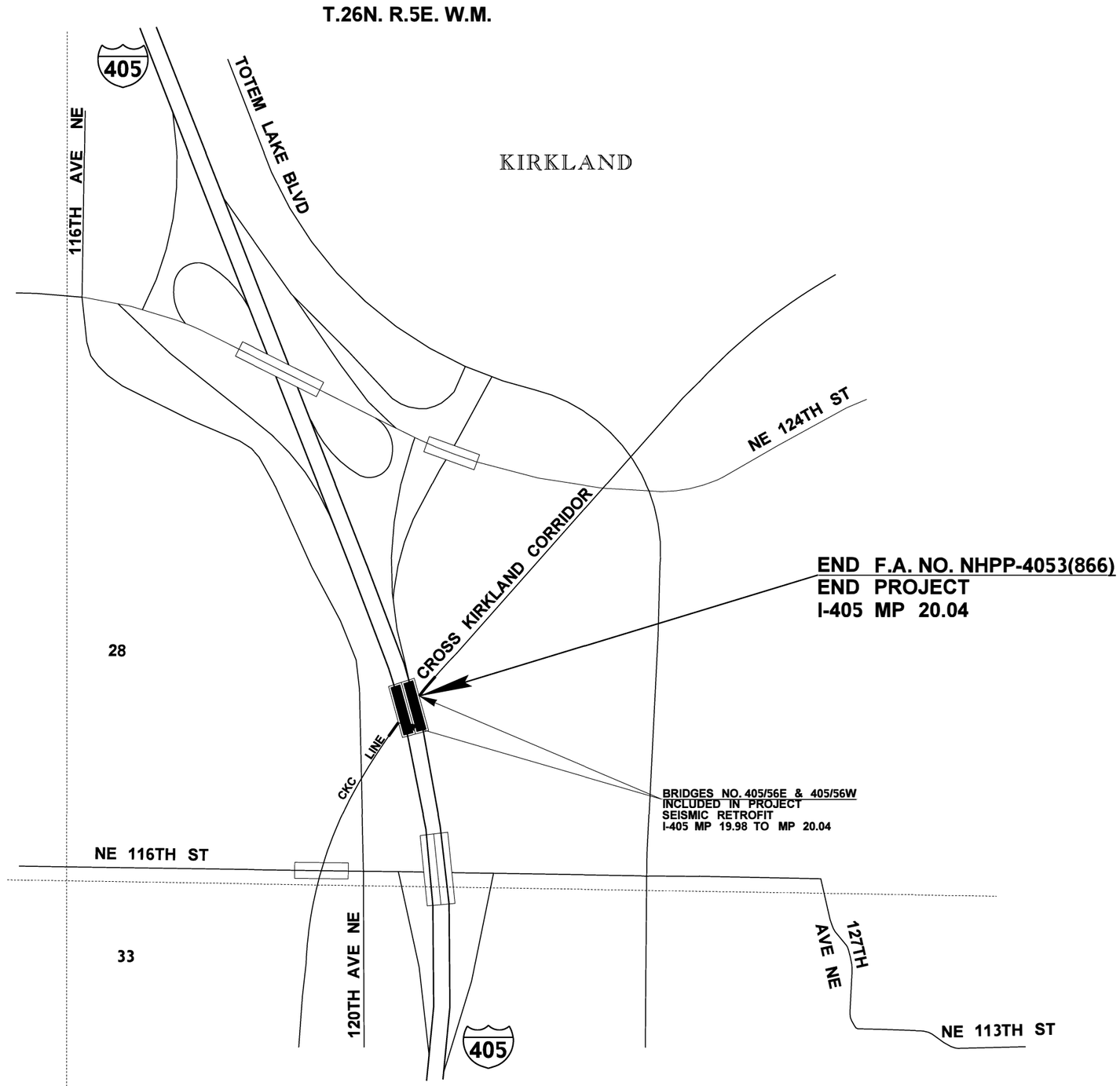

0 1750 3500
SCALE IN FEET

FILE NAME	T:\412348\XL5937\CAD\ContractPlans\XL5937_PS_VM.dgn						
TIME	10:27:22 AM				REGION NO. 10	STATE WASH	FED.AID PROJ.NO.
DATE	5/20/2022						
PLOTTED BY	oneilma				JOB NUMBER 20A039		
DESIGNED BY	B. BASSERI						
ENTERED BY	B. BASSERI				CONTRACT NO.	LOCATION NO.	
CHECKED BY	M. O'NEIL						
PROJ. ENGR.	C. ANDERSON						
REGIONAL ADM.	M. COTTEN	REVISION	DATE	BY			

P.E. STAMP BOX DATE

P.E. STAMP BOX DATE

Washington State Department of Transportation

I-405
BN RR BRIDGE TO PED TRAIL BRIDGE
SEISMIC RETROFIT

VICINITY MAP

Plot 4
PLAN REF NO VM4
SHEET 7 OF 176 SHEETS

SUMMARY OF QUANTITIES

ITEM NO	TOTAL QUANTITY	SUB-TOTAL * SECTION I-07.2(1) OF STANDARD SPECS	SUB-TOTAL ** SECTION I-07.2(2) OF STANDARD SPECS	STD. ITEM NO.	UNIT	ITEM	GROUP 1 BRIDGE 405/12 MP 1.14 TO MP 1.19	GROUP 2 BRIDGE 405/12 MP 1.19 TO MP 1.29	GROUP 3 BRIDGE 405/45W MP 14.68 TO MP 14.73	GROUP 4 BRIDGE 405/45W MP 14.68 TO MP 14.73	GROUP 3 BRIDGE 405/46W MP 14.83 TO MP 14.87	GROUP 4 BRIDGE 405/46W MP 14.83 TO MP 14.87	GROUP 3 BRIDGE 405/46E MP 14.83 TO MP 14.87	GROUP 4 BRIDGE 405/46E MP 14.83 TO MP 14.87	GROUP 3 BRIDGE 405/47W MP 14.92 TO MP 14.95	GROUP 4 BRIDGE 405/47W MP 14.92 TO MP 14.95	GROUP 3 BRIDGE 405/47E MP 14.92 TO MP 14.95	GROUP 4 BRIDGE 405/47E MP 14.92 TO MP 14.95	GROUP 3 BRIDGE 405/48W MP 15.00 TO MP 15.06	GROUP 4 BRIDGE 405/48W MP 15.00 TO MP 15.06	GROUP 3 BRIDGE 405/48E MP 15.00 TO MP 15.06	GROUP 4 BRIDGE 405/48E MP 15.00 TO MP 15.06
						PREPARATION																
1	LUMP SUM		LUMP SUM	0001	L.S.	MOBILIZATION	L.S.	L.S.	L.S.	L.S.	L.S.	L.S.	L.S.	L.S.	L.S.	L.S.	L.S.	L.S.	L.S.	L.S.	L.S.	L.S.
2	0.35		0.35	0025	ACRE	CLEARING AND GRUBBING	0.07	0.03	0.02	0.01	0.04	0.01	0.02	0.02	0.02	0.01	0.01	0.01	0.02	0.01		
3	LUMP SUM		LUMP SUM	0050	L.S.	REMOVAL OF STRUCTURES AND OBSTRUCTIONS		L.S.							L.S.	L.S.	L.S.	L.S.				
4	LUMP SUM		LUMP SUM	0061	L.S.	REMOVING PORTION OF EXISTING BRIDGE 405/12	L.S.	L.S.														
5	LUMP SUM		LUMP SUM	0061	L.S.	REMOVING PORTION OF EXISTING BRIDGE 405/48E															L.S.	L.S.
6	LUMP SUM		LUMP SUM	0061	L.S.	REMOVING PORTION OF EXISTING BRIDGE 405/56W																
7	LUMP SUM		LUMP SUM	0061	L.S.	REMOVING PORTION OF EXISTING BRIDGE 405/56E																
8	513.00		513.00	0145	L.F.	REMOVING CONC. BARRIER					74.00	39.00	264.00	136.00								
9	817.00		817.00	0170	L.F.	REMOVING GUARDRAIL							298.00	154.00					158.00	82.00	82.00	43.00
10	2.00		2.00	0182	EACH	REMOVING GUARDRAIL ANCHOR					1.00	1.00										
11	10110.00		10110.00	0187	L.F.	REMOVING PAINT LINE					7,580.00	2,530.00										
12	11490.00		11490.00	0190	L.F.	REMOVING PLASTIC LINE					8,620.00	2,870.00										
13	1.70		1.70	0208	HUND	REMOVING RAISED PAVEMENT MARKER					1.30	0.40										
14	50000.00		50000.00		DOL	UNANTICIPATED CONTAMINATED SOIL, EXC., H. AND D.	25,000.00	25,000.00														
						GRADING																
15	36.00		36.00	0405	C.Y.	COMMON BORROW INCL. HAUL					24.00	12.00										
16	82.00		82.00	0409	C.Y.	SELECT BORROW INCL. HAUL					27.00	14.00	27.00	14.00								
17	17.00		17.00	0470	C.Y.	EMBANKMENT COMPACTION					11.00	6.00										
						STRUCTURE																
18	2311.00		2311.00	4005	C.Y.	STRUCTURE EXCAVATION CLASS A	227.00	117.00	47.00	25.00	89.00	46.00	95.00	49.00	74.00	39.00	153.00	79.00	227.00	117.00	200.00	103.00
19	LUMP SUM		LUMP SUM	4013	L.S.	SHORING OR EXTRA EXCAVATION CL. A - BR NO. 405/12	L.S.	L.S.														
20	LUMP SUM		LUMP SUM	4013	L.S.	SHORING OR EXTRA EXCAVATION CL. A - BR NO. 405/45W			L.S.	L.S.												
21	LUMP SUM		LUMP SUM	4013	L.S.	SHORING OR EXTRA EXCAVATION CL. A - BR NO. 405/46W					L.S.	L.S.										
22	LUMP SUM		LUMP SUM	4013	L.S.	SHORING OR EXTRA EXCAVATION CL. A - BR NO. 405/46E							L.S.	L.S.								
23	LUMP SUM		LUMP SUM	4013	L.S.	SHORING OR EXTRA EXCAVATION CL. A - BR NO. 405/47W									L.S.	L.S.						
24	LUMP SUM		LUMP SUM	4013	L.S.	SHORING OR EXTRA EXCAVATION CL. A - BR NO. 405/47E											L.S.	L.S.				
25	LUMP SUM		LUMP SUM	4013	L.S.	SHORING OR EXTRA EXCAVATION CL. A - BR NO. 405/48W													L.S.	L.S.		
26	LUMP SUM		LUMP SUM	4013	L.S.	SHORING OR EXTRA EXCAVATION CL. A - BR NO. 405/48E															L.S.	L.S.
27	LUMP SUM		LUMP SUM	4013	L.S.	SHORING OR EXTRA EXCAVATION CL. A - BR NO. 405/56W																
28	LUMP SUM		LUMP SUM	4013	L.S.	SHORING OR EXTRA EXCAVATION CL. A - BR NO. 405/56E																
29	LUMP SUM		LUMP SUM	4330	L.S.	SEISMIC RETROFIT - BR 405/12	L.S.	L.S.														
30	LUMP SUM		LUMP SUM	4330	L.S.	SEISMIC RETROFIT - BR NO. 405/45W			L.S.	L.S.												
31	LUMP SUM		LUMP SUM	4330	L.S.	SEISMIC RETROFIT - BR NO. 405/46W					L.S.	L.S.										
32	LUMP SUM		LUMP SUM	4330	L.S.	SEISMIC RETROFIT - BR NO. 405/46E							L.S.	L.S.								
33	LUMP SUM		LUMP SUM	4330	L.S.	SEISMIC RETROFIT - BR NO. 405/47W									L.S.	L.S.						
34	LUMP SUM		LUMP SUM	4330	L.S.	SEISMIC RETROFIT - BR NO. 405/47E											L.S.	L.S.				
35	LUMP SUM		LUMP SUM	4330	L.S.	SEISMIC RETROFIT - BR NO. 405/48W													L.S.	L.S.		
36	LUMP SUM		LUMP SUM	4330	L.S.	SEISMIC RETROFIT - BR NO. 405/48E															L.S.	L.S.
37	LUMP SUM		LUMP SUM	4330	L.S.	SEISMIC RETROFIT - BR NO. 405/56W																
38	LUMP SUM		LUMP SUM	4330	L.S.	SEISMIC RETROFIT - BR NO. 405/56E																
39	LUMP SUM		LUMP SUM	4331	L.S.	COLUMN JACKETING - BR NO. 405/12	L.S.	L.S.														
40	LUMP SUM		LUMP SUM	4331	L.S.	COLUMN JACKETING - BR NO. 405/45W			L.S.	L.S.												
41	LUMP SUM		LUMP SUM	4331	L.S.	COLUMN JACKETING - BR NO. 405/46W					L.S.	L.S.										
42	LUMP SUM		LUMP SUM	4331	L.S.	COLUMN JACKETING - BR NO. 405/46E							L.S.	L.S.								
43	LUMP SUM		LUMP SUM	4331	L.S.	COLUMN JACKETING - BR NO. 405/47W									L.S.	L.S.						

GROUP LEGEND

GROUP NUMBER	SR	CONTROL SECTION	TAX SCHEDULE	FUND PARTICIPANTS
1	405	174310	**	FEDERAL
2	405	174311	**	FEDERAL
3	405	174312	**	FEDERAL
4	405	174312	**	STATE TOLLING

SUMMARY OF QUANTITIES

ITEM NO	TOTAL QUANTITY	SUB-TOTAL SECTION I-07.2(1) OF STANDARD SPECS	SUB-TOTAL SECTION I-07.2(2) OF STANDARD SPECS	STD. ITEM NO.	UNIT	ITEM	GROUP 5 BRIDGE 405/56W MP 19.98 TO MP 20.04	GROUP 6 BRIDGE 405/56W MP 19.98 TO MP 20.04	GROUP 5 BRIDGE 405/56E MP 19.98 TO MP 20.04	GROUP 6 BRIDGE 405/56E MP 19.98 TO MP 20.04	GROUP 7 SUA-982 UTB-1437	GROUP 8 SUA-982	GROUP 9 THIRD PARTY DAMAGES
						PREPARATION							
1	LUMP SUM		LUMP SUM	0001	L.S.	MOBILIZATION	L.S.	L.S.	L.S.	L.S.			
2				0025	ACRE	CLEARING AND GRUBBING	0.02	0.01	0.01	0.01			
3	LUMP SUM		LUMP SUM	0050	L.S.	REMOVAL OF STRUCTURES AND OBSTRUCTIONS							
4	LUMP SUM		LUMP SUM	0061	L.S.	REMOVING PORTION OF EXISTING BRIDGE 405/12							
5	LUMP SUM		LUMP SUM	0061	L.S.	REMOVING PORTION OF EXISTING BRIDGE 405/48E							
6	LUMP SUM		LUMP SUM	0061	L.S.	REMOVING PORTION OF EXISTING BRIDGE 405/56W	L.S.	L.S.					
7	LUMP SUM		LUMP SUM	0061	L.S.	REMOVING PORTION OF EXISTING BRIDGE 405/56E			L.S.	L.S.			
8				0145	L.F.	REMOVING CONC. BARRIER							
9				0170	L.F.	REMOVING GUARDRAIL							
10				0182	EACH	REMOVING GUARDRAIL ANCHOR							
11				0187	L.F.	REMOVING PAINT LINE							
12				0190	L.F.	REMOVING PLASTIC LINE							
13				0208	HUND	REMOVING RAISED PAVEMENT MARKER							
14					DOL	UNANTICIPATED CONTAMINATED SOIL, EXC., H. AND D.							
						GRADING							
15				0405	C.Y.	COMMON BORROW INCL. HAUL							
16				0409	C.Y.	SELECT BORROW INCL. HAUL							
17				0470	C.Y.	EMBANKMENT COMPACTION							
						STRUCTURE							
18				4005	C.Y.	STRUCTURE EXCAVATION CLASS A	310.00	160.00	101.00	53.00			
19	LUMP SUM		LUMP SUM	4013	L.S.	SHORING OR EXTRA EXCAVATION CL. A - BR NO. 405/12							
20	LUMP SUM		LUMP SUM	4013	L.S.	SHORING OR EXTRA EXCAVATION CL. A - BR NO. 405/45W							
21	LUMP SUM		LUMP SUM	4013	L.S.	SHORING OR EXTRA EXCAVATION CL. A - BR NO. 405/46W							
22	LUMP SUM		LUMP SUM	4013	L.S.	SHORING OR EXTRA EXCAVATION CL. A - BR NO. 405/46E							
23	LUMP SUM		LUMP SUM	4013	L.S.	SHORING OR EXTRA EXCAVATION CL. A - BR NO. 405/47W							
24	LUMP SUM		LUMP SUM	4013	L.S.	SHORING OR EXTRA EXCAVATION CL. A - BR NO. 405/47E							
25	LUMP SUM		LUMP SUM	4013	L.S.	SHORING OR EXTRA EXCAVATION CL. A - BR NO. 405/48W							
26	LUMP SUM		LUMP SUM	4013	L.S.	SHORING OR EXTRA EXCAVATION CL. A - BR NO. 405/48E							
27	LUMP SUM		LUMP SUM	4013	L.S.	SHORING OR EXTRA EXCAVATION CL. A - BR NO. 405/56W	L.S.	L.S.					
28	LUMP SUM		LUMP SUM	4013	L.S.	SHORING OR EXTRA EXCAVATION CL. A - BR NO. 405/56E			L.S.	L.S.			
29	LUMP SUM		LUMP SUM	4330	L.S.	SEISMIC RETROFIT - BR 405/12							
30	LUMP SUM		LUMP SUM	4330	L.S.	SEISMIC RETROFIT - BR NO. 405/45W							
31	LUMP SUM		LUMP SUM	4330	L.S.	SEISMIC RETROFIT - BR NO. 405/46W							
32	LUMP SUM		LUMP SUM	4330	L.S.	SEISMIC RETROFIT - BR NO. 405/46E							
33	LUMP SUM		LUMP SUM	4330	L.S.	SEISMIC RETROFIT - BR NO. 405/47W							
34	LUMP SUM		LUMP SUM	4330	L.S.	SEISMIC RETROFIT - BR NO. 405/47E							
35	LUMP SUM		LUMP SUM	4330	L.S.	SEISMIC RETROFIT - BR NO. 405/48W							
36	LUMP SUM		LUMP SUM	4330	L.S.	SEISMIC RETROFIT - BR NO. 405/48E							
37	LUMP SUM		LUMP SUM	4330	L.S.	SEISMIC RETROFIT - BR NO. 405/56W	L.S.	L.S.					
38	LUMP SUM		LUMP SUM	4330	L.S.	SEISMIC RETROFIT - BR NO. 405/56E			L.S.	L.S.			
39	LUMP SUM		LUMP SUM	4331	L.S.	COLUMN JACKETING - BR NO. 405/12							
40	LUMP SUM		LUMP SUM	4331	L.S.	COLUMN JACKETING - BR NO. 405/45W							
41	LUMP SUM		LUMP SUM	4331	L.S.	COLUMN JACKETING - BR NO. 405/46W							
42	LUMP SUM		LUMP SUM	4331	L.S.	COLUMN JACKETING - BR NO. 405/46E							
43	LUMP SUM		LUMP SUM	4331	L.S.	COLUMN JACKETING - BR NO. 405/47W							

GROUP LEGEND

GROUP NUMBER	SR	CONTROL SECTION	TAX SCHEDULE	FUND PARTICIPANTS
5	405	174313	**	FEDERAL
6	405	174313	**	STATE TOLLING
7	405	174312	**	FEDERAL,CITY OF BELLEVUE
8	405	174312	**	STATE TOLLING
9	405	174312	**	STATE

SUMMARY OF QUANTITIES

ITEM NO	TOTAL QUANTITY	SUB-TOTAL * SECTION I-07.2(1) OF STANDARD SPECS	SUB-TOTAL ** SECTION I-07.2(2) OF STANDARD SPECS	STD. ITEM NO.	UNIT	ITEM	GROUP 1 BRIDGE 405/12 MP 1.14 TO MP 1.19	GROUP 2 BRIDGE 405/12 MP 1.19 TO MP 1.29	GROUP 3 BRIDGE 405/45W MP 14.68 TO MP 14.73	GROUP 4 BRIDGE 405/45W MP 14.68 TO MP 14.73	GROUP 3 BRIDGE 405/46W MP 14.83 TO MP 14.87	GROUP 4 BRIDGE 405/46W MP 14.83 TO MP 14.87	GROUP 3 BRIDGE 405/46E MP 14.83 TO MP 14.87	GROUP 4 BRIDGE 405/46E MP 14.83 TO MP 14.87	GROUP 3 BRIDGE 405/47W MP 14.92 TO MP 14.95	GROUP 4 BRIDGE 405/47W MP 14.92 TO MP 14.95	GROUP 3 BRIDGE 405/47E MP 14.92 TO MP 14.95	GROUP 4 BRIDGE 405/47E MP 14.92 TO MP 14.95	GROUP 3 BRIDGE 405/48W MP 15.00 TO MP 15.06	GROUP 4 BRIDGE 405/48W MP 15.00 TO MP 15.06	GROUP 3 BRIDGE 405/48E MP 15.00 TO MP 15.06	GROUP 4 BRIDGE 405/48E MP 15.00 TO MP 15.06
44	LUMP SUM		LUMP SUM	4331	L.S.	COLUMN JACKETING - BR NO. 405/47E											L.S.	L.S.				
45	LUMP SUM		LUMP SUM	4331	L.S.	COLUMN JACKETING - BR NO. 405/48W													L.S.	L.S.		
46	LUMP SUM		LUMP SUM	4331	L.S.	COLUMN JACKETING - BR NO. 405/48E															L.S.	L.S.
47	LUMP SUM		LUMP SUM	4331	L.S.	COLUMN JACKETING - BR NO. 405/56W																
						SURFACING																
48	40.00		40.00	5095	C.Y.	CRUSHED SURFACING BASE COURSE					13.00	7.00			5.00	3.00	8.00	4.00				
						HOT MIX ASPHALT																
49	35.00		35.00	5767	TON	HMA CL. 1/2 IN. PG 58H-22					24.00	11.00										
50	150.00		150.00	5830	DOL	JOB MIX COMPLIANCE PRICE ADJUSTMENT					100.00	50.00										
51	100.00		100.00	5835	DOL	COMPACTION PRICE ADJUSTMENT					65.00	35.00										
52	246.00		246.00	5837	DOL	ASPHALT COST PRICE ADJUSTMENT					162.00	84.00										
53	-2.00		-2.00	6516	DOL	CYCLIC DENSITY PRICE ADJUSTMENT					-1.00	-1.00										
						EROSION CONTROL AND ROADSIDE PLANTING																
54	230.00		230.00	6403	DAY	ESC LEAD	30.00	20.00	13.00	7.00	13.00	7.00	13.00	7.00	13.00	7.00	13.00	7.00	13.00	7.00	13.00	7.00
55	32.00		32.00	6471	EACH	INLET PROTECTION		5.00	4.00	2.00	5.00	3.00			5.00	2.00			1.00	1.00	1.00	1.00
56	413.00		413.00	6500	L.F.	COMPOST SOCK			117.00	60.00	73.00	38.00									30.00	15.00
57	188000.00		188000.00	6490	DOL	EROSION/WATER POLLUTION CONTROL	55,000.00	37,000.00											31,632.00	16,368.00	31,632.00	16,368.00
58	1970.00		1970.00	6419	S.Y.	SEEDING AND FERTILIZING BY HAND	280.00	400.00	125.00	65.00	165.00	85.00	125.00	65.00	66.00	34.00	46.00	24.00			105.00	55.00
59	1294.00		1294.00	6630	L.F.	HIGH VISIBILITY FENCE			148.00	76.00	143.00	74.00							159.00	83.00	158.00	81.00
						TRAFFIC																
60	434.00		434.00	6756	L.F.	BEAM GUARDRAIL TYPE 11					67.00	35.00	67.00	35.00					76.00	39.00	76.00	39.00
61	258.00		258.00	6757	L.F.	BEAM GUARDRAIL TYPE 31							78.00	40.00					46.00	24.00	46.00	24.00
62	3.00		3.00	6760	EACH	BEAM GUARDRAIL TRANSITION SECTION TYPE 21							1.00						2.00			
63	2.00		2.00	6766	EACH	BEAM GUARDRAIL ANCHOR TYPE 10					1.00		1.00									
64	130.00		130.00	6780	L.F.	REMOVING AND RESETTING BEAM GUARDRAIL		130.00														
65	475.00		475.00	6776	L.F.	PRECAST CONC. BARRIER TYPE F			165.00	85.00	148.00	77.00										
66	400.00		400.00	6763	L.F.	SINGLE SLOPE CONCRETE BARRIER					132.00	68.00	132.00	68.00								
67	1440.00		1440.00	6781	L.F.	TEMPORARY BARRIER			145.00	75.00	402.00	208.00	402.00	208.00								
68	250.00		250.00	6784	L.F.	REMOVING AND RESETTING EXISTING PERMANENT BARRIER			165.00	85.00												
69	2400.00		2400.00	7448	HR	TRANSPORTABLE ATTENUATOR						800.00	800.00	800.00								
70	8000.00		8000.00	7450	DOL	REPAIR TRANSPORTABLE ATTENUATOR					2,636.00	1,364.00	2,636.00	1,364.00								
71	10110.00		10110.00	6806	L.F.	PAINT LINE					7,580.00	2,530.00										
72	10440.00		10440.00	6809	L.F.	PROFILED PLASTIC LINE					7,830.00	2,610.00										
73	560.00		560.00	6845	L.F.	PROFILED PLASTIC WIDE LINE					420.00	140.00										
74	1.70		1.70	6884	HUND	RAISED PAVEMENT MARKER TYPE 2					1.30	0.40										
75	21400.00		21400.00	6896	L.F.	TEMPORARY PAVEMENT MARKING-LONG DURATION					16,050.00	5,350.00										
76	16.00		16.00	6902	S.F.	SIGN COVERING							11.00	5.00								
77	LUMP SUM		LUMP SUM	6904	L.S.	ILLUMINATION SYSTEM 405/45W PIER 3			L.S.	L.S.												
78	LUMP SUM		LUMP SUM	6904	L.S.	ILLUMINATION SYSTEM 405/46W PIER 2 & 3					L.S.	L.S.										
79	LUMP SUM		LUMP SUM	6904	L.S.	ILLUMINATION SYSTEM 405/46E PIER 2 & 3							L.S.	L.S.								
80	LUMP SUM		LUMP SUM	6904	L.S.	ILLUMINATION SYSTEM SUA 982																
81	3760.00		3760.00	6956	HR	SEQUENTIAL ARROW SIGN					1,223.00	633.00	1,255.00	649.00								
82	2784.00		2784.00	6993	HR	PORTABLE CHANGEABLE MESSAGE SIGN			596.00	308.00	612.00	316.00	627.00	325.00								
83	LUMP SUM		LUMP SUM	6973	L.S.	OTHER TEMPORARY TRAFFIC CONTROL		L.S.	L.S.	L.S.	L.S.	L.S.	L.S.	L.S.	L.S.	L.S.	L.S.	L.S.	L.S.	L.S.	L.S.	L.S.
84	1192.00		1192.00	6980	HR	FLAGGERS									174.00	90.00	185.00	95.00	92.00	48.00	134.00	70.00

GROUP LEGEND

GROUP NUMBER	SR	CONTROL SECTION	TAX SCHEDULE	FUND PARTICIPANTS
1	405	174310	**	FEDERAL
2	405	174311	**	FEDERAL
3	405	174312	**	FEDERAL
4	405	174312	**	STATE TOLLING

SUMMARY OF QUANTITIES

ITEM NO	TOTAL QUANTITY	SUB-TOTAL SECTION I-07.2(1) OF STANDARD SPECS	SUB-TOTAL SECTION I-07.2(2) OF STANDARD SPECS	STD. ITEM NO.	UNIT	ITEM	GROUP 5 BRIDGE 405/56W MP 19.98 TO MP 20.04	GROUP 6 BRIDGE 405/56W MP 19.98 TO MP 20.04	GROUP 5 BRIDGE 405/56E MP 19.98 TO MP 20.04	GROUP 6 BRIDGE 405/56E MP 19.98 TO MP 20.04	GROUP 7 SUA-982 UTB-1437	GROUP 8 SUA-982	GROUP 9 THIRD PARTY DAMAGES
44	LUMP SUM		LUMP SUM	4331	L.S.	COLUMN JACKETING - BR NO. 405/47E							
45	LUMP SUM		LUMP SUM	4331	L.S.	COLUMN JACKETING - BR NO. 405/48W							
46	LUMP SUM		LUMP SUM	4331	L.S.	COLUMN JACKETING - BR NO. 405/48E							
47	LUMP SUM		LUMP SUM	4331	L.S.	COLUMN JACKETING - BR NO. 405/56W	L.S.	L.S.					
						SURFACING							
48				5095	C.Y.	CRUSHED SURFACING BASE COURSE							
						HOT MIX ASPHALT							
49				5767	TON	HMA CL. 1/2 IN. PG 58H-22							
50				5830	DOL	JOB MIX COMPLIANCE PRICE ADJUSTMENT							
51				5835	DOL	COMPACTION PRICE ADJUSTMENT							
52				5837	DOL	ASPHALT COST PRICE ADJUSTMENT							
53				6516	DOL	CYCLIC DENSITY PRICE ADJUSTMENT							
						EROSION CONTROL AND ROADSIDE PLANTING							
54				6403	DAY	ESC LEAD	13.00	7.00	13.00	7.00			
55				6471	EACH	INLET PROTECTION	1.00	1.00					
56				6500	L.F.	COMPOST SOCK			53.00	27.00			
57				6490	DOL	EROSION/WATER POLLUTION CONTROL							
58				6419	S.Y.	SEEDING AND FERTILIZING BY HAND	145.00	75.00	72.00	38.00			
59				6630	L.F.	HIGH VISIBILITY FENCE	165.00	85.00	80.00	42.00			
						TRAFFIC							
60				6756	L.F.	BEAM GUARDRAIL TYPE 11							
61				6757	L.F.	BEAM GUARDRAIL TYPE 31							
62				6760	EACH	BEAM GUARDRAIL TRANSITION SECTION TYPE 21							
63				6766	EACH	BEAM GUARDRAIL ANCHOR TYPE 10							
64				6780	L.F.	REMOVING AND RESETTING BEAM GUARDRAIL							
65				6776	L.F.	PRECAST CONC. BARRIER TYPE F							
66				6763	L.F.	SINGLE SLOPE CONCRETE BARRIER							
67				6781	L.F.	TEMPORARY BARRIER							
68				6784	L.F.	REMOVING AND RESETTING EXISTING PERMANENT BARRIER							
69				7448	HR	TRANSPORTABLE ATTENUATOR							
70				7450	DOL	REPAIR TRANSPORTABLE ATTENUATOR							
71				6806	L.F.	PAINT LINE							
72				6809	L.F.	PROFILED PLASTIC LINE							
73				6845	L.F.	PROFILED PLASTIC WIDE LINE							
74				6884	HUND	RAISED PAVEMENT MARKER TYPE 2							
75				6896	L.F.	TEMPORARY PAVEMENT MARKING-LONG DURATION							
76				6902	S.F.	SIGN COVERING							
77	LUMP SUM		LUMP SUM	6904	L.S.	ILLUMINATION SYSTEM 405/45W PIER 3							
78	LUMP SUM		LUMP SUM	6904	L.S.	ILLUMINATION SYSTEM 405/46W PIER 2 & 3							
79	LUMP SUM		LUMP SUM	6904	L.S.	ILLUMINATION SYSTEM 405/46E PIER 2 & 3							
80	LUMP SUM		LUMP SUM	6904	L.S.	ILLUMINATION SYSTEM SUA 982					L.S.	L.S.	
81				6956	HR	SEQUENTIAL ARROW SIGN							
82				6993	HR	PORTABLE CHANGEABLE MESSAGE SIGN							
83	LUMP SUM		LUMP SUM	6973	L.S.	OTHER TEMPORARY TRAFFIC CONTROL	L.S.	L.S.	L.S.	L.S.			
84				6980	HR	FLAGGERS	87.00	45.00	113.00	59.00			

GROUP LEGEND

GROUP NUMBER	SR	CONTROL SECTION	TAX SCHEDULE	FUND PARTICIPANTS
5	405	174313	**	FEDERAL
6	405	174313	**	STATE TOLLING
7	405	174312	**	FEDERAL,CITY OF BELLEVUE
8	405	174312	**	STATE TOLLING
9	405	174312	**	STATE

SUMMARY OF QUANTITIES

ITEM NO	TOTAL QUANTITY	SUB-TOTAL * SECTION I-07.2(1) OF STANDARD SPECS	SUB-TOTAL ** SECTION I-07.2(2) OF STANDARD SPECS	STD. ITEM NO.	UNIT	ITEM	GROUP 1 BRIDGE 405/12 MP 1.14 TO MP 1.19	GROUP 2 BRIDGE 405/12 MP 1.19 TO MP 1.29	GROUP 3 BRIDGE 405/45W MP 14.68 TO MP 14.73	GROUP 4 BRIDGE 405/45W MP 14.68 TO MP 14.73	GROUP 3 BRIDGE 405/46W MP 14.83 TO MP 14.87	GROUP 4 BRIDGE 405/46W MP 14.83 TO MP 14.87	GROUP 3 BRIDGE 405/46E MP 14.83 TO MP 14.87	GROUP 4 BRIDGE 405/46E MP 14.83 TO MP 14.87	GROUP 3 BRIDGE 405/47W MP 14.92 TO MP 14.95	GROUP 4 BRIDGE 405/47W MP 14.92 TO MP 14.95	GROUP 3 BRIDGE 405/47E MP 14.92 TO MP 14.95	GROUP 4 BRIDGE 405/47E MP 14.92 TO MP 14.95	GROUP 3 BRIDGE 405/48W MP 15.00 TO MP 15.06	GROUP 4 BRIDGE 405/48W MP 15.00 TO MP 15.06	GROUP 3 BRIDGE 405/48E MP 15.00 TO MP 15.06	GROUP 4 BRIDGE 405/48E MP 15.00 TO MP 15.06
85	17360.00		17360.00	6992	HR	OTHER TRAFFIC CONTROL LABOR	870.00	450.00	923.00	477.00	923.00	477.00	1,344.00	696.00	870.00	450.00	1,133.00	587.00	1,344.00	696.00	1,344.00	696.00
86	LUMP SUM		LUMP SUM	6974	L.S.	TRAFFIC CONTROL SUPERVISOR		L.S.	L.S.	L.S.	L.S.	L.S.	L.S.	L.S.	L.S.	L.S.	L.S.	L.S.	L.S.	L.S.	L.S.	L.S.
87	172.00		172.00	6982	S.F.	CONSTRUCTION SIGNS CLASS A		40.00	13.00	7.00	13.00	7.00	13.00	7.00					26.00	14.00	16.00	8.00
88	2562.00		2562.00	6976	HR	PATROL AND MAINTAIN TRAFFIC CONTROL MEASURES	218.00	107.00	156.00	78.00	168.00	84.00	164.00	82.00	165.00	83.00	168.00	84.00	145.00	73.00	191.00	96.00
89	LUMP SUM		LUMP SUM		L.S.	TEMPORARY ITS					L.S.		L.S.									
						OTHER ITEMS																
90	10000.00		10000.00	9004	DOL	PROJECT PARTNERING	10,000.00															
91	780.00		780.00	7024	C.Y.	CONC. CLASS 3000			99.00	51.00	46.00	24.00	66.00	34.00	53.00	27.00	53.00	27.00				
92	LUMP SUM		LUMP SUM	7037	L.S.	STRUCTURE SURVEYING	L.S.	L.S.														
93	LUMP SUM		LUMP SUM	7038	L.S.	ROADWAY SURVEYING	L.S.	L.S.														
94	146.00		146.00	7055	S.Y.	CEMENT CONC. SIDEWALK									36.00	18.00	61.00	31.00				
95	503.00		503.00	7066	S.Y.	SEMI-OPEN CONC. MASONRY SLOPE PROTECTION					72.00	38.00	76.00	39.00	28.00	15.00	23.00	12.00				
96	113.00		113.00	7084	L.F.	CHAIN LINK FENCE TYPE 4		113.00														
97	40000.00		40000.00	7715	DOL	FORCE ACCOUNT POTHOLING UTILITIES	5,000.00	5,000.00							3,295.00	1,705.00	3,295.00	1,705.00	3,295.00	1,705.00	3,295.00	1,705.00
98	22000.00		22000.00	7715	DOL	FORCE ACCOUNT MINOR BRIDGE REPAIR	2,000.00	2,000.00	1,318.00	682.00	1,318.00	682.00	1,318.00	682.00	1,318.00	682.00	1,318.00	682.00	1,318.00	682.00	1,318.00	682.00
99	50000.00		50000.00	7480	DOL	ROADSIDE CLEANUP	25,000.00								25,000.00							
100	5.00		5.00	7725	DOL	REIMBURSEMENT FOR THIRD PARTY DAMAGE																
101	-1.00		-1.00	7728	DOL	MINOR CHANGE		-1.00														
102	4850.00		4850.00	7730	DOL	FUEL COST ADJUSTMENT	242.00	242.00	242.00	242.00	243.00	243.00	242.00	242.00	244.00	244.00	244.00	244.00	242.00	242.00	242.00	242.00
103	8930.00		8930.00	7731	DOL	STEEL COST ADJUSTMENT	1,775.00	1,775.00	245.00	245.00	375.00	375.00	375.00	375.00	100.00	100.00	215.00	215.00	235.00	235.00	550.00	550.00
104	-1.00		-1.00	7732	DOL	AGGREGATE COMPLIANCE PRICE ADJUSTMENT	-1.00															
105	LUMP SUM		LUMP SUM	7736	L.S.	SPCC PLAN	L.S.	L.S.	L.S.	L.S.	L.S.	L.S.			L.S.	L.S.			L.S.	L.S.		
106	8.00		8.00	7569	EACH	NO TRESPASSING SIGN	2.00	2.00												1.00	1.00	
107	LUMP SUM		LUMP SUM	7570	L.S.	HEALTH AND SAFETY PLAN	L.S.	L.S.	L.S.	L.S.	L.S.	L.S.			L.S.	L.S.			L.S.	L.S.		
108	14000.00		14000.00	7571	DOL	FA-SITE CLEANUP OF BIO. AND PHYSICAL HAZARDS	5,000.00	5,000.00			659.00	341.00	659.00	341.00								
109	LUMP SUM		LUMP SUM		L.S.	REFERENCING EXISTING PAVEMENT MARKINGS					L.S.	L.S.										

GROUP LEGEND

GROUP NUMBER	SR	CONTROL SECTION	TAX SCHEDULE	FUND PARTICIPANTS
1	405	174310	**	FEDERAL
2	405	174311	**	FEDERAL
3	405	174312	**	FEDERAL
4	405	174312	**	STATE TOLLING

SUMMARY OF QUANTITIES

ITEM NO	TOTAL QUANTITY	SUB-TOTAL SECTION I-07.2(1) OF STANDARD SPECS	SUB-TOTAL SECTION I-07.2(2) OF STANDARD SPECS	STD. ITEM NO.	UNIT	ITEM	GROUP 5 BRIDGE 405/56W MP 19.98 TO MP 20.04	GROUP 6 BRIDGE 405/56W MP 19.98 TO MP 20.04	GROUP 5 BRIDGE 405/56E MP 19.98 TO MP 20.04	GROUP 6 BRIDGE 405/56E MP 19.98 TO MP 20.04	GROUP 7 SUA-982 UTB-1437	GROUP 8 SUA-982	GROUP 9 THIRD PARTY DAMAGES
85				6992	HR	OTHER TRAFFIC CONTROL LABOR	1,344.00	696.00	1,344.00	696.00			
86	LUMP SUM		LUMP SUM	6974	L.S.	TRAFFIC CONTROL SUPERVISOR	L.S.	L.S.	L.S.	L.S.			
87				6982	S.F.	CONSTRUCTION SIGNS CLASS A	3.00	1.00	3.00	1.00			
88				6976	HR	PATROL AND MAINTAIN TRAFFIC CONTROL MEASURES	168.00	84.00	165.00	83.00			
89	LUMP SUM		LUMP SUM		L.S.	TEMPORARY ITS							
						OTHER ITEMS							
90				9004	DOL	PROJECT PARTNERING							
91				7024	C.Y.	CONC. CLASS 3000	86.00	44.00	112.00	58.00			
92	LUMP SUM		LUMP SUM	7037	L.S.	STRUCTURE SURVEYING							
93	LUMP SUM		LUMP SUM	7038	L.S.	ROADWAY SURVEYING							
94				7055	S.Y.	CEMENT CONC. SIDEWALK							
95				7066	S.Y.	SEMI-OPEN CONC. MASONRY SLOPE PROTECTION	132.00	68.00					
96				7084	L.F.	CHAIN LINK FENCE TYPE 4							
97				7715	DOL	FORCE ACCOUNT POTHOLING UTILITIES	3,295.00	1,705.00	3,295.00	1,705.00			
98				7715	DOL	FORCE ACCOUNT MINOR BRIDGE REPAIR	1,318.00	682.00	1,318.00	682.00			
99				7480	DOL	ROADSIDE CLEANUP							
100				7725	DOL	REIMBURSEMENT FOR THIRD PARTY DAMAGE							5.00
101				7728	DOL	MINOR CHANGE							
102				7730	DOL	FUEL COST ADJUSTMENT	242.00	242.00	242.00	242.00			
103				7731	DOL	STEEL COST ADJUSTMENT	355.00	355.00	240.00	240.00			
104				7732	DOL	AGGREGATE COMPLIANCE PRICE ADJUSTMENT							
105	LUMP SUM		LUMP SUM	7736	L.S.	SPCC PLAN	L.S.	L.S.					
106				7569	EACH	NO TRESPASSING SIGN		1.00	1.00				
107	LUMP SUM		LUMP SUM	7570	L.S.	HEALTH AND SAFETY PLAN	L.S.	L.S.					
108				7571	DOL	FA-SITE CLEANUP OF BIO. AND PHYSICAL HAZARDS	659.00	341.00	659.00	341.00			
109	LUMP SUM		LUMP SUM		L.S.	REFERENCING EXISTING PAVEMENT MARKINGS							

GROUP LEGEND

GROUP NUMBER	SR	CONTROL SECTION	TAX SCHEDULE	FUND PARTICIPANTS
5	405	174313	**	FEDERAL
6	405	174313	**	STATE TOLLING

DATE	REVISION	BY

REGION	STATE	FEDERAL AID PROJECT. NO.
10	WA	NHPP-4053(866)

JOB NUMBER 20A039/3

CONTRACT NO 000000

Washington State Department of Transportation

I-405
BN RR BRIDGE TO PED TRAIL BRIDGE
SEISMIC RETROFIT

SUMMARY OF QUANTITIES

SQ6

T.23N.R.4E. W.M.

ALIGNMENT COORDINATES		
STATION	NORTHING	EASTING
A 10+00.0 POB, PT	173106.6	1292159.5
A 11+30.0 PC	172995.5	1292226.9
A 12+30.2 PCC	172924.2	1292296.2
A 13+27.9 PT		
A 14+59.1 POE	172926.4	1292518.9
B 10+00.0 POB	173190.4	1292529.1
B 12+84.4 POE, PT	172919.5	1292562.7

CURVE DATA							
CURVE NO.	P.I. STATION	NORTHING	EASTING	DELTA	RADIUS	TANGENT	LENGTH
C1	A 11+80.9	172952.1	1292253.5	25°15'35" LT	227.3'	50.9'	100.2'
C2	A 12+81.5	172896.1	1292339.1	42°46'15" LT	131.0'	51.3'	97.8'
C3	B 11+13.2	173082.7	1292494.5	38°02'01" LT	233.4'	80.4'	154.9'
C4	B 12+36.1	172961.7	1292538.9	09°03'47" LT	611.3'	48.4'	96.7'

CONTROL POINTS				
CONTROL POINT #	STATION (OFFSET)	NORTHING	EASTING	ELEVATION
CP1	B 11+24.0 (14.5' RT)	173068.1	1292494.2	23.50
CP2	A 11+99.2 (28.2' RT)	172921.6	1292252.9	21.95
CP3	A 13+07.6 (10.1' RT)	172892.7	1292369.5	22.47
CP4	A 11+55.1 (35.6' RT)	172952.9	1292213.1	31.40
GP-896	A 11+05.5 (25.1' LT)	173029.5	1292235.6	67.17

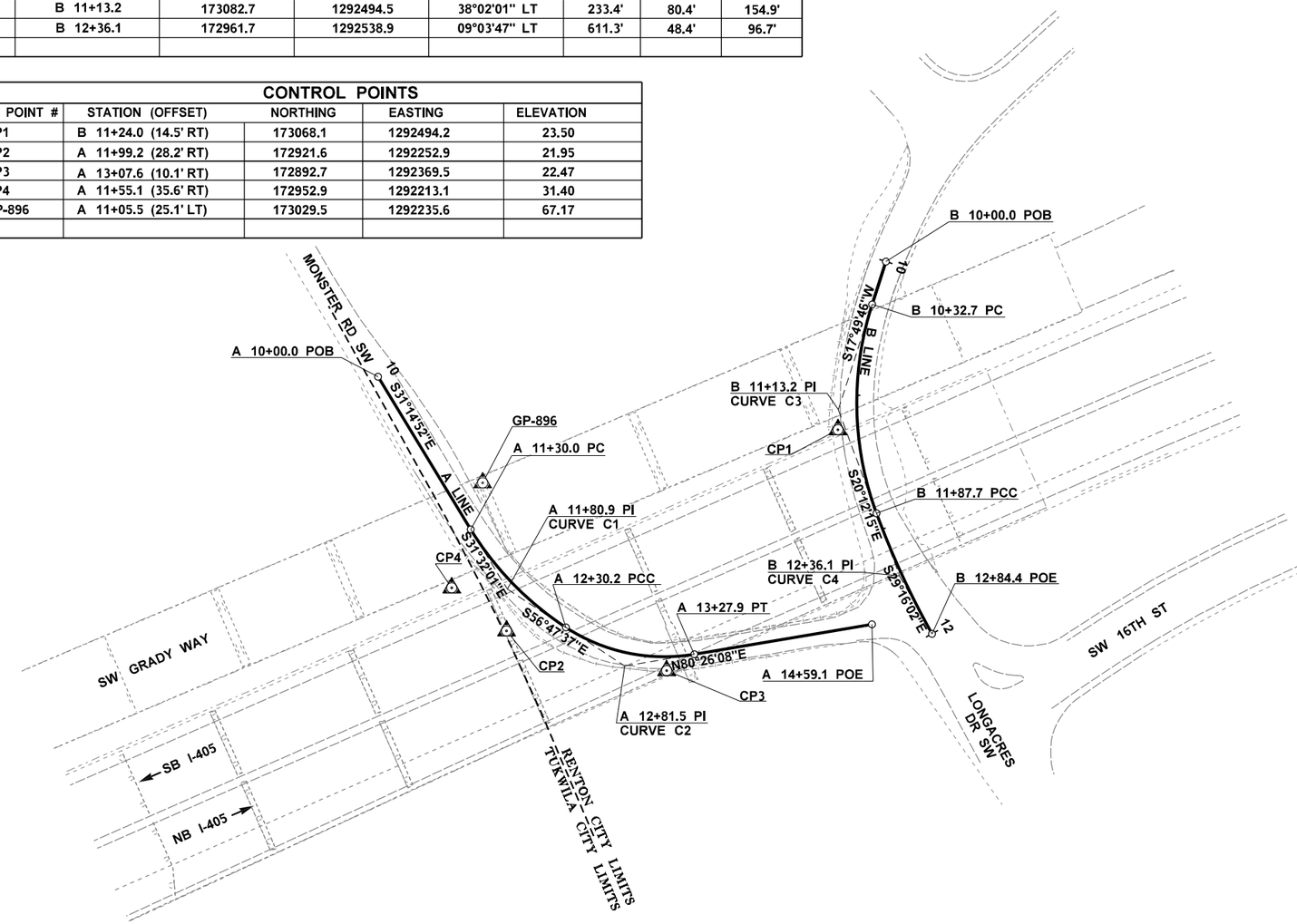

LEGEND

- CONTROL POINT - MONUMENT
- EXISTING BRIDGE PIER AND COLUMNS
- EXISTING EDGE LINE
- EXISTING GUARDRAIL
- EXISTING PAVED EDGE

CITY OF RENTON
BR 405/12

FILE NAME	T:\412348\XL5937\CAD\ContractPlans\XL5937_PS_AL.dgn				REGION NO.	STATE	FED.AID PROJ.NO.
TIME	10:29:11 AM				10	WASH	
DATE	5/20/2022				JOB NUMBER		
PLOTTED BY	oneilma				20A039		
DESIGNED BY	B. BASSERI				CONTRACT NO.		LOCATION NO.
ENTERED BY	B. BASSERI						
CHECKED BY	M. O'NEIL						
PROJ. ENGR.	C. ANDERSON						
REGIONAL ADM.	M. COTTEN	REVISION	DATE	BY			

CULLEN ANDERSON STATE OF WASHINGTON REGISTERED PROFESSIONAL ENGINEER 20123 OCT 2, 2012

SEE SHEET CT1
DATE
P.E. STAMP BOX

DATE
P.E. STAMP BOX

Washington State
Department of Transportation

I-405
BN RR BRIDGE TO PED TRAIL BRIDGE
SEISMIC RETROFIT

ALIGNMENT PLAN

Plot 1
PLAN REF NO
AL1
SHEET 14 OF 176 SHEETS

T.25N.R.5E. W.M.

ALIGNMENT COORDINATES		
STATION	NORTHING	EASTING
C 100+00.0 POB, PC	232660.5	1306416.8
C 103+26.5 PCC	232907.8	1306218.4
C 104+36.5 POE, PT	232966.3	1306125.4

CONTROL POINTS				
CONTROL POINT #	STATION (OFFSET)	NORTHING	EASTING	ELEVATION
405-5201	C 103+24.0 (21.4' RT)	232925.7	1306230.5	196.10
405-5202	C 100+44.8 (30.8' RT)	232714.2	1306431.6	203.45

CURVE DATA							
CURVE NO.	P.I. STATION	NORTHING	EASTING	DELTA	RADIUS	TANGENT	LENGTH
C6	C 101+73.5	232828.3	1306372.6	47°58'08" LT	390.0'	173.5'	326.5'
C7	C 103+81.7	232933.1	1306169.4	08°49'18" RT	649.5'	55.1'	110.0'

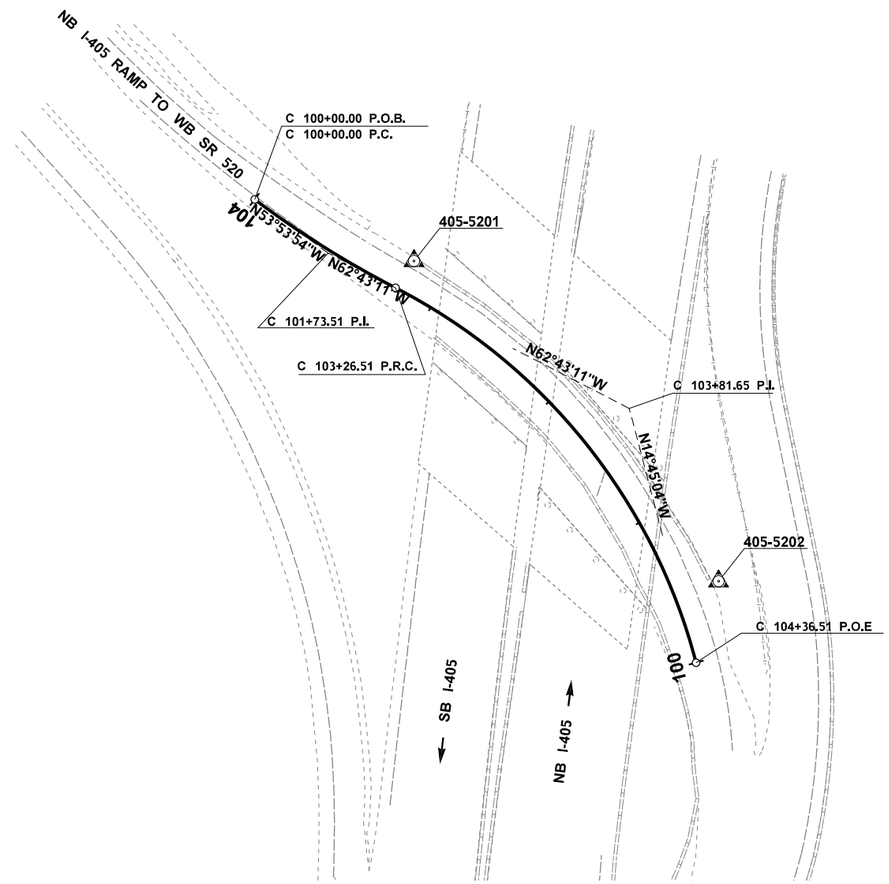

LEGEND

- CONTROL POINT - MONUMENT
- EXISTING BRIDGE PIER AND COLUMNS
- EXISTING EDGE LINE
- EXISTING GUARDRAIL
- EXISTING PAVED EDGE

DATUM

(NAVD) 88

HORIZONTAL DATUM: NAD 83 / 91 WASHINGTON NORTH ZONE US SURVEY FEET

0 50 100
SCALE IN FEET

CITY OF BELLEVUE
BR 405/45W

FILE NAME	T:\412348\XL5937\CAD\ContractPlans\XL5937_PS_AL.dgn
TIME	10:29:14 AM
DATE	5/20/2022
PLOTTED BY	oneilma
DESIGNED BY	B. BASSERI
ENTERED BY	B. BASSERI
CHECKED BY	M. O'NEIL
PROJ. ENGR.	C. ANDERSON
REGIONAL ADM.	M. COTTEN

REVISION | DATE | BY

REGION NO.	STATE	FED.AID PROJ.NO.
10	WASH	
JOB NUMBER 20A039		
CONTRACT NO.		LOCATION NO.

SEE SHEET CT1
DATE
P.E. STAMP BOX

DATE
P.E. STAMP BOX

Washington State Department of Transportation

I-405
BN RR BRIDGE TO PED TRAIL BRIDGE SEISMIC RETROFIT

ALIGNMENT PLAN

Plot 2
PLAN REF NO AL2
SHEET 15 OF 176 SHEETS

T.25N.R.5E. W.M.

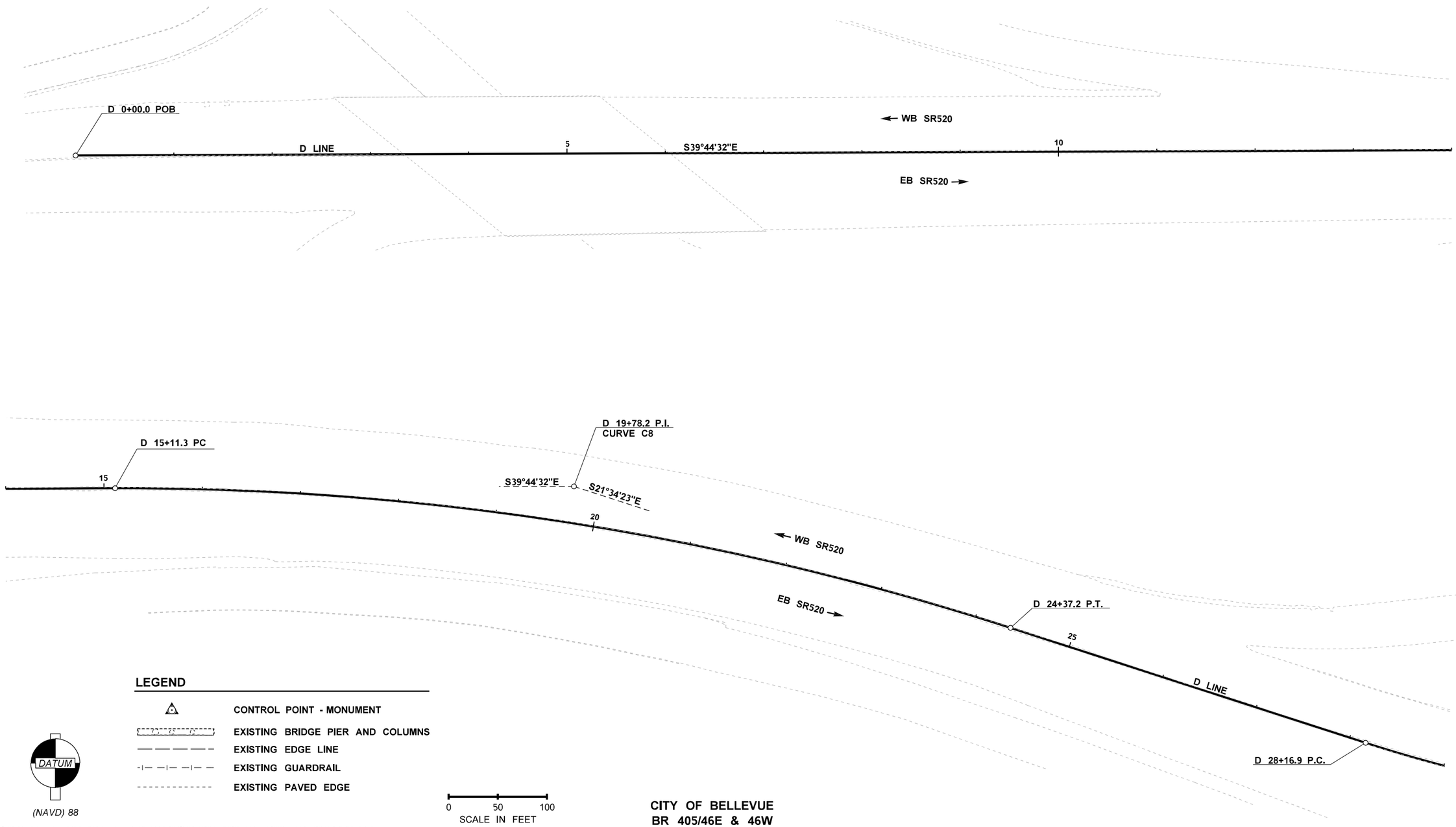

LEGEND

- CONTROL POINT - MONUMENT
- EXISTING BRIDGE PIER AND COLUMNS
- EXISTING EDGE LINE
- EXISTING GUARDRAIL
- EXISTING PAVED EDGE

DATUM

(NAVD) 88

0 50 100
SCALE IN FEET

CITY OF BELLEVUE
BR 405/46E & 46W

HORIZONTAL DATUM: NAD 83 / 91 WASHINGTON NORTH ZONE US SURVEY FEET

FILE NAME	T:\412348\XL5937\CAD\ContractPlans\XL5937_PS_AL.dgn				REGION NO. 10	STATE WASH	FED.AID PROJ.NO.
TIME	10:29:17 AM						
DATE	5/20/2022						
PLOTTED BY	oneilma				JOB NUMBER 20A039		
DESIGNED BY	B. BASSERI						
ENTERED BY	B. BASSERI						
CHECKED BY	M. O'NEIL				CONTRACT NO.		LOCATION NO.
PROJ. ENGR.	C. ANDERSON						
REGIONAL ADM.	M. COTTEN	REVISION	DATE	BY			

SEE SHEET CT1
DATE
P.E. STAMP BOX

DATE
P.E. STAMP BOX

Washington State
Department of Transportation

I-405
BN RR BRIDGE TO PED TRAIL BRIDGE
SEISMIC RETROFIT

ALIGNMENT PLAN

Plot 10
PLAN REF NO
AL3
SHEET 16 OF 176 SHEETS

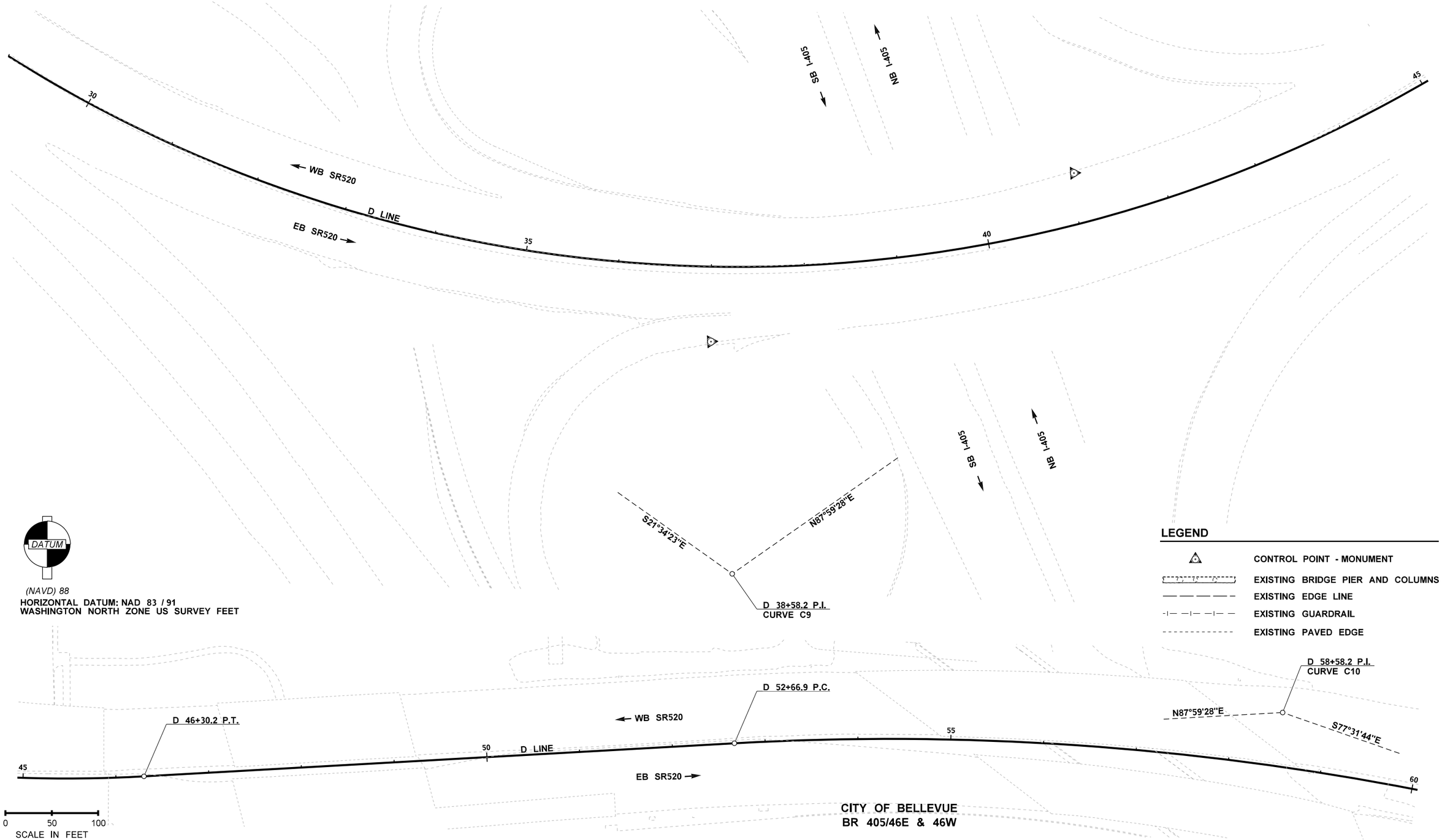

FILE NAME	T:\412348\XL5937\CAD\ContractPlans\XL5937_PS_AL.dgn				REGION NO. 10	STATE WASH	FED.AID PROJ.NO.
TIME	10:29:20 AM				JOB NUMBER 20A039		
DATE	5/20/2022				CONTRACT NO.		LOCATION NO.
PLOTTED BY	oneilma						
DESIGNED BY	B. BASSERI						
ENTERED BY	B. BASSERI						
CHECKED BY	M. O'NEIL						
PROJ. ENGR.	C. ANDERSON						
REGIONAL ADM.	M. COTTEN	REVISION	DATE	BY			

SEE SHEET CT1
DATE
P.E. STAMP BOX

DATE
P.E. STAMP BOX

Washington State
Department of Transportation

I-405
BN RR BRIDGE TO PED TRAIL BRIDGE
SEISMIC RETROFIT

ALIGNMENT PLAN

Plot 11
PLAN REF NO
AL4
SHEET 17 OF 176 SHEETS

T.25N.R.5E. W.M.

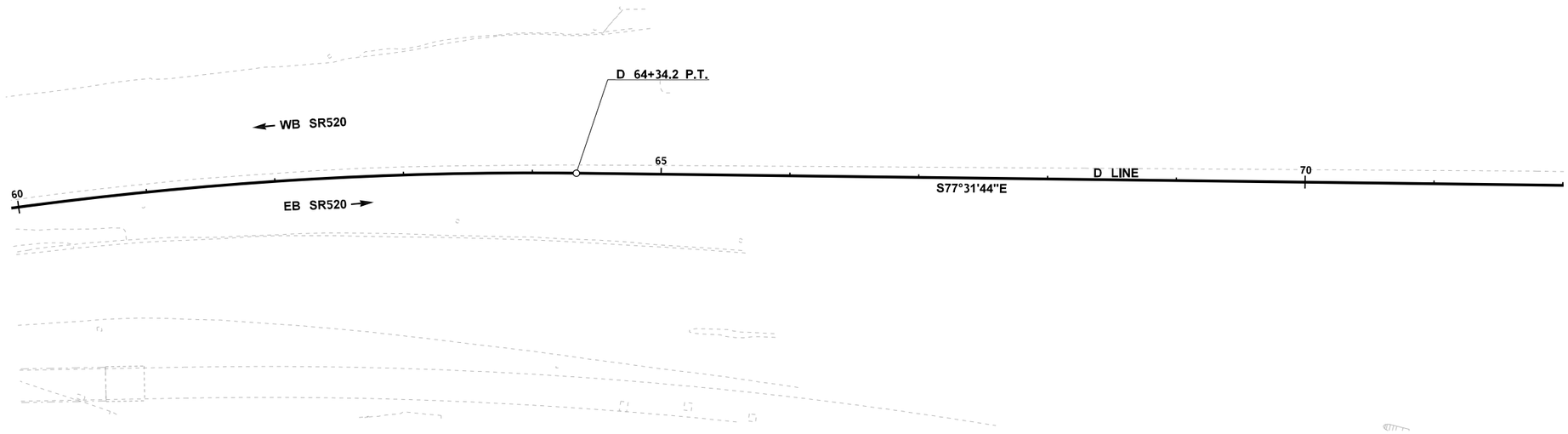

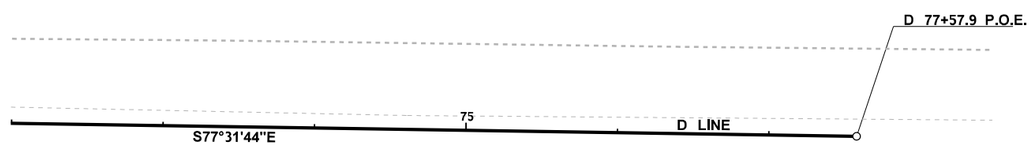

LEGEND

- CONTROL POINT - MONUMENT
- EXISTING BRIDGE PIER AND COLUMNS
- EXISTING EDGE LINE
- EXISTING GUARDRAIL
- EXISTING PAVED EDGE

DATUM

(NAVD) 88

0 50 100
SCALE IN FEET

CITY OF BELLEVUE
BR 405/46E & 46W

HORIZONTAL DATUM: NAD 83 / 91 WASHINGTON NORTH ZONE US SURVEY FEET

FILE NAME	T:\412348\XL5937\CAD\ContractPlans\XL5937_PS_AL.dgn			
TIME	10:29:23 AM			
DATE	5/20/2022			
PLOTTED BY	oneilma			
DESIGNED BY	B. BASSERI			
ENTERED BY	B. BASSERI			
CHECKED BY	M. O'NEIL			
PROJ. ENGR.	C. ANDERSON			
REGIONAL ADM.	M. COTTEN	REVISION	DATE	BY

REGION NO.	STATE	FED.AID PROJ.NO.
10	WASH	
JOB NUMBER 20A039		
CONTRACT NO.		LOCATION NO.

SEE SHEET CT1
DATE
P.E. STAMP BOX

DATE
P.E. STAMP BOX

Washington State
Department of Transportation

I-405
BN RR BRIDGE TO PED TRAIL BRIDGE
SEISMIC RETROFIT

ALIGNMENT PLAN

Plot 12
PLAN REF NO
AL5
SHEET 18 OF 176 SHEETS

T.25N.R.5E. W.M.

ALIGNMENT COORDINATES		
STATION	NORTHING	EASTING
E 9+83.5 POB, PC	234114.9	1306437.8
E 13+50.0 POE, PT	233953.2	1306765.2

CONTROL POINTS				
CONTROL POINT #	STATION (OFFSET)	NORTHING	EASTING	ELEVATION
405-5205	E 10+20.4 (21.3' RT)	234076.4	1306456.7	162.47
405-5206	E 13+43.5 (20.6' LT)	233974.8	1306765.3	173.61

CURVE DATA							
CURVE NO.	P.I. STATION	NORTHING	EASTING	DELTA	RADIUS	TANGENT	LENGTH
C9	E 11+68.2	234009.1	1306589.2	17°21'17"	1210.1'	184.7'	366.5'

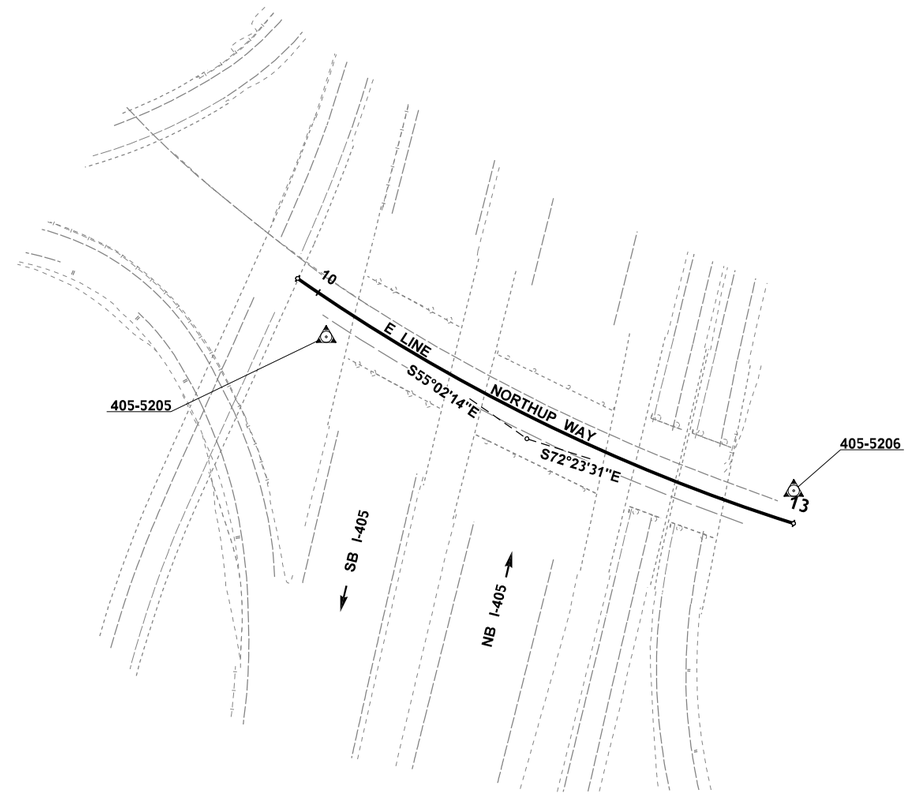

LEGEND

- CONTROL POINT - MONUMENT
- EXISTING BRIDGE PIER AND COLUMNS
- EXISTING EDGE LINE
- EXISTING GUARDRAIL
- EXISTING PAVED EDGE

DATUM

(NAVD) 88

0 50 100
SCALE IN FEET

HORIZONTAL DATUM: NAD 83 / 91 WASHINGTON NORTH ZONE US SURVEY FEET

CITY OF BELLEVUE
BR 405/47E & 47W

FILE NAME	T:\412348\XL5937\CAD\ContractPlans\XL5937_PS_AL.dgn						
TIME	10:29:26 AM				REGION NO. 10	STATE WASH	FED.AID PROJ.NO.
DATE	5/20/2022						
PLOTTED BY	oneilma				JOB NUMBER 20A039		
DESIGNED BY	B. BASSERI						
ENTERED BY	B. BASSERI				CONTRACT NO.		LOCATION NO.
CHECKED BY	M. O'NEIL						
PROJ. ENGR.	C. ANDERSON						
REGIONAL ADM.	M. COTTEN	REVISION	DATE	BY			

SEE SHEET CT1
DATE
P.E. STAMP BOX

DATE
P.E. STAMP BOX

Washington State
Department of Transportation

I-405
BN RR BRIDGE TO PED TRAIL BRIDGE
SEISMIC RETROFIT

ALIGNMENT PLAN

Plot 4
PLAN REF NO
AL6
SHEET 19 OF 176 SHEETS

T.25N.R.5E. W.M.

ALIGNMENT COORDINATES		
STATION	NORTHING	EASTING
F 10+00.0 POB, PC	234787.1	1306571.9
F 14+80.5 POE, PT	234412.2	1306864.9
CB 30+00.0 POB	234933.2	1306429.9
CB 39+45.1 POE	234149.4	1306955.5

CONTROL POINTS					
CONTROL POINT #	STATION (OFFSET)		NORTHING	EASTING	ELEVATION
405-5207	F 10+21.5 (17.9' RT)	CB 32+18.4 (32.7' LT)	234759.7	1306565.2	171.15
GP-981	F 13+70.2 (82.0' LT)	CB 35+56.3 (140.6' LT)	234542.0	1306836.6	198.96
405-5208	F 14+73.9 (15.0' RT)	CB 36+78.6 (70.2' LT)	234404.2	1306850.6	173.46

CURVE DATA							
CURVE NO.	P.I. STATION	NORTHING	EASTING	DELTA	RADIUS	TANGENT	LENGTH
C10	F 10+67.2	234725.9	1306600.0	09°41'23" LT	793.2'	67.2'	134.1'
C11	F 13+25.8	234512.4	1306746.4	13°48'27" LT	501.2'	60.7'	120.8'
C12	F 14+33.2	234440.4	1306826.9	05°10'55" LT	1045.9'	47.3'	94.6'
C13	CB 34+13.3	234572.5	1306631.7	08°12'55" RT	4245.7'	304.9'	608.8'

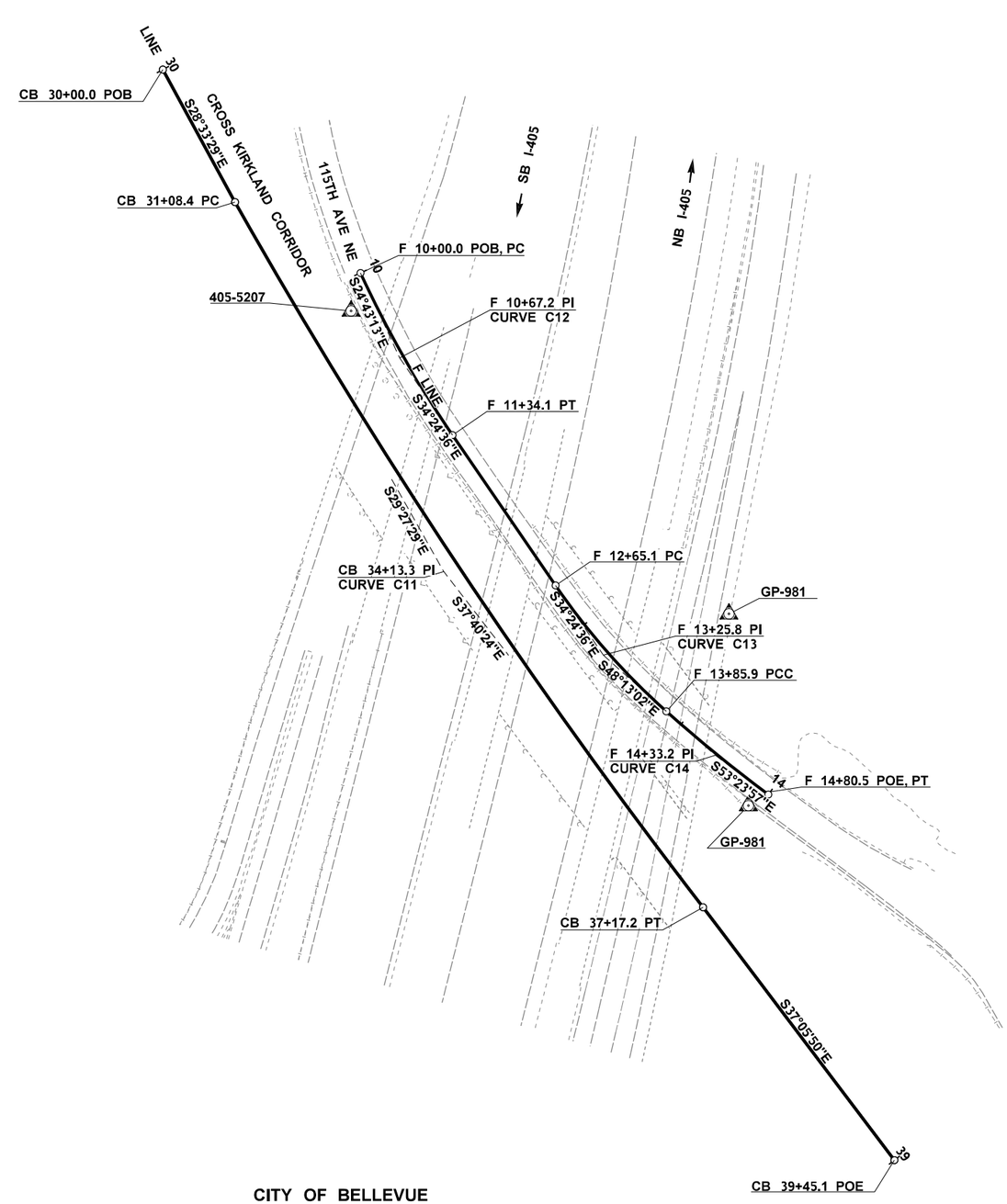

LEGEND

- CONTROL POINT - MONUMENT
- EXISTING BRIDGE PIER AND COLUMNS
- EXISTING EDGE LINE
- EXISTING GUARDRAIL
- EXISTING PAVED EDGE

DATUM

(NAVD) 88

0 50 100
SCALE IN FEET

HORIZONTAL DATUM: NAD 83 / 91 WASHINGTON NORTH ZONE US SURVEY FEET

CITY OF BELLEVUE
BR 405/48E & 48W

FILE NAME	T:\412348\XL5937\CAD\ContractPlans\XL5937_PS_AL.dgn					
TIME	10:29:29 AM				REGION NO. 10	STATE WASH
DATE	5/20/2022					
PLOTTED BY	oneilma				JOB NUMBER 20A039	FED.AID PROJ.NO.
DESIGNED BY	B. BASSERI					
ENTERED BY	B. BASSERI					
CHECKED BY	M. O'NEIL				CONTRACT NO.	LOCATION NO.
PROJ. ENGR.	C. ANDERSON					
REGIONAL ADM.	M. COTTEN	REVISION	DATE	BY		

SEE SHEET CT1
DATE
P.E. STAMP BOX

DATE
P.E. STAMP BOX

Washington State
Department of Transportation

I-405
BN RR BRIDGE TO PED TRAIL BRIDGE
SEISMIC RETROFIT

ALIGNMENT PLAN

Plot 5
PLAN REF NO AL7
SHEET 20 OF 176 SHEETS

T.26N.R.5E. W.M.

ALIGNMENT COORDINATES		
STATION	NORTHING	EASTING
CKC 48+84.4 PI, POB	260780.1	1309097.9
CKC 50+40.0 PC	260283.6	1308665.1
CKC 51+22.5 PT	260347.9	1308716.8
CKC 56+98.7 POE	260780.1	1309097.9

CONTROL POINTS				
CONTROL POINT #	STATION (OFFSET)	NORTHING	EASTING	ELEVATION
GP-908	CKC 54+25.8 (84.6' LT)	260631.4	1308853.9	189.00

CURVE DATA							
CURVE NO.	P.I. STATION	NORTHING	EASTING	DELTA	RADIUS	TANGENT	LENGTH
C14	CKC 50+81.3	260316.3	1308690.3	02°30'08" LT	1889.3'	41.3'	82.5'

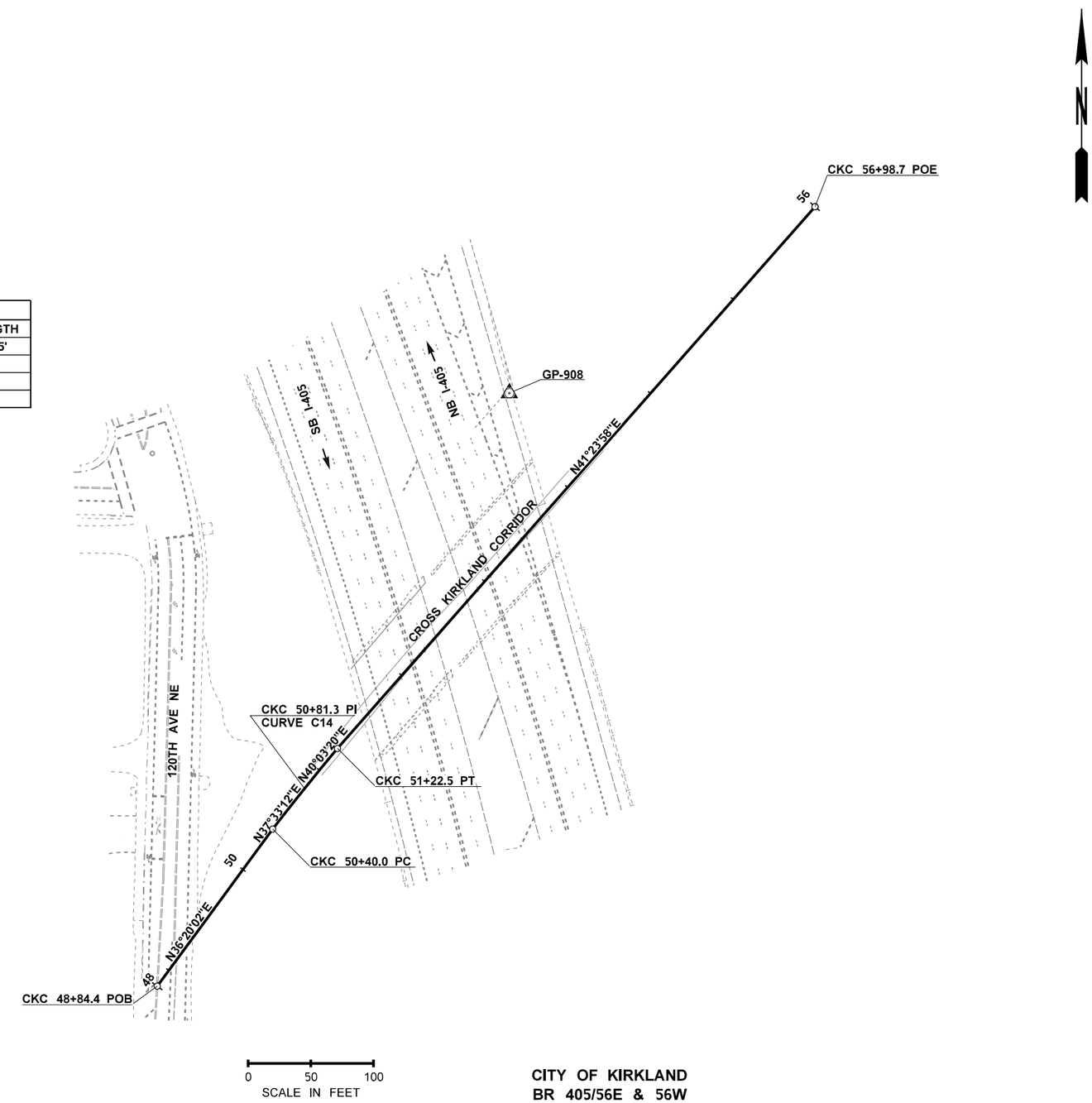

LEGEND

- CONTROL POINT - MONUMENT
- EXISTING BRIDGE PIER AND COLUMNS
- EXISTING EDGE LINE
- EXISTING GUARDRAIL
- EXISTING PAVED EDGE

DATUM

(NAVD) 88

HORIZONTAL DATUM: NAD 83 / 91 WASHINGTON NORTH ZONE US SURVEY FEET

CITY OF KIRKLAND
BR 405/56E & 56W

FILE NAME	T:\412348\XL5937\CAD\ContractPlans\XL5937_PS_AL.dgn			
TIME	10:29:34 AM			
DATE	5/20/2022			
PLOTTED BY	oneilma			
DESIGNED BY	B. BASSERI			
ENTERED BY	B. BASSERI			
CHECKED BY	M. O'NEIL			
PROJ. ENGR.	C. ANDERSON			
REGIONAL ADM.	M. COTTEN	REVISION	DATE	BY

REGION NO.	STATE	FED.AID PROJ.NO.
10	WASH	
JOB NUMBER 20A039		
CONTRACT NO.		LOCATION NO.

CULLEN ANDERSON, STATE OF WASHINGTON, 20122709, REGISTERED PROFESSIONAL ENGINEER

SEE SHEET CT1
DATE
P.E. STAMP BOX

DATE
P.E. STAMP BOX

Washington State Department of Transportation

I-405
BN RR BRIDGE TO PED TRAIL BRIDGE
SEISMIC RETROFIT

ALIGNMENT PLAN

Plot 6
PLAN REF NO
AL8
SHEET 21 OF 176 SHEETS

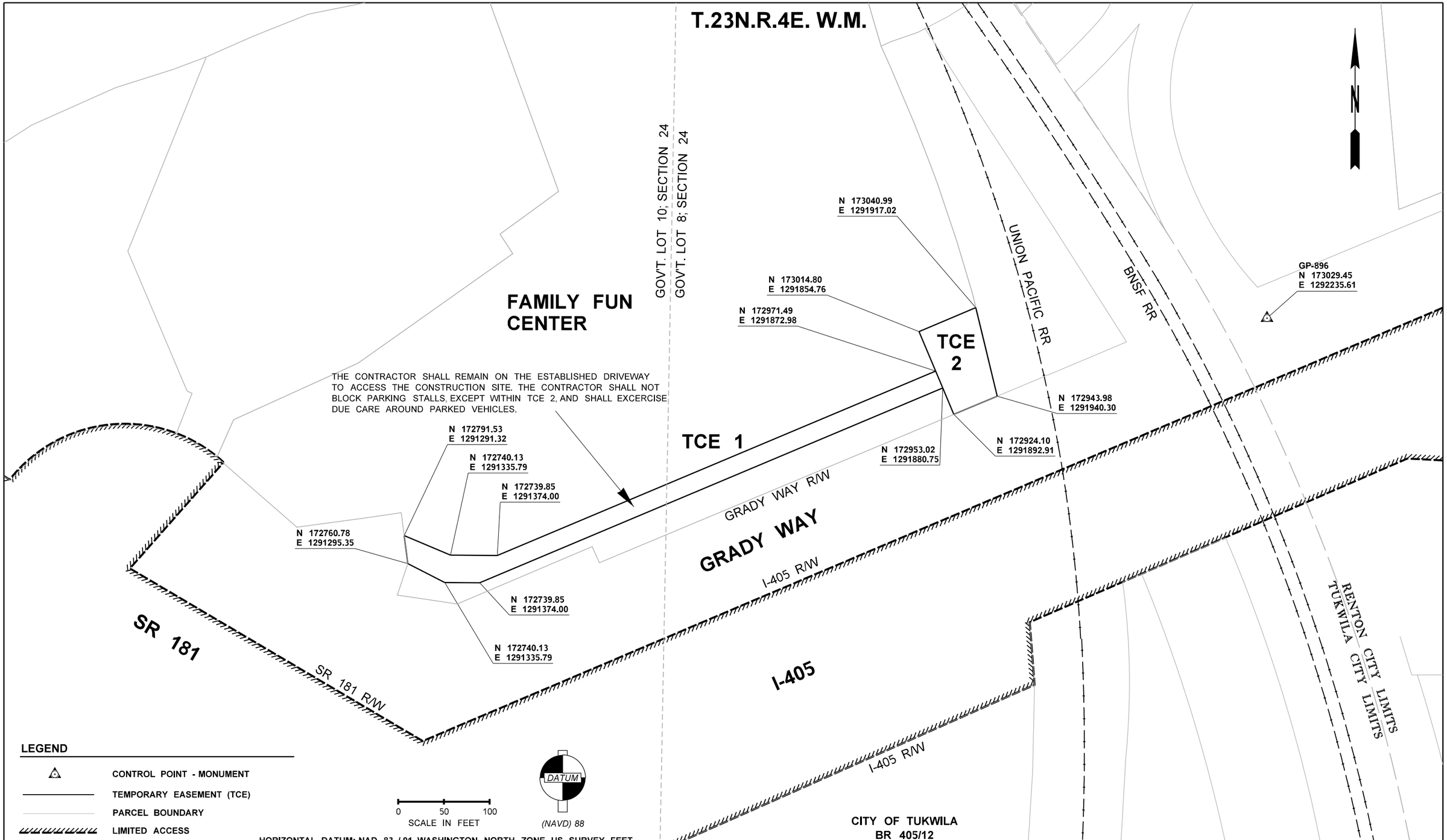

FILE NAME	T:\412348\XL5937\CAD\ContractPlans\XL5937_PS_RW.dgn
TIME	10:32:46 AM
DATE	5/20/2022
PLOTTED BY	oneilma
DESIGNED BY	M. O'NEIL
ENTERED BY	M. O'NEIL
CHECKED BY	C. ANDERSON
PROJ. ENGR.	C. ANDERSON
REGIONAL ADM.	M. COTTEN

REVISION	DATE	BY

REGION NO.	STATE	FED.AID PROJ.NO.
10	WASH	
JOB NUMBER 20A039		
CONTRACT NO.		LOCATION NO.

SEE SHEET CT1
DATE
P.E. STAMP BOX

DATE
P.E. STAMP BOX

Washington State Department of Transportation

I-405
BN RR BRIDGE TO PED TRAIL BRIDGE
SEISMIC RETROFIT

ROW PLAN

Plot 1
PLAN REF NO ROW1
SHEET 22 OF 176 SHEETS

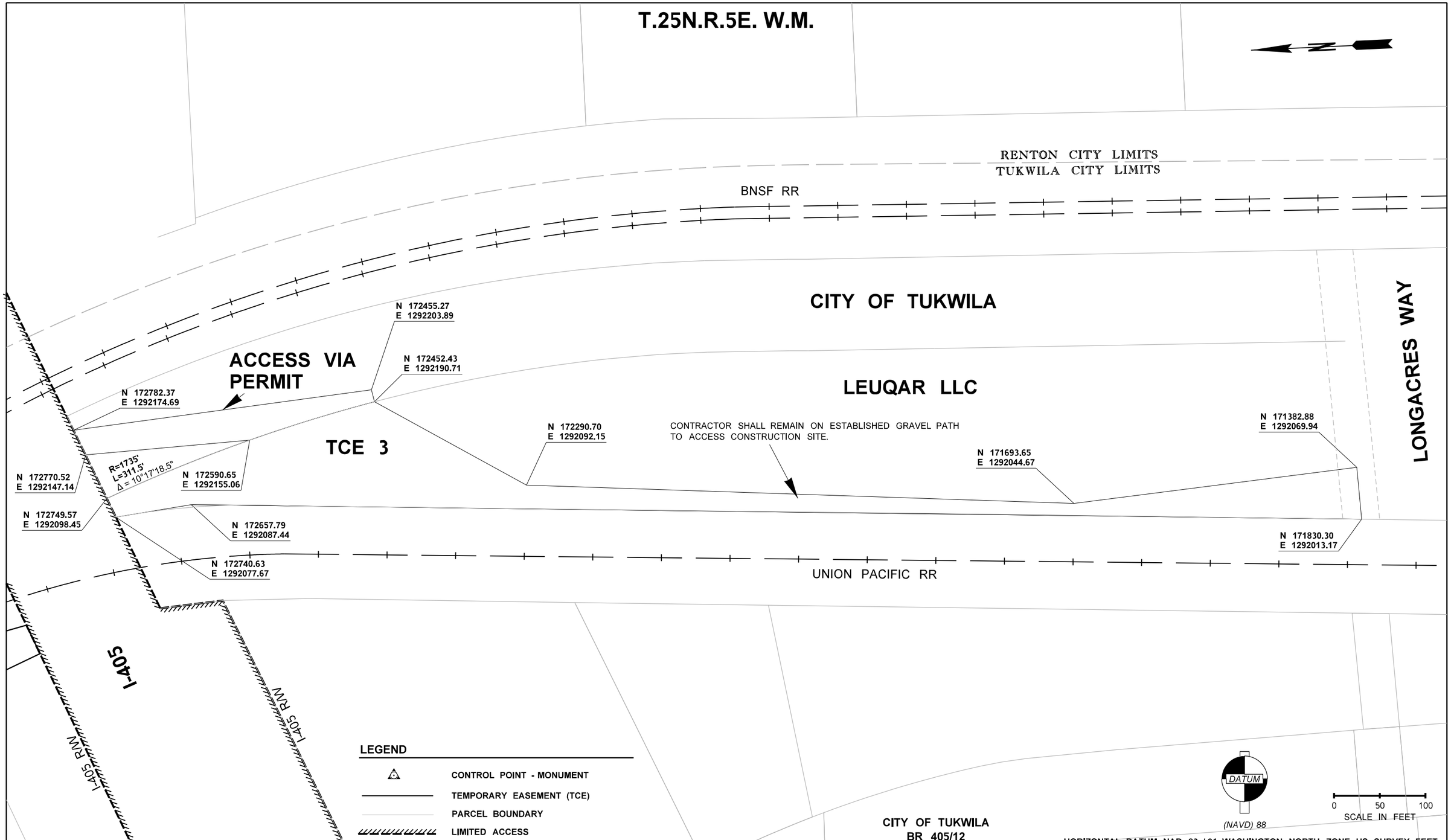

FILE NAME	T:\412348\XL5937\CAD\ContractPlans\XL5937_PS_RW.dgn			
TIME	10:32:48 AM			
DATE	5/20/2022			
PLOTTED BY	oneilma			
DESIGNED BY	M. O'NEIL			
ENTERED BY	M. O'NEIL			
CHECKED BY	C. ANDERSON			
PROJ. ENGR.	C. ANDERSON			
REGIONAL ADM.	M. COTTEN	REVISION	DATE	BY

REGION NO.	STATE	FED.AID PROJ.NO.
10	WASH	
JOB NUMBER 20A039		
CONTRACT NO.		LOCATION NO.

SEE SHEET CT1
DATE
P.E. STAMP BOX

P.E. STAMP BOX
DATE

Washington State Department of Transportation

I-405
BN RR BRIDGE TO PED TRAIL BRIDGE
SEISMIC RETROFIT

ROW PLAN

Plot 2
PLAN REF NO ROW2
SHEET 23 OF 176 SHEETS

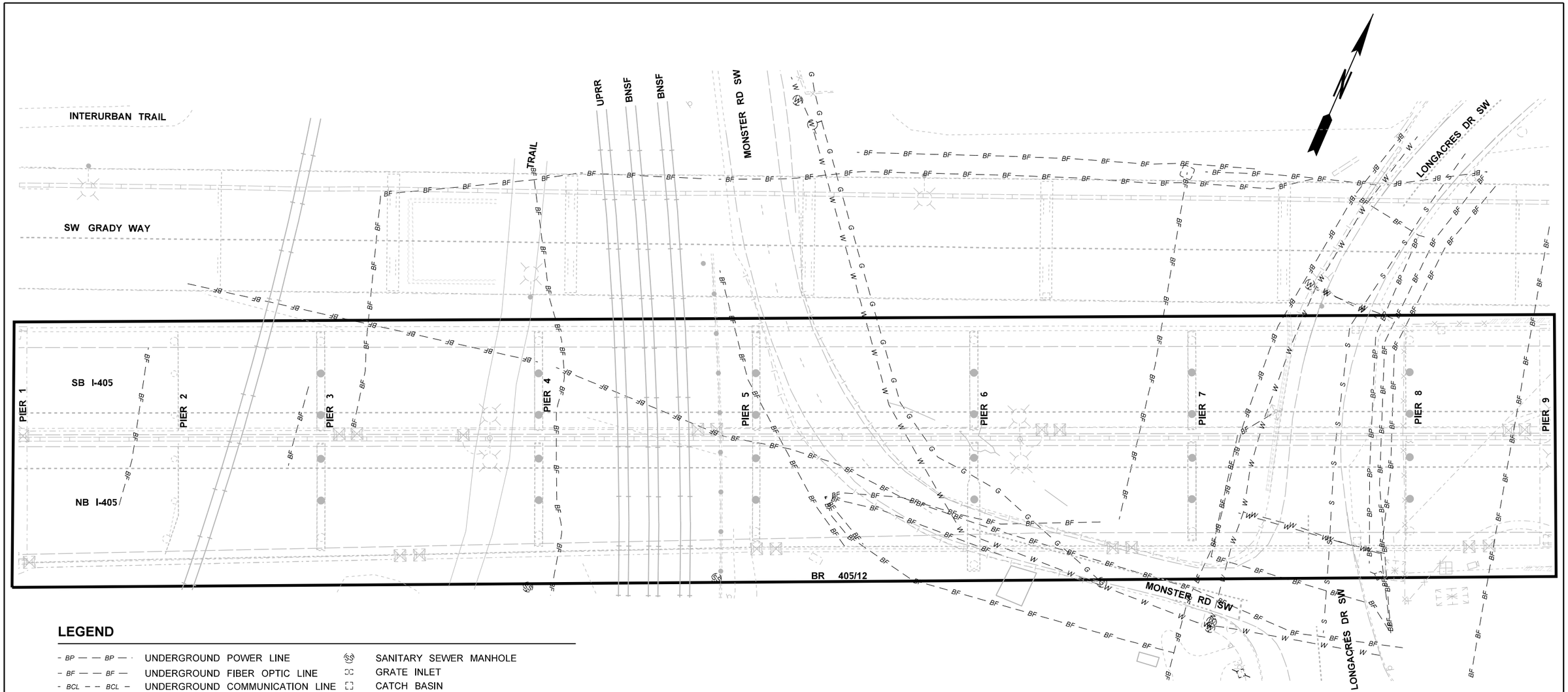

LEGEND

BP — BP	UNDERGROUND POWER LINE	SS	SANITARY SEWER MANHOLE
BF — BF	UNDERGROUND FIBER OPTIC LINE		GRATE INLET
BCL — BCL	UNDERGROUND COMMUNICATION LINE		CATCH BASIN
S — S	SANITARY SEWER LINE	C	UNDERGROUND COMMUNICATION VAULT
W — W	WATER LINE		UTILITY VAULT
G — G	GAS LINE	T	TELEPHONE BOX
ST — ST	STORM SEWER LINE		CONTROLLER CABINET
	CONCRETE BARRIER		J-BOX TYPE 1
	RETAINING WALL		J-BOX TYPE 2
	FENCE LINE		MANHOLE
	CULVERT		UTILITY POLE
	GUARDRAIL		EXISTING BRIDGE COLUMN
	DITCH BOTTOM		COLUMN TO BE RETROFITTED
	JURISDICTIONAL DITCH		
	CABLE BARRIER		
	RAILROAD TRACKS		

RENTON
BR 405 / 12

0 25 50
SCALE IN FEET

FILE NAME	T:\412348\XL5937\CAD\ContractPlans\XL5937_PS_EU.dgn			
TIME	10:37:30 AM			
DATE	5/20/2022			
PLOTTED BY	oneilma			
DESIGNED BY	B. BASSERI			
ENTERED BY	B. BASSERI			
CHECKED BY	M. O'NEIL			
PROJ. ENGR.	C. ANDERSON			
REGIONAL ADM.	M. COTTEN	REVISION	DATE	BY

REGION NO.	STATE	FED.AID PROJ.NO.
10	WASH	
JOB NUMBER 20A039		
CONTRACT NO.		LOCATION NO.

SEE SHEET CT1
DATE
P.E. STAMP BOX

DATE
P.E. STAMP BOX

Washington State
Department of Transportation

I-405
BN RR BRIDGE TO PED TRAIL BRIDGE
SEISMIC RETROFIT

EXISTING UTILITIES

Plot 1
PLAN REF NO
EXUT1
SHEET 24 OF 176 SHEETS

LEGEND

- UNDERGROUND POWER LINE
- UNDERGROUND FIBER OPTIC LINE
- UNDERGROUND COMMUNICATION LINE
- SANITARY SEWER LINE
- WATER LINE
- GAS LINE
- STORM SEWER LINE
- CONCRETE BARRIER
- RETAINING WALL
- FENCE LINE
- CULVERT
- GUARDRAIL
- DITCH BOTTOM
- JURISDICTIONAL DITCH
- CABLE BARRIER
- RAILROAD TRACKS
- SANITARY SEWER MANHOLE
- GRATE INLET
- CATCH BASIN
- UNDERGROUND COMMUNICATION VAULT
- UTILITY VAULT
- TELEPHONE BOX
- CONTROLLER CABINET
- J-BOX TYPE 1
- J-BOX TYPE 2
- MANHOLE
- UTILITY POLE
- EXISTING BRIDGE COLUMN
- COLUMN TO BE RETROFITTED

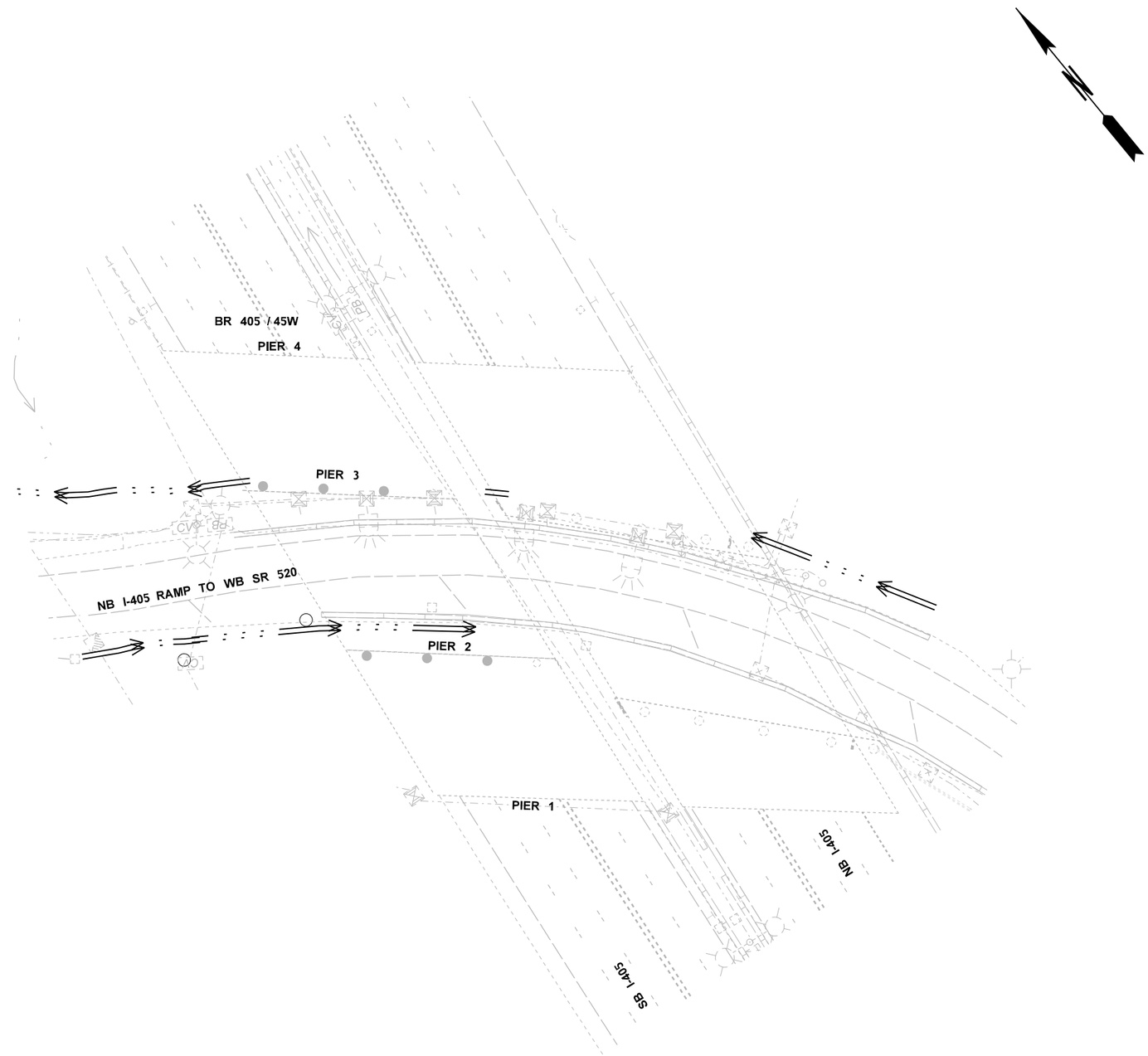

0 25 50
SCALE IN FEET

BELLEVUE
BR 405/45W

FILE NAME	T:\412348\XL5937\CAD\ContractPlans\XL5937_PS_EU.dgn				REGION NO. 10	STATE WASH	FED.AID PROJ.NO.
TIME	10:37:32 AM						
DATE	5/20/2022						
PLOTTED BY	oneilma				JOB NUMBER 20A039		
DESIGNED BY	B. BASSERI						
ENTERED BY	B. BASSERI						
CHECKED BY	M. O'NEIL				CONTRACT NO.		LOCATION NO.
PROJ. ENGR.	C. ANDERSON						
REGIONAL ADM.	M. COTTEN	REVISION	DATE	BY			

SEE SHEET CT1
DATE
P.E. STAMP BOX

DATE
P.E. STAMP BOX

Washington State
Department of Transportation

I-405
BN RR BRIDGE TO PED TRAIL BRIDGE
SEISMIC RETROFIT

EXISTING UTILITIES

Plot 2
PLAN REF NO
EXUT2
SHEET 25 OF 176 SHEETS

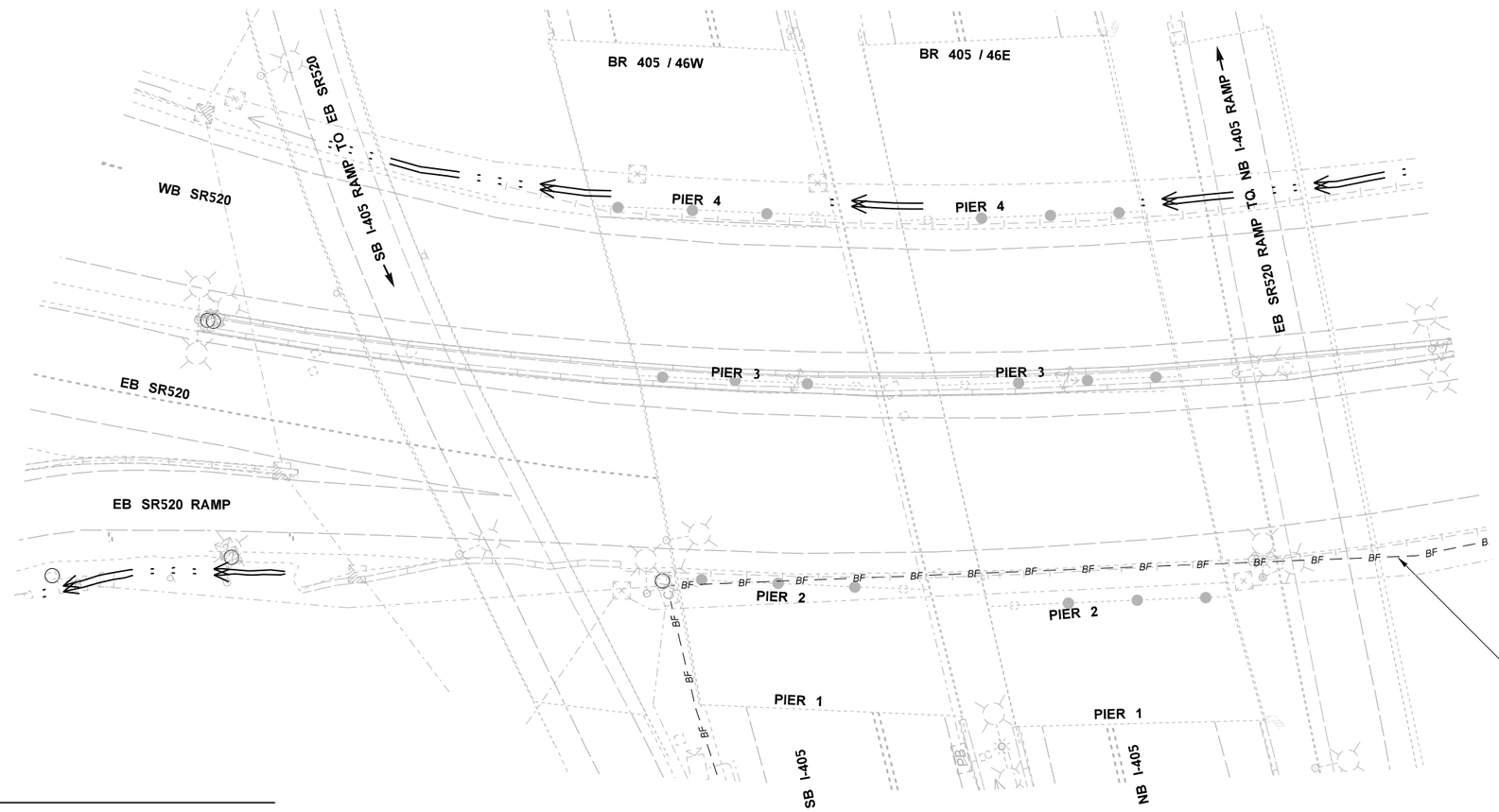

LEGEND

- UNDERGROUND POWER LINE
- UNDERGROUND FIBER OPTIC LINE
- UNDERGROUND COMMUNICATION LINE
- SANITARY SEWER LINE
- WATER LINE
- GAS LINE
- STORM SEWER LINE
- CONCRETE BARRIER
- RETAINING WALL
- FENCE LINE
- CULVERT
- GUARDRAIL
- DITCH BOTTOM
- JURISDICTIONAL DITCH
- CABLE BARRIER
- RAILROAD TRACKS
- SANITARY SEWER MANHOLE
- GRATE INLET
- CATCH BASIN
- UNDERGROUND COMMUNICATION VAULT
- UTILITY VAULT
- TELEPHONE BOX
- CONTROLLER CABINET
- J-BOX TYPE 1
- J-BOX TYPE 2
- MANHOLE
- UTILITY POLE
- EXISTING BRIDGE COLUMN
- COLUMN TO BE RETROFITTED

NOTE

1. THE LOCATION OF THE BURIED ITS FIBER OPTIC CABLE IS APPROXIMATE. THE CONTRACTOR SHALL POTHOLE TO LOCATE THE CABLE, AND THEN PROTECT THE CABLE IN PLACE.

BELLEVUE
BR 405/46W & 46E

0 25 50
SCALE IN FEET

FILE NAME	T:\412348\XL5937\CAD\ContractPlans\XL5937_PS_EU.dgn			
TIME	10:37:33 AM			
DATE	5/20/2022			
PLOTTED BY	oneilma			
DESIGNED BY	B. BASSERI			
ENTERED BY	B. BASSERI			
CHECKED BY	M. O'NEIL			
PROJ. ENGR.	C. ANDERSON			
REGIONAL ADM.	M. COTTEN	REVISION	DATE	BY

REGION NO.	STATE	FED.AID PROJ.NO.
10	WASH	
JOB NUMBER 20A039		
CONTRACT NO.		LOCATION NO.

P.E. STAMP BOX — SEE SHEET CT1 — DATE

P.E. STAMP BOX — DATE

Washington State Department of Transportation

I-405
BN RR BRIDGE TO PED TRAIL BRIDGE SEISMIC RETROFIT

EXISTING UTILITIES

Plot 3
PLAN REF NO EXUT3
SHEET 26 OF 176 SHEETS

LEGEND

- UNDERGROUND POWER LINE
- UNDERGROUND FIBER OPTIC LINE
- UNDERGROUND COMMUNICATION LINE
- SANITARY SEWER LINE
- WATER LINE
- GAS LINE
- STORM SEWER LINE
- CONCRETE BARRIER
- RETAINING WALL
- FENCE LINE
- CULVERT
- GUARDRAIL
- DITCH BOTTOM
- JURISDICTIONAL DITCH
- CABLE BARRIER
- RAILROAD TRACKS
- SANITARY SEWER MANHOLE
- GRATE INLET
- CATCH BASIN
- UNDERGROUND COMMUNICATION VAULT
- UTILITY VAULT
- TELEPHONE BOX
- CONTROLLER CABINET
- J-BOX TYPE 1
- J-BOX TYPE 2
- MANHOLE
- UTILITY POLE
- EXISTING BRIDGE COLUMN
- COLUMN TO BE RETROFITTED

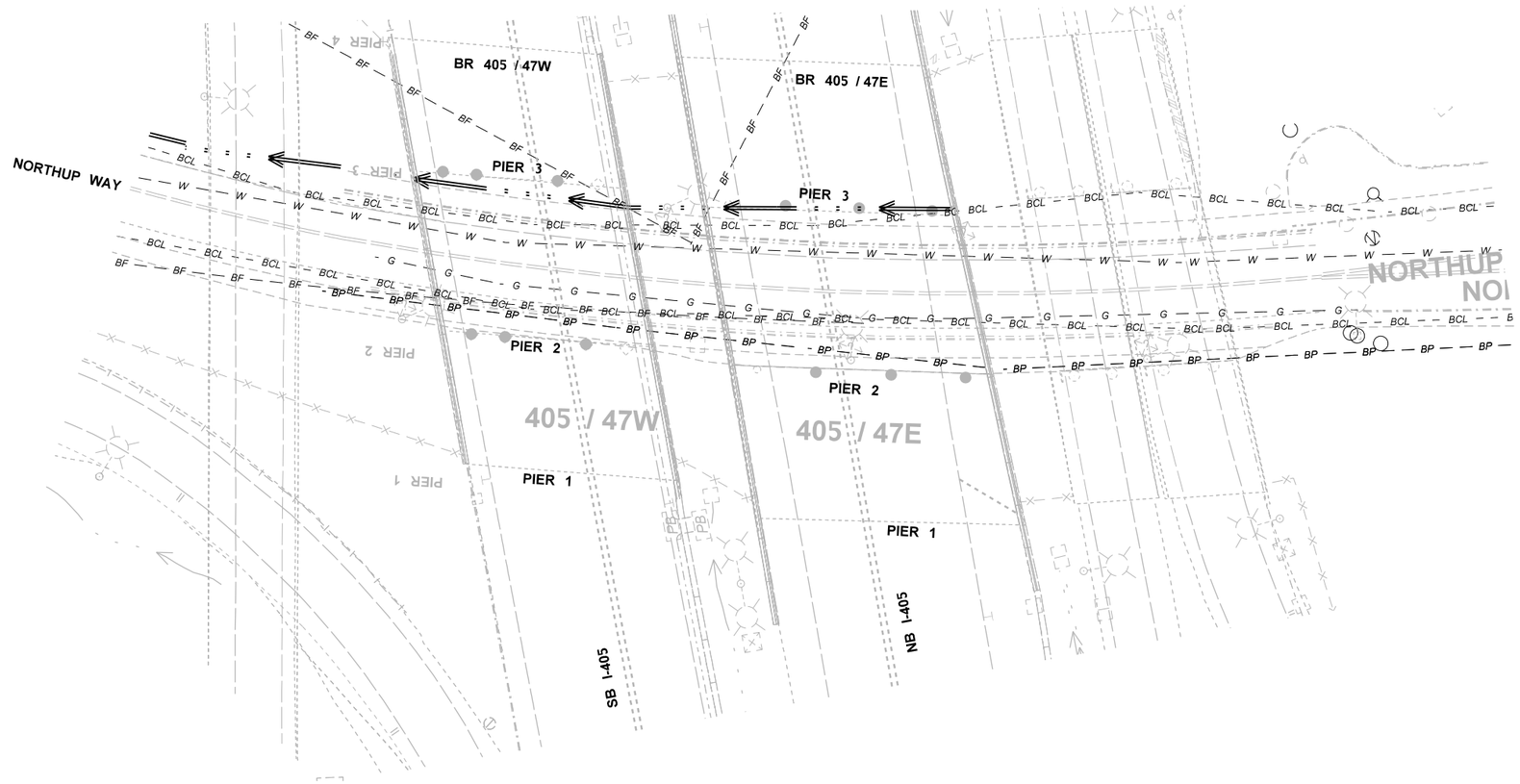

0 25 50
SCALE IN FEET

BELLEVUE
BR 405/47W & 47E

FILE NAME	T:\412348\XL5937\CAD\ContractPlans\XL5937_PS_EU.dgn						
TIME	10:37:35 AM				REGION NO. 10	STATE WASH	FED.AID PROJ.NO.
DATE	5/20/2022						
PLOTTED BY	oneilma						
DESIGNED BY	B. BASSERI				JOB NUMBER 20A039		
ENTERED BY	B. BASSERI						
CHECKED BY	M. O'NEIL				CONTRACT NO.		LOCATION NO.
PROJ. ENGR.	C. ANDERSON						
REGIONAL ADM.	M. COTTEN	REVISION	DATE	BY			

CULLEN ANDERSON STATE OF WASHINGTON 20122 PROFESSIONAL ENGINEER
SEE SHEET CT1
DATE
P.E. STAMP BOX

DATE
P.E. STAMP BOX

Washington State
Department of Transportation

I-405
BN RR BRIDGE TO PED TRAIL BRIDGE
SEISMIC RETROFIT

EXISTING UTILITIES

Plot 4
PLAN REF NO
EXUT4
SHEET 27 OF 176 SHEETS

LEGEND

- UNDERGROUND POWER LINE
- UNDERGROUND FIBER OPTIC LINE
- UNDERGROUND COMMUNICATION LINE
- SANITARY SEWER LINE
- WATER LINE
- GAS LINE
- STORM SEWER LINE
- CONCRETE BARRIER
- RETAINING WALL
- FENCE LINE
- CULVERT
- GUARDRAIL
- DITCH BOTTOM
- JURISDICTIONAL DITCH
- CABLE BARRIER
- RAILROAD TRACKS
- SANITARY SEWER MANHOLE
- GRATE INLET
- CATCH BASIN
- UNDERGROUND COMMUNICATION VAULT
- UTILITY VAULT
- TELEPHONE BOX
- CONTROLLER CABINET
- J-BOX TYPE 1
- J-BOX TYPE 2
- MANHOLE
- UTILITY POLE
- EXISTING BRIDGE COLUMN
- COLUMN TO BE RETROFITTED

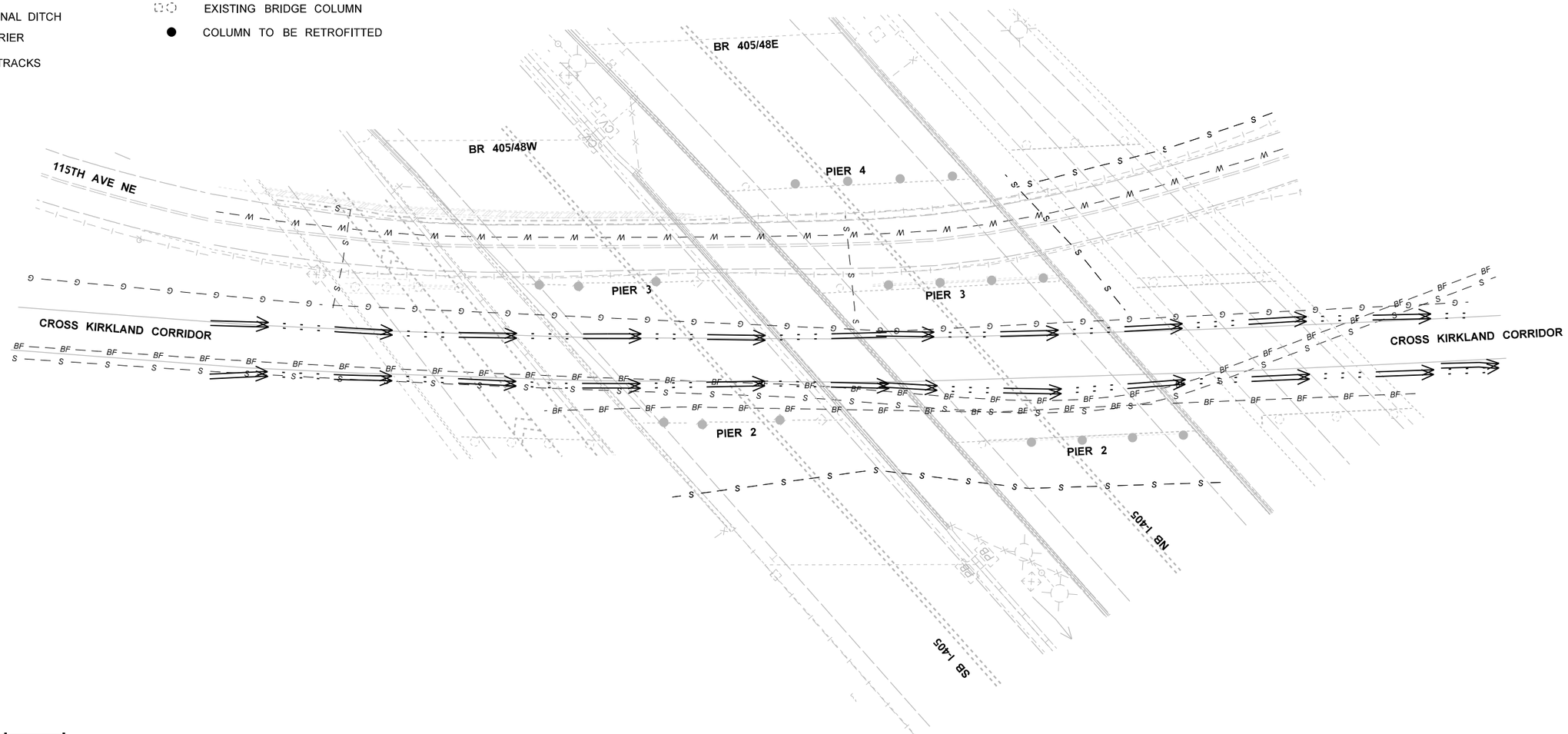

0 25 50
SCALE IN FEET

BELLEVUE
BR 405/48W & 48E

FILE NAME	T:\412348\XL5937\CAD\ContractPlans\XL5937_PS_EU.dgn						
TIME	10:37:36 AM						
DATE	5/20/2022						
PLOTTED BY	oneilma						
DESIGNED BY	B. BASSERI						
ENTERED BY	B. BASSERI						
CHECKED BY	M. O'NEIL						
PROJ. ENGR.	C. ANDERSON						
REGIONAL ADM.	M. COTTEN	REVISION	DATE	BY			

REGION NO.	STATE	FED.AID PROJ.NO.
10	WASH	
JOB NUMBER 20A039		
CONTRACT NO.		LOCATION NO.

SEE SHEET CT1
DATE
P.E. STAMP BOX

DATE
P.E. STAMP BOX

Washington State
Department of Transportation

I-405
BN RR BRIDGE TO PED TRAIL BRIDGE
SEISMIC RETROFIT

EXISTING UTILITIES

Plot 5
PLAN REF NO
EXUT5
SHEET 28 OF 176 SHEETS

LEGEND

BP — BP	UNDERGROUND POWER LINE
BF — BF	UNDERGROUND FIBER OPTIC LINE
BCL — BCL	UNDERGROUND COMMUNICATION LINE
S — S	SANITARY SEWER LINE
W — W	WATER LINE
G — G	GAS LINE
ST — ST	STORM SEWER LINE
	CONCRETE BARRIER
	RETAINING WALL
	FENCE LINE
	CULVERT
	GUARDRAIL
	DITCH BOTTOM
	JURISDICTIONAL DITCH
	CABLE BARRIER
	RAILROAD TRACKS
SS	SANITARY SEWER MANHOLE
	GRATE INLET
	CATCH BASIN
C	UNDERGROUND COMMUNICATION VAULT
	UTILITY VAULT
T	TELEPHONE BOX
	CONTROLLER CABINET
	J-BOX TYPE 1
	J-BOX TYPE 2
	MANHOLE
	UTILITY POLE
	EXISTING BRIDGE COLUMN
	COLUMN TO BE RETROFITTED

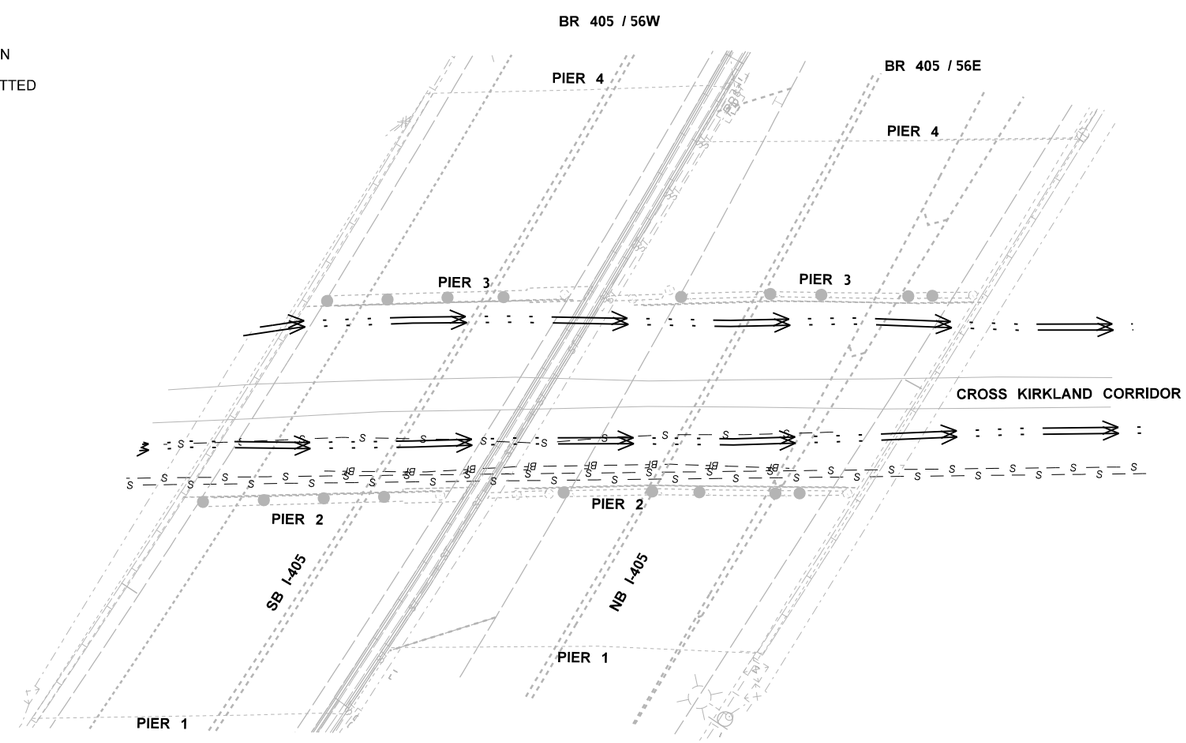

0 25 50
SCALE IN FEET

KIRKLAND
BR 405/56W & 56E

FILE NAME	T:\412348\XL5937\CAD\ContractPlans\XL5937_PS_EU.dgn
TIME	10:37:38 AM
DATE	5/20/2022
PLOTTED BY	oneilma
DESIGNED BY	B. BASSERI
ENTERED BY	B. BASSERI
CHECKED BY	M. O'NEIL
PROJ. ENGR.	C. ANDERSON
REGIONAL ADM.	M. COTTEN

REVISION | DATE | BY

REGION NO. 10 | STATE WASH | FED.AID PROJ.NO.

JOB NUMBER 20A039

CONTRACT NO. | LOCATION NO.

SEE SHEET CT1
DATE
P.E. STAMP BOX

DATE
P.E. STAMP BOX

Washington State Department of Transportation

I-405
BN RR BRIDGE TO PED TRAIL BRIDGE
SEISMIC RETROFIT

EXISTING UTILITIES

Plot 6
PLAN REF NO EXUT6
SHEET 29 OF 176 SHEETS

QUANTITY TABULATION - SITE PREP AND TESC

NOTE:
THE FIRST NUMBER OF THE "CODE" BELOW REFERS TO THE SHEET NO. OR THE SHEET REFERENCE NO. SHOWING THE CONSTRUCTION FEATURE.

THE SECOND NUMBER REFERS TO THE CONSTRUCTION FEATURE FOUND ON THAT SHEET.

CODE	LOCATION ➢ \ UNIT OF MEASURE ➢	CLEARING AND GRUBBING		REMOVING CONC. BARRIER		REMOVING GUARDRAIL	REMOVING GUARDRAIL ANCHOR		INLET PROTECTION	COMPOST SOCK	SEEDING AND FERTILIZING BY HAND	HIGH VISIBILITY FENCE					SEE GENERAL NOTES
		ACRE		L.F.		L.F.	EACH		EACH	L.F.	S.Y.	L.F.					
	BR 405/12																
SP1	B 10+19.5 TO B 12+31.7								5								1,3
SP1-1	A 11+38.5 (298.6' RT) TO A 11+70.5 (316.6' RT)	0.01									270						2
SP1-2	A 11+96.7 (39.0' LT) TO A 12+23.0 (27.7' LT)	0.04									180						2
SP1-3	A 12+31.8 (21.2' LT) TO A 13+08.2 (14.2' LT)	0.02									100						2
SP1-4	B 11+06.4 (30.4' LT) TO B 12+34.4 (47.9' LT)	0.03									130						2
	BR 405/45W																
SP2	C 100+36.3 TO C 104+28.8								6								1,3
SP2-1	C 102+65.3 (52.4' LT) TO C 103+84.1 (13.0' LT)											114					3,4
SP2-2	C 102+86.2 (18.5' LT) TO C 103+41.5 (14.0' LT)	0.02									120						2
SP2-3	C 103+08.2 (44.8' RT) TO C 104+36.5 (74.4' RT)									135							5
SP2-4	C 103+14.0 (45.7' RT) TO C 103+73.8 (57.7' RT)	0.01									70						2
SP2-5	C 103+27.8 (93.5' RT) TO C 104+30.1 (72.3' RT)											110					3,4
SP2-6	C 103+01.3 (36.3' LT) TO C 103+19.4 (15.6' LT)									42							5
	BR 405/46W & E																
SP3	D 10+16.6 TO D 13+06.2								8								1,3
SP3-1	D 10+52.0 (66.8' RT) TO D 11+43.9 (71.0' RT)											114					3,4
SP3-2	D 10+53.3 (62.6' RT) TO D 10+65.8 (75.0' RT)									21							5
SP3-3	D 10+66.1 (119.1' LT) TO D 11+52.7 (123.4' LT)											103					3,4
SP3-4	D 10+67.4 (63.4' RT) TO D 12+10.7 (46.2' RT)	0.04									190						2
SP3-5	D 10+75.9 (106.9' LT) TO D 11+57.3 (87.1' LT)									90							5
SP3-6	D 10+80.5 (67.3' RT) TO D 11+85.0 (44.0' RT)			113													
SP3-7	D 11+18.0 (87.4' LT) TO D 11+59.2 (86.8' LT)	0.01									60						2
SP3-8	D 11+65.6 (77.1' LT) TO D 13+80.5 (80.3' LT)					240	1										
SP3-9	D 11+84.0 (19.8' LT) TO D 13+81.5 (21.4' LT)			200													
SP3-10	D 11+84.0 (25.7' LT) TO D 13+81.5 (27.8' LT)			200													
SP3-11	D 11+84.7 (46.3' RT) TO D 13+98.9 (41.9' RT)					212	1										
SP3-12	D 12+56.7 (79.8' LT) TO D 12+78.0 (80.3' LT)	0.01									50						2
SP3-13	D 12+87.2 (43.8' RT) TO D 13+06.9 (43.2' RT)	0.01									30						2
SP3-14	D 13+69.1 (80.2' LT) TO D 14+27.4 (82.7' LT)	0.01									70						2
SP3-15	D 13+82.6 (42.3' RT) TO D 14+06.8 (42.8' RT)	0.01									40						2
	BR 405/47W & E																
SP4	E 9+95.9 to E 12+43.2								7								1,3
SP4-1	E 10+00.0 (28.1' LT) TO E10+17.4 (28.3' LT)	0.01									40						2
SP4-2	E 10+12.3 (26.5' RT) TO E 10+35.4 (26.1' RT)	0.01									30						2
SP4-3	E 10+24.3 (16.6' LT) TO E 10+48.6 (16.6' LT)																6
SP4-4	E 10+41.0 (16.1' RT) TO E 10+94.9 (15.9' RT)																6
SP4-5	E 10+95.2 (29.8' LT) TO E 11+19.7 (31.6' LT)	0.01									30						2
SP4-6	E 11+10.3 (25.1' RT) TO E 11.36.5 (38.6' RT)	0.01									40						2
SP4-7	E 11+44.4 (16.9' LT) TO E 12+10.4 (17.0' LT)																6
SP4-8	E 11+54.7 (16.1' RT) TO E 12+23.0 (15.8' RT)																6
	SHEET TOTAL	0.26		513		452	2		26	288	1450	441					

GENERAL NOTES:

1. INSTALL INLET PROTECTION IN ACCORDANCE WITH STANDARD SPECIFICATION 8-01.3(9)D.

2. SEE SPECIAL PROVISION 8-02.2(9-14.3).

3. SEE TABLE ON SHEETS SP1-SP6.

4. INSTALL HIGH VISIBILITY FENCE IN ACCORDANCE WITH STANDARD SPECIFICATION 9-14.6(8). SEE STANDARD PLAN I-10.10-01.

5. INSTALL COMPOST SOCK IN ACCORDANCE WITH STANDARD SPECIFICATION 8-01.3(12).

6. INFORMATIONAL ONLY. SEE "REMOVAL OF STRUCTURES AND OBSTRUCTIONS" IN STANDARD SPECIFICATIONS 2-02.3.

						REGION NO.	STATE	FED. AID PROJ. NO.
DESIGNED BY	B.BASSERI					10	WASH	
ENTERED BY	B.BASSERI							
CHECKED BY	M.O'NEIL					JOB NUMBER		
PROJ. ENGR.	C. ANDERSON					20A039		
REGION ADM.	M.COTTEN					CONTRACT NO.		
		DATE	DATE	REVISION	BY			

I-405
BN RR BRIDGE TO PED TRAIL BRIDGE
SEISMIC RETROFIT

QUANTITY TABULATION - SITE PREP AND TESC

QTSP1

SHEET 30 OF 176 SHEETS

QUANTITY TABULATION - SITE PREP AND TESC

NOTE:
THE FIRST NUMBER OF THE "CODE" BELOW REFERS TO THE SHEET NO. OR THE SHEET REFERENCE NO. SHOWING THE CONSTRUCTION FEATURE.

THE SECOND NUMBER REFERS TO THE CONSTRUCTION FEATURE FOUND ON THAT SHEET.

CODE	LOCATION ↓ \ UNIT OF MEASURE →	CLEARING AND GRUBBING		REMOVING CONC. BARRIER		REMOVING GUARDRAIL	REMOVING GUARDRAIL ANCHOR		INLET PROTECTION	COMPOST SOCK	SEEDING AND FERTILIZING BY HAND	HIGH VISIBILITY FENCE					SEE GENERAL NOTES
		ACRE		L.F.		L.F.	EACH		EACH	L.F.	S.Y.	L.F.					
SP4-9	E 12+12.3 (30.6' LT) TO E 12+25.2 (31.8' LT)	0.01									30						2
	BR 405/48W & E																
SP5	F 10+57.8 TO F 13+48.5								4								1,3
SP5	CB 37+97.5 (17.1' RT)								1								1,3
SP5-1	F 11+31.1 (13.8' RT) TO F 13+58.3 (14.9' RT)					240											
SP5-2	F 12+19.3 (12.6' LT) TO F 13+36.1 (14.9' RT)					125											
SP5-3	CB 34+62.2 (14.3' RT) TO CB 35+04.3 (13.8' RT)	0.03									160						2
SP5-4	CB 36+40.9 (60.7' LT) TO CB 37+18.0 (84.6' LT)											80					3,4
SP5-5	CB 36+40.9 (60.7' LT) TO CB 37+18.0 (84.6' LT)											162					3,4
SP5-6	CB 36+92.4 (7.1' LT) TO CB 36+93.0 (17.3' LT)									10							5
SP5-7	CB 37+28.1 (8.4' RT) TO CB 37+28.1 (23.4' RT)									15							5
SP5-8	CB 37+65.6 (96.2' LT) TO CB 37+78.8 (46.8' LT)											67					3,4
SP5-9	CB 37+90.3 (25.3' LT) TO CB 37+90.7 (6.4' LT)									20							5
SP5-10	CB 37+93.7 (26.9' LT) TO CB 39+44.2 (7.2' LT)											172					3,4
	BR 405/56W & E																
SP6	CKC 48+93.5 (30.6' RT)								1								1,3
SP6-1	CKC 50+51.8 (38.9' LT) TO CKC 51+79.3 (47.0' LT)											141					3,4
SP6-2	CKC 50+56.5 (17.8' RT) TO CKC 51+26.6 (30.0' RT)											109					3,4
SP6-3	CKC 50+63.2 (5.2' LT) TO CKC 51+53.3 (8.7' LT)	0.02									130						2
SP6-4	CKC 50+72.0 (12.9' RT) TO CKC 52+14.2 (11.2' RT)	0.01									90						2
SP6-5	CKC 53+61.5 (40.4' RT) TO CKC 54+64.7 (34.7' RT)											122					3,4
SP6-6	CKC 53+74.7 (9.1' RT) TO CKC 53+87.3 (10.1' RT)	0.01									30						2
SP6-7	CKC 53+87.6 (10.3' LT) TO CKC 54+09.3 (8.8' LT)	0.01									80						2
SP6-8	CKC 54+22.1 (32.0' LT) TO CKC 54+98.5 (24.3' LT)									80							5
	SHEET TOTAL	0.09				365			6	125	520	853					
	PROJECT TOTAL	0.35		513		817	2		32	413	1970	1294					

GENERAL NOTES:

1. INSTALL INLET PROTECTION IN ACCORDANCE WITH STANDARD SPECIFICATION 8-01.3(9)D.

2. SEE SPECIAL PROVISION 8-02.2(9-14.3).

3. SEE TABLE ON SHEETS SP1-SP6.

4. INSTALL HIGH VISIBILITY FENCE IN ACCORDANCE WITH STANDARD SPECIFICATION 9-14.6(8). SEE STANDARD PLAN I-10.10-01.

5. INSTALL COMPOST SOCK IN ACCORDANCE WITH STANDARD SPECIFICATION 8-01.3(12).

6. INFORMATIONAL ONLY. SEE "REMOVAL OF STRUCTURES AND OBSTRUCTIONS" IN STANDARD SPECIFICATIONS 2-02.3.

DESIGNED BY	B.BASSERI				REGION NO.	STATE	FED. AID PROJ. NO.
ENTERED BY	B.BASSERI				10	WASH	
CHECKED BY	M.O'NEIL				JOB NUMBER		
PROJ. ENGR.	C. ANDERSON				20A039		
REGION ADM.	M.COTTEN				CONTRACT NO.		
		DATE	DATE	REVISION	BY		

I-405
BN RR BRIDGE TO PED TRAIL BRIDGE
SEISMIC RETROFIT

QUANTITY TABULATION - SITE PREP AND TESC

QTSP2

SHEET 31 OF 176 SHEETS

NOTES:

1. REMOVE AND RESET GUARDRAIL FOR ACCESS TO BRIDGE COLUMNS. SEE "REMOVING AND RESETTING BEAM GUARDRAIL" ON SHEET PV1.
2. REMOVE PORTION OF EXISTING CHAIN LINK FENCE FOR ACCESS TO BRIDGE COLUMNS. SEE "REMOVAL OF STRUCTURES AND OBSTRUCTIONS" IN STANDARD SPECIFICATIONS 2-02.3.

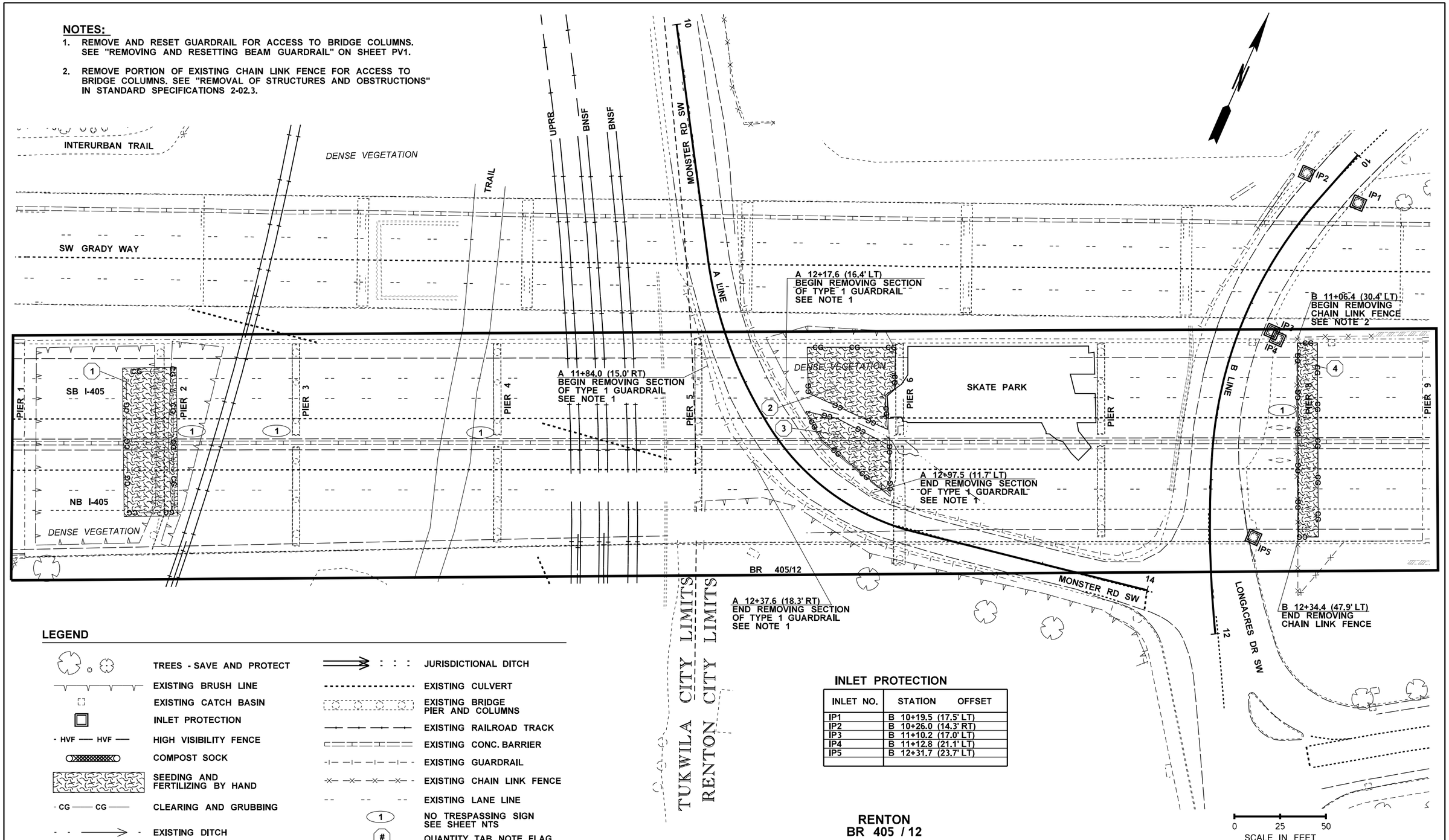

LEGEND

- TREES - SAVE AND PROTECT
- EXISTING BRUSH LINE
- EXISTING CATCH BASIN
- INLET PROTECTION
- HVF — HVF — HIGH VISIBILITY FENCE
- COMPOST SOCK
- SEEDING AND FERTILIZING BY HAND
- CG — CG — CLEARING AND GRUBBING
- EXISTING DITCH
- JURISDICTIONAL DITCH
- EXISTING CULVERT
- EXISTING BRIDGE PIER AND COLUMNS
- EXISTING RAILROAD TRACK
- EXISTING CONC. BARRIER
- EXISTING GUARDRAIL
- EXISTING CHAIN LINK FENCE
- EXISTING LANE LINE
- (1) NO TRESPASSING SIGN SEE SHEET NTS
- (#) QUANTITY TAB NOTE FLAG

INLET PROTECTION

INLET NO.	STATION OFFSET
IP1	B 10+19.5 (17.5' LT)
IP2	B 10+26.0 (14.3' RT)
IP3	B 11+10.2 (17.0' LT)
IP4	B 11+12.8 (21.1' LT)
IP5	B 12+31.7 (23.7' LT)

RENTON
BR 405 / 12

FILE NAME	T:\412348\XL5937\CAD\ContractPlans\XL5937_PS_SP.dgn					
TIME	10:45:19 AM					
DATE	5/20/2022					
PLOTTED BY	oneilma					
DESIGNED BY						
ENTERED BY						
CHECKED BY						
PROJ. ENGR.						
REGIONAL ADM.		REVISION	DATE	BY		

REGION NO.	STATE	FED.AID PROJ.NO.
10	WASH	
JOB NUMBER 20A039		
CONTRACT NO.		LOCATION NO.

SEE SHEET CT1
DATE
P.E. STAMP BOX

DATE
P.E. STAMP BOX

Washington State Department of Transportation

I-405
BN RR BRIDGE TO PED TRAIL BRIDGE SEISMIC RETROFIT

SITE PREP AND TESC

Plot 1
PLAN REF NO SP1
SHEET 32 OF 176 SHEETS

HIGH VISIBILITY FENCE

	POINT NAME	STATION	OFFSET
	BEGIN	C 102+65.3	(52.4' LT)
	ANGLE PT.	C 102+88.5	(50.9' LT)
1	ANGLE PT.	C 103+22.0	(15.0' LT)
	ANGLE PT.	C 103+62.3	(9.1' LT)
	END	C 103+84.1	(13.0' LT)
5	BEGIN	C 103+27.8	(93.5' RT)
	ANGLE PT.	C 103+74.9	(56.2' RT)
	ANGLE PT.	C 104+16.2	(63.0' RT)
	END	C 104+30.1	(72.3' RT)

INLET PROTECTION

INLET NO.	STATION	OFFSET
IP6	C 100+36.3	(10.9' LT)
IP7	C 100+36.3	(10.9' LT)
IP8	C 101+76.3	(24.2' LT)
IP9	C 102+42.0	(14.4' LT)
IP10	C 103+87.4	(16.6' LT)
IP11	C 104+28.8	(19.7' RT)

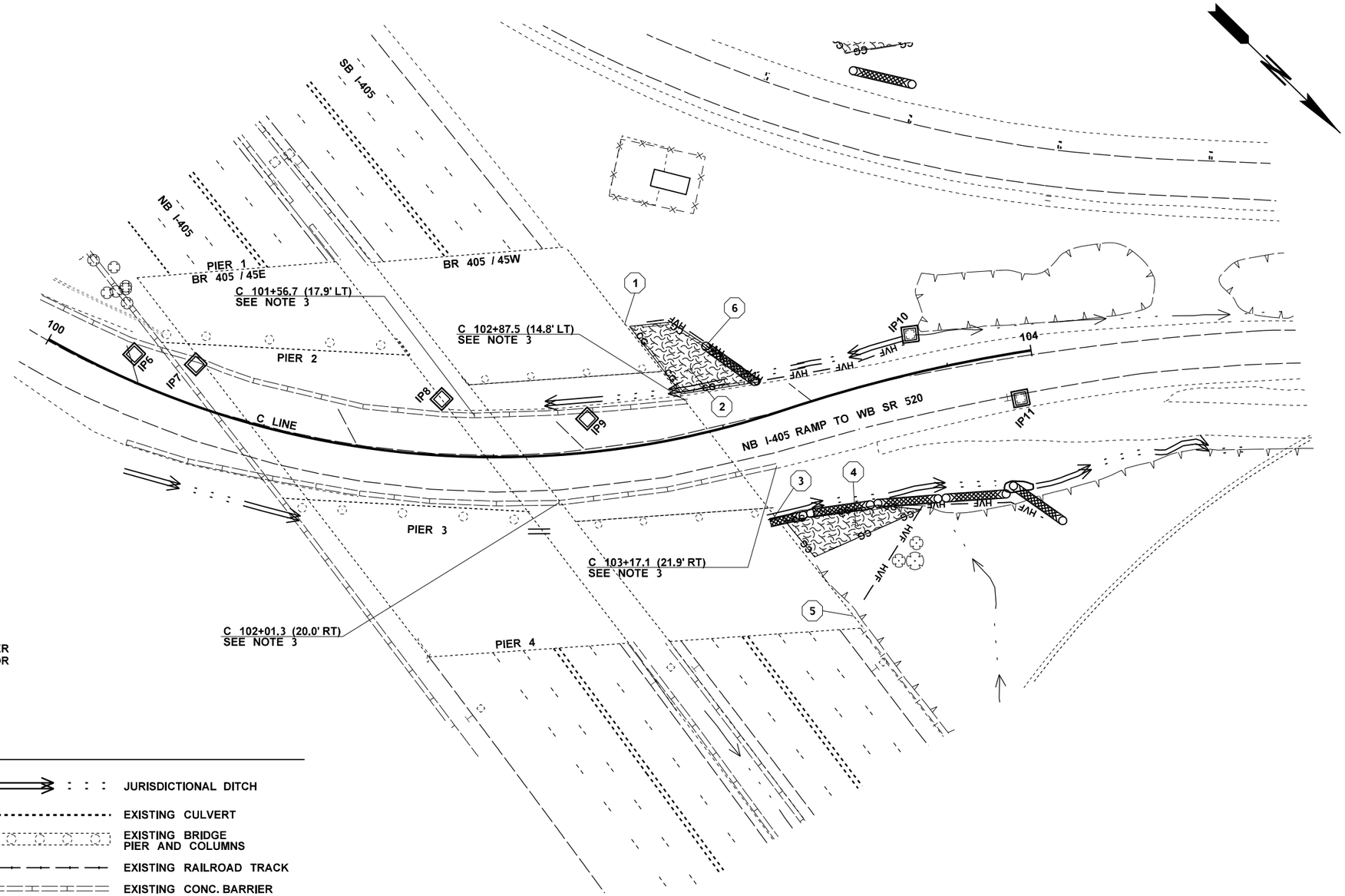

NOTES:

3. REMOVE AND REPLACE PORTION OF CONCRETE BARRIER FOR ACCESS TO BRIDGE COLUMNS. SEE SHEET PV2 FOR ADDITIONAL INFORMATION.

LEGEND

- TREES - SAVE AND PROTECT
- EXISTING BRUSH LINE
- EXISTING CATCH BASIN
- INLET PROTECTION
- HVF — HVF — HIGH VISIBILITY FENCE
- COMPOST SOCK
- SEEDING AND FERTILIZING BY HAND
- CG — CG — CLEARING AND GRUBBING
- EXISTING DITCH
- JURISDICTIONAL DITCH
- EXISTING CULVERT
- EXISTING BRIDGE PIER AND COLUMNS
- EXISTING RAILROAD TRACK
- EXISTING CONC. BARRIER
- EXISTING GUARDRAIL
- EXISTING CHAIN LINK FENCE
- EXISTING LANE LINE
- 1 NO TRESPASSING SIGN SEE SHEET NTS
- # QUANTITY TAB NOTE FLAG

BELLEVUE
BR 405/45W

0 25 50
SCALE IN FEET

FILE NAME	T:\412348\XL5937\CAD\ContractPlans\XL5937_PS_SP.dgn
TIME	10:45:21 AM
DATE	5/20/2022
PLOTTED BY	oneilma
DESIGNED BY	B. BASSERI
ENTERED BY	B. BASSERI
CHECKED BY	M. O'NEIL
PROJ. ENGR.	C. ANDERSON
REGIONAL ADM.	M. COTTEN

REVISION | DATE | BY

REGION NO. 10 | STATE WASH | FED.AID PROJ.NO.

JOB NUMBER 20A039

CONTRACT NO. | LOCATION NO.

SEE SHEET CT1
DATE
P.E. STAMP BOX

DATE
P.E. STAMP BOX

Washington State Department of Transportation

I-405
BN RR BRIDGE TO PED TRAIL BRIDGE
SEISMIC RETROFIT

SITE PREP AND TESC

Plot 2
PLAN REF NO SP2
SHEET 33 OF 176 SHEETS

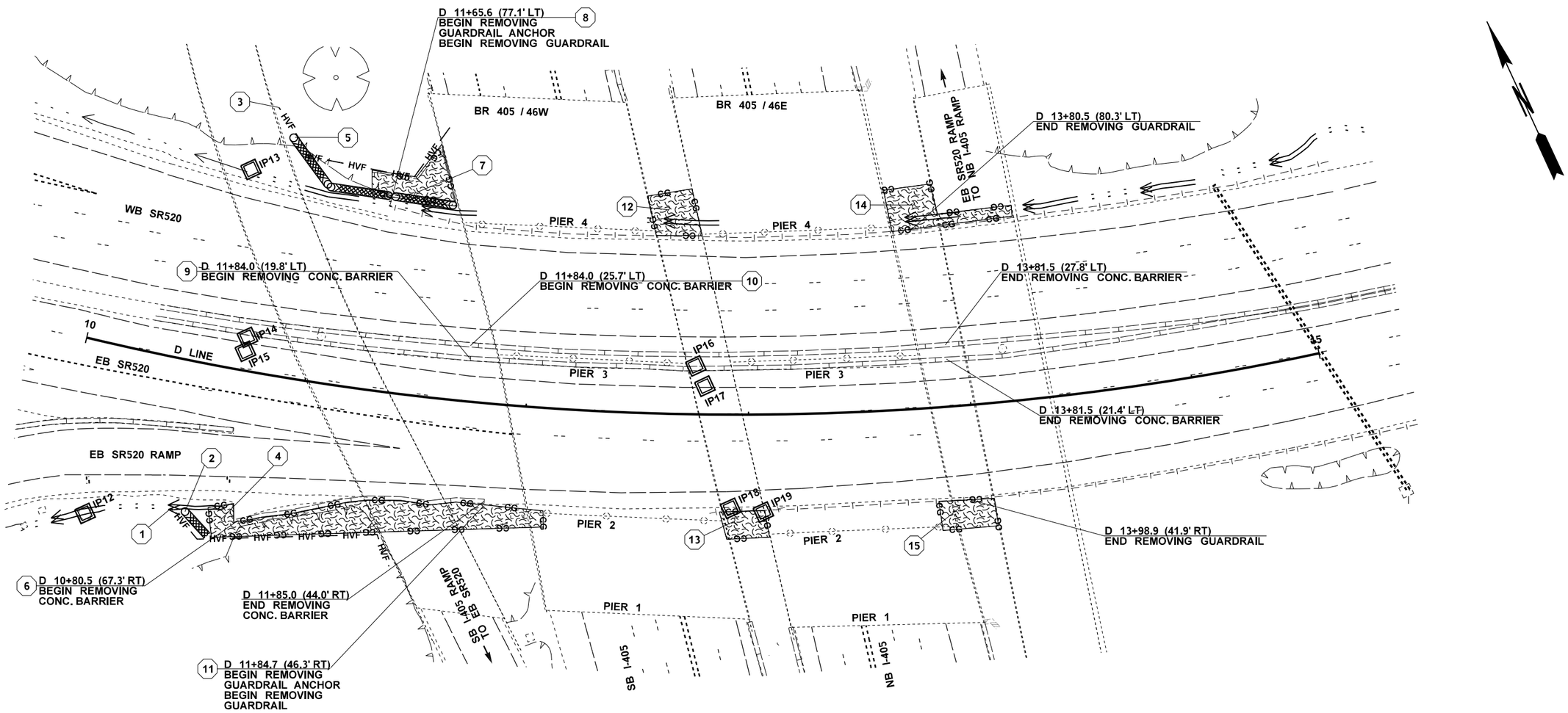

LEGEND

- TREES - SAVE AND PROTECT
- EXISTING BRUSH LINE
- EXISTING CATCH BASIN
- INLET PROTECTION
- HVF — HVF — HIGH VISIBILITY FENCE
- COMPOST SOCK
- SEEDING AND FERTILIZING BY HAND
- CG — CG — CLEARING AND GRUBBING
- EXISTING DITCH
- JURISDICTIONAL DITCH
- EXISTING CULVERT
- EXISTING BRIDGE PIER AND COLUMNS
- EXISTING RAILROAD TRACK
- EXISTING CONC. BARRIER
- EXISTING GUARDRAIL
- EXISTING CHAIN LINK FENCE
- EXISTING LANE LINE
- 1 NO TRESPASSING SIGN SEE SHEET NTS
- # QUANTITY TAB NOTE FLAG

HIGH VISIBILITY FENCE

	POINT NAME	STATION OFFSET
1	BEGIN	D 10+52.0 (66.8' RT)
	ANGLE PT.	D 10+65.3 (78.3' RT)
	ANGLE PT.	D 11+40.6 (63.9' RT)
	END	D 11+43.9 (71.0' RT)
3	BEGIN	D 10+66.1 (119.1' LT)
	ANGLE PT.	D 10+85.9 (99.9' LT)
	ANGLE PT.	D 11+37.0 (97.4' LT)
	END	D 11+52.7 (123.4' LT)

INLET PROTECTION

INLET NO.	STATION OFFSET
IP12	D 10+16.6 (77.1' RT)
IP13	D 10+58.2 (89.5' LT)
IP14	D 10+70.9 (15.0' LT)
IP15	D 10+71.2 (8.6' LT)
IP16	D 12+75.9 (21.8' LT)
IP17	D 12+80.2 (12.7' LT)
IP18	D 12+92.0 (42.1' RT)
IP19	D 13+06.2 (43.8' RT)

BELLEVUE
BR 405/46W & 46E

0 25 50
SCALE IN FEET

FILE NAME	T:\412348\XL5937\CAD\ContractPlans\XL5937_PS_SP.dgn
TIME	10:45:22 AM
DATE	5/20/2022
PLOTTED BY	oneilma
DESIGNED BY	B. BASSERI
ENTERED BY	B. BASSERI
CHECKED BY	M. O'NEIL
PROJ. ENGR.	C. ANDERSON
REGIONAL ADM.	M. COTTEN

REVISION | DATE | BY

REGION NO. 10 | STATE WASH | FED.AID PROJ.NO.

JOB NUMBER 20A039

CONTRACT NO. | LOCATION NO.

SEE SHEET CT1
DATE
P.E. STAMP BOX

DATE
P.E. STAMP BOX

Washington State Department of Transportation

I-405
BN RR BRIDGE TO PED TRAIL BRIDGE
SEISMIC RETROFIT

SITE PREP AND TESC

Plot 3
PLAN REF NO SP3
SHEET 34 OF 176 SHEETS

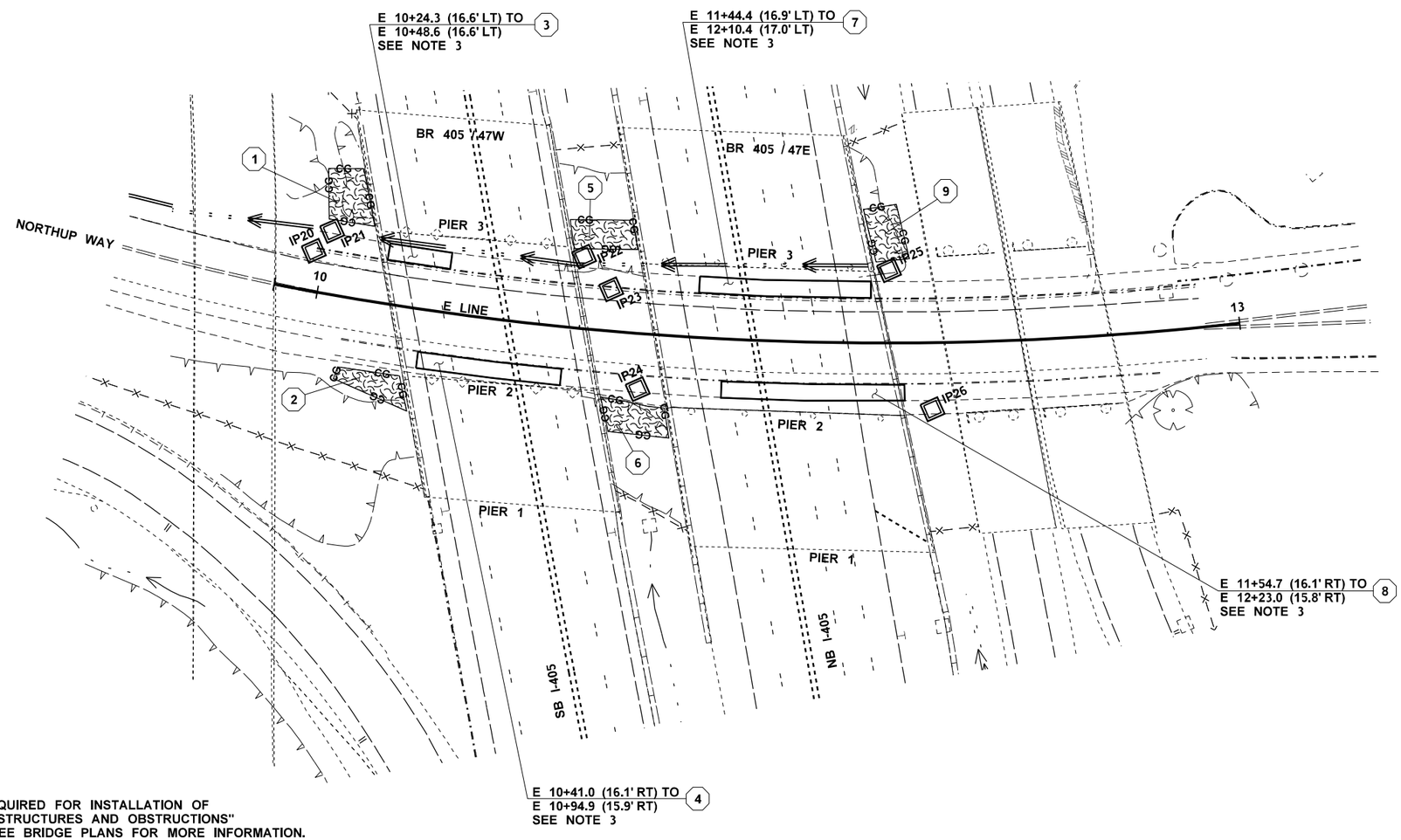

NOTES:

3. REMOVAL OF CONCRETE SIDEWALK REQUIRED FOR INSTALLATION OF COLUMN JACKETS. SEE "REMOVAL OF STRUCTURES AND OBSTRUCTIONS" IN STANDARD SPECIFICATIONS 2-02.3. SEE BRIDGE PLANS FOR MORE INFORMATION.

LEGEND

- TREES - SAVE AND PROTECT
- EXISTING BRUSH LINE
- EXISTING CATCH BASIN
- INLET PROTECTION
- HVF — HVF — HIGH VISIBILITY FENCE
- COMPOST SOCK
- SEEDING AND FERTILIZING BY HAND
- CG — CG — CLEARING AND GRUBBING
- EXISTING DITCH
- JURISDICTIONAL DITCH
- EXISTING CULVERT
- EXISTING BRIDGE PIER AND COLUMNS
- EXISTING RAILROAD TRACK
- EXISTING CONC. BARRIER
- EXISTING GUARDRAIL
- EXISTING CHAIN LINK FENCE
- EXISTING LANE LINE
- (1) NO TRESPASSING SIGN SEE SHEET NTS
- (#) QUANTITY TAB NOTE FLAG

INLET PROTECTION

INLET NO.	STATION OFFSET
IP20	E 9+95.9 (15.1' LT)
IP21	E 10+01.4 (23.9' LT)
IP22	E 11+09.1 (27.2' LT)
IP23	E 11+20.7 (15.8' LT)
IP24	E 11+33.7 (21.0' RT)
IP25	E 12+27.2 (27.5' LT)
IP26	E 12+43.2 (25.2' RT)

BELLEVUE
BR 405/47W & 47E

0 25 50
SCALE IN FEET

FILE NAME	T:\412348\XL5937\CAD\ContractPlans\XL5937_PS_SP.dgn
TIME	10:45:23 AM
DATE	5/20/2022
PLOTTED BY	oneilma
DESIGNED BY	B. BASSERI
ENTERED BY	B. BASSERI
CHECKED BY	M. O'NEIL
PROJ. ENGR.	C. ANDERSON
REGIONAL ADM.	M. COTTEN

REVISION | DATE | BY

REGION NO. 10 | STATE WASH | FED.AID PROJ.NO.
JOB NUMBER 20A039
CONTRACT NO. | LOCATION NO.

SEE SHEET CT1
DATE
P.E. STAMP BOX

DATE
P.E. STAMP BOX

Washington State Department of Transportation

I-405
BN RR BRIDGE TO PED TRAIL BRIDGE SEISMIC RETROFIT

SITE PREP AND TESC

Plot 4
PLAN REF NO SP4
SHEET 35 OF 176 SHEETS

LEGEND

	TREES - SAVE AND PROTECT
	EXISTING BRUSH LINE
	EXISTING CATCH BASIN
	INLET PROTECTION
- HVF — HVF —	HIGH VISIBILITY FENCE
	COMPOST SOCK
	SEEDING AND FERTILIZING BY HAND
- CG — CG —	CLEARING AND GRUBBING
	EXISTING DITCH
	JURISDICTIONAL DITCH
	EXISTING CULVERT
	EXISTING BRIDGE PIER AND COLUMNS
	EXISTING RAILROAD TRACK
	EXISTING CONC. BARRIER
	EXISTING GUARDRAIL
	EXISTING CHAIN LINK FENCE
	EXISTING LANE LINE
1	NO TRESPASSING SIGN SEE SHEET NTS
#	QUANTITY TAB NOTE FLAG

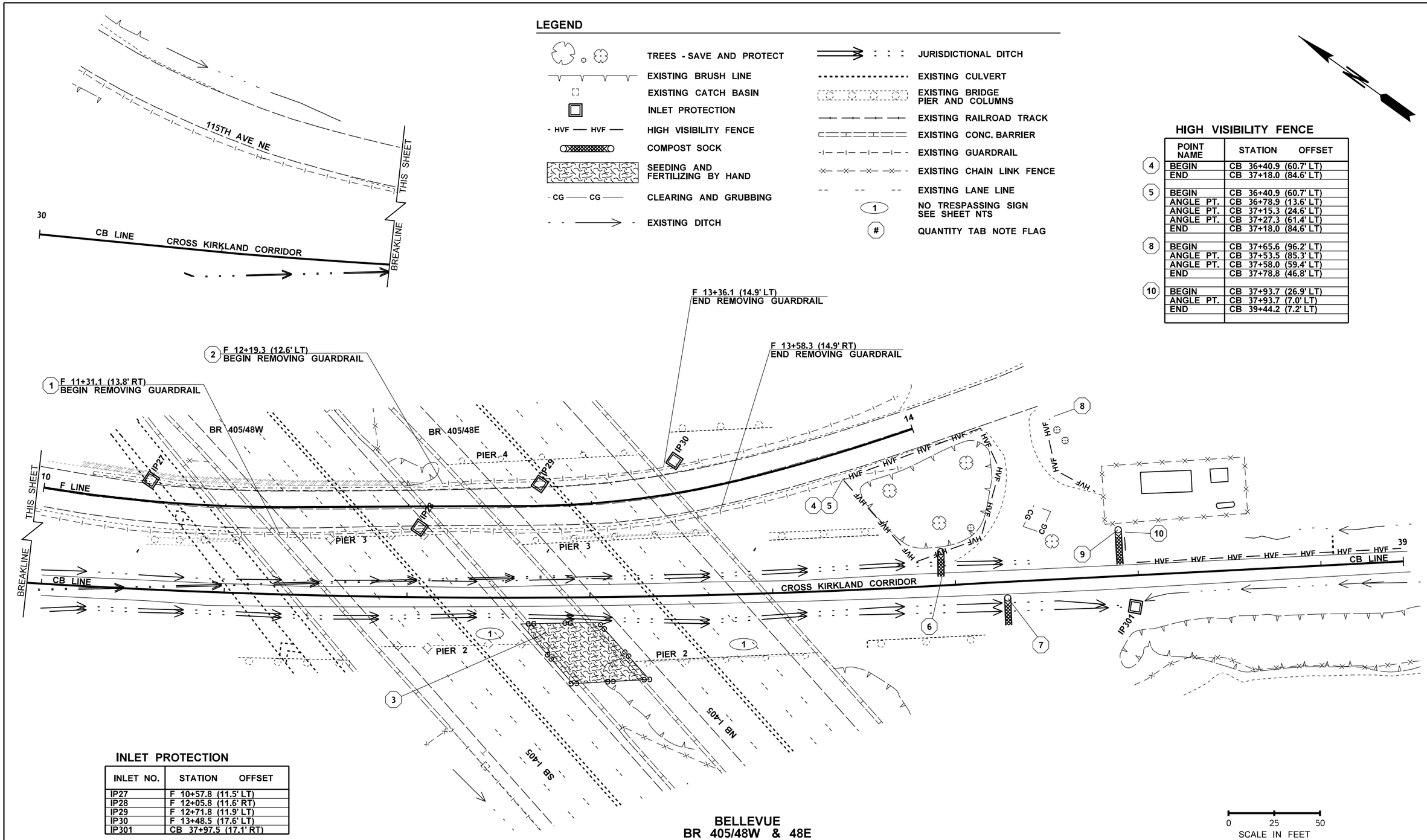

HIGH VISIBILITY FENCE

	POINT NAME	STATION OFFSET
4	BEGIN	CB 36+40.9 (60.7' LT)
	END	CB 37+18.0 (84.6' LT)
5	BEGIN	CB 36+40.9 (60.7' LT)
	ANGLE PT.	CB 36+78.9 (13.6' LT)
	ANGLE PT.	CB 37+15.3 (24.6' LT)
	ANGLE PT.	CB 37+27.3 (61.4' LT)
	END	CB 37+18.0 (84.6' LT)
8	BEGIN	CB 37+65.6 (96.2' LT)
	ANGLE PT.	CB 37+53.5 (85.3' LT)
	ANGLE PT.	CB 37+58.0 (59.4' LT)
	END	CB 37+78.8 (46.8' LT)
10	BEGIN	CB 37+93.7 (26.9' LT)
	ANGLE PT.	CB 37+93.7 (7.0' LT)
	END	CB 39+44.2 (7.2' LT)

INLET PROTECTION

INLET NO.	STATION OFFSET
IP27	F 10+57.8 (11.5' LT)
IP28	F 12+05.8 (11.6' RT)
IP29	F 12+71.8 (11.9' LT)
IP30	F 13+48.5 (17.6' LT)
IP301	CB 37+97.5 (17.1' RT)

BELLEVUE
BR 405/48W & 48E

0 25 50
SCALE IN FEET

FILE NAME	T:\412348\XL5937\CAD\ContractPlans\XL5937_PS_SP.dgn
TIME	10:45:24 AM
DATE	5/20/2022
PLOTTED BY	oneilma
DESIGNED BY	B. BASSERI
ENTERED BY	B. BASSERI
CHECKED BY	M. O'NEIL
PROJ. ENGR.	C. ANDERSON
REGIONAL ADM.	M. COTTEN

REVISION | DATE | BY

REGION NO.	STATE	FED.AID PROJ.NO.
10	WASH	
JOB NUMBER 20A039		
CONTRACT NO.		LOCATION NO.

SEE SHEET CT1
DATE
P.E. STAMP BOX

DATE
P.E. STAMP BOX

Washington State Department of Transportation

I-405
BN RR BRIDGE TO PED TRAIL BRIDGE SEISMIC RETROFIT

SITE PREP AND TESC

Plot 5
PLAN REF NO SP5
SHEET 36 OF 176 SHEETS

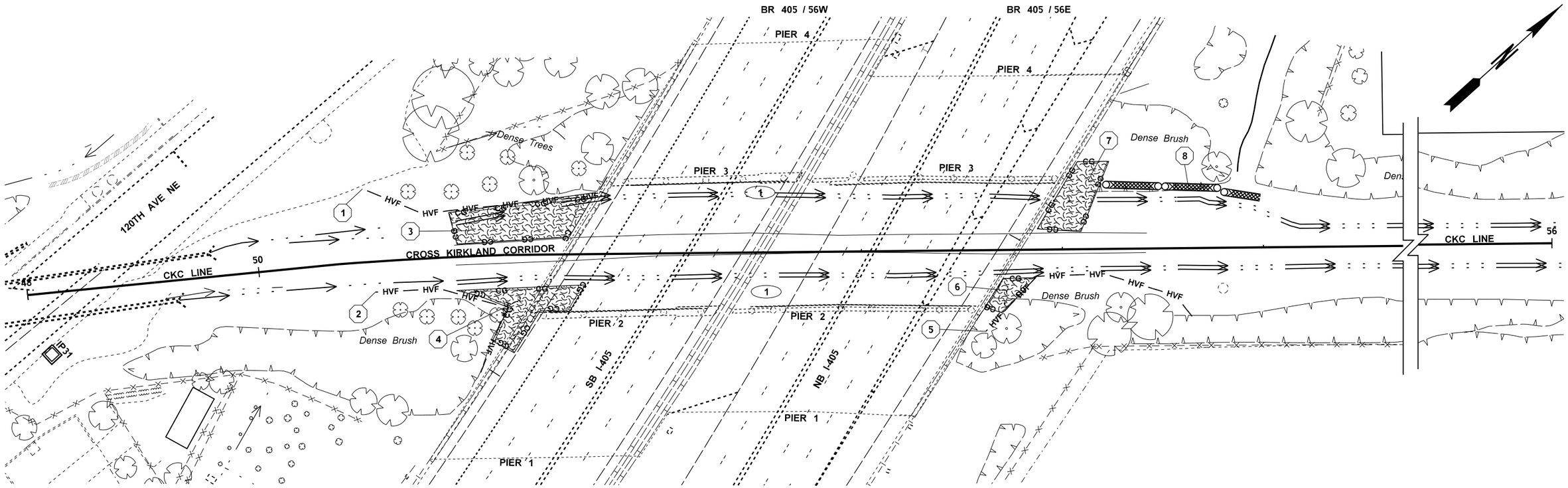

HIGH VISIBILITY FENCE

	POINT NAME	STATION OFFSET
1	BEGIN	CKC 50+54.0 (36.7' LT)
	ANGLE PT.	CKC 50+83.1 (22.3' LT)
	ANGLE PT.	CKC 51+68.3 (29.0' LT)
	END	CKC 51+79.3 (47.0' LT)
2	BEGIN	CKC 50+57.2 (15.0' RT)
	ANGLE PT.	CKC 50+89.7 (15.5' RT)
	ANGLE PT.	CKC 51+23.2 (26.0' RT)
	END	CKC 51+05.1 (64.9' RT)
5	BEGIN	CKC 53+61.5 (40.4' RT)
	ANGLE PT.	CKC 53+87.2 (13.2' RT)
	ANGLE PT.	CKC 54+21.3 (12.6' RT)
	ANGLE PT.	CKC 54+56.5 (23.3' RT)
	END	CKC 54+64.7 (34.7' RT)

INLET PROTECTION

INLET NO.	STATION OFFSET
IP31	CKC 48+93.5 (30.6' RT)

LEGEND

- TREES - SAVE AND PROTECT
- EXISTING BRUSH LINE
- EXISTING CATCH BASIN
- INLET PROTECTION
- HVF — HVF — HIGH VISIBILITY FENCE
- COMPOST SOCK
- SEEDING AND FERTILIZING BY HAND
- CG — CG — CLEARING AND GRUBBING
- EXISTING DITCH
- JURISDICTIONAL DITCH
- EXISTING CULVERT
- EXISTING BRIDGE PIER AND COLUMNS
- EXISTING RAILROAD TRACK
- EXISTING CONC. BARRIER
- EXISTING GUARDRAIL
- EXISTING CHAIN LINK FENCE
- EXISTING LANE LINE
- (1) NO TRESPASSING SIGN SEE SHEET NTS
- (#) QUANTITY TAB NOTE FLAG

KIRKLAND
BR 405/56E & 56E

0 25 50
SCALE IN FEET

FILE NAME	T:\412348\XL5937\CAD\ContractPlans\XL5937_PS_SP.dgn					
TIME	10:45:26 AM					
DATE	5/20/2022					
PLOTTED BY	oneilma					
DESIGNED BY	B. BASSERI					
ENTERED BY	B. BASSERI					
CHECKED BY	M. O'NEIL					
PROJ. ENGR.	C. ANDERSON					
REGIONAL ADM.	M. COTTEN	REVISION	DATE	BY		

REGION NO.	STATE	FED.AID PROJ.NO.
10	WASH	
JOB NUMBER 20A039		
CONTRACT NO.		LOCATION NO.

SEE SHEET CT1
DATE
P.E. STAMP BOX

DATE
P.E. STAMP BOX

Washington State Department of Transportation

I-405
BN RR BRIDGE TO PED TRAIL BRIDGE SEISMIC RETROFIT

SITE PREP AND TESC

Plot 6
PLAN REF NO SP6
SHEET 37 OF 176 SHEETS

1-3/4" TEXT (RED)

1" TEXT

ORANGE BACKGROUND

3/8" TEXT

5" SYMBOL HEIGHT
"DANGER/PELIGRO" - BLACK TEXT ON ORANGE BACKGROUND
WITH BLACK BORDER/ORANGE MARGIN.
"NO PEDESTRIAN" SYMBOL - BLACK PEDESTRIAN AND BORDER,
RED DIAGONAL AND CIRCLE, WHITE BACKGROUND.

3/4" TEXT

1/4" TEXT

2" SYMBOL HEIGHT
BLACK WITH BLACK TEXT

24"

NO TRESPASSING

ACTIVE CONSTRUCTION ZONE

[DATE OF NOTICE HERE]

KEEP OUT

CONSTRUCTION WILL OCCUR [location] FROM [start month/year] TO [end month/year].

PLEASE MOVE YOUR SHELTER AND YOUR PERSONAL BELONGINGS. WSDOT WILL CLEAR THIS CONSTRUCTION SITE AND REMOVE ALL PROPERTY STARTING ON [date] AND CONTINUING THROUGH [date].

ITEMS WILL BE HELD FOR A MAXIMUM OF 70 DAYS AFTER REMOVAL. IF YOU NEED TO RECOVER YOUR BELONGINGS, THEY WILL BE AVAILABLE FOR PICKUP AT [location] FROM [day and times]. CALL [phone number] IF YOU HAVE ANY QUESTIONS. WSDOT WILL DISPOSE OF ALL UNCLAIMED ITEMS.

IF YOU NEED HELP FINDING HOUSING AND OTHER SURVIVAL SERVICES, CONTACT 2-1-1 OR 1-800-621-4636.

HABRÁ CONSTRUCCIÓN EN [location] ENTRE [start month/year] Y [end month/year].

POR FAVOR, MUEVA SUS MATERIALES DE REFUGIO Y SUS PERTENENCIAS. WSDOT LIMPIARÁ ESTE SITIO Y REMOVERÁ TODOS LOS EFECTOS PERSONALES A PARTIR DE [date] HASTA [date].

UNA VEZ REMOVIDOS, SUS EFECTOS PERSONALES SERÁN GUARDADOS POR UN MÁXIMO DE 70 DÍAS. SI NECESITA RECUPERAR SUS PERTENENCIAS, PODRÁ HACERLO EN EL LUGAR SIGUIENTE (location) LOS (day) A LAS (times). LLAME AL [phone number] SI TIENE PREGUNTAS.

UNA VEZ CUMPLIDO EL PERIODO MÁXIMO, WSDOT DESECHARÁ TODOS LOS MATERIALES QUE NO SEAN RECLAMADOS.

SI NECESITA AYUDA EN BUSCAR ALOJAMIENTO U OTROS SERVICIOS RELACIONADOS, LLAME A LA LINEAS DE INFORMACIÓN COMUNITARIA 2-1-1 O 800-621-4636.

RCW 9A.52.070; RCW 9A.52.080

Washington State
Department of Transportation

3" 3" 30" 21" 3"

"NO TRESPASSING" SIGN

NOTES:

1. **UNLESS OTHERWISE NOTED, ALL TEXT IS BLACK ARIAL BOLD.**
2. **UNLESS OTHERWISE NOTED, WHITE BACKGROUND WITH 1/4" RED BORDER.**
3. **ALL DETAILS DRAWN 'NOT TO SCALE'.**

FILE NAME	T:\412348\XL5937\CAD\ContractPlans\XL5937_PS_NTS.dgn						
TIME	10:45:28 AM				REGION NO. 10	STATE WASH	FED.AID PROJ.NO.
DATE	5/20/2022						
PLOTTED BY	oneilma						
DESIGNED BY	B. BASSERI				JOB NUMBER 20A039		
ENTERED BY	B. BASSERI						
CHECKED BY	M. O'NEIL				CONTRACT NO.		LOCATION NO.
PROJ. ENGR.	C. ANDERSON						
REGIONAL ADM.	M. COTTEN	REVISION	DATE	BY			

P.E. STAMP BOX DATE

P.E. STAMP BOX DATE

Washington State
Department of Transportation

I-405
BN RR BRIDGE TO PED TRAIL BRIDGE SEISMIC RETROFIT

NO TRESPASSING SIGN

Plot 6

PLAN REF NO
NTS1

SHEET 38 OF 176 SHEETS

QUANTITY TABULATION - PAVING

NOTE:
THE FIRST NUMBER OF THE "CODE" BELOW REFERS TO THE SHEET NO. OR THE SHEET REFERENCE NO. SHOWING THE CONSTRUCTION FEATURE.

THE SECOND NUMBER REFERS TO THE CONSTRUCTION FEATURE FOUND ON THAT SHEET.

CODE	LOCATION ➢ \ UNIT OF MEASURE ➢	BEAM GUARDRAIL TYPE 11	BEAM GUARDRAIL TYPE 31	BEAM GUARDRAIL TRANSITION SECTION TYPE 21	BEAM GUARDRAIL ANCHOR TYPE 10		REMOVING AND RESETTING BEAM GUARDRAIL	PRECAST CONC. BARRIER TYPE F	SINGLE SLOPE CONCRETE BARRIER		REMOVING AND RESETTING EXISTING PERMANENT BARRIER		CEMENT CONC. SIDEWALK	SEMI-OPEN CONC. MASONRY SLOPE PROTECTION	CHAIN LINK FENCE TYPE 4		SEE GENERAL NOTES
		L.F.	L.F.	EACH	EACH		L.F.	L.F.	L.F.		L.F.		S.Y.	S.Y.	L.F.		
	BR 405/12																
PV1-1	A 11+84.0 (15.0' RT) TO A 12+37.6 (18.3' RT)						58										
PV1-2	A 12+17.6 (16.4' LT) TO A 12+97.5 (11.7' LT)						72										
PV1-3	B 11+06.4 (30.4' LT) TO B 12+34.4 (47.9' LT)														113		1
	BR 405/45W																
PV2-1	C 101+56.7 (17.9' LT) TO C 102+87.5 (14.8' LT)							125			125						6
PV2-2	C 102+01.3 (20.0' RT) TO C 103+17.1 (21.9' RT)							125			125						6
	BR 405/46W & E																
PV3-1	D 10+78.1 (60.6' RT) TO D 12+90.0 (40.5' RT)							225									6
PV3-2	D 11+27.2 (83.1' LT)				1												7
PV3-3	D 11+65.6 (77.1' LT) TO D 12+35.0 (79.5' LT)													56			2
PV3-4	D 11+68.1 (78.4' LT) TO D 13+80.5 (80.3' LT)	204		1													9
PV3-5	D 11+84.0 (25.7' LT) TO D 13+80.7 (28.1' LT)								200								5
PV3-6	D 11+84.0 (19.8' LT) TO D 13+80.7 (21.2' LT)								200								5
PV3-7	D 11+84.0 (LT) TO D 13+81.5 (LT)																
PV3-8	D 12+06.4 (47.6' RT) TO D 12+69.4 (47.3' RT)													54			2
PV3-9	D 12+75.2 (42.9' RT)				1												7
PV3-10	D 12+87.3 (42.7' RT) TO D 13+98.9 (41.9' RT)		118														3
PV3-11	D 13+01.4(80.6' LT) TO D 13+65.8 (81.0' LT)													64			2
PV3-12	D 13+30.5 (53.4' RT) TO D 13+88.0 (54.0' RT)													51			2
	BR 405/47W & E																
PV4-1	E 10+22.2 (27.1' LT) TO E 10+77.2 (29.7' LT)													43			2
PV4-2	E 10+24.3 (16.6' LT) TO E 10+48.6 (16.6' LT)												16				4
PV4-3	E 10+41.0 (16.1' RT) TO E 10+94.9 (15.9' RT)												38				4
PV4-4	E 10+41.8 (25.7' RT) TO E 10+92.1 (24.4' RT)													35			2
PV4-5	E 11+44.4 (16.9' LT) TO E 12+10.4 (17.0' LT)												44				4
PV4-6	E 11+54.7 (16.1' RT) TO E 12+23.0 (15.8' RT)												48				4
	BR 405/48W & E																
PV5-1	F 11+31.1 (13.8' RT) TO F 13+58.3 (14.9' RT)	230		2													9
PV5-2	F 12+19.3 (12.6' LT) TO F 13+62.0 (15.0' LT)		140														3,8
	BR 405/56W & E																
PV6-1	CKC 51+36.2 (23.8' RT) TO CKC 52+07.0 (23.3' RT)													100			2
PV6-2	CKC 51+77.1 (29.5' LT) TO CKC 52+47.4 (30.1' LT)													100			2
	SHEET TOTAL	434	258	3	2		130	475	400		250		146	503	113		
	PROJECT TOTAL	434	258	3	2		130	475	400		250		146	503	113		

GENERAL NOTES:

1. SEE CHAIN LINK FENCE STANDARD PLAN L-20.10.

2. SEE BRIDGE PLANS FOR ADDITIONAL INFORMATION. SEE STANDARD SPECIFICATION 8-16.3(2).

3. SEE BEAM GUARDRAIL TYPE 31 STANDARD PLAN C-20.10.

4. SEE CEMENT CONCRETE SIDEWALK STANDARD PLAN F-30.10.

5. SINGLE-SLOPE CONCRETE BARRIER: VERTICAL BACK. SEE STANDARD PLAN C-85.11.

6. SEE CONCRETE BARRIER TYPE F STANDARD PLAN C-60.10.

7. ANCHOR TYPE 10 FOR THRIE BEAM GUARDRAIL. SEE STANDARD PLAN C-23.60.

8. CONNECT BEAM GUARDRAIL TYPE 31 TO EXISTING TYPE 1 GUARDRAIL. SEE STANDARD PLAN C-25.80.

9. SEE STANDARD PLAN C-25.20.

DESIGNED BY	B. BASSERI		
ENTERED BY	B. BASSERI		
CHECKED BY	M. O'NEIL		
PROJ. ENGR.	C. ANDERSON		
REGION ADM.	M. COTTEN		
		DATE	**DATE**

REVISION | **BY**

REGION NO.	STATE	FED. AID PROJ. NO.
10	WASH	

JOB NUMBER 20A039

CONTRACT NO.

I-405
BN RR BRIDGE TO PED TRAIL BRIDGE
SEISMIC RETROFIT

QUANTITY TABULATION - PAVING

QTPV1

SHEET 39 **OF** 176 **SHEETS**

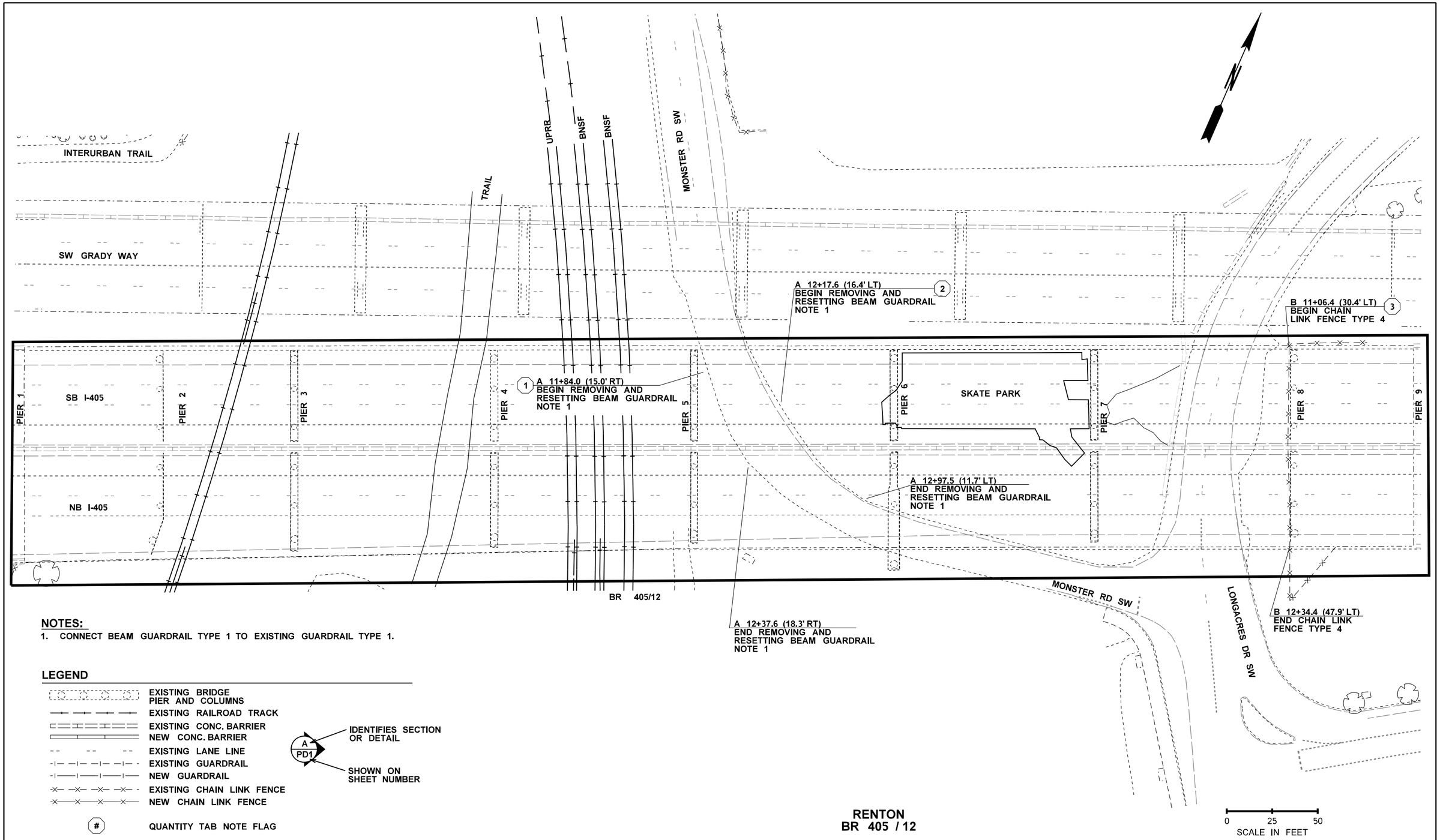

NOTES:

1. CONNECT BEAM GUARDRAIL TYPE 1 TO EXISTING GUARDRAIL TYPE 1.

LEGEND

- EXISTING BRIDGE PIER AND COLUMNS
- EXISTING RAILROAD TRACK
- EXISTING CONC. BARRIER
- NEW CONC. BARRIER
- EXISTING LANE LINE
- EXISTING GUARDRAIL
- NEW GUARDRAIL
- EXISTING CHAIN LINK FENCE
- NEW CHAIN LINK FENCE
- # QUANTITY TAB NOTE FLAG

A / PD1 — IDENTIFIES SECTION OR DETAIL; SHOWN ON SHEET NUMBER

RENTON
BR 405 / 12

FILE NAME	T:\412348\XL5937\CAD\ContractPlans\XL5937_PS_PV.dgn					
TIME	10:52:28 AM				REGION NO. 10	STATE WASH
DATE	5/20/2022				JOB NUMBER 20A039	FED.AID PROJ.NO.
PLOTTED BY	oneilma					
DESIGNED BY						
ENTERED BY						
CHECKED BY					CONTRACT NO.	LOCATION NO.
PROJ. ENGR.						
REGIONAL ADM.		REVISION	DATE	BY		

CULLEN ANDERSON
MONROE WASHINGTON
20123 OF
PROFESSIONAL ENGINEER
SEE SHEET CT1
DATE
P.E. STAMP BOX

DATE
P.E. STAMP BOX

Washington State
Department of Transportation

I-405
BN RR BRIDGE TO PED TRAIL BRIDGE
SEISMIC RETROFIT

PAVING PLAN

Plot 1
PLAN REF NO
PV1
SHEET 40 OF 176 SHEETS

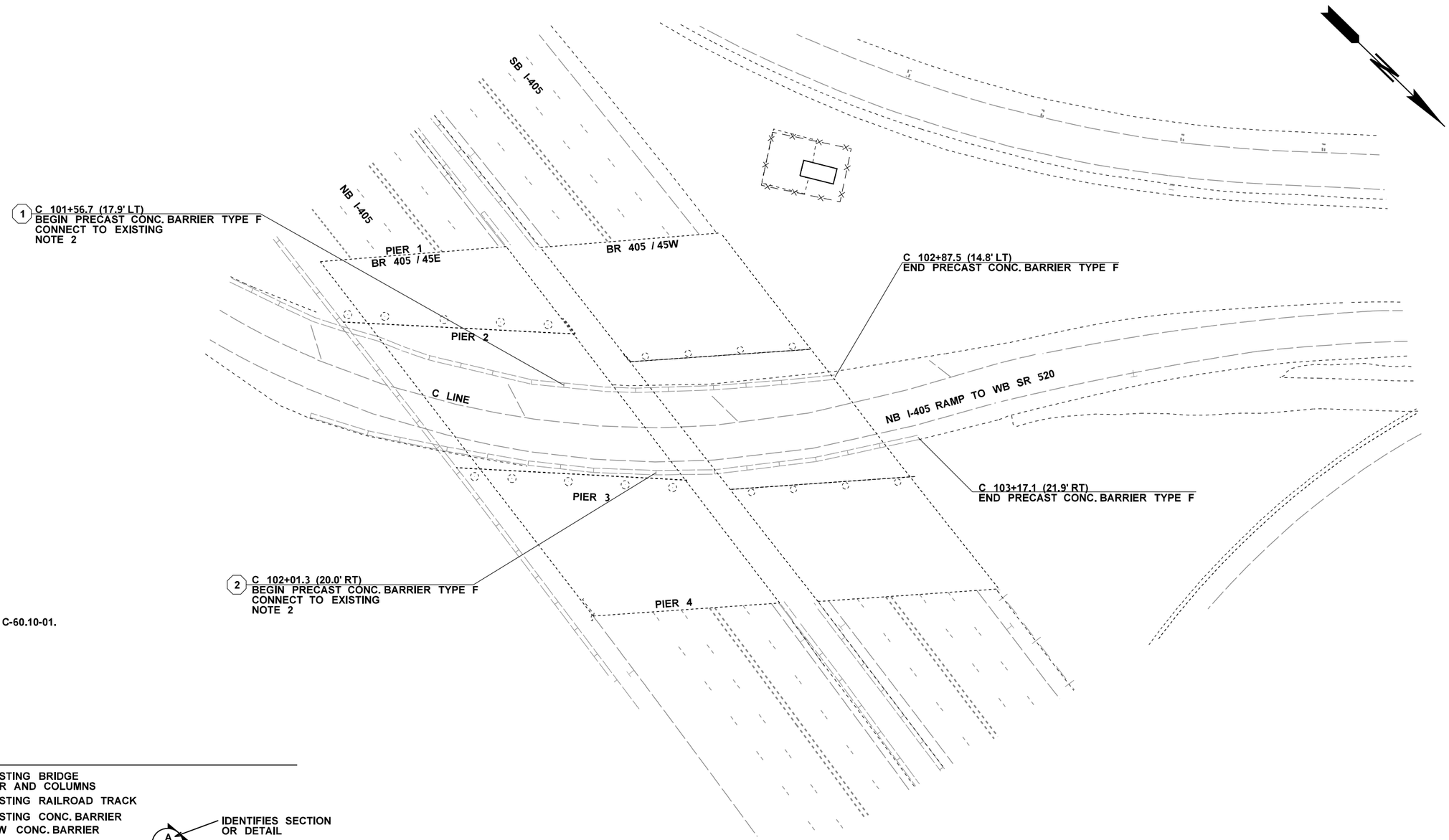

NOTES:

2. SEE STANDARD PLAN C-60.10-01.

LEGEND

- EXISTING BRIDGE PIER AND COLUMNS
- EXISTING RAILROAD TRACK
- EXISTING CONC. BARRIER
- NEW CONC. BARRIER
- EXISTING LANE LINE
- EXISTING GUARDRAIL
- NEW GUARDRAIL
- EXISTING CHAIN LINK FENCE
- NEW CHAIN LINK FENCE
- # QUANTITY TAB NOTE FLAG

A / PD1 — IDENTIFIES SECTION OR DETAIL; SHOWN ON SHEET NUMBER

BELLEVUE
BR 405/45W

0 25 50
SCALE IN FEET

FILE NAME	T:\412348\XL5937\CAD\ContractPlans\XL5937_PS_PV.dgn						
TIME	10:52:29 AM				REGION NO. 10	STATE WASH	FED.AID PROJ.NO.
DATE	5/20/2022						
PLOTTED BY	oneilma				JOB NUMBER 20A039		
DESIGNED BY	B. BASSERI						
ENTERED BY	B. BASSERI						
CHECKED BY	M. O'NEIL				CONTRACT NO.		LOCATION NO.
PROJ. ENGR.	C. ANDERSON						
REGIONAL ADM.	M. COTTEN	REVISION	DATE	BY			

SEE SHEET CT1
DATE
P.E. STAMP BOX

DATE
P.E. STAMP BOX

Washington State
Department of Transportation

I-405
BN RR BRIDGE TO PED TRAIL BRIDGE
SEISMIC RETROFIT

PAVING PLAN

Plot 2
PLAN REF NO
PV2
SHEET 41 OF 176 SHEETS

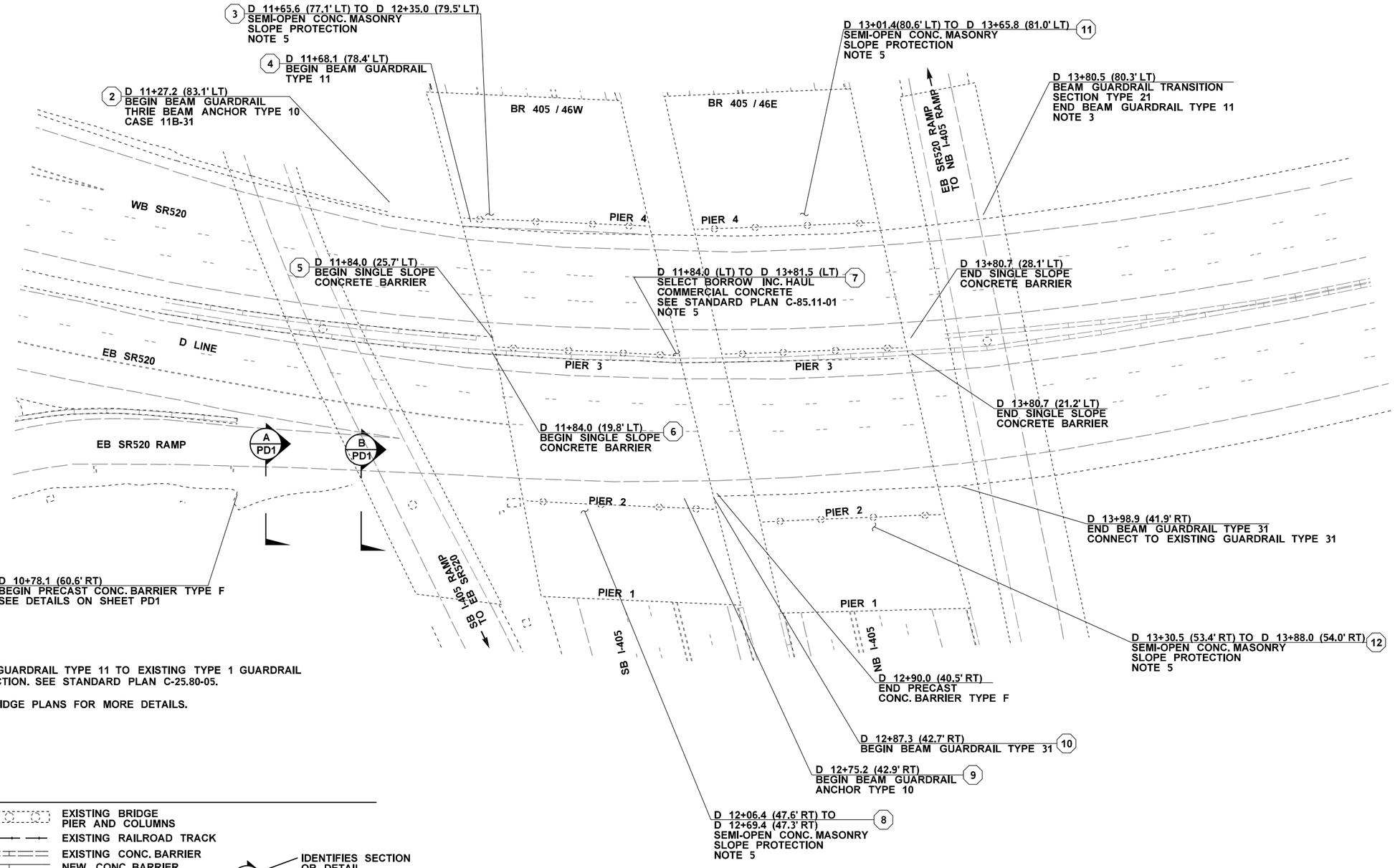

NOTES:

3. BEAM GUARDRAIL TYPE 11 TO EXISTING TYPE 1 GUARDRAIL CONNECTION. SEE STANDARD PLAN C-25.80-05.

5. SEE BRIDGE PLANS FOR MORE DETAILS.

LEGEND

- EXISTING BRIDGE PIER AND COLUMNS
- EXISTING RAILROAD TRACK
- EXISTING CONC. BARRIER
- NEW CONC. BARRIER
- EXISTING LANE LINE
- EXISTING GUARDRAIL
- NEW GUARDRAIL
- EXISTING CHAIN LINK FENCE
- NEW CHAIN LINK FENCE
- # QUANTITY TAB NOTE FLAG

A / PD1 — IDENTIFIES SECTION OR DETAIL; SHOWN ON SHEET NUMBER

BELLEVUE
BR 405/46W & 46E

0 25 50
SCALE IN FEET

FILE NAME	T:\412348\XL5937\CAD\ContractPlans\XL5937_PS_PV.dgn				REGION NO. 10	STATE WASH	FED.AID PROJ.NO.
TIME	10:52:30 AM				JOB NUMBER 20A039		
DATE	5/20/2022				CONTRACT NO.		LOCATION NO.
PLOTTED BY	oneilma						
DESIGNED BY	B. BASSERI						
ENTERED BY	B. BASSERI						
CHECKED BY	M. O'NEIL						
PROJ. ENGR.	C. ANDERSON						
REGIONAL ADM.	M. COTTEN	REVISION	DATE	BY			

SEE SHEET CT1
DATE
P.E. STAMP BOX

DATE
P.E. STAMP BOX

Washington State Department of Transportation

I-405
BN RR BRIDGE TO PED TRAIL BRIDGE SEISMIC RETROFIT

PAVING PLAN

Plot 3
PLAN REF NO PV3
SHEET 42 OF 176 SHEETS

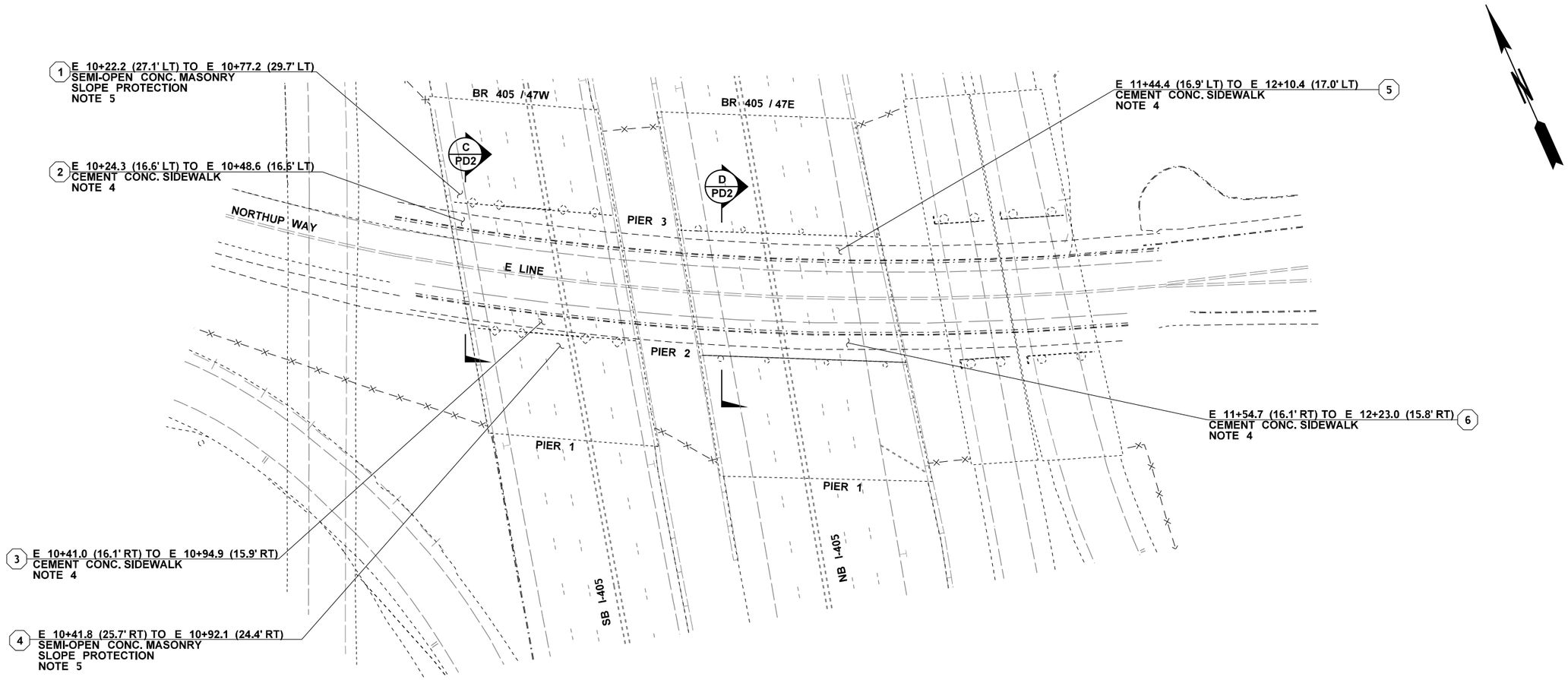

NOTES:

4. SEE DETAILS ON SHEET PD2.
5. SEE BRIDGE PLANS FOR MORE DETAILS.

LEGEND

- EXISTING BRIDGE PIER AND COLUMNS
- EXISTING RAILROAD TRACK
- EXISTING CONC. BARRIER
- NEW CONC. BARRIER
- EXISTING LANE LINE
- EXISTING GUARDRAIL
- NEW GUARDRAIL
- EXISTING CHAIN LINK FENCE
- NEW CHAIN LINK FENCE
- # QUANTITY TAB NOTE FLAG

A / PD1 — IDENTIFIES SECTION OR DETAIL; SHOWN ON SHEET NUMBER

BELLEVUE
BR 405/47W & 47E

0 25 50
SCALE IN FEET

FILE NAME	T:\412348\XL5937\CAD\ContractPlans\XL5937_PS_PV.dgn						
TIME	10:52:32 AM				REGION NO. 10	STATE WASH	FED.AID PROJ.NO.
DATE	5/20/2022				JOB NUMBER 20A039		
PLOTTED BY	oneilma						
DESIGNED BY	B. BASSERI				CONTRACT NO.	LOCATION NO.	
ENTERED BY	B. BASSERI						
CHECKED BY	M. O'NEIL						
PROJ. ENGR.	C. ANDERSON						
REGIONAL ADM.	M. COTTEN	REVISION	DATE	BY			

SEE SHEET CT1
DATE
P.E. STAMP BOX

DATE
P.E. STAMP BOX

Washington State
Department of Transportation

I-405
BN RR BRIDGE TO PED TRAIL BRIDGE
SEISMIC RETROFIT

PAVING PLAN

Plot 4
PLAN REF NO
PV4
SHEET 43 OF 176 SHEETS

LEGEND

- EXISTING BRIDGE PIER AND COLUMNS
- EXISTING RAILROAD TRACK
- EXISTING CONC. BARRIER
- NEW CONC. BARRIER
- EXISTING LANE LINE
- EXISTING GUARDRAIL
- NEW GUARDRAIL
- EXISTING CHAIN LINK FENCE
- NEW CHAIN LINK FENCE
- # QUANTITY TAB NOTE FLAG
- A / PD1 — IDENTIFIES SECTION OR DETAIL; SHOWN ON SHEET NUMBER

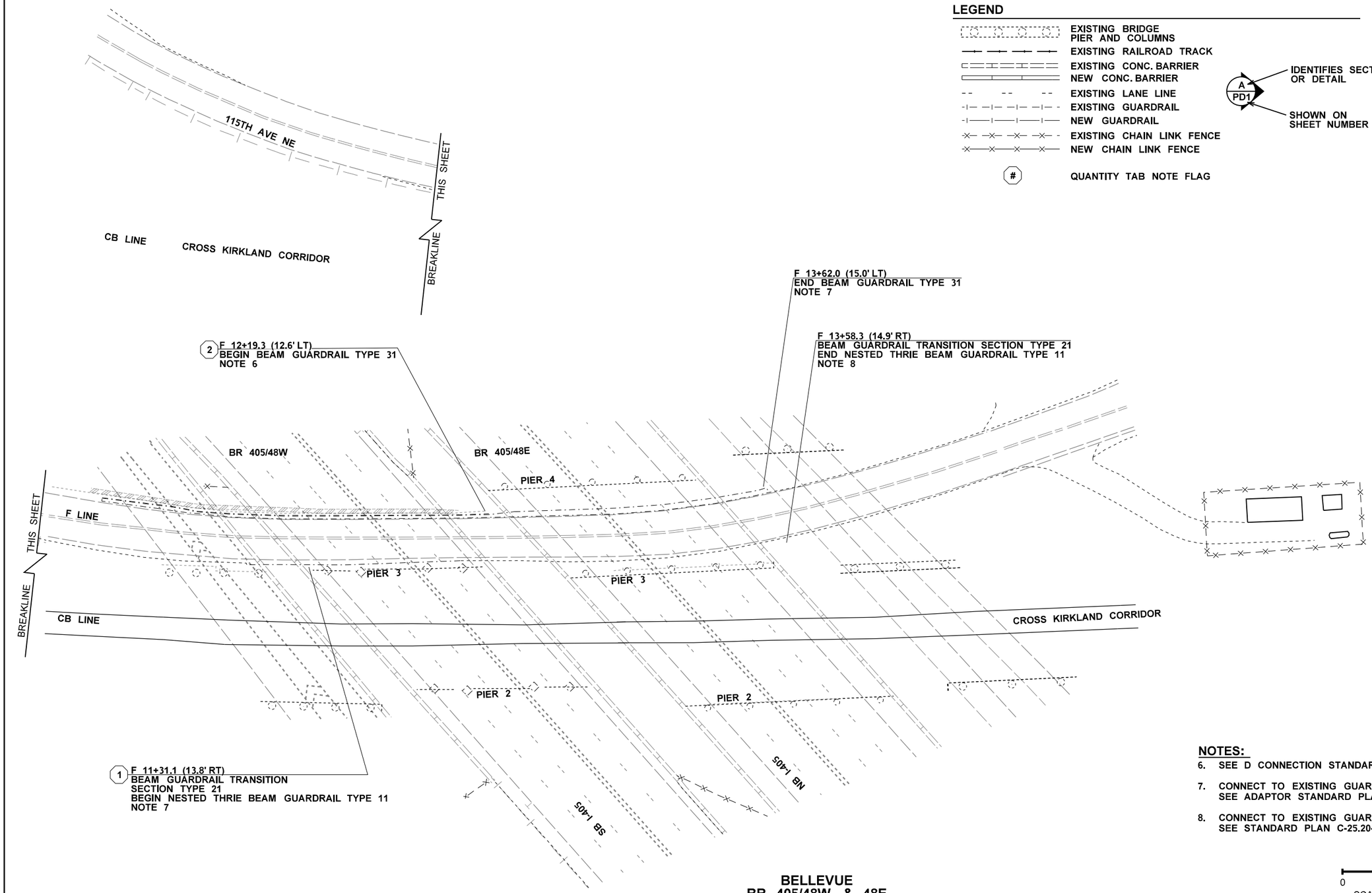

NOTES:

6. SEE D CONNECTION STANDARD PLAN C-24.10-02.
7. CONNECT TO EXISTING GUARDRAIL. SEE ADAPTOR STANDARD PLAN C-25.80-05.
8. CONNECT TO EXISTING GUARDRAIL. SEE STANDARD PLAN C-25.20-06.

0 25 50
SCALE IN FEET

BELLEVUE
BR 405/48W & 48E

FILE NAME	T:\412348\XL5937\CAD\ContractPlans\XL5937_PS_PV.dgn				REGION NO. 10	STATE WASH	FED.AID PROJ.NO.
TIME	10:52:33 AM						
DATE	5/20/2022						
PLOTTED BY	oneilma				JOB NUMBER 20A039		
DESIGNED BY	B. BASSERI						
ENTERED BY	B. BASSERI						
CHECKED BY	M. O'NEIL				CONTRACT NO.		LOCATION NO.
PROJ. ENGR.	C. ANDERSON						
REGIONAL ADM.	M. COTTEN	REVISION	DATE	BY			

SEE SHEET CT1
DATE
P.E. STAMP BOX

DATE
P.E. STAMP BOX

Washington State Department of Transportation

I-405
BN RR BRIDGE TO PED TRAIL BRIDGE SEISMIC RETROFIT

PAVING PLAN

Plot 5
PLAN REF NO PV5
SHEET 44 OF 176 SHEETS

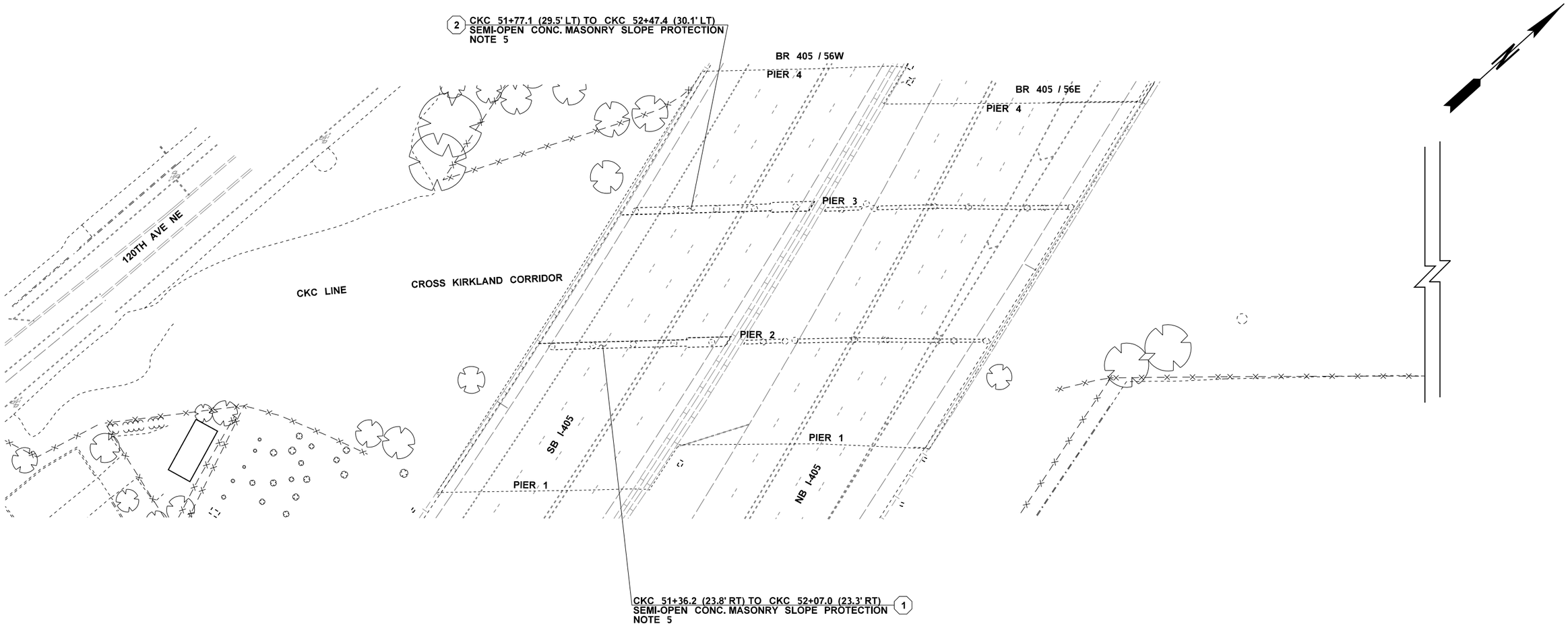

NOTES:

5. SEE BRIDGE PLANS FOR MORE DETAILS.

LEGEND

- EXISTING BRIDGE PIER AND COLUMNS
- EXISTING RAILROAD TRACK
- EXISTING CONC. BARRIER
- NEW CONC. BARRIER
- EXISTING LANE LINE
- EXISTING GUARDRAIL
- NEW GUARDRAIL
- EXISTING CHAIN LINK FENCE
- NEW CHAIN LINK FENCE
- # QUANTITY TAB NOTE FLAG

A / PD1 — IDENTIFIES SECTION OR DETAIL; SHOWN ON SHEET NUMBER

KIRKLAND
BR 405/56W & 56E

0 25 50
SCALE IN FEET

FILE NAME	T:\412348\XL5937\CAD\ContractPlans\XL5937_PS_PV.dgn						
TIME	10:52:34 AM				REGION NO. 10	STATE WASH	FED.AID PROJ.NO.
DATE	5/20/2022						
PLOTTED BY	oneilma				JOB NUMBER 20A039		
DESIGNED BY	B. BASSERI						
ENTERED BY	B. BASSERI				CONTRACT NO.		LOCATION NO.
CHECKED BY	M. O'NEIL						
PROJ. ENGR.	C. ANDERSON						
REGIONAL ADM.	M. COTTEN	REVISION	DATE	BY			

SEE SHEET CT1
DATE
P.E. STAMP BOX

DATE
P.E. STAMP BOX

Washington State Department of Transportation

I-405
BN RR BRIDGE TO PED TRAIL BRIDGE SEISMIC RETROFIT

PAVING PLAN

Plot 6
PLAN REF NO PV6
SHEET 45 OF 176 SHEETS

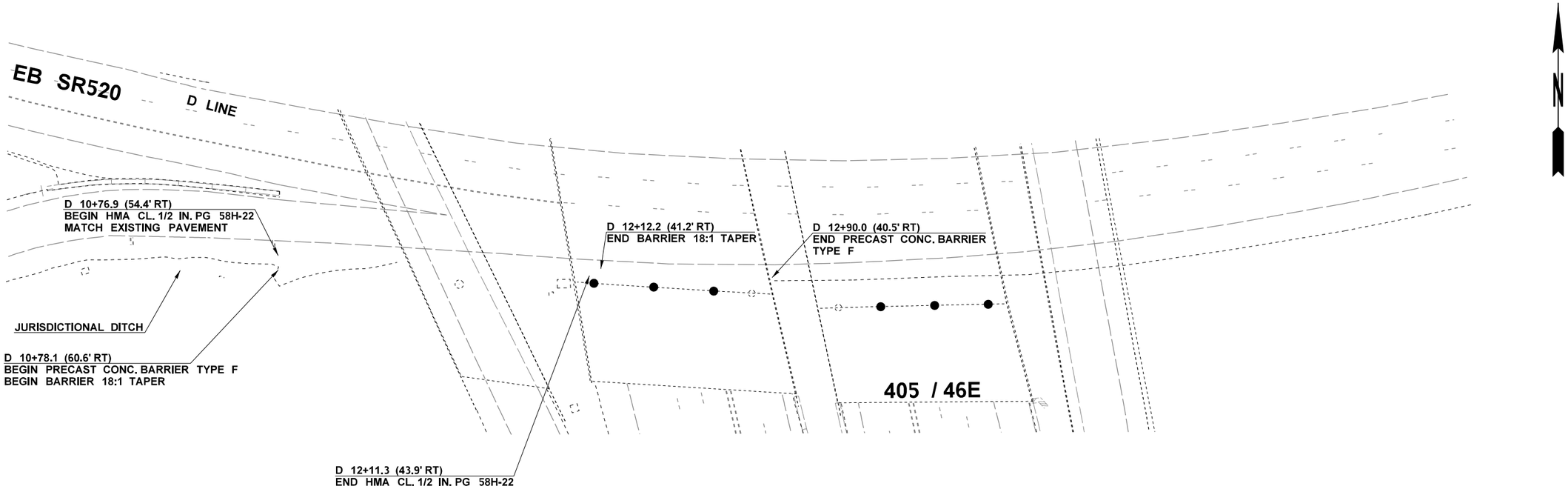

NOTES

1. ALL DEPTHS ARE COMPACTED DEPTHS.
2. SEE CONCRETE BARRIER STD. PLAN C-60.10-00.
3. SEE PAVING PLAN SHEET PV3 FOR GUARDRIAL REPLACEMENT AT THIS LOCATION.

LEGEND

- EXISTING LANE LINE
- EXISTING EDGE OF PAVEMENT
- EXISTING LANE EDGE
- EXISTING CONCRETE BARRIER
- EXISTING BRIDGE COLUMN
- EXISTING DITCH
- PRECAST CONC. BARRIER TYPE F
- BEAM GUARDRAIL TYPE 31
- HMA CL. 1/2 IN. PG 58H-22
- FILL — FILL EMBANKMENT FILL LINE

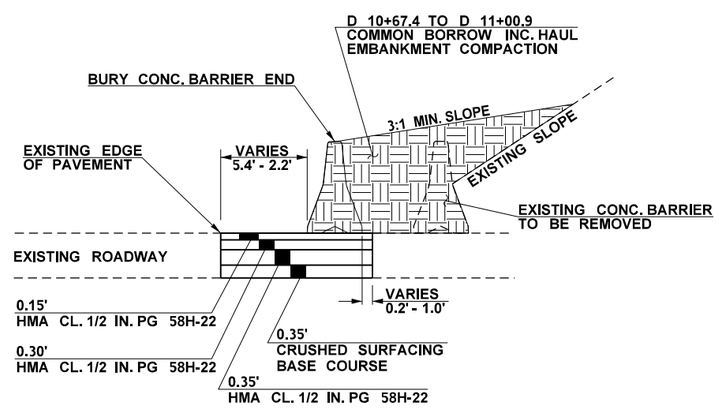

SECTION A-A

NOT TO SCALE

D 10+67.4 TO D 11+00.9

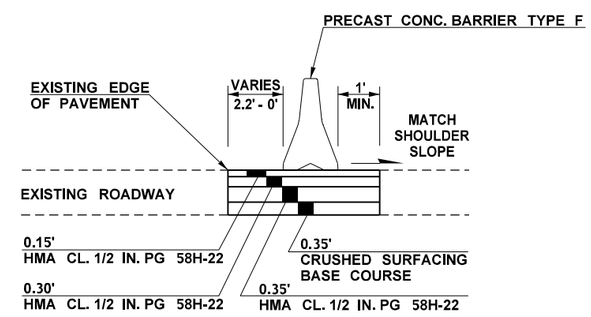

SECTION B-B

NOT TO SCALE

D 11+00.9 TO D 12+11.3

BR 405/46W
CONCRETE BARRIER INSTALLATION

0 25 50
SCALE IN FEET

FILE NAME	T:\412348\XL5937\CAD\ContractPlans\XL5937_PS_PD.dgn			
TIME	10:52:54 AM			
DATE	5/20/2022			
PLOTTED BY	oneilma			
DESIGNED BY	B. BASSERI			
ENTERED BY	B. BASSERI			
CHECKED BY	M. O'NEIL			
PROJ. ENGR.	C. ANDERSON			
REGIONAL ADM.	M. COTTEN	REVISION	DATE	BY

REGION NO.	STATE	FED.AID PROJ.NO.
10	WASH	
JOB NUMBER 20A039		
CONTRACT NO.		LOCATION NO.

SEE SHEET CT1
DATE
P.E. STAMP BOX

DATE
P.E. STAMP BOX

Washington State Department of Transportation

I-405
BN RR BRIDGE TO PED TRAIL BRIDGE
SEISMIC RETROFIT

PAVING DETAILS

PLAN REF NO
PD1

SHEET 46 OF 176 SHEETS

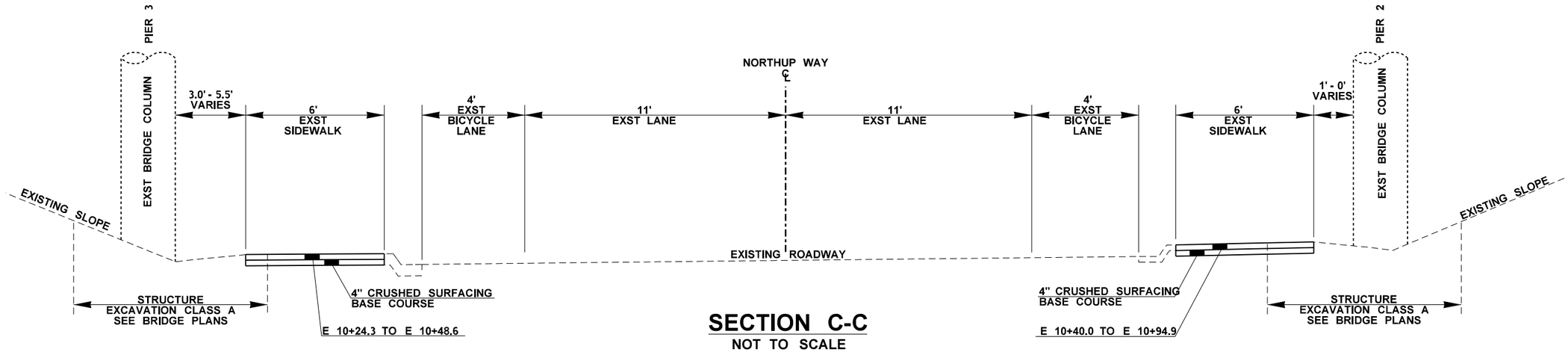

SECTION C-C

NOT TO SCALE

BR 405/47W

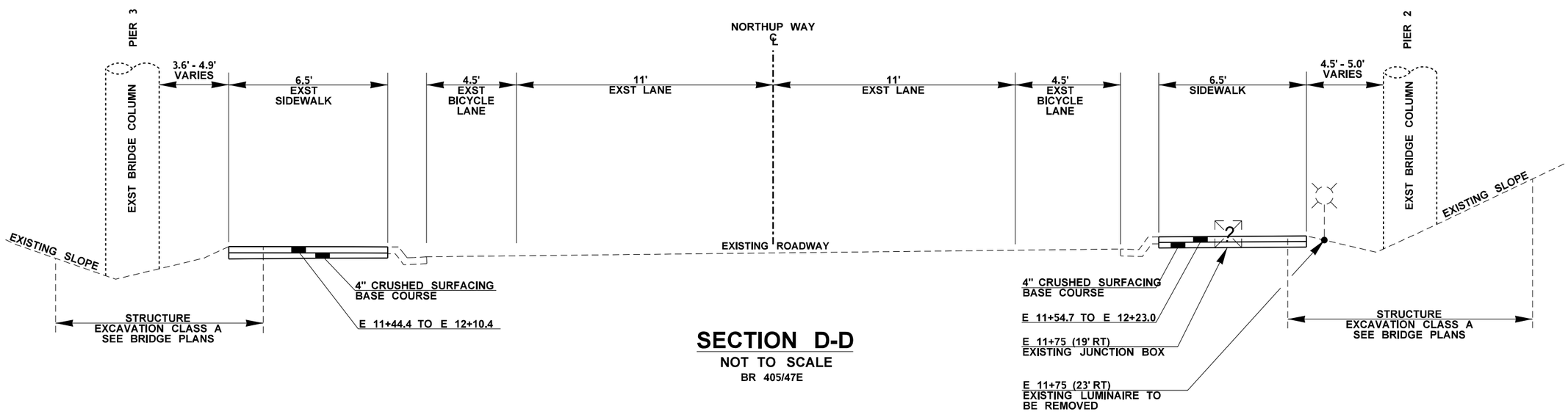

SECTION D-D

NOT TO SCALE

BR 405/47E

GENERAL NOTES:

1. DETAILS ARE "NOT TO SCALE".
2. SEE ELECTRICAL PLANS AND SPECIAL PROVISIONS FOR LUMINAIRE REMOVAL.
3. SEE ELECTRICAL PLANS AND SPECIAL PROVISIONS FOR NEW LIGHTING INSTALLATION AND CONNECTION.
4. SEE BRIDGE PLAN SHEETS BF1-BF5 AND BG1-BG6 FOR MORE DETAILS.
5. SEE SEE SIDEWALK STANDARD PLAN F-30.10-03.

FILE NAME	T:\412348\XL5937\CAD\ContractPlans\XL5937_PS_PD.dgn						
TIME	10:52:54 AM				REGION NO. 10	STATE WASH	FED.AID PROJ.NO.
DATE	5/20/2022						
PLOTTED BY	oneilma				JOB NUMBER 20A039		
DESIGNED BY	B. BASSERI						
ENTERED BY	B. BASSERI				CONTRACT NO.		LOCATION NO.
CHECKED BY	M. O'NEIL						
PROJ. ENGR.	C. ANDERSON						
REGIONAL ADM.	M. COTTEN	REVISION	DATE	BY			

SEE SHEET CT1

DATE

P.E. STAMP BOX

DATE

P.E. STAMP BOX

Washington State
Department of Transportation

I-405
BN RR BRIDGE TO PED TRAIL BRIDGE
SEISMIC RETROFIT

PAVING DETAILS

PLAN REF NO
PD2

SHEET 47 OF 176 SHEETS

QUANTITY TABULATION - PAVEMENT MARKINGS

NOTE:
THE FIRST NUMBER OF THE "CODE" BELOW REFERS TO THE SHEET NO. OR THE SHEET REFERENCE NO. SHOWING THE CONSTRUCTION FEATURE.

THE SECOND NUMBER REFERS TO THE CONSTRUCTION FEATURE FOUND ON THAT SHEET.

CODE	LOCATION ➢ \ UNIT OF MEASURE ➢	REMOVING PAINT LINE	REMOVING PLASTIC LINE		PAINT LINE	PROFILED PLASTIC LINE	PROFILED PLASTIC WIDE LINE		RAISED PAVEMENT MARKER TYPE 2		TEMPORARY PAVEMENT MAKRING - LONG DURATION						SEE GENERAL NOTES
		L.F.	L.F.		L.F.	L.F.	L.F.		HUND		L.F.						
MK1-1	D 24+92.89 (9.64' RT) TO D 47+44.53 (14.01 ' RT)	2264			2264						2264						1
MK1-2	D 24+95.51 (21.50' RT) TO D 47+50.20 (25.22' RT)		2279			2279			0.3		2279						4, 6
MK1-3	D 24+96.99 (32.58' RT) TO D 47+92.14 (40.49' RT)		2332			2332			0.3		2332						4, 6
MK1-4	D 24+98.93 (43.60' RT) TO D 38+34.89 (42.04' RT)	1367			1367						1367						2
MK1-5	D 24+98.93 (43.60' RT) TO D 28+00.00 (53.54' RT)		322				322		0.1		322						3, 6
MK1-6	D 22+40.29 (45.86' RT) TO D 27+00.77 (72.05' RT)		458		458						458						2
MK1-7	D 24+17.93 (50.83' RT) TO D27+00.77 (59.86' RT)		206			206			0.1								4, 6
MK2-1	D 35+52.51 (140.13' RT) TO D 38+34.89 (42.04' RT)	318			318						318						1
MK2-2	D 36+52.52 (83.35' RT) TO D 47+82.37 (49.70' RT)	1165			1165						1165						2
MK2-3	D 38+34.89 (42.04' RT) TO D 40+40.88 (42.17' RT)		189			189			0.1		189						5, 6
MK4-1	D 27+26.83 (46.72' LT) TO D 36+96.74 (35.71' LT)	970			970						970						2
MK4-2	D 27+27.45(34.85' LT) TO D 52+96.41 (38.85' LT)		2569			2569			0.3		2569						4, 6
MK4-3	D 27+ 23.74 (22.51' LT) TO D 52+91.61 (26.81' LT)		2568			2568			0.3		2568						4, 6
MK4-4	D 27+22.57 (10.22' LT) TO D 52+93.64 (15.06' LT)	2571			2571						2571						1
MK4-5	D 34+57.38 (62.75' LT) TO D 36+96.64 (35.71; LT)		240				240		0.1		240						3, 6
MK4-6	D 35+02.16 (73.63' LT) TO D 45+88.10 (42.42' LT)	1086			1086						1086						2
MK5-1	D 45+88.10 (42.43' LT) TO D 49+17.15 (39.68' LT)		330			300			0.1		330						5, 6
MK5-2	D 49+17.15 (39.68' LT) TO D 52+87.91 (50.91' LT)	371			371						371						2
	SHEET TOTAL	10112	11493		10570	10443	562		1.7		21399						
	PROJECT TOTAL	10112	11493		10570	10443	562		1.7		21399						

GENERAL NOTES:

1. PAVEMENT MARKINGS SHALL BE YELLOW EDGE LINE.SEE STANDARD PLAN M-20.20-02 AND M-20.10.

2. PAVEMENT MARKINGS SHALL BE WHITE EDGE LINE. SEE STANDARD PLAN M-20.20-02 AND M-20.10.

3. PAVEMENT MARKINGS SHALL BE WIDE EDGE LINE. SEE STANDARD PLAN M-20.20-02 AND M-20.10.

4. PAVEMENT MARKINGS SHALL BE WHITE LANE LINE. SEE STANDARD PLAN M-20.20-02 AND M-20.10.

5. PAVEMENT MARKINGS SHALL BE DOTTED EXTENSION LINE SEE STANDARD PLAN M-20.10.

6. RAISED PAVEMENT MARKERS SHALL BE TYPE 2W. SEE STANDARD PLAN M-20.30.

DESIGNED BY	C. MAR				
ENTERED BY	C. MAR				
CHECKED BY	M. O'NEIL				
PROJ. ENGR.	C. ANDERSON				
REGION ADM.	M. COTTEN				
		DATE	DATE	REVISION	BY

REGION NO.	STATE	FED. AID PROJ. NO.
10	WASH	

JOB NUMBER 20A039

CONTRACT NO.

I-405
BN RR BRIDGE TO PED TRAIL BRIDGE
SEISMIC RETROFIT

QUANTITY TABULATION - PAVEMENT MARKINGS

QTMK1

SHEET 48 OF 176 SHEETS

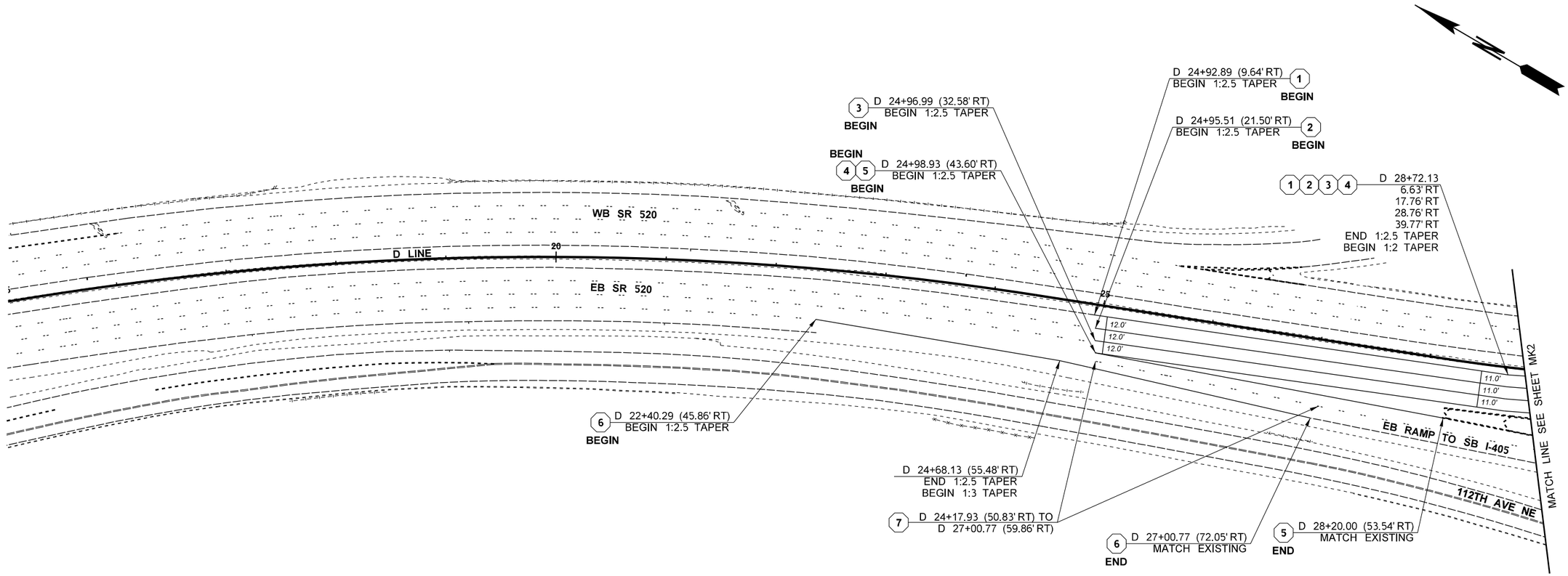

LEGEND

————————	EXISTING EDGE LINE
-- -- -- --	EXISTING LANE LINE
————————	TEMP. PAVEMENT MARKING
(1)	QUANTITY TAB. CODE

0 50 100
SCALE IN FEET

FILE NAME	T:\412348\XL5937\CAD\ContractPlans\XL5937_PS_MK.dgn				REGION NO. 10	STATE WASH	FED.AID PROJ.NO.
TIME	10:55:06 AM				JOB NUMBER 20A039		
DATE	5/20/2022						
PLOTTED BY	oneilma						
DESIGNED BY	C. MAR				CONTRACT NO.		LOCATION NO.
ENTERED BY	C. MAR						
CHECKED BY	M. O'NEIL						
PROJ. ENGR.	C. ANDERSON						
REGIONAL ADM.	M. COTTEN	REVISION	DATE	BY			

SEE SHEET CT1
DATE
P.E. STAMP BOX

DATE
P.E. STAMP BOX

Washington State
Department of Transportation

I-405
BN RR BRIDGE TO PED TRAIL BRIDGE
SEISMIC RETROFIT

PAVEMENT MARKING PLAN

Plot 1
PLAN REF NO
MK1
SHEET 49 OF 176 SHEETS

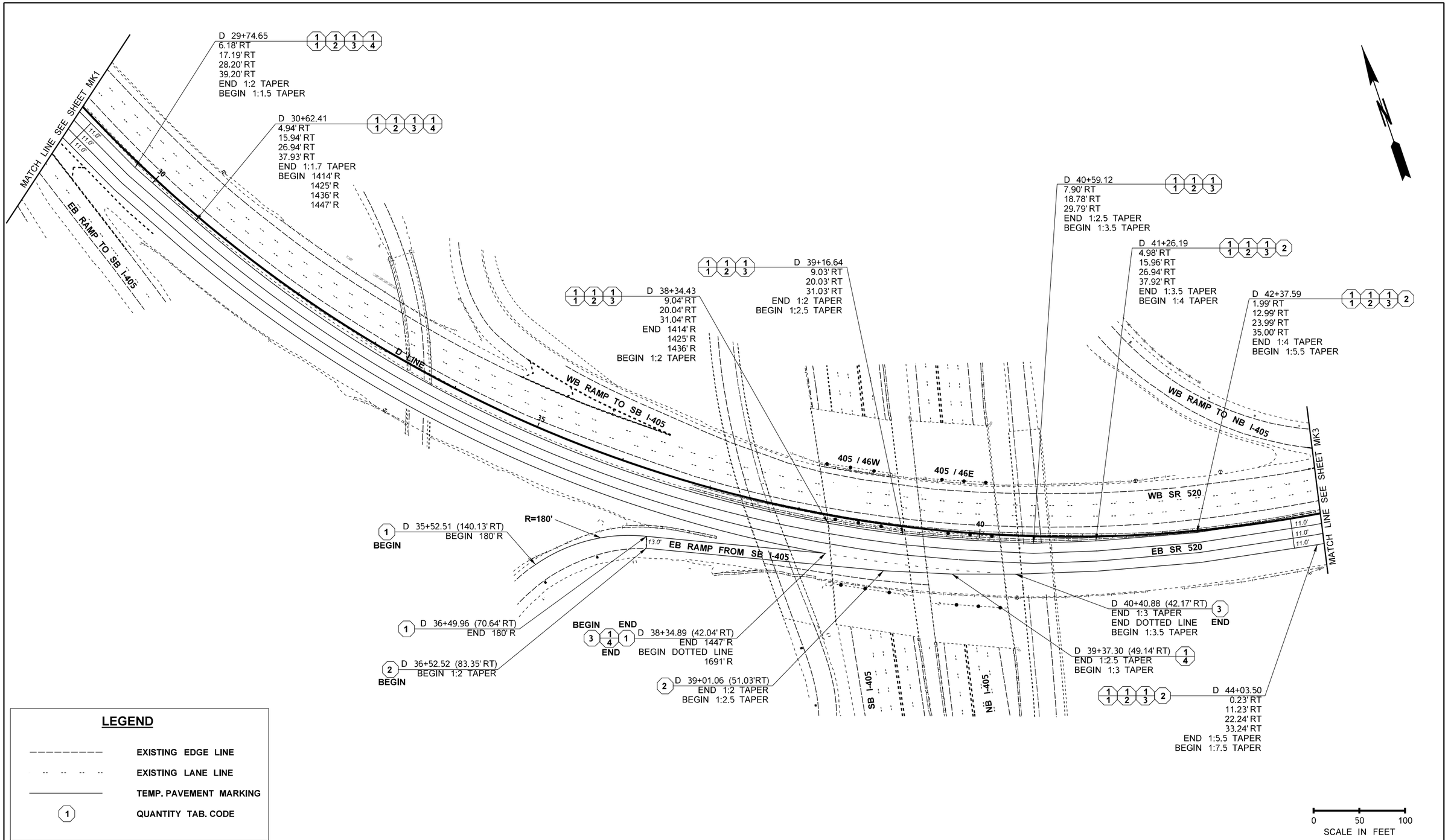

FILE NAME	T:\412348\XL5937\CAD\ContractPlans\XL5937_PS_MK.dgn
TIME	10:55:08 AM
DATE	5/20/2022
PLOTTED BY	oneilma
DESIGNED BY	C. MAR
ENTERED BY	C. MAR
CHECKED BY	M. O'NEIL
PROJ. ENGR.	C. ANDERSON
REGIONAL ADM.	M. COTTEN

REVISION | DATE | BY

REGION NO. 10 | STATE WASH | FED.AID PROJ.NO.

JOB NUMBER 20A039

CONTRACT NO. | LOCATION NO.

SEE SHEET CT1 DATE

P.E. STAMP BOX

P.E. STAMP BOX DATE

Washington State Department of Transportation

I-405
BN RR BRIDGE TO PED TRAIL BRIDGE
SEISMIC RETROFIT

PAVEMENT MARKING PLAN

Plot 2

PLAN REF NO MK2

SHEET 50 OF 176 SHEETS

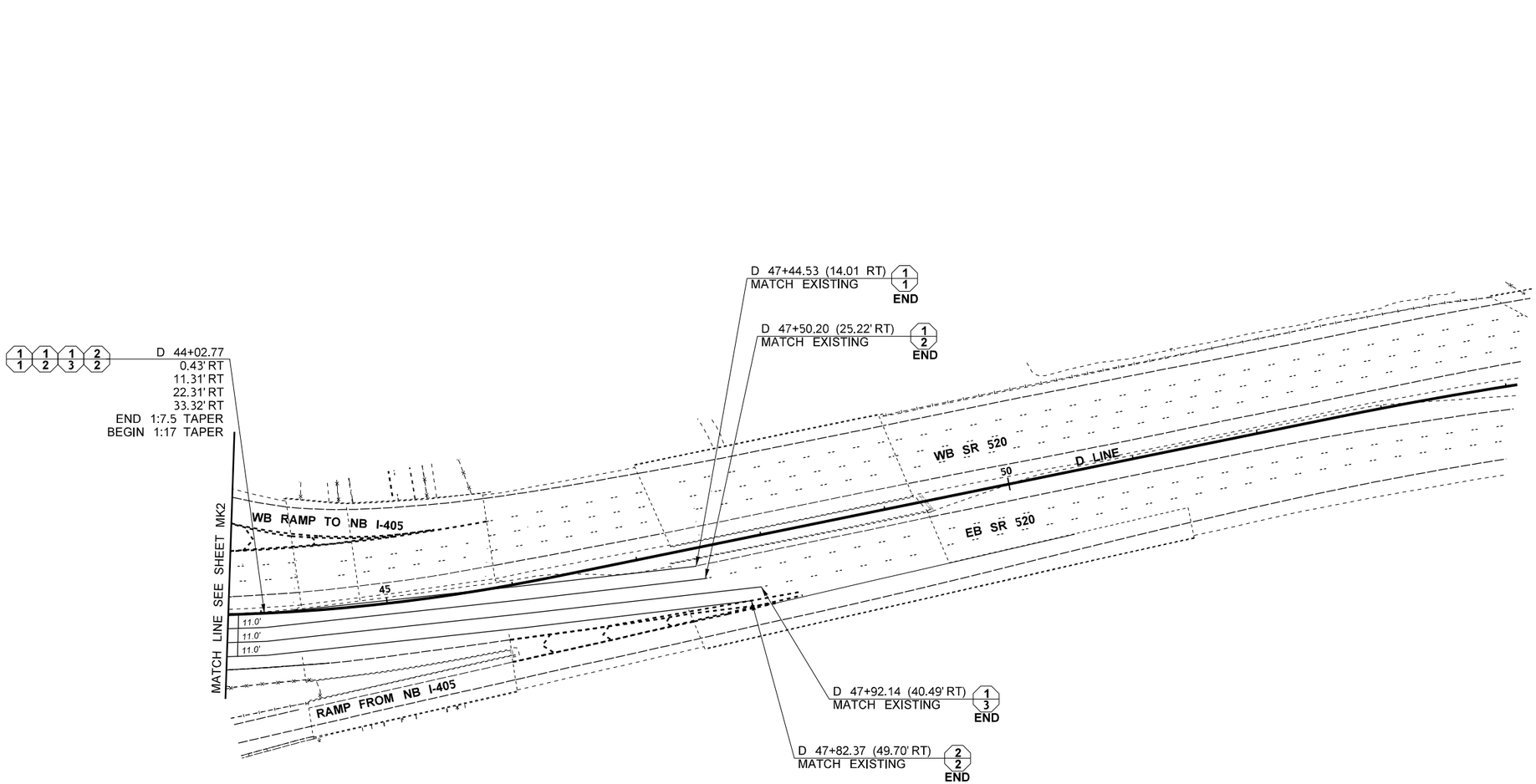

LEGEND

————————	EXISTING EDGE LINE
-- -- -- --	EXISTING LANE LINE
————————	TEMP. PAVEMENT MARKING
(1)	QUANTITY TAB. CODE

0 50 100
SCALE IN FEET

FILE NAME	T:\412348\XL5937\CAD\ContractPlans\XL5937_PS_MK.dgn				REGION NO. 10	STATE WASH	FED.AID PROJ.NO.
TIME	10:55:09 AM				JOB NUMBER 20A039		
DATE	5/20/2022						
PLOTTED BY	oneilma						
DESIGNED BY	C. MAR				CONTRACT NO.		LOCATION NO.
ENTERED BY	C. MAR						
CHECKED BY	M. O'NEIL						
PROJ. ENGR.	C. ANDERSON						
REGIONAL ADM.	M. COTTEN	REVISION	DATE	BY			

SEE SHEET CT1
DATE
P.E. STAMP BOX

DATE
P.E. STAMP BOX

Washington State
Department of Transportation

I-405
BN RR BRIDGE TO PED TRAIL BRIDGE
SEISMIC RETROFIT

PAVEMENT MARKING PLAN

Plot 3
PLAN REF NO
MK3
SHEET 51 OF 176 SHEETS

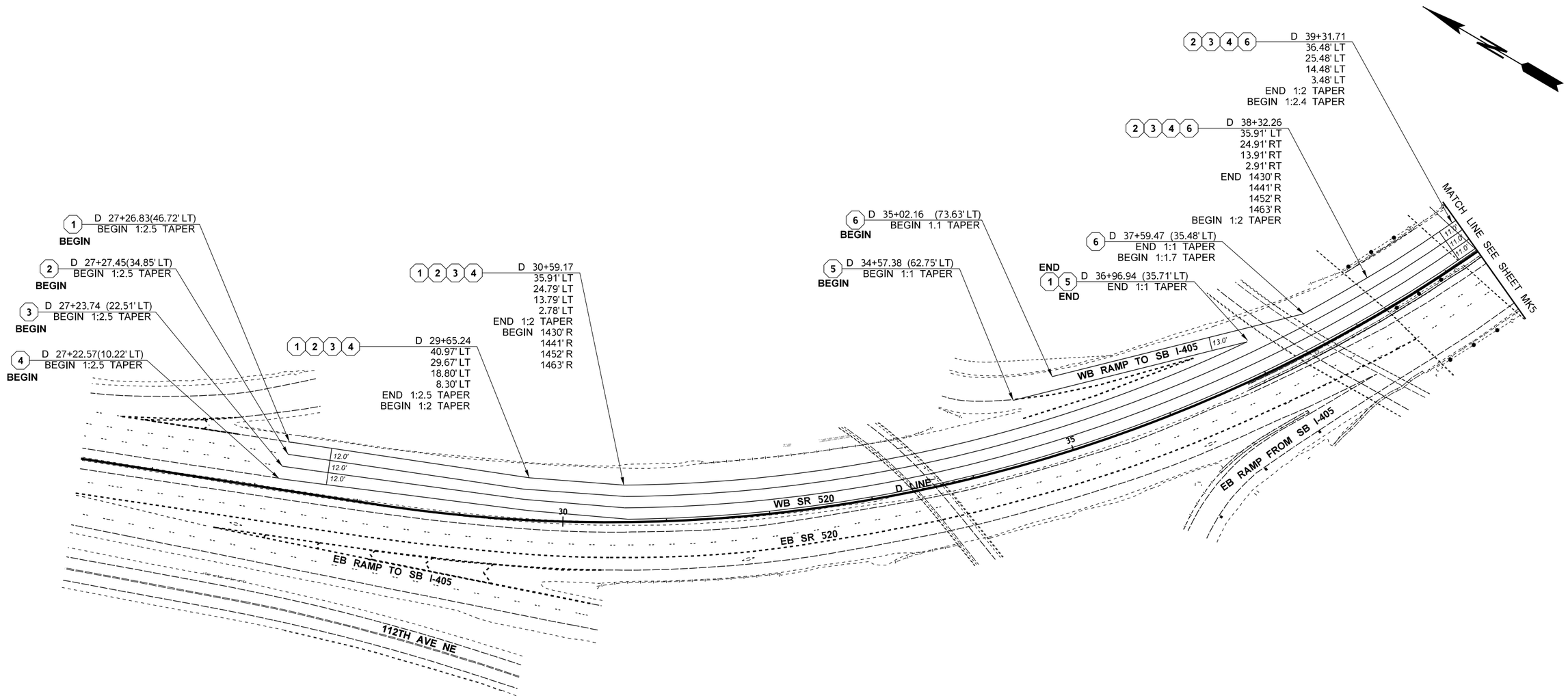

LEGEND

————————	EXISTING EDGE LINE
-- -- -- --	EXISTING LANE LINE
————————	TEMP. PAVEMENT MARKING
(1)	QUANTITY TAB. CODE

0 50 100
SCALE IN FEET

FILE NAME	T:\412348\XL5937\CAD\ContractPlans\XL5937_PS_MK.dgn
TIME	10:55:10 AM
DATE	5/20/2022
PLOTTED BY	oneilma
DESIGNED BY	C. MAR
ENTERED BY	C. MAR
CHECKED BY	M. O'NEIL
PROJ. ENGR.	C. ANDERSON
REGIONAL ADM.	M. COTTEN

REVISION | DATE | BY

REGION NO.	STATE	FED.AID PROJ.NO.
10	WASH	
JOB NUMBER 20A039		
CONTRACT NO.		LOCATION NO.

SEE SHEET CT1
DATE
P.E. STAMP BOX

DATE
P.E. STAMP BOX

Washington State Department of Transportation

I-405
BN RR BRIDGE TO PED TRAIL BRIDGE
SEISMIC RETROFIT

PAVEMENT MARKING PLAN

Plot 4
PLAN REF NO MK4
SHEET 52 OF 176 SHEETS

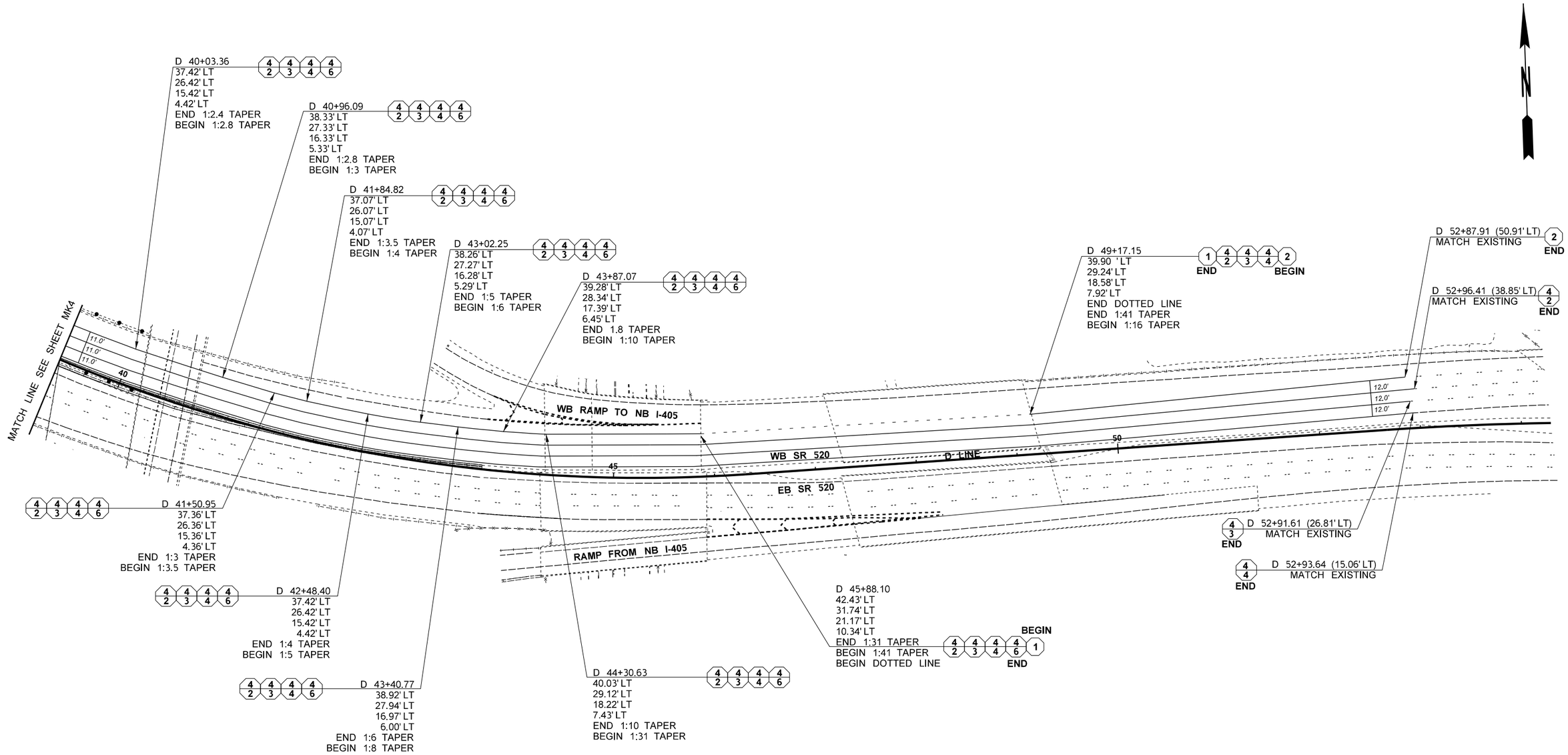

LEGEND

----------	EXISTING EDGE LINE
-- -- -- --	EXISTING LANE LINE
————	TEMP. PAVEMENT MARKING
(1)	QUANTITY TAB. CODE

FILE NAME	T:\412348\XL5937\CAD\ContractPlans\XL5937_PS_MK.dgn				REGION NO. 10	STATE WASH	FED.AID PROJ.NO.
TIME	10:55:11 AM				JOB NUMBER 20A039		
DATE	5/20/2022				CONTRACT NO.		LOCATION NO.
PLOTTED BY	oneilma						
DESIGNED BY	C. MAR						
ENTERED BY	C. MAR						
CHECKED BY	M. O'NEIL						
PROJ. ENGR.	C. ANDERSON						
REGIONAL ADM.	M. COTTEN	REVISION	DATE	BY			

CULLEN ANDERSON STATE OF WASHINGTON 20127 REGISTERED PROFESSIONAL ENGINEER

SEE SHEET CT1

DATE

P.E. STAMP BOX

DATE

P.E. STAMP BOX

Washington State Department of Transportation

I-405
BN RR BRIDGE TO PED TRAIL BRIDGE SEISMIC RETROFIT

PAVEMENT MARKING PLAN

Plot 5

PLAN REF NO MK5

SHEET 53 OF 176 SHEETS

CONSTRUCTION NOTES:

1. DISCONNECT THE EXISTING LUMINAIRE CIRCUIT IN THE NEAREST JUNCTION BOX. REMOVE LUMINAIRE AND FOUNDATION ENTIRELY. PROTECT AND PRESERVE THE LUMINAIRE TO RETURN TO THE CITY OF BELLEVUE. SEE SPECIAL PROVISIONS. SEE SHEET EL7.
2. INSTALL CONDUIT AND OTHER ELEMENTS TO BRIDGE COLUMNS AFTER RECEIVING THEIR STEEL COLUMN JACKETS SHALL BE ACHIEVED BY STRAPS. NO DRILLING INTO THE STEEL COLUMN JACKET ALLOWED. INSTALL WALLPACK 90 WATTS LED FIXTURE ON CROSSBEAM. SEE SHEET STANDARD PLANS J-60.13-00 AND J-60.14 FOR DETAILS.
3. INSTALL DEFLECTION FITTING.
4. REMOVE UNISTRUT, CONDUIT AND CONDUCTORS FROM COLUMN PRIOR TO WORK ON SEISMIC RETROFIT. AFTER COMPLETION OF SEISMIC RETROFIT, ATTACH CONDUIT TO COLUMN AND CROSSBEAM USING STRAP AND STAINLESS STEEL CHANNEL SUPPORT. SEE SHEET STANDARD PLANS J-60.13-00 AND J-60.14-01 FOR DETAILS.
5. REMOVE EXISTING CONDUIT AND CONDUCTORS TO NEAREST JUNCTION BOX. REINSTALL NEW CONDUIT AND CONDUCTORS TO MAKE LUMINAIRES OPERATIONAL.
6. REMOVE EXISTING LUMINAIRE AND REINSTALL NEW WALLPACK LED LUMINAIRE EQUIVALENT TO 150W HPS AT SAME EXISTING LOCATION.
7. REMOVE EXISTING NEMA BOX AND REINSTALL NEW 8" X 8" X 8" NEMA BOX AT SAME EXISTING LOCATION.
8. RE-INSTALL NEW JUNCTION BOX IN THE SIDEWALK WITH SLIP-RESISTANT LID.
9. INSTALL NEW 8" X 8" X 8" NEMA BOX ON STRUCTURE.

LEGEND

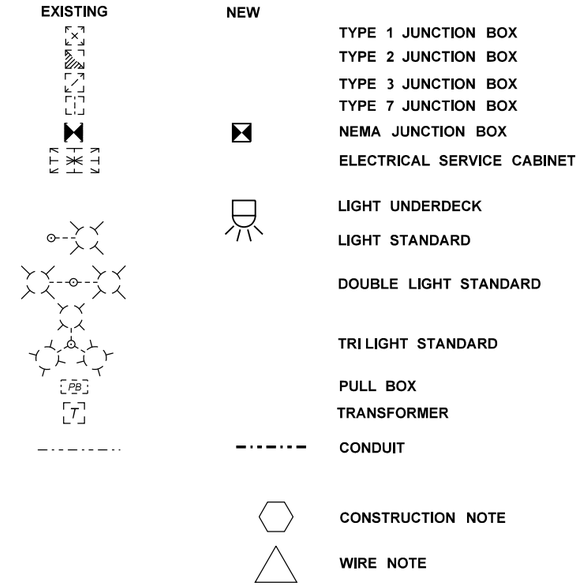

ABBREVIATION LIST

AMP	AMPERAGE
CC	CONTROLLER CABINET
EX., EXIST.	EXISTING
LT	LEFT
N/A	NOT APPLICABLE
NO.	NUMBER
RGS	RIGID GALVANIZED STEEL
R/W	RIGHT OF WAY
RT	RIGHT
STA.	STATION
T, xf	TRANSFORMER
V	VOLT

WIRING SCHEDULE EX. SERVICE NO. SUA 982

NO.	CONDUIT SIZE	CONDUCTORS EXISTING	CONDUCTORS NEW	CIRCUIT	COMMENTS
1	EX. 2"	2#8		2B	ILLUMINATION
2	EX. 2"	2#8		2D	ILLUMINATION
3	1"		2#8	2D	ILLUMINATION
4	1"		2#8	2B	ILLUMINATION
5	EX. 2"	6#8		2A,2B,2D	ILLUMINATION

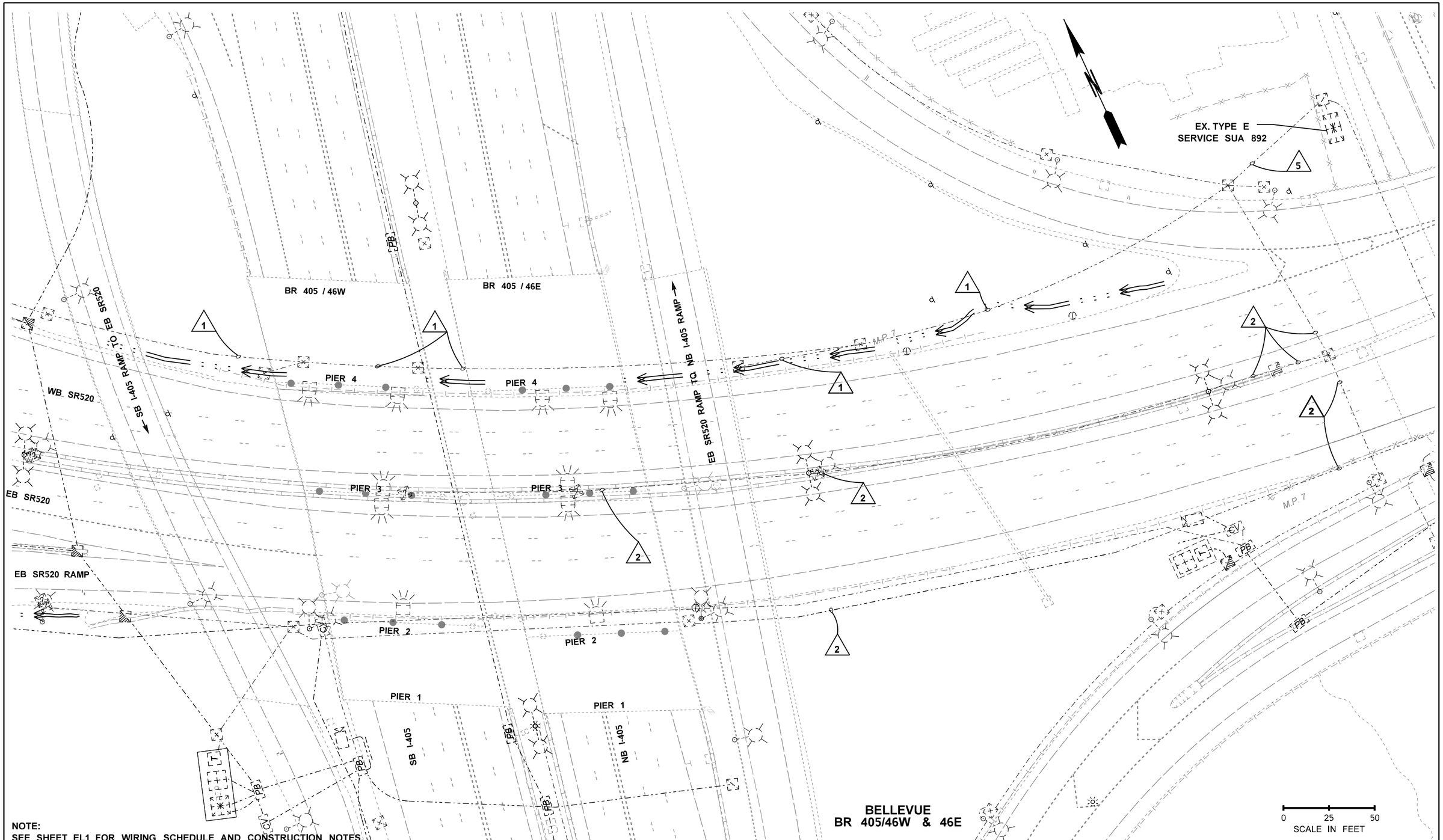

NOTE:
SEE SHEET EL1 FOR WIRING SCHEDULE AND CONSTRUCTION NOTES.

FILE NAME	T:\414124\ELECTRICAL\Projects\SR405\XL5937_RR BR TO TRAIL BR & I-90E FORK ISSAQUAH CR SEISMIC\XL5937_PS_ILL.dgn			
TIME	4:50:13 PM			
DATE	5/19/2022			
PLOTTED BY	wooc			
DESIGNED BY	B. PHAM			
ENTERED BY	H. MOSTAGHIMI			
CHECKED BY	D. DO			
PROJ. ENGR.	C. ANDERSON			
REGIONAL ADM.	M. COTTEN	REVISION	DATE	BY

REGION NO.	STATE	FED.AID PROJ.NO.
10	WASH	
JOB NUMBER 20A039		
CONTRACT NO.		LOCATION NO.

DUKE HUU DO
STATE OF WASHINGTON
31740
REGISTERED PROFESSIONAL ENGINEER

SEE SHEET CT1
DATE
P.E. STAMP BOX

DATE
P.E. STAMP BOX

Washington State
Department of Transportation

I-405
BN RR BRIDGE TO PED TRAIL BRIDGE
SEISMIC RETROFIT

ELECTRICAL PLANS

Plot 1
PLAN REF NO
EL2
SHEET 55 OF 176 SHEETS

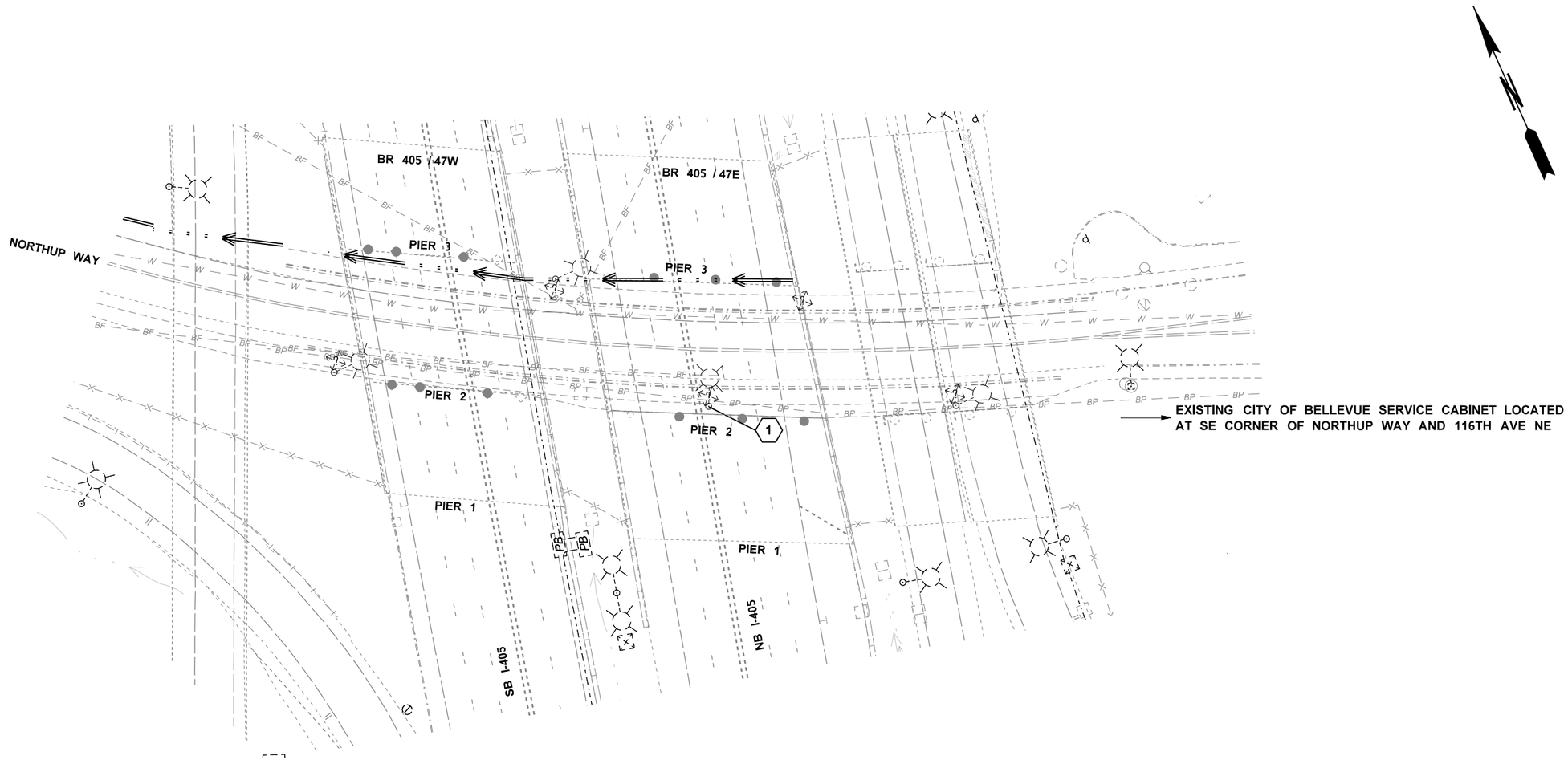

NOTE:
SEE SHEET EL1 FOR WIRING SCHEDULE AND CONSTRUCTION NOTES.

0 25 50
SCALE IN FEET

BELLEVUE
BR 405/47W & 47E

FILE NAME	T:\414124\ELECTRICAL\Projects\SR405\XL5937_RR BR TO TRAIL BR & I-90E FORK ISSAQUAH CR SEISMIC\XL5937_PS_ILL.dgn				REGION NO.	STATE	FED.AID PROJ.NO.	DUKE HUU DO STATE OF WASHINGTON 31740 REGISTERED PROFESSIONAL ENGINEER		Washington State Department of Transportation	I-405 BN RR BRIDGE TO PED TRAIL BRIDGE SEISMIC RETROFIT	Plot 2
TIME	4:50:13 PM				10	WASH						PLAN REF NO EL3
DATE	5/19/2022				JOB NUMBER 20A039							SHEET 56 OF 176 SHEETS
PLOTTED BY	wooc											
DESIGNED BY	B. PHAM											
ENTERED BY	H. MOSTAGHIMI											
CHECKED BY	D. DO				CONTRACT NO.		LOCATION NO.	SEE SHEET CT1 DATE	DATE		ELECTRICAL PLANS	
PROJ. ENGR.	C. ANDERSON											
REGIONAL ADM.	M. COTTEN	REVISION	DATE	BY				P.E. STAMP BOX	P.E. STAMP BOX			

46 W LOOKING SOUTH

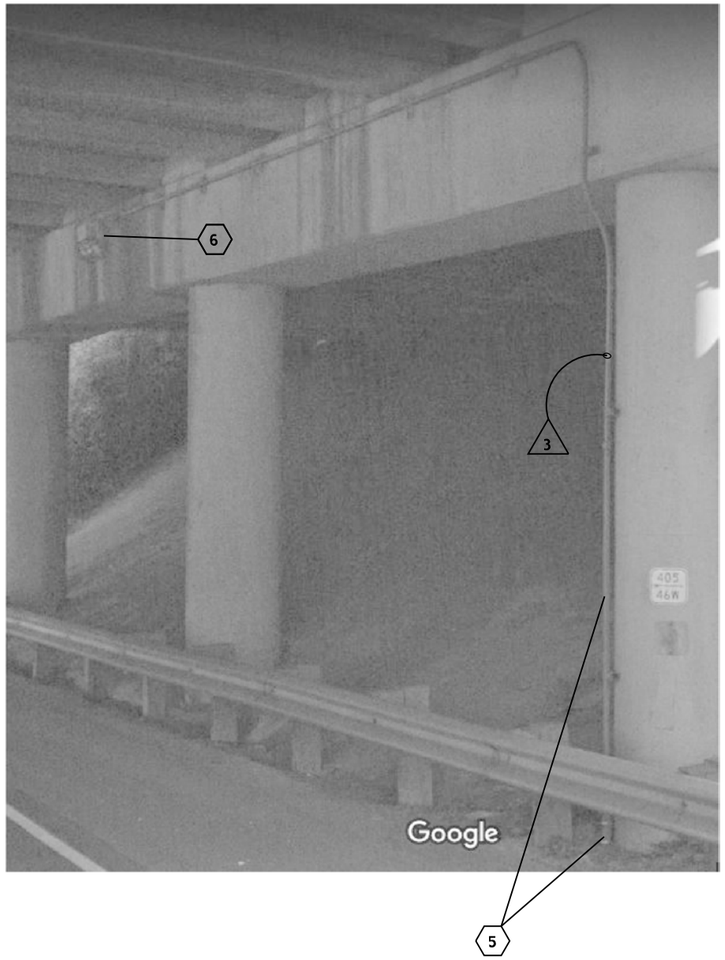

46 W MEDIAN LOOKING NORTH

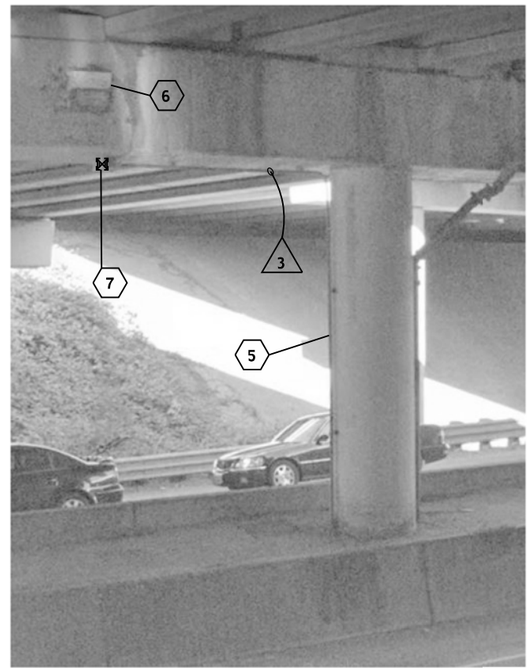

46 W MEDIAN LOOKING SOUTH

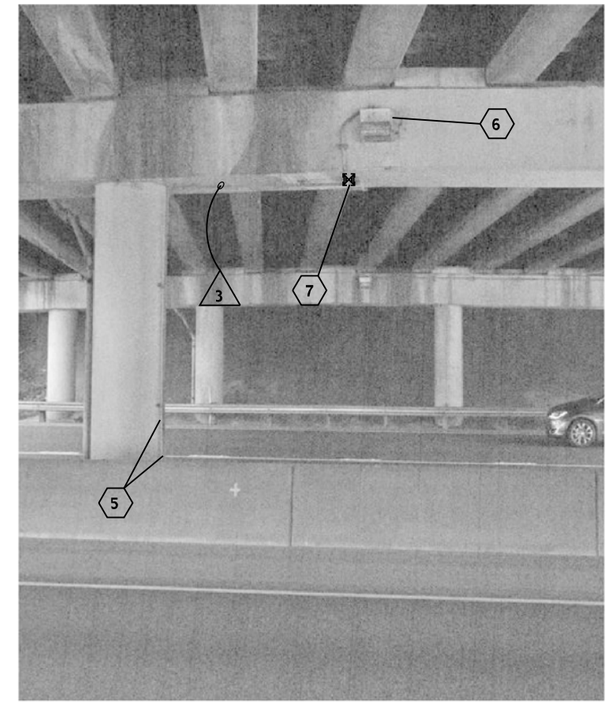

NOTE:
SEE SHEET EL1 FOR WIRING SCHEDULE AND CONSTRUCTION NOTES.

FILE NAME	T:\414124\ELECTRICAL\Projects\SR405\XL5937_RR BR TO TRAIL BR & I-90E FORK ISSAQUAH CR SEISMIC\XL5937_PS_ILL.dgn			
TIME	4:50:14 PM			
DATE	5/19/2022			
PLOTTED BY	wooc			
DESIGNED BY	B. PHAM			
ENTERED BY	H. MOSTAGHIMI			
CHECKED BY	D. DO			
PROJ. ENGR.	C. ANDERSON			
REGIONAL ADM.	M. COTTEN	REVISION	DATE	BY

REGION NO.	STATE	FED.AID PROJ.NO.
10	WASH	
JOB NUMBER 20A039		
CONTRACT NO.		LOCATION NO.

DUAN HUU DO
STATE OF WASHINGTON
51740
REGISTERED
PROFESSIONAL ENGINEER

SEE SHEET CT1
DATE
P.E. STAMP BOX

DATE
P.E. STAMP BOX

Washington State
Department of Transportation

I-405
BN RR BRIDGE TO PED TRAIL BRIDGE
SEISMIC RETROFIT

ELECTRICAL PLANS

Plot 3
PLAN REF NO
EL4
SHEET 57 OF 176 SHEETS

46 W LOOKING NORTH

46 E LOOKING SOUTH

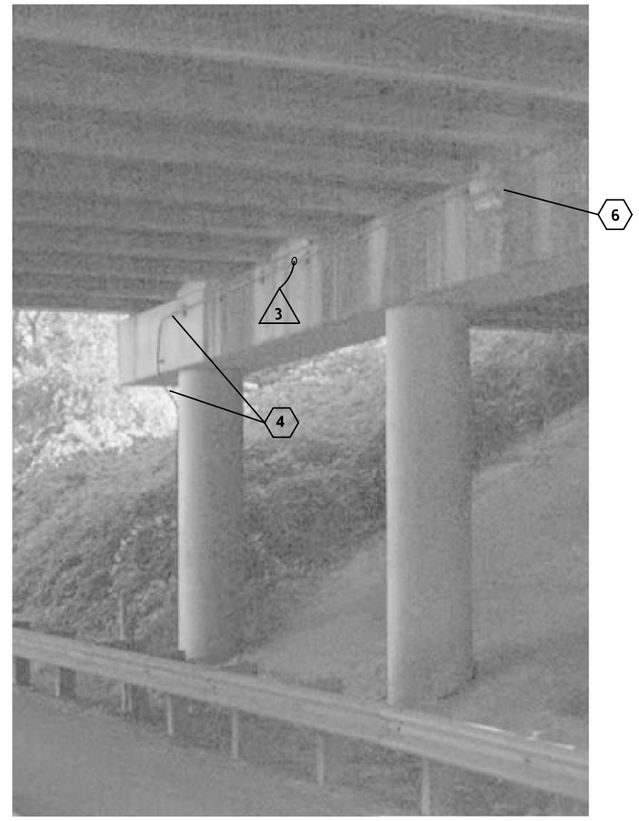

46 E MEDIAN LOOKING NORTH

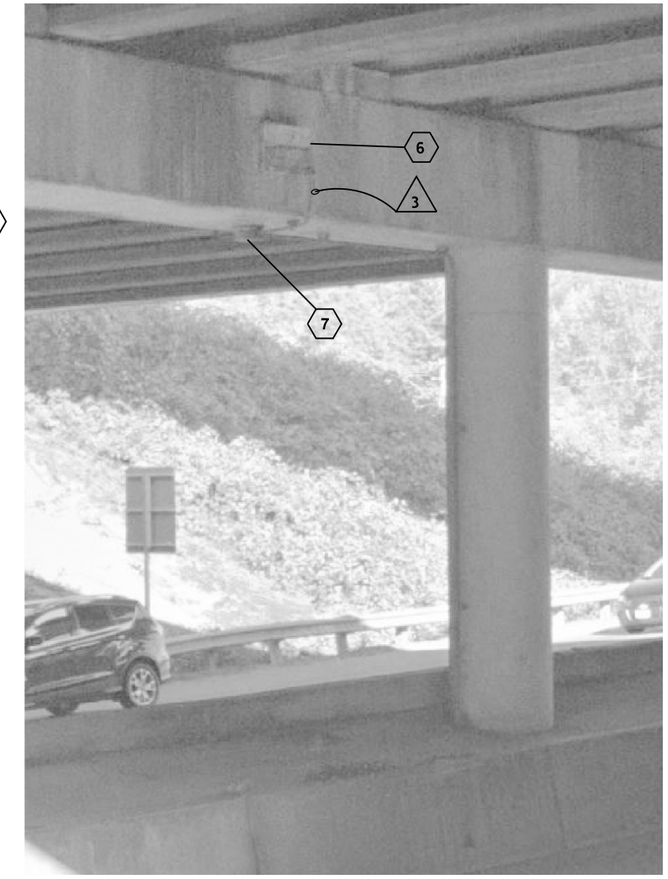

NOTE:
SEE SHEET EL1 FOR WIRING SCHEDULE AND CONSTRUCTION NOTES.

FILE NAME	T:\414124\ELECTRICAL\Projects\SR405\XL5937_RR BR TO TRAIL BR & I-90E FORK ISSAQUAH CR SEISMIC\XL5937_PS_ILL.dgn						
TIME	4:50:17 PM				REGION NO.	STATE	FED.AID PROJ.NO.
DATE	5/19/2022				10	WASH	
PLOTTED BY	wooc				JOB NUMBER		
DESIGNED BY	B. PHAM				20A039		
ENTERED BY	H. MOSTAGHIMI				CONTRACT NO.		LOCATION NO.
CHECKED BY	D. DO						
PROJ. ENGR.	C. ANDERSON						
REGIONAL ADM.	M. COTTEN	REVISION	DATE	BY			

DUKE HUU DO
STATE OF WASHINGTON
31740
REGISTERED
PROFESSIONAL ENGINEER

SEE SHEET CT1
DATE
P.E. STAMP BOX

DATE
P.E. STAMP BOX

Washington State
Department of Transportation

I-405
BN RR BRIDGE TO PED TRAIL BRIDGE
SEISMIC RETROFIT

ELECTRICAL PLANS

Plot 4
PLAN REF NO
EL5
SHEET 58 OF 176 SHEETS

46 E MEDIAN LOOKING SOUTH

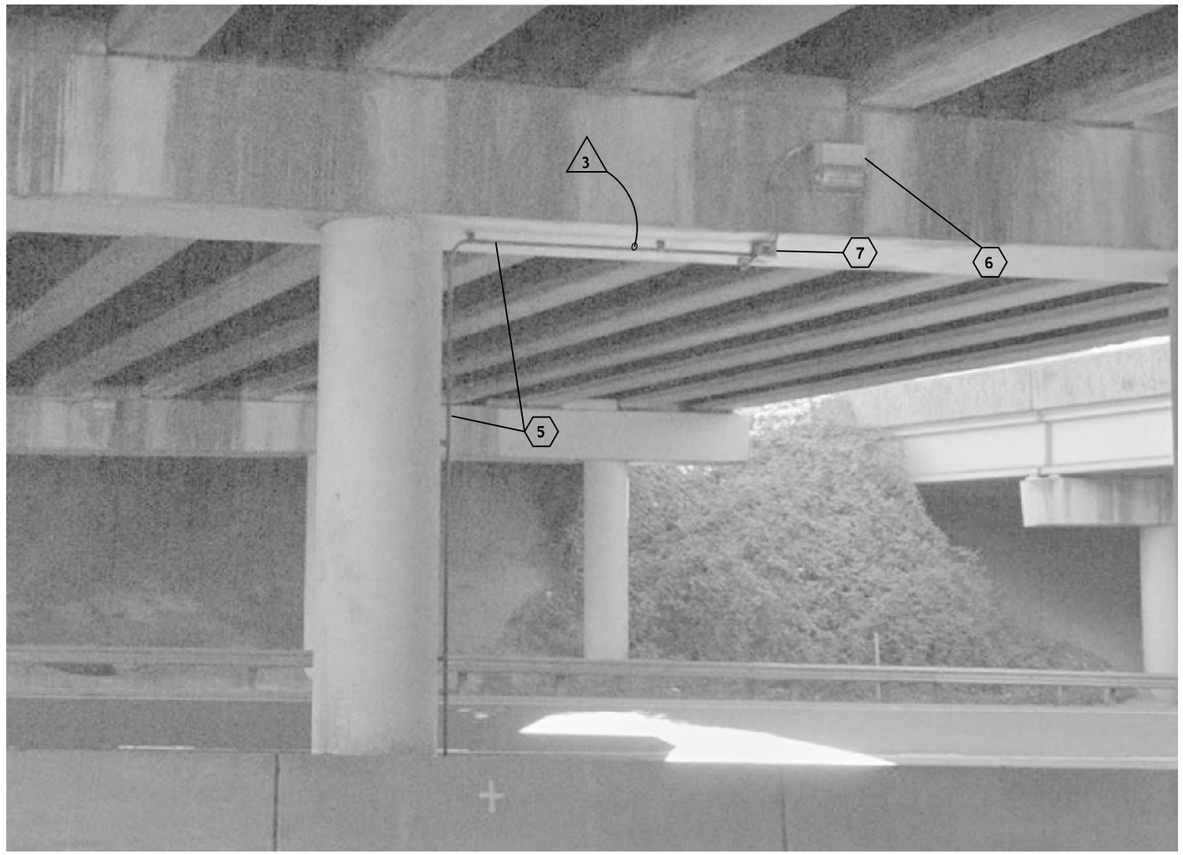

46 E LOOKING NORTH

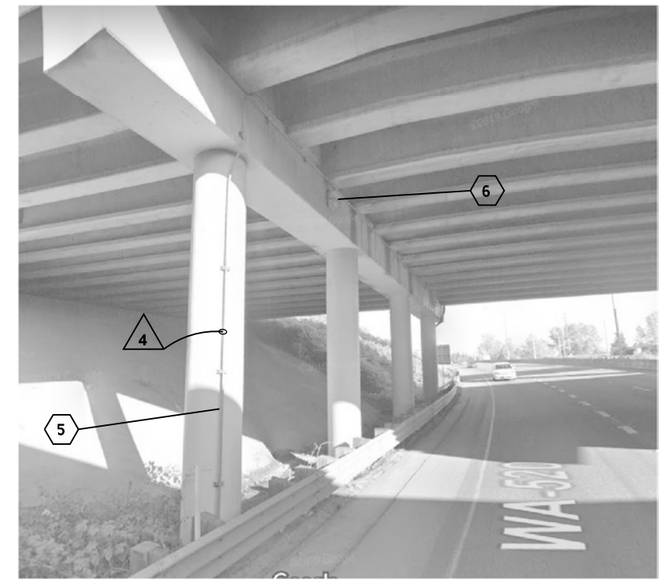

NOTE:
SEE SHEET EL1 FOR WIRING SCHEDULE AND CONSTRUCTION NOTES.

FILE NAME	T:\414124\ELECTRICAL\Projects\SR405\XL5937_RR BR TO TRAIL BR & I-90E FORK ISSAQUAH CR SEISMIC\XL5937_PS_ILL.dgn				REGION NO.	STATE	FED.AID PROJ.NO.
TIME	4:50:20 PM				10	WASH	
DATE	5/19/2022				JOB NUMBER		
PLOTTED BY	wooc				20A039		
DESIGNED BY	B. PHAM				CONTRACT NO.		LOCATION NO.
ENTERED BY	H. MOSTAGHIMI						
CHECKED BY	D. DO						
PROJ. ENGR.	C. ANDERSON						
REGIONAL ADM.	M. COTTEN	REVISION	DATE	BY			

DUAN HUI DO — STATE OF WASHINGTON — 51740 — REGISTERED PROFESSIONAL ENGINEER

SEE SHEET CT1
DATE
P.E. STAMP BOX

DATE
P.E. STAMP BOX

Washington State
Department of Transportation

I-405
BN RR BRIDGE TO PED TRAIL BRIDGE
SEISMIC RETROFIT

ELECTRICAL PLANS

Plot 5
PLAN REF NO
EL6
SHEET 59 OF 176 SHEETS

BRIDGE 405/47E

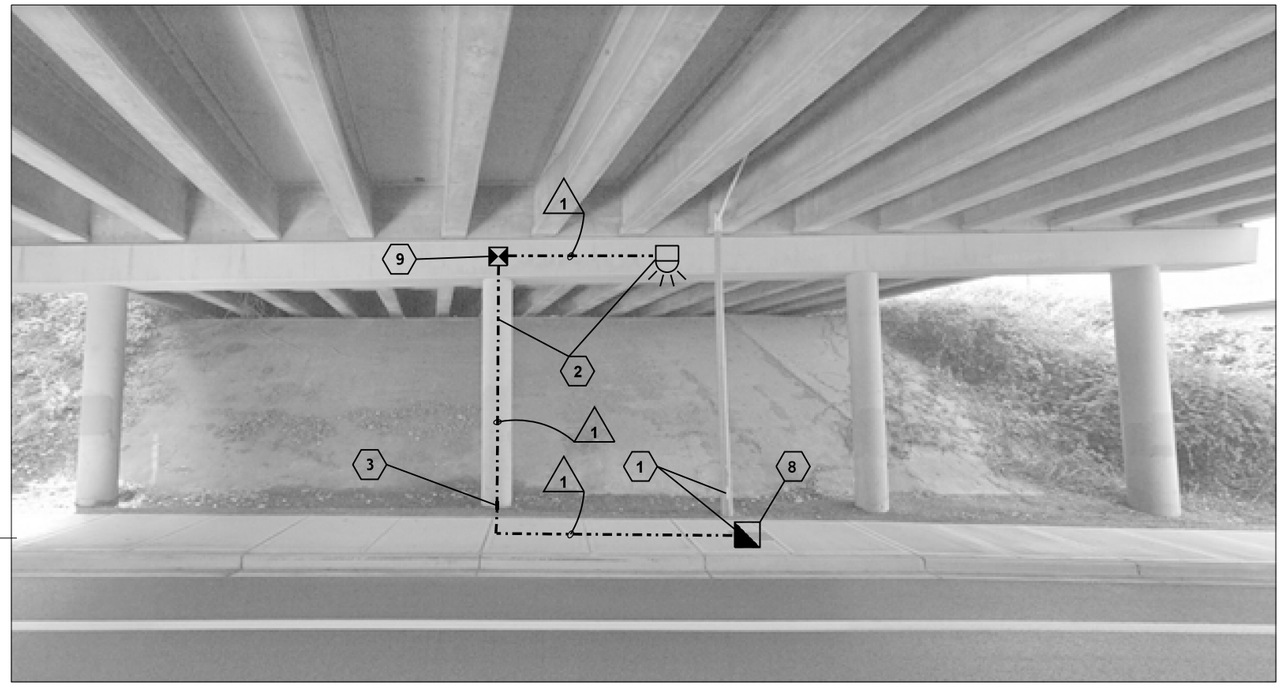

EXISTING CITY OF BELLEVUE SERVICE CABINET LOCATED AT SE CORNER OF NORTHUP WAY AND 116TH AVE NE

WIRING SCHEDULE				EX. CITY SERVICE	
NO.	CONDUIT SIZE	CONDUCTORS EXISTING	CONDUCTORS NEW	CIRCUIT	COMMENTS
1	1"		2#8	EX.	ILLUMINATION

NOTES:

1 CONTACT CHRISTINA HENRIE AT 425-452-7934 TEN WORKING DAYS PRIOR TO BEGIN WORK ON CITY OF BELLEVUE ELECTRICAL SYSTEM.

2 INSTALL CONDUIT AND OTHER ELEMENTS TO BRIDGE COLUMNS AFTER RECEIVING THEIR STEEL COLUMN JACKETS SHALL BE ACHIEVED BY STRAPS. NO DRILLING INTO THE STEEL COLUMN JACKET ALLOWED. INSTALL WALLPACK 90 WATTS LED FIXTURE ON CROSSBEAM. SEE SHEET STANDARD PLAN J-60.14 FOR DETAILS.

3 MOUNTING HARDWARE DETAILS ARE PROVIDED FOR ILLUSTRATIVE PURPOSES ONLY. THE CONTRACTOR MAY PROPOSE GEOMETRIC ATTACHMENT MODIFICATIONS. SUBJECT TO APPROVAL BY THE ENGINEER.

4 THE EXISTING LUMINAIRE POLE, MAST ARM AND FIXTURE SHALL BE DISCONNECTED, DISMANTLED, AND SHALL REMAIN THE PROPERTY OF THE CITY OF BELLEVUE. IF THE EQUIPMENT IS DAMAGED DURING THE REMOVAL OR DELIVERY, THE CONTRACTOR SHALL REPAIR OR REPLACE THE EQUIPMENT TO THE SATISFACTION OF THE CITY OF BELLEVUE AT THE EXPENSE OF THE CONTRACTOR.

NOTE:
SEE SHEET EL1 FOR CONSTRUCTION NOTES.

CONSTRUCTION NOTES:

1. INSTALL NON-INTRUSIVE VEHICLE DETECTOR DEVICE (WAVETRONIX SMARTSENSOR HD), BRACKET ON THE TIMBER POLE IN ACCORDANCE WITH THE NON-INTRUSIVE VEHICLE DETECTOR SPECIAL PROVISION AND ITS DETAIL SHEET ITSD1. CONNECT THE DEVICE TO THE ASSOCIATED EQUIPMENT INSIDE DATA STATION CABINET (520es00684) USING APPROVED WAVETRONIX SHIELDED DATA CABLE. REMOVE ENTIRE WAVETRONIX SYSTEM AND TIMBER POLE WHEN ORIGINAL LANE ALIGNMENT IS RESTORED.
2. LOCATE THE EXISTING CONDUIT WITHIN 10 FT AND PROTECT.INSTALL CLASS 5 MIN. 40 FT TIMBER POLE.
3. INSTALL 2" CONDUIT RISER,WEATHERHEAD AND NEW NEMA ENCLOSURE BOX ON THE TIMBER POLE . ROUTE THE CONDUIT TO THE EXISTING JUNCTION BOX. SEE DETAIL ON SHEET ITSD1.
4. INSTALL "CLICK!" COMPONENTS IN ACCORDANCE WITH THE NON-INTRUSIVE VEHICLE DETECTOR SYSTEM SPECIAL PROVISION AND THE ITS DETAILS SHEET ITSD1. INSTALL SIX CLICK 112 2-CHANNEL RACK CARDS IN THE INPUT FILE. CONNECT THESE CARDS TOGETHER AND TO THE CLICK 200 CARD PER MANUFACTURERS RECOMMENDED CABLE AND CONNECTORS.
5. PROTECT AND PRESERVE THE EXISTING FIBER AND CONDUIT.
6. INSTALL NEW CONDUIT IN THE EXISTING JUNCTION BOX.
7. PROTECT AND PRESERVE THE EXISTING FIBER AND CONDUIT MOUNTED ON THE UNDERDECK.
8. PROTECT AND PRESERVE THE EXISTING CONDUIT AND CONDUCTORS.

△ WIRING SCHEDULE

RUN NO.	CONDUIT EXISTING	CONDUIT NEW	INNERDUCT	EXISTING CABLE	NEW CABLE	REMARK
1	4"		A			
			B	1-36 SMFO		DISTRIBUTION FIBER
			C			
			D			
	4"		A			
			B			
			C	1-48 SMFO		MAINLINE COMMUNICATION
			D			
2		2"			1-WX	WAVETRONIX CABLE
3	2"			9-2C(S)		DETECTOR LEAD-INS
					1-WX	WAVETRONIX CABLE
4	3"			17-2C(S)		DETECTOR LEAD-INS
					1-WX	WAVETRONIX CABLE
5	2"			11-2C(S)		DETECTOR LEAD-INS
	2"				1-WX	WAVETRONIX CABLE
				6-2C(S)		DETECTOR LEAD-INS
6	3"			10-2C(S)		DETECTOR LEAD-INS
					1-WX	WAVETRONIX CABLE
	2"			7-2C(S)		DETECTOR LEAD-INS
7			A	1-48 SMFO		MAINLINE COMMUNICATION
	4"		B,C,D			SPARE
	4"		A	1-48 SMFO		DISTRIBUTION FIBER
			B,C,D			SPARE
8	2"		B	2-2C(S)		DETECTOR LEAD-INS
9	4"		A	1-48 SMFO		DISTRIBUTION FIBER
			B,C,D			SPARE
10	1.5"			5-2C(S)		DETECTOR LEAD-INS
	1.5"			3-2C(S)		DETECTOR LEAD-INS

ITS Legend

Existing	New	
		Type 1 Junction Box
		Type 2 Junction Box
		Type 3 Junction Box
		Type 4 Junction Box
		Type 8 Junction Box
SCV		ITS Small Cable Vault
CV		ITS Cable Vault
PB		ITS Pull Box
T		Transformer Cabinet
		Controller Cabinet
		CCTV Cabinet
		CCTV Camera
		WAVETRONIX DETECTION ZONE
		WAVETRONIX SYSTEM (NON- INTURSIVE VEHICLE DETECTOR)
		Timber Pole
		Conduit
		Electrical Service Cabinet
	X	Construction Note Flag
	X	Wire Note Flag
		Pole Note Flag

ABBREVIATIONS:

C	CONDUCTOR
CCTV	CLOSED CIRCUIT TELEVISION
COMM	COMMUNICATION
C(S)	CONDUCTOR SHIELDED
DET	DETECTOR
EX	EXISTING
ILL	ILLUMINATION
JB	JUNCTION BOX
MAX	MAXIMUM
MIN	MINIMUM
NTS	NOT TO SCALE
NO	NUMBER
PPP	PRETERMINATED PATCH PANEL
PR	PAIR
SMFO	SINGLE MODE FIBER OPTIC
STD	STANDARD
STUB	PRETERM PANEL FIBER STUB
TEMP	TEMPORARY
TYP	TYPICAL
VEH	VEHICLE
WX	WAVETRONIX

TIMBER POLE SCHEDULE			
⬡	LOCATION	POLE CLASS	HEIGHT
1	35+57.53 (94.0' RT)	CLASS 5	MIN. 40.0'

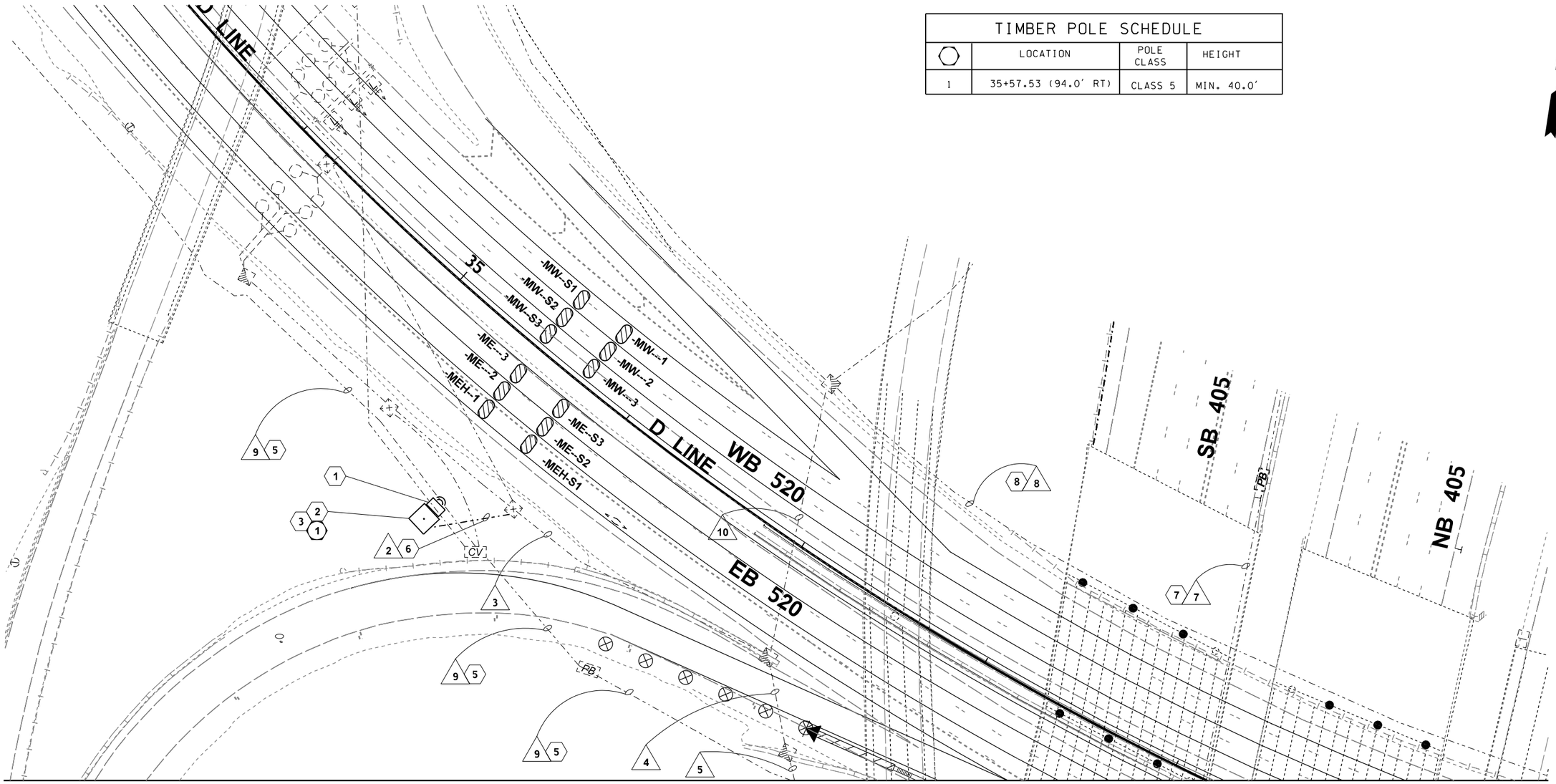

0 25 50
SCALE IN FEET

FILE NAME	T:\414121\Traffic Design_PROJECTS\SR 405\I405 & SR520_ Seismic Retrofit\XL5937_PS_TS.dgn					
TIME	4:17:41 PM					
DATE	5/19/2022					
PLOTTED BY	AlmustW					
DESIGNED BY	W. ALMUSTAFA					
ENTERED BY	W. ALMUSTAFA					
CHECKED BY	C. WOO					
PROJ. ENGR.	C. ANDERSON					
REGIONAL ADM.	M. COTTEN	REVISION	DATE	BY		

REGION NO.	STATE	FED.AID PROJ.NO.
10	WASH	
JOB NUMBER 20A039		
CONTRACT NO.		LOCATION NO.

MICHAEL LEE FORBIS · STATE OF WASHINGTON · 52130 · REGISTERED PROFESSIONAL ENGINEER

SEE SHEET CT2

DATE

P.E. STAMP BOX

DATE

P.E. STAMP BOX

Washington State Department of Transportation

I-405
BN RR BRIDGE TO PED TRAIL BRIDGE SEISMIC RETROFIT

TEMPORARY ITS PLAN

Plot 2

PLAN REF NO **ITS2**

SHEET 62 OF 176 SHEETS

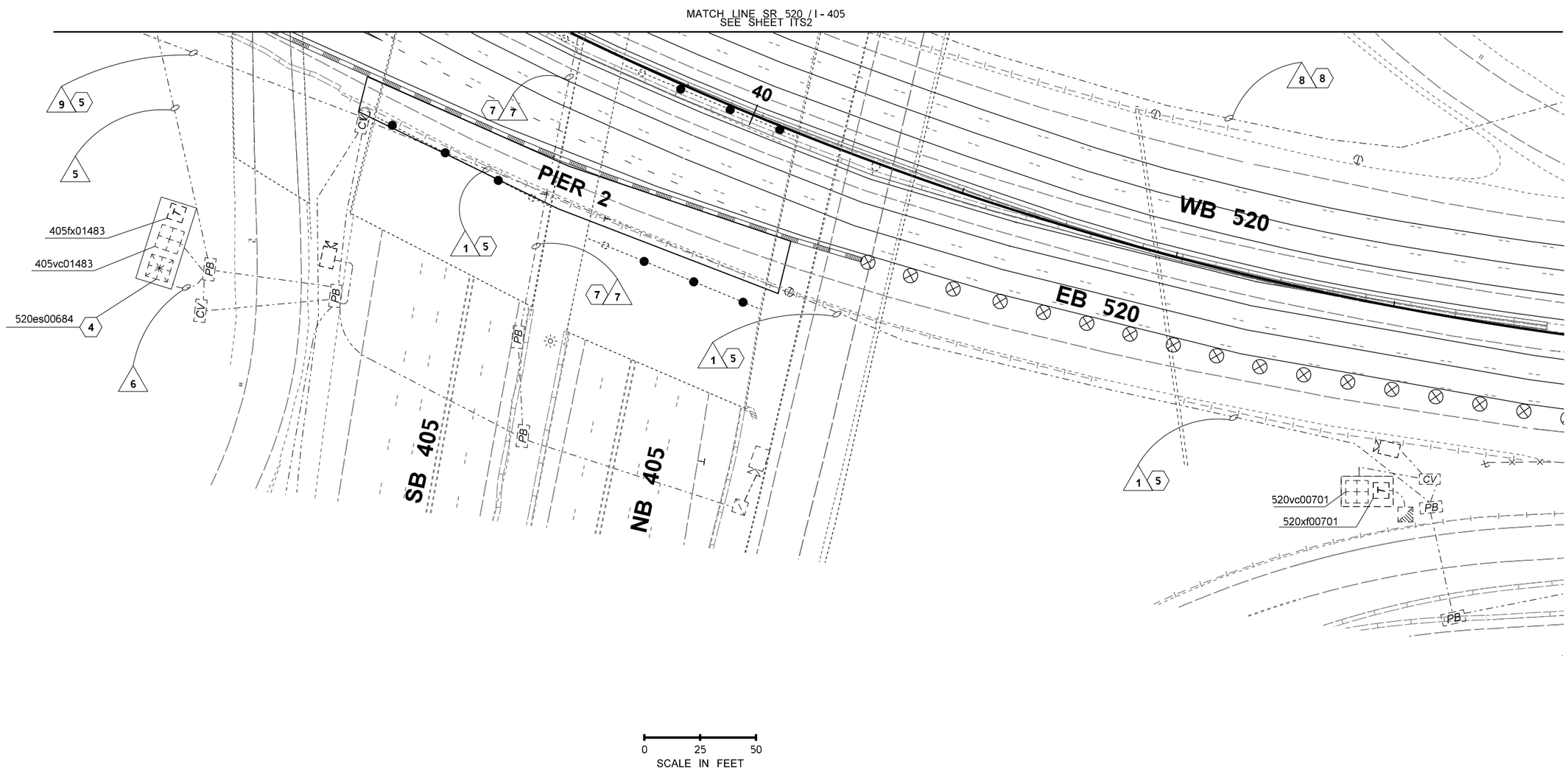

FILE NAME	T:\414121\Traffic Design_PROJECTS\SR 405\I405 & SR520_ Seismic Retrofit\XL5937_PS_TS.dgn					
TIME	4:17:43 PM				REGION NO. 10	STATE WASH
DATE	5/19/2022					FED.AID PROJ.NO.
PLOTTED BY	AlmustW					
DESIGNED BY	W. ALMUSTAFA				JOB NUMBER 20A039	
ENTERED BY	W. ALMUSTAFA					
CHECKED BY	C. WOO				CONTRACT NO.	LOCATION NO.
PROJ. ENGR.	C. ANDERSON					
REGIONAL ADM.	M. COTTEN	REVISION	DATE	BY		

MICHAEL LEE FORBIS · STATE OF WASHINGTON · 52158 · REGISTERED PROFESSIONAL ENGINEER

SEE SHEET CT2

DATE

P.E. STAMP BOX

DATE

P.E. STAMP BOX

Washington State Department of Transportation

I-405

BN RR BRIDGE TO PED TRAIL BRIDGE SEISMIC RETROFIT

TEMPORARY ITS PLAN

Plot 3

PLAN REF NO ITS3

SHEET 63 OF 176 SHEETS

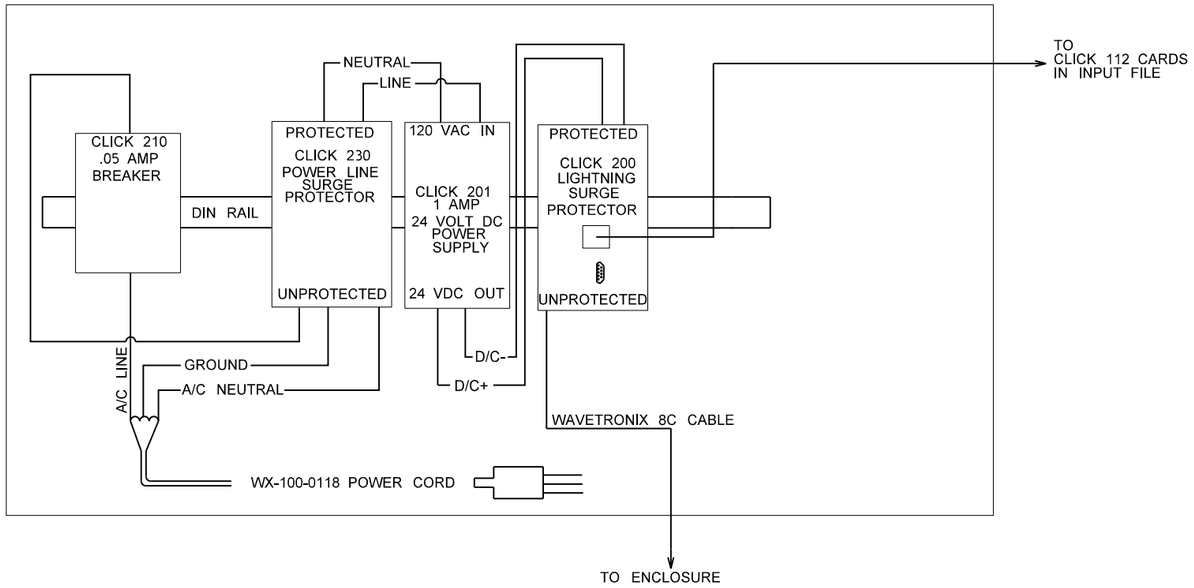

WAVETRONIX EQUIPMENT IN DATA STATION CABINET DETAIL

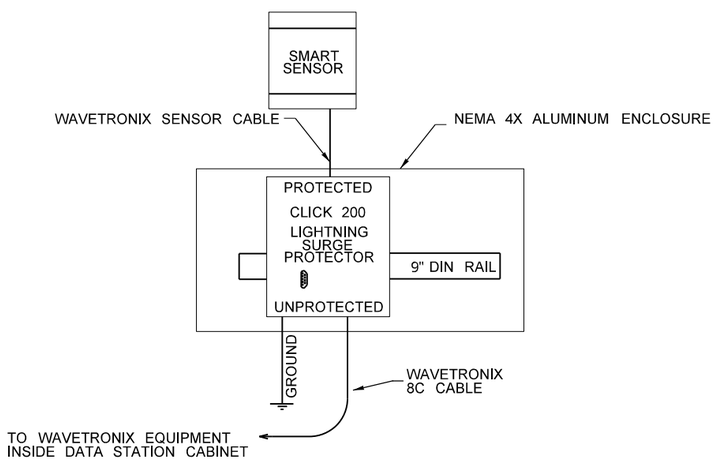

WAVETRONIX POLE MOUNTED NEMA ENCLOSURE EQUIPMENT DETAIL

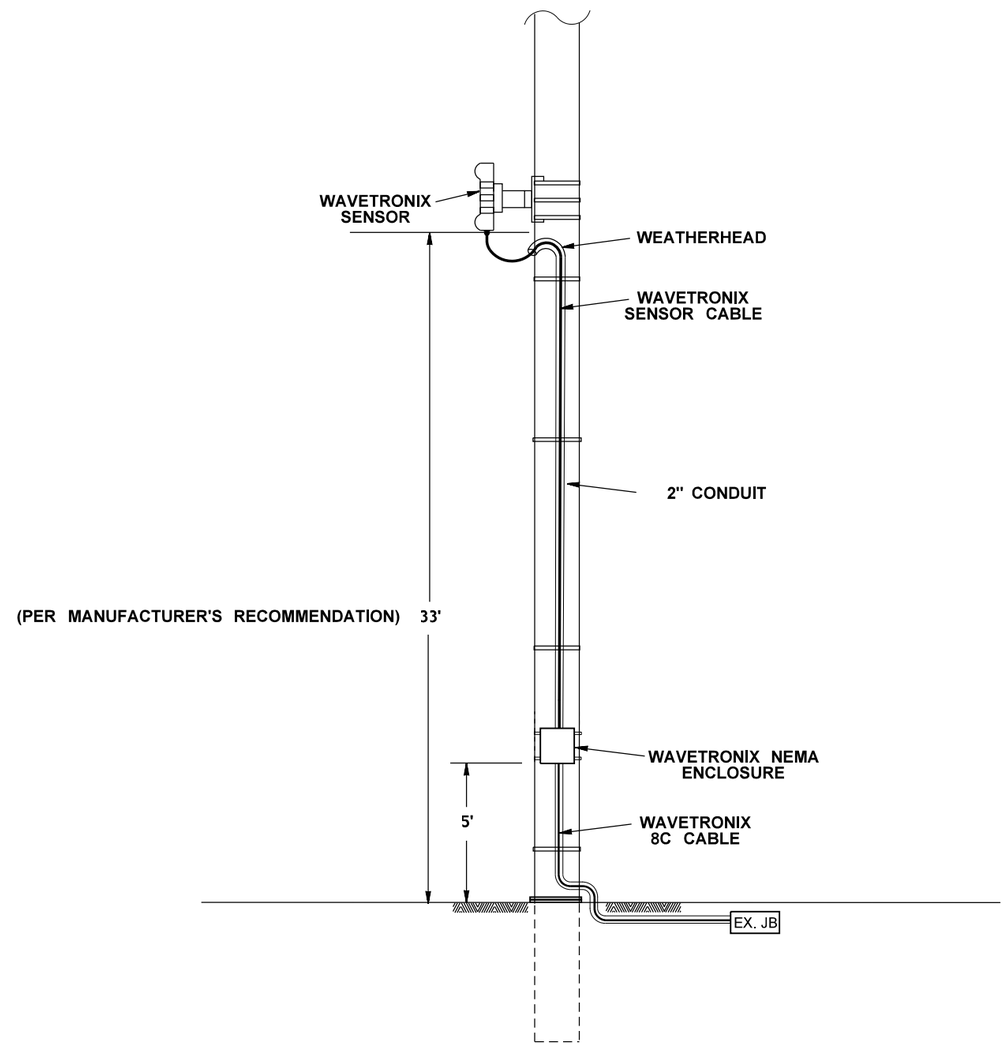

NON-INTRUSIVE VEHICLE DETECTOR MOUNTING ON TIMBER POLE

NOT TO SCALE

FILE NAME	T:\414121\Traffic Design_PROJECTS\SR 405\I405 & SR520_ Seismic Retrofit\XL5937_PS_TS.dgn						
TIME	4:17:45 PM				REGION NO. 10	STATE WASH	FED.AID PROJ.NO.
DATE	5/19/2022						
PLOTTED BY	AlmustW						
DESIGNED BY	W. ALMUSTAFA				JOB NUMBER 20A039		
ENTERED BY	W. ALMUSTAFA						
CHECKED BY	C. WOO				CONTRACT NO.		LOCATION NO.
PROJ. ENGR.	C. ANDERSON						
REGIONAL ADM.	M. COTTEN	REVISION	DATE	BY			

MICHAEL LEE FORBIS — STATE OF WASHINGTON — 32150 — REGISTERED PROFESSIONAL ENGINEER

Michael Forbis

SEE SHEET CT2

DATE

P.E. STAMP BOX

DATE

P.E. STAMP BOX

Washington State
Department of Transportation

I-405
BN RR BRIDGE TO PED TRAIL BRIDGE
SEISMIC RETROFIT

ITS DETAILS

Plot 4

PLAN REF NO
ITS4

SHEET 64 OF 176 SHEETS

GENERAL NOTES

1. ALL MATERIALS AND WORKMANSHIP SHALL BE IN ACCORDANCE WITH THE REQUIREMENTS OF THE WASHINGTON STATE DEPARTMENT OF TRANSPORTATION STANDARD SPECIFICATIONS FOR ROAD, BRIDGE AND MUNICIPAL CONSTRUCTION - DATED 2022.

2. NEW CONSTRUCTION HAS BEEN DESIGNED IN ACCORDANCE WITH THE REQUIREMENTS OF THE AASHTO LRFD BRIDGE DESIGN SPECIFICATIONS 8TH EDITION, DATED 2017 AND THE FHWA-HRT-06-032 SEISMIC RETROFITTING MANUAL FOR HIGHWAY STRUCTURES, DATED 2006.

3. EXISTING FEATURES, DIMENSIONS, AND ELEVATIONS ARE BASED ON AS-BUILT PLANS. ALL DIMENSIONS SHALL BE FIELD MEASURED AND VERIFIED BY THE CONTRACTOR, PRIOR TO ORDERING MATERIALS AND FABRICATION (SEE SPECIAL PROVISIONS).

4. CONTRACTOR SHALL LOCATE EXISTING STEEL REINFORCING USING NONDESTRUCTIVE METHODS TO AVOID DAMAGE DURING DRILLING OPERATIONS. THE CONTRACTOR SHALL NOTIFY THE ENGINEER IMMEDIATELY IF ANY EXISTING REBAR OR ANCHOR BOLTS ARE ENCOUNTERED OR ARE IN CONFLICT WITH THE WORK DETAILED, AND SHALL OBTAIN APPROVAL FROM THE ENGINEER BEFORE CONTINUING WORK. CORE DRILLING IS NOT ALLOWED.

5. ALL NEW MATERIALS USED SHALL MEET THE FOLLOWING REQUIREMENTS:
   - CONCRETE CLASS 4000
   - REINFORCING STEEL BARS - ASTM A706, GRADE 60, U.N.O.
   - STEEL COLUMN JACKETS - ASTM A36

6. THE MINIMUM CONCRETE COVER MEASURED FROM THE FACE OF THE CONCRETE TO THE FACE OF ANY REINFORCING STEEL SHALL BE 1 1/2" U.N.O.

7. EXISTING BRIDGE DRAIN PIPE MOUNTED ON THE COLUMN SURFACE SHALL BE REMOVED TO 3" BELOW BOTTOM OF BRIDGE DECK.

8. CONCRETE SURFACES REQUIRED TO BE ROUGHENED SHALL BE ROUGHENED IN ACCORDANCE WITH SECTION 6-02.3(12)B OR THE SPALL PATTERN ALTERNATIVE ROUGHENED SURFACE SHOWN IN DETAIL 2 ON BRIDGE SHEET BB6.

9. THE LOCATION OF DOWEL BARS MAY BE ADJUSTED BY +/- 1" IF NECESSARY TO AVOID CONFLICTS WITH EXISTING REINFORCING STEEL. DOWEL BARS SHALL BE KEPT A MINIMUM OF 3" FROM THE EDGE OF CONCRETE.

10. SEE UTILITY SHEETS FOR THE LOCATIONS OF EXISTING UTILITIES.

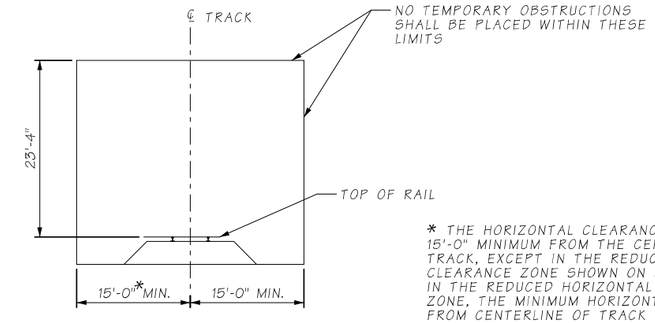

* THE HORIZONTAL CLEARANCE SHALL BE 15'-0" MINIMUM FROM THE CENTERLINE OF TRACK, EXCEPT IN THE REDUCED HORIZONTAL CLEARANCE ZONE SHOWN ON SHEET BB14. IN THE REDUCED HORIZONTAL CLEARANCE ZONE, THE MINIMUM HORIZONTAL CLEARANCE FROM CENTERLINE OF TRACK SHALL BE 10'-0".

CONSTRUCTION CLEARANCE ENVELOPE

NORMAL TO RAILROAD TRACK ALIGNMENT
(LOOKING NORTH)

LEGEND

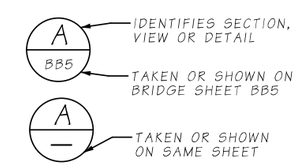

Bridge Design Engr.	KHALEGHI B.	c:\pwworking\west01\d1468466\12_General Notes.dgn							
Supervisor	KORPI D.				REGION NO.	STATE	FED. AID PROJ. NO.	SHEET NO.	TOTAL SHEETS
Designed By	CHI J.				10	WASH		65	176
Checked By	ANDREWS L.								
Detailed By	VYPLEL M.				JOB NUMBER				
Bridge Projects Engr.	ROSA M.				20A039				
Prelim. Plan By									
Architect/Specialist		DATE	REVISION	BY	APP'D				

4/20/2022 3:44:00 PM

BRIDGE AND STRUCTURES OFFICE

R. LEE ANDREWS — STATE OF WASHINGTON — 43571 — STRUCTURAL ENGINEER — PROFESSIONAL ENGINEER
SEE SHEET CT1
04/20/2022

Washington State Department of Transportation

HDR

I-405
BN RR BRIDGE TO PED TRAIL BRIDGE
SEISMIC RETROFIT
BRIDGE NO. 405/12

GENERAL NOTES

BRIDGE SHEET NO. BB1

SHEET 65 OF 176 SHEETS

SR 405 FILE NO._____ SHEET BB1
ProjectWise Vault:

SEC. 24, T.23N., R.4E., W.M.

CITY OF RENTON

I-405

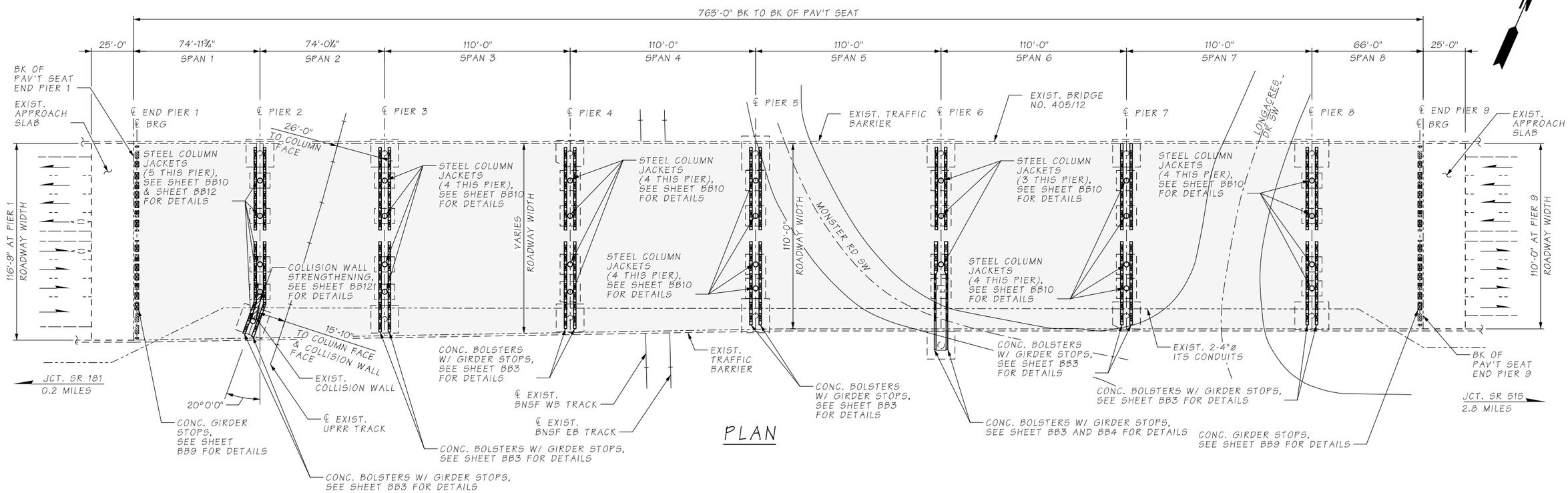

PLAN

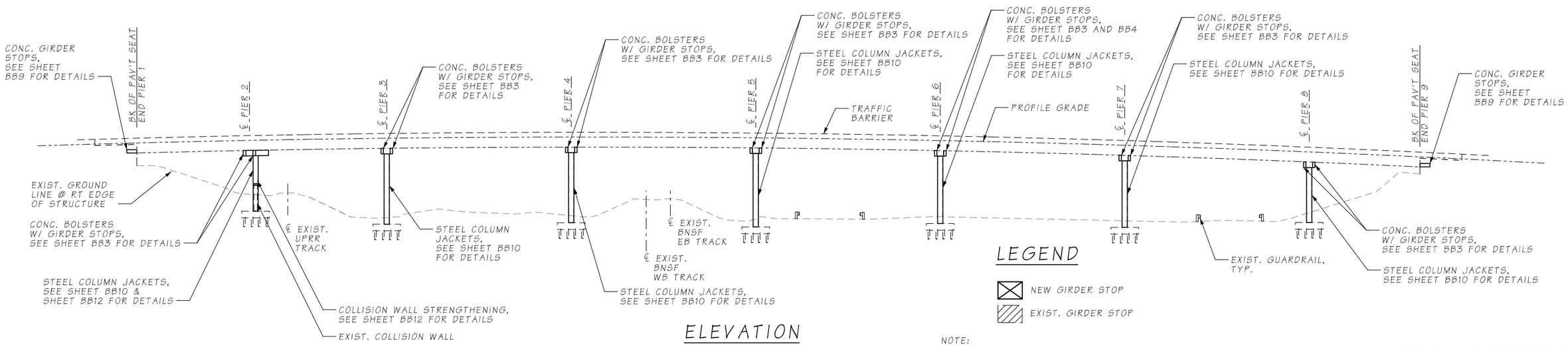

ELEVATION

LEGEND

- NEW GIRDER STOP
- EXIST. GIRDER STOP

NOTE:
FOR GENERAL NOTES, SEE SHEET BB1.

SEISMIC RETROFIT

Bridge Design Engr.	KHALEGHI B.	c:\pwworking\west01\d1468466\12_Layout Plan.dgn							
Supervisor	KORPI D.				REGION NO.	STATE	FED. AID PROJ. NO.	SHEET NO.	TOTAL SHEETS
Designed By	CHI J.				10	WASH		66	176
Checked By	ANDREWS L.				JOB NUMBER				
Detailed By	VYPLEL M.				20A039				
Bridge Projects Engr.	ROSA M.								
Prelim. Plan By									
Architect/Specialist		DATE	REVISION	BY	APP'D				

4/20/2022 3:44:17 PM

BRIDGE AND STRUCTURES OFFICE

R. LEE ANDREWS, STATE OF WASHINGTON, 43571, PROFESSIONAL ENGINEER

SEE SHEET CT1
04/20/2022

Washington State Department of Transportation

HDR

I-405
BN RR BRIDGE TO PED TRAIL BRIDGE
SEISMIC RETROFIT
BRIDGE NO. 405/12

LAYOUT

BRIDGE SHEET NO. BB2

SHEET 66 OF 176 SHEETS

SR 405 FILE NO. ____ SHEET BB2
ProjectWise Vault:

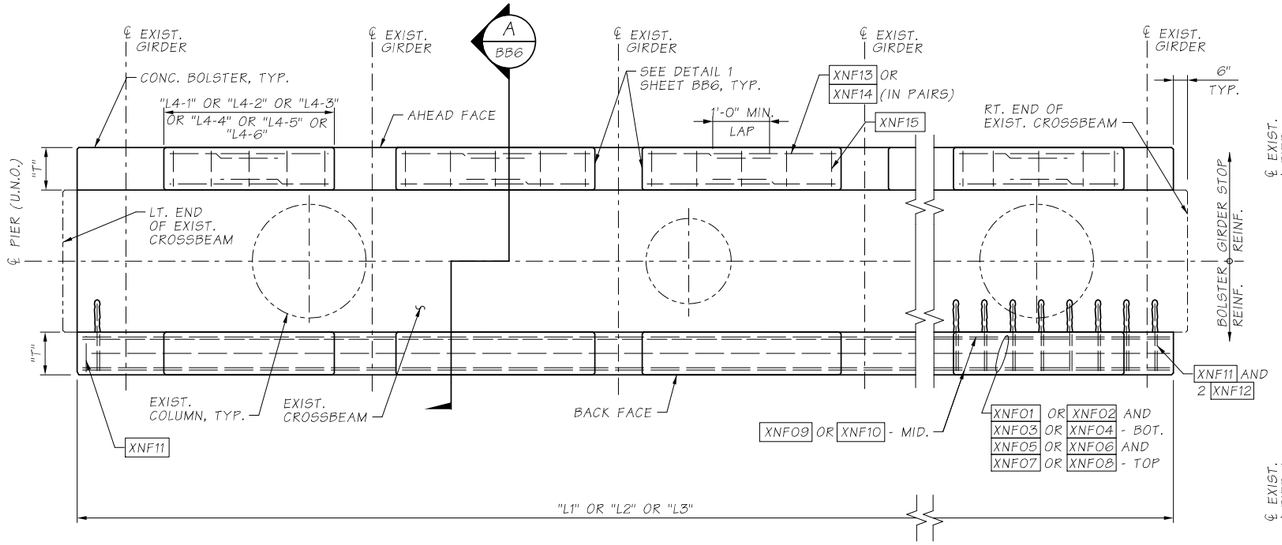

PLAN - TYP. CROSSBEAM BOLSTERS AND GIRDER STOPS

NOTE: SEE SHEET BB5 FOR CROSSBEAM BOLSTER AND GIRDER STOP DIMENSIONS.

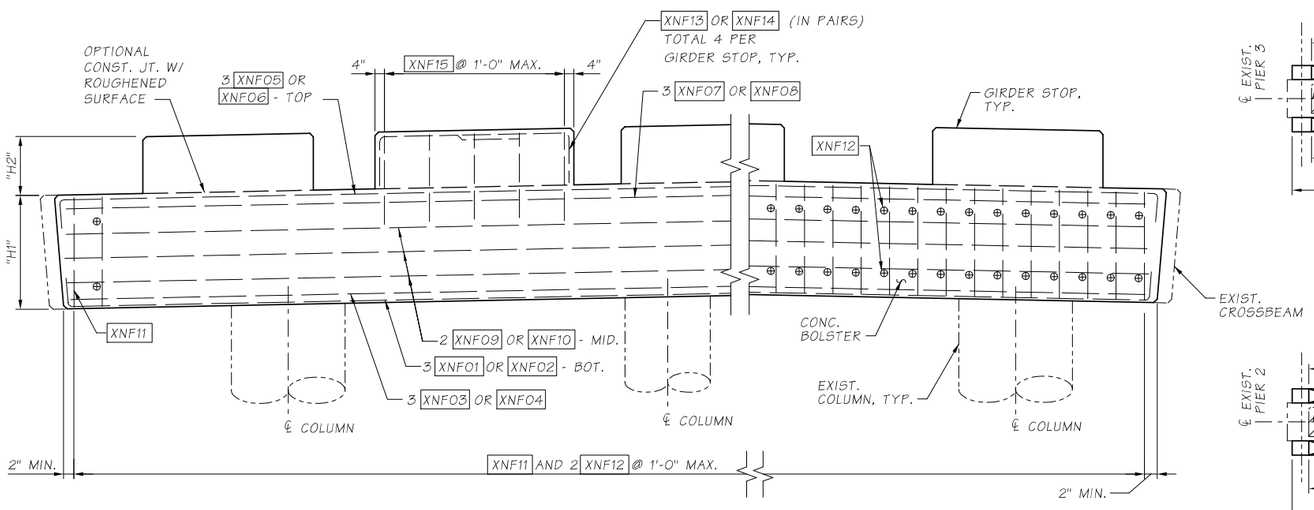

ELEVATION - TYP. CROSSBEAM BOLSTERS AND GIRDER STOPS

(BACK FACE SHOWN, AHEAD FACE SIMILAR)

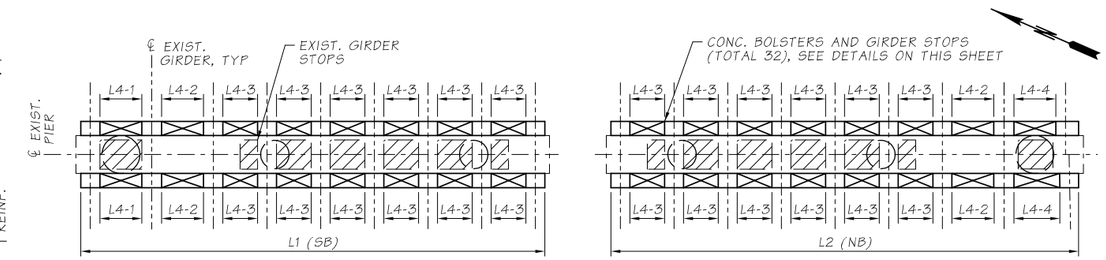

PIERS 5 & 6 (SB) & 7 AND 8 GIRDER STOP LAYOUT

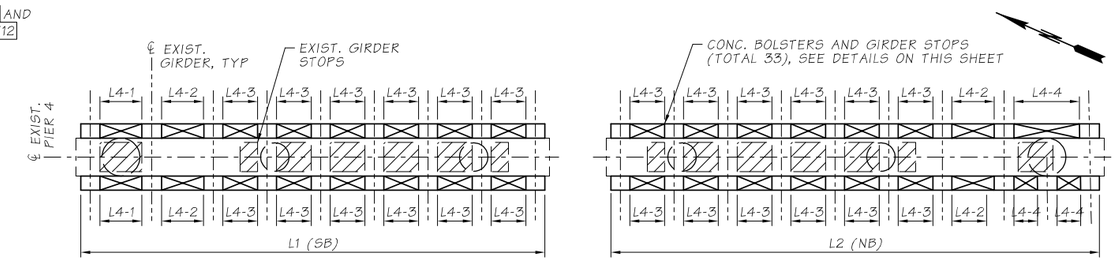

PIER 4 GIRDER STOP LAYOUT

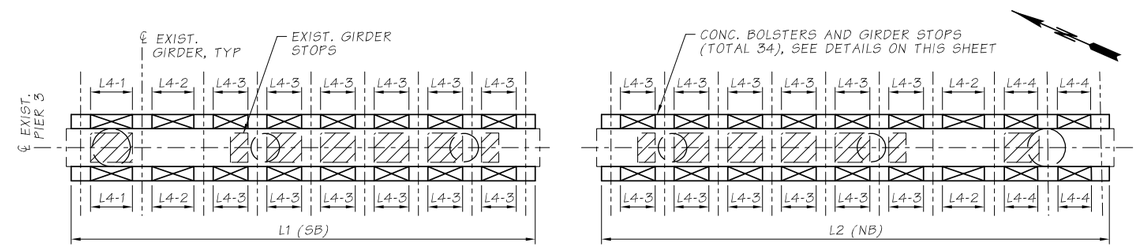

PIER 3 GIRDER STOP LAYOUT

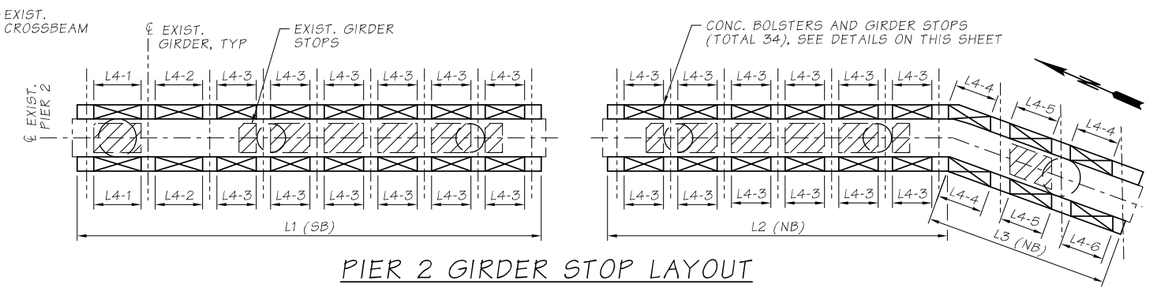

PIER 2 GIRDER STOP LAYOUT

Bridge Design Engr.	KHALEGHI B.	c:\pwworking\west01\d1468466\12_XBeam Bolsters-Girder Stops_Plan-Elev_1.dgn				REGION NO.	STATE	FED. AID PROJ. NO.	SHEET NO.	TOTAL SHEETS
Supervisor	KORPI D.					10	WASH		67	176
Designed By	CHI J.					JOB NUMBER				
Checked By	ANDREWS L.					20A039				
Detailed By	VYPLEL M.									
Bridge Projects Engr.	ROSA M.									
Prelim. Plan By										
Architect/Specialist		DATE	REVISION	BY	APP'D					

4/20/2022 3:44:22 PM

SR 405 FILE NO. 20A039 SHEET BB3
ProjectWise Vault:

BRIDGE AND STRUCTURES OFFICE

R. LEE ANDREWS, STATE OF WASHINGTON, 43571, STRUCTURAL ENGINEER, PROFESSIONAL ENGINEER

SEE SHEET CT1
04/20/2022

Washington State Department of Transportation

HDR

I-405
BN RR BRIDGE TO PED TRAIL BRIDGE
SEISMIC RETROFIT
BRIDGE NO. 405/12

CROSSBEAM BOLSTER AND GIRDER STOPS - PLAN AND ELEVATION 1

BRIDGE SHEET NO. BB3

SHEET 67 OF 176 SHEETS

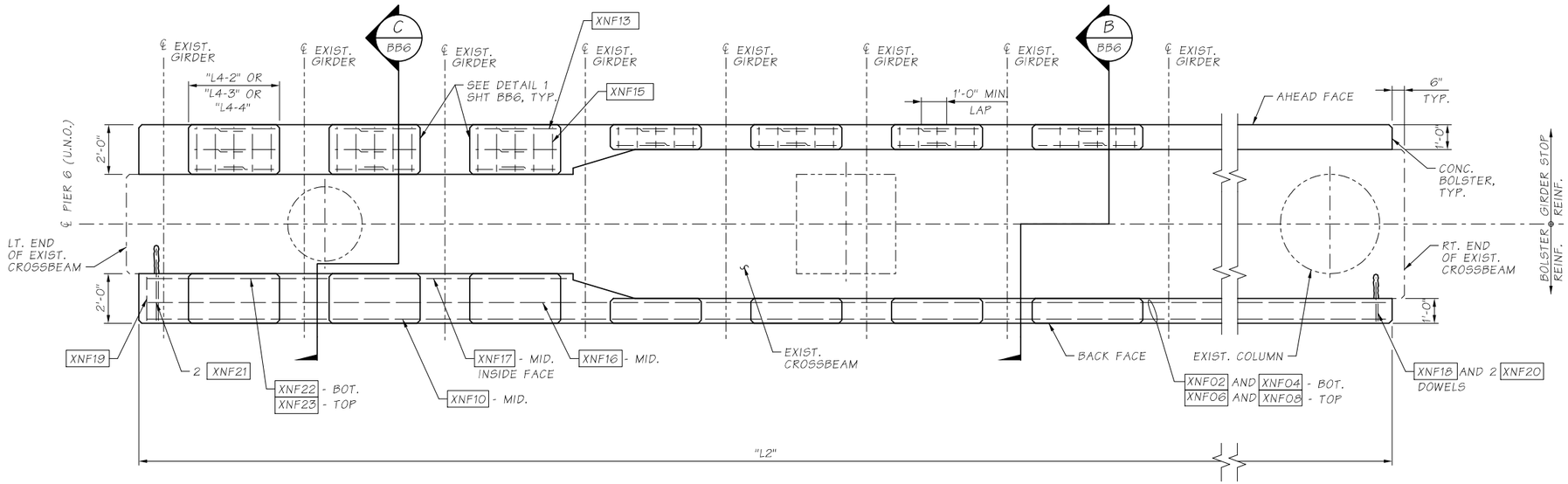

PIER 6 (NB)
PLAN - CROSSBEAM BOLSTERS AND GIRDER STOPS

NOTE: SEE SHEET BB5 FOR CROSSBEAM BOLSTER AND GIRDER STOP DIMENSIONS.

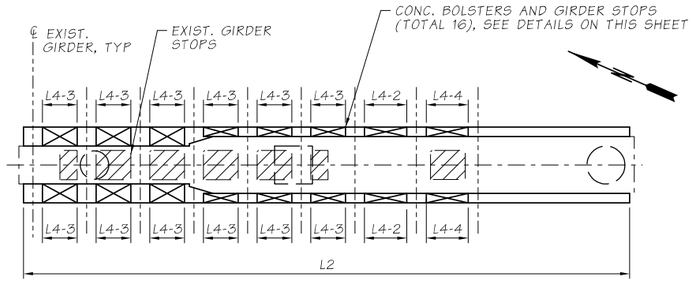

PIER 6 (NB) - GIRDER STOP LAYOUT

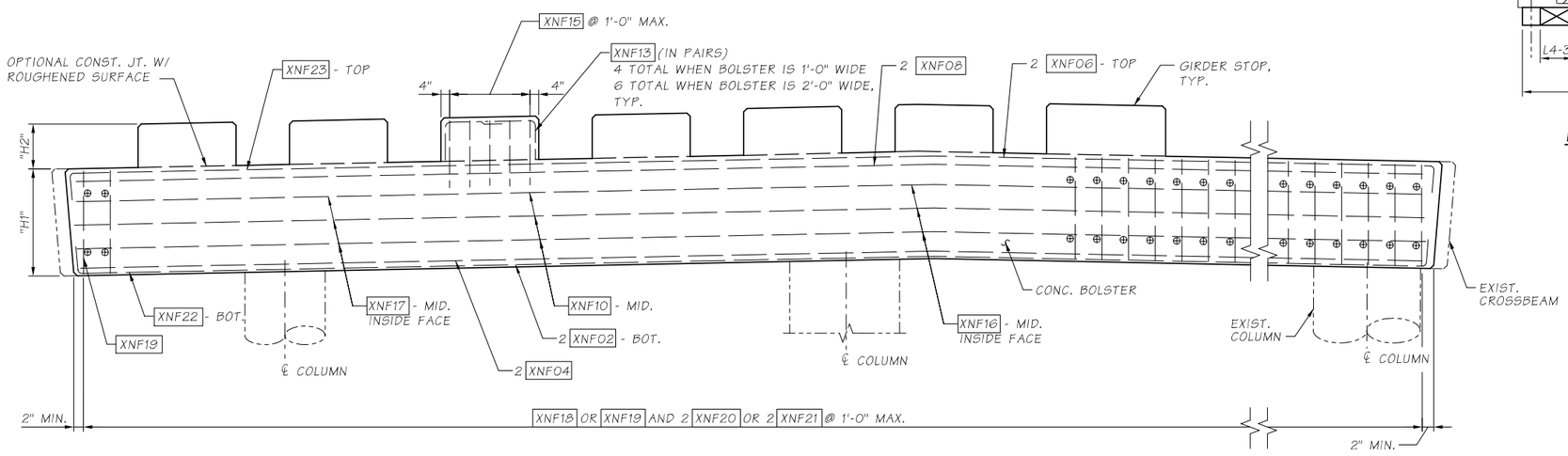

PIER 6 (NB)
ELEVATION - CROSSBEAM BOLSTERS AND GIRDER STOPS

(BACK FACE SHOWN, AHEAD FACE SIMILAR)

SR 405 FILE NO. 20A039 SHEET BB4
ProjectWise Vault:

Bridge Design Engr.	KHALEGHI B.	c:\pwworking\west01\d1468466\12_XBeam Bolsters-Girder Stops_Plan-Elev_2.dgn							
Supervisor	KORPI D.				REGION NO.	STATE	FED. AID PROJ. NO.	SHEET NO.	TOTAL SHEETS
Designed By	CHI J.				10	WASH		68	176
Checked By	ANDREWS L.								
Detailed By	VYPLEL M.				JOB NUMBER				
Bridge Projects Engr.	ROSA M.				20A039				
Prelim. Plan By									
Architect/Specialist		DATE	REVISION	BY	APP'D				

4/20/2022 3:44:25 PM

BRIDGE AND STRUCTURES OFFICE

R. LEE ANDREWS, STATE OF WASHINGTON, 43571, PROFESSIONAL ENGINEER
SEE SHEET CT1
04/20/2022

Washington State Department of Transportation

HDR

I-405
BN RR BRIDGE TO PED TRAIL BRIDGE SEISMIC RETROFIT
BRIDGE NO. 405/12

CROSSBEAM BOLSTER AND GIRDER STOPS - PLAN AND ELEVATION 2

BRIDGE SHEET NO. BB4

SHEET 68 OF 176 SHEETS

CROSSBEAM BOLSTER AND GIRDER STOP DIMENSIONS LIST

DIM.	DESCRIPTION	DIMENSIONS													
		PIER 2		PIER 3		PIER 4		PIER 5		PIER 6		PIER 7		PIER 8	
		BACK	AHEAD	BACK	AHEAD	BACK	AHEAD	BACK	AHEAD	BACK	AHEAD	BACK	AHEAD	BACK	AHEAD
L1	BOLSTER LENGTH	49'-0"	49'-0"	49'-0"	49'-0"	49'-0"	49'-0"	49'-0"	49'-0"	49'-0"	49'-0"	49'-0"	49'-0"	49'-0"	49'-0"
L2	BOLSTER LENGTH	35'-10½"	37'-1"	53'-6"	53'-6"	51'-5½"	51'-5½"	49'-3"	49'-3"	64'-0"	64'-0"	49'-0"	49'-0"	49'-0"	49'-0"
L3	BOLSTER LENGTH	19'-5½"	20'-8"	-	-	-	-	-	-	-	-	-	-	-	-
L4-1	GIRDER STOP LENGTH	1 @ 4'-3½"	1 @ 4'-3½"	1 @ 4'-3½"	1 @ 4'-3½"	1 @ 4'-3½"	1 @ 4'-3½"	1 @ 4'-3½"	1 @ 4'-3½"	1 @ 4'-3½"	1 @ 4'-3½"	1 @ 4'-3½"	1 @ 4'-3½"	1 @ 4'-3½"	1 @ 4'-3½"
L4-2	GIRDER STOP LENGTH	1 @ 4'-4"	1 @4'-4"	2 @ 4'-4"	2 @ 4'-4"	2 @ 4'-4"	2 @ 4'-4"	2 @ 4'-4"	2 @ 4'-4"	2 @ 4'-4"	2 @ 4'-4"	2 @ 4'-4"	2 @ 4'-4"	2 @ 4'-4"	2 @ 4'-4"
L4-3	GIRDER STOP LENGTH	12 @ 3'-6½"	12 @ 3'-6½"	12 @ 3'-6½"	12 @ 3'-6½"	12 @ 3'-6½"	12 @ 3'-6½"	12 @ 3'-6½"	12 @ 3'-6½"	12 @ 3'-6½"	12 @ 3'-6½"	12 @ 3'-6½"	12 @ 3'-6½"	12 @ 3'-6½"	12 @ 3'-6½"
L4-4	GIRDER STOP LENGTH	1 @ 4'-7½"	2 @ 4'-6"	2 @ 3'-5½"	2 @ 3'-5½"	2 @ 2'-4½"	1 @ 6'-9½"	1 @ 4'-9"	1 @ 4'-3½"	1 @ 4'-3½"	1 @ 4'-3½"	1 @ 4'-3½"	1 @ 4'-3½"	1 @ 4'-3½"	1 @ 4'-3½"
L4-5	GIRDER STOP LENGTH	1 @ 4'-6½"	1 @ 4'-5½"	-	-	-	-	-	-	-	-	-	-	-	-
L4-6	GIRDER STOP LENGTH	1 @ 4'-7"	-	-	-	-	-	-	-	-	-	-	-	-	-
H1	BOLSTER HEIGHT	3'-1⅝"	3'-1⅝"	3'-1⅝"	3'-1⅝"	3'-1⅝"	3'-1⅝"	3'-1⅝"	3'-1⅝"	3'-1⅝"	3'-1⅝"	3'-1⅝"	3'-1⅝"	3'-1⅝"	3'-1⅝"
H2	GIRDER STOP HEIGHT	1'-0"	1'-0"	1'-0"	1'-0"	1'-0"	1'-0"	1'-0"	1'-0"	1'-0"	1'-0"	1'-0"	1'-0"	1'-0"	1'-0"
T	BOLSTER THICKNESS	1'-6"	1'-6"	1'-6"	1'-6"	1'-6"	1'-6"	1'-6"	1'-6"	SEE NOTE 5	SEE NOTE 5	1'-6"	1'-6"	1'-6"	1'-6"
θ	SKEW ANGLE	0	0	0	0	0	0	0	0	0	0	0	0	0	0

NOTES:

1. DIMENSIONS PROVIDED ARE FOR REFERENCE ONLY. CONTRACTOR SHALL ADJUST DIMENSIONS IN THE FIELD SUCH THAT THE REQUIREMENTS OF DETAIL 1 ON SHEET BB6 ARE SATISFIED.
2. SEE GENERAL NOTE 3 ON SHEET BB1.
3. SEE SHEETS BB7 AND BB8 FOR BAR LIST.
4. EXISTING GIRDERS AND DIAPHRAGMS NOT SHOWN FOR CLARITY.
5. BOLSTER THICKNESS "T" FOR PIER 6 SB SHALL BE 1'-6".
   BOLSTER THICKNESS "T" FOR PIER 6 NB SHALL BE PER DETAILS ON SHEET BB4.

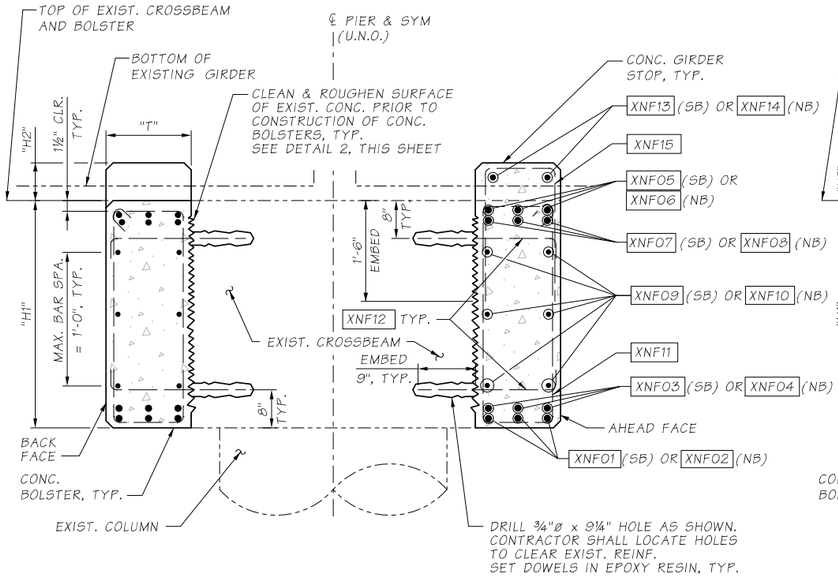

SECTION A / BB3

NOTE:

1. SEE SHEET BB5 FOR "H1", "H2", AND "T" DIMENSIONS

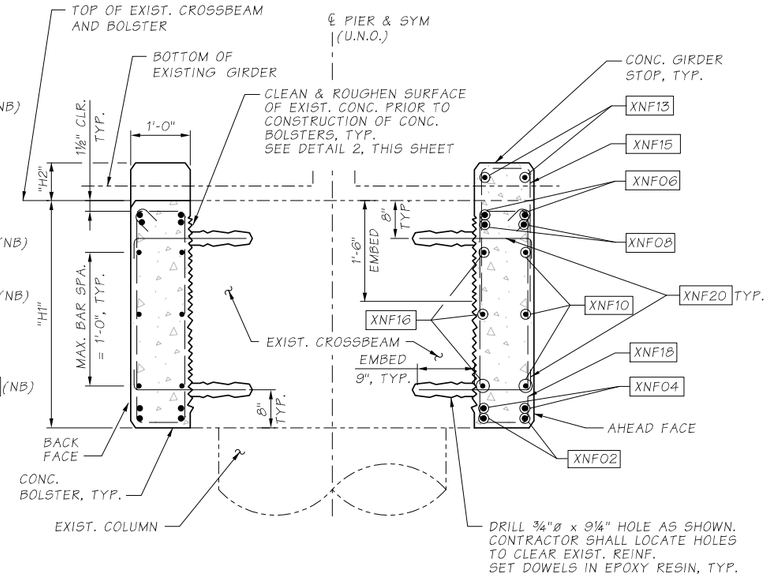

SECTION B / BB4

NOTE:

1. SEE SHEET BB5 FOR "H1" AND "H2" DIMENSIONS

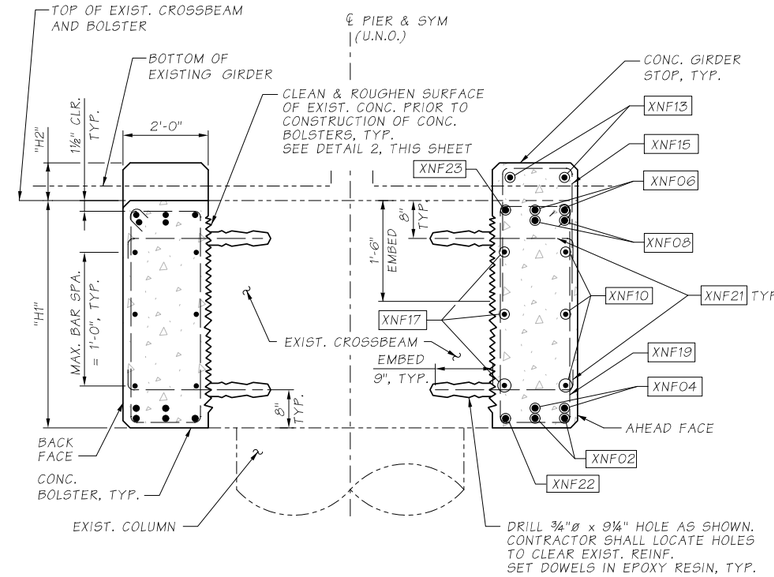

SECTION C / BB4

NOTE:

1. SEE SHEET BB5 FOR "H1" AND "H2" DIMENSIONS

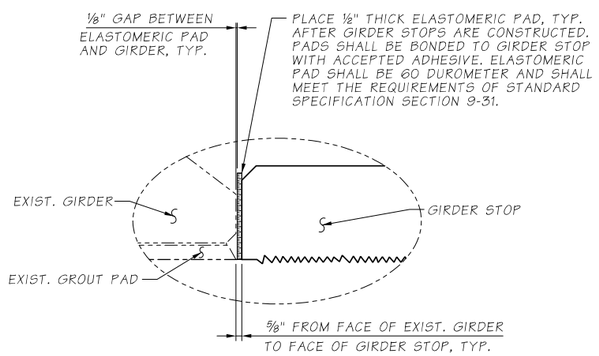

DETAIL 1 / BB3

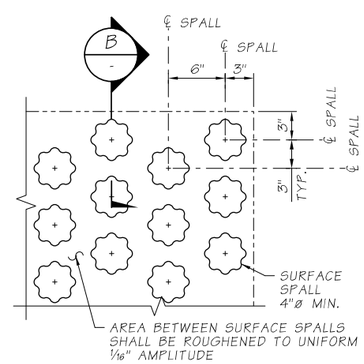

ELEVATION

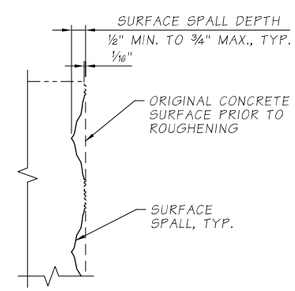

SECTION B / -

SPALL PATTERN ALTERNATIVE ROUGHENED SURFACE DETAIL 2 / -

SR 405 FILE NO. 20A039 SHEET BB6
ProjectWise Vault:

Bridge Design Engr.	KHALEGHI B.	c:\pwworking\west01\d1468466\12_XBeam Bolster-Girder Stops_Details.dgn							
Supervisor	KORPI D.				REGION NO.	STATE	FED. AID PROJ. NO.	SHEET NO.	TOTAL SHEETS
Designed By	CHI J.				10	WASH		70	176
Checked By	ANDREWS L.								
Detailed By	VYPLEL M.				JOB NUMBER				
Bridge Projects Engr.	ROSA M.				20A039				
Prelim. Plan By									
Architect/Specialist		DATE	REVISION	BY	APP'D				

4/20/2022 3:44:37 PM

BRIDGE AND STRUCTURES OFFICE

R. LEE ANDREWS — STATE OF WASHINGTON — 43571 — STRUCTURAL ENGINEER — PROFESSIONAL ENGINEER
SEE SHEET CT1
04/20/2022

Washington State Department of Transportation

HDR

I-405
BN RR BRIDGE TO PED TRAIL BRIDGE SEISMIC RETROFIT
BRIDGE NO. 405/12

CROSSBEAM BOLSTER AND GIRDER STOPS - DETAILS

BRIDGE SHEET NO. BB6

SHEET 70 OF 176 SHEETS

CROSSBEAM BOLSTER / GIRDER STOP BAR LIST

	REBAR MARK	LOCATION	SIZE	BAR GRADE *	DIMENSIONS A HORIZ.	B VERT.	C HORIZ.	LENGTH	TOTAL #	WEIGHT
PIER 2	SB									
	X2B01	BOLSTER LONG. BOT.	11	80	47'-9"	2'-0"	-	51'-9"	3	825
	X2B03	BOLSTER LONG. BOT.	11	80	47'-9"	-	-	47'-9"	3	762
	X2B05	BOLSTER LONG. TOP	11	80	48'-9"	2'-0"	-	52'-9"	3	841
	X2B07	BOLSTER LONG. TOP	11	80	48'-9"	-	-	48'-9"	3	778
	X2B09	BOLSTER LONG. MID.	4	-	48'-3"	-	-	48'-3"	6	194
	X2B11	BOLSTER TIES	4	-	1'-3"	2'-10½"	-	9'-0"	73	440
	X2B12	BOLSTER DOWELS	6	-	2'-4"	-	-	3'-4"	146	731
	X2B13	GIRDER STOP (PAIRS)	4	-	2'-8"	10½"	-	3'-7"	32	76
	X2B15	GIRDER STOP U-SHAPED	4	-	1'-3"	2'-4½"	-	6'-0"	34	137
	NB									
	X2B02	BOLSTER LONG. BOT.	11	80	35'-4½"	2'-0"	18'-11½"	58'-5"	3	931
	X2B04	BOLSTER LONG. BOT.	11	80	35'-4½"	-	18'-11½"	54'-5"	3	867
	X2B06	BOLSTER LONG. TOP	11	80	35'-10½"	2'-0"	19'-5½"	59'-5"	3	947
	X2B08	BOLSTER LONG. TOP	11	80	35'-10½"	-	19'-5½"	55'-5"	3	883
	X2B10	BOLSTER LONG. MID.	8	-	35'-7½"	-	19'-2½"	54'-11"	6	879
	X2B11	BOLSTER TIES	4	-	1'-3"	2'-10½"	-	9'-0"	85	513
	X2B12	BOLSTER DOWELS	6	-	2'-4"	-	-	3'-4"	170	852
	X2B13	GIRDER STOP (PAIRS)	4	-	2'-8"	10½"	-	3'-7"	36	86
	X2B15	GIRDER STOP U-SHAPED	4	-	1'-3"	2'-4½"	-	6'-0"	39	157
	SB									
	X2A01	BOLSTER LONG. BOT.	11	80	47'-9"	2'-0"	-	51'-9"	3	825
	X2A03	BOLSTER LONG. BOT.	11	80	47'-9"	-	-	47'-9"	3	762
	X2A05	BOLSTER LONG. TOP	11	80	48'-9"	2'-0"	-	52'-9"	3	841
	X2A07	BOLSTER LONG. TOP	11	80	48'-9"	-	-	48'-9"	3	778
	X2A09	BOLSTER LONG. MID.	4	-	48'-3"	-	-	48'-3"	6	194
	X2A11	BOLSTER TIES	4	-	1'-3"	2'-10½"	-	9'-0"	73	440
	X2A12	BOLSTER DOWELS	6	-	2'-4"	-	-	3'-4"	146	731
	X2A13	GIRDER STOP (PAIRS)	4	-	2'-8"	10½"	-	3'-7"	32	76
	X2A15	GIRDER STOP U-SHAPED	4	-	1'-3"	2'-4½"	-	6'-0"	34	137
	NB									
	X2A02	BOLSTER LONG. BOT.	11	80	35'-4½"	2'-0"	18'-11½"	58'-5"	3	931
	X2A04	BOLSTER LONG. BOT.	11	80	35'-4½"	-	18'-11½"	54'-5"	3	867
	X2A06	BOLSTER LONG. TOP	11	80	35'-10½"	2'-0"	19'-5½"	59'-5"	3	947
	X2A08	BOLSTER LONG. TOP	11	80	35'-10½"	-	19'-5½"	55'-5"	3	883
	X2A10	BOLSTER LONG. MID.	8	-	35'-7½"	-	19'-2½"	54'-11"	6	879
	X2A11	BOLSTER TIES	4	-	1'-3"	2'-10½"	-	9'-0"	85	513
	X2A12	BOLSTER DOWELS	6	-	2'-4"	-	-	3'-4"	170	852
	X2A13	GIRDER STOP (PAIRS)	4	-	2'-8"	10½"	-	3'-7"	36	86
	X2A15	GIRDER STOP U-SHAPED	4	-	1'-3"	2'-4½"	-	6'-0"	39	157
PIER 3	X3B01	BOLSTER LONG. BOT.	11	80	47'-9"	2'-0"	-	51'-9"	3	825
	X3B02	BOLSTER LONG. BOT.	11	80	52'-4½"	2'-0"	-	56'-5"	3	899
	X3B03	BOLSTER LONG. BOT.	11	80	47'-9"	-	-	47'-9"	3	762
	X3B04	BOLSTER LONG. BOT.	11	80	52'-4½"	-	-	52'-5"	3	835
	X3B05	BOLSTER LONG. TOP	11	80	48'-9"	2'-0"	-	52'-9"	3	841
	X3B06	BOLSTER LONG. TOP	11	80	53'-4½"	2'-0"	-	57'-5"	3	915
	X3B07	BOLSTER LONG. TOP	11	80	48'-9"	-	-	48'-9"	3	778
	X3B08	BOLSTER LONG. TOP	11	80	53'-4½"	-	-	53'-5"	3	851
	X3B09	BOLSTER LONG. MID.	4	-	48'-3"	-	-	48'-3"	6	194
	X3B10	BOLSTER LONG. MID.	4	-	52'-10½"	-	-	52'-11"	6	212
	X3B11	BOLSTER TIES	4	-	1'-3"	2'-10½"	-	9'-0"	168	1013
	X3B12	BOLSTER DOWELS	6	-	2'-4"	-	-	3'-4"	336	1683
	X3B13	GIRDER STOP (PAIRS)	4	-	2'-8"	10½"	-	3'-7"	68	161
	X3B15	GIRDER STOP U-SHAPED	4	-	1'-3"	2'-4½"	-	6'-0"	71	285
	X3A01	BOLSTER LONG. BOT.	11	80	47'-9"	2'-0"	-	51'-9"	3	825
	X3A02	BOLSTER LONG. BOT.	11	80	52'-4½"	2'-0"	-	56'-5"	3	899
	X3A03	BOLSTER LONG. BOT.	11	80	47'-9"	-	-	47'-9"	3	762
	X3A04	BOLSTER LONG. BOT.	11	80	52'-4½"	-	-	52'-5"	3	835
	X3A05	BOLSTER LONG. TOP	11	80	48'-9"	2'-0"	-	52'-9"	3	841
	X3A06	BOLSTER LONG. TOP	11	80	53'-4½"	2'-0"	-	57'-5"	3	915
	X3A07	BOLSTER LONG. TOP	11	80	48'-9"	-	-	48'-9"	3	778
	X3A08	BOLSTER LONG. TOP	11	80	53'-4½"	-	-	53'-5"	3	851
	X3A09	BOLSTER LONG. MID.	4	-	48'-3"	-	-	48'-3"	6	194
	X3A10	BOLSTER LONG. MID.	4	-	52'-10½"	-	-	52'-11"	6	212
	X3A11	BOLSTER TIES	4	-	1'-3"	2'-10½"	-	9'-0"	168	1013
	X3A12	BOLSTER DOWELS	6	-	2'-4"	-	-	3'-4"	336	1683
	X3A13	GIRDER STOP (PAIRS)	4	-	2'-8"	10½"	-	3'-7"	68	161
	X3A15	GIRDER STOP U-SHAPED	4	-	1'-3"	2'-4½"	-	6'-0"	71	285

CROSSBEAM BOLSTER / GIRDER STOP BAR LIST

	REBAR MARK	LOCATION	SIZE	BAR GRADE *	DIMENSIONS A HORIZ.	B VERT.	LENGTH	TOTAL #	WEIGHT
PIER 4	X4B01	BOLSTER LONG. BOT.	11	80	47'-9"	2'-0"	51'-9"	3	825
	X4B02	BOLSTER LONG. BOT.	11	80	50'-3½"	2'-0"	54'-4"	3	866
	X4B03	BOLSTER LONG. BOT.	11	80	47'-9"	-	47'-9"	3	762
	X4B04	BOLSTER LONG. BOT.	11	80	50'-3½"	-	50'-4"	3	803
	X4B05	BOLSTER LONG. TOP	11	80	48'-9"	2'-0"	52'-9"	3	841
	X4B06	BOLSTER LONG. TOP	11	80	51'-3½"	2'-0"	55'-4"	3	882
	X4B07	BOLSTER LONG. TOP	11	80	48'-9"	-	48'-9"	3	778
	X4B08	BOLSTER LONG. TOP	11	80	51'-3½"	-	53'-4"	3	819
	X4B09	BOLSTER LONG. MID.	4	-	48'-3"	-	48'-3"	6	194
	X4B10	BOLSTER LONG. MID.	4	-	50'-9½"	-	50'-10"	6	204
	X4B11	BOLSTER TIES	4	-	1'-3"	2'-10½"	9'-0"	162	977
	X4B12	BOLSTER DOWELS	6	-	2'-4"	-	3'-4"	324	1623
	X4B13	GIRDER STOP (PAIRS)	4	-	2'-6½"	10½"	3'-7"	60	137
	X4B14	GIRDER STOP (PAIRS)	4	-	1'-7"	10½"	2'-6"	8	14
	X4B15	GIRDER STOP U-SHAPED	4	-	1'-3"	2'-4½"	6'-0"	70	281
	X4A01	BOLSTER LONG. BOT.	11	80	47'-9"	2'-0"	51'-9"	3	825
	X4A02	BOLSTER LONG. BOT.	11	80	50'-3½"	2'-0"	54'-4"	3	866
	X4A03	BOLSTER LONG. BOT.	11	80	47'-9"	-	47'-9"	3	762
	X4A04	BOLSTER LONG. BOT.	11	80	50'-3½"	-	50'-4"	3	803
	X4A05	BOLSTER LONG. TOP	11	80	48'-9"	2'-0"	52'-9"	3	841
	X4A06	BOLSTER LONG. TOP	11	80	51'-3½"	2'-0"	55'-4"	3	882
	X4A07	BOLSTER LONG. TOP	11	80	48'-9"	-	48'-9"	3	778
	X4A08	BOLSTER LONG. TOP	11	80	51'-3½"	-	53'-4"	3	819
	X4A09	BOLSTER LONG. MID.	4	-	48'-3"	-	48'-3"	6	194
	X4A10	BOLSTER LONG. MID.	4	-	50'-9½"	-	50'-10"	6	204
	X4A11	BOLSTER TIES	4	-	1'-3"	2'-10½"	9'-0"	162	977
	X4A12	BOLSTER DOWELS	6	-	2'-4"	-	3'-4"	324	1623
	X4A13	GIRDER STOP (PAIRS)	4	-	2'-8"	10½"	3'-7"	64	152
	X4A15	GIRDER STOP U-SHAPED	4	-	1'-3"	2'-4½"	6'-0"	70	281
PIER 5	X5B01	BOLSTER LONG. BOT.	11	80	47'-9"	2'-0"	51'-9"	3	825
	X5B02	BOLSTER LONG. BOT.	11	80	48'-1½"	2'-0"	52'-2"	3	831
	X5B03	BOLSTER LONG. BOT.	11	80	47'-9"	-	47'-9"	3	762
	X5B04	BOLSTER LONG. BOT.	11	80	48'-1½"	-	48'-2"	3	768
	X5B05	BOLSTER LONG. TOP	11	80	48'-9"	2'-0"	52'-9"	3	841
	X5B06	BOLSTER LONG. TOP	11	80	49'-1½"	2'-0"	53'-2"	3	847
	X5B07	BOLSTER LONG. TOP	11	80	48'-9"	-	48'-9"	3	778
	X5B08	BOLSTER LONG. TOP	11	80	49'-1½"	-	49'-2"	3	784
	X5B09	BOLSTER LONG. MID.	4	-	48'-3"	-	48'-3"	6	194
	X5B10	BOLSTER LONG. MID.	4	-	48'-7½"	-	48'-8"	6	195
	X5B11	BOLSTER TIES	4	-	1'-3"	2'-10½"	9'-0"	154	928
	X5B12	BOLSTER DOWELS	6	-	2'-4"	-	3'-4"	308	1543
	X5B13	GIRDER STOP (PAIRS)	4	-	2'-8"	10½"	3'-7"	64	152
	X5B15	GIRDER STOP U-SHAPED	4	-	1'-3"	2'-4½"	6'-0"	68	273
	X5A01	BOLSTER LONG. BOT.	11	80	47'-9"	2'-0"	51'-9"	3	825
	X5A02	BOLSTER LONG. BOT.	11	80	48'-1½"	2'-0"	52'-2"	3	831
	X5A03	BOLSTER LONG. BOT.	11	80	47'-9"	-	47'-9"	3	762
	X5A04	BOLSTER LONG. BOT.	11	80	48'-1½"	-	48'-2"	3	768
	X5A05	BOLSTER LONG. TOP	11	80	48'-9"	2'-0"	52'-9"	3	841
	X5A06	BOLSTER LONG. TOP	11	80	49'-1½"	2'-0"	53'-2"	3	847
	X5A07	BOLSTER LONG. TOP	11	80	48'-9"	-	48'-9"	3	778
	X5A08	BOLSTER LONG. TOP	11	80	49'-1½"	-	49'-2"	3	784
	X5A09	BOLSTER LONG. MID.	4	-	48'-3"	-	48'-3"	6	194
	X5A10	BOLSTER LONG. MID.	4	-	48'-7½"	-	48'-8"	6	195
	X5A11	BOLSTER TIES	4	-	1'-3"	2'-10½"	9'-0"	154	928
	X5A12	BOLSTER DOWELS	6	-	2'-4"	-	3'-4"	308	1543
	X5A13	GIRDER STOP (PAIRS)	4	-	2'-8"	10½"	3'-7"	64	152
	X5A15	GIRDER STOP U-SHAPED	4	-	1'-3"	2'-4½"	6'-0"	68	273

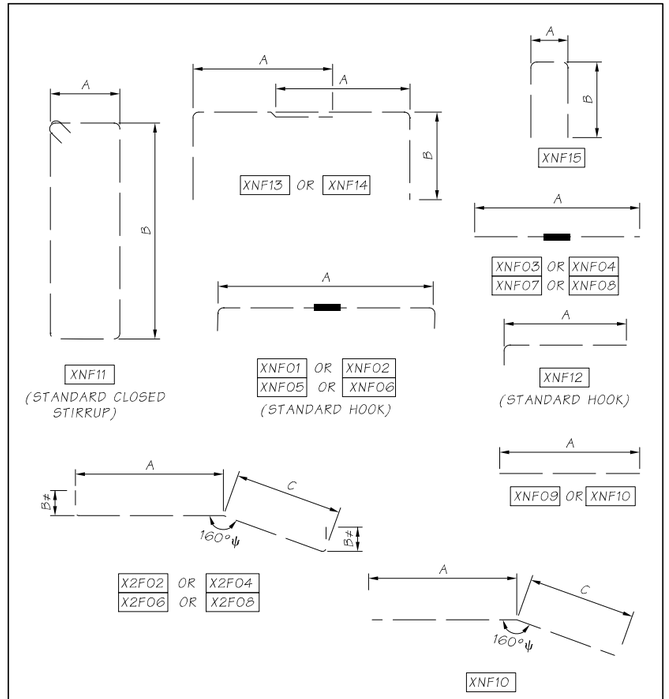

REBAR BENDING DIAGRAM (ALL DIMENSIONS ARE OUT TO OUT)
MINIMUM REINF. STEEL SPLICE LENGTHS:
#4: 2'-0"
DENOTES MECHANICAL SPLICE
#DIMENSION IS VERTICAL
ψDIMENSION IS HORIZONTAL

NOTES:

1. XNFOO = BAR MARK FOR CROSSBEAM BOLSTER AND/OR GIRDER STOP, WHERE "N" IS THE BENT NUMBER AND "F" IS THE FACE ("A"= AHEAD AND "B"= BACK)
2. STAGGER MECHANICAL SPLICE LOCATION BY 3'-0" MIN. BETWEEN ADJACENT BARS.
3. ALL REINFORCING #9 AND LARGER SHALL USE MECHANICAL SPLICES. ALL REINFORCING #8 AND SMALLER SHALL USE LAP SPLICES.

* BAR GRADE ONLY IF DIFFERENT THAN GRADE 60

SR 405 FILE NO. 20A039 SHEET BB7
ProjectWise Vault:

Bridge Design Engr.	KHALEGHI B.	c:\pwworking\west01\d1468466\12_XBeam Bolster-Girder Stops_Bar List 1.dgn							
Supervisor	KORPI D.				REGION NO.	STATE	FED. AID PROJ. NO.	SHEET NO.	TOTAL SHEETS
Designed By	CHI J.				10	WASH		71	176
Checked By	ANDREWS L.				JOB NUMBER 20A039				
Detailed By	VYPLEL M.								
Bridge Projects Engr.	ROSA M.								
Prelim. Plan By									
Architect/Specialist		DATE	REVISION	BY	APP'D				

4/20/2022 3:44:39 PM

BRIDGE AND STRUCTURES OFFICE

R. LEE ANDREWS STATE OF WASHINGTON 43571 AGRICULTURAL ENGINEER PROFESSIONAL ENGINEER
SEE SHEET CT1
04/20/2022

Washington State Department of Transportation

HDR

I-405
BN RR BRIDGE TO PED TRAIL BRIDGE SEISMIC RETROFIT
BRIDGE NO. 405/12

CROSSBEAM BOLSTER AND GIRDER STOPS - BAR LIST 1

BRIDGE SHEET NO. BB7

SHEET 71 OF 176 SHEETS

CROSSBEAM BOLSTER / GIRDER STOP BAR LIST

	REBAR MARK	LOCATION	SIZE	BAR GRADE *	DIMENSIONS A HORIZ.	DIMENSIONS B VERT.	DIMENSIONS LENGTH	TOTAL #	WEIGHT
PIER 6	SB								
	X6B01	BOLSTER LONG. BOT.	11	80	47'-9"	2'-0"	51'-9"	3	825
	X6B03	BOLSTER LONG. BOT.	11	80	47'-9"	-	47'-9"	3	762
	X6B05	BOLSTER LONG. TOP	11	80	48'-9"	2'-0"	52'-9"	3	841
	X6B07	BOLSTER LONG. TOP	11	80	48'-9"	-	48'-9"	3	778
	X6B09	BOLSTER LONG. MID.	4	-	48'-3"	-	48'-3"	6	194
	X6B11	BOLSTER TIES	4	-	1'-3"	2'-10½"	9'-0"	73	440
	X6B12	BOLSTER DOWELS	6	-	2'-4"	-	3'-4"	146	731
	X6B13	GIRDER STOP (PAIRS)	4	-	2'-8"	10½"	3'-7"	64	152
	X6B15	GIRDER STOP U-SHAPED	4	-	1'-3"	2'-4½"	6'-0"	68	273
	NB								
	X6B02	BOLSTER LONG. BOT.	14	80	62'-9"	2'-7"	67'-11"	2	1040
	X6B04	BOLSTER LONG. BOT.	14	80	62'-9"	-	62'-9"	2	961
	X6B06	BOLSTER LONG. TOP	14	80	63'-9"	2'-7"	68'-11"	2	1055
	X6B08	BOLSTER LONG. TOP	14	80	63'-9"	-	63'-9"	2	976
	X6B10	BOLSTER LONG. MID.	4	-	63'-3"	-	63'-3"	3	128
	X6B13	GIRDER STOP (PAIRS)	4	-	2'-8"	10½"	3'-7"	48	114
	X6B15	GIRDER STOP U-SHAPED	4	-	1'-3"	2'-4½"	6'-0"	34	148
	X6B16	BOLSTER LONG. MID.	4	-	48'-6"	-	48'-6"	3	98
	X6B17	BOLSTER LONG. MID.	4	-	17'-1½"	-	17'-2"	3	35
	X6B18	BOLSTER TIES	4	-	9"	2'-10½"	8'-0"	70	376
	X6B19	BOLSTER TIES	4	-	1'-9"	2'-10½"	10'-0"	27	181
	X6B20	BOLSTER DOWELS	6	-	1'-9"	-	2'-7"	140	544
	X6B21	BOLSTER DOWELS	6	-	2'-9"	-	3'-7"	54	291
	X6B22	BOLSTER LONG. BOT.	6	-	17'-1½"	-	17'-2"	2	52
	X6B23	BOLSTER LONG. TOP	6	-	17'-1½"	-	17'-2"	2	52
	SB								
	X6A01	BOLSTER LONG. BOT.	11	80	47'-9"	2'-0"	51'-9"	3	825
	X6A03	BOLSTER LONG. BOT.	11	80	47'-9"	-	47'-9"	3	762
	X6A05	BOLSTER LONG. TOP	11	80	48'-9"	2'-0"	52'-9"	3	841
	X6A07	BOLSTER LONG. TOP	11	80	48'-9"	-	48'-9"	3	778
	X6A09	BOLSTER LONG. MID.	4	-	48'-3"	-	48'-3"	6	194
	X6A11	BOLSTER TIES	4	-	1'-3"	2'-10½"	9'-0"	73	440
	X6A12	BOLSTER DOWELS	6	-	2'-4"	-	3'-4"	146	731
	X6A13	GIRDER STOP (PAIRS)	4	-	2'-8"	10½"	3'-7"	64	152
	X6A15	GIRDER STOP U-SHAPED	4	-	1'-3"	2'-4½"	6'-0"	68	273
	NB								
	X6A02	BOLSTER LONG. BOT.	14	80	62'-9"	2'-7"	67'-11"	2	1040
	X6A04	BOLSTER LONG. BOT.	14	80	62'-9"	-	62'-9"	2	961
	X6A06	BOLSTER LONG. TOP	14	80	63'-9"	2'-7"	68'-11"	2	1055
	X6A08	BOLSTER LONG. TOP	14	80	63'-9"	-	63'-9"	2	976
	X6A10	BOLSTER LONG. MID.	4	-	63'-3"	-	63'-3"	3	128
	X6A13	GIRDER STOP (PAIRS)	4	-	2'-8"	10½"	3'-7"	48	114
	X6A15	GIRDER STOP U-SHAPED	4	-	1'-3"	2'-4½"	6'-0"	34	148
	X6A16	BOLSTER LONG. MID.	4	-	48'-6"	-	48'-6"	3	98
	X6A17	BOLSTER LONG. MID.	4	-	17'-2"	-	17'-2"	3	35
	X6A18	BOLSTER TIES	4	-	9"	2'-10½"	8'-0"	70	376
	X6A19	BOLSTER TIES	4	-	1'-9"	2'-10½"	10'-0"	27	181
	X6A20	BOLSTER DOWELS	6	-	1'-9"	-	2'-7"	140	544
	X6A21	BOLSTER DOWELS	6	-	2'-9"	-	3'-7"	54	291
	X6A22	BOLSTER LONG. BOT.	6	-	17'-1½"	-	17'-2"	2	52
	X6A23	BOLSTER LONG. TOP	6	-	17'-1½"	-	17'-2"	2	52
PIER 7	X7B01	BOLSTER LONG. BOT.	11	80	47'-9"	2'-0"	51'-9"	6	1650
	X7B03	BOLSTER LONG. BOT.	11	80	47'-9"	-	47'-9"	6	1523
	X7B05	BOLSTER LONG. TOP	11	80	48'-9"	2'-0"	52'-9"	6	1682
	X7B07	BOLSTER LONG. TOP	11	80	48'-9"	-	48'-9"	6	1555
	X7B09	BOLSTER LONG. MID.	4	-	48'-3"	-	48'-3"	12	387
	X7B11	BOLSTER TIES	4	-	1'-3"	2'-10½"	9'-0"	146	880
	X7B12	BOLSTER DOWELS	6	-	2'-4"	-	3'-4"	292	1462
	X7B13	GIRDER STOP (PAIRS)	4	-	2'-8"	10½"	3'-7"	64	152
	X7B15	GIRDER STOP U-SHAPED	4	-	1'-3"	2'-4½"	6'-0"	68	273
	X7A01	BOLSTER LONG. BOT.	11	80	47'-9"	2'-0"	51'-9"	6	1650
	X7A03	BOLSTER LONG. BOT.	11	80	47'-9"	-	47'-9"	6	1523
	X7A05	BOLSTER LONG. TOP	11	80	48'-9"	2'-0"	52'-9"	6	1682
	X7A07	BOLSTER LONG. TOP	11	80	48'-9"	-	48'-9"	6	1555
	X7A09	BOLSTER LONG. MID.	4	-	48'-3"	-	48'-3"	12	387
	X7A11	BOLSTER TIES	4	-	1'-3"	2'-10½"	9'-0"	146	880
	X7A12	BOLSTER DOWELS	6	-	2'-4"	-	3'-4"	292	1462
	X7A13	GIRDER STOP (PAIRS)	4	-	2'-8"	10½"	3'-7"	64	152
	X7A15	GIRDER STOP U-SHAPED	4	-	1'-3"	2'-4½"	6'-0"	68	273

CROSSBEAM BOLSTER / GIRDER STOP BAR LIST

	REBAR MARK	LOCATION	SIZE	BAR GRADE *	DIMENSIONS A HORIZ.	DIMENSIONS B VERT.	DIMENSIONS LENGTH	TOTAL #	WEIGHT
PIER 8	X8B01	BOLSTER LONG. BOT.	11	80	47'-9"	2'-0"	51'-9"	6	1650
	X8B03	BOLSTER LONG. BOT.	11	80	47'-9"	-	47'-9"	6	1523
	X8B05	BOLSTER LONG. TOP	11	80	48'-9"	2'-0"	52'-9"	6	1682
	X8B07	BOLSTER LONG. TOP	11	80	48'-9"	-	48'-9"	6	1555
	X8B09	BOLSTER LONG. MID.	4	-	48'-3"	-	48'-3"	12	387
	X8B11	BOLSTER TIES	4	-	1'-3"	2'-10½"	9'-0"	146	880
	X8B12	BOLSTER DOWELS	6	-	2'-4"	-	3'-4"	292	1462
	X8B13	GIRDER STOP (PAIRS)	4	-	2'-8"	10½"	3'-7"	64	152
	X8B15	GIRDER STOP U-SHAPED	4	-	1'-3"	2'-4½"	6'-0"	68	273
	X8A01	BOLSTER LONG. BOT.	11	80	47'-9"	2'-0"	51'-9"	6	1650
	X8A03	BOLSTER LONG. BOT.	11	80	47'-9"	-	47'-9"	6	1523
	X8A05	BOLSTER LONG. TOP	11	80	48'-9"	2'-0"	52'-9"	6	1682
	X8A07	BOLSTER LONG. TOP	11	80	48'-9"	-	48'-9"	6	1555
	X8A09	BOLSTER LONG. MID.	4	-	48'-3"	-	48'-3"	12	387
	X8A11	BOLSTER TIES	4	-	1'-3"	2'-10½"	9'-0"	146	880
	X8A12	BOLSTER DOWELS	6	-	2'-4"	-	3'-4"	292	1462
	X8A13	GIRDER STOP (PAIRS)	4	-	2'-8"	10½"	3'-7"	64	152
	X8A15	GIRDER STOP U-SHAPED	4	-	1'-3"	2'-4½"	6'-0"	68	273

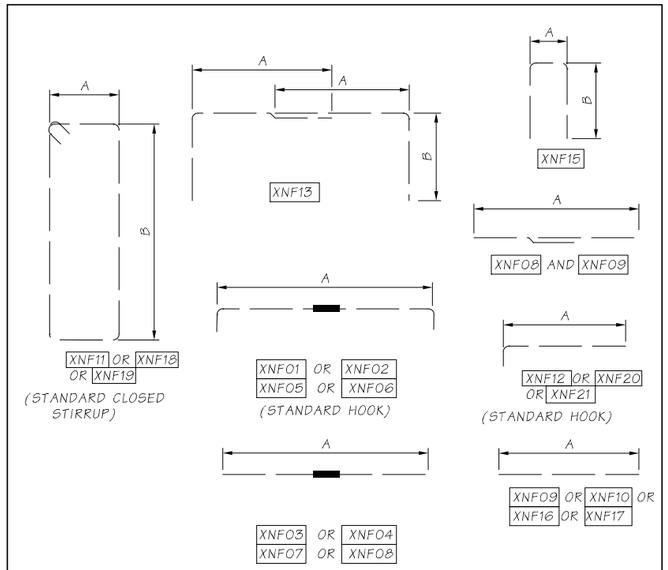

REBAR BENDING DIAGRAM (ALL DIMENSIONS ARE OUT TO OUT)
MINIMUM REINF. STEEL SPLICE LENGTHS:
#4: 2'-0"
DENOTES MECHANICAL SPLICE

NOTES:

1. XNF00 = BAR MARK FOR CROSSBEAM BOLSTER AND/OR GIRDER STOP, WHERE "N" IS THE BENT NUMBER AND "F" IS THE FACE ("A"= AHEAD AND "B"= BACK)
2. STAGGER MECHANICAL SPLICE LOCATION BY 3'-0" MIN. BETWEEN ADJACENT BARS.
3. ALL REINFORCING #9 AND LARGER SHALL USE MECHANICAL SPLICES. ALL REINFORCING #8 AND SMALLER SHALL USE LAP SPLICES.

* BAR GRADE ONLY IF DIFFERENT THAN GRADE 60

SR 405 FILE NO. 20A039 SHEET BB8
ProjectWise Vault:

Bridge Design Engr.	KHALEGHI B.	c:\pwworking\west01\d1468466\12_XBeam Bolster-Girder Stops_Bar List 2.dgn							
Supervisor	KORPI D.								
Designed By	CHI J.								
Checked By	ANDREWS L.								
Detailed By	VYPLEL M.								
Bridge Projects Engr.	ROSA M.								
Prelim. Plan By									
Architect/Specialist		DATE	REVISION	BY	APP'D				

4/20/2022 3:44:43 PM

REGION NO.	STATE	FED. AID PROJ. NO.	SHEET NO.	TOTAL SHEETS
10	WASH		72	176

JOB NUMBER 20A039

BRIDGE AND STRUCTURES OFFICE

R. LEE ANDREWS, STATE OF WASHINGTON, 43571, STRUCTURAL ENGINEER, PROFESSIONAL ENGINEER
SEE SHEET CT1
04/20/2022

Washington State Department of Transportation

HDR

I-405
BN RR BRIDGE TO PED TRAIL BRIDGE SEISMIC RETROFIT
BRIDGE NO. 405/12

CROSSBEAM BOLSTER AND GIRDER STOPS - BAR LIST 2

BRIDGE SHEET NO. BB8

SHEET 72 OF 176 SHEETS

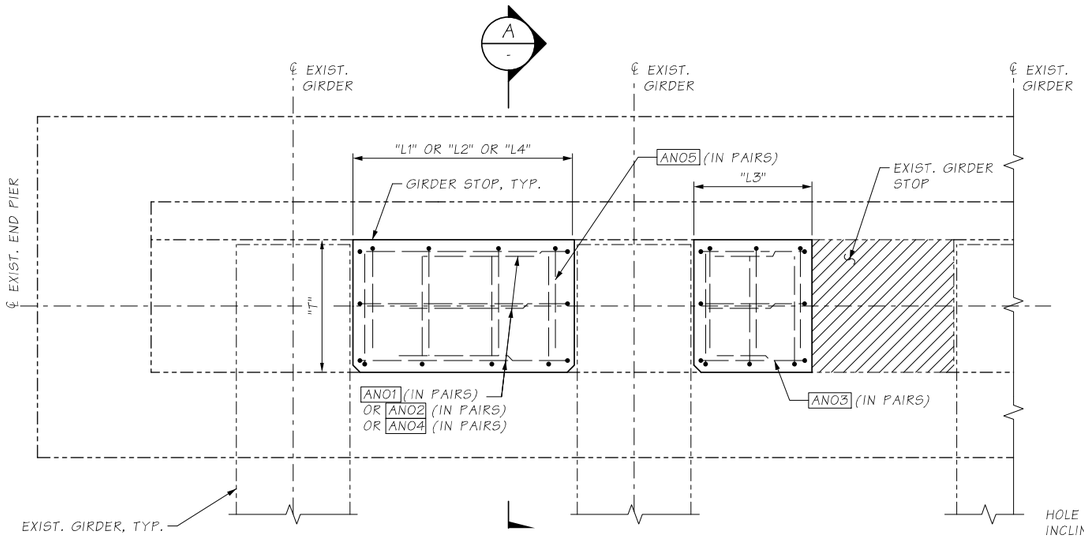

PLAN - TYP. END PIER W/ GIRDER STOPS

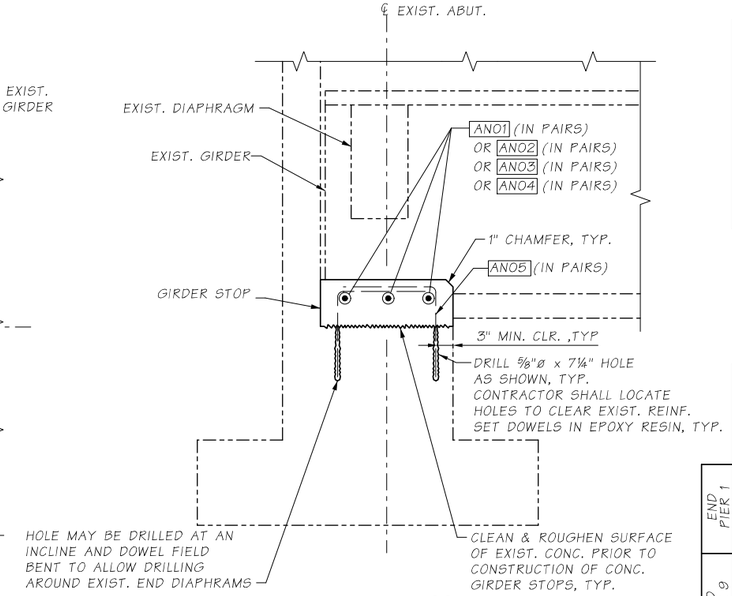

SECTION A

END PIER GIRDER STOP DIMENSIONS LIST

DIM.	DESCRIPTION	DIMENSIONS	
		END PIER 1	END PIER 9
L1	GIRDER STOP LENGTH	1 @ 3'-0"	1 @ 3'-0"
L2	GIRDER STOP LENGTH	8 @ 3'-6½"	8 @ 3'-6½"
L3	GIRDER STOP LENGTH	4 @ 1'-7½"	4 @ 1'-7½"
L4	GIRDER STOP LENGTH	1 @ 3'-7½"	1 @ 3'-7½"
H	GIRDER STOP HEIGHT	1'-0"	1'-0"
T	GIRDER STOP DEPTH	2'-3"	2'-3"
θ	SKEW ANGLE	0°	0°

NOTES:

1. SEE GENERAL NOTES ON SHEET BB1.
2. DIMENSIONS PROVIDED ARE FOR REFERENCE ONLY. CONTRACTOR SHALL ADJUST DIMENSIONS SUCH THAT THE REQUIREMENTS OF DETAIL 1 ON SHEET BB6 AND SECTION A ON THIS SHEET ARE SATISFIED.

END PIER GIRDER STOP BAR LIST

	REBAR MARK	LOCATION	SIZE	DIMENSIONS			TOTAL #	WEIGHT
				A HORIZ.	B VERT.	LENGTH		
END PIER 1	A101	GIRDER STOP TRANSV.	4	1'-10½"	-	2'-9"	6	12
	A102	GIRDER STOP TRANSV.	4	2'-1½"	-	3'-0"	48	97
	A103	GIRDER STOP TRANSV.	4	1'-2"	-	2'-1"	24	33
	A104	GIRDER STOP TRANSV.	4	2'-10½"	-	3'-9"	6	16
	A105	GIRDER STOP LONG.	4	1'-11½"	1'-8"	3'-8"	56	136
END PIER 9	A901	GIRDER STOP TRANSV.	4	1'-10½"	-	2'-9"	6	12
	A902	GIRDER STOP TRANSV.	4	2'-1½"	-	3'-0"	48	97
	A903	GIRDER STOP TRANSV.	4	1'-2"	-	2'-1"	24	33
	A904	GIRDER STOP TRANSV.	4	2'-10½"	-	3'-9"	6	16
	A905	GIRDER STOP LONG.	4	1'-11½"	1'-8"	3'-8"	56	136

REBAR BENDING DIAGRAM (ALL DIMENSIONS ARE OUT TO OUT)

MINIMUM REINF. STEEL SPLICE LENGTHS - #4: 2'-0"

ANOO = BAR MARK FOR END PIER GIRDER STOP, WHERE "N" IS THE END PIER NUMBER

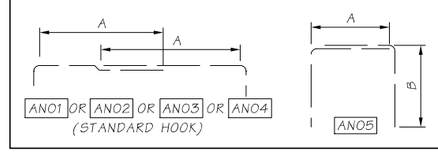

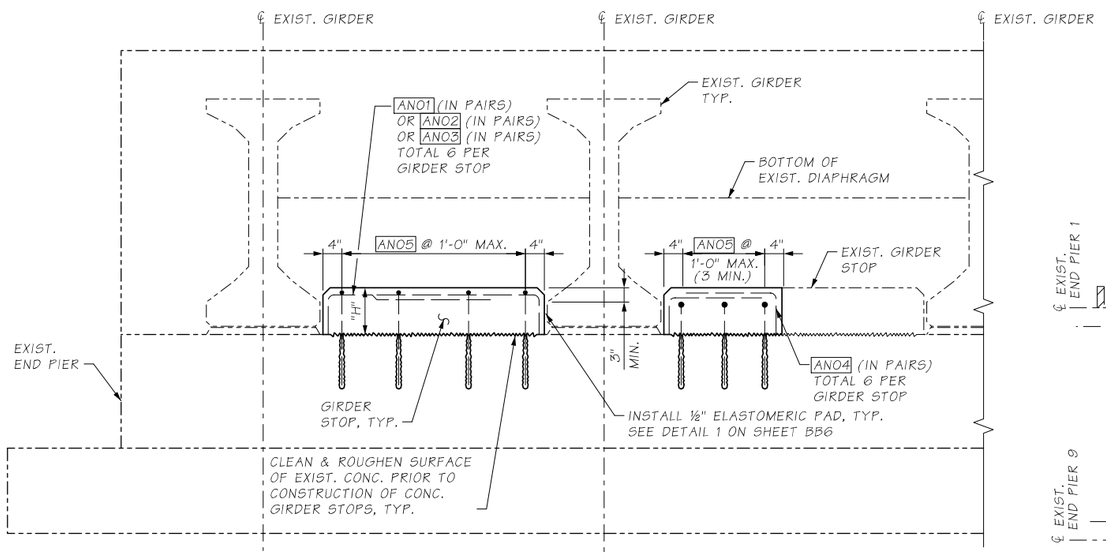

ELEVATION - TYP. END PIER W/ GIRDER STOPS

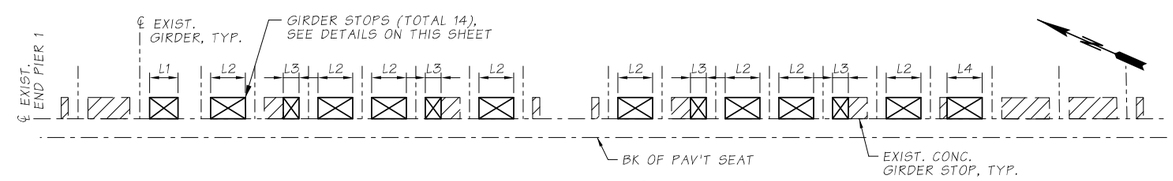

END PIER 1 GIRDER STOP LAYOUT

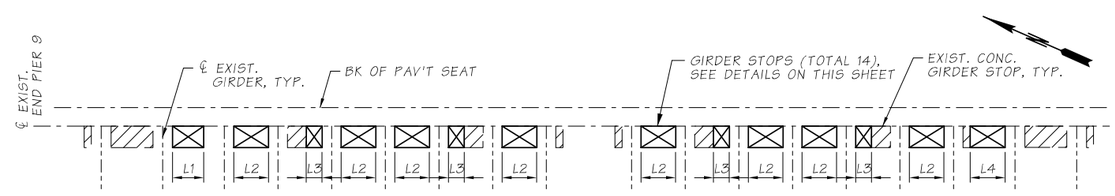

END PIER 9 GIRDER STOP LAYOUT

Bridge Design Engr.	KHALEGHI B.	c:\pwworking\west01\d1468466\12_End Pier Girder Stops_Plan-Elev.dgn						
Supervisor	KORPI D.							
Designed By	CHI J.							
Checked By	ANDREWS L.							
Detailed By	VYPLEL M.							
Bridge Projects Engr.	ROSA M.							
Prelim. Plan By								
Architect/Specialist		DATE	REVISION	BY	APP'D			

REGION NO.	STATE	FED. AID PROJ. NO.	SHEET NO.	TOTAL SHEETS
10	WASH		73	176
JOB NUMBER 20A039				

BRIDGE AND STRUCTURES OFFICE

K. LEE ANDREWS, STATE OF WASHINGTON, 43571, PROFESSIONAL ENGINEER

SEE SHEET CT1
04/20/2022

Washington State Department of Transportation

HDR

I-405
BN RR BRIDGE TO PED TRAIL BRIDGE
SEISMIC RETROFIT
BRIDGE NO. 405/12

END PIER GIRDER STOPS
PLAN AND ELEVATION

BRIDGE SHEET NO. BB9

SHEET 73 OF 176 SHEETS

SR 405 FILE NO. 20A039 SHEET BB9
ProjectWise Vault:

4/20/2022 3:44:47 PM

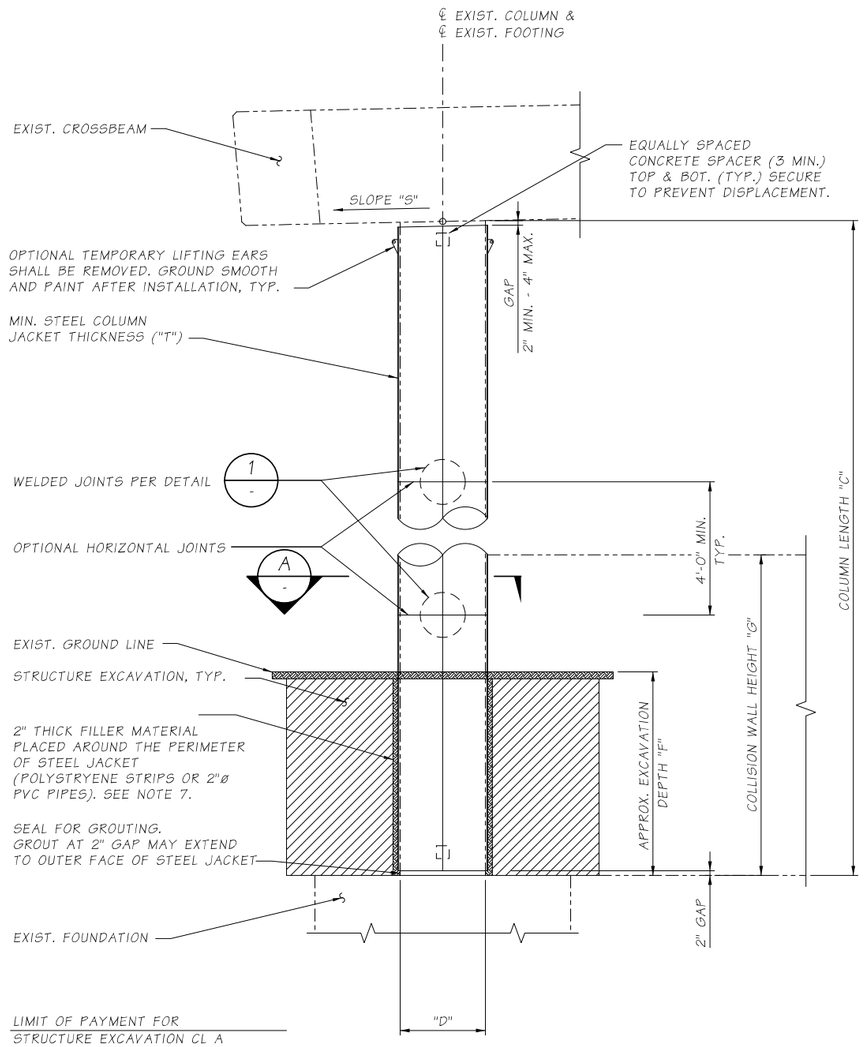

ELEVATION - TYP. COLUMN STEEL JACKET

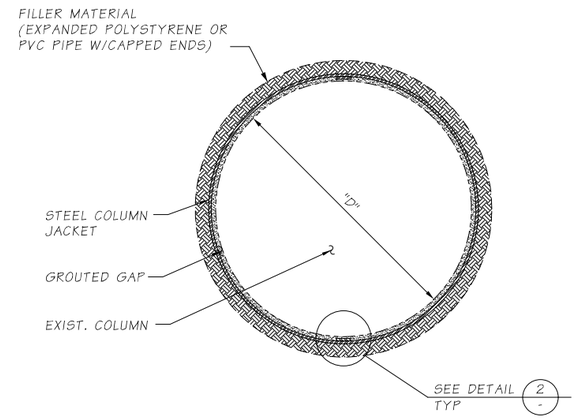

SECTION A -

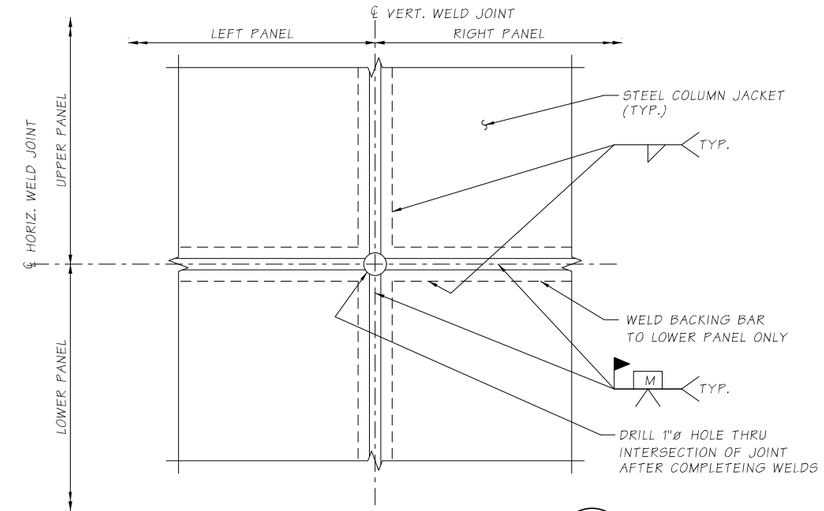

STEEL JACKET WELD DETAIL 1 -

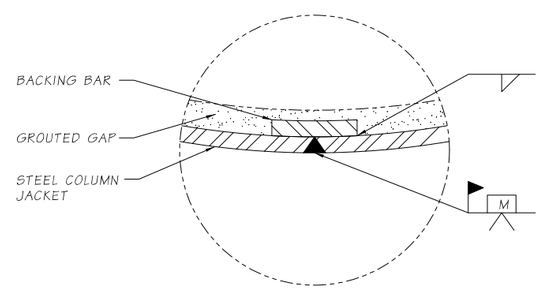

DETAIL 2
TYP. WELD JOINT -

NOTES:

1. DIMENSIONS PROVIDED ARE FOR REFERENCE ONLY. SEE GENERAL NOTE 3 ON SHEET BB1.
2. APPROPRIATE INJECTION NOZZLES SHALL BE PROVIDED ON COLUMN JACKET AND SHALL BE REMOVED, GROUND FLUSH AND PAINTED FOLLOWING COMPLETION OF GROUTING OPERATION.
3. ALL VOIDS BETWEEN STEEL COLUMN JACKET AND EXIST. COLUMN SURFACE SHALL BE FILLED WITH CEMENT GROUT.
4. THE LOCATION AND NUMBER OF HORIZONTAL WELDS SHALL BE DETERMINED BY THE CONTRACTOR AND SUBJECT TO THE APPROVAL OF THE ENGINEER. JACKETS SHALL BE PROVIDED IN MAXIMUM PRACTICAL LENGTHS, TO MINIMIZE HORIZONTAL WELDS. THERE SHALL BE NO SKIP WELDS.
5. STEEL COLUMN JACKETS SHALL BE FABRICATED FROM ASTM A36 STRUCTURAL STEEL AND PAINTED IN ACCORDANCE WITH THE SPECIAL PROVISIONS.
6. GROUTING SHALL BE DONE FROM THE BOTTOM UP IN ACCORDANCE WITH THE SPECIAL PROVISIONS.
7. THE 2" THICK FILLER MATERIAL AROUND THE PERIMETER OF THE STEEL JACKET SHALL BE USED FOR PARTIALLY BURIED COLUMNS WHERE THE DEPTH IS MORE THAN 4'-0" OR COLUMNS ARE ADJACENT TO PAVED SURFACES OR SLOPE PROTECTION.

SR 405 FILE NO. 20A039 SHEET BB10
ProjectWise Vault:

Bridge Design Engr.	KHALEGHI B.	c:\pwworking\west01\d1468466\12_Steel Column Jackets_Elev-Det.dgn							
Supervisor	KORPI D.				REGION NO.	STATE	FED. AID PROJ. NO.	SHEET NO.	TOTAL SHEETS
Designed By	CHI J.				10	WASH		74	176
Checked By	ANDREWS L.				JOB NUMBER				
Detailed By	VYPLEL M.				20A039				
Bridge Projects Engr.	ROSA M.								
Prelim. Plan By									
Architect/Specialist		DATE	REVISION	BY	APP'D				

4/20/2022 3:44:50 PM

BRIDGE AND STRUCTURES OFFICE

R. LEE ANDREWS, STATE OF WASHINGTON, 43571, PROFESSIONAL ENGINEER
SEE SHEET CT1
04/20/2022

Washington State Department of Transportation

HDR

I-405
BN RR BRIDGE TO PED TRAIL BRIDGE SEISMIC RETROFIT
BRIDGE NO. 405/12

STEEL COLUMN JACKETS ELEVATIONS AND DETAILS

BRIDGE SHEET NO. BB10

SHEET 74 OF 176 SHEETS

STEEL COLUMN JACKET DIMENSIONS LIST

DIM.	DESCRIPTION	PIER 2						PIER 3						PIER 4						PIER 5					
D	EXIST. COLUMN DIA. (FROM NORTH TO SOUTH)	4'-0"	3'-0"	3'-0"	3'-0"	3'-0"	4'-0"	4'-0"	3'-0"	3'-0"	3'-0"	3'-0"	4'-0"	4'-0"	3'-0"	3'-0"	3'-0"	3'-0"	4'-0"	4'-0"	3'-0"	3'-0"	3'-0"	3'-0"	4'-0"
T	JACKET THICKNESS	N/A	⅜"	⅜"	⅜"	⅜"	⅜"	N/A	⅜"	⅜"	⅜"	⅜"	N/A	N/A	⅜"	⅜"	⅜"	⅜"	N/A	N/A	⅜"	⅜"	⅜"	⅜"	N/A
C	COLUMN LENGTH (FROM NORTH TO SOUTH)	34.52'	34.68'	34.68'	34.68'	34.68'	34.43'	37.74'	37.93'	36.93'	36.93'	36.93'	36.70'	41.60'	40.32'	38.32'	36.82'	36.82'	38.08'	37.37'	36.08'	36.08'	37.58'	37.58'	38.87'
S	CROSSBEAM SLOPE	2%±						2%±						2%±						2%±					
F	APPROX. EXCAVATION DEPTH* (FROM NORTH TO SOUTH)	N/A	7.0'	8.9'	8.8'	10.1'	10.1'	N/A	1.9'	1.1'	1.1'	0.3'	N/A	N/A	5.0'	2.2'	0.7'	0.9'	N/A	N/A	0.7'	0.7'	0.9'	0.7'	N/A
G	COLLISION WALL HEIGHT (FROM NORTH TO SOUTH)	N/A	N/A	N/A	N/A	17.17'	17.17'	N/A	N/A	N/A	N/A	N/A	N/A	N/A	N/A	N/A	N/A	N/A	N/A	N/A	N/A	N/A	N/A	N/A	N/A

* EXCAVATION DEPTHS ARE APPROXIMATE AND MAY VARY ±1'-0". EXCAVATION DEPTHS ARE MEASURED AT THE FACE OF THE COLUMN.

STEEL COLUMN JACKET DIMENSIONS LIST CONT.

DIM.	DESCRIPTION	PIER 6						PIER 7						PIER 8					
D	EXIST. COLUMN DIA. (FROM NORTH TO SOUTH)	4'-0"	3'-0"	3'-0"	3'-0"	4'-0"	4'-0"	4'-0"	3'-0"	3'-0"	3'-0"	3'-0"	4'-0"	4'-0"	3'-0"	3'-0"	3'-0"	3'-0"	4'-0"
T	JACKET THICKNESS	N/A	⅜"	⅜"	⅜"	N/A	N/A	N/A	⅜"	⅜"	⅜"	⅜"	N/A	N/A	⅜"	⅜"	⅜"	⅜"	N/A
C	COLUMN LENGTH (FROM NORTH TO SOUTH)	36.05'	34.77'	34.77'	34.77'	33.88'	35.72'	33.64'	32.36'	32.36'	32.36'	32.36'	33.64'	29.15'	29.36'	29.36'	29.36'	29.36'	29.15'
S	CROSSBEAM SLOPE	2%±						2%±						2%±					
F	APPROX. EXCAVATION DEPTH* (FROM NORTH TO SOUTH)	N/A	1.4'	1.2'	0.6'	N/A	N/A	N/A	1.6'	1.4'	0.7'	0.6	N/A	N/A	4.4'	4.4'	4.6	4.5	N/A
G	COLLISION WALL HEIGHT (FROM NORTH TO SOUTH)	N/A	N/A	N/A	N/A	N/A	N/A	N/A	N/A	N/A	N/A	N/A	N/A	N/A	N/A	N/A	N/A	N/A	N/A

* EXCAVATION DEPTHS ARE APPROXIMATE AND MAY VARY ±1'-0". EXCAVATION DEPTHS ARE MEASURED AT THE FACE OF THE COLUMN.

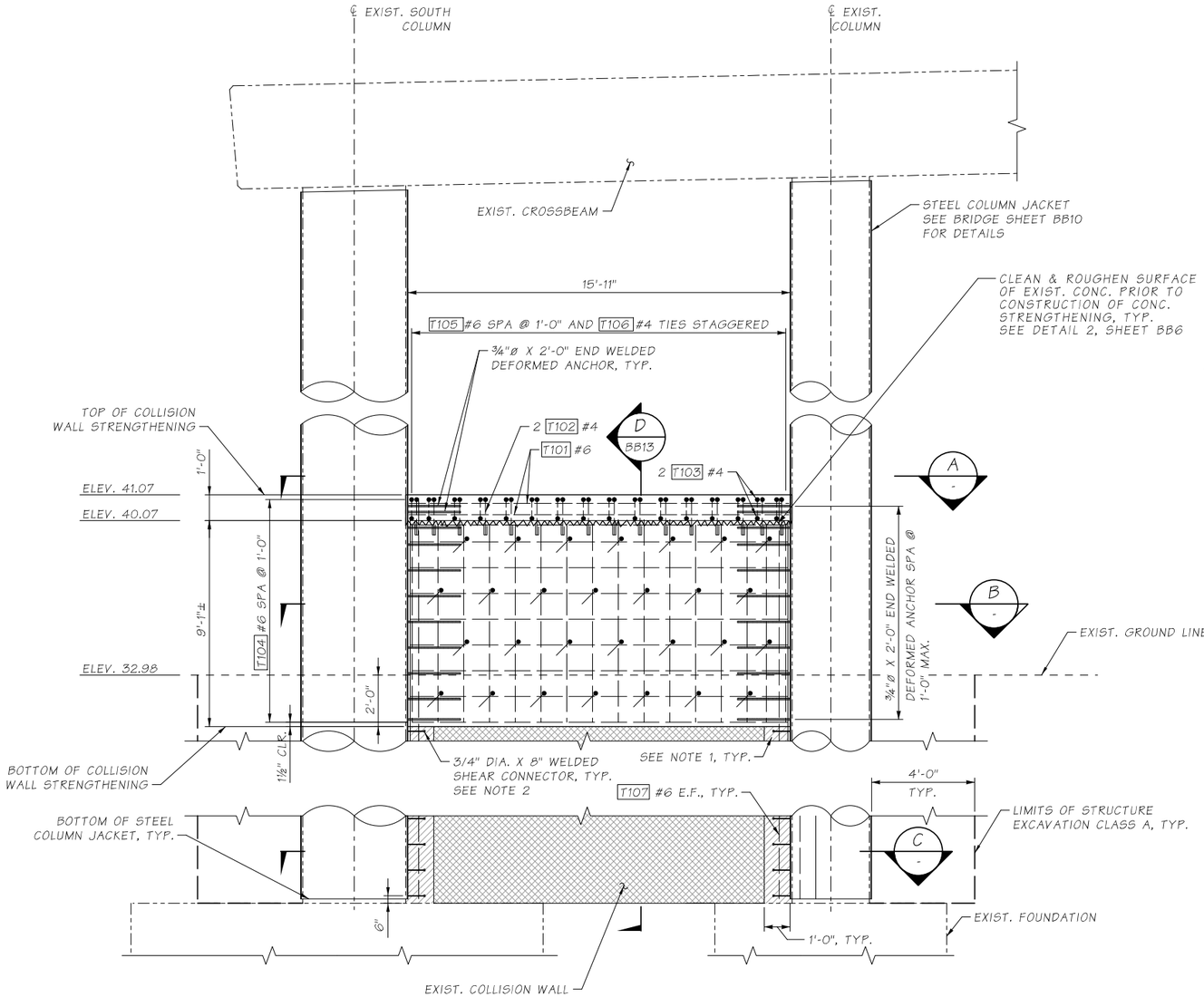

ELEVATION - STEEL COLUMN JACKET AND COLLISION WALL STRENGTHENING

LOOKING WEST

NOTE:

1. EXISTING COLLISION WALL TO BE DEMOLISHED 1'-0" FROM EXISTING FACE OF COLUMN TO INSTALL NEW COLUMN JACKETS.

2. WELDED SHEAR CONNECTORS SHALL BE SHOP WELDED TO THE COLUMN JACKET. WELDED SHEAR CONNECTORS SHALL BE SPACED VERTICALLY AT APPROXIMATELY 1'-0" O.C.

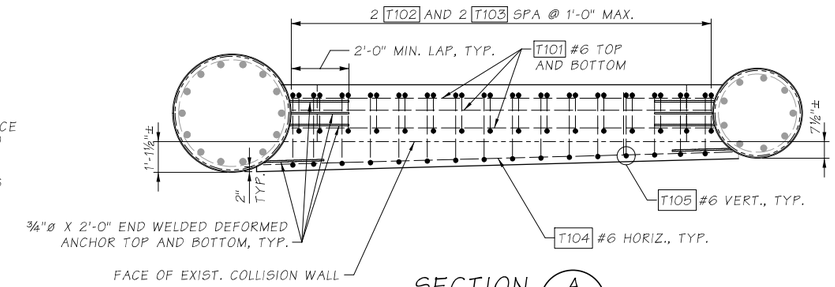

SECTION A
-

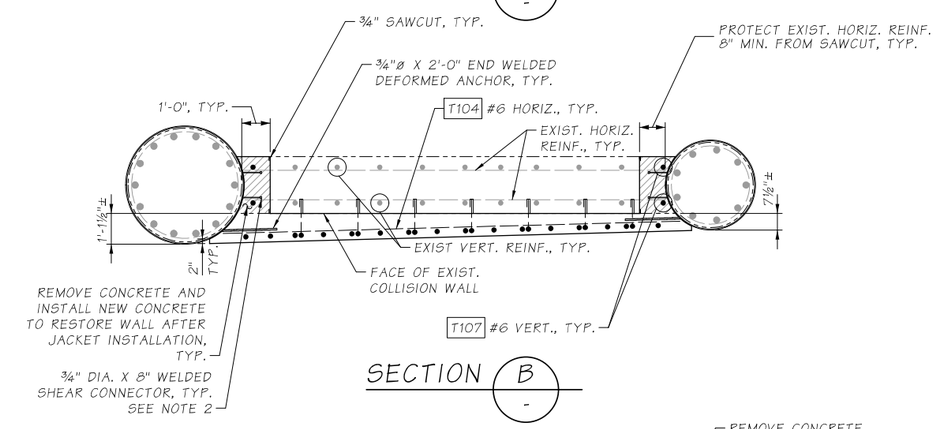

SECTION B
-

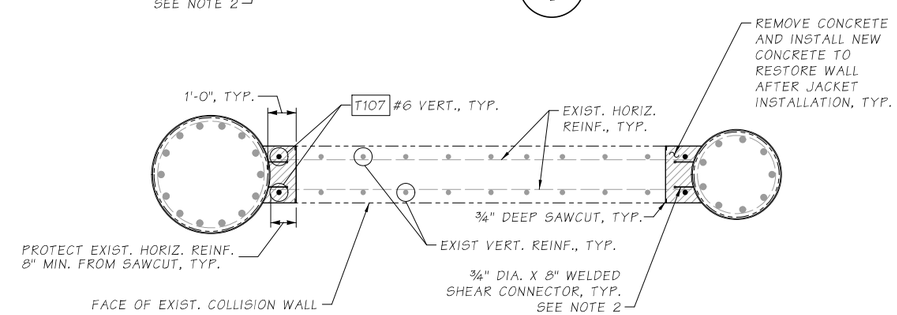

SECTION C
-

Bridge Design Engr.	KHALEGHI B.	c:\pwworking\west01\d1468466\12_Partial Height Steel Col Jackets_Elev.dgn							
Supervisor	KORPI D.					REGION NO.	STATE	FED. AID PROJ. NO.	SHEET NO.	TOTAL SHEETS
Designed By	CHI J.					10	WASH		76	176
Checked By	ANDREWS L.					JOB NUMBER				
Detailed By	VYPLEL M.					20A039				
Bridge Projects Engr.	ROSA M.									
Prelim. Plan By										
Architect/Specialist		DATE	REVISION	BY	APP'D					

4/20/2022 3:44:58 PM

BRIDGE AND STRUCTURES OFFICE

R. LEE ANDREWS STATE OF WASHINGTON 43571 PROFESSIONAL ENGINEER

SEE SHEET CT1
04/20/2022

Washington State Department of Transportation

HDR

I-405
BN RR BRIDGE TO PED TRAIL BRIDGE SEISMIC RETROFIT
BRIDGE NO. 405/12

STEEL COLUMN JACKETS & COLLISION WALL ELEV.

BRIDGE SHEET NO. BB12

SHEET 76 OF 176 SHEETS

SR 405 FILE NO. 20A039 SHEET BB12
ProjectWise Vault:

COLLISION WALL BAR LIST

REBAR MARK	LOCATION	SIZE	DIMENSIONS A	DIMENSIONS LENGTH	TOTAL #	WEIGHT
T101	COLLISION STRENGTHENING TOP, LONG.	#6	15'-8"	15'-8"	6	141
T102	COLLISION TOP DOWELS	#4	1'-6½"	1'-11"	34	43
T103	COLLISION WALL TOP STIRRUPS	#4	2'-10½"	3'-7"	34	75
			2'-4½"	3'-1"		
T104	COLLISION STRENGTHENING, LONG	#6	15'-8"	15'-8"	11	259
T105	COLLISION STRENGTHENING, VERT.	#6	9'-10"	9'-10"	15	222
T106	COLLISION WALL DOWELS	#4	1'-0"	1'-5"	85	92
			1'-6"	1'-11"		
T107	COLLISION STRENGTHENING, VERT.	#6	17'-10"	17'-10"	4	107

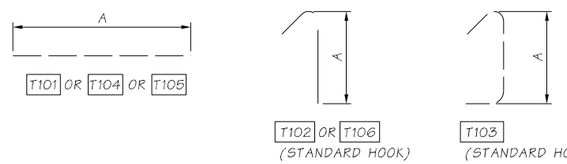

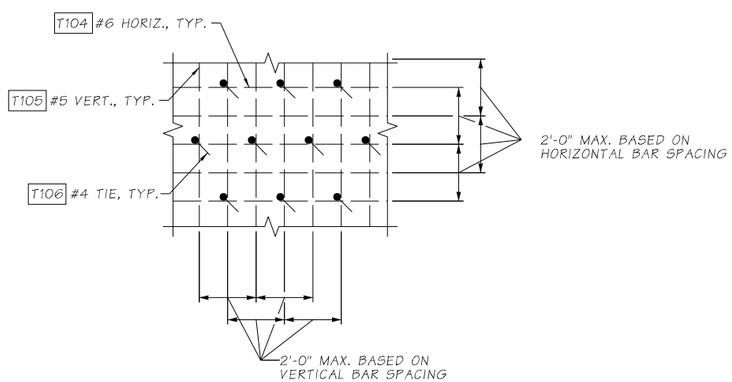

TIE BAR SPACING DETAIL

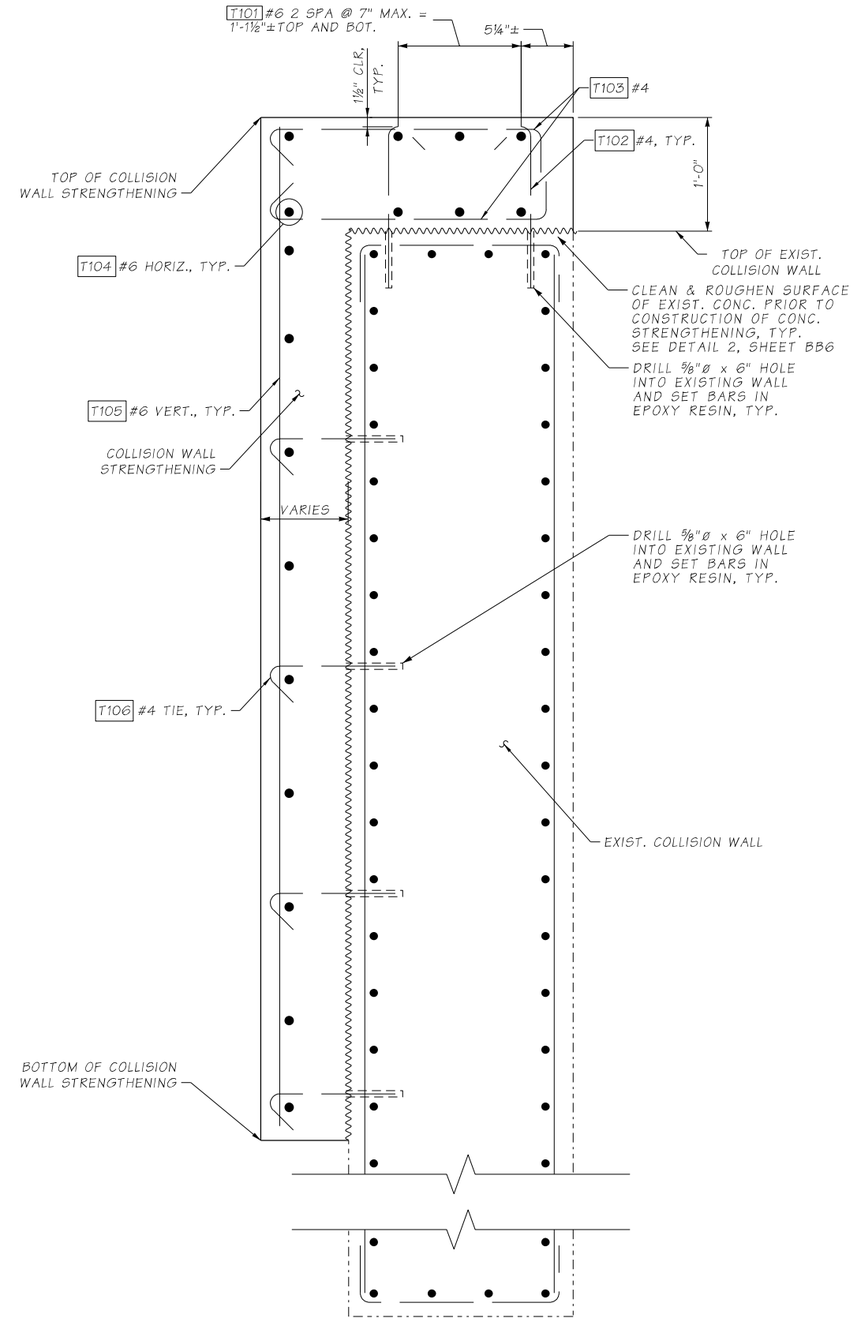

SECTION D / BB12

Bridge Design Engr.	KHALEGHI B.	c:\pwworking\west01\d1468466\12_Partial Height Steel Col Jackets_Elev_2.dgn								
Supervisor	KORPI D.									
Designed By	CHI J.									
Checked By	ANDREWS L.									
Detailed By	VYPLEL M.									
Bridge Projects Engr.	ROSA M.									
Prelim. Plan By										
Architect/Specialist		DATE	REVISION	BY	APP'D					

REGION NO.	STATE	FED. AID PROJ. NO.	SHEET NO.	TOTAL SHEETS
10	WASH		77	176
JOB NUMBER 20A039				

BRIDGE AND STRUCTURES OFFICE

R. LEE ANDREWS, STATE OF WASHINGTON, 43571, STRUCTURAL ENGINEER, PROFESSIONAL ENGINEER

SEE SHEET CT1
04/20/2022

Washington State Department of Transportation

HDR

I-405
BN RR BRIDGE TO PED TRAIL BRIDGE
SEISMIC RETROFIT
BRIDGE NO. 405/12

STEEL COLUMN JACKETS & COLLISION WALL DETAILS

BRIDGE SHEET NO. BB13

SHEET 77 OF 176 SHEETS

SR 405 FILE NO. 20A039 SHEET BB13
ProjectWise Vault:

4/20/2022 6:34:29 PM

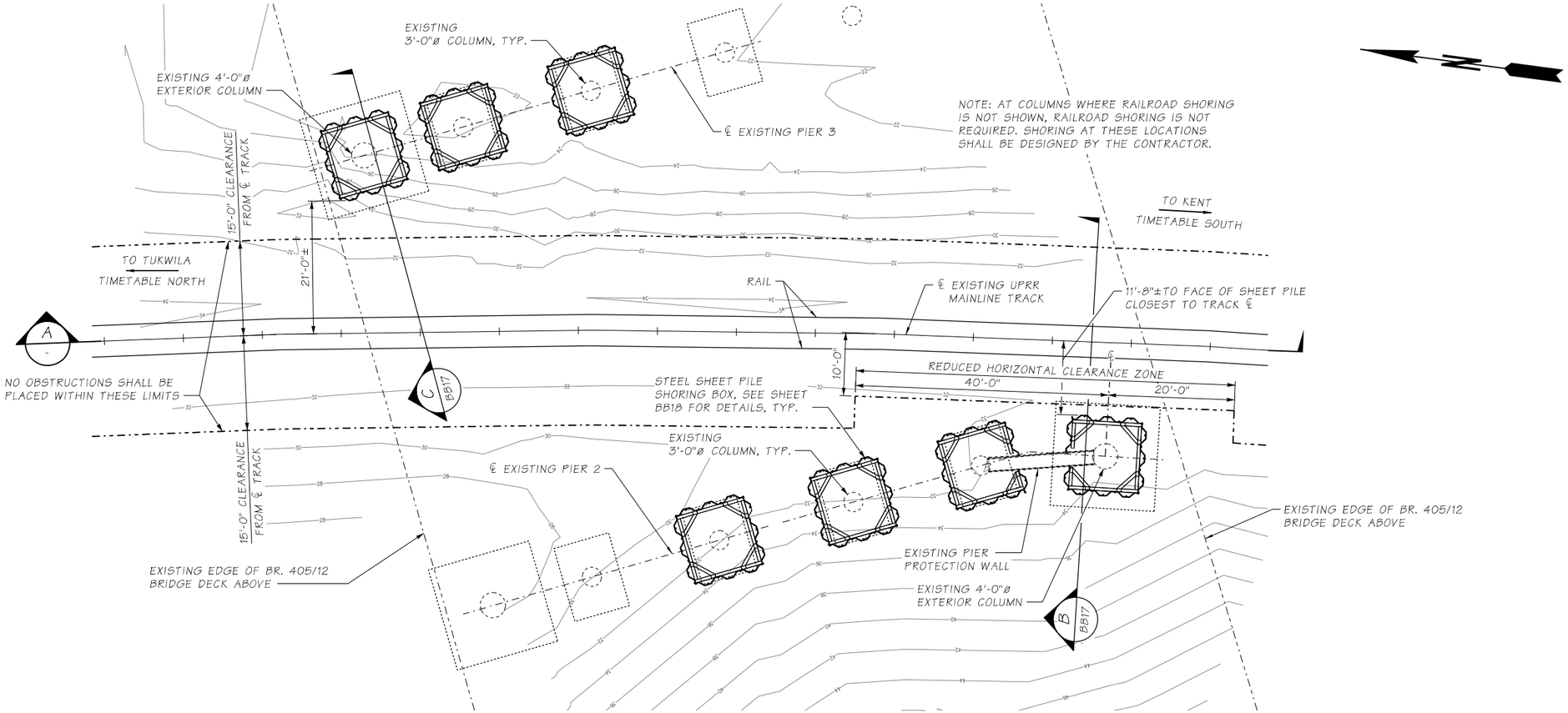

PLAN

BRIDGE SEISMIC RETROFIT WORK IS NOT SHOWN FOR CLARITY.

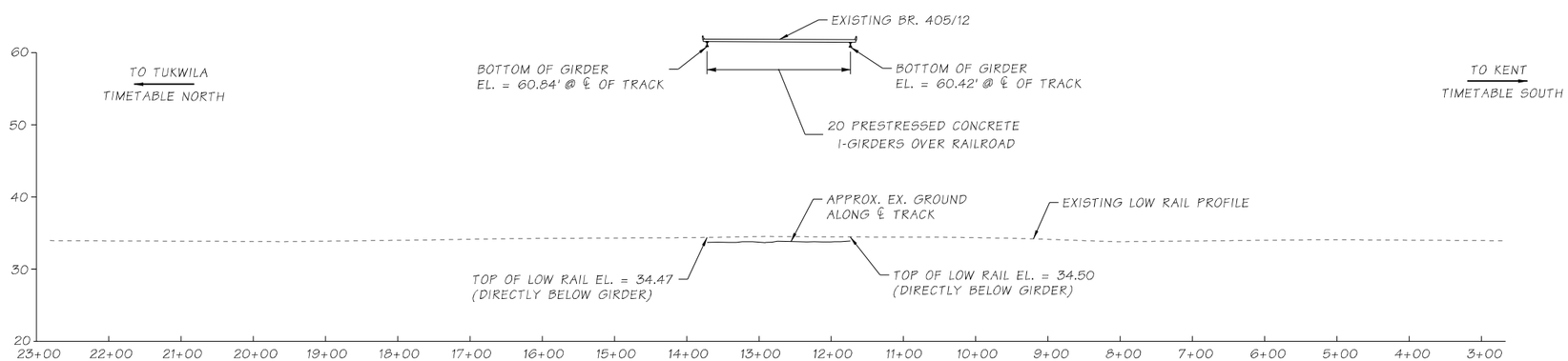

SECTION A

RAIL PROFILE AT ℄ TRACK

I-405 BN RR BRIDGE TO PED TRAIL BRIDGE SEISMIC RETROFIT
LOCATION: WSDOT BRIDGE NO. 405/12
COORDINATES: 47.465000, -122.241921
TRACK OWNER: UPRR
LINE SEGMENT: N/A
MILEPOST: 172.66
SUBDIVISION: SEATTLE

Bridge Design Engr.	KHALEGHI B.	c:\pwworking\west01\d1468466\12_Shoring Site Plan-Track Profile.dgn							
Supervisor	ANDREWS L.				REGION NO.	STATE	FED. AID PROJ. NO.	SHEET NO.	TOTAL SHEETS
Designed By	HATCH M.				10	WASH		78	176
Checked By	KELLER M.				JOB NUMBER				
Detailed By	VYPLEL M.				20A039				
Bridge Projects Engr.	ROSA M.								
Prelim. Plan By									
Architect/Specialist		DATE	REVISION	BY	APP'D				

4/20/2022 6:35:51 PM

BRIDGE AND STRUCTURES OFFICE

R. LEE ANDREWS, STATE OF WASHINGTON, 43571, PROFESSIONAL ENGINEER

SEE SHEET CT1
04/20/2022

Washington State Department of Transportation

HDR

I-405
BN RR BRIDGE TO PED TRAIL BRIDGE SEISMIC RETROFIT
BRIDGE NO. 405/12

RAILROAD SHORING SITE PLAN & TRACK PROFILE

BRIDGE SHEET NO. BB14

SHEET 78 OF 176 SHEETS

SR 405 FILE NO. 20A039 SHEET BB14
ProjectWise Vault:

UPRR MINIMUM CRITERIA FOR TRACK, SHORING & EXISTING STRUCTURE MONITORING

MONITORING PROGRAM

TRACK, SHORING AND EXISTING STRUCTURES SHALL BE MONITORED FOR SETTLEMENT AND/OR DISPLACEMENT DURING AN ADJACENT EXCAVATION, PILE DRIVING OR OTHER ACTIVITY AS DICTATED BY THE RAILROAD. A DETAILED MONITORING PLAN SHALL BE SUBMITTED FOR REVIEW BY THE RAILROAD PRIOR TO THE START OF ANY WORK. THE MONITORING PLAN SHALL COMPLY WITH THE FOLLOWING MINIMUM REQUIREMENTS, HOWEVER MORE STRINGENT CRITERIA MAY BE REQUIRED BY THE RAILROAD ON A CASE BY CASE BASIS.

A. TRACK, SHORING & EXISTING STRUCTURE DEFLECTION/SETTLEMENT LIMITS
- I. THE TOP OF RAIL SHALL NOT PERMANENTLY DEFLECT MORE THAN 1/4" VERTICAL OR HORIZONTAL.
- II. ANY POINT OF THE SHORING SHALL NOT DEFLECT MORE THAN 3/8" FOR SHORING LOCATED AT 18' FROM CL OF TRACK OR CLOSER.
- III. ANY POINT OF THE SHORING SHALL NOT DEFLECT MORE THAN 1/2" FOR SHORING LOCATED MORE THAN 18' FROM CL OF TRACK, UNLESS THE SHORING IS SUPPORTING A CUT ENTIRELY LOCATED IN ZONE B.
- IV. ANY POINT OF EXISTING SUBSTRUCTURE SUPPORTING RAILROAD TRACK(S) SHALL NOT PERMANENTLY DEFLECT MORE THAN 3/8" VERTICAL OR HORIZONTAL.

B. TARGETS
- I. EACH TRACK SHALL HAVE MONITORING TARGETS AT EACH RAIL.
- II. TRACK MONITORING SHALL NOT REQUIRE TRACK ACCESS OTHER THAN TO PLACE THE TRACK MONITORING TARGETS.
- III. MONITORING TARGETS SHOULD BE PLACED SUCH THAT MONITORING IS POSSIBLE WHEN A TRAIN IS PRESENT. HOWEVER, MONITORING DURING THE PASSING OF A TRAIN IS NOT REQUIRED AS THE TRAIN WILL TEMPORARILY DEFLECT THE TRACK.
- IV. ADHESIVE BACKED REFLECTIVE TARGETS MAY BE ATTACHED TO THE SIDE OF THE RAILS TEMPORARILY. TARGETS SHOULD BE REMOVED ONCE MONITORING PHASE IS COMPLETE.
- V. EACH SHORING SYSTEM SHALL HAVE MONITORING TARGETS AT THE TOP OF THE SHORING AND, IF A BRACED SYSTEM, AT POINTS OF BRACING.
- VI. MONITOR ANY EXISTING SUBSTRUCTURES SUPPORTING RAILROAD TRACK(S) WITHIN THE VICINITY OF THE WORK WITH A MINIMUM OF 4 MONITORING TARGETS PER EXISTING SUBSTRUCTURE ELEMENT.
- VII. THE DISTANCE BETWEEN MONITORING POINTS ON RAIL AND SHORING SHALL BE SPACED NO MORE THAN 10 FEET APART, AND RAIL MONITORING POINTS MUST EXTEND AT LEAST 20' BEYOND END OF SHORING SYSTEM(S).
- VIII. A PLAN VIEW SHALL BE DEVELOPED FOR RAILROAD REVIEW SHOWING THE LOCATION OF ALL MONITORING POINTS.

C. EXECUTION:
- I. IF SHUTDOWN VALUES ARE REACHED, ALL CONSTRUCTION OPERATIONS SHALL STOP UNTIL THE MATTER IS RESOLVED.
- II. PROVIDE AN ESTABLISHED CONTINGENCY PLAN TO THE RAILROAD.
- III. ESTABLISH A BENCH MARK IN THE VICINITY OF THE CONSTRUCTION. ESTABLISH LOCATIONS FOR SHOOTING ELEVATIONS ON THE TARGETS AT EACH AREA OF CONSTRUCTION.
  - 1). SURVEY EQUIPMENT AND CONTROL USED FOR MONITORING SHALL BE ACCURATE TO 0.01'. GPS QUALITY IS NOT ACCEPTABLE.
- IV. MONITORING SURVEY DATA SHALL BE PROCESSED IN TO AN EASY TO INTERPRET DIGITAL FORMAT AND BE SUBMITTED TO THE RAILROAD UPON REQUEST. THE DOCUMENT SHALL BE FORMATTED TO KEEP ALL PRIOR SURVEY RESULTS IN ONE, EASY TO REFERENCE LOCATION.
- VI. MONITORING SHALL COMMENCE ONCE ANY CONSTRUCTION ACTIVITY IS WITHIN ZONE A.
- VII. DURING CONSTRUCTION AND USE OF THE SHORING, MONITORING MAY NEED TO BE PERFORMED CONTINUOUSLY. HOWEVER, DURING CONSTRUCTION AND USE OF THE SHORING, MONITORING SHALL NEVER BE PERFORMED LESS THAN THREE TIMES A DAY.
- VIII. MONITORING SHALL CONTINUE AFTER FINAL BACKFILL IS COMPLETE, AT A MINIMUM ONCE A DAY FOR 7 DAYS OR AS REQUIRED BY THE RAILROAD.

CONTINGENCY PLANS

A. THE CONTRACTOR SHALL SUPPLY CONTINGENCY PLAN(S), WHICH ANTICIPATE REACHING THE THRESHOLD AND SHUTDOWN VALUES, FOR ALL CONSTRUCTION ACTIVITIES WHICH MAY RESULT IN HORIZONTAL AND/OR VERTICAL TRACK, SHORING OR EXISTING STRUCTURE DEFLECTION AND/OR SETTLEMENT.
- I. TRACK MONITORING VALUES:
  - 1. THRESHOLD VALUE = 1/8" PERMANENT VERTICAL OR HORIZONTAL DEFLECTION.
  - 2. SHUTDOWN VALUE = 1/4" PERMANENT VERTICAL OR HORIZONTAL DEFLECTION.
- II. SHORING MONITORING VALUES:
  - 1. SHUTDOWN VALUE = 3/8" PERMANENT HORIZONTAL DEFLECTION FOR SHORING LOCATED AT 18' OR CLOSER TO TRACK CL.
  - 2. SHUTDOWN VALUE = 1/2" PERMANENT HORIZONTAL DEFLECTION FOR SHORING LOCATED FARTHER THAN 18' FROM TRACK CL, UNLESS THE SHORING IS SUPPORTING A CUT ENTIRELY LOCATED IN ZONE B.
- III. EXISTING STRUCTURE MONITORING VALUES:
  - 1. SHUTDOWN VALUE = 3/8" PERMANENT VERTICAL OR HORIZONTAL DEFLECTION AND/OR SETTLEMENT.

B. THE CONTINGENCY PLANS SHALL PROVIDE THE CONTRACTOR'S DETAILED MEANS AND METHODS, WITH OPTIONS IF NECESSARY, TO RETURN AND MAINTAIN SHORING DEFLECTIONS WITHIN ACCEPTABLE LIMITS.

C. THE CONTRACTOR SHALL ANTICIPATE THE NEED TO IMPLEMENT EACH CONTINGENCY PLAN WITH REQUIRED MATERIALS, EQUIPMENT AND PERSONNEL.
- I. ONCE THE THRESHOLD VALUE IS MET, THE CONTRACTOR SHALL DETERMINE THE APPROPRIATE CONTINGENCY PLAN(S) AND IMMEDIATELY DISCUSS THIS PLAN WITH, AND RECEIVE CONFIRMATION FROM, THE RAILROAD.
- II. ONCE THE SHUTDOWN VALUE IS EXCEEDED, ALL PROJECT WORK SHALL STOP AND THE CHOSEN CONTINGENCY PLAN SHALL COMMENCE.
  - 1. THE RAILROAD MAY CHOOSE TO ALLOW AND/OR REQUIRE THE IMMEDIATE IMPLEMENTATION OF SPECIFIC APPROVED CONTINGENCY PLANS, SUBMITTED BY THE CONTRACTOR, ONCE THE SHUTDOWN VALUE IS EXCEEDED.

TRACK PROTECTION SHORING ZONES

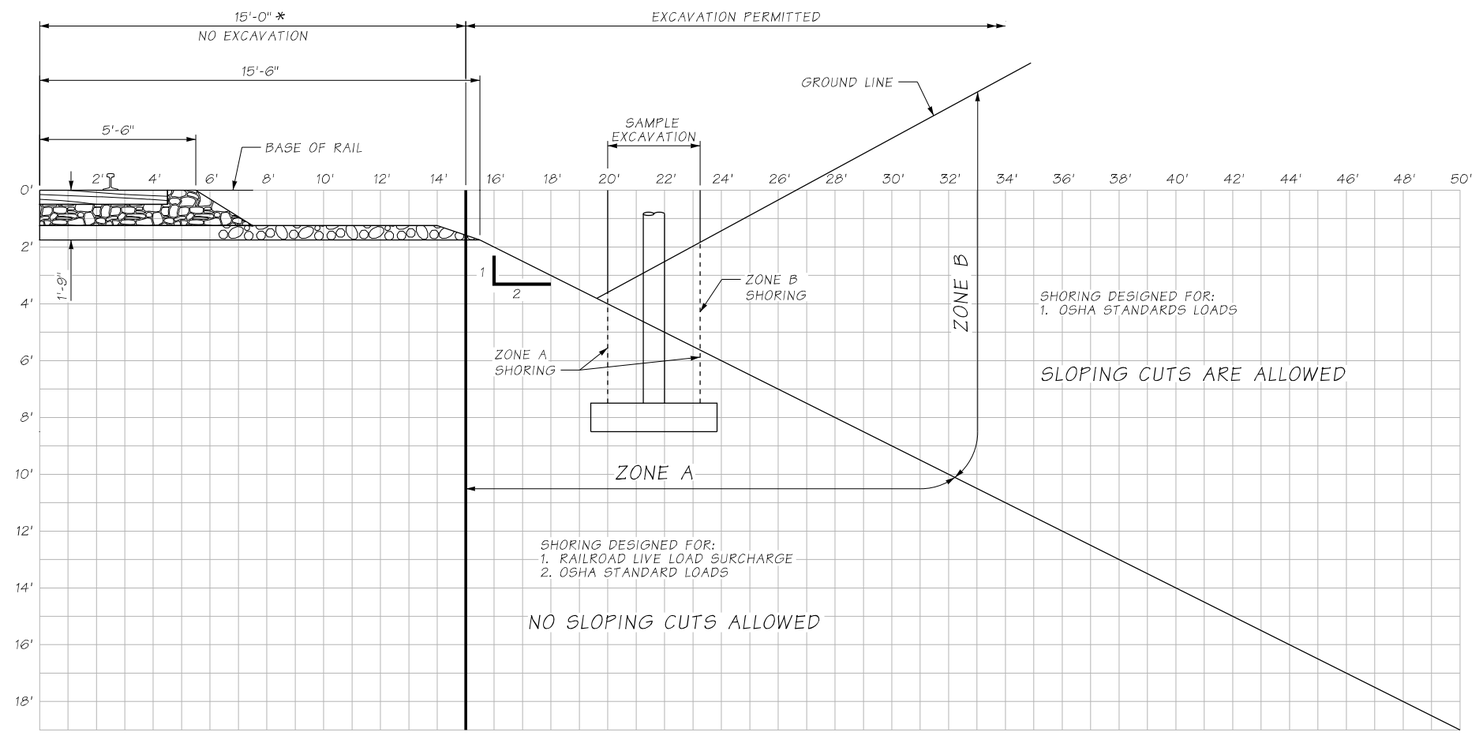

* SHORING MAY BE PLACE AT 11'-8" OR GREATER WITHIN THE REDUCED HORIZONTAL CLEARANCE ZONE SHOWN ON SHEET BB14.

GENERAL NOTES

ALL DIMENSIONS ARE MEASURED PERPENDICULAR TO CL OF TRACK. EXCAVATIONS THAT ENCROACH INTO ZONE A SHALL BE SHORED WITH RAILROAD SHORING IN ACCORDANCE WITH THESE PLANS.

I-405 BN RR BRIDGE TO PED TRAIL BRIDGE SEISMIC RETROFIT
LOCATION: WSDOT BRIDGE NO. 405/12
COORDINATES: 47.465000, -122.241921
TRACK OWNER: UPRR
LINE SEGMENT: N/A
MILEPOST: 172.66
SUBDIVISION: SEATTLE

Bridge Design Engr.	KHALEGHI B.	c:\pwworking\west01\d1468466\12_UPRR Temp Shoring Requirements.dgn				REGION NO.	STATE	FED. AID PROJ. NO.	SHEET NO.	TOTAL SHEETS
Supervisor	ANDREWS L.					10	WASH		79	176
Designed By	KELLER M.					JOB NUMBER				
Checked By	HATCH M.					20A039				
Detailed By	VYPLEL M.									
Bridge Projects Engr.	ROSA M.									
Prelim. Plan By										
Architect/Specialist		DATE	REVISION	BY	APP'D					

4/20/2022 6:37:46 PM

BRIDGE AND STRUCTURES OFFICE

R. LEE ANDREWS, STATE OF WASHINGTON, 43571, STRUCTURAL ENGINEER, PROFESSIONAL ENGINEER
SEE SHEET CT1
04/20/2022

Washington State Department of Transportation

HDR

I-405
BN RR BRIDGE TO PED TRAIL BRIDGE SEISMIC RETROFIT
BRIDGE NO. 405/12

RAILROAD SHORING AND MONITORING REQUIREMENTS

BRIDGE SHEET NO. BB15

SHEET 79 OF 176 SHEETS

SR 405 FILE NO. 20A039 SHEET BB15
ProjectWise Vault:

RAILROAD SHORING GENERAL NOTES

1. SEE GENERAL NOTES ON SHEET BB1 FOR ADDITIONAL DETAILS.

2. CONTACT THE UNION PACIFIC "CALL BEFORE YOU DIG" NUMBER 90 DAYS (NOT LESS THAN 60 DAYS) PRIOR TO PROPOSED CONSTRUCTION START DATE. PRIOR TO CONSTRUCTION, CONFIRM THAT ALL NECESSARY RELOCATIONS HAVE BEEN COMPLETED. THE CBYD NUMBER IS: 1-800-424-555

DESIGN NOTES

1. THE RAILROAD SHORING HAS BEEN DESIGNED IN ACCORDANCE WITH THE AREMA MANUAL FOR RAILWAY ENGINEERING, CHAPTER 15: STEEL STRUCTURES. BACKFILL PROPERTIES: UNIT WEIGHT OF MOIST SOIL = 120 PCF, INTERNAL FRICTION ANGLE >= 30 DEG

2. THE SHORING HAS BEEN DESIGNED FOR COOPER E80 LIVE LOAD WITH FILL TO THE PROPOSED BASE OF RAIL.

3. FOR ESTUARINE SOIL LAYERS, ASSUMED ACTIVE PRESSURE COEFFICIENT, Ka = 0.36 AND PASSIVE PRESSURE COEFFICIENT, Kp = 2.77. FOR ALLUVIUM SOIL LAYER, ASSUMED ACTIVE PRESSURE COEFFICIENT, Ka = 0.26 AND PASSIVE PRESSURE COEFFICIENT, Kp = 3.85.

4. FOR IN SITU SOIL CLASSIFICATION AND OTHER GEOTECHNICAL PROPERTIES, SEE "GEOTECHNICAL REPORT FOR I-405/BN RR BRIDGE TO PEDESTRIAN TRAIL BRIDGE - SEISMIC RETROFIT (RENTON GROUPING)", PREPARED BY WSDOT DATED JANUARY 16, 2020.

5. MAXIMUM ALLOWABLE BENDING STRESS IN STEEL COMPONENTS:
   WALERS AND STRUTS: 27.5 ksi (0.55*Fy)
   SHEET PILE: 39.6 ksi (0.66*Fy)

6. BACKFILL MATERIAL WILL CONSIST OF TEMPORARILY EXCAVATED MATERIAL.

7. RAIL LIVE LOAD INDUCED LATERAL WALL DISPLACEMENT: ~0.1" (< 0.25")
   CENTERLINE TRACK VERTICAL DISPLACEMENT DUE TO WALL: ~0.07" (< 0.25")

8. DRAINAGE PATTERNS ARE NOT AFFECTED BY THE PROPOSED SHORING PLAN.

STRUCTURAL STEEL NOTES

1. MATERIAL SHALL CONFORM TO THE FOLLOWING REQUIREMENTS:

WALERS AND STRUTS		ASTM A992 GR. 50
SHEET PILE	MIN. Sx = 18.1 IN^3/FT, Ix = 84.38 IN^4/FT (PZ22)	ASTM A572 GR. 60

2. ALL WELDING SHALL BE IN ACCORDANCE WITH THE BRIDGE WELDING CODE, AWS D1.5. WELDING TO BE ALLOWED ONLY AS SHOWN ON THE DRAWINGS.

3. WELDED JOINTS ARE TO BE AWS PREQUALIFIED. ALTERNATE JOINT DETAILS ARE SUBJECT TO APPROVAL BY THE ENGINEER. ALL WELDING SHALL BE DONE TO MINIMIZE DISTORTION.

GENERAL NOTES FOR CONSTRUCTION ACTIVITIES NEAR RAILROAD TRACKS

1. RAILROAD REVIEW AND APPROVAL OF A DETAILED WORK PLAN IS REQUIRED PRIOR TO COMMENCEMENT OF CONSTRUCTION. THIS INCLUDES, BUT IS NOT LIMITED TO, SHORING INSTALLATION AND REMOVAL, FALSEWORK, ACCESS ROUTES, MATERIAL AND EQUIPMENT STAGING AREAS, EQUIPMENT TYPES AND LIMITS, ETC.

2. ANY SHORING SYSTEM THAT IMPACTS THE RAILROAD OPERATIONS AND/OR SUPPORTS RAILROAD EMBANKMENT SHALL BE DESIGNED AND CONSTRUCTED PER RAILROAD TEMPORARY SHORING REQUIREMENTS.

3. ALL DEMOLITION WITHIN THE RAILROAD RIGHT-OF-WAY AND/OR DEMOLITION THAT MAY IMPACT THE RAILROAD TRACKS OR OPERATIONS SHALL COMPLY WITH THE RAILROAD DEMOLITION REQUIREMENTS.

4. ERECTION OVER THE RAILROAD RIGHT-OF-WAY SHALL BE DESIGNED TO CAUSE NO INTERRUPTION TO ALL RAILROAD OPERATIONS.

5. THE ELEVATION OF THE EXISTING TOP-OF-RAIL PROFILE SHALL BE VERIFIED BEFORE BEGINNING CONSTRUCTION. ALL DISCREPANCIES SHALL BE BROUGHT TO THE ATTENTION OF THE RAILROAD PRIOR TO CONSTRUCTION.

6. THE PROPOSED PROJECT SHALL NOT CHANGE THE QUANTITY AND/OR CHARACTERISTICS OF THE FLOW IN THE RAILROAD DITCHES AND/OR DRAINAGE STRUCTURES.

7. THE CONTRACTOR MUST SUBMIT A PROPOSED METHOD OF EROSION AND SEDIMENT CONTROL AND HAVE THE METHOD APPROVED BY THE RAILROAD PRIOR TO BEGINNING ANY GRADING ON THE PROJECT SITE.

8. FOR RAILROAD COORDINATION PLEASE REFER TO THE RAILROAD'S COORDINATION REQUIREMENTS AS PART OF THE SPECIFICATIONS OR SPECIAL PROVISIONS OF THE PROJECT.

9. TEMPORARY CONSTRUCTION CLEARANCES, INCLUDING FALSEWORK CLEARANCES, SHALL COMPLY WITH CLEARANCE ENVELOPE ON SHEET BB1.

10. ALL PERMANENT CLEARANCES SHALL BE VERIFIED BEFORE PROJECT CLOSEOUT.

11. WORK WITHIN 25' OF TRACK AND/OR WITH POTENTIAL TO FOUL WILL REQUIRE RAILROAD FLAGGING.

12. ALL EQUIPMENT, MATERIALS, AND PERSONNEL SHALL REMAIN OUTSIDE THE MINIMUM CONSTRUCTION CLEARANCE ENVELOPE, EXCEPT WHEN WORKING IN DESIGNATED AND APPROVED TRACK CURFEWS.

13. ALL PERSONNEL MUST CLEAR THE AREA WITHIN 25 FEET OF TRACK CENTERLINE WHEN TRAINS PASS THE WORK SITE.

14. WHEN TRAINS PASS THE WORK SITE, ALL WORK WITHIN 50 FEET OF CENTERLINE OF TRACK(S) SHALL CEASE WITH ALL EQUIPMENT PROPERLY SECURED.

15. SITE SHALL BE ACCESSED WHERE POSSIBLE WITHOUT CROSSING TRACK EXCEPT AT ESTABLISHED CROSSINGS. IF TRACK CROSSINGS BY VEHICLES OR EQUIPMENT ARE REQUIRED AWAY FROM EXISTING TRACK CROSSINGS, COORDINATE WITH THE RAILROAD FLAGGER.

16. EQUIPMENT UNDER LOAD SHALL NOT BE SUPPORTED ON TRACK OR BALLAST AT ANY TIME.

I-405 BN RR BRIDGE TO PED TRAIL BRIDGE SEISMIC RETROFIT
LOCATION: WSDOT BRIDGE NO. 405/12
COORDINATES: 47.465000, -122.241921
TRACK OWNER: UPRR
LINE SEGMENT: N/A
MILEPOST: 172.66
SUBDIVISION: SEATTLE

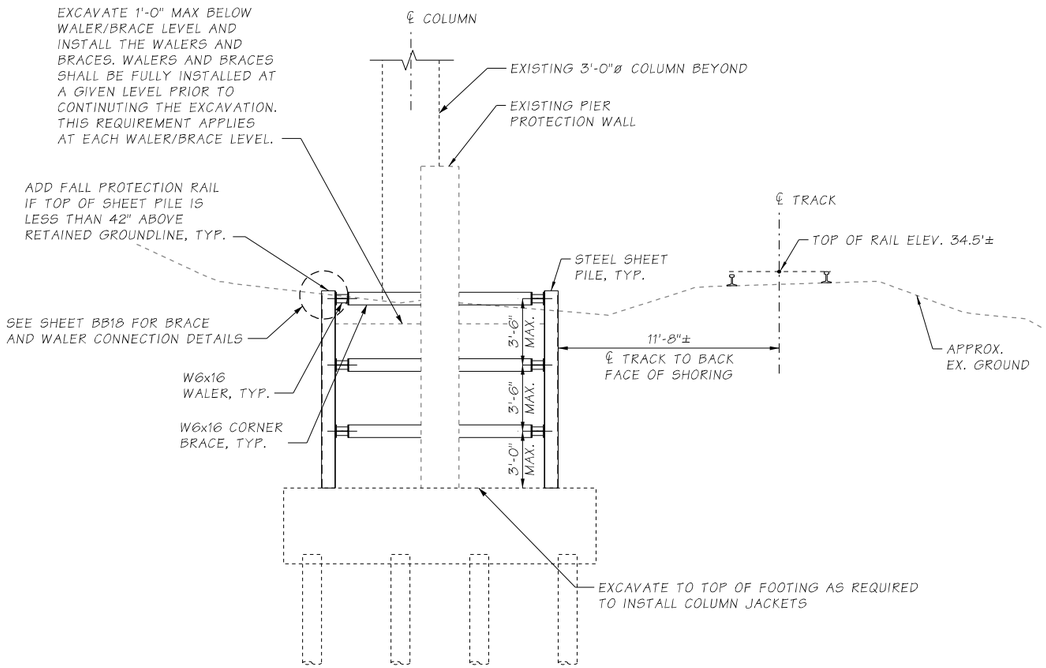

SECTION B / BB14
PIER 2 SOUTH

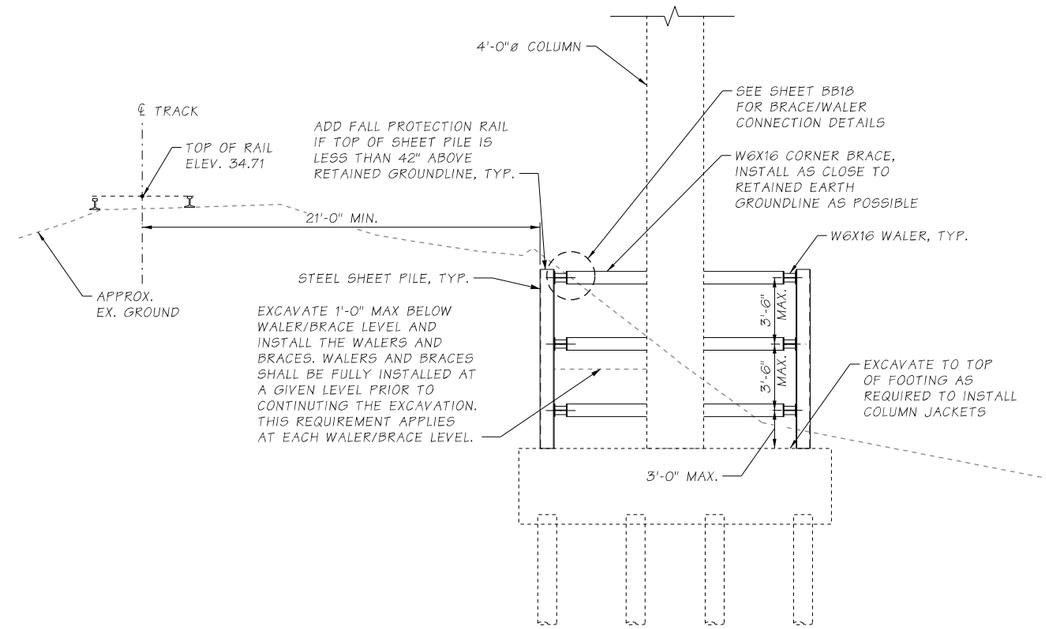

SECTION C / BB14
PIER 3 NORTH

NOTES
1. BRIDGE SEISMIC RETROFIT WORK IS NOT SHOWN FOR CLARITY.
2. A MINIMUM OF TWO LEVELS OF WALERS/BRACES ARE REQUIRED.

I-405 BN RR BRIDGE TO PED TRAIL BRIDGE SEISMIC RETROFIT
LOCATION: WSDOT BRIDGE NO. 405/12
COORDINATES: 47.465000, -122.241921
TRACK OWNER: UPRR
LINE SEGMENT: N/A
MILEPOST: 172.66
SUBDIVISION: SEATTLE

Bridge Design Engr.	KHALEGHI B.	c:\pwworking\west01\d1468466\12_Temp Shoring Sections.dgn							
Supervisor	ANDREWS L.				REGION NO.	STATE	FED. AID PROJ. NO.	SHEET NO.	TOTAL SHEETS
Designed By	HATCH M.				10	WASH		81	176
Checked By	KELLER M.								
Detailed By	VYPLEL M.				JOB NUMBER				
Bridge Projects Engr.	ROSA M.				20A039				
Prelim. Plan By									
Architect/Specialist		DATE	REVISION	BY	APP'D				

4/20/2022 6:42:48 PM

BRIDGE AND STRUCTURES OFFICE

R. LEE ANDREWS, STATE OF WASHINGTON, 43571, STRUCTURAL ENGINEER, PROFESSIONAL ENGINEER
SEE SHEET CT1
04/20/2022

Washington State Department of Transportation

HDR

I-405
BN RR BRIDGE TO PED TRAIL BRIDGE SEISMIC RETROFIT
BRIDGE NO. 405/12

PIER 2 RAILROAD SHORING BRACED CONDITION DETAILS

BRIDGE SHEET NO. BB17

SHEET 81 OF 176 SHEETS

SR 405 FILE NO. 20A039 SHEET BB17
ProjectWise Vault:

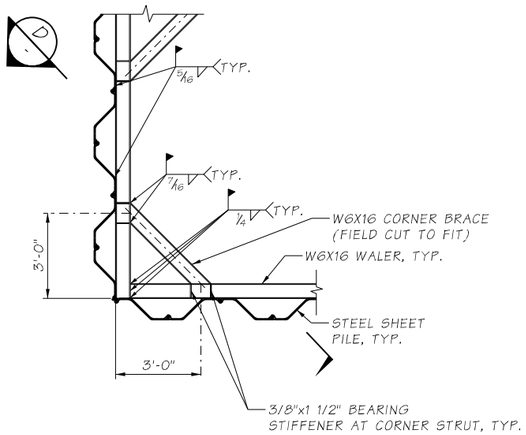

CORNER BRACE DETAIL

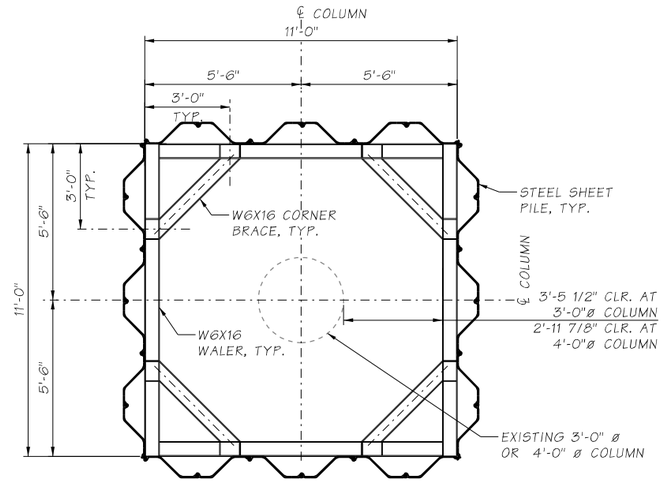

TYPICAL SHEET PILE SHORING BOX DETAIL

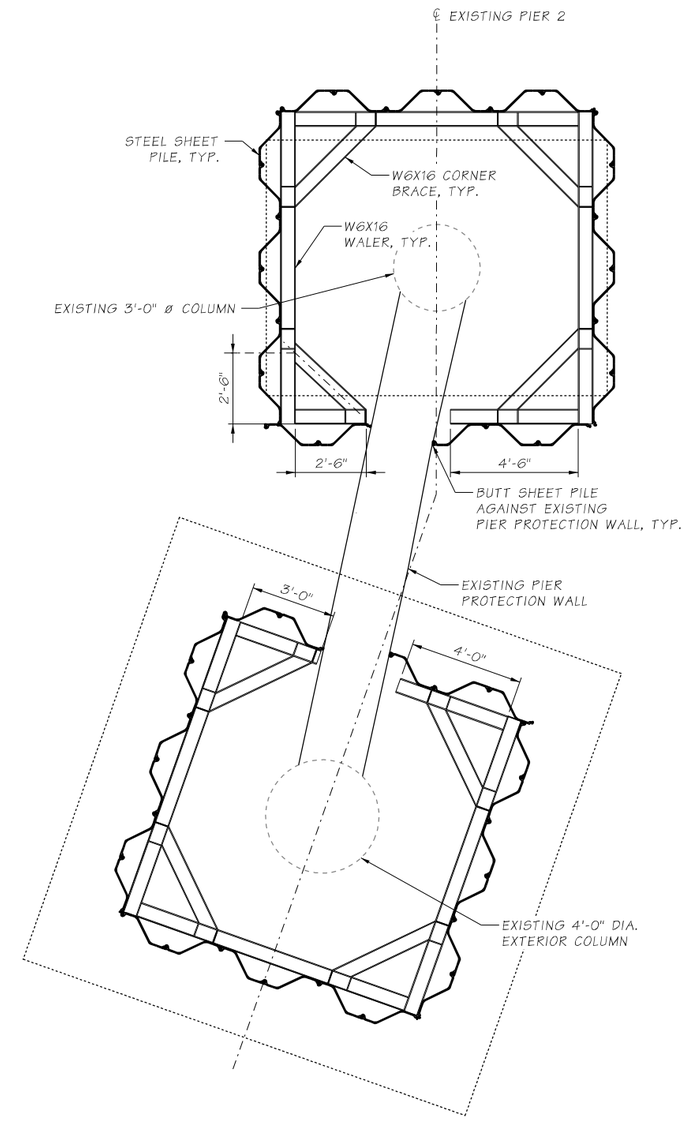

SHORING BOXES AT PIER PROTECTION WALL - PIER 2

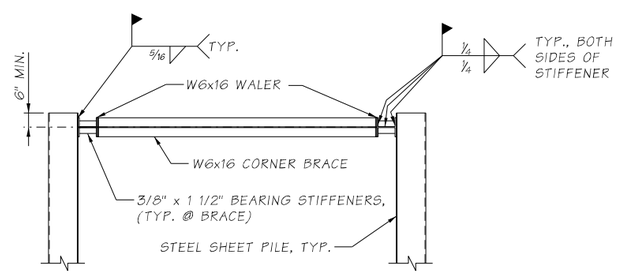

SECTION D
-

I-405 BN RR BRIDGE TO PED TRAIL BRIDGE SEISMIC RETROFIT
LOCATION: WSDOT BRIDGE NO. 405/12
COORDINATES: 47.465000, -122.241921
TRACK OWNER: UPRR
LINE SEGMENT: N/A
MILEPOST: 172.66
SUBDIVISION: SEATTLE

Bridge Design Engr.	KHALEGHI B.	c:\pwworking\west01\d1468466\12_Pier 2 Temp Shoring Box Details.dgn			REGION NO.	STATE	FED. AID PROJ. NO.	SHEET NO.	TOTAL SHEETS
Supervisor	ANDREWS L.				10	WASH		82	176
Designed By	WINKELBAUER				JOB NUMBER				
Checked By	HATCH M.				20A039				
Detailed By	VYPLEL M.								
Bridge Projects Engr.	ROSA M.								
Prelim. Plan By									
Architect/Specialist		DATE	REVISION	BY	APP'D				

4/20/2022 6:43:51 PM

BRIDGE AND STRUCTURES OFFICE

K. LEE ANDREWS — STATE OF WASHINGTON — 43571 — STRUCTURAL ENGINEER — PROFESSIONAL ENGINEER

SEE SHEET CT1
04/20/2022

Washington State Department of Transportation

HDR

I-405
BN RR BRIDGE TO PED TRAIL BRIDGE SEISMIC RETROFIT
BRIDGE NO. 405/12

RAILROAD SHORING DETAILS

BRIDGE SHEET NO. BB18

SHEET 82 OF 176 SHEETS

SR 405 FILE NO. 20A039 SHEET BB18
ProjectWise Vault:

WIRE ROPE INSTALLATION INSTRUCTIONS:

1. THREAD WIRE ROPE THROUGH ALL CLIPS AND BARREL ANCHORS AND SEAT RETAINING WEDGES ON ONE END POST.
2. AFTER INSTALLING BRACES, STRETCH WIRE ROPE. HANG A MINIMUM OF 10 LB. ON CABLE BETWEEN TWO POSTS AND REMOVE ALL SAG TO A MAXIMUM OF 2 INCHES.
3. SEAT RETAINING WEDGES AT REMAINING END POST.
4. REMOVE WEIGHTS.
5. TIGHTEN CLIPS AT INTERMEDIATE POSTS.

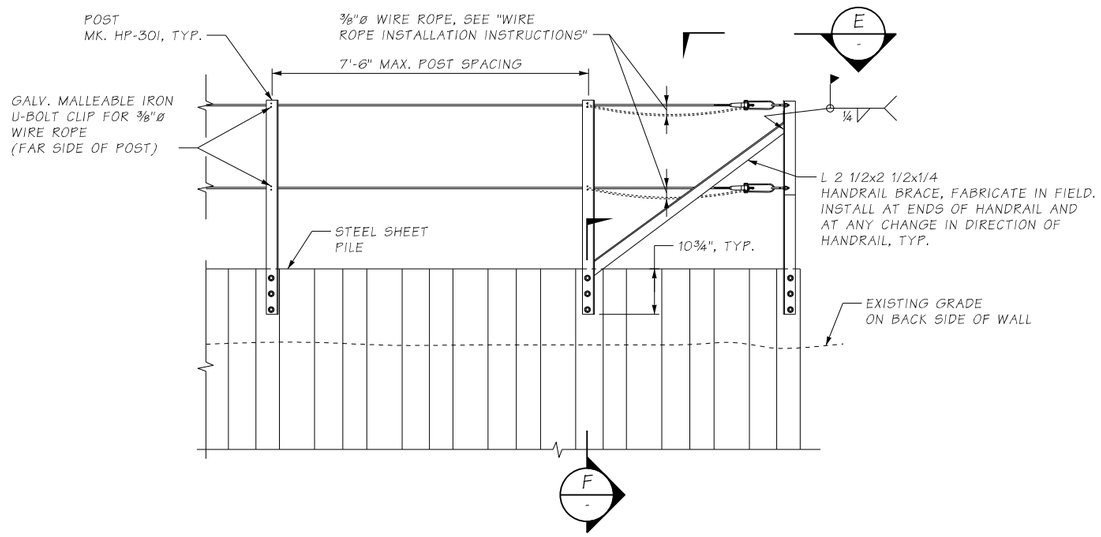

TYPICAL FALL PROTECTION RAIL INSTALLATION

(LOOKING AT EXCAVATED FACE OF WALL,
FALL PROTECTION IS REQUIRED WHENEVER THE TOP OF SHEET PILE
IS LESS THAN 42" ABOVE EXISTING GRADE AND THE EXCAVATION DEPTH IS GREATER THAN 3'-6".

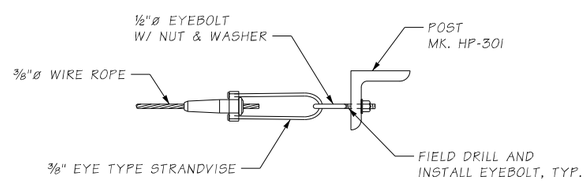

SECTION E
N.T.S.

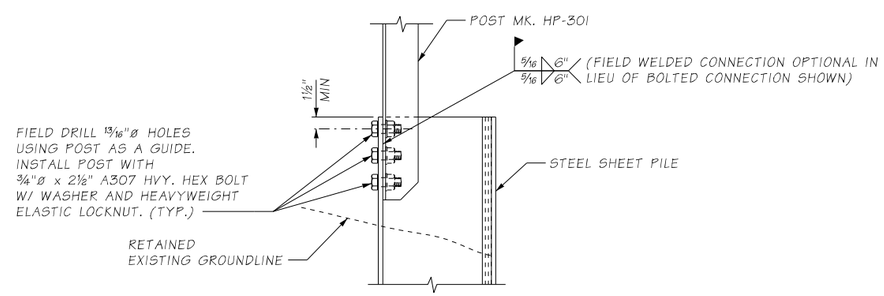

SECTION F
N.T.S.

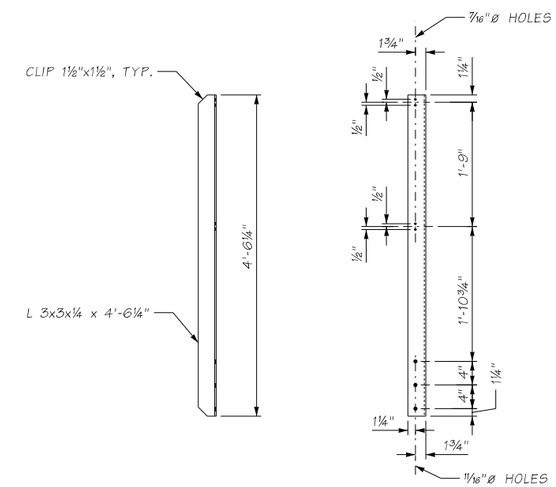

POST MK. HP-301
N.T.S.

I-405 BN RR BRIDGE TO PED TRAIL BRIDGE SEISMIC RETROFIT
LOCATION: WSDOT BRIDGE NO. 405/12
COORDINATES: 47.465000, -122.241921
TRACK OWNER: UPRR
LINE SEGMENT: N/A
MILEPOST: 172.66
SUBDIVISION: SEATTLE

Bridge Design Engr.	KHALEGHI B.	c:\pwworking\west01\d1468466\12_Railroad Temp Shoring Handrail Details.dgn				REGION NO.	STATE	FED. AID PROJ. NO.	SHEET NO. / TOTAL SHEETS
Supervisor	ANDREWS L.					10	WASH		83 / 176
Designed By	HATCH M.					JOB NUMBER			
Checked By	WINKELBAUER					20A039			
Detailed By	VYPLEL M.								
Bridge Projects Engr.	ROSA M.								
Prelim. Plan By									
Architect/Specialist		DATE	REVISION	BY	APP'D				

4/20/2022 6:44:41 PM

BRIDGE AND STRUCTURES OFFICE

R. LEE ANDREWS — STATE OF WASHINGTON — 43571 — STRUCTURAL ENGINEER — PROFESSIONAL ENGINEER
SEE SHEET CT1
04/20/2022

Washington State Department of Transportation

HDR

I-405
BN RR BRIDGE TO PED TRAIL BRIDGE SEISMIC RETROFIT
BRIDGE NO. 405/12

RAILROAD SHORING
FALL PROTECTION RAIL DETAILS

BRIDGE SHEET NO. BB19

SHEET 83 OF 176 SHEETS

SR 405 FILE NO. 20A039 SHEET BB19
ProjectWise Vault:

SEC. 29, T.25N., R.5E., W.M.
CITY OF BELLEVUE

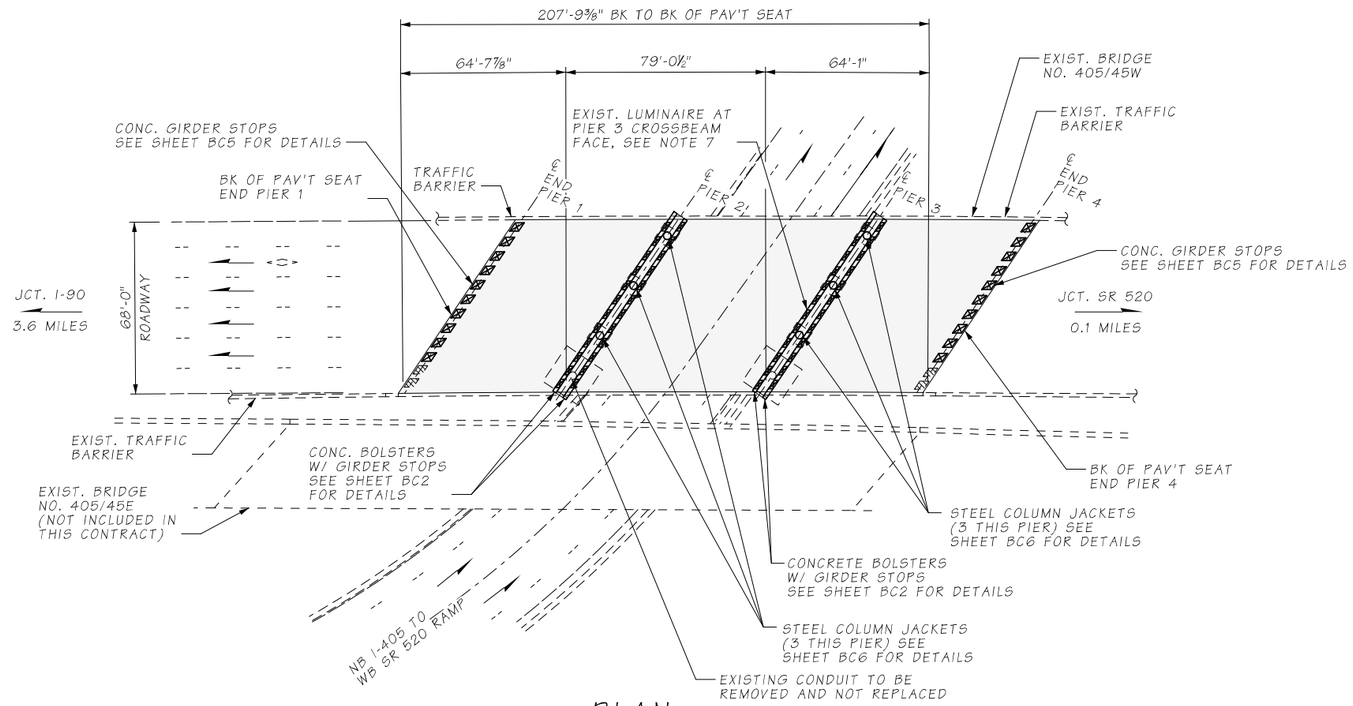

PLAN

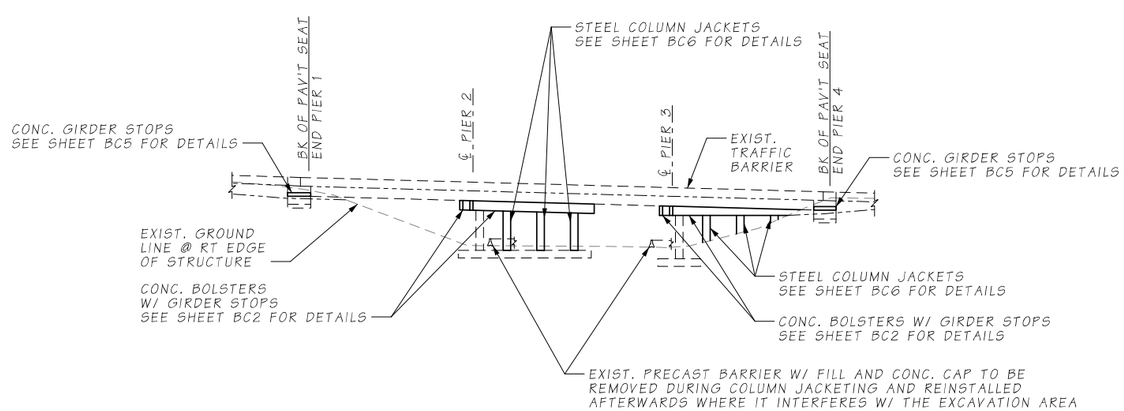

ELEVATION

GENERAL NOTES

1. ALL MATERIALS AND WORKMANSHIP SHALL BE IN ACCORDANCE WITH THE REQUIREMENTS OF THE WASHINGTON STATE DEPARTMENT OF TRANSPORTATION STANDARD SPECIFICATIONS FOR ROAD, BRIDGE AND MUNICIPAL CONSTRUCTION - DATED 2022.
2. NEW CONSTRUCTION HAS BEEN DESIGNED IN ACCORDANCE WITH THE REQUIREMENTS OF THE AASHTO LRFD BRIDGE DESIGN SPECIFICATIONS 8TH EDITION, DATED 2017 AND THE FHWA-HRT-06-032 SEISMIC RETROFITTING MANUAL FOR HIGHWAY STRUCTURES, DATED 2006.
3. EXISTING FEATURES, DIMENSIONS, AND ELEVATIONS ARE BASED ON AS-BUILT PLANS. ALL DIMENSIONS SHALL BE FIELD MEASURED AND VERIFIED BY THE CONTRACTOR, PRIOR TO ORDERING MATERIALS AND FABRICATION (SEE SPECIAL PROVISIONS).
4. CONTRACTOR SHALL LOCATE EXISTING STEEL REINFORCING USING NONDESTRUCTIVE METHODS TO AVOID DAMAGE DURING DRILLING OPERATIONS. THE CONTRACTOR SHALL NOTIFY THE ENGINEER IMMEDIATELY IF ANY EXISTING REBAR OR ANCHOR BOLTS ARE ENCOUNTERED OR ARE IN CONFLICT WITH THE WORK DETAILED, AND SHALL OBTAIN APPROVAL FROM THE ENGINEER BEFORE CONTINUING WORK. CORE DRILLING IS NOT ALLOWED.
5. ALL NEW MATERIALS USED SHALL MEET THE FOLLOWING REQUIREMENTS:
   - CONCRETE CLASS 4000
   - REINFORCING STEEL BARS - ASTM A706, GRADE 60, U.N.O.
   - STEEL COLUMN JACKETS - ASTM A36
6. THE MINIMUM CONCRETE COVER MEASURED FROM THE FACE OF THE CONCRETE TO THE FACE OF ANY REINFORCING STEEL SHALL BE 1 1/2" U.N.O.
7. EXISTING DRAIN PIPES ATTACHED TO INTERMEDIATE PIERS SHALL BE REMOVED. CONDUITS, AND OTHER ITEMS THAT ARE MOUNTED ON THE INTERMEDIATE PIER SURFACE SHALL BE CAREFULLY REMOVED, AS REQUIRED, AND REPLACED AFTER SEISMIC RETROFIT IS COMPLETE. RE-ATTACHMENT DETAILS SHALL BE SUBMITTED TO THE ENGINEER FOR APPROVAL, PRIOR TO RE-INSTALLATION.
8. CONCRETE SURFACES REQUIRED TO BE ROUGHENED SHALL BE ROUGHENED IN ACCORDANCE WITH SECTION 6-02.3(12)B OR THE SPALL PATTERN ALTERNATIVE ROUGHENED SURFACE SHOWN IN DETAIL 2 ON BRIDGE SHEET BC3.
9. THE LOCATION OF DOWEL BARS MAY BE ADJUSTED BY +/- 1" IF NECESSARY TO AVOID CONFLICTS WITH EXISTING REINFORCING STEEL. DOWEL BARS SHALL BE KEPT A MINIMUM OF 3" FROM THE EDGE OF CONCRETE.
10. SEE UTILITY SHEETS FOR THE LOCATIONS OF EXISTING UTILITIES.

LEGEND

NEW GIRDER STOP

EXISTING GIRDER STOP

A / BC5 — IDENTIFIES SECTION, VIEW OR DETAIL; TAKEN OR SHOWN ON BRIDGE SHEET BC5

A / — TAKEN OR SHOWN ON SAME SHEET

SEISMIC RETROFIT

Bridge Design Engr.	KHALEGHI B.	c:\pwworking\west01\d1468466\45W_Layout Plan.dgn			REGION NO.	STATE	FED. AID PROJ. NO.	SHEET NO.	TOTAL SHEETS
Supervisor	KORPI D.				10	WASH		84	176
Designed By	KARSLI N.				JOB NUMBER				
Checked By	CHI J.				20A039				
Detailed By	VYPLEL M.								
Bridge Projects Engr.	ROSA M.								
Prelim. Plan By									
Architect/Specialist		DATE	REVISION	BY	APP'D				

4/20/2022 10:06:25 PM

BRIDGE AND STRUCTURES OFFICE

K. LEE ANDREW — STATE OF WASHINGTON — 43571 — STRUCTURAL ENGINEER — PROFESSIONAL ENGINEER

SEE SHEET CT1
04/20/2022

Washington State Department of Transportation

HDR

I-405
BN RR BRIDGE TO PED TRAIL BRIDGE
SEISMIC RETROFIT
BRIDGE NO. 405/45W

LAYOUT

BRIDGE SHEET NO. BC1

SHEET 84 OF 176 SHEETS

SR 405 FILE NO. ____ SHEET BC1
ProjectWise Vault:

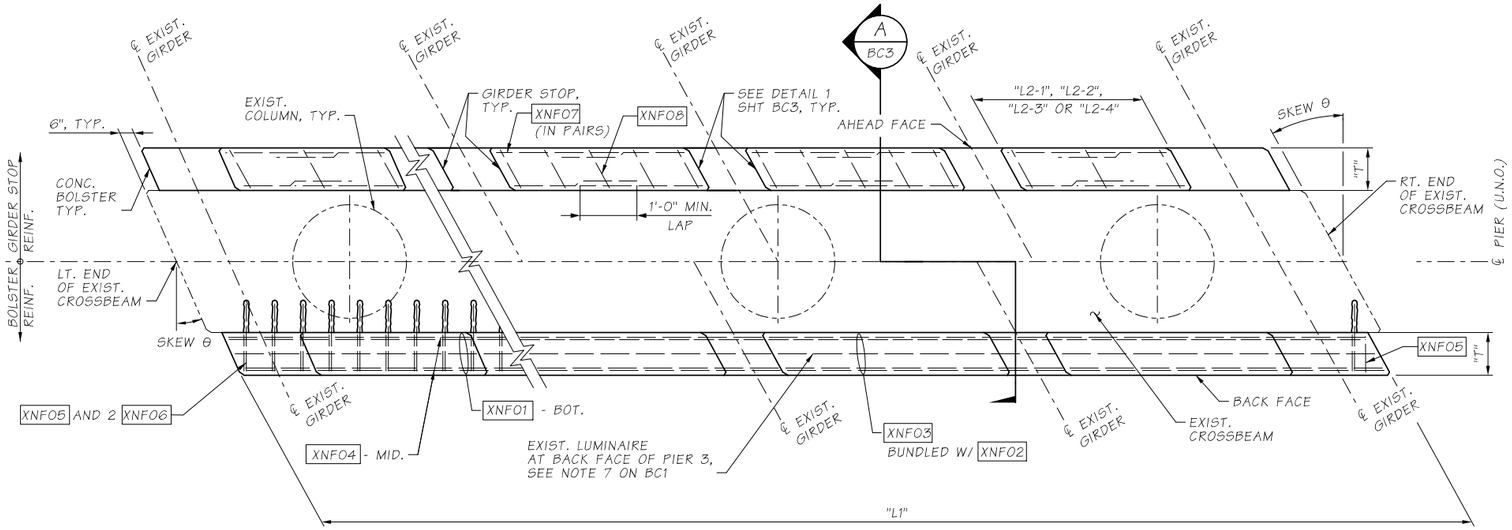

PLAN - TYP. CROSSBEAM BOLSTERS AND GIRDER STOPS

CROSSBEAM BOLSTER AND GIRDER STOP DIMENSIONS LIST					
DIM.	DESCRIPTION	DIMENSIONS			
		PIER 2		PIER 3	
		BACK	AHEAD	BACK	AHEAD
L1	BOLSTER LENGTH	83'-8"	83'-8"	83'-6"	83'-6"
L2-1	GIRDER STOP LENGTH	4'-5"	4'-5"	4'-5"	4'-5"
L2-2	GIRDER STOP LENGTH	3'-9⅜"	3'-9"	3'-8⅝"	3'-8⅝"
L2-3	GIRDER STOP LENGTH	3'-7⅞"	3'-7⅝"	3'-6⅞"	3'-6⅝"
L2-4	GIRDER STOP LENGTH	3'-8"	3'-8"	3'-6⅞"	3'-6⅝"
H1	BOLSTER HEIGHT	3'-3"	3'-3"	3'-3"	3'-3"
H2	GIRDER STOP HEIGHT	1'-0"	1'-0"	1'-0"	1'-0"
T	BOLSTER THICKNESS	1'-6"	1'-6"	1'-6"	1'-6"
θ	SKEW ANGLE	55°43'12"	55°43'12"	56°07'12"	56°07'12"

NOTES:

1. DIMENSIONS PROVIDED ARE FOR REFERENCE ONLY. CONTRACTOR SHALL ADJUST DIMENSIONS IN THE FIELD SUCH THAT THE REQUIREMENTS OF DETAIL 1 ON SHEET BC3 ARE SATISFIED.
2. SEE GENERAL NOTE 3 ON SHEET BC1.
3. SEE SHEET BC4 FOR BAR LIST.
4. EXISTING GIRDERS AND DIAPHRAGMS NOT SHOWN FOR CLARITY.

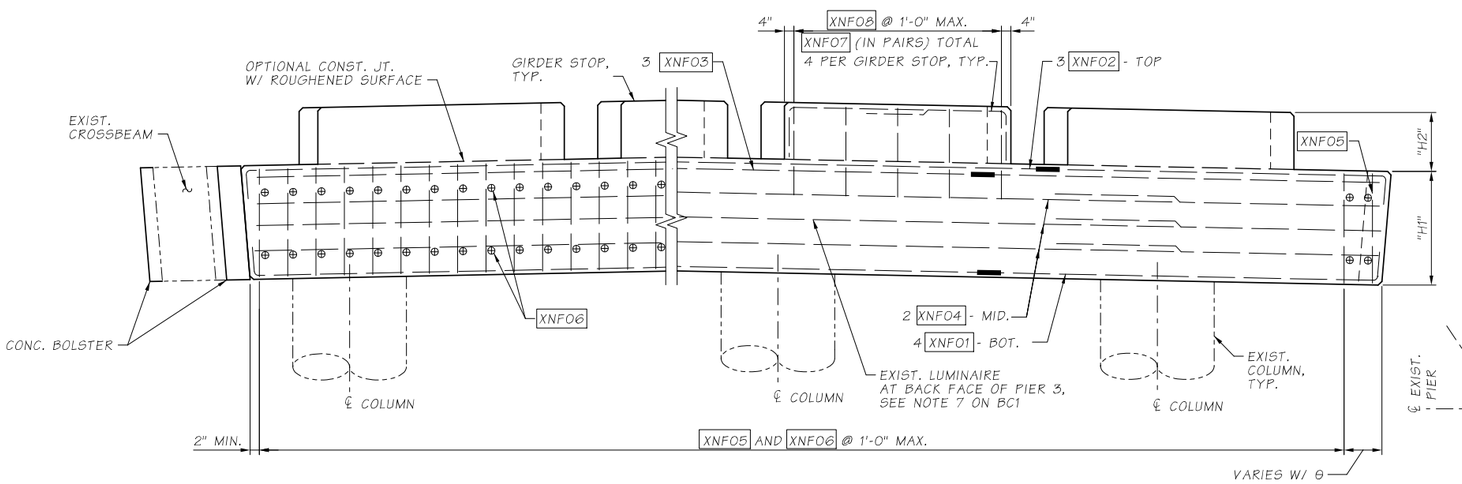

ELEVATION - TYP. CROSSBEAM BOLSTERS AND GIRDER STOPS

(BACK FACE SHOWN, AHEAD FACE SIMILAR)

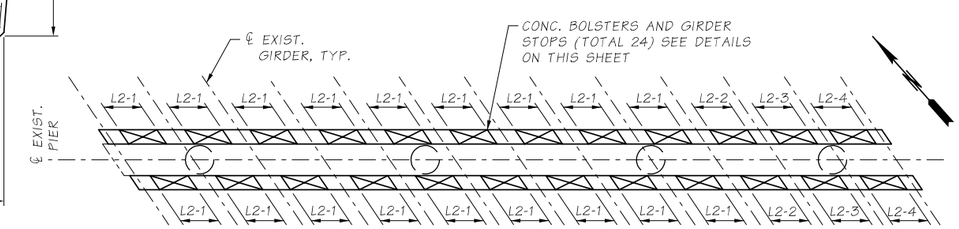

TYPICAL INTERMEDIATE PIER GIRDER STOP LAYOUT

SR 405 FILE NO. 20A039 SHEET BC2
Project Wise Vault:

Bridge Design Engr.	KHALEGHI B.	c:\pwworking\west01\d1468466\45W_XBeam Bolster-Girder Stops_Plan-Elev.dgn							
Supervisor	KORPI D.				REGION NO.	STATE	FED. AID PROJ. NO.	SHEET NO.	TOTAL SHEETS
Designed By	KARSLI N.				10	WASH		85	176
Checked By	CHI J.								
Detailed By	VYPLEL M.				JOB NUMBER 20A039				
Bridge Projects Engr.	ROSA M.								
Prelim. Plan By									
Architect/Specialist		DATE	REVISION	BY	APP'D				

4/20/2022 4:52:11 PM

BRIDGE AND STRUCTURES OFFICE

R. LEE ANDERT — STATE OF WASHINGTON — 43571 — STRUCTURAL ENGINEER — PROFESSIONAL ENGINEER
SEE SHEET CT1
04/20/2022

Washington State Department of Transportation

HDR

I-405
BN RR BRIDGE TO PED TRAIL BRIDGE SEISMIC RETROFIT
BRIDGE NO. 405/45W

CROSSBEAM BOLSTER AND GIRDER STOPS - PLAN AND ELEVATION

BRIDGE SHEET NO. BC2

SHEET 85 OF 176 SHEETS

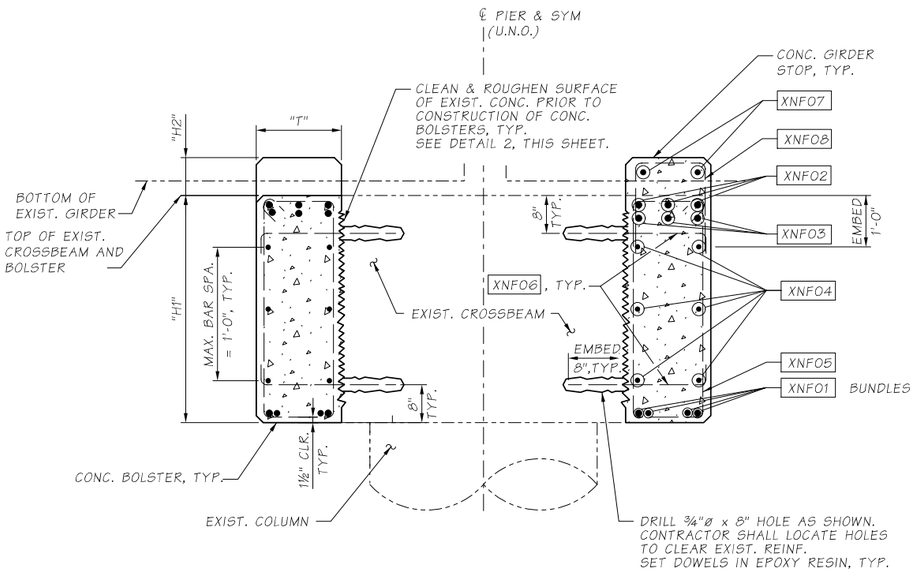

SECTION A / BC2

NOTE:

1. SEE SHEET BC2 FOR "H1", "H2", AND "T" DIMENSIONS

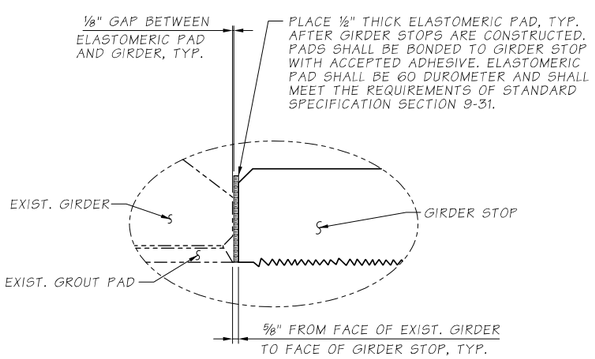

DETAIL 1 / BC2

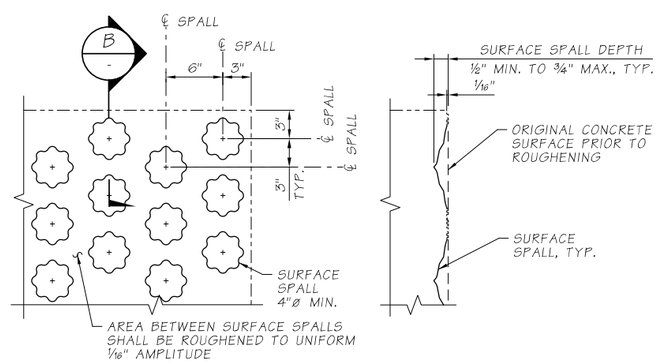

ELEVATION

SECTION B / -

SPALL PATTERN ALTERNATIVE
ROUGHENED SURFACE DETAIL 2 / -

Bridge Design Engr.	KHALEGHI B.	c:\pwworking\west01\d1468466\45W_XBeam Bolster-Girder Stops_Details.dgn				REGION NO.	STATE	FED. AID PROJ. NO.	SHEET NO.	TOTAL SHEETS
Supervisor	KORPI D.					10	WASH		86	176
Designed By	KARSLI N.					JOB NUMBER				
Checked By	CHI J.					20A039				
Detailed By	VYPLEL M.									
Bridge Projects Engr.	ROSA M.									
Prelim. Plan By										
Architect/Specialist		DATE	REVISION	BY	APP'D					

4/20/2022 4:52:15 PM

BRIDGE AND STRUCTURES OFFICE

R. LEE ANDERS — STATE OF WASHINGTON — 43571 — PROFESSIONAL ENGINEER
SEE SHEET CT1
04/20/2022

Washington State Department of Transportation

HDR

I-405
BN RR BRIDGE TO PED TRAIL BRIDGE SEISMIC RETROFIT
BRIDGE NO. 405/45W

CROSSBEAM BOLSTER AND GIRDER STOPS - DETAILS

BRIDGE SHEET NO. BC3

SHEET 86 OF 176 SHEETS

SR 405 FILE NO. 20A039 SHEET BC3
ProjectWise Vault:

CROSSBEAM BOLSTER / GIRDER STOP BAR LIST

	REBAR MARK	LOCATION	SIZE	BAR GRADE *	DIMENSIONS A	DIMENSIONS B	DIMENSIONS LENGTH	TOTAL #	WEIGHT
PIER 2	X2B01	BOLSTER LONG. BOT.	#11	80	83'-4"	-	87'-4"	4	1856
	X2B02	BOLSTER LONG. TOP	#11	80	83'-4"	-	87'-4"	3	1392
	X2B03	BOLSTER LONG. TOP	#11	80	83'-4"	-	83'-4"	3	1328
	X2B04	BOLSTER LONG. MID.	#4	-	83'-4"	-	85'-4"	6	342
	X2B05	BOLSTER TIES	#4	-	1'-3"	3'-0"	9'-0"	84	505
	X2B06	BOLSTER DOWELS	#5	-	2'-1"	-	2'-11"	168	504
	X2B07	GIRDER STOP (PAIRS)	#4	-	3'-1"	11"	4'-0"	48	127
	X2B08	GIRDER STOP U-SHAPED	#4	-	1'-3"	1'-10½"	4'-2"	48	132
	X2A01	BOLSTER LONG. BOT.	#11	80	83'-4"	-	87'-4"	4	1856
	X2A02	BOLSTER LONG. TOP	#11	80	83'-4"	-	87'-4"	3	1392
	X2A03	BOLSTER LONG. TOP	#11	80	83'-4"	-	83'-4"	3	1328
	X2A04	BOLSTER LONG. MID.	#4	-	83'-4"	-	85'-4"	6	342
	X2A05	BOLSTER TIES	#4	-	1'-3"	3'-0"	9'-0"	84	505
	X2A06	BOLSTER DOWELS	#5	-	2'-1"	-	2'-11"	168	504
	X2A07	GIRDER STOP (PAIRS)	#4	-	3'-1"	11"	4'-0"	48	127
	X2A08	GIRDER STOP U-SHAPED	#4	-	1'-3"	1'-10½"	4'-2"	48	132
PIER 3	X3B01	BOLSTER LONG. BOT.	#11	80	83'-2"	-	87'-2"	4	1852
	X3B02	BOLSTER LONG. TOP	#11	80	83'-2"	-	87'-2"	3	1389
	X3B03	BOLSTER LONG. TOP	#11	80	83'-2"	-	83'-2"	3	1326
	X3B04	BOLSTER LONG. MID.	#4	-	83'-2"	-	85'-2"	6	341
	X3B05	BOLSTER TIES	#4	-	1'-3"	3'-0"	9'-0"	84	505
	X3B06	BOLSTER DOWELS	#5	-	2'-1"	-	2'-11"	168	504
	X3B07	GIRDER STOP (PAIRS)	#4	-	3'-1"	11"	4'-0"	48	127
	X3B08	GIRDER STOP U-SHAPED	#4	-	1'-3"	1'-10½"	4'-2"	48	132
	X3A01	BOLSTER LONG. BOT.	#11	80	83'-2"	-	87'-2"	4	1852
	X3A02	BOLSTER LONG. TOP	#11	80	83'-2"	-	87'-2"	3	1389
	X3A03	BOLSTER LONG. TOP	#11	80	83'-2"	-	83'-2"	3	1326
	X3A04	BOLSTER LONG. MID.	#4	-	83'-2"	-	85'-2"	6	341
	X3A05	BOLSTER TIES	#4	-	1'-3"	3'-0"	9'-0"	84	505
	X3A06	BOLSTER DOWELS	#5	-	2'-1"	-	2'-11"	168	504
	X3A07	GIRDER STOP (PAIRS)	#4	-	3'-1"	11"	4'-0"	48	127
	X3A08	GIRDER STOP U-SHAPED	#4	-	1'-3"	1'-10½"	4'-2"	48	132

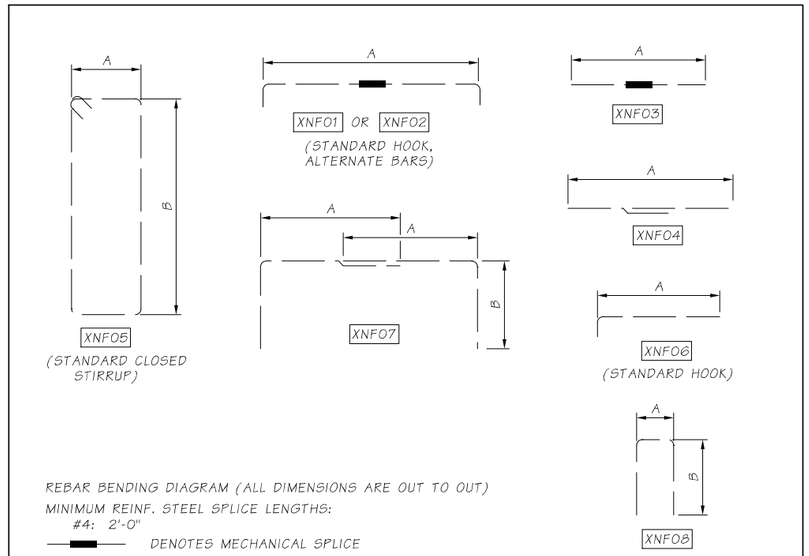

REBAR BENDING DIAGRAM (ALL DIMENSIONS ARE OUT TO OUT)

MINIMUM REINF. STEEL SPLICE LENGTHS:
#4: 2'-0"

DENOTES MECHANICAL SPLICE

NOTES:

1. XNF00 = BAR MARK FOR CROSSBEAM BOLSTER AND/OR GIRDER STOP, WHERE "N" IS THE BENT NUMBER AND "F" IS THE FACE ("A"= AHEAD AND "B"= BACK)
2. STAGGER MECHANICAL SPLICE LOCATION BY 3'-0" MIN. BETWEEN ADJACENT BARS.
3. ALL REINFORCING #9 AND LARGER SHALL USE MECHANCAL SPLICES. ALL REINORCING #8 AND SMALLER SHALL USE LAP SPLICES.

* BAR GRADE ONLY IF DIFFERENT THAN GRADE 60

SR 405 FILE NO. 20A039 SHEET BC4
ProjectWise Vault:

Bridge Design Engr.	KHALEGHI B.	c:\pwworking\west01\d1468466\45W_XBeam Bolster-Girder Stops_Bar List.dgn							
Supervisor	KORPI D.				REGION NO.	STATE	FED. AID PROJ. NO.	SHEET NO.	TOTAL SHEETS
Designed By	KARSLI N.				10	WASH		87	176
Checked By	CHI J.								
Detailed By	VYPLEL M.				JOB NUMBER				
Bridge Projects Engr.	ROSA M.				20A039				
Prelim. Plan By									
Architect/Specialist		DATE	REVISION	BY	APP'D				

4/20/2022 4:52:17 PM

BRIDGE AND STRUCTURES OFFICE

R. LEE ANDREWS STATE OF WASHINGTON 43571 STRUCTURAL ENGINEER PROFESSIONAL ENGINEER

SEE SHEET CT1
04/20/2022

Washington State Department of Transportation

HDR

I-405
BN RR BRIDGE TO PED TRAIL BRIDGE
SEISMIC RETROFIT
BRIDGE NO. 405/45W

CROSSBEAM BOLSTER AND GIRDER STOPS - BAR LIST

BRIDGE SHEET NO. BC4

SHEET 87 OF 176 SHEETS

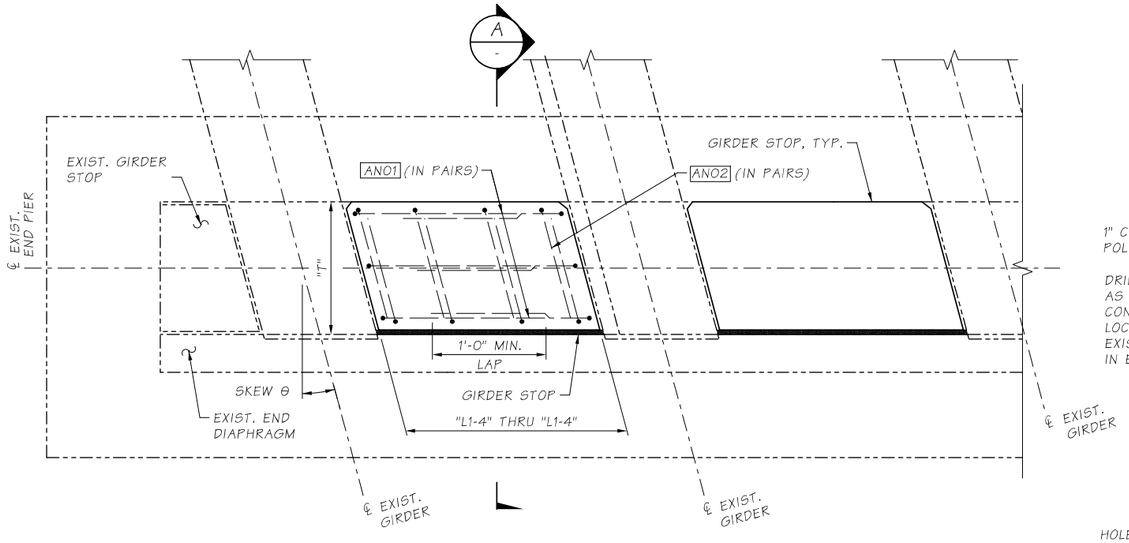

PLAN - TYP. END PIER W/ GIRDER STOPS

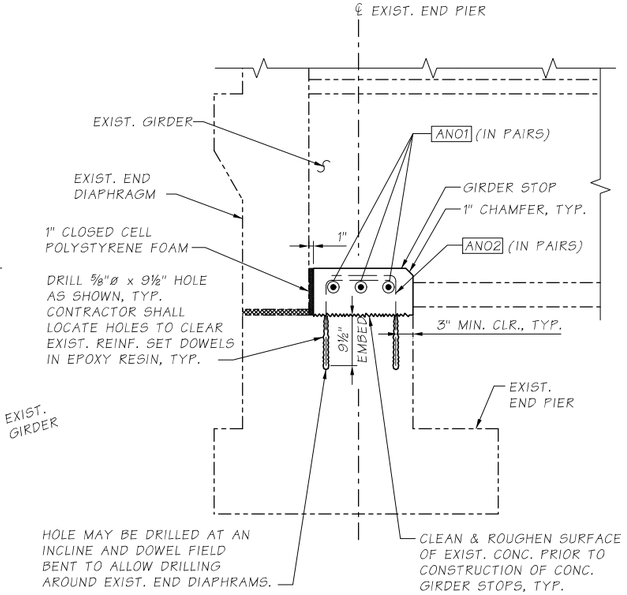

SECTION A

END PIER GIRDER STOP DIMENSIONS LIST

DIM.	DESCRIPTION	DIMENSIONS	
		END PIER 1	END PIER 4
L1	GIRDER STOP LENGTH	4'-5"	4'-5"
L2	GIRDER STOP LENGTH	3'-10"	3'-8⅜"
L3	GIRDER STOP LENGTH	N/A	N/A
L4	GIRDER STOP LENGTH	N/A	N/A
H	GIRDER STOP HEIGHT	1'-0"	1'-0"
T	GIRDER STOP DEPTH	1'-9"	1'-9"
θ	SKEW ANGLE	55°24'00"	56°26'24"

NOTES:

1. SEE GENERAL NOTES ON SHEET BC1.
2. DIMENSIONS PROVIDED ARE FOR REFERENCE ONLY. CONTRACTOR SHALL ADJUST DIMENSIONS SUCH THAT THE REQUIREMENTS OF DETAIL 1 AND SECTION A ARE SATISFIED.

END PIER GIRDER STOP BAR LIST

	REBAR MARK	LOCATION	SIZE	DIMENSIONS			TOTAL #	WEIGHT
				A HORIZ.	B VERT.	LENGTH		
END PIER 1	A101	GIRDER STOP LONG.	4	3'-1"	10½"	4'-0"	60	159
	A102	GIRDER STOP TRANSV.	4	1'-3"	1'-8"	2'-11"	80	156
END PIER 4	A401	GIRDER STOP LONG.	4	3'-1"	10½"	4'-0"	60	159
	A402	GIRDER STOP TRANSV.	4	1'-3"	1'-8"	2'-11"	80	156

NOTES:

REBAR BENDING DIAGRAM (ALL DIMENSIONS ARE OUT TO OUT)
MINIMUM REINF. STEEL SPLICE LENGTHS - #4: 2'-0"
ANOO = BAR MARK FOR END PIER GIRDER STOP, WHERE "N" IS THE END PIER NUMBER

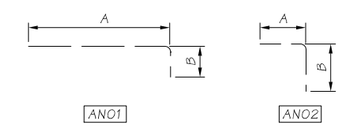

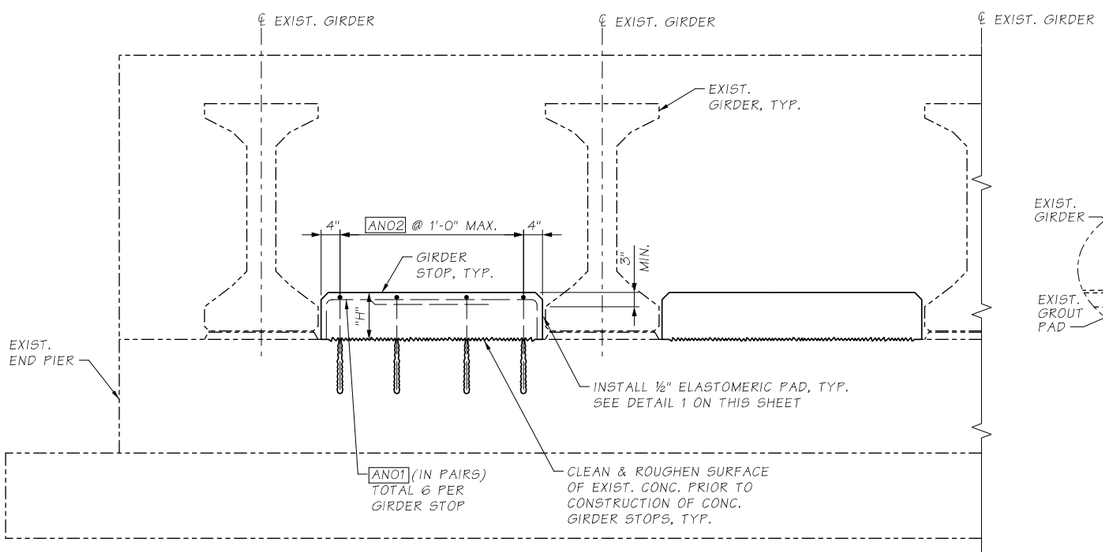

ELEVATION - TYP. END PIER W/ GIRDER STOPS

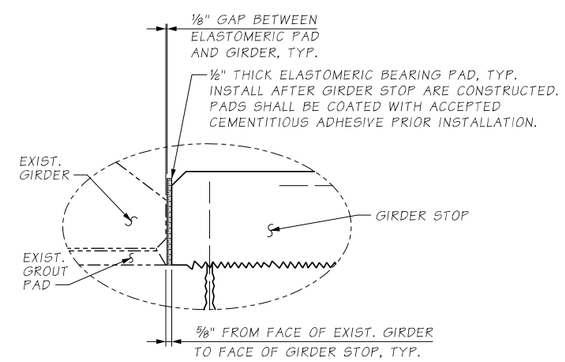

DETAIL 1

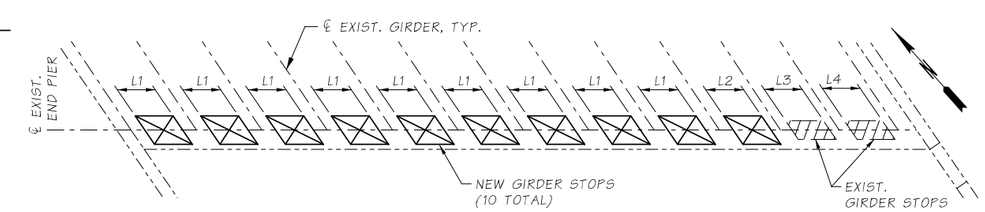

TYPICAL END PIER GIRDER STOP LAYOUT

END PIER 1 SHOWN (END PIER 4 SIMILAR BY OPP. HAND)

Bridge Design Engr.	KHALEGHI B.	c:\pwworking\west01\d1468466\45W_End Pier Girder Stops_Plan-Elev.dgn			REGION NO.	STATE	FED. AID PROJ. NO.	SHEET NO.	TOTAL SHEETS
Supervisor	KORPI D.				10	WASH		88	176
Designed By	KARSLI N.				JOB NUMBER				
Checked By	CHI J.				20A039				
Detailed By	VYPLEL M.								
Bridge Projects Engr.	ROSA M.								
Prelim. Plan By									
Architect/Specialist		DATE	REVISION	BY	APP'D				

4/20/2022 4:52:35 PM

BRIDGE AND STRUCTURES OFFICE

K. LEE ANDREWS — STATE OF WASHINGTON — 43571 — STRUCTURAL PROJECT PROFESSIONAL ENGINEER
SEE SHEET CT1
04/20/2022

Washington State Department of Transportation

HDR

I-405
BN RR BRIDGE TO PED TRAIL BRIDGE
SEISMIC RETROFIT
BRIDGE NO. 405/45W

END PIER GIRDER STOPS
PLAN AND ELEVATION

BRIDGE SHEET NO. BC5

SHEET 88 OF 176 SHEETS

SR 405 FILE NO. 20A039 SHEET BC5
ProjectWise Vault:

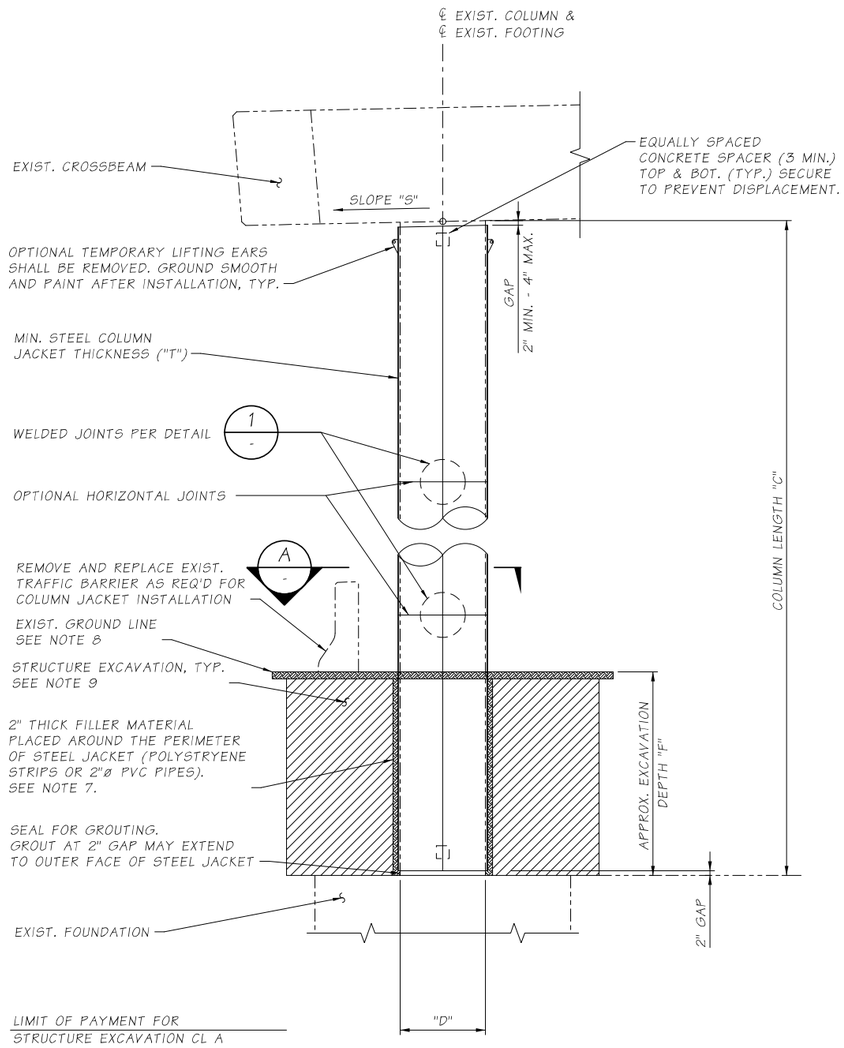

ELEVATION - TYP. COLUMN STEEL JACKET

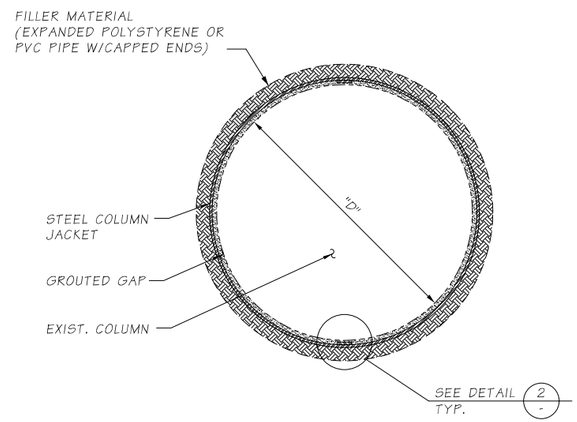

SECTION A -

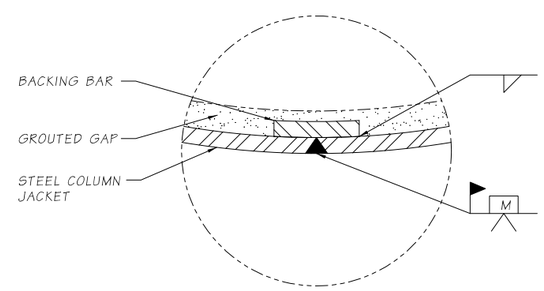

DETAIL 2 -

TYP. WELD JOINT

STEEL COLUMN JACKET DIMENSIONS LIST

DIM.	DESCRIPTION	PIER 2				PIER 3			
D	EXIST. COLUMN DIA.	3'-0"	3'-0"	3'-0"	3'-0"	3'-0"	3'-0"	3'-0"	3'-0"
T	JACKET THICKNESS	3/8"	3/8"	3/8"	N/A	3/8"	3/8"	3/8"	N/A
C	COLUMN LENGTH (FROM WEST TO EAST)	18.08'	19.00'	18.42	N/A	15.75'	16.67'	16.67'	N/A
S	CROSSBEAM SLOPE	2%	2%	2%	2%	2%	2%	2%	2%
F	APPROX. EXCAVATION DEPTH* (FROM WEST TO EAST)	5.5'	5.4'	4.8'	N/A	1.8'	2.1'	2.3'	N/A

* EXCAVATION DEPTH MAY VARY ±1'-0"

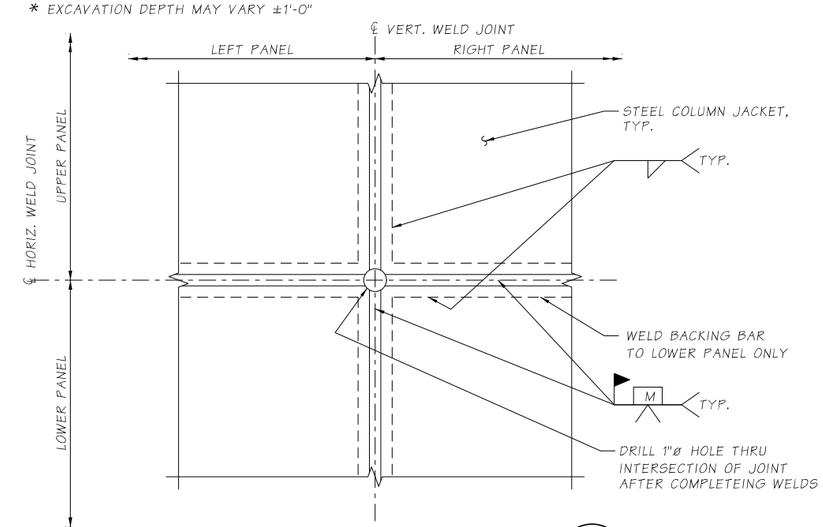

STEEL JACKET WELD DETAIL 1 -

NOTES:

1. DIMENSIONS PROVIDED ARE FOR REFERENCE ONLY. SEE GENERAL NOTE 3 ON SHEET BC1.
2. APPROPRIATE INJECTION NOZZLES SHALL BE PROVIDED ON COLUMN JACKET AND SHALL BE REMOVED, GROUND FLUSH AND PAINTED FOLLOWING COMPLETION OF GROUTING OPERATION.
3. ALL VOIDS BETWEEN STEEL COLUMN JACKET AND EXIST. COLUMN SURFACE SHALL BE FILLED WITH CEMENT GROUT.
4. THE LOCATION AND NUMBER OF HORIZONTAL WELDS SHALL BE DETERMINED BY THE CONTRACTOR AND SUBJECT TO THE APPROVAL OF THE ENGINEER. THE LOCATION OF COLUMN JACKET WELDS IS FOR ILLUSTRATION. THERE SHALL BE NO SKIP WELDS.
5. STEEL COLUMN JACKETS SHALL BE FABRICATED FROM ASTM A36 STRUCTURAL STEEL AND PAINTED IN ACCORDANCE WITH THE SPECIAL PROVISIONS.
6. GROUTING SHALL BE DONE FROM THE BOTTOM UP IN ACCORDANCE WITH THE SPECIAL PROVISIONS.
7. THE 2" THICK FILLER MATERIAL AROUND THE PERIMETER OF THE STEEL JACKET SHALL BE USED FOR PARTIALLY BURIED COLUMNS WHERE THE DEPTH IS MORE THAN 4'-0" OR COLUMNS ARE ADJACENT TO PAVED SURFACES OR SLOPE PROTECTION.
8. EXIST. GRADE AND SLOPE PROTECTIONS TO BE REMOVED AND REPLACED AS NECESSARY FOR COLUMN JACKET INSTALATION.
9. USE STRUCTURAL SHORING WHERE NECESSARY TO SUPPORT SIDES OF EXCAVATION TO PREVENT CAVE-INS.

SR 405 FILE NO. 20A039 SHEET BC6
ProjectWise Vault:

Bridge Design Engr.	KHALEGHI B.	c:\pwworking\west01\d1468466\45W_Steel Column Jackets_Elev-Det.dgn							
Supervisor	KORPI D.				REGION NO.	STATE	FED. AID PROJ. NO.	SHEET NO.	TOTAL SHEETS
Designed By	KARSLI N.				10	WASH		89	176
Checked By	CHI J.				JOB NUMBER				
Detailed By	VYPLEL M.				20A039				
Bridge Projects Engr.	ROSA M.								
Prelim. Plan By									
Architect/Specialist		DATE	REVISION	BY	APP'D				

4/20/2022 4:52:39 PM

BRIDGE AND STRUCTURES OFFICE

R. LEE ANDREWS STATE OF WASHINGTON 43571 STRUCTURAL ENGINEER PROFESSIONAL ENGINEER
SEE SHEET CT1
04/20/2022

Washington State Department of Transportation

HDR

I-405
BN RR BRIDGE TO PED TRAIL BRIDGE SEISMIC RETROFIT
BRIDGE NO. 405/45W

STEEL COLUMN JACKETS ELEVATIONS AND DETAILS

BRIDGE SHEET NO. BC6

SHEET 89 OF 176 SHEETS

SEC. 20, T.25N., R.5E., W.M.

CITY OF BELLEVUE

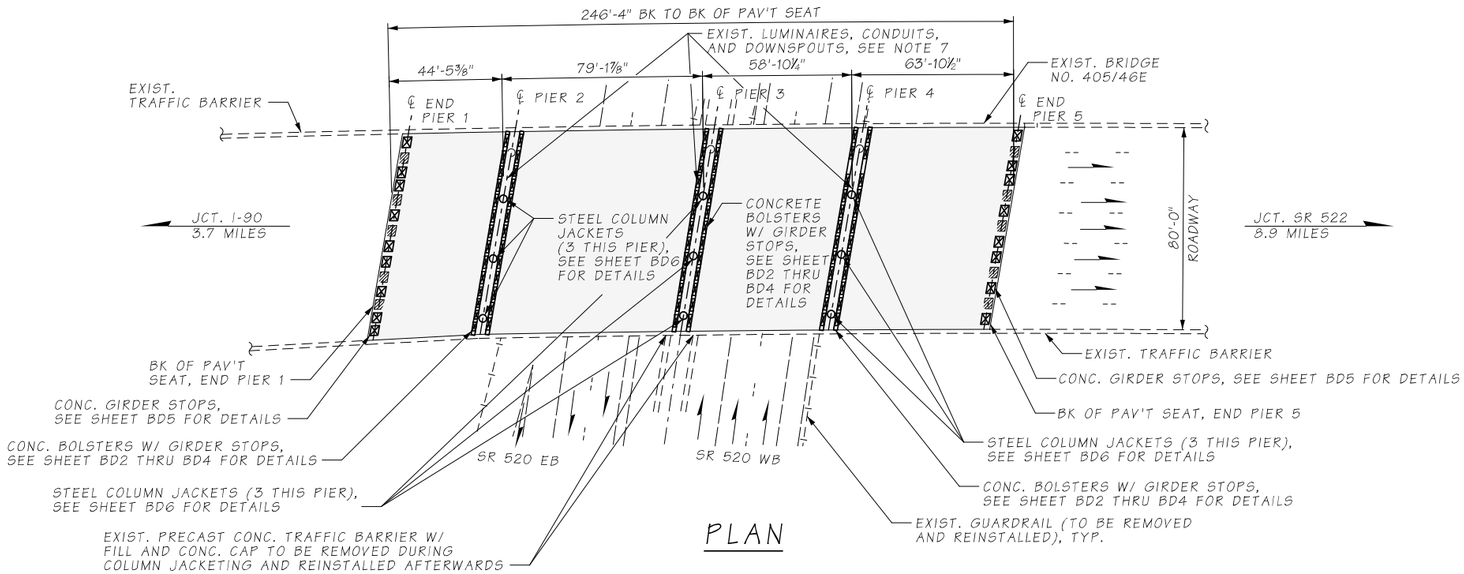

PLAN

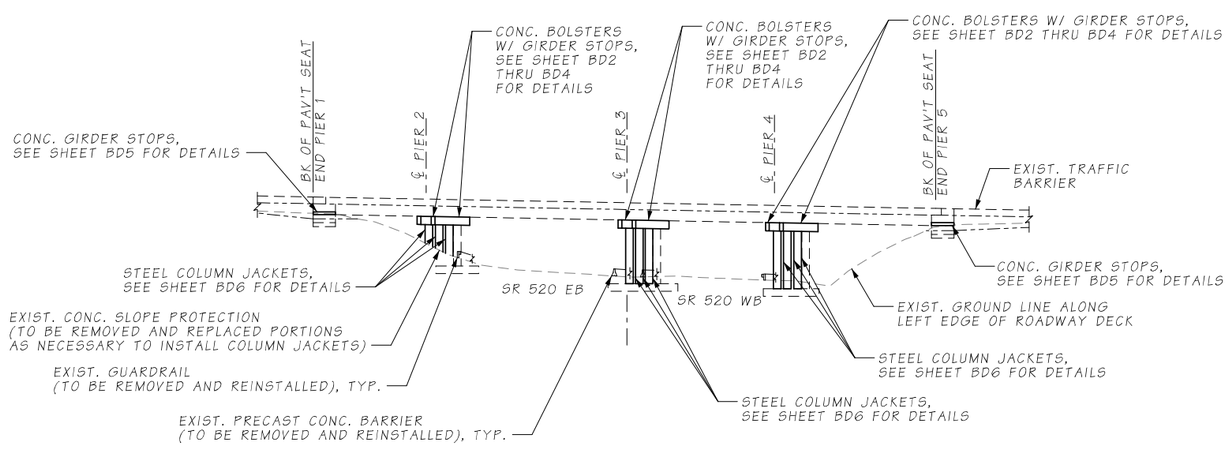

ELEVATION

GENERAL NOTES

1. ALL MATERIALS AND WORKMANSHIP SHALL BE IN ACCORDANCE WITH THE REQUIREMENTS OF THE WASHINGTON STATE DEPARTMENT OF TRANSPORTATION STANDARD SPECIFICATIONS FOR ROAD, BRIDGE AND MUNICIPAL CONSTRUCTION - DATED 2022.
2. NEW CONSTRUCTION HAS BEEN DESIGNED IN ACCORDANCE WITH THE REQUIREMENTS OF THE AASHTO LRFD BRIDGE DESIGN SPECIFICATIONS 8TH EDITION, DATED 2017 AND THE FHWA-HRT-06-032 SEISMIC RETROFITTING MANUAL FOR HIGHWAY STRUCTURES, DATED 2006.
3. EXISTING FEATURES, DIMENSIONS, AND ELEVATIONS ARE BASED ON AS-BUILT PLANS. ALL DIMENSIONS SHALL BE FIELD MEASURED AND VERIFIED BY THE CONTRACTOR, PRIOR TO ORDERING MATERIALS AND FABRICATION (SEE SPECIAL PROVISIONS).
4. CONTRACTOR SHALL LOCATE EXISTING STEEL REINFORCING USING NONDESTRUCTIVE METHODS TO AVOID DAMAGE DURING DRILLING OPERATIONS. THE CONTRACTOR SHALL NOTIFY THE ENGINEER IMMEDIATELY IF ANY EXISTING REBAR OR ANCHOR BOLTS ARE ENCOUNTERED OR ARE IN CONFLICT WITH THE WORK DETAILED, AND SHALL OBTAIN APPROVAL FROM THE ENGINEER BEFORE CONTINUING WORK. CORE DRILLING IS NOT ALLOWED.
5. ALL NEW MATERIALS USED SHALL MEET THE FOLLOWING REQUIREMENTS:
   - CONCRETE CLASS 4000
   - REINFORCING STEEL BARS - ASTM A706, GRADE 60, U.N.O. ON BAR LIST
   - STEEL COLUMN JACKETS - ASTM A36
6. THE MINIMUM CONCRETE COVER MEASURED FROM THE FACE OF THE CONCRETE TO THE FACE OF ANY REINFORCING STEEL SHALL BE 1 1/2" U.N.O.
7. EXISTING DRAIN PIPES ATTACHED TO INTERMEDIATE PIERS SHALL BE REMOVED. CONDUITS, AND OTHER ITEMS THAT ARE MOUNTED ON THE INTERMEDIATE PIER SURFACES SHALL BE CAREFULLY REMOVED, AS REQUIRED, AND REPLACED AFTER SEISMIC RETROFIT IS COMPLETE. RE-ATTACHMENT DETAILS SHALL BE SUBMITTED TO THE ENGINEER FOR APPROVAL, PRIOR TO RE-INSTALLATION.
8. CONCRETE SURFACES REQUIRED TO BE ROUGHENED SHALL BE ROUGHENED IN ACCORDANCE WITH SECTION 6-02.3(12)B OR THE SPALL PATTERN ALTERNATIVE ROUGHENED SURFACE SHOWN IN DETAIL 2 ON BRIDGE SHEET BD3.
9. THE LOCATION OF DOWEL BARS MAY BE ADJUSTED BY +/- 1" IF NECESSARY TO AVOID CONFLICTS WITH EXISTING REINFORCING STEEL. DOWEL BARS SHALL BE KEPT A MINIMUM OF 3" FROM THE EDGE OF CONCRETE.
10. SEE UTILITY SHEETS FOR THE LOCATIONS OF EXISTING UTILITIES.

LEGEND

NEW GIRDER STOP

EXISTING GIRDER STOP

A / BD5 — IDENTIFIES SECTION, VIEW OR DETAIL; TAKEN OR SHOWN ON BRIDGE SHEET BD5

A / — TAKEN OR SHOWN ON SAME SHEET

SEISMIC RETROFIT

Bridge Design Engr.	KHALEGHI B.	c:\pwworking\west01\d1468466\46E_Layout Plan.dgn				REGION NO.	STATE	FED. AID PROJ. NO.	SHEET NO.	TOTAL SHEETS
Supervisor	KORPI D.					10	WASH		90	176
Designed By	JUMPAWONG K.					JOB NUMBER				
Checked By	ANDREWS L.					20A039				
Detailed By	VYPLEL M.									
Bridge Projects Engr.	ROSA M.									
Prelim. Plan By										
Architect/Specialist		DATE	REVISION	BY	APP'D					

4/20/2022 4:52:51 PM

BRIDGE AND STRUCTURES OFFICE

K. LEE ANDREWS — STATE OF WASHINGTON — 43571 — STRUCTURAL ENGINEER — PROFESSIONAL ENGINEER

SEE SHEET CT1
04/20/2022

Washington State Department of Transportation

HDR

I-405
BN RR BRIDGE TO PED TRAIL BRIDGE
SEISMIC RETROFIT
BRIDGE NO. 405/46E

LAYOUT

BRIDGE SHEET NO. BD1

SHEET 90 OF 176 SHEETS

SR 405 FILE NO. ____ SHEET BD1

ProjectWise Vault:

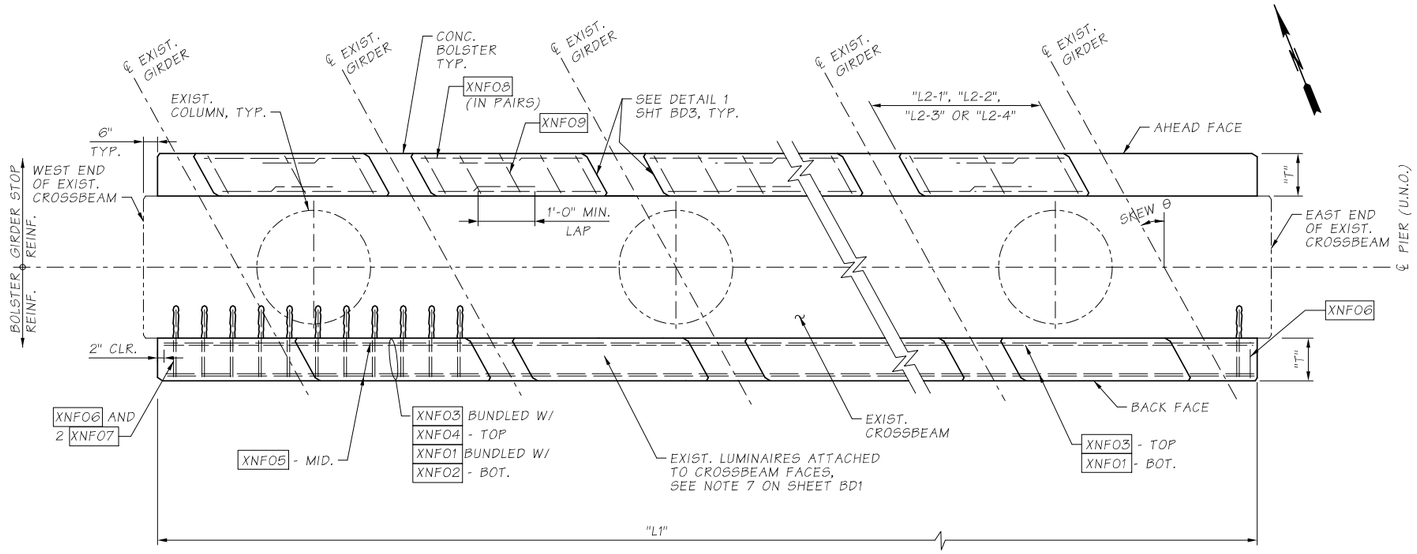

PLAN - TYP. CROSSBEAM BOLSTERS AND GIRDER STOPS

CROSSBEAM BOLSTER AND GIRDER STOP DIMENSIONS LIST							
DIM.	DESCRIPTION	DIMENSIONS					
		PIER 2		PIER 3		PIER 4	
		BACK	AHEAD	BACK	AHEAD	BACK	AHEAD
L1	BOLSTER LENGTH	84'-2"	84'-2"	84'-2"	84'-2"	84'-2"	84'-2"
L2-1	GIRDER STOP LENGTH	2 @ 4'-4"	2 @ 4'-4½"	2 @ 4'-5½"	2 @ 4'-5½"	2 @ 4'-5"	2 @ 4'-5"
L2-2	GIRDER STOP LENGTH	1 @ 3'-10"	1 @ 3'-10"	1 @ 3'-11"	1 @ 3'-11"	1 @ 3'-10½"	1 @ 3'-10½"
L2-3	GIRDER STOP LENGTH	7 @ 4'-2"	10 @ 4'-2"	10 @ 4'-2"	10 @ 4'-2"	10 @ 4'-2"	10 @ 4'-2"
L2-4	GIRDER STOP LENGTH	4 @ 2'-7½"	-	-	-	-	-
H1	BOLSTER HEIGHT	3'-3"	3'-3"	3'-3"	3'-3"	3'-3"	3'-3"
H2	GIRDER STOP HEIGHT	1'-0"	1'-0"	1'-0"	1'-0"	1'-0"	1'-0"
T	BOLSTER THICKNESS	1'-0"	1'-0"	1'-0"	1'-0"	1'-0"	1'-0"
θ	SKEW ANGLE	10°43'43"	10°43'43"	10°20'02"	10°20'02"	10°02'21"	10°02'21"

NOTES:

1. DIMENSIONS PROVIDED ARE FOR REFERENCE ONLY. CONTRACTOR SHALL ADJUST DIMENSIONS IN THE FIELD SUCH THAT THE REQUIREMENTS OF DETAIL 1 ON SHEET BD3 ARE SATISFIED.
2. SEE GENERAL NOTE 3 ON SHEET BD1.
3. SEE SHEET BD4 FOR BAR LIST.
4. EXISTING GIRDERS AND DIAPHRAGMS NOT SHOWN FOR CLARITY.

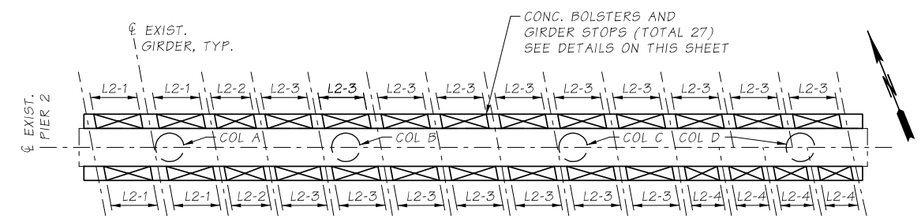

PIER 2 GIRDER STOP LAYOUT

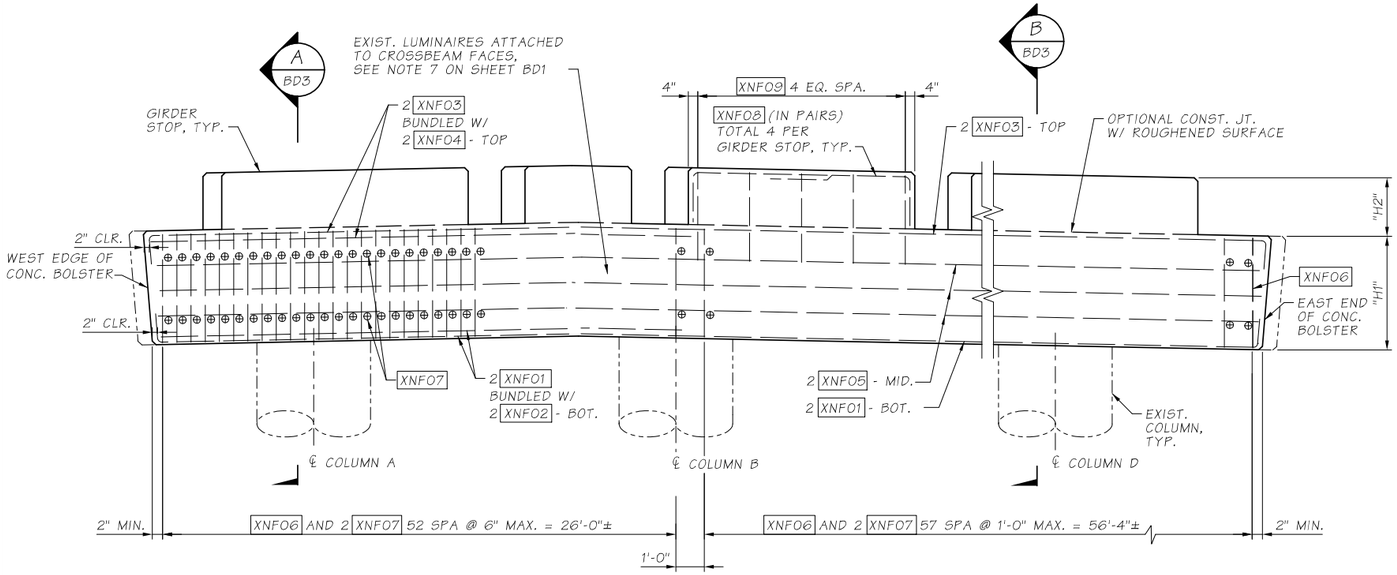

ELEVATION - TYP. CROSSBEAM BOLSTERS AND GIRDER STOPS

(BACK FACE SHOWN, AHEAD FACE SIMILAR)

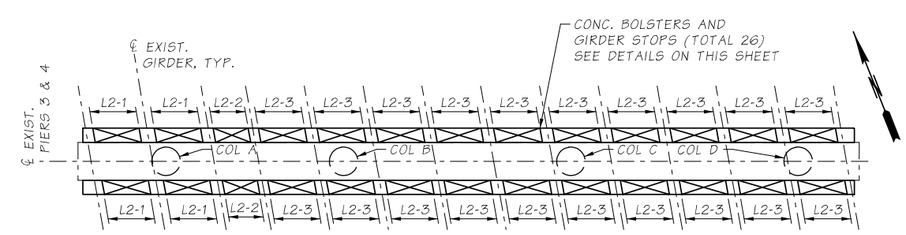

PIERS 3 & 4 GIRDER STOP LAYOUT

Bridge Design Engr.	KHALEGHI B.	c:\pwworking\west01\d1468466\46E_XBeam Bolster-Girder Stops_Plan-Elev.dgn				REGION NO.	STATE	FED. AID PROJ. NO.	SHEET NO.	TOTAL SHEETS
Supervisor	KORPI D.					10	WASH		91	176
Designed By	JUMPAWONG K.					JOB NUMBER				
Checked By	ANDREWS L.					20A039				
Detailed By	VYPLEL M.									
Bridge Projects Engr.	ROSA M.									
Prelim. Plan By										
Architect/Specialist		DATE	REVISION	BY	APP'D					

4/20/2022 4:52:57 PM

BRIDGE AND STRUCTURES OFFICE

R. LEE ANDREWS — STATE OF WASHINGTON — 43571 — STRUCTURAL ENGINEER — PROFESSIONAL ENGINEER

SEE SHEET CT1
04/20/2022

Washington State Department of Transportation

HDR

I-405
BN RR BRIDGE TO PED TRAIL BRIDGE SEISMIC RETROFIT
BRIDGE NO. 405/46E

CROSSBEAM BOLSTER AND GIRDER STOPS - PLAN AND ELEVATION

BRIDGE SHEET NO. BD2

SHEET 91 OF 176 SHEETS

SR 405 FILE NO. 20A039 SHEET BD2
ProjectWise Vault:

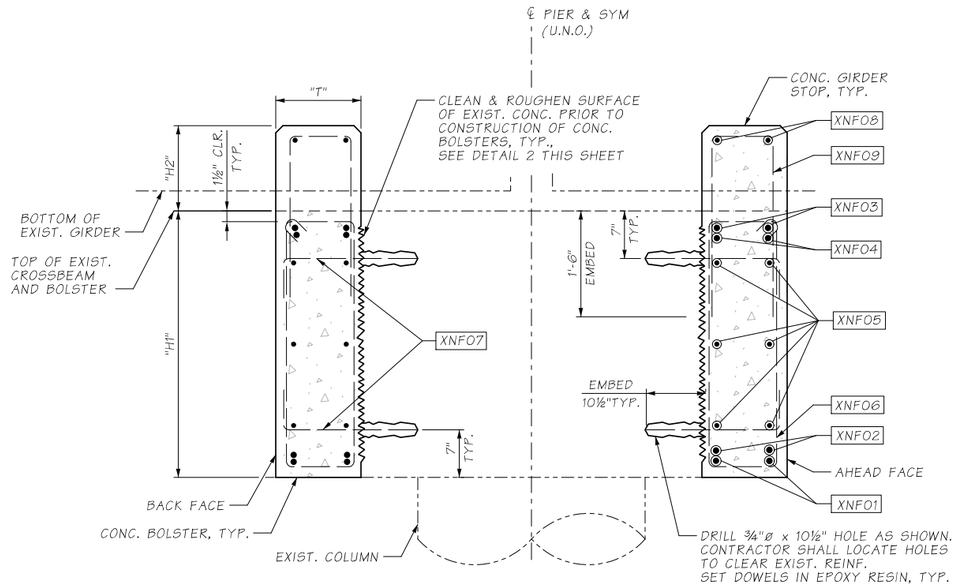

SECTION A / BD2

NOTES:
1. SEE SHEET BD2 FOR "H1", "H2", AND "T" DIMENSIONS

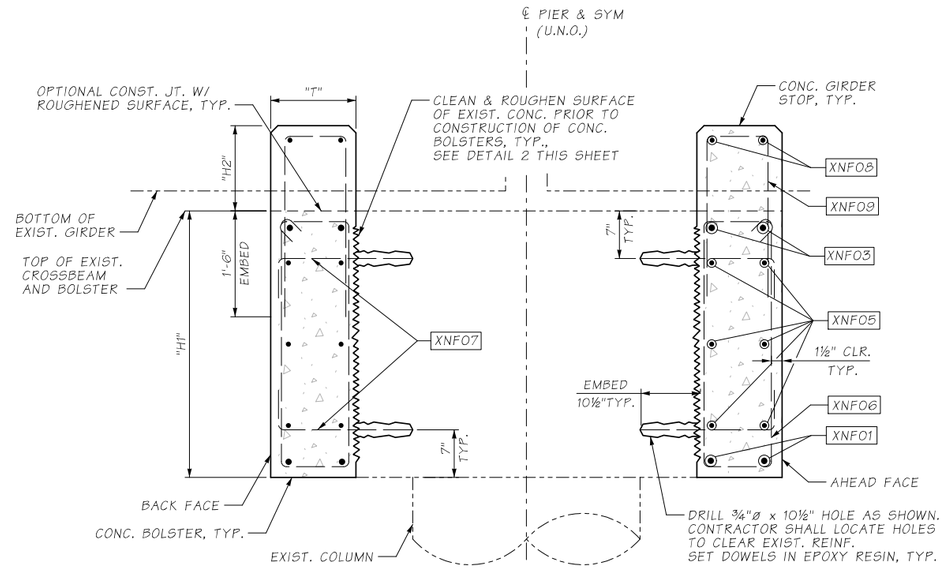

SECTION B / BD2

NOTES:
1. SEE SHEET BD2 FOR "H1", "H2", AND "T" DIMENSIONS

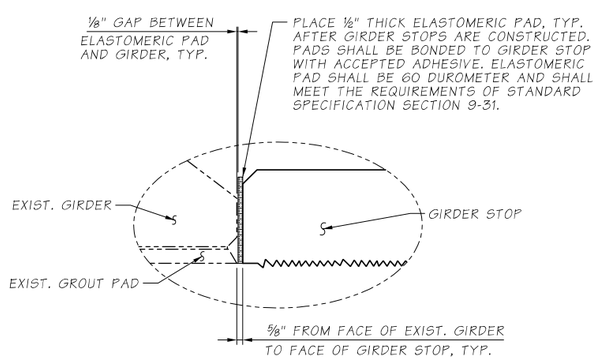

DETAIL 1 / BD2

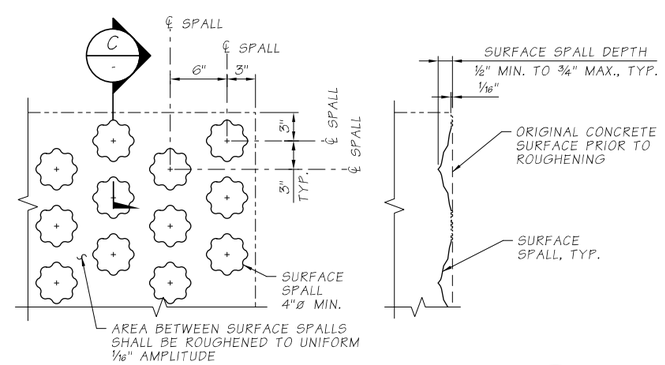

ELEVATION

SECTION C / -

SPALL PATTERN ALTERNATIVE ROUGHENED SURFACE DETAIL 2 / -

Bridge Design Engr.	KHALEGHI B.	c:\pwworking\west01\d1468466\46E_XBeam Bolster-Girder Stops_Details.dgn							
Supervisor	KORPI D.				REGION NO.	STATE	FED. AID PROJ. NO.	SHEET NO.	TOTAL SHEETS
Designed By	JUMPAWONG K.				10	WASH		92	176
Checked By	ANDREWS L.								
Detailed By	VYPLEL M.				JOB NUMBER				
Bridge Projects Engr.	ROSA M.				20A039				
Prelim. Plan By									
Architect/Specialist		DATE	REVISION	BY	APP'D				

4/20/2022 4:53:00 PM

BRIDGE AND STRUCTURES OFFICE

R. LEE ANDREWS, STATE OF WASHINGTON, 43571, STRUCTURAL ENGINEER, PROFESSIONAL ENGINEER
SEE SHEET CT1
04/20/2022

Washington State Department of Transportation

HDR

I-405
BN RR BRIDGE TO PED TRAIL BRIDGE SEISMIC RETROFIT
BRIDGE NO. 405/46E

CROSSBEAM BOLSTER AND GIRDER STOPS - DETAILS

BRIDGE SHEET NO. BD3

SHEET 92 OF 176 SHEETS

SR 405 FILE NO. 20A039 SHEET BD3
Project Wise Vault:

CROSSBEAM BOLSTER / GIRDER STOP BAR LIST

	REBAR MARK	LOCATION	SIZE	BAR GRADE *	DIMENSIONS A	DIMENSIONS B	DIMENSIONS LENGTH	TOTAL #	WEIGHT
PIER 2	X2B01	BOLSTER LONG. BOT.	14	80	83'-1"	-	88'-3"	2	1350
	X2B02	BOLSTER LONG. BOT.	14	80	28'-0"	-	28'-0"	2	429
	X2B03	BOLSTER LONG. TOP	14	80	83'-10"	-	89'-0"	2	1362
	X2B04	BOLSTER LONG. TOP	14	80	28'-6"	-	28'-6"	2	436
	X2B05	BOLSTER LONG. MID.	4	-	83'-5"	-	85'-5"	6	343
	X2B06	BOLSTER TIES	4	-	9"	3'-0"	7'-9"	112	580
	X2B07	BOLSTER DOWELS	5	-	1'-9"	-	2'-7"	224	604
	X2B08	GIRDER STOP (PAIRS)	4	-	3'-0"	10-½"	3'-11"	56	141
	X2B09	GIRDER STOP U-SHAPED	4	-	9"	2'-4½"	5'-6"	70	257
	X2A01	BOLSTER LONG. BOT.	14	80	83'-1"	-	88'-3"	2	1350
	X2A02	BOLSTER LONG. BOT.	14	80	28'-0"	-	28'-0"	2	429
	X2A03	BOLSTER LONG. TOP	14	80	83'-10"	-	89'-0"	2	1362
	X2A04	BOLSTER LONG. TOP	14	80	28'-6"	-	28'-6"	2	436
	X2A05	BOLSTER LONG. MID.	4	-	83'-5"	-	85'-5"	6	343
	X2A06	BOLSTER TIES	4	-	9"	3'-0"	7'-9"	112	580
	X2A07	BOLSTER DOWELS	5	-	1'-9"	-	2'-7"	224	604
	X2A08	GIRDER STOP (PAIRS)	4	-	3'-0"	10-½"	3'-11"	52	141
	X2A09	GIRDER STOP U-SHAPED	4	-	9"	2'-4½"	5'-6"	65	239
PIER 3	X3B01	BOLSTER LONG. BOT.	14	80	83'-1"	-	88'-3"	2	1350
	X3B02	BOLSTER LONG. BOT.	14	80	28'-0"	-	28'-0"	2	429
	X3B03	BOLSTER LONG. TOP	14	80	83'-10"	-	89'-0"	2	1362
	X3B04	BOLSTER LONG. TOP	14	80	28'-6"	-	28'-6"	2	436
	X3B05	BOLSTER LONG. MID.	4	-	83'-5"	-	85'-5"	6	343
	X3B06	BOLSTER TIES	4	-	9"	3'-0"	7'-9"	112	580
	X3B07	BOLSTER DOWELS	5	-	1'-9"	-	2'-7"	224	604
	X3B08	GIRDER STOP (PAIRS)	4	-	3'-0"	10-½"	3'-11"	52	141
	X3B09	GIRDER STOP U-SHAPED	4	-	9"	2'-4½"	5'-6"	65	239
	X3A01	BOLSTER LONG. BOT.	14	80	83'-1"	-	88'-3"	2	1350
	X3A02	BOLSTER LONG. BOT.	14	80	28'-0"	-	28'-0"	2	429
	X3A03	BOLSTER LONG. TOP	14	80	83'-10"	-	89'-0"	2	1362
	X3A04	BOLSTER LONG. TOP	14	80	28'-6"	-	28'-6"	2	436
	X3A05	BOLSTER LONG. MID.	4	-	83'-5"	-	85'-5"	6	343
	X3A06	BOLSTER TIES	4	-	9"	3'-0"	7'-9"	112	580
	X3A07	BOLSTER DOWELS	5	-	1'-9"	-	2'-7"	224	604
	X3A08	GIRDER STOP (PAIRS)	4	-	3'-0"	10-½"	3'-11"	52	141
	X3A09	GIRDER STOP U-SHAPED	4	-	9"	2'-4½"	5'-6"	65	239
PIER 4	X4B01	BOLSTER LONG. BOT.	14	80	83'-1"	-	88'-3"	2	1350
	X4B02	BOLSTER LONG. BOT.	14	80	28'-0"	-	28'-0"	2	429
	X4B03	BOLSTER LONG. TOP	14	80	83'-10"	-	89'-0"	2	1362
	X4B04	BOLSTER LONG. TOP	14	80	28'-6"	-	28'-6"	2	436
	X4B05	BOLSTER LONG. MID.	4	-	83'-5"	-	85'-5"	6	343
	X4B06	BOLSTER TIES	4	-	9"	3'-0"	7'-9"	112	580
	X4B07	BOLSTER DOWELS	5	-	1'-9"	-	2'-7"	224	604
	X4B08	GIRDER STOP (PAIRS)	4	-	3'-0"	10-½"	3'-11"	52	141
	X4B09	GIRDER STOP U-SHAPED	4	-	9"	2'-4½"	5'-6"	65	239
	X4A01	BOLSTER LONG. BOT.	14	80	83'-1"	-	88'-3"	2	1350
	X4A02	BOLSTER LONG. BOT.	14	80	28'-0"	-	28'-0"	2	429
	X4A03	BOLSTER LONG. TOP	14	80	83'-10"	-	89'-0"	2	1362
	X4A04	BOLSTER LONG. TOP	14	80	28'-6"	-	28'-6"	2	436
	X4A05	BOLSTER LONG. MID.	4	-	83'-5"	-	85'-5"	6	343
	X4A06	BOLSTER TIES	4	-	9"	3'-0"	7'-9"	112	580
	X4A07	BOLSTER DOWELS	5	-	1'-9"	-	2'-7"	224	604
	X4A08	GIRDER STOP (PAIRS)	4	-	3'-0"	10-½"	3'-11"	52	141
	X4A09	GIRDER STOP U-SHAPED	4	-	9"	2'-4½"	5'-6"	65	239

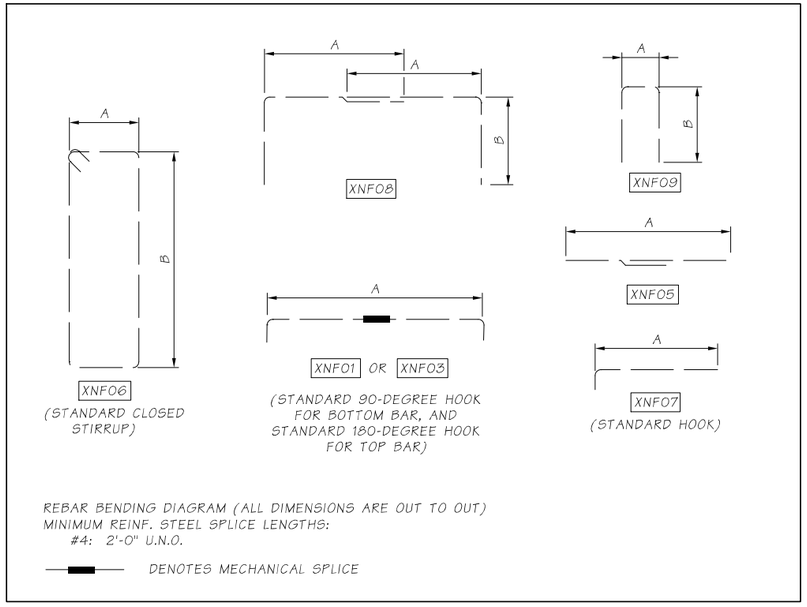

NOTES:

1. XNFOO = BAR MARK FOR CROSSBEAM BOLSTER AND/OR GIRDER STOP, WHERE "N" IS THE BENT NUMBER AND "F" IS THE FACE ("A"= AHEAD AND "B"= BACK)
2. STAGGER MECHANICAL SPLICE LOCATION BY 3'-0" MIN. BETWEEN ADJACENT BARS.
3. ALL REINFORCING #9 AND LARGER SHALL USE MECHANICAL SPLICES. ALL REINFORCING #8 AND SMALLER SHALL USE LAP SPLICES.

* BAR GRADE ONLY IF DIFFERENT THAN GRADE 60

SR 405 FILE NO. 20A039 SHEET BD4
ProjectWise Vault:

Bridge Design Engr.	KHALEGHI B.	c:\pwworking\west01\d1468466\46E_XBeam Bolster-Girder Stops_Bar List.dgn				REGION NO.	STATE	FED. AID PROJ. NO.	SHEET NO. / TOTAL SHEETS
Supervisor	KORPI D.					10	WASH		93 / 176
Designed By	JUMPAWONG K.					JOB NUMBER			
Checked By	ANDREWS L.					20A039			
Detailed By	VYPLEL M.								
Bridge Projects Engr.	ROSA M.								
Prelim. Plan By									
Architect/Specialist		DATE	REVISION	BY	APP'D				

4/20/2022 4:53:04 PM

BRIDGE AND STRUCTURES OFFICE

R. LEE ANDREWS STATE OF WASHINGTON 43571 STRUCTURAL ENGINEER PROFESSIONAL ENGINEER
SEE SHEET CT1
04/20/2022

Washington State Department of Transportation

HDR

I-405
BN RR BRIDGE TO PED TRAIL BRIDGE SEISMIC RETROFIT
BRIDGE NO. 405/46E

CROSSBEAM BOLSTER AND GIRDER STOPS - BAR LIST

BRIDGE SHEET NO. BD4

SHEET 93 OF 176 SHEETS

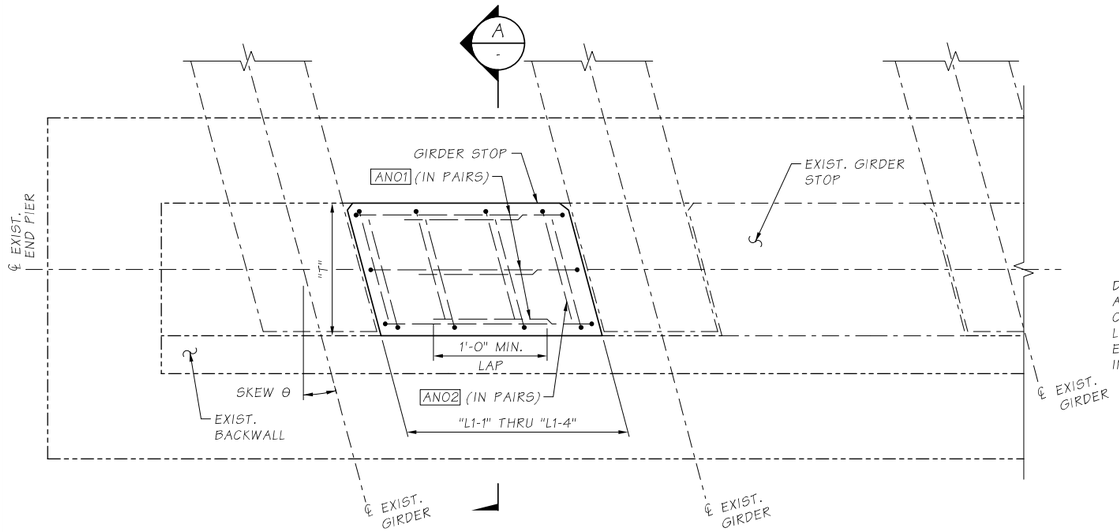

PLAN - TYP. END PIER W/ GIRDER STOPS

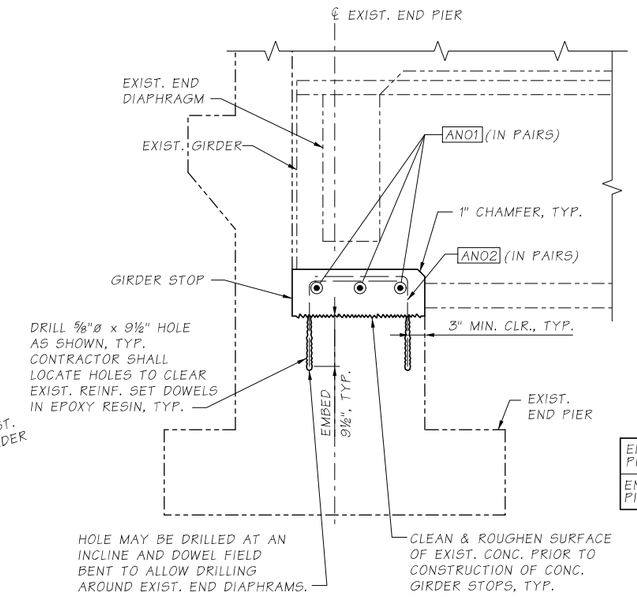

SECTION A / -

END PIER GIRDER STOP DIMENSIONS LIST

DIM.	DESCRIPTION	DIMENSIONS	
		END PIER 1	END PIER 5
L1-1	GIRDER STOP LENGTH	1 @ 4'-2½"	1 @ 4'-2½"
L1-2	GIRDER STOP LENGTH	1 @ 3'-8½"	1 @ 3'-4"
L1-3	GIRDER STOP LENGTH	4 @ 4'-2"	6 @ 4'-2"
L1-4	GIRDER STOP LENGTH	3 @ 3'-2½"	-
H	GIRDER STOP HEIGHT	1'-0"	1'-0"
T	GIRDER STOP DEPTH	2'-3"	2'-3"
θ	SKEW ANGLE	10°56'23"	9°44'06"

NOTES:

1. SEE GENERAL NOTES ON SHEET BD1.
2. DIMENSIONS PROVIDED ARE FOR REFERENCE ONLY. CONTRACTOR SHALL ADJUST DIMENSIONS SUCH THAT THE REQUIREMENTS OF DETAIL 1 AND SECTION A ARE SATISFIED.

END PIER GIRDER STOP BAR LIST

	REBAR MARK	LOCATION	SIZE	DIMENSIONS			TOTAL #	WEIGHT
				A	B	LENGTH		
END PIER 1	A101	GIRDER STOP TRANSV.	4	2'-6"	-	3'-2"	54	114
	A102	GIRDER STOP LONG.	4	2'-0"	1'-8"	3'-8"	72	176
END PIER 5	A501	GIRDER STOP TRANSV.	4	2'-6"	-	3'-2"	48	102
	A502	GIRDER STOP LONG.	4	2'-0"	1'-8"	3'-8"	64	157

NOTES:

REBAR BENDING DIAGRAM (ALL DIMENSIONS ARE OUT TO OUT)

MINIMUM REINF. STEEL SPLICE LENGTHS - #4: 2'-0" U.N.O.

ANOO = BAR MARK FOR END PIER GIRDER STOP, WHERE "N" IS THE END PIER NUMBER

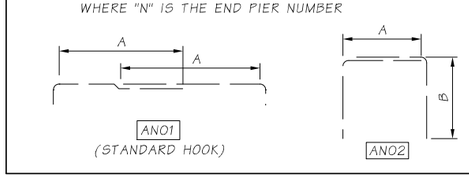

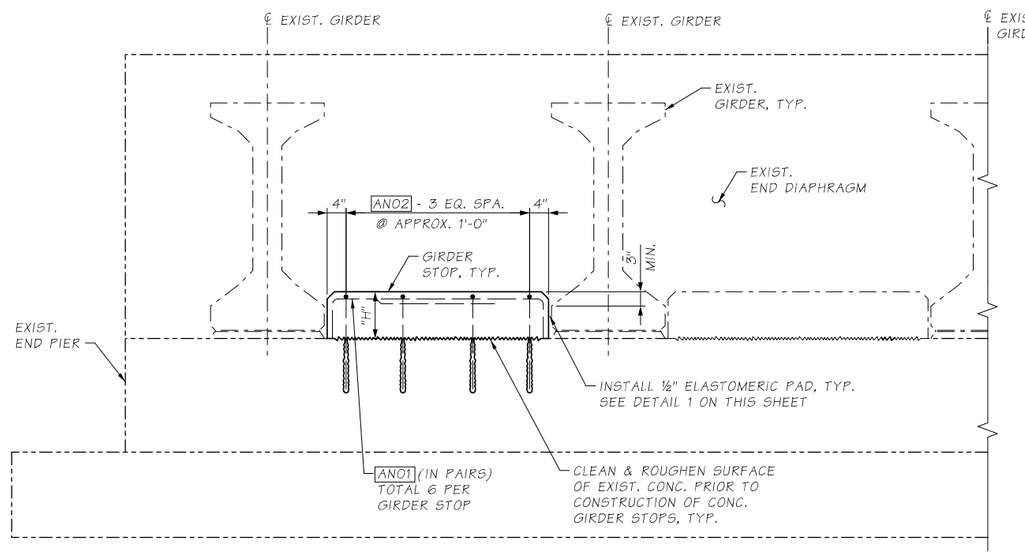

ELEVATION - TYP. END PIER W/ GIRDER STOPS

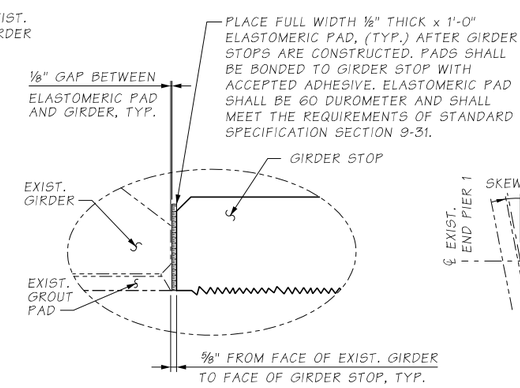

DETAIL 1 / -

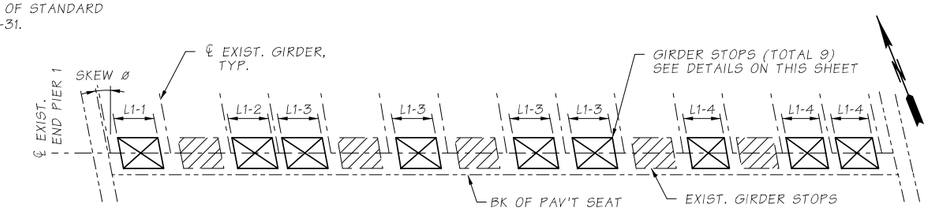

END PIER 1 GIRDER STOP LAYOUT

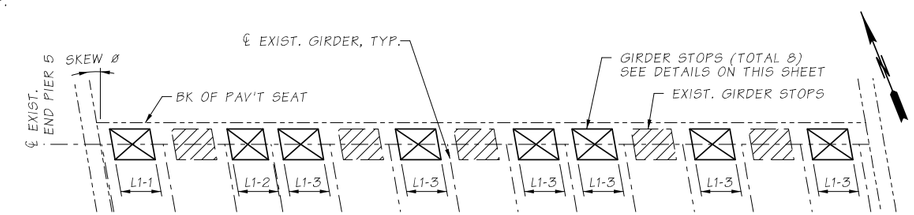

END PIER 5 GIRDER STOP LAYOUT

SR 405 FILE NO. 20A039 SHEET BD5
ProjectWise Vault:

Bridge Design Engr.	KHALEGHI B.	c:\pwworking\west01\d1468466\46E_End Pier Girder Stops_Plan-Elev.dgn						
Supervisor	KORPI D.				REGION NO.	STATE	FED. AID PROJ. NO.	SHEET NO.	TOTAL SHEETS
Designed By	JUMPAWONG K.				10	WASH		94	176
Checked By	ANDREWS L.				JOB NUMBER 20A039				
Detailed By	VYPLEL M.								
Bridge Projects Engr.	ROSA M.								
Prelim. Plan By									
Architect/Specialist		DATE	REVISION	BY	APP'D				

4/20/2022 4:53:21 PM

BRIDGE AND STRUCTURES OFFICE

R. LEE ANDREWS, STATE OF WASHINGTON, 43571, STRUCTURAL ENGINEER, PROFESSIONAL ENGINEER
SEE SHEET CT1
04/20/2022

Washington State Department of Transportation

HDR

I-405
BN RR BRIDGE TO PED TRAIL BRIDGE
SEISMIC RETROFIT
BRIDGE NO. 405/46E

END PIER GIRDER STOPS
PLAN AND ELEVATION

BRIDGE SHEET NO. BD5

SHEET 94 OF 176 SHEETS

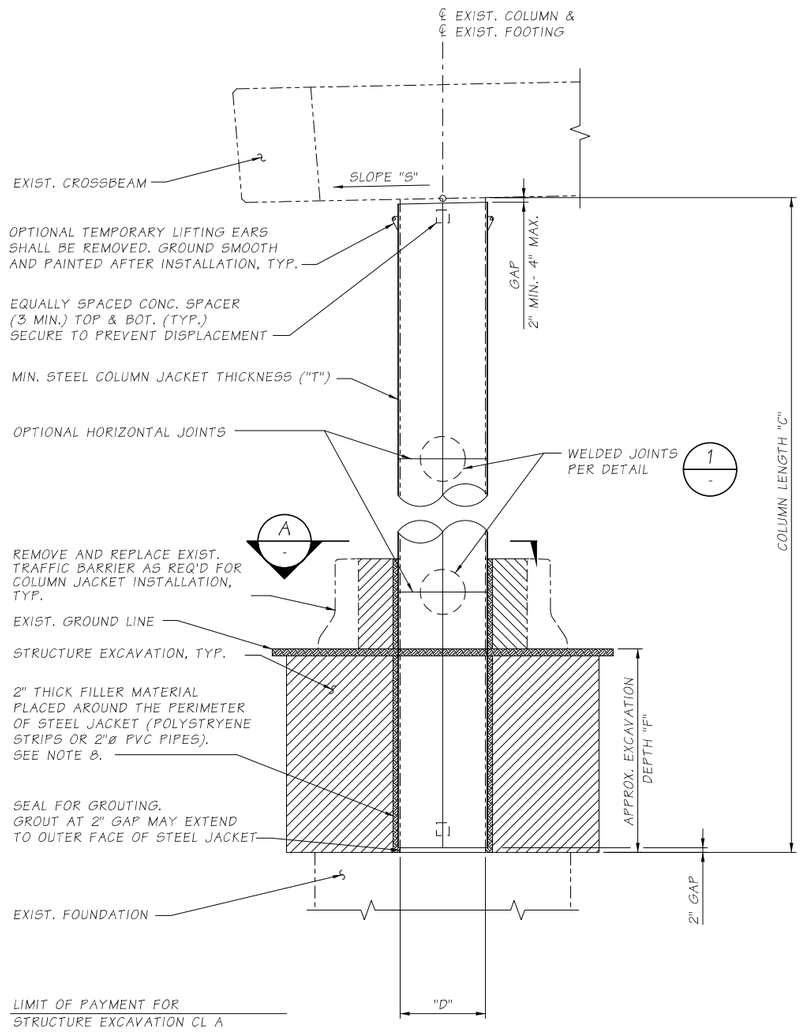

ELEVATION - TYP. COLUMN STEEL JACKET

PIER 3 SHOWN
(PIERS 2 & 4 SIMILAR WITH SLOPE PROTECTION AND GUARDRAIL INSTEAD OF TRAFFIC BARRIER ON EACH SIDE OF COLUMN)

STEEL COLUMN JACKET DIMENSIONS LIST

DIM.	DESCRIPTION	PIER 2				PIER 3				PIER 4			
	COLUMN	A	B	C	D	A	B	C	D	A	B	C	D
D	EXIST. COLUMN DIA.	3'-0" (ALL)				3'-0" (ALL)				3'-0" (ALL)			
T	JACKET THICKNESS	N/A	⅜"	⅜"	⅜"	N/A	⅜"	⅜"	⅜"	N/A	⅜"	⅜"	⅜"
C	COLUMN LENGTH (FROM WEST TO EAST)	N/A	18.04'	17.70'	17.35'	N/A	22.19'	21.85'	21.51'	N/A	22.95'	22.61'	22.26'
S	CROSSBEAM SLOPE	1.4%±				1.4%±				1.5%±			
F	APPROX. EXCAVATION DEPTH* (FROM WEST TO EAST)	N/A	4.4'	4.8'	4.6'	N/A	4.1'	4.7'	5.6'	N/A	3.5'	4.4'	5.3'

* EXCAVATION DEPTH MAY VARY ±1'-0"

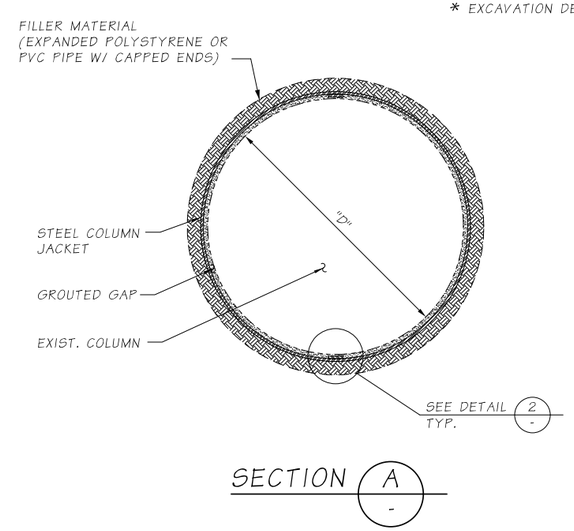

SECTION A -

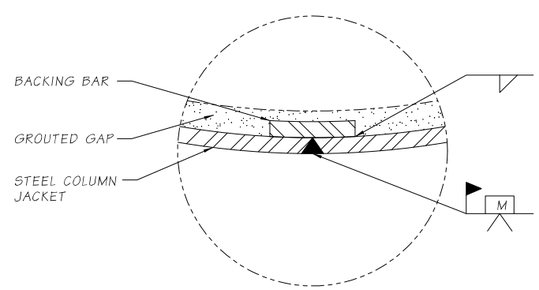

DETAIL 2 -
TYP. WELD JOINT

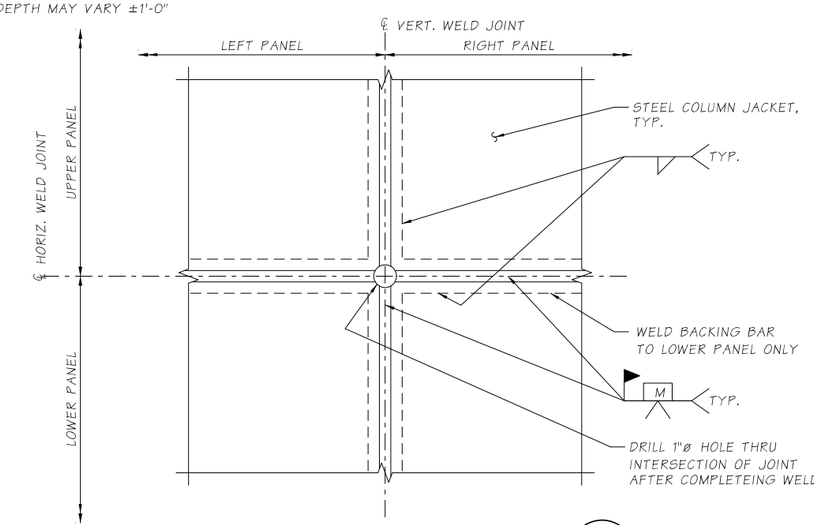

STEEL JACKET WELD DETAIL 1 -

NOTES:

1. DIMENSIONS PROVIDED ARE FOR REFERENCE ONLY. SEE GENERAL NOTE 3 ON SHEET BD1.
2. APPROPRIATE INJECTION NOZZLES SHALL BE PROVIDED ON COLUMN JACKET AND SHALL BE REMOVED, GROUND FLUSH AND PAINTED FOLLOWING COMPLETION OF GROUTING OPERATION.
3. ALL VOIDS BETWEEN STEEL COLUMN JACKET AND EXIST. COLUMN SURFACE SHALL BE FILLED WITH CEMENT GROUT.
4. THE LOCATION AND NUMBER OF HORIZONTAL WELDS SHALL BE DETERMINED BY THE CONTRACTOR AND SUBJECT TO THE APPROVAL OF THE ENGINEER. THE LOCATION OF COLUMN JACKET WELDS IS FOR ILLUSTRATION. THERE SHALL BE NO SKIP WELDS.
5. STEEL COLUMN JACKETS SHALL BE FABRICATED FROM ASTM A36 STRUCTURAL STEEL AND PAINTED IN ACCORDANCE WITH THE SPECIAL PROVISIONS.
6. EXIST. DRAIN PIPE AND CONDUIT MOUNTED ON THE COLUMN SURFACES OF PIERS 2, 3 & 4 SHALL BE CAREFULLY REMOVED FOR COLUMN JACKET INSTALLATION. CONDUIT SHALL BE REPLACED AFTER COLUMN JACKET INSTALLATION IS COMPLETE. RE-ATTACHMENT DETAILS SHALL BE SUBMITTED TO THE ENGINEER FOR APPROVAL.
7. GROUTING SHALL BE DONE FROM THE BOTTOM UP IN ACCORDANCE WITH THE SPECIAL PROVISIONS.
8. THE 2" THICK FILLER MATERIAL AROUND THE PERIMETER OF THE STEEL JACKET SHALL BE USED FOR PARTIALLY BURIED COLUMNS WHERE THE DEPTH IS MORE THAN 4'-0" OR COLUMNS ARE ADJACENT TO PAVED SURFACES OR SLOPE PROTECTION.
9. USE STRUCTURAL SHORING WHERE NECESSARY TO SUPPORT EXISTING ROADWAY.
10. SEE SHEET EU3 FOR THE LOCATION OF EXISTING UTILITIES.

SEC. 20, T.25N., R.5E., W.M.
CITY OF BELLEVUE

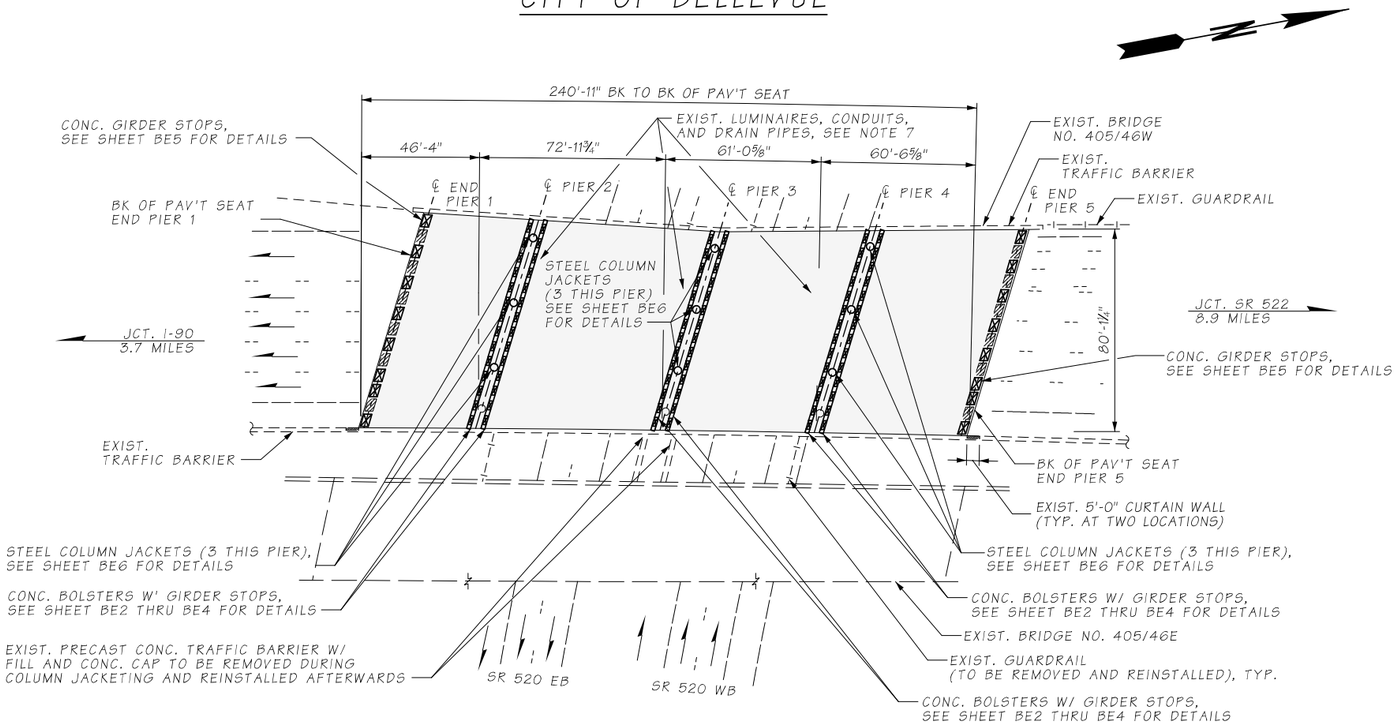

PLAN

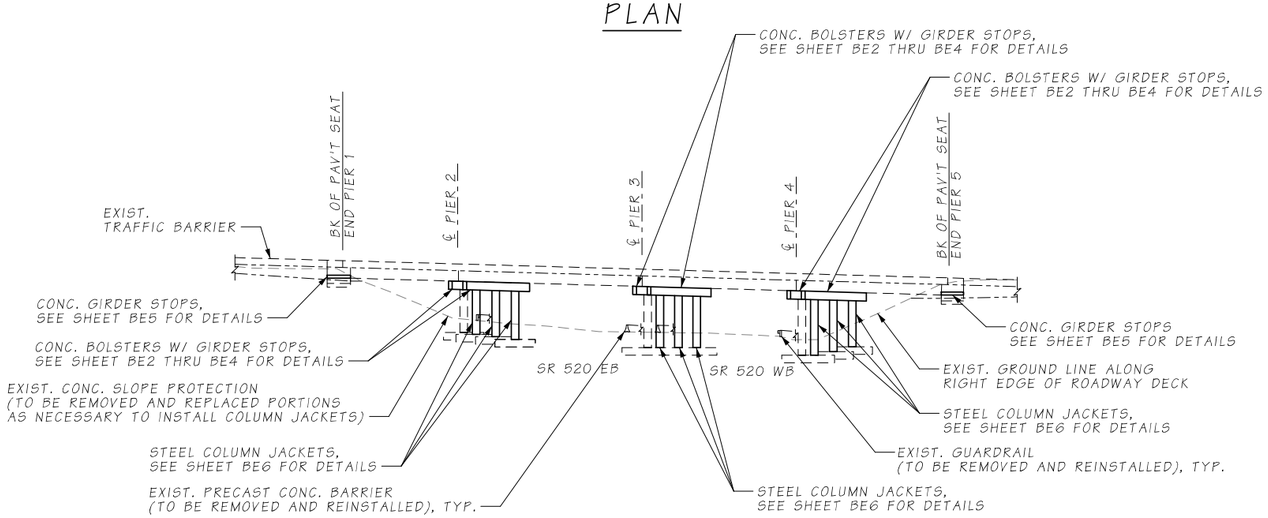

ELEVATION

GENERAL NOTES

1. ALL MATERIALS AND WORKMANSHIP SHALL BE IN ACCORDANCE WITH THE REQUIREMENTS OF THE WASHINGTON STATE DEPARTMENT OF TRANSPORTATION STANDARD SPECIFICATIONS FOR ROAD, BRIDGE AND MUNICIPAL CONSTRUCTION - DATED 2022.
2. NEW CONSTRUCTION HAS BEEN DESIGNED IN ACCORDANCE WITH THE REQUIREMENTS OF THE AASHTO LRFD BRIDGE DESIGN SPECIFICATIONS 8TH EDITION, DATED 2017 AND THE FHWA-HRT-06-032 SEISMIC RETROFITTING MANUAL FOR HIGHWAY STRUCTURES, DATED 2006.
3. EXISTING FEATURES, DIMENSIONS, AND ELEVATIONS ARE BASED ON AS-BUILT PLANS. ALL DIMENSIONS SHALL BE FIELD MEASURED AND VERIFIED BY THE CONTRACTOR, PRIOR TO ORDERING MATERIALS AND FABRICATION (SEE SPECIAL PROVISIONS).
4. CONTRACTOR SHALL LOCATE EXISTING STEEL REINFORCING USING NONDESTRUCTIVE METHODS TO AVOID DAMAGE DURING DRILLING OPERATIONS. THE CONTRACTOR SHALL NOTIFY THE ENGINEER IMMEDIATELY IF ANY EXISTING REBAR OR ANCHOR BOLTS ARE ENCOUNTERED OR ARE IN CONFLICT WITH THE WORK DETAILED, AND SHALL OBTAIN APPROVAL FROM THE ENGINEER BEFORE CONTINUING WORK. CORE DRILLING IS NOT ALLOWED.
5. ALL NEW MATERIALS USED SHALL MEET THE FOLLOWING REQUIREMENTS:
   - CONCRETE CLASS 4000
   - REINFORCING STEEL BARS - ASTM A706, GRADE 60, U.N.O. ON BAR LIST
   - STEEL COLUMN JACKETS - ASTM A36
6. THE MINIMUM CONCRETE COVER MEASURED FROM THE FACE OF THE CONCRETE TO THE FACE OF ANY REINFORCING STEEL SHALL BE 1 1/2" U.N.O.
7. EXISTING DRAIN PIPES ATTACHED TO INTERMEDIATE PIERS SHALL BE REMOVED. CONDUITS, AND OTHER ITEMS THAT ARE MOUNTED ON THE INTERMEDIATE PIER SURFACES SHALL BE CAREFULLY REMOVED, AS REQUIRED, AND REPLACED AFTER SEISMIC RETROFIT IS COMPLETE. RE-ATTACHMENT DETAILS SHALL BE SUBMITTED TO THE ENGINEER FOR APPROVAL, PRIOR TO RE-INSTALLATION.
8. CONCRETE SURFACES REQUIRED TO BE ROUGHENED SHALL BE ROUGHENED IN ACCORDANCE WITH SECTION 6-02.3(12)B OR THE SPALL PATTERN ALTERNATIVE ROUGHENED SURFACE SHOWN IN DETAIL 2 ON BRIDGE SHEET BE3.
9. THE LOCATION OF DOWEL BARS MAY BE ADJUSTED BY +/- 1" IF NECESSARY TO AVOID CONFLICTS WITH EXISTING REINFORCING STEEL. DOWEL BARS SHALL BE KEPT A MINIMUM OF 3" FROM THE EDGE OF CONCRETE.
10. SEE UTILITY SHEETS FOR THE LOCATIONS OF EXISTING UTILITIES.

LEGEND

- NEW GIRDER STOP
- EXISTING GIRDER STOP
- A / BE5 — IDENTIFIES SECTION, VIEW OR DETAIL; TAKEN OR SHOWN ON BRIDGE SHEET BE5
- A / — TAKEN OR SHOWN ON SAME SHEET

SEISMIC RETROFIT

Bridge Design Engr.	KHALEGHI B.	c:\pwworking\west01\d1468466\46W_Layout Plan.dgn							
Supervisor	KORPI D.				REGION NO.	STATE	FED. AID PROJ. NO.	SHEET NO.	TOTAL SHEETS
Designed By	JUMPAWONG K.				10	WASH		96	176
Checked By	ANDREWS L.								
Detailed By	VYPLEL M.				JOB NUMBER				
Bridge Projects Engr.	ROSA M.				20A039				
Prelim. Plan By									
Architect/Specialist		DATE	REVISION	BY	APP'D				

4/20/2022 4:53:28 PM

BRIDGE AND STRUCTURES OFFICE

K. LEE ANDREWS — STATE OF WASHINGTON — 43571 — STRUCTURAL ENGINEER — PROFESSIONAL ENGINEER

SEE SHEET CT1
04/20/2022

Washington State Department of Transportation

HDR

I-405
BN RR BRIDGE TO PED TRAIL BRIDGE
SEISMIC RETROFIT
BRIDGE NO. 405/46W

LAYOUT

BRIDGE SHEET NO. BE1

SHEET 96 OF 176 SHEETS

SR 405 FILE NO. ____ SHEET BE1
ProjectWise Vault:

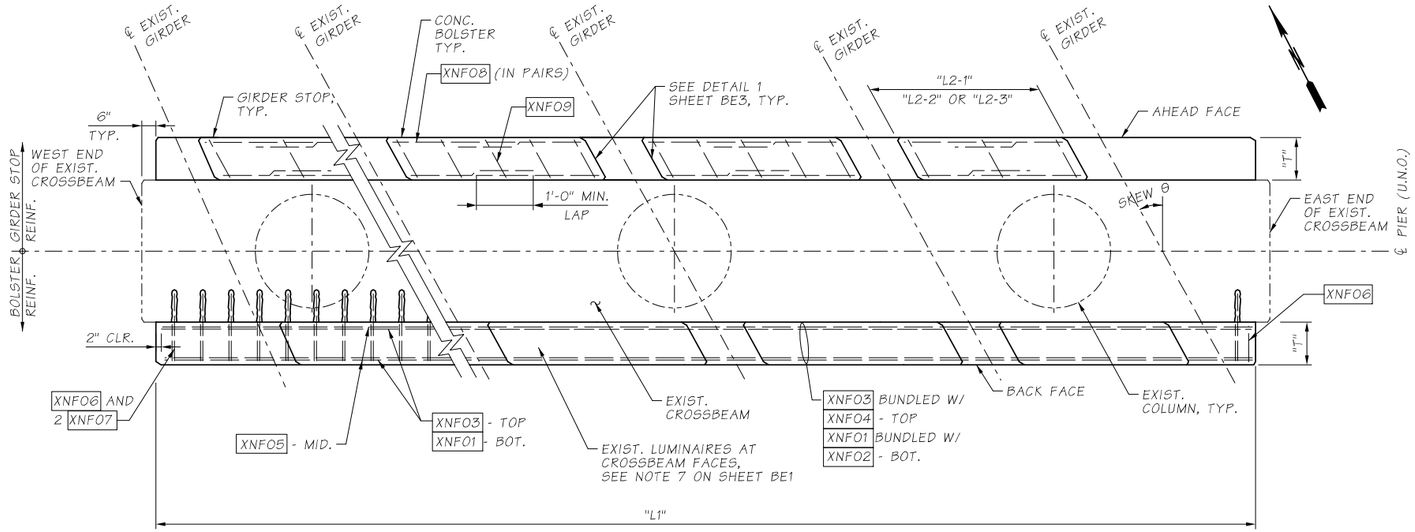

PLAN - TYP. CROSSBEAM BOLSTERS AND GIRDER STOPS

CROSSBEAM BOLSTER AND GIRDER STOP DIMENSIONS LIST							
DIM.	DESCRIPTION	DIMENSIONS					
		PIER 2		PIER 3		PIER 4	
		BACK	AHEAD	BACK	AHEAD	BACK	AHEAD
L1	BOLSTER LENGTH	88'-3"	88'-3"	84'-6"	84'-6"	86'-3"	86'-3"
L2-1	GIRDER STOP LENGTH	11 @ 4'-1"	11 @ 4'-1"	11 @ 3'-10"	11 @ 3'-9½"	11 @ 3'-11"	11 @ 3'-11"
L2-2	GIRDER STOP LENGTH	1 @ 3'-2"	1 @ 3'-2"	1 @ 3'-1"	1 @ 3'-1"	1 @ 3'-1½"	1 @ 3'-2"
L2-3	GIRDER STOP LENGTH	2 @ 3'-8"	2 @ 3'-8"	2 @ 3'-7"	2 @ 3'-7"	2 @ 3'-7½"	2 @ 3'-8"
H1	BOLSTER HEIGHT	3'-3"	3'-3"	3'-3"	3'-3"	3'-3"	3'-3"
H2	GIRDER STOP HEIGHT	1'-0"	1'-0"	1'-0"	1'-0"	1'-0"	1'-0"
T	BOLSTER THICKNESS	1'-0"	1'-0"	1'-0"	1'-0"	1'-0"	1'-0"
θ	SKEW ANGLE	16°19'50"	16°19'50"	15°57'58"	15°57'58"	15°39'38"	15°39'38"

NOTES:

1. DIMENSIONS PROVIDED ARE FOR REFERENCE ONLY. CONTRACTOR SHALL ADJUST DIMENSIONS IN THE FIELD SUCH THAT THE REQUIREMENTS OF DETAIL 1 ON SHEET BE3 ARE SATISFIED.
2. SEE GENERAL NOTE 3 ON SHEET BE1.
3. SEE SHEET BE4 FOR BAR LIST.
4. EXISTING GIRDERS AND DIAPHRAGMS NOT SHOWN FOR CLARITY.

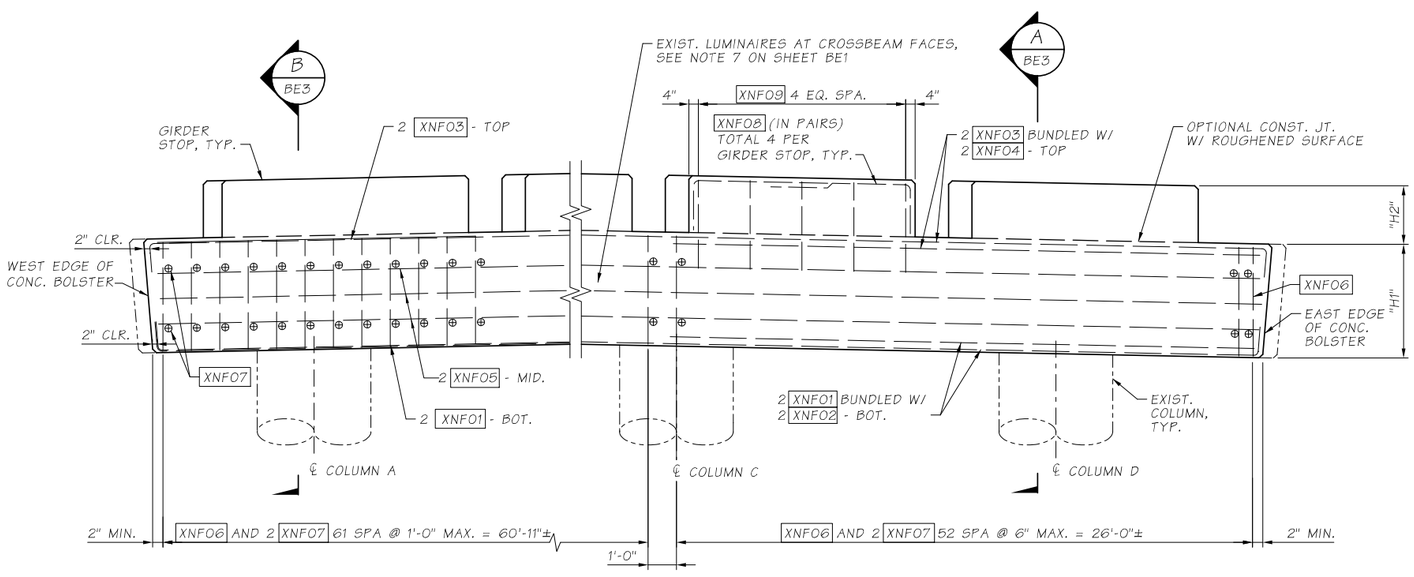

ELEVATION - TYP. CROSSBEAM BOLSTERS AND GIRDER STOPS

(BACK FACE SHOWN, AHEAD FACE SIMILAR)

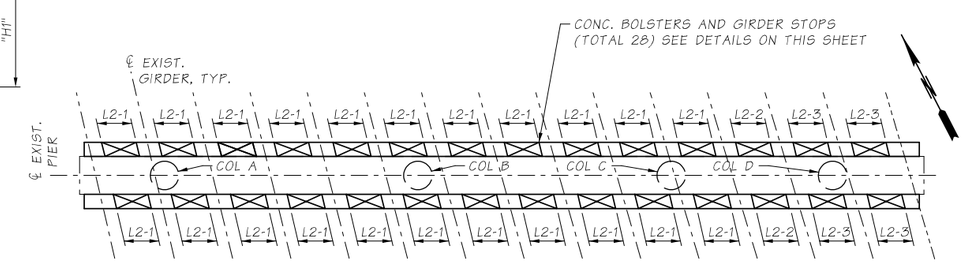

TYPICAL INTERMEDIATE GIRDER STOP LAYOUT

SR 405 FILE NO. 20A039 SHEET BE2
ProjectWise Vault:

Bridge Design Engr.	KHALEGHI B.	c:\pwworking\west01\d1468466\46W_XBeam Bolster-Girder Stops_Plan-Elev.dgn							
Supervisor	KORPI D.				REGION NO.	STATE	FED. AID PROJ. NO.	SHEET NO.	TOTAL SHEETS
Designed By	JUMPAWONG K.				10	WASH		97	176
Checked By	ANDREWS L.				JOB NUMBER				
Detailed By	VYPLEL M.				20A039				
Bridge Projects Engr.	ROSA M.								
Prelim. Plan By									
Architect/Specialist		DATE	REVISION	BY	APP'D				

4/20/2022 4:53:31 PM

BRIDGE AND STRUCTURES OFFICE

K. LEE ANDREWS STATE OF WASHINGTON 43571 STRUCTURAL PRINCIPAL PROFESSIONAL ENGINEER

SEE SHEET CT1
04/20/2022

Washington State Department of Transportation

HDR

I-405
BN RR BRIDGE TO PED TRAIL BRIDGE SEISMIC RETROFIT
BRIDGE NO. 405/46W

CROSSBEAM BOLSTER AND GIRDER STOPS - PLAN AND ELEVATION

BRIDGE SHEET NO. BE2

SHEET 97 OF 176 SHEETS

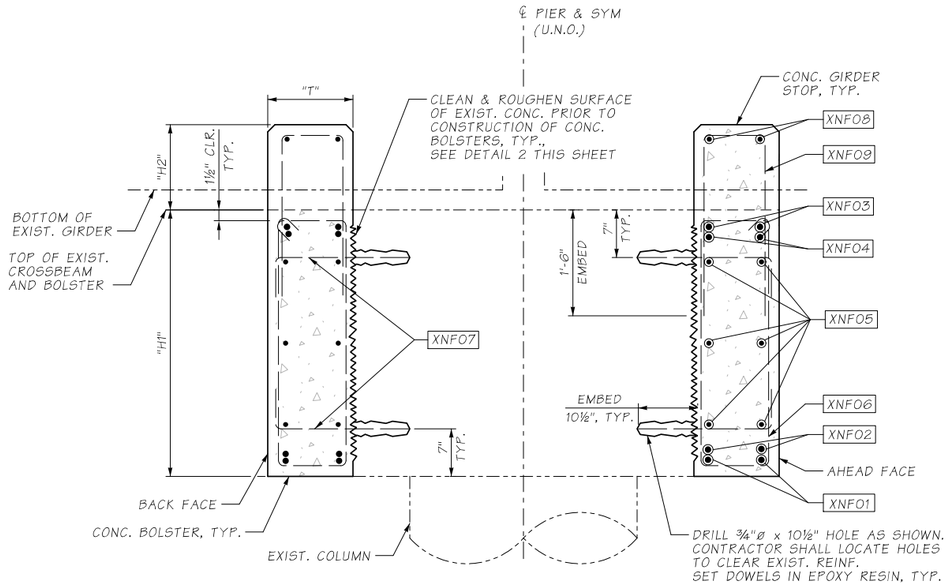

SECTION A / BE2

NOTES:
1. SEE SHEET BE2 FOR "H1", "H2", AND "T" DIMENSIONS

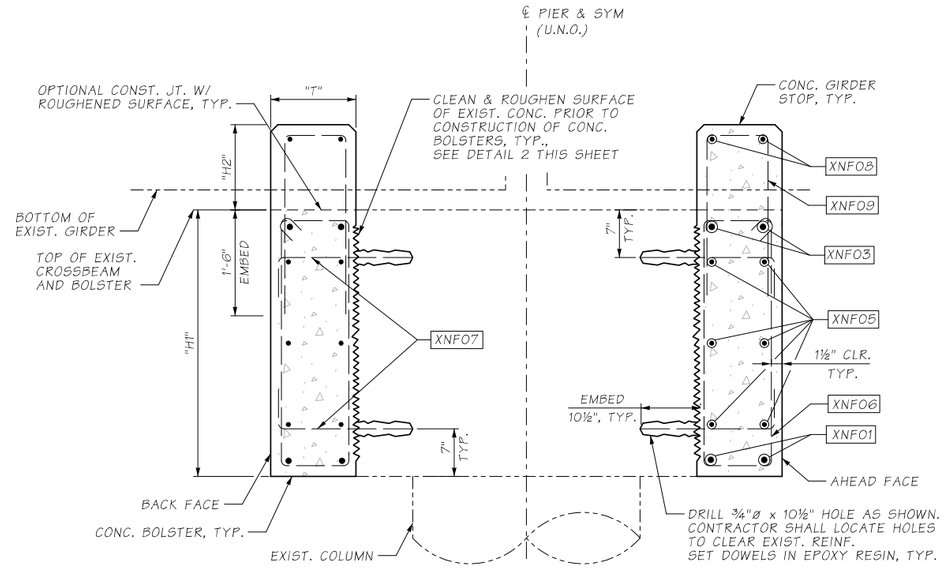

SECTION B / BE2

NOTES:
1. SEE SHEET BE2 FOR "H1", "H2", AND "T" DIMENSIONS

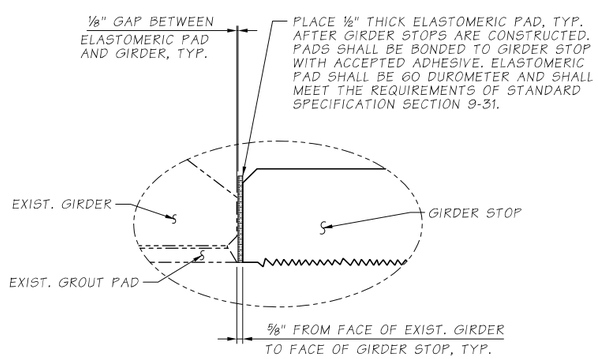

DETAIL 1 / BE2

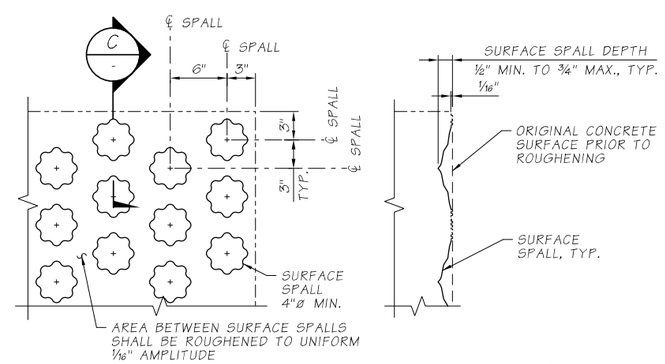

ELEVATION

SECTION C / -

SPALL PATTERN ALTERNATIVE
ROUGHENED SURFACE DETAIL 2 / -

SR 405 FILE NO. 20A039 SHEET BE3
Project Wise Vault:

Bridge Design Engr.	KHALEGHI B.	c:\pwworking\west01\d1468466\46W_XBeam Bolster-Girder Stops_Details.dgn							
Supervisor	KORPI D.				REGION NO.	STATE	FED. AID PROJ. NO.	SHEET NO.	TOTAL SHEETS
Designed By	JUMPAWONG K.				10	WASH		98	176
Checked By	ANDREWS L.								
Detailed By	VYPLEL M.				JOB NUMBER				
Bridge Projects Engr.	ROSA M.				20A039				
Prelim. Plan By									
Architect/Specialist		DATE	REVISION	BY	APP'D				

4/20/2022 4:53:43 PM

BRIDGE AND STRUCTURES OFFICE

R. LEE ANDREWS, STATE OF WASHINGTON, 43571, STRUCTURAL ENGINEER, PROFESSIONAL ENGINEER
SEE SHEET CT1
04/20/2022

Washington State Department of Transportation

HDR

I-405
BN RR BRIDGE TO PED TRAIL BRIDGE
SEISMIC RETROFIT
BRIDGE NO. 405/46W

CROSSBEAM BOLSTER AND GIRDER STOPS - DETAILS

BRIDGE SHEET NO. BE3

SHEET 98 OF 176 SHEETS

CROSSBEAM BOLSTER / GIRDER STOP BAR LIST

	REBAR MARK	LOCATION	SIZE	BAR GRADE *	DIMENSIONS A	DIMENSIONS B	DIMENSIONS LENGTH	TOTAL #	WEIGHT
PIER 2	X2B01	BOLSTER LONG. BOT.	14	80	87'-2"	-	92'-4"	2	1413
	X2B02	BOLSTER LONG. BOT.	14	80	28'-0"	-	28'-0"	2	429
	X2B03	BOLSTER LONG. TOP	14	80	88'-0"	-	93'-2"	2	1426
	X2B04	BOLSTER LONG. TOP	14	80	28'-6"	-	28'-6"	2	436
	X2B05	BOLSTER LONG. MID.	4	-	87'-7"	-	89'-7"	6	359
	X2B06	BOLSTER TIES	4	-	9"	3'-0"	7'-9"	115	596
	X2B07	BOLSTER DOWELS	5	-	1'-9"	-	2'-7"	230	620
	X2B08	GIRDER STOP (PAIRS)	4	-	3'-0"	10-½"	3'-11"	56	147
	X2B09	GIRDER STOP U-SHAPED	4	-	9"	2'-4½"	5'-6"	70	257
	X2A01	BOLSTER LONG. BOT.	14	80	87'-2"	-	92'-4"	2	1413
	X2A02	BOLSTER LONG. BOT.	14	80	28'-0"	-	28'-0"	2	429
	X2A03	BOLSTER LONG. TOP	14	80	88'-0"	-	93'-2"	2	1426
	X2A04	BOLSTER LONG. TOP	14	80	28'-6"	-	28'-6"	2	436
	X2A05	BOLSTER LONG. MID.	4	-	87'-7"	-	89'-7"	6	359
	X2A06	BOLSTER TIES	4	-	9"	3'-0"	7'-9"	115	596
	X2A07	BOLSTER DOWELS	5	-	1'-9"	-	2'-7"	230	620
	X2A08	GIRDER STOP (PAIRS)	4	-	3'-0"	10-½"	3'-11"	56	147
	X2A09	GIRDER STOP U-SHAPED	4	-	9"	2'-4½"	5'-6"	70	257
PIER 3	X3B01	BOLSTER LONG. BOT.	14	80	83'-5"	-	88'-7"	2	1356
	X3B02	BOLSTER LONG. BOT.	14	80	28'-0"	-	28'-0"	2	429
	X3B03	BOLSTER LONG. TOP	14	80	84'-2"	-	89'-4"	2	1367
	X3B04	BOLSTER LONG. TOP	14	80	28'-6"	-	28'-6"	2	436
	X3B05	BOLSTER LONG. MID.	4	-	83'-10"	-	85'-10"	6	344
	X3B06	BOLSTER TIES	4	-	9"	3'-0"	7'-9"	111	575
	X3B07	BOLSTER DOWELS	5	-	1'-9"	-	2'-7"	222	598
	X3B08	GIRDER STOP (PAIRS)	4	-	3'-0"	10-½"	3'-11"	56	147
	X3B09	GIRDER STOP U-SHAPED	4	-	9"	2'-4½"	5'-6"	70	257
	X3A01	BOLSTER LONG. BOT.	14	80	83'-5"	-	88'-7"	2	1356
	X3A02	BOLSTER LONG. BOT.	14	80	28'-0"	-	28'-0"	2	429
	X3A03	BOLSTER LONG. TOP	14	80	84'-2"	-	89'-4"	2	1367
	X3A04	BOLSTER LONG. TOP	14	80	28'-6"	-	28'-6"	2	436
	X3A05	BOLSTER LONG. MID.	4	-	83'-10"	-	85'-10"	6	344
	X3A06	BOLSTER TIES	4	-	9"	3'-0"	7'-9"	111	575
	X3A07	BOLSTER DOWELS	5	-	1'-9"	-	2'-7"	222	598
	X3A08	GIRDER STOP (PAIRS)	4	-	3'-0"	10-½"	3'-11"	56	147
	X3A09	GIRDER STOP U-SHAPED	4	-	9"	2'-4½"	5'-6"	70	257
PIER 4	X4B01	BOLSTER LONG. BOT.	14	80	85'-2"	-	90'-4"	2	1382
	X4B02	BOLSTER LONG. BOT.	14	80	28'-0"	-	28'-0"	2	429
	X4B03	BOLSTER LONG. TOP	14	80	85'-11"	-	91'-1"	2	1394
	X4B04	BOLSTER LONG. TOP	14	80	28'-6"	-	28'-6"	2	436
	X4B05	BOLSTER LONG. MID.	4	-	85'-6"	-	87'-6"	6	351
	X4B06	BOLSTER TIES	4	-	9"	3'-0"	7'-9"	112	580
	X4B07	BOLSTER DOWELS	5	-	1'-9"	-	2'-7"	224	604
	X4B08	GIRDER STOP (PAIRS)	4	-	3'-0"	10-½"	3'-11"	56	147
	X4B09	GIRDER STOP U-SHAPED	4	-	9"	2'-4½"	5'-6"	70	257
	X4A01	BOLSTER LONG. BOT.	14	80	85'-2"	-	90'-4"	2	1382
	X4A02	BOLSTER LONG. BOT.	14	80	28'-0"	-	28'-0"	2	429
	X4A03	BOLSTER LONG. TOP	14	80	85'-11"	-	91'-1"	2	1394
	X4A04	BOLSTER LONG. TOP	14	80	28'-6"	-	28'-6"	2	436
	X4A05	BOLSTER LONG. MID.	4	-	85'-6"	-	87'-6"	6	351
	X4A06	BOLSTER TIES	4	-	9"	3'-0"	7'-9"	112	580
	X4A07	BOLSTER DOWELS	5	-	1'-9"	-	2'-7"	224	604
	X4A08	GIRDER STOP (PAIRS)	4	-	3'-0"	10-½"	3'-11"	56	147
	X4A09	GIRDER STOP U-SHAPED	4	-	9"	2'-4½"	5'-6"	70	257

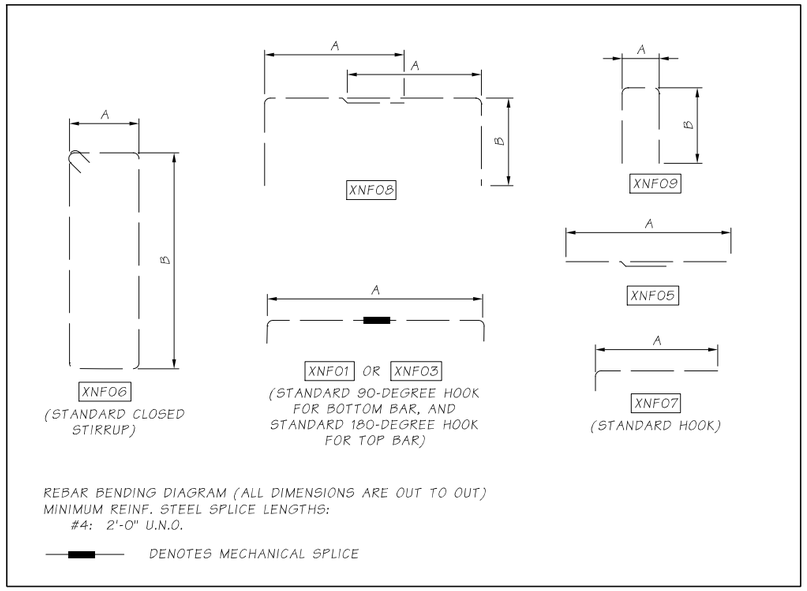

NOTES:

1. XNF00 = BAR MARK FOR CROSSBEAM BOLSTER AND/OR GIRDER STOP, WHERE "N" IS THE BENT NUMBER AND "F" IS THE FACE ("A"= AHEAD AND "B"= BACK)
2. STAGGER MECHANICAL SPLICE LOCATION BY 3'-0" MIN. BETWEEN ADJACENT BARS.
3. ALL REINFORCING #9 AND LARGER SHALL USE MECHANICAL SPLICES. ALL REINFORCING #8 AND SMALLER SHALL USE LAP SPLICES.

* BAR GRADE ONLY IF DIFFERENT THAN GRADE 60

SR 405 FILE NO. 20A039 SHEET BE4
Project Wise Vault:

Bridge Design Engr.	KHALEGHI B.	c:\pwworking\west01\d1468466\46W_XBeam Bolster-Girder Stops_Bar List.dgn							
Supervisor	KORPI D.				REGION NO.	STATE	FED. AID PROJ. NO.	SHEET NO.	TOTAL SHEETS
Designed By	JUMPAWONG K.				10	WASH		99	176
Checked By	ANDREWS L.				JOB NUMBER				
Detailed By	VYPLEL M.				20A039				
Bridge Projects Engr.	ROSA M.								
Prelim. Plan By									
Architect/Specialist		DATE	REVISION	BY	APP'D				

4/20/2022 4:53:46 PM

BRIDGE AND STRUCTURES OFFICE

R. LEE ANDREWS, STATE OF WASHINGTON, 43571, PROFESSIONAL ENGINEER
SEE SHEET CT1
04/20/2022

Washington State Department of Transportation

HDR

I-405
BN RR BRIDGE TO PED TRAIL BRIDGE
SEISMIC RETROFIT
BRIDGE NO. 405/46W

CROSSBEAM BOLSTER AND GIRDER STOPS - BAR LIST

BRIDGE SHEET NO. BE4

SHEET 99 OF 176 SHEETS

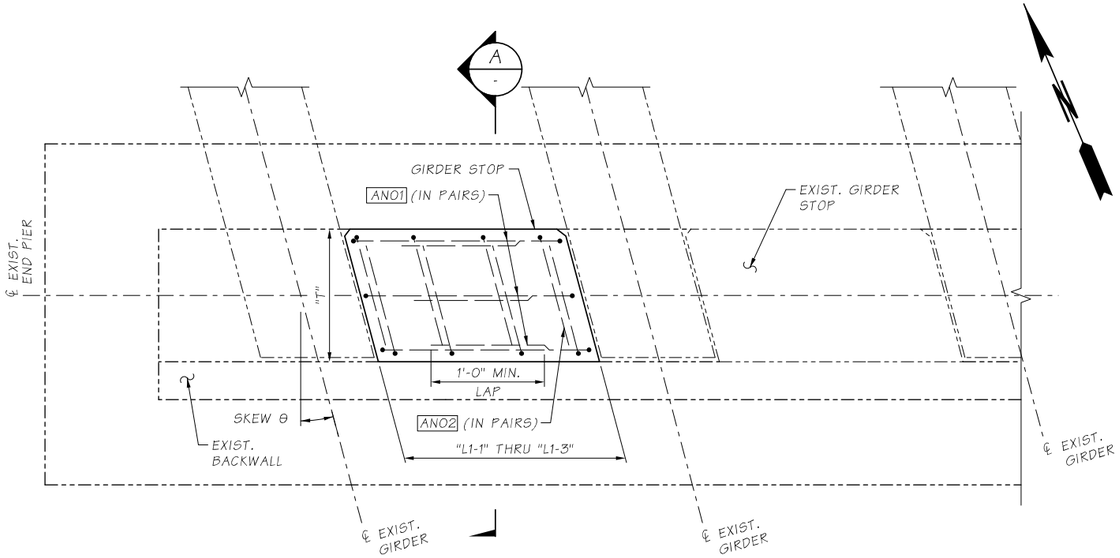

PLAN - TYP. END PIER W/ GIRDER STOPS

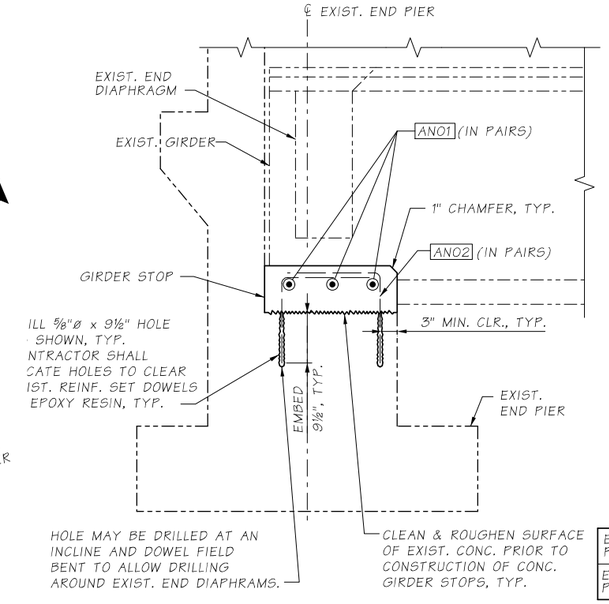

SECTION A -

END PIER GIRDER STOP DIMENSIONS LIST

DIM.	DESCRIPTION	DIMENSIONS	
		END PIER 1	END PIER 5
L1-1	GIRDER STOP LENGTH	6 @ 4'-3"	6 @ 4'-1"
L1-2	GIRDER STOP LENGTH	1 @ 3'-6"	1 @ 3'-9½"
L1-3	GIRDER STOP LENGTH	1 @ 4'-0"	1 @ 3'-9½"
H	GIRDER STOP HEIGHT	1'-0"	1'-0"
T	GIRDER STOP DEPTH	2'-3"	2'-3"
θ	SKEW ANGLE	16°33'11"	15°22'09"

NOTES:

1. SEE GENERAL NOTES ON SHEET BE1.
2. DIMENSIONS PROVIDED ARE FOR REFERENCE ONLY. CONTRACTOR SHALL ADJUST DIMENSIONS SUCH THAT THE REQUIREMENTS OF DETAIL 1 AND SECTION A ARE SATISFIED.

END PIER GIRDER STOP BAR LIST

	REBAR MARK	LOCATION	SIZE	DIMENSIONS			TOTAL #	WEIGHT
				A HORIZ.	B VERT.	LENGTH		
END PIER 1	A101	GIRDER STOP TRANSV.	4	2'-6"	-	3'-2"	48	102
	A102	GIRDER STOP LONG.	4	2'-0"	1'-8"	3'-8"	64	157
END PIER 5	A501	GIRDER STOP TRANSV.	4	2'-6"	-	3'-2"	48	102
	A502	GIRDER STOP LONG.	4	2'-0"	1'-8"	3'-8"	64	157

NOTES:

REBAR BENDING DIAGRAM (ALL DIMENSIONS ARE OUT TO OUT)

MINIMUM REINF. STEEL SPLICE LENGTHS - #4: 2'-0" U.N.O.

ANOO = BAR MARK FOR END PIER GIRDER STOP, WHERE "N" IS THE END PIER NUMBER

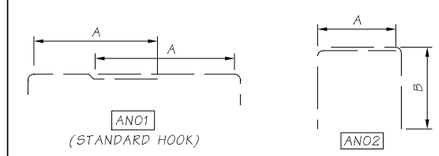

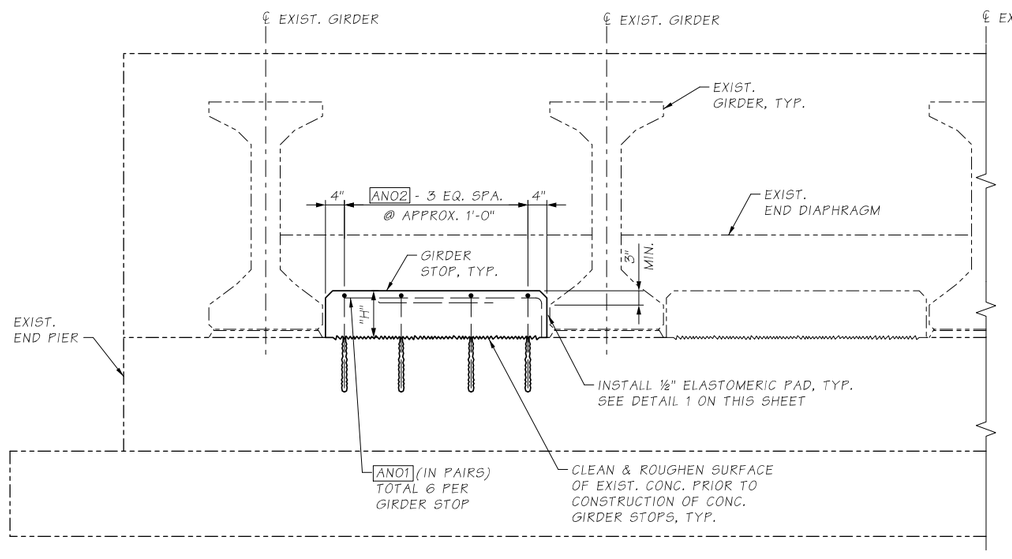

ELEVATION - TYP. END PIER W/ GIRDER STOPS

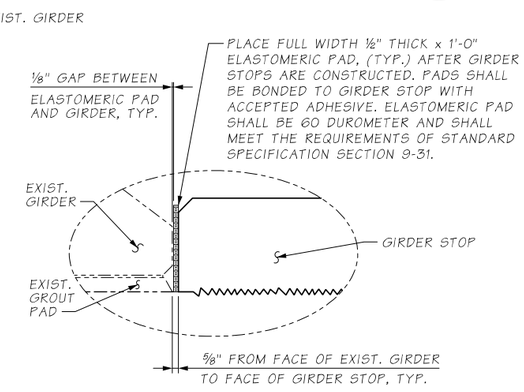

DETAIL 1 -

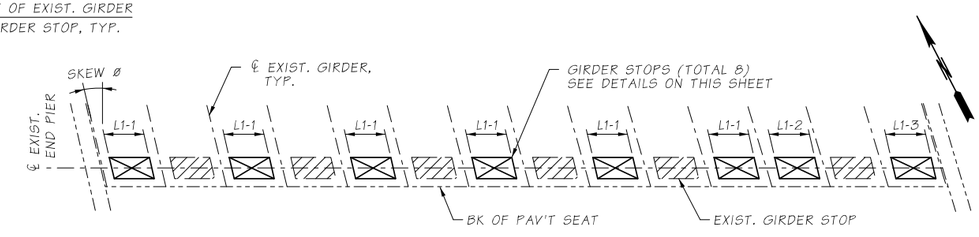

TYPICAL END PIER GIRDER STOP LAYOUT

END PIER 1 SHOWN (END PIER 5 SIMILAR BY OPP. HAND)

SR 405 FILE NO. 20A039 SHEET BE5

ProjectWise Vault:

Bridge Design Engr.	KHALEGHI B.	c:\pwworking\west01\d1468466\46W_End Pier Girder Stops_Plan-Elev.dgn						
Supervisor	KORPI D.				REGION NO.	STATE	FED. AID PROJ. NO.	SHEET NO.	TOTAL SHEETS
Designed By	JUMPAWONG K.				10	WASH		100	176
Checked By	ANDREWS L.				JOB NUMBER				
Detailed By	VYPLEL M.				20A039				
Bridge Projects Engr.	ROSA M.								
Prelim. Plan By									
Architect/Specialist		DATE	REVISION	BY	APP'D				

4/20/2022 4:53:36 PM

BRIDGE AND STRUCTURES OFFICE

R. LEE ANDREWS, STATE OF WASHINGTON, 43571, AGRICULTURAL ENGINEER, PROFESSIONAL ENGINEER

SEE SHEET CT1
04/20/2022

Washington State Department of Transportation

HDR

I-405
BN RR BRIDGE TO PED TRAIL BRIDGE
SEISMIC RETROFIT
BRIDGE NO. 405/46W

END PIER GIRDER STOPS
PLAN AND ELEVATION

BRIDGE SHEET NO. BE5

SHEET 100 OF 176 SHEETS

STEEL COLUMN JACKET DIMENSIONS LIST

DIM.	DESCRIPTION	PIER 2				PIER 3				PIER 4			
	COLUMN	A	B	C	D	A	B	C	D	A	B	C	D
D	EXIST. COLUMN DIA.	3'-0" (ALL)				3'-0" (ALL)				3'-0" (ALL)			
T	JACKET THICKNESS	⅜"	⅜"	⅜"	N/A	⅜"	⅜"	⅜"	N/A	⅜"	⅜"	⅜"	N/A
C	COLUMN LENGTH (FROM WEST TO EAST)	16.68'	17.45'	17.81'	N/A	20.69'	21.42'	21.71'	N/A	20.99'	21.73'	22.05'	N/A
S	CROSSBEAM SLOPE	3%±				3%±				3%±			
F	APPROX. EXCAVATION DEPTH* (FROM WEST TO EAST)	4.9'	5.3'	5.9'	N/A	4.2'	4.9'	5.6'	N/A	3.9'	4.5'	4.9'	N/A

*EXCAVATION DEPTH MAY VARY ±1'-0"

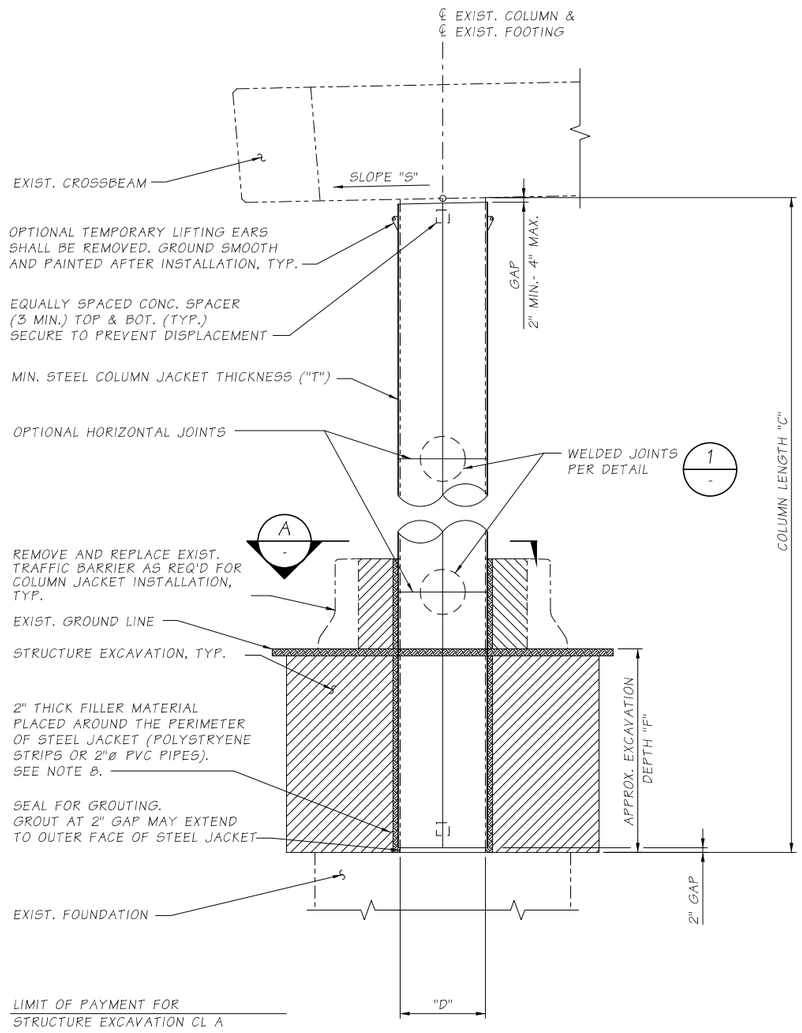

ELEVATION - TYP. COLUMN STEEL JACKET

PIER 3 SHOWN
(PIERS 2 & 4 SIMILAR WITH SLOPE PROTECTION AND GUARDRAIL INSTEAD OF TRAFFIC BARRIER ON EACH SIDE OF COLUMN)

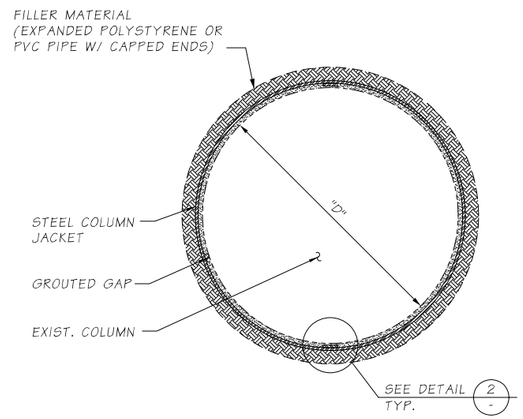

SECTION A

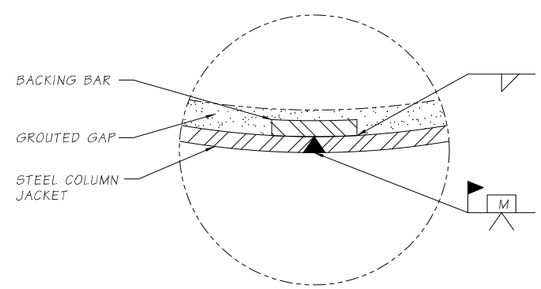

DETAIL 2

TYP. WELD JOINT

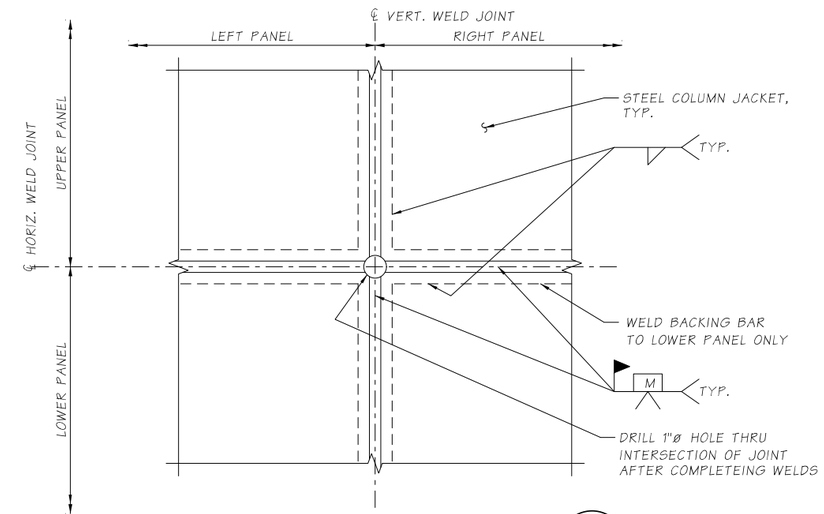

STEEL JACKET WELD DETAIL 1

NOTES:

1. DIMENSIONS PROVIDED ARE FOR REFERENCE ONLY. SEE GENERAL NOTE 3 ON SHEET BE1.
2. APPROPRIATE INJECTION NOZZLES SHALL BE PROVIDED ON COLUMN JACKET AND SHALL BE REMOVED, GROUND FLUSH AND PAINTED FOLLOWING COMPLETION OF GROUTING OPERATION.
3. ALL VOIDS BETWEEN STEEL COLUMN JACKET AND EXIST. COLUMN SURFACE SHALL BE FILLED WITH CEMENT GROUT.
4. THE LOCATION AND NUMBER OF HORIZONTAL WELDS SHALL BE DETERMINED BY THE CONTRACTOR AND SUBJECT TO THE APPROVAL OF THE ENGINEER. THE LOCATION OF COLUMN JACKET WELDS IS FOR ILLUSTRATION. THERE SHALL BE NO SKIP WELDS.
5. STEEL COLUMN JACKETS SHALL BE FABRICATED FROM ASTM A36 STRUCTURAL STEEL AND PAINTED IN ACCORDANCE WITH THE SPECIAL PROVISIONS.
6. EXIST. DRAIN PIPE AND CONDUIT MOUNTED ON THE COLUMN SURFACES OF PIERS 2, 3 & 4 SHALL BE CAREFULLY REMOVED FOR COLUMN JACKET INSTALLATION. CONDUIT SHALL BE REPLACED AFTER COLUMN JACKET INSTALLATION IS COMPLETE. RE-ATTACHMENT DETAILS SHALL BE SUBMITTED TO THE ENGINEER FOR APPROVAL.
7. GROUTING SHALL BE DONE FROM THE BOTTOM UP IN ACCORDANCE WITH THE SPECIAL PROVISIONS.
8. THE 2" THICK FILLER MATERIAL AROUND THE PERIMETER OF THE STEEL JACKET SHALL BE USED FOR PARTIALLY BURIED COLUMNS WHERE THE DEPTH IS MORE THAN 4'-0" OR COLUMNS ARE ADJACENT TO PAVED SURFACES OR SLOPE PROTECTION.
9. USE STRUCTURAL SHORING WHERE NECESSARY TO SUPPORT EXISTING ROADWAY.
10. SEE SHEET EU3 FOR THE LOCATION OF EXISTING UTILITIES.

SEC. 20, T.25N., R.5E., W.M.

CITY OF BELLEVUE

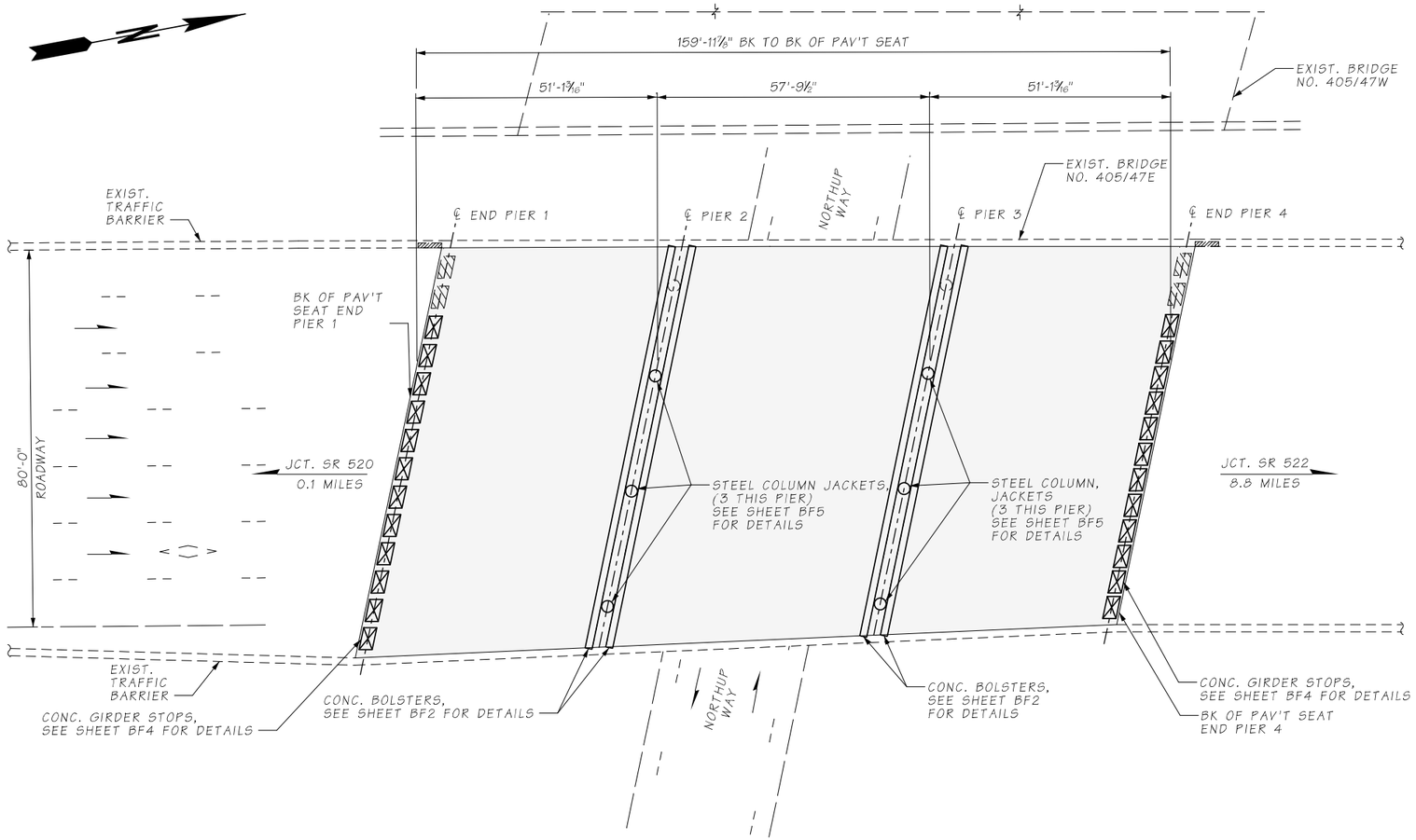

PLAN

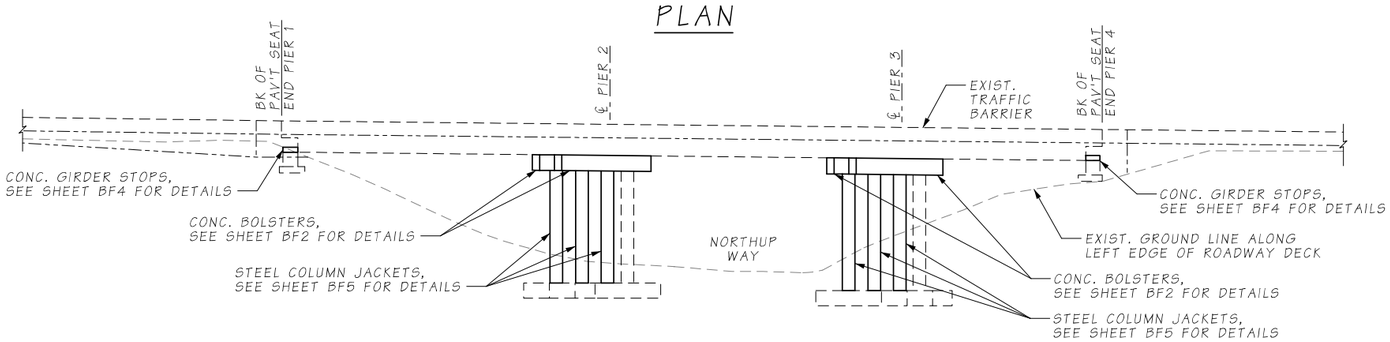

ELEVATION

GENERAL NOTES

1. ALL MATERIALS AND WORKMANSHIP SHALL BE IN ACCORDANCE WITH THE REQUIREMENTS OF THE WASHINGTON STATE DEPARTMENT OF TRANSPORTATION STANDARD SPECIFICATIONS FOR ROAD, BRIDGE AND MUNICIPAL CONSTRUCTION - DATED 2022.
2. NEW CONSTRUCTION HAS BEEN DESIGNED IN ACCORDANCE WITH THE REQUIREMENTS OF THE AASHTO LRFD BRIDGE DESIGN SPECIFICATIONS 8TH EDITION, DATED 2017 AND THE FHWA-HRT-06-032 SEISMIC RETROFITTING MANUAL FOR HIGHWAY STRUCTURES, DATED 2006.
3. EXISTING FEATURES, DIMENSIONS, AND ELEVATIONS ARE BASED ON AS-BUILT PLANS. ALL DIMENSIONS SHALL BE FIELD MEASURED AND VERIFIED BY THE CONTRACTOR, PRIOR TO ORDERING MATERIALS AND FABRICATION (SEE SPECIAL PROVISIONS).
4. CONTRACTOR SHALL LOCATE EXISTING STEEL REINFORCING USING NONDESTRUCTIVE METHODS TO AVOID DAMAGE DURING DRILLING OPERATIONS. THE CONTRACTOR SHALL NOTIFY THE ENGINEER IMMEDIATELY IF ANY EXISTING REBAR OR ANCHOR BOLTS ARE ENCOUNTERED OR ARE IN CONFLICT WITH THE WORK DETAILED, AND SHALL OBTAIN APPROVAL FROM THE ENGINEER BEFORE CONTINUING WORK. CORE DRILLING IS NOT ALLOWED.
5. ALL NEW MATERIALS USED SHALL MEET THE FOLLOWING REQUIREMENTS:
   - CONCRETE CLASS 4000
   - REINFORCING STEEL BARS - ASTM A706, GRADE 60, U.N.O.
   - STEEL COLUMN JACKETS - ASTM A36
6. THE MINIMUM CONCRETE COVER MEASURED FROM THE FACE OF THE CONCRETE TO THE FACE OF ANY REINFORCING STEEL SHALL BE 1 1/2" U.N.O.
7. CONCRETE SURFACES REQUIRED TO BE ROUGHENED SHALL BE ROUGHENED IN ACCORDANCE WITH SECTION 6-02.3(12)B OR THE SPALL PATTERN ALTERNATIVE ROUGHENED SURFACE SHOWN IN DETAIL 2 ON BRIDGE SHEET BF3.
8. THE LOCATION OF DOWEL BARS MAY BE ADJUSTED BY +/- 1" IF NECESSARY TO AVOID CONFLICTS WITH EXISTING REINFORCING STEEL. DOWEL BARS SHALL BE KEPT A MINIMUM OF 3" FROM THE EDGE OF CONCRETE.
9. SEE UTILITY SHEETS FOR THE LOCATIONS OF EXISTING UTILITIES.

LEGEND

- NEW GIRDER STOP
- EXISTING GIRDER STOP
- A / BF5 — IDENTIFIES SECTION, VIEW OR DETAIL; TAKEN OR SHOWN ON BRIDGE SHEET BF5
- A / — TAKEN OR SHOWN ON SAME SHEET

SEISMIC RETROFIT

Bridge Design Engr.	KHALEGHI B.	c:\pwworking\west01\d1468466\47E_Layout Plan.dgn							
Supervisor	KORPI D.								
Designed By	CAMACHO L.F.								
Checked By	LEE J.J.								
Detailed By	VYPLEL M.								
Bridge Projects Engr.	ROSA M.								
Prelim. Plan By									
Architect/Specialist		DATE	REVISION	BY	APP'D				

REGION NO.	STATE	FED. AID PROJ. NO.	SHEET NO.	TOTAL SHEETS
10	WASH		102	176
JOB NUMBER 20A039				

BRIDGE AND STRUCTURES OFFICE

R. LEE ANDREWS, STATE OF WASHINGTON, 43571, STRUCTURAL ENGINEER, PROFESSIONAL ENGINEER

SEE SHEET CT1
04/20/2022

Washington State Department of Transportation

HDR

I-405
BN RR BRIDGE TO PED TRAIL BRIDGE
SEISMIC RETROFIT
BRIDGE NO. 405/47E

LAYOUT

BRIDGE SHEET NO. BF1

SHEET 102 OF 176 SHEETS

SR 405 FILE NO. ____ SHEET BF1

ProjectWise Vault:

4/20/2022 10:06:43 PM

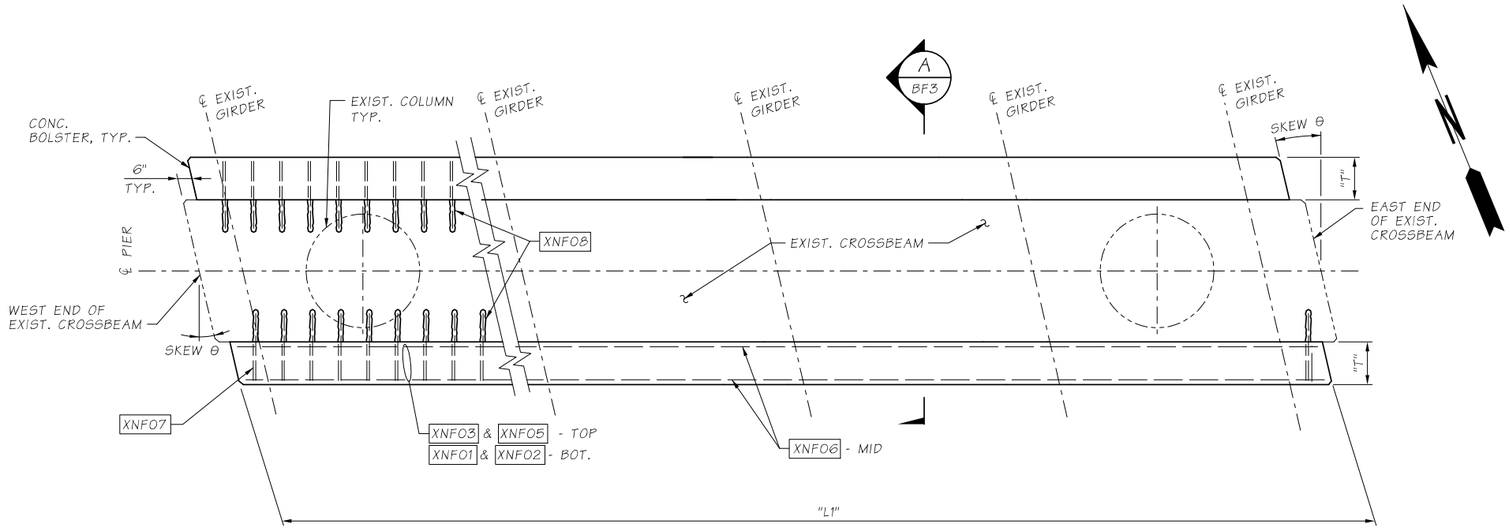

PLAN - TYP. CROSSBEAM W/ CONCRETE BOLSTERS

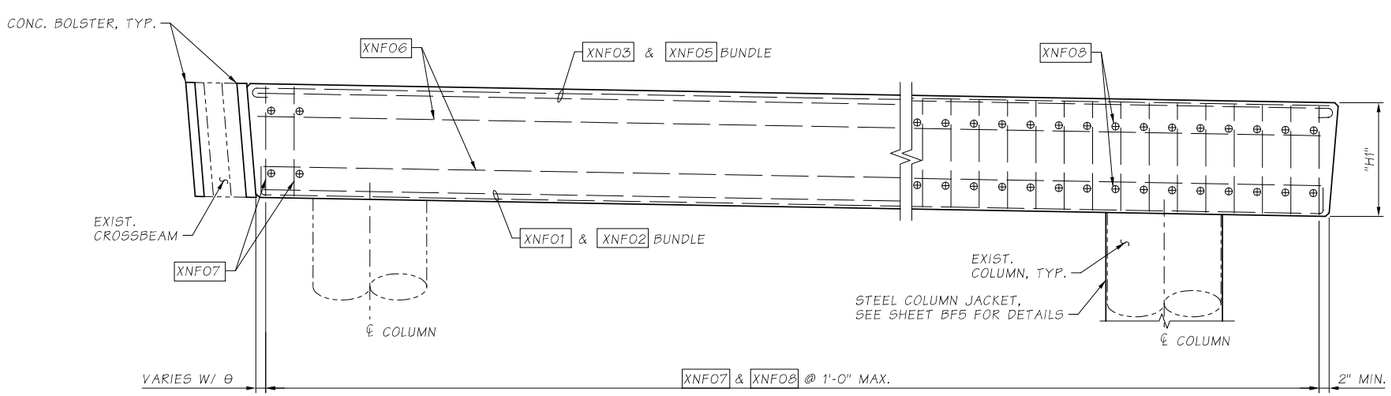

ELEVATION - TYP. CROSSBEAM W/ CONCRETE BOLSTERS

CROSSBEAM BOLSTER DIMENSIONS LIST

DIM.	DESCRIPTION	DIMENSIONS			
		PIER 2		PIER 3	
		BACK	AHEAD	BACK	AHEAD
L1	BOLSTER LENGTH	87'-11"	87'-11"	85'-4"	85'-4"
H1	BOLSTER HEIGHT	2'-6"	2'-6"	2'-6"	2'-6"
T	BOLSTER THICKNESS	1'-6"	1'-6"	1'-6"	1'-6"
θ	SKEW ANGLE	11°42'	11°42'	11°42'	11°42'

NOTES:

1. SEE GENERAL NOTE 3 ON SHEET BF1.
2. SEE SHEET BF3 FOR BAR LIST.
3. EXISTING GIRDERS AND DIAPHRAGMS NOT SHOWN FOR CLARITY.
4. SPLICES SHALL BE STAGGERED AT 3'-0" MIN. AND LOCATED MIDSPAN BETWEEN COLUMNS.

SR 405 FILE NO. 20A039 SHEET BF2
ProjectWise Vault:

Bridge Design Engr.	KHALEGHI B.	c:\pwworking\west01\d1468466\47E_XBeam Bolsters_Plan-Elev.dgn			
Supervisor	KORPI D.				
Designed By	CAMACHO L.F.				
Checked By	LEE J.J.				
Detailed By	VYPLEL M.				
Bridge Projects Engr.	ROSA M.				
Prelim. Plan By					
Architect/Specialist		DATE	REVISION	BY	APP'D

REGION NO.	STATE	FED. AID PROJ. NO.	SHEET NO.	TOTAL SHEETS
10	WASH		103	176
JOB NUMBER 20A039				

BRIDGE AND STRUCTURES OFFICE

SEE SHEET CT1
04/20/2022

Washington State Department of Transportation

HDR

I-405
BN RR BRIDGE TO PED TRAIL BRIDGE
SEISMIC RETROFIT
BRIDGE NO. 405/47E

CROSSBEAM BOLSTERS
PLAN AND ELEVATION

BRIDGE SHEET NO. BF2

SHEET 103 OF 176 SHEETS

4/20/2022 4:54:08 PM

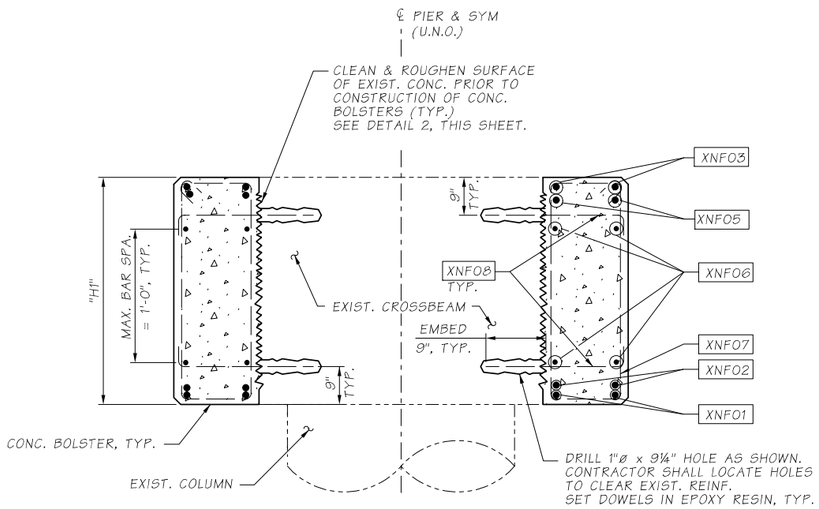

SECTION A / BF2

NOTE:
1. SEE SHEET BF2 FOR "H1" DIMENSIONS

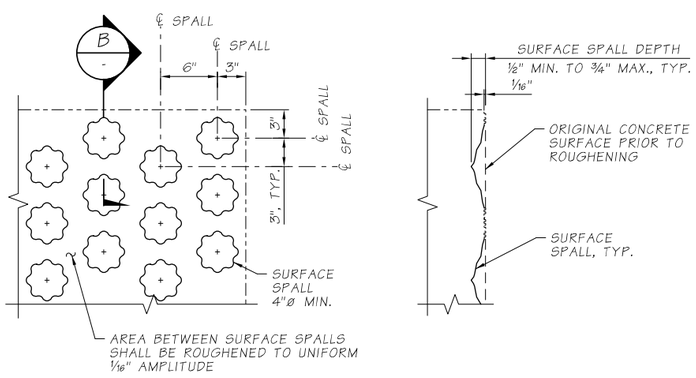

ELEVATION

SECTION B / -

SPALL PATTERN ALTERNATIVE
ROUGHENED SURFACE DETAIL 2 / -

CROSSBEAM BOLSTER BAR LIST

	REBAR MARK	LOCATION	BAR SIZE	BAR GRADE *	DIMENSIONS A	DIMENSIONS B	DIMENSIONS LENGTH	TOTAL #	WEIGHT
PIER 2	X2B01	BOLSTER LONG. BOT.	11	80	86'-8"	-	87'-2"	2	926
	X2B02	BOLSTER LONG. BOT.	11	80	86'-2"	-	89'-5"	2	950
	X2B03	BOLSTER LONG. TOP	11	80	87'-8"	-	88'-2"	2	937
	X2B05	BOLSTER LONG. TOP	11	80	87'-2"	-	90'-5"	2	961
	X2B06	BOLSTER LONG. MID.	4	-	86'-11"	-	86'-11"	4	232
	X2B07	BOLSTER TIES	4	-	1'-3"	2'-3"	9'-0"	87	524
	X2B08	BOLSTER DOWELS	6	-	2'-1½"	-	2'-11½"	172	764
	X2A01	BOLSTER LONG. BOT.	11	80	86'-8"	-	87'-2"	2	926
	X2A02	BOLSTER LONG. BOT.	11	80	86'-2"	-	89'-5"	2	950
	X2A03	BOLSTER LONG. TOP	11	80	87'-8"	-	88'-2"	2	937
	X2A05	BOLSTER LONG. TOP	11	80	87'-2"	-	90'-5"	2	961
	X2A06	BOLSTER LONG. MID.	4	-	86'-11"	-	86'-11"	4	232
	X2A07	BOLSTER TIES	4	-	1'-3"	2'-3"	9'-0"	87	524
	X2A08	BOLSTER DOWELS	6	-	2'-1½"	-	2'-11½"	172	764
PIER 3	X3B01	BOLSTER LONG. BOT.	11	80	84'-2"	-	84'-8"	2	900
	X3B02	BOLSTER LONG. BOT.	11	80	83'-8"	-	84'-2"	2	894
	X3B03	BOLSTER LONG. TOP	11	80	85'-2"	-	85'-8"	2	910
	X3B05	BOLSTER LONG. TOP	11	80	84'-8"	-	85'-2"	2	905
	X3B06	BOLSTER LONG. MID.	4	-	84'-5"	-	84'-5"	4	226
	X3B07	BOLSTER TIES	4	-	1'-3"	2'-3"	9'-0"	85	509
	X3B08	BOLSTER DOWELS	6	-	2'-1½"	-	2'-11½"	168	746
	X3A01	BOLSTER LONG. BOT.	11	80	84'-2"	-	84'-8"	2	900
	X3A02	BOLSTER LONG. BOT.	11	80	83'-8"	-	84'-2"	2	894
	X3A03	BOLSTER LONG. TOP	11	80	85'-2"	-	85'-8"	2	910
	X3A05	BOLSTER LONG. TOP	11	80	84'-8"	-	85'-2"	2	905
	X3A06	BOLSTER LONG. MID.	4	-	84'-5"	-	84'-5"	4	226
	X3A07	BOLSTER TIES	4	-	1'-3"	2'-3"	9'-0"	85	509
	X3A08	BOLSTER DOWELS	6	-	2'-1½"	-	2'-11½"	168	746

REBAR BENDING DIAGRAM (ALL DIMENSIONS ARE OUT TO OUT)
MINIMUM REINF. STEEL SPLICE LENGTHS:
#4: 2'-0"

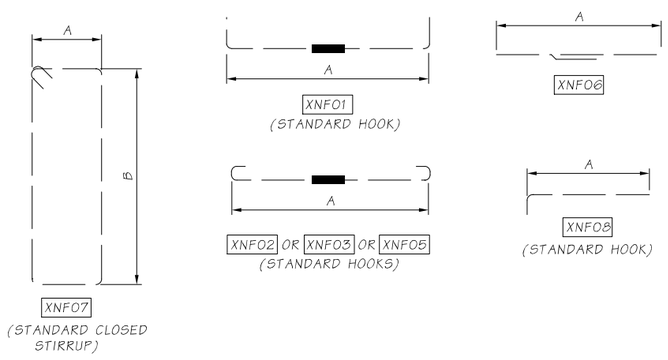

NOTES:

1. XNF00 = BAR MARK FOR CROSSBEAM BOLSTER, WHERE "N" IS THE BENT NUMBER AND "F" IS THE FACE "A"= AHEAD AND "B"= BACK)
2. STAGGER MECHANICAL SPLICE LOCATION BY 3'-0" MIN. BETWEEN ADJACENT BARS
3. BARS XNF01 ARE BUNDLED WITH BARS XNF02
   BARS XNF03 ARE BUNDLED WITH BARS XNF05
4. ALL REINFORCING #9 AND LARGER SHALL USE MECHANICAL SPLICES.
   ALL REINFORCING #8 AND SMALLER SHALL USE LAP SPLICES.

DENOTES MECHANICAL SPLICE

SR 405 FILE NO. 20A039 SHEET BF3
ProjectWise Vault:

Bridge Design Engr.	KHALEGHI B.	c:\pwworking\west01\d1468466\47E_XBeam Bolstess_Details-Barlist.dgn							
Supervisor	KORPI D.				REGION NO.	STATE	FED. AID PROJ. NO.	SHEET NO.	TOTAL SHEETS
Designed By	CAMACHO L.F.				10	WASH		104	176
Checked By	LEE J.J.				JOB NUMBER				
Detailed By	VYPLEL M.				20A039				
Bridge Projects Engr.	ROSA M.								
Prelim. Plan By									
Architect/Specialist		DATE	REVISION	BY	APP'D				

4/20/2022 4:54:11 PM

BRIDGE AND STRUCTURES OFFICE

K. LEE ANDREWS — STATE OF WASHINGTON — 43571 — PROFESSIONAL ENGINEER
SEE SHEET CT1
04/20/2022

Washington State Department of Transportation

HDR

I-405
BN RR BRIDGE TO PED TRAIL BRIDGE SEISMIC RETROFIT
BRIDGE NO. 405/47E

CROSSBEAM BOLSTERS DETAILS AND BAR LIST

BRIDGE SHEET NO. BF3

SHEET 104 OF 176 SHEETS

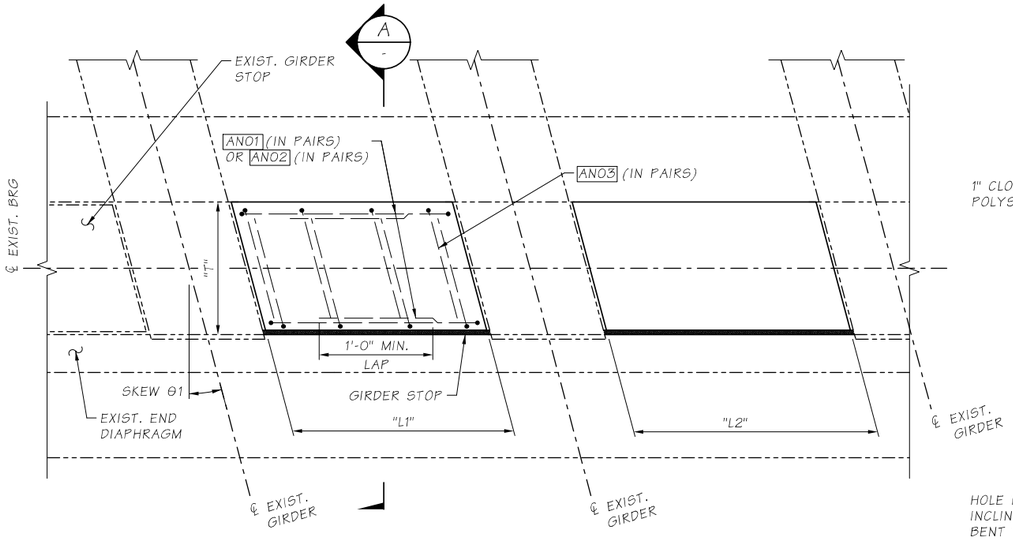

PLAN - TYP. END PIER W/ GIRDER STOPS

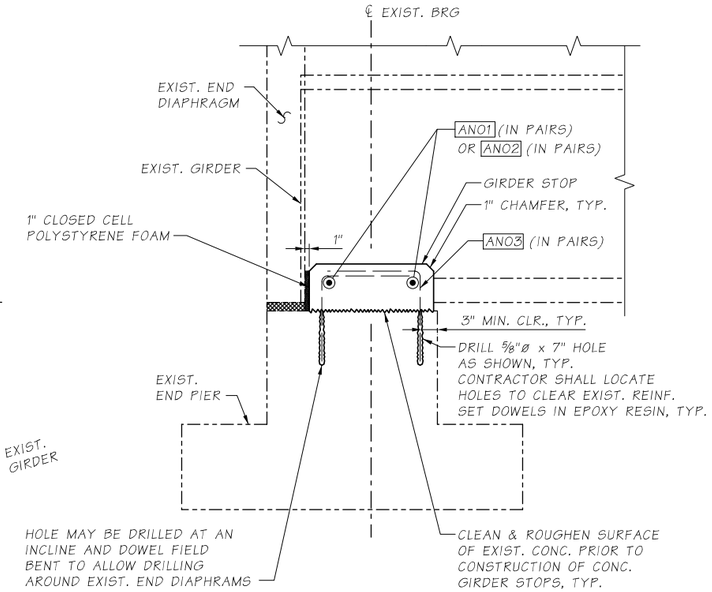

SECTION A -

END PIER GIRDER STOP BAR LIST

	REBAR MARK	LOCATION	BAR SIZE	DIMENSIONS A	DIMENSIONS B	DIMENSIONS LENGTH	TOTAL #	WEIGHT
END PIER 1	A101	GIRDER STOP TRANSV.	4	2'-8½"	-	3'-4½"	4	9
	A102	GIRDER STOP TRANSV.	4	2'-7½"	-	3'-5½"	44	97
	A103	GIRDER STOP LONG.	4	1'-0"	1'-5½"	2'-5½"	96	158
END PIER 4	A401	GIRDER STOPS TRANSV.	4	2'-8½"	-	3'-4½"	4	9
	A402	GIRDER STOP TRANSV.	4	2'-4"	-	3'-0"	44	88
	A403	GIRDER STOP LONG.	4	1'-0"	1'-5½"	2'-5½"	96	158

ANOO = BAR MARK FOR END PIER GIRDER STOP, WHERE "N" IS THE END PIER NUMBER

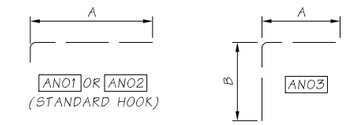

END PIER GIRDER STOP DIMENSIONS LIST

DIM.	DESCRIPTION	DIMENSIONS END PIER 1	DIMENSIONS END PIER 4
L1	GIRDER STOP LENGTH	1 @ 4'-8"	1 @ 4'-8"
L2	GIRDER STOP LENGTH	11 @ 4'-7"	11 @ 3'-11½"
H	GIRDER STOP HEIGHT	1'-0"	1'-0"
T	GIRDER STOP DEPTH	1'-6"	1'-6"
θ1	SKEW ANGLE	11°53'24"	11°42'0"

NOTES

1. SEE GENERAL NOTES ON SHEET BF1.
2. DIMENSIONS PROVIDED ARE FOR REFERENCE ONLY. CONTRACTOR SHALL ADJUST DIMENSIONS SUCH THAT THE REQUIREMENTS OF DETAIL 1 AND SECTION A ARE SATISFIED.

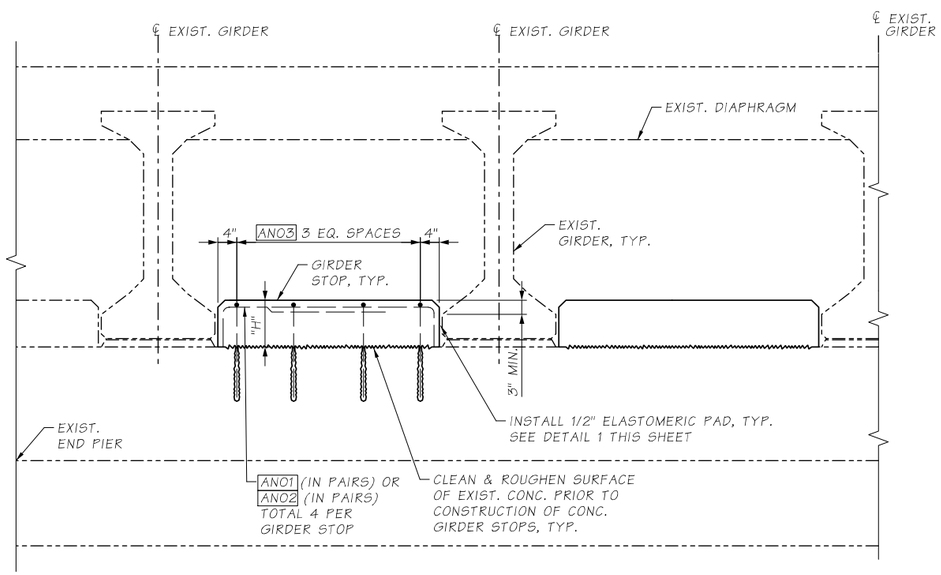

ELEVATION - TYP. END PIER W/ GIRDER STOPS

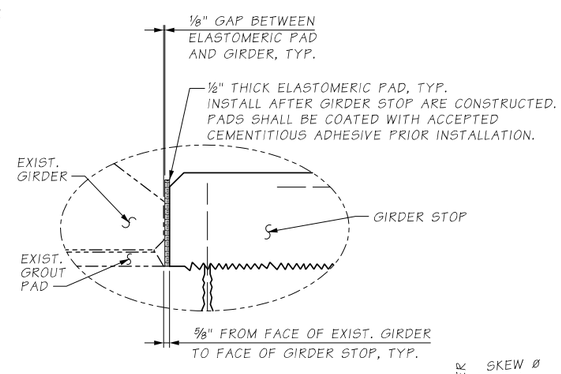

DETAIL 1 -

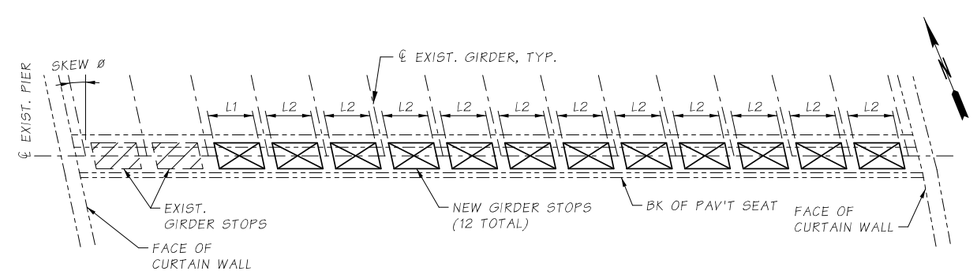

TYPICAL END PIER GIRDER STOP LAYOUT

END PIER 1 SHOWN (END PIER 4 SIMILAR BY OPP. HAND)

SR 405 FILE NO. 20A039 SHEET BF4
ProjectWise Vault:

Bridge Design Engr.	KHALEGHI B.	c:\pwworking\west01\d1468466\47E_End Pier Girder Stops_Plan-Elev.dgn						
Supervisor	KORPI D.				REGION NO.	STATE	FED. AID PROJ. NO.	SHEET NO.	TOTAL SHEETS
Designed By	CAMACHO L.F.				10	WASH		105	176
Checked By	LEE J.J.								
Detailed By	VYPLEL M.				JOB NUMBER 20A039				
Bridge Projects Engr.	ROSA M.								
Prelim. Plan By									
Architect/Specialist		DATE	REVISION	BY	APP'D				

4/20/2022 4:54:16 PM

BRIDGE AND STRUCTURES OFFICE

SEE SHEET CT1
04/20/2022

Washington State Department of Transportation

HDR

I-405
BN RR BRIDGE TO PED TRAIL BRIDGE SEISMIC RETROFIT
BRIDGE NO. 405/47E

END PIER GIRDER STOPS PLAN AND ELEVATION

BRIDGE SHEET NO. BF4

SHEET 105 OF 176 SHEETS

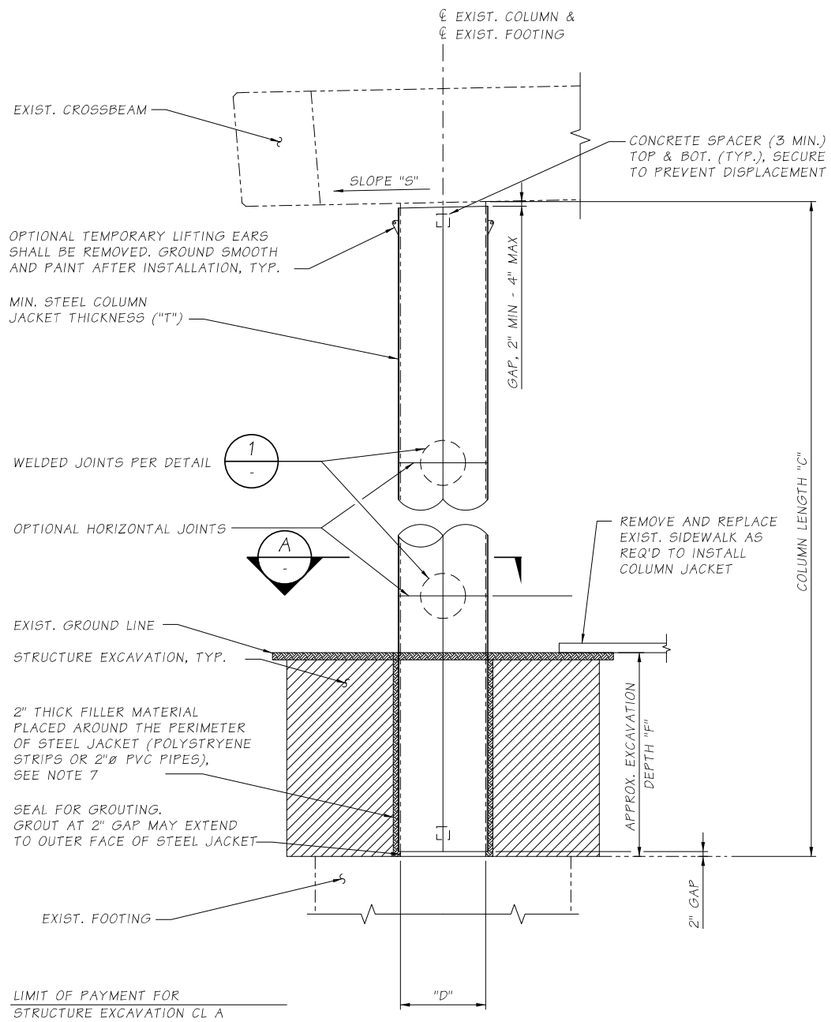

ELEVATION - TYP. COLUMN STEEL JACKET

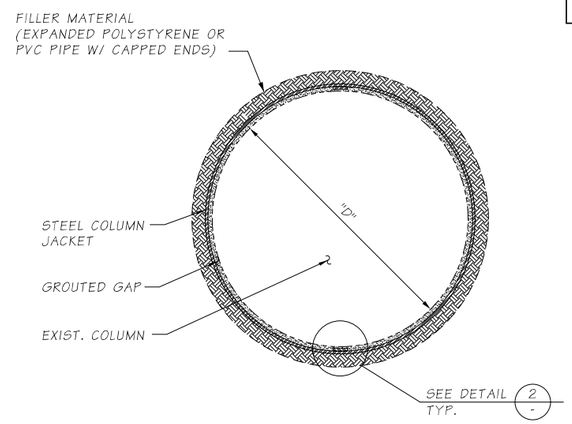

SECTION A -

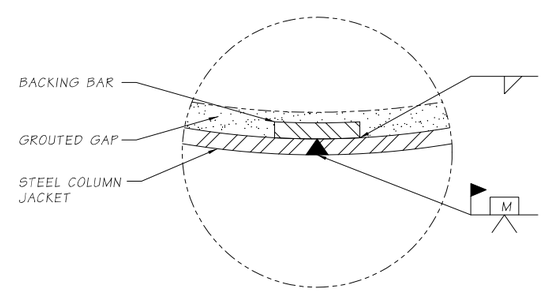

DETAIL 2 -
TYP. WELD JOINT

STEEL COLUMN JACKET DIMENSIONS LIST

DIM.	DESCRIPTION	PIER 2				PIER 3			
D	EXIST. COLUMN DIA.	2'-0" (ALL)				2'-0" (ALL)			
T	JACKET THICKNESS	N/A	3/8"	3/8"	3/8"	N/A	3/8"	3/8"	3/8"
C	COLUMN LENGTH (FROM WEST TO EAST)	N/A	22.20'	21.54'	21.04'	N/A	23.25'	22.58'	22.08'
S	CROSSBEAM SLOPE	2%±				2%±			
F	APPROX. EXCAVATION DEPTH* (FROM WEST TO EAST)	N/A	6.4'	6.9'	7.7'	N/A	5.4'	5.9'	7.2'

* EXCAVATION DEPTH MAY VARY ±1'-0"

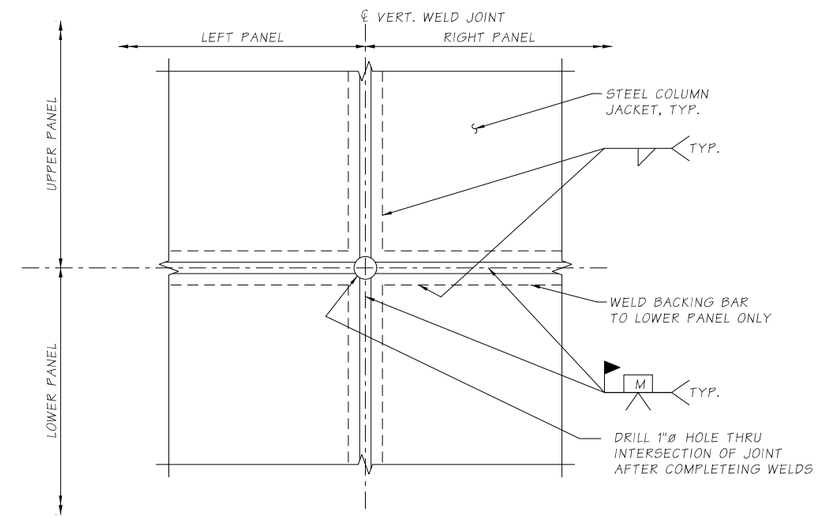

STEEL JACKET WELD DETAIL 1 -

NOTES:

1. DIMENSIONS PROVIDED ARE FOR REFERENCE ONLY. SEE GENERAL NOTE 3 ON SHEET BF1.
2. APPROPRIATE INJECTION NOZZLES SHALL BE PROVIDED ON COLUMN JACKET AND SHALL BE REMOVED, GROUND FLUSH AND PAINTED FOLLOWING COMPLETION OF GROUTING OPERATION.
3. ALL VOIDS BETWEEN STEEL COLUMN JACKET AND EXIST. COLUMN SURFACE SHALL BE FILLED WITH CEMENT GROUT.
4. THE LOCATION AND NUMBER OF HORIZONTAL WELDS SHALL BE DETERMINED BY THE CONTRACTOR AND SUBJECT TO THE APPROVAL OF THE ENGINEER. THE LOCATION OF COLUMN JACKET WELDS IS FOR ILLUSTRATION. THERE SHALL BE NO SKIP WELDS.
5. STEEL COLUMN JACKETS SHALL BE FABRICATED FROM ASTM A36 STRUCTURAL STEEL AND PAINTED IN ACCORDANCE WITH THE SPECIAL PROVISIONS.
6. GROUTING SHALL BE DONE FROM THE BOTTOM UP IN ACCORDANCE WITH THE SPECIAL PROVISIONS.
7. THE 2" THICK FILLER MATERIAL AROUND THE PERIMETER OF THE STEEL JACKET SHALL BE USED FOR PARTIALLY BURIED COLUMNS WHERE THE DEPTH IS MORE THAN 4'-0" OR COLUMNS ARE ADJACENT TO PAVED SURFACES OR SLOPE PROTECTION.

SEC. 20, T.25N., R.5E., W.M.
CITY OF BELLEVUE

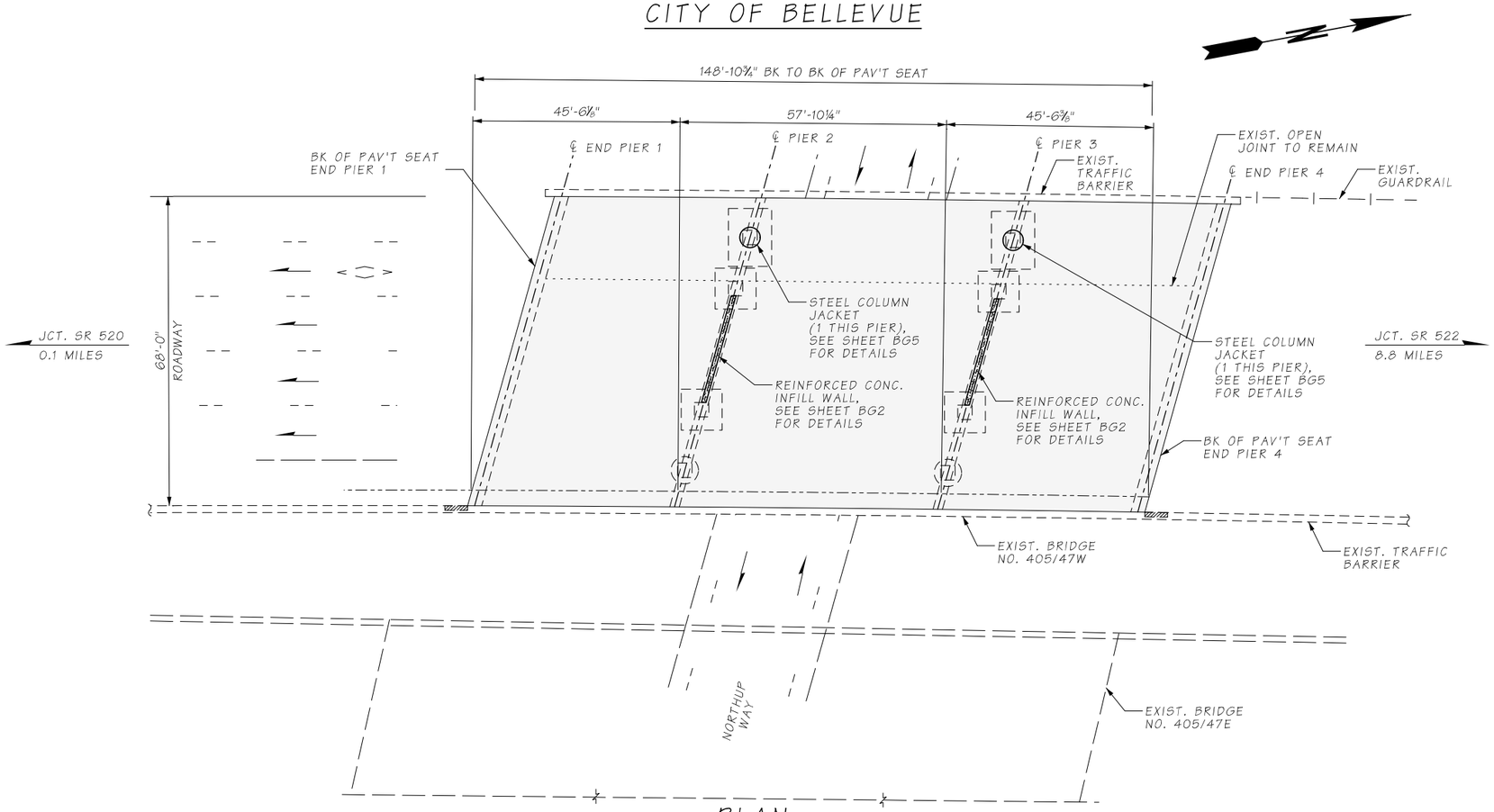

PLAN

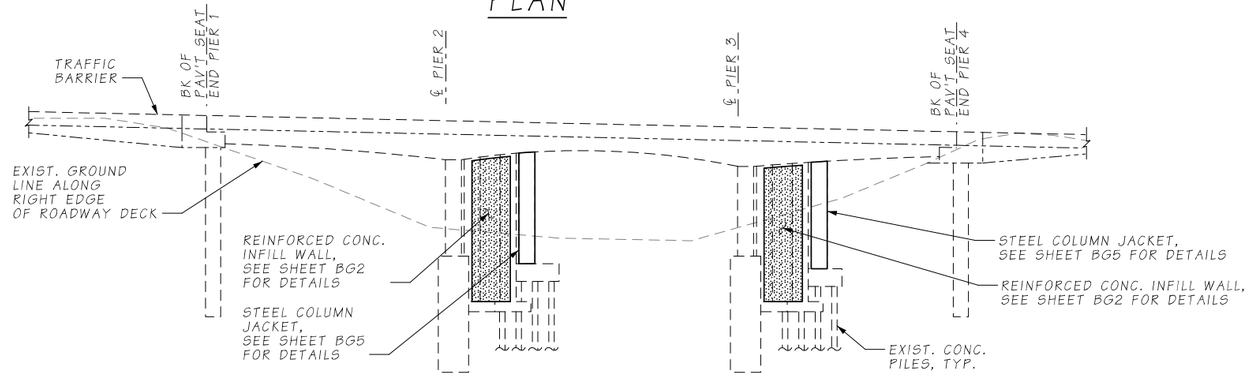

ELEVATION

GENERAL NOTES

1. ALL MATERIALS AND WORKMANSHIP SHALL BE IN ACCORDANCE WITH THE REQUIREMENTS OF THE WASHINGTON STATE DEPARTMENT OF TRANSPORTATION STANDARD SPECIFICATIONS FOR ROAD, BRIDGE AND MUNICIPAL CONSTRUCTION - DATED 2022.
2. NEW CONSTRUCTION HAS BEEN DESIGNED IN ACCORDANCE WITH THE REQUIREMENTS OF THE AASHTO LRFD BRIDGE DESIGN SPECIFICATIONS 8TH EDITION, DATED 2017 AND THE FHWA-HRT-06-032 SEISMIC RETROFITTING MANUAL FOR HIGHWAY STRUCTURES, DATED 2006.
3. EXISTING FEATURES, DIMENSIONS, AND ELEVATIONS ARE BASED ON AS-BUILT PLANS. ALL DIMENSIONS SHALL BE FIELD MEASURED AND VERIFIED BY THE CONTRACTOR, PRIOR TO ORDERING MATERIALS AND FABRICATION (SEE SPECIAL PROVISIONS).
4. CONTRACTOR SHALL LOCATE EXISTING STEEL REINFORCING USING NONDESTRUCTIVE METHODS TO AVOID DAMAGE DURING DRILLING OPERATIONS. THE CONTRACTOR SHALL NOTIFY THE ENGINEER IMMEDIATELY IF ANY EXISTING REBAR OR ANCHOR BOLTS ARE ENCOUNTERED OR ARE IN CONFLICT WITH THE WORK DETAILED, AND SHALL OBTAIN APPROVAL FROM THE ENGINEER BEFORE CONTINUING WORK. CORE DRILLING IS NOT ALLOWED.
5. ALL NEW MATERIALS USED SHALL MEET THE FOLLOWING REQUIREMENTS:
   - CONCRETE CLASS 4000
   - REINFORCING STEEL BARS - ASTM A706, GRADE 60, U.N.O.
   - STEEL COLUMN JACKETS - ASTM A36
6. THE MINIMUM CONCRETE COVER MEASURED FROM THE FACE OF THE CONCRETE TO THE FACE OF ANY REINFORCING STEEL SHALL BE 1 1/2" U.N.O.
7. CONCRETE SURFACES REQUIRED TO BE ROUGHENED SHALL BE ROUGHENED IN ACCORDANCE WITH SECTION 6-02.3(12)B OR THE SPALL PATTERN ALTERNATIVE ROUGHENED SURFACE SHOWN IN DETAIL 2 ON BRIDGE SHEET BG4.
8. THE LOCATION OF DOWEL BARS MAY BE ADJUSTED BY +/- 1" IF NECESSARY TO AVOID CONFLICTS WITH EXISTING REINFORCING STEEL. DOWEL BARS SHALL BE KEPT A MINIMUM OF 3" FROM THE EDGE OF CONCRETE.
9. SEE UTILITY SHEETS FOR THE LOCATIONS OF EXISTING UTILITIES.

LEGEND

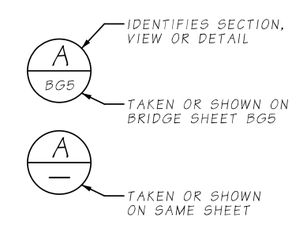

SEISMIC RETROFIT

Bridge Design Engr.	KHALEGHI B.	c:\pwworking\west01\d1468466\47W_Layout Plan.dgn				REGION NO.	STATE	FED. AID PROJ. NO.	SHEET NO.	TOTAL SHEETS
Supervisor	KORPI D.					10	WASH		107	176
Designed By	CAMACHO L.F.					JOB NUMBER				
Checked By	LEE J.J.					20A039				
Detailed By	VYPLEL M.									
Bridge Projects Engr.	ROSA M.									
Prelim. Plan By										
Architect/Specialist		DATE	REVISION	BY	APP'D					

BRIDGE AND STRUCTURES OFFICE

R. LEE ANDERSON, STATE OF WASHINGTON, 43571, PROFESSIONAL ENGINEER
SEE SHEET CT1
04/20/2022

Washington State Department of Transportation

HDR

I-405
BN RR BRIDGE TO PED TRAIL BRIDGE
SEISMIC RETROFIT
BRIDGE NO. 405/47W

LAYOUT

BRIDGE SHEET NO. BG1

SHEET 107 OF 176 SHEETS

SR 405 FILE NO. ____ SHEET BG1
ProjectWise Vault:
4/20/2022 4:54:27 PM

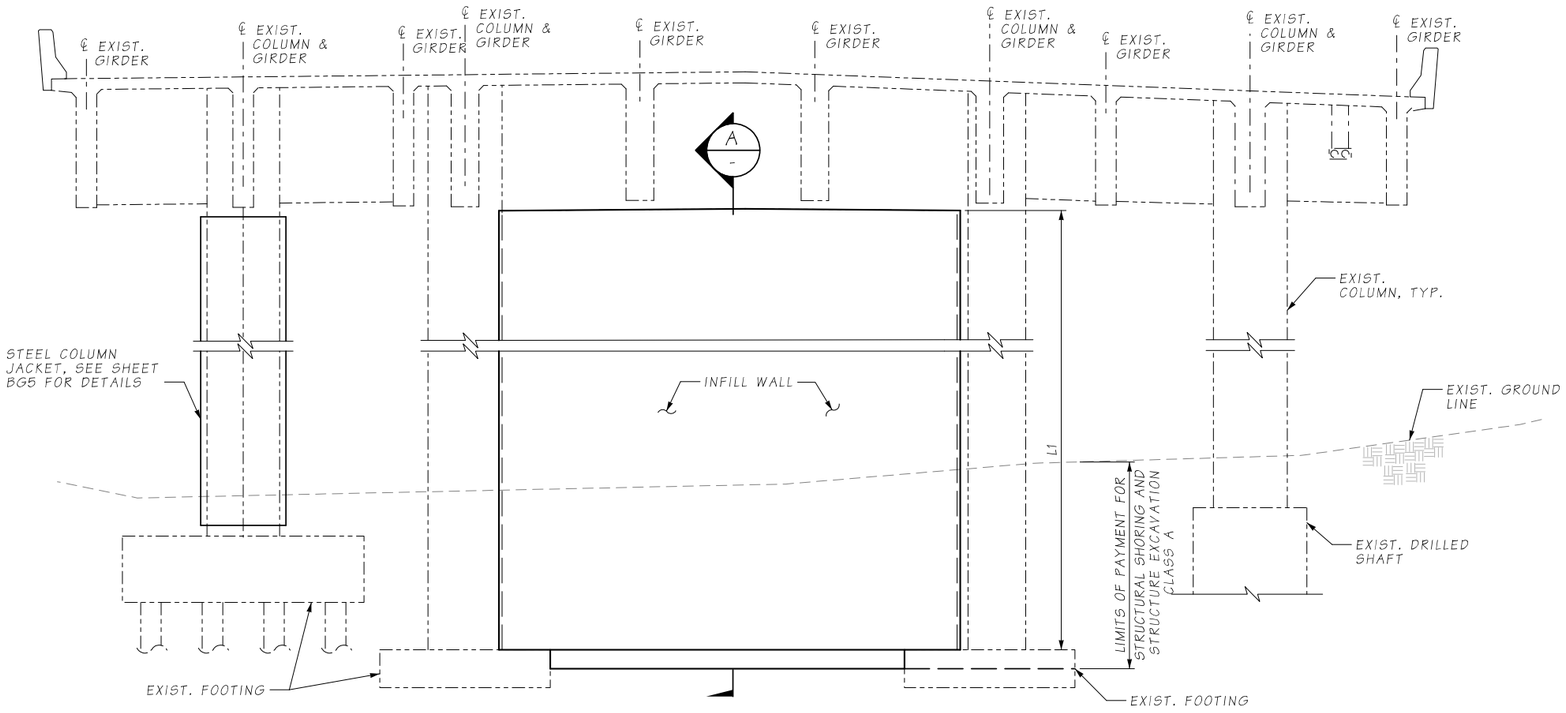

ELEVATION - PIERS 2 & 3 INFILL WALL

(PIER 2 SHOWN, PIER 3 SIMILAR)

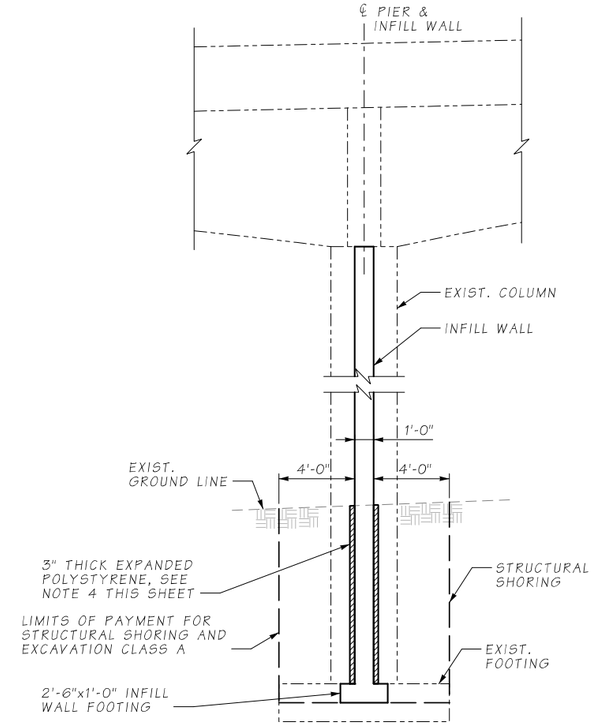

SECTION A

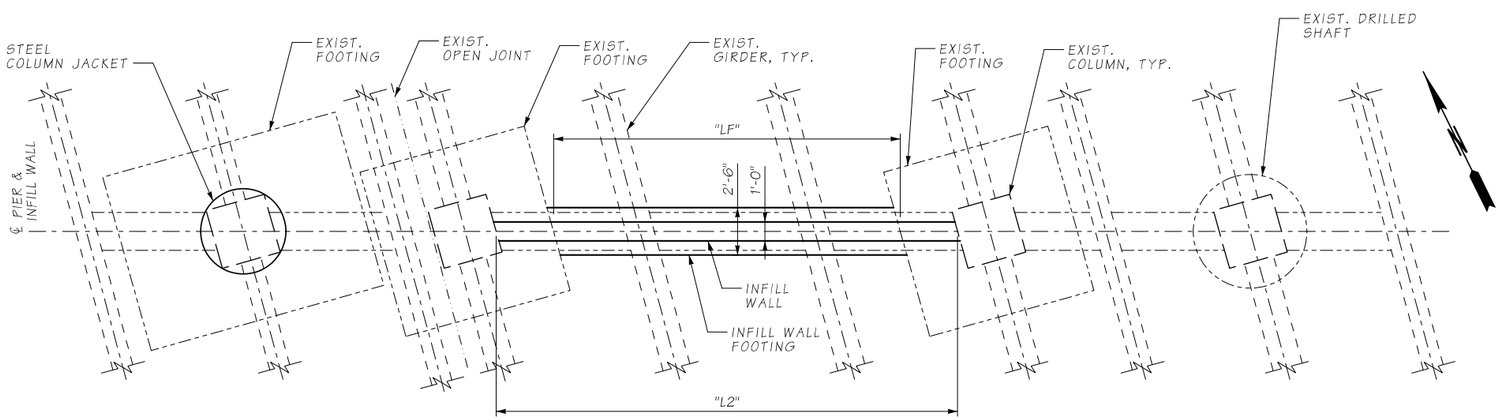

PLAN - PIERS 2 & 3 INFILL WALL

(PIER 2 SHOWN, PIER 3 SIMILAR)

NOTES:

1. SEE SHEET BG3 FOR INFILL WALL DIMENSIONS.
2. SEE GENERAL NOTE 3 ON SHEET BG1.
3. REINFORCEMENT NOT SHOWN FOR CLARITY. SEE SHEET BG3 FOR REINFORCING DETAILS.
4. CONTRACTOR SHALL PLACE 3" THICK EXPANDED POLYSTYRENE AGAINST ALL EXPOSED CONCRETE SURFACES BELOW THE FINISHED GROUND LINE AT PIERS 2 AND 3. BACKFILLING OPERATIONS SHALL BE PERFORMED IN A MANNER THAT MINIMIZES DAMAGE TO THE EXPANDED POLYSTYRENE.

Bridge Design Engr.	KHALEGHI B.	c:\pwworking\west01\d1468466\47W_Piers 2-3_Infill Walls.dgn							
Supervisor	KORPI D.				REGION NO.	STATE	FED. AID PROJ. NO.	SHEET NO.	TOTAL SHEETS
Designed By	CAMACHO L.F.				10	WASH		108	176
Checked By	LEE J.J.				JOB NUMBER				
Detailed By	VYPLEL M.				20A039				
Bridge Projects Engr.	ROSA M.								
Prelim. Plan By									
Architect/Specialist		DATE	REVISION	BY	APP'D				

4/20/2022 4:54:30 PM

BRIDGE AND STRUCTURES OFFICE

R. LEE ANDREWS, STATE OF WASHINGTON, 43571, STRUCTURAL ENGINEER, PROFESSIONAL ENGINEER

SEE SHEET CT1
04/20/2022

Washington State Department of Transportation

HDR

I-405
BN RR BRIDGE TO PED TRAIL BRIDGE
SEISMIC RETROFIT
BRIDGE NO. 405/47W

PIERS 2 & 3 INFILL WALLS
PLAN, ELEVATION & SECTION

BRIDGE SHEET NO. BG2

SHEET 108 OF 176 SHEETS

SR 405 FILE NO. 20A039 SHEET BG2
Project Wise Vault:

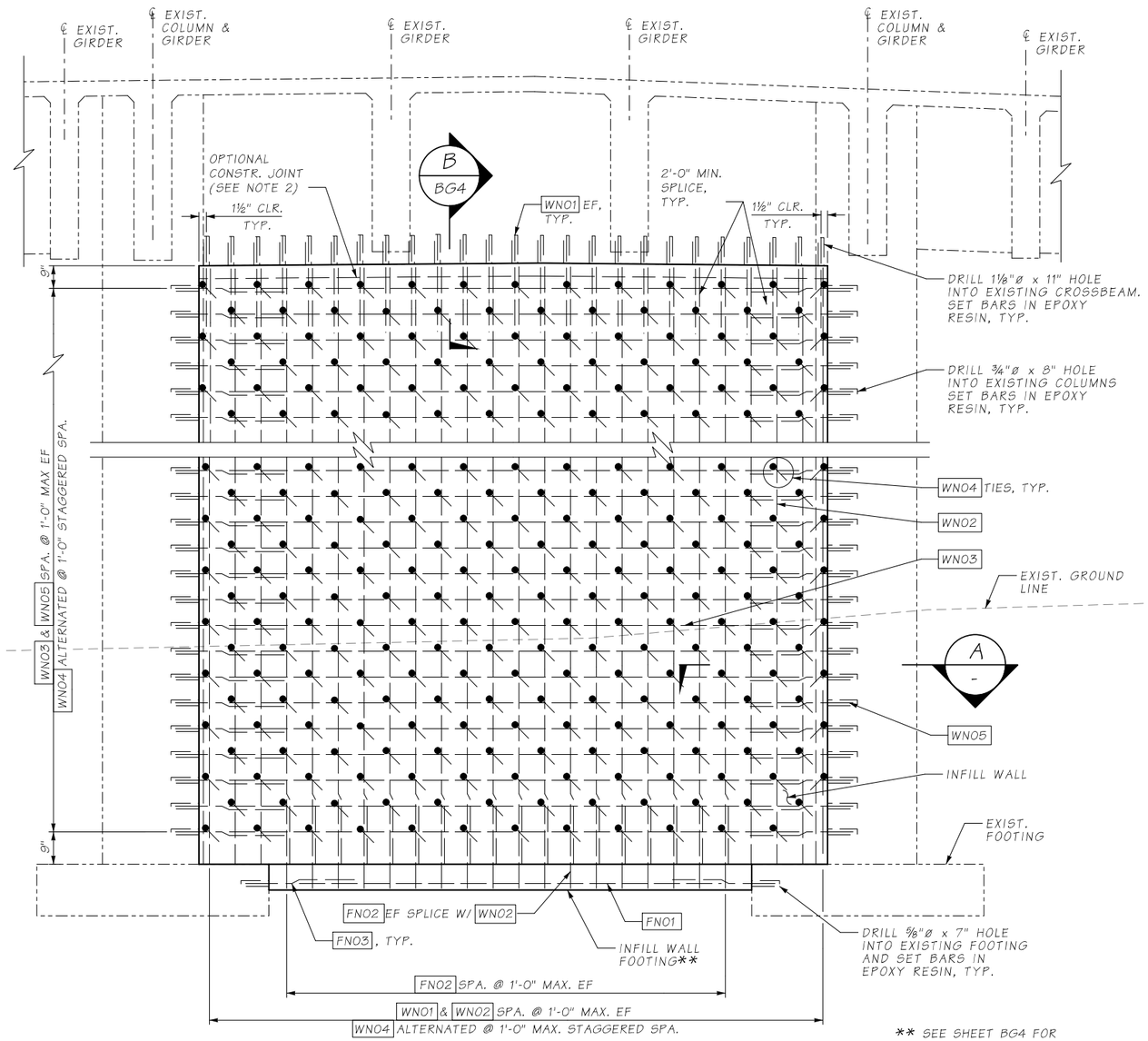

** SEE SHEET BG4 FOR FOOTING REINFORCEMENT

ELEVATION - PIERS 2 & 3 INFILL WALL REINFORCING

(PIER 2 SHOWN, PIER 3 SIMILAR, NEAR FACE REINFORCING SHOWN, FAR FACE SIMILAR)

INFILL WALL DIMENSIONS & ELEVATIONS LIST

DIM.	LOCATION	DIMENSIONS	
		PIER 2	PIER 3
L1	WALL HEIGHT	27'-2"	26'-9"
L2	WALL LENGTH	24'-5"	24'-5"
LF	FOOTING LENGTH	15'-1"	15'-1"
D	APPROXIMATE EXCAVATION DEPTH*	11.7'	10.4'

DIMENSIONS AND ELEVATIONS SHOWN ON SHEET BG2.

* EXCAVATION DEPTH MAY VARY ±1'-0"

INFILL WALL BAR LIST

	BAR MARK	LOCATION	SIZE	DIMENSIONS			TOTAL#	WEIGHT
				A	B	LENGTH		
PIER 2	W201	VERTICAL DOWEL BARS	7	2'-2"	0'-11"	3'-1"	48	303
	W202	VERTICAL BARS	5	26'-11"	-	26'-11"	48	1348
	W203	HORIZONTAL BARS	5	24'-2"	-	24'-2"	54	1361
	W204	TIES	3	0'-9"	-	1'-6"	337	191
	W205	HORIZONTAL DOWEL BARS	5	2'-10"	-	2'-10"	108	320
PIER 3	W301	VERTICAL DOWEL BARS	7	2'-2"	0'-11"	3'-1"	48	303
	W302	VERTICAL BARS	5	26'-6"	-	26'-6"	48	1327
	W303	HORIZONTAL BARS	5	24'-2"	-	24'-2"	54	1361
	W304	TIES	3	0'-9"	-	1'-6"	337	191
	W305	HORIZONTAL DOWEL BARS	5	2'-10"	-	2'-10"	108	320

REBAR BENDING DIAGRAM (ALL DIMENSIONS ARE OUT TO OUT)

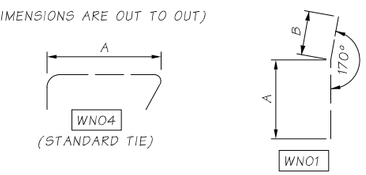

NOTES:

1. WNOO = BAR MARK FOR INFILL WALLS, WHERE "N" IS THE PIER NUMBER.
2. OPTIONAL CONSTRUCTION JOINT MAY BE PLACED WITHIN 6" OFF EXISTING CROSSBEAM. 4000 PSI SELF-CONSOLIDATING CONCRETE SHALL BE PLACED ABOVE THE CONSTRUCTION JOINT. CONTRACTOR SHALL SUBMIT TYPE 2E WORKING DRAWINGS SHOWING METHOD OF INSTALLATION FOR APPROVAL BY THE ENGINEER.

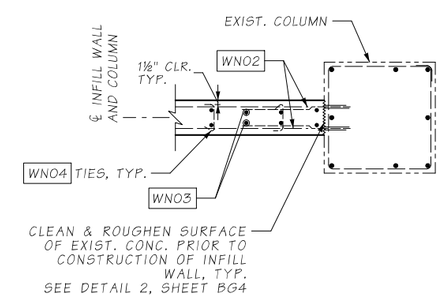

SECTION A / -

SR 405 FILE NO. 20A039 SHEET BG3
ProjectWise Vault:

Bridge Design Engr.	KHALEGHI B.	c:\pwworking\west01\d1468466\47W_Piers 2-3_Infill Walls_Reinf Det.dgn						
Supervisor	KORPI D.							
Designed By	CAMACHO L.F.							
Checked By	LEE J.J.							
Detailed By	VYPLEL M.							
Bridge Projects Engr.	ROSA M.							
Prelim. Plan By								
Architect/Specialist		DATE	REVISION	BY	APP'D			

4/20/2022 4:54:33 PM

REGION NO.	STATE	FED. AID PROJ. NO.	SHEET NO.	TOTAL SHEETS
10	WASH		109	176
JOB NUMBER 20A039				

BRIDGE AND STRUCTURES OFFICE

R. LEE ANDREWS — STATE OF WASHINGTON — 43571 — STRUCTURAL ENGINEER — PROFESSIONAL ENGINEER

SEE SHEET CT1
04/20/2022

Washington State Department of Transportation

HDR

I-405
BN RR BRIDGE TO PED TRAIL BRIDGE
SEISMIC RETROFIT
BRIDGE NO. 405/47W

PIERS 2 & 3 INFILL WALLS
REINFORCING DETAILS & BAR LIST

BRIDGE SHEET NO. BG3

SHEET 109 OF 176 SHEETS

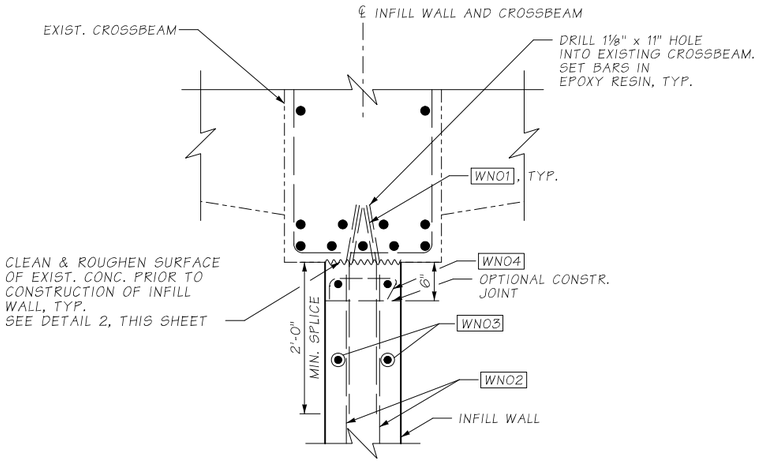

SECTION B / BG4

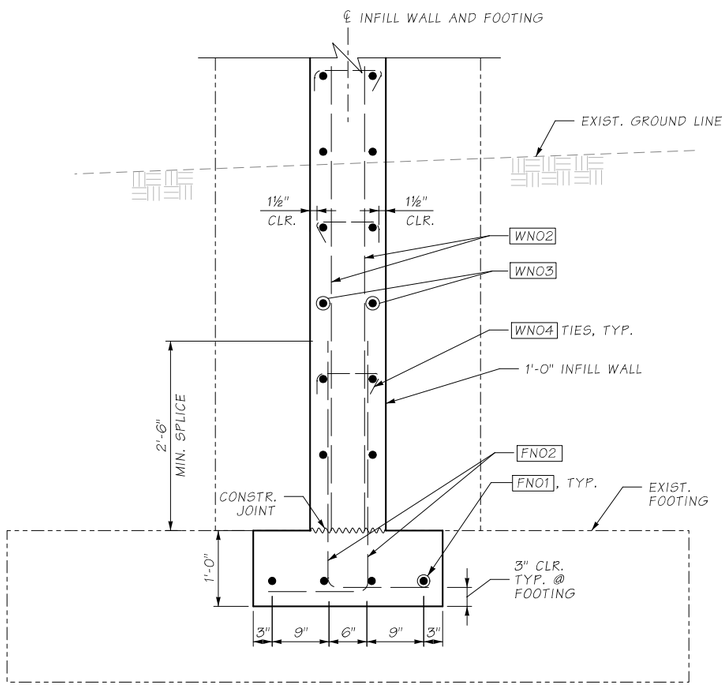

PIERS 2 & 3 INFILL WALL FOOTING DETAIL

INFILL WALL FOOTING BAR LIST

PIER #	BAR MARK	LOCATION	BAR SIZE	DIMENSIONS HORIZ. A	DIMENSIONS VERT. B	DIMENSIONS LENGTH	TOTAL #	WEIGHT
PIER 2	F201	INFILL WALL FOOTING	4	14'-10"	-	14'-10"	4	40
	F202	INFILL WALL FOOTING	5	1'-7"	3'-3"	4'-10"	32	162
	F203	HORIZONTAL DOWEL BARS	4	2'-10"	-	2'-10"	8	15
PIER 3	F301	INFILL WALL FOOTING	4	14'-10"	-	14'-10"	4	40
	F302	INFILL WALL FOOTING	5	1'-7"	3'-3"	4'-10"	32	162
	F303	HORIZONTAL DOWEL BARS	4	2'-10"	-	2'-10"	8	15

REBAR BENDING DIAGRAM (ALL DIMENSIONS ARE OUT TO OUT)

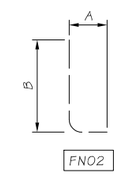

NOTE: FN00= BAR MARK FOR INFILL WALLS, WHERE "N" IS THE PIER NUMBER.

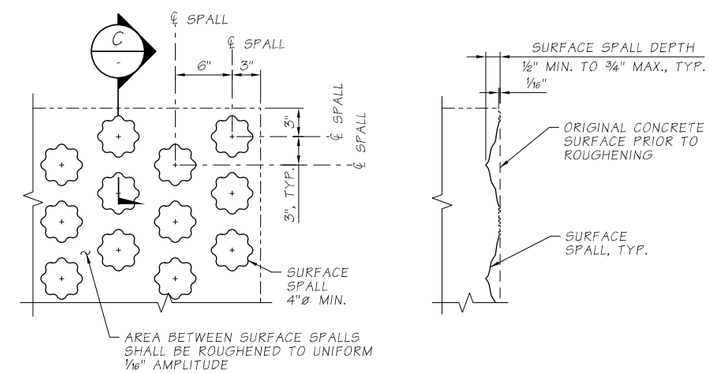

ELEVATION

SECTION C / -

SPALL PATTERN ALTERNATIVE ROUGHENED SURFACE DETAIL 2 / -

SR 405 FILE NO. 20A039 SHEET BG4
ProjectWise Vault:

Bridge Design Engr.	KHALEGHI B.	c:\pwworking\west01\d1468466\47W_Piers 2-3_Infill Wall Footing_Reinf.dgn							
Supervisor	KORPI D.				REGION NO.	STATE	FED. AID PROJ. NO.	SHEET NO.	TOTAL SHEETS
Designed By	CAMACHO L.F.				10	WASH		110	176
Checked By	LEE J.J.				JOB NUMBER				
Detailed By	VYPLEL M.				20A039				
Bridge Projects Engr.	ROSA M.								
Prelim. Plan By									
Architect/Specialist		DATE	REVISION	BY	APP'D				

4/20/2022 4:54:37 PM

BRIDGE AND STRUCTURES OFFICE

R. LEE ANDERSON, STATE OF WASHINGTON, 43571, PROFESSIONAL ENGINEER

SEE SHEET CT1
04/20/2022

Washington State Department of Transportation

HDR

I-405
BN RR BRIDGE TO PED TRAIL BRIDGE
SEISMIC RETROFIT
BRIDGE NO. 405/47W

PIERS 2 & 3 INFILL WALL FOOTING REINFORCING DETAILS & BAR LIST

BRIDGE SHEET NO. BG4

SHEET 110 OF 176 SHEETS

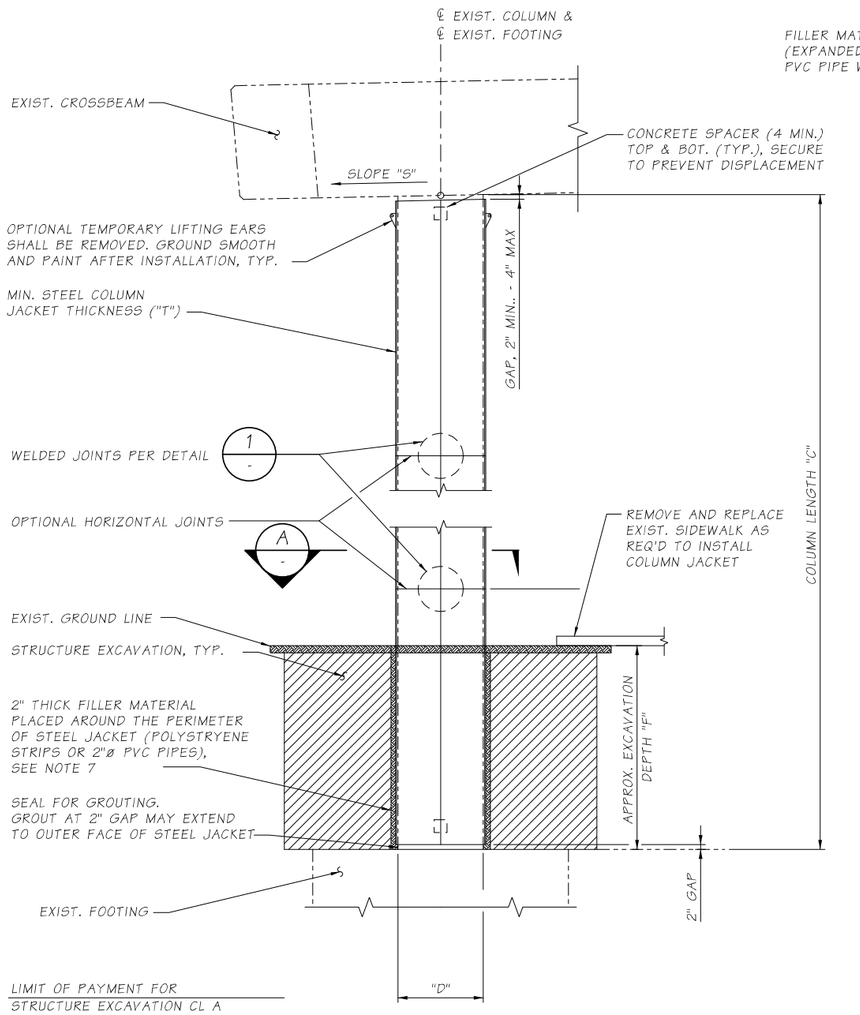

ELEVATION - TYP. COLUMN STEEL JACKET

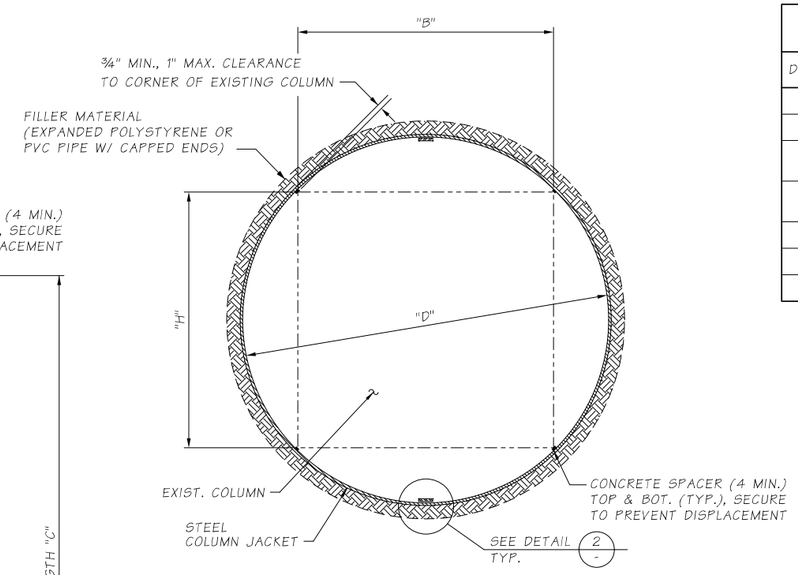

SECTION A -

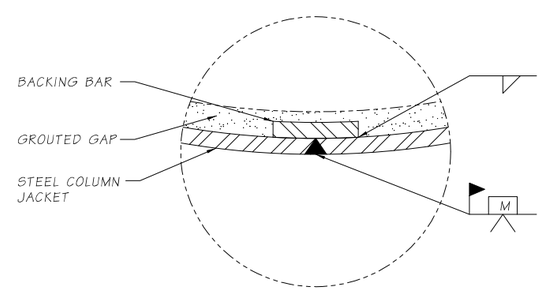

DETAIL 2 -
TYP. WELD JOINT

STEEL COLUMN JACKET DIMENSIONS LIST

DIM./ELEV.	DESCRIPTION	PIER 2				PIER 3			
B	EXISTING COLUMN WIDTH	3'-2" (ALL)				3'-2" (ALL)			
H	EXISTING COLUMN DEPTH	3'-2" (ALL)				3'-2" (ALL)			
C	COLUMN LENGTH (FROM WEST TO EAST)	20.07'	N/A	N/A	N/A	20.57'	N/A	N/A	N/A
F	APPROX. EXCAVATION DEPTH* (FROM WEST TO EAST)	4.0'	N/A	N/A	N/A	4.4'	N/A	N/A	N/A
S	CROSSBEAM SLOPE	2%±				2%±			
T	JACKET THICKNESS	⅜"	N/A	N/A	N/A	⅜"	N/A	N/A	N/A
D	DIAMETER	4'-8½"	N/A	N/A	N/A	4'-8½"	N/A	N/A	N/A

* EXCAVATION DEPTH MAY VARY ±1'-0"

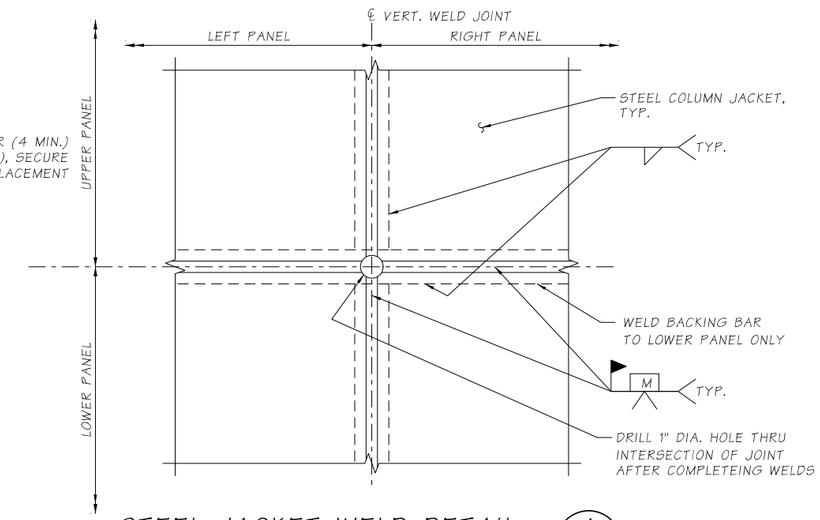

STEEL JACKET WELD DETAIL 1 -

NOTES:

1. DIMENSIONS PROVIDED ARE FOR REFERENCE ONLY. SEE GENERAL NOTE 3 ON SHEET BG1.
2. APPROPRIATE INJECTION NOZZLES SHALL BE PROVIDED ON COLUMN JACKET AND SHALL BE REMOVED, GROUND FLUSH AND PAINTED FOLLOWING COMPLETION OF GROUTING OPERATION.
3. ALL VOIDS BETWEEN STEEL COLUMN JACKET AND EXIST. COLUMN SURFACE SHALL BE FILLED WITH CEMENT GROUT.
4. THE LOCATION AND NUMBER OF HORIZONTAL WELDS SHALL BE DETERMINED BY THE CONTRACTOR AND SUBJECT TO THE APPROVAL OF THE ENGINEER. THE LOCATION OF COLUMN JACKET WELDS IS FOR ILLUSTRATION. THERE SHALL BE NO SKIP WELDS.
5. STEEL COLUMN JACKETS SHALL BE FABRICATED FROM ASTM A36 STRUCTURAL STEEL AND PAINTED IN ACCORDANCE WITH THE SPECIAL PROVISIONS.
6. GROUTING SHALL BE DONE FROM THE BOTTOM UP IN ACCORDANCE WITH THE SPECIAL PROVISIONS.
7. THE 2" THICK FILLER MATERIAL AROUND THE PERIMETER OF THE STEEL JACKET SHALL BE USED FOR PARTIALLY BURIED COLUMNS WHERE THE DEPTH IS MORE THAN 4'-0" OR COLUMNS ARE ADJACENT TO PAVED SURFACES OR SLOPE PROTECTION.

SR 405 FILE NO. 20A039 SHEET BG5
ProjectWise Vault:

Bridge Design Engr.	KHALEGHI B.	c:\pwworking\west01\d1468466\47W_Steel Column Jackets_Elev-Det.dgn						
Supervisor	KORPI D.				REGION NO.	STATE	FED. AID PROJ. NO.	SHEET NO.	TOTAL SHEETS
Designed By	CAMACHO L.F.				10	WASH		111	176
Checked By	LEE J.J.								
Detailed By	VYPLEL M.				JOB NUMBER				
Bridge Projects Engr.	ROSA M.				20A039				
Prelim. Plan By									
Architect/Specialist		DATE	REVISION	BY	APP'D				

4/20/2022 4:54:41 PM

BRIDGE AND STRUCTURES OFFICE

E. LEE ANDERSON, STATE OF WASHINGTON, 43571, STRUCTURAL ENGINEER, PROFESSIONAL ENGINEER
SEE SHEET CT1
04/20/2022

Washington State Department of Transportation

HDR

I-405
BN RR BRIDGE TO PED TRAIL BRIDGE
SEISMIC RETROFIT
BRIDGE NO. 405/47W

STEEL COLUMN JACKETS
ELEVATIONS AND DETAILS

BRIDGE SHEET NO. BG5

SHEET 111 OF 176 SHEETS

SEC. 20, T.25N., R.5E., W.M.
CITY OF BELLEVUE

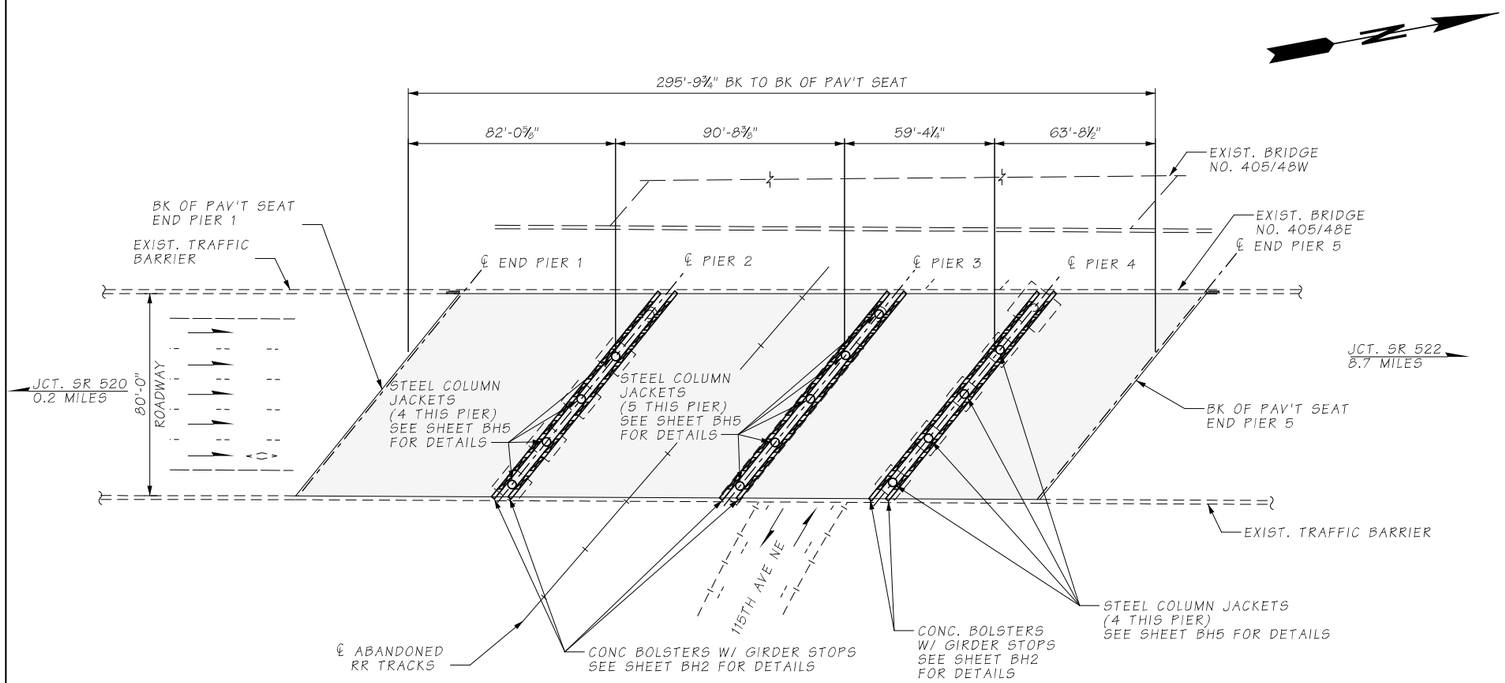

PLAN

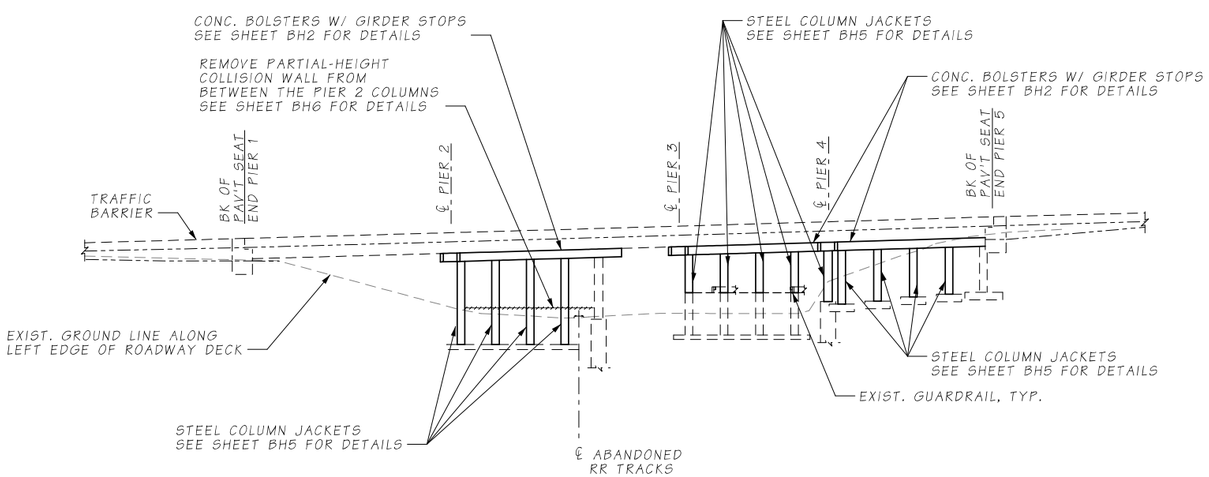

ELEVATION

GENERAL NOTES

1. ALL MATERIALS AND WORKMANSHIP SHALL BE IN ACCORDANCE WITH THE REQUIREMENTS OF THE WASHINGTON STATE DEPARTMENT OF TRANSPORTATION STANDARD SPECIFICATIONS FOR ROAD, BRIDGE AND MUNICIPAL CONSTRUCTION - DATED 2022.
2. NEW CONSTRUCTION HAS BEEN DESIGNED IN ACCORDANCE WITH THE REQUIREMENTS OF THE AASHTO LRFD BRIDGE DESIGN SPECIFICATIONS 8TH EDITION, DATED 2017 AND THE FHWA-HRT-06-032 SEISMIC RETROFITTING MANUAL FOR HIGHWAY STRUCTURES, DATED 2006.
3. EXISTING FEATURES, DIMENSIONS, AND ELEVATIONS ARE BASED ON AS-BUILT PLANS. ALL DIMENSIONS SHALL BE FIELD MEASURED AND VERIFIED BY THE CONTRACTOR, PRIOR TO ORDERING MATERIALS AND FABRICATION (SEE SPECIAL PROVISIONS).
4. CONTRACTOR SHALL LOCATE EXISTING STEEL REINFORCING USING NONDESTRUCTIVE METHODS TO AVOID DAMAGE DURING DRILLING OPERATIONS. THE CONTRACTOR SHALL NOTIFY THE ENGINEER IMMEDIATELY IF ANY EXISTING REBAR OR ANCHOR BOLTS ARE ENCOUNTERED OR ARE IN CONFLICT WITH THE WORK DETAILED, AND SHALL OBTAIN APPROVAL FROM THE ENGINEER BEFORE CONTINUING WORK. CORE DRILLING IS NOT ALLOWED.
5. ALL NEW MATERIALS USED SHALL MEET THE FOLLOWING REQUIREMENTS:
   - CONCRETE CLASS 4000
   - REINFORCING STEEL BARS - ASTM A706, GRADE 60, U.N.O.
   - STEEL COLUMN JACKETS - ASTM A36
6. THE MINIMUM CONCRETE COVER MEASURED FROM THE FACE OF THE CONCRETE TO THE FACE OF ANY REINFORCING STEEL SHALL BE 1 1/2" U.N.O.
7. CONCRETE SURFACES REQUIRED TO BE ROUGHENED SHALL BE ROUGHENED IN ACCORDANCE WITH SECTION 6-02.3(12)B OR THE SPALL PATTERN ALTERNATIVE ROUGHENED SURFACE SHOWN IN DETAIL 2 ON BRIDGE SHEET BH3.
8. THE LOCATION OF DOWEL BARS MAY BE ADJUSTED BY +/- 1" IF NECESSARY TO AVOID CONFLICTS WITH EXISTING REINFORCING STEEL. DOWEL BARS SHALL BE KEPT A MINIMUM OF 3" FROM THE EDGE OF CONCRETE.
9. SEE UTILITY SHEETS FOR THE LOCATIONS OF EXISTING UTILITIES.

LEGEND

⊠ NEW GIRDER STOP

A / BH5 — IDENTIFIES SECTION, VIEW OR DETAIL; TAKEN OR SHOWN ON BRIDGE SHEET BH5

A / — TAKEN OR SHOWN ON SAME SHEET

SEISMIC RETROFIT

Bridge Design Engr.	KHALEGHI B.	c:\pwworking\west01\d1468466\48E_Layout Plan.dgn				REGION NO.	STATE	FED. AID PROJ. NO.	SHEET NO.	TOTAL SHEETS
Supervisor	KORPI D.					10	WASH		112	176
Designed By	CHI J.					JOB NUMBER				
Checked By	KARSLI N.					20A039				
Detailed By	VYPLEL M.									
Bridge Projects Engr.	ROSA M.									
Prelim. Plan By										
Architect/Specialist		DATE	REVISION	BY	APP'D					

4/20/2022 4:54:44 PM

BRIDGE AND STRUCTURES OFFICE

R. LEE ANDREWS — STATE OF WASHINGTON — 43571 — STRUCTURAL PROJECT PROFESSIONAL ENGINEER

SEE SHEET CT1
04/20/2022

Washington State Department of Transportation

HDR

I-405
BN RR BRIDGE TO PED TRAIL BRIDGE
SEISMIC RETROFIT
BRIDGE NO. 405/48E

LAYOUT

BRIDGE SHEET NO. BH1

SHEET 112 OF 176 SHEETS

SR 405 FILE NO. ____ SHEET BH1
ProjectWise Vault:

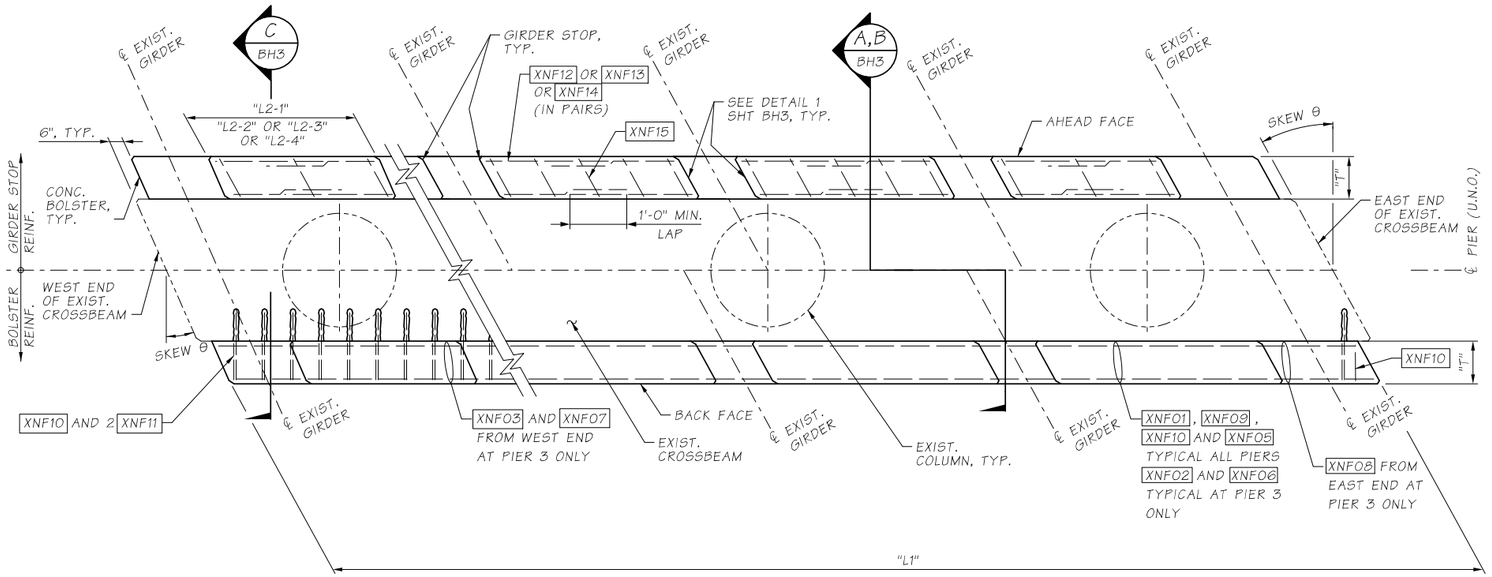

PLAN - TYP. CROSSBEAM BOLSTERS AND GIRDER STOPS

CROSSBEAM BOLSTER AND GIRDER STOP DIMENSIONS LIST

DIM.	DESCRIPTION	DIMENSIONS					
		PIER 2		PIER 3		PIER 4	
		BACK	AHEAD	BACK	AHEAD	BACK	AHEAD
L1	BOLSTER LENGTH	102'-4¾"	102'-4¾"	103'-10¼"	103'-10¼"	104'-10¾"	104'-10¾"
L2-1	GIRDER STOP LENGTH	2 @ 5'-3"	2 @ 5'-3"	2 @ 5'-0½"	2 @ 5'-0½"	2 @ 5'-3"	2 @ 5'-3"
L2-2	GIRDER STOP LENGTH	1 @ 6'-1⁵⁄₃₂"	1 @ 6'-1⁵⁄₃₂"	1 @ 6'-3"	1 @ 6'-3"	1 @ 5'-11½"	1 @ 5'-11½"
L2-3	GIRDER STOP LENGTH	2 @ 6'-5⁹⁄₁₆"	2 @ 6'-5⁹⁄₁₆"	2 @ 7'-2¼"	2 @ 7'-2¼"	2 @ 7'-8¹⁄₁₆"	2 @ 7'-8¹⁄₁₆"
L2-4	GIRDER STOP LENGTH	6 @ 6'-10¼"	6 @ 6'-10¼"	6 @ 6'-10¼"	6 @ 6'-10¼"	6 @ 6'-10¼"	6 @ 6'-10¼"
H1	BOLSTER HEIGHT	3'-6"	3'-6"	3'-6"	3'-6"	3'-6"	3'-6"
H2	GIRDER STOP HEIGHT	1'-0"	1'-0"	1'-0"	1'-0"	1'-0"	1'-0"
T	BOLSTER THICKNESS	1'-6"	1'-6"	1'-6"	1'-6"	1'-6"	1'-6"
θ	SKEW ANGLE	39°	39°	39°	39°	39°	39°

NOTES:

1. DIMENSIONS PROVIDED ARE FOR REFERENCE ONLY. CONTRACTOR SHALL ADJUST DIMENSIONS IN THE FIELD SUCH THAT THE REQUIREMENTS OF DETAIL 1 ON SHEET BH3 ARE SATISFIED.
2. SEE GENERAL NOTE 3 ON SHEET BH1.
3. SEE SHEET BH4 FOR BAR LIST.
4. EXISTING GIRDERS AND DIAPHRAGMS NOT SHOWN FOR CLARITY.

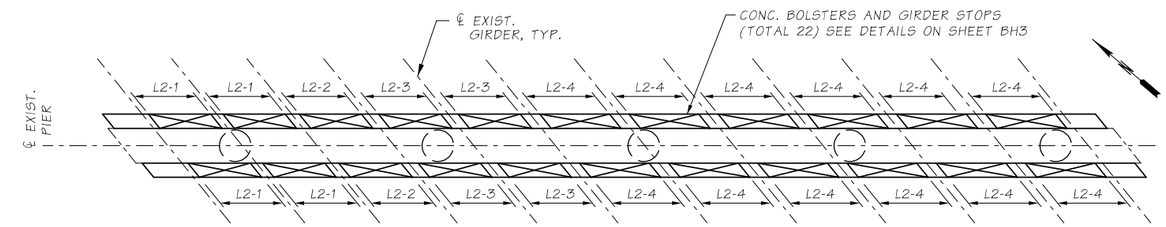

TYPICAL INTERMEDIATE GIRDER STOP LAYOUT

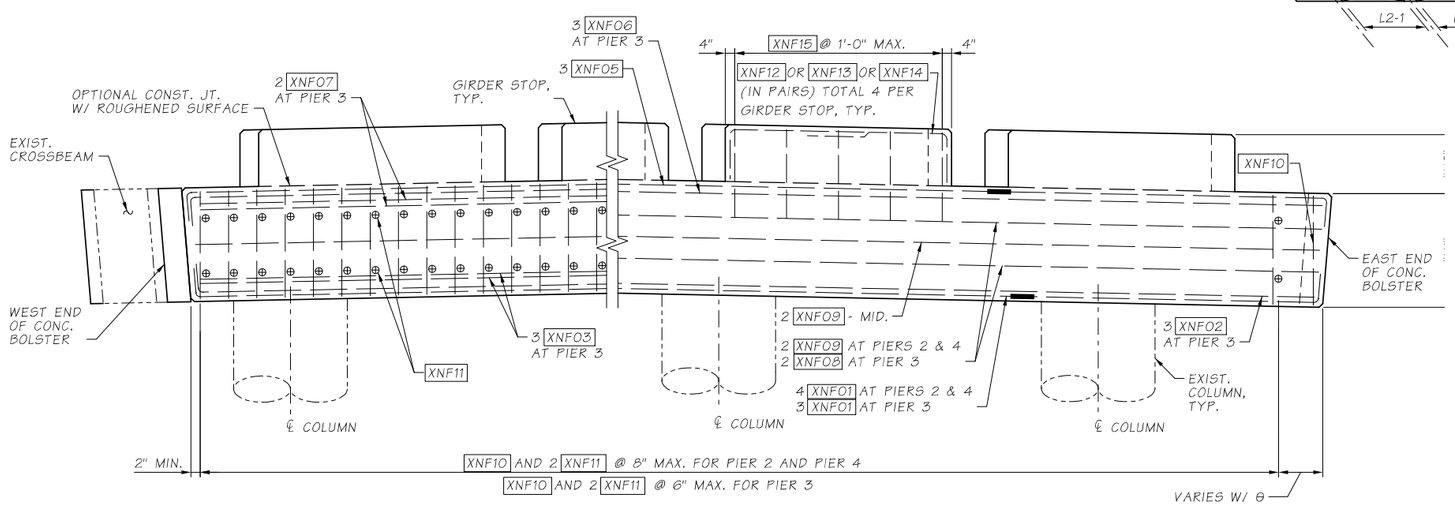

ELEVATION - TYP. CROSSBEAM BOLSTERS AND GIRDER STOPS

(BACK FACE SHOWN, AHEAD FACE SIMILAR)

SR 405 FILE NO. 20A039 SHEET BH2
ProjectWise Vault:

Bridge Design Engr.	KHALEGHI B.	c:\pwworking\west01\d1468466\48E_XBeam Bolster-Girder Stops_Plan-Elev.dgn							
Supervisor	KORPI D.				REGION NO.	STATE	FED. AID PROJ. NO.	SHEET NO.	TOTAL SHEETS
Designed By	CHI J.				10	WASH		113	176
Checked By	KARSLI N.				JOB NUMBER				
Detailed By	VYPLEL M.				20A039				
Bridge Projects Engr.	ROSA M.								
Prelim. Plan By									
Architect/Specialist		DATE	REVISION	BY	APP'D				

4/20/2022 4:54:47 PM

BRIDGE AND STRUCTURES OFFICE

R. LEE ANDREWS, STATE OF WASHINGTON, 43571, PROFESSIONAL ENGINEER
SEE SHEET CT1
04/20/2022

Washington State Department of Transportation

HDR

I-405
BN RR BRIDGE TO PED TRAIL BRIDGE SEISMIC RETROFIT
BRIDGE NO. 405/48E

CROSSBEAM BOLSTER AND GIRDER STOPS - PLAN AND ELEVATION

BRIDGE SHEET NO. BH2

SHEET 113 OF 176 SHEETS

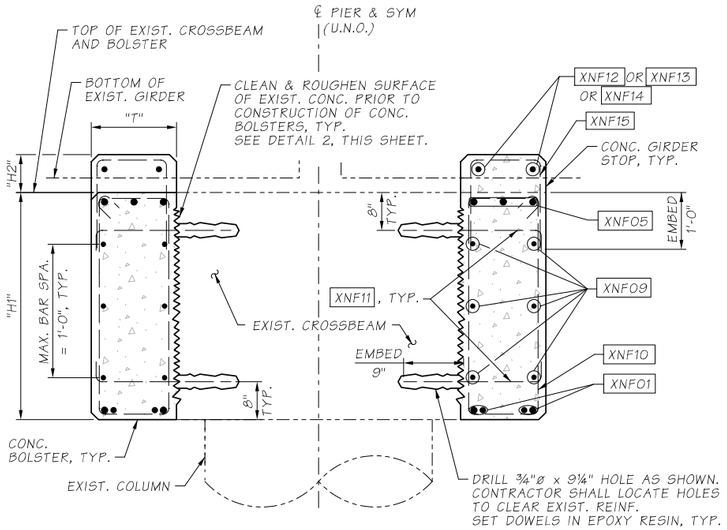

SECTION A / BH2
FOR PIERS 2 & 4

SEE SHEET BH2 FOR "H1", "H2", AND "T" DIMENSIONS

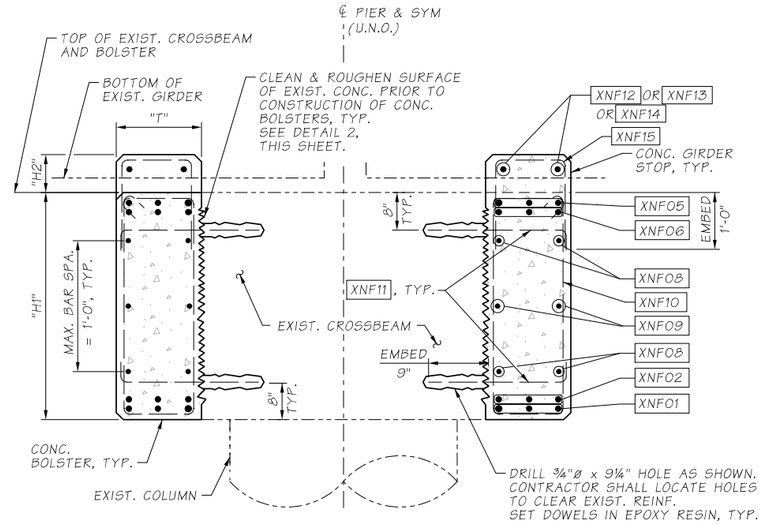

SECTION B / BH2
FOR PIER 3

SEE SHEET BH2 FOR "H1", "H2", AND "T" DIMENSIONS

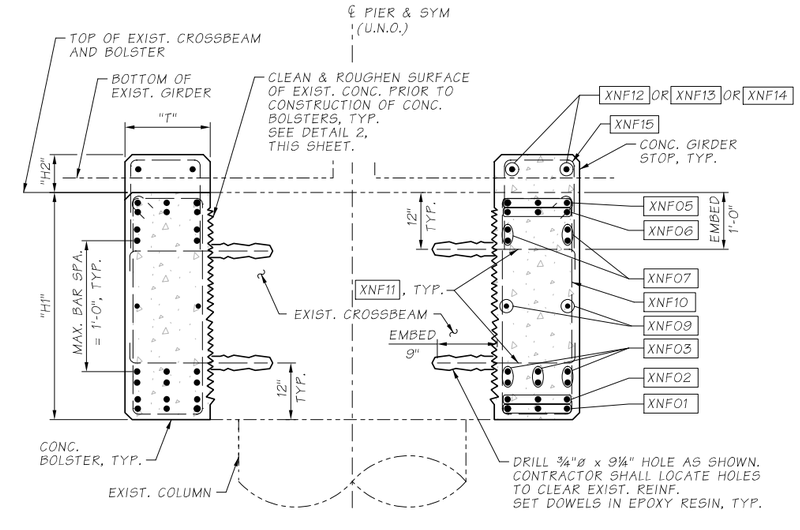

SECTION C / BH2
FOR PIER 3

SEE SHEET BH2 FOR "H1", "H2", AND "T" DIMENSIONS

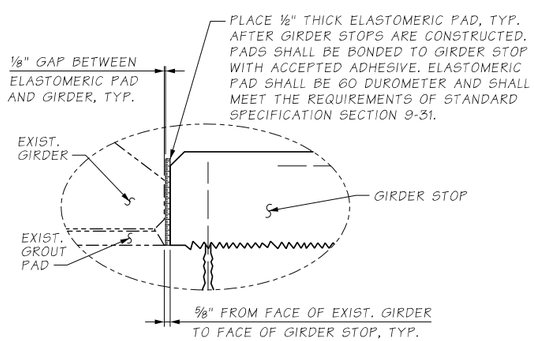

DETAIL 1 / -

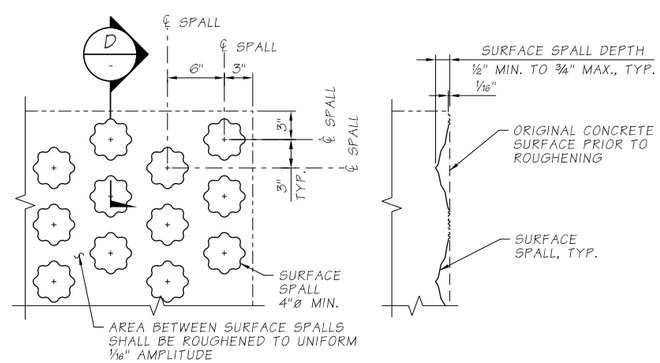

ELEVATION

SECTION D / -

SPALL PATTERN ALTERNATIVE
ROUGHENED SURFACE DETAIL 2 / -

Bridge Design Engr.	KHALEGHI B.	c:\pwworking\west01\d1468466\48E_XBeam Bolster-Girder Stops_Details.dgn							
Supervisor	KORPI D.				REGION NO.	STATE	FED. AID PROJ. NO.	SHEET NO.	TOTAL SHEETS
Designed By	CHI J.				10	WASH		114	176
Checked By	KARSLI N.								
Detailed By	VYPLEL M.				JOB NUMBER				
Bridge Projects Engr.	ROSA M.				20A039				
Prelim. Plan By									
Architect/Specialist		DATE	REVISION	BY	APP'D				

4/20/2022 4:54:50 PM

BRIDGE AND STRUCTURES OFFICE

R. LEE ANDREWS, STATE OF WASHINGTON, 43571, STRUCTURAL ENGINEER, PROFESSIONAL ENGINEER
SEE SHEET CT1
04/20/2022

Washington State Department of Transportation

HDR

I-405
BN RR BRIDGE TO PED TRAIL BRIDGE
SEISMIC RETROFIT
BRIDGE NO. 405/48E

CROSSBEAM BOLSTER AND GIRDER STOPS - DETAILS

BRIDGE SHEET NO. BH3

SHEET 114 OF 176 SHEETS

SR 405 FILE NO. 20A039 SHEET BH3
ProjectWise Vault:

CROSSBEAM BOLSTER / GIRDER STOP BAR LIST

	REBAR MARK	LOCATION	SIZE	BAR GRADE *	DIMENSIONS A HORIZ.	DIMENSIONS B VERT.	DIMENSIONS LENGTH	TOTAL #	WEIGHT
PIER 2	X2B01	BOLSTER LONG. BOT.	#11	80	102'-1"	-	106'-1"	4	2255
	X2B05	BOLSTER LONG. TOP	#11	80	102'-1"	-	106'-1"	3	1691
	X2B09	BOLSTER LONG. MID.	#4	-	102'-1"	-	104'-1"	6	418
	X2B10	BOLSTER TIES	#4	-	1'-3"	3'-3"	9'-9"	155	1010
	X2B11	BOLSTER DOWEL	#5	-	2'-½"	-	2'-9½"	310	579
	X2B12	GIRDER STOP (PAIRS)	#4	-	4'-2"	8"	4'-10"	12	39
	X2B13	GIRDER STOP (PAIRS)	#4	-	4'-6½"	8"	5'-2½"	32	112
	X2B15	GIRDER STOP U-SHAPED	#4	-	1'-3"	1'-7½"	4'-6"	66	199
	X2A01	BOLSTER LONG. BOT.	#11	80	102'-1"	-	106'-1"	4	2255
	X2A05	BOLSTER LONG. TOP	#11	80	102'-1"	-	106'-1"	3	1691
	X2A09	BOLSTER LONG. MID.	#4	-	102'-1"	-	104'-1"	6	418
	X2A10	BOLSTER TIES	#4	-	1'-3"	3'-3"	9'-9"	155	1010
	X2A11	BOLSTER DOWEL	#5	-	2'-½"	-	2'-9½"	310	579
	X2A12	GIRDER STOP (PAIRS)	#4	-	4'-2"	8"	4'-10"	12	39
	X2A13	GIRDER STOP (PAIRS)	#4	-	4'-6½"	8"	5'-2½"	32	112
	X2A15	GIRDER STOP U-SHAPED	#4	-	1'-3"	1'-7½"	4'-6"	66	199
PIER 3	X3B01	BOLSTER LONG. BOT.	#11	80	103'-6½"	-	107'-6½"	3	1715
	X3B02	BOLSTER LONG. BOT.	#11	80	103'-6½"	-	107'-6½"	3	1715
	X3B03	BOLSTER LONG. BOT.	#11	80	30'-6¼"	-	30'-6¼"	6	973
	X3B05	BOLSTER LONG. TOP	#11	80	103'-6½"	-	107'-6½"	3	1715
	X3B06	BOLSTER LONG. TOP	#11	80	103'-6½"	-	107'-6½"	3	1715
	X3B07	BOLSTER LONG. TOP	#11	80	30'-6¼"	-	30'-6¼"	4	649
	X3B08	BOLSTER LONG. MID.	#4	-	72'-8"	-	74'-8"	4	200
	X3B09	BOLSTER LONG. MID.	#4	-	103'-6½"	-	105'-6½"	2	142
	X3B10	BOLSTER TIES	#5	-	1'-3"	3'-3"	9'-11"	209	1385
	X3B11	BOLSTER DOWELS	#5	-	2'-½"	-	2'-9½"	418	780
	X3B12	GIRDER STOP (PAIRS)	#4	-	3'-7½"	8"	4'-3½"	8	23
	X3B13	GIRDER STOP (PAIRS)	#4	-	4'-2½"	8"	4'-10½"	4	14
	X3B14	GIRDER STOP (PAIRS)	#4	-	4'-8½"	8"	5'-4½"	32	115
	X3B15	GIRDER STOP U-SHAPED	#4	-	1'-3"	1'-7½"	4'-6"	66	199
	X3A01	BOLSTER LONG. BOT.	#11	80	103'-6½"	-	107'-6½"	3	1715
	X3A02	BOLSTER LONG. BOT.	#11	80	103'-6½"	-	107'-6½"	3	1715
	X3A03	BOLSTER LONG. BOT.	#11	80	30'-6¼"	-	30'-6¼"	6	973
	X3A05	BOLSTER LONG. TOP	#11	80	103'-6½"	-	107'-6½"	3	1715
	X3A06	BOLSTER LONG. TOP	#11	80	103'-6½"	-	107'-6½"	3	1715
	X3A07	BOLSTER LONG. TOP	#11	80	30'-6¼"	-	30'-6¼"	4	649
	X3A08	BOLSTER LONG. MID.	#4	-	72'-8"	-	74'-8"	4	200
	X3A09	BOLSTER LONG. MID.	#4	-	103'-6½"	-	105'-6½"	2	142
	X3A10	BOLSTER TIES	#5	-	1'-3"	3'-3"	9'-11"	209	1385
	X3A11	BOLSTER DOWELS	#5	-	2'-½"	-	2'-9½"	418	780
	X3A12	GIRDER STOP (PAIRS)	#4	-	3'-7½"	8"	4'-3½"	8	23
	X3A13	GIRDER STOP (PAIRS)	#4	-	4'-2½"	8"	4'-10½"	4	14
	X3A14	GIRDER STOP (PAIRS)	#4	-	4'-8½"	8"	5'-4½"	32	115
	X3A15	GIRDER STOP U-SHAPED	#4	-	1'-3"	1'-7½"	4'-6"	66	199
PIER 4	X4B01	BOLSTER LONG. BOT.	#11	80	104'-7"	-	108'-7"	4	2308
	X4B05	BOLSTER LONG. TOP	#11	80	104'-7"	-	108'-7"	3	1731
	X4B09	BOLSTER LONG. MID.	#4	-	104'-7"	-	106'-7"	6	428
	X4B10	BOLSTER TIES	#4	-	1'-3"	3'-3"	9'-9"	158	1030
	X4B11	BOLSTER DOWELS	#5	-	2'-½"	-	2'-9½"	318	594
	X4B12	GIRDER STOP (PAIRS)	#4	-	4'-1"	8"	4'-9"	12	39
	X4B13	GIRDER STOP (PAIRS)	#4	-	4'-11½"	8"	5'-7½"	8	31
	X4B14	GIRDER STOP (PAIRS)	#4	-	4'-6½"	8"	5'-2½"	24	84
	X4B15	GIRDER STOP U-SHAPED	#4	-	1'-3"	1'-7½"	4'-6"	66	199
	X4A01	BOLSTER LONG. BOT.	#11	80	104'-7"	-	108'-7"	4	2308
	X4A05	BOLSTER LONG. TOP	#11	80	104'-7"	-	108'-7"	3	1731
	X4A09	BOLSTER LONG. MID.	#4	-	104'-7"	-	106'-7"	6	428
	X4A10	BOLSTER TIES	#4	-	1'-3"	3'-3"	9'-9"	158	1030
	X4A11	BOLSTER DOWELS	#5	-	2'-½"	-	2'-9½"	318	594
	X4A12	GIRDER STOP (PAIRS)	#4	-	4'-1"	8"	4'-9"	12	39
	X4A13	GIRDER STOP (PAIRS)	#4	-	4'-11½"	8"	5'-7½"	8	31
	X4A14	GIRDER STOP (PAIRS)	#4	-	4'-6½"	8"	5'-2½"	24	84
	X4A15	GIRDER STOP U-SHAPED	#4	-	1'-3"	1'-7½"	4'-6"	66	199

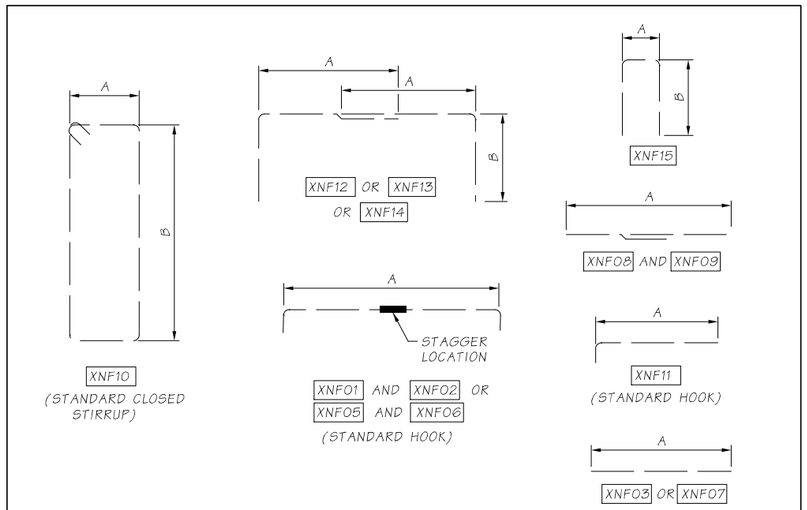

REBAR BENDING DIAGRAM (ALL DIMENSIONS ARE OUT TO OUT)
MINIMUM REINF. STEEL SPLICE LENGTHS:
#4: 2'-0"
DENOTES MECHANICAL SPLICE

NOTES:

1. XNF00 = BAR MARK FOR CROSSBEAM BOLSTER AND/OR GIRDER STOP, WHERE "N" IS THE BENT NUMBER AND "F" IS THE FACE ("A"= AHEAD AND "B"= BACK)
2. STAGGER MECHANICAL SPLIVE LOCATION BY 3'-0" MIN. BETWEEN ADJACENT BARS.
3. ALL REINFORCING #9 AND LARGER SHALL USE MECHANICAL SPLICES. ALL REINFORCING #8 AND SMALLER SHALL USE LAP SPLICES.

* BAR GRADE ONLY IF DIFFERENT THAN GRADE 60

SR 405 FILE NO. 20A039 SHEET BH4
ProjectWise Vault:

Bridge Design Engr.	KHALEGHI B.	c:\pwworking\west01\d1468466\48E_XBeam Bolster-Girder Stops_Barlist.dgn							
Supervisor	KORPI D.				REGION NO.	STATE	FED. AID PROJ. NO.	SHEET NO.	TOTAL SHEETS
Designed By	CHI J.				10	WASH		115	176
Checked By	KARSLI N.				JOB NUMBER				
Detailed By	VYPLEL M.				20A039				
Bridge Projects Engr.	ROSA M.								
Prelim. Plan By									
Architect/Specialist		DATE	REVISION	BY	APP'D				

4/20/2022 4:54:54 PM

BRIDGE AND STRUCTURES OFFICE

R. LEE ANDREWS STATE OF WASHINGTON 43571 STRUCTURAL ENGINEER PROFESSIONAL ENGINEER
SEE SHEET CT1
04/20/2022

Washington State Department of Transportation

HDR

I-405
BN RR BRIDGE TO PED TRAIL BRIDGE SEISMIC RETROFIT
BRIDGE NO. 405/48E

CROSSBEAM BOLSTER AND GIRDER STOPS - BAR LIST

BRIDGE SHEET NO. BH4

SHEET 115 OF 176 SHEETS

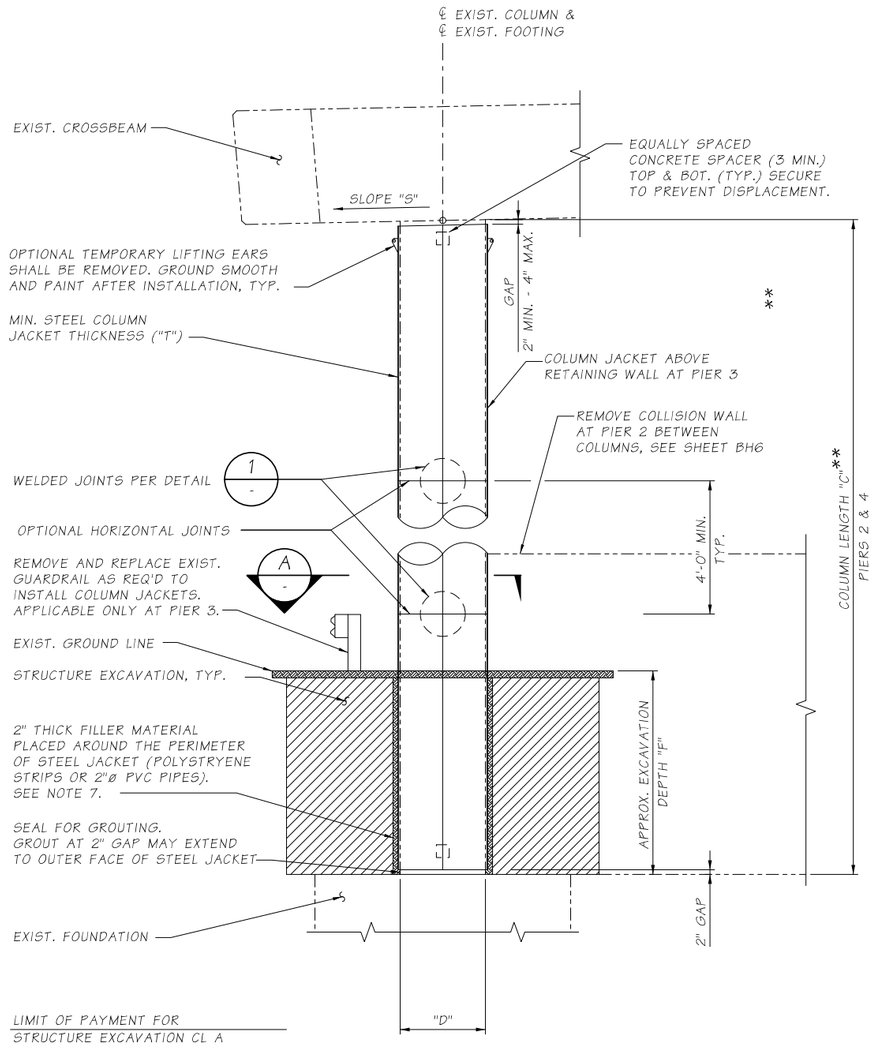

ELEVATION - TYP. COLUMN STEEL JACKET

** PIER 2 COLUMN JACKETS SHALL BE CONSTRUCTED AFTER EXISTING COLLISION WALL IS REMOVED AND EXTEND TO WITHIN 2" OF EXISTING FOOTING. PIER 3 COLUMN JACKETS SHALL BE CONSTRUCTED TO WITHIN 2" OF TOP OF EXISTING RETAINING WALL

STEEL COLUMN JACKET DIMENSIONS LIST

DIM.	DESCRIPTION	PIER 2					PIER 3					PIER 4				
D	EXIST. COLUMN DIA. (FROM WEST TO EAST)	3'-4"	3'-0"	3'-0"	3'-0"	3'-0"	3'-4"	3'-0"	3'-0"	3'-0"	3'-0"	3'-0"	3'-0"	3'-0"	3'-0"	3'-0"
T	JACKET THICKNESS	N/A	3/8"	3/8"	3/8"	3/8"	3/8"	3/8"	3/8"	3/8"	3/8"	N/A	3/8"	3/8"	3/8"	3/8"
C	COLUMN LENGTH (FROM WEST TO EAST)	N/A	32.91'	32.91'	32.91'	32.91'	12.75'	12.64'	12.64'	12.64'	12.64'	N/A	21.43'	21.43'	21.43'	21.43'
S	CROSSBEAM SLOPE	0.91%±					0.21%±					0.38%±				
F	APPROX. EXCAVATION DEPTH* (FROM WEST TO EAST)	N/A	13.0'	13.1'	13.7'	12.4'	3.6'	2.3'	2.3'	2.3'	2.3'	N/A	7.4'	6.9'	6.9'	6.7'
G	COLLISION WALL HEIGHT (FROM WEST TO EAST)	4'-6"	10'-6"	10'-6"	10'-6"	10'-6"	N/A					N/A				
H	RETAINING WALL HEIGHT (FROM WEST TO EAST)	N/A					18'-6"	18'-6"	18'-6"	18'-6"	18'-6"	N/A				

* EXCAVATION DEPTH MAY VARY ±1'-0"

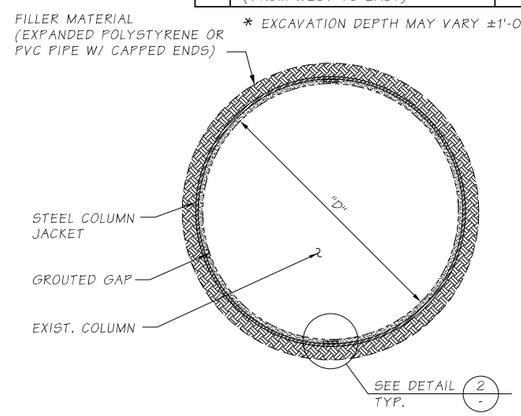

SECTION A

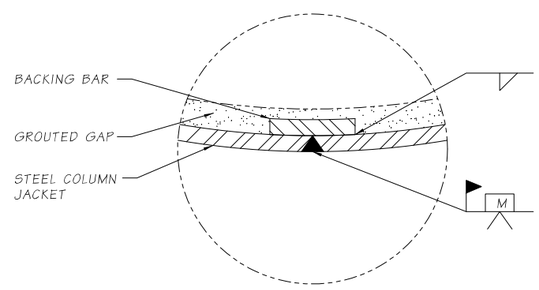

DETAIL 2

TYP. WELD JOINT

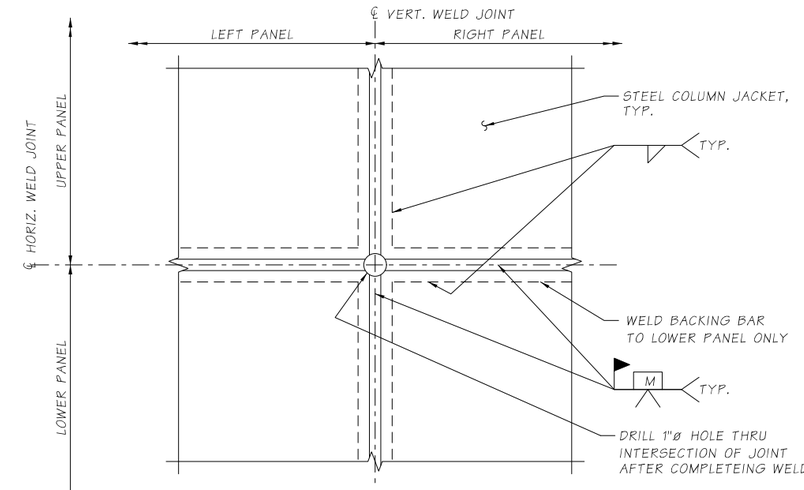

STEEL JACKET WELD DETAIL 1

NOTES:

1. DIMENSIONS PROVIDED ARE FOR REFERENCE ONLY. SEE GENERAL NOTE 3 ON SHEET BH1.
2. APPROPRIATE INJECTION NOZZLES SHALL BE PROVIDED ON COLUMN JACKET AND SHALL BE REMOVED, GROUND FLUSH AND PAINTED FOLLOWING COMPLETION OF GROUTING OPERATION.
3. ALL VOIDS BETWEEN STEEL COLUMN JACKET AND EXIST. COLUMN SURFACE SHALL BE FILLED WITH CEMENT GROUT.
4. THE LOCATION AND NUMBER OF HORIZONTAL WELDS SHALL BE DETERMINED BY THE CONTRACTOR AND SUBJECT TO THE APPROVAL OF THE ENGINEER. THE LOCATION OF COLUMN JACKET WELDS IS FOR ILLUSTRATION. THERE SHALL BE NO SKIP WELDS.
5. STEEL COLUMN JACKETS SHALL BE FABRICATED FROM ASTM A36 STRUCTURAL STEEL AND PAINTED IN ACCORDANCE WITH THE SPECIAL PROVISIONS.
6. GROUTING SHALL BE DONE FROM THE BOTTOM UP IN ACCORDANCE WITH THE SPECIAL PROVISIONS.
7. THE 2" THICK FILLER MATERIAL AROUND THE PERIMETER OF THE STEEL JACKET SHALL BE USED FOR PARTIALLY BURIED COLUMNS WHERE THE DEPTH IS MORE THAN 4'-0" OR COLUMNS ARE ADJACENT TO PAVED SURFACES OR SLOPE PROTECTION.
8. USE STRUCTURAL SHORING WHERE NECESSARY TO SUPPORT EXISTING ROADWAY.

SR 405 FILE NO. 20A039 SHEET BH5
ProjectWise Vault:

Bridge Design Engr.	KHALEGHI B.	c:\pwworking\west01\d1468466\48E_Steel Column Jackets_Elev-Det.dgn						
Supervisor	KORPI D.				REGION NO.	STATE	FED. AID PROJ. NO.	SHEET NO.	TOTAL SHEETS
Designed By	CHI J.				10	WASH		116	176
Checked By	KARSLI N.				JOB NUMBER 20A039				
Detailed By	VYPLEL M.								
Bridge Projects Engr.	ROSA M.								
Prelim. Plan By									
Architect/Specialist		DATE	REVISION	BY	APP'D				

4/20/2022 4:54:58 PM

BRIDGE AND STRUCTURES OFFICE

R. LEE ANDREWS STATE OF WASHINGTON 43571 STRUCTURAL ENGINEER PROFESSIONAL ENGINEER
SEE SHEET CT1
04/20/2022

Washington State Department of Transportation

HDR

I-405
BN RR BRIDGE TO PED TRAIL BRIDGE SEISMIC RETROFIT
BRIDGE NO. 405/48E

STEEL COLUMN JACKETS ELEVATIONS AND DETAILS

BRIDGE SHEET NO. BH5

SHEET 116 OF 176 SHEETS

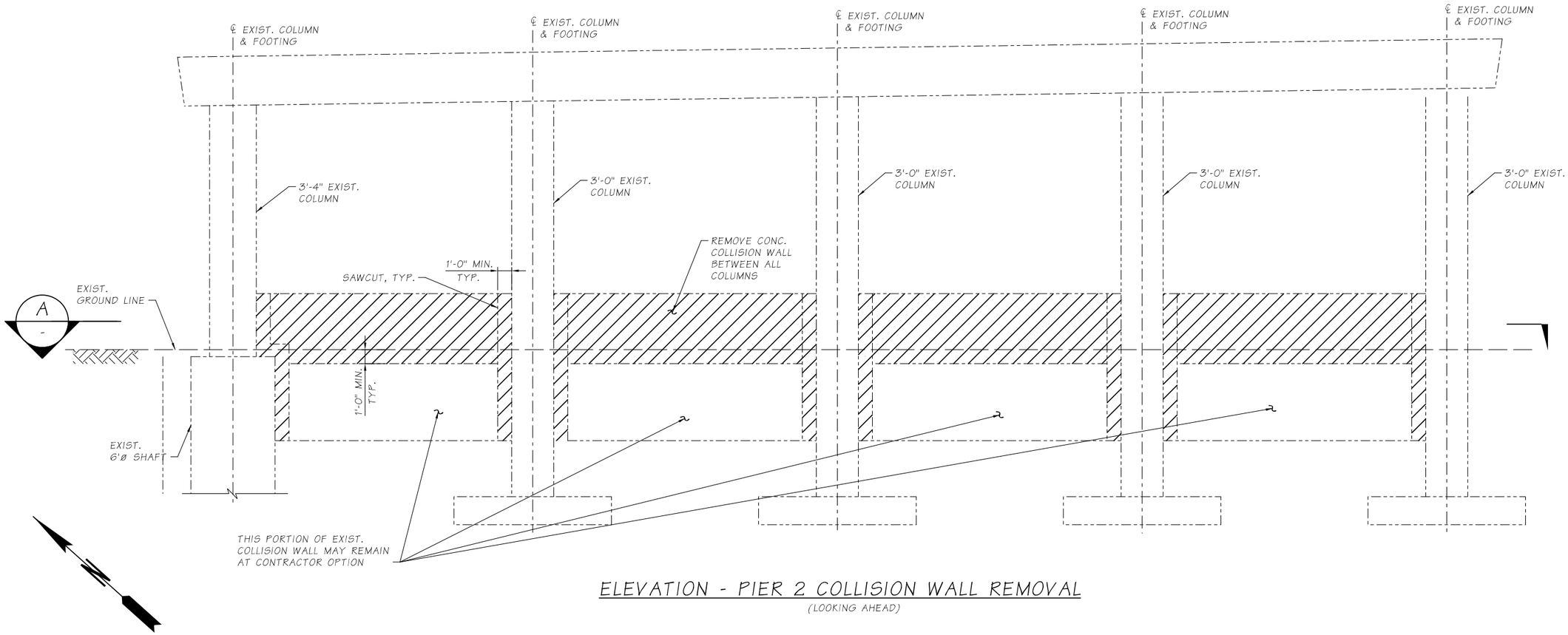

ELEVATION - PIER 2 COLLISION WALL REMOVAL

(LOOKING AHEAD)

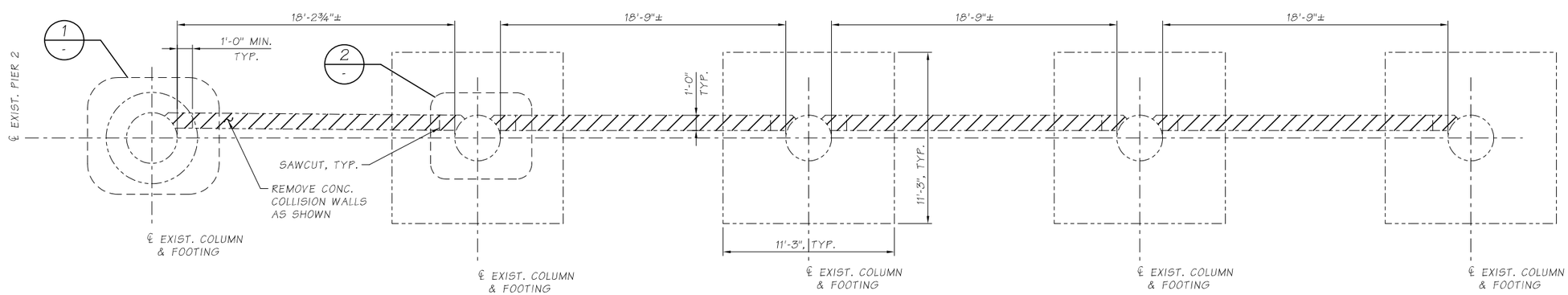

SECTION - PIER 2 COLLISION WALL REMOVAL

A
-

(REINF. BARS NOT SHOWN FOR CLARITY)

NOTE

1. SEE NOTES ON SHEET BH7.

LEGEND

EXISTING CONCRETE TO BE REMOVED

Bridge Design Engr.	KHALEGHI B.	c:\pwworking\west01\d1468466\48E_Collision Wall Removal Elevation.dgn							
Supervisor	KORPI D.				REGION NO.	STATE	FED. AID PROJ. NO.	SHEET NO.	TOTAL SHEETS
Designed By	CHI J.				10	WASH		117	176
Checked By	KARSLI N.				JOB NUMBER				
Detailed By	VYPLEL M.				20A039				
Bridge Projects Engr.	ROSA M.								
Prelim. Plan By									
Architect/Specialist		DATE	REVISION	BY	APP'D				

4/20/2022 4:55:00 PM

BRIDGE AND STRUCTURES OFFICE

R. LEE ANDERSON, STATE OF WASHINGTON, 43571, PROFESSIONAL ENGINEER

SEE SHEET CT1
04/20/2022

Washington State Department of Transportation

HDR

I-405
BN RR BRIDGE TO PED TRAIL BRIDGE
SEISMIC RETROFIT
BRIDGE NO. 405/48E

PIER 2 COLLISION WALL REMOVAL ELEVATION

BRIDGE SHEET NO. BH6

SHEET 117 OF 176 SHEETS

SR 405 FILE NO. ____ SHEET BH6

ProjectWise Vault:

NOTES

1. DIMENSIONS PROVIDED ARE FOR REFERENCE ONLY & SHALL BE VERIFIED IN THE FIELD.
2. SEE GENERAL NOTES ON SHEET BH1.
3. STEEL COLUMN JACKETS NOT SHOWN FOR CLARITY. SEE SHEET BH5 FOR STEEL JACKET DETAILS.
4. THE CONTRACTOR SHALL SAFEGUARD EXISTING BRIDGE COLUMNS, FOOTINGS, CROSSBEAMS, AND OTHER COMPONENTS FROM DAMAGE DURING REMOVAL OF COLLISION WALLS.
5. COLLISION WALL REMOVAL SHALL BE PERFORMED IN A MANNER THAT PREVENTS DAMAGE TO COLUMN REINF. STEEL AND CORE CONCRETE. REMOVAL METHODS ARE SUBJECT TO THE APPROVAL OF THE ENGINEER.
6. AT EXISTING WEST COLUMN OF PIERS 2 & 4 ONLY, REPAIR THE CONCRETE COVER OVER TIES WITH EPOXY MORTAR.

LEGEND

EXISTING CONCRETE TO BE REMOVED

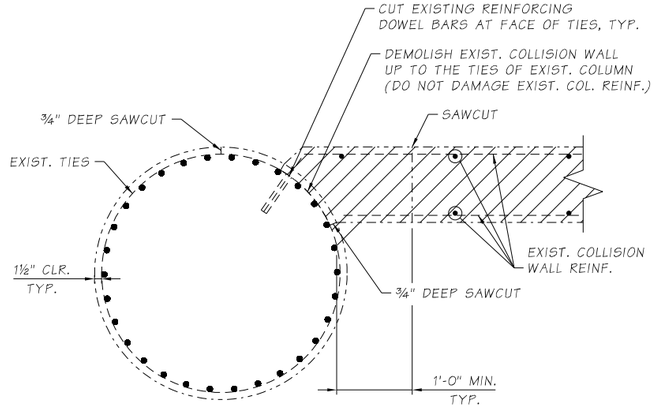

COLLISION WALL REMOVAL AT 3'-4" COLUMN (1 / -)

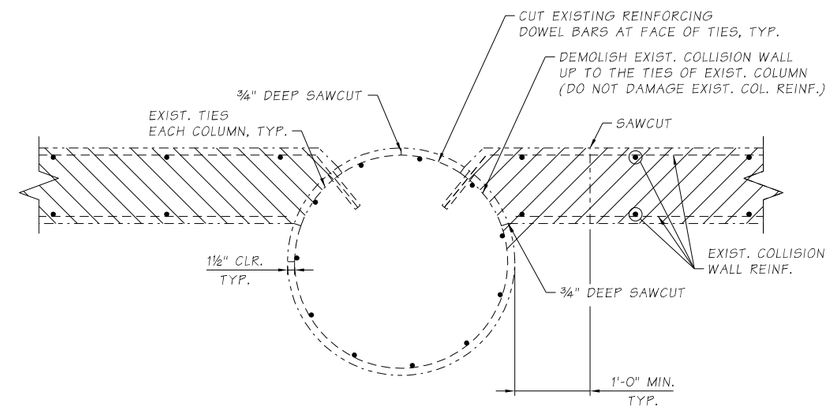

COLLISION WALL REMOVAL AT 3'-0" COLUMNS (2 / -)

SR 405 FILE NO. ____ SHEET BH7
ProjectWise Vault:

Bridge Design Engr.	KHALEGHI B.	c:\pwworking\west01\d1468466\48E_Collision Wall Removal Details.dgn							
Supervisor	KORPI D.				REGION NO.	STATE	FED. AID PROJ. NO.	SHEET NO.	TOTAL SHEETS
Designed By	CHI J.				10	WASH		118	176
Checked By	KARSLI N.				JOB NUMBER				
Detailed By	VYPLEL M.				20A039				
Bridge Projects Engr.	ROSA M.								
Prelim. Plan By									
Architect/Specialist		DATE	REVISION	BY	APP'D				

4/20/2022 6:45:29 PM

BRIDGE AND STRUCTURES OFFICE

R. LEE ANDREWS, STATE OF WASHINGTON, 43571, STRUCTURAL ENGINEER, PROFESSIONAL ENGINEER
SEE SHEET CT1
04/20/2022

Washington State Department of Transportation

HDR

I-405
BN RR BRIDGE TO PED TRAIL BRIDGE
SEISMIC RETROFIT
BRIDGE NO. 405/48E

PIER 2 COLLISION WALL REMOVAL DETAILS

BRIDGE SHEET NO. BH7

SHEET 118 OF 176 SHEETS

SEC. 20, T.25N., R.5E., W.M.
CITY OF BELLEVUE

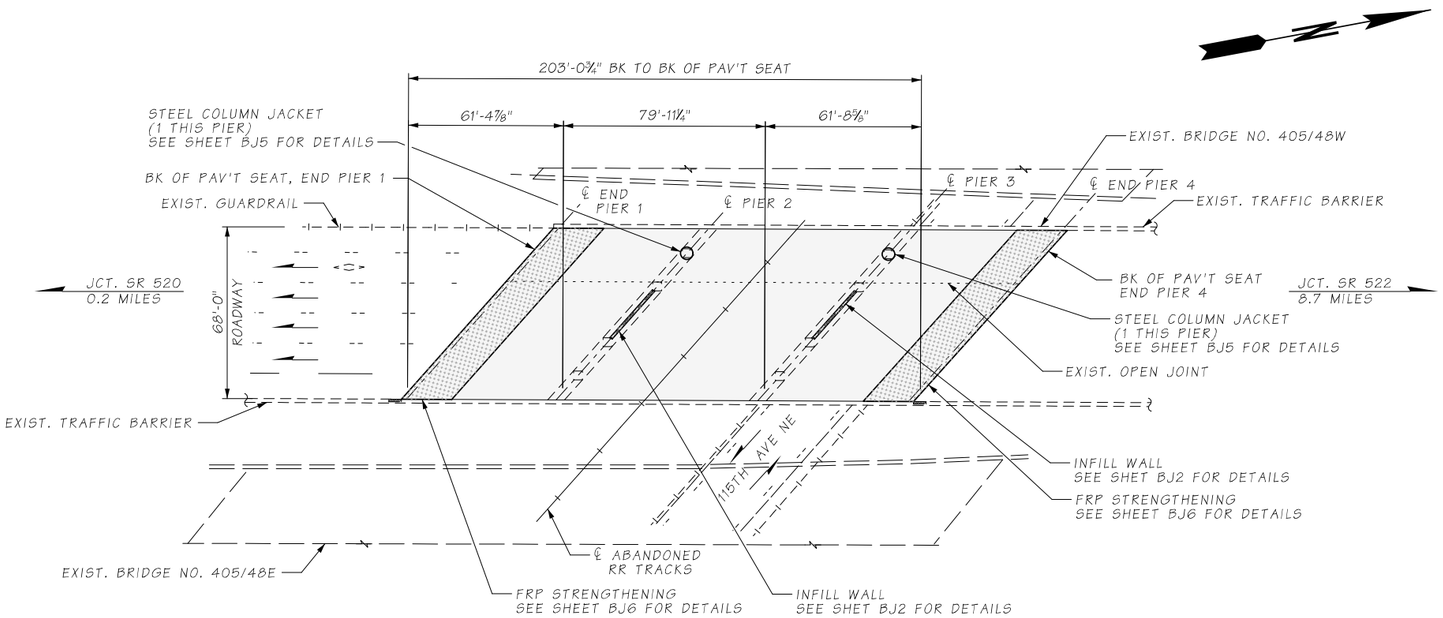

PLAN

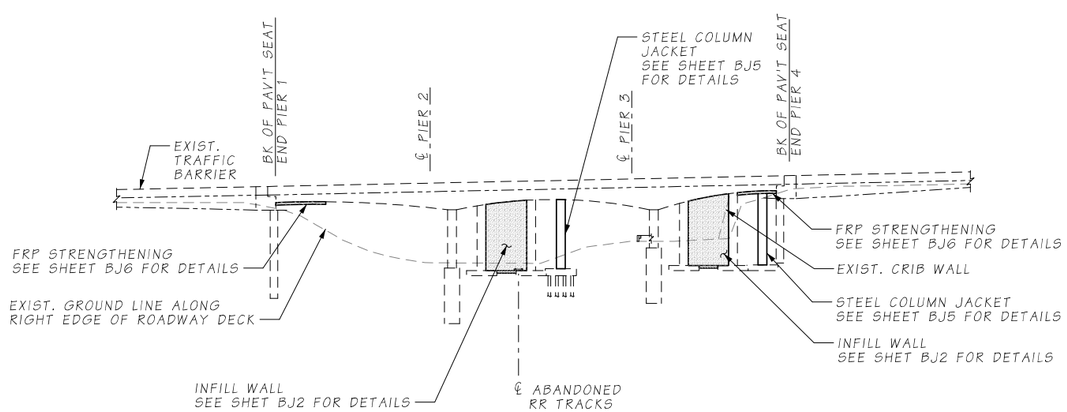

ELEVATION

GENERAL NOTES

1. ALL MATERIALS AND WORKMANSHIP SHALL BE IN ACCORDANCE WITH THE REQUIREMENTS OF THE WASHINGTON STATE DEPARTMENT OF TRANSPORTATION STANDARD SPECIFICATIONS FOR ROAD, BRIDGE AND MUNICIPAL CONSTRUCTION - DATED 2022.
2. NEW CONSTRUCTION HAS BEEN DESIGNED IN ACCORDANCE WITH THE REQUIREMENTS OF THE AASHTO LRFD BRIDGE DESIGN SPECIFICATIONS 8TH EDITION, DATED 2017 AND THE FHWA-HRT-06-032 SEISMIC RETROFITTING MANUAL FOR HIGHWAY STRUCTURES, DATED 2006.
3. EXISTING FEATURES, DIMENSIONS, AND ELEVATIONS ARE BASED ON AS-BUILT PLANS. ALL DIMENSIONS SHALL BE FIELD MEASURED AND VERIFIED BY THE CONTRACTOR, PRIOR TO ORDERING MATERIALS AND FABRICATION (SEE SPECIAL PROVISIONS).
4. CONTRACTOR SHALL LOCATE EXISTING STEEL REINFORCING USING NONDESTRUCTIVE METHODS TO AVOID DAMAGE DURING DRILLING OPERATIONS. THE CONTRACTOR SHALL NOTIFY THE ENGINEER IMMEDIATELY IF ANY EXISTING REBAR OR ANCHOR BOLTS ARE ENCOUNTERED OR ARE IN CONFLICT WITH THE WORK DETAILED, AND SHALL OBTAIN APPROVAL FROM THE ENGINEER BEFORE CONTINUING WORK. CORE DRILLING IS NOT ALLOWED.
5. ALL NEW MATERIALS USED SHALL MEET THE FOLLOWING REQUIREMENTS:
   - CONCRETE CLASS 4000
   - REINFORCING STEEL BARS - ASTM A706, GRADE 60, U.N.O.
   - STEEL COLUMN JACKETS - ASTM A36
6. THE MINIMUM CONCRETE COVER MEASURED FROM THE FACE OF THE CONCRETE TO THE FACE OF ANY REINFORCING STEEL SHALL BE 1 1/2" U.N.O.
7. CONCRETE SURFACES REQUIRED TO BE ROUGHENED SHALL BE ROUGHENED IN ACCORDANCE WITH SECTION 6-02.3(12)B OR THE SPALL PATTERN ALTERNATIVE ROUGHENED SURFACE SHOWN IN DETAIL 2 ON BRIDGE SHEET BJ4.
8. THE LOCATION OF DOWEL BARS MAY BE ADJUSTED BY +/- 1" IF NECESSARY TO AVOID CONFLICTS WITH EXISTING REINFORCING STEEL. DOWEL BARS SHALL BE KEPT A MINIMUM OF 3" FROM THE EDGE OF CONCRETE.
9. SEE UTILITY SHEETS FOR THE LOCATIONS OF EXISTING UTILITIES.

LEGEND

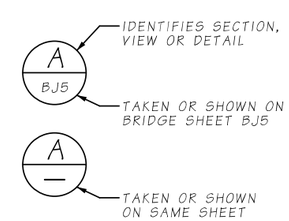

SEISMIC RETROFIT

Bridge Design Engr.	KHALEGHI B.	c:\pwworking\west01\d1468466\48W_Layout Plan.dgn				REGION NO.	STATE	FED. AID PROJ. NO.	SHEET NO.	TOTAL SHEETS
Supervisor	KORPI D.					10	WASH		119	176
Designed By	KARSLI N.					JOB NUMBER				
Checked By	CHI J.					20A039				
Detailed By	VYPLEL M.									
Bridge Projects Engr.	ROSA M.									
Prelim. Plan By										
Architect/Specialist		DATE	REVISION	BY	APP'D					

4/20/2022 4:55:08 PM

BRIDGE AND STRUCTURES OFFICE

R. LEE ANDREWS — STATE OF WASHINGTON — 43571 — STRUCTURAL ENGINEER — PROFESSIONAL ENGINEER

SEE SHEET CT1
04/20/2022

Washington State Department of Transportation

HDR

I-405
BN RR BRIDGE TO PED TRAIL BRIDGE
SEISMIC RETROFIT
BRIDGE NO. 405/48W

LAYOUT

BRIDGE SHEET NO. BJ1

SHEET 119 OF 176 SHEETS

SR 405 FILE NO. ____ SHEET BJ1
ProjectWise Vault:

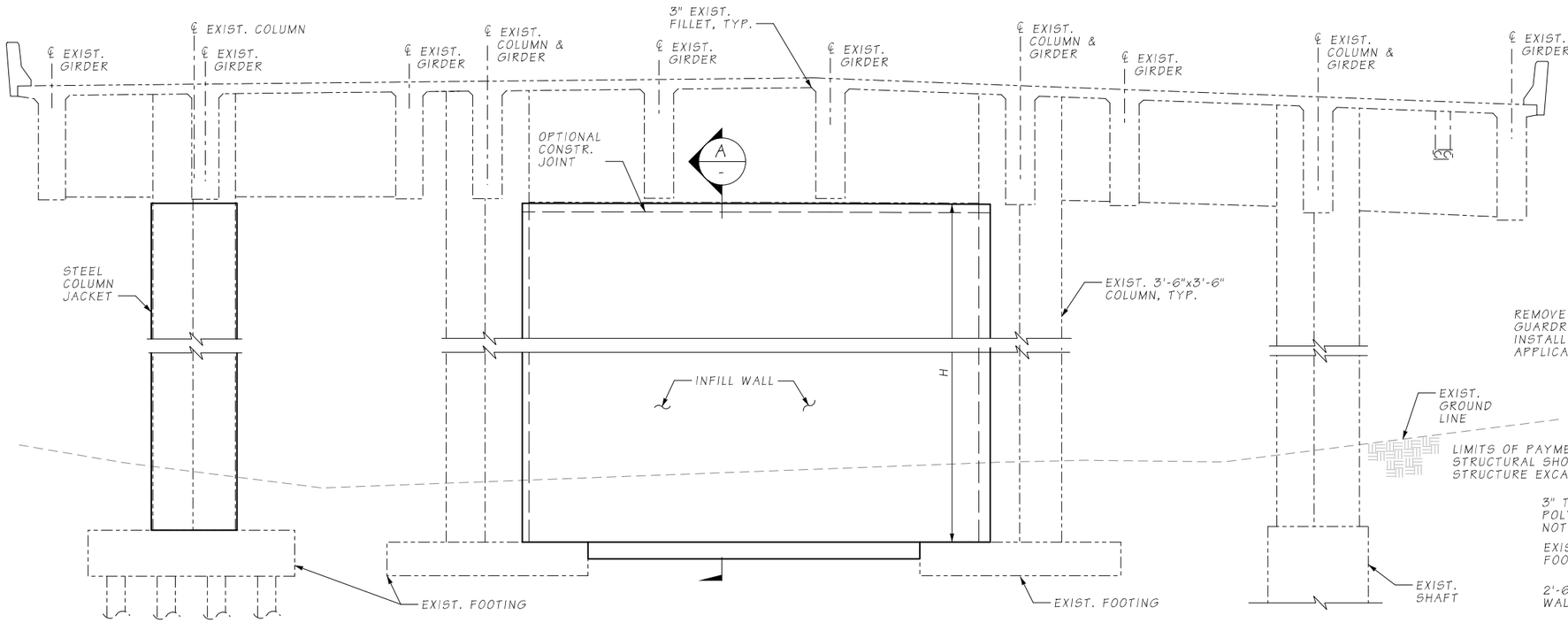

ELEVATION - PIERS 2 & 3 INFILL WALL

(PIER 2 SHOWN, PIER 3 SIMILAR)

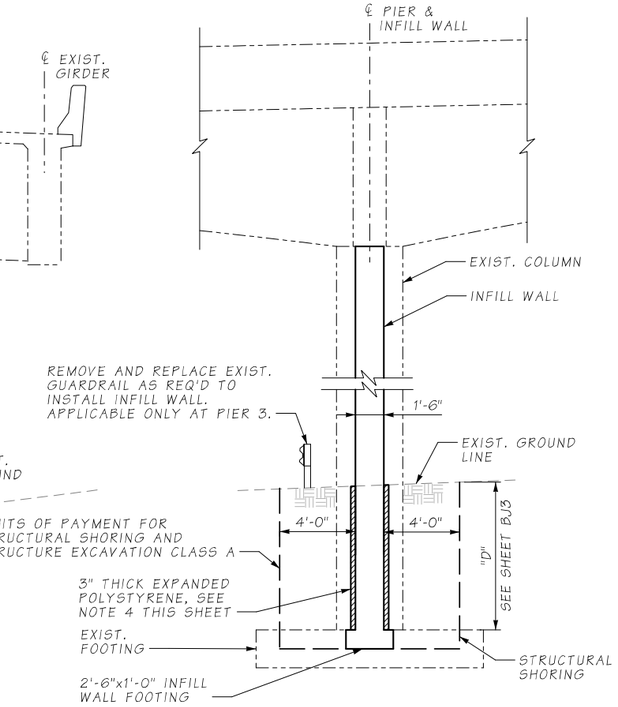

SECTION A

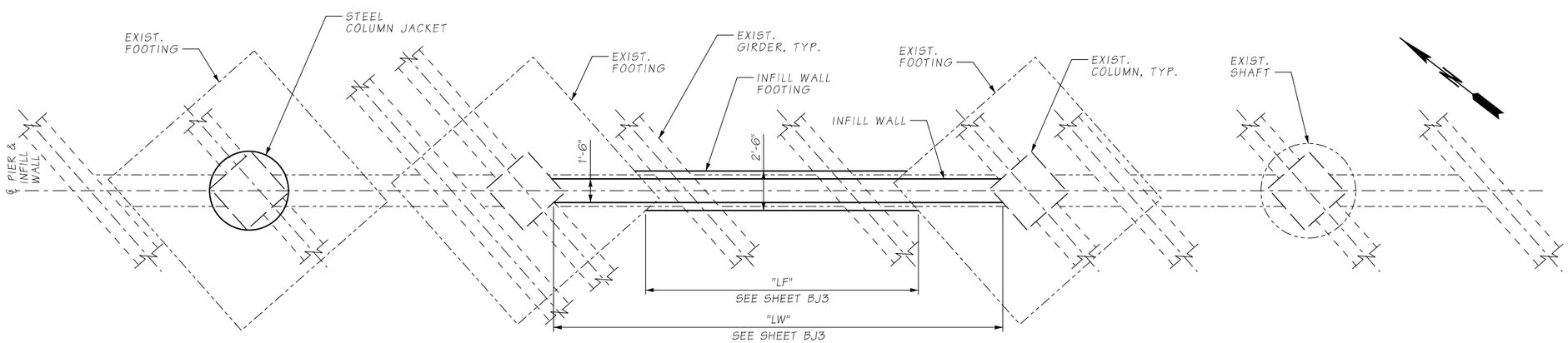

PLAN - PIERS 2 & 3 INFILL WALL

(PIER 2 SHOWN, PIER 3 SIMILAR)

NOTES:

1. SEE SHEET BJ3 FOR INFILL WALL DIMENSIONS.
2. SEE GENERAL NOTE 4 ON SHEET BJ1.
3. REINFORCEMENT NOT SHOWN FOR CLARITY. SEE SHEET BJ3 FOR REINFORCING DETAILS.
4. CONTRACTOR SHALL PLACE 3" THICK EXPANDED POLYSTYRENE AGAINST ALL EXPOSED CONCRETE SURFACES BELOW THE FINISHED GROUND LINE AT PIERS 2 AND 3. BACKFILLING OPERATIONS SHALL BE PERFORMED IN A MANNER THAT MINIMIZES DAMAGE TO THE EXPANDED POLYSTYRENE.

SR 405 FILE NO. 20A039 SHEET BJ2
ProjectWise Vault:

Bridge Design Engr.	KHALEGHI B.	c:\pwworking\west01\d1468466\48W_Piers 2-3_Infill Walls.dgn								
Supervisor	KORPI D.				REGION NO.	STATE	FED. AID PROJ. NO.	SHEET NO.	TOTAL SHEETS	BRIDGE DESIGN ENGINEER
Designed By	HAIR J.				10	WASH		120	176	
Checked By	KARSLI N.				JOB NUMBER					
Detailed By	VYPLEL M.				20A039					
Bridge Projects Engr.	ROSA M.									
Prelim. Plan By										
Architect/Specialist		DATE	REVISION	BY	APP'D					

4/20/2022 4:55:22 PM

BRIDGE AND STRUCTURES OFFICE

R. LEE ANDREWS — STATE OF WASHINGTON — 43571 — STRUCTURAL ENGINEER — PROFESSIONAL ENGINEER

SEE SHEET CT1
04/20/2022

Washington State Department of Transportation

HDR

I-405
BN RR BRIDGE TO PED TRAIL BRIDGE
SEISMIC RETROFIT
BRIDGE NO. 405/48W

PIERS 2 & 3 INFILL WALLS
PLAN, ELEVATION & SECTION

BRIDGE SHEET NO. BJ2

SHEET 120 OF 176 SHEETS

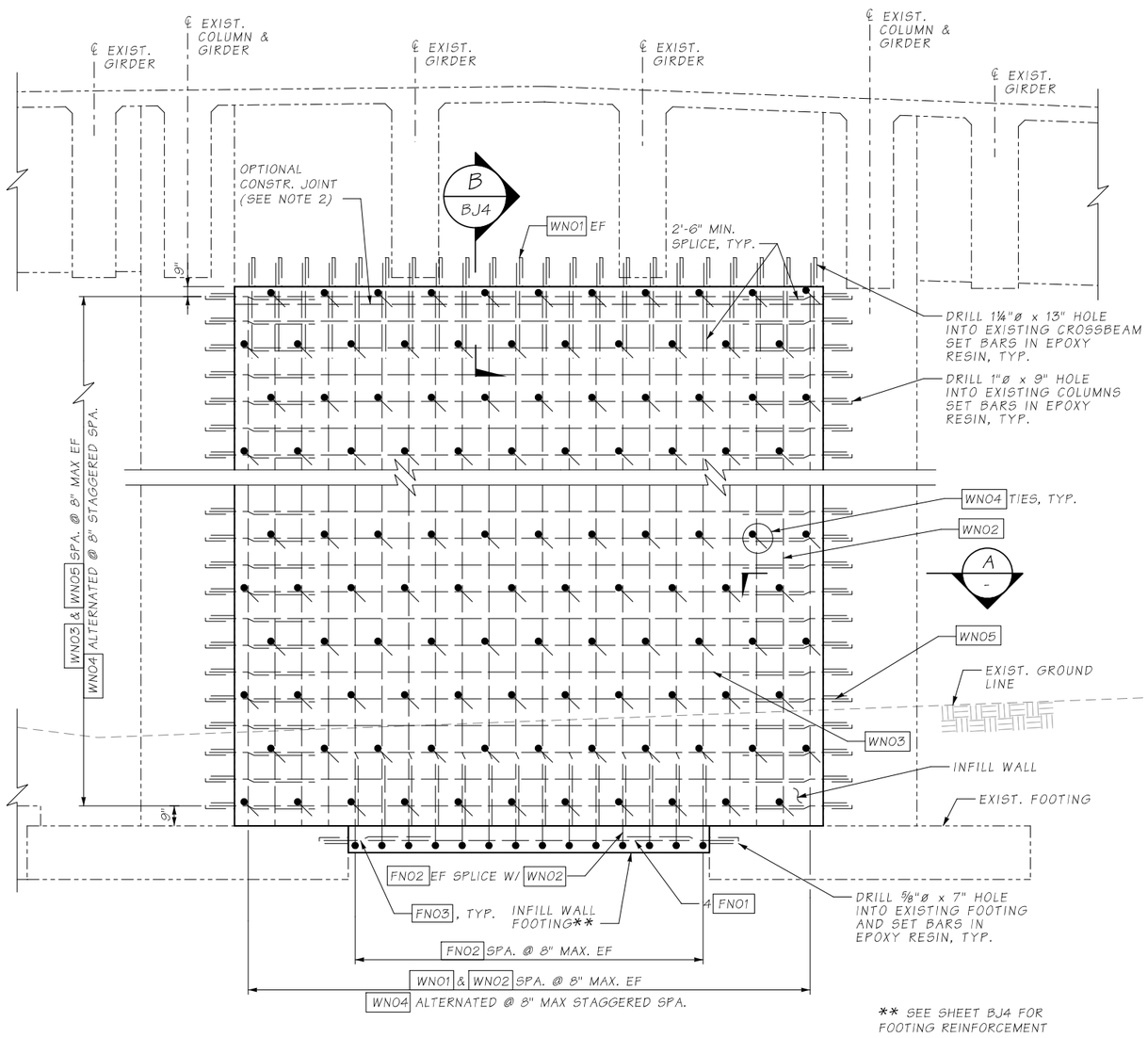

ELEVATION - PIERS 2 & 3 INFILL WALL REINFORCING

(PIER 2 SHOWN, PIER 3 SIMILAR.
NEAR FACE REINFORCING SHOWN, FAR FACE SIMILAR)

INFILL WALL DIMENSIONS LIST

DIM.	LOCATION	DIMENSIONS	
		PIER 2	PIER 3
H	WALL HEIGHT	24'-7"	25'-0"
LW	WALL LENGTH	30'-7"	30'-7"
LF	FOOTING LENGTH	19'-4"	19'-4"
D	APPROX. EXCAVATION DEPTH*	10.6'	10.9'

DIMENSIONS SHOWN ON SHEET BJ2.
* EXCAVATION DEPTH MAY VARY ±1'-0"

INFILL WALL BAR LIST

	BAR MARK	LOCATION	SIZE	DIMENSIONS			TOTAL#	WEIGHT
				A	B	LENGTH		
PIER 2	W201	VERTICAL DOWEL BARS	8	3'-9"	-	3'-9"	92	921
	W202	VERTICAL BARS	8	24'-4"	-	24'-4"	92	5977
	W203	HORIZONTAL BARS	6	30'-4"	-	30'-4"	74	3372
	W204	TIES	4	1'-3"	-	1'-11"	1702	2180
	W205	HORIZONTAL DOWEL BARS	6	2'-8"	9"	3'-5"	148	760
PIER 3	W301	VERTICAL DOWEL BARS	8	3'-9"	-	3'-9"	94	941
	W302	VERTICAL BARS	8	24'-9"	-	24'-9"	94	6212
	W303	HORIZONTAL BARS	6	30'-4"	-	30'-4"	74	3372
	W304	TIES	4	1'-3"	-	1'-11"	1739	2227
	W305	HORIZONTAL DOWEL BARS	6	2'-8"	9"	3'-5"	148	760

REBAR BENDING DIAGRAM (ALL DIMENSIONS ARE OUT TO OUT)

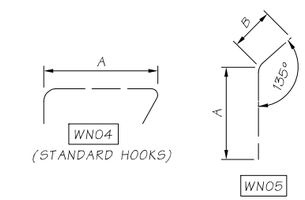

NOTES:

1. WN00 = BAR MARK FOR INFILL WALLS, WHERE "N" IS THE PIER NUMBER.
2. OPTIONAL CONSTRUCTION JOINT MAY BE PLACED WITHIN 6" OFF EXISTING CROSSBEAM. 4000 PSI SELF-CONSOLIDATING CONCRETE SHALL BE PLACED ABOVE THE CONSTRUCTION JOINT. CONTRACTOR SHALL SUBMIT TYPE 2E WORKING DRAWINGS SHOWING METHOD OF INSTALLATION FOR APPROVAL BY THE ENGINEER.
3. DIMENSION TO WN05 DOWEL BARS IS APPROXIMATE.
4. ADJUST ANGLE OF WN05 DOWEL BARS TO FIT.

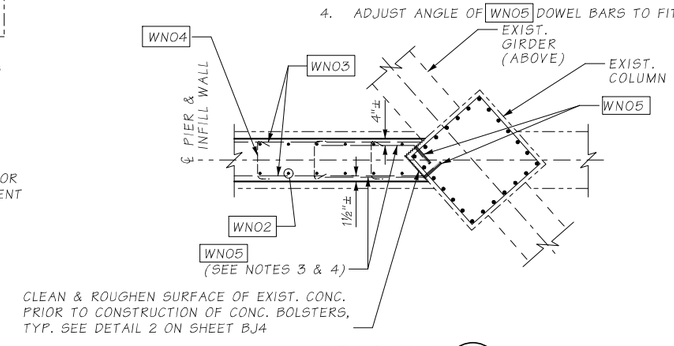

SECTION A

SR 405 FILE NO. 20A039 SHEET BJ3
ProjectWise Vault:

Bridge Design Engr.	KHALEGHI B.	c:\pwworking\west01\d1468466\48W_Piers 2-3_Infill Walls_Reinf Det.dgn						
Supervisor	KORPI D.				REGION NO.	STATE	FED. AID PROJ. NO.	SHEET NO.	TOTAL SHEETS
Designed By	HAIR J.				10	WASH		121	176
Checked By	KARSLI N.				JOB NUMBER 20A039				
Detailed By	VYPLEL M.								
Bridge Projects Engr.	ROSA M.								
Prelim. Plan By									
Architect/Specialist		DATE	REVISION	BY	APP'D				

4/20/2022 4:55:32 PM

BRIDGE AND STRUCTURES OFFICE

K. LEE ANDREWS — STATE OF WASHINGTON — 43571 — STRUCTURAL — PROFESSIONAL ENGINEER
SEE SHEET CT1
04/20/2022

Washington State Department of Transportation

HDR

I-405
BN RR BRIDGE TO PED TRAIL BRIDGE
SEISMIC RETROFIT
BRIDGE NO. 405/48W

PIERS 2 & 3 INFILL WALLS
REINFORCING DETAILS & BAR LIST

BRIDGE SHEET NO. BJ3

SHEET 121 OF 176 SHEETS

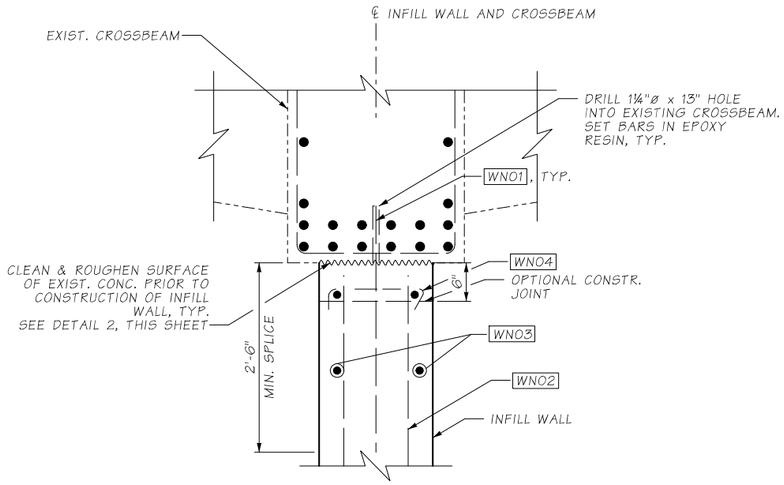

SECTION B / BJ3

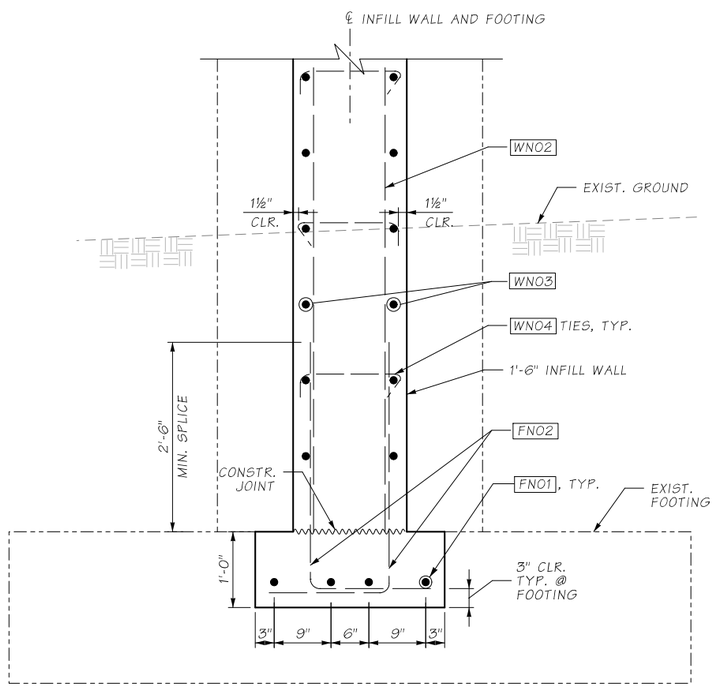

PIERS 2 & 3 INFILL WALL FOOTING DETAIL

INFILL WALL FOOTING BAR LIST

PIER #	BAR MARK	LOCATION	SIZE	DIMENSIONS A	DIMENSIONS B	DIMENSIONS LENGTH	TOTAL #	WEIGHT
PIER 2	F201	INFILL WALL FOOTING	4	19'-1"	-	19'-1"	4	51
	F202	INFILL WALL FOOTING	5	1'-7"	3'-3"	4'-10"	60	303
	F203	HORIZONTAL DOWEL BARS	4	2'-10"		2'-10"	8	15
PIER 3	F301	INFILL WALL FOOTING	4	19'-1"	-	19'-1"	4	51
	F302	INFILL WALL FOOTING	5	1'-7"	3'-3"	4'-10"	60	303
	F303	HORIZONTAL DOWEL BARS	4	2'-10"		2'-10"	8	15

REBAR BENDING DIAGRAM (ALL DIMENSIONS ARE OUT TO OUT)

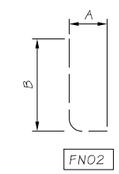

NOTE: FN00= BAR MARK FOR INFILL WALL FOOTINGS, WHERE "F" IS THE PIER NUMBER.

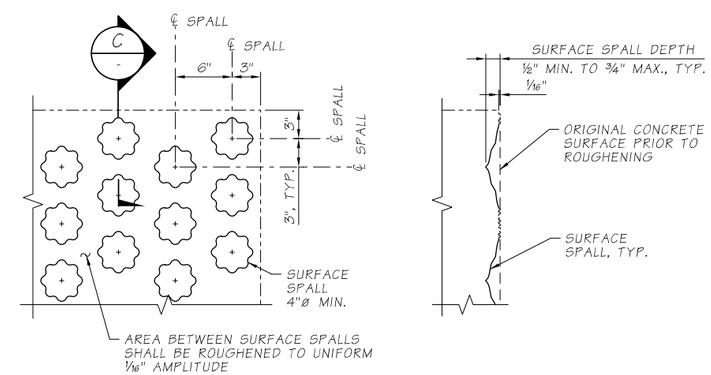

ELEVATION

SECTION C / -

SPALL PATTERN ALTERNATIVE ROUGHENED SURFACE DETAIL 2 / -

SR 405 FILE NO. 20A039 SHEET BJ4
ProjectWise Vault:

Bridge Design Engr.	KHALEGHI B.	c:\pwworking\west01\d1468466\48W_Piers 2-3_Infill Wall Footing_Reinf.dgn						
Supervisor	KORPI D.				REGION NO.	STATE	FED. AID PROJ. NO.	SHEET NO.	TOTAL SHEETS
Designed By	HAIR J.				10	WASH		122	176
Checked By	KARSLI N.								
Detailed By	VYPLEL M.				JOB NUMBER 20A039				
Bridge Projects Engr.	ROSA M.								
Prelim. Plan By									
Architect/Specialist		DATE	REVISION	BY	APP'D				

4/20/2022 4:55:37 PM

BRIDGE AND STRUCTURES OFFICE

R. LEE ANDREWS — STATE OF WASHINGTON — 43571 — STRUCTURAL ENGINEER — PROFESSIONAL ENGINEER
SEE SHEET CT1
04/20/2022

Washington State Department of Transportation

HDR

I-405
BN RR BRIDGE TO PED TRAIL BRIDGE
SEISMIC RETROFIT
BRIDGE NO. 405/48W

PIERS 2 & 3 INFILL WALL FOOTING REINFORCING DETAILS & BAR LIST

BRIDGE SHEET NO. BJ4

SHEET 122 OF 176 SHEETS

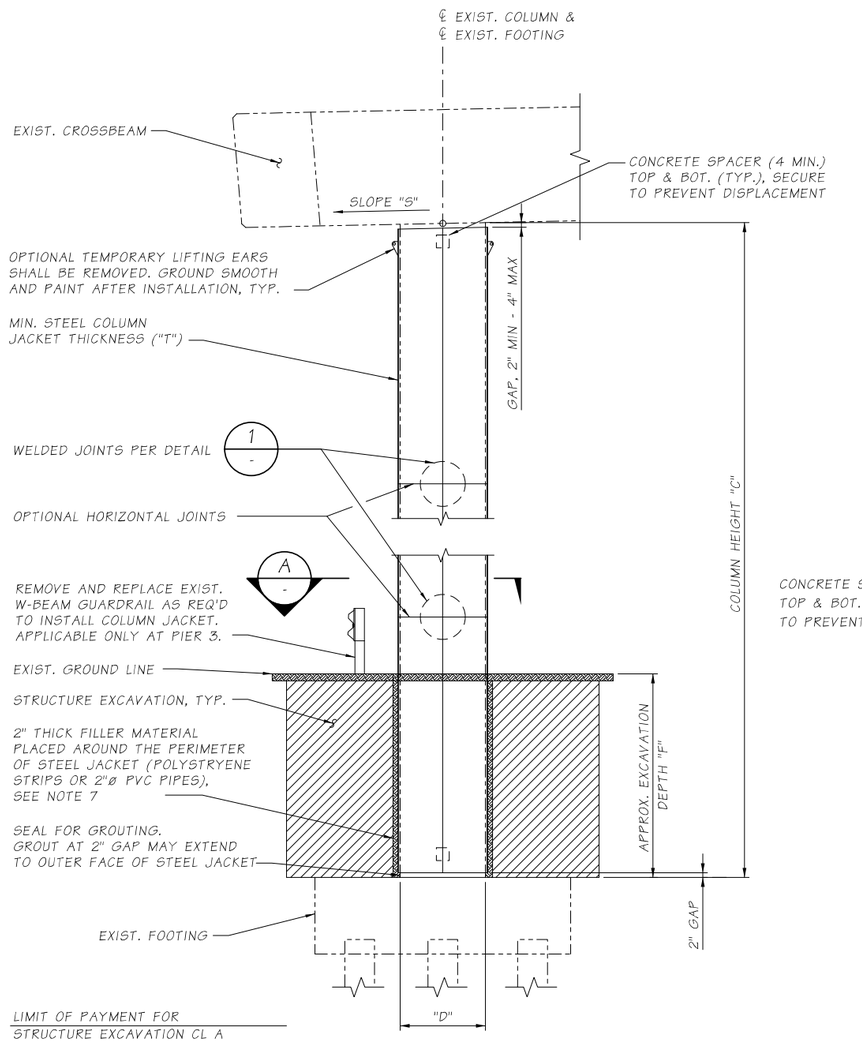

ELEVATION - TYP. COLUMN STEEL JACKET

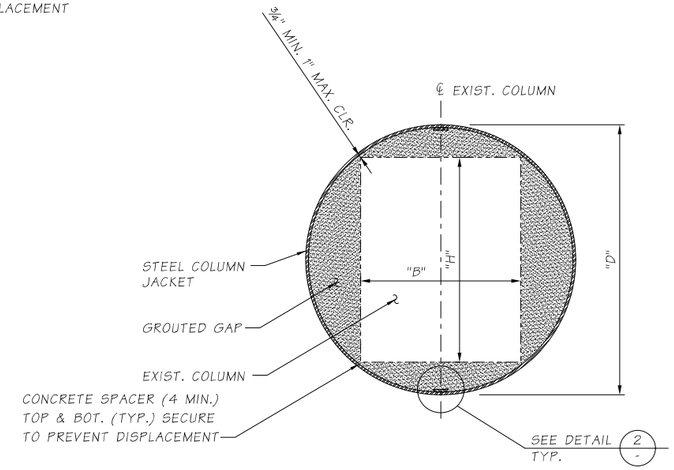

SECTION A -

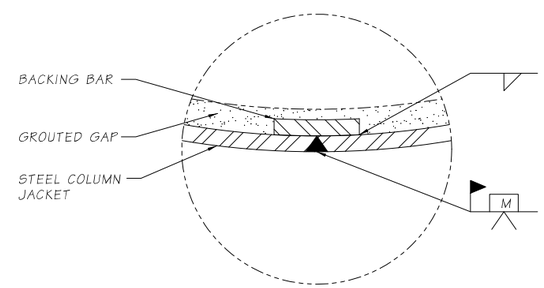

DETAIL 2 -

TYP. WELD JOINT

STEEL COLUMN JACKET DIMENSIONS LIST

DIM.	DESCRIPTION	PIER 2				PIER 3			
B	EXIST. COLUMN WIDTH	3'-6"	3'-6"	3'-6"	3'-6"	3'-6"	3'-6"	3'-6"	3'-6"
H	EXIST. COLUMN DEPTH	3'-6"	3'-6"	3'-6"	3'-6"	3'-6"	3'-6"	3'-6"	3'-6"
C	COLUMN HEIGHT (FROM WEST TO EAST)	24.7'	N/A	N/A	N/A	25.6'	N/A	N/A	N/A
F	APPROX. EXCAVATION DEPTH* (FROM WEST TO EAST)	9.6'	N/A	N/A	N/A	10.5'	N/A	N/A	N/A
S	CROSSBEAM SLOPE	1.0%	1.0%	1.0%	1.0%	1.0%	1.0%	1.0%	1.0%
T	JACKET THICKNESS	3/8"	N/A	N/A	N/A	3/8"	N/A	N/A	N/A
D	DIAMETER	5'-2"	N/A	N/A	N/A	5'-2"	N/A	N/A	N/A

*EXCAVATION DEPTH MAY VARY ±1'-0"

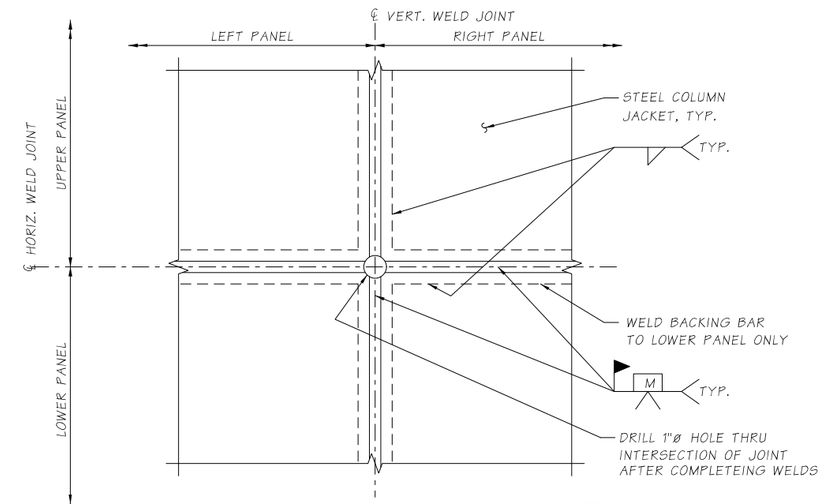

STEEL JACKET WELD DETAIL 1 -

NOTES:

1. DIMENSIONS PROVIDED ARE FOR REFERENCE ONLY. SEE GENERAL NOTES ON SHEET BJ1.
2. APPROPRIATE INJECTION NOZZLES SHALL BE PROVIDED ON COLUMN JACKET AND SHALL BE REMOVED, GROUND FLUSH AND PAINTED FOLLOWING COMPLETION OF GROUTING OPERATION.
3. ALL VOIDS BETWEEN STEEL COLUMN JACKET AND EXIST. COLUMN SURFACE SHALL BE FILLED WITH CEMENT GROUT.
4. THE LOCATION AND NUMBER OF HORIZONTAL WELDS SHALL BE DETERMINED BY THE CONTRACTOR AND SUBJECT TO THE APPROVAL OF THE ENGINEER. THE LOCATION OF COLUMN JACKET WELDS IS FOR ILLUSTRATION. THERE SHALL BE NO SKIP WELDS.
5. STEEL COLUMN JACKETS SHALL BE FABRICATED FROM ASTM A36 STRUCTURAL STEEL AND PAINTED IN ACCORDANCE WITH THE SPECIAL PROVISIONS.
6. GROUTING SHALL BE DONE FROM THE BOTTOM UP IN ACCORDANCE WITH THE SPECIAL PROVISIONS.
7. THE 2" THICK FILLER MATERIAL AROUND THE PERIMETER OF THE STEEL JACKET SHALL BE USED FOR PARTIALLY BURIED COLUMNS WHERE THE DEPTH IS MORE THAN 4'-0" OR COLUMNS ARE ADJACENT TO PAVED SURFACES OR SLOPE PROTECTION.
8. USE STRUCTURAL SHORING WHERE NECESSARY TO SUPPORT EXISTING ROADWAY.

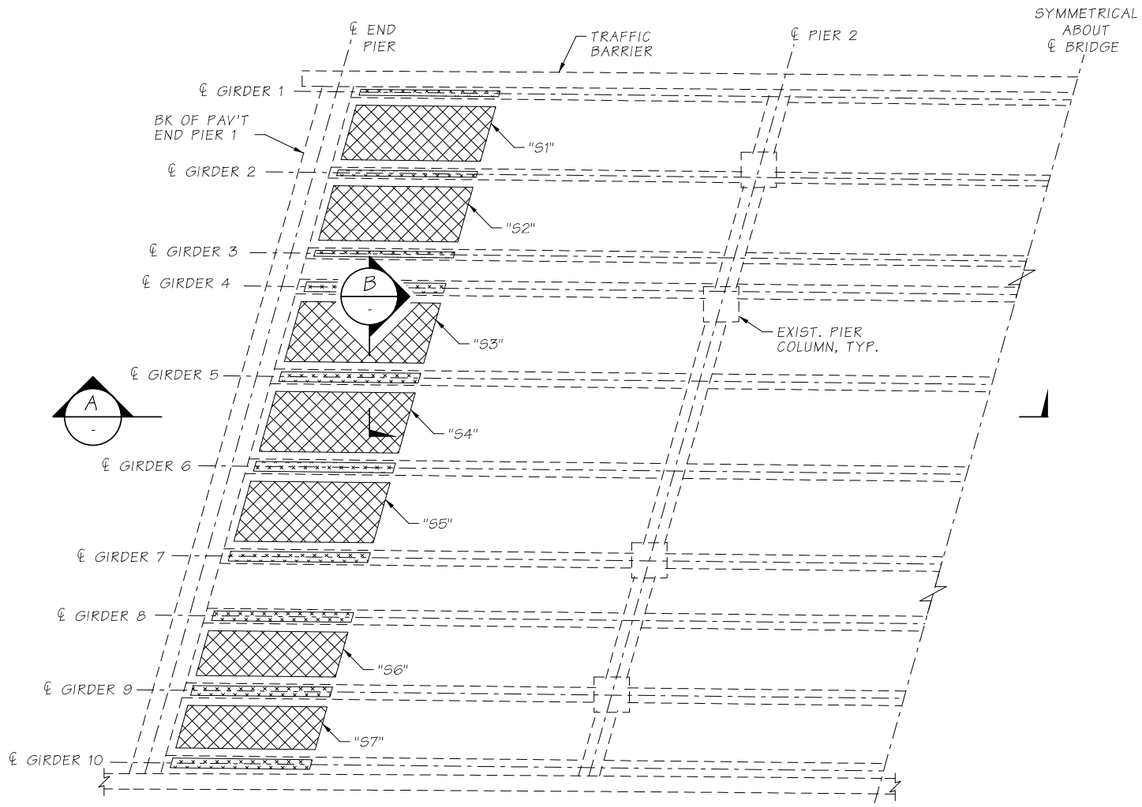

PART PLAN OF BRIDGE

FRP APPLIED TO THE BOTTOM OF GIRDER

FRP APPLIED TO THE BOTTOM OF DECK

BOTTOM OF DECK MIN. FRP FACTORED TENSILE CAPACITY (KIPS)							
LOCATION	DECK MARK						
	S1	S2	S3	S4	S5	S6	S7
BOTTOM OF DECK	391	391	326	297	326	424	424

BOTTOM OF GIRDER MIN. FRP FACTORED TENSILE CAPACITY (KIPS)										
LOCATION	GIRDER MARK									
	1	2	3	4	5	6	7	8	9	10
BOTTOM OF GIRDER	82	82	82	95	95	95	95	95	95	95

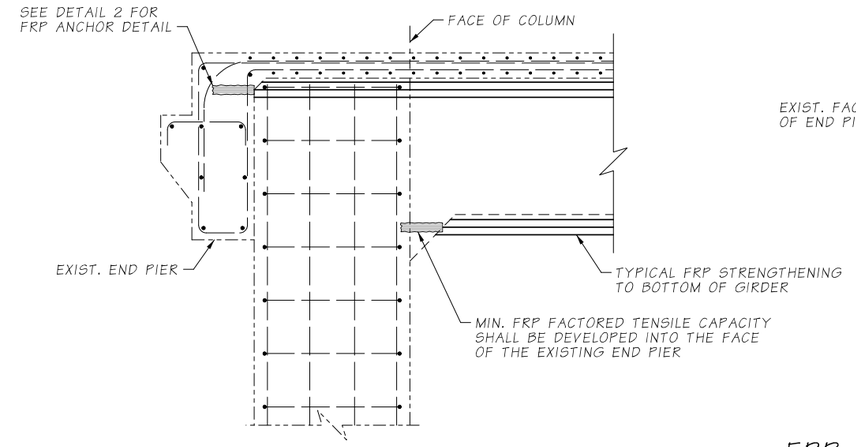

DETAIL 1 -
NTS

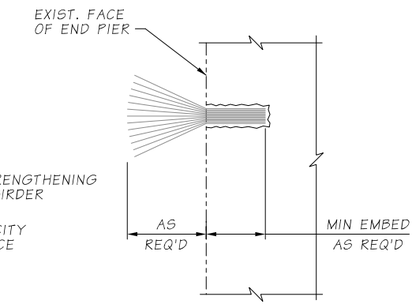

FRP ANCHOR DETAIL 2 -
NTS

FRP STRENGTHENING REQUIREMENTS

THE CONTRACTOR SHALL DESIGN THE CARBON FRP STRENGTHENING SYSTEM TO PROVIDE ADDITIONAL MOMENT CAPACITY OVER THE ENTIRE LENGTH OF THE "FRP STRENGTHENING ZONE" SHOWN ON THIS SHEET. MIN. FRP FACTORED TENSILE CAPACITY SHOWN IN THE TABLE ABOVE.

THE CARBON FRP SYSTEM SHALL BE DESIGNED TO ACHIEVE THE MIN. FACTORED TENSILE CAPACITY AT A MAXIMUM STRAIN LIMIT OF 0.005 IN/IN AND ADJUSTED BY APPROPRIATE STRENGTH REDUCTION FACTORS (ENVIRONMENTAL, ETC.).

NOTES

1. DIMENSIONS PROVIDED ARE FOR REFERENCE ONLY. CONTRACTOR SHALL VERIFY ALL CONTROLLING FIELD DIMENSIONS PRIOR TO FABRICATION.
2. PRIOR TO FRP STRENGTHENING, THE CONCRETE SURFACE SHALL BE CLEAN, DRY, AND FREE OF PROTRUSIONS OR CAVITIES. SURFACE PREPARATION AND FRP INSTALLATION SHALL BE PERFORMED IN ACCORDANCE WITH FRP MANUFACTURER'S REQUIREMENTS.
3. THE NUMBER OF FRP LAYERS SHOWN IS FOR ILLUSTRATIVE PURPOSES ONLY. THE NUMBER OF FRP LAYERS AND FRP ANCHORS SHALL BE DETERMINED BY THE CONTRACTOR'S DESIGN TO MEET THE FRP STRENGTHENING REQUIREMENTS.

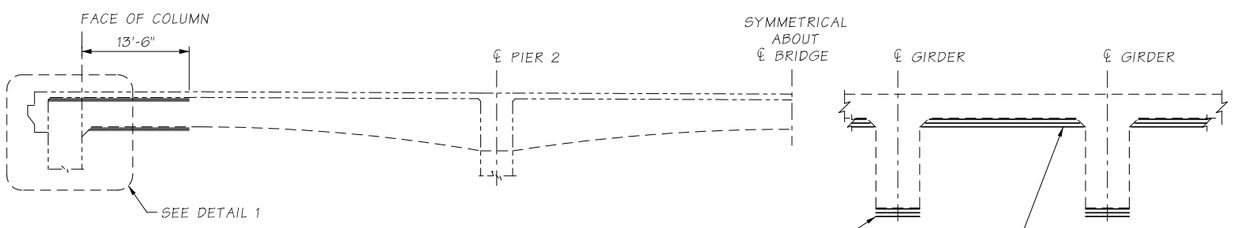

SECTION A -
TYPICAL GIRDER ELEVATION

SECTION B -
TYPICAL GIRDER SECTION

Bridge Design Engr.	KHALEGHI B.	c:\pwworking\west01\d1468466\48W_Girder FRP_Plan-Elev-Det.dgn							
Supervisor	KORPI D.				REGION NO.	STATE	FED. AID PROJ. NO.	SHEET NO.	TOTAL SHEETS
Designed By	HAIR J.				10	WASH		124	176
Checked By	KARSLI N.								
Detailed By	VYPLEL M.				JOB NUMBER				
Bridge Projects Engr.	ROSA M.				20A039				
Prelim. Plan By									
Architect/Specialist		DATE	REVISION	BY	APP'D				

4/20/2022 4:55:50 PM

BRIDGE AND STRUCTURES OFFICE

R. LEE ANDREWS — STATE OF WASHINGTON — 43571 — PROFESSIONAL ENGINEER

SEE SHEET CT1
04/20/2022

Washington State Department of Transportation

HDR

I-405
BN RR BRIDGE TO PED TRAIL BRIDGE
SEISMIC RETROFIT
BRIDGE NO. 405/48W

GIRDER FRP - PLAN, ELEVATION AND DETAILS

BRIDGE SHEET NO. BJ6

SHEET 124 OF 176 SHEETS

SR 405 FILE NO. ____ SHEET BJ6
ProjectWise Vault:

SEC. 28, T.26N., R.5E., W.M.
CITY OF KIRKLAND

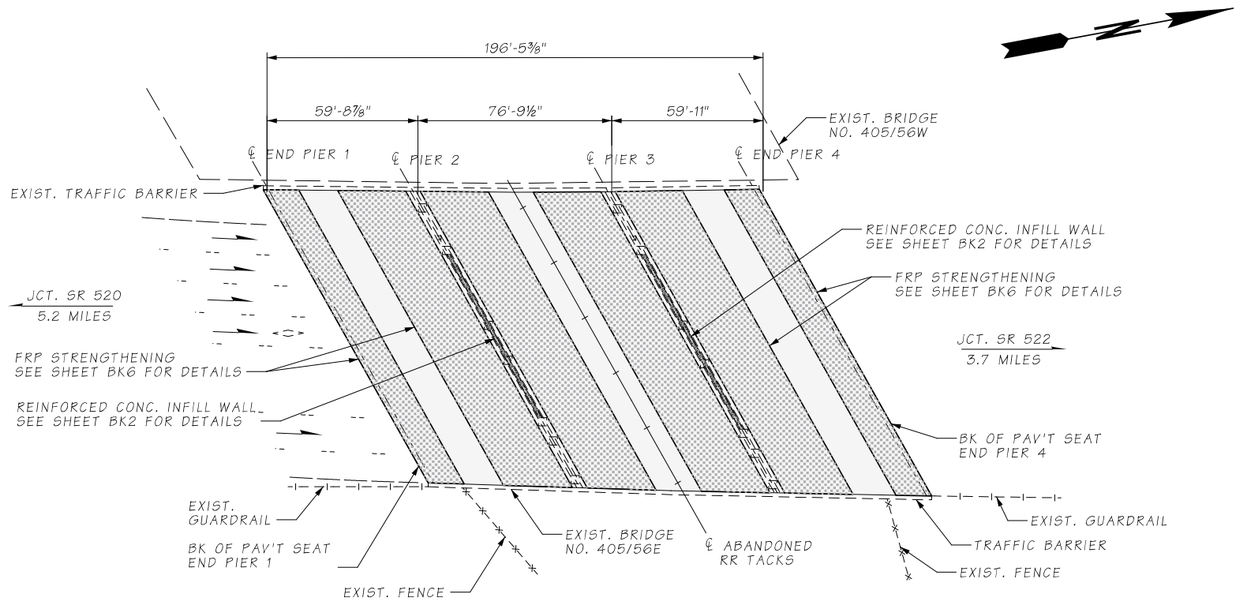

PLAN

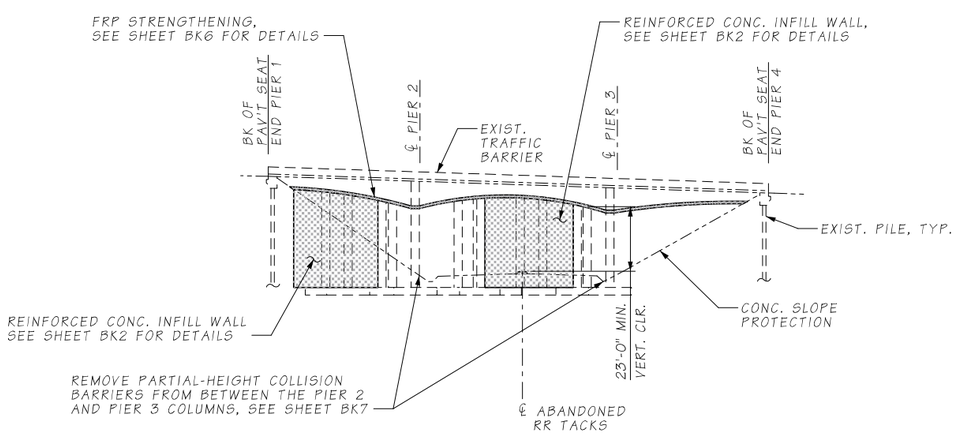

ELEVATION

GENERAL NOTES

1. ALL MATERIALS AND WORKMANSHIP SHALL BE IN ACCORDANCE WITH THE REQUIREMENTS OF THE WASHINGTON STATE DEPARTMENT OF TRANSPORTATION STANDARD SPECIFICATIONS FOR ROAD, BRIDGE AND MUNICIPAL CONSTRUCTION - DATED 2022.
2. NEW CONSTRUCTION HAS BEEN DESIGNED IN ACCORDANCE WITH THE REQUIREMENTS OF THE AASHTO LRFD BRIDGE DESIGN SPECIFICATIONS 8TH EDITION, DATED 2017 AND THE FHWA-HRT-06-032 SEISMIC RETROFITTING MANUAL FOR HIGHWAY STRUCTURES, DATED 2006.
3. EXISTING FEATURES, DIMENSIONS, AND ELEVATIONS ARE BASED ON AS-BUILT PLANS. ALL DIMENSIONS SHALL BE FIELD MEASURED AND VERIFIED BY THE CONTRACTOR, PRIOR TO ORDERING MATERIALS AND FABRICATION (SEE SPECIAL PROVISIONS).
4. CONTRACTOR SHALL LOCATE EXISTING STEEL REINFORCING USING NONDESTRUCTIVE METHODS TO AVOID DAMAGE DURING DRILLING OPERATIONS. THE CONTRACTOR SHALL NOTIFY THE ENGINEER IMMEDIATELY IF ANY EXISTING REBAR OR ANCHOR BOLTS ARE ENCOUNTERED OR ARE IN CONFLICT WITH THE WORK DETAILED, AND SHALL OBTAIN APPROVAL FROM THE ENGINEER BEFORE CONTINUING WORK. CORE DRILLING IS NOT ALLOWED.
5. ALL NEW MATERIALS USED SHALL MEET THE FOLLOWING REQUIREMENTS:
   - CONCRETE CLASS 4000
   - REINFORCING STEEL BARS - ASTM A706, GRADE 60, U.N.O.
6. THE MINIMUM CONCRETE COVER MEASURED FROM THE FACE OF THE CONCRETE TO THE FACE OF ANY REINFORCING STEEL SHALL BE 1 1/2" U.N.O.
7. CONCRETE SURFACES REQUIRED TO BE ROUGHENED SHALL BE ROUGHENED IN ACCORDANCE WITH SECTION 6-02.3(12)B OR THE SPALL PATTERN ALTERNATIVE ROUGHENED SURFACE SHOWN IN DETAIL 2 ON BRIDGE SHEET BK5.
8. THE LOCATION OF DOWEL BARS MAY BE ADJUSTED BY +/- 1" IF NECESSARY TO AVOID CONFLICTS WITH EXISTING REINFORCING STEEL. DOWEL BARS SHALL BE KEPT A MINIMUM OF 3" FROM THE EDGE OF CONCRETE.
9. SEE UTILITY SHEETS FOR THE LOCATIONS OF EXISTING UTILITIES.

LEGEND

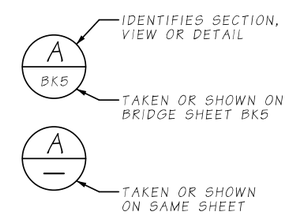

SEISMIC RETROFIT

Bridge Design Engr.	KHALEGHI B.	c:\pwworking\west01\d1468466\56E_Layout Plan.dgn							
Supervisor	KORPI D.				REGION NO.	STATE	FED. AID PROJ. NO.	SHEET NO.	TOTAL SHEETS
Designed By	KARSLI N.				10	WASH		125	176
Checked By	CHI J.								
Detailed By	VYPLEL M.				JOB NUMBER				
Bridge Projects Engr.	ROSA M.				20A039				
Prelim. Plan By									
Architect/Specialist		DATE	REVISION	BY	APP'D				

4/20/2022 4:55:53 PM

BRIDGE AND STRUCTURES OFFICE

R. LEE ANDREWS — STATE OF WASHINGTON — 43571 — STRUCTURAL ENGINEER — PROFESSIONAL ENGINEER

SEE SHEET CT1
04/20/2022

Washington State Department of Transportation

HDR

I-405
BN RR BRIDGE TO PED TRAIL BRIDGE
SEISMIC RETROFIT
BRIDGE NO. 405/56E

LAYOUT

BRIDGE SHEET NO. BK1

SHEET 125 OF 176 SHEETS

SR 405 FILE NO.____ SHEET BK1
ProjectWise Vault:

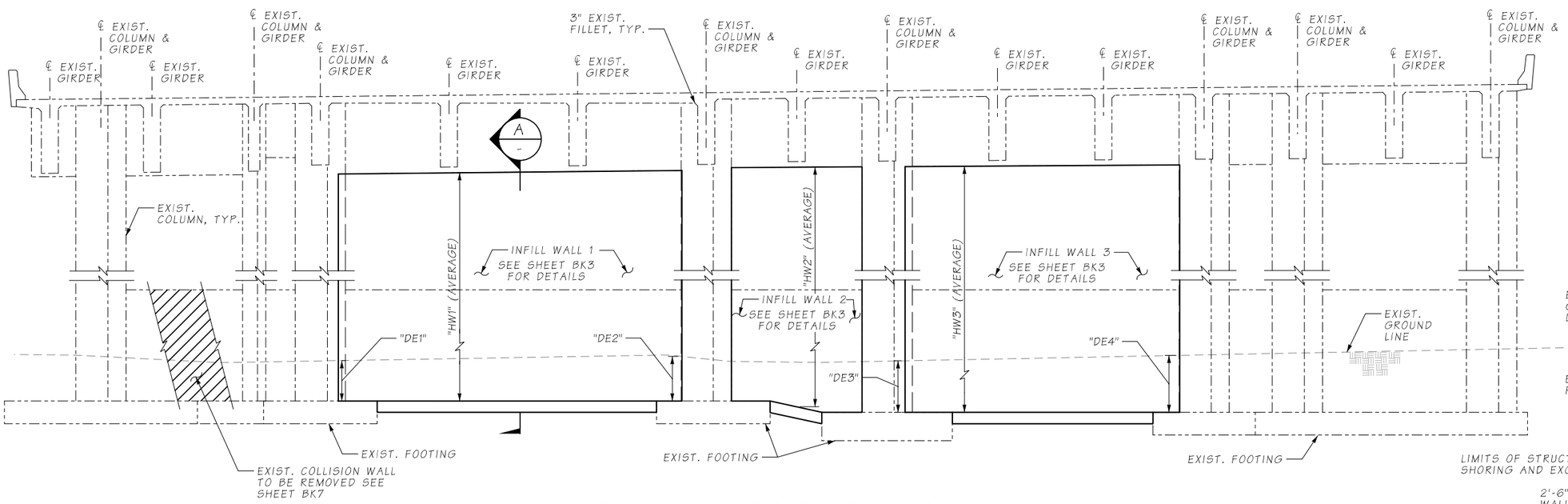

ELEVATION - PIERS 2 & 3 INFILL WALL

(PIER 2 SHOWN, PIER 3 SIMILAR)

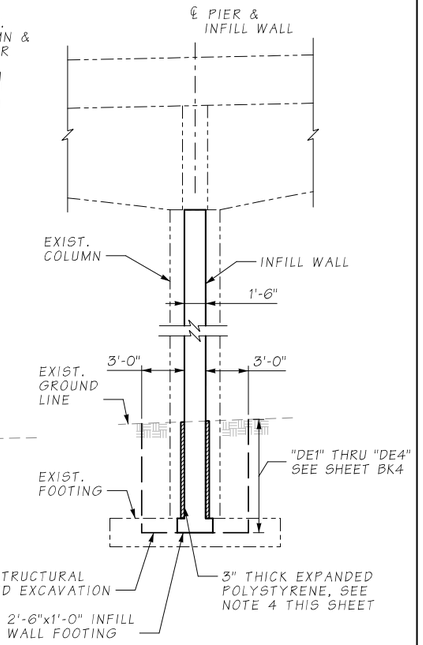

SECTION A

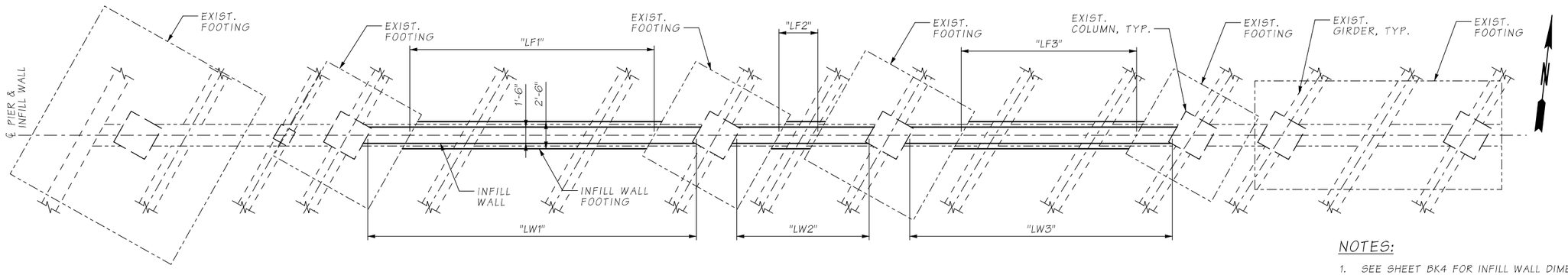

PLAN - PIERS 2 & 3 INFILL WALL

(PIER 2 SHOWN, PIER 3 SIMILAR)

NOTES:

1. SEE SHEET BK4 FOR INFILL WALL DIMENSIONS AND ELEVATIONS.
2. SEE GENERAL NOTE 4 ON SHEET BK1.
3. REINFORCEMENT NOT SHOWN FOR CLARITY. SEE SHEETS BK3, BK4 AND BK5 FOR REINFORCING DETAILS.
4. CONTRACTOR SHALL PLACE 3" THICK EXPANDED POLYSTYRENE AGAINST ALL EXPOSED CONCRETE SURFACES BELOW THE FINISHED GROUND LINE AT PIERS 2 AND 3. BACKFILLING OPERATIONS SHALL BE PERFORMED IN A MANNER THAT MINIMIZES DAMAGE TO THE EXPANDED POLYSTYRENE.

SR 405 FILE NO. 20A039 SHEET BK2
ProjectWise Vault:

Bridge Design Engr.	KHALEGHI B.	c:\pwworking\west01\d1468466\56E_Piers 2-3_Infill Walls.dgn			REGION NO.	STATE	FED. AID PROJ. NO.	SHEET NO.	TOTAL SHEETS
Supervisor	KORPI D.				10	WASH		126	176
Designed By	HAIR J.				JOB NUMBER				
Checked By	KARSLI N.				20A039				
Detailed By	VYPLEL M.								
Bridge Projects Engr.	ROSA M.								
Prelim. Plan By									
Architect/Specialist		DATE	REVISION	BY	APP'D				

4/20/2022 4:55:57 PM

BRIDGE AND STRUCTURES OFFICE

R. LEE ANDREWS — STATE OF WASHINGTON — 43571 — STRUCTURAL ENGINEER — PROFESSIONAL ENGINEER
SEE SHEET CT1
04/20/2022

Washington State Department of Transportation

HDR

I-405
BN RR BRIDGE TO PED TRAIL BRIDGE
SEISMIC RETROFIT
BRIDGE NO. 405/56E

PIERS 2 & 3 INFILL WALLS
PLAN, ELEVATION & SECTION

BRIDGE SHEET NO. BK2

SHEET 126 OF 176 SHEETS

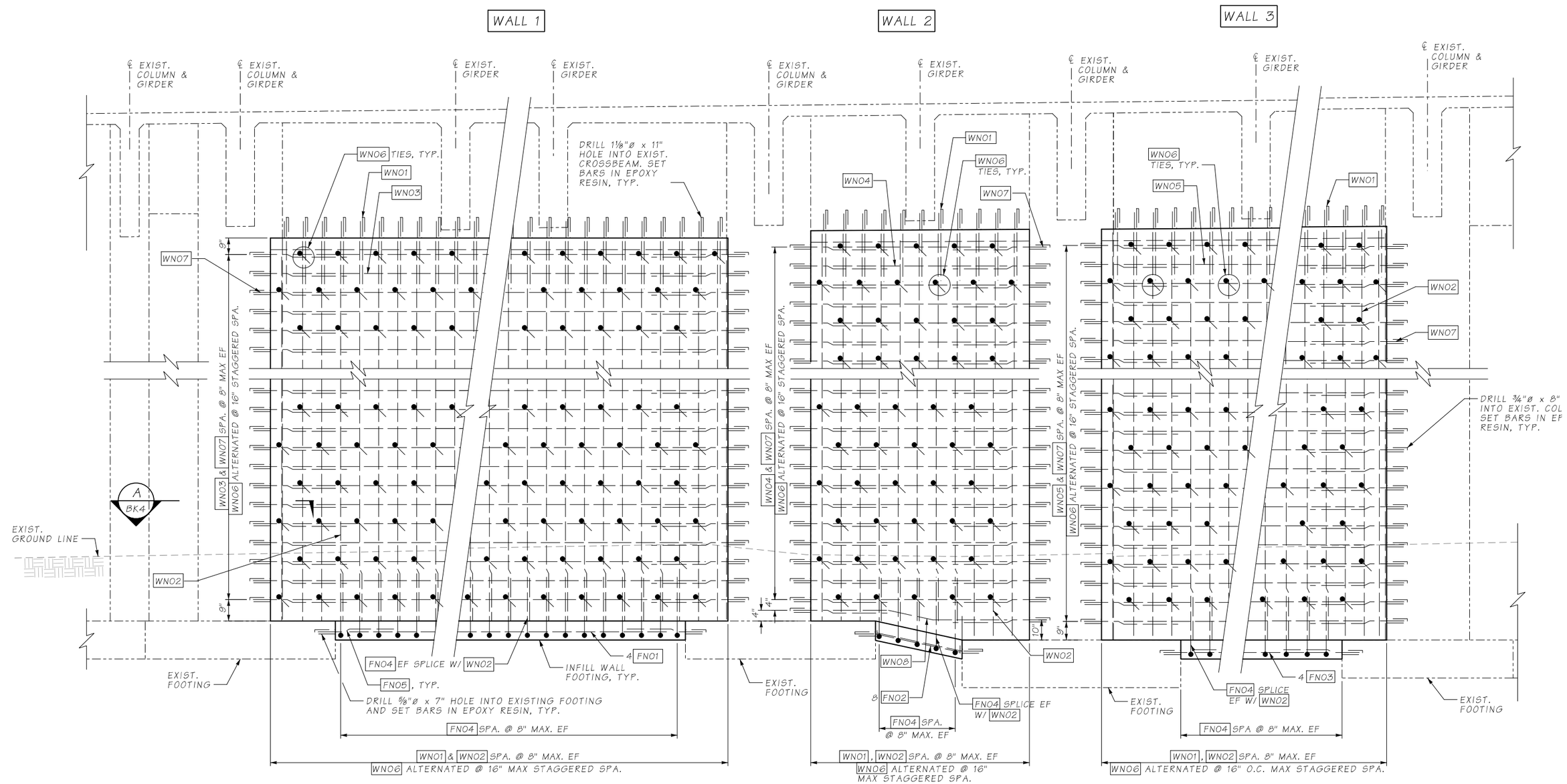

ELEVATION - PIERS 2 & 3 INFILL WALL REINFORCING

(PIER 2 SHOWN, PIER 3 SIMILAR,
NEAR FACE REINFORCING SHOWN, FAR FACE SIMILAR)

SR 405 FILE NO. 20A039 SHEET BK3
ProjectWise Vault:

Bridge Design Engr.	KHALEGHI B.	c:\pwworking\west01\d1468466\56E_Piers 2-3_Infill Walls_Reinf_Details.dgn							
Supervisor	KORPI D.				REGION NO.	STATE	FED. AID PROJ. NO.	SHEET NO.	TOTAL SHEETS
Designed By	HAIR J.				10	WASH		127	176
Checked By	KARSLI N.				JOB NUMBER				
Detailed By	VYPLEL M.				20A039				
Bridge Projects Engr.	ROSA M.								
Prelim. Plan By									
Architect/Specialist		DATE	REVISION	BY	APP'D				

4/20/2022 4:56:05 PM

BRIDGE AND STRUCTURES OFFICE

R. LEE ANDREWS — STATE OF WASHINGTON — 43571 — STRUCTURAL ENGINEER — PROFESSIONAL ENGINEER
SEE SHEET CT1
04/20/2022

Washington State Department of Transportation

HDR

I-405
BN RR BRIDGE TO PED TRAIL BRIDGE
SEISMIC RETROFIT
BRIDGE NO. 405/56E

PIERS 2 & 3 INFILL WALLS
REINFORCING DETAILS

BRIDGE SHEET NO. BK3

SHEET 127 OF 176 SHEETS

INFILL WALL DIMENSIONS AND ELEVATIONS LIST

DIM.	LOCATION	PIER 2	PIER 3
LW1	WALL LENGTH 1	26'-4"	26'-4"
LW2	WALL LENGTH 2	12'-2"	13'-5"
LW3	WALL LENGTH 3	21'-8"	25'-11"
HW1	WALL HEIGHT 1	28'-10½"	26'-8"
HW2	WALL HEIGHT 2	30'-1"	28'-7½"
HW3	WALL HEIGHT 3	31'-4"	30'-1"
LF1	FOOTING LENGTH 1	17'-8½"	17'-8½"
LF2	FOOTING LENGTH 2	2'-3"	3'-11"
LF3	FOOTING LENGTH 3	12'-3½"	16'-2½"
DE1	APPROX. EXCAVATION DEPTH 1*	10'-4"	6'-4"
DE2	APPROX. EXCAVATION DEPTH 2*	10'-3"	5'-1"
DE3	APPROX. EXCAVATION DEPTH 3*	12'-0"	11'-4"
DE4	APPROX. EXCAVATION DEPTH 4*	10'-8"	11'-4"

* EXCAVATION DEPTH MAY VARY ±1'-0"

INFILL WALL BAR LIST

	BAR MARK	LOCATION	SIZE	DIMENSIONS A	B	C	LENGTH	TOTAL #	WEIGHT
PIER 2	W201	VERTICAL DOWEL BARS	7	3'-2"	-	-	3'-2"	176	1139
	W202	VERTICAL BARS	5	VARIES FROM 28'-6" TO 31'-6"	-	-	VARIES	176	5507
	W203	HORIZONTAL BARS WALL 1	5	26'-1"	-	-	26'-1"	86	2340
	W204	HORIZONTAL BARS WALL 2	5	11'-11"	-	-	11'-11"	91	1131
	W205	HORIZONTAL BARS WALL 3	5	21'-5"	-	-	21'-5"	94	2100
	W206	TIES	4	1'-3"	-	-	1'-11"	4064	5203
	W207	HORIZONTAL DOWEL BARS	5	2'-3"	8"	-	2'-11"	546	1661
	W308	HORIZONTAL BOT WALL 2 BAR	5	3'-3"	2'-7"	6'-0"	11'-11"	2	25
PIER 3	W301	VERTICAL DOWEL BARS	7	3'-2"	-	-	3'-2"	193	1249
	W302	VERTICAL BARS	5	VARIES FROM 25'-9" TO 30'-2"	-	-	VARIES	193	5637
	W303	HORIZONTAL BARS WALL 1	5	26'-1"	-	-	30'-4"	81	2204
	W304	HORIZONTAL BARS WALL 2	5	13'-2"	-	-	17'-5"	87	1195
	W305	HORIZONTAL BARS WALL 3	5	25'-8"	-	-	29'-11"	90	2410
	W306	TIES	4	1'-3"	-	-	1'-11"	4200	5377
	W307	HORIZONTAL DOWEL BARS	5	2'-3"	8"	-	2'-11"	520	1582
	W308	HORIZONTAL BOT WALL 2 BAR	5	3'-3"	3'-3"	6'-7"	13'-2"	2	28

REBAR BENDING DIAGRAM (ALL DIMENSIONS ARE OUT TO OUT)
WN00= BAR MARK FOR INFILL WALLS, WHERE "N" IS THE PIER NUMBER.

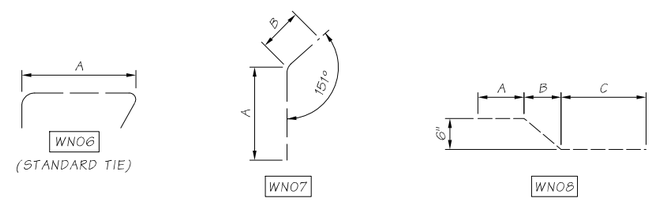

NOTES:

1. WN00 = BAR MARK FOR INFILL WALLS, WHERE "N" IS THE PIER NUMBER.
2. OPTIONAL CONSTRUCTION JOINT MAY BE PLACED WITHIN 6" OFF EXISTING CROSSBEAM. 4000 PSI SELF-CONSOLIDATING CONCRETE SHALL BE PLACED ABOVE THE CONSTRUCTION JOINT. CONTRACTOR SHALL SUBMIT TYPE 2 WORKING DRAWINGS SHOWING METHOD OF INSTALLATION FOR APPROVAL BY THE ENGINEER.

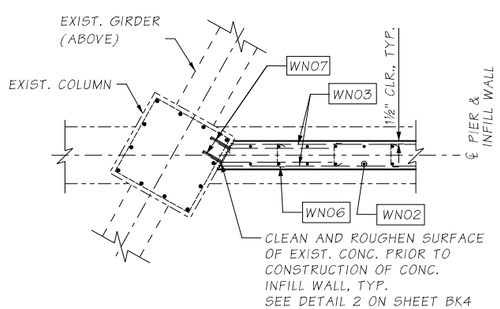

SECTION A
BK3

SR 405 FILE NO. 20A039 SHEET BK4
ProjectWise Vault:

Bridge Design Engr.	KHALEGHI B.	c:\pwworking\west01\d1468466\56E_Piers 2-3_Infill Walls_Reinf_Bar List.dgn							
Supervisor	KORPI D.				REGION NO.	STATE	FED. AID PROJ. NO.	SHEET NO.	TOTAL SHEETS
Designed By	HAIR J.				10	WASH		128	176
Checked By	KARSLI N.				JOB NUMBER				
Detailed By	VYPLEL M.				20A039				
Bridge Projects Engr.	ROSA M.								
Prelim. Plan By									
Architect/Specialist		DATE	REVISION	BY	APP'D				

4/20/2022 4:56:10 PM

BRIDGE AND STRUCTURES OFFICE

SEE SHEET CT1
04/20/2022

Washington State Department of Transportation

HDR

I-405
BN RR BRIDGE TO PED TRAIL BRIDGE SEISMIC RETROFIT
BRIDGE NO. 405/56E

PIERS 2 & 3 INFILL WALLS REINFORCING BAR LIST

BRIDGE SHEET NO. BK4

SHEET 128 OF 176 SHEETS

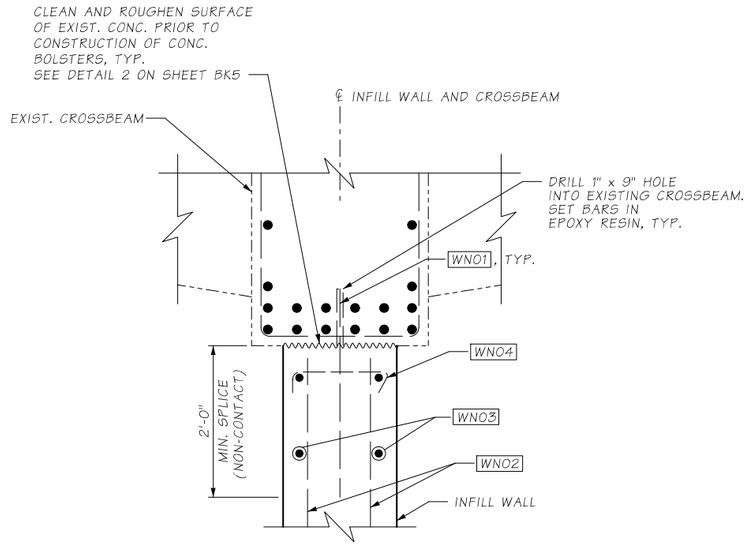

PIERS 2 & 3 INFILL WALL CROSSBEAM DETAIL

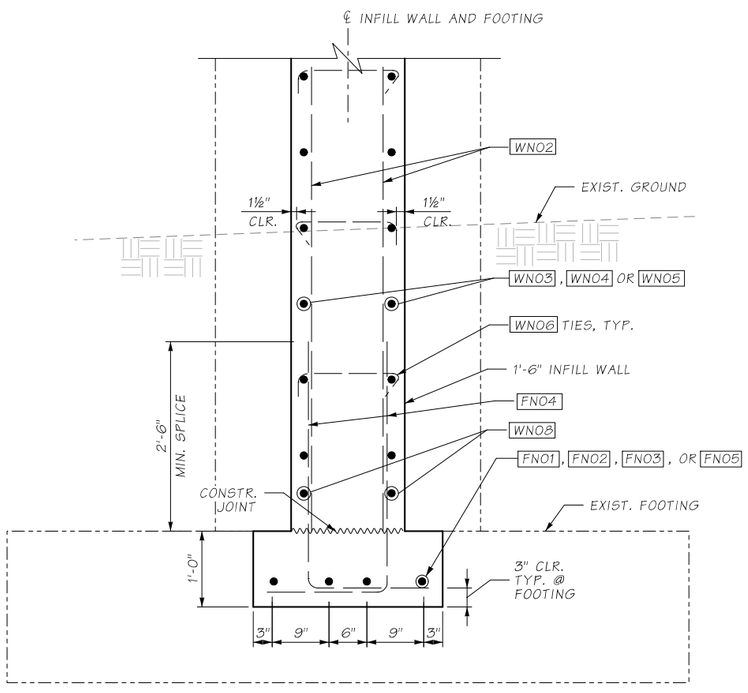

PIERS 2 & 3 INFILL WALL FOOTING DETAIL

INFILL WALL FOOTING BAR LIST

PIER #	BAR MARK	LOCATION	SIZE	DIMENSIONS			TOTAL #	WEIGHT
				HORIZ. A	VERT. B	LENGTH		
PIER 2	F201	LONG. BARS 1	5	17'-6"	-	17'-6"	4	73
	F202	LONG. BARS 2	5	3'-7"	1'-0"	5'-8"	8	48
	F203	LONG. BARS 3	5	12'-1"	-	12'-1"	4	51
	F204	STARTER BARS	4	1'-7"	3'-3"	4'-10"	92	297
	F205	HORIZ. DOWEL BARS	4	2'-10"	-	2'-10"	16	31
PIER 3	F301	LONG. BARS 1	5	17'-6"	-	17'-6"	4	73
	F302	LONG. BARS 2	5	5'-3"	1'-0"	7'-6"	8	63
	F303	LONG. BARS 3	5	16'-0"	-	16'-0"	4	67
	F304	STARTER BARS	4	1'-7"	3'-3"	4'-10"	106	343
	F305	HORIZ. DOWEL BARS	4	2'-10"	-	2'-10"	16	31

REBAR BENDING DIAGRAM (ALL DIMENSIONS ARE OUT TO OUT)

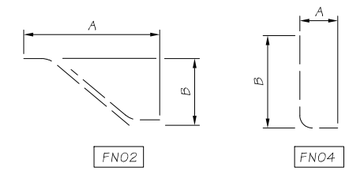

NOTE: FN00= BAR MARK FOR INFILL WALLS, WHERE "F" IS THE PIER NUMBER.

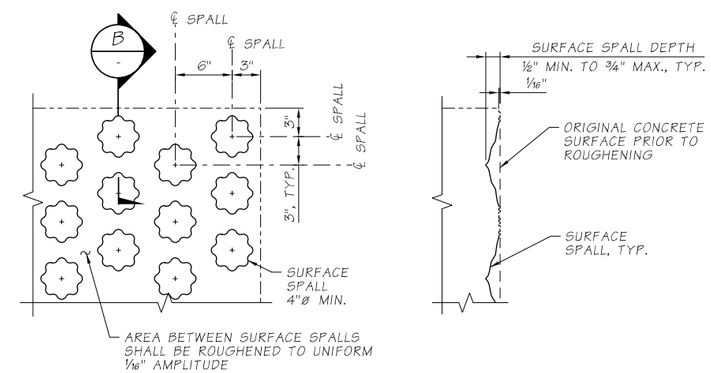

ELEVATION

SECTION B / -

SPALL PATTERN ALTERNATIVE ROUGHENED SURFACE DETAIL 2 / -

SR 405 FILE NO. 20A039 SHEET BK5
ProjectWise Vault:

Bridge Design Engr.	KHALEGHI B.	c:\pwworking\west01\d1468466\56E_Piers 2-3_Infill Wall Footing_Reinf.dgn							
Supervisor	KORPI D.				REGION NO.	STATE	FED. AID PROJ. NO.	SHEET NO.	TOTAL SHEETS
Designed By	HAIR J.				10	WASH		129	176
Checked By	KARSLI N.				JOB NUMBER				
Detailed By	VYPLEL M.				20A039				
Bridge Projects Engr.	ROSA M.								
Prelim. Plan By									
Architect/Specialist		DATE	REVISION	BY	APP'D				

4/20/2022 4:56:13 PM

BRIDGE AND STRUCTURES OFFICE

R. LEE ANDERSON, STATE OF WASHINGTON, AGRICULTURAL ENGINEER, 43571, PROFESSIONAL ENGINEER
SEE SHEET CT1
04/20/2022

Washington State Department of Transportation

HDR

I-405
BN RR BRIDGE TO PED TRAIL BRIDGE
SEISMIC RETROFIT
BRIDGE NO. 405/56E

PIERS 2 & 3 INFILL WALL FOOTING REINFORCING DETAILS & BAR LIST

BRIDGE SHEET NO. BK5

SHEET 129 OF 176 SHEETS

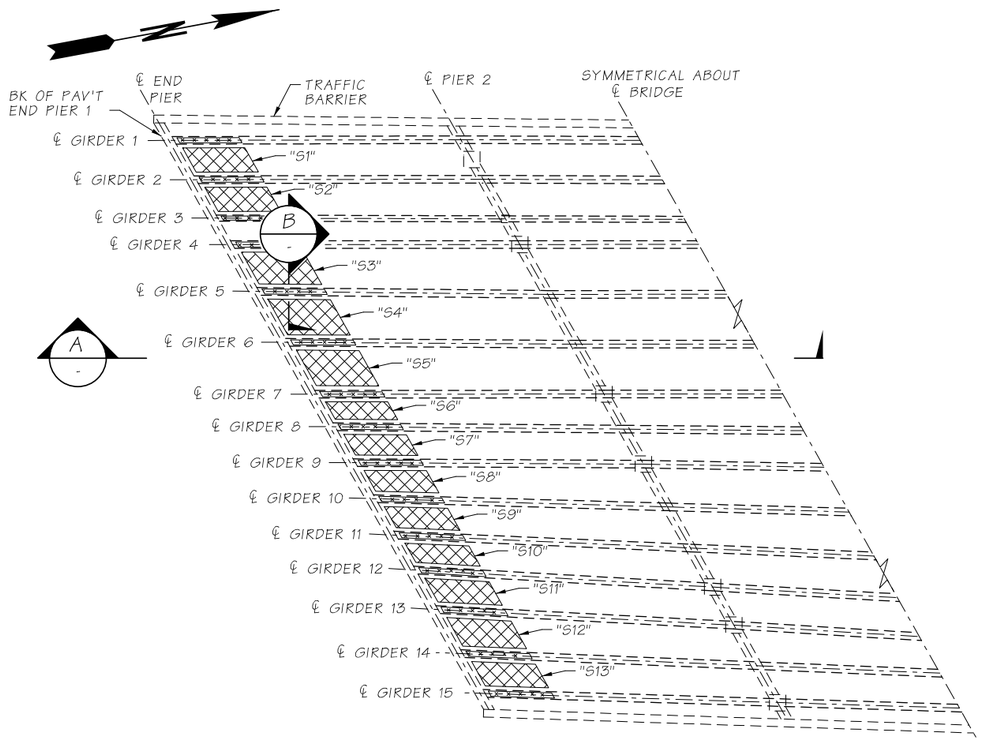

PART PLAN OF BRIDGE

BOTTOM OF DECK MIN. FRP FACTORED TENSILE CAPACITY (KIPS)													
LOCATION	DECK MARK												
	S1	S2	S3	S4	S5	S6	S7	S8	S9	S10	S11	S12	S13
BOTTOM OF DECK	436	216	333	222	215	137	112	159	159	159	124	89	187

MIN. FRP FACTORED TENSILE CAPACITY (KIPS)															
LOCATION	GIRDER MARK														
	1	2	3	4	5	6	7	8	9	10	11	12	13	14	15
BOTTOM OF GIRDER	142	142	142	138	138	138	138	142	149	149	149	149	142	142	142

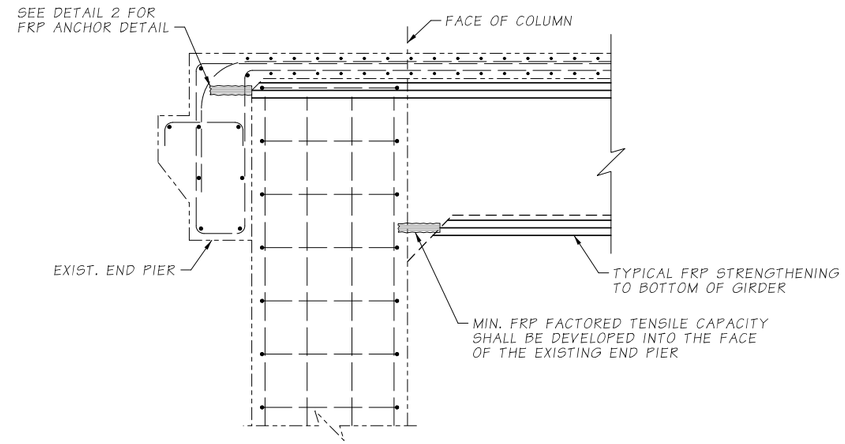

DETAIL 1 / -
NTS

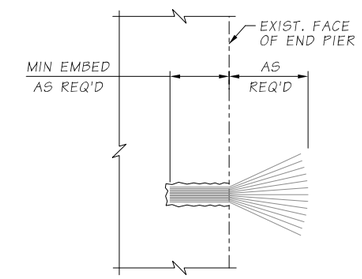

FRP ANCHOR DETAIL 2 / -
NTS

LEGEND

FRP APPLIED TO THE BOTTOM OF GIRDER

FRP APPLIED TO THE BOTTOM OF DECK

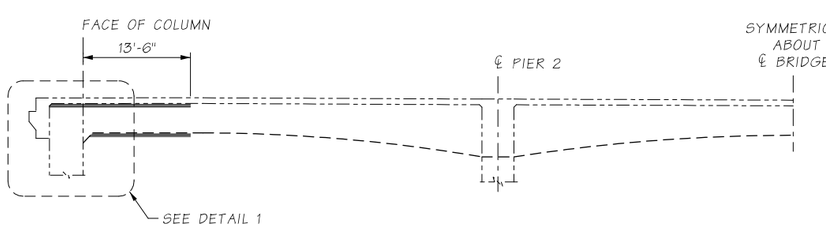

SECTION A / -

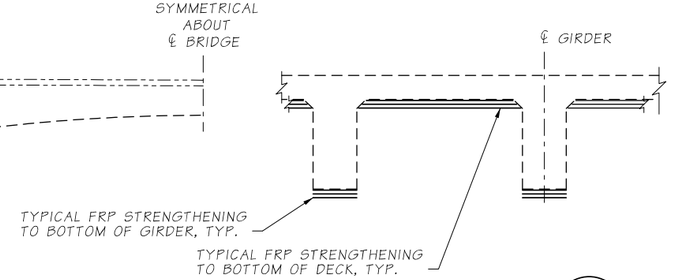

SECTION B / -
TYPICAL GIRDER SECTION

FRP STRENGTHENING REQUIREMENTS

THE CONTRACTOR SHALL DESIGN THE CARBON FRP STRENGTHENING SYSTEM TO PROVIDE ADDITIONAL MOMENT CAPACITY OVER THE ENTIRE LENGTH OF THE "FRP STRENGTHENING ZONE" SHOWN ON THIS SHEET. MIN. FRP FACTORED TENSILE CAPACITY SHOWN IN THE TABLE ABOVE.

THE CARBON FRP SYSTEM SHALL BE DESIGNED TO ACHIEVE THE MIN. FACTORED TENSILE CAPACITY AT A MAXIMUM STRAIN LIMIT OF 0.005 IN/IN AND ADJUSTED BY APPROPRIATE STRENGTH REDUCTION FACTORS (ENVIRONMENTAL, ETC.).

NOTES

1. DIMENSIONS PROVIDED ARE FOR REFERENCE ONLY. CONTRACTOR SHALL VERIFY ALL CONTROLLING FIELD DIMENSIONS PRIOR TO FABRICATION.
2. PRIOR TO FRP STRENGTHENING, THE CONCRETE SURFACE SHALL BE CLEAN, DRY, AND FREE OF PROTRUSIONS OR CAVITIES. SURFACE PREPARATION AND FRP INSTALLATION SHALL BE PERFORMED IN ACCORDANCE WITH FRP MANUFACTURER'S REQUIREMENTS.
3. THE NUMBER OF FRP LAYERS SHOWN IS FOR ILLUSTRATIVE PURPOSES ONLY. THE NUMBER OF FRP LAYERS AND FRP ANCHORS SHALL BE DETERMINED BY THE CONTRACTOR'S DESIGN TO MEET THE FRP STRENGTHENING REQUIREMENTS.

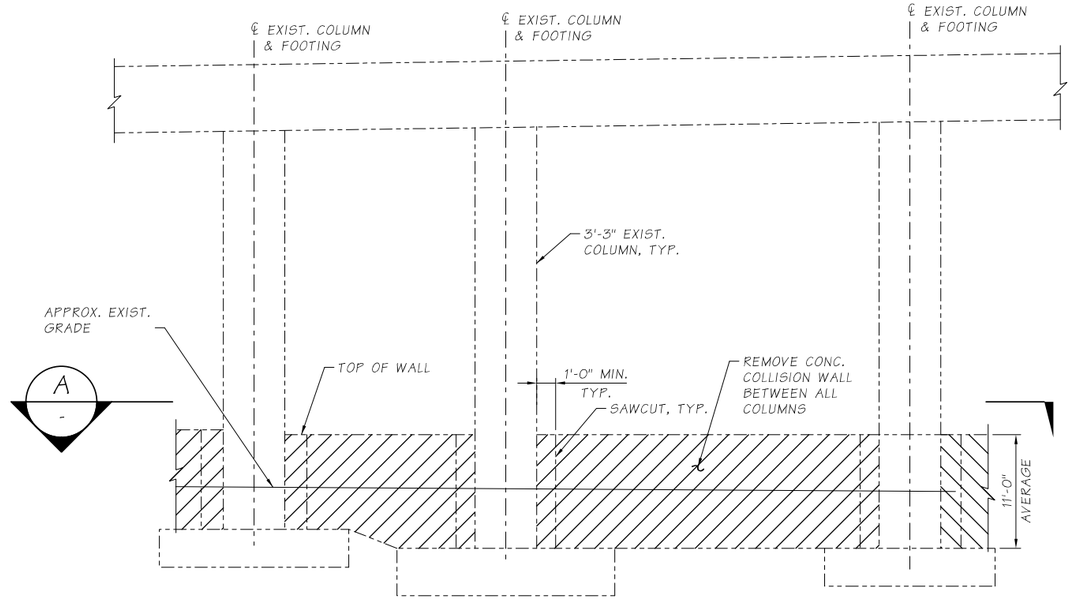

PARTIAL ELEVATION - PIER 2 COLLISION WALL REMOVAL

(LOOKING AHEAD, PIER 3 SIMILAR)

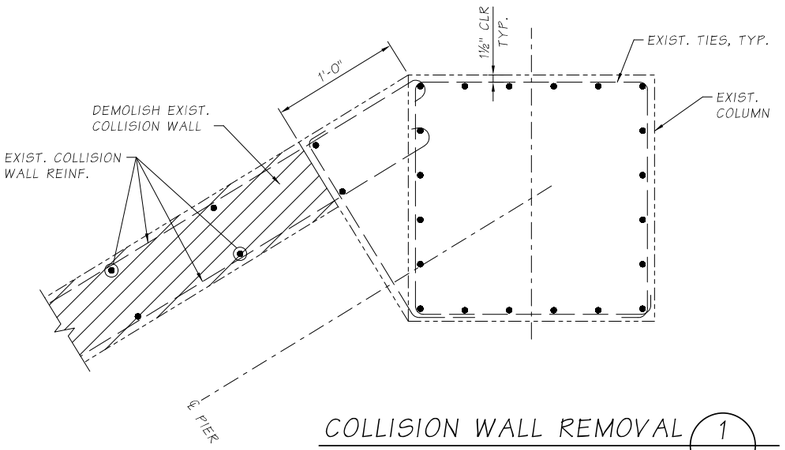

COLLISION WALL REMOVAL 1 -

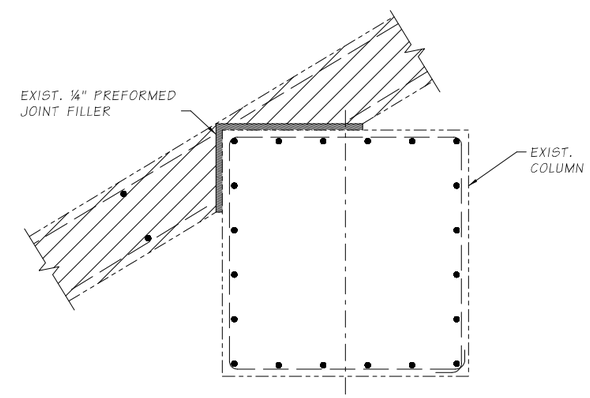

COLLISION WALL REMOVAL 2 -

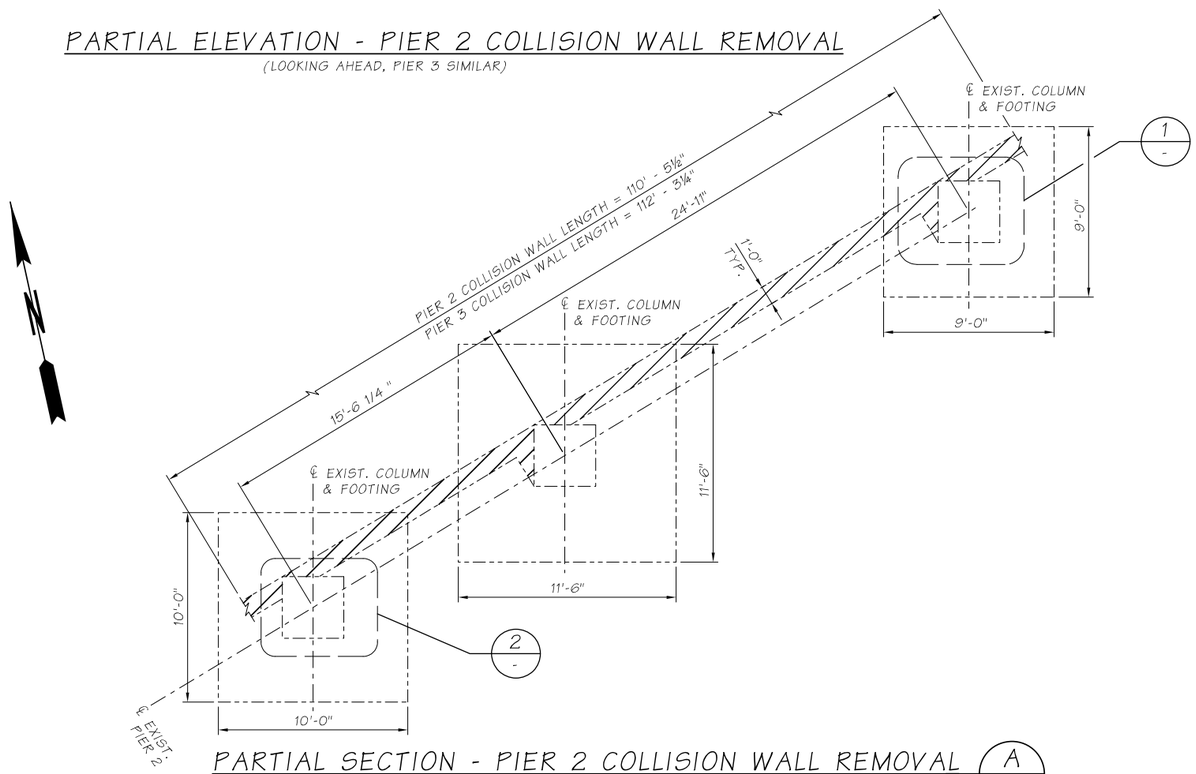

PARTIAL SECTION - PIER 2 COLLISION WALL REMOVAL A -

(REINF. BARS NOT SHOWN FOR CLARITY, PIER 3 SIMILAR)

LEGEND

EXISTING CONCRETE TO BE REMOVED

NOTES

1. DIMENSIONS PROVIDED ARE FOR REFERENCE ONLY.
2. SEE GENERAL NOTES ON SHEET BK1.
3. SEE PIERS 2 & 3 INFILL WALLS PLAN, ELEVATION & SECTION ON SHEET BK2 FOR BENT ELEVATION. ENTIRE LENGTH OF COLLISION WALL TO BE REMOVED.
4. THE CONTRACTOR SHALL SAFEGUARD EXISTING BRIDGE COLUMNS, FOOTINGS, CROSSBEAMS, AND OTHER COMPONENTS FROM DAMAGE DURING REMOVAL OF COLLISION WALLS.
5. COLLISION WALL REMOVAL SHALL BE PERFORMED IN A MANNER THAT PREVENTS DAMAGE TO COLUMN REINF. STEEL AND CORE CONCRETE. REMOVAL METHODS ARE SUBJECT TO THE APPROVAL OF THE ENGINEER.

SEISMIC RETROFIT

SR 405 FILE NO. ____ SHEET BK7
ProjectWise Vault:

Bridge Design Engr.	KHALEGHI B.	c:\pwworking\west01\d1468466\56E_Collision Wall Removal.dgn							
Supervisor	KORPI D.				REGION NO.	STATE	FED. AID PROJ. NO.	SHEET NO.	TOTAL SHEETS
Designed By	KARSLI N.				10	WASH		131	176
Checked By	CHI J.								
Detailed By	VYPLEL M.				JOB NUMBER				
Bridge Projects Engr.	ROSA M.				20A039				
Prelim. Plan By									
Architect/Specialist		DATE	REVISION	BY	APP'D				

4/20/2022 4:56:25 PM

BRIDGE AND STRUCTURES OFFICE

R. LEE ANDREWS, STATE OF WASHINGTON, 43571, STRUCTURAL ENGINEER, PROFESSIONAL ENGINEER
SEE SHEET CT1
04/20/2022

Washington State Department of Transportation

HDR

I-405
BN RR BRIDGE TO PED TRAIL BRIDGE
SEISMIC RETROFIT
BRIDGE NO. 405/56E

PIERS 2&3 COLLISION WALL REMOVAL ELEVATION AND DETAILS

BRIDGE SHEET NO. BK7

SHEET 131 OF 176 SHEETS

SEC. 28, T.26N., R.5E., W.M.
CITY OF KIRKLAND

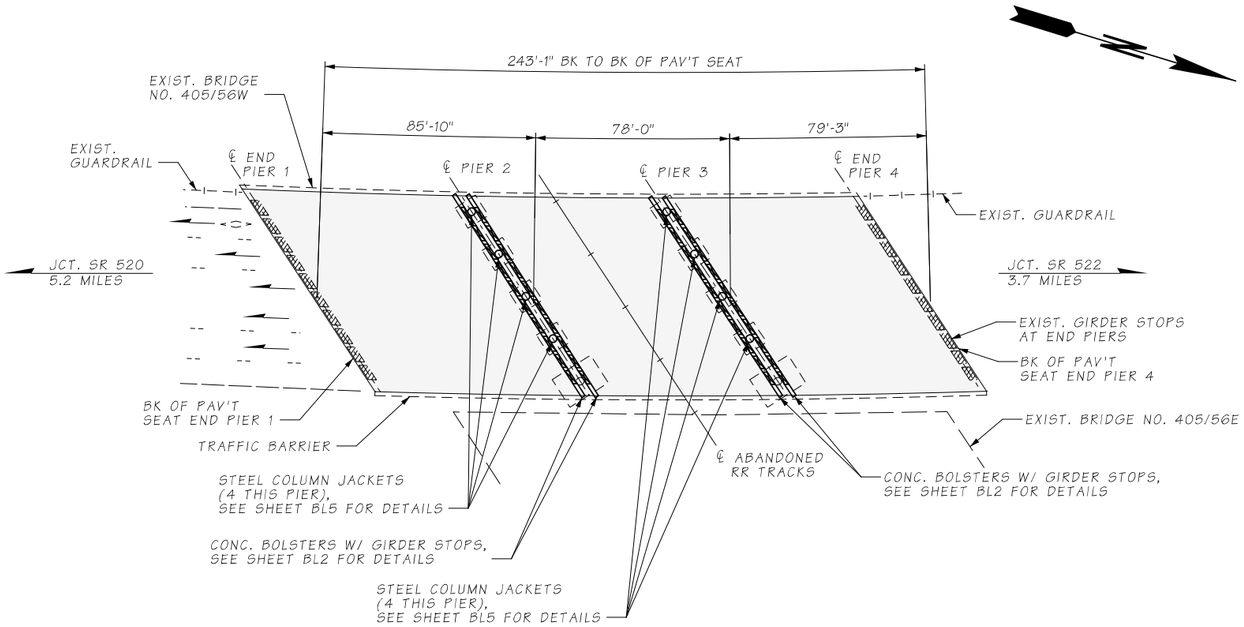

PLAN

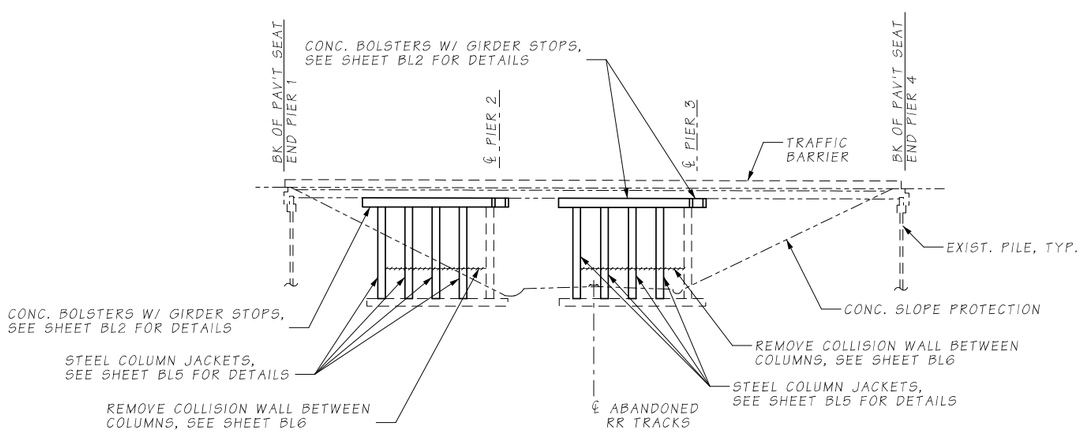

ELEVATION

GENERAL NOTES

1. ALL MATERIALS AND WORKMANSHIP SHALL BE IN ACCORDANCE WITH THE REQUIREMENTS OF THE WASHINGTON STATE DEPARTMENT OF TRANSPORTATION STANDARD SPECIFICATIONS FOR ROAD, BRIDGE AND MUNICIPAL CONSTRUCTION - DATED 2022.
2. NEW CONSTRUCTION HAS BEEN DESIGNED IN ACCORDANCE WITH THE REQUIREMENTS OF THE AASHTO LRFD BRIDGE DESIGN SPECIFICATIONS 8TH EDITION, DATED 2017 AND THE FHWA-HRT-06-032 SEISMIC RETROFITTING MANUAL FOR HIGHWAY STRUCTURES, DATED 2006.
3. EXISTING FEATURES, DIMENSIONS, AND ELEVATIONS ARE BASED ON AS-BUILT PLANS. ALL DIMENSIONS SHALL BE FIELD MEASURED AND VERIFIED BY THE CONTRACTOR, PRIOR TO ORDERING MATERIALS AND FABRICATION (SEE SPECIAL PROVISIONS).
4. CONTRACTOR SHALL LOCATE EXISTING STEEL REINFORCING USING NONDESTRUCTIVE METHODS TO AVOID DAMAGE DURING DRILLING OPERATIONS. THE CONTRACTOR SHALL NOTIFY THE ENGINEER IMMEDIATELY IF ANY EXISTING REBAR OR ANCHOR BOLTS ARE ENCOUNTERED OR ARE IN CONFLICT WITH THE WORK DETAILED, AND SHALL OBTAIN APPROVAL FROM THE ENGINEER BEFORE CONTINUING WORK. CORE DRILLING IS NOT ALLOWED.
5. ALL NEW MATERIALS USED SHALL MEET THE FOLLOWING REQUIREMENTS:
   - CONCRETE CLASS 4000
   - REINFORCING STEEL BARS - ASTM A706, GRADE 60, U.N.O.
   - STEEL COLUMN JACKETS - ASTM A36
6. THE MINIMUM CONCRETE COVER MEASURED FROM THE FACE OF THE CONCRETE TO THE FACE OF ANY REINFORCING STEEL SHALL BE 1 1/2" U.N.O.
7. CONCRETE SURFACES REQUIRED TO BE ROUGHENED SHALL BE ROUGHENED IN ACCORDANCE WITH SECTION 6-02.3(12)B OR THE SPALL PATTERN ALTERNATIVE ROUGHENED SURFACE SHOWN IN DETAIL 2 ON BRIDGE SHEET BL3.
8. THE LOCATION OF DOWEL BARS MAY BE ADJUSTED BY +/- 1" IF NECESSARY TO AVOID CONFLICTS WITH EXISTING REINFORCING STEEL. DOWEL BARS SHALL BE KEPT A MINIMUM OF 3" FROM THE EDGE OF CONCRETE.
9. SEE UTILITY SHEETS FOR THE LOCATIONS OF EXISTING UTILITIES.

LEGEND

EXISTING GIRDER STOP

NEW GIRDER STOP

A / BL5 — IDENTIFIES SECTION, VIEW OR DETAIL; TAKEN OR SHOWN ON BRIDGE SHEET BL5

A / — TAKEN OR SHOWN ON SAME SHEET

SEISMIC RETROFIT

Bridge Design Engr.	KHALEGHI B.	c:\pwworking\west01\d1468466\56W_Layout Plan.dgn				REGION NO.	STATE	FED. AID PROJ. NO.	SHEET NO.	TOTAL SHEETS
Supervisor	KORPI D.					10	WASH		132	176
Designed By	CHI J.					JOB NUMBER				
Checked By	KARSLI N.					20A039				
Detailed By	VYPLEL M.									
Bridge Projects Engr.	ROSA M.									
Prelim. Plan By										
Architect/Specialist		DATE	REVISION	BY	APP'D					

4/20/2022 4:56:29 PM

BRIDGE AND STRUCTURES OFFICE

K. LEE ANDREWS — STATE OF WASHINGTON — 43571 — STRUCTURAL ENGINEER — PROFESSIONAL ENGINEER

SEE SHEET CT1
04/20/2022

Washington State Department of Transportation

HDR

I-405
BN RR BRIDGE TO PED TRAIL BRIDGE
SEISMIC RETROFIT
BRIDGE NO. 405/56W

LAYOUT

BRIDGE SHEET NO. BL1

SHEET 132 OF 176 SHEETS

SR 405 FILE NO. ____ SHEET BL1
ProjectWise Vault:

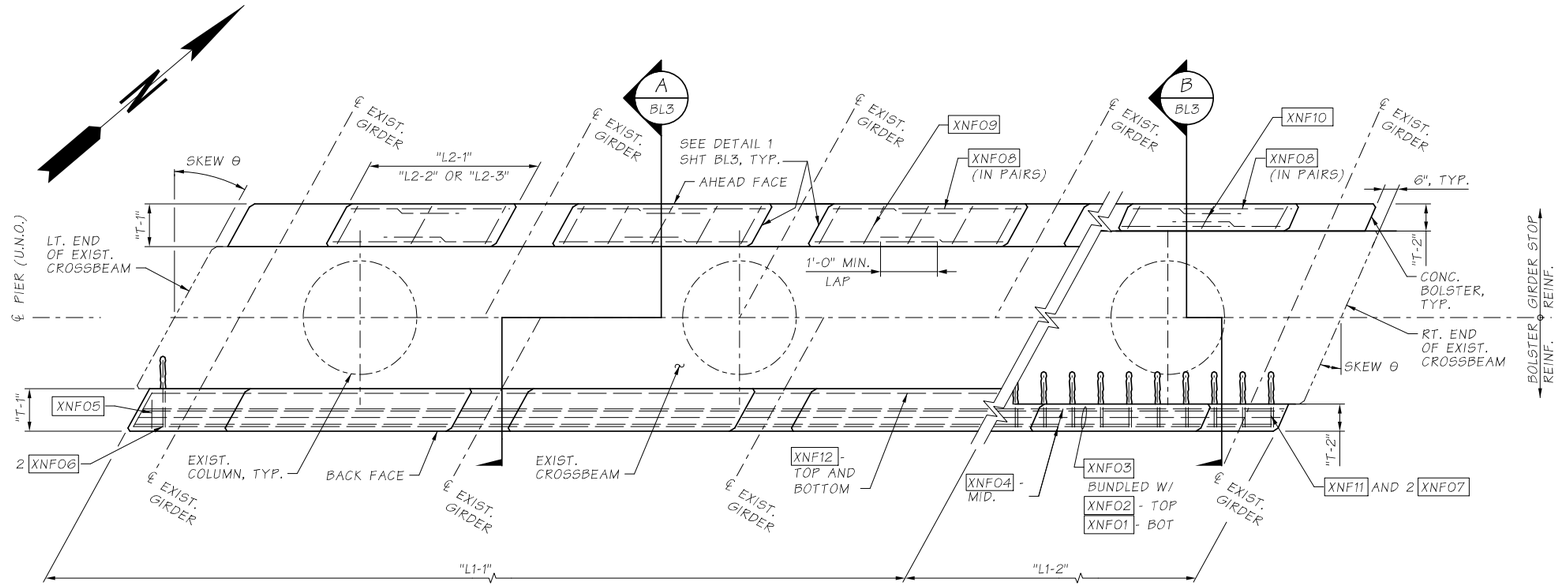

PLAN - TYP. CROSSBEAM BOLSTERS AND GIRDER STOPS

CROSSBEAM BOLSTER AND GIRDER STOP DIMENSIONS LIST

DIM.	DESCRIPTION	DIMENSIONS			
		PIER 2		PIER 3	
		BACK	AHEAD	BACK	AHEAD
L1-1	BOLSTER LENGTH	73'-6¼"	73'-6¼"	73'-6¼"	73'-6¼"
L1-2	BOLSTER LENGTH	19'-0"	19'-0"	19'-0"	19'-0"
L2-1	GIRDER STOP LENGTH	8 @ 6'-1½"	8 @ 6'-1½"	8 @ 6'-1½"	8 @ 6'-1½"
L2-2	GIRDER STOP LENGTH	1 @ 6'-6"	1 @ 6'-6"	1 @ 6'-6"	1 @ 6'-6"
L2-3	GIRDER STOP LENGTH	1 @ 6'-5½"	1 @ 6'-5½"	1 @ 6'-5½"	1 @ 6'-5½"
H1	BOLSTER HEIGHT	3'-6"	3'-6"	3'-6"	3'-6"
H2	GIRDER STOP HEIGHT	1'-0"	1'-0"	1'-0"	1'-0"
T-1	BOLSTER THICKNESS	1'-10"	1'-10"	1'-10"	1'-10"
T-2	BOLSTER THICKNESS	1'-2"	1'-2"	1'-2"	1'-2"
θ	SKEW ANGLE	33°	33°	33°	33°

NOTES:

1. DIMENSIONS PROVIDED ARE FOR REFERENCE ONLY. CONTRACTOR SHALL ADJUST DIMENSIONS IN THE FIELD SUCH THAT THE REQUIREMENTS OF DETAIL 1 ON SHEET BL3 ARE SATISFIED.
2. SEE GENERAL NOTE 3 ON SHEET BL1.
3. SEE SHEET BL4 FOR BAR LIST.
4. EXISTING GIRDERS AND DIAPHRAGMS NOT SHOWN FOR CLARITY.

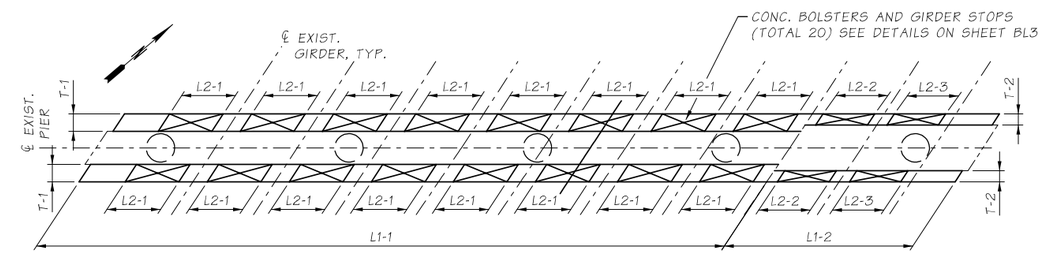

TYPICAL INTERMEDIATE GIRDER STOP LAYOUT

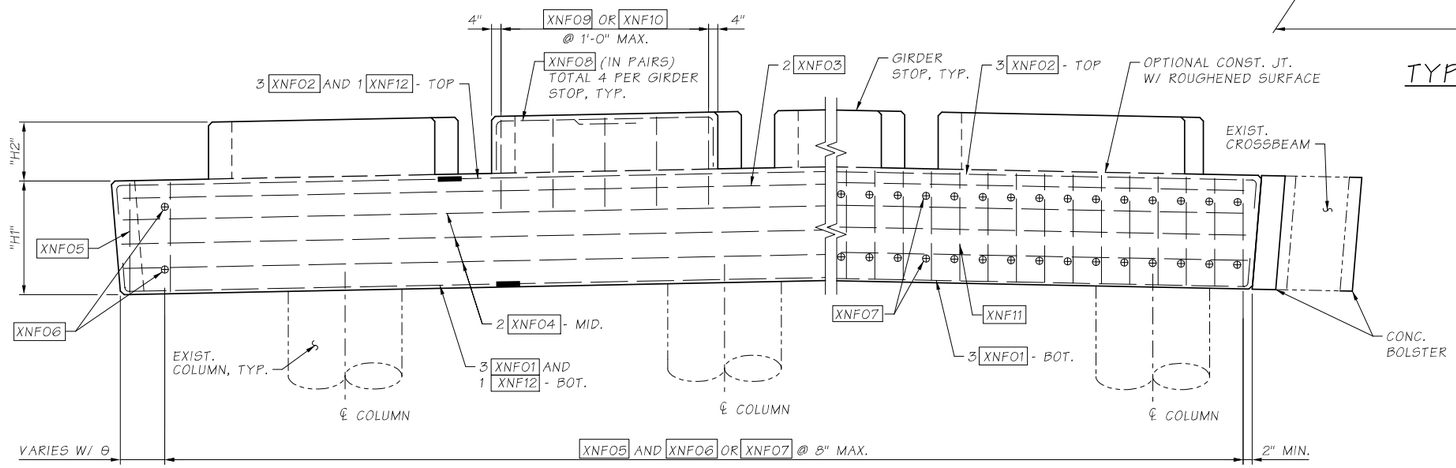

ELEVATION - TYP. CROSSBEAM BOLSTERS AND GIRDER STOPS

(BACK FACE SHOWN, AHEAD FACE SIMILAR)

SR 405 FILE NO. 20A039 SHEET BL2
ProjectWise Vault:

Bridge Design Engr.	KHALEGHI B.	c:\pwworking\west01\d1468466\56W_XBeam Bolster-Girder Stops_Plan-Elev.dgn							
Supervisor	KORPI D.				REGION NO.	STATE	FED. AID PROJ. NO.	SHEET NO.	TOTAL SHEETS
Designed By	CHI J.				10	WASH		133	176
Checked By	KARSLI N.				JOB NUMBER				
Detailed By	VYPLEL M.				20A039				
Bridge Projects Engr.	ROSA M.								
Prelim. Plan By									
Architect/Specialist		DATE	REVISION	BY	APP'D				

4/20/2022 4:56:32 PM

BRIDGE AND STRUCTURES OFFICE

R. LEE ANDREWS STATE OF WASHINGTON 43571 STRUCTURAL ENGINEER PROFESSIONAL ENGINEER
SEE SHEET CT1
04/20/2022

Washington State Department of Transportation

HDR

I-405
BN RR BRIDGE TO PED TRAIL BRIDGE SEISMIC RETROFIT
BRIDGE NO. 405/56W

CROSSBEAM BOLSTER AND GIRDER STOPS - PLAN AND ELEVATION

BRIDGE SHEET NO. BL2

SHEET 133 OF 176 SHEETS

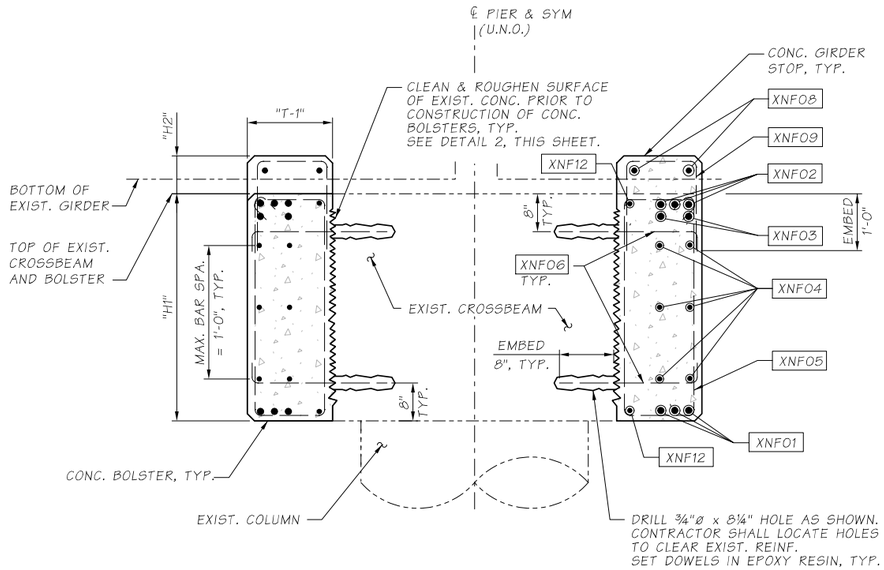

SECTION A / BL2

NOTE:

1. SEE SHEET BL2 FOR "H1", "H2", AND "T-1" DIMENSIONS

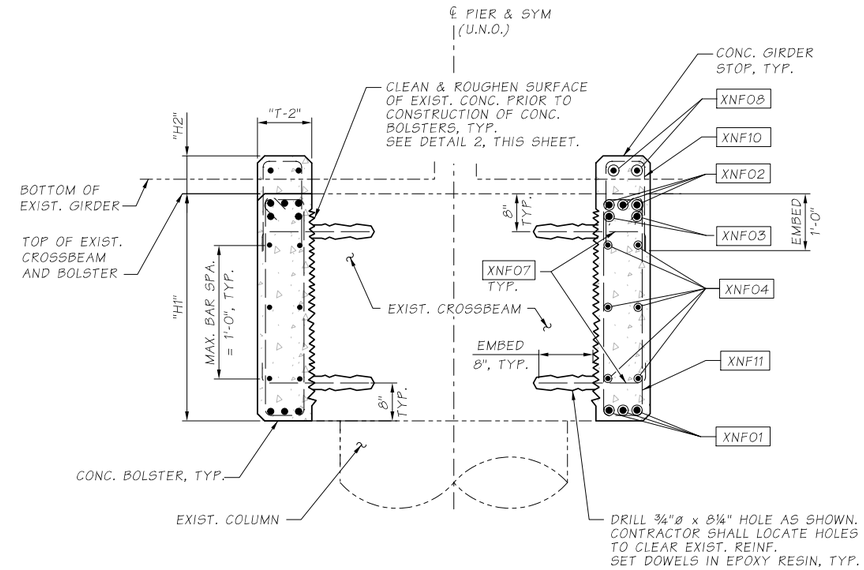

SECTION B / BL2

NOTE:

1. SEE SHEET BL2 FOR "H1", "H2", AND "T-2" DIMENSIONS

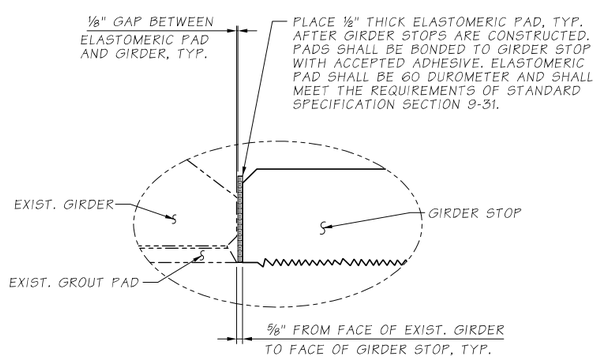

DETAIL 1 / BL2

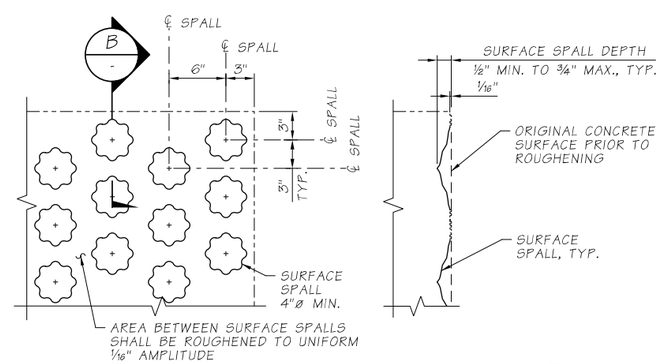

ELEVATION

SECTION B / -

SPALL PATTERN ALTERNATIVE ROUGHENED SURFACE DETAIL 2 / -

SR 405 FILE NO. 20A039 SHEET BL3
ProjectWise Vault:

Bridge Design Engr.	KHALEGHI B.	c:\pwworking\west01\d1468466\56W_XBeam Bolster-Girder Stops_Details.dgn							
Supervisor	KORPI D.				REGION NO.	STATE	FED. AID PROJ. NO.	SHEET NO.	TOTAL SHEETS
Designed By	CHI J.				10	WASH		134	176
Checked By	KARSLI N.								
Detailed By	VYPLEL M.				JOB NUMBER				
Bridge Projects Engr.	ROSA M.				20A039				
Prelim. Plan By									
Architect/Specialist		DATE	REVISION	BY	APP'D				

4/20/2022 4:56:36 PM

BRIDGE AND STRUCTURES OFFICE

R. LEE ANDREWS — STATE OF WASHINGTON — 43571 — STRUCTURAL ENGINEER — PROFESSIONAL ENGINEER

SEE SHEET CT1
04/20/2022

Washington State Department of Transportation

HDR

I-405
BN RR BRIDGE TO PED TRAIL BRIDGE
SEISMIC RETROFIT
BRIDGE NO. 405/56W

CROSSBEAM BOLSTER AND GIRDER STOPS - DETAILS

BRIDGE SHEET NO. BL3

SHEET 134 OF 176 SHEETS

CROSSBEAM BOLSTER / GIRDER STOP BAR LIST

	REBAR MARK	LOCATION	SIZE	BAR GRADE *	DIMENSIONS A HORIZ.	DIMENSIONS B VERT.	DIMENSIONS LENGTH	TOTAL #	WEIGHT
PIER 2	X2B01	BOLSTER LONG. BOT.	#11	80	92'-2½"	-	96-2½"	3	1534
	X2B02	BOLSTER LONG. TOP	#11	80	92'-2½"	-	96'-2½"	3	1534
	X2B03	BOLSTER LONG. TOP	#11	80	92'-2½"	-	96'-2½"	2	1023
	X2B04	BOLSTER LONG. MID.	#4	-	92'-2½"	-	94'-2½"	6	378
	X2B05	BOLSTER TIES	#4	-	1'-7"	3'-3"	10'-5"	111	773
	X2B06	BOLSTER DOWELS	#5	-	2'-1½"	-	2'-9½"	224	418
	X2B07	BOLSTER DOWELS	#5	-	1'-5½"	-	2'-2½"	60	99
	X2B08	GIRDER STOP (PAIRS)	#4	-	4'-8"	8"	5'-4"	40	143
	X2B09	GIRDER STOP U-SHAPED	#4	-	1'-7"	1'-7½"	4'-10"	40	130
	X2B10	GIRDER STOP U-SHAPED	#4	-	11"	1'-7½"	4'-2"	10	33
	X2B11	BOLSTER TIES	#4	-	11"	3'-3"	9'-1"	30	183
	X2B12	BOLSTER LONG. BOT. & TOP	#5	-	73'-2¼"	-	74'-5¼"	2	156
	X2A01	BOLSTER LONG. BOT.	#11	80	92'-2½"	-	96-2½"	3	1534
	X2A02	BOLSTER LONG. TOP	#11	80	92'-2½"	-	96'-2½"	3	1534
	X2A03	BOLSTER LONG. TOP	#11	80	92'-2½"	-	96'-2½"	2	1023
	X2A04	BOLSTER LONG. MID.	#4	-	92'-2½"	-	94'-2½"	6	378
	X2A05	BOLSTER TIES	#4	-	1'-7"	3'-3"	10'-5"	111	773
	X2A06	BOLSTER DOWELS	#5	-	2'-1½"	-	2'-9½"	224	418
	X2A07	BOLSTER DOWELS	#5	-	1'-5½"	-	2'-2½"	60	99
	X2A08	GIRDER STOP (PAIRS)	#4	-	4'-8"	8"	5'-4"	40	143
	X2A09	GIRDER STOP U-SHAPED	#4	-	1'-7"	1'-7½"	4'-10"	40	130
	X2A10	GIRDER STOP U-SHAPED	#4	-	11"	1'-7½"	4'-2"	10	33
	X2A11	BOLSTER TIES	#4	-	11"	3'-3"	9'-1"	30	183
	X2A12	BOLSTER LONG. BOT. & TOP	#5	-	73'-2¼"	-	74'-5¼"	2	156
PIER 3	X3B01	BOLSTER LONG. BOT.	#11	80	92'-2½"	-	96-2½"	3	1534
	X3B02	BOLSTER LONG. TOP	#11	80	92'-2½"	-	96'-2½"	3	1534
	X3B03	BOLSTER LONG. TOP	#11	80	92'-2½"	-	96'-2½"	2	1023
	X3B04	BOLSTER LONG. MID.	#4	-	92'-2½"	-	94'-2½"	6	378
	X3B05	BOLSTER TIES	#4	-	1'-7"	3'-3"	10'-5"	111	773
	X3B06	BOLSTER DOWELS	#5	-	2'-1½"	-	2'-9½"	224	418
	X3B07	BOLSTER DOWELS	#5	-	1'-5½"	-	2'-2½"	60	99
	X3B08	GIRDER STOP (PAIRS)	#4	-	4'-8"	8"	5'-4"	40	143
	X3B09	GIRDER STOP U-SHAPED	#4	-	1'-7"	1'-7½"	4'-10"	40	130
	X3B10	GIRDER STOP U-SHAPED	#4	-	11"	1'-7½"	4'-2"	10	33
	X3B11	BOLSTER TIES	#4	-	11"	3'-3"	9'-1"	30	183
	X3B12	BOLSTER LONG. BOT. & TOP	#5	-	73'-2¼"	-	74'-5¼"	2	156
	X3A01	BOLSTER LONG. BOT.	#11	80	92'-2½"	-	96-2½"	3	1534
	X3A02	BOLSTER LONG. TOP	#11	80	92'-2½"	-	96'-2½"	3	1534
	X3A03	BOLSTER LONG. TOP	#11	80	92'-2½"	-	96'-2½"	2	1023
	X3A04	BOLSTER LONG. MID.	#4	-	92'-2½"	-	94'-2½"	6	378
	X3A05	BOLSTER TIES	#4	-	1'-7"	3'-3"	10'-5"	111	773
	X3A06	BOLSTER DOWELS	#5	-	2'-1½"	-	2'-9½"	224	418
	X3A07	BOLSTER DOWELS	#5	-	1'-5½"	-	2'-2½"	60	99
	X3A08	GIRDER STOP (PAIRS)	#4	-	4'-8"	8"	5'-4"	40	143
	X3A09	GIRDER STOP U-SHAPED	#4	-	1'-7"	1'-7½"	4'-10"	40	130
	X3A10	GIRDER STOP U-SHAPED	#4	-	11"	1'-7½"	4'-2"	10	33
	X3A11	BOLSTER TIES	#4	-	11"	3'-3"	9'-1"	30	183
	X3A12	BOLSTER LONG. BOT. & TOP	#5	-	73'-2¼"	-	74'-5¼"	2	156

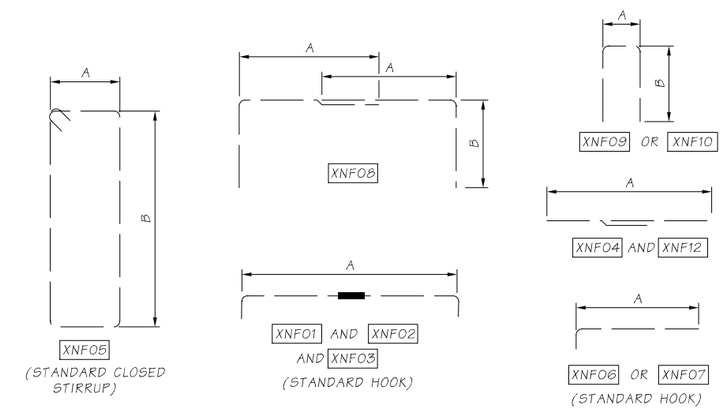

REBAR BENDING DIAGRAM (ALL DIMENSIONS ARE OUT TO OUT)
MINIMUM REINF. STEEL SPLICE LENGTHS:
#4: 2'-0"
#5: 2'-6"

DENOTES MECHANICAL SPLICE

NOTES:

1. XNF00 = BAR MARK FOR CROSSBEAM BOLSTER AND/OR GIRDER STOP, WHERE "N" IS THE BENT NUMBER AND "F" IS THE FACE ("A"= AHEAD AND "B"= BACK)
2. STAGGER MECHANICAL SPLICE LOCATION BY 3'-0" MIN. BETWEEN ADJACENT BARS.
3. ALL REINFORCING #9 AND LARGER SHALL USE MECHANICAL SPLICES. ALL REINFORCING #8 AND SMALLER SHALL USE LAP SPLICES.

* BAR GRADE ONLY IF DIFFERENT THAN GRADE 60

SR 405 FILE NO. 20A039 SHEET BL4
ProjectWise Vault:

Bridge Design Engr.	KHALEGHI B.	c:\pwworking\west01\d1468466\56W_XBeam Bolster-Girder Stops_Bar List.dgn							
Supervisor	KORPI D.				REGION NO.	STATE	FED. AID PROJ. NO.	SHEET NO.	TOTAL SHEETS
Designed By	CHI J.				10	WASH		135	176
Checked By	KARSLI N.				JOB NUMBER				
Detailed By	VYPLEL M.				20A039				
Bridge Projects Engr.	ROSA M.								
Prelim. Plan By									
Architect/Specialist		DATE	REVISION	BY	APP'D				

4/20/2022 4:56:40 PM

BRIDGE AND STRUCTURES OFFICE

STATE OF WASHINGTON R. LEE ANDREWS 43571 REGISTERED PROFESSIONAL ENGINEER

SEE SHEET CT1
04/20/2022

Washington State Department of Transportation

HDR

I-405
BN RR BRIDGE TO PED TRAIL BRIDGE SEISMIC RETROFIT
BRIDGE NO. 405/56W

CROSSBEAM BOLSTER AND GIRDER STOPS - BAR LIST

BRIDGE SHEET NO. BL4

SHEET 135 OF 176 SHEETS

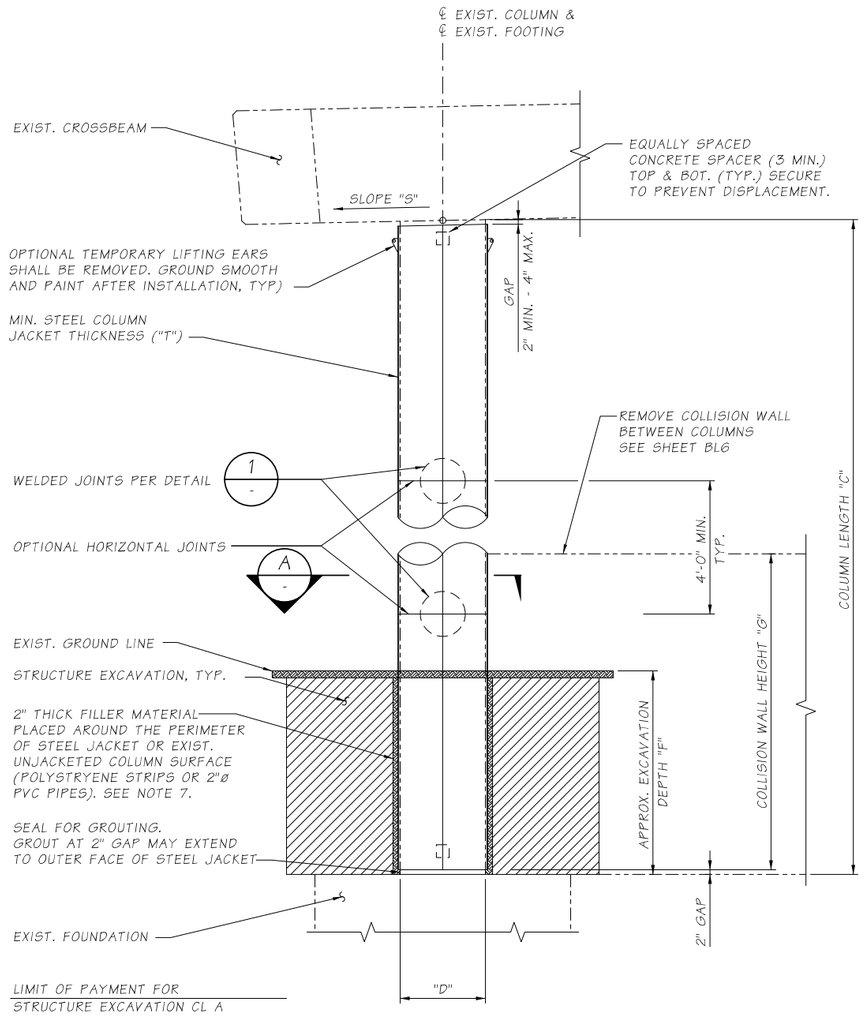

ELEVATION - TYP. COLUMN STEEL JACKET

STEEL COLUMN JACKET DIMENSIONS LIST											
DIM.	DESCRIPTION	PIER 2					PIER 3				
D	EXIST. COLUMN DIA. (FROM WEST TO EAST)	3'-0" (ALL)					3'-0" (ALL)				
T	JACKET THICKNESS	⅜"	⅜"	⅜"	⅜"	N/A	⅜"	⅜"	⅜"	⅜"	N/A
C	COLUMN LENGTH (FROM WEST TO EAST)	27.10'	27.78'	28.43'	29.11'	N/A	25.85'	26.50'	27.14'	27.79'	N/A
S	CROSSBEAM SLOPE	3.36%±					3.25%±				
F	APPROX. EXCAVATION DEPTH* (FROM WEST TO EAST)	5.4'	5.2'	5.1'	5.2'	N/A	7.4'	6.1'	6.2'	6.4'	N/A
G	COLLISION WALL HEIGHT (FROM WEST TO EAST)	12'-0"±(ALL)					12'-0"±(ALL)				

* APPROX. EXCAVATION DEPTH MAY VARY ±1'-0"

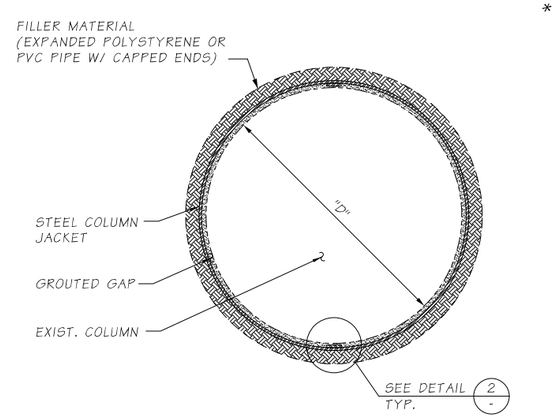

SECTION A

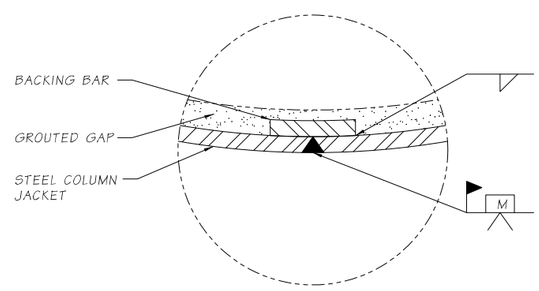

DETAIL 2
TYP. WELD JOINT

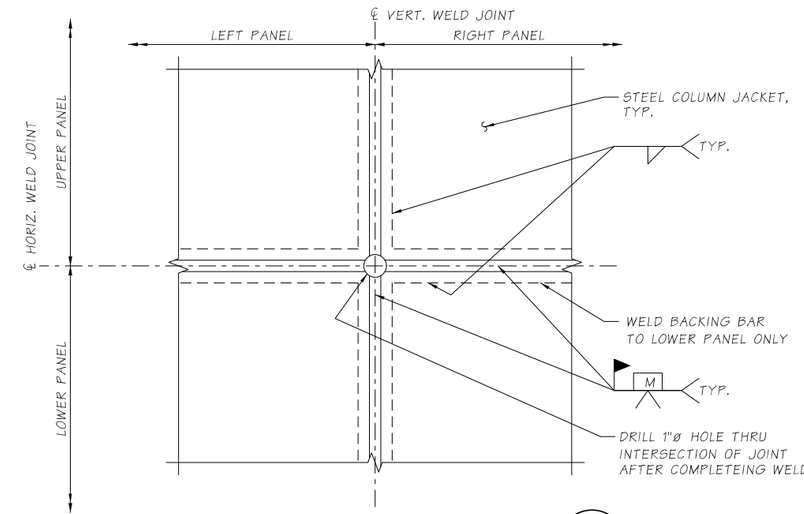

STEEL JACKET WELD DETAIL 1

NOTES:

1. DIMENSIONS PROVIDED ARE FOR REFERENCE ONLY. SEE GENERAL NOTE 3 ON SHEET BL1.
2. APPROPRIATE INJECTION NOZZLES SHALL BE PROVIDED ON COLUMN JACKET AND SHALL BE REMOVED, GROUND FLUSH AND PAINTED FOLLOWING COMPLETION OF GROUTING OPERATION.
3. ALL VOIDS BETWEEN STEEL COLUMN JACKET AND EXIST. COLUMN SURFACE SHALL BE FILLED WITH CEMENT GROUT.
4. THE LOCATION AND NUMBER OF HORIZONTAL WELDS SHALL BE DETERMINED BY THE CONTRACTOR AND SUBJECT TO THE APPROVAL OF THE ENGINEER. THE LOCATION OF COLUMN JACKET WELDS IS FOR ILLUSTRATION. THERE SHALL BE NO SKIP WELDS.
5. STEEL COLUMN JACKETS SHALL BE FABRICATED FROM ASTM A36 STRUCTURAL STEEL AND PAINTED IN ACCORDANCE WITH THE SPECIAL PROVISIONS.
6. GROUTING SHALL BE DONE FROM THE BOTTOM UP IN ACCORDANCE WITH THE SPECIAL PROVISIONS.
7. THE 2" THICK FILLER MATERIAL AROUND THE PERIMETER OF THE STEEL JACKET SHALL BE USED FOR PARTIALLY BURIED COLUMNS WHERE THE DEPTH IS MORE THAN 4'-0" OR COLUMNS ARE ADJACENT TO PAVED SURFACES OR SLOPE PROTECTION.

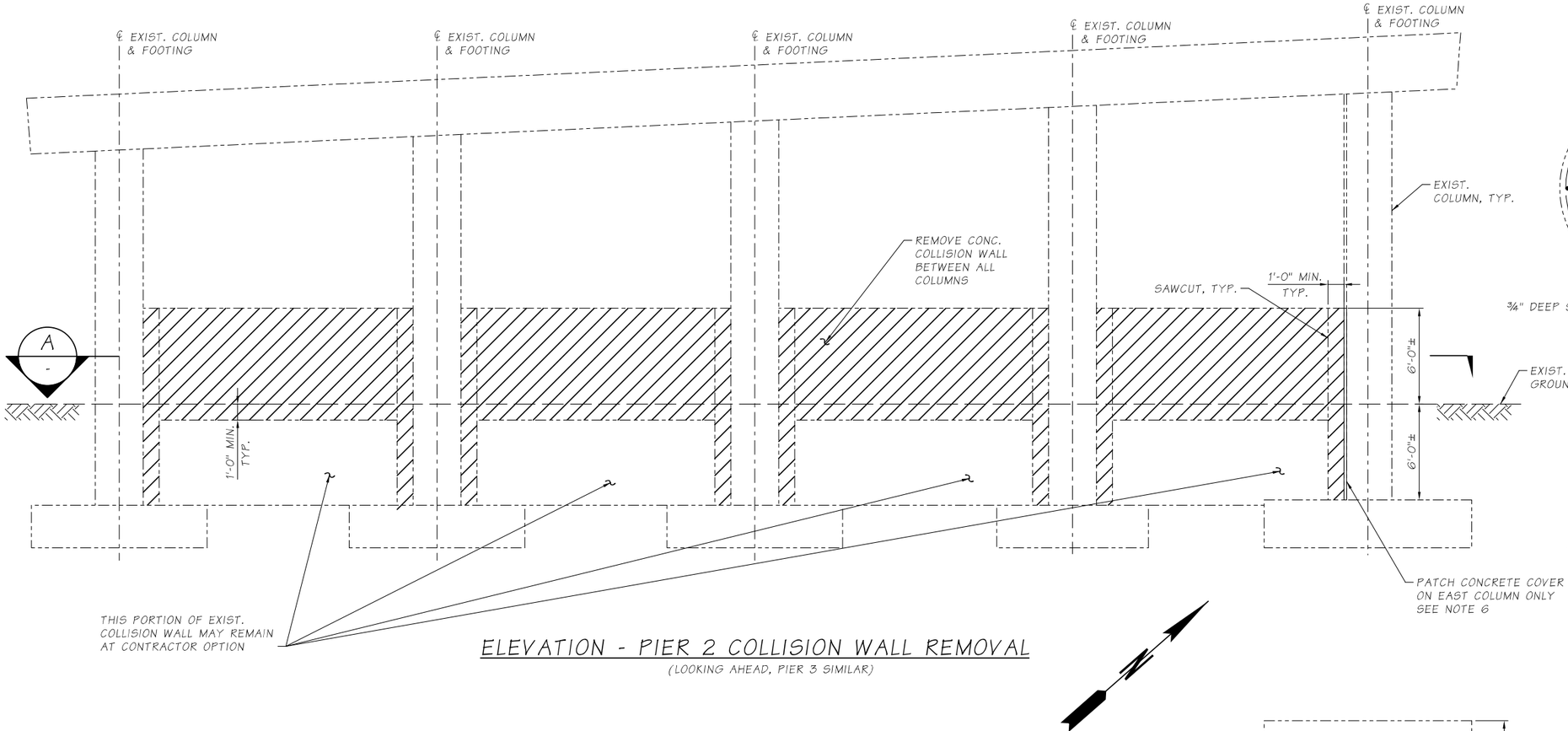

ELEVATION - PIER 2 COLLISION WALL REMOVAL

(LOOKING AHEAD, PIER 3 SIMILAR)

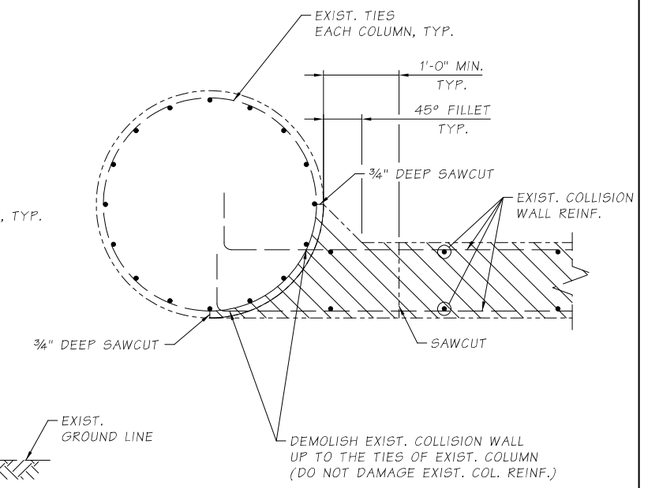

TYP. COLLISION WALL REMOVAL AT COLUMN 1 -

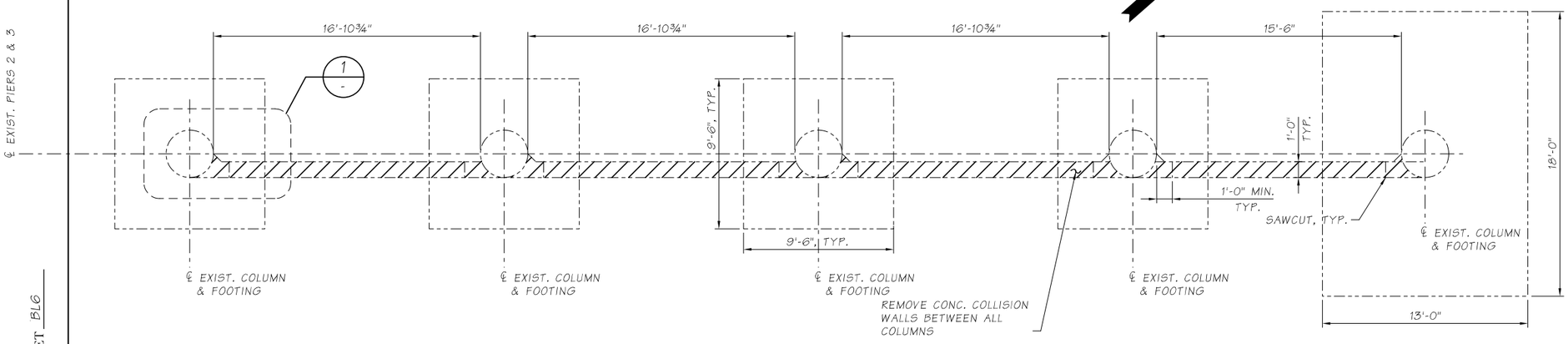

SECTION - PIER 2 COLLISION WALL REMOVAL A -

(REINF. BARS NOT SHOWN FOR CLARITY, PIER 3 SIMILAR)

LEGEND

EXISTING CONCRETE TO BE REMOVED

NOTES

1. DIMENSIONS PROVIDED ARE FOR REFERENCE ONLY.
2. SEE GENERAL NOTES ON SHEET BL1.
3. SEE SHEET BL1 FOR PLACEMENT OF STEEL JACKETS. SEE SHEET BL5 FOR STEEL JACKET DETAILS.
4. THE CONTRACTOR SHALL SAFEGUARD EXISTING BRIDGE COLUMNS, FOOTINGS, CROSSBEAMS, AND OTHER COMPONENTS FROM DAMAGE DURING REMOVAL OF COLLISION WALLS.
5. COLLISION WALL REMOVAL SHALL BE PERFORMED IN A MANNER THAT PREVENTS DAMAGE TO COLUMN REINF. STEEL AND CORE CONCRETE. REMOVAL METHODS ARE SUBJECT TO THE APPROVAL OF THE ENGINEER.
6. AT EXISTING EAST COLUMNS ONLY, REPAIR THE CONCRETE COVER OVER TIES WITH EPOXY MORTAR.

℄ EXIST. PIERS 2 & 3

SR 405 FILE NO. SHEET BL6

ProjectWise Vault:

Bridge Design Engr.	KHALEGHI B.	c:\pwworking\west01\d1468466\56W_Collision Wall Removal.dgn			
Supervisor	KORPI D.				
Designed By	CHI J.				
Checked By	KARSLI N.				
Detailed By	VYPLEL M.				
Bridge Projects Engr.	ROSA M.				
Prelim. Plan By					
Architect/Specialist		DATE	REVISION	BY	APP'D

REGION NO.	STATE	FED. AID PROJ. NO.	SHEET NO.	TOTAL SHEETS
10	WASH		137	176
JOB NUMBER 20A039				

BRIDGE AND STRUCTURES OFFICE

F. LEE ANDREWS, STATE OF WASHINGTON, 43571, PROFESSIONAL ENGINEER

SEE SHEET CT1
04/20/2022

Washington State Department of Transportation

HDR

I-405
BN RR BRIDGE TO PED TRAIL BRIDGE
SEISMIC RETROFIT
BRIDGE NO. 405/56W

PIERS 2&3 COLLISION WALL REMOVAL ELEVATION AND DETAILS

BRIDGE SHEET NO. BL6

SHEET 137 OF 176 SHEETS

4/20/2022 4:56:46 PM

PCMS 1	
1	2
WB SR520 EXIT RAMP	SHOULDER CLOSED
2.0 SEC	2.0 SEC

FIELD LOCATE 1/4 +/- MILE IN ADVANCE OF W20-1 SIGN.

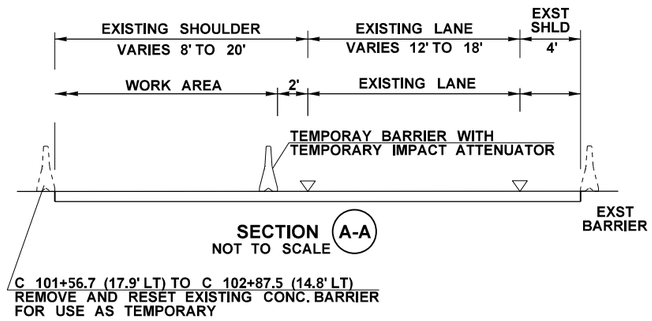

SECTION A-A
NOT TO SCALE

THIS SHEET ONLY	QTY
TEMPORARY BARRIER (LF)	220
TEMPORARY IMPACT ATTENUATOR (EA)	1

LEGEND

- CLASS A CONSTRUCTION SIGN
- BARRIER MOUNTED TEMPORARY SIGN
- TEMPORARY SIGN LOCATION
- TRAFFIC SAFETY DRUM
- EXISTING PAVEMENT MARKING
- TYPE 2 BARRICADE WITH R9 SIGN
- FLAGGER
- TEMPORARY TRAFFIC BARRIER WITH REFLECTORS
- TEMPORARY IMPACT ATTENUATOR
- SEQUENTIAL ARROW SIGN
- TRANSPORTABLE ATTENUATOR
- PCMS — PORTABLE CHANGEABLE MESSAGE SIGN

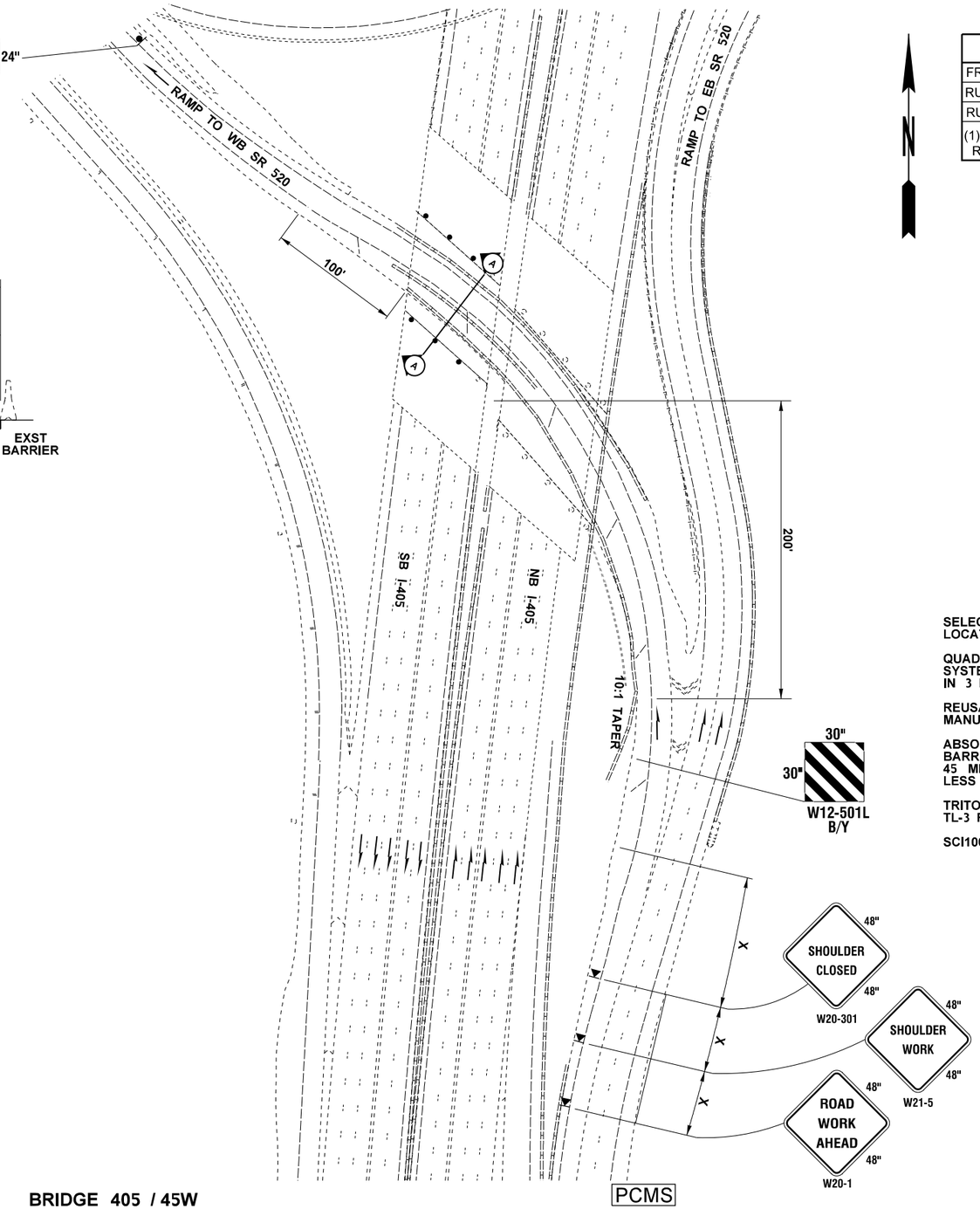

BRIDGE 405 / 45W

SIGN SPACING = X (1)		
FREEWAYS & EXPRESSWAYS	55 / 70 MPH	1500'
RURAL HIGHWAYS	60 / 65 MPH	800'
RURAL ROADS	45 / 55 MPH	500'

(1) ALL SPACING MAY BE ADJUSTED TO ACCOMMODATE INTERCHANGE RAMPS, AT-GRADE INTERSECTIONS AND DRIVEWAYS.

MINIMUM LONGITUDINAL BUFFER SPACE = B						
SPEED (MPH)	50	55	60	65	70	75
LENGTH (feet)	425	495	570	645	730	820

STATIONARY TRANSPORTABLE ATTENUATOR ROLL AHEAD DISTANCE = R			
HOST VEHICLE WEIGHT 9,900 TO 22,000 lbs.		HOST VEHICLE WEIGHT > 22,000 lbs.	
50-55 MPH	60+ MPH	50-55 MPH	60+ MPH
123'	172'	100'	150'

CHANNELIZATION DEVICE SPACING (feet)		
MPH	TAPER	TANGENT
50/70	40	80
35/45	30	60

POSTED SPEED=60 MPH

SELECT FROM THE FOLLOWING LIST OF IMPACT ATTENUATORS FOR THIS LOCATION:

QUADGUARD CZ _____ BAY MANUFACTURED BY ENERGY ABSORPTION SYSTEMS, INC. FILL IN 6 BAY FOR SPEEDS OF 45 MPH OR GREATER. FILL IN 3 BAY FOR SPEEDS LESS THAN 45 MPH.

REUSABLE ENERGY ABSORBING CRASH TERMINAL (REACT 350) MANUFACTURED BY ENERGY ABSORPTION SYSTEMS. INC.

ABSORB 350 WITH _ ____ ABSORBING ELEMENTS MANUFACTURED BY BARRIER SYSTEMS, INC. FILL IN 9 ABSORBING ELEMENTS FOR SPEEDS OF 45 MPH OR GREATER. FILL IN 5 ABSORBING ELEMENTS FOR SPEEDS LESS THAN 45 MPH.

TRITON CET MANUFACTURED BY ENERGY ABSORPTION SYSTEMS, INC. (USE TL-3 FOR SPEEDS 62 MPH OR LESS. USE TL-2 FOR 45 MPH OR LESS)

SCI100GM, SCI70GM MANUFACTURED BY SCI PRODUCTS INC.

NOTES:

1. SEE SPECIAL PROVISIONS FOR WORK HOUR RESTRICTIONS.
2. DISTANCE BETWEEN LANE CLOSURE TAPER AND ALL OPEN RAMPS SHALL BE 500' MINIMUM.
3. DEVICES SHALL NOT ENCROACH INTO TRAVELED LANE.
4. PLACE TRANSVERSE DEVICE ACROSS CLOSED LANES AT EVERY 500'.
5. DEVICE SPACING FOR THE DOWNSTREAM TAPER SHALL BE 20'.
6. SIGNS ARE BLACK ON ORANGE UNLESS OTHERWISE INDICATED.

NOT TO SCALE

FILE NAME	T:\412348\XL5937\CAD\ContractPlans\XL5937_PS_TC.dgn
TIME	11:10:35 AM
DATE	5/20/2022
PLOTTED BY	oneilma
DESIGNED BY	B. BASSERI
ENTERED BY	B. BASSERI
CHECKED BY	M. O'NEIL
PROJ. ENGR.	C. ANDERSON
REGIONAL ADM.	M. COTTEN

REVISION | DATE | BY

REGION NO. 10 | STATE WASH | FED.AID PROJ.NO.

JOB NUMBER 20A039

CONTRACT NO. | LOCATION NO.

P.E. STAMP BOX DATE

P.E. STAMP BOX DATE

Washington State Department of Transportation

I-405
BN RR BRIDGE TO PED TRAIL BRIDGE
SEISMIC RETROFIT

TRAFFIC CONTROL PLANS

Plot 1
PLAN REF NO TC1
SHEET 138 OF 176 SHEETS

PCMS 1	
1	2
WB SR520 RAMP CLOSED	FOLLOW DETOUR
2.0 SEC	2.0 SEC

FIELD LOCATE 1/4 +/- MILE IN ADVANCE OF W20-1 SIGN.

SIGN CONFIGURATION

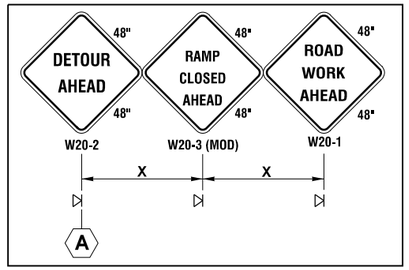

LEGEND

- CLASS A CONSTRUCTION SIGN
- BARRIER MOUNTED TEMPORARY SIGN
- TEMPORARY SIGN LOCATION
- TRAFFIC SAFETY DRUM
- EXISTING PAVEMENT MARKING
- TYPE 2 BARRICADE WITH R9 SIGN
- FLAGGER
- TEMPORARY TRAFFIC BARRIER WITH REFLECTORS
- TEMPORARY IMPACT ATTENUATOR
- SEQUENTIAL ARROW SIGN
- TRANSPORTABLE ATTENUATOR
- PCMS — PORTABLE CHANGEABLE MESSAGE SIGN

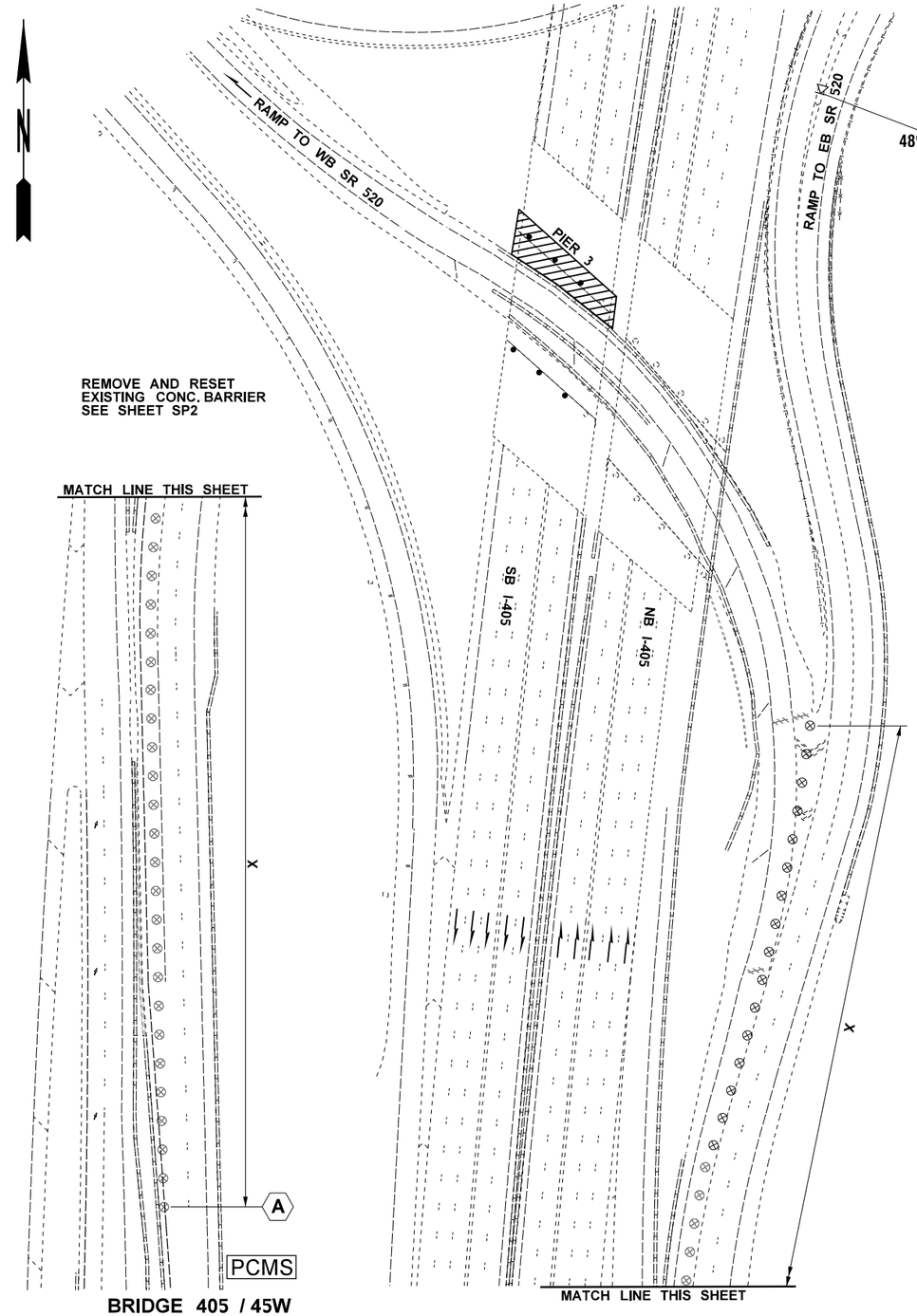

BRIDGE 405 / 45W

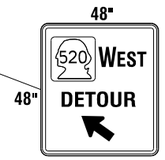

SEE SHEET DU5 FOR DETOUR PLAN

SIGN SPACING = X (1)		
FREEWAYS & EXPRESSWAYS	55 / 70 MPH	1500'
RURAL HIGHWAYS	60 / 65 MPH	800'
RURAL ROADS	45 / 55 MPH	500'
(1) ALL SPACING MAY BE ADJUSTED TO ACCOMMODATE INTERCHANGE RAMPS, AT-GRADE INTERSECTIONS AND DRIVEWAYS.		

CHANNELIZATION DEVICE SPACING (feet)		
MPH	TAPER	TANGENT
50/70	40	80
35/45	30	60

POSTED SPEED=60 MPH

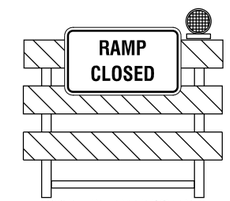

TYPE 3L BARRICADE W/ R11-4 SIGN 60"x30" B/W (3 PLACES)

SELECT FROM THE FOLLOWING LIST OF IMPACT ATTENUATORS FOR THIS LOCATION:

QUADGUARD CZ _____ BAY MANUFACTURED BY ENERGY ABSORPTION SYSTEMS, INC. FILL IN 6 BAY FOR SPEEDS OF 45 MPH OR GREATER. FILL IN 3 BAY FOR SPEEDS LESS THAN 45 MPH.

REUSABLE ENERGY ABSORBING CRASH TERMINAL (REACT 350) MANUFACTURED BY ENERGY ABSORPTION SYSTEMS. INC.

ABSORB 350 WITH _ ___ ABSORBING ELEMENTS MANUFACTURED BY BARRIER SYSTEMS, INC. FILL IN 9 ABSORBING ELEMENTS FOR SPEEDS OF 45 MPH OR GREATER. FILL IN 5 ABSORBING ELEMENTS FOR SPEEDS LESS THAN 45 MPH.

TRITON CET MANUFACTURED BY ENERGY ABSORPTION SYSTEMS, INC. (USE TL-3 FOR SPEEDS 62 MPH OR LESS. USE TL-2 FOR 45 MPH OR LESS)

SCI100GM, SCI70GM MANUFACTURED BY SCI PRODUCTS INC.

NOTES:

1. SEE SPECIAL PROVISIONS FOR WORK HOUR RESTRICTIONS.
2. DISTANCE BETWEEN LANE CLOSURE TAPER AND ALL OPEN RAMPS SHALL BE 500' MINIMUM.
3. DEVICES SHALL NOT ENCROACH INTO TRAVELED LANE.
4. PLACE TRANSVERSE DEVICE ACROSS CLOSED LANES AT EVERY 500'.
5. DEVICE SPACING FOR THE DOWNSTREAM TAPER SHALL BE 20'.
6. SIGNS ARE BLACK ON ORANGE UNLESS OTHERWISE INDICATED.

NOT TO SCALE

FILE NAME	T:\412348\XL5937\CAD\ContractPlans\XL5937_PS_TC.dgn
TIME	11:10:39 AM
DATE	5/20/2022
PLOTTED BY	oneilma
DESIGNED BY	B. BASSERI
ENTERED BY	B. BASSERI
CHECKED BY	M. O'NEIL
PROJ. ENGR.	C. ANDERSON
REGIONAL ADM.	M. COTTEN

REVISION | DATE | BY

REGION NO. 10 | STATE WASH | FED.AID PROJ.NO.

JOB NUMBER 20A039

CONTRACT NO. | LOCATION NO.

P.E. STAMP BOX DATE

P.E. STAMP BOX DATE

Washington State Department of Transportation

I-405
BN RR BRIDGE TO PED TRAIL BRIDGE
SEISMIC RETROFIT

TRAFFIC CONTROL PLANS

Plot 2

PLAN REF NO TC2

SHEET 139 OF 176 SHEETS

MINIMUM LANE CLOSURE TAPER LENGTH = L							
LANE WIDTH (feet)	SPEED (MPH)	50	55	60	65	70	75
12	L (feet)	600	660	720	780	840	900
MINIMUM SHOULDER CLOSURE TAPER LENGTH = L/3							
SHOULDER WIDTH (feet)	SPEED (MPH)	50	55	60	65	70	75
6	L/3 (feet)	120	120	120	160	160	160
10	L/3 (feet)	200	200	200	240	240	280
USE A MINIMUM 3 DEVICES FOR SHOULDER LESS THAN 6'.							

MINIMUM LONGITUDINAL BUFFER SPACE = B						
SPEED (MPH)	50	55	60	65	70	75
LENGTH (feet)	425	495	570	645	730	820
STATIONARY TRANSPORTABLE ATTENUATOR ROLL AHEAD DISTANCE = R						
HOST VEHICLE WEIGHT 9,900 TO 22,000 lbs.			HOST VEHICLE WEIGHT > 22,000 lbs.			
50-55 MPH	60+ MPH		50-55 MPH		60+ MPH	
123'	172'		100'		150'	

SIGN SPACING = X (1)		
FREEWAYS & EXPRESSWAYS	55 / 70 MPH	1500'
RURAL HIGHWAYS	60 / 65 MPH	800'
RURAL ROADS	45 / 55 MPH	500'
(1) ALL SPACING MAY BE ADJUSTED TO ACCOMMODATE INTERCHANGE RAMPS, AT-GRADE INTERSECTIONS AND DRIVEWAYS.		

POSTED SPEED=60 MPH

CHANNELIZATION DEVICE SPACING (feet)		
MPH	TAPER	TANGENT
50/70	40	80
35/45	30	60

SELECT FROM THE FOLLOWING LIST OF IMPACT ATTENUATORS FOR THIS LOCATION:

QUADGUARD CZ _____ BAY MANUFACTURED BY ENERGY ABSORPTION SYSTEMS, INC. FILL IN 6 BAY FOR SPEEDS OF 45 MPH OR GREATER. FILL IN 3 BAY FOR SPEEDS LESS THAN 45 MPH.

REUSABLE ENERGY ABSORBING CRASH TERMINAL (REACT 350) MANUFACTURED BY ENERGY ABSORPTION SYSTEMS. INC.

ABSORB 350 WITH _ ____ ABSORBING ELEMENTS MANUFACTURED BY BARRIER SYSTEMS, INC. FILL IN 9 ABSORBING ELEMENTS FOR SPEEDS OF 45 MPH OR GREATER. FILL IN 5 ABSORBING ELEMENTS FOR SPEEDS LESS THAN 45 MPH.

TRITON CET MANUFACTURED BY ENERGY ABSORPTION SYSTEMS, INC. (USE TL-3 FOR SPEEDS 62 MPH OR LESS. USE TL-2 FOR 45 MPH OR LESS)

SCI100GM, SCI70GM MANUFACTURED BY SCI PRODUCTS INC.

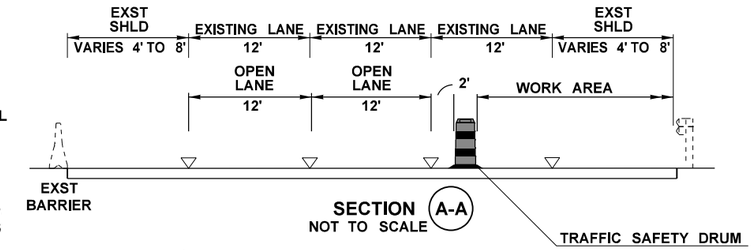

SECTION A-A
NOT TO SCALE

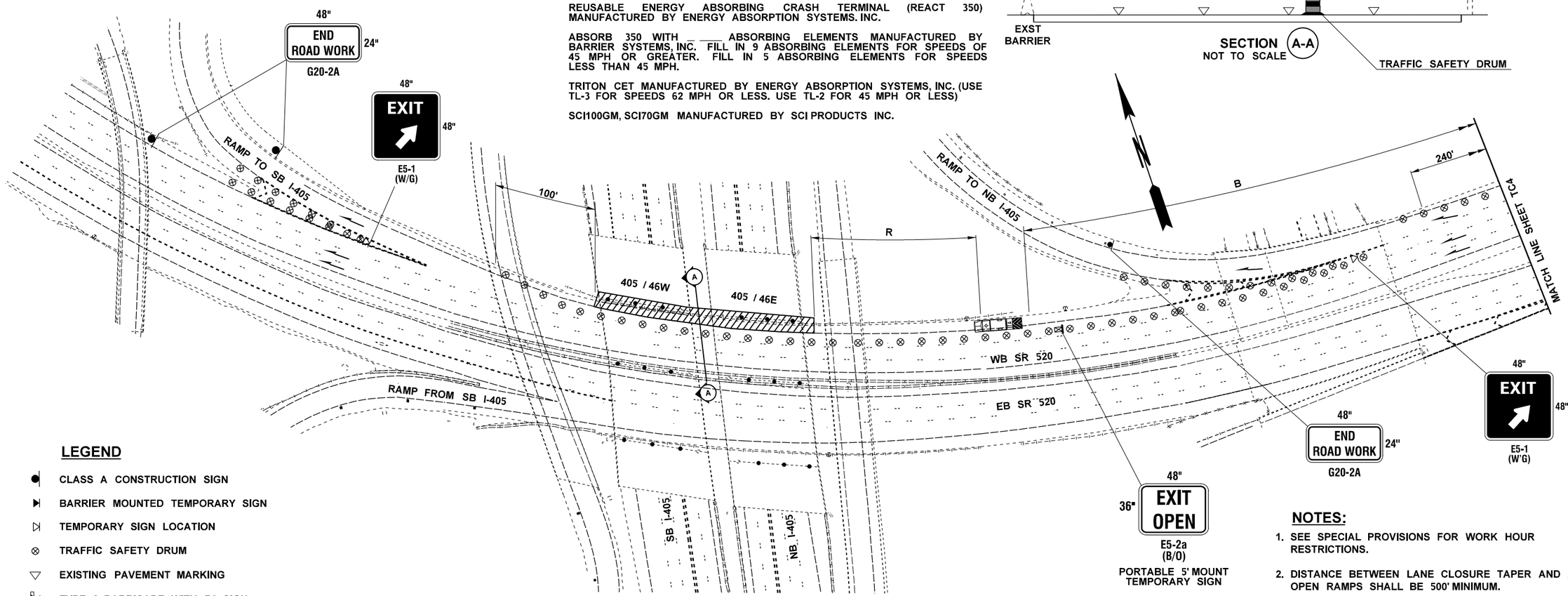

LEGEND

- CLASS A CONSTRUCTION SIGN
- BARRIER MOUNTED TEMPORARY SIGN
- TEMPORARY SIGN LOCATION
- TRAFFIC SAFETY DRUM
- EXISTING PAVEMENT MARKING
- TYPE 2 BARRICADE WITH R9 SIGN
- FLAGGER
- TEMPORARY TRAFFIC BARRIER WITH REFLECTORS
- TEMPORARY IMPACT ATTENUATOR
- SEQUENTIAL ARROW SIGN
- TRANSPORTABLE ATTENUATOR
- PCMS — PORTABLE CHANGEABLE MESSAGE SIGN

NOTES:

1. SEE SPECIAL PROVISIONS FOR WORK HOUR RESTRICTIONS.
2. DISTANCE BETWEEN LANE CLOSURE TAPER AND ALL OPEN RAMPS SHALL BE 500' MINIMUM.
3. DEVICES SHALL NOT ENCROACH INTO TRAVELED LANE.
4. PLACE TRANSVERSE DEVICE ACROSS CLOSED LANES AT EVERY 500'.
5. DEVICE SPACING FOR THE DOWNSTREAM TAPER SHALL BE 20'.
6. SIGNS ARE BLACK ON ORANGE UNLESS OTHERWISE INDICATED.

BRIDGES 405 / 46W AND 46E

NOT TO SCALE

FILE NAME	T:\412348\XL5937\CAD\ContractPlans\XL5937_PS_TC.dgn				REGION NO.	STATE	FED.AID PROJ.NO.
TIME	11:10:43 AM				10	WASH	
DATE	5/20/2022				JOB NUMBER		
PLOTTED BY	oneilma				20A039		
DESIGNED BY	B. BASSERI				CONTRACT NO.		LOCATION NO.
ENTERED BY	B. BASSERI						
CHECKED BY	M. O'NEIL						
PROJ. ENGR.	C. ANDERSON						
REGIONAL ADM.	M. COTTEN	REVISION	DATE	BY			

P.E. STAMP BOX — DATE

P.E. STAMP BOX — DATE

Washington State Department of Transportation

I-405
BN RR BRIDGE TO PED TRAIL BRIDGE
SEISMIC RETROFIT

TRAFFIC CONTROL PLANS

Plot 3
PLAN REF NO TC3
SHEET 140 OF 176 SHEETS

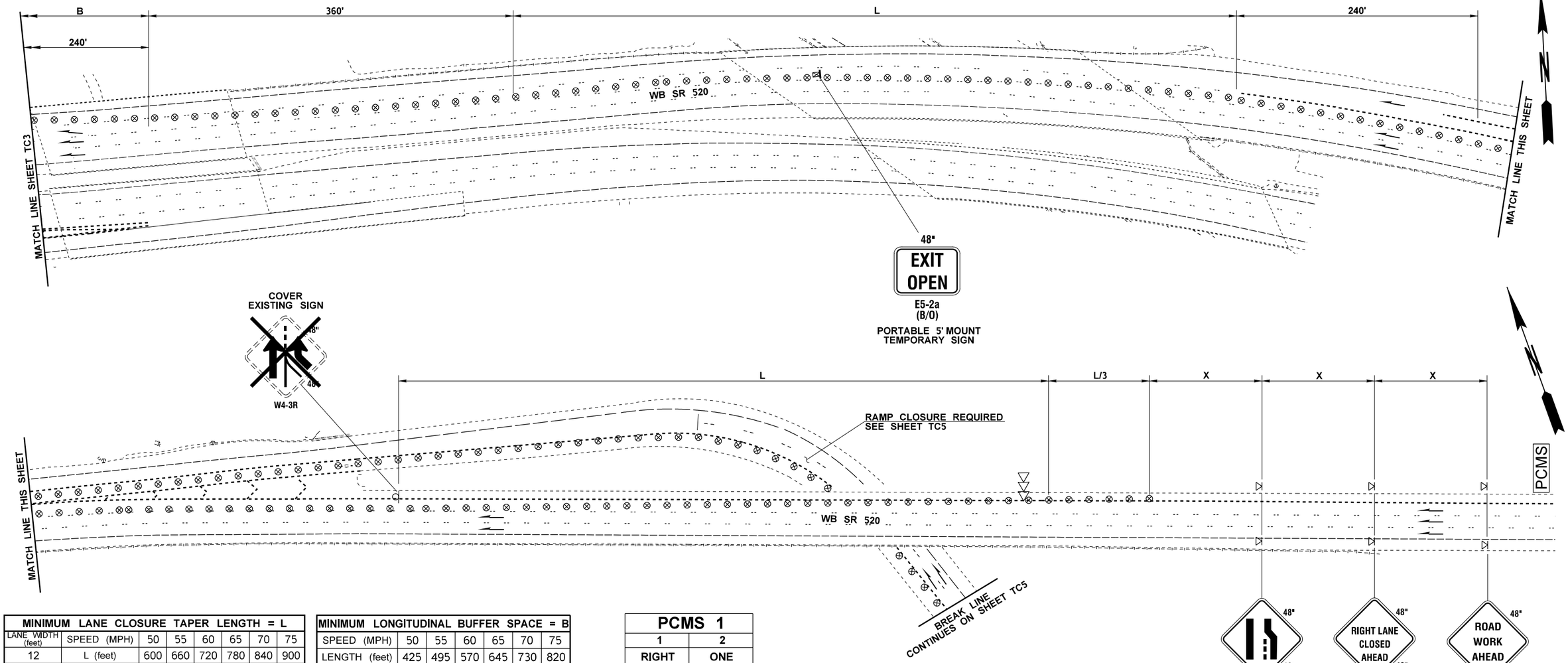

MINIMUM LANE CLOSURE TAPER LENGTH = L							
LANE WIDTH (feet)	SPEED (MPH)	50	55	60	65	70	75
12	L (feet)	600	660	720	780	840	900
MINIMUM SHOULDER CLOSURE TAPER LENGTH = L/3							
SHOULDER WIDTH (feet)	SPEED (MPH)	50	55	60	65	70	75
6	L/3 (feet)	120	120	120	160	160	160
10	L/3 (feet)	200	200	200	240	240	280
USE A MINIMUM 3 DEVICES FOR SHOULDER LESS THAN 6'.							

MINIMUM LONGITUDINAL BUFFER SPACE = B						
SPEED (MPH)	50	55	60	65	70	75
LENGTH (feet)	425	495	570	645	730	820
STATIONARY TRANSPORTABLE ATTENUATOR ROLL AHEAD DISTANCE = R						
HOST VEHICLE WEIGHT 9,900 TO 22,000 lbs.			HOST VEHICLE WEIGHT > 22,000 lbs.			
50-55 MPH	60+ MPH		50-55 MPH		60+ MPH	
123'	172'		100'		150'	

PCMS 1	
1	2
RIGHT LANE CLOSED	ONE MILE AHEAD
2.0 SEC	2.0 SEC

FIELD LOCATE 1/4 +/- MILE IN ADVANCE OF W20-1 SIGN.

SIGN SPACING = X (1)		
FREEWAYS & EXPRESSWAYS	55 / 70 MPH	1500'
RURAL HIGHWAYS	60 / 65 MPH	800'
RURAL ROADS	45 / 55 MPH	500'
(1) ALL SPACING MAY BE ADJUSTED TO ACCOMMODATE INTERCHANGE RAMPS, AT-GRADE INTERSECTIONS AND DRIVEWAYS.		

CHANNELIZATION DEVICE SPACING (feet)		
MPH	TAPER	TANGENT
50/70	40	80
35/45	30	60

POSTED SPEED=60 MPH

NOTES:

1. SEE SPECIAL PROVISIONS FOR WORK HOUR RESTRICTIONS.
2. DISTANCE BETWEEN LANE CLOSURE TAPER AND ALL OPEN RAMPS SHALL BE 500' MINIMUM.
3. DEVICES SHALL NOT ENCROACH INTO TRAVELED LANE.
4. PLACE TRANSVERSE DEVICE ACROSS CLOSED LANES AT EVERY 500'.
5. DEVICE SPACING FOR THE DOWNSTREAM TAPER SHALL BE 20'.
6. SIGNS ARE BLACK ON ORANGE UNLESS OTHERWISE INDICATED.

LEGEND

SEE SHEET TC3.

NOT TO SCALE

FILE NAME	T:\412348\XL5937\CAD\ContractPlans\XL5937_PS_TC.dgn					
TIME	11:10:47 AM					
DATE	5/20/2022					
PLOTTED BY	oneilma					
DESIGNED BY	B. BASSERI					
ENTERED BY	B. BASSERI					
CHECKED BY	M. O'NEIL					
PROJ. ENGR.	C. ANDERSON					
REGIONAL ADM.	M. COTTEN	REVISION	DATE	BY		

REGION NO.	STATE	FED.AID PROJ.NO.
10	WASH	
JOB NUMBER 20A039		
CONTRACT NO.		LOCATION NO.

P.E. STAMP BOX DATE

P.E. STAMP BOX DATE

Washington State Department of Transportation

I-405
BN RR BRIDGE TO PED TRAIL BRIDGE
SEISMIC RETROFIT

TRAFFIC CONTROL PLANS

Plot 4

PLAN REF NO TC4

SHEET 141 OF 176 SHEETS

MINIMUM TAPER LENGTH = L (feet)										
LANE WIDTH (feet)	Posted Speed (mph)									
	25	30	35	40	45	50	55	60	65	70
10	105	150	205	270	-	-	-	-	-	-
11	115	165	225	295	-	-	-	-	-	-
12	125	180	245	320	-	-	-	-	-	-

CHANNELIZATION DEVICE SPACING (feet)		
MPH	TAPER	TANGENT
35/45	30	60
25/30	20	40

POSTED SPEED=
30 MPH - 124TH AVE NE
35 MPH - NORTHUP WAY

SIGN SPACING = X		
RURAL ROADS & URBAN ARTERIALS	35 / 40 MPH	350' ±
RURAL ROADS, URBAN ARTERIALS, RESIDENTIAL & BUSINESS DISTRICTS	25 / 30 MPH	200' ± (2)
URBAN STREETS	25 MPH OR LESS	100' ± (2)

(1) ALL SPACING MAY BE ADJUSTED TO ACCOMMODATE INTERCHANGE RAMPS, AT-GRADE INTERSECTIONS AND DRIVEWAYS.
(2) THIS SPACING MAY BE REDUCED IN URBAN AREAS TO FIT ROADWAY CONDITIONS.

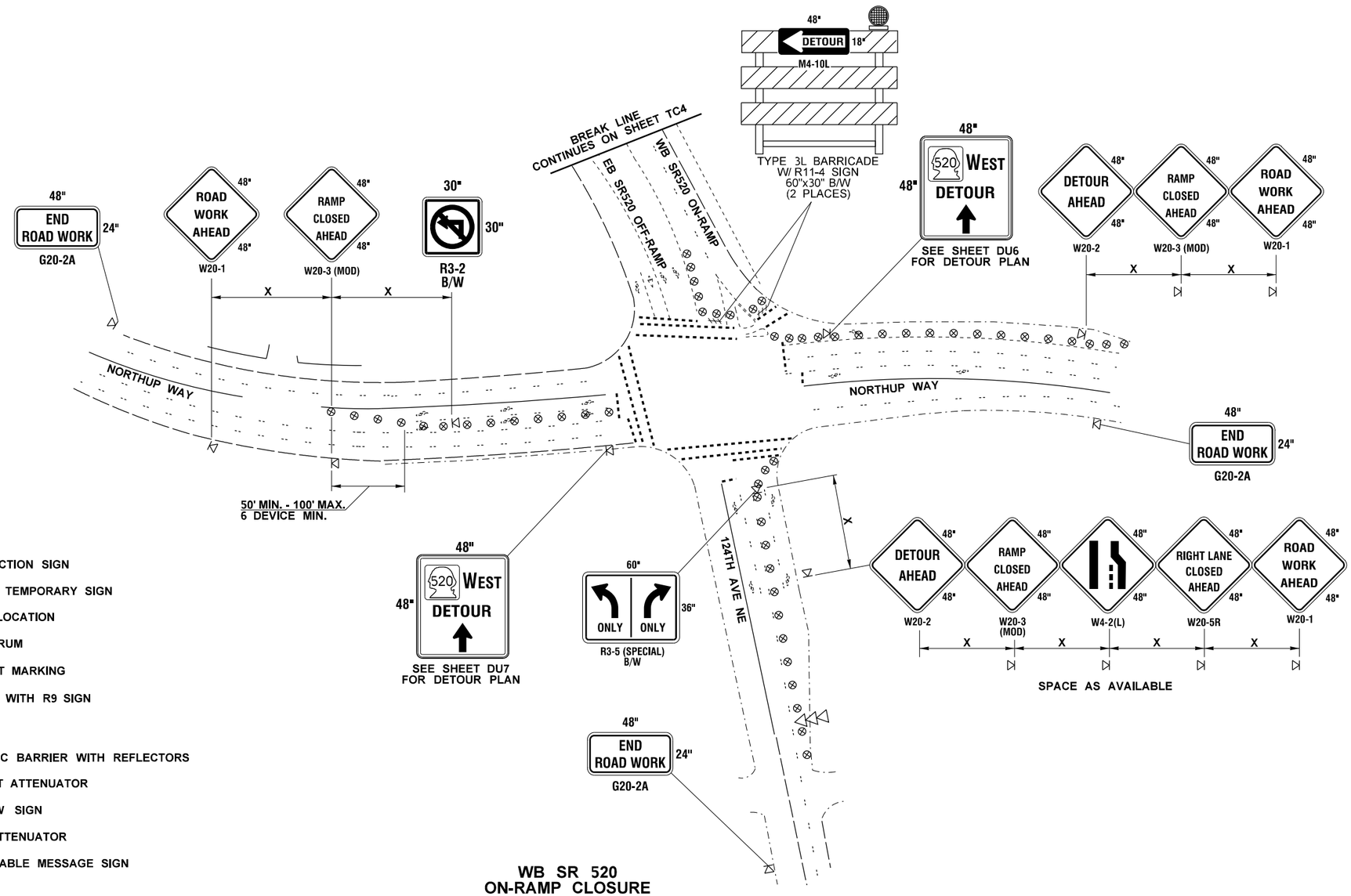

LEGEND

- CLASS A CONSTRUCTION SIGN
- BARRIER MOUNTED TEMPORARY SIGN
- TEMPORARY SIGN LOCATION
- TRAFFIC SAFETY DRUM
- EXISTING PAVEMENT MARKING
- TYPE 2 BARRICADE WITH R9 SIGN
- FLAGGER
- TEMPORARY TRAFFIC BARRIER WITH REFLECTORS
- TEMPORARY IMPACT ATTENUATOR
- SEQUENTIAL ARROW SIGN
- TRANSPORTABLE ATTENUATOR
- PCMS — PORTABLE CHANGEABLE MESSAGE SIGN

WB SR 520
ON-RAMP CLOSURE

NOT TO SCALE

FILE NAME	T:\412348\XL5937\CAD\ContractPlans\XL5937_PS_TC.dgn						
TIME	11:12:08 AM				REGION NO. 10	STATE WASH	FED.AID PROJ.NO.
DATE	5/20/2022						
PLOTTED BY	oneilma				JOB NUMBER 20A039		
DESIGNED BY	B. BASSERI						
ENTERED BY	B. BASSERI				CONTRACT NO.		LOCATION NO.
CHECKED BY	M. O'NEIL						
PROJ. ENGR.	C. ANDERSON						
REGIONAL ADM.	M. COTTEN	REVISION	DATE	BY			

P.E. STAMP BOX — DATE

P.E. STAMP BOX — DATE

Washington State
Department of Transportation

I-405
BN RR BRIDGE TO PED TRAIL BRIDGE
SEISMIC RETROFIT

TRAFFIC CONTROL PLANS

Plot 5
PLAN REF NO TC5
SHEET 142 OF 176 SHEETS

MINIMUM LANE CLOSURE TAPER LENGTH = L							
LANE WIDTH (feet)	SPEED (MPH)	50	55	60	65	70	75
12	L (feet)	600	660	720	780	840	900
MINIMUM SHOULDER CLOSURE TAPER LENGTH = L/3							
SHOULDER WIDTH (feet)	SPEED (MPH)	50	55	60	65	70	75
6	L/3 (feet)	120	120	120	160	160	160
10	L/3 (feet)	200	200	200	240	240	280
USE A MINIMUM 3 DEVICES FOR SHOULDER LESS THAN 6'.							

MINIMUM LONGITUDINAL BUFFER SPACE = B						
SPEED (MPH)	50	55	60	65	70	75
LENGTH (feet)	425	495	570	645	730	820
STATIONARY TRANSPORTABLE ATTENUATOR ROLL AHEAD DISTANCE = R						
HOST VEHICLE WEIGHT 9,900 TO 22,000 lbs.			HOST VEHICLE WEIGHT > 22,000 lbs.			
50-55 MPH		60+ MPH	50-55 MPH		60+ MPH	
123'		172'	100'		150'	

SIGN SPACING = X (1)		
FREEWAYS & EXPRESSWAYS	55 / 70 MPH	1500'
RURAL HIGHWAYS	60 / 65 MPH	800'
RURAL ROADS	45 / 55 MPH	500'

(1) ALL SPACING MAY BE ADJUSTED TO ACCOMMODATE INTERCHANGE RAMPS, AT-GRADE INTERSECTIONS AND DRIVEWAYS.

CHANNELIZATION DEVICE SPACING (feet)		
MPH	TAPER	TANGENT
50/70	40	80
35/45	30	60

POSTED SPEED=60 MPH

PCMS 1	
1	2
LEFT LANE CLOSED	ONE MILE AHEAD
2.0 SEC	2.0 SEC

FIELD LOCATE 1/4 +/- MILE IN ADVANCE OF W20-1 SIGN.

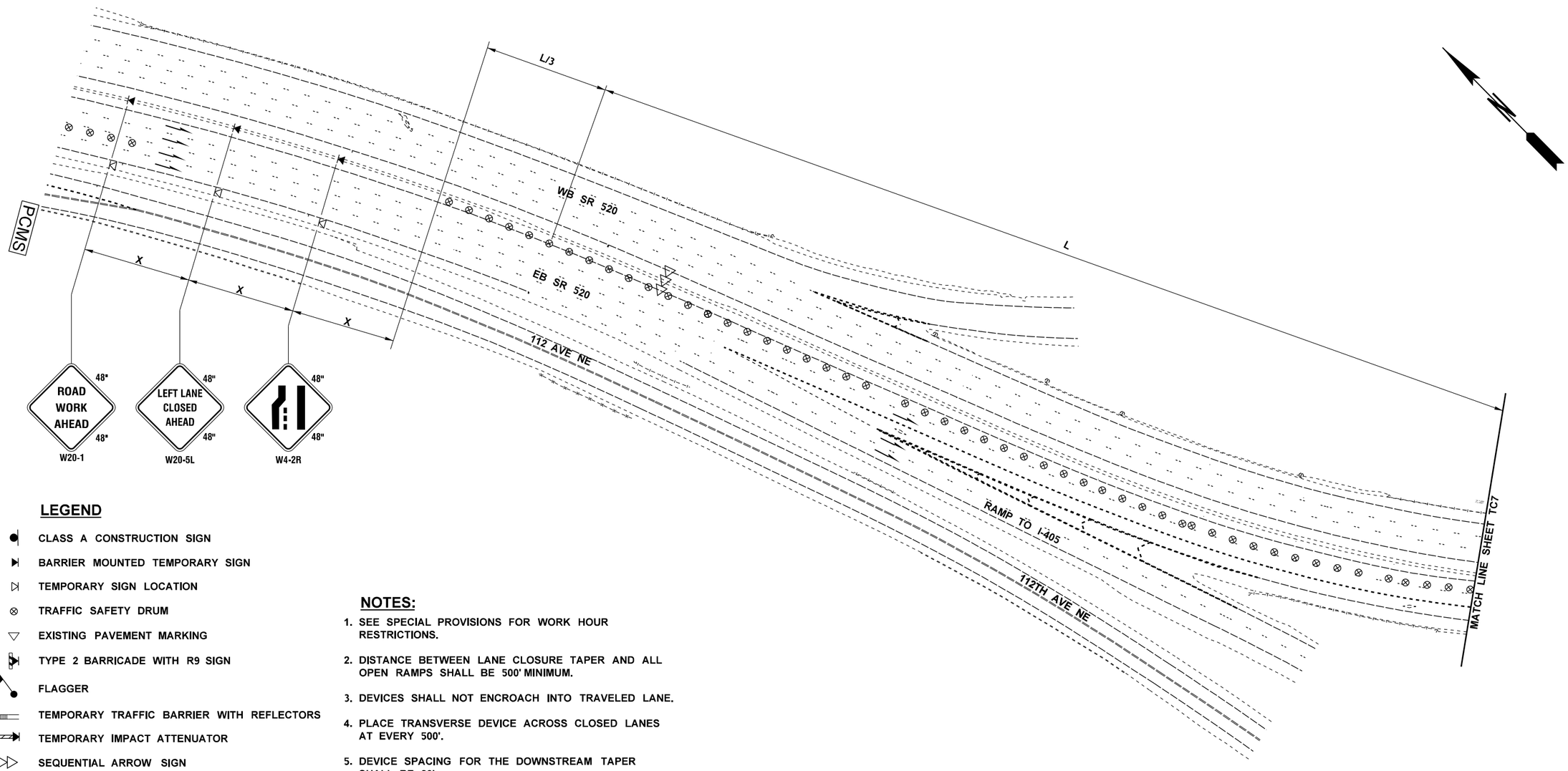

LEGEND

- CLASS A CONSTRUCTION SIGN
- BARRIER MOUNTED TEMPORARY SIGN
- TEMPORARY SIGN LOCATION
- TRAFFIC SAFETY DRUM
- EXISTING PAVEMENT MARKING
- TYPE 2 BARRICADE WITH R9 SIGN
- FLAGGER
- TEMPORARY TRAFFIC BARRIER WITH REFLECTORS
- TEMPORARY IMPACT ATTENUATOR
- SEQUENTIAL ARROW SIGN
- TRANSPORTABLE ATTENUATOR
- PCMS — PORTABLE CHANGEABLE MESSAGE SIGN

NOTES:

1. SEE SPECIAL PROVISIONS FOR WORK HOUR RESTRICTIONS.
2. DISTANCE BETWEEN LANE CLOSURE TAPER AND ALL OPEN RAMPS SHALL BE 500' MINIMUM.
3. DEVICES SHALL NOT ENCROACH INTO TRAVELED LANE.
4. PLACE TRANSVERSE DEVICE ACROSS CLOSED LANES AT EVERY 500'.
5. DEVICE SPACING FOR THE DOWNSTREAM TAPER SHALL BE 20'.
6. SIGNS ARE BLACK ON ORANGE UNLESS OTHERWISE INDICATED.

NOT TO SCALE

FILE NAME	T:\412348\XL5937\CAD\ContractPlans\XL5937_PS_TC.dgn			
TIME	11:12:12 AM			
DATE	5/20/2022			
PLOTTED BY	oneilma			
DESIGNED BY	B. BASSERI			
ENTERED BY	B. BASSERI			
CHECKED BY	M. O'NEIL			
PROJ. ENGR.	C. ANDERSON			
REGIONAL ADM.	M. COTTEN	REVISION	DATE	BY

REGION NO.	STATE	FED.AID PROJ.NO.
10	WASH	
JOB NUMBER 20A039		
CONTRACT NO.		LOCATION NO.

P.E. STAMP BOX — DATE

P.E. STAMP BOX — DATE

Washington State Department of Transportation

I-405
BN RR BRIDGE TO PED TRAIL BRIDGE
SEISMIC RETROFIT

TRAFFIC CONTROL PLANS

Plot 6

PLAN REF NO TC6

SHEET 143 OF 176 SHEETS

MINIMUM LANE CLOSURE TAPER LENGTH = L							
LANE WIDTH (feet)	SPEED (MPH)	50	55	60	65	70	75
12	L (feet)	600	660	720	780	840	900
MINIMUM SHOULDER CLOSURE TAPER LENGTH = L/3							
SHOULDER WIDTH (feet)	SPEED (MPH)	50	55	60	65	70	75
6	L/3 (feet)	120	120	120	160	160	160
10	L/3 (feet)	200	200	200	240	240	280
USE A MINIMUM 3 DEVICES FOR SHOULDER LESS THAN 6'.							

MINIMUM LONGITUDINAL BUFFER SPACE = B						
SPEED (MPH)	50	55	60	65	70	75
LENGTH (feet)	425	495	570	645	730	820
STATIONARY TRANSPORTABLE ATTENUATOR ROLL AHEAD DISTANCE = R						
HOST VEHICLE WEIGHT 9,900 TO 22,000 lbs.			HOST VEHICLE WEIGHT > 22,000 lbs.			
50-55 MPH	60+ MPH		50-55 MPH	60+ MPH		
123'	172'		100'	150'		

SIGN SPACING = X (1)		
FREEWAYS & EXPRESSWAYS	55 / 70 MPH	1500'
RURAL HIGHWAYS	60 / 65 MPH	800'
RURAL ROADS	45 / 55 MPH	500'
(1) ALL SPACING MAY BE ADJUSTED TO ACCOMMODATE INTERCHANGE RAMPS, AT-GRADE INTERSECTIONS AND DRIVEWAYS.		

CHANNELIZATION DEVICE SPACING (feet)		
MPH	TAPER	TANGENT
50/70	40	80
35/45	30	60

POSTED SPEED=60 MPH

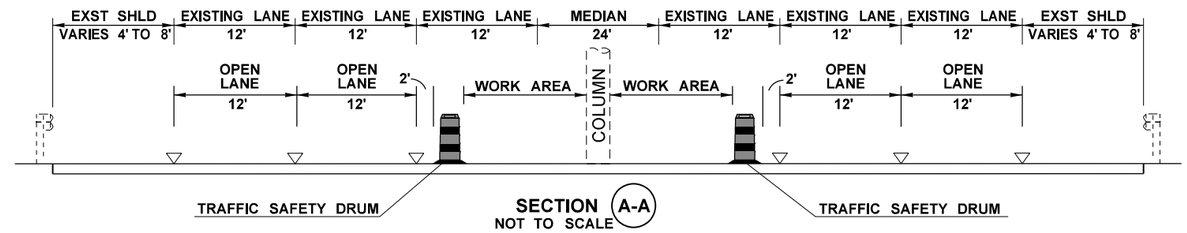

SECTION A-A
NOT TO SCALE

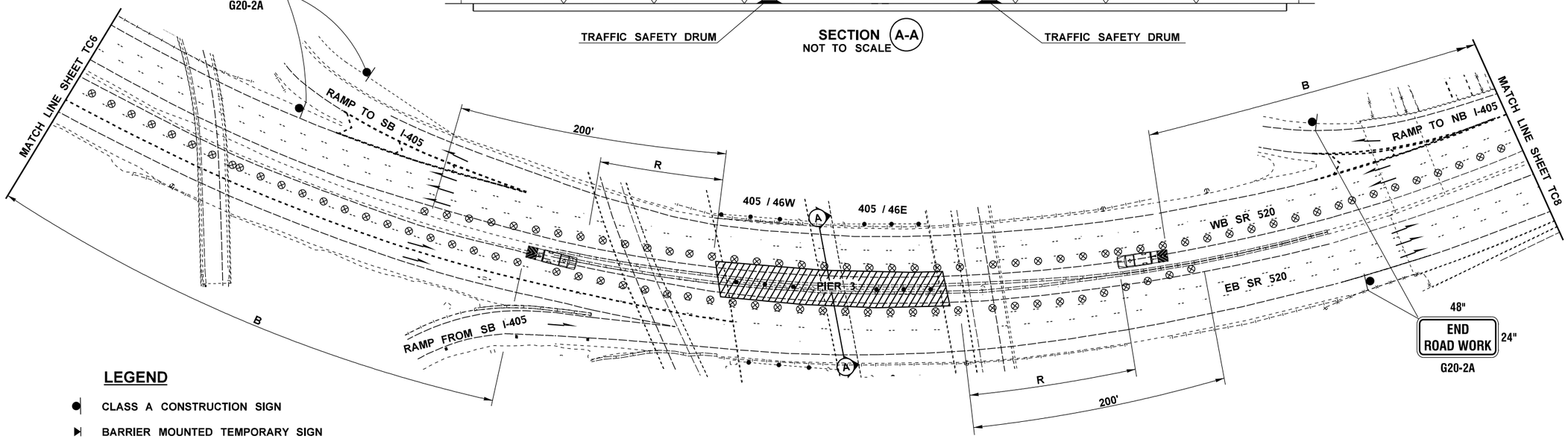

LEGEND

- CLASS A CONSTRUCTION SIGN
- BARRIER MOUNTED TEMPORARY SIGN
- TEMPORARY SIGN LOCATION
- TRAFFIC SAFETY DRUM
- EXISTING PAVEMENT MARKING
- TYPE 2 BARRICADE WITH R9 SIGN
- FLAGGER
- TEMPORARY TRAFFIC BARRIER WITH REFLECTORS
- TEMPORARY IMPACT ATTENUATOR
- SEQUENTIAL ARROW SIGN
- TRANSPORTABLE ATTENUATOR
- PCMS — PORTABLE CHANGEABLE MESSAGE SIGN

SELECT FROM THE FOLLOWING LIST OF IMPACT ATTENUATORS FOR THIS LOCATION:

QUADGUARD CZ _____ BAY MANUFACTURED BY ENERGY ABSORPTION SYSTEMS, INC. FILL IN 6 BAY FOR SPEEDS OF 45 MPH OR GREATER. FILL IN 3 BAY FOR SPEEDS LESS THAN 45 MPH.

REUSABLE ENERGY ABSORBING CRASH TERMINAL (REACT 350) MANUFACTURED BY ENERGY ABSORPTION SYSTEMS. INC.

ABSORB 350 WITH _ ____ ABSORBING ELEMENTS MANUFACTURED BY BARRIER SYSTEMS, INC. FILL IN 9 ABSORBING ELEMENTS FOR SPEEDS OF 45 MPH OR GREATER. FILL IN 5 ABSORBING ELEMENTS FOR SPEEDS LESS THAN 45 MPH.

TRITON CET MANUFACTURED BY ENERGY ABSORPTION SYSTEMS, INC. (USE TL-3 FOR SPEEDS 62 MPH OR LESS. USE TL-2 FOR 45 MPH OR LESS)

SCI100GM, SCI70GM MANUFACTURED BY SCI PRODUCTS INC.

BRIDGE 405 / 46W AND 46E

NOTES:

1. SEE SPECIAL PROVISIONS FOR WORK HOUR RESTRICTIONS.
2. DISTANCE BETWEEN LANE CLOSURE TAPER AND ALL OPEN RAMPS SHALL BE 500' MINIMUM.
3. DEVICES SHALL NOT ENCROACH INTO TRAVELED LANE.
4. PLACE TRANSVERSE DEVICE ACROSS CLOSED LANES AT EVERY 500'.
5. DEVICE SPACING FOR THE DOWNSTREAM TAPER SHALL BE 20'.
6. SIGNS ARE BLACK ON ORANGE UNLESS OTHERWISE INDICATED.

NOT TO SCALE

FILE NAME	T:\412348\XL5937\CAD\ContractPlans\XL5937_PS_TC.dgn				REGION NO. 10	STATE WASH	FED.AID PROJ.NO.
TIME	11:12:15 AM						
DATE	5/20/2022						
PLOTTED BY	oneilma				JOB NUMBER 20A039		
DESIGNED BY	B. BASSERI						
ENTERED BY	B. BASSERI						
CHECKED BY	M. O'NEIL				CONTRACT NO.		LOCATION NO.
PROJ. ENGR.	C. ANDERSON						
REGIONAL ADM.	M. COTTEN	REVISION	DATE	BY			

P.E. STAMP BOX — DATE

P.E. STAMP BOX — DATE

Washington State Department of Transportation

I-405
BN RR BRIDGE TO PED TRAIL BRIDGE
SEISMIC RETROFIT

TRAFFIC CONTROL PLANS

Plot 7
PLAN REF NO TC7
SHEET 144 OF 176 SHEETS

MINIMUM LANE CLOSURE TAPER LENGTH = L							
LANE WIDTH (feet)	SPEED (MPH)	50	55	60	65	70	75
12	L (feet)	600	660	720	780	840	900
MINIMUM SHOULDER CLOSURE TAPER LENGTH = L/3							
SHOULDER WIDTH (feet)	SPEED (MPH)	50	55	60	65	70	75
6	L/3 (feet)	120	120	120	160	160	160
10	L/3 (feet)	200	200	200	240	240	280
USE A MINIMUM 3 DEVICES FOR SHOULDER LESS THAN 6'.							

POSTED SPEED = 60 MPH

MINIMUM LONGITUDINAL BUFFER SPACE = B						
SPEED (MPH)	50	55	60	65	70	75
LENGTH (feet)	425	495	570	645	730	820

STATIONARY TRANSPORTABLE ATTENUATOR ROLL AHEAD DISTANCE = R			
HOST VEHICLE WEIGHT 9,900 TO 22,000 lbs.		HOST VEHICLE WEIGHT > 22,000 lbs.	
50-55 MPH	60+ MPH	50-55 MPH	60+ MPH
123'	172'	100'	150'

SIGN SPACING = X (1)		
FREEWAYS & EXPRESSWAYS	55 / 70 MPH	1500'
RURAL HIGHWAYS	60 / 65 MPH	800'
RURAL ROADS	45 / 55 MPH	500'
(1) ALL SPACING MAY BE ADJUSTED TO ACCOMMODATE INTERCHANGE RAMPS, AT-GRADE INTERSECTIONS AND DRIVEWAYS.		

CHANNELIZATION DEVICE SPACING (feet)		
MPH	TAPER	TANGENT
50/70	40	80
35/45	30	60

POSTED SPEED=60 MPH

N

PCMS 1	
1	2
LEFT LANE CLOSED	MERGE RIGHT
2.0 SEC	2.0 SEC

FIELD LOCATE 1/4 +/- MILE IN ADVANCE OF W20-1 SIGN.

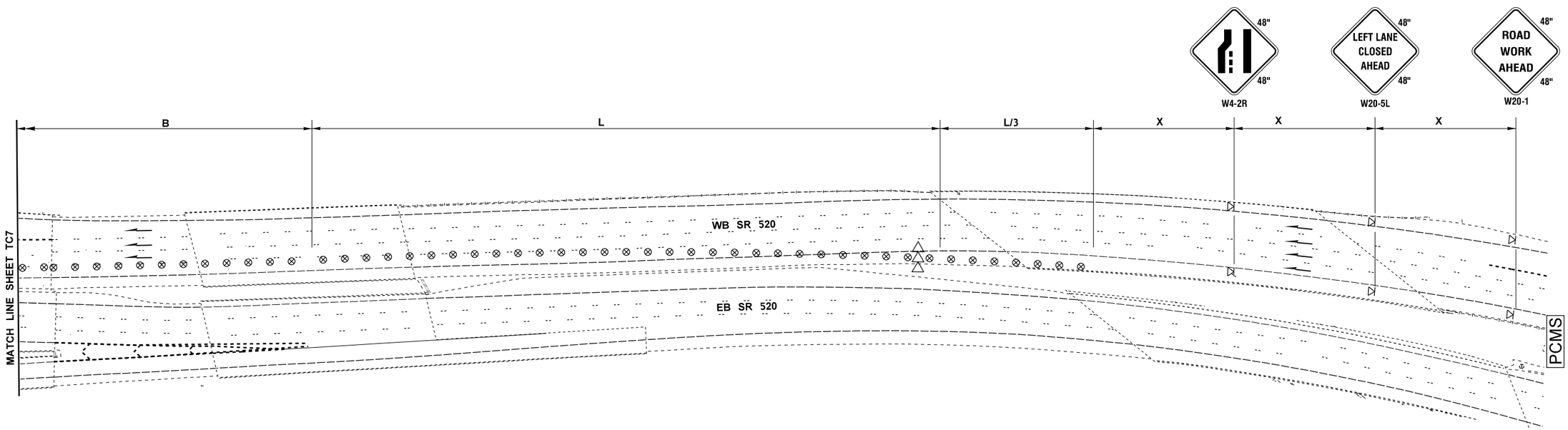

LEGEND

- CLASS A CONSTRUCTION SIGN
- BARRIER MOUNTED TEMPORARY SIGN
- TEMPORARY SIGN LOCATION
- TRAFFIC SAFETY DRUM
- EXISTING PAVEMENT MARKING
- TYPE 2 BARRICADE WITH R9 SIGN
- FLAGGER
- TEMPORARY TRAFFIC BARRIER WITH REFLECTORS
- TEMPORARY IMPACT ATTENUATOR
- SEQUENTIAL ARROW SIGN
- TRANSPORTABLE ATTENUATOR
- PCMS — PORTABLE CHANGEABLE MESSAGE SIGN

NOTES:

1. SEE SPECIAL PROVISIONS FOR WORK HOUR RESTRICTIONS.
2. DISTANCE BETWEEN LANE CLOSURE TAPER AND ALL OPEN RAMPS SHALL BE 500' MINIMUM.
3. DEVICES SHALL NOT ENCROACH INTO TRAVELED LANE.
4. PLACE TRANSVERSE DEVICE ACROSS CLOSED LANES AT EVERY 500'.
5. DEVICE SPACING FOR THE DOWNSTREAM TAPER SHALL BE 20'.
6. SIGNS ARE BLACK ON ORANGE UNLESS OTHERWISE INDICATED.

NOT TO SCALE

FILE NAME	T:\412348\XL5937\CAD\ContractPlans\XL5937_PS_TC.dgn					
TIME	11:12:19 AM					
DATE	5/20/2022					
PLOTTED BY	oneilma					
DESIGNED BY	B. BASSERI					
ENTERED BY	B. BASSERI					
CHECKED BY	M. O'NEIL					
PROJ. ENGR.	C. ANDERSON					
REGIONAL ADM.	M. COTTEN	REVISION	DATE	BY		

REGION NO.	STATE	FED.AID PROJ.NO.
10	WASH	
JOB NUMBER 20A039		
CONTRACT NO.		LOCATION NO.

P.E. STAMP BOX — DATE

P.E. STAMP BOX — DATE

Washington State Department of Transportation

I-405
BN RR BRIDGE TO PED TRAIL BRIDGE SEISMIC RETROFIT

TRAFFIC CONTROL PLANS

Plot 8

PLAN REF NO TC8

SHEET 145 OF 176 SHEETS

MINIMUM LANE CLOSURE TAPER LENGTH = L							
LANE WIDTH (feet)	SPEED (MPH)	50	55	60	65	70	75
12	L (feet)	600	660	720	780	840	900
MINIMUM SHOULDER CLOSURE TAPER LENGTH = L/3							
SHOULDER WIDTH (feet)	SPEED (MPH)	50	55	60	65	70	75
6	L/3 (feet)	120	120	120	160	160	160
10	L/3 (feet)	200	200	200	240	240	280
USE A MINIMUM 3 DEVICES FOR SHOULDER LESS THAN 6'.							

MINIMUM LONGITUDINAL BUFFER SPACE = B						
SPEED (MPH)	50	55	60	65	70	75
LENGTH (feet)	425	495	570	645	730	820

STATIONARY TRANSPORTABLE ATTENUATOR ROLL AHEAD DISTANCE = R			
HOST VEHICLE WEIGHT 9,900 TO 22,000 lbs.		HOST VEHICLE WEIGHT > 22,000 lbs.	
50-55 MPH	60+ MPH	50-55 MPH	60+ MPH
123'	172'	100'	150'

SIGN SPACING = X (1)		
FREEWAYS & EXPRESSWAYS	55 / 70 MPH	1500'
RURAL HIGHWAYS	60 / 65 MPH	800'
RURAL ROADS	45 / 55 MPH	500'
(1) ALL SPACING MAY BE ADJUSTED TO ACCOMMODATE INTERCHANGE RAMPS, AT-GRADE INTERSECTIONS AND DRIVEWAYS.		

CHANNELIZATION DEVICE SPACING (feet)		
MPH	TAPER	TANGENT
50/70	40	80
35/45	30	60

POSTED SPEED=60 MPH

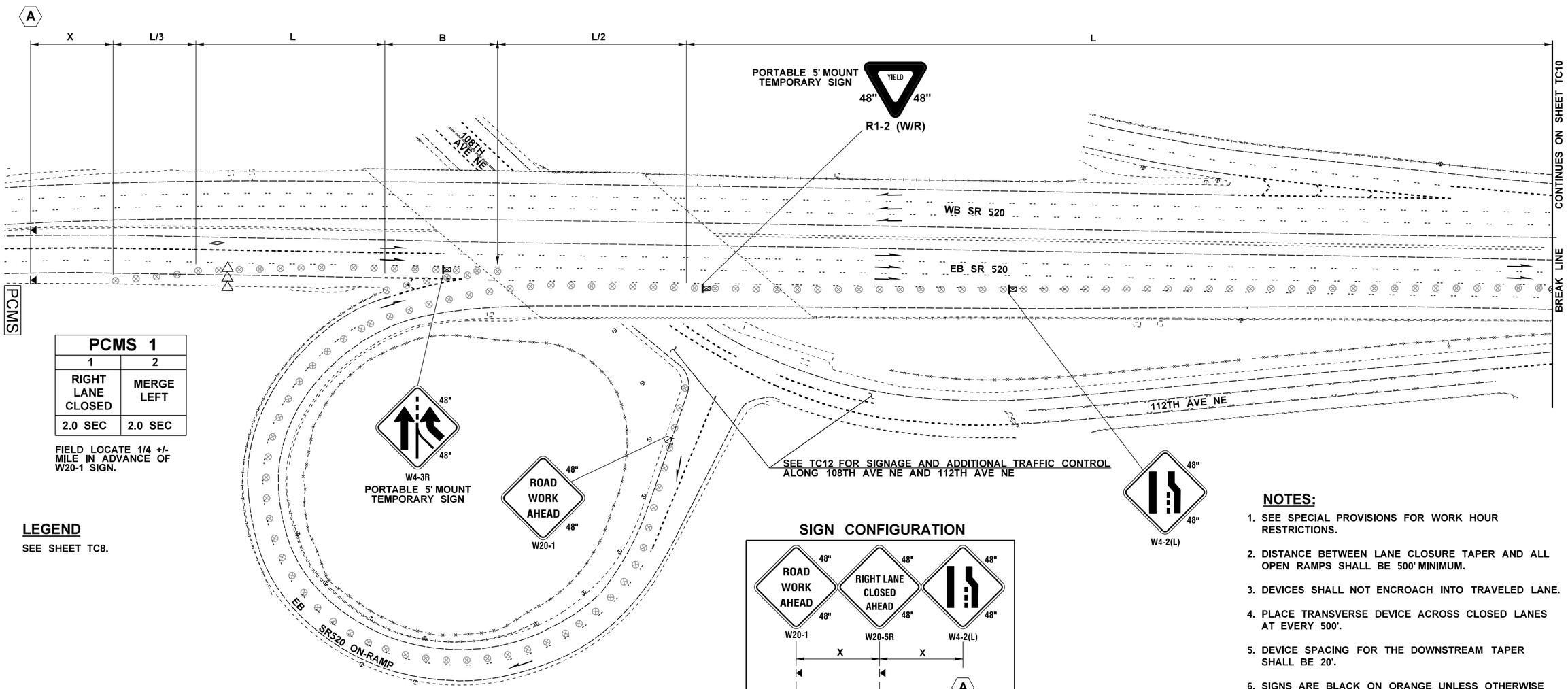

PCMS 1	
1	2
RIGHT LANE CLOSED	MERGE LEFT
2.0 SEC	2.0 SEC

FIELD LOCATE 1/4 +/- MILE IN ADVANCE OF W20-1 SIGN.

LEGEND

SEE SHEET TC8.

SIGN CONFIGURATION

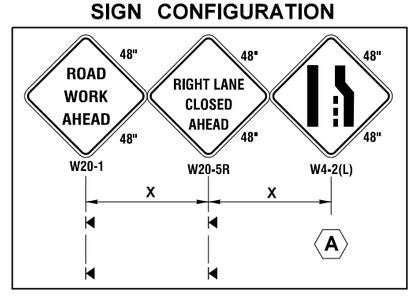

NOTES:

1. SEE SPECIAL PROVISIONS FOR WORK HOUR RESTRICTIONS.
2. DISTANCE BETWEEN LANE CLOSURE TAPER AND ALL OPEN RAMPS SHALL BE 500' MINIMUM.
3. DEVICES SHALL NOT ENCROACH INTO TRAVELED LANE.
4. PLACE TRANSVERSE DEVICE ACROSS CLOSED LANES AT EVERY 500'.
5. DEVICE SPACING FOR THE DOWNSTREAM TAPER SHALL BE 20'.
6. SIGNS ARE BLACK ON ORANGE UNLESS OTHERWISE INDICATED.

NOT TO SCALE

FILE NAME	T:\412348\XL5937\CAD\ContractPlans\XL5937_PS_TC.dgn					
TIME	11:12:23 AM				REGION NO. 10	STATE WASH
DATE	5/20/2022					FED.AID PROJ.NO.
PLOTTED BY	oneilma				JOB NUMBER 20A039	
DESIGNED BY	B. BASSERI					
ENTERED BY	B. BASSERI					
CHECKED BY	M. O'NEIL				CONTRACT NO.	LOCATION NO.
PROJ. ENGR.	C. ANDERSON					
REGIONAL ADM.	M. COTTEN	REVISION	DATE	BY		

P.E. STAMP BOX DATE

P.E. STAMP BOX DATE

Washington State Department of Transportation

I-405
BN RR BRIDGE TO PED TRAIL BRIDGE
SEISMIC RETROFIT

TRAFFIC CONTROL PLANS

Plot 9

PLAN REF NO TC9

SHEET 146 OF 176 SHEETS

MINIMUM LANE CLOSURE TAPER LENGTH = L							
LANE WIDTH (feet)	SPEED (MPH)	50	55	60	65	70	75
12	L (feet)	600	660	720	780	840	900
MINIMUM SHOULDER CLOSURE TAPER LENGTH = L/3							
SHOULDER WIDTH (feet)	SPEED (MPH)	50	55	60	65	70	75
6	L/3 (feet)	120	120	120	160	160	160
10	L/3 (feet)	200	200	200	240	240	280
USE A MINIMUM 3 DEVICES FOR SHOULDER LESS THAN 6'.							

MINIMUM LONGITUDINAL BUFFER SPACE = B						
SPEED (MPH)	50	55	60	65	70	75
LENGTH (feet)	425	495	570	645	730	820
STATIONARY TRANSPORTABLE ATTENUATOR ROLL AHEAD DISTANCE = R						
HOST VEHICLE WEIGHT 9,900 TO 22,000 lbs.			HOST VEHICLE WEIGHT > 22,000 lbs.			
50-55 MPH	60+ MPH		50-55 MPH		60+ MPH	
123'	172'		100'		150'	

SIGN SPACING = X (1)		
FREEWAYS & EXPRESSWAYS	55 / 70 MPH	1500'
RURAL HIGHWAYS	60 / 65 MPH	800'
RURAL ROADS	45 / 55 MPH	500'
(1) ALL SPACING MAY BE ADJUSTED TO ACCOMMODATE INTERCHANGE RAMPS, AT-GRADE INTERSECTIONS AND DRIVEWAYS.		

CHANNELIZATION DEVICE SPACING (feet)		
MPH	TAPER	TANGENT
50/70	40	80
35/45	30	60

POSTED SPEED=60 MPH

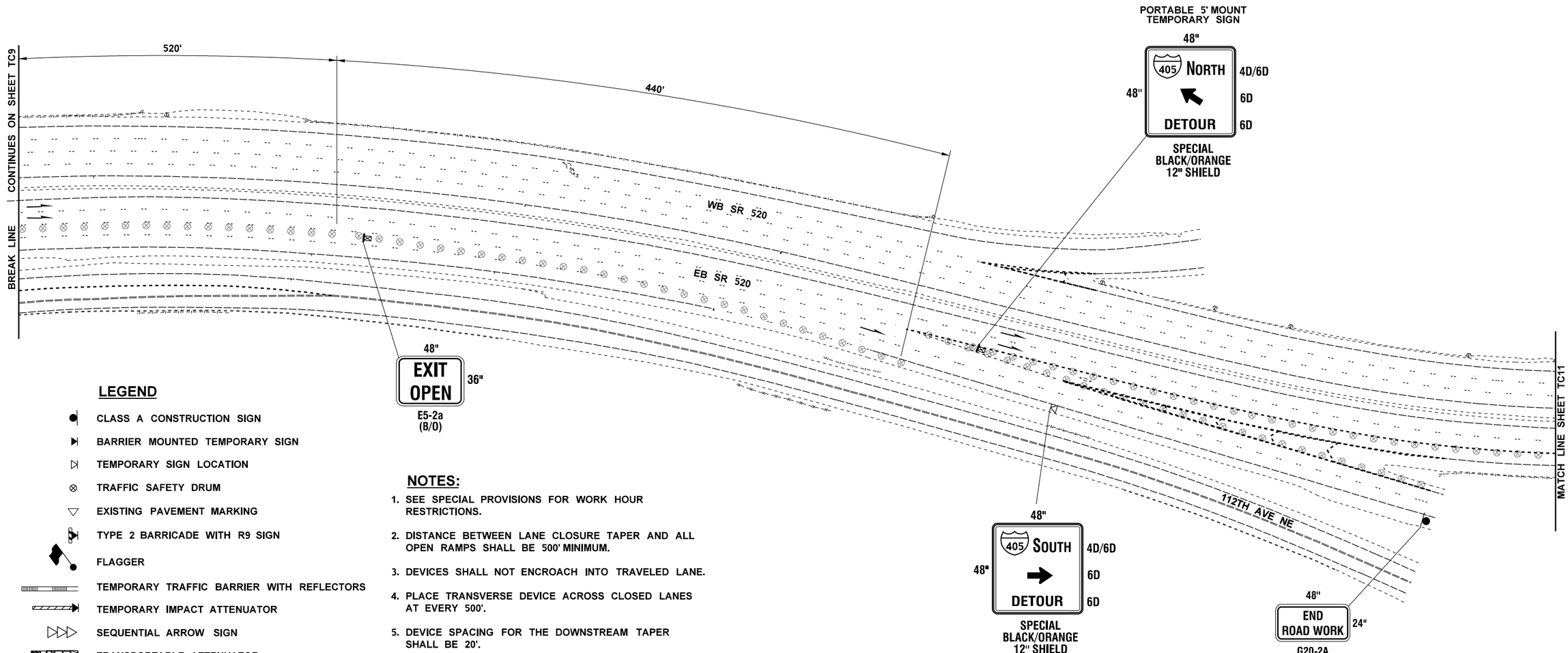

LEGEND

- CLASS A CONSTRUCTION SIGN
- BARRIER MOUNTED TEMPORARY SIGN
- TEMPORARY SIGN LOCATION
- TRAFFIC SAFETY DRUM
- EXISTING PAVEMENT MARKING
- TYPE 2 BARRICADE WITH R9 SIGN
- FLAGGER
- TEMPORARY TRAFFIC BARRIER WITH REFLECTORS
- TEMPORARY IMPACT ATTENUATOR
- SEQUENTIAL ARROW SIGN
- TRANSPORTABLE ATTENUATOR
- PCMS — PORTABLE CHANGEABLE MESSAGE SIGN

NOTES:

1. SEE SPECIAL PROVISIONS FOR WORK HOUR RESTRICTIONS.
2. DISTANCE BETWEEN LANE CLOSURE TAPER AND ALL OPEN RAMPS SHALL BE 500' MINIMUM.
3. DEVICES SHALL NOT ENCROACH INTO TRAVELED LANE.
4. PLACE TRANSVERSE DEVICE ACROSS CLOSED LANES AT EVERY 500'.
5. DEVICE SPACING FOR THE DOWNSTREAM TAPER SHALL BE 20'.
6. SIGNS ARE BLACK ON ORANGE UNLESS OTHERWISE INDICATED.

NOT TO SCALE

FILE NAME	T:\412348\XL5937\CAD\ContractPlans\XL5937_PS_TC.dgn					
TIME	11:12:26 AM					
DATE	5/20/2022					
PLOTTED BY	oneilma					
DESIGNED BY	B. BASSERI					
ENTERED BY	B. BASSERI					
CHECKED BY	M. O'NEIL					
PROJ. ENGR.	C. ANDERSON					
REGIONAL ADM.	M. COTTEN	REVISION	DATE	BY		

REGION NO.	STATE	FED.AID PROJ.NO.
10	WASH	
JOB NUMBER 20A039		
CONTRACT NO.		LOCATION NO.

P.E. STAMP BOX — DATE

P.E. STAMP BOX — DATE

Washington State Department of Transportation

I-405
BN RR BRIDGE TO PED TRAIL BRIDGE
SEISMIC RETROFIT

TRAFFIC CONTROL PLANS

Plot 10

PLAN REF NO TC10

SHEET 147 OF 176 SHEETS

MINIMUM LANE CLOSURE TAPER LENGTH = L							
LANE WIDTH (feet)	SPEED (MPH)	50	55	60	65	70	75
12	L (feet)	600	660	720	780	840	900
MINIMUM SHOULDER CLOSURE TAPER LENGTH = L/3							
SHOULDER WIDTH (feet)	SPEED (MPH)	50	55	60	65	70	75
6	L/3 (feet)	120	120	120	160	160	160
10	L/3 (feet)	200	200	200	240	240	280
USE A MINIMUM 3 DEVICES FOR SHOULDER LESS THAN 6'.							

MINIMUM LONGITUDINAL BUFFER SPACE = B						
SPEED (MPH)	50	55	60	65	70	75
LENGTH (feet)	425	495	570	645	730	820

STATIONARY TRANSPORTABLE ATTENUATOR ROLL AHEAD DISTANCE = R			
HOST VEHICLE WEIGHT 9,900 TO 22,000 lbs.		HOST VEHICLE WEIGHT > 22,000 lbs.	
50-55 MPH	60+ MPH	50-55 MPH	60+ MPH
123'	172'	100'	150'

SIGN SPACING = X (1)		
FREEWAYS & EXPRESSWAYS	55 / 70 MPH	1500'
RURAL HIGHWAYS	60 / 65 MPH	800'
RURAL ROADS	45 / 55 MPH	500'
(1) ALL SPACING MAY BE ADJUSTED TO ACCOMMODATE INTERCHANGE RAMPS, AT-GRADE INTERSECTIONS AND DRIVEWAYS.		

CHANNELIZATION DEVICE SPACING (feet)		
MPH	TAPER	TANGENT
50/70	40	80
35/45	30	60

POSTED SPEED=60 MPH

SELECT FROM THE FOLLOWING LIST OF IMPACT ATTENUATORS FOR THIS LOCATION:

QUADGUARD CZ _____ BAY MANUFACTURED BY ENERGY ABSORPTION SYSTEMS, INC. FILL IN 6 BAY FOR SPEEDS OF 45 MPH OR GREATER. FILL IN 3 BAY FOR SPEEDS LESS THAN 45 MPH.

REUSABLE ENERGY ABSORBING CRASH TERMINAL (REACT 350) MANUFACTURED BY ENERGY ABSORPTION SYSTEMS. INC.

ABSORB 350 WITH _ ____ ABSORBING ELEMENTS MANUFACTURED BY BARRIER SYSTEMS, INC. FILL IN 9 ABSORBING ELEMENTS FOR SPEEDS OF 45 MPH OR GREATER. FILL IN 5 ABSORBING ELEMENTS FOR SPEEDS LESS THAN 45 MPH.

TRITON CET MANUFACTURED BY ENERGY ABSORPTION SYSTEMS, INC. (USE TL-3 FOR SPEEDS 62 MPH OR LESS. USE TL-2 FOR 45 MPH OR LESS)

SCI100GM, SCI70GM MANUFACTURED BY SCI PRODUCTS INC.

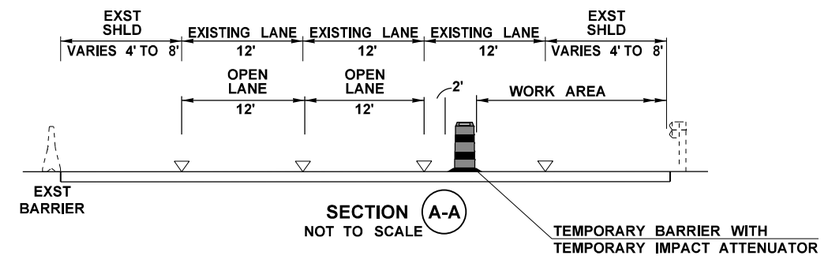

SECTION A-A
NOT TO SCALE

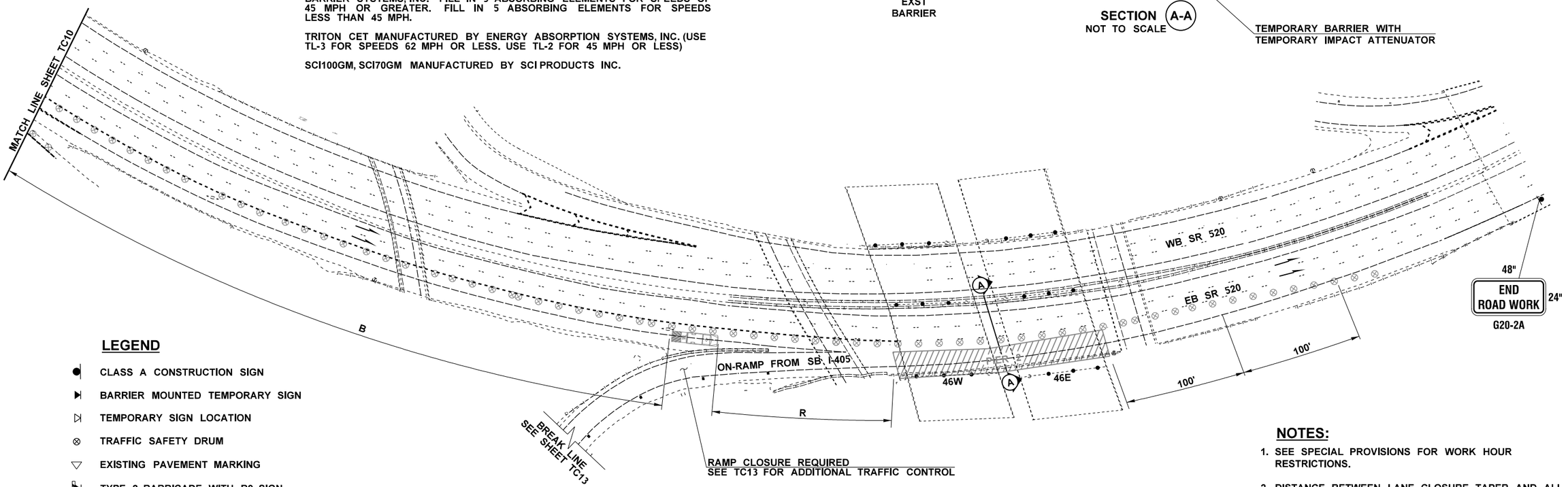

LEGEND

- CLASS A CONSTRUCTION SIGN
- BARRIER MOUNTED TEMPORARY SIGN
- TEMPORARY SIGN LOCATION
- TRAFFIC SAFETY DRUM
- EXISTING PAVEMENT MARKING
- TYPE 2 BARRICADE WITH R9 SIGN
- FLAGGER
- TEMPORARY TRAFFIC BARRIER WITH REFLECTORS
- TEMPORARY IMPACT ATTENUATOR
- SEQUENTIAL ARROW SIGN
- TRANSPORTABLE ATTENUATOR
- PCMS — PORTABLE CHANGEABLE MESSAGE SIGN

NOTES:

1. SEE SPECIAL PROVISIONS FOR WORK HOUR RESTRICTIONS.
2. DISTANCE BETWEEN LANE CLOSURE TAPER AND ALL OPEN RAMPS SHALL BE 500' MINIMUM.
3. DEVICES SHALL NOT ENCROACH INTO TRAVELED LANE.
4. PLACE TRANSVERSE DEVICE ACROSS CLOSED LANES AT EVERY 500'.
5. DEVICE SPACING FOR THE DOWNSTREAM TAPER SHALL BE 20'.
6. SIGNS ARE BLACK ON ORANGE UNLESS OTHERWISE INDICATED.

BRIDGE 405 / 46W AND 46E
WB SR 520 ON-RAMP CLOSURE

NOT TO SCALE

FILE NAME	T:\412348\XL5937\CAD\ContractPlans\XL5937_PS_TC.dgn						
TIME	11:12:30 AM				REGION NO. 10	STATE WASH	FED.AID PROJ.NO.
DATE	5/20/2022						
PLOTTED BY	oneilma						
DESIGNED BY	B. BASSERI				JOB NUMBER 20A039		
ENTERED BY	B. BASSERI						
CHECKED BY	M. O'NEIL				CONTRACT NO.		LOCATION NO.
PROJ. ENGR.	C. ANDERSON						
REGIONAL ADM.	M. COTTEN	REVISION	DATE	BY			

P.E. STAMP BOX — DATE

P.E. STAMP BOX — DATE

Washington State Department of Transportation

I-405
BN RR BRIDGE TO PED TRAIL BRIDGE
SEISMIC RETROFIT

TRAFFIC CONTROL PLANS

Plot 11
PLAN REF NO TC11
SHEET 148 OF 176 SHEETS

SIGN SPACING = X		
RURAL ROADS & URBAN ARTERIALS	35 / 40 MPH	350' ±
RURAL ROADS, URBAN ARTERIALS, RESIDENTIAL & BUSINESS DISTRICTS	25 / 30 MPH	200' ± (2)
URBAN STREETS	25 MPH OR LESS	100' ± (2)

(1) ALL SPACING MAY BE ADJUSTED TO ACCOMMODATE INTERCHANGE RAMPS, AT-GRADE INTERSECTIONS AND DRIVEWAYS.
(2) THIS SPACING MAY BE REDUCED IN URBAN AREAS TO FIT ROADWAY CONDITIONS.

108TH AVE NE
POSTED SPEED=30 MPH

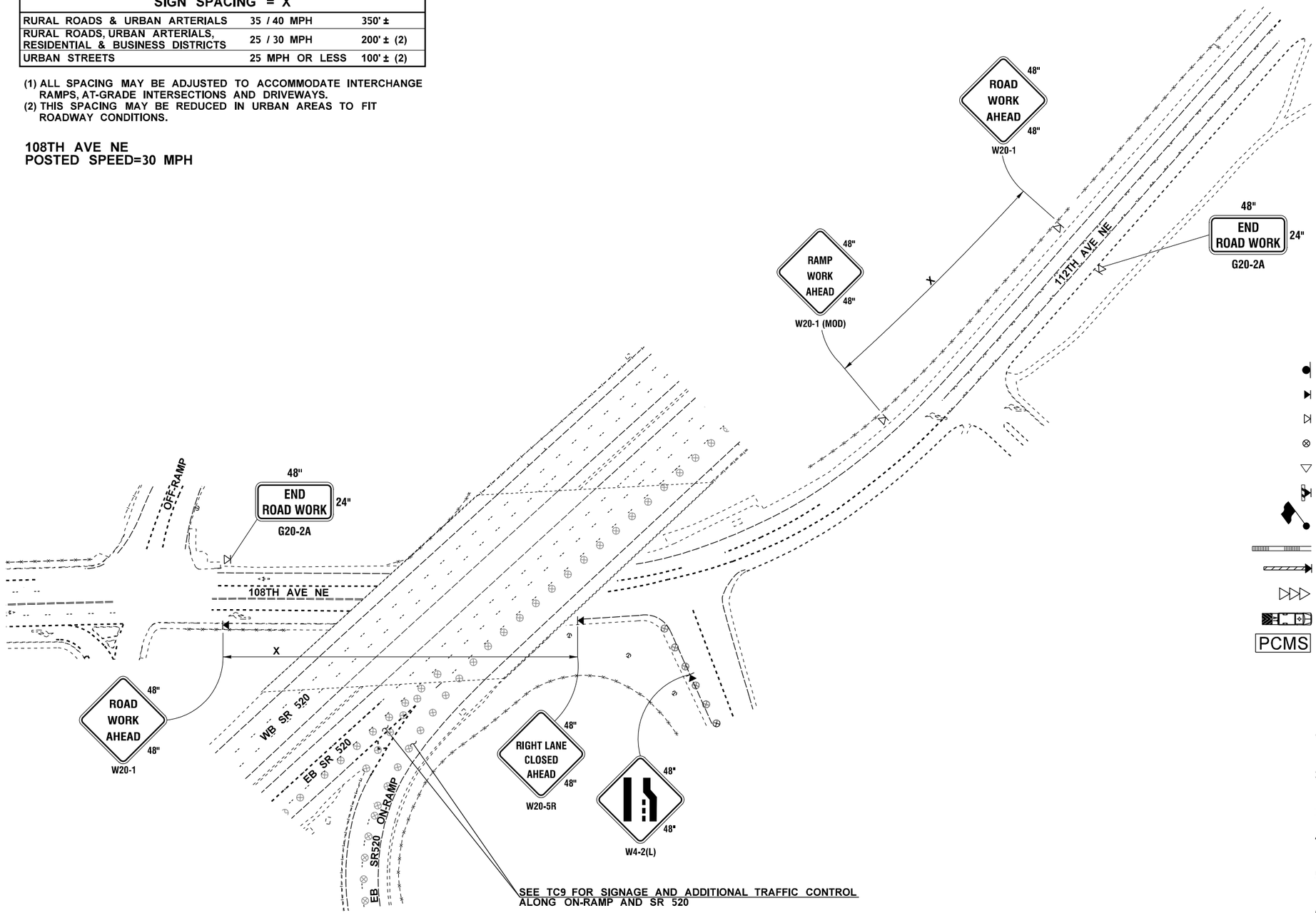

LEGEND

- CLASS A CONSTRUCTION SIGN
- BARRIER MOUNTED TEMPORARY SIGN
- TEMPORARY SIGN LOCATION
- TRAFFIC SAFETY DRUM
- EXISTING PAVEMENT MARKING
- TYPE 2 BARRICADE WITH R9 SIGN
- FLAGGER
- TEMPORARY TRAFFIC BARRIER WITH REFLECTORS
- TEMPORARY IMPACT ATTENUATOR
- SEQUENTIAL ARROW SIGN
- TRANSPORTABLE ATTENUATOR
- PCMS — PORTABLE CHANGEABLE MESSAGE SIGN

NOTES:

1. SEE SPECIAL PROVISIONS FOR WORK HOUR RESTRICTIONS.
2. DISTANCE BETWEEN LANE CLOSURE TAPER AND ALL OPEN RAMPS SHALL BE 500' MINIMUM.
3. DEVICES SHALL NOT ENCROACH INTO TRAVELED LANE.
4. PLACE TRANSVERSE DEVICE ACROSS CLOSED LANES AT EVERY 500'.
5. DEVICE SPACING FOR THE DOWNSTREAM TAPER SHALL BE 20'.
6. SIGNS ARE BLACK ON ORANGE UNLESS OTHERWISE INDICATED.

EB SR 520
ON-RAMP CLOSURE

NOT TO SCALE

FILE NAME	T:\412348\XL5937\CAD\ContractPlans\XL5937_PS_TC.dgn
TIME	11:12:34 AM
DATE	5/20/2022
PLOTTED BY	oneilma
DESIGNED BY	B. BASSERI
ENTERED BY	B. BASSERI
CHECKED BY	M. O'NEIL
PROJ. ENGR.	C. ANDERSON
REGIONAL ADM.	M. COTTEN

REVISION | DATE | BY

REGION NO. 10 | STATE WASH | FED.AID PROJ.NO.
JOB NUMBER 20A039
CONTRACT NO. | LOCATION NO.

P.E. STAMP BOX DATE
P.E. STAMP BOX DATE

Washington State Department of Transportation

I-405
BN RR BRIDGE TO PED TRAIL BRIDGE SEISMIC RETROFIT

TRAFFIC CONTROL PLANS

Plot 12
PLAN REF NO TC12
SHEET 149 OF 176 SHEETS

MINIMUM LANE CLOSURE TAPER LENGTH = L							
LANE WIDTH (feet)	SPEED (MPH)	50	55	60	65	70	75
12	L (feet)	600	660	720	780	840	900
MINIMUM SHOULDER CLOSURE TAPER LENGTH = L/3							
SHOULDER WIDTH (feet)	SPEED (MPH)	50	55	60	65	70	75
6	L/3 (feet)	120	120	120	160	160	160
10	L/3 (feet)	200	200	200	240	240	280
USE A MINIMUM 3 DEVICES FOR SHOULDER LESS THAN 6'.							

SIGN SPACING = X (1)		
FREEWAYS & EXPRESSWAYS	55 / 70 MPH	1500'
RURAL HIGHWAYS	60 / 65 MPH	800'
RURAL ROADS	45 / 55 MPH	500'
(1) ALL SPACING MAY BE ADJUSTED TO ACCOMMODATE INTERCHANGE RAMPS, AT-GRADE INTERSECTIONS AND DRIVEWAYS.		

CHANNELIZATION DEVICE SPACING (feet)		
MPH	TAPER	TANGENT
50/70	40	80
35/45	30	60

POSTED SPEED=60 MPH

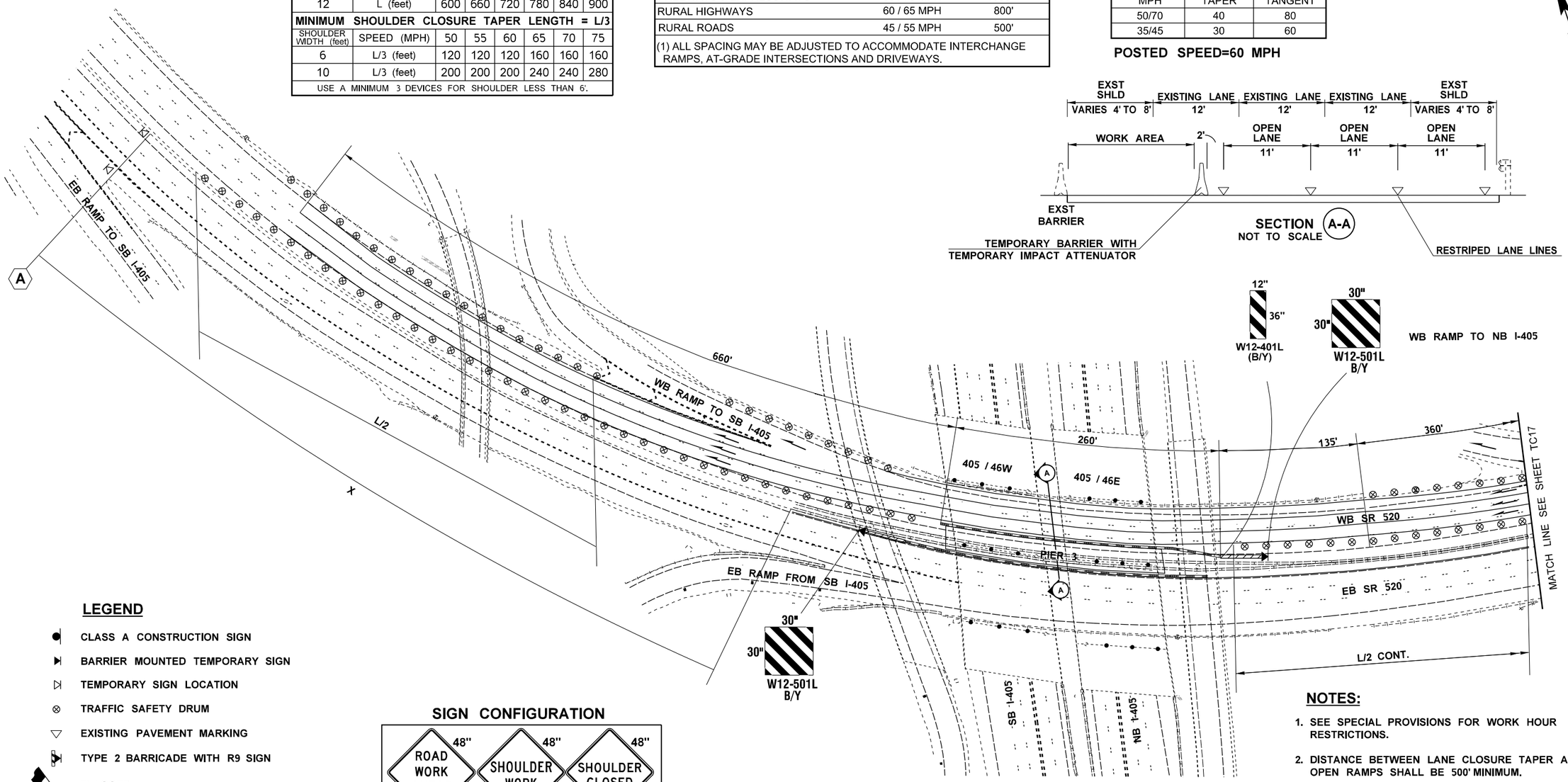

LEGEND

- CLASS A CONSTRUCTION SIGN
- BARRIER MOUNTED TEMPORARY SIGN
- TEMPORARY SIGN LOCATION
- TRAFFIC SAFETY DRUM
- EXISTING PAVEMENT MARKING
- TYPE 2 BARRICADE WITH R9 SIGN
- FLAGGER
- TEMPORARY TRAFFIC BARRIER WITH REFLECTORS
- TEMPORARY IMPACT ATTENUATOR
- SEQUENTIAL ARROW SIGN
- TRANSPORTABLE ATTENUATOR
- PCMS — PORTABLE CHANGEABLE MESSAGE SIGN

SIGN CONFIGURATION

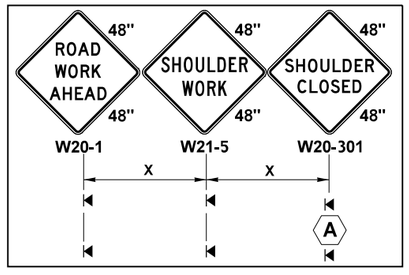

BRIDGES 405 / 46W AND 46E
WB SR 520 RIGHT LANE SHIFT

NOTES:

1. SEE SPECIAL PROVISIONS FOR WORK HOUR RESTRICTIONS.
2. DISTANCE BETWEEN LANE CLOSURE TAPER AND ALL OPEN RAMPS SHALL BE 500' MINIMUM.
3. DEVICES SHALL NOT ENCROACH INTO TRAVELED LANE.
4. PLACE TRANSVERSE DEVICE ACROSS CLOSED LANES AT EVERY 500'.
5. DEVICE SPACING FOR THE DOWNSTREAM TAPER SHALL BE 20'.
6. SIGNS ARE BLACK ON ORANGE UNLESS OTHERWISE INDICATED.

NOT TO SCALE

FILE NAME	T:\412348\XL5937\CAD\ContractPlans\XL5937_PS_TC.dgn				REGION NO. 10	STATE WASH	FED.AID PROJ.NO.
TIME	11:12:38 AM						
DATE	5/20/2022						
PLOTTED BY	oneilma				JOB NUMBER 20A039		
DESIGNED BY	C. MAR						
ENTERED BY	C. MAR						
CHECKED BY	M. O'NEIL				CONTRACT NO.		LOCATION NO.
PROJ. ENGR.	C. ANDERSON						
REGIONAL ADM.	M. COTTEN	REVISION	DATE	BY			

P.E. STAMP BOX — DATE

P.E. STAMP BOX — DATE

Washington State Department of Transportation

I-405
BN RR BRIDGE TO PED TRAIL BRIDGE
SEISMIC RETROFIT

TRAFFIC CONTROL PLANS

Plot 16
PLAN REF NO TC13
SHEET 150 OF 176 SHEETS

MINIMUM LANE CLOSURE TAPER LENGTH = L							
LANE WIDTH (feet)	SPEED (MPH)	50	55	60	65	70	75
12	L (feet)	600	660	720	780	840	900
MINIMUM SHOULDER CLOSURE TAPER LENGTH = L/3							
SHOULDER WIDTH (feet)	SPEED (MPH)	50	55	60	65	70	75
6	L/3 (feet)	120	120	120	160	160	160
10	L/3 (feet)	200	200	200	240	240	280
USE A MINIMUM 3 DEVICES FOR SHOULDER LESS THAN 6'.							

SIGN SPACING = X (1)		
FREEWAYS & EXPRESSWAYS	55 / 70 MPH	1500'
RURAL HIGHWAYS	60 / 65 MPH	800'
RURAL ROADS	45 / 55 MPH	500'
(1) ALL SPACING MAY BE ADJUSTED TO ACCOMMODATE INTERCHANGE RAMPS, AT-GRADE INTERSECTIONS AND DRIVEWAYS.		

CHANNELIZATION DEVICE SPACING (feet)		
MPH	TAPER	TANGENT
50/70	40	80
35/45	30	60

POSTED SPEED=60 MPH

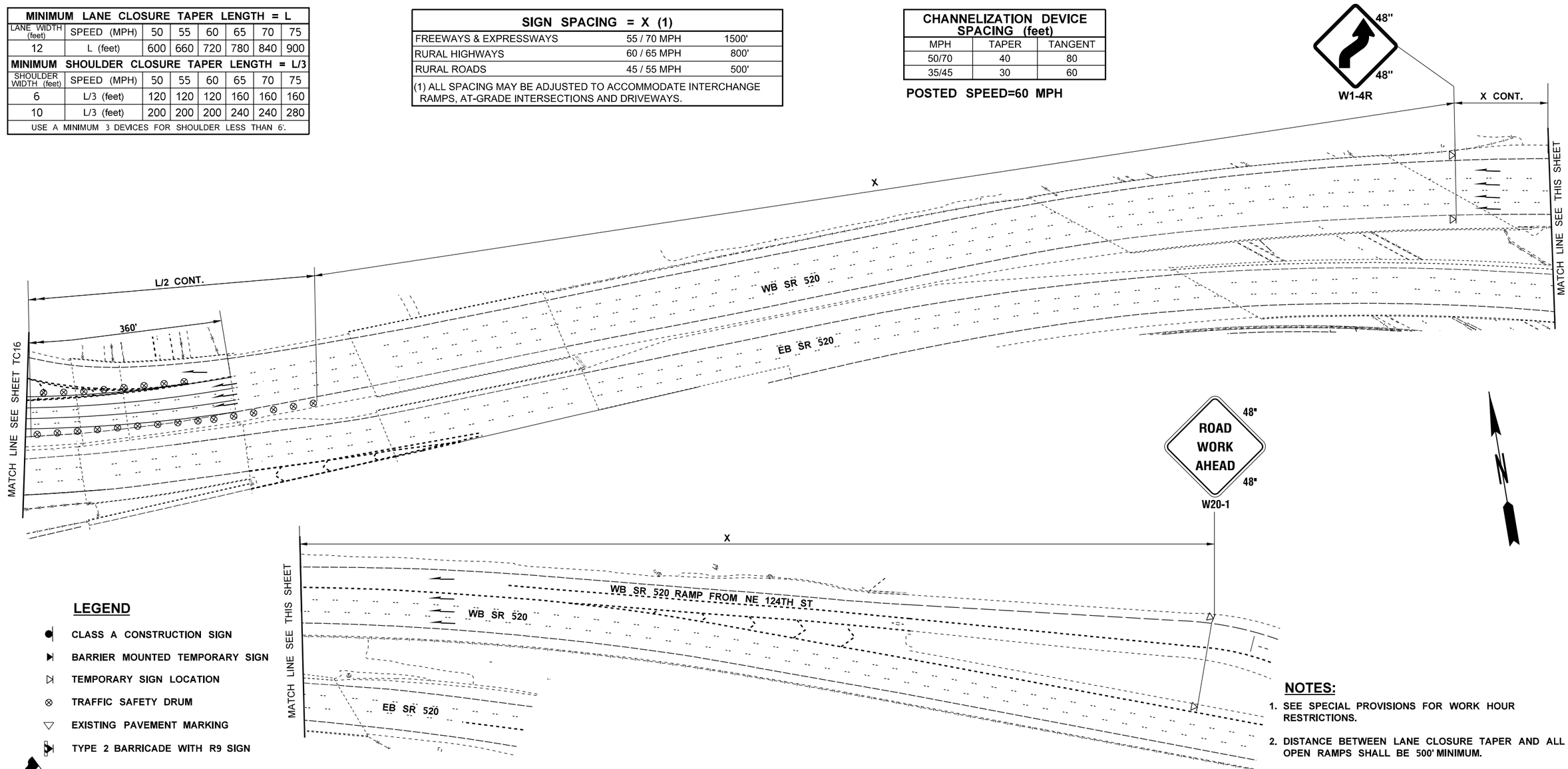

LEGEND

- CLASS A CONSTRUCTION SIGN
- BARRIER MOUNTED TEMPORARY SIGN
- TEMPORARY SIGN LOCATION
- TRAFFIC SAFETY DRUM
- EXISTING PAVEMENT MARKING
- TYPE 2 BARRICADE WITH R9 SIGN
- FLAGGER
- TEMPORARY TRAFFIC BARRIER WITH REFLECTORS
- TEMPORARY IMPACT ATTENUATOR
- SEQUENTIAL ARROW SIGN
- TRANSPORTABLE ATTENUATOR
- PCMS — PORTABLE CHANGEABLE MESSAGE SIGN

NOTES:

1. SEE SPECIAL PROVISIONS FOR WORK HOUR RESTRICTIONS.
2. DISTANCE BETWEEN LANE CLOSURE TAPER AND ALL OPEN RAMPS SHALL BE 500' MINIMUM.
3. DEVICES SHALL NOT ENCROACH INTO TRAVELED LANE.
4. PLACE TRANSVERSE DEVICE ACROSS CLOSED LANES AT EVERY 500'.
5. DEVICE SPACING FOR THE DOWNSTREAM TAPER SHALL BE 20'.
6. SIGNS ARE BLACK ON ORANGE UNLESS OTHERWISE INDICATED.

BRIDGES 405 / 46W AND 46E
WB SR 520 RIGHT LANE SHIFT

NOT TO SCALE

FILE NAME	T:\412348\XL5937\CAD\ContractPlans\XL5937_PS_TC.dgn				
TIME	11:12:42 AM				
DATE	5/20/2022				
PLOTTED BY	oneilma				
DESIGNED BY	C. MAR				
ENTERED BY	C. MAR				
CHECKED BY	M. O'NEIL				
PROJ. ENGR.	C. ANDERSON				
REGIONAL ADM.	M. COTTEN	REVISION	DATE	BY	

REGION NO.	STATE	FED.AID PROJ.NO.
10	WASH	
JOB NUMBER 20A039		
CONTRACT NO.		LOCATION NO.

P.E. STAMP BOX — DATE

P.E. STAMP BOX — DATE

Washington State Department of Transportation

I-405
BN RR BRIDGE TO PED TRAIL BRIDGE
SEISMIC RETROFIT

TRAFFIC CONTROL PLANS

Plot 17
PLAN REF NO TC14
SHEET 151 OF 176 SHEETS

MINIMUM LANE CLOSURE TAPER LENGTH = L							
LANE WIDTH (feet)	SPEED (MPH)	50	55	60	65	70	75
12	L (feet)	600	660	720	780	840	900
MINIMUM SHOULDER CLOSURE TAPER LENGTH = L/3							
SHOULDER WIDTH (feet)	SPEED (MPH)	50	55	60	65	70	75
6	L/3 (feet)	120	120	120	160	160	160
10	L/3 (feet)	200	200	200	240	240	280
USE A MINIMUM 3 DEVICES FOR SHOULDER LESS THAN 6'.							

SIGN SPACING = X (1)		
FREEWAYS & EXPRESSWAYS	55 / 70 MPH	1500'
RURAL HIGHWAYS	60 / 65 MPH	800'
RURAL ROADS	45 / 55 MPH	500'
(1) ALL SPACING MAY BE ADJUSTED TO ACCOMMODATE INTERCHANGE RAMPS, AT-GRADE INTERSECTIONS AND DRIVEWAYS.		

CHANNELIZATION DEVICE SPACING (feet)		
MPH	TAPER	TANGENT
50/70	40	80
35/45	30	60

POSTED SPEED=60 MPH

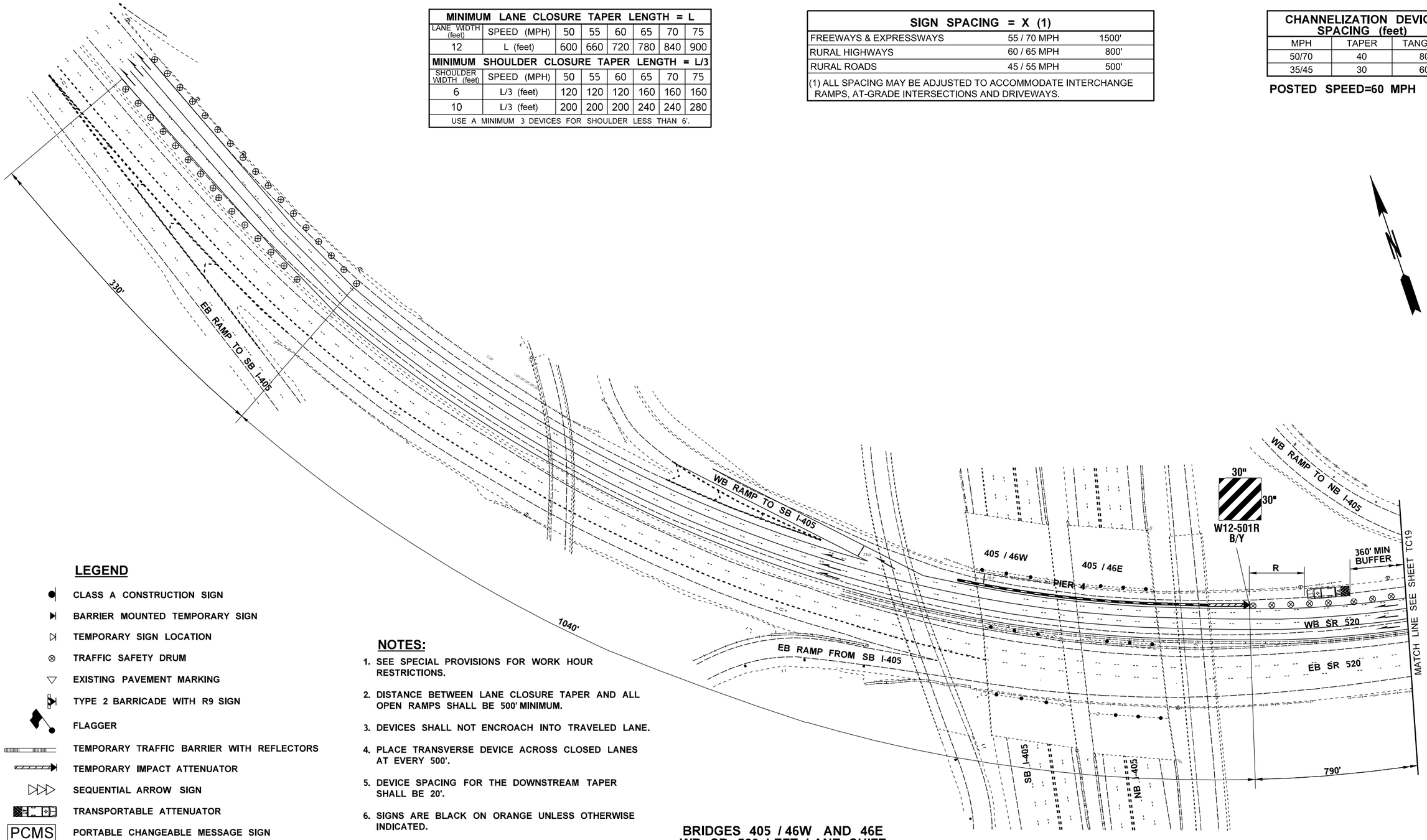

LEGEND

- CLASS A CONSTRUCTION SIGN
- BARRIER MOUNTED TEMPORARY SIGN
- TEMPORARY SIGN LOCATION
- TRAFFIC SAFETY DRUM
- EXISTING PAVEMENT MARKING
- TYPE 2 BARRICADE WITH R9 SIGN
- FLAGGER
- TEMPORARY TRAFFIC BARRIER WITH REFLECTORS
- TEMPORARY IMPACT ATTENUATOR
- SEQUENTIAL ARROW SIGN
- TRANSPORTABLE ATTENUATOR
- PCMS — PORTABLE CHANGEABLE MESSAGE SIGN

NOTES:

1. SEE SPECIAL PROVISIONS FOR WORK HOUR RESTRICTIONS.
2. DISTANCE BETWEEN LANE CLOSURE TAPER AND ALL OPEN RAMPS SHALL BE 500' MINIMUM.
3. DEVICES SHALL NOT ENCROACH INTO TRAVELED LANE.
4. PLACE TRANSVERSE DEVICE ACROSS CLOSED LANES AT EVERY 500'.
5. DEVICE SPACING FOR THE DOWNSTREAM TAPER SHALL BE 20'.
6. SIGNS ARE BLACK ON ORANGE UNLESS OTHERWISE INDICATED.

NOT TO SCALE

BRIDGES 405 / 46W AND 46E
WB SR 520 LEFT LANE SHIFT

FILE NAME	T:\412348\XL5937\CAD\ContractPlans\XL5937_PS_TC.dgn				REGION NO. 10	STATE WASH	FED.AID PROJ.NO.
TIME	11:12:46 AM				JOB NUMBER 20A039		
DATE	5/20/2022				CONTRACT NO.		LOCATION NO.
PLOTTED BY	oneilma						
DESIGNED BY	C. MAR						
ENTERED BY	C. MAR						
CHECKED BY	M. O'NEIL						
PROJ. ENGR.	C. ANDERSON						
REGIONAL ADM.	M. COTTEN	REVISION	DATE	BY			

P.E. STAMP BOX — DATE

P.E. STAMP BOX — DATE

Washington State Department of Transportation

I-405
BN RR BRIDGE TO PED TRAIL BRIDGE
SEISMIC RETROFIT

TRAFFIC CONTROL PLANS

Plot 18

PLAN REF NO TC15

SHEET 152 OF 176 SHEETS

MINIMUM LANE CLOSURE TAPER LENGTH = L							
LANE WIDTH (feet)	SPEED (MPH)	50	55	60	65	70	75
12	L (feet)	600	660	720	780	840	900
MINIMUM SHOULDER CLOSURE TAPER LENGTH = L/3							
SHOULDER WIDTH (feet)	SPEED (MPH)	50	55	60	65	70	75
6	L/3 (feet)	120	120	120	160	160	160
10	L/3 (feet)	200	200	200	240	240	280
USE A MINIMUM 3 DEVICES FOR SHOULDER LESS THAN 6'.							

SIGN SPACING = X (1)		
FREEWAYS & EXPRESSWAYS	55 / 70 MPH	1500'
RURAL HIGHWAYS	60 / 65 MPH	800'
RURAL ROADS	45 / 55 MPH	500'
(1) ALL SPACING MAY BE ADJUSTED TO ACCOMMODATE INTERCHANGE RAMPS, AT-GRADE INTERSECTIONS AND DRIVEWAYS.		

CHANNELIZATION DEVICE SPACING (feet)		
MPH	TAPER	TANGENT
50/70	40	80
35/45	30	60

POSTED SPEED=60 MPH

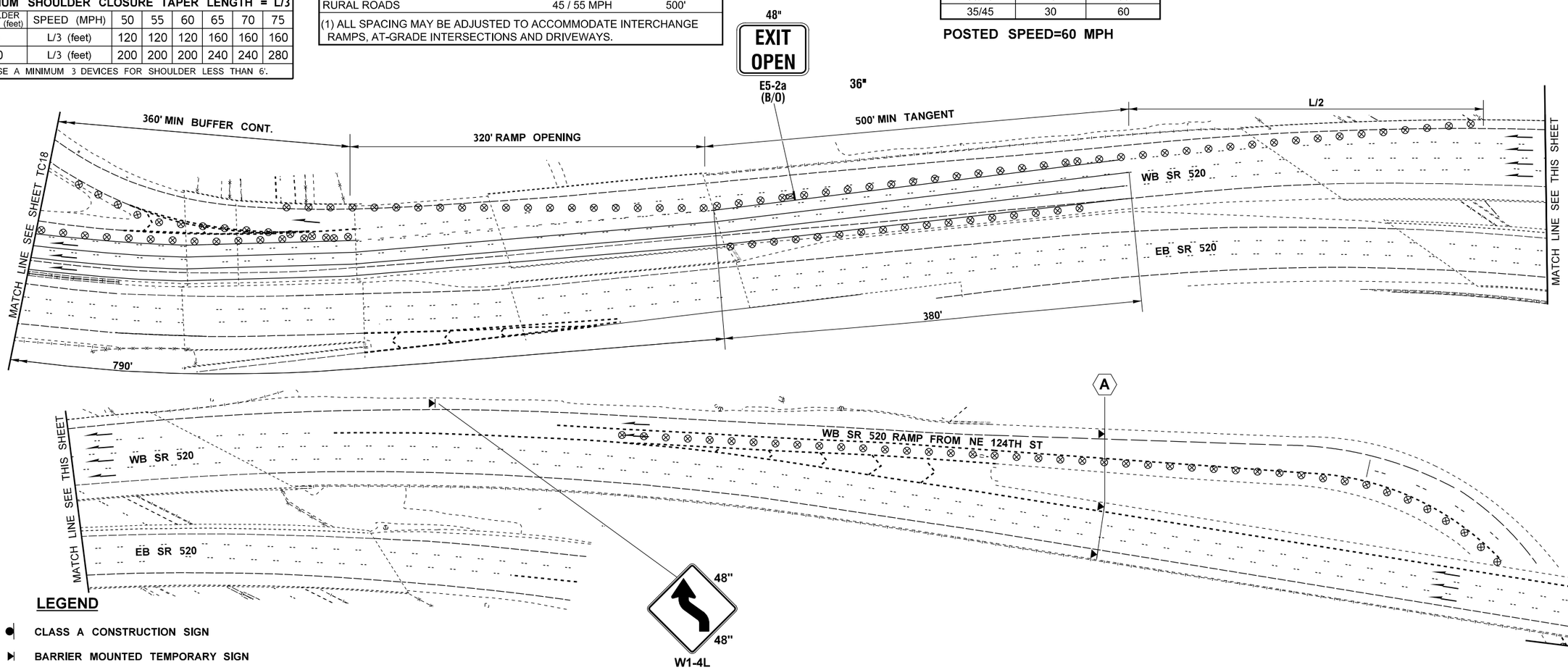

LEGEND

- CLASS A CONSTRUCTION SIGN
- BARRIER MOUNTED TEMPORARY SIGN
- TEMPORARY SIGN LOCATION
- TRAFFIC SAFETY DRUM
- EXISTING PAVEMENT MARKING
- TYPE 2 BARRICADE WITH R9 SIGN
- FLAGGER
- TEMPORARY TRAFFIC BARRIER WITH REFLECTORS
- TEMPORARY IMPACT ATTENUATOR
- SEQUENTIAL ARROW SIGN
- TRANSPORTABLE ATTENUATOR
- PCMS — PORTABLE CHANGEABLE MESSAGE SIGN

SIGN CONFIGURATION

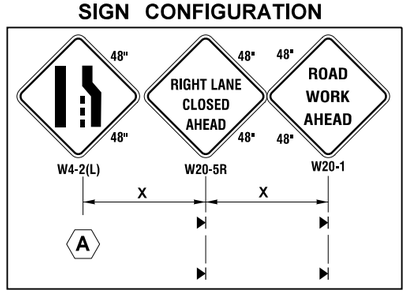

BRIDGES 405 / 46W AND 46E
EB SR 520 LEFT LANE SHIFT

NOTES:

1. SEE SPECIAL PROVISIONS FOR WORK HOUR RESTRICTIONS.
2. DISTANCE BETWEEN LANE CLOSURE TAPER AND ALL OPEN RAMPS SHALL BE 500' MINIMUM.
3. DEVICES SHALL NOT ENCROACH INTO TRAVELED LANE.
4. PLACE TRANSVERSE DEVICE ACROSS CLOSED LANES AT EVERY 500'.
5. DEVICE SPACING FOR THE DOWNSTREAM TAPER SHALL BE 20'.
6. SIGNS ARE BLACK ON ORANGE UNLESS OTHERWISE INDICATED.

NOT TO SCALE

FILE NAME	T:\412348\XL5937\CAD\ContractPlans\XL5937_PS_TC.dgn						
TIME	11:12:50 AM				REGION NO. 10	STATE WASH	FED.AID PROJ.NO.
DATE	5/20/2022						
PLOTTED BY	oneilma						
DESIGNED BY	C. MAR				JOB NUMBER 20A039		
ENTERED BY	C. MAR						
CHECKED BY	M. O'NEIL				CONTRACT NO.		LOCATION NO.
PROJ. ENGR.	C. ANDERSON						
REGIONAL ADM.	M. COTTEN	REVISION	DATE	BY			

P.E. STAMP BOX DATE

P.E. STAMP BOX DATE

Washington State Department of Transportation

I-405
BN RR BRIDGE TO PED TRAIL BRIDGE
SEISMIC RETROFIT

TRAFFIC CONTROL PLANS

Plot 19

PLAN REF NO TC16

SHEET 153 OF 176 SHEETS

MINIMUM LANE CLOSURE TAPER LENGTH = L							
LANE WIDTH (feet)	SPEED (MPH)	50	55	60	65	70	75
12	L (feet)	600	660	720	780	840	900
MINIMUM SHOULDER CLOSURE TAPER LENGTH = L/3							
SHOULDER WIDTH (feet)	SPEED (MPH)	50	55	60	65	70	75
6	L/3 (feet)	120	120	120	160	160	160
10	L/3 (feet)	200	200	200	240	240	280
USE A MINIMUM 3 DEVICES FOR SHOULDER LESS THAN 6'.							

SIGN SPACING = X (1)		
FREEWAYS & EXPRESSWAYS	55 / 70 MPH	1500'
RURAL HIGHWAYS	60 / 65 MPH	800'
RURAL ROADS	45 / 55 MPH	500'
(1) ALL SPACING MAY BE ADJUSTED TO ACCOMMODATE INTERCHANGE RAMPS, AT-GRADE INTERSECTIONS AND DRIVEWAYS.		

CHANNELIZATION DEVICE SPACING (feet)		
MPH	TAPER	TANGENT
50/70	40	80
35/45	30	60

POSTED SPEED=60 MPH

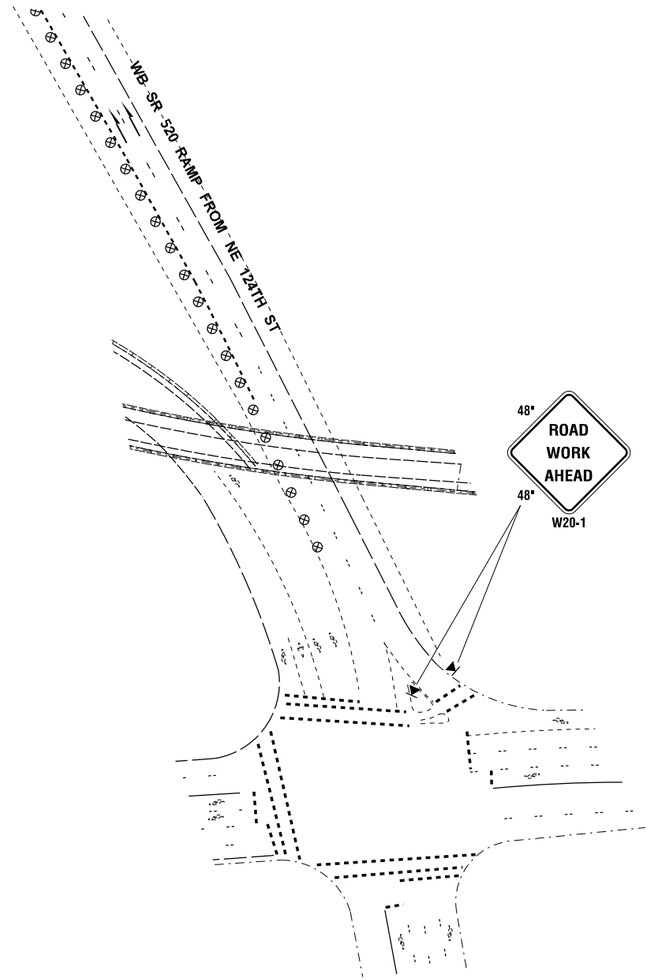

LEGEND

- CLASS A CONSTRUCTION SIGN
- BARRIER MOUNTED TEMPORARY SIGN
- TEMPORARY SIGN LOCATION
- TRAFFIC SAFETY DRUM
- EXISTING PAVEMENT MARKING
- TYPE 2 BARRICADE WITH R9 SIGN
- FLAGGER
- TEMPORARY TRAFFIC BARRIER WITH REFLECTORS
- TEMPORARY IMPACT ATTENUATOR
- SEQUENTIAL ARROW SIGN
- TRANSPORTABLE ATTENUATOR
- PCMS — PORTABLE CHANGEABLE MESSAGE SIGN

NOTES:

1. SEE SPECIAL PROVISIONS FOR WORK HOUR RESTRICTIONS.
2. DISTANCE BETWEEN LANE CLOSURE TAPER AND ALL OPEN RAMPS SHALL BE 500' MINIMUM.
3. DEVICES SHALL NOT ENCROACH INTO TRAVELED LANE.
4. PLACE TRANSVERSE DEVICE ACROSS CLOSED LANES AT EVERY 500'.
5. DEVICE SPACING FOR THE DOWNSTREAM TAPER SHALL BE 20'.
6. SIGNS ARE BLACK ON ORANGE UNLESS OTHERWISE INDICATED.

BRIDGES 405 / 46W AND 46E
EB SR 520 LEFT LANE SHIFT

NOT TO SCALE

FILE NAME	T:\412348\XL5937\CAD\ContractPlans\XL5937_PS_TC.dgn						
TIME	11:12:55 AM				REGION NO. 10	STATE WASH	FED.AID PROJ.NO.
DATE	5/20/2022						
PLOTTED BY	oneilma						
DESIGNED BY	C. MAR				JOB NUMBER 20A039		
ENTERED BY	C. MAR						
CHECKED BY	M. O'NEIL				CONTRACT NO.		LOCATION NO.
PROJ. ENGR.	C. ANDERSON						
REGIONAL ADM.	M. COTTEN	REVISION	DATE	BY			

P.E. STAMP BOX — DATE

P.E. STAMP BOX — DATE

Washington State
Department of Transportation

I-405
BN RR BRIDGE TO PED TRAIL BRIDGE
SEISMIC RETROFIT

TRAFFIC CONTROL PLANS

Plot 20
PLAN REF NO TC17
SHEET 154 OF 176 SHEETS

MINIMUM LANE CLOSURE TAPER LENGTH = L							
LANE WIDTH (feet)	SPEED (MPH)	50	55	60	65	70	75
12	L (feet)	600	660	720	780	840	900
MINIMUM SHOULDER CLOSURE TAPER LENGTH = L/3							
SHOULDER WIDTH (feet)	SPEED (MPH)	50	55	60	65	70	75
6	L/3 (feet)	120	120	120	160	160	160
10	L/3 (feet)	200	200	200	240	240	280
USE A MINIMUM 3 DEVICES FOR SHOULDER LESS THAN 6'.							

SIGN SPACING = X (1)		
FREEWAYS & EXPRESSWAYS	55 / 70 MPH	1500'
RURAL HIGHWAYS	60 / 65 MPH	800'
RURAL ROADS	45 / 55 MPH	500'
(1) ALL SPACING MAY BE ADJUSTED TO ACCOMMODATE INTERCHANGE RAMPS, AT-GRADE INTERSECTIONS AND DRIVEWAYS.		

CHANNELIZATION DEVICE SPACING (feet)		
MPH	TAPER	TANGENT
50/70	40	80
35/45	30	60

POSTED SPEED=60 MPH

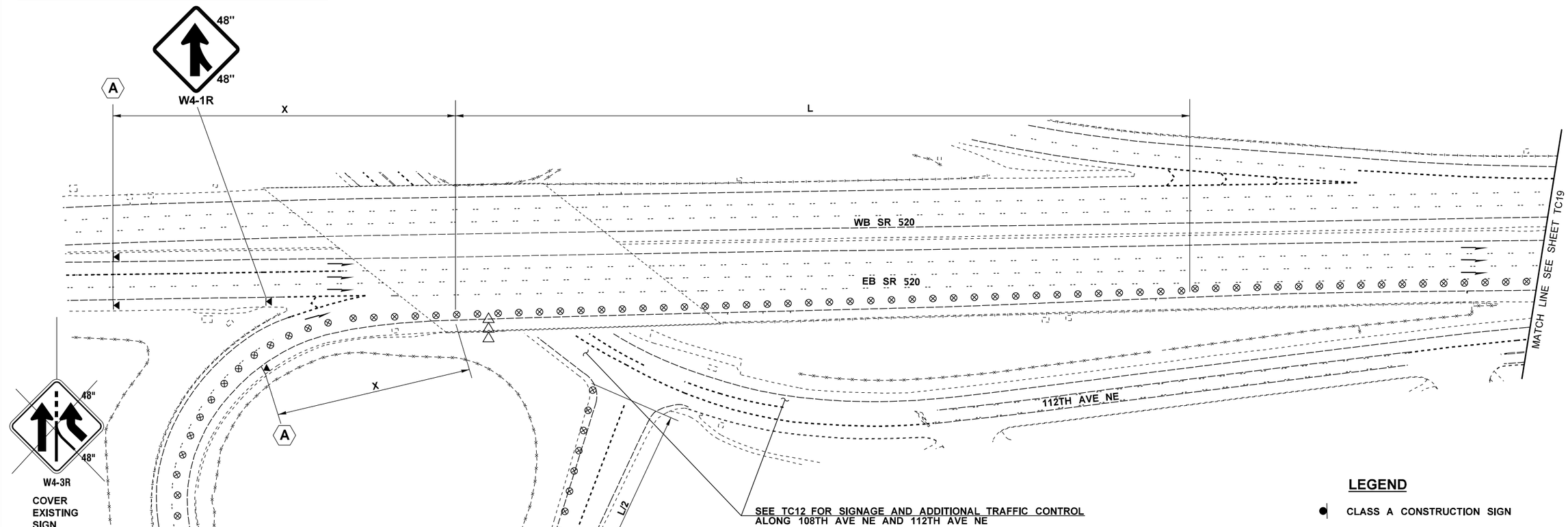

SIGN CONFIGURATION

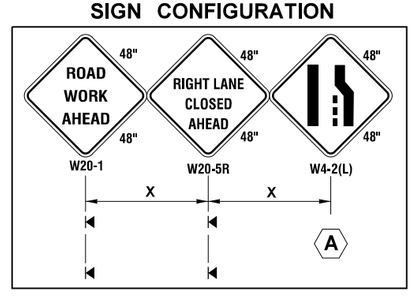

NOTES:

1. SEE SPECIAL PROVISIONS FOR WORK HOUR RESTRICTIONS.
2. DISTANCE BETWEEN LANE CLOSURE TAPER AND ALL OPEN RAMPS SHALL BE 500' MINIMUM.
3. DEVICES SHALL NOT ENCROACH INTO TRAVELED LANE.
4. PLACE TRANSVERSE DEVICE ACROSS CLOSED LANES AT EVERY 500'.
5. DEVICE SPACING FOR THE DOWNSTREAM TAPER SHALL BE 20'.
6. SIGNS ARE BLACK ON ORANGE UNLESS OTHERWISE INDICATED.

LEGEND

- CLASS A CONSTRUCTION SIGN
- BARRIER MOUNTED TEMPORARY SIGN
- TEMPORARY SIGN LOCATION
- TRAFFIC SAFETY DRUM
- EXISTING PAVEMENT MARKING
- TYPE 2 BARRICADE WITH R9 SIGN
- FLAGGER
- TEMPORARY TRAFFIC BARRIER WITH REFLECTORS
- TEMPORARY IMPACT ATTENUATOR
- SEQUENTIAL ARROW SIGN
- TRANSPORTABLE ATTENUATOR
- PCMS — PORTABLE CHANGEABLE MESSAGE SIGN

BRIDGES 405 / 46W AND 46E
EB SR 520 LANE SHIFT

NOT TO SCALE

FILE NAME	T:\412348\XL5937\CAD\ContractPlans\XL5937_PS_TC.dgn
TIME	11:12:58 AM
DATE	5/20/2022
PLOTTED BY	oneilma
DESIGNED BY	C. MAR
ENTERED BY	C. MAR
CHECKED BY	M. O'NEIL
PROJ. ENGR.	C. ANDERSON
REGIONAL ADM.	M. COTTEN

REVISION	DATE	BY

REGION NO.	STATE	FED.AID PROJ.NO.
10	WASH	
JOB NUMBER 20A039		
CONTRACT NO.		LOCATION NO.

P.E. STAMP BOX DATE

P.E. STAMP BOX DATE

Washington State Department of Transportation

I-405
BN RR BRIDGE TO PED TRAIL BRIDGE SEISMIC RETROFIT

TRAFFIC CONTROL PLANS

Plot 21

PLAN REF NO **TC18**

SHEET 155 OF 176 SHEETS

MINIMUM LANE CLOSURE TAPER LENGTH = L							
LANE WIDTH (feet)	SPEED (MPH)	50	55	60	65	70	75
12	L (feet)	600	660	720	780	840	900
MINIMUM SHOULDER CLOSURE TAPER LENGTH = L/3							
SHOULDER WIDTH (feet)	SPEED (MPH)	50	55	60	65	70	75
6	L/3 (feet)	120	120	120	160	160	160
10	L/3 (feet)	200	200	200	240	240	280
USE A MINIMUM 3 DEVICES FOR SHOULDER LESS THAN 6'.							

SIGN SPACING = X (1)		
FREEWAYS & EXPRESSWAYS	55 / 70 MPH	1500'
RURAL HIGHWAYS	60 / 65 MPH	800'
RURAL ROADS	45 / 55 MPH	500'
(1) ALL SPACING MAY BE ADJUSTED TO ACCOMMODATE INTERCHANGE RAMPS, AT-GRADE INTERSECTIONS AND DRIVEWAYS.		

CHANNELIZATION DEVICE SPACING (feet)		
MPH	TAPER	TANGENT
50/70	40	80
35/45	30	60

POSTED SPEED=60 MPH

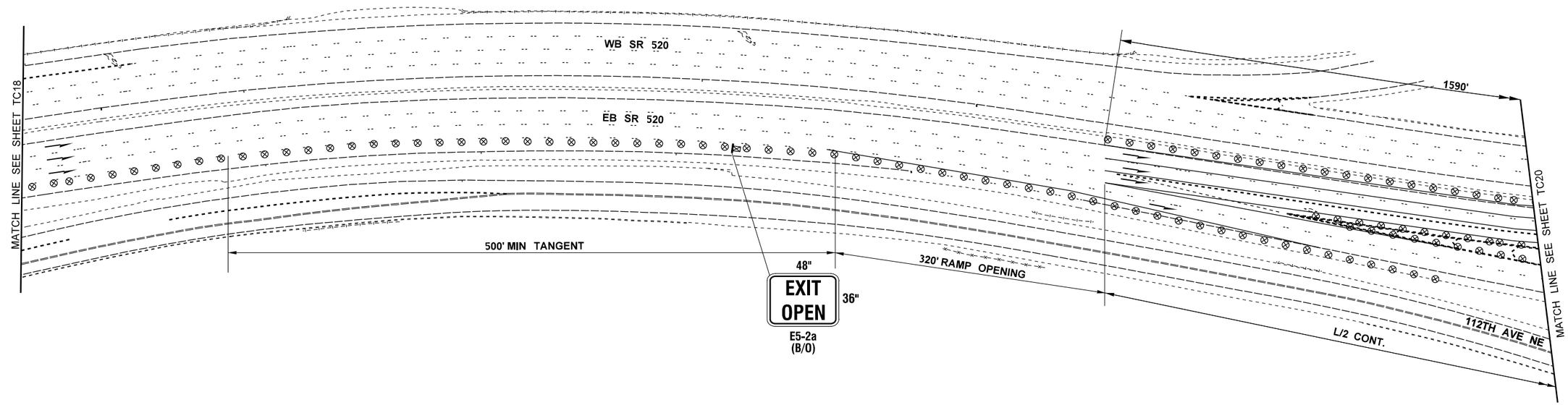

LEGEND

- CLASS A CONSTRUCTION SIGN
- BARRIER MOUNTED TEMPORARY SIGN
- TEMPORARY SIGN LOCATION
- TRAFFIC SAFETY DRUM
- EXISTING PAVEMENT MARKING
- TYPE 2 BARRICADE WITH R9 SIGN
- FLAGGER
- TEMPORARY TRAFFIC BARRIER WITH REFLECTORS
- TEMPORARY IMPACT ATTENUATOR
- SEQUENTIAL ARROW SIGN
- TRANSPORTABLE ATTENUATOR
- PCMS — PORTABLE CHANGEABLE MESSAGE SIGN

NOTES:

1. SEE SPECIAL PROVISIONS FOR WORK HOUR RESTRICTIONS.
2. DISTANCE BETWEEN LANE CLOSURE TAPER AND ALL OPEN RAMPS SHALL BE 500' MINIMUM.
3. DEVICES SHALL NOT ENCROACH INTO TRAVELED LANE.
4. PLACE TRANSVERSE DEVICE ACROSS CLOSED LANES AT EVERY 500'.
5. DEVICE SPACING FOR THE DOWNSTREAM TAPER SHALL BE 20'.
6. SIGNS ARE BLACK ON ORANGE UNLESS OTHERWISE INDICATED.

BRIDGES 405 / 46W AND 46E
EB SR 520 LANE SHIFT

NOT TO SCALE

FILE NAME	T:\412348\XL5937\CAD\ContractPlans\XL5937_PS_TC.dgn
TIME	11:13:02 AM
DATE	5/20/2022
PLOTTED BY	oneilma
DESIGNED BY	C. MAR
ENTERED BY	C. MAR
CHECKED BY	M. O'NEIL
PROJ. ENGR.	C. ANDERSON
REGIONAL ADM.	M. COTTEN

REVISION | DATE | BY

REGION NO. 10 | STATE WASH | FED.AID PROJ.NO.

JOB NUMBER 20A039

CONTRACT NO. | LOCATION NO.

P.E. STAMP BOX — DATE

P.E. STAMP BOX — DATE

Washington State Department of Transportation

I-405
BN RR BRIDGE TO PED TRAIL BRIDGE
SEISMIC RETROFIT

TRAFFIC CONTROL PLANS

Plot 22

PLAN REF NO TC19

SHEET 156 OF 176 SHEETS

MINIMUM LANE CLOSURE TAPER LENGTH = L							
LANE WIDTH (feet)	SPEED (MPH)	50	55	60	65	70	75
12	L (feet)	600	660	720	780	840	900
MINIMUM SHOULDER CLOSURE TAPER LENGTH = L/3							
SHOULDER WIDTH (feet)	SPEED (MPH)	50	55	60	65	70	75
6	L/3 (feet)	120	120	120	160	160	160
10	L/3 (feet)	200	200	200	240	240	280
USE A MINIMUM 3 DEVICES FOR SHOULDER LESS THAN 6'.							

SIGN SPACING = X (1)		
FREEWAYS & EXPRESSWAYS	55 / 70 MPH	1500'
RURAL HIGHWAYS	60 / 65 MPH	800'
RURAL ROADS	45 / 55 MPH	500'
(1) ALL SPACING MAY BE ADJUSTED TO ACCOMMODATE INTERCHANGE RAMPS, AT-GRADE INTERSECTIONS AND DRIVEWAYS.		

CHANNELIZATION DEVICE SPACING (feet)		
MPH	TAPER	TANGENT
50/70	40	80
35/45	30	60

POSTED SPEED=60 MPH

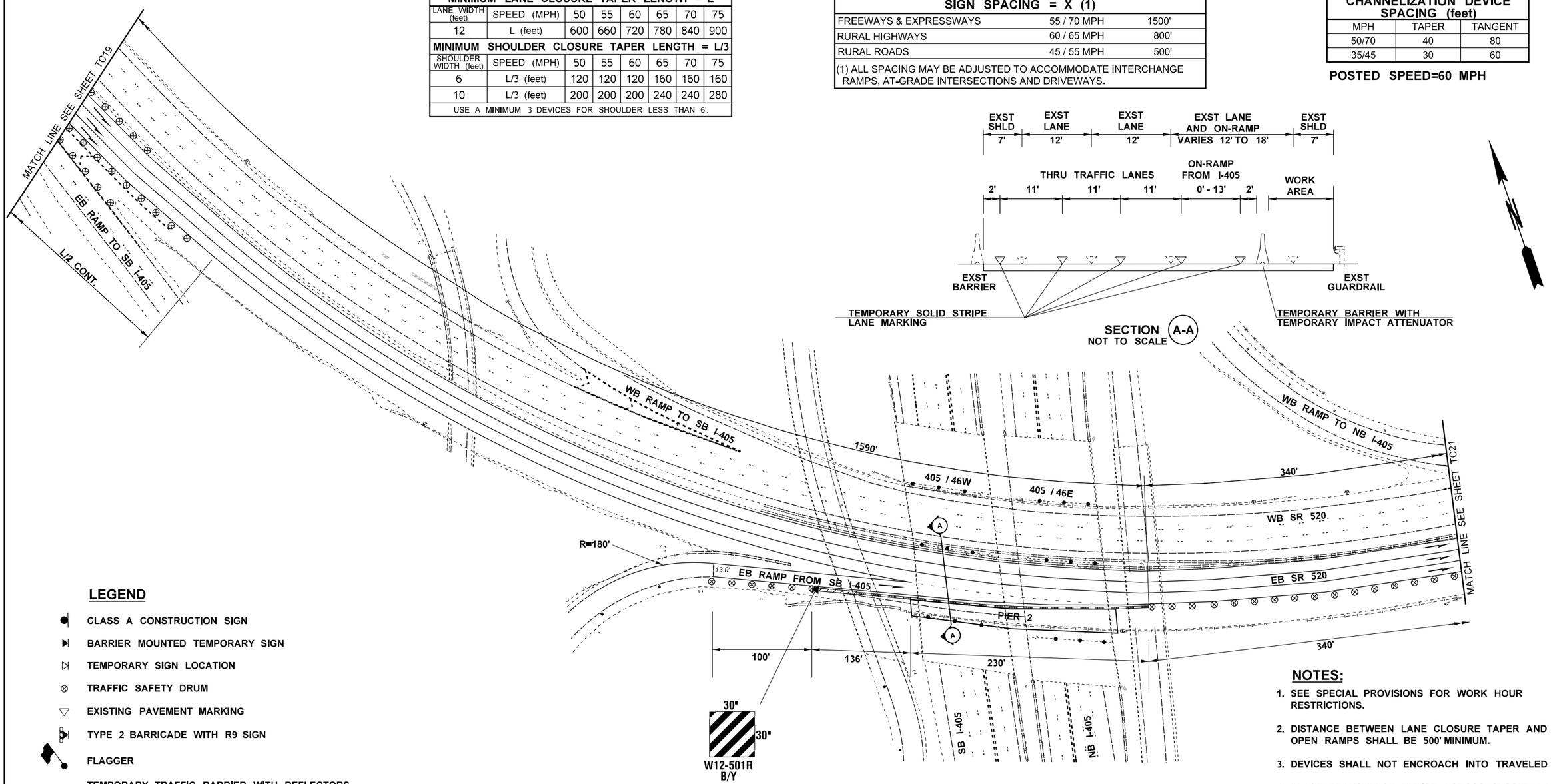

LEGEND

- CLASS A CONSTRUCTION SIGN
- BARRIER MOUNTED TEMPORARY SIGN
- TEMPORARY SIGN LOCATION
- TRAFFIC SAFETY DRUM
- EXISTING PAVEMENT MARKING
- TYPE 2 BARRICADE WITH R9 SIGN
- FLAGGER
- TEMPORARY TRAFFIC BARRIER WITH REFLECTORS
- TEMPORARY IMPACT ATTENUATOR
- SEQUENTIAL ARROW SIGN
- TRANSPORTABLE ATTENUATOR
- PCMS — PORTABLE CHANGEABLE MESSAGE SIGN

NOTES:

1. SEE SPECIAL PROVISIONS FOR WORK HOUR RESTRICTIONS.
2. DISTANCE BETWEEN LANE CLOSURE TAPER AND ALL OPEN RAMPS SHALL BE 500' MINIMUM.
3. DEVICES SHALL NOT ENCROACH INTO TRAVELED LANE.
4. PLACE TRANSVERSE DEVICE ACROSS CLOSED LANES AT EVERY 500'.
5. DEVICE SPACING FOR THE DOWNSTREAM TAPER SHALL BE 20'.
6. SIGNS ARE BLACK ON ORANGE UNLESS OTHERWISE INDICATED.

BRIDGES 405 / 46W AND 46E
EB SR 520 LANE SHIFT

NOT TO SCALE

FILE NAME	T:\412348\XL5937\CAD\ContractPlans\XL5937_PS_TC.dgn						
TIME	11:13:06 AM				REGION NO. 10	STATE WASH	FED.AID PROJ.NO.
DATE	5/20/2022						
PLOTTED BY	oneilma						
DESIGNED BY	C. MAR				JOB NUMBER 20A039		
ENTERED BY	C. MAR						
CHECKED BY	M. O'NEIL				CONTRACT NO.		LOCATION NO.
PROJ. ENGR.	C. ANDERSON						
REGIONAL ADM.	M. COTTEN	REVISION	DATE	BY			

P.E. STAMP BOX — DATE

P.E. STAMP BOX — DATE

Washington State Department of Transportation

I-405
BN RR BRIDGE TO PED TRAIL BRIDGE
SEISMIC RETROFIT

TRAFFIC CONTROL PLANS

Plot 23

PLAN REF NO TC20

SHEET 157 OF 176 SHEETS

MINIMUM LANE CLOSURE TAPER LENGTH = L							
LANE WIDTH (feet)	SPEED (MPH)	50	55	60	65	70	75
12	L (feet)	600	660	720	780	840	900
MINIMUM SHOULDER CLOSURE TAPER LENGTH = L/3							
SHOULDER WIDTH (feet)	SPEED (MPH)	50	55	60	65	70	75
6	L/3 (feet)	120	120	120	160	160	160
10	L/3 (feet)	200	200	200	240	240	280
USE A MINIMUM 3 DEVICES FOR SHOULDER LESS THAN 6'.							

SIGN SPACING = X (1)		
FREEWAYS & EXPRESSWAYS	55 / 70 MPH	1500'
RURAL HIGHWAYS	60 / 65 MPH	800'
RURAL ROADS	45 / 55 MPH	500'
(1) ALL SPACING MAY BE ADJUSTED TO ACCOMMODATE INTERCHANGE RAMPS, AT-GRADE INTERSECTIONS AND DRIVEWAYS.		

CHANNELIZATION DEVICE SPACING (feet)		
MPH	TAPER	TANGENT
50/70	40	80
35/45	30	60

POSTED SPEED=60 MPH

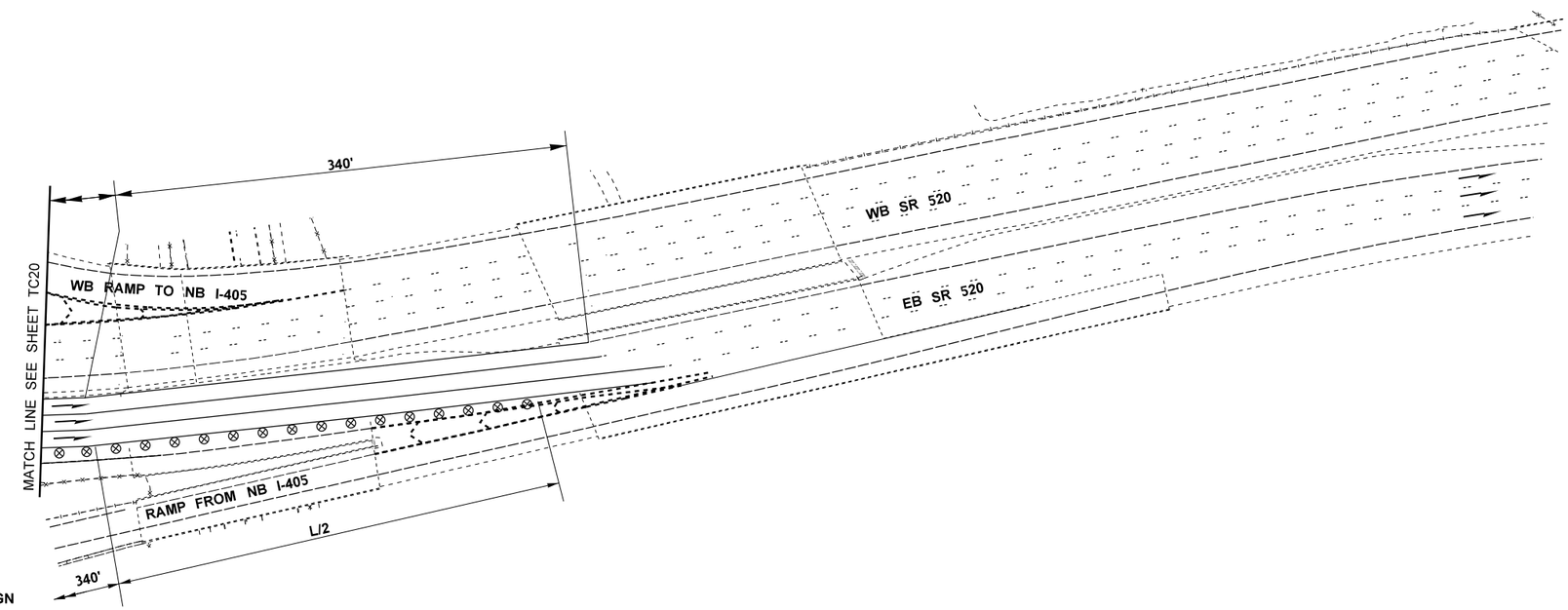

LEGEND

- CLASS A CONSTRUCTION SIGN
- BARRIER MOUNTED TEMPORARY SIGN
- TEMPORARY SIGN LOCATION
- TRAFFIC SAFETY DRUM
- EXISTING PAVEMENT MARKING
- TYPE 2 BARRICADE WITH R9 SIGN
- FLAGGER
- TEMPORARY TRAFFIC BARRIER WITH REFLECTORS
- TEMPORARY IMPACT ATTENUATOR
- SEQUENTIAL ARROW SIGN
- TRANSPORTABLE ATTENUATOR
- PCMS — PORTABLE CHANGEABLE MESSAGE SIGN

NOTES:

1. SEE SPECIAL PROVISIONS FOR WORK HOUR RESTRICTIONS.
2. DISTANCE BETWEEN LANE CLOSURE TAPER AND ALL OPEN RAMPS SHALL BE 500' MINIMUM.
3. DEVICES SHALL NOT ENCROACH INTO TRAVELED LANE.
4. PLACE TRANSVERSE DEVICE ACROSS CLOSED LANES AT EVERY 500'.
5. DEVICE SPACING FOR THE DOWNSTREAM TAPER SHALL BE 20'.
6. SIGNS ARE BLACK ON ORANGE UNLESS OTHERWISE INDICATED.

BRIDGES 405 / 46W AND 46E
EB SR 520 LANE SHIFT

NOT TO SCALE

FILE NAME	T:\412348\XL5937\CAD\ContractPlans\XL5937_PS_TC.dgn
TIME	11:13:11 AM
DATE	5/20/2022
PLOTTED BY	oneilma
DESIGNED BY	C. MAR
ENTERED BY	C. MAR
CHECKED BY	M. O'NEIL
PROJ. ENGR.	C. ANDERSON
REGIONAL ADM.	M. COTTEN

REVISION | DATE | BY

REGION NO. 10 | STATE WASH | FED.AID PROJ.NO.

JOB NUMBER 20A039

CONTRACT NO. | LOCATION NO.

P.E. STAMP BOX — DATE

P.E. STAMP BOX — DATE

Washington State Department of Transportation

I-405
BN RR BRIDGE TO PED TRAIL BRIDGE
SEISMIC RETROFIT

TRAFFIC CONTROL PLANS

Plot 24

PLAN REF NO TC21

SHEET 158 OF 176 SHEETS

MINIMUM LANE CLOSURE TAPER LENGTH = L							
LANE WIDTH (feet)	SPEED (MPH)	50	55	60	65	70	75
12	L (feet)	600	660	720	780	840	900
MINIMUM SHOULDER CLOSURE TAPER LENGTH = L/3							
SHOULDER WIDTH (feet)	SPEED (MPH)	50	55	60	65	70	75
6	L/3 (feet)	120	120	120	160	160	160
10	L/3 (feet)	200	200	200	240	240	280
USE A MINIMUM 3 DEVICES FOR SHOULDER LESS THAN 6'.							

SIGN SPACING = X (1)		
FREEWAYS & EXPRESSWAYS	55 / 70 MPH	1500'
RURAL HIGHWAYS	60 / 65 MPH	800'
RURAL ROADS	45 / 55 MPH	500'
(1) ALL SPACING MAY BE ADJUSTED TO ACCOMMODATE INTERCHANGE RAMPS, AT-GRADE INTERSECTIONS AND DRIVEWAYS.		

CHANNELIZATION DEVICE SPACING (feet)		
MPH	TAPER	TANGENT
50/70	40	80
35/45	30	60

POSTED SPEED=60 MPH

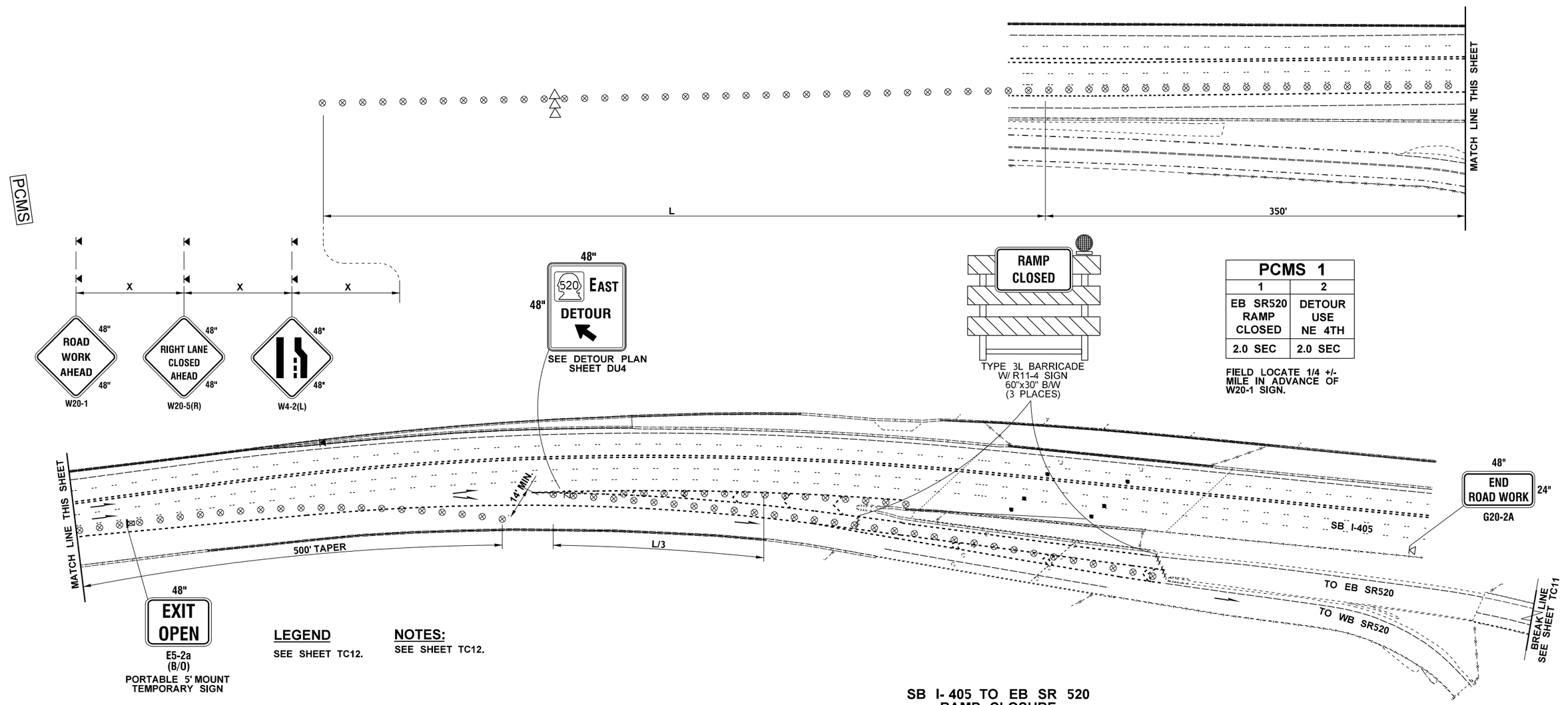

PCMS 1	
1	2
EB SR520 RAMP CLOSED	DETOUR USE NE 4TH
2.0 SEC	2.0 SEC

FIELD LOCATE 1/4 +/- MILE IN ADVANCE OF W20-1 SIGN.

LEGEND

SEE SHEET TC12.

NOTES:

SEE SHEET TC12.

SB I- 405 TO EB SR 520 RAMP CLOSURE

NOT TO SCALE

FILE NAME	T:\412348\XL5937\CAD\ContractPlans\XL5937_PS_TC.dgn
TIME	11:13:15 AM
DATE	5/20/2022
PLOTTED BY	oneilma
DESIGNED BY	B. BASSERI
ENTERED BY	B. BASSERI
CHECKED BY	M. O'NEIL
PROJ. ENGR.	C. ANDERSON
REGIONAL ADM.	M. COTTEN

REVISION | DATE | BY

REGION NO.	STATE	FED.AID PROJ.NO.
10	WASH	
JOB NUMBER 20A039		
CONTRACT NO.		LOCATION NO.

P.E. STAMP BOX DATE

P.E. STAMP BOX DATE

Washington State Department of Transportation

I-405
BN RR BRIDGE TO PED TRAIL BRIDGE SEISMIC RETROFIT

TRAFFIC CONTROL PLANS

Plot 13

PLAN REF NO **TC22**

SHEET 159 OF 176 SHEETS

SIGN SPACING = X		
RURAL ROADS & URBAN ARTERIALS	35 / 40 MPH	350' ±
RURAL ROADS, URBAN ARTERIALS, RESIDENTIAL & BUSINESS DISTRICTS	25 / 30 MPH	200' ± (2)
URBAN STREETS	25 MPH OR LESS	100' ± (2)

(1) ALL SPACING MAY BE ADJUSTED TO ACCOMMODATE INTERCHANGE RAMPS, AT-GRADE INTERSECTIONS AND DRIVEWAYS.
(2) THIS SPACING MAY BE REDUCED IN URBAN AREAS TO FIT ROADWAY CONDITIONS.

NORTHUP WAY
POSTED SPEED=35 MPH

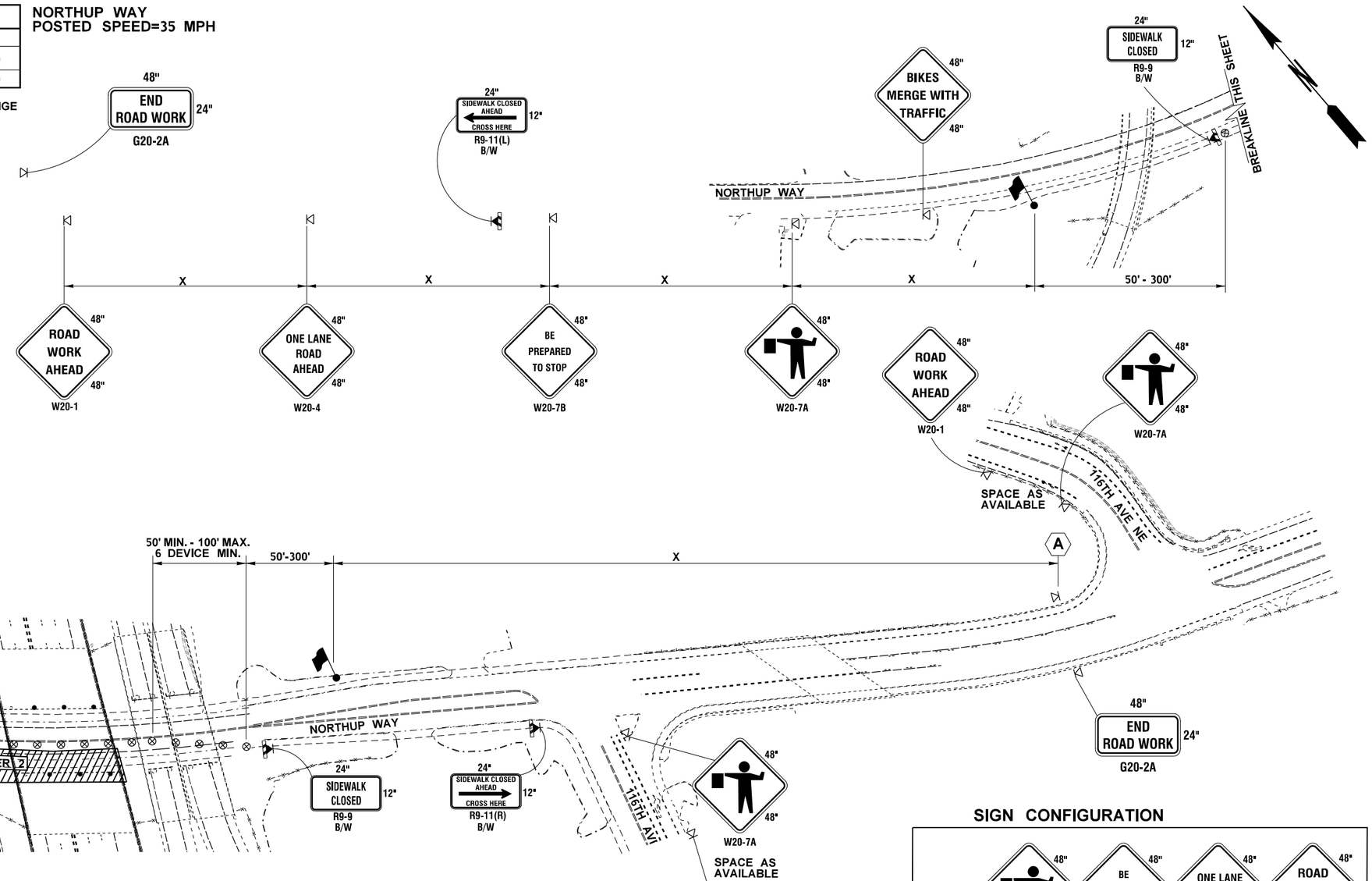

LEGEND

- CLASS A CONSTRUCTION SIGN
- BARRIER MOUNTED TEMPORARY SIGN
- TEMPORARY SIGN LOCATION
- TRAFFIC SAFETY DRUM
- EXISTING PAVEMENT MARKING
- TYPE 2 BARRICADE WITH R9 SIGN
- FLAGGER
- TEMPORARY TRAFFIC BARRIER WITH REFLECTORS
- TEMPORARY IMPACT ATTENUATOR
- SEQUENTIAL ARROW SIGN
- TRANSPORTABLE ATTENUATOR
- PCMS — PORTABLE CHANGEABLE MESSAGE SIGN

SIGN CONFIGURATION

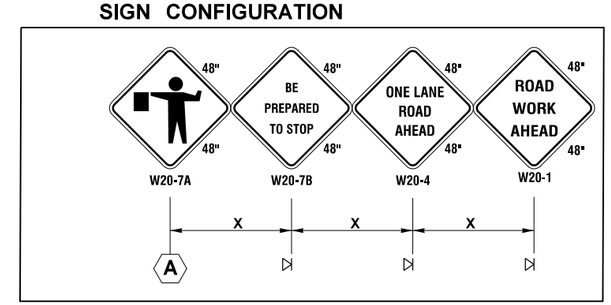

NOTES:

1. SEE SPECIAL PROVISIONS FOR WORK HOUR RESTRICTIONS.
3. DEVICES SHALL NOT ENCROACH INTO TRAVELED LANE.
5. DEVICE SPACING FOR THE DOWNSTREAM TAPER SHALL BE 20'.
6. SIGNS ARE BLACK ON ORANGE UNLESS OTHERWISE INDICATED.

BRIDGE 405 / 47W AND 47E
NORTHUP WAY SINGLE LANE CLOSURE
ALTERNATING TRAFFIC
WITH PEDESTRIAN TRAFFIC CONTROL

FILE NAME	T:\412348\XL5937\CAD\ContractPlans\XL5937_PS_TC.dgn					
TIME	11:13:19 AM				REGION NO. 10	STATE WASH
DATE	5/20/2022					FED.AID PROJ.NO.
PLOTTED BY	oneilma					
DESIGNED BY	B. BASSERI				JOB NUMBER 20A039	
ENTERED BY	B. BASSERI					
CHECKED BY	M. O'NEIL				CONTRACT NO.	LOCATION NO.
PROJ. ENGR.	C. ANDERSON					
REGIONAL ADM.	M. COTTEN	REVISION	DATE	BY		

P.E. STAMP BOX — DATE
P.E. STAMP BOX — DATE

Washington State Department of Transportation

I-405
BN RR BRIDGE TO PED TRAIL BRIDGE
SEISMIC RETROFIT

TRAFFIC CONTROL PLANS

Plot 14
PLAN REF NO TC23
SHEET 160 OF 176 SHEETS

SIGN SPACING = X		
RURAL ROADS & URBAN ARTERIALS	35 / 40 MPH	350' ±
RURAL ROADS, URBAN ARTERIALS, RESIDENTIAL & BUSINESS DISTRICTS	25 / 30 MPH	200' ± (2)
URBAN STREETS	25 MPH OR LESS	100' ± (2)

(1) ALL SPACING MAY BE ADJUSTED TO ACCOMMODATE INTERCHANGE RAMPS, AT-GRADE INTERSECTIONS AND DRIVEWAYS.
(2) THIS SPACING MAY BE REDUCED IN URBAN AREAS TO FIT ROADWAY CONDITIONS.

NORTHUP WAY
POSTED SPEED=35 MPH

LEGEND

- CLASS A CONSTRUCTION SIGN
- BARRIER MOUNTED TEMPORARY SIGN
- TEMPORARY SIGN LOCATION
- TRAFFIC SAFETY DRUM
- EXISTING PAVEMENT MARKING
- TYPE 2 BARRICADE WITH R9 SIGN
- FLAGGER
- TEMPORARY TRAFFIC BARRIER WITH REFLECTORS
- TEMPORARY IMPACT ATTENUATOR
- SEQUENTIAL ARROW SIGN
- TRANSPORTABLE ATTENUATOR
- PCMS — PORTABLE CHANGEABLE MESSAGE SIGN

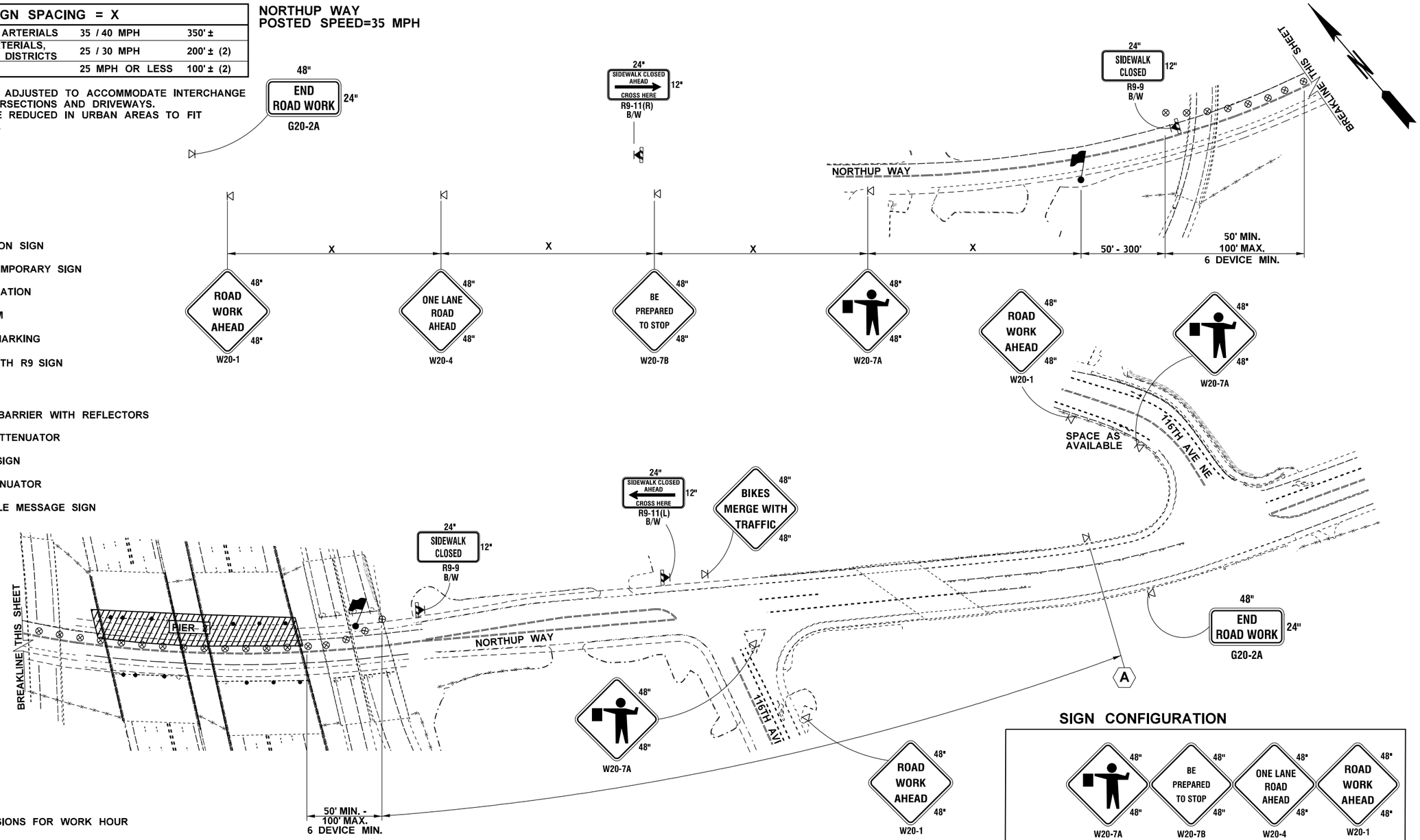

SIGN CONFIGURATION

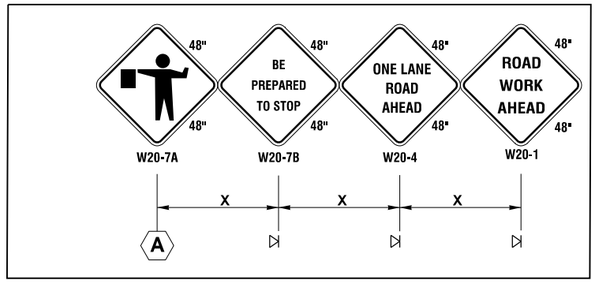

1. SEE SPECIAL PROVISIONS FOR WORK HOUR RESTRICTIONS.
3. DEVICES SHALL NOT ENCROACH INTO TRAVELED LANE.
5. DEVICE SPACING FOR THE DOWNSTREAM TAPER SHALL BE 20'.
6. SIGNS ARE BLACK ON ORANGE UNLESS OTHERWISE INDICATED.

BRIDGE 405 / 47W AND 47E
NORTHUP WAY SINGLE LANE CLOSURE
ALTERNATING TRAFFIC
WITH PEDESTRIAN TRAFFIC CONTROL

FILE NAME	T:\412348\XL5937\CAD\ContractPlans\XL5937_PS_TC.dgn
TIME	11:13:23 AM
DATE	5/20/2022
PLOTTED BY	oneilma
DESIGNED BY	B. BASSERI
ENTERED BY	B. BASSERI
CHECKED BY	M. O'NEIL
PROJ. ENGR.	C. ANDERSON
REGIONAL ADM.	M. COTTEN

REVISION | DATE | BY

REGION NO. 10 | STATE WASH | FED.AID PROJ.NO.
JOB NUMBER 20A039
CONTRACT NO. | LOCATION NO.

P.E. STAMP BOX — DATE
P.E. STAMP BOX — DATE

Washington State Department of Transportation

I-405
BN RR BRIDGE TO PED TRAIL BRIDGE
SEISMIC RETROFIT

TRAFFIC CONTROL PLANS

Plot 15
PLAN REF NO TC24
SHEET 161 OF 176 SHEETS

PCMS 1	
1	2
SLOW TRAFFIC AHEAD	NEXT # MILES
2.0 SEC	2.0 SEC

FIELD LOCATE AT LEAST 1/2 +/- MILE IN ADVANCE OF PCMS 2.

RELOCATE AS NEEDED TO REMAIN 1 +/- MILE IN ADVANCE OF QUEUE.

PCMS MAY BE TRUCK MOUNTED; IF SO, THE THREE TRANSVERSE DRUMS ARE OPTIONAL.

REMOVE WHEN QUEUE NO LONGER PRESENT.

= APPROXIMATE QUEUE LENGTH ROUNDED UP TO NEAREST MILE

LOCATE PCMS PER WSDOT STANDARD SPECIFICATION 1-10.3(3)C.

PCMS 2	
1	2
LEFT 2 LANES CLOSED	1 MILE AHEAD
2.0 SEC	2.0 SEC

FIELD LOCATE 1/4 +/- MILE IN ADVANCE OF W20-1 SIGN.

LOCATE PCMS PER WSDOT STANDARD SPECIFICATION 1-10.3(3)C.

MAXIMUM CHANNELIZATION DEVICE SPACING (feet)		
MPH	TAPER	TANGENT
50-75	40	80

SIGN SPACING = X (1)		
FREEWAYS & EXPRESSWAYS	50-75 MPH	1500' +/-

(1) ALL SPACING MAY BE ADJUSTED TO ACCOMMODATE INTERCHANGE RAMPS, AT-GRADE INTERSECTIONS AND DRIVEWAYS.
(2) THIS SPACING MAY BE REDUCED IN URBAN AREAS TO FIT ROADWAY CONDITIONS.

MINIMUM LANE CLOSURE TAPER LENGTH = L							
LANE WIDTH (feet)	SPEED (MPH)	50	55	60	65	70	75
12	L (feet)	600	660	720	780	840	900

MINIMUM SHOULDER CLOSURE TAPER LENGTH = L/3							
SHOULDER WIDTH (feet)	SPEED (MPH)	50	55	60	65	70	75
6	L/3 (feet)	120	120	120	160	160	160
10	L/3 (feet)	200	200	200	240	240	280

USE A MINIMUM 3 DEVICES FOR SHOULDER LESS THAN 6'.

MINIMUM LONGITUDINAL BUFFER SPACE = B						
SPEED (MPH)	50	55	60	65	70	75
LENGTH (feet)	425	495	570	645	730	820

STATIONARY TRANSPORTABLE ATTENUATOR ROLL AHEAD DISTANCE = R			
HOST VEHICLE WEIGHT 9,900 TO 22,000 lbs.		HOST VEHICLE WEIGHT > 22,000 lbs.	
50-55 MPH	60+ MPH	50-55 MPH	60+ MPH
123'	172'	100'	150'

FOR EXIT-RAMP AND ON-RAMP DETAILS WITHIN LANE CLOSURE CONFIGURATION: SEE SHEETS TC26 AND TC27

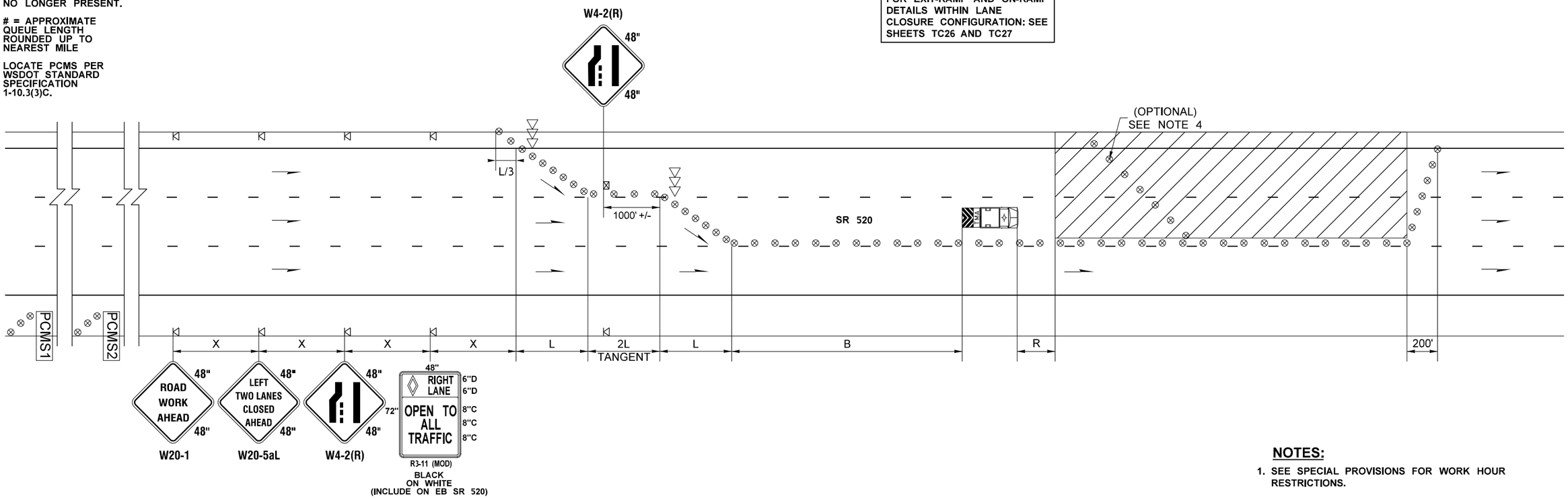

NOTES:

1. SEE SPECIAL PROVISIONS FOR WORK HOUR RESTRICTIONS.
2. DISTANCE BETWEEN LANE CLOSURE TAPER AND ALL OPEN RAMPS SHALL BE 500' MINIMUM.
3. DEVICES SHALL NOT ENCROACH INTO TRAVELED LANE.
4. PLACE TRANSVERSE DEVICE ACROSS CLOSED LANES AT EVERY 500'.
5. DEVICE SPACING FOR THE DOWNSTREAM TAPER SHALL BE 20'.
6. SIGNS ARE BLACK ON ORANGE UNLESS OTHERWISE INDICATED.

LEGEND

- CLASS A CONSTRUCTION SIGN
- BARRIER MOUNTED TEMPORARY SIGN
- TEMPORARY SIGN LOCATION
- TRAFFIC SAFETY DRUM
- EXISTING PAVEMENT MARKING
- TYPE 2 BARRICADE WITH R9 SIGN
- FLAGGER
- TEMPORARY TRAFFIC BARRIER WITH REFLECTORS
- TEMPORARY IMPACT ATTENUATOR
- SEQUENTIAL ARROW SIGN
- TRANSPORTABLE ATTENUATOR
- PCMS — PORTABLE CHANGEABLE MESSAGE SIGN

SR 520 DOUBLE LEFT LANE CLOSURE WITH NO LANE SHIFTS (SHEET 1 OF 3)

NOT TO SCALE

FILE NAME	T:\412348\XL5937\CAD\ContractPlans\XL5937_PS_TC_SR520Lanes.dgn
TIME	11:13:26 AM
DATE	5/20/2022
PLOTTED BY	oneilma
DESIGNED BY	A. DANNEMILLER
ENTERED BY	A. DANNEMILLER
CHECKED BY	M. O'NEIL
PROJ. ENGR.	C. ANDERSON
REGIONAL ADM.	M. COTTEN

REVISION	DATE	BY

REGION NO.	STATE	FED.AID PROJ.NO.
10	WASH	
JOB NUMBER 20A039		
CONTRACT NO.		LOCATION NO.

P.E. STAMP BOX — DATE

P.E. STAMP BOX — DATE

Washington State Department of Transportation

I-405
BN RR BRIDGE TO PED TRAIL BRIDGE SEISMIC RETROFIT

TRAFFIC CONTROL PLANS

Plot 1
PLAN REF NO TC25
SHEET 162 OF 176 SHEETS

NOTES:

1. SEE SPECIAL PROVISIONS FOR WORK HOUR RESTRICTIONS.
2. DISTANCE BETWEEN LANE CLOSURE TAPER AND ALL OPEN RAMPS SHALL BE 500' MINIMUM.
3. DEVICES SHALL NOT ENCROACH INTO TRAVELED LANE.
4. PLACE TRANSVERSE DEVICE ACROSS CLOSED LANES AT EVERY 500'.
5. DEVICE SPACING FOR THE DOWNSTREAM TAPER SHALL BE 20'.
6. SIGNS ARE BLACK ON ORANGE UNLESS OTHERWISE INDICATED.

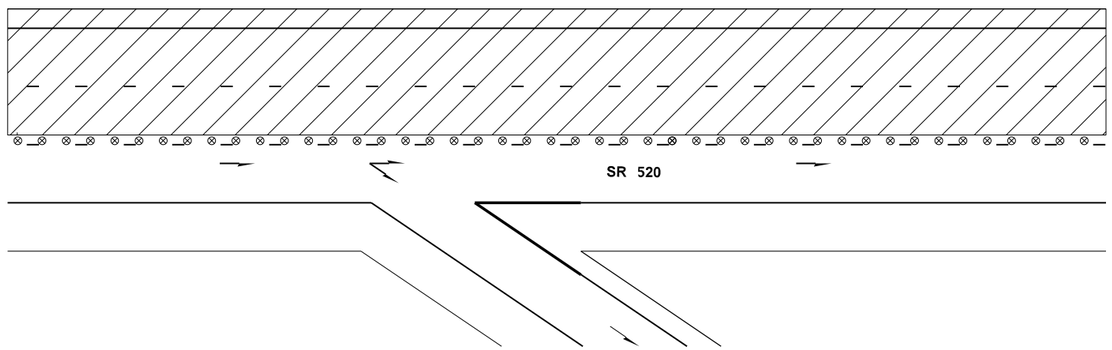

OPEN RIGHT EXIT-RAMP DETAIL

NOT TO SCALE

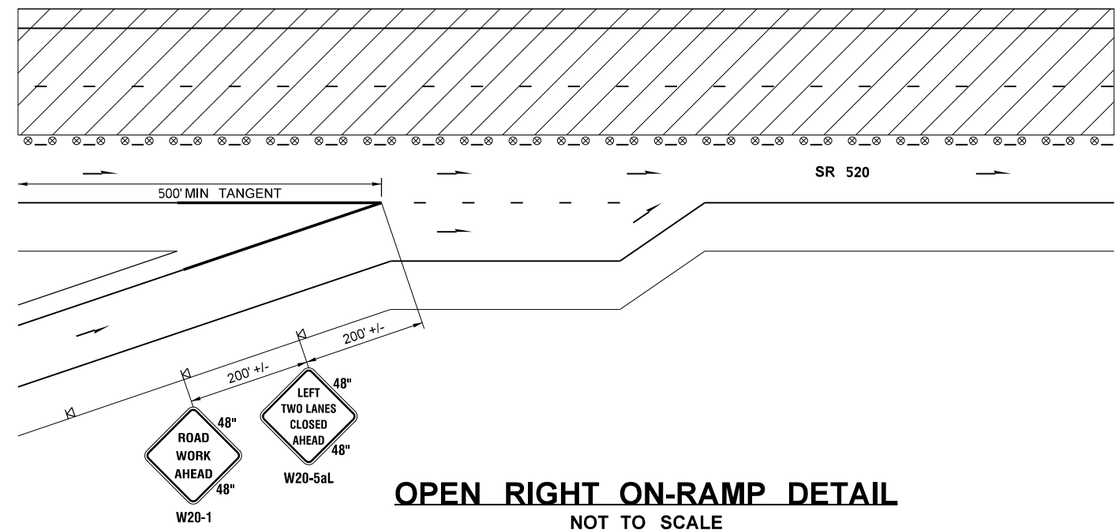

OPEN RIGHT ON-RAMP DETAIL

NOT TO SCALE

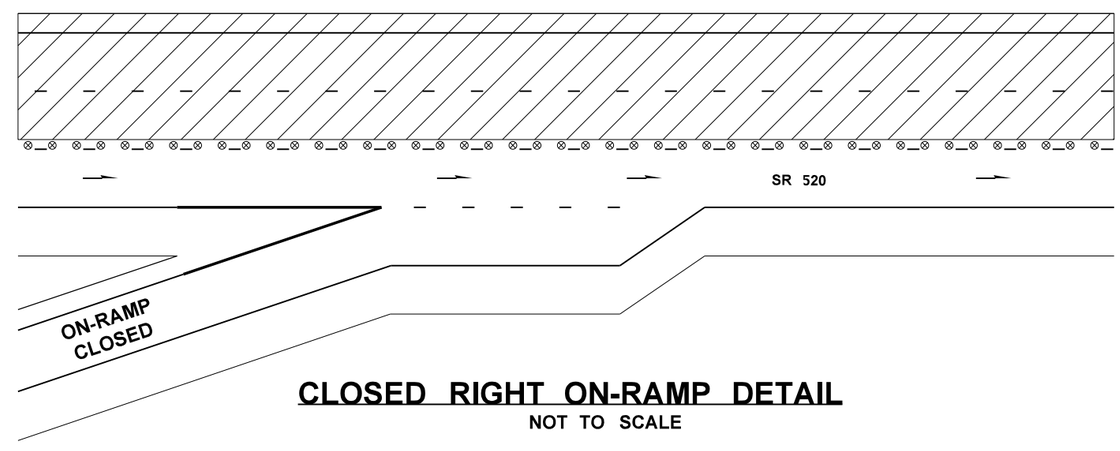

CLOSED RIGHT EXIT-RAMP DETAIL

RIGHT EXIT-RAMPS ARE TO REMAIN OPEN WITH THIS DOUBLE LEFT LANE CLOSURE CONFIGURATION

CLOSED RIGHT ON-RAMP DETAIL

NOT TO SCALE

SR 520 DOUBLE LEFT LANE CLOSURE WITH NO LANE SHIFTS (SHEET 2 OF 3)

NOT TO SCALE

FILE NAME	T:\412348\XL5937\CAD\ContractPlans\XL5937_PS_TC_SR520Lanes.dgn						
TIME	11:13:27 AM				REGION NO. 10	STATE WASH	FED.AID PROJ.NO.
DATE	5/20/2022						
PLOTTED BY	oneilma						
DESIGNED BY	A. DANNEMILLER				JOB NUMBER 20A039		
ENTERED BY	A. DANNEMILLER						
CHECKED BY	M. O'NEIL				CONTRACT NO.		LOCATION NO.
PROJ. ENGR.	C. ANDERSON						
REGIONAL ADM.	M. COTTEN	REVISION	DATE	BY			

DATE
P.E. STAMP BOX

DATE
P.E. STAMP BOX

Washington State Department of Transportation

I-405
BN RR BRIDGE TO PED TRAIL BRIDGE
SEISMIC RETROFIT

TRAFFIC CONTROL PLANS

Plot 2
PLAN REF NO TC26
SHEET 163 OF 176 SHEETS

NOTES:

1. SEE SPECIAL PROVISIONS FOR WORK HOUR RESTRICTIONS.
2. DISTANCE BETWEEN LANE CLOSURE TAPER AND ALL OPEN RAMPS SHALL BE 500' MINIMUM.
3. DEVICES SHALL NOT ENCROACH INTO TRAVELED LANE.
4. PLACE TRANSVERSE DEVICE ACROSS CLOSED LANES AT EVERY 500'.
5. DEVICE SPACING FOR THE DOWNSTREAM TAPER SHALL BE 20'.
6. SIGNS ARE BLACK ON ORANGE UNLESS OTHERWISE INDICATED.

MINIMUM RAMP SHIFT TAPER LENGTH = 2*(L/2)							
LANE WIDTH (feet)	SPEED (MPH)	50	55	60	65	70	75
12	2*(L/2) (feet)	600	660	720	780	840	900

MINIMUM RAMP ACCELEATION & MERGE LENGTH = L/2							
LANE WIDTH (feet)	SPEED (MPH)	50	55	60	65	70	75
12	L/2 (feet)	300	330	360	390	420	450

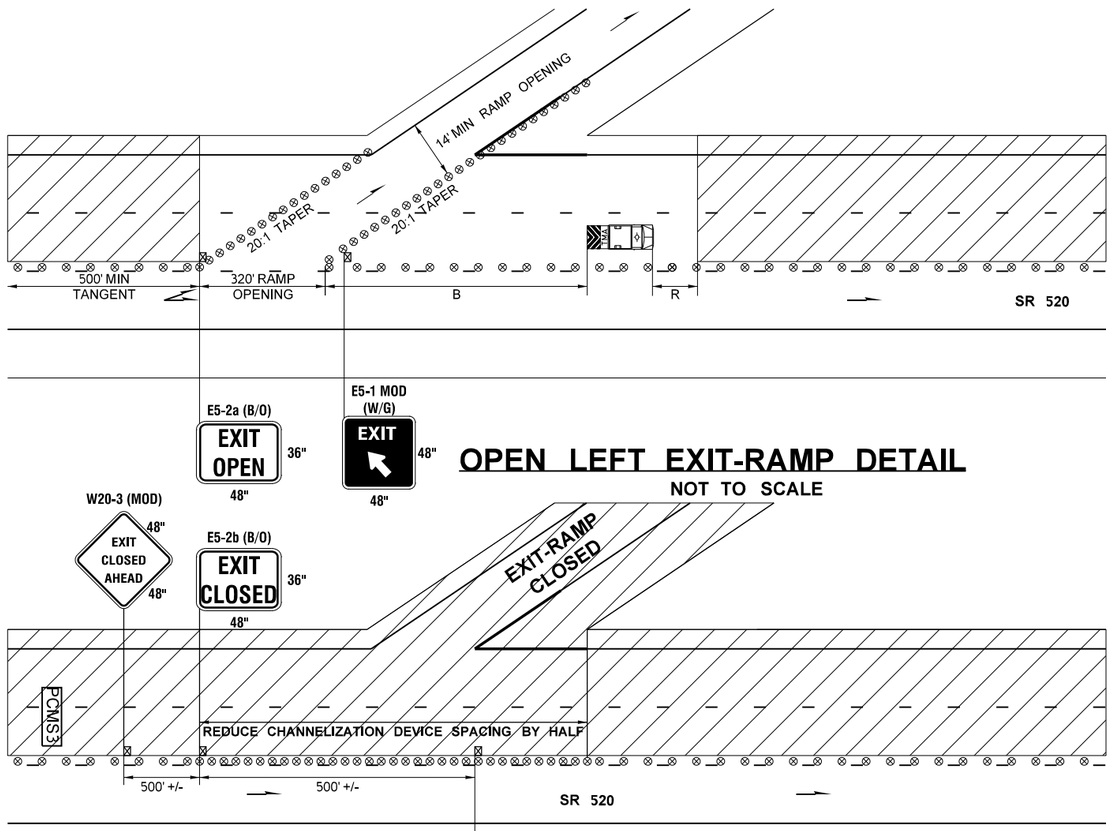

OPEN LEFT EXIT-RAMP DETAIL

NOT TO SCALE

(OPTIONAL)

PCMS 3	
1	2
EXIT ### CLOSED AHEAD	DETOUR TO EXIT ###
2.0 SEC	2.0 SEC

FIELD LOCATE 1/4 +/- MILE IN ADVANCE OF W20-3 (MOD) SIGN.

LOCATE PCMS PER WSDOT STANDARD SPECIFICATION 1-10.3(3)C.

M4-9
DETOUR
36"
48"
(SEE NOTE 3)

OR

M4-9 MOD (B/O)
SSSSS
DETOUR
48"
48"
(ROUTE-SPECIFIC)

CLOSED LEFT EXIT-RAMP DETAIL

NOT TO SCALE

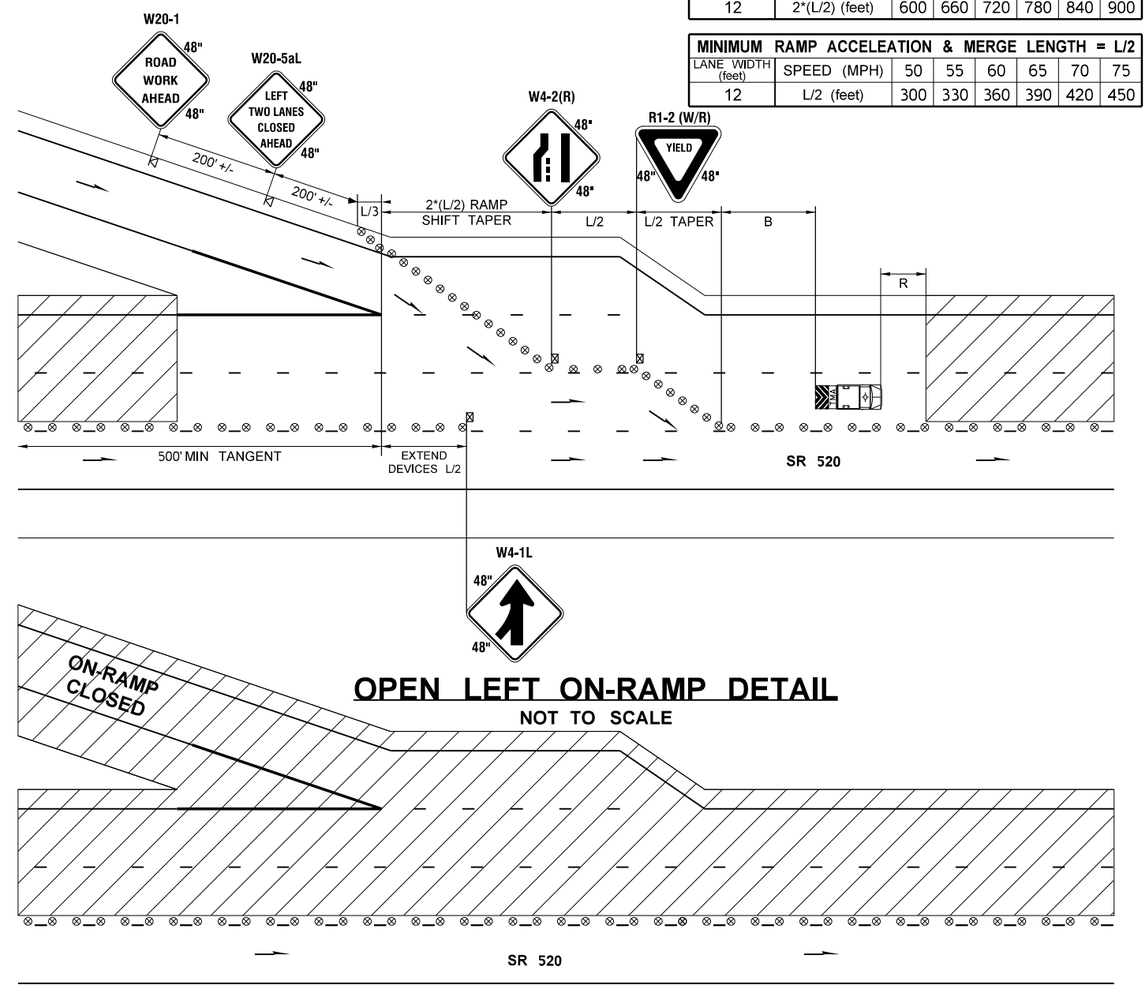

OPEN LEFT ON-RAMP DETAIL

NOT TO SCALE

CLOSED LEFT ON-RAMP DETAIL

NOT TO SCALE

SR 520 DOUBLE LEFT LANE CLOSURE WITH NO LANE SHIFTS (SHEET 3 OF 3)

NOT TO SCALE

FILE NAME	T:\412348\XL5937\CAD\ContractPlans\XL5937_PS_TC_SR520Lanes.dgn				REGION NO. 10	STATE WASH	FED.AID PROJ.NO.
TIME	11:13:27 AM						
DATE	5/20/2022						
PLOTTED BY	oneilma				JOB NUMBER 20A039		
DESIGNED BY	A. DANNEMILLER						
ENTERED BY	A. DANNEMILLER						
CHECKED BY	M. O'NEIL				CONTRACT NO.		LOCATION NO.
PROJ. ENGR.	C. ANDERSON						
REGIONAL ADM.	M. COTTEN	REVISION	DATE	BY			

P.E. STAMP BOX DATE

P.E. STAMP BOX DATE

Washington State Department of Transportation

I-405
BN RR BRIDGE TO PED TRAIL BRIDGE
SEISMIC RETROFIT

TRAFFIC CONTROL PLANS

Plot 3

PLAN REF NO TC27

SHEET 164 OF 176 SHEETS

PCMS 1	
1	2
SLOW TRAFFIC AHEAD	NEXT # MILES
2.0 SEC	2.0 SEC

FIELD LOCATE AT LEAST 1/2 +/- MILE IN ADVANCE OF PCMS 2.

RELOCATE AS NEEDED TO REMAIN 1 +/- MILE IN ADVANCE OF QUEUE.

PCMS MAY BE TRUCK MOUNTED; IF SO, THE THREE TRANSVERSE DRUMS ARE OPTIONAL.

REMOVE WHEN QUEUE NO LONGER PRESENT.

= APPROXIMATE QUEUE LENGTH ROUNDED UP TO NEAREST MILE

LOCATE PCMS PER WSDOT STANDARD SPECIFICATION 1-10.3(3)C.

PCMS 2	
1	2
RIGHT 2 LANES CLOSED	1 MILE AHEAD
2.0 SEC	2.0 SEC

FIELD LOCATE 1/4 +/- MILE IN ADVANCE OF W20-1 SIGN.

LOCATE PCMS PER WSDOT STANDARD SPECIFICATION 1-10.3(3)C.

MAXIMUM CHANNELIZATION DEVICE SPACING (feet)		
MPH	TAPER	TANGENT
50-75	40	80

SIGN SPACING = X (1)		
FREEWAYS & EXPRESSWAYS	50-75 MPH	1500' +/-

(1) ALL SPACING MAY BE ADJUSTED TO ACCOMMODATE INTERCHANGE RAMPS, AT-GRADE INTERSECTIONS AND DRIVEWAYS.
(2) THIS SPACING MAY BE REDUCED IN URBAN AREAS TO FIT ROADWAY CONDITIONS.

MINIMUM LANE CLOSURE TAPER LENGTH = L							
LANE WIDTH (feet)	SPEED (MPH)	50	55	60	65	70	75
12	L (feet)	600	660	720	780	840	900

MINIMUM SHOULDER CLOSURE TAPER LENGTH = L/3							
SHOULDER WIDTH (feet)	SPEED (MPH)	50	55	60	65	70	75
6	L/3 (feet)	120	120	120	160	160	160
10	L/3 (feet)	200	200	200	240	240	280

USE A MINIMUM 3 DEVICES FOR SHOULDER LESS THAN 6'.

MINIMUM LONGITUDINAL BUFFER SPACE = B						
SPEED (MPH)	50	55	60	65	70	75
LENGTH (feet)	425	495	570	645	730	820

STATIONARY TRANSPORTABLE ATTENUATOR ROLL AHEAD DISTANCE = R			
HOST VEHICLE WEIGHT 9,900 TO 22,000 lbs.		HOST VEHICLE WEIGHT > 22,000 lbs.	
50-55 MPH	60+ MPH	50-55 MPH	60+ MPH
123'	172'	100'	150'

FOR EXIT-RAMP AND ON-RAMP DETAILS WITHIN LANE CLOSURE CONFIGURATION: SEE SHEETS TC29 AND TC30

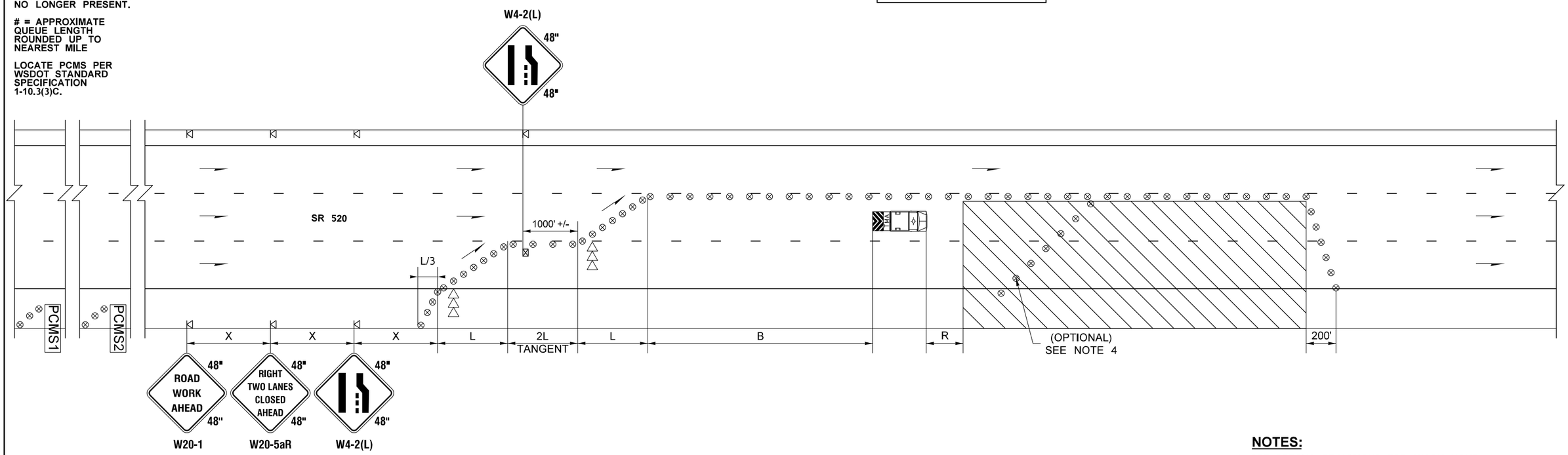

NOTES:

1. SEE SPECIAL PROVISIONS FOR WORK HOUR RESTRICTIONS.
2. DISTANCE BETWEEN LANE CLOSURE TAPER AND ALL OPEN RAMPS SHALL BE 500' MINIMUM.
3. DEVICES SHALL NOT ENCROACH INTO TRAVELED LANE.
4. PLACE TRANSVERSE DEVICE ACROSS CLOSED LANES AT EVERY 500'.
5. DEVICE SPACING FOR THE DOWNSTREAM TAPER SHALL BE 20'.
6. SIGNS ARE BLACK ON ORANGE UNLESS OTHERWISE INDICATED.

LEGEND

- CLASS A CONSTRUCTION SIGN
- BARRIER MOUNTED TEMPORARY SIGN
- TEMPORARY SIGN LOCATION
- TRAFFIC SAFETY DRUM
- EXISTING PAVEMENT MARKING
- TYPE 2 BARRICADE WITH R9 SIGN
- FLAGGER
- TEMPORARY TRAFFIC BARRIER WITH REFLECTORS
- TEMPORARY IMPACT ATTENUATOR
- SEQUENTIAL ARROW SIGN
- TRANSPORTABLE ATTENUATOR
- PCMS — PORTABLE CHANGEABLE MESSAGE SIGN

SR 520 DOUBLE RIGHT LANE CLOSURE WITH NO LANE SHIFTS (SHEET 1 OF 3)

NOT TO SCALE

FILE NAME	T:\412348\XL5937\CAD\ContractPlans\XL5937_PS_TC_SR520Lanes.dgn
TIME	11:13:28 AM
DATE	5/20/2022
PLOTTED BY	oneilma
DESIGNED BY	A. DANNEMILLER
ENTERED BY	A. DANNEMILLER
CHECKED BY	M. O'NEIL
PROJ. ENGR.	C. ANDERSON
REGIONAL ADM.	M. COTTEN

REVISION | DATE | BY

REGION NO.	STATE	FED.AID PROJ.NO.
10	WASH	
JOB NUMBER 20A039		
CONTRACT NO.		LOCATION NO.

P.E. STAMP BOX — DATE

P.E. STAMP BOX — DATE

Washington State Department of Transportation

I-405
BN RR BRIDGE TO PED TRAIL BRIDGE SEISMIC RETROFIT

TRAFFIC CONTROL PLANS

Plot 4

PLAN REF NO TC28

SHEET 165 OF 176 SHEETS

NOTES:

1. SEE SPECIAL PROVISIONS FOR WORK HOUR RESTRICTIONS.
2. DISTANCE BETWEEN LANE CLOSURE TAPER AND ALL OPEN RAMPS SHALL BE 500' MINIMUM.
3. DEVICES SHALL NOT ENCROACH INTO TRAVELED LANE.
4. PLACE TRANSVERSE DEVICE ACROSS CLOSED LANES AT EVERY 500'.
5. DEVICE SPACING FOR THE DOWNSTREAM TAPER SHALL BE 20'.
6. SIGNS ARE BLACK ON ORANGE UNLESS OTHERWISE INDICATED.

MINIMUM RAMP SHIFT TAPER LENGTH = 2*(L/2)							
LANE WIDTH (feet)	SPEED (MPH)	50	55	60	65	70	75
12	2*(L/2) (feet)	600	660	720	780	840	900

MINIMUM RAMP ACCELEATION & MERGE LENGTH = L/2							
LANE WIDTH (feet)	SPEED (MPH)	50	55	60	65	70	75
12	L/2 (feet)	300	330	360	390	420	450

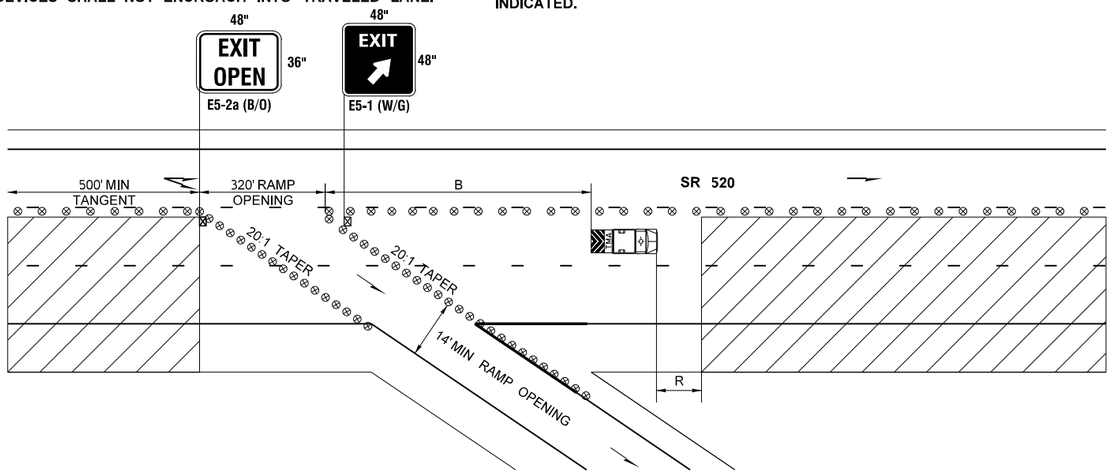

OPEN RIGHT EXIT-RAMP DETAIL

NOT TO SCALE

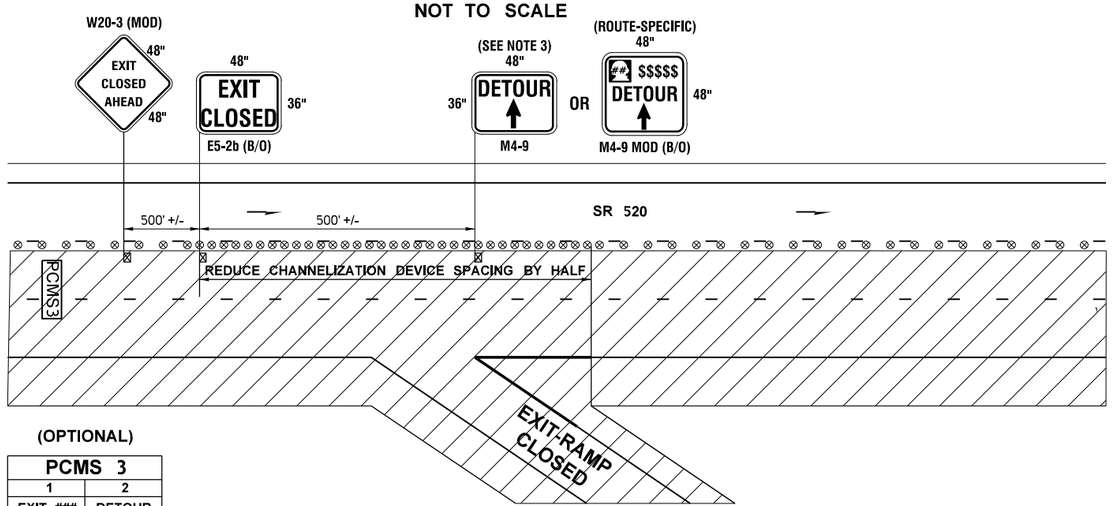

(OPTIONAL)

PCMS 3	
1	2
EXIT ### CLOSED AHEAD	DETOUR TO EXIT ###
2.0 SEC	2.0 SEC

FIELD LOCATE 1/4 +/- MILE IN ADVANCE OF W20-3 (MOD) SIGN.

LOCATE PCMS PER WSDOT STANDARD SPECIFICATION 1-10.3(3)C.

CLOSED RIGHT EXIT-RAMP DETAIL

NOT TO SCALE

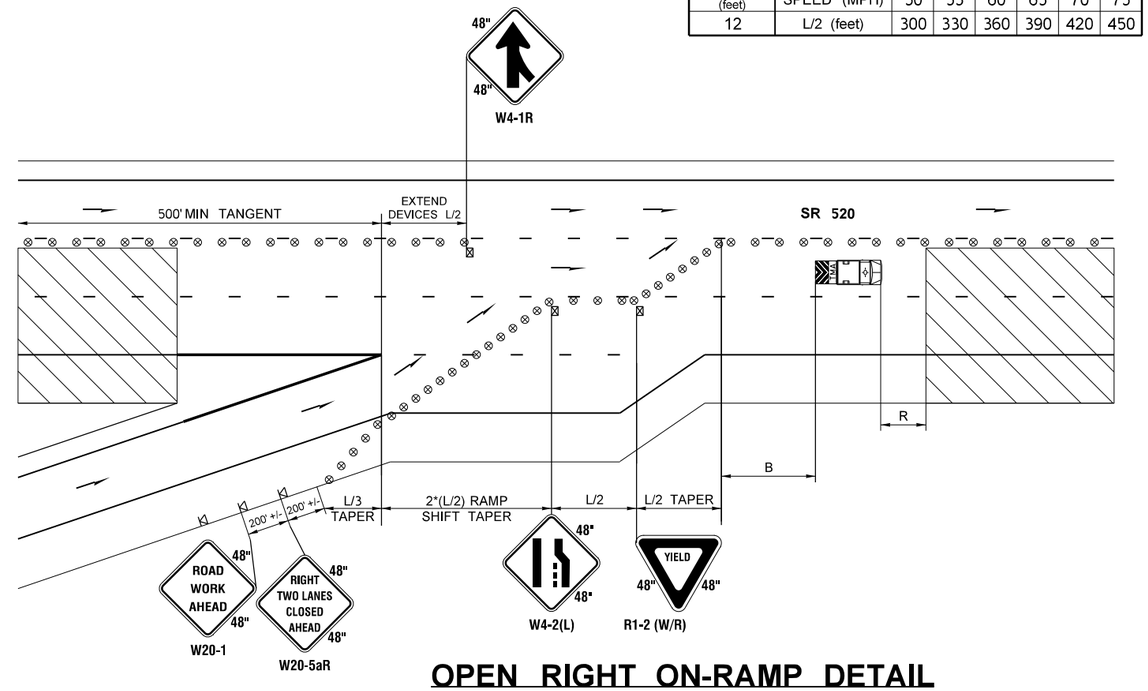

OPEN RIGHT ON-RAMP DETAIL

NOT TO SCALE

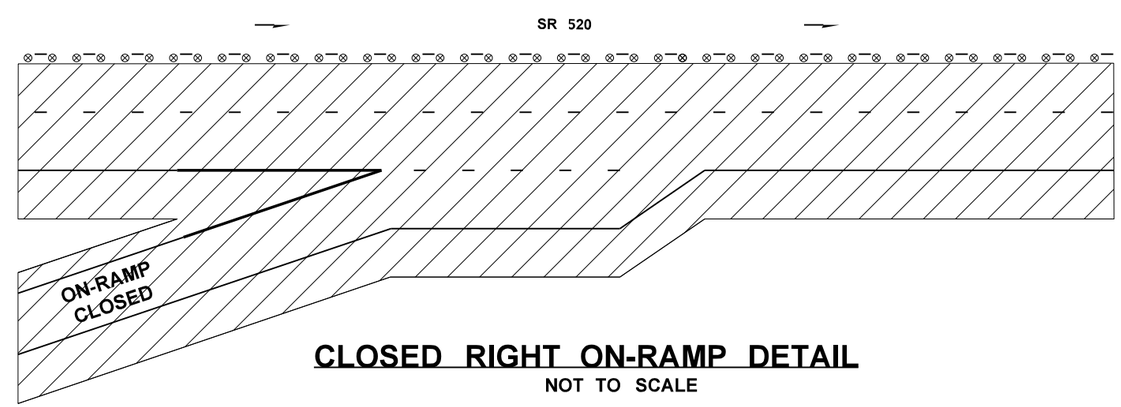

CLOSED RIGHT ON-RAMP DETAIL

NOT TO SCALE

SR 520 DOUBLE RIGHT LANE CLOSURE WITH NO LANE SHIFTS (SHEET 2 OF 3)

NOT TO SCALE

FILE NAME	T:\412348\XL5937\CAD\ContractPlans\XL5937_PS_TC_SR520Lanes.dgn				REGION NO. 10	STATE WASH	FED.AID PROJ.NO.
TIME	11:13:28 AM				JOB NUMBER 20A039		
DATE	5/20/2022				CONTRACT NO.		LOCATION NO.
PLOTTED BY	oneilma						
DESIGNED BY	A. DANNEMILLER						
ENTERED BY	A. DANNEMILLER						
CHECKED BY	M. O'NEIL						
PROJ. ENGR.	C. ANDERSON						
REGIONAL ADM.	M. COTTEN	REVISION	DATE	BY			

DATE P.E. STAMP BOX

DATE P.E. STAMP BOX

Washington State Department of Transportation

I-405
BN RR BRIDGE TO PED TRAIL BRIDGE SEISMIC RETROFIT

TRAFFIC CONTROL PLANS

Plot 5

PLAN REF NO TC29

SHEET 166 OF 176 SHEETS

NOTES:

1. SEE SPECIAL PROVISIONS FOR WORK HOUR RESTRICTIONS.
2. DISTANCE BETWEEN LANE CLOSURE TAPER AND ALL OPEN RAMPS SHALL BE 500' MINIMUM.
3. DEVICES SHALL NOT ENCROACH INTO TRAVELED LANE.
4. PLACE TRANSVERSE DEVICE ACROSS CLOSED LANES AT EVERY 500'.
5. DEVICE SPACING FOR THE DOWNSTREAM TAPER SHALL BE 20'.
6. SIGNS ARE BLACK ON ORANGE UNLESS OTHERWISE INDICATED.

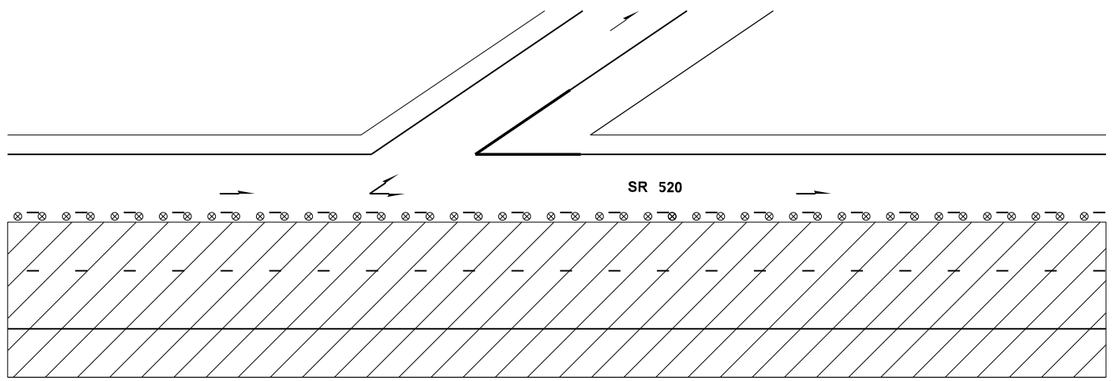

OPEN LEFT EXIT-RAMP DETAIL

NOT TO SCALE

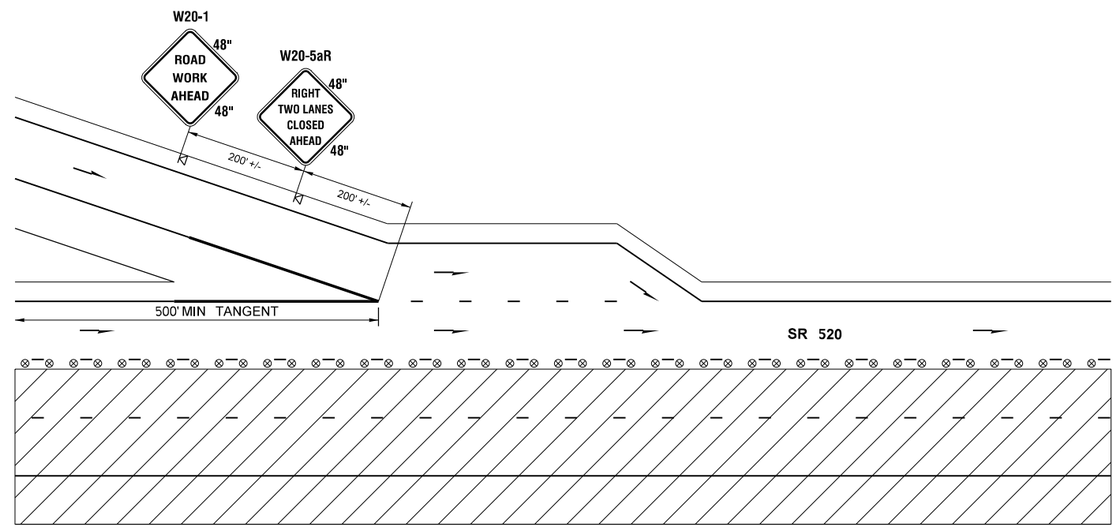

OPEN LEFT ON-RAMP DETAIL

NOT TO SCALE

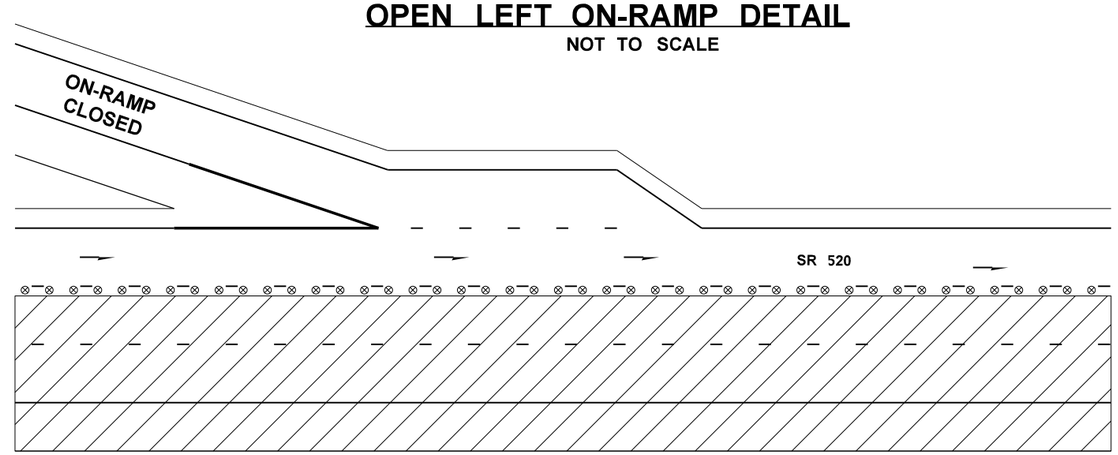

CLOSED LEFT EXIT-RAMP DETAIL

LEFT EXIT-RAMPS ARE TO REMAIN OPEN WITH THIS DOUBLE RIGHT LANE CLOSURE CONFIGURATION

CLOSED LEFT ON-RAMP DETAIL

NOT TO SCALE

SR 520 DOUBLE RIGHT LANE CLOSURE WITH NO LANE SHIFTS (SHEET 3 OF 3)

NOT TO SCALE

FILE NAME	T:\412348\XL5937\CAD\ContractPlans\XL5937_PS_TC_SR520Lanes.dgn						
TIME	11:13:29 AM				REGION NO. 10	STATE WASH	FED.AID PROJ.NO.
DATE	5/20/2022						
PLOTTED BY	oneilma				JOB NUMBER 20A039		
DESIGNED BY	A. DANNEMILLER						
ENTERED BY	A. DANNEMILLER				CONTRACT NO.	LOCATION NO.	
CHECKED BY	M. O'NEIL						
PROJ. ENGR.	C. ANDERSON						
REGIONAL ADM.	M. COTTEN	REVISION	DATE	BY			

P.E. STAMP BOX DATE

P.E. STAMP BOX DATE

Washington State Department of Transportation

I-405
BN RR BRIDGE TO PED TRAIL BRIDGE
SEISMIC RETROFIT

TRAFFIC CONTROL PLANS

Plot 6

PLAN REF NO TC30

SHEET 167 OF 176 SHEETS

CITY OF BELLEVUE

BR 405/48W & 48E
MILEPOST 15.00

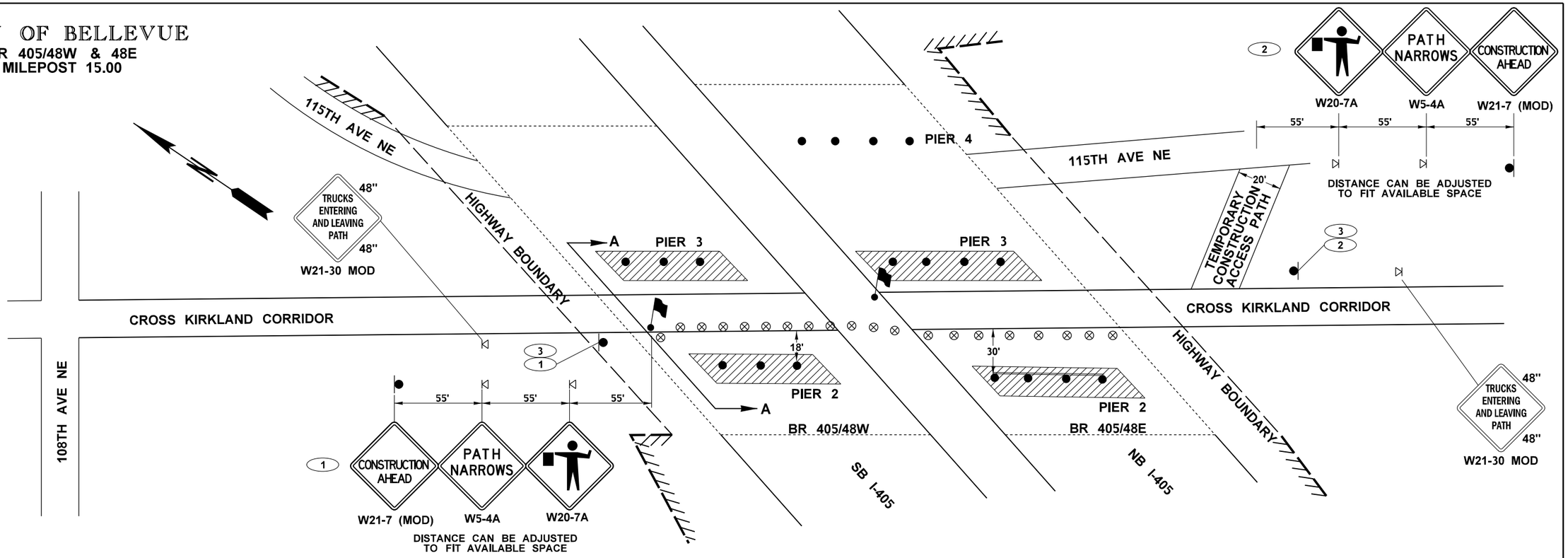

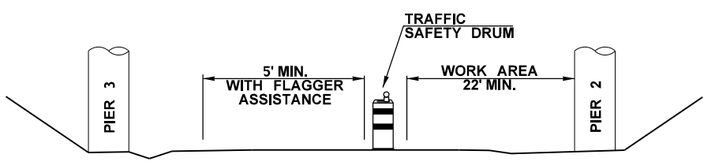

SECTION A-A
WORKING HOURS

SIMILAR CONFIGURTION APPLIES TO WORK ON ALL PIERS

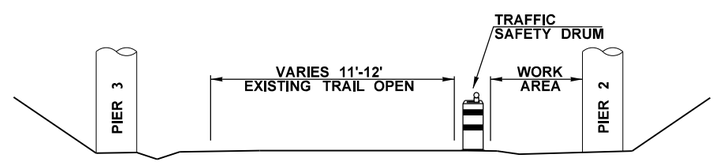

SECTION A-A
NON-WORKING HOURS

SIMILAR CONFIGURTION APPLIES TO WORK ON ALL PIERS

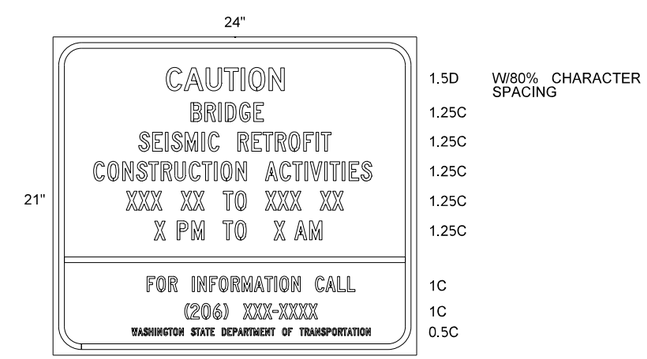

SPECIAL
⅛" MARGIN & BORDER
1.5" CORNER RADIUS
2" FLYING TEE
BLACK ON WHITE

(3)

LEGEND

- WORK AREA
- WSDOT RIGHT-OF-WAY
- EXISTING BRIDGE COLUMN
- TRAFFIC SAFETY DRUM
- CLASS A CONSTRUCTION SIGN LOCATION
- TEMPORARY SIGN LOCATION
- (1) CONSTRUCTION SIGN IDENTIFICATION
- FLAGGER

NOTES

1. A MINIMUM OF 5' WIDTH OF UNIMPEDED TRAIL SHALL BE MAINTAINED DURING WORKING HOURS, EXCEPT WHEN TRUCKS ARE ACCESSING THE WORK SITE TO HAUL EXCAVATED MATERIAL AND COLUMN JACKETS.
2. TEMPORARY SIGNS ARE BLACK ON ORANGE 18" X 18".

NOT TO SCALE

FILE NAME	T:\412348\XL5937\CAD\ContractPlans\XL5937_PS_PTC.dgn					
TIME	11:19:21 AM				REGION NO. 10	STATE WASH	FED.AID PROJ.NO.
DATE	5/20/2022					
PLOTTED BY	oneilma					
DESIGNED BY	B. BASSERI				JOB NUMBER 20A039	
ENTERED BY	B. BASSERI					
CHECKED BY	M. O'NEIL				CONTRACT NO.	LOCATION NO.
PROJ. ENGR.	C. ANDERSON					
REGIONAL ADM.	M. COTTEN	REVISION	DATE	BY		

P.E. STAMP BOX DATE

P.E. STAMP BOX DATE

Washington State Department of Transportation

I-405
BN RR BRIDGE TO PED TRAIL BRIDGE SEISMIC RETROFIT

PEDESTRIAN TRAFFIC CONTROL

PLAN REF NO **PTC1**

SHEET 168 OF 176 SHEETS

CITY OF KIRKLAND

BR 405/56W & 56E
MILEPOST 19.98

NOTES

1. A MINIMUM OF 5' WIDTH OF UNIMPEDED TRAIL SHALL BE MAINTAINED DURING WORKING HOURS, EXCEPT WHEN TRUCKS ARE ACCESSING THE WORK SITE TO HAUL EXCAVATED MATERIAL AND COLUMN JACKETS.
2. TEMPORARY SIGNS ARE BLACK ON ORANGE 18" X 18".

SPECIAL
3/4" MARGIN & BORDER
1.5" CORNER RADIUS
2" FLYING TEE
BLACK ON WHITE

(1)

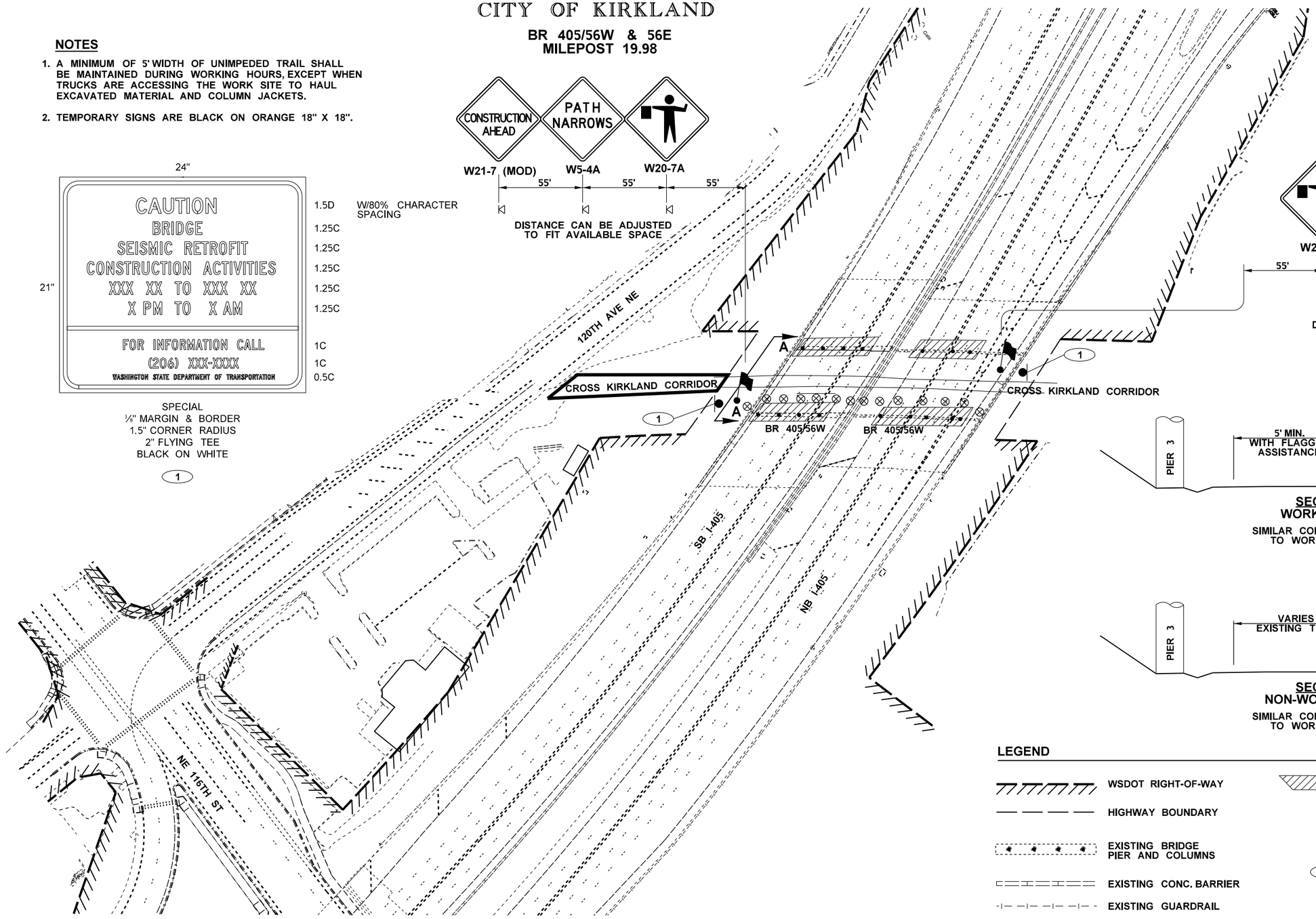

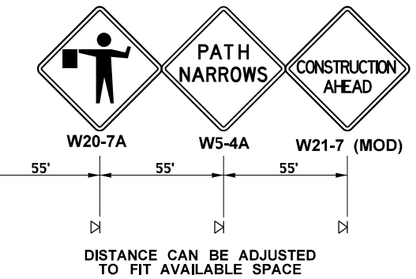

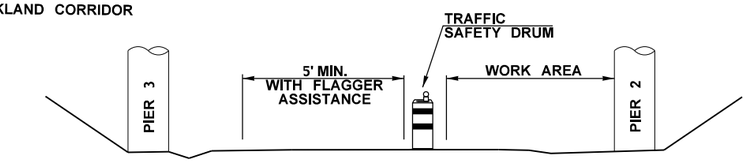

SECTION A-A
WORKING HOURS

SIMILAR CONFIGURTION APPLIES TO WORK ON ALL PIERS

SECTION A-A
NON-WORKING HOURS

SIMILAR CONFIGURTION APPLIES TO WORK ON ALL PIERS

LEGEND

- WSDOT RIGHT-OF-WAY
- HIGHWAY BOUNDARY
- EXISTING BRIDGE PIER AND COLUMNS
- EXISTING CONC. BARRIER
- EXISTING GUARDRAIL
- WORK AREA
- TRAFFIC SAFETY DRUM
- CLASS A CONSTRUCTION SIGN LOCATION
- TEMPORARY SIGN LOCATION
- (1) CONSTRUCTION SIGN IDENTIFICATION
- FLAGGER

FILE NAME	T:\412348\XL5937\CAD\ContractPlans\XL5937_PS_PTC.dgn				REGION NO. 10	STATE WASH	FED.AID PROJ.NO.
TIME	11:19:22 AM						
DATE	5/20/2022						
PLOTTED BY	oneilma				JOB NUMBER 20A039		
DESIGNED BY	B. BASSERI						
ENTERED BY	B. BASSERI						
CHECKED BY	M. O'NEIL				CONTRACT NO.		LOCATION NO.
PROJ. ENGR.	C. ANDERSON						
REGIONAL ADM.	M. COTTEN	REVISION	DATE	BY			

DATE
P.E. STAMP BOX

DATE
P.E. STAMP BOX

Washington State Department of Transportation

I-405
BN RR BRIDGE TO PED TRAIL BRIDGE
SEISMIC RETROFIT

PEDESTRIAN TRAFFIC CONTROL

PLAN REF NO
PTC2

SHEET 169 OF 176 SHEETS

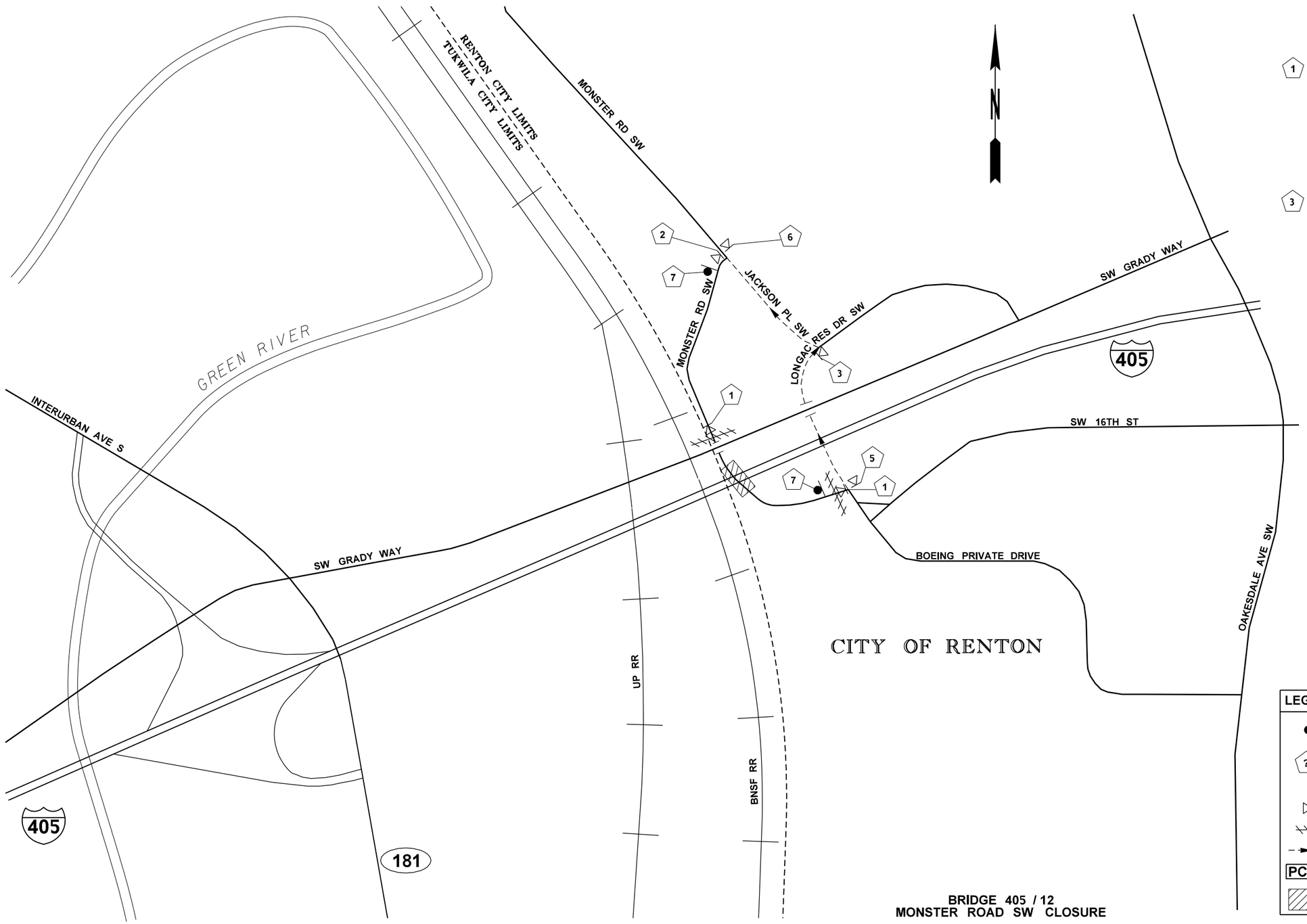

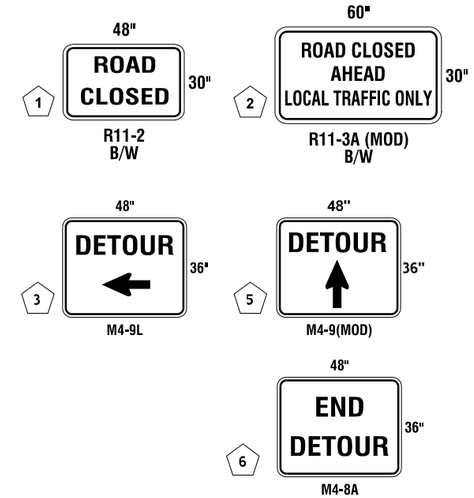

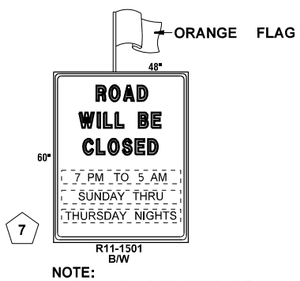

NOTE:
ACTUAL PLAQUE MESSAGE TO BE DETERMINED BY THE ENGINEER. VERIFY SIGN LOCATION WITH ENGINEER.

SIGN TO BE PLACED (5) FIVE DAYS IN ADVANCE OF THE CLOSURE. SIGN TO BE COVERED WHEN NOT IN USE.

LEGEND

- CLASS A CONSTRUCTION SIGN
- SIGN NUMBER
- TEMPORARY SIGN LOCATION
- TYPE 3 BARRICADE
- DETOUR ROUTE
- PCMS — PORTABLE CHANGEABLE MESSAGE SIGN
- ROAD CLOSURE

BRIDGE 405 / 12
MONSTER ROAD SW CLOSURE

FILE NAME	T:\412348\XL5937\CAD\ContractPlans\XL5937_PS_DU.dgn						
TIME	11:19:30 AM				REGION NO. 10	STATE WASH	FED.AID PROJ.NO.
DATE	5/20/2022						
PLOTTED BY	oneilma						
DESIGNED BY	B. BASSERI				JOB NUMBER 20A039		
ENTERED BY	B. BASSERI						
CHECKED BY	M. O'NEIL				CONTRACT NO.		LOCATION NO.
PROJ. ENGR.	C. ANDERSON						
REGIONAL ADM.	M. COTTEN	REVISION	DATE	BY			

DATE
P.E. STAMP BOX

DATE
P.E. STAMP BOX

Washington State
Department of Transportation

I-405
BN RR BRIDGE TO PED TRAIL BRIDGE
SEISMIC RETROFIT

DETOUR PLAN

Plot 1
PLAN REF NO
DU1
SHEET 170 OF 176 SHEETS

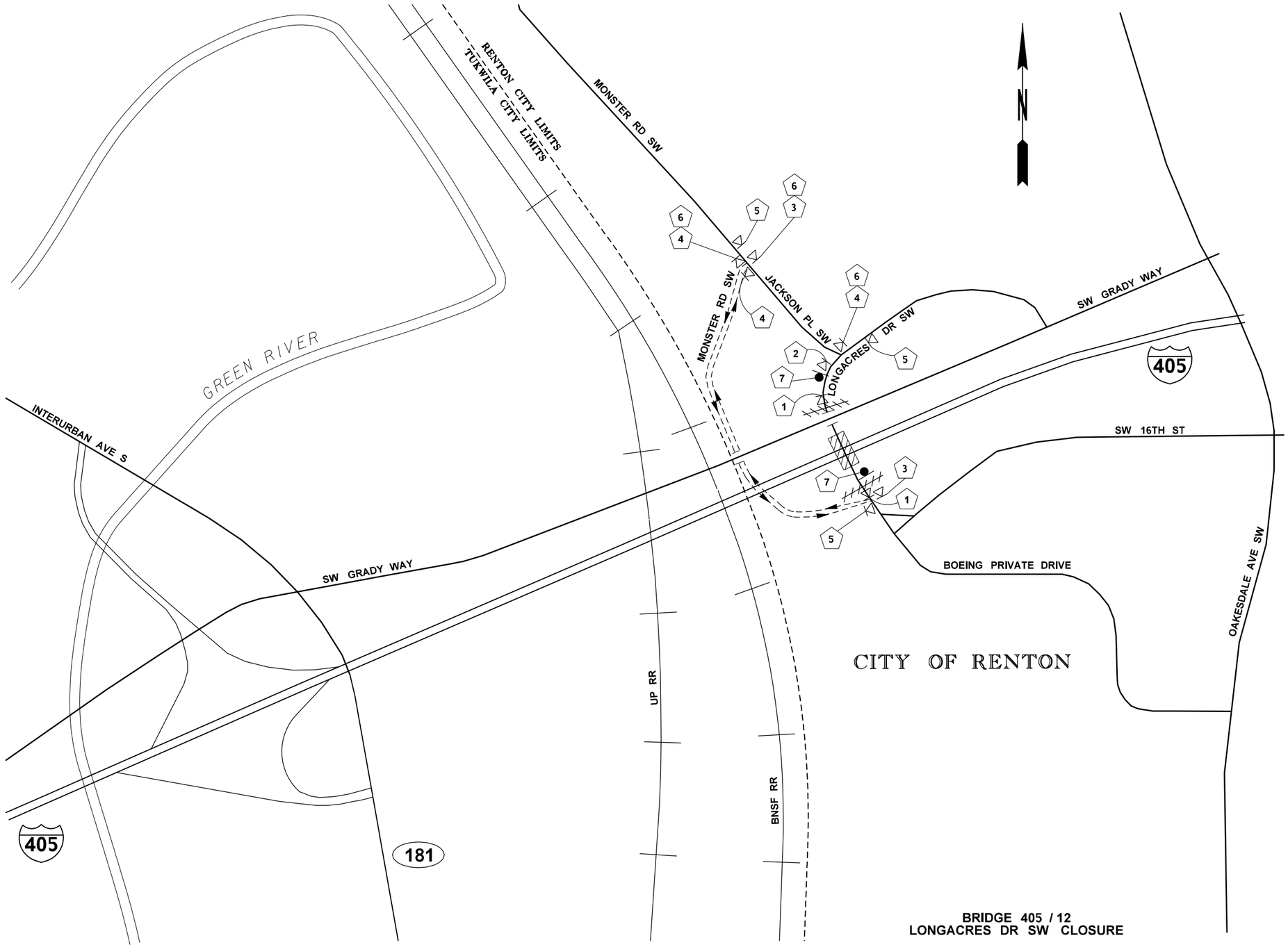

BRIDGE 405 / 12
LONGACRES DR SW CLOSURE

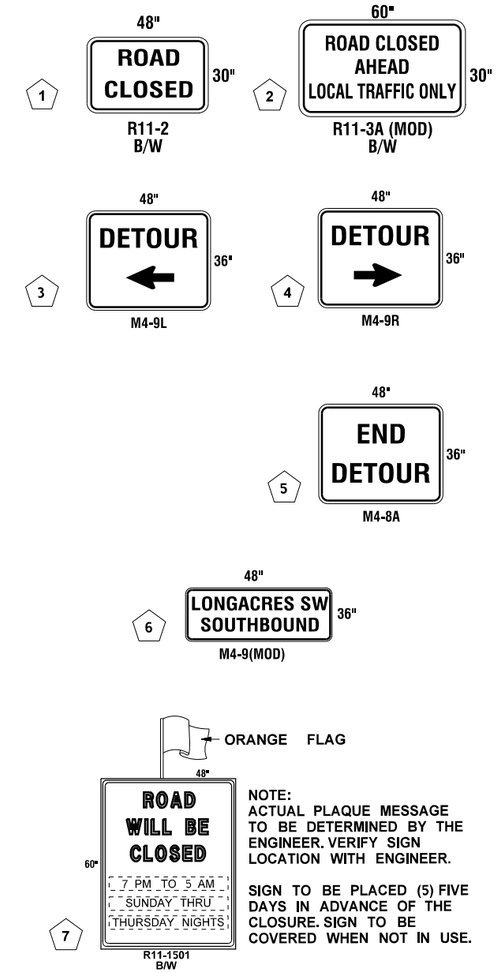

NOTE:
ACTUAL PLAQUE MESSAGE TO BE DETERMINED BY THE ENGINEER. VERIFY SIGN LOCATION WITH ENGINEER.

SIGN TO BE PLACED (5) FIVE DAYS IN ADVANCE OF THE CLOSURE. SIGN TO BE COVERED WHEN NOT IN USE.

LEGEND

- CLASS A CONSTRUCTION SIGN
- ? SIGN NUMBER
- TEMPORARY SIGN LOCATION
- TYPE 3 BARRICADE
- DETOUR ROUTE
- PCMS PORTABLE CHANGEABLE MESSAGE SIGN
- ROAD CLOSURE

FILE NAME	T:\412348\XL5937\CAD\ContractPlans\XL5937_PS_DU.dgn						
TIME	11:19:30 AM				REGION NO. 10	STATE WASH	FED.AID PROJ.NO.
DATE	5/20/2022						
PLOTTED BY	oneilma				JOB NUMBER 20A039		
DESIGNED BY	B. BASSERI						
ENTERED BY	B. BASSERI						
CHECKED BY	M. O'NEIL				CONTRACT NO.		LOCATION NO.
PROJ. ENGR.	C. ANDERSON						
REGIONAL ADM.	M. COTTEN	REVISION	DATE	BY			

P.E. STAMP BOX DATE

P.E. STAMP BOX DATE

Washington State Department of Transportation

I-405
BN RR BRIDGE TO PED TRAIL BRIDGE
SEISMIC RETROFIT

DETOUR PLAN

Plot 2

PLAN REF NO DU2

SHEET 171 OF 176 SHEETS

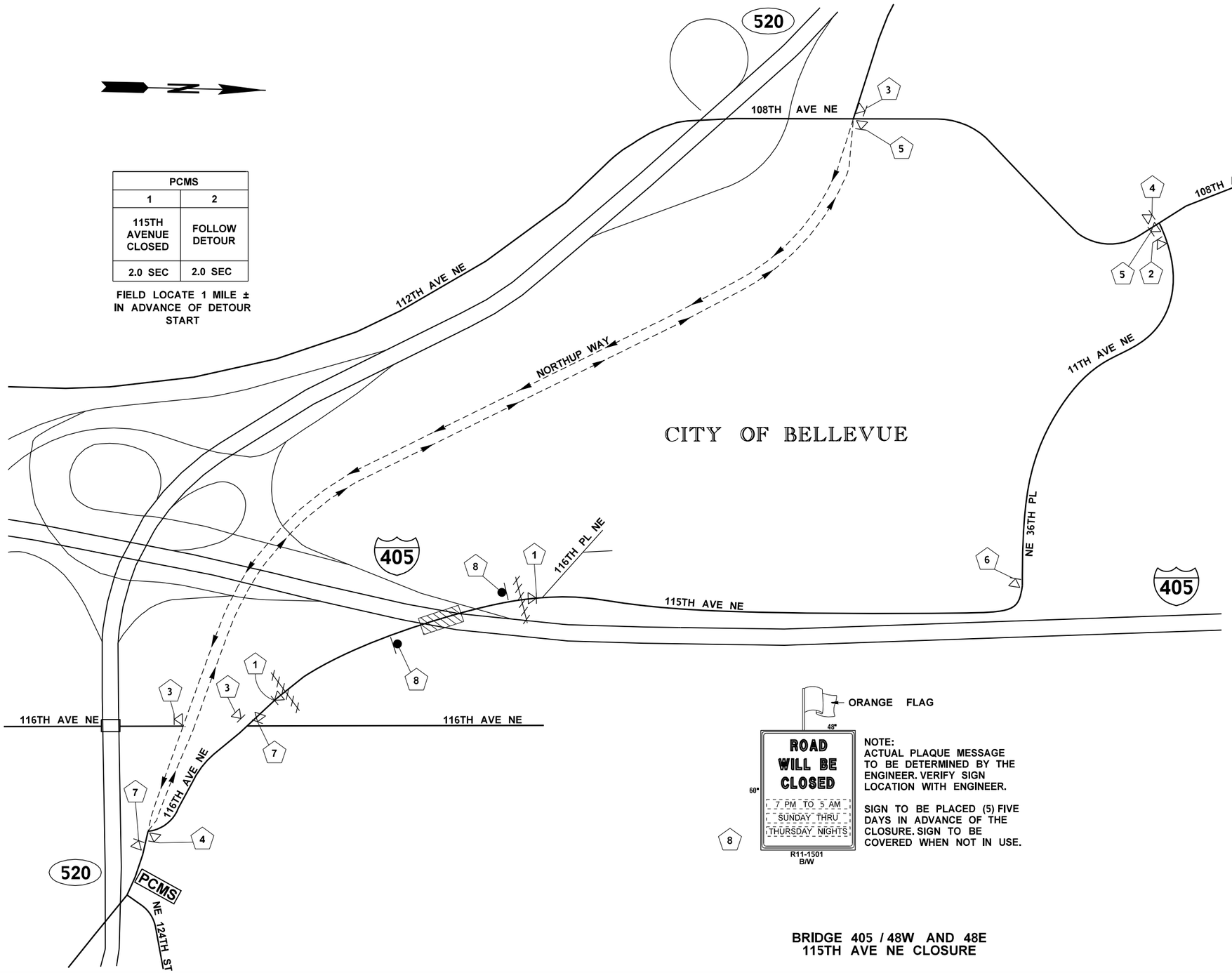

PCMS	
1	2
115TH AVENUE CLOSED	FOLLOW DETOUR
2.0 SEC	2.0 SEC

FIELD LOCATE 1 MILE ± IN ADVANCE OF DETOUR START

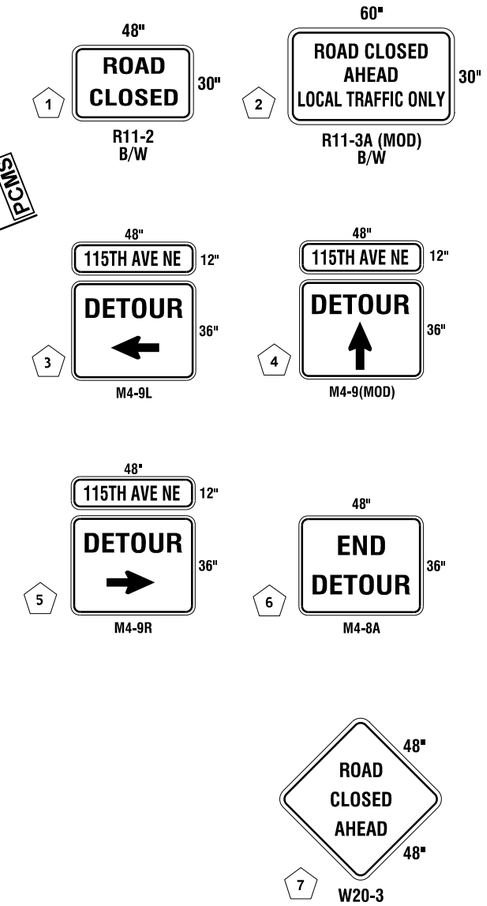

NOTE:
ACTUAL PLAQUE MESSAGE TO BE DETERMINED BY THE ENGINEER. VERIFY SIGN LOCATION WITH ENGINEER.

SIGN TO BE PLACED (5) FIVE DAYS IN ADVANCE OF THE CLOSURE. SIGN TO BE COVERED WHEN NOT IN USE.

LEGEND

- CLASS A CONSTRUCTION SIGN
- SIGN NUMBER
- TEMPORARY SIGN LOCATION
- TYPE 3 BARRICADE
- DETOUR ROUTE
- PCMS — PORTABLE CHANGEABLE MESSAGE SIGN
- ROAD CLOSURE

BRIDGE 405 / 48W AND 48E
115TH AVE NE CLOSURE

FILE NAME	T:\412348\XL5937\CAD\ContractPlans\XL5937_PS_DU.dgn
TIME	11:19:31 AM
DATE	5/20/2022
PLOTTED BY	oneilma
DESIGNED BY	B. BASSERI
ENTERED BY	B. BASSERI
CHECKED BY	M. O'NEIL
PROJ. ENGR.	C. ANDERSON
REGIONAL ADM.	M. COTTEN

REVISION | DATE | BY

REGION NO.	STATE	FED.AID PROJ.NO.
10	WASH	
JOB NUMBER 20A039		
CONTRACT NO.		LOCATION NO.

P.E. STAMP BOX — DATE

P.E. STAMP BOX — DATE

Washington State Department of Transportation

I-405
BN RR BRIDGE TO PED TRAIL BRIDGE SEISMIC RETROFIT

DETOUR PLAN

Plot 3

PLAN REF NO DU3

SHEET 172 OF 176 SHEETS

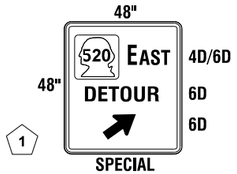

SPECIAL
BLACK/ORANGE
12" SHIELD

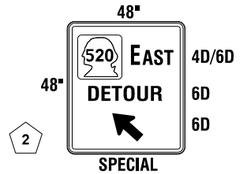

SPECIAL
BLACK/ORANGE
12" SHIELD

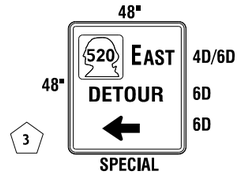

SPECIAL
BLACK/ORANGE
12" SHIELD

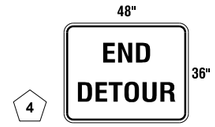

M4-8A

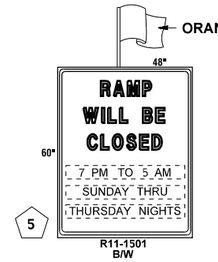

R11-1501
B/W

NOTE:
ACTUAL PLAQUE MESSAGE TO BE DETERMINED BY THE ENGINEER. VERIFY SIGN LOCATION WITH ENGINEER.

SIGN TO BE PLACED (5) FIVE DAYS IN ADVANCE OF THE CLOSURE. SIGN TO BE COVERED WHEN NOT IN USE.

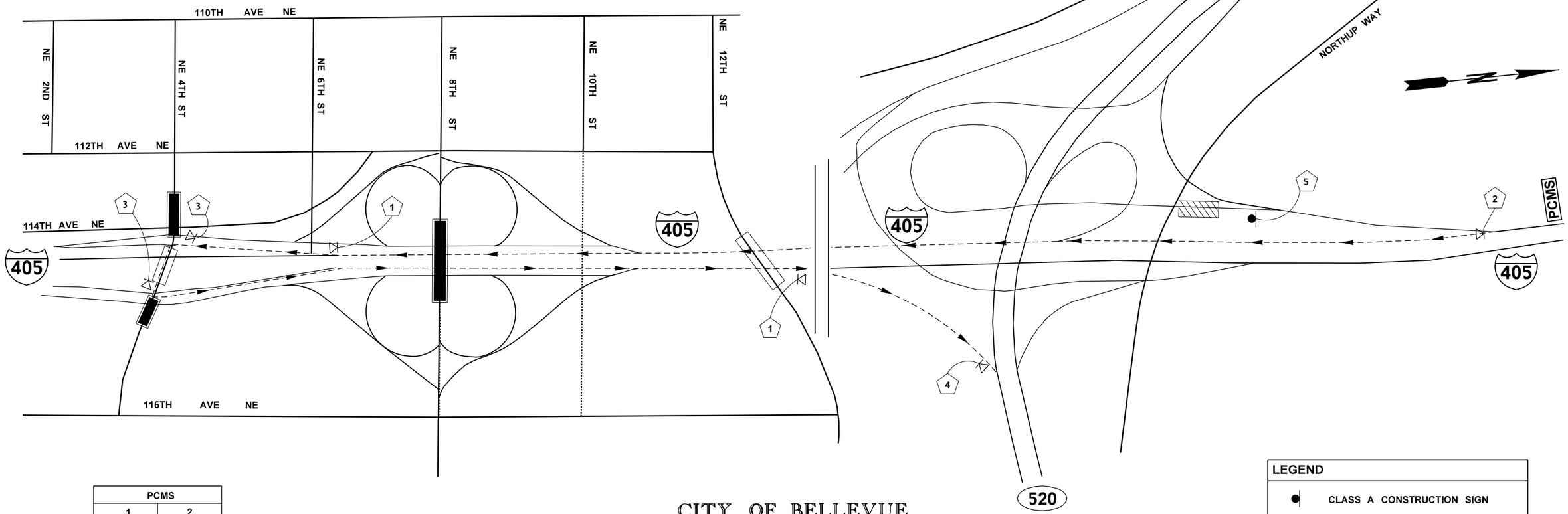

PCMS	
1	2
EB SR520 RAMP CLOSED	DETOUR USE NE 4TH
2.0 SEC	2.0 SEC

FIELD LOCATE 1 MILE ± IN ADVANCE OF DETOUR START

LEGEND

- CLASS A CONSTRUCTION SIGN
- SIGN NUMBER
- TEMPORARY SIGN LOCATION
- TYPE 3 BARRICADE
- DETOUR ROUTE
- PCMS — PORTABLE CHANGEABLE MESSAGE SIGN
- ROAD CLOSURE

SB I-405 TO EB SR 520 RAMP CLOSURE

FILE NAME	T:\412348\XL5937\CAD\ContractPlans\XL5937_PS_DU.dgn						
TIME	11:19:31 AM				REGION NO. 10	STATE WASH	FED.AID PROJ.NO.
DATE	5/20/2022						
PLOTTED BY	oneilma						
DESIGNED BY	B. BASSERI				JOB NUMBER 20A039		
ENTERED BY	B. BASSERI						
CHECKED BY	M. O'NEIL				CONTRACT NO.		LOCATION NO.
PROJ. ENGR.	C. ANDERSON						
REGIONAL ADM.	M. COTTEN	REVISION	DATE	BY			

DATE
P.E. STAMP BOX

DATE
P.E. STAMP BOX

Washington State
Department of Transportation

I-405
BN RR BRIDGE TO PED TRAIL BRIDGE
SEISMIC RETROFIT

DETOUR PLAN

Plot 4
PLAN REF NO
DU4
SHEET 173 OF 176 SHEETS

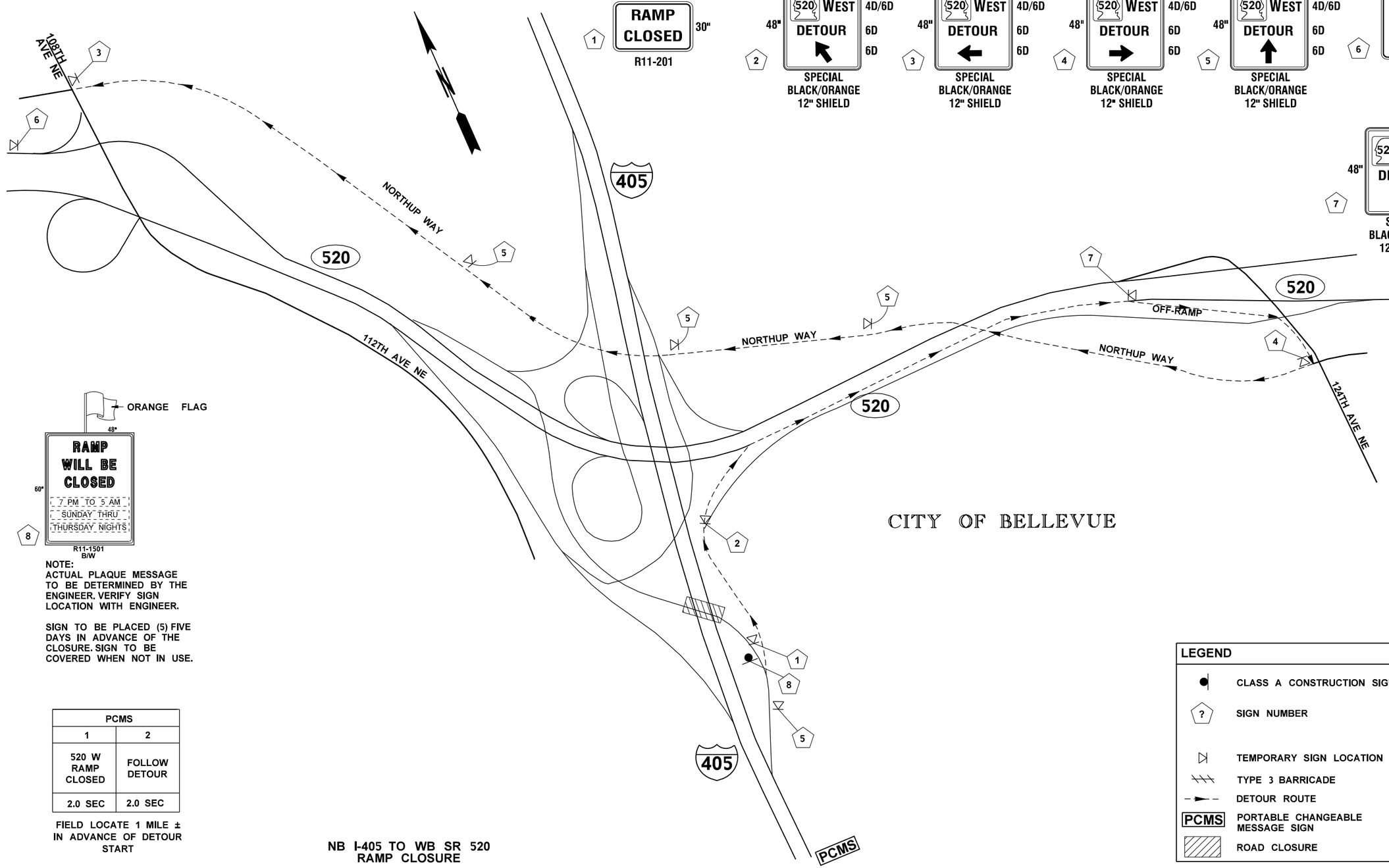

48" RAMP CLOSED 30" R11-201

48" 520 WEST DETOUR 48" 4D/6D 6D 6D — SPECIAL BLACK/ORANGE 12" SHIELD

48" END DETOUR 36" M4-8A

ORANGE FLAG

48" RAMP WILL BE CLOSED 60" 7 PM TO 5 AM SUNDAY THRU THURSDAY NIGHTS R11-1501 B/W

NOTE:
ACTUAL PLAQUE MESSAGE TO BE DETERMINED BY THE ENGINEER. VERIFY SIGN LOCATION WITH ENGINEER.

SIGN TO BE PLACED (5) FIVE DAYS IN ADVANCE OF THE CLOSURE. SIGN TO BE COVERED WHEN NOT IN USE.

PCMS	
1	2
520 W RAMP CLOSED	FOLLOW DETOUR
2.0 SEC	2.0 SEC

FIELD LOCATE 1 MILE ± IN ADVANCE OF DETOUR START

NB I-405 TO WB SR 520 RAMP CLOSURE

LEGEND

- CLASS A CONSTRUCTION SIGN
- SIGN NUMBER
- TEMPORARY SIGN LOCATION
- TYPE 3 BARRICADE
- DETOUR ROUTE
- PCMS — PORTABLE CHANGEABLE MESSAGE SIGN
- ROAD CLOSURE

FILE NAME	T:\412348\XL5937\CAD\ContractPlans\XL5937_PS_DU.dgn				REGION NO. 10	STATE WASH	FED.AID PROJ.NO.
TIME	11:19:32 AM				JOB NUMBER 20A039		
DATE	5/20/2022				CONTRACT NO.		LOCATION NO.
PLOTTED BY	oneilma						
DESIGNED BY	B. BASSERI						
ENTERED BY	B. BASSERI						
CHECKED BY	M. O'NEIL						
PROJ. ENGR.	C. ANDERSON						
REGIONAL ADM.	M. COTTEN	REVISION	DATE	BY			

P.E. STAMP BOX — DATE

P.E. STAMP BOX — DATE

Washington State Department of Transportation

I-405
BN RR BRIDGE TO PED TRAIL BRIDGE
SEISMIC RETROFIT

DETOUR PLAN

Plot 5

PLAN REF NO DU5

SHEET 174 OF 176 SHEETS

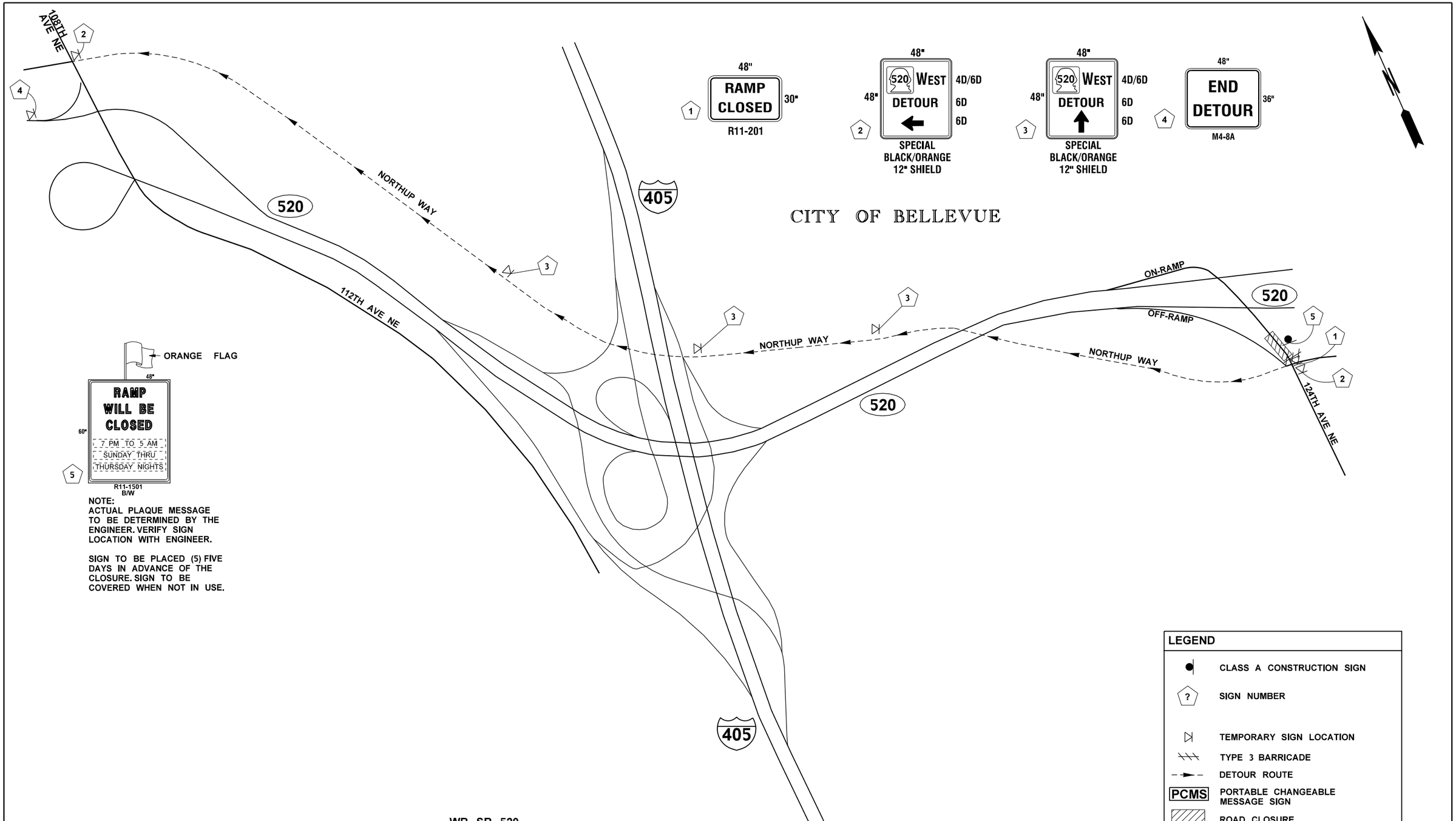

NOTE:
ACTUAL PLAQUE MESSAGE TO BE DETERMINED BY THE ENGINEER. VERIFY SIGN LOCATION WITH ENGINEER.

SIGN TO BE PLACED (5) FIVE DAYS IN ADVANCE OF THE CLOSURE. SIGN TO BE COVERED WHEN NOT IN USE.

LEGEND

- CLASS A CONSTRUCTION SIGN
- SIGN NUMBER
- TEMPORARY SIGN LOCATION
- TYPE 3 BARRICADE
- DETOUR ROUTE
- PCMS — PORTABLE CHANGEABLE MESSAGE SIGN
- ROAD CLOSURE

WB SR 520
ON-RAMP CLOSURE

FILE NAME	T:\412348\XL5937\CAD\ContractPlans\XL5937_PS_DU.dgn						
TIME	11:19:32 AM				REGION NO. 10	STATE WASH	FED.AID PROJ.NO.
DATE	5/20/2022						
PLOTTED BY	oneilma						
DESIGNED BY	B. BASSERI				JOB NUMBER 20A039		
ENTERED BY	B. BASSERI						
CHECKED BY	M. O'NEIL				CONTRACT NO.		LOCATION NO.
PROJ. ENGR.	C. ANDERSON						
REGIONAL ADM.	M. COTTEN	REVISION	DATE	BY			

P.E. STAMP BOX — DATE

P.E. STAMP BOX — DATE

Washington State Department of Transportation

I-405
BN RR BRIDGE TO PED TRAIL BRIDGE SEISMIC RETROFIT

DETOUR PLAN

Plot 5

PLAN REF NO DU6

SHEET 175 OF 176 SHEETS

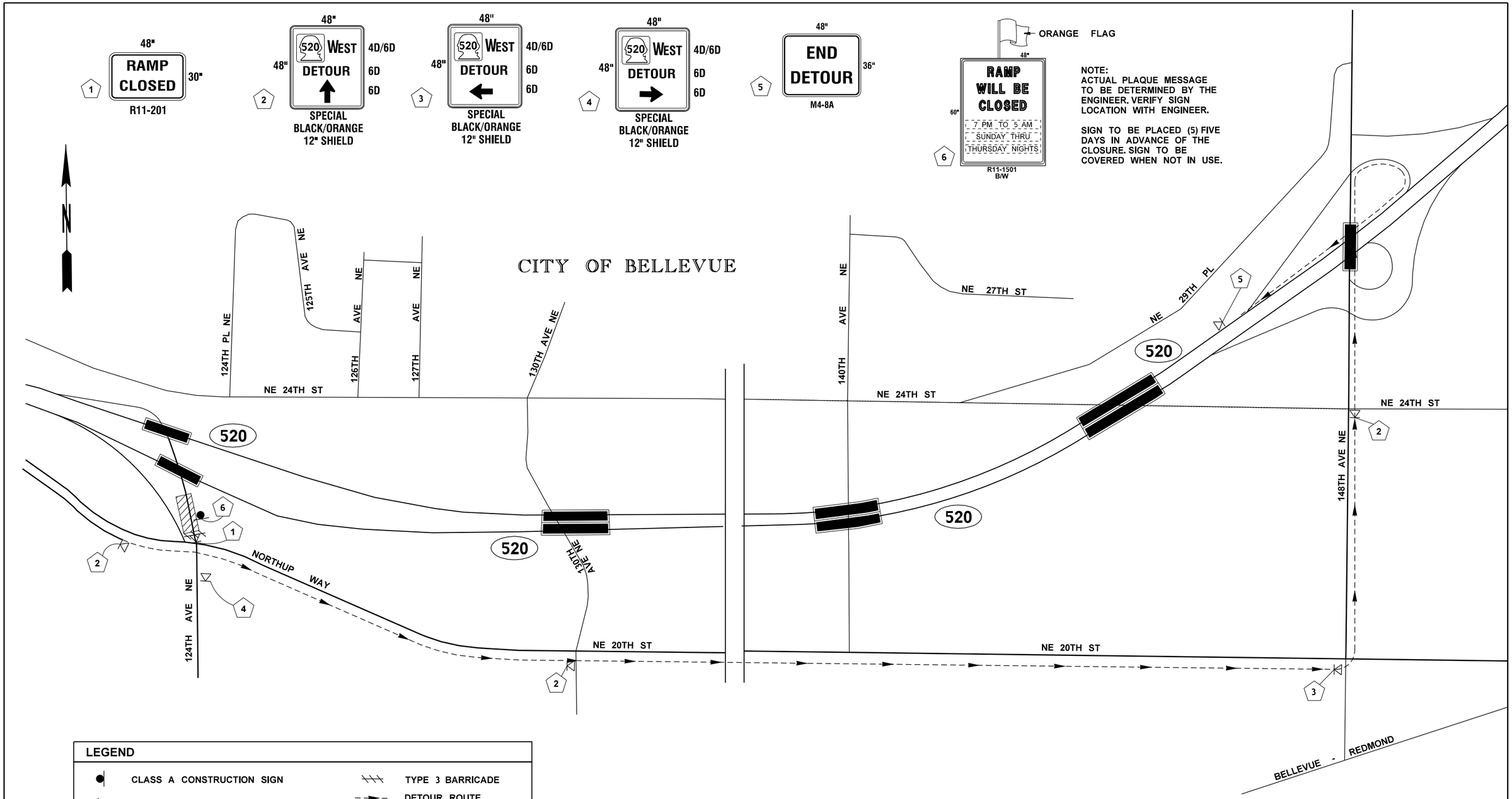

WB SR 520
ON-RAMP CLOSURE

FILE NAME	T:\412348\XL5937\CAD\ContractPlans\XL5937_PS_DU.dgn				REGION NO. 10	STATE WASH	FED.AID PROJ.NO.
TIME	11:19:33 AM				JOB NUMBER 20A039		
DATE	5/20/2022				CONTRACT NO.		LOCATION NO.
PLOTTED BY	oneilma						
DESIGNED BY	B. BASSERI						
ENTERED BY	B. BASSERI						
CHECKED BY	M. O'NEIL						
PROJ. ENGR.	C. ANDERSON						
REGIONAL ADM.	M. COTTEN	REVISION	DATE	BY			

P.E. STAMP BOX DATE

P.E. STAMP BOX DATE

Washington State Department of Transportation

I-405
BN RR BRIDGE TO PED TRAIL BRIDGE SEISMIC RETROFIT

DETOUR PLAN

Plot 7

PLAN REF NO DU7

SHEET 176 OF 176 SHEETS