INDEX

SHEET NO.	PLAN REFERENCE NO.	TITLE
1	IN1	INDEX
2	CT1	CERTIFICATION SHEET
3	VM1	VICINITY MAP
4 - 5	SQ1 - SQ2	SUMMARY OF QUANTITIES
6 - 17	RS1 - RS12	ROADWAY SECTIONS
18	ST1	CONSTRUCTION STAGING NOTES
19 - 28	ST2 - ST11	CONSTRUCTION STAGING PLANS
29 - 32	AL1 - AL4	ALIGNMENT / RIGHT OF WAY PLANS
33 - 35	SP1 - SP3	SITE PREPARATION AND UTILITY PLANS
36 - 40	RP1 - RP5	ROADWAY PROFILES
41 - 42	EC1 - EC2	TESC PLANS
43 - 45	DR1 - DR3	DRAINAGE PLAN, PROFILE, AND DETAIL
46 - 48	NA1 - NA3	SOIL PREPARATION PLANS
49 - 52	NB1 - NB4	PLANTING PLANS
53 - 56	QTPM1 - QTPM4	QUANTITY TABULATIONS - PAVING AND PAVEMENT MARKINGS
57 - 62	PV1 - PV6	PAVING PLAN AND PAVING DETAILS
63	MK1	PAVEMENT MARKINGS PLAN
64 - 66	IL1 - IL3	ILLUMINATION PLANS AND DETAIL
67 - 68	XS1 - XS2	LUMINAIRE FOUNDATION CROSS SECTIONS
69 - 71	SN1 - SN3	SIGNING PLANS
72	CS1	CONSTRUCTION SIGNING PLAN
73 - 76	TC1 - TC4	TRAFFIC CONTROL PLANS

INDEX (CONTINUED)

SHEET NO.	PLAN REFERENCE NO.	TITLE

PLAN REFERENCE NO.

SHEET OF SHEETS

NOTE: ALL SHEET REFERENCES, FIRST NOS. OF STRUCTURE CODE DESIGNATIONS AND MATCH LINE SHEET REFERENCES, ETC., THROUGHOUT THE PLANS, REFER TO THE ENTRY IN THE PLAN REFERENCE NUMBER BOX.

FILE NAME	G:\444301\05-Design\02-Projects\SR 500 182nd RAB\1-CADD-Plans\20-1.2 CAD Sheet Files\D50021R_SH_IN.dgn
TIME	8:32:37 AM
DATE	3/29/2022
PLOTTED BY	bournem
DESIGNED BY	MORGAN BOURNE
ENTERED BY	MORGAN BOURNE
CHECKED BY	ANDY ROMANCHOCK
PROJ. ENGR.	SUSAN FELL
REGIONAL ADM.	CARLEY FRANCIS

REVISION | DATE | BY

REGION NO. 10 | STATE WASH | FED.AID PROJ.NO. HSIP-0500(029)

JOB NUMBER 21X327

CONTRACT NO.

LOCATION NO. XL6488

P.E. STAMP BOX DATE

Washington State Department of Transportation

SR 500
NE 182ND AVE
INTERSECTION IMPROVEMENTS

INDEX

PLOT 1

PLAN REF. NO. IN1

SHEET 1 OF 76 SHEETS

PROJECT LICENSED PROFESSIONAL CERTIFICATES

Susan Fell Mar 29, 2022 AS A LICENSED PROFESSIONAL IN DIRECT RESPONSIBLE CHARGE OF DEVELOPING THIS CONTRACT, I CERTIFY THAT ALL PLANS THAT CONTAIN MY STAMP HAVE BEEN DEVELOPED UNDER MY SUPERVISION.	Monica Harwood Mar 29, 2022 AS A LICENSED PROFESSIONAL IN DIRECT RESPONSIBLE CHARGE OF DEVELOPING THIS CONTRACT, I CERTIFY THAT ALL PLANS THAT CONTAIN MY STAMP HAVE BEEN DEVELOPED UNDER MY SUPERVISION.	Dan Corlett Mar 29, 2022 AS A LICENSED PROFESSIONAL IN DIRECT RESPONSIBLE CHARGE OF DEVELOPING THIS CONTRACT, I CERTIFY THAT ALL PLANS THAT CONTAIN MY STAMP HAVE BEEN DEVELOPED UNDER MY SUPERVISION.	AS A LICENSED PROFESSIONAL IN DIRECT RESPONSIBLE CHARGE OF DEVELOPING THIS CONTRACT, I CERTIFY THAT ALL PLANS THAT CONTAIN MY STAMP HAVE BEEN DEVELOPED UNDER MY SUPERVISION.
AS A LICENSED PROFESSIONAL IN DIRECT RESPONSIBLE CHARGE OF DEVELOPING THIS CONTRACT, I CERTIFY THAT ALL PLANS THAT CONTAIN MY STAMP HAVE BEEN DEVELOPED UNDER MY SUPERVISION.	AS A LICENSED PROFESSIONAL IN DIRECT RESPONSIBLE CHARGE OF DEVELOPING THIS CONTRACT, I CERTIFY THAT ALL PLANS THAT CONTAIN MY STAMP HAVE BEEN DEVELOPED UNDER MY SUPERVISION.	AS A LICENSED PROFESSIONAL IN DIRECT RESPONSIBLE CHARGE OF DEVELOPING THIS CONTRACT, I CERTIFY THAT ALL PLANS THAT CONTAIN MY STAMP HAVE BEEN DEVELOPED UNDER MY SUPERVISION.	AS A LICENSED PROFESSIONAL IN DIRECT RESPONSIBLE CHARGE OF DEVELOPING THIS CONTRACT, I CERTIFY THAT ALL PLANS THAT CONTAIN MY STAMP HAVE BEEN DEVELOPED UNDER MY SUPERVISION.
AS A LICENSED PROFESSIONAL IN DIRECT RESPONSIBLE CHARGE OF DEVELOPING THIS CONTRACT, I CERTIFY THAT ALL PLANS THAT CONTAIN MY STAMP HAVE BEEN DEVELOPED UNDER MY SUPERVISION.	AS A LICENSED PROFESSIONAL IN DIRECT RESPONSIBLE CHARGE OF DEVELOPING THIS CONTRACT, I CERTIFY THAT ALL PLANS THAT CONTAIN MY STAMP HAVE BEEN DEVELOPED UNDER MY SUPERVISION.	AS A LICENSED PROFESSIONAL IN DIRECT RESPONSIBLE CHARGE OF DEVELOPING THIS CONTRACT, I CERTIFY THAT ALL PLANS THAT CONTAIN MY STAMP HAVE BEEN DEVELOPED UNDER MY SUPERVISION.	AS A LICENSED PROFESSIONAL IN DIRECT RESPONSIBLE CHARGE OF DEVELOPING THIS CONTRACT, I CERTIFY THAT ALL PLANS THAT CONTAIN MY STAMP HAVE BEEN DEVELOPED UNDER MY SUPERVISION.

NOTES:

THIS PLAN SET WAS DEVELOPED ELECTRONICALLY UNDER THE DIRECT SUPERVISION OF THE LICENSED PROFESSIONALS THAT HAVE AFFIXED THEIR SIGNATURE TO THIS PAGE.

THIS SHEET SERVES AS THE CERTIFICATION BY THE ABOVE LICENSED PROFESSIONALS OF ALL SHEETS IN THIS PLAN SET WHERE THEIR STAMPS AND SIGNATURES APPEAR.

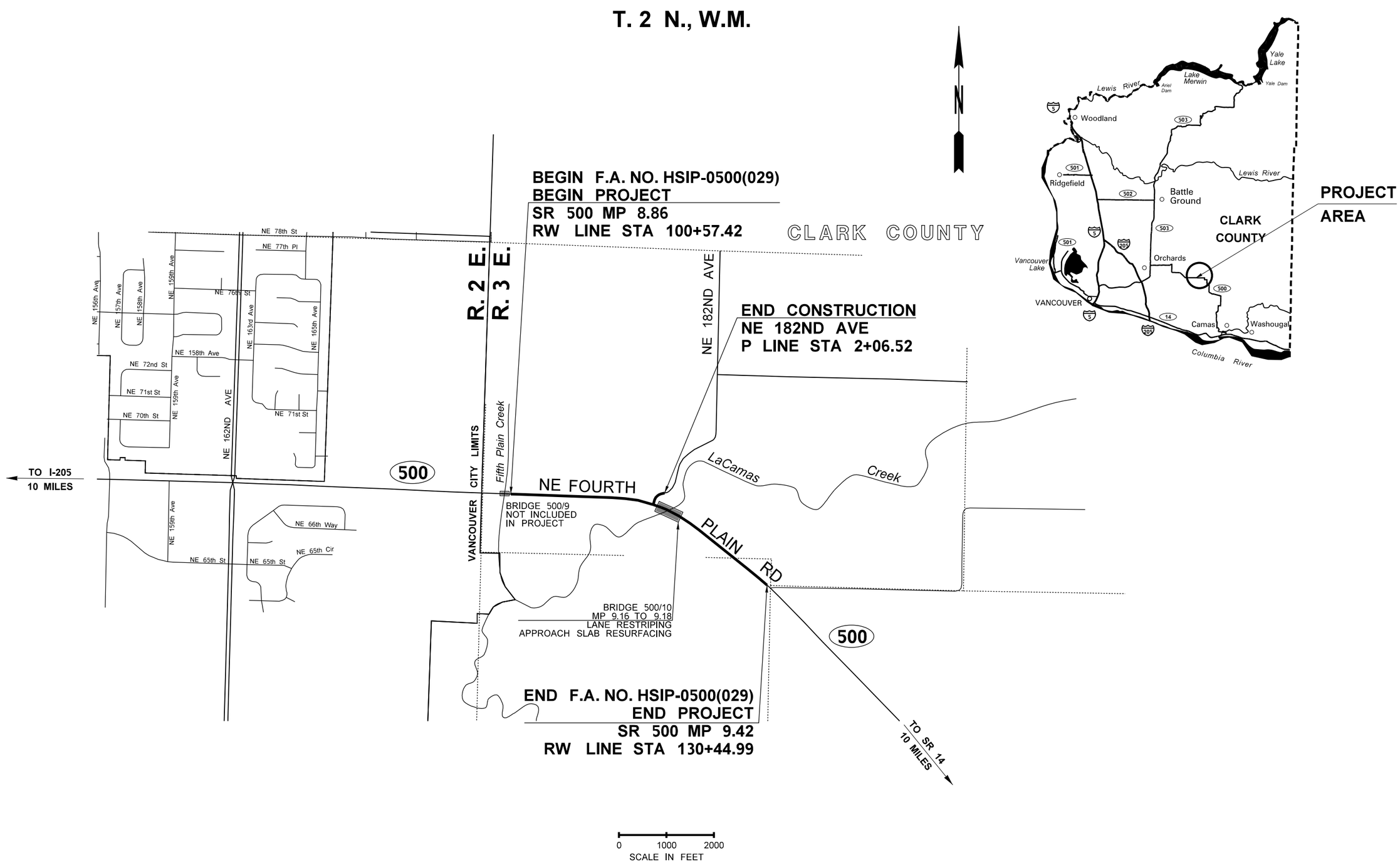

FILE NAME	G:\444301\05-Design\02-Projects\SR 500 182nd RAB\1-CADD-Plans\20-1.2 CAD Sheet Files\D50021R_SH_VM.dgn						
TIME	8:32:39 AM				REGION NO. 10	STATE WASH	FED.AID PROJ.NO. HSIP-0500(029)
DATE	3/29/2022						
PLOTTED BY	bournem						
DESIGNED BY	MORGAN BOURNE				JOB NUMBER 21X327		
ENTERED BY	MORGAN BOURNE						
CHECKED BY	ANDY ROMANCHOCK				CONTRACT NO.		LOCATION NO. XL6488
PROJ. ENGR.	SUSAN FELL						
REGIONAL ADM.	CARLEY FRANCIS	REVISION	DATE	BY			

P.E. STAMP BOX DATE

P.E. STAMP BOX DATE

Washington State Department of Transportation

SR 500
NE 182ND AVE
INTERSECTION IMPROVEMENTS

VICINITY MAP

PLOT 1

PLAN REF NO VM1

SHEET 3 OF 76 SHEETS

SUMMARY OF QUANTITIES

ITEM NO	TOTAL QUANTITY	SUB-TOTAL * SECTION I-07.2(1) OF STANDARD SPECS	SUB-TOTAL ** SECTION I-07.2(2) OF STANDARD SPECS	STD. ITEM NO.	UNIT	ITEM	GROUP 1 MP 8.86 TO MP 9.42	GROUP 2 WSDOT PAID COUNTY ROW	GROUP 3 GCB3605 WSDOT ROW	GROUP 4 GCB3605 COUNTY ROW	GROUP 5 THIRD PARTY DAMAGES
						PREPARATION					
1	LUMP SUM	LUMP SUM	LUMP SUM	0001	L.S.	MOBILIZATION	L.S.	L.S.			
2	LUMP SUM	LUMP SUM	LUMP SUM	0035	L.S.	CLEARING AND GRUBBING	L.S.	L.S.			
3	LUMP SUM		LUMP SUM	0050	L.S.	REMOVAL OF STRUCTURES AND OBSTRUCTIONS	L.S.				
4	75.00		75.00	0170	L.F.	REMOVING GUARDRAIL	75.00				
5	120.00		120.00	0187	L.F.	REMOVING PAINT LINE	120.00				
6	0.03		0.03	0208	HUND	REMOVING RAISED PAVEMENT MARKER	0.03				
						GRADING					
7	1480.00	50.00	1430.00	0310	C.Y.	ROADWAY EXCAVATION INCL. HAUL	1,430.00	50.00			
8	1670.00	360.00	1310.00	0431	TON	GRAVEL BORROW INCL. HAUL	1,310.00	360.00			
						DRAINAGE					
9	300.00	10.00	290.00	1086	TON	QUARRY SPALLS	290.00	10.00			
10	90.00		90.00	1290	L.F.	CL. V REINF. CONC. CULV. PIPE 12 IN. DIAM.	90.00				
11	372.00		372.00		L.F.	MEDIA FILTER DRAIN TYPE 3	372.00				
						SURFACING					
12	1080.00	120.00	960.00	5100	TON	CRUSHED SURFACING BASE COURSE	960.00	120.00			
						CEMENT CONCRETE PAVEMENT					
13	32.00		32.00	5706	L.F.	SEALING EXISTING LONGITUDINAL AND TRANSVERSE JOINT	32.00				
14	315.90	315.90			S.Y.	PIGMENTED CEMENT CONCRETE PAVEMENT			313.80	2.10	
						HOT MIX ASPHALT					
15	397.00	161.00	236.00	5711	S.Y.	PLANING BITUMINOUS PAVEMENT	236.00	161.00			
16	120.00		120.00	5708	S.Y.	REMOVING EXISTING OVERLAY FROM BRIDGE DECK	120.00				
17	40.00		40.00	5716	TON	HMA FOR PRELEVELING CL. 3/8 IN. PG 58H-22	40.00				
18	1010.00	120.00	890.00	5766	TON	HMA CL. 3/8 IN. PG 58H-22	890.00	120.00			
19	5400.00		5400.00	5830	DOL	JOB MIX COMPLIANCE PRICE ADJUSTMENT	5,400.00				
20	8840.00		8840.00	5835	DOL	COMPACTION PRICE ADJUSTMENT	8,840.00				
21	540.00		540.00	5837	DOL	ASPHALT COST PRICE ADJUSTMENT	540.00				
22	10.00		10.00	6885	EACH	HMA CORE-ROADWAY	10.00				
23	32.00		32.00	6511	L.F.	HMA SAWCUT AND SEAL	32.00				
						EROSION CONTROL AND ROADSIDE PLANTING					
24	6.00		6.00	6403	DAY	ESC LEAD	6.00				
25	1335.00	145.00	1190.00	6453	S.Y.	COMPOST BLANKET	1,190.00	145.00			
26	LUMP SUM	LUMP SUM	LUMP SUM	6488	L.S.	EROSION CONTROL AND WATER POLLUTION PREVENTION	L.S.	L.S.			
27	0.52	0.03	0.49	6414	ACRE	SEEDING, FERTILIZING, AND MULCHING	0.49	0.03			
28	0.38	0.03	0.35	6407	ACRE	TOPSOIL TYPE A	0.35	0.03			
29	35.00	10.00	25.00	6552	EACH	PSIPE TREE MIX	25.00	10.00			
30	525.00	170.00	355.00	6552	EACH	PSIPE SHRUB MIX A	355.00	170.00			
31	60.00		60.00	6552	EACH	PSIPE SHRUB MIX B	60.00				
32	200.00		200.00	6552	EACH	PSIPE EMERGENT MIX	200.00				
33	2590.00	290.00	2300.00	6635	L.F.	HIGH VISIBILITY SILT FENCE	2,300.00	290.00			
34	0.14	0.03	0.11		ACRE	BARK MULCH	0.11	0.03			
35	80.00		80.00		HR	GENERAL WEED CONTROL - CHEMICAL APPLICATION	80.00				

GROUP LEGEND

GROUP NUMBER	SR	CONTROL SECTION	TAX SCHEDULE	FUND PARTICIPANTS
1	500	064000	**	STATE,FEDERAL IW
2	000	0600CY	*	STATE,FEDERAL IW
3	500	064000	*	LOCAL-CLARK CNTY
4	000	0600CT	*	LOCAL-CLARK CNTY
5	500	064000	**	STATE

DATE	REVISION	BY

REGION	STATE	FEDERAL AID PROJECT. NO.
10	WA	HSIP-0500(029)

JOB NUMBER 21X327/8

CONTRACT NO 000000

Washington State Department of Transportation

SR 500
NE 182ND AVE
INTERSECTION IMPROVEMENTS

SUMMARY OF QUANTITIES

SQ1

SUMMARY OF QUANTITIES

ITEM NO	TOTAL QUANTITY	SUB-TOTAL * SECTION I-07.2(1) OF STANDARD SPECS	SUB-TOTAL ** SECTION I-07.2(2) OF STANDARD SPECS	STD. ITEM NO.	UNIT	ITEM	GROUP 1 MP 8.86 TO MP 9.42	GROUP 2 WSDOT PAID COUNTY ROW	GROUP 3 GCB3605 WSDOT ROW	GROUP 4 GCB3605 COUNTY ROW	GROUP 5 THIRD PARTY DAMAGES
36	80.00		80.00		HR	GENERAL WEED CONTROL - HAND OR MECHANICAL CONTROL	80.00				
						TRAFFIC					
37	3.00	3.00		6698	EACH	ROUNDABOUT SPLITTER ISLAND NOSING CURB			2.00	1.00	
38	541.00	15.00	526.00	6699	L.F.	ROUNDABOUT CEMENT CONCRETE CURB AND GUTTER	526.00	15.00			
39	192.00	192.00		6709	L.F.	ROUNDABOUT TRUCK APRON CEM. CONC. CURB AND GUTTER			192.00		
40	789.00	54.00	735.00		L.F.	DUAL FACED CEMENT CONC. CURB AND GUTTER WITH SCUPPER	735.00	54.00			
41	309.00	40.00	269.00	6711	L.F.	BEAM GUARDRAIL TYPE 31 - 8 FT. LONG POST	269.00	40.00			
42	470.00	24.00	446.00	6712	L.F.	BEAM GUARDRAIL TYPE 31 - 9 FT. LONG POST	446.00	24.00			
43	1.00		1.00	6760	EACH	BEAM GUARDRAIL TRANSITION SECTION TYPE 22	1.00				
44	2.00	2.00		6719	EACH	BEAM GUARDRAIL TYPE 31 NON-FLARED TERMINAL			1.00	1.00	
45	1.00	1.00		6766	EACH	BEAM GUARDRAIL ANCHOR TYPE 10			1.00		
46	11.00	4.00	7.00	6832	EACH	FLEXIBLE GUIDE POST	7.00	4.00			
47	2460.00	420.00	2040.00	6807	L.F.	PLASTIC LINE	2,040.00	420.00			
48	150.00		150.00	6838	L.F.	PLASTIC 12 INCH WIDE LINE	150.00				
49	3.00		3.00	6833	EACH	PLASTIC TRAFFIC ARROW	3.00				
50	15.00	15.00		9238	EACH	PLASTIC YIELD LINE SYMBOL			15.00		
51	1.06	0.11	0.95	6884	HUND	RAISED PAVEMENT MARKER TYPE 2	0.95	0.11			
52	LUMP SUM	LUMP SUM	LUMP SUM	6890	L.S.	PERMANENT SIGNING	L.S.	L.S.			
53	2670.00	420.00	2250.00	6895	L.F.	TEMPORARY PAVEMENT MARKING-SHORT DURATION	2,250.00	420.00			
54	18.00		18.00	6872	EACH	TEMPORARY MISC. PAVEMENT MARKINGS - SHORT DURATION	18.00				
55	LUMP SUM	LUMP SUM	LUMP SUM	6904	L.S.	ILLUMINATION SYSTEM	L.S.	L.S.			
56	LUMP SUM	LUMP SUM	LUMP SUM	6971	L.S.	PROJECT TEMPORARY TRAFFIC CONTROL	L.S.	L.S.			
57	LUMP SUM	LUMP SUM	LUMP SUM	6974	L.S.	TRAFFIC CONTROL SUPERVISOR	L.S.	L.S.			
58	564.00	66.00	498.00	6982	S.F.	CONSTRUCTION SIGNS CLASS A	498.00	66.00			
59	150.00		150.00	6822	L.F.	PLASTIC CROSSHATCH MARKING	150.00				
60	160.00		160.00	6818	L.F.	PLASTIC WIDE LINE	160.00				
						OTHER ITEMS					
61	50000.00		50000.00	7002	DOL	INCENTIVE EARLY COMPL. FULL INTERSECTION CLOSURE	50,000.00				
62	35.00		35.00	7006	C.Y.	STRUCTURE EXCAVATION CLASS B INCL. HAUL	35.00				
63	8.00		8.00	7097	EACH	END, GATE, CORNER, AND PULL POST FOR CHAIN LINK FENCE	8.00				
64	88.00		88.00	7135	L.F.	GLARE SCREEN TYPE 2	88.00				
65	10000.00		10000.00	7715	DOL	FORCE ACCOUNT REMOVAL OF STRUCTURES AND OBSTRUCTIONS	10,000.00				
66	10000.00		10000.00	7715	DOL	FORCE ACCOUNT UTILITY CONFLICT	10,000.00				
67	4000.00	600.00	3400.00	7480	DOL	ROADSIDE CLEANUP	3,400.00	600.00			
68	5.00		5.00	7725	DOL	REIMBURSEMENT FOR THIRD PARTY DAMAGE					5.00
69	-1.00		-1.00	7728	DOL	MINOR CHANGE	-1.00				
70	-1.00		-1.00	7732	DOL	AGGREGATE COMPLIANCE PRICE ADJUSTMENT	-1.00				
71	LUMP SUM		LUMP SUM	7736	L.S.	SPCC PLAN	L.S.				
72	560.00	20.00	540.00	7550	S.Y.	CONSTRUCTION GEOTEXTILE FOR UNDERGROUND DRAINAGE	540.00	20.00			
73	LUMP SUM		LUMP SUM	7570	L.S.	HEALTH AND SAFETY PLAN	L.S.				

GROUP LEGEND

GROUP NUMBER	SR	CONTROL SECTION	TAX SCHEDULE	FUND PARTICIPANTS
1	500	064000	**	STATE,FEDERAL IW
2	000	0600CY	*	STATE,FEDERAL IW
3	500	064000	*	LOCAL-CLARK CNTY
4	000	0600CT	*	LOCAL-CLARK CNTY
5	500	064000	**	STATE

LEGEND

1. PLANING BITUMINOUS PAVEMENT
2. HMA FOR PRELEVELING CL. ⅛ IN. PG 58H-22
3. HMA CL. ⅛ IN. PG 58H-22
4. CRUSHED SURFACING BASE COURSE
5. GRAVEL BORROW INCL. HAUL
6. DUAL FACED CEMENT CONC. CURB AND GUTTER WITH SCUPPER
7. ROUNDABOUT CEMENT CONCRETE CURB AND GUTTER
8. ROUNDABOUT TRUCK APRON CEM. CONC. CURB AND GUTTER
9. PIGMENTED CEMENT CONCRETE PAVEMENT
10. MEDIA FILTER DRAIN TYPE 3
11. BEAM GUARDRAIL TYPE 31 - 8 FT. LONG POST (CASE 4)
12. BEAM GUARDRAIL TYPE 31 - 9 FT. LONG POST (CASE 5)
13. QUARRY SPALLS
14. CONSTRUCTION GEOTEXTILE FOR UNDERGROUND DRAINAGE
15. CL. V REINF. CONC. CULV. PIPE 12 IN. DIAM.
16. REMOVING EXISTING OVERLAY FROM BRIDGE DECK
17. BEAM GUARDRAIL TRANSITION SECTION TYPE 22

NOTES:

1. ALL SURFACING AND PAVING DEPTHS ARE COMPACTED DEPTHS. COURSES SHALL NOT EXCEED DEPTHS DEFINED IN THE STANDARD SPECIFICATIONS.
2. SEE STANDARD PLANS C-22.40 AND C-23.60 FOR GUARDRAIL TERMINAL AND ANCHOR DETAILS.
3. SEE STD. SPEC. 5-04.3(12)A2 FOR LONGITUDINAL JOINTS IN HMA PLACED IN MULTIPLE LIFTS. TOP JOINTS SHALL BE OFFSET 6" FROM LANE MARKINGS.
4. SAWCUT SHALL BE ON THE INSIDE EDGE OF EXISTING EDGE LINES AT LOCATIONS WHERE FULL DEPTH REBUILD IS REQUIRED OUTSIDE EXISTING PAVEMENT LIMITS.
5. SAWCUT SHALL BE 1' FROM FACE OF GUTTER AT LOCATIONS WHERE FULL DEPTH REBUILD IS REQUIRED FOR ROUNDABOUT TRUCK APRON AND SPLITTER ISLANDS WITHIN EXISTING PAVEMENT LIMITS.
6. GRAVEL BORROW SHALL BE TERRACED INTO THE EXISTING EMBANKMENT PER STD. SPEC. 2-03.3(14).
7. THE NUMBER OF BENCHES NEEDED FOR TERRACES IS DEPENDENT UPON THE FILL HEIGHT. AS A RESULT, THE ACTUAL NUMBER OF BENCHES REQUIRED IN THE FIELD MAY DIFFER THAN WHAT IS SHOWN IN THE SLOPE DETAILS. DIMENSIONS OF TERRACES AND BENCHES SHALL MATCH WHAT IS SHOWN IN THE SLOPE DETAILS.
8. GRAVEL BORROW SHALL BE COMPACTED USING METHOD C PER STD. SPEC. 2-03.3(14)C.
9. CONSTRUCTION GEOTEXTILE FOR UNDERGROUND DRAINAGE SHALL BE PLACED FROM THE BOTTOM UP, AND NOT ANCHORED FROM THE TOP DURING INSTALLATION.
10. 1' THICK QUARRY SPALL BLANKET AND CONSTRUCTION GEOTEXTILE FOR UNDERGROUND DRAINAGE SHALL BE INSTALLED EVERYWHERE CUT OR FILL SLOPES ARE STEEPER THAN 1.75:1.

N STA 30+00.00 TO STA 30+35.05

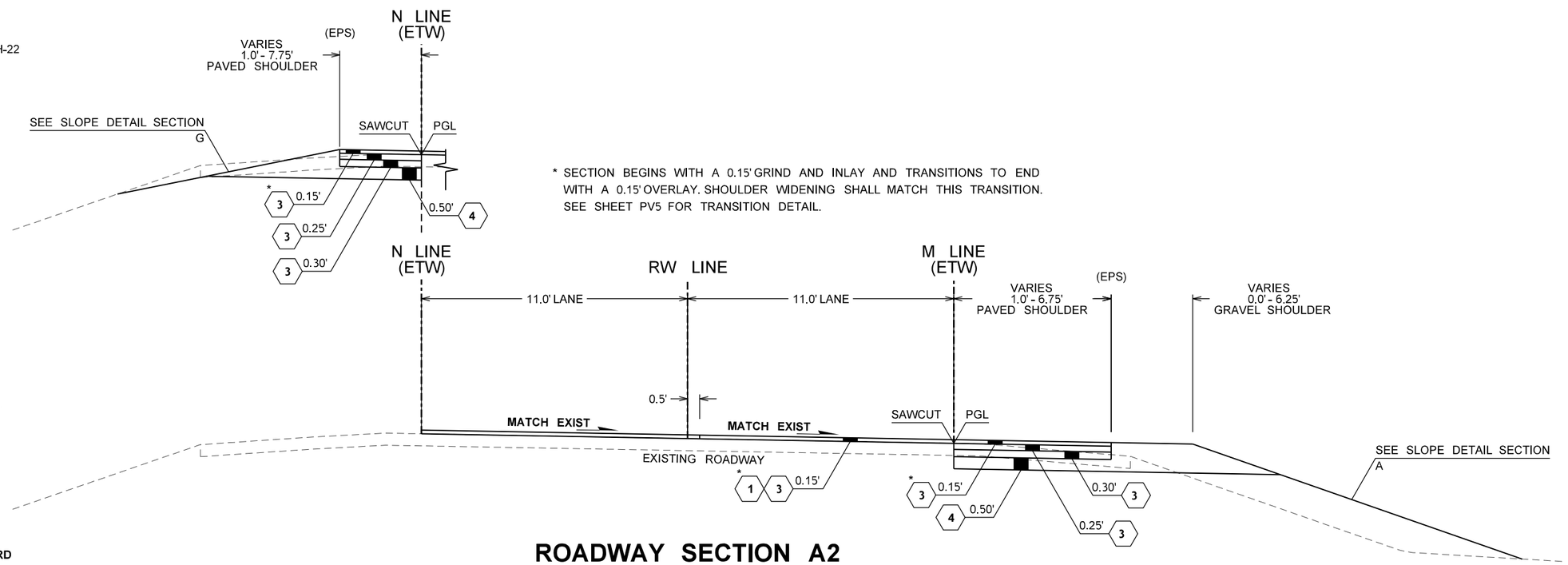

* SECTION BEGINS WITH A 0.15' GRIND AND INLAY AND TRANSITIONS TO END WITH A 0.15' OVERLAY. SHOULDER WIDENING SHALL MATCH THIS TRANSITION. SEE SHEET PV5 FOR TRANSITION DETAIL.

ROADWAY SECTION A2

WEST LEG ON SR 500
RW STA 111+03.32 TO STA 111+98.49
M STA 20+00.00 TO STA 20+94.75

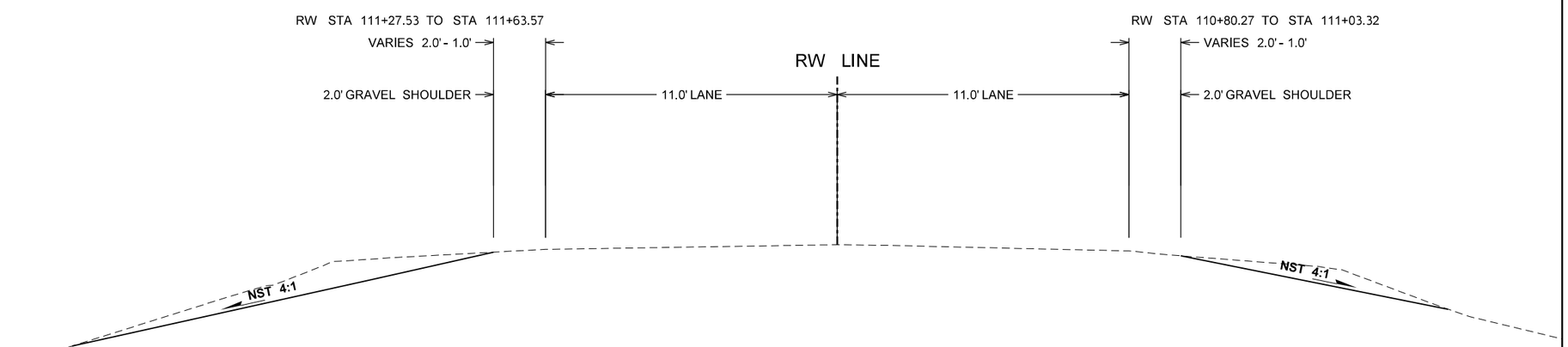

RW STA 103+01.65 TO STA 111+63.57

ROADWAY SECTION A1

SR 500 WEST OF ROUNDABOUT

RW STA 106+99.03 TO STA 108+52.25
RW STA 109+28.45 TO STA 111+03.32

FILE NAME	G:\444301\05-Design\02-Projects\SR 500 182nd RAB\1-CADD-Plans\20-1.2 CAD Sheet Files\D50021R_SH_RS.dgn				REGION NO. 10	STATE WASH
TIME	8:32:44 AM				JOB NUMBER 21X327	FED.AID PROJ.NO. HSIP-0500(029)
DATE	3/29/2022					
PLOTTED BY	bournem					
DESIGNED BY	MORGAN BOURNE				CONTRACT NO.	LOCATION NO. XL6488
ENTERED BY	MORGAN BOURNE					
CHECKED BY	ANDY ROMANCHOCK					
PROJ. ENGR.	SUSAN FELL					
REGIONAL ADM.	CARLEY FRANCIS	REVISION	DATE	BY		

SUSAN WAI LEONG FELL, STATE OF WASHINGTON, 36748, REGISTERED PROFESSIONAL ENGINEER

SEE SHEET CT1
DATE
P.E. STAMP BOX

DATE
P.E. STAMP BOX

Washington State Department of Transportation

SR 500
NE 182ND AVE
INTERSECTION IMPROVEMENTS

ROADWAY SECTIONS

PLOT 1
PLAN REF NO RS1
SHEET 6 OF 76 SHEETS

LEGEND

1. PLANING BITUMINOUS PAVEMENT
2. HMA FOR PRELEVELING CL. ⅛ IN. PG 58H-22
3. HMA CL. ⅛ IN. PG 58H-22
4. CRUSHED SURFACING BASE COURSE
5. GRAVEL BORROW INCL. HAUL
6. DUAL FACED CEMENT CONC. CURB AND GUTTER WITH SCUPPER
7. ROUNDABOUT CEMENT CONCRETE CURB AND GUTTER
8. ROUNDABOUT TRUCK APRON CEM. CONC. CURB AND GUTTER
9. PIGMENTED CEMENT CONCRETE PAVEMENT
10. MEDIA FILTER DRAIN TYPE 3
11. BEAM GUARDRAIL TYPE 31 - 8 FT. LONG POST (CASE 4)
12. BEAM GUARDRAIL TYPE 31 - 9 FT. LONG POST (CASE 5)
13. QUARRY SPALLS
14. CONSTRUCTION GEOTEXTILE FOR UNDERGROUND DRAINAGE
15. CL. V REINF. CONC. CULV. PIPE 12 IN. DIAM.
16. REMOVING EXISTING OVERLAY FROM BRIDGE DECK
17. BEAM GUARDRAIL TRANSITION SECTION TYPE 22

NOTES:

1. ALL SURFACING AND PAVING DEPTHS ARE COMPACTED DEPTHS. COURSES SHALL NOT EXCEED DEPTHS DEFINED IN THE STANDARD SPECIFICATIONS.
2. SEE STANDARD PLANS C-22.40 AND C-23.60 FOR GUARDRAIL TERMINAL AND ANCHOR DETAILS.
3. SEE STD. SPEC. 5-04.3(12)A2 FOR LONGITUDINAL JOINTS IN HMA PLACED IN MULTIPLE LIFTS. TOP JOINTS SHALL BE OFFSET 6" FROM LANE MARKINGS.
4. SAWCUT SHALL BE ON THE INSIDE EDGE OF EXISTING EDGE LINES AT LOCATIONS WHERE FULL DEPTH REBUILD IS REQUIRED OUTSIDE EXISTING PAVEMENT LIMITS.
5. SAWCUT SHALL BE 1' FROM FACE OF GUTTER AT LOCATIONS WHERE FULL DEPTH REBUILD IS REQUIRED FOR ROUNDABOUT TRUCK APRON AND SPLITTER ISLANDS WITHIN EXISTING PAVEMENT LIMITS.
6. GRAVEL BORROW SHALL BE TERRACED INTO THE EXISTING EMBANKMENT PER STD. SPEC. 2-03.3(14).
7. THE NUMBER OF BENCHES NEEDED FOR TERRACES IS DEPENDENT UPON THE FILL HEIGHT. AS A RESULT, THE ACTUAL NUMBER OF BENCHES REQUIRED IN THE FIELD MAY DIFFER THAN WHAT IS SHOWN IN THE SLOPE DETAILS. DIMENSIONS OF TERRACES AND BENCHES SHALL MATCH WHAT IS SHOWN IN THE SLOPE DETAILS.
8. GRAVEL BORROW SHALL BE COMPACTED USING METHOD C PER STD. SPEC. 2-03.3(14)C.
9. CONSTRUCTION GEOTEXTILE FOR UNDERGROUND DRAINAGE SHALL BE PLACED FROM THE BOTTOM UP, AND NOT ANCHORED FROM THE TOP DURING INSTALLATION.
10. 1' THICK QUARRY SPALL BLANKET AND CONSTRUCTION GEOTEXTILE FOR UNDERGROUND DRAINAGE SHALL BE INSTALLED EVERYWHERE CUT OR FILL SLOPES ARE STEEPER THAN 1.75:1.

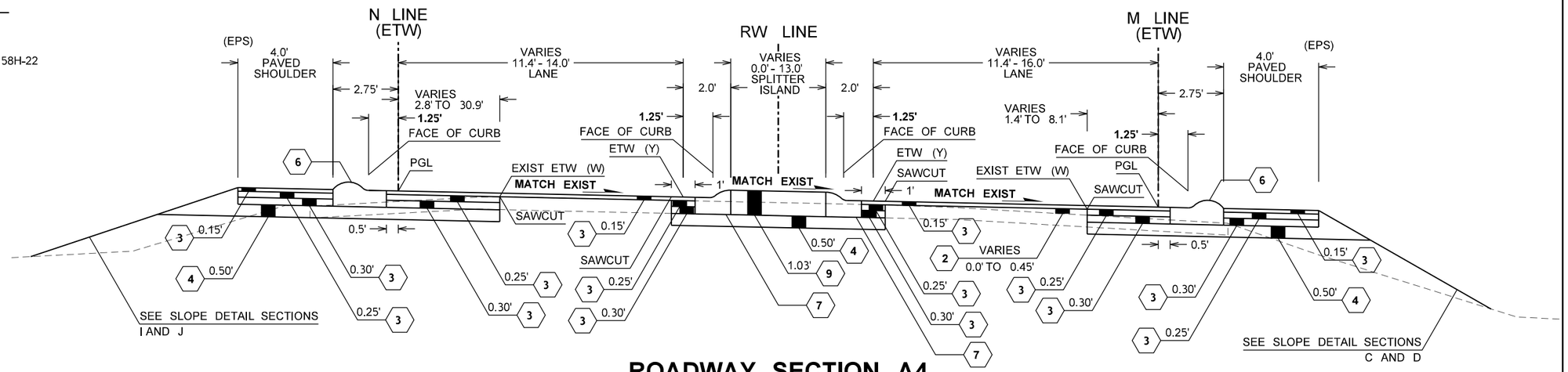

ROADWAY SECTION A4

WEST LEG ON SR 500
RW STA 113+16.59 TO STA 115+00.63
M STA 22+10.92 TO STA 23+91.54
N STA 31+53.06 TO STA 33+34.43

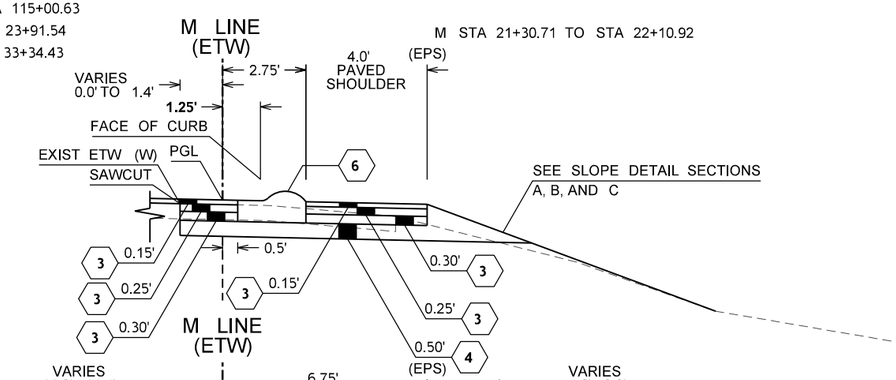

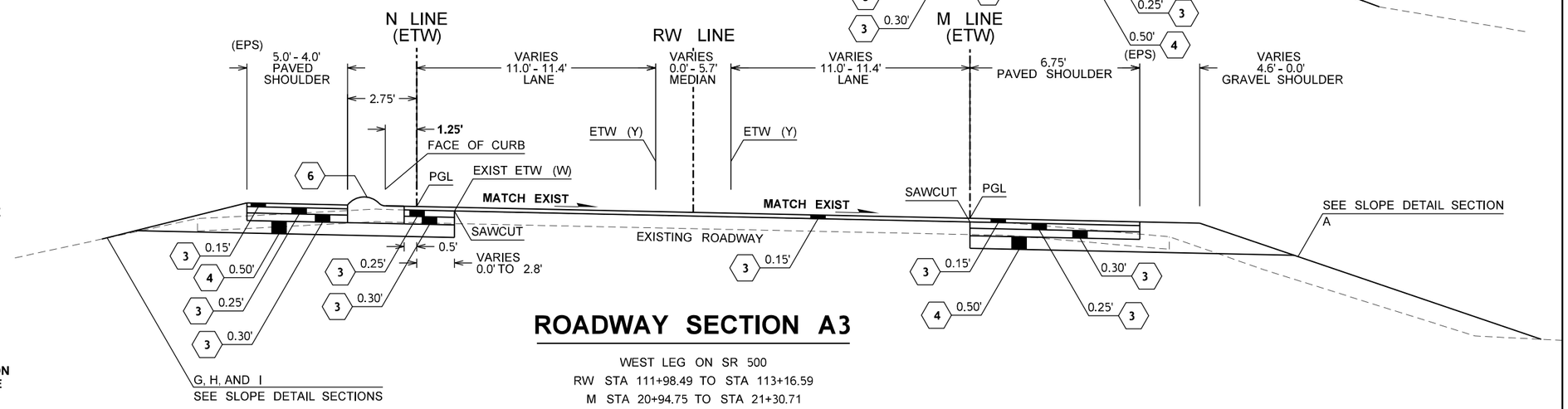

ROADWAY SECTION A3

WEST LEG ON SR 500
RW STA 111+98.49 TO STA 113+16.59
M STA 20+94.75 TO STA 21+30.71
N STA 30+35.05 TO STA 31+53.06

FILE NAME	G:\444301\05-Design\02-Projects\SR 500 182nd RAB\1-CADD-Plans\20-1.2 CAD Sheet Files\D50021R_SH_RS.dgn
TIME	8:32:45 AM
DATE	3/29/2022
PLOTTED BY	bournem
DESIGNED BY	MORGAN BOURNE
ENTERED BY	MORGAN BOURNE
CHECKED BY	ANDY ROMANCHOCK
PROJ. ENGR.	SUSAN FELL
REGIONAL ADM.	CARLEY FRANCIS

REVISION | DATE | BY

REGION NO. 10 | STATE WASH | FED.AID PROJ.NO. HSIP-0500(029)

JOB NUMBER 21X327

CONTRACT NO. | LOCATION NO. XL6488

SEE SHEET CT1 DATE — P.E. STAMP BOX

DATE — P.E. STAMP BOX

Washington State Department of Transportation

SR 500
NE 182ND AVE
INTERSECTION IMPROVEMENTS

ROADWAY SECTIONS

PLOT 2
PLAN REF NO RS2
SHEET 7 OF 76 SHEETS

LEGEND

1. PLANING BITUMINOUS PAVEMENT
2. HMA FOR PRELEVELING CL. ⅛ IN. PG 58H-22
3. HMA CL. ⅛ IN. PG 58H-22
4. CRUSHED SURFACING BASE COURSE
5. GRAVEL BORROW INCL. HAUL
6. DUAL FACED CEMENT CONC. CURB AND GUTTER WITH SCUPPER
7. ROUNDABOUT CEMENT CONCRETE CURB AND GUTTER
8. ROUNDABOUT TRUCK APRON CEM. CONC. CURB AND GUTTER
9. PIGMENTED CEMENT CONCRETE PAVEMENT
10. MEDIA FILTER DRAIN TYPE 3
11. BEAM GUARDRAIL TYPE 31 - 8 FT. LONG POST (CASE 4)
12. BEAM GUARDRAIL TYPE 31 - 9 FT. LONG POST (CASE 5)
13. QUARRY SPALLS
14. CONSTRUCTION GEOTEXTILE FOR UNDERGROUND DRAINAGE
15. CL. V REINF. CONC. CULV. PIPE 12 IN. DIAM.
16. REMOVING EXISTING OVERLAY FROM BRIDGE DECK
17. BEAM GUARDRAIL TRANSITION SECTION TYPE 22

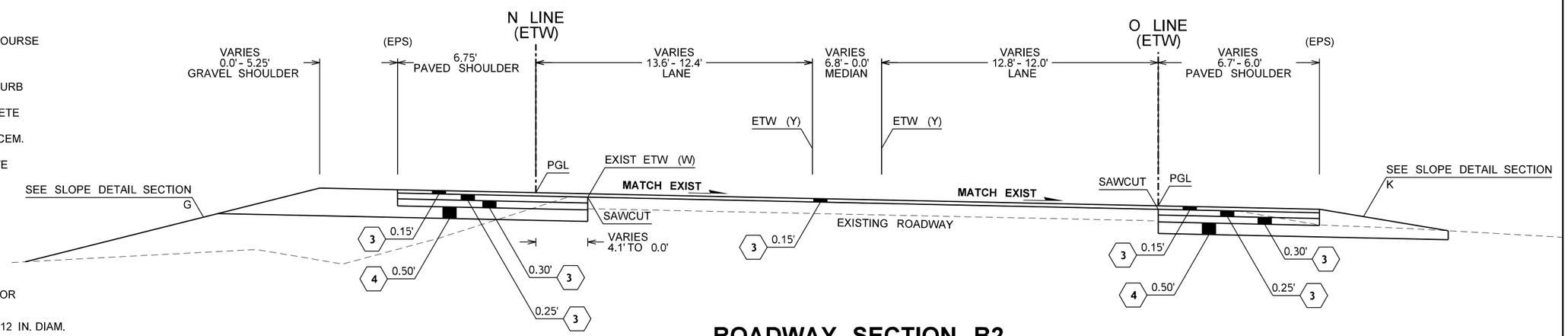

ROADWAY SECTION B2

NORTH LEG ON NE 182ND AVE
N STA 34+51.29 TO STA 35+03.52
O STA 41+63.83 TO STA 42+07.23

NOTES:

1. ALL SURFACING AND PAVING DEPTHS ARE COMPACTED DEPTHS. COURSES SHALL NOT EXCEED DEPTHS DEFINED IN THE STANDARD SPECIFICATIONS.
2. SEE STANDARD PLANS C-22.40 AND C-23.60 FOR GUARDRAIL TERMINAL AND ANCHOR DETAILS.
3. SEE STD. SPEC. 5-04.3(12)A2 FOR LONGITUDINAL JOINTS IN HMA PLACED IN MULTIPLE LIFTS. TOP JOINTS SHALL BE OFFSET 6" FROM LANE MARKINGS.
4. SAWCUT SHALL BE ON THE INSIDE EDGE OF EXISTING EDGE LINES AT LOCATIONS WHERE FULL DEPTH REBUILD IS REQUIRED OUTSIDE EXISTING PAVEMENT LIMITS.
5. SAWCUT SHALL BE 1' FROM FACE OF GUTTER AT LOCATIONS WHERE FULL DEPTH REBUILD IS REQUIRED FOR ROUNDABOUT TRUCK APRON AND SPLITTER ISLANDS WITHIN EXISTING PAVEMENT LIMITS.
6. GRAVEL BORROW SHALL BE TERRACED INTO THE EXISTING EMBANKMENT PER STD. SPEC. 2-03.3(14).
7. THE NUMBER OF BENCHES NEEDED FOR TERRACES IS DEPENDENT UPON THE FILL HEIGHT. AS A RESULT, THE ACTUAL NUMBER OF BENCHES REQUIRED IN THE FIELD MAY DIFFER THAN WHAT IS SHOWN IN THE SLOPE DETAILS. DIMENSIONS OF TERRACES AND BENCHES SHALL MATCH WHAT IS SHOWN IN THE SLOPE DETAILS.
8. GRAVEL BORROW SHALL BE COMPACTED USING METHOD C PER STD. SPEC. 2-03.3(14)C.
9. CONSTRUCTION GEOTEXTILE FOR UNDERGROUND DRAINAGE SHALL BE PLACED FROM THE BOTTOM UP, AND NOT ANCHORED FROM THE TOP DURING INSTALLATION.
10. 1' THICK QUARRY SPALL BLANKET AND CONSTRUCTION GEOTEXTILE FOR UNDERGROUND DRAINAGE SHALL BE INSTALLED EVERYWHERE CUT OR FILL SLOPES ARE STEEPER THAN 1.75:1.

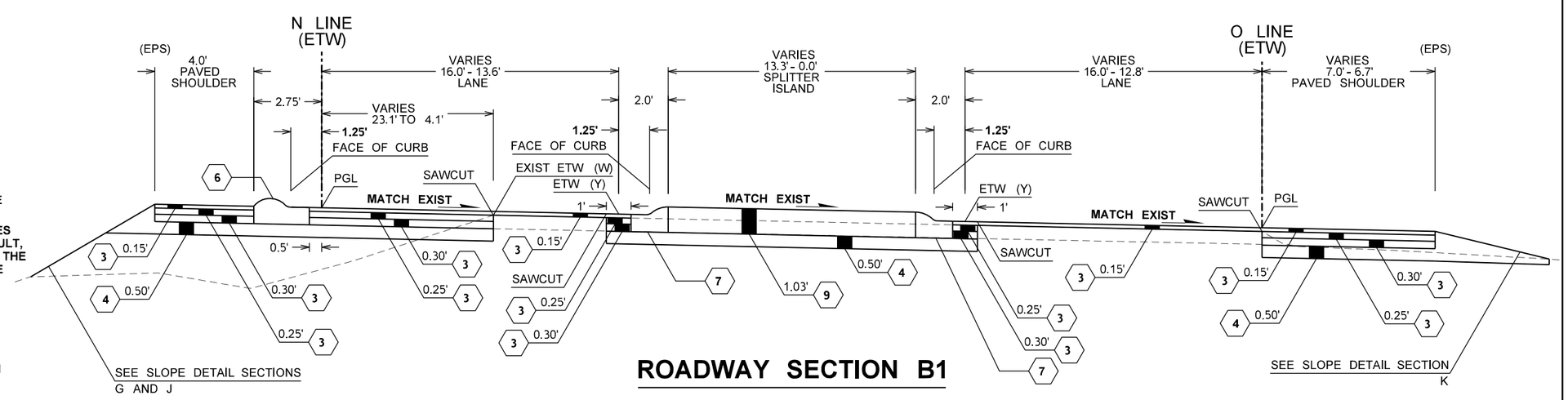

ROADWAY SECTION B1

NORTH LEG ON NE 182ND AVE
N STA 33+97.50 TO STA 34+51.29
O STA 41+28.61 TO STA 41+63.83

FILE NAME	G:\444301\05-Design\02-Projects\SR 500 182nd RAB\1-CADD-Plans\20-1.2 CAD Sheet Files\D50021R_SH_RS.dgn					
TIME	8:32:45 AM					
DATE	3/29/2022					
PLOTTED BY	bournem					
DESIGNED BY	MORGAN BOURNE					
ENTERED BY	MORGAN BOURNE					
CHECKED BY	ANDY ROMANCHOCK					
PROJ. ENGR.	SUSAN FELL					
REGIONAL ADM.	CARLEY FRANCIS	REVISION	DATE	BY		

REGION NO. 10 | STATE WASH | FED.AID PROJ.NO. HSIP-0500(029)
JOB NUMBER 21X327
CONTRACT NO. | LOCATION NO. XL6488

SUSAN WAI LEONG FELL, STATE OF WASHINGTON, 36748, REGISTERED PROFESSIONAL ENGINEER
SEE SHEET CT1
DATE
P.E. STAMP BOX

DATE
P.E. STAMP BOX

Washington State Department of Transportation

SR 500
NE 182ND AVE
INTERSECTION IMPROVEMENTS

ROADWAY SECTIONS

PLOT 3
PLAN REF NO RS3
SHEET 8 OF 76 SHEETS

LEGEND

1. PLANING BITUMINOUS PAVEMENT
2. HMA FOR PRELEVELING CL. ⅛ IN. PG 58H-22
3. HMA CL. ⅛ IN. PG 58H-22
4. CRUSHED SURFACING BASE COURSE
5. GRAVEL BORROW INCL. HAUL
6. DUAL FACED CEMENT CONC. CURB AND GUTTER WITH SCUPPER
7. ROUNDABOUT CEMENT CONCRETE CURB AND GUTTER
8. ROUNDABOUT TRUCK APRON CEM. CONC. CURB AND GUTTER
9. PIGMENTED CEMENT CONCRETE PAVEMENT
10. MEDIA FILTER DRAIN TYPE 3
11. BEAM GUARDRAIL TYPE 31 - 8 FT. LONG POST (CASE 4)
12. BEAM GUARDRAIL TYPE 31 - 9 FT. LONG POST (CASE 5)
13. QUARRY SPALLS
14. CONSTRUCTION GEOTEXTILE FOR UNDERGROUND DRAINAGE
15. CL. V REINF. CONC. CULV. PIPE 12 IN. DIAM.
16. REMOVING EXISTING OVERLAY FROM BRIDGE DECK
17. BEAM GUARDRAIL TRANSITION SECTION TYPE 22

NOTES:

1. ALL SURFACING AND PAVING DEPTHS ARE COMPACTED DEPTHS. COURSES SHALL NOT EXCEED DEPTHS DEFINED IN THE STANDARD SPECIFICATIONS.
2. SEE STANDARD PLANS C-22.40 AND C-23.60 FOR GUARDRAIL TERMINAL AND ANCHOR DETAILS.
3. SEE STD. SPEC. 5-04.3(12)A2 FOR LONGITUDINAL JOINTS IN HMA PLACED IN MULTIPLE LIFTS. TOP JOINTS SHALL BE OFFSET 6" FROM LANE MARKINGS.
4. SAWCUT SHALL BE ON THE INSIDE EDGE OF EXISTING EDGE LINES AT LOCATIONS WHERE FULL DEPTH REBUILD IS REQUIRED OUTSIDE EXISTING PAVEMENT LIMITS.
5. SAWCUT SHALL BE 1' FROM FACE OF GUTTER AT LOCATIONS WHERE FULL DEPTH REBUILD IS REQUIRED FOR ROUNDABOUT TRUCK APRON AND SPLITTER ISLANDS WITHIN EXISTING PAVEMENT LIMITS.
6. GRAVEL BORROW SHALL BE TERRACED INTO THE EXISTING EMBANKMENT PER STD. SPEC. 2-03.3(14).
7. THE NUMBER OF BENCHES NEEDED FOR TERRACES IS DEPENDENT UPON THE FILL HEIGHT. AS A RESULT, THE ACTUAL NUMBER OF BENCHES REQUIRED IN THE FIELD MAY DIFFER THAN WHAT IS SHOWN IN THE SLOPE DETAILS. DIMENSIONS OF TERRACES AND BENCHES SHALL MATCH WHAT IS SHOWN IN THE SLOPE DETAILS.
8. GRAVEL BORROW SHALL BE COMPACTED USING METHOD C PER STD. SPEC. 2-03.3(14)C.
9. CONSTRUCTION GEOTEXTILE FOR UNDERGROUND DRAINAGE SHALL BE PLACED FROM THE BOTTOM UP, AND NOT ANCHORED FROM THE TOP DURING INSTALLATION.
10. 1' THICK QUARRY SPALL BLANKET AND CONSTRUCTION GEOTEXTILE FOR UNDERGROUND DRAINAGE SHALL BE INSTALLED EVERYWHERE CUT OR FILL SLOPES ARE STEEPER THAN 1.75:1.

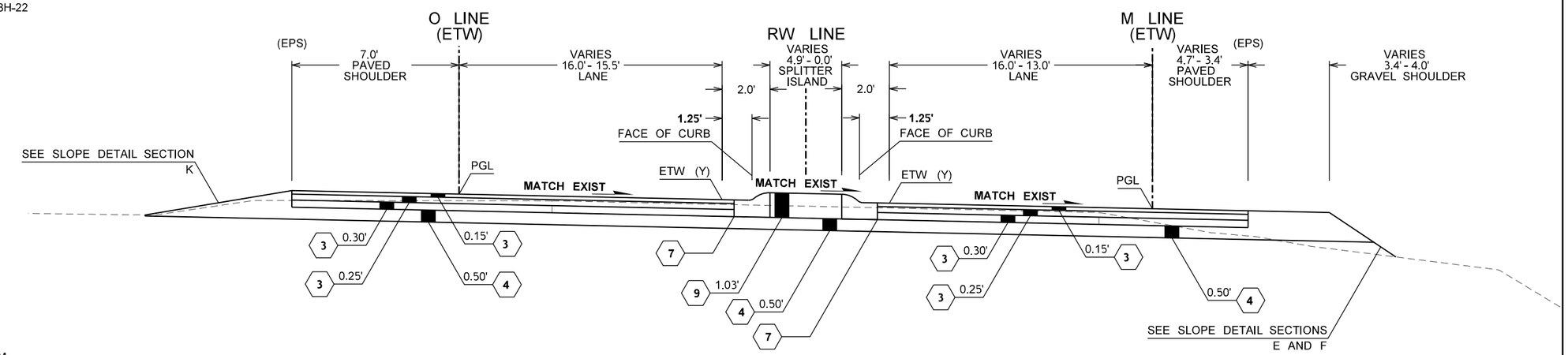

ROADWAY SECTION C1

EAST LEG ON SR 500
RW STA 115+90.38 TO STA 116+01.12
M STA 24+92.15 TO STA 25+04.51
O STA 40+73.08 TO STA 40+79.85

* SECTION BEGINS WITH A 0.15' OVERLAY AND TRANSITIONS TO END WITH A 0.15' GRIND AND INLAY. SHOULDER WIDENING SHALL MATCH THIS TRANSITION. SEE SHEET PV5 FOR TRANSITION DETAIL.

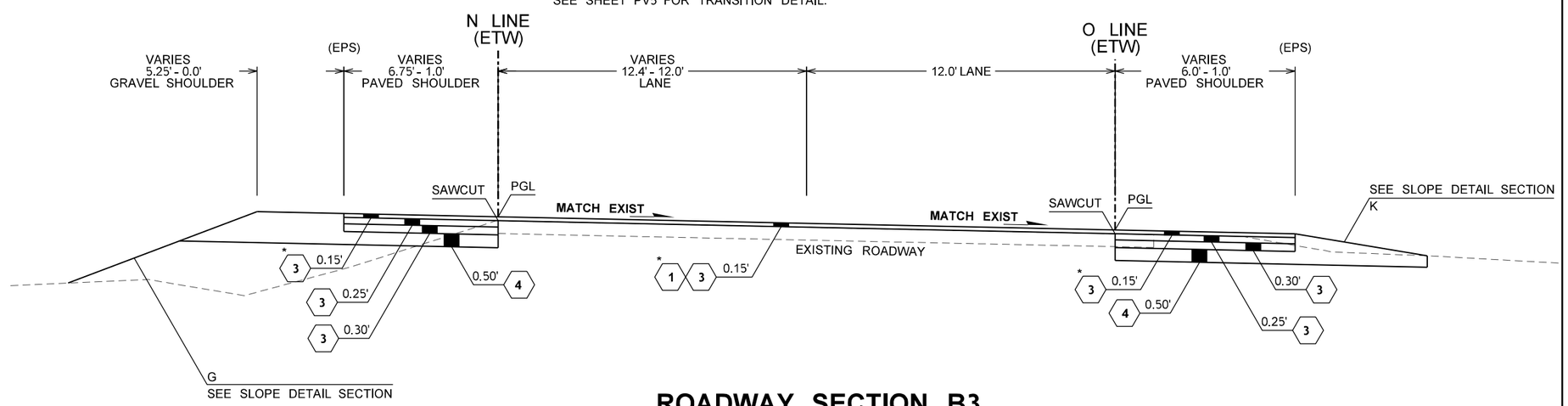

ROADWAY SECTION B3

NORTH LEG ON NE 182ND AVE
N STA 35+03.52 TO STA 35+59.87
O STA 42+07.23 TO STA 42+35.85

FILE NAME	G:\444301\05-Design\02-Projects\SR 500 182nd RAB\1-CADD-Plans\20-1.2 CAD Sheet Files\D50021R_SH_RS.dgn			
TIME	8:32:46 AM			
DATE	3/29/2022			
PLOTTED BY	bournem			
DESIGNED BY	MORGAN BOURNE			
ENTERED BY	MORGAN BOURNE			
CHECKED BY	ANDY ROMANCHOCK			
PROJ. ENGR.	SUSAN FELL			
REGIONAL ADM.	CARLEY FRANCIS	REVISION	DATE	BY

REGION NO. 10 | STATE WASH | FED.AID PROJ.NO. HSIP-0500(029)
JOB NUMBER 21X327
CONTRACT NO.
LOCATION NO. XL6488

SUSAN WAI LEONG FELL — STATE OF WASHINGTON — 36748 — REGISTERED PROFESSIONAL ENGINEER
SEE SHEET CT1
DATE
P.E. STAMP BOX

DATE
P.E. STAMP BOX

Washington State Department of Transportation

SR 500
NE 182ND AVE
INTERSECTION IMPROVEMENTS

ROADWAY SECTIONS

PLOT 4
PLAN REF NO RS4
SHEET 9 OF 76 SHEETS

LEGEND

1. PLANING BITUMINOUS PAVEMENT
2. HMA FOR PRELEVELING CL. ⅛ IN. PG 58H-22
3. HMA CL. ⅛ IN. PG 58H-22
4. CRUSHED SURFACING BASE COURSE
5. GRAVEL BORROW INCL. HAUL
6. DUAL FACED CEMENT CONC. CURB AND GUTTER WITH SCUPPER
7. ROUNDABOUT CEMENT CONCRETE CURB AND GUTTER
8. ROUNDABOUT TRUCK APRON CEM. CONC. CURB AND GUTTER
9. PIGMENTED CEMENT CONCRETE PAVEMENT
10. MEDIA FILTER DRAIN TYPE 3
11. BEAM GUARDRAIL TYPE 31 - 8 FT. LONG POST (CASE 4)
12. BEAM GUARDRAIL TYPE 31 - 9 FT. LONG POST (CASE 5)
13. QUARRY SPALLS
14. CONSTRUCTION GEOTEXTILE FOR UNDERGROUND DRAINAGE
15. CL. V REINF. CONC. CULV. PIPE 12 IN. DIAM.
16. REMOVING EXISTING OVERLAY FROM BRIDGE DECK
17. BEAM GUARDRAIL TRANSITION SECTION TYPE 22

NOTES:

1. ALL SURFACING AND PAVING DEPTHS ARE COMPACTED DEPTHS. COURSES SHALL NOT EXCEED DEPTHS DEFINED IN THE STANDARD SPECIFICATIONS.
2. SEE STANDARD PLANS C-22.40 AND C-23.60 FOR GUARDRAIL TERMINAL AND ANCHOR DETAILS.
3. SEE STD. SPEC. 5-04.3(12)A2 FOR LONGITUDINAL JOINTS IN HMA PLACED IN MULTIPLE LIFTS. TOP JOINTS SHALL BE OFFSET 6" FROM LANE MARKINGS.
4. SAWCUT SHALL BE ON THE INSIDE EDGE OF EXISTING EDGE LINES AT LOCATIONS WHERE FULL DEPTH REBUILD IS REQUIRED OUTSIDE EXISTING PAVEMENT LIMITS.
5. SAWCUT SHALL BE 1' FROM FACE OF GUTTER AT LOCATIONS WHERE FULL DEPTH REBUILD IS REQUIRED FOR ROUNDABOUT TRUCK APRON AND SPLITTER ISLANDS WITHIN EXISTING PAVEMENT LIMITS.
6. GRAVEL BORROW SHALL BE TERRACED INTO THE EXISTING EMBANKMENT PER STD. SPEC. 2-03.3(14).
7. THE NUMBER OF BENCHES NEEDED FOR TERRACES IS DEPENDENT UPON THE FILL HEIGHT. AS A RESULT, THE ACTUAL NUMBER OF BENCHES REQUIRED IN THE FIELD MAY DIFFER THAN WHAT IS SHOWN IN THE SLOPE DETAILS. DIMENSIONS OF TERRACES AND BENCHES SHALL MATCH WHAT IS SHOWN IN THE SLOPE DETAILS.
8. GRAVEL BORROW SHALL BE COMPACTED USING METHOD C PER STD. SPEC. 2-03.3(14)C.
9. CONSTRUCTION GEOTEXTILE FOR UNDERGROUND DRAINAGE SHALL BE PLACED FROM THE BOTTOM UP, AND NOT ANCHORED FROM THE TOP DURING INSTALLATION.
10. 1' THICK QUARRY SPALL BLANKET AND CONSTRUCTION GEOTEXTILE FOR UNDERGROUND DRAINAGE SHALL BE INSTALLED EVERYWHERE CUT OR FILL SLOPES ARE STEEPER THAN 1.75:1.

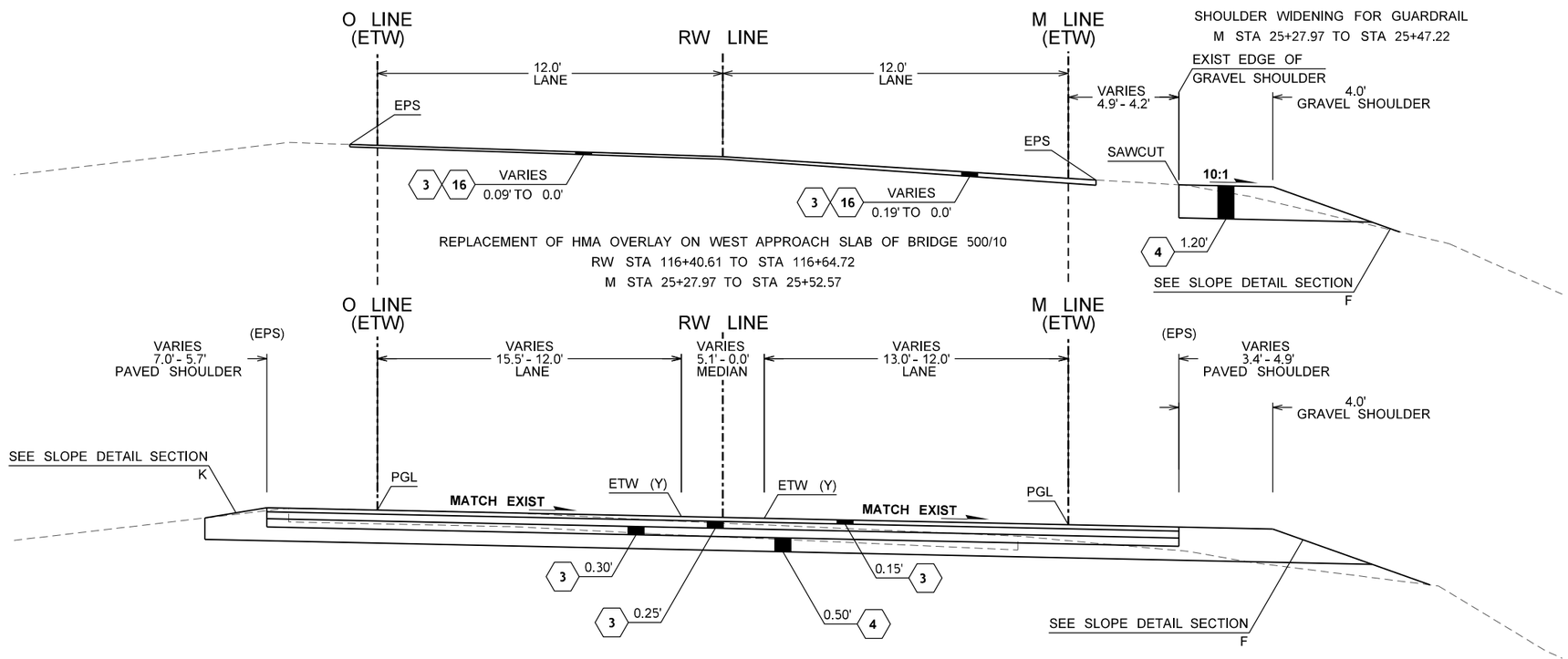

ROADWAY SECTION C2

EAST LEG ON SR 500
RW STA 116+01.12 TO STA 116+40.61
M STA 25+04.51 TO STA 25+27.97
O STA 40+28.75 TO STA 40+73.08

FILE NAME	G:\444301\05-Design\02-Projects\SR 500 182nd RAB\1-CADD-Plans\20-1.2 CAD Sheet Files\D50021R_SH_RS.dgn			
TIME	8:32:47 AM			
DATE	3/29/2022			
PLOTTED BY	bournem			
DESIGNED BY	MORGAN BOURNE			
ENTERED BY	MORGAN BOURNE			
CHECKED BY	ANDY ROMANCHOCK			
PROJ. ENGR.	SUSAN FELL			
REGIONAL ADM.	CARLEY FRANCIS	REVISION	DATE	BY

REGION NO.	STATE	FED.AID PROJ.NO.
10	WASH	HSIP-0500(029)
JOB NUMBER 21X327		
CONTRACT NO.		LOCATION NO. XL6488

SUSAN WAI LEONG FELL — STATE OF WASHINGTON — 36708 — REGISTERED PROFESSIONAL ENGINEER

SEE SHEET CT1
DATE
P.E. STAMP BOX

DATE
P.E. STAMP BOX

Washington State Department of Transportation

SR 500
NE 182ND AVE
INTERSECTION IMPROVEMENTS

ROADWAY SECTIONS

PLOT 5
PLAN REF NO RS5
SHEET 10 OF 76 SHEETS

LEGEND

1. PLANING BITUMINOUS PAVEMENT
2. HMA FOR PRELEVELING CL. ⅛ IN. PG 58H-22
3. HMA CL. ⅛ IN. PG 58H-22
4. CRUSHED SURFACING BASE COURSE
5. GRAVEL BORROW INCL. HAUL
6. DUAL FACED CEMENT CONC. CURB AND GUTTER WITH SCUPPER
7. ROUNDABOUT CEMENT CONCRETE CURB AND GUTTER
8. ROUNDABOUT TRUCK APRON CEM. CONC. CURB AND GUTTER
9. PIGMENTED CEMENT CONCRETE PAVEMENT
10. MEDIA FILTER DRAIN TYPE 3
11. BEAM GUARDRAIL TYPE 31 - 8 FT. LONG POST (CASE 4)
12. BEAM GUARDRAIL TYPE 31 - 9 FT. LONG POST (CASE 5)
13. QUARRY SPALLS
14. CONSTRUCTION GEOTEXTILE FOR UNDERGROUND DRAINAGE
15. CL. V REINF. CONC. CULV. PIPE 12 IN. DIAM.
16. REMOVING EXISTING OVERLAY FROM BRIDGE DECK
17. BEAM GUARDRAIL TRANSITION SECTION TYPE 22

NOTES:

1. ALL SURFACING AND PAVING DEPTHS ARE COMPACTED DEPTHS. COURSES SHALL NOT EXCEED DEPTHS DEFINED IN THE STANDARD SPECIFICATIONS.
2. SEE STANDARD PLANS C-22.40 AND C-23.60 FOR GUARDRAIL TERMINAL AND ANCHOR DETAILS.
3. SEE STD. SPEC. 5-04.3(12)A2 FOR LONGITUDINAL JOINTS IN HMA PLACED IN MULTIPLE LIFTS. TOP JOINTS SHALL BE OFFSET 6" FROM LANE MARKINGS.
4. SAWCUT SHALL BE ON THE INSIDE EDGE OF EXISTING EDGE LINES AT LOCATIONS WHERE FULL DEPTH REBUILD IS REQUIRED OUTSIDE EXISTING PAVEMENT LIMITS.
5. SAWCUT SHALL BE 1' FROM FACE OF GUTTER AT LOCATIONS WHERE FULL DEPTH REBUILD IS REQUIRED FOR ROUNDABOUT TRUCK APRON AND SPLITTER ISLANDS WITHIN EXISTING PAVEMENT LIMITS.
6. GRAVEL BORROW SHALL BE TERRACED INTO THE EXISTING EMBANKMENT PER STD. SPEC. 2-03.3(14).
7. THE NUMBER OF BENCHES NEEDED FOR TERRACES IS DEPENDENT UPON THE FILL HEIGHT. AS A RESULT, THE ACTUAL NUMBER OF BENCHES REQUIRED IN THE FIELD MAY DIFFER THAN WHAT IS SHOWN IN THE SLOPE DETAILS. DIMENSIONS OF TERRACES AND BENCHES SHALL MATCH WHAT IS SHOWN IN THE SLOPE DETAILS.
8. GRAVEL BORROW SHALL BE COMPACTED USING METHOD C PER STD. SPEC. 2-03.3(14)C.
9. CONSTRUCTION GEOTEXTILE FOR UNDERGROUND DRAINAGE SHALL BE PLACED FROM THE BOTTOM UP, AND NOT ANCHORED FROM THE TOP DURING INSTALLATION.
10. 1' THICK QUARRY SPALL BLANKET AND CONSTRUCTION GEOTEXTILE FOR UNDERGROUND DRAINAGE SHALL BE INSTALLED EVERYWHERE CUT OR FILL SLOPES ARE STEEPER THAN 1.75:1.

R STA 11+14.66 TO STA 11+25.02
R STA 12+02.53 TO STA 12+08.82
R STA 12+82.91 TO STA 12+89.78

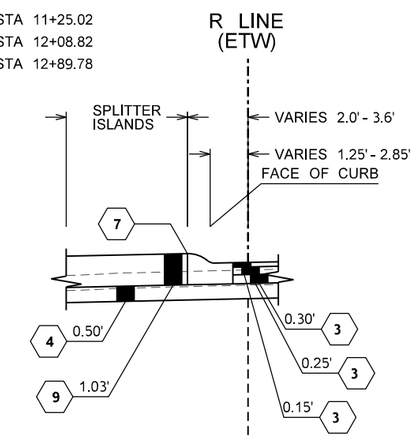

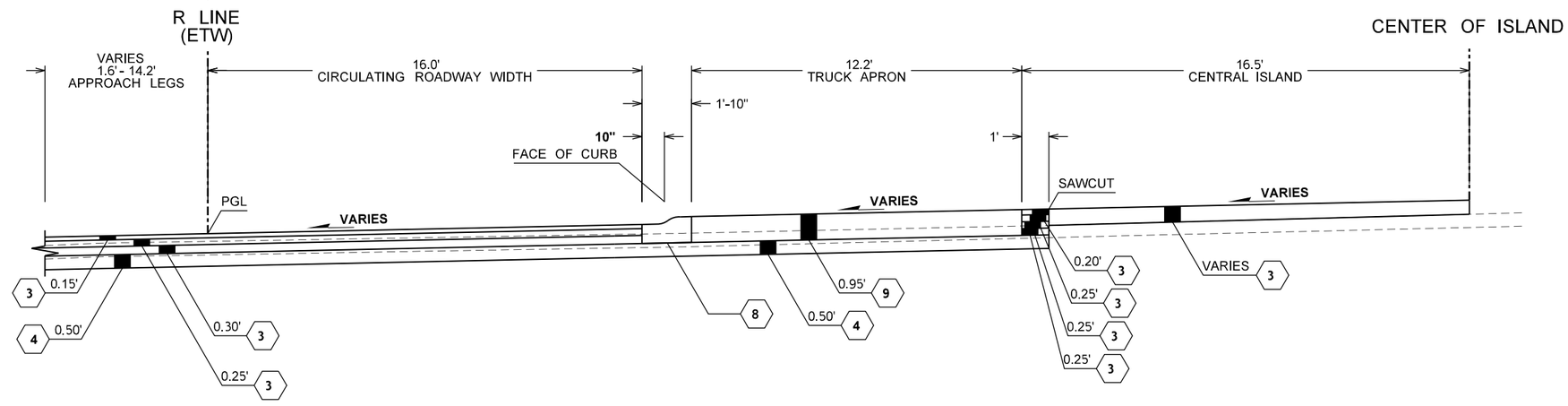

ROADWAY SECTION D1

ROUNDABOUT CIRCULATING AREA
R STA 10+00.00 TO STA 10+09.01
R STA 11+25.02 TO STA 11+37.55
R STA 11+89.20 TO STA 12+02.53
R STA 12+69.40 TO STA 12+82.91
R STA 12+89.78 TO STA 12+92.16

FILE NAME	G:\444301\05-Design\02-Projects\SR 500 182nd RAB\1-CADD-Plans\20-1.2 CAD Sheet Files\D50021R_SH_RS.dgn						
TIME	8:32:48 AM				REGION NO. 10	STATE WASH	FED.AID PROJ.NO. HSIP-0500(029)
DATE	3/29/2022						
PLOTTED BY	bournem				JOB NUMBER 21X327		
DESIGNED BY	MORGAN BOURNE						
ENTERED BY	MORGAN BOURNE						
CHECKED BY	ANDY ROMANCHOCK				CONTRACT NO.		LOCATION NO. XL6488
PROJ. ENGR.	SUSAN FELL						
REGIONAL ADM.	CARLEY FRANCIS	REVISION	DATE	BY			

SUSAN WAI LEONG FELL — STATE OF WASHINGTON — 36748 — REGISTERED PROFESSIONAL ENGINEER

SEE SHEET CT1 DATE
P.E. STAMP BOX

DATE
P.E. STAMP BOX

Washington State Department of Transportation

SR 500
NE 182ND AVE
INTERSECTION IMPROVEMENTS

ROADWAY SECTIONS

PLOT 6
PLAN REF NO RS6
SHEET 11 OF 76 SHEETS

LEGEND

1. PLANING BITUMINOUS PAVEMENT
2. HMA FOR PRELEVELING CL. ⅛ IN. PG 58H-22
3. HMA CL. ⅛ IN. PG 58H-22
4. CRUSHED SURFACING BASE COURSE
5. GRAVEL BORROW INCL. HAUL
6. DUAL FACED CEMENT CONC. CURB AND GUTTER WITH SCUPPER
7. ROUNDABOUT CEMENT CONCRETE CURB AND GUTTER
8. ROUNDABOUT TRUCK APRON CEM. CONC. CURB AND GUTTER
9. PIGMENTED CEMENT CONCRETE PAVEMENT
10. MEDIA FILTER DRAIN TYPE 3
11. BEAM GUARDRAIL TYPE 31 - 8 FT. LONG POST (CASE 4)
12. BEAM GUARDRAIL TYPE 31 - 9 FT. LONG POST (CASE 5)
13. QUARRY SPALLS
14. CONSTRUCTION GEOTEXTILE FOR UNDERGROUND DRAINAGE
15. CL. V REINF. CONC. CULV. PIPE 12 IN. DIAM.
16. REMOVING EXISTING OVERLAY FROM BRIDGE DECK
17. BEAM GUARDRAIL TRANSITION SECTION TYPE 22

NOTES:

1. ALL SURFACING AND PAVING DEPTHS ARE COMPACTED DEPTHS. COURSES SHALL NOT EXCEED DEPTHS DEFINED IN THE STANDARD SPECIFICATIONS.
2. SEE STANDARD PLANS C-22.40 AND C-23.60 FOR GUARDRAIL TERMINAL AND ANCHOR DETAILS.
3. SEE STD. SPEC. 5-04.3(12)A2 FOR LONGITUDINAL JOINTS IN HMA PLACED IN MULTIPLE LIFTS. TOP JOINTS SHALL BE OFFSET 6" FROM LANE MARKINGS.
4. SAWCUT SHALL BE ON THE INSIDE EDGE OF EXISTING EDGE LINES AT LOCATIONS WHERE FULL DEPTH REBUILD IS REQUIRED OUTSIDE EXISTING PAVEMENT LIMITS.
5. SAWCUT SHALL BE 1' FROM FACE OF GUTTER AT LOCATIONS WHERE FULL DEPTH REBUILD IS REQUIRED FOR ROUNDABOUT TRUCK APRON AND SPLITTER ISLANDS WITHIN EXISTING PAVEMENT LIMITS.
6. GRAVEL BORROW SHALL BE TERRACED INTO THE EXISTING EMBANKMENT PER STD. SPEC. 2-03.3(14).
7. THE NUMBER OF BENCHES NEEDED FOR TERRACES IS DEPENDENT UPON THE FILL HEIGHT. AS A RESULT, THE ACTUAL NUMBER OF BENCHES REQUIRED IN THE FIELD MAY DIFFER THAN WHAT IS SHOWN IN THE SLOPE DETAILS. DIMENSIONS OF TERRACES AND BENCHES SHALL MATCH WHAT IS SHOWN IN THE SLOPE DETAILS.
8. GRAVEL BORROW SHALL BE COMPACTED USING METHOD C PER STD. SPEC. 2-03.3(14)C.
9. CONSTRUCTION GEOTEXTILE FOR UNDERGROUND DRAINAGE SHALL BE PLACED FROM THE BOTTOM UP, AND NOT ANCHORED FROM THE TOP DURING INSTALLATION.
10. 1' THICK QUARRY SPALL BLANKET AND CONSTRUCTION GEOTEXTILE FOR UNDERGROUND DRAINAGE SHALL BE INSTALLED EVERYWHERE CUT OR FILL SLOPES ARE STEEPER THAN 1.75:1.

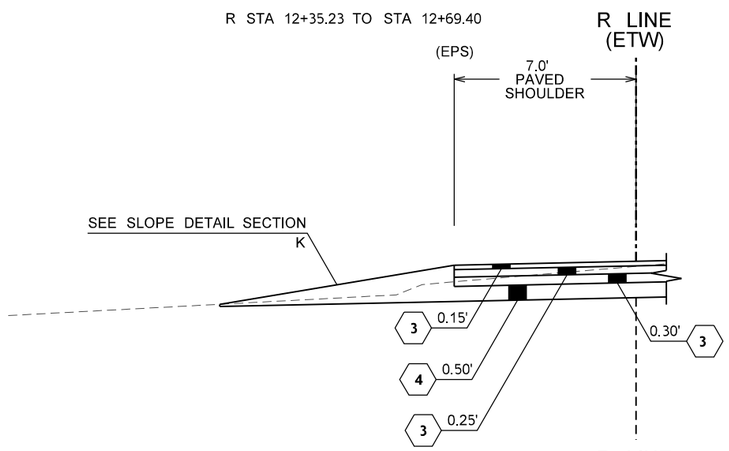

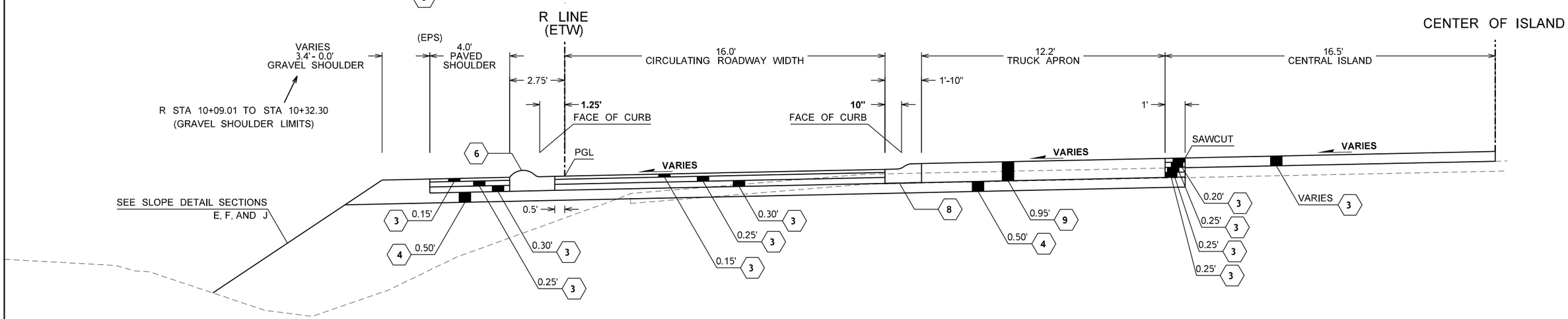

ROADWAY SECTION D2

ROUNDABOUT CIRCULATING AREA
R STA 10+09.01 TO STA 10+60.23
R STA 11+37.55 TO STA 11+89.20

FILE NAME	G:\444301\05-Design\02-Projects\SR 500 182nd RAB\1-CADD-Plans\20-1.2 CAD Sheet Files\D50021R_SH_RS.dgn			
TIME	8:32:48 AM			
DATE	3/29/2022			
PLOTTED BY	bournem			
DESIGNED BY	MORGAN BOURNE			
ENTERED BY	MORGAN BOURNE			
CHECKED BY	ANDY ROMANCHOCK			
PROJ. ENGR.	SUSAN FELL			
REGIONAL ADM.	CARLEY FRANCIS	REVISION	DATE	BY

REGION NO.	STATE	FED.AID PROJ.NO.
10	WASH	HSIP-0500(029)
JOB NUMBER 21X327		
CONTRACT NO.		LOCATION NO. XL6488

SUSAN WAI LEONG FELL — STATE OF WASHINGTON — 36748 — REGISTERED PROFESSIONAL ENGINEER

SEE SHEET CT1
DATE
P.E. STAMP BOX

DATE
P.E. STAMP BOX

Washington State Department of Transportation

SR 500
NE 182ND AVE
INTERSECTION IMPROVEMENTS

ROADWAY SECTIONS

PLOT 7
PLAN REF NO RS7
SHEET 12 OF 76 SHEETS

LEGEND

1. PLANING BITUMINOUS PAVEMENT
2. HMA FOR PRELEVELING CL. ⅛ IN. PG 58H-22
3. HMA CL. ⅛ IN. PG 58H-22
4. CRUSHED SURFACING BASE COURSE
5. GRAVEL BORROW INCL. HAUL
6. DUAL FACED CEMENT CONC. CURB AND GUTTER WITH SCUPPER
7. ROUNDABOUT CEMENT CONCRETE CURB AND GUTTER
8. ROUNDABOUT TRUCK APRON CEM. CONC. CURB AND GUTTER
9. PIGMENTED CEMENT CONCRETE PAVEMENT
10. MEDIA FILTER DRAIN TYPE 3
11. BEAM GUARDRAIL TYPE 31 - 8 FT. LONG POST (CASE 4)
12. BEAM GUARDRAIL TYPE 31 - 9 FT. LONG POST (CASE 5)
13. QUARRY SPALLS
14. CONSTRUCTION GEOTEXTILE FOR UNDERGROUND DRAINAGE
15. CL. V REINF. CONC. CULV. PIPE 12 IN. DIAM.
16. REMOVING EXISTING OVERLAY FROM BRIDGE DECK
17. BEAM GUARDRAIL TRANSITION SECTION TYPE 22

NOTES:

1. ALL SURFACING AND PAVING DEPTHS ARE COMPACTED DEPTHS. COURSES SHALL NOT EXCEED DEPTHS DEFINED IN THE STANDARD SPECIFICATIONS.
2. SEE STANDARD PLANS C-22.40 AND C-23.60 FOR GUARDRAIL TERMINAL AND ANCHOR DETAILS.
3. SEE STD. SPEC. 5-04.3(12)A2 FOR LONGITUDINAL JOINTS IN HMA PLACED IN MULTIPLE LIFTS. TOP JOINTS SHALL BE OFFSET 6" FROM LANE MARKINGS.
4. SAWCUT SHALL BE ON THE INSIDE EDGE OF EXISTING EDGE LINES AT LOCATIONS WHERE FULL DEPTH REBUILD IS REQUIRED OUTSIDE EXISTING PAVEMENT LIMITS.
5. SAWCUT SHALL BE 1' FROM FACE OF GUTTER AT LOCATIONS WHERE FULL DEPTH REBUILD IS REQUIRED FOR ROUNDABOUT TRUCK APRON AND SPLITTER ISLANDS WITHIN EXISTING PAVEMENT LIMITS.
6. GRAVEL BORROW SHALL BE TERRACED INTO THE EXISTING EMBANKMENT PER STD. SPEC. 2-03.3(14).
7. THE NUMBER OF BENCHES NEEDED FOR TERRACES IS DEPENDENT UPON THE FILL HEIGHT. AS A RESULT, THE ACTUAL NUMBER OF BENCHES REQUIRED IN THE FIELD MAY DIFFER THAN WHAT IS SHOWN IN THE SLOPE DETAILS. DIMENSIONS OF TERRACES AND BENCHES SHALL MATCH WHAT IS SHOWN IN THE SLOPE DETAILS.
8. GRAVEL BORROW SHALL BE COMPACTED USING METHOD C PER STD. SPEC. 2-03.3(14)C.
9. CONSTRUCTION GEOTEXTILE FOR UNDERGROUND DRAINAGE SHALL BE PLACED FROM THE BOTTOM UP, AND NOT ANCHORED FROM THE TOP DURING INSTALLATION.
10. 1' THICK QUARRY SPALL BLANKET AND CONSTRUCTION GEOTEXTILE FOR UNDERGROUND DRAINAGE SHALL BE INSTALLED EVERYWHERE CUT OR FILL SLOPES ARE STEEPER THAN 1.75:1.

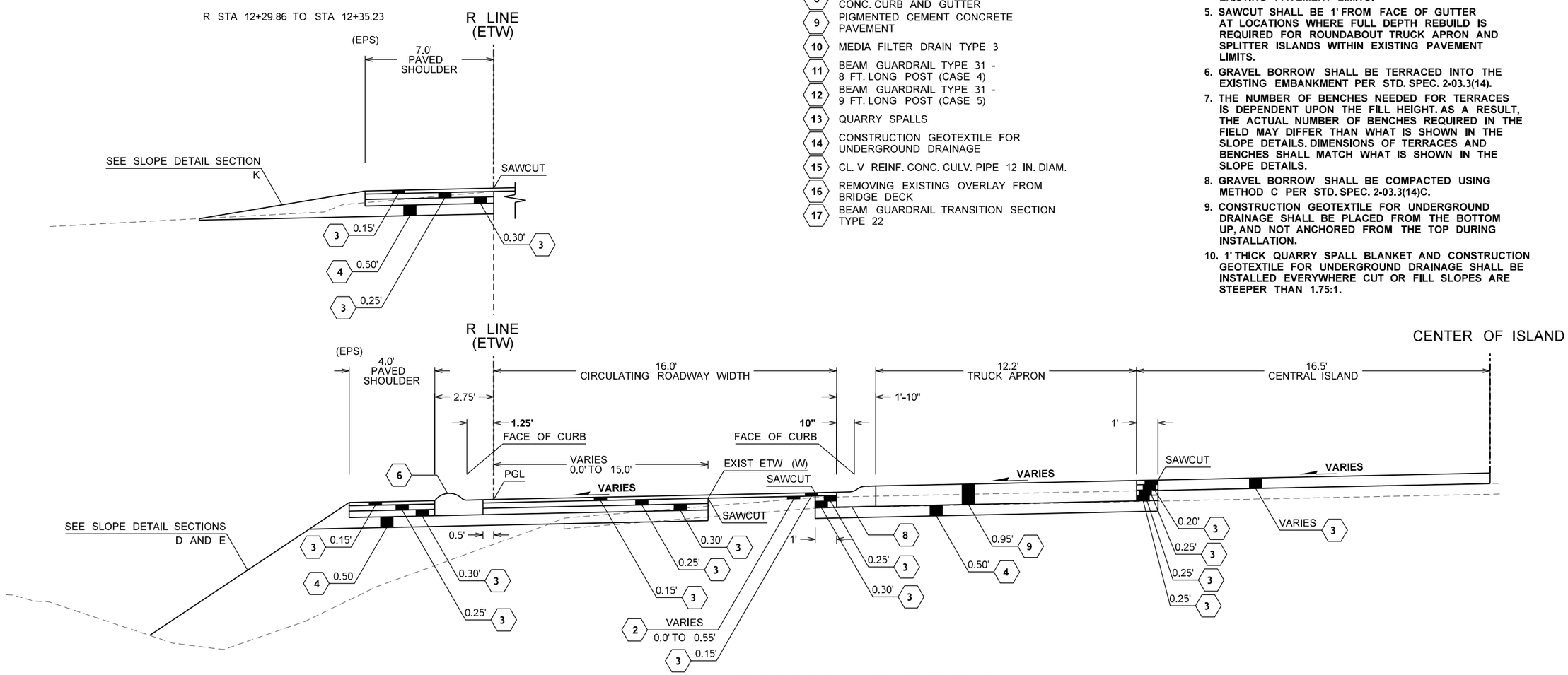

ROADWAY SECTION D3

ROUNDABOUT CIRCULATING AREA
R STA 10+60.23 TO STA 10+98.80

FILE NAME	G:\444301\05-Design\02-Projects\SR 500 182nd RAB\1-CADD-Plans\20-1.2 CAD Sheet Files\D50021R_SH_RS.dgn				REGION NO. 10	STATE WASH	FED.AID PROJ.NO. HSIP-0500(029)	SEE SHEET CT1	Washington State Department of Transportation	SR 500 NE 182ND AVE INTERSECTION IMPROVEMENTS	PLOT 8
TIME	8:32:49 AM										PLAN REF NO RS8
DATE	3/29/2022										
PLOTTED BY	bournem										
DESIGNED BY	MORGAN BOURNE				JOB NUMBER 21X327						SHEET 13 OF 76 SHEETS
ENTERED BY	MORGAN BOURNE										
CHECKED BY	ANDY ROMANCHOCK										
PROJ. ENGR.	SUSAN FELL										
REGIONAL ADM.	CARLEY FRANCIS	REVISION	DATE	BY	CONTRACT NO.		LOCATION NO. XL6488	P.E. STAMP BOX DATE	P.E. STAMP BOX DATE	ROADWAY SECTIONS	

LEGEND

1. PLANING BITUMINOUS PAVEMENT
2. HMA FOR PRELEVELING CL. ⅛ IN. PG 58H-22
3. HMA CL. ⅛ IN. PG 58H-22
4. CRUSHED SURFACING BASE COURSE
5. GRAVEL BORROW INCL. HAUL
6. DUAL FACED CEMENT CONC. CURB AND GUTTER WITH SCUPPER
7. ROUNDABOUT CEMENT CONCRETE CURB AND GUTTER
8. ROUNDABOUT TRUCK APRON CEM. CONC. CURB AND GUTTER
9. PIGMENTED CEMENT CONCRETE PAVEMENT
10. MEDIA FILTER DRAIN TYPE 3
11. BEAM GUARDRAIL TYPE 31 - 8 FT. LONG POST (CASE 4)
12. BEAM GUARDRAIL TYPE 31 - 9 FT. LONG POST (CASE 5)
13. QUARRY SPALLS
14. CONSTRUCTION GEOTEXTILE FOR UNDERGROUND DRAINAGE
15. CL. V REINF. CONC. CULV. PIPE 12 IN. DIAM.
16. REMOVING EXISTING OVERLAY FROM BRIDGE DECK
17. BEAM GUARDRAIL TRANSITION SECTION TYPE 22

NOTES:

1. ALL SURFACING AND PAVING DEPTHS ARE COMPACTED DEPTHS. COURSES SHALL NOT EXCEED DEPTHS DEFINED IN THE STANDARD SPECIFICATIONS.
2. SEE STANDARD PLANS C-22.40 AND C-23.60 FOR GUARDRAIL TERMINAL AND ANCHOR DETAILS.
3. SEE STD. SPEC. 5-04.3(12)A2 FOR LONGITUDINAL JOINTS IN HMA PLACED IN MULTIPLE LIFTS. TOP JOINTS SHALL BE OFFSET 6" FROM LANE MARKINGS.
4. SAWCUT SHALL BE ON THE INSIDE EDGE OF EXISTING EDGE LINES AT LOCATIONS WHERE FULL DEPTH REBUILD IS REQUIRED OUTSIDE EXISTING PAVEMENT LIMITS.
5. SAWCUT SHALL BE 1' FROM FACE OF GUTTER AT LOCATIONS WHERE FULL DEPTH REBUILD IS REQUIRED FOR ROUNDABOUT TRUCK APRON AND SPLITTER ISLANDS WITHIN EXISTING PAVEMENT LIMITS.
6. GRAVEL BORROW SHALL BE TERRACED INTO THE EXISTING EMBANKMENT PER STD. SPEC. 2-03.3(14).
7. THE NUMBER OF BENCHES NEEDED FOR TERRACES IS DEPENDENT UPON THE FILL HEIGHT. AS A RESULT, THE ACTUAL NUMBER OF BENCHES REQUIRED IN THE FIELD MAY DIFFER THAN WHAT IS SHOWN IN THE SLOPE DETAILS. DIMENSIONS OF TERRACES AND BENCHES SHALL MATCH WHAT IS SHOWN IN THE SLOPE DETAILS.
8. GRAVEL BORROW SHALL BE COMPACTED USING METHOD C PER STD. SPEC. 2-03.3(14)C.
9. CONSTRUCTION GEOTEXTILE FOR UNDERGROUND DRAINAGE SHALL BE PLACED FROM THE BOTTOM UP, AND NOT ANCHORED FROM THE TOP DURING INSTALLATION.
10. 1' THICK QUARRY SPALL BLANKET AND CONSTRUCTION GEOTEXTILE FOR UNDERGROUND DRAINAGE SHALL BE INSTALLED EVERYWHERE CUT OR FILL SLOPES ARE STEEPER THAN 1.75:1.

R STA 11+11.49 TO STA 11+14.66
R STA 12+08.82 TO STA 12+16.48

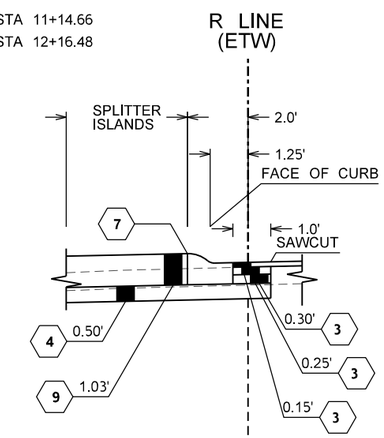

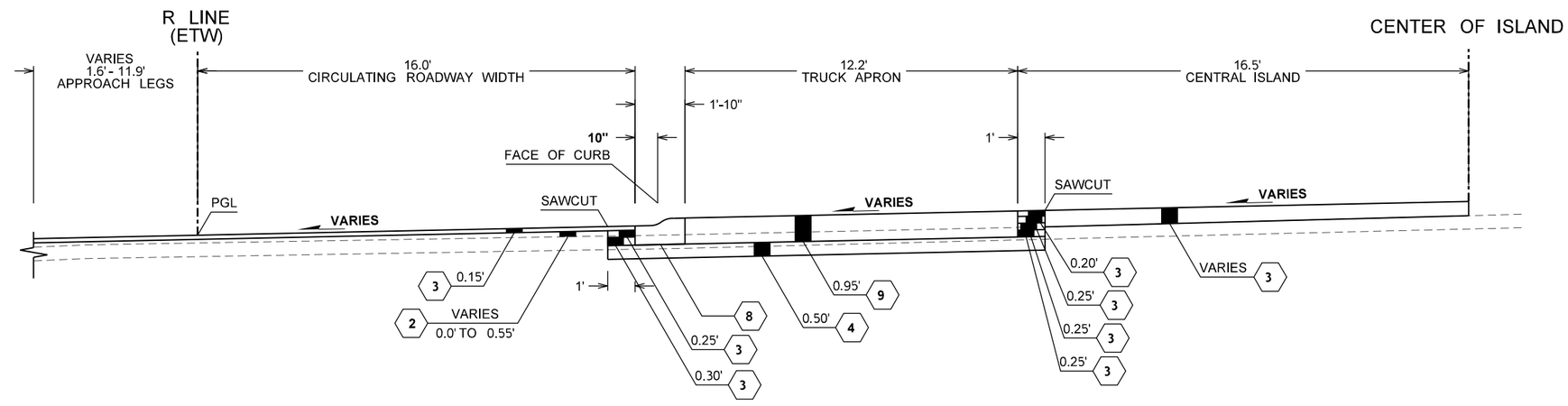

ROADWAY SECTION D4

ROUNDABOUT CIRCULATING AREA
R STA 10+98.80 TO STA 11+11.49
R STA 12+16.48 TO STA 12+29.86

FILE NAME	G:\444301\05-Design\02-Projects\SR 500 182nd RAB\1-CADD-Plans\20-1.2 CAD Sheet Files\D50021R_SH_RS.dgn							
TIME	8:32:50 AM				REGION NO. 10	STATE WASH	FED.AID PROJ.NO. HSIP-0500(029)	
DATE	3/29/2022							
PLOTTED BY	bournem				JOB NUMBER 21X327			
DESIGNED BY	MORGAN BOURNE							
ENTERED BY	MORGAN BOURNE							
CHECKED BY	ANDY ROMANCHOCK				CONTRACT NO.		LOCATION NO. XL6488	
PROJ. ENGR.	SUSAN FELL							
REGIONAL ADM.	CARLEY FRANCIS	REVISION	DATE	BY				

SUSAN WAI LEONG FELL — STATE OF WASHINGTON — 36748 — REGISTERED PROFESSIONAL ENGINEER

SEE SHEET CT1 DATE
P.E. STAMP BOX

DATE
P.E. STAMP BOX

Washington State Department of Transportation

SR 500
NE 182ND AVE
INTERSECTION IMPROVEMENTS

ROADWAY SECTIONS

PLOT 9
PLAN REF NO RS9
SHEET 14 OF 76 SHEETS

LEGEND

1. PLANING BITUMINOUS PAVEMENT
2. HMA FOR PRELEVELING CL. ⅛ IN. PG 58H-22
3. HMA CL. ⅛ IN. PG 58H-22
4. CRUSHED SURFACING BASE COURSE
5. GRAVEL BORROW INCL. HAUL
6. DUAL FACED CEMENT CONC. CURB AND GUTTER WITH SCUPPER
7. ROUNDABOUT CEMENT CONCRETE CURB AND GUTTER
8. ROUNDABOUT TRUCK APRON CEM. CONC. CURB AND GUTTER
9. PIGMENTED CEMENT CONCRETE PAVEMENT
10. MEDIA FILTER DRAIN TYPE 3
11. BEAM GUARDRAIL TYPE 31 - 8 FT. LONG POST (CASE 4)
12. BEAM GUARDRAIL TYPE 31 - 9 FT. LONG POST (CASE 5)
13. QUARRY SPALLS
14. CONSTRUCTION GEOTEXTILE FOR UNDERGROUND DRAINAGE
15. CL. V REINF. CONC. CULV. PIPE 12 IN. DIAM.
16. REMOVING EXISTING OVERLAY FROM BRIDGE DECK
17. BEAM GUARDRAIL TRANSITION SECTION TYPE 22

NOTES:

1. ALL SURFACING AND PAVING DEPTHS ARE COMPACTED DEPTHS. COURSES SHALL NOT EXCEED DEPTHS DEFINED IN THE STANDARD SPECIFICATIONS.
2. SEE STANDARD PLANS C-22.40 AND C-23.60 FOR GUARDRAIL TERMINAL AND ANCHOR DETAILS.
3. SEE STD. SPEC. 5-04.3(12)A2 FOR LONGITUDINAL JOINTS IN HMA PLACED IN MULTIPLE LIFTS. TOP JOINTS SHALL BE OFFSET 6" FROM LANE MARKINGS.
4. SAWCUT SHALL BE ON THE INSIDE EDGE OF EXISTING EDGE LINES AT LOCATIONS WHERE FULL DEPTH REBUILD IS REQUIRED OUTSIDE EXISTING PAVEMENT LIMITS.
5. SAWCUT SHALL BE 1' FROM FACE OF GUTTER AT LOCATIONS WHERE FULL DEPTH REBUILD IS REQUIRED FOR ROUNDABOUT TRUCK APRON AND SPLITTER ISLANDS WITHIN EXISTING PAVEMENT LIMITS.
6. GRAVEL BORROW SHALL BE TERRACED INTO THE EXISTING EMBANKMENT PER STD. SPEC. 2-03.3(14).
7. THE NUMBER OF BENCHES NEEDED FOR TERRACES IS DEPENDENT UPON THE FILL HEIGHT. AS A RESULT, THE ACTUAL NUMBER OF BENCHES REQUIRED IN THE FIELD MAY DIFFER THAN WHAT IS SHOWN IN THE SLOPE DETAILS. DIMENSIONS OF TERRACES AND BENCHES SHALL MATCH WHAT IS SHOWN IN THE SLOPE DETAILS.
8. GRAVEL BORROW SHALL BE COMPACTED USING METHOD C PER STD. SPEC. 2-03.3(14)C.
9. CONSTRUCTION GEOTEXTILE FOR UNDERGROUND DRAINAGE SHALL BE PLACED FROM THE BOTTOM UP, AND NOT ANCHORED FROM THE TOP DURING INSTALLATION.
10. 1' THICK QUARRY SPALL BLANKET AND CONSTRUCTION GEOTEXTILE FOR UNDERGROUND DRAINAGE SHALL BE INSTALLED EVERYWHERE CUT OR FILL SLOPES ARE STEEPER THAN 1.75:1.

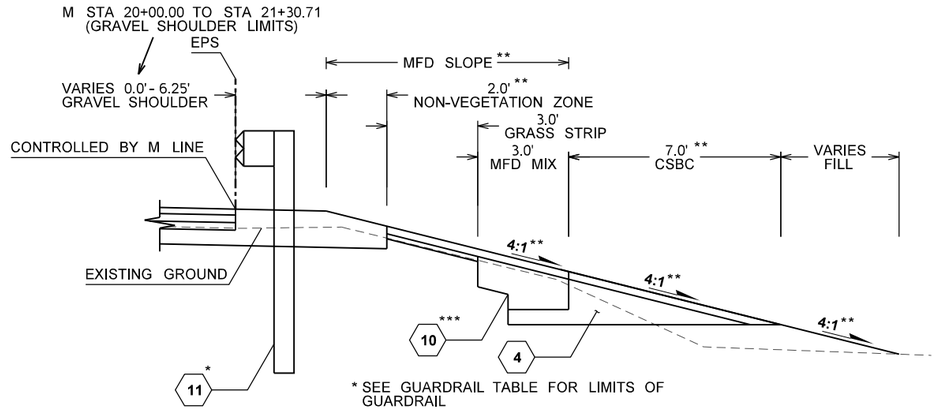

* SEE GUARDRAIL TABLE FOR LIMITS OF GUARDRAIL

** SEE MFD VARIATION TABLE FOR WIDTHS AND SLOPES THAT VARY FROM THIS DETAIL

*** SEE SHEET DR3 FOR ADDITIONAL MFD DETAILS

SLOPE DETAIL A

SOUTH QUADRANT

GUARDRAIL WITH MEDIA FILTER DRAIN

M STA 20+00.00 TO STA 21+36.77

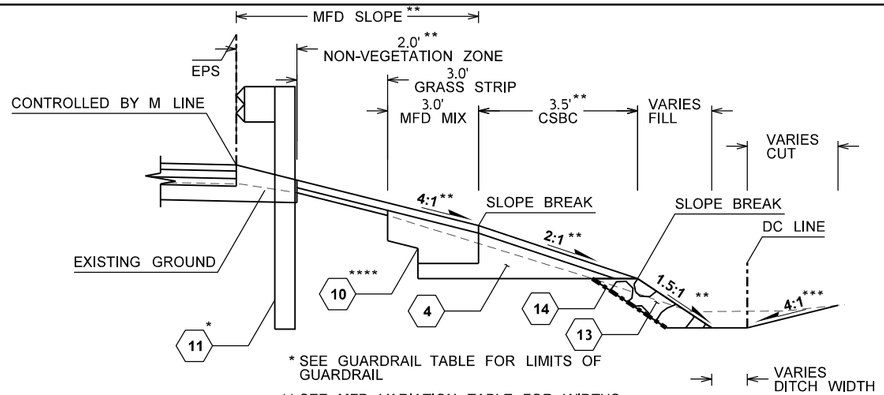

* SEE GUARDRAIL TABLE FOR LIMITS OF GUARDRAIL

** SEE MFD VARIATION TABLE FOR WIDTHS AND SLOPES THAT VARY FROM THIS DETAIL

*** SEE DITCH VARIATION TABLE FOR SLOPES THAT VARY FROM THIS DETAIL

**** SEE SHEET DR3 FOR ADDITIONAL MFD DETAILS

SLOPE DETAIL B

SOUTH QUADRANT

GUARDRAIL WITH MEDIA FILTER DRAIN AND DITCH

M STA 21+36.77 TO STA 22+00.00

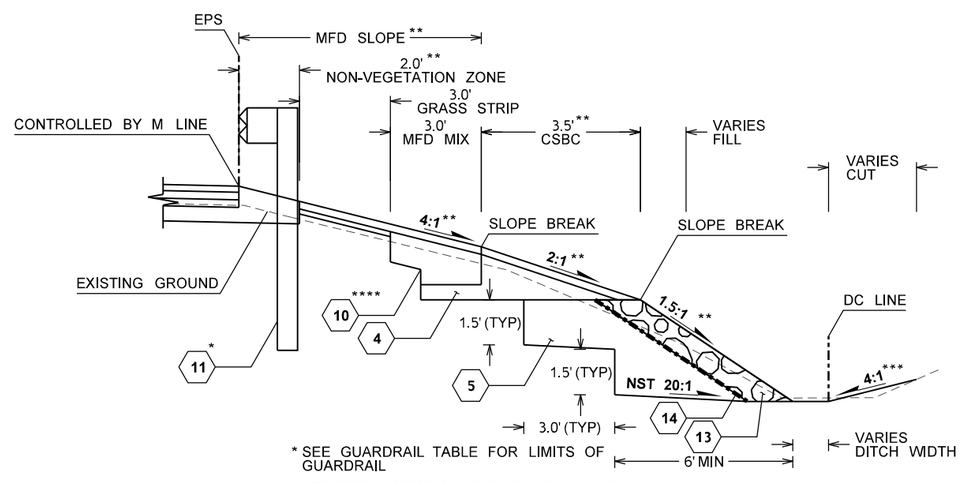

* SEE GUARDRAIL TABLE FOR LIMITS OF GUARDRAIL

** SEE MFD VARIATION TABLE FOR WIDTHS AND SLOPES THAT VARY FROM THIS DETAIL

*** SEE DITCH VARIATION TABLE FOR SLOPES THAT VARY FROM THIS DETAIL

**** SEE SHEET DR3 FOR ADDITIONAL MFD DETAILS

SLOPE DETAIL C

SOUTH QUADRANT

GUARDRAIL WITH MEDIA FILTER DRAIN, DITCH, AND HILLSIDE TERRACES

M STA 22+00.00 TO STA 23+75.00

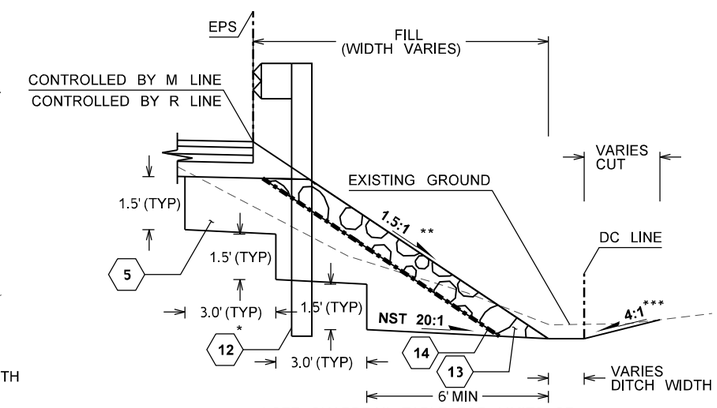

* SEE GUARDRAIL TABLE FOR LIMITS OF GUARDRAIL

** SEE SLOPE VARIATION TABLE FOR SLOPES THAT VARY FROM THIS DETAIL

*** SEE DITCH VARIATION TABLE FOR SLOPES THAT VARY FROM THIS DETAIL

SLOPE DETAIL D

SOUTH QUADRANT

GUARDRAIL WITH DITCH AND HILLSIDE TERRACES

M STA 23+75.00 TO STA 24+18.74

R STA 10+75.31 TO STA 10+98.80

FILE NAME	G:\444301\05-Design\02-Projects\SR 500 182nd RAB\1-CADD-Plans\20-1.2 CAD Sheet Files\D50021R_SH_RS.dgn				REGION NO. 10	STATE WASH	FED.AID PROJ.NO. HSIP-0500(029)
TIME	8:32:50 AM						
DATE	3/29/2022						
PLOTTED BY	bournem				JOB NUMBER 21X327		
DESIGNED BY	MORGAN BOURNE						
ENTERED BY	MORGAN BOURNE						
CHECKED BY	ANDY ROMANCHOCK				CONTRACT NO.		LOCATION NO. XL6488
PROJ. ENGR.	SUSAN FELL						
REGIONAL ADM.	CARLEY FRANCIS	REVISION	DATE	BY			

SUSAN WAI LEONG FELL — STATE OF WASHINGTON — 36748 — REGISTERED PROFESSIONAL ENGINEER

SEE SHEET CT1 DATE

P.E. STAMP BOX

DATE

P.E. STAMP BOX

Washington State Department of Transportation

SR 500
NE 182ND AVE
INTERSECTION IMPROVEMENTS

ROADWAY SECTIONS

PLOT 10

PLAN REF NO RS10

SHEET 15 OF 76 SHEETS

LEGEND

1. PLANING BITUMINOUS PAVEMENT
2. HMA FOR PRELEVELING CL. ⅜ IN. PG 58H-22
3. HMA CL. ⅜ IN. PG 58H-22
4. CRUSHED SURFACING BASE COURSE
5. GRAVEL BORROW INCL. HAUL
6. DUAL FACED CEMENT CONC. CURB AND GUTTER WITH SCUPPER
7. ROUNDABOUT CEMENT CONCRETE CURB AND GUTTER
8. ROUNDABOUT TRUCK APRON CEM. CONC. CURB AND GUTTER
9. PIGMENTED CEMENT CONCRETE PAVEMENT
10. MEDIA FILTER DRAIN TYPE 3
11. BEAM GUARDRAIL TYPE 31 - 8 FT. LONG POST (CASE 4)
12. BEAM GUARDRAIL TYPE 31 - 9 FT. LONG POST (CASE 5)
13. QUARRY SPALLS
14. CONSTRUCTION GEOTEXTILE FOR UNDERGROUND DRAINAGE
15. CL. V REINF. CONC. CULV. PIPE 12 IN. DIAM.
16. REMOVING EXISTING OVERLAY FROM BRIDGE DECK
17. BEAM GUARDRAIL TRANSITION SECTION TYPE 22

NOTES:

1. ALL SURFACING AND PAVING DEPTHS ARE COMPACTED DEPTHS. COURSES SHALL NOT EXCEED DEPTHS DEFINED IN THE STANDARD SPECIFICATIONS.
2. SEE STANDARD PLANS C-22.40 AND C-23.60 FOR GUARDRAIL TERMINAL AND ANCHOR DETAILS.
3. SEE STD. SPEC. 5-04.3(12)A2 FOR LONGITUDINAL JOINTS IN HMA PLACED IN MULTIPLE LIFTS. TOP JOINTS SHALL BE OFFSET 6" FROM LANE MARKINGS.
4. SAWCUT SHALL BE ON THE INSIDE EDGE OF EXISTING EDGE LINES AT LOCATIONS WHERE FULL DEPTH REBUILD IS REQUIRED OUTSIDE EXISTING PAVEMENT LIMITS.
5. SAWCUT SHALL BE 1' FROM FACE OF GUTTER AT LOCATIONS WHERE FULL DEPTH REBUILD IS REQUIRED FOR ROUNDABOUT TRUCK APRON AND SPLITTER ISLANDS WITHIN EXISTING PAVEMENT LIMITS.
6. GRAVEL BORROW SHALL BE TERRACED INTO THE EXISTING EMBANKMENT PER STD. SPEC. 2-03.3(14).
7. THE NUMBER OF BENCHES NEEDED FOR TERRACES IS DEPENDENT UPON THE FILL HEIGHT. AS A RESULT, THE ACTUAL NUMBER OF BENCHES REQUIRED IN THE FIELD MAY DIFFER THAN WHAT IS SHOWN IN THE SLOPE DETAILS. DIMENSIONS OF TERRACES AND BENCHES SHALL MATCH WHAT IS SHOWN IN THE SLOPE DETAILS.
8. GRAVEL BORROW SHALL BE COMPACTED USING METHOD C PER STD. SPEC. 2-03.3(14)C.
9. CONSTRUCTION GEOTEXTILE FOR UNDERGROUND DRAINAGE SHALL BE PLACED FROM THE BOTTOM UP, AND NOT ANCHORED FROM THE TOP DURING INSTALLATION.
10. 1' THICK QUARRY SPALL BLANKET AND CONSTRUCTION GEOTEXTILE FOR UNDERGROUND DRAINAGE SHALL BE INSTALLED EVERYWHERE CUT OR FILL SLOPES ARE STEEPER THAN 1.75:1.

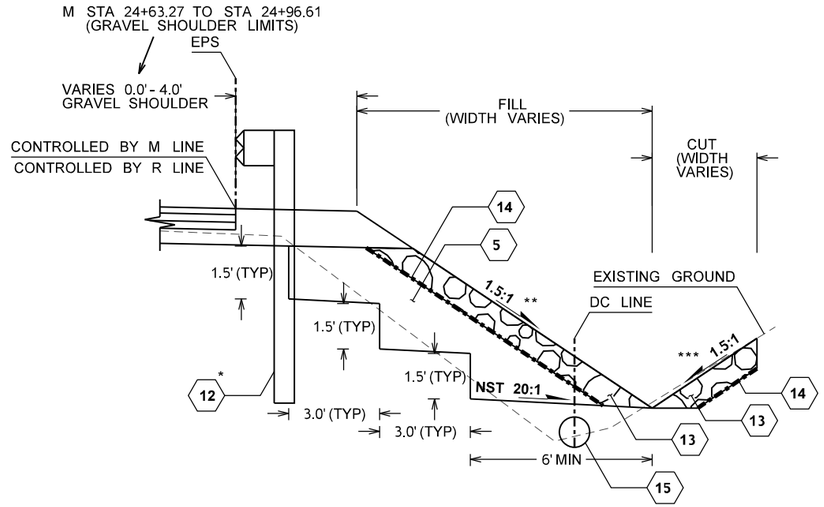

* SEE GUARDRAIL TABLE FOR LIMITS OF GUARDRAIL

** SEE SLOPE VARIATION TABLE FOR SLOPES THAT VARY FROM THIS DETAIL

*** SEE DITCH VARIATION TABLE FOR SLOPES THAT VARY FROM THIS DETAIL

SLOPE DETAIL E

SOUTH QUADRANT

GUARDRAIL WITH DITCH, CULVERT, AND HILLSIDE TERRACES

M STA 24+18.74 TO STA 24+96.60

R STA 10+15.19 TO STA 10+75.31

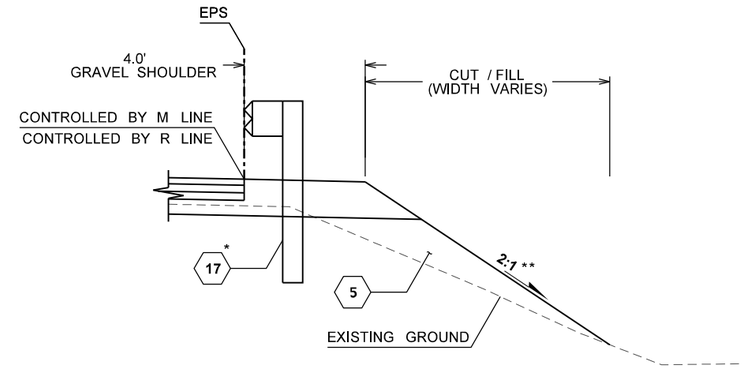

* SEE GUARDRAIL TABLE FOR LIMITS OF GUARDRAIL

** SEE SLOPE VARIATION TABLE FOR SLOPES THAT VARY FROM THIS DETAIL

SLOPE DETAIL F

SOUTH QUADRANT

GUARDRAIL WITH CUT / FILL

M STA 24+96.60 TO STA 25+47.22

R STA 10+09.01 TO STA 10+15.19

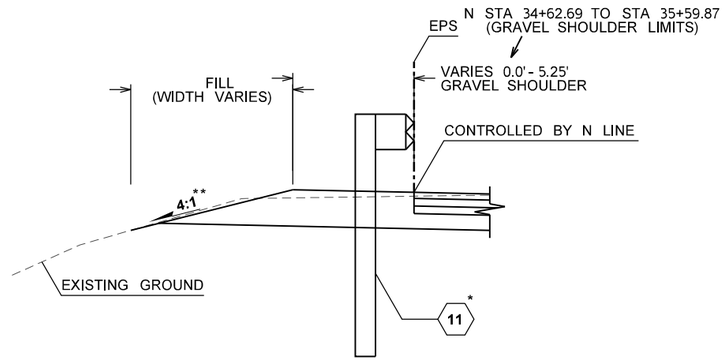

* SEE GUARDRAIL TABLE FOR LIMITS OF GUARDRAIL

** SEE SLOPE VARIATION TABLE FOR SLOPES THAT VARY FROM THIS DETAIL

SLOPE DETAIL G

NORTHWEST QUADRANT

GUARDRAIL WITH CUT / FILL

N STA 30+00.00 TO STA 30+73.45

N STA 34+25.20 TO STA 35+59.87

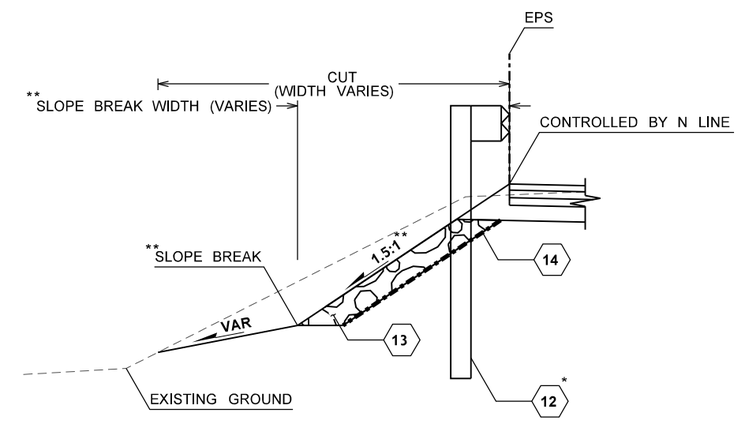

* SEE GUARDRAIL TABLE FOR LIMITS OF GUARDRAIL

** SEE SLOPE VARIATION TABLE FOR SLOPES THAT VARY FROM THIS DETAIL

SLOPE DETAIL H

NORTHWEST QUADRANT

GUARDRAIL WITH CUT

N STA 30+73.45 TO STA 31+00.00

FILE NAME	G:\444301\05-Design\02-Projects\SR 500 182nd RAB\1-CADD-Plans\20-1.2 CAD Sheet Files\D50021R_SH_RS.dgn				REGION NO. 10	STATE WASH	FED.AID PROJ.NO. HSIP-0500(029)	Washington State Department of Transportation
TIME	8:32:51 AM							
DATE	3/29/2022							
PLOTTED BY	bournem				JOB NUMBER 21X327			
DESIGNED BY	MORGAN BOURNE							
ENTERED BY	MORGAN BOURNE							
CHECKED BY	ANDY ROMANCHOCK				CONTRACT NO.		LOCATION NO. XL6488	
PROJ. ENGR.	SUSAN FELL							
REGIONAL ADM.	CARLEY FRANCIS	REVISION	DATE	BY				

P.E. STAMP BOX — SEE SHEET CT1 — DATE

P.E. STAMP BOX — DATE

SR 500
NE 182ND AVE
INTERSECTION IMPROVEMENTS

ROADWAY SECTIONS

PLOT 11

PLAN REF NO RS11

SHEET 16 OF 76 SHEETS

LEGEND

1. PLANING BITUMINOUS PAVEMENT
2. HMA FOR PRELEVELING CL. ⅛ IN. PG 58H-22
3. HMA CL. ⅛ IN. PG 58H-22
4. CRUSHED SURFACING BASE COURSE
5. GRAVEL BORROW INCL. HAUL
6. DUAL FACED CEMENT CONC. CURB AND GUTTER WITH SCUPPER
7. ROUNDABOUT CEMENT CONCRETE CURB AND GUTTER
8. ROUNDABOUT TRUCK APRON CEM. CONC. CURB AND GUTTER
9. PIGMENTED CEMENT CONCRETE PAVEMENT
10. MEDIA FILTER DRAIN TYPE 3
11. BEAM GUARDRAIL TYPE 31 - 8 FT. LONG POST (CASE 4)
12. BEAM GUARDRAIL TYPE 31 - 9 FT. LONG POST (CASE 5)
13. QUARRY SPALLS
14. CONSTRUCTION GEOTEXTILE FOR UNDERGROUND DRAINAGE
15. CL. V REINF. CONC. CULV. PIPE 12 IN. DIAM.
16. REMOVING EXISTING OVERLAY FROM BRIDGE DECK
17. BEAM GUARDRAIL TRANSITION SECTION TYPE 22

NOTES:

1. ALL SURFACING AND PAVING DEPTHS ARE COMPACTED DEPTHS. COURSES SHALL NOT EXCEED DEPTHS DEFINED IN THE STANDARD SPECIFICATIONS.
2. SEE STANDARD PLANS C-22.40 AND C-23.60 FOR GUARDRAIL TERMINAL AND ANCHOR DETAILS.
3. SEE STD. SPEC. 5-04.3(12)A2 FOR LONGITUDINAL JOINTS IN HMA PLACED IN MULTIPLE LIFTS. TOP JOINTS SHALL BE OFFSET 6" FROM LANE MARKINGS.
4. SAWCUT SHALL BE ON THE INSIDE EDGE OF EXISTING EDGE LINES AT LOCATIONS WHERE FULL DEPTH REBUILD IS REQUIRED OUTSIDE EXISTING PAVEMENT LIMITS.
5. SAWCUT SHALL BE 1' FROM FACE OF GUTTER AT LOCATIONS WHERE FULL DEPTH REBUILD IS REQUIRED FOR ROUNDABOUT TRUCK APRON AND SPLITTER ISLANDS WITHIN EXISTING PAVEMENT LIMITS.
6. GRAVEL BORROW SHALL BE TERRACED INTO THE EXISTING EMBANKMENT PER STD. SPEC. 2-03.3(14).
7. THE NUMBER OF BENCHES NEEDED FOR TERRACES IS DEPENDENT UPON THE FILL HEIGHT. AS A RESULT, THE ACTUAL NUMBER OF BENCHES REQUIRED IN THE FIELD MAY DIFFER THAN WHAT IS SHOWN IN THE SLOPE DETAILS. DIMENSIONS OF TERRACES AND BENCHES SHALL MATCH WHAT IS SHOWN IN THE SLOPE DETAILS.
8. GRAVEL BORROW SHALL BE COMPACTED USING METHOD C PER STD. SPEC. 2-03.3(14)C.
9. CONSTRUCTION GEOTEXTILE FOR UNDERGROUND DRAINAGE SHALL BE PLACED FROM THE BOTTOM UP, AND NOT ANCHORED FROM THE TOP DURING INSTALLATION.
10. 1' THICK QUARRY SPALL BLANKET AND CONSTRUCTION GEOTEXTILE FOR UNDERGROUND DRAINAGE SHALL BE INSTALLED EVERYWHERE CUT OR FILL SLOPES ARE STEEPER THAN 1.75:1.

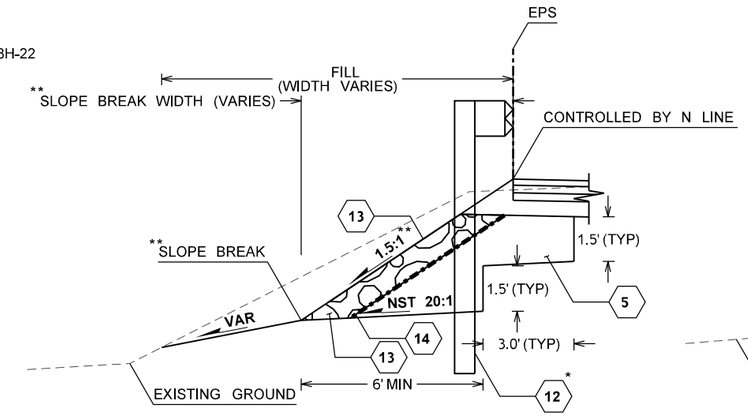

* SEE GUARDRAIL TABLE FOR LIMITS OF GUARDRAIL

** SEE SLOPE VARIATION TABLE FOR SLOPES THAT VARY FROM THIS DETAIL

SLOPE DETAIL I

NORTHWEST QUADRANT

GUARDRAIL WITH CUT AND HILLSIDE TERRACES

N STA 31+00.00 TO STA 33+08.28

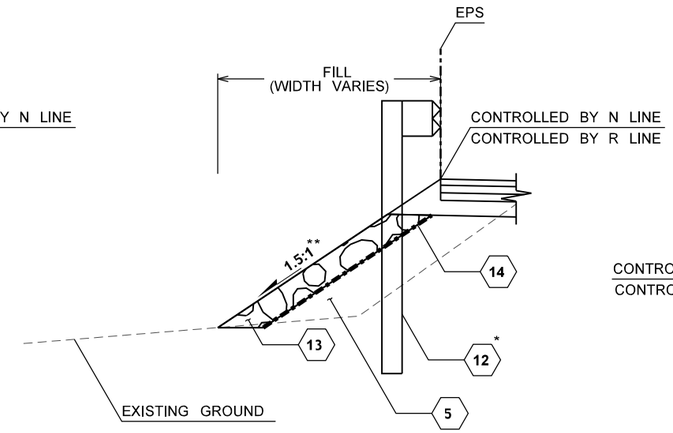

* SEE GUARDRAIL TABLE FOR LIMITS OF GUARDRAIL

** SEE SLOPE VARIATION TABLE FOR SLOPES THAT VARY FROM THIS DETAIL

SLOPE DETAIL J

NORTHWEST QUADRANT

GUARDRAIL WITH FILL

N STA 33+08.28 TO STA 34+25.20

R STA 11+37.55 TO STA 11+89.20

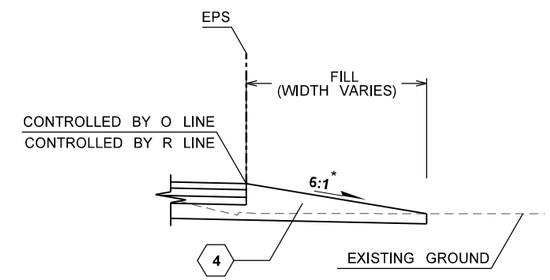

* SEE SLOPE VARIATION TABLE FOR SLOPES THAT VARY FROM THIS DETAIL

SLOPE DETAIL K

NORTHEAST QUADRANT

FILL

O STA 40+49.55 TO STA 42+35.85

R STA 12+29.86 TO STA 12+69.40

GUARDRAIL TABLE

LIMITS OF GUARDRAIL

(INCLUDES ANCHORS, TERMINALS, AND TRANSITION SECTIONS)

STATION RANGES

M 20+81.65 TO 25+47.22

R 10+09.01 TO 10+98.80

N 30+35.05 TO 34+96.74

R 11+37.55 TO 11+89.20

DITCH VARIATION TABLE

BACK SLOPE VARIATIONS

STATION RANGES	BACK SLOPE
M 21+36.77 TO 22+60.00	4:1
M 22+60.00 TO 22+80.00	4:1 TO 2:1
M 22+80.00 TO 23+20.76	2:1
M 23+20.76 TO 23+30.00	2:1 TO 5:1
M 23+30.00 TO 24+25.00	5:1 TO 1.5:1
M 24+25.00 TO 24+96.60	1.5:1

MFD VARIATION TABLE

NON-VEGETATION ZONE WIDTH VARIATIONS

STATION RANGES	WIDTH
M 20+00.00 TO 21+20.00	1.0'
M 21+20.00 TO 21+30.71	1.0' TO 2.0'
M 21+30.71 TO 23+75.00	2.0'

CSBC WIDTH VARIATIONS

STATION RANGES	WIDTH
M 20+00.00 TO 21+30.71	7.0'
M 21+30.71 TO 21+50.00	7.0' TO 3.5'
M 21+50.00 TO 23+75.00	3.5'

CSBC SLOPE VARIATIONS

STATION RANGES	SLOPE
M 20+00.00 TO 21+30.71	4:1
M 21+30.71 TO 21+50.00	4:1 TO 2:1
M 21+50.00 TO 23+75.00	2:1

FILL SLOPE VARIATIONS

STATION RANGES	SLOPE
M 20+00.00 TO 21+30.71	4:1
M 21+30.71 TO 21+50.00	4:1 TO 1.5:1
M 21+50.00 TO 23+75.00	1.5:1

SLOPE VARIATION TABLE

SLOPE VARIATIONS

STATION RANGES	SLOPE
M 23+75.00 TO 24+96.60	1.5:1
M 24+96.60 TO 25+47.22	1.5:1 TO 2:1
N 30+00.00 TO 30+35.00	5:1 TO 3:1
N 30+35.00 TO 30+70.00	3:1 TO 4:1
N 30+70.00 TO 30+90.00	4:1 TO 1.5:1
N 30+90.00 TO 34+00.00	1.5:1
N 34+00.00 TO 34+62.69	1.5:1 TO 4:1
N 34+62.69 TO 35+59.87	4:1
O 40+49.55 TO 40+90.00	20:1
O 40+90.00 TO 41+10.00	20:1 TO 6:1
O 41+10.00 TO 42+35.85	6:1

STATION RANGES	SLOPE BREAK WIDTH
N 30+73.45 TO 30+90.00	10.0' TO 6.5'
N 30+90.00 TO 31+65.00	6.5'
N 31+65.00 TO 31+75.00	6.5' TO 4.0'
N 31+75.00 TO 32+70.00	4.0'
N 32+70.00 TO 32+80.00	4.0' TO 6.0'
N 32+80.00 TO 33+08.28	6.0' TO 7.0'

FILE NAME	G:\444301\05-Design\02-Projects\SR 500 182nd RAB\1-CADD-Plans\20-1.2 CAD Sheet Files\D50021R_SH_RS.dgn
TIME	8:32:52 AM
DATE	3/29/2022
PLOTTED BY	bournem
DESIGNED BY	MORGAN BOURNE
ENTERED BY	MORGAN BOURNE
CHECKED BY	ANDY ROMANCHOCK
PROJ. ENGR.	SUSAN FELL
REGIONAL ADM.	CARLEY FRANCIS

REVISION | DATE | BY

REGION NO. 10 | STATE WASH | FED.AID PROJ.NO. HSIP-0500(029)

JOB NUMBER 21X327

CONTRACT NO.

LOCATION NO. XL6488

SEE SHEET CT1

DATE

P.E. STAMP BOX

DATE

P.E. STAMP BOX

Washington State Department of Transportation

SR 500
NE 182ND AVE
INTERSECTION IMPROVEMENTS

ROADWAY SECTIONS

PLOT 12

PLAN REF NO RS12

SHEET 17 OF 76 SHEETS

BUFFER DATA										
LONGITUDINAL BUFFER SPACE = B										
SPEED (MPH)	25	30	35	40	45	50	55	60	65	70
LENGTH (feet)	155	200	250	305	360	425	495	570	645	730

TRANSPORTABLE ATTENUATOR ROLL AHEAD DISTANCE = R					
HOST VEHICLE WEIGHT 9,900 TO 22,000 lbs.			HOST VEHICLE WEIGHT > 22,000 lbs.		
< 45 MPH	45-55 MPH	> 55 MPH	< 45 MPH	45-55 MPH	> 55 MPH
100'	123'	172'	74'	100'	150'

PROTECTIVE VEHICLE (WORK VEHICLE) = R
NO SPECIFIED DISTANCE REQUIRED

MINIMUM SHOULDER TAPER LENGTH = L/3 (feet)										
SHOULDER WIDTH (feet)	Posted Speed (mph)									
	25	30	35	40	45	50	55	60	65	70
8'	40	40	60	90	120	130	150	160	170	190
10'	40	60	90	90	150	170	190	200	220	240
USE A MINIMUM 3 DEVICES TAPER FOR SHOULDER LESS THEN 8'.										

MINIMUM TAPER LENGTH = L (feet)										
LANE WIDTH (feet)	Posted Speed (mph)									
	25	30	35	40	45	50	55	60	65	70
10	105	150	205	270	450	500	550	-	-	-
11	115	165	225	295	495	550	605	660	-	-
12	125	180	245	320	540	600	660	720	-	-

SIGN SPACING = X		
FREEWAYS & EXPRESSWAYS	60 / 65 MPH	1500' ± (OR AS PER MUTCD)
RURAL HIGHWAYS	60 / 65 MPH	800' ±
RURAL ROADS	45 / 55 MPH	500' ±
RURAL ROADS & URBAN ARTERIALS	35 / 40 MPH	350' ±
RURAL ROADS, URBAN ARTERIALS, RESIDENTIAL & BUSINESS DISTRICTS	25 / 30 MPH	200' ± (2)
URBAN STREETS	25 MPH OR LESS	100' ± (2)

(1) ALL SPACING MAY BE ADJUSTED TO ACCOMMODATE INTERCHANGE RAMPS, AT-GRADE INTERSECTIONS AND DRIVEWAYS.
(2) THIS SPACING MAY BE REDUCED IN URBAN AREAS TO FIT ROADWAY CONDITIONS.

CHANNELIZATION DEVICE SPACING (feet)		
MPH	TAPER	TANGENT
50/70	40	80
35/45	30	60
25/30	20	40

STAGING GENERAL NOTES

1. SEE SPECIAL PROVISIONS FOR CLOSURES AND LANE RESTRICTIONS.
2. THE CONTRACTOR SHALL REMOVE CONFLICTING PAVEMENT MARKINGS.
3. SEE STD. SPEC. 1-07.23(1) - CONSTRUCTION UNDER TRAFFIC FOR DROP-OFFS NOT PROTECTED BY TEMPORARY BARRIER.
4. CONFLICTING SIGNS SHALL BE COVERED IN ACCORDANCE WITH STD. SPEC. 8-21.3(3) (SIGN COVERING WILL BE PAID UNDER OTHER ITEMS OF WORK).
5. THESE STAGING PLANS ARE FOR GENERAL INFORMATION ONLY AND DO NOT SHOW EVERY STAGE OR CONSTRUCTION ACTIVITY THAT THE CONTRACTOR MAY NEED TO COMPLETE THIS PROJECT. WHERE NEEDED, THE CONTRACTOR SHALL DEVISE THEIR OWN STAGING PLANS. PRIOR APPROVAL IS REQUIRED FOR NEW STAGING PLANS, OR FOR MODIFICATIONS TO THIS ONE.
6. TOP LIFT PAVING SHALL BE DONE AFTER CONSTRUCTING THE FOLLOWING: ALL BASE LIFTS OF HMA, AND CURBS AND GUTTERS.

STAGE 1: 1A, 1B, AND 1C NOTES

1. STAGE 1 WORK SHALL BE ACCOMPLISHED USING TRAFFIC CONTROL PLAN TC1. TRAFFIC CONTROL PLANS TC2 AND TC3 CAN BE USED AS NEEDED.
2. STAGE 1 WORK INCLUDES THE FOLLOWING:
   - -INSTALLATION OF CLASS A SIGNS AND TESC MEASURES
   - -REMOVAL OF DEBRIS BUILDUP ON SHOULDERS OF BRIDGE 500 / 10 PER ROADSIDE CLEANUP SPECIAL PROVISION
   - -CLEARING AND GRUBBING, REMOVALS, SAWCUTS, ROADWAY EXCAVATION
   - -INSTALLATION OF FENCE
   - -CONSTRUCTION OF LUMINAIRE FOUNDATIONS, FILLS, HMA BASE LIFTS, AND MEDIA FILTER DRAINS
   - -INSTALLATION OF GUARDRAIL

*** THIS IS A LIST OF AVAILABLE WORK ITEMS IN THIS STAGE. THE CONTRACTOR MAY ELECT TO DO STAGE 1 WORK DURING STAGE 2, WITH THE EXCEPTION OF INSTALLATION OF CLASS A SIGNS AND TESC MEASURES, AND INSTALLATION OF FENCE. FENCE INSTALLATION SHALL IMMEDIATELY FOLLOW INSTALLATION OF CLASS A SIGNS AND TESC MEASURES AND SHALL INCLUDE ANY REQUIRED CLEARING AND GRUBBING, AND ANY FENCE REMOVAL NEEDED FOR FENCE INSTALLATION. THE CONTRACTOR SHALL COORDINATE WITH WSDOT AND RECEIVE APPROVAL PRIOR TO ANY FENCE REMOVAL IN THE AREA NORTHEAST OF THE INTERSECTION OF SR 500 AND NE 182ND AVENUE. IMMEDIATELY AFTER FENCE INSTALLATION THE TESC MEASURES ADJACENT TO THE FENCE SHALL BE REMOVED. ANY REPLACEMENT TESC MEASURES SHALL BE INSTALLED ON THE ROADWAY SIDE OF THE FENCE. AFTER FENCE INSTALLATION AND ASSOCIATED TESC MEASURE REMOVALS IN THE AREA NORTHEAST OF THE INTERSECTION OF SR 500 AND NE 182ND AVENUE, NO CONTRACTOR ACCESS SHALL BE ALLOWED IN THE AREA DEPICTED ON SHEET AL2.

ALL WORK SHALL BE COMPLETE BY THE END OF STAGE 2, WITH THE EXCEPTION OF INSTALLATION OF PERMANENT PAVEMENT MARKINGS, PERMANENT ILLUMINATION, AND RESTORATION.

3. STAGES 1A, 1B, AND 1C CAN BE PERFORMED IN ANY ORDER, EXCEPT AS NOTED ABOVE.
4. AFTER COMPLETION OF WORK ACTIVITIES, REQUIREMENTS FOR DROP-OFFS AND CLEAR ZONE SHALL BE MET.
5. EMERGENCY SERVICES SHALL BE ACCOMMODATED THROUGH THE WORK ZONE WITH AS SHORT OF A DELAY AS POSSIBLE.

STAGE 2 NOTES

1. STAGE 2 WORK SHALL BE ACCOMPLISHED USING THE FULL CLOSURE TRAFFIC CONTROL - SEE PLAN SHEETS ST7 - ST11.
2. SEE SPECIAL PROVISIONS FOR WORK ACTIVITIES TO COMPLETE PRIOR TO THE END OF STAGE 2 FULL CLOSURE.
3. THE CONTRACTOR SHALL MAINTAIN A WAY FOR EMERGENCY SERVICE VEHICLES TO DRIVE THROUGH THE FULL CLOSURE WORK ZONE AT ALL TIMES, WITH THE EXCEPTION OF 2 DAYS FOR THE FULL DEPTH CONSTRUCTION - M LINE STA 24+60 TO 25+50. THE CONTRACTOR SHALL PROVIDE A TWO WEEK NOTICE TO THE ENGINEER OF THE 2 DAY CLOSURE TO EMERGENCY VEHICLES.

STAGE 3 NOTES

1. STAGE 3 WORK SHALL BE ACCOMPLISHED USING TRAFFIC CONTROL PLANS TC1 - TC4.
2. AFTER THE ROUNDABOUT IS OPEN TO TRAFFIC THE FOLLOWING WORK ACTIVITIES SHALL BE COMPLETED:
   - -INSTALLATION OF PERMANENT PAVEMENT MARKINGS AFTER THE HMA CURE TIME
   - -COMPLETION OF ROADSIDE RESTORATION
   - -INSTALLATION OF PERMANENT ILLUMINATION (IF TEMPORARY ILLUMINATION WAS INSTALLED DURING STAGE 2)
   - -CLEANUP AND REMOVAL OF BMP'S AND CLASS A SIGNS

STAGE 1A - SINGLE LANE CLOSURE

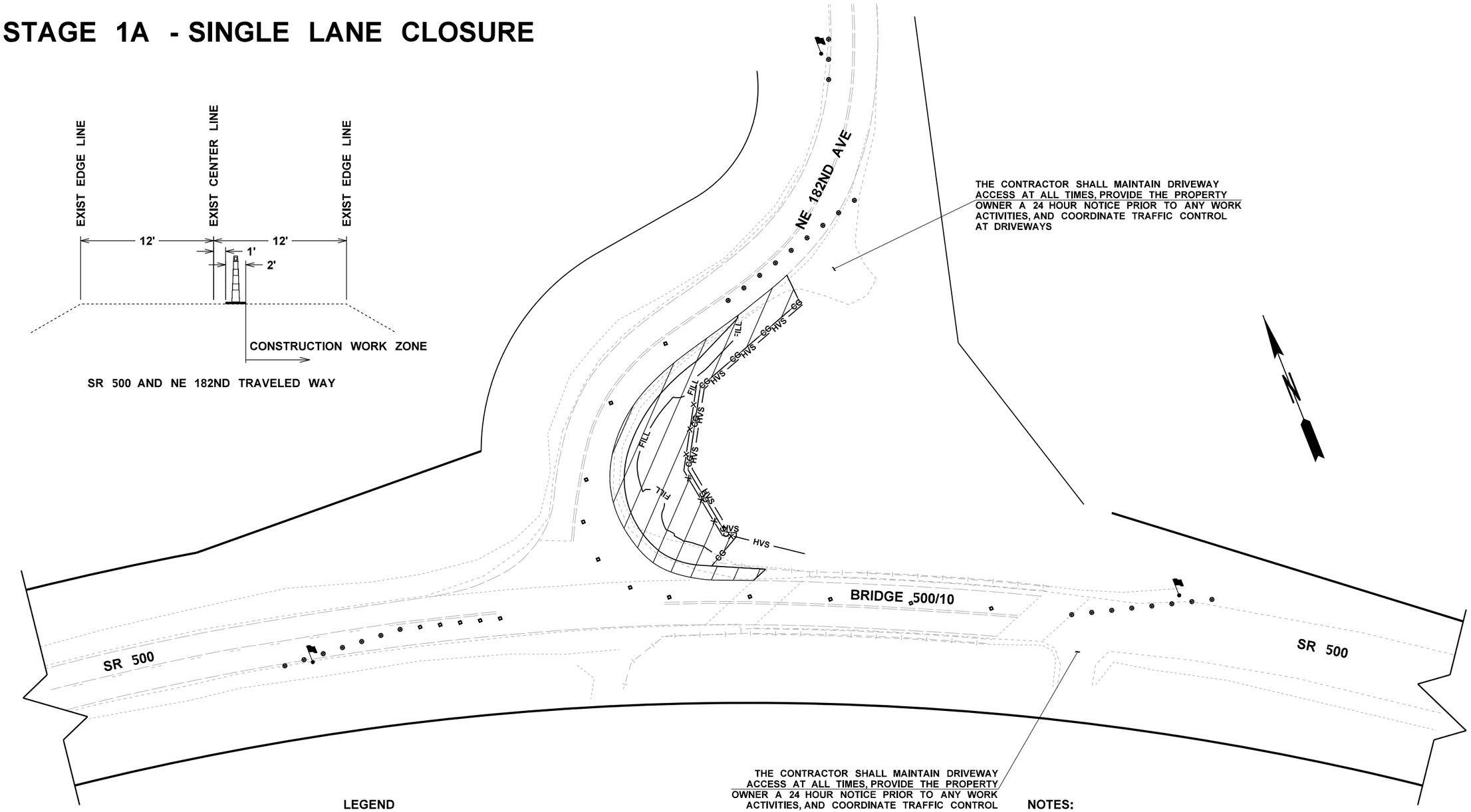

LEGEND

- WORK AREA
- TALL CHANNELIZING DEVICE
- TRAFFIC SAFETY DRUM
- FLAGGING STATION

0 25 50
SCALE IN FEET

NOTES:

1. SEE SHEET ST1 FOR GENERAL NOTES AND NOTES REGARDING WORK ACTIVITIES AND REQUIREMENTS FOR THIS STAGE.
2. SEE SHEETS TC1 - TC3 FOR REQUIRED CLASS B SIGNS.

FILE NAME	G:\444301\05-Design\02-Projects\SR 500 182nd RAB\1-CADD-Plans\20-1.2 CAD Sheet Files\D50021R_SH_STRev1.dgn				
TIME	11:09:15 AM				
DATE	3/29/2022				
PLOTTED BY	bournem				
DESIGNED BY	MORGAN BOURNE				
ENTERED BY	MORGAN BOURNE				
CHECKED BY	ANDY ROMANCHOCK				
PROJ. ENGR.	SUSAN FELL				
REGIONAL ADM.	CARLEY FRANCIS	REVISION	DATE	BY	

REGION NO.	STATE	FED.AID PROJ.NO.
10	WASH	HSIP-0500(029)
JOB NUMBER 21X327		
CONTRACT NO.		LOCATION NO. XL6488

SUSAN WAI LEONG FELL — STATE OF WASHINGTON — 36748 — REGISTERED PROFESSIONAL ENGINEER

SEE SHEET CT1
DATE
P.E. STAMP BOX

DATE
P.E. STAMP BOX

Washington State Department of Transportation

SR 500
NE 182ND AVE
INTERSECTION IMPROVEMENTS

CONSTRUCTION STAGING PLANS

PLOT 2
PLAN REF NO ST2
SHEET 19 OF 76 SHEETS

STAGE 1B - SINGLE LANE CLOSURE

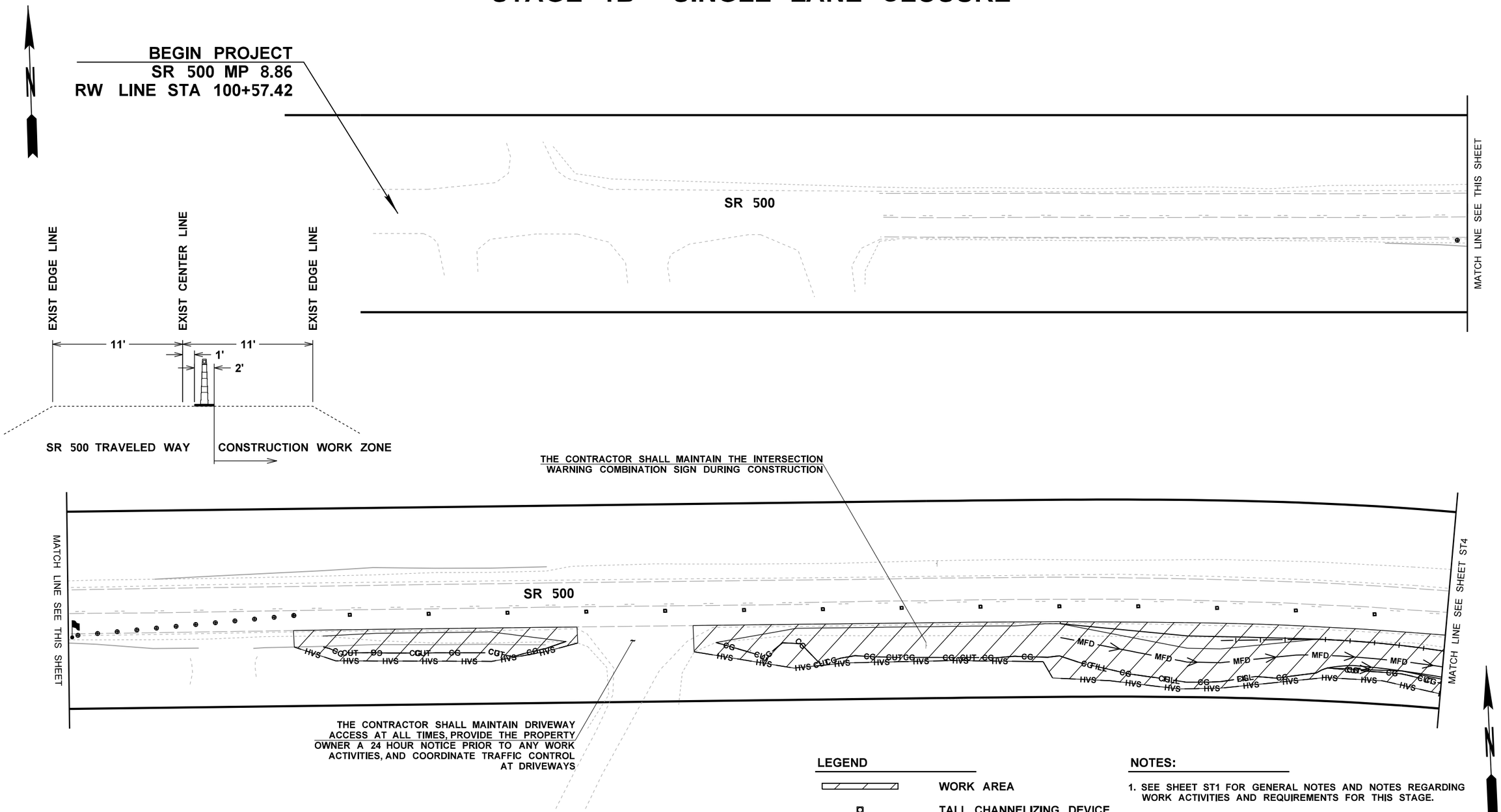

LEGEND

- WORK AREA
- TALL CHANNELIZING DEVICE
- TRAFFIC SAFETY DRUM
- FLAGGING STATION

NOTES:

1. SEE SHEET ST1 FOR GENERAL NOTES AND NOTES REGARDING WORK ACTIVITIES AND REQUIREMENTS FOR THIS STAGE.
2. SEE SHEETS TC1 - TC3 FOR REQUIRED CLASS B SIGNS.

FILE NAME	G:\444301\05-Design\02-Projects\SR 500 182nd RAB\1-CADD-Plans\20-1.2 CAD Sheet Files\D50021R_SH_STRev1.dgn
TIME	8:33:27 AM
DATE	3/29/2022
PLOTTED BY	bournem
DESIGNED BY	MORGAN BOURNE
ENTERED BY	MORGAN BOURNE
CHECKED BY	ANDY ROMANCHOCK
PROJ. ENGR.	SUSAN FELL
REGIONAL ADM.	CARLEY FRANCIS

REVISION	DATE	BY

REGION NO.	STATE	FED.AID PROJ.NO.
10	WASH	HSIP-0500(029)
JOB NUMBER 21X327		
CONTRACT NO.		LOCATION NO. XL6488

SUSAN WAI LEONG FELL — STATE OF WASHINGTON — 36748 — REGISTERED PROFESSIONAL ENGINEER

SEE SHEET CT1
DATE
P.E. STAMP BOX

DATE
P.E. STAMP BOX

Washington State Department of Transportation

SR 500
NE 182ND AVE
INTERSECTION IMPROVEMENTS

CONSTRUCTION STAGING PLANS

PLOT 3

PLAN REF NO
ST3

SHEET 20 OF 76 SHEETS

STAGE 1B - SINGLE LANE CLOSURE

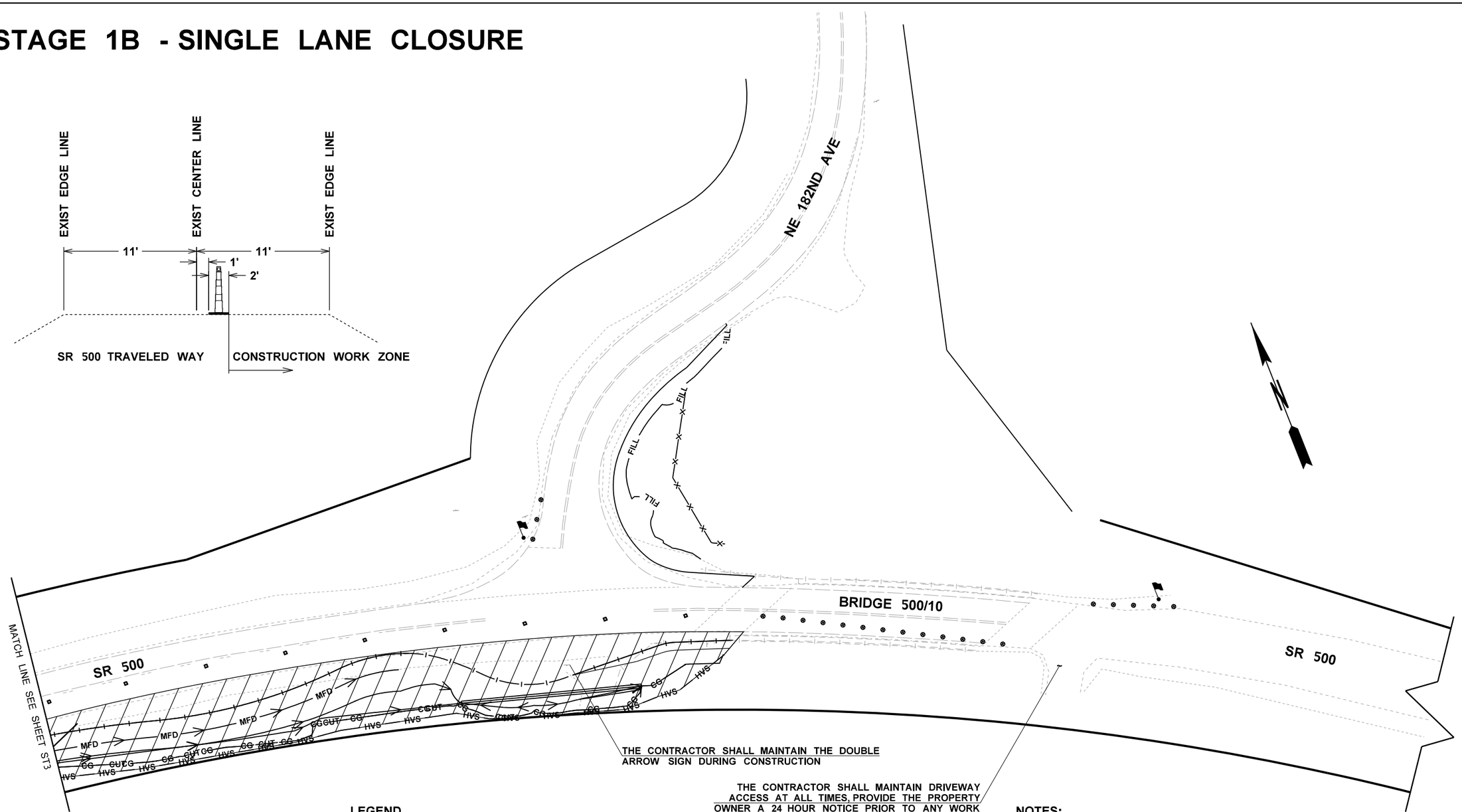

LEGEND

- WORK AREA
- TALL CHANNELIZING DEVICE
- TRAFFIC SAFETY DRUM
- FLAGGING STATION

0 25 50
SCALE IN FEET

NOTES:

1. SEE SHEET ST1 FOR GENERAL NOTES AND NOTES REGARDING WORK ACTIVITIES AND REQUIREMENTS FOR THIS STAGE.
2. SEE SHEETS TC1 - TC3 FOR REQUIRED CLASS B SIGNS.

FILE NAME	G:\444301\05-Design\02-Projects\SR 500 182nd RAB\1-CADD-Plans\20-1.2 CAD Sheet Files\D50021R_SH_STRev1.dgn
TIME	8:33:28 AM
DATE	3/29/2022
PLOTTED BY	bournem
DESIGNED BY	MORGAN BOURNE
ENTERED BY	MORGAN BOURNE
CHECKED BY	ANDY ROMANCHOCK
PROJ. ENGR.	SUSAN FELL
REGIONAL ADM.	CARLEY FRANCIS

REVISION	DATE	BY

REGION NO.	STATE	FED.AID PROJ.NO.
10	WASH	HSIP-0500(029)
JOB NUMBER 21X327		
CONTRACT NO.		LOCATION NO. XL6488

SUSAN WAI LEONG FELL — STATE OF WASHINGTON — 36748 — REGISTERED PROFESSIONAL ENGINEER

SEE SHEET CT1
DATE
P.E. STAMP BOX

DATE
P.E. STAMP BOX

Washington State Department of Transportation

SR 500
NE 182ND AVE
INTERSECTION IMPROVEMENTS

CONSTRUCTION STAGING PLANS

PLOT 4
PLAN REF NO ST4
SHEET 21 OF 76 SHEETS

STAGE 1C - SINGLE LANE CLOSURE

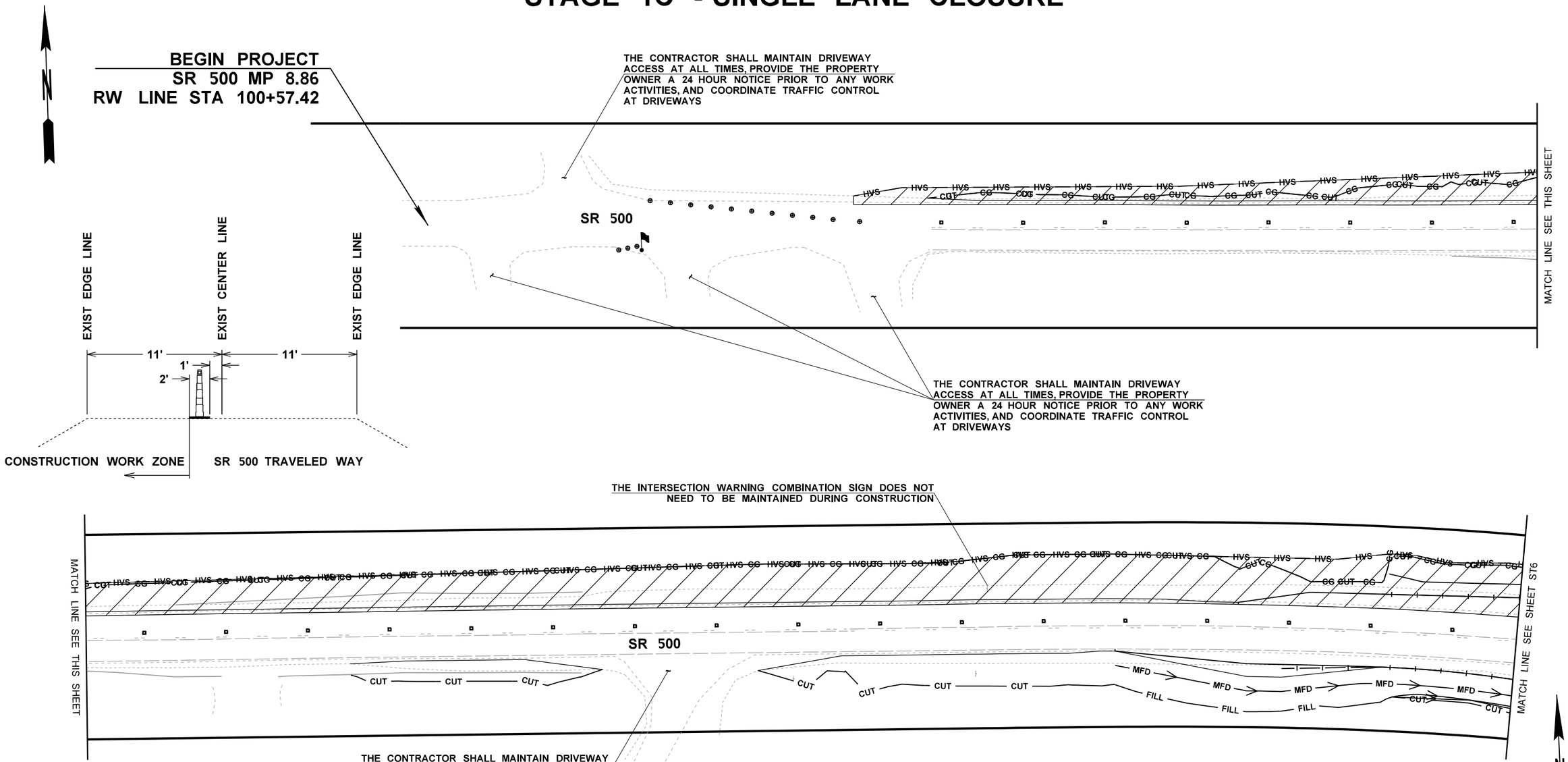

LEGEND

- WORK AREA
- TALL CHANNELIZING DEVICE
- TRAFFIC SAFETY DRUM
- FLAGGING STATION

NOTES:

1. SEE SHEET ST1 FOR GENERAL NOTES AND NOTES REGARDING WORK ACTIVITIES AND REQUIREMENTS FOR THIS STAGE.
2. SEE SHEETS TC1 - TC3 FOR REQUIRED CLASS B SIGNS.

FILE NAME	G:\444301\05-Design\02-Projects\SR 500 182nd RAB\1-CADD-Plans\20-1.2 CAD Sheet Files\D50021R_SH_STRev1.dgn
TIME	8:33:30 AM
DATE	3/29/2022
PLOTTED BY	bournem
DESIGNED BY	MORGAN BOURNE
ENTERED BY	MORGAN BOURNE
CHECKED BY	ANDY ROMANCHOCK
PROJ. ENGR.	SUSAN FELL
REGIONAL ADM.	CARLEY FRANCIS

REVISION	DATE	BY

REGION NO.	STATE	FED.AID PROJ.NO.
10	WASH	HSIP-0500(029)
JOB NUMBER 21X327		
CONTRACT NO.		LOCATION NO. XL6488

SUSAN WAI LEONG FELL, STATE OF WASHINGTON, 16749, REGISTERED PROFESSIONAL ENGINEER

SEE SHEET CT1
DATE
P.E. STAMP BOX

DATE
P.E. STAMP BOX

Washington State Department of Transportation

SR 500
NE 182ND AVE
INTERSECTION IMPROVEMENTS

CONSTRUCTION STAGING PLANS

PLOT 5
PLAN REF NO ST5
SHEET 22 OF 76 SHEETS

STAGE 1C - SINGLE LANE CLOSURE

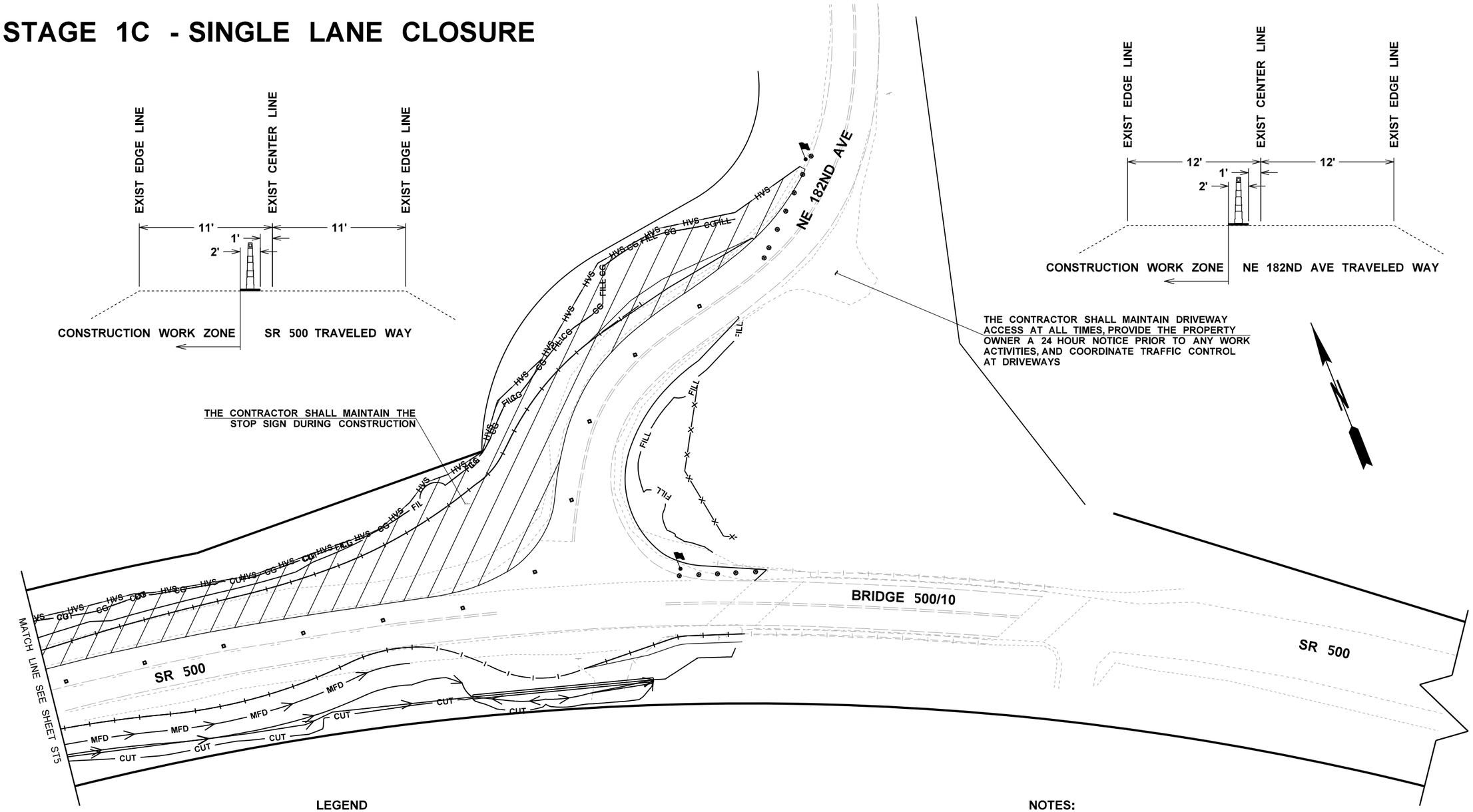

LEGEND

- WORK AREA
- TALL CHANNELIZING DEVICE
- TRAFFIC SAFETY DRUM
- FLAGGING STATION

0 25 50
SCALE IN FEET

NOTES:

1. SEE SHEET ST1 FOR GENERAL NOTES AND NOTES REGARDING WORK ACTIVITIES AND REQUIREMENTS FOR THIS STAGE.
2. SEE SHEETS TC1 - TC3 FOR REQUIRED CLASS B SIGNS.

FILE NAME	G:\444301\05-Design\02-Projects\SR 500 182nd RAB\1-CADD-Plans\20-1.2 CAD Sheet Files\D50021R_SH_STRev1.dgn				REGION NO. 10	STATE WASH	FED.AID PROJ.NO. HSIP-0500(029)	
TIME	8:33:31 AM				JOB NUMBER 21X327			
DATE	3/29/2022							
PLOTTED BY	bournem							
DESIGNED BY	MORGAN BOURNE							
ENTERED BY	MORGAN BOURNE							
CHECKED BY	ANDY ROMANCHOCK				CONTRACT NO.		LOCATION NO. XL6488	
PROJ. ENGR.	SUSAN FELL							
REGIONAL ADM.	CARLEY FRANCIS	REVISION	DATE	BY				

SUSAN WAI LEONG FELL — STATE OF WASHINGTON — 36748 — REGISTERED PROFESSIONAL ENGINEER

SEE SHEET CT1
DATE
P.E. STAMP BOX

DATE
P.E. STAMP BOX

Washington State Department of Transportation

SR 500
NE 182ND AVE
INTERSECTION IMPROVEMENTS

CONSTRUCTION STAGING PLANS

PLOT 6
PLAN REF NO ST6
SHEET 23 OF 76 SHEETS

SIGNING AND MESSAGING 14 DAYS PRIOR TO AND DURING FULL CLOSURE

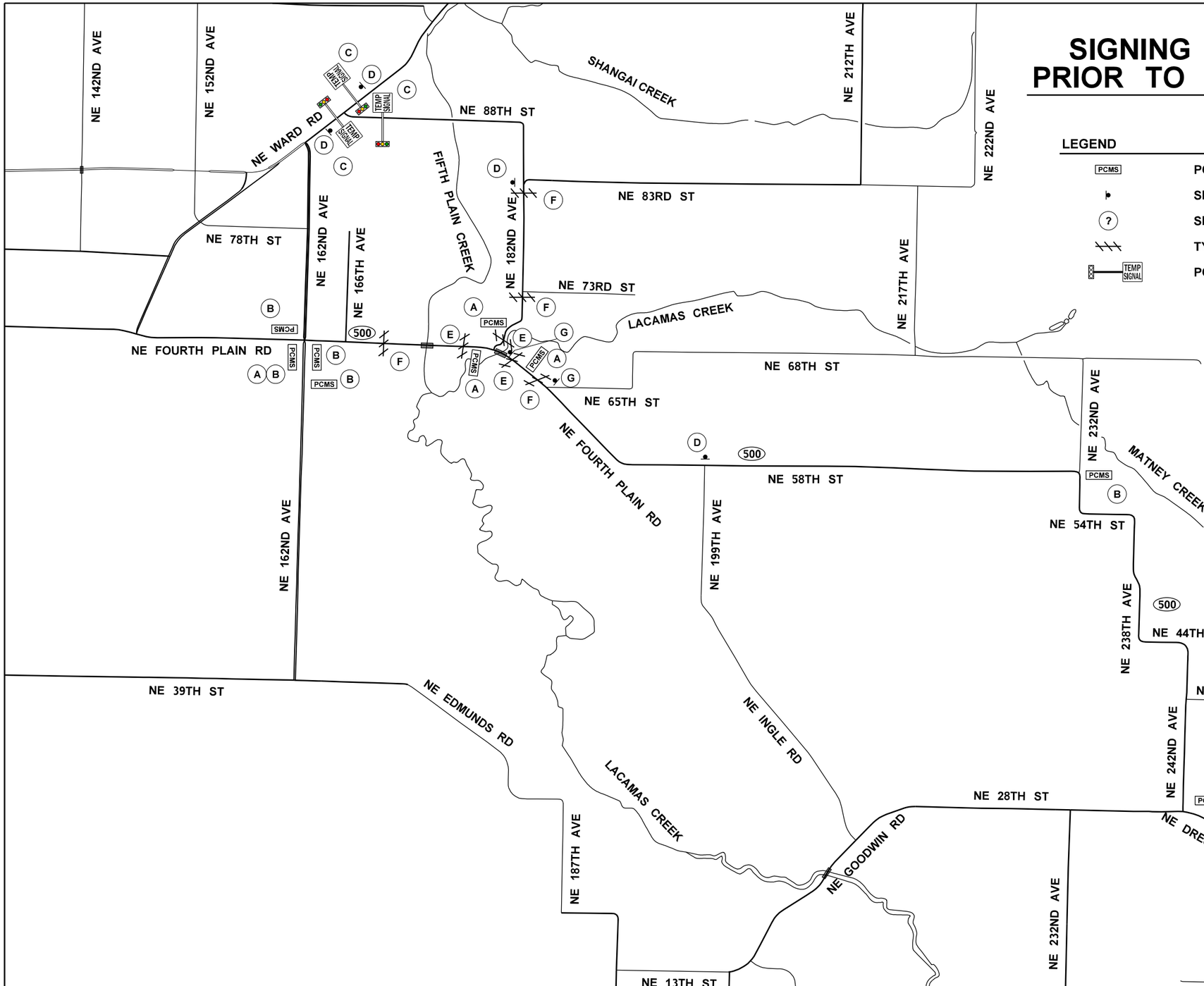

LEGEND

PCMS	PORTABLE CHANGEABLE MESSAGE SIGN
	SIGN
?	SIGN DETAIL
	TYPE 3 BARRICADE (DURING FULL CLOSURE ONLY)
TEMP SIGNAL	PORTABLE TEMPORARY TRAFFIC SIGNAL

NOTES:

1. ACTUAL LOCATIONS TO BE DETERMINED IN THE FIELD BY THE ENGINEER.
2. SEE SHEET ST8 FOR ADDITIONAL SIGNING AND MESSAGING DETAILS.
3. SEE SHEET ST9 FOR ADDITIONAL PORTABLE TEMPORARY TRAFFIC SIGNAL DETAILS.
4. THE PORTABLE TEMPORARY TRAFFIC SIGNALS SHALL BE OPERATIONAL DURING THE FULL CLOSURE. THE CONTRACTOR MAY HAVE THE PORTABLE TEMPORARY TRAFFIC SIGNALS OPERATIONAL PRIOR TO THE FULL CLOSURE.

N

0 1250 2500
SCALE IN FEET

FILE NAME	G:\444301\05-Design\02-Projects\SR 500 182nd RAB\1-CADD-Plans\20-1.2 CAD Sheet Files\D50021R_SH_STRev2.dgn
TIME	8:33:36 AM
DATE	3/29/2022
PLOTTED BY	bournem
DESIGNED BY	MORGAN BOURNE
ENTERED BY	MORGAN BOURNE
CHECKED BY	ANDY ROMANCHOCK
PROJ. ENGR.	SUSAN FELL
REGIONAL ADM.	CARLEY FRANCIS

REVISION | DATE | BY

REGION NO.	STATE	FED.AID PROJ.NO.
10	WASH	HSIP-0500(029)
JOB NUMBER 21X327		
CONTRACT NO.		LOCATION NO. XL6488

SUSAN WAI LEONG FELL, STATE OF WASHINGTON, 16749, REGISTERED PROFESSIONAL ENGINEER

SEE SHEET CT1
DATE
P.E. STAMP BOX

DATE
P.E. STAMP BOX

Washington State Department of Transportation

SR 500
NE 182ND AVE
INTERSECTION IMPROVEMENTS

CONSTRUCTION STAGING PLANS

PLOT 7
PLAN REF NO ST7
SHEET 24 OF 76 SHEETS

SIGNING AND MESSAGING 14 DAYS PRIOR TO AND DURING FULL CLOSURE

REQUIRED: 5 EA
14 DAYS PRIOR TO FULL CLOSURE

(A)

PCMS	
1	2
SR 500 AT 182ND CLOSED	X/X/X TO X/X/X
2.0 SEC	2.0 SEC

REQUIRED: 6 EA
DURING FULL CLOSURE

(B)

PCMS	
1	2
SR 500 CLOSED AT 182ND	X/X TO X/X USE ALT ROUTE
2.0 SEC	2.0 SEC

REQUIRED: 3 EA
DURING FULL CLOSURE

(C)

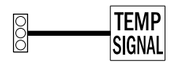

REQUIRED: 4 EA
DURING FULL CLOSURE

(D)

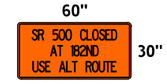

R11-3
BLACK / ORANGE
MOUNTED ON POST

REQUIRED: 3 EA
DURING FULL CLOSURE
(HARD CLOSURE)

(E)

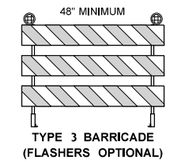

R11-201
BLACK / WHITE
MOUNTED ON BARRICADE

REQUIRED: 4 EA
DURING FULL CLOSURE
(SOFT CLOSURE)

(F)

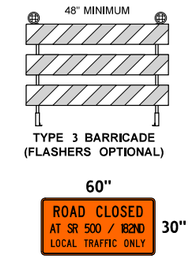

R11-3
BLACK / ORANGE
MOUNTED ON BARRICADE

REQUIRED: 2 EA
DURING FULL CLOSURE

(G)

SPECIAL
WHITE / BLUE
MOUNTED ON POST

REQUIRED: 3 EA
DURING FULL CLOSURE

(N/A)
(SEE SHEET ST9)

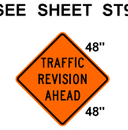

W20-901
BLACK / ORANGE
MOUNTED ON POST

REQUIRED: 2 EA
DURING FULL CLOSURE

(N/A)
(SEE SHEET ST9)

W20-7B
BLACK / ORANGE
MOUNTED ON POST

REQUIRED: 3 EA
DURING FULL CLOSURE

(N/A)
(SEE SHEET ST9)

W3-3
BLACK / ORANGE
MOUNTED ON POST

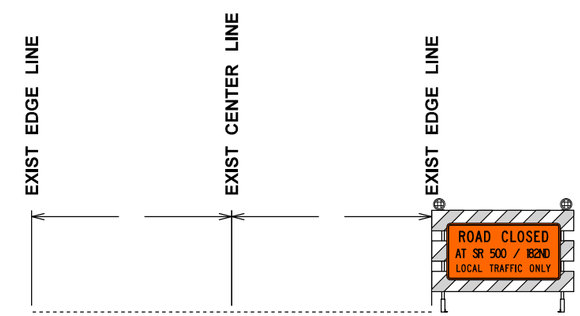

SOFT CLOSURE DETAIL

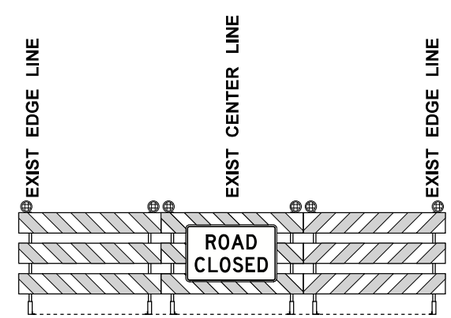

HARD CLOSURE DETAIL

	FULL CLOSURE CLASS A SIGN QUANTITIES			
	SIGN	QTY	UNIT	NOTES
(D)	R11-3	50	S.F.	
(E)	R11-201	30	S.F.	
(F)	R11-3	50	S.F.	
(G)	SPECIAL	32	S.F.	
(N/A)	W20-901	48	S.F.	SEE SHEET ST9 FOR SIGN LOCATIONS AND ADDITIONAL DETAILS
(N/A)	W20-7B	32	S.F.	SEE SHEET ST9 FOR SIGN LOCATIONS AND ADDITIONAL DETAILS
(N/A)	W3-3	48	S.F.	SEE SHEET ST9 FOR SIGN LOCATIONS AND ADDITIONAL DETAILS
	TOTAL QUANTITY	290	S.F.	

NOTES:

1. SEE SHEET ST1 FOR GENERAL NOTES.
2. SEE SHEET ST7 FOR ADDITIONAL SIGNING AND MESSAGING DETAILS.
3. SEE SHEET ST9 FOR ADDITIONAL PORTABLE TEMPORARY TRAFFIC SIGNAL DETAILS.
3. ACTUAL LOCATIONS TO BE DETERMINED IN THE FIELD BY THE ENGINEER.

CONSTRUCTION NOTES:

1. FURNISH, INSTALL, MAINTAIN AND REMOVE A PORTABLE TEMPORARY TRAFFIC SIGNAL SYSTEM WITH DETECTION. REFER TO SPECIAL PROVISIONS "PORTABLE TEMPORARY TRAFFIC CONTROL SIGNAL" FOR ADDITIONAL DETAILS.
2. FURNISH AND INSTALL A 18 INCH WIDE TEMPORARY STOP LINE.
3. FURNISH AND INSTALL BLACK TEMPORARY PAVEMENT MARKING TAPE AND COVER EXTENDED DOTTED LANE LINE.
4. REMOVE, PRESERVE AND PROTECT EXISTING "STOP SIGN AHEAD" SIGN. FURNISH AND INSTALL A "SIGNAL AHEAD" SIGN W3-3 AND MOUNT ON EXISTING SIGNPOST. "STOP SIGN AHEAD" SIGN SHALL BE RE-INSTALLED ONCE THE PORTABLE TEMPORARY TRAFFIC SIGNAL IS NO LONGER REQUIRED AND/ OR IN USE.
5. SIGNAL HEAD SHALL INCLUDE A LEFT TURN ARROW FOR ALL INDICATION AND SHALL BE CENTERED IN THE MIDDLE OF THE LEFT TURN LANE.
6. ONCE THE PORTABLE TEMPORARY TRAFFIC SIGNAL IS INSTALLED AND OPERATIONAL THE CONTRACTOR SHALL COVER OR REMOVE, PRESERVE AND PROTECT EXISTING "STOP" SIGN. ONCE THE TEMPORARY PORTABLE TRAFFIC SIGNAL IS NO LONGER REQUIRED AND/OR IN USE THE EXISTING "STOP" SIGNS SHALL BE UNCOVERED OR INSTALLED. LOST OR DAMAGED SIGNS SHALL BE REPLACED AT THE CONTRACTORS' EXPENSE.
7. FURNISH, INSTALL, MAINTAIN AND REMOVE A PORTABLE TEMPORARY PEDESTRIAN SIGNAL, PUSH BUTTON AND DISPLAY. REFER TO THIS SHEET FOR THE NUMBER OF PEDESTRIAN SIGNAL DISPLAYS. EACH SIGNAL DISPLAY SHALL INCLUDE ITS OWN PUSH BUTTON.
8. FURNISH AND INSTALL A 8 INCH WIDE CROSSWALK LINES. CROSSWALK LINES SHALL BE REMOVED ONCE TEMPORARY TRAFFIC SIGNAL IS NO LONGER REQUIRED OR IN USE.

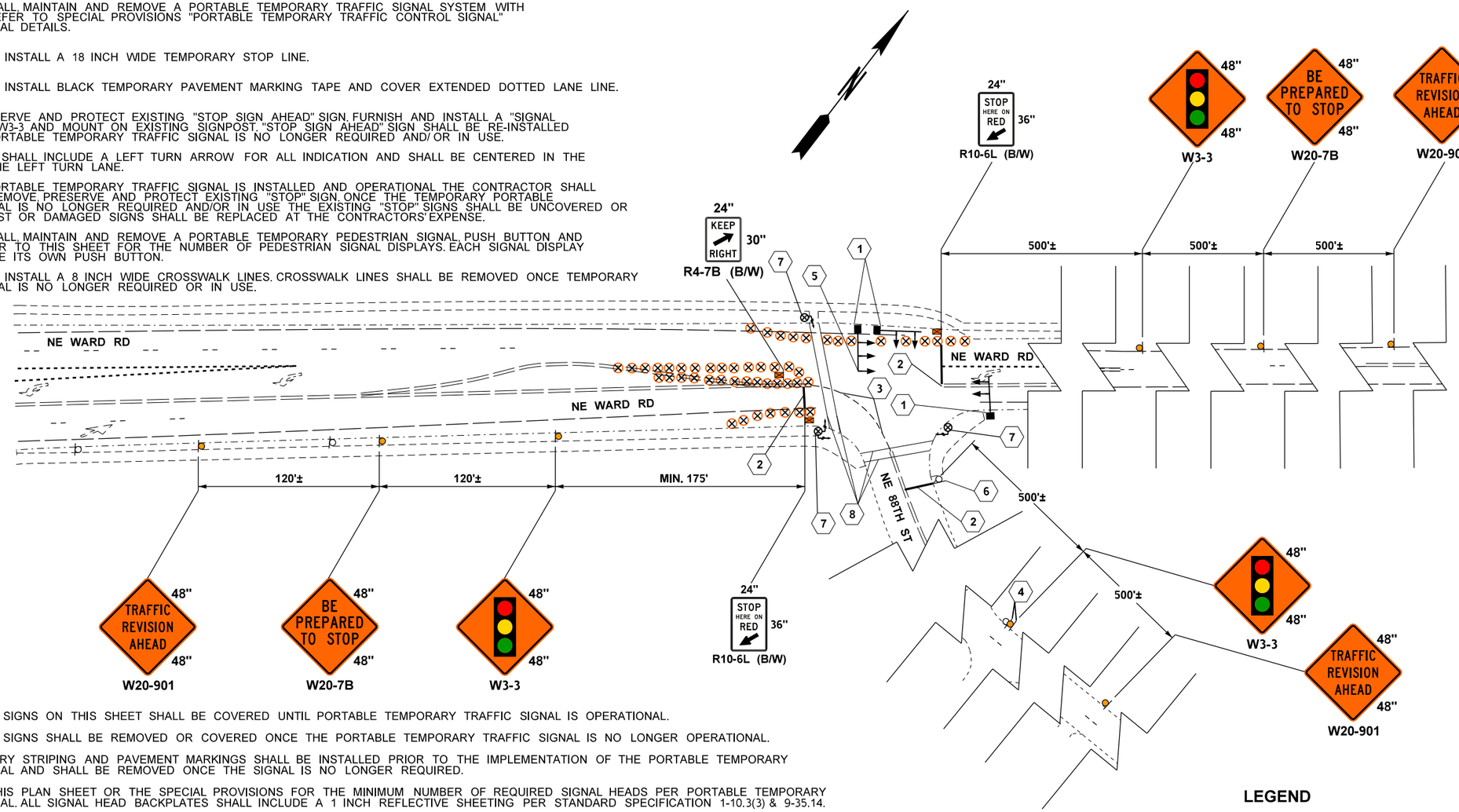

NOTES:

1. ALL CLASS A SIGNS ON THIS SHEET SHALL BE COVERED UNTIL PORTABLE TEMPORARY TRAFFIC SIGNAL IS OPERATIONAL.
2. ALL CLASS A SIGNS SHALL BE REMOVED OR COVERED ONCE THE PORTABLE TEMPORARY TRAFFIC SIGNAL IS NO LONGER OPERATIONAL.
3. ALL TEMPORARY STRIPING AND PAVEMENT MARKINGS SHALL BE INSTALLED PRIOR TO THE IMPLEMENTATION OF THE PORTABLE TEMPORARY TRAFFIC SIGNAL AND SHALL BE REMOVED ONCE THE SIGNAL IS NO LONGER REQUIRED.
4. REFER TO THIS PLAN SHEET OR THE SPECIAL PROVISIONS FOR THE MINIMUM NUMBER OF REQUIRED SIGNAL HEADS PER PORTABLE TEMPORARY TRAFFIC SIGNAL. ALL SIGNAL HEAD BACKPLATES SHALL INCLUDE A 1 INCH REFLECTIVE SHEETING PER STANDARD SPECIFICATION 1-10.3(3) & 9-35.14.
5. ADJUSTMENT TO THE PORTABLE TEMPORARY TRAFFIC SIGNAL SHALL BE ADDRESSED BY THE CONTRACTOR AND/ OR MANUFACTURER WITHIN 2 HOURS OF THE ENGINEER'S REQUEST. FAILURE TO COMPLY RESULTING IN WSDOT STAFF HAVING TO MAKE THE ADJUSTMENT WILL RESULT IN THE CONTRACTOR BEING CHARGED/BILLED FOR ALL TIME, MATERIAL(S) AND EXPENSES ACCRUED FOR EACH ADJUSTMENT.
6. CONTRACTOR SHALL BE ON SITE WITHIN 1 HOUR OF THE PORTABLE TEMPORARY TRAFFIC SIGNAL FAILING OR NOT OPERATING CORRECTLY. ALL ASSOCIATED FLAGGING DUE TO A SIGNAL REPAIR AND/ OR FAILING SHALL BE INCIDENTAL TO THE BID ITEM FOR "PROJECT TEMPORARY TRAFFIC CONTROL". FAILURE TO COMPLY RESULTING IN WSDOT STAFF HAVING TO FLAG, FIX OR REPAIR THE SIGNAL WILL RESULT IN THE CONTRACTOR BEING CHARGED/ BILLED FOR ALL TIME, MATERIAL(S), AND EXPENSES ACCRUED FOR EACH REPAIR.
7. CONTRACTOR SHALL PROVIDE TEMPORARY LIGHTING FOR THE INTERSECTION OF NE WARD RD AND NE 88TH ST PRIOR TO THE IMPLEMENTATION OF THE PORTABLE TEMPORARY TRAFFIC SIGNAL. INTERSECTION SHALL BE ILLUMINATED DURING HOURS OF DARKNESS OR DURING INCLEMENT WEATHER AS DEFINED ON PLAN SHEET IL1. REFER TO CONTRACT SPECIAL PROVISION "PORTABLE TEMPORARY TRAFFIC CONTROL SIGNAL" FOR ADDITIONAL DETAILS. TEMPORARY LIGHTING FOR THE PORTABLE TEMPORARY SIGNAL SHALL BE INCIDENTAL TO THE BID ITEM FOR " PROJECT TEMPORARY TRAFFIC CONTROL"
8. SIGNAL TIMING SHALL BE OBTAINED AND VERIFIED BY WSDOT SWR REGION TRAFFIC OFFICE. THE CONTRACTOR SHALL REQUEST SIGNAL TIMING NO LESS THAN 5 DAYS PRIOR TO SIGNAL INITIATION.
9. ALL ITEMS SHOWN ON THIS PLAN SHEET EXCEPT FOR CLASS A SIGNS SHALL BE INCIDENTAL TO THE BID ITEM FOR "PROJECT TEMPORARY TRAFFIC CONTROL".
10. LOCATIONS OF ITEMS SHOWN ON THIS SHEET ARE APPROXIMATE AND SHALL BE DETERMINED IN THE FIELD BY THE CONTRACTOR AND CONFIRMED BY WSDOT.

PHASE DIAGRAM

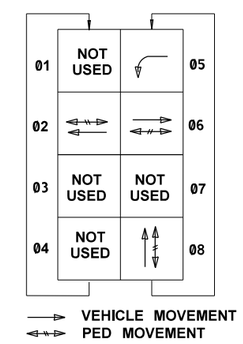

LEGEND

EXIST.	NEW	
		CLASS A SIGN
		PORTABLE SIGN MOUNT (5' MIN.)
		SIGN
		PORTABLE TEMPORARY TRAFFIC SIGNAL
		SIGNAL HEAD
		TRAFFIC SAFETY DRUM
		PORTABLE PEDESTRIAN SIGNAL
		PORTABLE PEDESTRIAN DISPLAY
		TEMPORARY STOP LINE (18")
		TEMPORARY CROSSWALK LINE (8")
		CONSTRUCTION NOTE

0 40 80
SCALE IN FEET

FILE NAME	W:\SWApps\Maintenance\Traffic\TRAFFIC DESIGN\01-ACTIVE DESIGN FILES\XL6488_SR 500 NE 182nd Ave - Intersection Improvements\Sheet\XL6488_PS_TEMP_Sig.dgn
TIME	10:16:27 AM
DATE	3/29/2022
PLOTTED BY	wachtek
DESIGNED BY	K. WACHTER
ENTERED BY	K. WACHTER
CHECKED BY	R. SMITH/ J. WHITFIELD
PROJ. ENGR.	M. HARWOOD
REGIONAL ADM.	C. FRANCIS

REVISION | DATE | BY

REGION NO. 10 | STATE WASH | FED.AID PROJ.NO. HSIP-0500(029)

JOB NUMBER 21X327

CONTRACT NO.

LOCATION NO. XL6488

MONICA JO HARWOOD DUNCAN — STATE OF WASHINGTON — 39399 — REGISTERED PROFESSIONAL ENGINEER

SEE SHEET CT1 DATE

P.E. STAMP BOX

DATE

P.E. STAMP BOX

Washington State Department of Transportation

SR 500
NE 182ND AVE
INTERSECTION IMPROVEMENTS

PORTABLE TEMPORARY TRAFFIC SIGNAL

Plot 9

PLAN REF NO ST9

SHEET 26 OF 76 SHEETS

STAGE 2 - FULL CLOSURE

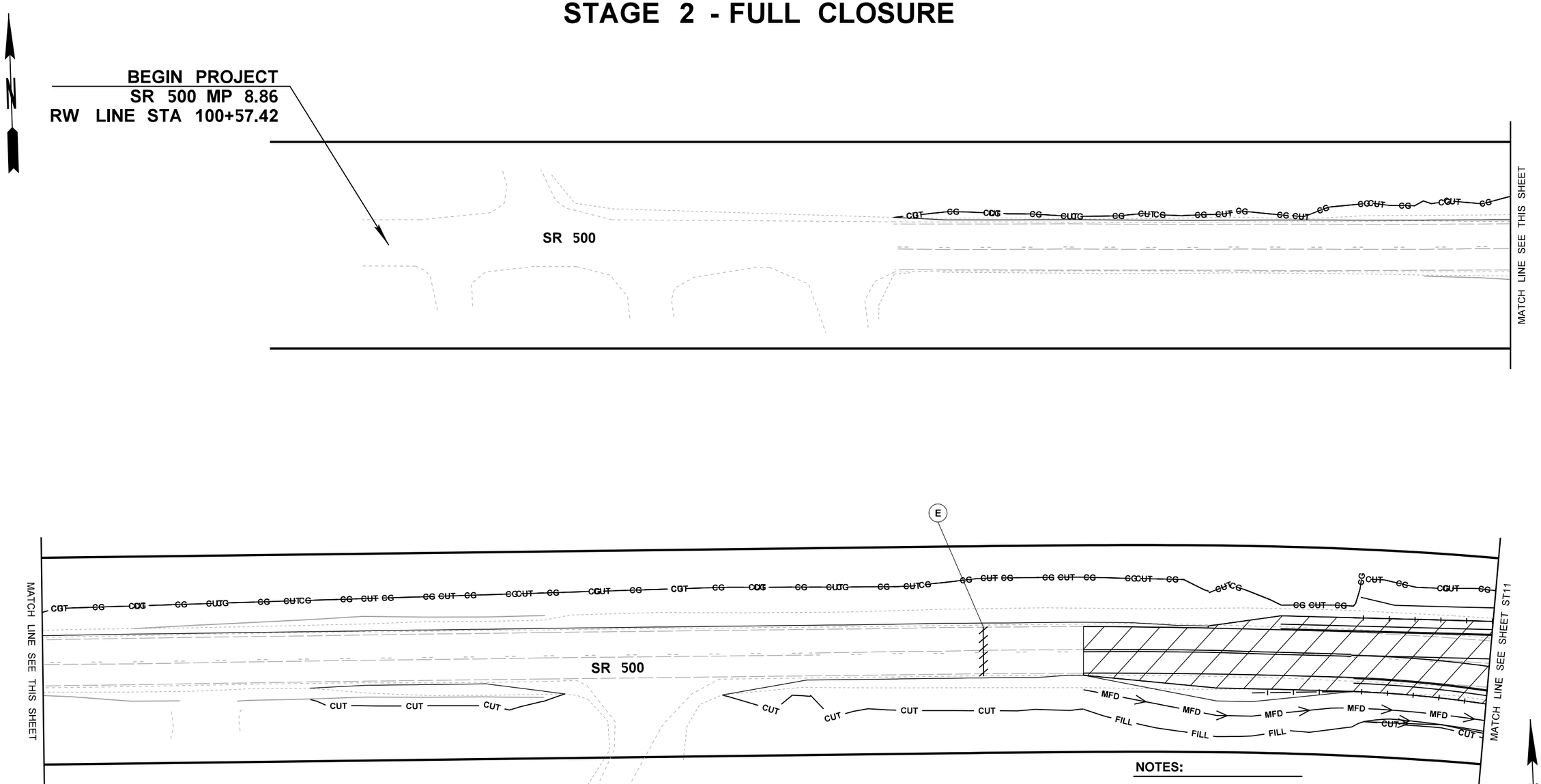

NOTES:

1. SEE SHEET ST1 FOR GENERAL NOTES AND NOTES REGARDING WORK ACTIVITIES AND REQUIREMENTS FOR THIS STAGE.
2. SEE SHEETS TC1 - TC3 FOR REQUIRED CLASS B SIGNS.
3. SEE SHEETS ST7 AND ST8 FOR SOFT CLOSURE SIGNING DETAILS NORTH, EAST, AND WEST OF THE FULL CLOSURE.
4. SEE SHEETS ST7 AND ST8 FOR SIGNING AND MESSAGING DETAILS AND QUANTITIES.
5. SEE SHEET ST9 FOR PORTABLE TEMPORARY TRAFFIC SIGNAL TO BE USED DURING STAGE 2.

LEGEND

- WORK AREA
- TYPE 3 BARRICADE
- SIGN
- SIGN DETAIL

0 25 50
SCALE IN FEET

FILE NAME	G:\444301\05-Design\02-Projects\SR 500 182nd RAB\1-CADD-Plans\20-1.2 CAD Sheet Files\D50021R_SH_STRev1.dgn
TIME	8:33:43 AM
DATE	3/29/2022
PLOTTED BY	bournem
DESIGNED BY	MORGAN BOURNE
ENTERED BY	MORGAN BOURNE
CHECKED BY	ANDY ROMANCHOCK
PROJ. ENGR.	SUSAN FELL
REGIONAL ADM.	CARLEY FRANCIS

REVISION | DATE | BY

REGION NO. 10 | STATE WASH | JOB NUMBER 21X327 | CONTRACT NO.

FED.AID PROJ.NO. HSIP-0500(029)

LOCATION NO. XL6488

SUSAN WAI LEONG FELL — STATE OF WASHINGTON — 36748 — REGISTERED PROFESSIONAL ENGINEER

SEE SHEET CT1
DATE
P.E. STAMP BOX

DATE
P.E. STAMP BOX

Washington State Department of Transportation

SR 500
NE 182ND AVE
INTERSECTION IMPROVEMENTS

CONSTRUCTION STAGING PLANS

PLOT 10
PLAN REF NO ST10
SHEET 27 OF 76 SHEETS

STAGE 2 - FULL CLOSURE

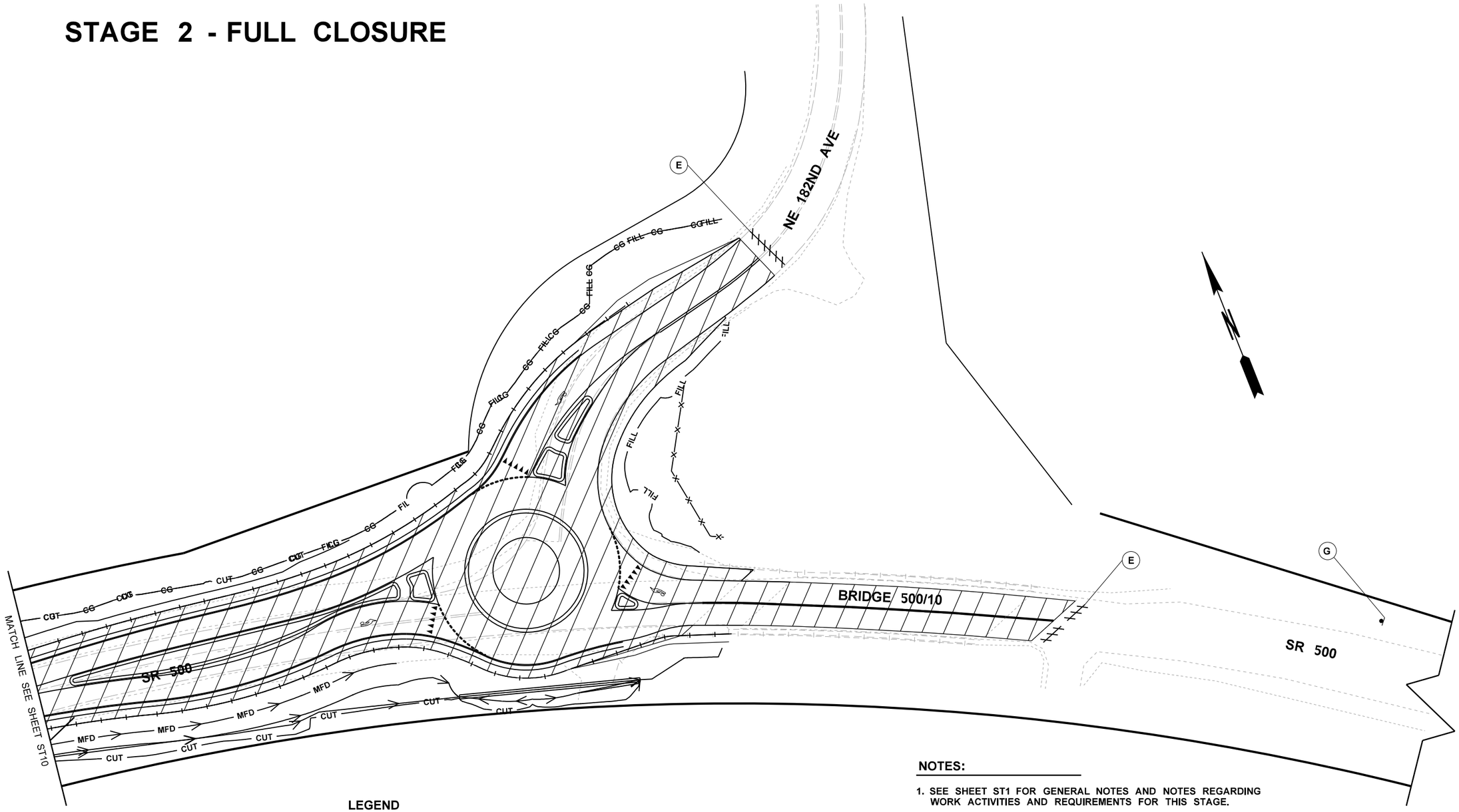

LEGEND

- WORK AREA
- TYPE 3 BARRICADE
- SIGN
- (?) SIGN DETAIL

0 25 50
SCALE IN FEET

NOTES:

1. SEE SHEET ST1 FOR GENERAL NOTES AND NOTES REGARDING WORK ACTIVITIES AND REQUIREMENTS FOR THIS STAGE.
2. SEE SHEETS TC1 - TC3 FOR REQUIRED CLASS B SIGNS.
3. SEE SHEETS ST7 AND ST8 FOR SOFT CLOSURE SIGNING DETAILS NORTH, EAST, AND WEST OF THE FULL CLOSURE.
4. SEE SHEETS ST7 AND ST8 FOR SIGNING AND MESSAGING DETAILS AND QUANTITIES.
5. SEE SHEET ST9 FOR PORTABLE TEMPORARY TRAFFIC SIGNAL TO BE USED DURING STAGE 2.

FILE NAME	G:\444301\05-Design\02-Projects\SR 500 182nd RAB\1-CADD-Plans\20-1.2 CAD Sheet Files\D50021R_SH_STRev1.dgn			
TIME	8:33:44 AM			
DATE	3/29/2022			
PLOTTED BY	bournem			
DESIGNED BY	MORGAN BOURNE			
ENTERED BY	MORGAN BOURNE			
CHECKED BY	ANDY ROMANCHOCK			
PROJ. ENGR.	SUSAN FELL			
REGIONAL ADM.	CARLEY FRANCIS	REVISION	DATE	BY

REGION NO.	STATE	FED.AID PROJ.NO.
10	WASH	HSIP-0500(029)
JOB NUMBER 21X327		
CONTRACT NO.		LOCATION NO. XL6488

SUSAN WAI LEONG FELL — STATE OF WASHINGTON — 36748 — REGISTERED PROFESSIONAL ENGINEER

SEE SHEET CT1
DATE
P.E. STAMP BOX

DATE
P.E. STAMP BOX

Washington State Department of Transportation

SR 500
NE 182ND AVE
INTERSECTION IMPROVEMENTS

CONSTRUCTION STAGING PLANS

PLOT 11
PLAN REF NO ST11
SHEET 28 OF 76 SHEETS

T.2N. R.3E. W.M.

CURVE DATA					
P.I. STATION	DELTA	RADIUS	TANGENT	LENGTH	SUPER
RW LINE 116+24.77	27°13'00.85" RT	1432.50'	346.78'	680.47'	

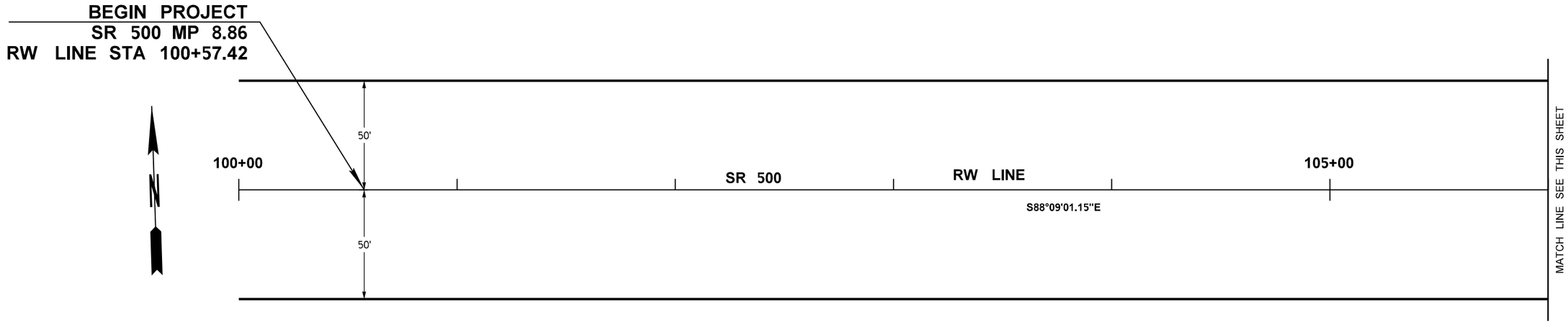

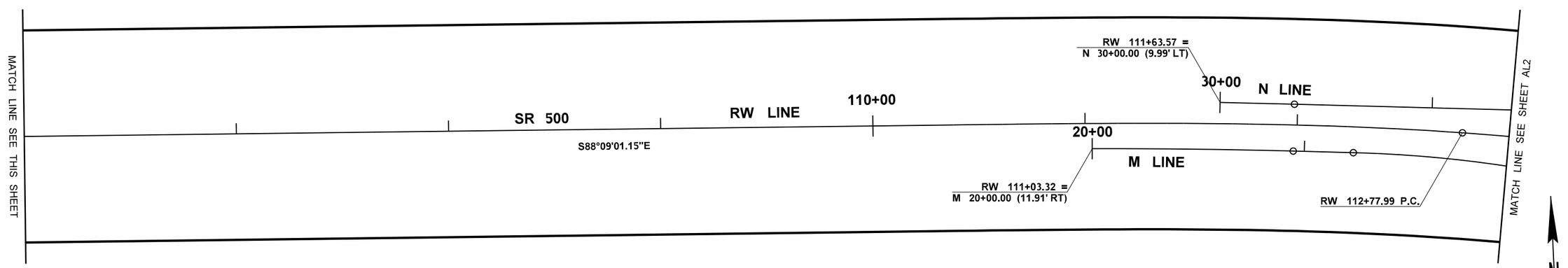

LEGEND

RIGHT OF WAY

NOTES:

1. SEE SHEET AL4 FOR M LINE AND N LINE ALIGNMENTS AND CURVE DATA INFORMATION.

0 25 50
SCALE IN FEET

FILE NAME	G:\444301\05-Design\02-Projects\SR 500 182nd RAB\1-CADD-Plans\20-1.2 CAD Sheet Files\D50021R_SH_AL.dgn						
TIME	8:33:48 AM				REGION NO. 10	STATE WASH	FED.AID PROJ.NO. HSIP-0500(029)
DATE	3/29/2022						
PLOTTED BY	bournem				JOB NUMBER 21X327		
DESIGNED BY	MORGAN BOURNE						
ENTERED BY	MORGAN BOURNE						
CHECKED BY	ANDY ROMANCHOCK				CONTRACT NO.		LOCATION NO. XL6488
PROJ. ENGR.	SUSAN FELL						
REGIONAL ADM.	CARLEY FRANCIS	REVISION	DATE	BY			

SUSAN WAI LEONG FELL, STATE OF WASHINGTON, 36708, REGISTERED PROFESSIONAL ENGINEER

SEE SHEET CT1
DATE
P.E. STAMP BOX

DATE
P.E. STAMP BOX

Washington State Department of Transportation

SR 500
NE 182ND AVE
INTERSECTION IMPROVEMENTS

ALIGNMENT / RIGHT OF WAY PLANS

PLOT 1
PLAN REF NO AL1
SHEET 29 OF 76 SHEETS

T.2N. R.3E. W.M.

CURVE DATA					
P.I. STATION	DELTA	RADIUS	TANGENT	LENGTH	SUPER
RW LINE 116+24.77	27°13'00.85" RT	1432.50'	346.78'	680.47'	
P LINE 1+00.00	63°36'00.40" RT	63.00'	39.06'	69.93'	
P LINE 2+62.70	68°04'01.26" LT	113.00'	76.32'	134.24'	

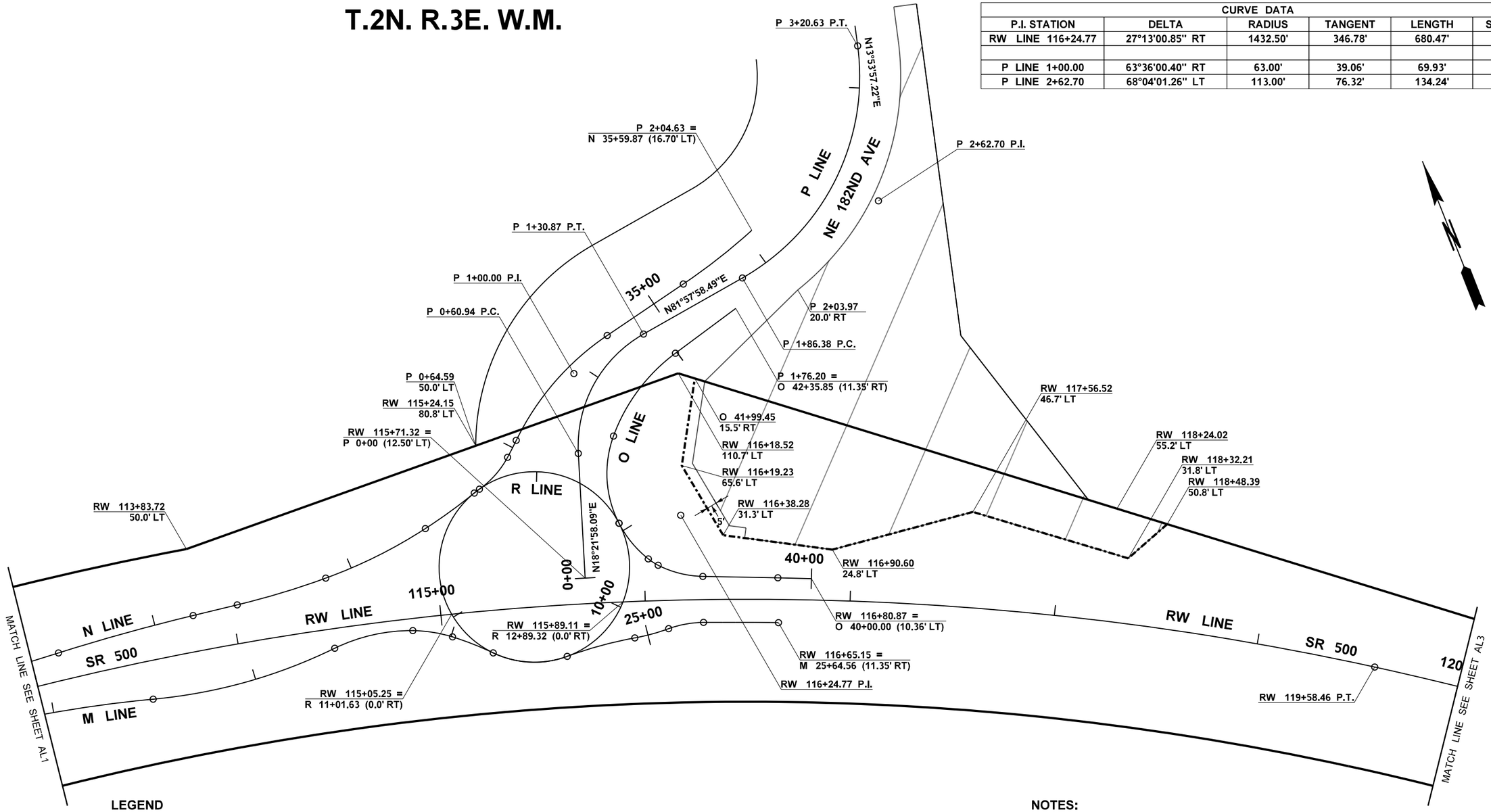

LEGEND

- RIGHT OF WAY
- CLARK COUNTY RIGHT OF WAY
- TURNBACK LINE
- LEASE LINE
- NO CONTRACTOR ACCESS WITHIN THIS ZONE

0 25 50
SCALE IN FEET

NOTES:

1. SEE SHEET AL4 FOR M LINE, N LINE, O LINE, AND R LINE ALIGNMENTS AND CURVE DATA INFORMATION.

FILE NAME	G:\444301\05-Design\02-Projects\SR 500 182nd RAB\1-CADD-Plans\20-1.2 CAD Sheet Files\D50021R_SH_AL.dgn
TIME	8:33:49 AM
DATE	3/29/2022
PLOTTED BY	bournem
DESIGNED BY	MORGAN BOURNE
ENTERED BY	MORGAN BOURNE
CHECKED BY	ANDY ROMANCHOCK
PROJ. ENGR.	SUSAN FELL
REGIONAL ADM.	CARLEY FRANCIS

REVISION | DATE | BY

REGION NO. 10 | STATE WASH | FED.AID PROJ.NO. HSIP-0500(029)

JOB NUMBER 21X327

CONTRACT NO.

LOCATION NO. XL6488

SUSAN WAI LEONG FELL — STATE OF WASHINGTON — 36748 — REGISTERED PROFESSIONAL ENGINEER

SEE SHEET CT1 DATE
P.E. STAMP BOX

DATE
P.E. STAMP BOX

Washington State Department of Transportation

SR 500
NE 182ND AVE
INTERSECTION IMPROVEMENTS

ALIGNMENT / RIGHT OF WAY PLANS

PLOT 2
PLAN REF NO AL2
SHEET 30 OF 76 SHEETS

T.2N. R.3E. W.M.

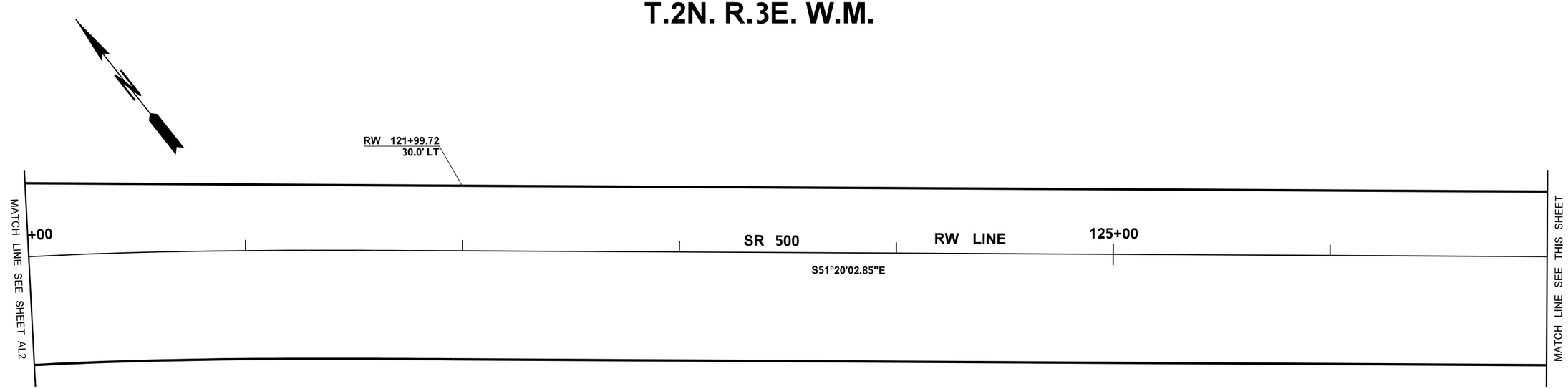

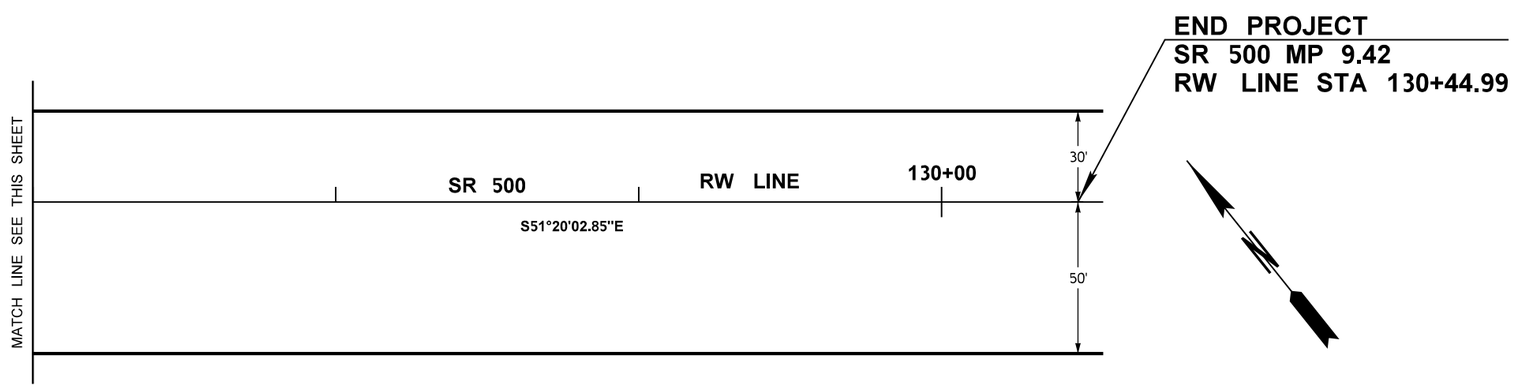

LEGEND

RIGHT OF WAY

0 25 50
SCALE IN FEET

FILE NAME	G:\444301\05-Design\02-Projects\SR 500 182nd RAB\1-CADD-Plans\20-1.2 CAD Sheet Files\D50021R_SH_AL.dgn						
TIME	8:33:50 AM				REGION NO. 10	STATE WASH	FED.AID PROJ.NO. HSIP-0500(029)
DATE	3/29/2022						
PLOTTED BY	bournem				JOB NUMBER 21X327		
DESIGNED BY	MORGAN BOURNE						
ENTERED BY	MORGAN BOURNE						
CHECKED BY	ANDY ROMANCHOCK				CONTRACT NO.		LOCATION NO. XL6488
PROJ. ENGR.	SUSAN FELL						
REGIONAL ADM.	CARLEY FRANCIS	REVISION	DATE	BY			

SUSAN WAI LEONG FELL — STATE OF WASHINGTON — 36708 — REGISTERED PROFESSIONAL ENGINEER

SEE SHEET CT1
DATE
P.E. STAMP BOX

DATE
P.E. STAMP BOX

Washington State
Department of Transportation

SR 500
NE 182ND AVE
INTERSECTION IMPROVEMENTS

ALIGNMENT / RIGHT OF WAY PLANS

PLOT 3
PLAN REF NO
AL3
SHEET 31 OF 76 SHEETS

T.2N. R.3E. W.M.

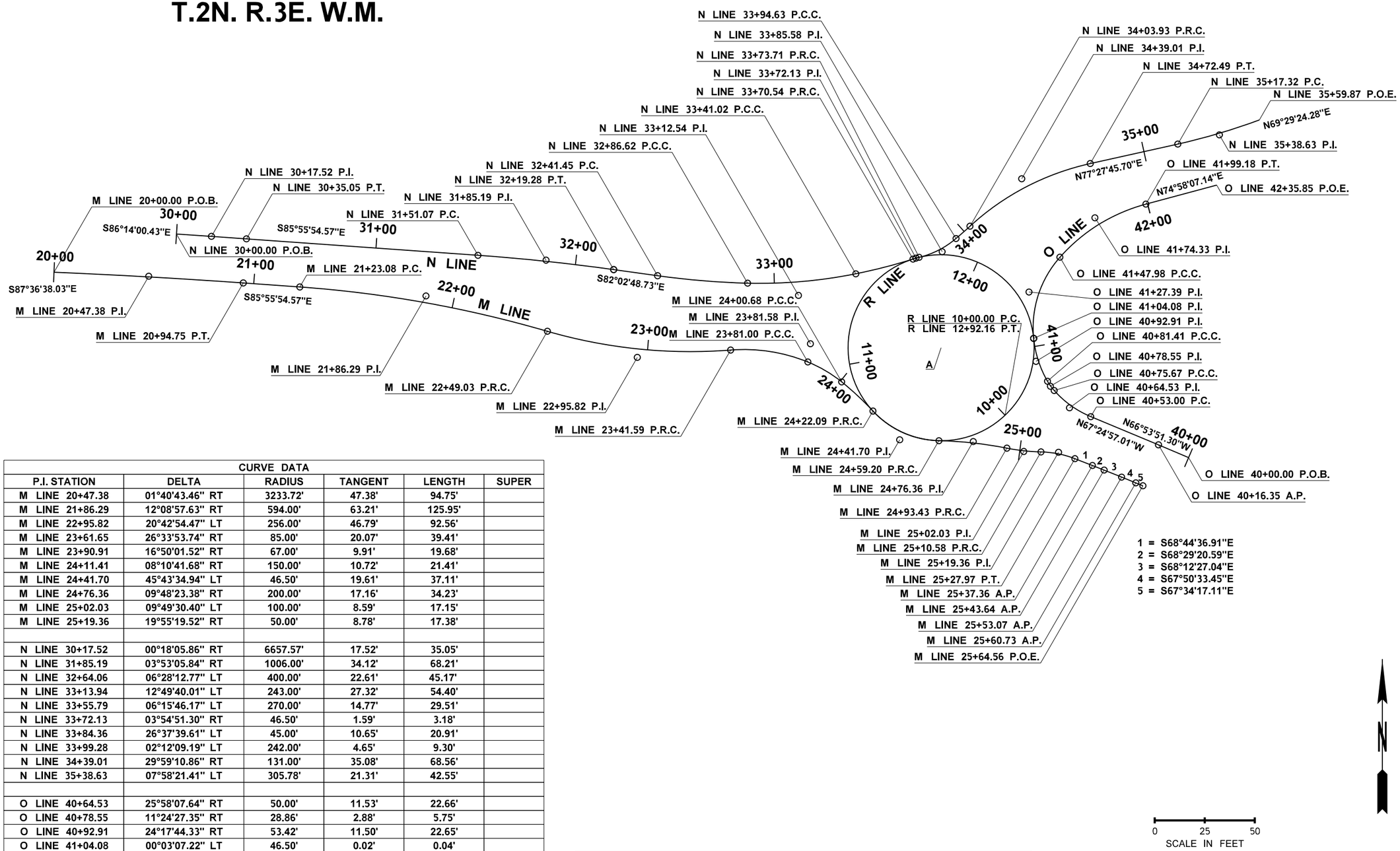

CURVE DATA					
P.I. STATION	DELTA	RADIUS	TANGENT	LENGTH	SUPER
M LINE 20+47.38	01°40'43.46" RT	3233.72'	47.38'	94.75'	
M LINE 21+86.29	12°08'57.63" RT	594.00'	63.21'	125.95'	
M LINE 22+95.82	20°42'54.47" LT	256.00'	46.79'	92.56'	
M LINE 23+61.65	26°33'53.74" RT	85.00'	20.07'	39.41'	
M LINE 23+90.91	16°50'01.52" RT	67.00'	9.91'	19.68'	
M LINE 24+11.41	08°10'41.68" RT	150.00'	10.72'	21.41'	
M LINE 24+41.70	45°43'34.94" LT	46.50'	19.61'	37.11'	
M LINE 24+76.36	09°48'23.38" RT	200.00'	17.16'	34.23'	
M LINE 25+02.03	09°49'30.40" LT	100.00'	8.59'	17.15'	
M LINE 25+19.36	19°55'19.52" RT	50.00'	8.78'	17.38'	
N LINE 30+17.52	00°18'05.86" RT	6657.57'	17.52'	35.05'	
N LINE 31+85.19	03°53'05.84" RT	1006.00'	34.12'	68.21'	
N LINE 32+64.06	06°28'12.77" LT	400.00'	22.61'	45.17'	
N LINE 33+13.94	12°49'40.01" LT	243.00'	27.32'	54.40'	
N LINE 33+55.79	06°15'46.17" LT	270.00'	14.77'	29.51'	
N LINE 33+72.13	03°54'51.30" RT	46.50'	1.59'	3.18'	
N LINE 33+84.36	26°37'39.61" LT	45.00'	10.65'	20.91'	
N LINE 33+99.28	02°12'09.19" LT	242.00'	4.65'	9.30'	
N LINE 34+39.01	29°59'10.86" RT	131.00'	35.08'	68.56'	
N LINE 35+38.63	07°58'21.41" LT	305.78'	21.31'	42.55'	
O LINE 40+64.53	25°58'07.64" RT	50.00'	11.53'	22.66'	
O LINE 40+78.55	11°24'27.35" RT	28.86'	2.88'	5.75'	
O LINE 40+92.91	24°17'44.33" RT	53.42'	11.50'	22.65'	
O LINE 41+04.08	00°03'07.22" LT	46.50'	0.02'	0.04'	
O LINE 41+27.39	47°25'41.97" RT	53.00'	23.28'	43.87'	
O LINE 41+74.33	33°20'10.08" RT	88.00'	26.35'	51.20'	

RADIUS POINT	DELTA	RADIUS	TANGENT	LENGTH
A	359°59'15.64" RT	46.50'	-1.00	292.16'

FILE NAME	G:\444301\05-Design\02-Projects\SR 500 182nd RAB\1-CADD-Plans\20-1.2 CAD Sheet Files\D50021R_SH_AL.dgn			
TIME	8:33:51 AM			
DATE	3/29/2022			
PLOTTED BY	bournem			
DESIGNED BY	MORGAN BOURNE			
ENTERED BY	MORGAN BOURNE			
CHECKED BY	ANDY ROMANCHOCK			
PROJ. ENGR.	SUSAN FELL			
REGIONAL ADM.	CARLEY FRANCIS	REVISION	DATE	BY

REGION NO. 10 | STATE WASH | FED.AID PROJ.NO. HSIP-0500(029)

JOB NUMBER 21X327

CONTRACT NO.

LOCATION NO. XL6488

SEE SHEET CT1

DATE

P.E. STAMP BOX

P.E. STAMP BOX

DATE

Washington State Department of Transportation

SR 500
NE 182ND AVE
INTERSECTION IMPROVEMENTS

ALIGNMENT / RIGHT OF WAY PLANS

PLOT 4

PLAN REF NO AL4

SHEET 32 OF 76 SHEETS

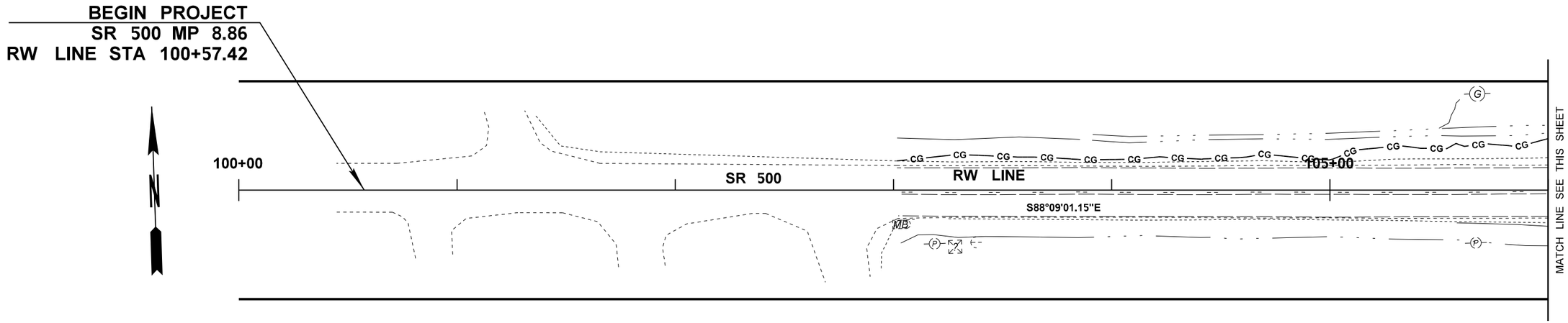

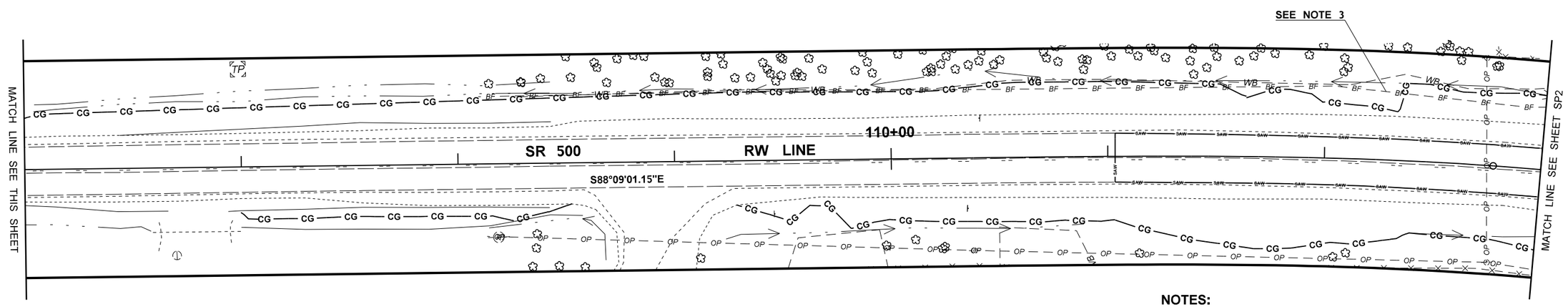

LEGEND

- EXISTING RIGHT OF WAY
- EXISTING EDGE OF PAVEMENT
- EXISTING EDGE OF GRAVEL SHOULDER
- EXISTING BOTTOM OF DITCH
- EXISTING WETLAND BOUNDARY
- EXISTING GUARDRAIL
- EXISTING FENCE
- EXISTING CONCRETE CULVERT
- EXISTING TREE
- EXISTING SIGN
- EXISTING BURIED FIBER OPTIC
- EXISTING OVERHEAD POWER LINE
- EXISTING POWER POLE
- EXISTING OHW
- EXISTING BRIDGE
- EXISTING SIDEWALK
- CLEARING AND GRUBBING LINE
- SAWCUT / SAWCUT AND SEAL
- CONSTRUCTION NOTE

0 25 50
SCALE IN FEET

NOTES:

1. REMOVAL ITEMS ENCOUNTERED IN THE FIELD THAT ARE NOT SHOWN ON THIS SHEET SHALL BE REMOVED AND PAID FOR AS 'FORCE ACCOUNT REMOVAL OF STRUCTURES AND OBSTRUCTIONS'.
2. SEE TABLE ON SHEET SP2 FOR SITE PREPARATION QUANTITIES.
3. THE CONTRACTOR SHALL LOCATE AND DETERMINE THE DEPTH OF BURIED UTILITIES PRIOR TO PERFORMING ANY WORK IN THE VICINITY. THE CONTRACTOR SHALL NOTIFY THE ENGINEER OF ANY POTENTIAL UTILITY CONFLICTS.

FILE NAME	G:\444301\05-Design\02-Projects\SR 500 182nd RAB\1-CADD-Plans\20-1.2 CAD Sheet Files\D50021R_SH_SP.dgn				REGION NO. 10	STATE WASH	FED.AID PROJ.NO. HSIP-0500(029)
TIME	8:34:07 AM						
DATE	3/29/2022						
PLOTTED BY	bournem				JOB NUMBER 21X327		
DESIGNED BY	MORGAN BOURNE						
ENTERED BY	MORGAN BOURNE						
CHECKED BY	ANDY ROMANCHOCK				CONTRACT NO.		LOCATION NO. XL6488
PROJ. ENGR.	SUSAN FELL						
REGIONAL ADM.	CARLEY FRANCIS	REVISION	DATE	BY			

SUSAN WAI LEONG FELL, STATE OF WASHINGTON, 36748, REGISTERED PROFESSIONAL ENGINEER
SEE SHEET CT1
DATE
P.E. STAMP BOX

DATE
P.E. STAMP BOX

Washington State Department of Transportation

SR 500
NE 182ND AVE
INTERSECTION IMPROVEMENTS

SITE PREPARATION AND UTILITY PLANS

PLOT 1
PLAN REF NO SP1
SHEET 33 OF 76 SHEETS

LEGEND

- EXISTING RIGHT OF WAY
- EXISTING CLARK COUNTY RIGHT OF WAY
- EXISTING TURNBACK LINE
- LEASE LINE
- EXISTING EDGE OF PAVEMENT
- EXISTING EDGE OF GRAVEL SHOULDER
- EXISTING BOTTOM OF DITCH
- EXISTING WETLAND BOUNDARY (WB)
- EXISTING GUARDRAIL
- EXISTING FENCE
- EXISTING CONCRETE CULVERT
- EXISTING TREE
- EXISTING SIGN
- EXISTING BURIED FIBER OPTIC (BF)
- EXISTING OVERHEAD POWER LINE (OP)
- EXISTING POWER POLE
- EXISTING OHW (OHW)
- EXISTING BRIDGE
- EXISTING SIDEWALK
- CLEARING AND GRUBBING LINE (CG)
- SAWCUT / SAWCUT AND SEAL (SAW)
- FULL DEPTH PAVEMENT REBUILD
- CONSTRUCTION NOTE (?)

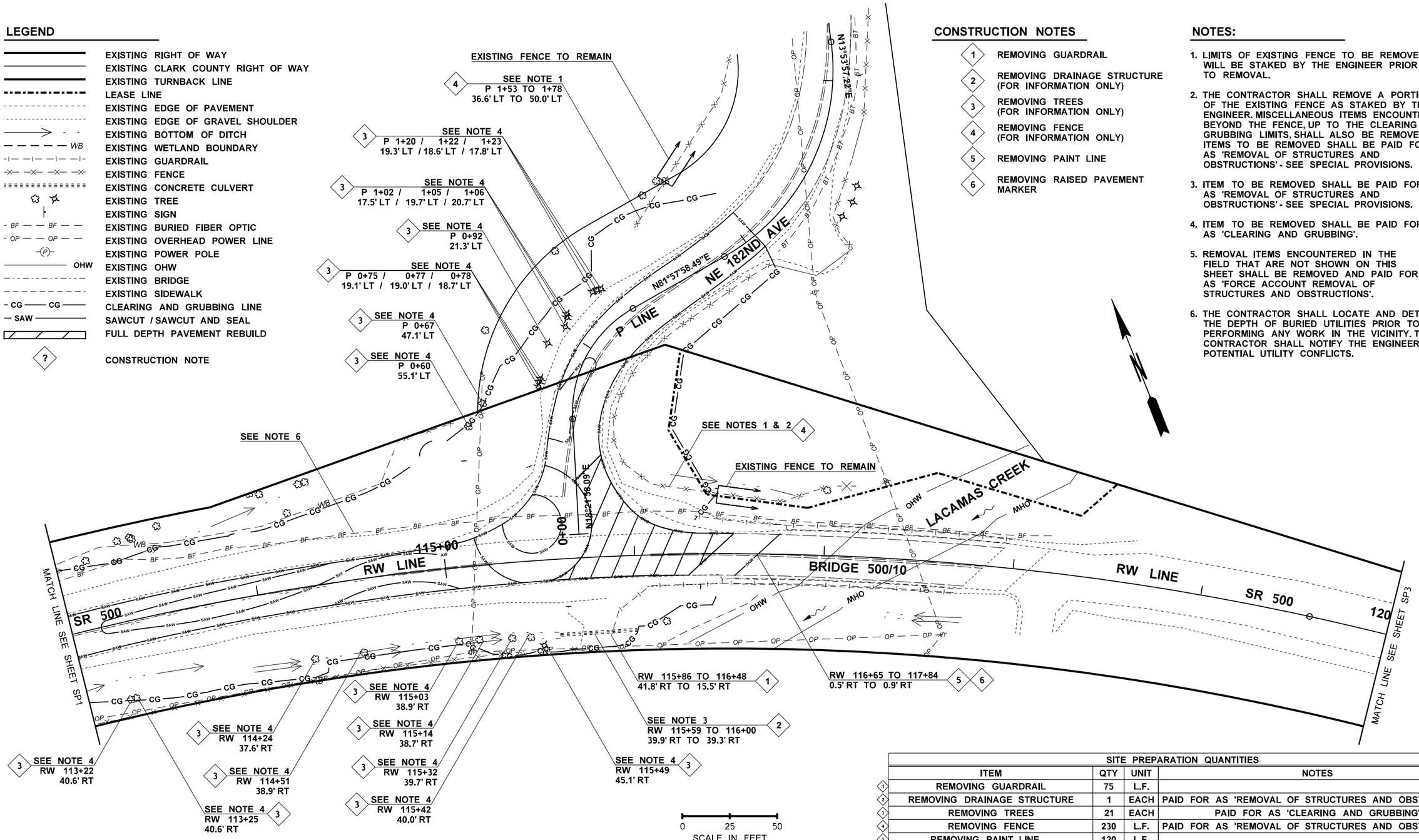

CONSTRUCTION NOTES

1. REMOVING GUARDRAIL
2. REMOVING DRAINAGE STRUCTURE (FOR INFORMATION ONLY)
3. REMOVING TREES (FOR INFORMATION ONLY)
4. REMOVING FENCE (FOR INFORMATION ONLY)
5. REMOVING PAINT LINE
6. REMOVING RAISED PAVEMENT MARKER

NOTES:

1. LIMITS OF EXISTING FENCE TO BE REMOVED WILL BE STAKED BY THE ENGINEER PRIOR TO REMOVAL.
2. THE CONTRACTOR SHALL REMOVE A PORTION OF THE EXISTING FENCE AS STAKED BY THE ENGINEER. MISCELLANEOUS ITEMS ENCOUNTERED BEYOND THE FENCE, UP TO THE CLEARING AND GRUBBING LIMITS, SHALL ALSO BE REMOVED. ITEMS TO BE REMOVED SHALL BE PAID FOR AS 'REMOVAL OF STRUCTURES AND OBSTRUCTIONS' - SEE SPECIAL PROVISIONS.
3. ITEM TO BE REMOVED SHALL BE PAID FOR AS 'REMOVAL OF STRUCTURES AND OBSTRUCTIONS' - SEE SPECIAL PROVISIONS.
4. ITEM TO BE REMOVED SHALL BE PAID FOR AS 'CLEARING AND GRUBBING'.
5. REMOVAL ITEMS ENCOUNTERED IN THE FIELD THAT ARE NOT SHOWN ON THIS SHEET SHALL BE REMOVED AND PAID FOR AS 'FORCE ACCOUNT REMOVAL OF STRUCTURES AND OBSTRUCTIONS'.
6. THE CONTRACTOR SHALL LOCATE AND DETERMINE THE DEPTH OF BURIED UTILITIES PRIOR TO PERFORMING ANY WORK IN THE VICINITY. THE CONTRACTOR SHALL NOTIFY THE ENGINEER OF ANY POTENTIAL UTILITY CONFLICTS.

SITE PREPARATION QUANTITIES

	ITEM	QTY	UNIT	NOTES
1	REMOVING GUARDRAIL	75	L.F.	
2	REMOVING DRAINAGE STRUCTURE	1	EACH	PAID FOR AS 'REMOVAL OF STRUCTURES AND OBSTRUCTIONS'
3	REMOVING TREES	21	EACH	PAID FOR AS 'CLEARING AND GRUBBING'
4	REMOVING FENCE	230	L.F.	PAID FOR AS 'REMOVAL OF STRUCTURES AND OBSTRUCTIONS'
5	REMOVING PAINT LINE	120	L.F.	
6	REMOVING RAISED PAVEMENT MARKER	0.03	HUND	

FILE NAME	G:\444301\05-Design\02-Projects\SR 500 182nd RAB\1-CADD-Plans\20-1.2 CAD Sheet Files\D50021R_SH_SP.dgn
TIME	8:34:09 AM
DATE	3/29/2022
PLOTTED BY	bournem
DESIGNED BY	MORGAN BOURNE
ENTERED BY	MORGAN BOURNE
CHECKED BY	ANDY ROMANCHOCK
PROJ. ENGR.	SUSAN FELL
REGIONAL ADM.	CARLEY FRANCIS

REVISION | DATE | BY

REGION NO. 10 | STATE WASH | FED.AID PROJ.NO. HSIP-0500(029)

JOB NUMBER 21X327

CONTRACT NO. | LOCATION NO. XL6488

SUSAN WAI LEONG FELL — STATE OF WASHINGTON — 36748 — REGISTERED PROFESSIONAL ENGINEER

SEE SHEET CT1 — DATE — P.E. STAMP BOX

DATE — P.E. STAMP BOX

Washington State Department of Transportation

SR 500
NE 182ND AVE
INTERSECTION IMPROVEMENTS

SITE PREPARATION AND UTILITY PLANS

PLOT 2

PLAN REF NO SP2

SHEET 34 OF 76 SHEETS

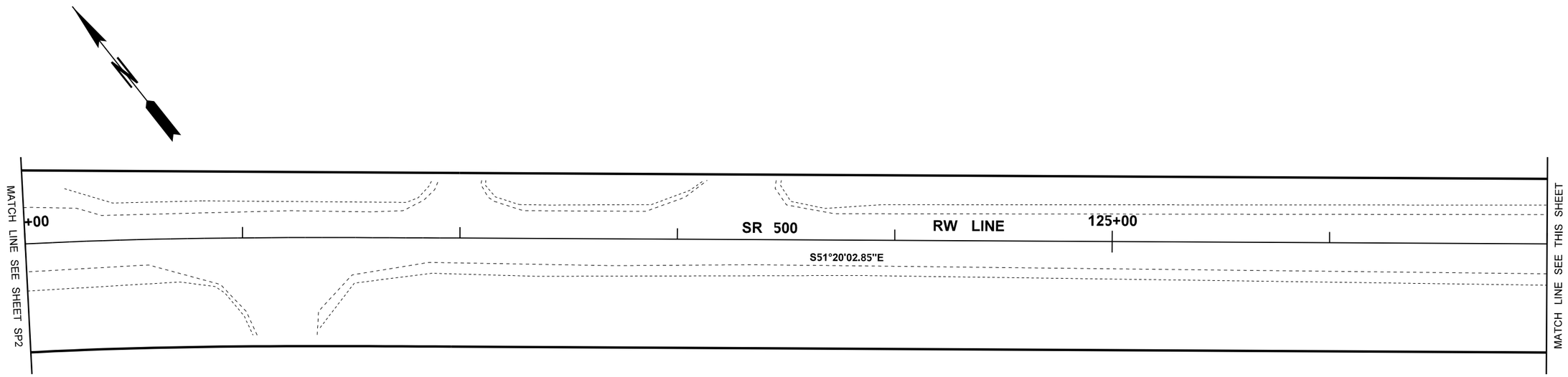

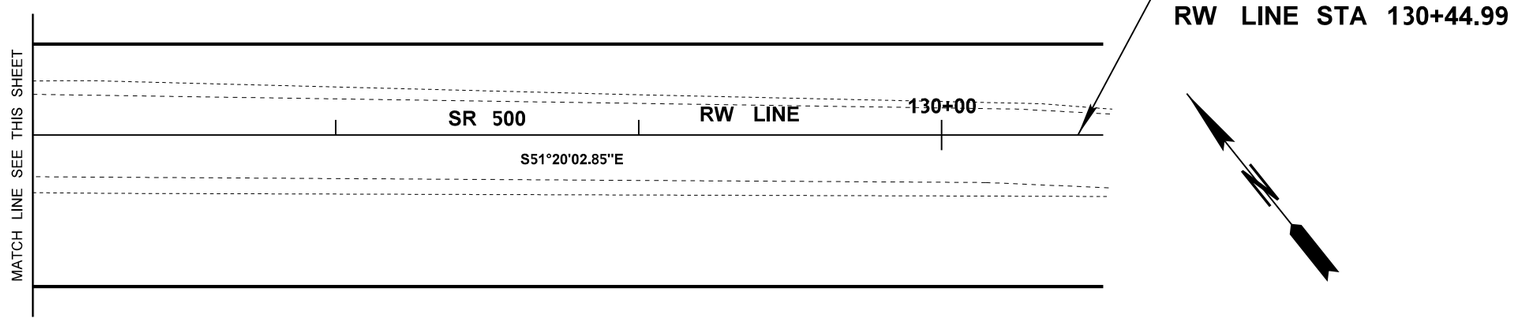

END PROJECT
SR 500 MP 9.42
RW LINE STA 130+44.99

LEGEND

- EXISTING RIGHT OF WAY
- EXISTING EDGE OF PAVEMENT
- EXISTING EDGE OF GRAVEL SHOULDER
- EXISTING BOTTOM OF DITCH
- EXISTING WETLAND BOUNDARY (WB)
- EXISTING GUARDRAIL
- EXISTING FENCE
- EXISTING CONCRETE CULVERT
- EXISTING TREE
- EXISTING SIGN
- EXISTING BURIED FIBER OPTIC (BF)
- EXISTING OVERHEAD POWER LINE (OP)
- EXISTING POWER POLE (P)
- EXISTING OHW
- EXISTING BRIDGE
- EXISTING SIDEWALK
- CLEARING AND GRUBBING LINE (CG)
- SAWCUT / SAWCUT AND SEAL (SAW)
- CONSTRUCTION NOTE (?)

0 25 50
SCALE IN FEET

NOTES:

1. REMOVAL ITEMS ENCOUNTERED IN THE FIELD THAT ARE NOT SHOWN ON THIS SHEET SHALL BE REMOVED AND PAID FOR AS 'FORCE ACCOUNT REMOVAL OF STRUCTURES AND OBSTRUCTIONS'.
2. SEE TABLE ON SHEET SP2 FOR SITE PREPARATION QUANTITIES.
3. THE CONTRACTOR SHALL LOCATE AND DETERMINE THE DEPTH OF BURIED UTILITIES PRIOR TO PERFORMING ANY WORK IN THE VICINITY. THE CONTRACTOR SHALL NOTIFY THE ENGINEER OF ANY POTENTIAL UTILITY CONFLICTS.

FILE NAME	G:\444301\05-Design\02-Projects\SR 500 182nd RAB\1-CADD-Plans\20-1.2 CAD Sheet Files\D50021R_SH_SP.dgn
TIME	8:34:10 AM
DATE	3/29/2022
PLOTTED BY	bournem
DESIGNED BY	MORGAN BOURNE
ENTERED BY	MORGAN BOURNE
CHECKED BY	ANDY ROMANCHOCK
PROJ. ENGR.	SUSAN FELL
REGIONAL ADM.	CARLEY FRANCIS

REVISION | DATE | BY

REGION NO. 10 | STATE WASH | FED.AID PROJ.NO. HSIP-0500(029)
JOB NUMBER 21X327
CONTRACT NO.
LOCATION NO. XL6488

SUSAN WAI LEONG FELL, STATE OF WASHINGTON, 36708, REGISTERED PROFESSIONAL ENGINEER
SEE SHEET CT1
DATE
P.E. STAMP BOX

DATE
P.E. STAMP BOX

Washington State Department of Transportation

SR 500
NE 182ND AVE
INTERSECTION IMPROVEMENTS

SITE PREPARATION AND UTILITY PLANS

PLOT 3
PLAN REF NO SP3
SHEET 35 OF 76 SHEETS

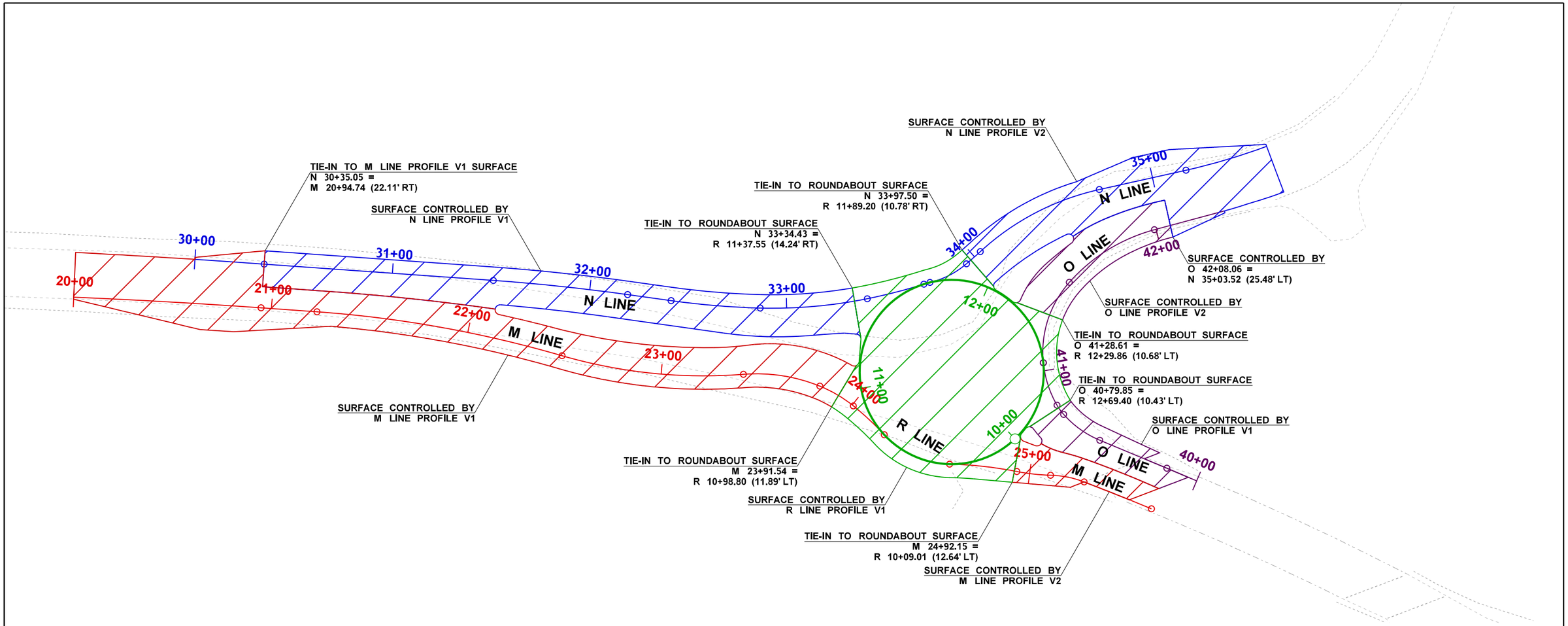

PROFILE AND SURFACE CONTROL OVERVIEW

LEGEND

- SURFACE CONTROLLED BY M LINE PROFILES
- SURFACE CONTROLLED BY N LINE PROFILES
- SURFACE CONTROLLED BY O LINE PROFILES
- SURFACE CONTROLLED BY R LINE PROFILE

0 25 50
SCALE IN FEET

NOTES:

1. SEE SHEET AL4 FOR M LINE, N LINE, O LINE, AND R LINE ALIGNMENTS AND CURVE DATA INFORMATION.

N

FILE NAME	G:\444301\05-Design\02-Projects\SR 500 182nd RAB\1-CADD-Plans\20-1.2 CAD Sheet Files\D50021R_SH_RP.dgn			
TIME	8:34:29 AM			
DATE	3/29/2022			
PLOTTED BY	bournem			
DESIGNED BY	MORGAN BOURNE			
ENTERED BY	MORGAN BOURNE			
CHECKED BY	ANDY ROMANCHOCK			
PROJ. ENGR.	SUSAN FELL			
REGIONAL ADM.	CARLEY FRANCIS	REVISION	DATE	BY

REGION NO.	STATE	FED.AID PROJ.NO.
10	WASH	HSIP-0500(029)
JOB NUMBER 21X327		
CONTRACT NO.		LOCATION NO. XL6488

SUSAN WAI LEONG FELL STATE OF WASHINGTON 36748 REGISTERED PROFESSIONAL ENGINEER

SEE SHEET CT1
DATE
P.E. STAMP BOX

DATE
P.E. STAMP BOX

Washington State Department of Transportation

SR 500
NE 182ND AVE
INTERSECTION IMPROVEMENTS

ROADWAY PROFILES

PLOT 1
PLAN REF NO RP1
SHEET 36 OF 76 SHEETS

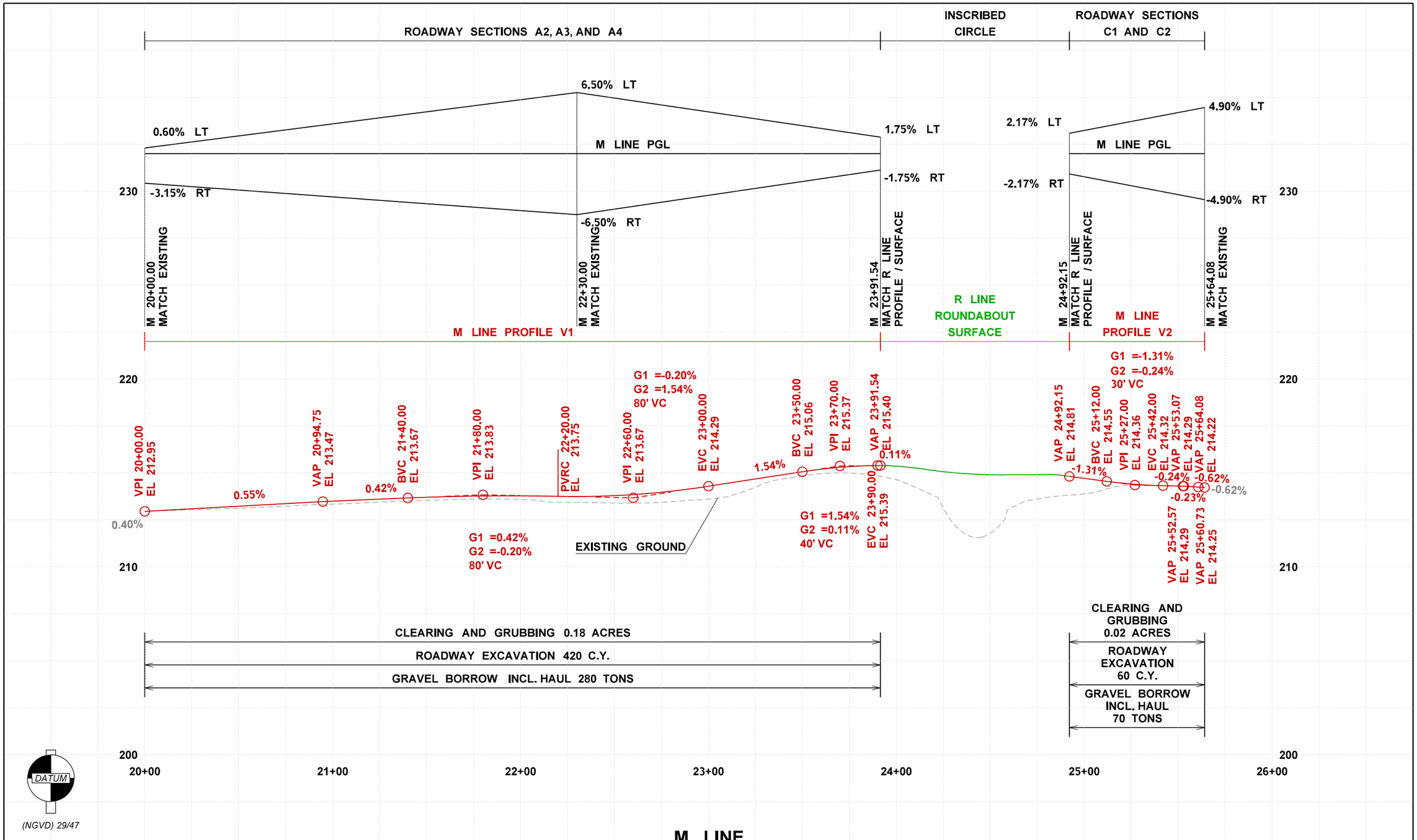

FILE NAME	G:\444301\05-Design\02-Projects\SR 500 182nd RAB\1-CADD-Plans\20-1.2 CAD Sheet Files\D50021R_SH_RP.dgn						
TIME	8:34:30 AM				REGION NO. 10	STATE WASH	FED.AID PROJ.NO. HSIP-0500(029)
DATE	3/29/2022						
PLOTTED BY	bournem				JOB NUMBER 21X327		
DESIGNED BY	MORGAN BOURNE						
ENTERED BY	MORGAN BOURNE						
CHECKED BY	ANDY ROMANCHOCK				CONTRACT NO.		LOCATION NO. XL6488
PROJ. ENGR.	SUSAN FELL						
REGIONAL ADM.	CARLEY FRANCIS	REVISION	DATE	BY			

SEE SHEET CT1
DATE
P.E. STAMP BOX

P.E. STAMP BOX
DATE

Washington State Department of Transportation

SR 500
NE 182ND AVE
INTERSECTION IMPROVEMENTS

ROADWAY PROFILES

PLOT 2
PLAN REF. NO. RP2
SHEET 37 OF 76 SHEETS

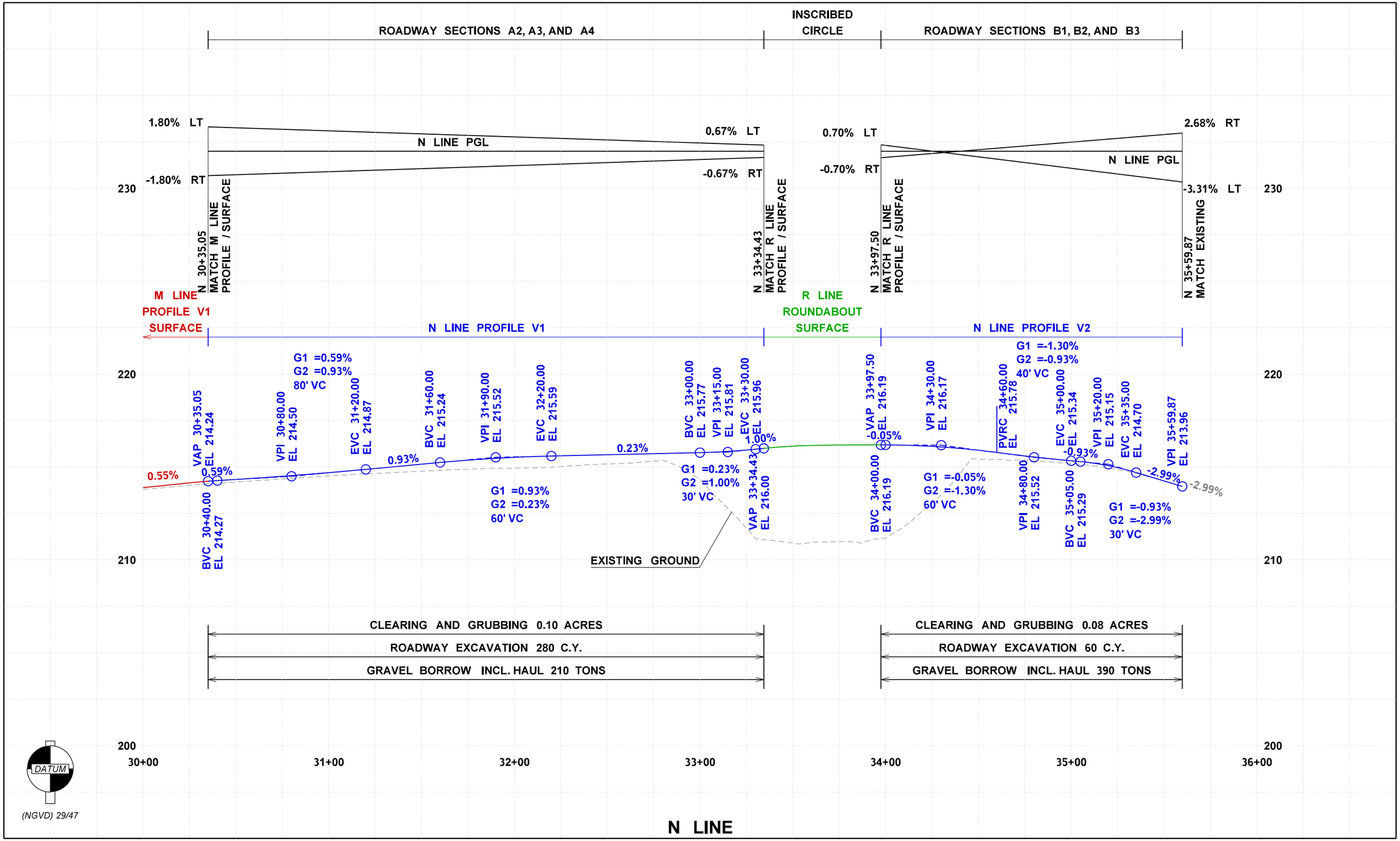

FILE NAME	G:\444301\05-Design\02-Projects\SR 500 182nd RAB\1-CADD-Plans\20-1.2 CAD Sheet Files\D50021R_SH_RP.dgn						
TIME	8:34:31 AM						
DATE	3/29/2022						
PLOTTED BY	bournem						
DESIGNED BY	MORGAN BOURNE						
ENTERED BY	MORGAN BOURNE						
CHECKED BY	ANDY ROMANCHOCK						
PROJ. ENGR.	SUSAN FELL						
REGIONAL ADM.	CARLEY FRANCIS	REVISION	DATE	BY			

REGION NO. 10 | STATE WASH | FED.AID PROJ.NO. HSIP-0500(029)

JOB NUMBER 21X327

CONTRACT NO.

LOCATION NO. XL6488

SEE SHEET CT1 DATE

P.E. STAMP BOX

DATE

P.E. STAMP BOX

Washington State Department of Transportation

SR 500
NE 182ND AVE
INTERSECTION IMPROVEMENTS

ROADWAY PROFILES

PLOT 3

PLAN REF. NO. RP3

SHEET 38 OF 76 SHEETS

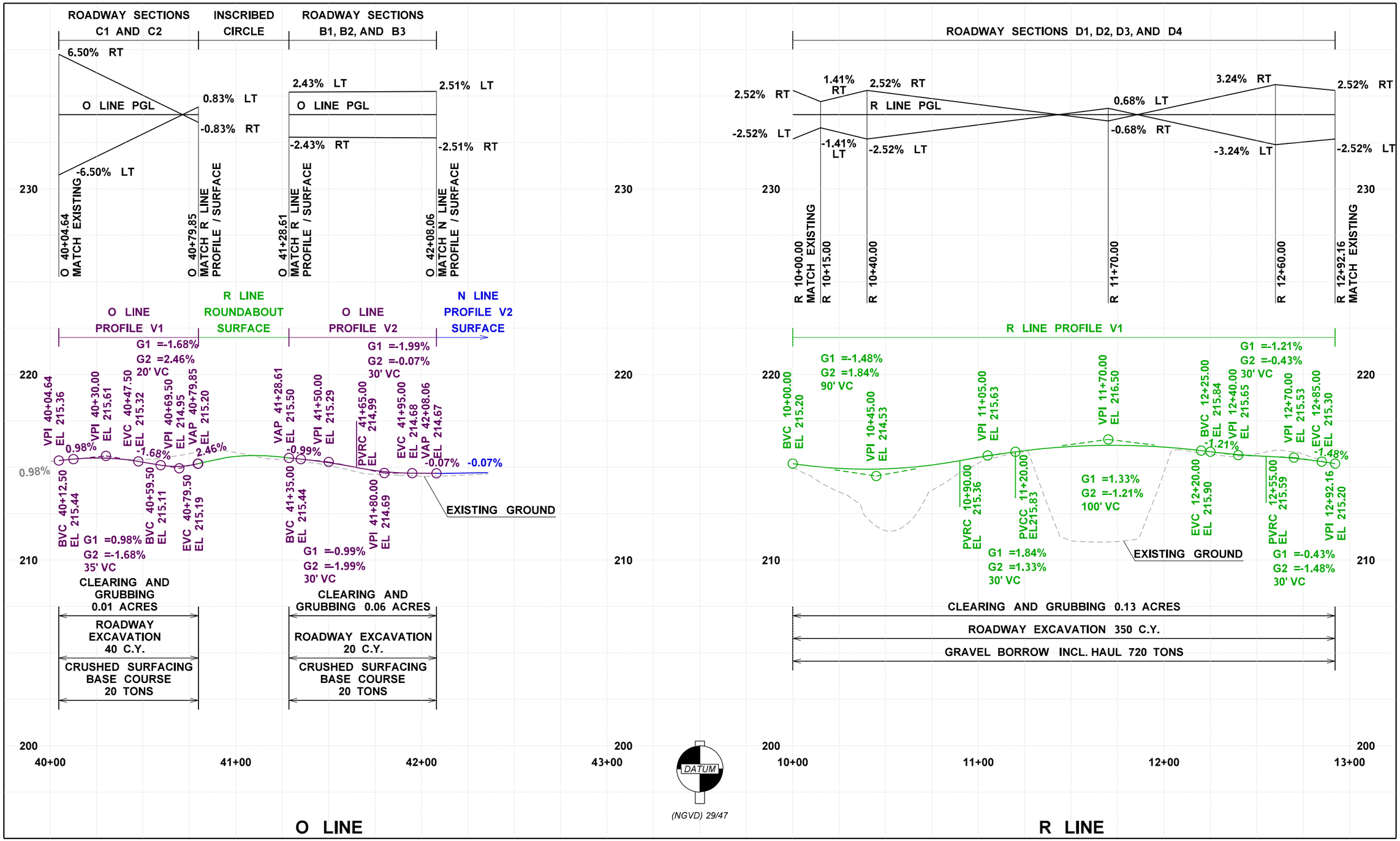

FILE NAME	G:\444301\05-Design\02-Projects\SR 500 182nd RAB\1-CADD-Plans\20-1.2 CAD Sheet Files\D50021R_SH_RP.dgn				REGION NO. 10	STATE WASH	FED.AID PROJ.NO. HSIP-0500(029)
TIME	8:34:32 AM				JOB NUMBER 21X327		
DATE	3/29/2022						
PLOTTED BY	bournem						
DESIGNED BY	MORGAN BOURNE						
ENTERED BY	MORGAN BOURNE						
CHECKED BY	ANDY ROMANCHOCK				CONTRACT NO.		LOCATION NO. XL6488
PROJ. ENGR.	SUSAN FELL						
REGIONAL ADM.	CARLEY FRANCIS	REVISION	DATE	BY			

SUSAN WAI LEONG FELL — STATE OF WASHINGTON — 36748 — REGISTERED PROFESSIONAL ENGINEER

SEE SHEET CT1 DATE
P.E. STAMP BOX

P.E. STAMP BOX DATE

Washington State Department of Transportation

SR 500
NE 182ND AVE
INTERSECTION IMPROVEMENTS

ROADWAY PROFILES

PLOT 4
PLAN REF. NO. RP4
SHEET 39 OF 76 SHEETS

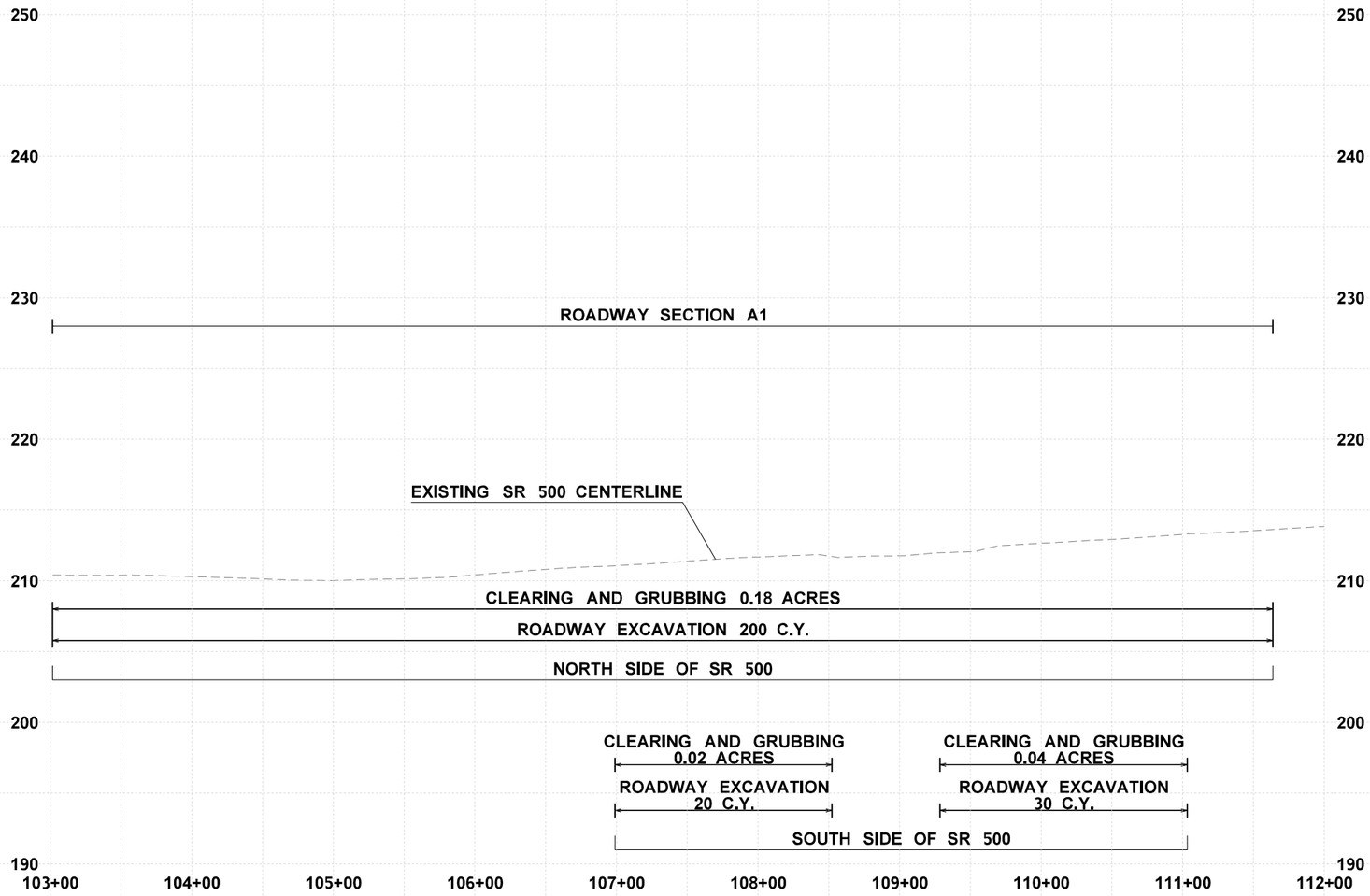

DATUM

(NGVD) 29/47

RW LINE

* PROFILE SHOWN FOR QUANTITY INFORMATION PURPOSES.

FILE NAME	G:\444301\05-Design\02-Projects\SR 500 182nd RAB\1-CADD-Plans\20-1.2 CAD Sheet Files\D50021R_SH_RP.dgn						
TIME	8:34:33 AM				REGION NO. 10	STATE WASH	FED.AID PROJ.NO. HSIP-0500(029)
DATE	3/29/2022						
PLOTTED BY	bournem				JOB NUMBER 21X327		
DESIGNED BY	MORGAN BOURNE						
ENTERED BY	MORGAN BOURNE						
CHECKED BY	ANDY ROMANCHOCK				CONTRACT NO.		LOCATION NO. XL6488
PROJ. ENGR.	SUSAN FELL						
REGIONAL ADM.	CARLEY FRANCIS	REVISION	DATE	BY			

SUSAN WAI LEONG FELL — STATE OF WASHINGTON — 36748 — REGISTERED PROFESSIONAL ENGINEER

SEE SHEET CT1

DATE

P.E. STAMP BOX

DATE

P.E. STAMP BOX

Washington State Department of Transportation

SR 500
NE 182ND AVE
INTERSECTION IMPROVEMENTS

ROADWAY PROFILES

PLOT 5

PLAN REF. NO. RP5

SHEET 40 OF 76 SHEETS

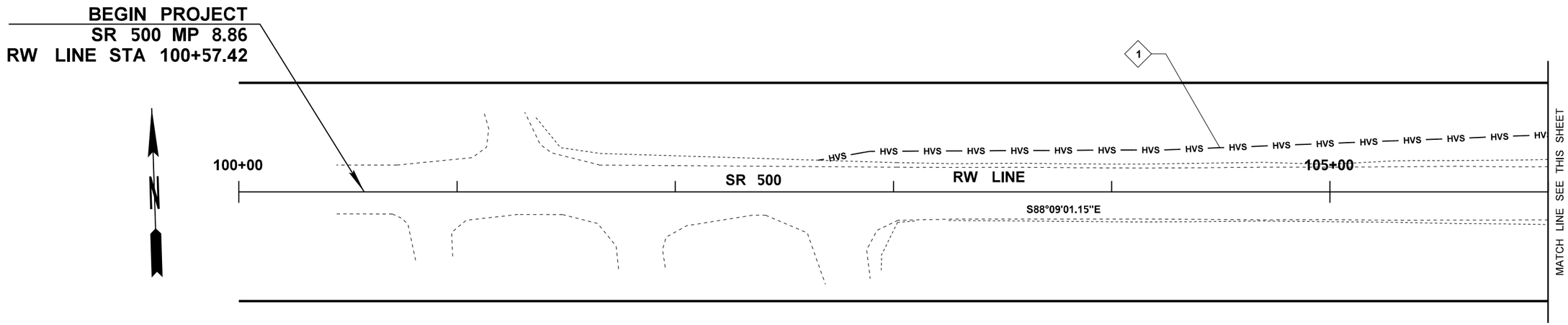

CONSTRUCTION NOTES

1 HIGH VISIBILITY SILT FENCE (HVS)

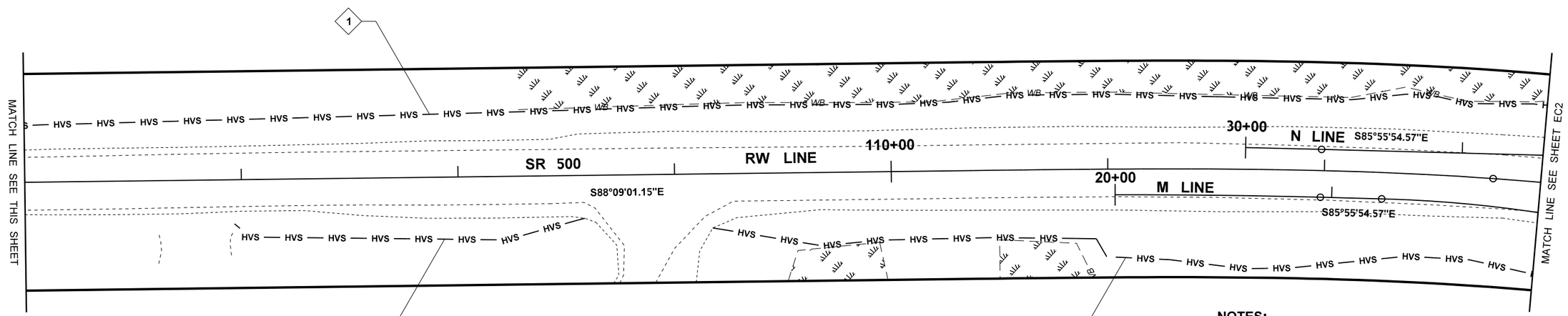

LEGEND

- EXISTING RIGHT OF WAY
- EXISTING EDGE OF PAVEMENT
- EXISTING EDGE OF GRAVEL SHOULDER
- WB EXISTING WETLAND BOUNDARY
- HVS HVS HIGH VISIBILITY SILT FENCE
- ? CONSTRUCTION NOTE

0 25 50
SCALE IN FEET

NOTES:

1. HIGH VISIBILITY SILT FENCE WILL BE STAKED BY THE ENGINEER PRIOR TO INSTALLATION.
2. SEE STANDARD PLAN I-30.17 FOR HIGH VISIBILITY SILT FENCE.
3. SEE TABLE ON SHEET EC2 FOR TESC PLAN QUANTITIES.

FILE NAME	G:\444301\05-Design\02-Projects\SR 500 182nd RAB\1-CADD-Plans\20-1.2 CAD Sheet Files\D50021R_SH_EC.dgn
TIME	8:34:48 AM
DATE	3/29/2022
PLOTTED BY	bournem
DESIGNED BY	MORGAN BOURNE
ENTERED BY	MORGAN BOURNE
CHECKED BY	ANDY ROMANCHOCK
PROJ. ENGR.	SUSAN FELL
REGIONAL ADM.	CARLEY FRANCIS

REVISION	DATE	BY

REGION NO.	STATE	FED.AID PROJ.NO.
10	WASH	HSIP-0500(029)
JOB NUMBER 21X327		
CONTRACT NO.		LOCATION NO. XL6488

SUSAN WAI LEONG FELL · STATE OF WASHINGTON · 16748 · REGISTERED PROFESSIONAL ENGINEER

SEE SHEET CT1
DATE
P.E. STAMP BOX

DATE
P.E. STAMP BOX

Washington State Department of Transportation

SR 500
NE 182ND AVE
INTERSECTION IMPROVEMENTS

TESC PLANS

PLOT 1
PLAN REF NO EC1
SHEET 41 OF 76 SHEETS

LEGEND

- EXISTING RIGHT OF WAY
- EXISTING CLARK COUNTY RIGHT OF WAY
- EXISTING TURNBACK LINE
- LEASE LINE
- EXISTING EDGE OF PAVEMENT
- EXISTING EDGE OF GRAVEL SHOULDER
- WB — EXISTING WETLAND BOUNDARY
- HVS — HVS — HIGH VISIBILITY SILT FENCE
- ? — CONSTRUCTION NOTE

CONSTRUCTION NOTES

1 HIGH VISIBILITY SILT FENCE (HVS)

TESC PLAN QUANTITIES - HIGH VISIBILITY SILT FENCE (HVS)	
LOCATION	QTY (L.F.)
RW 102+66 (14.5' LT) TO 116+72 (216' LT)	1510
RW 106+97 (20.3' RT) TO 108+58 (19.8' RT)	170
RW 109+17 (25.0' RT) TO 116+44 (27.0' RT)	730
P 0+08 (108' RT) TO 2+04 (24.1' RT)	180
TOTAL	2590

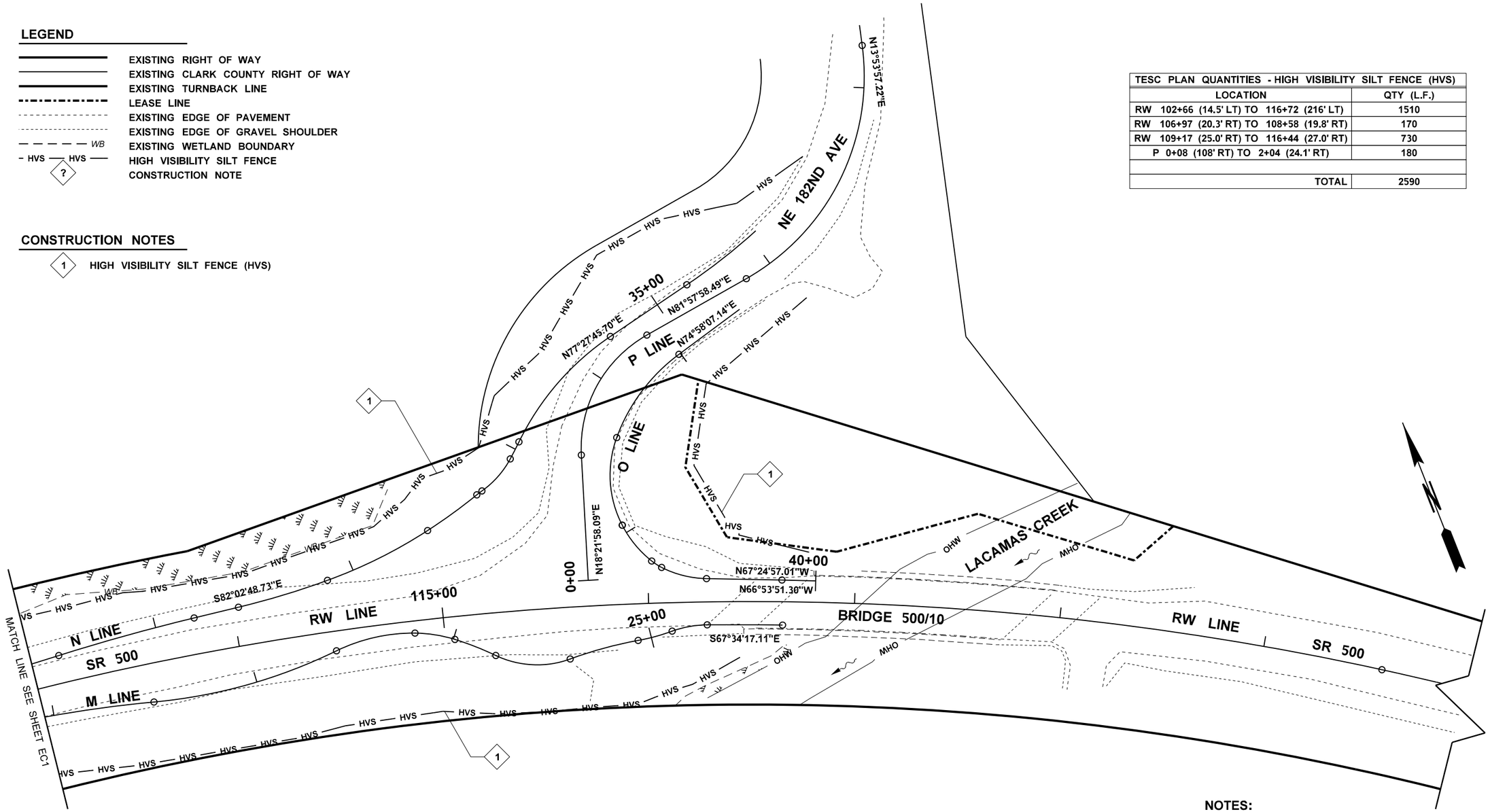

NOTES:

1. HIGH VISIBILITY SILT FENCE WILL BE STAKED BY THE ENGINEER PRIOR TO INSTALLATION.
2. SEE STANDARD PLAN I-30.17 FOR HIGH VISIBILITY SILT FENCE.

0 25 50
SCALE IN FEET

FILE NAME	G:\444301\05-Design\02-Projects\SR 500 182nd RAB\1-CADD-Plans\20-1.2 CAD Sheet Files\D50021R_SH_EC.dgn
TIME	8:34:49 AM
DATE	3/29/2022
PLOTTED BY	bournem
DESIGNED BY	MORGAN BOURNE
ENTERED BY	MORGAN BOURNE
CHECKED BY	ANDY ROMANCHOCK
PROJ. ENGR.	SUSAN FELL
REGIONAL ADM.	CARLEY FRANCIS

REVISION | DATE | BY

REGION NO. 10 | STATE WASH | FED.AID PROJ.NO. HSIP-0500(029)

JOB NUMBER 21X327

CONTRACT NO. | LOCATION NO. XL6488

SUSAN WAI LEONG FELL — STATE OF WASHINGTON — 16779 — REGISTERED PROFESSIONAL ENGINEER

SEE SHEET CT1 DATE
P.E. STAMP BOX

DATE
P.E. STAMP BOX

Washington State Department of Transportation

SR 500
NE 182ND AVE
INTERSECTION IMPROVEMENTS

TESC PLANS

PLOT 2
PLAN REF NO EC2
SHEET 42 OF 76 SHEETS

SECTION A-A*
DITCH SECTION
NOT TO SCALE

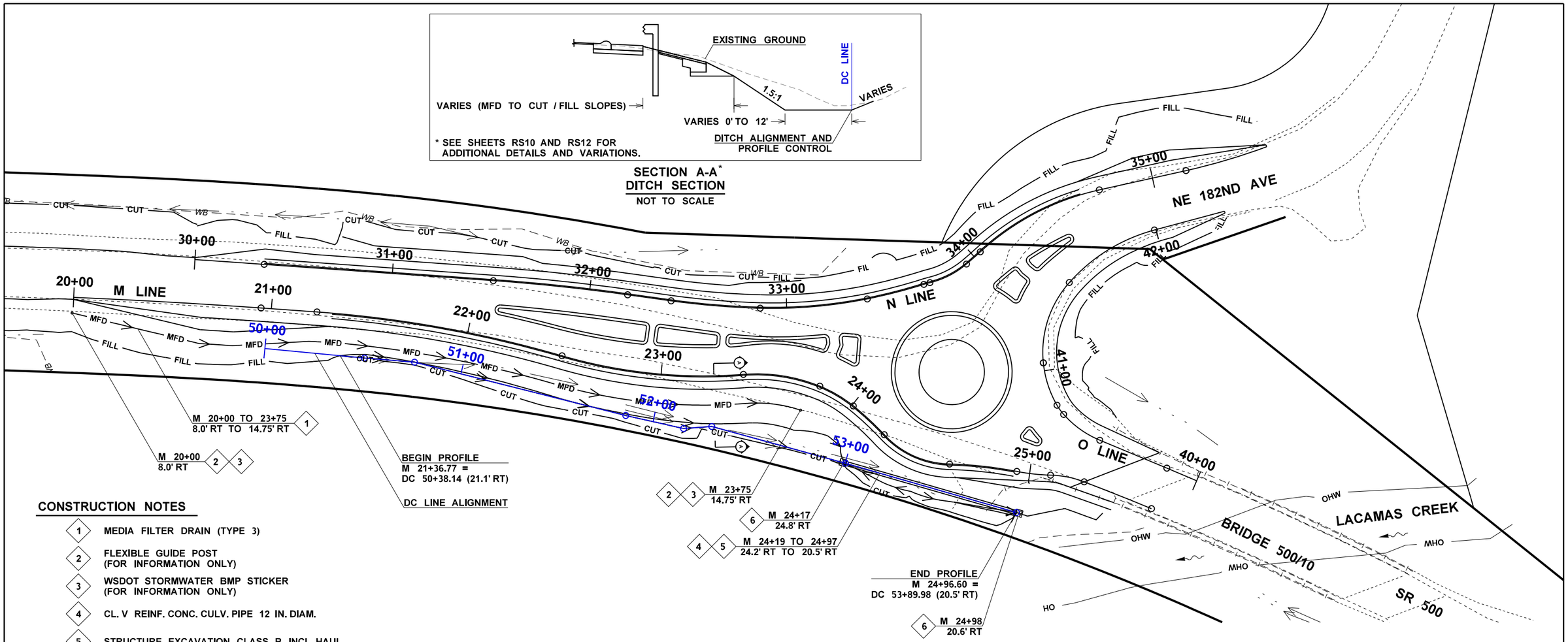

CONSTRUCTION NOTES

1. MEDIA FILTER DRAIN (TYPE 3)
2. FLEXIBLE GUIDE POST (FOR INFORMATION ONLY)
3. WSDOT STORMWATER BMP STICKER (FOR INFORMATION ONLY)
4. CL. V REINF. CONC. CULV. PIPE 12 IN. DIAM.
5. STRUCTURE EXCAVATION CLASS B INCL. HAUL
6. QUARRY SPALLS

DRAINAGE QUANTITIES

	ITEM	QTY	UNIT	NOTES
1	MEDIA FILTER DRAIN TYPE 3	372	L.F.	PAYMENT INCLUDES ITEMS 'FLEXIBLE GUIDE POST' AND 'WSDOT STORMWATER BMP STICKER'
2	FLEXIBLE GUIDE POST	2	EACH	INCIDENTAL TO 'MEDIA FILTER DRAIN TYPE 3' SEE STANDARD PLAN M-24.65 FLEXIBLE GUIDE POST DETAIL
3	WSDOT STORMWATER BMP STICKER	2	EACH	INCIDENTAL TO 'MEDIA FILTER DRAIN TYPE 3' SEE STANDARD PLAN M-24.65 WSDOT STORMWATER BMP STICKER DETAIL WSDOT STORMWATER BMP STICKER LABEL SHALL SHOW 'MEDIA FILTER DRAIN'
4	CL. V REINF. CONC. CULV. PIPE 12 IN. DIAM.	90	L.F.	CULVERT ENDS SHALL BE BEVELED TO MATCH PROPOSED SLOPES SEE STANDARD PLAN B-55.20 FOR PIPE ZONE BEDDING AND BACKFILL SEE STANDARD PLAN B-70.20 FOR BEVELED END SECTIONS
5	STRUCTURE EXCAVATION CLASS B INCL. HAUL	35	C.Y.	SEE STANDARD PLAN B-55.20 FOR PIPE ZONE BEDDING AND BACKFILL
6	QUARRY SPALLS	37	TON	QUARRY SPALL PAD SHALL BE INSTALLED AT EACH CULVERT END SEE SHEET DR3 FOR QUARRY SPALL PAD DETAIL

LEGEND

- EXISTING RIGHT OF WAY
- EXISTING CLARK COUNTY RIGHT OF WAY
- EXISTING TURNBACK LINE
- EXISTING EDGE OF PAVEMENT
- EXISTING EDGE OF GRAVEL SHOULDER
- EXISTING BOTTOM OF DITCH
- WB — EXISTING WETLAND BOUNDARY
- BOTTOM OF DITCH
- MFD — MEDIA FILTER DRAIN (TYPE 3)
- CUT — CUT LINE
- FILL — FILL LINE
- FLEXIBLE GUIDE POST
- CONCRETE CULVERT
- QUARRY SPALLS
- ? — CONSTRUCTION NOTE

NOTES:

1. SEE SPECIAL PROVISIONS - 'MEDIA FILTER DRAIN'.
2. SEE SHEET DR2 FOR PROPOSED DITCH AND CULVERT PROFILE.
3. SEE SHEET DR3 FOR MEDIA FILTER DRAIN AND QUARRY SPALL PAD DETAILS.

N

0 25 50
SCALE IN FEET

FILE NAME	G:\444301\05-Design\02-Projects\SR 500 182nd RAB\1-CADD-Plans\20-1.2 CAD Sheet Files\D50021R_SH_DR.dgn
TIME	8:35:11 AM
DATE	3/29/2022
PLOTTED BY	bournem
DESIGNED BY	MORGAN BOURNE
ENTERED BY	MORGAN BOURNE
CHECKED BY	ANDY ROMANCHOCK
PROJ. ENGR.	SUSAN FELL
REGIONAL ADM.	CARLEY FRANCIS

REVISION | DATE | BY

REGION NO. 10 | STATE WASH | FED.AID PROJ.NO. HSIP-0500(029)

JOB NUMBER 21X327

CONTRACT NO. | LOCATION NO. XL6488

SUSAN WAI LEONG FELL — STATE OF WASHINGTON — 38748 — REGISTERED PROFESSIONAL ENGINEER

SEE SHEET CT1
DATE
P.E. STAMP BOX

DATE
P.E. STAMP BOX

Washington State Department of Transportation

SR 500
NE 182ND AVE
INTERSECTION IMPROVEMENTS

DRAINAGE PLAN

PLOT 1
PLAN REF NO DR1
SHEET 43 OF 76 SHEETS

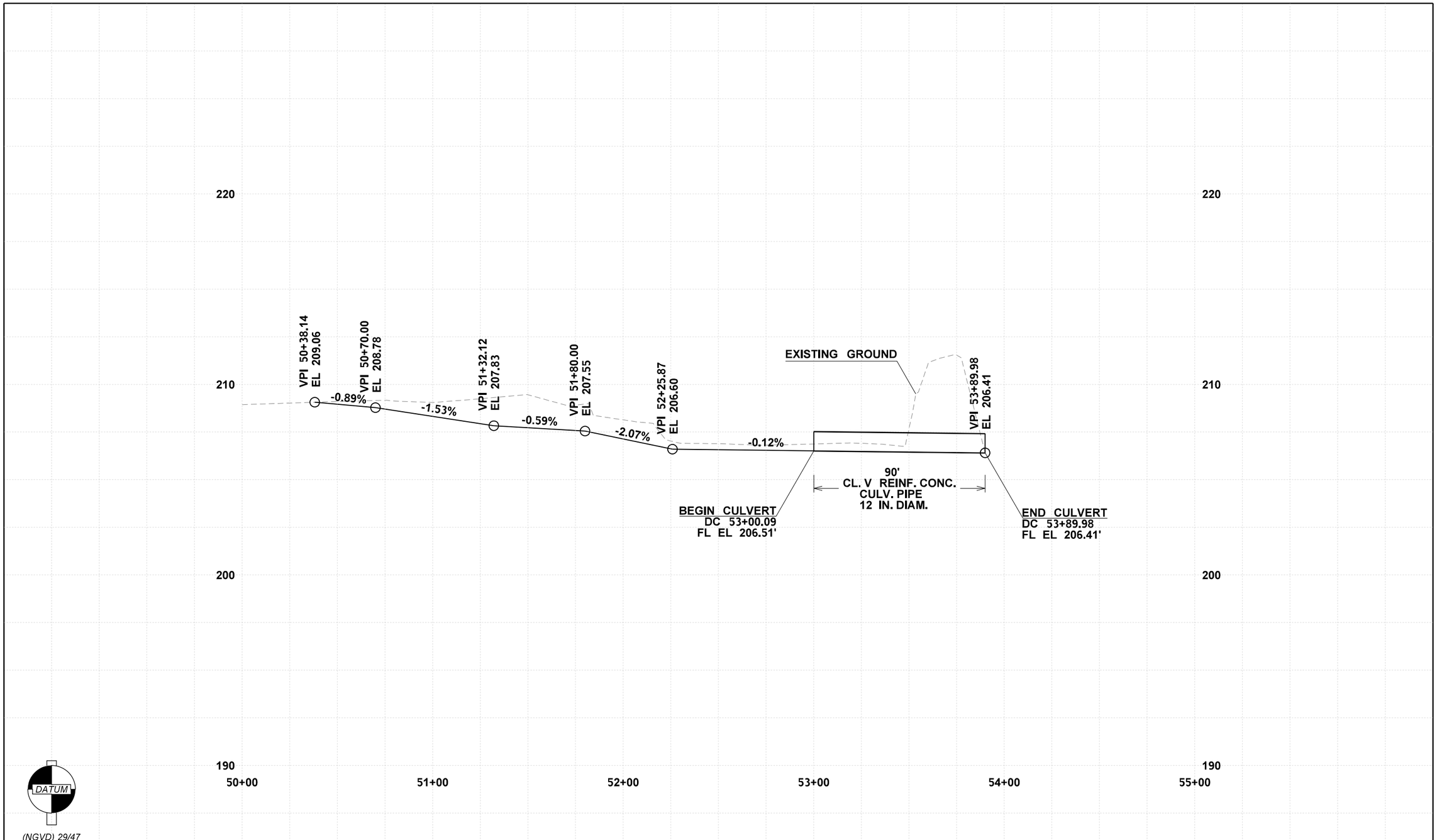

DC LINE - PROPOSED DITCH AND CULVERT PROFILE

FILE NAME	G:\444301\05-Design\02-Projects\SR 500 182nd RAB\1-CADD-Plans\20-1.2 CAD Sheet Files\D50021R_SH_DR.dgn				REGION NO. 10	STATE WASH	FED.AID PROJ.NO. HSIP-0500(029)
TIME	8:35:12 AM				JOB NUMBER 21X327		
DATE	3/29/2022				CONTRACT NO.		LOCATION NO. XL6488
PLOTTED BY	bournem						
DESIGNED BY	MORGAN BOURNE						
ENTERED BY	MORGAN BOURNE						
CHECKED BY	ANDY ROMANCHOCK						
PROJ. ENGR.	SUSAN FELL						
REGIONAL ADM.	CARLEY FRANCIS	REVISION	DATE	BY			

SUSAN WAI LEONG FELL — STATE OF WASHINGTON — 36748 — REGISTERED PROFESSIONAL ENGINEER

SEE SHEET CT1
DATE
P.E. STAMP BOX

DATE
P.E. STAMP BOX

Washington State
Department of Transportation

SR 500
NE 182ND AVE
INTERSECTION IMPROVEMENTS

DRAINAGE PROFILE

PLOT 2
PLAN REF. NO. DR2
SHEET 44 OF 76 SHEETS

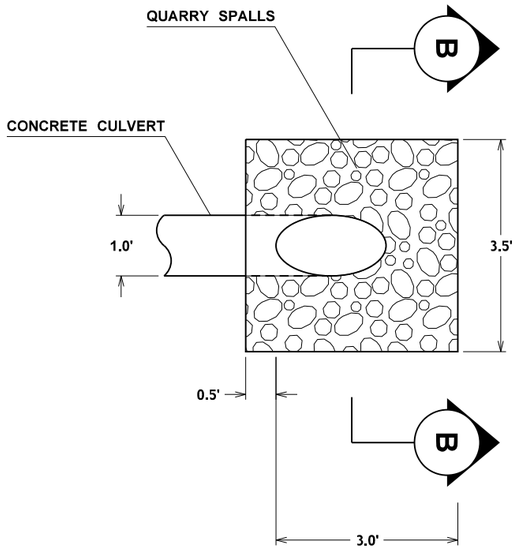

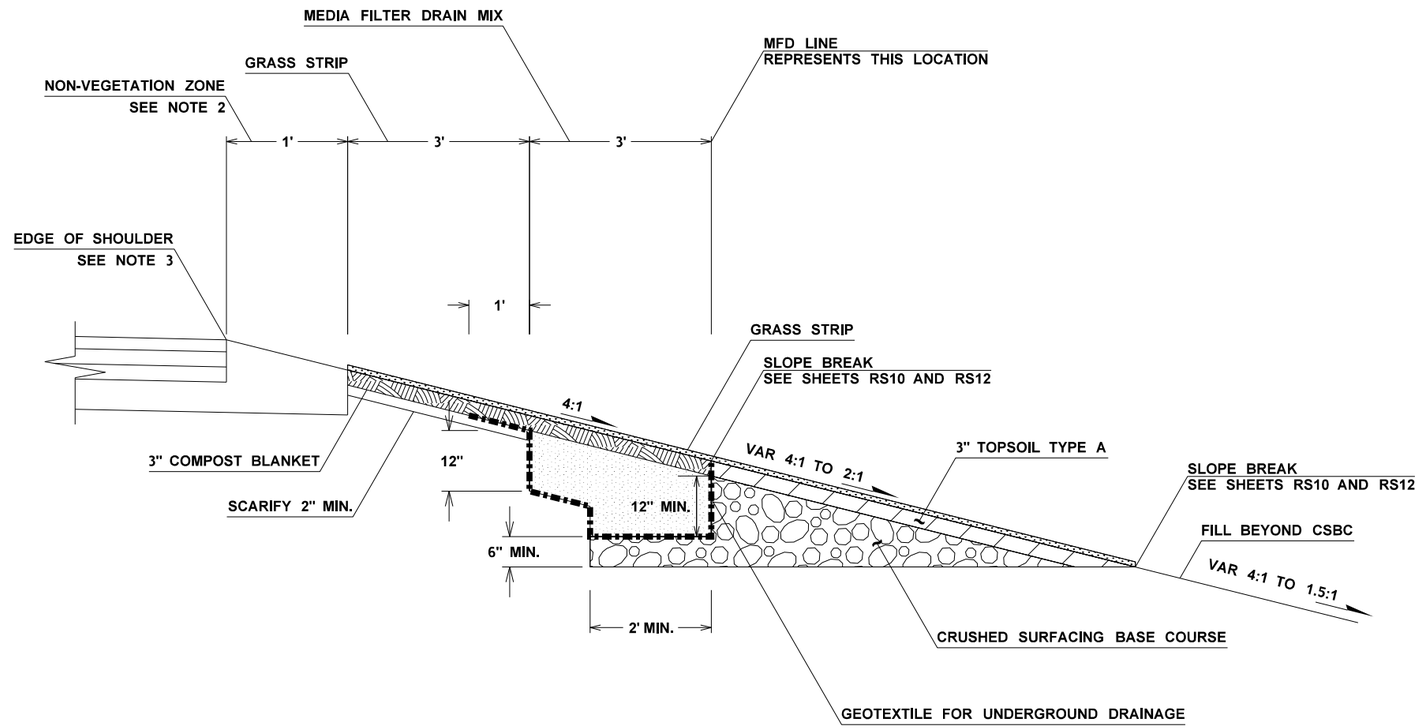

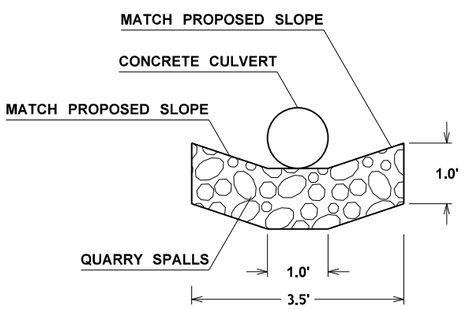

SECTION B-B

QUARRY SPALL PAD

NOT TO SCALE

MEDIA FILTER DRAIN (TYPE 3)

NOT TO SCALE

NOTES:

1. SEE SHEETS RS10 AND RS12 FOR MEDIA FILTER DRAIN SLOPE DETAILS AND VARIATIONS.
2. THE NON-VEGETATION ZONE WIDTH SHALL BE 2 FEET WHEN ADJACENT TO GUARDRAIL INSTALLATIONS. SEE SHEETS RS10 AND RS12 FOR DETAILS.
3. A 1-INCH VERTICAL DROP SHALL BE PROVIDED BETWEEN THE EDGE OF PAVEMENT AND NON-VEGETATION ZONE.

FILE NAME	G:\444301\05-Design\02-Projects\SR 500 182nd RAB\1-CADD-Plans\20-1.2 CAD Sheet Files\D50021R_SH_DR.dgn				REGION NO. 10	STATE WASH	FED.AID PROJ.NO. HSIP-0500(029)
TIME	8:35:13 AM				JOB NUMBER 21X327		
DATE	3/29/2022				CONTRACT NO.		LOCATION NO. XL6488
PLOTTED BY	bournem						
DESIGNED BY	MORGAN BOURNE						
ENTERED BY	MORGAN BOURNE						
CHECKED BY	ANDY ROMANCHOCK						
PROJ. ENGR.	SUSAN FELL						
REGIONAL ADM.	CARLEY FRANCIS	REVISION	DATE	BY			

SUSAN WAI LEONG FELL — STATE OF WASHINGTON — 36748 — REGISTERED PROFESSIONAL ENGINEER

SEE SHEET CT1 DATE
P.E. STAMP BOX

DATE
P.E. STAMP BOX

Washington State Department of Transportation

SR 500
NE 182ND AVE
INTERSECTION IMPROVEMENTS

DRAINAGE DETAILS

PLOT 3
PLAN REF NO DR3
SHEET 45 OF 76 SHEETS

1 3 4 9

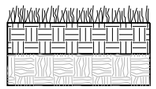

SURFACE WEED FREE PRIOR TO TOPSOIL PLACEMENT

SEEDING, FERTILIZING, AND MULCHING AS NOTED ON PLANS (SEE CONTRACT PROVISIONS)

TOPSOIL TYPE A (3-INCH SETTLED DEPTH)

SUBGRADE AFTER FILL REMOVAL AND CLEARING. ROTOTILL SUBGRADE TO MIN. 8" DEPTH WHERE SHOWN ON PLAN

TOPSOIL & SEED PLACEMENT (1)

NOT TO SCALE

4 5

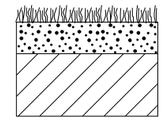

SEEDING, FERTILIZING, AND MULCHING AS NOTED ON PLANS (SEE CONTRACT PROVISIONS)

COMPOST BLANKET (3-INCH SETTLED DEPTH)
* DO NOT INCORPORATE *

MFD AS SHOWN ON PLANS

COMPOST BLANKET PLACEMENT, SEEDING (MFD) (2)

NOT TO SCALE

1 5 6 7 8 9

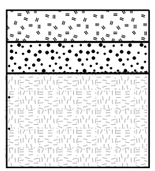

SURFACE WEED FREE PRIOR TO TOPSOIL AND COMPOST PLACEMENT

BARK MULCH (3 INCH SETTLED DEPTH)

COMPOST BLANKET (3-INCH SETTLED DEPTH). BARE SOIL CONDITION PRIOR TO COMPOST PLACEMENT.
* DO NOT INCORPORATE *

SUBGRADE AFTER FILL REMOVAL AND CLEARING. ROTOTILL SUBGRADE TO MIN. 8" DEPTH WHERE SHOWN ON PLAN

COMPOST BLANKET & BARK MULCH PLACEMENT (3)

NOT TO SCALE

2

10' TARGETED SELECTIVE CLEARING AND BARK MULCH. CLEAR 10' DIAMETER CIRCLE OF ALL GRASS AND WEEDS, REMOVE SOD TO A DEPTH OF 3 INCHES. APPLY 3-INCH SETTLED DEPTH OF COMPOST AT CENTER AS SHOWN. APPLY 3-INCH SETTLED DEPTH BARK MULCH CIRCLE PRIOR TO PLANTING TO COVER ENTIRE AREA INCLUDING INNER COMPOST CIRCLE.

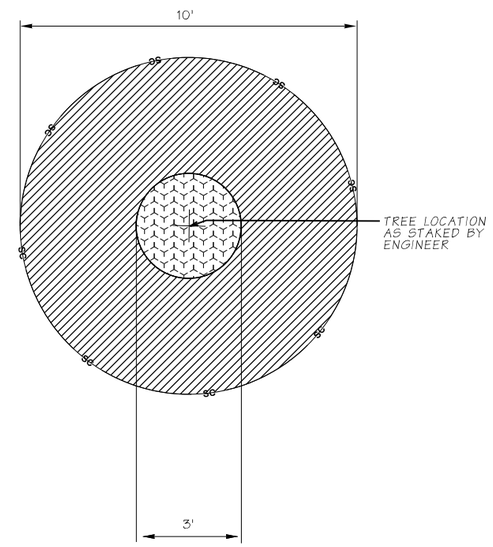

3' COMPOST AT 3-INCH SETTLED DEPTH CENTERED ON TREE LOCATION. BARK MULCH SHALL COVER COMPOST AREA.

SELECTIVE CLEARING AND PLANTING (4)

NOT TO SCALE

SUMMARY OF QUANTITIES

ITEM	UNIT	QTY NA1	QTY NA2	TOTAL
TOPSOIL TYPE A (3 INCH SETTLED DEPTH)	ACRES	0.22	0.16	0.38
SEEDING, FERTILIZING AND MULCHING	ACRES	0.22	0.30	0.52
COMPOST BLANKET	SY	25	1310	1335
BARK MULCH	ACRES	0.005	0.13	0.135

CONSTRUCTION NOTES

1. SOIL PREPARATION TO PRODUCE BARE SOIL CONDITION. SEE SECTION 8-02.3(5) OF THE STANDARD SPECIFICATIONS AND CONTRACT PROVISIONS.
2. TARGETED SELECTIVE CLEARING AND BARK MULCH WHERE STAKED BY ENGINEER. SEE CONTRACT PROVISIONS.
3. TOPSOIL TYPE 'A', 3 INCH SETTLED DEPTH. SEE SECTION 8-02.3(4)A OF THE STANDARD SPECIFICATIONS AND CONTRACT PROVISIONS.
4. SEEDING, FERTILIZING AND MULCHING PER SECTION 8-02.3(9) OF CONTRACT PROVISIONS.
5. COMPOST BLANKET, 3 INCH SETTLED DEPTH. SEE SECTION 8-01.3(4) OF THE STANDARD SPECIFICATIONS AND CONTRACT PROVISIONS.
6. COMPOST BLANKET, 3 INCH SETTLED DEPTH, 3' DIAMETER CIRCLES AROUND TREE PLANTING LOCATIONS AS STAKED BY ENGINEER. SEE SECTION 8-01.3(4) OF THE STANDARD SPECIFICATIONS AND CONTRACT PROVISIONS.
7. BARK MULCH, 3 INCH SETTLED DEPTH, 10' DIAMETER CIRCLES AROUND TREE PLANTING LOCATIONS AS STAKED BY ENGINEER. SEE SECTION 8-02.3(11)C OF THE STANDARD SPECIFICATIONS AND CONTRACT PROVISIONS.
8. BARK MULCH, 3 INCH SETTLED DEPTH. SEE SECTION 8-02.3(11)B OF THE STANDARD SPECIFICATIONS AND CONTRACT PROVISIONS.
9. ROTOTILL CLEARED SUB-GRADE TO A MINIMUM DEPTH OF 8-INCHES. RAKE AND REMOVE ALL SPALLS, GRAVEL, AND OTHER ANGULAR ROCK, NATURAL ROCKS LARGER THAN 2-INCHES IN DIAMETER, CONSTRUCTION DEBRIS, WOODY DEBRIS, THATCH, AND OTHER VEGETATION. DISPOSE OUTSIDE OF THE PROJECT LIMITS.

FILE NAME	G:\RoadsIde\01_ projects\500\SR-500 NE 182nd Roundabout\DesIgn\CAD\D50021R_SH_RoadsIde.dgn
TIME	1:58:16 PM
DATE	3/22/2022
PLOTTED BY	knappb
DESIGNED BY	B KNAPP
ENTERED BY	B KNAPP
CHECKED BY	D CORLETT
PROJ. ENGR.	SUSAN FELL
REGIONAL ADM.	CARLEY FRANCIS

REVISION | DATE | BY

REGION NO. 10 | STATE WASH | JOB NUMBER 21X327 | CONTRACT NO.

FED.AID PROJ.NO. HSIP-0500(029)

LOCATION NO. XL6488

STATE OF WASHINGTON DANIEL R CORLETT NO. 375 EXP. 10/29/2022 LANDSCAPE ARCHITECT

SEE SHEET CT1

DATE

P.E. STAMP BOX

DATE

P.E. STAMP BOX

Washington State Department of Transportation

SR 500
NE 182ND AVE
INTERSECTION IMPROVEMENTS

SOIL PREPARATION PLAN

Plot 1

PLAN REF NO NA1

SHEET 46 OF 75 SHEETS

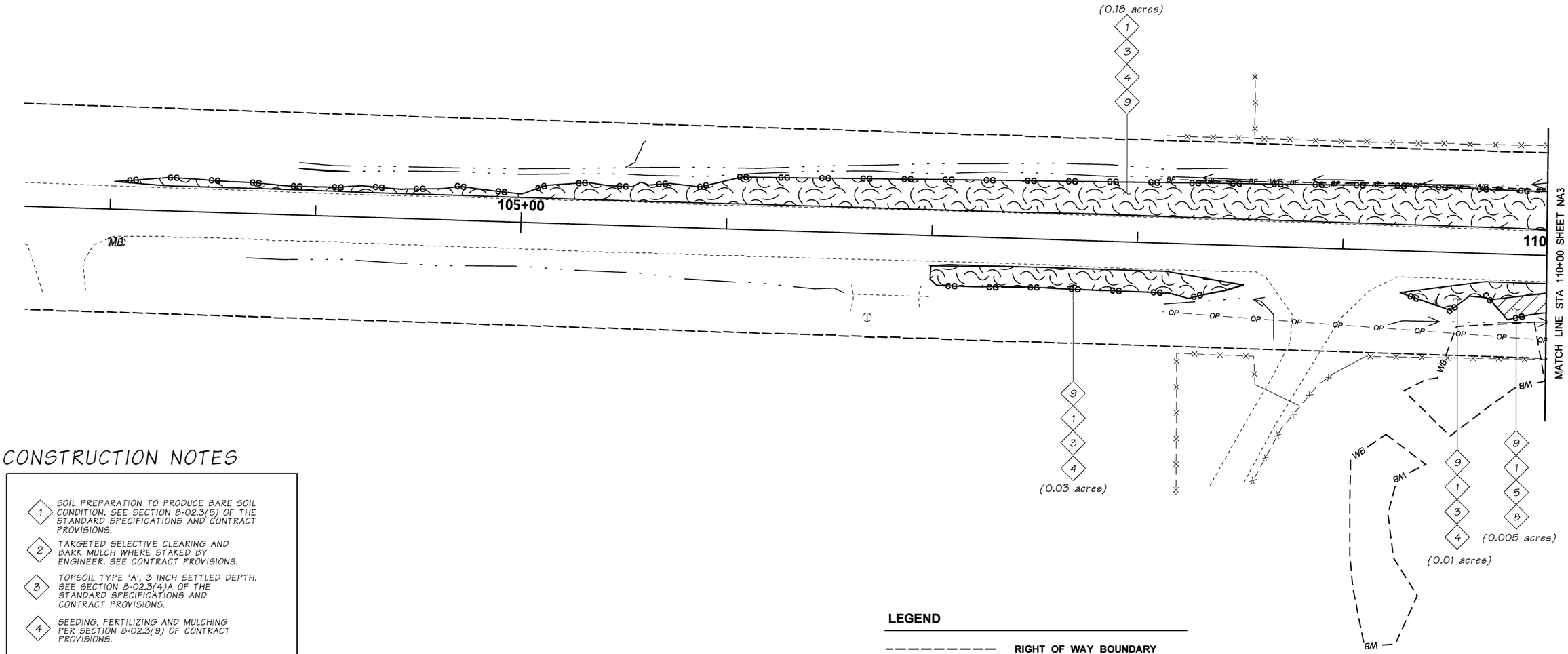

CONSTRUCTION NOTES

1. SOIL PREPARATION TO PRODUCE BARE SOIL CONDITION. SEE SECTION 8-02.3(5) OF THE STANDARD SPECIFICATIONS AND CONTRACT PROVISIONS.
2. TARGETED SELECTIVE CLEARING AND BARK MULCH WHERE STAKED BY ENGINEER. SEE CONTRACT PROVISIONS.
3. TOPSOIL TYPE 'A', 3 INCH SETTLED DEPTH. SEE SECTION 8-02.3(4)A OF THE STANDARD SPECIFICATIONS AND CONTRACT PROVISIONS.
4. SEEDING, FERTILIZING AND MULCHING PER SECTION 8-02.3(9) OF CONTRACT PROVISIONS.
5. COMPOST BLANKET, 3 INCH SETTLED DEPTH. SEE SECTION 8-01.3(4) OF THE STANDARD SPECIFICATIONS AND CONTRACT PROVISIONS.
6. COMPOST BLANKET, 3 INCH SETTLED DEPTH, 3' DIAMETER CIRCLES AROUND TREE PLANTING LOCATIONS AS STAKED BY ENGINEER. SEE SECTION 8-01.3(4) OF THE STANDARD SPECIFICATIONS AND CONTRACT PROVISIONS.
7. BARK MULCH, 3 INCH SETTLED DEPTH, 10' DIAMETER CIRCLES AROUND TREE PLANTING LOCATIONS AS STAKED BY ENGINEER. SEE SECTION 8-02.3(11)C OF THE STANDARD SPECIFICATIONS AND CONTRACT PROVISIONS.
8. BARK MULCH, 3 INCH SETTLED DEPTH. SEE SECTION 8-02.3(11)B OF THE STANDARD SPECIFICATIONS AND CONTRACT PROVISIONS.
9. ROTOTILL CLEARED SUB-GRADE TO A MINIMUM DEPTH OF 8-INCHES. RAKE AND REMOVE ALL SPALLS, GRAVEL, AND OTHER ANGULAR ROCK, NATURAL ROCKS LARGER THAN 2-INCHES IN DIAMETER, CONSTRUCTION DEBRIS, WOODY DEBRIS, THATCH, AND OTHER VEGETATION. DISPOSE OUTSIDE OF THE PROJECT LIMITS.

QUANTITIES THIS SHEET

ITEM	UNIT	QTY
TOPSOIL TYPE A (3 INCH SETTLED DEPTH)	ACRES	0.22
SEEDING, FERTILIZING AND MULCHING	ACRES	0.22
COMPOST BLANKET	SY	25
BARK MULCH	ACRES	0.005

LEGEND

- RIGHT OF WAY BOUNDARY
- SHOULDER GRAVEL EDGE
- EDGE OF PAVEMENT
- GUARDRAIL
- DITCH BOTTOM
- OHW — ORDINARY HIGH WATER LINE
- CG — CLEAR AND GRUB LINE
- WB — WETLAND BOUNDARY
- EXISTING TREES TO BE PROTECTED
- OP — OVERHEAD POWERLINE
- FENCELINE
- MFD — MEDIA FILTER DRAIN

N

0 25 50
SCALE IN FEET

FILE NAME	G:\Roadside\01_ projects\500\SR-500 NE 182nd Roundabout\Design\CAD\D50021R_SH_Roadside.dgn
TIME	1:59:02 PM
DATE	3/22/2022
PLOTTED BY	knappb
DESIGNED BY	B KNAPP
ENTERED BY	B KNAPP
CHECKED BY	D CORLETT
PROJ. ENGR.	SUSAN FELL
REGIONAL ADM.	CARLEY FRANCIS

REVISION | DATE | BY

REGION NO. 10 | STATE WASH | FED.AID PROJ.NO. HSIP-0500(029)

JOB NUMBER 21X327

CONTRACT NO.

LOCATION NO. XL6488

STATE OF WASHINGTON DANIEL R CORLETT 40725 EXP 10/20/22 LANDSCAPE ARCHITECT

P.E. STAMP BOX

SEE SHEET CT1

DATE

P.E. STAMP BOX

DATE

Washington State Department of Transportation

SR 500
NE 182ND AVE
INTERSECTION IMPROVEMENTS

SOIL PREPARATION PLAN

Plot 2

PLAN REF NO NA2

SHEET 47 OF 76 SHEETS

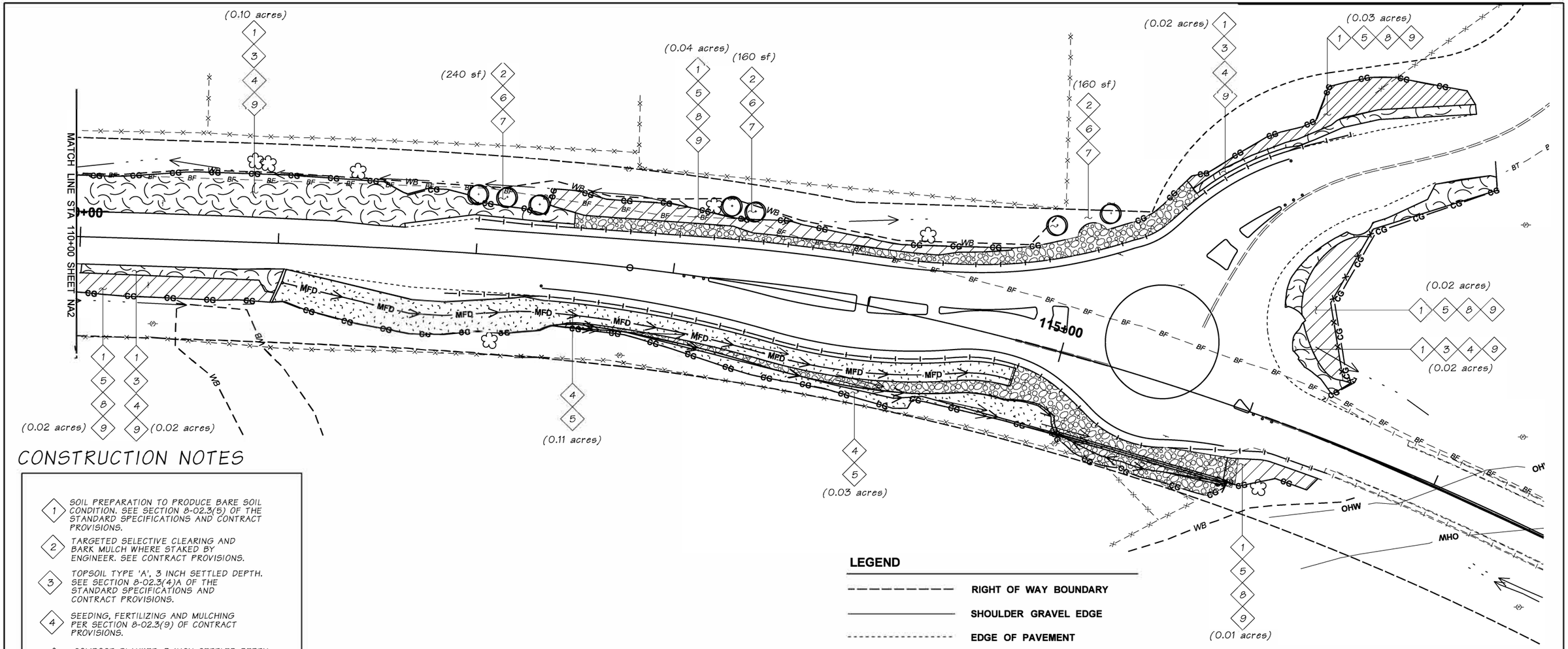

CONSTRUCTION NOTES

1. SOIL PREPARATION TO PRODUCE BARE SOIL CONDITION. SEE SECTION 8-02.3(5) OF THE STANDARD SPECIFICATIONS AND CONTRACT PROVISIONS.
2. TARGETED SELECTIVE CLEARING AND BARK MULCH WHERE STAKED BY ENGINEER. SEE CONTRACT PROVISIONS.
3. TOPSOIL TYPE 'A', 3 INCH SETTLED DEPTH. SEE SECTION 8-02.3(4)A OF THE STANDARD SPECIFICATIONS AND CONTRACT PROVISIONS.
4. SEEDING, FERTILIZING AND MULCHING PER SECTION 8-02.3(9) OF CONTRACT PROVISIONS.
5. COMPOST BLANKET, 3 INCH SETTLED DEPTH. SEE SECTION 8-01.3(4) OF THE STANDARD SPECIFICATIONS AND CONTRACT PROVISIONS.
6. COMPOST BLANKET, 3 INCH SETTLED DEPTH, 3' DIAMETER CIRCLES AROUND TREE PLANTING LOCATIONS AS STAKED BY ENGINEER. SEE SECTION 8-01.3(4) OF THE STANDARD SPECIFICATIONS AND CONTRACT PROVISIONS.
7. BARK MULCH, 3 INCH SETTLED DEPTH, 10' DIAMETER CIRCLES AROUND TREE PLANTING LOCATIONS AS STAKED BY ENGINEER. SEE SECTION 8-02.3(11)C OF THE STANDARD SPECIFICATIONS AND CONTRACT PROVISIONS.
8. BARK MULCH, 3 INCH SETTLED DEPTH. SEE SECTION 8-02.3(11)B OF THE STANDARD SPECIFICATIONS AND CONTRACT PROVISIONS.
9. ROTOTILL CLEARED SUB-GRADE TO A MINIMUM DEPTH OF 8-INCHES. RAKE AND REMOVE ALL SPALLS, GRAVEL, AND OTHER ANGULAR ROCK, NATURAL ROCKS LARGER THAN 2-INCHES IN DIAMETER, CONSTRUCTION DEBRIS, WOODY DEBRIS, THATCH, AND OTHER VEGETATION. DISPOSE OUTSIDE OF THE PROJECT LIMITS.

QUANTITIES THIS SHEET

ITEM	UNIT	QTY
TOPSOIL TYPE A (3 INCH SETTLED DEPTH)	ACRES	0.16
SEEDING, FERTILIZING AND MULCHING	ACRES	0.30
COMPOST BLANKET	SY	1310
BARK MULCH	ACRES	0.13

LEGEND

- RIGHT OF WAY BOUNDARY
- SHOULDER GRAVEL EDGE
- EDGE OF PAVEMENT
- GUARDRAIL
- DITCH BOTTOM
- OHW — ORDINARY HIGH WATER LINE
- SC — SELECTIVE CLEARING
- CG — CLEARING AND GRUBBING
- WB — WETLAND BOUNDARY
- EXISTING TREES TO BE PROTECTED
- OP — OVERHEAD POWERLINE
- FENCELINE
- MFD — MEDIA FILTER DRAIN
- TARGETED TREE PLANTING AS STAKED BY ENGINEER

N

0 25 50
SCALE IN FEET

FILE NAME	G:\Roadside\01_ projects\500\SR-500 NE 182nd Roundabout\Design\CAD\D50021R_SH_Roadside.dgn
TIME	1:59:32 PM
DATE	3/22/2022
PLOTTED BY	knappb
DESIGNED BY	B KNAPP
ENTERED BY	B KNAPP
CHECKED BY	D CORLETT
PROJ. ENGR.	SUSAN FELL
REGIONAL ADM.	CARLEY FRANCIS

REVISION | DATE | BY

REGION NO. 10 | STATE WASH | JOB NUMBER 21X327 | CONTRACT NO.

FED.AID PROJ.NO. HSIP-0500(029)

LOCATION NO. XL6488

STATE OF WASHINGTON DANIEL R. CORLETT NO. 725 EXP 10/22/22 LANDSCAPE ARCHITECT

SEE SHEET CT1

P.E. STAMP BOX — DATE

P.E. STAMP BOX — DATE

Washington State Department of Transportation

SR 500
NE 182ND AVE
INTERSECTION IMPROVEMENTS

SOIL PREPARATION PLAN

Plot 3

PLAN REF NO NA3

SHEET 48 OF 76 SHEETS

ROADSIDE RESTORATION PLANT MATERIAL SCHEDULE

Symbol	Plant Code	Botanical Name	Common Name	Height	Root Type	A.S.N.S.	Spacing	Layout	Notes	Percent of mix	Total in mix
N/A	TREES (TMR)	Fraxinus latifolia	Oregon Ash	#7 min. (6' min.)	Cont.	2.1.2 Type 1	where staked	na	3/4 inch caliper min.	na	16
		Pseudotsuga menziesii	Douglas Fir	#7 min. (3' min.)	Cont.	4.7.2 Type 4	where staked	na	min. 24" spread Natural, unsheared	na	5
		Acer circinatum	Vine Maple	#5 min. (4' min)	Cont.	2.3.2 Type 3	where staked	na	Min. 9/16 inch caliper 6 branches		7
		Frangula purshiana	Cascara	#5 min. (4' min)	Cont.	2.3.2 Type 3	where staked	na	Min. 9/16 inch caliper 6 branches	na	7
	SHRUBS (SMA)	Mahonia aquifolium	Tall Oregon Grape	#1 (9" min.)	Cont.	5.7.2 Type 4	3' oc where staked	triangle	3 stems min.	5%	40
		Oemleria cerasiformes	Osoberry	24" - 36"	B.R.	3.3.2 Type 2	3' oc	triangle	3 canes min.	10%	50
		Polystichum munitum	Sword Fern	#1	Cont.		3' oc	triangle	5 fronds min.	10%	60
		Rosa nutkana	Nootka Rose	24" - 36"	B.R.	3.3.2 Type 2	3' oc	triangle	3 canes min.	20%	100
		Spiraea douglasii	Douglas' Spiraea	#1	Cont.	3.3.2 Type 2	3' oc	triangle	4 canes min.	5%	25
		Symphoricarpos albus	Snowberry	24"-36"	B.R.	3.3.2 Type 2	3' oc	triangle	4 canes min.	50%	250
	SHRUBS (SMB)	Symphoricarpos albus	Snowberry	#1	Cont.	3.3.2 Type 2	3' oc	triangle	4 canes min.	50%	30
		Mahonia aquifolium	Tall Oregon Grape	#1 (9" min.)	Cont.	5.7.2 Type 4	3' oc where staked	triangle	3 stems min.	50%	30
N/A	EMERGENT (EM)	Carex obnupta	Slough Sedge	10"	Plugs		18" oc	triangle	4" min. root depth, 6" min. top growth	na	200

B&B Balled and Burlaped
B.R. Bare Root
Cont. Container
O.C. On Center
A.S.N.S. American Standards for Nursery Stock

PLANTING NOTES:

1. All material shall meet the requirements of the American Standard Nursery Stock, April 14, 2014. Conflicts between the ASNS and these specifications, then these specifications shall apply.A letter of compliance with the "American Standard of Nursery Stock" is required from the supplier for all plant material.

2. All plant material shall be nursery grown stock. Container plant material shall be well rooted in pot and meet requirements of Section 9-14.7(1) and 9-14.7(2) of the contract provisions.

3. Planting areas shall be staked by contractor and approved by the Engineer prior to planting.

4. No plant material shall be planted until it has been inspected and approved for planting by the Engineer.

5. Plant material shall be stored and handled per section 9-14.7(3) of the contract provisions.

6. Plant material shall be installed per section 8-02.3(8) of the standard specifications and contract provisions.

7. Plants to be randomly mixed within designated plant groups as approved by the Engineer unless specified otherwise.
Completely remove burlap, wire baskets, plastic, string or wire lacing fromthe plant material and planting hole.
Roots of bareroot stock shall not be bunched, curled, twisted, or unreasonably bent when placed in the planting hole.
Loosen sides and roots of container plants prior to installation, cut circling roots.
All plant crowns to be free of bark mulch.

8. See planting details and contract provisions. All Douglas Fir shall be staked per the detail. No other trees shall require staking.

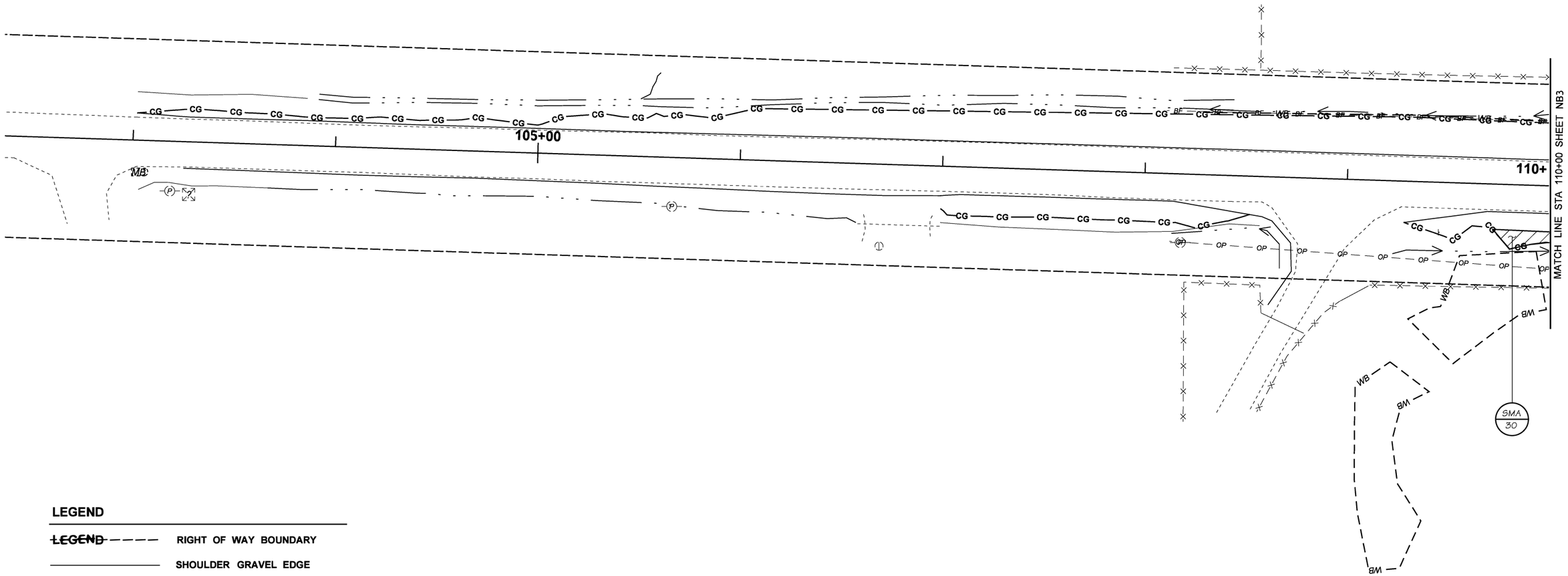

LEGEND

~~LEGEND~~	RIGHT OF WAY BOUNDARY
	SHOULDER GRAVEL EDGE
	EDGE OF PAVEMENT
	GUARDRAIL
	DITCH BOTTOM
OHW	ORDINARY HIGH WATER LINE
SC	SELECTIVE CLEARING
CG CG	CLEARING AND GRUBBING
WB	WETLAND BOUNDARY
	EXISTING TREES TO BE PROTECTED
OP	OVERHEAD POWERLINE
	FENCELINE
MFD MFD	MEDIA FILTER DRAIN

N

0 25 50
SCALE IN FEET

FILE NAME	G:\Roadside\01_ projects\500\SR-500 NE 182nd Roundabout\Design\CAD\D50021R_SH_Roadside.dgn				REGION NO. 10	STATE WASH	FED.AID PROJ.NO. HSIP-0500(029)
TIME	2:00:46 PM						
DATE	3/22/2022						
PLOTTED BY	knappb				JOB NUMBER 21X327		
DESIGNED BY	B KNAPP						
ENTERED BY	B KNAPP						
CHECKED BY	D CORLETT				CONTRACT NO.		LOCATION NO. XL6488
PROJ. ENGR.	SUSAN FELL						
REGIONAL ADM.	CARLEY FRANCIS	REVISION	DATE	BY			

STATE OF WASHINGTON DANIEL R CORLETT NO. 725 EXP. 10/22/2022 LANDSCAPE ARCHITECT

SEE SHEET CT1
DATE
P.E. STAMP BOX

DATE
P.E. STAMP BOX

Washington State Department of Transportation

SR 500
NE 182ND AVE
INTERSECTION IMPROVEMENTS

PLANTING PLAN

Plot 6
PLAN REF NO NB2
SHEET 50 OF 76 SHEETS

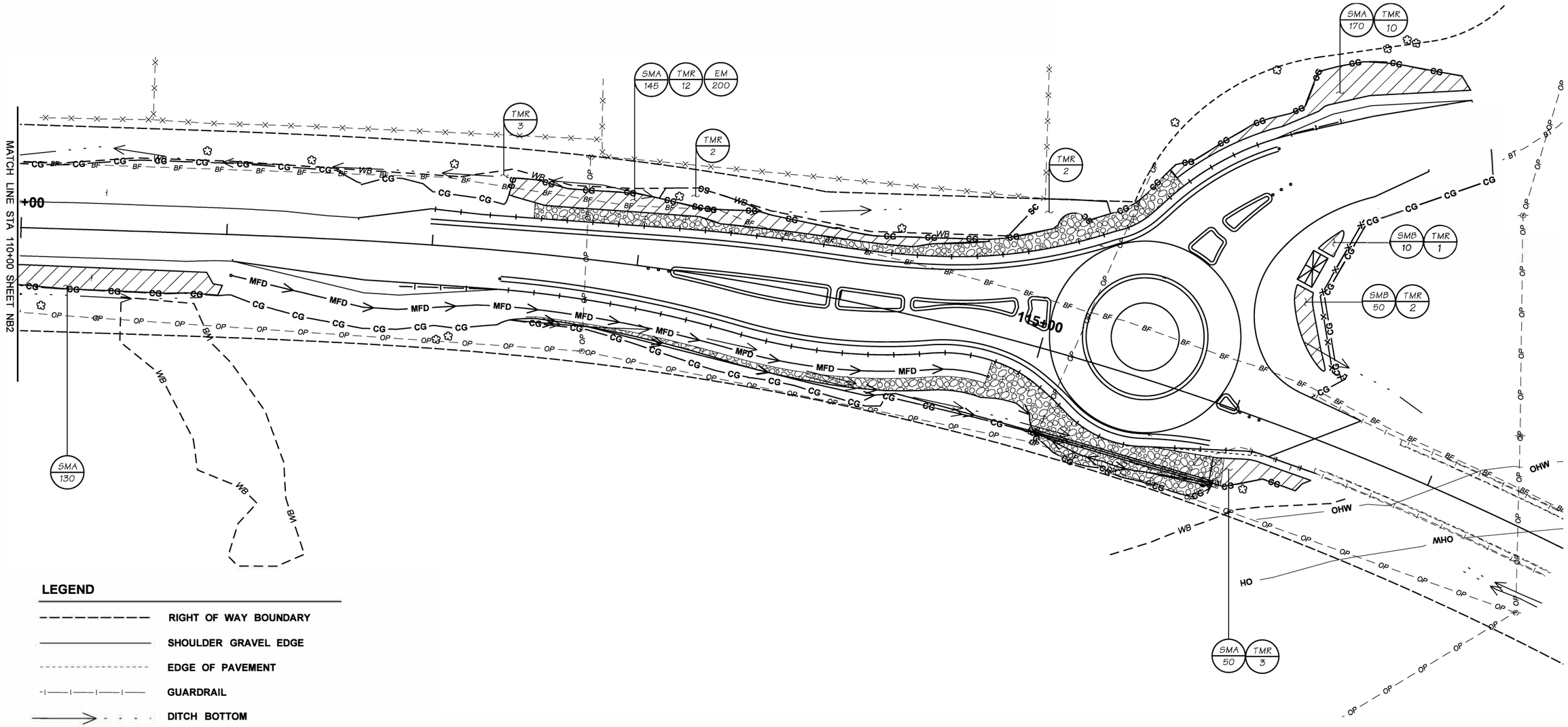

LEGEND

— — — — — — — —	RIGHT OF WAY BOUNDARY
————————	SHOULDER GRAVEL EDGE
- - - - - - - - - - - - - - - -	EDGE OF PAVEMENT
-I——I——I——I——	GUARDRAIL
——→ - - - -	DITCH BOTTOM
———— OHW ———	ORDINARY HIGH WATER LINE
——— SC ———	SELECTIVE CLEARING
— CG —— CG ———	CLEARING AND GRUBBING
— — — — — WB — —	WETLAND BOUNDARY
✿✿✿	EXISTING TREES TO BE PROTECTED
—— OP —— ———	OVERHEAD POWERLINE
-x- -x- -x- -x- -x- -x- —	FENCELINE
- MFD ——→ MFD	MEDIA FILTER DRAIN

N

0 25 50
SCALE IN FEET

FILE NAME	G:\Roadside\01_ projects\500\SR-500 NE 182nd Roundabout\Design\CAD\D50021R_SH_Roadside.dgn						
TIME	2:01:10 PM				REGION NO. 10	STATE WASH	FED.AID PROJ.NO. HSIP-0500(029)
DATE	3/22/2022						
PLOTTED BY	knappb				JOB NUMBER 21X327		
DESIGNED BY	B KNAPP						
ENTERED BY	B KNAPP						
CHECKED BY	D CORLETT				CONTRACT NO.		LOCATION NO. XL6488
PROJ. ENGR.	SUSAN FELL						
REGIONAL ADM.	CARLEY FRANCIS	REVISION	DATE	BY			

STATE OF WASHINGTON DANIEL R. CORLETT NO 725 EXP 10/20/2022 LANDSCAPE ARCHITECT

SEE SHEET CT1
DATE
P.E. STAMP BOX

DATE
P.E. STAMP BOX

Washington State Department of Transportation

SR 500
NE 182ND AVE
INTERSECTION IMPROVEMENTS

PLANTING PLAN

Plot 7
PLAN REF NO NB3
SHEET 51 OF 76 SHEETS

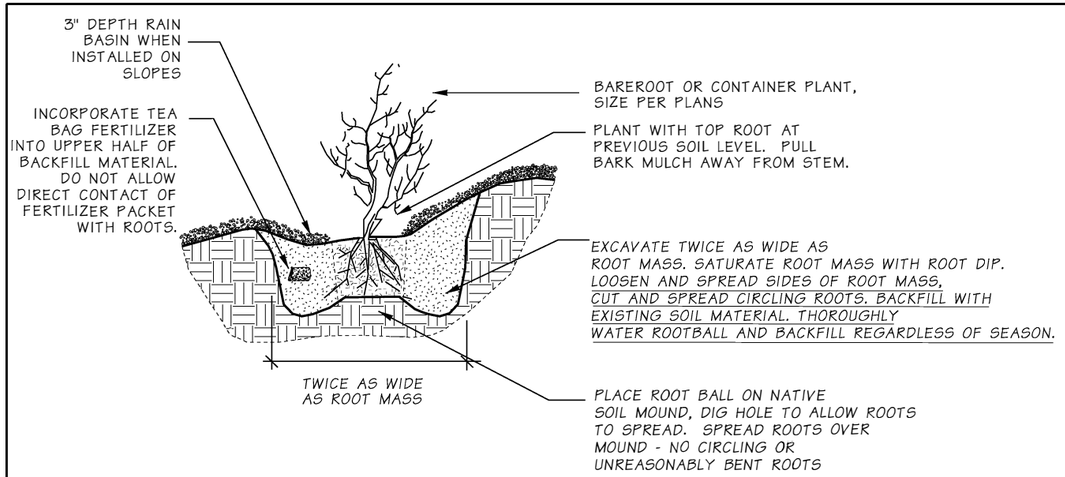

SLOPE AND BAREROOT PLANTING (1)

NOT TO SCALE

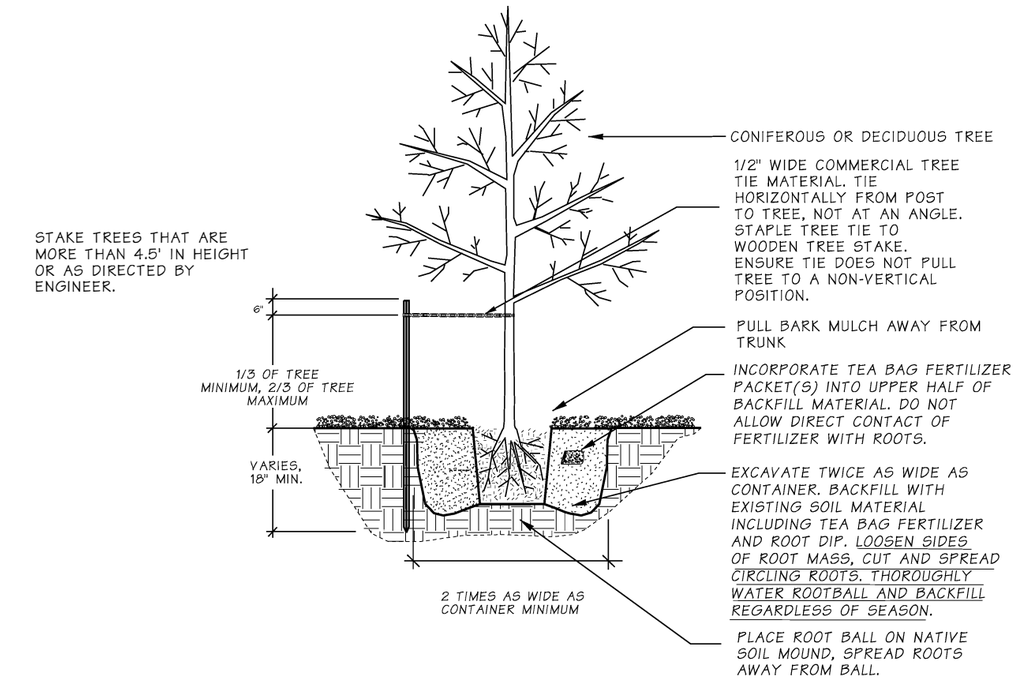

TREE PLANTING (2)

NOT TO SCALE

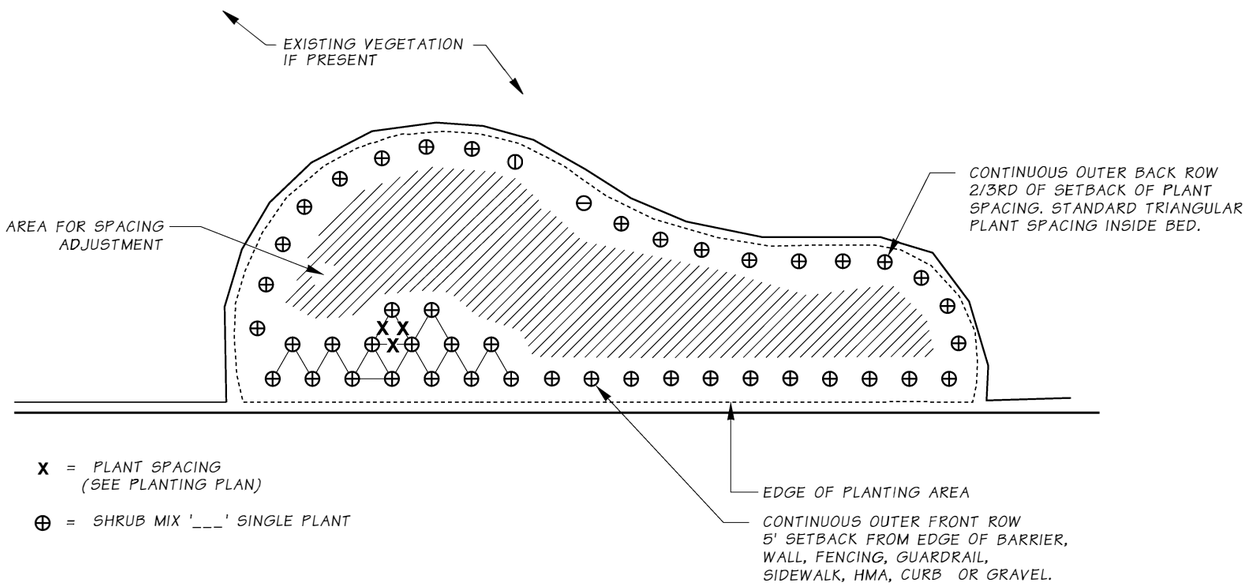

SHRUB MIX LAYOUT AND SETBACK (3)

NOT TO SCALE

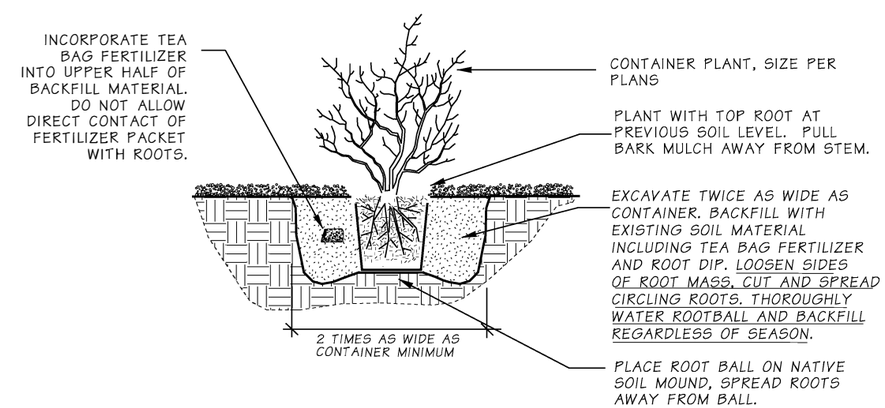

CONTAINER PLANTING (4)

NOT TO SCALE

FILE NAME	G:\Roadside\01_ projects\500\SR-500 NE 182nd Roundabout\Design\CAD\D50021R_SH_Roadside.dgn						
TIME	2:01:37 PM				REGION NO. 10	STATE WASH	FED.AID PROJ.NO. HSIP-0500(029)
DATE	3/22/2022						
PLOTTED BY	knappb				JOB NUMBER 21X327		
DESIGNED BY	B KNAPP						
ENTERED BY	B KNAPP						
CHECKED BY	D CORLETT				CONTRACT NO.		LOCATION NO. XL6488
PROJ. ENGR.	SUSAN FELL						
REGIONAL ADM.	CARLEY FRANCIS	REVISION	DATE	BY			

STATE OF WASHINGTON DANIEL R. CORLETT NO. 725 EXP. 10/22/2022 LANDSCAPE ARCHITECT

SEE SHEET CT1

DATE

P.E. STAMP BOX

P.E. STAMP BOX

DATE

Washington State Department of Transportation

SR 500
NE 182ND AVE
INTERSECTION IMPROVEMENTS

PLANTING PLAN

Plot 8

PLAN REF NO NB4

SHEET 52 OF 76 SHEETS

QUANTITY TABULATION - PAVING AND PAVEMENT MARKINGS

NOTE:
THE FIRST NUMBER OF THE "CODE" BELOW REFERS TO THE SHEET NO. OR THE SHEET REFERENCE NO. SHOWING THE CONSTRUCTION FEATURE.

THE SECOND NUMBER REFERS TO THE CONSTRUCTION FEATURE FOUND ON THAT SHEET.

CODE	LOCATION ↓ \ UNIT OF MEASURE →	PIGMENTED CEMENT CONCRETE PAVEMENT	HMA SAWCUT AND SEAL	ROUNDABOUT SPLITTER ISLAND NOSING CURB	ROUNDABOUT CEMENT CONCRETE CURB AND GUTTER	ROUNDABOUT TRUCK APRON CEM. CONC. CURB AND GUTTER	DUAL FACED CEMENT CONC. CURB AND GUTTER WITH SCUPPER	BEAM GUARDRAIL TYPE 31 - 8 FT. LONG POST	BEAM GUARDRAIL TYPE 31 - 9 FT. LONG POST	BEAM GUARDRAIL TRANSITION SECTION TYPE 22	BEAM GUARDRAIL TYPE 31 NON-FLARED TERMINAL	BEAM GUARDRAIL ANCHOR TYPE 10	CONSTRUCTION GEOTEXTILE FOR UNDERGROUND DRAINAGE	QUARRY SPALLS	GLARE SCREEN TYPE 2	END, GATE, CORNER, AND PULL POST FOR CHAIN LINK FENCE	SEE GENERAL NOTES
		S.Y.	L.F.	EACH	L.F.	L.F.	L.F.	L.F.	L.F.	EACH	EACH	EACH	S.Y.	TON	L.F.	EACH	
PV1-1	M 20+82 (8.75' RT) TO 21+31 (6.75' RT)										1						7
PV1-2	M 21+31 (6.75' RT) TO 23+75 (6.75' RT)							243									5 , 12 , 13
PV1-3	M 21+31 (0.50' RT) TO 24+92 (0.50' RT)						361										4
PV1-4	M 21+45 (19.6' RT) TO 25+00 (21.2' RT)												275	150			10
PV1-5	N 30+35 (0.50' LT) TO 34+63 (0.50' LT)						428										4
PV1-6	N 30+35 (7.75' LT) TO 30+48 (7.25' LT)											1					9
PV1-7	N 30+48 (7.25' LT) TO 30+73 (6.75' LT)							26									5 , 12 , 13
PV1-8	N 30+85 (14.3' LT) TO 34+15 (17.0' LT)												235	120			10
PV1-9	N 30+73 (6.75' LT) TO 34+25 (6.75' LT)								348								5 , 12 , 13
PV2-1	M 22+11 (14.4' LT)			1													3
PV2-2	M 22+13 (12.1' LT) TO 22+91 (19.6' LT)				81												3
PV2-3	M 22+13 (13.6' LT) TO 22+90 (19.6' LT)	52.3															
PV2-4	M 23+82 (23.1' LT) TO 23+92 (17.7' LT)				25												3
PV2-5	M 23+83 (23.5' LT) TO 23+91 (18.5' LT)	10.4															
PV2-6	M 24+92 (17.1' LT) TO 25+01 (14.4' LT)				13												3
PV2-7	M 24+93 (17.7' LT) TO 25+03 (16.4' LT)	3.1															
PV2-8	M 25+05 (15.7' LT)			1													3
PV2-9	M 24+96 (4.12' RT) TO 25+47 (4.24' RT)									1							6
PV2-10	M 25+28 (0.0' RT) TO 25+52 (22.0' LT)		32														1
PV2-11	M 24+15 (27.1' RT) TO 24+97 (20.5' RT)												50	30			10
PV2-12	N 31+56 (12.0' RT) TO 32+32 (18.1' RT)				81												3
PV2-13	N 33+24 (20.7' RT) TO 33+34 (17.7' RT)				23												3
PV2-14	N 33+97 (17.6' RT) TO 34+14 (22.0' RT)				28												3
PV2-15	N 33+99 (18.4' RT) TO 34+12 (22.1' RT)	13.9															
PV2-16	N 34+20 (21.2' RT) TO 34+48 (16.6' RT)				28												3
PV2-17	N 34+22 (21.0' RT) TO 34+48 (18.1' RT)	10.3															
PV2-18	N 34+51 (18.7' RT)			1													3
PV2-19	N 34+63 (6.75' LT) TO 34+97 (7.75' LT)										1						8
PV2-20	O 40+75 (16.5' LT) TO 40+80 (17.5' LT)				12												3
PV2-21	O 41+29 (17.6' LT) TO 41+39 (21.8' LT)				26												3
PV2-22	O 41+43 (20.9' LT) TO 41+62 (13.5' LT)				27												3
PV2-23	O 40+38 (21.5' RT)															1	11
PV2-24	O 40+45 (22.0' RT)															1	11
PV2-25	O 40+50 (30.5' RT)															1	11
	SHEET TOTAL	90	32	3	344		789	269	348	1	2	1	560	300		3	

GENERAL NOTES:

1. SEE STANDARD PLAN A-40.20 DETAIL 3 FOR BRIDGE PAVING JOINT SEALS.

2. SEE STANDARD PLAN A-40.20 DETAIL 7 FOR BRIDGE PAVING JOINT SEALS.

3. SEE STANDARD PLAN F-10.18 FOR ROUNDABOUT CEMENT CONCRETE CURBS.

4. SEE SHEET PV3 FOR DUAL FACED CEMENT CONC. CURB AND GUTTER WITH SCUPPER DETAILS.

5. SEE STANDARD PLAN C-20.10 FOR BEAM GUARDRAIL TYPE 31.

6. SEE STANDARD PLAN C-25.22 FOR BEAM GUARDRAIL (TYPE 31) TRANSITION SECTION TYPE 22.

7. SEE STANDARD PLAN C-22.40 FOR BEAM GUARDRAIL TYPE 31 NON-FLARED TERMINAL (ALL POSTED SPEEDS).

8. SEE STANDARD PLAN C-22.45 FOR BEAM GUARDRAIL TYPE 31 NON-FLARED TERMINAL (POSTED SPEED 45 MPH AND BELOW).

9. SEE STANDARD PLAN C-23.60 FOR BEAM GUARDRAIL (TYPE 31) ANCHOR TYPE 10.

10. SEE SHEETS RS10 - RS12 FOR QUARRY SPALL DETAILS.

11. SEE STANDARD PLAN L-40.20 FOR GLARE SCREEN TYPE 2 (CHAIN LINK WITH SLATS).

12. GUARDRAIL POSTS SHALL BE INSTALLED IN A MANNER THAT PREVENTS RIPPING AND DISTORTION OF THE CONSTRUCTION GEOTEXTILE FOR UNDERGROUND DRAINAGE.

13. GUARDRAIL POSTS SHALL BE STEEL AT LOCATIONS WHERE GUARDRAIL IS INSTALLED WITH QUARRY SPALLS AND CONSTRUCTION GEOTEXTILE FOR UNDERGROUND DRAINAGE.

DESIGNED BY	MORGAN BOURNE				
ENTERED BY	MORGAN BOURNE				
CHECKED BY	ANDY ROMANCHOCK				
PROJ. ENGR.	SUSAN FELL				
REGION ADM.	CARLEY FRANCIS				
		DATE	**DATE**	**REVISION**	**BY**

REGION NO.	STATE	FED. AID PROJ. NO.
10	WASH	HSIP-0500(029)
JOB NUMBER		
21X327		
CONTRACT NO.		

Washington State Department of Transportation

SR 500
NE 182ND AVE
INTERSECTION IMPROVEMENTS

QUANTITY TABULATION - PAVING AND PAVEMENT MARKINGS

QTPM 1

QUANTITY TABULATION - PAVING AND PAVEMENT MARKINGS

NOTE:
THE FIRST NUMBER OF THE "CODE" BELOW REFERS TO THE SHEET NO. OR THE SHEET REFERENCE NO. SHOWING THE CONSTRUCTION FEATURE.

THE SECOND NUMBER REFERS TO THE CONSTRUCTION FEATURE FOUND ON THAT SHEET.

CODE	LOCATION ↓ \ UNIT OF MEASURE →	PIGMENTED CEMENT CONCRETE PAVEMENT	HMA SAWCUT AND SEAL	ROUNDABOUT SPLITTER ISLAND NOSING CURB	ROUNDABOUT CEMENT CONCRETE CURB AND GUTTER	ROUNDABOUT TRUCK APRON CEM. CONC. CURB AND GUTTER	DUAL FACED CEMENT CONC. CURB AND GUTTER WITH SCUPPER	BEAM GUARDRAIL TYPE 31 - 8 FT. LONG POST	BEAM GUARDRAIL TYPE 31 - 9 FT. LONG POST	BEAM GUARDRAIL TRANSITION SECTION TYPE 22	BEAM GUARDRAIL TYPE 31 NON-FLARED TERMINAL	BEAM GUARDRAIL ANCHOR TYPE 10	CONSTRUCTION GEOTEXTILE FOR UNDERGROUND DRAINAGE	QUARRY SPALLS	GLARE SCREEN TYPE 2	END, GATE, CORNER, AND PULL POST FOR CHAIN LINK FENCE	SEE GENERAL NOTES
		S.Y.	L.F.	EACH	L.F.	L.F.	L.F.	L.F.	L.F.	EACH	EACH	EACH	S.Y.	TON	L.F.	EACH	
PV2-26	O 41+08 (40.7' RT)															1	11
PV2-27	O 41+41 (36.1' RT)															1	11
PV2-28	O 41+61 (33.7' RT)															1	11
PV2-29	O 40+38 (21.5' RT) TO O 41+99 (15.5' RT)														88		11
PV2-30	O 41+90 (22.2' RT)															1	11
PV2-31	O 41+99 (15.5' RT)															1	11
PV2-32	R 10+00 (16.0' RT) TO 12+92 (16.0' RT)					192											3
PV2-33	R 10+00 (17.8' RT) TO 12+92 (17.8' RT)	191.9															
PV2-34	N 34+25 (6.75' LT) TO 34+63 (6.75' LT)							40									5 , 12 , 13
PV2-35	N 32+35 (18.0' RT) TO 32+68 (17.2' RT)				40												3
PV2-36	N 32+37 (18.0' RT) TO 32+66 (17.2' RT)	22.2															
PV2-37	N 32+72 (17.0' RT) TO 33+18 (19.1' RT)	11.8															
PV2-38	N 32+70 (17.0' RT) TO 33+20 (19.5' RT)				58												3
PV2-39	M 22+95 (19.7' LT) TO 23+30 (17.9' LT)				41												3
PV2-40	M 23+34 (17.8' LT) TO 23+78 (21.8' LT)				58												3
PV2-41	M 23+75 (6.75' RT) TO 24+96 (4.12' RT)								122								5 , 12 , 13
	SHEET TOTAL	225.9			197	192		40	122						88	5	
	PROJECT TOTAL	315.9	32	3	541	192	789	309	470	1	2	1	560	300	88	8	

GENERAL NOTES:

1. SEE STANDARD PLAN A-40.20 DETAIL 3 FOR BRIDGE PAVING JOINT SEALS.

2. SEE STANDARD PLAN A-40.20 DETAIL 7 FOR BRIDGE PAVING JOINT SEALS.

3. SEE STANDARD PLAN F-10.18 FOR ROUNDABOUT CEMENT CONCRETE CURBS.

4. SEE SHEET PV3 FOR DUAL FACED CEMENT CONC. CURB AND GUTTER WITH SCUPPER DETAILS.

5. SEE STANDARD PLAN C-20.10 FOR BEAM GUARDRAIL TYPE 31.

6. SEE STANDARD PLAN C-25.22 FOR BEAM GUARDRAIL (TYPE 31) TRANSITION SECTION TYPE 22.

7. SEE STANDARD PLAN C-22.40 FOR BEAM GUARDRAIL TYPE 31 NON-FLARED TERMINAL (ALL POSTED SPEEDS).

8. SEE STANDARD PLAN C-22.45 FOR BEAM GUARDRAIL TYPE 31 NON-FLARED TERMINAL (POSTED SPEED 45 MPH AND BELOW).

9. SEE STANDARD PLAN C-23.60 FOR BEAM GUARDRAIL (TYPE 31) ANCHOR TYPE 10.

10. SEE SHEETS RS10 - RS12 FOR QUARRY SPALL DETAILS.

11. SEE STANDARD PLAN L-40.20 FOR GLARE SCREEN TYPE 2 (CHAIN LINK WITH SLATS).

12. GUARDRAIL POSTS SHALL BE INSTALLED IN A MANNER THAT PREVENTS RIPPING AND DISTORTION OF THE CONSTRUCTION GEOTEXTILE FOR UNDERGROUND DRAINAGE.

13. GUARDRAIL POSTS SHALL BE STEEL AT LOCATIONS WHERE GUARDRAIL IS INSTALLED WITH QUARRY SPALLS AND CONSTRUCTION GEOTEXTILE FOR UNDERGROUND DRAINAGE.

DESIGNED BY	MORGAN BOURNE						
ENTERED BY	MORGAN BOURNE						
CHECKED BY	ANDY ROMANCHOCK						
PROJ. ENGR.	SUSAN FELL						
REGION ADM.	CARLEY FRANCIS						
		DATE	**DATE**	**REVISION**		**BY**	

REGION NO.	STATE	FED. AID PROJ. NO.
10	WASH	HSIP-0500(029)
JOB NUMBER		
21X327		
CONTRACT NO.		

Washington State Department of Transportation

SR 500
NE 182ND AVE
INTERSECTION IMPROVEMENTS

QUANTITY TABULATION - PAVING AND PAVEMENT MARKINGS

QTPM 2

SHEET 54 **OF** 76 **SHEETS**

QUANTITY TABULATION - PAVING AND PAVEMENT MARKINGS

NOTE:
THE FIRST NUMBER OF THE "CODE" BELOW REFERS TO THE SHEET NO. OR THE SHEET REFERENCE NO. SHOWING THE CONSTRUCTION FEATURE.

THE SECOND NUMBER REFERS TO THE CONSTRUCTION FEATURE FOUND ON THAT SHEET.

CODE	LOCATION ➢ \ UNIT OF MEASURE ➢	SEALING EXISTING LONGITUDINAL AND TRANSVERSE JOINT	FLEXIBLE GUIDE POST														SEE GENERAL NOTES
		L.F.	EACH														
PV1-10	M 21+30 (1.62' RT)		1														
PV2-42	O 40+05 (0.0' RT) TO 40+28 (22.0' LT)	32															2
PV2-43	M 22+00 (13.6' LT)		1														
PV2-44	M 22+05 (14.0' LT)		1														
PV2-45	M 22+10 (14.4' LT)		1														
PV2-46	M 25+06 (15.3' LT)		1														
PV2-47	M 25+11 (13.3' LT)		1														
PV2-48	M 25+15 (12.0' LT)		1														
PV2-49	N 34+63 (1.62' LT)		1														
PV2-50	N 34+52 (18.5' RT)		1														
PV2-51	N 34+58 (17.5' RT)		1														
PV2-52	N 34+64 (16.5' RT)		1														
	SHEET TOTAL	32	11														
	PROJECT TOTAL	32	11														

GENERAL NOTES:

1. SEE STANDARD PLAN A-40.20 DETAIL 3 FOR BRIDGE PAVING JOINT SEALS.

2. SEE STANDARD PLAN A-40.20 DETAIL 7 FOR BRIDGE PAVING JOINT SEALS.

3. SEE STANDARD PLAN F-10.18 FOR ROUNDABOUT CEMENT CONCRETE CURBS.

4. SEE SHEET PV3 FOR DUAL FACED CEMENT CONC. CURB AND GUTTER WITH SCUPPER DETAILS.

5. SEE STANDARD PLAN C-20.10 FOR BEAM GUARDRAIL TYPE 31.

6. SEE STANDARD PLAN C-25.22 FOR BEAM GUARDRAIL (TYPE 31) TRANSITION SECTION TYPE 22.

7. SEE STANDARD PLAN C-22.40 FOR BEAM GUARDRAIL TYPE 31 NON-FLARED TERMINAL (ALL POSTED SPEEDS).

8. SEE STANDARD PLAN C-22.45 FOR BEAM GUARDRAIL TYPE 31 NON-FLARED TERMINAL (POSTED SPEED 45 MPH AND BELOW).

9. SEE STANDARD PLAN C-23.60 FOR BEAM GUARDRAIL (TYPE 31) ANCHOR TYPE 10.

10. SEE SHEETS RS10 - RS12 FOR QUARRY SPALL DETAILS.

11. SEE STANDARD PLAN L-40.20 FOR GLARE SCREEN TYPE 2 (CHAIN LINK WITH SLATS).

12. GUARDRAIL POSTS SHALL BE INSTALLED IN A MANNER THAT PREVENTS RIPPING AND DISTORTION OF THE CONSTRUCTION GEOTEXTILE FOR UNDERGROUND DRAINAGE.

13. GUARDRAIL POSTS SHALL BE STEEL AT LOCATIONS WHERE GUARDRAIL IS INSTALLED WITH QUARRY SPALLS AND CONSTRUCTION GEOTEXTILE FOR UNDERGROUND DRAINAGE.

		DATE	DATE	REVISION	BY
DESIGNED BY	MORGAN BOURNE				
ENTERED BY	MORGAN BOURNE				
CHECKED BY	ANDY ROMANCHOCK				
PROJ. ENGR.	SUSAN FELL				
REGION ADM.	CARLEY FRANCIS				

REGION NO.	STATE	FED. AID PROJ. NO.
10	WASH	HSIP-0500(029)

JOB NUMBER 21X327

CONTRACT NO.

Washington State Department of Transportation

SR 500
NE 182ND AVE
INTERSECTION IMPROVEMENTS

QUANTITY TABULATION - PAVING AND PAVEMENT MARKINGS

QTPM 3

SHEET 55 OF 76 SHEETS

QUANTITY TABULATION - PAVING AND PAVEMENT MARKINGS

NOTE:
THE FIRST NUMBER OF THE "CODE" BELOW REFERS TO THE SHEET NO. OR THE SHEET REFERENCE NO. SHOWING THE CONSTRUCTION FEATURE.

THE SECOND NUMBER REFERS TO THE CONSTRUCTION FEATURE FOUND ON THAT SHEET.

CODE	LOCATION ➢ \ UNIT OF MEASURE ➢	PLASTIC LINE	PLASTIC 12 INCH WIDE LINE	PLASTIC TRAFFIC ARROW		PLASTIC YIELD LINE SYMBOL	RAISED PAVEMENT MARKER TYPE 2	PLASTIC WIDE LINE		TEMPORARY PAVEMENT MARKING - SHORT DURATION	TEMPORARY MISC. PAVEMENT MARKINGS - SHORT DURATION	REMOVING PAINT LINE	REMOVING RAISED PAVEMENT MARKER		PLASTIC CROSSHATCH MARKING		SEE GENERAL NOTES
		L.F.	L.F.	EACH		EACH	HUND	L.F.		L.F.	EACH	L.F.	HUND		L.F.		
MK1-1	M 20+00 (0.0' RT) TO 25+53 (0.0' RT)	553					0.14			553							2 , 3 , 4 , 5
MK1-2	M 20+00 (10.8' LT) TO 21+29 (10.7' LT)	130					0.03			130							2 , 4 , 5
MK1-3	M 21+29 (10.7' LT) TO 23+94 (16.0' LT)	273					0.07			273							2 , 3 , 4 , 5
MK1-4	R 11+21 (8.0' RT)			1							1						3 , 6
MK1-5	M 23+93 (1.0' LT) TO 23+93 (15.0' LT)					5					5						3 , 7
MK1-6	M 24+90 (16.0' LT) TO 25+33 (11.1' LT)	46					0.1			46							1 , 3 , 4 , 5
MK1-7	N 30+00 (0.0' RT) TO 35+60 (0.0' RT)	560					0.14			560							2 , 3 , 4 , 5
MK1-8	N 30+70 (11.4' RT) TO 33+41 (14.0' RT)	275					0.07			275							2 , 3 , 4 , 5
MK1-9	N 33+95 (16.0' RT) TO 35+01 (12.4' RT)	99					0.02			99							2 , 3 , 4 , 5
MK1-10	N 33+96 (1.0' RT) TO 33+96 (15.0' RT)					5					5						3 , 7
MK1-11	R 12+10 (8.0' RT)			1							1						3 , 6
MK1-12	N 35+01 (12.4' RT) TO 35+60 (13.3' RT)	62					0.01			62							2 , 4 , 5
MK1-13	O 40+05 (0.0' RT) TO 41+04 (0.0' RT)	100					0.2			100							1 , 3 , 4 , 5 , 8
MK1-14	RW 116+33 (0.1' RT) TO 116+65 (0.5' RT)		30				0.06			30							1 , 8
MK1-15	O 40+48 (11.2' LT) TO 40+81 (16.0' LT)	44					0.09			44							1 , 3 , 4 , 5
MK1-16	R 12+86 (8.0' RT)			1							1						3 , 6
MK1-17	O 40+81 (1.0' LT) TO 40+81 (15.0' LT)					5					5						3 , 7
MK1-18	O 41+04 (0.0' RT) TO 42+36 (0.0' RT)	132					0.03			132							2 , 3 , 4 , 5
MK1-19	O 41+27 (16.0' LT) TO 42+05 (13.2' LT)	93					0.02			93							2 , 3 , 4 , 5
MK1-20	R 10+73 (0.0' RT) TO 11+09 (0.0' RT)							40		40							3 , 4
MK1-21	R 11+09 (0.0' RT) TO 11+32 (0.0' RT)						0.01	25		25							2 , 3 , 4 , 5
MK1-22	R 11+70 (0.0' RT) TO 12+00 (0.0' RT)							30		30							3 , 4
MK1-23	R 12+00 (0.0' RT) TO 12+19 (0.0' RT)						0.01	20		20							2 , 3 , 4 , 5
MK1-24	R 12+50 (0.0' RT) TO 12+81 (0.0' RT)							30		30							3 , 4
MK1-25	R 12+81 (0.0' RT) TO 12+92 (0.0' RT)						0.01	15		15							2 , 3 , 4 , 5
MK1-26	M 20+00 (22.6' LT) TO 20+60 (22.2' LT)	61					0.01			61							2 , 3 , 4 , 5
MK1-27	N 35+31 (24.6' RT) TO 35+60 (24.6' RT)	32					0.01			32							2 , 3 , 4 , 5
MK1-28	RW 116+65 (0.5' RT) TO 117+84 (0.9' RT)		120				0.03										2 , 8 , 9
MK1-29	RW 116+65 (0.5' RT) TO 117+84 (0.9' RT)											120	0.03				
MK1-30	R 10+00 (17.8' RT) TO 12+92 (17.8' RT)														150		7 , 10
	SHEET TOTAL	2460	150	3		15	1.06	160		2650	18	120	0.03		150		
	PROJECT TOTAL	2460	150	3		15	1.06	160		2650	18	120	0.03		150		

GENERAL NOTES:

1. RAISED PAVEMENT MARKER TYPE 2 SPACING SHALL BE 5 FEET.

2. RAISED PAVEMENT MARKER TYPE 2 SPACING SHALL BE 40 FEET.

3. SEE STANDARD PLAN M-12.10 FOR ROUNDABOUT PAVEMENT MARKINGS.

4. SEE STANDARD PLAN M-20.10 FOR LONGITUDINAL MARKING PATTERNS.

5. SEE STANDARD PLAN M-20.30 FOR LONGITUDINAL MARKING SUPPLEMENT WITH RAISED PAVEMENT MARKERS.

6. SEE STANDARD PLAN M-24.40 FOR SYMBOL MARKINGS - TRAFFIC ARROWS FOR LOW-SPEED ROADWAYS.

7. SEE STANDARD PLAN M-24.60 FOR SYMBOL MARKINGS MISCELLANEOUS.

8. RAISED PAVEMENT MARKER TYPE 2 SHALL BE INSTALLED ON THE CENTER OF THE PLASTIC 12 INCH WIDE LINE.

9. TEMPORARY PAVEMENT MARKING - SHORT DURATION SHALL BE EXCLUDED FROM THE BRIDGE AND ONLY INSTALLED ON THE APPROACH SLAB.

10. CHEVRON SPACING SHALL BE 14' ON CENTER, FOR A TOTAL OF 10 CHEVRONS.

DESIGNED BY	MORGAN BOURNE			
ENTERED BY	MORGAN BOURNE			
CHECKED BY	ANDY ROMANCHOCK			
PROJ. ENGR.	SUSAN FELL			
REGION ADM.	CARLEY FRANCIS			
		DATE	**DATE**	**REVISION**	**BY**

REGION NO.	STATE	FED. AID PROJ. NO.
10	WASH	HSIP-0500(029)
JOB NUMBER		
21X327		
CONTRACT NO.		

Washington State Department of Transportation

SR 500
NE 182ND AVE
INTERSECTION IMPROVEMENTS

QUANTITY TABULATION - PAVING AND PAVEMENT MARKINGS

QTPM 4

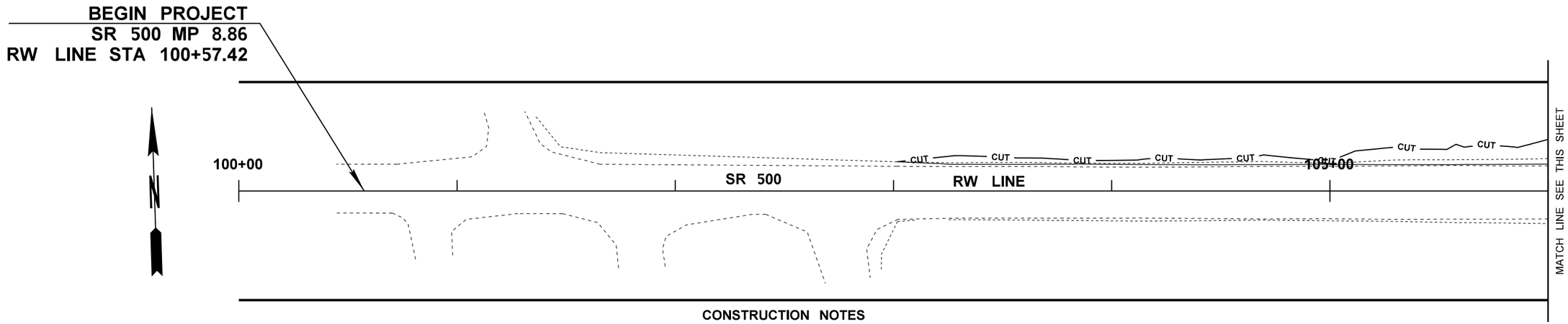

NOTES:

1. SEE SHEETS QTPM1 - QTPM3 FOR QUANTITES.
2. SEE ROADWAY PROFILE SHEETS FOR EARTHWORK QUANTITES.
3. SEE SHEET PV3 FOR DUAL FACED CEMENT CONC. CURB AND GUTTER WITH SCUPPER DETAILS.
4. PAVING WIDTHS ARE FOR REFERENCE ONLY. REFER TO THE ROADWAY SECTIONS FOR MORE DETAIL AND EXACT STATIONING.
5. SEE SHEET MK1 FOR LANE WIDTH TRANSITION DETAILS.
6. SEE SHEET PV2 FOR TAPER TABLE.

CONSTRUCTION NOTES

- 6 DUAL FACED CEMENT CONC. CURB AND GUTTER WITH SCUPPER
- 7 BEAM GUARDRAIL TYPE 31 - 8 FT. LONG POST
- 8 BEAM GUARDRAIL TYPE 31 - 9 FT. LONG POST
- 10 BEAM GUARDRAIL TYPE 31 NON-FLARED TERMINAL
- 11 BEAM GUARDRAIL ANCHOR TYPE 10
- 12 QUARRY SPALLS
- 15 FLEXIBLE GUIDE POST
- 16 CONSTRUCTION GEOTEXTILE FOR UNDERGROUND DRAINAGE

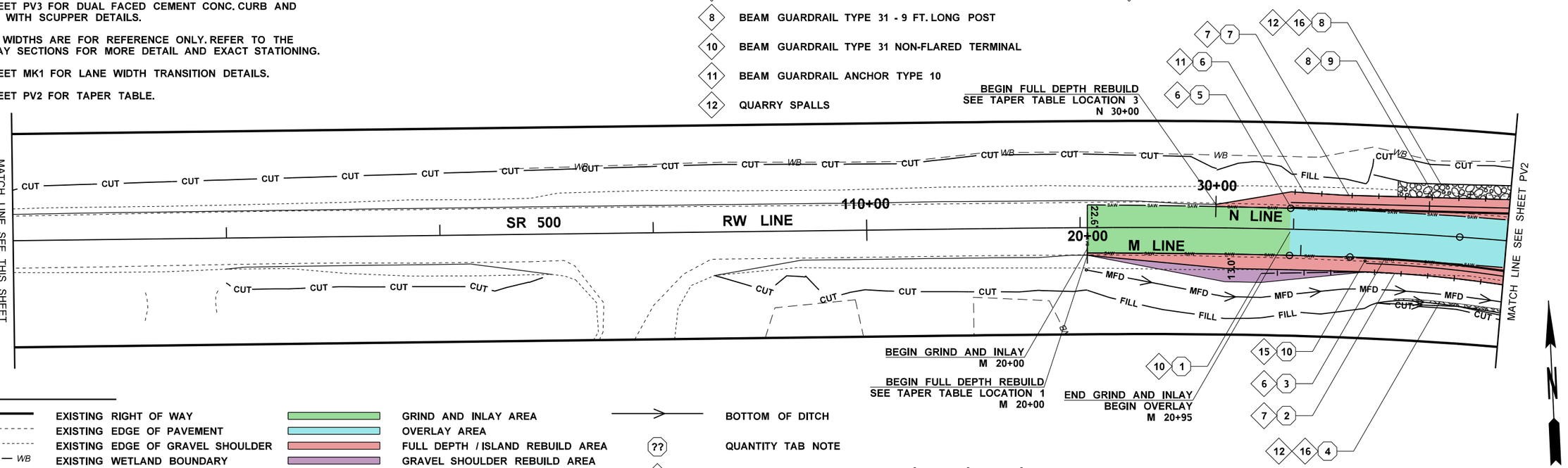

LEGEND

- EXISTING RIGHT OF WAY
- EXISTING EDGE OF PAVEMENT
- EXISTING EDGE OF GRAVEL SHOULDER
- WB — EXISTING WETLAND BOUNDARY
- BEAM GUARDRAIL TYPE 31 (9 FT. POST)
- SAW — SAWCUT
- MFD — MEDIA FILTER DRAIN (TYPE 3)
- GRIND AND INLAY AREA
- OVERLAY AREA
- FULL DEPTH / ISLAND REBUILD AREA
- GRAVEL SHOULDER REBUILD AREA
- QUARRY SPALLS
- CUT — CUT LINE
- FILL — FILL LINE
- BOTTOM OF DITCH
- ?? QUANTITY TAB NOTE
- ? CONSTRUCTION NOTE

0 25 50
SCALE IN FEET

FILE NAME	G:\444301\05-Design\02-Projects\SR 500 182nd RAB\1-CADD-Plans\20-1.2 CAD Sheet FIles\D50021R_SH_PVRev1.dgn
TIME	8:35:33 AM
DATE	3/29/2022
PLOTTED BY	bournem
DESIGNED BY	MORGAN BOURNE
ENTERED BY	MORGAN BOURNE
CHECKED BY	ANDY ROMANCHOCK
PROJ. ENGR.	SUSAN FELL
REGIONAL ADM.	CARLEY FRANCIS

REVISION | DATE | BY

REGION NO. 10 | STATE WASH | FED.AID PROJ.NO. HSIP-0500(029)

JOB NUMBER 21X327

CONTRACT NO.

LOCATION NO. XL6488

SUSAN WAI LEONG FELL — STATE OF WASHINGTON — 36748 — REGISTERED PROFESSIONAL ENGINEER

SEE SHEET CT1 DATE

P.E. STAMP BOX

DATE

P.E. STAMP BOX

Washington State Department of Transportation

SR 500
NE 182ND AVE
INTERSECTION IMPROVEMENTS

PAVING PLANS

PLOT 1

PLAN REF NO PV1

SHEET 57 OF 76 SHEETS

CONSTRUCTION NOTES

1. PIGMENTED CEMENT CONCRETE PAVEMENT
2. HMA SAWCUT AND SEAL
3. ROUNDABOUT SPLITTER ISLAND NOSING CURB
4. ROUNDABOUT CEMENT CONCRETE CURB AND GUTTER
5. ROUNDABOUT TRUCK APRON CEM. CONC. CURB AND GUTTER
6. DUAL FACED CEMENT CONC. CURB AND GUTTER WITH SCUPPER
7. BEAM GUARDRAIL TYPE 31 - 8 FT. LONG POST
8. BEAM GUARDRAIL TYPE 31 - 9 FT. LONG POST
9. BEAM GUARDRAIL TRANSITION SECTION TYPE 22
10. BEAM GUARDRAIL TYPE 31 NON-FLARED TERMINAL
12. QUARRY SPALLS
13. GLARE SCREEN TYPE 2
14. END, GATE, CORNER, AND PULL POST FOR CHAIN LINK FENCE
15. FLEXIBLE GUIDE POST
16. CONSTRUCTION GEOTEXTILE FOR UNDERGROUND DRAINAGE
17. SEALING EXISTING LONGITUDINAL AND TRANSVERSE JOINT

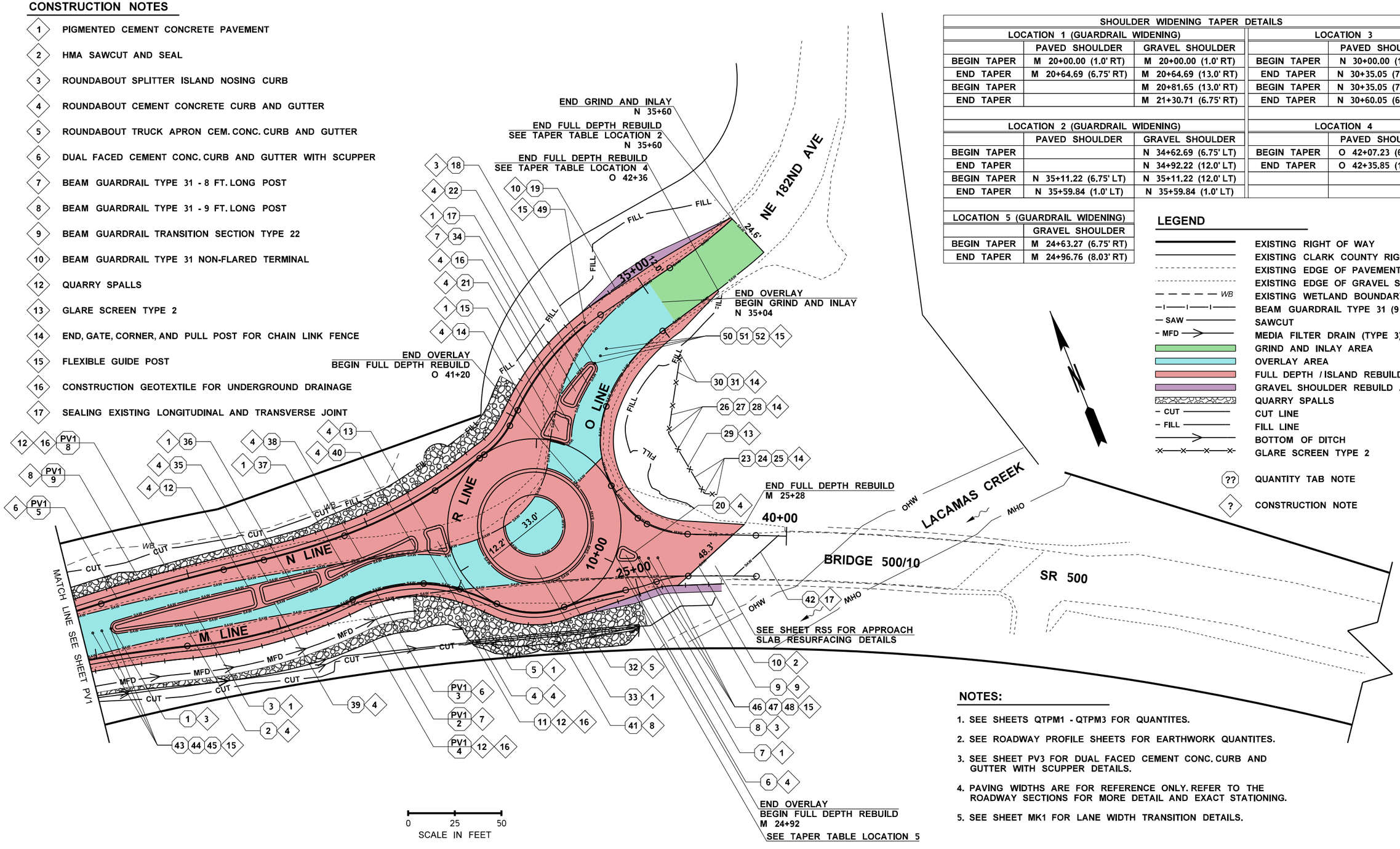

SHOULDER WIDENING TAPER DETAILS				
LOCATION 1 (GUARDRAIL WIDENING)			LOCATION 3	
	PAVED SHOULDER	GRAVEL SHOULDER		PAVED SHOULDER
BEGIN TAPER	M 20+00.00 (1.0' RT)	M 20+00.00 (1.0' RT)	BEGIN TAPER	N 30+00.00 (1.0' LT)
END TAPER	M 20+64.69 (6.75' RT)	M 20+64.69 (13.0' RT)	END TAPER	N 30+35.05 (7.75' LT)
BEGIN TAPER		M 20+81.65 (13.0' RT)	BEGIN TAPER	N 30+35.05 (7.75' LT)
END TAPER		M 21+30.71 (6.75' RT)	END TAPER	N 30+60.05 (6.75' LT)
LOCATION 2 (GUARDRAIL WIDENING)			LOCATION 4	
	PAVED SHOULDER	GRAVEL SHOULDER		PAVED SHOULDER
BEGIN TAPER		N 34+62.69 (6.75' LT)	BEGIN TAPER	O 42+07.23 (6.0' RT)
END TAPER		N 34+92.22 (12.0' LT)	END TAPER	O 42+35.85 (1.0' RT)
BEGIN TAPER	N 35+11.22 (6.75' LT)	N 35+11.22 (12.0' LT)		
END TAPER	N 35+59.84 (1.0' LT)	N 35+59.84 (1.0' LT)		
LOCATION 5 (GUARDRAIL WIDENING)				
	GRAVEL SHOULDER			
BEGIN TAPER	M 24+63.27 (6.75' RT)			
END TAPER	M 24+96.76 (8.03' RT)			

LEGEND

- EXISTING RIGHT OF WAY
- EXISTING CLARK COUNTY RIGHT OF WAY
- EXISTING EDGE OF PAVEMENT
- EXISTING EDGE OF GRAVEL SHOULDER
- WB — EXISTING WETLAND BOUNDARY
- BEAM GUARDRAIL TYPE 31 (9 FT. POST)
- SAW — SAWCUT
- MFD — MEDIA FILTER DRAIN (TYPE 3)
- GRIND AND INLAY AREA
- OVERLAY AREA
- FULL DEPTH / ISLAND REBUILD AREA
- GRAVEL SHOULDER REBUILD AREA
- QUARRY SPALLS
- CUT — CUT LINE
- FILL — FILL LINE
- BOTTOM OF DITCH
- GLARE SCREEN TYPE 2
- ?? QUANTITY TAB NOTE
- ? CONSTRUCTION NOTE

NOTES:

1. SEE SHEETS QTPM1 - QTPM3 FOR QUANTITES.
2. SEE ROADWAY PROFILE SHEETS FOR EARTHWORK QUANTITES.
3. SEE SHEET PV3 FOR DUAL FACED CEMENT CONC. CURB AND GUTTER WITH SCUPPER DETAILS.
4. PAVING WIDTHS ARE FOR REFERENCE ONLY. REFER TO THE ROADWAY SECTIONS FOR MORE DETAIL AND EXACT STATIONING.
5. SEE SHEET MK1 FOR LANE WIDTH TRANSITION DETAILS.

FILE NAME	G:\444301\05-Design\02-Projects\SR 500 182nd RAB\1-CADD-Plans\20-1.2 CAD Sheet Files\D50021R_SH_PVRev1.dgn
TIME	8:35:34 AM
DATE	3/29/2022
PLOTTED BY	bournem
DESIGNED BY	MORGAN BOURNE
ENTERED BY	MORGAN BOURNE
CHECKED BY	ANDY ROMANCHOCK
PROJ. ENGR.	SUSAN FELL
REGIONAL ADM.	CARLEY FRANCIS

REVISION | DATE | BY

REGION NO. 10 | STATE WASH | FED.AID PROJ.NO. HSIP-0500(029)

JOB NUMBER 21X327

CONTRACT NO.

LOCATION NO. XL6488

SUSAN WAI LEONG FELL — STATE OF WASHINGTON — 36748 — REGISTERED PROFESSIONAL ENGINEER

SEE SHEET CT1 DATE

P.E. STAMP BOX

DATE

P.E. STAMP BOX

Washington State Department of Transportation

SR 500
NE 182ND AVE
INTERSECTION IMPROVEMENTS

PAVING PLANS

PLOT 2

PLAN REF NO PV2

SHEET 58 OF 76 SHEETS

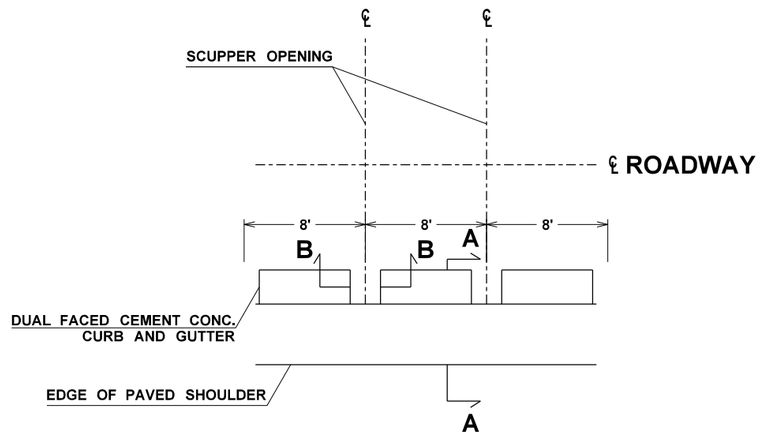

PLAN VIEW
NOT TO SCALE

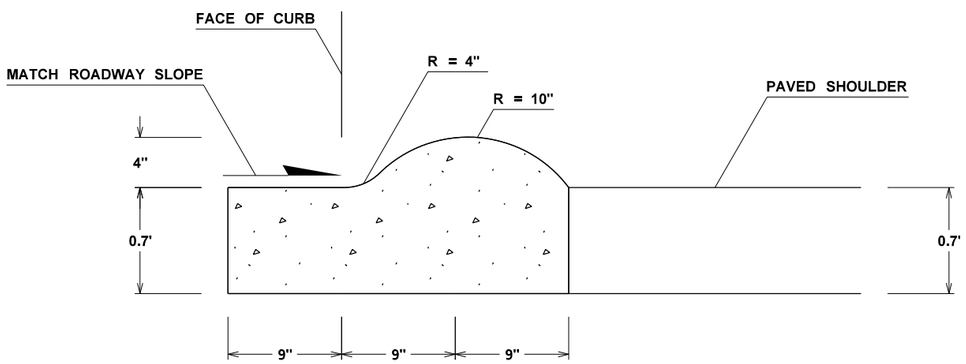

SECTION A-A
NOT TO SCALE

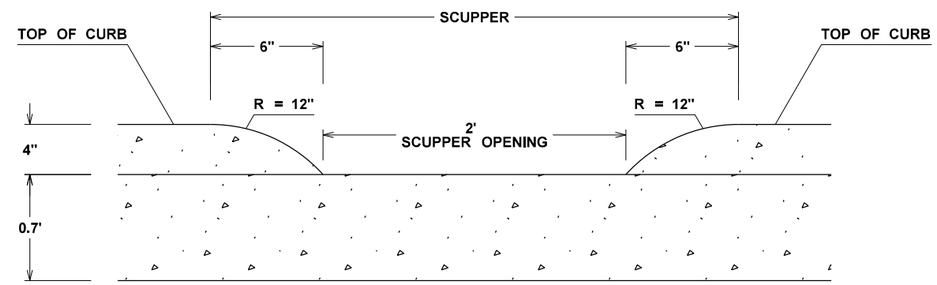

SECTION B-B
NOT TO SCALE

NOTES:

1. SEE SHEETS QTPM1 AND QTPM2 FOR QUANTITIES AND LOCATIONS.
2. SEE STANDARD PLAN F-30.10 FOR CURB EXPANSION AND CONTRACTION JOINT SPACING.

DUAL FACED CEMENT CONC. CURB AND GUTTER WITH SCUPPER

FILE NAME	G:\444301\05-Design\02-Projects\SR 500 182nd RAB\1-CADD-Plans\20-1.2 CAD Sheet Files\D50021R_SH_PV.dgn			
TIME	8:35:57 AM			
DATE	3/29/2022			
PLOTTED BY	bournem			
DESIGNED BY	MORGAN BOURNE			
ENTERED BY	MORGAN BOURNE			
CHECKED BY	ANDY ROMANCHOCK			
PROJ. ENGR.	SUSAN FELL			
REGIONAL ADM.	CARLEY FRANCIS	REVISION	DATE	BY

REGION NO.	STATE	FED.AID PROJ.NO.
10	WASH	HSIP-0500(029)
JOB NUMBER 21X327		
CONTRACT NO.		LOCATION NO. XL6488

SUSAN WAI LEONG FELL — STATE OF WASHINGTON — 36748 — REGISTERED PROFESSIONAL ENGINEER

SEE SHEET CT1 DATE
P.E. STAMP BOX

DATE
P.E. STAMP BOX

Washington State Department of Transportation

SR 500
NE 182ND AVE
INTERSECTION IMPROVEMENTS

PAVING DETAILS

PLOT 3
PLAN REF NO PV3
SHEET 59 OF 76 SHEETS

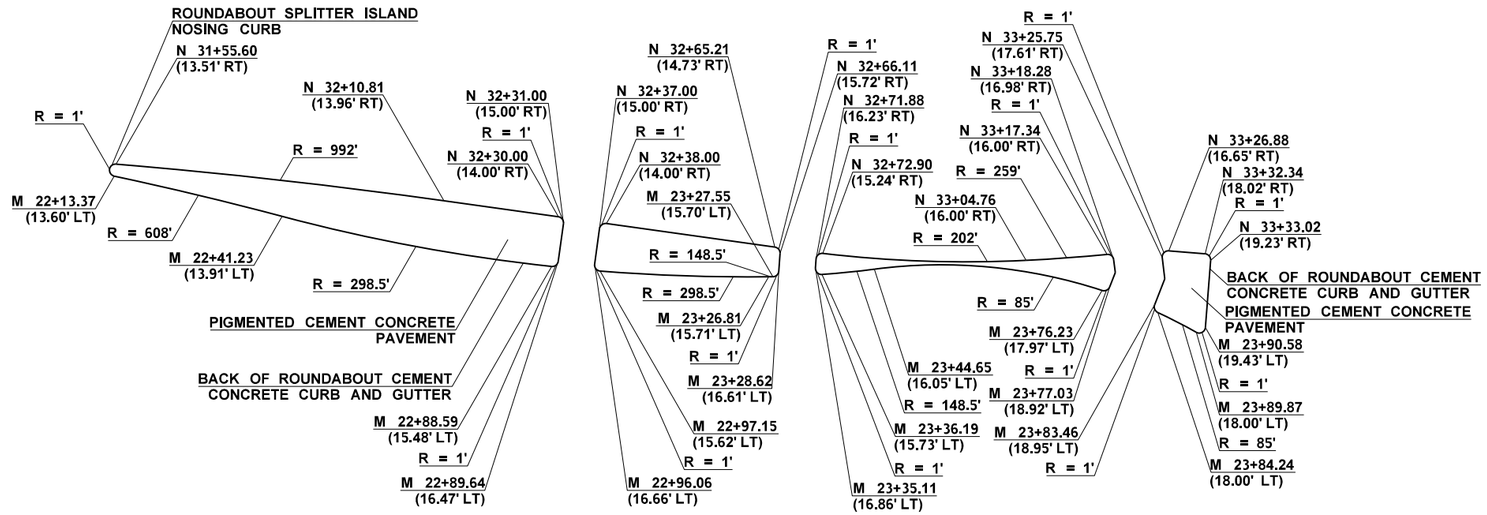

WEST LEG SPLITTER ISLAND

NOT TO SCALE

* CONTRACTION JOINT SPACING IN SPLITTER ISLANDS SHALL MATCH JOINT SPACING IN CURB AND GUTTER

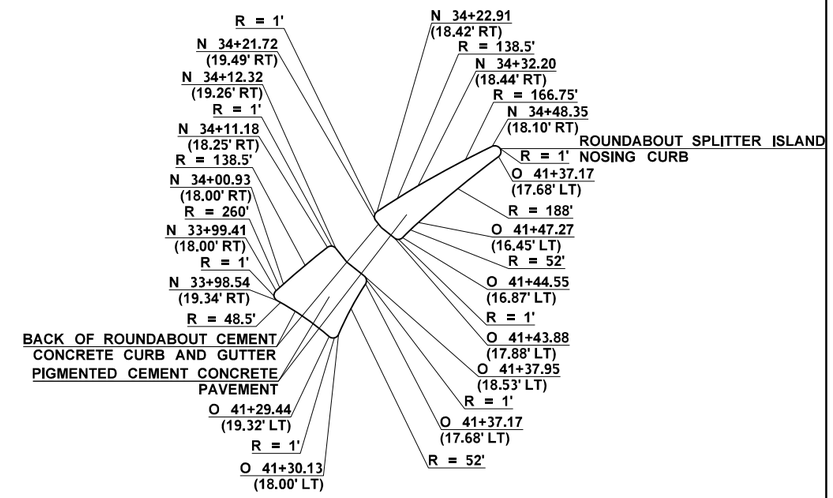

NORTH LEG SPLITTER ISLAND

NOT TO SCALE

* CONTRACTION JOINT SPACING IN SPLITTER ISLANDS SHALL MATCH JOINT SPACING IN CURB AND GUTTER

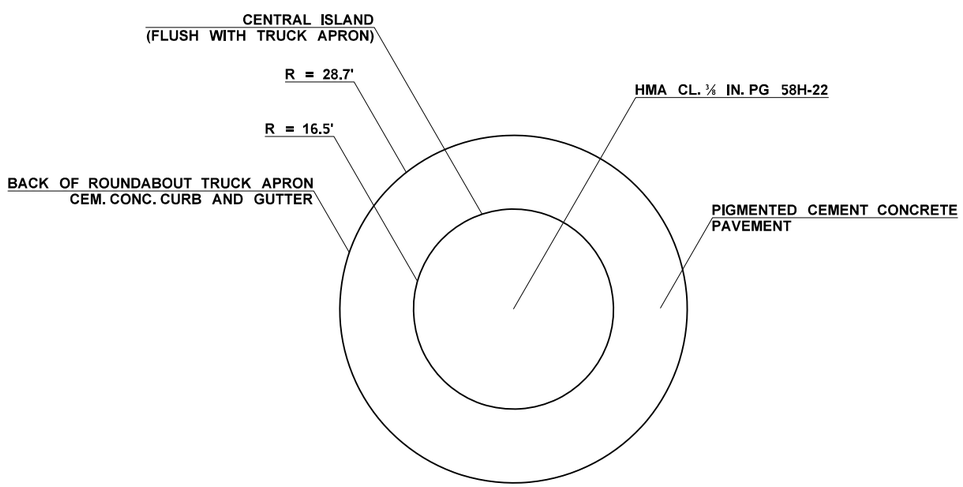

TRUCK APRON AND CENTRAL ISLAND

NOT TO SCALE

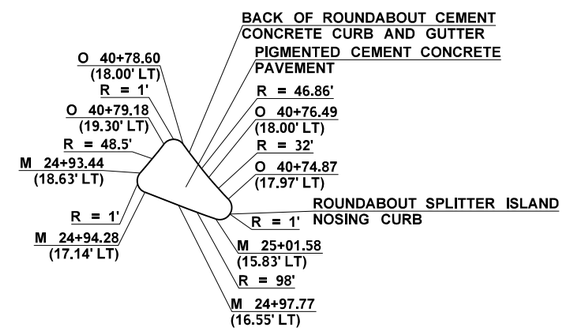

EAST LEG SPLITTER ISLAND

NOT TO SCALE

* CONTRACTION JOINT SPACING IN SPLITTER ISLANDS SHALL MATCH JOINT SPACING IN CURB AND GUTTER

FILE NAME	G:\444301\05-Design\02-Projects\SR 500 182nd RAB\1-CADD-Plans\20-1.2 CAD Sheet Files\D50021R_SH_PV.dgn				REGION NO. 10	STATE WASH	FED.AID PROJ.NO. HSIP-0500(029)
TIME	8:35:58 AM						
DATE	3/29/2022						
PLOTTED BY	bournem				JOB NUMBER 21X327		
DESIGNED BY	MORGAN BOURNE						
ENTERED BY	MORGAN BOURNE						
CHECKED BY	ANDY ROMANCHOCK				CONTRACT NO.		LOCATION NO. XL6488
PROJ. ENGR.	SUSAN FELL						
REGIONAL ADM.	CARLEY FRANCIS	REVISION	DATE	BY			

SUSAN WAI LEONG FELL — STATE OF WASHINGTON — 36748 — REGISTERED PROFESSIONAL ENGINEER

SEE SHEET CT1 DATE

P.E. STAMP BOX

DATE

P.E. STAMP BOX

Washington State Department of Transportation

SR 500
NE 182ND AVE
INTERSECTION IMPROVEMENTS

PAVING DETAILS

PLOT 4

PLAN REF NO PV4

SHEET 60 OF 76 SHEETS

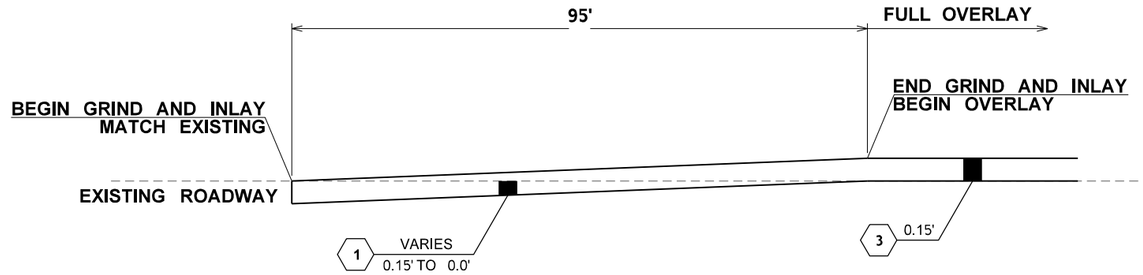

LEGEND

1 PLANING BITUMINOUS PAVEMENT

3 HMA CL. ⅛ IN. PG 58H-22

GRIND AND INLAY TO OVERLAY TRANSITION DETAIL

NOT TO SCALE

M 20+00 TO 20+95

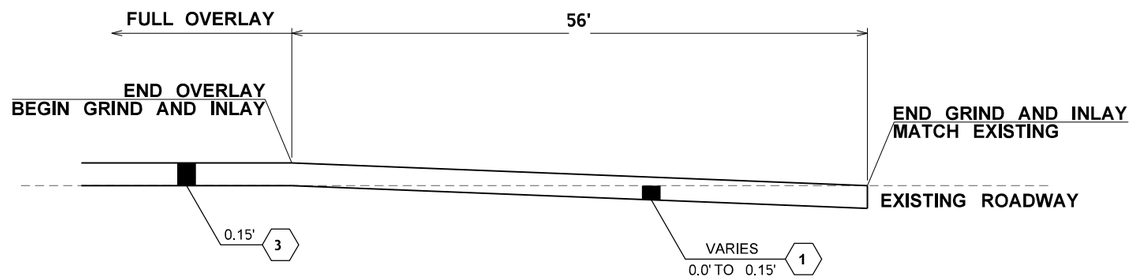

LEGEND

1 PLANING BITUMINOUS PAVEMENT

3 HMA CL. ⅛ IN. PG 58H-22

OVERLAY TO GRIND AND INLAY TRANSITION DETAIL

NOT TO SCALE

N 35+04 TO 35+60

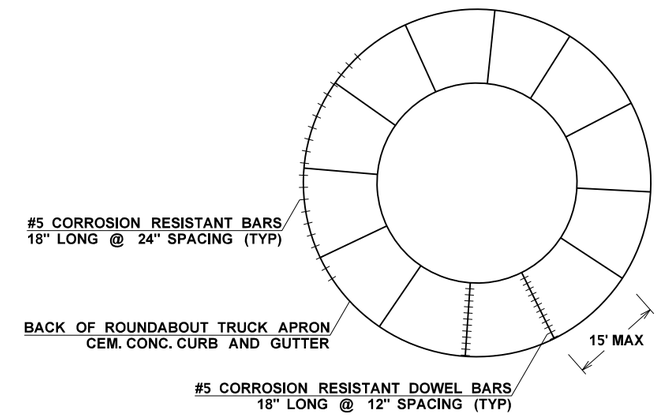

TRUCK APRON JOINT SPACING

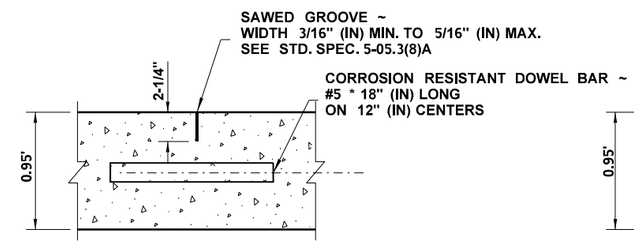

SECTION VIEW
TRANSVERSE CONTRACTION JOINT
NTS

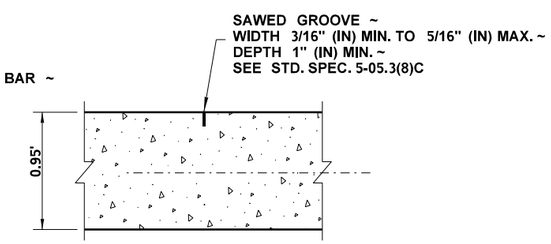

SECTION VIEW
TRANSVERSE CONSTRUCTION JOINT
NTS

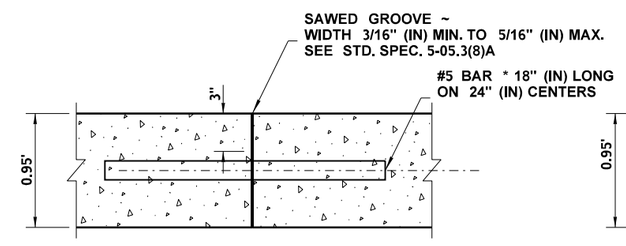

SECTION VIEW
LONGITUDINAL CONTRACTION JOINT
NTS

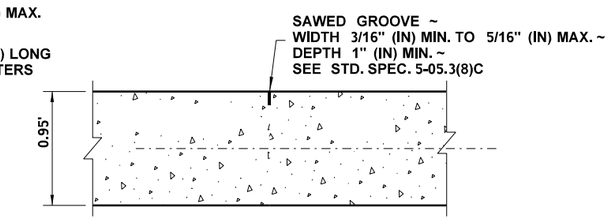

SECTION VIEW
LONGITUDINAL CONSTRUCTION JOINT
NTS

NOTES:

1. SEE STANDARD SPECIFICATIONS 5-05.3(8)B, SEALING SAWED CONTRACTION JOINTS.
2. SEE STANDARD SPECIFICATIONS 5-05.3(8)C FOR CONSTRUCTION JOINTS.
3. SEALING OF ALL JOINTS IS INCIDENTAL TO PIGMENTED CEMENT CONCRETE PAVEMENT.
4. CORROSION RESISTANT DOWEL BARS SHALL BE USED IN THE TRUCK APRON AT THE CONTRACTION JOINTS.
5. NO. 5 CORROSION RESISTANT BARS SHALL BE USED AT THE INTERFACE OF THE BACK OF THE ROUNDABOUT TRUCK APRON CEM. CONC. CURB AND GUTTER AND THE TRUCK APRON.
6. CORROSION RESISTANT BARS AND DOWEL BARS ARE PAID INCIDENTAL TO PIGMENTED CEMENT CONCRETE PAVEMENT.

FILE NAME	G:\444301\05-Design\02-Projects\SR 500 182nd RAB\1-CADD-Plans\20-1.2 CAD Sheet Files\D50021R_SH_PV.dgn					
TIME	8:35:59 AM					
DATE	3/29/2022					
PLOTTED BY	bournem					
DESIGNED BY	MORGAN BOURNE					
ENTERED BY	MORGAN BOURNE					
CHECKED BY	ANDY ROMANCHOCK					
PROJ. ENGR.	SUSAN FELL					
REGIONAL ADM.	CARLEY FRANCIS	REVISION	DATE	BY		

REGION NO.	STATE	FED.AID PROJ.NO.
10	WASH	HSIP-0500(029)
JOB NUMBER 21X327		
CONTRACT NO.		LOCATION NO. XL6488

SUSAN WAI LEONG FELL — STATE OF WASHINGTON — 36748 — REGISTERED PROFESSIONAL ENGINEER

SEE SHEET CT1
DATE
P.E. STAMP BOX

DATE
P.E. STAMP BOX

Washington State Department of Transportation

SR 500
NE 182ND AVE
INTERSECTION IMPROVEMENTS

PAVING DETAILS

PLOT 5

PLAN REF NO
PV5

SHEET 61 OF 76 SHEETS

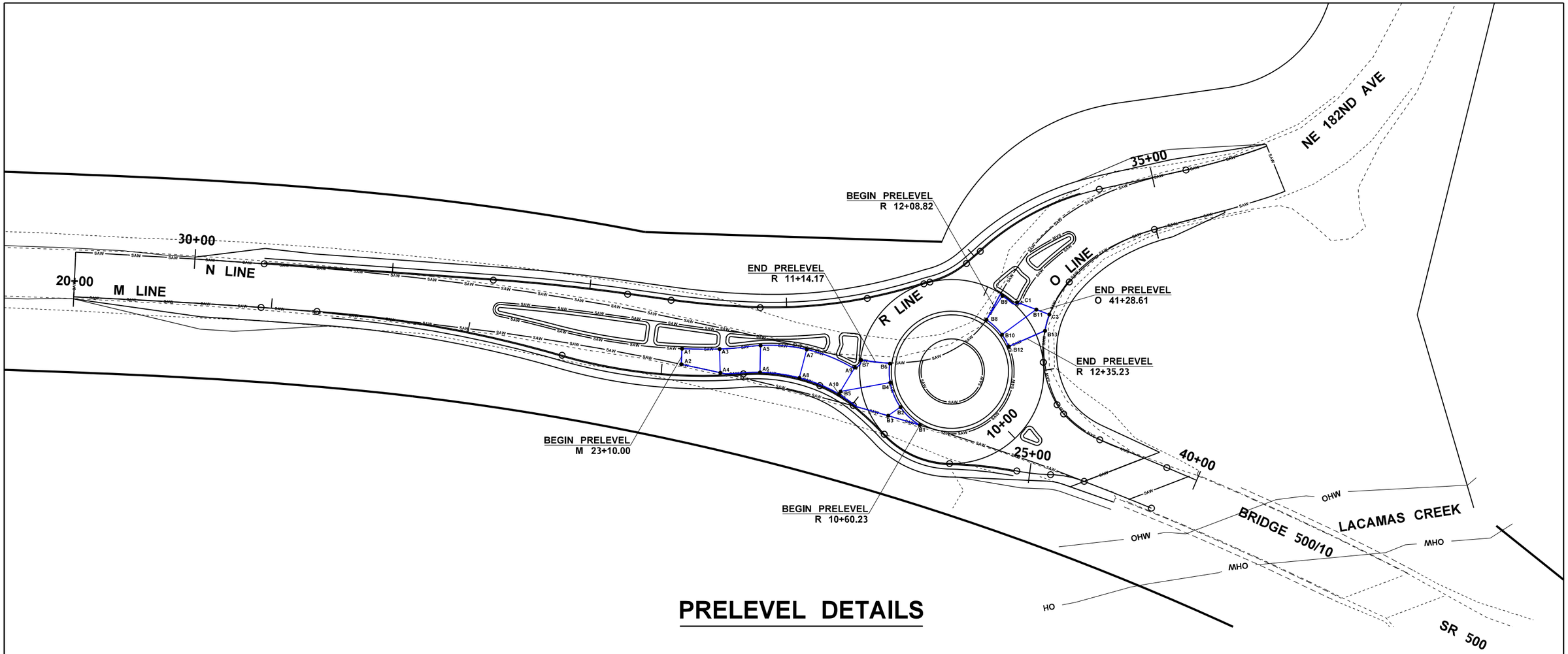

PRELEVEL DETAILS

PRELEVEL DEPTHS			
POINT	STATION	OFFSET	PRELEVEL DEPTH
A1	M 23+10.00	13.24' LT	0.00'
A2	M 23+10.00	5.35' LT	0.00'
A3	M 23+30.00	13.19' LT	0.00'
A4	M 23+30.00	1.19' LT	0.07'
A5	M 23+50.00	14.07' LT	0.00'
A6	M 23+50.00	0.50' LT	0.07'
A7	M 23+70.00	15.32' LT	0.00'
A8	M 23+70.00	0.50' LT	0.16'
A9	M 23+91.54	16.21' LT	0.00'
A10	M 23+91.54	0.50' LT	0.45'
C1	O 41+28.61	16.14' LT	0.00'
C2	O 41+28.61	0.12' LT	0.00'

PRELEVEL DEPTHS			
POINT	STATION	OFFSET	PRELEVEL DEPTH
B1	R 10+60.23	15.00' RT	0.55'
B2	R 10+80.00	15.00' RT	0.10'
B3	R 10+80.00	7.42' RT	0.45'
B4	R 11+00.00	15.00' RT	0.05'
B5	R 11+00.00	10.55' LT	0.34'
B6	R 11+14.17	15.00' RT	0.05'
B7	R 11+14.17	0.45' RT	0.00'
B8	R 12+08.82	15.00' RT	0.05'
B9	R 12+08.82	0.05' RT	0.00'
B10	R 12+25.00	15.00' RT	0.05'
B11	R 12+25.00	6.48' LT	0.00'
B12	R 12+35.23	15.00' RT	0.00'
B13	R 12+35.23	4.96' LT	0.00'

LEGEND

- EXISTING RIGHT OF WAY
- EXISTING CLARK COUNTY RIGHT OF WAY
- EXISTING EDGE OF PAVEMENT
- EXISTING EDGE OF GRAVEL SHOULDER
- PRELEVEL AREA

NOTES:

1. PRELEVEL DEPTHS SHOWN ON THIS SHEET ARE DEPTHS NEEDED TO BRING HMA TO 0.15' BELOW THE FINAL GRADE ELEVATIONS.
2. THE FINAL TOP LIFT OF PAVING SHALL BE A CONSTANT DEPTH OF 0.15'.

FILE NAME	G:\444301\05-Design\02-Projects\SR 500 182nd RAB\1-CADD-Plans\20-1.2 CAD Sheet Files\D50021R_SH_PV.dgn
TIME	8:36:00 AM
DATE	3/29/2022
PLOTTED BY	bournem
DESIGNED BY	MORGAN BOURNE
ENTERED BY	MORGAN BOURNE
CHECKED BY	ANDY ROMANCHOCK
PROJ. ENGR.	SUSAN FELL
REGIONAL ADM.	CARLEY FRANCIS

REVISION | DATE | BY

REGION NO. 10 | STATE WASH | FED.AID PROJ.NO. HSIP-0500(029)

JOB NUMBER 21X327

CONTRACT NO. | LOCATION NO. XL6488

SUSAN WAI LEONG FELL — STATE OF WASHINGTON — 36748 — REGISTERED PROFESSIONAL ENGINEER

SEE SHEET CT1 DATE

P.E. STAMP BOX

DATE

P.E. STAMP BOX

Washington State Department of Transportation

SR 500
NE 182ND AVE
INTERSECTION IMPROVEMENTS

PAVING DETAILS

PLOT 6

PLAN REF NO PV6

SHEET 62 OF 76 SHEETS

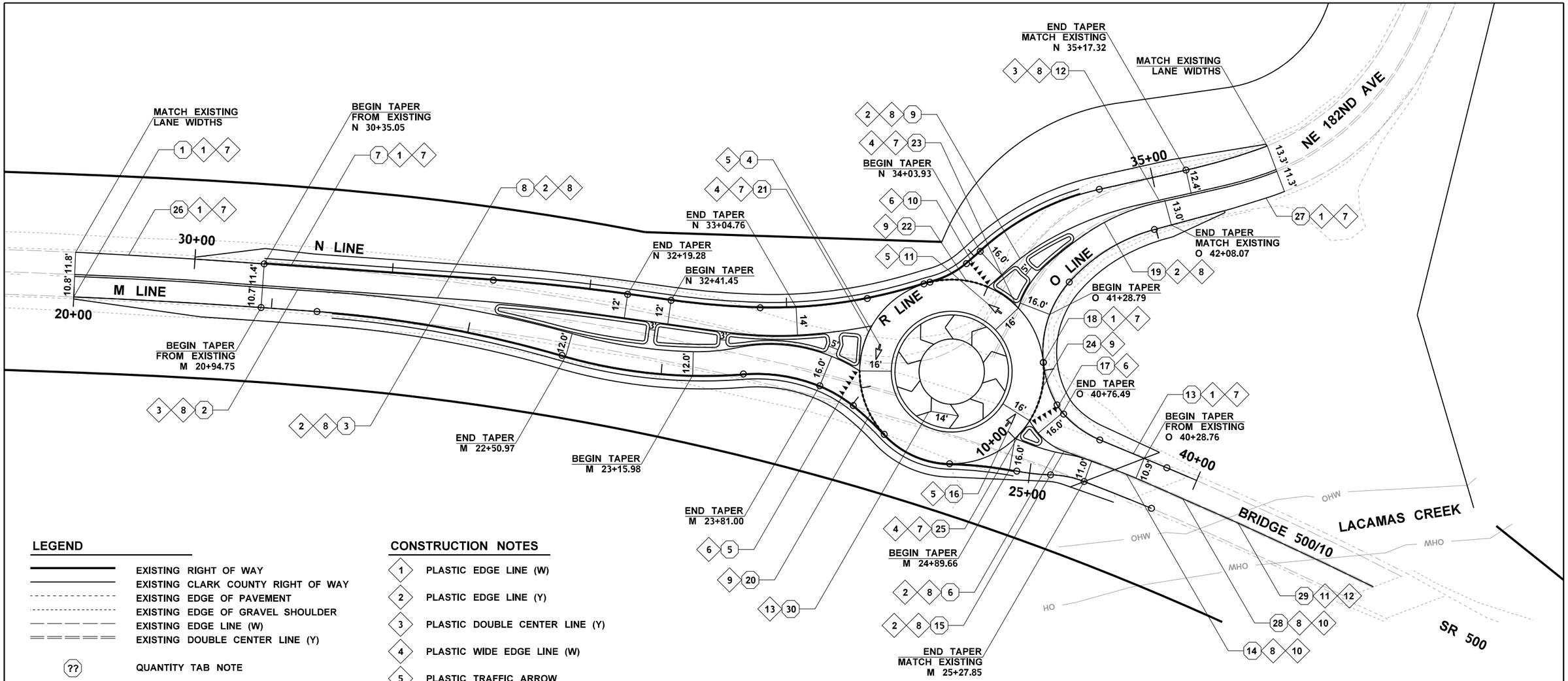

LEGEND

- EXISTING RIGHT OF WAY
- EXISTING CLARK COUNTY RIGHT OF WAY
- EXISTING EDGE OF PAVEMENT
- EXISTING EDGE OF GRAVEL SHOULDER
- EXISTING EDGE LINE (W)
- EXISTING DOUBLE CENTER LINE (Y)
- ?? QUANTITY TAB NOTE
- ? CONSTRUCTION NOTE

CONSTRUCTION NOTES

1. PLASTIC EDGE LINE (W)
2. PLASTIC EDGE LINE (Y)
3. PLASTIC DOUBLE CENTER LINE (Y)
4. PLASTIC WIDE EDGE LINE (W)
5. PLASTIC TRAFFIC ARROW
6. PLASTIC YIELD LINE SYMBOL
7. RAISED PAVEMENT MARKER TYPE 2 (W)
8. RAISED PAVEMENT MARKER TYPE 2 (Y)
9. PLASTIC WIDE DOTTED ENTRY LINE (W)
10. PLASTIC 12 INCH WIDE LINE (Y)
11. REMOVING PAINT LINE
12. REMOVING RAISED PAVEMENT MARKER
13. PLASTIC CROSSHATCH MARKING (W)

0 25 50
SCALE IN FEET

NOTES:

1. SEE SHEET QTPM3 FOR QUANTITES.

FILE NAME	G:\444301\05-Design\02-Projects\SR 500 182nd RAB\1-CADD-Plans\20-1.2 CAD Sheet Files\D50021R_SH_PV.dgn				REGION NO. 10	STATE WASH	FED.AID PROJ.NO. HSIP-0500(029)
TIME	8:36:06 AM						
DATE	3/29/2022						
PLOTTED BY	bournem						
DESIGNED BY	MORGAN BOURNE				JOB NUMBER 21X327		
ENTERED BY	MORGAN BOURNE						
CHECKED BY	ANDY ROMANCHOCK				CONTRACT NO.		LOCATION NO. XL6488
PROJ. ENGR.	SUSAN FELL						
REGIONAL ADM.	CARLEY FRANCIS	REVISION	DATE	BY			

SUSAN WAI LEONG FELL — STATE OF WASHINGTON — 36748 — REGISTERED PROFESSIONAL ENGINEER

SEE SHEET CT1 DATE
P.E. STAMP BOX

DATE
P.E. STAMP BOX

Washington State Department of Transportation

SR 500
NE 182ND AVE
INTERSECTION IMPROVEMENTS

PAVEMENT MARKINGS PLAN

PLOT 1
PLAN REF NO MK1
SHEET 63 OF 76 SHEETS

GENERAL NOTES:

1. THE LOCATIONS OF FEATURES SHOWN IN THE PLANS ARE APPROXIMATE AND SHALL BE VERIFIED IN THE FIELD BY THE CONTRACTOR.
2. CONTRACTOR SHALL COORDINATE WITH THE ENGINEER TO ENSURE WSDOT ELECTRICAL INSPECTOR IS PRESENT DURING THE INSTALLATION OF ALL CABINETS, POLES, FOUNDATIONS, CONDUITS AND CONDUCTORS. MATERIAL INSTALLED OUTSIDE OF THE PRESENCE OF THE ELECTRICAL INSPECTOR IS SUBJECT TO REJECTION.
3. ILLUMINATION SHALL BE INSTALLED AND OPERATIONAL PRIOR TO THE CONSTRUCTION OF THE TRAFFIC ISLANDS/ CURBS OR UPON COMPLETION OF TRAFFIC ISLAND/ CURBS IF CONSTRUCTED DURING FULL CLOSURE. IF CONTRACTOR ELECTS TO USE TEMPORARY LIGHTING, THE CONTRACTOR SHALL SUBMIT A TEMPORARY LIGHTING PLAN TO THE TRAFFIC ENGINEER FOR APPROVAL PRIOR TO USE. APPROVAL OF TEMPORARY LIGHTING PLAN MAY TAKE UP TO 5 WORKING DAYS PER SUBMITTAL/ REVISION. TEMPORARY LIGHTING AND APPROVAL SHALL BE INCIDENTAL TO THE BID ITEM "ILLUMINATION SYSTEM". CONTRACTOR SHALL REFER TO WSDOT DESIGN MANUAL CHAPTER 1040 FOR LIGHTING REQUIREMENTS. TEMPORARY LIGHTING PLAN SHALL INCLUDE, BUT NOT LIMITED TO THE LOCATION(S) OF TEMPORARY ILLUMINATION, LIGHTING LEVEL CALCULATIONS AND LAYOUT. REFER TO WSDOT DESIGN MANUAL EXHIBIT 1040-14 AND 1040-27.
4. DURING HOURS OF DARKNESS AND/ OR INCLEMENT WEATHER THE CONTRACTOR SHALL MAINTAIN LIGHTING LEVELS THROUGHOUT THE PROJECT. HOURS OF DARKNESS ARE DEFINED AS 1/2 HOUR PRIOR TO SUNSET AND 1/2 HOUR AFTER SUN RISE. ELECTRICAL HOTWORK IS NOT PERMITTED
5. CONTRACTOR SHALL PERFORM LOCATES OF UNDERGROUND UTILITIES PRIOR TO CONSTRUCTING LUMINAIRE FOUNDATION.
6. CONTRACTOR SHALL USE CAUTION NEAR EXISTING EQUIPMENT AND UTILITIES. ADDITIONAL HANDWORK MAY BE REQUIRED.
7. ALL CONDUIT AND CONDUCTORS SHALL BE INSTALLED A MINIMUM OF 3' FROM THE BACK OF GUARDRAIL POST. CONDUIT/ CONDUCTORS FOUND TO BE WITHIN 3' OF GUARDRAIL POST SHALL BE RELOCATED AT THE CONTRACTORS EXPENSE.
8. ALL CONDUIT AND CONDUCTORS SHALL BE INSTALLED WITHIN WSDOT RIGHT OF WAY UNLESS STATED OTHERWISE. PUD FEEDER WIRES AND CONDUIT ARE PERMITTED FOR INSTALLATION OUTSIDE OF WSDOT RIGHT OF WAY WHERE SHOWN IN THE PLANS.
9. ALL PRELIMINARY INVESTIGATION RELATED TO REQUEST FOR INFORMATION (RFI) SHALL BE INCIDENTAL TO THE BID ITEM BEING PERFORMED. ALL RFI'S SHALL INCLUDE, BUT ARE NOT LIMITED TO THE FOLLOWING INFORMATION: LOCATION('S), EXISTING LAYOUT/ CONFIGURATION, ISSUE/ QUESTION AND A PROPOSED SOLUTION IF APPLICABLE.
10. NEW FOUNDATIONS SHALL HAVE AN "IDENTIFICATION TAG". REFER TO PLAN SHEET IL3 FOR ID TAG DETAILS.
11. REFER TO APPENDIX B FOR ADDITIONAL PUD REQUIREMENTS. ALL PUD REQUIREMENTS SHALL BE INCIDENTAL TO THE BID ITEM "ILLUMINATION SYSTEM".
12. ALL JUNCTION BOXES INSTALLED OUTSIDE OF THE ROADWAY SHALL HAVE A 1'Wx1'D CONCRETE COLLAR AROUND THE PERIMETER OF THE JUNCTION BOX. REFER TO DETAIL SHEET IL3.

LEGEND

EXIST.	NEW	
		CONDUIT & CONDUCTOR
BF		FIBER
OHP		OVERHEAD POWER
		UTILITY POLE
		TYPE 1 JUNCTION BOX
		TYPE 2 JUNCTION BOX
		METAL LIGHT STANDARD & LUMINAIRE
		ELECTRICAL SERVICE
		CLARK PUD PEDESTAL
		WIRE NOTE
		CONSTRUCTION NOTE

*** FOR FEATURES NOT SHOWN ON SHEET IL2 REFER TO PAVING AND STRIPING PLANS.**

FILE NAME	W:\SWApps\Maintenance\Traffic\TRAFFIC DESIGN\01-ACTIVE DESIGN FILES\XL6488_SR 500 NE 182nd Ave - Intersection Improvements\Sheet\XL6488_PS_EL.dgn
TIME	9:55:20 AM
DATE	3/29/2022
PLOTTED BY	wachtek
DESIGNED BY	K. WACHTER
ENTERED BY	K. WACHTER
CHECKED BY	SWR TRAFFIC OFFICE
PROJ. ENGR.	M. HARWOOD
REGIONAL ADM.	C. FRANCIS

REVISION | DATE | BY

REGION NO. 10 | STATE WASH | JOB NUMBER 21X327 | CONTRACT NO.

FED.AID PROJ.NO. HSIP-0500(029)

LOCATION NO. XL6488

P.E. STAMP BOX — SEE SHEET CT1 — DATE

P.E. STAMP BOX — DATE

Washington State Department of Transportation

SR 500
NE 182ND AVE
INTERSECTION IMPROVEMENTS

ILLUMINATION PLAN

Plot 1

PLAN REF NO IL1

SHEET 64 OF 76 SHEETS

WIRING SCHEDULE - ILLUMINATION SYSTEM

NO.	CONDUIT SIZE	CONDUCTORS	CIRCUIT	NOTES
1	1"	2 - #8	A	
2	1½"	2 - #8	A	
3	1"	2 - #8	B	
	2"			SPARE
4	1½"	2 - #8	A	
		2 - #8	B	
	2"			SPARE
5	1"	2 - #8	A	
	2"			SPARE
6	2"	2 - #8	A	
		2 - #8	B	
	2"			SPARE
7	2"	3 - 1/0		CABINET POWER
8	1"	2 - #8	B	
9	1½"	2 - #8	B	
	2"			SPARE
10	3"	350 AL UG Tx		

LUMINAIRE SCHEDULE — SERVICE NO. SD3768

LUMINAIRE NUMBER	CIRCUIT	LOCATION STATION	LOCATION OFFSET	TYPE - DISTRIBUTION - WATTAGE	MAST ARM	H1	BASE TYPE	ANGLE FROM ℄	FOUNDATION DEPTH
1	A	N 31+21.62	13' LT	III - MED CUTOFF - 310 HPS	10	40	FIXED	89°	9.0'
2	B	N 32+31.98	12' LT	III - MED CUTOFF - 310 HPS	10	40	FIXED	88°	9.0'
3	A	N 33+52.60	12' LT	III - MED CUTOFF - 310 HPS	10	40	FIXED	86°	9.0'
4	A	O 41+92.27	9' RT	III - MED CUTOFF - 310 HPS	12	40	SLIP	78.5°	4.5'
5	B	O 41+01.80	14' RT	III - MED CUTOFF - 310 HPS	12	40	SLIP	89°	4.5'
6	A	M 25+24.97	12' RT	III - MED CUTOFF - 310 HPS	10	40	FIXED	73°	9.0'
7	B	M 24+20.59	10' RT	III - MED CUTOFF - 310 HPS	10	40	FIXED	87°	9.0'

BREAKER SCHEDULE — SD3768
TYPE B MOD SERVICE — 120/240V

CIRCUIT	DESCRIPTION	BREAKER RATING	CONTACTOR RATING
---	MAIN	200 AMP	---
A	ILLUMINATION A	20 AMP	30 AMP
B	ILLUMINATION B	20 AMP	30 AMP
C	SPARE	20 AMP	N/A
D	SPARE	20 AMP	N/A
E	SPARE	20 AMP	N/A
F	GFCI	20 AMP	N/A
G	PHOTOCELL	15 AMP	N/A

BUSSWORK SHALL BE RATED AT 250 AMP MINIMUM REFER TO STANDARD PLAN J-10.20 FOR ADDITIONAL BREAKER AND CABINET REQUIREMENTS.

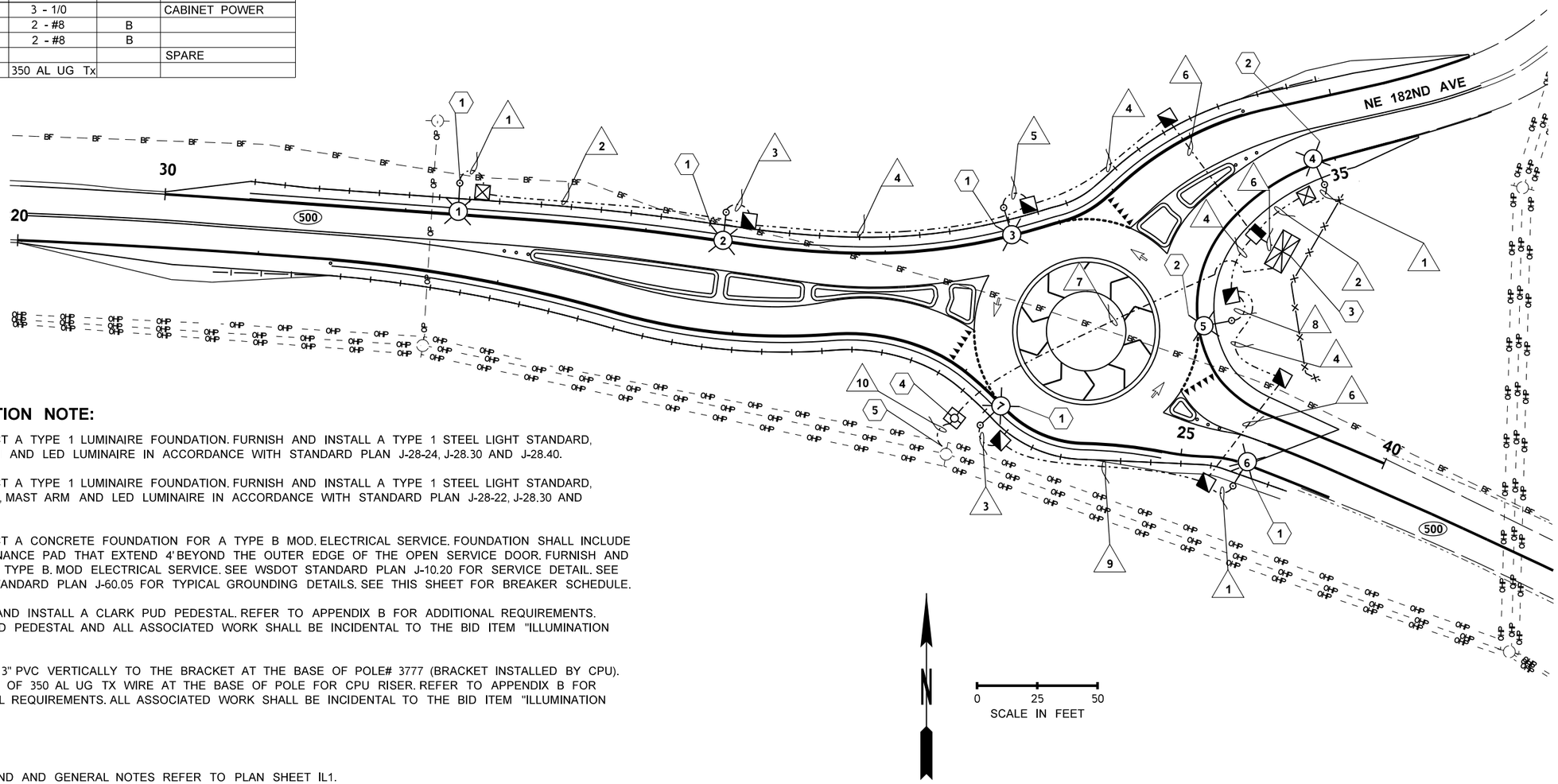

CONSTRUCTION NOTE:

1. CONSTRUCT A TYPE 1 LUMINAIRE FOUNDATION. FURNISH AND INSTALL A TYPE 1 STEEL LIGHT STANDARD, MAST ARM AND LED LUMINAIRE IN ACCORDANCE WITH STANDARD PLAN J-28-24, J-28.30 AND J-28.40.

2. CONSTRUCT A TYPE 1 LUMINAIRE FOUNDATION. FURNISH AND INSTALL A TYPE 1 STEEL LIGHT STANDARD, SLIP BASE, MAST ARM AND LED LUMINAIRE IN ACCORDANCE WITH STANDARD PLAN J-28-22, J-28.30 AND J-28.42.

3. CONSTRUCT A CONCRETE FOUNDATION FOR A TYPE B MOD. ELECTRICAL SERVICE. FOUNDATION SHALL INCLUDE A MAINTENANCE PAD THAT EXTEND 4' BEYOND THE OUTER EDGE OF THE OPEN SERVICE DOOR. FURNISH AND INSTALL A TYPE B. MOD ELECTRICAL SERVICE. SEE WSDOT STANDARD PLAN J-10.20 FOR SERVICE DETAIL. SEE WSDOT STANDARD PLAN J-60.05 FOR TYPICAL GROUNDING DETAILS. SEE THIS SHEET FOR BREAKER SCHEDULE.

4. FURNISH AND INSTALL A CLARK PUD PEDESTAL. REFER TO APPENDIX B FOR ADDITIONAL REQUIREMENTS. CLARK PUD PEDESTAL AND ALL ASSOCIATED WORK SHALL BE INCIDENTAL TO THE BID ITEM "ILLUMINATION SYSTEM".

5. PLUMB (1) 3" PVC VERTICALLY TO THE BRACKET AT THE BASE OF POLE# 3777 (BRACKET INSTALLED BY CPU). COIL 40-FT OF 350 AL UG TX WIRE AT THE BASE OF POLE FOR CPU RISER. REFER TO APPENDIX B FOR ADDITIONAL REQUIREMENTS. ALL ASSOCIATED WORK SHALL BE INCIDENTAL TO THE BID ITEM "ILLUMINATION SYSTEM".

NOTES:

1. FOR LEGEND AND GENERAL NOTES REFER TO PLAN SHEET IL1.
2. ALL LUMINAIRES SHALL BE INSTALLED A MIN. OF 10' FROM ANY OVERHEAD POWERLINE.

FILE NAME	W:\SWApps\Maintenance\Traffic\TRAFFIC DESIGN\01-ACTIVE DESIGN FILES\XL6488_SR 500 NE 182nd Ave - Intersection Improvements\Sheet\XL6488_PS_EL.dgn
TIME	9:55:39 AM
DATE	3/29/2022
PLOTTED BY	wachtek
DESIGNED BY	K. WACHTER
ENTERED BY	K. WACHTER
CHECKED BY	SWR TRAFFIC OFFICE
PROJ. ENGR.	M. HARWOOD
REGIONAL ADM.	C. FRANCIS

REVISION | DATE | BY

REGION NO. 10 | STATE WASH | FED.AID PROJ.NO. HSIP-0500(029)

JOB NUMBER 21X327

CONTRACT NO.

LOCATION NO. XL6488

MONICA JO HARWOOD DUNCAN — STATE OF WASHINGTON — 39399 — REGISTERED PROFESSIONAL ENGINEER

SEE SHEET CT1 DATE

P.E. STAMP BOX

DATE

P.E. STAMP BOX

Washington State Department of Transportation

SR 500
NE 182ND AVE
INTERSECTION IMPROVEMENTS

ILLUMINATION PLAN

Plot 2

PLAN REF NO IL2

SHEET 65 OF 76 SHEETS

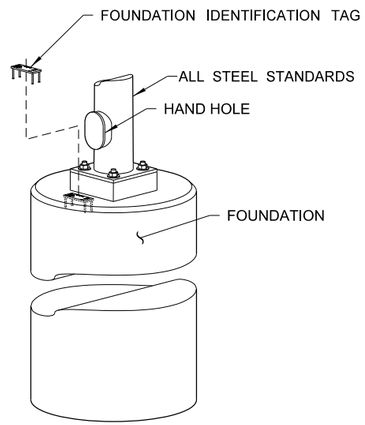

OBLIQUE VIEW

REINFORCING AND ANCHOR BOLTS NOT SHOWN FOR CLARITY

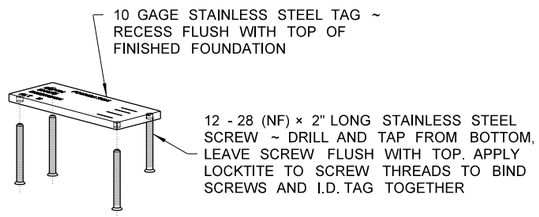

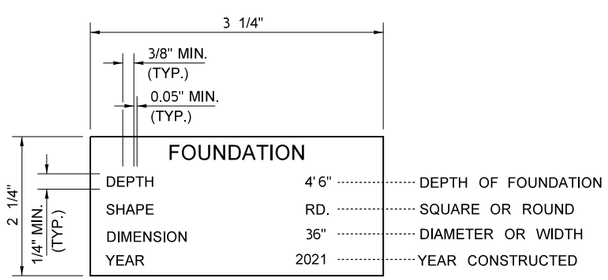

TEXT SHALL BE ENGRAVED 0.014" DEEP

FOUNDATION IDENTIFICATION TAG DETAIL

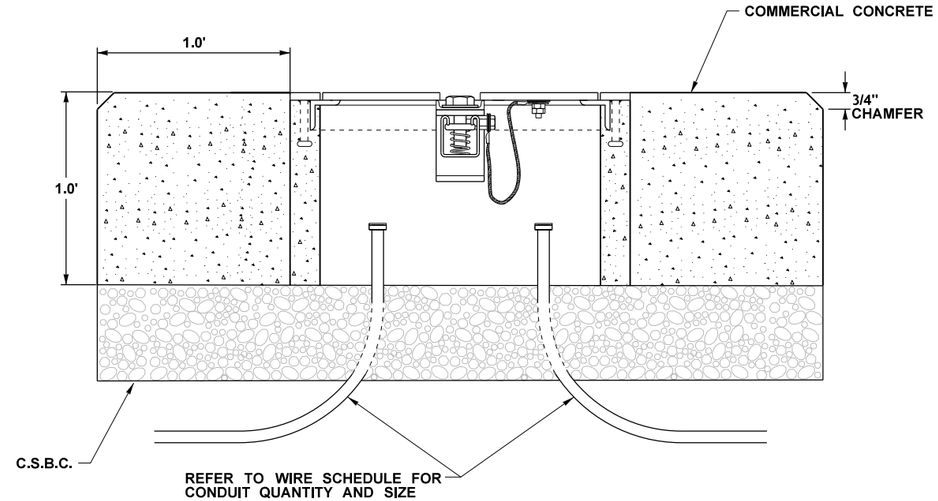

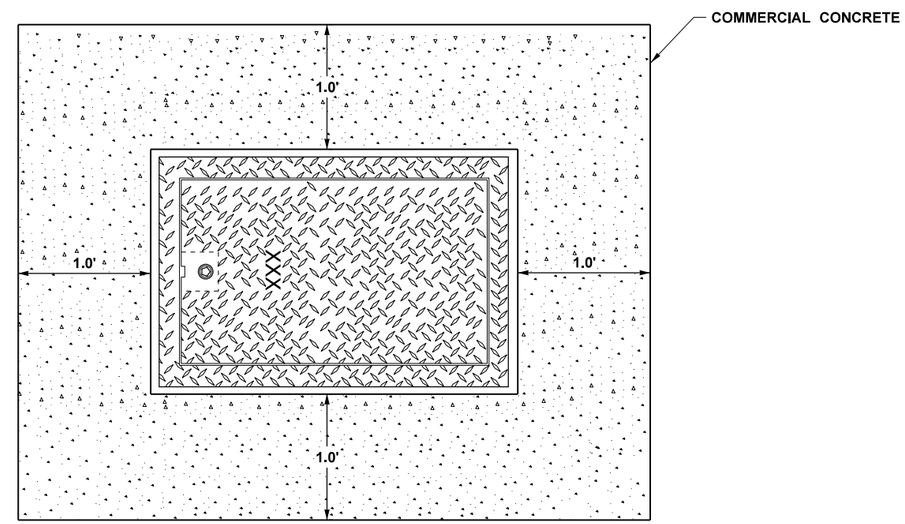

JUNCTION BOX COLLAR

FILE NAME	W:\SWApps\Maintenance\Traffic\TRAFFIC DESIGN\01-ACTIVE DESIGN FILES\XL6488_SR 500 NE 182nd Ave - Intersection Improvements\Sheet\XL6488_PS_EL.dgn							
TIME	9:55:55 AM				REGION NO. 10	STATE WASH	FED.AID PROJ.NO. HSIP-0500(029)	
DATE	3/29/2022							
PLOTTED BY	wachtek				JOB NUMBER 21X327			
DESIGNED BY	K. WACHTER							
ENTERED BY	K. WACHTER							
CHECKED BY	SWR TRAFFIC OFFICE				CONTRACT NO.		LOCATION NO. XL6488	
PROJ. ENGR.	M. HARWOOD							
REGIONAL ADM.	C. FRANCIS	REVISION	DATE	BY				

MONICA JO HARWOOD DUNCAN · STATE OF WASHINGTON · 39399 · REGISTERED PROFESSIONAL ENGINEER

SEE SHEET CT1 DATE

P.E. STAMP BOX

DATE

P.E. STAMP BOX

Washington State Department of Transportation

SR 500
NE 182ND AVE
INTERSECTION IMPROVEMENTS

ILLUMINATION DETAIL

Plot 3

PLAN REF NO IL3

SHEET 66 OF 76 SHEETS

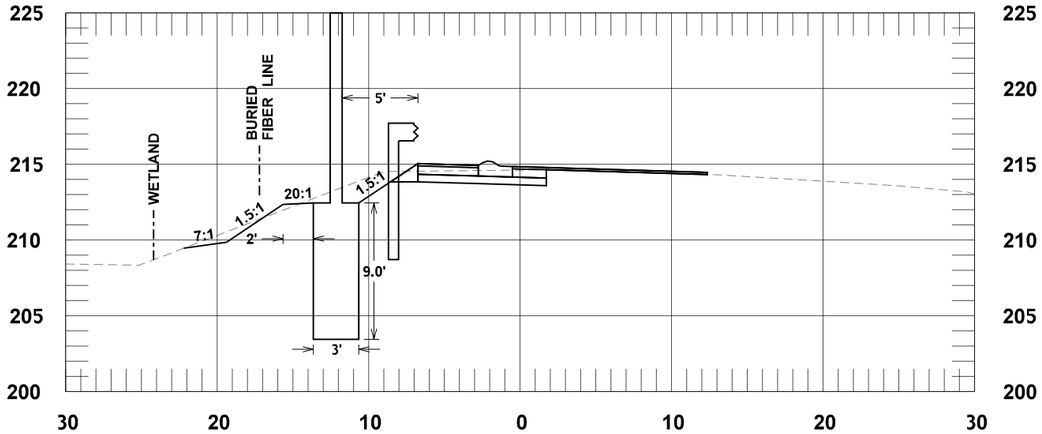

N LINE 31+21.62

LUMINAIRE NO. 1

COORDINATES TO CENTER TOP OF FOUNDATION

NORTHING: 129940

EASTING: 1131814

ELEV: 212.4

SEE STANDARD PLANS J-28.24 AND J-28.30, DEPTH 9.0'

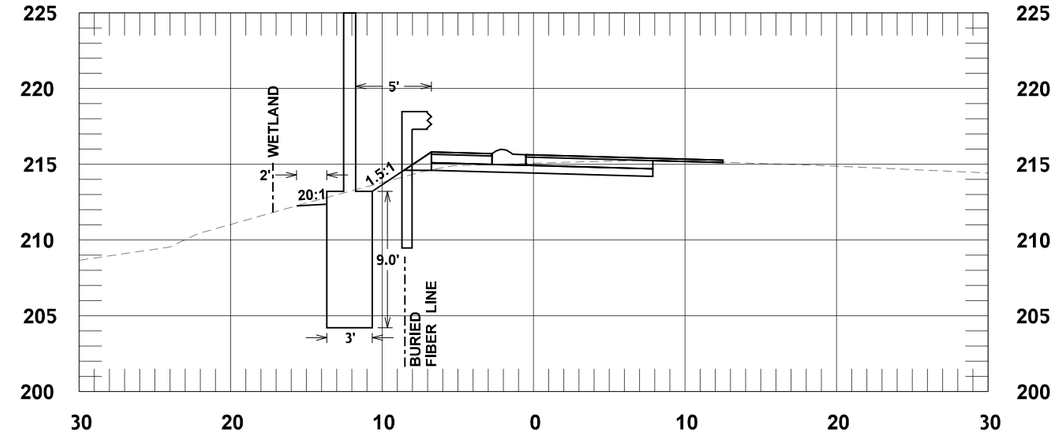

N LINE 32+31.98

LUMINAIRE NO. 2

COORDINATES TO CENTER TOP OF FOUNDATION

NORTHING: 129928

EASTING: 1131924

ELEV: 213.2

SEE STANDARD PLANS J-28.24 AND J-28.30, DEPTH 9.0'

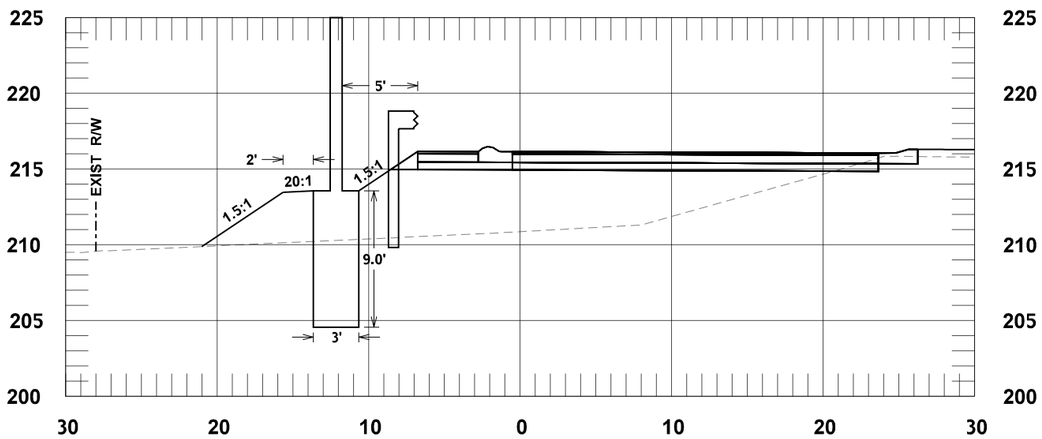

N LINE 33+52.60

LUMINAIRE NO. 3

COORDINATES TO CENTER TOP OF FOUNDATION

NORTHING: 129930

EASTING: 1132039

ELEV: 213.6

SEE STANDARD PLANS J-28.24 AND J-28.30, DEPTH 9.0'

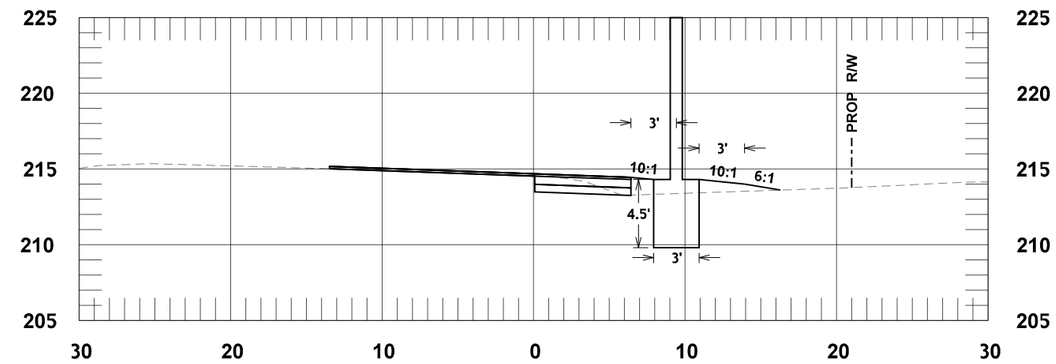

O LINE 41+92.27

LUMINAIRE NO. 4

COORDINATES TO CENTER TOP OF FOUNDATION

NORTHING: 129939

EASTING: 1132172

ELEV: 214.3

SEE STANDARD PLAN J-28.30, DEPTH 4.5'

FILE NAME	G:\444301\05-Design\02-Projects\SR 500 182nd RAB\1-CADD-Plans\20-1.2 CAD Sheet Files\D50021R_SH_XS.dgn			
TIME	8:36:09 AM			
DATE	3/29/2022			
PLOTTED BY	bournem			
DESIGNED BY	MORGAN BOURNE			
ENTERED BY	MORGAN BOURNE			
CHECKED BY	ANDY ROMANCHOCK			
PROJ. ENGR.	SUSAN FELL			
REGIONAL ADM.	CARLEY FRANCIS	REVISION	DATE	BY

REGION NO. 10 | STATE WASH | FED.AID PROJ.NO. HSIP-0500(029)

JOB NUMBER 21X327

CONTRACT NO.

LOCATION NO. XL6488

SUSAN WAI LEONG FELL — STATE OF WASHINGTON — 36748 — REGISTERED PROFESSIONAL ENGINEER

SEE SHEET CT1

DATE

P.E. STAMP BOX

DATE

P.E. STAMP BOX

Washington State Department of Transportation

SR 500
NE 182ND AVE
INTERSECTION IMPROVEMENTS

LUMINAIRE FOUNDATION CROSS SECTIONS

PLOT 1

PLAN REF NO XS1

SHEET 67 OF 76 SHEETS

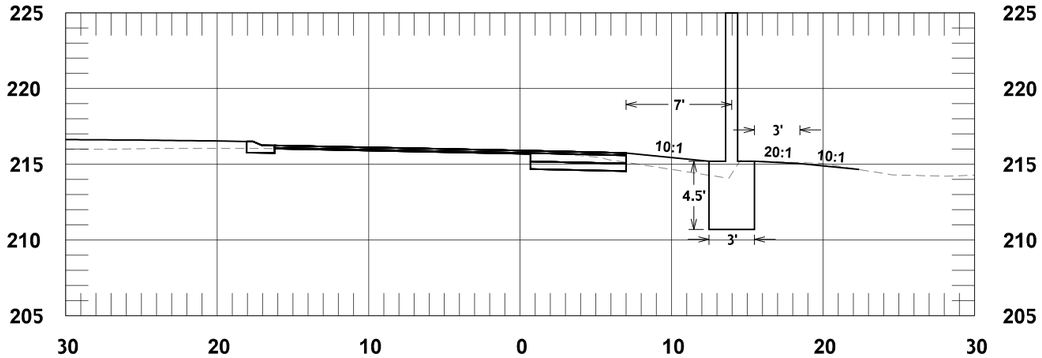

O LINE 41+01.80 **COORDINATES TO CENTER TOP OF FOUNDATION**

LUMINAIRE NO. 5

NORTHING: 129883

EASTING: 1132134

ELEV: 215.2

SEE STANDARD PLAN J-28.30, DEPTH 4.5'

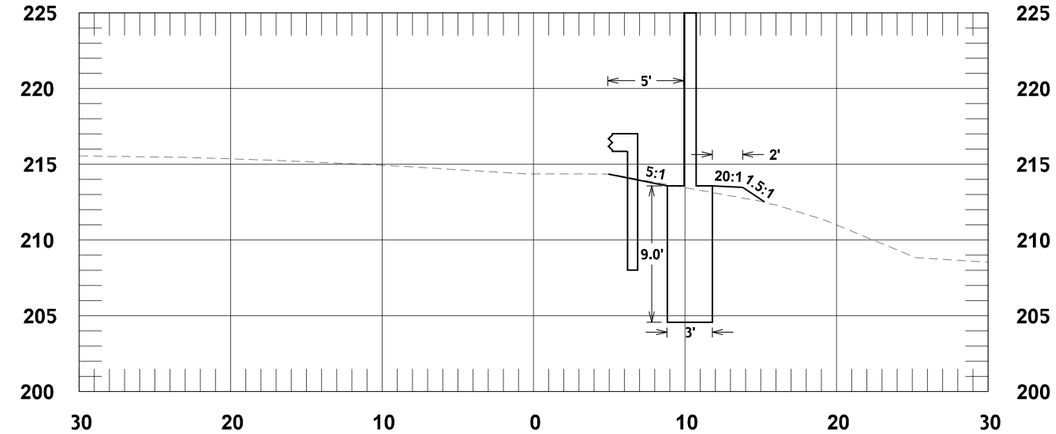

M LINE 25+24.97 **COORDINATES TO CENTER TOP OF FOUNDATION**

LUMINAIRE NO. 6

NORTHING: 129814

EASTING: 1132135

ELEV: 213.6

SEE STANDARD PLANS J-28.24 AND J-28.30, DEPTH 9.0'

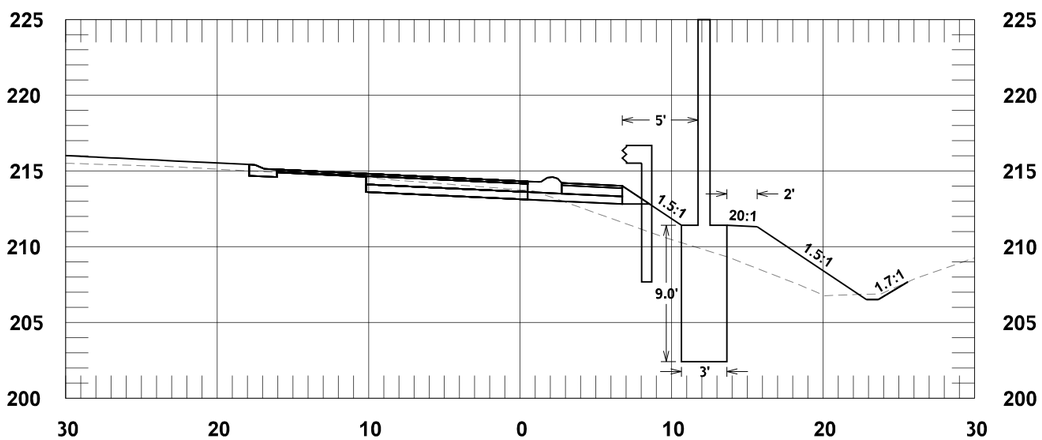

M LINE 24+20.59 **COORDINATES TO CENTER TOP OF FOUNDATION**

LUMINAIRE NO. 7

NORTHING: 129840

EASTING: 1132030

ELEV: 211.4

SEE STANDARD PLANS J-28.24 AND J-28.30, DEPTH 9.0'

FILE NAME	G:\444301\05-Design\02-Projects\SR 500 182nd RAB\1-CADD-Plans\20-1.2 CAD Sheet Files\D50021R_SH_XS.dgn			
TIME	8:36:10 AM			
DATE	3/29/2022			
PLOTTED BY	bournem			
DESIGNED BY	MORGAN BOURNE			
ENTERED BY	MORGAN BOURNE			
CHECKED BY	ANDY ROMANCHOCK			
PROJ. ENGR.	SUSAN FELL			
REGIONAL ADM.	CARLEY FRANCIS	REVISION	DATE	BY

REGION NO.	STATE	FED.AID PROJ.NO.
10	WASH	HSIP-0500(029)
JOB NUMBER 21X327		
CONTRACT NO.		LOCATION NO. XL6488

SEE SHEET CT1

DATE

P.E. STAMP BOX

DATE

P.E. STAMP BOX

Washington State Department of Transportation

SR 500
NE 182ND AVE
INTERSECTION IMPROVEMENTS

LUMINAIRE FOUNDATION CROSS SECTIONS

PLOT 2

PLAN REF NO XS2

SHEET 68 OF 76 SHEETS

SIGN INSTALLATION SPECIFICATIONS

SIGN NO.	SIGN CODE	SIGN DESCRIPTION	STA. LOC. (or MP)	SIGN SIZE X	SIGN SIZE Y	SHEETING TYPE	LETTER SIZE OR CODE	POST MATERIAL	POST SIZE	POST LENGTH H1	POST LENGTH H2	POST LENGTH H3	POST LENGTH H4	CLEARANCE V	CLEARANCE W	REMARKS
1	D10-101	MILE 9	SR 500 MP 9.00 RT	14"	18"	III or IV	STANDARD	STEEL	2.5" SQ.	8'						
2	W2-6P	ROUNDABOUT AHEAD	SR 500 MP 9.01 RT	30"	18"	III or IV	STANDARD	STEEL	3" SQ	15'						SEE NOTE #2.
3	W2-6	ROUNDABOUT SYMBOL	SR 500 MP 9.01 RT	36"	36"	III or IV	STANDARD									MOUNT BELOW SIGN #2
4	D3-201	NE 182ND AVE	SR 500 MP 9.01 RT	48"	12"	III or IV	SIGN DETAIL									MOUNT BELOW SIGN #3. 5' MIN. MOUNTING HEIGHT.
5	W13-1	15 MPH	SR 500 MP 9.01 RT	24"	24"	III or IV	STANDARD									MOUNT BELOW SIGN #4. 5' MIN. MOUNTING HEIGHT.
6	R4-7	KEEP RIGHT SYMBOL	STA. M 22+32.79 LT	18"	24"	III or IV	STANDARD	STEEL	2.5" SQ.	10'						INSTALL IN CONCRETE SPLITTER ISLAND. SEE NOTE #2.
7	D1-602MOD	NE 182ND AVE, ARROW, ARROW, SR500 EAST	STA. M 22+41.28 RT	60"	48"	III or IV	SIGN DETAIL	STEEL	3" SQ	12'						
8	R1-2	YIELD	STA. M 23+92.33 RT	48"	48"	III or IV	STANDARD	STEEL	2.5" SQ.	12'						SEE NOTE #1.
9	R1-2A	TO TRAFFIC IN CIRCLE	STA. M 23+92.33 RT	24"	18"	III or IV	STANDARD									MOUNT BELOW SIGN #8. 5' MIN. MOUNTING HEIGHT.
10	INTENTIONALLY LEFT BLANK															
11	W12-401R	LATERAL CLEARANCE MARKER	STA. M 25+49.71 RT	12"	36"	III or IV	STANDARD	STEEL	2.5" SQ.	8'						
12	W12-401L	LATERAL CLEARANCE MARKER	SR 500 MP 9.17 RT	12"	36"	III or IV	STANDARD	STEEL	2.5" SQ.	8'						
13	INTENTIONALLY LEFT BLANK															
14	W2-6P	ROUNDABOUT AHEAD	SR 500 MP 9.285 LT	30"	18"	III or IV	STANDARD	STEEL	3" SQ	15'						SEE NOTE #2.
15	W2-6	ROUNDABOUT SYMBOL	SR 500 MP 9.285 LT	36"	36"	III or IV	STANDARD									MOUNT BELOW SIGN #14
16	D3-201	NE 182ND AVE	SR 500 MP 9.285 LT	48"	12"	III or IV	SIGN DETAIL									MOUNT BELOW SIGN #15
17	W13-1	15 MPH	SR 500 MP 9.285 LT	24"	24"	III or IV	STANDARD									MOUNT BELOW SIGN #16. 5' MIN. MOUNTING HEIGHT.
18	D1-602MOD	ARROW, SR500 WEST, ARROW, NE 182ND AVE	SR 500 MP 9.19 LT	60"	48"	III or IV	SIGN DETAIL	STEEL	3" SQ	12'						
19	W12-401R	LATERAL CLEARANCE MARKER	SR 500 MP 9.17 LT	12"	36"	III or IV	STANDARD	STEEL	2.5" SQ.	8'						
20	W12-401L	LATERAL CLEARANCE MARKER	STA. O 40+00.00 RT	12"	36"	III or IV	STANDARD	STEEL	2.5" SQ.	8'						
21	R1-2	YIELD	STA. O 40+81.95 RT	48"	48"	III or IV	STANDARD	STEEL	2.5" SQ.	12'						SEE NOTE #1.
22	R1-2A	TO TRAFFIC IN CIRCLE	STA. O 40+81.95 RT	24"	18"	III or IV	STANDARD									MOUNT BELOW SIGN #21. 5' MIN. MOUNTING HEIGHT.
23	W2-6P	ROUNDABOUT AHEAD	STA. P 04+42.30 LT	30"	18"	III or IV	STANDARD	STEEL	3" SQ	15'						SEE NOTE #2.
24	W2-6	ROUNDABOUT SYMBOL	STA. P 04+42.30 LT	36"	36"	III or IV	STANDARD									MOUNT BELOW SIGN #23
25	D3-201	HWY 500	STA. P 04+42.30 LT	36"	12"	III or IV	SIGN DETAIL									MOUNT BELOW SIGN #24
26	W13-1	15 MPH	STA. P 04+42.30 LT	24"	24"	III or IV	STANDARD									MOUNT BELOW SIGN #25. 5' MIN. MOUNTING HEIGHT.
27	D1-602MOD	ARROW, SR500 W, SR 500 E ARROW	STA. P 02+10.98 LT	60"	48"	III or IV	SIGN DETAIL	STEEL	3" SQ	12'						
28	INTENTIONALLY LEFT BLANK															
29	R1-2A	YIELD	STA. N 33+92.76 LT	48"	48"	III or IV	STANDARD	STEEL	2.5" SQ.	12						SEE NOTE #1.
30	R1-2aP	TO TRAFFIC IN CIRCLE	STA. N 33+92.76 LT	24"	18"	III or IV	STANDARD									MOUNT BELOW SIGN #29. 5' MIN. MOUNTING HEIGHT.
31	M1-701	WEST STATE ROUTE 500	STA. N 30+41.88 LT	24"	30"	III or IV	STANDARD	STEEL	2.5" SQ.	13						

CONSTRUCTION NOTES:

POST LENGTHS SHOWN ARE APPROXIMATE. FINAL VALUES SHALL BE DETERMINED IN THE FIELD BY THE CONTRACTOR PRIOR TO FABRICATION.
FOR STRUCTURE AND MOUNTING DETAILS SEE STANDARD PLAN SHEET SERIES "G".
FOR CODE REFERENCES AND STANDARD DETAILS SEE WASHINGTON STATE SIGN FABRICATION MANUAL.
FOR CLEARANCES VALUES V AND W NOT STATED IN THE PLANS REFER TO STANDARD PLAN G20.10.
ALL 3" POSTS SHALL BE MOUNTED ON SB-3 SUPPORT.
ALL 2.5" SINGLE POST SHALL BE MOUNTED ON ST-4 SUPPORT.
ALL SIGNS 36" OR WIDER REQUIRE SIGN BRACING PER STANDARD PLAN G-50.10.
NEW OR RELOCATED SIGNS SHALL BE PRESERVED. SIGNS FOUND TO BE DAMAGED OR STOLEN ARE TO BE REPLACED AT THE CONTRACTOR EXPENSE.

PRECAST BASES ARE NOT PERMITTED.
CONTRACTOR SHALL MOVE SIGN(S) AHEAD OR BACK ON STATION TO AVOID SIGN OBSTRUCTIONS.
FOR SIGN DETAILS REFER TO SHEET SN2.
CONTRACTOR SHALL HAVE ALL SIGNS INSTALLED PRIOR TO TRAFFIC BEING RELEASED INTO THE FINAL ROUNDABOUT CONFIGURATION.

NOTES:

1. FURNISH AND INSTALL A RED SIGN POST REFLECTOR ON ONE SIDE OF THE SIGN.
2. FURNISH AND INSTALL A YELLOW SIGN POST REFLECTOR ON ONE SIDE OF THE SIGN.

SIGN RELOCATION SPECIFICATIONS

SIGN NO.	SIGN CODE	SIGN DESCRIPTION	EXIST. STA. LOC. (or MP)	NEW STA. LOC. (or MP)	SIGN SIZE		POST MATERIAL	POST SIZE	POST LENGTH				CLEARANCE		REMARKS
					X	Y			H1	H2	H3	H4	V	W	
1	D1-101	LACAMAS WATER SHED, LACAMAS CREEK	M 25+33.75 RT	M 25+35.00 RT	24	30	STEEL	2" DIA	10						REMOVE AND DISPOSE OF EXIST. POST AND FOUNDATION
2	D1-101	LACAMAS WATER SHED, LACAMAS CREEK	SR 500 MP 9.19 LT	SR 500 MP 9.18 LT	24	30	STEEL	2" DIA	10						REMOVE AND DISPOSE OF EXIST. POST AND FOUNDATION

SIGN REMOVAL SPECIFICATIONS

SIGN NO.	SIGN CODE	SIGN DESCRIPTION	STA. LOC. (or MP)	SIGN SIZE		POST MATERIAL	POST SIZE	# OF POSTS	REMARKS
				X	Y				
1	D10-101	MILE 9	SR 500 MP 9.00 RT	18"	24"	STEEL	2.5" SQ.	1	
2	W1-10R	COMBO CURVE RIGHT	SR 500 MP 9.02 RT	36"	36"	STEEL	2.5" SQ.	1	
3	D3-201	NE 182ND AVE	SR 500 MP 9.02 RT	60"	18"				MOUNTED BELOW SIGN NO. 2
4	W13-1	40 MPH	SR 500 MP 9.02 RT	30"	30"				MOUNTED BELOW SIGN NO. 3
5	W12-401R	LATERAL CLEARANCE MARKER	STA. M 25+49.71 RT	12"	36"	WOOD	4x4	1	
6	W12-401L	LATERAL CLEARANCE MARKER	SR 500 MP 9.17 RT	12"	36"	WOOD	4x4	1	
7	W1-10R	COMBO CURVE RIGHT	SR 500 MP 9.28 RT	36"	36"	STEEL	2.5" SQ.	1	
8	D3-201	NE 182ND AVE	SR 500 MP 9.28 RT	60"	18"				MOUNTED BELOW SIGN NO. 7
9	W13-1	40 MPH	SR 500 MP 9.28 RT	30"	30"				MOUNTED BELOW SIGN NO. 8
10	W1-10R	COMBO CURVE RIGHT	SR 500 MP 9.285 LT	36"	36"	STEEL	2.5" SQ.	1	
11	D3-201	NE 182ND AVE	SR 500 MP 9.285 LT	60"	18"				MOUNTED BELOW SIGN NO. 10
12	W13-1	40 MPH	SR 500 MP 9.285 LT	30"	30"				MOUNTED BELOW SIGN NO. 11
13	W12-401L	LATERAL CLEARANCE MARKER	SR 500 MP 9.17 LT	12"	36"	7 WOOD	4x4	1	
14	W12-401L	LATERAL CLEARANCE MARKER	STA. O 40+00.00 RT	12"	36"	WOOD	4x4	1	
15	W3-1a	STOP AHEAD SYMBOL	STA. P 04+31.88 LT	48"	48"	STEEL	2" DIA.	1	
16	D3-201	NE 182ND AVE	STA. N 33+63.61 LT	60"	18"	STEEL	2.5" SQ.	1	
17	R1-1	STOP	STA. N 33+63.61 LT	36"	36"				MOUNTED BELOW SIGN NO. 16
18	W1-10R	COMBO CURVE RIGHT	SR 500 MP 9.02 LT	36"	36"	STEEL	2.5" SQ.	1	
19	D3-201	NE 182ND AVE	SR 500 MP 9.02 LT	60"	18"				MOUNTED BELOW SIGN NO. 18
20	W13-1	40 MPH	SR 500 MP 9.02 LT	30"	30"				MOUNTED BELOW SIGN NO. 19

CONSTRUCTION NOTES:

SIGNS NOT BEING RELOCATED SHALL BE DISPOSED OF BY THE CONTRACTOR.
ALL SIGN FOUNDATIONS SHALL BE REMOVED AND DISPOSED OF BY THE CONTRACTOR.

SIGN DETAILS

FILE NAME	W:\SWApps\Maintenance\Traffic\TRAFFIC DESIGN\01-ACTIVE DESIGN FILES\XL6488_SR 500 NE 182nd Ave - Intersection Improvements\Sheet\XL6488_PS_SN.dgn
TIME	10:04:50 AM
DATE	3/29/2022
PLOTTED BY	wachtek
DESIGNED BY	K. WACHTER
ENTERED BY	K. WACHTER
CHECKED BY	D. BURKEY/ R. SMITH
PROJ. ENGR.	M. HARWOOD
REGIONAL ADM.	C. FRANCIS

REVISION | DATE | BY

REGION NO. 10 | STATE WASH | FED.AID PROJ.NO. HSIP-0500(29)

JOB NUMBER 21X327

CONTRACT NO.

LOCATION NO. XL6488

MONICA O. HARWOOD DUNCAN, STATE OF WASHINGTON, 39399, REGISTERED PROFESSIONAL ENGINEER

SEE SHEET CT1

DATE

P.E. STAMP BOX

DATE

P.E. STAMP BOX

Washington State Department of Transportation

SR 500
NE 182ND AVE
INTERSECTION IMPROVEMENTS

SIGN RELOCATE/ REMOVAL SPECIFICATIONS & SIGN DETAIL

Plot 2

PLAN REF NO SN2

SHEET 70 OF 76 SHEETS

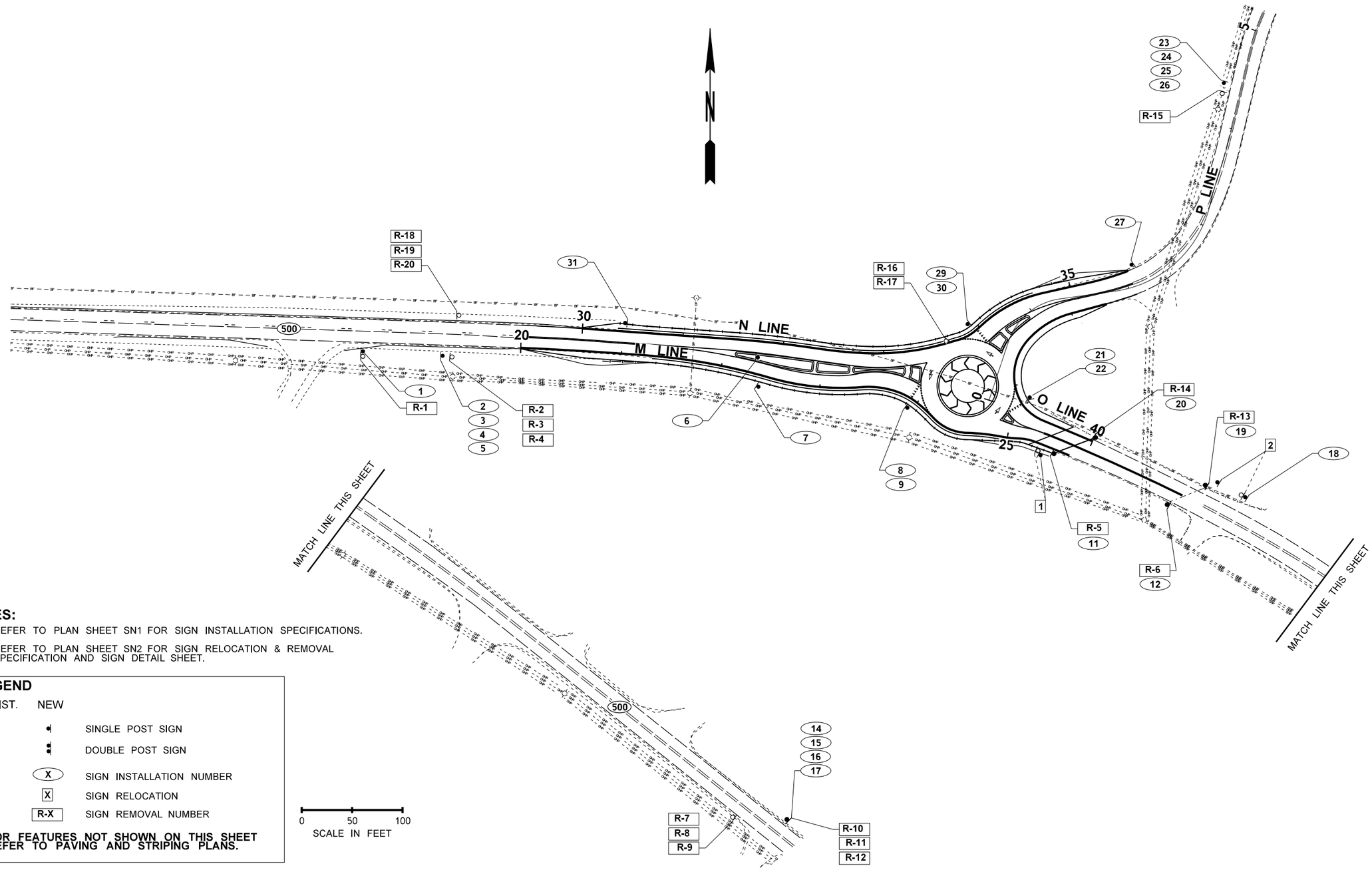

NOTES:

1. REFER TO PLAN SHEET SN1 FOR SIGN INSTALLATION SPECIFICATIONS.
2. REFER TO PLAN SHEET SN2 FOR SIGN RELOCATION & REMOVAL SPECIFICATION AND SIGN DETAIL SHEET.

LEGEND

EXIST.	NEW	
		SINGLE POST SIGN
		DOUBLE POST SIGN
	(X)	SIGN INSTALLATION NUMBER
	[X]	SIGN RELOCATION
	[R-X]	SIGN REMOVAL NUMBER

*FOR FEATURES NOT SHOWN ON THIS SHEET REFER TO PAVING AND STRIPING PLANS.

FILE NAME	W:\SWApps\Maintenance\Traffic\TRAFFIC DESIGN\01-ACTIVE DESIGN FILES\XL6488_SR 500 NE 182nd Ave - Intersection Improvements\Sheet\XL6488_PS_SN.dgn						
TIME	10:13:37 AM				REGION NO. 10	STATE WASH	FED.AID PROJ.NO. HSIP-0500(29)
DATE	3/29/2022						
PLOTTED BY	wachtek						
DESIGNED BY	K. WACHTER				JOB NUMBER 21X327		
ENTERED BY	K. WACHTER						
CHECKED BY	D. BURKEY/ R. SMITH				CONTRACT NO.		LOCATION NO. XL6488
PROJ. ENGR.	M. HARWOOD						
REGIONAL ADM.	C. FRANCIS	REVISION	DATE	BY			

MONICA JO HARWOOD DUNCAN — STATE OF WASHINGTON — 39399 — REGISTERED PROFESSIONAL ENGINEER

SEE SHEET CT1
DATE
P.E. STAMP BOX

DATE
P.E. STAMP BOX

Washington State Department of Transportation

SR 500
NE 182ND AVE
INTERSECTION IMPROVEMENTS

SIGNING PLAN

Plot 3

PLAN REF NO
SN3

SHEET 71 OF 76 SHEETS

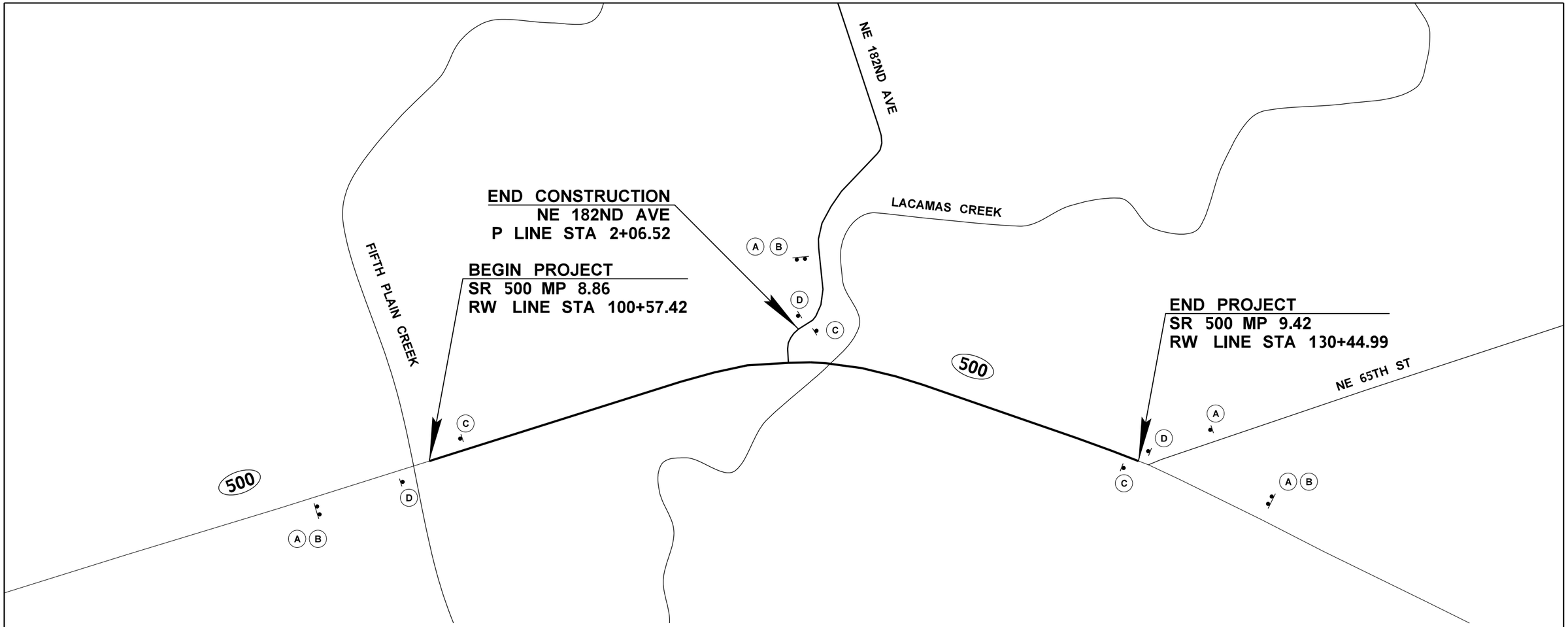

REQUIRED: 4 EA

(A)

W20-1

REQUIRED: 3 EA

(B)

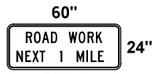

G20-2

REQUIRED: 3 EA

(C)

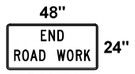

G20-2A

G24-501

MOUNT BELOW G20-2A

REQUIRED: 3 EA

(D)

I20-301

BLACK ON WHITE

0 200 400
SCALE IN FEET

NOTES:

1. ACTUAL LOCATIONS TO BE DETERMINED IN THE FIELD BY THE ENGINEER.
2. ALL SIGNS SHALL BE BLACK ON ORANGE UNLESS OTHERWISE DESIGNATED.
3. COVER OR REMOVE CONFLICTING SIGNS.
4. SEE SHEETS ST7 - ST11 FOR ADDITIONAL CLASS A SIGN DETAILS AND QUANTITIES.

FILE NAME	G:\444301\05-Design\02-Projects\SR 500 182nd RAB\1-CADD-Plans\20-1.2 CAD Sheet Files\D50021R_SH_CS.dgn			
TIME	8:43:03 AM			
DATE	3/29/2022			
PLOTTED BY	bournem			
DESIGNED BY	MORGAN BOURNE			
ENTERED BY	MORGAN BOURNE			
CHECKED BY	ANDY ROMANCHOCK			
PROJ. ENGR.	SUSAN FELL			
REGIONAL ADM.	CARLEY FRANCIS	REVISION	DATE	BY

REGION NO.	STATE	FED.AID PROJ.NO.
10	WASH	HSIP-0500(029)
JOB NUMBER 21X327		
CONTRACT NO.		LOCATION NO. XL6488

SUSAN WAI LEONG FELL, STATE OF WASHINGTON, 36748, REGISTERED PROFESSIONAL ENGINEER

SEE SHEET CT1
DATE
P.E. STAMP BOX

DATE
P.E. STAMP BOX

Washington State
Department of Transportation

SR 500
NE 182ND AVE
INTERSECTION IMPROVEMENTS

CONSTRUCTION SIGNING PLAN

PLOT 1
PLAN REF NO
CS1
SHEET 72 OF 76 SHEETS

BUFFER DATA

LONGITUDINAL BUFFER SPACE = B

SPEED (MPH)	25	30	35	40	45	50	55	60	65	70
LENGTH (feet)	155	200	250	305	360	425	495	570	645	730

TRANSPORTABLE ATTENUATOR ROLL AHEAD DISTANCE = R

HOST VEHICLE WEIGHT 9,900 TO 22,000 lbs.			HOST VEHICLE WEIGHT > 22,000 lbs.		
< 45 MPH	45-55 MPH	> 55 MPH	< 45 MPH	45-55 MPH	> 55 MPH
100'	123'	172'	74'	100'	150'

PROTECTIVE VEHICLE (WORK VEHICLE) = R

NO SPECIFIED DISTANCE REQUIRED

SIGN SPACING = X (1)

RURAL HIGHWAYS	60 / 65 MPH	800' ±
RURAL ROADS	45 / 55 MPH	500' ±
RURAL ROADS & URBAN ARTERIALS	35 / 40 MPH	350' ±
RURAL ROADS, URBAN ARTERIALS, RESIDENTIAL & BUSINESS DISTRICTS	25 / 30 MPH	200' ± (2)
URBAN STREETS	25 MPH OR LESS	100' ± (2)

(1) ALL SPACING MAY BE ADJUSTED TO ACCOMMODATE INTERSECTIONS AND DRIVEWAYS.
(2) THIS SPACING MAY BE REDUCED IN URBAN AREAS TO FIT ROADWAY CONDITIONS.

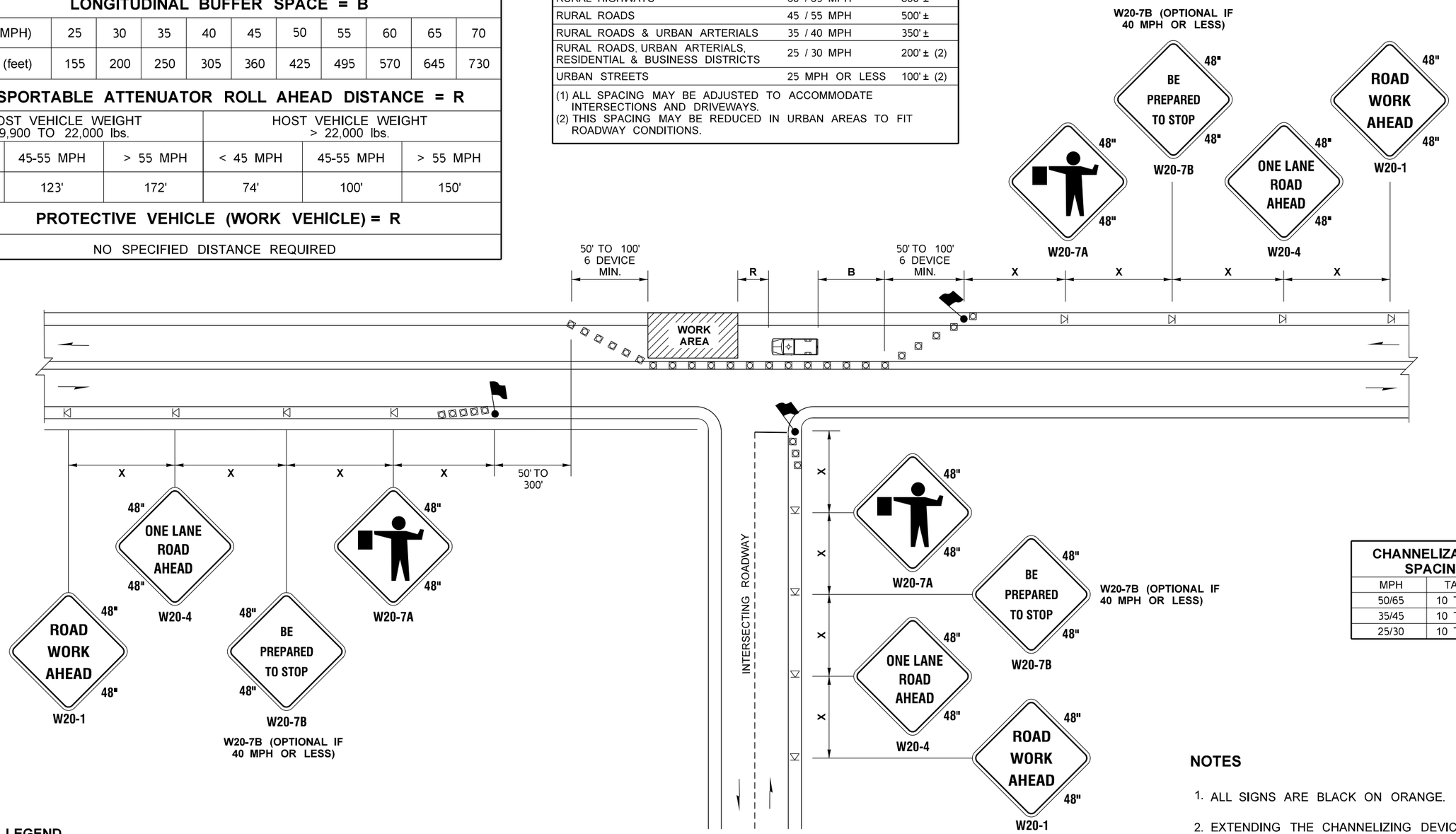

CHANNELIZATION DEVICE SPACING (FEET)

MPH	TAPER	TANGENT
50/65	10 TO 20	80
35/45	10 TO 20	60
25/30	10 TO 20	40

LEGEND

- FLAGGING STATION
- TEMPORARY SIGN LOCATION
- CHANNELIZING DEVICES
- PROTECTIVE VEHICLE

NOTES

1. ALL SIGNS ARE BLACK ON ORANGE.
2. EXTENDING THE CHANNELIZING DEVICE TAPER ACROSS SHOULDER IS RECOMMENDED.
3. NIGHT WORK REQUIRES ADDITIONAL ROADWAY LIGHTING AT FLAGGING STATIONS. SEE THE **STANDARD SPECIFICATIONS** FOR ADDITIONAL DETAILS.
4. SEE **SPECIAL PROVISIONS** FOR WORK HOUR RESTRICTIONS.

ONE-LANE, TWO-WAY TRAFFIC CONTROL WITH FLAGGERS

NOT TO SCALE

FILE NAME	G:\444301\05-Design\02-Projects\SR 500 182nd RAB\1-CADD-Plans\20-1.2 CAD Sheet Files\D50021R_SH_TC.dgn
TIME	8:43:05 AM
DATE	3/29/2022
PLOTTED BY	bournem
DESIGNED BY	MORGAN BOURNE
ENTERED BY	MORGAN BOURNE
CHECKED BY	ANDY ROMANCHOCK
PROJ. ENGR.	SUSAN FELL
REGIONAL ADM.	CARLEY FRANCIS

REVISION | DATE | BY

REGION NO. | STATE: WASH | FED.AID PROJ.NO. HSIP-0500(029)

JOB NUMBER 21X327

CONTRACT NO. | LOCATION NO. XL6488

P.E. STAMP BOX DATE

P.E. STAMP BOX DATE

Washington State Department of Transportation

SR 500
NE 182ND AVE
INTERSECTION IMPROVEMENTS

TRAFFIC CONTROL PLANS

PLOT 1

PLAN REF NO TC1

SHEET 73 OF 76 SHEETS

SIGN SPACING = X (1)		
RURAL ROADS & URBAN ARTERIALS	35 / 40 MPH	350' ±
RURAL ROADS, URBAN ARTERIALS, RESIDENTIAL & BUSINESS DISTRICTS	25 / 30 MPH	200' ± (2)
URBAN STREETS	25 MPH OR LESS	100' ± (2)

(1) ALL SPACING MAY BE ADJUSTED TO ACCOMMODATE INTERSECTIONS AND DRIVEWAYS.
(2) THIS SPACING MAY BE REDUCED IN URBAN AREAS TO FIT ROADWAY CONDITIONS.

MINIMUM SHOULDER TAPER LENGTH = L/3 (feet)

SHOULDER WIDTH (feet)	Posted Speed (mph)									
	25	30	35	40	45	50	55	60	65	70
8'	40	40	60	90	-	-	-	-	-	-
10'	40	60	90	90	-	-	-	-	-	-

USE A 3 DEVICES TAPER FOR SHOULDERS LESS THEN 8'

BUFFER DATA

LONGITUDINAL BUFFER SPACE = B

SPEED (MPH)	25	30	35	40	45	50	55	60	65	70
LENGTH (feet)	155	200	250	305	360	425	495	570	645	730

TRANSPORTABLE ATTENUATOR ROLL AHEAD DISTANCE = R

HOST VEHICLE WEIGHT 9,900 TO 22,000 lbs.			HOST VEHICLE WEIGHT > 22,000 lbs.		
< 45 MPH	45-55 MPH	> 55 MPH	< 45 MPH	45-55 MPH	> 55 MPH
100'	123'	172'	74'	100'	150'

PROTECTIVE VEHICLE (WORK VEHICLE) = R

NO SPECIFIED DISTANCE REQUIRED

CHANNELIZATION DEVICE SPACING (feet)

MPH	TAPER	TANGENT
35/40	30	60
25/30	20	40

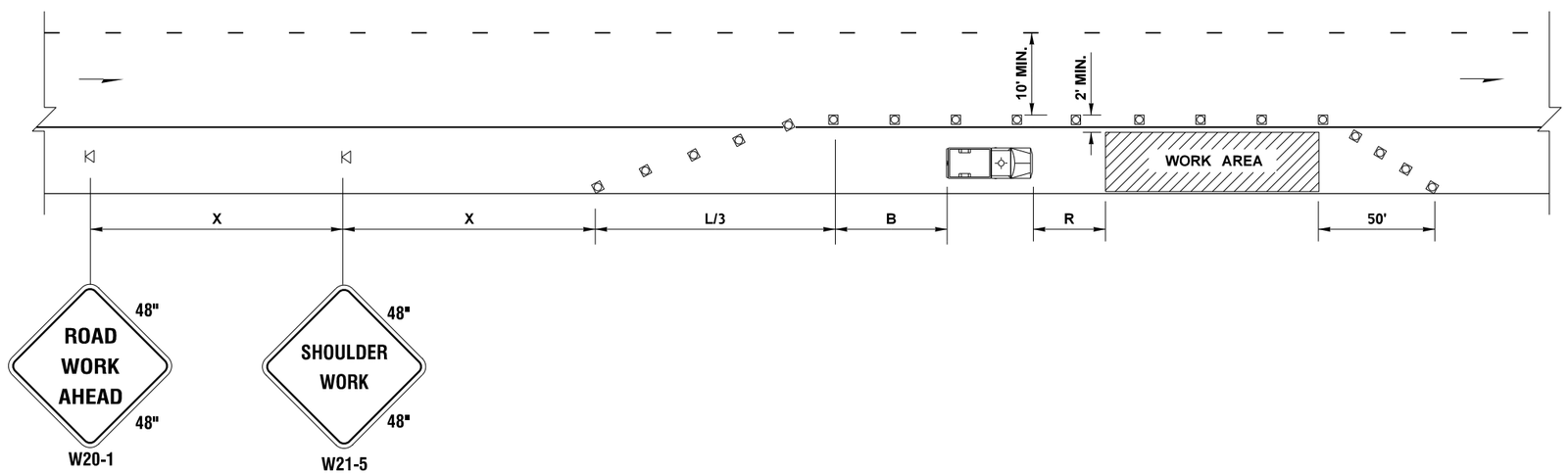

LEGEND

- TEMPORARY SIGN LOCATION
- CHANNELIZING DEVICES
- PROTECTIVE VEHICLE

SHOULDER CLOSURE - LOW SPEED

(40 MPH OR LESS)

NOT TO SCALE

NOTES

1. DEVICE SPACING FOR THE DOWNSTREAM TAPER SHALL BE 20' (FT).
2. ALL SIGNS ARE BLACK ON ORANGE.

FILE NAME	G:\444301\05-Design\02-Projects\SR 500 182nd RAB\1-CADD-Plans\20-1.2 CAD Sheet Files\D50021R_SH_TC.dgn
TIME	8:43:06 AM
DATE	3/29/2022
PLOTTED BY	bournem
DESIGNED BY	MORGAN BOURNE
ENTERED BY	MORGAN BOURNE
CHECKED BY	ANDY ROMANCHOCK
PROJ. ENGR.	SUSAN FELL
REGIONAL ADM.	CARLEY FRANCIS

REVISION | DATE | BY

REGION NO. | STATE: WASH | FED.AID PROJ.NO. HSIP-0500(029)

JOB NUMBER 21X327

CONTRACT NO. | LOCATION NO. XL6488

P.E. STAMP BOX DATE

P.E. STAMP BOX DATE

Washington State Department of Transportation

SR 500
NE 182ND AVE
INTERSECTION IMPROVEMENTS

TRAFFIC CONTROL PLANS

PLOT 2

PLAN REF NO TC2

SHEET 74 OF 76 SHEETS

MINIMUM SHOULDER TAPER LENGTH = L/3 (feet)										
SHOULDER WIDTH (feet)	Posted Speed (mph)									
	25	30	35	40	45	50	55	60	65	70
8'	-	-	-	-	120	130	150	160	170	190
10'	-	-	-	-	150	170	190	200	220	240
USE A MINIMUM 3 DEVICES TAPER FOR SHOULDER LESS THEN 8'.										

SIGN SPACING = X (1)		
FREEWAYS & EXPRESSWAYS	55 / 70 MPH	1500' ±
RURAL HIGHWAYS	60 / 65 MPH	800' ±
RURAL ROADS	45 / 55 MPH	500' ±
(1) ALL SPACING MAY BE ADJUSTED TO ACCOMMODATE INTERCHANGE RAMPS, AT-GRADE INTERSECTIONS AND DRIVEWAYS.		

CHANNELIZATION DEVICE SPACING (feet)		
MPH	TAPER	TANGENT
50/70	40	80
35/45	30	60

BUFFER DATA										
LONGITUDINAL BUFFER SPACE = B										
SPEED (MPH)	25	30	35	40	45	50	55	60	65	70
LENGTH (feet)	155	200	250	305	360	425	495	570	645	730

TRANSPORTABLE ATTENUATOR ROLL AHEAD DISTANCE = R					
HOST VEHICLE WEIGHT 9,900 TO 22,000 lbs.			HOST VEHICLE WEIGHT > 22,000 lbs.		
< 45 MPH	45-55 MPH	> 55 MPH	< 45 MPH	45-55 MPH	> 55 MPH
100'	123'	172'	74'	100'	150'

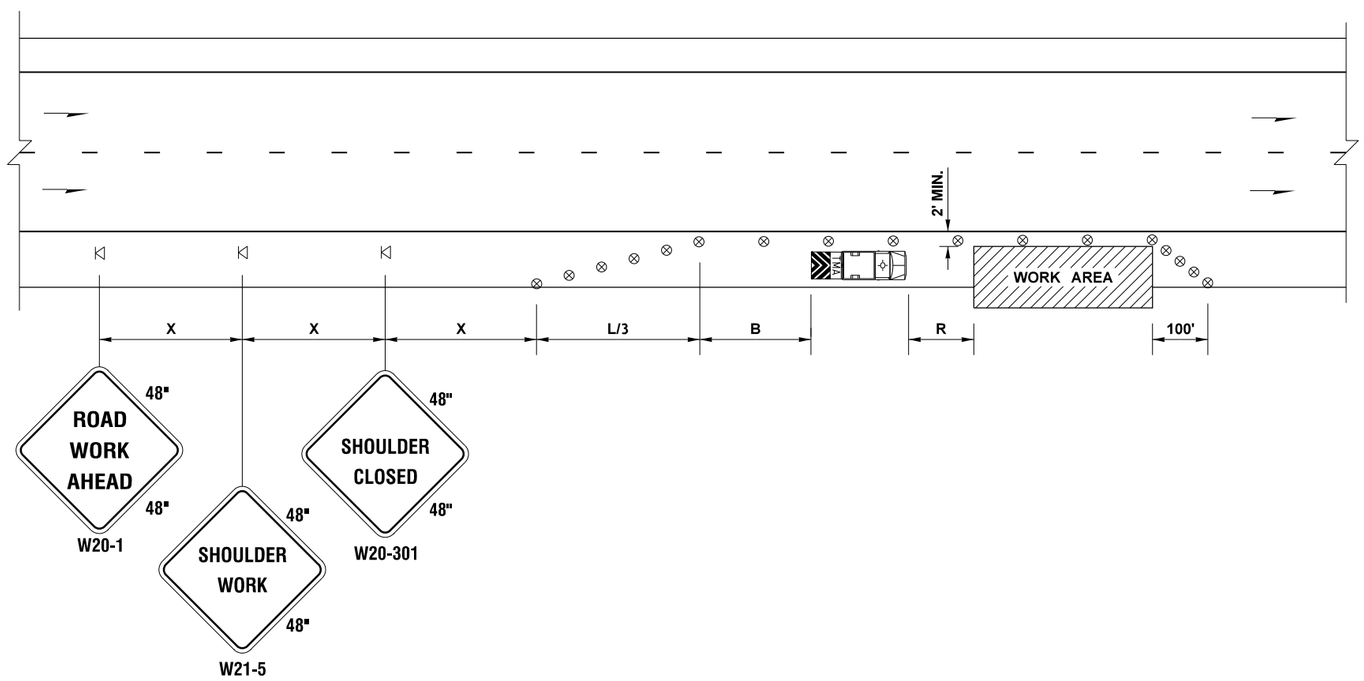

LEGEND

- TEMPORARY SIGN LOCATION
- TRAFFIC SAFETY DRUM
- TRANSPORTABLE ATTENUATOR

SHOULDER CLOSURE - HIGH SPEED

NOT TO SCALE

NOTES

1. NO ENCROACHMENT IN TRAVELED LANE. IF ENCROACHMENT IS NECESSARY, LANE SHALL BE CLOSED.
2. DEVICE SPACING FOR THE DOWNSTREAM TAPER SHALL BE 20' (FT) O.C.
3. ALL SIGNS ARE BLACK ON ORANGE.

FILE NAME	G:\444301\05-Design\02-Projects\SR 500 182nd RAB\1-CADD-Plans\20-1.2 CAD Sheet Files\D50021R_SH_TC.dgn			
TIME	8:43:07 AM			
DATE	3/29/2022			
PLOTTED BY	bournem			
DESIGNED BY	MORGAN BOURNE			
ENTERED BY	MORGAN BOURNE			
CHECKED BY	ANDY ROMANCHOCK			
PROJ. ENGR.	SUSAN FELL			
REGIONAL ADM.	CARLEY FRANCIS	REVISION	DATE	BY

REGION NO.	STATE	FED.AID PROJ.NO.
	WASH	HSIP-0500(029)
JOB NUMBER 21X327		
CONTRACT NO.		LOCATION NO. XL6488

DATE
P.E. STAMP BOX

DATE
P.E. STAMP BOX

Washington State Department of Transportation

SR 500
NE 182ND AVE
INTERSECTION IMPROVEMENTS

TRAFFIC CONTROL PLANS

PLOT 3
PLAN REF NO TC3
SHEET 75 OF 76 SHEETS

SIGN SPACING = X (1)		
RURAL ROADS	45 / 55 MPH	500' ±
RURAL ROADS & URBAN ARTERIALS	35 / 40 MPH	350' ±
RURAL ROADS & URBAN ARTERIALS RESIDENTAL & BUSINESS DISTRICTS	25 / 30 MPH	200' ± (2)
URBAN STREETS	25 MPH OR LESS	100' ± (2)

(1) ALL SPACING MAY BE ADJUSTED TO ACCOMMODATE INTERCHANGE RAMPS, AT-GRADE INTERSECTIONS AND DRIVEWAYS.
(2) THIS SPACING MAY BE REDUCED IN URBAN AREAS TO FIT ROADWAY CONDITIONS.

CHANNELIZATION DEVICE SPACING (feet)		
MPH	TAPER	TANGENT
50/55	40	80
35/45	30	60
25/30	20	40

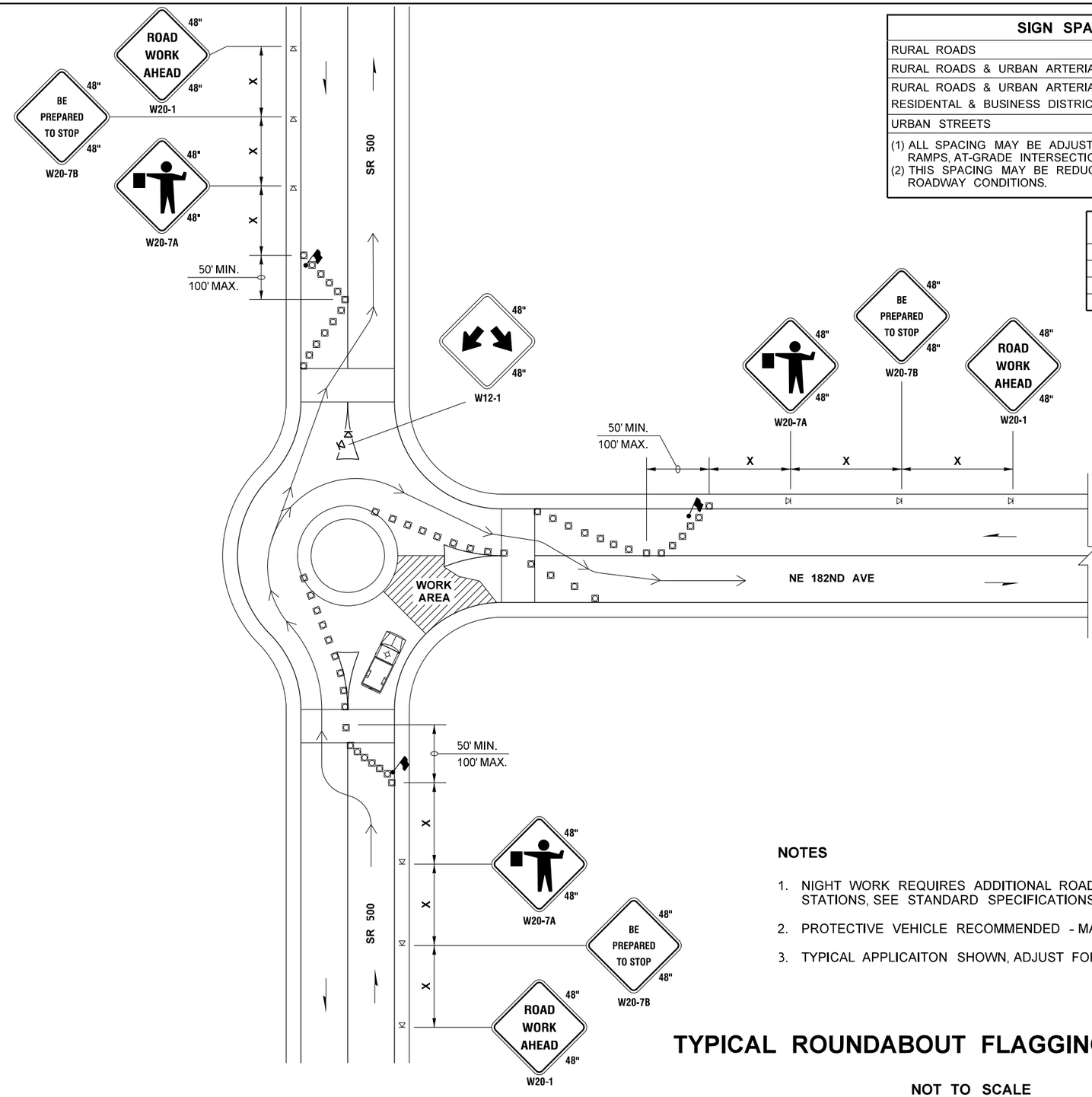

LEGEND

- FLAGGING STATION
- TEMPORARY SIGN LOCATION
- CHANNELIZING DEVICES
- PROTECTIVE VEHICLE - RECOMMENDED

NOTES

1. NIGHT WORK REQUIRES ADDITIONAL ROADWAY LIGHTING AT FLAGGING STATIONS, SEE STANDARD SPECIFICATIONS FOR ADDITIONAL DETAILS.
2. PROTECTIVE VEHICLE RECOMMENDED - MAY BE A WORK VEHICLE.
3. TYPICAL APPLICAITON SHOWN, ADJUST FOR SITE CONDITIONS.

TYPICAL ROUNDABOUT FLAGGING OPERATION

NOT TO SCALE

FILE NAME	G:\444301\05-Design\02-Projects\SR 500 182nd RAB\1-CADD-Plans\20-1.2 CAD Sheet Files\D50021R_SH_TC.dgn
TIME	8:43:07 AM
DATE	3/29/2022
PLOTTED BY	bournem
DESIGNED BY	MORGAN BOURNE
ENTERED BY	MORGAN BOURNE
CHECKED BY	ANDY ROMANCHOCK
PROJ. ENGR.	SUSAN FELL
REGIONAL ADM.	CARLEY FRANCIS

REVISION | DATE | BY

REGION NO. | STATE: WASH

JOB NUMBER 21X327

CONTRACT NO.

FED.AID PROJ.NO. HSIP-0500(029)

LOCATION NO. XL6488

P.E. STAMP BOX DATE

P.E. STAMP BOX DATE

Washington State Department of Transportation

SR 500
NE 182ND AVE
INTERSECTION IMPROVEMENTS

TRAFFIC CONTROL PLANS

PLOT 4

PLAN REF NO TC4

SHEET 76 OF 76 SHEETS