INDEX

SHEET NO.	PLAN REFERENCE NO.	TITLE
		VOLUME 1
1 - 4	IN1 - IN4	INDEX
5	CT1	CERTIFICATION SHEET
6 - 7	VM1 - VM2	VICINITY MAP
8 - 47	SQ1 - SQ40	SUMMARY OF QUANTITIES
48 - 51	STP1 - STP4	STAGING AND STOCKPILE PLAN
		STAGING - STAGE 1
52 - 53	DO1-1 - DO1-2	DETOUR OVERVIEW - STAGE 1
54 - 55	TS1-1 - TS1-2	TRAFFIC SEQUENCING - STAGE 1
56 - 57	TR1-1 - TR1-3	TEMP. ROADWAY SECTIONS - STAGE 1
58 - 59	QT1-1 - QT1-2	QUANTITY TABULATION - STAGE 1
60 - 80	D1-1 - D1-21	DETOUR PLAN - STAGE 1
		STAGING - STAGE 2
81 - 82	DO2-1 - DO2-2	DETOUR OVERVIEW - STAGE 2
83 - 84	TS2-1 - TS2-2	TRAFFIC SEQUENCING - STAGE 2
85 - 87	TR2-1 - TR2-3	TEMP. ROADWAY SECTIONS - STAGE 2
88	QT2-1	QUANTITY TABULATION - STAGE 2
89 - 98	D2-1 - D2-10	DETOUR PLAN - STAGE 2
99 - 100	TPR2-1 - TPR2-2	PROFILE & SUPERELEVATION - STAGE 2
		STAGING - STAGE 3
101 - 102	DO3-1 - DO3-2	DETOUR OVERVIEW - STAGE 3
103	TS3-1	TRAFFIC SEQUENCING - STAGE 3
104	TR3-1	TEMP. ROADWAY SECTIONS - STAGE 3
105	QT3-1	QUANTITY TABULATION - STAGE 3
106 - 124	D3-1 - D3-19	DETOUR PLAN - STAGE 3
		STAGING - STAGE 4
125 - 126	DO4-1 - DO4-2	DETOUR OVERVIEW - STAGE 4
127 - 129	TS4-1 - TS4-3	TRAFFIC SEQUENCING - STAGE 4
130 - 133	TR4-1 - TR4-4	TEMP. ROADWAY SECTIONS - STAGE 4
134 - 135	QT4-1 - QT4-2	QUANTITY TABULATION - STAGE 4
136 - 157	D4-1 - D4-22	DETOUR PLAN - STAGE 4
158 - 161	TPR4-1 - TPR4-4	PROFILE & SUPERELEVATION - STAGE 4
		STAGING - STAGE 5
162 - 163	DO5-1 - DO5-2	DETOUR OVERVIEW - STAGE 5
164 - 165	TS5-1 - TS5-2	TRAFFIC SEQUENCING - STAGE 5
166 - 167	TR5-1 - TR5-2	TEMP. ROADWAY SECTIONS - STAGE 5
168	QT5-1	QUANTITY TABULATION - STAGE 5
169 - 179	D5-1 - D5-11	DETOUR PLAN - STAGE 5
180 - 188	TDE1 - TDE9	TEMP. DETAILS STAGE 1 - STAGE 5

INDEX (CONTINUED)

SHEET NO.	PLAN REFERENCE NO.	TITLE
		VOLUME 2
189 - 192	IN5 - IN8	INDEX
193	CT2	CERTIFICATION SHEET
194 - 195	TDSN1 - TDSN2	STRUCTURE NOTES - TEMP. DRAINAGE
196	TD0	TEMP. DRAINAGE LEGEND SHEET
197 - 215	TD1-1 - TD1-19	TEMP. DRAINAGE PLAN - STAGE 1
216 - 226	TD2-1 - TD2-11	TEMP. DRAINAGE PLAN - STAGE 2
227 - 229	TP2-1 - TP2-3	TEMP. DRAINAGE PROFILES - STAGE 2
230 - 245	TD3-1 - TD3-16	TEMP. DRAINAGE PLAN - STAGE 3
246 - 249	TP3-1 - TP3-4	TEMP. DRAINAGE PROFILES - STAGE 3
250 - 272	TD4-1 - TD4-23	TEMP. DRAINAGE PLAN - STAGE 4
273	TP4-1	TEMP. DRAINAGE PROFILES - STAGE 4
274 - 275	TDD1 - TDD2	TEMPORARY DRAINAGE DETAILS
276 - 290	RS1 - RS15	ROADWAY SECTIONS (FINAL)
291 - 297	RD1 - RD7	ROADWAY DETAILS
298	LS1	LEGEND
299 - 300	QTAS1 - QTAS2	QUANTITY TABULATION - ALIGNMENT / SITE PREPARATION PLAN
301 - 330	ASP1 - ASP30	ALIGNMENT / SITE PREPARATION PLAN
331 - 332	PR1 - PR2	TE PROFILE & SUPERELEVATION
333 - 361	PR3 - PR31	LE PROFILE & SUPERELEVATION
362	PR32	TW PROFILE & SUPERELEVATION
363 - 389	PR33 - PR59	LW PROFILE & SUPERELEVATION
		VOLUME 3
390 - 393	IN9 - IN12	INDEX
394	CT3	CERTIFICATION SHEET
395	EC0	TESC OVERVIEW
396 - 425	EC1 - EC30	TESC PLAN
426 - 428	ECD1 - ECD3	TESC DETAILS

PLAN REF NO
¢¢##
SHEET ## OF ## SHEETS

NOTE: ALL SHEET REFERENCES, FIRST NOS. OF STRUCTURE CODE DESIGNATIONS AND MATCH LINE SHEET REFERENCES, ETC., THROUGHOUT THE PLANS, REFER TO THE ENTRY IN THE PLAN

FILE NAME	K:\452201\090\06736_Phase 3\Design_CAD_Sheets\010-Index\XL5479_PS_IN.dgn
TIME	1:59:04 PM
DATE	2/15/2022
PLOTTED BY	kingk
DESIGNED BY	KING/SCHILPEROORT
ENTERED BY	K. KING
CHECKED BY	K. KING
PROJ. ENGR.	A. BYRD
REGIONAL ADM.	T. TREPANIER

REVISION | DATE | BY

REGION NO. 10 | STATE WASH | FED.AID PROJ.NO.

JOB NUMBER 19Y007

CONTRACT NO. | LOCATION NO.

P.E. STAMP BOX DATE

P.E. STAMP BOX DATE

Washington State Department of Transportation

I-90
CABIN CREEK I/C TO W EASTON I/C
PHASE 3 - ADD LANES/WILDLIFE BRIDGES

INDEX

Plot 17

PLAN REF NO IN17

SHEET 787 OF 1783 SHEETS

INDEX

SHEET NO.	PLAN REFERENCE NO.	TITLE
429	STN1	STRUCTURE NOTES - DRAINAGE GENERAL NOTES
430 - 465	STN2 - STN37	STRUCTURE NOTES - DRAINAGE
466 - 495	DR1 - DR30	DRAINAGE PLAN
496 - 545	DP1 - DP50	DRAINAGE PROFILES
546 - 560	DPP1 - DPP15	DITCH PLANS AND PROFILES
561 - 576	DD1 - DD16	DRAINAGE DETAILS
577 - 582	HCZ1 - HCZ6	HYDRAULIC CONNECTIVITY ZONES
		VOLUME 4
583 - 586	IN16 - IN16	INDEX
587	CT4	CERTIFICATION SHEET
		STREAM PLANS
588 - 593	CR1-1 - CR1-6	UNNAMED CREEK (MP 64.4) SITE PLAN
594 - 600	CR2-1 - CR2-7	CEDAR CREEK SITE PLAN
601 - 606	CR3-1 - CR3-6	UNNAMED CREEK (MP 65.1) SITE PLAN
607 - 611	CR4-1 - CR4-5	TELEPHONE CREEK SITE PLAN
612 - 616	CR5-1 - CR5-5	HUDSON CREEK SITE PLAN
617 - 623	CR6-1 - CR6-7	UNNAMED CREEK (MP 66.8) SITE PLAN
624 - 631	CR7-1 - CR7-8	UNNAMED CREEK (MP 67.1) SITE PLAN
632 - 637	CR8-1 - CR8-6	UNNAMED CREEK (MP 67.8) SITE PLAN
638	CD1	CREEK DETAILS
639 - 649	LWM1 - LWM11	LARGE WOODY MATERIAL
650 - 661	CG1 - CG12	CONTOUR GRADING PLAN
662 - 691	RR1 - RR30	ROADSIDE RESTORATION PLAN
692 - 693	RRD1 - RRD2	ROADSIDE RESTORATION DETAILS
694 - 699	HP1 - HP6	HABITAT PLAN
700 - 701	HD1 - HD2	HABITAT DETAILS
702 - 730	PV1 - PV29	PAVING PLAN
731 - 744	PD1 - PD14	CEMENT CONCRETE PAVEMENT JOINTS
745 - 756	QTB1 - QTB12	QUANTITY TABULATION - FENCE & BARRIER
757 - 786	FB1 - FB30	FENCE & BARRIER PLAN
		VOLUME 5
787 - 790	IN17 - IN20	INDEX
791	CT5	CERTIFICATION SHEET

INDEX (CONTINUED)

SHEET NO.	PLAN REFERENCE NO.	TITLE
792 - 804	WFD1 - WFD13	WILDLIFE FENCE DETAILS
805 - 807	WFD14 - WFD16	WILDLIFE RAMP JUMPOUT DETAILS
808	QTM1	QUANTITY TABULATION - PAVEMENT MARKING
809 - 814	MK1 - MK6	PAVEMENT MARKING PLAN
815 - 819	PMD1 - PMD5	PAVEMENT MARKING DETAILS
820	PMD6	LINEAR DELINEATION DETAIL
821	PMD7	RIGID GUIDE POST DETAIL
822	PMD8	FLEXIBLE GUIDE POST LOCATIONS
		TRAFFIC BARRIERS
823	INTB1	INDEX
824 - 836	TB1 - TB13	TRAFFIC BARRIERS
837 - 863	DB1 - DB27	DIFFERENTIAL BARRIER WALLS
		WALLS CW1-CW4 & CE1-CE4 - CEDAR CREEK BRIDGES
864 - 865	WS1 - WS2	CEDAR CREEK WALL PLAN & PROFILE
		WALLS TW1-TW2 & TE1-TE2 - TELEPHONE CREEK BRIDGES
866	WS3	TELEPHONE CREEK WALL PLAN
867	WS4	TELEPHONE CREEK WALL PROFILE
		WALLS HW1-HW4 & HE1-HE3 - HUDSON CREEK BRIDGES
868 - 869	WS5 - WS6	HUDSON CREEK WALL PLAN & PROFILE
		WALLS UW1-UW4 & UE1-UE4 - UNNAMED CREEK (MP67.1)
870 - 871	WS7 - WS8	UNNAMED CREEK (MP 67.1) WALL PLAN & PROFILE
		WALLS OC-RT & OC-LT - WILDLIFE OVERCROSSING
872	WS9	WILDLIFE OVERCROSSING WALL PLAN
873 - 874	WS10 - WS11	WILDLIFE OVERCROSSING WALL PROFILE
		WALLS WW1-WW2, WE1-WE2 & WWE1-WWE2 - WILDLIFE UNDERCROSSING
875	WS12	WILDLIFE UNDERCROSSING WALL PLAN
876 - 877	WS13 - WS14	WILDILFE UNDERCROSSING WALL PROFILE
		WALLS SW1-SW2, SE1-SE2 & SWE1-SWE2 - SPARKS ROAD
878	WS15	SPARKS ROAD WALL PLAN
879 - 880	WS16 - WS17	SPARKS ROAD WALL PROFILE
881 - 882	WS18 - WS19	WALL SECTIONS
883 - 886	WS20 - WS23	RETAINING WALL ARCHITECTURAL DETAILS
887 - 888	WS24 - WS25	CABLE FENCE DETAILS

PLAN REF NO
¢¢##
SHEET ## OF ## SHEETS

NOTE: ALL SHEET REFERENCES, FIRST NOS. OF STRUCTURE CODE DESIGNATIONS AND MATCH LINE SHEET REFERENCES, ETC., THROUGHOUT THE PLANS, REFER TO THE ENTRY IN THE PLAN

INDEX

SHEET NO.	PLAN REFERENCE NO.	TITLE
		WALLS 1-3
889	INW1	INDEX WALL
890 - 915	W1 - W26	WALL PLANS AND PROFILES
916 - 936	WD1 - WD21	WALL DETAILS
937 - 969	SP1 - SP33	SOLDIER PILE WALL PLANS
970 - 971	SF1 - SF2	SHOTCRETE FACING DETAILS
972 - 976	RB1 - RB5	RAILING BASE DETAILS
		VOLUME 6
977 - 980	IN21 - IN24	INDEX
981	CT6	CERTIFICATION SHEET
		SIGNS, ILLUMINATION & ITS
982 - 983	SS1 - SS2	SIGN REMOVAL SPECS
984	SS3	SIGN RELOCATION SPECS
985 - 986	SS4 - SS5	SIGN INSTALL SPECS
987 - 1015	TR1 - TR29	ELECTRICAL AND SIGN REMOVAL
1016 - 1045	SN1 - SN30	SIGNING PLAN
1046 - 1075	ITS1 - ITS30	ILLUMINATION AND ITS PLAN
1076 - 1080	ITS31 - ITS35	HUT LAYOUT
1081	TD1	UTILITY TRENCH DETAILS
1082 - 1083	TD2 - TD3	CCTV POLE DETAILS
1084 - 1089	TD4 - TD9	ITS - EQUIPMENT HUT
1090	TD10	ITS - WIRING DIGRAMS
1091	TD11	FIBER & UTILITY VAULT LOCATIONS
1092	TD12	UTILITY VAULT LAYOUT
1093	TD13	ITS & ELECTRICAL DETAILS
1094 - 1096	TD14 - TD16	FIBER SPLICING DIAGRAMS
1097	TD17	WILDLIFE CAMERA POLE DETAIL
1098 - 1099	TD18 - TD19	WILDLIFE OVERCROSSING DETAIL
1100	TD20	ITS - ABUTMENT WALL DETAIL
1101	TD21	VMS HEAT TRACE DETAILS
1102	TD22	CROSSCUT TRENCHING DETAIL
1103 - 1105	TD23 - TD25	VMS / VSL MOUNTING DETAILS

INDEX (CONTINUED)

SHEET NO.	PLAN REFERENCE NO.	TITLE
		CEDAR CREEK BRIDGE EB
1106	INB1	INDEX BRIDGE
1107 - 1136	BA1 - BA30	CEADR CREEK EASTBOUND BRIDGE PLANS
		CEDAR CREEK BRIDGE WB
1137	INB2	INDEX BRIDGE
1138 - 1166	BB1 - BB29	CEDAR CREEK WESTBOUND BRIDGE PLANS
		VOLUME 7
1167 - 1170	IN25 - IN28	INDEX
1171	CT7	CERTIFICATION SHEET
		TELEPHONE CREEK BRIDGE
1172	INB3	INDEX BRIDGE
1173 - 1200	BC1 - BC28	TELEPHONE CREEK BRIDGE PLANS
		HUDSON CREEK BRIDGE EB
1201	INB4	INDEX BRIDGE
1202 - 1266	BD1 - BD65	HUDSON CREEK EASTBOUND BRIDGE PLANS
		HUDSON CREEK BRIDGE WB
1267	INB5	INDEX BRIDGE
1268 - 1306	BE1 - BE39	HUDSON CREEK WESTBOUND BRIDGE PLANS
		UNNAMED CREEK (MP 67.1) BRIDGE EB
1307	INB6	INDEX BRIDGE
1308 - 1361	BF1 - BF54	UNNAMED CREEK (MP 67.1) EASTBOUND BRIDGE PLANS

PLAN REF NO
¢¢##
SHEET ## OF ## SHEETS

NOTE: ALL SHEET REFERENCES, FIRST NOS. OF STRUCTURE CODE DESIGNATIONS AND MATCH LINE SHEET REFERENCES, ETC., THROUGHOUT THE PLANS, REFER TO THE ENTRY IN THE PLAN

FILE NAME	K:\452201\090\06736_Phase 3\Design_CAD_Sheets\010-Index\XL5479_PS_IN.dgn
TIME	1:59:18 PM
DATE	2/15/2022
PLOTTED BY	kingk
DESIGNED BY	KING/SCHILPEROORT
ENTERED BY	K. KING
CHECKED BY	K. KING
PROJ. ENGR.	A. BYRD
REGIONAL ADM.	T. TREPANIER

REVISION | DATE | BY

REGION NO. 10 | STATE WASH | FED.AID PROJ.NO.
JOB NUMBER 19Y007
CONTRACT NO. | LOCATION NO.

P.E. STAMP BOX DATE

P.E. STAMP BOX DATE

Washington State Department of Transportation

I-90
CABIN CREEK I/C TO W EASTON I/C
PHASE 3 - ADD LANES/WILDLIFE BRIDGES

INDEX

Plot 19
PLAN REF NO IN19
SHEET 789 OF 1783 SHEETS

INDEX

SHEET NO.	PLAN REFERENCE NO.	TITLE
		VOLUME 8
1362 - 1365	IN29 - IN32	INDEX
1366	CT8	CERTIFICATION SHEET
		UNNAMED CREEK (MP 67.1) BRIDGE WB
1367	INB7	INDEX BRIDGE
1368 - 1417	BG1 - BG50	UNNAMED CREEK (MP 67.1) WESTBOUND BRIDGE PLANS
		WILDLIFE OVERCROSSING STRUCTURE EB & WB AND WALLS
1418	INB8	INDEX BRIDGE
1419 - 1442	WA1 - WA24	WILDLIFE OVERCROSSING STRUCTURE EB & WB PLANS
1443 - 1454	WO1 - WO12	WILDLIFE OVERCROSSING WALL PLANS
1455 - 1458	WOC1 - WOC4	WILDLIFE OVERCROSSING MISC. DETAILS
1459 - 1464	WOC5 - WOC10	ARCHITECTURAL DETAILS
		WILDLIFE UNDERCROSSING (MP 68.8) BRIDGE EB
1465	INB9	INDEX BRIDGE
1466 - 1525	BH1 - BH60	WILDLIFE UNDERCROSSING (MP 68.8) EASTBOUND BRIDGE PLANS
		VOLUME 9
1526 - 1529	IN33 - IN36	INDEX
1530	CT9	CERTIFICATION SHEET
		WILDLIFE UNDERCROSSING (MP 68.8) BRIDGE WB
1531	INB10	INDEX BRIDGE
1532 - 1588	BJ1 - BJ57	WILDLIFE UNDERCROSSING (MP 68.8) WESTBOUND BRIDGE PLANS
		SPARKS ROAD BRIDGE EB
1589	INB11	INDEX BRIDGE
1590 - 1620	BK1 - BK31	SPARKS ROAD EASTBOUND BRIDGE PLANS
		SPARKS ROAD BRIDGE WB
1621	INB12	INDEX BRIDGE
1622 - 1652	BL1 - BL31	SPARKS ROAD WESTBOUND BRIDGE PLANS
		VOLUME 10
1653 - 1656	IN37 - IN40	INDEX
1657	CT10	CERTIFICATION SHEET

INDEX (CONTINUED)

SHEET NO.	PLAN REFERENCE NO.	TITLE
		KACHESS RIVER BRIDGE EB
1658	INB13	INDEX BRIDGE
1659 - 1696	BM1 - BM38	KACHESS RIVER EASTBOUND BRIDGE PLANS
		KACHESS RIVER BRIDGE WB
1697	BN1	KACHESS RIVER WESTBOUND BRIDGE PLANS
		SIGN STRUCTURES
1698	SB1	CANTILEVER SIGN STRUCTURE GENERAL NOTES
1699 - 1703	SB2 - SB6	CANTILEVER NO.1 - NO.5 LAYOUT
1704 - 1705	SB7 - SB8	CANTILEVER 1, 2, 3, 4, 5 STRUCTURAL DETAILS
1706 - 1707	SB9 - SB10	CANTILEVER 1, 2, 3, 4, 5 FOUNDATION DETAILS
1708 - 1711	SB11 - SB14	CANTILEVER NO.6 - NO.9 LAYOUT
1712 - 1714	SB15 - SB17	CANTILEVER 6, 7, 8, 9 STRUCTURAL DETAILS
1715	SB18	CANTILEVER 5, 6, 7, 8, CAMERA SUPPORT POST DETAILS
1716 - 1717	SB19 - SB20	CANTILEVER 6, 7, 8, 9 FOUNDATION DETAILS
1718 - 1719	SB21 - SB22	VARIABLE SPEED LIMIT SIGNS - MOUNTING DETAILS
1720 - 1721	SB23 - SB24	ELECTRICAL CABINET MOUNTING DETAILS
1722	SSH1	CAMERA POLE SHAFT CAP WITH SNOW SHIELD
1723	SSH2	SIGN STRUCTURE SHAFT CAP WITH SNOW SHIELD
1724	SSH3	SNOW SHIELD DETAILS
1725 - 1726	FS1 - FS2	FOREST SERVICE SIGN PLAN
1727	FS3	FOREST SERVICE SIGN DETAILS
		ROCK SLOPE STABILIZATION
1728 - 1732	RK1 - RK5	ROCK SLOPE STABILIZATION PLAN
1733 - 1737	RKP1 - RKP5	ROCK SLOPE PROFILE
1738 - 1739	RKT1 - RKT2	ROCK SLOPE STABILIZATION TYPICAL
1740 - 1758	RKD1 - RKD19	ROCK SLOPE DETAILS
1759 - 1761	CLA1 - CLA3	CLASS A SIGNING PLAN
1762 - 1779	TCP1 - TCP18	TRAFFIC CONTROL PLAN
1780 - 1781	D1 - D2	BIKE DETOUR PLAN
1782 - 1783	D3 - D4	DETOUR PLAN

PLAN REF NO
¢¢##
SHEET ## OF ## SHEETS

NOTE: ALL SHEET REFERENCES, FIRST NOS. OF STRUCTURE CODE DESIGNATIONS AND MATCH LINE SHEET REFERENCES, ETC., THROUGHOUT THE PLANS, REFER TO THE ENTRY IN THE PLAN

FILE NAME	K:\452201\090\06736_Phase 3\Design_CAD_Sheets\010-Index\XL5479_PS_IN.dgn
TIME	1:59:25 PM
DATE	2/15/2022
PLOTTED BY	kingk
DESIGNED BY	KING/SCHILPEROORT
ENTERED BY	K. KING
CHECKED BY	K. KING
PROJ. ENGR.	A. BYRD
REGIONAL ADM.	T. TREPANIER

REVISION | DATE | BY

REGION NO.	STATE	FED.AID PROJ.NO.
10	WASH	
JOB NUMBER 19Y007		
CONTRACT NO.		LOCATION NO.

P.E. STAMP BOX DATE

P.E. STAMP BOX DATE

Washington State Department of Transportation

I-90
CABIN CREEK I/C TO W EASTON I/C
PHASE 3 - ADD LANES/WILDLIFE BRIDGES

INDEX

Plot 20
PLAN REF NO IN20
SHEET 790 OF 1783 SHEETS

PROJECT LICENSED PROFESSIONAL CERTIFICATES

Andrew Byrd Feb 18, 2022 AS A LICENSED PROFESSIONAL IN DIRECT RESPONSIBLE CHARGE OF DEVELOPING THIS CONTRACT, I CERTIFY THAT ALL PLANS THAT CONTAIN MY STAMP HAVE BEEN DEVELOPED UNDER MY SUPERVISION.	Bijan Khaleghi Feb 18, 2022 AS A LICENSED PROFESSIONAL IN DIRECT RESPONSIBLE CHARGE OF DEVELOPING THIS CONTRACT, I CERTIFY THAT ALL PLANS THAT CONTAIN MY STAMP HAVE BEEN DEVELOPED UNDER MY SUPERVISION.	Richard Zeldenrust Feb 18, 2022 AS A LICENSED PROFESSIONAL IN DIRECT RESPONSIBLE CHARGE OF DEVELOPING THIS CONTRACT, I CERTIFY THAT ALL PLANS THAT CONTAIN MY STAMP HAVE BEEN DEVELOPED UNDER MY SUPERVISION.	rochonm@wsdot.wa.gov Feb 22, 2022 AS A LICENSED PROFESSIONAL IN DIRECT RESPONSIBLE CHARGE OF DEVELOPING THIS CONTRACT, I CERTIFY THAT ALL PLANS THAT CONTAIN MY STAMP HAVE BEEN DEVELOPED UNDER MY SUPERVISION.
Anthony Mizumori Feb 22, 2022 AS A LICENSED PROFESSIONAL IN DIRECT RESPONSIBLE CHARGE OF DEVELOPING THIS CONTRACT, I CERTIFY THAT ALL PLANS THAT CONTAIN MY STAMP HAVE BEEN DEVELOPED UNDER MY SUPERVISION.	Brian Aldrich Feb 18, 2022 AS A LICENSED PROFESSIONAL IN DIRECT RESPONSIBLE CHARGE OF DEVELOPING THIS CONTRACT, I CERTIFY THAT ALL PLANS THAT CONTAIN MY STAMP HAVE BEEN DEVELOPED UNDER MY SUPERVISION.	Veronica Raub Mauren Feb 22, 2022 AS A LICENSED PROFESSIONAL IN DIRECT RESPONSIBLE CHARGE OF DEVELOPING THIS CONTRACT, I CERTIFY THAT ALL PLANS THAT CONTAIN MY STAMP HAVE BEEN DEVELOPED UNDER MY SUPERVISION.	Todd Mooney Feb 18, 2022 AS A LICENSED PROFESSIONAL IN DIRECT RESPONSIBLE CHARGE OF DEVELOPING THIS CONTRACT, I CERTIFY THAT ALL PLANS THAT CONTAIN MY STAMP HAVE BEEN DEVELOPED UNDER MY SUPERVISION.
Tony Allen Feb 18, 2022 AS A LICENSED PROFESSIONAL IN DIRECT RESPONSIBLE CHARGE OF DEVELOPING THIS CONTRACT, I CERTIFY THAT ALL PLANS THAT CONTAIN MY STAMP HAVE BEEN DEVELOPED UNDER MY SUPERVISION.	AS A LICENSED PROFESSIONAL IN DIRECT RESPONSIBLE CHARGE OF DEVELOPING THIS CONTRACT, I CERTIFY THAT ALL PLANS THAT CONTAIN MY STAMP HAVE BEEN DEVELOPED UNDER MY SUPERVISION.	AS A LICENSED PROFESSIONAL IN DIRECT RESPONSIBLE CHARGE OF DEVELOPING THIS CONTRACT, I CERTIFY THAT ALL PLANS THAT CONTAIN MY STAMP HAVE BEEN DEVELOPED UNDER MY SUPERVISION.	AS A LICENSED PROFESSIONAL IN DIRECT RESPONSIBLE CHARGE OF DEVELOPING THIS CONTRACT, I CERTIFY THAT ALL PLANS THAT CONTAIN MY STAMP HAVE BEEN DEVELOPED UNDER MY SUPERVISION.

NOTES:

THIS PLAN SET WAS DEVELOPED ELECTRONICALLY UNDER THE DIRECT SUPERVISION OF THE LICENSED PROFESSIONALS THAT HAVE AFFIXED THEIR SIGNATURE TO THIS PAGE.

THIS SHEET SERVES AS THE CERTIFICATION BY THE ABOVE LICENSED PROFESSIONALS OF ALL SHEETS IN THIS PLAN SET WHERE THEIR STAMPS AND SIGNATURES APPEAR.

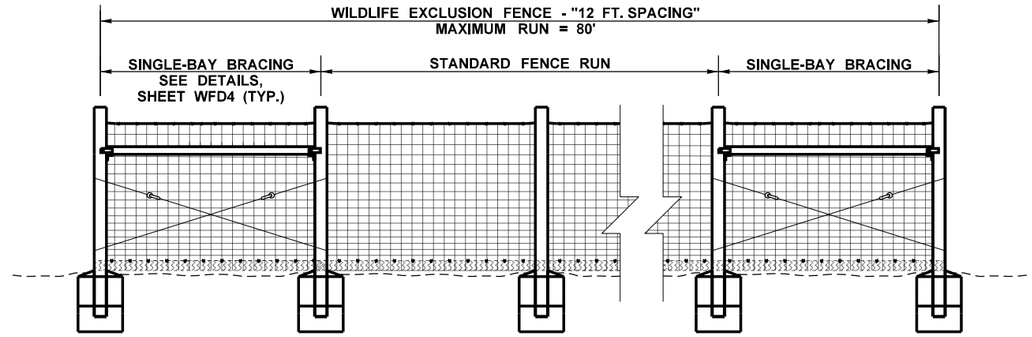

SINGLE-BAY BRACING LAYOUT DETAIL

NOT TO SCALE

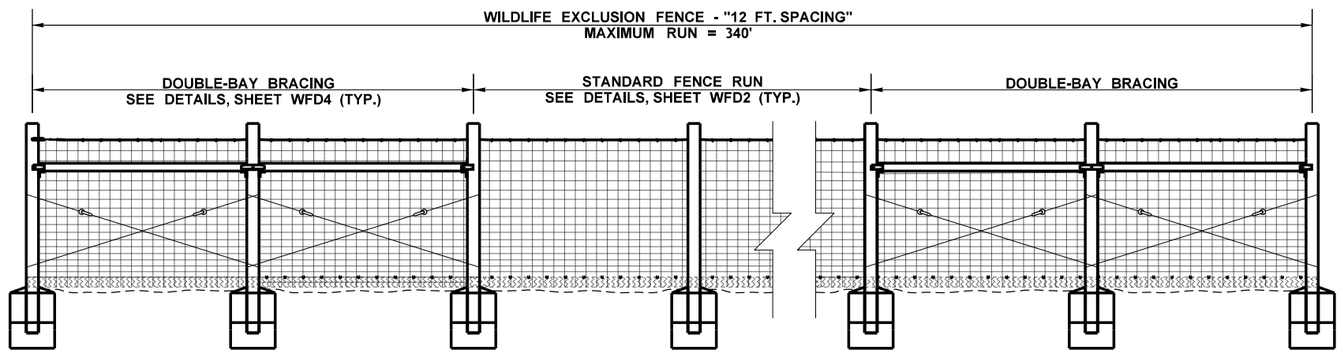

DOUBLE-BAY BRACING LAYOUT DETAIL

NOT TO SCALE

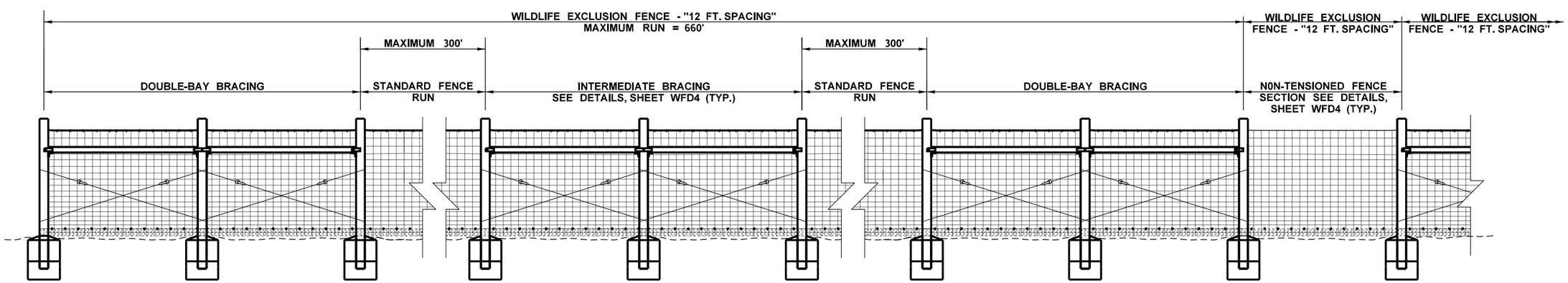

INTERMEDIATE BRACING LAYOUT DETAIL

NOT TO SCALE

NOTES:

1. SEE SPECIAL PROVISION "WILDLIFE EXCLUSION FENCE" FOR ADDITIONAL FENCE INSTALLATION REQUIREMENTS.

FILE NAME	K:\452201\090\06736_Phase 3\Design_CAD_Sheets\500-WildlifeFencePlan\XL5479_PS_WF_Details.dgn
TIME	8:08:07 AM
DATE	2/15/2022
PLOTTED BY	kingk
DESIGNED BY	KING/SCHILPEROORT
ENTERED BY	J. VENEGAS
CHECKED BY	K. KING
PROJ. ENGR.	A. BYRD
REGIONAL ADM.	T. TREPANIER

REVISION	DATE	BY

REGION NO.	STATE	FED.AID PROJ.NO.
10	WASH	
JOB NUMBER 19Y007		
CONTRACT NO.		LOCATION NO.

ANDREW D. BYRD — STATE OF WASHINGTON — 29933 — REGISTERED PROFESSIONAL ENGINEER

SEE SHEET CT5
DATE
P.E. STAMP BOX

DATE
P.E. STAMP BOX

Washington State
Department of Transportation

I-90
CABIN CREEK I/C TO W EASTON I/C
PHASE 3 - ADD LANES/WILDLIFE BRIDGES

WILDLIFE FENCE DETAILS

Plot 1
PLAN REF NO
WFD1
SHEET 792 OF 1783 SHEETS

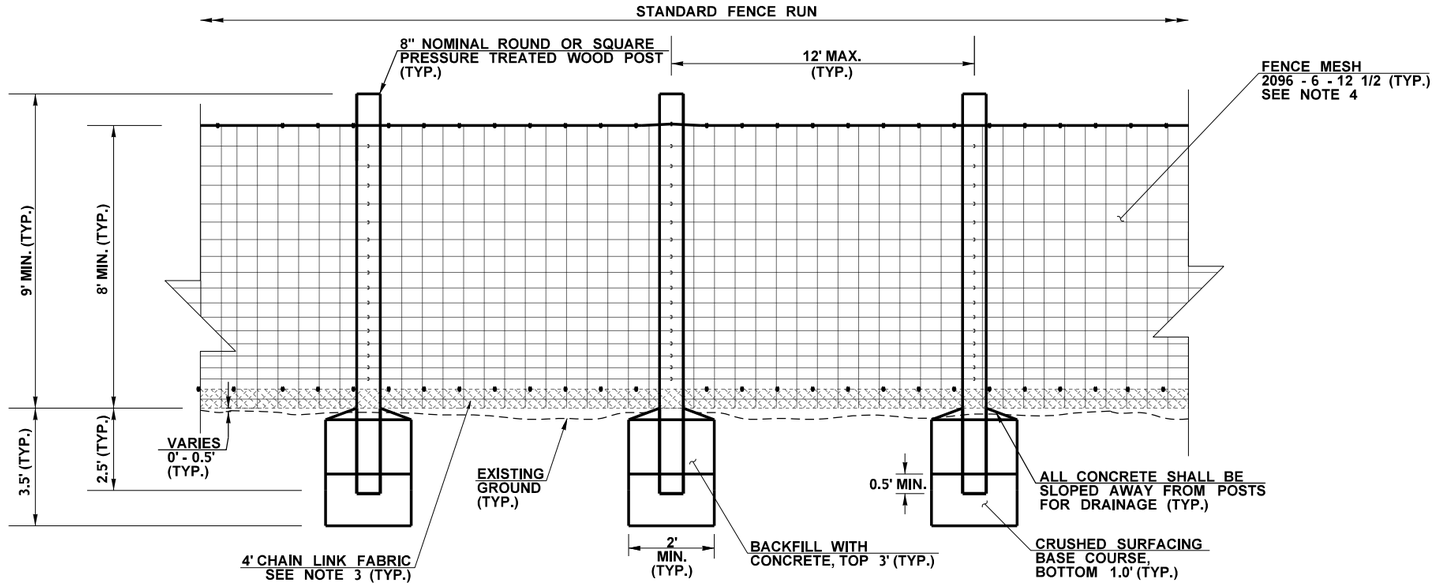

WILDLIFE EXCLUSION FENCE - 12 FT. SPACING
STANDARD FENCE RUN
NOT TO SCALE

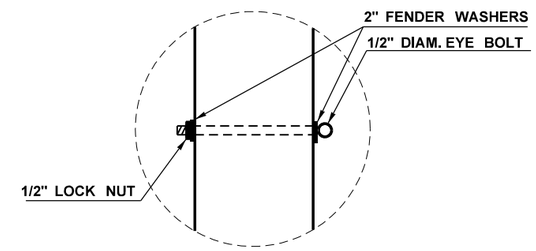

DETAIL A
NOT TO SCALE

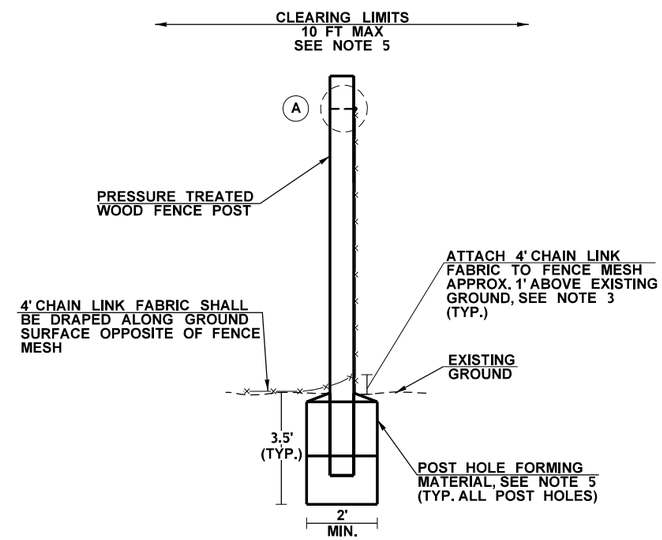

WILDLIFE EXCLUSION FENCE - WOOD POST
TYPICAL SECTION
NOT TO SCALE

NOTES:

1. SEE SHEETS WFD4 AND WFD5 FOR ADDITIONAL INFORMATION.
2. POST LENGTH SHALL BE A MINIMUM OF 12 FT . EXPOSED POST LENGTH WHEN INSTALLED VARIES DEPENDING ON SLOPE (APPROXIMATELY 9 FT).
3. CONTRACTOR SHALL EITHER TRIM 4' CHAIN LINK FABRIC TO FIT AROUND POSTS, MAINTAINING A CONTINUOUS FABRIC, OR CUT 4' CHAIN LINK FABRIC TO FIT BETWEEN POSTS. ATTACH 4' CHAIN LINK FABRIC TO FENCE MESH USING 1/4" OPEN GALVANIZED 12 GAUGE ROUND WIRE HOG RING SPACED 1' O.C.
4. FENCE MESH SHALL BE INSTALLED ON THE INTERSTATE SIDE OF THE POSTS AND WITH SMALLER OPENINGS ON THE BOTTOM UNLESS NOTED OTHERWISE. FENCE MESH SHALL BE TENSIONED TO MANUFACTURER SPECIFICATIONS.
5. SEE SPECIAL PROVISION "WILDLIFE EXCLUSION FENCE" FOR ADDITIONAL REQUIREMENTS.

FILE NAME	K:\452201\090\06736_Phase 3\Design_CAD_Sheets\500-WildlifeFencePlan\XL5479_PS_WF_Details.dgn						
TIME	8:08:08 AM				REGION NO. 10	STATE WASH	FED.AID PROJ.NO.
DATE	2/15/2022						
PLOTTED BY	kingk						
DESIGNED BY	KING/SCHILPEROORT				JOB NUMBER 19Y007		
ENTERED BY	J. VENEGAS						
CHECKED BY	K. KING				CONTRACT NO.		LOCATION NO.
PROJ. ENGR.	A. BYRD						
REGIONAL ADM.	T. TREPANIER	REVISION	DATE	BY			

ANDREW D. BYRD — STATE OF WASHINGTON — 19853 — REGISTERED PROFESSIONAL ENGINEER

SEE SHEET CT5
DATE
P.E. STAMP BOX

DATE
P.E. STAMP BOX

Washington State Department of Transportation

I-90
CABIN CREEK I/C TO W. EASTON I/C
PHASE 3 - ADD LANES/WILDLIFE BRIDGES

WILDLIFE FENCE DETAILS

Plot 2
PLAN REF NO WFD2
SHEET 793 OF 1783 SHEETS

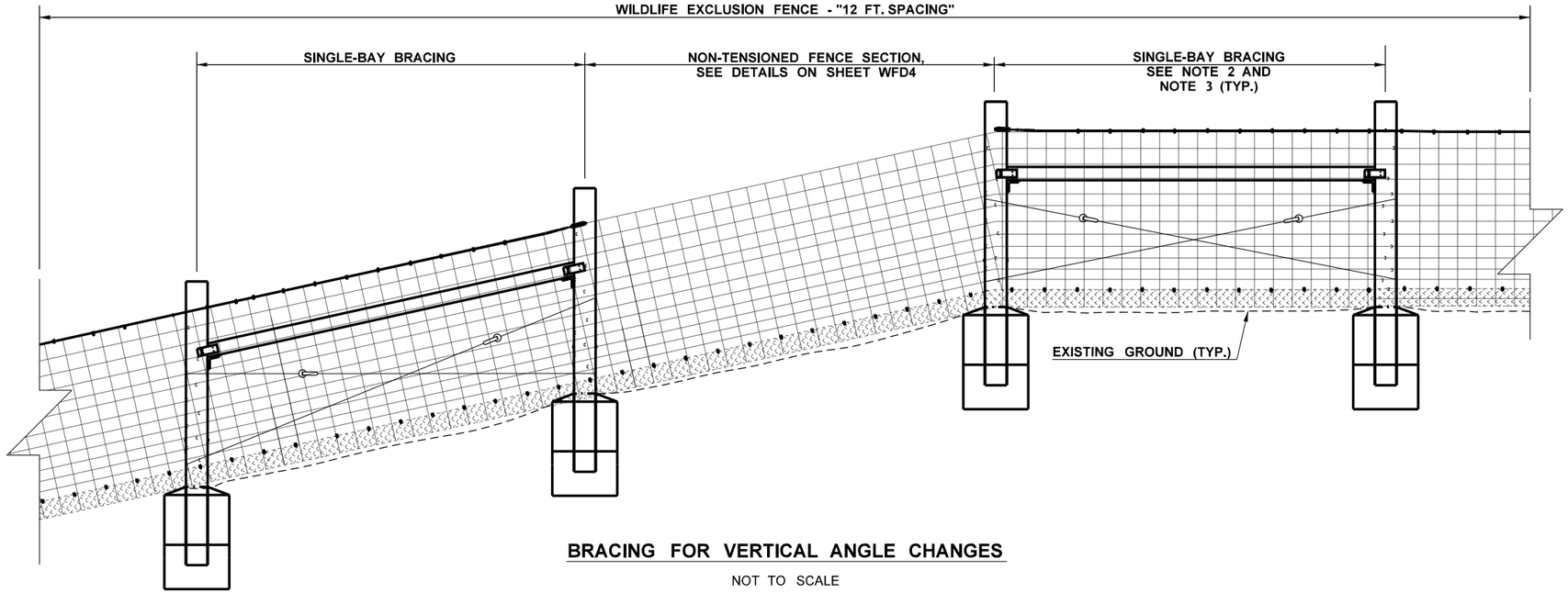

BRACING FOR VERTICAL ANGLE CHANGES

NOT TO SCALE

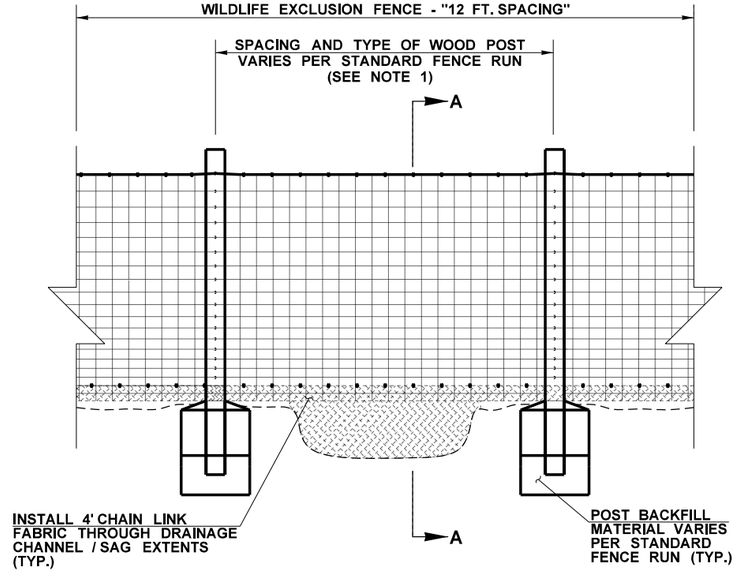

DRAINAGE CHANNEL / SAG DETAIL

NOT TO SCALE

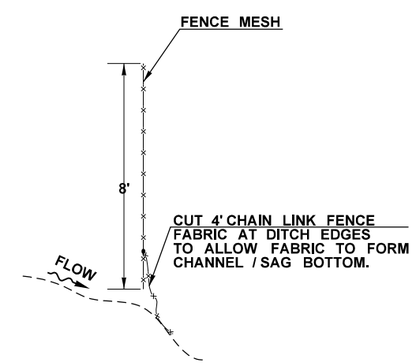

SECTION A-A

NOT TO SCALE

NOTES:

1. SEE SHEET WFD2 FOR DETAILS.
2. SEE SHEETS WFD4 AND WFD5 FOR DETAILS.
3. INSTALL BRACING FOR VERTICAL ANGLE CHANGES OF GREATER THAN 20 DEGREES. REVERSE NON-TENSIONED FENCE SECTION LOCATION FOR UPSLOPE CONDITIONS (PLACE ON FLAT GROUND).

FILE NAME	K:\452201\090\06736_Phase 3\Design_CAD_Sheets\500-WildlifeFencePlan\XL5479_PS_WF_Details.dgn						
TIME	8:08:08 AM				REGION NO. 10	STATE WASH	FED.AID PROJ.NO.
DATE	2/15/2022						
PLOTTED BY	kingk						
DESIGNED BY	KING/SCHILPEROORT				JOB NUMBER 19Y007		
ENTERED BY	J. VENEGAS						
CHECKED BY	K. KING				CONTRACT NO.		LOCATION NO.
PROJ. ENGR.	A. BYRD						
REGIONAL ADM.	T. TREPANIER	REVISION	DATE	BY			

ANDREW D. BYRD — STATE OF WASHINGTON — 39833 — REGISTERED PROFESSIONAL ENGINEER

SEE SHEET CTS
DATE
P.E. STAMP BOX

DATE
P.E. STAMP BOX

Washington State Department of Transportation

I-90
CABIN CREEK I/C TO W. EASTON I/C
PHASE 3 - ADD LANES/WILDLIFE BRIDGES

WILDLIFE FENCE DETAILS

Plot 3
PLAN REF NO WFD3
SHEET 794 OF 1783 SHEETS

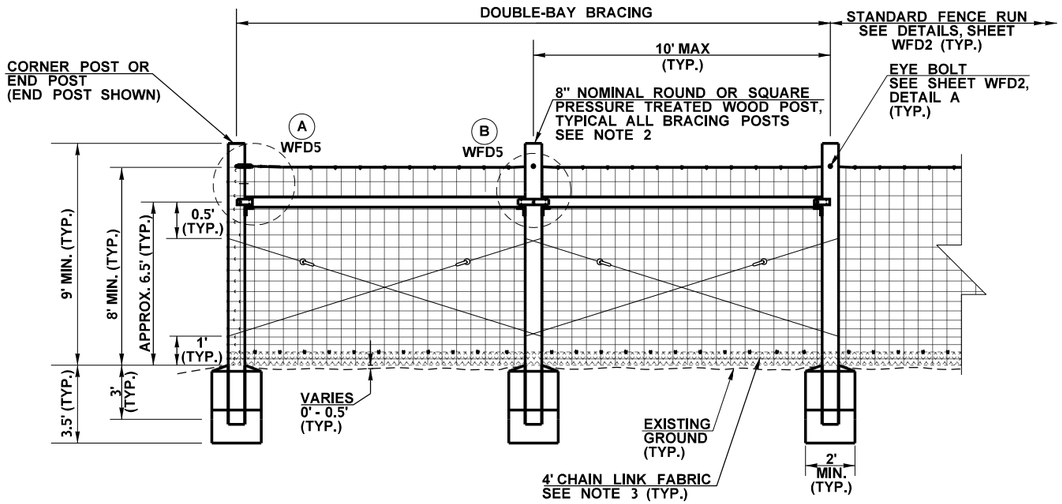

DOUBLE-BAY BRACING DETAIL
BARE SIDE OF POSTS
NOT TO SCALE

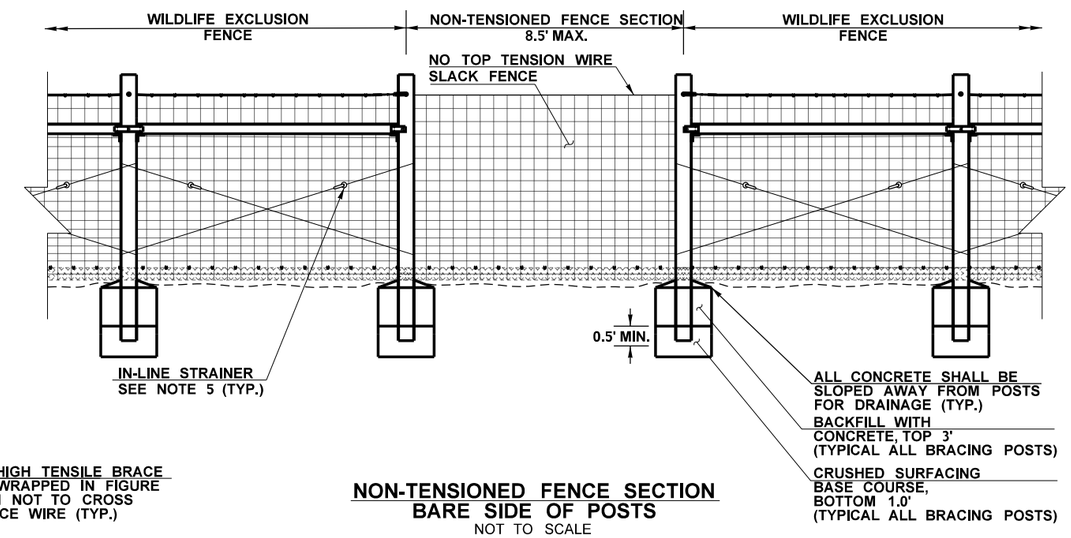

NON-TENSIONED FENCE SECTION
BARE SIDE OF POSTS
NOT TO SCALE

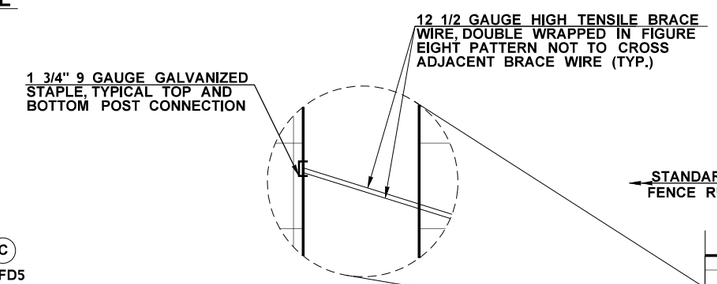

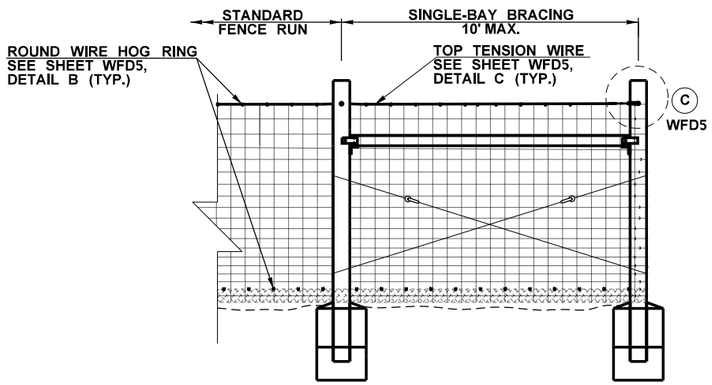

SINGLE-BAY BRACING DETAIL
BARE SIDE OF POSTS
NOT TO SCALE

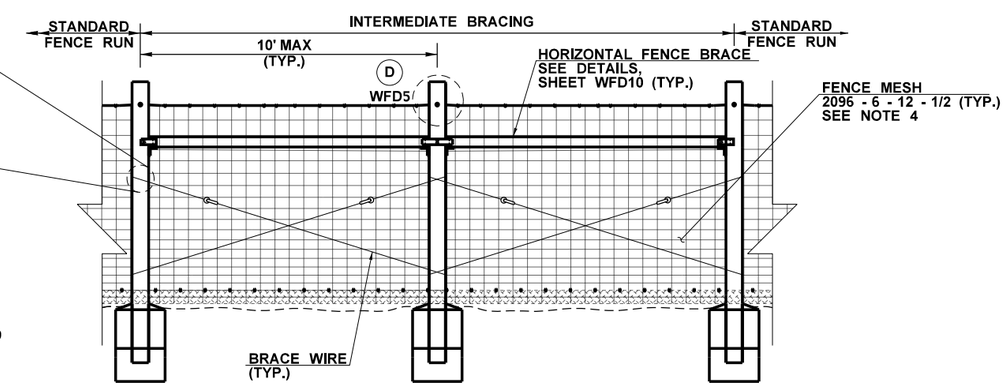

INTERMEDIATE BRACING DETAIL
BARE SIDE OF POSTS
NOT TO SCALE

NOTES:

1. SEE SPECIAL PROVISION "WILDLIFE EXCLUSION FENCE" FOR ADDITIONAL FENCE REQUIREMENTS.
2. POST LENGTH SHALL BE A MINIMUM OF 12 FT . EXPOSED POST LENGTH WHEN INSTALLED VARIES DEPENDING ON SLOPE (APPROXIMATELY 9 FT).
3. CONTRACTOR SHALL EITHER TRIM 4' CHAIN LINK FABRIC TO FIT AROUND POSTS, MAINTAINING A CONTINUOUS FABRIC, OR CUT 4' CHAIN LINK FABRIC TO FIT BETWEEN POSTS. ATTACH 4' CHAIN LINK FABRIC TO FENCE MESH USING 1/4" OPEN GALVANIZED 12 GAUGE ROUND WIRE HOG RINGS SPACED 1' ON-CENTER (O.C.).
4. FENCE MESH SHALL BE INSTALLED ON THE INTERSTATE SIDE OF THE POSTS AND WITH SMALLER OPENINGS ON THE BOTTOM UNLESS NOTED OTHERWISE. FENCE MESH SHALL BE TENSIONED TO MANUFACTURER SPECIFICATIONS.
5. IN-LINE STRAINER SHALL BE A HOT-DIPPED GALVANIZED RATCHET TYPE WIRE STRAINER. TWO STRAINER HANDLES SHALL BE PROVIDED TO THE CONTRACTING AGENCY.

FILE NAME	K:\452201\090\06736_Phase 3\Design_CAD_Sheets\500-WildlifeFencePlan\XL5479_PS_WF_Details.dgn						
TIME	8:08:09 AM				REGION NO. 10	STATE WASH	FED.AID PROJ.NO.
DATE	2/15/2022						
PLOTTED BY	kingk						
DESIGNED BY	KING/SCHILPEROORT				JOB NUMBER 19Y007		
ENTERED BY	J. VENEGAS						
CHECKED BY	K. KING				CONTRACT NO.		LOCATION NO.
PROJ. ENGR.	A. BYRD						
REGIONAL ADM.	T. TREPANIER	REVISION	DATE	BY			

ANDREW D. BYRD — STATE OF WASHINGTON — 39853 — REGISTERED PROFESSIONAL ENGINEER

SEE SHEET CT5
DATE
P.E. STAMP BOX

DATE
P.E. STAMP BOX

Washington State
Department of Transportation

I-90
CABIN CREEK I/C TO W. EASTON I/C
PHASE 3 - ADD LANES/WILDLIFE BRIDGES

WILDLIFE FENCE DETAILS

Plot 4
PLAN REF NO
WFD4
SHEET 795 OF 1783 SHEETS

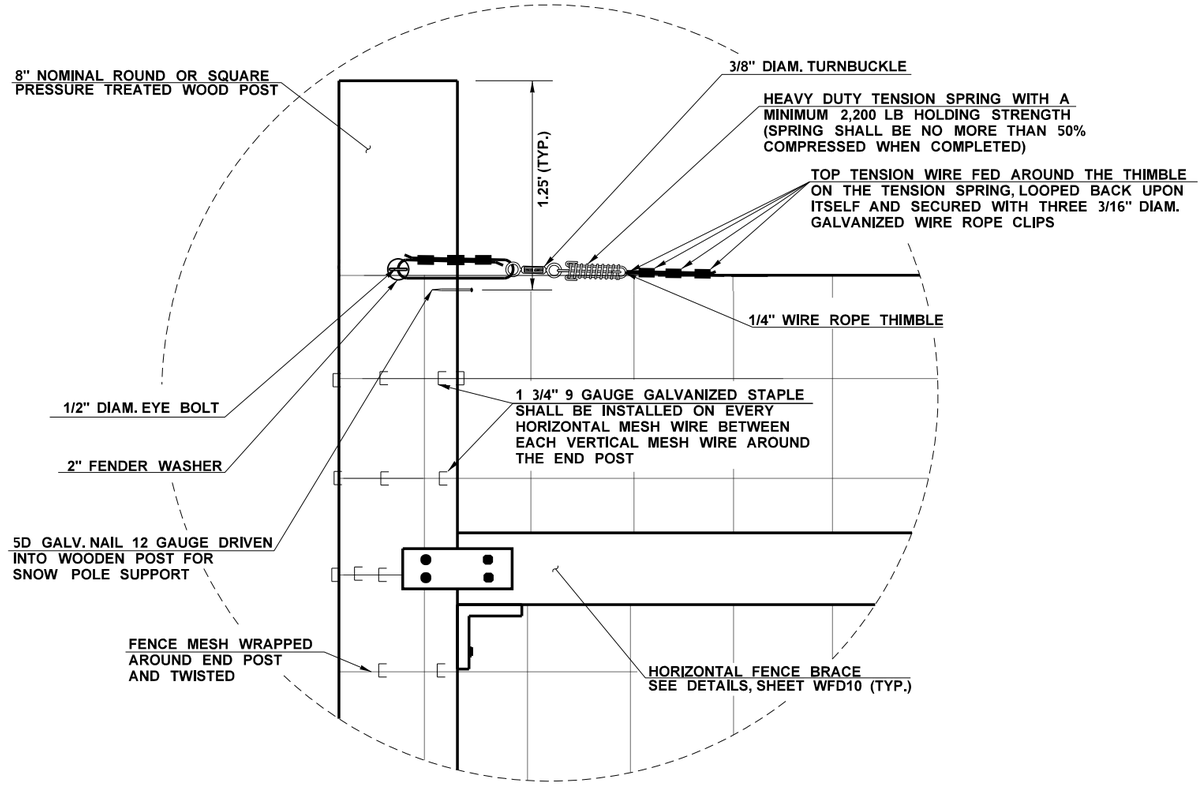

DETAIL A - LEADING END TOP TENSION WIRE ATTACHMENT
FENCE MESH SIDE OF POST
NOT TO SCALE

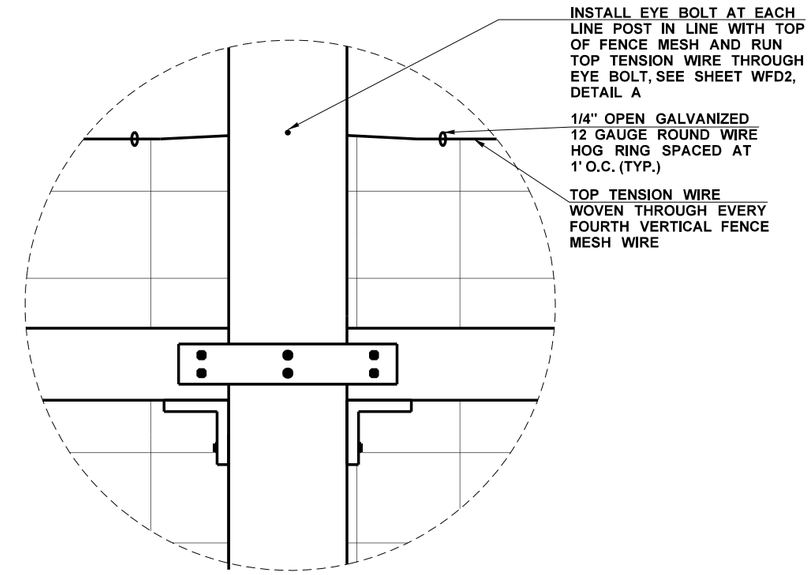

DETAIL B
BARE SIDE OF POST
NOT TO SCALE

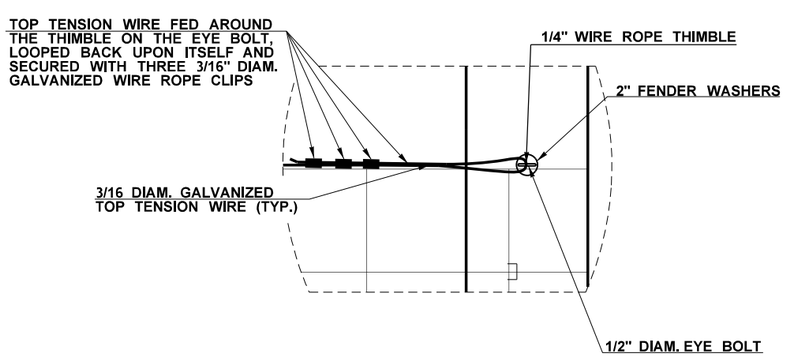

DETAIL C - TRAILING END TOP TENSION WIRE ATTACHMENT
FENCE MESH SIDE OF POST
NOT TO SCALE

NOTES:

1. SEE SPECIAL PROVISION "WILDLIFE EXCLUSION FENCE" FOR HARDWARE/MATERIAL REQUIREMENTS.
2. SEE SPECIAL PROVISION "SNOW POLES" FOR ADDITIONAL REQUIREMENTS.
3. ADJUSTMENTS TO WILDLIFE EXCLUSION FENCE TO ACCOMMODATE SNOW POLES SHALL BE APPROVED BY THE ENGINEER.

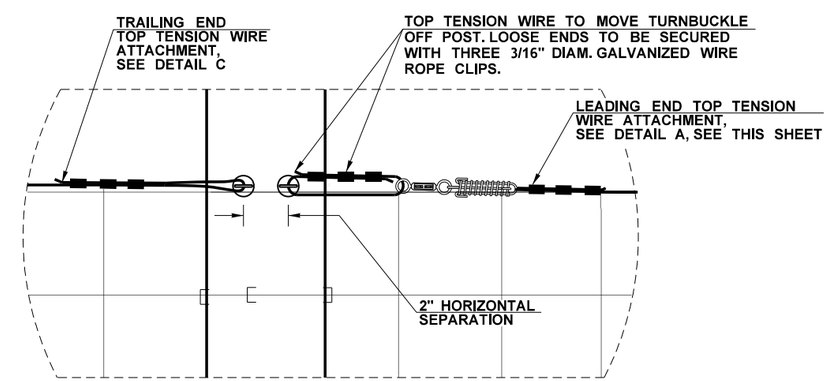

DETAIL D - INTERMEDIATE BRACING TOP TENSION WIRE ATTACHMENT
FENCE MESH SIDE OF POST
NOT TO SCALE

FILE NAME	K:\452201\090\06736_Phase 3\Design_CAD_Sheets\500-WildlifeFencePlan\XL5479_PS_WF_Details.dgn						
TIME	8:08:10 AM				REGION NO. 10	STATE WASH	FED.AID PROJ.NO.
DATE	2/15/2022						
PLOTTED BY	kingk				JOB NUMBER 19Y007		
DESIGNED BY	KING/SCHILPEROORT						
ENTERED BY	J. VENEGAS						
CHECKED BY	K. KING				CONTRACT NO.		LOCATION NO.
PROJ. ENGR.	A. BYRD						
REGIONAL ADM.	T. TREPANIER	REVISION	DATE	BY			

ANDREW D. BYRD — STATE OF WASHINGTON — REGISTERED PROFESSIONAL ENGINEER — 39853

SEE SHEET CT5
DATE
P.E. STAMP BOX

DATE
P.E. STAMP BOX

Washington State Department of Transportation

I-90
CABIN CREEK I/C TO W. EASTON I/C
PHASE 3 - ADD LANES/WILDLIFE BRIDGES

WILDLIFE FENCE DETAILS

Plot 5
PLAN REF NO
WFD5
SHEET 796 OF 1783 SHEETS

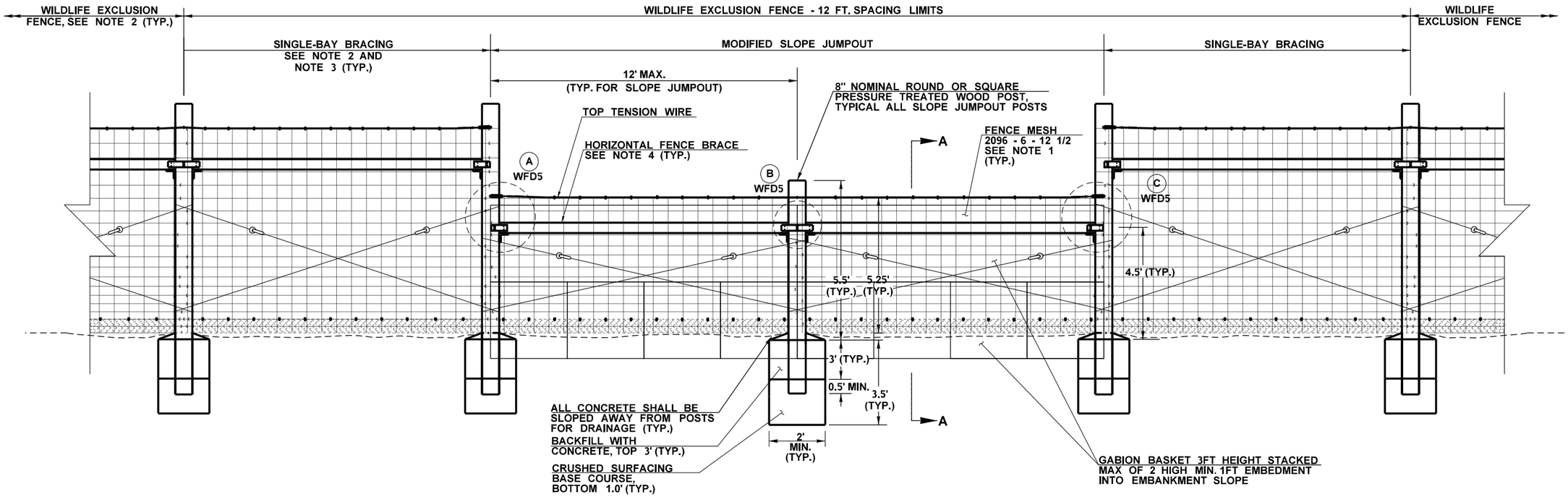

MODIFIED SLOPE JUMPOUT DETAIL

TYPICAL ELEVATION VIEW
NOT TO SCALE

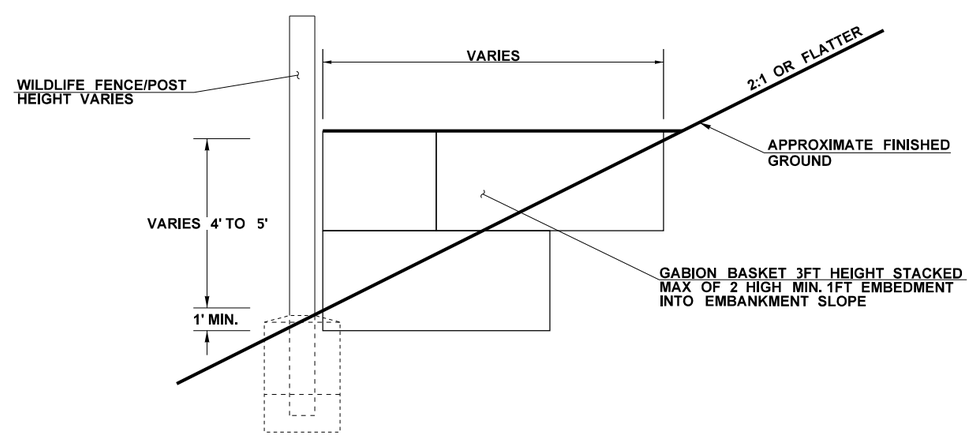

SECTION A-A

NOT TO SCALE

NOTES:

1. SLOPE JUMPOUT FENCE MESH SHALL BE CUT TO HEIGHT, REMOVING THE TOP OF THE FENCE MESH.
2. REFER TO SHEETS WFD2, WFD4, AND WFD5 FOR DETAILS.
3. WHERE A SLOPE JUMPOUT ABUTS A WALL OMIT THE SINGLE-BAY BRACING ON THE WALL SIDE.
4. CONTRACTOR SHALL INSTALL A HORIZONTAL FENCE BRACE (SEE SHEET WFD10) WITHIN EVERY BAY OF THE SLOPE JUMPOUT.

MODIFIED SLOPE JUMPOUT LIMITS

STATION RANGE	LENGTH (FT)
LE 1750+14.36 (46.0' RT) TO LE 1750+14.26 (62.0' RT)	16
LE 1751+28.96 (46.1' RT) TO LE 1751+28.26 (62.1' RT)	16
LE 1801+02.96 (46.0' RT) TO LE 1801+02.58 (62.0' RT)	16
LE 1829+46.32 (46.3' RT) TO LE 1829+46.19 (62.3' RT)	16
LE 1833+13.99 (46.0' RT) TO LE 1833+13.56 (62.0' RT)	16
LW 1916+74.85 (45.0' LT) TO LW 1916+66.84 (58.9' LT)	16
LE 1919+39.24 (33.5' RT) TO LE 1919+44.35 (48.7' RT)	16
LE 1931+73.82 (34.7' RT) TO LE 1931+73.57 (50.6' RT)	16
LW 1932+18.6 (45.6' LT) TO LW 1932+31.15 (75.1' LT)	32

FILE NAME	K:\452201\090\06736_Phase 3\Design_CAD_Sheets\500-WildlifeFencePlan\XL5479_PS_WF_Details.dgn
TIME	8:08:11 AM
DATE	2/15/2022
PLOTTED BY	kingk
DESIGNED BY	KING/SCHILPEROORT
ENTERED BY	J. VENEGAS
CHECKED BY	K. KING
PROJ. ENGR.	A. BYRD
REGIONAL ADM.	T. TREPANIER

REVISION | DATE | BY

REGION NO. 10 | STATE WASH | FED.AID PROJ.NO.
JOB NUMBER 19Y007
CONTRACT NO. | LOCATION NO.

ANDREW D. BYRD, STATE OF WASHINGTON, 19873, REGISTERED PROFESSIONAL ENGINEER
SEE SHEET CT5
DATE
P.E. STAMP BOX

DATE
P.E. STAMP BOX

Washington State Department of Transportation

I-90
CABIN CREEK I/C TO W. EASTON I/C
PHASE 3 - ADD LANES/WILDLIFE BRIDGES

WILDLIFE FENCE DETAILS

Plot 6
PLAN REF NO WFD6
SHEET 797 OF 1783 SHEETS

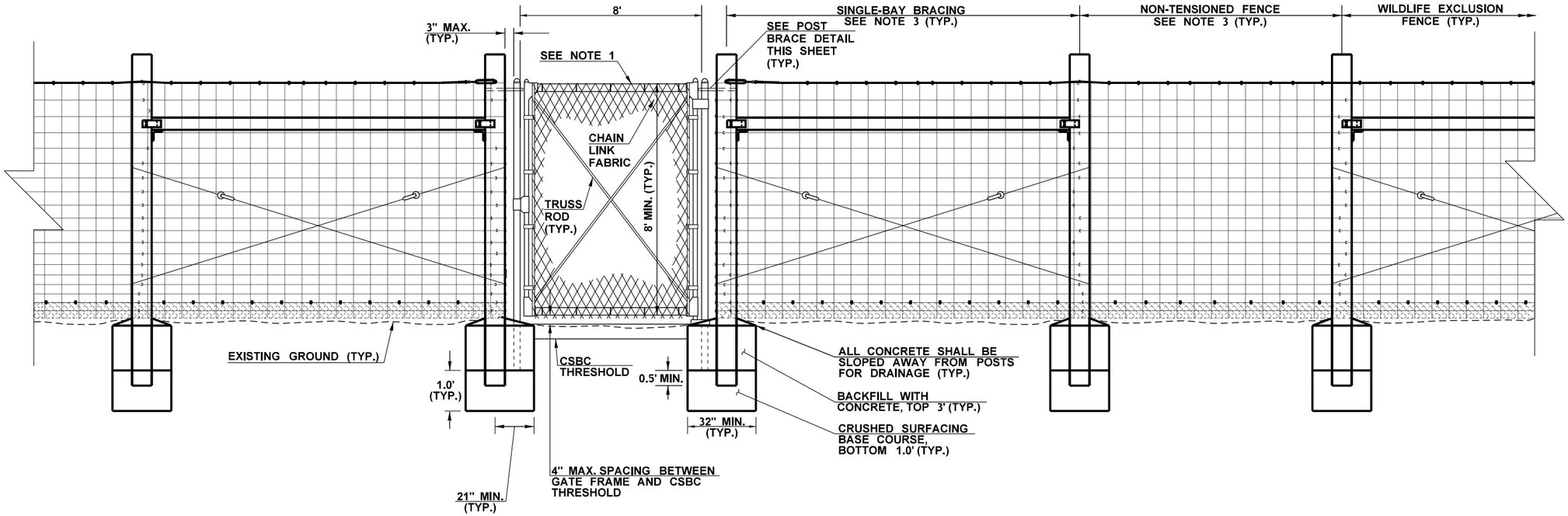

MODIFIED SINGLE GATE DETAIL
FENCE SIDE OF POSTS
NOT TO SCALE

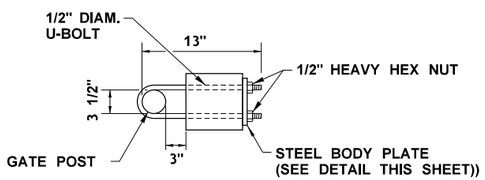

TOP VIEW

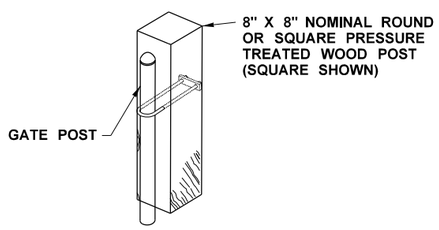

ISOMETRIC VIEW

POST BRACE DETAIL
NOT TO SCALE

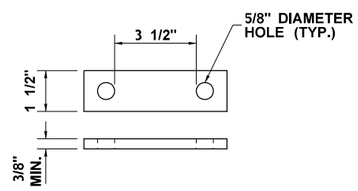

STEEL BODY PLATE DETAIL
NOT TO SCALE

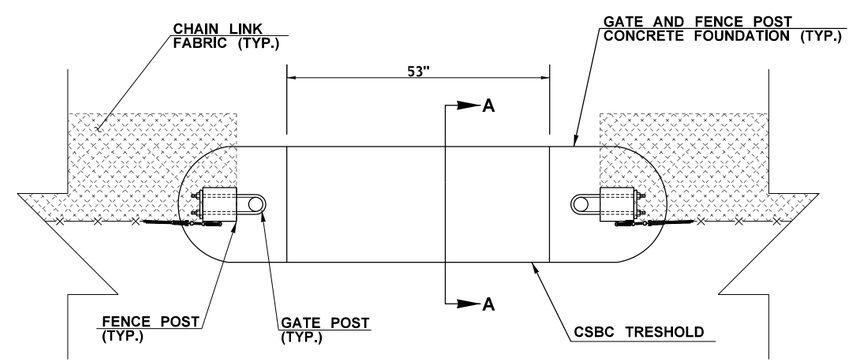

CSBC TRESHOLD TOP VIEW
NOT TO SCALE

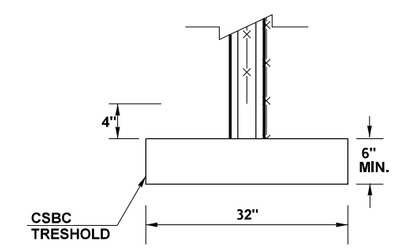

SECTION A-A
NOT TO SCALE

NOTES:
1. SEE STANDARD PLAN L-30.10 FOR ADDITIONAL DETAILS NOT SHOWN.
2. SEE SPECIAL PROVISION "WILDLIFE EXCLUSION FENCE" FOR GATE COLOR, AND ADDITIONAL INFORMATION.
3. REFER TO SHEETS WFD4 AND WFD5 FOR DETAILS.

FILE NAME	K:\452201\090\06736_Phase 3\Design_CAD_Sheets\500-WildlifeFencePlan\XL5479_PS_WF_Details.dgn					
TIME	8:08:12 AM				REGION NO. 10	STATE WASH
DATE	2/15/2022					FED.AID PROJ.NO.
PLOTTED BY	kingk					
DESIGNED BY	KING/SCHILPEROORT				JOB NUMBER 19Y007	
ENTERED BY	J. VENEGAS					
CHECKED BY	K. KING				CONTRACT NO.	LOCATION NO.
PROJ. ENGR.	A. BYRD					
REGIONAL ADM.	T. TREPANIER	REVISION	DATE	BY		

ANDREW D. BYRD, STATE OF WASHINGTON, 39833, REGISTERED PROFESSIONAL ENGINEER
SEE SHEET CTS
DATE
P.E. STAMP BOX

DATE
P.E. STAMP BOX

Washington State Department of Transportation

I-90
CABIN CREEK I/C TO W. EASTON I/C
PHASE 3 - ADD LANES/WILDLIFE BRIDGES

WILDLIFE FENCE DETAILS

Plot 7
PLAN REF NO WFD7
SHEET 798 OF 1783 SHEETS

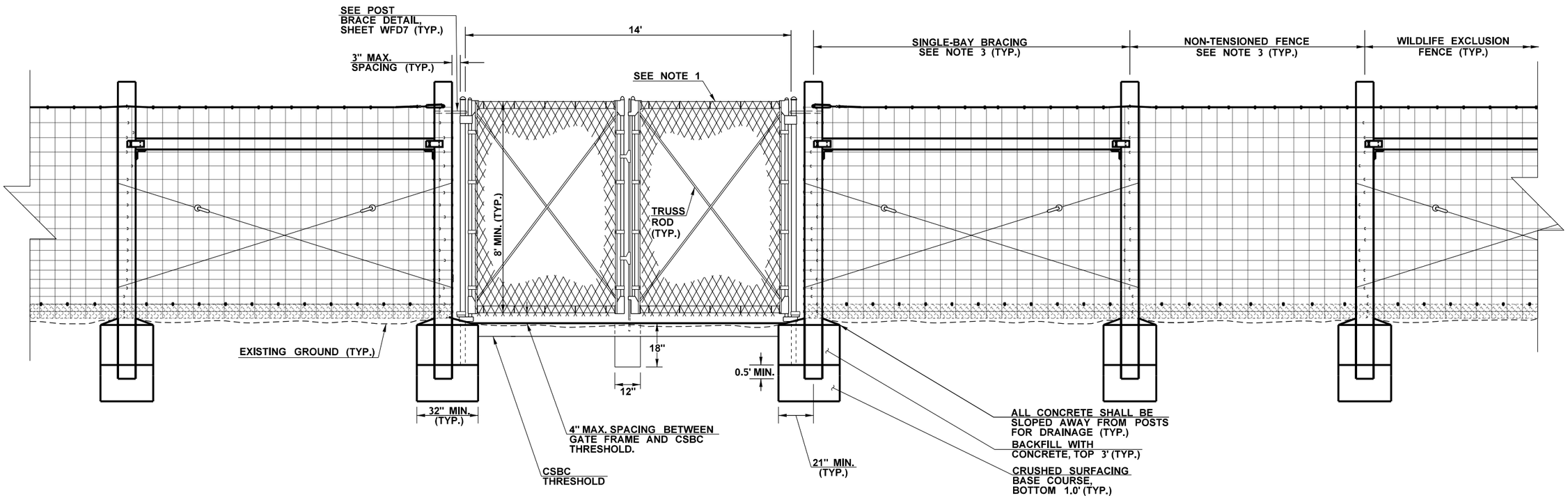

MODIFIED DOUBLE GATE - 14 FT.
DETAIL FENCE SIDE OF POSTS
NOT TO SCALE

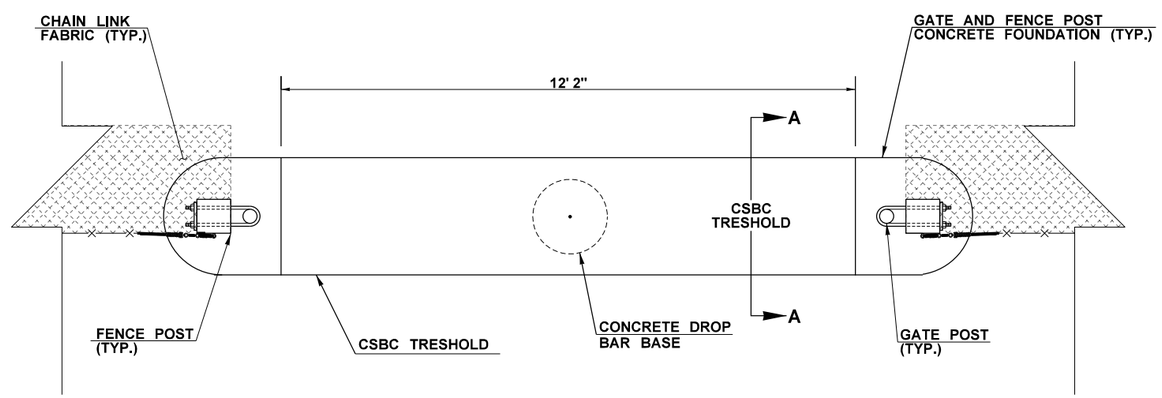

CSBC TRESHOLD VIEW
NOT TO SCALE

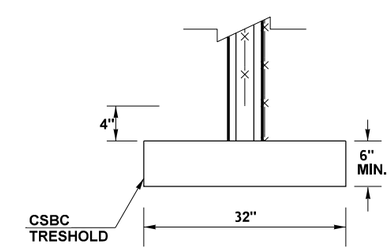

SECTION A-A
NOT TO SCALE

NOTES:
1. SEE STANDARD PLAN L-30.10 FOR ADDITIONAL DETAILS NOT SHOWN.
2. SEE SPECIAL PROVISION "WILDLIFE EXCLUSION FENCE" FOR GATE COLOR, AND ADDITIONAL INFORMATION.
3. REFER TO SHEETS WFD4 AND WFD5 FOR DETAILS.

FILE NAME	K:\452201\090\06736_Phase 3\Design_CAD_Sheets\500-WildlifeFencePlan\XL5479_PS_WF_Details.dgn			
TIME	8:08:13 AM			
DATE	2/15/2022			
PLOTTED BY	kingk			
DESIGNED BY	KING/SCHILPEROORT			
ENTERED BY	J. VENEGAS			
CHECKED BY	K. KING			
PROJ. ENGR.	A. BYRD			
REGIONAL ADM.	T. TREPANIER	REVISION	DATE	BY

REGION NO.	STATE	FED.AID PROJ.NO.
10	WASH	
JOB NUMBER 19Y007		
CONTRACT NO.		LOCATION NO.

ANDREW D. BYRD, STATE OF WASHINGTON, 39833, REGISTERED PROFESSIONAL ENGINEER
SEE SHEET CT5
DATE
P.E. STAMP BOX

DATE
P.E. STAMP BOX

Washington State Department of Transportation

I-90
CABIN CREEK I/C TO W. EASTON I/C
PHASE 3 - ADD LANES/WILDLIFE BRIDGES

WILDLIFE FENCE DETAILS

Plot 8
PLAN REF NO WFD8
SHEET 799 OF 1783 SHEETS

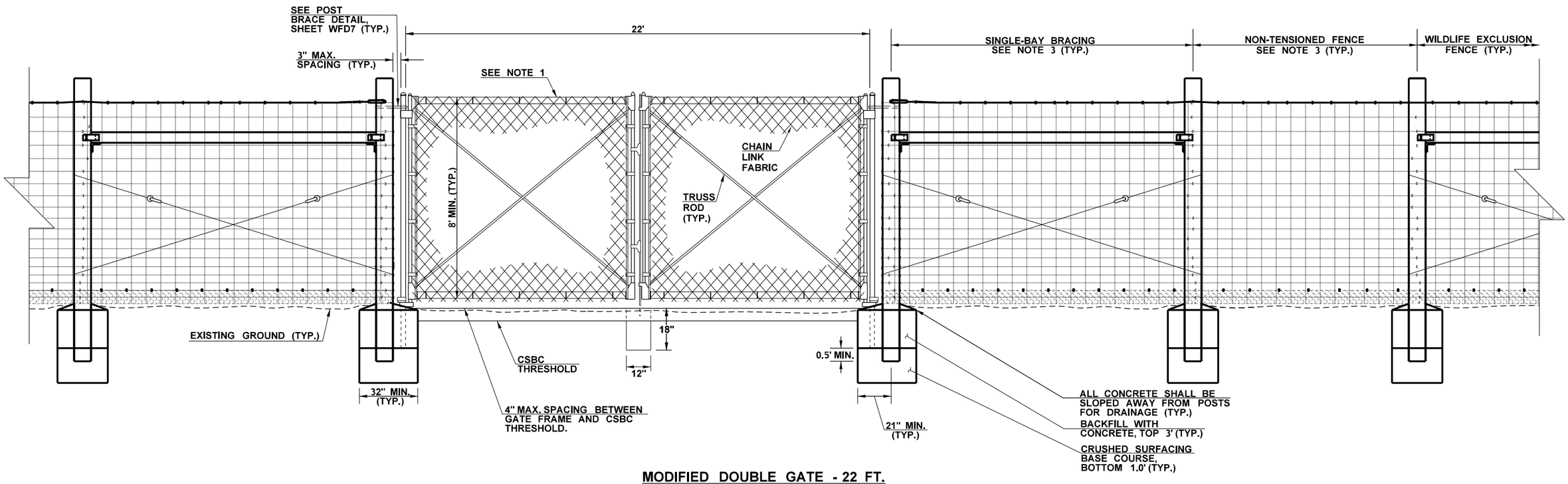

MODIFIED DOUBLE GATE - 22 FT.
DETAIL FENCE SIDE OF POSTS
NOT TO SCALE

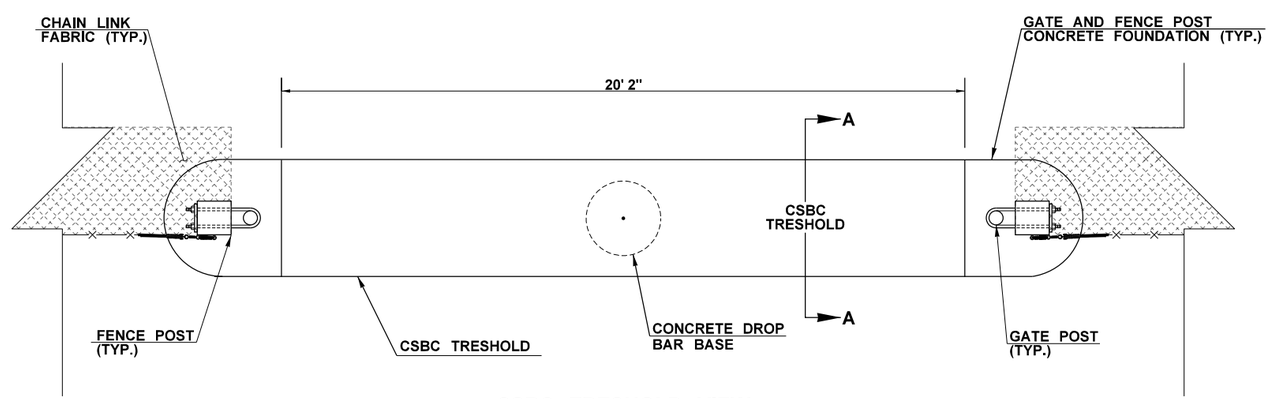

CSBC TRESHOLD VIEW
NOT TO SCALE

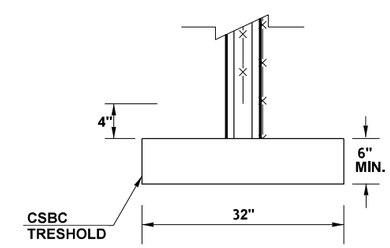

SECTION A-A
NOT TO SCALE

NOTES:
1. SEE STANDARD PLAN L-30.10 FOR ADDITIONAL DETAILS NOT SHOWN.
2. SEE SPECIAL PROVISION "WILDLIFE EXCLUSION FENCE" FOR GATE COLOR, AND ADDITIONAL INFORMATION.
3. REFER TO SHEETS WFD4 AND WFD5 FOR DETAILS.

FILE NAME	K:\452201\090\06736_Phase 3\Design_CAD_Sheets\500-WildlifeFencePlan\XL5479_PS_WF_Details.dgn			
TIME	8:08:14 AM			
DATE	2/15/2022			
PLOTTED BY	kingk			
DESIGNED BY	KING/SCHILPEROORT			
ENTERED BY	J. VENEGAS			
CHECKED BY	K. KING			
PROJ. ENGR.	A. BYRD			
REGIONAL ADM.	T. TREPANIER	REVISION	DATE	BY

REGION NO.	STATE	FED.AID PROJ.NO.
10	WASH	
JOB NUMBER 19Y007		
CONTRACT NO.		LOCATION NO.

ANDREW D. BYRD, STATE OF WASHINGTON, 39833, REGISTERED PROFESSIONAL ENGINEER
SEE SHEET CT5
DATE
P.E. STAMP BOX

DATE
P.E. STAMP BOX

Washington State Department of Transportation

I-90
CABIN CREEK I/C TO W. EASTON I/C
PHASE 3 - ADD LANES/WILDLIFE BRIDGES

WILDLIFE FENCE DETAILS

Plot 9
PLAN REF NO WFD9
SHEET 800 OF 1783 SHEETS

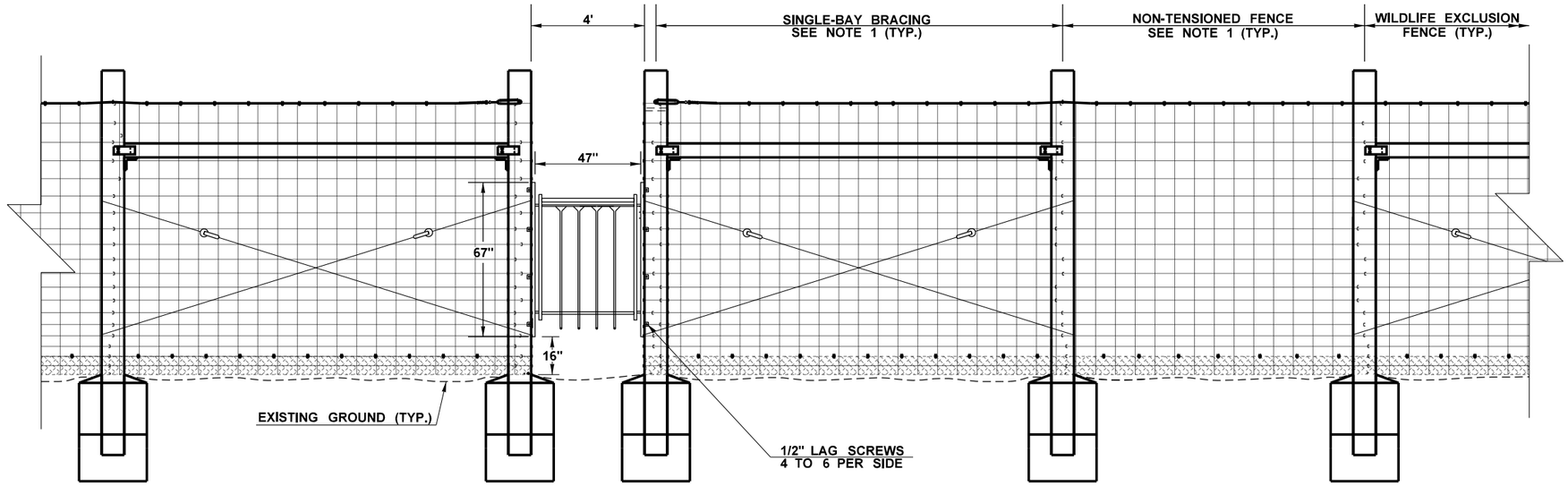

WILDLIFE ONE-WAY GATE DETAIL

NOT TO SCALE

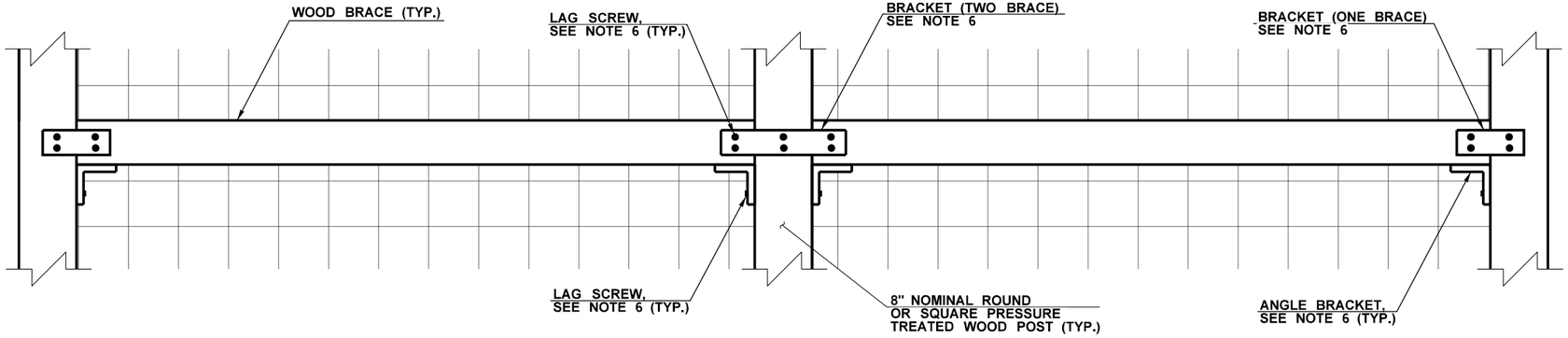

HORIZONTAL FENCE BRACE

NOT TO SCALE

NOTES:

1. REFER TO SHEETS WFD4 AND WFD5 FOR DETAILS.
2. CONTRACTOR SHALL INSTALL A HORIZONTAL FENCE BRACE (SEE DETAILS THIS SHEET) WITHIN EVERY BAY OF THE SLOPE JUMPOUT.
3. MOUNTING BRACKETS SHALL BE FABRICATED PRIOR TO GALVANIZING. GALVANIZING SHALL CONFORM TO ASTM123.
4. SEE SPECIAL PROVISION "WILDLIFE EXCLUSION FENCE" FOR HORIZONTAL FENCE BRACE COLOR AND ADDITIONAL INFORMATION.
5. WELDING SHALL CONFORM TO STANDARD SPECIFICATION 6-03.3(25).
6. SEE SPECIAL PROVISION "WILDLIFE EXCLUSION FENCE" FOR WOOD BRACE, BRACKET, AND LAG SCREW INFORMATION.

ONE-WAY GATE LIMITS
STATION RANGE
LW 1701+32.40 (78.0' LT) TO LW 1701+31.96 (83.2' LT)
LW 1702+05.84 (50.8' LT) TO LW 1702+05.78 (56.0' LT)
LW 1706+44.84 (54.1' LT) TO LW 1706+45.03 (59.3' LT)
LW 1717+18.58 (53.3' LT) TO LW 1717+18.66 (58.4' LT)
LW 1726+03.68 (55.9' LT) TO LW 1726+03.96 (61.0' LT)
LE 1738+66.72 (56.0' RT) TO LE 1738+67.07 (61.1' RT)
LW 1751+36.57 (67.9' LT) TO LW 1751+36.99 (73.0' LT)
LW 1751+95.53 (65.1' LT) TO LW 1751+95.28 (70.3' LT)
LE 1766+65.29 (56.0' RT) TO LE 1766+65.27 (61.2' RT)
LW 1771+28.35 (56.8' LT) TO LW 1771+28.97 (62.0' LT)
LE 1784+18.83 (72.8' RT) TO LE 1784+19.18 (77.9' RT)
LW 1801+63.68 (62.9' LT) TO LW 1801+63.74 (68.0' LT)
LW 1803+44.25 (62.5' LT) TO LW 1803+44.39 (67.7' LT)
LE 1811+73.82 (72.8' RT) TO LE 1811+74.16 (77.9' RT)
LW 1829+76.57 (46.0' LT) TO LW 1829+76.51 (51.2' LT)
LW 1920+03.90 (65.3' LT) TO LW 1920+03.09 (70.4' LT)

FILE NAME	K:\452201\090\06736_Phase 3\Design_CAD_Sheets\500-WildlifeFencePlan\XL5479_PS_WF_Details.dgn
TIME	8:08:15 AM
DATE	2/15/2022
PLOTTED BY	kingk
DESIGNED BY	KING/SCHILPEROORT
ENTERED BY	J. VENEGAS
CHECKED BY	K. KING
PROJ. ENGR.	A. BYRD
REGIONAL ADM.	T. TREPANIER

REVISION | DATE | BY

REGION NO. 10 | STATE WASH | FED.AID PROJ.NO.

JOB NUMBER 19Y007

CONTRACT NO. | LOCATION NO.

ANDREW D. BYRD — STATE OF WASHINGTON — REGISTERED PROFESSIONAL ENGINEER 19873

SEE SHEET CT5 DATE

P.E. STAMP BOX

DATE

P.E. STAMP BOX

Washington State Department of Transportation

I-90
CABIN CREEK I/C TO W. EASTON I/C
PHASE 3 - ADD LANES/WILDLIFE BRIDGES

WILDLIFE FENCE DETAILS

Plot 10

PLAN REF NO WFD10

SHEET 801 OF 1783 SHEETS

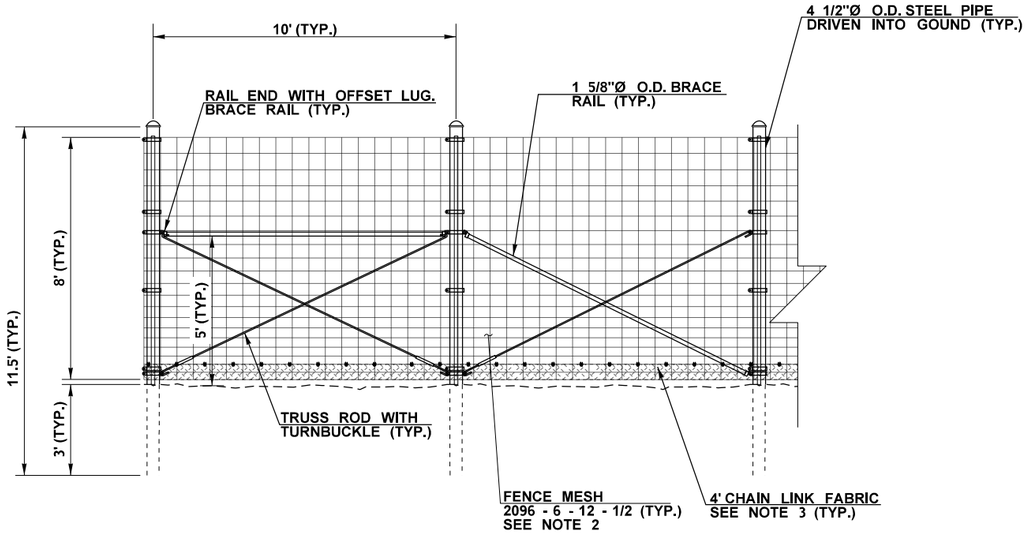

WILDLIFE EXCLUSION FENCE
PIPE POST START AND END BRACING DETAIL
NOT TO SCALE

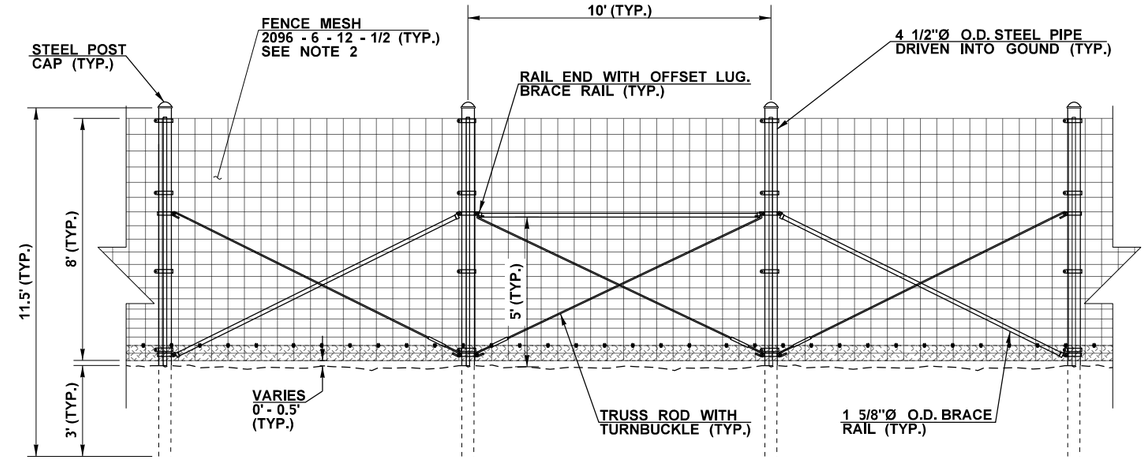

WILDLIFE EXCLUSION FENCE
PIPE POST BRACING LAYOUT DETAIL
NOT TO SCALE

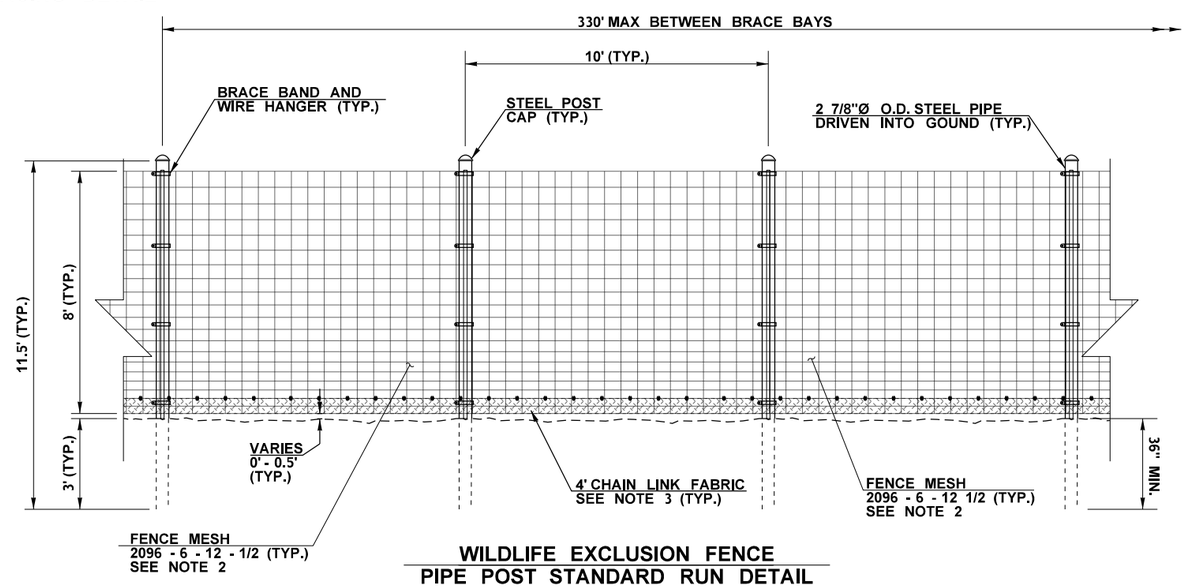

WILDLIFE EXCLUSION FENCE
PIPE POST STANDARD RUN DETAIL
NOT TO SCALE

CONSTRUCTION NOTES:

1. PIPE POSTS SHALL BE SET IN UNDISTURBED EARTH EITHER BY DRIVING OR DRILLING TO A MINIMUM DEPTH OF 36 INCHES. DRIVING SHALL BE ACCOMPLISHED IN SUCH A MANNER AS NOT TO DAMAGE THE POST.
2. VOIDS AROUND THE POST SHALL BE BACKFILLED WITH SUITABLE MATERIAL AND THOROUGHLY TAMPED. SOIL SHALL BE COMPACTED UNTIL THERE IS NO DEFLECTION WHEN HORIZONTAL PRESSURE IS APPLIED TO THE TOP.

NOTES:

1. CONTRACTOR SHALL EITHER TRIM 4' CHAIN LINK FABRIC TO FIT AROUND POSTS, MAINTAINING A CONTINUOUS FABRIC, OR CUT 4' CHAIN LINK FABRIC TO FIT BETWEEN POSTS. ATTACH 4' CHAIN LINK FABRIC TO FENCE MESH USING 1/4" OPEN GALVANIZED 12 GAUGE ROUND WIRE HOG RINGS SPACED 1' ON-CENTER (O.C.).
2. SLOPE JUMPOUT FENCE MESH SHALL BE CUT TO HEIGHT, REMOVING THE TOP OF THE FENCE MESH.

FILE NAME	K:\452201\090\06736_Phase 3\Design_CAD_Sheets\500-WildlifeFencePlan\XL5479_PS_WF_Details.dgn				REGION NO. 10	STATE WASH	FED.AID PROJ.NO.
TIME	8:08:16 AM				JOB NUMBER 19Y007		
DATE	2/15/2022				CONTRACT NO.		LOCATION NO.
PLOTTED BY	kingk						
DESIGNED BY	KING/SCHILPEROORT						
ENTERED BY	J. VENEGAS						
CHECKED BY	K. KING						
PROJ. ENGR.	A. BYRD						
REGIONAL ADM.	T. TREPANIER	REVISION	DATE	BY			

ANDREW D. BYRD — STATE OF WASHINGTON — 39833 — REGISTERED PROFESSIONAL ENGINEER

SEE SHEET CTS
DATE
P.E. STAMP BOX

DATE
P.E. STAMP BOX

Washington State
Department of Transportation

I-90
CABIN CREEK I/C TO W. EASTON I/C
PHASE 3 - ADD LANES/BUILD WILDLIFE BRIDGES

WILDLIFE FENCE DETAILS

Plot 11
PLAN REF NO
WFD11
SHEET 802 OF 1783 SHEETS

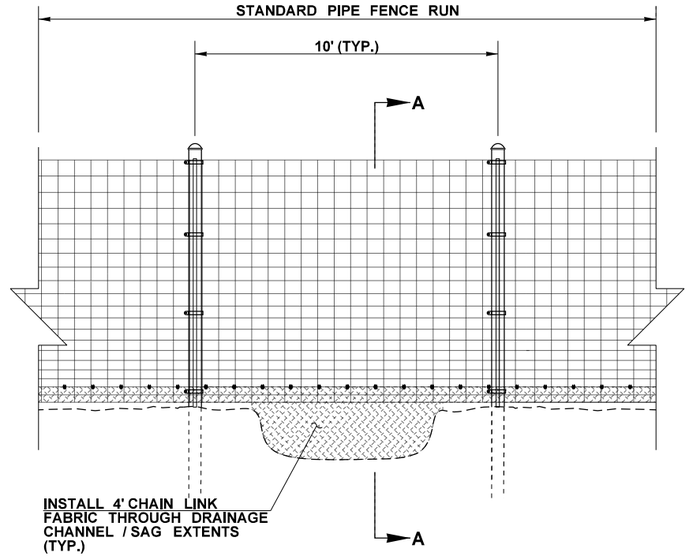

PIPE POST DRAINAGE CHANNEL / SAG DETAIL

NOT TO SCALE

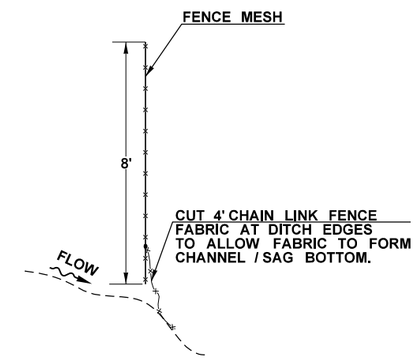

SECTION A-A

NOT TO SCALE

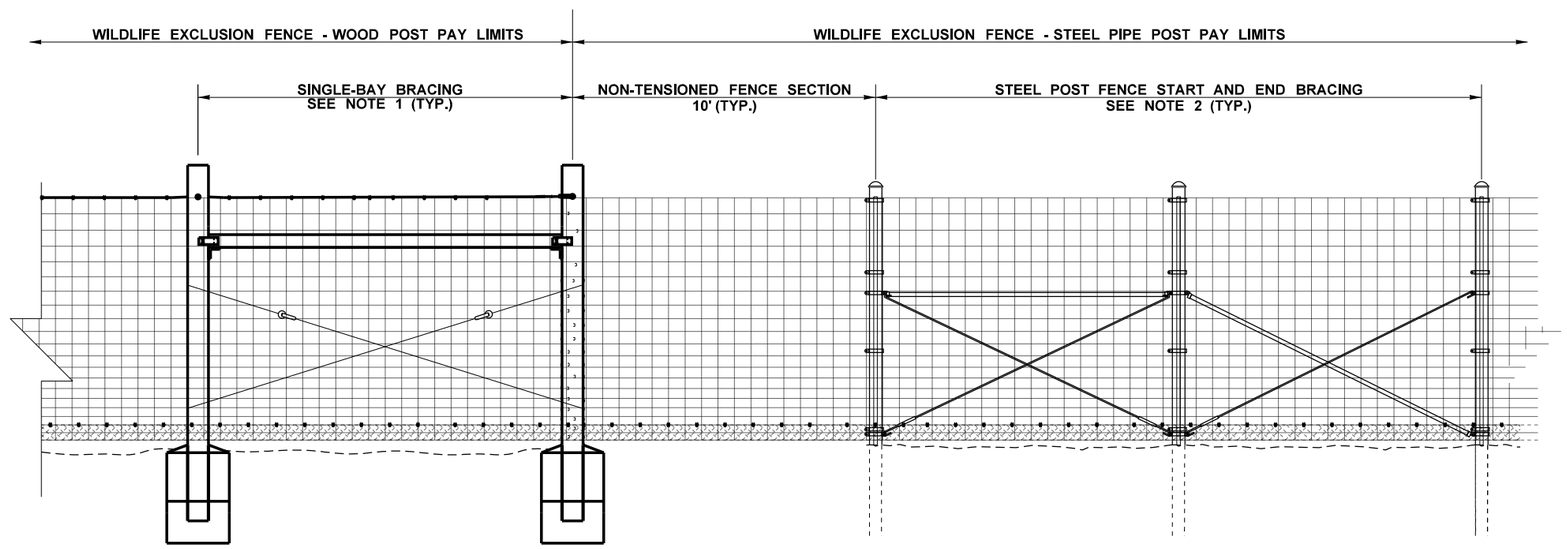

WILDLIFE EXCLUSION FENCE WOOD POST TO PIPE POST DETAIL

NOT TO SCALE

NOTES:

1. REFER TO SHEETS WFD4 AND WFD5 FOR DETAILS.
2. REFER TO SHEET WFD11 FOR DETAILS

FILE NAME	K:\452201\090\06736_Phase 3\Design_CAD_Sheets\500-WildlifeFencePlan\XL5479_PS_WF_Details.dgn						
TIME	8:08:16 AM				REGION NO. 10	STATE WASH	FED.AID PROJ.NO.
DATE	2/15/2022						
PLOTTED BY	kingk				JOB NUMBER 19Y007		
DESIGNED BY	KING/SCHILPEROORT						
ENTERED BY	J. VENEGAS						
CHECKED BY	K. KING				CONTRACT NO.		LOCATION NO.
PROJ. ENGR.	A. BYRD						
REGIONAL ADM.	T. TREPANIER	REVISION	DATE	BY			

ANDREW D. BYRD STATE OF WASHINGTON 39853 REGISTERED PROFESSIONAL ENGINEER

SEE SHEET CTS

DATE

P.E. STAMP BOX

DATE

P.E. STAMP BOX

Washington State Department of Transportation

I-90

CABIN CREEK I/C TO W. EASTON I/C

PHASE 3 - ADD LANES/BUILD WILDLIFE BRIDGES

WILDLIFE FENCE DETAILS

Plot 12

PLAN REF NO WFD12

SHEET 803 OF 1783 SHEETS

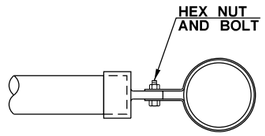

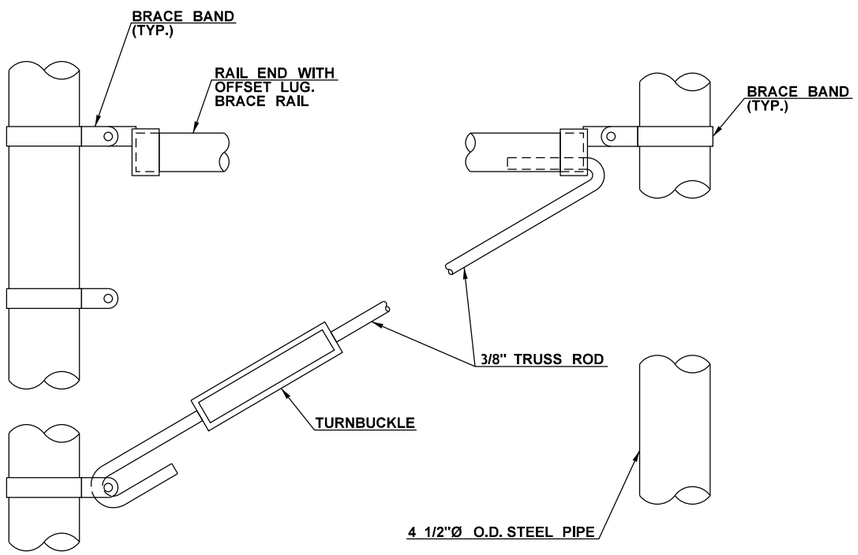

PIPE FENCE BRACE DETAILS
NOT TO SCALE

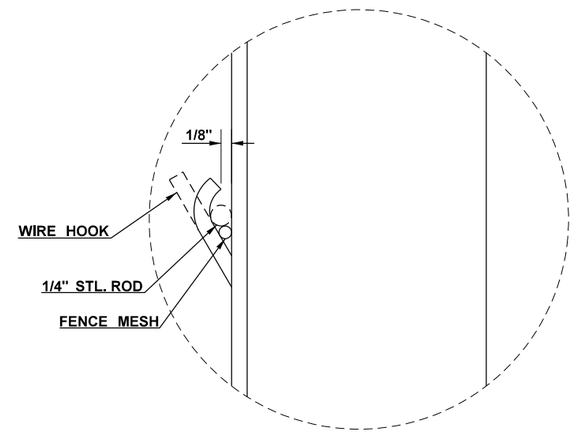

DETAIL E
NOT TO SCALE

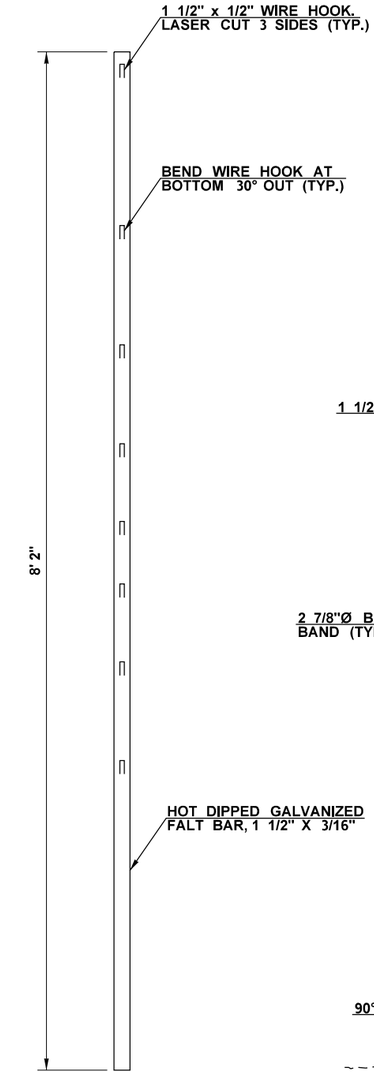

WIRE HANGER
FOR FENCE MESH
NOT TO SCALE

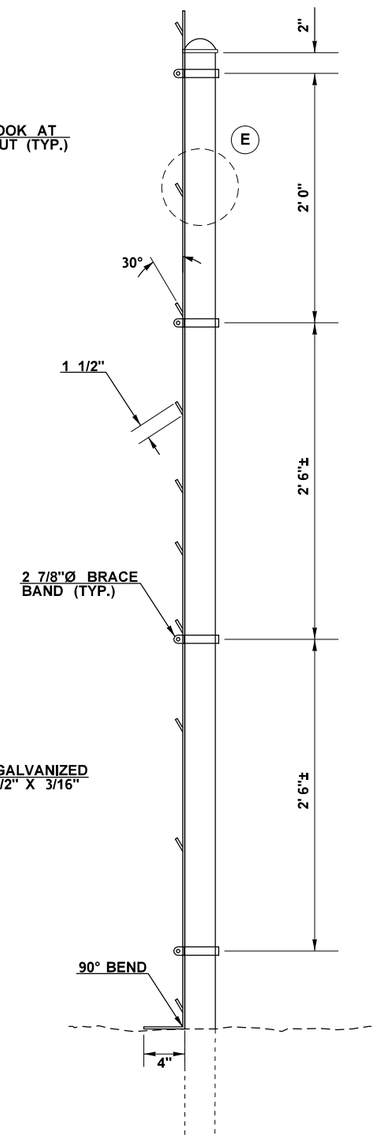

BRACE BAND ASSEMNLY
NOT TO SCALE

WILDLIFE EXCLUSION FENCE PIPE POST DETAILS

FILE NAME	K:\452201\090\06736_Phase 3\Design_CAD_Sheets\500-WildlifeFencePlan\XL5479_PS_WF_Details.dgn						
TIME	8:08:17 AM				REGION NO. 10	STATE WASH	FED.AID PROJ.NO.
DATE	2/15/2022						
PLOTTED BY	kingk						
DESIGNED BY	KING/SCHILPEROORT				JOB NUMBER 19Y007		
ENTERED BY	J. VENEGAS						
CHECKED BY	K. KING				CONTRACT NO.		LOCATION NO.
PROJ. ENGR.	A. BYRD						
REGIONAL ADM.	T. TREPANIER	REVISION	DATE	BY			

ANDREW D. BYRD, STATE OF WASHINGTON, 39833, REGISTERED PROFESSIONAL ENGINEER
SEE SHEET CT5
DATE
P.E. STAMP BOX

DATE
P.E. STAMP BOX

Washington State
Department of Transportation

I-90
CABIN CREEK I/C TO W. EASTON I/C
PHASE 3 - ADD LANES/BUILD WILDLIFE BRIDGES

WILDLIFE FENCE DETAILS

Plot 13
PLAN REF NO
WFD13
SHEET 804 OF 1783 SHEETS

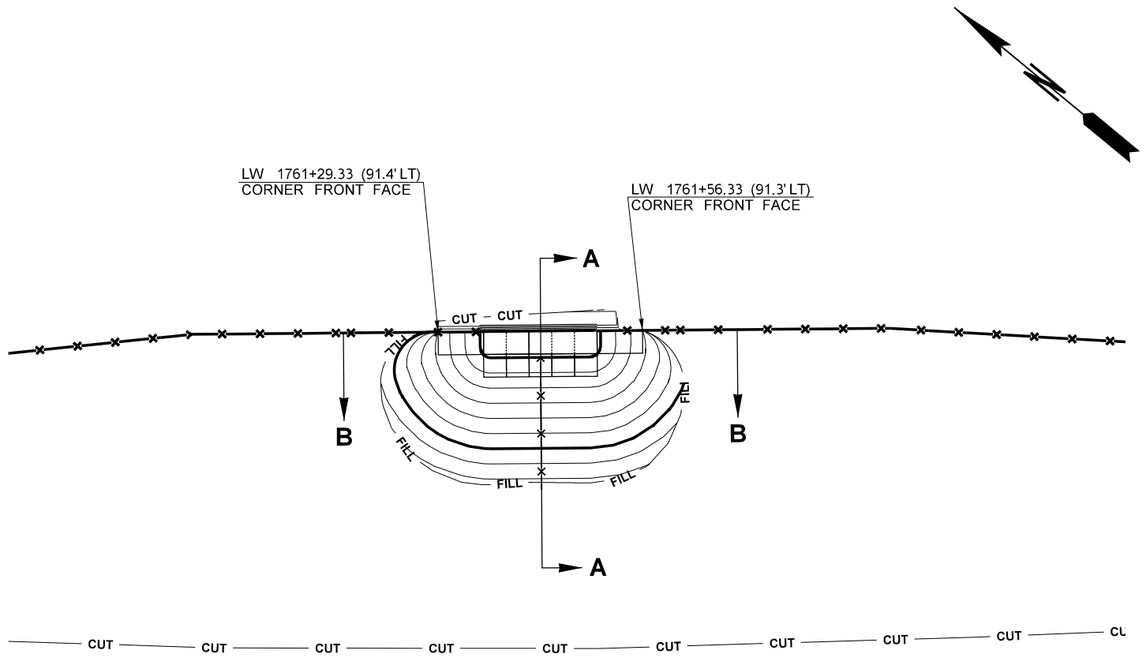

0 10 20
SCALE IN FEET

WILDLIFE RAMP JUMPOUT 1
PLAN VIEW

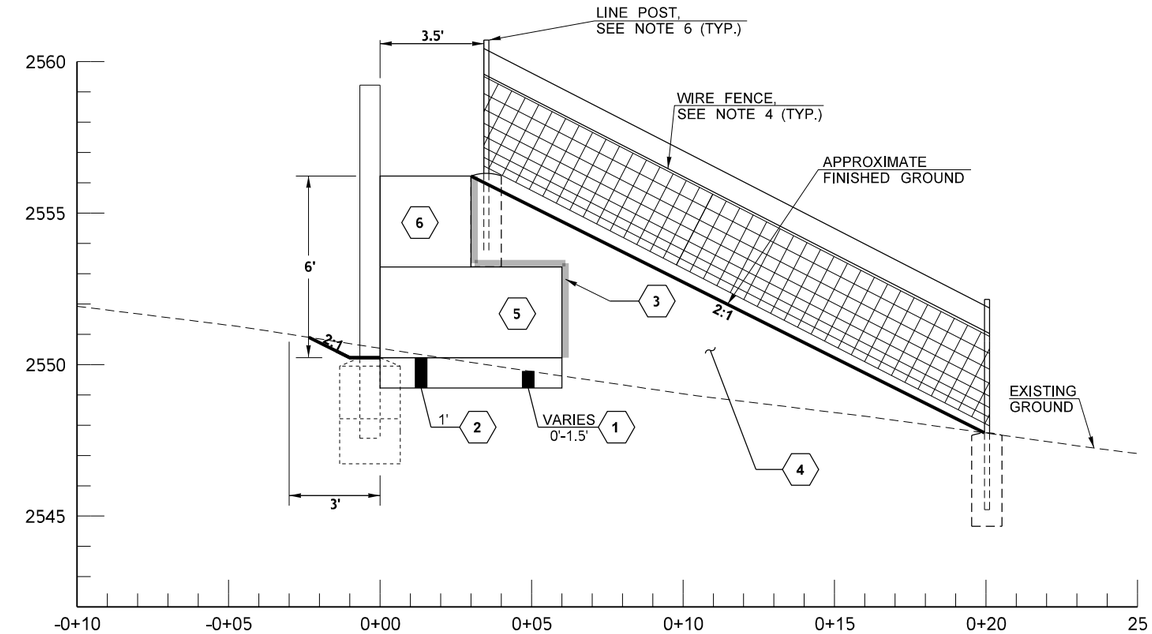

WILDLIFE RAMP JUMPOUT 1
SIDE PROFILE VIEW A-A

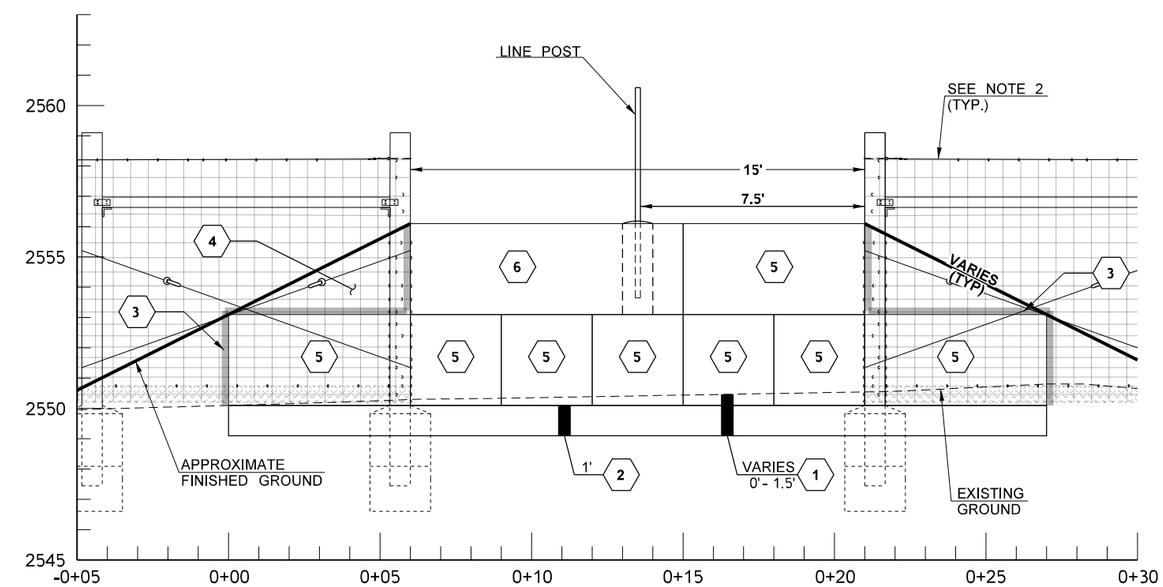

WILDLIFE RAMP JUMPOUT 1
PROFILE VIEW B-B

NOTES:

1. SEE WSDOT STANDARD PLAN D-6, GABIONS.
2. CONTRACTOR SHALL INSTALL SINGLE BAY BRACING FOLLOWED BY NON-TENSIONED FENCE SECTION AT EACH END OF THE RAMP JUMPOUT TO TIE THE PRECEDING AND SUBSEQUENT WILDLIFE EXCLUSION FENCE. SEE DETAILS ON WFD4.
3. WILDLIFE RAMP JUMPOUT STATIONS OFFSETS AND ELEVATIONS ARE APPROXIMATE.
4. SEE WSDOT STANDARD PLAN L-10.10, WIRE FENCE TYPE 1. SEE NOTE 6 FOR ADDITIONAL INFORMATION.
5. ANCHOR LINE POST USING A 3 FT LONG, 12 IN ROUND SONOTUBE AND COMMERCIAL CONCRETE. EMBED LINE POST 2.5 FT INTO CONCRETE FILLED SONOTUBE. HANDWORK MAY BE REQUIRED FOR GRADING.

LEGEND

WILDLIFE EXCLUSION FENCE		1	STRUCTURE EXCAVATION CLASS B INCL. HAUL
WIRE FENCE TYPE 1		2	GRAVEL BORROW INCL. HAUL
INTERMEDIATE CONTOUR		3	CONSTRUCTION GEOTEXTILE FOR SEPARATION
INDEX CONTOUR		4	EMBANKMENT COMPACTION (METHOD A)
GABION BASKET		5	GABION CRIBBING, UNIT A (SEE NOTE 1)
		6	GABION CRIBBING, UNIT B (SEE NOTE 1)

FILE NAME	K:\452201\090\06736_Phase 3\Design_CAD_Sheets\500-WildlifeFencePlan\XL5479_PS_WF_Details.dgn						
TIME	8:08:18 AM				REGION NO. 10	STATE WASH	FED.AID PROJ.NO.
DATE	2/15/2022						
PLOTTED BY	kingk				JOB NUMBER 19Y007		
DESIGNED BY	J. VENEGAS						
ENTERED BY	J. VENEGAS						
CHECKED BY	K. KING				CONTRACT NO.		LOCATION NO.
PROJ. ENGR.	A. BYRD						
REGIONAL ADM.	T. TREPANIER	REVISION	DATE	BY			

ANDREW D. BYRD, STATE OF WASHINGTON, 39872, REGISTERED PROFESSIONAL ENGINEER

SEE SHEET CT5
DATE
P.E. STAMP BOX

DATE
P.E. STAMP BOX

Washington State
Department of Transportation

I-90
CABIN CREEK I/C TO W EASTON I/C
PHASE 3 - ADD LANES/WILDLIFE BRIDGES

WILDLIFE RAMP JUMPOUT DETAILS

Plot 14
PLAN REF NO
WFD14
SHEET 805 OF 1783 SHEETS

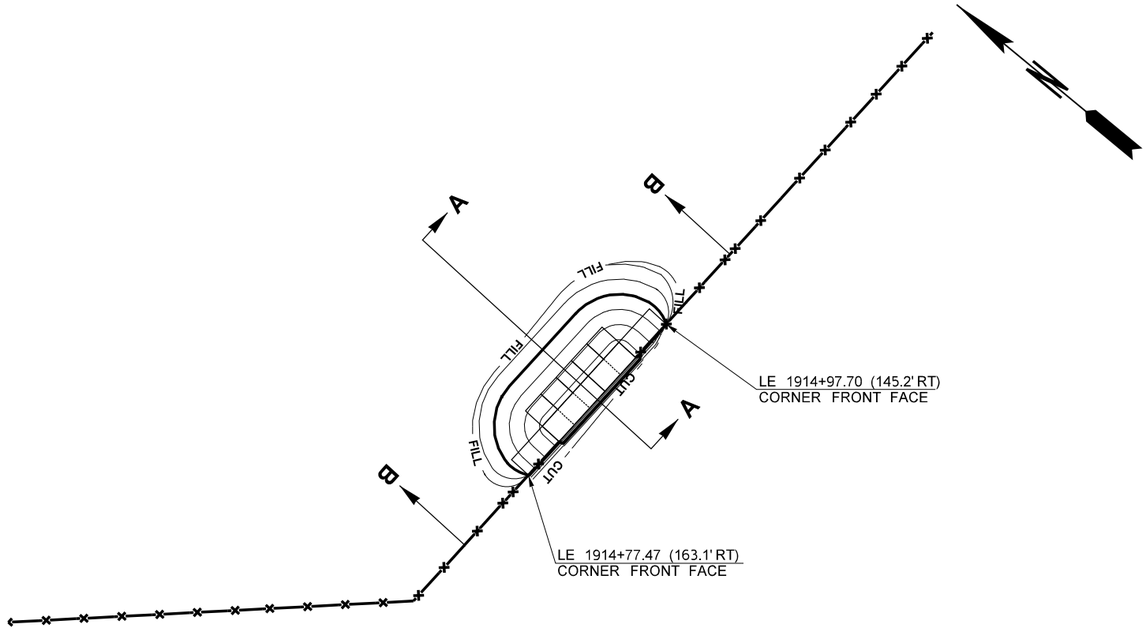

0 10 20
SCALE IN FEET

WILDLIFE RAMP JUMPOUT 2
PLAN VIEW

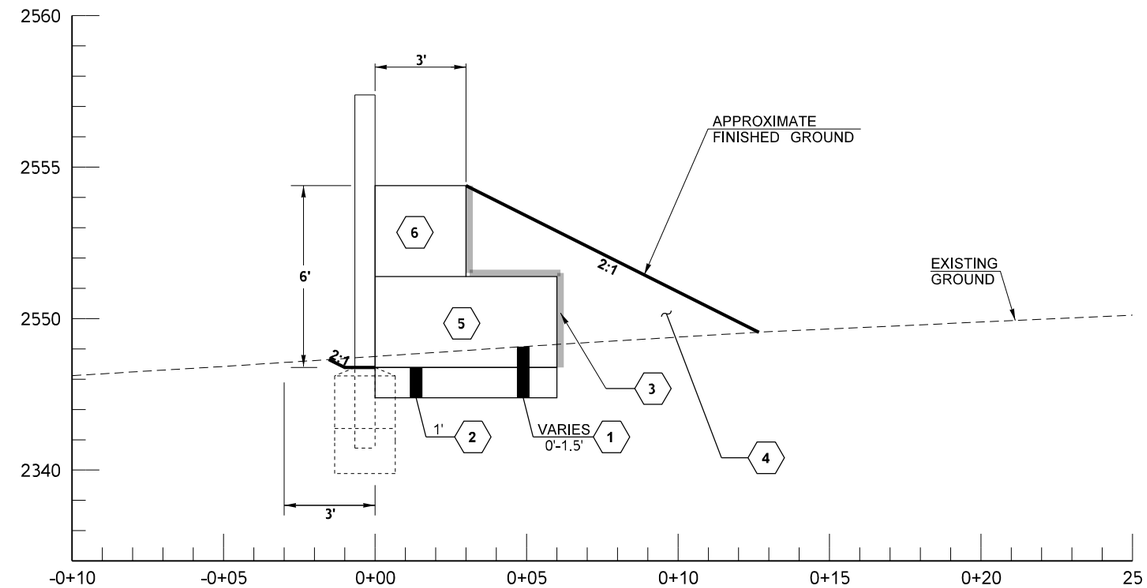

WILDLIFE RAMP JUMPOUT 2
SIDE PROFILE VIEW A-A

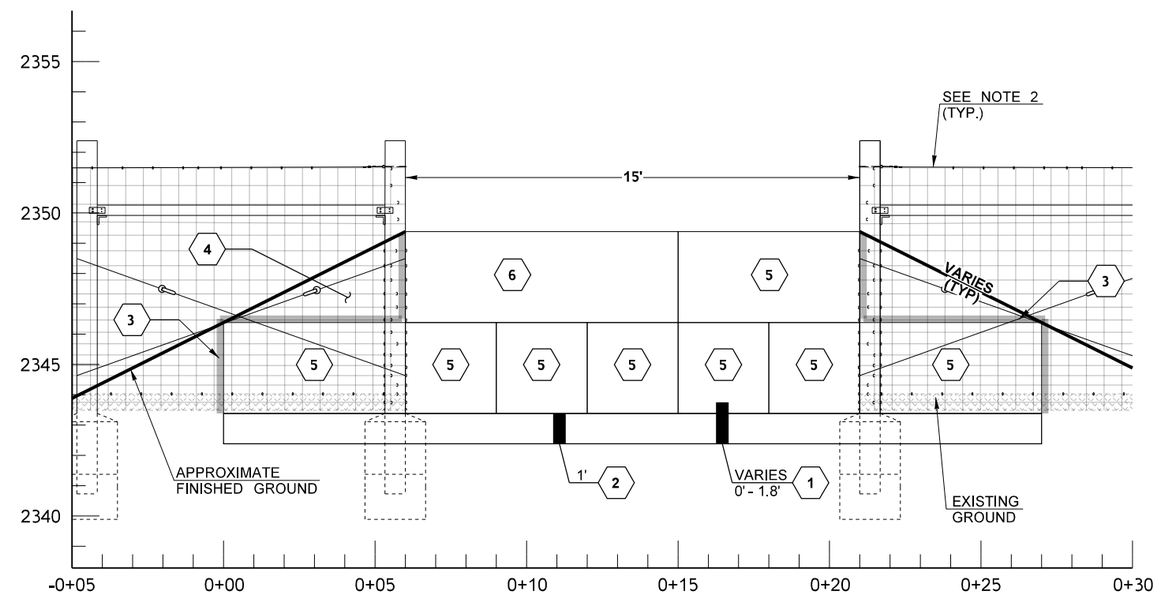

WILDLIFE RAMP JUMPOUT 2
PROFILE VIEW B-B

NOTES:
1. SEE WSDOT STANDARD PLAN D-6, GABIONS.
2. CONTRACTOR SHALL INSTALL SINGLE BAY BRACING FOLLOWED BY NON-TENSIONED FENCE SECTION AT EACH END OF THE RAMP JUMPOUT TO TIE THE PRECEDING AND SUBSEQUENT WILDLIFE EXCLUSION FENCE. SEE DETAILS ON WFD4.
3. WILDLIFE RAMP JUMPOUT STATIONS OFFSETS AND ELEVATIONS ARE APPROXIMATE.

LEGEND

WILDLIFE EXCLUSION FENCE		1	STRUCTURE EXCAVATION CLASS B INCL. HAUL
INTERMEDIATE CONTOUR		2	GRAVEL BORROW INCL. HAUL
INDEX CONTOUR		3	CONSTRUCTION GEOTEXTILE FOR SEPARATION
GABION BASKET		4	EMBANKMENT COMPACTION (METHOD A)
		5	GABION CRIBBING, UNIT A (SEE NOTE 1)
		6	GABION CRIBBING, UNIT B (SEE NOTE 1)

FILE NAME	K:\452201\090\06736_Phase 3\Design_CAD_Sheets\500-WildlifeFencePlan\XL5479_PS_WF_Details.dgn
TIME	8:08:19 AM
DATE	2/15/2022
PLOTTED BY	kingk
DESIGNED BY	J. VENEGAS
ENTERED BY	J. VENEGAS
CHECKED BY	K. KING
PROJ. ENGR.	A. BYRD
REGIONAL ADM.	T. TREPANIER

REVISION | DATE | BY

REGION NO.	STATE	FED.AID PROJ.NO.
10	WASH	
JOB NUMBER 19Y007		
CONTRACT NO.		LOCATION NO.

ANDREW D. BYRD — STATE OF WASHINGTON — 19873 — REGISTERED PROFESSIONAL ENGINEER
SEE SHEET CT5
DATE
P.E. STAMP BOX

DATE
P.E. STAMP BOX

Washington State Department of Transportation

I-90
CABIN CREEK I/C TO W EASTON I/C
PHASE 3 - ADD LANES/WILDLIFE BRIDGES

WILDLIFE RAMP JUMPOUT DETAILS

Plot 15
PLAN REF NO WFD15
SHEET 806 OF 1783 SHEETS

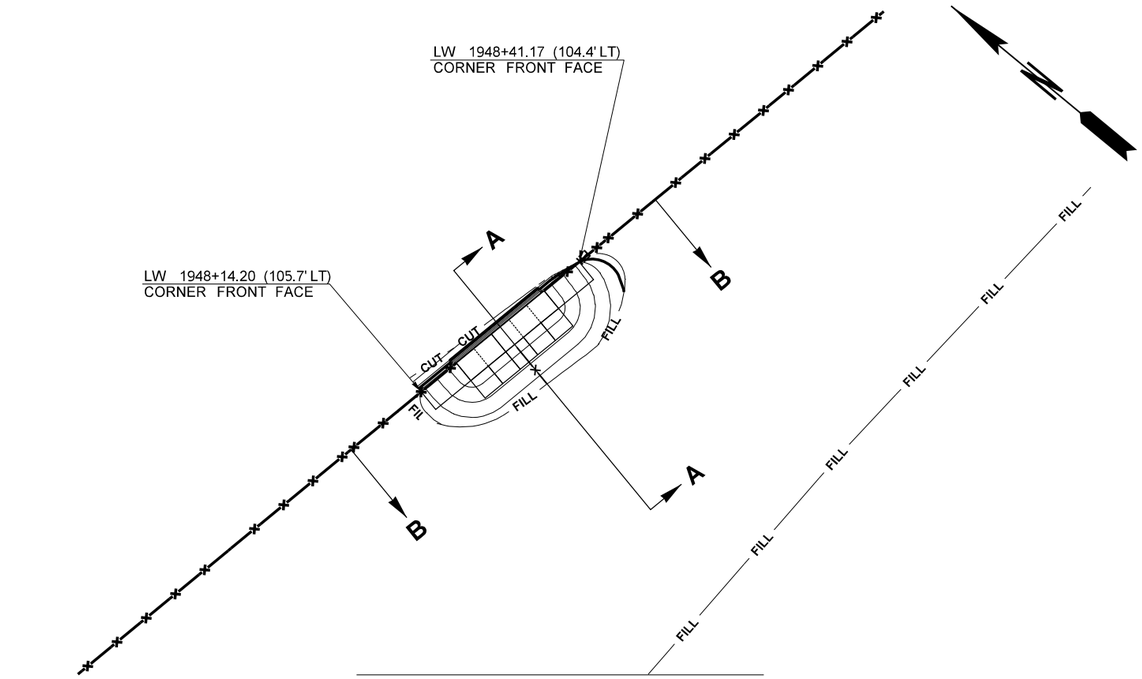

WILDLIFE RAMP JUMPOUT 3
PLAN VIEW

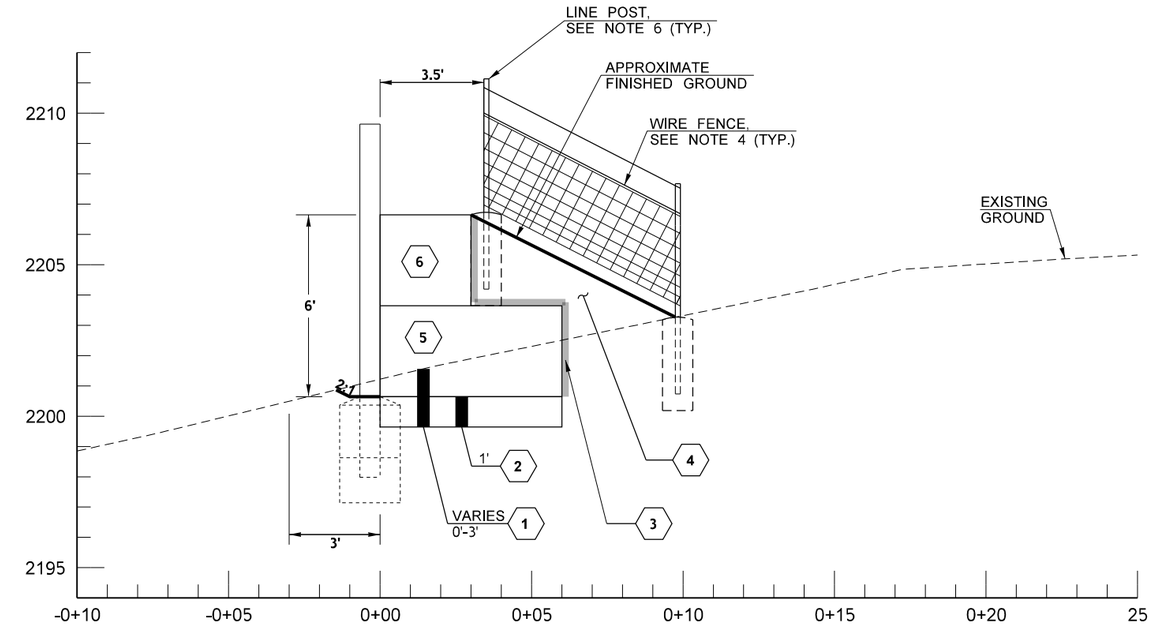

WILDLIFE RAMP JUMPOUT 3
SIDE PROFILE VIEW A-A

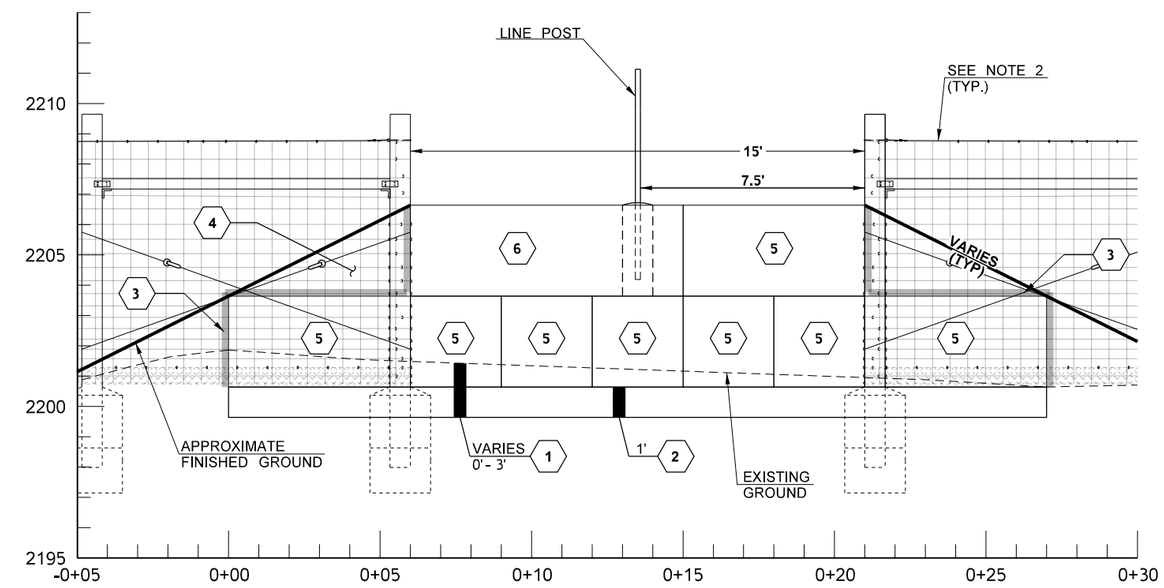

WILDLIFE RAMP JUMPOUT 3
PROFILE VIEW B-B

NOTES:
1. SEE WSDOT STANDARD PLAN D-6, GABIONS.
2. CONTRACTOR SHALL INSTALL SINGLE BAY BRACING FOLLOWED BY NON-TENSIONED FENCE SECTION AT EACH END OF THE RAMP JUMPOUT TO TIE THE PRECEDING AND SUBSEQUENT WILDLIFE EXCLUSION FENCE. SEE DETAILS ON WFD4.
3. WILDLIFE RAMP JUMPOUT STATIONS OFFSETS AND ELEVATIONS ARE APPROXIMATE.
4. SEE WSDOT STANDARD PLAN L-10.10, WIRE FENCE TYPE 1. SEE NOTE 6 FOR ADDITIONAL INFORMATION.
5. ANCHOR LINE POST USING A 3 FT LONG, 12 IN ROUND SONOTUBE AND COMMERCIAL CONCRETE. EMBED LINE POST 2.5 FT INTO CONCRETE FILLED SONOTUBE. HANDWORK MAY BE REQUIRED FOR GRADING.

LEGEND

WILDLIFE EXCLUSION FENCE		1	STRUCTURE EXCAVATION CLASS B INCL. HAUL
WIRE FENCE TYPE 1		2	GRAVEL BORROW INCL. HAUL
INTERMEDIATE CONTOUR		3	CONSTRUCTION GEOTEXTILE FOR SEPARATION
INDEX CONTOUR		4	EMBANKMENT COMPACTION (METHOD A)
GABION BASKET		5	GABION CRIBBING, UNIT A (SEE NOTE 1)
		6	GABION CRIBBING, UNIT B (SEE NOTE 1)

FILE NAME	K:\452201\090\06736_Phase 3\Design_CAD_Sheets\500-WildlifeFencePlan\XL5479_PS_WF_Details.dgn
TIME	8:08:20 AM
DATE	2/15/2022
PLOTTED BY	kingk
DESIGNED BY	J. VENEGAS
ENTERED BY	J. VENEGAS
CHECKED BY	K. KING
PROJ. ENGR.	A. BYRD
REGIONAL ADM.	T. TREPANIER

REVISION | DATE | BY

REGION NO. 10 | STATE WASH | FED.AID PROJ.NO.
JOB NUMBER 19Y007
CONTRACT NO. | LOCATION NO.

ANDREW D. BYRD, STATE OF WASHINGTON, 39833, REGISTERED PROFESSIONAL ENGINEER
SEE SHEET CT5
DATE
P.E. STAMP BOX

DATE
P.E. STAMP BOX

Washington State Department of Transportation

I-90
CABIN CREEK I/C TO W EASTON I/C
PHASE 3 - ADD LANES/WILDLIFE BRIDGES

WILDLIFE RAMP JUMPOUT DETAILS

Plot 16
PLAN REF NO WFD16
SHEET 807 OF 1783 SHEETS

QUANTITY TABULATION - PAVEMENT MARKING

NOTE:
THE FIRST NUMBER OF THE "CODE" BELOW REFERS TO THE SHEET NO. OR THE SHEET REFERENCE NO. SHOWING THE CONSTRUCTION FEATURE.

THE SECOND NUMBER REFERS TO THE CONSTRUCTION FEATURE FOUND ON THAT SHEET.

CODE	LOCATION ↓ \ UNIT OF MEASURE →	FLEXIBLE GUIDE POST	RIGID GUIDE POST	LDS BARRIER DELINEATOR *			PAINT LINE	GROOVED PLASTIC LINE *	GROOVED PLASTIC WIDE LINE		PLASTIC DRAINAGE MARKERS	SHOULDER RUMBLE STRIP TYPE 1 *		RECESSED PAVEMENT MARKERS *	GROOVED PLASTIC CROSSHATCH MARKING		SEE GENERAL NOTES
		EACH	EACH	EACH			L.F.	L.F.	L.F.		EACH	MI.		HUND	L.F.		
	TW 100+00 TO 109+36.55			150			1730	1100						0.3			1, 2, 3, 6
	TE 100+00 TO 117+85.31			290			570	4810	140					0.5			1, 2, 3, 6
	LE 1691+15.02 TO LE 2000+00	226	172	3910			8780	125100	620		271	11.7		18.2			1, 2, 3, 4, 5, 6
	LW 1692+20 TO LW 1995+00	101	253	4110			8080	122430	2900		184	11.5		17.5	240		1, 2, 3, 4, 5, 6
	W 300+00 TO 308+00		18				1600	800				0.2		0.2			1, 2, 4, 6
	SHEET TOTAL	327	443	8460			20760	254240	3660		455	23.4		36.7	240		
	PROJECT TOTAL	327	443	8460			20760	254240	3660		455	23.4		36.7	240		

GENERAL NOTES:

1. SEE SHEET PMD1 - PMD4 FOR GROOVED PLASTIC LINE DETAILS.

2. SEE PMD5 FOR RECESSED PAVEMENT MARKERS DETAILS.

3. SEE PMD6 FOR LDS LINEAR DELINEATION SYSTEM DETAILS.

4. SEE PMD7 FOR RIGID GUIDE POST DETAILS.

5. SEE PMD8 FOR FLEXIBLE GUIDE POST FOR STORMWATER BMP LOCATIONS.

6. REFLECTIVE SHEETING SHALL BE WHITE ON THE RIGHT SIDE OF TRAFFIC AND YELLOW ON THE LEFT SIDE OF TRAFFIC.

* THIS ITEM APPEARS ON MULTIPLE QUANTITY TABULATION OR STRUCTURE NOTE SHEETS.

DESIGNED BY	B. SCHILPEROORT				
ENTERED BY	A. MERCADO				
CHECKED BY	K. KING				
PROJ. ENGR.	A. BYRD				
REGION ADM.	T. TREPANIER				
		DATE	DATE	REVISION	BY

REGION NO.	STATE	FED. AID PROJ. NO.
10	WASH	

JOB NUMBER
19Y007

CONTRACT NO.

Washington State Department of Transportation

I-90
CABIN CREEK I/C TO W EASTON I/C
PHASE 3 - ADD LANES/WILDLIFE BRIDGES

QUANTITY TABULATION - PAVEMENT MARKING

QTM 1

SHEET 808 OF 1783 SHEETS

PAVEMENT MARKING KEY

1	GROOVED PLASTIC LINE - 6 INCH. YELLOW EDGE LINE.
2	GROOVED PLASTIC LINE - 6 INCH. WHITE EDGE LINE.
3	GROOVED PLASTIC LINE - 6 INCH. LANE LINE WITH RECESSED PAVEMENT MARKERS.
4	PAINT LINE - 6 INCH. YELLOW EDGE LINE
5	PAINT LINE - 6 INCH. WHITE EDGE LINE
6	PAINT LINE - 6 INCH. LANE LINE
10	GROOVED PLASTIC WIDE LANE LINE - WHITE.

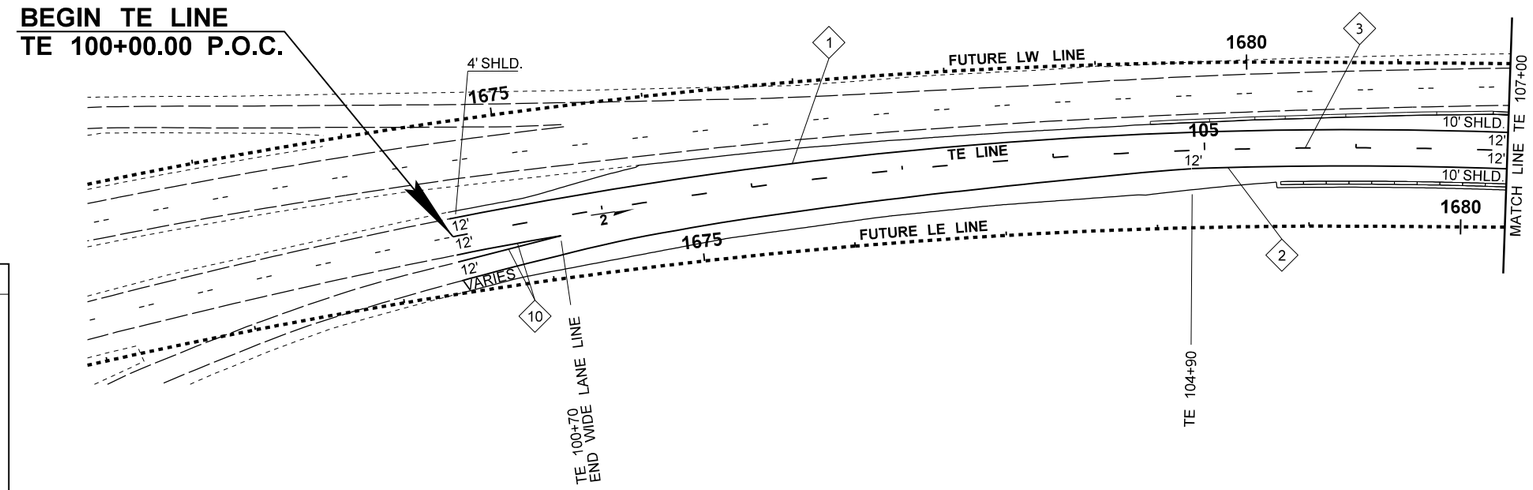

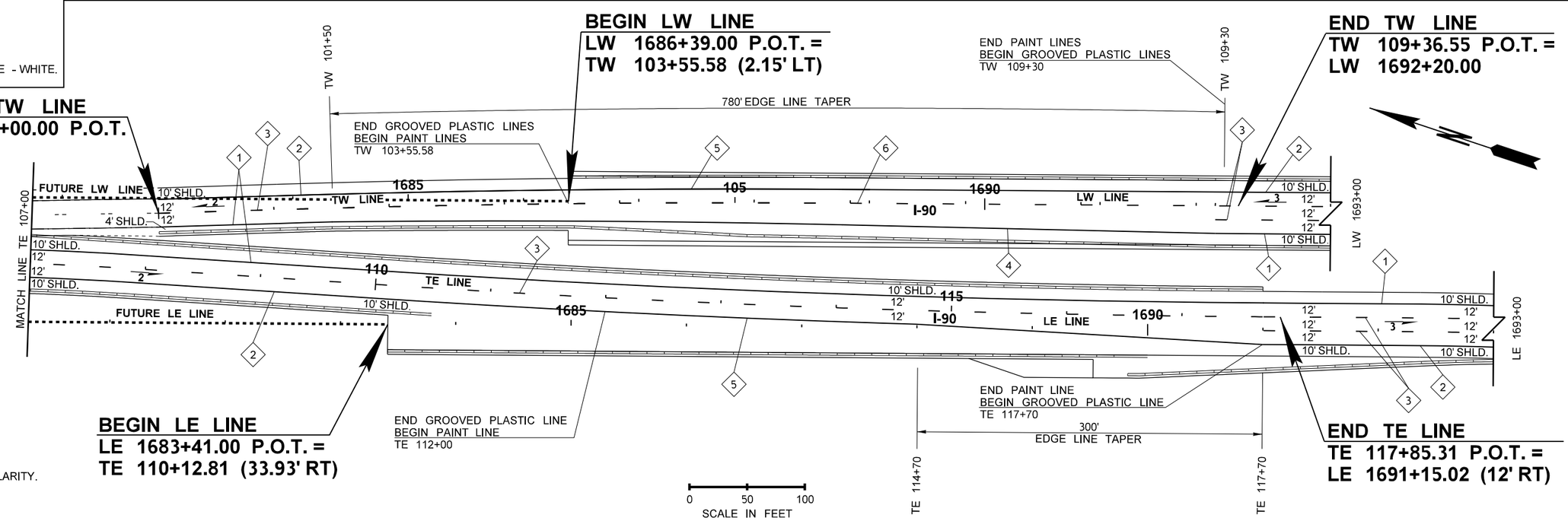

NOTES:

1. CENTER LINE NOT SHOWN FOR CLARITY.

FILE NAME	K:\452201\090\06736_Phase 3\Design_CAD_Sheets\270-PvmtMarkingPlan\XL5479_PS_MK.dgn
TIME	10:49:29 PM
DATE	2/17/2022
PLOTTED BY	kingk
DESIGNED BY	KING/SCHILPEROORT
ENTERED BY	J. VENEGAS
CHECKED BY	K. KING
PROJ. ENGR.	A. BYRD
REGIONAL ADM.	T. TREPANIER

REVISION | DATE | BY

REGION NO.	STATE	FED.AID PROJ.NO.
10	WASH	
JOB NUMBER 19Y007		
CONTRACT NO.		LOCATION NO.

ANDREW D. BYRD — STATE OF WASHINGTON — 38833 — REGISTERED PROFESSIONAL ENGINEER

SEE SHEET CTS
DATE
P.E. STAMP BOX

DATE
P.E. STAMP BOX

Washington State Department of Transportation

I-90
CABIN CREEK I/C TO W EASTON I/C
PHASE 3 - ADD LANES/WILDLIFE BRIDGES

PAVEMENT MARKING PLAN

Plot 1
PLAN REF NO MK1
SHEET 809 OF 1783 SHEETS

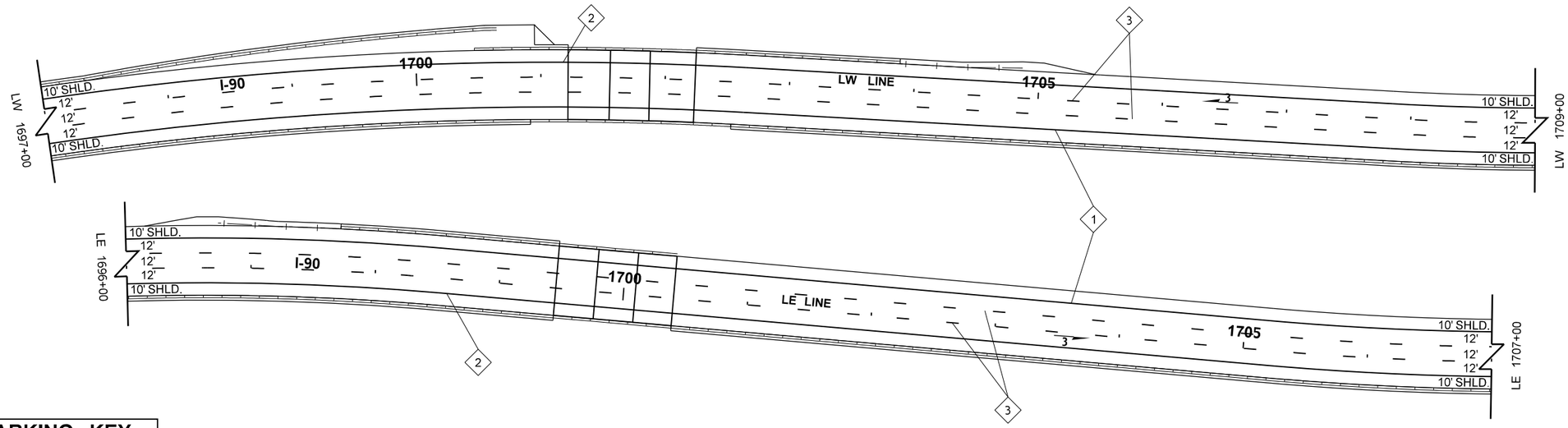

PAVEMENT MARKING KEY

1. GROOVED PLASTIC LINE - 6 INCH. YELLOW EDGE LINE.
2. GROOVED PLASTIC LINE - 6 INCH. WHITE EDGE LINE.
3. GROOVED PLASTIC LINE - 6 INCH. LANE LINE WITH RECESSED PAVEMENT MARKERS.

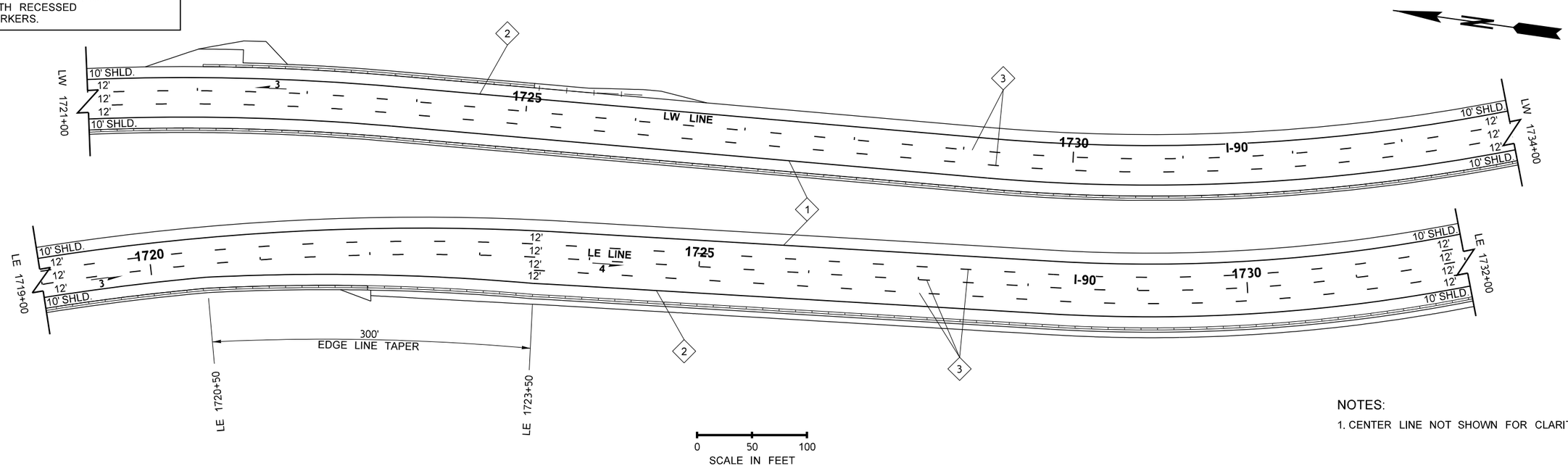

NOTES:

1. CENTER LINE NOT SHOWN FOR CLARITY.

FILE NAME	K:\452201\090\06736_Phase 3\Design_CAD_Sheets\270-PvmtMarkingPlan\XL5479_PS_MK.dgn			
TIME	10:49:32 PM			
DATE	2/17/2022			
PLOTTED BY	kingk			
DESIGNED BY	KING/SCHILPEROORT			
ENTERED BY	J. VENEGAS			
CHECKED BY	K. KING			
PROJ. ENGR.	A. BYRD			
REGIONAL ADM.	T. TREPANIER	REVISION	DATE	BY

REGION NO.	STATE	FED.AID PROJ.NO.
10	WASH	
JOB NUMBER 19Y007		
CONTRACT NO.		LOCATION NO.

ANDREW D. BYRD — STATE OF WASHINGTON — 19833 — REGISTERED PROFESSIONAL ENGINEER

SEE SHEET CTS
DATE
P.E. STAMP BOX

DATE
P.E. STAMP BOX

Washington State Department of Transportation

I-90
CABIN CREEK I/C TO W EASTON I/C
PHASE 3 - ADD LANES/WILDLIFE BRIDGES

PAVEMENT MARKING PLAN

Plot 2
PLAN REF NO **MK2**
SHEET 810 OF 1783 SHEETS

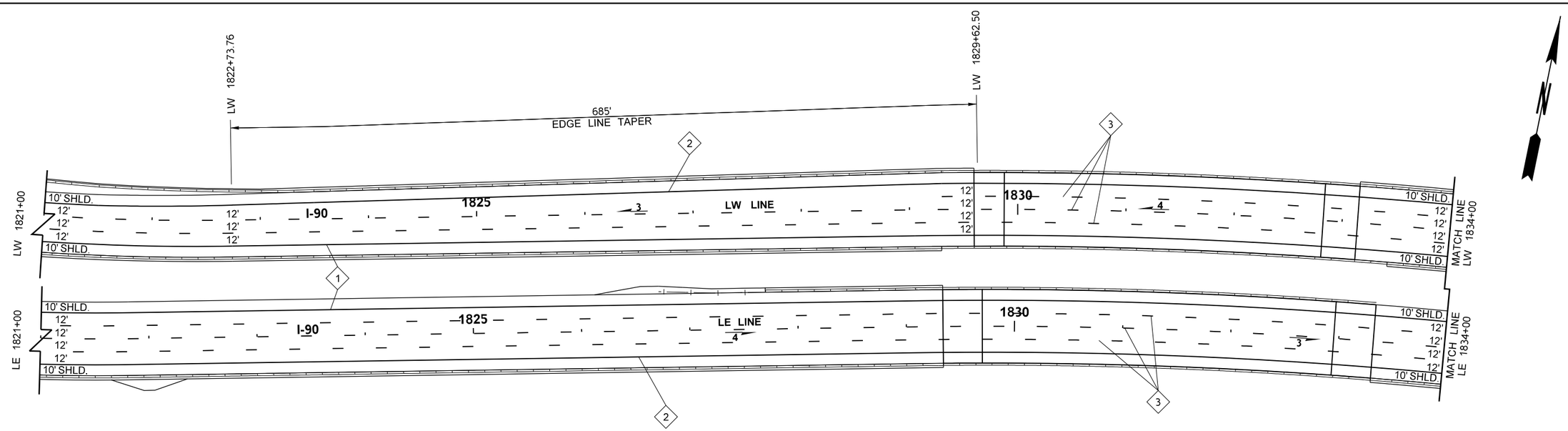

PAVEMENT MARKING KEY

1. GROOVED PLASTIC LINE - 6 INCH. YELLOW EDGE LINE.
2. GROOVED PLASTIC LINE - 6 INCH. WHITE EDGE LINE.
3. GROOVED PLASTIC LINE - 6 INCH. LANE LINE WITH RECESSED PAVEMENT MARKERS.

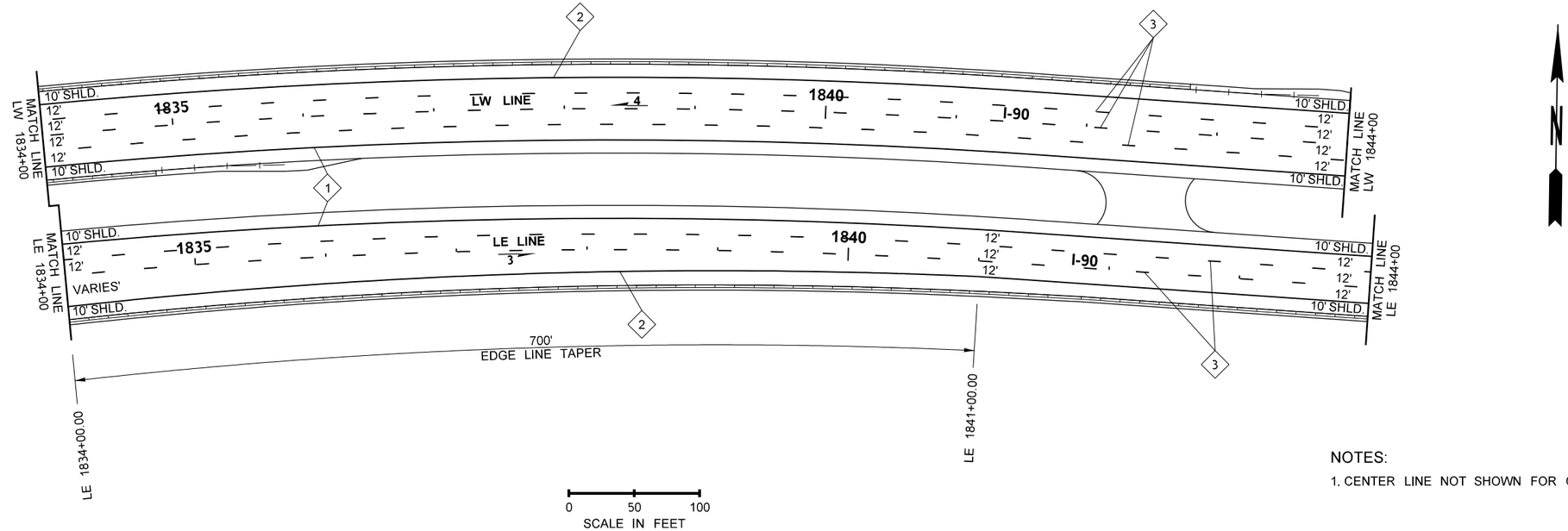

NOTES:

1. CENTER LINE NOT SHOWN FOR CLARITY.

FILE NAME	K:\452201\090\06736_Phase 3\Design_CAD_Sheets\270-PvmtMarkingPlan\XL5479_PS_MK.dgn						
TIME	10:49:35 PM						
DATE	2/17/2022						
PLOTTED BY	kingk						
DESIGNED BY	KING/SCHILPEROORT						
ENTERED BY	J. VENEGAS						
CHECKED BY	K. KING						
PROJ. ENGR.	A. BYRD						
REGIONAL ADM.	T. TREPANIER	REVISION	DATE	BY			

REGION NO.	STATE	FED.AID PROJ.NO.
10	WASH	
JOB NUMBER 19Y007		
CONTRACT NO.		LOCATION NO.

ANDREW D. BYRD — STATE OF WASHINGTON — 39833 — REGISTERED PROFESSIONAL ENGINEER

SEE SHEET CTS — DATE — P.E. STAMP BOX

DATE — P.E. STAMP BOX

Washington State Department of Transportation

I-90
CABIN CREEK I/C TO W EASTON I/C
PHASE 3 - ADD LANES/WILDLIFE BRIDGES

PAVEMENT MARKING PLAN

Plot 3

PLAN REF NO MK3

SHEET 811 OF 1783 SHEETS

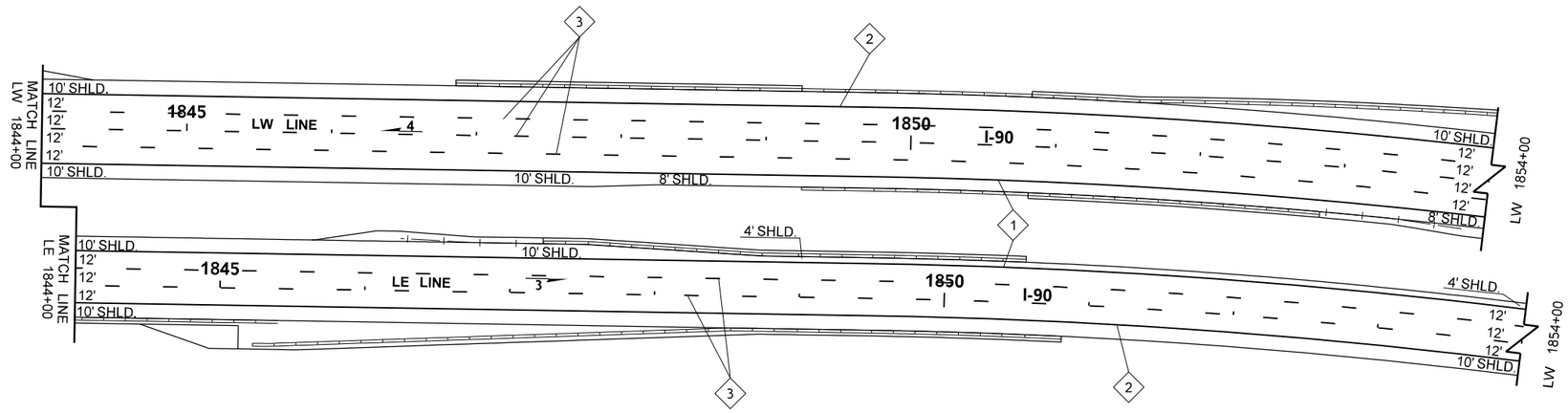

PAVEMENT MARKING KEY

1. GROOVED PLASTIC LINE - 6 INCH. YELLOW EDGE LINE.
2. GROOVED PLASTIC LINE - 6 INCH. WHITE EDGE LINE.
3. GROOVED PLASTIC LINE - 6 INCH. LANE LINE WITH RECESSED PAVEMENT MARKERS.

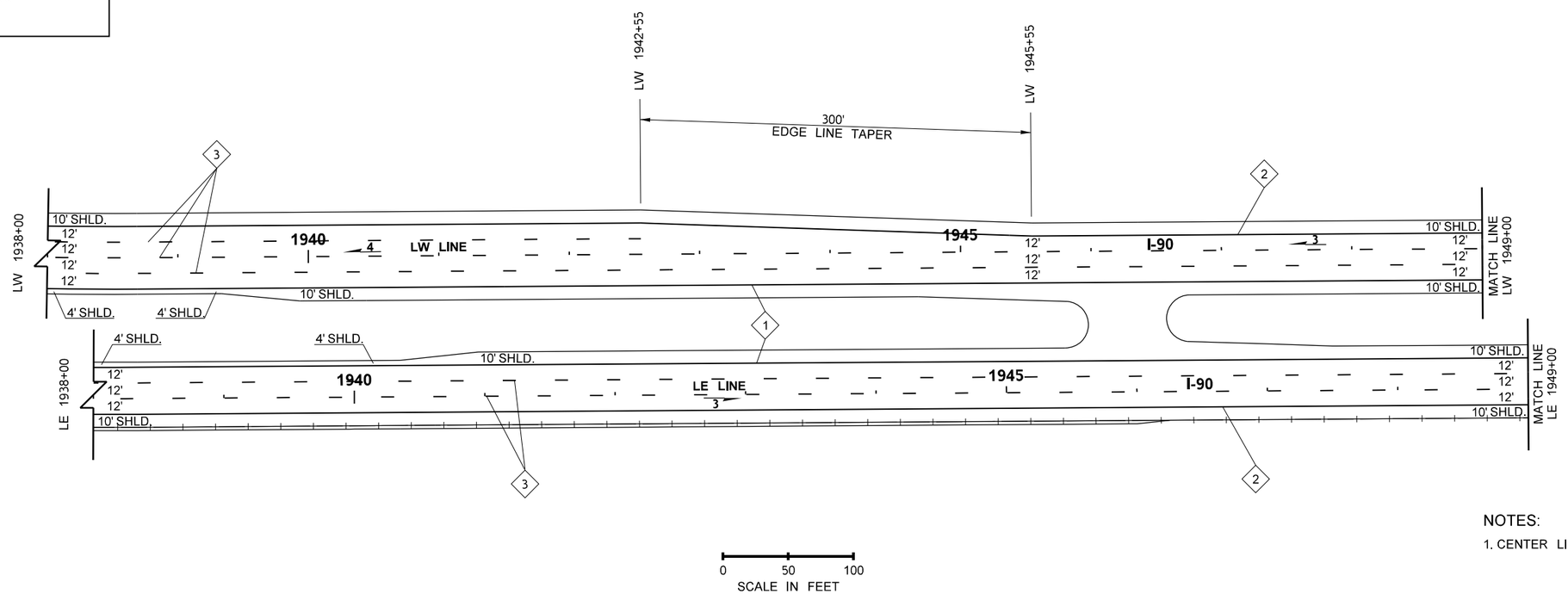

NOTES:

1. CENTER LINE NOT SHOWN FOR CLARITY.

0 50 100
SCALE IN FEET

FILE NAME	K:\452201\090\06736_Phase 3\Design_CAD_Sheets\270-PvmtMarkingPlan\XL5479_PS_MK.dgn							
TIME	10:49:38 PM				REGION NO. 10	STATE WASH	FED.AID PROJ.NO.	
DATE	2/17/2022							
PLOTTED BY	kingk				JOB NUMBER 19Y007			
DESIGNED BY	KING/SCHILPEROORT							
ENTERED BY	J. VENEGAS							
CHECKED BY	K. KING				CONTRACT NO.		LOCATION NO.	
PROJ. ENGR.	A. BYRD							
REGIONAL ADM.	T. TREPANIER	REVISION	DATE	BY				

ANDREW D. BYRD — STATE OF WASHINGTON — 40933 — REGISTERED PROFESSIONAL ENGINEER

SEE SHEET CT5
DATE
P.E. STAMP BOX

DATE
P.E. STAMP BOX

Washington State Department of Transportation

I-90
CABIN CREEK I/C TO W EASTON I/C
PHASE 3 - ADD LANES/WILDLIFE BRIDGES

PAVEMENT MARKING PLAN

Plot 4
PLAN REF NO
MK4
SHEET 812 OF 1783 SHEETS

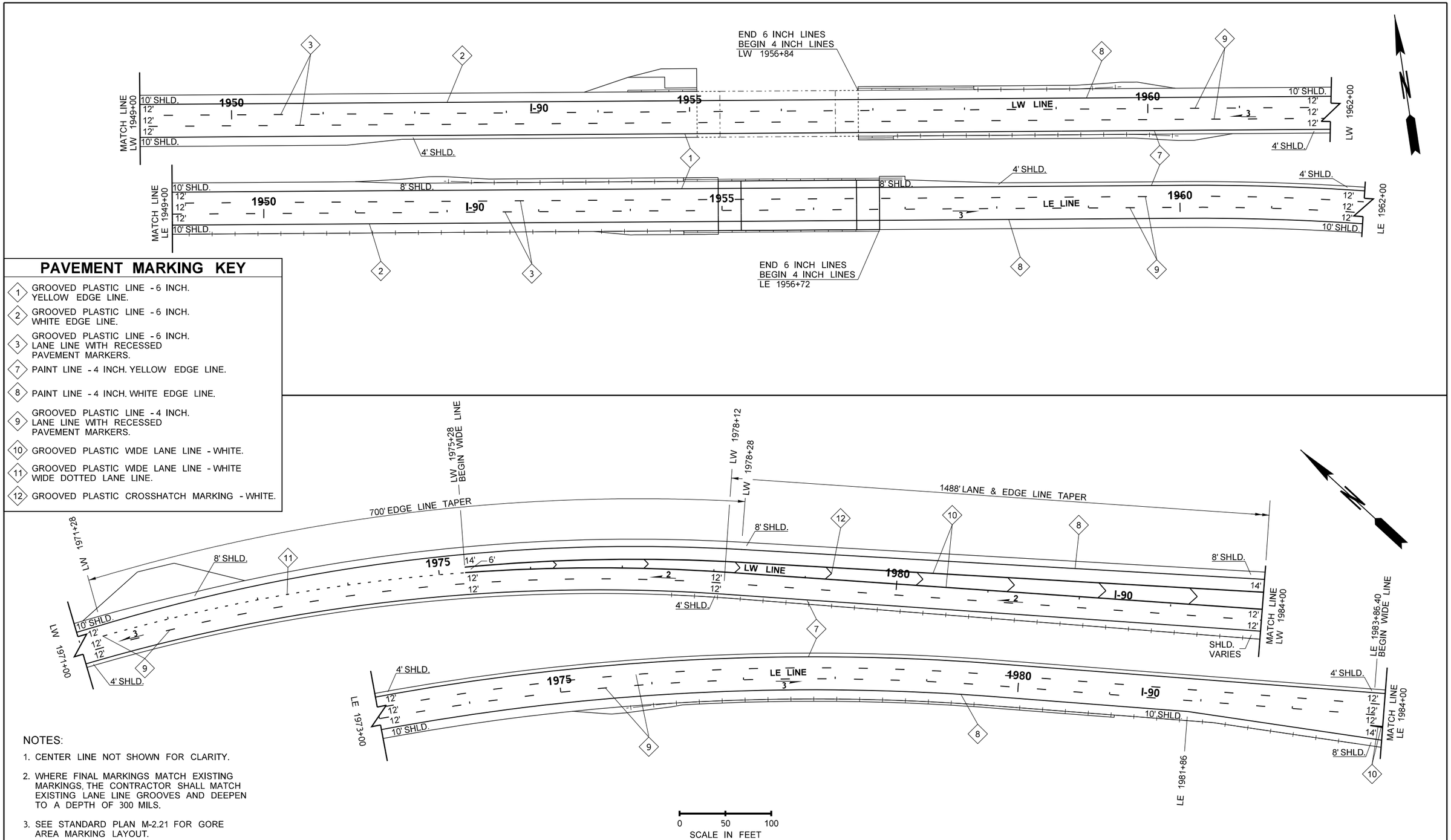

PAVEMENT MARKING KEY

1. GROOVED PLASTIC LINE - 6 INCH. YELLOW EDGE LINE.
2. GROOVED PLASTIC LINE - 6 INCH. WHITE EDGE LINE.
3. GROOVED PLASTIC LINE - 6 INCH. LANE LINE WITH RECESSED PAVEMENT MARKERS.
7. PAINT LINE - 4 INCH. YELLOW EDGE LINE.
8. PAINT LINE - 4 INCH. WHITE EDGE LINE.
9. GROOVED PLASTIC LINE - 4 INCH. LANE LINE WITH RECESSED PAVEMENT MARKERS.
10. GROOVED PLASTIC WIDE LANE LINE - WHITE.
11. GROOVED PLASTIC WIDE LANE LINE - WHITE WIDE DOTTED LANE LINE.
12. GROOVED PLASTIC CROSSHATCH MARKING - WHITE.

NOTES:

1. CENTER LINE NOT SHOWN FOR CLARITY.
2. WHERE FINAL MARKINGS MATCH EXISTING MARKINGS, THE CONTRACTOR SHALL MATCH EXISTING LANE LINE GROOVES AND DEEPEN TO A DEPTH OF 300 MILS.
3. SEE STANDARD PLAN M-2.21 FOR GORE AREA MARKING LAYOUT.

FILE NAME	K:\452201\090\06736_Phase 3\Design_CAD_Sheets\270-PvmtMarkingPlan\XL5479_PS_MK.dgn
TIME	10:49:41 PM
DATE	2/17/2022
PLOTTED BY	kingk
DESIGNED BY	KING/SCHILPEROORT
ENTERED BY	J. VENEGAS
CHECKED BY	K. KING
PROJ. ENGR.	A. BYRD
REGIONAL ADM.	T. TREPANIER

REVISION | DATE | BY

REGION NO. 10 | STATE WASH | FED.AID PROJ.NO.

JOB NUMBER 19Y007

CONTRACT NO. | LOCATION NO.

ANDREW D. BYRD, STATE OF WASHINGTON, 38655, REGISTERED PROFESSIONAL ENGINEER

SEE SHEET CT5 DATE

P.E. STAMP BOX

P.E. STAMP BOX DATE

Washington State Department of Transportation

I-90

CABIN CREEK I/C TO W EASTON I/C

PHASE 3 - ADD LANES/WILDLIFE BRIDGES

PAVEMENT MARKING PLAN

Plot 5

PLAN REF NO MK5

SHEET 813 OF 1783 SHEETS

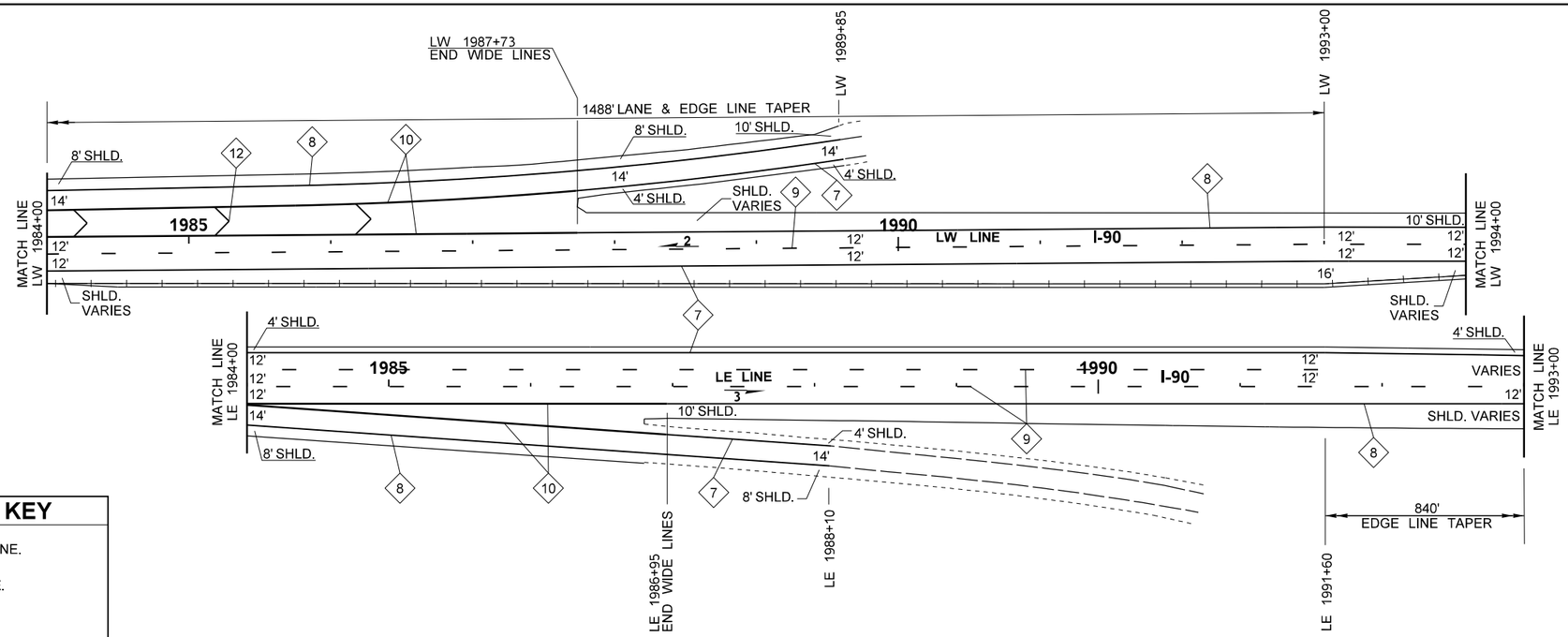

PAVEMENT MARKING KEY

7	PAINT LINE - 4 INCH. YELLOW EDGE LINE.
8	PAINT LINE - 4 INCH. WHITE EDGE LINE.
9	GROOVED PLASTIC LINE - 4 INCH. LANE LINE WITH RECESSED PAVEMENT MARKERS.
10	GROOVED PLASTIC WIDE LANE LINE - WHITE.
12	GROOVED PLASTIC CROSSHATCH MARKING - WHITE.

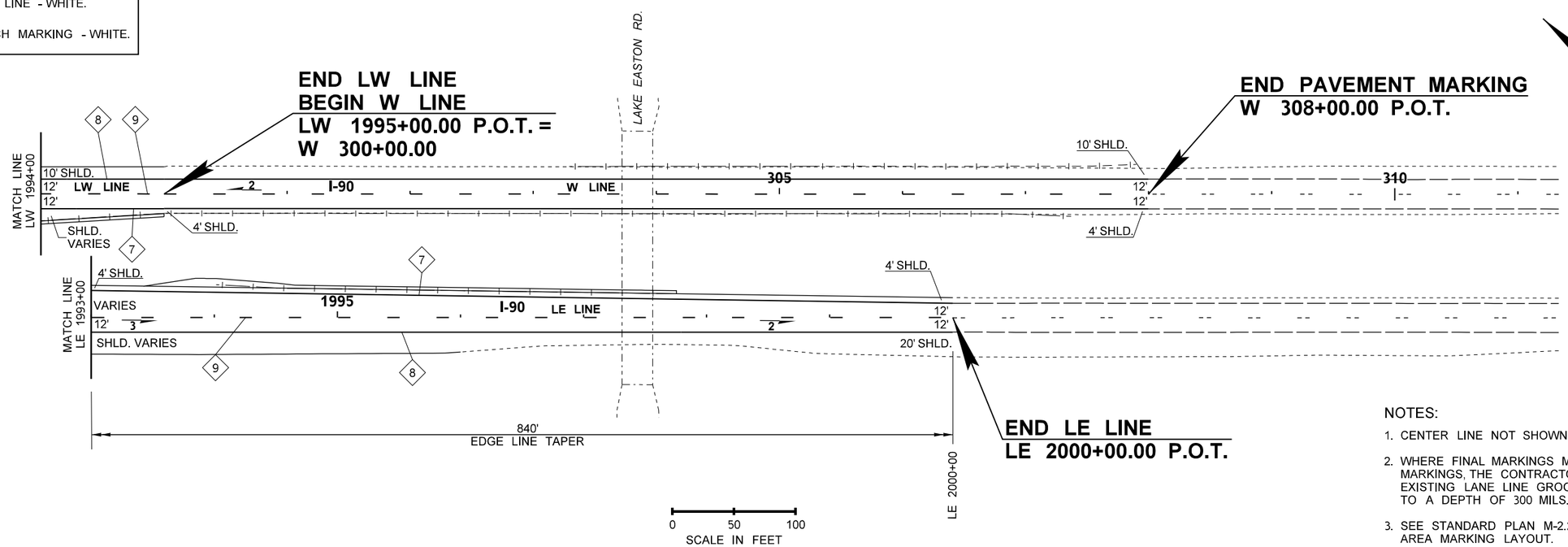

NOTES:

1. CENTER LINE NOT SHOWN FOR CLARITY.
2. WHERE FINAL MARKINGS MATCH EXISTING MARKINGS, THE CONTRACTOR SHALL MATCH EXISTING LANE LINE GROOVES AND DEEPEN TO A DEPTH OF 300 MILS.
3. SEE STANDARD PLAN M-2.21 FOR GORE AREA MARKING LAYOUT.

FILE NAME	K:\452201\090\06736_Phase 3\Design_CAD_Sheets\270-PvmtMarkingPlan\XL5479_PS_MK.dgn				
TIME	10:49:43 PM				
DATE	2/17/2022				
PLOTTED BY	kingk				
DESIGNED BY	KING/SCHILPEROORT				
ENTERED BY	J. VENEGAS				
CHECKED BY	K. KING				
PROJ. ENGR.	A. BYRD				
REGIONAL ADM.	T. TREPANIER	REVISION	DATE	BY	

REGION NO.	STATE	FED.AID PROJ.NO.
10	WASH	
JOB NUMBER 19Y007		
CONTRACT NO.		LOCATION NO.

ANDREW D. BYRD — STATE OF WASHINGTON — 19873 — REGISTERED PROFESSIONAL ENGINEER

SEE SHEET CT5 DATE
P.E. STAMP BOX

DATE
P.E. STAMP BOX

Washington State Department of Transportation

I-90
CABIN CREEK I/C TO W EASTON I/C
PHASE 3 - ADD LANES/WILDLIFE BRIDGES

PAVEMENT MARKING PLAN

Plot 6
PLAN REF NO MK6
SHEET 814 OF 1783 SHEETS

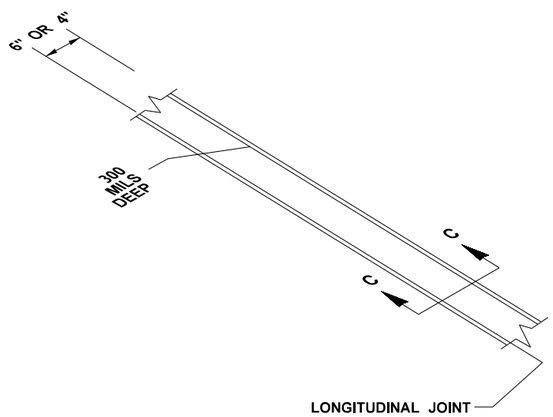

ISOMETRIC VIEW

GROOVED PLASTIC EDGE LINE
6 INCH OR 4 INCH

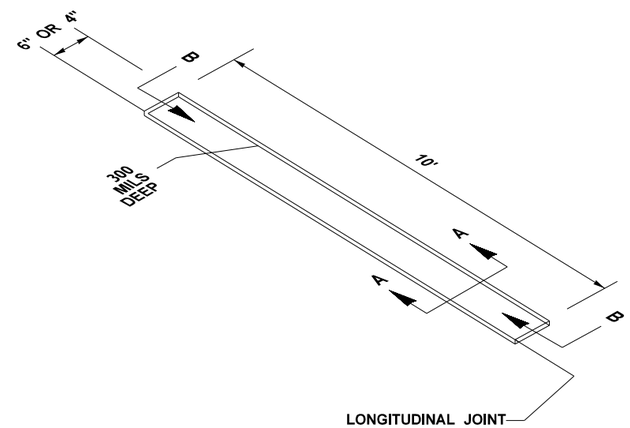

ISOMETRIC VIEW

GROOVED PLASTIC LANE LINE
6 INCH OR 4 INCH

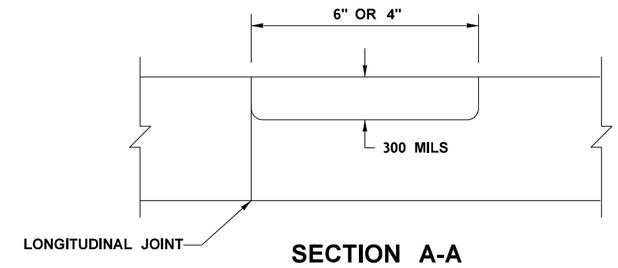

SECTION A-A

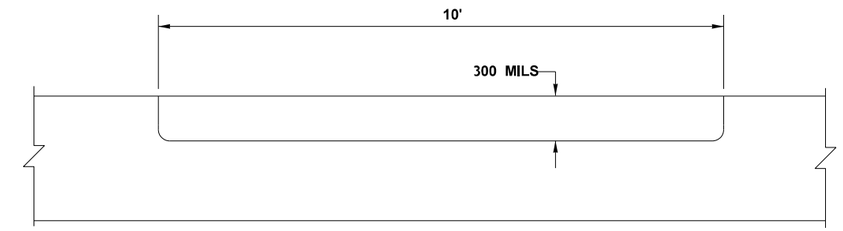

SECTION B-B

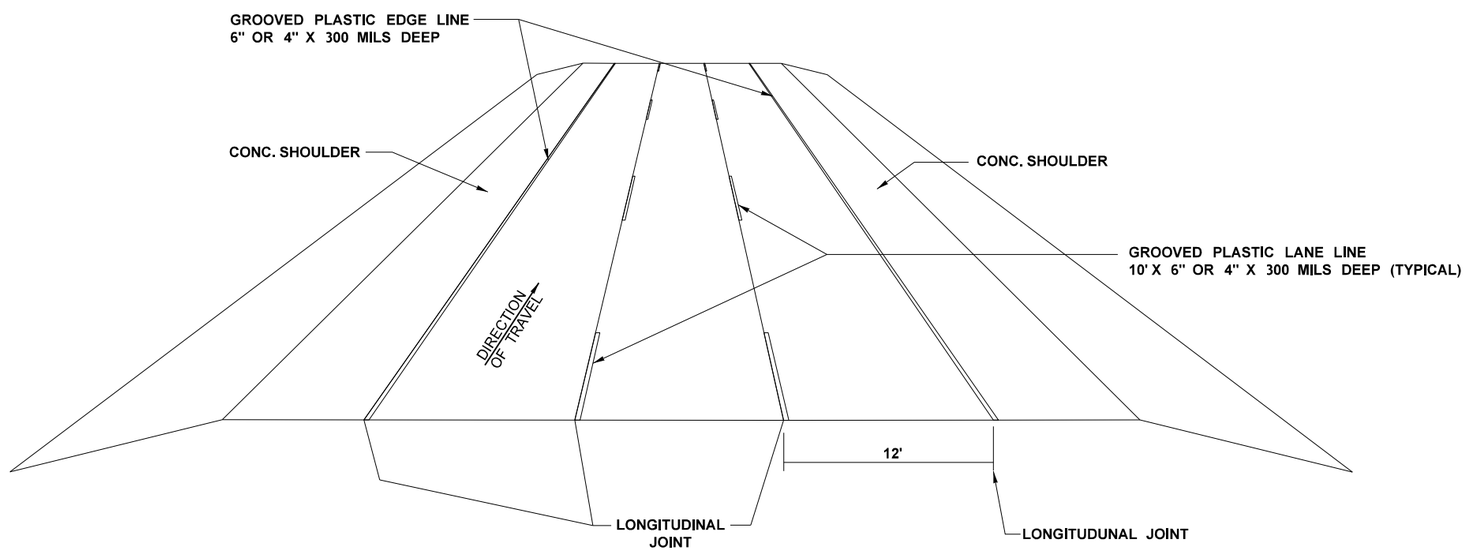

PERSPECTIVE VIEW

GROOVED PLASTIC LANE LINE & GROOVED PLASTIC EDGE LINE
3 LANE & SHOULDER CEMENT CONCRETE PAVEMENT SECTION

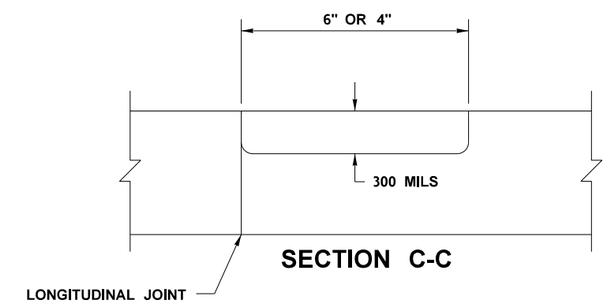

SECTION C-C

NOTES:

1. SEE PAVEMENT MARKING PLANS FOR LINE LOCATIONS.
2. REFERENCE PAVING PLANS FOR JOINT LOCATIONS.
3. SEE PAVEMENT MARKING PLANS FOR LINE TYPE AND WIDTH.

FILE NAME	K:\452201\090\06736_Phase 3\Design_CAD_Sheets\270-PvmtMarkingPlan\XL5479_PS_PMD.dgn						
TIME	1:58:57 PM				REGION NO. 10	STATE WASH	FED.AID PROJ.NO.
DATE	2/10/2022						
PLOTTED BY	kingk				JOB NUMBER 19Y007		
DESIGNED BY	KING/SCHILPEROORT						
ENTERED BY	B. SCHILPEROORT				CONTRACT NO.		LOCATION NO.
CHECKED BY	K. KING						
PROJ. ENGR.	A. BYRD						
REGIONAL ADM.	T. TREPANIER	REVISION	DATE	BY			

ANDREW D. BYRD — STATE OF WASHINGTON — 19873 — REGISTERED PROFESSIONAL ENGINEER

SEE SHEET CT5 DATE

P.E. STAMP BOX

DATE

P.E. STAMP BOX

Washington State Department of Transportation

I-90
CABIN CREEK I/C TO W EASTON I/C
PHASE 3 - ADD LANES/WILDLIFE BRIDGES

PAVEMENT MARKING DETAILS

Plot 1

PLAN REF NO PMD1

SHEET 815 OF 1783 SHEETS

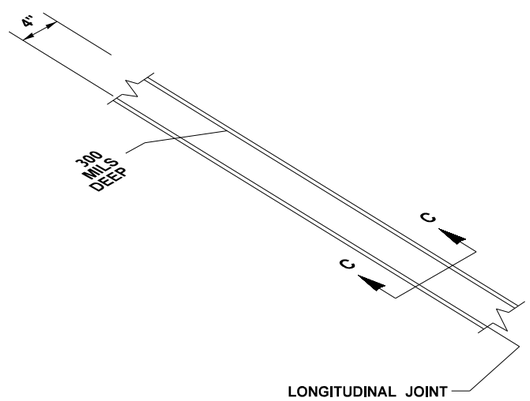

ISOMETRIC VIEW

GROOVED PLASTIC EDGE LINE - 4 INCH

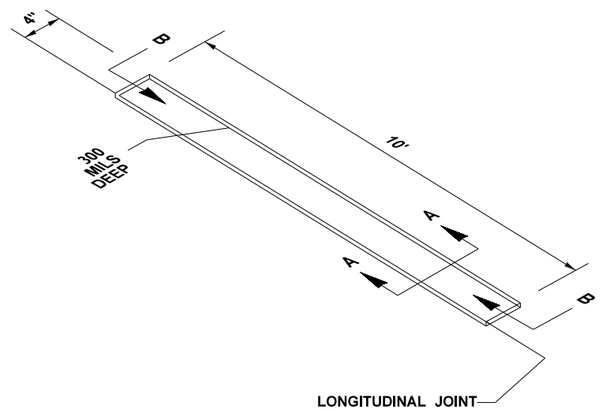

ISOMETRIC VIEW

GROOVED PLASTIC LANE LINE - 4 INCH

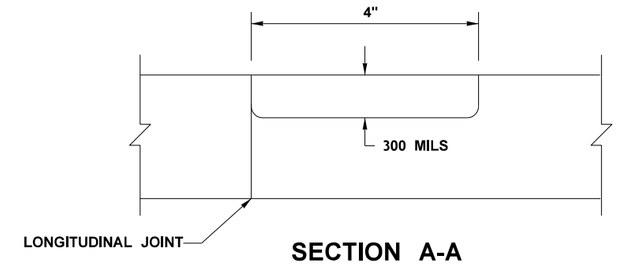

SECTION A-A

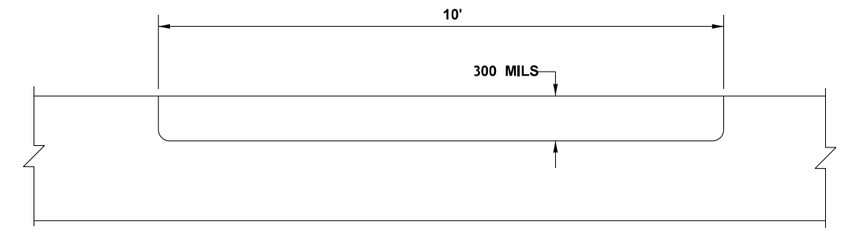

SECTION B-B

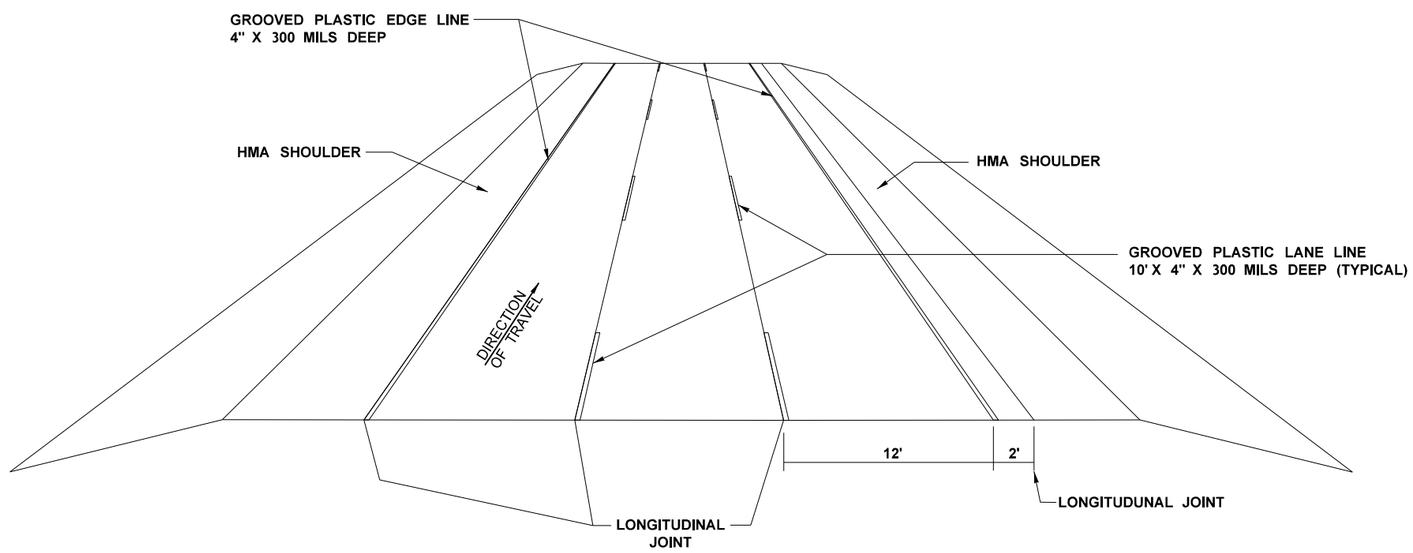

PERSPECTIVE VIEW

GROOVED PLASTIC LANE LINE & GROOVED PLASTIC EDGE LINE
3 LANE CEMENT CONCRETE & HMA SHOULDER PAVEMENT SECTION

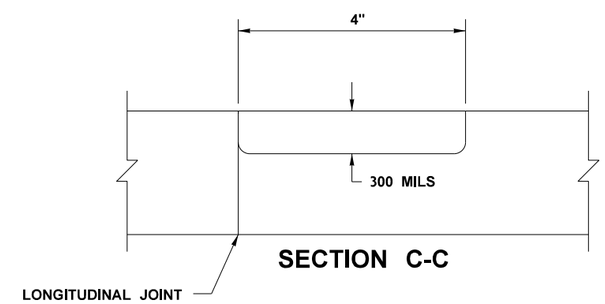

SECTION C-C

NOTES:

1. SEE PAVEMENT MARKING PLANS FOR LINE LOCATIONS.
2. REFERENCE PAVING PLANS FOR JOINT LOCATIONS.
3. SEE PAVEMENT MARKING PLANS FOR LINE TYPE AND WIDTH.

FILE NAME	K:\452201\090\06736_Phase 3\Design_CAD_Sheets\270-PvmtMarkingPlan\XL5479_PS_PMD.dgn			
TIME	1:58:58 PM			
DATE	2/10/2022			
PLOTTED BY	kingk			
DESIGNED BY	KING/SCHILPEROORT			
ENTERED BY	B. SCHILPEROORT			
CHECKED BY	K. KING			
PROJ. ENGR.	A. BYRD			
REGIONAL ADM.	T. TREPANIER	REVISION	DATE	BY

REGION NO.	STATE	FED.AID PROJ.NO.
10	WASH	
JOB NUMBER 19Y007		
CONTRACT NO.		LOCATION NO.

ANDREW D. BYRD — STATE OF WASHINGTON — REGISTERED PROFESSIONAL ENGINEER — 19873

SEE SHEET CT5 DATE

P.E. STAMP BOX

DATE

P.E. STAMP BOX

Washington State Department of Transportation

I-90
CABIN CREEK I/C TO W EASTON I/C
PHASE 3 - ADD LANES/WILDLIFE BRIDGES

PAVEMENT MARKING DETAILS

Plot 2

PLAN REF NO PMD2

SHEET 816 OF 1783 SHEETS

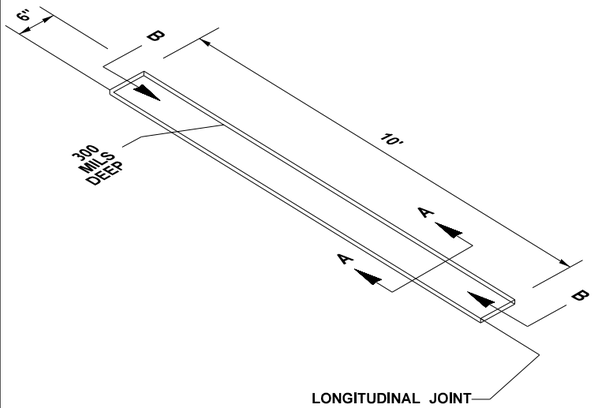

ISOMETRIC VIEW

GROOVED PLASTIC LANE LINE - 6 INCH

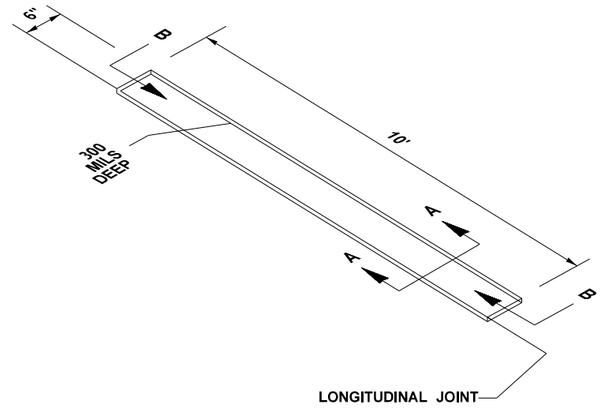

ISOMETRIC VIEW

GROOVED PLASTIC LANE LINE - 6 INCH

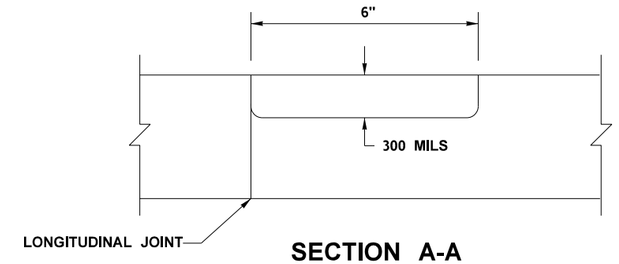

SECTION A-A

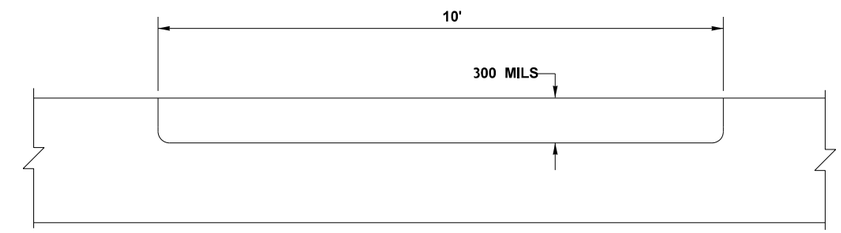

SECTION B-B

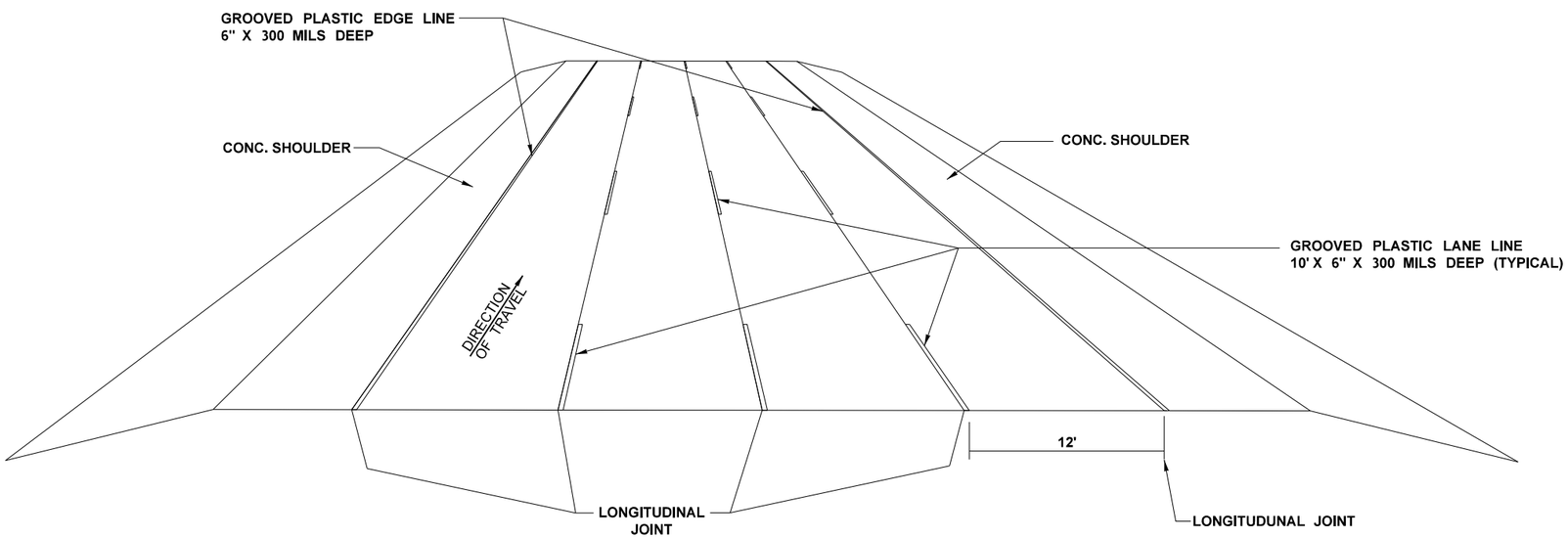

PERSPECTIVE VIEW

GROOVED PLASTIC LANE LINE & GROOVED PLASTIC EDGE LINE
4 LANE & SHOULDER CEMENT CONCRETE PAVEMENT SECTION

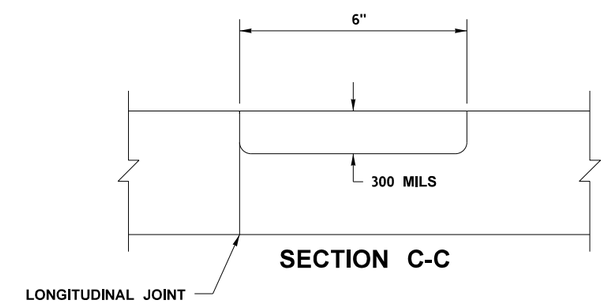

SECTION C-C

NOTES:

1. SEE PAVEMENT MARKING PLANS FOR LINE LOCATIONS.
2. REFERENCE PAVING PLANS FOR JOINT LOCATIONS.
3. SEE PAVEMENT MARKING PLANS FOR LINE TYPE AND WIDTH.

FILE NAME	K:\452201\090\06736_Phase 3\Design_CAD_Sheets\270-PvmtMarkingPlan\XL5479_PS_PMD.dgn			
TIME	1:58:58 PM			
DATE	2/10/2022			
PLOTTED BY	kingk			
DESIGNED BY	KING/SCHILPEROORT			
ENTERED BY	B. SCHILPEROORT			
CHECKED BY	K. KING			
PROJ. ENGR.	A. BYRD			
REGIONAL ADM.	T. TREPANIER	REVISION	DATE	BY

REGION NO.	STATE	FED.AID PROJ.NO.
10	WASH	
JOB NUMBER 19Y007		
CONTRACT NO.		LOCATION NO.

ANDREW D. BYRD — STATE OF WASHINGTON — 39873 — REGISTERED PROFESSIONAL ENGINEER

SEE SHEET CT5
DATE
P.E. STAMP BOX

DATE
P.E. STAMP BOX

Washington State Department of Transportation

I-90
CABIN CREEK I/C TO W EASTON I/C
PHASE 3 - ADD LANES/WILDLIFE BRIDGES

PAVEMENT MARKING DETAILS

Plot 3
PLAN REF NO PMD3
SHEET 817 OF 1783 SHEETS

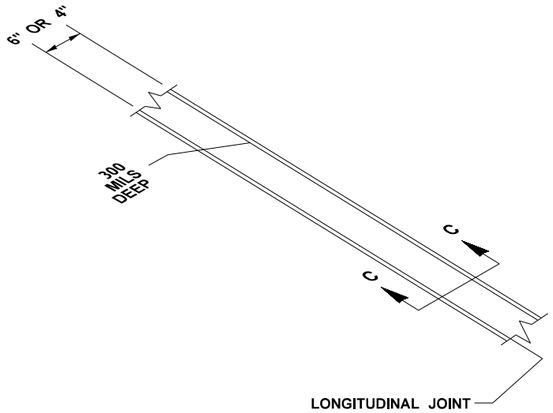

ISOMETRIC VIEW

GROOVED PLASTIC EDGE LINE
6 INCH OR 4 INCH

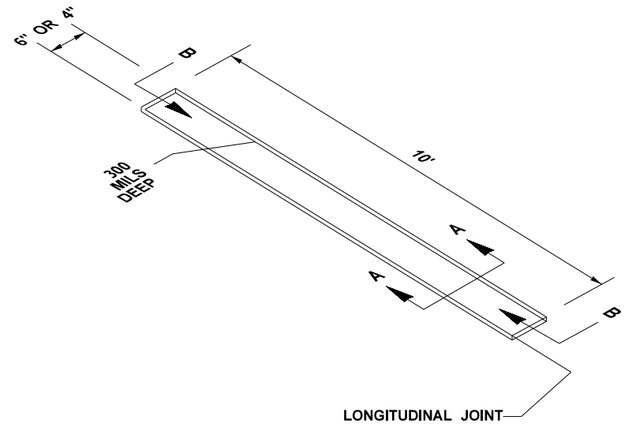

ISOMETRIC VIEW

GROOVED PLASTIC LANE LINE
6 INCH OR 4 INCH

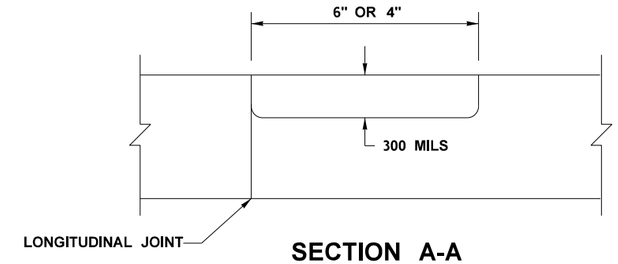

SECTION A-A

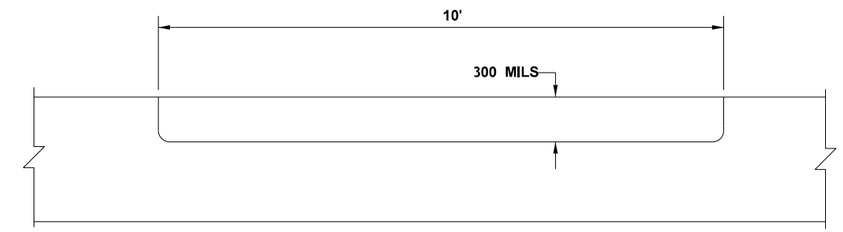

SECTION B-B

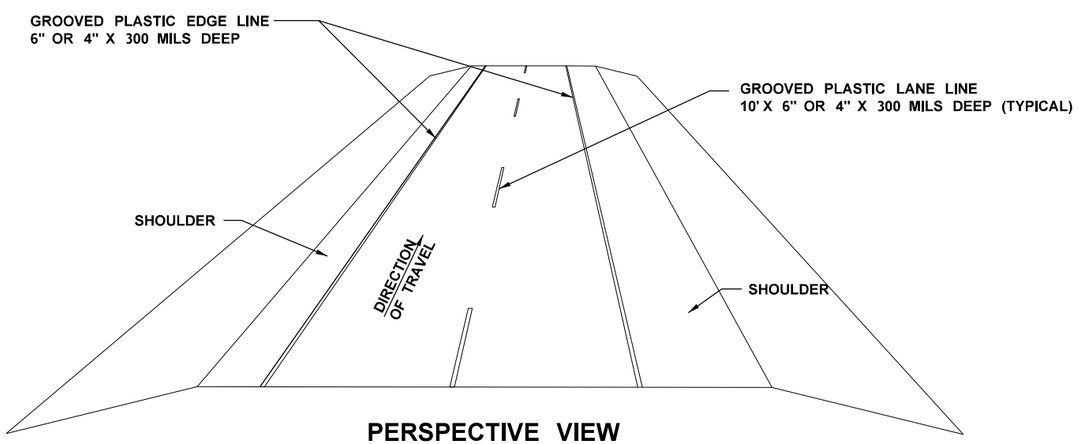

PERSPECTIVE VIEW

GROOVED PLASTIC LANE LINE & GROOVED PLASTIC EDGE LINE
2 LANE HMA PAVEMENT SECTION

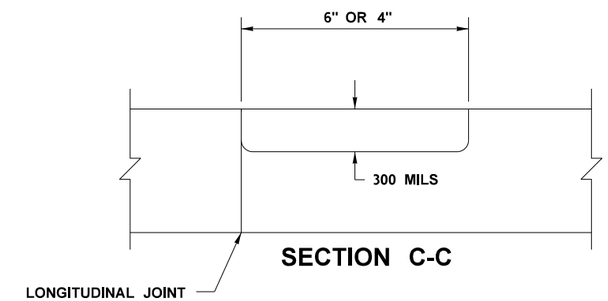

SECTION C-C

NOTES:

1. SEE PAVEMENT MARKING PLANS FOR LINE LOCATIONS.
2. REFERENCE PAVING PLANS FOR JOINT LOCATIONS.
3. SEE PAVEMENT MARKING PLANS FOR LINE TYPE AND WIDTH.

FILE NAME	K:\452201\090\06736_Phase 3\Design_CAD_Sheets\270-PvmtMarkingPlan\XL5479_PS_PMD.dgn						
TIME	1:58:59 PM				REGION NO. 10	STATE WASH	FED.AID PROJ.NO.
DATE	2/10/2022						
PLOTTED BY	kingk						
DESIGNED BY	KING/SCHILPEROORT				JOB NUMBER 19Y007		
ENTERED BY	B. SCHILPEROORT						
CHECKED BY	K. KING				CONTRACT NO.		LOCATION NO.
PROJ. ENGR.	A. BYRD						
REGIONAL ADM.	T. TREPANIER	REVISION	DATE	BY			

ANDREW D. BYRD — STATE OF WASHINGTON — 19933 — REGISTERED PROFESSIONAL ENGINEER

SEE SHEET CTS
DATE
P.E. STAMP BOX

DATE
P.E. STAMP BOX

Washington State Department of Transportation

I-90
CABIN CREEK I/C TO W EASTON I/C
PHASE 3 - ADD LANES/WILDLIFE BRIDGES

PAVEMENT MARKING DETAILS

Plot 4
PLAN REF NO PMD4
SHEET 818 OF 1783 SHEETS

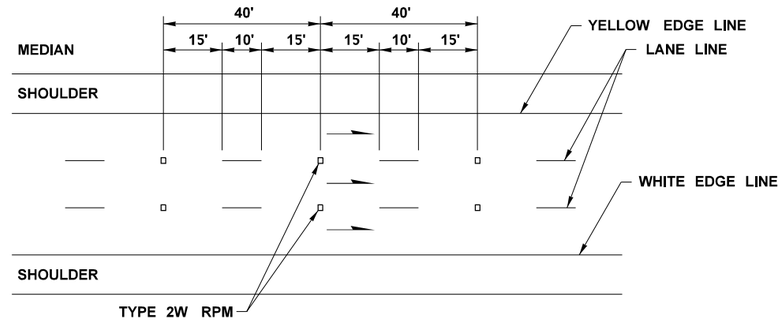

TYPE 2 RPM RAISED FACE COLORS	
TYPE 2W	WHITE ~ ONE SIDE ONLY

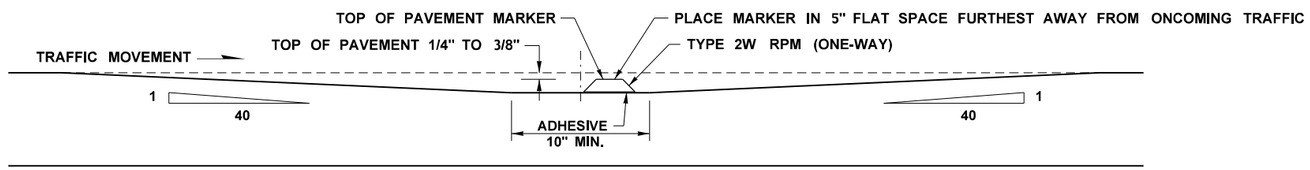

ELEVATION VIEW

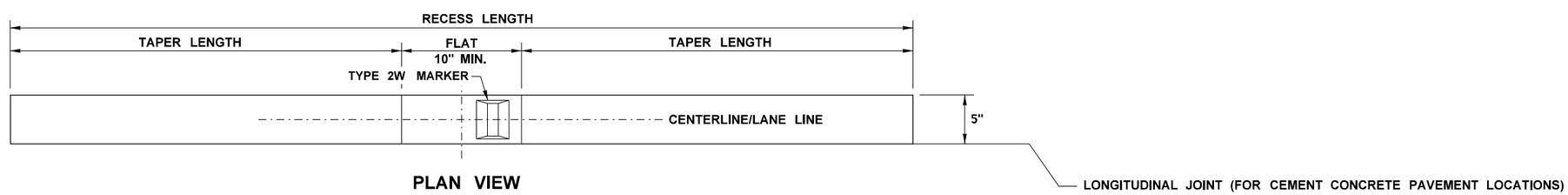

PLAN VIEW

RECESSED PAVEMENT MARKER DETAILS

FOR USE WHERE SPECIFIED IN CONTRACT

NOTES:

ALL RPM'S SET IN RECESSES SHALL HAVE AN ABRASION RESISTANT COATING.

NO RPM'S IN RECESSES ACROSS BRIDGE DECKS OR APPROACH SLABS.

FILE NAME	K:\452201\090\06736_Phase 3\Design_CAD_Sheets\270-PvmtMarkingPlan\XL5479_PS_PMD.dgn					
TIME	1:59:00 PM				REGION NO. 10	STATE WASH
DATE	2/10/2022					FED.AID PROJ.NO.
PLOTTED BY	kingk				JOB NUMBER 19Y007	
DESIGNED BY	KING/SCHILPEROORT					
ENTERED BY	B. SCHILPEROORT				CONTRACT NO.	LOCATION NO.
CHECKED BY	K. KING					
PROJ. ENGR.	A. BYRD					
REGIONAL ADM.	T. TREPANIER	REVISION	DATE	BY		

ANDREW D. BYRD — STATE OF WASHINGTON — 19873 — REGISTERED PROFESSIONAL ENGINEER

SEE SHEET CT5

DATE

P.E. STAMP BOX

DATE

P.E. STAMP BOX

Washington State Department of Transportation

I-90

CABIN CREEK I/C TO W EASTON I/C

PHASE 3 - ADD LANES/WILDLIFE BRIDGES

PAVEMENT MARKING DETAILS

Plot 5

PLAN REF NO PMD5

SHEET 819 OF 1783 SHEETS

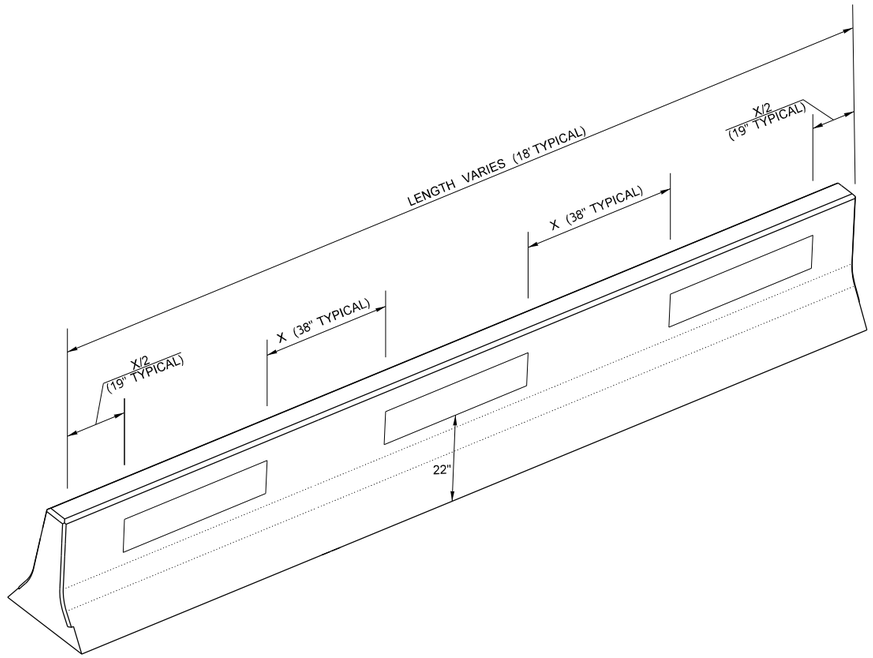

CAST IN PLACE CONCRETE BARRIER (LONG SECTIONS)

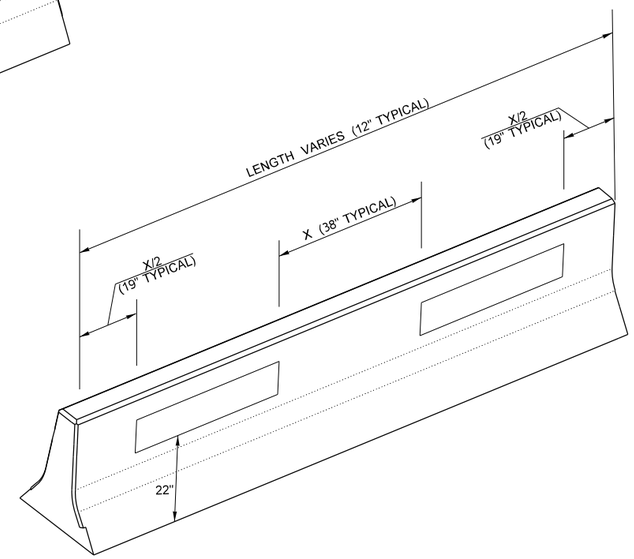

PRECAST CONCRETE BARRIER

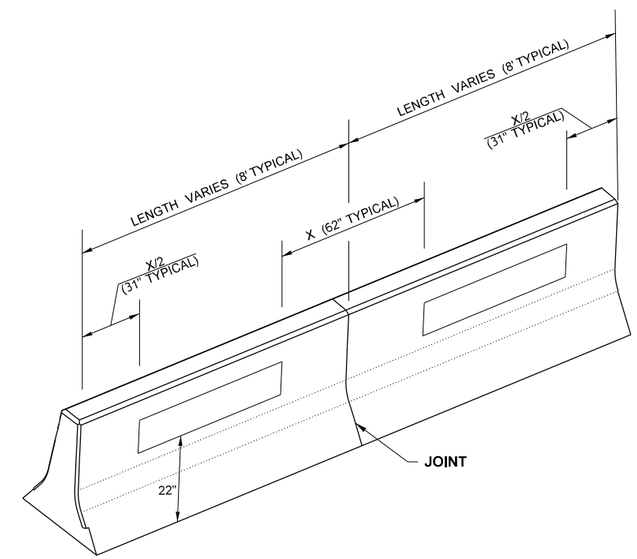

CAST IN PLACE CONCRETE BARRIER

NOTES:

1. LINEAR DELINEATION SYSTEM (LDS) SHALL BE INSTALLED FROM MP 64.16 TO MP 70.34. LINEAR DELINEATION SYSTEM (LDS) SHALL BE INSTALLED ON ALL CONCRETE BARRIER, INCLUDING BRIDGES, CAST-IN-PLACE AND MOMENT SLAB BARRIERS. YELLOW LDS SHALL BE USED ON THE LEFT SIDE OF THE ROAD AND WHITE LDS SHALL BE USED ON THE RIGHT SIDE OF THE ROAD. CONTRACTOR TO VERIFY LDS COLOR WITH ENGINEER BEFORE INSTALLATION.
2. SEE SPECIAL PROVISIONS SECTION "LINEAR DELINEATION SYSTEM" FOR ADDITIONAL INFORMATION.
3. DISTANCE BETWEEN LDS MARKERS SHALL NOT EXCEED 72". LDS MARKERS SHALL NOT BE INSTALLED ACROSS ANY JOINT OR JUNCTION BOX.

LINEAR DELINEATION SYSTEM (LDS)

FILE NAME	K:\452201\090\06736_Phase 3\Design_CAD_Sheets\270-PvmtMarkingPlan\XL5479_PS_PMD.dgn						
TIME	1:59:00 PM				REGION NO. 10	STATE WASH	FED.AID PROJ.NO.
DATE	2/10/2022						
PLOTTED BY	kingk						
DESIGNED BY	KING/SCHILPEROORT				JOB NUMBER 19Y007		
ENTERED BY	B. SCHILPEROORT						
CHECKED BY	K. KING				CONTRACT NO.		LOCATION NO.
PROJ. ENGR.	A. BYRD						
REGIONAL ADM.	T. TREPANIER	REVISION	DATE	BY			

ANDREW D. BYRD — STATE OF WASHINGTON — 39833 — REGISTERED PROFESSIONAL ENGINEER

SEE SHEET CT5 DATE
P.E. STAMP BOX

DATE
P.E. STAMP BOX

Washington State Department of Transportation

I-90
CABIN CREEK I/C TO W EASTON I/C
PHASE 3 - ADD LANES/WILDLIFE BRIDGES

LINEAR DELINEATION DETAIL

Plot 6
PLAN REF NO PMD6
SHEET 820 OF 1783 SHEETS

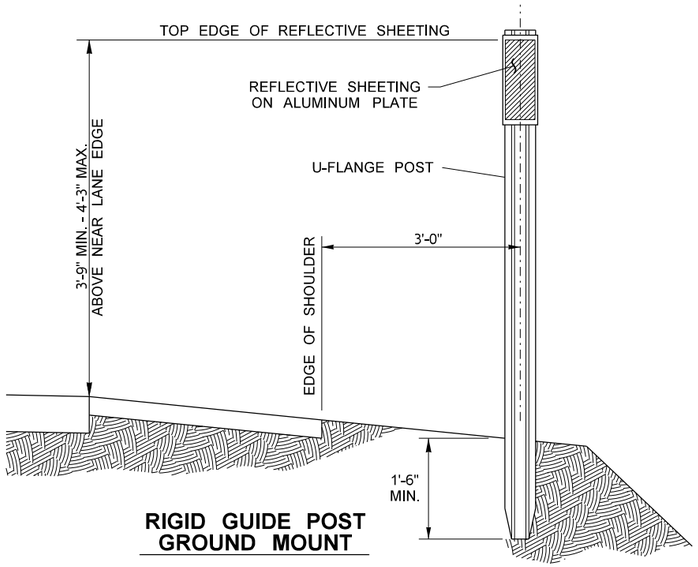

RIGID GUIDE POST GROUND MOUNT

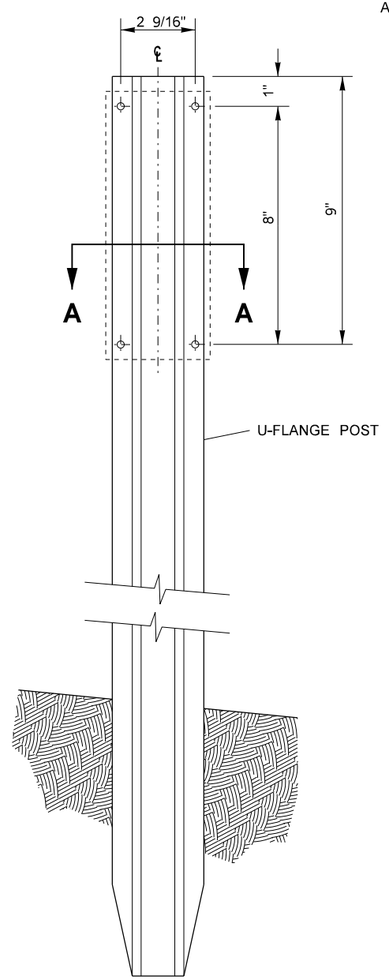

RIGID GUIDE POST

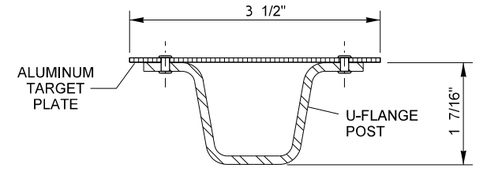

SECTION A-A

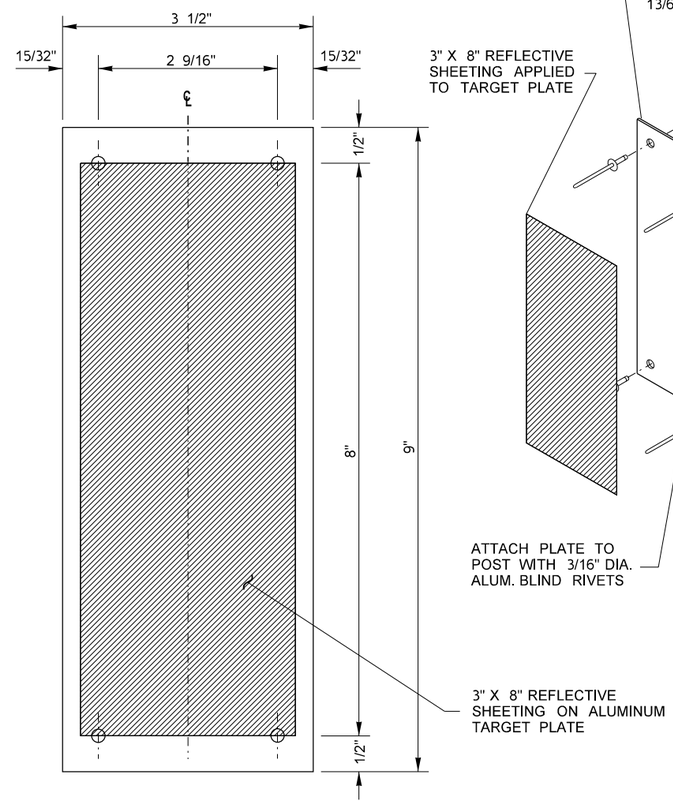

TARGET PLATE DETAIL

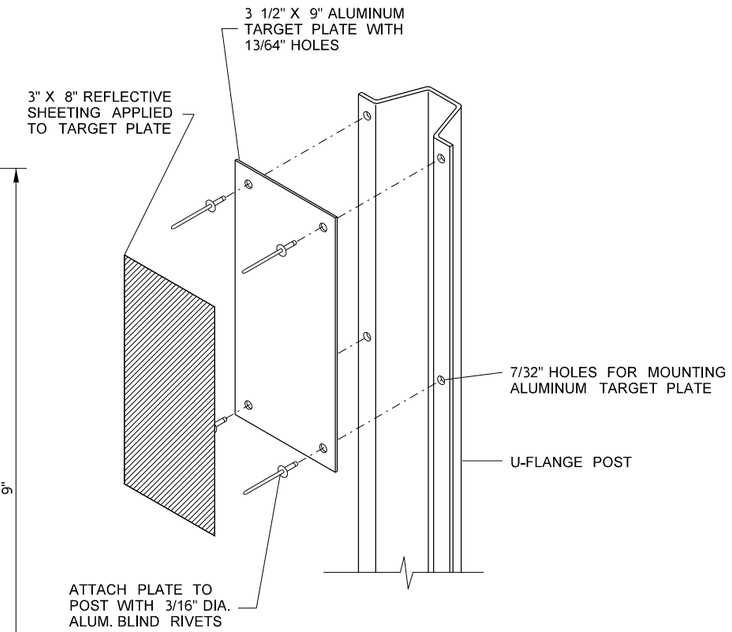

ASSEMBLY DETAIL

NOTES: WHEN GUARDRAIL RUNS CONCURRENT, THE CONTRACTOR SHALL DRIVE THE RIGID GUIDE POST IN THE LINE WITH THE GUARDRAIL POSTS.

FILE NAME	K:\452201\090\06736_Phase 3\Design_CAD_Sheets\270-PvmtMarkingPlan\XL5479_PS_PMD.dgn						
TIME	1:59:01 PM				REGION NO. 10	STATE WASH	FED.AID PROJ.NO.
DATE	2/10/2022						
PLOTTED BY	kingk				JOB NUMBER 19Y007		
DESIGNED BY	KING/SCHILPEROORT						
ENTERED BY	B. SCHILPEROORT						
CHECKED BY	K. KING				CONTRACT NO.		LOCATION NO.
PROJ. ENGR.	A. BYRD						
REGIONAL ADM.	T. TREPANIER	REVISION	DATE	BY			

ANDREW D. BYRD — STATE OF WASHINGTON — 35973 — REGISTERED PROFESSIONAL ENGINEER

SEE SHEET CT5

DATE

P.E. STAMP BOX

DATE

P.E. STAMP BOX

Washington State Department of Transportation

I-90
CABIN CREEK I/C TO W EASTON I/C
PHASE 3 - ADD LANES/WILDLIFE BRIDGES

RIGID GUIDE POST DETAIL

Plot 7

PLAN REF NO PMD7

SHEET 821 OF 1783 SHEETS

FLEXIBLE GUIDE POST FOR STORMWATER LOCATIONS

LE NATURAL DISPERSION	
LOCATION START	LOCATION END
LE 1846+50 (44' RT.)	LE 1849+00 (33' RT.)
LE 1850+80 (31' RT.)	LE 1862+00 (38' RT.)
LE 1868+00 (31' RT.)	LE 1900+00 (35' RT.)
LE 1904+50 (31' RT.)	LE 1912+00 (35' RT.)
LE 1959+00 (31' RT.)	LE 1979+50 (31' RT.)
LE 1982+50 (33' RT.)	LE 1986+80 (66' RT.)
LE 1986+81 (25' RT.)	LE 1996+00 (38' RT.)

MEDIAN NATURAL DISPERSION	
LOCATION START	LOCATION END
LE 1703+00 (40' LT.)	LE 1714+00 (40' LT.)
LE 1726+00 (41' LT.)	LE 1734+00 (41' LT.)
LE 1794+00 (41' LT.)	LE 1800+70 (45' LT.)
LE 1803+32 (41' LT.)	LE 1824+50 (44' LT.)
LW 1828+00 (45' RT.)	LW 1829+60 (45' RT.)
LW 1833+29 (45' RT.)	LW 1841+95 (41' RT.)
LW 1842+89 (41' RT.)	LW 1849+25 (41' RT.)
LW 1852+86 (46' RT.)	LW 1866+50 (39' RT.)
LW 1884+08 (39' RT.)	LW 1905+51 (39' RT.)
LE 1919+74 (38' LT.)	LE 1930+89 (49' LT.)
LE 1933+03 (38' LT.)	LE 1945+45 (44' LT.)
LE 1946+39 (48' LT.)	LE 1954+96 (41' LT.)
LE 1957+00 (37' LT.)	LE 1959+00 (37' LT.)
LW 1960+51 (37' RT.)	LW 1980+87 (40' RT.)

LW NATURAL DISPERSION	
LOCATION START	LOCATION END
LW 1686+39 (32' LT.)	LW 1690+50 (32' LT.)
LW 1704+50 (28' LT.)	LW 1716+50 (28' LT.)
LW 1752+03 (32' LT.)	LW 1801+14 (27' LT.)
LW 1803+65 (32' LT.)	LW 1808+49 (28' LT.)
LW 1823+00 (33' LT.)	LW 1828+00 (42' LT.)
LW 1882+50 (45' LT.)	LW 1883+80 (45' LT.)
LW 1905+51 (45' LT.)	LW 1915+50 (45' LT.)
LW 1920+52 (51' LT.)	LW 1931+33 (49' LT.)
LW 1932+48 (51' LT.)	LW 1955+08 (47' LT.)
LW 1956+84 (35' LT.)	LW 1960+51 (31' LT.)
LW 1980+85 (52' LT.)	LW 1987+00 (69' LT.)
LW 1987+80 (32' LT.)	LW 1995+00 (32' LT.)

STEEP SLOPE DISPERSION
SEE SHEET DD4 FOR LIMITS

MODIFIED CHANNELIZED NATURAL DISPERSION
SEE SHEET DD3 FOR LIMITS

NOTES:

1. USE BROWN, FLEXIBLE, NON-REFLECTIVE GUIDEPOST MARKERS.
2. THE BEGINNING, INTERMEDIATE, AND END GUIDEPOSTS SHALL BE PLACED AT THE BEST MANAGEMENT PRACTICE (BMP) BACK EDGE FARTHEST FROM THE ROADWAY TO HELP FACILITATE MOWING AND OTHER MAINTENANCE OPERATIONS.
3. INTERMEDIATE GUIDE POSTS SHALL BE SPACED AT INTERVALS OF THE LESSER OF 500 FEET OR HALF THE TOTAL LENGTH.

INDEX

SHEET NO.	PLAN REFERENCE NO.	TITLE
		TRAFFIC BARRIER
823	INTB1	INDEX BRIDGE
824 - 825	TB1 - TB2	PRECAST CONC. BARRIER TYPE 42 IN.
826	TB3	PRECAST CONC. BARRIER TRANSITION TYPE 42 IN.
827	TB4	CONC. BARRIER TRANSITION TYPE 2 TO 42 IN. F-SHAPE
828 - 829	TB5 - TB6	BARRIER GAP DETAILS
830	TB7	SEW TRAFFIC BARRIER - 42 IN. ON WALL
831	TB8	SEW TRAFFIC BARRIER - 42 IN. ON GRADE
832 - 834	TB9 - TB11	SEW TRAFFIC BARRIER - 42 IN. DETAILS
835	TB12	CAST-IN-PLACE CONC. BARRIER TYPE 42 IN. TUNNEL BARRIER-WESTBOUND
836	TB13	CAST-IN-PLACE CONC. BARRIER TYPE 42 IN. EASTBOUND TUNNEL BARRIER
		DIFFERENTIAL BARRIER
837	DB1	GENERAL NOTES
838	DB2	DIFFERENTIAL BARRIER WALL 1 LAYOUT
839 - 841	DB5	DB1 FOOTING LAYOUT AND ELEVATION
842	DB6	DIFFERENTIAL BARRIER WALL 1 PROFILES
843	DB7	DB1 BARRIER TRANSITION
844 - 846	DB8 - DB10	DIFFERENTIAL BARRIER WALL 2 LAYOUT
847 - 855	DB11 - DB19	DB2 FOOTING LAYOUT AND ELEVATION
856 - 857	DB20 - DB21	DIFFERENTIAL BARRIER WALL 2 FOOTING PROFILE
858	DB22	DB2 CURBLINE PROFILE
859	DB23	DB2 BARRIER TRANSITION
860 - 863	DB24 - DB27	DIFFERENTIAL BARRIER WALL DETAILS

INDEX (CONTINUED)

SHEET NO.	PLAN REFERENCE NO.	TITLE

PLAN REF NO
¢¢##
SHEET
##
OF
##
SHEETS

NOTE: ALL SHEET REFERENCES, FIRST NOS. OF STRUCTURE CODE DESIGNATIONS AND MATCH LINE SHEET REFERENCES, ETC., THROUGHOUT THE PLANS, REFER TO THE ENTRY IN THE PLAN

FILE NAME	K:\452201\090\06736_Phase 3\Design_CAD_Sheets\010-Index\XL5479_PS_INB.dgn
TIME	8:23:00 PM
DATE	2/16/2022
PLOTTED BY	Elderg
DESIGNED BY	KING/SCHILPEROORT
ENTERED BY	K. KING
CHECKED BY	K. KING
PROJ. ENGR.	A. BYRD
REGIONAL ADM.	T. TREPANIER

REVISION | DATE | BY

REGION NO. 10 | STATE WASH | FED.AID PROJ.NO.

JOB NUMBER 197007

CONTRACT NO. | LOCATION NO.

P.E. STAMP BOX DATE

P.E. STAMP BOX DATE

Washington State Department of Transportation

I-90
CABIN CREEK I/C TO W EASTON I/C
PHASE 3 - ADD LANES/WILDLIFE BRIDGES

INDEX BARRIER

Plot 1
PLAN REF NO INTB1
SHEET 823 OF 1783 SHEETS

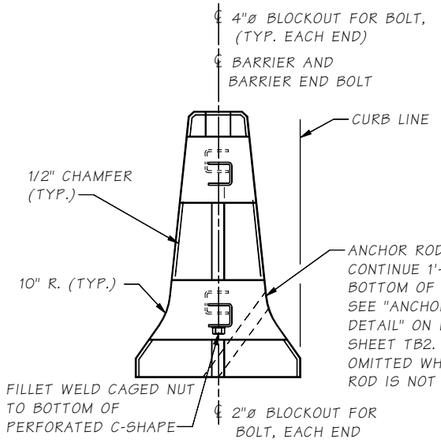

VIEW A

REINFORCING NOT SHOWN FOR CLARITY

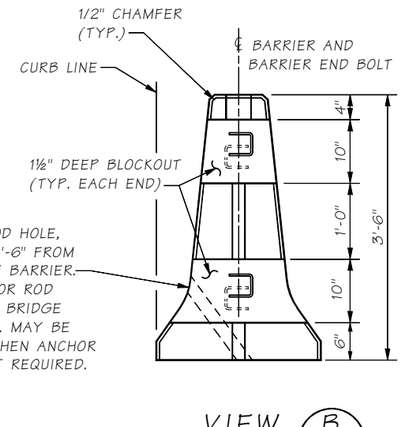

VIEW B

REINFORCING NOT SHOWN FOR CLARITY

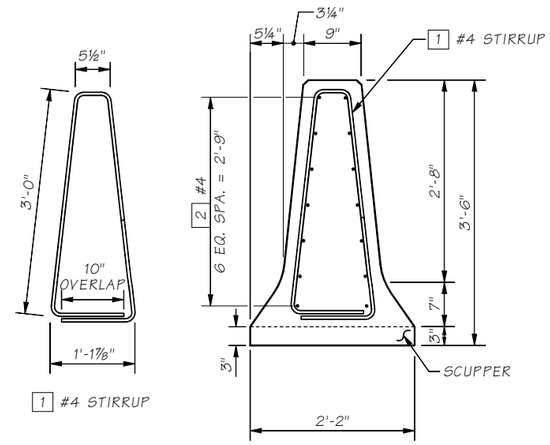

SECTION C

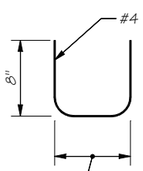

U-BAR DETAIL

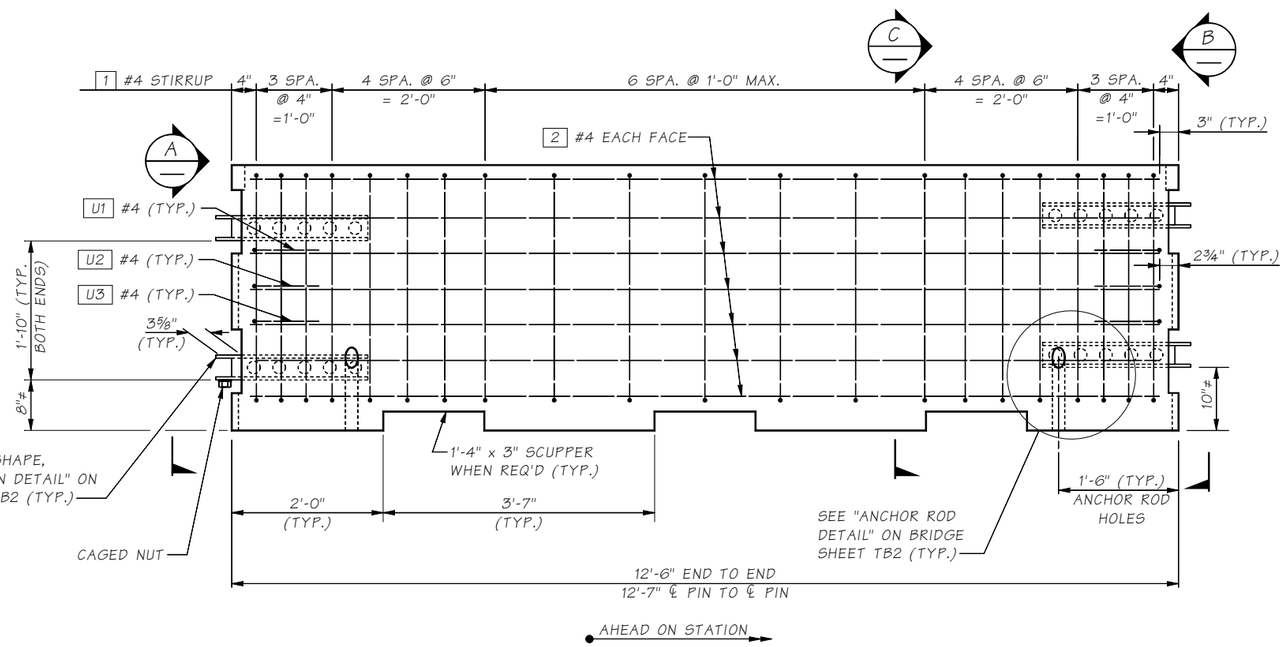

PRECAST CONC. BARRIER TYPE 42 IN. ELEVATION

≠ SEE FABRICATION NOTE 7 THIS SHEET.

PRECAST BARRIER GENERAL NOTES

1. ALL MATERIAL AND WORKMANSHIP SHALL BE IN ACCORDANCE WITH THE REQUIREMENTS OF THE WASHINGTON STATE DEPARTMENT OF TRANSPORTATION STANDARD SPECIFICATIONS FOR ROAD, BRIDGE, AND MUNICIPAL CONSTRUCTION DATED 2022.
2. THIS STRUCTURE HAS BEEN DESIGNED IN ACCORDANCE WITH THE REQUIREMENTS OF THE AASHTO LRFD BRIDGE DESIGN SPECIFICATIONS 9TH EDITION 2020. THE TRAFFIC BARRIERS HAVE BEEN DESIGNED IN ACCORDANCE WITH THE REQUIREMENTS FOR TEST LEVEL 4 (TL-4) RAILINGS.
3. PRECAST BARRIER DESIGNS ARE BASED UPON THE OREGON DEPARTMENT OF TRANSPORTATION STANDARD DRAWING NO. RD545, TITLED "PRECAST TALL (42") CONCRETE BARRIER," WITH EFFECTIVE DATES OF JUNE 1, 2014 TO NOVEMBER 30, 2014.

FABRICATION NOTES

1. ALL REINFORCING STEEL SHALL CONFORM TO ASTM A706, AASHTO M31 OR ASTM A615 GRADE 60. ALL BARS SHALL BE FULL LENGTH AS SHOWN AND SHALL BE PLACED 2" CLEAR OF THE NEAREST FACE OF CONCRETE UNLESS SHOWN OTHERWISE.
2. CONCRETE SHALL BE CLASS 5000.
3. FALSEWORK SHALL BE CAREFULLY RELEASED TO PREVENT IMPACT OR UNDUE STRESS IN THE STRUCTURE.
4. EXCEPT FOR LOCATION OF THE C-SHAPE AND DIFFERING BARRIER ENDS SHOWN ON BRIDGE SHEETS TB3 AND TB4, THE DIMENSIONS SHOWN ARE TYPICAL FOR BOTH ENDS OF BARRIER SECTION OR OPPOSING ENDS OF BARRIER TERMINALS.
5. C-SHAPE SHALL BE PLACED TO A TOLERANCE OF 3/32".
6. ALL BOLTS, RODS, AND RELATED HARDWARE SHALL BE GALVANIZED AFTER FABRICATION PER AASHTO M 232. C-SHAPE STEEL SURFACES SHALL BE GALVANIZED AFTER FABRICATION IN ACCORDANCE WITH AASHTO M 111.
7. VERTICAL DIMENSION TO THE C-SHAPE IN THE BARRIER TERMINAL IS DETERMINED BY THE END OF THE BARRIER SEGMENT TO WHICH IT IS BEING CONNECTED. SEE "CONNECTION DETAIL" ON BRIDGE SHEET TB2.
8. THE CONTRACTOR SHALL FABRICATE ANCHOR HOLES ON THE TRAFFIC SIDE OF THE BARRIERS. IF TRAFFIC IS ON BOTH SIDES OF BARRIER, ANCHOR HOLES SHALL BE FABRICATED ON ONE SIDE OF THE BARRIER AS SPECIFIED BY THE CIVIL PLANS.
9. MATERIALS SPECIFICATIONS:
   C-SHAPE: ASTM A 36
   BARRIER END BOLT: ASTM A 449
   ANCHOR RODS: ASTM A 307
   HIGH STRENGTH GALVANIZED BOLTS: ASTM A449
   HIGH STRENGTH GALVANIZED THREADED RODS: ASTM F1554 GR105
   GALVANIZED JAM NUTS: ASTM A563
   GALVANIZED BEVELED WASHERS: ASTM F436

INSTALLATION NOTES

1. NORMAL USE OF PRECAST CONCRETE BARRIER TYPE 42 IN. IS RESTRICTED TO CURVES WITH RADII GREATER THAN 770 FEET.
2. DO NOT INSTALL AT A ROADWAY CROWN.
3. SEE BRIDGE SHEET TB2 WHEN A BARRIER LENGTH OTHER THAN THE STANDARD 12'-6" LENGTH IS REQUIRED. SEE BRIDGE SHEETS TB3 AND TB4 FOR BARRIER TRANSITIONS.
4. NON-STANDARD LENGTH BARRIER SEGMENTS SHALL BE A MINUMUM OF 50'-0" FROM THE END OF ANY BARRIER RUN.
5. NON-STANDARD LENGTH BARRIER SEGMENTS SHALL NOT BE INSTALLED ABUTTING EACH OTHER.
6. NO MORE THAN 3 NON-STANDARD LENGTH BARRIER SEGMENTS SHALL BE USED BETWEEN ENDS OF BARRIER RUNS.
7. ESTIMATED BARRIER WEIGHT IS 8070 POUNDS PER 12'-6" UNIT LENGTH.
8. FOR BARRIER ANCHORAGE, SEE "ANCHOR ROD DETAIL" ON BRIDGE SHEET TB2.
9. ANCHOR HOLES SHALL BE INSTALLED ON THE TRAFFIC SIDE OF THE BARRIER. IF TRAFFIC IS ON BOTH SIDES OF BARRIER, ANCHOR HOLES SHALL BE INSTALLED ON ONE SIDE OF THE BARRIER, AS SPECIFIED BY THE CIVIL PLANS.

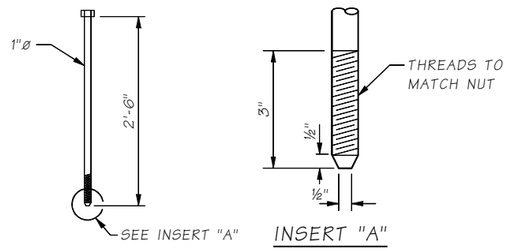

BARRIER END BOLT DETAIL

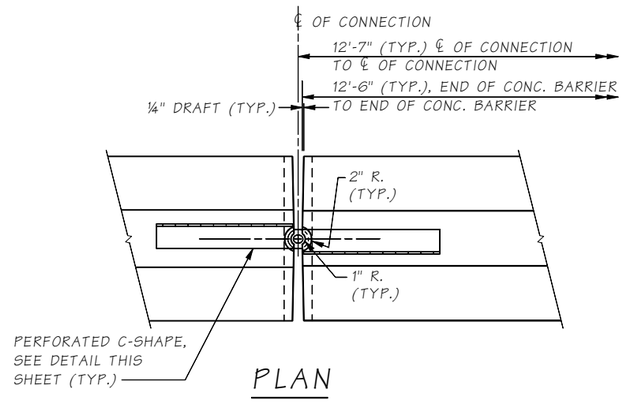

PLAN

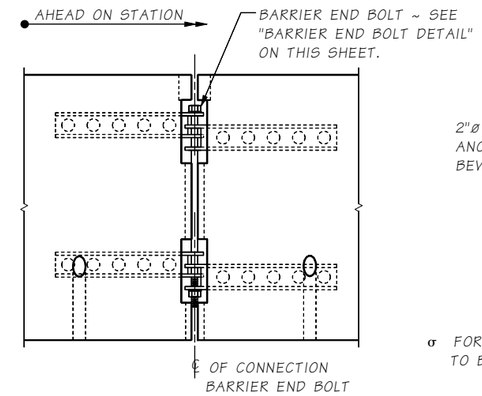

ELEVATION

CONNECTION DETAIL

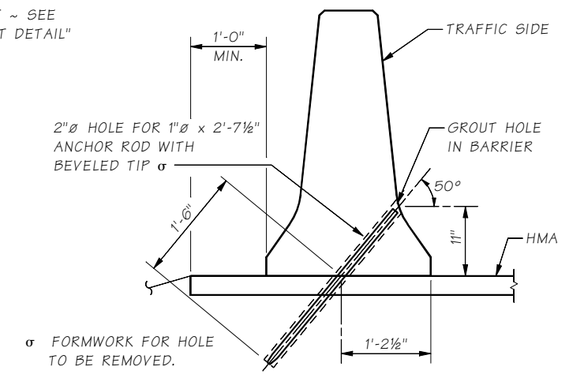

ANCHOR ROD DETAIL

ANCHOR ROD HOLE MAY BE OMITTED WHEN ANCHOR ROD IS NOT REQUIRED.

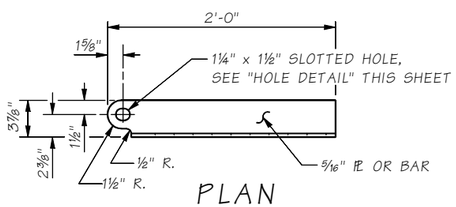

PLAN

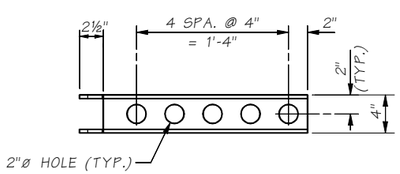

ELEVATION

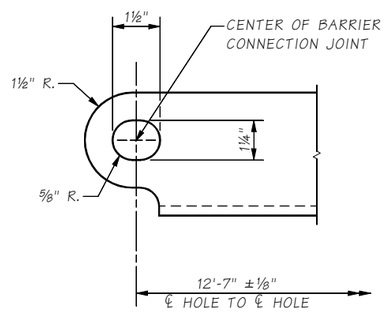

HOLE DETAIL

PERFORATED C-SHAPE

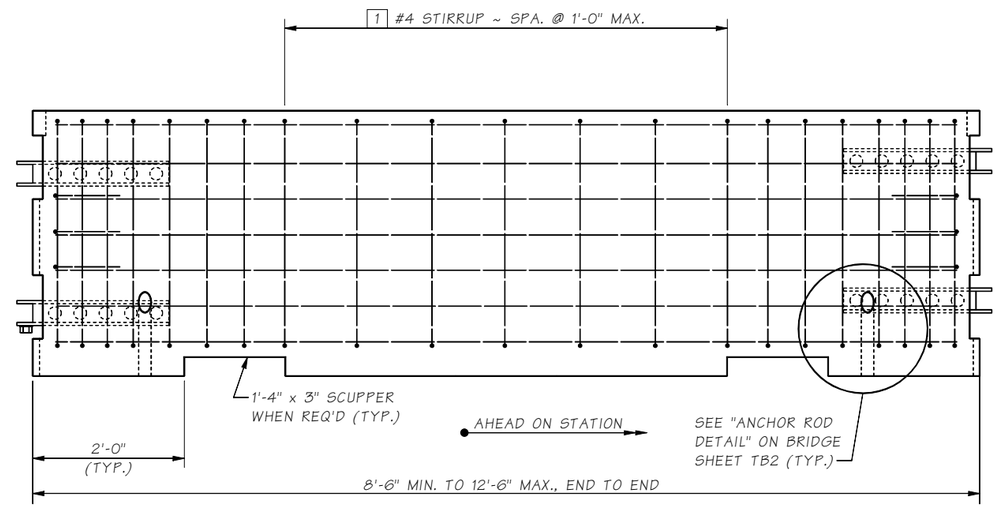

NON-STANDARD LENGTH
PRECAST CONC. BARRIER TYPE 42 IN.
ELEVATION

SEE BRIDGE SHEET TB1 FOR ADDITIONAL INFORMATION AND DETAILS.

SR I-90 FILE NO. ____ SHEET TB2

Bridge Design Engr.	Khaleghi, B	M:\Z-Team\I-90 PHASE 3 CABIN CR\window files\BARRIER TYPE 42 IN SHEET 2.wnd									
Supervisor	Zeldenrust, RP										
Designed By	Olleman, KE 09/20										
Checked By	Bedi, G										
Detailed By	Uhde, T 09/20										
Bridge Projects Engr.											
Prelim. Plan By											
Architect/Specialist		DATE	REVISION	BY	APP'D						

REGION NO.	STATE	FED. AID PROJ. NO.	SHEET NO.	TOTAL SHEETS
10	WASH.			
JOB NUMBER 19Y007				
CONTRACT NO.				

P.E. STAMP BOX
RICHARD P. ZELDENRUST
STATE OF WASHINGTON
25470
STRUCTURAL ENGINEER
PROFESSIONAL ENGINEER
SEE SHEET CT5
DATE:

BRIDGE AND STRUCTURES OFFICE

P.E. STAMP BOX
BIJAN KHALEGHI
STATE OF WASHINGTON
27695
STRUCTURAL ENGINEER
PROFESSIONAL ENGINEER
SEE SHEET CT5
DATE:

Washington State Department of Transportation

I-90
CABIN CR I/C TO W EASTON I/C
PHASE 3 - ADD LANES/WILDLIFE BRIDGES
ROADWAY BARRIERS

PRECAST CONC. BARRIER TYPE 42 IN.
SHEET 2

BRIDGE SHEET NO. TB2
SHEET 825 OF 1783 SHEETS

Mon Feb 07 14:22:43 2022

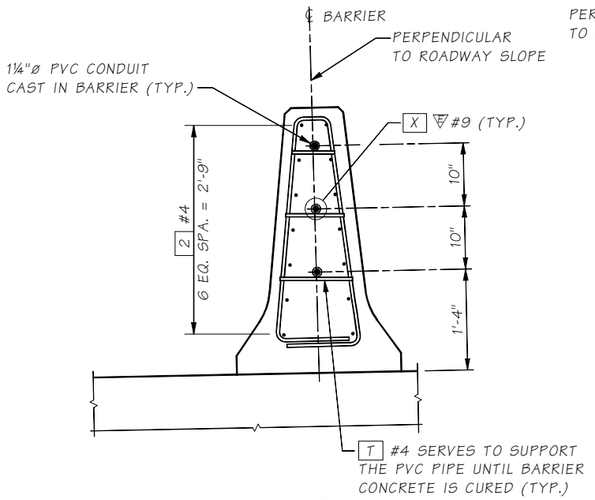

SECTION E

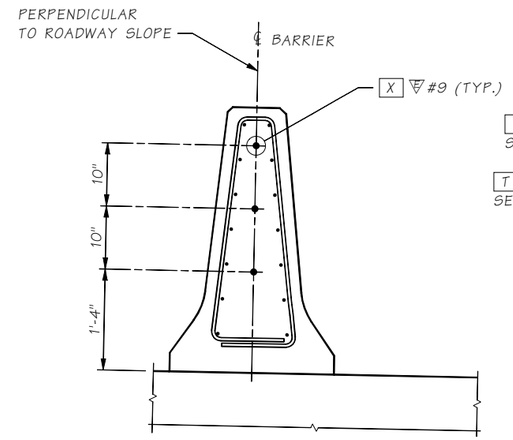

SECTION F

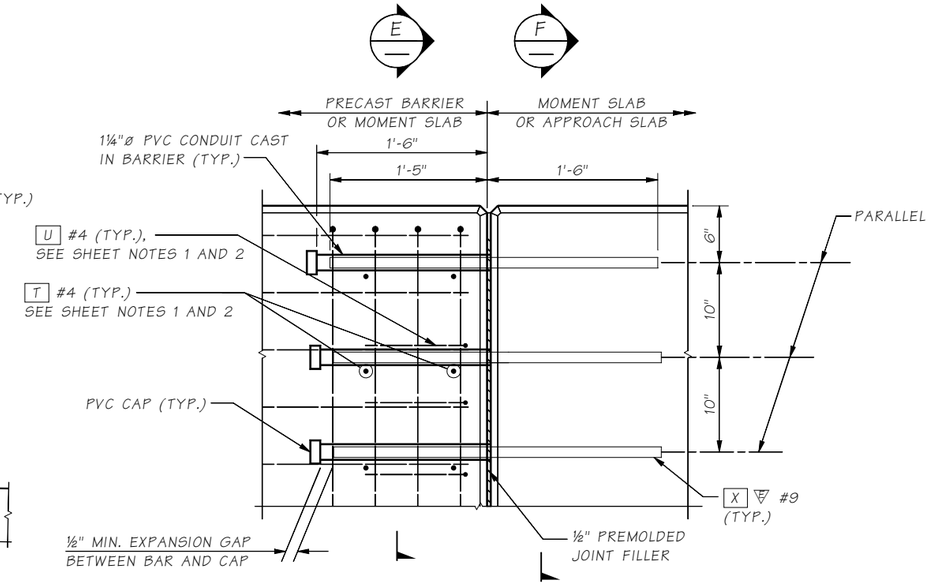

DETAIL G

OPTION 1 (TYP.)

SHEET NOTES:

1. SEE BRIDGE SHEET TB1 FOR REINFORCING BARS WITH THE PREFIX "U".
2. U, T, AND X ARE REQUIRED FOR PRECAST BARRIER, MOMENT SLAB, OR APPROACH SLAB. ADDITIONAL PRECAST BARRIER REBAR IS SHOWN FOR ILLUSTRATIVE PURPOSES ONLY.
3. ENSURE SMOOTH TRANSITION BETWEEN BARRIER FACES AT JOINT.

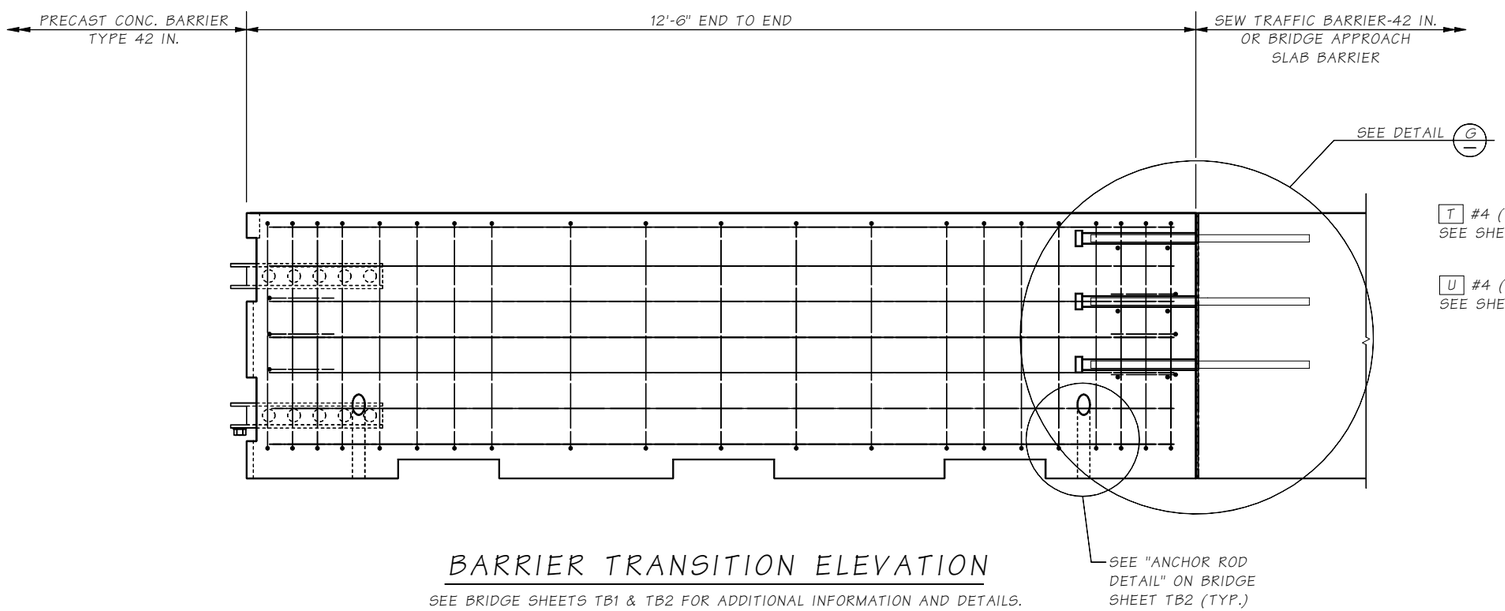

BARRIER TRANSITION ELEVATION

SEE BRIDGE SHEETS TB1 & TB2 FOR ADDITIONAL INFORMATION AND DETAILS.

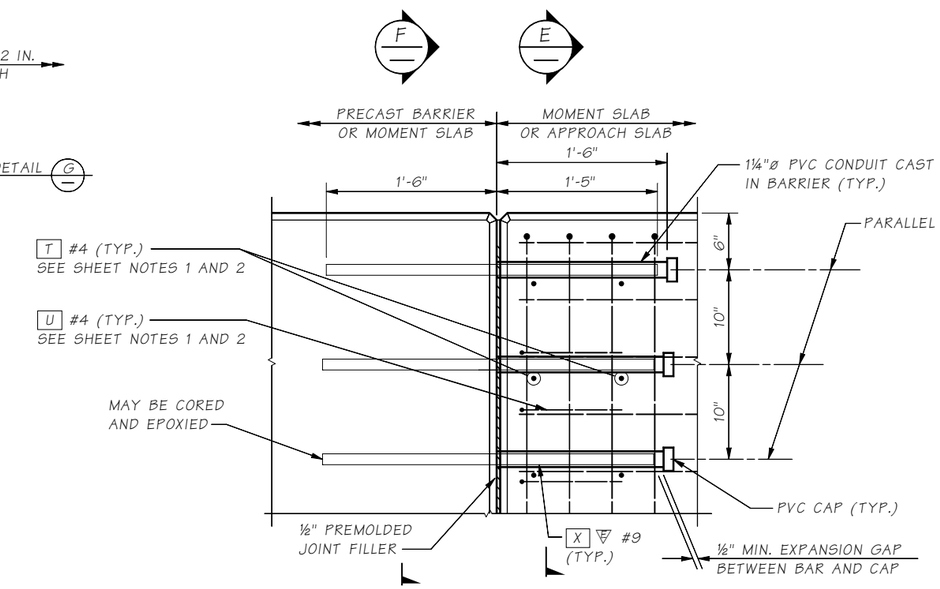

DETAIL G

OPTION 2
WHERE CALLED OUT BY BRIDGE PLANS.

SR I-90 FILE NO. ____ SHEET TB3

Bridge Design Engr.	Khaleghi, B	M:\Z-Team\I-90 PHASE 3 CABIN CR\window files\BARRIER TYPE 42 IN SHEET 3.wnd								
Supervisor	Zeldenrust, RP									
Designed By	Olleman, KE 09/20									
Checked By	Bedi, G									
Detailed By	Uhde, T/DeBoer, J 09/20									
Bridge Projects Engr.										
Prelim. Plan By										
Architect/Specialist		DATE	REVISION	BY	APP'D					

REGION NO.	STATE	FED. AID PROJ. NO.	SHEET NO.	TOTAL SHEETS
10	WASH.			
JOB NUMBER 19Y007				
CONTRACT NO.				

P.E. STAMP BOX
RICHARD P. ZELDENRUST, STATE OF WASHINGTON, 25470, STRUCTURAL ENGINEER, PROFESSIONAL ENGINEER
SEE SHEET CT5
DATE:

BRIDGE AND STRUCTURES OFFICE

P.E. STAMP BOX
BIJAN KHALEGHI, STATE OF WASHINGTON, 27695, STRUCTURAL ENGINEER, PROFESSIONAL ENGINEER
SEE SHEET CT5
DATE:

Washington State Department of Transportation

I-90
CABIN CR I/C TO W EASTON I/C
PHASE 3 - ADD LANES/WILDLIFE BRIDGES
ROADWAY BARRIERS

PRECAST CONC. BARRIER TRANSITION TYPE 42 IN.

BRIDGE SHEET NO. TB3
SHEET 826 OF 1783 SHEETS

Mon Feb 07 14:22:46 2022

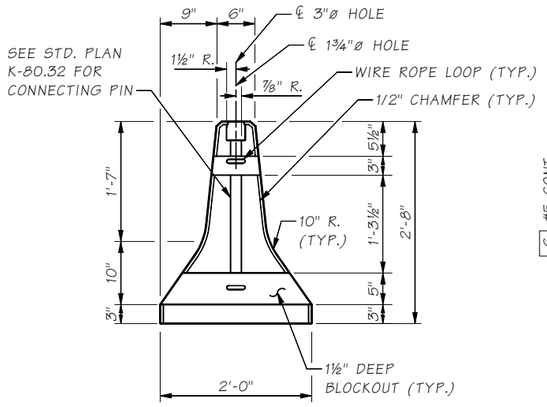

VIEW J

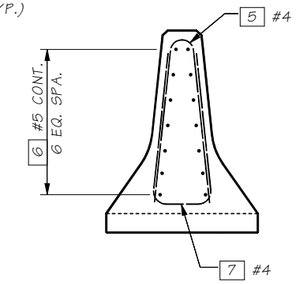

SECTION K

SHOWN AT LIMIT OF TRANSITION

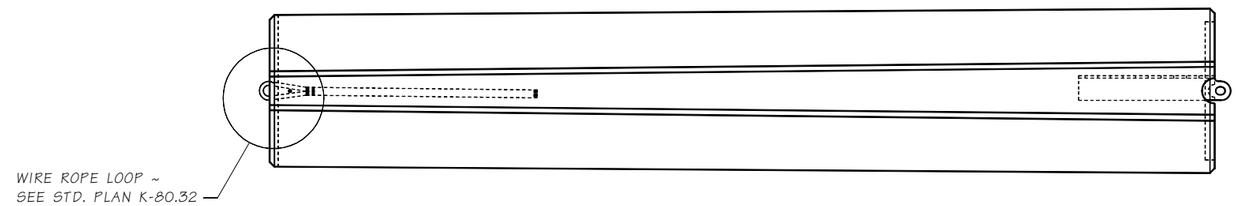

PLAN

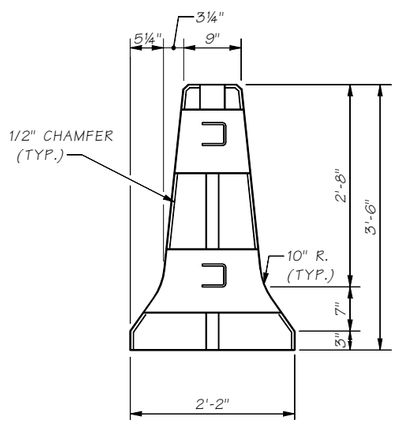

VIEW L

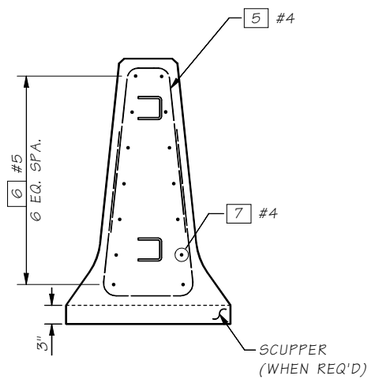

SECTION M

SHOWN AT LIMIT OF TRANSITION
SEE BRIDGE SHEETS TB1 & TB2 FOR DETAILS NOT SHOWN.

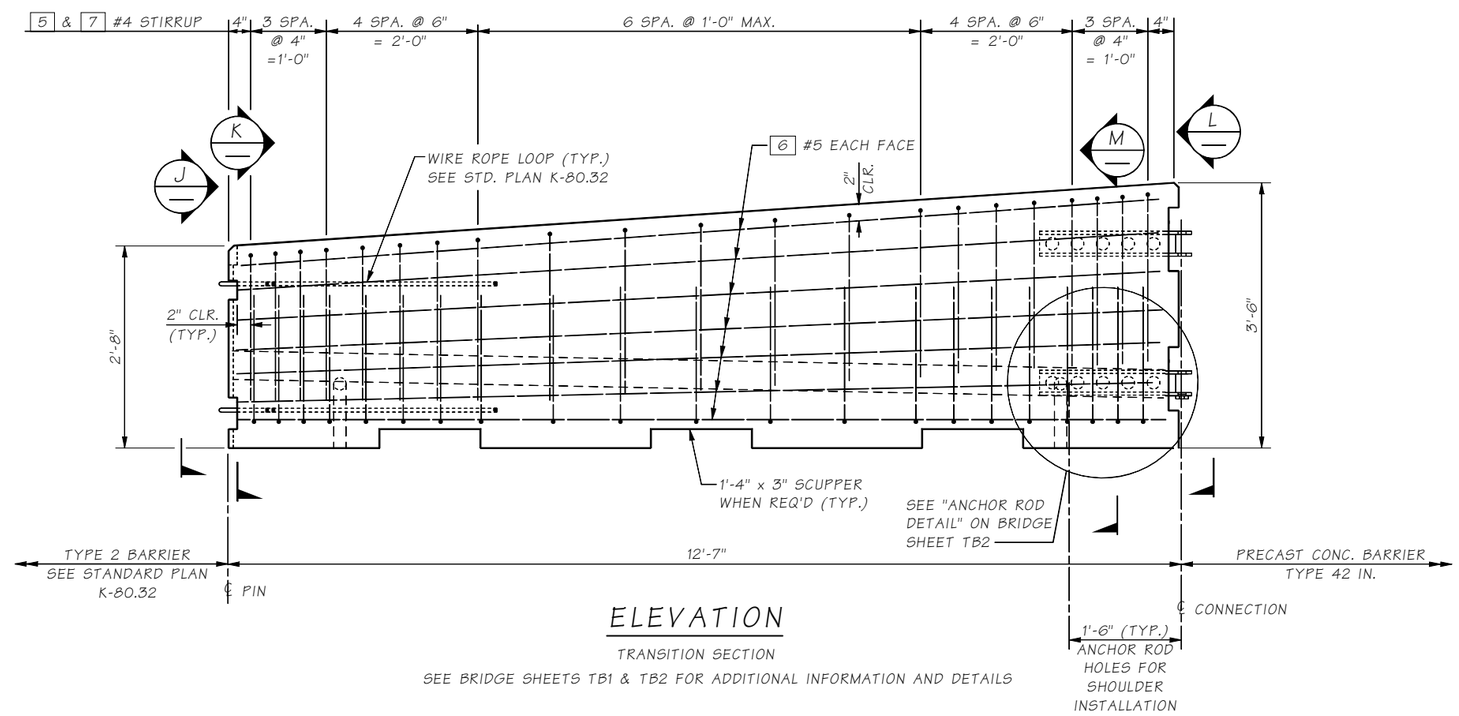

ELEVATION

TRANSITION SECTION

SEE BRIDGE SHEETS TB1 & TB2 FOR ADDITIONAL INFORMATION AND DETAILS

BENDING DIAGRAM

(ALL DIMENSIONS ARE OUT TO OUT)

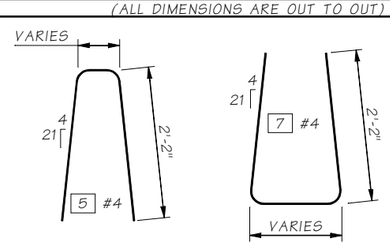

Bridge Design Engr.	Khaleghi, B	M:\Z-Team\I-90 PHASE 3 CABIN CR\window files\BARRIER TRANS TYPE 2 F SHAPE.wnd			
Supervisor	Zeldenrust, RP				
Designed By	Olleman, KE 09/20				
Checked By	Bedi, G				
Detailed By	Uhde, T 09/20				
Bridge Projects Engr.					
Prelim. Plan By					
Architect/Specialist		DATE	REVISION	BY	APP'D

REGION NO.	STATE	FED. AID PROJ. NO.	SHEET NO.	TOTAL SHEETS
10	WASH.			
JOB NUMBER 19Y007				
CONTRACT NO.				

P.E. STAMP BOX: RICHARD P. ZELDENRUST, STATE OF WASHINGTON, 25470, PROFESSIONAL ENGINEER — SEE SHEET CT5 — DATE

BRIDGE AND STRUCTURES OFFICE

P.E. STAMP BOX: BILAN KHALEGHI, STATE OF WASHINGTON, 27695, PROFESSIONAL ENGINEER — SEE SHEET CT5 — DATE

Washington State Department of Transportation

I-90
CABIN CR I/C TO W EASTON I/C
PHASE 3 - ADD LANES/WILDLIFE BRIDGES
ROADWAY BARRIERS

CONC. BARRIER TRANSITION TYPE 2 TO 42 IN. F-SHAPE

BRIDGE SHEET NO. TB4

SHEET 827 OF 1783 SHEETS

SR I-90 FILE NO. ____ SHEET TB4

Mon Feb 07 14:22:49 2022

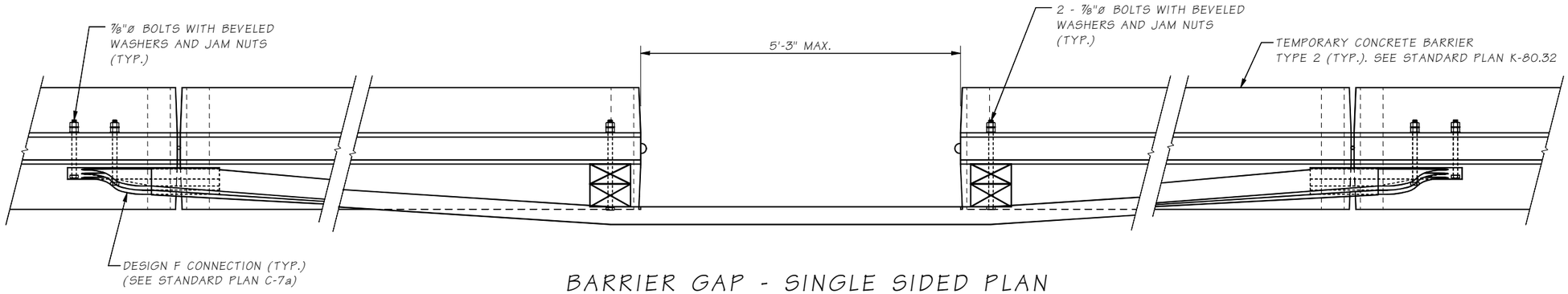

BARRIER GAP - SINGLE SIDED PLAN

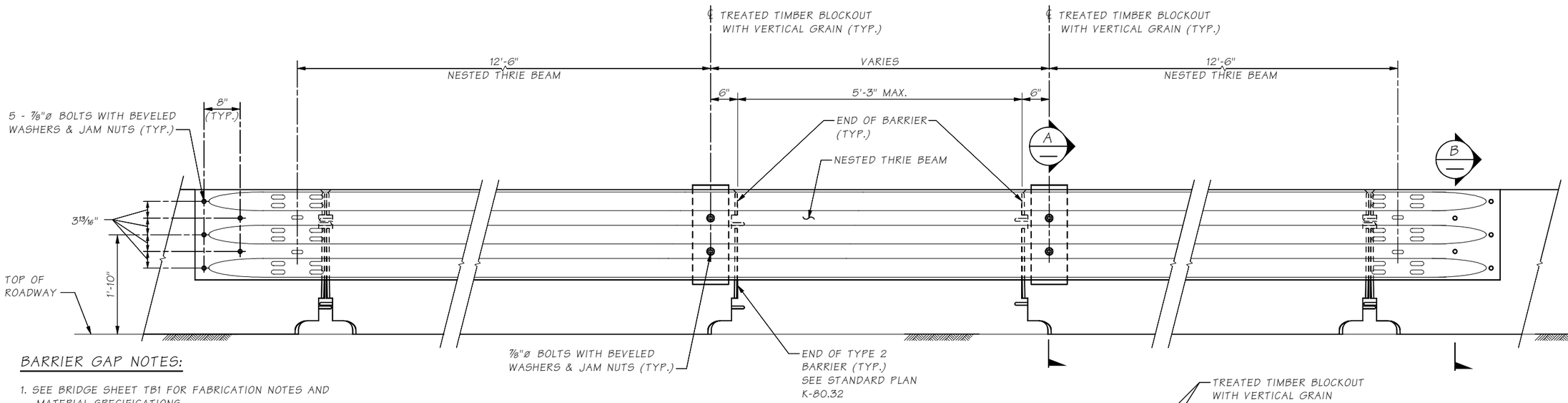

BARRIER GAP - SINGLE SIDED ELEVATION

BARRIER GAP NOTES:

1. SEE BRIDGE SHEET TB1 FOR FABRICATION NOTES AND MATERIAL SPECIFICATIONS.
2. HIGH STRENGTH GALVANIZED BOLTS SHALL CONFORM TO ASTM A449.
3. THREADED RODS SHALL CONFORM TO ASTM F1554 GR 105. TWO JAM NUTS AND A BEVELED WASHER ON EACH SIDE REQUIRED.
4. THREADED RODS MAY BE SUBSTITUTED AS NEEDED FOR ASTM F3125 GR. A325 BOLTS. TWO JAM NUTS AND A BEVELED WASHER ON EACH SIDE REQUIRED.
5. GALVANIZED JAM NUTS SHALL CONFORM TO ASTM A563.
6. GALVANIZED BEVELED WASHERS SHALL CONFORM TO ASTM F436.
7. BETWEEN BARRIER GAPS, THE MINIMUM RUN LENGTH OF CONCRETE BARRIER TYPE 2 IS 50'-0".
8. ALL BOLTS, RODS, AND RELATED HARDWARE SHALL BE GALVANIZED AFTER FABRICATION PER AASHTO M232 OR ASTM F2329, AS APPLICABLE.

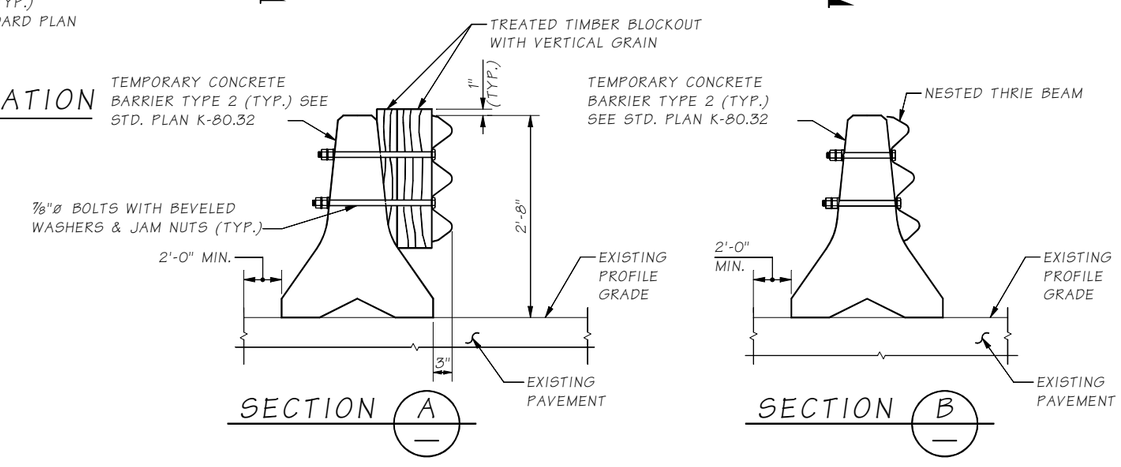

Bridge Design Engr.	Khaleghi, B	M:\Z-Team\I-90 PHASE 3 CABIN CR\window files\BARRIER GAP DETAILS 1.wnd			REGION NO.	STATE	FED. AID PROJ. NO.	SHEET NO.	TOTAL SHEETS
Supervisor	Zeldenrust, RP				10	WASH.			
Designed By	Olleman, KE 09/20				JOB NUMBER 19Y007				
Checked By	Bedi, G								
Detailed By	Uhde, T 09/20				CONTRACT NO.				
Bridge Projects Engr.									
Prelim. Plan By									
Architect/Specialist		DATE	REVISION	BY	APP'D				

P.E. STAMP BOX — RICHARD P. ZELDENRUST, STATE OF WASHINGTON, 20470, STRUCTURAL ENGINEER, PROFESSIONAL ENGINEER — SEE SHEET CT5 — DATE

BRIDGE AND STRUCTURES OFFICE

P.E. STAMP BOX — BIJAN KHALEGHI, STATE OF WASHINGTON, 27686, STRUCTURAL ENGINEER, PROFESSIONAL ENGINEER — SEE SHEET CT5 — DATE

Washington State Department of Transportation

I-90
CABIN CR I/C TO W EASTON I/C
PHASE 3 - ADD LANES/WILDLIFE BRIDGES
ROADWAY BARRIERS

BARRIER GAP DETAILS
1 OF 2

BRIDGE SHEET NO. TB5

SHEET 828 OF 1783 SHEETS

SR I-90 FILE NO. ____ SHEET TB5

Mon Feb 07 14:22:51 2022

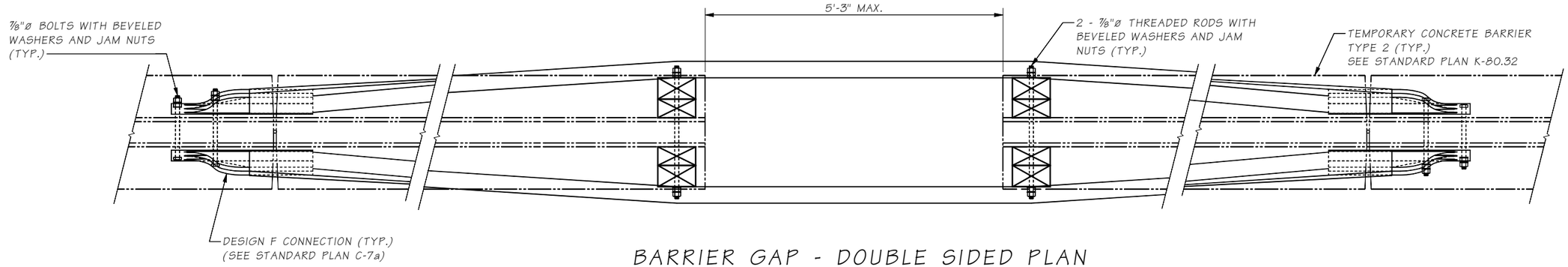

BARRIER GAP - DOUBLE SIDED PLAN

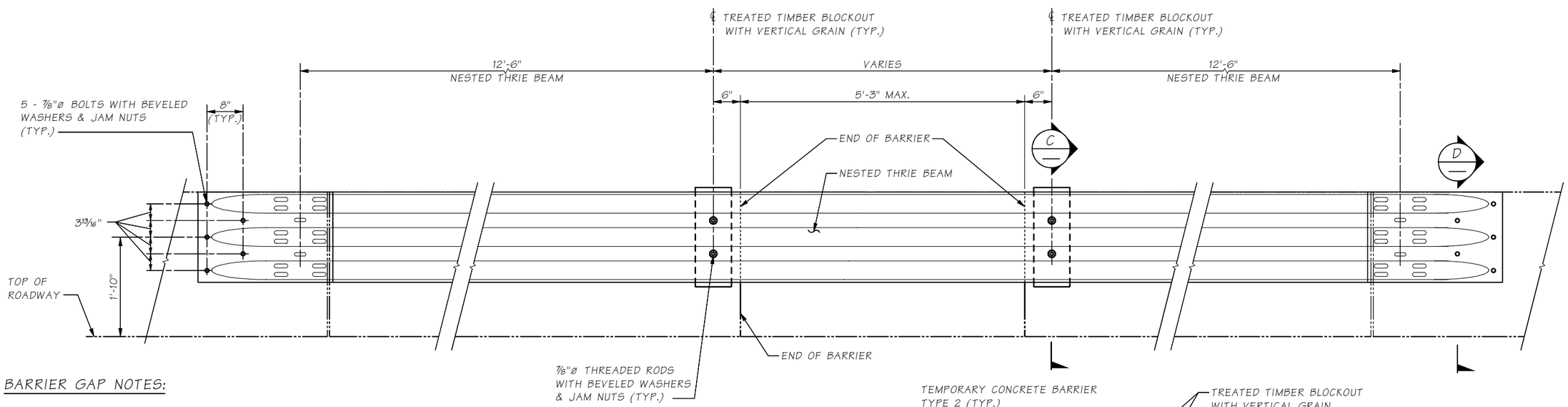

BARRIER GAP - DOUBLE SIDED ELEVATION

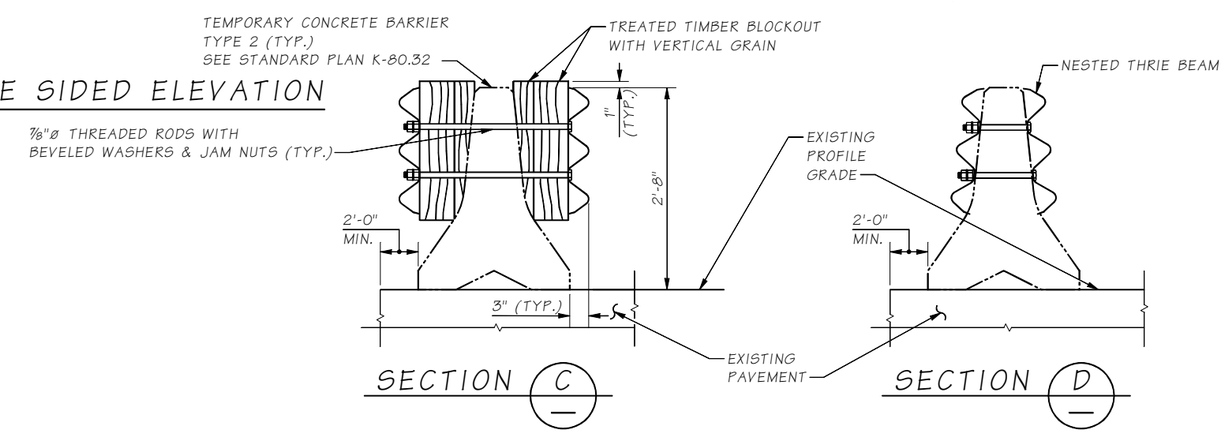

SECTION C

SECTION D

BARRIER GAP NOTES:

1. SEE BRIDGE SHEET TB1 FOR FABRICATION NOTES AND MATERIAL SPECIFICATIONS.
2. HIGH STRENGTH GALVANIZED BOLTS SHALL CONFORM TO ASTM A449.
3. HREADED RODS SHALL CONFORM TO ASTM F1554 GR 105. TWO JAM NUTS AND A BEVELED WASHER ON EACH SIDE REQUIRED.
4. THREADED RODS MAY BE SUBSTITUTED AS NEEDED FOR ASTM F3125 GR. A325 BOLTS. TWO JAM NUTS AND A BEVELED WASHER ON EACH SIDE REQUIRED.
5. GALVANIZED JAM NUTS SHALL CONFORM TO ASTM A563.
6. GALVANIZED BEVELED WASHERS SHALL CONFORM TO ASTM F436.
7. BETWEEN BARRIER GAPS, THE MINIMUM RUN LENGTH OF CONCRETE BARRIER TYPE 2 IS 50'-0".
8. ALL BOLTS, RODS, AND RELATED HARDWARE SHALL BE GALVANIZED AFTER FABRICATION PER AASHTO M232 OR ASTM F2329, AS APPLICABLE.

SR I-90 FILE NO. ____ SHEET TB6

Bridge Design Engr.	Khaleghi, B	M:\Z-Team\I-90 PHASE 3 CABIN CR\window files\BARRIER GAP DETAILS 2.wnd				REGION NO.	STATE	FED. AID PROJ. NO.	SHEET NO.	TOTAL SHEETS	
Supervisor	Zeldenrust, RP					10	WASH.				
Designed By	Olleman, KE 09/20					JOB NUMBER 19Y007					
Checked By	Bedi, G										
Detailed By	Uhde, T 09/20					CONTRACT NO.					
Bridge Projects Engr.											
Prelim. Plan By											
Architect/Specialist		DATE	REVISION	BY	APP'D						

P.E. STAMP BOX: RICHARD P. ZELDENRUST, STATE OF WASHINGTON, 25470, PROFESSIONAL ENGINEER — SEE SHEET CT5 DATE:

BRIDGE AND STRUCTURES OFFICE

P.E. STAMP BOX: BIJAN KHALEGHI, STATE OF WASHINGTON, 27695, PROFESSIONAL ENGINEER — SEE SHEET CT5 DATE:

Washington State Department of Transportation

I-90
CABIN CR I/C TO W EASTON I/C
PHASE 3 - ADD LANES/WILDLIFE BRIDGES
ROADWAY BARRIERS

BARRIER GAP DETAILS
2 OF 2

BRIDGE SHEET NO. TB6
SHEET 829 OF 1783 SHEETS

Mon Feb 07 14:22:54 2022

INSTALLATION NOTES

1. THE BARRIER GEOMETRY REFERENCE LINE (B.G.R.L.) IS PERPENDICULAR TO THE TRANSVERSE ROADWAY SLOPE (T.R.S.). FOR SUPERELEVATED TRANSVERSE ROADWAY SLOPES, THE B.G.R.L. ON THE LOW SIDE OF THE ROADWAY SHALL BE PERPENDICULAR TO THE T.R.S. UP TO A MAXIMUM OF 8% SUPERELEVATION. THE B.G.R.L. ON THE HIGH SIDE SHALL ALWAYS BE PERPENDICULAR TO THE T.R.S. GEOMETRY SHALL BE ADJUSTED AS REQUIRED TO PROVIDE A SMOOTH TRANSITION IN ABUTTING BARRIER TYPES.
2. SIZE CONDUIT PER WIRING SCHEDULE, SEE ELECTRICAL PLANS.

SEW TRAFFIC BARRIER GENERAL NOTES

1. ALL MATERIAL AND WORKMANSHIP SHALL BE IN ACCORDANCE WITH THE REQUIREMENTS OF THE WASHINGTON STATE DEPARTMENT OF TRANSPORTATION STANDARD SPECIFICATIONS FOR ROAD, BRIDGE, AND MUNICIPAL CONSTRUCTION DATED 2022.
2. THIS STRUCTURE HAS BEEN DESIGNED IN ACCORDANCE WITH THE REQUIREMENTS OF THE AASHTO LRFD BRIDGE DESIGN SPECIFICATIONS 9TH EDITION 2020. THE MOMENT SLAB TRAFFIC BARRIERS HAVE BEEN DESIGNED IN ACCORDANCE WITH THE REQUIREMENTS FOR TEST LEVEL 5 (TL-5) RAILINGS.
3. ALL REINFORCING STEEL SHALL CONFORM TO ASTM A706, AASHTO M31 OR ASTM A615 GRADE 60. ALL BARS SHALL BE FULL LENGTH AS SHOWN AND SHALL BE PLACED 2" CLEAR OF THE NEAREST FACE OF CONCRETE UNLESS SHOWN OTHERWISE. INCREASE THE COVER AS REQUIRED TO ACCOMMODATE ARCHITECTURAL FEATURES AND FINISH.
4. CONCRETE SHALL BE CLASS 4000.
5. FALSEWORK SHALL BE CAREFULLY RELEASED TO PREVENT IMPACT OR UNDUE STRESS IN THE STRUCTURE.
6. THE MINIMUM SEW TRAFFIC BARRIER LENGTH IS 30'-0". EXPANSION JOINTS NOT PERMITTED. SEW TRAFFIC BARRIERS SUPPORTED PARTIALLY ON GROUND AT GRADE AND ON RETAINING WALLS SHALL BE CONTINUOUS.
7. A.P. = ANGLE POINT

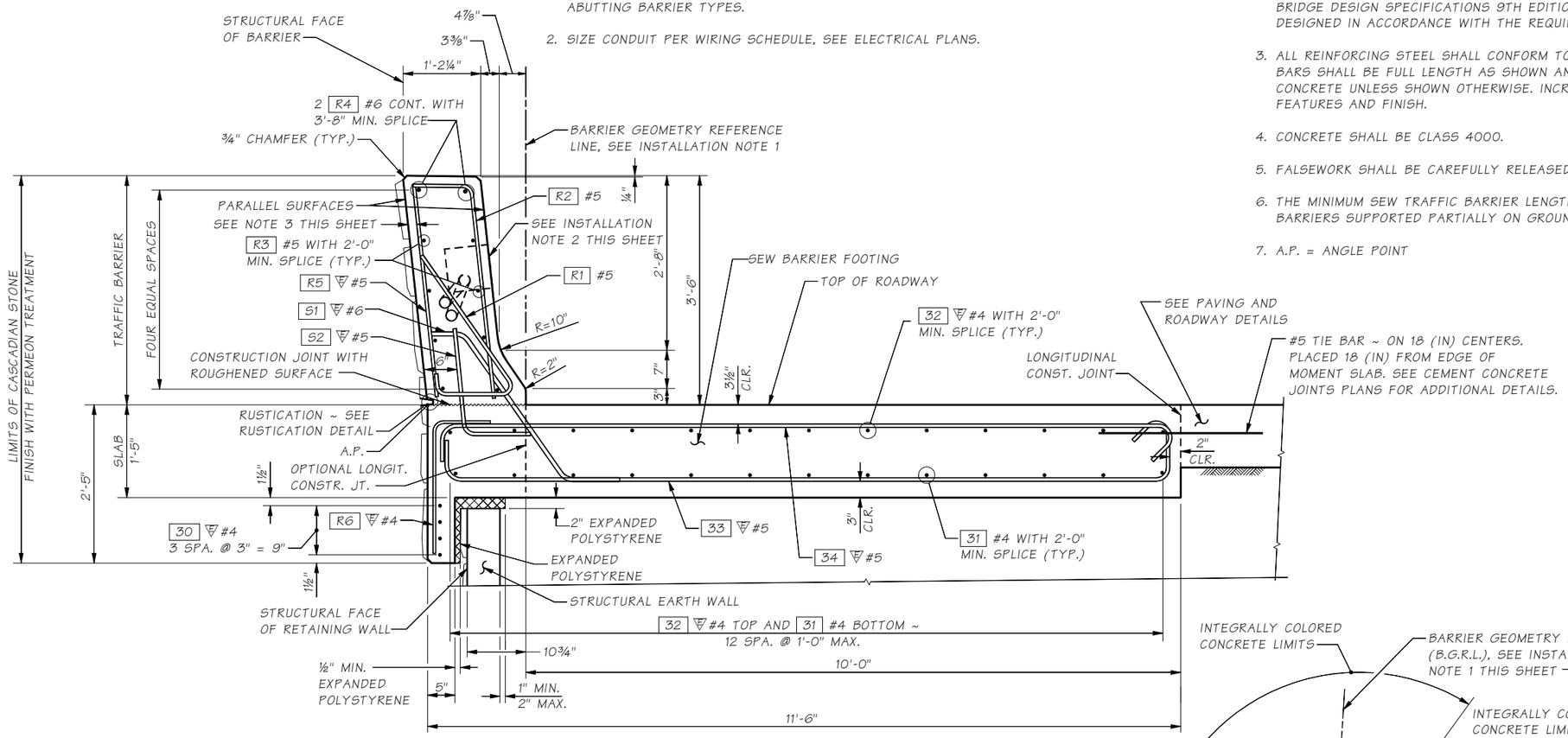

TYPICAL SECTION ON RETAINING WALL

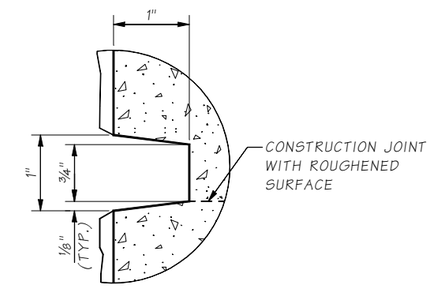

RUSTICATION DETAIL

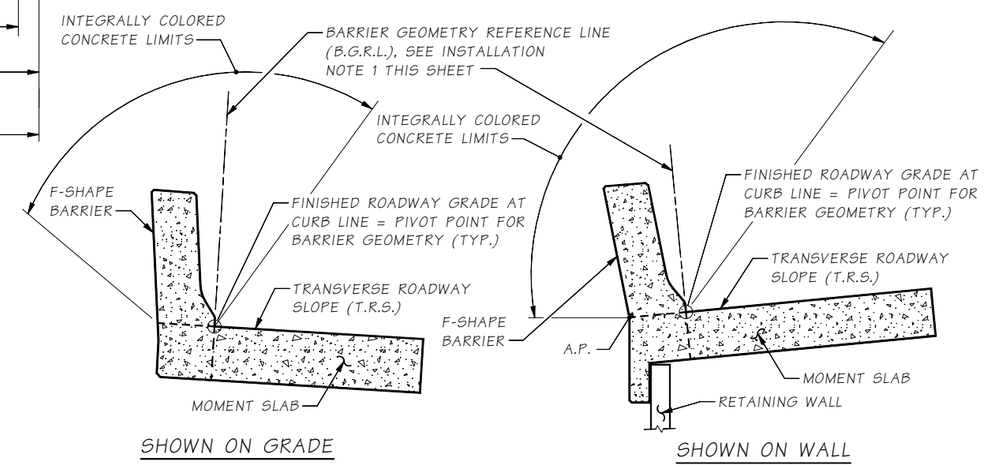

TYPICAL SECTION

REINFORCING STEEL NOT SHOWN FOR CLARITY.

REINFORCING STEEL BENDING DIAGRAM

ALL DIMENSIONS ARE OUT TO OUT
= EPOXY COATED

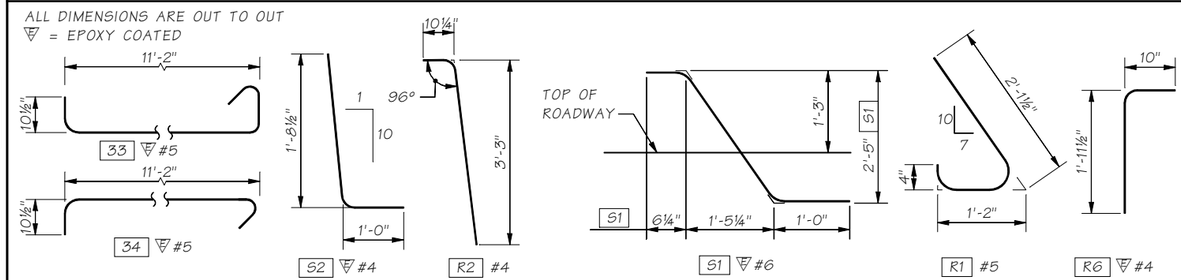

Bridge Design Engr.	Khaleghi, B	M:\Z-Team\I-90 PHASE 3 CABIN CR\window files\SEW TRAFFIC BARRIER ON WALL.wnd			REGION NO.	STATE	FED. AID PROJ. NO.	SHEET NO.	TOTAL SHEETS
Supervisor	Zeldenrust, RP				10	WASH.			
Designed By	Olleman, KE 12/20				JOB NUMBER 19Y007				
Checked By	Bedi, G								
Detailed By	Uhde, T 12/20				CONTRACT NO.				
Bridge Projects Engr.									
Prelim. Plan By									
Architect/Specialist		DATE	REVISION	BY	APP'D				

Mon Feb 07 14:22:59 2022

P.E. STAMP BOX: RICHARD P. ZELDENRUST, STATE OF WASHINGTON, 25470, STRUCTURAL ENGINEER, PROFESSIONAL ENGINEER — SEE SHEET CT5 — DATE:

BRIDGE AND STRUCTURES OFFICE

P.E. STAMP BOX: BILAN KHALEGHI, STATE OF WASHINGTON, 27695, STRUCTURAL ENGINEER, PROFESSIONAL ENGINEER — SEE SHEET CT5 — DATE:

Washington State Department of Transportation

I-90
CABIN CR I/C TO W EASTON I/C
PHASE 3 - ADD LANES/WILDLIFE BRIDGES
ROADWAY BARRIERS

SEW TRAFFIC BARRIER - 42 IN. ON WALL

BRIDGE SHEET NO. TB7

SHEET 830 OF 1783 SHEETS

SR I-90 FILE NO. ____ SHEET TB7

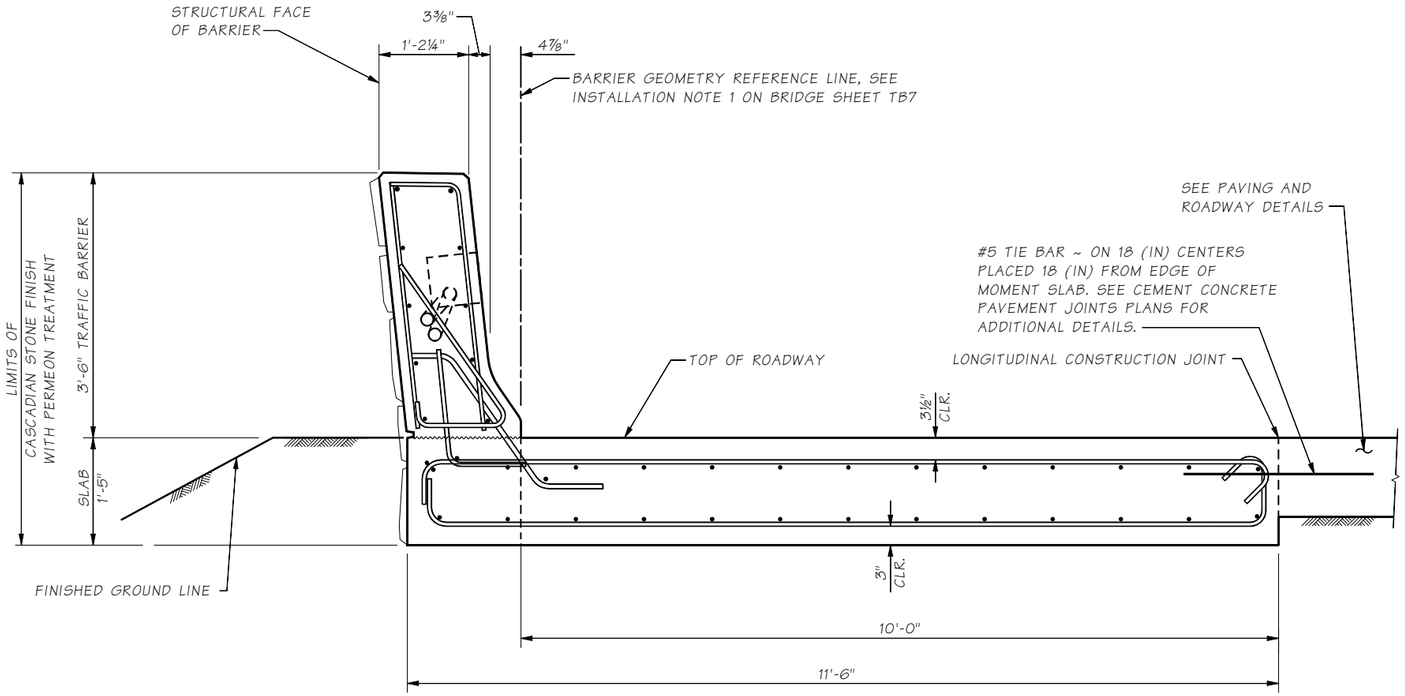

TYPICAL SECTION ON GRADE

NOTE: SEE BRIDGE SHEET TB7 FOR DETAILS NOT SHOWN.

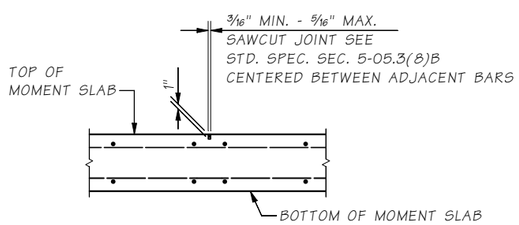

MOMENT SLAB TRANSVERSE CONTRACTION JOINT DETAIL

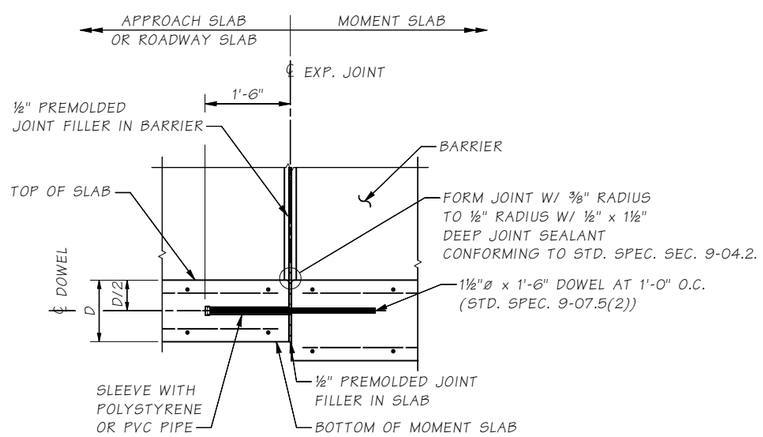

MOMENT SLAB TRANVERSE EXPANSION JOINT DETAIL

BARRIER REINFORCING STEEL NOT SHOWN FOR CLARITY.

JUNCTION BOX LOCATIONS

BRIDGE	ALIGNMENT	STATION	OFFSET	"TS" OR "LT"
CEDAR CREEK WB BRIDGE	LW	1701+03.63	RIGHT	TS
CEDAR CREEK WB BRIDGE	LW	1701+11.73	RIGHT	LT
CEDAR CREEK WB BRIDGE	LW	1702+34.25	RIGHT	TS
CEDAR CREEK WB BRIDGE	LW	1702+42.35	RIGHT	LT
TELEPHONE CREEK BRIDGE	LE	1749+94.00	RIGHT	TS
TELEPHONE CREEK BRIDGE	LE	1750+02.00	RIGHT	LT
TELEPHONE CREEK BRIDGE	LE	1751+42.00	RIGHT	TS
TELEPHONE CREEK BRIDGE	LE	1751+50.00	RIGHT	LT
HUDSON CREEK WB BRIDGE	LW	1801+50.67	LEFT	TS
HUDSON CREEK WB BRIDGE	LW	1801+58.67	LEFT	LT
HUDSON CREEK WB BRIDGE	LW	1801+50.67	RIGHT	TS
HUDSON CREEK WB BRIDGE	LW	1801+58.67	RIGHT	LT
HUDSON CREEK WB BRIDGE	LW	1803+65.00	LEFT	TS
HUDSON CREEK WB BRIDGE	LW	1803+73.00	LEFT	LT
HUDSON CREEK WB BRIDGE	LW	1803+80.00	RIGHT	TS
HUDSON CREEK WB BRIDGE	LW	1803+88.00	RIGHT	LT
HUDSON CREEK EB BRIDGE	LE	1800+77.51	RIGHT	TS
HUDSON CREEK EB BRIDGE	LE	1800+85.51	RIGHT	LS
UNNAMED CREEK MP 67.1 WB BRIDGE	LW	1829+41.53	RIGHT	TS
UNNAMED CREEK MP 67.1 WB BRIDGE	LW	1829+49.59	RIGHT	LT
UNNAMED CREEK MP 67.1 WB BRIDGE	LW	1833+24.39	RIGHT	TS
UNNAMED CREEK MP 67.1 WB BRIDGE	LW	1833+32.45	RIGHT	LT
WILDLIFE UNDERCROSSING WB BRIDGE	LW	1916+32.00	LEFT	TS
WILDLIFE UNDERCROSSING WB BRIDGE	LW	1916+40.00	LEFT	LT
SPARKS ROAD WB BRIDGE	LW	1930+99.14	LEFT	TS
SPARKS ROAD WB BRIDGE	LW	1931+07.23	LEFT	LT
SPARKS ROAD EB BRIDGE	LE	1930+59.92	RIGHT	TS
SPARKS ROAD EB BRIDGE	LE	1930+67.86	RIGHT	LT
SPARKS ROAD EB BRIDGE	LE	1932+10.14	RIGHT	TS
SPARKS ROAD EB BRIDGE	LE	1932+18.08	RIGHT	LT

SR I-90 FILE NO. ____ SHEET TB8

Bridge Design Engr.	Khaleghi, B	
Supervisor	Zeldenrust, RP	
Designed By	Olleman, KE	12/20
Checked By	Bedi, G	
Detailed By	Uhde, T	12/20
Bridge Projects Engr.		
Prelim. Plan By		
Architect/Specialist		

M:\Z-Team\I-90 PHASE 3 CABIN CR\window files\SEW TRAFFIC BARRIER ON GRADE.wnd

DATE	REVISION	BY	APP'D

REGION NO.	STATE	FED. AID PROJ. NO.	SHEET NO.	TOTAL SHEETS
10	WASH.			
JOB NUMBER 19Y007				
CONTRACT NO.				

P.E. STAMP BOX — RICHARD P. ZELDENRUST — STATE OF WASHINGTON — 25490 — PROFESSIONAL ENGINEER — SEE SHEET CT5 — DATE

BRIDGE AND STRUCTURES OFFICE

P.E. STAMP BOX — BILAN KHALEGHI — STATE OF WASHINGTON — 27646 — PROFESSIONAL ENGINEER — SEE SHEET CT5 — DATE

Washington State Department of Transportation

I-90
CABIN CR I/C TO W EASTON I/C
PHASE 3 - ADD LANES/WILDLIFE BRIDGES
ROADWAY BARRIERS

SEW TRAFFIC BARRIER - 42 IN. ON GRADE

BRIDGE SHEET NO. TB8

SHEET 831 OF 1783 SHEETS

Mon Feb 07 14:23:06 2022

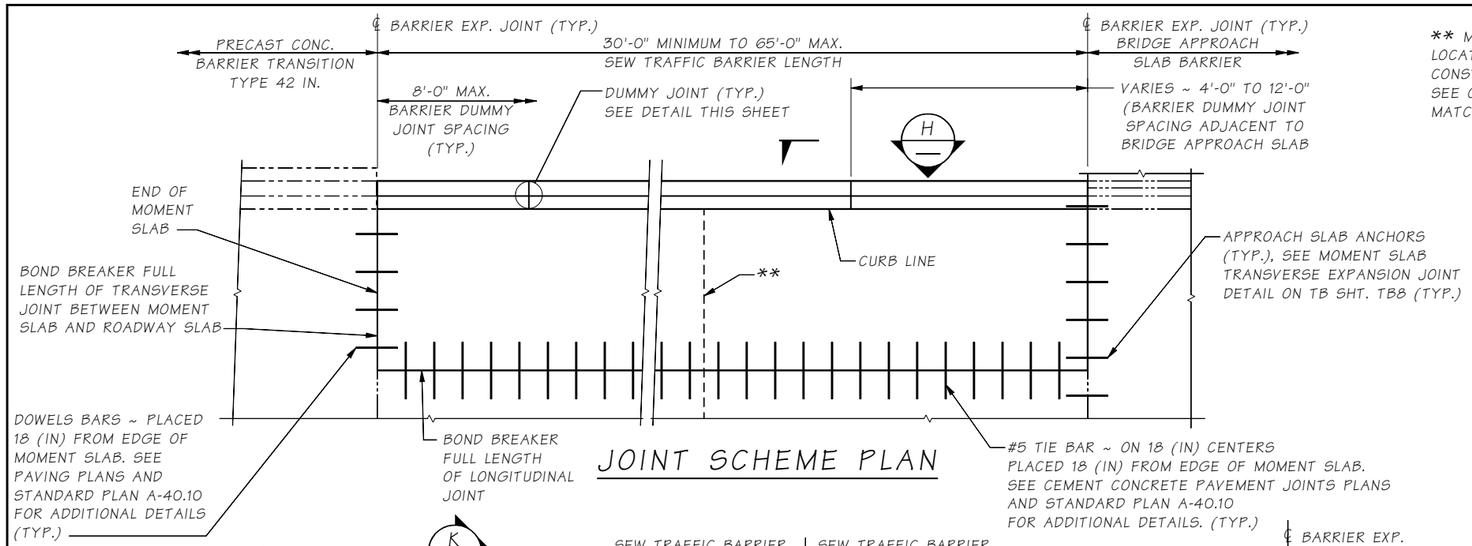

JOINT SCHEME PLAN

** MOMENT SLAB TRANSVERSE CONTRACTION JOINT. LOCATE BETWEEN MOMENT SLAB TRANSVERSE CONSTRUCTION JOINTS. SEE DETAIL ON TB. SHT. TB8 SEE CIVIL PLANS FOR SPACING MATCH ADJACENT CEMENT CONC. PAVEMENT JOINTS.

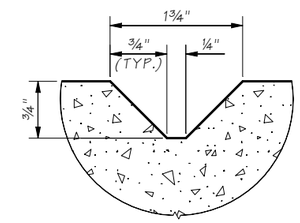

DUMMY JOINT DETAIL

INSTALL BARRIER DUMMY JOINTS ON TOP OF AND ON TRAFFIC SIDE OF BARRIER

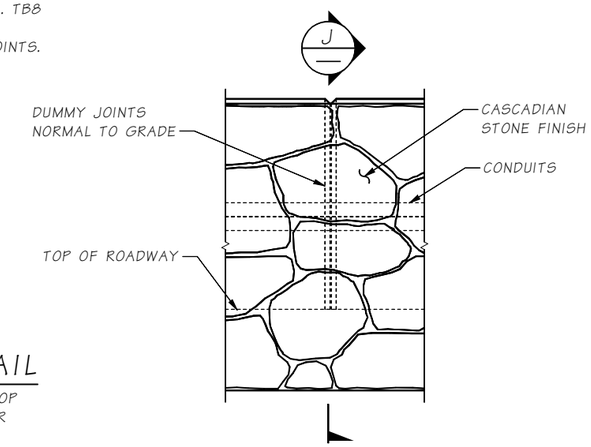

VIEW H

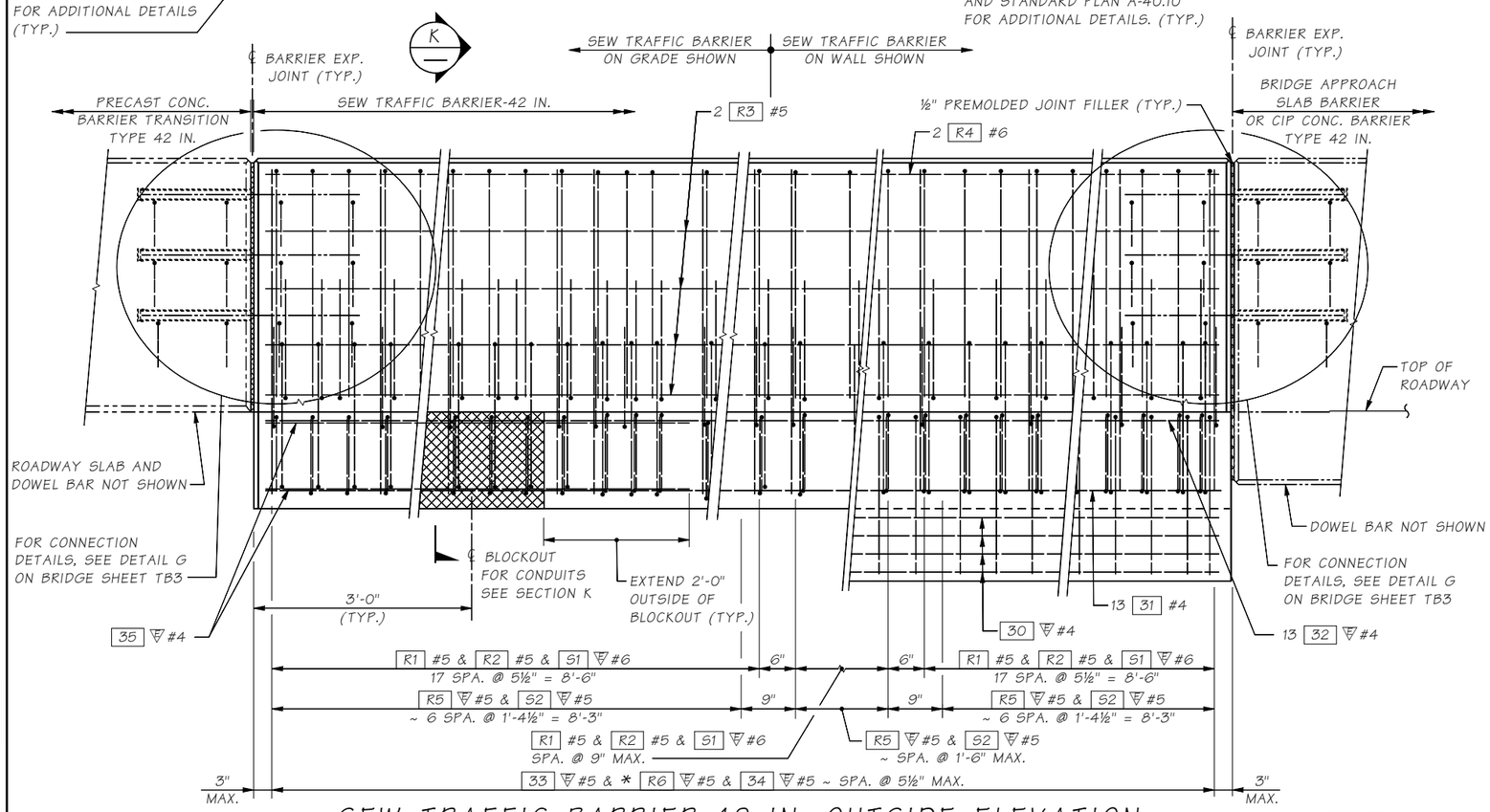

SEW TRAFFIC BARRIER-42 IN. OUTSIDE ELEVATION

CONDUITS NOT SHOWN FOR CLARITY

* R6 #4 ONLY REQUIRED AT SEW TRAFFIC BARRIER 42 IN. ON WALL.

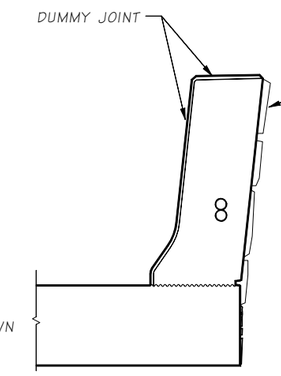

SECTION J

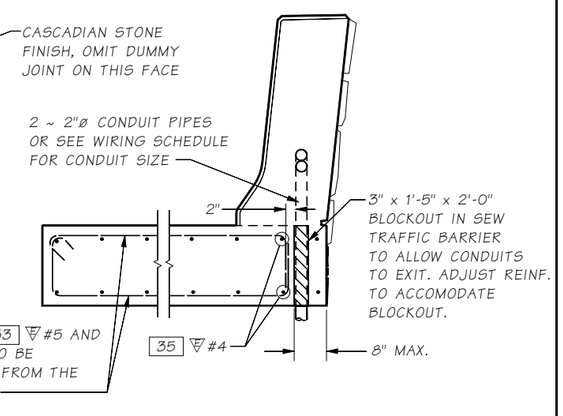

SECTION K

Bridge Design Engr.	Khaleghi, B	M:\Z-Team\I-90 PHASE 3 CABIN CR\window files\SEW TRAFFIC BARRIER DETAILS 1.wnd							
Supervisor	Zeldenrust, RP				REGION NO.	STATE	FED. AID PROJ. NO.	SHEET NO.	TOTAL SHEETS
Designed By	Olleman, KE 12/20				10	WASH.			
Checked By	Bedi, G				JOB NUMBER 19Y007				
Detailed By	Uhde, T/DeBoer, J 12/20								
Bridge Projects Engr.					CONTRACT NO.				
Prelim. Plan By									
Architect/Specialist		DATE	REVISION	BY	APP'D				

Mon Feb 07 14:23:12 2022

P.E. STAMP BOX — RICHARD P. ZELDENREST, STATE OF WASHINGTON, 38490, PROFESSIONAL ENGINEER — SEE SHEET CT5 — DATE

BRIDGE AND STRUCTURES OFFICE

P.E. STAMP BOX — BILAN KHALEGHI, STATE OF WASHINGTON, 37646, PROFESSIONAL ENGINEER — SEE SHEET CT5 — DATE

Washington State Department of Transportation

I-90
CABIN CR I/C TO W EASTON I/C
PHASE 3 - ADD LANES/WILDLIFE BRIDGES
ROADWAY BARRIERS

SEW TRAFFIC BARRIER - 42 IN.
DETAILS 1

BRIDGE SHEET NO. TB9

SHEET 832 OF 1783 SHEETS

SR I-90 FILE NO. SHEET TB9

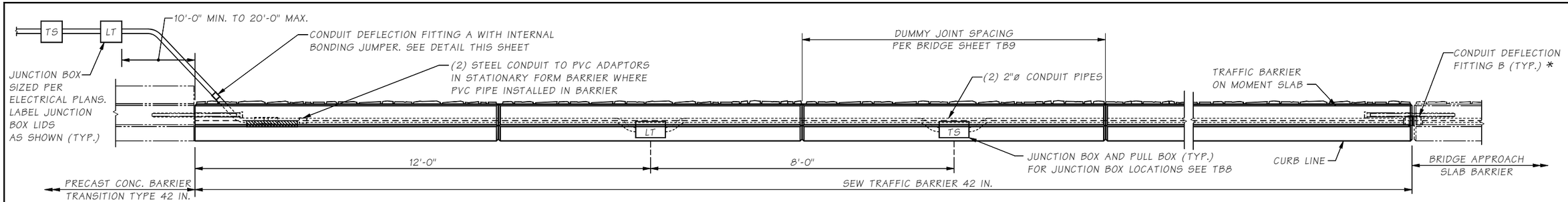

SEW TRAFFIC BARRIER-42 IN. PLAN

* SEE INSTALLATION NOTE 2 ON BRIDGE SHEET TB7.

SEE INSTALLATION NOTE 2 ON BRIDGE SHEET TB7.

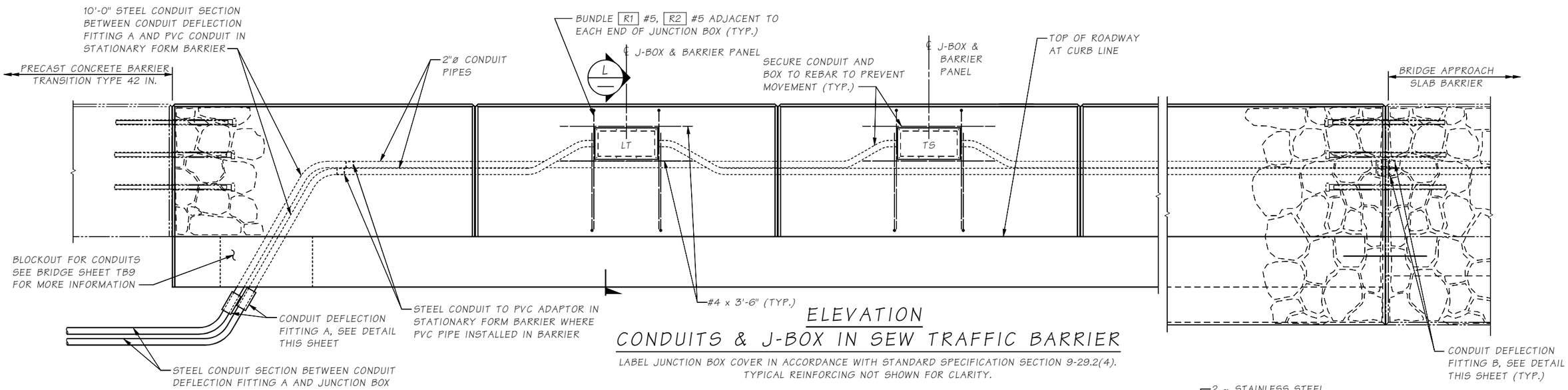

ELEVATION

CONDUITS & J-BOX IN SEW TRAFFIC BARRIER

LABEL JUNCTION BOX COVER IN ACCORDANCE WITH STANDARD SPECIFICATION SECTION 9-29.2(4).
TYPICAL REINFORCING NOT SHOWN FOR CLARITY.

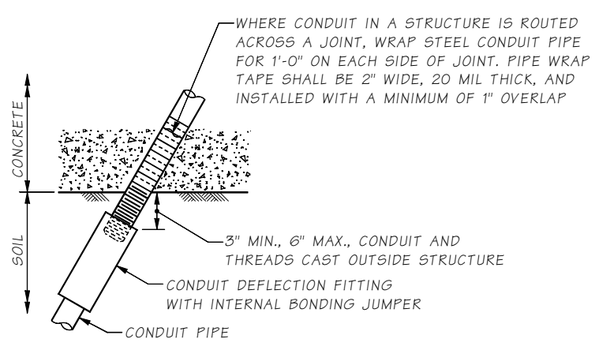

CONDUIT DEFLECTION FITTING A

CONDUIT FITTING - TYPE DX FOR DEFLECTION OF 30° AND ¾" MOVEMENT. PLACE AT CONDUIT PIPE EXIT FROM STRUCTURE. FITTING SHALL BE IN NEUTRAL STATE AFTER INSTALLATION.

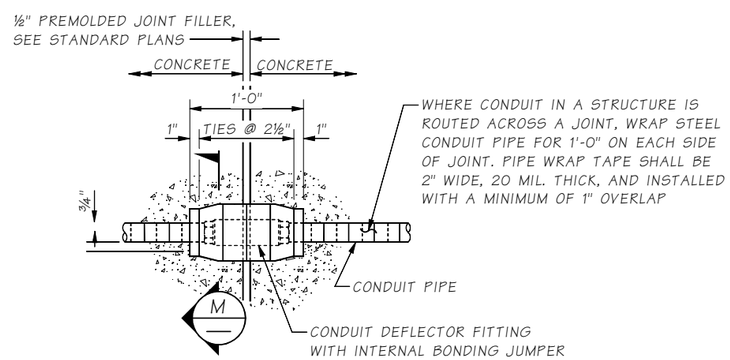

CONDUIT DEFLECTION FITTING B

CONDUIT FITTING - TYPE DX FOR DEFLECTION OF 30° AND ¾" MOVEMENT.

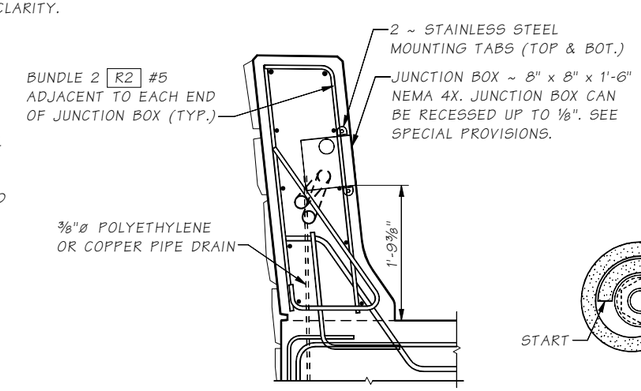

SECTION L

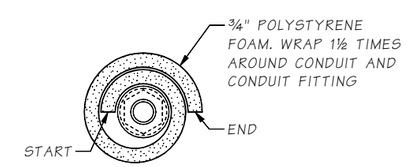

SECTION M

Bridge Design Engr.	Khaleghi, B	M:\Z-Team\I-90 PHASE 3 CABIN CR\window files\SEW TRAFFIC BARRIER DETAILS 2.wnd									
Supervisor	Zeldenrust, RP					REGION NO.	STATE	FED. AID PROJ. NO.	SHEET NO.	TOTAL SHEETS	
Designed By	Olleman, KE 12/20					10	WASH.				
Checked By	Bedi, G					JOB NUMBER 19Y007					
Detailed By	Uhde, T 12/20										
Bridge Projects Engr.						CONTRACT NO.					
Prelim. Plan By											
Architect/Specialist		DATE	REVISION	BY	APP'D						

Mon Feb 07 14:23:16 2022

P.E. STAMP BOX — SEE SHEET CT5 — DATE

BRIDGE AND STRUCTURES OFFICE

P.E. STAMP BOX — SEE SHEET CT5 — DATE

Washington State Department of Transportation

I-90
CABIN CR I/C TO W EASTON I/C
PHASE 3 - ADD LANES/WILDLIFE BRIDGES
ROADWAY BARRIERS

SEW TRAFFIC BARRIER - 42 IN.
DETAILS 2

BRIDGE SHEET NO. TB10

SHEET 833 OF 1783 SHEETS

SR I-90 FILE NO. SHEET TB10

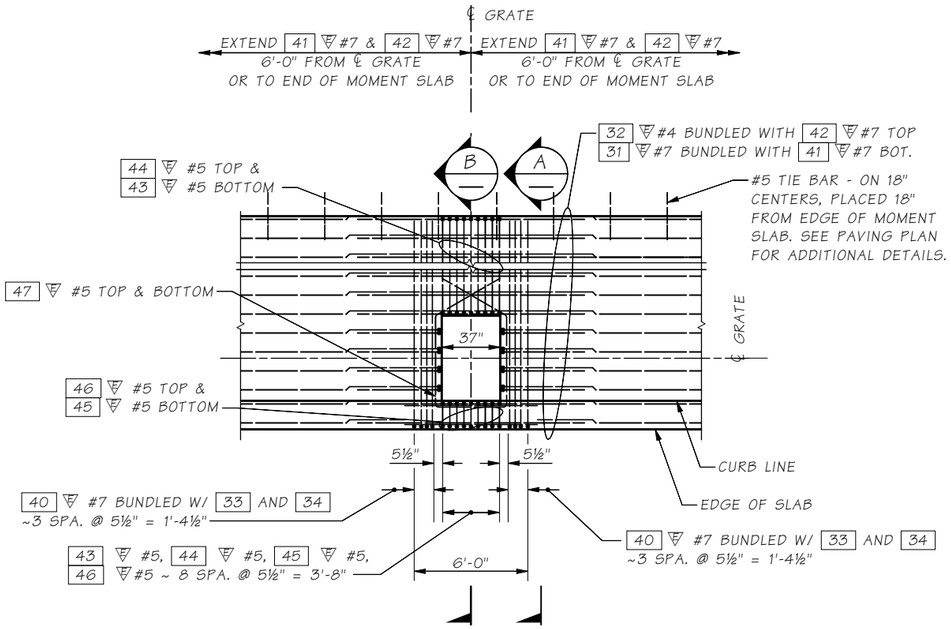

PLAN

AT GRATE INLET TYPE 2 (SEE STD PLAN B35.40)
FOR DETAILS NOT SHOWN
SEE BRIDGE SHEET TB7.

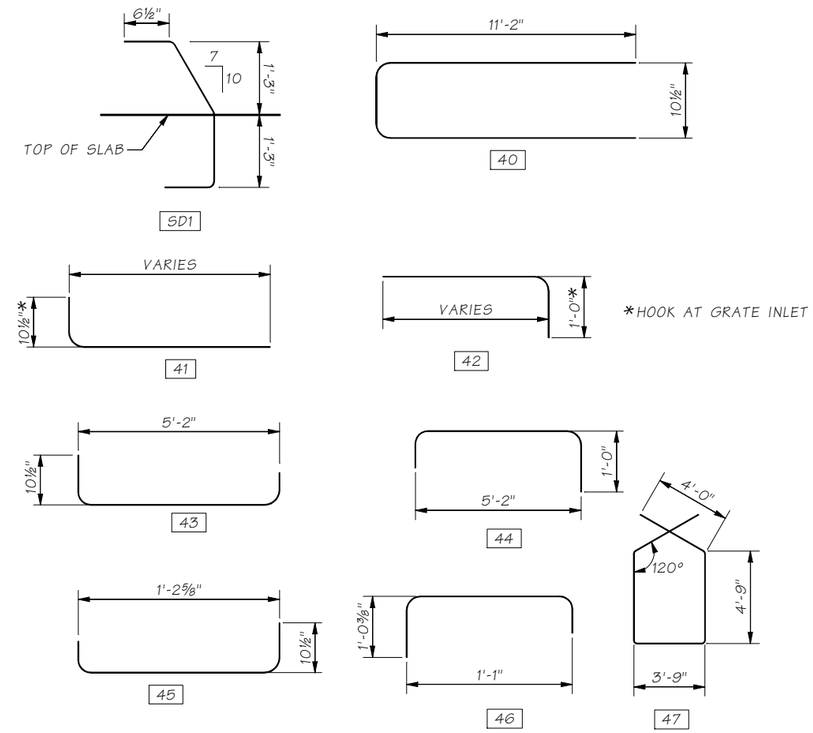

REINFORCING STEEL BENDING DIAGRAM

ALL DIMENSIONS ARE OUT TO OUT

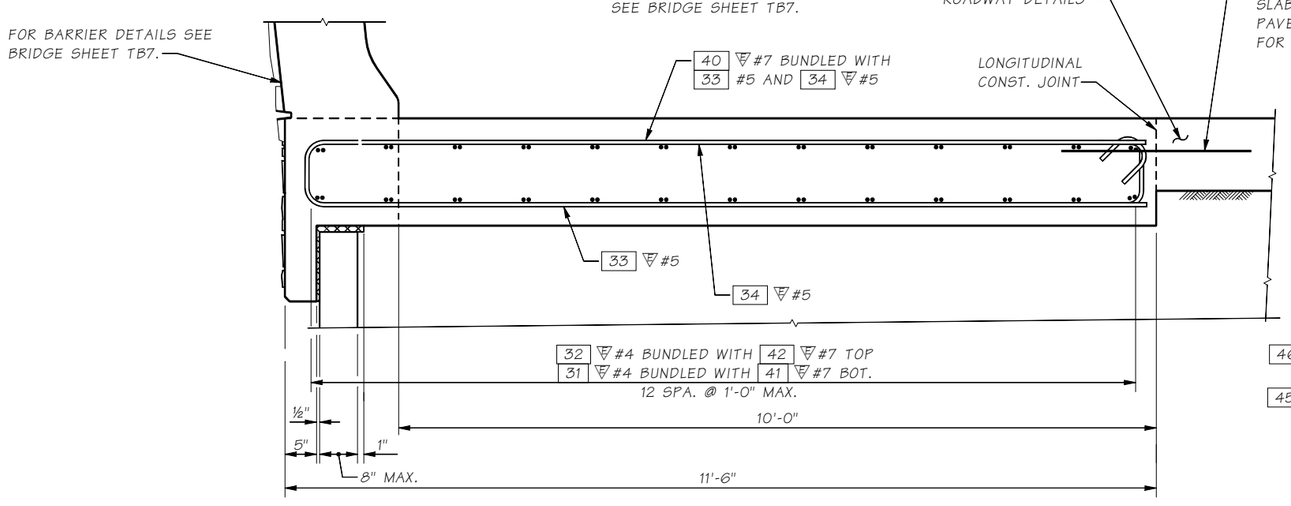

SECTION A

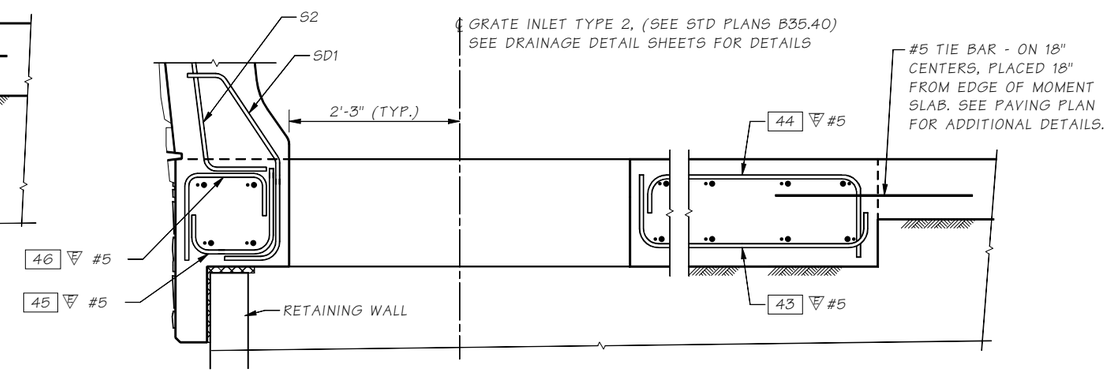

SECTION B

AT GRATE INLET

Bridge Design Engr.	Khaleghi, B	M:\Z-Team\I-90 PHASE 3 CABIN CR\window files\SEW TRAFFIC BARRIER DETAILS 3.wnd							
Supervisor	Zeldenrust, RP				REGION NO.	STATE	FED. AID PROJ. NO.	SHEET NO.	TOTAL SHEETS
Designed By	Olleman, KE 03/21				10	WASH.			
Checked By	Bedi, G				JOB NUMBER 19Y007				
Detailed By	Uhde, T/DeBoer, J 03/21								
Bridge Projects Engr.					CONTRACT NO.				
Prelim. Plan By									
Architect/Specialist		DATE	REVISION	BY	APP'D				

Mon Feb 07 14:23:24 2022

P.E. STAMP BOX: RICHARD P. ZELDENRUST, STATE OF WASHINGTON, 36470, PROFESSIONAL ENGINEER — SEE SHEET CT5 — DATE

BRIDGE AND STRUCTURES OFFICE

P.E. STAMP BOX: BIJAN KHALEGHI, STATE OF WASHINGTON, 27946, PROFESSIONAL ENGINEER — SEE SHEET CT5 — DATE

Washington State Department of Transportation

I-90
CABIN CR I/C TO W EASTON I/C
PHASE 3 - ADD LANES/WILDLIFE BRIDGES
ROADWAY BARRIERS

SEW TRAFFIC BARRIER - 42 IN.
DETAILS 3

BRIDGE SHEET NO. TB11

SHEET 834 OF 1783 SHEETS

SR I-90 FILE NO. ____ SHEET TB11

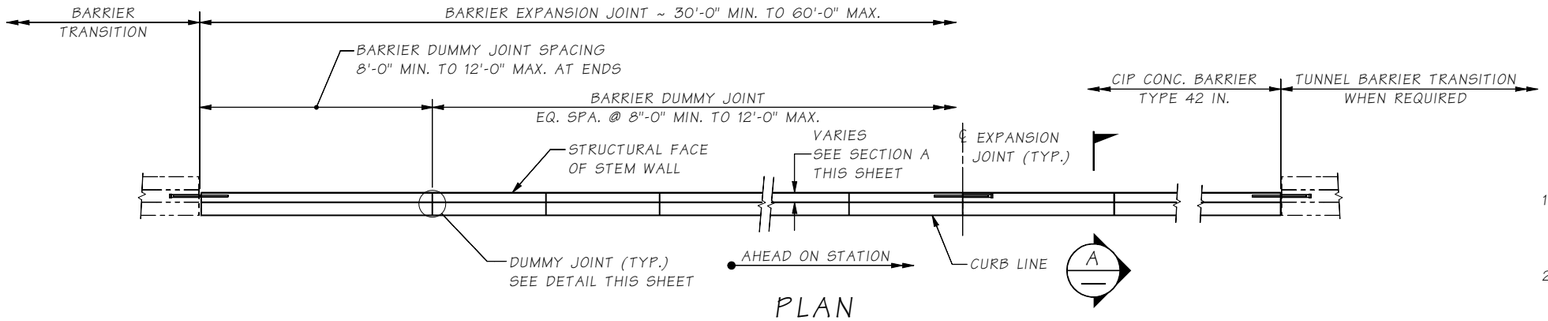

PLAN

LW ALIGNMENT

NOTE:

1. CIP = CAST-IN-PLACE

CIP CONC. BARRIER GENERAL NOTES

1. ALL MATERIAL AND WORKMANSHIP SHALL BE IN ACCORDANCE WITH THE REQUIREMENTS OF THE WASHINGTON STATE DEPARTMENT OF TRANSPORTATION STANDARD SPECIFICATIONS FOR ROAD, BRIDGE, AND MUNICIPAL CONSTRUCTION DATED 2022.
2. THIS STRUCTURE HAS BEEN DESIGNED IN ACCORDANCE WITH THE REQUIREMENTS OF THE AASHTO LRFD BRIDGE DESIGN SPECIFICATIONS 9TH EDITION 2020.
3. ALL REINFORCING STEEL SHALL CONFORM TO ASTM A706, AASHTO M31 OR ASTM A615 GRADE 60. ALL BARS SHALL BE FULL LENGTH AS SHOWN AND SHALL BE PLACED 1½" CLEAR OF THE NEAREST FACE OF CONCRETE UNLESS SHOWN OTHERWISE.
4. CONCRETE SHALL BE CLASS 4000.
5. FALSEWORK SHALL BE CAREFULLY RELEASED TO PREVENT IMPACT OR UNDUE STRESS IN THE STRUCTURE.
6. THE BARRIER GEOMETRY REFERENCE LINE (B.G.R.L.) IS PERPENDICULAR TO THE TRANSVERSE ROADWAY SLOPE (T.R.S.). GEOMETRY IN ABUTTING SEW BARRIER SHALL BE ADJUSTED TO PROVIDE A SMOOTH TRANSITION BETWEEN ABUTTING BARRIER TYPES. TUNNEL LINER BARRIER SHOULD NOT BE ADJUSTED.

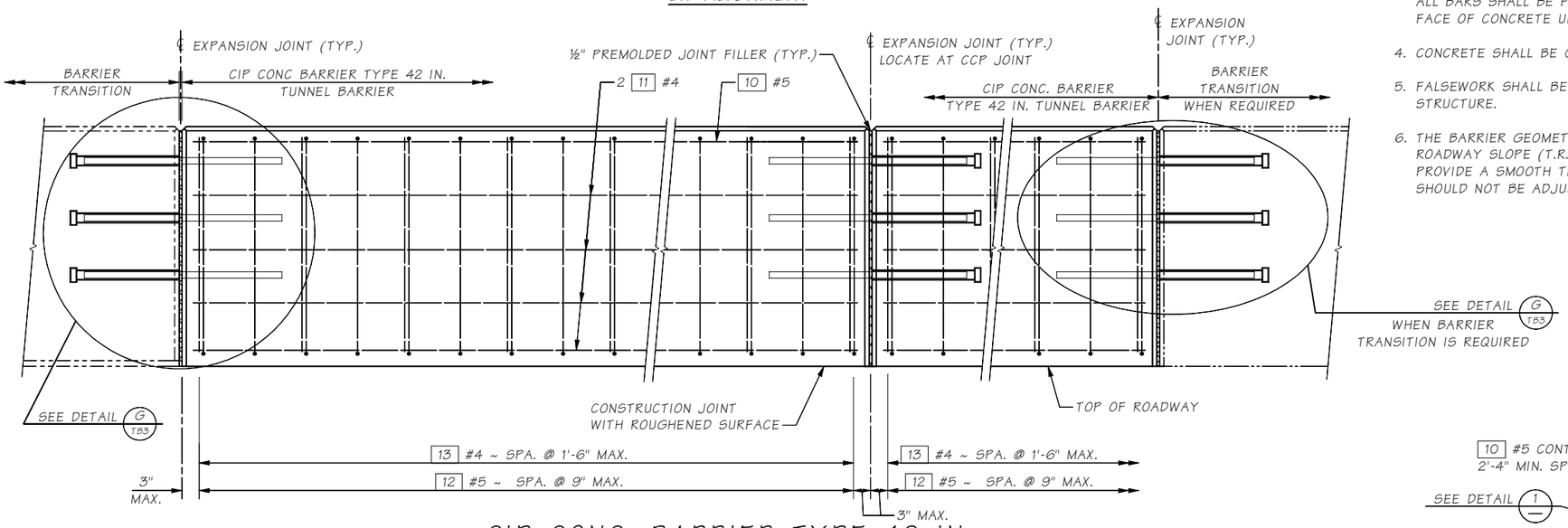

CIP CONC. BARRIER TYPE 42 IN.

LW ALIGNMENT

BENDING DIAGRAM

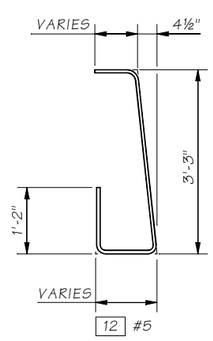

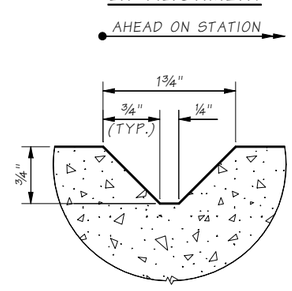

DUMMY JOINT DETAIL

INSTALL BARRIER DUMMY JOINTS ON TOP OF AND ON TRAFFIC SIDE OF BARRIER

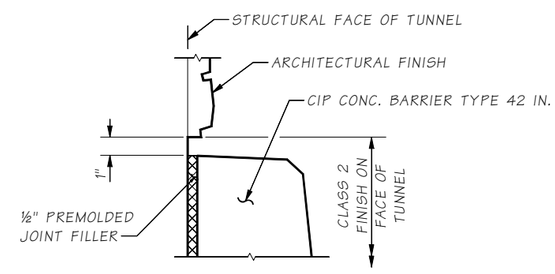

DETAIL 1

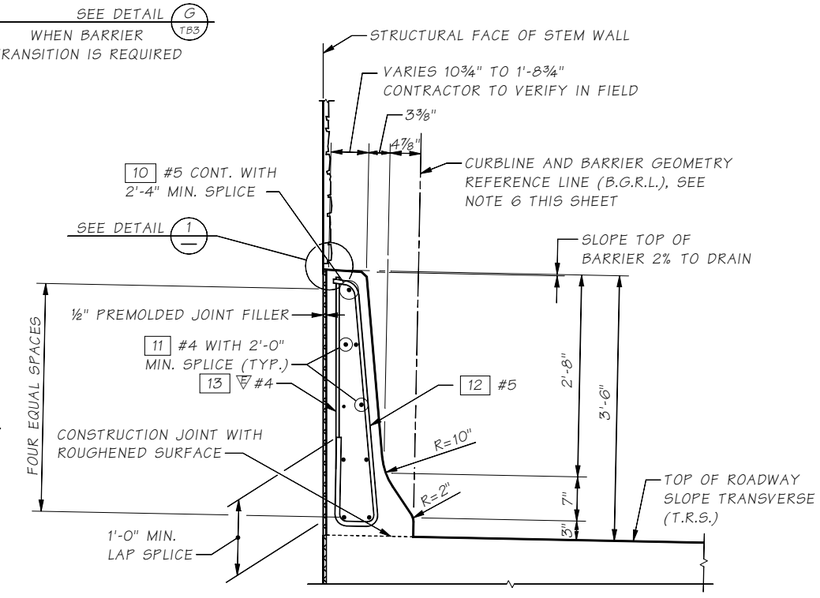

SECTION A

Bridge Design Engr.	Khaleghi, B	M:\Z-Team\I-90 PHASE 3 CABIN CR\window files\TUNNEL 1.wnd								
Supervisor	Zeldenrust, RP				REGION NO.	STATE	FED. AID PROJ. NO.	SHEET NO.	TOTAL SHEETS	
Designed By	Olleman, KE 02/21				10	WASH.				
Checked By	Bedi, G									
Detailed By	Uhde, T 02/21				JOB NUMBER 19Y007					
Bridge Projects Engr.										
Prelim. Plan By					CONTRACT NO.					
Architect/Specialist		DATE	REVISION	BY	APP'D					

Mon Feb 07 14:23:27 2022

P.E. STAMP BOX — RICHARD P. ZELDENRUST, STATE OF WASHINGTON, 38476, PROFESSIONAL ENGINEER — SEE SHEET CT5 — DATE

BRIDGE AND STRUCTURES OFFICE

P.E. STAMP BOX — BIJAN KHALEGHI, STATE OF WASHINGTON, 37686, PROFESSIONAL ENGINEER — SEE SHEET CT5 — DATE

Washington State Department of Transportation

I-90
CABIN CR I/C TO W EASTON I/C
PHASE 3 - ADD LANES/WILDLIFE BRIDGES
ROADWAY BARRIERS

CAST-IN-PLACE CONC. BARRIER TYPE 42 IN. TUNNEL BARRIER - WESTBOUND

BRIDGE SHEET NO. TB12

SHEET 835 OF 1783 SHEETS

SR I-90 FILE NO. ____ SHEET TB12

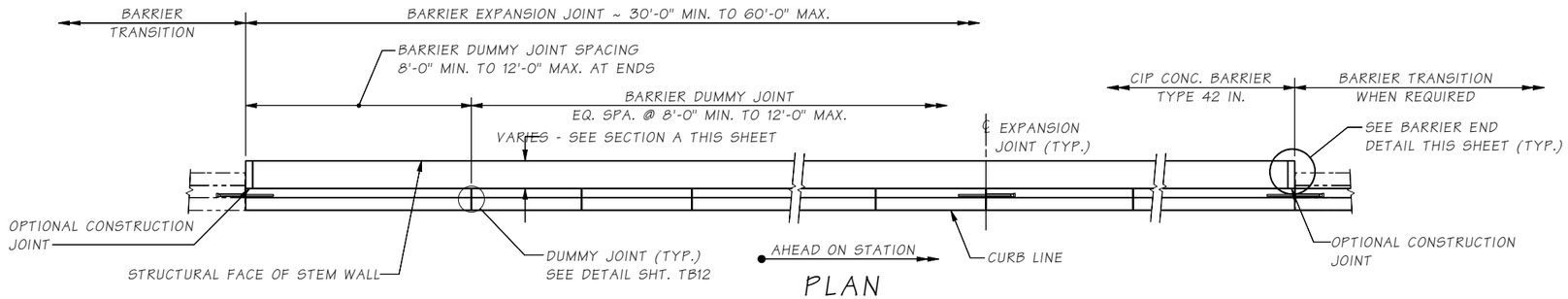

PLAN

LE ALIGNMENT

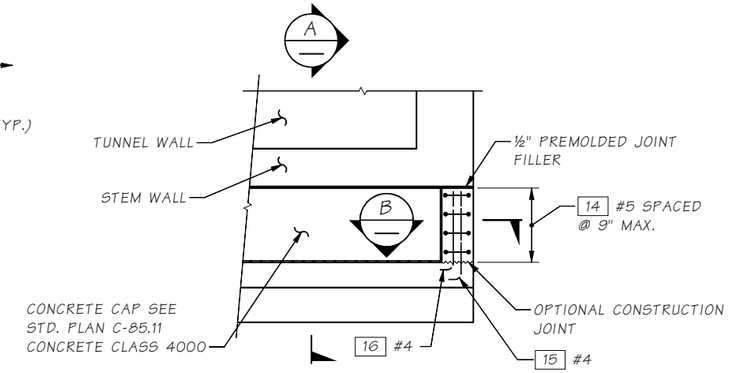

BARRIER END DETAIL

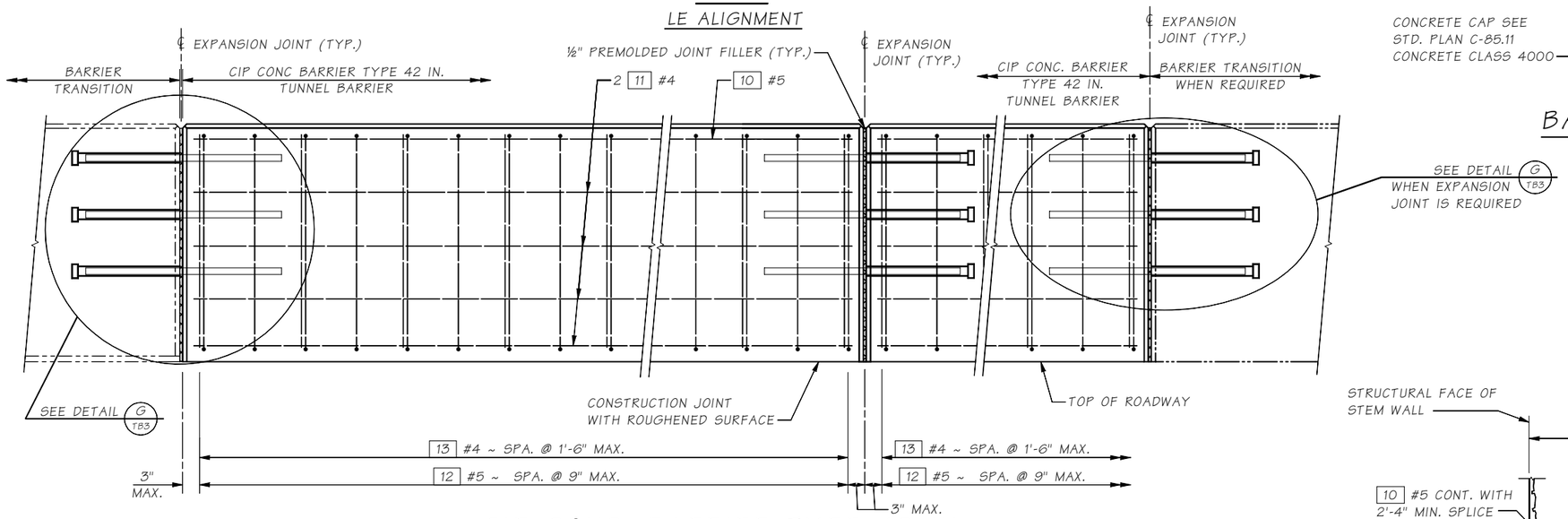

CIP CONC. BARRIER TYPE 42 IN.

LE ALIGNMENT

NOTE:

1. CIP = CAST-IN-PLACE

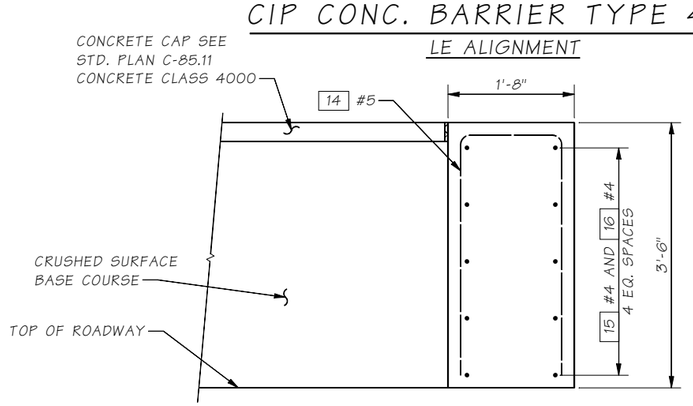

SECTION B

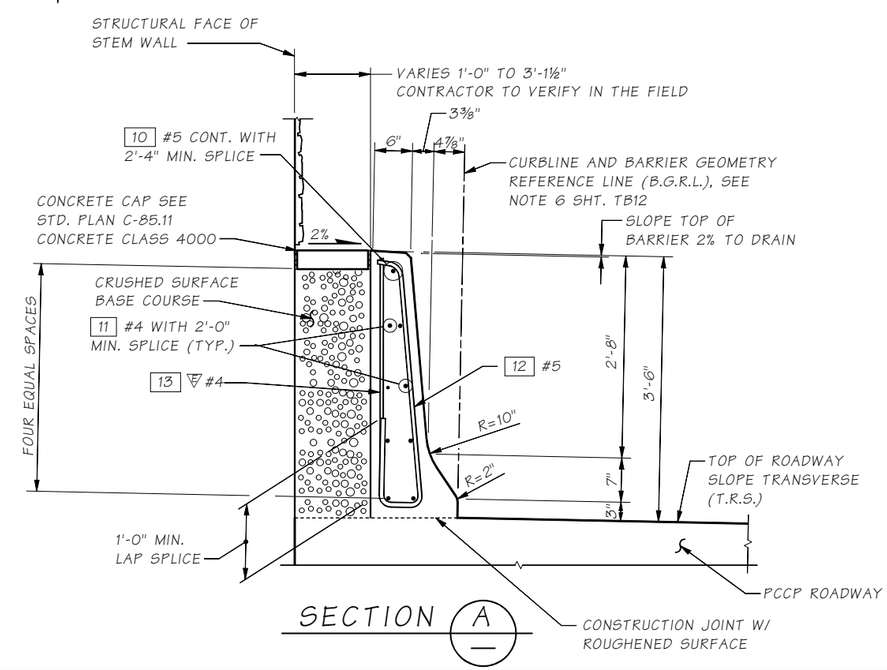

SECTION A

Bridge Design Engr.	Khaleghi, B	M:\Z-Team\I-90 PHASE 3 CABIN CR\window files\TUNNEL 2.wnd				REGION NO.	STATE	FED. AID PROJ. NO.	SHEET NO.	TOTAL SHEETS	
Supervisor	Zeldenrust, RP					10	WASH.				
Designed By	Olleman, KE 02/21					JOB NUMBER 19Y007					
Checked By	Bedi, G										
Detailed By	Uhde, T/DeBoer, J 02/21					CONTRACT NO.					
Bridge Projects Engr.											
Prelim. Plan By											
Architect/Specialist		DATE	REVISION	BY	APP'D						

Mon Feb 07 14:23:33 2022

P.E. STAMP BOX: RICHARD P. ZELDENRUST, STATE OF WASHINGTON, 25470, PROFESSIONAL ENGINEER — SEE SHEET CT5 — DATE

BRIDGE AND STRUCTURES OFFICE

P.E. STAMP BOX: BILIAN KHALEGHI, STATE OF WASHINGTON, 27695, PROFESSIONAL ENGINEER — SEE SHEET CT5 — DATE

Washington State Department of Transportation

I-90
CABIN CR I/C TO W EASTON I/C
PHASE 3 - ADD LANES/WILDLIFE BRIDGES
ROADWAY BARRIERS

CIP CONC BARRIER TYPE 42 IN.
EASTBOUND TUNNEL BARRIER

BRIDGE SHEET NO. TB13

SHEET 836 OF 1783 SHEETS

SR I-90 FILE NO. ____ SHEET TB13

GENERAL NOTES:

1. ALL MATERIAL AND WORKMANSHIP SHALL BE IN ACCORDANCE WITH THE REQUIREMENTS OF THE WASHINGTON STATE DEPARTMENT OF TRANSPORTATION STANDARD SPECIFICATIONS FOR ROAD, BRIDGE AND MUNICIPAL CONSTRUCTION, DATED 2022.

2. THIS STRUCTURE HAS BEEN DESIGNED IN ACCORDANCE WITH THE REQUIREMENTS OF THE AASHTO LRFD BRIDGE DESIGN SPECIFICATIONS - 9TH EDITION - 2020 WITH INTERIMS. THE TRAFFIC BARRIERS HAVE BEEN DESIGNED IN ACCORDANCE WITH THE REQUIREMENTS FOR TEST LEVEL 4 (TL-4) RAILINGS.

3. THE SEISMIC DESIGN PARAMETERS HAVE BEEN DETERMINED IN ACCORDANCE WITH THE AASHTO GUIDE SPECIFICATIONS FOR LRFD, 2ND EDITION 2011, USING SITE CLASS D, A 0.2 SECOND PERIOD SPECTRAL ACCELERATION COEFFICIENT OF .53 ON SITE CLASS B, AN EFFECTIVE PEAK GROUND ACCELERATION COEFFICIENT (As) OF .32, AND A SEISMIC HORIZONTAL ACCELERATION COEFFICIENT (Kh) OF .16.

4. ALL CONCRETE SHALL BE CLASS 4000.

5. UNLESS OTHERWISE SHOWN IN THE PLANS, THE CONCRETE COVER MEASURED FROM THE FACE OF CONCRETE TO THE FACE OF ANY REINFORCING STEEL SHALL BE 3" AT BOTTOM OF THE WALLS AND 3" AT THE BOTTOM OF THE CIP BARRIERS AND 2" AT ALL OTHER LOCATIONS.

6. ALL DIMENSIONS ARE HORIZONTAL AND VERTICAL UNLESS OTHERWISE SHOWN.

7. EXISTING GROUND LINE IS APPROXIMATE AND SHALL BE VERIFIED BY THE CONTRACTOR IN THE FIELD.

8. CONDUITS, JUNCTION BOXES AND UTILITIES ARE SHOWN FOR REFERENCE ONLY. THE CONTRACTOR SHALL COORDINATE THESE PLANS WITH ELECTRICAL AND OTHER CIVIL PLANS.

9. DRAINAGE LOCATED WITHIN THE ZONE OF INFLUENCE OF THE WALL FOOTING SHALL BE INSTALLED PRIOR TO WALL INSTALLATION. FOR DRAINAGE INSTALLATION, SEE DRAINAGE PLANS.

LEGEND

B / 15 — IDENTIFIES SECTION, VIEW OR DETAIL; TAKEN OR SHOWN ON BRIDGE SHEET 15

B / — TAKEN OR SHOWN ON THE SAME SHEET

SR ___ FILE NO. ___ SHEET DB1

Bridge Design Engr.	Khaleghi, B	M:\Z-Team\I-90 PHASE 3 CABIN CR WALLS\window files\DB GENERAL NOTES.wnd								
Supervisor	Zeldenrust, RP					REGION NO.	STATE	FED. AID PROJ. NO.	SHEET NO.	TOTAL SHEETS
Designed By	Olleman, KE 03/21					10	WASH.			
Checked By	Bedi, G									
Detailed By	Uhde,T/Swantak,S 03/21					JOB NUMBER 19Y007				
Bridge Projects Engr.										
Prelim. Plan By						CONTRACT NO.				
Architect/Specialist		DATE	REVISION	BY	APP'D					

P.E. STAMP BOX: RICHARD P. ZELDENRUST, STATE OF WASHINGTON, 25470, STRUCTURAL ENGINEER, PROFESSIONAL ENGINEER — SEE SHEET CT5 — DATE:

BRIDGE AND STRUCTURES OFFICE

P.E. STAMP BOX: BIJAN KHALEGHI, STATE OF WASHINGTON, 27695, STRUCTURAL ENGINEER, PROFESSIONAL ENGINEER — SEE SHEET CT5 — DATE:

Washington State Department of Transportation

I-90
CABIN CR I/C TO W EASTON I/C
PHASE 3 - ADD LANES/WILDLIFE BRIDGES

GENERAL NOTES

BRIDGE SHEET NO. DB1

SHEET 837 OF 1783 SHEETS

Mon Feb 07 14:28:46 2022

CURVE DATA					
P.I. STATION	Δ	RADIUS	TANGENT	LENGTH	BK. TANGENT BRG.
DB1 12+36.92	15°33'2.93" LT	1735.104'	236.921'	470.930'	S 24°10'44" E

SEC. 25, T.21N., R.12E., W.M.
KITTITAS COUNTY

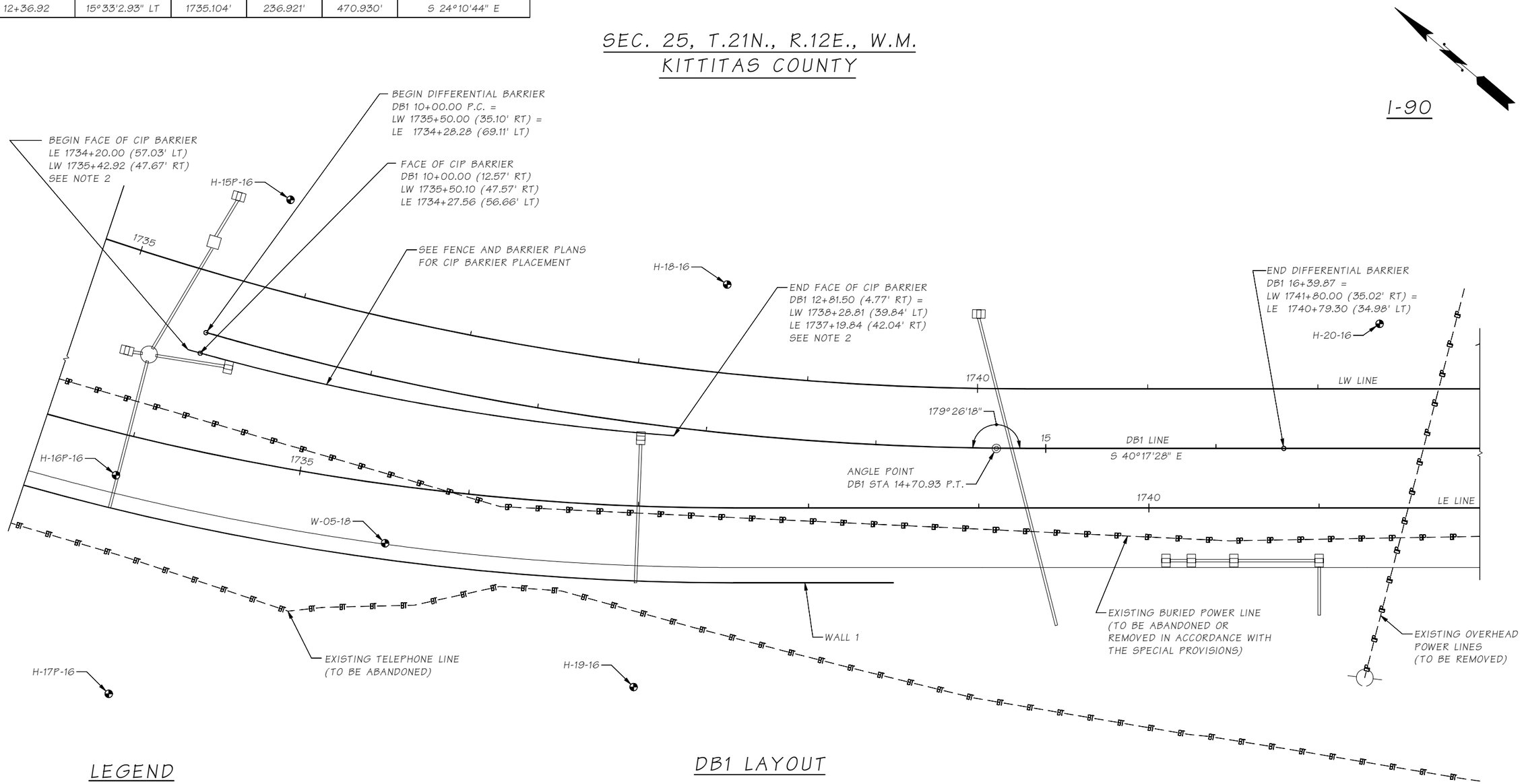

DB1 LAYOUT

LEGEND

- SOIL BORING LOCATION
- EXIST. BURIED POWER
- EXIST. BURIED TELEPHONE

NOTE:

1. CIP = CAST-IN-PLACE CONCRETE.
2. SAFETY FACE OF CIP BARRIER IS PLACED ALONG A TAPER ON THE LE ALIGNMENT FROM LE 1734+28.28 (69.11' LT) TO LE 1740+79.30 (34.98' LT)

VARIABLE HEIGHT CONCRETE BARRIER WALL

SR ____ FILE NO. ____ SHEET DB2

Bridge Design Engr.	Khaleghi, B	M:\Z-Team\I-90 PHASE 3 CABIN CR WALLS\window files\DB1 LAYOUT.wnd			
Supervisor	Zeldenrust, RP				
Designed By	Olleman, KE 03/21				
Checked By	Bedi, G				
Detailed By	T.U./S.S./J.D. 03/21				
Bridge Projects Engr.					
Prelim. Plan By					
Architect/Specialist		DATE	REVISION	BY	APP'D

REGION NO.	STATE	FED. AID PROJ. NO.	SHEET NO.	TOTAL SHEETS
10	WASH.			
JOB NUMBER 19Y007				
CONTRACT NO.				

P.E. STAMP BOX — RICHARD P. ZELDENRUST, STATE OF WASHINGTON, 25970, PROFESSIONAL ENGINEER — SEE SHEET CT5 — DATE

BRIDGE AND STRUCTURES OFFICE

P.E. STAMP BOX — BILLAN KHALEGHI, STATE OF WASHINGTON, 37695, PROFESSIONAL ENGINEER — SEE SHEET CT5 — DATE

Washington State Department of Transportation

I-90
CABIN CR I/C TO W EASTON I/C
PHASE 3 - ADD LANES/WILDLIFE BRIDGES

DIFFERENTIAL BARRIER WALL 1 LAYOUT

BRIDGE SHEET NO. DB2

SHEET 838 OF 1783 SHEETS

Mon Feb 07 14:29:49 2022

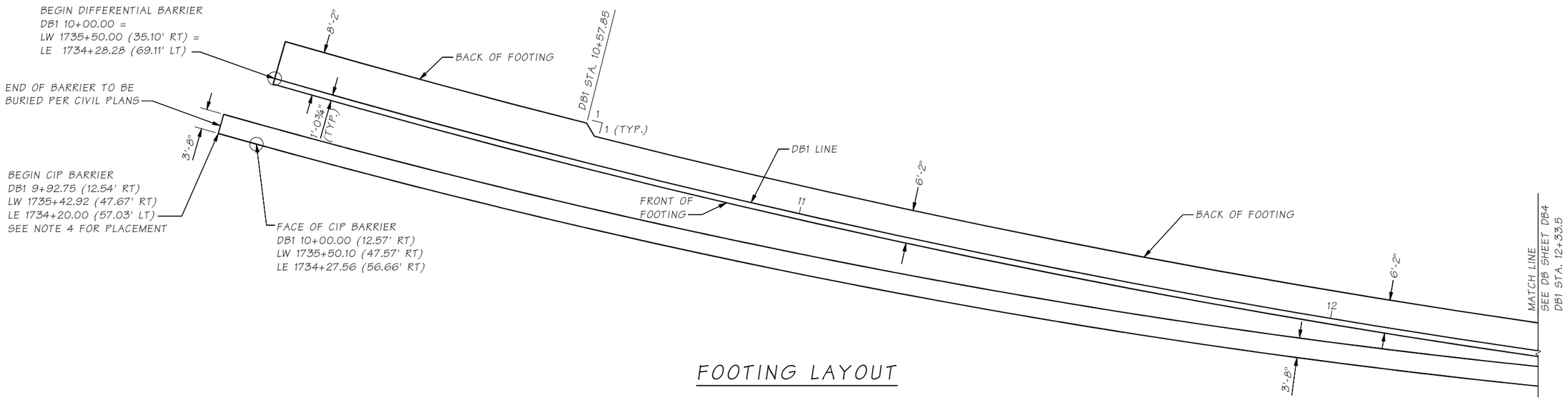

FOOTING LAYOUT

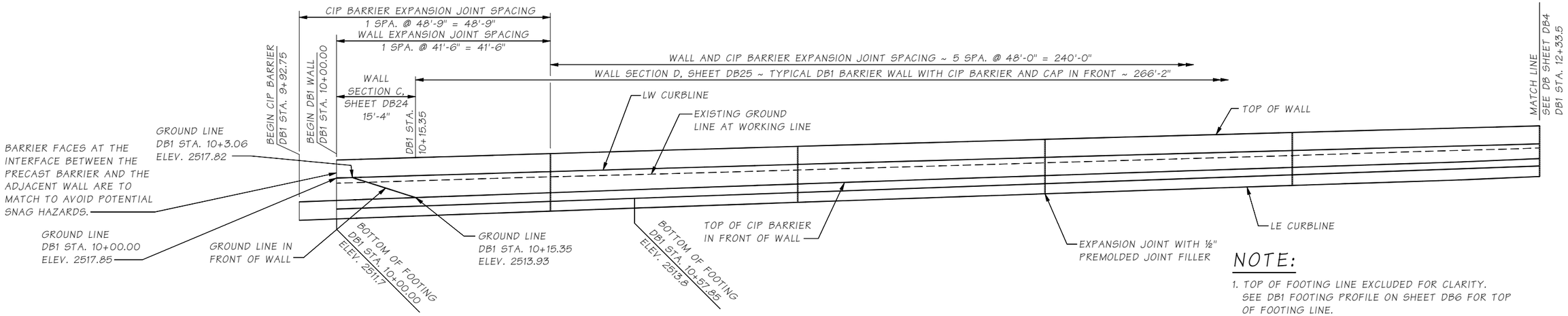

DEVELOPED ELEVATION

NOTE:

1. TOP OF FOOTING LINE EXCLUDED FOR CLARITY. SEE DB1 FOOTING PROFILE ON SHEET DB6 FOR TOP OF FOOTING LINE.
2. CIP = CAST-IN-PLACE CONCRETE.
3. BOTTOM OF CIP BARRIER EXCLUDED FOR CLARITY. SEE DB25 FOR CIP BARRIER GEOMETRY.
4. SAFETY FACE OF CIP BARRIER IS PLACED ALONG A TAPER ON THE LE ALIGNMENT FROM LE 1734+28.28 (69.11' LT) TO LE 1740+79.30 (34.98' LT)

DATUM

NAVD 88

SR ____ FILE NO. ____ SHEET DB3

Bridge Design Engr.	Khaleghi, B	
Supervisor	Zeldenrust, RP	
Designed By	Olleman, KE	12/21
Checked By	Bedi, G	
Detailed By	Uhde, T	12/21
Bridge Projects Engr.		
Prelim. Plan By		
Architect/Specialist		

M:\Z-Team\I-90 PHASE 3 CABIN CR WALLS\window files\DB1 FTNG LAYOUT & ELEV 1.wnd

DATE	REVISION	BY	APP'D

REGION NO.	STATE	FED. AID PROJ. NO.	SHEET NO.	TOTAL SHEETS
10	WASH.			

JOB NUMBER 19Y007

CONTRACT NO.

P.E. STAMP BOX — RICHARD P. ZELDENRUST, STATE OF WASHINGTON, 25479, STRUCTURAL ENGINEER, PROFESSIONAL ENGINEER — SEE SHEET CT5 DATE:

BRIDGE AND STRUCTURES OFFICE

P.E. STAMP BOX — BIJAN KHALEGHI, STATE OF WASHINGTON, 27695, STRUCTURAL ENGINEER, PROFESSIONAL ENGINEER — SEE SHEET CT5 DATE:

Washington State Department of Transportation

I-90
CABIN CR I/C TO W EASTON I/C
PHASE 3 - ADD LANES/WILDLIFE BRIDGES

DB1 FOOTING LAYOUT AND ELEVATION 1 OF 3

BRIDGE SHEET NO. DB3

SHEET 839 OF 1783 SHEETS

Mon Feb 07 14:29:55 2022

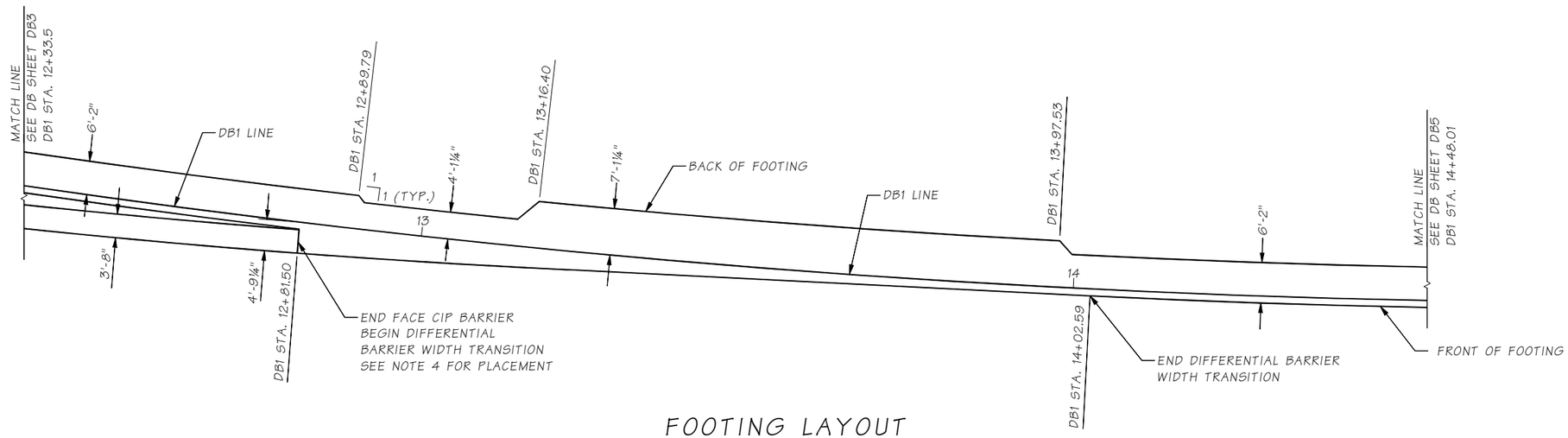

FOOTING LAYOUT

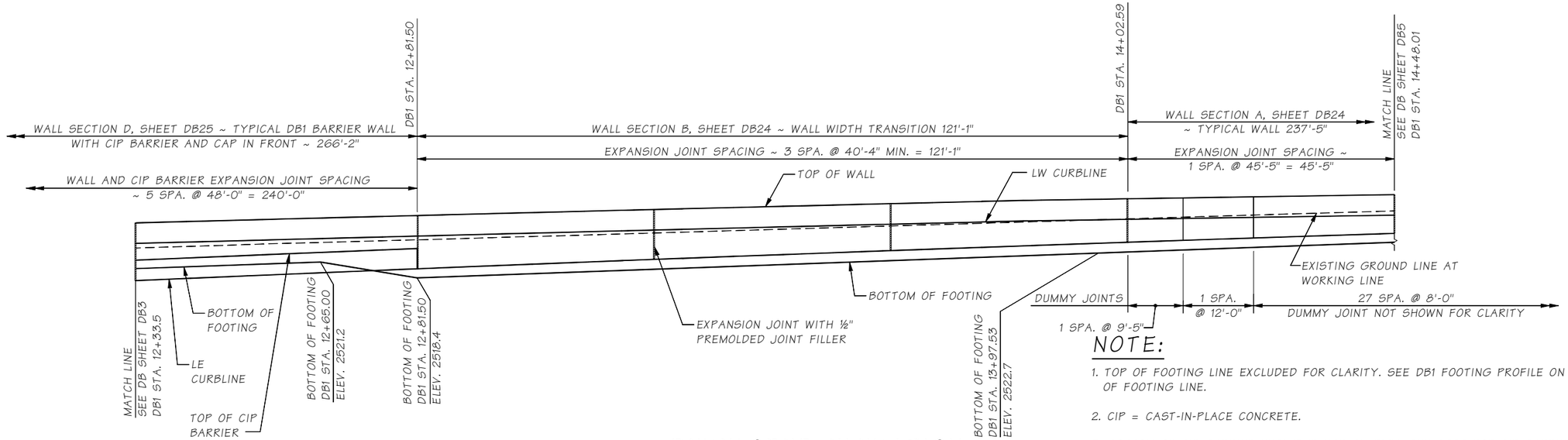

DATUM

NAVD 88

DEVELOPED ELEVATION

NOTE:

1. TOP OF FOOTING LINE EXCLUDED FOR CLARITY. SEE DB1 FOOTING PROFILE ON SHEET DB6 FOR TOP OF FOOTING LINE.
2. CIP = CAST-IN-PLACE CONCRETE.
3. BOTTOM OF CIP BARRIER EXCLUDED FOR CLARITY. SEE DB25 FOR CIP BARRIER GEOMETRY.
4. SAFETY FACE OF CIP BARRIER IS PLACED ALONG A TAPER ON THE LE ALIGNMENT FROM LE 1734+28.28 (69.11' LT) TO LE 1740+79.30 (34.98' LT)

SR ___ FILE NO. ___ SHEET DB4

Bridge Design Engr.	Khaleghi, B		
Supervisor	Zeldenrust, RP		
Designed By	Olleman, KE	12/21	
Checked By	Bedi, G		
Detailed By	Uhde, T	12/21	
Bridge Projects Engr.			
Prelim. Plan By			
Architect/Specialist			

M:\Z-Team\I-90 PHASE 3 CABIN CR WALLS\window files\DB1 FTNG LAYOUT & ELEV 2.wnd

DATE	REVISION	BY	APP'D

REGION NO.	STATE	FED. AID PROJ. NO.	SHEET NO.	TOTAL SHEETS
10	WASH.			

JOB NUMBER 19Y007

CONTRACT NO.

P.E. STAMP BOX: RICHARD P. ZELDENRUST, STATE OF WASHINGTON, 25476, PROFESSIONAL ENGINEER — SEE SHEET CT5 — DATE

BRIDGE AND STRUCTURES OFFICE

P.E. STAMP BOX: BILAN KHALEGHI, STATE OF WASHINGTON, 37695, PROFESSIONAL ENGINEER — SEE SHEET CT5 — DATE

Washington State Department of Transportation

I-90
CABIN CR I/C TO W EASTON I/C
PHASE 3 - ADD LANES/WILDLIFE BRIDGES

DB1 FOOTING LAYOUT
AND ELEVATION 2 OF 3

BRIDGE SHEET NO. DB4

SHEET 840 OF 1783 SHEETS

Mon Feb 07 14:30:01 2022

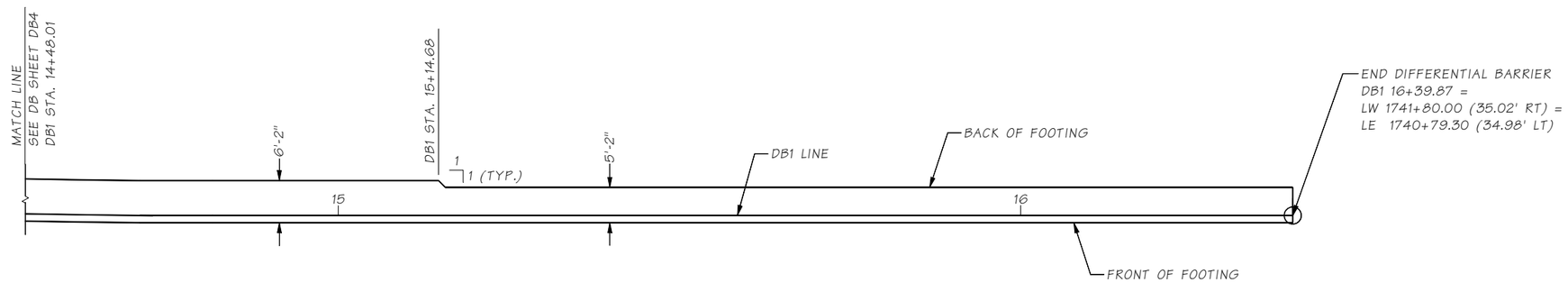

FOOTING LAYOUT

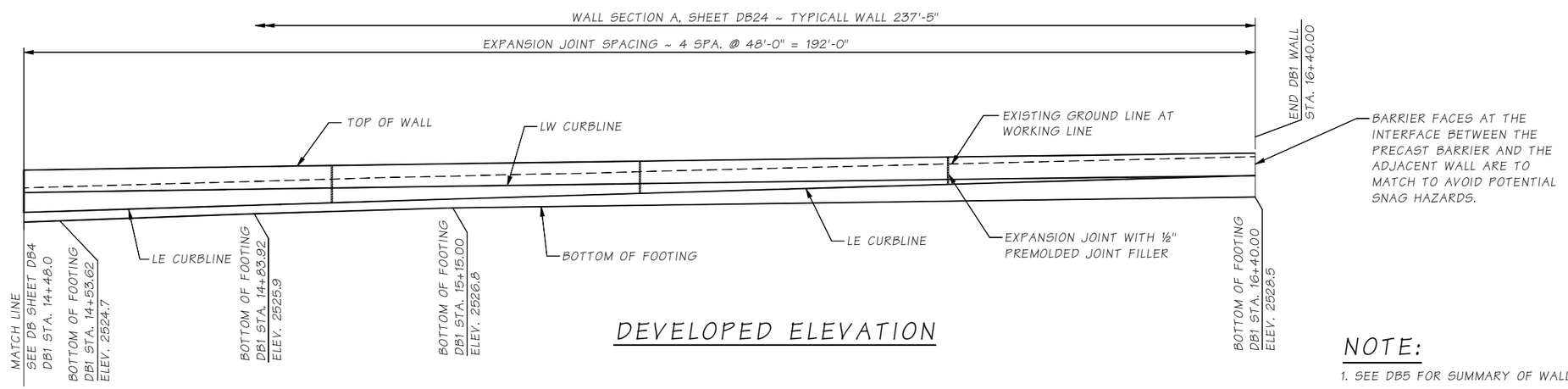

DEVELOPED ELEVATION

NOTE:

1. SEE DB5 FOR SUMMARY OF WALL ELEVATIONS.
2. TOP OF FOOTING LINE EXCLUDED FOR CLARITY. SEE DB1 FOOTING PROFILE ON SHEET DB6 FOR TOP OF FOOTING LINE.
3. CIP = CAST-IN-PLACE CONCRETE.

DATUM

NAVD 88

SR ____ FILE NO. ____ SHEET DB5

Bridge Design Engr.	Khaleghi, B	M:\Z-Team\I-90 PHASE 3 CABIN CR WALLS\window files\DB1 FTNG LAYOUT & ELEV 3.wnd									
Supervisor	Zeldenrust, RP					REGION NO.	STATE	FED. AID PROJ. NO.	SHEET NO.	TOTAL SHEETS	
Designed By	Olleman, KE 12/21					10	WASH.				
Checked By	Bedi, G					JOB NUMBER 19Y007					
Detailed By	Uhde, T 12/21										
Bridge Projects Engr.											
Prelim. Plan By						CONTRACT NO.					
Architect/Specialist		DATE	REVISION	BY	APP'D						

P.E. STAMP BOX
RICHARD P. ZELDENRUST
STATE OF WASHINGTON
25470
PROFESSIONAL ENGINEER
SEE SHEET CT5
DATE:

BRIDGE AND STRUCTURES OFFICE

P.E. STAMP BOX
BIJAN KHALEGHI
STATE OF WASHINGTON
27695
PROFESSIONAL ENGINEER
SEE SHEET CT5
DATE:

Washington State Department of Transportation

I-90
CABIN CR I/C TO W EASTON I/C
PHASE 3 - ADD LANES/WILDLIFE BRIDGES

DB1 FOOTING LAYOUT
AND ELEVATION 3 OF 3

BRIDGE SHEET NO. DB5
SHEET 841 OF 1783 SHEETS

Mon Feb 07 14:30:05 2022

ELEVATIONS SCHEDULE			
DB1 STATION	LW CURBLINE ELEV.	TOP OF CAP ELEV.	CIP BARRIER LE CURBLINE ELEV.
10+00.00	2517.73'	2513.37'	2509.80'
10+20.00	2518.33'	2514.10'	2510.53'
10+40.00	2518.93'	2514.82'	2511.26'
10+60.00	2519.52'	2515.53'	2511.97'
10+80.00	2520.10'	2516.23'	2512.68'
11+00.00	2520.68'	2516.92'	2513.39'
11+20.00	2521.25'	2517.61'	2514.08'
11+40.00	2521.81'	2518.28'	2514.77'
11+60.00	2522.37'	2518.95'	2515.44'
11+80.00	2522.92'	2519.61'	2516.11'
12+00.00	2523.46'	2520.26'	2516.78'
12+20.00	2524.00'	2520.92'	2517.45'
12+40.00	2524.53'	2521.78'	2518.32'
12+60.00	2525.06'	2522.61'	2519.16'
12+80.00	2525.57'	2523.43'	2519.98'
12+80.50	2525.61'	2523.49'	2520.05'
12+81.50	2525.61'	2523.49'	2520.05'

ELEVATIONS SCHEDULE		
DB1 STATION	LW CURBLINE ELEV.	WALL LE CURBLINE ELEV.
13+00.00	2526.09'	2520.79'
13+20.00	2526.59'	2521.58'
13+40.00	2527.09'	2522.33'
13+60.00	2527.58'	2523.06'
13+80.00	2528.07'	2523.78'
14+00.00	2528.43'	2524.48'
14+20.00	2528.74'	2525.16'
14+40.00	2529.05'	2525.82'
14+60.00	2529.35'	2526.46'
14+80.00	2529.64'	2527.09'
15+00.00	2529.93'	2527.70'
15+20.00	2530.22'	2528.31'
15+40.00	2530.50'	2528.92'
15+60.00	2530.78'	2529.51'
15+80.00	2531.04'	2530.10'
16+00.00	2531.30'	2530.68'
16+20.00	2531.56'	2531.26'
16+39.87	2531.80'	2531.81'

DB1 CURBLINE PROFILE

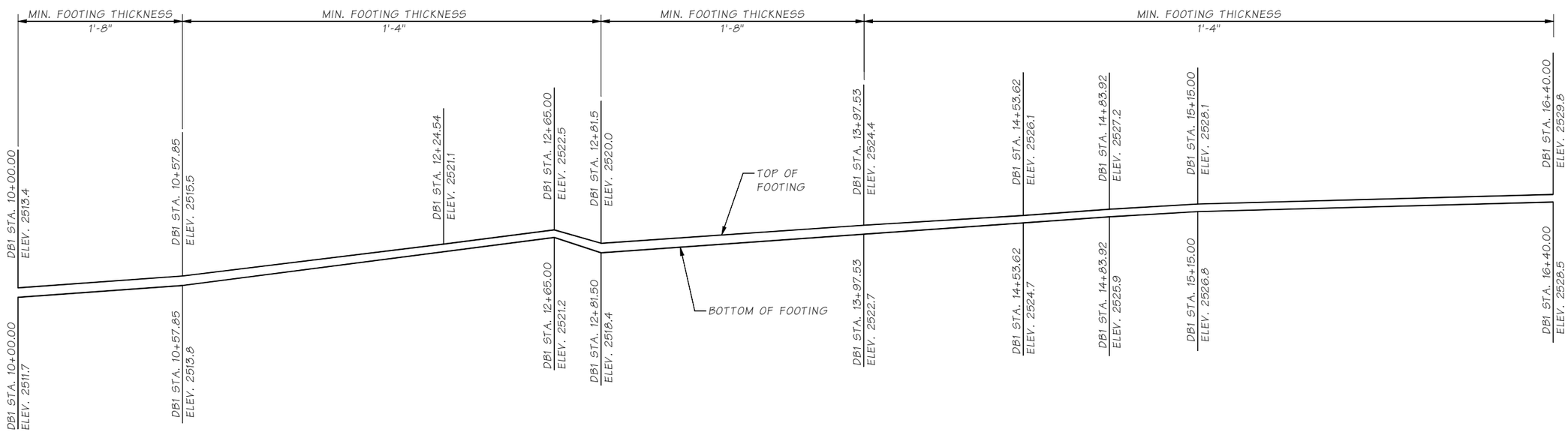

DATUM

NAVD 88

DB1 FOOTING PROFILE

NOTE:

1. CIP = CAST-IN-PLACE CONCRETE.

SR ____ FILE NO. ____ SHEET DB6

Bridge Design Engr.	Khaleghi, B	M:\Z-Team\I-90 PHASE 3 CABIN CR WALLS\window files\DB1 ELEVATION 2.wnd				
Supervisor	Zeldenrust, RP					
Designed By	Olleman, KE 05/21					
Checked By						
Detailed By	Uhde, T 05/21					
Bridge Projects Engr.						
Prelim. Plan By						
Architect/Specialist		DATE	REVISION	BY	APP'D	

REGION NO.	STATE	FED. AID PROJ. NO.	SHEET NO.	TOTAL SHEETS
10	WASH.			
JOB NUMBER 19Y007				
CONTRACT NO.				

P.E. STAMP BOX: RICHARD P. ZELDENRUST, STATE OF WASHINGTON, 25670, PROFESSIONAL ENGINEER — SEE SHEET CT5 — DATE:

BRIDGE AND STRUCTURES OFFICE

P.E. STAMP BOX: BILLAN KHALEGHI, STATE OF WASHINGTON, 37695, PROFESSIONAL ENGINEER — SEE SHEET CT5 — DATE:

Washington State Department of Transportation

I-90
CABIN CR I/C TO W EASTON I/C
PHASE 3 - ADD LANES/WILDLIFE BRIDGES

DIFFERENTIAL BARRIER WALL 1 PROFILES

BRIDGE SHEET NO. DB6

SHEET 842 OF 1783 SHEETS

Mon Feb 07 14:30:23 2022

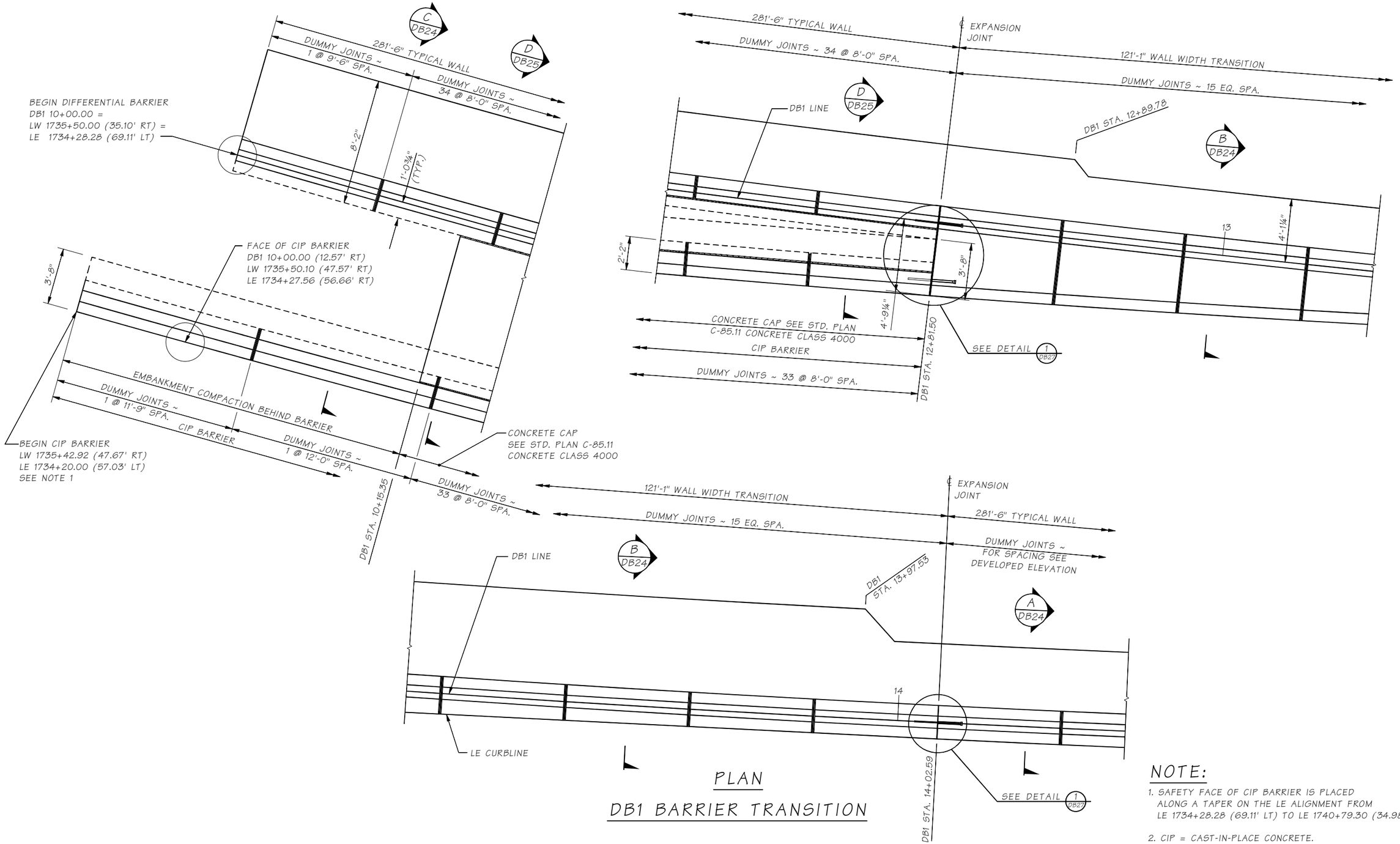

PLAN

DB1 BARRIER TRANSITION

NOTE:

1. SAFETY FACE OF CIP BARRIER IS PLACED ALONG A TAPER ON THE LE ALIGNMENT FROM LE 1734+28.28 (69.11' LT) TO LE 1740+79.30 (34.98' LT)
2. CIP = CAST-IN-PLACE CONCRETE.

SR ____ FILE NO. ____ SHEET DB7

Bridge Design Engr.	Khaleghi, B	M:\Z-Team\I-90 PHASE 3 CABIN CR WALLS\window files\DB1 BARRIER TRANSITION.wnd								
Supervisor	Zeldenrust, RP					REGION NO.	STATE	FED. AID PROJ. NO.	SHEET NO.	TOTAL SHEETS
Designed By	Olleman, KE 06/21					10	WASH.			
Checked By	Bedi, G					JOB NUMBER 19Y007				
Detailed By	Uhde, T 06/21									
Bridge Projects Engr.						CONTRACT NO.				
Prelim. Plan By										
Architect/Specialist		DATE	REVISION	BY	APP'D					

P.E. STAMP BOX: RICHARD P. ZELDENRUST, STATE OF WASHINGTON, 25470, STRUCTURAL ENGINEER, PROFESSIONAL ENGINEER — SEE SHEET CT5 — DATE:

BRIDGE AND STRUCTURES OFFICE

P.E. STAMP BOX: BIJAN KHALEGHI, STATE OF WASHINGTON, 27695, STRUCTURAL ENGINEER, PROFESSIONAL ENGINEER — SEE SHEET CT5 — DATE:

Washington State Department of Transportation

I-90
CABIN CR I/C TO W EASTON I/C
PHASE 3 - ADD LANES/WILDLIFE BRIDGES

DB1 BARRIER TRANSITION

BRIDGE SHEET NO. DB7

SHEET 843 OF 1783 SHEETS

Mon Feb 07 14:30:39 2022

DB2 LINE CURVE DATA					
P.I. STA.	Δ	RADIUS	TANGENT	LENGTH	BACK TANGENT BEARING
DB2 27+29.23	24°35'50.72" LT	2415.10'	526.52'	1036.82'	S 40°46'02" E

SEC. 31, T.21N., R.13E., W.M.
KITTITAS COUNTY

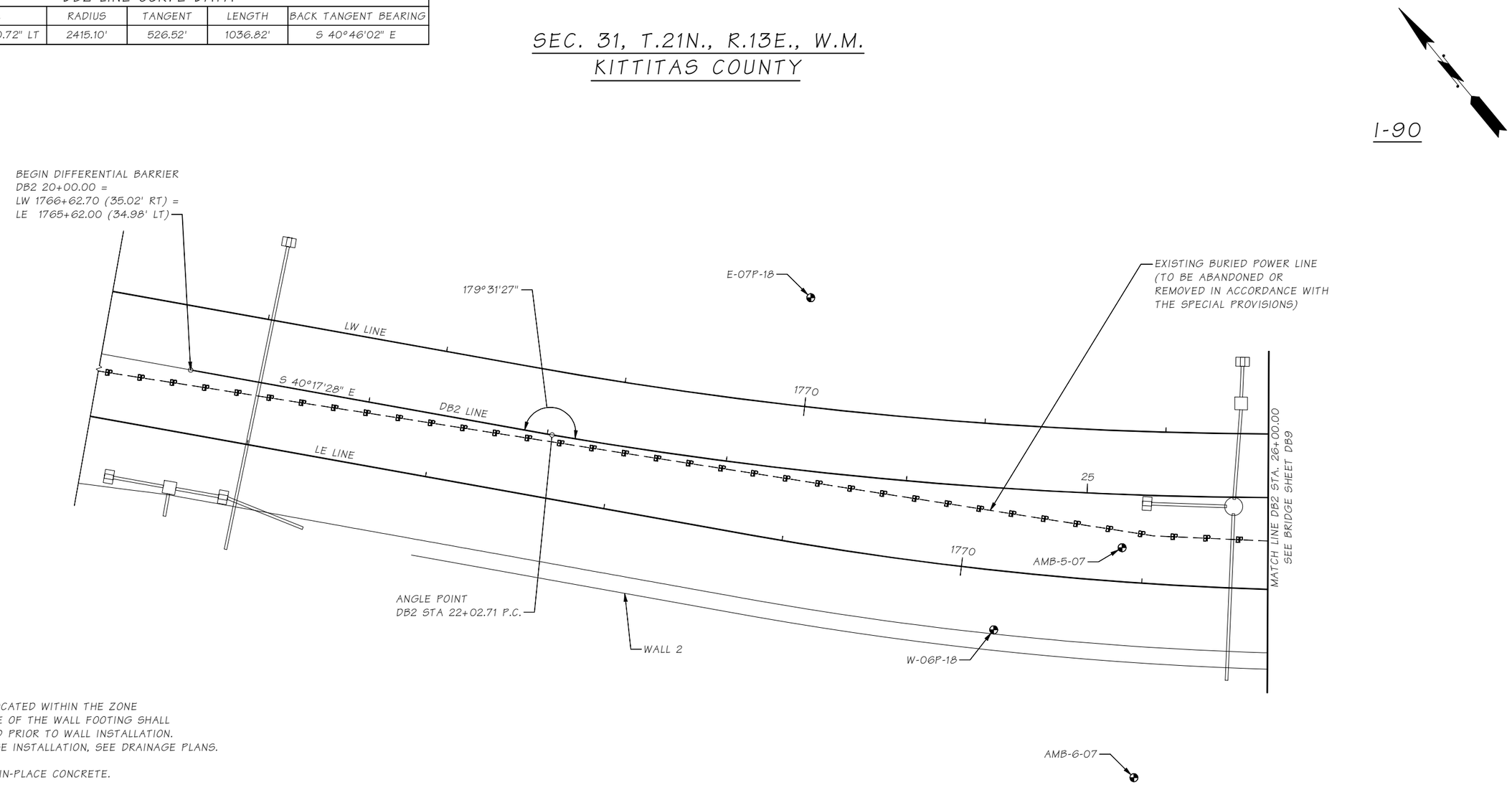

DB2 LAYOUT

NOTE:

1. DRAINAGE LOCATED WITHIN THE ZONE OF INFLUENCE OF THE WALL FOOTING SHALL BE INSTALLED PRIOR TO WALL INSTALLATION. FOR DRAINAGE INSTALLATION, SEE DRAINAGE PLANS.
2. CIP = CAST-IN-PLACE CONCRETE.

LEGEND

- SOIL BORING LOCATION
- EXIST. BURIED POWER
- EXIST. BURIED TELEPHONE

VARIABLE HEIGHT CONCRETE BARRIER WALL

SR ____ FILE NO. ____ SHEET DB8

Bridge Design Engr.	Khaleghi, B	M:\Z-Team\I-90 PHASE 3 CABIN CR WALLS\window files\DB2 LAYOUT 1.wnd								
Supervisor	Zeldenrust, RP									
Designed By	Olleman, KE 03/21									
Checked By	Bedi, G									
Detailed By	T.U./S.S./J.D. 03/21									
Bridge Projects Engr.										
Prelim. Plan By										
Architect/Specialist		DATE	REVISION	BY	APP'D					

REGION NO.	STATE	FED. AID PROJ. NO.	SHEET NO.	TOTAL SHEETS
10	WASH.			
JOB NUMBER 19Y007				
CONTRACT NO.				

P.E. STAMP BOX
RICHARD P. ZELDENRUST
STATE OF WASHINGTON
STRUCTURAL ENGINEER
PROFESSIONAL ENGINEER
SEE SHEET CT5
DATE:

BRIDGE AND STRUCTURES OFFICE

P.E. STAMP BOX
BIJAN KHALEGHI
STATE OF WASHINGTON
STRUCTURAL ENGINEER
PROFESSIONAL ENGINEER
SEE SHEET CT5
DATE:

Washington State Department of Transportation

I-90
CABIN CR I/C TO W EASTON I/C
PHASE 3 - ADD LANES/WILDLIFE BRIDGES

DIFFERENTIAL BARRIER WALL 2
LAYOUT 1 OF 3

BRIDGE SHEET NO. DB8
SHEET 844 OF 1783 SHEETS

Mon Feb 07 14:31:34 2022

DB2 LINE CURVE DATA					
P.I. STA.	Δ	RADIUS	TANGENT	LENGTH	BACK TANGENT BEARING
DB2 27+29.23	24°35'50.72" LT	2415.10'	526.52'	1036.82'	S 40°46'01" E
DB2 32+88.28	2°55'37.28" LT	1908.16'	48.75'	97.48'	S 65°02'21" E

SEC. 31, T.21N., R.13E., W.M.
KITTITAS COUNTY

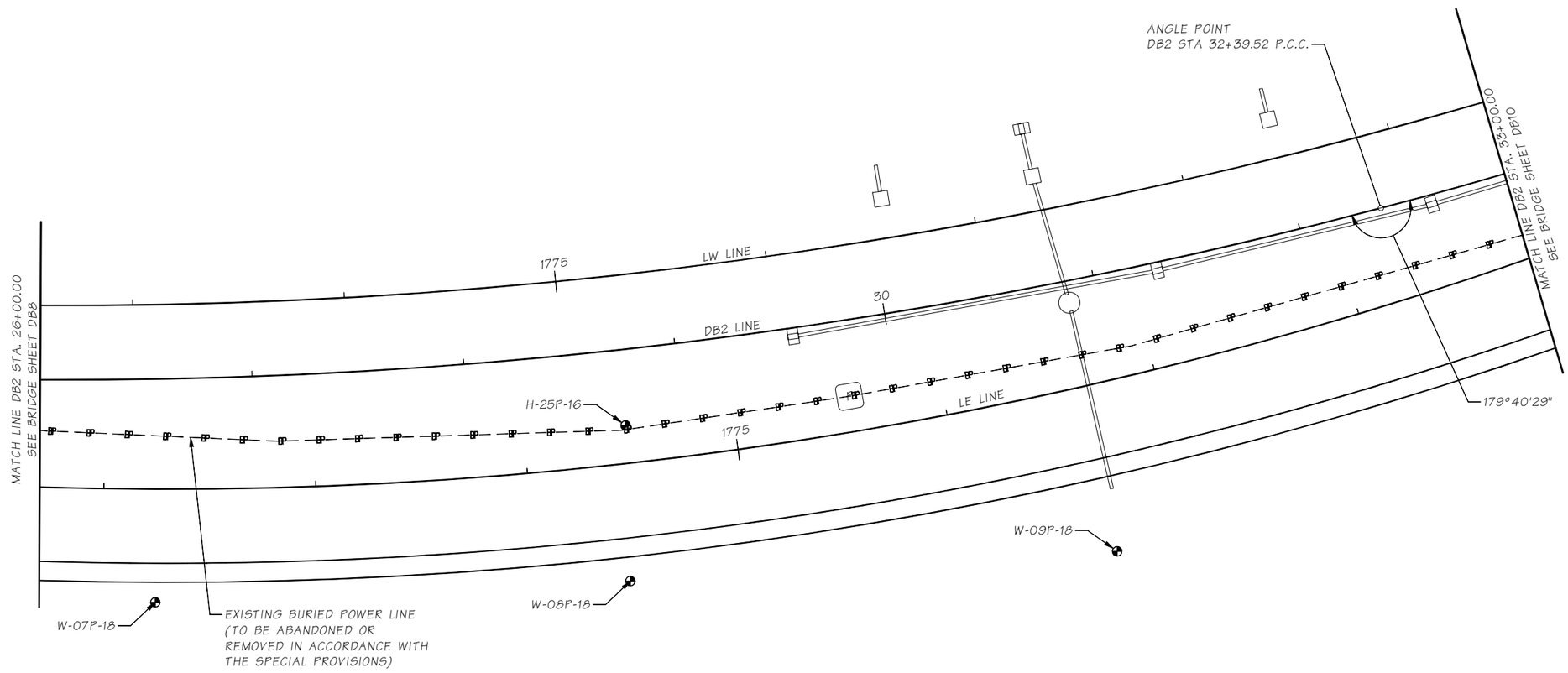

DB2 LAYOUT

NOTE:

1. DRAINAGE LOCATED WITHIN THE ZONE OF INFLUENCE OF THE WALL FOOTING SHALL BE INSTALLED PRIOR TO WALL INSTALLATION. FOR DRAINAGE INSTALLATION, SEE DRAINAGE PLANS.

VARIABLE HEIGHT
CONCRETE BARRIER WALL

SR ___ FILE NO. ___ SHEET DB9

Bridge Design Engr.	Khaleghi, B	M:\Z-Team\I-90 PHASE 3 CABIN CR WALLS\window files\DB2 LAYOUT 2.wnd			
Supervisor	Zeldenrust, RP				
Designed By	Olleman, KE 03/21				
Checked By	Bedi, G				
Detailed By	T.U./S.S./J.D. 03/21				
Bridge Projects Engr.					
Prelim. Plan By					
Architect/Specialist		DATE	REVISION	BY	APP'D

REGION NO.	STATE	FED. AID PROJ. NO.	SHEET NO.	TOTAL SHEETS
10	WASH.			
JOB NUMBER 19Y007				
CONTRACT NO.				

P.E. STAMP BOX
STATE OF WASHINGTON RICHARD P. ZELDENRUST 25870 STRUCTURAL ENGINEER PROFESSIONAL ENGINEER
SEE SHEET CT5
DATE

BRIDGE AND STRUCTURES OFFICE

P.E. STAMP BOX
STATE OF WASHINGTON BILLAN KHALEGHI 37695 STRUCTURAL ENGINEER PROFESSIONAL ENGINEER
SEE SHEET CT5
DATE

Washington State
Department of Transportation

I-90
CABIN CR I/C TO W EASTON I/C
PHASE 3 - ADD LANES/WILDLIFE BRIDGES

DIFFERENTAIL BARRIER WALL 2
LAYOUT 2 OF 3

BRIDGE SHEET NO. DB9

SHEET 845 OF 1783 SHEETS

Mon Feb 07 14:32:05 2022

DB2 LINE CURVE DATA					
P.I. STA.	Δ	RADIUS	TANGENT	LENGTH	BACK TANGENT BEARING
DB2 32+88.28	2°55'37.28" LT	1908.16'	48.75'	97.48'	S 65°02'21" E
DB2 34+34.64	4°05'51.83" LT	2415.10'	86.40'	172.73'	S 67°56'37" E

SEC. 31, T.21N., R.13E., W.M.
KITTITAS COUNTY

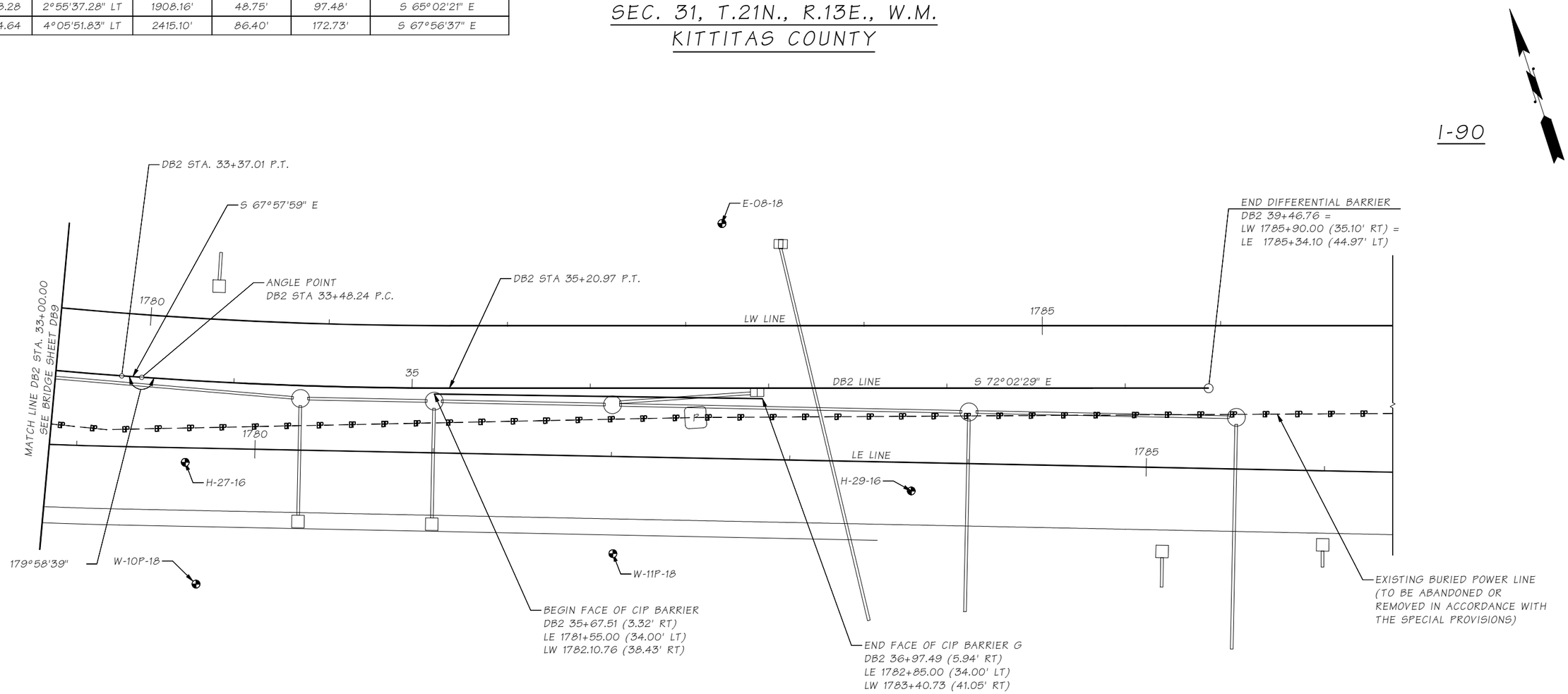

DB2 LAYOUT

NOTE:

1. DRAINAGE LOCATED WITHIN THE ZONE OF INFLUENCE OF THE WALL FOOTING SHALL BE INSTALLED PRIOR TO WALL INSTALLATION. FOR DRAINAGE INSTALLATION, SEE DRAINAGE PLANS.

VARIABLE HEIGHT CONCRETE BARRIER WALL

SR ___ FILE NO. ___ SHEET DB10

Bridge Design Engr.	Khaleghi, B	M:\Z-Team\I-90 PHASE 3 CABIN CR WALLS\window files\DB2 LAYOUT 3.wnd								
Supervisor	Zeldenrust, RP									
Designed By	Olleman, KE 03/21									
Checked By	Bedi, G									
Detailed By	T.U./S.S./J.D. 03/21									
Bridge Projects Engr.										
Prelim. Plan By										
Architect/Specialist		DATE	REVISION	BY	APP'D					

REGION NO.	STATE	FED. AID PROJ. NO.	SHEET NO.	TOTAL SHEETS
10	WASH.			
JOB NUMBER 19Y007				
CONTRACT NO.				

P.E. STAMP BOX
RICHARD P. ZELDENRUST
STATE OF WASHINGTON
25479
STRUCTURAL ENGINEER
PROFESSIONAL ENGINEER
SEE SHEET CT5
DATE:

BRIDGE AND STRUCTURES OFFICE

P.E. STAMP BOX
BIJAN KHALEGHI
STATE OF WASHINGTON
27695
STRUCTURAL ENGINEER
PROFESSIONAL ENGINEER
SEE SHEET CT5
DATE:

Washington State Department of Transportation

I-90
CABIN CR I/C TO W EASTON I/C
PHASE 3 - ADD LANES/WILDLIFE BRIDGES

DIFFERENTIAL BARRIER WALL 2
LAYOUT 3 OF 3

BRIDGE SHEET NO. DB10
SHEET 846 OF 1783 SHEETS

Mon Feb 07 14:32:31 2022

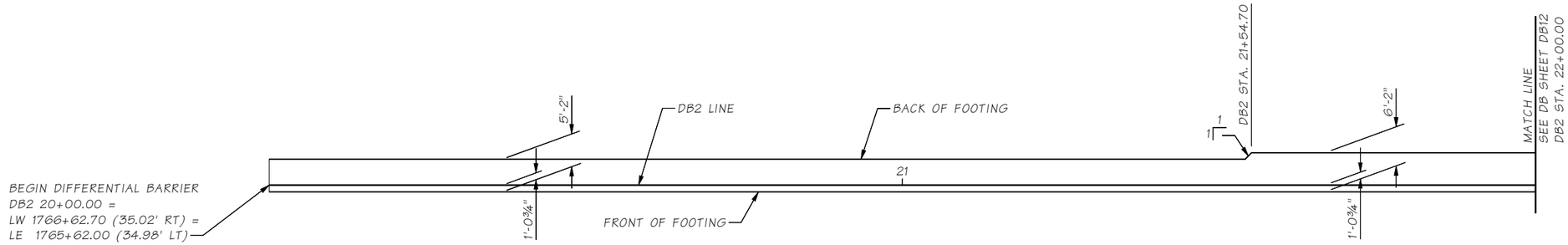

FOOTING LAYOUT

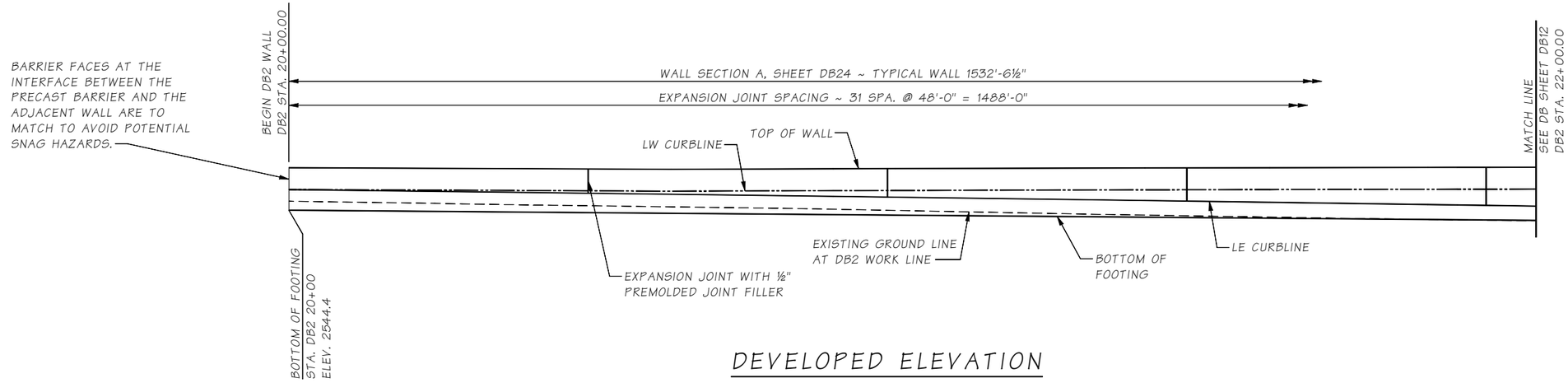

DEVELOPED ELEVATION

DATUM

NAVD 88

NOTE:

1. TOP OF FOOTING LINE EXCLUDED FOR CLARITY. SEE DB2 FOOTING PROFILE ON SHEETS DB20 AND DB21 FOR TOP OF FOOTING LINE.

SR ____ FILE NO. ____ SHEET DB11

Bridge Design Engr.	Khaleghi, B	M:\Z-Team\I-90 PHASE 3 CABIN CR WALLS\window files\DB2 FTNG LAYOUT & ELEV 1.wnd								
Supervisor	Zeldenrust, RP									
Designed By	Olleman, KE 12/21									
Checked By	Bedi, G									
Detailed By	Uhde, T 12/21									
Bridge Projects Engr.										
Prelim. Plan By										
Architect/Specialist		DATE	REVISION	BY	APP'D					

REGION NO.	STATE	FED. AID PROJ. NO.	SHEET NO.	TOTAL SHEETS
10	WASH.			
JOB NUMBER 19Y007				
CONTRACT NO.				

P.E. STAMP BOX
RICHARD P. ZELDENRUST
STATE OF WASHINGTON
25476
PROFESSIONAL ENGINEER
SEE SHEET CT5
DATE:

BRIDGE AND STRUCTURES OFFICE

P.E. STAMP BOX
BIJAN KHALEGHI
STATE OF WASHINGTON
27695
PROFESSIONAL ENGINEER
SEE SHEET CT5
DATE:

Washington State Department of Transportation

I-90
CABIN CR I/C TO W EASTON I/C
PHASE 3 - ADD LANES/WILDLIFE BRIDGES

DB2 FOOTING LAYOUT AND ELEVATION 1 OF 9

BRIDGE SHEET NO. DB11
SHEET 847 OF 1783 SHEETS

Mon Feb 07 14:32:35 2022

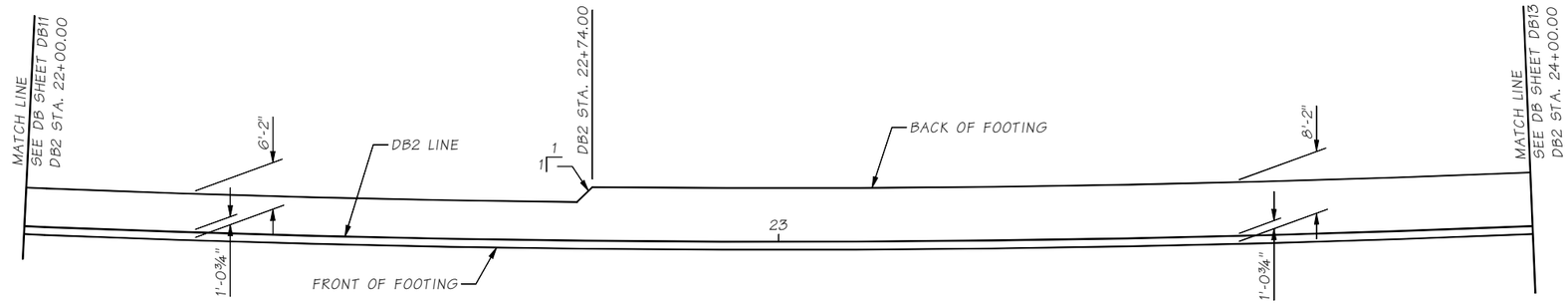

FOOTING LAYOUT

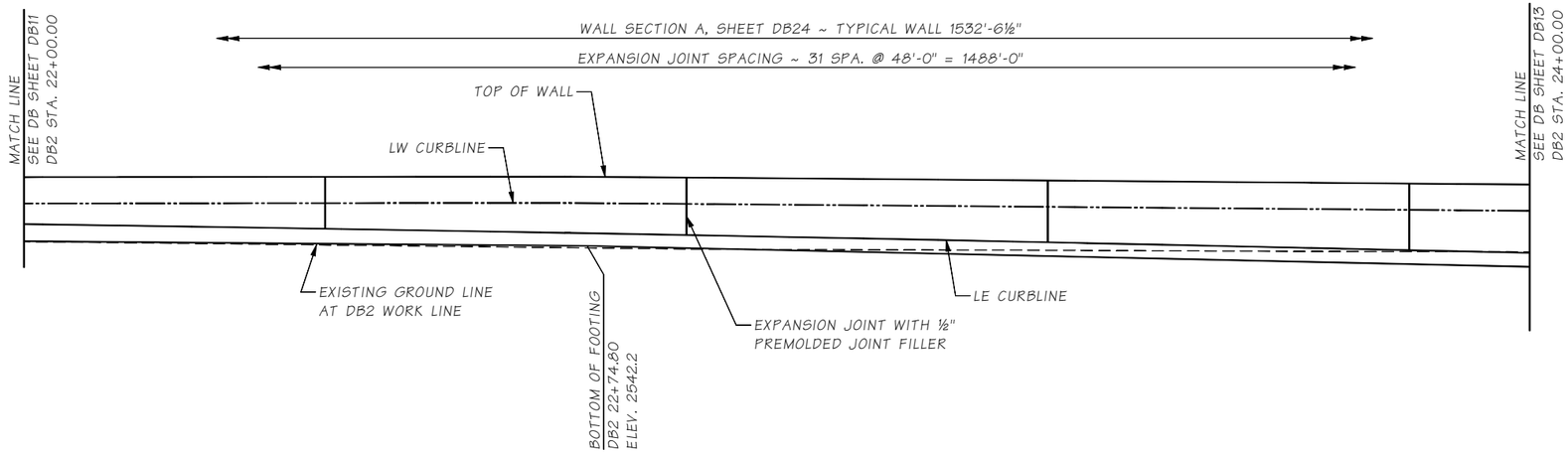

DEVELOPED ELEVATION

NOTE:

1. TOP OF FOOTING LINE EXCLUDED FOR CLARITY. SEE DB2 FOOTING PROFILE ON SHEETS DB20 AND DB21 FOR TOP OF FOOTING LINE.

DATUM

NAVD 88

SR ____ FILE NO. ____ SHEET DB12

Bridge Design Engr.	Khaleghi, B	M:\Z-Team\I-90 PHASE 3 CABIN CR WALLS\window files\DB2 FTNG LAYOUT & ELEV 2.wnd									
Supervisor	Zeldenrust, RP										
Designed By	Olleman, KE 12/21										
Checked By	Bedi, G										
Detailed By	Uhde, T 12/21										
Bridge Projects Engr.											
Prelim. Plan By											
Architect/Specialist		DATE	REVISION	BY	APP'D						

REGION NO.	STATE	FED. AID PROJ. NO.	SHEET NO.	TOTAL SHEETS
10	WASH.			
JOB NUMBER 19Y007				
CONTRACT NO.				

P.E. STAMP BOX
RICHARD P. ZELDENRUST
STATE OF WASHINGTON
25470
STRUCTURAL ENGINEER
PROFESSIONAL ENGINEER
SEE SHEET CT5
DATE:

BRIDGE AND STRUCTURES OFFICE

P.E. STAMP BOX
BIJAN KHALEGHI
STATE OF WASHINGTON
27695
STRUCTURAL ENGINEER
PROFESSIONAL ENGINEER
SEE SHEET CT5
DATE:

Washington State Department of Transportation

I-90
CABIN CR I/C TO W EASTON I/C
PHASE 3 - ADD LANES/WILDLIFE BRIDGES

DB2 FOOTING LAYOUT
AND ELEVATION 2 OF 9

BRIDGE SHEET NO. DB12
SHEET 848 OF 1783 SHEETS

Mon Feb 07 14:32:39 2022

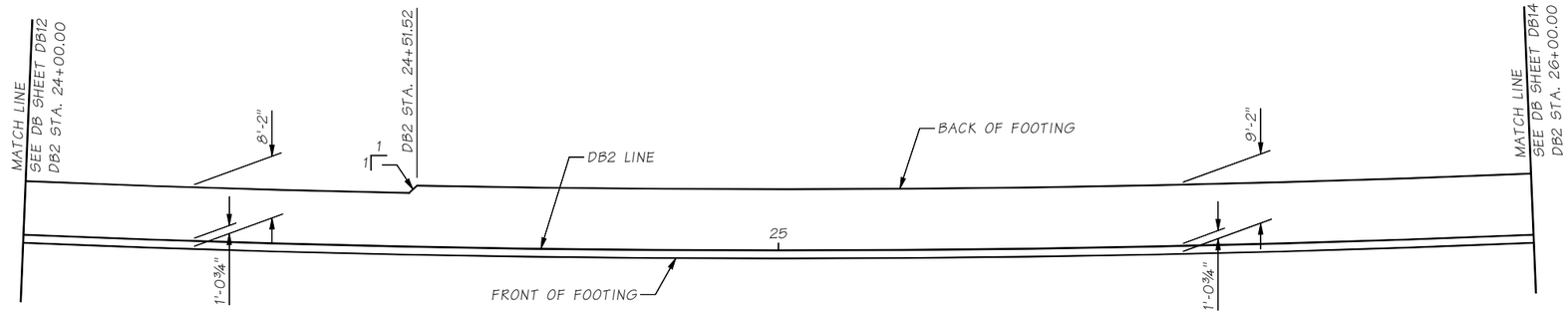

FOOTING LAYOUT

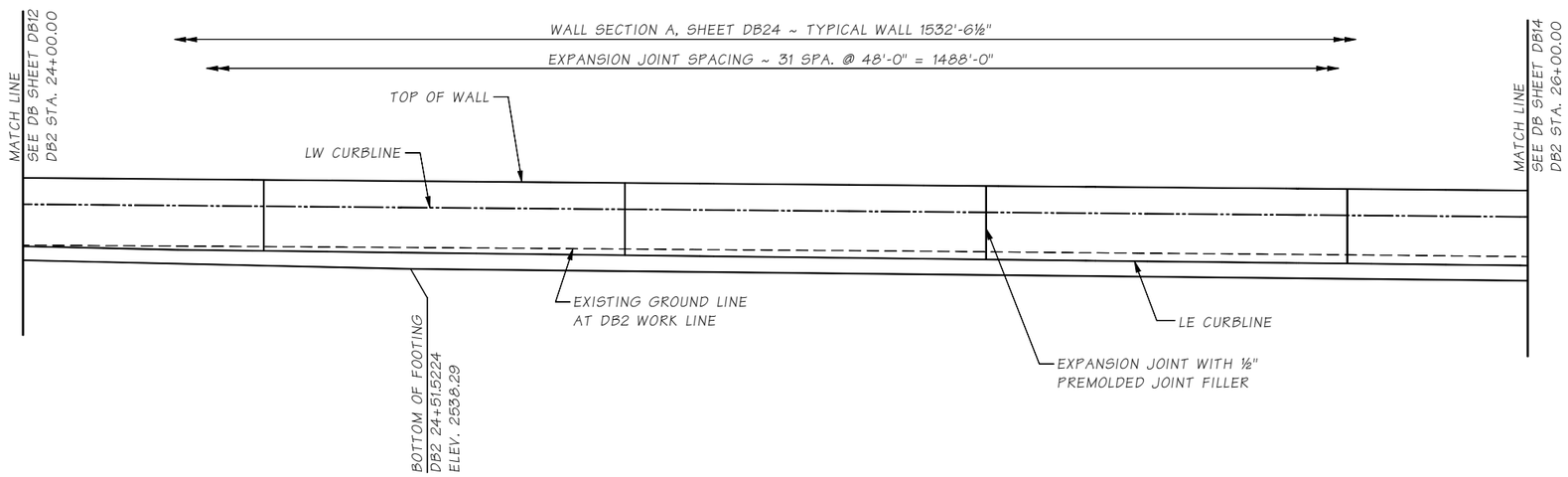

DEVELOPED ELEVATION

NOTE:

1. TOP OF FOOTING LINE EXCLUDED FOR CLARITY. SEE DB2 FOOTING PROFILE ON SHEETS DB20 AND DB21 FOR TOP OF FOOTING LINE.

DATUM

NAVD 88

SR ___ FILE NO. ___ SHEET DB13

Bridge Design Engr.	Khaleghi, B	M:\Z-Team\I-90 PHASE 3 CABIN CR WALLS\window files\DB2 FTNG LAYOUT & ELEV 3.wnd				REGION NO.	STATE	FED. AID PROJ. NO.	SHEET NO.	TOTAL SHEETS	
Supervisor	Zeldenrust, RP					10	WASH.				
Designed By	Olleman, KE 12/21					JOB NUMBER 19Y007					
Checked By	Bedi, G										
Detailed By	Uhde, T 12/21					CONTRACT NO.					
Bridge Projects Engr.											
Prelim. Plan By											
Architect/Specialist		DATE	REVISION	BY	APP'D						

P.E. STAMP BOX
RICHARD P. ZELDENRUST
STATE OF WASHINGTON
25470
PROFESSIONAL ENGINEER
SEE SHEET CT5
DATE

BRIDGE AND STRUCTURES OFFICE

P.E. STAMP BOX
BIJAN KHALEGHI
STATE OF WASHINGTON
27695
PROFESSIONAL ENGINEER
SEE SHEET CT5
DATE

Washington State Department of Transportation

I-90
CABIN CR I/C TO W EASTON I/C
PHASE 3 - ADD LANES/WILDLIFE BRIDGES

DB2 FOOTING LAYOUT AND ELEVATION 3 OF 9

BRIDGE SHEET NO. DB13

SHEET 849 OF 1783 SHEETS

Mon Feb 07 14:32:45 2022

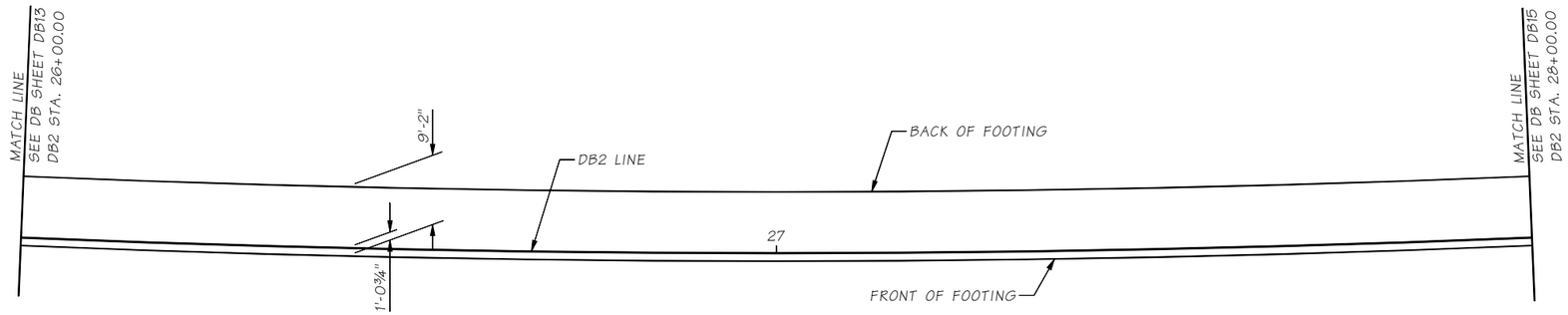

FOOTING LAYOUT

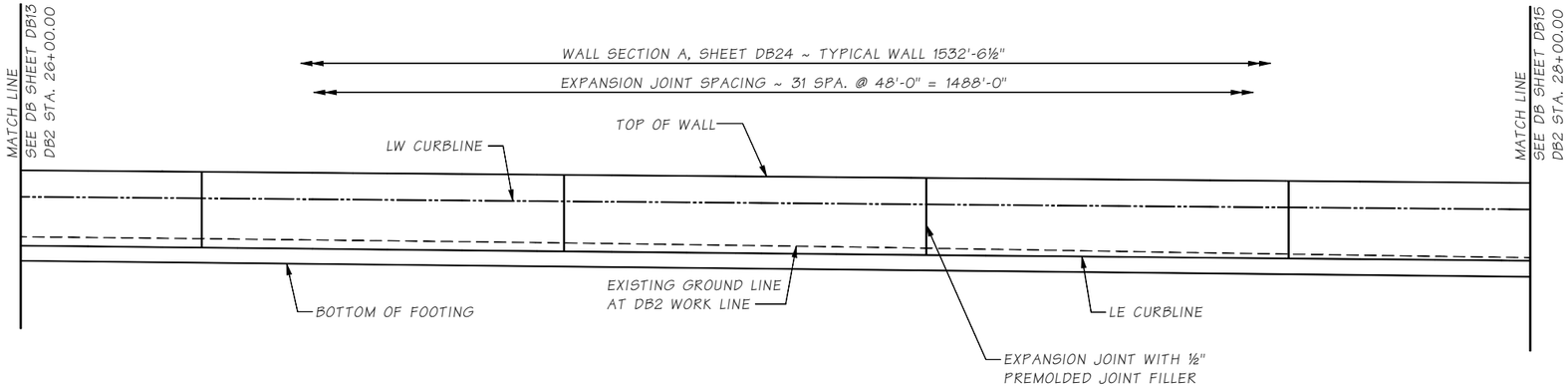

DEVELOPED ELEVATION

NOTE:

1. TOP OF FOOTING LINE EXCLUDED FOR CLARITY. SEE DB2 FOOTING PROFILE ON SHEETS DB20 AND DB21 FOR TOP OF FOOTING LINE.

DATUM

NAVD 88

SR ___ FILE NO. ___ SHEET DB14

Bridge Design Engr.	Khaleghi, B	M:\Z-Team\I-90 PHASE 3 CABIN CR WALLS\window files\DB2 FTNG LAYOUT & ELEV 4.wnd								
Supervisor	Zeldenrust, RP					REGION NO.	STATE	FED. AID PROJ. NO.	SHEET NO.	TOTAL SHEETS
Designed By	Olleman, KE 12/21					10	WASH.			
Checked By	Bedi, G					JOB NUMBER 19Y007				
Detailed By	Uhde, T 12/21									
Bridge Projects Engr.						CONTRACT NO.				
Prelim. Plan By										
Architect/Specialist		DATE	REVISION	BY	APP'D					

P.E. STAMP BOX
RICHARD P. ZELDENRUST
STATE OF WASHINGTON
25470
PROFESSIONAL ENGINEER
SEE SHEET CT5
DATE

BRIDGE AND STRUCTURES OFFICE

P.E. STAMP BOX
BIJAN KHALEGHI
STATE OF WASHINGTON
27695
PROFESSIONAL ENGINEER
SEE SHEET CT5
DATE

Washington State Department of Transportation

I-90
CABIN CR I/C TO W EASTON I/C
PHASE 3 - ADD LANES/WILDLIFE BRIDGES

DB2 FOOTING LAYOUT AND ELEVATION 4 OF 9

BRIDGE SHEET NO. DB14
SHEET 850 OF 1783 SHEETS

Mon Feb 07 14:32:50 2022

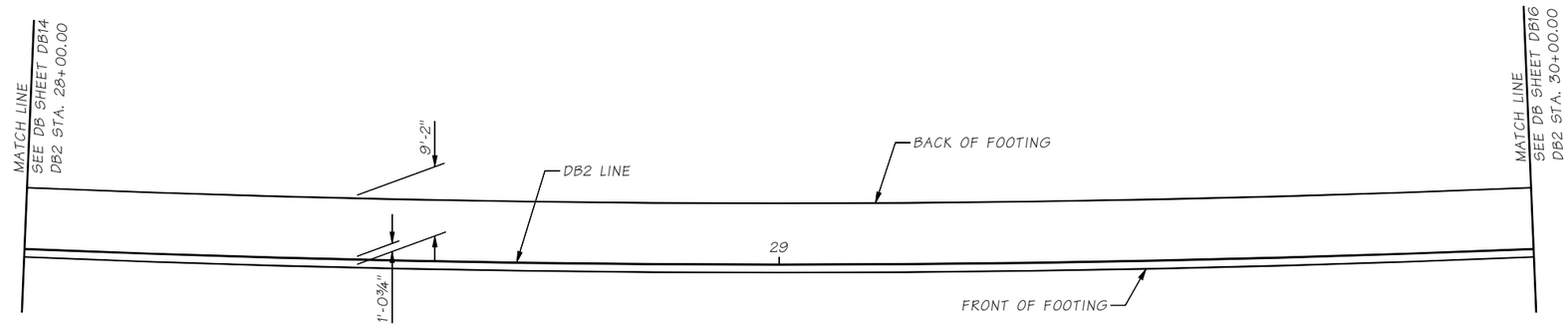

FOOTING LAYOUT

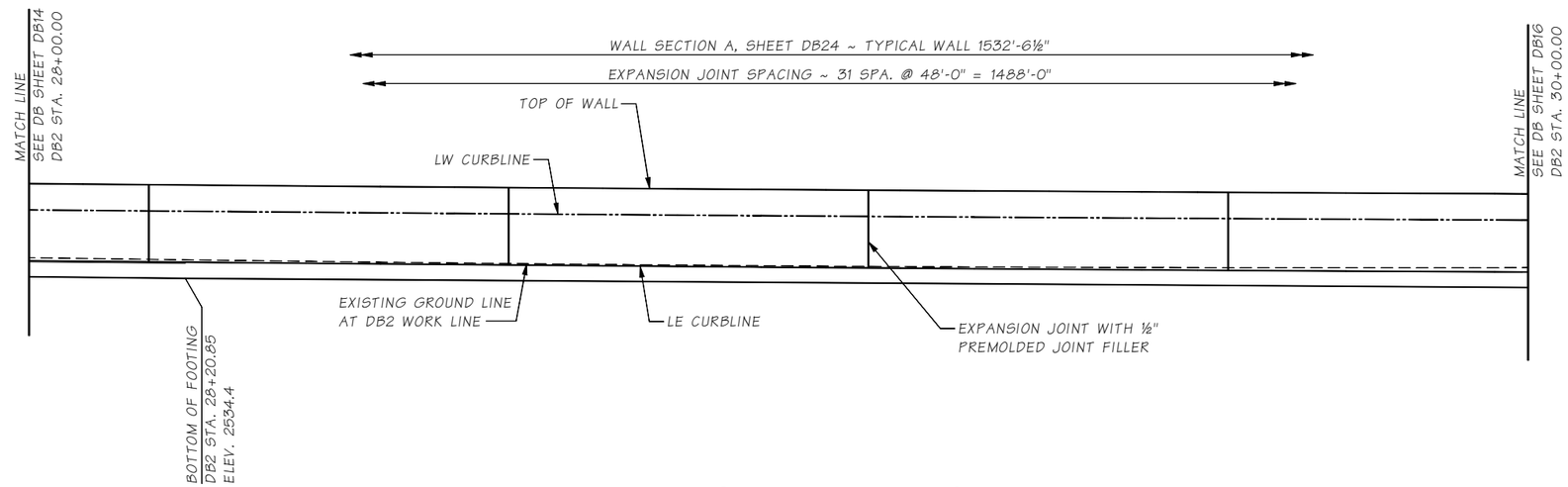

DEVELOPED ELEVATION

NOTE:

1. TOP OF FOOTING LINE EXCLUDED FOR CLARITY. SEE DB2 FOOTING PROFILE ON SHEETS DB20 AND DB21 FOR TOP OF FOOTING LINE.

DATUM

NAVD 88

SR ____ FILE NO. ____ SHEET DB15

Bridge Design Engr.	Khaleghi, B	M:\Z-Team\I-90 PHASE 3 CABIN CR WALLS\window files\DB2 FTNG LAYOUT & ELEV 5.wnd								
Supervisor	Zeldenrust, RP									
Designed By	Olleman, KE 12/21									
Checked By	Bedi, G									
Detailed By	Uhde, T 12/21									
Bridge Projects Engr.										
Prelim. Plan By										
Architect/Specialist		DATE	REVISION	BY	APP'D					

REGION NO.	STATE	FED. AID PROJ. NO.	SHEET NO.	TOTAL SHEETS
10	WASH.			
JOB NUMBER 19Y007				
CONTRACT NO.				

P.E. STAMP BOX
RICHARD P. ZELDENRUST
STATE OF WASHINGTON
25470
STRUCTURAL ENGINEER
PROFESSIONAL ENGINEER
SEE SHEET CT5
DATE:

BRIDGE AND STRUCTURES OFFICE

P.E. STAMP BOX
BIJAN KHALEGHI
STATE OF WASHINGTON
27695
STRUCTURAL ENGINEER
PROFESSIONAL ENGINEER
SEE SHEET CT5
DATE:

Washington State Department of Transportation

I-90
CABIN CR I/C TO W EASTON I/C
PHASE 3 - ADD LANES/WILDLIFE BRIDGES

DB2 FOOTING LAYOUT AND ELEVATION 5 OF 9

BRIDGE SHEET NO. DB15

SHEET 851 OF 1783 SHEETS

Mon Feb 07 14:32:54 2022

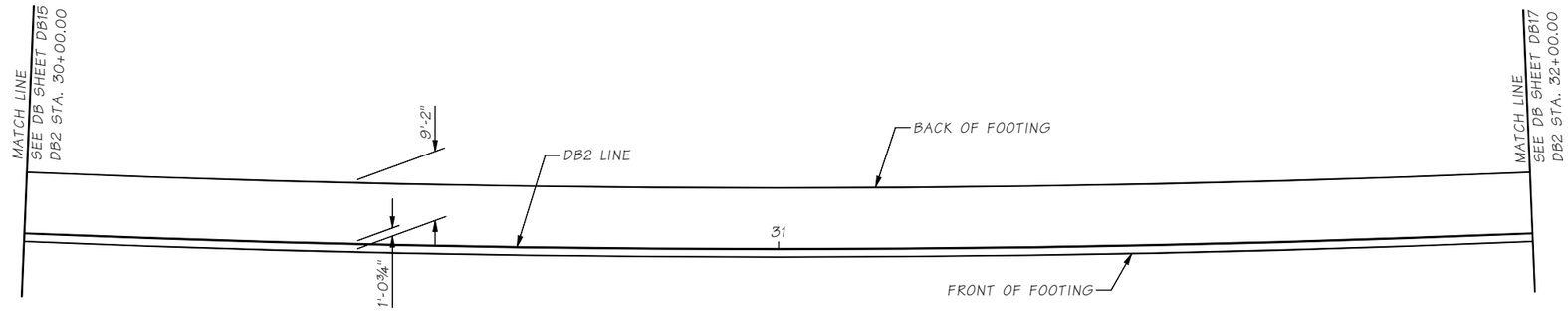

FOOTING LAYOUT

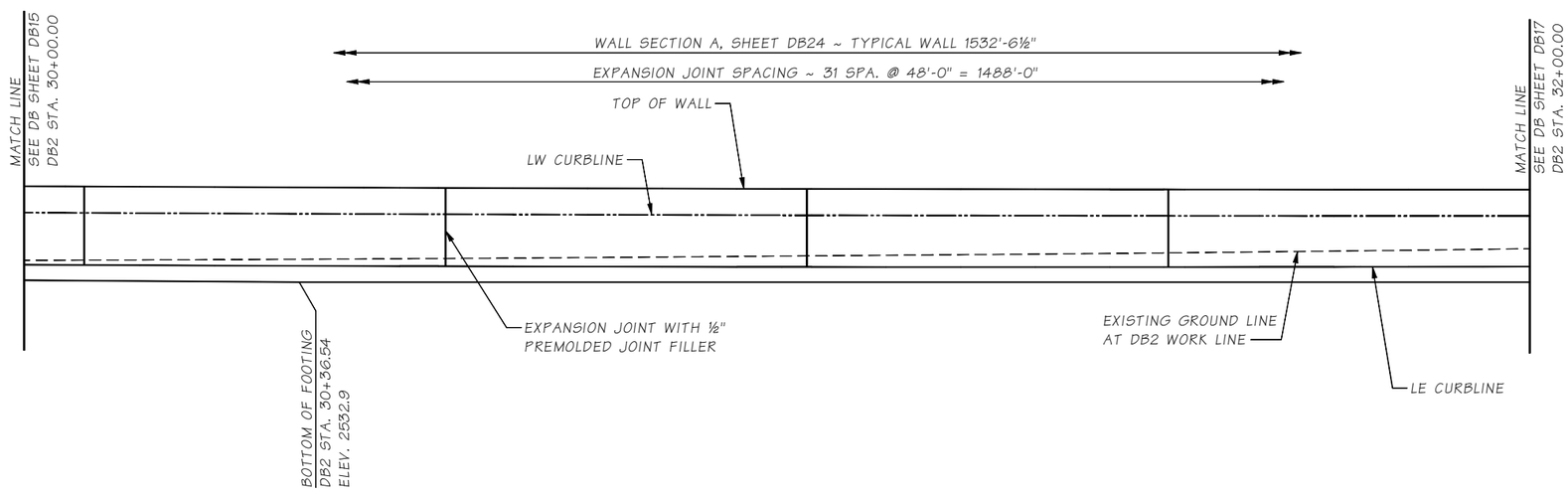

DEVELOPED ELEVATION

NOTE:

1. TOP OF FOOTING LINE EXCLUDED FOR CLARITY. SEE DB2 FOOTING PROFILE ON SHEETS DB20 AND DB21 FOR TOP OF FOOTING LINE.

DATUM

NAVD 88

SR ___ FILE NO. ___ SHEET DB16

Bridge Design Engr.	Khaleghi, B	M:\Z-Team\I-90 PHASE 3 CABIN CR WALLS\window files\DB2 FTNG LAYOUT & ELEV 6.wnd								
Supervisor	Zeldenrust, RP					REGION NO.	STATE	FED. AID PROJ. NO.	SHEET NO.	TOTAL SHEETS
Designed By	Olleman, KE 12/21					10	WASH.			
Checked By	Bedi, G					JOB NUMBER 19Y007				
Detailed By	Uhde, T 12/21									
Bridge Projects Engr.										
Prelim. Plan By						CONTRACT NO.				
Architect/Specialist		DATE	REVISION	BY	APP'D					

P.E. STAMP BOX
RICHARD P. ZELDENRUST
STATE OF WASHINGTON
25470
STRUCTURAL ENGINEER
PROFESSIONAL ENGINEER
SEE SHEET CT5
DATE

BRIDGE AND STRUCTURES OFFICE

P.E. STAMP BOX
BIJAN KHALEGHI
STATE OF WASHINGTON
27695
STRUCTURAL ENGINEER
PROFESSIONAL ENGINEER
SEE SHEET CT5
DATE

Washington State Department of Transportation

I-90
CABIN CR I/C TO W EASTON I/C
PHASE 3 - ADD LANES/WILDLIFE BRIDGES

DB2 FOOTING LAYOUT AND ELEVATION 6 OF 9

BRIDGE SHEET NO. DB16

SHEET 852 OF 1783 SHEETS

Mon Feb 07 14:33:01 2022

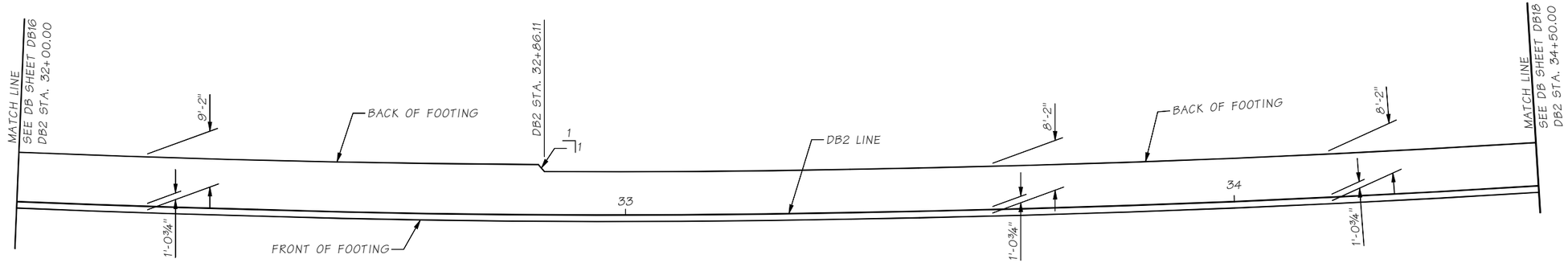

FOOTING LAYOUT

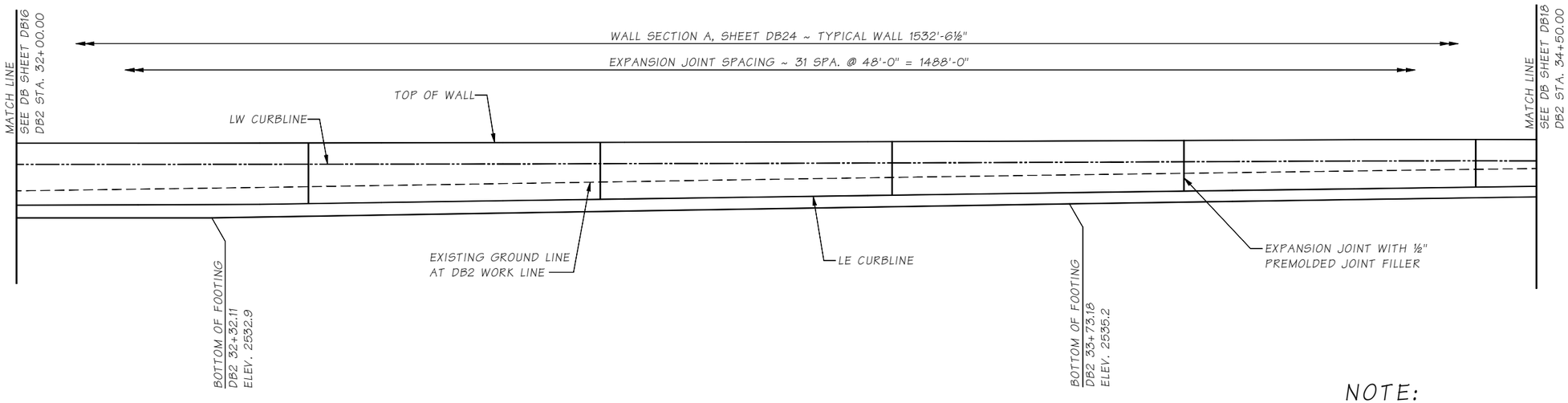

DEVELOPED ELEVATION

NOTE:

1. TOP OF FOOTING LINE EXCLUDED FOR CLARITY.
   SEE DB2 FOOTING PROFILE ON SHEETS DB20 AND DB21
   FOR TOP OF FOOTING LINE.

2. CIP = CAST-IN-PLACE CONCRETE

DATUM

NAVD 88

SR ____ FILE NO. ____ SHEET DB17

Bridge Design Engr.	Khaleghi, B		
Supervisor	Zeldenrust, RP		
Designed By	Olleman, KE	12/21	
Checked By	Bedi, G		
Detailed By	Uhde, T	12/21	
Bridge Projects Engr.			
Prelim. Plan By			
Architect/Specialist			

M:\Z-Team\I-90 PHASE 3 CABIN CR WALLS\window files\DB2 FTNG LAYOUT & ELEV 7.wnd

DATE	REVISION	BY	APP'D

REGION NO.	STATE	FED. AID PROJ. NO.	SHEET NO.	TOTAL SHEETS
10	WASH.			
JOB NUMBER 19Y007				
CONTRACT NO.				

P.E. STAMP BOX
RICHARD P. ZELDENRUST
STATE OF WASHINGTON
33470
PROFESSIONAL ENGINEER
SEE SHEET CT5
DATE

BRIDGE AND STRUCTURES OFFICE

P.E. STAMP BOX
BIJAN KHALEGHI
STATE OF WASHINGTON
27096
PROFESSIONAL ENGINEER
SEE SHEET CT5
DATE

Washington State
Department of Transportation

I-90
CABIN CR I/C TO W EASTON I/C
PHASE 3 - ADD LANES/WILDLIFE BRIDGES

DB2 FOOTING LAYOUT
AND ELEVATION 7 OF 9

BRIDGE SHEET NO. DB17

SHEET 853 OF 1783 SHEETS

Mon Feb 07 14:33:06 2022

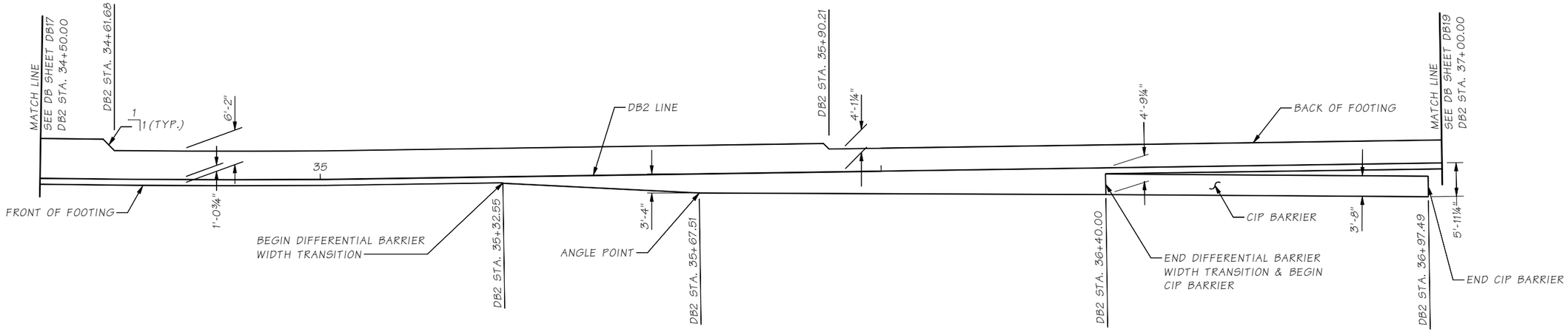

FOOTING LAYOUT

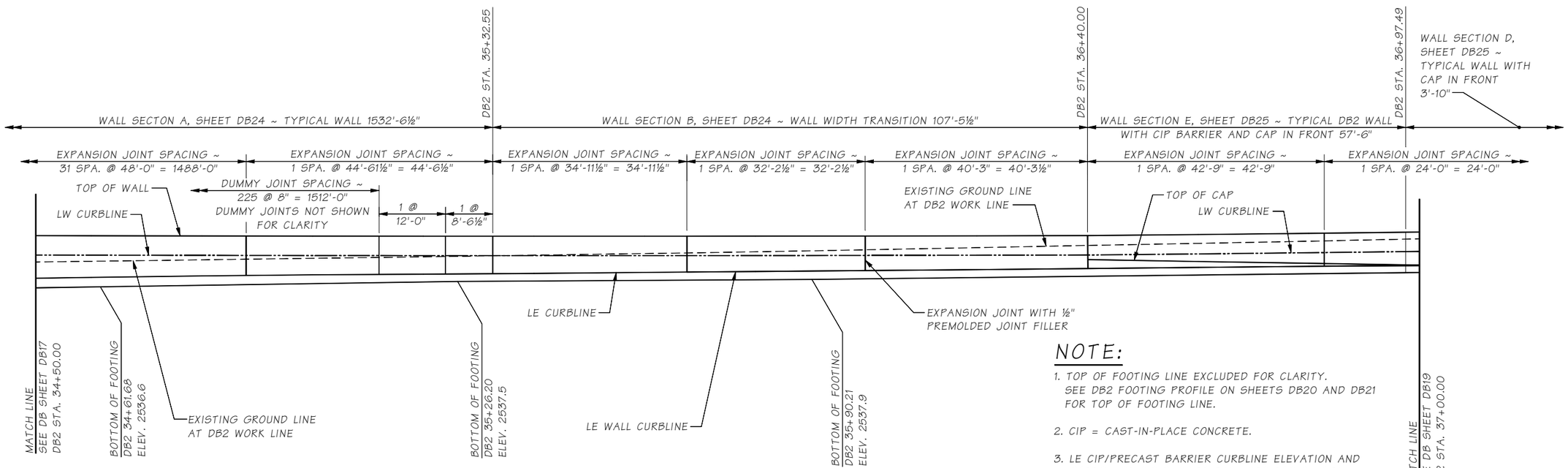

DATUM

NAVD 88

DEVELOPED ELEVATION

NOTE:

1. TOP OF FOOTING LINE EXCLUDED FOR CLARITY. SEE DB2 FOOTING PROFILE ON SHEETS DB20 AND DB21 FOR TOP OF FOOTING LINE.
2. CIP = CAST-IN-PLACE CONCRETE.
3. LE CIP/PRECAST BARRIER CURBLINE ELEVATION AND BOTTOM OF CIP BARRIER EXCLUDED FOR CLARITY. SEE DB22 FOR LE CIP/PRECAST BARRIER CURBLINE ELEVATION AND SEE DB25 FOR CIP BARRIER GEOMETRY.

SR FILE NO. SHEET DB18

Bridge Design Engr.	Khaleghi, B	M:\Z-Team\I-90 PHASE 3 CABIN CR WALLS\window files\DB2 FTNG LAYOUT & ELEV 8.wnd			
Supervisor	Zeldenrust, RP				
Designed By	Olleman, KE 12/21				
Checked By	Bedi, G				
Detailed By	Uhde, T/DeBoer, J 12/21				
Bridge Projects Engr.					
Prelim. Plan By					
Architect/Specialist		DATE	REVISION	BY	APP'D

REGION NO.	STATE	FED. AID PROJ. NO.	SHEET NO.	TOTAL SHEETS
10	WASH.			
JOB NUMBER 19Y007				
CONTRACT NO.				

P.E. STAMP BOX — RICHARD P. ZELDENRUST, STATE OF WASHINGTON, 25470, PROFESSIONAL ENGINEER — SEE SHEET CT5 — DATE

BRIDGE AND STRUCTURES OFFICE

P.E. STAMP BOX — BIJAN KHALEGHI, STATE OF WASHINGTON, 27906, PROFESSIONAL ENGINEER — SEE SHEET CT5 — DATE

Washington State Department of Transportation

I-90
CABIN CR I/C TO W EASTON I/C
PHASE 3 - ADD LANES/WILDLIFE BRIDGES

DB2 FOOTING LAYOUT
AND ELEVATION 8 OF 9

BRIDGE SHEET NO. DB18

SHEET 854 OF 1783 SHEETS

Mon Feb 07 14:33:11 2022

FOOTING LAYOUT

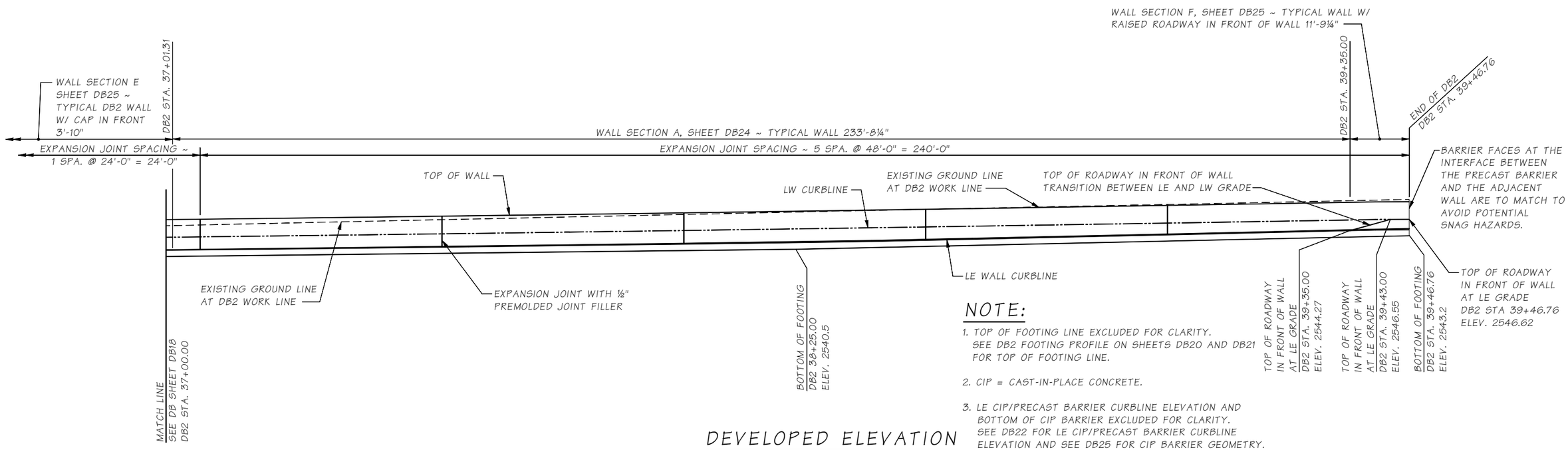

NOTE:

1. TOP OF FOOTING LINE EXCLUDED FOR CLARITY. SEE DB2 FOOTING PROFILE ON SHEETS DB20 AND DB21 FOR TOP OF FOOTING LINE.
2. CIP = CAST-IN-PLACE CONCRETE.
3. LE CIP/PRECAST BARRIER CURBLINE ELEVATION AND BOTTOM OF CIP BARRIER EXCLUDED FOR CLARITY. SEE DB22 FOR LE CIP/PRECAST BARRIER CURBLINE ELEVATION AND SEE DB25 FOR CIP BARRIER GEOMETRY.

DEVELOPED ELEVATION

DATUM

NAVD 88

SR ____ FILE NO. ____ SHEET DB19

Bridge Design Engr.	Khaleghi, B	M:\Z-Team\I-90 PHASE 3 CABIN CR WALLS\window files\DB2 FTNG LAYOUT & ELEV 9.wnd								
Supervisor	Zeldenrust, RP					REGION NO.	STATE	FED. AID PROJ. NO.	SHEET NO.	TOTAL SHEETS
Designed By	Olleman, KE 12/21					10	WASH.			
Checked By	Bedi, G					JOB NUMBER 19Y007				
Detailed By	Uhde, T/DeBoer, J 12/21									
Bridge Projects Engr.										
Prelim. Plan By						CONTRACT NO.				
Architect/Specialist		DATE	REVISION	BY	APP'D					

P.E. STAMP BOX
RICHARD P. ZELDENRUST
STATE OF WASHINGTON
25470
PROFESSIONAL ENGINEER
SEE SHEET CT5
DATE:

BRIDGE AND STRUCTURES OFFICE

P.E. STAMP BOX
BIJAN KHALEGHI
STATE OF WASHINGTON
27695
PROFESSIONAL ENGINEER
SEE SHEET CT5
DATE:

Washington State Department of Transportation

I-90
CABIN CR I/C TO W EASTON I/C
PHASE 3 - ADD LANES/WILDLIFE BRIDGES

DB2 FOOTING LAYOUT AND ELEVATION 9 OF 9

BRIDGE SHEET NO. DB19
SHEET 855 OF 1783 SHEETS

Mon Feb 07 14:33:18 2022

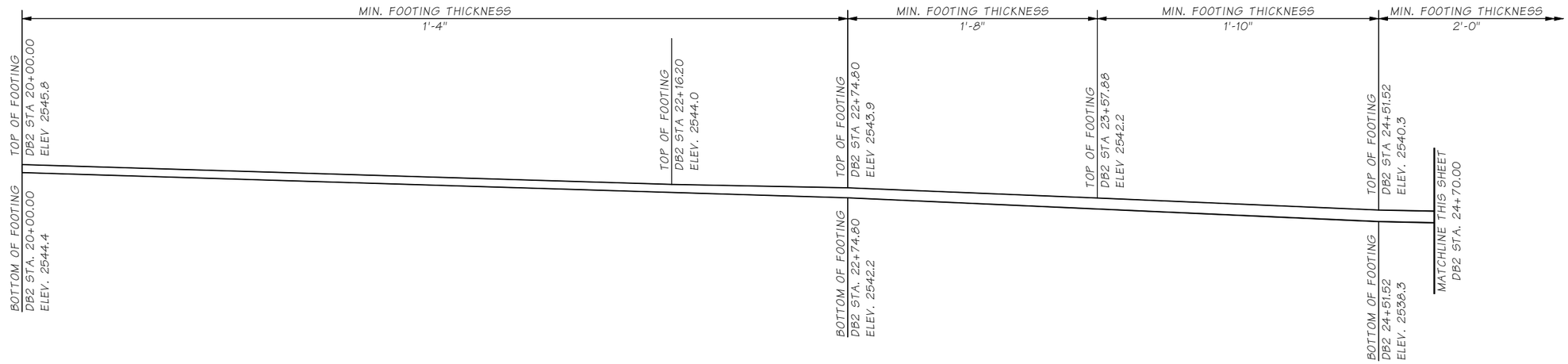

DB2 FOOTING PROFILE

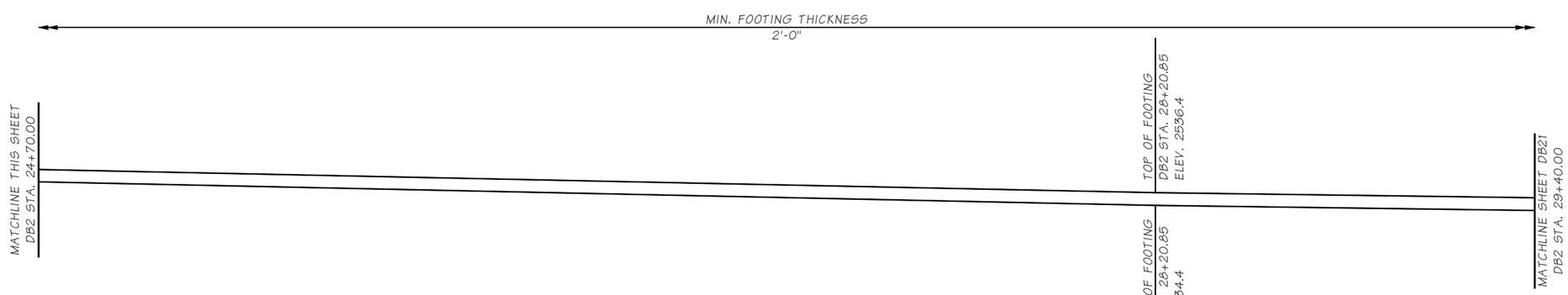

DB2 FOOTING PROFILE

DATUM

NAVD 88

SR ____ FILE NO. ____ SHEET DB20

Bridge Design Engr.	Khaleghi, B	M:\Z-Team\I-90 PHASE 3 CABIN CR WALLS\window files\DB2 PROFILE 1.wnd								
Supervisor	Zeldenrust, RP					REGION NO.	STATE	FED. AID PROJ. NO.	SHEET NO.	TOTAL SHEETS
Designed By	Olleman, KE 03/21					10	WASH.			
Checked By	Bedi, G					JOB NUMBER 19Y007				
Detailed By	Evans, A 03/21									
Bridge Projects Engr.										
Prelim. Plan By						CONTRACT NO.				
Architect/Specialist		DATE	REVISION	BY	APP'D					

P.E. STAMP BOX
RICHARD P. ZELDENRUST
STATE OF WASHINGTON
25470
STRUCTURAL ENGINEER
PROFESSIONAL ENGINEER
SEE SHEET CT5
DATE:

BRIDGE AND STRUCTURES OFFICE

P.E. STAMP BOX
BIJAN KHALEGHI
STATE OF WASHINGTON
27695
STRUCTURAL ENGINEER
PROFESSIONAL ENGINEER
SEE SHEET CT5
DATE:

Washington State Department of Transportation

I-90
CABIN CR I/C TO W EASTON I/C
PHASE 3 - ADD LANES/WILDLIFE BRIDGES

DIFFERENTIAL BARRIER WALL 2
FOOTING PROFILE 1 OF 2

BRIDGE SHEET NO. DB20

SHEET 856 OF 1783 SHEETS

Mon Feb 07 14:33:20 2022

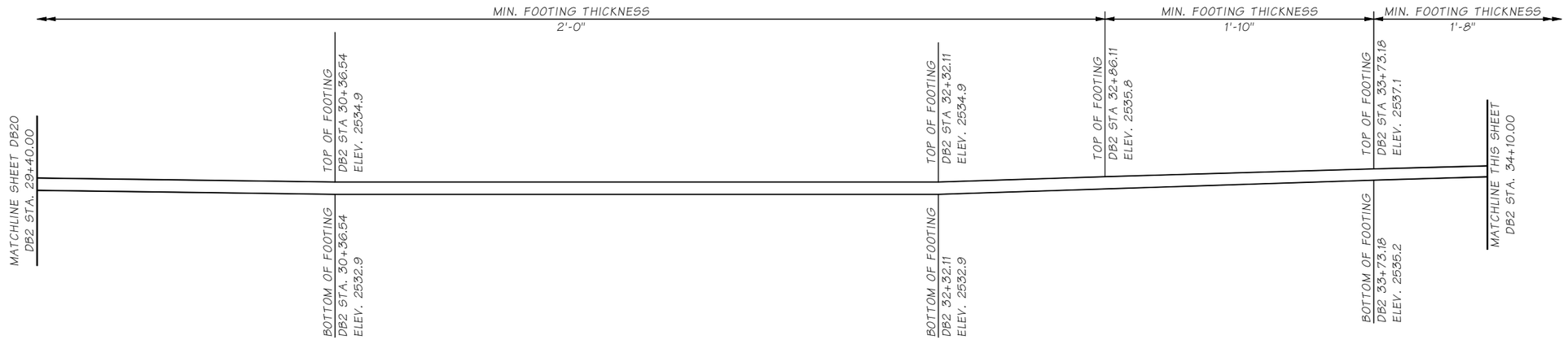

DB2 FOOTING PROFILE

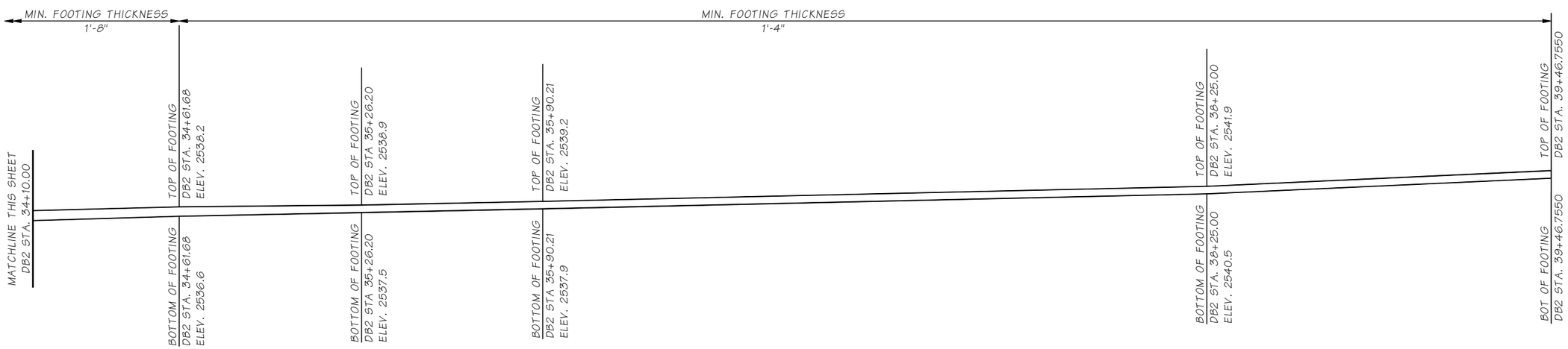

DB2 FOOTING PROFILE

DATUM

NAVD 88

SR ____ FILE NO. ____ SHEET DB21

Bridge Design Engr.	Khaleghi, B	M:\Z-Team\I-90 PHASE 3 CABIN CR WALLS\window files\DB2 PROFILE 2.wnd								
Supervisor	Zeldenrust, RP									
Designed By	Olleman, KE 06/21									
Checked By	Bedi, G									
Detailed By	Evans, A 06/21									
Bridge Projects Engr.										
Prelim. Plan By										
Architect/Specialist		DATE	REVISION	BY	APP'D					

REGION NO.	STATE	FED. AID PROJ. NO.	SHEET NO.	TOTAL SHEETS
10	WASH.			
JOB NUMBER 19Y007				
CONTRACT NO.				

P.E. STAMP BOX
RICHARD P. ZELDENRUST
STATE OF WASHINGTON
25476
REGISTERED PROFESSIONAL ENGINEER
SEE SHEET CT5
DATE

BRIDGE AND STRUCTURES OFFICE

P.E. STAMP BOX
BIJAN KHALEGHI
STATE OF WASHINGTON
27695
REGISTERED PROFESSIONAL ENGINEER
SEE SHEET CT5
DATE

Washington State Department of Transportation

I-90
CABIN CR I/C TO W EASTON I/C
PHASE 3 - ADD LANES/WILDLIFE BRIDGES

DIFFERENTIAL BARRIER WALL 2
FOOTING PROFILE 2 OF 2

BRIDGE SHEET NO. DB21

SHEET 857 OF 1783 SHEETS

Mon Feb 07 14:33:22 2022

ELEVATIONS - SCHEDULE		
DB2 STATION	LW CURBLINE ELEVATION	LE CURBLINE ELEVATION
20+00.00	2547.78'	2547.78'
20+20.00	2547.70'	2547.54'
20+40.00	2547.62'	2547.29'
20+60.00	2547.52'	2547.04'
20+80.00	2547.58'	2546.79'
21+00.00	2547.64'	2546.52'
21+20.00	2547.69'	2546.26'
21+40.00	2547.74'	2545.98'
21+60.00	2547.78'	2545.70'
21+80.00	2547.82'	2545.42'
22+00.00	2547.85'	2545.13'
22+20.00	2547.88'	2544.82'
22+40.00	2547.90'	2544.50'
22+60.00	2547.91'	2544.17'
22+80.00	2547.86'	2543.82'
23+00.00	2547.71'	2543.44'
23+20.00	2547.54'	2543.05'
23+40.00	2547.38'	2542.62'
23+60.00	2547.21'	2542.19'
23+80.00	2547.04'	2541.75'
24+00.00	2546.87'	2541.31'
24+20.00	2546.71'	2540.85'
24+40.00	2546.54'	2540.60'
24+60.00	2546.37'	2540.35'
24+80.00	2546.20'	2540.11'
25+00.00	2546.04'	2539.88'
25+20.00	2545.87'	2539.64'

ELEVATIONS - SCHEDULE (CONT.)		
DB2 STATION	LW CURBLINE ELEVATION	LE CURBLINE ELEVATION
25+40.00	2545.70'	2539.42'
25+60.00	2545.53'	2539.19'
25+80.00	2545.37'	2538.97'
26+00.00	2545.20'	2538.75'
26+20.00	2545.03'	2538.53'
26+40.00	2544.86'	2538.32'
26+60.00	2544.70'	2538.11'
26+80.00	2544.53'	2537.91'
27+00.00	2544.36'	2537.71'
27+20.00	2544.19'	2537.51'
27+40.00	2544.03'	2537.32'
27+60.00	2543.86'	2537.13'
27+80.00	2543.69'	2536.94'
28+00.00	2543.52'	2536.76'
28+20.00	2543.36'	2536.58'
28+40.00	2543.19'	2536.40'
28+60.00	2543.03'	2536.23'
28+80.00	2542.88'	2536.06'
29+00.00	2542.74'	2535.89'
29+20.00	2542.60'	2535.74'
29+40.00	2542.48'	2535.60'
29+60.00	2542.37'	2535.47'
29+80.00	2542.26'	2535.36'
30+00.00	2542.17'	2535.26'
30+20.00	2542.08'	2535.17'
30+40.00	2542.00'	2535.10'
30+60.00	2541.93'	2535.04'

ELEVATIONS - SCHEDULE (CONT.)		
DB2 STATION	LW CURBLINE ELEVATION	LE CURBLINE ELEVATION
30+80.00	2541.88'	2535.00'
31+00.00	2541.83'	2534.97'
31+20.00	2541.79'	2534.95'
31+40.00	2541.75'	2534.94'
31+60.00	2541.73'	2534.95'
31+80.00	2541.72'	2534.98'
32+00.00	2541.72'	2535.02'
32+20.00	2541.72'	2535.07'
32+40.00	2541.74'	2535.16'
32+60.00	2541.77'	2535.45'
32+80.00	2541.80'	2535.74'
33+00.00	2541.85'	2536.03'
33+20.00	2541.89'	2536.32'
33+40.00	2541.95'	2536.61'
33+60.00	2542.02'	2536.89'
33+80.00	2542.10'	2537.17'
34+00.00	2542.19'	2537.44'
34+20.00	2542.28'	2537.71'
34+40.00	2542.32'	2537.98'
34+60.00	2542.28'	2538.26'
34+80.00	2542.25'	2538.53'
35+00.00	2542.22'	2538.73'
35+20.00	2542.20'	2538.85'
35+40.00	2542.20'	2538.99'
35+60.00	2542.20'	2539.16'

ELEVATIONS - SCHEDULE (CONT.)				
DB2 STATION	LW CURBLINE ELEVATION	TOP OF CAP ELEVATION	LE WALL CURBLINE ELEVATION	LE CIP/PRECAST BARRIER CURBLINE ELEVATION
35+67.57	2542.20'	-	2539.23'	2539.23'
35+80.00	2542.21'	-	2539.33'	2539.33'
36+00.00	2542.24'	-	2539.50'	2539.50'
36+20.00	2542.27'	-	2539.67'	2539.67'
36+40.00	2542.31'	2541.48'	2539.86'	2539.86'
36+60.00	2542.50'	2541.14'	2540.06'	2540.06'
36+80.00	2542.72'	2540.81'	2540.27'	2540.27'
37+00.00	2542.95'	2540.48'	2540.38'	2540.48'
37+01.31	-	2540.45'	-	-
37+20.00	2543.19'	-	2540.60'	2535.45'
37+40.00	2543.44'	-	2540.83'	2535.74'
37+60.00	2543.70'	-	2541.07'	2536.03'
37+80.00	2543.97'	-	2541.31'	2536.32'
38+00.00	2544.25'	-	2541.57'	2536.61'
38+20.00	2544.54'	-	2541.84'	2536.89'
38+40.00	2544.83'	-	2542.13'	2537.17'
38+60.00	2545.14'	-	2542.56'	2537.44'
38+80.00	2545.46'	-	2543.01'	2537.71'
39+00.00	2545.78'	-	2543.46'	2537.98'
39+20.00	2546.12'	-	2543.92'	2538.26'
39+40.00	2546.46'	-	2544.39'	2538.53'
39+46.76	2546.58'	-	2544.53'	2538.73'

DATUM

NAVD 88

SR ____ FILE NO. ____ SHEET DB22

Bridge Design Engr.	Khaleghi, B	M:\Z-Team\I-90 PHASE 3 CABIN CR WALLS\window files\DB2 CURBLINE PROFILE 1.wnd								
Supervisor	Zeldenrust, RP				REGION NO.	STATE	FED. AID PROJ. NO.	SHEET NO.	TOTAL SHEETS	
Designed By	Olleman, KE 07/21				10	WASH.				
Checked By	Bedi, G				JOB NUMBER 19Y007					
Detailed By	Uhde, T 07/21									
Bridge Projects Engr.					CONTRACT NO.					
Prelim. Plan By										
Architect/Specialist		DATE	REVISION	BY	APP'D					

Mon Feb 07 14:33:25 2022

P.E. STAMP BOX — RICHARD P. ZELDENRUST, STATE OF WASHINGTON, 26470, PROFESSIONAL ENGINEER — SEE SHEET CT5 — DATE

BRIDGE AND STRUCTURES OFFICE

P.E. STAMP BOX — BIJAN KHALEGHI, STATE OF WASHINGTON, 27906, PROFESSIONAL ENGINEER — SEE SHEET CT5 — DATE

Washington State Department of Transportation

I-90
CABIN CR I/C TO W EASTON I/C
PHASE 3 - ADD LANES/WILDLIFE BRIDGES

DB2 CURBLINE PROFILE 1

BRIDGE SHEET NO. DB22

SHEET 858 OF 1783 SHEETS

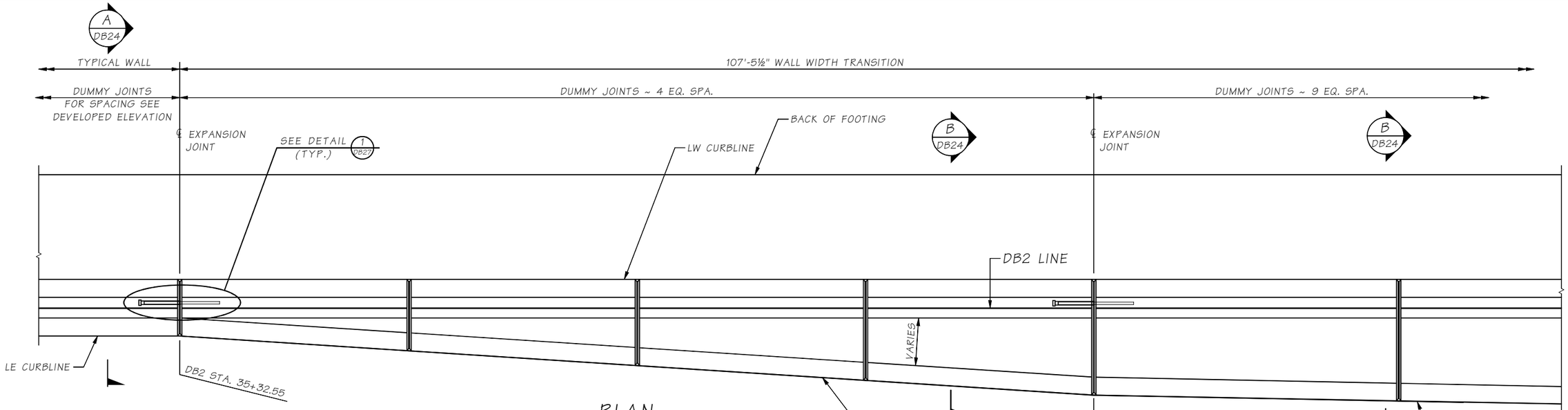

PLAN
DB2 BARRIER TRANSITION

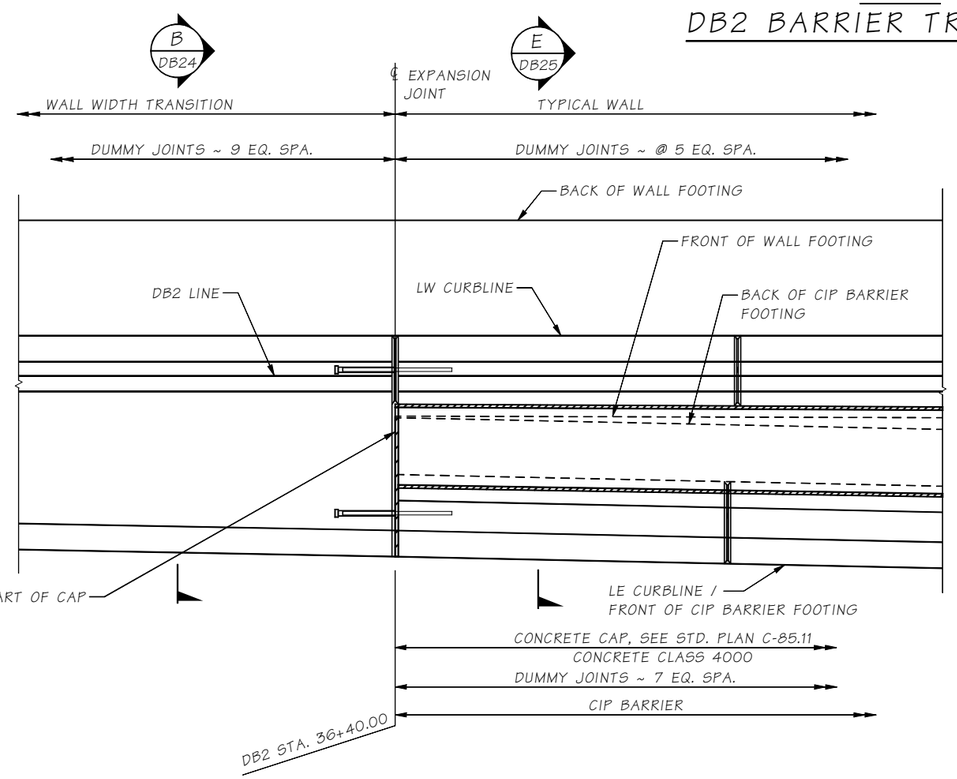

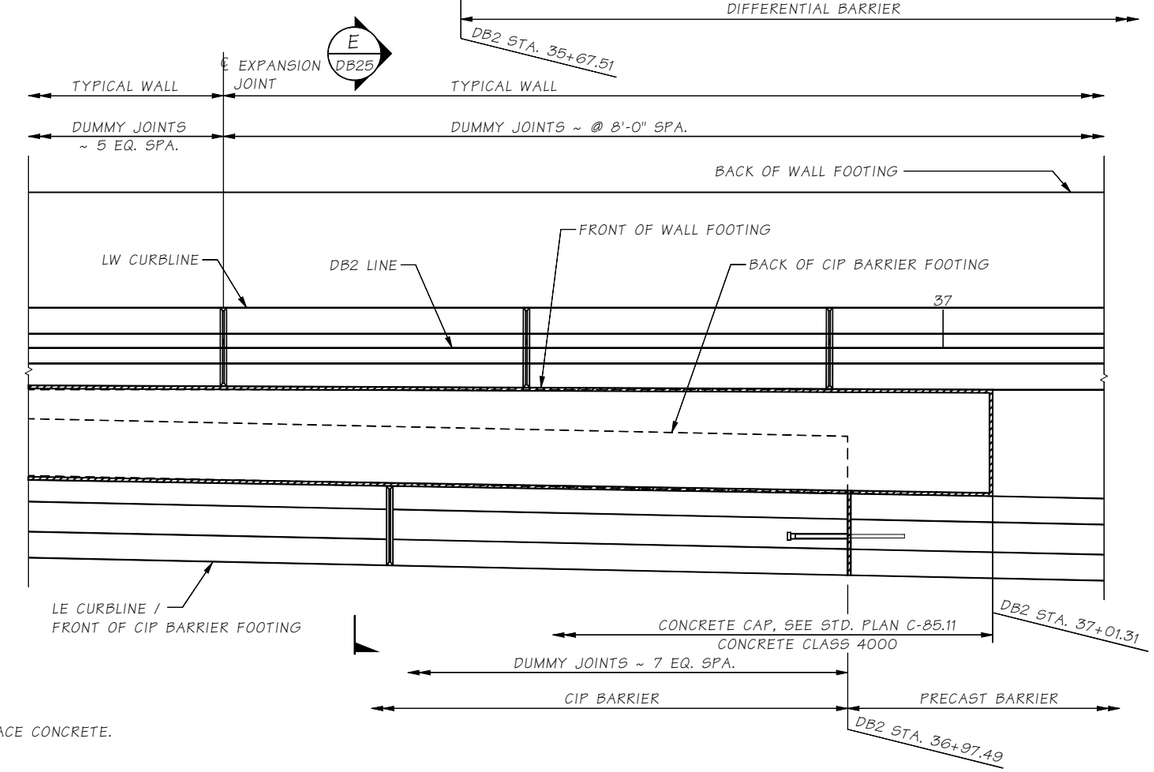

NOTE:

1. CIP = CAST-IN-PLACE CONCRETE.

SR ____ FILE NO. ____ SHEET DB23

Bridge Design Engr.	Khaleghi, B	M:\Z-Team\I-90 PHASE 3 CABIN CR WALLS\window files\DB2 BARRIER TRANSITION.wnd								
Supervisor	Zeldenrust, RP									
Designed By	Olleman, KE 07/21									
Checked By	Bedi, G									
Detailed By	Uhde, T/DeBoer, J 07/21									
Bridge Projects Engr.										
Prelim. Plan By										
Architect/Specialist		DATE	REVISION	BY	APP'D					

REGION NO.	STATE	FED. AID PROJ. NO.	SHEET NO.	TOTAL SHEETS
10	WASH.			
JOB NUMBER 19Y007				
CONTRACT NO.				

P.E. STAMP BOX
RICHARD P. ZELDENRUST
STATE OF WASHINGTON
25476
STRUCTURAL ENGINEER
PROFESSIONAL ENGINEER
SEE SHEET CT5
DATE

BRIDGE AND STRUCTURES OFFICE

P.E. STAMP BOX
BIJAN KHALEGHI
STATE OF WASHINGTON
27695
STRUCTURAL ENGINEER
PROFESSIONAL ENGINEER
SEE SHEET CT5
DATE

Washington State Department of Transportation

I-90
CABIN CR I/C TO W EASTON I/C
PHASE 3 - ADD LANES/WILDLIFE BRIDGES

DB2 BARRIER TRANSITION

BRIDGE SHEET NO. DB23
SHEET 859 OF 1783 SHEETS

Mon Feb 07 14:33:41 2022

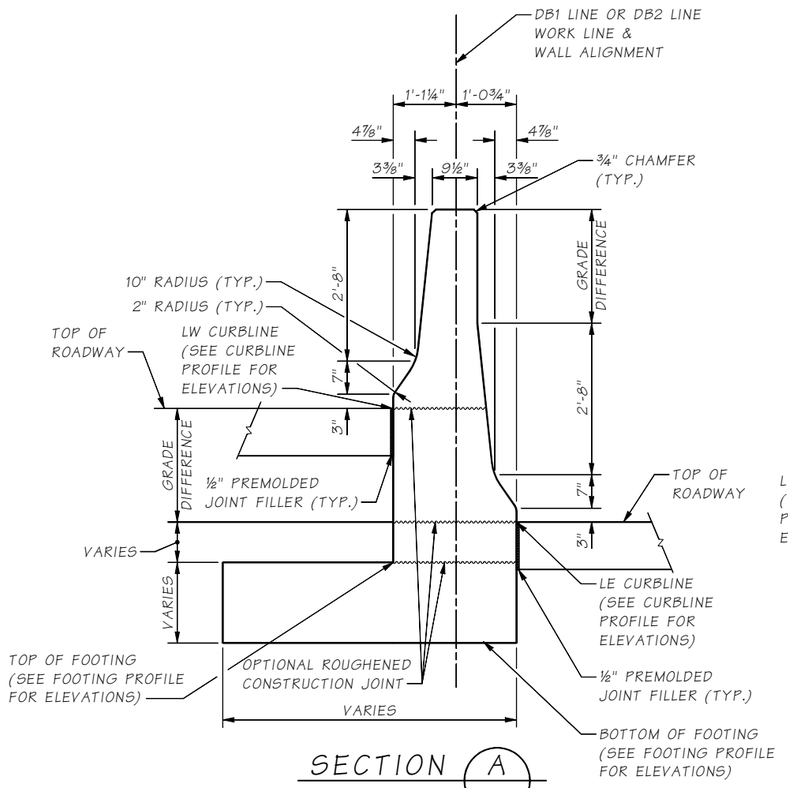

SECTION A

TYPICAL WALL.
FOR REBAR, SEE TYPICAL WALL
REBAR DETAIL.

DB4, DB5, DB7,
DB11, DB12, DB13,
DB14, DB15, DB16,
DB17, DB18, DB19,
DB23

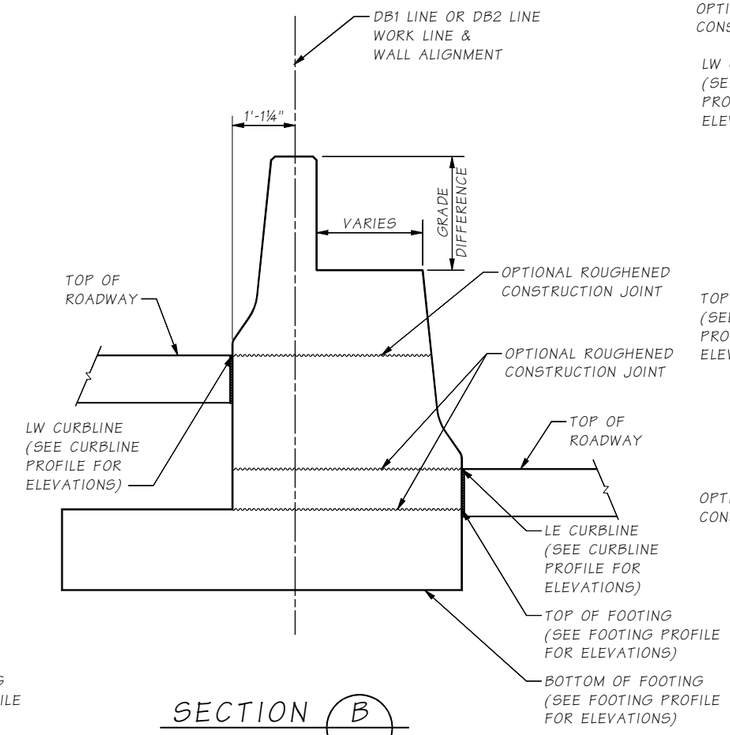

SECTION B

WALL WIDTH
TRANSITION. SEE
SECTION A FOR BARRIER GEOMETRY
INFORMATION. FOR REBAR, SEE WIDTH
TRANSITION WALL REBAR DETAIL.

DB4, DB7, DB18,
DB23

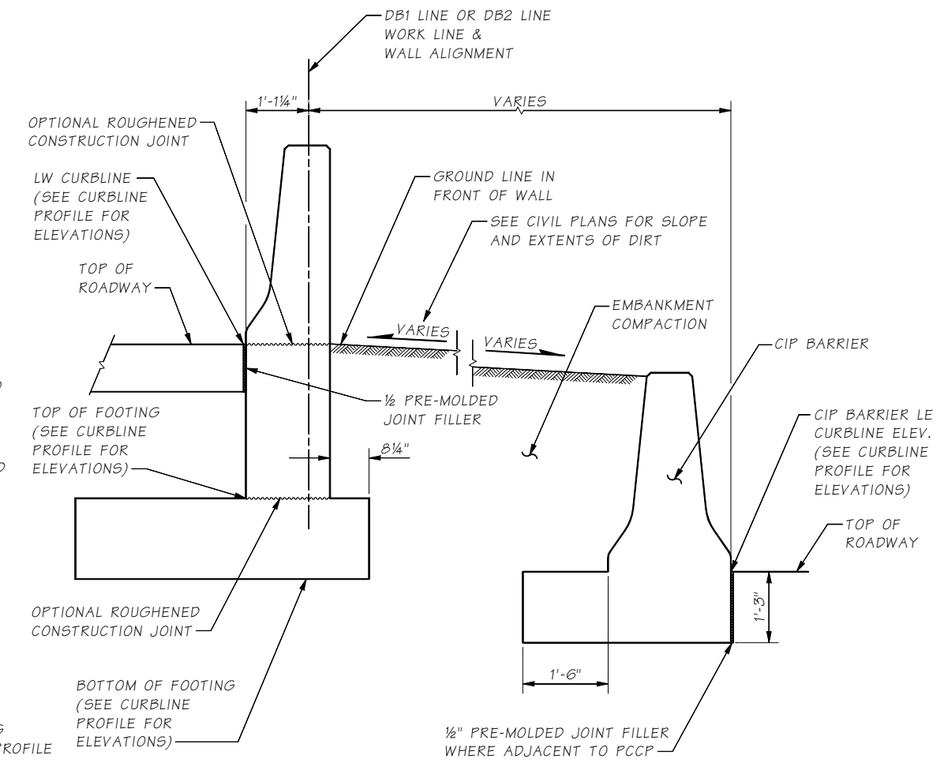

SECTION C

TYPICAL WALL WITH CIP BARRIER
AND EMBANKMENT COMPACTION
IN FRONT OF WALL. SEE SECTION A FOR
BARRIER GEOMETRY INFORMATION.
FOR REBAR, SEE SINGLE BARRIER
REBAR DETAIL AND CIP BARRIER
REBAR DETAIL.

DB3, DB7

*MINIMUM DISTANCE BETWEEN CONSTRUCTION
JOINTS SHALL BE 40'-0" UNLESS OTHERWISE NOTED.

SR ____ FILE NO. ____ SHEET DB24

Bridge Design Engr.	Khaleghi, B	M:\Z-Team\I-90 PHASE 3 CABIN CR WALLS\window files\DB WALL DETAILS 1.wnd								
Supervisor	Zeldenrust, RP									
Designed By	Olleman, KE 03/21									
Checked By	Bedi, G									
Detailed By	T.U./S.S./J.D. 03/21									
Bridge Projects Engr.										
Prelim. Plan By										
Architect/Specialist		DATE	REVISION	BY	APP'D					

REGION NO.	STATE	FED. AID PROJ. NO.	SHEET NO.	TOTAL SHEETS
10	WASH.			
JOB NUMBER 19Y007				
CONTRACT NO.				

P.E. STAMP BOX
RICHARD P. ZELDENRUST
STATE OF WASHINGTON
25470
PROFESSIONAL ENGINEER
SEE SHEET CT5
DATE

BRIDGE AND STRUCTURES OFFICE

P.E. STAMP BOX
BILAN KHALEGHI
STATE OF WASHINGTON
27646
PROFESSIONAL ENGINEER
SEE SHEET CT5
DATE

Washington State
Department of Transportation

I-90
CABIN CR I/C TO W EASTON I/C
PHASE 3 - ADD LANES/WILDLIFE BRIDGES

DIFFERENTIAL BARRIER WALL
DETAILS 1 OF 4

BRIDGE SHEET NO. DB24

SHEET 860 OF 1783 SHEETS

Mon Feb 07 14:33:46 2022

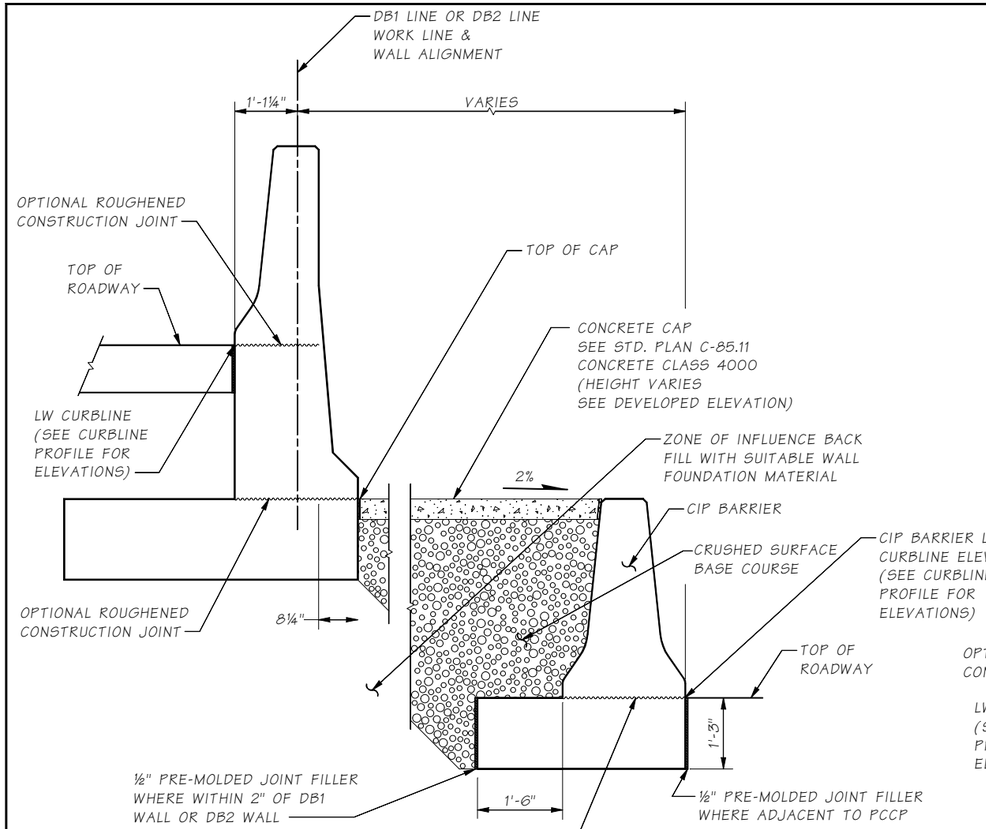

SECTION D

TYPICAL DB1 BARRIER WALL W/ CIP BARRIER AND CAP IN FRONT OF WALL. SEE SECTION A FOR BARRIER GEOMETRY INFORMATION. FOR REBAR, SEE TYPICAL WALL REBAR DETAIL AND CIP BARRIER REBAR DETAIL.

DB3, DB4, DB7

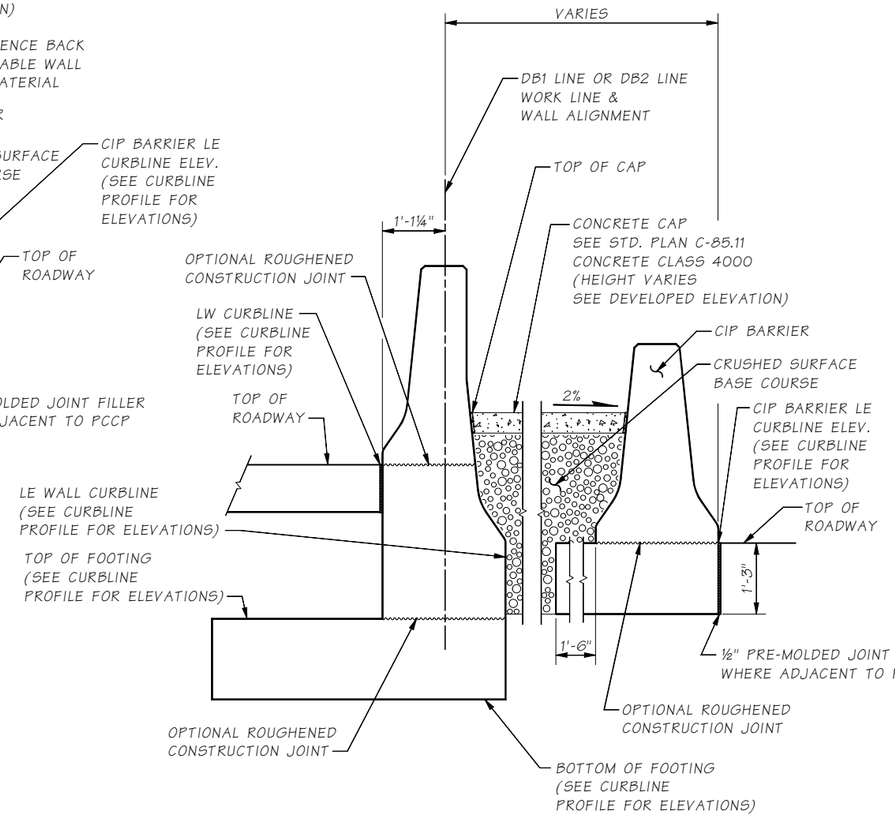

SECTION E

TYPICAL DB2 WALL WITH CIP BARRIER AND CAP IN FRONT OF WALL. SEE SECTION A FOR BARRIER GEOMETRY INFORMATION. FOR REBAR, SEE TYPICAL WALL REBAR DETAIL AND CIP BARRIER REBAR DETAIL.

DB18, DB19, DB23

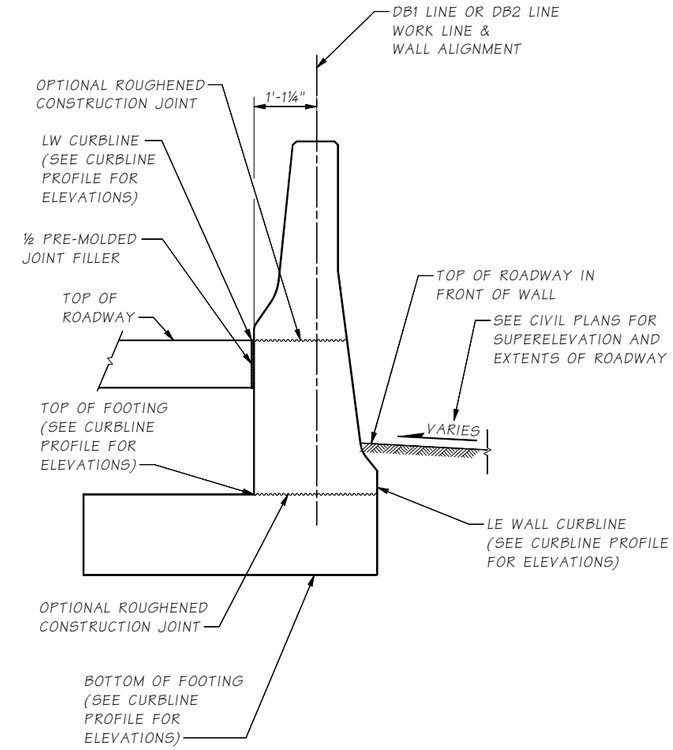

SECTION F

TYPICAL WALL WITH RAISED ROADWAY IN FRONT OF WALL. SEE SECTION A FOR BARRIER GEOMETRY INFORMATION. FOR REBAR, SEE SINGLE BARRIER REBAR DETAIL.

DB19

NOTE:

1. CIP = CAST-IN-PLACE CONCRETE.

CIP BARRIER INSTALLATION NOTES

1. THE BARRIER GEOMETRY REFERENCE LINE (B.G.R.L.) IS PERPENDICULAR TO THE TRANSVERSE ROADWAY SLOPE (T.R.S.). FOR SUPERELEVATED TRANSVERSE ROADWAY SLOPES, THE B.G.R.L. ON THE LOW SIDE OF THE ROADWAY SHALL BE PERPENDICULAR TO THE T.R.S. UP TO A MAXIMUM OF 8% SUPERELEVATION. THE B.G.R.L. ON THE HIGH SIDE SHALL ALWAYS BE PERPENDICULAR TO THE T.R.S. GEOMETRY SHALL BE ADJUSTED AS REQUIRED TO PROVIDE A SMOOTH TRANSITION IN ABUTTING BARRIER TYPES.

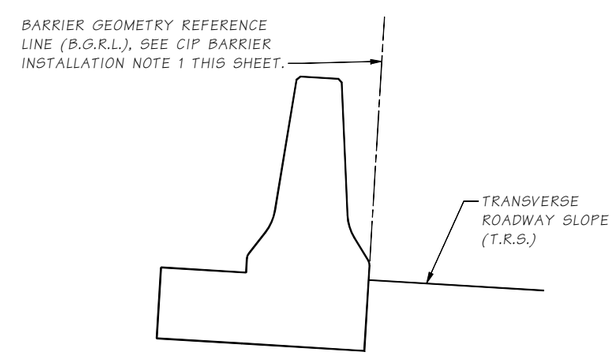

CIP BARRIER ORIENTATION DETAIL

Bridge Design Engr.	Khaleghi, B	M:\Z-Team\I-90 PHASE 3 CABIN CR WALLS\window files\DB WALL DETAILS 2.wnd									
Supervisor	Zeldenrust, RP										
Designed By	Olleman, KE 03/21										
Checked By	Bedi, G										
Detailed By	T.U/S.S./J.D. 03/21										
Bridge Projects Engr.											
Prelim. Plan By											
Architect/Specialist		DATE	REVISION	BY	APP'D						

REGION NO.	STATE	FED. AID PROJ. NO.	SHEET NO.	TOTAL SHEETS
10	WASH.			
JOB NUMBER 19Y007				
CONTRACT NO.				

P.E. STAMP BOX — RICHARD P. ZELDENRUST, STATE OF WASHINGTON, 28470, PROFESSIONAL ENGINEER — SEE SHEET CT5 — DATE

BRIDGE AND STRUCTURES OFFICE

P.E. STAMP BOX — BRIAN KHALEGHI, STATE OF WASHINGTON, 27696, PROFESSIONAL ENGINEER — SEE SHEET CT5 — DATE

Washington State Department of Transportation

I-90
CABIN CR I/C TO W EASTON I/C
PHASE 3 - ADD LANES/WILDLIFE BRIDGES

DIFFERENTIAL BARRIER WALL DETAILS 2 OF 4

BRIDGE SHEET NO. DB25

SHEET 861 OF 1783 SHEETS

SR FILE NO. SHEET DB25

Mon Feb 07 14:51:37 2022

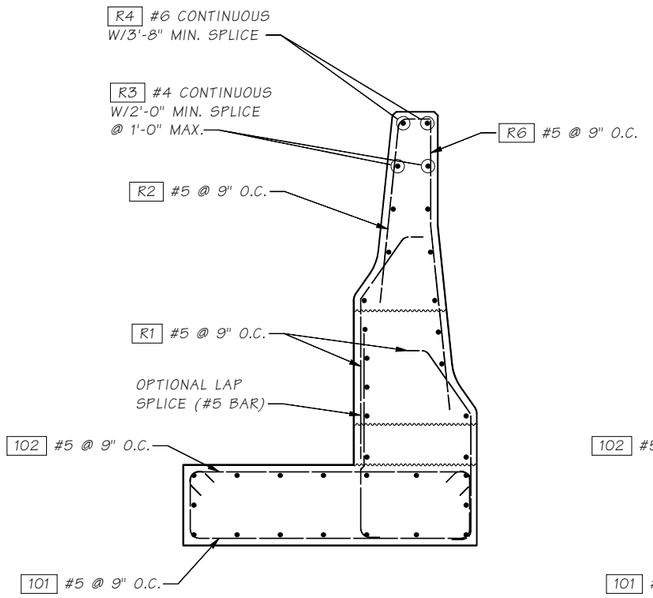

TYPICAL WALL REBAR DETAIL

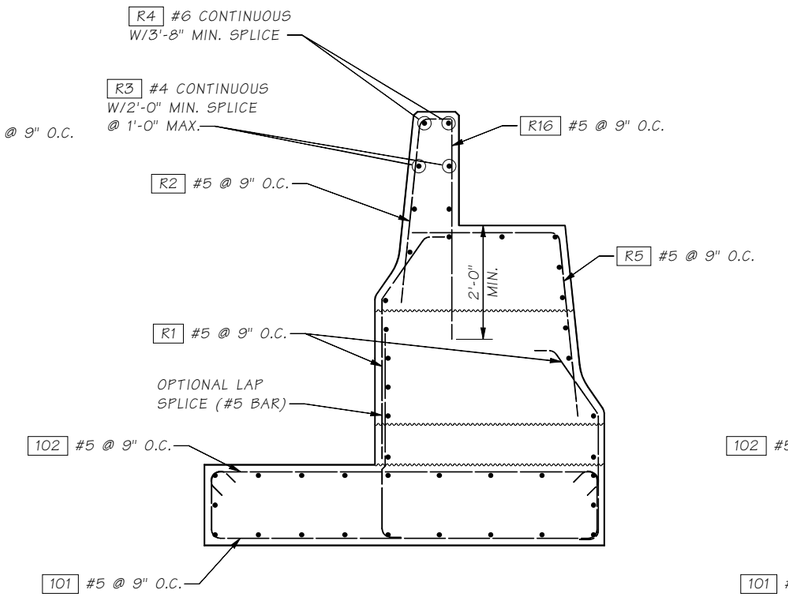

WIDTH TRANSITION REBAR DETAIL

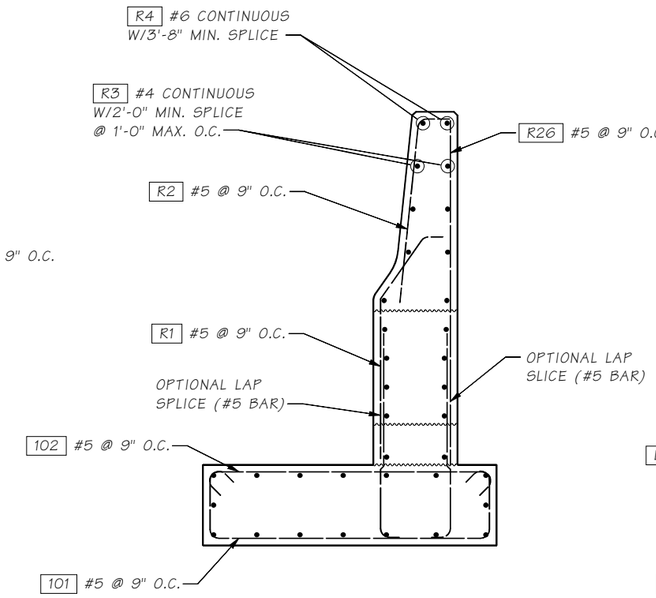

SINGLE BARRIER REBAR DETAIL

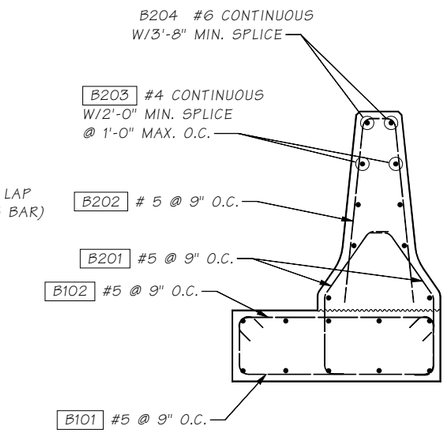

CIP BARRIER REBAR DETAIL

REINFORCING STEEL BENDING DIAGRAM

ALL DIMENSIONS ARE OUT TO OUT

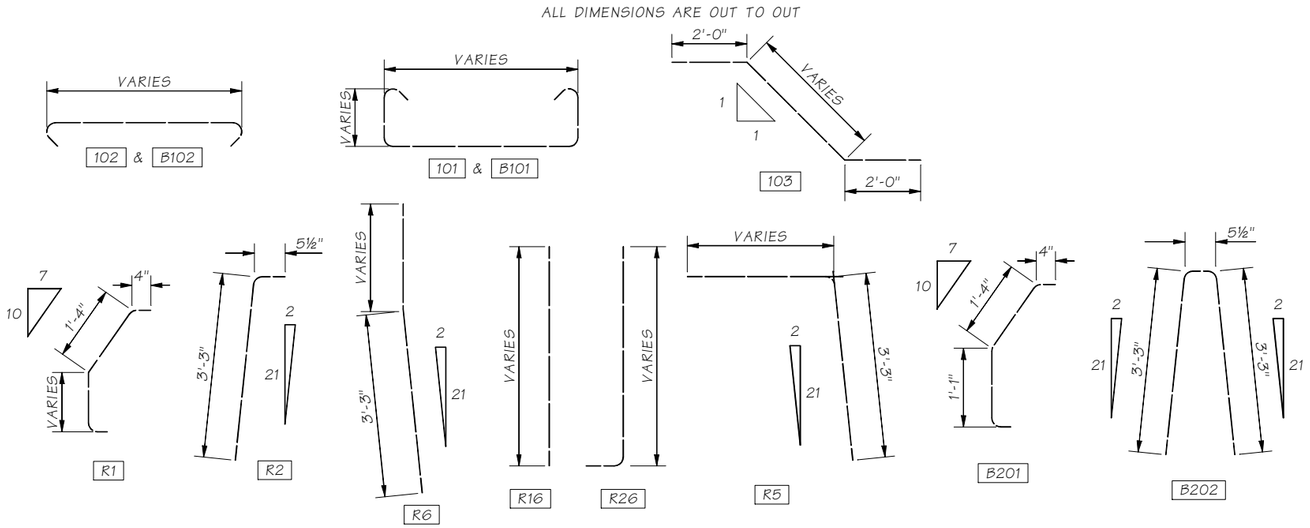

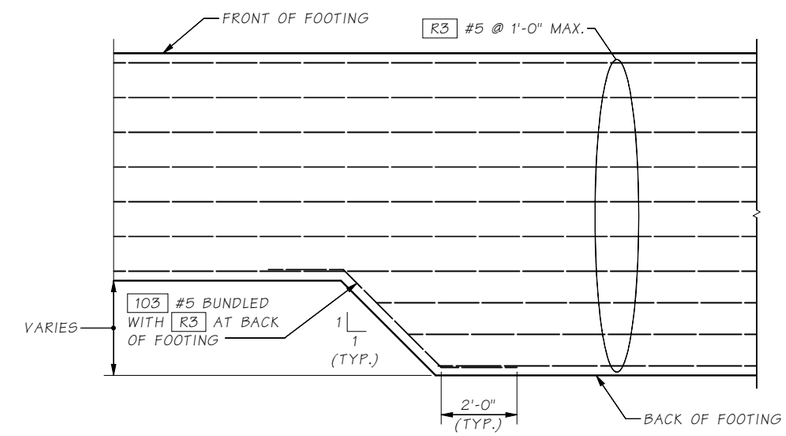

FOOTING STEP PLAN VIEW DETAIL

TRANSVERSE FOOTING REINFORCEMENT NOT SHOWN FOR CLARITY

NOTES:

1. MIN. LAP SPLICE:
   #4 = 2'-0"
   #5 = 2'-0"
   #6 = 3'-1"
2. DO NOT SPLICE MORE THAN 50% BARS AT ANY ONE LOCATION UNLESS NOTED OTHERWISE. STAGGER SPLICES A MINIMUM OF ONE SPLICE LENGTH.
3. CIP = CAST-IN-PLACE CONCRETE.

Bridge Design Engr.	Khaleghi, B	M:\Z-Team\I-90 PHASE 3 CABIN CR WALLS\window files\DB WALL DETAILS 3.wnd			REGION NO.	STATE	FED. AID PROJ. NO.	SHEET NO.	TOTAL SHEETS	P.E. STAMP BOX
Supervisor	Zeldenrust, RP				10	WASH.				RICHARD P. ZELDENRUST, STATE OF WASHINGTON, 25470, PROFESSIONAL ENGINEER
Designed By	Olleman, KE 07/21				JOB NUMBER 19Y007					SEE SHEET CT5
Checked By	Bedi, G									DATE
Detailed By	Uhde,T/Swantak,S 07/21									BRIDGE AND STRUCTURES OFFICE
Bridge Projects Engr.										P.E. STAMP BOX
Prelim. Plan By										BILAN KHALEGHI, STATE OF WASHINGTON, 27695, PROFESSIONAL ENGINEER
Architect/Specialist		DATE	REVISION	BY	APP'D	CONTRACT NO.				SEE SHEET CT5
										DATE

Mon Feb 07 14:33:55 2022

Washington State Department of Transportation

I-90
CABIN CR I/C TO W EASTON I/C
PHASE 3 - ADD LANES/WILDLIFE BRIDGES

DIFFERENTIAL BARRIER WALL DETAILS 3 OF 4

BRIDGE SHEET NO. DB26

SHEET 862 OF 1783 SHEETS

SR FILE NO. SHEET DB26

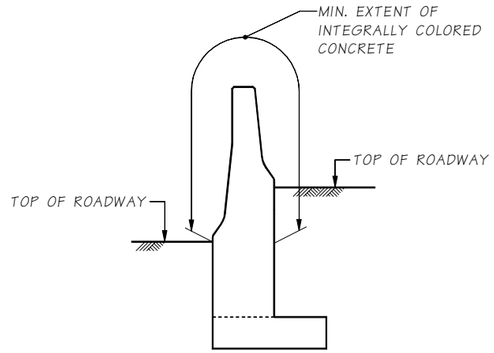

INTEGRALLY COLORED CONCRETE LIMITS FOR WALL & CIP BARRIER

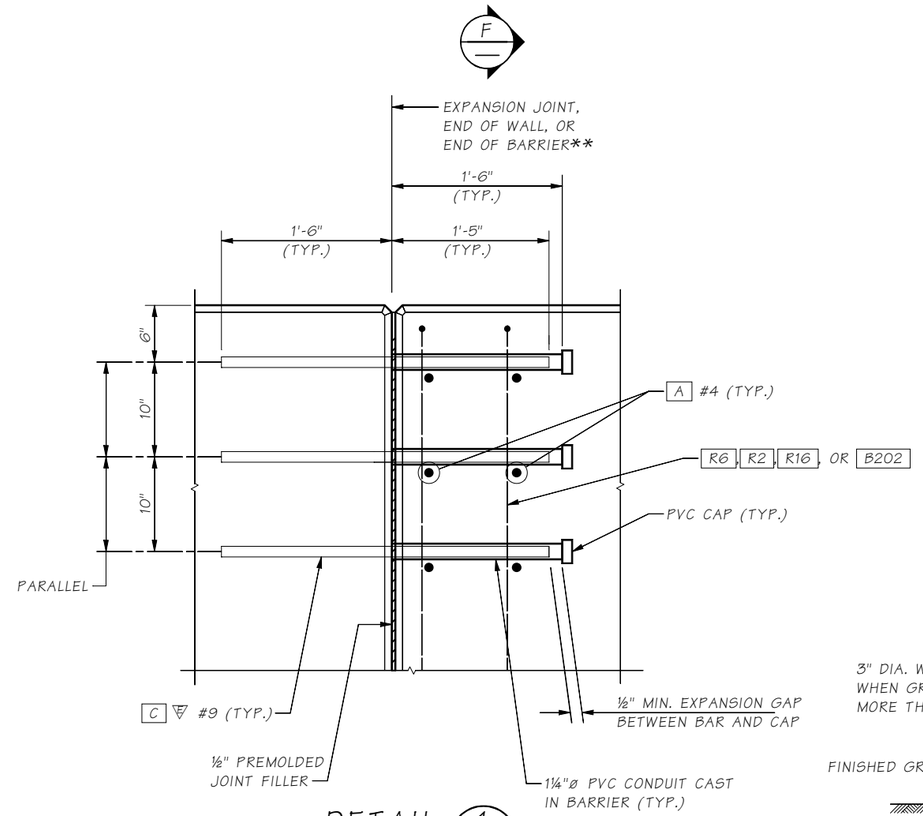

DETAIL 1

WALL REINFORCEMENT NOT SHOWN FOR CLARITY

DB7, DB23

**BARRIER FACES AT THE INTERFACE BETWEEN THE PRECAST BARRIER OR CIP BARRIER AND THE ADJACENT DB1 WALL OR DB2 WALL ARE TO MATCH TO AVOID POTENTIAL SNAG HAZARDS.

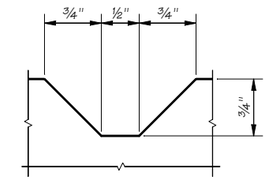

DUMMY JOINT DETAIL

OCCURS EVERY 8'-0" (TYP.)
12'-0" MAX.

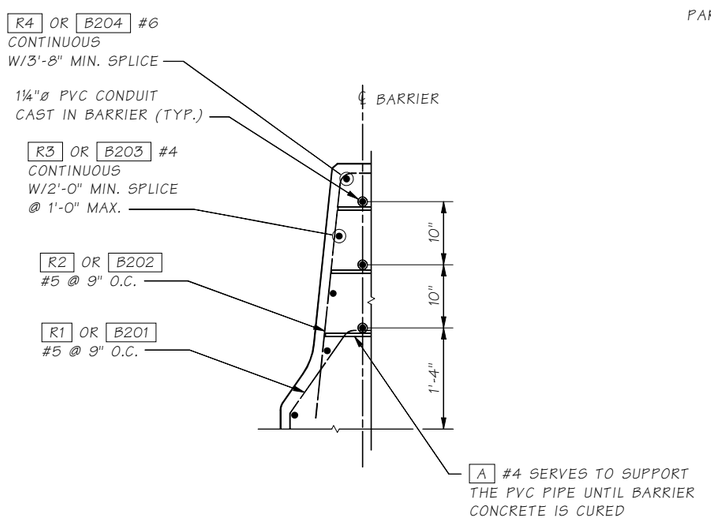

SECTION F

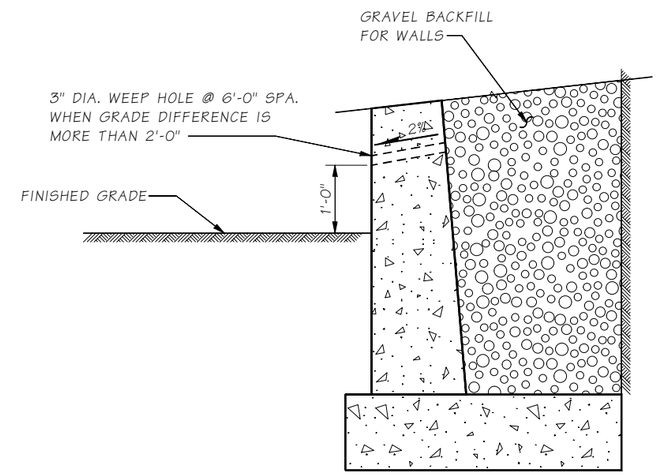

WALL BACKFILL AND DRAINAGE DETAIL

NOTE:

1. CIP = CAST-IN-PLACE CONCRETE.

SR ____ FILE NO. ____ SHEET DB27

Bridge Design Engr.	Khaleghi, B	M:\Z-Team\I-90 PHASE 3 CABIN CR WALLS\window files\DB WALL DETAILS 4.wnd				REGION NO.	STATE	FED. AID PROJ. NO.	SHEET NO.	TOTAL SHEETS
Supervisor	Zeldenrust, RP					10	WASH.			
Designed By	Olleman, KE 07/21					JOB NUMBER 19Y007				
Checked By	Bedi, G									
Detailed By	Uhde,T/Swantak,S 07/21					CONTRACT NO.				
Bridge Projects Engr.										
Prelim. Plan By										
Architect/Specialist		DATE	REVISION	BY	APP'D					

Mon Feb 07 14:34:02 2022

P.E. STAMP BOX — RICHARD P. ZELDENRUST, STATE OF WASHINGTON, 20870, PROFESSIONAL ENGINEER — SEE SHEET CT5 — DATE

BRIDGE AND STRUCTURES OFFICE

P.E. STAMP BOX — BILAN KHALEGHI, STATE OF WASHINGTON, 27695, PROFESSIONAL ENGINEER — SEE SHEET CT5 — DATE

Washington State Department of Transportation

I-90
CABIN CR I/C TO W EASTON I/C
PHASE 3 - ADD LANES/WILDLIFE BRIDGES

DIFFERENTIAL BARRIER WALL DETAILS 4 OF 4

BRIDGE SHEET NO. DB27

SHEET 863 OF 1783 SHEETS

CURVE DATA

P.I. STATION	DELTA	RADIUS	TANGENT	LENGTH
CW3 3+18.00	0°44'45" RT	2,766'	18.00'	36'
CW4 4+20.50	0°50'57" RT	2,766'	20.50'	41'

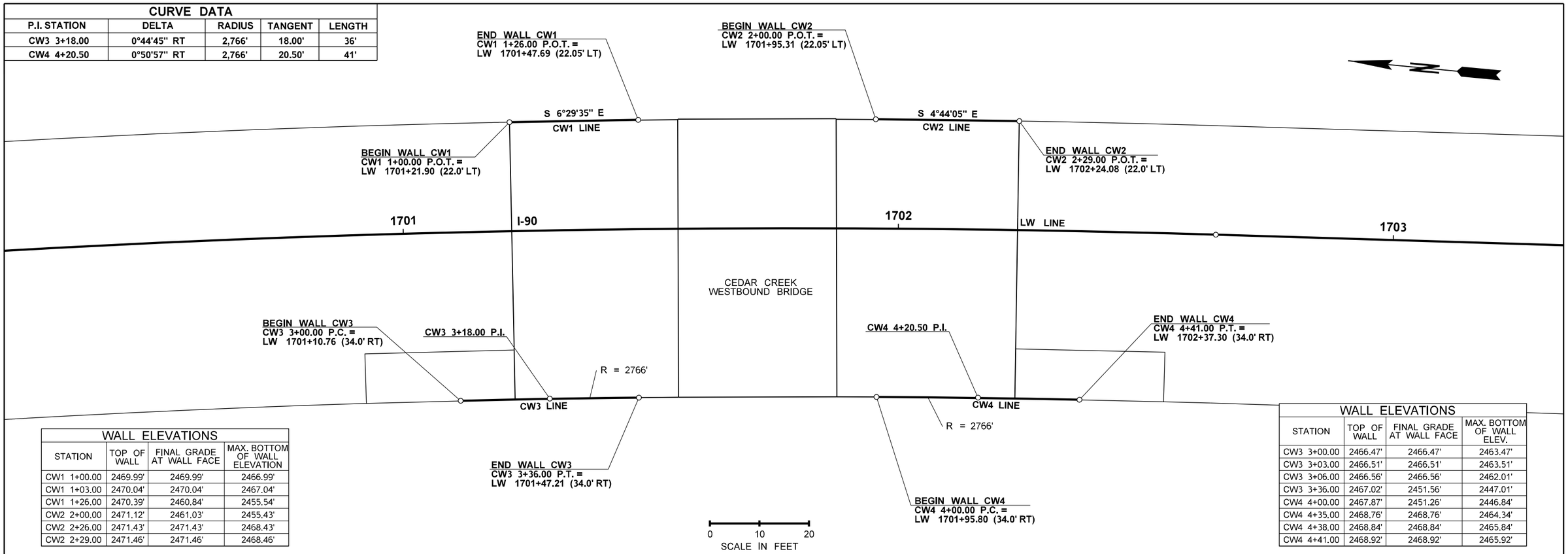

WALL ELEVATIONS

STATION	TOP OF WALL	FINAL GRADE AT WALL FACE	MAX. BOTTOM OF WALL ELEVATION
CW1 1+00.00	2469.99'	2469.99'	2466.99'
CW1 1+03.00	2470.04'	2470.04'	2467.04'
CW1 1+26.00	2470.39'	2460.84'	2455.54'
CW2 2+00.00	2471.12'	2461.03'	2455.43'
CW2 2+26.00	2471.43'	2471.43'	2468.43'
CW2 2+29.00	2471.46'	2471.46'	2468.46'

WALL ELEVATIONS

STATION	TOP OF WALL	FINAL GRADE AT WALL FACE	MAX. BOTTOM OF WALL ELEV.
CW3 3+00.00	2466.47'	2466.47'	2463.47'
CW3 3+03.00	2466.51'	2466.51'	2463.51'
CW3 3+06.00	2466.56'	2466.56'	2462.01'
CW3 3+36.00	2467.02'	2451.56'	2447.01'
CW4 4+00.00	2467.87'	2451.26'	2446.84'
CW4 4+35.00	2468.76'	2468.76'	2464.34'
CW4 4+38.00	2468.84'	2468.84'	2465.84'
CW4 4+41.00	2468.92'	2468.92'	2465.92'

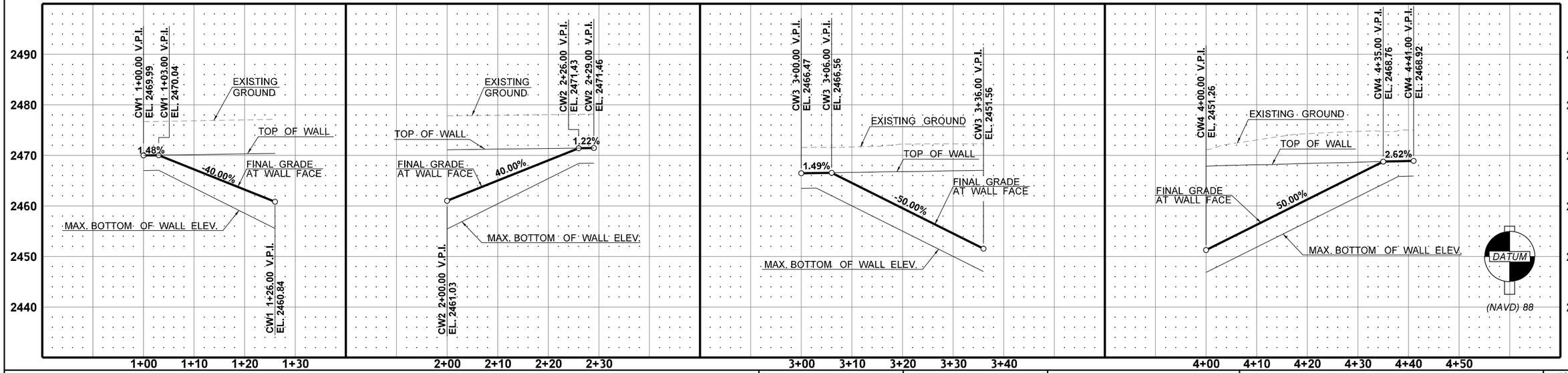

FILE NAME	K:\452201\090\06736_Phase 3\Design_CAD_Sheets\290-MInorStruct\XL5479_PS_BR_Wall.dgn
TIME	6:17:09 PM
DATE	2/16/2022
PLOTTED BY	kingk
DESIGNED BY	M. GIPNER / K. KING
ENTERED BY	J. VENEGAS
CHECKED BY	K. KING
PROJ. ENGR.	A. BYRD
REGIONAL ADM.	T. TREPANIER

REVISION | DATE | BY

REGION NO. 10 | STATE WASH | FED.AID PROJ.NO.

JOB NUMBER 19Y007

CONTRACT NO. | LOCATION NO.

SEE SHEET CT5 DATE

P.E. STAMP BOX

DATE

P.E. STAMP BOX

Washington State Department of Transportation

I-90
CABIN CREEK I/C TO W EASTON I/C
PHASE 3 - ADD LANES/WILDLIFE BRIDGES

CEDAR CREEK
WALL PLAN & PROFILE

Plot 1

PLAN REF NO WS1

SHEET 864 OF 1783 SHEETS

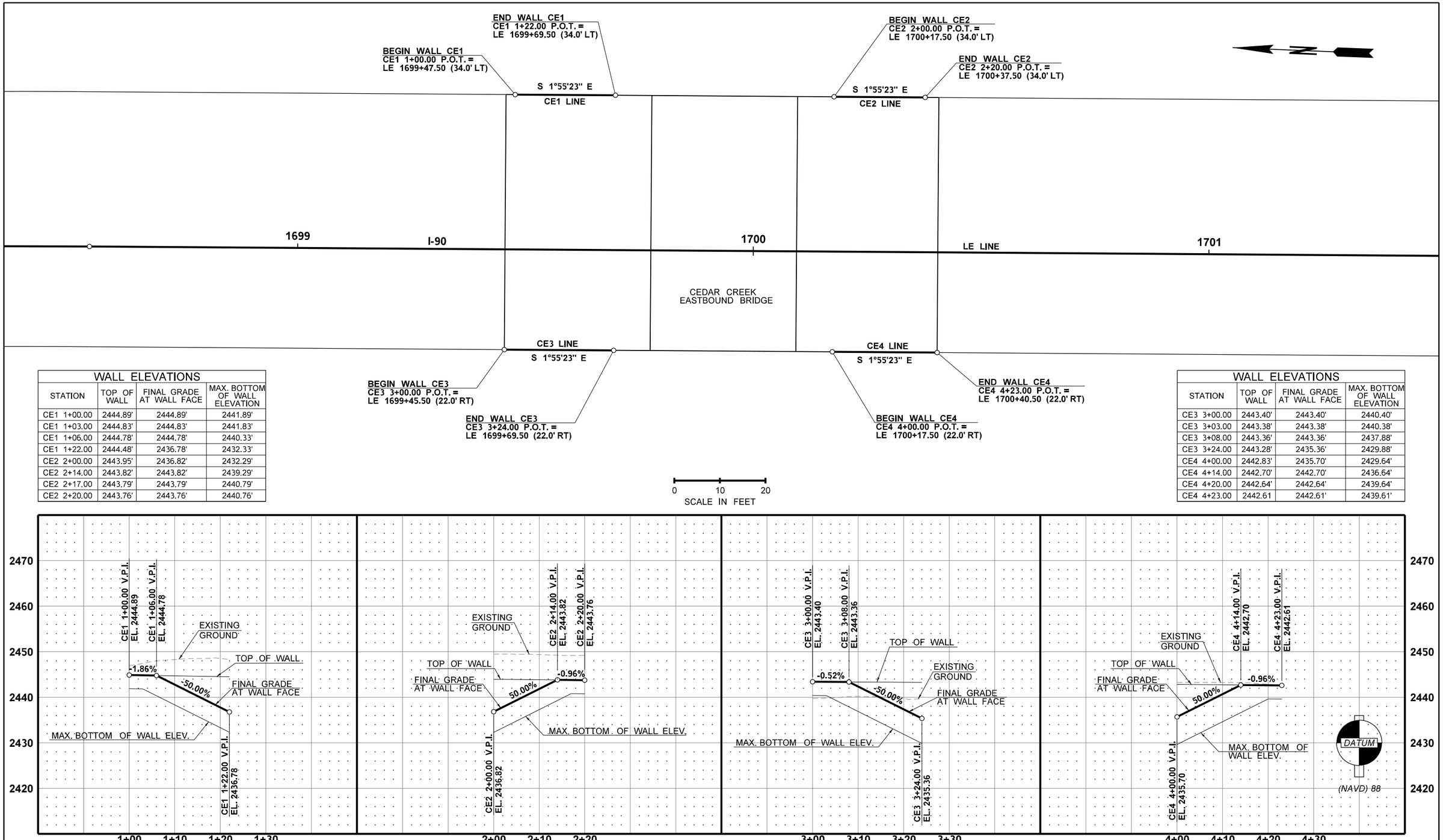

WALL ELEVATIONS			
STATION	TOP OF WALL	FINAL GRADE AT WALL FACE	MAX. BOTTOM OF WALL ELEVATION
CE1 1+00.00	2444.89'	2444.89'	2441.89'
CE1 1+03.00	2444.83'	2444.83'	2441.83'
CE1 1+06.00	2444.78'	2444.78'	2440.33'
CE1 1+22.00	2444.48'	2436.78'	2432.33'
CE2 2+00.00	2443.95'	2436.82'	2432.29'
CE2 2+14.00	2443.82'	2443.82'	2439.29'
CE2 2+17.00	2443.79'	2443.79'	2440.79'
CE2 2+20.00	2443.76'	2443.76'	2440.76'

WALL ELEVATIONS			
STATION	TOP OF WALL	FINAL GRADE AT WALL FACE	MAX. BOTTOM OF WALL ELEVATION
CE3 3+00.00	2443.40'	2443.40'	2440.40'
CE3 3+03.00	2443.38'	2443.38'	2440.38'
CE3 3+08.00	2443.36'	2443.36'	2437.88'
CE3 3+24.00	2443.28'	2435.36'	2429.88'
CE4 4+00.00	2442.83'	2435.70'	2429.64'
CE4 4+14.00	2442.70'	2442.70'	2436.64'
CE4 4+20.00	2442.64'	2442.64'	2439.64'
CE4 4+23.00	2442.61	2442.61'	2439.61'

FILE NAME	K:\452201\090\06736_Phase 3\Design_CAD_Sheets\290-MInorStruct\XL5479_PS_BR_Wall.dgn					
TIME	6:17:10 PM					
DATE	2/16/2022					
PLOTTED BY	kingk					
DESIGNED BY	M. GIPNER / K. KING					
ENTERED BY	J. VENEGAS					
CHECKED BY	K. KING					
PROJ. ENGR.	A. BYRD					
REGIONAL ADM.	T. TREPANIER	REVISION	DATE	BY		

REGION NO.	STATE	FED.AID PROJ.NO.
10	WASH	
JOB NUMBER 19Y007		
CONTRACT NO.		LOCATION NO.

SEE SHEET CT5
DATE
P.E. STAMP BOX

DATE
P.E. STAMP BOX

Washington State Department of Transportation

I-90
CABIN CREEK I/C TO W EASTON I/C
PHASE 3 - ADD LANES/WILDLIFE BRIDGES

CEDAR CREEK
WALL PLAN & PROFILE

Plot 2
PLAN REF NO
WS2
SHEET 865 OF 1783 SHEETS

WALL ELEVATIONS			
STATION	TOP OF WALL	FINAL GRADE AT WALL FACE	MAX. BOTTOM OF WALL ELEVATION
TW1 1+00.00	2542.22'	2542.22'	2539.22'
TW1 1+03.00	2542.23'	2542.23'	2539.23'
TW1 1+18.00	2542.30'	2537.23'	2531.73'
TW2 2+00.00	2542.53'	2537.60'	2532.10'
TW2 2+15.00	2542.60'	2542.60'	2539.60'
TW2 2+18.00	2542.61'	2542.61'	2539.61'

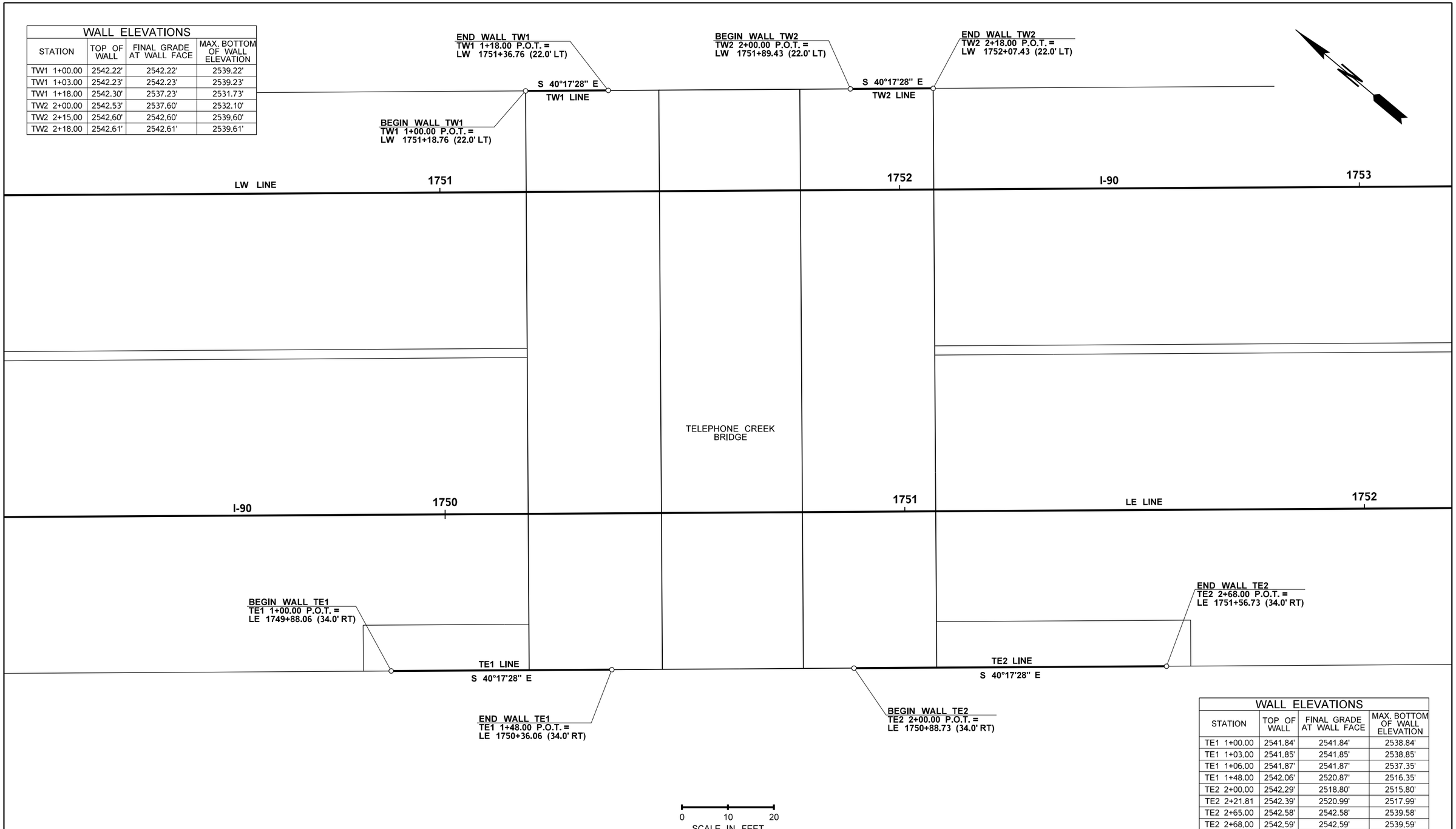

WALL ELEVATIONS			
STATION	TOP OF WALL	FINAL GRADE AT WALL FACE	MAX. BOTTOM OF WALL ELEVATION
TE1 1+00.00	2541.84'	2541.84'	2538.84'
TE1 1+03.00	2541.85'	2541.85'	2538.85'
TE1 1+06.00	2541.87'	2541.87'	2537.35'
TE1 1+48.00	2542.06'	2520.87'	2516.35'
TE2 2+00.00	2542.29'	2518.80'	2515.80'
TE2 2+21.81	2542.39'	2520.99'	2517.99'
TE2 2+65.00	2542.58'	2542.58'	2539.58'
TE2 2+68.00	2542.59'	2542.59'	2539.59'

FILE NAME	K:\452201\090\06736_Phase 3\Design_CAD_Sheets\290-MInorStruct\XL5479_PS_BR_Wall.dgn
TIME	6:17:12 PM
DATE	2/16/2022
PLOTTED BY	kingk
DESIGNED BY	M. GIPNER / K. KING
ENTERED BY	J. VENEGAS
CHECKED BY	K. KING
PROJ. ENGR.	A. BYRD
REGIONAL ADM.	T. TREPANIER

REVISION | DATE | BY

REGION NO.	STATE	FED.AID PROJ.NO.
10	WASH	
JOB NUMBER 19Y007		
CONTRACT NO.		LOCATION NO.

ANDREW D. BYRD — STATE OF WASHINGTON — 19833 — REGISTERED PROFESSIONAL ENGINEER

SEE SHEET CT5

DATE

P.E. STAMP BOX

P.E. STAMP BOX

DATE

Washington State Department of Transportation

I-90
CABIN CREEK I/C TO W EASTON I/C
PHASE 3 - ADD LANES/WILDLIFE BRIDGES

TELEPHONE CREEK
WALL PLAN

Plot 3

PLAN REF NO
WS3

SHEET 866 OF 1783 SHEETS

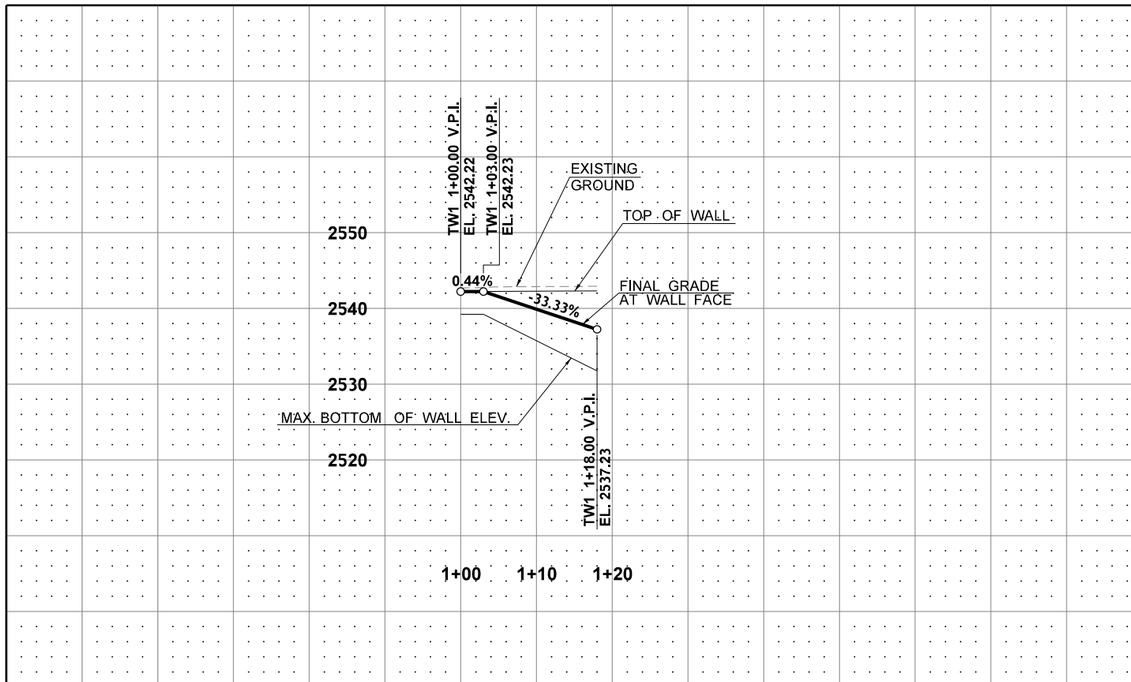

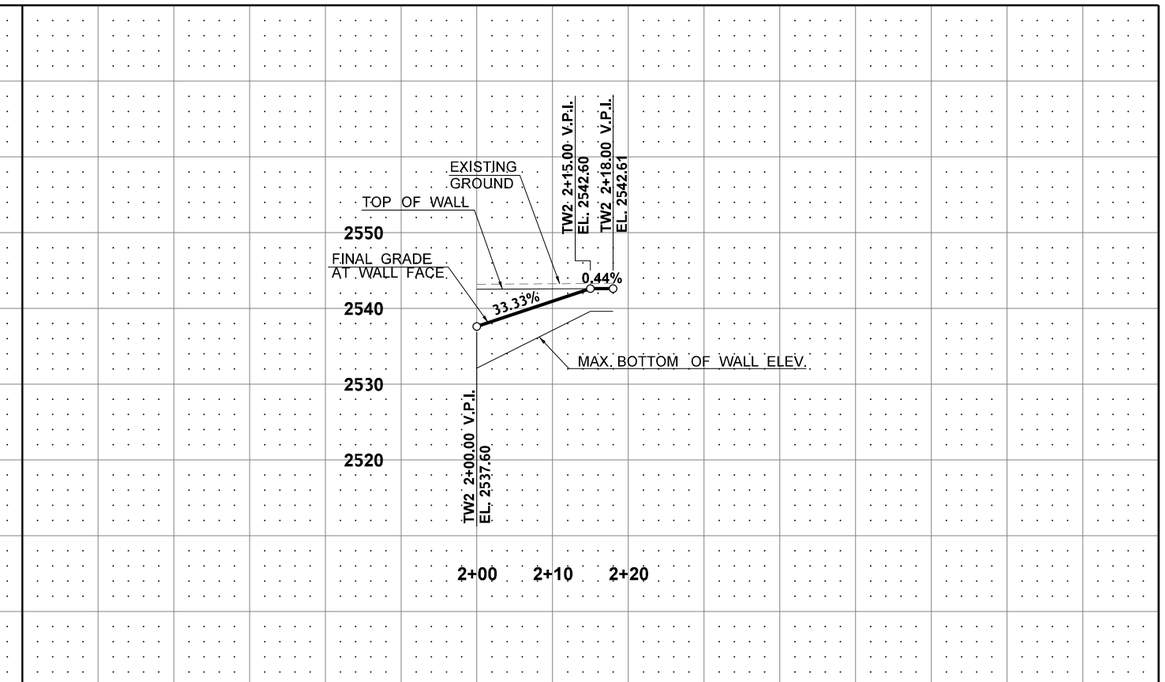

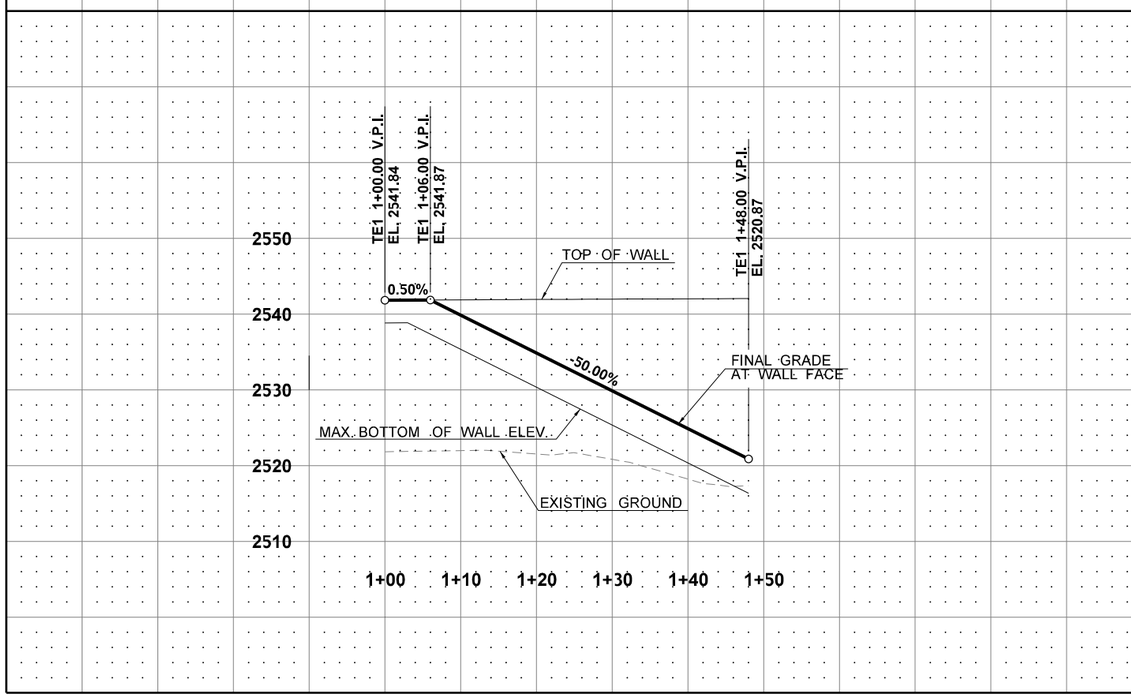

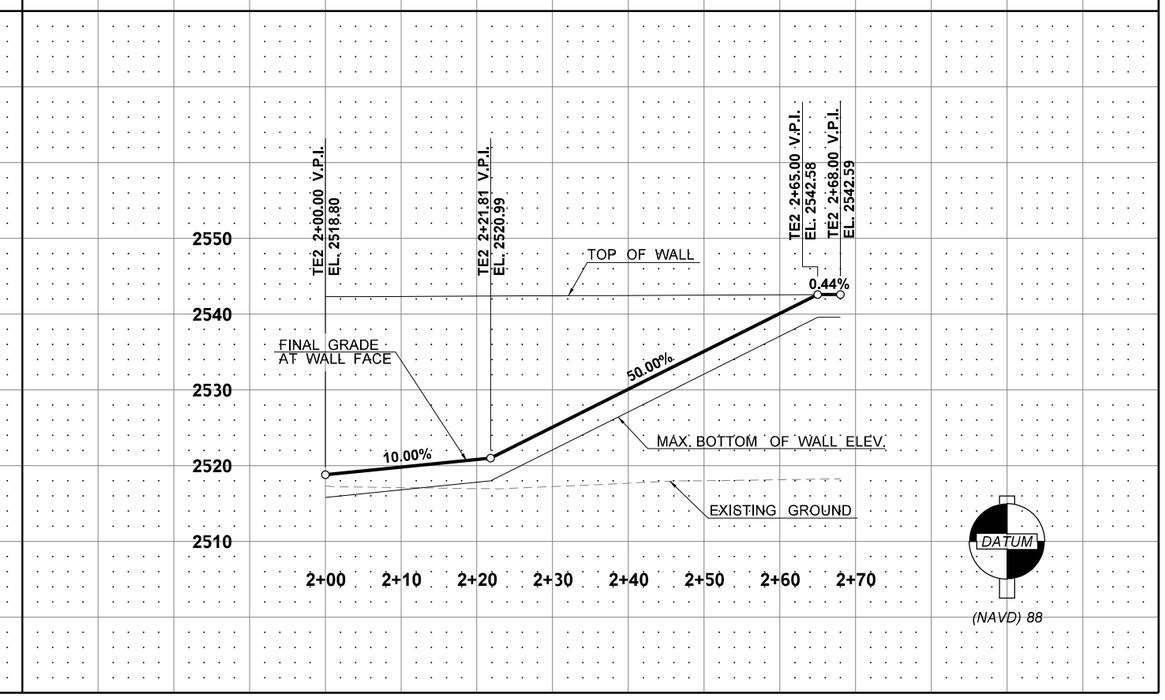

FILE NAME	K:\452201\090\06736_Phase 3\Design_CAD_Sheets\290-MinorStruct\XL5479_PS_BR_Wall.dgn
TIME	6:17:13 PM
DATE	2/16/2022
PLOTTED BY	kingk
DESIGNED BY	M. GIPNER / K. KING
ENTERED BY	J. VENEGAS
CHECKED BY	K. KING
PROJ. ENGR.	A. BYRD
REGIONAL ADM.	T. TREPANIER

REVISION | DATE | BY

REGION NO.	STATE	FED.AID PROJ.NO.
10	WASH	
JOB NUMBER 19Y007		
CONTRACT NO.		LOCATION NO.

ANDREW D. BYRD, STATE OF WASHINGTON, 39833, REGISTERED PROFESSIONAL ENGINEER

SEE SHEET CT5
DATE
P.E. STAMP BOX

DATE
P.E. STAMP BOX

Washington State Department of Transportation

I-90
CABIN CREEK I/C TO W EASTON I/C
PHASE 3 - ADD LANES/BUILD WILDLIFE BRIDGES

TELEPHONE CREEK
WALL PROFILE

Plot 4
PLAN REF. NO. WS4
SHEET 867 OF 1783 SHEETS

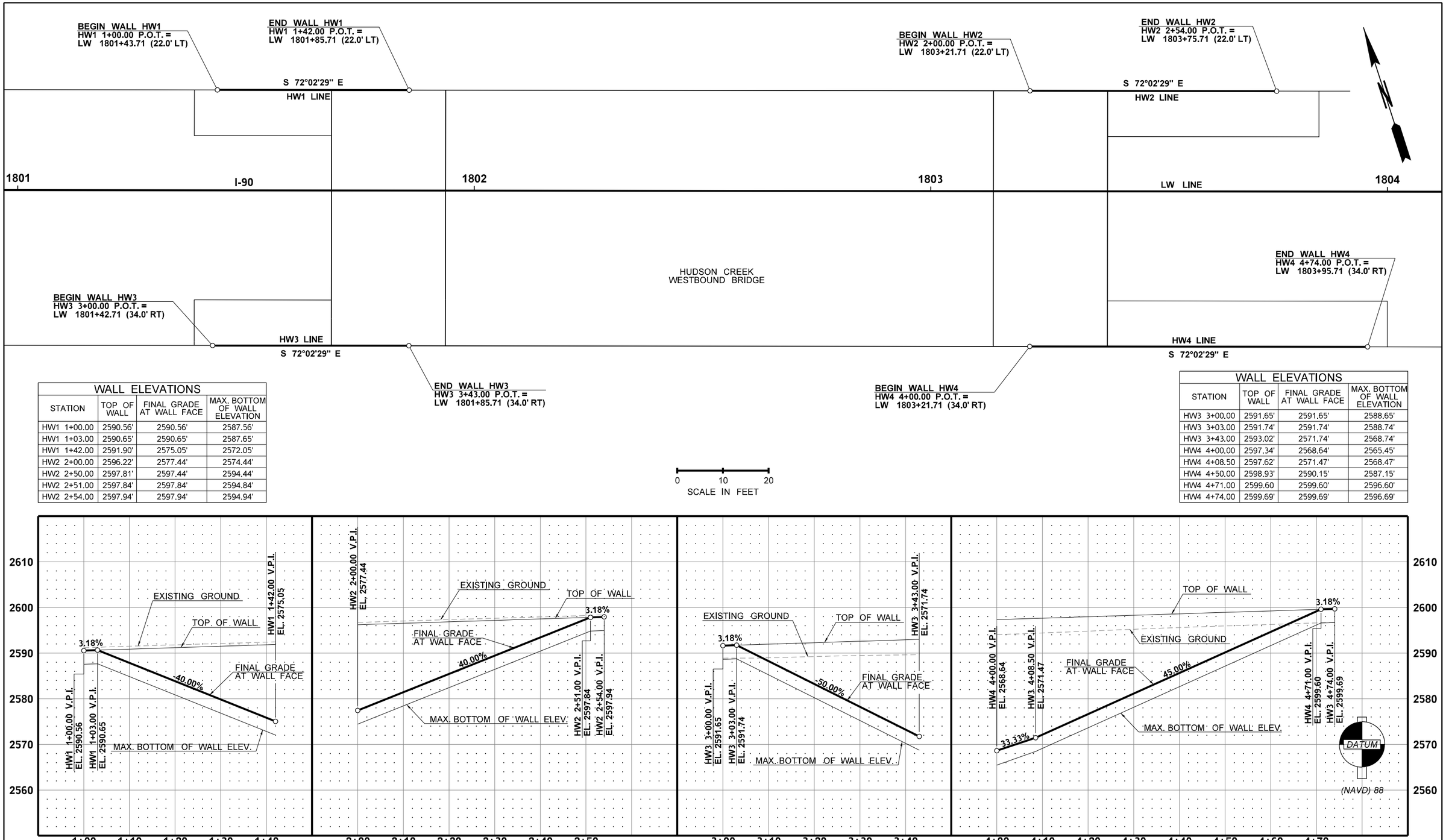

WALL ELEVATIONS			
STATION	TOP OF WALL	FINAL GRADE AT WALL FACE	MAX. BOTTOM OF WALL ELEVATION
HW1 1+00.00	2590.56'	2590.56'	2587.56'
HW1 1+03.00	2590.65'	2590.65'	2587.65'
HW1 1+42.00	2591.90'	2575.05'	2572.05'
HW2 2+00.00	2596.22'	2577.44'	2574.44'
HW2 2+50.00	2597.81'	2597.44'	2594.44'
HW2 2+51.00	2597.84'	2597.84'	2594.84'
HW2 2+54.00	2597.94'	2597.94'	2594.94'

WALL ELEVATIONS			
STATION	TOP OF WALL	FINAL GRADE AT WALL FACE	MAX. BOTTOM OF WALL ELEVATION
HW3 3+00.00	2591.65'	2591.65'	2588.65'
HW3 3+03.00	2591.74'	2591.74'	2588.74'
HW3 3+43.00	2593.02'	2571.74'	2568.74'
HW4 4+00.00	2597.34'	2568.64'	2565.45'
HW4 4+08.50	2597.62'	2571.47'	2568.47'
HW4 4+50.00	2598.93'	2590.15'	2587.15'
HW4 4+71.00	2599.60	2599.60'	2596.60'
HW4 4+74.00	2599.69'	2599.69'	2596.69'

FILE NAME	K:\452201\090\06736_Phase 3\Design_CAD_Sheets\290-MInorStruct\XL5479_PS_BR_Wall.dgn
TIME	6:17:14 PM
DATE	2/16/2022
PLOTTED BY	kingk
DESIGNED BY	M. GIPNER / K. KING
ENTERED BY	J. VENEGAS
CHECKED BY	K. KING
PROJ. ENGR.	A. BYRD
REGIONAL ADM.	T. TREPANIER

REVISION | DATE | BY

REGION NO.	STATE	FED.AID PROJ.NO.
10	WASH	
JOB NUMBER 19Y007		
CONTRACT NO.		LOCATION NO.

ANDREW D. BYRD — STATE OF WASHINGTON — 39933 — REGISTERED PROFESSIONAL ENGINEER

SEE SHEET CT5
DATE
P.E. STAMP BOX

DATE
P.E. STAMP BOX

Washington State
Department of Transportation

I-90
CABIN CREEK I/C TO W EASTON I/C
PHASE 3 - ADD LANES/WILDLIFE BRIDGES

HUDSON CREEK
WALL PLAN & PROFILE

Plot 5
PLAN REF NO
WS5
SHEET 868 OF 1783 SHEETS

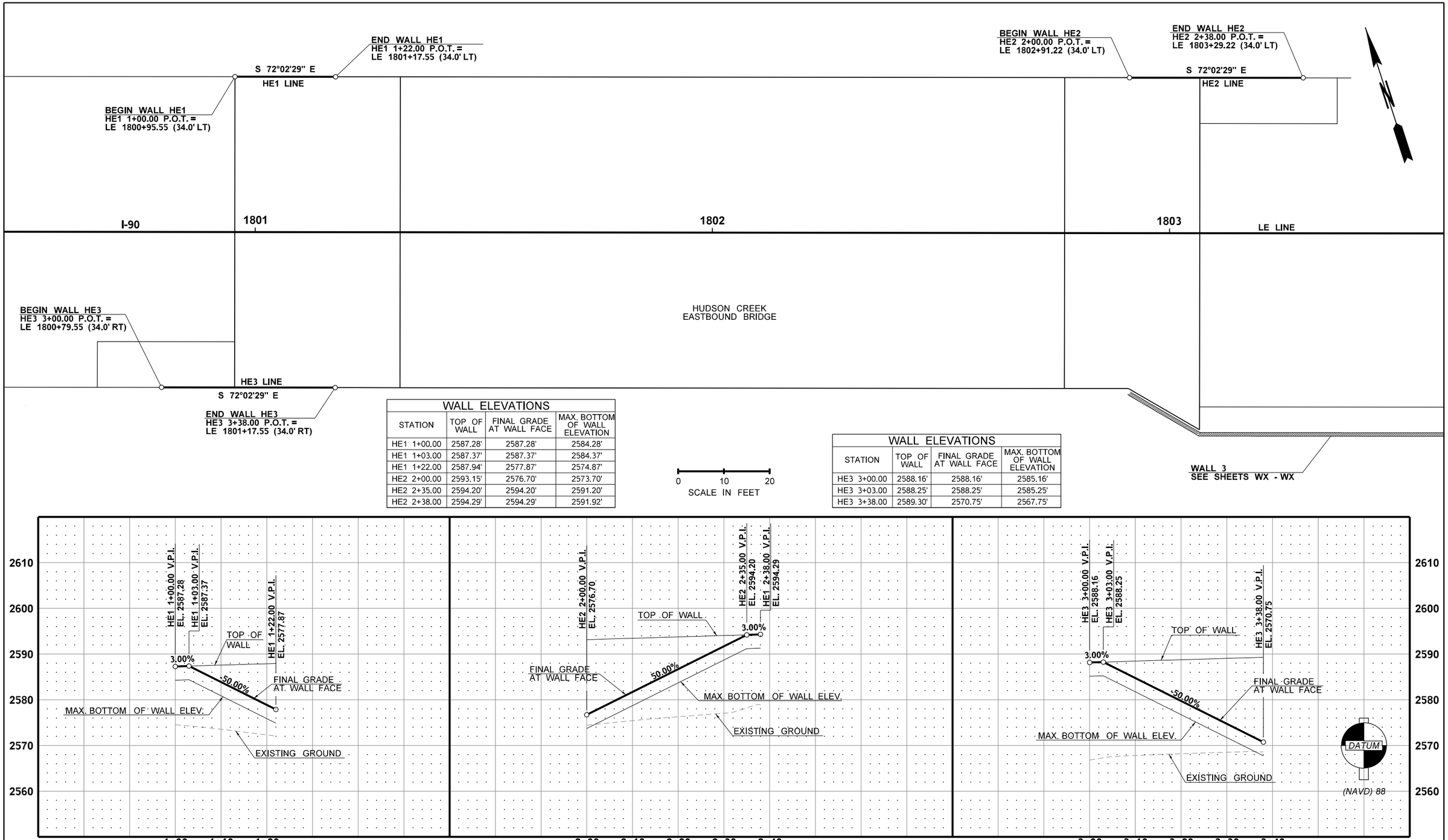

WALL ELEVATIONS

STATION	TOP OF WALL	FINAL GRADE AT WALL FACE	MAX. BOTTOM OF WALL ELEVATION
HE1 1+00.00	2587.28'	2587.28'	2584.28'
HE1 1+03.00	2587.37'	2587.37'	2584.37'
HE1 1+22.00	2587.94'	2577.87'	2574.87'
HE2 2+00.00	2593.15'	2576.70'	2573.70'
HE2 2+35.00	2594.20'	2594.20'	2591.20'
HE2 2+38.00	2594.29'	2594.29'	2591.92'

WALL ELEVATIONS

STATION	TOP OF WALL	FINAL GRADE AT WALL FACE	MAX. BOTTOM OF WALL ELEVATION
HE3 3+00.00	2588.16'	2588.16'	2585.16'
HE3 3+03.00	2588.25'	2588.25'	2585.25'
HE3 3+38.00	2589.30'	2570.75'	2567.75'

FILE NAME	K:\452201\090\06736_Phase 3\Design_CAD_Sheets\290-MInorStruct\XL5479_PS_BR_Wall.dgn
TIME	6:17:16 PM
DATE	2/16/2022
PLOTTED BY	kingk
DESIGNED BY	M. GIPNER / K. KING
ENTERED BY	J. VENEGAS
CHECKED BY	K. KING
PROJ. ENGR.	A. BYRD
REGIONAL ADM.	T. TREPANIER

REVISION | DATE | BY

REGION NO. 10 | STATE WASH | FED.AID PROJ.NO.

JOB NUMBER 19Y007

CONTRACT NO. | LOCATION NO.

SEE SHEET CT5

P.E. STAMP BOX | DATE | P.E. STAMP BOX | DATE

Washington State Department of Transportation

I-90
CABIN CREEK I/C TO W EASTON I/C
PHASE 3 - ADD LANES/WILDLIFE BRIDGES

HUDSON CREEK
WALL PLAN & PROFILE

Plot 6

PLAN REF NO WS6

SHEET 869 OF 1783 SHEETS

CURVE DATA

P.I. STATION	DELTA	RADIUS	TANGENT	LENGTH
UW1 1+10.00	0°14'49" RT	4,642'	3.09'	20'
UW2 2+12.00	0°17'46" RT	4,642'	12.00'	24'
UW3 3+17.00	0°25'33" RT	4,574'	17.00'	34'
UW4 4+19.00	0°28'34" RT	4,574'	19.00'	38'

WALL ELEVATIONS

STATION	TOP OF WALL	FINAL GRADE AT WALL FACE	MAX. BOTTOM OF WALL ELEVATION
UW1 1+00.00	2647.59'	2647.59'	2644.59'
UW1 1+03.00	2647.71'	2647.71'	2644.71'
UW1 1+20.00	2647.84'	2639.21'	2636.21'
UW2 2+00.00	2649.80'	2639.41'	2636.41'
UW2 2+21.00	2649.91'	2649.91'	2646.91'
UW2 2+24.00	2649.93'	2649.93'	2646.93'

WALL ELEVATIONS

STATION	TOP OF WALL	FINAL GRADE AT WALL FACE	MAX. BOTTOM OF WALL ELEVATION
UW3 3+00.00	2644.96'	2644.96'	2641.96'
UW3 3+03.00	2644.95'	2644.95'	2641.95'
UW3 3+34.00	2645.10'	2629.45'	2626.45'
UW4 4+00.00	2647.06'	2629.78'	2626.78'
UW4 4+35.00	2647.28'	2647.28'	2644.28'
UW4 4+38.00	2647.30'	2647.30'	2644.30'

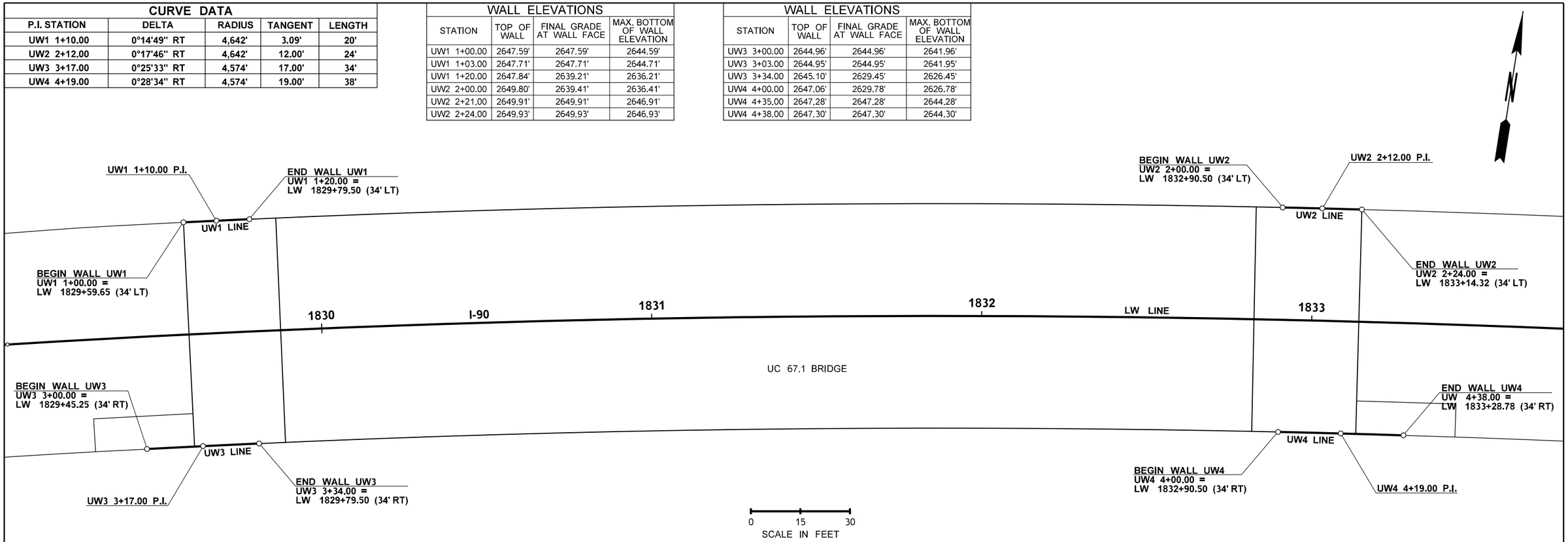

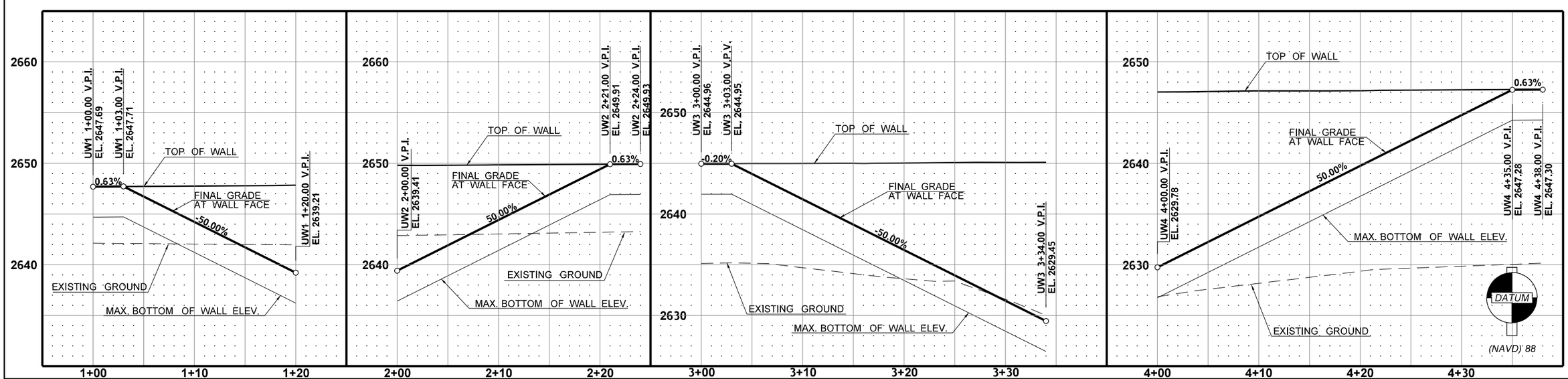

FILE NAME	K:\452201\090\06736_Phase 3\Design_CAD_Sheets\290-MInorStruct\XL5479_PS_BR_Wall.dgn
TIME	6:17:17 PM
DATE	2/16/2022
PLOTTED BY	kingk
DESIGNED BY	M. GIPNER / K. KING
ENTERED BY	J. VENEGAS
CHECKED BY	K. KING
PROJ. ENGR.	A. BYRD
REGIONAL ADM.	T. TREPANIER

REVISION | DATE | BY

REGION NO. 10 | STATE WASH | FED.AID PROJ.NO.

JOB NUMBER 19Y007

CONTRACT NO. | LOCATION NO.

ANDREW D. BYRD — STATE OF WASHINGTON — 29933 — REGISTERED PROFESSIONAL ENGINEER

SEE SHEET CT5 — DATE — P.E. STAMP BOX

DATE — P.E. STAMP BOX

Washington State Department of Transportation

I-90
CABIN CREEK I/C TO W EASTON I/C
PHASE 3 - ADD LANES/WILDLIFE BRIDGES

UNNAMED CREEK (MP 67.1)
WALL PLAN & PROFILE

Plot 7

PLAN REF NO WS7

SHEET 870 OF 1783 SHEETS

CURVE DATA

P.I. STATION	DELTA	RADIUS	TANGENT	LENGTH
UE1 1+11.50	0°17'26" RT	4,534'	11.50'	23'
UE2 2+14.50	0°21'59" RT	4,534'	14.50'	29'
UE3 3+14.00	0°21'33" RT	4,466'	14.00'	28'
UE4 4+14.00	0°21'33" RT	4,466'	14.00'	28'

WALL ELEVATIONS

STATION	TOP OF WALL	FINAL GRADE AT WALL FACE	MAX. BOTTOM OF WALL ELEVATION
UE1 1+00.00	2644.71'	2644.71'	2641.71'
UE1 1+03.00	2644.75'	2644.75'	2641.75'
UE1 1+23.00	2645.03'	2634.75'	2631.75'
UE2 2+00.00	2647.50'	2634.67'	2631.67'
UE2 2+26.00	2647.67'	2647.67'	2644.67'
UE2 2+29.00	2647.69'	2647.69'	2644.69'

WALL ELEVATIONS

STATION	TOP OF WALL	FINAL GRADE AT WALL FACE	MAX. BOTTOM OF WALL ELEVATION
UE3 3+00.00	2642.31'	2642.31'	2639.31'
UE3 3+03.00	2642.31'	2642.31'	2639.31'
UE3 3+28.00	2642.31'	2629.81'	2626.81'
UE4 4+00.00	2644.77'	2632.45'	2629.45'
UE4 4+25.00	2644.95'	2644.95'	2641.95'
UE4 4+28.00	2644.97'	2644.97'	2641.97'

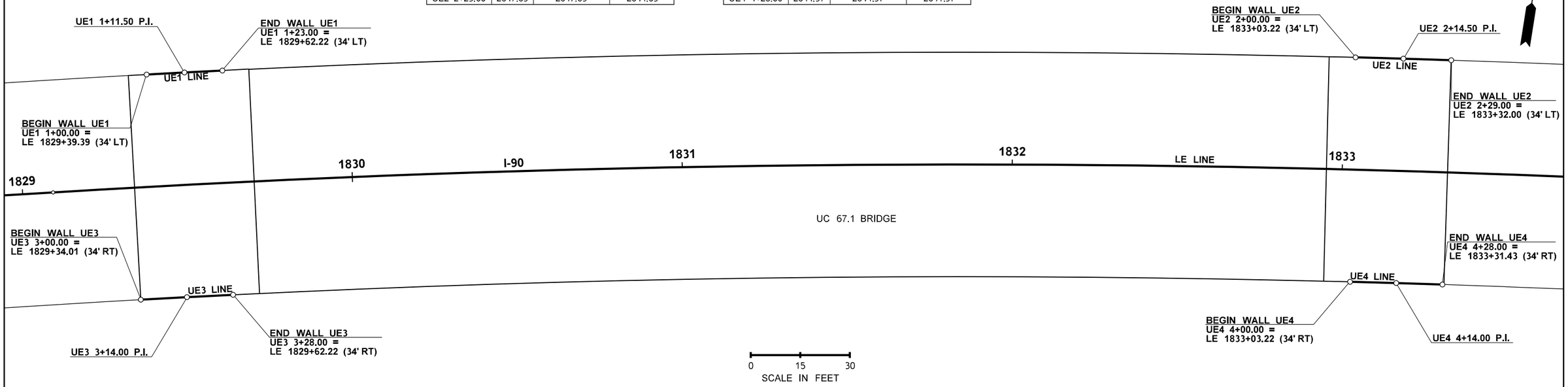

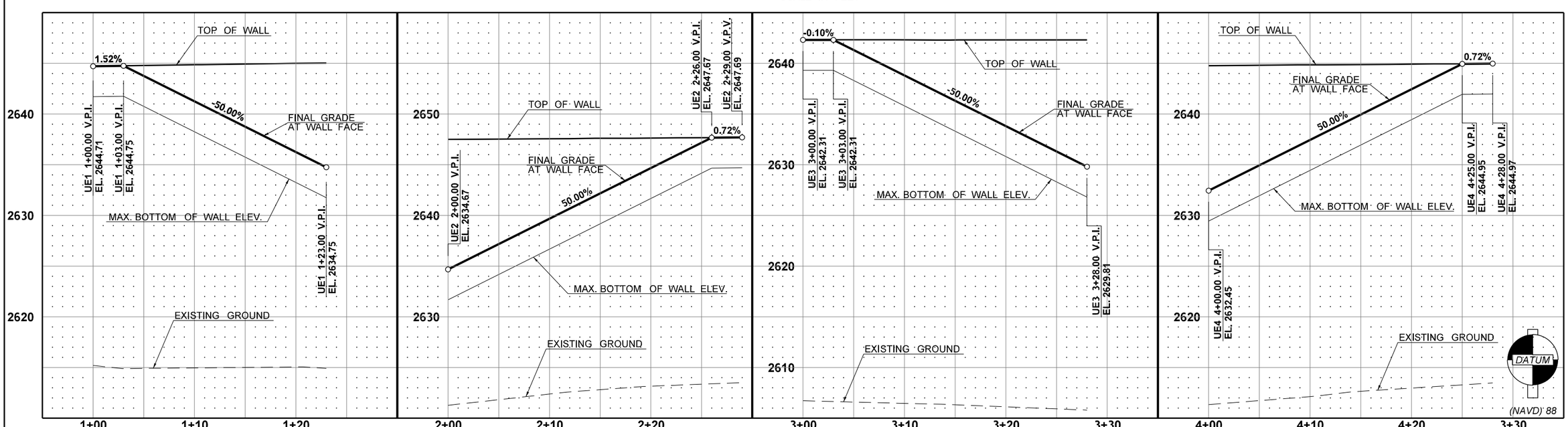

FILE NAME	K:\452201\090\06736_Phase 3\Design_CAD_Sheets\290-MInorStruct\XL5479_PS_BR_Wall.dgn
TIME	6:17:18 PM
DATE	2/16/2022
PLOTTED BY	kingk
DESIGNED BY	M. GIPNER / K. KING
ENTERED BY	J. VENEGAS
CHECKED BY	K. KING
PROJ. ENGR.	A. BYRD
REGIONAL ADM.	T. TREPANIER

REVISION | DATE | BY

REGION NO.	STATE	FED.AID PROJ.NO.
10	WASH	
JOB NUMBER 19Y007		
CONTRACT NO.		LOCATION NO.

ANDREW D. BYRD — STATE OF WASHINGTON — 19832 — REGISTERED PROFESSIONAL ENGINEER

SEE SHEET CT5

DATE

P.E. STAMP BOX

DATE

P.E. STAMP BOX

Washington State Department of Transportation

I-90
CABIN CREEK I/C TO W EASTON I/C
PHASE 3 - ADD LANES/WILDLIFE BRIDGES

UNNAMED CREEK (MP 67.1)
WALL PLAN & PROFILE

Plot 8

PLAN REF NO WS8

SHEET 871 OF 1783 SHEETS

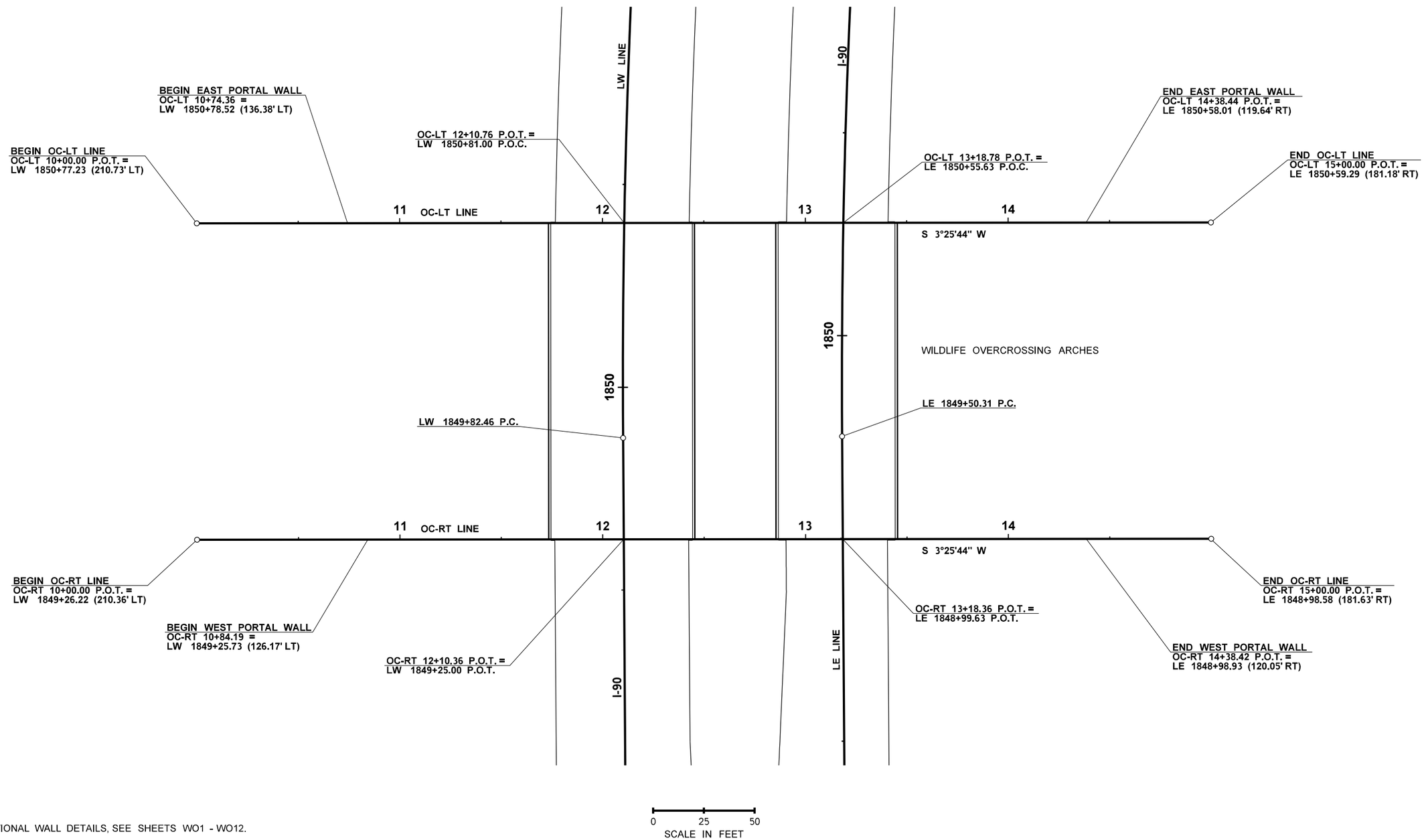

1. FOR ADDITIONAL WALL DETAILS, SEE SHEETS WO1 - WO12.

FILE NAME	K:\452201\090\06736_Phase 3\Design_CAD_Sheets\290-MinorStruct\XL5479_PS_BR_Wall.dgn			
TIME	6:17:34 PM			
DATE	2/16/2022			
PLOTTED BY	kingk			
DESIGNED BY	M. GIPNER / K. KING			
ENTERED BY	J. VENEGAS			
CHECKED BY	K. KING			
PROJ. ENGR.	A. BYRD			
REGIONAL ADM.	T. TREPANIER	REVISION	DATE	BY

REGION NO.	STATE	FED.AID PROJ.NO.
10	WASH	
JOB NUMBER 19Y007		
CONTRACT NO.		LOCATION NO.

ANDREW D. BYRD
STATE OF WASHINGTON
39833
REGISTERED PROFESSIONAL ENGINEER

SEE SHEET CT5
DATE
P.E. STAMP BOX

DATE
P.E. STAMP BOX

Washington State
Department of Transportation

I-90
CABIN CREEK I/C TO W EASTON I/C
PHASE 3 - ADD LANES/WILDLIFE BRIDGES

WILDLIFE OVERCROSSING
WALL PLAN

Plot 17
PLAN REF NO
WS9
SHEET
872
OF
1783
SHEETS

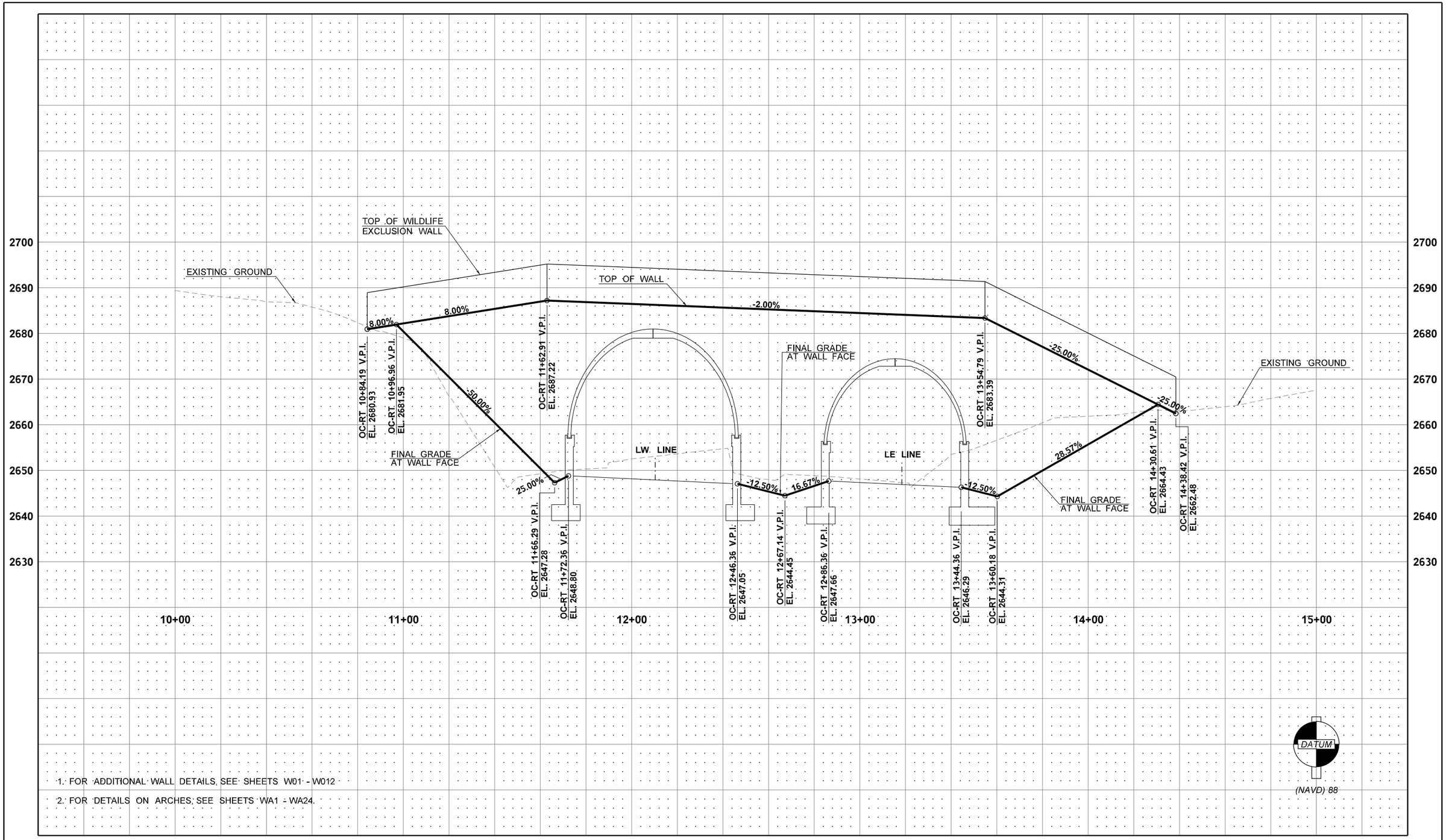

1. FOR ADDITIONAL WALL DETAILS, SEE SHEETS W01 - W012
2. FOR DETAILS ON ARCHES, SEE SHEETS WA1 - WA24.

FILE NAME	K:\452201\090\06736_Phase 3\Design_CAD_Sheets\290-MinorStruct\XL5479_PS_BR_Wall.dgn						
TIME	7:42:17 AM				REGION NO. 10	STATE WASH	FED.AID PROJ.NO.
DATE	2/17/2022						
PLOTTED BY	kingk				JOB NUMBER 19Y007		
DESIGNED BY	M. GIPNER / K. KING						
ENTERED BY	J. VENEGAS						
CHECKED BY	K. KING				CONTRACT NO.		LOCATION NO.
PROJ. ENGR.	A. BYRD						
REGIONAL ADM.	T. TREPANIER	REVISION	DATE	BY			

ANDREW D. BYRD — STATE OF WASHINGTON — 39833 — REGISTERED PROFESSIONAL ENGINEER

SEE SHEET CT5

DATE

P.E. STAMP BOX

DATE

P.E. STAMP BOX

Washington State Department of Transportation

I-90
CABIN CREEK I/C TO W EASTON I/C
PHASE 3 - ADD LANES/WILDLIFE BRIDGES

WILDLIFE OVERCROSSING
WALL PROFILE

Plot 19

PLAN REF. NO. WS10

SHEET 873 OF 1783 SHEETS

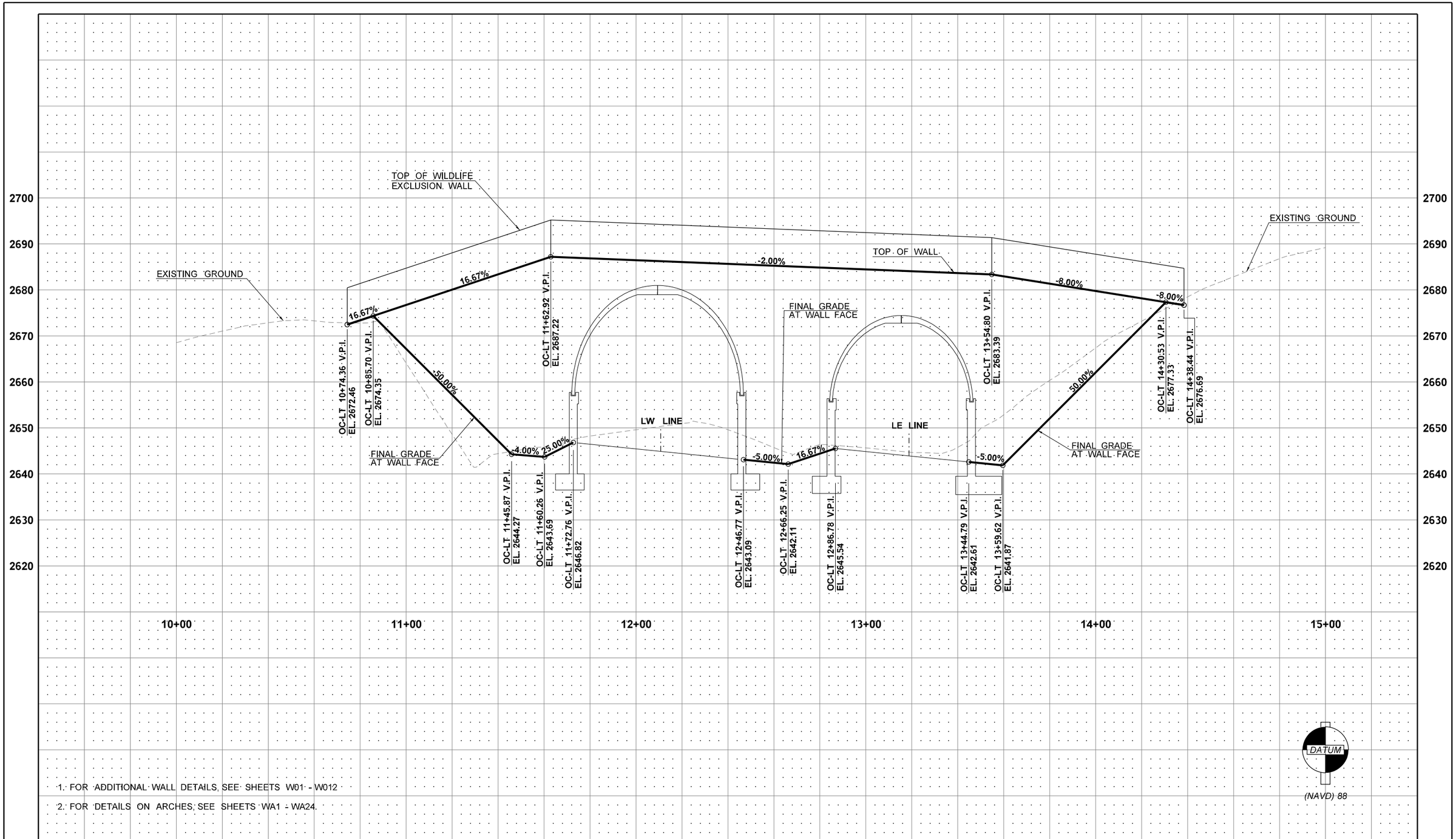

1. FOR ADDITIONAL WALL DETAILS, SEE SHEETS W01 - W012
2. FOR DETAILS ON ARCHES, SEE SHEETS WA1 - WA24.

FILE NAME	K:\452201\090\06736_Phase 3\Design_CAD_Sheets\290-MinorStruct\XL5479_PS_BR_Wall.dgn
TIME	7:42:27 AM
DATE	2/17/2022
PLOTTED BY	kingk
DESIGNED BY	M. GIPNER / K. KING
ENTERED BY	J. VENEGAS
CHECKED BY	K. KING
PROJ. ENGR.	A. BYRD
REGIONAL ADM.	T. TREPANIER

REVISION | DATE | BY

REGION NO.	STATE	FED.AID PROJ.NO.
10	WASH	
JOB NUMBER 19Y007		
CONTRACT NO.		LOCATION NO.

ANDREW D. BYRD — STATE OF WASHINGTON — REGISTERED PROFESSIONAL ENGINEER

SEE SHEET CT5

DATE

P.E. STAMP BOX

P.E. STAMP BOX

DATE

Washington State Department of Transportation

I-90
CABIN CREEK I/C TO W EASTON I/C
PHASE 3 - ADD LANES/WILDLIFE BRIDGES

WILDLIFE OVERCROSSING WALL PROFILE

Plot 20

PLAN REF. NO. WS11

SHEET 874 OF 1783 SHEETS

CURVE DATA				
P.I. STATION	DELTA	RADIUS	TANGENT	LENGTH
WE2 2+18.00	0°39'32" LT	3,130'	18.00'	36.00'

WALL ELEVATIONS			
STATION	TOP OF WALL	FINAL GRADE AT WALL FACE	MAX. BOTTOM OF WALL ELEVATION
WW1 1+00.00	2351.02'	2351.02'	2348.02'
WW1 1+03.00	2350.89'	2350.89'	2347.89'
WW1 1+52.00	2348.76'	2326.39'	2323.39'
WW2 2+00.00	2334.45'	2319.41'	2316.41'
WW2 2+03.00	2334.23'	2320.91'	2317.91'
WW2 2+25.03	2331.93'	2331.93'	2328.93'
WW2 2+28.00	2331.62'	2331.62'	2328.62'

WALL ELEVATIONS			
STATION	TOP OF WALL	FINAL GRADE AT WALL FACE	MAX. BOTTOM OF WALL ELEVATION
WE1 1+00.00	2339.47'	2339.47'	2336.47'
WE1 1+09.88	2340.77'	2340.77'	2337.77'
WE1 1+42.00	2344.97'	2324.70'	2321.70'
WE1 1+45.00	2345.10'	2323.20'	2320.20'
WE2 2+00.00	2333.83'	2317.43'	2314.43'
WE2 2+31.94	2332.64'	2332.64'	2329.64
WE2 2+36.00	2332.49'	2332.49'	2329.49'

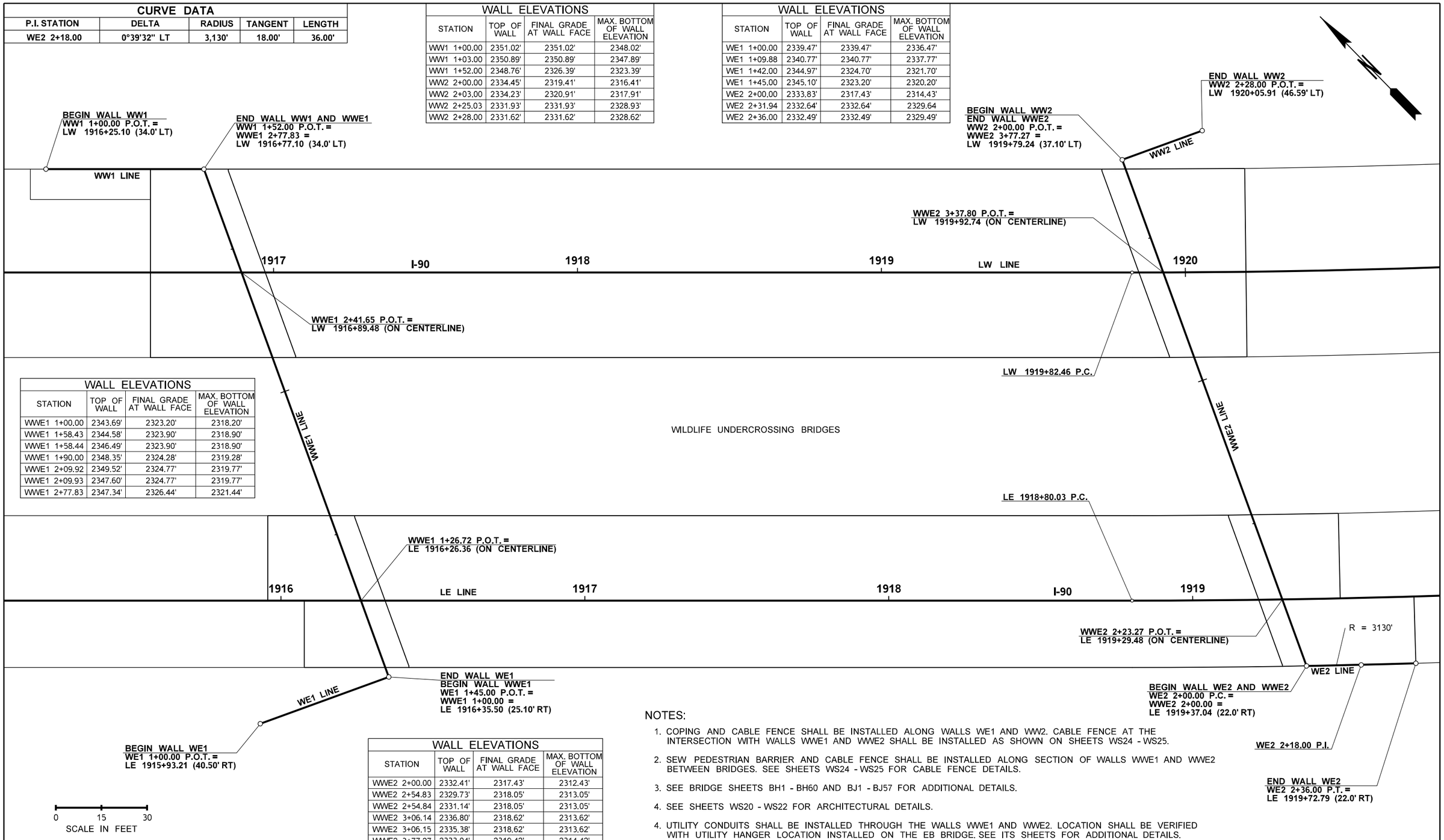

WALL ELEVATIONS			
STATION	TOP OF WALL	FINAL GRADE AT WALL FACE	MAX. BOTTOM OF WALL ELEVATION
WWE1 1+00.00	2343.69'	2323.20'	2318.20'
WWE1 1+58.43	2344.58'	2323.90'	2318.90'
WWE1 1+58.44	2346.49'	2323.90'	2318.90'
WWE1 1+90.00	2348.35'	2324.28'	2319.28'
WWE1 2+09.92	2349.52'	2324.77'	2319.77'
WWE1 2+09.93	2347.60'	2324.77'	2319.77'
WWE1 2+77.83	2347.34'	2326.44'	2321.44'

WALL ELEVATIONS			
STATION	TOP OF WALL	FINAL GRADE AT WALL FACE	MAX. BOTTOM OF WALL ELEVATION
WWE2 2+00.00	2332.41'	2317.43'	2312.43'
WWE2 2+54.83	2329.73'	2318.05'	2313.05'
WWE2 2+54.84	2331.14'	2318.05'	2313.05'
WWE2 3+06.14	2336.80'	2318.62'	2313.62'
WWE2 3+06.15	2335.38'	2318.62'	2313.62'
WWE2 3+77.27	2333.04'	2319.42'	2314.42'

NOTES:

1. COPING AND CABLE FENCE SHALL BE INSTALLED ALONG WALLS WE1 AND WW2. CABLE FENCE AT THE INTERSECTION WITH WALLS WWE1 AND WWE2 SHALL BE INSTALLED AS SHOWN ON SHEETS WS24 - WS25.
2. SEW PEDESTRIAN BARRIER AND CABLE FENCE SHALL BE INSTALLED ALONG SECTION OF WALLS WWE1 AND WWE2 BETWEEN BRIDGES. SEE SHEETS WS24 - WS25 FOR CABLE FENCE DETAILS.
3. SEE BRIDGE SHEETS BH1 - BH60 AND BJ1 - BJ57 FOR ADDITIONAL DETAILS.
4. SEE SHEETS WS20 - WS22 FOR ARCHITECTURAL DETAILS.
4. UTILITY CONDUITS SHALL BE INSTALLED THROUGH THE WALLS WWE1 AND WWE2. LOCATION SHALL BE VERIFIED WITH UTILITY HANGER LOCATION INSTALLED ON THE EB BRIDGE. SEE ITS SHEETS FOR ADDITIONAL DETAILS.

FILE NAME	K:\452201\090\06736_Phase 3\Design_CAD_Sheets\290-MInorStruct\XL5479_PS_BR_Wall.dgn				
TIME	6:17:19 PM				
DATE	2/16/2022				
PLOTTED BY	kingk				
DESIGNED BY	M. GIPNER / K. KING				
ENTERED BY	J. VENEGAS				
CHECKED BY	K. KING				
PROJ. ENGR.	A. BYRD				
REGIONAL ADM.	T. TREPANIER	REVISION	DATE	BY	

REGION NO.	STATE	FED.AID PROJ.NO.
10	WASH	
JOB NUMBER 19Y007		
CONTRACT NO.		LOCATION NO.

SEE SHEET CT5
DATE
P.E. STAMP BOX

DATE
P.E. STAMP BOX

Washington State Department of Transportation

I-90
CABIN CREEK I/C TO W EASTON I/C
PHASE 3 - ADD LANES/WILDLIFE BRIDGES

WILDLIFE UNDERCROSSING WALL PLAN

Plot 9
PLAN REF NO WS12
SHEET 875 OF 1783 SHEETS

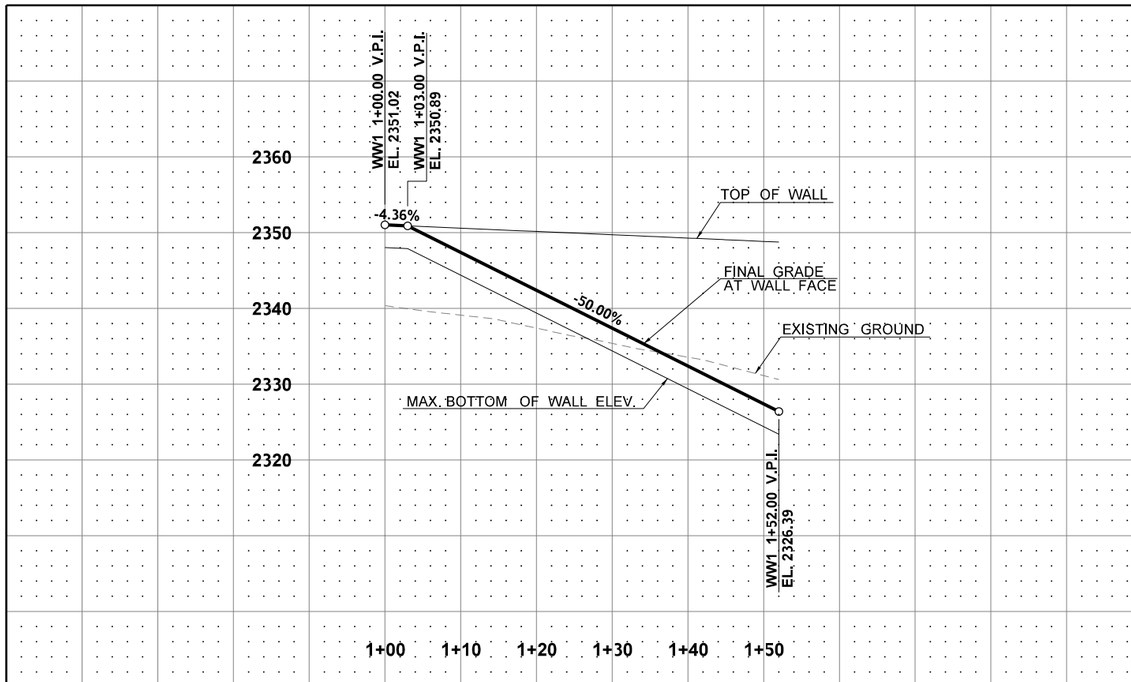

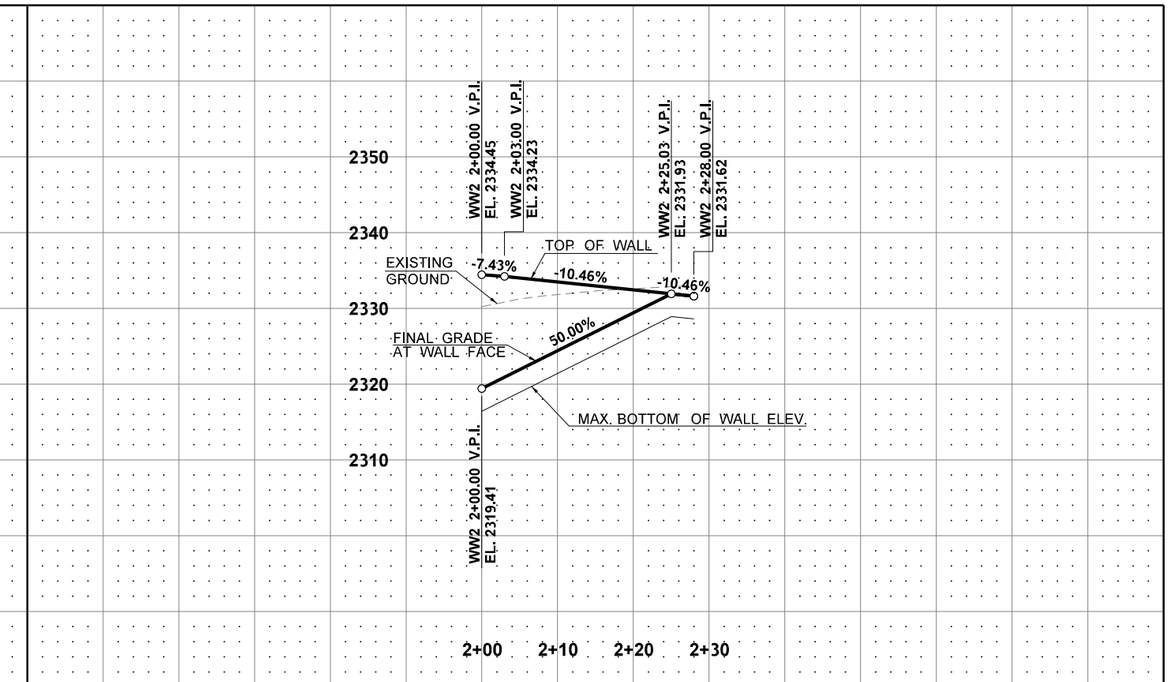

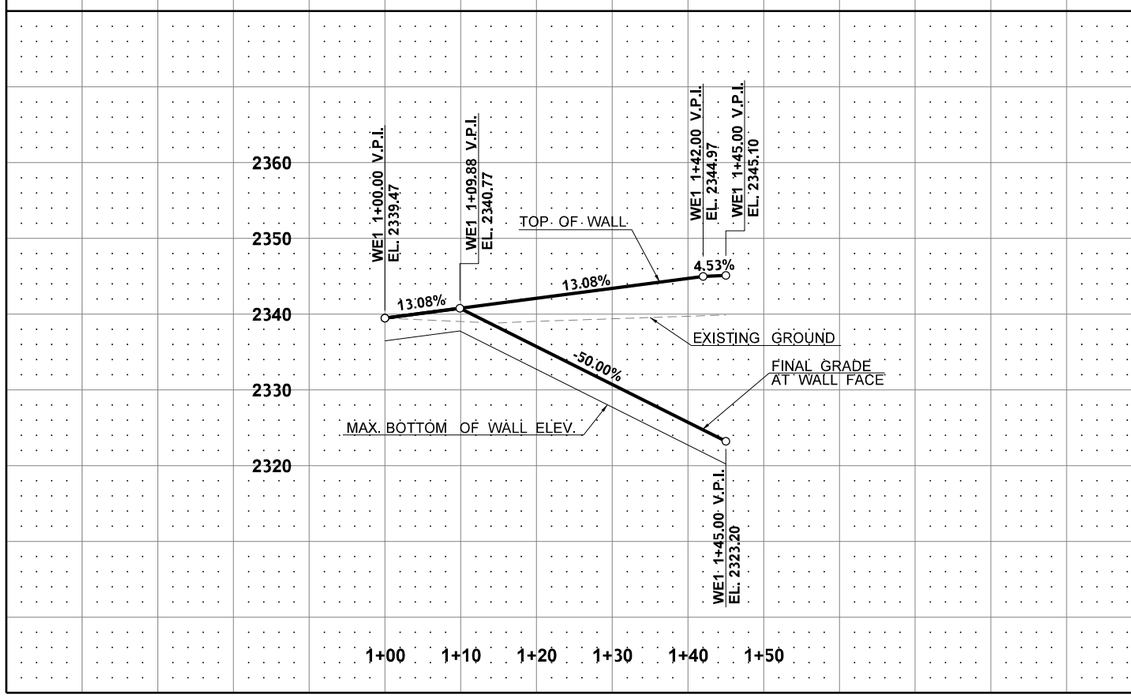

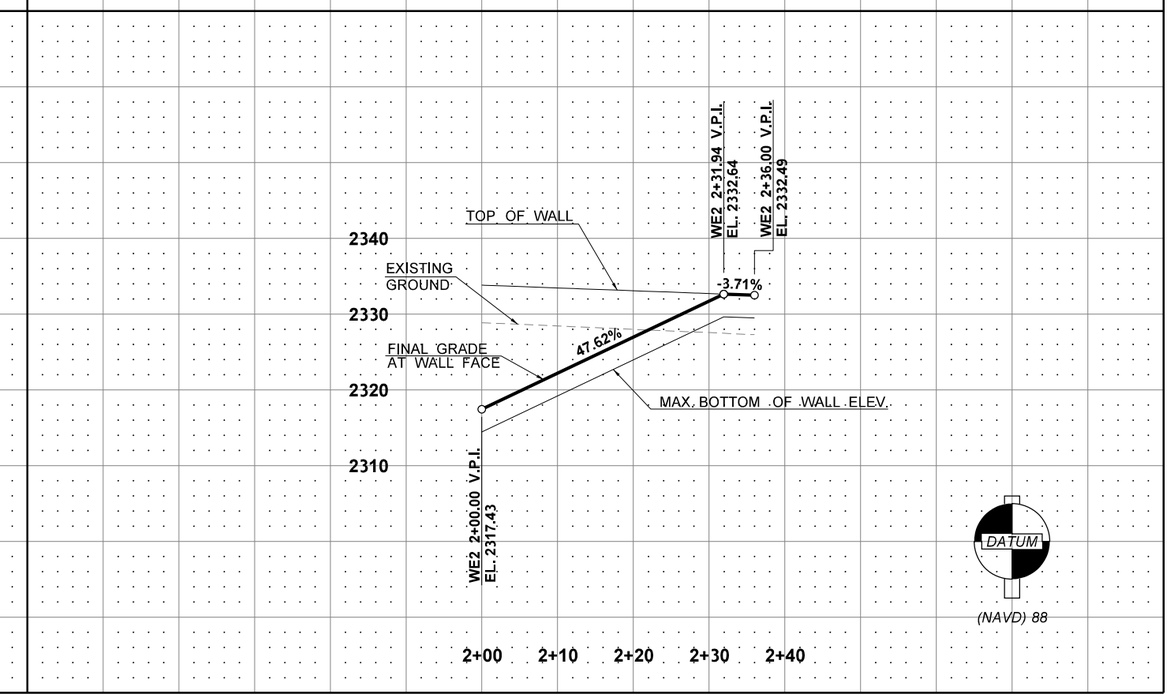

FILE NAME	K:\452201\090\06736_Phase 3\Design_CAD_Sheets\290-MinorStruct\XL5479_PS_BR_Wall.dgn			
TIME	6:17:21 PM			
DATE	2/16/2022			
PLOTTED BY	kingk			
DESIGNED BY	M. GIPNER / K. KING			
ENTERED BY	J. VENEGAS			
CHECKED BY	K. KING			
PROJ. ENGR.	A. BYRD			
REGIONAL ADM.	T. TREPANIER	REVISION	DATE	BY

REGION NO.	STATE	FED.AID PROJ.NO.
10	WASH	
JOB NUMBER 19Y007		
CONTRACT NO.		LOCATION NO.

ANDREW D. BYRD
STATE OF WASHINGTON
39833
REGISTERED PROFESSIONAL ENGINEER

SEE SHEET CT5
DATE
P.E. STAMP BOX

DATE
P.E. STAMP BOX

Washington State
Department of Transportation

I-90
CABIN CREEK I/C TO W EASTON I/C
PHASE 3 - ADD LANES/WILDLIFE BRIDGES

WILDLIFE UNDERCROSSING
WALL PROFILE

Plot 10
PLAN REF. NO.
WS13
SHEET
876
OF
1783
SHEETS

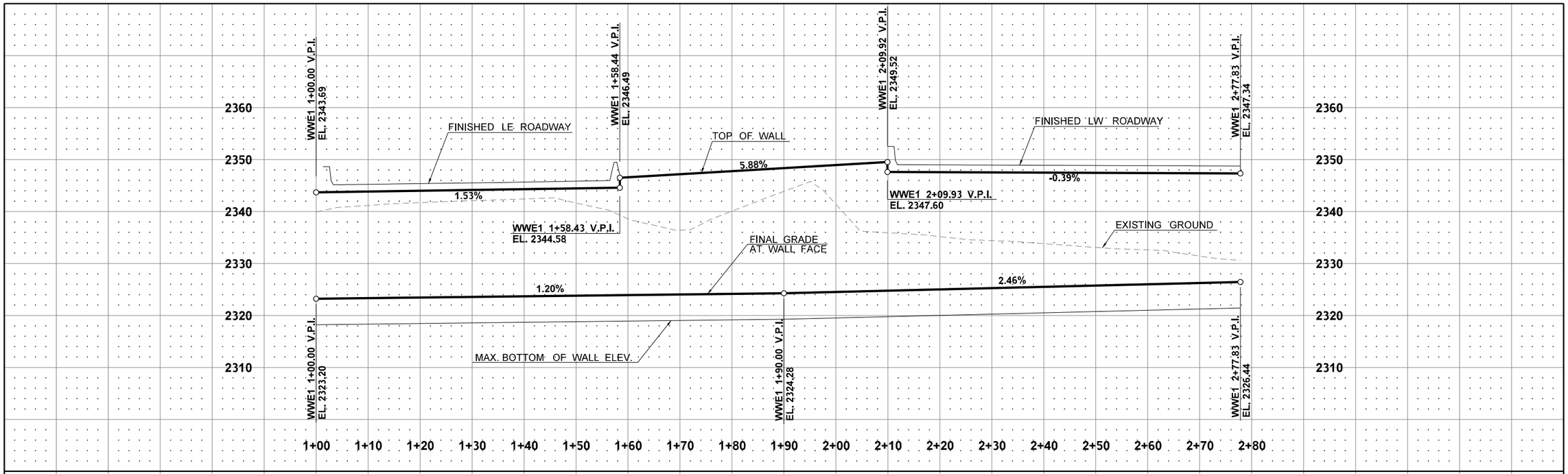

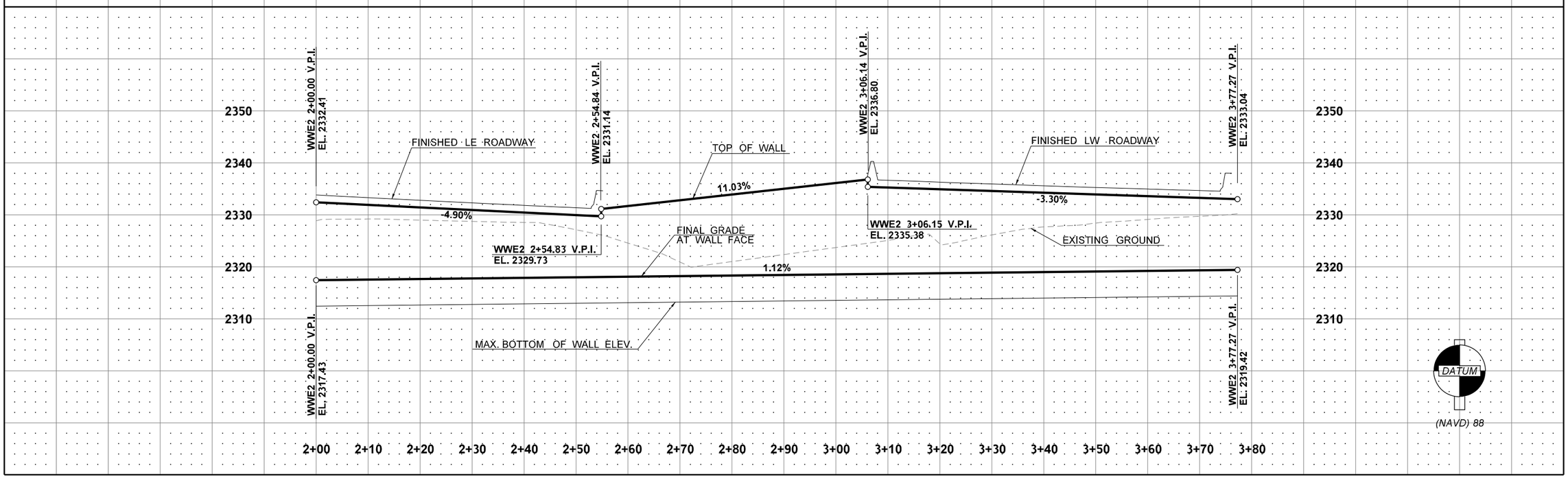

FILE NAME	K:\452201\090\06736_Phase 3\Design_CAD_Sheets\290-MInorStruct\XL5479_PS_BR_Wall.dgn						
TIME	6:17:22 PM						
DATE	2/16/2022						
PLOTTED BY	kingk						
DESIGNED BY	M. GIPNER / K. KING						
ENTERED BY	J. VENEGAS						
CHECKED BY	K. KING						
PROJ. ENGR.	A. BYRD						
REGIONAL ADM.	T. TREPANIER	REVISION	DATE	BY			

REGION NO.	STATE	FED.AID PROJ.NO.
10	WASH	
JOB NUMBER 19Y007		
CONTRACT NO.		LOCATION NO.

ANDREW D. BYRD — STATE OF WASHINGTON — REGISTERED PROFESSIONAL ENGINEER

SEE SHEET CT5

DATE

P.E. STAMP BOX

DATE

P.E. STAMP BOX

Washington State Department of Transportation

I-90
CABIN CREEK I/C TO W EASTON I/C
PHASE 3 - ADD LANES/WILDLIFE BRIDGES

WILDLIFE UNDERCROSSING
WALL PROFILE

Plot 11

PLAN REF. NO. WS14

SHEET 877 OF 1783 SHEETS

CURVE DATA

P.I. STATION	DELTA	RADIUS	TANGENT	LENGTH
SW1 1+23.00	0°53'19" LT	2,966'	23.00'	46'
SW2 2+15.00	0°34'46" LT	2,966'	15.00'	30'
SE1 1+26.50	0°58'13" LT	3,130'	26.50'	53'
SE2 2+21.00	0°46'08" LT	3,130'	21.00'	42'

WALL ELEVATIONS

STATION	TOP OF WALL	FINAL GRADE AT WALL FACE	MAX. BOTTOM OF WALL ELEVATION
SW1 1+00.00	2285.27'	2285.27'	2282.27'
SW1 1+03.00	2285.14'	2285.14'	2282.14'
SW1 1+32.00	2283.24'	2263.64'	2260.64'
SW2 2+00.00	2279.89	2265.20'	2262.20'
SW2 2+27.00	2278.70'	2278.70'	2275.70'
SW2 2+30.00	2278.57'	2278.57'	2275.57'

WALL ELEVATIONS

STATION	TOP OF WALL	FINAL GRADE AT WALL FACE	MAX. BOTTOM OF WALL ELEVATION
SE1 1+00.00	2286.86'	2286.86'	2283.86'
SE1 1+03.00	2286.73'	2286.73'	2283.73'
SE1 1+53.00	2284.64'	2261.73'	2258.73'
SE2 2+00.00	2281.44'	2260.30'	2257.30'
SE2 2+39.00	2279.80'	2279.80'	2276.80'
SE2 2+42.00	2279.68'	2279.68'	2276.68'

WALL ELEVATIONS

STATION	TOP OF WALL	FINAL GRADE AT WALL FACE	MAX. BOTTOM OF WALL ELEVATION	FINAL GRADE AT DITCH BOTTOM
SWE1 1+00.00	2279.30'	2258.10'	2253.00'	2256.51'
SWE1 1+39.22	2286.50'	2258.92'	2255.00'	2257.53'
SWE2 2+00.00	2277.16'	2257.55'	2253.00'	2256.43'
SWE2 2+39.51	2284.33'	2258.37'	2255.90'	2257.38'

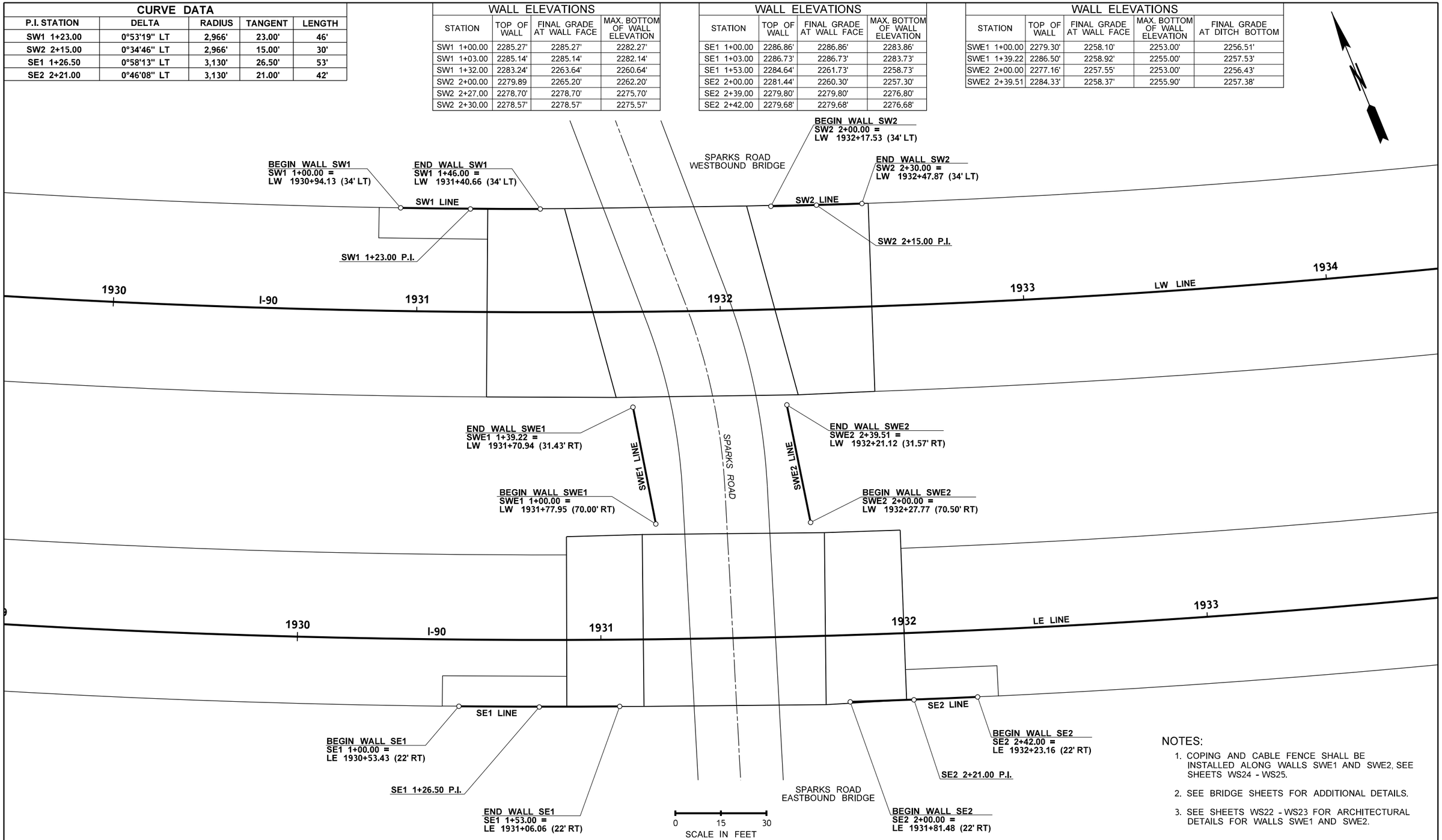

NOTES:

1. COPING AND CABLE FENCE SHALL BE INSTALLED ALONG WALLS SWE1 AND SWE2, SEE SHEETS WS24 - WS25.
2. SEE BRIDGE SHEETS FOR ADDITIONAL DETAILS.
3. SEE SHEETS WS22 - WS23 FOR ARCHITECTURAL DETAILS FOR WALLS SWE1 AND SWE2.

FILE NAME	K:\452201\090\06736_Phase 3\Design_CAD_Sheets\290-MInorStruct\XL5479_PS_BR_Wall.dgn
TIME	6:17:23 PM
DATE	2/16/2022
PLOTTED BY	kingk
DESIGNED BY	M. GIPNER / K. KING
ENTERED BY	J. VENEGAS
CHECKED BY	K. KING
PROJ. ENGR.	A. BYRD
REGIONAL ADM.	T. TREPANIER

REVISION | DATE | BY

REGION NO.	STATE	FED.AID PROJ.NO.
10	WASH	

JOB NUMBER 19Y007

CONTRACT NO. | LOCATION NO.

SEE SHEET CT5 DATE
P.E. STAMP BOX

DATE
P.E. STAMP BOX

Washington State Department of Transportation

I-90
CABIN CREEK I/C TO W EASTON I/C
PHASE 3 - ADD LANES/WILDLIFE BRIDGES

SPARKS ROAD WALL PLAN

Plot 12
PLAN REF NO WS15
SHEET 878 OF 1783 SHEETS

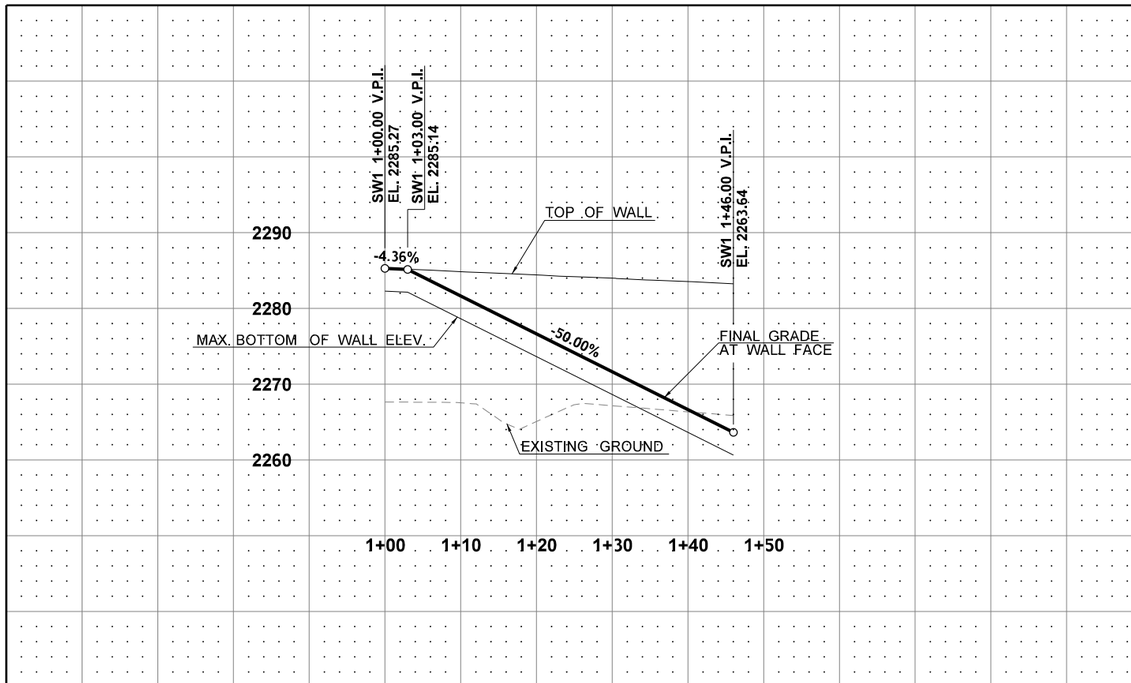

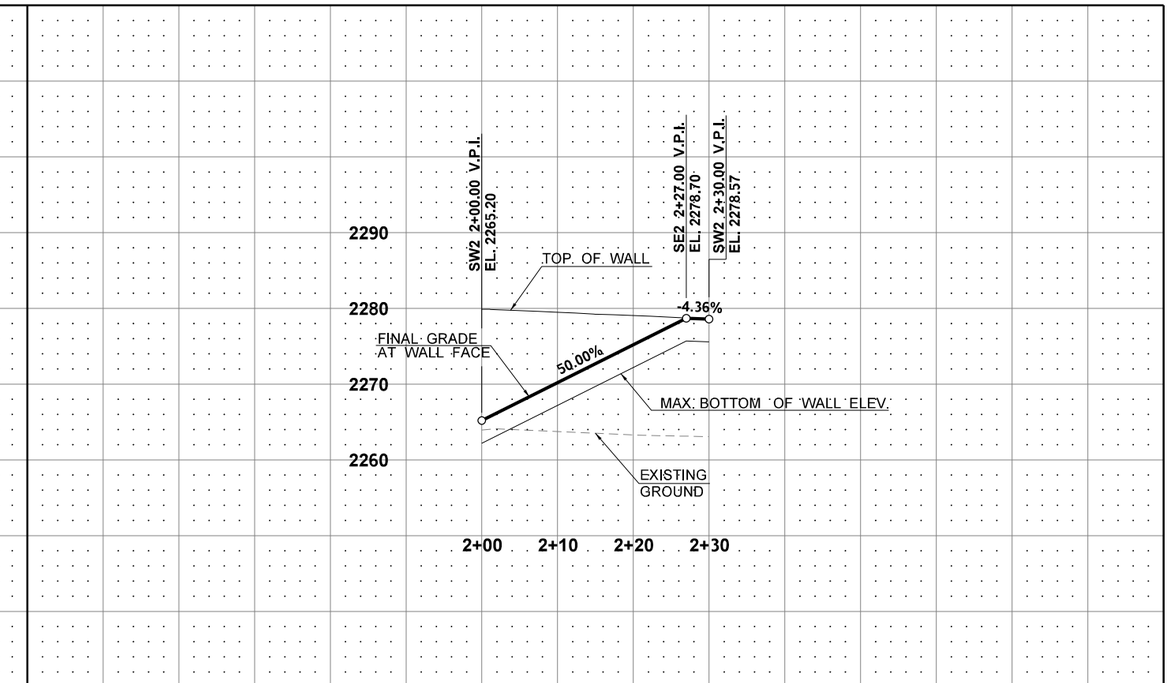

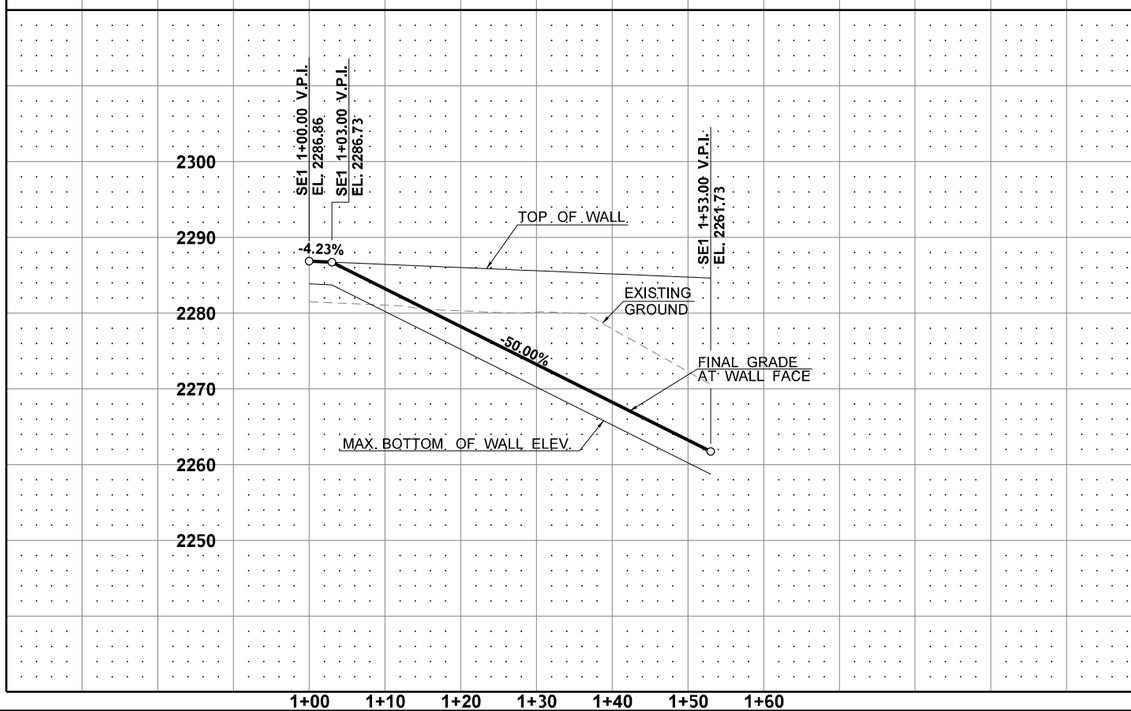

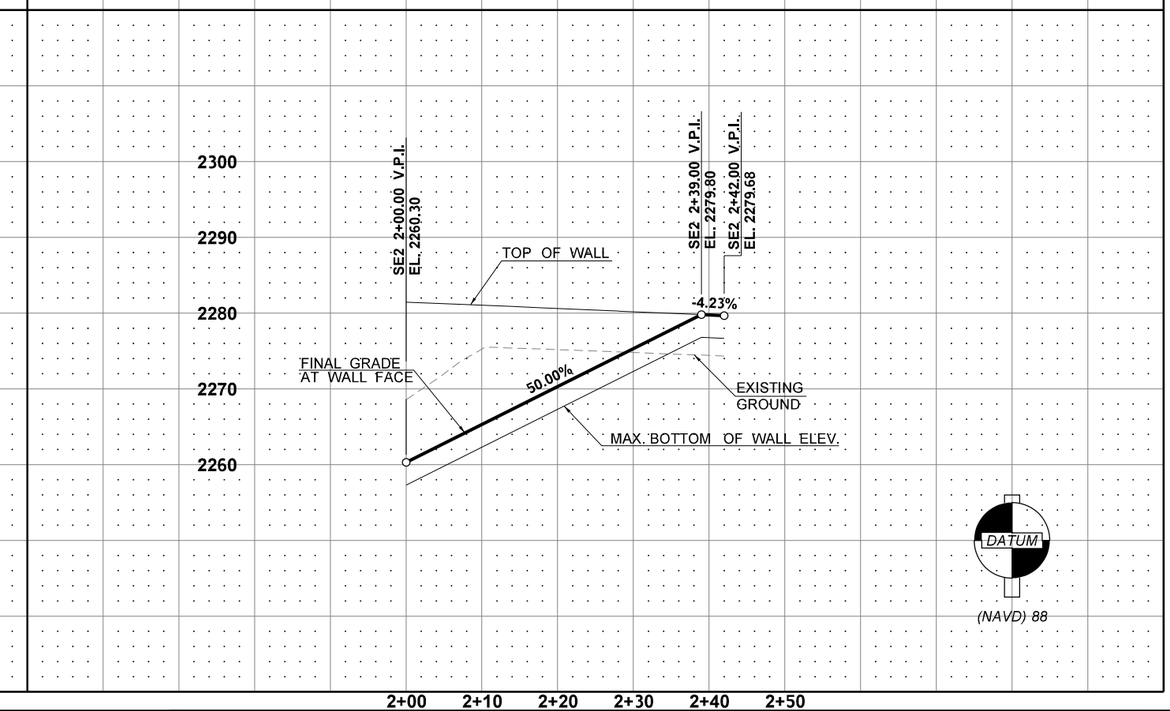

FILE NAME	K:\452201\090\06736_Phase 3\Design_CAD_Sheets\290-MinorStruct\XL5479_PS_BR_Wall.dgn			
TIME	6:17:25 PM			
DATE	2/16/2022			
PLOTTED BY	kingk			
DESIGNED BY	M. GIPNER / K. KING			
ENTERED BY	J. VENEGAS			
CHECKED BY	K. KING			
PROJ. ENGR.	A. BYRD			
REGIONAL ADM.	T. TREPANIER	REVISION	DATE	BY

REGION NO.	STATE	FED.AID PROJ.NO.
10	WASH	
JOB NUMBER 19Y007		
CONTRACT NO.		LOCATION NO.

ANDREW D. BYRD
STATE OF WASHINGTON
39833
REGISTERED PROFESSIONAL ENGINEER

SEE SHEET CT5
DATE
P.E. STAMP BOX

DATE
P.E. STAMP BOX

Washington State
Department of Transportation

I-90
CABIN CREEK I/C TO W EASTON I/C
PHASE 3 - ADD LANES/WILDLIFE BRIDGES

SPARKS ROAD WALL PROFILE

Plot 13
PLAN REF. NO.
WS16
SHEET
879
OF
1783
SHEETS

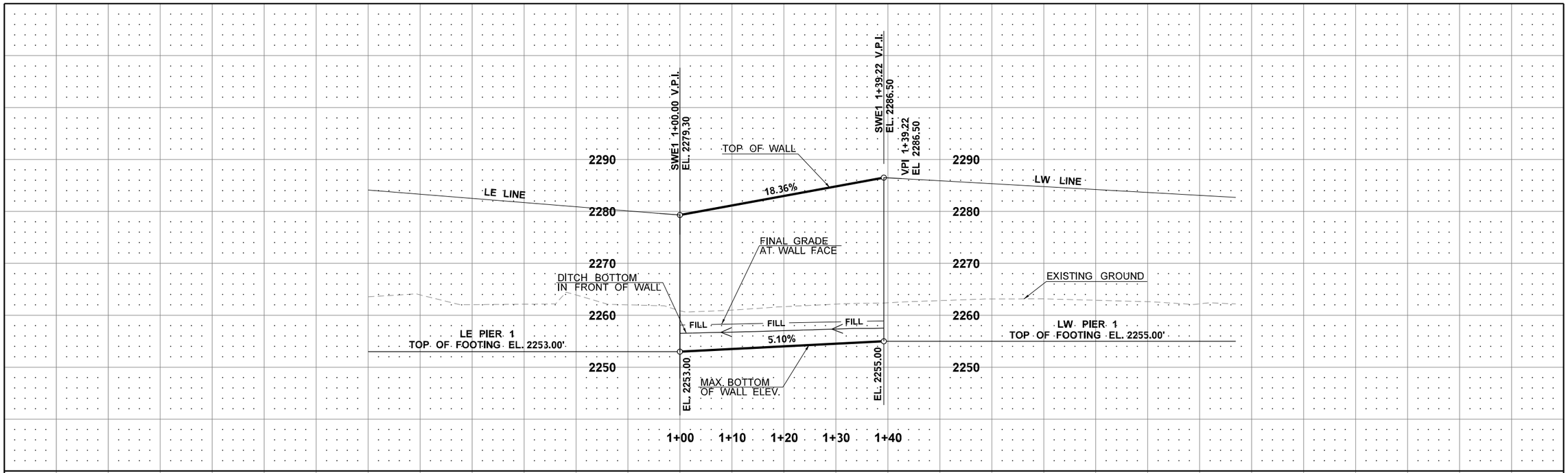

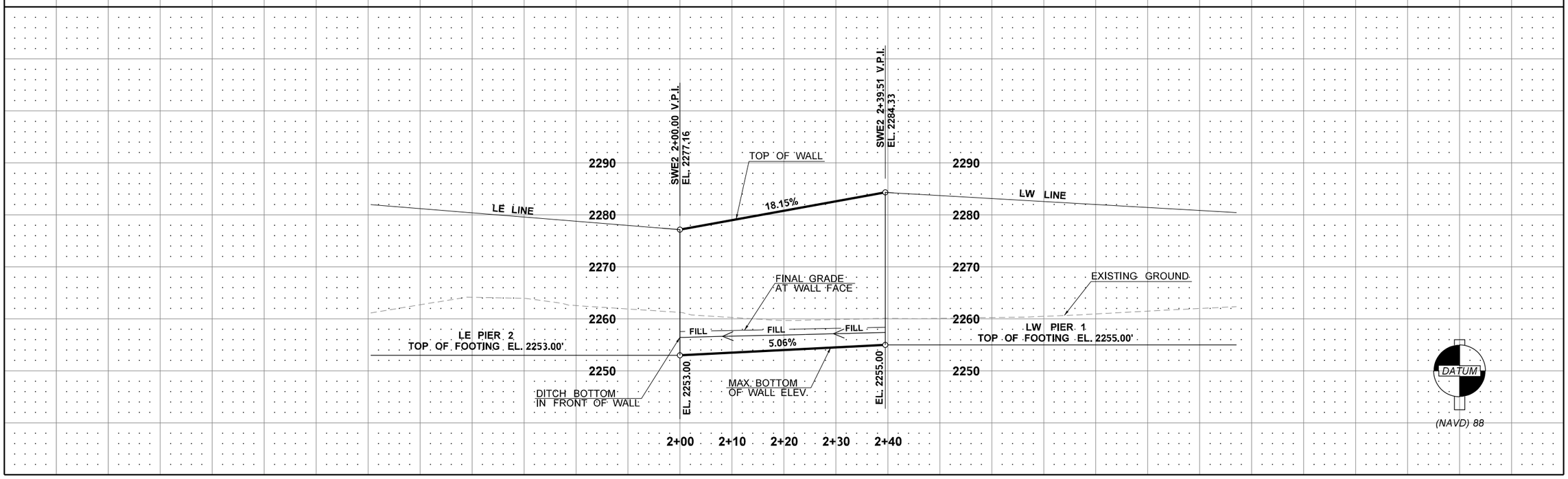

FILE NAME	K:\452201\090\06736_Phase 3\Design_CAD_Sheets\290-MInorStruct\XL5479_PS_BR_Wall.dgn						
TIME	6:17:26 PM						
DATE	2/16/2022						
PLOTTED BY	kingk						
DESIGNED BY	M. GIPNER / K. KING						
ENTERED BY	J. VENEGAS						
CHECKED BY	K. KING						
PROJ. ENGR.	A. BYRD						
REGIONAL ADM.	T. TREPANIER	REVISION	DATE	BY			

REGION NO.	STATE	FED.AID PROJ.NO.
10	WASH	
JOB NUMBER 19Y007		
CONTRACT NO.		LOCATION NO.

ANDREW D. BYRD — STATE OF WASHINGTON — 39873 — REGISTERED PROFESSIONAL ENGINEER

SEE SHEET CT5
DATE
P.E. STAMP BOX

DATE
P.E. STAMP BOX

Washington State
Department of Transportation

I-90
CABIN CREEK I/C TO W EASTON I/C
PHASE 3 - ADD LANES/WILDLIFE BRIDGES

SPARKS ROAD WALL PROFILE

Plot 14
PLAN REF. NO. WS17
SHEET 880 OF 1783 SHEETS

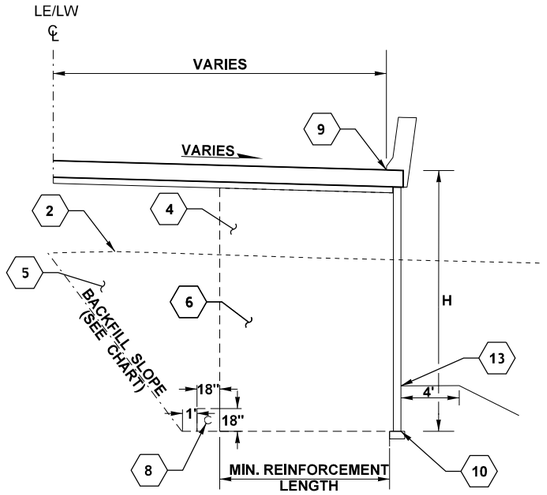

NOT TO SCALE

STRUCTURAL EARTH WALL		
WALL	MINIMUM WALL REINFORCEMENT LENGTH	BACKFILL SLOPE
CE1 (SECTION REVERSED)	0.7H (6' MIN.)	1:1
CE2 (SECTION REVERSED)	0.7H (6' MIN.)	1:1
CE3	0.7H (6' MIN.)	1:1
CE4	0.7H (6' MIN.)	1:1
CW1 (SECTION REVERSED)	0.7H (6' MIN.)	1:1
CW2 (SECTION REVERSED)	0.7H (6' MIN.)	1:1
CW3	0.7H (6' MIN.)	1:1
CW4	0.7H (6' MIN.)	1:1
HW1 (SECTION REVERSED)	0.7H (6' MIN.)	1.5:1
HW2 (SECTION REVERSED)	0.7H (6' MIN.)	1.5:1
HW3	0.7H (6' MIN.)	1.5:1
HW4	0.7H (6' MIN.)	1.5:1
HE1 (SECTION REVERSED)	0.7H (6' MIN.)	1.5:1
HE2 (SECTION REVERSED)	0.7H (6' MIN.)	1.5:1
HE3	0.7H (6' MIN.)	1.5:1
UE1 (SECTION REVERSED)	0.7H (11' MIN.)	1:1
UE2 (SECTION REVERSED)	0.7H (11' MIN.)	1:1
UW1 (SECTION REVERSED)	0.7H (11' MIN.)	1:1
UW2 (SECTION REVERSED)	0.7H (11' MIN.)	1:1
UW3	0.7H (11' MIN.)	1:1
UW4	0.7H (11' MIN.)	1:1

NOTES:

1. SEE SPECIAL PROVISIONS FOR ADDITIONAL MATERIALS AND CONSTRUCTION REQUIREMENTS.
2. SEE DRAINAGE DETAIL SHEET DD8 FOR UNDERDRAIN DETAILS.
3. MINIMUM WALL EMBEDMENT IS 3 FT.
4. SEE BRIDGE SHEETS FOR WALL FINISH.
5. SEE TRAFFIC BARRIER SHEETS FOR BARRIER DETAILS.
6. FILL BELOW MAXIMUM GROUNDWATER ELEVATION SHALL CONSIST OF PERMEABLE BALLAST.
7. FILL FOR WALLS SHALL BE COMPACTED IN ACCORDANCE WITH METHOD C
8. CONTACT ENGINEER TWO WEEKS (MINIMUM) PRIOR TO EXCAVATION TO COORDINATE SUBGRADE INSPECTION

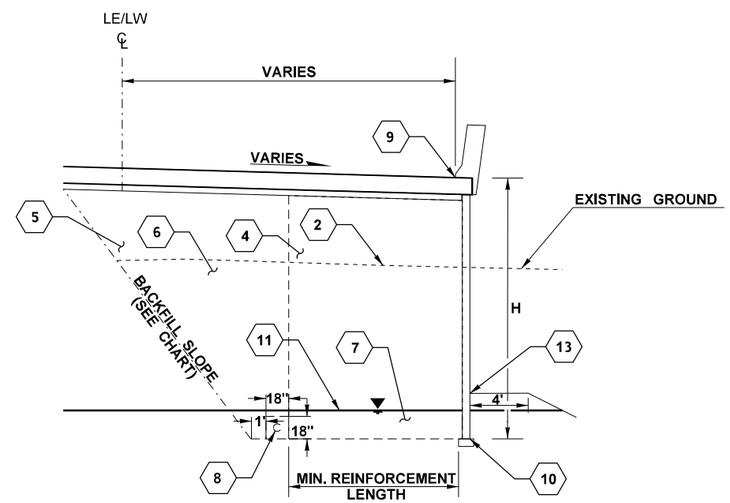

NOT TO SCALE

STRUCTURAL EARTH WALL			
WALL	MINIMUM WALL REINFORCEMENT LENGTH	INERPOLATED MAXIMUM GROUNDWATER ELEVATION	BACKFILL SLOPE
TW1	0.7H (8' MIN.)	2536.0'	1:1
TW2	0.7H (8' MIN.)	2536.0'	1:1
WE2	0.7H (6' MIN.)	2321.0'	1.5:1
WW1 (SECTION REVERSED)	0.7H (6' MIN.)	2332.0'	1.5:1
SW1 (SECTION REVERSED)	0.75H (11' MIN.)	2266.0'	1.5:1
SW2 (SECTION REVERSED)	0.75H (11' MIN.)	2260.0'	1.5:1
SE1	0.75H (11' MIN.)	2259.0'	1.5:1
SE2	0.75H (11' MIN.)	2258.0'	1.5:1

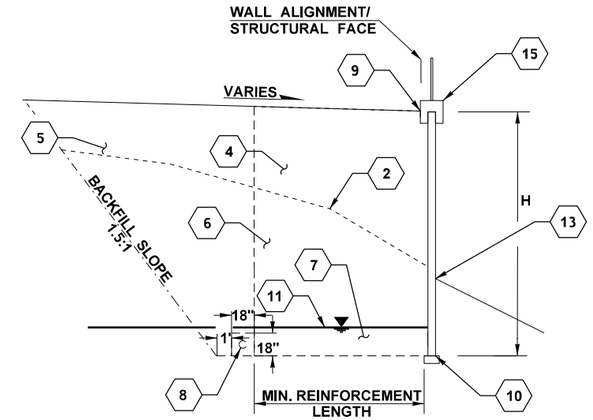

NOT TO SCALE

STRUCTURAL EARTH WALL		
WALL	MINIMUM WALL REINFORCEMENT LENGTH	MAXIMUM GROUNDWATER ELEVATION
SWE1	0.75H (11' MIN.)	2262.0'
SWE2	0.75H (11' MIN.)	2259.0'
WWE1	21'	2323.0'
WWE2	WWE2 2+00.00 to WWE2 2+76.00: 14'	2321.0'
	WWE2 2+76.00 to WWE2 3+78.00: 17'	2321.0'

LEGEND

2	EXISTING GROUND
4	GRAVEL BORROW FOR STRUCTURAL EARTH WALL INCL. HAUL
5	SELECT BORROW INCL. HAUL
6	STRUCTURE EXCAVATION CLASS A INCL. HAUL
7	PERMEABLE BALLAST FOR STRUCTURAL EARTH WALL INCL. HAUL
8	UNDERDRAIN
9	TOP OF WALL/ WALL WORK LINE
10	BOTTOM OF WALL
11	MAXIMUM GROUNDWATER ELEVATION
13	FINAL GRADE AT WALL FACE
14	GEOSYNTHETIC REINFORCEMENT
15	CONCRETE COPING OR SEW PEDESTRIAN BARRIER WITH CABLE FENCE

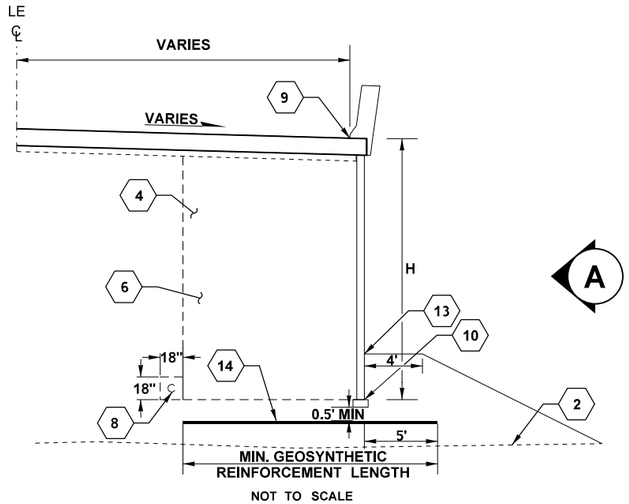

GEOSYNTHETIC REINFORCEMENT		
WALL	T_{al} (LBS/FT)*	MINIMUM GEOSYNTHETIC BASE REINFORCEMENT LENGTH (FT)
UE3	5100	22
UE4	6500	25

* THE LONG-TERM GEOSYNTHETIC DESIGN STRENGTH (T_{al}) SHALL BE DETERMINED IN ACCORDANCE WITH WSDOT STANDARD PRACTICE T925. SEE QUALIFIED PRODUCTS LIST (QPL), APPENDIX D, FOR PRODUCTS IN WHICH T_{al} HAS BEEN DETERMINED.

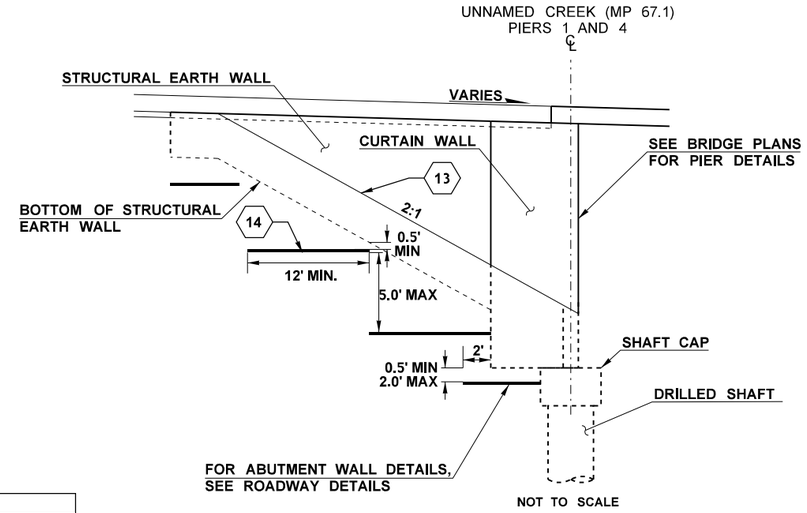

SECTION A

NOT TO SCALE

NOTES:

1. SEE SPECIAL PROVISIONS FOR ADDITIONAL MATERIALS AND CONSTRUCTION REQUIREMENTS.
2. SEE DRAINAGE DETAIL SHEET DD8 FOR UNDERDRAIN DETAILS.
3. MINIMUM WALL EMBEDMENT IS 3 FT.
4. SEE BRIDGE SHEETS FOR WALL FINISH.
5. SEE TRAFFIC BARRIER SHEETS FOR BARRIER DETAILS.
6. FILL BELOW MAXIMUM GROUNDWATER ELEVATION SHALL CONSIST OF PERMEABLE BALLAST.
7. FILL FOR WALLS SHALL BE COMPACTED IN ACCORDANCE WITH METHOD C
8. CONTACT ENGINEER TWO WEEKS (MINIMUM) PRIOR TO EXCAVATION TO COORDINATE SUBGRADE INSPECTION

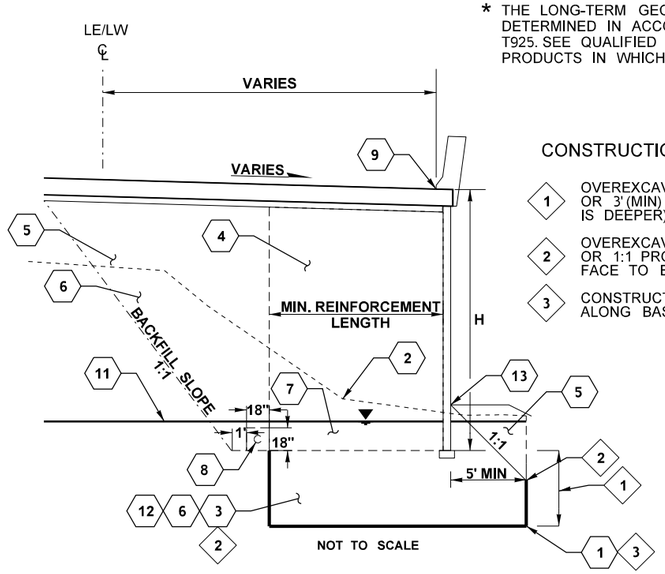

CONSTRUCTION NOTES:

1. OVEREXCAVATE 3' (MIN) BELOW FOOTING ELEVATION, OR 3' (MIN) BELOW EXISTING GROUND (WHICHEVER IS DEEPER).
2. OVEREXCAVATE 5' (MIN) FROM FRONT FACE OF WALL OR 1:1 PROJECTION FROM FINAL GRADE AT WALL FACE TO EXISTING GROUND, WHICHEVER IS GREATER.
3. CONSTRUCTION GEOTEXTILE FOR SEPARATION ALONG BASE AND SIDE OF OVEREXCAVATED ZONE.

STRUCTURAL EARTH WALL		
WALL	MINIMUM WALL REINFORCEMENT LENGTH	MAXIMUM GROUNDWATER ELEVATION
TE1	0.7H (8' MIN.)	2522.0'
TE2	0.7H (8' MIN.)	2522.0'

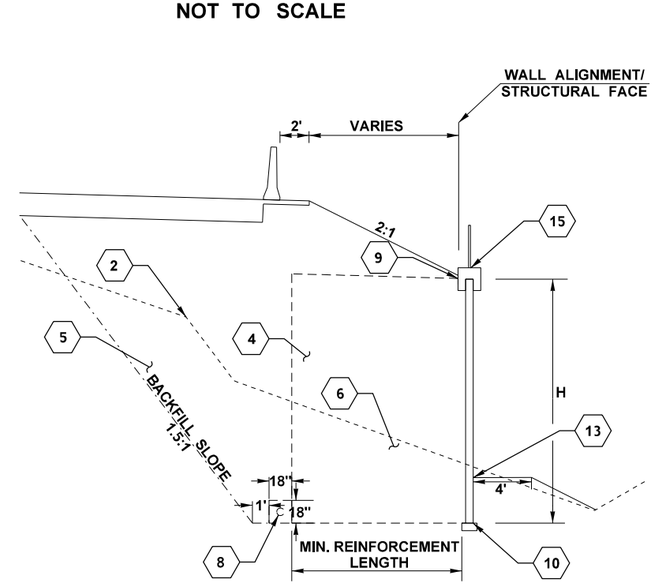

STRUCTURAL EARTH WALL	
WALL	MINIMUM WALL REINFORCEMENT LENGTH
WE1	0.7H (6' MIN.)
WW2 (SECTION REVERSED)	0.7H (6' MIN.)

LEGEND

1. CONSTRUCTION GEOTEXTILE FOR SEPARATION
2. EXISTING GROUND
3. GRAVEL BORROW INCL. HAUL
4. GRAVEL BORROW FOR STRUCTURAL EARTH WALL INCL. HAUL
5. SELECT BORROW INCL. HAUL
6. STRUCTURE EXCAVATION CLASS A INCL. HAUL
7. PERMEABLE BALLAST FOR STRUCTURAL EARTH WALL INCL. HAUL
8. UNDERDRAIN
9. TOP OF WALL/ WALL WORK LINE
10. BOTTOM OF WALL
11. MAXIMUM GROUNDWATER ELEVATION
12. EMBANKMENT COMPACTION
13. FINAL GRADE AT WALL FACE
14. GEOSYNTHETIC REINFORCEMENT
15. CONCRETE COPING WITH CABLE FENCE

FILE NAME	K:\452201\090\06736_Phase 3\Design_CAD_Sheets\290-MInorStruct\XL5479_PS_BR_Wall.dgn					
TIME	6:17:30 PM				REGION NO. 10	STATE WASH
DATE	2/16/2022					FED.AID PROJ.NO.
PLOTTED BY	kingk					
DESIGNED BY	K. KING/L. SALADIN				JOB NUMBER 19Y007	
ENTERED BY	J. VENEGAS/L. SALADIN					
CHECKED BY	K. KING				CONTRACT NO.	LOCATION NO.
PROJ. ENGR.	A. BYRD					
REGIONAL ADM.	T. TREPANIER	REVISION	DATE	BY		

ANDREW D. BYRD, STATE OF WASHINGTON, REGISTERED PROFESSIONAL ENGINEER

SEE SHEET CT5
DATE
P.E. STAMP BOX

DATE
P.E. STAMP BOX

Washington State Department of Transportation

I-90
CABIN CREEK I/C TO W EASTON I/C
PHASE 3 - ADD LANES/WILDLIFE BRIDGES

WALL SECTIONS

Plot 16
PLAN REF NO WS19
SHEET 882 OF 1783 SHEETS

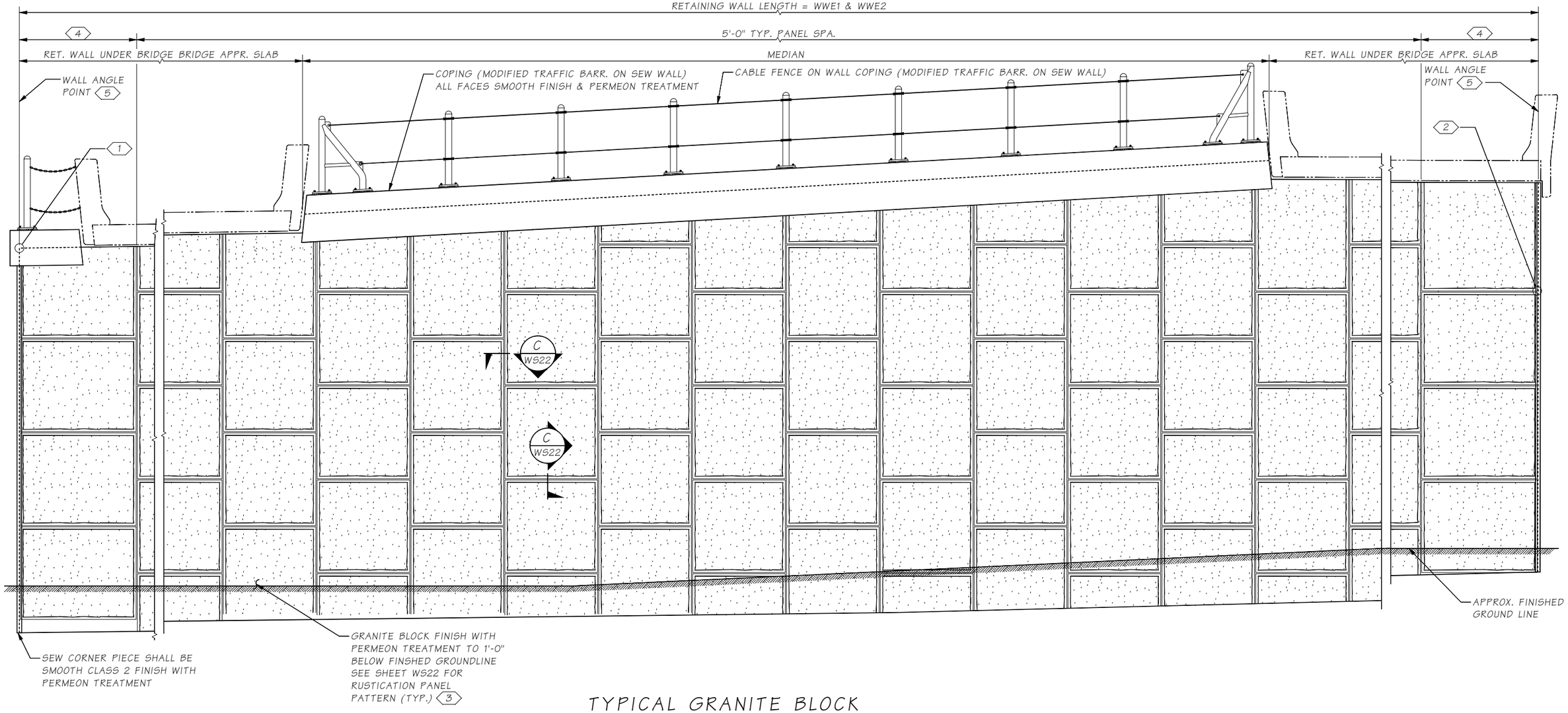

TYPICAL GRANITE BLOCK PATTERN LAYOUT

SHOWING STRUCTUAL EARTH RETAINING WALL WWE1 BEHIND ABUTMENT. WWE2 SIMILAR.

1. VERTICAL LINE WORK POINT FOR GRANITE BLOCK FINISH SHALL BE AT THE UPPER CORNER OF WALL
2. HORIZONTAL LINE WORK POINT FOR GRANITE BLOCK FINISH SHALL BE LOCATED TO ALIGN WITH PATTERN OF ABUTMENT WALL CONSTRUCTION.
3. NUMBER OF TYPICAL 5'-0" x 5'-0" RUSTICATION PANELS VARIES AS A FUNCTION OF RETAINING WALL HEIGHT AND LENGTH.
4. PANEL WIDTH MAY VARY 4'-0" MIN. TO 6'-6" MAX. AT ENDS OF WALL. BOTH ENDS EQUAL.
5. SEE SHEET WS21 FOR ADJACENT WALL DETAILS.

SR I-90 FILE NO. ____ SHEET BX20

Bridge Design Engr.	Khaleghi, B	
Supervisor	Aldrich, BS	
Designed By	Rochon, MJ	01/22
Checked By	Mizumori, A	01/22
Detailed By	Rochon, MJ	01/22
Bridge Projects Engr.		
Prelim. Plan By		
Architect/Specialist		

M:\X-Team\I-90_WILDLIFE U-XING ARCH_SCR\window files\ARCH DET WS20.wnd

DATE	REVISION	BY	APP'D

REGION NO.	STATE	FED. AID PROJ. NO.	SHEET NO.	TOTAL SHEETS
10	WASH.			
JOB NUMBER 19Y007				
CONTRACT NO.				

P.E. STAMP BOX
SEE SHEET CT1
DATE

BRIDGE AND STRUCTURES OFFICE

P.E. STAMP BOX
MATHEW J. ROCHON
STATE OF WASHINGTON
40414
REGISTERED PROFESSIONAL ENGINEER
SEE SHEET CT5
DATE

Washington State Department of Transportation

I-90
EASTON HILL TO W EASTON I/C PHASE 3
ADD LANES/WILDLIFE BRIDGES
WILDLIFE UNDERCROSSING RETAINING WALLS

RETAINING WALL
ARCHITECTURAL DETAILS 1 OF 3

BRIDGE SHEET NO. WS20

SHEET 883 OF 1783 SHEETS

Thu Feb 03 11:14:08 2022

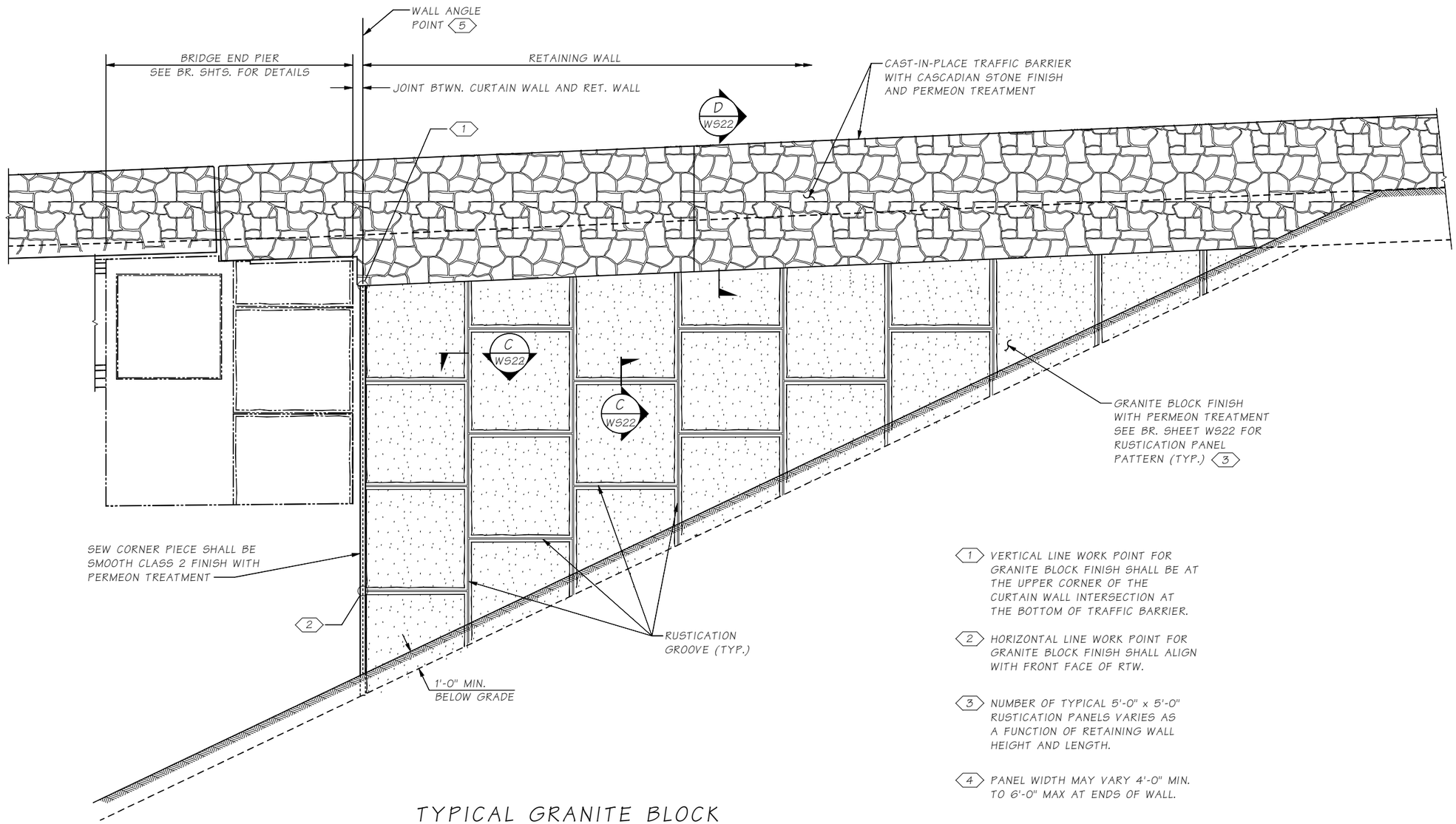

1. VERTICAL LINE WORK POINT FOR GRANITE BLOCK FINISH SHALL BE AT THE UPPER CORNER OF THE CURTAIN WALL INTERSECTION AT THE BOTTOM OF TRAFFIC BARRIER.
2. HORIZONTAL LINE WORK POINT FOR GRANITE BLOCK FINISH SHALL ALIGN WITH FRONT FACE OF RTW.
3. NUMBER OF TYPICAL 5'-0" x 5'-0" RUSTICATION PANELS VARIES AS A FUNCTION OF RETAINING WALL HEIGHT AND LENGTH.
4. PANEL WIDTH MAY VARY 4'-0" MIN. TO 6'-0" MAX AT ENDS OF WALL.
5. SEE SHEET WS20 FOR ADJACENT WALL DETAILS.

TYPICAL GRANITE BLOCK PATTERN LAYOUT

SHOWING STRUCTUAL EARTH RETAINING WALL WW1, WE2 SIMILAR.
WE1 & WW2 SIMILAR, BUT WITH CABLE FENCE INSTEAD OF TRAFFIC BARRIER.

SR I-90 FILE NO. ____ SHEET WS21

Bridge Design Engr.	Khaleghi, B	
Supervisor	Aldrich, BS	
Designed By	Rochon, MJ	01/22
Checked By	Mizumori, A	01/22
Detailed By	Rochon, MJ	01/22
Bridge Projects Engr.		
Prelim. Plan By		
Architect/Specialist		

M:\X-Team\I-90_WILDLIFE U-XING ARCH_SCR\window files\ARCH DET WS21.wnd

DATE	REVISION	BY	APP'D

REGION NO.	STATE	FED. AID PROJ. NO.	SHEET NO.	TOTAL SHEETS
10	WASH.			
JOB NUMBER 19Y007				
CONTRACT NO.				

P.E. STAMP BOX
SEE SHEET CT1
DATE

BRIDGE AND STRUCTURES OFFICE

P.E. STAMP BOX
MATHEW J. ROCHON
STATE OF WASHINGTON
40414
REGISTERED PROFESSIONAL ENGINEER
SEE SHEET CT5
DATE

Washington State Department of Transportation

I-90
EASTON HILL TO W EASTON I/C PHASE 3
ADD LANES/WILDLIFE BRIDGES
WILDLIFE UNDERCROSSING RETAINING WALLS

RETAINING WALL
ARCHITECTURAL DETAILS 2 OF 3

BRIDGE SHEET NO. WS21
SHEET 884 OF 1783 SHEETS

Thu Feb 03 11:14:15 2022

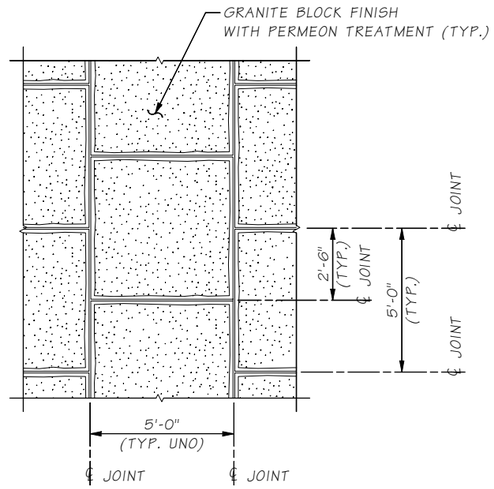

RUSTICATION PANEL PATTERN

TYPICAL FOR S.E.W. PRECAST PANELS.
CAST-IN-PLACE CURTAIN WALL SIMILAR.

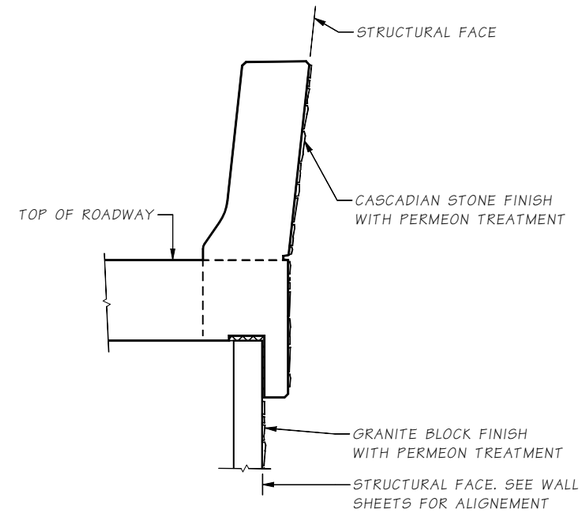

SECTION D / WS22

α CONCRETE SURFACE VARIES
IN DEPTH DEPENDING ON
FORMLINER MANUFACTURERS
AMPLITUDE ± APPROXIMATELY 1¾"

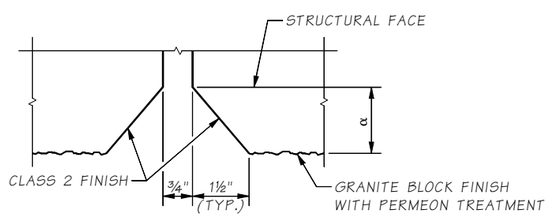

SECTION C / WS20 & WS21

PRECAST RUSTICATION GROOVE
TYPICAL FOR VERTICAL
AND HORIZONTAL APPLICATIONS

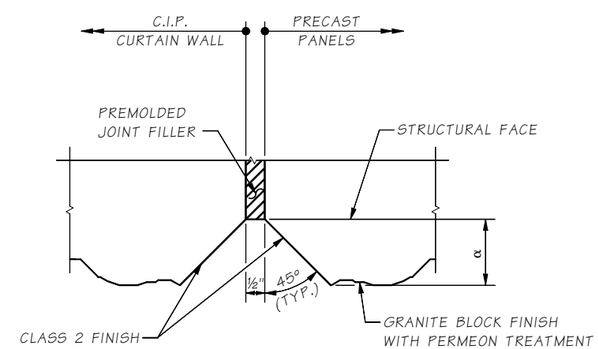

SECTION E / WS23

CAST-IN-PLACE & PRECAST
CORNER GROOVE

Bridge Design Engr.	Khaleghi, B		
Supervisor	Aldrich, BS		
Designed By	Rochon, MJ	01/22	
Checked By	Mizumori, A	01/22	
Detailed By	Rochon, MJ	01/22	
Bridge Projects Engr.			
Prelim. Plan By			
Architect/Specialist			

M:\X-Team\I-90_WILDLIFE U-XING ARCH_SCR\window files\ARCH DET WS22.wnd

DATE	REVISION	BY	APP'D

REGION NO.	STATE	FED. AID PROJ. NO.	SHEET NO.	TOTAL SHEETS
10	WASH.			

JOB NUMBER 19Y007

CONTRACT NO.

P.E. STAMP BOX
SEE SHEET CT1
DATE

BRIDGE AND STRUCTURES OFFICE

P.E. STAMP BOX
MATHEW J. ROCHON
STATE OF WASHINGTON
40414
REGISTERED
PROFESSIONAL ENGINEER
SEE SHEET CT5
DATE

Washington State
Department of Transportation

I-90
EASTON HILL TO W EASTON I/C PHASE 3
ADD LANES/WILDLIFE BRIDGES
WILDLIFE UNDERCROSSING RETAINING WALLS

RETAINING WALL
ARCHITECTURAL DETAILS 3 OF 3

BRIDGE SHEET NO. WS22

SHEET 885 OF 1783 SHEETS

SR I-90 FILE NO. ____ SHEET WS22

Thu Feb 03 11:14:20 2022

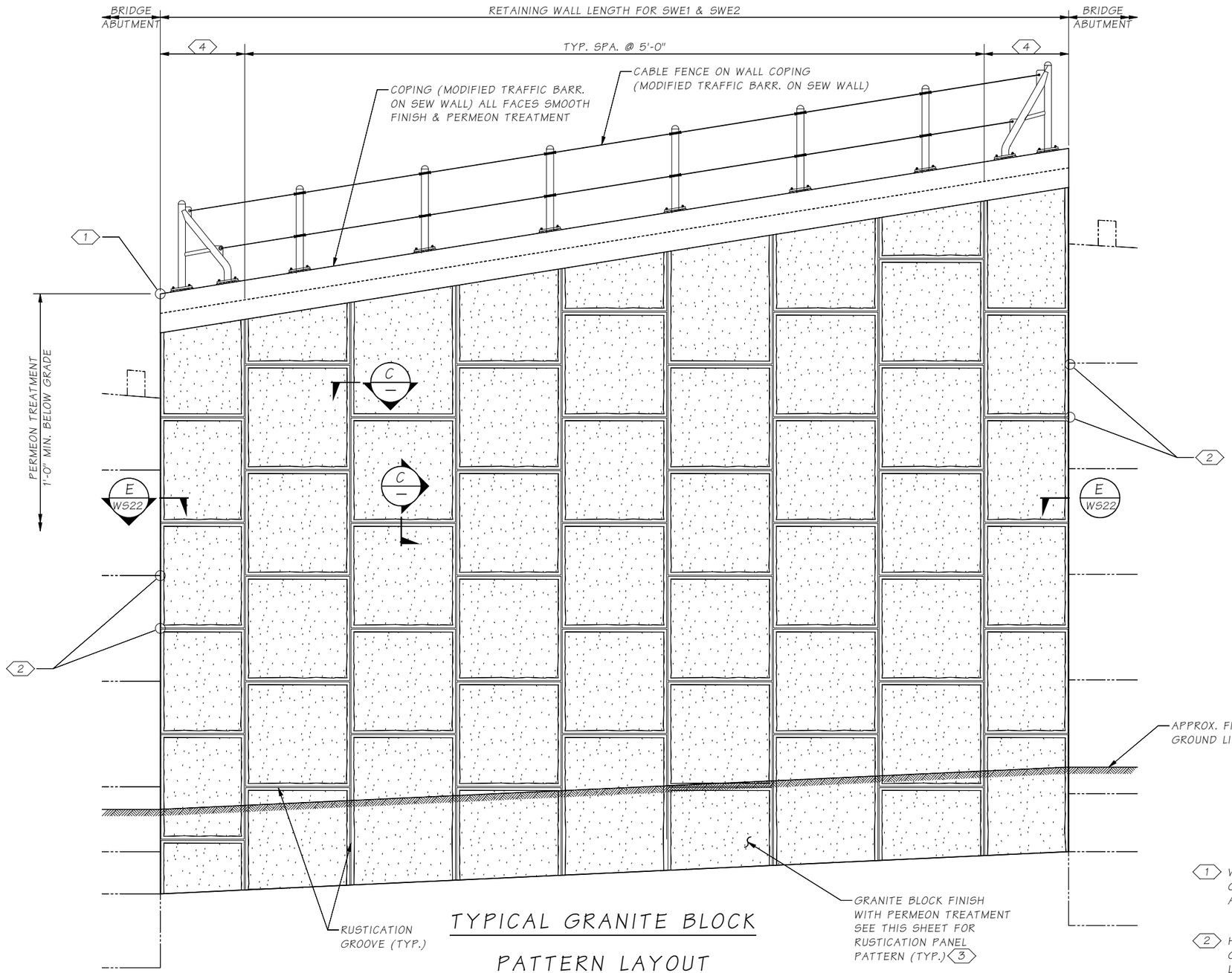

TYPICAL GRANITE BLOCK PATTERN LAYOUT

SHOWING STRUCTUAL EARTH RETAINING WALL, SEE BR. SHTS. FOR CAST-IN-PLACE ABUTMENT.

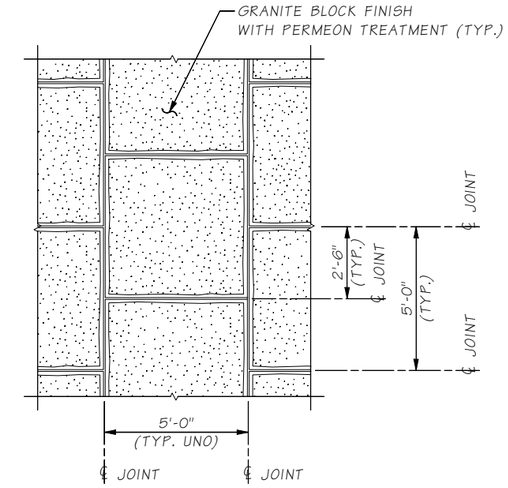

RUSTICATION PANEL PATTERN

TYPICAL FOR S.E.W. PRECAST PANELS.
CAST-IN-PLACE CURTAIN WALL SIMILAR.

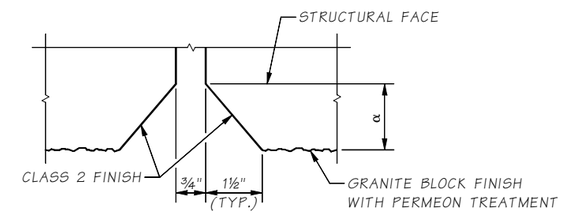

α CONCRETE SURFACE VARIES IN DEPTH DEPENDING ON FORMLINER MANUFACTURERS AMPLITUDE ± APPROXIMATELY 1¾"

SECTION C

PRECAST RUSTICATION GROOVE TYPICAL FOR VERTICAL AND HORIZONTAL APPLICATIONS

1. VERTICAL LINE WORK POINT FOR GRANITE BLOCK FINISH SHALL BE AT THE UPPER CORNER OF WALL
2. HORIZONTAL LINE WORK POINT FOR GRANITE BLOCK FINISH SHALL BE LOCATED ALIGN WITH PATTERN OF ABUTMENT WALL CONSTRUCTION.
3. NUMBER OF TYPICAL 5'-0" x 5'-0" RUSTICATION PANELS VARIES AS A FUNCTION OF RETAINING WALL HEIGHT AND LENGTH.
4. PANEL WIDTH MAY VARY 4'-0" MIN. TO 6'-0" MAX. AT ENDS OF WALL. BOTH ENDS EQUAL.

SR I-90 FILE NO. ____ SHEET WS23

Bridge Design Engr.	Khaleghi, B	
Supervisor	Aldrich, BS	
Designed By	Rochon, MJ	01/22
Checked By	Barkley, J	01/22
Detailed By	Rochon, MJ	01/22
Bridge Projects Engr.		
Prelim. Plan By		
Architect/Specialist		

M:\X-Team\I-90_WILDLIFE U-XING ARCH_SCR\window files\ARCH DET WS23.wnd

DATE	REVISION	BY	APP'D

REGION NO.	STATE	FED. AID PROJ. NO.	SHEET NO.	TOTAL SHEETS
10	WASH.			

JOB NUMBER 19Y007

CONTRACT NO.

P.E. STAMP BOX

SEE SHEET CT1
DATE

BRIDGE AND STRUCTURES OFFICE

P.E. STAMP BOX

MATHEW J. ROCHON, STATE OF WASHINGTON, 40414, REGISTERED PROFESSIONAL ENGINEER

SEE SHEET CT5
DATE

Washington State Department of Transportation

I-90
EASTON HILL TO W EASTON I/C PHASE 3
ADD LANES/WILDLIFE BRIDGES
SPARKS RD MEDIAN RETAINING WALLS

RETAINING WALL ARCHITECTURAL DETAILS

BRIDGE SHEET NO. WS23

SHEET 886 OF 1783 SHEETS

Thu Feb 03 11:14:23 2022

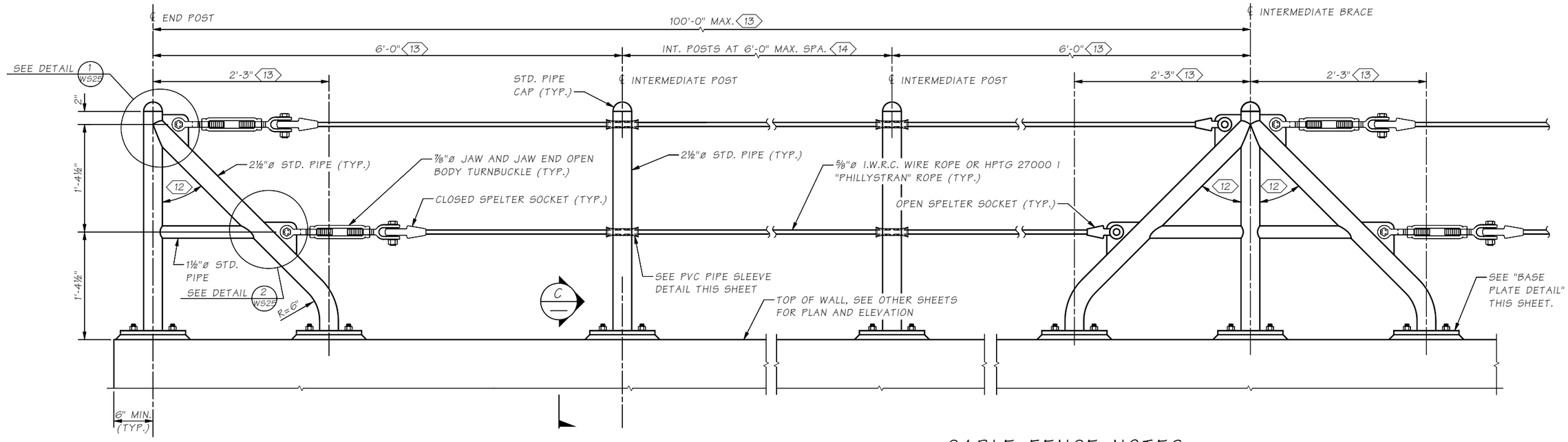

ELEVATION CABLE FENCE

DRILL 1⅛"ø HOLE FOR ¾"ø SCHED. 40 PVC PIPE (1.05" O.D.), BEVEL EDGES OF INSIDE DIA. TO PREVENT CHAFING. PLACE THRU CENTER OF POST AND FLARE ENDS (TYP.).

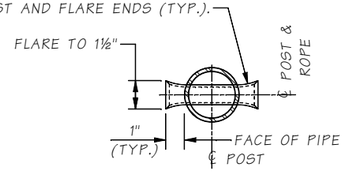

PVC PIPE SLEEVE DETAIL

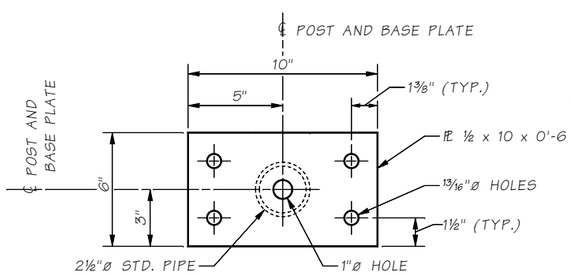

BASE PLATE DETAIL

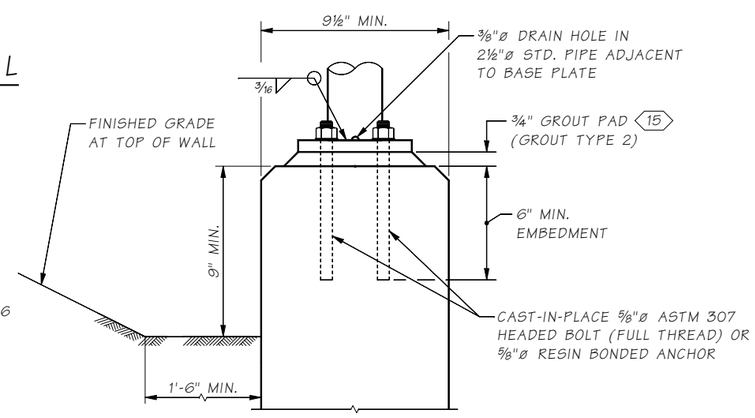

SECTION C

CABLE FENCE NOTES:

1. ALL STEEL PIPE SHALL BE ASTM A53 GRADE B, TYPE E OR S, OR EQUIVALENT HSS ROUND TUBE ASTM A500 GRADE B.
2. ALL STEEL PLATE SHALL BE ASTM A36 OR ASTM A572.
3. ROPE SHALL CONSIST OF ZINC-COATED WIRES CONFORMING TO ASTM A603, OR ASTM A1023 WITH A PRESTRETCHED MODULUS OF ELASTICITY OF 15,000 KSI, OR "PHILLYSTRAN" ROPE.
4. ALL PARTS EXCEPT ROPE SHALL BE HOT DIP GALVANIZED IN ACCORDANCE WITH AASHTO M 111, M 232, OR ASTM F2329 AFTER FABRICATION, UNLESS NOTED OTHERWISE.
5. THE SPELTER SOCKETS AND SOCKETING PROCEDURE SHALL BE IN ACCORDANCE WITH THE SPELTER SOCKET AND ROPE MANUFACTURERS RECOMMENDATIONS.
6. ALL POSTS TO BE INSTALLED VERTICAL AND ROPE TO BE INSTALLED PARALLEL TO TOP OF WALL.
7. ROPE SHALL BE INSTALLED TO 400 LBS. TENSION LEAVING A TAKE UP OF 6" STILL AVAILABLE IN THE TURNBUCKLE. THE CONTRACTOR SHALL SUBMIT CABLE TENSIONING DETAILS TO THE ENGINEER FOR ACCEPTANCE.
8. EACH CONTINUOUS LENGTH OF CABLE SHALL HAVE A TURNBUCKLE AT ONE END ONLY AND BE ANCHORED TO END POST WITH BRACE AT BOTH ENDS.
9. INTERMEDIATE POSTS AND BRACES SHALL NOT TO BE INSTALLED ACROSS EXPANSION JOINT.
10. CABLE FENCE WAS DESIGNED FOR A 200 LB. LOAD ON THE TOP RAIL APPLIED IN ANY DIRECTION, AS REQUIRED BY WASHINGTON ADMINISTRATIVE CODE 296-155-24615. CONTRACTOR DESIGNED WALLS AND COMPONENTS SHALL BE DESIGNED TO THE SAME REQUIREMENTS.
11. ROPE, SPELTER SOCKETS, TURNBUCKLES AND THEIR CONNECTIONS SHALL HAVE A MINIMUM BREAKING STRENGTH OF 26 KIPS.

12 ANGLES VARY WITH THE SLOPE OF THE TOP OF WALL. APPROX. 45° WHEN INSTALLED ON A LEVEL SURFACE.

13 MEASURED PERPENDICULAR TO THE POSTS.

14 OMIT INTERMEDIATE POST WHEN SPACING BETWEEN END POST AND INTERMEDIATE BRACE IS LESS THAN 8'-6".

15 GROUT SHALL BE IN ACCORDANCE WITH SECTION 9-20.3(2)

Bridge Design Engr.	Khaleghi, B		
Supervisor	Aldrich, BS		
Designed By	Mizumori, A	10/21	
Checked By	Howlett, K	11/21	
Detailed By	Bontemps, W	10/21	
Bridge Projects Engr.			
Prelim. Plan By			
Architect/Specialist			

M:\X-Team\I-90 PHASE 3 FALL PROTECTION\window files\CABLE FENCE DETAILS.wnd

DATE	REVISION	BY	APP'D

REGION NO.	STATE	FED. AID PROJ. NO.	SHEET NO.	TOTAL SHEETS
10	WASH.			

JOB NUMBER 19Y007

CONTRACT NO.

P.E. STAMP BOX — ANTHONY J. I. MIZUMORI — STATE OF WASHINGTON — 44007 — PROFESSIONAL ENGINEER — SEE SHEET CT5 — DATE:

BRIDGE AND STRUCTURES OFFICE

P.E. STAMP BOX — BRIAN S. ALDRICH — STATE OF WASHINGTON — 37684 — PROFESSIONAL ENGINEER — SEE SHEET CT5 — DATE:

Washington State Department of Transportation

I-90
CABIN CREEK I/C TO W EASTON I/C
PHASE 3 - ADD LANES/WILDLIFE BRIDGES

CABLE FENCE DETAILS 1 OF 2

BRIDGE SHEET NO. WS24

SHEET 887 OF 1783 SHEETS

SR 90 FILE NO. ____ SHEET WS24

Tue Feb 01 08:22:43 2022

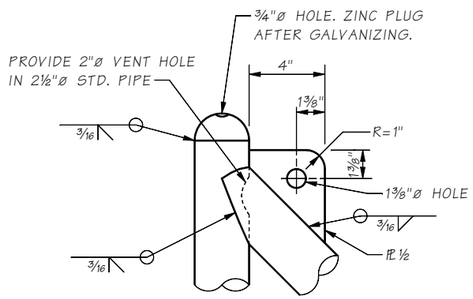

DETAIL 1 / WS24

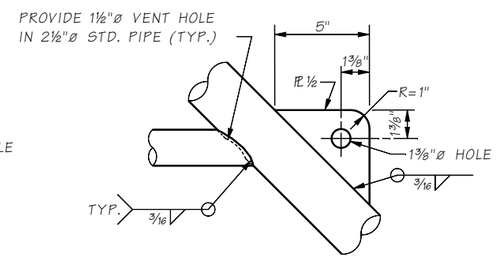

DETAIL 2 / WS24

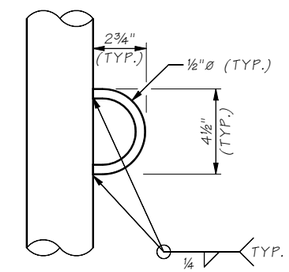

DETAIL 3 / —

RETAINER LOOP

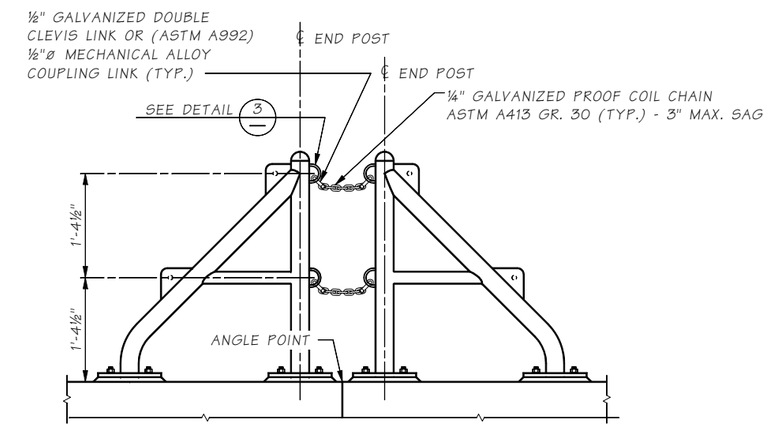

CHAIN CONNECTION ELEVATION AT ANGLE POINTS

ELEVATION VIEW ALONG CENTERLINE TOP OF WALL.
CHAIN TO BE INSTALLED ACROSS WALL ANGLE POINTS.
(WIRE ROPE AND SPELTER SOCKETS NOT SHOWN FOR CLARITY)

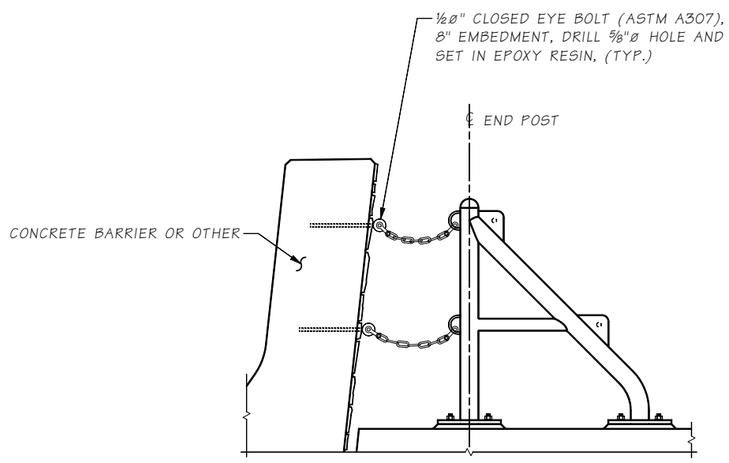

CHAIN CONNECTION ELEVATION AT ENDS

TO BE INSTALLED WHERE OPEN GAP EXCEED 1'-0"
(WIRE ROPE AND SPELTER SOCKETS NOT SHOWN FOR CLARITY)

NOTES:

1. SEE CONTRACT PLANS FOR JOINT LOCATIONS.

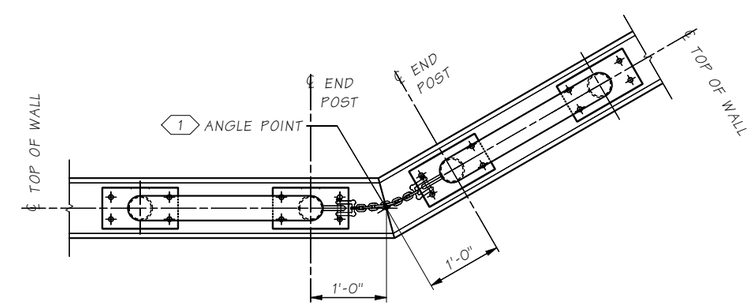

CHAIN CONNECTION PLAN AT ANGLE POINTS

ROPE NOT SHOWN FOR CLARITY

Bridge Design Engr.	Khaleghi, B		M:\X-Team\I-90 PHASE 3 FALL PROTECTION\window files\CABLE FENCE DETAILS 2.wnd			REGION NO.	STATE	FED. AID PROJ. NO.	SHEET NO.	TOTAL SHEETS
Supervisor	Aldrich, BS					10	WASH.			
Designed By	Mizumori, A	10/21				JOB NUMBER 19Y007				
Checked By	Howlett, K	11/21								
Detailed By	Bontemps, W	10/21				CONTRACT NO.				
Bridge Projects Engr.										
Prelim. Plan By										
Architect/Specialist			DATE	REVISION	BY	APP'D				

P.E. STAMP BOX — ANTHONY J. I. MIZUMORI, STATE OF WASHINGTON, 44357, PROFESSIONAL ENGINEER — SEE SHEET CT5 — DATE:

BRIDGE AND STRUCTURES OFFICE

P.E. STAMP BOX — BRIAN S. ALDRICH, STATE OF WASHINGTON, 37834, PROFESSIONAL ENGINEER — SEE SHEET CT5 — DATE:

Washington State Department of Transportation

I-90
CABIN CREEK I/C TO W EASTON I/C
PHASE 3 - ADD LANES/WILDLIFE BRIDGES

CABLE FENCE DETAILS 2 OF 2

BRIDGE SHEET NO. WS25

SHEET 888 OF 1783 SHEETS

SR 90 FILE NO. ____ SHEET WS25

Tue Feb 01 08:22:45 2022

INDEX

SHEET NO.	PLAN REFERENCE NO.	TITLE
		WALL 1
889	INW1	INDEX BRIDGE
890	W1	WALL 1 PLAN VIEW
891 - 892	W2 - W3	WALL 1 PROFILE
893 - 895	W4 - W6	WALL 1 SECTIONS
896 - 897	W7 - W8	WALL 1 TABLES
898 - 899	W9 - W10	WALL 1 FRONT GRADING
		WALL 2
900 - 901	W11 - W12	WALL 2 PLAN VIEW
902 - 903	W13 - W14	WALL 2 PROFILE
904 - 905	W15 - W16	WALL 2 SECTIONS
906 - 807	W17 - W18	WALL 2 TABLES
908 - 909	W19 - W20	WALL 2 FRONT GRADING
		WALL 3
910	W21	WALL 3 PLAN VIEW
911	W22	WALL 3 PROFILE
912	W23	WALL 3 SECTIONS
913	W24	WALL 3 TABLES
914 - 915	W25 - W26	WALL 3 FRONT GRADING
		WALLS 1 - 3
916	WD1	WALLS 1-3 GENERAL NOTES
917	WD2	WALLS 1-3 GEOSYNTHETIC WALL GENERAL DETAILS
918	WD3	WALLS 1-3 GEOMEMBRANE DETAILS
919	WD4	WALL 3 GEOMEMBRANE DETAILS
920 - 923	WD5 - WD8	WALLS 1-3 GEOSYNTHETIC PROPERTIES TABLE

INDEX (CONTINUED)

SHEET NO.	PLAN REFERENCE NO.	TITLE
924 - 925	WD9 - WD10	WALLS 1-3 WELDED WIRE SIZE AND SPACING TABLE
926 - 930	WD11 - WD15	WALLS 1-2 INSTRUMENTATION
931 - 932	WD16 - WD17	WALLS 1-2 STRUCTURE EXCAVATION
933	WD18	WALLS 1-3 STRUCTURE EXCAVATION
934	WD19	WALLS 1-3 UNSTABLE BASE EXCAVATION & REPLACEMENT
935	WD20	WALLS 1 & 3 SELECT BORROW SECTIONS
936	WD21	WALLS 1-3 SELECT BORROW SECTIONS
		SOLDIER PILE WALLS
937 - 938	SP1 - SP2	SOLDIER PILE WALL 1 LAYOUT
939 - 940	SP3 - SP4	SOLIER PILE WALL 1 GENERAL NOTES AND PILE SCHEDULE
941	SP5	SOLDIER PILE WALL 1 CONSTRUCTION SEQUENCE
942 - 944	SP6 - SP8	SOLDIER PILE WALL 1 DEVELOPED ELEVATION
945 - 946	SP9 - SP10	SOLDIER PILE WALL 1 DETAILS
947 - 948	SP11 - SP12	SOLDIER PILE WALL 1 CONCRETE FASCIA DETAILS
949	SP13	SOLDIER PILE WALL 1 PERMANENT GROUND ANCHOR DETAILS
950 - 951	SP14 - SP15	SOLDIER PILE WALL 1 CABLE FENCE DETAILS
952 - 954	SP16 - SP18	SOLDIER PILE WALL 2 LAYOUT
955 - 956	SP19 - SP20	SOLDIER PILE WALL 2 GENERAL NOTES AND PILE SCHEDULE
957	SP21	SOLDIER PILE WALL 2 CONSTRUCTION SEQUENCE
958 - 962	SP22 - SP26	SOLDIER PILE WALL 2 DEVELOPED ELEVATION
963 - 964	SP27 - SP28	SOLDIER PILE WALL 2 DETAILS
965 - 966	SP29 - SP30	SOLDIER PILE WALL 2 CONCRETE FASCIA DETAILS
967	SP31	SOLDIER PILE WALL 2 PERMANENT GROUND ANCHOR DETAILS
968 - 969	SP32 - SP33	SOLDIER PILE WALL 2 CABLE FENCE DETAILS
970 - 971	SF1 - SF2	SHOTCRETE FACING DETAILS
972 - 974	RB1 - RB3	RAILING BASE DETAILS
975 - 976	RB4 - RB5	RAILING BASE CABLE FENCE DETAILS

PLAN REF NO
¢¢##
SHEET
##
OF
##
SHEETS

NOTE: ALL SHEET REFERENCES, FIRST NOS. OF STRUCTURE CODE DESIGNATIONS AND MATCH LINE SHEET REFERENCES, ETC., THROUGHOUT THE PLANS, REFER TO THE ENTRY IN THE PLAN

FILE NAME	K:\452201\090\06736_Phase 3\Design_CAD_Sheets\010-Index\XL5479_PS_INB.dgn
TIME	1:44:44 PM
DATE	2/16/2022
PLOTTED BY	KhalifH
DESIGNED BY	KING/SCHILPEROORT
ENTERED BY	K. KING
CHECKED BY	K. KING
PROJ. ENGR.	A. BYRD
REGIONAL ADM.	T. TREPANIER

REVISION | DATE | BY

REGION NO. 10 | STATE WASH | FED.AID PROJ.NO.
JOB NUMBER 197007
CONTRACT NO. | LOCATION NO.

P.E. STAMP BOX DATE

P.E. STAMP BOX DATE

Washington State Department of Transportation

I-90
CABIN CREEK I/C TO W EASTON I/C
PHASE 3 - ADD LANES/WILDLIFE BRIDGES

INDEX WALL

Plot 15
PLAN REF NO INW1
SHEET 889 OF 1783 SHEETS

CURVE DATA				
P.I. STATION	DELTA	RADIUS	TANGENT	LENGTH
WALL 1 21+15.78	35°37'53" LT	1,544'	496.19'	960.19'

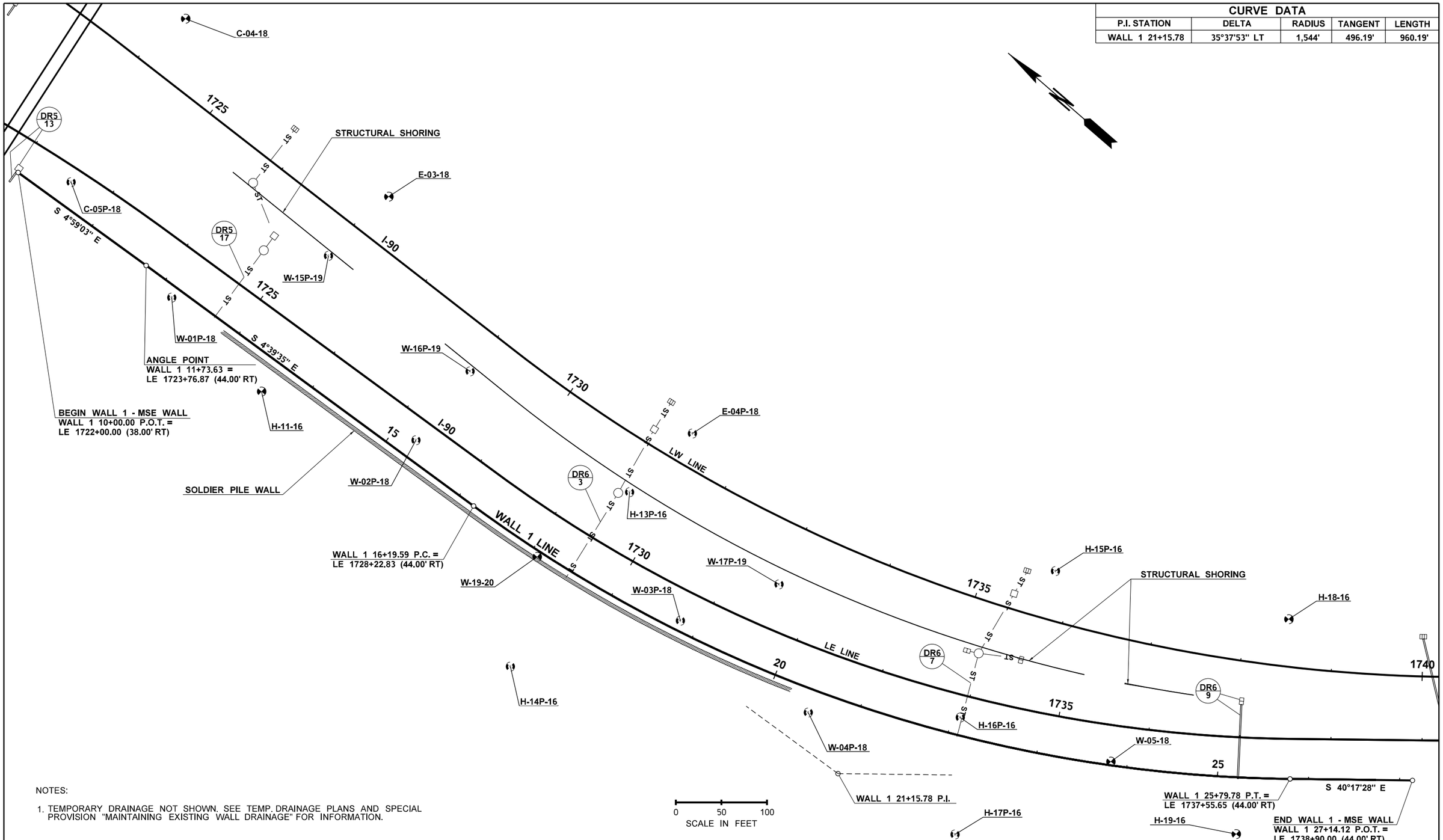

NOTES:

1. TEMPORARY DRAINAGE NOT SHOWN. SEE TEMP. DRAINAGE PLANS AND SPECIAL PROVISION "MAINTAINING EXISTING WALL DRAINAGE" FOR INFORMATION.

FILE NAME	K:\452201\090\06736_Phase 3\Design_CAD_Sheets\290-MInorStruct\XL5479_PS_WALLS.dgn				REGION NO. 10	STATE WASH	FED.AID PROJ.NO.
TIME	5:06:30 PM				JOB NUMBER 19Y007		
DATE	2/15/2022				CONTRACT NO.		LOCATION NO.
PLOTTED BY	GipnerM						
DESIGNED BY	M. GIPNER						
ENTERED BY	J. VENEGAS						
CHECKED BY	K. KING						
PROJ. ENGR.	A. BYRD						
REGIONAL ADM.	T. TREPANIER	REVISION	DATE	BY			

ANDREW D. BYRD — STATE OF WASHINGTON — 19833 — REGISTERED PROFESSIONAL ENGINEER

SEE SHEET CT5

DATE

P.E. STAMP BOX

DATE

P.E. STAMP BOX

Washington State Department of Transportation

I-90
CABIN CREEK I/C TO W EASTON I/C
PHASE 3 - ADD LANES/WILDLIFE BRIDGES

WALL 1 PLAN VIEW

Plot 1

PLAN REF NO W1

SHEET 890 OF 1783 SHEETS

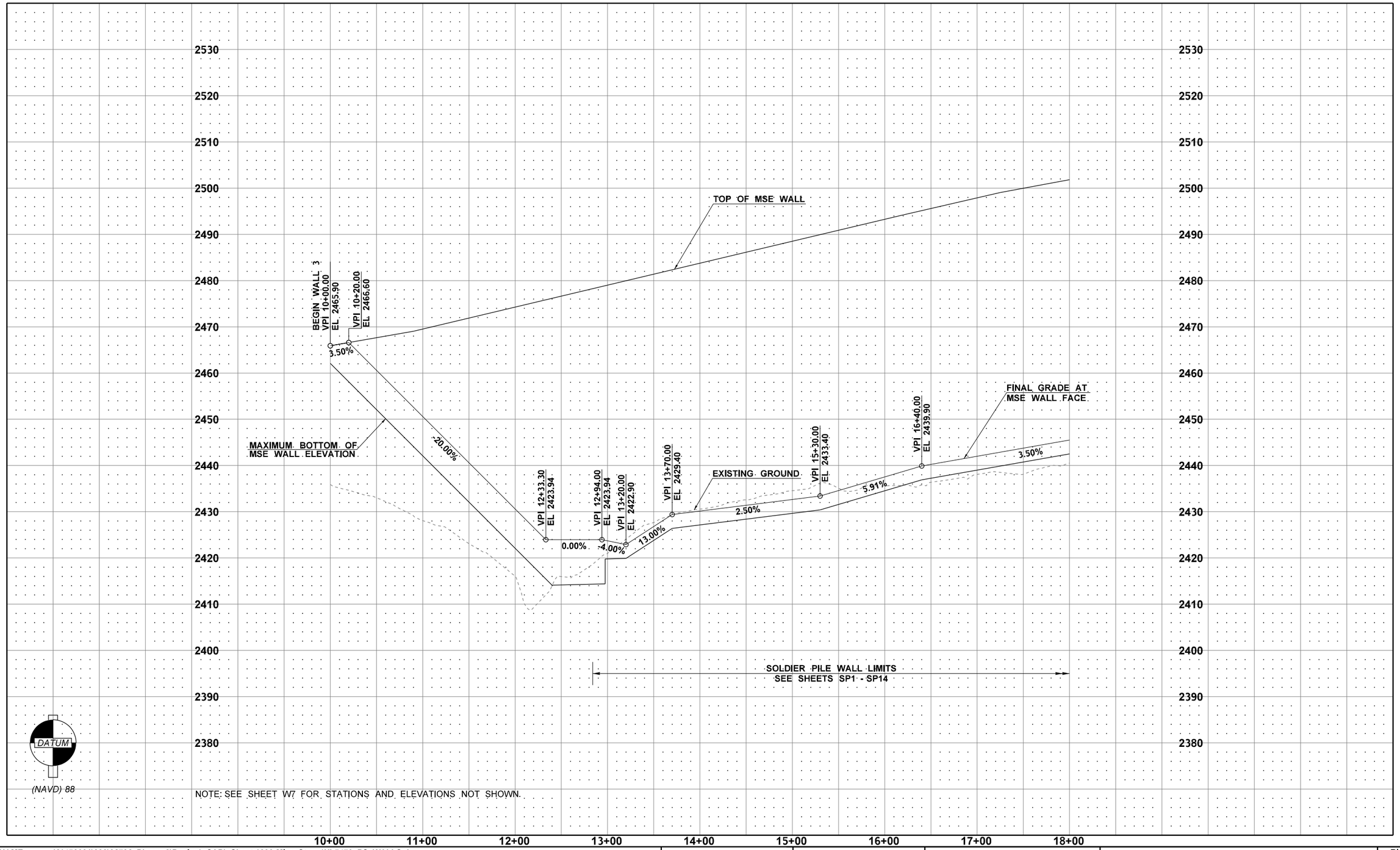

FILE NAME	K:\452201\090\06736_Phase 3\Design_CAD_Sheets\290-MInorStruct\XL5479_PS_WALLS.dgn
TIME	5:06:32 PM
DATE	2/15/2022
PLOTTED BY	GipnerM
DESIGNED BY	M. GIPNER
ENTERED BY	J. VENEGAS
CHECKED BY	K. KING
PROJ. ENGR.	A. BYRD
REGIONAL ADM.	T. TREPANIER

REVISION | DATE | BY

REGION NO.	STATE
10	WASH

JOB NUMBER 19Y007

CONTRACT NO.

FED.AID PROJ.NO.

LOCATION NO.

ANDREW D. BYRD — STATE OF WASHINGTON — 19833 — REGISTERED PROFESSIONAL ENGINEER

SEE SHEET CT5

DATE

P.E. STAMP BOX

DATE

P.E. STAMP BOX

Washington State Department of Transportation

I-90
CABIN CREEK I/C TO W EASTON I/C
PHASE 3 - ADD LANES/WILDLIFE BRIDGES

WALL 1 PROFILE

Plot 2

PLAN REF. NO. W2

SHEET 891 OF 1783 SHEETS

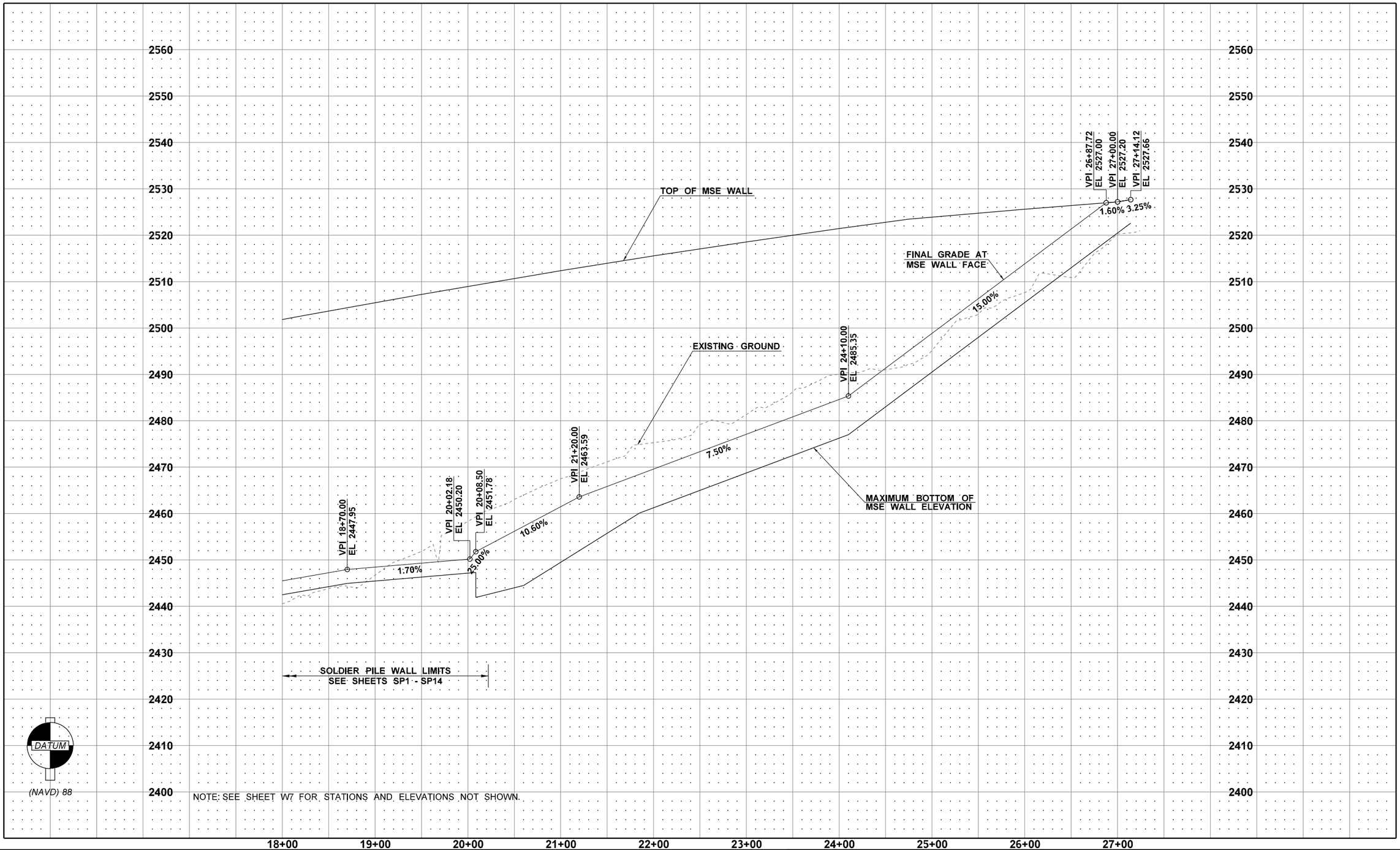

FILE NAME	K:\452201\090\06736_Phase 3\Design_CAD_Sheets\290-MinorStruct\XL5479_PS_WALLS.dgn
TIME	5:06:35 PM
DATE	2/15/2022
PLOTTED BY	GipnerM
DESIGNED BY	M. GIPNER
ENTERED BY	J. VENEGAS
CHECKED BY	K. KING
PROJ. ENGR.	A. BYRD
REGIONAL ADM.	T. TREPANIER

REVISION | DATE | BY

REGION NO.	STATE	FED.AID PROJ.NO.
10	WASH	
JOB NUMBER 19Y007		
CONTRACT NO.		LOCATION NO.

ANDREW D. BYRD, STATE OF WASHINGTON, 39833, REGISTERED PROFESSIONAL ENGINEER

SEE SHEET CT5
DATE
P.E. STAMP BOX

DATE
P.E. STAMP BOX

Washington State Department of Transportation

I-90
CABIN CREEK I/C TO W EASTON I/C
PHASE 3 - ADD LANES/WILDLIFE BRIDGES

WALL 1 PROFILE

Plot 3
PLAN REF. NO. W3
SHEET 892 OF 1783 SHEETS

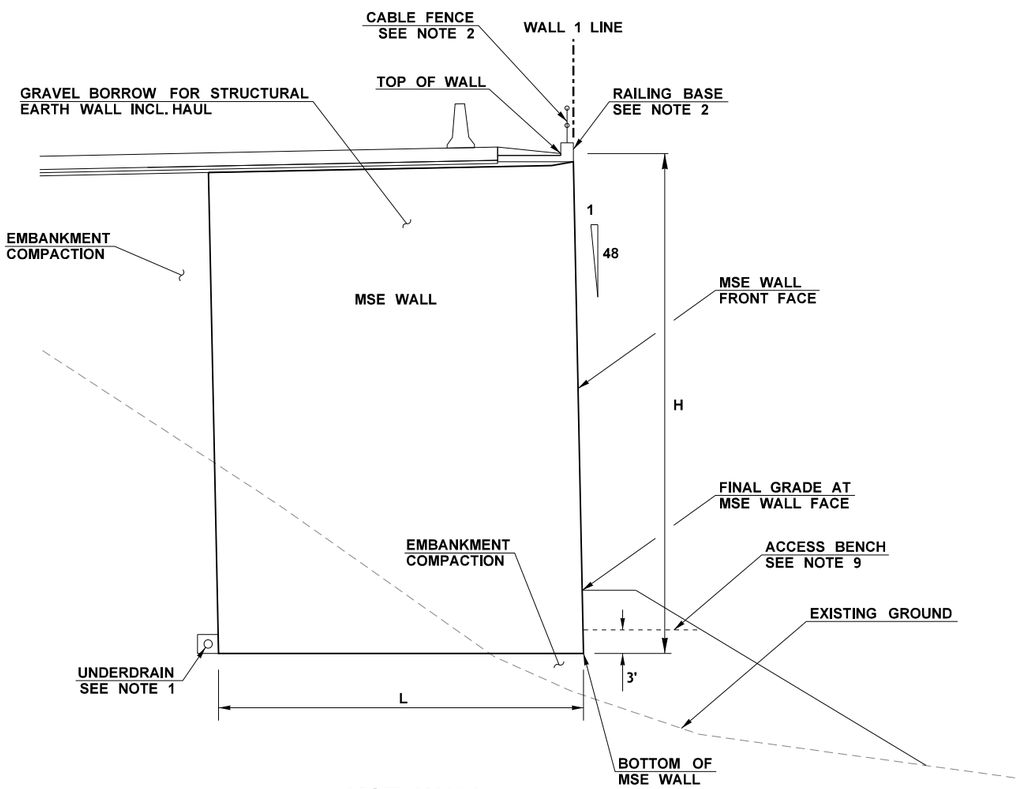

MSE WALL

(NOT TO SCALE)
WALL 1 10+00.00 TO WALL 1 12+84.00
WALL 1 24+40.00 TO WALL 1 27+14.12

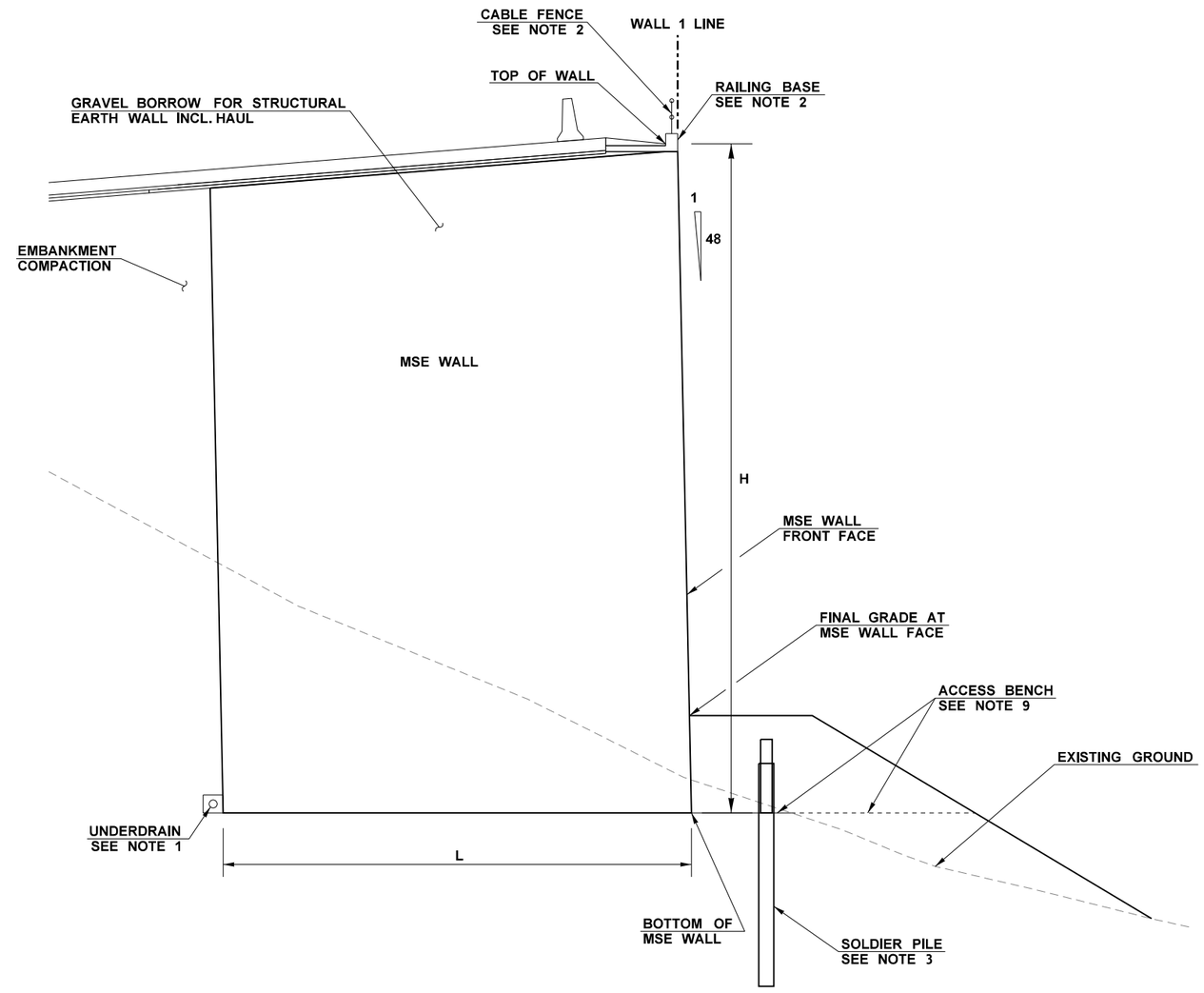

MSE WALL BEHIND CANTILEVER SOLDIER PILE

(NOT TO SCALE)
WALL 1 12+84.00 TO WALL 1 12+97.50

NOTES:

1. SEE DRAINAGE PLANS, DRAINAGE PROFILES AND DRAINAGE DETAILS FOR UNDERDRAIN TYPE, SIZE, LOCATION AND ADDITIONAL DETAILS.
2. SEE SHEETS RB1 - RB5 FOR RAILING BASE AND ATTACHED CABLE FENCE DETAILS.
3. SEE SHEETS SP1 - SP14 FOR SOLDIER PILE WALL DETAILS.
4. FOR GRADING IN FRONT OF WALL SEE SHEETS W9 AND W10.
5. FOR STRUCTURE EXCAVATION, UNSTABLE BASE EXCAVATION AND ADDITIONAL BACKFILL REQUIREMENTS FOR PORTIONS OF THESE EXCAVATIONS SEE SHEETS WD16 - WD19.
6. SELECT BORROW REQUIRED UNDER MSE WALL IN LIMITED LOCATIONS. SEE SHEETS WD20 AND WD21 FOR DETAILS.
7. HILFIKER WELDED WIRE WALL SHOWN. GEOSYNTHETIC WALL ALTERNATIVE SIMILAR, SEE SHEET WD2 FOR DETAILS.
8. SEE REINFORCEMENT LENGTH TABLE ON SHEET W8 FOR VALUES OF VARIABLE "L".
9. PROFILES PROVIDE FOR THE CONSTRUCTION OF AN ACCESS BENCH TO ACCOMMODATE SOLIDER PILE WALL CONSTRUCTION. BENCH WIDTH VARIES AND MAY NOT BE WIDE ENOUGH FOR ALL CONTRACTOR EQUIPMENT WITHOUT ADDITIONAL EMBANKMENT OR TEMPORARY EARTH RETAINING STRUCTURES. CONSTRUCTION AND DESIGN OF ANY TEMPORARY EARTH RETAINING STRUCTURES OR ADDITIONAL EMBANKMENT WIDER THAN THE LIMITS OF STRUCTURE EXCAVATION AND PERMANENT EMBANKMENT SHOWN IN THE PLANS ARE THE RESPONSIBILITY OF THE CONTRACTOR. ANY SUCH ADDITIONAL WORK SHALL NOT EXTEND BEYOND THE CLEARING AND GRUBBING LIMITS SHOWN ON THE ALIGNMENT / SITE PREPARATION PLANS.

FILE NAME	K:\452201\090\06736_Phase 3\Design_CAD_Sheets\290-MInorStruct\XL5479_PS_WALLS.dgn				REGION NO.	STATE	FED.AID PROJ.NO.
TIME	5:06:37 PM				10	WASH	
DATE	2/15/2022				JOB NUMBER		
PLOTTED BY	GipnerM				19Y007		
DESIGNED BY	M. GIPNER				CONTRACT NO.		LOCATION NO.
ENTERED BY	M. GIPNER						
CHECKED BY	K. KING						
PROJ. ENGR.	A. BYRD						
REGIONAL ADM.	T. TREPANIER	REVISION	DATE	BY			

SEE SHEET CT5
DATE
P.E. STAMP BOX

DATE
P.E. STAMP BOX

Washington State
Department of Transportation

I-90
CABIN CREEK I/C TO W EASTON I/C
PHASE 3 - ADD LANES/WILDLIFE BRIDGES

WALL 1 SECTIONS

Plot 4
PLAN REF NO
W4
SHEET
893
OF
1783
SHEETS

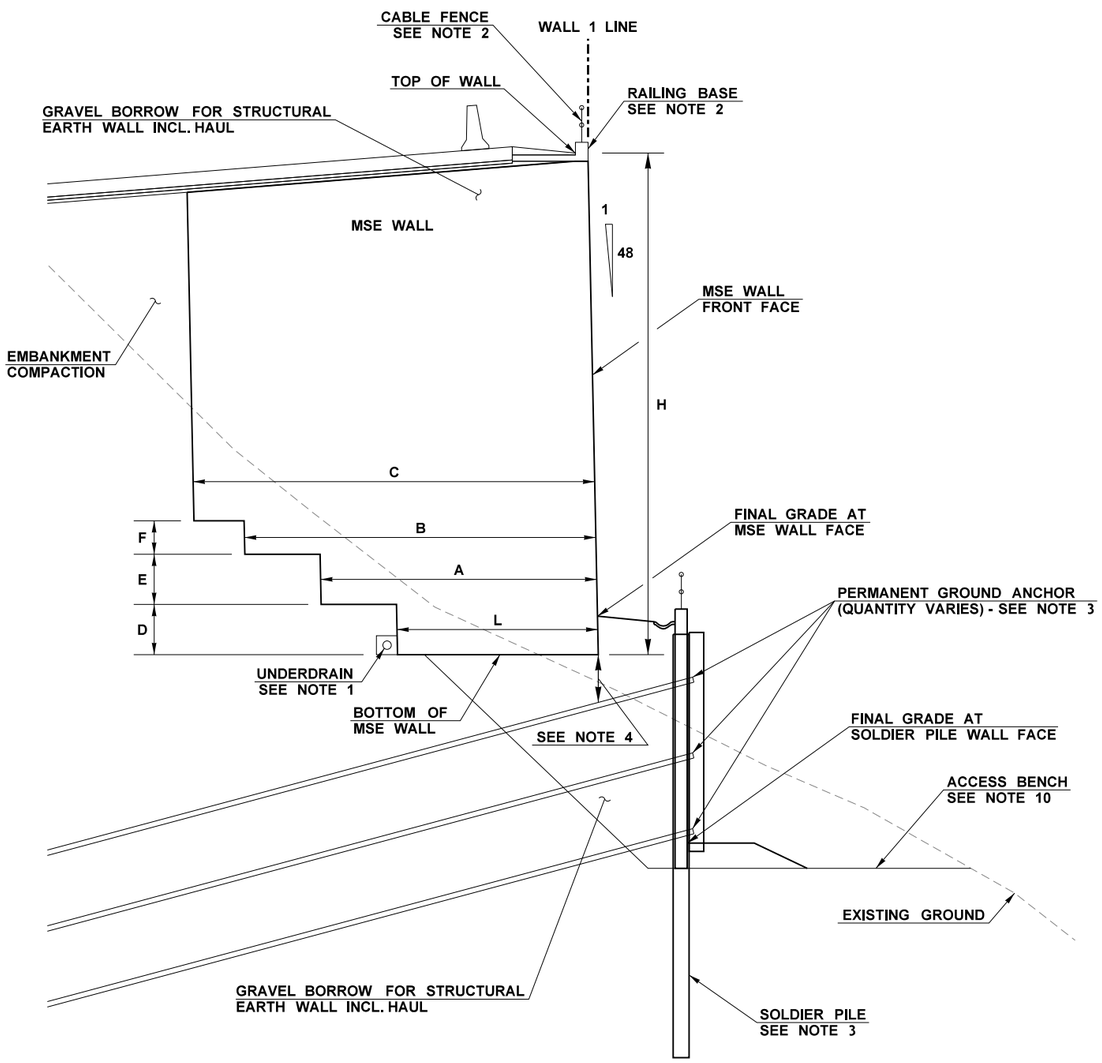

MSE WALL WITH TRUNCATED BASE BEHIND TIEBACK SOLDIER PILE

(NOT TO SCALE)
WALL 1 12+97.50 TO WALL 1 20+08.50

NOTES:

1. SEE DRAINAGE PLANS, DRAINAGE PROFILES AND DRAINAGE DETAILS FOR UNDERDRAIN TYPE, SIZE, LOCATION AND ADDITIONAL DETAILS.
2. SEE SHEETS RB1 - RB5 FOR RAILING BASE AND ATTACHED CABLE FENCE DETAILS.
3. SEE SHEETS SP1 - SP14 FOR SOLDIER PILE WALL DETAILS.
4. MAINTAIN A MINIMUM OF 1.75' OF CLEARANCE BETWEEN BOTTOM OF MSE WALL AND TOP OF PERMANENT GROUND ANCHOR. IF CLEARANCE CAN NOT BE MAINTAINED WHILE ACHIEVING THE "MAXIMUM BOTTOM OF MSE WALL ELEVATION" THE CONTRACTOR'S TYPE 2E WORKING DRAWINGS FOR THE MSE WALL SHALL LIST ALL LOCATIONS AND STATE HOW FAR THE BOTTOM OF THE MSE WALL IS ABOVE THE "MAXIMUM BOTTOM OF MSE WALL ELEVATION". ALL LOCATIONS SHALL BE SUBJECT TO APPROVAL BY THE ENGINEER IN WRITING.
5. FOR GRADING IN FRONT OF WALL SEE SHEETS W9 AND W10.
6. FOR STRUCTURE EXCAVATION, UNSTABLE BASE EXCAVATION AND ADDITIONAL BACKFILL REQUIREMENTS FOR PORTIONS OF THESE EXCAVATIONS SEE SHEETS WD16 - WD19.
7. SELECT BORROW REQUIRED UNDER MSE WALL IN LIMITED LOCATIONS. SEE SHEETS WD20 AND WD21 FOR DETAILS.
8. HILFIKER WELDED WIRE WALL SHOWN. GEOSYNTHETIC WALL ALTERNATIVE SIMILAR, SEE SHEET WD2 FOR DETAILS.
9. SEE TABLES ON SHEET W8 FOR VALUES OF VARIABLES "A", "B", "C", "D", "E", "F" AND "L".
10. PROFILES PROVIDE FOR THE CONSTRUCTION OF AN ACCESS BENCH TO ACCOMMODATE SOLIDER PILE WALL CONSTRUCTION. BENCH WIDTH VARIES AND MAY NOT BE WIDE ENOUGH FOR ALL CONTRACTOR EQUIPMENT WITHOUT ADDITIONAL EMBANKMENT OR TEMPORARY EARTH RETAINING STRUCTURES. CONSTRUCTION AND DESIGN OF ANY TEMPORARY EARTH RETAINING STRUCTURES OR ADDITIONAL EMBANKMENT WIDER THAN THE LIMITS OF STRUCTURE EXCAVATION AND PERMANENT EMBANKMENT SHOWN IN THE PLANS ARE THE RESPONSIBILITY OF THE CONTRACTOR. ANY SUCH ADDITIONAL WORK SHALL NOT EXTEND BEYOND THE CLEARING AND GRUBBING LIMITS SHOWN ON THE ALIGNMENT / SITE PREPARATION PLANS.

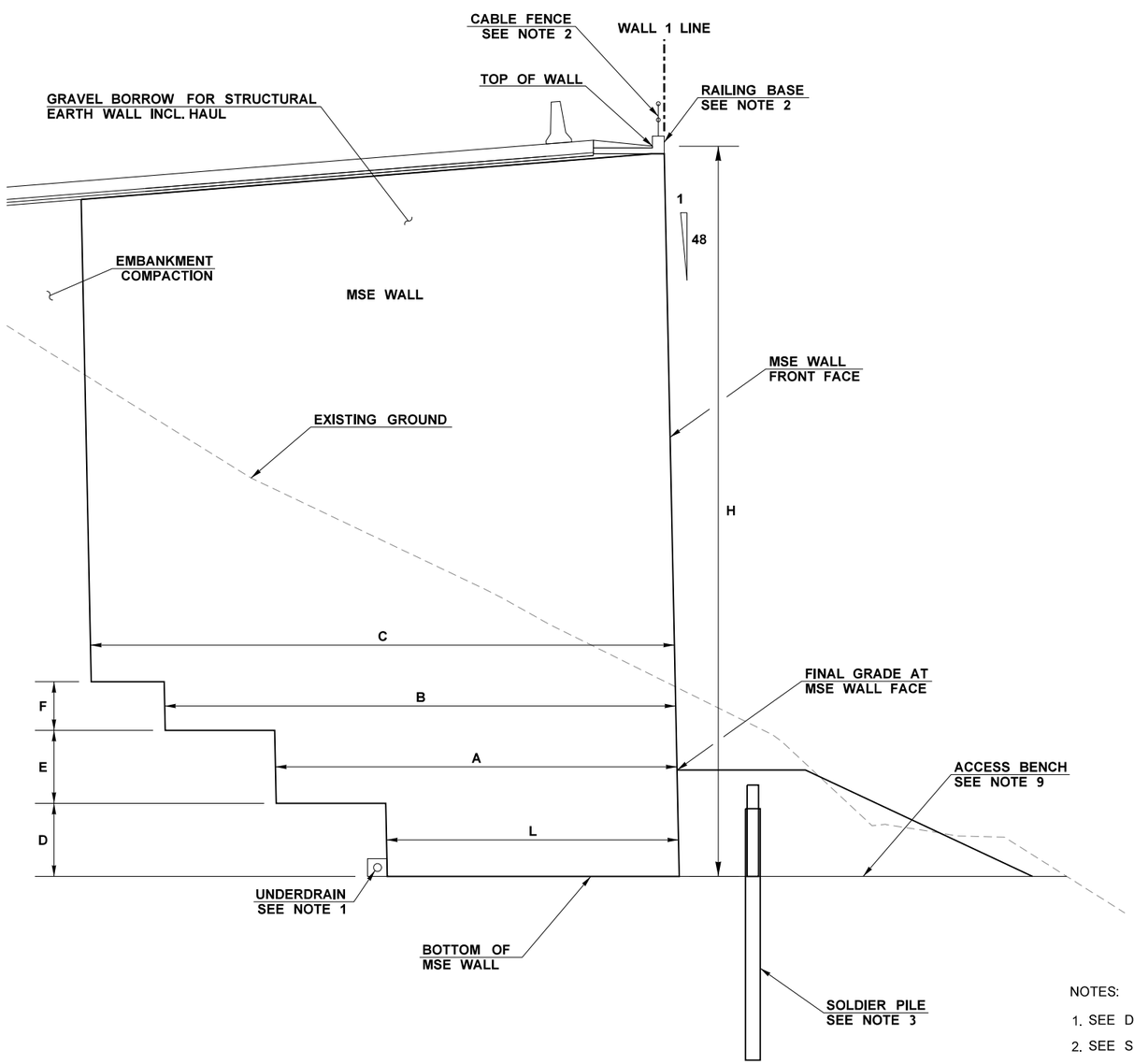

MSE WALL WITH TRUNCATED BASE BEHIND CANTILEVER SOLDIER PILE

(NOT TO SCALE)
WALL 1 20+08.50 TO WALL 1 20+22.00

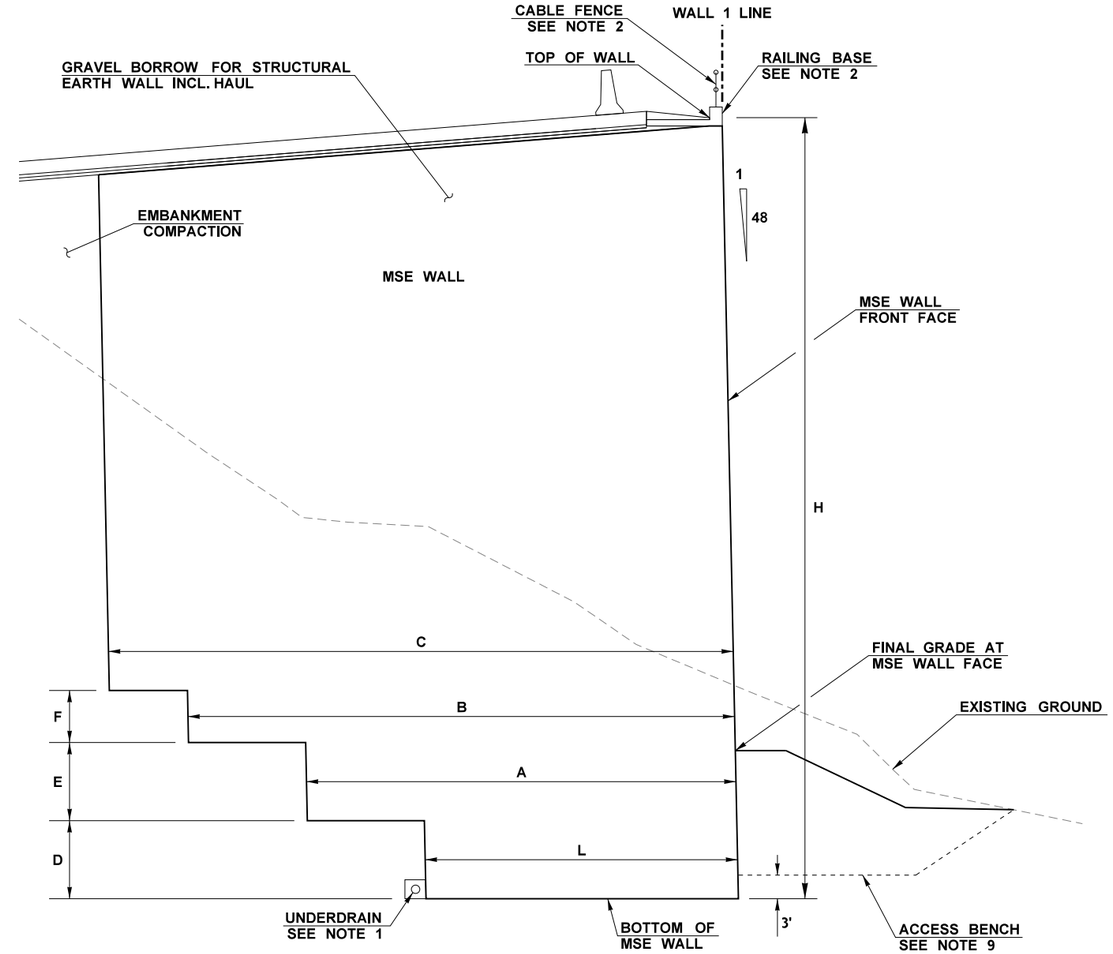

MSE WALL WITH TRUNCATED BASE

(NOT TO SCALE)
WALL 1 20+22.00 TO WALL 1 24+40.00

NOTES:

1. SEE DRAINAGE PLANS, DRAINAGE PROFILES AND DRAINAGE DETAILS FOR UNDERDRAIN TYPE, SIZE, LOCATION AND ADDITIONAL DETAILS.
2. SEE SHEETS RB1 - RB5 FOR RAILING BASE AND ATTACHED CABLE FENCE DETAILS.
3. SEE SHEETS SP1 - SP14 FOR SOLDIER PILE WALL DETAILS.
4. FOR GRADING IN FRONT OF WALL SEE SHEETS W9 AND W10.
5. FOR STRUCTURE EXCAVATION, UNSTABLE BASE EXCAVATION AND ADDITIONAL BACKFILL REQUIREMENTS FOR PORTIONS OF THESE EXCAVATIONS SEE SHEETS WD16 - WD19.
6. SELECT BORROW REQUIRED UNDER MSE WALL IN LIMITED LOCATIONS. SEE SHEETS WD20 AND WD21 FOR DETAILS.
7. HILFIKER WELDED WIRE WALL SHOWN. GEOSYNTHETIC WALL ALTERNATIVE SIMILAR, SEE SHEET WD2 FOR DETAILS.
8. SEE TABLES ON SHEET W8 FOR VALUES OF VARIABLES "A", "B", "C", "D", "E", "F" AND "L".
9. PROFILES PROVIDE FOR THE CONSTRUCTION OF AN ACCESS BENCH TO ACCOMMODATE SOLIDER PILE WALL CONSTRUCTION. BENCH WIDTH VARIES AND MAY NOT BE WIDE ENOUGH FOR ALL CONTRACTOR EQUIPMENT WITHOUT ADDITIONAL EMBANKMENT OR TEMPORARY EARTH RETAINING STRUCTURES. CONSTRUCTION AND DESIGN OF ANY TEMPORARY EARTH RETAINING STRUCTURES OR ADDITIONAL EMBANKMENT WIDER THAN THE LIMITS OF STRUCTURE EXCAVATION AND PERMANENT EMBANKMENT SHOWN IN THE PLANS ARE THE RESPONSIBILITY OF THE CONTRACTOR. ANY SUCH ADDITIONAL WORK SHALL NOT EXTEND BEYOND THE CLEARING AND GRUBBING LIMITS SHOWN ON THE ALIGNMENT / SITE PREPARATION PLANS.

FILE NAME	K:\452201\090\06736_Phase 3\Design_CAD_Sheets\290-MinorStruct\XL5479_PS_WALLS.dgn			
TIME	2:22:01 PM			
DATE	2/15/2022			
PLOTTED BY	GipnerM			
DESIGNED BY	M. GIPNER			
ENTERED BY	M. GIPNER			
CHECKED BY	K. KING			
PROJ. ENGR.	A. BYRD			
REGIONAL ADM.	T. TREPANIER	REVISION	DATE	BY

REGION NO.	STATE	FED.AID PROJ.NO.
10	WASH	
JOB NUMBER 19Y007		
CONTRACT NO.		LOCATION NO.

ANDREW D. BYRD, STATE OF WASHINGTON, 39833, REGISTERED PROFESSIONAL ENGINEER
SEE SHEET CT5
DATE
P.E. STAMP BOX

SEE SHEET CT5
DATE
P.E. STAMP BOX

Washington State
Department of Transportation

I-90
CABIN CREEK I/C TO W EASTON I/C
PHASE 3 - ADD LANES/WILDLIFE BRIDGES

WALL 1 SECTIONS

Plot 6
PLAN REF NO
W6
SHEET
895
OF
1783
SHEETS

WALL 1 STATION	TOP OF WALL	FINAL GRADE AT MSE WALL FACE	BOTTOM OF WALL FASCIA	MAXIMUM BOTTOM OF WALL ELEVATION
10+00.00	2465.90	2465.90	2462.10	2462.10
10+20.00	2466.60	2466.60	2458.10	2458.10
10+50.00	2467.65	2460.60	2452.10	2452.10
10+65.00	2468.18	2457.60	2452.10	2449.10
10+90.00	2469.05	2452.60	2447.10	2444.10
11+00.00	2469.53	2450.60	2445.10	2442.10
11+50.00	2471.90	2440.60	2435.10	2432.10
12+00.00	2474.28	2430.60	2425.10	2422.10
12+33.30	2475.86	2423.94	2418.44	2415.44
12+40.00	2476.18	2423.94	2417.10	2414.10
12+50.00	2476.65	2423.94	2417.57	2414.15
12+94.00	2478.74	2423.94	2419.62	2414.37
12+97.50 BK.	2478.91	2423.80	2419.79	2414.39
12+97.50 AHD.	2478.91	2423.80	2419.79	2419.79
13+00.00	2479.03	2423.70	2419.80	2419.80
13+20.00	2479.98	2422.90	2419.90	2419.90
13+50.00	2481.40	2426.80	2423.80	2423.80
13+70.00	2482.35	2429.40	2426.40	2426.40
14+00.00	2483.78	2430.15	2427.15	2427.15
14+50.00	2486.15	2431.40	2428.40	2428.40
15+00.00	2488.53	2432.65	2429.65	2429.65
15+30.00	2489.95	2433.40	2430.40	2430.40
15+50.00	2490.90	2434.58	2431.58	2431.58
16+00.00	2493.28	2437.54	2434.54	2434.54
16+20.00	2494.22	2438.72	2435.72	2435.72
16+40.00	2495.15	2439.90	2436.90	2436.90
16+50.00	2495.61	2440.25	2437.25	2437.25
17+00.00	2497.91	2442.00	2439.00	2439.00
17+25.00	2499.05	2442.88	2439.88	2439.88
17+50.00	2499.98	2443.75	2440.75	2440.75
18+00.00	2501.83	2445.50	2442.50	2442.50
18+20.00	2502.57	2446.20	2443.20	2443.20

WALL 1 STATION	TOP OF WALL	FINAL GRADE AT MSE WALL FACE	BOTTOM OF WALL FASCIA	MAXIMUM BOTTOM OF WALL ELEVATION
18+50.00	2503.65	2447.25	2444.25	2444.25
18+70.00	2504.37	2447.95	2444.95	2444.95
19+00.00	2505.45	2448.46	2445.46	2445.46
19+50.00	2507.25	2449.31	2446.31	2446.31
20+00.00	2508.95	2450.16	2447.16	2447.16
20+02.18	2509.02	2450.20	2447.20	2447.20
20+08.50 BK.	2509.24	2451.78	2447.30	2447.30
20+08.50 AHD.	2509.24	2451.78	2447.30	2441.92
20+50.00	2510.65	2456.18	2447.46	2444.00
20+60.00	2510.99	2457.23	2447.50	2444.50
21+00.00	2512.35	2461.48	2452.50	2449.50
21+20.00	2512.99	2463.60	2455.00	2452.00
21+50.00	2513.95	2465.85	2458.75	2455.75
21+85.00	2515.07	2468.47	2463.13	2460.13
22+00.00	2515.55	2469.60	2464.25	2461.25
22+50.00	2517.05	2473.35	2468.00	2465.00
23+00.00	2518.55	2477.10	2471.75	2468.75
23+50.00	2520.00	2480.85	2475.50	2472.50
24+00.00	2521.45	2484.60	2479.25	2476.25
24+10.00	2521.72	2485.35	2480.00	2477.00
24+50.00	2522.80	2491.35	2486.00	2483.00
24+75.00	2523.47	2495.10	2489.75	2486.75
25+00.00	2523.90	2498.85	2493.50	2490.50
25+50.00	2524.75	2506.35	2501.00	2498.00
26+00.00	2525.60	2513.84	2508.50	2505.50
26+20.00	2525.92	2516.85	2511.50	2508.50
26+40.00	2526.24	2519.85	2511.50	2511.50
26+50.00	2526.40	2521.35	2513.00	2513.00
26+87.72	2527.00	2527.00	2518.66	2518.66
27+00.00	2527.20	2527.20	2520.50	2520.50
27+14.12	2527.66	2527.66	2522.62	2522.62

MSE WALL ELEVATION TABLE

WALL 1 STATION	FINAL GRADE AT SOLDIER PILE WALL FACE
12+84.00	2423.94
13+20.00	2422.50
13+38.18	2418.86
13+70.00	2423.00
15+30.00	2427.00
16+40.00	2421.50
18+70.00	2429.55
19+76.66	2443.42
20+11.28	2452.07
20+22.00	2453.21

SOLDIER PILE FINAL GRADE ELEVATION TABLE

WALL 1 STATION	TOP OF SOLDIER PILE GUTTER
12+97.78	2423.39
13+20.00	2422.50
13+70.00	2429.00
15+30.00	2433.00
16+40.00	2439.50
18+70.00	2447.55
20+02.18	2449.80
20+06.48	2450.87

SOLDIER PILE GUTTER ELEVATION TABLE

FOR ESTIMATING PURPOSES ONLY THE CONTRACTING AGENCY ESTIMATES:		
	STRUCTURE EXCAVATION CLASS A INCL. HAUL WALL 1-3	
	ROCK	OVERBURDEN
WALL 1	4,200 C.Y.	41,520 C.Y.

ESTIMATED EXCAVATION QUANTITIES

NOTES:

1. BOTTOM OF WALL FASCIA COLUMN IN THE MSE WALL ELEVATION TABLE APPLIES TO THE GEOSYNTHETIC WALL ALTERNATIVE ONLY. THE HILFIKER WELDED WIRE WALL ALTERNATIVE SHALL NOT HAVE A SHOTCRETE OR CONCRETE FASCIA, EXCEPT AT CATCH BASINS AS DETAILED ON SHEET SF2.

BEGIN STATION - WALL 1	END STATION - WALL 1	MAXIMUM STEP HEIGHT			NOTES
		D	E	F	
12+97.50	19+85.00	0.10H	0.10H	0.067H	
19+85.00	20+08.50 BK.	T	T	T	
20+08.50 BK.	20+08.50 BK.	0.022H	0.109H	0.072H	
20+08.50 AHD.	21+75.00	0.10H	0.10H	0.067H	
21+75.00	22+00.00	T	T	T	SEE NOTE 2
22+00.00	22+25.00	.12H	.12H	.08H	SEE NOTE 2
22+25.00	22+50.00	T	T	T	SEE NOTE 2
22+50.00	24+40.00	0.10H	0.10H	0.067H	

REINFORCEMENT STEP HEIGHT TABLE

BEGIN STATION - WALL 1	END STATION - WALL 1	SLOPE (H:V)
		S
10+00.00	10+40.00	2:1
10+40.00	10+60.00	T
10+60.00	12+35.00	2.2:1
12+35.00	12+60.00	T
12+60.00	26+90.00	2.1:1
26+90.00	27+14.12	T
27+14.12	27+14.12	2:1

FINAL GRADE SLOPE TABLE

BEGIN STATION - WALL 1	END STATION - WALL 1	MINIMUM LENGTH				
		L	L	A	B	C
10+00.00	12+97.50 BK.	11 FT	0.75H	N/A	N/A	N/A
12+97.50 AHD.	12+97.50 AHD.	11 FT	0.82H	0.82H	0.82H	0.82H
12+97.50 AHD.	13+70.00	11 FT	T	T	T	T
13+70.00	19+85.00	11 FT	0.40H	0.55H	0.70H	0.80H
19+85.00	20+08.50 BK.	11 FT	T	T	T	T
20+08.50 BK.	20+08.50 BK.	11 FT	.43H	.60H	.76H	.87H
20+08.50 AHD.	23+90.00	11 FT	0.40H	0.55H	0.70H	0.80H
23+90.00	24+40.00	11 FT	T	T	T	T
24+40.00	24+40.00	11 FT	0.75H	0.75H	0.75H	0.75H
24+40.00	27+14.12	11 FT	0.75H	N/A	N/A	N/A

REINFORCEMENT LENGTH TABLE

BEGIN STATION - WALL 1	END STATION - WALL 1	WIDTH (FT)	
		W	V
10+00.00	12+60.00	4.00	N/A
12+60.00	12+95.00	T	N/A
12+95.00	12+97.78	12.07	N/A
12+97.78	20+06.48	N/A	5.20
20+06.48	20+10.00	12.00	N/A
20+10.00	20+40.00	T	N/A
20+40.00	26+90.00	4.00	N/A
26+90.00	27+14.12	T	N/A
27+14.12	27+14.12	13.00	N/A

FINAL GRADE BENCH WIDTH TABLE

NOTES:

1. IN TABLES "T" = TRANSITION.
2. BACK FACE OF WALL SHALL BE FOUNDED ON BEDROCK WITH 1' OF EXCAVATION BELOW BOTTOM OF WALL INTO ROCK AS SHOWN ON SHEET WD17 SECTION "SOLDIER PILE EXCAVATION IN BEDROCK". IF ENTIRE BACK FACE OF WALL IS NOT FOUNDED ON BEDROCK THEN THE MAXIMUM REINFORCEMENT STEP HEIGHT SHALL BE MODIFIED AS LISTED BELOW:
   D = 0.10H
   E = 0.10H
   F = 0.067H

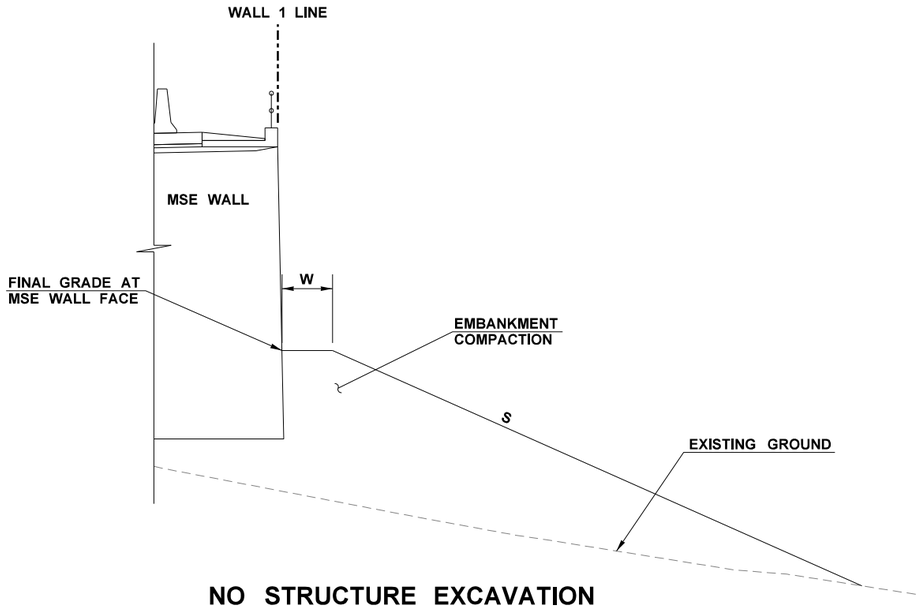

NO STRUCTURE EXCAVATION

(NOT TO SCALE)
WHERE FRONT OF WALL IS ABOVE EXISTING GROUND

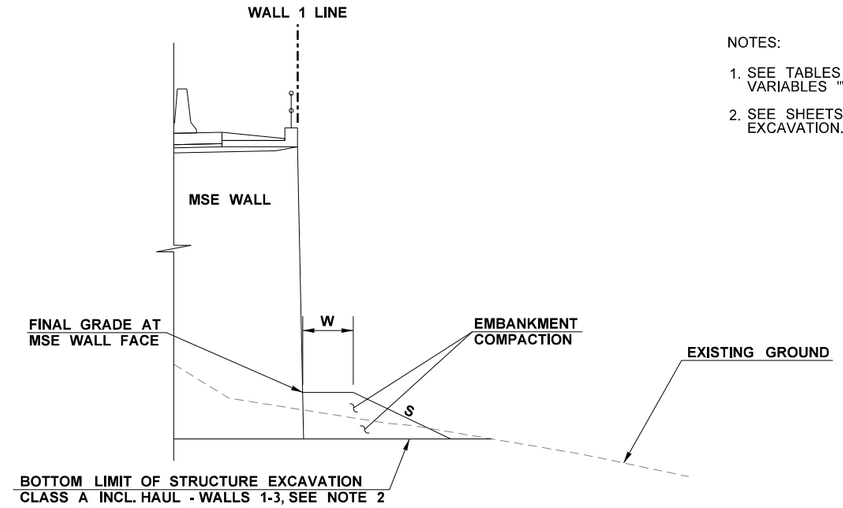

NOTES:

1. SEE TABLES ON SHEET W8 FOR VALUES OF VARIABLES "W" AND "S".
2. SEE SHEETS WD16 - WD18 FOR STRUCTURE EXCAVATION.

MEDIUM WIDTH STRUCTURE EXCAVATION

(NOT TO SCALE)
WHERE FRONT STRUCTURE EXCAVATION IS WIDER THAN FINAL EMBANKMENT AND IS ALL LEVEL

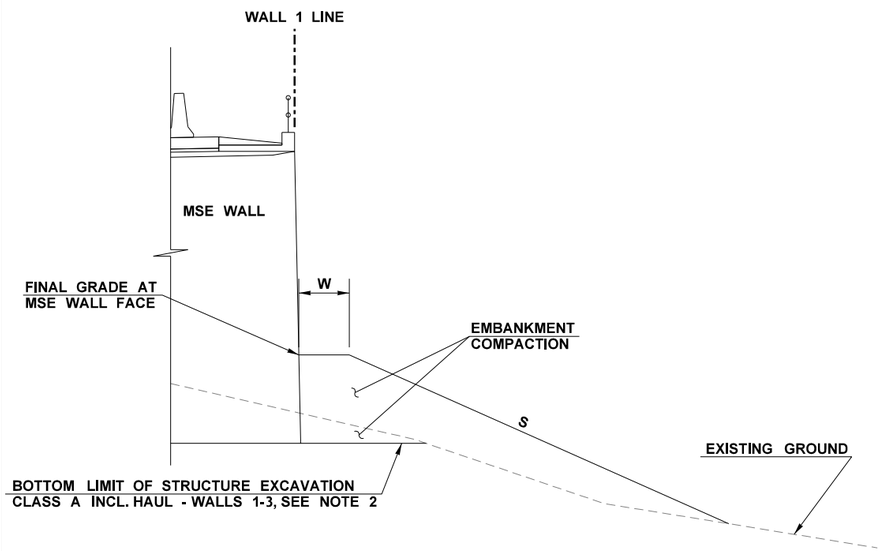

NARROW STRUCTURE EXCAVATION

(NOT TO SCALE)
WHERE FRONT STRUCTURE EXCAVATION IS NARROWER THAN FINAL EMBANKMENT

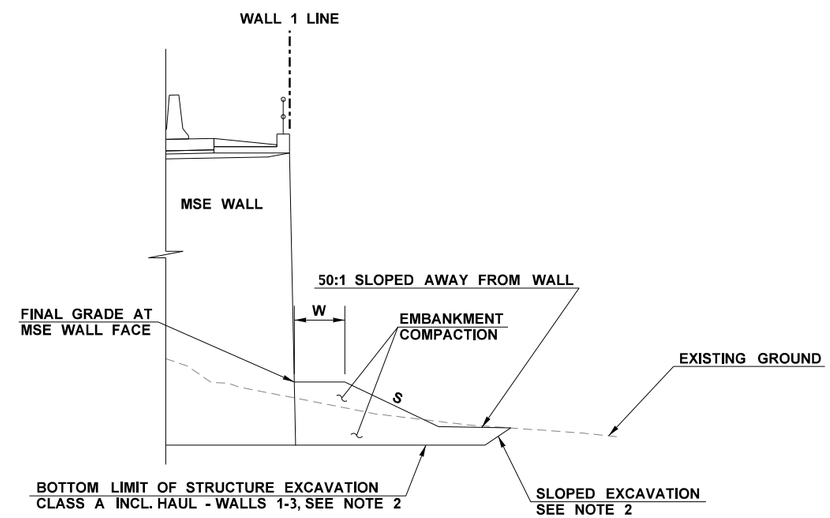

WIDE STRUCTURE EXCAVATION

(NOT TO SCALE)
WHERE FRONT STRUCTURE EXCAVATION IS WIDER THAN FINAL EMBANKMENT
AT "S" SLOPE, AND FRONT STRUCTURE EXCAVATION HAS A SLOPED GRADE

FILE NAME	K:\452201\090\06736_Phase 3\Design_CAD_Sheets\290-MInorStruct\XL5479_PS_WALLS.dgn						
TIME	5:06:54 PM				REGION NO. 10	STATE WASH	FED.AID PROJ.NO.
DATE	2/15/2022						
PLOTTED BY	GipnerM						
DESIGNED BY	M. GIPNER				JOB NUMBER 19Y007		
ENTERED BY	M. GIPNER						
CHECKED BY	K. KING				CONTRACT NO.		LOCATION NO.
PROJ. ENGR.	A. BYRD						
REGIONAL ADM.	T. TREPANIER	REVISION	DATE	BY			

ANDREW D. BYRD — STATE OF WASHINGTON — REGISTERED PROFESSIONAL ENGINEER

SEE SHEET CT5
DATE
P.E. STAMP BOX

DATE
P.E. STAMP BOX

Washington State
Department of Transportation

I-90
CABIN CREEK I/C TO W EASTON I/C
PHASE 3 - ADD LANES/WILDLIFE BRIDGES

WALL 1 FRONT GRADING

Plot 9
PLAN REF NO
W9
SHEET 898 OF 1783 SHEETS

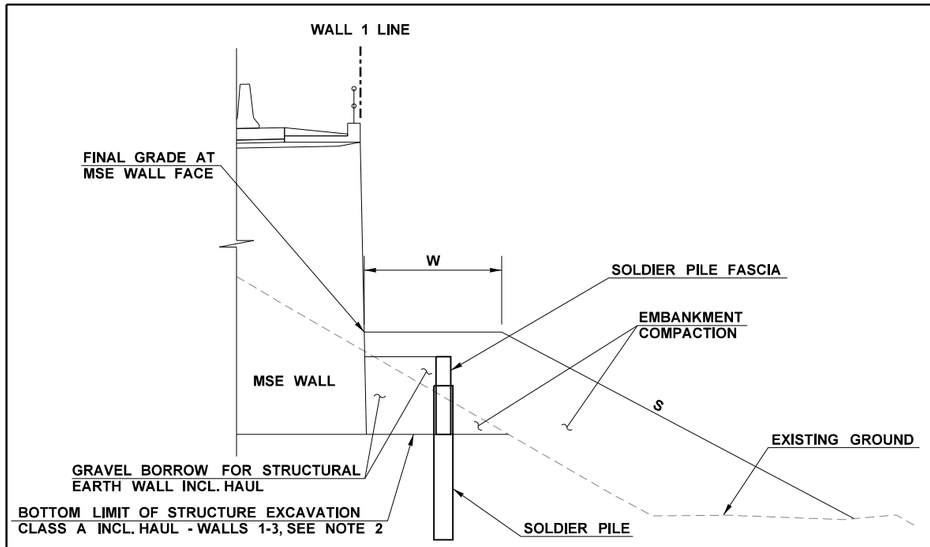

SOLDIER PILE WITHOUT GUTTER - NARROW STRUCTURE EXCAVATION

(NOT TO SCALE)
WALL 1 12+84.00 TO WALL 1 12+97.78

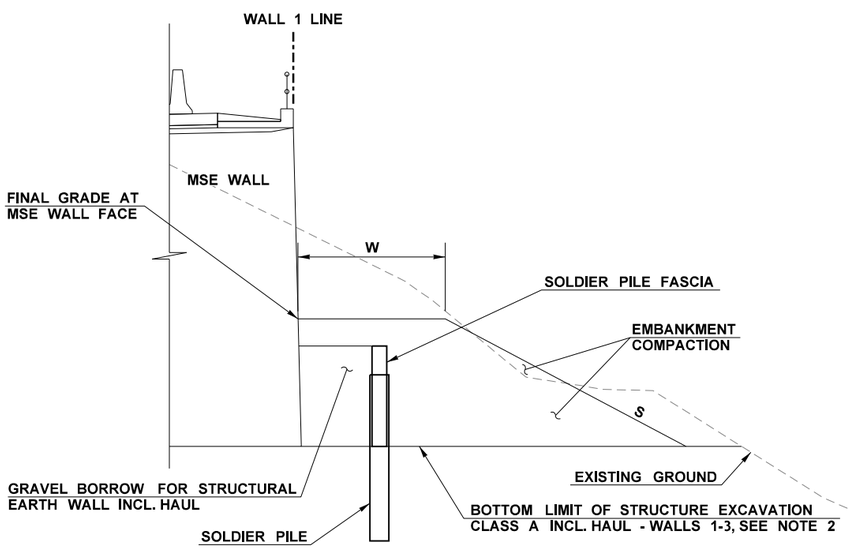

SOLDIER PILE WITHOUT GUTTER - WIDE STRUCTURE EXCAVATION

(NOT TO SCALE)
WALL 1 20+06.48 TO WALL 1 20+22.00

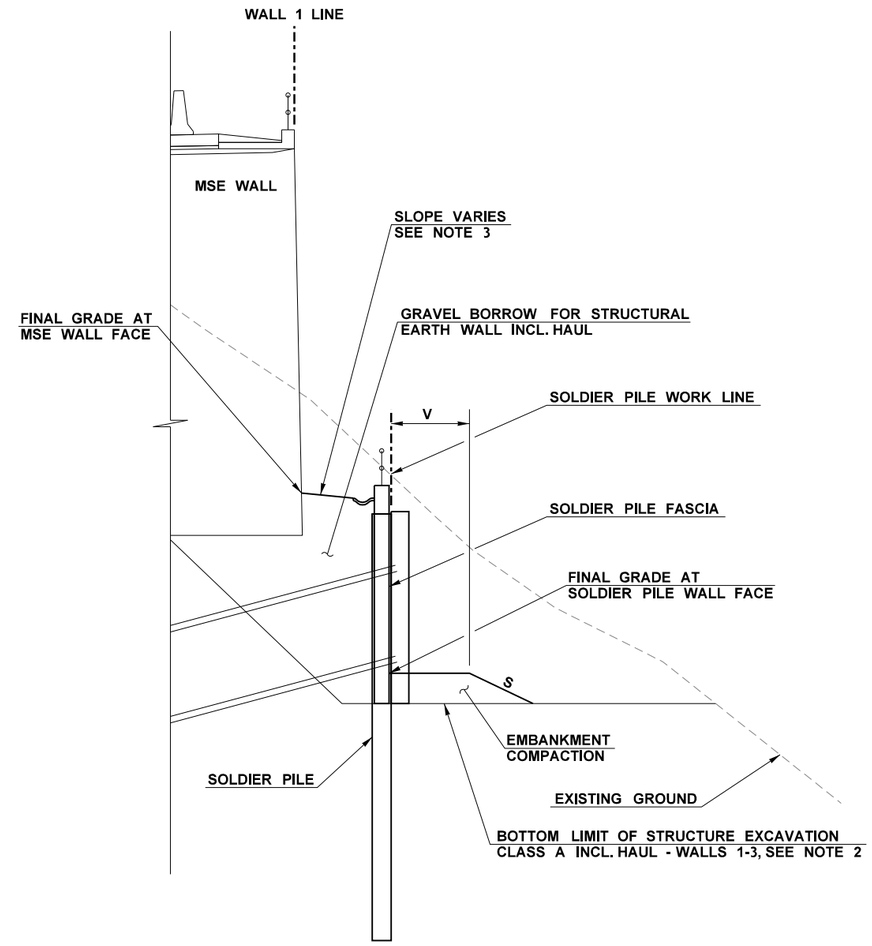

SOLDIER PILE WITH GUTTER

(NOT TO SCALE)
WALL 1 12+97.78 TO WALL 1 20+06.48

NOTES:

1. SEE TABLES ON SHEET W8 FOR VALUES OF VARIABLES "W", "V" AND "S".
2. SEE SHEETS WD16 TO WD18 FOR STRUCTURE EXCAVATION.
3. ADJUST SLOPE TO MATCH "FINAL GRADE AT MSE WALL FACE" ELEVATION ON LEFT EDGE AND TOP OF SOLDIER PILE GUTTER ELEVATION ON RIGHT EDGE.

FILE NAME	K:\452201\090\06736_Phase 3\Design_CAD_Sheets\290-MInorStruct\XL5479_PS_WALLS.dgn						
TIME	5:06:56 PM				REGION NO. 10	STATE WASH	FED.AID PROJ.NO.
DATE	2/15/2022						
PLOTTED BY	GipnerM				JOB NUMBER 19Y007		
DESIGNED BY	M. GIPNER						
ENTERED BY	M. GIPNER						
CHECKED BY	K. KING				CONTRACT NO.		LOCATION NO.
PROJ. ENGR.	A. BYRD						
REGIONAL ADM.	T. TREPANIER	REVISION	DATE	BY			

ANDREW D. BYRD — STATE OF WASHINGTON — 39873 — REGISTERED PROFESSIONAL ENGINEER

SEE SHEET CT5
DATE
P.E. STAMP BOX

DATE
P.E. STAMP BOX

Washington State
Department of Transportation

I-90
CABIN CREEK I/C TO W EASTON I/C
PHASE 3 - ADD LANES/WILDLIFE BRIDGES

WALL 1 FRONT GRADING

Plot 10
PLAN REF NO
W10
SHEET 899 OF 1783 SHEETS

CURVE DATA				
P.I. STATION	DELTA	RADIUS	TANGENT	LENGTH
WALL 2 17+88.76	30°35'41" LT	1,994'	545.40'	1064.75'

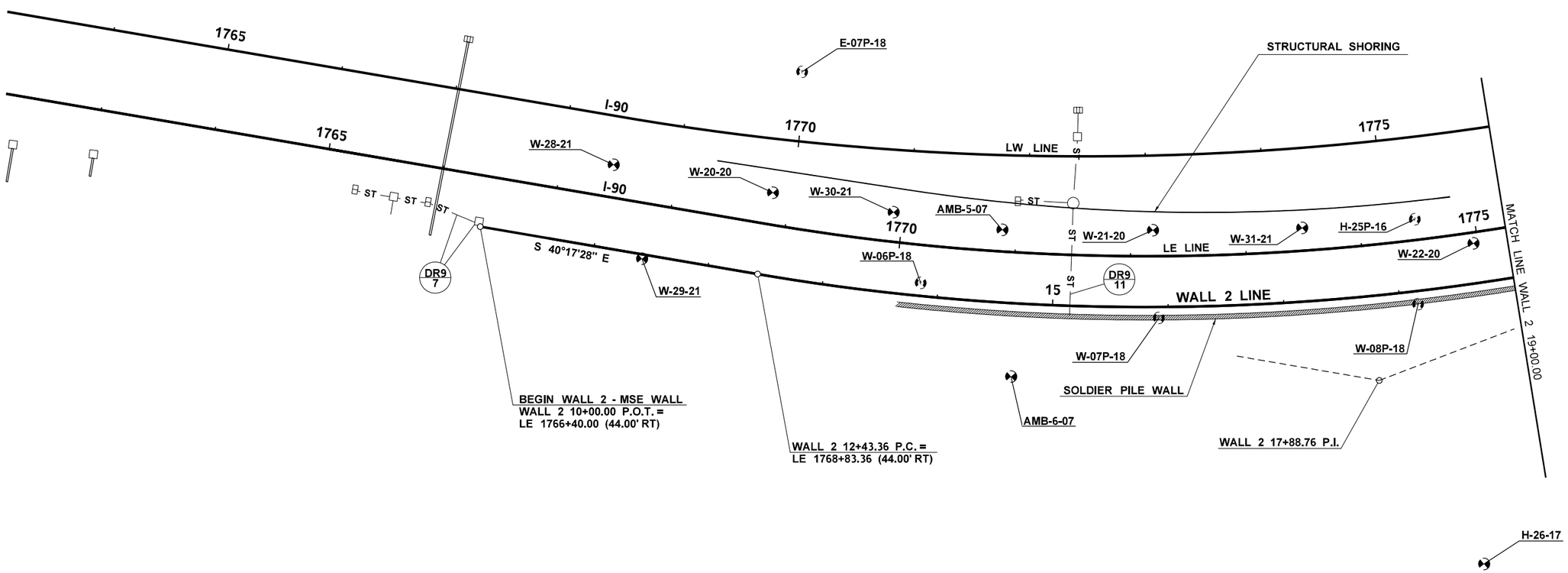

NOTES:

1. TEMPORARY DRAINAGE NOT SHOWN. SEE TEMP. DRAINAGE PLANS AND SPECIAL PROVISION "MAINTAINING EXISTING WALL DRAINAGE" FOR INFORMATION.

2. TEMPORARY DRAINAGE INCLUDES A CULVERT PIPE THAT CROSSES UNDER THE MSE & SOLDIER PILE FASCIA AT WALL 2 19+64.50 AND MUST BE INSTALLED BEFORE THESE PORTIONS OF THE WALL ARE CONSTRUCTED. TEMPORARY DRAINAGE ALSO INCLUDES MULTIPLE MANHOLES AND CULVERTS WITHIN THE POTENTIAL LIMITS OF THE WALL SHORING OR EXTRA EXCAVATION CLASS A WALL 1-3 THAT SHALL BE ACCOUNTED FOR WITHOUT DISTURBANCE IN THE CONTRACTOR'S SHORING OR EXTRA EXCAVATION CLASS A WORKING DRAWINGS.

0 50 100
SCALE IN FEET

FILE NAME	K:\452201\090\06736_Phase 3\Design_CAD_Sheets\290-MInorStruct\XL5479_PS_WALLS.dgn						
TIME	5:06:59 PM				REGION NO. 10	STATE WASH	FED.AID PROJ.NO.
DATE	2/15/2022						
PLOTTED BY	GipnerM				JOB NUMBER 19Y007		
DESIGNED BY	M. GIPNER						
ENTERED BY	J. VENEGAS				CONTRACT NO.		LOCATION NO.
CHECKED BY	K. KING						
PROJ. ENGR.	A. BYRD						
REGIONAL ADM.	T. TREPANIER	REVISION	DATE	BY			

ANDREW D. BYRD — STATE OF WASHINGTON — 39833 — REGISTERED PROFESSIONAL ENGINEER

SEE SHEET CT5
DATE
P.E. STAMP BOX

DATE
P.E. STAMP BOX

Washington State Department of Transportation

I-90
CABIN CREEK I/C TO W EASTON I/C
PHASE 3 - ADD LANES/WILDLIFE BRIDGES

WALL 2 PLAN VIEW

Plot 11
PLAN REF NO W11
SHEET 900 OF 1783 SHEETS

CURVE DATA				
P.I. STATION	DELTA	RADIUS	TANGENT	LENGTH
WALL 2 17+88.76	30°35'41" LT	1,994'	545.40'	1064.75'

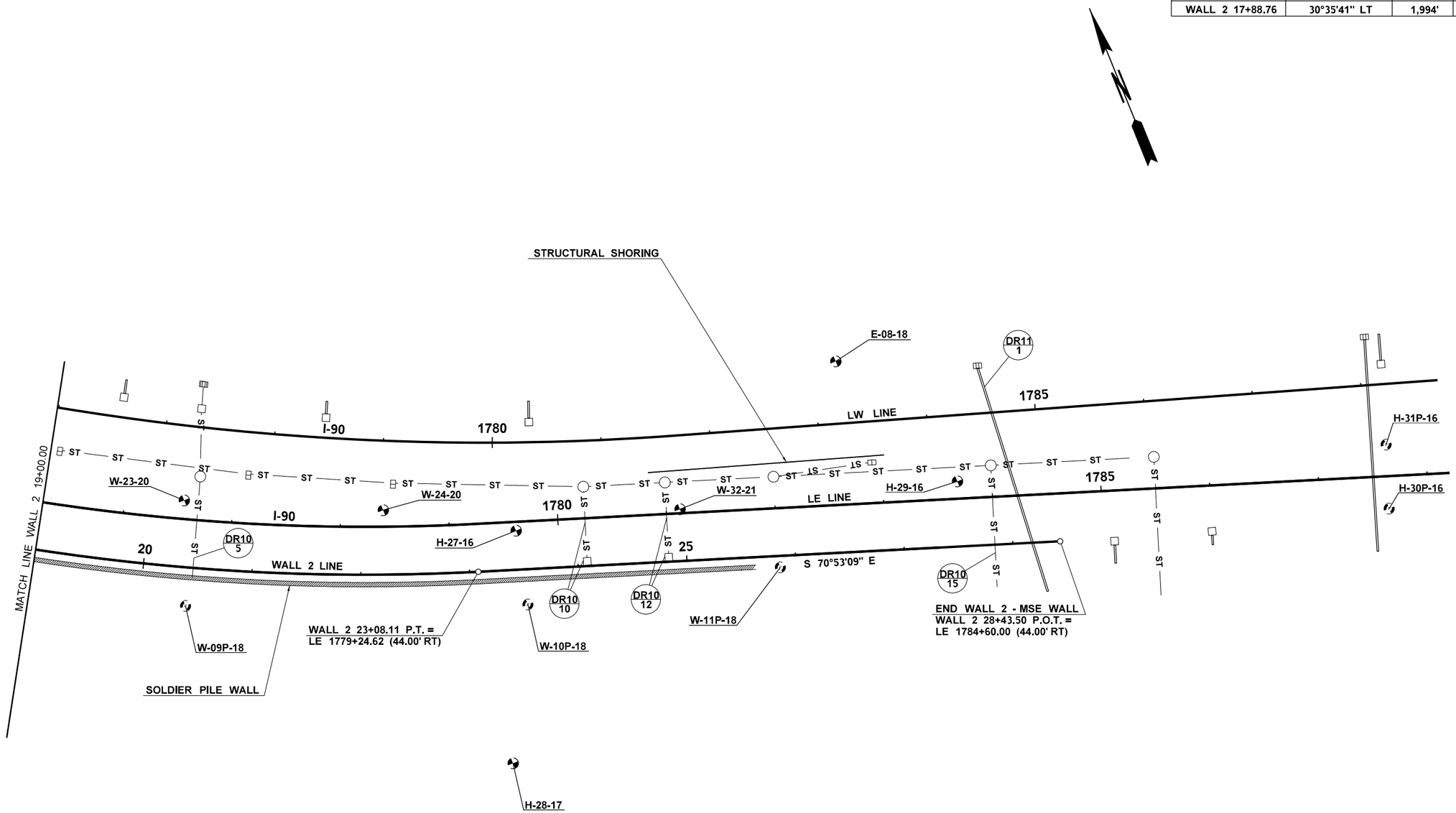

NOTES:

1. TEMPORARY DRAINAGE NOT SHOWN. SEE TEMP. DRAINAGE PLANS AND SPECIAL PROVISION "MAINTAINING EXISTING WALL DRAINAGE" FOR INFORMATION.
2. TEMPORARY DRAINAGE INCLUDES A CULVERT PIPE THAT CROSSES UNDER THE MSE & SOLDIER PILE FASCIA AT WALL 2 19+64.50 AND MUST BE INSTALLED BEFORE THESE PORTIONS OF THE WALL ARE CONSTRUCTED. TEMPORARY DRAINAGE ALSO INCLUDES MULTIPLE MANHOLES AND CULVERTS WITHIN THE POTENTIAL LIMITS OF THE WALL SHORING OR EXTRA EXCAVATION CLASS A WALL 1-3 THAT SHALL BE ACCOUNTED FOR WITHOUT DISTURBANCE IN THE CONTRACTOR'S SHORING OR EXTRA EXCAVATION CLASS A WORKING DRAWINGS.

0 50 100
SCALE IN FEET

FILE NAME	K:\452201\090\06736_Phase 3\Design_CAD_Sheets\290-MInorStruct\XL5479_PS_WALLS.dgn						
TIME	5:07:01 PM				REGION NO. 10	STATE WASH	FED.AID PROJ.NO.
DATE	2/15/2022						
PLOTTED BY	GipnerM				JOB NUMBER 19Y007		
DESIGNED BY	M. GIPNER						
ENTERED BY	J. VENEGAS				CONTRACT NO.		LOCATION NO.
CHECKED BY	K. KING						
PROJ. ENGR.	A. BYRD						
REGIONAL ADM.	T. TREPANIER	REVISION	DATE	BY			

ANDREW D. BYRD — STATE OF WASHINGTON — 19873 — REGISTERED PROFESSIONAL ENGINEER

SEE SHEET CT5
DATE
P.E. STAMP BOX

DATE
P.E. STAMP BOX

Washington State Department of Transportation

I-90
CABIN CREEK I/C TO W EASTON I/C
PHASE 3 - ADD LANES/WILDLIFE BRIDGES

WALL 2 PLAN VIEW

Plot 12
PLAN REF NO W12
SHEET 901 OF 1783 SHEETS

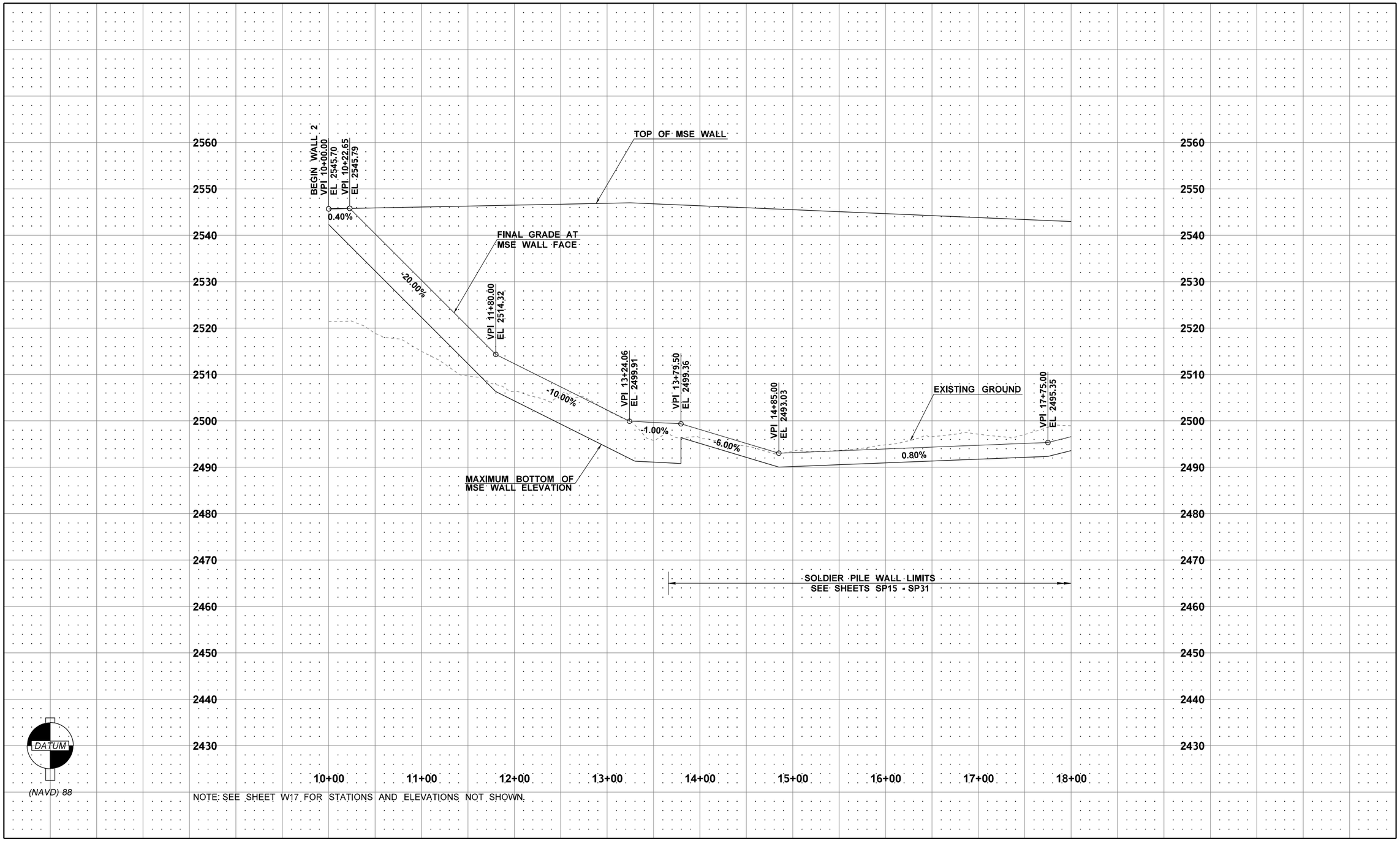

NOTE: SEE SHEET W17 FOR STATIONS AND ELEVATIONS NOT SHOWN.

FILE NAME	K:\452201\090\06736_Phase 3\Design_CAD_Sheets\290-MInorStruct\XL5479_PS_WALLS.dgn
TIME	5:07:04 PM
DATE	2/15/2022
PLOTTED BY	GipnerM
DESIGNED BY	M. GIPNER
ENTERED BY	J. VENEGAS
CHECKED BY	K. KING
PROJ. ENGR.	A. BYRD
REGIONAL ADM.	T. TREPANIER

REVISION | DATE | BY

REGION NO. 10 | STATE WASH | FED.AID PROJ.NO.

JOB NUMBER 19Y007

CONTRACT NO. | LOCATION NO.

ANDREW D. BYRD — STATE OF WASHINGTON — 39873 — REGISTERED PROFESSIONAL ENGINEER

SEE SHEET CT5

DATE

P.E. STAMP BOX

DATE

P.E. STAMP BOX

Washington State
Department of Transportation

I-90
CABIN CREEK I/C TO W EASTON I/C
PHASE 3 - ADD LANES/WILDLIFE BRIDGES

WALL 2 PROFILE

Plot 13

PLAN REF. NO. W13

SHEET 902 OF 1783 SHEETS

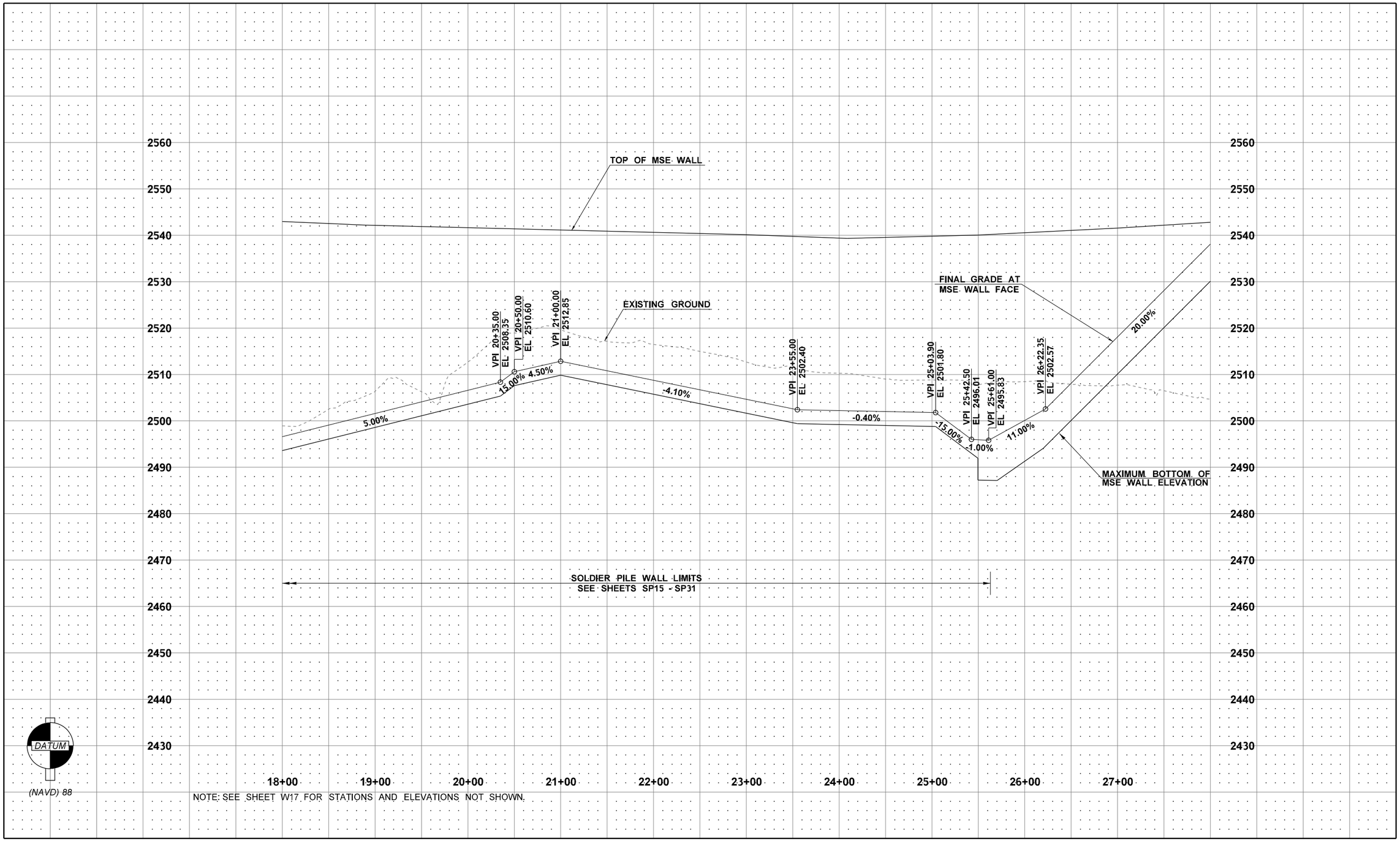

NOTE: SEE SHEET W17 FOR STATIONS AND ELEVATIONS NOT SHOWN.

FILE NAME	K:\452201\090\06736_Phase 3\Design_CAD_Sheets\290-MInorStruct\XL5479_PS_WALLS.dgn						
TIME	5:07:06 PM				REGION NO. 10	STATE WASH	FED.AID PROJ.NO.
DATE	2/15/2022				JOB NUMBER 19Y007		
PLOTTED BY	GipnerM				CONTRACT NO.		LOCATION NO.
DESIGNED BY	M. GIPNER						
ENTERED BY	J. VENEGAS						
CHECKED BY	K. KING						
PROJ. ENGR.	A. BYRD						
REGIONAL ADM.	T. TREPANIER	REVISION	DATE	BY			

ANDREW D. BYRD — STATE OF WASHINGTON — 39933 — REGISTERED PROFESSIONAL ENGINEER

SEE SHEET CT5
DATE
P.E. STAMP BOX

DATE
P.E. STAMP BOX

Washington State
Department of Transportation

I-90
CABIN CREEK I/C TO W EASTON I/C
PHASE 3 - ADD LANES/WILDLIFE BRIDGES

WALL 2 PROFILE

Plot 14
PLAN REF. NO.
W14

SHEET 903 OF 1783 SHEETS

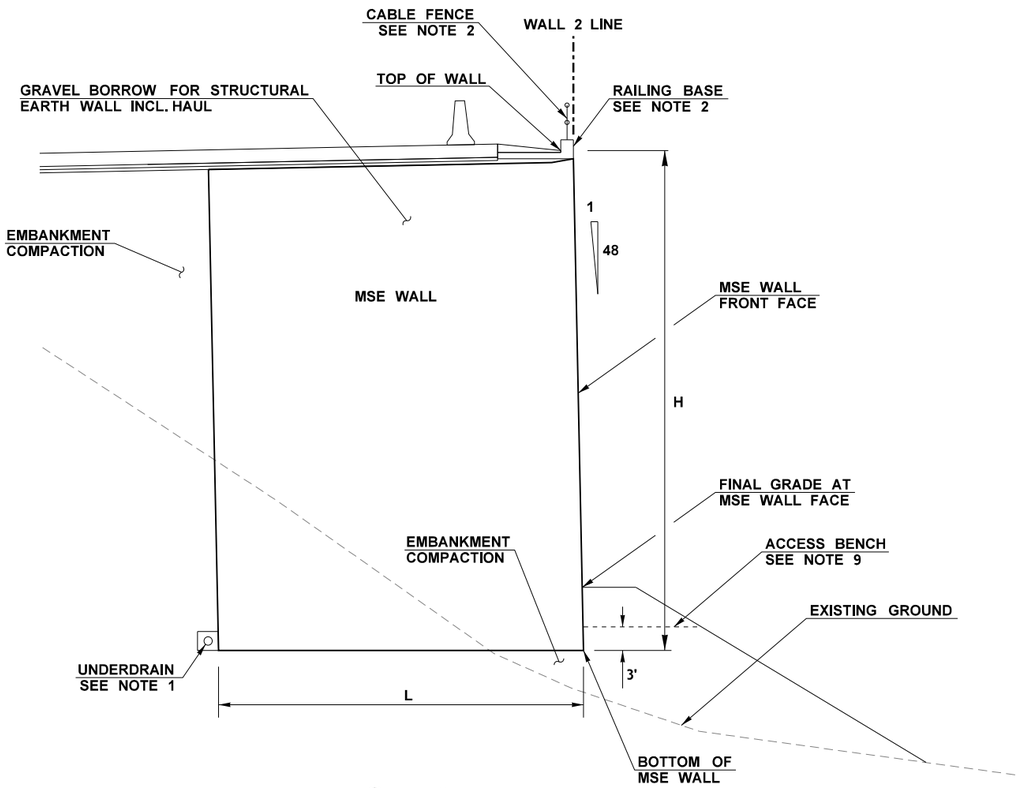

MSE WALL

(NOT TO SCALE)
WALL 2 10+00.00 TO WALL 2 13+66.00
WALL 2 25+63.00 TO WALL 2 28+43.50

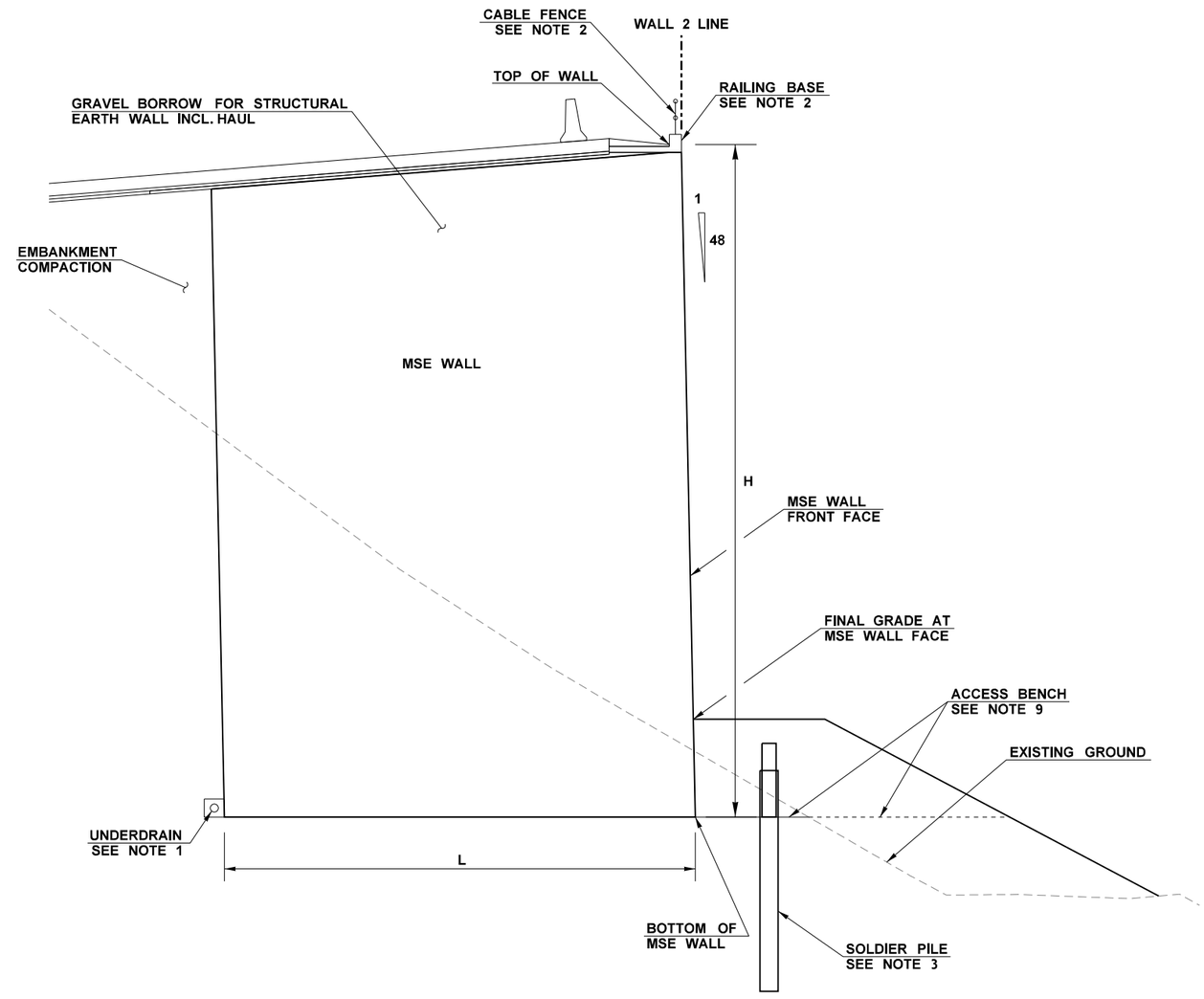

MSE WALL BEHIND CANTILEVER SOLDIER PILE

(NOT TO SCALE)
WALL 2 13+66.00 TO WALL 2 13+79.50
WALL 2 25+49.50 TO WALL 2 25+63.00

NOTES:

1. SEE DRAINAGE PLANS, DRAINAGE PROFILES AND DRAINAGE DETAILS FOR UNDERDRAIN TYPE, SIZE, LOCATION AND ADDITIONAL DETAILS.
2. SEE SHEETS RB1 - RB5 FOR RAILING BASE AND ATTACHED CABLE FENCE DETAILS.
3. SEE SHEETS SP15 - SP31 FOR SOLDIER PILE WALL DETAILS.
4. FOR GRADING IN FRONT OF WALL SEE SHEETS W19 AND W20.
5. FOR STRUCTURE EXCAVATION, UNSTABLE BASE EXCAVATION AND ADDITIONAL BACKFILL REQUIREMENTS FOR PORTIONS OF THESE EXCAVATIONS SEE SHEETS WD16 - WD19.
6. SELECT BORROW REQUIRED UNDER MSE WALL IN LIMITED LOCATIONS. SEE SHEETS WD20 AND WD21 FOR DETAILS.
7. HILFIKER WELDED WIRE WALL SHOWN. GEOSYNTHETIC WALL ALTERNATIVE SIMILAR, SEE SHEET WD2 FOR DETAILS.
8. SEE REINFORCEMENT LENGTH TABLE ON SHEET W18 FOR VALUES OF VARIABLE "L".
9. PROFILES PROVIDE FOR THE CONSTRUCTION OF AN ACCESS BENCH TO ACCOMMODATE SOLIDER PILE WALL CONSTRUCTION. BENCH WIDTH VARIES AND MAY NOT BE WIDE ENOUGH FOR ALL CONTRACTOR EQUIPMENT WITHOUT ADDITIONAL EMBANKMENT OR TEMPORARY EARTH RETAINING STRUCTURES. CONSTRUCTION AND DESIGN OF ANY TEMPORARY EARTH RETAINING STRUCTURES OR ADDITIONAL EMBANKMENT WIDER THAN THE LIMITS OF STRUCTURE EXCAVATION AND PERMANENT EMBANKMENT SHOWN IN THE PLANS ARE THE RESPONSIBILITY OF THE CONTRACTOR. ANY SUCH ADDITIONAL WORK SHALL NOT EXTEND BEYOND THE CLEARING AND GRUBBING LIMITS SHOWN ON THE ALIGNMENT / SITE PREPARATION PLANS.

FILE NAME	K:\452201\090\06736_Phase 3\Design_CAD_Sheets\290-MInorStruct\XL5479_PS_WALLS.dgn				REGION NO. 10	STATE WASH	FED.AID PROJ.NO.
TIME	5:07:09 PM				JOB NUMBER 19Y007		
DATE	2/15/2022				CONTRACT NO.		LOCATION NO.
PLOTTED BY	GipnerM						
DESIGNED BY	M. GIPNER						
ENTERED BY	M. GIPNER						
CHECKED BY	K. KING						
PROJ. ENGR.	A. BYRD						
REGIONAL ADM.	T. TREPANIER	REVISION	DATE	BY			

SEE SHEET CT5
DATE
P.E. STAMP BOX

DATE
P.E. STAMP BOX

Washington State
Department of Transportation

I-90
CABIN CREEK I/C TO W EASTON I/C
PHASE 3 - ADD LANES/WILDLIFE BRIDGES

WALL 2 SECTIONS

Plot 15
PLAN REF NO
W15
SHEET
904
OF
1783
SHEETS

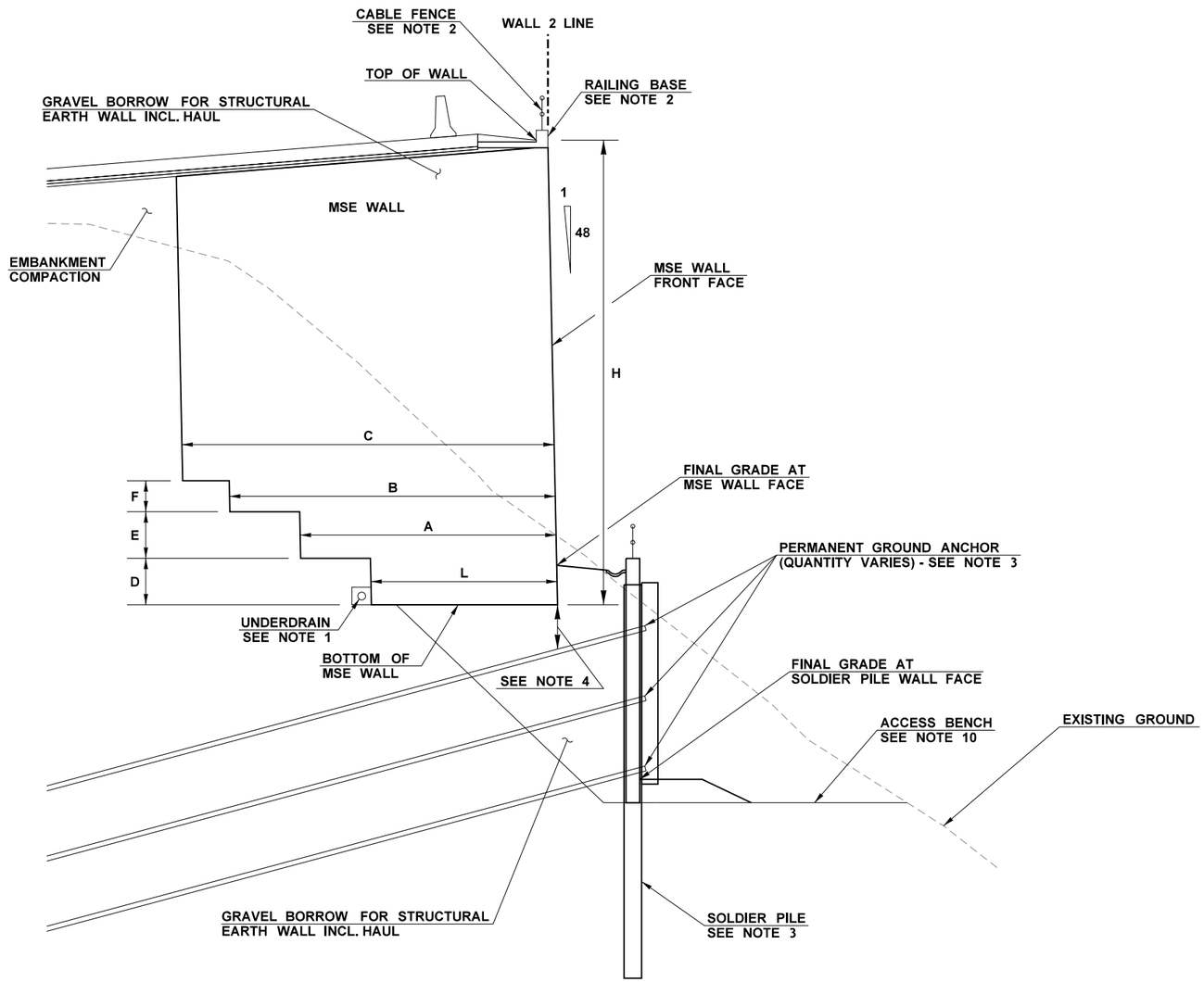

MSE WALL WITH TRUNCATED BASE BEHIND TIEBACK SOLDIER PILE

(NOT TO SCALE)
WALL 2 13+79.50 TO WALL 2 25+49.50

NOTES:

1. SEE DRAINAGE PLANS, DRAINAGE PROFILES AND DRAINAGE DETAILS FOR UNDERDRAIN TYPE, SIZE, LOCATION AND ADDITIONAL DETAILS.
2. SEE SHEETS RB1 - RB5 FOR RAILING BASE AND ATTACHED CABLE FENCE DETAILS.
3. SEE SHEETS SP15 - SP31 FOR SOLDIER PILE WALL DETAILS.
4. MAINTAIN A MINIMUM OF 1.75' OF CLEARANCE BETWEEN BOTTOM OF MSE WALL AND TOP OF PERMANENT GROUND ANCHOR. IF CLEARANCE CAN NOT BE MAINTAINED WHILE ACHIEVING THE "MAXIMUM BOTTOM OF MSE WALL ELEVATION" THE CONTRACTOR'S TYPE 2E WORKING DRAWINGS FOR THE MSE WALL SHALL LIST ALL LOCATIONS AND STATE HOW FAR THE BOTTOM OF THE MSE WALL IS ABOVE THE "MAXIMUM BOTTOM OF MSE WALL ELEVATION". ALL LOCATIONS SHALL BE SUBJECT TO APPROVAL BY THE ENGINEER IN WRITING.
5. FOR GRADING IN FRONT OF WALL SEE SHEETS W19 AND W20.
6. FOR STRUCTURE EXCAVATION, UNSTABLE BASE EXCAVATION AND ADDITIONAL BACKFILL REQUIREMENTS FOR PORTIONS OF THESE EXCAVATIONS SEE SHEETS WD16 - WD19.
7. SELECT BORROW REQUIRED UNDER MSE WALL IN LIMITED LOCATIONS. SEE SHEETS WD20 AND WD21 FOR DETAILS.
8. HILFIKER WELDED WIRE WALL SHOWN. GEOSYNTHETIC WALL ALTERNATIVE SIMILAR, SEE SHEET WD2 FOR DETAILS.
9. SEE TABLES ON SHEET W18 FOR VALUES OF VARIABLES "A", "B", "C", "D", "E", "F" AND "L".
10. PROFILES PROVIDE FOR THE CONSTRUCTION OF AN ACCESS BENCH TO ACCOMMODATE SOLIDER PILE WALL CONSTRUCTION. BENCH WIDTH VARIES AND MAY NOT BE WIDE ENOUGH FOR ALL CONTRACTOR EQUIPMENT WITHOUT ADDITIONAL EMBANKMENT OR TEMPORARY EARTH RETAINING STRUCTURES. CONSTRUCTION AND DESIGN OF ANY TEMPORARY EARTH RETAINING STRUCTURES OR ADDITIONAL EMBANKMENT WIDER THAN THE LIMITS OF STRUCTURE EXCAVATION AND PERMANENT EMBANKMENT SHOWN IN THE PLANS ARE THE RESPONSIBILITY OF THE CONTRACTOR. ANY SUCH ADDITIONAL WORK SHALL NOT EXTEND BEYOND THE CLEARING AND GRUBBING LIMITS SHOWN ON THE ALIGNMENT / SITE PREPARATION PLANS.

FILE NAME	K:\452201\090\06736_Phase 3\Design_CAD_Sheets\290-MinorStruct\XL5479_PS_WALLS.dgn			
TIME	2:22:30 PM			
DATE	2/15/2022			
PLOTTED BY	GipnerM			
DESIGNED BY	M. GIPNER			
ENTERED BY	M. GIPNER			
CHECKED BY	K. KING			
PROJ. ENGR.	A. BYRD			
REGIONAL ADM.	T. TREPANIER	REVISION	DATE	BY

REGION NO.	STATE	FED.AID PROJ.NO.
10	WASH	
JOB NUMBER 19Y007		
CONTRACT NO.		LOCATION NO.

SEE SHEET CT5 DATE
P.E. STAMP BOX

SEE SHEET CT5 DATE
P.E. STAMP BOX

Washington State
Department of Transportation

I-90
CABIN CREEK I/C TO W EASTON I/C
PHASE 3 - ADD LANES/WILDLIFE BRIDGES

WALL 2 SECTIONS

Plot 16
PLAN REF NO
W16
SHEET 905 OF 1783 SHEETS

WALL 2 STATION	TOP OF WALL	FINAL GRADE AT MSE WALL FACE	BOTTOM OF WALL FASCIA	MAXIMUM BOTTOM OF WALL ELEVATION
10+00.00	2545.70	2545.70	2542.32	2542.32
10+22.65	2545.79	2545.79	2537.79	2537.79
10+50.00	2545.90	2540.32	2532.32	2532.32
10+65.00	2545.96	2537.32	2532.32	2529.32
11+00.00	2546.10	2530.32	2525.32	2522.32
11+50.00	2546.30	2520.32	2515.32	2512.32
11+80.00	2546.42	2514.32	2509.32	2506.32
12+00.00	2546.50	2512.32	2507.32	2504.32
12+50.00	2546.70	2507.32	2502.32	2499.32
13+00.00	2546.90	2502.32	2497.32	2494.32
13+24.06	2547.00	2499.91	2494.91	2491.91
13+25.00	2547.00	2499.90	2494.82	2491.82
13+30.00	2546.96	2499.86	2494.32	2491.32
13+50.00	2546.79	2499.66	2495.14	2491.12
13+79.50 BK.	2546.54	2499.36	2496.36	2490.82
13+79.50 AHD.	2546.54	2499.36	2496.36	2496.36
14+00.00	2546.36	2498.13	2495.13	2495.13
14+50.00	2545.94	2495.13	2492.13	2492.13
14+85.00	2545.64	2493.03	2490.03	2490.03
15+00.00	2545.51	2493.15	2490.15	2490.15
15+50.00	2545.09	2493.55	2490.55	2490.55
16+00.00	2544.66	2493.95	2490.95	2490.95
16+50.00	2544.24	2494.35	2491.35	2491.35
17+00.00	2543.81	2494.75	2491.75	2491.75
17+50.00	2543.39	2495.15	2492.15	2492.15
17+75.00	2543.17	2495.35	2492.35	2492.35
18+00.00	2542.96	2496.60	2493.60	2493.60
18+50.00	2542.54	2499.10	2496.10	2496.10
18+90.00	2542.20	2501.10	2498.10	2498.10
19+00.00	2542.15	2501.60	2498.60	2498.60
19+50.00	2541.90	2504.10	2501.10	2501.10
20+00.00	2541.65	2506.60	2503.60	2503.60

WALL 2 STATION	TOP OF WALL	FINAL GRADE AT MSE WALL FACE	BOTTOM OF WALL FASCIA	MAXIMUM BOTTOM OF WALL ELEVATION
20+35.00	2541.47	2508.35	2505.35	2505.35
20+50.00	2541.40	2510.60	2507.60	2507.60
21+00.00	2541.15	2512.85	2509.85	2509.85
21+50.00	2540.90	2510.80	2507.80	2507.80
22+00.00	2540.65	2508.75	2505.75	2505.75
22+50.00	2540.40	2506.70	2503.70	2503.70
23+00.00	2540.15	2504.65	2501.65	2501.65
23+50.00	2539.77	2502.60	2499.60	2499.60
23+55.00	2539.73	2502.40	2499.40	2499.40
24+00.00	2539.40	2502.22	2499.22	2499.22
24+08.50	2539.33	2502.18	2499.18	2499.18
24+50.00	2539.54	2502.02	2499.02	2499.02
25+00.00	2539.79	2501.82	2498.82	2498.82
25+03.90	2539.81	2501.80	2498.80	2498.80
25+42.50	2540.00	2496.01	2493.01	2493.01
25+49.50 BK.	2540.04	2495.94	2491.96	2491.96
25+49.50 AHD.	2540.04	2495.94	2491.96	2487.22
25+50.00	2540.04	2495.94	2491.89	2487.22
25+61.00	2540.15	2495.83	2490.23	2487.17
25+61.44	2540.16	2495.87	2490.17	2487.17
25+70.22	2540.24	2496.84	2490.13	2487.13
26+00.00	2540.54	2500.12	2494.30	2491.30
26+20.00	2540.74	2502.31	2497.10	2494.10
26+22.35	2540.76	2502.57	2497.57	2494.57
26+50.00	2541.04	2508.10	2503.10	2500.10
27+00.00	2541.54	2518.10	2513.10	2510.10
27+50.00	2542.17	2528.10	2523.10	2520.10
27+75.00	2542.48	2533.10	2528.10	2525.10
27+90.00	2542.67	2536.10	2528.10	2528.10
28+00.00	2542.79	2538.10	2530.10	2530.10
28+25.00	2543.10	2543.10	2535.10	2535.10
28+43.50	2543.66	2543.66	2538.80	2538.80

MSE WALL ELEVATION TABLE

WALL 2 STATION	FINAL GRADE AT SOLDIER PILE WALL FACE
13+66.00	2499.50
13+69.97	2499.46
15+00.00	2474.75
17+75.00	2476.95
19+75.00	2486.95
20+50.00	2498.20
21+00.00	2500.45
23+55.00	2489.99
25+02.63	2489.40
25+63.00	2496.05

SOLDIER PILE FINAL GRADE ELEVATION TABLE

WALL 2 STATION	TOP OF SOLDIER PILE GUTTER
13+71.66	2499.04
13+79.50	2498.96
14+85.00	2492.63
17+75.00	2494.95
20+35.00	2507.95
20+50.00	2510.2
21+00.00	2512.45
23+55.00	2502
25+03.90	2501.4
25+42.50	2495.61
25+57.67	2495.46

SOLDIER PILE GUTTER ELEVATION TABLE

FOR ESTIMATING PURPOSES ONLY THE CONTRACTING AGENCY ESTIMATES:		
	STRUCTURE EXCAVATION CLASS A INCL. HAUL WALL 1-3	
	ROCK	OVERBURDEN
WALL 2	1,220 C.Y.	58,640 C.Y.

ESTIMATED EXCAVATION QUANTITIES

NOTES:

1. BOTTOM OF WALL FASCIA COLUMN IN THE MSE WALL ELEVATION TABLE APPLIES TO THE GEOSYNTHETIC WALL ALTERNATIVE ONLY. THE HILFIKER WELDED WIRE WALL ALTERNATIVE SHALL NOT HAVE A SHOTCRETE OR CONCRETE FASCIA, EXCEPT AT CATCH BASINS AS DETAILED ON SHEET SF2.

BEGIN STATION - WALL 2	END STATION - WALL 2	MAXIMUM STEP HEIGHT			NOTES
		D	E	F	
13+79.50	18+25.00	0.10H	0.10H	0.067H	
18+25.00	18+50.00	T	T	T	SEE NOTE 2
18+50.00	19+00.00	0.15H	0.15H	0.10H	SEE NOTE 2
19+00.00	19+40.00	T	T	T	SEE NOTE 2
19+40.00	25+49.50	0.10H	0.10H	0.067H	

REINFORCEMENT STEP HEIGHT TABLE

BEGIN STATION - WALL 2	END STATION - WALL 2	SLOPE (H:V)
		S
10+00.00	10+00.00	2:1
10+00.00	10+22.00	T
10+22.00	11+80.00	2.2:1
11+80.00	12+00.00	T
12+00.00	13+40.00	2.1:1
13+40.00	13+70.00	T
13+70.00	13+80.00	1.8:1
13+80.00	14+10.00	T
14+10.00	26+00.00	2.1:1
26+00.00	26+20.00	T
26+20.00	28+25.00	2.2:1
28+25.00	28+43.50	T
28+43.50	28+43.50	2:1

FINAL GRADE SLOPE TABLE

BEGIN STATION - WALL 2	END STATION - WALL 2	MINIMUM LENGTH				
		L	L	A	B	C
10+00.00	13+79.50 BK.	11 FT	0.70H	N/A	N/A	N/A
13+79.50 AHD.	13+79.50 AHD.	11 FT	0.77H	0.77H	0.77H	0.77H
13+79.50 AHD.	14+30.00	11 FT	T	T	T	T
14+30.00	24+80.00	11 FT	0.40H	0.55H	0.70H	0.80H
24+80.00	25+49.50 BK.	11 FT	T	T	T	T
25+49.50 BK.	25+49.50 BK.	11 FT	0.77H	0.77H	0.77H	0.77H
25+49.50 AHD.	28+43.50	11 FT	0.70H	N/A	N/A	N/A

REINFORCEMENT LENGTH TABLE

BEGIN STATION - WALL 2	END STATION - WALL 2	WIDTH (FT)	
		W	V
10+00.00	10+00.00	13.50	N/A
10+00.00	10+22.00	T	N/A
10+22.00	13+40.00	4.00	N/A
13+40.00	13+70.00	T	N/A
13+70.00	13+71.66	12.23	N/A
13+71.66	25+57.67	N/A	5.20
25+57.67	25+57.67	12.29	N/A
25+57.67	25+90.00	T	N/A
25+90.00	28+25.00	4.00	N/A
28+25.00	28+43.50	T	N/A
28+43.50	28+43.50	12.97	N/A

FINAL GRADE BENCH WIDTH TABLE

NOTES:

1. IN TABLES "T" = TRANSITION.
2. BACK FACE OF WALL SHALL BE FOUNDED ON BEDROCK WITH 1' OF EXCAVATION BELOW BOTTOM OF WALL INTO ROCK AS SHOWN ON SHEET WD17 SECTION "SOLDIER PILE EXCAVATION IN BEDROCK". IF ENTIRE BACK FACE OF WALL IS NOT FOUNDED ON BEDROCK THEN THE MAXIMUM REINFORCEMENT STEP HEIGHT SHALL BE MODIFIED AS LISTED BELOW:
   D = 0.10H
   E = 0.10H
   F = 0.067H

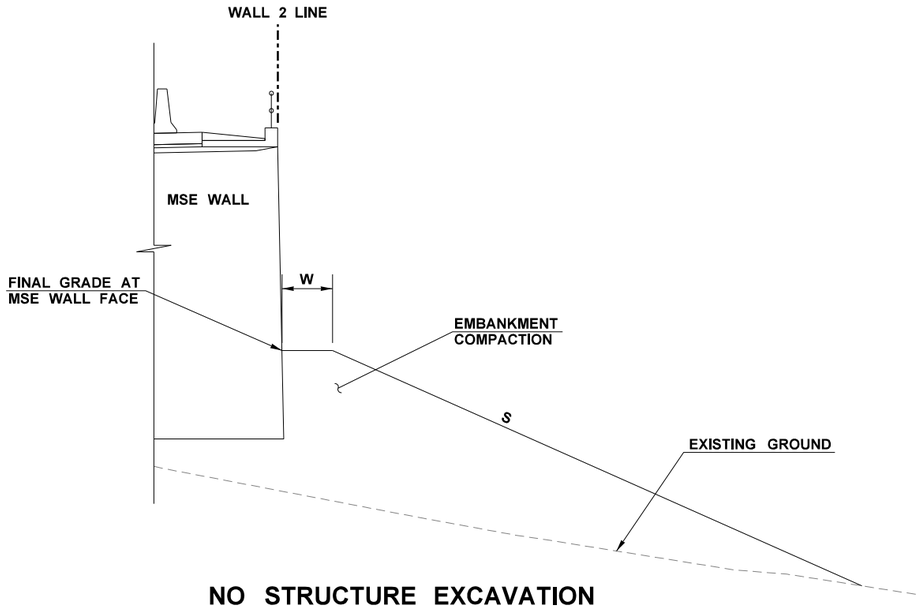

NO STRUCTURE EXCAVATION

(NOT TO SCALE)
WHERE FRONT OF WALL IS ABOVE EXISTING GROUND

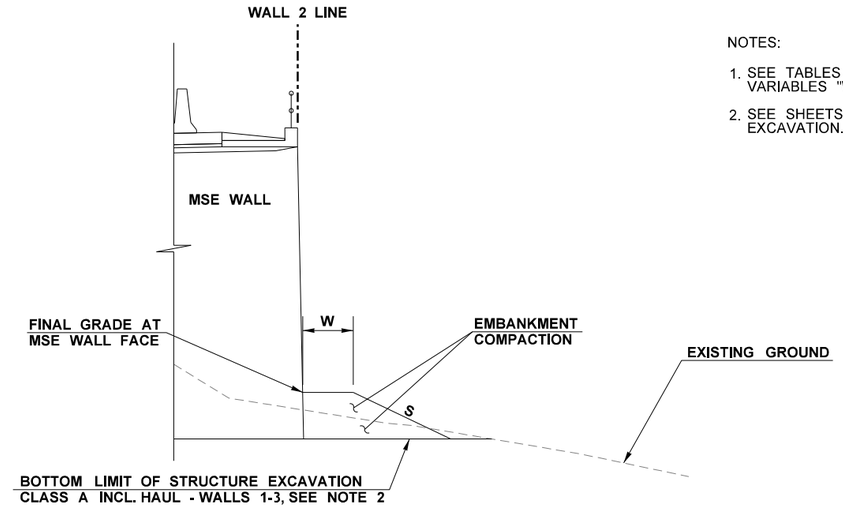

NOTES:

1. SEE TABLES ON SHEET W18 FOR VALUES OF VARIABLES "W" AND "S".
2. SEE SHEETS WD16 - WD18 FOR STRUCTURE EXCAVATION.

MEDIUM WIDTH STRUCTURE EXCAVATION

(NOT TO SCALE)
WHERE FRONT STRUCTURE EXCAVATION IS WIDER THAN FINAL EMBANKMENT AND IS ALL LEVEL

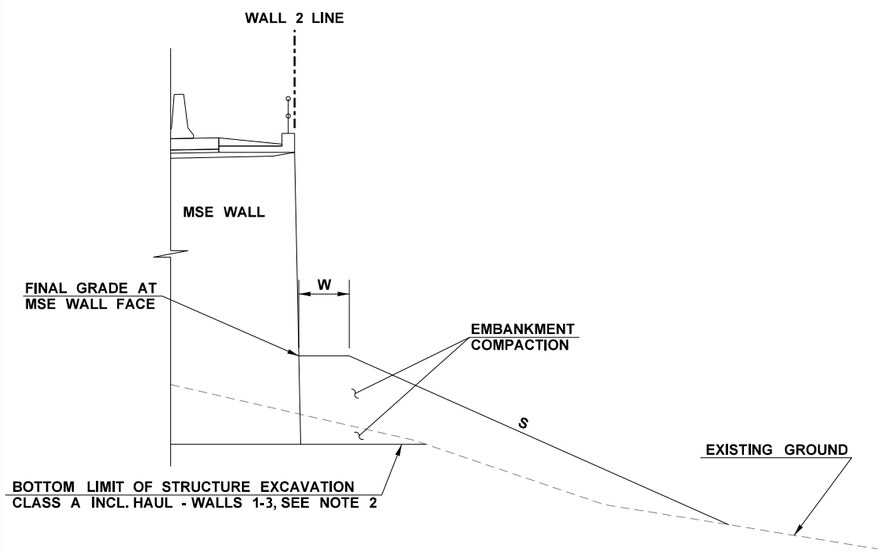

NARROW STRUCTURE EXCAVATION

(NOT TO SCALE)
WHERE FRONT STRUCTURE EXCAVATION IS NARROWER THAN FINAL EMBANKMENT

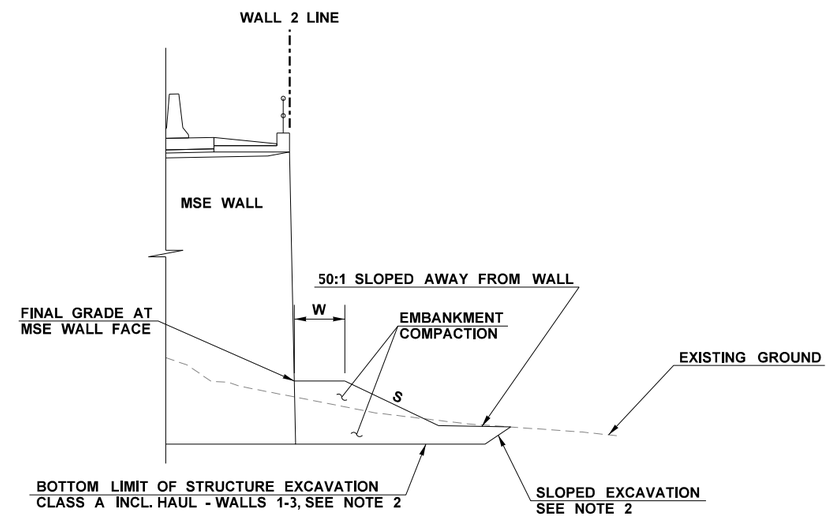

WIDE STRUCTURE EXCAVATION

(NOT TO SCALE)
WHERE FRONT STRUCTURE EXCAVATION IS WIDER THAN FINAL EMBANKMENT
AT "S" SLOPE, AND FRONT STRUCTURE EXCAVATION HAS A SLOPED GRADE

FILE NAME	K:\452201\090\06736_Phase 3\Design_CAD_Sheets\290-MInorStruct\XL5479_PS_WALLS.dgn						
TIME	5:07:23 PM				REGION NO. 10	STATE WASH	FED.AID PROJ.NO.
DATE	2/15/2022						
PLOTTED BY	GipnerM						
DESIGNED BY	M. GIPNER				JOB NUMBER 19Y007		
ENTERED BY	M. GIPNER						
CHECKED BY	K. KING				CONTRACT NO.		LOCATION NO.
PROJ. ENGR.	A. BYRD						
REGIONAL ADM.	T. TREPANIER	REVISION	DATE	BY			

ANDREW D. BYRD — STATE OF WASHINGTON — 39833 — REGISTERED PROFESSIONAL ENGINEER

SEE SHEET CT5
DATE
P.E. STAMP BOX

DATE
P.E. STAMP BOX

Washington State
Department of Transportation

I-90
CABIN CREEK I/C TO W EASTON I/C
PHASE 3 - ADD LANES/WILDLIFE BRIDGES

WALL 2 FRONT GRADING

Plot 19
PLAN REF NO
W19
SHEET 908 OF 1783 SHEETS

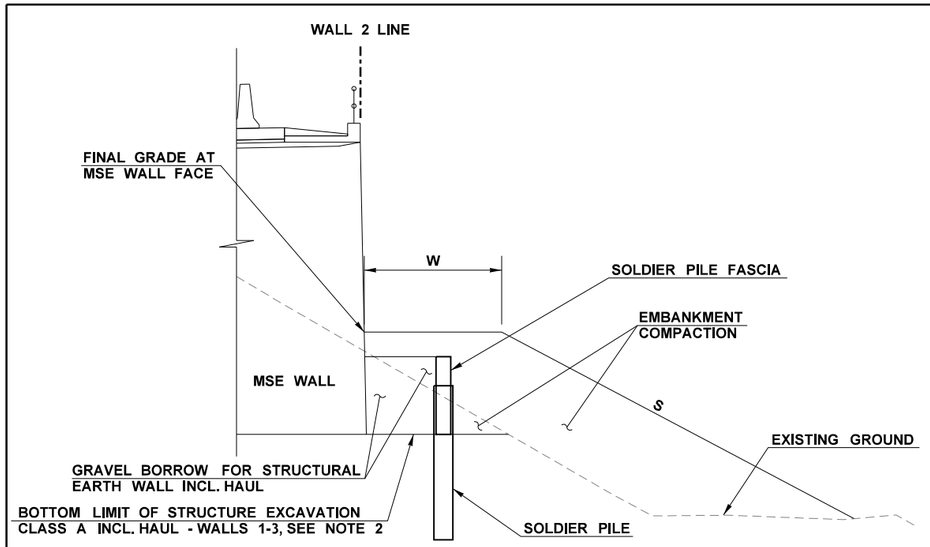

SOLDIER PILE WITHOUT GUTTER - NARROW STRUCTURE EXCAVATION

(NOT TO SCALE)
WALL 2 13+66.00 TO WALL 2 13+71.66

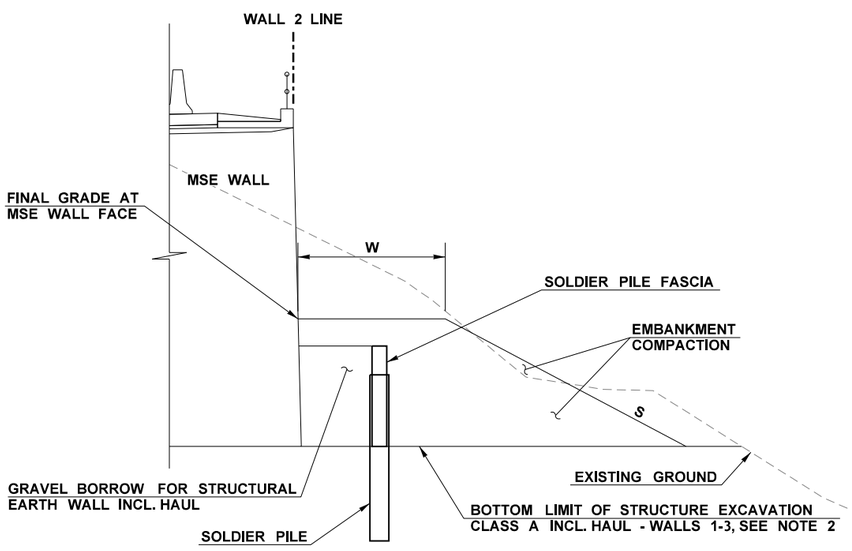

SOLDIER PILE WITHOUT GUTTER - WIDE STRUCTURE EXCAVATION

(NOT TO SCALE)
WALL 2 25+57.67 TO WALL 2 25+63.00

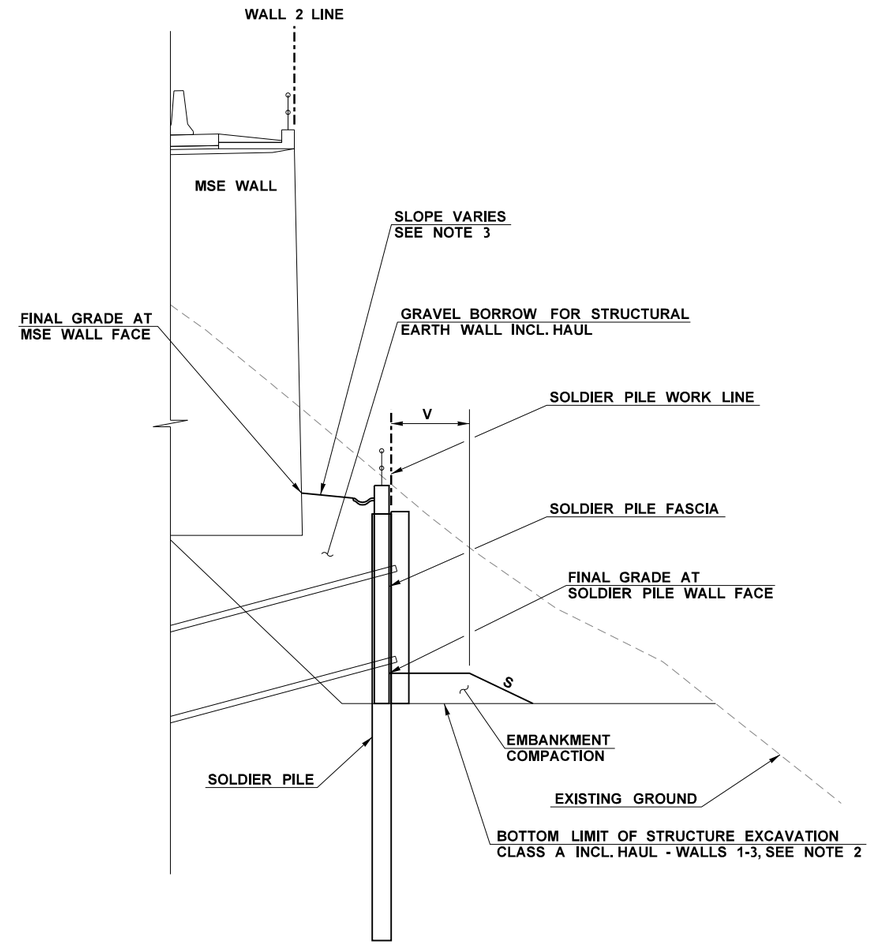

SOLDIER PILE WITH GUTTER

(NOT TO SCALE)
WALL 2 13+71.66 TO WALL 2 25+57.67

NOTES:

1. SEE TABLES ON SHEET W18 FOR VALUES OF VARIABLES "W", "V" AND "S".
2. SEE SHEETS WD16 TO WD18 FOR STRUCTURE EXCAVATION.
3. ADJUST SLOPE TO MATCH "FINAL GRADE AT MSE WALL FACE" ELEVATION ON LEFT EDGE AND TOP OF SOLDIER PILE GUTTER ELEVATION ON RIGHT EDGE.

FILE NAME	K:\452201\090\06736_Phase 3\Design_CAD_Sheets\290-MInorStruct\XL5479_PS_WALLS.dgn				REGION NO. 10	STATE WASH	FED.AID PROJ.NO.
TIME	5:07:26 PM				JOB NUMBER 19Y007		
DATE	2/15/2022						
PLOTTED BY	GipnerM						
DESIGNED BY	M. GIPNER				CONTRACT NO.		LOCATION NO.
ENTERED BY	M. GIPNER						
CHECKED BY	K. KING						
PROJ. ENGR.	A. BYRD						
REGIONAL ADM.	T. TREPANIER	REVISION	DATE	BY			

ANDREW D. BYRD — STATE OF WASHINGTON — 39873 — REGISTERED PROFESSIONAL ENGINEER

SEE SHEET CT5
DATE
P.E. STAMP BOX

DATE
P.E. STAMP BOX

Washington State
Department of Transportation

I-90
CABIN CREEK I/C TO W EASTON I/C
PHASE 3 - ADD LANES/WILDLIFE BRIDGES

WALL 2 FRONT GRADING

Plot 20
PLAN REF NO
W20
SHEET 909 OF 1783 SHEETS

CURVE DATA				
P.I. STATION	DELTA	RADIUS	TANGENT	LENGTH
WALL 3 18+84.58	1°35'55" LT	1,994'	27.82'	55.64'

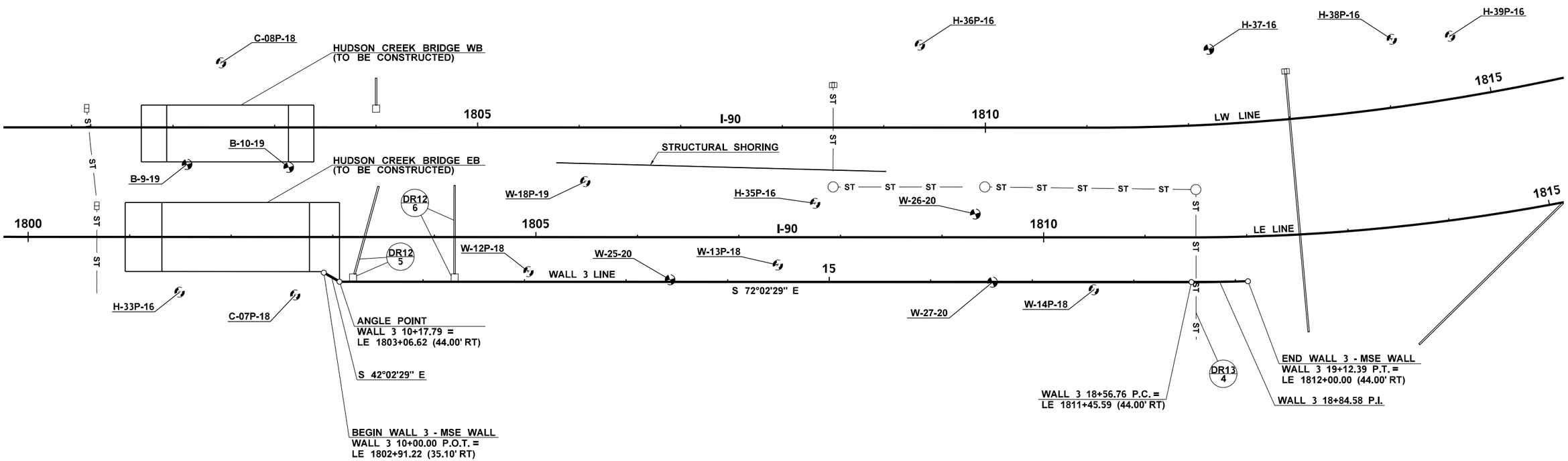

NOTES:

1. TEMPORARY DRAINAGE NOT SHOWN. SEE TEMP. DRAINAGE PLANS AND SPECIAL PROVISION "MAINTAINING EXISTING WALL DRAINAGE" FOR INFORMATION.
2. OTHER RETAINING WALLS NOT SHOWN FOR CLARITY. SEE HUDSON CREEK BRIDGE EB SHEETS FOR RETAINING WALLS HC1 AND HC2. SEE WS SERIES SHEETS FOR OTHER STRUCTURAL EARTH WALLS IN THE HUDSON CREEK BRIDGES VICINTY.

0 50 100
SCALE IN FEET

FILE NAME	K:\452201\090\06736_Phase 3\Design_CAD_Sheets\290-MInorStruct\XL5479_PS_WALLS.dgn				REGION NO. 10	STATE WASH	FED.AID PROJ.NO.
TIME	5:07:28 PM				JOB NUMBER 19Y007		
DATE	2/15/2022				CONTRACT NO.		LOCATION NO.
PLOTTED BY	GipnerM						
DESIGNED BY	M. GIPNER						
ENTERED BY	J. VENEGAS						
CHECKED BY	K. KING						
PROJ. ENGR.	A. BYRD						
REGIONAL ADM.	T. TREPANIER	REVISION	DATE	BY			

ANDREW D. BYRD — STATE OF WASHINGTON — 39833 — REGISTERED PROFESSIONAL ENGINEER

SEE SHEET CT5
DATE
P.E. STAMP BOX

DATE
P.E. STAMP BOX

Washington State
Department of Transportation

I-90
CABIN CREEK I/C TO W EASTON I/C
PHASE 3 - ADD LANES/WILDLIFE BRIDGES

WALL 3 PLAN VIEW

Plot 21
PLAN REF NO
W21
SHEET 910 OF 1783 SHEETS

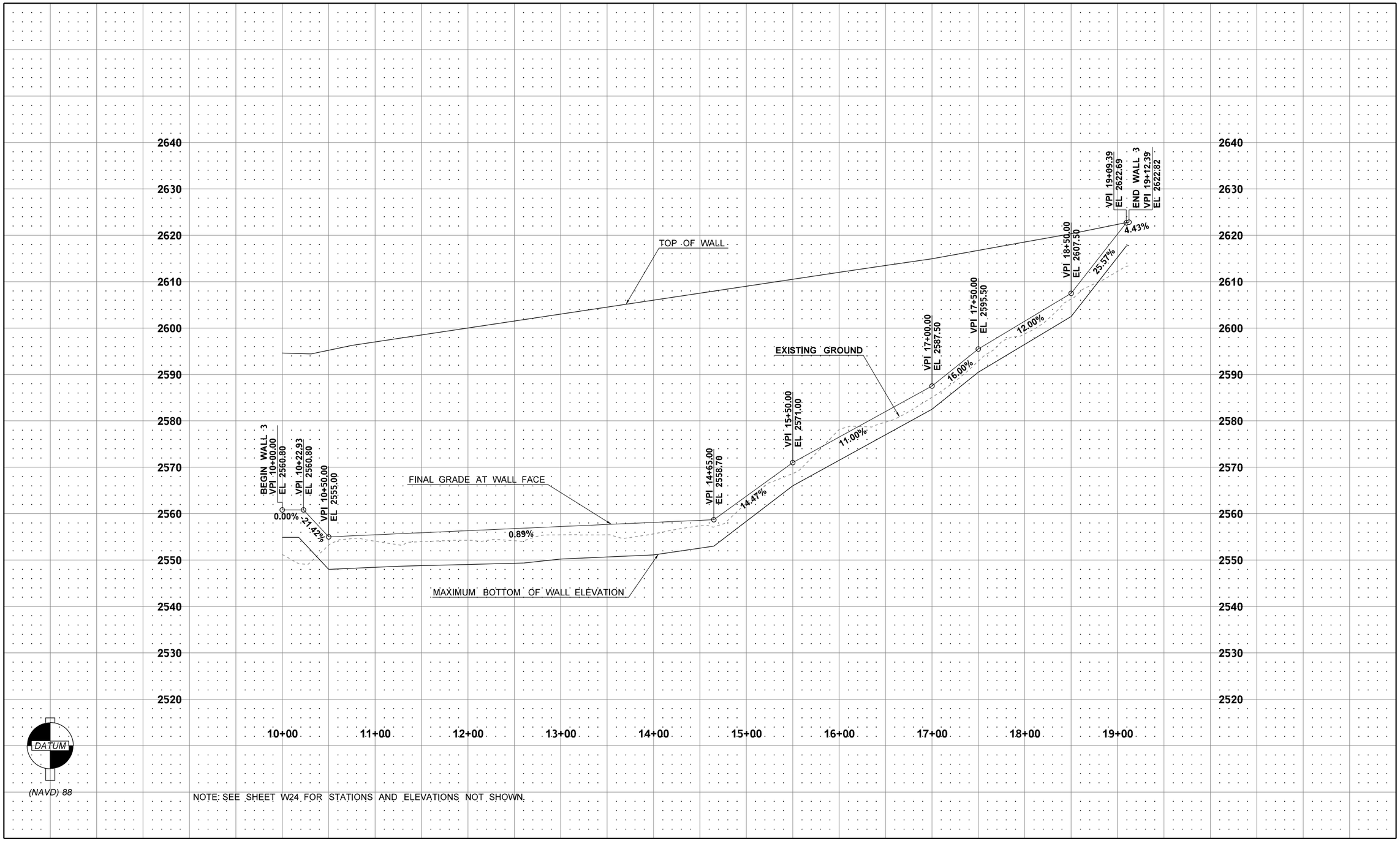

NOTE: SEE SHEET W24 FOR STATIONS AND ELEVATIONS NOT SHOWN.

FILE NAME	K:\452201\090\06736_Phase 3\Design_CAD_Sheets\290-MInorStruct\XL5479_PS_WALLS.dgn						
TIME	5:07:30 PM				REGION NO. 10	STATE WASH	FED.AID PROJ.NO.
DATE	2/15/2022						
PLOTTED BY	GipnerM				JOB NUMBER 19Y007		
DESIGNED BY	M. GIPNER						
ENTERED BY	J. VENEGAS				CONTRACT NO.		LOCATION NO.
CHECKED BY	K. KING						
PROJ. ENGR.	A. BYRD						
REGIONAL ADM.	T. TREPANIER	REVISION	DATE	BY			

ANDREW D. BYRD — STATE OF WASHINGTON — 39853 — REGISTERED PROFESSIONAL ENGINEER

SEE SHEET CT5

DATE

P.E. STAMP BOX

DATE

P.E. STAMP BOX

Washington State Department of Transportation

I-90
CABIN CREEK I/C TO W EASTON I/C
PHASE 3 - ADD LANES/WILDLIFE BRIDGES

WALL 3 PROFILE

Plot 22

PLAN REF. NO. W22

SHEET 911 OF 1783 SHEETS

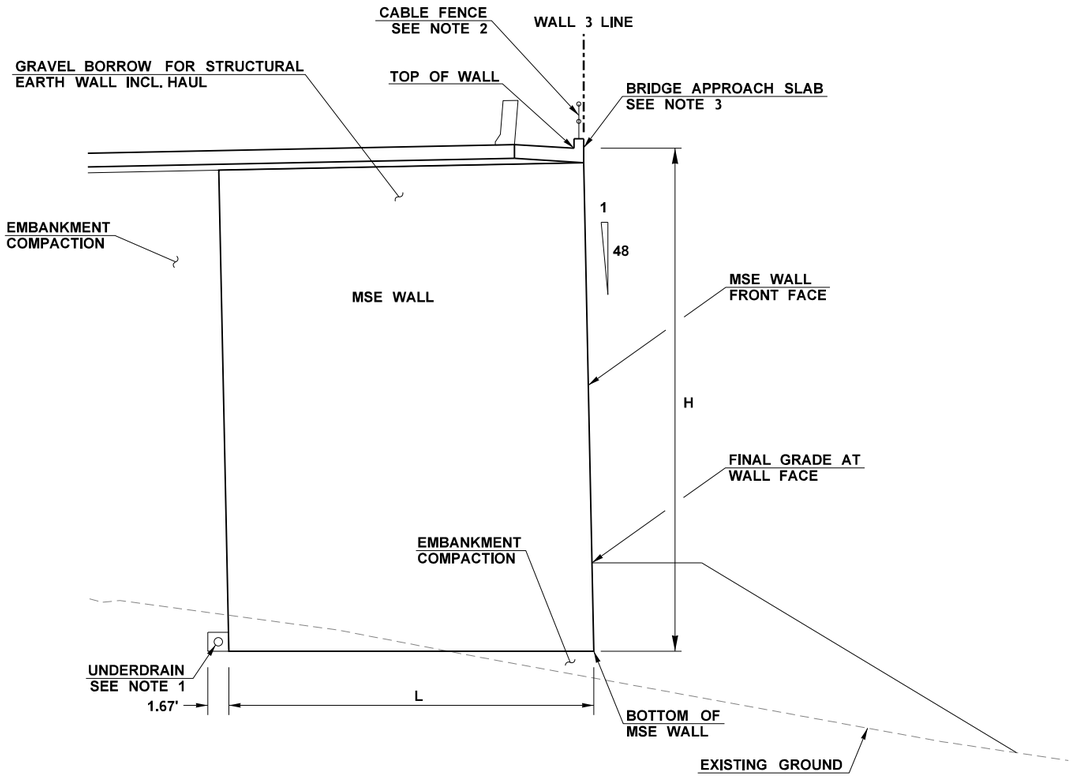

MSE WALL

(NOT TO SCALE)
WALL 3 10+00.00 TO 10+17.79
WALL HC2 NOT SHOWN - SEE NOTE 3

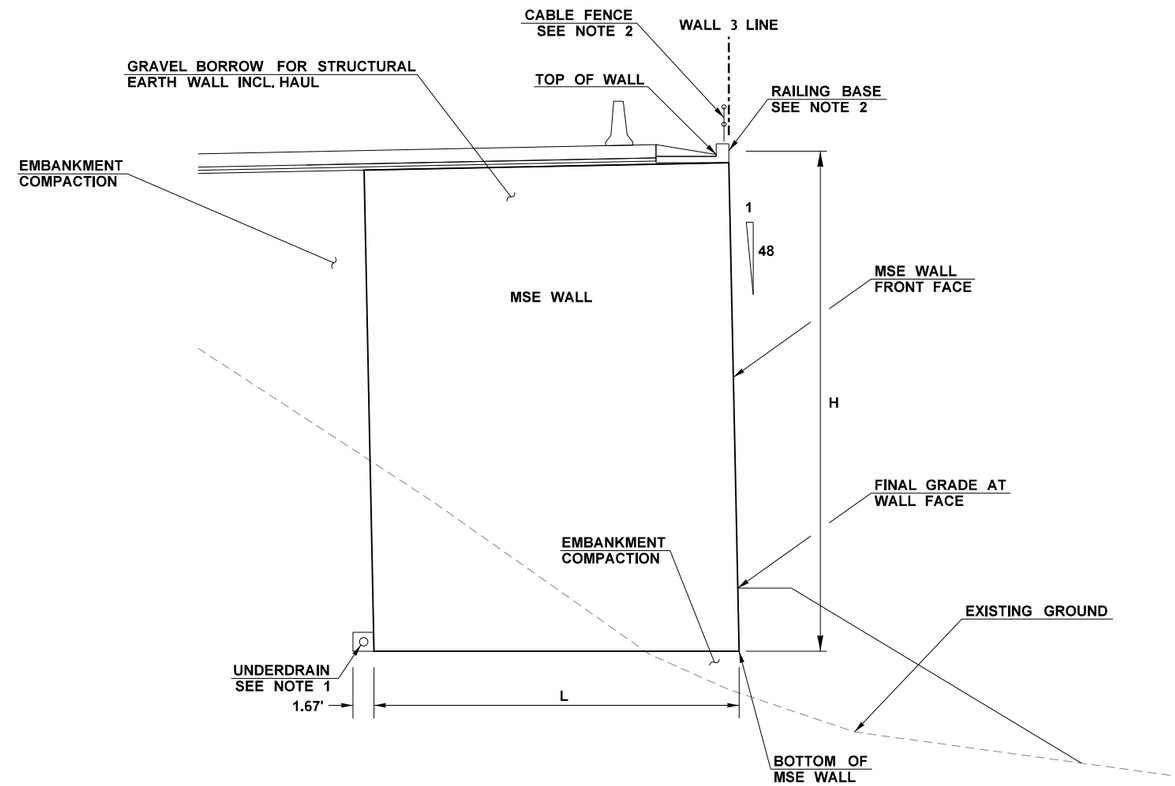

MSE WALL

(NOT TO SCALE)
WALL 3 10+17.79 TO 19+12.39

NOTES:

1. SEE DRAINAGE PLANS, DRAINAGE PROFILES AND DRAINAGE DETAILS FOR UNDERDRAIN TYPE, SIZE, LOCATION AND ADDITIONAL DETAILS.
2. SEE SHEETS RB1 - RB5 FOR RAILING BASE AND ATTACHED CABLE FENCE DETAILS.
3. WALL HC2 NOT SHOWN. SEE HUDSON CREEK BRIDGE EB SHEETS FOR WALL HC2 DETAILS.
4. FOR GRADING IN FRONT OF WALL SEE SHEETS W25 AND W26.
5. FOR STRUCTURE EXCAVATION, UNSTABLE BASE EXCAVATION AND ADDITIONAL BACKFILL REQUIREMENTS FOR PORTIONS OF THESE EXCAVATIONS SEE SHEETS WD16 - WD19.
6. SELECT BORROW REQUIRED UNDER MSE WALL IN LIMITED LOCATIONS. SEE SHEETS WD20 AND WD21 FOR DETAILS.
7. HILFIKER WELDED WIRE WALL SHOWN. GEOSYNTHETIC WALL ALTERNATIVE SIMILAR, SEE SHEET WD2 FOR DETAILS.
8. SEE REINFORCEMENT LENGTH TABLE ON SHEET W24 FOR VALUES OF VARIABLE "L".

FOR ESTIMATING PURPOSES ONLY THE CONTRACTING AGENCY ESTIMATES:		
	STRUCTURE EXCAVATION CLASS A INCL. HAUL WALL 1-3	
	ROCK	OVERBURDEN
WALL 3	1,590 C.Y.	12,970 C.Y.

ESTIMATED EXCAVATION QUANTITIES

FILE NAME	K:\452201\090\06736_Phase 3\Design_CAD_Sheets\290-MInorStruct\XL5479_PS_WALLS.dgn						
TIME	5:07:33 PM				REGION NO. 10	STATE WASH	FED.AID PROJ.NO.
DATE	2/15/2022						
PLOTTED BY	GipnerM				JOB NUMBER 19Y007		
DESIGNED BY	M. GIPNER						
ENTERED BY	M. GIPNER						
CHECKED BY	K. KING				CONTRACT NO.		LOCATION NO.
PROJ. ENGR.	A. BYRD						
REGIONAL ADM.	T. TREPANIER	REVISION	DATE	BY			

ANDREW D. BYRD — STATE OF WASHINGTON — 19972 — REGISTERED PROFESSIONAL ENGINEER

SEE SHEET CT5
DATE
P.E. STAMP BOX

DATE
P.E. STAMP BOX

Washington State
Department of Transportation

I-90
CABIN CREEK I/C TO W EASTON I/C
PHASE 3 - ADD LANES/WILDLIFE BRIDGES

WALL 3 SECTIONS

Plot 23
PLAN REF NO
W23
SHEET 912 OF 1783 SHEETS

NOTES:

1. IN TABLES "T" = TRANSITION.

* FROM WALL 3 10+00.00 TO WALL 3 10+10.00 THE BOTTOM OF THE MSE WALL SHALL BE PLACED AT AN ELEVATION OF PRECISELY 2554.90' IN ORDER TO MATCH THE BOTTOM OF THE EB HUDSON CREEK BRIDGE PIER 2 SPREAD FOOTING, A LOWER ELEVATION IS NOT PERMITTED.

WALL 3 ALIGNMENT			
STATION	TOP OF WALL	FINAL GRADE AT WALL FACE	MAXIMUM BOTTOM OF WALL ELEVATION*
10+00.00	2594.64	2560.80	2554.90
10+17.79	2594.51	2560.80	2554.90
10+22.93	2594.48	2560.80	2553.80
10+31.17	2594.42	2559.03	2552.03
10+50.00	2595.22	2555.00	2548.00
10+75.00	2596.27	2555.22	2548.22
11+00.00	2597.02	2555.45	2548.45
11+25.00	2597.77	2555.67	2548.67
11+50.00	2598.52	2555.89	2548.79
12+00.00	2600.02	2556.34	2549.05
12+50.00	2601.52	2556.78	2549.30
12+60.00	2601.82	2556.87	2549.35
13+00.00	2603.02	2557.23	2550.23
13+50.00	2604.52	2557.67	2550.67
14+00.00	2606.02	2558.12	2551.12
14+50.00	2607.52	2558.57	2552.57
14+65.00	2607.97	2558.70	2553.00
15+00.00	2609.02	2563.76	2558.35
15+50.00	2610.52	2571.00	2566.00
16+00.00	2612.02	2576.50	2571.50
16+50.00	2613.50	2582.00	2577.00
17+00.00	2614.94	2587.50	2582.50
17+50.00	2616.75	2595.50	2590.50
18+00.00	2618.56	2601.50	2596.50
18+50.00	2620.33	2607.50	2602.50
19+00.00	2622.35	2620.29	2615.29
19+09.39	2622.73	2622.69	2617.69
19+12.39	2622.85	2622.82	2617.82

ELEVATION TABLE

LE ALIGNMENT		
BEGIN STATION	END STATION	SLOPE (H:V) S
1802+91.22		2:1
1802+91.22	1803+06.62	T
1803+06.62		2.25:1

WALL 3 ALIGNMENT		
BEGIN STATION	END STATION	SLOPE (H:V) S
10+17.79	10+50.00	2.25:1
10+50.00	10+75.00	T
10+75.00	14+40.00	2:1
14+40.00	14+65.00	T
14+65.00	18+25.00	2.1:1
18+25.00	18+50.00	T
18+50.00	19+12.39	2.25:1

FINAL GRADE SLOPE TABLES

LE ALIGNMENT		
BEGIN STATION	END STATION	WIDTH (FT) W
1802+91.22		46.00
1802+91.22	1803+06.62	T
1803+06.62		48.68

WALL 3 ALIGNMENT		
BEGIN STATION	END STATION	WIDTH (FT) W
10+17.79	19+09.39	4.00
19+09.39	19+12.39	T
19+12.39		5.20

FINAL GRADE BENCH WIDTH TABLES

WALL 3 ALIGNMENT			
BEGIN STATION	END STATION	MINIMUM LENGTH	
		L	L
10+00.00	19+12.39	11 FT	0.73H

REINFORCEMENT LENGTH TABLE

MINIMUM SOIL REINFORCEMENT LENGTH SHALL BE THE GREATER OF THE 2 VALUES LISTED IN THE TABLE

FILE NAME	K:\452201\090\06736_Phase 3\Design_CAD_Sheets\290-MInorStruct\XL5479_PS_WALLS.dgn					
TIME	8:11:42 PM				REGION NO. 10	STATE WASH	FED.AID PROJ.NO.
DATE	2/7/2022					
PLOTTED BY	GipnerM					
DESIGNED BY	M. GIPNER				JOB NUMBER 19Y007	
ENTERED BY	M. GIPNER					
CHECKED BY	K. KING				CONTRACT NO.	LOCATION NO.
PROJ. ENGR.	A. BYRD					
REGIONAL ADM.	T. TREPANIER	REVISION	DATE	BY		

ANDREW D. BYRD, STATE OF WASHINGTON, 39873, REGISTERED PROFESSIONAL ENGINEER
SEE SHEET CT5
DATE
P.E. STAMP BOX

VERONICA ROSINA LENOR MAUK PETERSEN, STATE OF WASHINGTON, 20100251, REGISTERED PROFESSIONAL ENGINEER
SEE SHEET CT5
DATE
P.E. STAMP BOX

Washington State Department of Transportation

I-90
CABIN CREEK I/C TO W EASTON I/C
PHASE 3 - ADD LANES/WILDLIFE BRIDGES

WALL 3 TABLES

Plot 24
PLAN REF NO W24
SHEET 913 OF 1783 SHEETS

NOTES:

1. SEE TABLES ON SHEET W24 FOR VALUES OF VARIABLES "W" AND "S".
2. SEE SHEET WD18 FOR STRUCTURE EXCAVATION.

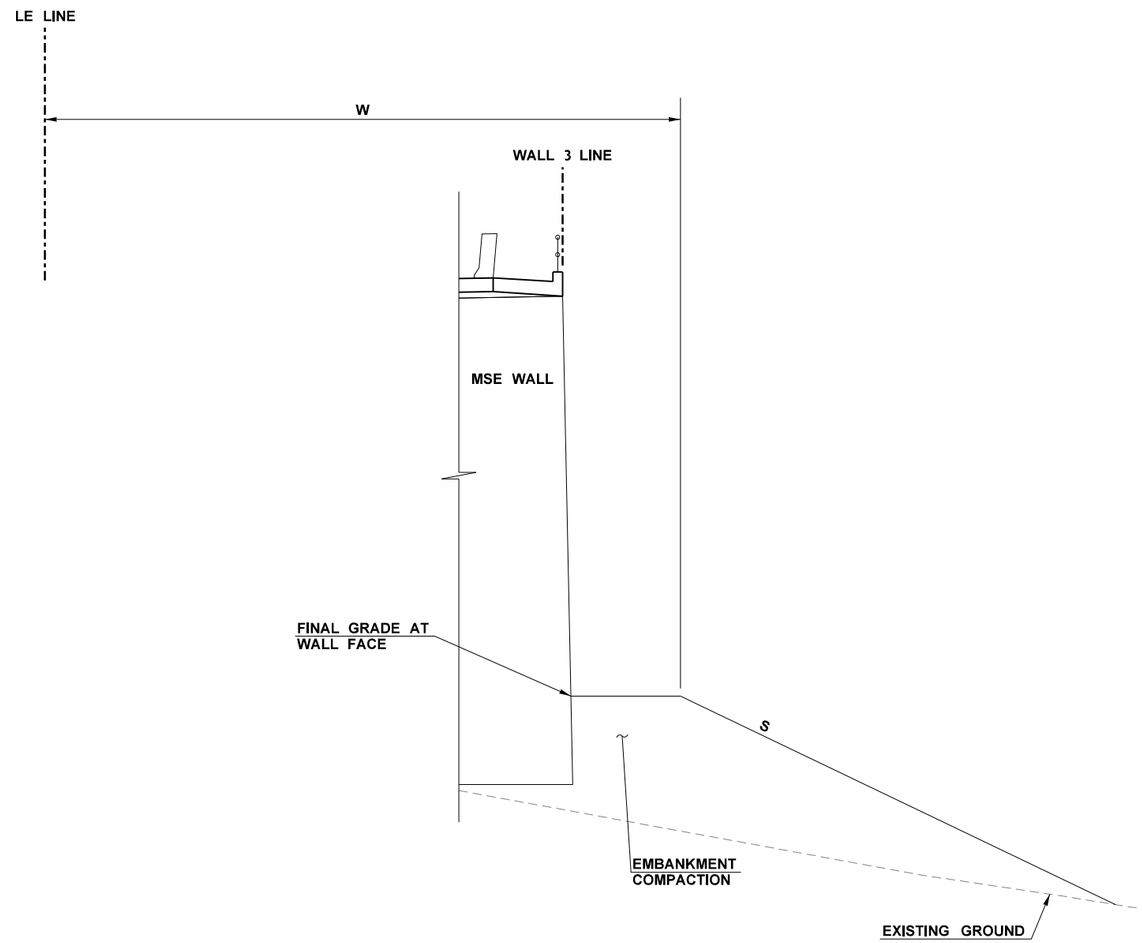

NO STRUCTURE EXCAVATION

(NOT TO SCALE)
LE 1802+91.22 TO LE 1803+06.62
SECTION CUT PERPENDICULAR TO LE LINE

FILE NAME	K:\452201\090\06736_Phase 3\Design_CAD_Sheets\290-MInorStruct\XL5479_PS_WALLS.dgn						
TIME	5:07:40 PM				REGION NO. 10	STATE WASH	FED.AID PROJ.NO.
DATE	2/15/2022						
PLOTTED BY	GipnerM						
DESIGNED BY	M. GIPNER				JOB NUMBER 19Y007		
ENTERED BY	M. GIPNER						
CHECKED BY	K. KING				CONTRACT NO.		LOCATION NO.
PROJ. ENGR.	A. BYRD						
REGIONAL ADM.	T. TREPANIER	REVISION	DATE	BY			

ANDREW D. BYRD — STATE OF WASHINGTON — 39823 — REGISTERED PROFESSIONAL ENGINEER
SEE SHEET CT5
DATE
P.E. STAMP BOX

DATE
P.E. STAMP BOX

Washington State Department of Transportation

I-90
CABIN CREEK I/C TO W EASTON I/C
PHASE 3 - ADD LANES/WILDLIFE BRIDGES

WALL 3 FRONT GRADING

Plot 25
PLAN REF NO W25
SHEET 914 OF 1783 SHEETS

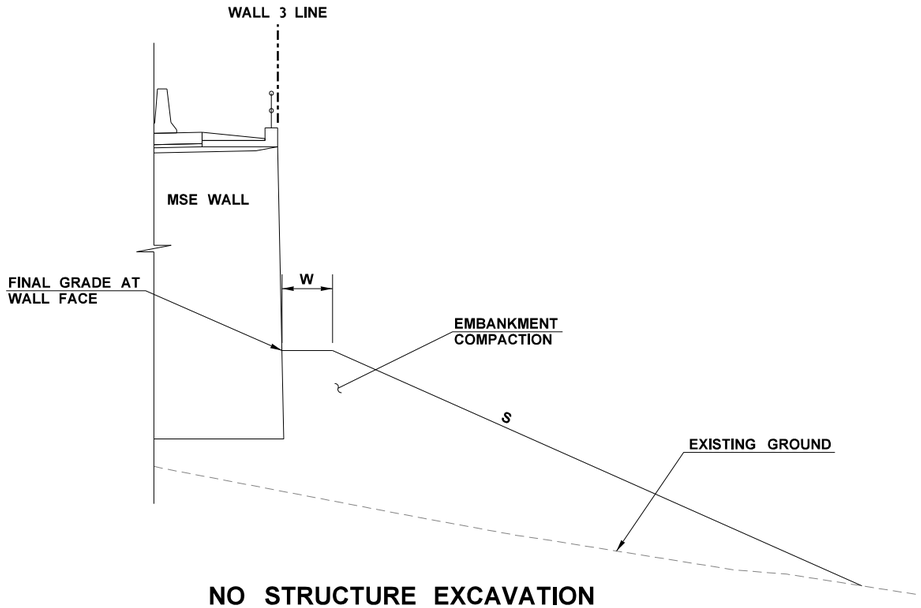

NO STRUCTURE EXCAVATION

(NOT TO SCALE)
WHERE FRONT OF WALL IS ABOVE EXISTING GROUND

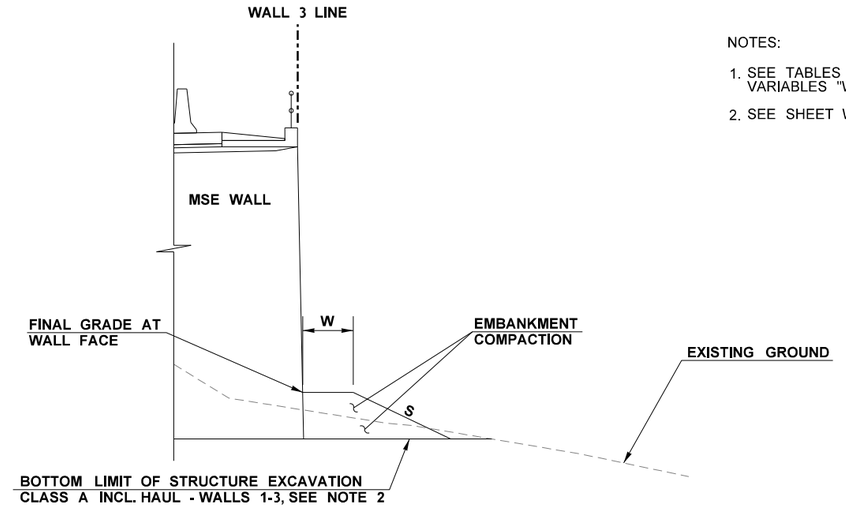

NOTES:

1. SEE TABLES ON SHEET W24 FOR VALUES OF VARIABLES "W" AND "S".
2. SEE SHEET WD18 FOR STRUCTURE EXCAVATION.

MEDIUM WIDTH STRUCTURE EXCAVATION

(NOT TO SCALE)
WHERE FRONT STRUCTURE EXCAVATION IS WIDER THAN FINAL EMBANKMENT AND IS ALL LEVEL

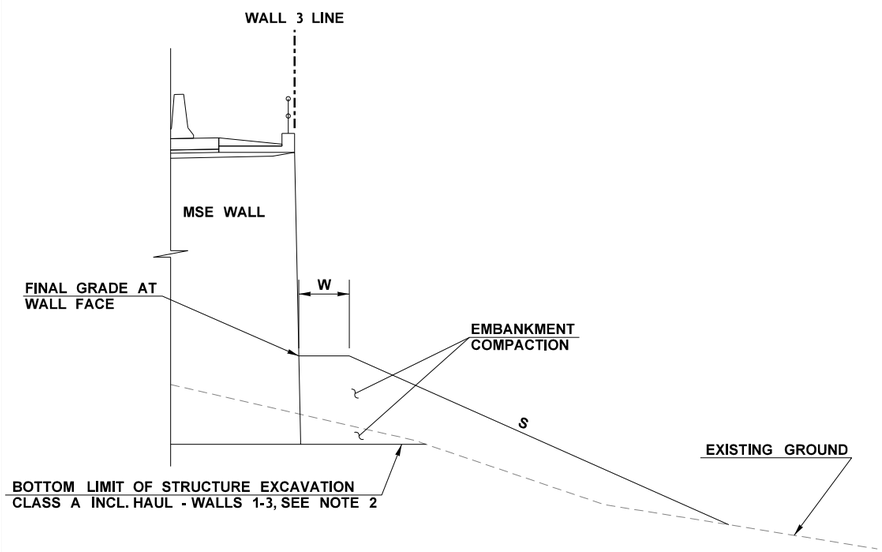

NARROW STRUCTURE EXCAVATION

(NOT TO SCALE)
WHERE FRONT STRUCTURE EXCAVATION IS NARROWER THAN FINAL EMBANKMENT

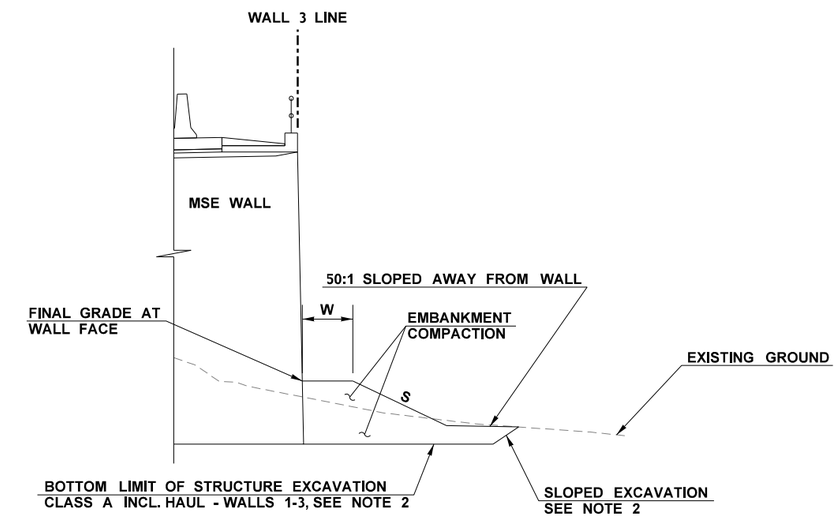

WIDE STRUCTURE EXCAVATION

(NOT TO SCALE)
WHERE FRONT STRUCTURE EXCAVATION IS WIDER THAN FINAL EMBANKMENT
AT "S" SLOPE, AND FRONT STRUCTURE EXCAVATION HAS A SLOPED GRADE

FILE NAME	K:\452201\090\06736_Phase 3\Design_CAD_Sheets\290-MInorStruct\XL5479_PS_WALLS.dgn						
TIME	5:07:43 PM				REGION NO. 10	STATE WASH	FED.AID PROJ.NO.
DATE	2/15/2022						
PLOTTED BY	GipnerM						
DESIGNED BY	M. GIPNER				JOB NUMBER 19Y007		
ENTERED BY	M. GIPNER						
CHECKED BY	K. KING				CONTRACT NO.		LOCATION NO.
PROJ. ENGR.	A. BYRD						
REGIONAL ADM.	T. TREPANIER	REVISION	DATE	BY			

ANDREW D. BYRD — STATE OF WASHINGTON — 39832 — REGISTERED PROFESSIONAL ENGINEER

SEE SHEET CT5
DATE
P.E. STAMP BOX

DATE
P.E. STAMP BOX

Washington State
Department of Transportation

I-90
CABIN CREEK I/C TO W EASTON I/C
PHASE 3 - ADD LANES/WILDLIFE BRIDGES

WALL 3 FRONT GRADING

Plot 26
PLAN REF NO
W26
SHEET 915 OF 1783 SHEETS

HIFIKER WELDED WIRE WALL ALTERNATIVE GENERAL NOTES:

1. HILFIKER WELDED WIRE WALL ALTERNATIVE SHALL USE A ROCK FACE.
2. DETAILED CALCULATIONS ARE NOT REQUIRED FOR TYPE 2E WORKING DRAWING SUBMITTAL. DETAILS ARE STILL REQUIRED INCLUDING, BUT NOT LIMITED TO ADAPTING THE REINFORCEMENT DESIGN AROUND ALL DRAINAGE STRUCTURES AND PIPES.
3. LONGITUDINAL WIRE SPLICES IN THE WELDED WIRE MATS (I.E., WELDED WIRE MAT SPLICES ORIENTED IN THE TRANSVERSE DIRECTION OF THE MAT, APPROXIMATELY PARALLEL TO THE WALL FACE) SHALL BE AVOIDED WHERE PRACTICAL. SPLICES SHALL NOT BE PLACED WITHIN 0.40H OF THE WALL FRONT FACE. ANY SPLICES SHALL BE ACCOMPLISHED WITH A POSITIVE, MECHANICAL CONNECTION AND SHALL BE DETAILED IN THE TYPE 2E WORKING DRAWING.

GEOSYNTHETIC WALL ATLERNATIVE GENERAL NOTES:

1. SHOTCRETE FASCIA SHALL NOT BE INSTALLED AT ANY LOCATION ON THE WALL UNTIL THE TOP GEOSYNTHETIC LAYER HAS BEEN PLACED FOR 50 FEET UPSTATION AND DOWNSTATION OF THE AREA WHERE SHOTCRETE IS BEING INSTALLED. THE ONLY EXCEPTION IS THE SHOTCRETE FASCIA ALONG THE BOTTOM OF THE GEOSYNTHETIC WALL WITHIN THE SOLDIER PILE WALL LIMITS MAY BE INSTALLED TO THE VERTICAL LIMITS SHOWN IN STAGE 3 OF THE SOLDIER PILE CONSTRUCTION SEQUENCE SHEETS SP8 AND SP20.

GENERAL NOTES FOR ALL MSE WALL ALTERNATIVES:

1. FOR WALLS 1-3 ONLY THERE ARE TWO ALTERNATIVES FOR THE MECHANICALLY STABILIZED EARTH (MSE) PORTION OF THE WALLS. ALTERNATIVE A1 IS BASED ON CONSTRUCTING GEOSYNTHETIC RETAINING WALLS WITH SHOTCRETE FASCIAS. ALTERNATIVE A2 IS BASED ON CONSTRUCTING STRUCTURAL EARTH WALLS USING A HILFIKER WELDED WIRE WALL SYSTEM. SEE SPECIAL PROVISION "ALTERNATIVE BIDS" FOR ADDITIONAL INFORMATION.
2. BEFORE CONSTRUCTION OF THE MSE WALL REINFORCEMENT BEGINS ALL EMBANKMENT BELOW THE BOTTOM OF WALL ELEVATION SHALL BE CONSTRUCTED TO THE FULL WIDTH AS SHOWN IN THE PLANS, INCLUDING IN FRONT OF THE WALL.
3. BEFORE WINTER SHUTDOWN EACH SEASON EMBANKMENT SHALL BE PLACED IN FRONT OF THE WALL, INCLUDING PARTIALLY CONSTRUCTED SECTIONS OF WALLS, TO AN ELEVATION A MINIMUM OF 3 FEET ABOVE THE BOTTOM OF THE MSE WALL.

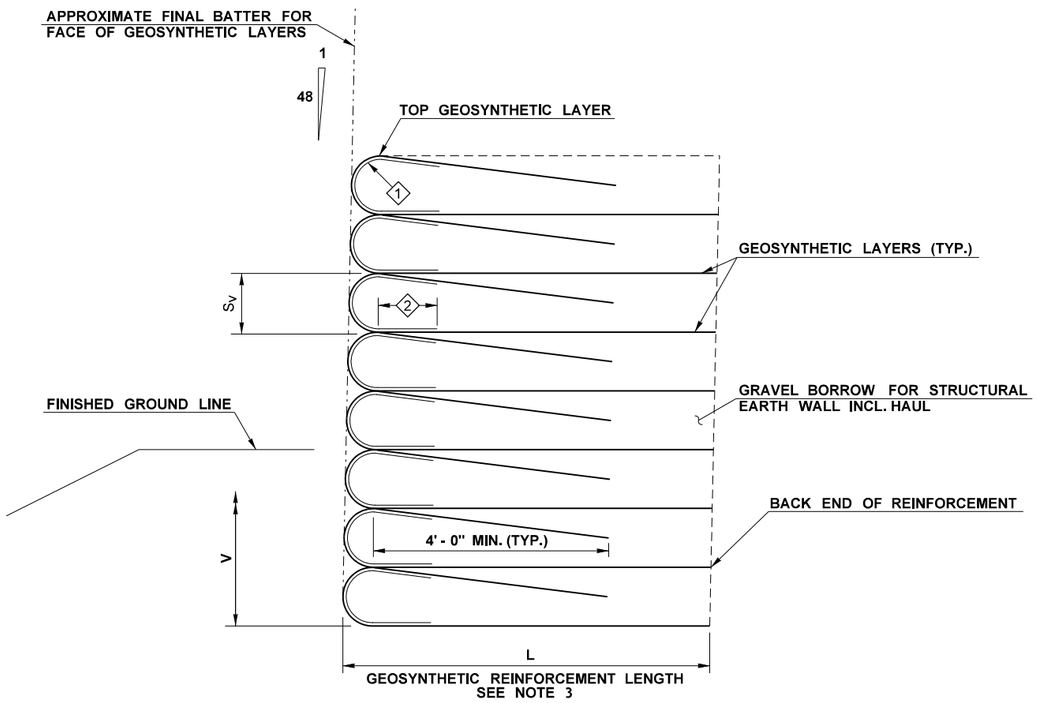

GEOSYNTHETIC WALL ALTERNATIVE SECTION

SHOTCRETE FASCIA NOT SHOWN FOR CLARITY
(NOT TO SCALE)

KEY NOTES

1. GEOTEXTILE FOR UNDERGROUND DRAINAGE CLASS A, MODERATE SURVIVABILITY (ONLY NEEDED IF A GEOGRID IS USED FOR GEOSYNTHETIC REINFORCEMENT)

2. 1' - 0" MIN. GEOTEXTILE OVERLAP, TOP & BOTTOM

NOTES:

1. FOR VALUES OF "L", SEE SHEETS W8, W18 AND W24. WITH THE EXCEPTION OF THE TOP LAYER, ALL LAYERS OF GEOSYNTHETIC USED IN A WALL SHALL BE PLACED AT THE SAME SPACING OF S_V = 1.00' OR 1.25'. THERE SHALL BE NO MIXING OF THE S_V = 1.0' AND S_V = 1.25' TABLES ON SHEETS WD5 THROUGH WD8. THE THICKNESS OF THE TOP LAYER MAY BE REDUCED TO A MINIMUM OF 0.50' TO ACCOUNT FOR THE SLOPING PROFILE OF THE TOP OF THE WALL.

2. FOR GEOSYNTHETIC WALL CONSTRUCTION SEQUENCE, SEE STANDARD PLAN D-3.09 SHEET 4.

3. REINFORCEMENT LENGTH MEASURED FROM BACK OF SHOTCRETE FASCIA AS SHOWN. FOR SECTIONS OF WALLS WITH A TRUNCATED BASE, REINFORCEMENT LENGTHS "A", "B" AND "C" SHOWN ON SHEETS W5, W6 AND W16 MEASURED SIMILAR.

4. WHERE ROADWAY SUPERELEVATION WILL RESULT IN LESS THAN 6 INCHES OF CLEARANCE BETWEEN THE TOP GEOSYNTHETIC REINFORCEMENT LAYER AND THE BOTTOM OF ROADWAY SURFACING, THE TOP LAYERS OF GEOSYNTHETIC REINFORCEMENT SHALL BE DEFLECTED DOWNWARD IN ORDER TO MAINTAIN BETWEEN 6 INCHES AND 1 FOOT OF CLEARANCE BETWEEN THE BACK END OF TOP GEOSYNTHETIC REINFORCEMENT LAYER AND THE BOTTOM OF ROADWAY SURFACING WHILE ALSO MAINTAINING A MINIMUM OF 3 INCHES OF SEPARATION BETWEEN ADJACENT GEOSYNTHETIC REINFORCING LAYERS AT THE BACK END OF THE LAYERS.

5. BOTTOM OF FASCIA ELEVATION VARIES. SEE MSE WALL ELEVATION TABLES ON SHEETS W7 AND W17 FOR BOTTOM OF FASCIA ELEVATIONS FOR WALLS 1 AND 2, RESPECTIVELY. AT WALL 3 THE BOTTOM OF FASCIA ELEVATION SHALL MATCH THE BOTTOM OF MSE WALL ELEVATION.

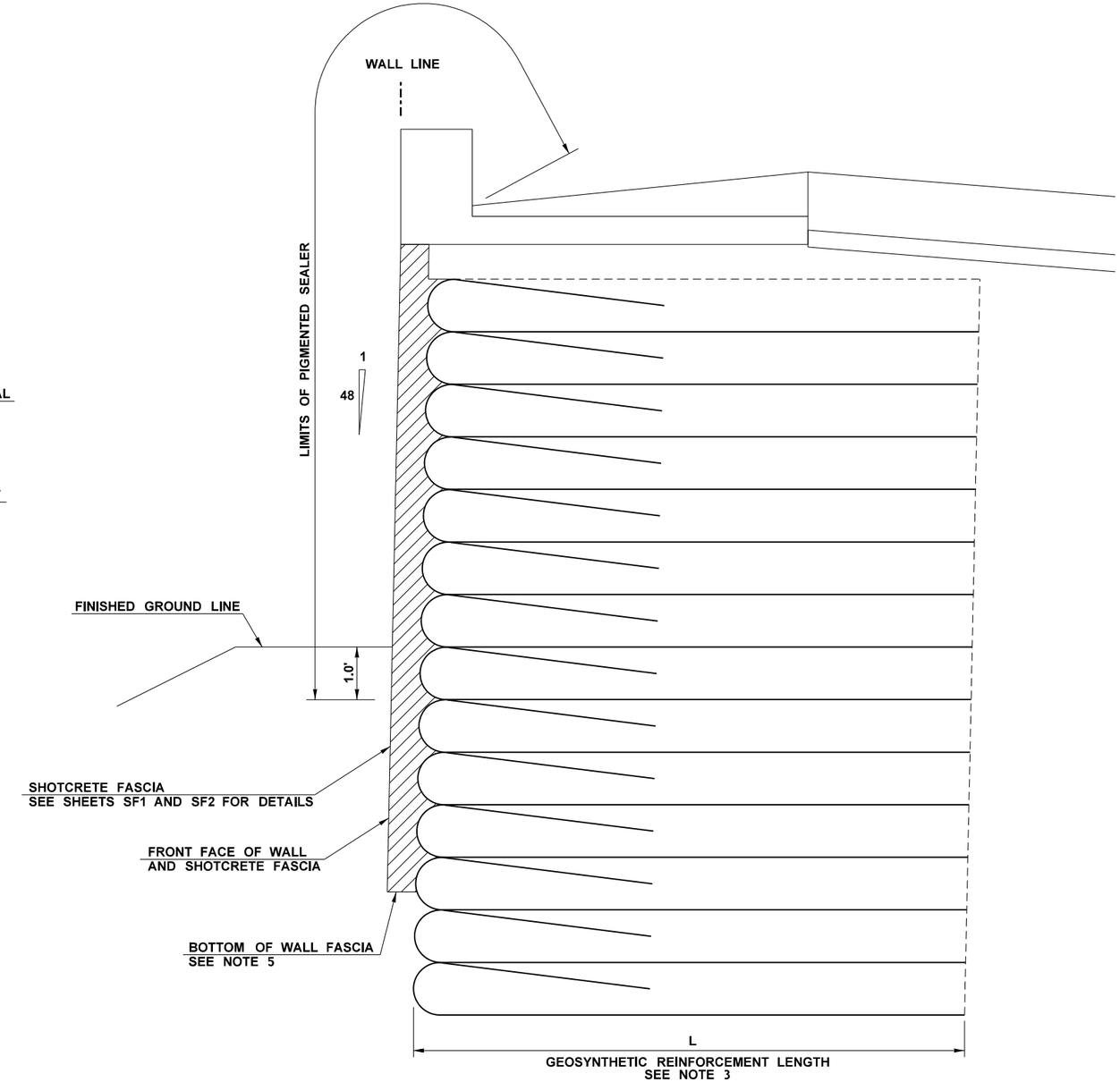

GEOSYNTHETIC WALL ALTERNATIVE SECTION WITH SHOTCRETE FASCIA

(NOT TO SCALE)

FILE NAME	K:\452201\090\06736_Phase 3\Design_CAD_Sheets\290-MInorStruct\XL5479_PS_WALLS_WD.dgn						
TIME	8:37:22 PM				REGION NO. 10	STATE WASH	FED.AID PROJ.NO.
DATE	2/7/2022						
PLOTTED BY	GipnerM				JOB NUMBER 19Y007		
DESIGNED BY	M. GIPNER						
ENTERED BY	J. HARVEY				CONTRACT NO.		LOCATION NO.
CHECKED BY	K. KING						
PROJ. ENGR.	A. BYRD						
REGIONAL ADM.	T. TREPANIER	REVISION	DATE	BY			

TONY M. ALLEN — STATE OF WASHINGTON — 25339 — REGISTERED PROFESSIONAL ENGINEER

SEE SHEET CT5
DATE
P.E. STAMP BOX

DATE
P.E. STAMP BOX

Washington State Department of Transportation

I-90
CABIN CREEK I/C TO W EASTON I/C
PHASE 3 - ADD LANES/WILDLIFE BRIDGES

WALLS 1-3
GEOSYNTHETIC WALL GENERAL DETAILS

Plot 2
PLAN REF NO WD2
SHEET 917 OF 1783 SHEETS

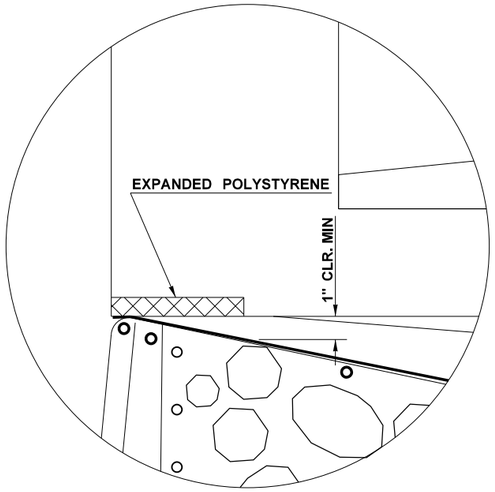

DETAIL A
(NOT TO SCALE)

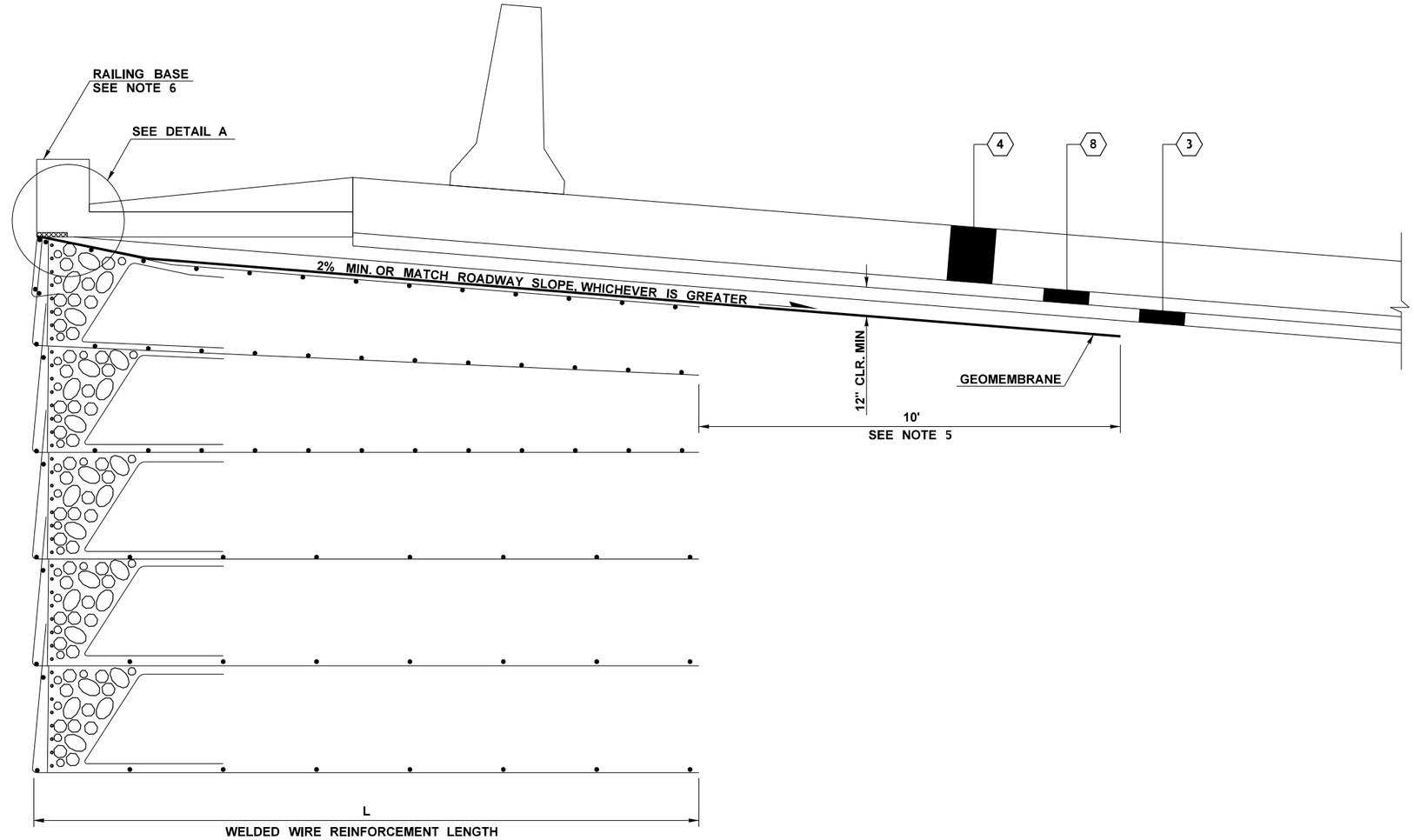

GEOMEMBRANE DETAIL WITH RAILING BASE
(NOT TO SCALE)

NOTES:

1. GEOMEMBRANE SHALL BE INSTALLED ON THE HILFIKER WELDED WIRE WALL ALTERNATIVE. GEOMEMBRANE SHALL NOT BE INSTALLED ON THE GEOSYNTHETIC WALL ALTERNATIVE.
2. GEOMEMBRANE SHALL HAVE A WATERTIGHT CONNECTION TO ALL CATCH BASINS WITHIN THE WALL REINFORCEMENT ZONE. CONTRACTOR SHALL SUBMIT A TYPE 2 WORKING DRAWING DETAILING THE GEOMEMBRANE CONNECTION TO CATCH BASINS.
3. GEOMEMBRANE SHALL BE PROTECTED FROM DAMAGE DURING AND AFTER INSTALLATION, INCLUDING BUT NOT LIMITED TO TEARING AND PUNCTURE. THIS SHALL INCLUDE BUT NOT BE LIMITED TO PROTECTING THE GEOMEMBRANE FROM DAMAGE FROM SURVEY MATERIALS SUCH AS STAKES OR HUBS, PAVING OPERATIONS SUCH AS DOWEL BAR BASKET ANCHORS OR FIXED FORM STAKES, CONTRACTOR EQUIPMENT, ETC.
4. MINIMUM 2" CLEARANCE BETWEEN GEOMEMBRANE AND WELDED WIRE SHALL BE MAINTAINED EXCEPT MAY BE REDUCED TO AS LITTLE AS 0" WITHIN 2' OF THE WALL FRONT FACE.
5. WHERE WALL USES A TRUNCATED BASE THE GEOMEMBRANE SHALL EXTEND 10' PAST THE BACK EDGE OF THE TOP LAYER OF WELDED WIRE.
6. SEE SHEETS RB1 - RB5 FOR RAILING BASE AND ATTACHED CABLE FENCE DETAILS.
7. SEE ROADWAY SECTIONS FOR MATERIAL DEPTHS NOT SHOWN.

LEGEND

- (3) CRUSHED SURFACING BASE COURSE
- (4) CEMENT CONC. PAVEMENT
- (8) HMA CL. 3/8 IN. PG 64H-28

FILE NAME	K:\452201\090\06736_Phase 3\Design_CAD_Sheets\290-MInorStruct\XL5479_PS_WALLS_WD.dgn						
TIME	3:42:12 PM				REGION NO. 10	STATE WASH	FED.AID PROJ.NO.
DATE	2/15/2022						
PLOTTED BY	GipnerM				JOB NUMBER 19Y007		
DESIGNED BY	M. GIPNER						
ENTERED BY	M. GIPNER						
CHECKED BY	K. KING				CONTRACT NO.		LOCATION NO.
PROJ. ENGR.	A. BYRD						
REGIONAL ADM.	T. TREPANIER	REVISION	DATE	BY			

ANDREW D. BYRD — STATE OF WASHINGTON — 24673 — REGISTERED PROFESSIONAL ENGINEER

SEE SHEET CT5
DATE
P.E. STAMP BOX

DATE
P.E. STAMP BOX

Washington State Department of Transportation

I-90
CABIN CREEK I/C TO W EASTON I/C
PHASE 3 - ADD LANES/WILDLIFE BRIDGES

WALLS 1-3 GEOMEMBRANE DETAILS

Plot 3
PLAN REF NO WD3
SHEET 918 OF 1783 SHEETS

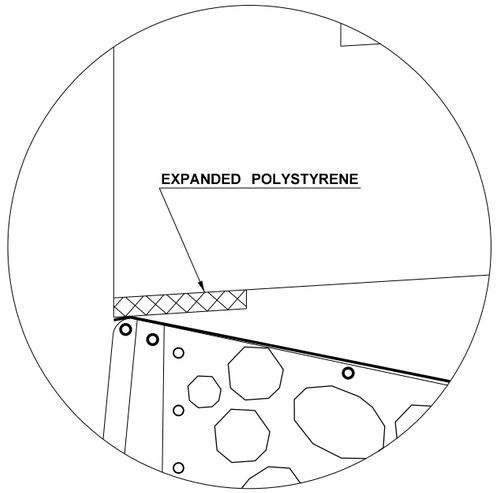

DETAIL A
(NOT TO SCALE)

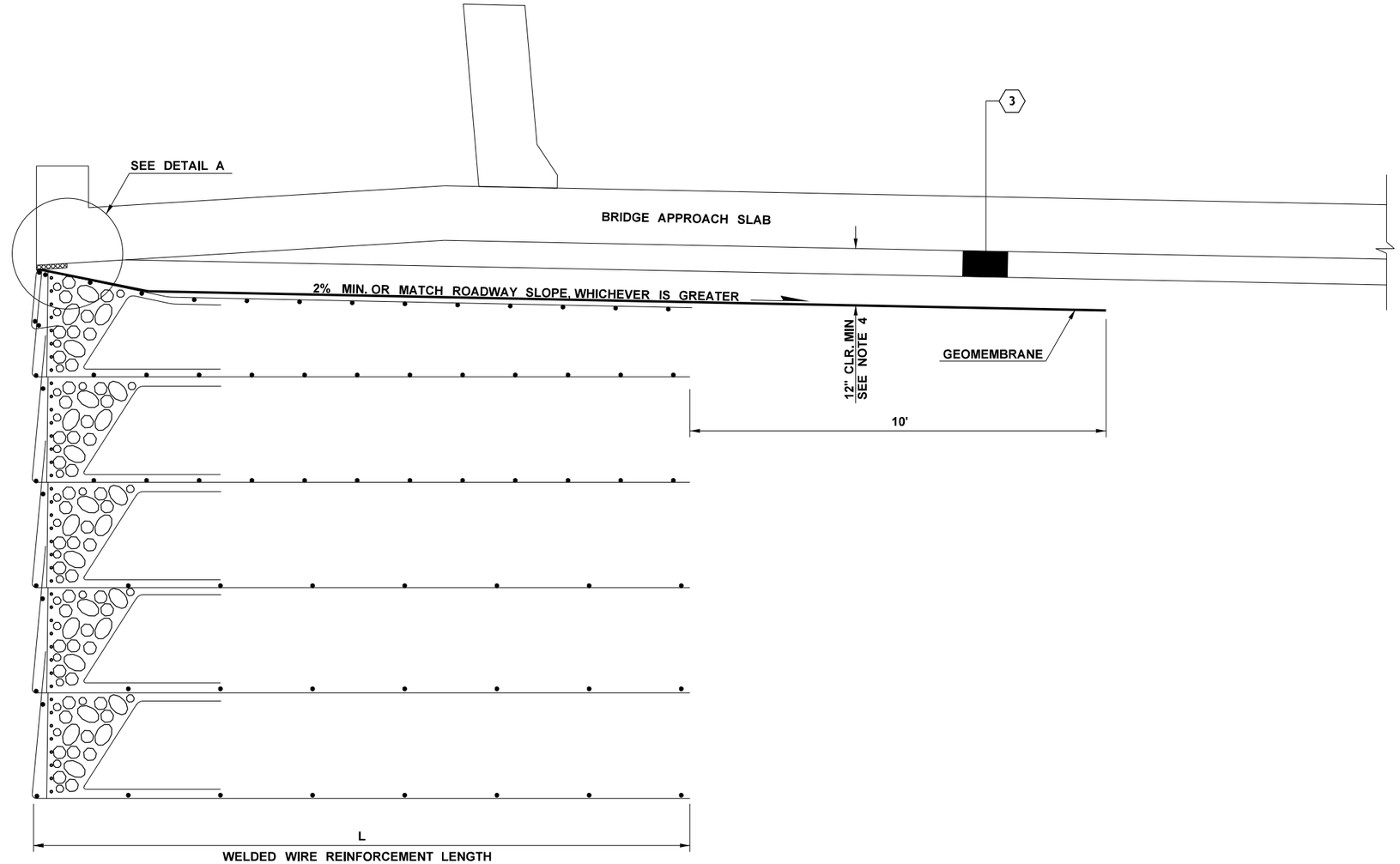

GEOMEMBRANE DETAIL WITH APPROACH SLAB
(NOT TO SCALE)

NOTES:

1. GEOMEMBRANE SHALL BE INSTALLED ON THE HILFIKER WELDED WIRE WALL ALTERNATIVE. GEOMEMBRANE SHALL NOT BE INSTALLED ON THE GEOSYNTHETIC WALL ALTERNATIVE.
2. GEOMEMBRANE SHALL BE PROTECTED FROM DAMAGE DURING AND AFTER INSTALLATION, INCLUDING BUT NOT LIMITED TO TEARING AND PUNCTURE. THIS SHALL INCLUDE BUT NOT BE LIMITED TO PROTECTING THE GEOMEMBRANE FROM DAMAGE FROM SURVEY MATERIALS SUCH AS STAKES OR HUBS, PAVING OPERATIONS SUCH AS DOWEL BAR BASKET ANCHORS OR FIXED FORM STAKES, CONTRACTOR EQUIPMENT, ETC.
3. MINIMUM 2" CLEARANCE BETWEEN GEOMEMBRANE AND WELDED WIRE SHALL BE MAINTAINED EXCEPT MAY BE REDUCED TO AS LITTLE AS 0" WITHIN 2' OF THE WALL FRONT FACE.
4. MINIMUM 12" CLEARANCE BETWEEN GEOMEMBRANE AND APPROACH SLAB SHALL BE MAINTAINED EXCEPT MAY BE REDUCED TO AS LITTLE AS 1" WITHIN 8' OF THE WALL FRONT FACE.
5. SEE HUDSON CREEK BRIDGE EB SHEETS FOR APPROACH SLAB DETAILS.

LEGEND

3 CRUSHED SURFACING BASE COURSE

FILE NAME	K:\452201\090\06736_Phase 3\Design_CAD_Sheets\290-MInorStruct\XL5479_PS_WALLS_WD.dgn						
TIME	3:42:15 PM				REGION NO. 10	STATE WASH	FED.AID PROJ.NO.
DATE	2/15/2022						
PLOTTED BY	GipnerM				JOB NUMBER 19Y007		
DESIGNED BY	M. GIPNER						
ENTERED BY	M. GIPNER						
CHECKED BY	K. KING				CONTRACT NO.		LOCATION NO.
PROJ. ENGR.	A. BYRD						
REGIONAL ADM.	T. TREPANIER	REVISION	DATE	BY			

ANDREW D. BYRD — STATE OF WASHINGTON — 39833 — REGISTERED PROFESSIONAL ENGINEER

SEE SHEET CT5
DATE
P.E. STAMP BOX

DATE
P.E. STAMP BOX

Washington State Department of Transportation

I-90
CABIN CREEK I/C TO W EASTON I/C
PHASE 3 - ADD LANES/WILDLIFE BRIDGES

WALL 3 GEOMEMBRANE DETAILS

Plot 4
PLAN REF NO WD4
SHEET 919 OF 1783 SHEETS

DESIGN WALL HEIGHT, H (FT)			70 ≥ H > 65		65 ≥ H > 60		60 ≥ H > 55		55 ≥ H > 50		50 ≥ H > 45		45 ≥ H > 40		40 ≥ H > 35		35 ≥ H > 30		30 ≥ H > 25		25 ≥ H > 20		20 ≥ H > 10		10 ≥ H	
DISTANCE ABOVE WALL BASE, V (FT)	REINFORCEMENT VERTICAL SPACING, S_V (FT)	LAYER NUMBER	T_{al} (KIPS/FT)	$J_{2\%1000h}$ (KIPS/FT)	T_{al} (KIPS/FT)	$J_{2\%1000h}$ (KIPS/FT)	T_{al} (KIPS/FT)	$J_{2\%1000h}$ (KIPS/FT)	T_{al} (KIPS/FT)	$J_{2\%1000h}$ (KIPS/FT)	T_{al} (KIPS/FT)	$J_{2\%1000h}$ (KIPS/FT)	T_{al} (KIPS/FT)	$J_{2\%1000h}$ (KIPS/FT)	T_{al} (KIPS/FT)	$J_{2\%1000h}$ (KIPS/FT)	T_{al} (KIPS/FT)	$J_{2\%1000h}$ (KIPS/FT)	T_{al} (KIPS/FT)	$J_{2\%1000h}$ (KIPS/FT)	T_{al} (KIPS/FT)	$J_{2\%1000h}$ (KIPS/FT)	T_{al} (KIPS/FT)	$J_{2\%1000h}$ (KIPS/FT)	T_{al} (KIPS/FT)	$J_{2\%1000h}$ (KIPS/FT)
69	1.00	70	0.27	8.53																						
68	1.00	69	0.27	8.53																						
67	1.00	68	0.27	8.53																						
66	1.00	67	0.28	8.53																						
65	1.00	66	0.28	8.53																						
64	1.00	65	0.29	8.53	0.26	11																				
63	1.00	64	0.3	8.53	0.25	11																				
62	1.00	63	0.3	8.53	0.26	11																				
61	1.00	62	0.31	8.53	0.26	11																				
60	1.00	61	0.32	8.53	0.27	11																				
59	1.00	60	0.32	8.53	0.28	11	0.24	8.5																		
58	1.00	59	0.33	8.53	0.28	11	0.23	8.5																		
57	1.00	58	0.34	8.53	0.29	11	0.24	8.5																		
56	1.00	57	0.34	8.53	0.3	11	0.25	8.5																		
55	1.00	56	0.35	8.53	0.3	11	0.25	8.5																		
54	1.00	55	0.36	8.53	0.31	11	0.26	8.5	0.22	8.5																
53	1.00	54	0.36	8.53	0.32	11	0.27	8.5	0.22	8.5																
52	1.00	53	0.37	8.53	0.32	11	0.28	8.5	0.22	8.5																
51	1.00	52	0.4	11	0.33	11	0.28	8.5	0.23	8.5																
50	1.00	51	0.41	11	0.34	11	0.29	8.5	0.24	8.5																
49	1.00	50	0.41	11	0.35	11	0.3	8.5	0.25	8.5	0.2	8.5														
48	1.00	49	0.42	11	0.35	11	0.3	8.5	0.25	8.5	0.2	8.5														
47	1.00	48	0.53	19.2	0.38	11	0.31	8.5	0.26	8.5	0.21	8.5														
46	1.00	47	0.55	19.2	0.39	11	0.32	8.5	0.27	8.5	0.22	8.5														
45	1.00	46	0.57	19.2	0.4	11	0.33	8.5	0.28	8.5	0.22	8.5														
44	1.00	45	0.58	19.2	0.41	11	0.33	8.5	0.28	8.5	0.23	8.5	0.19	8.5												
43	1.00	44	0.6	19.2	0.53	19.2	0.34	8.5	0.29	8.5	0.24	8.5	0.18	8.5												
42	1.00	43	0.61	19.2	0.55	19.2	0.37	11	0.3	8.5	0.25	8.5	0.19	8.5												
41	1.00	42	0.63	19.2	0.56	19.2	0.38	11	0.31	8.5	0.25	8.5	0.2	8.5												
40	1.00	41	0.65	19.2	0.58	19.2	0.39	11	0.31	8.5	0.26	8.5	0.21	8.5												
39	1.00	40	0.66	19.2	0.6	19.2	0.52	19.2	0.32	8.5	0.27	8.5	0.22	8.5	0.18	11										
38	1.00	39	0.68	19.2	0.62	19.2	0.54	19.2	0.33	8.5	0.28	8.5	0.22	8.5	0.18	11										
37	1.00	38	0.81	25.8	0.63	19.2	0.56	19.2	0.36	11	0.28	8.5	0.23	8.5	0.18	11										
36	1.00	37	0.83	25.8	0.65	19.2	0.58	19.2	0.37	11	0.29	8.5	0.24	8.5	0.19	11										
35	1.00	36	0.85	25.8	0.67	19.2	0.59	19.2	0.39	11	0.3	8.5	0.25	8.5	0.2	11										
34	1.00	35	0.86	25.8	0.79	19.2	0.61	19.2	0.53	19.2	0.31	8.5	0.26	8.5	0.21	11	0.15	8.5								
33	1.00	34	0.88	25.8	0.81	25.8	0.63	19.2	0.55	19.2	0.35	11	0.26	8.5	0.22	11	0.15	8.5								
32	1.00	33	0.9	25.8	0.83	25.8	0.65	19.2	0.57	19.2	0.36	11	0.27	8.5	0.23	11	0.16	8.5								
31	1.00	32	1.01	31.1	0.85	25.8	0.67	19.2	0.59	19.2	0.38	11	0.28	8.5	0.24	11	0.17	8.5								
30	1.00	31	1.03	31.1	0.87	25.8	0.68	19.2	0.6	19.2	0.52	19.2	0.29	8.5	0.25	11	0.18	8.5								

1.0' S_V GEOSYNTHETIC MINIMUM PROPERTIES

(CONTINUES ON NEXT SHEET)

NOTES:

1. THE LONG-TERM GEOSYNTHETIC DESIGN STRENGTH "T_{al}" SHALL BE DETERMINED IN ACCORDANCE WITH AASHTO STANDARD PRACTICE R69-20. "$J_{2\%1000h}$" IS THE CREEP STIFFNESS DETERMINED AT A STRAIN LEVEL OF 2% AFTER 1,000 HOURS OF LOADING BASED ON THE MINIMUM AVERAGE ROLL VALUE, OR MINIMUM VALUE FOR "T_{ult}" PROVIDED IN QPL APPENDIX "D". SEE QUALIFIED PRODUCTS LIST (QPL), APPENDIX "D." FOR PRODUCTS IN WHICH "T_{al}" AND "$J_{2\%1000h}$" HAS BEEN DETERMINED. "H" AND "V" ARE GRAPHICALLY DEFINED ON THE WALL 1-3 SECTIONS AND SHEET WD1, RESPECTIVELY. "V" IS THE DISTANCE FROM THE BOTTOM OF WALL TO A GEOSYNTHETIC LAYER, AND IS USED TO DETERMINE "T_{al}" AND "$J_{2\%1000h}$" FOR THAT LAYER.
2. THIS TABLE APPLIES TO THE 1.0' S_V GEOSYNTHETIC ALTERNATIVE FOR ALL OF WALLS 1-3, S_V IS THE GEOSYNTHETIC VERTICAL SPACING AS GRAPHICALLY DEFINED ON SHEET WD2.
3. THE "$J_{2\%1000h}$" PROPERTY VALUE MINIMUM REQUIREMENT IN THE TABLE WILL TYPICALLY REQUIRE A HIGHER GEOSYNTHETIC REINFORCEMENT TENSILE STRENGTH THAN THE "T_{al}" SHOWN IN THE TABLE AND WILL TYPICALLY CONTROL THE GEOSYNTHETIC PRODUCT SELECTION.

DESIGN WALL HEIGHT, H (FT)			70 ≥ H > 65		65 ≥ H > 60		60 ≥ H > 55		55 ≥ H > 50		50 ≥ H > 45		45 ≥ H > 40		40 ≥ H > 35		35 ≥ H > 30		30 ≥ H > 25		25 ≥ H > 20		20 ≥ H > 10		10 ≥ H	
DISTANCE ABOVE WALL BASE, V (FT)	REINFORCEMENT VERTICAL SPACING, S_V (FT)	LAYER NUMBER	T_{al}	$J_{2\%1000h}$	T_{al}	$J_{2\%1000h}$	T_{al}	$J_{2\%1000h}$	T_{al}	$J_{2\%1000h}$	T_{al}	$J_{2\%1000h}$	T_{al}	$J_{2\%1000h}$	T_{al}	$J_{2\%1000h}$	T_{al}	$J_{2\%1000h}$	T_{al}	$J_{2\%1000h}$	T_{al}	$J_{2\%1000h}$	T_{al}	$J_{2\%1000h}$	T_{al}	$J_{2\%1000h}$
			(KIPS/FT)	(KIPS/FT)	(KIPS/FT)	(KIPS/FT)	(KIPS/FT)	(KIPS/FT)	(KIPS/FT)	(KIPS/FT)	(KIPS/FT)	(KIPS/FT)	(KIPS/FT)	(KIPS/FT)	(KIPS/FT)	(KIPS/FT)	(KIPS/FT)	(KIPS/FT)	(KIPS/FT)	(KIPS/FT)	(KIPS/FT)	(KIPS/FT)	(KIPS/FT)	(KIPS/FT)	(KIPS/FT)	(KIPS/FT)
29	1.00	30	1.05	31.1	0.89	25.8	0.81	25.8	0.62	19.2	0.54	19.2	0.3	8.5	0.27	11	0.19	8.5	0.13	8.5						
28	1.00	29	1.08	31.1	0.91	25.8	0.83	25.8	0.64	19.2	0.55	19.2	0.36	11	0.28	11	0.2	8.5	0.13	8.5						
27	1.00	28	1.1	31.1	1.03	32.4	0.85	25.8	0.66	19.2	0.57	19.2	0.37	11	0.3	11	0.21	8.5	0.14	8.5						
26	1.00	27	1.19	35.6	1.05	32.4	0.88	25.8	0.68	19.2	0.59	19.2	0.39	11	0.31	11	0.21	8.5	0.15	8.5						
25	1.00	26	1.22	35.6	1.07	32.4	0.9	25.8	0.81	25.8	0.61	19.2	0.53	19.2	0.33	11	0.23	8.5	0.16	8.5						
24	1.00	25	1.24	35.6	1.09	32.4	0.92	25.8	0.83	25.8	0.63	19.2	0.55	19.2	0.35	11	0.24	8.5	0.17	8.5	0.12	8.5				
23	1.00	24	1.26	35.6	1.19	35.6	1.03	31.1	0.85	25.8	0.65	19.2	0.57	19.2	0.36	11	0.26	8.5	0.18	8.5	0.12	8.5				
22	1.00	23	1.37	40.7	1.22	35.6	1.05	31.1	0.87	25.8	0.67	19.2	0.59	19.2	0.38	11	0.27	8.5	0.19	8.5	0.13	8.5				
21	1.00	22	1.4	40.7	1.24	35.6	1.08	31.1	0.89	25.8	0.8	25.8	0.61	19.2	0.52	19.2	0.29	8.5	0.21	8.5	0.14	8.5				
20	1.00	21	1.42	40.7	1.26	35.6	1.1	31.1	0.92	25.8	0.82	25.8	0.63	19.2	0.54	19.2	0.3	8.5	0.23	8.5	0.16	8.5				
19	1.00	20	1.64	52.2	1.38	40.7	1.2	35.6	1.05	32.4	0.84	25.8	0.65	19.2	0.56	19.2	0.36	11	0.24	8.5	0.17	8.5	0.1	8.5		
18	1.00	19	1.66	52.2	1.4	40.7	1.22	35.6	1.08	32.4	0.87	25.8	0.67	19.2	0.58	19.2	0.38	11	0.26	8.5	0.19	8.5	0.11	8.5		
17	1.00	18	1.67	52.2	1.42	40.7	1.25	35.6	1.1	32.4	0.89	25.8	0.8	25.8	0.6	19.2	0.39	11	0.27	8.5	0.21	8.5	0.12	8.5		
16	1.00	17	1.67	52.2	1.42	40.7	1.26	35.6	1.12	32.4	0.91	25.8	0.83	25.8	0.63	19.2	0.54	19.2	0.29	8.5	0.23	8.5	0.14	8.5		
15	1.00	16	1.67	52.2	1.42	40.7	1.26	35.6	1.13	32.4	1.02	31.1	0.85	25.8	0.65	19.2	0.56	19.2	0.35	8.5	0.24	8.5	0.16	8.5		
14	1.00	15	1.67	52.2	1.42	40.7	1.26	35.6	1.13	32.4	1.02	31.1	0.87	25.8	0.67	19.2	0.59	19.2	0.36	11	0.26	8.5	0.18	8.5		
13	1.00	14	1.67	52.2	1.42	40.7	1.26	35.6	1.13	32.4	1.02	31.1	0.87	25.8	0.68	19.2	0.61	19.2	0.38	11	0.28	8.5	0.2	8.5		
12	1.00	13	1.67	52.2	1.42	40.7	1.26	35.6	1.13	32.4	1.02	31.1	0.87	25.8	0.68	19.2	0.63	19.2	0.53	11	0.3	8.5	0.21	8.5		
11	1.00	12	1.67	52.2	1.42	40.7	1.26	35.6	1.13	32.4	1.02	31.1	0.87	25.8	0.68	19.2	0.63	19.2	0.55	19.2	0.36	11	0.23	8.5		
10	1.00	11	1.67	52.2	1.42	40.7	1.26	35.6	1.13	32.4	1.02	31.1	0.87	25.8	0.68	19.2	0.63	19.2	0.55	19.2	0.38	11	0.25	8.5		
9	1.00	10	1.67	52.2	1.42	40.7	1.26	35.6	1.13	32.4	1.02	31.1	0.87	25.8	0.68	19.2	0.63	19.2	0.55	19.2	0.38	11	0.27	8.5	0.09	8.5
8	1.00	9	1.67	52.2	1.42	40.7	1.26	35.6	1.13	32.4	1.02	31.1	0.87	25.8	0.68	19.2	0.63	19.2	0.55	19.2	0.38	11	0.28	8.5	0.09	8.5
7	1.00	8	1.67	52.2	1.42	40.7	1.26	35.6	1.13	32.4	1.02	31.1	0.87	25.8	0.68	19.2	0.63	19.2	0.55	19.2	0.38	11	0.28	8.5	0.11	8.5
6	1.00	7	1.67	52.2	1.42	40.7	1.26	35.6	1.13	32.4	1.02	31.1	0.87	25.8	0.68	19.2	0.63	19.2	0.55	19.2	0.38	11	0.28	8.5	0.14	8.5
5	1.00	6	1.67	52.2	1.42	40.7	1.26	35.6	1.13	32.4	1.02	31.1	0.87	25.8	0.68	19.2	0.63	19.2	0.55	19.2	0.38	11	0.28	8.5	0.16	8.5
4	1.00	5	1.67	52.2	1.42	40.7	1.26	35.6	1.13	32.4	1.02	31.1	0.87	25.8	0.79	25.8	0.63	19.2	0.55	19.2	0.38	11	0.28	8.5	0.16	8.5
3	1.00	4	1.67	52.2	1.42	40.7	1.26	35.6	1.13	32.4	1.02	31.1	0.87	25.8	0.79	25.8	0.63	19.2	0.55	19.2	0.38	11	0.28	8.5	0.16	8.5
2	1.00	3	1.67	52.2	1.42	40.7	1.26	35.6	1.13	32.4	1.02	31.1	0.87	25.8	0.79	25.8	0.63	19.2	0.55	19.2	0.38	11	0.28	8.5	0.16	8.5
1	1.00	2	1.67	52.2	1.42	40.7	1.26	35.6	1.13	32.4	1.02	31.1	0.87	25.8	0.79	25.8	0.63	19.2	0.55	19.2	0.38	11	0.28	8.5	0.16	8.5
0	1.00	1	1.67	52.2	1.42	40.7	1.3	37.6	1.13	32.4	1.02	31.1	0.87	25.8	0.79	25.8	0.63	19.2	0.55	19.2	0.38	11	0.28	8.5	0.16	8.5

1.0' S_V GEOSYNTHETIC MINIMUM PROPERTIES

(CONTINUED FROM PREVIOUS SHEET)

NOTES:

1. THE LONG-TERM GEOSYNTHETIC DESIGN STRENGTH "T_{al}" SHALL BE DETERMINED IN ACCORDANCE WITH AASHTO STANDARD PRACTICE R69-20. "$J_{2\%1000h}$" IS THE CREEP STIFFNESS DETERMINED AT A STRAIN LEVEL OF 2% AFTER 1,000 HOURS OF LOADING, BASED ON THE MINIMUM AVERAGE ROLL VALUE, OR MINIMUM VALUE FOR "T_{ult}" PROVIDED IN QPL APPENDIX "D". SEE QUALIFIED PRODUCTS LIST (QPL), APPENDIX "D," FOR PRODUCTS IN WHICH "T_{al}" AND "$J_{2\%1000h}$" HAS BEEN DETERMINED. "H" AND "V" ARE GRAPHICALLY DEFINED ON THE WALL 1-3 SECTIONS AND SHEET WD1, RESPECTIVELY. "V" IS THE DISTANCE FROM THE BOTTOM OF WALL TO A GEOSYNTHETIC LAYER, AND IS USED TO DETERMINE "T_{al}" AND "$J_{2\%1000h}$" FOR THAT LAYER.
2. THIS TABLE APPLIES TO THE 1.0' S_V GEOSYNTHETIC ALTERNATIVE FOR ALL OF WALLS 1-3. S_V IS THE GEOSYNTHETIC VERTICAL SPACING AS GRAPHICALLY DEFINED ON SHEET WD2.
3. THE "$J_{2\%1000h}$" PROPERTY VALUE MINIMUM REQUIREMENT IN THE TABLE WILL TYPICALLY REQUIRE A HIGHER GEOSYNTHETIC REINFORCEMENT TENSILE STRENGTH THAN THE "T_{al}" SHOWN IN THE TABLE AND WILL TYPICALLY CONTROL THE GEOSYNTHETIC PRODUCT SELECTION.

DESIGN WALL HEIGHT, H (FT)			70 ≥ H > 65		65 ≥ H > 60		60 ≥ H > 55		55 ≥ H > 50		50 ≥ H > 45		45 ≥ H > 40		40 ≥ H > 35		35 ≥ H > 30		30 ≥ H > 25		25 ≥ H > 20		20 ≥ H > 10		10 ≥ H	
DISTANCE ABOVE WALL BASE, V (FT)	REINFORCEMENT VERTICAL SPACING, S_V (FT)	LAYER NUMBER	T_{al}	$J_{2\%1000h}$	T_{al}	$J_{2\%1000h}$	T_{al}	$J_{2\%1000h}$	T_{al}	$J_{2\%1000h}$	T_{al}	$J_{2\%1000h}$	T_{al}	$J_{2\%1000h}$	T_{al}	$J_{2\%1000h}$	T_{al}	$J_{2\%1000h}$	T_{al}	$J_{2\%1000h}$	T_{al}	$J_{2\%1000h}$	T_{al}	$J_{2\%1000h}$	T_{al}	$J_{2\%1000h}$
			(KIPS/FT)	(KIPS/FT)	(KIPS/FT)	(KIPS/FT)	(KIPS/FT)	(KIPS/FT)	(KIPS/FT)	(KIPS/FT)	(KIPS/FT)	(KIPS/FT)	(KIPS/FT)	(KIPS/FT)	(KIPS/FT)	(KIPS/FT)	(KIPS/FT)	(KIPS/FT)	(KIPS/FT)	(KIPS/FT)	(KIPS/FT)	(KIPS/FT)	(KIPS/FT)	(KIPS/FT)	(KIPS/FT)	(KIPS/FT)
68.75	1.25	56	0.38	8.5																						
67.50	1.25	55	0.37	8.5																						
66.25	1.25	54	0.38	8.5																						
65.00	1.25	53	0.39	8.5																						
63.75	1.25	52	0.4	8.5	0.31	8.5																				
62.50	1.25	51	0.41	8.5	0.31	8.5																				
61.25	1.25	50	0.42	8.5	0.32	8.5																				
60.00	1.25	49	0.43	8.5	0.33	8.5																				
58.75	1.25	48	0.44	8.5	0.34	8.5	0.29	8.5																		
57.50	1.25	47	0.45	8.5	0.35	8.5	0.29	8.5																		
56.25	1.25	46	0.46	8.5	0.36	8.5	0.3	8.5																		
55.00	1.25	45	0.46	8.5	0.36	8.5	0.31	8.5																		
53.75	1.25	44	0.5	11	0.37	8.5	0.32	8.5	0.27	8.5																
52.50	1.25	43	0.51	11	0.38	8.5	0.33	8.5	0.27	8.5																
51.25	1.25	42	0.52	11	0.39	8.5	0.34	8.5	0.28	8.5																
50.00	1.25	41	0.6	19.2	0.4	8.5	0.35	8.5	0.29	8.5																
48.75	1.25	40	0.62	19.2	0.44	11	0.36	8.5	0.3	8.5	0.25	8.5														
47.50	1.25	39	0.63	19.2	0.45	11	0.37	8.5	0.31	8.5	0.25	8.5														
46.25	1.25	38	0.64	19.2	0.53	19.2	0.38	8.5	0.32	8.5	0.26	8.5														
45.00	1.25	37	0.66	19.2	0.55	19.2	0.38	8.5	0.33	8.5	0.27	8.5														
43.75	1.25	36	0.67	19.2	0.58	19.2	0.42	11	0.34	8.5	0.28	8.5	0.23	8.5												
42.50	1.25	35	0.68	19.2	0.6	19.2	0.43	11	0.35	8.5	0.29	8.5	0.23	8.5												
41.25	1.25	34	0.81	25.8	0.63	19.2	0.53	19.2	0.36	8.5	0.3	8.5	0.24	8.5												
40.00	1.25	33	0.84	25.8	0.65	19.2	0.56	19.2	0.39	11	0.31	8.5	0.25	8.5												
38.75	1.25	32	0.86	25.8	0.67	19.2	0.58	19.2	0.41	11	0.32	8.5	0.26	8.5	0.21	8.5										
37.50	1.25	31	0.89	25.8	0.81	25.8	0.61	19.2	0.52	19.2	0.33	8.5	0.27	8.5	0.21	8.5										
36.25	1.25	30	1.01	31.1	0.84	25.8	0.63	19.2	0.55	19.2	0.35	8.5	0.28	8.5	0.22	8.5										
35.00	1.25	29	1.04	31.1	0.87	25.8	0.66	19.2	0.57	19.2	0.38	11	0.3	8.5	0.23	8.5										
33.75	1.25	28	1.07	31.1	0.89	25.8	0.68	19.2	0.6	19.2	0.39	11	0.31	8.5	0.24	8.5	0.19	8.5								
32.50	1.25	27	1.09	31.1	1.01	31.1	0.82	25.8	0.63	19.2	0.53	19.2	0.32	8.5	0.26	8.5	0.19	8.5								
31.25	1.25	26	1.2	35.6	1.04	31.1	0.85	25.8	0.65	19.2	0.56	19.2	0.33	8.5	0.27	8.5	0.2	8.5								
30.00	1.25	25	1.23	35.6	1.07	31.1	0.88	25.8	0.68	19.2	0.59	19.2	0.48	19.2	0.28	8.5	0.21	8.5								
28.75	1.25	24	1.3	37.6	1.1	31.1	0.9	25.8	0.82	25.8	0.61	19.2	0.51	19.2	0.29	8.5	0.23	8.5	0.17	8.5						
27.50	1.25	23	1.33	37.6	1.21	35.6	1.02	31.1	0.85	25.8	0.64	19.2	0.54	19.2	0.3	8.5	0.24	8.5	0.17	8.5						
26.25	1.25	22	1.45	42.4	1.25	35.6	1.06	31.1	0.88	25.8	0.67	19.2	0.57	19.2	0.35	11	0.25	8.5	0.18	8.5						
25.00	1.25	21	1.48	42.4	1.31	37.6	1.09	31.1	0.91	25.8	0.81	25.8	0.6	19.2	0.38	11	0.26	8.5	0.2	8.5						
23.75	1.25	20	1.68	52.2	1.43	42.4	1.2	35.6	1.03	31.1	0.84	25.8	0.63	19.2	0.53	19.2	0.28	8.5	0.21	8.5	0.14	8.5				
22.50	1.25	19	1.72	52.2	1.47	42.4	1.23	35.6	1.06	31.1	0.87	25.8	0.65	19.2	0.56	19.2	0.3	8.5	0.22	8.5	0.15	8.5				
21.25	1.25	18	1.76	52.2	1.67	52.2	1.3	37.6	1.1	31.1	0.9	25.8	0.68	19.2	0.59	19.2	0.49	20.5	0.24	8.5	0.16	8.5				
20.00	1.25	17	1.8	52.2	1.71	52.2	1.33	37.6	1.24	37.6	1.02	31.1	0.82	25.8	0.62	19.2	0.53	20.5	0.26	8.5	0.18	8.5				

1.25' S_V GEOSYNTHETIC MINIMUM PROPERTIES

(CONTINUES ON NEXT SHEET)

NOTES:

1. THE LONG-TERM GEOSYNTHETIC DESIGN STRENGTH "T_{al}" SHALL BE DETERMINED IN ACCORDANCE WITH AASHTO STANDARD PRACTICE R69-20. "$J_{2\%1000h}$" IS THE CREEP STIFFNESS DETERMINED AT A STRAIN LEVEL OF 2% AFTER 1,000 HOURS OF LOADING, BASED ON THE MINIMUM AVERAGE ROLL VALUE, OR MINIMUM VALUE FOR "T_{ult}" PROVIDED IN QPL APPENDIX "D". SEE QUALIFIED PRODUCTS LIST (QPL), APPENDIX "D," FOR PRODUCTS IN WHICH "T_{al}" AND "$J_{2\%1000h}$" HAS BEEN DETERMINED. "H" AND "V" ARE GRAPHICALLY DEFINED ON THE WALL 1-3 SECTIONS AND SHEET WD1, RESPECTIVELY. "V" IS THE DISTANCE FROM THE BOTTOM OF WALL TO A GEOSYNTHETIC LAYER, AND IS USED TO DETERMINE "T_{al}" AND "$J_{2\%1000h}$" FOR THAT LAYER.
2. THIS TABLE APPLIES TO THE 1.25' S_V GEOSYNTHETIC ALTERNATIVE FOR ALL OF WALLS 1-3, S_V IS THE GEOSYNTHETIC VERTICAL SPACING AS GRAPHICALLY DEFINED ON SHEET WD2.
3. THE "$J_{2\%1000h}$" PROPERTY VALUE MINIMUM REQUIREMENT IN THE TABLE WILL TYPICALLY REQUIRE A HIGHER GEOSYNTHETIC REINFORCEMENT TENSILE STRENGTH THAN THE "T_{al}" SHOWN IN THE TABLE AND WILL TYPICALLY CONTROL THE GEOSYNTHETIC PRODUCT SELECTION.

DESIGN WALL HEIGHT, H (FT)			70 ≥ H > 65		65 ≥ H > 60		60 ≥ H > 55		55 ≥ H > 50		50 ≥ H > 45		45 ≥ H > 40		40 ≥ H > 35		35 ≥ H > 30		30 ≥ H > 25		25 ≥ H > 20		20 ≥ H > 10		10 ≥ H	
DISTANCE ABOVE WALL BASE, V (FT)	REINFORCEMENT VERTICAL SPACING, S_V (FT)	LAYER NUMBER	T_{al}	$J_{2\%1000h}$	T_{al}	$J_{2\%1000h}$	T_{al}	$J_{2\%1000h}$	T_{al}	$J_{2\%1000h}$	T_{al}	$J_{2\%1000h}$	T_{al}	$J_{2\%1000h}$	T_{al}	$J_{2\%1000h}$	T_{al}	$J_{2\%1000h}$	T_{al}	$J_{2\%1000h}$	T_{al}	$J_{2\%1000h}$	T_{al}	$J_{2\%1000h}$	T_{al}	$J_{2\%1000h}$
			(KIPS/FT)	(KIPS/FT)	(KIPS/FT)	(KIPS/FT)	(KIPS/FT)	(KIPS/FT)	(KIPS/FT)	(KIPS/FT)	(KIPS/FT)	(KIPS/FT)	(KIPS/FT)	(KIPS/FT)	(KIPS/FT)	(KIPS/FT)	(KIPS/FT)	(KIPS/FT)	(KIPS/FT)	(KIPS/FT)	(KIPS/FT)	(KIPS/FT)	(KIPS/FT)	(KIPS/FT)	(KIPS/FT)	(KIPS/FT)
18.75	1.25	16	1.83	52.2	1.75	52.2	1.45	42.4	1.28	37.6	1.06	31.1	0.86	25.8	0.65	19.2	0.56	20.5	0.28	8.5	0.19	8.5	0.13	8.5		
17.50	1.25	15	1.92	54.9	1.79	52.2	1.49	42.4	1.31	37.6	1.09	31.1	0.89	25.8	0.68	19.2	0.59	20.5	0.3	8.5	0.21	8.5	0.13	8.5		
16.25	1.25	14	1.92	54.9	1.8	52.2	1.69	52.2	1.4	40.7	1.15	31.1	1.01	31.1	0.82	25.8	0.63	20.5	0.49	19.2	0.24	8.5	0.15	8.5		
15.00	1.25	13	1.92	54.9	1.8	52.2	1.69	52.2	1.42	40.7	1.24	32.4	1.05	31.1	0.86	25.8	0.66	20.5	0.52	19.2	0.26	8.5	0.18	8.5		
13.75	1.25	12	1.92	54.9	1.8	52.2	1.69	52.2	1.42	40.7	1.24	35.6	1.07	31.1	0.89	25.8	0.69	20.5	0.56	19.2	0.28	8.5	0.21	8.5		
12.50	1.25	11	2.2	72.4	1.8	52.2	1.69	52.2	1.42	40.7	1.24	35.6	1.07	31.1	0.91	25.8	0.72	20.5	0.59	19.2	0.46	19.2	0.23	8.5		
11.25	1.25	10	2.2	72.4	1.8	52.2	1.69	52.2	1.42	40.7	1.24	35.6	1.07	31.1	0.91	25.8	0.73	20.5	0.63	19.2	0.5	19.2	0.26	8.5		
10.00	1.25	9	2.2	72.4	1.8	52.2	1.69	52.2	1.42	40.7	1.24	35.6	1.07	31.1	0.91	25.8	0.73	20.5	0.63	19.2	0.53	19.2	0.29	8.5		
8.75	1.25	8	2.2	72.4	1.8	52.2	1.69	52.2	1.42	40.7	1.24	35.6	1.07	31.1	0.91	25.8	0.73	20.5	0.63	19.2	0.54	19.2	0.36	11	0.11	8.5
7.50	1.25	7	2.2	72.4	1.8	52.2	1.69	52.2	1.42	40.7	1.24	35.6	1.07	31.1	0.91	25.8	0.73	20.5	0.63	19.2	0.54	19.2	0.37	11	0.12	8.5
6.25	1.25	6	2.2	72.4	1.8	52.2	1.69	52.2	1.42	40.7	1.24	35.6	1.07	31.1	0.91	25.8	0.73	20.5	0.63	19.2	0.54	19.2	0.37	11	0.15	8.5
5.00	1.25	5	2.2	72.4	1.8	52.2	1.69	52.2	1.42	40.7	1.24	35.6	1.07	31.1	0.91	25.8	0.73	20.5	0.63	19.2	0.54	19.2	0.37	11	0.19	8.5
3.75	1.25	4	2.2	72.4	1.8	52.2	1.69	52.2	1.42	40.7	1.24	35.6	1.07	31.1	0.91	25.8	0.73	20.5	0.63	19.2	0.54	19.2	0.37	11	0.19	8.5
2.50	1.25	3	2.2	72.4	1.8	52.2	1.69	52.2	1.42	40.7	1.24	35.6	1.07	31.1	0.91	25.8	0.73	20.5	0.63	19.2	0.54	19.2	0.37	11	0.19	8.5
1.25	1.25	2	2.2	72.4	1.8	52.2	1.69	52.2	1.42	40.7	1.24	35.6	1.07	31.1	0.91	25.8	0.73	20.5	0.63	19.2	0.54	19.2	0.37	11	0.19	8.5
0.00	1.25	1	2.09	72.4	1.71	52.2	1.6	52.2	1.35	40.7	1.18	35.6	1.02	31.1	0.86	25.8	0.79	26.6	0.6	19.2	0.51	19.2	0.35	11	0.18	8.5

1.25' S_V GEOSYNTHETIC MINIMUM PROPERTIES

(CONTINUED FROM PREVIOUS SHEET)

NOTES:

1. THE LONG-TERM GEOSYNTHETIC DESIGN STRENGTH "T_{al}" SHALL BE DETERMINED IN ACCORDANCE WITH AASHTO STANDARD PRACTICE R69-20. "$J_{2\%1000h}$" IS THE CREEP STIFFNESS DETERMINED AT A STRAIN LEVEL OF 2% AFTER 1,000 HOURS OF LOADING, BASED ON THE MINIMUM AVERAGE ROLL VALUE, OR MINIMUM VALUE FOR "T_{ult}" PROVIDED IN QPL APPENDIX "D". SEE QUALIFIED PRODUCTS LIST (QPL), APPENDIX "D," FOR PRODUCTS IN WHICH "T_{al}" AND "$J_{2\%1000h}$" HAS BEEN DETERMINED. "H" AND "V" ARE GRAPHICALLY DEFINED ON THE WALL 1-3 SECTIONS AND SHEET WD1, RESPECTIVELY. "V" IS THE DISTANCE FROM THE BOTTOM OF WALL TO A GEOSYNTHETIC LAYER, AND IS USED TO DETERMINE "T_{al}" AND "$J_{2\%1000h}$" FOR THAT LAYER.
2. THIS TABLE APPLIES TO THE 1.25' S_V GEOSYNTHETIC ALTERNATIVE FOR ALL OF WALLS 1-3, S_V IS THE GEOSYNTHETIC VERTICAL SPACING AS GRAPHICALLY DEFINED ON SHEET WD2.
3. THE "$J_{2\%1000h}$" PROPERTY VALUE MINIMUM REQUIREMENT IN THE TABLE WILL TYPICALLY REQUIRE A HIGHER GEOSYNTHETIC REINFORCEMENT TENSILE STRENGTH THAN THE "T_{al}" SHOWN IN THE TABLE AND WILL TYPICALLY CONTROL THE GEOSYNTHETIC PRODUCT SELECTION.

DESIGN WALL HEIGHT, H (FT)			70 ≥ H > 66			66 ≥ H > 60			60 ≥ H > 56			56 ≥ H > 50			50 ≥ H > 46		
DISTANCE ABOVE WALL BASE, V (FT)	REINFORCEMENT VERTICAL SPACING, S_V (FT)	LAYER NUMBER	LONGITUDINAL WIRE MINIMUM DIAMETER (MM)	LONGITUDINAL WIRE MINIMUM SIZE	TRANSVERSE WIRE MINIMUM SIZE AND MAXIMUM SPACING (IN)	LONGITUDINAL WIRE MINIMUM DIAMETER (MM)	LONGITUDINAL WIRE MINIMUM SIZE	TRANSVERSE WIRE MINIMUM SIZE AND MAXIMUM SPACING (IN)	LONGITUDINAL WIRE MINIMUM DIAMETER (MM)	LONGITUDINAL WIRE MINIMUM SIZE	TRANSVERSE WIRE MINIMUM SIZE AND MAXIMUM SPACING (IN)	LONGITUDINAL WIRE MINIMUM DIAMETER (MM)	LONGITUDINAL WIRE MINIMUM SIZE	TRANSVERSE WIRE MINIMUM SIZE AND MAXIMUM SPACING (IN)	LONGITUDINAL WIRE MINIMUM DIAMETER (MM)	LONGITUDINAL WIRE MINIMUM SIZE	TRANSVERSE WIRE MINIMUM SIZE AND MAXIMUM SPACING (IN)
68	2.0	35	6.1	W4.5	W3.5 x 12												
66	2.0	34	6.1	W4.5	W3.5 x 12												
64	2.0	33	6.1	W4.5	W4 x 21	6.1	W4.5	W3.5 x 12									
62	2.0	32	6.1	W4.5	W4 x 21	6.1	W4.5	W3.5 x 12									
60	2.0	31	6.1	W4.5	W4 x 21	6.1	W4.5	W4.5 x 21									
58	2.0	30	6.1	W4.5	W4.5 x 21	6.1	W4.5	W4.5 x 21	6.1	W4.5	W3.5 x 12						
56	2.0	29	6.1	W4.5	W4.5 x 21	6.1	W4.5	W4.5 x 21	6.1	W4.5	W3.5 x 12						
54	2.0	28	6.4	W5	W4.5 x 21	6.1	W4.5	W4.5 x 21	6.1	W4.5	W4.5 x 21	6.1	W4.5	W3.5 x 12			
52	2.0	27	7.6	W7	W4.5 x 21	6.1	W4.5	W4.5 x 21	6.1	W4.5	W4.5 x 21	6.1	W4.5	W3.5 x 12			
50	2.0	26	7.6	W7	W4.5 x 21	6.4	W5	W4.5 x 21	6.1	W4.5	W4.5 x 21	6.1	W4.5	W4.5 x 21			
48	2.0	25	7.6	W7	W4.5 x 21	6.4	W5	W4.5 x 21	6.1	W4.5	W4.5 x 21	6.1	W4.5	W4.5 x 21	6.1	W4.5	W3.5 x 12
46	2.0	24	7.6	W7	W4.5 x 21	7.6	W7	W4.5 x 21	6.1	W4.5	W4.5 x 21	6.1	W4.5	W4.5 x 21	6.1	W4.5	W3.5 x 12
44	2.0	23	7.6	W7	W4.5 x 21	7.6	W7	W4.5 x 21	6.4	W5	W4.5 x 21	6.1	W4.5	W4.5 x 21	6.1	W4.5	W4.5 x 21
42	2.0	22	7.6	W7	W4.5 x 21	7.6	W7	W4.5 x 21	6.4	W5	W4.5 x 21	6.1	W4.5	W4.5 x 21	6.1	W4.5	W4.5 x 21
40	2.0	21	7.6	W7	W4.5 x 21	7.6	W7	W4.5 x 21	7.6	W7	W4.5 x 21	6.1	W4.5	W4.5 x 21	6.1	W4.5	W4.5 x 21
38	2.0	20	7.6	W7	W4.5 x 21	7.6	W7	W4.5 x 21	7.6	W7	W4.5 x 21	6.4	W5	W4.5 x 21	6.1	W4.5	W4.5 x 21
36	2.0	19	8.8	W9.5	W4.5 x 21	7.6	W7	W4.5 x 21	7.6	W7	W4.5 x 21	7.6	W7	W4.5 x 21	6.1	W4.5	W4.5 x 21
34	2.0	18	8.8	W9.5	W4.5 x 21	7.6	W7	W4.5 x 21	7.6	W7	W4.5 x 21	7.6	W7	W4.5 x 21	6.1	W4.5	W4.5 x 21
32	2.0	17	8.8	W9.5	W4.5 x 21	8.8	W9.5	W4.5 x 21	7.6	W7	W4.5 x 21	7.6	W7	W4.5 x 21	6.4	W5	W4.5 x 21
30	2.0	16	8.8	W9.5	W4.5 x 21	8.8	W9.5	W4.5 x 21	7.6	W7	W4.5 x 21	7.6	W7	W4.5 x 21	6.4	W5	W4.5 x 21
28	2.0	15	8.8	W9.5	W4.5 x 21	8.8	W9.5	W4.5 x 21	7.6	W7	W4.5 x 21	7.6	W7	W4.5 x 21	7.6	W7	W4.5 x 21
26	2.0	14	8.8	W9.5	W4.5 x 21	8.8	W9.5	W4.5 x 21	8.8	W9.5	W4.5 x 21	7.6	W7	W4.5 x 21	7.6	W7	W4.5 x 21
24	2.0	13	8.8	W9.5	W4.5 x 21	8.8	W9.5	W4.5 x 21	8.8	W9.5	W4.5 x 21	7.6	W7	W4.5 x 21	7.6	W7	W4.5 x 21
22	2.0	12	8.8	W9.5	W4.5 x 21	8.8	W9.5	W4.5 x 21	8.8	W9.5	W4.5 x 21	8.8	W9.5	W4.5 x 21	7.6	W7	W4.5 x 21
20	2.0	11	9.9	W12	W5 x 21	8.8	W9.5	W4.5 x 21	8.8	W9.5	W4.5 x 21	8.8	W9.5	W4.5 x 21	7.6	W7	W4.5 x 21
18	2.0	10	9.9	W12	W5 x 21	8.8	W9.5	W4.5 x 21	8.8	W9.5	W4.5 x 21	8.8	W9.5	W4.5 x 21	7.6	W7	W4.5 x 21
16	2.0	9	9.9	W12	W5 x 21	8.8	W9.5	W4.5 x 21	8.8	W9.5	W4.5 x 21	8.8	W9.5	W4.5 x 21	7.6	W7	W4.5 x 21
14	2.0	8	9.9	W12	W5 x 21	8.8	W9.5	W4.5 x 21	8.8	W9.5	W4.5 x 21	8.8	W9.5	W4.5 x 21	7.6	W7	W4.5 x 21
12	2.0	7	9.9	W12	W5 x 21	8.8	W9.5	W4.5 x 21	8.8	W9.5	W4.5 x 21	8.8	W9.5	W4.5 x 21	7.6	W7	W4.5 x 21
10	2.0	6	9.9	W12	W5 x 21	8.8	W9.5	W4.5 x 21	8.8	W9.5	W4.5 x 21	8.8	W9.5	W4.5 x 21	7.6	W7	W4.5 x 21
8	2.0	5	9.9	W12	W5 x 21	8.8	W9.5	W4.5 x 21	8.8	W9.5	W4.5 x 21	8.8	W9.5	W4.5 x 21	7.6	W7	W4.5 x 21
6	2.0	4	9.9	W12	W5 x 21	8.8	W9.5	W4.5 x 21	8.8	W9.5	W4.5 x 21	8.8	W9.5	W4.5 x 21	7.6	W7	W4.5 x 21
4	2.0	3	9.9	W12	W5 x 21	8.8	W9.5	W4.5 x 21	8.8	W9.5	W4.5 x 21	8.8	W9.5	W4.5 x 21	7.6	W7	W4.5 x 21
2	2.0	2	9.9	W12	W5 x 21	8.8	W9.5	W4.5 x 21	8.8	W9.5	W4.5 x 21	8.8	W9.5	W4.5 x 21	7.6	W7	W4.5 x 21
0	2.0	1	9.9	W12	W5 x 21	8.8	W9.5	W4.5 x 21	8.8	W9.5	W4.5 x 21	8.8	W9.5	W4.5 x 21	7.6	W7	W4.5 x 21

WELDED WIRE SIZE AND SPACING TABLE

(CONTINUES ON NEXT SHEET)

NOTES:

1. ALL LONGITUDINAL WIRES SHALL BE SPACED AT 8 INCHES.
2. ALL TRANSVERSE WIRES IN THE TOP 2 MATS AND THE CAP MAT SHALL BE SPACED AT 12 INCHES. TRANSVERSE WIRE IN ALL OTHER MATS SHALL BE SPACED AT 21 INCHES MAXIMUM.
3. VERTICAL SPACING OF REINFORCEMENT LAYERS IS 24 INCHES, EXCEPT THE TOP MAT (CAP) MAY BE REDUCED TO ACCOUNT FOR THE SLOPING PROFILE OF THE TOP OF THE WALL IN ACCORDANCE WITH WALL MANUFACTURERS RECOMMENDATIONS.
4. TRANSVERSE WIRE SIZE SHALL BE THE GREATER OF THE MINIMUM LISTED IN THE TABLE OR HAVE A CROSS-SECTIONAL AREA 40% OF THE LONGITUDINAL WIRE'S CROSS-SECTION SECTIONAL AREA.

DESIGN WALL HEIGHT, H (FT)			46 ≥ H > 40			40 ≥ H > 36			36 ≥ H > 30			30 ≥ H		
DISTANCE ABOVE WALL BASE, V (FT)	REINFORCEMENT VERTICAL SPACING, S_V (FT)	LAYER NUMBER	LONGITUDINAL WIRE MINIMUM DIAMETER (MM)	LONGITUDINAL WIRE MINIMUM SIZE	TRANSVERSE WIRE MINIMUM SIZE AND MAXIMUM SPACING (IN)	LONGITUDINAL WIRE MINIMUM DIAMETER (MM)	LONGITUDINAL WIRE MINIMUM SIZE	TRANSVERSE WIRE MINIMUM SIZE AND MAXIMUM SPACING (IN)	LONGITUDINAL WIRE MINIMUM DIAMETER (MM)	LONGITUDINAL WIRE MINIMUM SIZE	TRANSVERSE WIRE MINIMUM SIZE AND MAXIMUM SPACING (IN)	LONGITUDINAL WIRE MINIMUM DIAMETER (MM)	LONGITUDINAL WIRE MINIMUM SIZE	TRANSVERSE WIRE MINIMUM SIZE AND MAXIMUM SPACING (IN)
68	2.0	35												
66	2.0	34												
64	2.0	33												
62	2.0	32												
60	2.0	31												
58	2.0	30												
56	2.0	29												
54	2.0	28												
52	2.0	27												
50	2.0	26												
48	2.0	25												
46	2.0	24												
44	2.0	23	6.1	W4.5	W3.5 x 12									
42	2.0	22	6.1	W4.5	W3.5 x 12									
40	2.0	21	6.1	W4.5	W4.5 x 21									
38	2.0	20	6.1	W4.5	W4.5 x 21	6.1	W4.5	W3.5 x 12						
36	2.0	19	6.1	W4.5	W4.5 x 21	6.1	W4.5	W3.5 x 12						
34	2.0	18	6.1	W4.5	W4.5 x 21	6.1	W4.5	W4.5 x 21	6.1	W4.5	W3.5 x 12			
32	2.0	17	6.1	W4.5	W4.5 x 21	6.1	W4.5	W4.5 x 21	6.1	W4.5	W3.5 x 12			
30	2.0	16	6.1	W4.5	W4.5 x 21	6.1	W4.5	W4.5 x 21	6.1	W4.5	W4.5 x 21			
28	2.0	15	6.4	W5	W4.5 x 21	6.1	W4.5	W4.5 x 21	6.1	W4.5	W4.5 x 21	6.1	W4.5	W3.5 x 12
26	2.0	14	6.4	W5	W4.5 x 21	6.1	W4.5	W4.5 x 21	6.1	W4.5	W4.5 x 21	6.1	W4.5	W3.5 x 12
24	2.0	13	7.6	W7	W4.5 x 21	6.1	W4.5	W4.5 x 21	6.1	W4.5	W4.5 x 21	6.1	W4.5	W4.5 x 21
22	2.0	12	7.6	W7	W4.5 x 21	6.4	W5	W4.5 x 21	6.1	W4.5	W4.5 x 21	6.1	W4.5	W4.5 x 21
20	2.0	11	7.6	W7	W4.5 x 21	6.4	W5	W4.5 x 21	6.1	W4.5	W4.5 x 21	6.1	W4.5	W4.5 x 21
18	2.0	10	7.6	W7	W4.5 x 21	7.6	W7	W4.5 x 21	6.4	W5	W4.5 x 21	6.1	W4.5	W4.5 x 21
16	2.0	9	7.6	W7	W4.5 x 21	7.6	W7	W4.5 x 21	6.4	W5	W4.5 x 21	6.1	W4.5	W4.5 x 21
14	2.0	8	7.6	W7	W4.5 x 21	7.6	W7	W4.5 x 21	7.6	W7	W4.5 x 21	6.1	W4.5	W4.5 x 21
12	2.0	7	7.6	W7	W4.5 x 21	7.6	W7	W4.5 x 21	7.6	W7	W4.5 x 21	6.1	W4.5	W4.5 x 21
10	2.0	6	7.6	W7	W4.5 x 21	7.6	W7	W4.5 x 21	7.6	W7	W4.5 x 21	6.1	W4.5	W4.5 x 21
8	2.0	5	7.6	W7	W4.5 x 21	7.6	W7	W4.5 x 21	7.6	W7	W4.5 x 21	6.1	W4.5	W4.5 x 21
6	2.0	4	7.6	W7	W4.5 x 21	7.6	W7	W4.5 x 21	7.6	W7	W4.5 x 21	6.1	W4.5	W4.5 x 21
4	2.0	3	7.6	W7	W4.5 x 21	7.6	W7	W4.5 x 21	7.6	W7	W4.5 x 21	6.1	W4.5	W4.5 x 21
2	2.0	2	7.6	W7	W4.5 x 21	7.6	W7	W4.5 x 21	7.6	W7	W4.5 x 21	6.1	W4.5	W4.5 x 21
0	2.0	1	7.6	W7	W4.5 x 21	7.6	W7	W4.5 x 21	7.6	W7	W4.5 x 21	6.1	W4.5	W4.5 x 21

WELDED WIRE SIZE AND SPACING TABLE

(CONTINUED FROM PREVIOUS SHEET)

NOTES:

1. ALL LONGITUDINAL WIRES SHALL BE SPACED AT 8 INCHES.
2. ALL TRANSVERSE WIRES IN THE TOP 2 MATS AND THE CAP MAT SHALL BE SPACED AT 12 INCHES. TRANSVERSE WIRE IN ALL OTHER MATS SHALL BE SPACED AT 21 INCHES MAXIMUM.
3. VERTICAL SPACING OF REINFORCEMENT LAYERS IS 24 INCHES, EXCEPT THE TOP MAT (CAP) MAY BE REDUCED TO ACCOUNT FOR THE SLOPING PROFILE OF THE TOP OF THE WALL IN ACCORDANCE WITH WALL MANUFACTURERS RECOMMENDATIONS.
4. TRANSVERSE WIRE SIZE SHALL BE THE GREATER OF THE MINIMUM LISTED IN THE TABLE OR HAVE A CROSS-SECTIONAL AREA 40% OF THE LONGITUDINAL WIRE'S CROSS-SECTION SECTIONAL AREA.

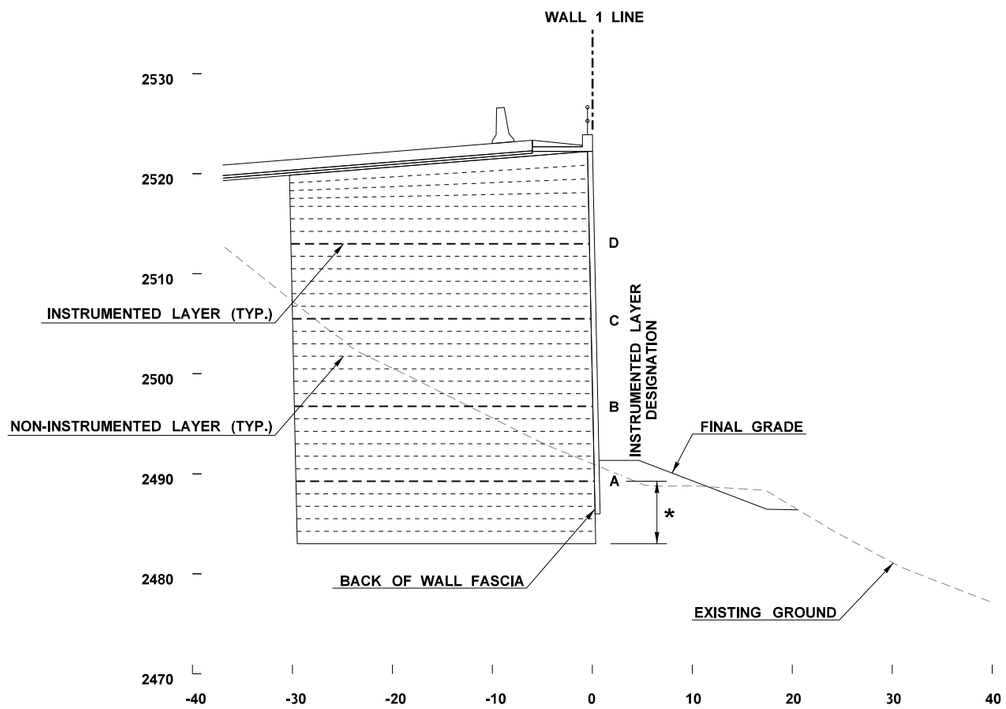

WALL 1
WALL 1 24+50

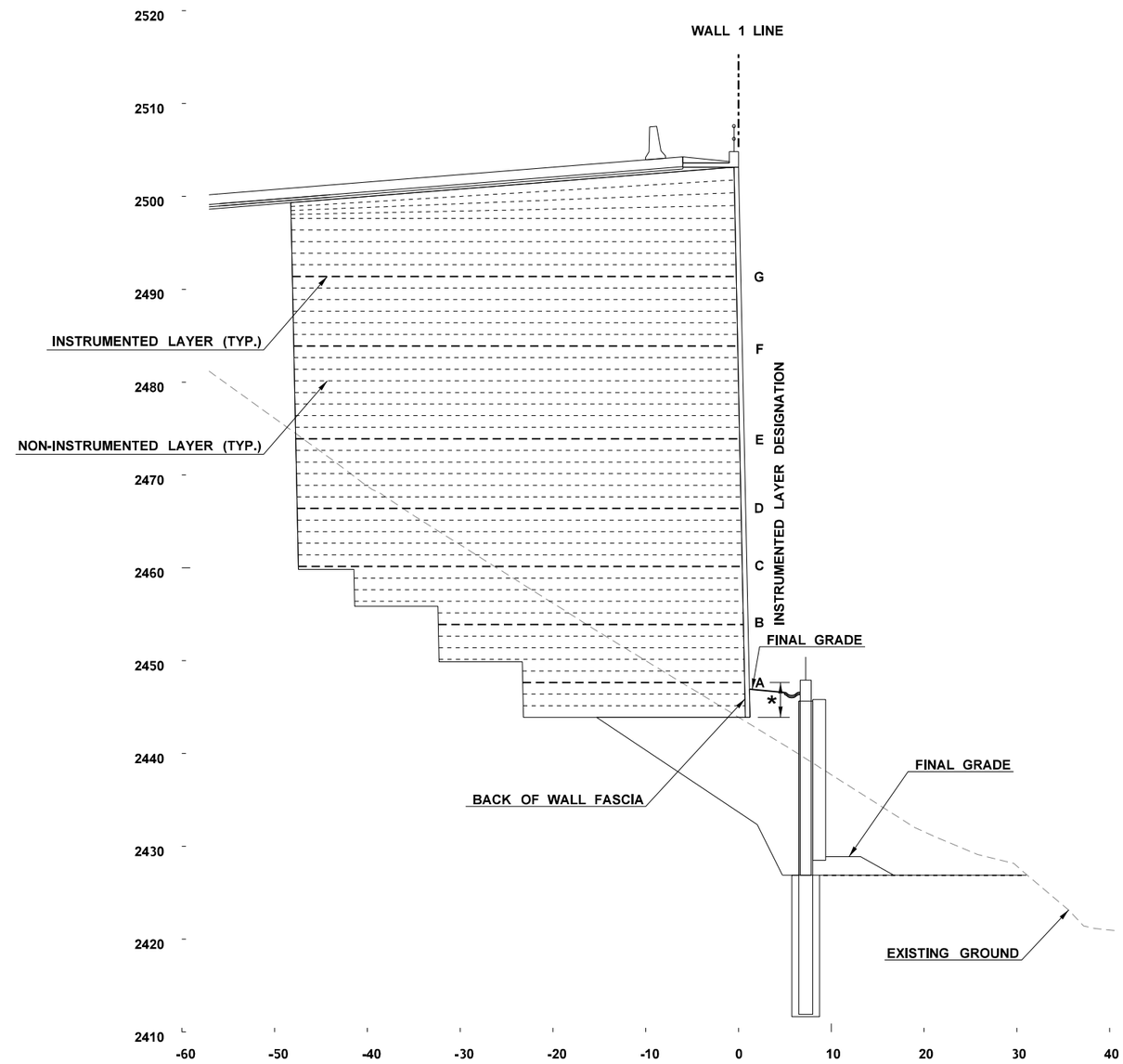

WALL 1
WALL 1 18+51

NOTES:

1. GEOSYNTHETIC WALL WITH REINFORCEMENT S_V OF 1.25 FEET SHOWN. OTHER WALL TYPE ALTERNATIVES AND REINFORCEMENT SPACING OPTIONS SIMILAR.
2. SEE SP SERIES SHEETS FOR SOLDIER PILE WALL INSTRUMENTATION.

* DISTANCE ABOVE WALL BASE TO INSTRUMENTATION LAYER A. SEE SHEET WD14 FOR ADDITIONAL INFORMATION. INSTRUMENTED LAYERS B THROUGH G MEASURED FROM SAME POINT AT BASE OF WALL.

FILE NAME	K:\452201\090\06736_Phase 3\Design_CAD_Sheets\290-MInorStruct\XL5479_PS_WALLS_WD.dgn				REGION NO. 10	STATE WASH	FED.AID PROJ.NO.
TIME	8:38:18 PM						
DATE	2/7/2022						
PLOTTED BY	GipnerM				JOB NUMBER 19Y007		
DESIGNED BY	M. GIPNER						
ENTERED BY	J. HARVEY						
CHECKED BY	K. KING				CONTRACT NO.		LOCATION NO.
PROJ. ENGR.	A. BYRD						
REGIONAL ADM.	T. TREPANIER	REVISION	DATE	BY			

TONY M. ALLEN — STATE OF WASHINGTON — 25339 — REGISTERED PROFESSIONAL ENGINEER

SEE SHEET CT5
DATE
P.E. STAMP BOX

DATE
P.E. STAMP BOX

Washington State Department of Transportation

I-90
CABIN CREEK I/C TO W EASTON I/C
PHASE 3 - ADD LANES/WILDLIFE BRIDGES

WALLS 1-2 INSTRUMENTATION

Plot 11
PLAN REF NO
WD11
SHEET 926 OF 1783 SHEETS

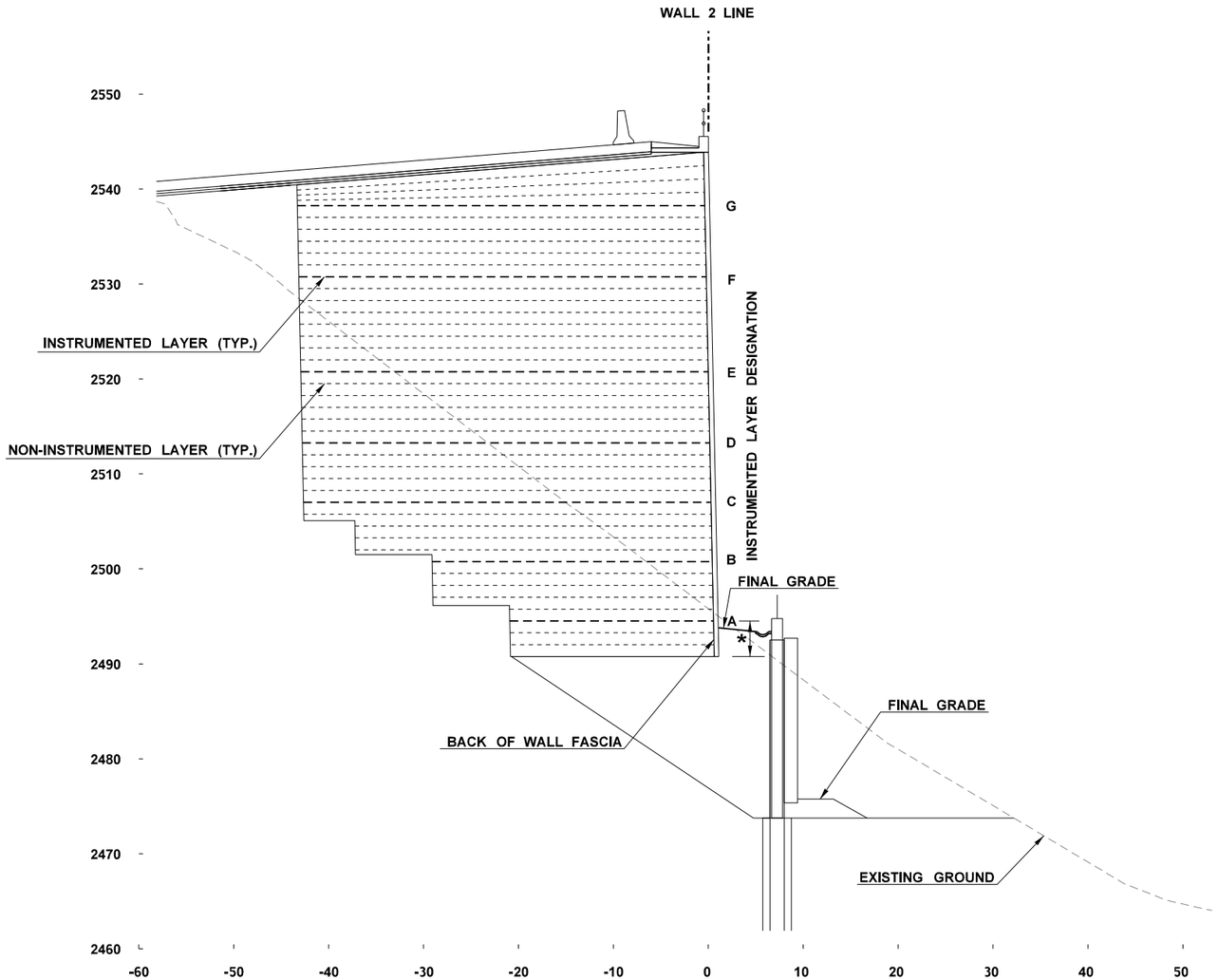

WALL 2
WALL 2 16+27

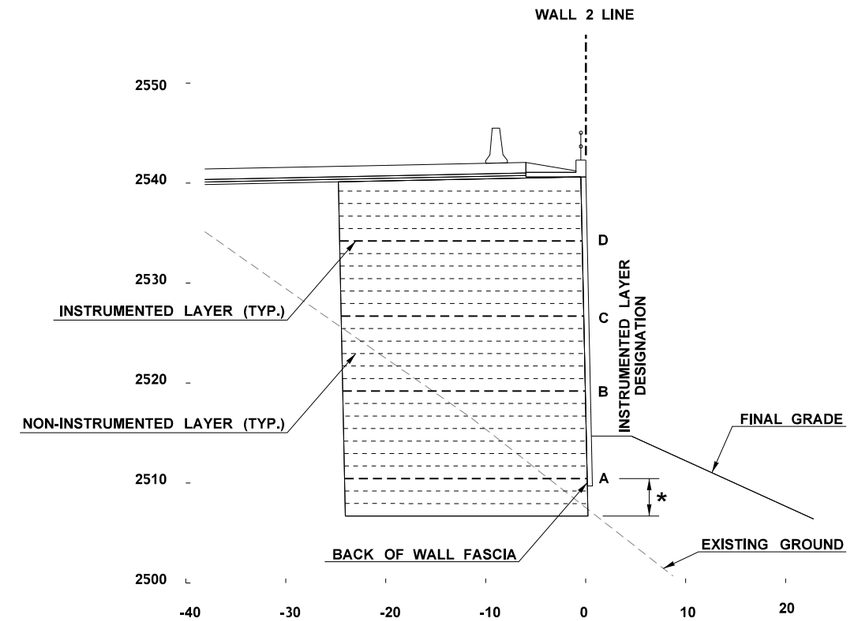

WALL 2
WALL 2 26+83

NOTES:

1. GEOSYNTHETIC WALL WITH REINFORCEMENT S_V OF 1.25 FEET SHOWN. OTHER WALL TYPE ALTERNATIVES AND REINFORCEMENT SPACING OPTIONS SIMILAR.
2. SEE SP SERIES SHEETS FOR SOLDIER PILE WALL INSTRUMENTATION.

* DISTANCE ABOVE WALL BASE TO INSTRUMENTATION LAYER A. SEE SHEET WD15 FOR ADDITIONAL INFORMATION. INSTRUMENTED LAYERS B THROUGH G MEASURED FROM SAME POINT AT BASE OF WALL.

FILE NAME	K:\452201\090\06736_Phase 3\Design_CAD_Sheets\290-MInorStruct\XL5479_PS_WALLS_WD.dgn						
TIME	8:38:20 PM				REGION NO. 10	STATE WASH	FED.AID PROJ.NO.
DATE	2/7/2022						
PLOTTED BY	GipnerM						
DESIGNED BY	M. GIPNER				JOB NUMBER 19Y007		
ENTERED BY	J. HARVEY						
CHECKED BY	K. KING				CONTRACT NO.		LOCATION NO.
PROJ. ENGR.	A. BYRD						
REGIONAL ADM.	T. TREPANIER	REVISION	DATE	BY			

TONY M. ALLEN — STATE OF WASHINGTON — 25339 — REGISTERED PROFESSIONAL ENGINEER

SEE SHEET CT5
DATE
P.E. STAMP BOX

DATE
P.E. STAMP BOX

Washington State Department of Transportation

I-90
CABIN CREEK I/C TO W EASTON I/C
PHASE 3 - ADD LANES/WILDLIFE BRIDGES

WALLS 1-2 INSTRUMENTATION

Plot 12
PLAN REF NO WD12
SHEET 927 OF 1783 SHEETS

NOTES:

1. STRAIN GAUGES TO BE PLACED IN PAIRS (TOP AND BOTTOM SIDES OF RIB OR LONGITUDINAL WIRE) ON MACHINE DIRECTION (I.E.,LONGITUDINAL) RIB, AT MID-POINT BETWEEN TRANSVERSE RIBS, WITH NO MORE THAN TWO GAUGE PAIRS ON ANY SINGLE RIB OR WIRE.
2. PLAN VIEW SHOWN IS AN EXAMPLE AT A SINGLE LOCATION TO ILLUSTRATE HOW THE INSTRUMENTATION CAN BE LAID OUT. LONGITUDINAL AND TRANSVERSE RIB/WIRE SPACING SHOWN IS FOR ILLUSTRATIVE PURPOSES ONLY AND MAY NOT MATCH ACTUAL SPACING, DEPENDING ON WHICH REINFORCEMENT MATERIAL IS USED AND LOCATION, REINFORCEMENT SHALL MEET THE REQUIREMENTS SHOWN ON SHEETS WD5 TO WD10.
3. A "DUMMY" STRAIN GAUGE IS REQUIRED IN SOME LOCATIONS. SEE SPECIAL PROVISION "INSTRUMENTATION FOR STRUCTURAL EARTH AND SOLDIER PILE TIEBACK WALLS" FOR ADDITIONAL REQUIREMENTS FOR INSTRUMENTATION, INCLUDING "DUMMY" STRAIN GAUGES.

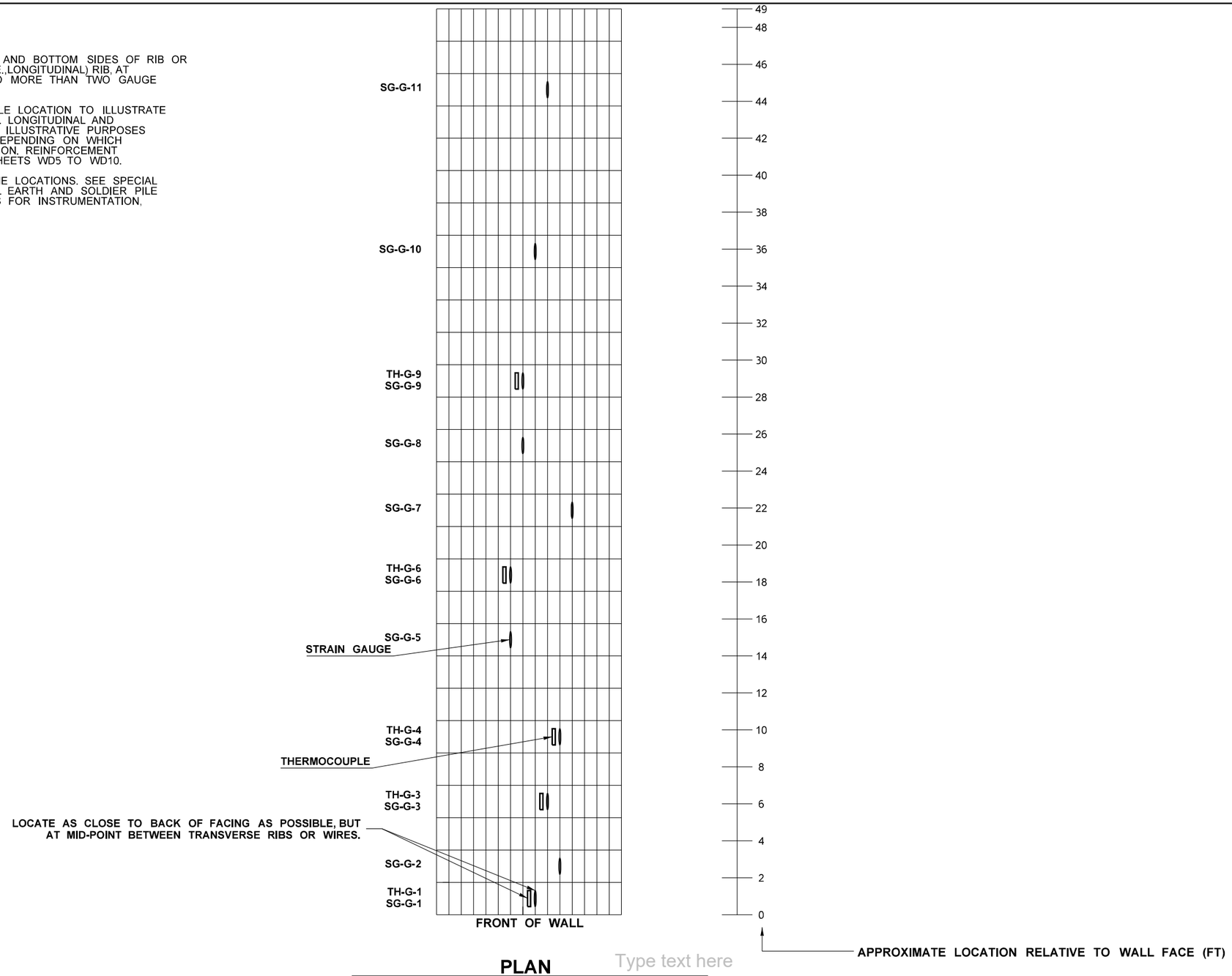

Type text here

PLAN

INSTRUMENTED LAYER G 48 FT ABOVE WALL BASE
(NOT TO SCALE)

FILE NAME	K:\452201\090\06736_Phase 3\Design_CAD_Sheets\290-MInorStruct\XL5479_PS_WALLS_WD.dgn						
TIME	8:38:23 PM				REGION NO. 10	STATE WASH	FED.AID PROJ.NO.
DATE	2/7/2022						
PLOTTED BY	GipnerM				JOB NUMBER 19Y007		
DESIGNED BY	M. GIPNER						
ENTERED BY	M. MAHONY				CONTRACT NO.		LOCATION NO.
CHECKED BY	K. KING						
PROJ. ENGR.	A. BYRD						
REGIONAL ADM.	T. TREPANIER	REVISION	DATE	BY			

TONY M. ALLEN — STATE OF WASHINGTON — 25339 — REGISTERED PROFESSIONAL ENGINEER

SEE SHEET CT5

DATE

P.E. STAMP BOX

DATE

P.E. STAMP BOX

Washington State Department of Transportation

I-90
CABIN CREEK I/C TO W EASTON I/C
PHASE 3 - ADD LANES/WILDLIFE BRIDGES

WALLS 1-2 INSTRUMENTATION

Plot 13

PLAN REF NO WD13

SHEET 928 OF 1783 SHEETS

LEVEL	DISTANCE ABOVE WALL BASE (FT)	STRAIN GAUGE PAIR DESIGNATIONS	THERMOCOUPLE DESIGNATIONS	NOMINAL DISTANCE FROM BACK OF WALL FACE (FT)
LEVEL A	4	SG-A-1	TH-A-1	0.5
		SG-A-2		2
		SG-A-3	TH-A-3	4
		SG-A-4	TH-A-4	7
		SG-A-5		11
		SG-A-6	TH-A-6	18
LEVEL B	10	SG-B-1		0.5
		SG-B-2		2
		SG-B-3		4
		SG-B-4		7
		SG-B-5		10
		SG-B-6		19
		SG-B-7		29
LEVEL C	16	SG-C-1	TH-C-1	0.5
		SG-C-2		2
		SG-C-3	TH-C-3	4
		SG-C-4		6
		SG-C-5	TH-C-5	8
		SG-C-6		10
		SG-C-7	TH-C-7	15
		SG-C-8		23
		SG-C-9		34
LEVEL D	22	SG-D-1		0.5
		SG-D-2		2
		SG-D-3		4
		SG-D-4		7
		SG-D-5		10
		SG-D-6		13
		SG-D-7		19
		SG-D-8		30
		SG-D-9		44
LEVEL E	30	SG-E-1	TH-E-1	0.5
		SG-E-2		2
		SG-E-3	TH-E-3	4
		SG-E-4	TH-E-4	8
		SG-E-5	TH-E-5	11
		SG-E-6		13
		SG-E-7	TH-E-7	15
		SG-E-8		18
		SG-E-9	TH-E-9	30
		SG-E-10		44
LEVEL F	40	SG-F-1		0.5
		SG-F-2		2
		SG-F-3		5
		SG-F-4		10
		SG-F-5		15
		SG-F-6		18
		SG-F-7		21
		SG-F-8		24
		SG-F-9		30
		SG-F-10		44
LEVEL G	48	SG-G-1	TH-G-1	0.5
		SG-G-2		2
		SG-G-3	TH-G-3	5
		SG-G-4	TH-G-4	10
		SG-G-5		15
		SG-G-6	TH-G-6	19
		SG-G-7		22
		SG-G-8		25
		SG-G-9	TH-G-9	28
		SG-G-10		35
		SG-G-11		44

INSTRUMENTATION - MSE WALL 1 18+51

LEVEL	DISTANCE ABOVE WALL BASE (FT)	STRAIN GAUGE PAIR DESIGNATIONS	THERMOCOUPLE DESIGNATIONS	NOMINAL DISTANCE FROM BACK OF WALL FACE (FT)
LEVEL A	6	SG-A-1	TH-A-1	0.5
		SG-A-2		2
		SG-A-3	TH-A-3	4
		SG-A-4		10
		SG-A-5	TH-A-5	17
		SG-A-6		25
LEVEL B	14	SG-B-1	TH-B-1	0.5
		SG-B-2		2
		SG-B-3	TH-B-3	4
		SG-B-4		6
		SG-B-5	TH-B-5	8
		SG-B-6		10
		SG-B-7		15
		SG-B-8	TH-B-8	25
LEVEL C	22	SG-C-1		0.5
		SG-C-2		2
		SG-C-3		4
		SG-C-4		6
		SG-C-5		8
		SG-C-6		10
		SG-C-7		15
		SG-C-8		25
LEVEL D	30	SG-D-1	TH-D-1	0.5
		SG-D-2		2
		SG-D-3	TH-D-3	4
		SG-D-4		6
		SG-D-5	TH-D-5	8
		SG-D-6		10
		SG-D-7		15
		SG-D-8	TH-D-8	20
		SG-D-9		25

INSTRUMENTATION - MSE WALL 1 24+50

FILE NAME	K:\452201\090\06736_Phase 3\Design_CAD_Sheets\290-MInorStruct\XL5479_PS_WALLS_WD.dgn			
TIME	8:38:26 PM			
DATE	2/7/2022			
PLOTTED BY	GipnerM			
DESIGNED BY	M. GIPNER			
ENTERED BY	M. GIPNER			
CHECKED BY	K. KING			
PROJ. ENGR.	A. BYRD			
REGIONAL ADM.	T. TREPANIER	REVISION	DATE	BY

REGION NO. 10 | STATE WASH | FED.AID PROJ.NO.

JOB NUMBER 19Y007

CONTRACT NO. | LOCATION NO.

TONY M. ALLEN, STATE OF WASHINGTON, 25339, REGISTERED PROFESSIONAL ENGINEER

SEE SHEET CT5

DATE

P.E. STAMP BOX

DATE

P.E. STAMP BOX

Washington State Department of Transportation

I-90
CABIN CREEK I/C TO W EASTON I/C
PHASE 3 - ADD LANES/WILDLIFE BRIDGES

WALLS 1-2 INSTRUMENTATION

Plot 14

PLAN REF NO WD14

SHEET 929 OF 1783 SHEETS

LEVEL	DISTANCE ABOVE WALL BASE (FT)	STRAIN GAUGE PAIR DESIGNATIONS	THERMOCOUPLE DESIGNATIONS	NOMINAL DISTANCE FROM BACK OF WALL FACE (FT)
LEVEL A	4	SG-A-1	TH-A-1	0.5
		SG-A-2		2
		SG-A-3	TH-A-3	4
		SG-A-4	TH-A-4	7
		SG-A-5		11
		SG-A-6	TH-A-6	18
LEVEL B	10	SG-B-1		0.5
		SG-B-2		2
		SG-B-3		4
		SG-B-4		7
		SG-B-5		10
		SG-B-6		17
		SG-B-7		27
LEVEL C	16	SG-C-1	TH-C-1	0.5
		SG-C-2		2
		SG-C-3	TH-C-3	4
		SG-C-4		6
		SG-C-5	TH-C-5	8
		SG-C-6		10
		SG-C-7	TH-C-7	15
		SG-C-8		23
		SG-C-9		34
LEVEL D	22	SG-D-1		0.5
		SG-D-2		2
		SG-D-3		4
		SG-D-4		7
		SG-D-5		10
		SG-D-6		13
		SG-D-7		19
		SG-D-8		28
		SG-D-9		40
LEVEL E	30	SG-E-1	TH-E-1	0.5
		SG-E-2		2
		SG-E-3	TH-E-3	4
		SG-E-4	TH-E-4	8
		SG-E-5	TH-E-5	11
		SG-E-6		13
		SG-E-7	TH-E-7	15
		SG-E-8		18
		SG-E-9	TH-E-9	28
		SG-E-10		40
LEVEL F	40	SG-F-1		0.5
		SG-F-2		2
		SG-F-3		5
		SG-F-4		10
		SG-F-5		15
		SG-F-6		18
		SG-F-7		21
		SG-F-8		24
		SG-F-9		29
		SG-F-10		40
LEVEL G	48	SG-G-1	TH-G-1	0.5
		SG-G-2		2
		SG-G-3	TH-G-3	5
		SG-G-4	TH-G-4	10
		SG-G-5		15
		SG-G-6	TH-G-6	19
		SG-G-7		22
		SG-G-8		25
		SG-G-9	TH-G-9	28
		SG-G-10		33
		SG-G-11		40

INSTRUMENTATION - MSE WALL 2 16+27

LEVEL	DISTANCE ABOVE WALL BASE (FT)	STRAIN GAUGE PAIR DESIGNATIONS	THERMOCOUPLE DESIGNATIONS	NOMINAL DISTANCE FROM BACK OF WALL FACE (FT)
LEVEL A	4	SG-A-1	TH-A-1	0.5
		SG-A-2		2
		SG-A-3	TH-A-3	4
		SG-A-4	TH-A-4	12
		SG-A-5		19
LEVEL B	12	SG-B-1	TH-B-1	0.5
		SG-B-2		2
		SG-B-3	TH-B-3	4
		SG-B-4		6
		SG-B-5	TH-B-5	8
		SG-B-6		11
		SG-B-7		16
		SG-B-8	TH-B-8	20
LEVEL C	20	SG-C-1		0.5
		SG-C-2		2
		SG-C-3		4
		SG-C-4		7
		SG-C-5		10
		SG-C-6		12
		SG-C-7		16
		SG-C-8		20
LEVEL D	28	SG-D-1	TH-D-1	0.5
		SG-D-2		2
		SG-D-3	TH-D-3	4
		SG-D-4		7
		SG-D-5	TH-D-5	9
		SG-D-6		10
		SG-D-7		12
		SG-D-8		17
		SG-D-9	TH-D-9	21

INSTRUMENTATION - MSE WALL 2 26+83

NOTES:

1. SEE SHEETS SP6 TO SP8 AND SP21 TO SP25 FOR ELEVATION.
2. ALL EMBANKMENT AND BACKFILL LOCATED BOTH BEHIND THE SOLDIER PILE AND BENEATH THE TOP OF THE SOLDIER PILE FASCIA SHALL CONSIST OF GRAVEL BORROW FOR STRUCTURAL EARTH WALL INCL. HAUL.
3. ALL BACKFILL LOCATED UNDERNEATH THE MSE WALL SHALL CONSIST OF GRAVEL BORROW FOR STRUCTURAL EARTH WALL INCL. HAUL.
4. ALL BACKFILL OF EXCAVATION OUTSIDE THE LIMITS SHOWN IN THE PLANS OR EXTRA EXCAVATION LOCATED UNDERNEATH THE MSE WALL SHALL MEET THE REQUIREMENTS OF GRAVEL BORROW FOR STRUCTURAL EARTH WALL. BACKFILL SHALL BE PLACED AND COMPACTED IN ACCORDANCE WITH SPECIAL PROVISION "EMBANKMENTS AT LARGE WALLS".
5. ESTIMATED SHORING OR EXTRA EXCAVATION SHOWN FOR INFORMATIONAL PURPOSES ONLY AND DOES NOT REPRESENT ACTUAL LIMITS. SEE WALL PLAN VIEWS FOR STRUCTURAL SHORING LIMITS. CONTRACTOR IS RESPONSIBLE FOR DESIGN OF SHORING OR EXTRA EXCAVATION PER STANDARD SPECIFICATION 2-09.
6. WHEREVER BEDROCK IS PRESENT WITHIN 1' OF THE BOTTOM OF MSE WALL OR WITHIN 1' OF THE BOTTOM OF ANY TRUNCATED BASE STEPS, IT SHALL BE EXCAVATED TO AN ELEVATION 1' BELOW THE BOTTOM OF MSE WALL AND BOTTOM OF EACH TRUNCATED STEP. BACKFILL SHALL BE GRAVEL BORROW FOR STRUCTURAL EARTH WALL INCL. HAUL AND SHALL BE PLACED AND COMPACTED IN ACCORDANCE WITH SPECIAL PROVISION "EMBANKMENTS AT LARGE WALLS". APPLIES TO ENTIRE LENGTH OF WALLS 1-3. NOT SHOWN ON ALL SECTIONS.
7. FOR UNSTABLE BASE EXCAVATION AND ADDITIONAL BACKFILL REQUIREMENTS FOR PORTIONS OF THESE EXCAVATIONS SEE SHEET WD19.

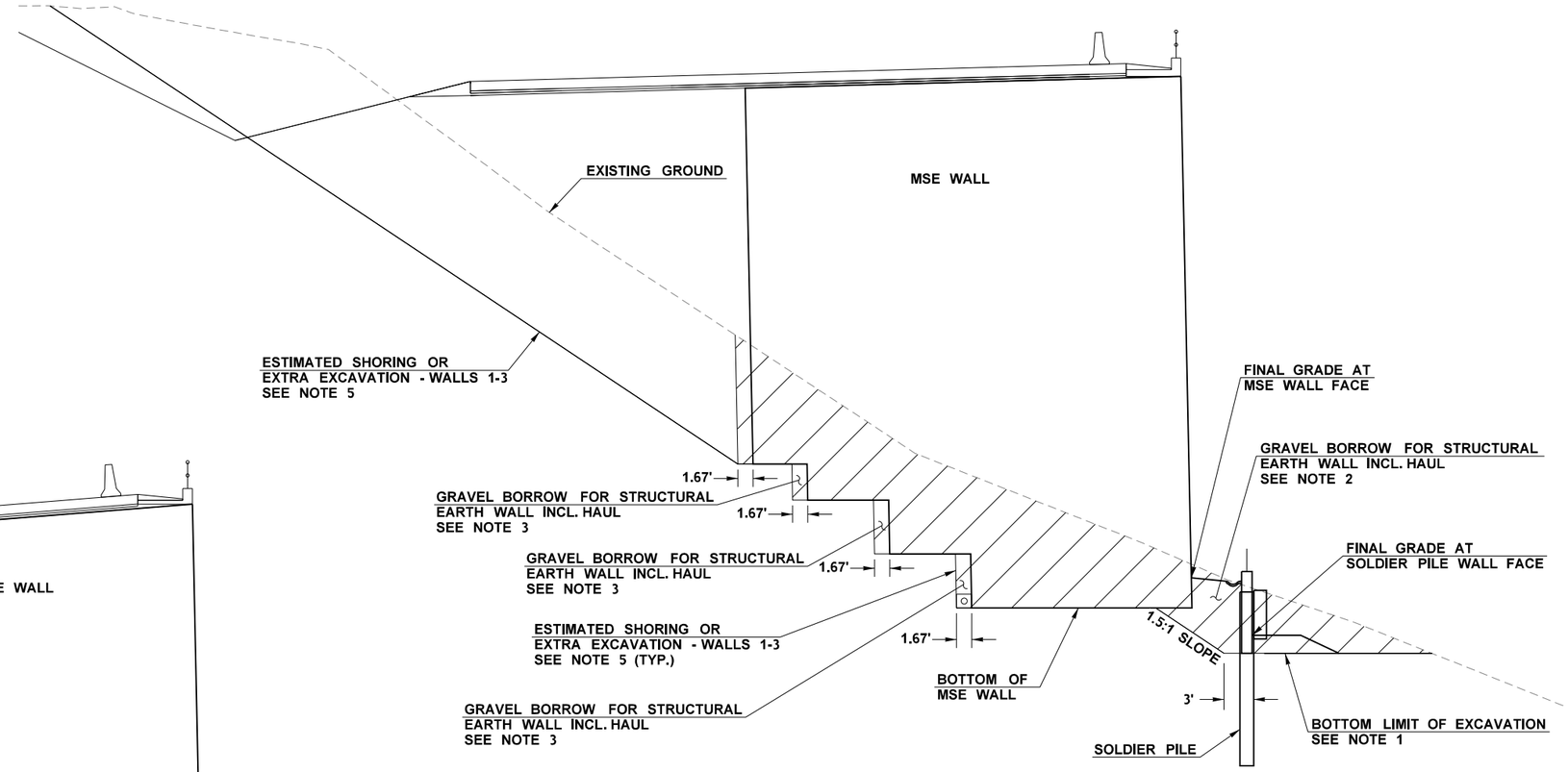

NARROW SOLDIER PILE EXCAVATION

(NOT TO SCALE)
WHERE STRUCTURE EXCAVATION BEHIND SOLDIER PILE WALL INTERCEPTS THE BOTTOM OF THE MSE WALL

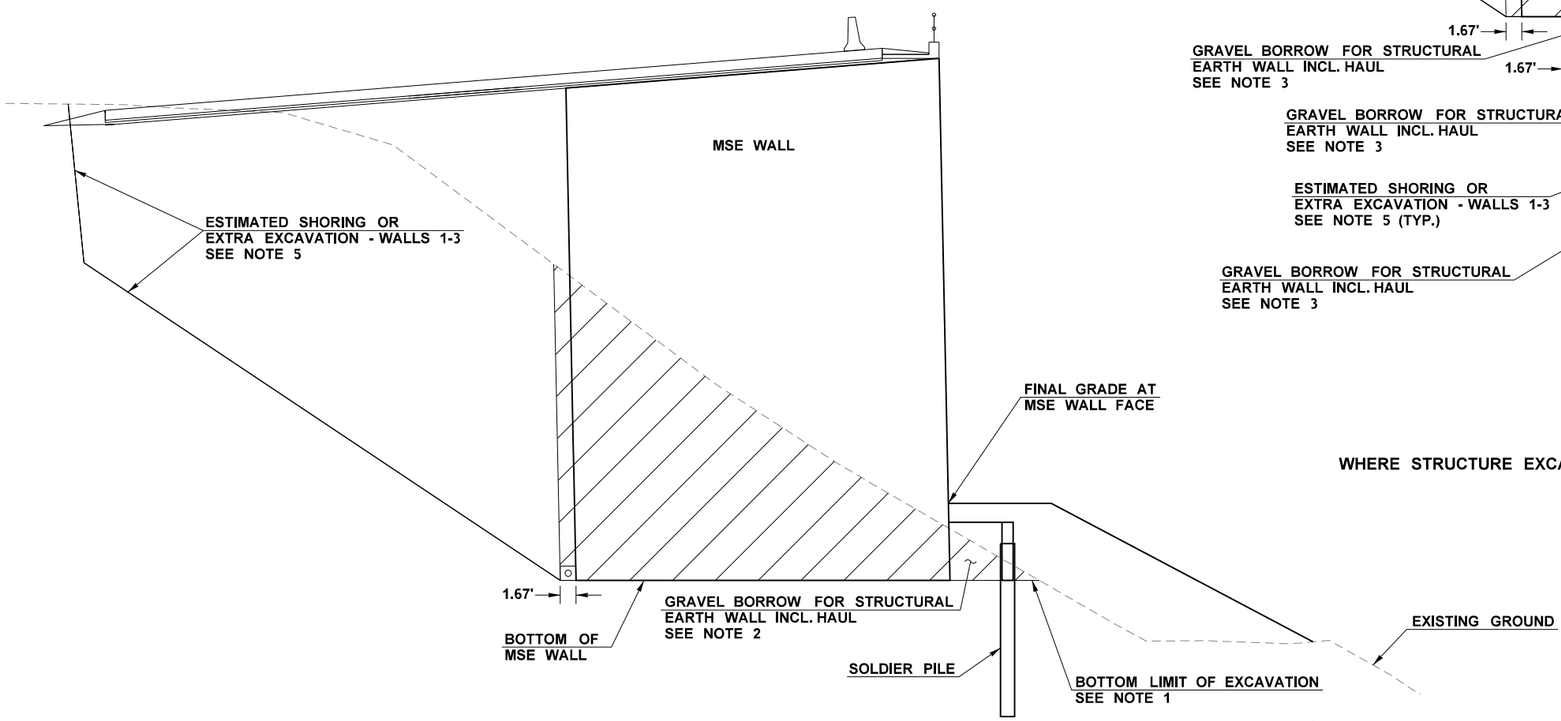

CANTILEVER SOLDIER PILE

(NOT TO SCALE)
(CONSTANT WIDTH MSE REINFORCEMENT SHOWN. FOR LOCATIONS WITH TRUNCATED MSE REINFORCEMENT LENGTH SEE NARROW SOLDIER PILE EXCAVATION SECTION FOR EXCAVATION AND BACKFILL AT BACK OF MSE WALL)
WALL 1 12+84.00 TO WALL 1 12+97.50
WALL 1 20+08.50 TO WALL 1 20+22.00
WALL 2 13+66.00 TO WALL 2 13+79.50
WALL 2 25+49.50 TO WALL 2 25+63.00

STRUCTURE EXCAVATION
CLASS A INCL. HAUL - WALLS 1-3

FILE NAME	K:\452201\090\06736_Phase 3\Design_CAD_Sheets\290-MInorStruct\XL5479_PS_WALLS_WD.dgn									Plot 16
TIME	3:43:30 PM				REGION NO. 10	STATE WASH	FED.AID PROJ.NO.		Washington State Department of Transportation	I-90 CABIN CREEK I/C TO W EASTON I/C PHASE 3 - ADD LANES/WILDLIFE BRIDGES	PLAN REF NO WD16
DATE	2/15/2022				JOB NUMBER 19Y007						SHEET 931 OF 1783 SHEETS
PLOTTED BY	GipnerM										
DESIGNED BY	M. GIPNER										
ENTERED BY	M. GIPNER										
CHECKED BY	K. KING				CONTRACT NO.		LOCATION NO.				
PROJ. ENGR.	A. BYRD										
REGIONAL ADM.	T. TREPANIER	REVISION	DATE	BY				SEE SHEET CT5 DATE P.E. STAMP BOX	DATE P.E. STAMP BOX	WALLS 1-2 STRUCTURE EXCAVATION	

NOTES:

1. SEE SHEETS SP6 TO SP8 AND SP21 TO SP25 FOR ELEVATION.
2. ALL EMBANKMENT AND BACKFILL LOCATED BOTH BEHIND THE SOLDIER PILE AND BENEATH THE TOP OF THE SOLDIER PILE FASCIA SHALL CONSIST OF GRAVEL BORROW FOR STRUCTURAL EARTH WALL INCL. HAUL.
3. ALL BACKFILL LOCATED UNDERNEATH THE MSE WALL SHALL CONSIST OF GRAVEL BORROW FOR STRUCTURAL EARTH WALL INCL. HAUL.
4. ALL BACKFILL OF EXCAVATION OUTSIDE THE LIMITS SHOWN IN THE PLANS OR EXTRA EXCAVATION LOCATED UNDERNEATH THE MSE WALL SHALL MEET THE REQUIREMENTS OF GRAVEL BORROW FOR STRUCTURAL EARTH WALL. BACKFILL SHALL BE PLACED AND COMPACTED IN ACCORDANCE WITH SPECIAL PROVISION "EMBANKMENTS AT LARGE WALLS".
5. ESTIMATED SHORING OR EXTRA EXCAVATION SHOWN FOR INFORMATIONAL PURPOSES ONLY AND DOES NOT REPRESENT ACTUAL LIMITS. SEE WALL PLAN VIEWS FOR STRUCTURAL SHORING LIMITS. CONTRACTOR IS RESPONSIBLE FOR DESIGN OF SHORING OR EXTRA EXCAVATION PER STANDARD SPECIFICATION 2-09.
6. WHEREVER BEDROCK IS PRESENT WITHIN 1' OF THE BOTTOM OF MSE WALL OR WITHIN 1' OF THE BOTTOM OF ANY TRUNCATED BASE STEPS, IT SHALL BE EXCAVATED TO AN ELEVATION 1' BELOW THE BOTTOM OF MSE WALL AND BOTTOM OF EACH TRUNCATED STEP. BACKFILL SHALL BE GRAVEL BORROW FOR STRUCTURAL EARTH WALL INCL. HAUL AND SHALL BE PLACED AND COMPACTED IN ACCORDANCE WITH SPECIAL PROVISION "EMBANKMENTS AT LARGE WALLS". APPLIES TO ENTIRE LENGTH OF WALLS 1-3. NOT SHOWN ON ALL SECTIONS.

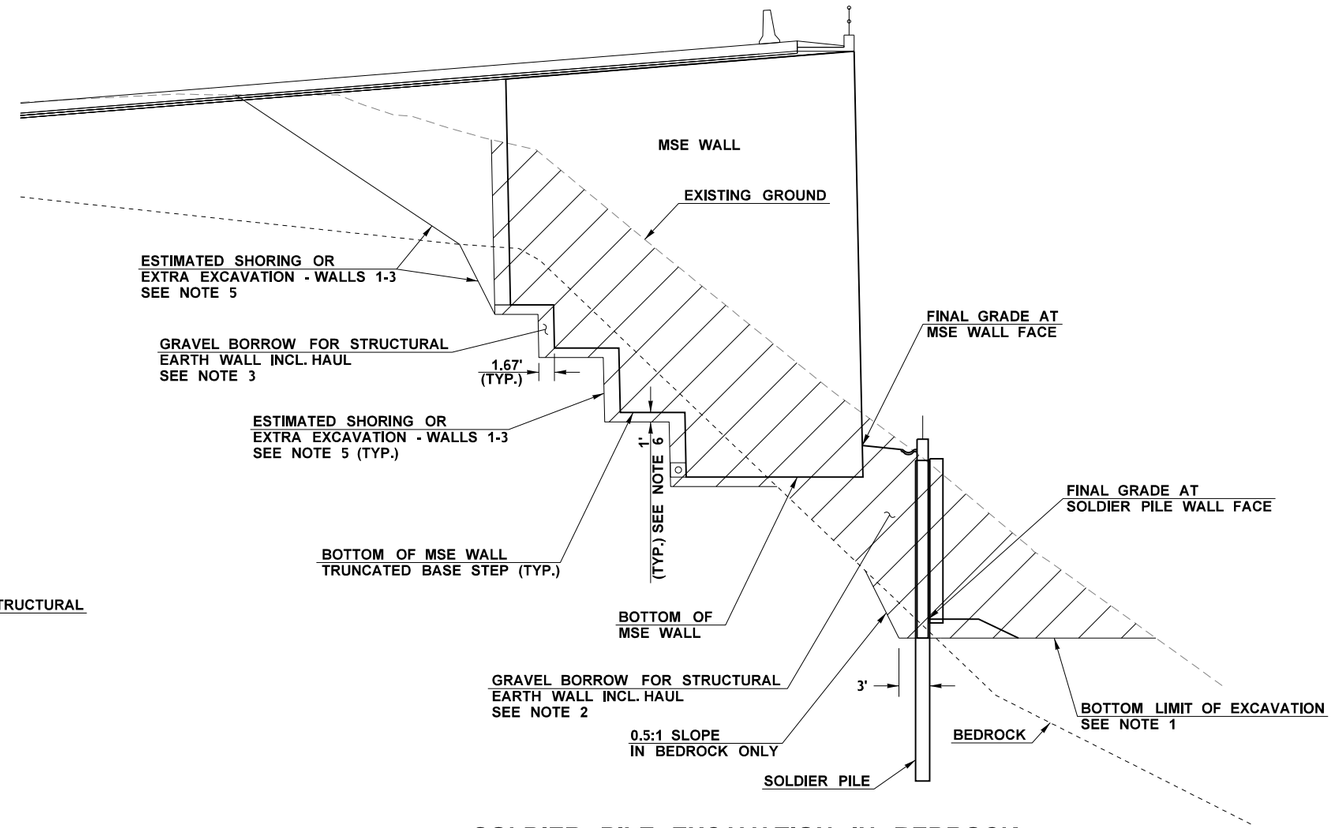

SOLDIER PILE EXCAVATION IN BEDROCK

(NOT TO SCALE)

WHERE STRUCTURE EXCAVATION BEHIND SOLDIER PILE WALL IS PARTIALLY IN BEDROCK

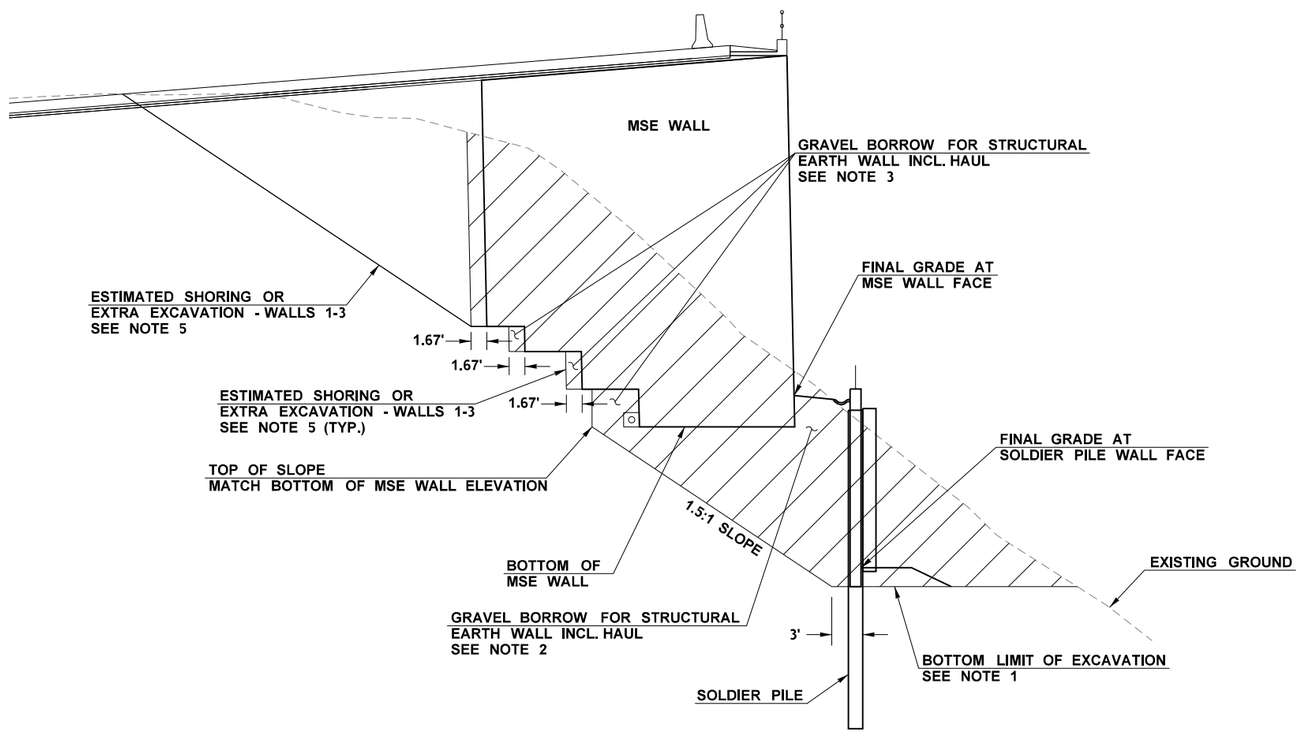

WIDE SOLDIER PILE EXCAVATION

(NOT TO SCALE)

WHERE STRUCTURE EXCAVATION BEHIND SOLDIER PILE WALL DOES NOT INTERCEPT THE BOTTOM OF THE MSE WALL

STRUCTURE EXCAVATION
CLASS A INCL. HAUL - WALLS 1-3

FILE NAME	K:\452201\090\06736_Phase 3\Design_CAD_Sheets\290-MInorStruct\XL5479_PS_WALLS_WD.dgn						
TIME	3:43:34 PM				REGION NO. 10	STATE WASH	FED.AID PROJ.NO.
DATE	2/15/2022						
PLOTTED BY	GipnerM						
DESIGNED BY	M. GIPNER				JOB NUMBER 19Y007		
ENTERED BY	M. GIPNER						
CHECKED BY	K. KING				CONTRACT NO.		LOCATION NO.
PROJ. ENGR.	A. BYRD						
REGIONAL ADM.	T. TREPANIER	REVISION	DATE	BY			

ANDREW D. BYRD — STATE OF WASHINGTON — 19873 — REGISTERED PROFESSIONAL ENGINEER

SEE SHEET CT5
DATE
P.E. STAMP BOX

DATE
P.E. STAMP BOX

Washington State
Department of Transportation

I-90
CABIN CREEK I/C TO W EASTON I/C
PHASE 3 - ADD LANES/WILDLIFE BRIDGES

WALLS 1-2 STRUCTURE EXCAVATION

Plot 17
PLAN REF NO
WD17
SHEET 932 OF 1783 SHEETS

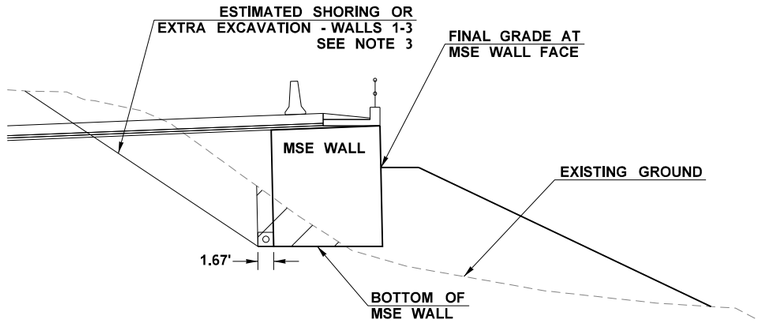

MSE WALL PARTIAL WIDTH EXCAVATION

(NOT TO SCALE)
WHERE FRONT OF MSE WALL IS ABOVE EXISTING GROUND
AND BACK OF MSE WALL REQUIRES EXCAVATION

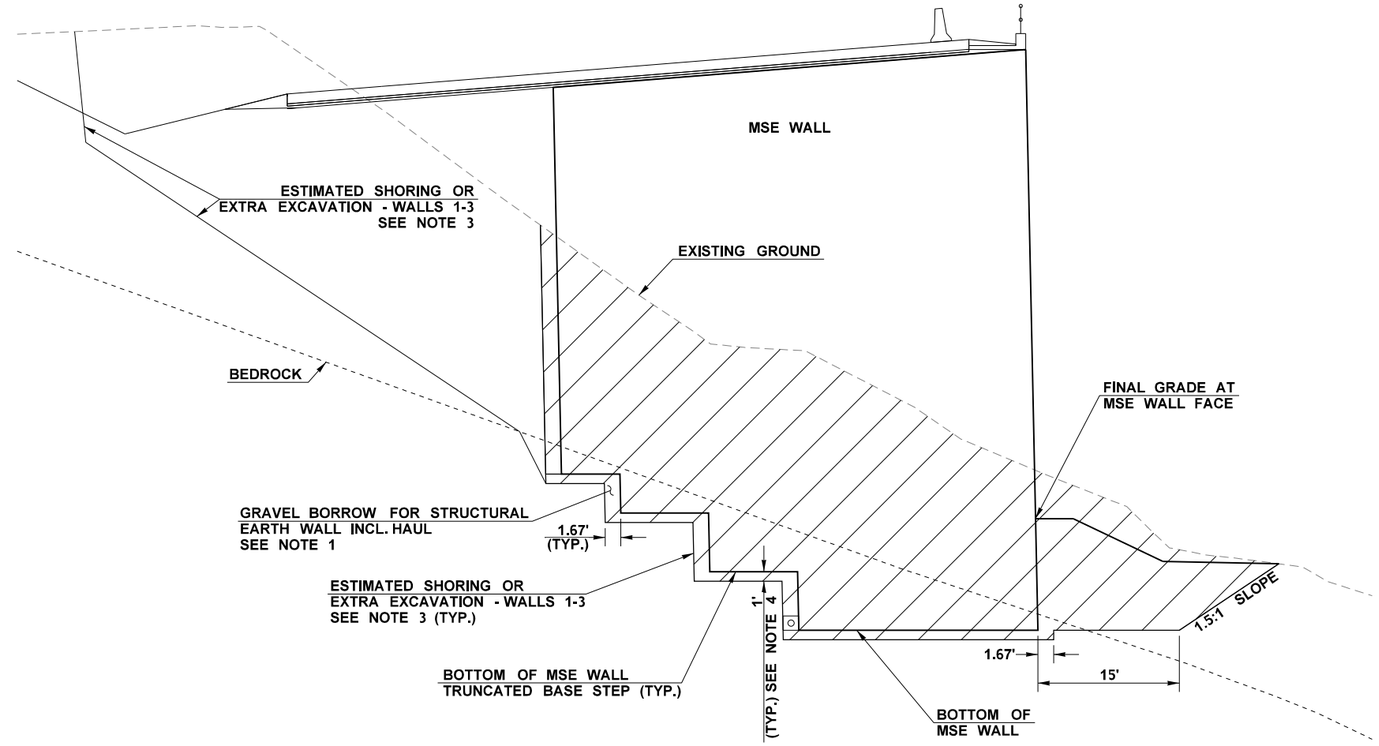

WIDE MSE WALL EXCAVATION

(NOT TO SCALE)
(TRUNCATED MSE REINFORCEMENT LENGTH SHOWN. EXCAVATION IN FRONT OF MSE WALL
SHALL BE THE SAME FOR LOCATIONS WITH CONSTANT WIDTH MSE REINFORCEMENT)

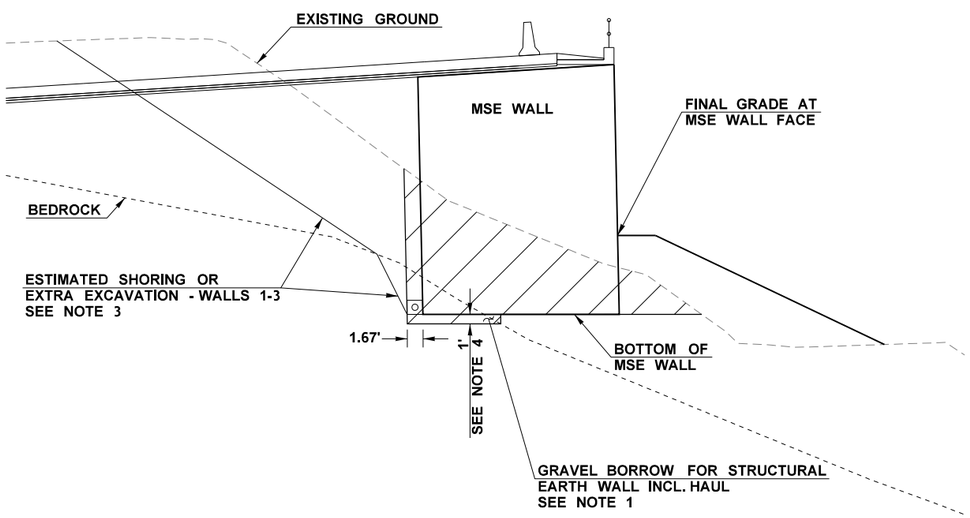

NARROW MSE WALL EXCAVATION

(NOT TO SCALE)
WHERE FRONT EXCAVATION IS LESS THAN 15' WIDE
(CONSTANT WIDTH MSE REINFORCEMENT SHOWN. EXCAVATION IN FRONT OF MSE WALL
SHALL BE THE SAME FOR LOCATIONS WITH TRUNCATED MSE REINFORCEMENT LENGTH)

NOTES:

1. ALL BACKFILL LOCATED UNDERNEATH THE MSE WALL SHALL CONSIST OF GRAVEL BORROW FOR STRUCTURAL EARTH WALL INCL. HAUL.
2. ALL BACKFILL OF EXCAVATION OUTSIDE THE LIMITS SHOWN IN THE PLANS OR EXTRA EXCAVATION LOCATED UNDERNEATH THE MSE WALL SHALL MEET THE REQUIREMENTS OF GRAVEL BORROW FOR STRUCTURAL EARTH WALL. BACKFILL SHALL BE PLACED AND COMPACTED IN ACCORDANCE WITH SPECIAL PROVISION "EMBANKMENTS AT LARGE WALLS".
3. ESTIMATED SHORING OR EXTRA EXCAVATION SHOWN FOR INFORMATIONAL PURPOSES ONLY AND DOES NOT REPRESENT ACTUAL LIMITS. SEE WALL PLAN VIEWS FOR STRUCTURAL SHORING LIMITS. CONTRACTOR IS RESPONSIBLE FOR DESIGN OF SHORING OR EXTRA EXCAVATION PER STANDARD SPECIFICATION 2-09.
4. WHEREVER BEDROCK IS PRESENT WITHIN 1' OF THE BOTTOM OF MSE WALL OR WITHIN 1' OF THE BOTTOM OF ANY TRUNCATED BASE STEPS, IT SHALL BE EXCAVATED TO AN ELEVATION 1' BELOW THE BOTTOM OF MSE WALL AND BOTTOM OF EACH TRUNCATED STEP. BACKFILL SHALL BE GRAVEL BORROW FOR STRUCTURAL EARTH WALL INCL. HAUL AND SHALL BE PLACED AND COMPACTED IN ACCORDANCE WITH SPECIAL PROVISION "EMBANKMENTS AT LARGE WALLS". APPLIES TO ENTIRE LENGTH OF WALLS 1-3. NOT SHOWN ON ALL SECTIONS.
5. FOR UNSTABLE BASE EXCAVATION AND ADDITIONAL BACKFILL REQUIREMENTS FOR PORTIONS OF THESE EXCAVATIONS SEE SHEET WD19.

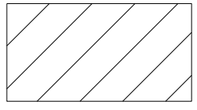

STRUCTURE EXCAVATION
CLASS A INCL. HAUL - WALLS 1-3

FILE NAME	K:\452201\090\06736_Phase 3\Design_CAD_Sheets\290-MInorStruct\XL5479_PS_WALLS_WD.dgn						
TIME	3:43:37 PM				REGION NO. 10	STATE WASH	FED.AID PROJ.NO.
DATE	2/15/2022						
PLOTTED BY	GipnerM				JOB NUMBER 19Y007		
DESIGNED BY	M. GIPNER						
ENTERED BY	M. GIPNER						
CHECKED BY	K. KING				CONTRACT NO.		LOCATION NO.
PROJ. ENGR.	A. BYRD						
REGIONAL ADM.	T. TREPANIER	REVISION	DATE	BY			

SEE SHEET CT5
DATE
P.E. STAMP BOX

DATE
P.E. STAMP BOX

Washington State
Department of Transportation

I-90
CABIN CREEK I/C TO W EASTON I/C
PHASE 3 - ADD LANES/WILDLIFE BRIDGES

WALLS 1-3 STRUCTURE EXCAVATION

Plot 18
PLAN REF NO
WD18
SHEET 933 OF 1783 SHEETS

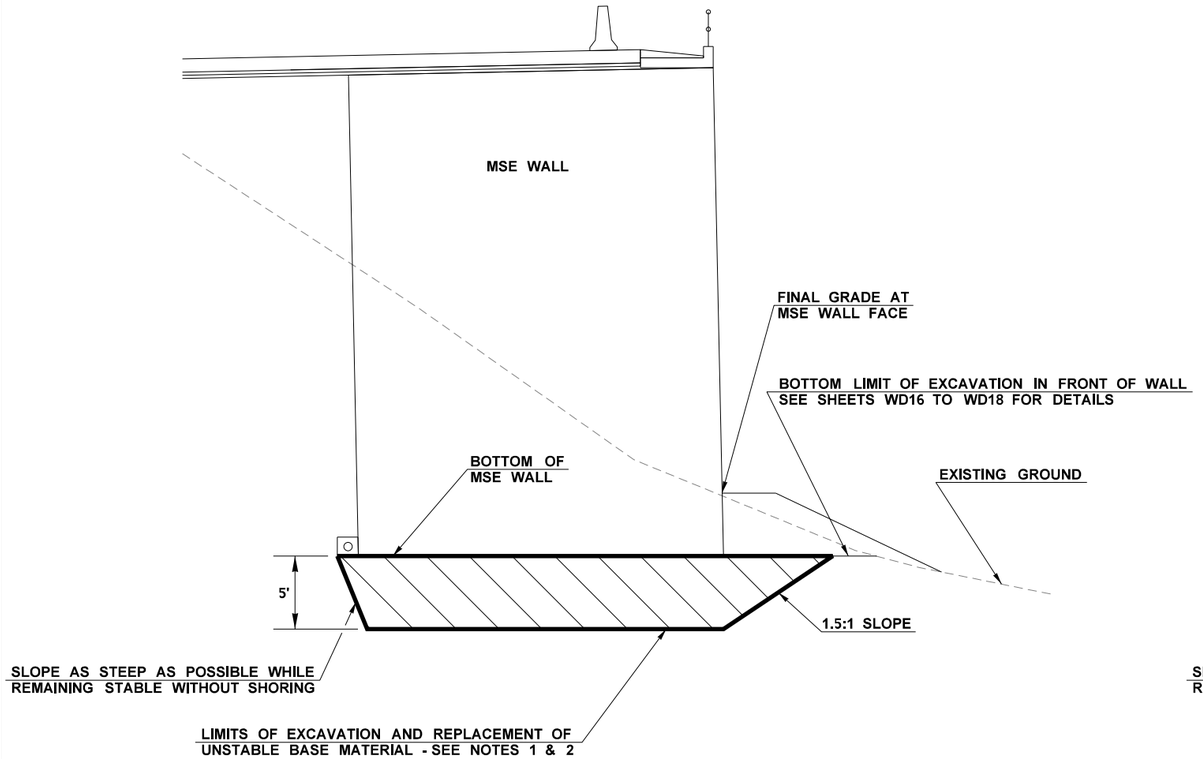

REQUIRED EXCAVATION AND REPLACEMENT OF UNSTABLE BASE MATERIAL

(NOT TO SCALE)

WALL 2 11+35.00 TO 13+66.00

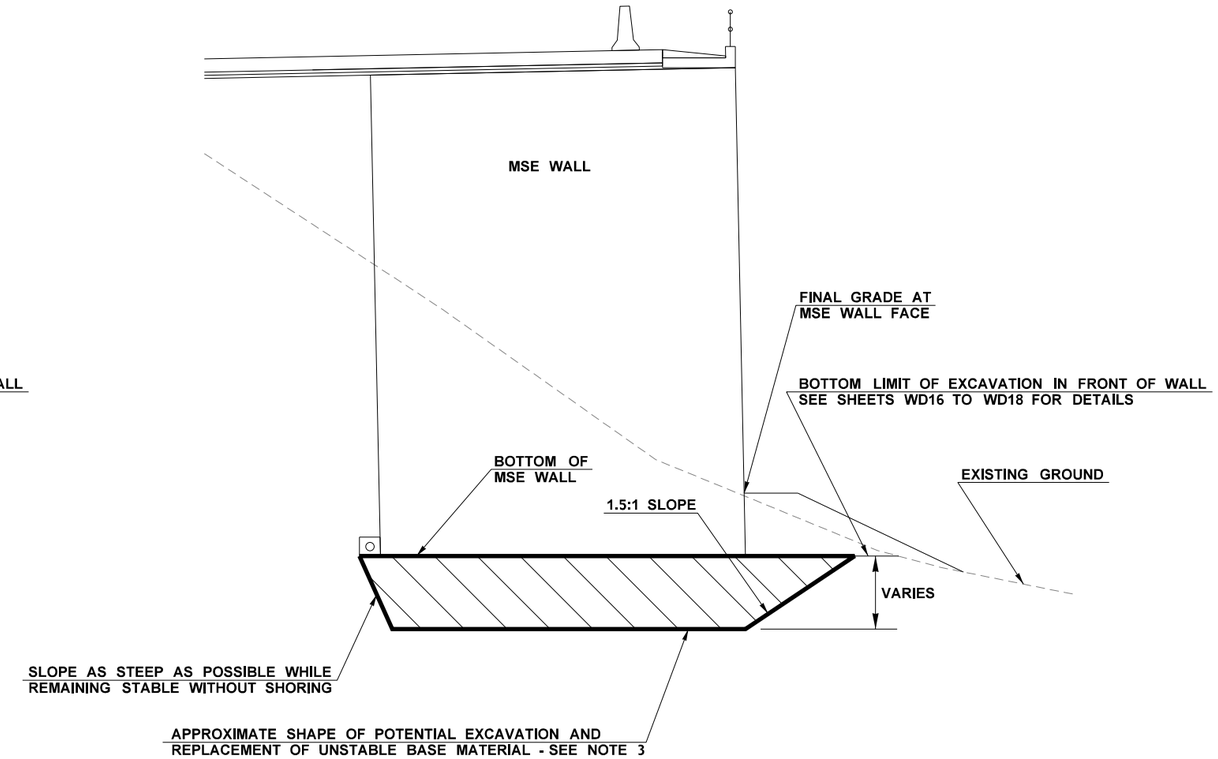

POTENTIAL EXCAVATION AND REPLACEMENT OF UNSTABLE BASE MATERIAL

(NOT TO SCALE)

LOCATIONS TO BE DETERMINED BY THE ENGINEER AFTER EXCAVATION TO BOTTOM OF MSE WALL IS COMPLETED

NOTES:

1. LIMITS MAY BE MODIFIED BY THE ENGINEER BASED ON THE MATERIAL ENCOUNTERED DURING EXCAVATION. UPON COMPLETION OF THE EXCAVATION THE CONTRACTOR SHALL NOTIFY THE ENGINEER. NO BACKFILL MAY BE PLACED UNTIL THE ENGINEER HAS INSPECTED THE COMPLETED EXCAVATION AND GIVEN PERMISSION TO PROCEED.
2. WHERE BOTTOM OF MSE WALL IS ABOVE EXISTING GRADE WITHIN THE LISTED STATION LIMITS, EXCAVATE TO 5 FEET BELOW BOTTOM OF MSE WALL AS SHOWN. BACKFILL EXCAVATION WITH GRAVEL BORROW FOR STRUCTURAL EARTH WALL INCL. HAUL. GRAVEL BACKFILL FOR STRUCTURAL EARTH WALL INCL. HAUL REQUIRED FOR ALL EMBANKMENT BELOW BOTTOM OF MSE WALL ELEVATION EXTENDING OUT TO FACE OF EMBANKMENT.
3. LIMITS AND SHAPE OF EXCAVATION AND BACKFILL WILL BE DETERMINED BY THE ENGINEER BASED ON THE MATERIAL ENCOUNTERED DURING EXCAVATION. UPON COMPLETION OF THE EXCAVATION THE CONTRACTOR SHALL NOTIFY THE ENGINEER. NO BACKFILL MAY BE PLACED UNTIL THE ENGINEER HAS INSPECTED THE COMPLETED EXCAVATION AND GIVEN PERMISSION TO PROCEED.
4. GRAVEL BORROW FOR STRUCTURAL EARTH WALL PLACED OUTSIDE THE MSE WALL REINFORCEMENT ZONE SHALL BE PLACED AND COMPACTED IN ACCORDANCE WITH SPECIAL PROVISION "EMBANKMENTS AT LARGE WALLS".

STRUCTURE EXCAVATION
CLASS A INCL. HAUL - WALLS 1-3
AND
GRAVEL BORROW FOR STRUCTURAL
EARTH WALL INCL. HAUL

FILE NAME	K:\452201\090\06736_Phase 3\Design_CAD_Sheets\290-MInorStruct\XL5479_PS_WALLS_WD.dgn				REGION NO.	STATE	FED.AID PROJ.NO.
TIME	8:38:48 PM				10	WASH	
DATE	2/7/2022				JOB NUMBER		
PLOTTED BY	GipnerM				19Y007		
DESIGNED BY	M. GIPNER				CONTRACT NO.		LOCATION NO.
ENTERED BY	M. GIPNER						
CHECKED BY	K. KING						
PROJ. ENGR.	A. BYRD						
REGIONAL ADM.	T. TREPANIER	REVISION	DATE	BY			

ANDREW D. BYRD — STATE OF WASHINGTON — REGISTERED PROFESSIONAL ENGINEER
SEE SHEET CT5
DATE
P.E. STAMP BOX

D. TODD MOONEY — STATE OF WASHINGTON — 40586 — REGISTERED PROFESSIONAL ENGINEER
SEE SHEET CT5
DATE
P.E. STAMP BOX

Washington State
Department of Transportation

I-90
CABIN CREEK I/C TO W EASTON I/C
PHASE 3 - ADD LANES/WILDLIFE BRIDGES

WALLS 1-3 UNSTABLE BASE
EXCAVATION & REPLACEMENT

Plot 19
PLAN REF NO
WD19
SHEET
934
OF
1783
SHEETS

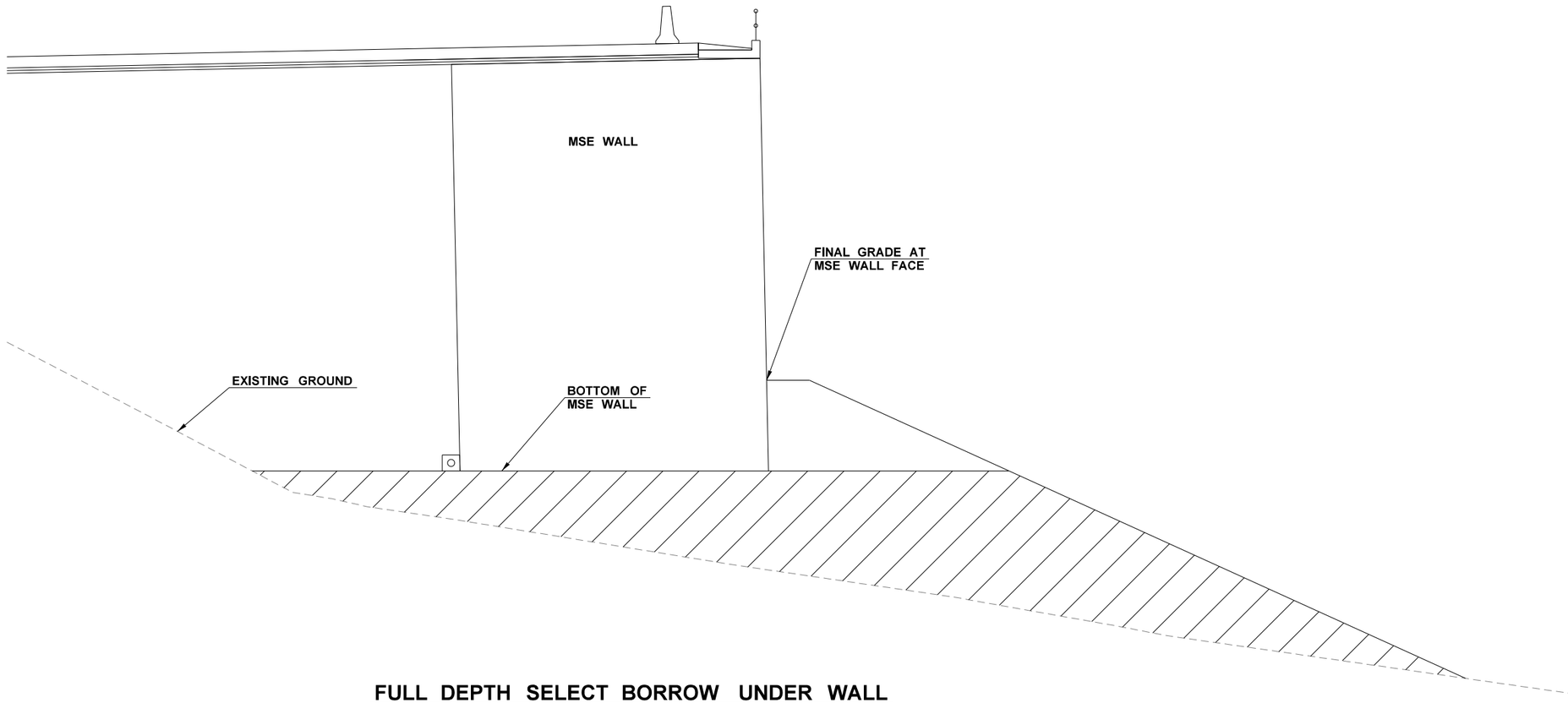

FULL DEPTH SELECT BORROW UNDER WALL

(NOT TO SCALE)

WALL 1 10+90.00 TO WALL 1 12+60.00
WALL 3 10+00.00 TO WALL 3 10+50.00

NOTES:

1. SELECT BORROW SHALL BE PLACED AND COMPACTED IN ACCORDANCE WITH SPECIAL PROVISION "EMBANKMENTS AT LARGE WALLS".
2. ANY EXCAVATION BELOW THE BOTTOM OF MSE WALL ELEVATION WITHIN THE LISTED STATION LIMITS SHALL BE BACKFILLED WITH SELECT BORROW. THIS INCLUDES BUT IS NOT LIMITED TO EXCAVATION FOR WALLS HC1 AND HC2.
3. AT WALL 3 10+00.00 SELECT BORROW SHALL EXTEND BACK ON STATION 1 FOOT THEN THE TOP SHALL BE SLOPED DOWN AT A 1:1 SLOPE UNTIL IT INTERCEPTS EXISTING GROUND OR THE BOTTOM OF ANY EXCAVATION, WHICHEVER IS LOWER. IF THIS OVERLAPS ANY REQUIREMENTS FOR GRAVEL BORROW REQUIRED AT THE EB HUDSON CREEK BRIDGE, THE REQUIREMENTS FOR GRAVEL BORROW SHALL CONTROL.

SELECT BORROW INCL. HAUL AND EMBANKMENT COMPACTION

FILE NAME	K:\452201\090\06736_Phase 3\Design_CAD_Sheets\290-MinorStruct\XL5479_PS_WALLS_WD.dgn			
TIME	8:38:51 PM			
DATE	2/7/2022			
PLOTTED BY	GipnerM			
DESIGNED BY	M. GIPNER			
ENTERED BY	M. GIPNER			
CHECKED BY	K. KING			
PROJ. ENGR.	A. BYRD			
REGIONAL ADM.	T. TREPANIER	REVISION	DATE	BY

REGION NO.	STATE	FED.AID PROJ.NO.
10	WASH	
JOB NUMBER 19Y007		
CONTRACT NO.		LOCATION NO.

SEE SHEET CT5
DATE
P.E. STAMP BOX

SEE SHEET CT5
DATE
P.E. STAMP BOX

Washington State Department of Transportation

I-90
CABIN CREEK I/C TO W EASTON I/C
PHASE 3 - ADD LANES/WILDLIFE BRIDGES

WALLS 1 & 3
SELECT BORROW SECTIONS

Plot 20
PLAN REF NO
WD20
SHEET 935 OF 1783 SHEETS

NOTES:

1. SELECT BORROW SHALL BE PLACED AND COMPACTED IN ACCORDANCE WITH SPECIAL PROVISION "EMBANKMENTS AT LARGE WALLS".

2. APPLIES WHEN THE BOTTOM OF THE MSE WALL IS PARTIALLY FOUNDED ON NEW EMBANKMENT AND THE REMAINDER IS FOUNDED IN A CUT FOR THE FULL LENGTH OF WALLS 1-3 EXCEPT FOR THE FOLLOWING RANGES:
   WALL 1 10+90.00 TO WALL 1 12+60.00
   WALL 1 12+84.00 TO WALL 1 20+22.00
   WALL 2 11+35.00 TO WALL 2 25+63.00
   WALL 3 10+00.00 TO WALL 3 10+50.00

3. APPLIES WHEN THE BOTTOM OF THE MSE WALL IS COMPLETELY FOUNDED ON NEW EMBANKMENT FOR THE FULL LENGTH OF WALLS 1-3 EXCEPT FOR THE FOLLOWING RANGES:
   WALL 1 10+90.00 TO WALL 1 12+60.00
   WALL 1 12+84.00 TO WALL 1 20+22.00
   WALL 2 11+35.00 TO WALL 2 25+63.00
   WALL 3 10+00.00 TO WALL 3 10+50.00

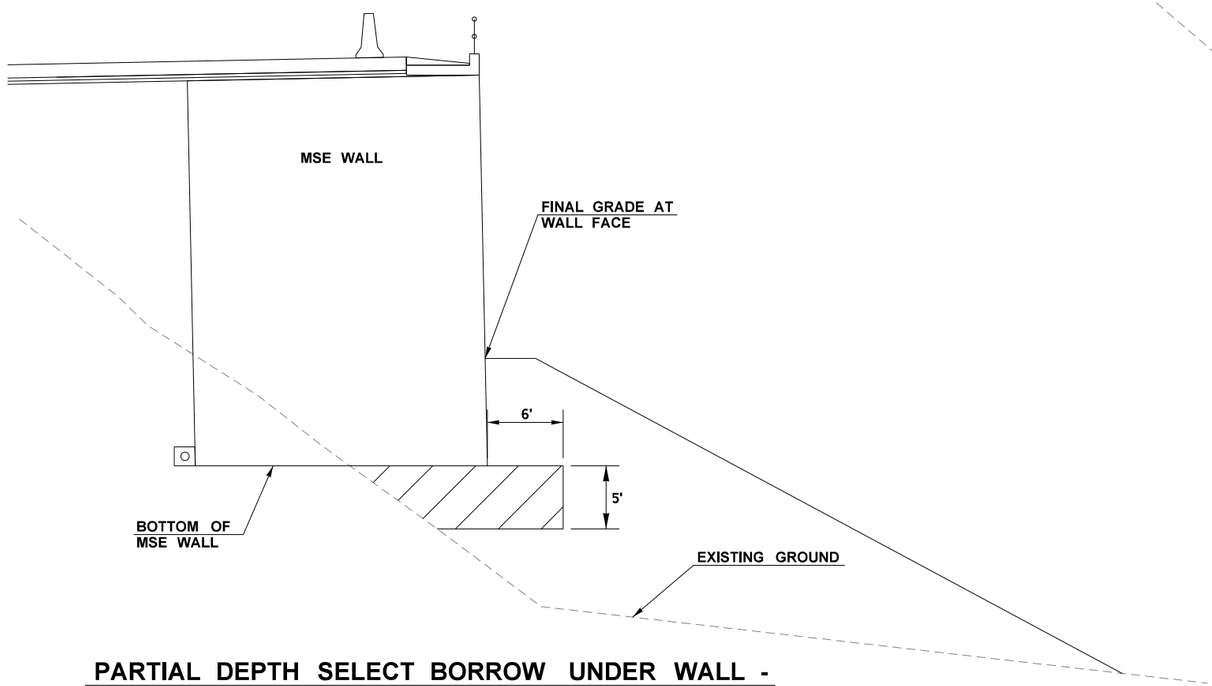

PARTIAL DEPTH SELECT BORROW UNDER WALL - PARTIAL WIDTH EMBANKMENT

(NOT TO SCALE)
SEE NOTE 2

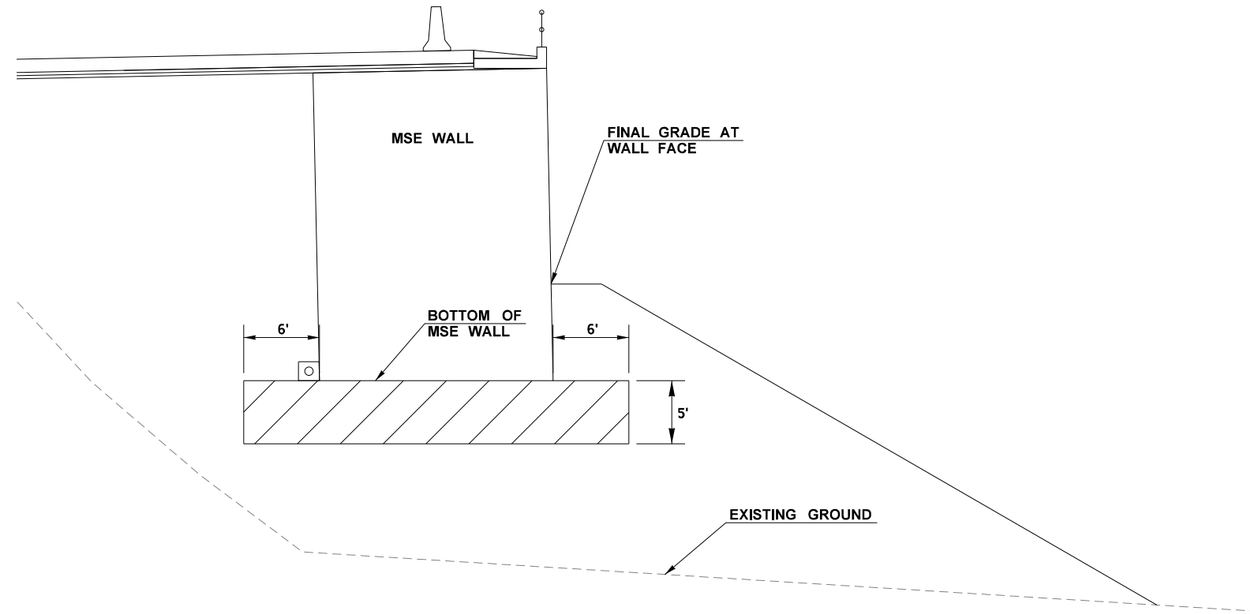

PARTIAL DEPTH SELECT BORROW UNDER WALL - FULL WIDTH EMBANKMENT

(NOT TO SCALE)
SEE NOTE 3

SELECT BORROW INCL. HAUL AND EMBANKMENT COMPACTION

FILE NAME	K:\452201\090\06736_Phase 3\Design_CAD_Sheets\290-MInorStruct\XL5479_PS_WALLS_WD.dgn						
TIME	8:38:54 PM				REGION NO. 10	STATE WASH	FED.AID PROJ.NO.
DATE	2/7/2022						
PLOTTED BY	GipnerM				JOB NUMBER 19Y007		
DESIGNED BY	M. GIPNER						
ENTERED BY	M. GIPNER				CONTRACT NO.		LOCATION NO.
CHECKED BY	K. KING						
PROJ. ENGR.	A. BYRD						
REGIONAL ADM.	T. TREPANIER	REVISION	DATE	BY			

P.E. STAMP BOX — SEE SHEET CT5 — DATE

P.E. STAMP BOX — SEE SHEET CT5 — DATE

Washington State Department of Transportation

I-90
CABIN CREEK I/C TO W EASTON I/C
PHASE 3 - ADD LANES/WILDLIFE BRIDGES

WALLS 1-3
SELECT BORROW SECTIONS

Plot 21
PLAN REF NO WD21
SHEET 936 OF 1783 SHEETS

CURVE DATA					
P.I. STATION	Δ	RADIUS	TANGENT	LENGTH	BK. TANGENT BRG.
LE 1721+23.08	13°16'44" RT.	2200.00'	256.08'	509.87'	S 17°56'19" E
WALL 1 21+15.78	35°37'53" LT.	1544.00'	496.19'	960.19'	S 4°39'35" E

SEC. 25, T.21N., R.12E., W.M.
KITTITAS COUNTY

I-90

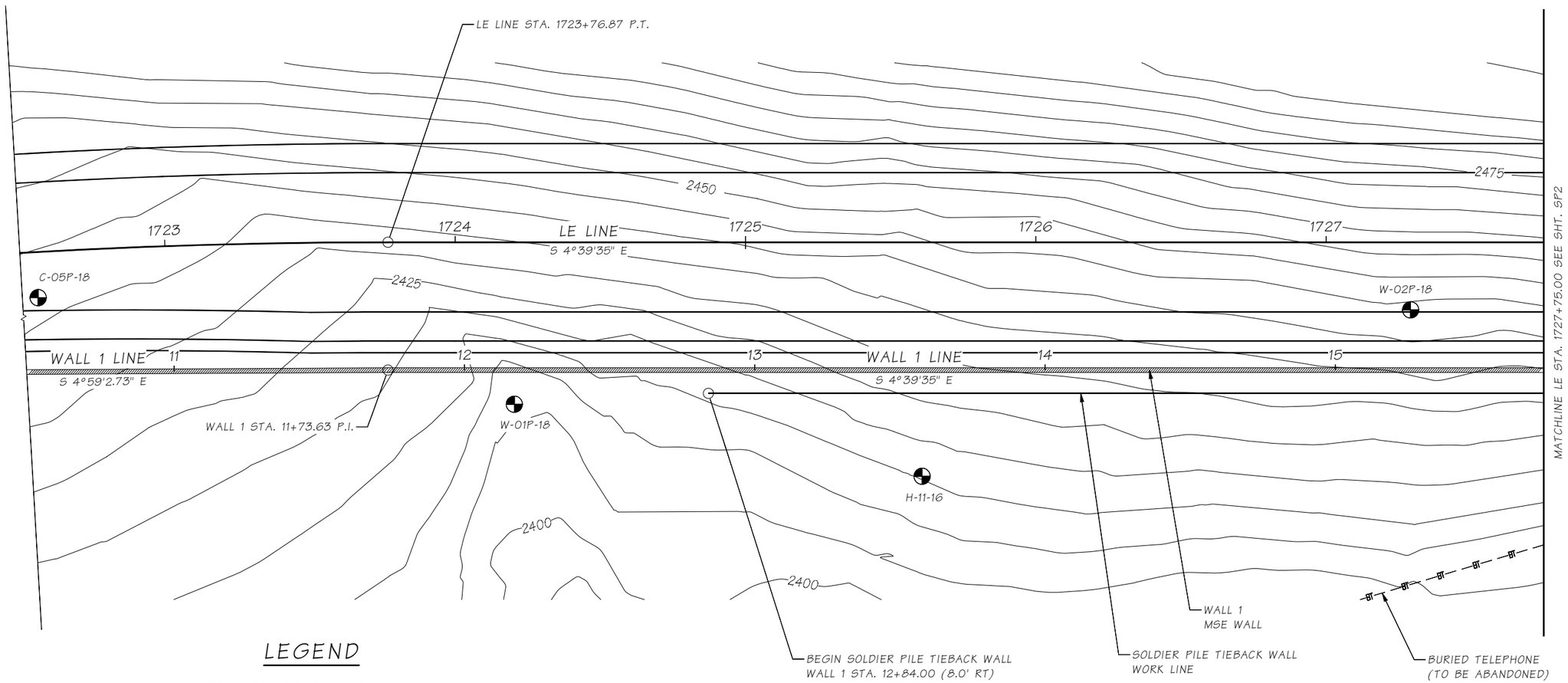

LEGEND

B / 7 — IDENTIFIES SECTION OR VIEW
TAKEN OR SHOWN ON BRIDGE SHEET 7

1 / — IDENTIFIES DETAIL
TAKEN OR SHOWN ON THE SAME SHEET

TEST HOLE

PLAN

SOLDIER PILE TIEBACK WALL

SR ___ FILE NO. ___ SHEET SP1

Bridge Design Engr.	Khaleghi, B		
Supervisor	Zeldenrust, RP		
Designed By	Barkley, J	03/21	
Checked By	Pawelka, M	02/22	
Detailed By	Swantak, S	09/21	
Bridge Projects Engr.			
Prelim. Plan By			
Architect/Specialist			

M:\Z-Team\I-90 PHASE 3 CABIN CR WALLS\window files\WALL 1 LAYOUT 1.wnd

DATE	REVISION	BY	APP'D

REGION NO.	STATE	FED. AID PROJ. NO.	SHEET NO.	TOTAL SHEETS
10	WASH.			

JOB NUMBER 19Y007
CONTRACT NO.

P.E. STAMP BOX
SEE SHEET CT5
DATE

BRIDGE AND STRUCTURES OFFICE

P.E. STAMP BOX
BILLAN KHALEGHI
STATE OF WASHINGTON
27695
STRUCTURAL ENGINEER
PROFESSIONAL ENGINEER
SEE SHEET CT5
DATE

Washington State
Department of Transportation

I-90
CABIN CR I/C TO W EASTON I/C
PHASE 3 - ADD LANES/WILDLIFE BRIDGES

SOLDIER PILE WALL 1
LAYOUT 1 OF 2

BRIDGE SHEET NO. SP1
SHEET 937 OF 1783 SHEETS

Mon Feb 07 14:07:34 2022

CURVE DATA					
P.I. STATION	Δ	RADIUS	TANGENT	LENGTH	BK. TANGENT BRG.
LE 1733+04.08	35°37'53" LT.	1500.00'	482.05'	932.83'	S 4°39'35" E
WALL 1 21+15.78	35°37'53" LT.	1544.00'	496.19'	960.19'	S 4°39'35" E

SEC. 25, T.21N., R.12E., W.M.
KITTITAS COUNTY

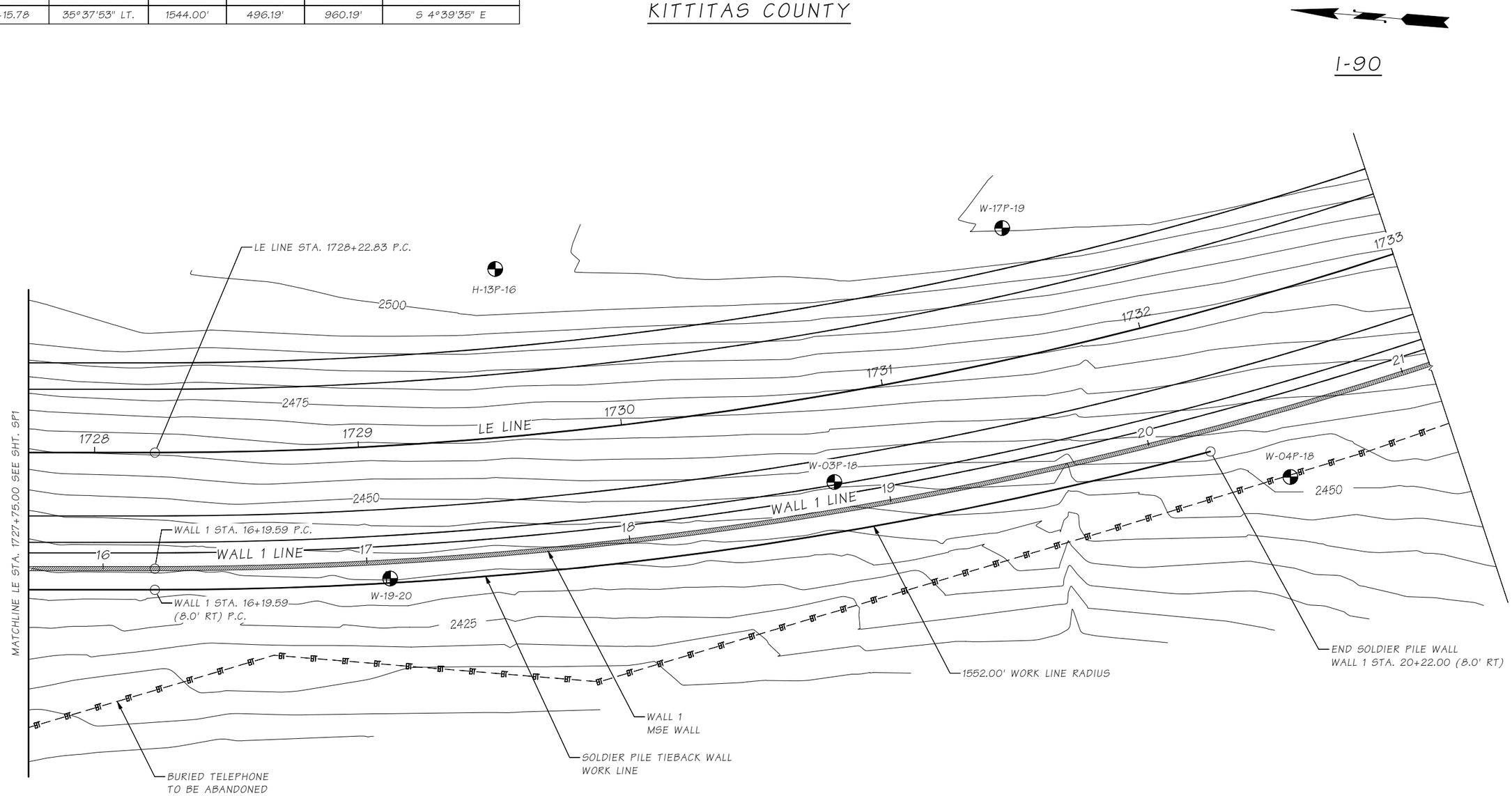

PLAN

SOLDIER PILE TIEBACK WALL

SR ____ FILE NO. ____ SHEET SP2

Bridge Design Engr.	Khaleghi, B	
Supervisor	Zeldenrust, RP	
Designed By	Barkley, J	06/21
Checked By	Pawelka, M	02/22
Detailed By	Swantak, S	09/21
Bridge Projects Engr.		
Prelim. Plan By		
Architect/Specialist		

M:\Z-Team\I-90 PHASE 3 CABIN CR WALLS\window files\WALL 1 LAYOUT 2.wnd

DATE	REVISION	BY	APP'D

REGION NO.	STATE	FED. AID PROJ. NO.	SHEET NO.	TOTAL SHEETS
10	WASH.			

JOB NUMBER 19Y007

CONTRACT NO.

P.E. STAMP BOX

SEE SHEET CT5
DATE:

BRIDGE AND STRUCTURES OFFICE

P.E. STAMP BOX

BIJAN KHALEGHI
STATE OF WASHINGTON
27695
STRUCTURAL ENGINEER
PROFESSIONAL ENGINEER

SEE SHEET CT5
DATE:

Washington State Department of Transportation

I-90
CABIN CR I/C TO W EASTON I/C
PHASE 3 - ADD LANES/WILDLIFE BRIDGES

SOLDIER PILE WALL 1
LAYOUT 2 OF 2

BRIDGE SHEET NO. SP2

SHEET 938 OF 1783 SHEETS

Mon Feb 07 14:07:34 2022

GENERAL NOTES

1. ALL MATERIAL AND WORKMANSHIP SHALL BE IN ACCORDANCE WITH THE REQUIREMENTS OF THE WASHINGTON STATE DEPARTMENT OF TRANSPORTATION STANDARD SPECIFICATIONS FOR ROAD, BRIDGE AND MUNICIPAL CONSTRUCTION, DATED 2022.

2. THIS STRUCTURE HAS BEEN DESIGNED IN ACCORDANCE WITH THE REQUIREMENTS OF THE AASHTO LRFD BRIDGE DESIGN SPECIFICATIONS - 9TH EDITION - 2020 AND CURRENT INTERIMS.

3. W SECTION STEEL SOLDIER PILES SHALL CONFORM TO ASTM A992. HP SECTION STEEL SOLDIER PILES SHALL CONFORM TO ASTM A572 GR. 50. SOLDIER PILES SHALL BE PAINTED TO THE LIMITS SHOWN IN THE PLANS IN ACCORDANCE WITH SECTION 6-16.3(4).

4. PLATES FOR THE SOLDIER PILE ASSEMBLY STIFFENER SHALL CONFORM TO ASTM A572 GR. 50. THE 8"ø EXTRA STRONG PIPE SHALL CONFORM TO THE REQUIREMENTS OF ASTM A53 GR. B. OR ASTM A500 GRADE B OR C.

5. ALL WELDING SHALL BE DONE TO MINIMIZE DISTORTION. WELDING SEQUENCES AND PROCEDURES SHALL BE SUBMITTED TO THE ENGINEER FOR APPROVAL PRIOR TO THE START OF FABRICATION.

6. CONCRETE FOR THE FASCIA PANELS SHALL BE CLASS 4000.

7. EXISTING GROUND LINE IS APPROXIMATE AND SHALL BE VERIFIED BY THE CONTRACTOR IN THE FIELD.

8. PERMANENT GROUND ANCHOR (PGA) LOCK OFF LOAD = 75 PERCENT OF THE MAXIMUM FACTORED DESIGN PGA LOAD FOR THE PILE.

9. PGA VERIFICATION TEST SHALL BE PERFORMED AT THE LOCATIONS SHOWN IN THE TABLE

PILE NO.	PGA NO.
28	PGA 1
54	PGA 3
74	PGA 2

NOTE: VERIFICATION TESTS ARE PERFORMED BETWEEN SOLDIER PILE LOCATIONS

SOLDIER PILE SCHEDULE

SOLDIER PILE NO.	SOLDIER PILE SIZE	EMBEDMENT DEPTH "D"	TOTAL LENGTH OF SOLDIER PILE = D+H	SHAFT DIA.	PGA 1 FACTORED DESIGN LOAD (KIPS)	PGA 2 FACTORED DESIGN LOAD (KIPS)	PGA 3 FACTORED DESIGN LOAD (KIPS)
1	W14 x 159	38'-0"	41'-6"	36"	N/A	N/A	N/A
2	W14 x 159	35'-9"	42'-9"	36"	N/A	N/A	N/A
3	W14 x 159	33'-3"	40'-3"	36"	215	N/A	N/A
4	W14 x 159	31'-0"	38'-0"	36"	215	N/A	N/A
5	W14 x 159	28'-6"	35'-6"	36"	215	N/A	N/A
6	W14 x 159	27'-3"	34'-3"	36"	215	N/A	N/A
7	W14 x 159	26'-3"	33'-3"	36"	215	N/A	N/A
8	W14 x 159	25'-0"	32'-0"	36"	215	N/A	N/A
9	W14 x 159	25'-3"	32'-3"	36"	215	N/A	N/A
10	W14 x 159	25'-9"	32'-9"	36"	215	N/A	N/A
11	W14 x 159	26'-3"	33'-3"	36"	215	N/A	N/A
12	W14 x 159	26'-6"	33'-6"	36"	215	N/A	N/A
13	W14 x 159	26'-6"	33'-6"	36"	215	N/A	N/A
14	W14 x 159	26'-6"	33'-6"	36"	215	N/A	N/A
15	W14 x 159	26'-0"	33'-0"	36"	215	N/A	N/A
16	W14 x 159	25'-9"	32'-9"	36"	215	N/A	N/A
17	W14 x 159	25'-3"	32'-3"	36"	215	N/A	N/A
18	W14 x 159	24'-3"	31'-3"	36"	215	N/A	N/A
19	W14 x 159	22'-9"	29'-9"	36"	215	N/A	N/A
20	W14 x 159	20'-9"	27'-9"	36"	255	N/A	N/A
21	W14 x 159	21'-6"	28'-6"	36"	255	N/A	N/A
22	W14 x 159	21'-6"	28'-6"	36"	255	N/A	N/A
23	W14 x 159	19'-9"	26'-9"	36"	255	N/A	N/A
24	W14 x 159	18'-0"	25'-0"	36"	255	N/A	N/A
25	W14 x 159	18'-0"	25'-0"	36"	255	N/A	N/A
26	W14 x 159	18'-6"	25'-6"	36"	255	N/A	N/A
27	W14 x 159	19'-0"	26'-0"	36"	255	N/A	N/A
28	W14 x 159	19'-6"	26'-6"	36"	255	N/A	N/A
29	W14 x 159	19'-6"	27'-2"	36"	255	N/A	N/A
30	W14 x 159	19'-3"	27'-11"	36"	255	N/A	N/A
31	W14 x 159	19'-0"	28'-7"	36"	255	N/A	N/A
32	W14 x 159	18'-6"	29'-1"	36"	255	N/A	N/A
33	W14 x 159	18'-9"	30'-4"	36"	255	N/A	N/A
34	W14 x 159	22'-6"	35'-1"	36"	255	225	N/A
35	W14 x 159	21'-6"	35'-0"	36"	255	225	N/A
36	W14 x 159	24'-0"	38'-6"	36"	205	225	N/A
37	W14 x 159	23'-3"	38'-9"	36"	205	225	N/A
38	W14 x 159	21'-0"	37'-6"	36"	205	225	N/A
39	W14 x 132	20'-0"	37'-6"	36"	205	225	N/A
40	W14 x 132	20'-0"	37'-8"	36"	205	225	260
41	W14 x 132	18'-9"	37'-9"	36"	205	225	260
42	W14 x 132	18'-6"	37'-6"	36"	205	225	260
43	W14 x 132	18'-6"	37'-6"	36"	205	225	260
44	W14 x 132	19'-6"	38'-6"	36"	205	225	260
45	W14 x 132	22'-0"	41'-0"	36"	205	225	260
46	W14 x 132	24'-3"	43'-3"	36"	205	225	260
47	W14 x 132	26'-9"	45'-9"	36"	205	225	260
48	W14 x 132	28'-3"	27'-3"	36"	205	225	260
49	W14 x 132	28'-0"	47'-0"	36"	205	225	260
50	W14 x 132	27'-0"	46'-0"	36"	205	225	260
51	W14 x 132	25'-9"	44'-9"	36"	205	225	260
52	W14 x 132	24'-6"	43'-6"	36"	205	225	260
53	W14 x 132	23'-3"	42'-3"	36"	205	225	260
54	W14 x 132	22'-3"	41'-3"	36"	205	225	260
55	W14 x 132	23'-3"	42'-3"	36"	205	225	260
56	W14 x 132	23'-9"	42'-9"	36"	225	225	225
57	W14 x 132	22'-0"	41'-0"	36"	225	225	225
58	W14 x 132	19'-3"	38'-3"	36"	225	225	225
59	W14 x 132	18'-9"	37'-9"	36"	225	225	225
60	W14 x 132	18'-3"	37'-3"	36"	225	225	225

SOLDIER PILE SCHEDULE

SOLDIER PILE NO.	SOLDIER PILE SIZE	EMBEDMENT DEPTH "D"	TOTAL LENGTH OF SOLDIER PILE = D+H	SHAFT DIA.	PGA 1 FACTORED DESIGN LOAD (KIPS)	PGA 2 FACTORED DESIGN LOAD (KIPS)	PGA 3 FACTORED DESIGN LOAD (KIPS)
61	W14 x 132	16'-9"	35'-9"	36"	225	225	225
62	W14 x 132	15'-3"	34'-3"	36"	225	225	225
63	W14 x 132	15'-0"	34'-0"	36"	225	225	225
64	W14 x 132	15'-0"	34'-0"	36"	225	225	225
65	W14 x 132	16'-0"	35'-0"	36"	225	225	225
66	W14 x 132	15'-0"	34'-0"	36"	225	225	225
67	W14 x 132	15'-0"	33'-2"	36"	225	225	225
68	W14 x 132	15'-0"	32'-1"	36"	270	225	N/A
69	W14 x 132	15'-3"	31'-4"	36"	270	225	N/A
70	W14 x 132	16'-0"	31'-0"	36"	270	225	N/A
71	W14 x 132	16'-3"	30'-4"	36"	270	225	N/A
72	W14 x 159	19'-9"	29'-9"	36"	270	225	N/A
73	W14 x 159	18'-3"	30'-3"	36"	270	225	N/A
74	W14 x 159	19'-6"	30'-6"	36"	270	225	N/A
75	W14 x 159	20'-3"	30'-3"	36"	270	N/A	N/A
76	W14 x 159	21'-0"	29'-11"	36"	270	N/A	N/A
77	W14 x 159	21'-3"	29'-6"	36"	270	N/A	N/A
78	W14 x 159	21'-0"	29'-1"	36"	270	N/A	N/A
79	W14 x 159	21'-0"	28'-9"	36"	270	N/A	N/A
80	W14 x 159	21'-0"	28'-5"	36"	270	N/A	N/A
81	W14 x 159	21'-0"	28'-2"	36"	270	N/A	N/A
82	W14 x 159	21'-0"	27'-10"	36"	N/A	N/A	N/A
83	W14 x 159	21'-0"	24'-5"	36"	N/A	N/A	N/A

NOTE: REFER TO THE SPECIAL PROVISIONS FOR DETAILS ON VARIANCE IN PILE LENGTHS.

SR ____ FILE NO. ____ SHEET SP4

Bridge Design Engr.	Khaleghi, B	
Supervisor	Zeldenrust, RP	
Designed By	Barkley, J	06/21
Checked By	Pawelka, M	02/22
Detailed By	Evans, A	06/21
Bridge Projects Engr.		
Prelim. Plan By		
Architect/Specialist		

M:\Z-Team\I-90 PHASE 3 CABIN CR WALLS\window files\WALL 1 GEN NOTES AND SCHEDULE 2.wnd

DATE	REVISION	BY	APP'D

REGION NO.	STATE	FED. AID PROJ. NO.	SHEET NO.	TOTAL SHEETS
10	WASH.			

JOB NUMBER 19Y007

CONTRACT NO.

P.E. STAMP BOX

RICHARD P. ZELDENRUST — STATE OF WASHINGTON — 25479 — PROFESSIONAL ENGINEER

SEE SHEET CT5

DATE

BRIDGE AND STRUCTURES OFFICE

P.E. STAMP BOX

BIJAN KHALEGHI — STATE OF WASHINGTON — 27695 — PROFESSIONAL ENGINEER

SEE SHEET CT5

DATE

Washington State Department of Transportation

I-90
CABIN CR I/C TO W EASTON I/C
PHASE 3 - ADD LANES/WILDLIFE BRIDGES

SOLDIER PILE WALL 1 GENERAL NOTES AND PILE SCHEDULE 2 OF 2

BRIDGE SHEET NO. SP4

SHEET 940 OF 1783 SHEETS

Mon Feb 07 14:07:34 2022

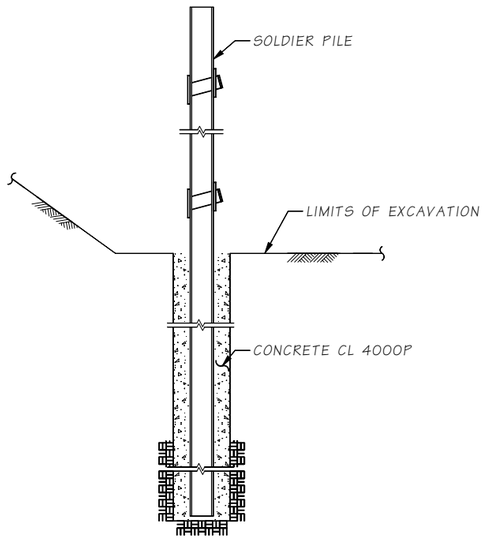

STAGE 1

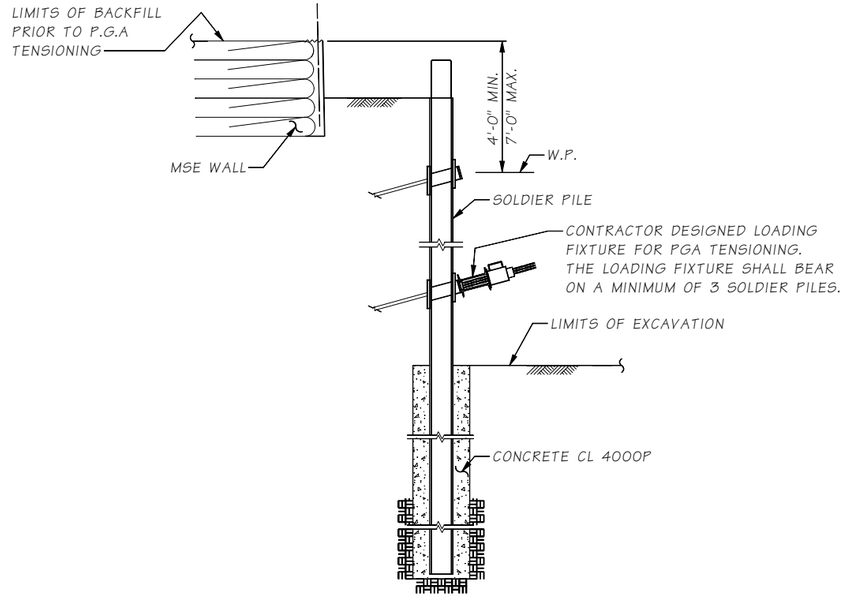

STAGE 3

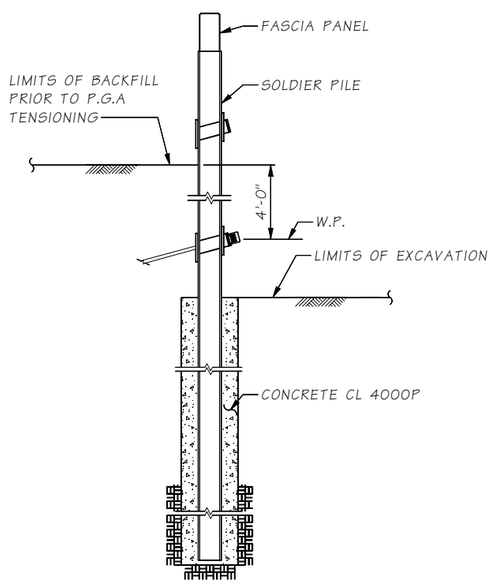

STAGE 2

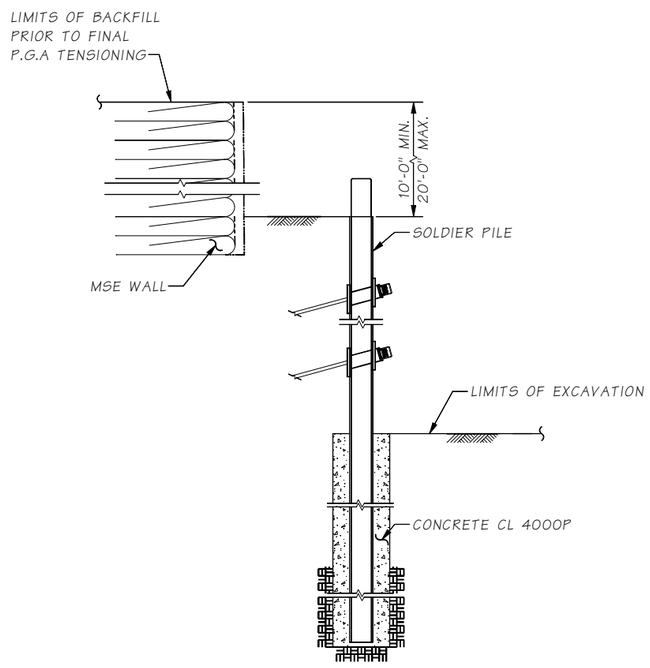

STAGE 4

P.G.A INSTALLATION SEQUENCE

1. DRILL SOLDIER PILE SHAFT AND INSTALL SOLDIER PILE. BACKFILL SHAFT WITH CONCRETE CLASS 4000P.
2. CAST FASCIA PANELS AND BACKFILL BEHIND THE WALL TO 4'-0" ABOVE THE BOTTOM P.G.A LOCATION. INSTALL THE P.G.A. AND TENSION TO 50% OF THE DESIGNATED LOCK-OFF LOAD. REPEAT FOR CONSECUTIVE P.G.A LOCATIONS.
3. BACKFILL AND CONSTRUCT THE MSE WALL TO A MINIMUM OF 4'-0" OR MAXIMUM OF 7'-0" ABOVE THE TOP PGA LOCATION. INSTALL THE P.G.A. AND TENSION TO 50% OF THE DESIGNATED LOCK-OFF LOAD.
4. CONSTRUCT THE MSE WALL TO A MINIMUM OF 10'-0" OR MAXIMUM OF 20'-0" ABOVE THE THE SOLDIER PILE WALL AND APPLY 100% OF THE DESIGNATED LOCK-OFF LOAD TO ALL P.G.As. CONTINUE MSE WALL CONSTRUCTION.

SR ____ FILE NO. ____ SHEET SP5

Bridge Design Engr.	Khaleghi, B	
Supervisor	Zeldenrust, RP	
Designed By	Barkley, J	09/21
Checked By	Pawelka, M	02/22
Detailed By	Barkley, J	09/21
Bridge Projects Engr.		
Prelim. Plan By		
Architect/Specialist		

M:\Z-Team\I-90 PHASE 3 CABIN CR WALLS\window files\WALL 1 CONSTR SEQ.wnd

DATE	REVISION	BY	APP'D

REGION NO.	STATE	FED. AID PROJ. NO.	SHEET NO.	TOTAL SHEETS
10	WASH.			

JOB NUMBER 19Y007

CONTRACT NO.

P.E. STAMP BOX — RICHARD P. ZELDENRUST, STATE OF WASHINGTON, 38470, STRUCTURAL ENGINEER, PROFESSIONAL ENGINEER — SEE SHEET CT5 — DATE

BRIDGE AND STRUCTURES OFFICE

P.E. STAMP BOX — BHAM KHALEGHI, STATE OF WASHINGTON, 27986, STRUCTURAL ENGINEER, PROFESSIONAL ENGINEER — SEE SHEET CT5 — DATE

Washington State Department of Transportation

I-90
CABIN CR I/C TO W EASTON I/C
PHASE 3 - ADD LANES/WILDLIFE BRIDGES

SOLDIER PILE WALL 1
CONSTRUCTION SEQUENCE

BRIDGE SHEET NO. SP5

SHEET 941 OF 1783 SHEETS

Mon Feb 07 14:07:34 2022

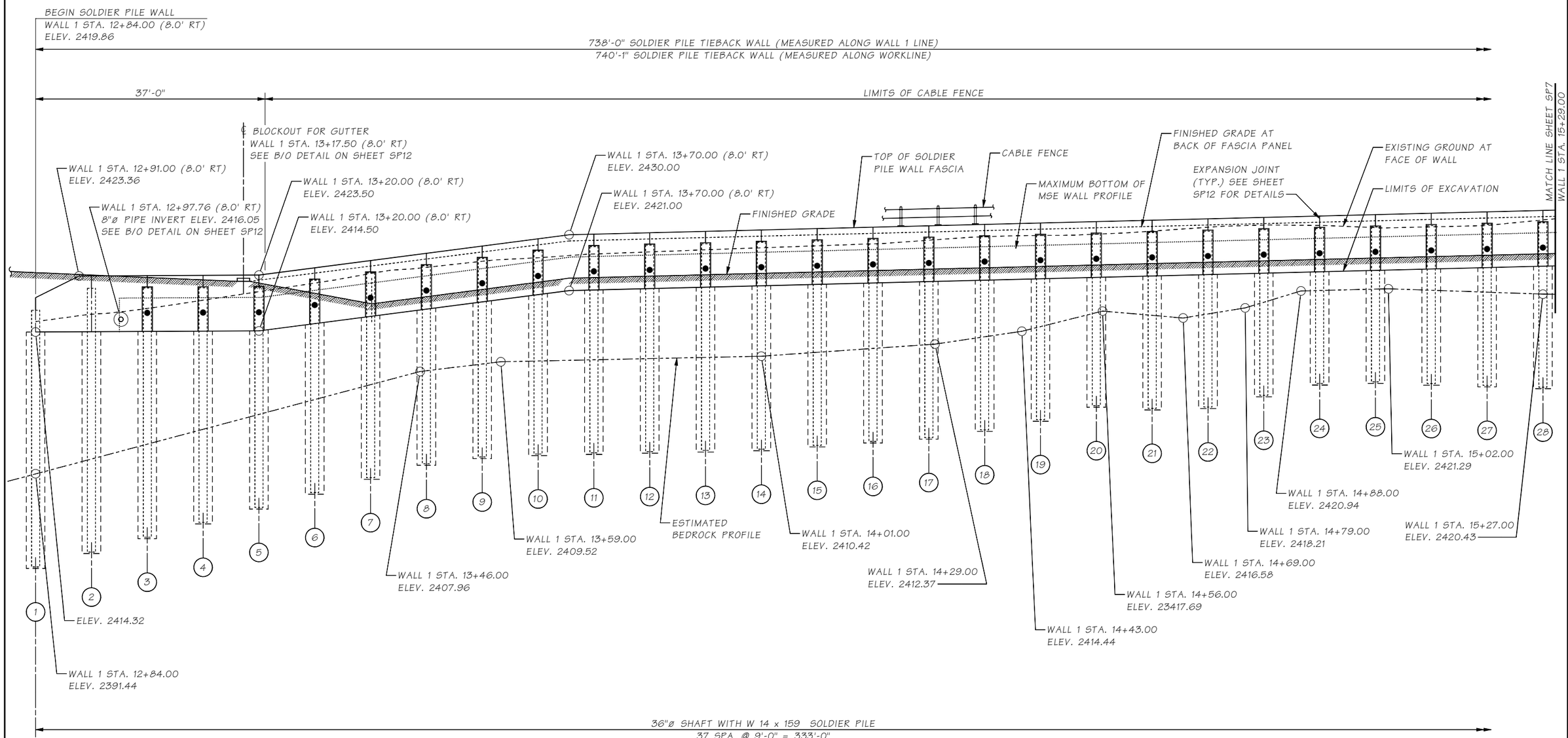

DEVELOPED ELEVATION

● = PGA LOCATION

DATUM

N.A.V.D. OF 1988

SR ____ FILE NO. ____ SHEET SP6

Bridge Design Engr.	Khaleghi, B	M:\Z-Team\I-90 PHASE 3 CABIN CR WALLS\window files\WALL 1 ELEVATION 1.wnd									
Supervisor	Zeldenrust, RP										
Designed By	Barkley, J	06/21									
Checked By	Pawelka, M	02/22									
Detailed By	Evans, A	06/21									
Bridge Projects Engr.											
Prelim. Plan By											
Architect/Specialist			DATE	REVISION	BY	APP'D					

REGION NO.	STATE	FED. AID PROJ. NO.	SHEET NO.	TOTAL SHEETS
10	WASH.			
JOB NUMBER 19Y007				
CONTRACT NO.				

P.E. STAMP BOX
RICHARD P. ZELDENRUST
STATE OF WASHINGTON
25476
STRUCTURAL ENGINEER
PROFESSIONAL ENGINEER
SEE SHEET CT5
DATE:

BRIDGE AND STRUCTURES OFFICE

P.E. STAMP BOX
BIJAN KHALEGHI
STATE OF WASHINGTON
27695
STRUCTURAL ENGINEER
PROFESSIONAL ENGINEER
SEE SHEET CT5
DATE:

Washington State Department of Transportation

I-90
CABIN CR I/C TO W EASTON I/C
PHASE 3 - ADD LANES/WILDLIFE BRIDGES

SOLDIER PILE WALL 1
DEVELOPED ELEVATION 1 OF 3

BRIDGE SHEET NO. SP6
SHEET 942 OF 1783 SHEETS

Mon Feb 07 14:07:35 2022

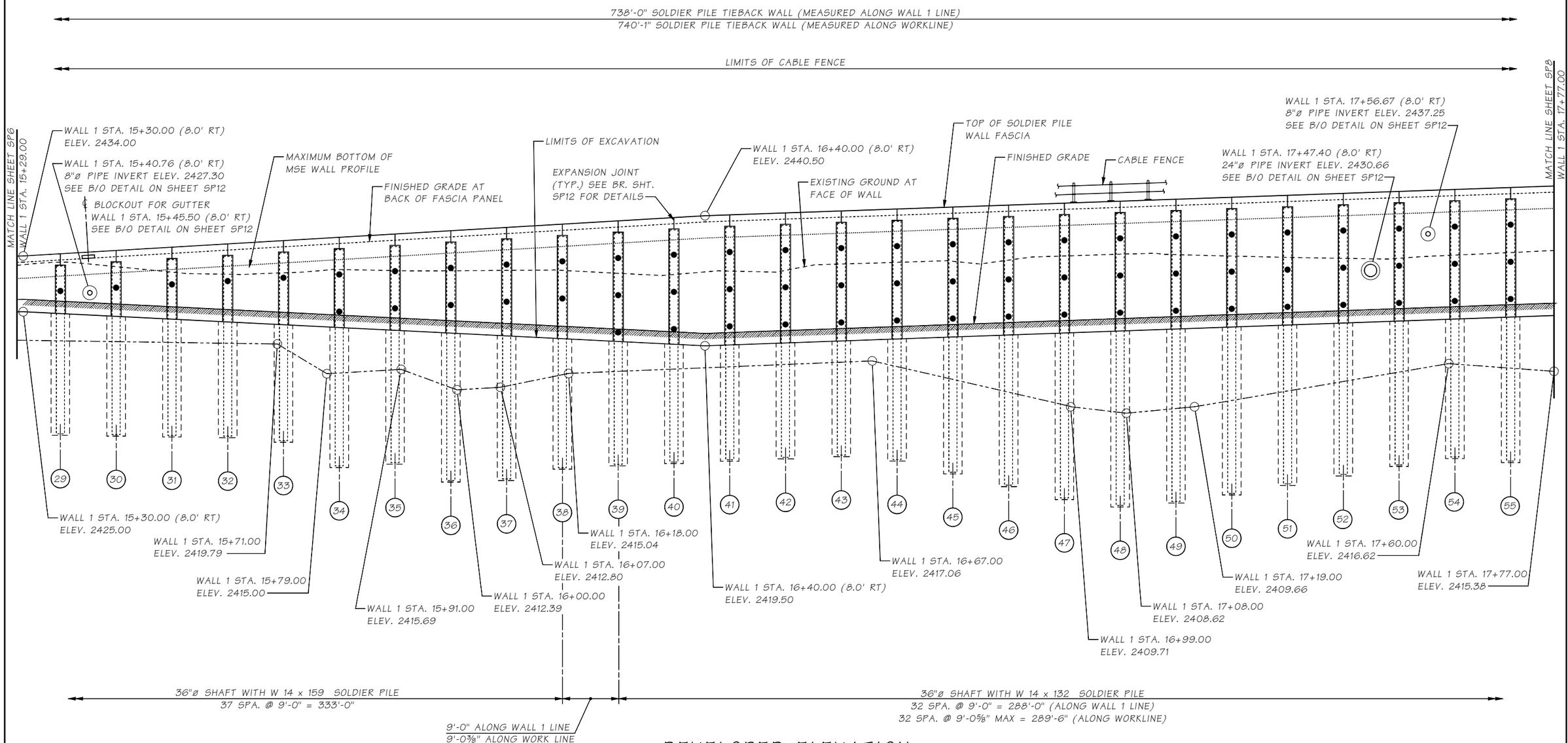

DEVELOPED ELEVATION

● = PGA LOCATION

Bridge Design Engr.	Khaleghi, B		
Supervisor	Zeldenrust, RP		
Designed By	Barkley, J	06/21	
Checked By	Pawelka, M	02/22	
Detailed By	Evans, A	06/21	
Bridge Projects Engr.			
Prelim. Plan By			
Architect/Specialist			

M:\Z-Team\I-90 PHASE 3 CABIN CR WALLS\window files\WALL 1 ELEVATION 2.wnd

DATE	REVISION	BY	APP'D

REGION NO.	STATE	FED. AID PROJ. NO.	SHEET NO.	TOTAL SHEETS
10	WASH.			
JOB NUMBER 19Y007				
CONTRACT NO.				

P.E. STAMP BOX
RICHARD P. ZELDENRUST
STATE OF WASHINGTON
25470
PROFESSIONAL ENGINEER
SEE SHEET CT5
DATE:

BRIDGE AND STRUCTURES OFFICE

P.E. STAMP BOX
BILLAN KHALEGHI
STATE OF WASHINGTON
37695
PROFESSIONAL ENGINEER
SEE SHEET CT5
DATE:

Washington State
Department of Transportation

I-90
CABIN CR I/C TO W EASTON I/C
PHASE 3 - ADD LANES/WILDLIFE BRIDGES

SOLDIER PILE WALL 1
DEVELOPED ELEVATION 2 OF 3

BRIDGE SHEET NO. SP7

SHEET 943 OF 1783 SHEETS

SR ____ FILE NO. ____ SHEET SP7

Mon Feb 07 14:07:35 2022

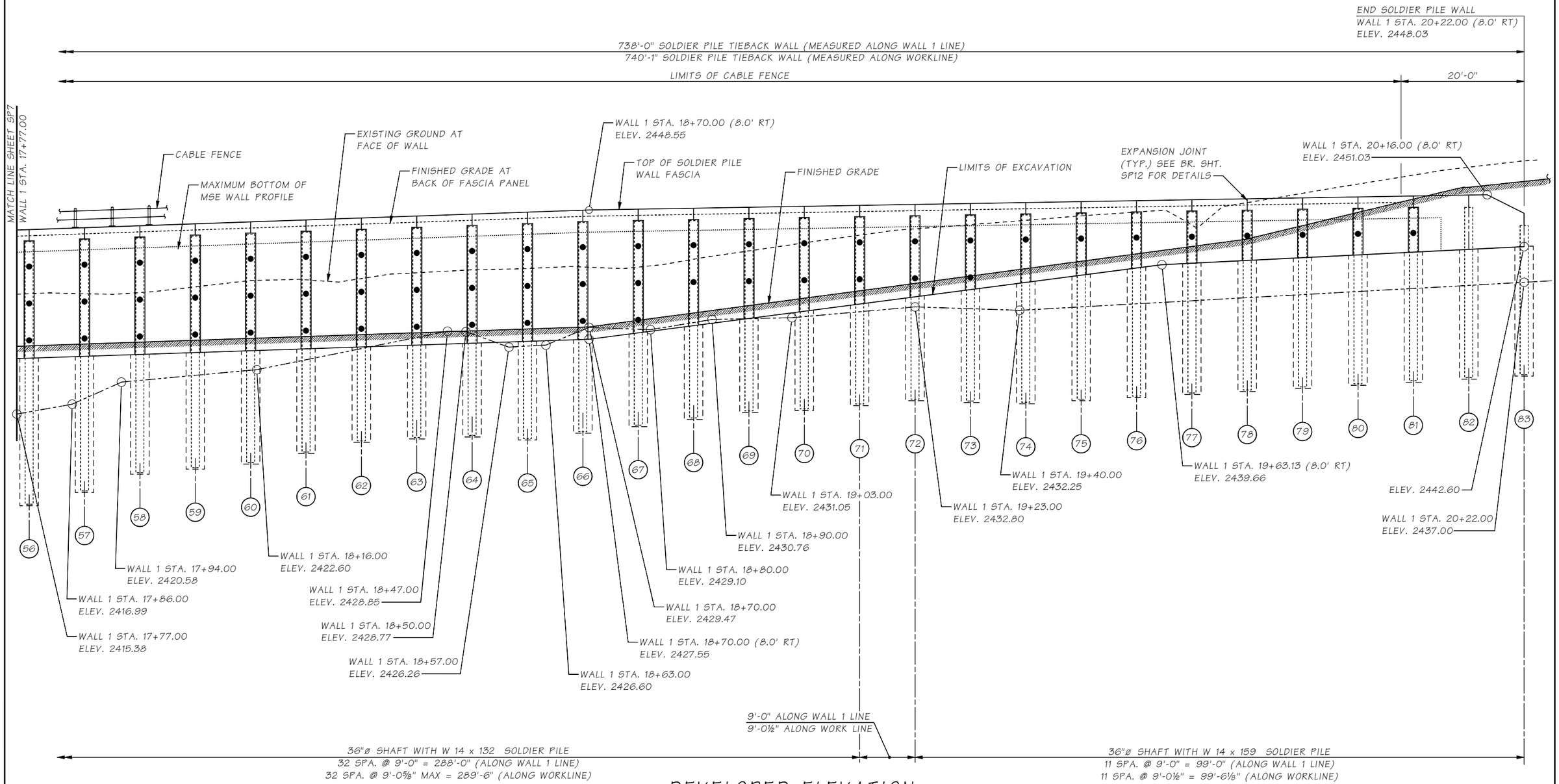

DEVELOPED ELEVATION

● = PGA LOCATION

Bridge Design Engr.	Khaleghi, B	
Supervisor	Zeldenrust, RP	
Designed By	Barkley, J	06/21
Checked By	Pawelka, M	02/22
Detailed By	Evans, A	06/21
Bridge Projects Engr.		
Prelim. Plan By		
Architect/Specialist		

M:\Z-Team\I-90 PHASE 3 CABIN CR WALLS\window files\WALL 1 ELEVATION 3.wnd

DATE	REVISION	BY	APP'D

REGION NO.	STATE	FED. AID PROJ. NO.	SHEET NO.	TOTAL SHEETS
10	WASH.			
JOB NUMBER 19Y007				
CONTRACT NO.				

P.E. STAMP BOX — RICHARD P. ZELDENRUST, STATE OF WASHINGTON, 38470, PROFESSIONAL ENGINEER — SEE SHEET CT5 — DATE

BRIDGE AND STRUCTURES OFFICE

P.E. STAMP BOX — BIJAN KHALEGHI, STATE OF WASHINGTON, 27986, PROFESSIONAL ENGINEER — SEE SHEET CT5 — DATE

Washington State Department of Transportation

I-90
CABIN CR I/C TO W EASTON I/C
PHASE 3 - ADD LANES/WILDLIFE BRIDGES

SOLDIER PILE WALL 1
DEVELOPED ELEVATION 3 OF 3

BRIDGE SHEET NO. SP8

SHEET 944 OF 1783 SHEETS

SR ____ FILE NO. ____ SHEET SP8

Mon Feb 07 14:07:36 2022

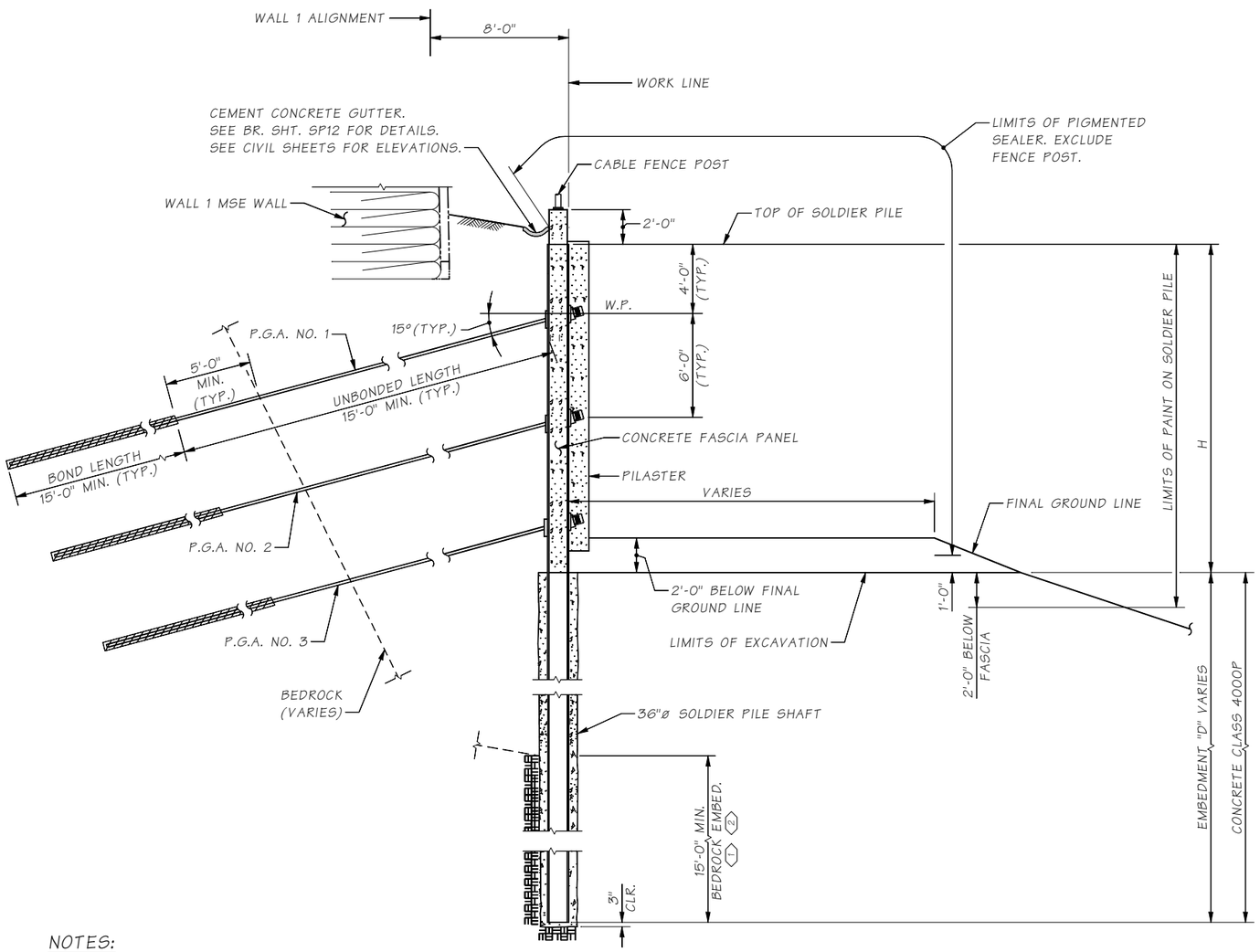

TYPICAL SECTION

SHOWN FOR SOLDIER PILE WITH P.G.A.
SIMILAR FOR SOLDIER PILE WITHOUT P.G.A.

P.G.A.= PERMANENT GROUND ANCHOR

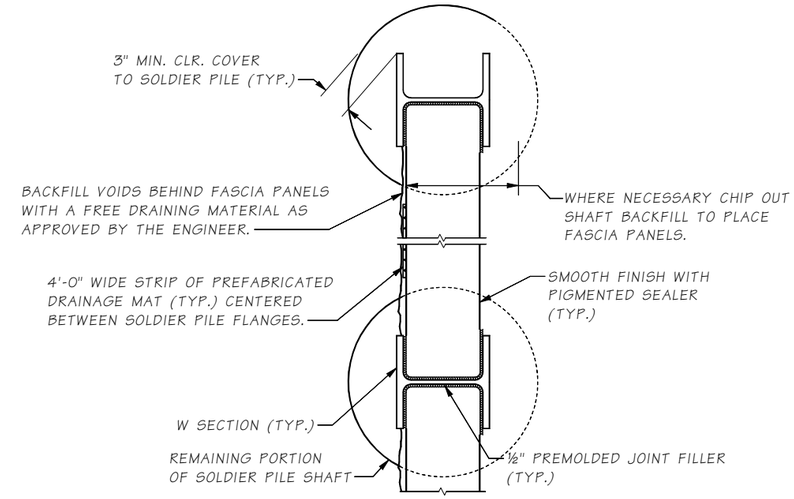

PLAN
SOLDIER PILE WALL
WITHOUT P. G. A.

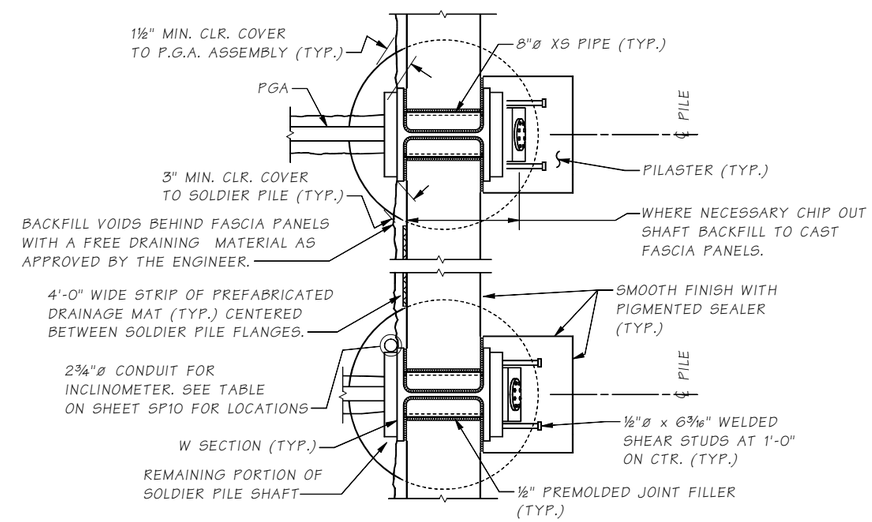

PLAN
SOLDIER PILE WALL
WITH P. G. A.

NOTES:

1. MINIMUM BEDROCK EMBEDMENT SHALL BE IN COMPETENT BEDROCK VERIFIED BY THE ENGINEER.
2. THE CONTRACTOR IS PERMITTED TO REDUCED THE SHAFT DIAMETER TO 30"ø MINIMUM IN THE ROCK SOCKET FOR TELESCOPING. A 36"ø SHAFT SHALL BE MAINTAINED ABOVE THE ROCK SURFACE.

SR ___ FILE NO. ___ SHEET SP9

Bridge Design Engr.	Khaleghi, B		M:\Z-Team\I-90 PHASE 3 CABIN CR WALLS\window files\WALL 1 DETAILS 1.wnd								
Supervisor	Zeldenrust, RP										
Designed By	Barkley, J	03/21									
Checked By	Pawelka, M	02/22									
Detailed By	Evans, A	03/21									
Bridge Projects Engr.											
Prelim. Plan By											
Architect/Specialist			DATE	REVISION	BY	APP'D					

REGION NO.	STATE	FED. AID PROJ. NO.	SHEET NO.	TOTAL SHEETS
10	WASH.			
JOB NUMBER 19Y007				
CONTRACT NO.				

P.E. STAMP BOX: RICHARD P. ZELDENRUST, STATE OF WASHINGTON, 25490, STRUCTURAL ENGINEER, PROFESSIONAL ENGINEER, U.S.A. — SEE SHEET CT5 — DATE:

BRIDGE AND STRUCTURES OFFICE

P.E. STAMP BOX: BILIAN KHALEGHI, STATE OF WASHINGTON, 27695, STRUCTURAL ENGINEER, PROFESSIONAL ENGINEER — SEE SHEET CT5 — DATE:

Washington State Department of Transportation

I-90
CABIN CR I/C TO W EASTON I/C
PHASE 3 - ADD LANES/WILDLIFE BRIDGES

SOLDIER PILE WALL 1
DETAILS 1 OF 2

BRIDGE SHEET NO. SP9

SHEET 945 OF 1783 SHEETS

Mon Feb 07 14:07:36 2022

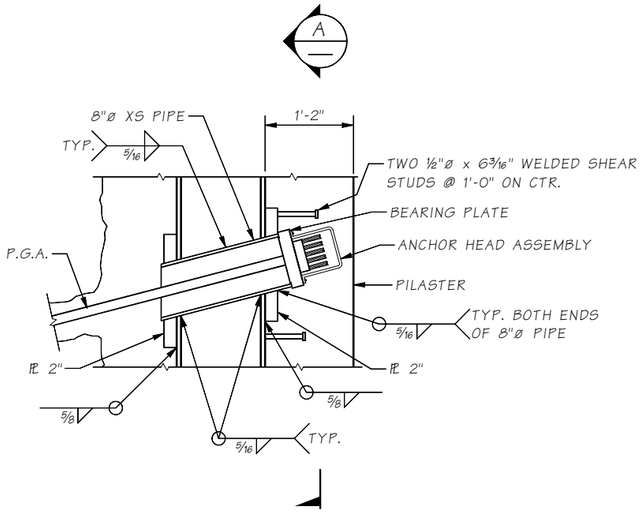

ELEVATION - SOLDIER PILE WITH P.G.A. THRU WEB

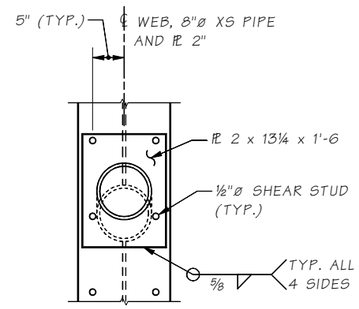

VIEW A
AT W14x132 SOLDIER PILE

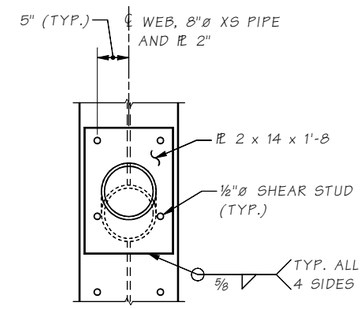

VIEW A
AT W14x159 SOLDIER PILE

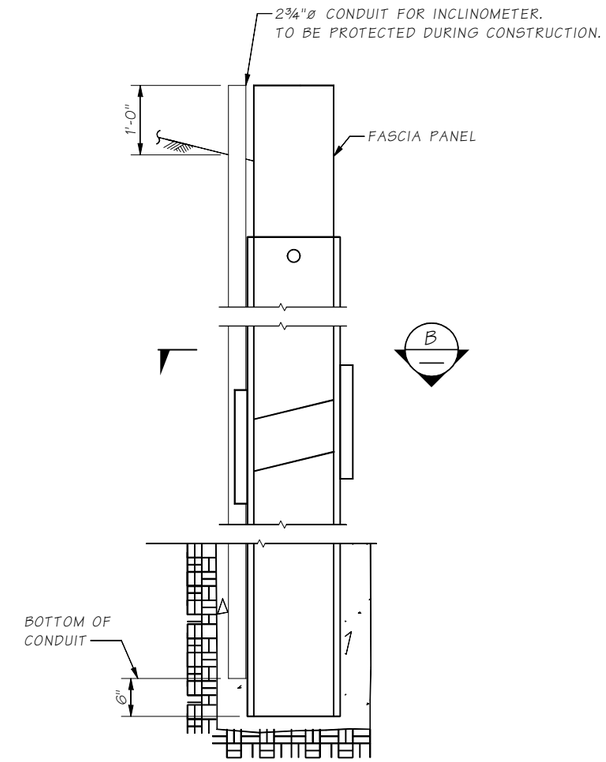

INCLINOMETER DETAIL

INCLINOMETER LOCATIONS	
PILE #	4, 50, 68, 80

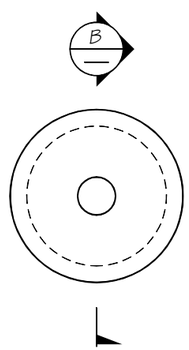

BEARING PLATE

BEARING PLATE SHALL BE SIZED IN ACCORDANCE WITH THE STANDARD SPECIFICATION SECTION 6-17.3(5).

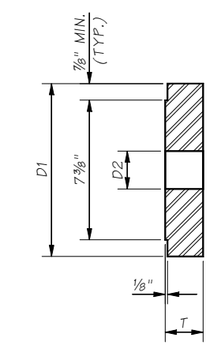

SECTION B

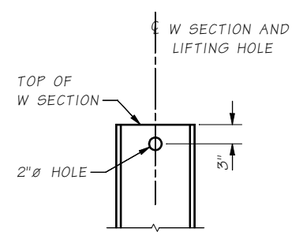

SOLDIER PILE LIFTING HOLE

LIFTING HOLE TO BE DRILLED IN THE SHOP PRIOR TO PAINTING THE PILE.

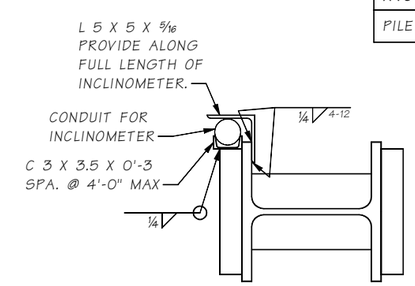

SECTION B
AT PGA LOCATION

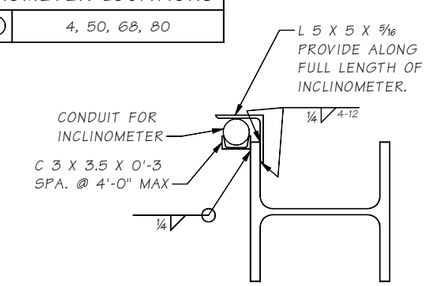

SECTION B
BELOW PGA LOCATION

Bridge Design Engr.	Khaleghi, B	
Supervisor	Zeldenrust, RP	
Designed By	Barkley, J	06/21
Checked By	Pawelka, M	02/22
Detailed By	Evans, A	06/21
Bridge Projects Engr.		
Prelim. Plan By		
Architect/Specialist		

M:\Z-Team\I-90 PHASE 3 CABIN CR WALLS\window files\WALL 1 DETAILS 2.WND

DATE	REVISION	BY	APP'D

REGION NO.	STATE	FED. AID PROJ. NO.	SHEET NO.	TOTAL SHEETS
10	WASH.			
JOB NUMBER 19Y007				
CONTRACT NO.				

P.E. STAMP BOX
RICHARD P. ZELDENRUST — STATE OF WASHINGTON — 35970 — PROFESSIONAL ENGINEER
SEE SHEET CT5
DATE

BRIDGE AND STRUCTURES OFFICE

P.E. STAMP BOX
BIJAN KHALEGHI — STATE OF WASHINGTON — 27594 — PROFESSIONAL ENGINEER
SEE SHEET CT5
DATE

Washington State Department of Transportation

I-90
CABIN CR I/C TO W EASTON I/C
PHASE 3 - ADD LANES/WILDLIFE BRIDGES

SOLIDER PILE WALL 1
DETAILS 2 OF 2

BRIDGE SHEET NO. SP10

SHEET 946 OF 1783 SHEETS

SR FILE NO. SHEET SP10

Mon Feb 07 14:07:36 2022

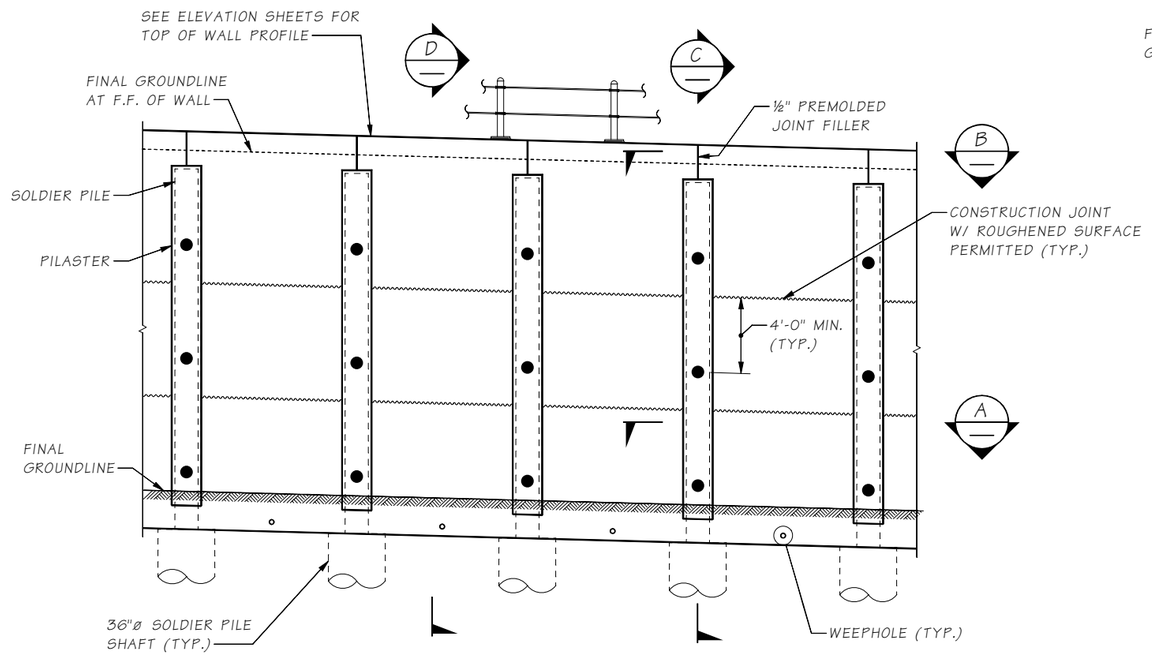

PARTIAL WALL ELEVATION

● = P.G.A

FOR INFORMATION NOT SHOWN OR NOTED SEE ELEVATION SHEETS

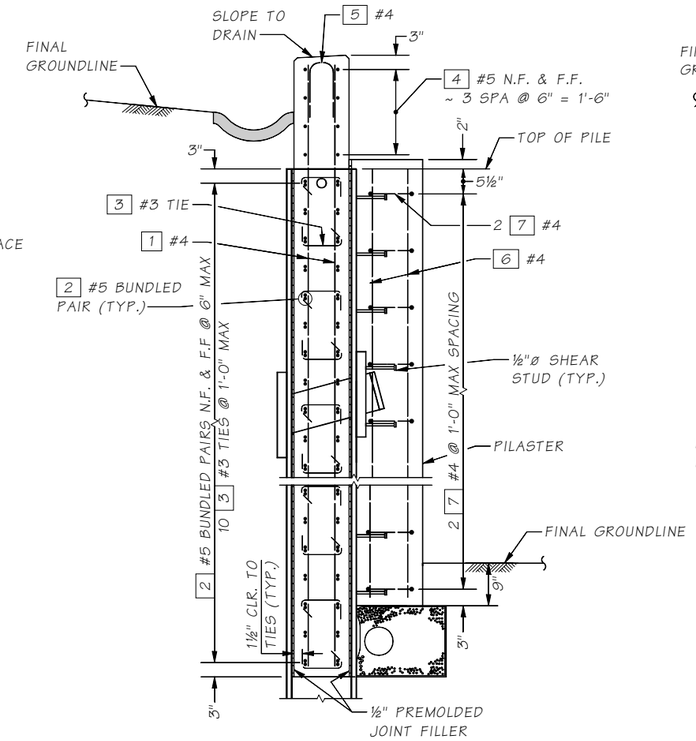

SECTION C

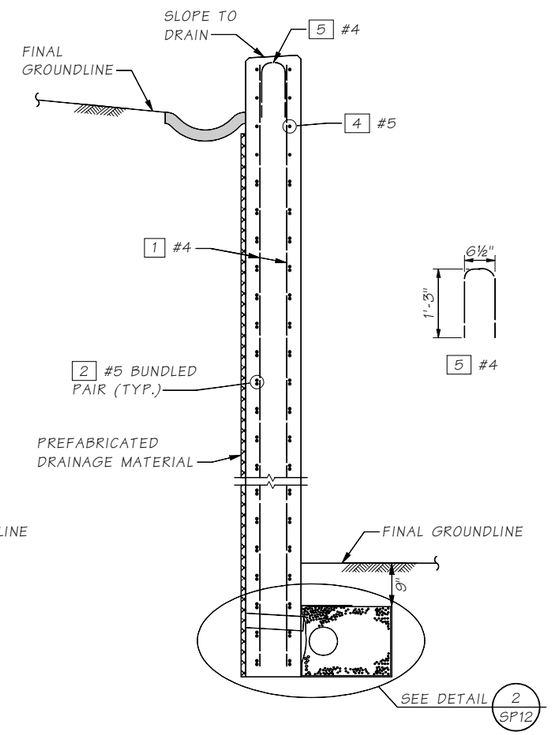

SECTION D

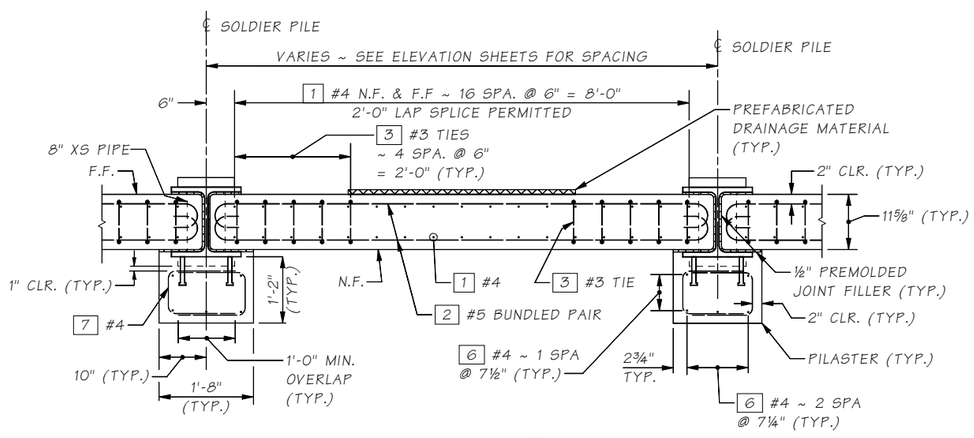

SECTION A

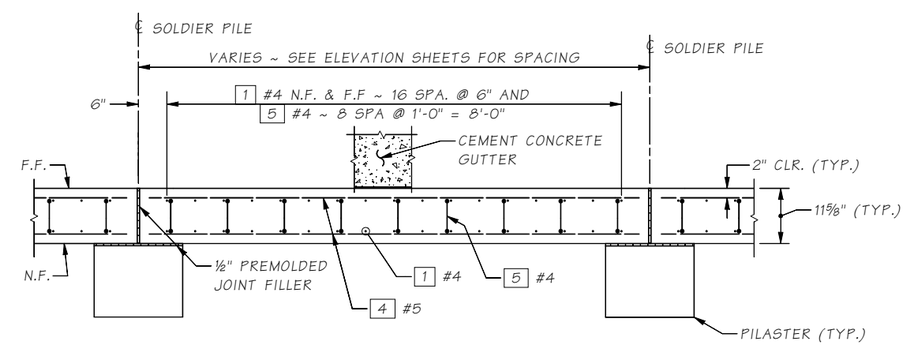

SECTION B

LEGEND:

N.F. = NEAR FACE
F.F. = FAR FACE

Bridge Design Engr.	Khaleghi, B		M:\Z-Team\I-90 PHASE 3 CABIN CR WALLS\window files\WALL 1 DETAILS 3.wnd							
Supervisor	Zeldenrust, RP									
Designed By	Barkley, J	09/21								
Checked By	Pawelka, M	02/22								
Detailed By	Barkley, J	10/21								
Bridge Projects Engr.										
Prelim. Plan By										
Architect/Specialist			DATE	REVISION	BY	APP'D				

Mon Feb 07 14:07:37 2022

REGION NO.	STATE	FED. AID PROJ. NO.	SHEET NO.	TOTAL SHEETS
10	WASH.			
JOB NUMBER 19Y007				
CONTRACT NO.				

P.E. STAMP BOX: RICHARD P. ZELDENRUST, STATE OF WASHINGTON, 25470, PROFESSIONAL ENGINEER — SEE SHEET CT5 — DATE

BRIDGE AND STRUCTURES OFFICE

P.E. STAMP BOX: BILLAN KHALEGHI, STATE OF WASHINGTON, 37695, PROFESSIONAL ENGINEER — SEE SHEET CT5 — DATE

Washington State Department of Transportation

I-90
CABIN CR I/C TO W EASTON I/C
PHASE 3 - ADD LANES/WILDLIFE BRIDGES

SOLDIER PILE WALL 1
CONCRETE FASCIA DETAILS 1 OF 2

BRIDGE SHEET NO. SP11

SHEET 947 OF 1783 SHEETS

SR ____ FILE NO. ____ SHEET SP11

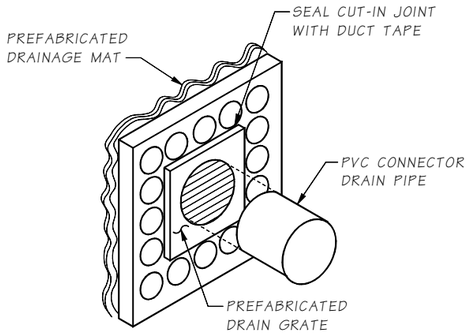

ISOMETRIC VIEW

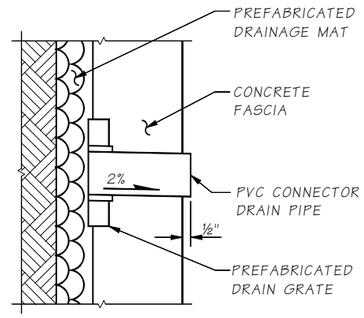

SECTIONAL VIEW

WEEP HOLE DRAIN DETAILS

DRAIN GRATE INSTALLATION SHALL NOT DISRUPT PREFABRICATED DRAINAGE MAT

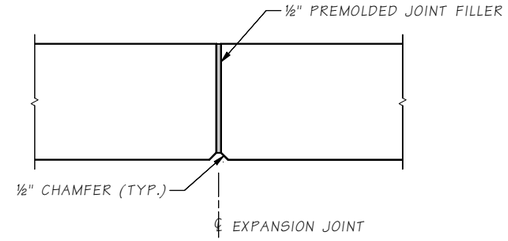

EXPANSION JOINT DETAIL

NOTE:
EXPANSION JOINTS SHALL BE LOCATED AS SHOWN ON ELEVATION SHEETS

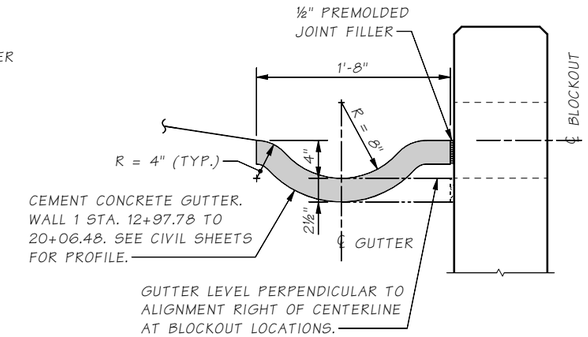

DETAIL 1

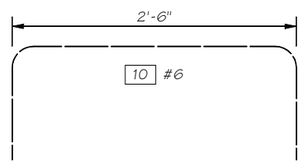

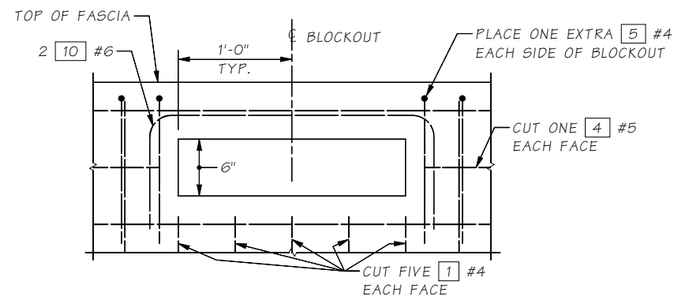

GUTTER BLOCKOUT DETAIL

NOTE: CABLE FENCE POSTS SHALL NOT BE PLACED OVER THE GUTTER BLOCKOUT

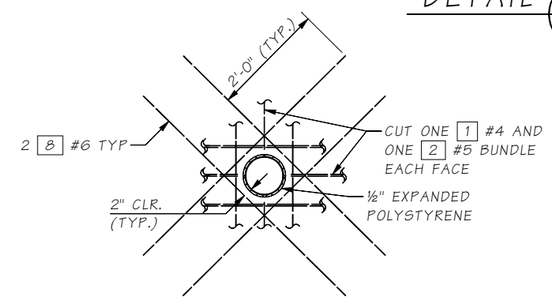

8"ø PIPE BLOCKOUT DETAIL

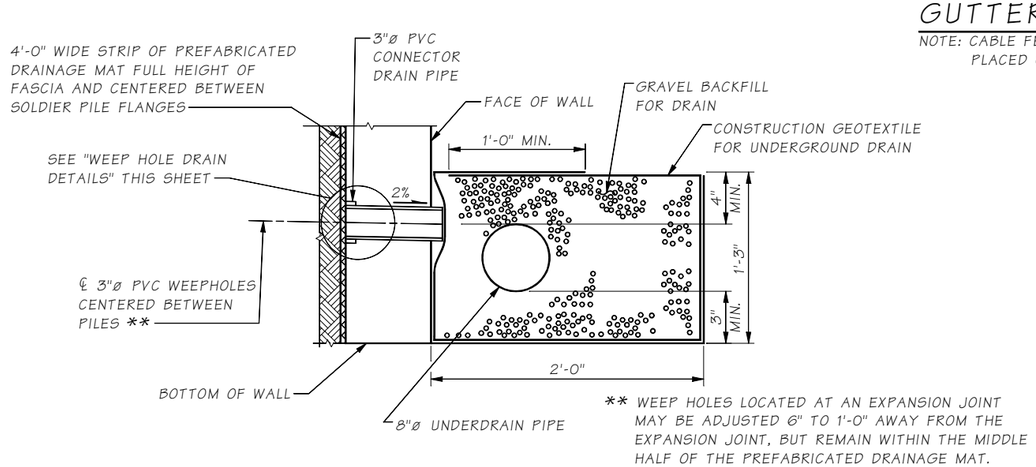

** WEEP HOLES LOCATED AT AN EXPANSION JOINT MAY BE ADJUSTED 6" TO 1'-0" AWAY FROM THE EXPANSION JOINT, BUT REMAIN WITHIN THE MIDDLE HALF OF THE PREFABRICATED DRAINAGE MAT.

DETAIL 2

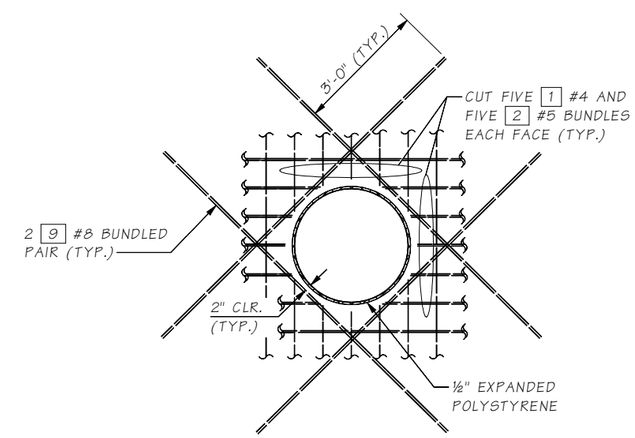

24"ø PIPE BLOCKOUT DETAIL

Bridge Design Engr.	Khaleghi, B		M:\Z-Team\I-90 PHASE 3 CABIN CR WALLS\window files\WALL 1 DET 4.wnd								
Supervisor	Zeldenrust, RP										
Designed By	Barkley, J	09/21									
Checked By	Pawelka, M	02/22									
Detailed By	Evans, A	09/21									
Bridge Projects Engr.											
Prelim. Plan By											
Architect/Specialist			DATE	REVISION	BY	APP'D					

REGION NO.	STATE	FED. AID PROJ. NO.	SHEET NO.	TOTAL SHEETS
10	WASH.			
JOB NUMBER 19Y007				
CONTRACT NO.				

P.E. STAMP BOX — RICHARD P. ZELDENRUST, STATE OF WASHINGTON, 25470, STRUCTURAL ENGINEER, PROFESSIONAL ENGINEER — SEE SHEET CT5 — DATE

BRIDGE AND STRUCTURES OFFICE

P.E. STAMP BOX — BIJAN KHALEGHI, STATE OF WASHINGTON, 27695, STRUCTURAL ENGINEER, PROFESSIONAL ENGINEER — SEE SHEET CT5 — DATE

Washington State Department of Transportation

I-90
CABIN CR I/C TO W EASTON I/C
PHASE 3 - ADD LANES/WILDLIFE BRIDGES

SOLDIER PILE WALL 1
CONCRETE FASCIA DETAILS 2 OF 2

BRIDGE SHEET NO. SP12

SHEET 948 OF 1783 SHEETS

SR FILE NO. SHEET SP12

Mon Feb 07 14:07:37 2022

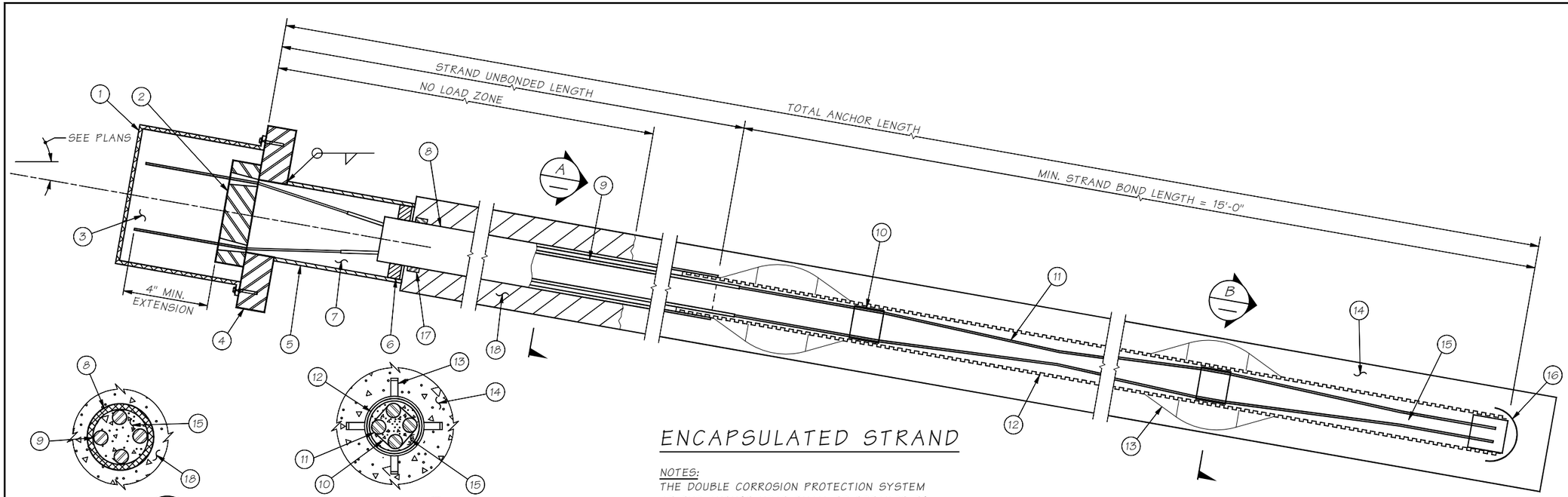

SECTION A

SECTION B

1. ANCHORAGE COVER
2. ANCHOR HEAD AND WEDGES
3. ANTICORROSION GREASE
4. BEARING PLATE
5. TRUMPET
6. SEAL
7. ANTICORROSION GREASE
8. PVC OR POLYETHYLENE TUBE
9. INDIVIDUALLY GREASED AND SHEATHED STRAND.
10. SPACER
11. STRAND
12. CORRUGATED PVC
13. CENTRALIZER
14. ANCHOR GROUT
15. ENCAPSULATION GROUT
16. END CAP
17. TENSION RING TO RESIST SPLITTING FORCE OF DEFLECTED STRANDS.
18. NON-STRUCTURAL FILLER

ENCAPSULATED STRAND

NOTES:

THE DOUBLE CORROSION PROTECTION SYSTEM AT THE ANCHOR HEAD SHALL BE DETAILED TO ALLOW A MINIMUM OF ± 3° VARIATION IN THE SLOPE OF THE SOIL ANCHOR FOR PLACEMENT TOLERANCE.

ALL ANCHORAGE COVERS SHALL BE BOLTED TO THE BEARING PLATES.

THE CONTRACTOR SHALL PROTECT ANY EXCESS LENGTH OF STRAND FROM CORROSION DURING THE P.G.A. TENSIONING PROCESS UNTIL THE PILASTER HAS BEEN CONSTRUCTED.

SR ____ FILE NO. ____ SHEET SP13

Bridge Design Engr.	Khaleghi, B	
Supervisor	Zeldenrust, RP	
Designed By	Barkley, J	06/21
Checked By	Pawelka, M	02/22
Detailed By	Evans, A	06/21
Bridge Projects Engr.		
Prelim. Plan By		
Architect/Specialist		

M:\Z-Team\I-90 PHASE 3 CABIN CR WALLS\window files\WALL 1 GROUND ANCHOR DETAILS.WND

DATE	REVISION	BY	APP'D

REGION NO.	STATE	FED. AID PROJ. NO.	SHEET NO.	TOTAL SHEETS
10	WASH.			
JOB NUMBER 19Y007				
CONTRACT NO.				

P.E. STAMP BOX
RICHARD P. ZELDENRUST, STATE OF WASHINGTON, 25870, PROFESSIONAL ENGINEER
SEE SHEET CT5
DATE

BRIDGE AND STRUCTURES OFFICE

P.E. STAMP BOX
BILIAN KHALEGHI, STATE OF WASHINGTON, 27646, PROFESSIONAL ENGINEER
SEE SHEET CT5
DATE

Washington State Department of Transportation

I-90
CABIN CR I/C TO W EASTON I/C
PHASE 3 - ADD LANES/WILDLIFE BRIDGES

SOLDIER PILE WALL 1
PERMANENT GROUND ANCHOR DETAILS

BRIDGE SHEET NO. SP13

SHEET 949 OF 1783 SHEETS

Mon Feb 07 14:07:37 2022

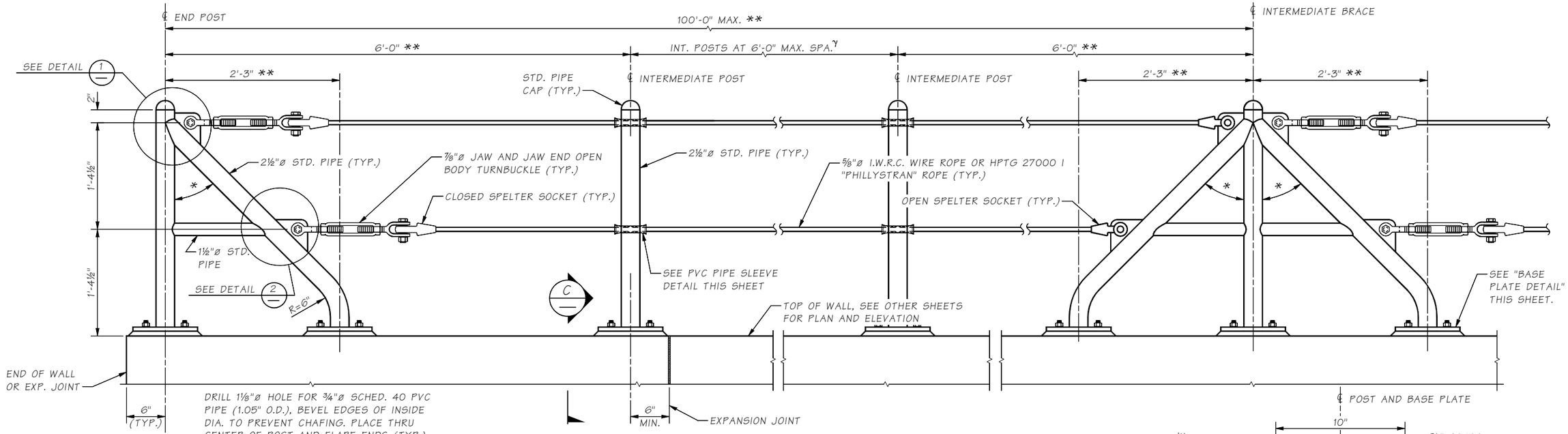

ELEVATION
CABLE FENCE

* ANGLES VARY WITH THE SLOPE OF THE TOP OF WALL. APPROX. 45° WHEN INSTALLED ON A LEVEL SURFACE.

** MEASURED PERPENDICULAR TO THE POSTS.

γ OMIT INTERMEDIATE POST WHEN SPACING BETWEEN END POST AND INTERMEDIATE BRACE IS LESS THAN 8'-6".

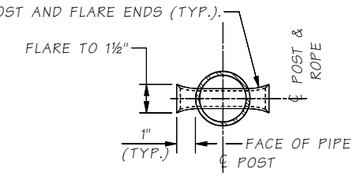

PVC PIPE SLEEVE DETAIL

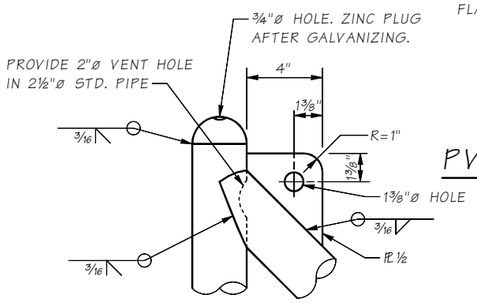

DETAIL 1

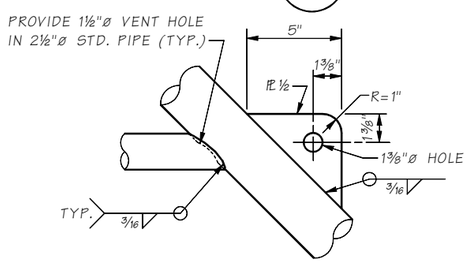

DETAIL 2

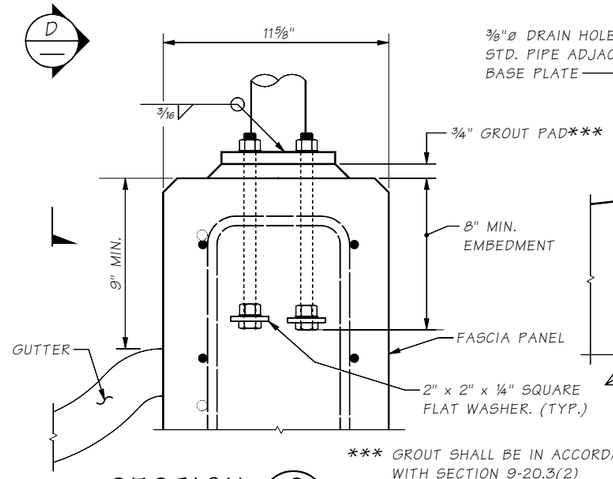

*** GROUT SHALL BE IN ACCORDANCE WITH SECTION 9-20.3(2)

SECTION C

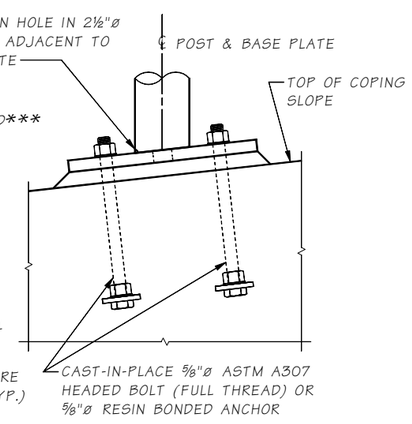

VIEW D

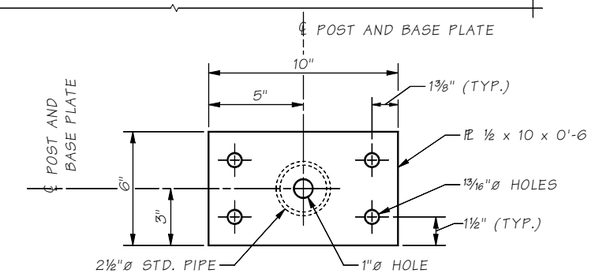

BASE PLATE DETAIL

NOTES:

1. ALL STEEL PIPE SHALL BE ASTM A53 GRADE B, TYPE E OR S, OR EQUIVALENT HSS ROUND TUBE ASTM A 500 GRADE B
2. ALL STEEL PLATE SHALL BE ASTM A 36 OR ASTM A 572.
3. ROPE SHALL CONSIST OF ZINC-COATED WIRES CONFORMING TO ASTM A 603, OR ASTM A 1023 WITH A PRESTRETCHED MODULUS OF ELASTICITY OF 15,000 KSI, OR "PHILLYSTRAN" ROPE.
4. ALL PARTS EXCEPT ROPE SHALL BE HOT DIP GALVANIZED IN ACCORDANCE WITH AASHTO M111, M232, OR ASTM F2329 AFTER FABRICATION, UNLESS NOTED OTHERWISE.
5. THE SPELTER SOCKETS AND SOCKETING PROCEDURE SHALL BE IN ACCORDANCE WITH THE SPELTER SOCKET AND ROPE MANUFACTURERS RECOMMENDATIONS.
6. ALL POSTS TO BE INSTALLED VERTICAL AND ROPE TO BE INSTALLED PARALLEL TO TOP OF WALL.
7. ROPE SHALL BE INSTALLED TO 400 LBS TENSION LEAVING A TAKE UP OF 6" STILL AVAILABLE IN THE TURNBUCKLE. THE CONTRACTOR SHALL SUBMIT CABLE TENSIONING DETAILS TO THE ENGINEER FOR ACCEPTANCE.
8. EACH CONTINUOUS LENGTH OF CABLE SHALL HAVE A TURNBUCKLE AT ONE END ONLY AND BE ANCHORED TO END POST WITH BRACE AT BOTH ENDS.
9. INTERMEDIATE POSTS AND BRACES SHALL NOT TO BE INSTALLED ACROSS EXPANSION JOINT.
10. CABLE FENCE WAS DESIGNED FOR A 200 LB. LOAD ON THE TOP RAIL APPLIED IN ANY DIRECTION, AS REQUIRED BY WASHINGTON ADMINISTRATIVE CODE 296-880-40005.
11. ROPE, SPELTER SOCKETS, TURNBUCKLES AND THIER CONNECTIONS SHALL HAVE A MINIMUM BREAKING STRENGTH OF 26 KIPS.

Bridge Design Engr.	Khaleghi, B		
Supervisor	Zeldenrust, RP		
Designed By	Barkley, J	09/21	
Checked By	Pawelka, M	02/22	
Detailed By	Evans, A	09/21	
Bridge Projects Engr.			
Prelim. Plan By			
Architect/Specialist			

M:\Z-Team\I-90 PHASE 3 CABIN CR WALLS\window files\WALL 1 CABLE DET 4.wnd

DATE	REVISION	BY	APP'D

REGION NO.	STATE	FED. AID PROJ. NO.	SHEET NO.	TOTAL SHEETS
10	WASH.			
JOB NUMBER 19Y007				
CONTRACT NO.				

P.E. STAMP BOX — RICHARD P. ZELDENRUST — STATE OF WASHINGTON — 25670 — PROFESSIONAL ENGINEER — SEE SHEET CT5 — DATE

BRIDGE AND STRUCTURES OFFICE

P.E. STAMP BOX — BILLAN KHALEGHI — STATE OF WASHINGTON — 37695 — PROFESSIONAL ENGINEER — SEE SHEET CT5 — DATE

Washington State Department of Transportation

I-90
CABIN CR I/C TO W EASTON I/C
PHASE 3 - ADD LANES/WILDLIFE BRIDGES

SOLDIER PILE WALL 1
CABLE FENCE DETAILS 1 OF 2

BRIDGE SHEET NO. SP14

SHEET 950 OF 1783 SHEETS

SR ___ FILE NO. ___ SHEET SP14

Mon Feb 07 14:07:38 2022

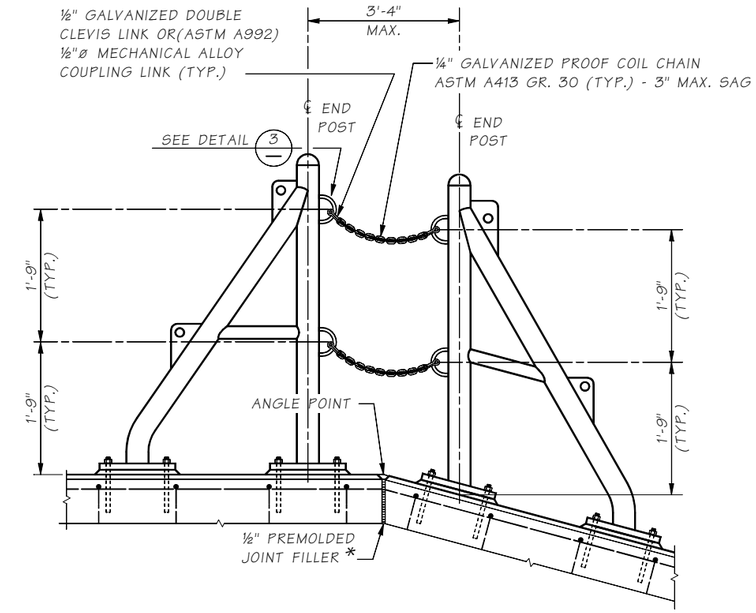

CHAIN CONNECTION ELEVATION

TO BE INSTALLED ACROSS WALL ANGLE POINTS, BOTH VERTICAL AND HORIZONTAL.

* SEE CONTRACT PLANS FOR JOINT LOCATIONS.

(WIRE ROPE AND SPELTER SOCKETS NOT SHOWN FOR CLARITY)

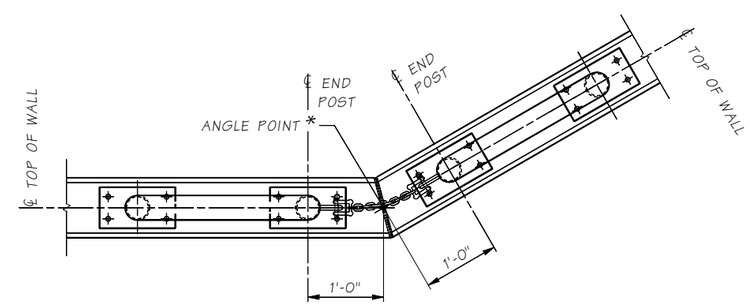

CHAIN CONNECTION PLAN

ROPE NOT SHOWN FOR CLARITY

SR ____ FILE NO. ____ SHEET SP15

Bridge Design Engr.	Khaleghi, B	M:\Z-Team\I-90 PHASE 3 CABIN CR WALLS\window files\WALL 1 CABLE DET 3.wnd									
Supervisor	Zeldenrust, RP					REGION NO.	STATE	FED. AID PROJ. NO.	SHEET NO.	TOTAL SHEETS	
Designed By	Barkley, J 07/21					10	WASH.				
Checked By	Pawelka, M 02/22					JOB NUMBER 19Y007					
Detailed By	Evans, A 07/21										
Bridge Projects Engr.						CONTRACT NO.					
Prelim. Plan By											
Architect/Specialist		DATE	REVISION	BY	APP'D						

P.E. STAMP BOX: RICHARD P. ZELDENRUST, STATE OF WASHINGTON, 25470, PROFESSIONAL ENGINEER — SEE SHEET CT5 DATE:

BRIDGE AND STRUCTURES OFFICE

P.E. STAMP BOX: BIJAN KHALEGHI, STATE OF WASHINGTON, 27695, PROFESSIONAL ENGINEER — SEE SHEET CT5 DATE:

Washington State Department of Transportation

I-90
CABIN CR I/C TO W EASTON I/C
PHASE 3 - ADD LANES/WILDLIFE BRIDGES

SOLDIER PILE WALL 1
CABLE FENCE DETAILS 2 OF 2

BRIDGE SHEET NO. SP15

SHEET 951 OF 1783 SHEETS

Mon Feb 07 14:07:38 2022

CURVE DATA					
P.I. STATION	Δ	RADIUS	TANGENT	LENGTH	BK. TANGENT BRG.
LE 1774+16.72	30°35'41" LT.	1950.00'	533.36'	1041.26'	S 40°17'28" E
WALL 2 17+88.76	30°35'41" LT.	1994.00'	545.40'	1064.75'	S 40°17'28" E

SEC. 31, T.21N., R.13E., W.M.
KITTITAS COUNTY

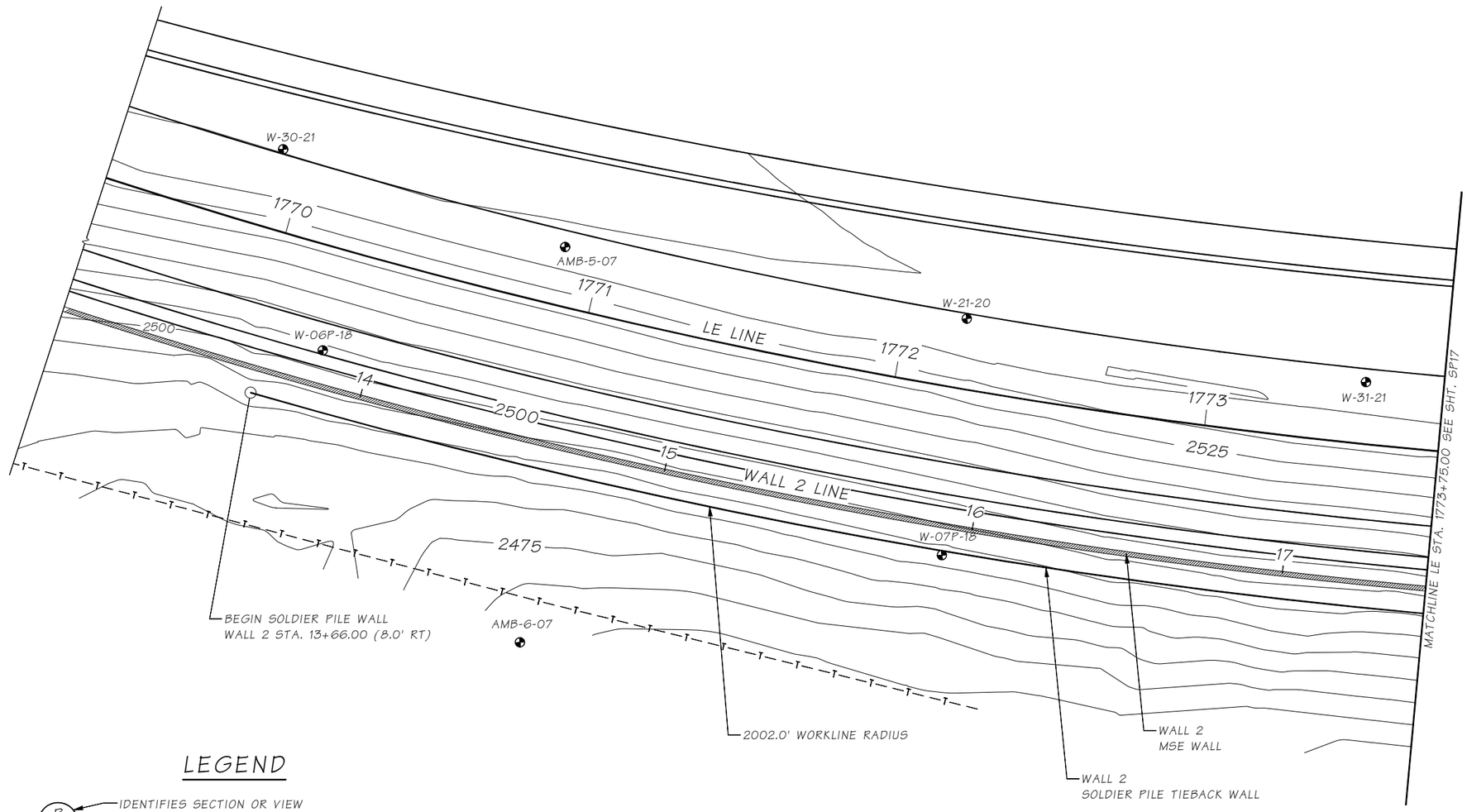

LEGEND

B/7 — IDENTIFIES SECTION OR VIEW
TAKEN OR SHOWN ON BRIDGE SHEET 7

1/— IDENTIFIES DETAIL
TAKEN OR SHOWN ON THE SAME SHEET

TEST HOLE

PLAN

SOLDIER PILE TIEBACK WALL

SR ____ FILE NO. ____ SHEET SP16

Bridge Design Engr.	Khaleghi, B		
Supervisor	Zeldenrust, RP		
Designed By	Barkley, J	01/21	
Checked By	Pawelka, M	02/22	
Detailed By	Evans, A	01/21	
Bridge Projects Engr.			
Prelim. Plan By			
Architect/Specialist			

M:\Z-Team\I-90 PHASE 3 CABIN CR WALLS\window files\WALL 2 LAYOUT 1.wnd

DATE	REVISION	BY	APP'D

REGION NO.	STATE	FED. AID PROJ. NO.	SHEET NO.	TOTAL SHEETS
10	WASH.			

JOB NUMBER 19Y007
CONTRACT NO.

P.E. STAMP BOX
SEE SHEET CT5
DATE

BRIDGE AND STRUCTURES OFFICE

P.E. STAMP BOX
BILAN KHALEGHI
STATE OF WASHINGTON
37695
PROFESSIONAL ENGINEER
SEE SHEET CT5
DATE

Washington State Department of Transportation

I-90
CABIN CR I/C TO W EASTON I/C
PHASE 3 - ADD LANES/WILDLIFE BRIDGES

SOLDIER PILE WALL 2
LAYOUT 1 OF 3

BRIDGE SHEET NO. SP16
SHEET 952 OF 1783 SHEETS

Mon Feb 07 14:07:38 2022

CURVE DATA					
P.I. STATION	Δ	RADIUS	TANGENT	LENGTH	BK. TANGENT BRG.
LE 1774+16.72	30°35'41" LT.	1950.00'	533.36'	1041.26'	S 40°17'28" E
WALL 2 17+88.76	30°35'41" LT.	1994.00'	545.40'	1064.75'	S 40°17'28" E

SEC. 31, T.21N., R.13E., W.M.
KITTITAS COUNTY

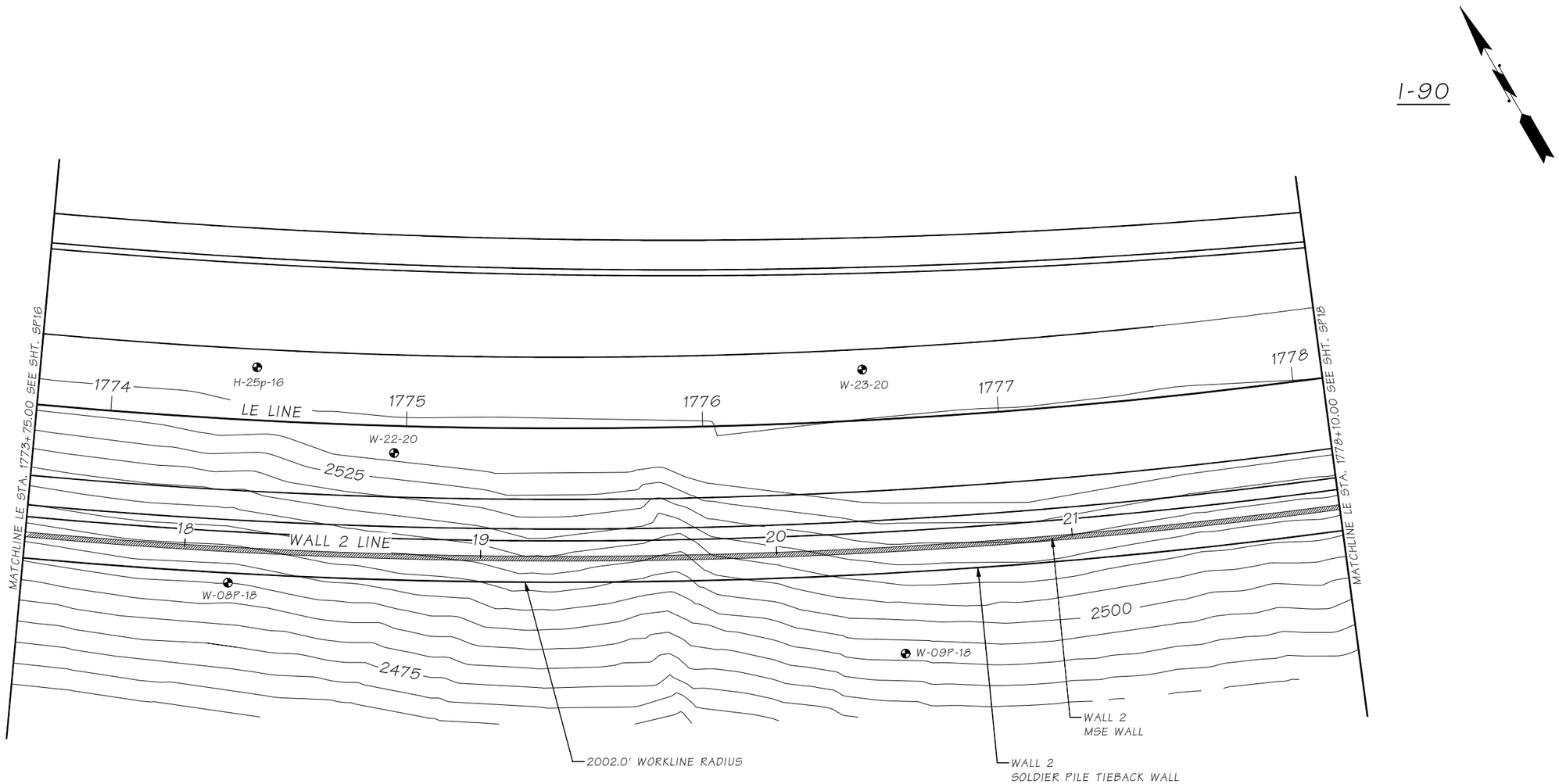

PLAN

SOLDIER PILE TIEBACK WALL

SR ____ FILE NO. ____ SHEET SP17

Bridge Design Engr.	Khaleghi, B	M:\Z-Team\I-90 PHASE 3 CABIN CR WALLS\window files\WALL 2 LAYOUT 2.wnd									
Supervisor	Zeldenrust, RP										
Designed By	Barkley, J	01/21									
Checked By	Pawelka, M	02/22									
Detailed By	Evans, A	01/21									
Bridge Projects Engr.											
Prelim. Plan By											
Architect/Specialist			DATE	REVISION	BY	APP'D					

REGION NO.	STATE	FED. AID PROJ. NO.	SHEET NO.	TOTAL SHEETS
10	WASH.			
JOB NUMBER 19Y007				
CONTRACT NO.				

P.E. STAMP BOX
SEE SHEET CT5
DATE

BRIDGE AND STRUCTURES OFFICE

P.E. STAMP BOX
BIJAN KHALEGHI
STATE OF WASHINGTON
27695
STRUCTURAL ENGINEER
PROFESSIONAL ENGINEER
SEE SHEET CT5
DATE

Washington State Department of Transportation

I-90
CABIN CR I/C TO W EASTON I/C
PHASE 3 - ADD LANES/WILDLIFE BRIDGES

SOLDIER PILE WALL 2
LAYOUT 2 OF 3

BRIDGE SHEET NO. SP17
SHEET 953 OF 1783 SHEETS

Mon Feb 07 14:07:38 2022

CURVE DATA					
P.I. STATION	Δ	RADIUS	TANGENT	LENGTH	BK. TANGENT BRG.
LE 1774+16.72	30°35'41" LT.	1950.00'	533.36'	1041.26'	S 40°17'28" E
WALL 2 17+88.76	30°35'41" LT.	1994.00'	545.40'	1064.75'	S 40°17'28" E

SEC. 31, T.21N., R.13E., W.M.
KITTITAS COUNTY

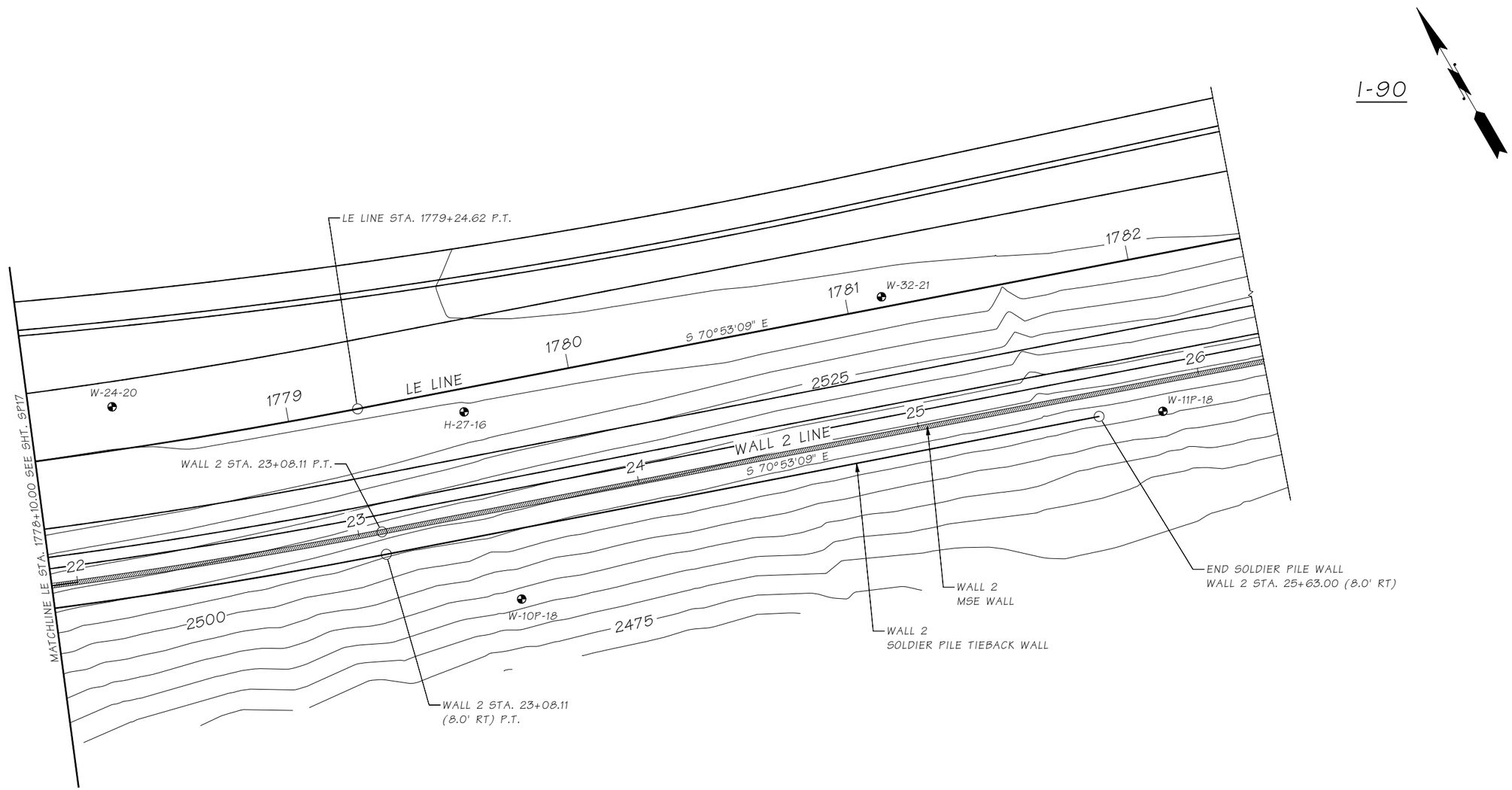

PLAN

SOLDIER PILE TIEBACK WALL

SR ___ FILE NO. ___ SHEET SP18

Bridge Design Engr.	Khaleghi, B	M:\Z-Team\I-90 PHASE 3 CABIN CR WALLS\window files\WALL 2 LAYOUT 3.wnd									
Supervisor	Zeldenrust, RP										
Designed By	Barkley, J	01/21									
Checked By	Pawelka, M	02/22									
Detailed By	Evans, A	01/21									
Bridge Projects Engr.											
Prelim. Plan By											
Architect/Specialist			DATE	REVISION	BY	APP'D					

REGION NO.	STATE	FED. AID PROJ. NO.	SHEET NO.	TOTAL SHEETS
10	WASH.			
JOB NUMBER 19Y007				
CONTRACT NO.				

P.E. STAMP BOX
SEE SHEET CT5
DATE

BRIDGE AND STRUCTURES OFFICE

P.E. STAMP BOX
BIJAN KHALEGHI
STATE OF WASHINGTON
27695
STRUCTURAL ENGINEER
PROFESSIONAL ENGINEER
SEE SHEET CT5
DATE

Washington State Department of Transportation

I-90
CABIN CR I/C TO W EASTON I/C
PHASE 3 - ADD LANES/WILDLIFE BRIDGES

SOLDIER PILE WALL 2
LAYOUT 3 OF 3

BRIDGE SHEET NO. SP18
SHEET 954 OF 1783 SHEETS

Mon Feb 07 14:07:39 2022

GENERAL NOTES

1. ALL MATERIAL AND WORKMANSHIP SHALL BE IN ACCORDANCE WITH THE REQUIREMENTS OF THE WASHINGTON STATE DEPARTMENT OF TRANSPORTATION STANDARD SPECIFICATIONS FOR ROAD, BRIDGE AND MUNICIPAL CONSTRUCTION, DATED 2022.

2. THIS STRUCTURE HAS BEEN DESIGNED IN ACCORDANCE WITH THE REQUIREMENTS OF THE AASHTO LRFD BRIDGE DESIGN SPECIFICATIONS - 9TH EDITION - 2020 AND CURRENT INTERIMS.

3. W SECTION STEEL SOLDIER PILES SHALL CONFORM TO ASTM A992. HP SECTION STEEL SOLDIER PILES SHALL CONFORM TO ASTM A572. SOLDIER PILES SHALL BE PAINTED TO THE LIMITS SHOWN IN THE PLANS IN ACCORDANCE WITH SECTION 6-16.3(4).

4. PLATES FOR THE SOLDIER PILE ASSEMBLY STIFFENER SHALL CONFORM TO ASTM A572 GR. 50. THE 8"ø EXTRA STRONG PIPE SHALL CONFORM TO THE REQUIREMENTS OF ASTM A53 GR. B OR ASTM A500 GR. B OR C.

5. ALL WELDING SHALL BE DONE TO MINIMIZE DISTORTION. WELDING SEQUENCES AND PROCEDURES SHALL BE SUBMITTED TO THE ENGINEER FOR APPROVAL PRIOR TO THE START OF FABRICATION.

6. CONCRETE IN THE FASCIA PANELS SHALL BE CLASS 4000.

7. EXISTING GROUND LINE IS APPROXIMATE AND SHALL BE VERIFIED BY THE CONTRACTOR IN THE FIELD.

8. PERMANENT GROUND ANCHOR (PGA) LOCK OFF LOAD = 75 PERCENT OF THE MAXIMUM FACTORED DESIGN LOAD FOR THE GIVEN PILE.

   PGA VERIFICATION TESTS SHALL BE PERFORMED AT THE LOCATIONS SHOWN IN THE TABLE

WALL 2 STA.	ELEVATION (FT)
15+91 ± 14'	2484 ± 4'
18+97 ± 14'	2492 ± 4'
23+20 ± 14'	2494 ± 3'

NOTE: VERIFICATION TESTS ARE PERFORMED BETWEEN SOLDIER PILE LOCATIONS.

SOLDIER PILE SCHEDULE

SOLDIER PILE NO.	SOLDIER PILE SIZE	EMBEDMENT DEPTH "D"	TOTAL LENGTH OF SOLDIER PILE = D+H	SHAFT DIA.	PGA 1 FACTORED DESIGN LOAD (KIPS)	PGA 2 FACTORED DESIGN LOAD (KIPS)	PGA 3 FACTORED DESIGN LOAD (KIPS)
1	W14 x 193	34'-0"	37'-2"	36"	N/A	N/A	N/A
2	W14 x 193	35'-5"	42'-6"	36"	N/A	N/A	N/A
3	W14 x 193	36'-2"	43'-8"	36"	260	N/A	N/A
4	W14 x 193	36'-3"	44'-7"	36"	260	N/A	N/A
5	W14 x 193	36'-5"	45'-7"	36"	260	N/A	N/A
6	W14 x 193	36'-7"	46'-6"	36"	260	N/A	N/A
7	W14 x 193	36'-8"	47'-6"	36"	260	N/A	N/A
8	W14 x 193	36'-10"	48'-5"	36"	260	N/A	N/A
9	W14 x 193	37'-0"	49'-5"	36"	260	290	N/A
10	W14 x 193	37'-1"	50'-4"	36"	260	290	N/A
11	W14 x 193	37'-3"	51'-3"	36"	260	290	N/A
12	W14 x 193	37'-5"	52'-3"	36"	260	290	N/A
13	W14 x 193	37'-6"	53'-2"	36"	260	290	N/A
14	W14 x 193	37'-8"	54'-1"	36"	260	290	N/A
15	W14 x 193	37'-10"	55'-7"	36"	260	290	330
16	W14 x 193	38'-1"	57'-1"	36"	260	290	330
17	W14 x 193	39'-8"	58'-8"	36"	260	290	330
18	W14 x 193	41'-3"	60'-3"	36"	260	290	330
19	W14 x 193	42'-10"	61'-10"	36"	260	290	330
20	W14 x 193	44'-4"	63'-4"	36"	260	290	330
21	W14 x 193	45'-11"	64'-11"	36"	260	290	330
22	W14 x 193	47'-6"	66'-6"	36"	260	290	330
23	W14 x 193	49'-0"	68'-0"	36"	260	290	330
24	W14 x 193	50'-8"	69'-8"	36"	260	290	330
25	W14 x 193	52'-2"	71'-2"	36"	260	290	330
26	W14 x 193	53'-9"	72'-9"	36"	260	290	330
27	W14 x 193	52'-8"	71'-8"	36"	260	290	330
28	W14 x 193	52'-4"	71'-4"	36"	260	290	330
29	W14 x 193	50'-11"	69'-11"	36"	260	290	330
30	W14 x 193	49'-6"	68'-6"	36"	260	290	330
31	W14 x 193	48'-1"	67'-1"	36"	260	290	330
32	W14 x 193	46'-8"	65'-8"	36"	260	290	330
33	W14 x 193	45'-3"	64'-3"	36"	260	290	330
34	W14 x 193	43'-10"	62'-10"	36"	260	290	330
35	W14 x 193	42'-5"	61'-5"	36"	260	290	330
36	W14 x 193	41'-0"	60'-0"	36"	260	290	330
37	W14 x 193	39'-7"	58'-7"	36"	260	290	330
38	W14 x 193	38'-2"	57'-2"	36"	260	290	330
39	W14 x 193	36'-9"	55'-9"	36"	260	290	330
40	W14 x 193	35'-4"	54'-4"	36"	260	290	330
41	W14 x 193	33'-11"	52'-11"	36"	240	270	305
42	W14 x 193	32'-6"	51'-6"	36"	240	270	305
43	W14 x 193	31'-1"	50'-1"	36"	240	270	305
44	W14 x 193	29'-8"	48'-8"	36"	240	270	305
45	W14 x 193	28'-3"	47'-3"	36"	240	270	305
46	W14 x 193	26'-10"	45'-10"	36"	240	270	305
47	W14 x 193	25'-8"	44'-8"	36"	240	270	305
48	W14 x 193	24'-7"	43'-7"	36"	240	270	305
49	W14 x 193	23'-7"	42'-6"	36"	240	270	305
50	W14 x 193	22'-6"	41'-6"	36"	240	270	305
51	W14 x 132	21'-6"	40'-6"	36"	225	230	275
52	W14 x 132	20'-6"	39'-6"	36"	225	230	275
53	W14 x 132	19'-11"	38'-11"	36"	225	230	275
54	W14 x 132	19'-5"	38'-5"	36"	225	230	275
55	W14 x 132	19'-1"	38'-1"	36"	225	230	275
56	W14 x 132	19'-2"	38'-2"	36"	225	230	275
57	W14 x 132	19'-2"	38'-2"	36"	225	230	275
58	W14 x 132	19'-2"	38'-2"	36"	225	230	275
59	W14 x 132	19'-3"	38'-3"	36"	225	230	275
60	W14 x 132	19'-3"	38'-3"	36"	225	230	275

SR ____ FILE NO. ____ SHEET SP19

Bridge Design Engr.	Khaleghi, B	
Supervisor	Zeldenrust, RP	
Designed By	Barkley, J	01/21
Checked By	Pawelka, M	02/22
Detailed By	Evans, A	01/21
Bridge Projects Engr.		
Prelim. Plan By		
Architect/Specialist		

M:\Z-Team\I-90 PHASE 3 CABIN CR WALLS\window files\WALL 2 GEN NOTES AND SCHEDULE 1.wnd

DATE	REVISION	BY	APP'D

REGION NO.	STATE	FED. AID PROJ. NO.	SHEET NO.	TOTAL SHEETS
10	WASH.			

JOB NUMBER 19Y007

CONTRACT NO.

P.E. STAMP BOX — RICHARD P. ZELDENRUST, STATE OF WASHINGTON, 20409, STRUCTURAL ENGINEER, PROFESSIONAL ENGINEER — SEE SHEET CT5 — DATE

BRIDGE AND STRUCTURES OFFICE

P.E. STAMP BOX — BIJAN KHALEGHI, STATE OF WASHINGTON, 27695, STRUCTURAL ENGINEER, PROFESSIONAL ENGINEER — SEE SHEET CT5 — DATE

Washington State Department of Transportation

I-90
CABIN CR I/C TO W EASTON I/C
PHASE 3 - ADD LANES/WILDLIFE BRIDGES

SOLDIER PILE WALL 2 GENERAL NOTES AND PILE SCHEDULE 1 OF 2

BRIDGE SHEET NO. SP19

SHEET 955 OF 1783 SHEETS

Mon Feb 07 14:07:39 2022

SOLDIER PILE SCHEDULE

SOLDIER PILE NO.	SOLDIER PILE SIZE	EMBEDMENT DEPTH "D"	TOTAL LENGTH OF SOLDIER PILE = D+H	SHAFT DIA.	PGA 1 FACTORED DESIGN LOAD (KIPS)	PGA 2 FACTORED DESIGN LOAD (KIPS)	PGA 3 FACTORED DESIGN LOAD (KIPS)
61	W14 x 132	19'-3"	38'-3"	36"	225	230	275
62	W14 x 132	19'-3"	38'-3"	36"	225	230	275
63	W14 x 132	19'-4"	38'-4"	36"	225	230	275
64	W14 x 132	19'-4"	38'-4"	36"	225	230	275
65	W14 x 132	19'-4"	38'-4"	36"	225	230	275
66	W14 x 132	19'-5"	38'-5"	36"	225	230	275
67	W14 x 132	19'-5"	38'-5"	36"	225	230	275
68	W14 x 132	19'-5"	38'-5"	36"	225	230	275
69	W14 x 132	19'-9"	38'-5"	36"	225	230	275
70	W14 x 132	20'-8"	38'-6"	36"	225	230	275
71	W14 x 132	21'-7"	38'-6"	36"	225	230	N/A
72	W14 x 132	22'-6"	38'-6"	36"	225	230	N/A
73	W14 x 132	23'-5"	38'-6"	36"	225	230	N/A
74	W14 x 132	24'-4"	38'-6"	36"	225	230	N/A
75	W14 x 132	25'-11"	39'-3"	36"	225	230	N/A
76	W14 x 132	28'-2"	41'-2"	36"	260	265	N/A
77	W14 x 132	30'-5"	43'-5"	36"	260	265	N/A
78	W14 x 132	31'-8"	44'-8"	36"	260	265	N/A
79	W14 x 132	32'-11"	45'-11"	36"	260	265	N/A
80	W14 x 132	34'-3"	47'-3"	36"	260	265	N/A
81	W14 x 132	35'-6"	48'-6"	36"	260	265	N/A
82	W14 x 132	36'-10"	49'-10"	36"	260	265	N/A
83	W14 x 132	37'-10"	50'-10"	36"	260	265	N/A
84	W14 x 132	38'-5"	51'-5"	36"	260	265	N/A
85	W14 x 132	39'-0"	52'-0"	36"	260	265	N/A
86	W14 x 132	39'-6"	52'-6"	36"	260	265	N/A
87	W14 x 132	40'-1"	53'-1"	36"	260	265	N/A
88	W14 x 132	40'-8"	53'-8"	36"	260	265	N/A
89	W14 x 132	41'-3"	54'-3"	36"	260	265	N/A
90	W14 x 132	41'-10"	54'-10"	36"	260	265	N/A
91	W14 x 132	42'-4"	55'-4"	36"	260	265	N/A
92	W14 x 132	42'-11"	55'-11"	36"	260	265	N/A
93	W14 x 132	43'-6"	56'-6"	36"	260	265	N/A
94	W14 x 132	44'-1"	57'-1"	36"	260	265	N/A
95	W14 x 132	44'-8"	57'-8"	36"	260	265	N/A
96	W14 x 132	45'-3"	58'-3"	36"	260	265	N/A
97	W14 x 132	45'-9"	58'-9"	36"	260	265	N/A
98	W14 x 132	46'-4"	59'-4"	36"	260	265	N/A
99	W14 x 132	46'-11"	59'-11"	36"	260	265	N/A
100	W14 x 132	47'-6"	60'-6"	36"	260	265	N/A
101	W14 x 132	48'-1"	61'-1"	36"	260	265	N/A
102	W14 x 132	48'-8"	61'-8"	36"	260	265	N/A
103	W14 x 132	49'-2"	62'-2"	36"	260	265	N/A
104	W14 x 132	49'-9"	62'-9"	36"	260	265	N/A
105	W14 x 132	50'-2"	63'-2"	36"	260	265	N/A
106	W14 x 132	49'-10"	62'-10"	36"	260	265	N/A
107	W14 x 132	49'-5"	62'-5"	36"	260	265	N/A
108	W14 x 132	49'-1"	62'-1"	36"	260	265	N/A
109	W14 x 132	48'-8"	61'-8"	36"	260	265	N/A
110	W14 x 132	48'-4"	61'-4"	36"	260	265	N/A
111	W14 x 132	48'-0"	61'-0"	36"	260	265	N/A
112	W14 x 132	48'-0"	61'-0"	36"	260	265	N/A
113	W14 x 132	47'-11"	60'-11"	36"	260	265	N/A
114	W14 x 132	47'-11"	60'-11"	36"	260	265	N/A
115	W14 x 132	47'-10"	60'-10"	36"	260	265	N/A
116	W14 x 132	47'-10"	60'-10"	36"	260	265	N/A
117	W14 x 132	47'-9"	60'-9"	36"	260	265	N/A
118	W14 x 132	47'-9"	60'-9"	36"	260	265	N/A
119	W14 x 132	47'-9"	60'-9"	36"	260	265	N/A
120	W14 x 132	47'-8"	60'-8"	36"	260	265	N/A

SOLDIER PILE SCHEDULE

SOLDIER PILE NO.	SOLDIER PILE SIZE	EMBEDMENT DEPTH "D"	TOTAL LENGTH OF SOLDIER PILE = D+H	SHAFT DIA.	PGA 1 FACTORED DESIGN LOAD (KIPS)	PGA 2 FACTORED DESIGN LOAD (KIPS)	PGA 3 FACTORED DESIGN LOAD (KIPS)
121	W14 x 132	47'-8"	60'-8"	36"	260	265	N/A
122	W14 x 132	47'-8"	60'-8"	36"	260	265	N/A
123	W14 x 132	47'-7"	60'-7"	36"	260	265	N/A
124	W14 x 132	47'-6"	60'-6"	36"	260	265	N/A
125	W14 x 132	47'-6"	60'-6"	36"	260	265	N/A
126	W14 x 132	47'-6"	60'-6"	36"	260	265	N/A
127	W14 x 132	47'-5"	60'-5"	36"	260	265	N/A
128	W14 x 132	47'-5"	59'-5"	36"	260	265	N/A
129	W14 x 193	47'-4"	58'-3"	36"	310	N/A	N/A
130	W14 x 193	47'-4"	56'-11"	36"	310	N/A	N/A
131	W14 x 193	47'-6"	55'-10"	36"	310	N/A	N/A
132	W14 x 193	47'-8"	54'-8"	36"	310	N/A	N/A
133	W14 x 193	47'-11"	53'-7"	36"	N/A	N/A	N/A
134	W14 x 193	48'-1"	50'-10"	36"	N/A	N/A	N/A

NOTE: REFER TO THE SPECIAL PROVISIONS FOR DETAILS ON VARIANCE IN PILE LENGTHS.

SR ____ FILE NO. ____ SHEET SP20

Bridge Design Engr.	Khaleghi, B	
Supervisor	Zeldenrust, RP	
Designed By	Barkley, J	01/21
Checked By	Pawelka, M	02/22
Detailed By	Evans, A	01/21
Bridge Projects Engr.		
Prelim. Plan By		
Architect/Specialist		

M:\Z-Team\I-90 PHASE 3 CABIN CR WALLS\window files\WALL 2 GEN NOTES AND SCHEDULE 2.wnd

DATE	REVISION	BY	APP'D

REGION NO.	STATE	FED. AID PROJ. NO.	SHEET NO.	TOTAL SHEETS
10	WASH.			

JOB NUMBER 19Y007

CONTRACT NO.

P.E. STAMP BOX — RICHARD P. ZELDENRUST, STATE OF WASHINGTON, 25470, STRUCTURAL ENGINEER, PROFESSIONAL ENGINEER — SEE SHEET CT5 — DATE

BRIDGE AND STRUCTURES OFFICE

P.E. STAMP BOX — BILLAN KHALEGHI, STATE OF WASHINGTON, 27695, STRUCTURAL ENGINEER, PROFESSIONAL ENGINEER — SEE SHEET CT5 — DATE

Washington State Department of Transportation

I-90
CABIN CR I/C TO W EASTON I/C
PHASE 3 - ADD LANES/WILDLIFE BRIDGES

SOLDIER PILE WALL 2 GENERAL NOTES AND PILE SCHEDULE 2 OF 2

BRIDGE SHEET NO. SP20

SHEET 956 OF 1783 SHEETS

Mon Feb 07 14:07:39 2022

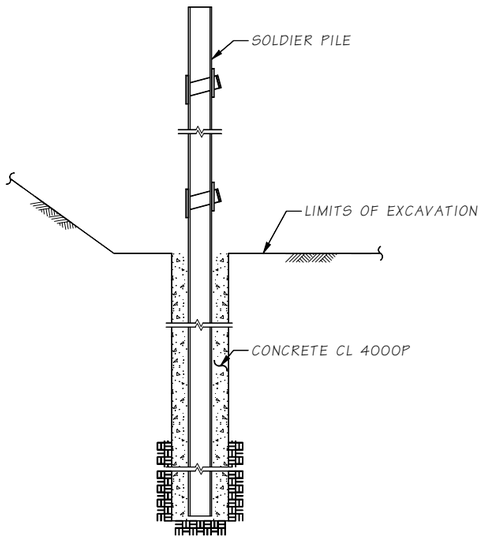

STAGE 1

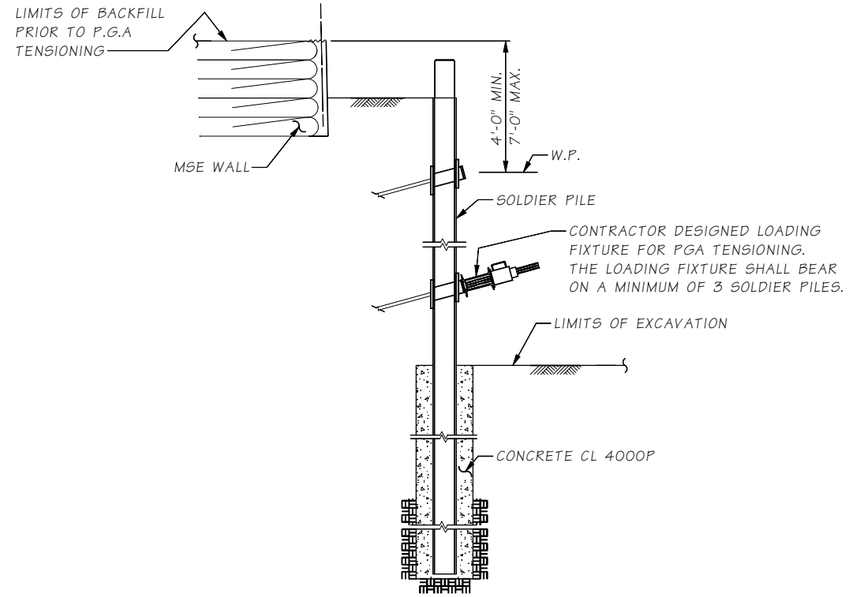

STAGE 3

P.G.A INSTALLATION SEQUENCE

1. DRILL SOLDIER PILE SHAFT AND INSTALL SOLDIER PILE. BACKFILL SHAFT WITH CONCRETE CLASS 4000P.
2. CAST FASCIA PANELS AND BACKFILL BEHIND THE WALL TO 4'-0" ABOVE THE BOTTOM P.G.A LOCATION. INSTALL THE P.G.A. AND TENSION TO 50% OF THE DESIGNATED LOCK-OFF LOAD. REPEAT FOR CONSECUTIVE P.G.A LOCATIONS.
3. BACKFILL AND CONSTRUCT THE MSE WALL TO A MINIMUM OF 4'-0" OR MAXIMUM OF 7'-0" ABOVE THE TOP PGA LOCATION. INSTALL THE P.G.A. AND TENSION TO 50% OF THE DESIGNATED LOCK-OFF LOAD.
4. CONSTRUCT THE MSE WALL TO A MINIMUM OF 10'-0" OR MAXIMUM OF 20'-0" ABOVE THE THE SOLDIER PILE WALL AND APPLY 100% OF THE DESIGNATED LOCK-OFF LOAD TO ALL P.G.As. CONTINUE MSE WALL CONSTRUCTION.

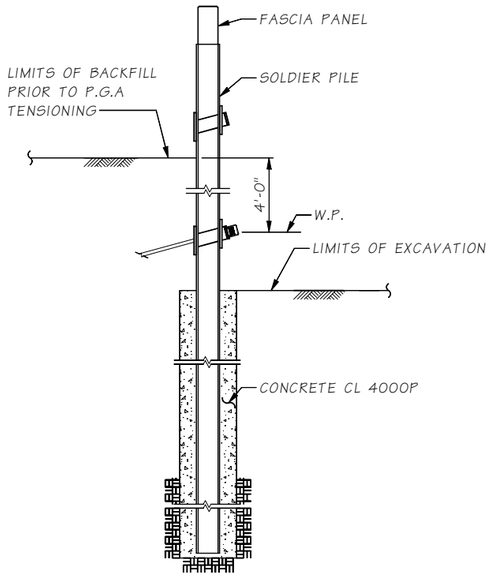

STAGE 2

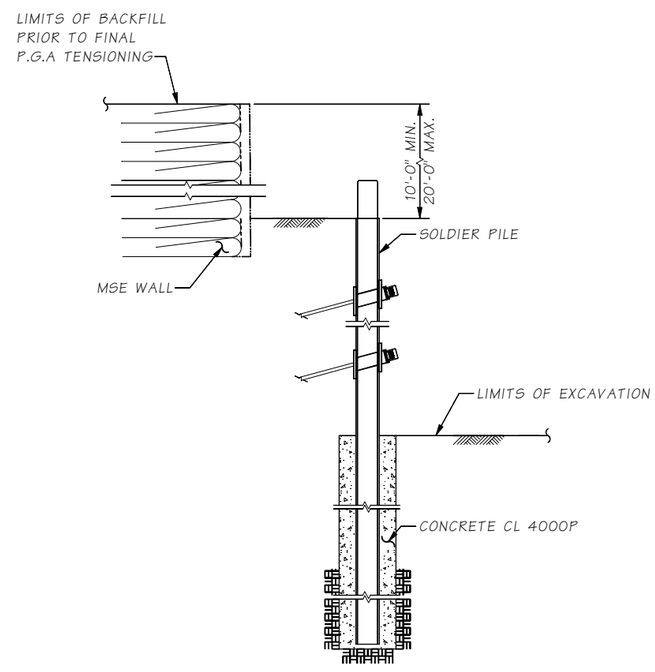

STAGE 4

Bridge Design Engr.	Khaleghi, B		M:\Z-Team\I-90 PHASE 3 CABIN CR WALLS\window files\WALL 2 CONSTR SEQ.wnd			REGION NO.	STATE	FED. AID PROJ. NO.	SHEET NO.	TOTAL SHEETS
Supervisor	Zeldenrust, RP					10	WASH.			
Designed By	Barkley, J	09/21				JOB NUMBER 19Y007				
Checked By	Pawelka, M	02/22								
Detailed By	Evans, A	09/21				CONTRACT NO.				
Bridge Projects Engr.										
Prelim. Plan By										
Architect/Specialist			DATE	REVISION	BY	APP'D				

Mon Feb 07 14:07:39 2022

P.E. STAMP BOX
RICHARD P. ZELDENRUST — STATE OF WASHINGTON — 25470 — PROFESSIONAL ENGINEER
SEE SHEET CT5
DATE

BRIDGE AND STRUCTURES OFFICE

P.E. STAMP BOX
BILLAN KHALEGHI — STATE OF WASHINGTON — 37695 — PROFESSIONAL ENGINEER
SEE SHEET CT5
DATE

Washington State Department of Transportation

I-90
CABIN CR I/C TO W EASTON I/C
PHASE 3 - ADD LANES/WILDLIFE BRIDGES

SOLDIER PILE WALL 2
CONSTRUCTION SEQUENCE

BRIDGE SHEET NO. SP21

SHEET 957 OF 1783 SHEETS

SR ____ FILE NO. ____ SHEET SP21

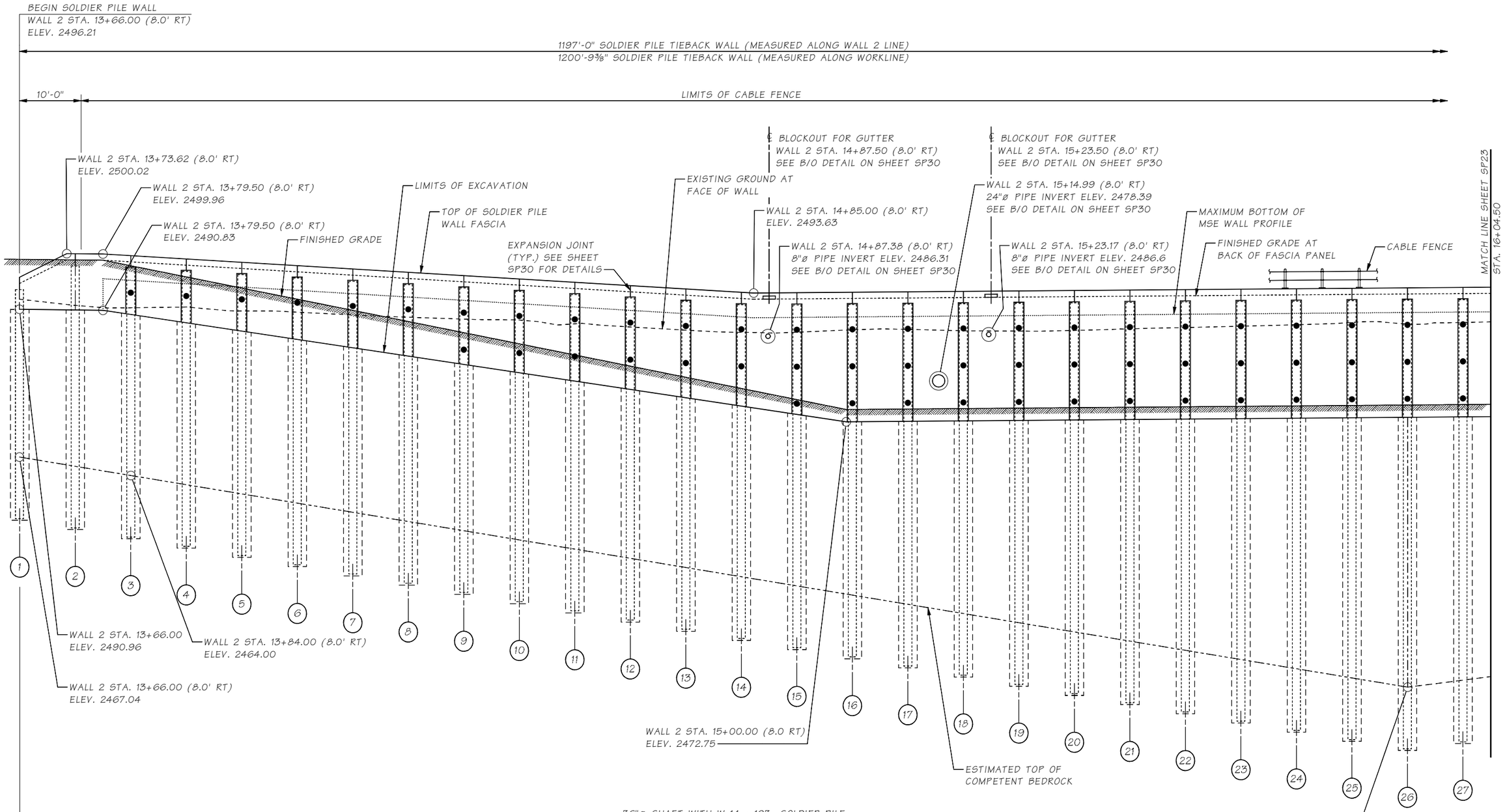

DEVELOPED ELEVATION

● = PGA LOCATION

SR ____ FILE NO. ____ SHEET SP22

Bridge Design Engr.	Khaleghi, B		
Supervisor	Zeldenrust, RP		
Designed By	Barkley, J	06/21	
Checked By	Pawelka, M	02/22	
Detailed By	Evans, A	06/21	
Bridge Projects Engr.			
Prelim. Plan By			
Architect/Specialist			

M:\Z-Team\I-90 PHASE 3 CABIN CR WALLS\window files\WALL 2 ELEVATION 1.wnd

DATE	REVISION	BY	APP'D

REGION NO.	STATE	FED. AID PROJ. NO.	SHEET NO.	TOTAL SHEETS
10	WASH.			

JOB NUMBER 19Y007

CONTRACT NO.

P.E. STAMP BOX — RICHARD P. ZELDENRUST — STATE OF WASHINGTON — 26870 — PROFESSIONAL ENGINEER — SEE SHEET CT5 — DATE

BRIDGE AND STRUCTURES OFFICE

P.E. STAMP BOX — BILLAN KHALEGHI — STATE OF WASHINGTON — 37695 — PROFESSIONAL ENGINEER — SEE SHEET CT5 — DATE

Washington State Department of Transportation

I-90
CABIN CR I/C TO W EASTON I/C
PHASE 3 - ADD LANES/WILDLIFE BRIDGES

SOLDIER PILE WALL 2
DEVELOPED ELEVATION 1 OF 5

BRIDGE SHEET NO. SP22

SHEET 958 OF 1783 SHEETS

Mon Feb 07 14:07:39 2022

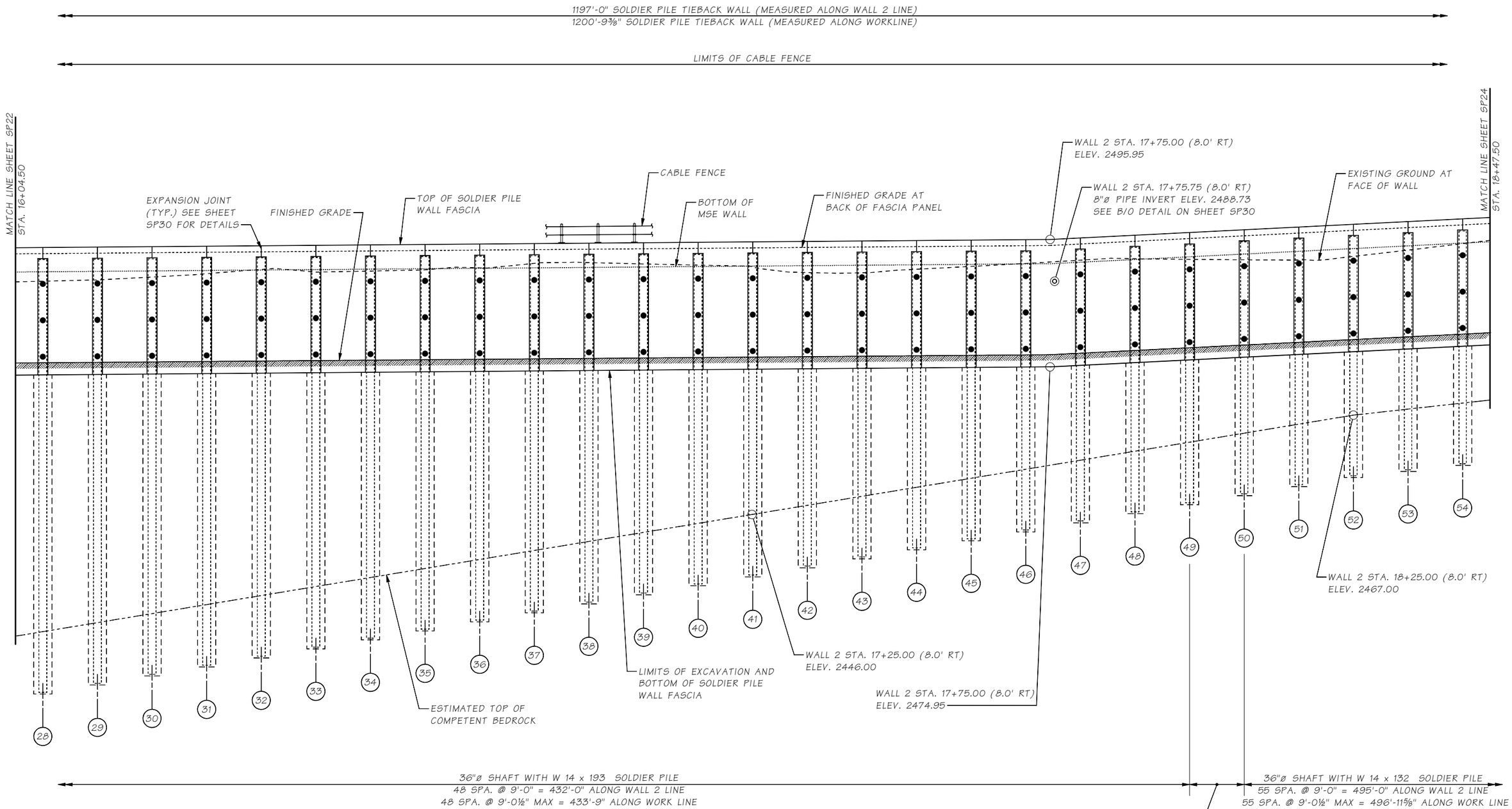

DEVELOPED ELEVATION

● = PGA LOCATION

Bridge Design Engr.	Khaleghi, B		
Supervisor	Zeldenrust, RP		
Designed By	Barkley, J	01/21	
Checked By	Pawelka, M	02/22	
Detailed By	Evans, A	01/21	
Bridge Projects Engr.			
Prelim. Plan By			
Architect/Specialist			

M:\Z-Team\I-90 PHASE 3 CABIN CR WALLS\window files\WALL 2 ELEVATION 2.wnd

DATE	REVISION	BY	APP'D

REGION NO.	STATE	FED. AID PROJ. NO.	SHEET NO.	TOTAL SHEETS
10	WASH.			

JOB NUMBER 19Y007

CONTRACT NO.

P.E. STAMP BOX — RICHARD P. ZELDENRUST, STATE OF WASHINGTON, 25670, STRUCTURAL ENGINEER, PROFESSIONAL ENGINEER — SEE SHEET CT5 — DATE

BRIDGE AND STRUCTURES OFFICE

P.E. STAMP BOX — BILIAN KHALEGHI, STATE OF WASHINGTON, 37695, STRUCTURAL ENGINEER, PROFESSIONAL ENGINEER — SEE SHEET CT5 — DATE

Washington State Department of Transportation

I-90
CABIN CR I/C TO W EASTON I/C
PHASE 3 - ADD LANES/WILDLIFE BRIDGES

SOLDIER PILE WALL 2
DEVELOPED ELEVATION 2 OF 5

BRIDGE SHEET NO. SP23

SHEET 959 OF 1783 SHEETS

SR ____ FILE NO. ____ SHEET SP23

Mon Feb 07 14:07:40 2022

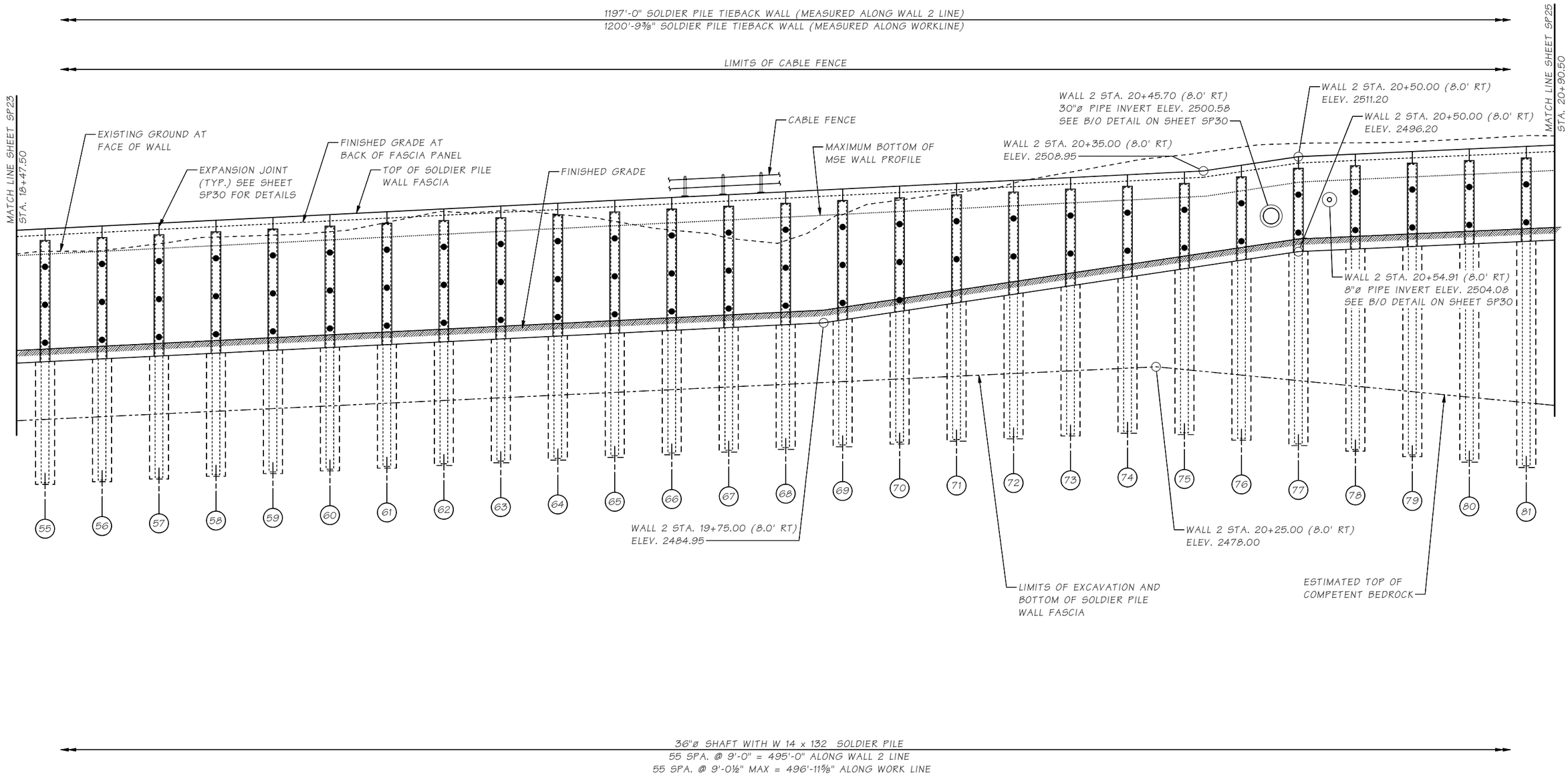

DEVELOPED ELEVATION

● = PGA LOCATION

SR ____ FILE NO. ____ SHEET SP24

Bridge Design Engr.	Khaleghi, B	M:\Z-Team\I-90 PHASE 3 CABIN CR WALLS\window files\WALL 2 ELEVATION 3.wnd									
Supervisor	Zeldenrust, RP										
Designed By	Barkley, J 01/21										
Checked By	Pawelka, M 02/22										
Detailed By	Evans, A 01/21										
Bridge Projects Engr.											
Prelim. Plan By											
Architect/Specialist		DATE	REVISION	BY	APP'D						

REGION NO.	STATE	FED. AID PROJ. NO.	SHEET NO.	TOTAL SHEETS
10	WASH.			
JOB NUMBER 19Y007				
CONTRACT NO.				

P.E. STAMP BOX
RICHARD P. ZELDENRUST
STATE OF WASHINGTON
25470
STRUCTURAL ENGINEER
PROFESSIONAL ENGINEER
SEE SHEET CT5
DATE:

BRIDGE AND STRUCTURES OFFICE

P.E. STAMP BOX
BIJAN KHALEGHI
STATE OF WASHINGTON
27695
STRUCTURAL ENGINEER
PROFESSIONAL ENGINEER
SEE SHEET CT5
DATE:

Washington State Department of Transportation

I-90
CABIN CR I/C TO W EASTON I/C
PHASE 3 - ADD LANES/WILDLIFE BRIDGES

SOLDIER PILE WALL 2
DEVELOPED ELEVATION 3 OF 5

BRIDGE SHEET NO. SP24
SHEET 960 OF 1783 SHEETS

Mon Feb 07 14:07:40 2022

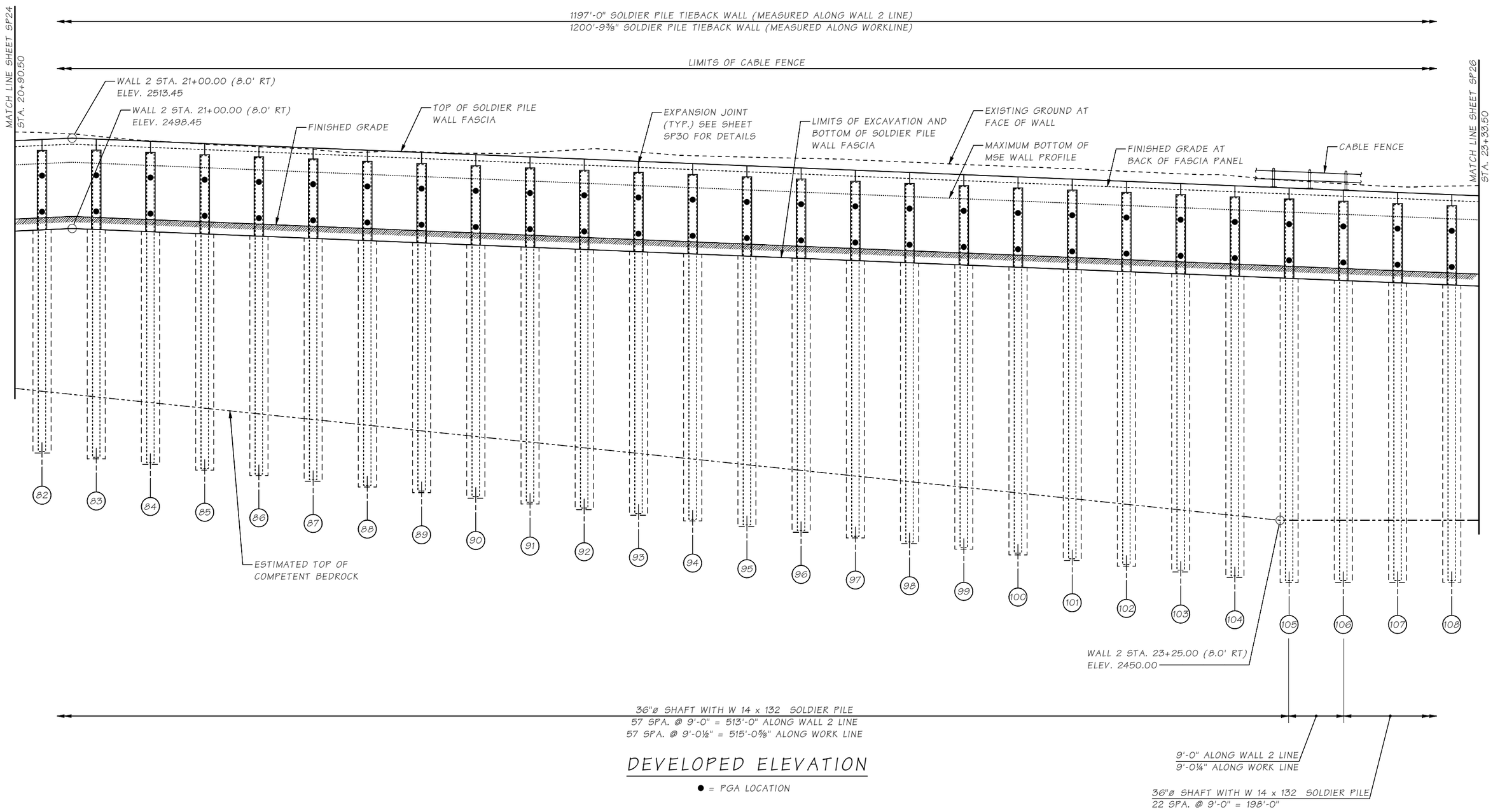

DEVELOPED ELEVATION

● = PGA LOCATION

SR ____ FILE NO. ____ SHEET SP25

Bridge Design Engr.	Khaleghi, B		
Supervisor	Zeldenrust, RP		
Designed By	Barkley, J	01/21	
Checked By	Pawelka, M	02/22	
Detailed By	Evans, A	01/21	
Bridge Projects Engr.			
Prelim. Plan By			
Architect/Specialist			

M:\Z-Team\I-90 PHASE 3 CABIN CR WALLS\window files\WALL 2 ELEVATION 4.wnd

DATE	REVISION	BY	APP'D

REGION NO.	STATE	FED. AID PROJ. NO.	SHEET NO.	TOTAL SHEETS
10	WASH.			
JOB NUMBER 19Y007				
CONTRACT NO.				

P.E. STAMP BOX
RICHARD P. ZELDENRUST
STATE OF WASHINGTON
25470
PROFESSIONAL ENGINEER
SEE SHEET CT5
DATE

BRIDGE AND STRUCTURES OFFICE

P.E. STAMP BOX
BIJAN KHALEGHI
STATE OF WASHINGTON
27895
PROFESSIONAL ENGINEER
SEE SHEET CT5
DATE

Washington State Department of Transportation

I-90
CABIN CR I/C TO W EASTON I/C
PHASE 3 - ADD LANES/WILDLIFE BRIDGES

SOLDIER PILE WALL 2
DEVELOPED ELEVATION 4 OF 5

BRIDGE SHEET NO. SP25

SHEET 961 OF 1783 SHEETS

Mon Feb 07 14:07:41 2022

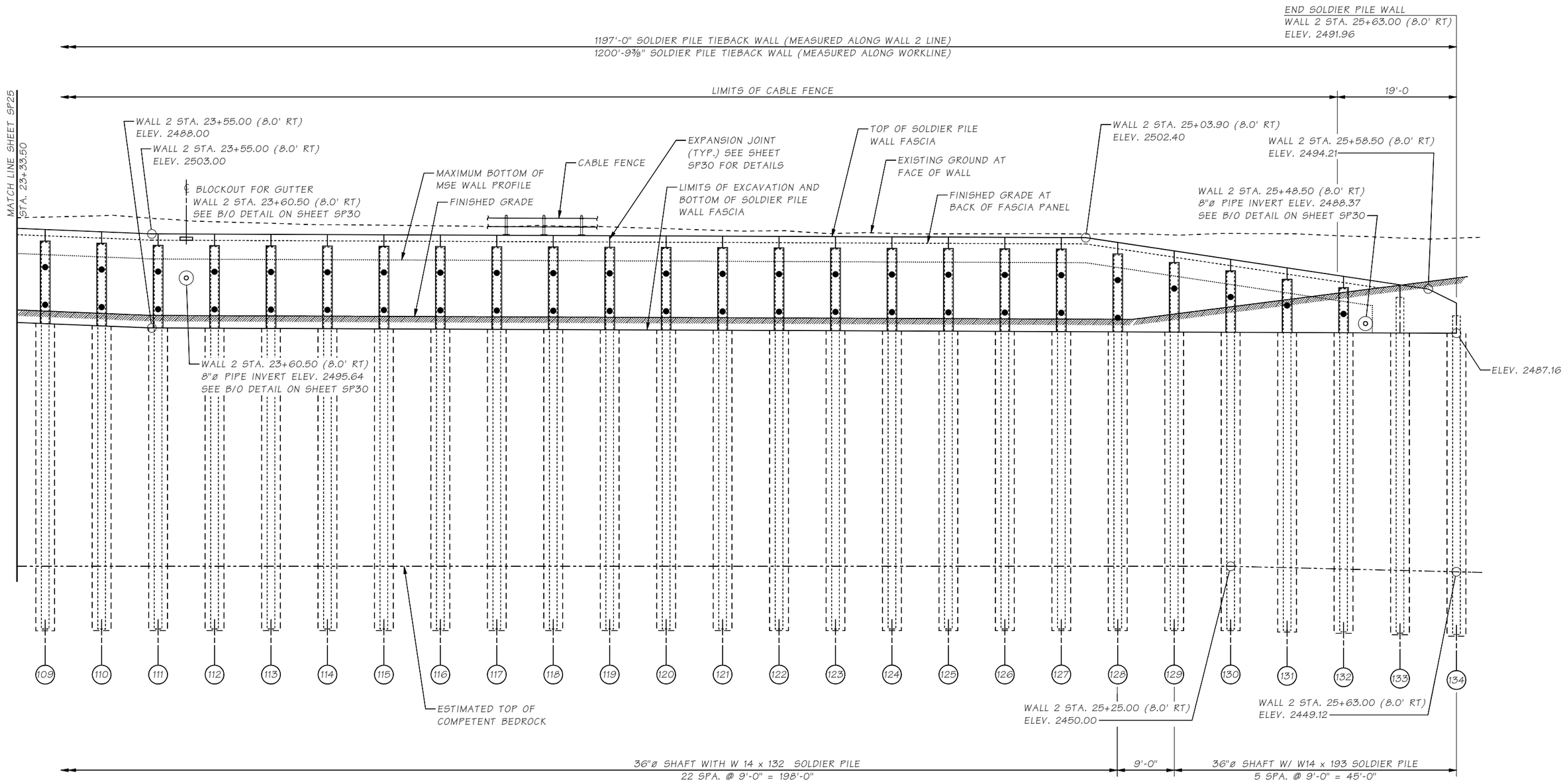

DEVELOPED ELEVATION

● = PGA LOCATION

SR ____ FILE NO. ____ SHEET SP26

Bridge Design Engr.	Khaleghi, B	M:\Z-Team\I-90 PHASE 3 CABIN CR WALLS\window files\WALL 2 ELEVATION 5.wnd								
Supervisor	Zeldenrust, RP									
Designed By	Barkley, J 05/21									
Checked By	Pawelka, M 02/22									
Detailed By	Evans, A 05/21									
Bridge Projects Engr.										
Prelim. Plan By										
Architect/Specialist		DATE	REVISION	BY	APP'D					

REGION NO.	STATE	FED. AID PROJ. NO.	SHEET NO.	TOTAL SHEETS
10	WASH.			
JOB NUMBER 19Y007				
CONTRACT NO.				

P.E. STAMP BOX
RICHARD P. ZELDENRUST
STATE OF WASHINGTON
25470
STRUCTURAL ENGINEER
PROFESSIONAL ENGINEER
SEE SHEET CT5
DATE

BRIDGE AND STRUCTURES OFFICE

P.E. STAMP BOX
BIJAN KHALEGHI
STATE OF WASHINGTON
27695
STRUCTURAL ENGINEER
PROFESSIONAL ENGINEER
SEE SHEET CT5
DATE

Washington State Department of Transportation

I-90
CABIN CR I/C TO W EASTON I/C
PHASE 3 - ADD LANES/WILDLIFE BRIDGES

SOLDIER PILE WALL 2
DEVELOPED ELEVATION 5 OF 5

BRIDGE SHEET NO. SP26
SHEET 962 OF 1783 SHEETS

Mon Feb 07 14:07:41 2022

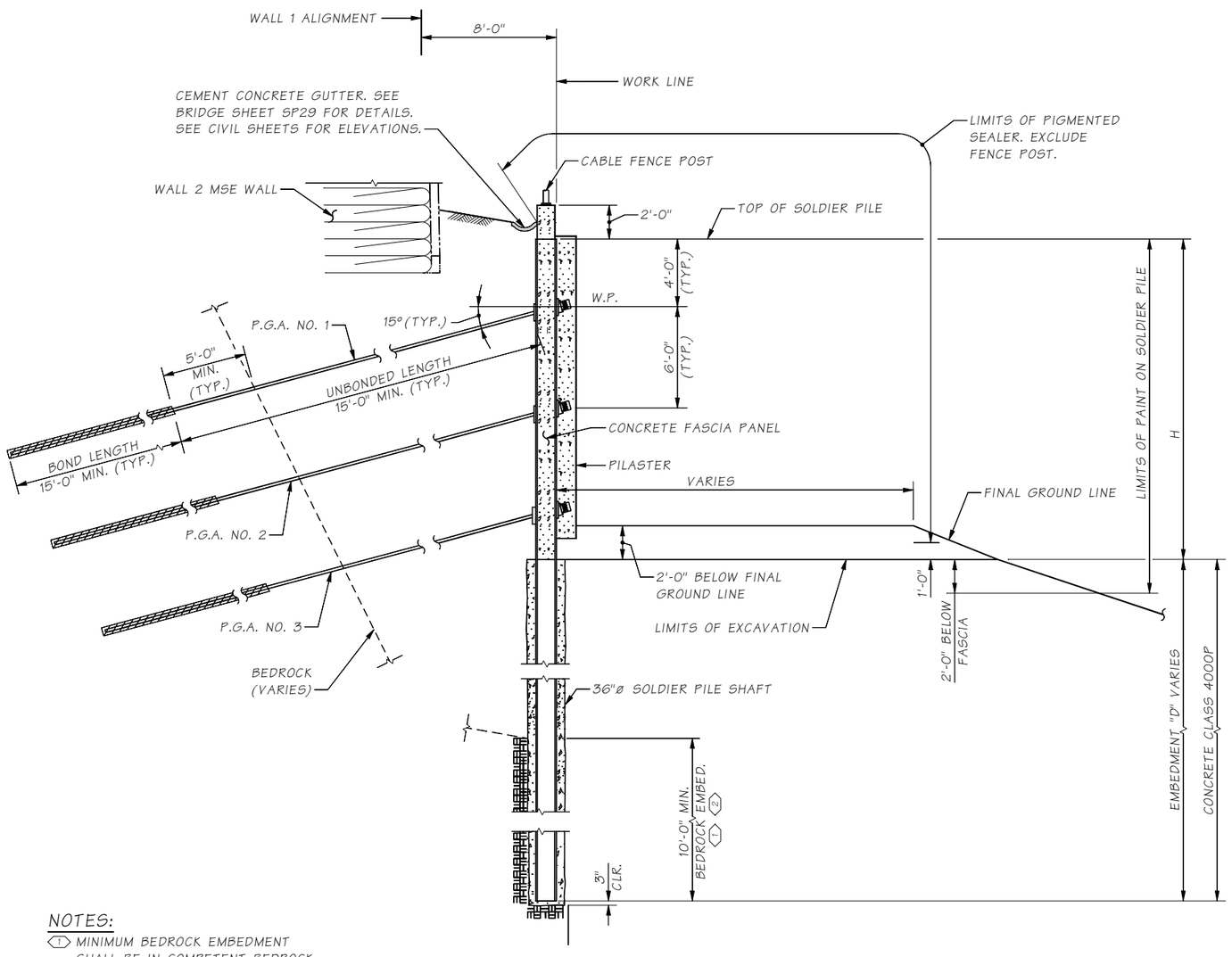

TYPICAL SECTION

SHOWN FOR SOLDIER PILE WITH P.G.A.
SIMILAR FOR SOLDIER PILE WITHOUT P.G.A.

P.G.A.= PERMANENT GROUND ANCHOR

NOTES:

1. MINIMUM BEDROCK EMBEDMENT SHALL BE IN COMPETENT BEDROCK VERIFIED BY THE ENGINEER.
2. THE CONTRACTOR IS PERMITTED TO REDUCED THE SHAFT DIAMETER TO 30"ø MINIMUM IN THE ROCK SOCKET FOR TELESCOPING. A 36"ø SHAFT SHALL BE MAINTAINED ABOVE THE ROCK SURFACE.

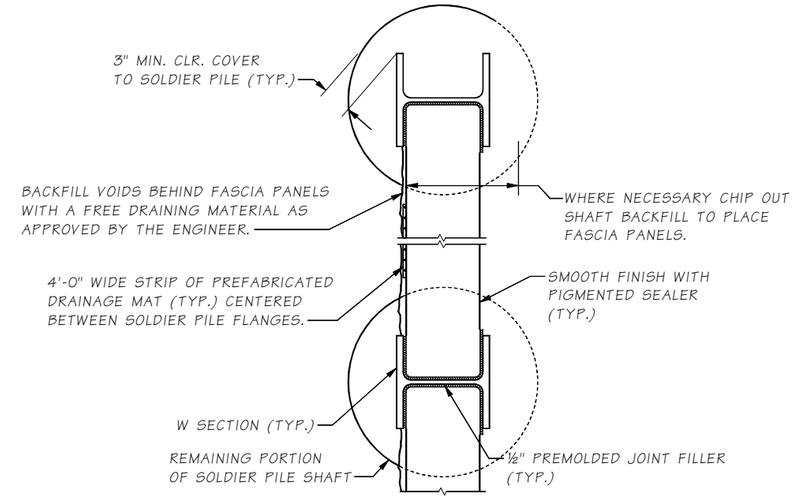

PLAN
SOLDIER PILE WALL
WITHOUT P. G. A.

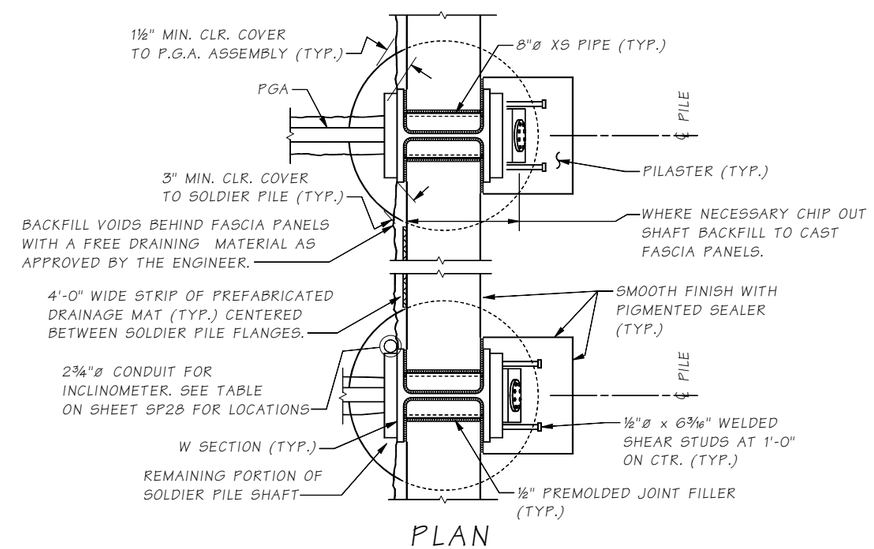

PLAN
SOLDIER PILE WALL
WITH P. G. A.

Bridge Design Engr.	Khaleghi, B	M:\Z-Team\I-90 PHASE 3 CABIN CR WALLS\window files\WALL 2 DETAILS 1.wnd	
Supervisor	Zeldenrust, RP		
Designed By	Barkley, J 01/21		
Checked By	Pawelka, M 02/22		
Detailed By	Evans, A 01/21		
Bridge Projects Engr.			
Prelim. Plan By			
Architect/Specialist			

DATE	REVISION	BY	APP'D

REGION NO.	STATE	FED. AID PROJ. NO.	SHEET NO.	TOTAL SHEETS
10	WASH.			
JOB NUMBER 19Y007				
CONTRACT NO.				

P.E. STAMP BOX — RICHARD P. ZELDENRUST, STATE OF WASHINGTON, 20470, PROFESSIONAL ENGINEER — SEE SHEET CT5 — DATE

BRIDGE AND STRUCTURES OFFICE

P.E. STAMP BOX — BRIAN KHALEGHI, STATE OF WASHINGTON, 27696, PROFESSIONAL ENGINEER — SEE SHEET CT5 — DATE

Washington State Department of Transportation

I-90
CABIN CR I/C TO W EASTON I/C
PHASE 3 - ADD LANES/WILDLIFE BRIDGES

SOLDIER PILE WALL 2
DETAILS 1 OF 2

BRIDGE SHEET NO. SP27

SHEET 963 OF 1783 SHEETS

SR ____ FILE NO. ____ SHEET SP27

Mon Feb 07 14:07:42 2022

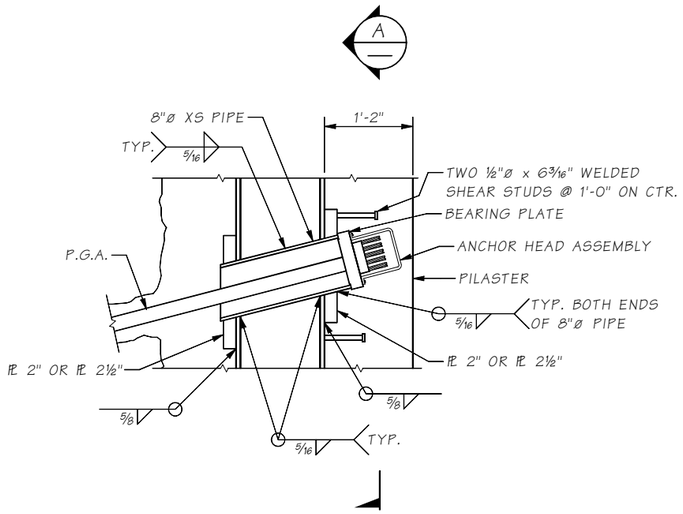

ELEVATION - SOLDIER PILE
WITH P.G.A. THRU WEB

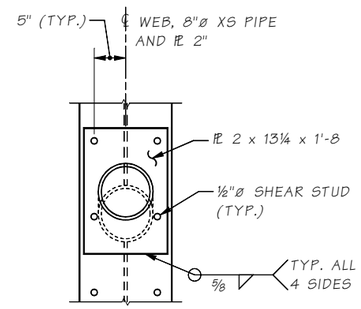

VIEW A
AT W14X132
SOLDIER PILE

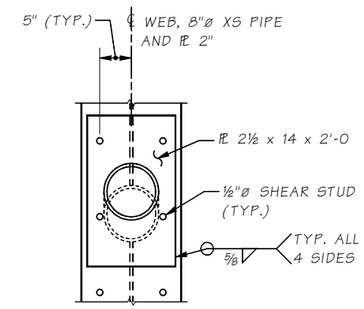

VIEW A
AT W14X193
SOLDIER PILE

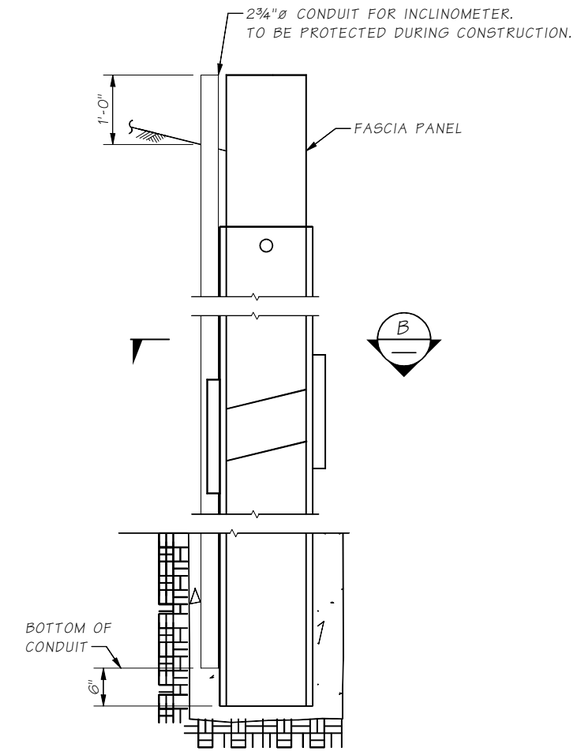

INCLINOMETER DETAIL

INCLINOMETER LOCATIONS	
PILE #	41, 52, 105, 129

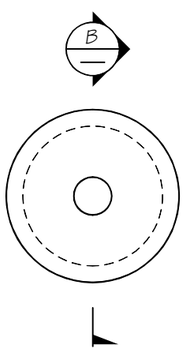

BEARING PLATE

BEARING PLATE SHALL BE SIZED IN ACCORDANCE WITH THE STANDARD SPECIFICATION SECTION 6-17.3(5).

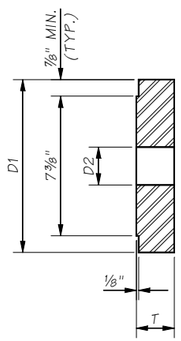

SECTION B

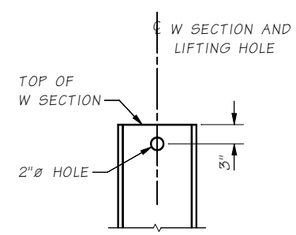

SOLDIER PILE
LIFTING HOLE

LIFTING HOLE TO BE DRILLED IN THE SHOP PRIOR TO PAINTING THE PILE.

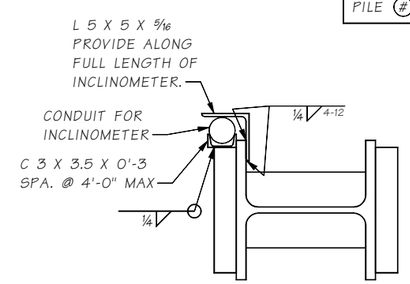

SECTION B
AT PGA LOCATION

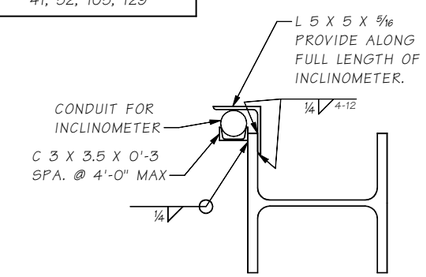

SECTION B
BELOW PGA LOCATION

SR ____ FILE NO. ____ SHEET SP28

Bridge Design Engr.	Khaleghi, B		M:\Z-Team\I-90 PHASE 3 CABIN CR WALLS\window files\WALL 2 DETAILS 2.wnd								
Supervisor	Zeldenrust, RP										
Designed By	Barkley, J	01/21									
Checked By	Pawelka, M	02/22									
Detailed By	Evans, A	01/21									
Bridge Projects Engr.											
Prelim. Plan By											
Architect/Specialist			DATE	REVISION	BY	APP'D					

REGION NO.	STATE	FED. AID PROJ. NO.	SHEET NO.	TOTAL SHEETS
10	WASH.			
JOB NUMBER 19Y007				
CONTRACT NO.				

P.E. STAMP BOX
RICHARD P. ZELDENRUST
STATE OF WASHINGTON
25470
STRUCTURAL ENGINEER
PROFESSIONAL ENGINEER
SEE SHEET CT5
DATE:

BRIDGE AND STRUCTURES OFFICE

P.E. STAMP BOX
BIJAN KHALEGHI
STATE OF WASHINGTON
27695
STRUCTURAL ENGINEER
PROFESSIONAL ENGINEER
SEE SHEET CT5
DATE:

Washington State Department of Transportation

I-90
CABIN CR I/C TO W EASTON I/C
PHASE 3 - ADD LANES/WILDLIFE BRIDGES

SOLDIER PILE WALL 2
DETAILS 2 OF 2

BRIDGE SHEET NO. SP28
SHEET 964 OF 1783 SHEETS

Mon Feb 07 14:07:42 2022

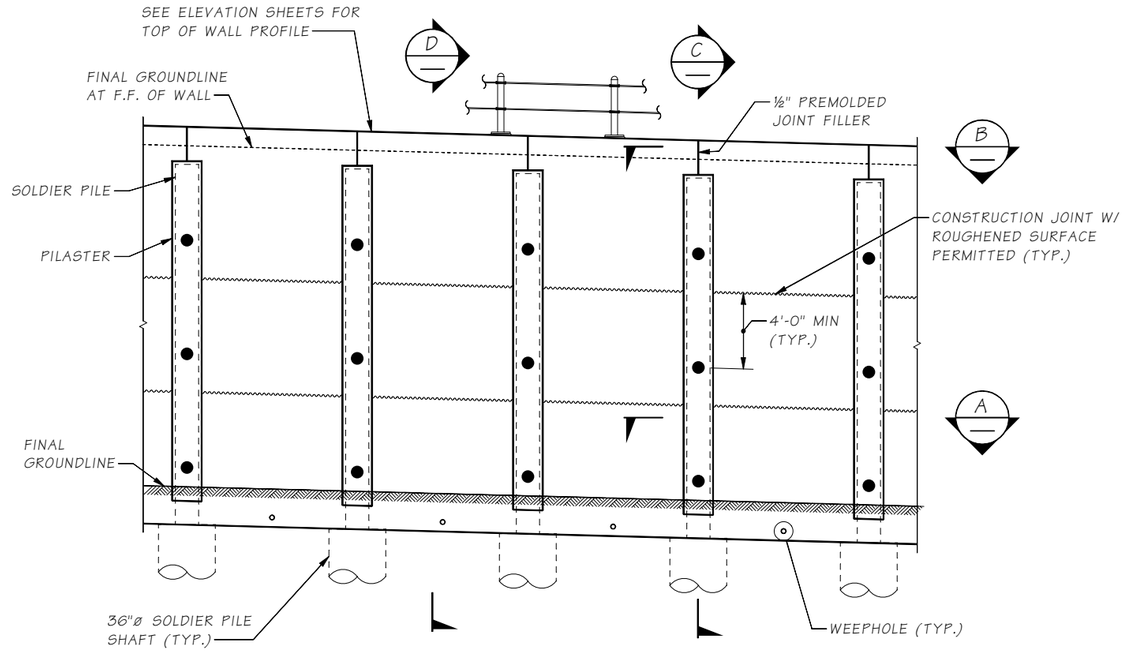

PARTIAL WALL ELEVATION

● = P.G.A

FOR INFORMATION NOT SHOWN OR NOTED SEE ELEVATION SHEETS.

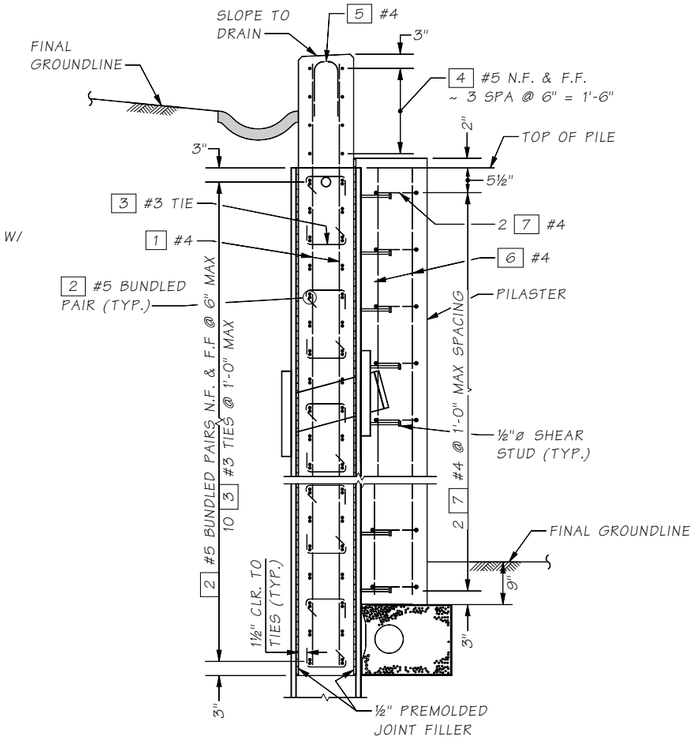

SECTION C

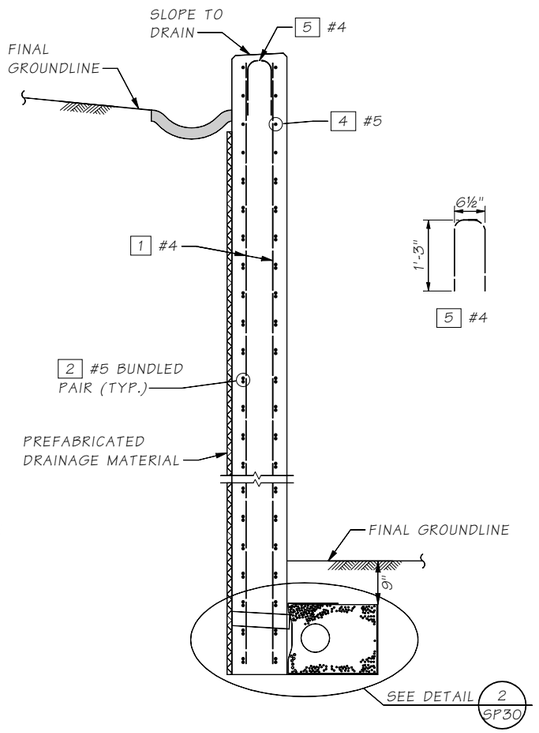

SECTION D

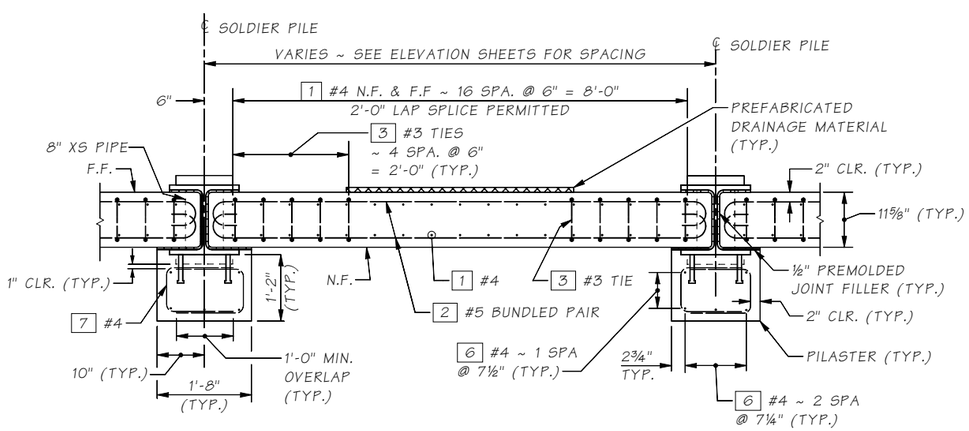

SECTION A

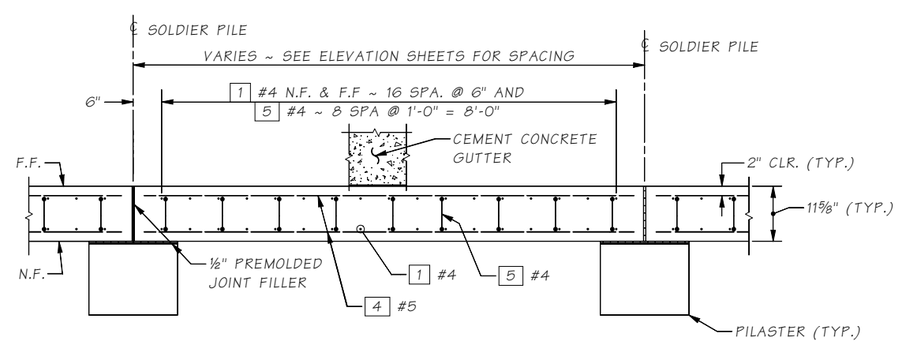

SECTION B

LEGEND:

N.F. = NEAR FACE
F.F. = FAR FACE

Bridge Design Engr.	Khaleghi, B		M:\Z-Team\I-90 PHASE 3 CABIN CR WALLS\window files\WALL 2 DETAILS 3.wnd			REGION NO.	STATE	FED. AID PROJ. NO.	SHEET NO.	TOTAL SHEETS
Supervisor	Zeldenrust, RP					10	WASH.			
Designed By	Barkley, J	09/21				JOB NUMBER 19Y007				
Checked By	Pawelka, M	02/22								
Detailed By	Evans, A	09/21				CONTRACT NO.				
Bridge Projects Engr.										
Prelim. Plan By										
Architect/Specialist			DATE	REVISION	BY	APP'D				

Mon Feb 07 14:07:42 2022

P.E. STAMP BOX: RICHARD P. ZELDENRUST, STATE OF WASHINGTON, 25470, STRUCTURAL ENGINEER, PROFESSIONAL ENGINEER — SEE SHEET CT5 — DATE

BRIDGE AND STRUCTURES OFFICE

P.E. STAMP BOX: BILLAN KHALEGHI, STATE OF WASHINGTON, 27695, STRUCTURAL ENGINEER, PROFESSIONAL ENGINEER — SEE SHEET CT5 — DATE

Washington State Department of Transportation

I-90
CABIN CR I/C TO W EASTON I/C
PHASE 3 - ADD LANES/WILDLIFE BRIDGES

SOLDIER PILE WALL 2
CONCRETE FASCIA DETAILS 1 OF 2

BRIDGE SHEET NO. SP29

SHEET 965 OF 1783 SHEETS

SR ___ FILE NO. ___ SHEET SP29

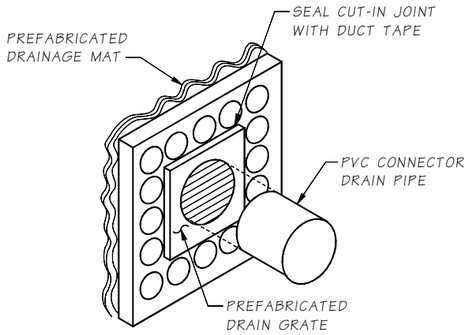

ISOMETRIC VIEW

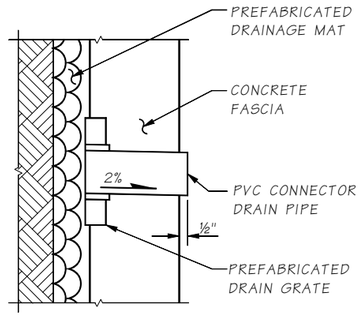

SECTIONAL VIEW

WEEP HOLE DRAIN DETAILS

DRAIN GRATE INSTALLATION SHALL NOT DISRUPT PREFABRICATED DRAINAGE MAT

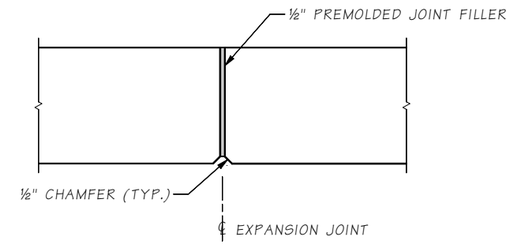

EXPANSION JOINT DETAIL

NOTE:
EXPANSION JOINTS SHALL BE LOCATED AS SHOWN ON ELEVATION SHEETS.

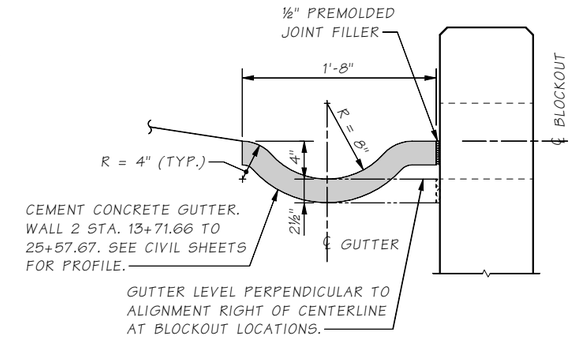

DETAIL 1

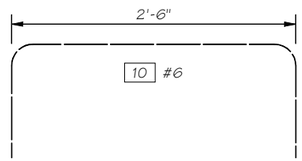

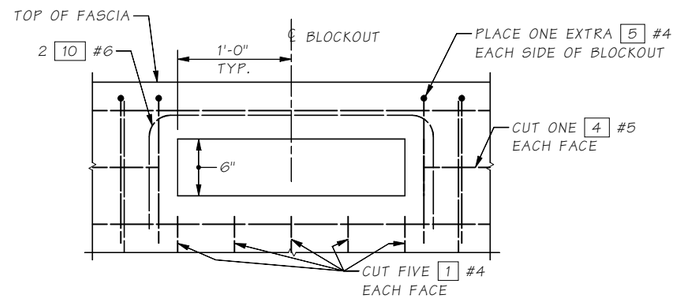

GUTTER BLOCKOUT DETAIL

NOTE: CABLE FENCE POSTS SHALL NOT BE PLACED OVER THE GUTTER BLOCKOUT

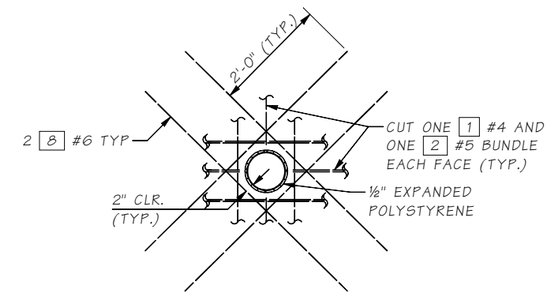

8"ø PIPE BLOCKOUT DETAIL

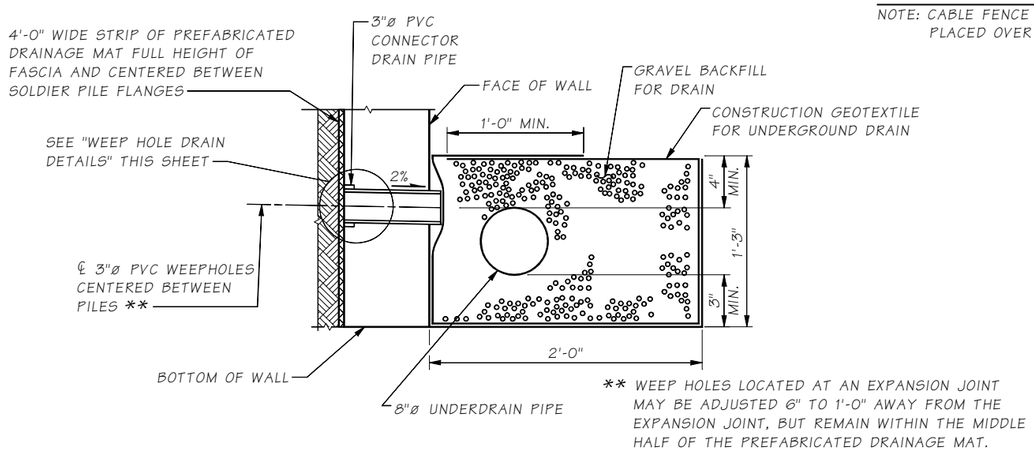

** WEEP HOLES LOCATED AT AN EXPANSION JOINT MAY BE ADJUSTED 6" TO 1'-0" AWAY FROM THE EXPANSION JOINT, BUT REMAIN WITHIN THE MIDDLE HALF OF THE PREFABRICATED DRAINAGE MAT.

DETAIL 2

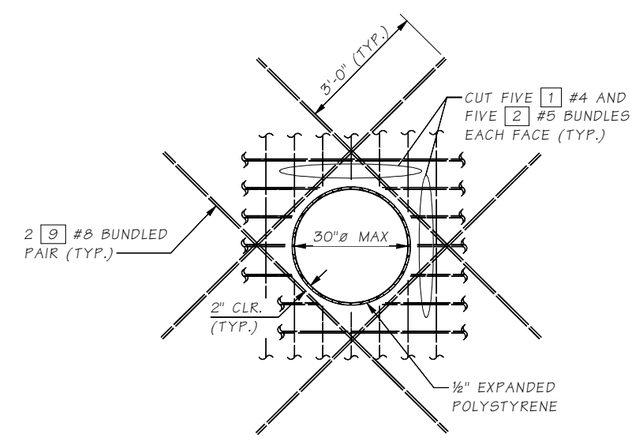

24" & 30"ø PIPE BLOCKOUT DETAIL

Bridge Design Engr.	Khaleghi, B		M:\Z-Team\I-90 PHASE 3 CABIN CR WALLS\window files\WALL 2 DET 4.wnd			REGION NO.	STATE	FED. AID PROJ. NO.	SHEET NO.	TOTAL SHEETS
Supervisor	Zeldenrust, RP					10	WASH.			
Designed By	Barkley, J	09/21				JOB NUMBER 19Y007				
Checked By	Pawelka, M	02/22								
Detailed By	Evans, A	09/21				CONTRACT NO.				
Bridge Projects Engr.										
Prelim. Plan By										
Architect/Specialist			DATE	REVISION	BY	APP'D				

Mon Feb 07 14:07:43 2022

P.E. STAMP BOX: RICHARD P. ZELDENRUST, STATE OF WASHINGTON, 25470, PROFESSIONAL ENGINEER — SEE SHEET CT5 — DATE

BRIDGE AND STRUCTURES OFFICE

P.E. STAMP BOX: BILLAN KHALEGHI, STATE OF WASHINGTON, 37695, PROFESSIONAL ENGINEER — SEE SHEET CT5 — DATE

Washington State Department of Transportation

I-90
CABIN CR I/C TO W EASTON I/C
PHASE 3 - ADD LANES/WILDLIFE BRIDGES

SOLDIER PILE WALL 2
CONCRETE FASCIA DETAILS 2 OF 2

BRIDGE SHEET NO. SP30

SHEET 966 OF 1783 SHEETS

SR ____ FILE NO. ____ SHEET SP30

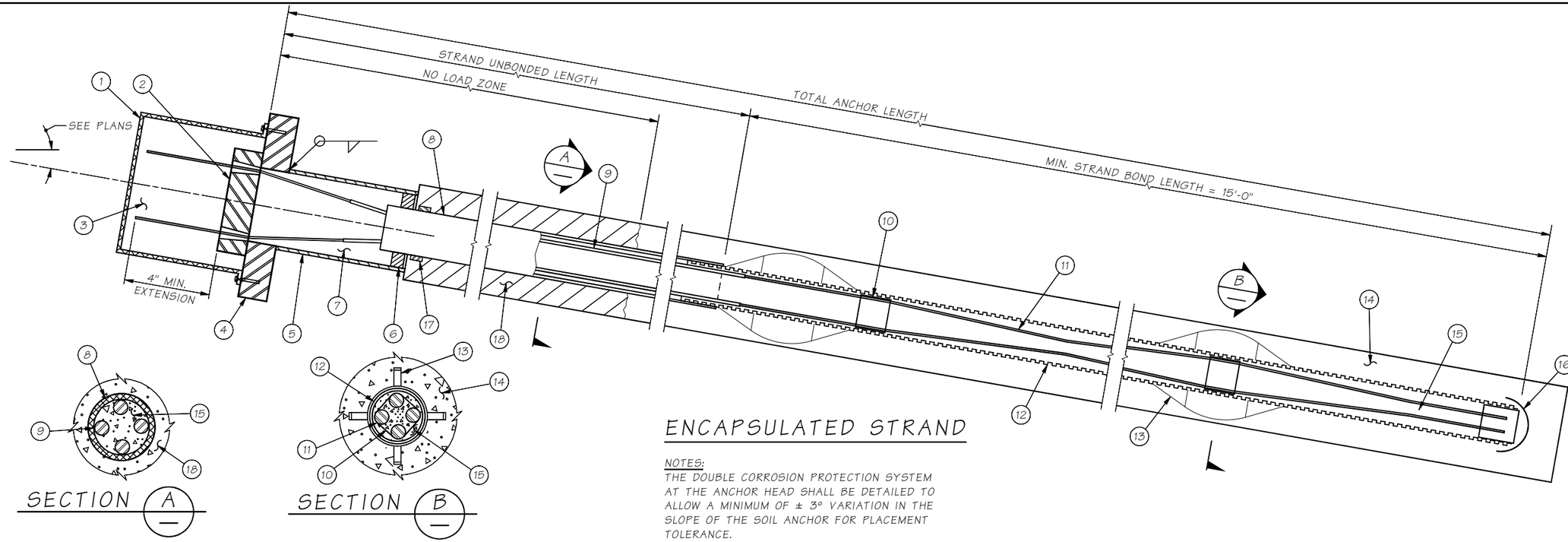

1. ANCHORAGE COVER
2. ANCHOR HEAD AND WEDGES
3. ANTICORROSION GREASE
4. BEARING PLATE
5. TRUMPET
6. SEAL
7. ANTICORROSION GREASE
8. PVC OR POLYETHYLENE TUBE
9. INDIVIDUALLY GREASED AND SHEATHED STRAND.
10. SPACER
11. STRAND
12. CORRUGATED PVC
13. CENTRALIZER
14. ANCHOR GROUT
15. ENCAPSULATION GROUT
16. END CAP
17. TENSION RING TO RESIST SPLITTING FORCE OF DEFLECTED STRANDS.
18. NON-STRUCTURAL FILLER

ENCAPSULATED STRAND

NOTES:
THE DOUBLE CORROSION PROTECTION SYSTEM AT THE ANCHOR HEAD SHALL BE DETAILED TO ALLOW A MINIMUM OF ± 3° VARIATION IN THE SLOPE OF THE SOIL ANCHOR FOR PLACEMENT TOLERANCE.

ALL ANCHORAGE COVERS SHALL BE BOLTED TO THE BEARING PLATES.

THE CONTRACTOR SHALL PROTECT ANY EXCESS LENGTH OF STRAND FROM CORROSION DURING THE P.G.A. TENSIONING PROCESS UNTIL THE PILASTER HAS BEEN CONSTRUCTED.

SR ____ FILE NO. ____ SHEET SP31

Bridge Design Engr.	Khaleghi, B	
Supervisor	Zeldenrust, RP	
Designed By	Barkley, J	01/21
Checked By	Pawelka, M	02/22
Detailed By	Evans, A	01/21
Bridge Projects Engr.		
Prelim. Plan By		
Architect/Specialist		

M:\Z-Team\I-90 PHASE 3 CABIN CR WALLS\window files\WALL 2 GROUND ANCHOR DETAILS.wnd

DATE	REVISION	BY	APP'D

REGION NO.	STATE	FED. AID PROJ. NO.	SHEET NO.	TOTAL SHEETS
10	WASH.			

JOB NUMBER 19Y007

CONTRACT NO.

P.E. STAMP BOX — RICHARD P. ZELDENRUST, STATE OF WASHINGTON, 25470, PROFESSIONAL ENGINEER — SEE SHEET CT5 — DATE:

BRIDGE AND STRUCTURES OFFICE

P.E. STAMP BOX — BIJAN KHALEGHI, STATE OF WASHINGTON, 27695, PROFESSIONAL ENGINEER — SEE SHEET CT5 — DATE:

Washington State Department of Transportation

I-90
CABIN CR I/C TO W EASTON I/C
PHASE 3 - ADD LANES/WILDLIFE BRIDGES

SOLDIER PILE WALL 2
PERMANENT GROUND ANCHOR DETAILS

BRIDGE SHEET NO. SP31

SHEET 967 OF 1783 SHEETS

Mon Feb 07 14:07:43 2022

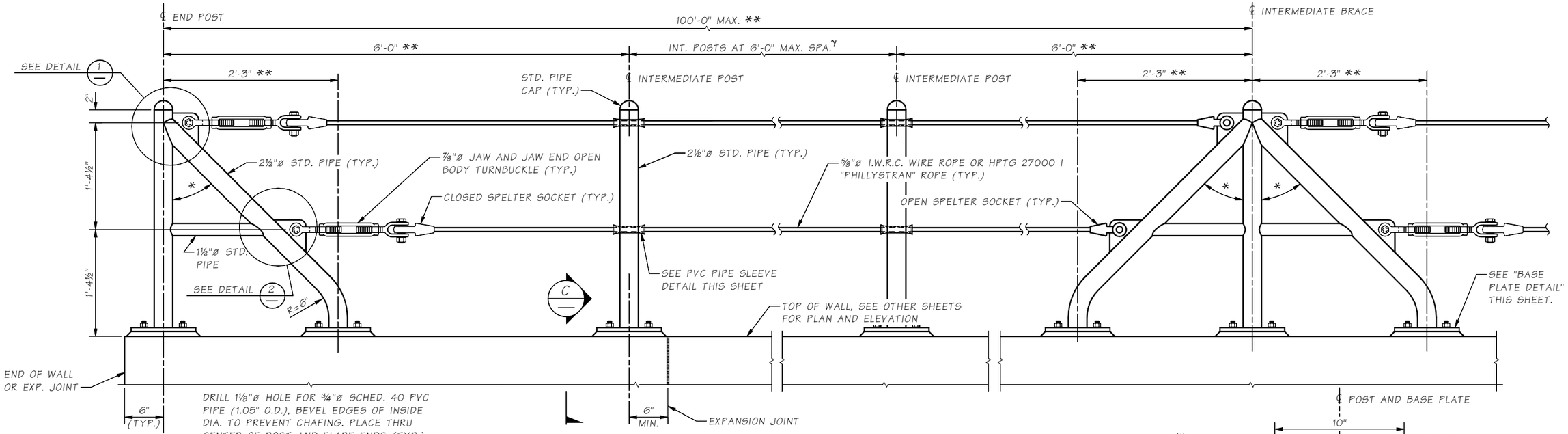

ELEVATION
CABLE FENCE

* ANGLES VARY WITH THE SLOPE OF THE TOP OF WALL. APPROX. 45° WHEN INSTALLED ON A LEVEL SURFACE.

** MEASURED PERPENDICULAR TO THE POSTS.

γ OMIT INTERMEDIATE POST WHEN SPACING BETWEEN END POST AND INTERMEDIATE BRACE IS LESS THAN 8'-6".

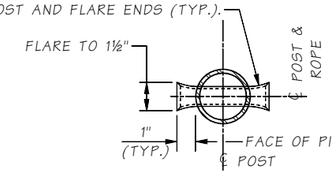

PVC PIPE SLEEVE DETAIL

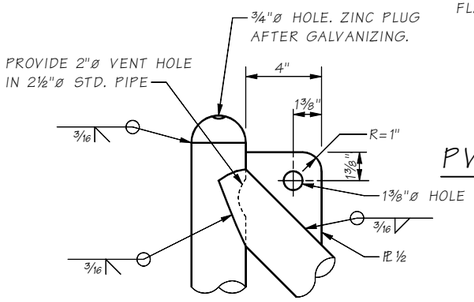

DETAIL 1

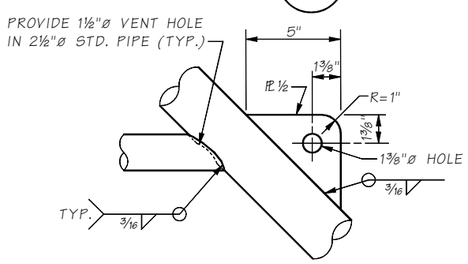

DETAIL 2

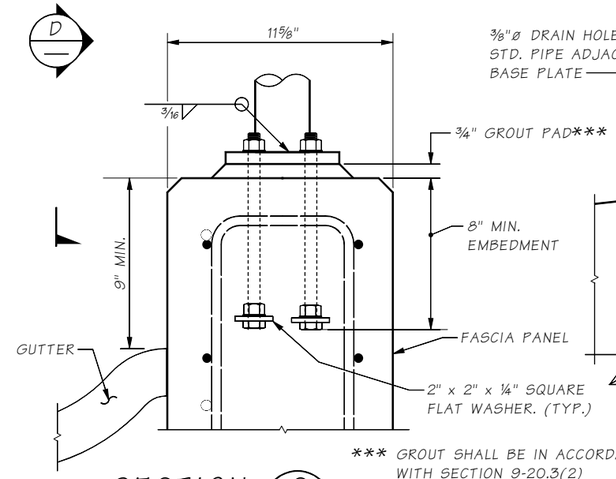

*** GROUT SHALL BE IN ACCORDANCE WITH SECTION 9-20.3(2)

SECTION C

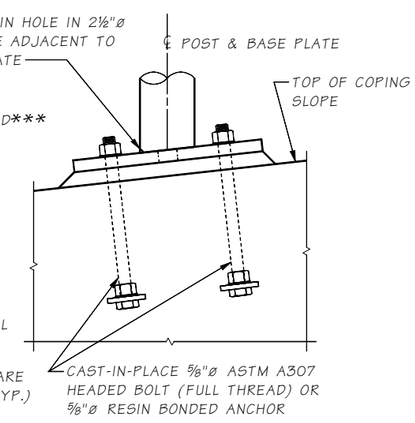

VIEW D

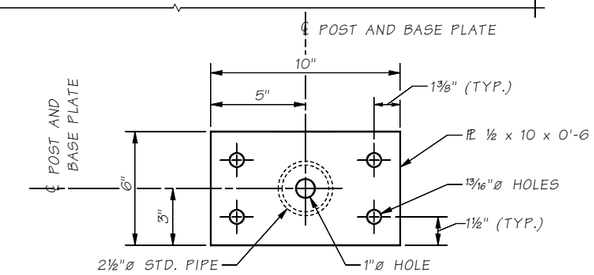

BASE PLATE DETAIL

NOTES:

1. ALL STEEL PIPE SHALL BE ASTM A53 GRADE B, TYPE E OR S, OR EQUIVALENT HSS ROUND TUBE ASTM A 500 GRADE B
2. ALL STEEL PLATE SHALL BE ASTM A 36 OR ASTM A 572.
3. ROPE SHALL CONSIST OF ZINC-COATED WIRES CONFORMING TO ASTM A 603, OR ASTM A 1023 WITH A PRESTRETCHED MODULUS OF ELASTICITY OF 15,000 KSI, OR "PHILLYSTRAN" ROPE.
4. ALL PARTS EXCEPT ROPE SHALL BE HOT DIP GALVANIZED IN ACCORDANCE WITH AASHTO M111, M232, OR ASTM F2329 AFTER FABRICATION, UNLESS NOTED OTHERWISE.
5. THE SPELTER SOCKETS AND SOCKETING PROCEDURE SHALL BE IN ACCORDANCE WITH THE SPELTER SOCKET AND ROPE MANUFACTURERS RECOMMENDATIONS.
6. ALL POSTS TO BE INSTALLED VERTICAL AND ROPE TO BE INSTALLED PARALLEL TO TOP OF WALL.
7. ROPE SHALL BE INSTALLED TO 400 LBS TENSION LEAVING A TAKE UP OF 6" STILL AVAILABLE IN THE TURNBUCKLE. THE CONTRACTOR SHALL SUBMIT CABLE TENSIONING DETAILS TO THE ENGINEER FOR ACCEPTANCE.
8. EACH CONTINUOUS LENGTH OF CABLE SHALL HAVE A TURNBUCKLE AT ONE END ONLY AND BE ANCHORED TO END POST WITH BRACE AT BOTH ENDS.
9. INTERMEDIATE POSTS AND BRACES SHALL NOT TO BE INSTALLED ACROSS EXPANSION JOINT.
10. CABLE FENCE WAS DESIGNED FOR A 200 LB. LOAD ON THE TOP RAIL APPLIED IN ANY DIRECTION, AS REQUIRED BY WASHINGTON ADMINISTRATIVE CODE 296-880-40005.
11. ROPE, SPELTER SOCKETS, TURNBUCKLES AND THIER CONNECTIONS SHALL HAVE A MINIMUM BREAKING STRENGTH OF 26 KIPS.

Bridge Design Engr.	Khaleghi, B		M:\Z-Team\I-90 PHASE 3 CABIN CR WALLS\window files\WALL 2 CABLE DET 4.wnd							
Supervisor	Zeldenrust, RP					REGION NO.	STATE	FED. AID PROJ. NO.	SHEET NO.	TOTAL SHEETS
Designed By	Barkley, J	09/21				10	WASH.			
Checked By	Pawelka, M	02/22				JOB NUMBER 19Y007				
Detailed By	Evans, A	09/21								
Bridge Projects Engr.						CONTRACT NO.				
Prelim. Plan By										
Architect/Specialist			DATE	REVISION	BY	APP'D				

P.E. STAMP BOX: RICHARD P. ZELDENRUST, STATE OF WASHINGTON, 25470, PROFESSIONAL ENGINEER — SEE SHEET CT5 — DATE

BRIDGE AND STRUCTURES OFFICE

P.E. STAMP BOX: BILLY KHALEGHI, STATE OF WASHINGTON, 37695, PROFESSIONAL ENGINEER — SEE SHEET CT5 — DATE

Washington State Department of Transportation

I-90
CABIN CR I/C TO W EASTON I/C
PHASE 3 - ADD LANES/WILDLIFE BRIDGES

SOLDIER PILE WALL 2
CABLE FENCE DETAILS 1 OF 2

BRIDGE SHEET NO. SP32

SHEET 968 OF 1783 SHEETS

SR ___ FILE NO. ___ SHEET SP32

Mon Feb 07 14:07:43 2022

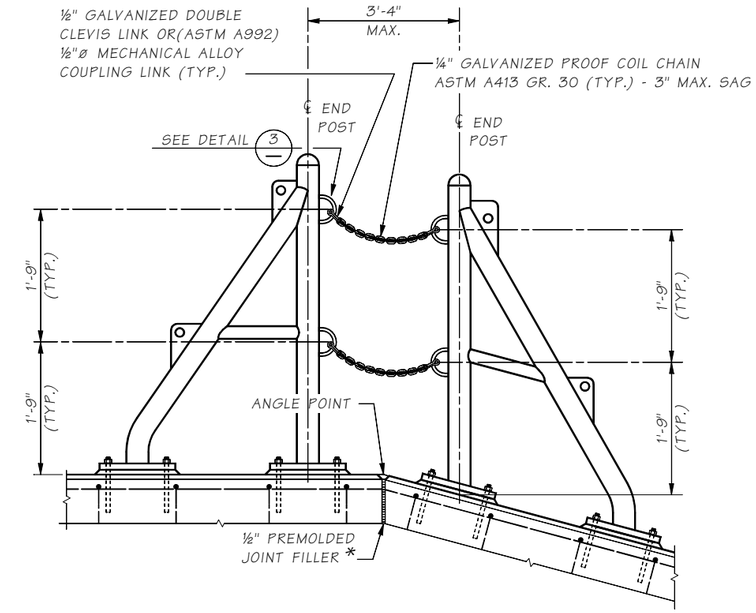

CHAIN CONNECTION ELEVATION

TO BE INSTALLED ACROSS WALL ANGLE POINTS, BOTH VERTICAL AND HORIZONTAL.

* SEE CONTRACT PLANS FOR JOINT LOCATIONS.

(WIRE ROPE AND SPELTER SOCKETS NOT SHOWN FOR CLARITY)

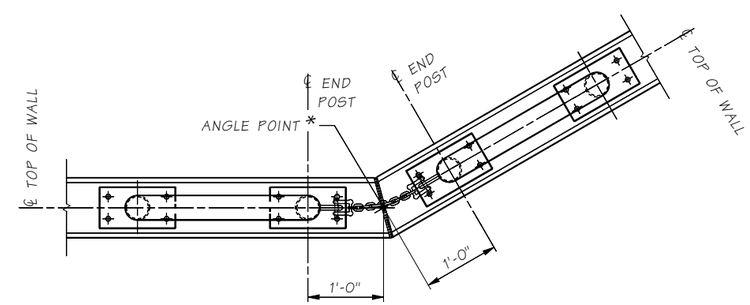

CHAIN CONNECTION PLAN

ROPE NOT SHOWN FOR CLARITY

SR ____ FILE NO. ____ SHEET SP33

Bridge Design Engr.	Khaleghi, B	M:\Z-Team\I-90 PHASE 3 CABIN CR WALLS\window files\WALL 2 CABLE DET 3.wnd	
Supervisor	Zeldenrust, RP		
Designed By	Barkley, J	07/21	
Checked By	Pawelka, M	02/22	
Detailed By	Evans, A	07/21	
Bridge Projects Engr.			
Prelim. Plan By			
Architect/Specialist			

DATE	REVISION	BY	APP'D

REGION NO.	STATE	FED. AID PROJ. NO.	SHEET NO.	TOTAL SHEETS
10	WASH.			

JOB NUMBER 19Y007

CONTRACT NO.

P.E. STAMP BOX — RICHARD P. ZELDENRUST — STATE OF WASHINGTON — 28470 — PROFESSIONAL ENGINEER — SEE SHEET CT5 — DATE

BRIDGE AND STRUCTURES OFFICE

P.E. STAMP BOX — BILIAN KHALEGHI — STATE OF WASHINGTON — 27646 — PROFESSIONAL ENGINEER — SEE SHEET CT5 — DATE

Washington State Department of Transportation

I-90
CABIN CR I/C TO W EASTON I/C
PHASE 3 - ADD LANES/WILDLIFE BRIDGES

SOLDIER PILE WALL 2
CABLE FENCE DETAILS 2 OF 2

BRIDGE SHEET NO. SP33

SHEET 969 OF 1783 SHEETS

Mon Feb 07 14:07:43 2022

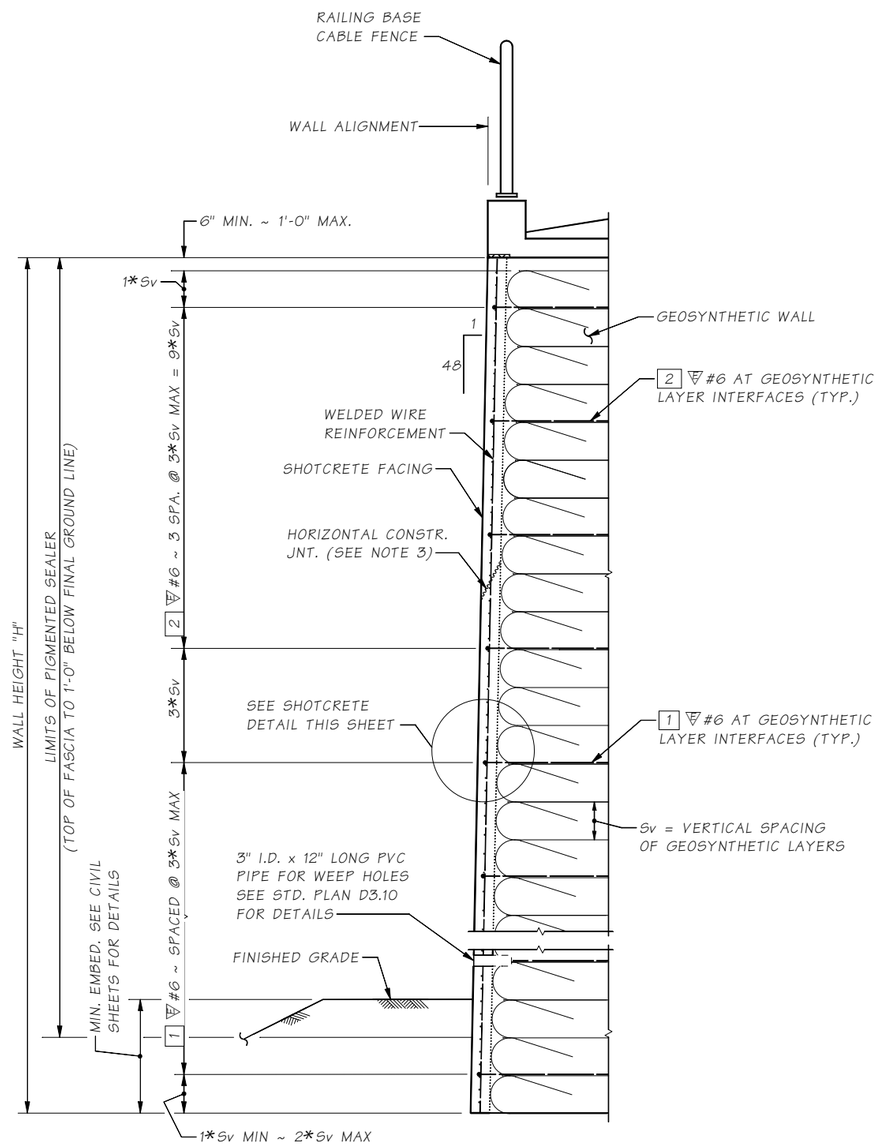

TYPICAL SECTION GEOSYNTHETIC RETAINING WALL WITH SHOTCRETE FACING

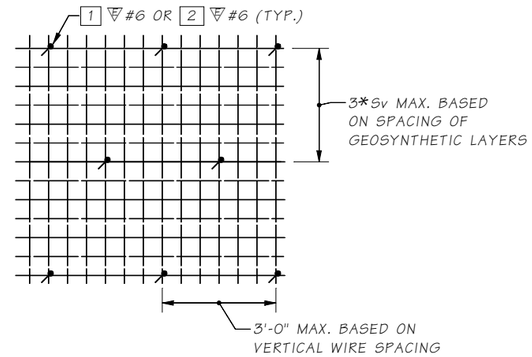

DOWEL BAR SPACING DETAIL

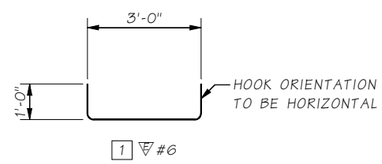

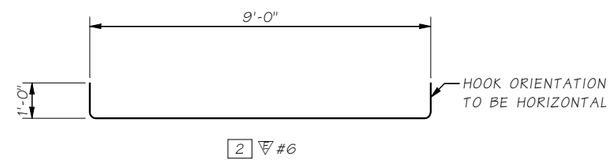

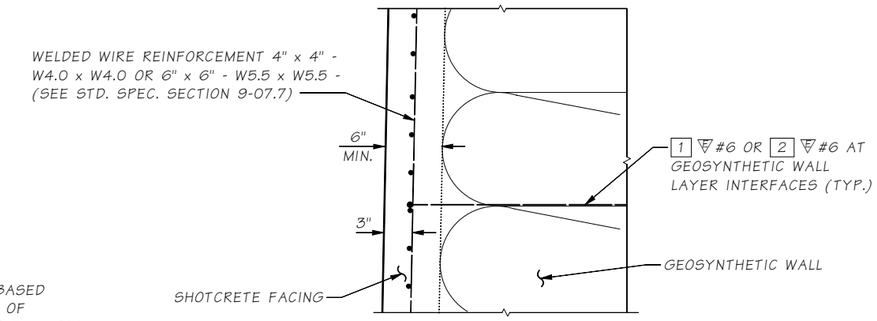

SHOTCRETE DETAIL

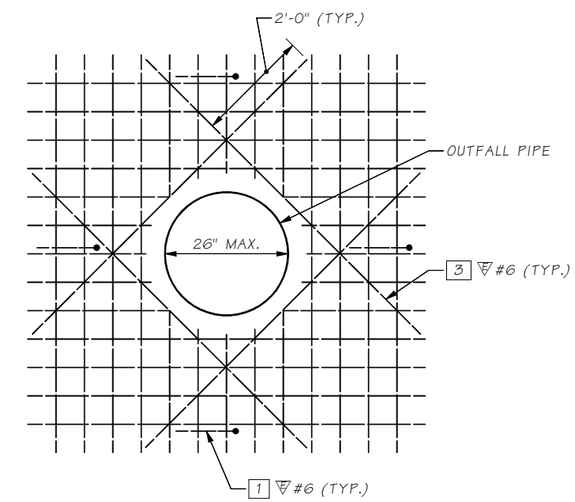

GEOSYNTHETIC WALL FASCIA PIPE BLOCKOUT DETAIL

NOTES:

1. WELDED WIRE REINFORCEMENT SHALL BE GALVANIZED IN ACCORDANCE WITH ASTM A 641 CLASS B.
2. THE SHOTCRETE FACING SHALL BE FINISHED IN ACCORDANCE WITH FINISH ALTERNATIVE B IN STD. SPEC. SECTION 6-18.3(8).
3. HORIZONTAL CONSTRUCTION JOINTS MAY BE PLACED AS REQUIRED FOR SHOTCRETE INSTALLATION. VERTICAL CONSTRUCTION JOINTS SHALL BE PLACED AT A MAXIMUM SPACING OF 50'-0". REFER TO STD. SPEC. 6-18.3(7) FOR SHOTCRETE APPLICATION REQUIREMENTS.

SR ____ FILE NO. ____ SHEET SF1

Bridge Design Engr.	Khaleghi, B		
Supervisor	Zeldenrust, RP		
Designed By	Barkley, J	06/21	
Checked By	Pawelka, M	02/22	
Detailed By	Evans, A	06/21	
Bridge Projects Engr.			
Prelim. Plan By			
Architect/Specialist			

M:\Z-Team\I-90 PHASE 3 CABIN CR WALLS\window files\GEO WALL DETAILS 1.wnd

DATE	REVISION	BY	APP'D

REGION NO.	STATE	FED. AID PROJ. NO.	SHEET NO.	TOTAL SHEETS
10	WASH.			
JOB NUMBER 19Y007				
CONTRACT NO.				

P.E. STAMP BOX — STATE OF WASHINGTON, RICHARD P. ZELDENRUST, 25470, STRUCTURAL ENGINEER, PROFESSIONAL ENGINEER — SEE SHEET CT5 — DATE

BRIDGE AND STRUCTURES OFFICE

P.E. STAMP BOX — STATE OF WASHINGTON, BILLAN KHALEGHI, 27695, STRUCTURAL ENGINEER, PROFESSIONAL ENGINEER — SEE SHEET CT5 — DATE

Washington State Department of Transportation

I-90
CABIN CR I/C TO W EASTON I/C
PHASE 3 - ADD LANES/WILDLIFE BRIDGES

SHOTCRETE FACING DETAILS 1 OF 2

BRIDGE SHEET NO. SF1

SHEET 970 OF 1783 SHEETS

Mon Feb 07 14:07:44 2022

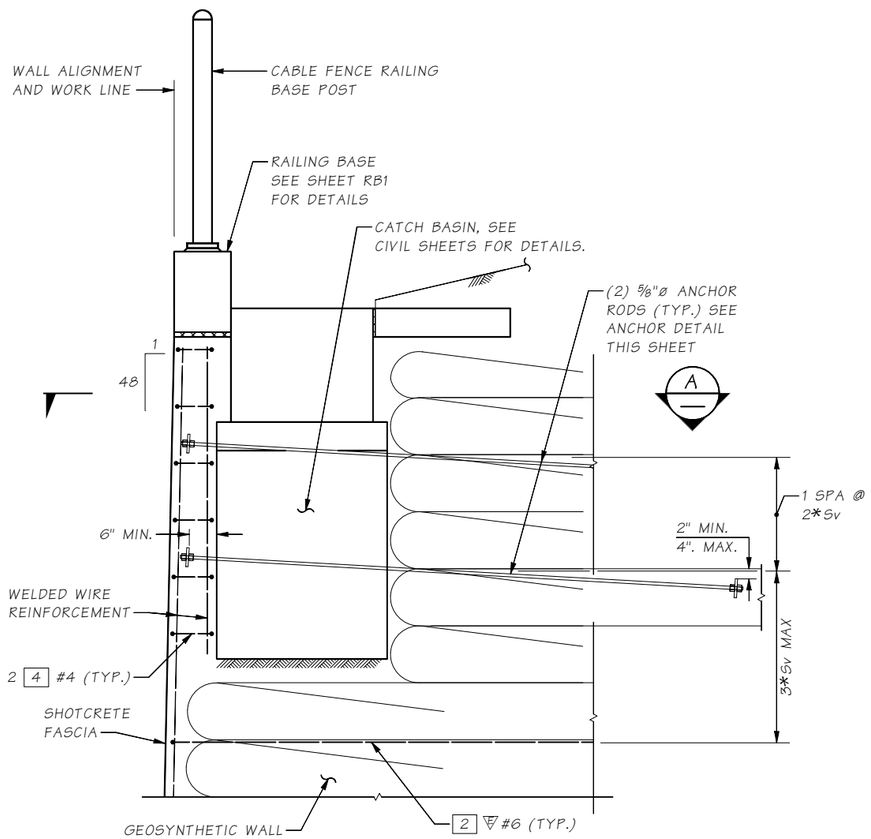

CATCH BASIN BLOCKOUT DETAIL FOR GEOSYNTHETIC WALL

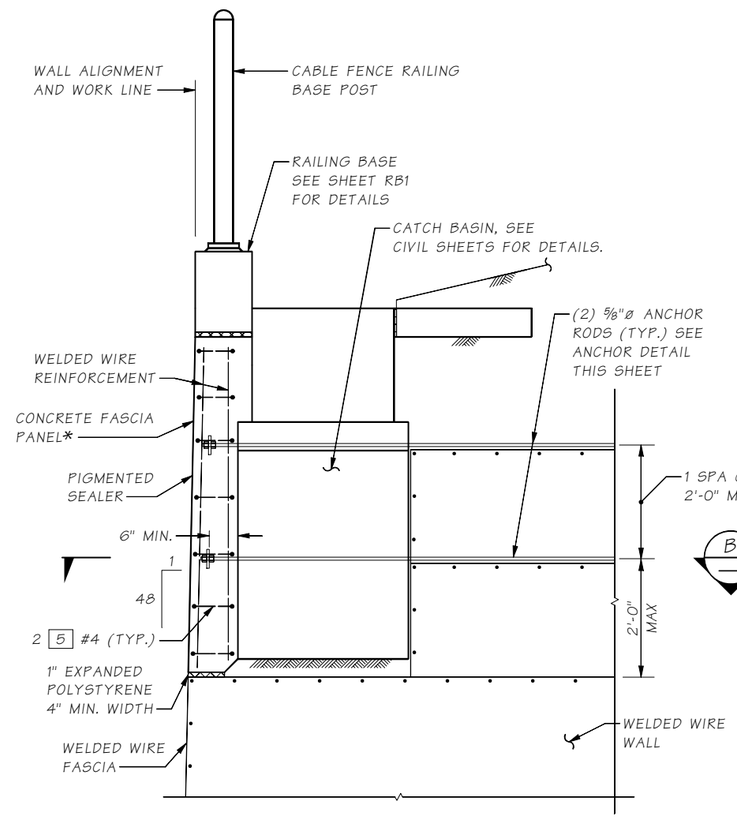

CATCH BASIN BLOCKOUT DETAIL FOR WELDED WIRE WALL

*CONSTRUCT IN ACCORDANCE WITH STD. SPEC. 6-15.3(9)

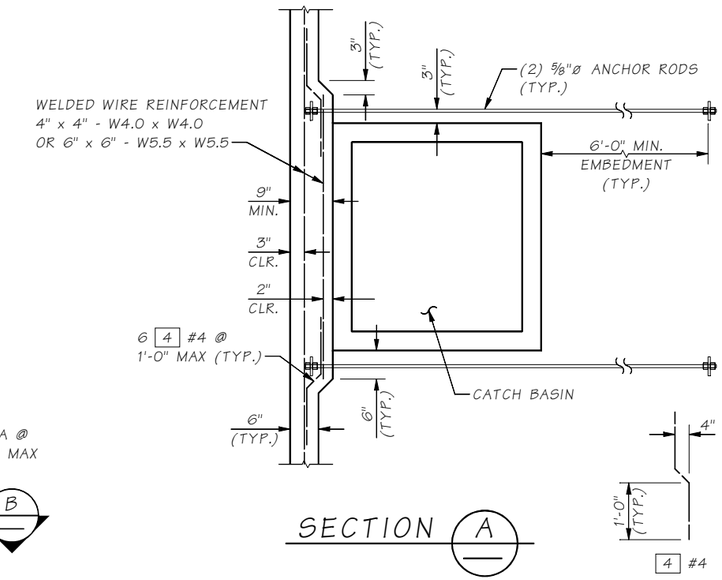

SECTION A

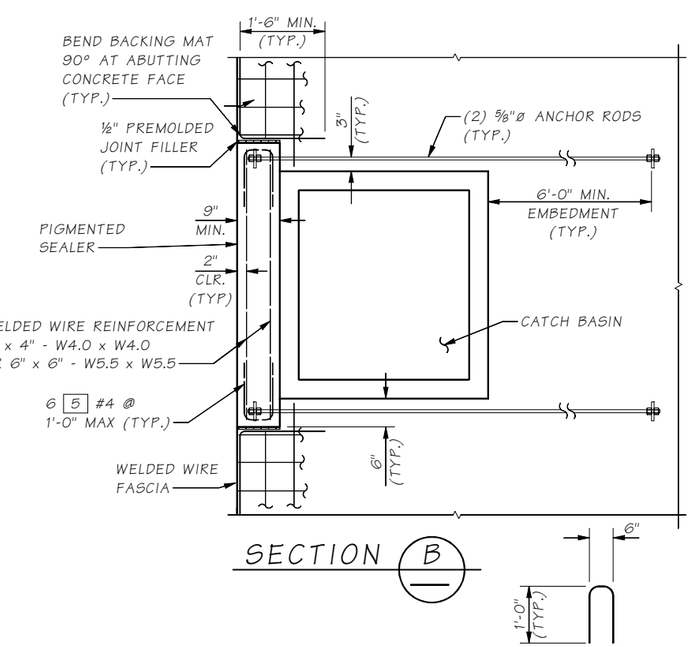

SECTION B

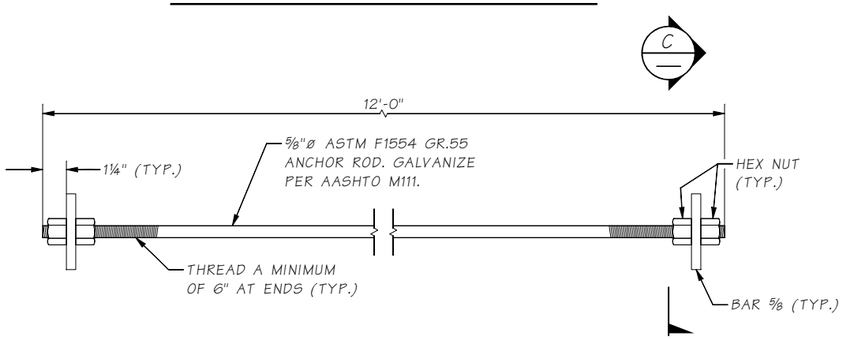

CATCH BASIN ANCHOR DETAIL

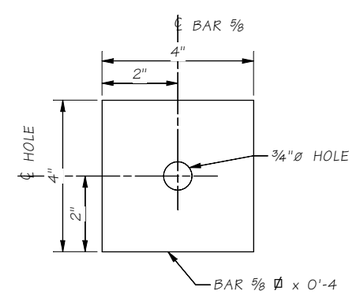

VIEW C

Bridge Design Engr.	Khaleghi, B		M:\Z-Team\I-90 PHASE 3 CABIN CR WALLS\window files\GEO WALL DETAILS 2.wnd									
Supervisor	Zeldenrust, RP											
Designed By	Barkley, J	07/21										
Checked By	Pawelka, M	02/22										
Detailed By	Barkley, J	07/21										
Bridge Projects Engr.												
Prelim. Plan By												
Architect/Specialist			DATE	REVISION	BY	APP'D						

REGION NO.	STATE	FED. AID PROJ. NO.	SHEET NO.	TOTAL SHEETS
10	WASH.			
JOB NUMBER 19Y007				
CONTRACT NO.				

P.E. STAMP BOX — RICHARD P. ZELDENRUST, STATE OF WASHINGTON, 20470, PROFESSIONAL ENGINEER, STRUCTURAL ENGINEER — SEE SHEET CT5 — DATE

BRIDGE AND STRUCTURES OFFICE

P.E. STAMP BOX — BRIAN KHALEGHI, STATE OF WASHINGTON, 27696, PROFESSIONAL ENGINEER, STRUCTURAL ENGINEER — SEE SHEET CT5 — DATE

Washington State Department of Transportation

I-90
CABIN CR I/C TO W EASTON I/C
PHASE 3 - ADD LANES/WILDLIFE BRIDGES

SHOTCRETE FACING DETAILS 2 OF 2

BRIDGE SHEET NO. SF2

SHEET 971 OF 1783 SHEETS

SR FILE NO. SHEET SF2

Mon Feb 07 14:07:44 2022

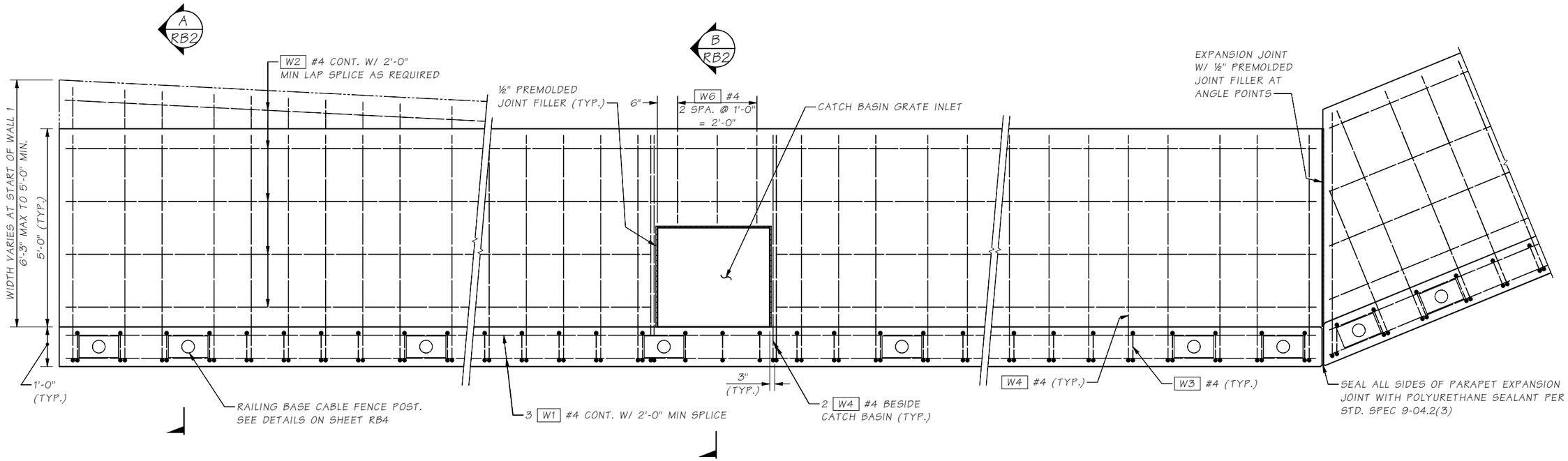

RAILING BASE PLAN

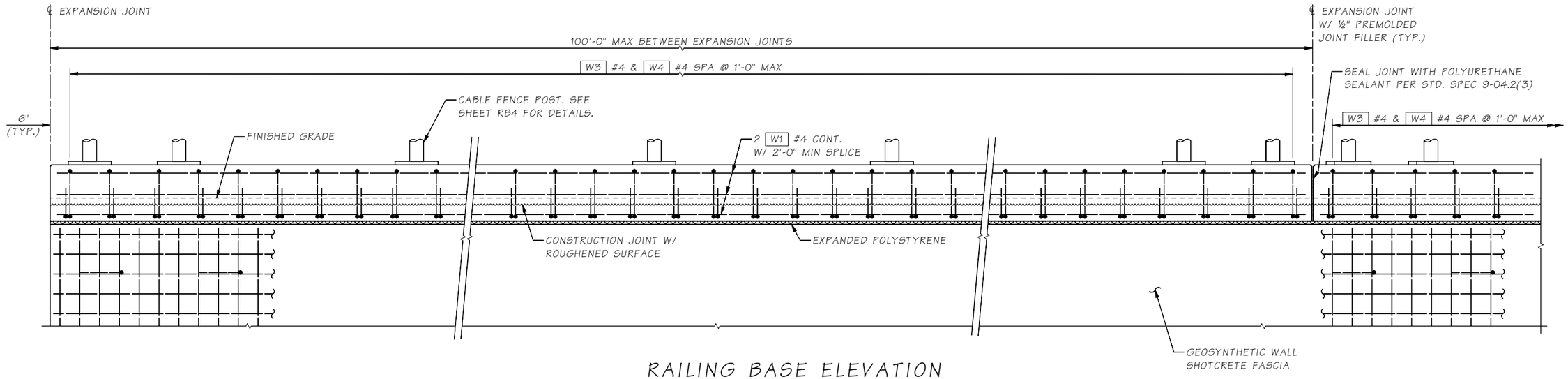

RAILING BASE ELEVATION

Bridge Design Engr.	Khaleghi, B		
Supervisor	Zeldenrust, RP		
Designed By	Barkley, J	07/21	
Checked By	Pawelka, M	02/22	
Detailed By	Barkley, J	07/21	
Bridge Projects Engr.			
Prelim. Plan By			
Architect/Specialist			

M:\Z-Team\I-90 PHASE 3 CABIN CR WALLS\window files\Railing Base Det 1.wnd

DATE	REVISION	BY	APP'D

REGION NO.	STATE	FED. AID PROJ. NO.	SHEET NO.	TOTAL SHEETS
10	WASH.			
JOB NUMBER 19Y007				
CONTRACT NO.				

P.E. STAMP BOX
RICHARD P. ZELDENRUST
STATE OF WASHINGTON
25470
PROFESSIONAL ENGINEER
SEE SHEET CT5
DATE

BRIDGE AND STRUCTURES OFFICE

P.E. STAMP BOX
BILAN KHALEGHI
STATE OF WASHINGTON
27646
PROFESSIONAL ENGINEER
SEE SHEET CT5
DATE

Washington State
Department of Transportation

I-90
CABIN CR I/C TO W EASTON I/C
PHASE 3 - ADD LANES/WILDLIFE BRIDGES

RAILING BASE
DETAILS 1 OF 3

BRIDGE SHEET NO. RB1

SHEET 972 OF 1783 SHEETS

SR ____ FILE NO. ____ SHEET RB1

Mon Feb 07 14:07:44 2022

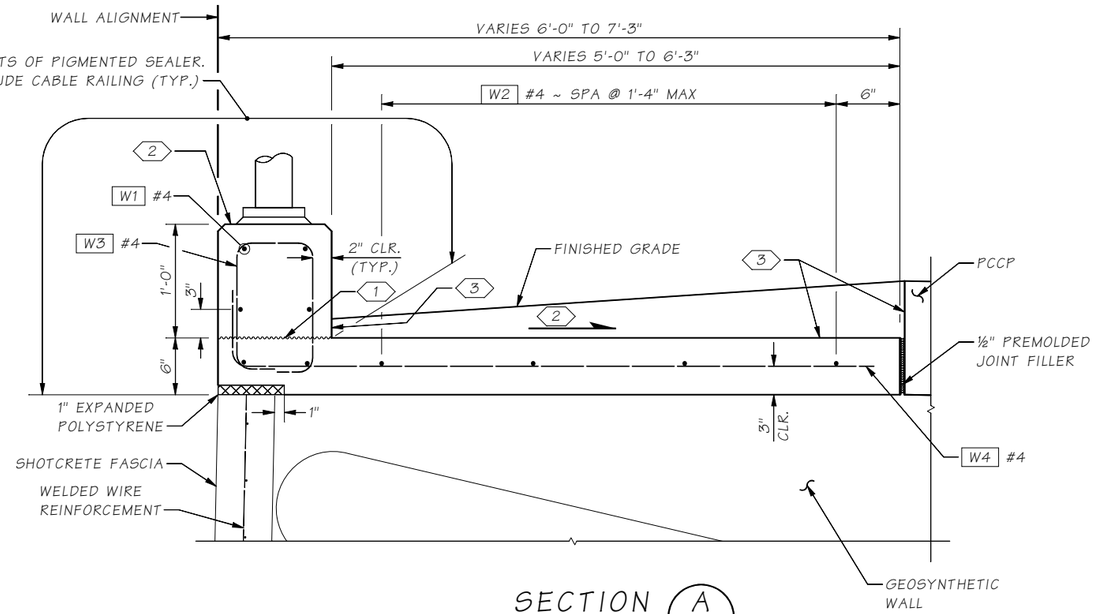

SECTION A RB1
GEOSYNTHETIC ALTERNATIVE

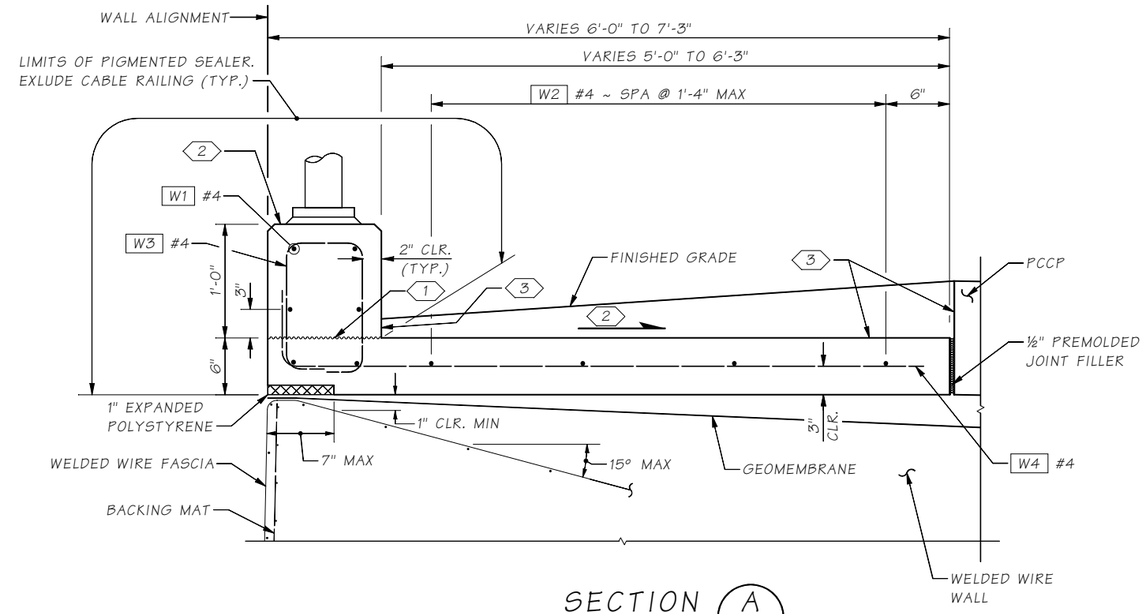

SECTION A RB1
WELDED WIRE ALTERNATIVE

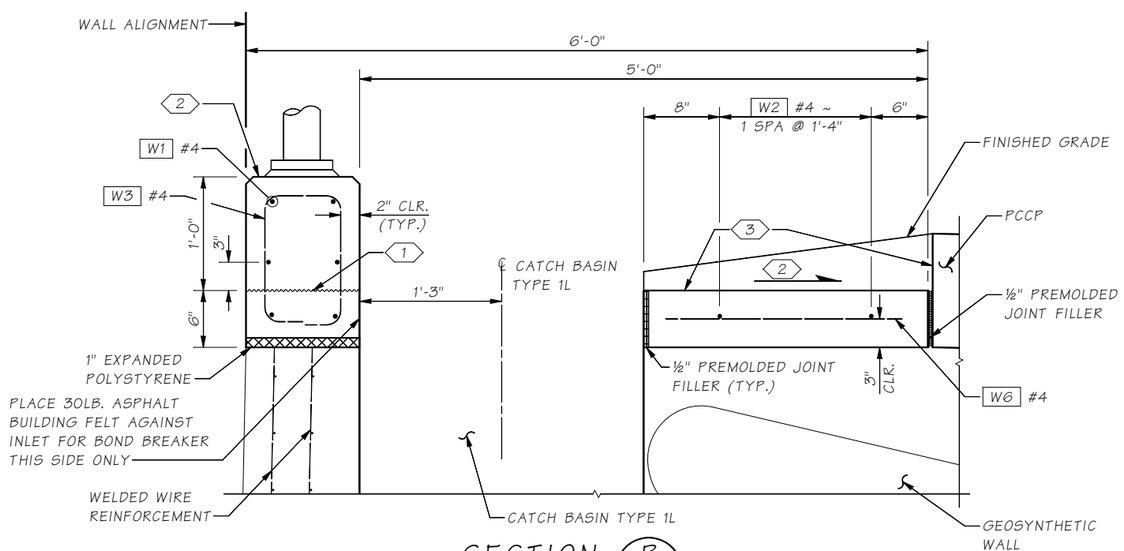

SECTION B RB1
AT CATCH BASIN

RAIL BASE LIMITS

ALIGNMENT	BEGIN STA.	END STA.
WALL 1	STA. 10+00.00	STA. 27+14.12
WALL 2	STA. 10+00.00	STA. 28+43.50
WALL 3	STA. 10+17.79	STA. 19+12.39

CABLE FENCE LIMITS

ALIGNMENT	BEGIN STA.	END STA.
WALL 1	STA. 10+20.00	STA. 26+88.00
WALL 2	STA. 10+22.00	STA. 28+25.00
WALL 3	STA. 10+17.79	STA. 19+10.00

NOTES:

1. CONSTRUCTION JOINT W/ ROUGHENED SURFACE
2. LEVEL PERPENDICULAR TO ALIGNMENT
3. WATERPROOF MEMBRANE PER STD. SPEC 6-08.3(8)

BENDING DIAGRAM

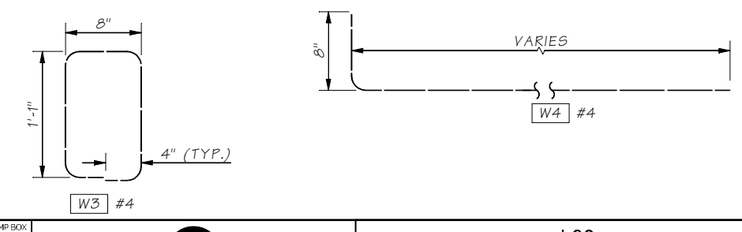

SR ___ FILE NO. ___ SHEET RB2

Bridge Design Engr.	Khaleghi, B	
Supervisor	Zeldenrust, RP	
Designed By	Barkley, J	07/21
Checked By	Pawelka, M	02/22
Detailed By	Barkley, J	07/21
Bridge Projects Engr.		
Prelim. Plan By		
Architect/Specialist		

M:\Z-Team\I-90 PHASE 3 CABIN CR WALLS\window files\Railing Base Det 2.wnd

DATE	REVISION	BY	APP'D

REGION NO.	STATE	FED. AID PROJ. NO.	SHEET NO.	TOTAL SHEETS
10	WASH.			

JOB NUMBER 19Y007

CONTRACT NO.

P.E. STAMP BOX — RICHARD P. ZELDENRUST, STATE OF WASHINGTON, 25470, STRUCTURAL ENGINEER, PROFESSIONAL ENGINEER — SEE SHEET CT5 — DATE

BRIDGE AND STRUCTURES OFFICE

P.E. STAMP BOX — BIJAN KHALEGHI, STATE OF WASHINGTON, 27695, STRUCTURAL ENGINEER, PROFESSIONAL ENGINEER — SEE SHEET CT5 — DATE

Washington State Department of Transportation

I-90
CABIN CR I/C TO W EASTON I/C
PHASE 3 - ADD LANES/WILDLIFE BRIDGES

RAILING BASE
DETAILS 2 OF 3

BRIDGE SHEET NO. RB2

SHEET 973 OF 1783 SHEETS

Mon Feb 07 14:07:45 2022

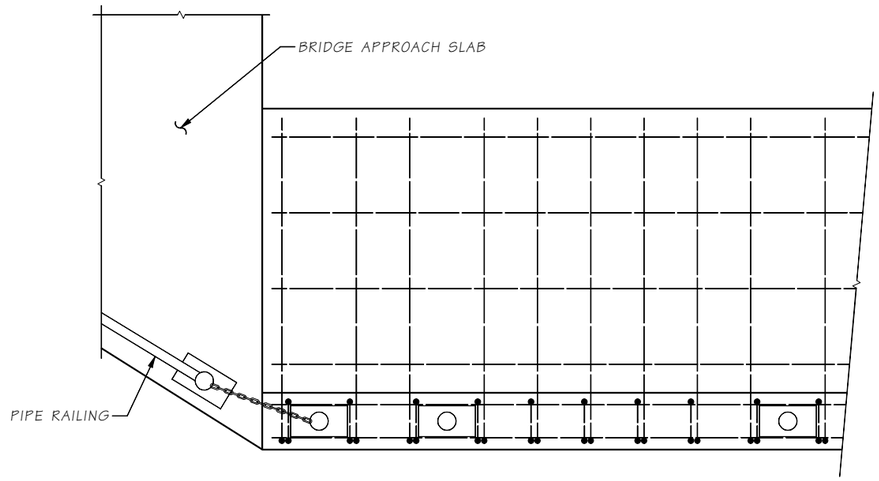

RAILING BASE PLAN
AT BRIDGE APPROACH SLAB

FOR DETAILS NOT SHOWN SEE SHEETS RB1 & RB2

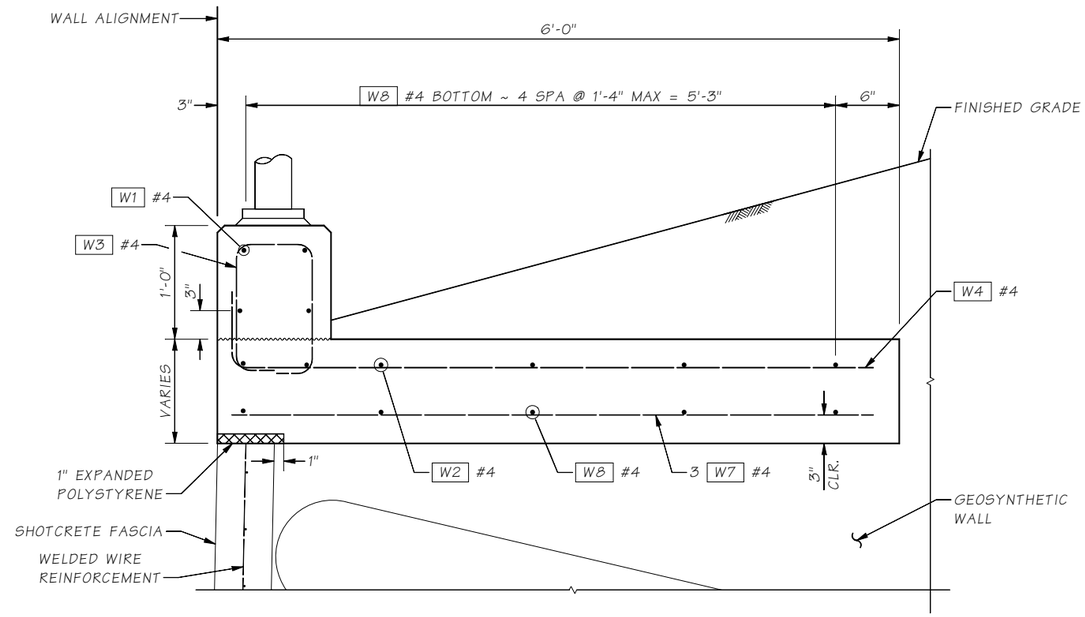

SECTION A

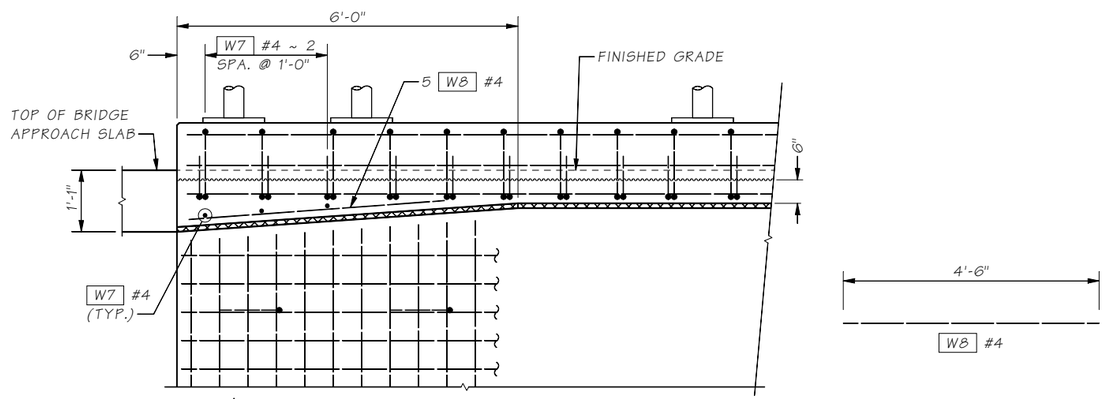

RAILING BASE ELEVATION
AT BRIDGE APPROACH SLAB

FOR DETAILS NOT SHOWN SEE SHEETS ???-???

SR ____ FILE NO. ____ SHEET RB3

Bridge Design Engr.	Khaleghi, B	M:\Z-Team\I-90 PHASE 3 CABIN CR WALLS\window files\Railing Base Details 6.wnd								
Supervisor	Zeldenrust, RP									
Designed By	Barkley, J 12/21									
Checked By	Pawelka, M 02/22									
Detailed By	Barkley, J 12/21									
Bridge Projects Engr.										
Prelim. Plan By										
Architect/Specialist		DATE	REVISION	BY	APP'D					

REGION NO.	STATE	FED. AID PROJ. NO.	SHEET NO.	TOTAL SHEETS
10	WASH.			
JOB NUMBER 19Y007				
CONTRACT NO.				

P.E. STAMP BOX
RICHARD P. ZELDENRUST
STATE OF WASHINGTON
25470
STRUCTURAL ENGINEER
PROFESSIONAL ENGINEER
SEE SHEET CT5
DATE

BRIDGE AND STRUCTURES OFFICE

P.E. STAMP BOX
BIJAN KHALEGHI
STATE OF WASHINGTON
27695
STRUCTURAL ENGINEER
PROFESSIONAL ENGINEER
SEE SHEET CT5
DATE

Washington State Department of Transportation

I-90
CABIN CR I/C TO W EASTON I/C
PHASE 3 - ADD LANES/WILDLIFE BRIDGES

RAILING BASE
DETAILS 3 OF 3

BRIDGE SHEET NO. RB3
SHEET 974 OF 1783 SHEETS

Mon Feb 07 14:07:45 2022

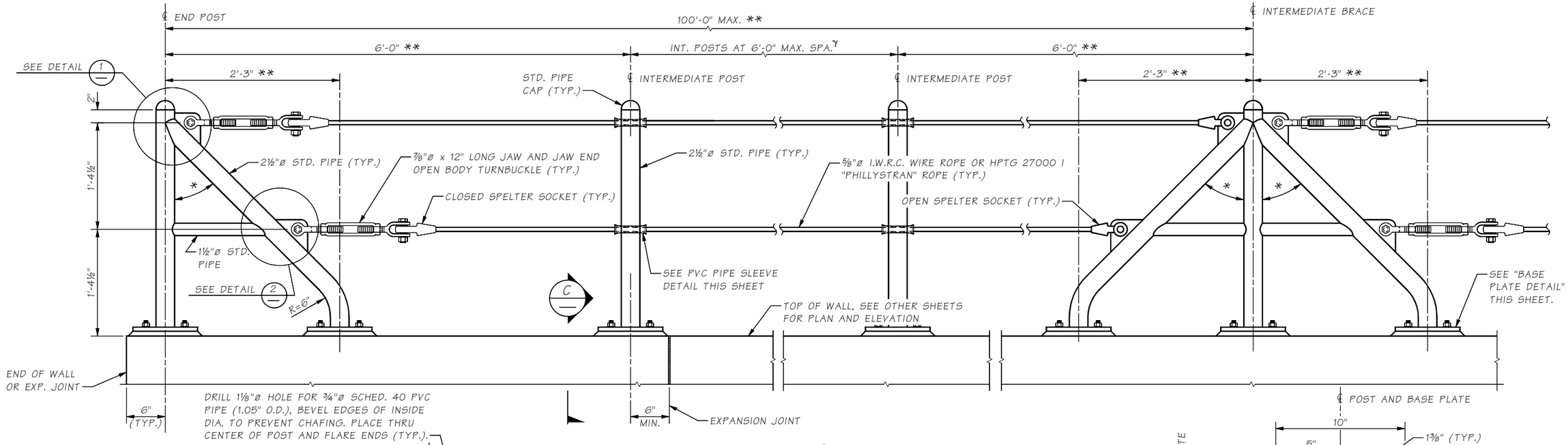

ELEVATION
CABLE FENCE

* ANGLES VARY WITH THE SLOPE OF THE TOP OF WALL. APPROX. 45° WHEN INSTALLED ON A LEVEL SURFACE.

** MEASURED PERPENDICULAR TO THE POSTS.

γ OMIT INTERMEDIATE POST WHEN SPACING BETWEEN END POST AND INTERMEDIATE BRACE IS LESS THAN 8'-6".

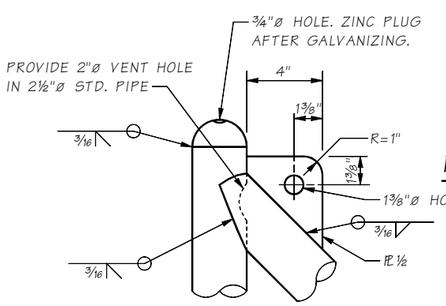

DETAIL 1

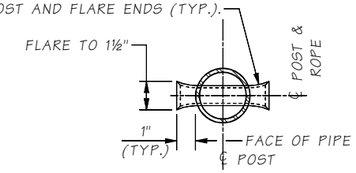

PVC PIPE SLEEVE DETAIL

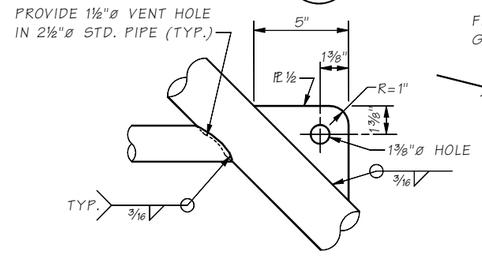

DETAIL 2

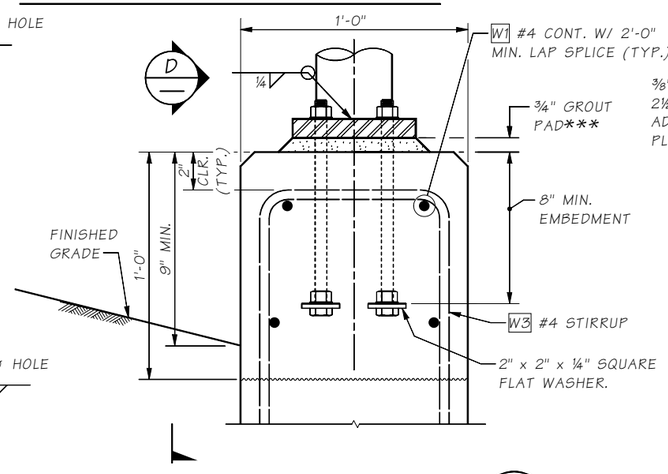

SECTION C

*** GROUT SHALL BE IN ACCORDANCE WITH SECTION 9-20.3 (2)

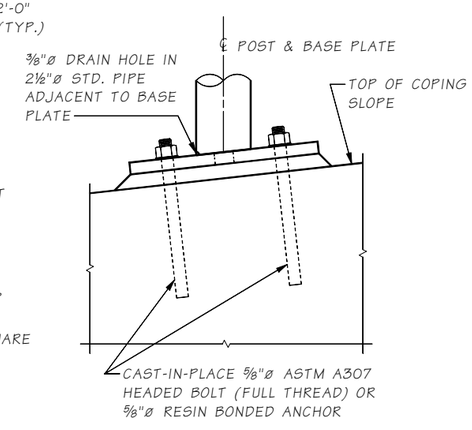

VIEW D

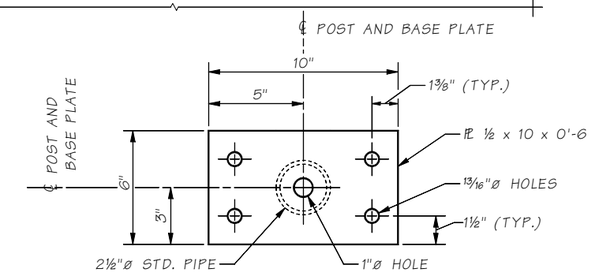

BASE PLATE DETAIL

NOTES:

1. ALL STEEL PIPE SHALL BE ASTM A53 GRADE B, TYPE E OR S, OR EQUIVALENT HSS ROUND TUBE ASTM A 500 GRADE B
2. ALL STEEL PLATE SHALL BE ASTM A 36 OR ASTM A 572.
3. ROPE SHALL CONSIST OF ZINC-COATED WIRES CONFORMING TO ASTM A 603, OR ASTM A 1023 WITH A PRESTRETCHED MODULUS OF ELASTICITY OF 15,000 KSI, OR "PHILLYSTRAN" ROPE.
4. ALL PARTS EXCEPT ROPE SHALL BE HOT DIP GALVANIZED IN ACCORDANCE WITH AASHTO M111, M232, OR ASTM F2329 AFTER FABRICATION, UNLESS NOTED OTHERWISE.
5. THE SPELTER SOCKETS AND SOCKETING PROCEDURE SHALL BE IN ACCORDANCE WITH THE SPELTER SOCKET AND ROPE MANUFACTURERS RECOMMENDATIONS.
6. ALL POSTS TO BE INSTALLED VERTICAL AND ROPE TO BE INSTALLED PARALLEL TO TOP OF WALL.
7. ROPE SHALL BE INSTALLED TO 400 LBS TENSION LEAVING A TAKE UP OF 6" STILL AVAILABLE IN THE TURNBUCKLE. THE CONTRACTOR SHALL SUBMIT CABLE TENSIONING DETAILS TO THE ENGINEER FOR ACCEPTANCE.
8. EACH CONTINUOUS LENGTH OF CABLE SHALL HAVE A TURNBUCKLE AT ONE END ONLY AND BE ANCHORED TO END POST WITH BRACE AT BOTH ENDS.
9. INTERMEDIATE POSTS AND BRACES SHALL NOT TO BE INSTALLED ACROSS EXPANSION JOINT.
10. CABLE FENCE WAS DESIGNED FOR A 200 LB. LOAD ON THE TOP RAIL APPLIED IN ANY DIRECTION, AS REQUIRED BY WASHINGTON ADMINISTRATIVE CODE 296-880-40005.
11. ROPE, SPELTER SOCKETS, TURNBUCKLES AND THIER CONNECTIONS SHALL HAVE A MINIMUM BREAKING STRENGTH OF 26 KIPS.

Bridge Design Engr.	Khaleghi, B		
Supervisor	Zeldenrust, RP		
Designed By	Barkley, J	07/21	
Checked By	Pawelka, M	02/22	
Detailed By	Evans, A	07/21	
Bridge Projects Engr.			
Prelim. Plan By			
Architect/Specialist			

M:\Z-Team\I-90 PHASE 3 CABIN CR WALLS\window files\Railing Base Det 3.wnd

DATE	REVISION	BY	APP'D

REGION NO.	STATE	FED. AID PROJ. NO.	SHEET NO.	TOTAL SHEETS
10	WASH.			
JOB NUMBER 19Y007				
CONTRACT NO.				

P.E. STAMP BOX — RICHARD P. ZELDENRUST, STATE OF WASHINGTON, 25970, PROFESSIONAL ENGINEER — SEE SHEET CT5 — DATE

BRIDGE AND STRUCTURES OFFICE

P.E. STAMP BOX — BILLAN KHALEGHI, STATE OF WASHINGTON, 37695, PROFESSIONAL ENGINEER — SEE SHEET CT5 — DATE

Washington State Department of Transportation

I-90
CABIN CR I/C TO W EASTON I/C
PHASE 3 - ADD LANES/WILDLIFE BRIDGES

RAILING BASE CABLE FENCE DETAILS 1 OF 2

BRIDGE SHEET NO. RB4

SHEET 975 OF 1783 SHEETS

SR ___ FILE NO. ___ SHEET RB4

Mon Feb 07 14:07:45 2022

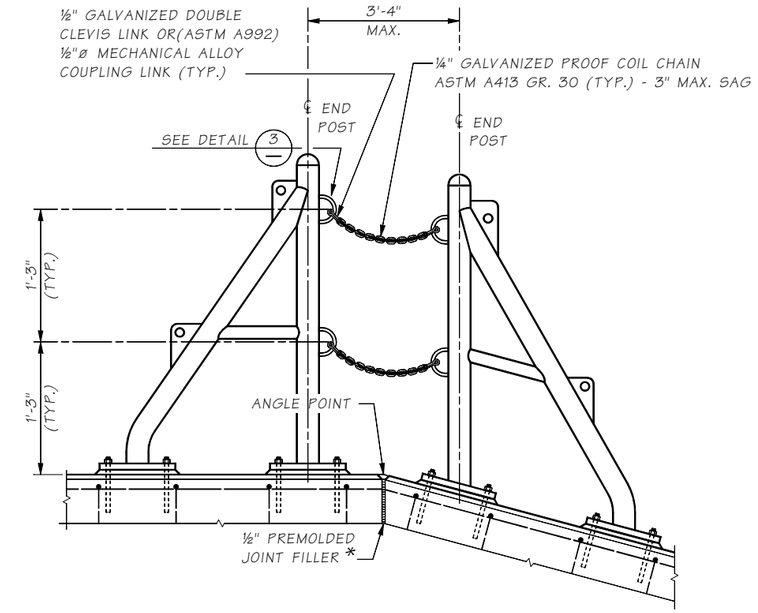

CHAIN CONNECTION ELEVATION

TO BE INSTALLED ACROSS WALL ANGLE POINTS, BOTH VERTICAL AND HORIZONTAL.

* SEE CONTRACT PLANS FOR JOINT LOCATIONS.

(WIRE ROPE AND SPELTER SOCKETS NOT SHOWN FOR CLARITY)

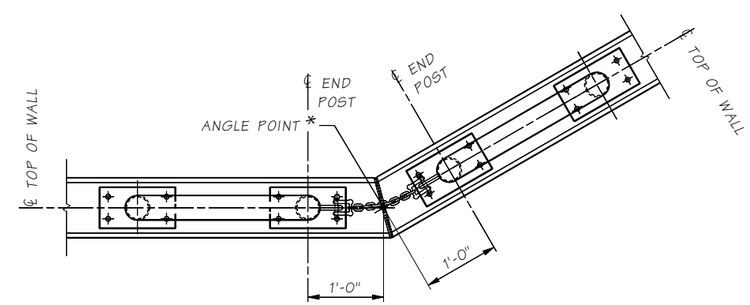

CHAIN CONNECTION PLAN

ROPE NOT SHOWN FOR CLARITY

SR ____ FILE NO. ____ SHEET RB5

Bridge Design Engr.	Khaleghi, B	
Supervisor	Zeldenrust, RP	
Designed By	Barkley, J	07/21
Checked By	Pawelka, M	02/22
Detailed By	Evans, A	07/21
Bridge Projects Engr.		
Prelim. Plan By		
Architect/Specialist		

M:\Z-Team\I-90 PHASE 3 CABIN CR WALLS\window files\Railing Base Det 5.wnd

DATE	REVISION	BY	APP'D

REGION NO.	STATE	FED. AID PROJ. NO.	SHEET NO.	TOTAL SHEETS
10	WASH.			
JOB NUMBER 19Y007				
CONTRACT NO.				

P.E. STAMP BOX
RICHARD P. ZELDENRUST, STATE OF WASHINGTON, 25476, PROFESSIONAL ENGINEER
SEE SHEET CT5
DATE

BRIDGE AND STRUCTURES OFFICE

P.E. STAMP BOX
BILIAN KHALEGHI, STATE OF WASHINGTON, 27646, PROFESSIONAL ENGINEER
SEE SHEET CT5
DATE

Washington State Department of Transportation

I-90
CABIN CR I/C TO W EASTON I/C
PHASE 3 - ADD LANES/WILDLIFE BRIDGES

RAILING BASE CABLE FENCE DETAILS 2 OF 2

BRIDGE SHEET NO. RB5

SHEET 976 OF 1783 SHEETS

Mon Feb 07 14:07:46 2022