FED. ROAD DIV. NO.	STATE	FED. AID PROJ. NO.	FISCAL YEAR	SHEET NO.	TOTAL SHEETS
10	WASH.	I-90-1(116)15		83	119

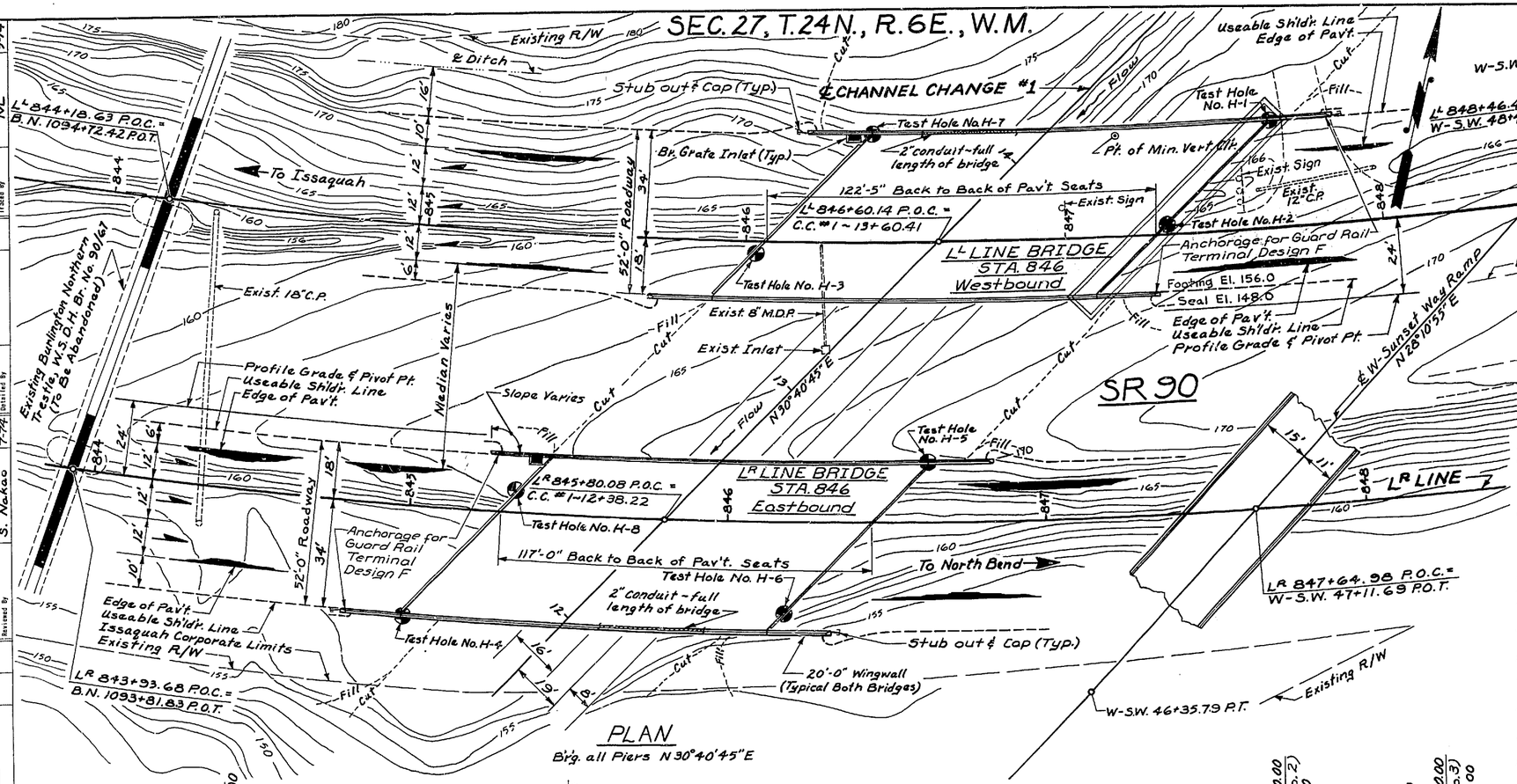

PLAN

Bi'rg. all Piers N 30°40'45" E

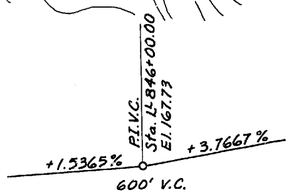

L^L LINE PROFILE

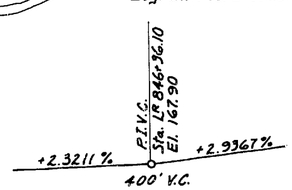

L^R LINE PROFILE

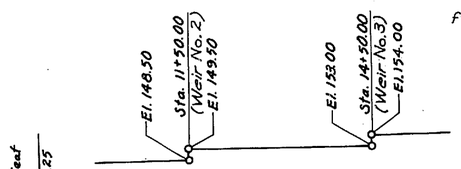

CHANNEL CHANGE #1 PROFILE

L^L LINE BRIDGE STA. 846

Back of Pav't. Seat Pier 1 Sta. L^L 846+05.83 Gr. El. 167.40

Back of Pav't. Seat Pier 2 Sta. L^L 847+28.25 Gr. El. 170.95

L^R LINE BRIDGE STA. 846

Back of Pav't. Seat Pier 1 Sta. L^R 845+28.00 Gr. El. 167.62

Back of Pav't. Seat Pier 2 Sta. L^R 846+45.00 Gr. El. 170.60

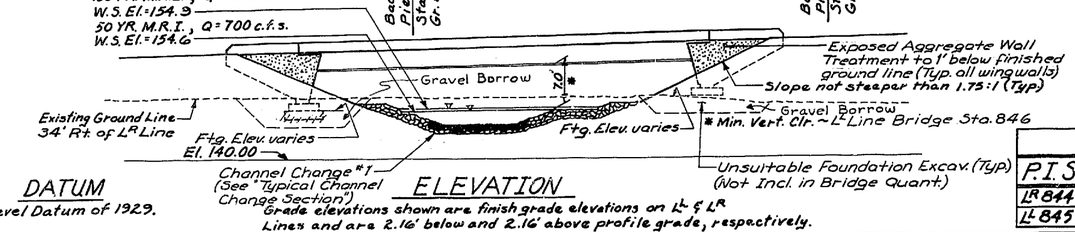

ELEVATION

Grade elevations shown are finish grade elevations on L^L & L^R Lines and are 2.16' below and 2.16' above profile grade, respectively.

DATUM

Sea Level Datum of 1929.

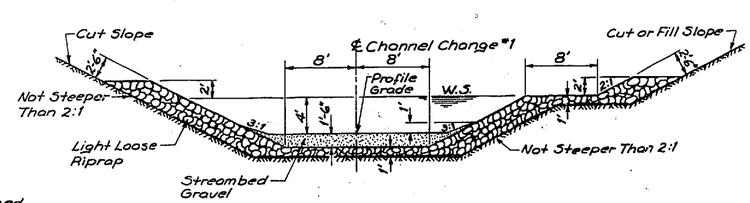

TYPICAL CHANNEL CHANGE SECTION

GENERAL NOTES

All materials and work shall be in accordance with the requirements of the State of Washington, Department of Highways, Standard Specifications for Road and Bridge Construction, dated 1974.

Footing elevations and substructure details are subject to change depending upon foundation material encountered. Reinforcing steel for footings, pier walls and wing walls shall not be cut until final footing elevations have been determined in the field and substructure details have been modified as required.

The concrete in the seals shall be Class D mix. The concrete in the footings shall be Class B mix. The concrete in the wing walls shall be Class AX Special mix. All other cast in place concrete shall be Class AX mix.

The concrete seals are designed for a water surface elevation of 153 feet. After seals are poured, cofferdams shall not be unwatered when the water is above elevation 153, and provision shall be made to flood the cofferdam in the event the water surface is above the design elevation.

Falsework shall be carefully released to prevent impact or undue stresses in the structure.

The maximum design soil pressure per square foot is three (3) tons for all piers.

Unless otherwise shown on the plans, concrete cover measured from the face of the concrete to the face of any reinforcement bar shall be 2" at the top of the roadway slab, 1" at the bottom of the roadway slab, 2½" at the bottom of footings and 1½" at all other locations.

The roadway slab shall not be poured until 24 hours minimum after pouring the diaphragms.

This structure has been designed in accordance with the requirements for Load Factor Design, 1973 AASHO Specifications.

APPROXIMATE QUANTITIES

	L^L Line Bridge Sta. 846	L^R Line Bridge Sta. 846
Structure Excavation Class A	840 Cu. Yds.	535 Cu. Yds.
Shoring and Cribs or Extra Excavation Class A	Lump Sum	Lump Sum
Steel Reinforcing Bars	43,000 Lbs.	41,000 Lbs.
Concrete Class D	100 Cu. Yds.	65 Cu. Yds.
Concrete Class B	110 Cu. Yds.	105 Cu. Yds.
Concrete Class AX	120 Cu. Yds.	115 Cu. Yds.
Concrete Class AX Special	45 Cu. Yds.	45 Cu. Yds.
Superstructure - L^L Line Bridge Sta. 846	Lump Sum	
Superstructure - L^R Line Bridge Sta. 846		Lump Sum
Water Reducing Additive	Est. 350 Dollars	Est. 310 Dollars
Removing Existing Bridge No. 90/68	Lump Sum	
Bridge Grate Inlet	1 Only	1 Only
Exposed Aggregate Finish	55 Sq. Yds.	60 Sq. Yds.

LOADING: HS-20 OR TWO 24^K AXLES @ 4' CTRS.

CURVE DATA

P.I. STATION	Δ	R	L	T	S	Bk. TAN.
L^R 844+28.20	98°44'20" Lt.	1750.0'	3015.80'	2039.55'	0.03'/ft.	S29°49'59"E
L^L 845+20.12	101°08'26" Lt.	1690.0'	2983.25'	2055.26'	0.03'/ft.	S29°49'59"E

AS BUILT CHANGES IN RED 6-6-83

SR 90 MP 15.35 TO MP 15.77

EAST ISSAQUAH INTERCHANGE

KING COUNTY

E. FORK ISSAQUAH CREEK BRIDGES - STA. LR & LL 846

LAYOUT

WASHINGTON STATE HIGHWAY COMMISSION
DEPARTMENT OF HIGHWAYS
OLYMPIA, WASHINGTON

G. H. ANDREWS — DIRECTOR OF HIGHWAYS

C. S. Floyd — BRIDGE ENGINEER

CONTRACT NUMBER 9840 — APPROVED August 13, 1974 — SHEET 83 OF 119 SHEETS

BY	APP'D	DATE	REVISION

DATE	REVISION	BY	APP'D
8-23-74	Changed Stations & Channel Change Sect.	PW	
9-18-74	Removed Test Hole H-153	GRL	

SR 90 JOB NO. 1622 SHEET 1 of 17 SHEETS

Layout By	Layout Checked By	Traced By
H.R. Basch 8-73	A.H. Walley 9-73	5-74 ML

Designed By	Design Checked By	Detailed By
P. Wood 5-74	Ingo Goller 6-74	

Engineer of Bridge Design	Superintendent Bridge Dept.	Revised By
R. Wm. B. Ellis 8-74	Wilfred Lee-Wallace 7-74	7-74 S. Nakao

C.S. 170106 ~ AREA 11 ~ PROJECT No. 1-90-1 ~ FUNCTION C.S. 275 ~ UNIT 10 ~ GROUP 61 ~ LIST No. 7 ~ ISSAQUAH TO FRESHWATER ~ SR 90 ~ E. FK. ISSAQUAH CR. BR. @ 101/152

SR 90/363

FED. ROAD DIV. NO.	STATE	FED. AID PROJ. NO.	FISCAL YEAR	SHEET NO.	TOTAL SHEETS
10	WASH.	I-90-1(116)	15	88	119

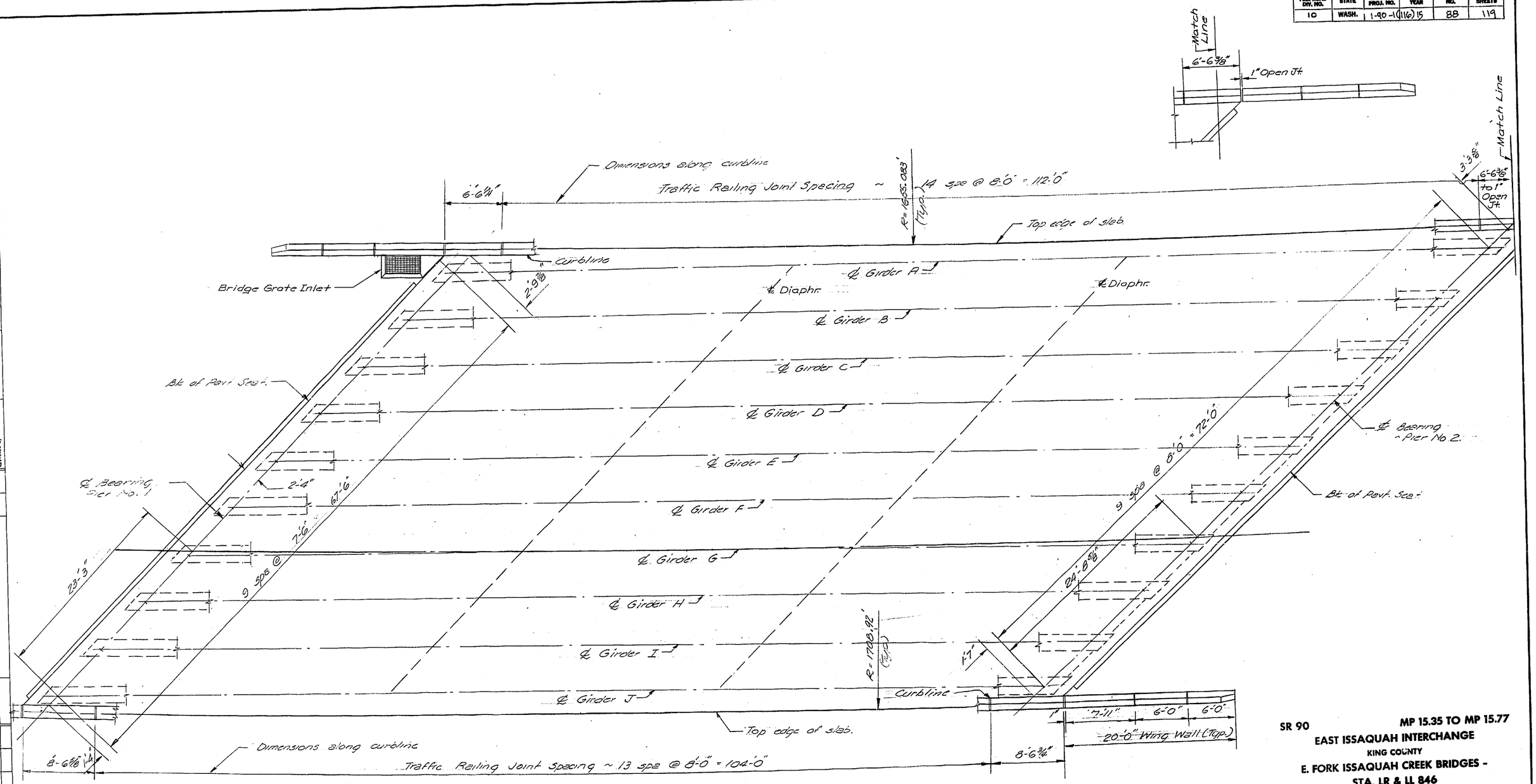

FRAMING PLAN ~ LL LINE

Bearing Piers N 30°40'45" E.

SR 90 MP 15.35 TO MP 15.77

EAST ISSAQUAH INTERCHANGE

KING COUNTY

E. FORK ISSAQUAH CREEK BRIDGES - STA. LR & LL 846

FRAMING PLAN - LL LINE

WASHINGTON STATE HIGHWAY COMMISSION
DEPARTMENT OF HIGHWAYS
OLYMPIA, WASHINGTON

G.H. ANDREWS — DIRECTOR OF HIGHWAYS

C. S. Floyd — BRIDGE ENGINEER — APPROVED August 13, 1974

CONTRACT NUMBER 9840 — SHEET 88 OF 119 SHEETS

SR 90 / 363

10/1/147

DATE	REVISION	BY	APP'D	DATE	REVISION	BY	APP'D

Designed By P. Wood 5-72 — Layout By
Design Checked By I. Goth 6-72 — Layout Checked By
Detailed By P. Wood 5-72 — Traced By

Engineer of Bridge Design Donald Vasselli 7-74
Supervising Bridge Engr. J. Nolan 7-74
Reviewed By

SR 90 JOB NO. 1622 SHEET 6

FED. ROAD DIV. NO.	STATE	FED. AID PROJ. NO.	FISCAL YEAR	SHEET NO.	TOTAL SHEETS
10	WASH.	I-90-1(116)15		97	119

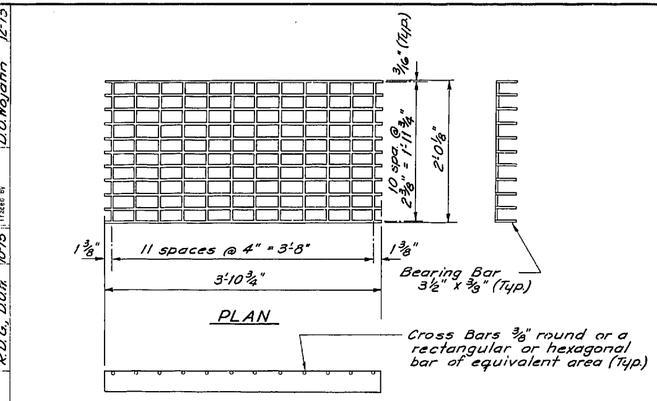

GRATE DETAILS

Weight is approx. 215 lbs.

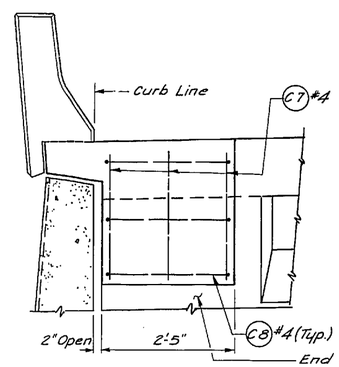

VIEW C-C

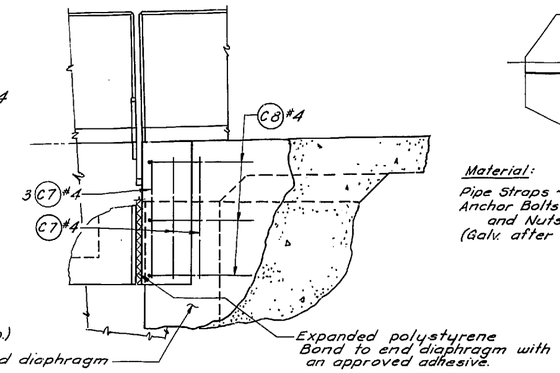

VIEW D-D

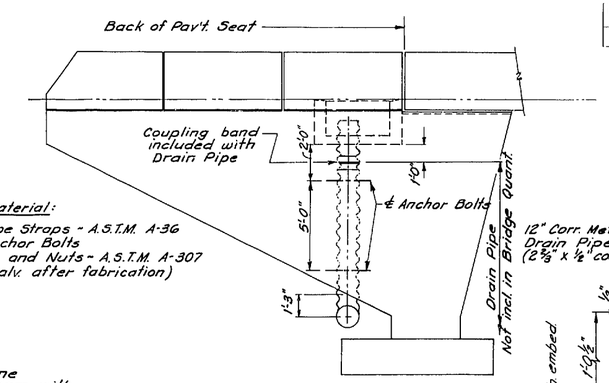

Material:
Pipe Straps - A.S.T.M. A-36
Anchor Bolts and Nuts - A.S.T.M. A-307
(Galv. after fabrication)

OUTSIDE ELEVATION

Details at wing wall shown. See other plans for blockout details for a drain pipe passing through a retaining wall.

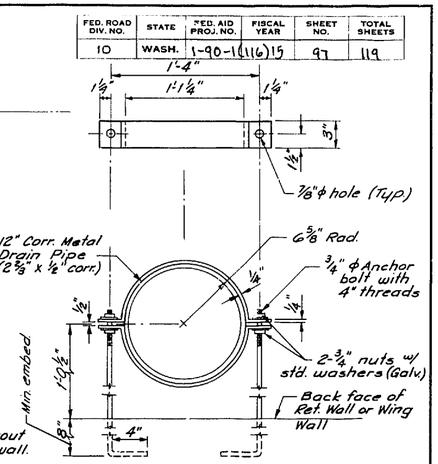

BRACKET TO SECURE DRAIN PIPE TO WALL

BAR LIST

MARK	SIZE	LENGTH	
I 1	7	5'-5"	
I 2	4	5'-1"	
I 3	4	6'-8"	
I 4	4	8'-2"	
I 5	4	3'-1"	Str.
I 6	4	8'-3"	
C 7	4	2'-3"	Str.
C 8	4	5'-6"	
C 9	4	5'-5"	

BENDING DIAGRAM (All dimensions are out to out)

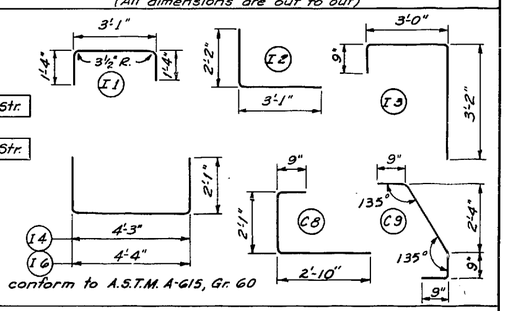

Note:
All reinforcing shall conform to A.S.T.M. A-615, Gr. 60

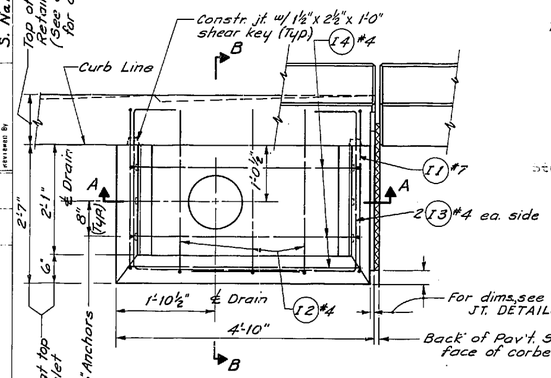

PLAN

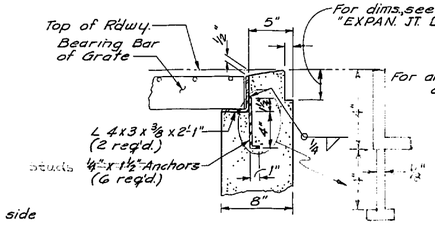

DETAIL G

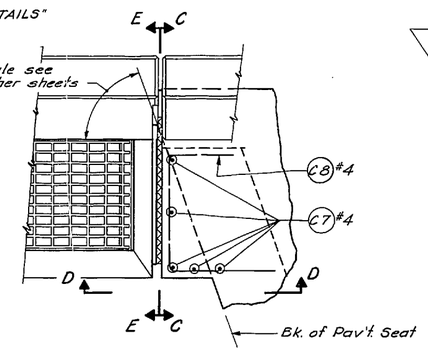

PLAN~CORBEL @ SKEWED END

(Expan. Jt. Seal not shown)

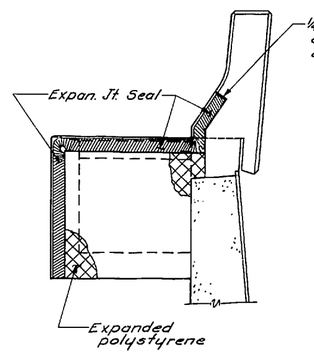

VIEW E-E

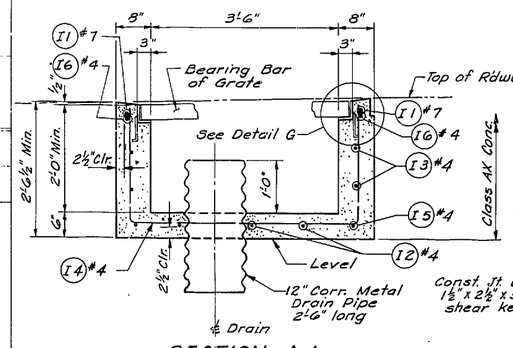

SECTION A-A

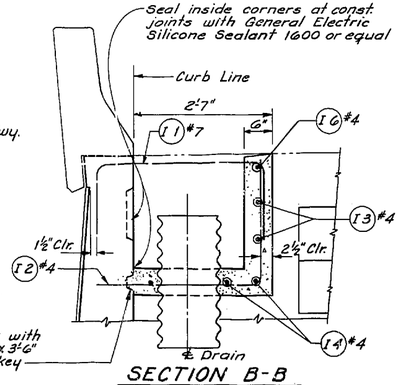

SECTION B-B

Details shown at wing wall. Modify as required for retaining wall

Note:
Omit bars C7, C8 & C9 for skews of 10° or less

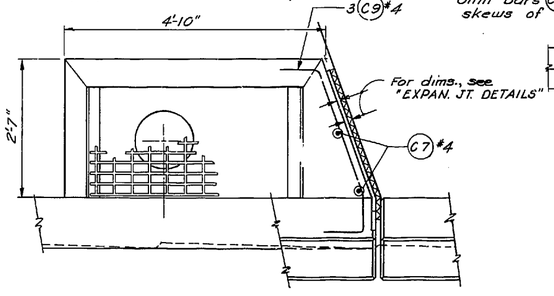

PLAN~INLET SKEWED

Exp. Jt. Seal not shown

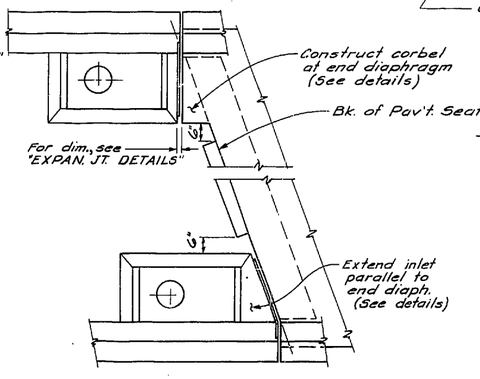

DETAIL @ SKEWED END

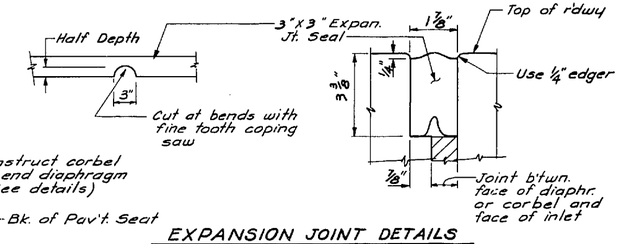

EXPANSION JOINT DETAILS

NOTES

Angles shall be set so that each bearing bar of prefabricated grate shall have full bearing on both ends.
The finish top of concrete shall be even with the grate surface.
All exposed concrete edges shall be finished with a one half (1/2) inch radius edger tool except as noted.
The grate shall be set parallel to the transverse roadway slope and parallel to longitudinal grade.
See the Standard Specifications for further requirements.

APPROX. QUANTITIES ~ ONE INLET ~ SKEWED

Concrete Class AX	0.8	Cu. Yds.
Steel Reinforcing Bars	112	Lbs.
* Structural Carbon Steel	290	Lbs.
Expansion Jt. Seal	6.0	Lin. Ft.
12" Dia. Corr. Metal Drain Pipe	2.5	Lin. Ft.

*Includes grate, anchor bolts and pipe clamps

AS BUILT CHANGES IN RED 6-6-83

SR 90 MP 15.35 TO MP 15.77
EAST ISSAQUAH INTERCHANGE
KING COUNTY
E. FORK ISSAQUAH CREEK BRIDGES - STA. LR & LL 846

BRIDGE GRATE INLET

WASHINGTON STATE HIGHWAY COMMISSION
DEPARTMENT OF HIGHWAYS
OLYMPIA, WASHINGTON

G.H. ANDREWS — DIRECTOR OF HIGHWAYS

C. S. Lloyd — BRIDGE ENGINEER

CONTRACT NUMBER 98440 — APPROVED August 13, 1974 — SHEET 97 OF 119 SHEETS

SR 90/363

P. Wood	7-74	Layout By	D.D. Wojahn	12-73
I. Galler	7-74	Layout Checked By		
R.D.G., D.D.W.	10-73	Traced By		
		Designed By		
		Design Checked By		
S. Nakao	7-74	Detailed By		
		Quantities Checked By		
		Supervising Bridge Eng.		
		Engineer of Bridge Design		
		APP'D		
		BY		
		REVISION		
		DATE		
		APP'D		
		BY		
		REVISION		
		DATE		

SR 90 JOB NO. 1622 SHEET 15

PAVING LEGEND

1. Asphalt Concrete Pavement Class D 0.06' Comp. Depth
2. Asphalt Concrete Pavement Class G 0.08' Comp. Depth
3. Asphalt Concrete Pavement Class G 0.14' to 0.00' Comp. Depth - See Pavement Taper Detail
4. Asphalt Concrete Pavement Class G 0.14' Comp. Depth - See Paving Detail
5. Membrane Waterproofing (Deck Seal)
6. Asphalt Concrete Pavement Class G 0.14' to 0.06'
7. PATCH THE SMALL SURFACE VOIDS IN THE BRIDGE DECKS USING A MIXTURE OF DURO BOND RESIN, CEMENT & SAND

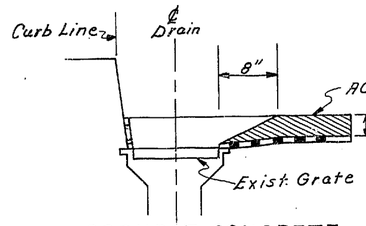

ASPHALT CONCRETE PAVEMENT TAPER DETAIL FOR NON-MODIFIED BRIDGE DRAINS

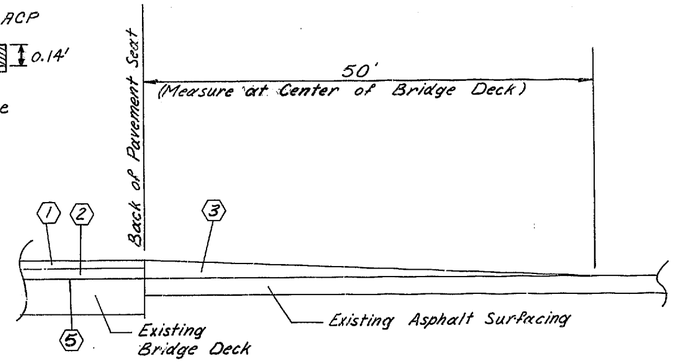

PAVEMENT TAPER DETAIL

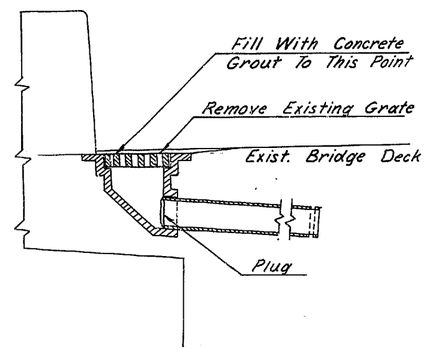

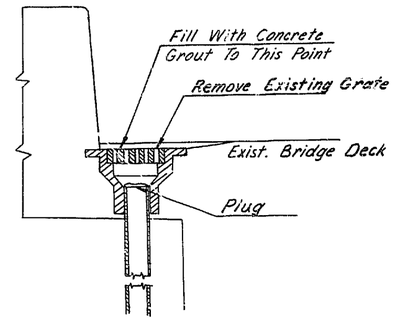

BRIDGE DRAIN PLUGGING DETAILS (See Special Provisions)

Bridge No.	Number of Drains
90/50 S	4
90/48 W-N	2
90/50 W-S	2
90/59 N	6
90/59 E-N	2
900/30	4
90/63 S	1
90/63 N	1
90/65 S	2
90/65 N	2
90/59 S	6

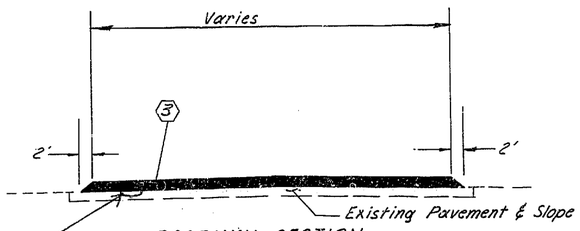

ROADWAY SECTION
Overlay Section Between Pav't Seat and Begin or End of Paving - See Plans for Limits

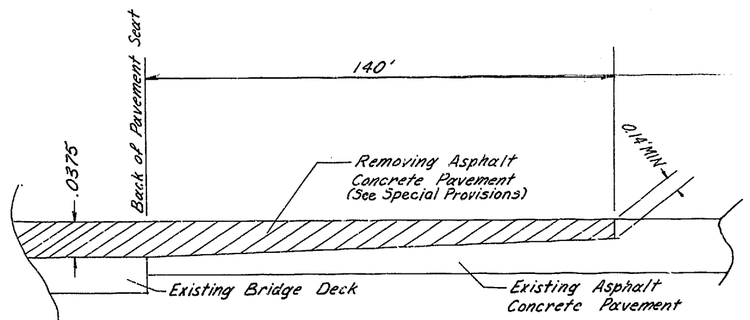

ASPHALT CONCRETE PAVEMENT REMOVAL DETAIL
Bridge No. 90/50 N (Both Ends)

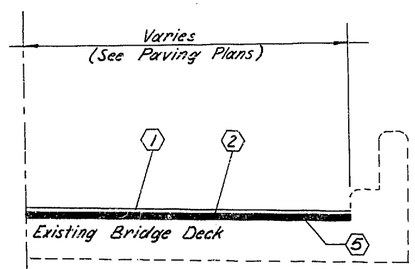

BRIDGE ROADWAY SECTION
HALF PLAN

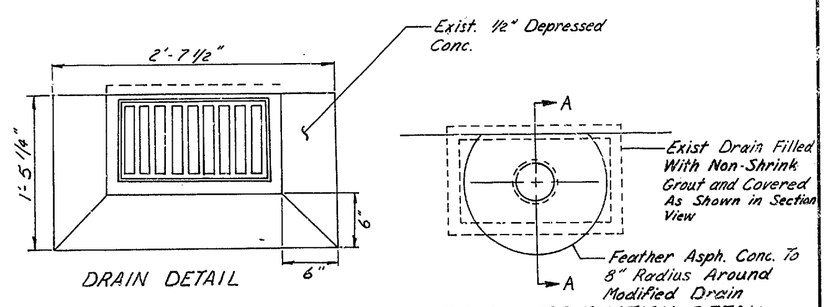

DRAIN DETAIL

DRAIN MODIFICATION DETAIL
(See Special Provisions)

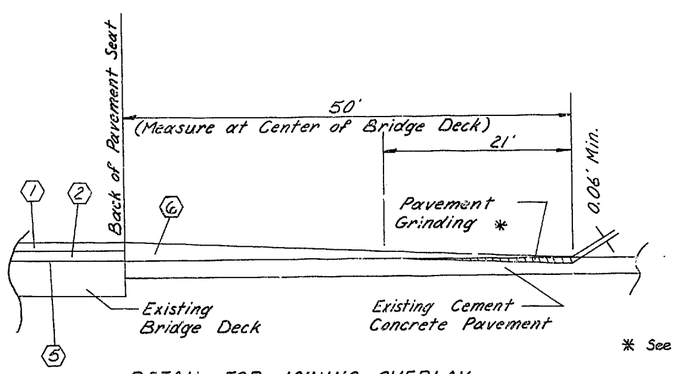

DETAIL FOR JOINING OVERLAY TO EXISTING CEMENT CONCRETE PAVEMENT
East Ends of Bridge Numbers 90/68 S & 90/68 N

* See Special Provisions

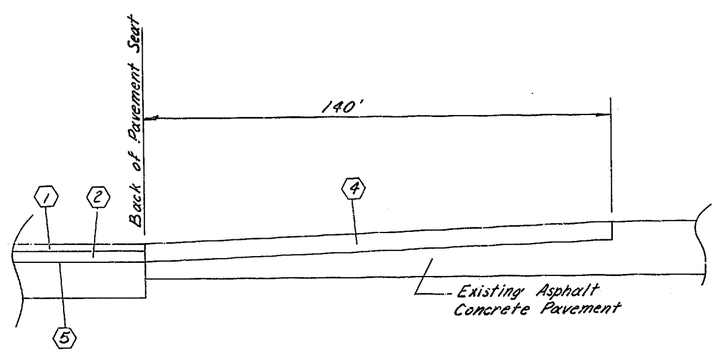

PAVING DETAIL
Bridge No. 90/50 N (Both Ends)

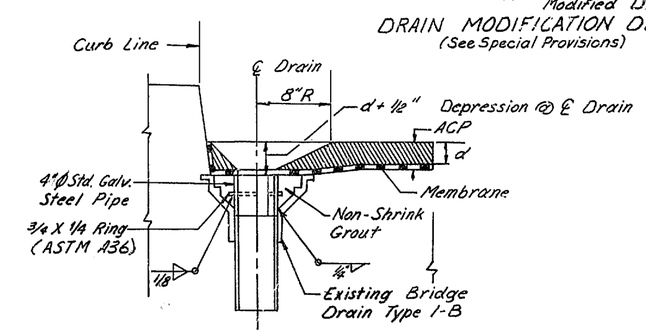

SECTION A-A

AS BUILT CHANGES IN RED 7-8-85

DRAWN P. HIMES / K. CONNELLY				REGION NO. 10	STATE WASH	FED. AID PROJ. NO. IR-90-1(213)	SHEET NO. 4	TOTAL SHEETS 15
Reviewed by P.A. Price								
CHECKED R. BOWMAN				JOB NUMBER 82W152				
PROJ. ENGR. KASKA / CREELMAN								
DIST. ADM. J.D. ZIRKLE				CONTRACT NO. 2406				
	DATE	REVISION	BY	APP'D				

DIVISION OF HIGHWAYS

August 2, 1982
APPROVED

Washington State Department of Transportation

SR 90
PREVENTIVE BRIDGE DECK TREATMENT
KING COUNTY

ROADWAY SECTIONS AND MISCELLANEOUS DETAILS

SHEET 4 OF 15 SHEETS

SR 90/508

K-E DOT FORM 221-011 Revised 5/80

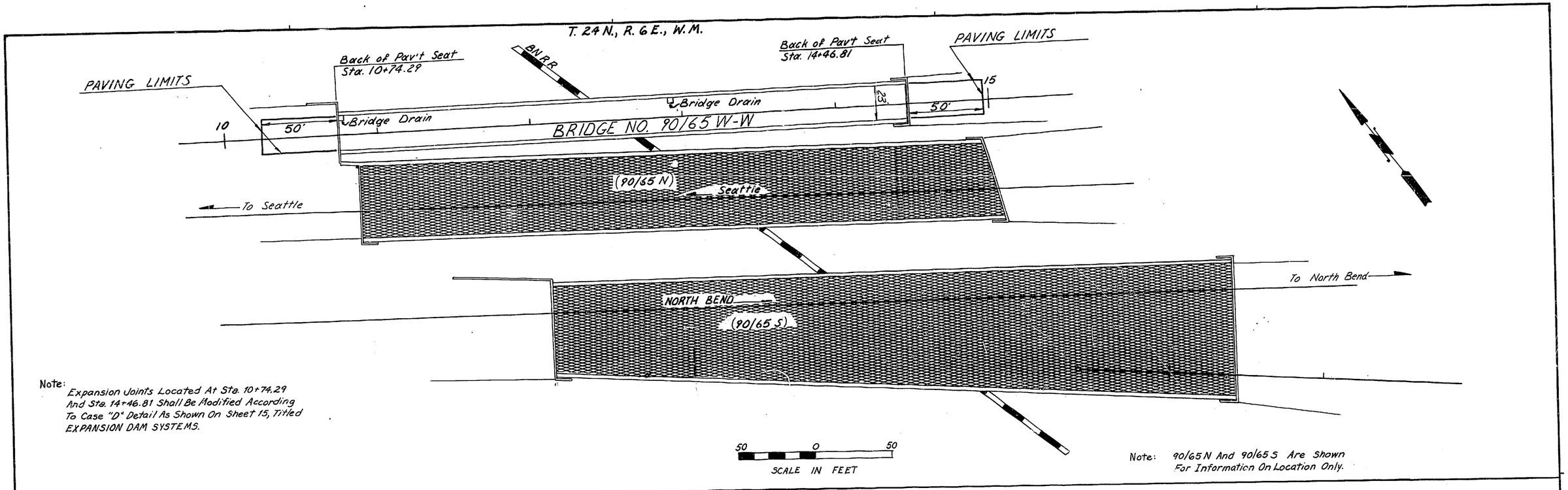

Note: Expansion Joints Located At Sta. 10+74.29 And Sta. 14+46.81 Shall Be Modified According To Case "D" Detail As Shown On Sheet 15, Titled EXPANSION DAM SYSTEMS.

Note: 90/65 N And 90/65 S Are Shown For Information On Location Only.

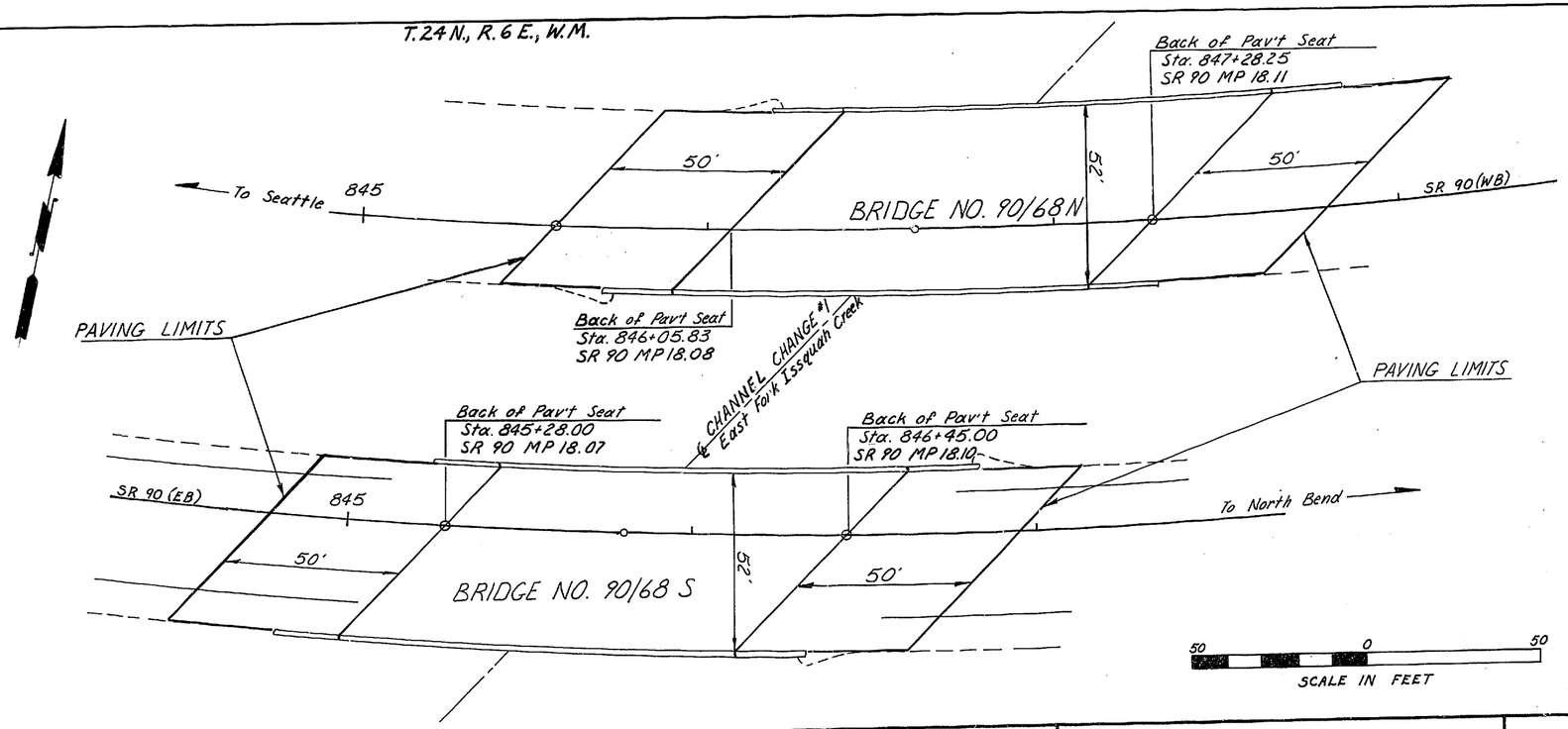

NOTE: No Expansion Joints Are To Be Modified On These Bridges.

DRAWN P. KIMES / K. CONNELLY			
Reviewed by P.A. Price			
CHECKED R. BOWMAN			
PROJ. ENGR. KASKA / CREELMAN			
DIST. ADM. J. D. ZIRKLE			
DATE	REVISION	BY	APP'D

REGION NO.	STATE	FED. AID PROJ. NO.	SHEET NO.	TOTAL SHEETS
10	WASH	IR-90-1(213)	13	15
JOB NUMBER 82W152				
CONTRACT NO. 2406				

DIVISION OF HIGHWAYS

August 2, 1982
APPROVED

Washington State Department of Transportation

SR 90
PREVENTIVE BRIDGE DECK TREATMENT
KING COUNTY

PLAN
BRIDGE NOS. 90/65 W-W, 90/68 N & 90/68 S

SHEET 13 OF 15 SHEETS

SR 90/508

K+E DOT FORM 221-011 Revised 6/80

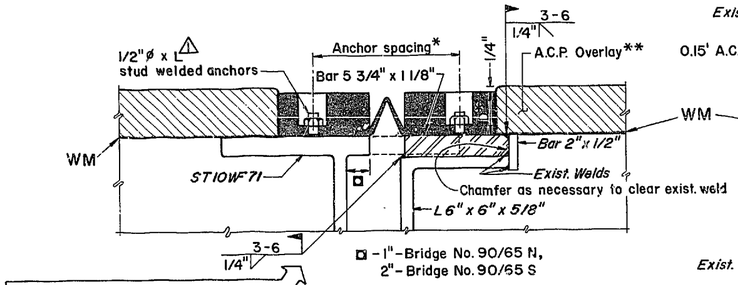

CASE A

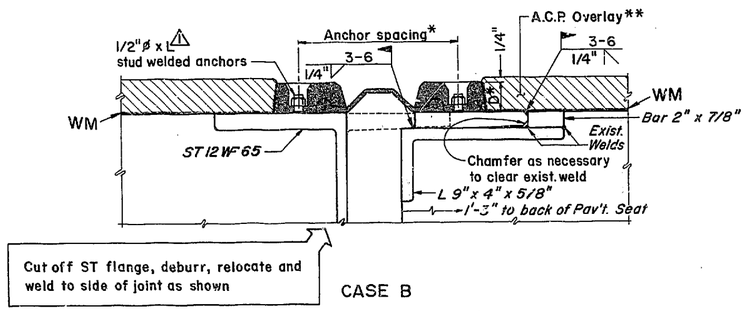

CASE B

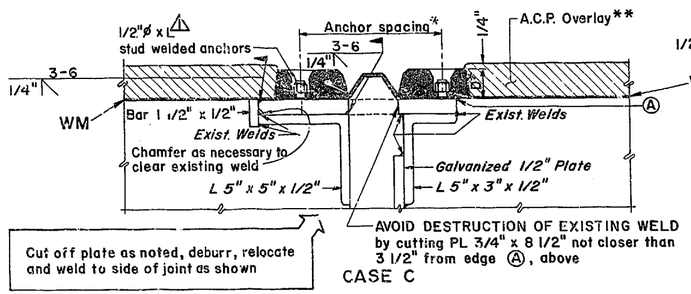

CASE C

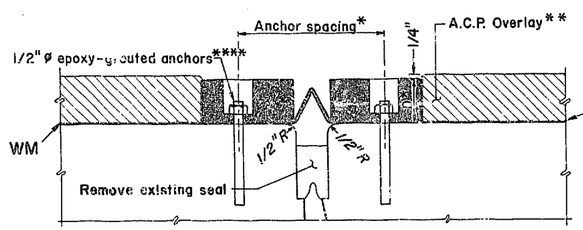

CASE D

FOR BRIDGE 90/59 SEE DETAIL B

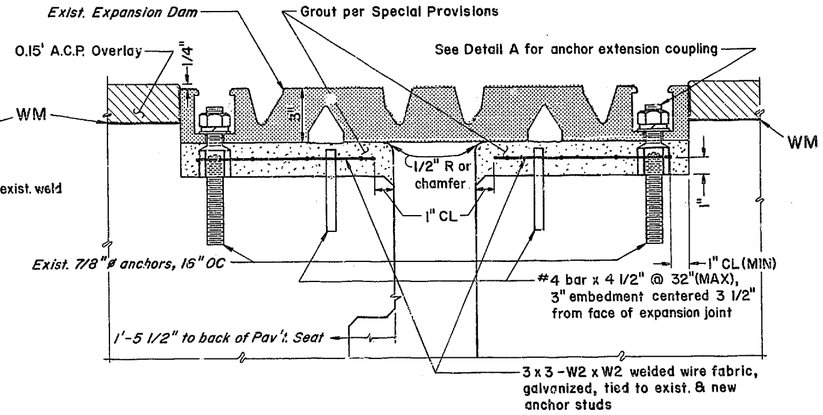

CASE E

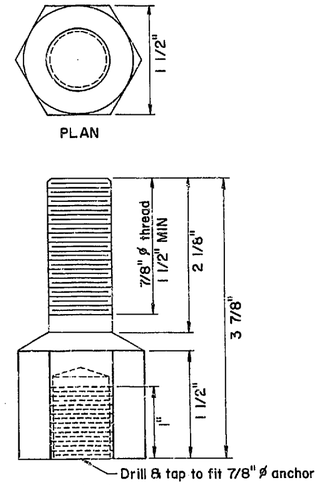

ELEVATION
Anchor Extension Coupling
(Machine from 1 1/2" HEX bar stock, ASTM A36)

DETAIL A

NOTE:

Vertical Lettering: work & materials to be added

Slant Lettering: existing structural elements

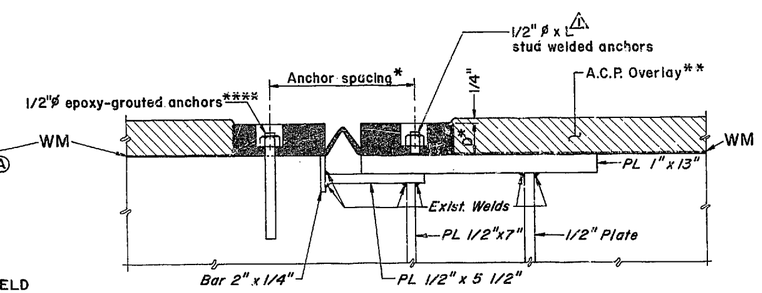

CASE F

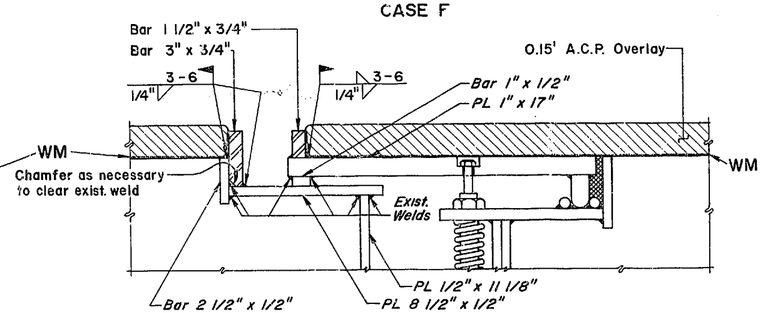

CASE G

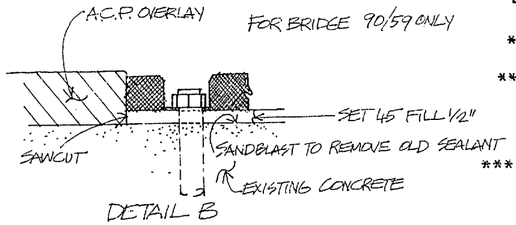

FOR BRIDGE 90/59 ONLY

DETAIL B

** *** TYPE 3 MAY BE USED ON ALL EXPANSION DAM SYSTEMS

NOTE:

FOR CASES A, B & C THE STATE WILL CONSIDER STEEL EXTRUSION STRIP SEAL SYSTEMS IN LIEU OF THOSE LISTED IN THE SYSTEM SELECTION TABLE.

SYSTEM SELECTION

BRIDGE NO.	CASE	EXPANSION DAM SYSTEM***
90/47 E-N	C	1 ,3,4
90/48 W-S	C	1 ,3,4
90/48 W-N	D	2,5, 6, 7, 8, 9, 10, 11
90/50 S	D	2,5, 6, 7, 8, 9, 10, 11
90/50 W-S	D	2,5, 6, 7, 8, 9, 10, 11
90/52	E	use existing
90/54 E-N	G	none
90/54 W	F	1 ,3,4
90/54 E	F	1 ,3,4
90/54 S-W	G	none
90/59 N	~~X~~D	~~2,5,6,7,8,9,10,11 / 1,3,4~~
90/59 S	~~X~~D	~~2,5,6,7,8,9,10,11 / 1,3,4~~
90/59 E-N	~~X~~D	~~2,5,6,7,8,9,10,11 / 1,3,4~~
900/30	B	1 ,3,4
90/65 S	A	1 ,3,4
90/65 N	A	1 ,3,4
90/65 W-W	D	2,5, 6, 7, 8, 9, 10, 11
90/66 S	D	2,5, 6, 7, 8, 9, 10, 11
90/66 N	D	2,5, 6, 7, 8, 9, 10, 11

* See Manufacturer' data.

** If system selected for joint treatment causes A.C.P. Overlay depth to exceed specified depth, feather Overlay away from joint to the satisfaction of the Engineer.

*** 1-ACME TROJAN TR 400

2-D.S. BROWN DELASTOFLEX SM 400

3-GENERAL TIRE GEN-STRIP CCL

4-FEL-PRO PRO SPAN PS 4

5-WATSON BOWMAN ALU-STRIP TYPE III SE 400

6-ON FLEX # 40

7-ACME TROJAN TR 300

8-D.S. BROWN DELASTOFLEX SM 300

9-FEL-PRO FEL SPAN T 30 A

10-WATSON BOWMAN ELASTODAM TYPE 200

11-ACME TITAN TYPE B TR 400

**** ACME KEYSTON SYSTEM; MOLLY PARABOND SYSTEM.
LENGTH PER MANUFACTURER'S SPECIFICATIONS.

⚠ LENGTH OF WELDED ANCHORS TO SUIT EXPANSION DAM MANUFACTURER'S RECOMMENDATIONS.

WM — Waterproof Membrane

AS BUILT CHANGES IN RED 7-8-85

Bridge Design Engineer R.A. Kaiser 8/82				
Supervisor				
Reviewed By Hubert J. Gowatz 8/82				
Designed By Pat Morin 8/82				
Checked By				
Detailed By J. Rijsdam 8/82	10/25/82	Rev. System Selection Chart	AM	RLB
Architect		*** Notes; Added Note		
Preliminary Plan By	DATE	REVISION	BY	APP'D

REGION NO.	STATE	FED. AID PROJ. NO.	SHEET NO.	TOTAL SHEETS
10	WASH	IR-90-1(213)	15	15

JOB NUMBER 82W152

CONTRACT NO. 2406

BRIDGES AND STRUCTURES

August 2, 1982

8/30/82 APPROVED

C. S. Lloyd by (OHE)

Washington State Department of Transportation

SR 90
PREVENTIVE BRIDGE DECK TREATMENT
KING COUNTY

EXPANSION DAM SYSTEMS

BRIDGE SHEET NO.

SHEET 15 OF 15 SHEETS

SR ___ JOB NO. ___ SHEET ___

K-E DOT FORM 221-013 Revised 6/80

SR 90/508

143/125

FED. ROAD DIV. NO.	STATE	FED. AID PROJ. NO.	FISCAL YEAR	SHEET NO.	TOTAL SHEETS
10	WASH.	I-90-1 (112)	15	115	135

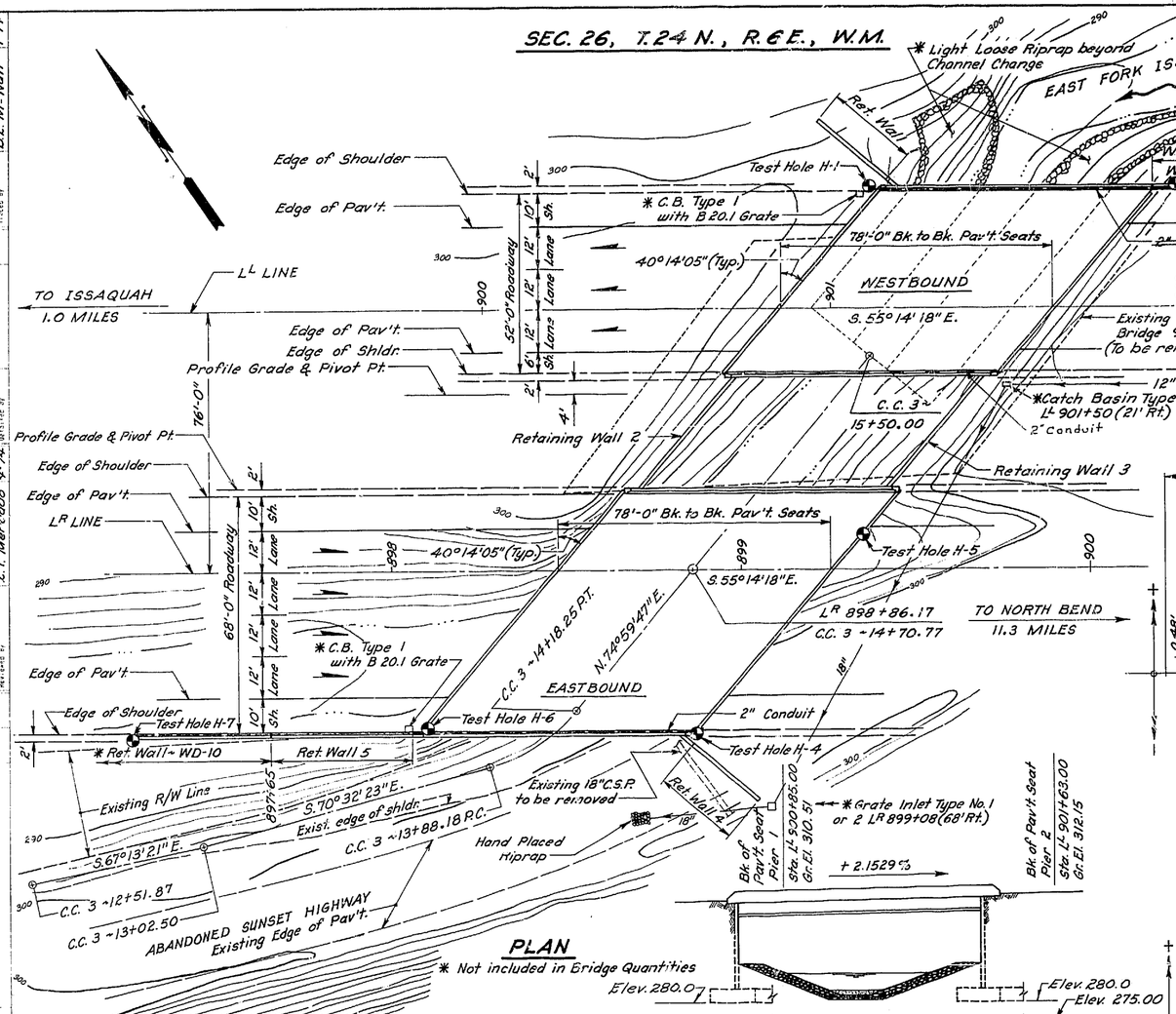

PLAN

* Not included in Bridge Quantities

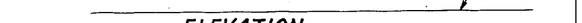

ELEVATION

WESTBOUND BRIDGE

Grade elevations shown are finish grades on L^L Line and vary from profile grade.

CHANNEL CHANGE CURVE DATA
P.I. Sta. = 14+03.69
R. = 50'
T. = 15.51'
L. = 30.08'
Δ = 34°27'50"

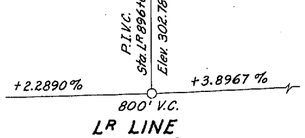

L^R LINE

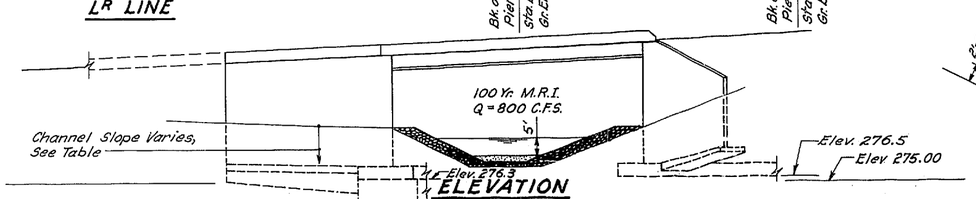

ELEVATION

EASTBOUND BRIDGE

Grade elevations shown are finish grades on L^R Line and vary from profile grade.

DATUM

Sea Level Datum of 1929

L^R LINE CURVE DATA	
P.I. = L^R 887+30.46	P.I. = L^R 922+33.29
Δ = 47°15'21" Rt.	Δ = 29°48'42" Lt.
R = 1900.00'	R = 7000.00'
T = 831.19'	T = 1863.32'
L = 1567.06'	L = 3642.19'
S = 0.09'/Ft.	S = 0.03'/Ft.

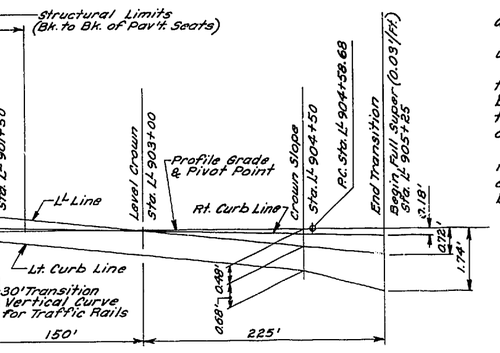

PROFILE GRADE OF CHANNEL CHANGE NO. 3

SR 90

L^L LINE SUPERELEVATION TRANSITION DIAGRAM

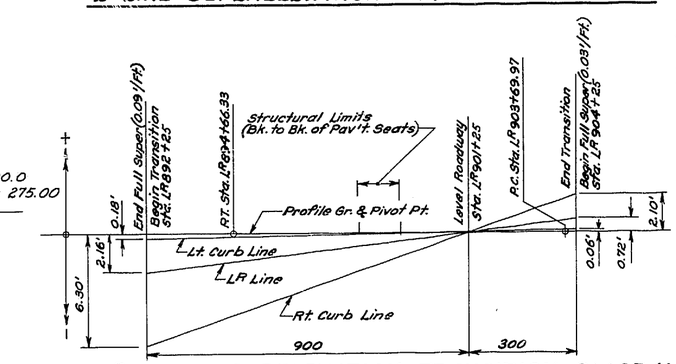

L^R LINE SUPERELEVATION TRANSITION DIAGRAM

CHANNEL CHANGE SLOPE TABLE		
Station	Lt. Slope	Rt. Slope
10+00 to 11+00	2:1	2:1
11+50 to 13+00	2:1	1.5:1
13+50	1.5:1	1.5:1
14+25 to 15+50	2:1	2:1

Slope varies between stations shown.

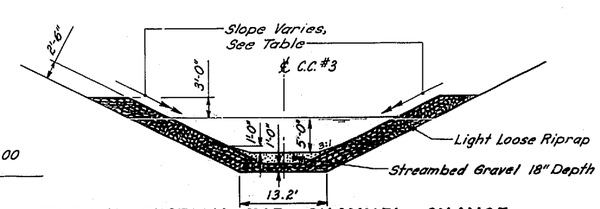

TYPICAL SECTION FOR CHANNEL CHANGE

Channel Change Quantities, not included in Bridge Quantities

GENERAL NOTES

All material and work shall be in accordance with the requirements of the State of Washington, Department of Highways, Standard Specifications for Road and Bridge Construction dated 1974.

Footing elevations and substructure details are subject to change depending upon foundation material encountered. Reinforcing steel for footings, pier walls, wing walls and retaining walls shall not be cut until final footing elevations have been determined in the field, and substructure details have been modified as required.

The concrete in all seals shall be Class D mix. The concrete in the footings and the retaining wall shall be Class B mix. All other cast-in-place concrete shall be Class AX mix.

The concrete seals for portion of Pier 1 Eastbound Bridge and for Retaining Wall 5 are designed for a water surface elevation of 2.8 feet above finish grade elevation of the bottom of channel. After the seals are poured, cofferdam shall not be unwatered when the water is above elevation noted and provision shall be made to flood the cofferdam in the event the water surface is above the design elevation.

The maximum design soil pressure per square foot is five (5) tons for Piers 1 and 2 of Eastbound and Westbound Bridge.

The roadway slab shall not be poured until 24 hours minimum after pouring the diaphragms.

Falsework shall be carefully released to prevent impact or undue stresses in the structure.

Unless otherwise shown on the plans, concrete cover measured from the face of the concrete to the face of any reinforcement bar shall be 2" at the top of the roadway slab, 1" at the bottom of the roadway slab, 2½" at the bottom of footing and 1½" at all other locations.

These structures have been designed in accordance with the requirements of Load Factor Design, 1973 A.A.S.H.O. Specifications except for the retaining walls, which is by Working Strength Design.

APPROXIMATE QUANTITIES

	WESTBOUND BRIDGE	EASTBOUND BRIDGE	RETAINING WALLS	
Structure Excavation Class A.	1815	2315	1805	Cu. Yds.
Shoring and Crib or Extra Excavation Class A.	L.S.	L.S.	L.S.	Lump Sum
Steel Reinforcing Bars.	135,000	163,800	78,700	Lbs.
Concrete Class D.	—	155	110	Cu. Yds.
Concrete Class B.	380	460	570	Cu. Yds.
Concrete Class AX.	265	475	5	Cu. Yds.
Superstructure ~ Issaquah Creek Bridge Sta. 901+00.	L.S.	L.S.	—	Lump Sum
Water Reducing Additive. Est.	200	300	—	Dollars
Removing Existing Structure No. 90/74.	L.S.			Lump Sum

Substitution of Class AX Concrete For Class D Concrete In Pier Shafts Which Are Poured Underwater Using A Tremie.

LOADING: HS-20
OR
TWO 24 KIP AXLES @ 4' CTRS.

SR 90 **MP 15.77 TO MP 16.64**

EAST ISSAQUAH VICINITY

KING COUNTY

E. FORK ISSAQUAH CREEK BRIDGES -

STA. L^L 901 00 EASTBOUND & WESTBOUND

LAYOUT

WASHINGTON STATE HIGHWAY COMMISSION
DEPARTMENT OF HIGHWAYS
OLYMPIA, WASHINGTON

G. H. ANDREWS — DIRECTOR OF HIGHWAYS

C. S. Lloyd — BRIDGE ENGINEER — APPROVED May 2, 1975

CONTRACT NUMBER 9773 — SHEET 115 OF 135 SHEETS

AS BUILT CHANGES IN RED 2-2-83

DATE	REVISION	BY	APP'D
4-30-74	Rev. "Typ. Sect. For Channel Change"	H.S.S.	
5-2-74	Manhole deleted.	H.S.S.	

Robinson-Duffy 3-74	Chart-Brommeyer 3-74	Super. Site, Drainage Details & C.C. #3 Section	M.J. Fraher 9-73
			D.S. Bowers 9-73
			D.L. McNeil 1-74

SR 90 JOB NO. 1627 SHEET 1 OF 21

109/21

SR 90/372

FED. ROAD DIV. NO.	STATE	FED. AID PROJ. NO.	FISCAL YEAR	SHEET NO.	TOTAL SHEETS
10	WASH.	I-90-1(112)15		122	135

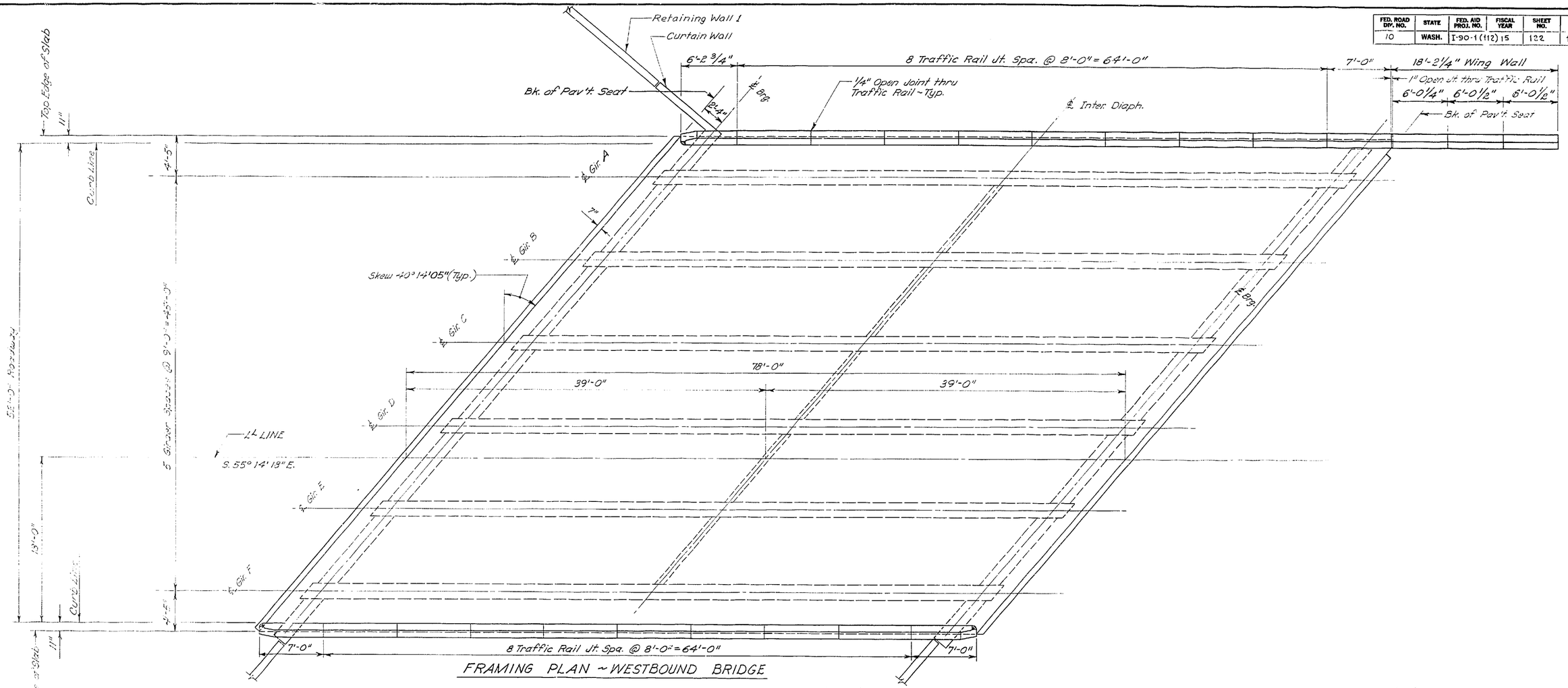

FRAMING PLAN ~ WESTBOUND BRIDGE

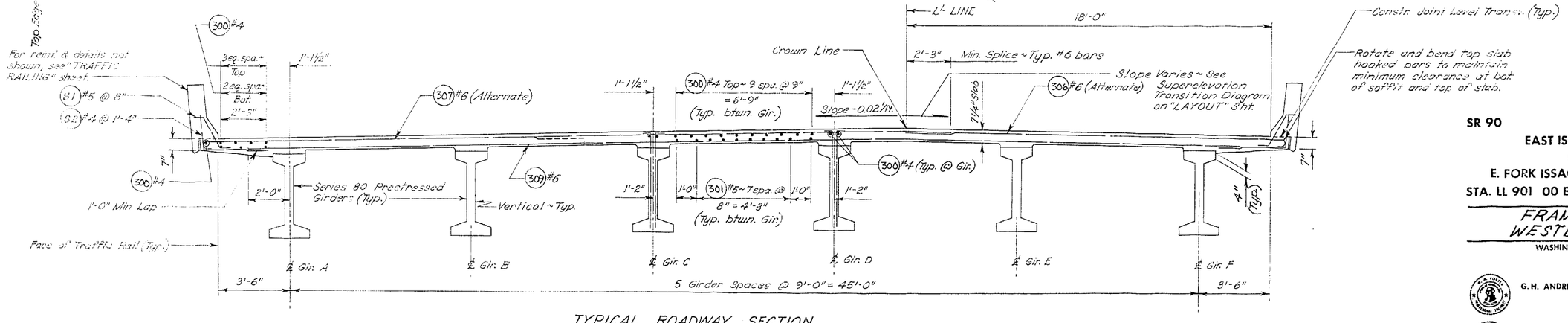

TYPICAL ROADWAY SECTION

Shown looking ahead on Stationing

DATE	REVISION	BY	APP'D	DATE	REVISION	BY	APP'D

Engineer of Bridge Design		Designed By		Layout By	
Supervising Bridge Engr.		Design Checked By		Layout Checked By	
Reviewed By		Detailed By		Traced By	

SR 90 JOB NO. 162" SHEET 6

SR 90 **MP 15.77 TO MP 16.64**

EAST ISSAQUAH VICINITY

KING COUNTY

E. FORK ISSAQUAH CREEK BRIDGES -

STA. LL 901 00 EASTBOUND & WESTBOUND

FRAMING PLAN
WESTBOUND BRIDGE

WASHINGTON STATE HIGHWAY COMMISSION
DEPARTMENT OF HIGHWAYS
OLYMPIA, WASHINGTON

G.H. ANDREWS DIRECTOR OF HIGHWAYS

BRIDGE ENGINEER APPROVED May 2, 1975

CONTRACT NUMBER 9973 SHEET 122 OF 135 SHEETS

109/14

SR 90/372

FED. ROAD DIV. NO.	STATE	FED. AID PROJ. NO.	FISCAL YEAR	SHEET NO.	TOTAL SHEETS
10	WASH.	I-90-1(112)	15	123	135

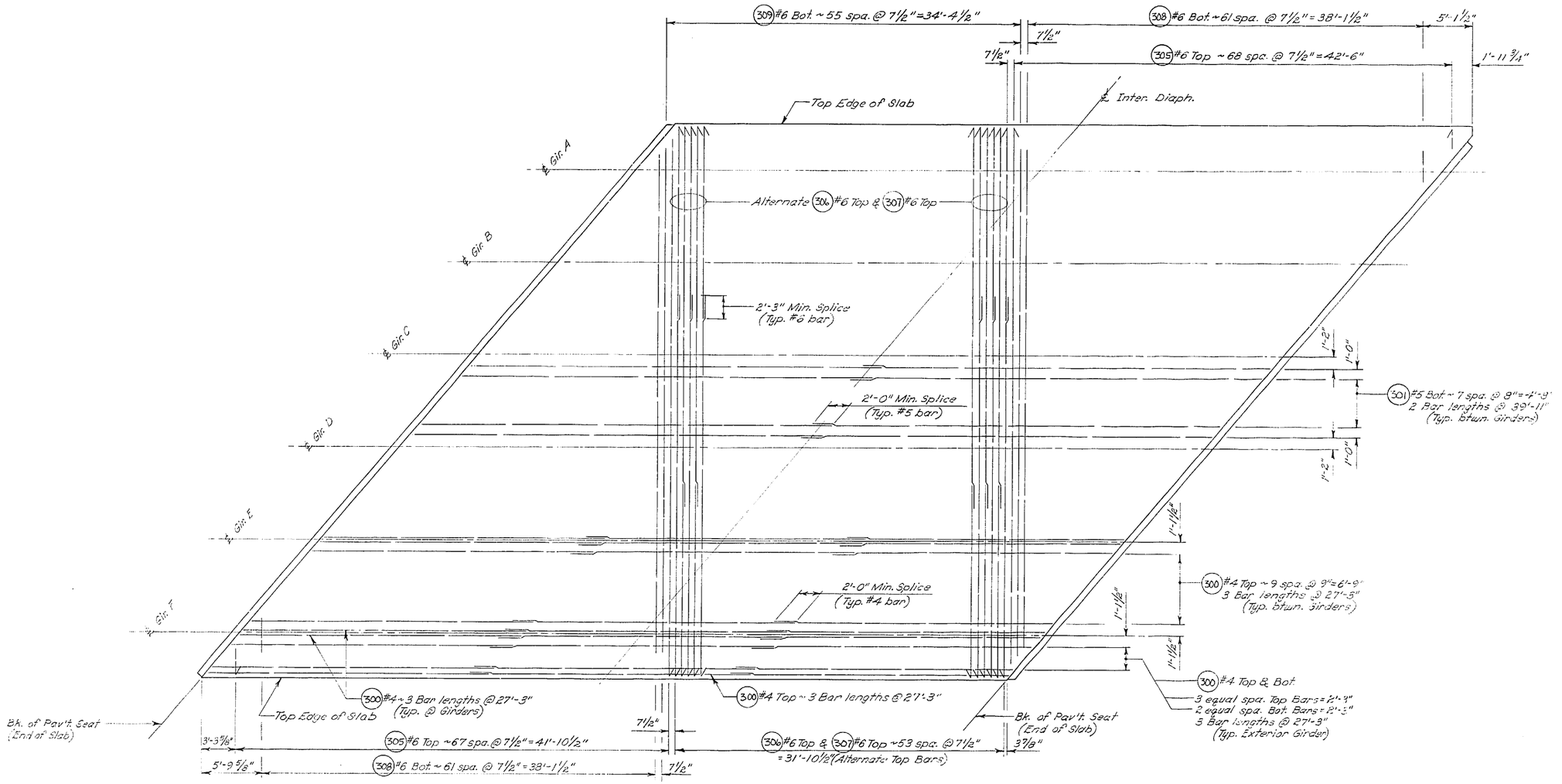

PLAN ~ ROADWAY SLAB REINFORCEMENT ~ WESTBOUND BRIDGE

REVISION	DATE	BY	APP'D

REVISION	DATE	BY	APP'D

Designed By	D.M. Duffy	Layout By	2-74
Design Checked By	R.D. Brammeier	Layout Checked By	2-74
Detailed By	D.L. McNoll	Issued By	1-74

Engineer of Bridge Design	W.W. Beaver		2-74
Supervising Bridge Engr.	W.A. Fry		2-74
Reviewed By	L.K. Nelson	Chief Engr.	4-74

SR 90 JOB NO. 1627 SHEET 9

SR 90 MP 15.77 TO MP 16.64

EAST ISSAQUAH VICINITY

KING COUNTY

E. FORK ISSAQUAH CREEK BRIDGES -

STA. LL 901 00 EASTBOUND & WESTBOUND

ROADWAY SLAB
WESTBOUND BRIDGE

WASHINGTON STATE HIGHWAY COMMISSION
DEPARTMENT OF HIGHWAYS
OLYMPIA, WASHINGTON

G.H. ANDREWS DIRECTOR OF HIGHWAYS

C. S. Allard
BRIDGE ENGINEER

APPROVED May 2, 1975

CONTRACT NUMBER 9473

SHEET 123 OF 135 SHEETS

10 9/13

SR 90/1373

FED. ROAD DIV. NO.	STATE	FED. AID PROJ. NO.	FISCAL YEAR	SHEET NO.	TOTAL SHEETS
10	WASH.	I-90-1(112)	15	134	135

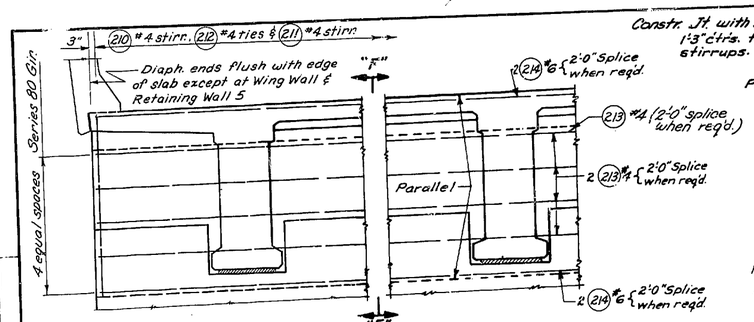

TYPICAL END DIAPHRAGM AT END PIERS

NOTE: For details at end of End Diaphragms see "PIER" sheets.

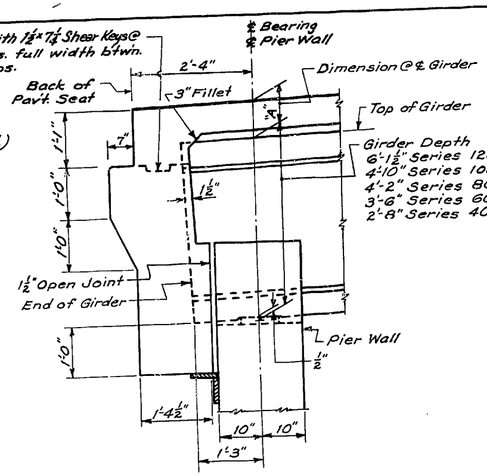

SECTION "F-F"

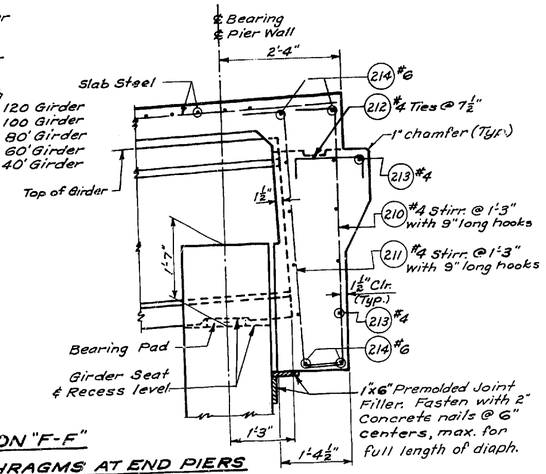

SECTIONS THRU END DIAPHRAGMS AT END PIERS

See "Girder Details" sheet for dimension "A".
All longitudinal dimensions are normal to skew.

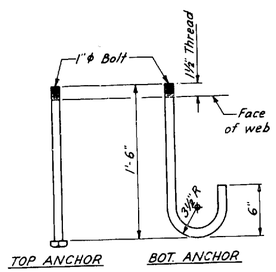

ANCHOR DETAILS

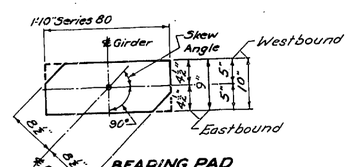

BEARING PAD

Laminated Elastomeric Brg. Pad 1" Thick ~ 1 Shim.
Durometer Hardness = 60.
16 required ~ Eastbound Struct.
12 required ~ Westbound Struct.

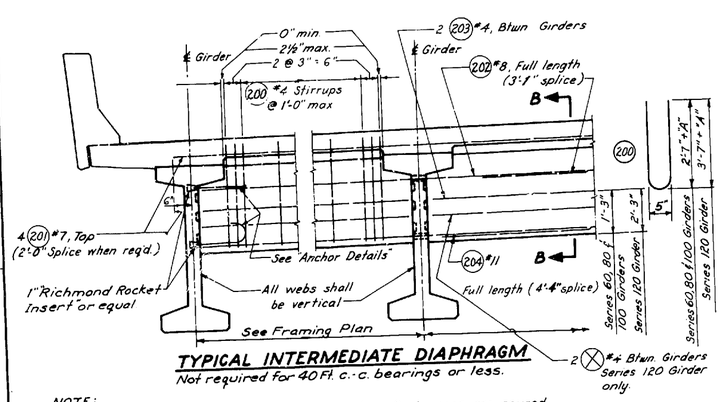

TYPICAL INTERMEDIATE DIAPHRAGM

Not required for 40 Ft. c.-c. bearings or less.

NOTE:
Girders shall be held rigidly in place when diaphragms are poured.
Reinforcing bars shall be threaded through holes in girders prior to placing of exterior girders.
See plans for "Traffic Railing" dimensions & location.
See "Girder Details" sht for Dimension "A".

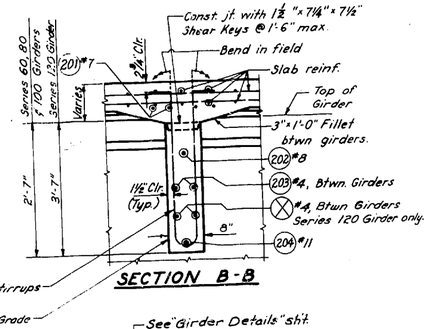

SECTION B-B

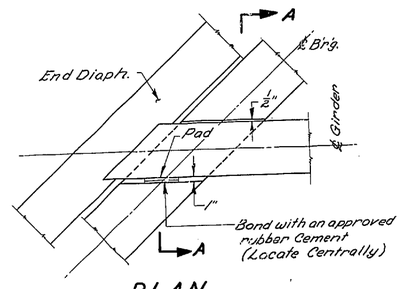

PLAN

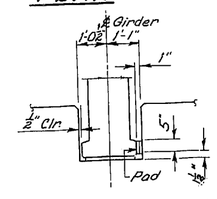

SECTION A-A

GIRDER STOP BEARING PAD

Pads:
Laminated Elastometric Brg. Pad 1" thick ~ 1 shim. Durometer Hardness = 60 ~ Size: 5" x 1'-0"
Use Girder Stop Brg. Pad @ Girders C & D on Westbound Bridge & @ Girders C & F on Eastbound Bridge

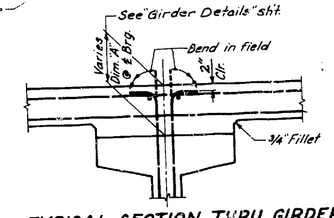

TYPICAL SECTION THRU GIRDER SHOWING METHOD OF ADJUSTING RDWY. ELEVS. FOR VERT. CURVES, CAMBER OR SUPERELEVATION.

Bridge Design Engineer	12-27-67
Supervising Bridge Eng.	7-2-68
Designed	7-71 D.S.B.
Detailed (LKM)	9-23-71 H.J.K.
Checked	
Traced	
Quantities Checked	
Quantities Figured	

SR 90 JOB NO. 1627 SHEET 20

7-2-68

SR 90 MP 15.77 TO MP 16.64
EAST ISSAQUAH VICINITY
KING COUNTY
E. FORK ISSAQUAH CREEK BRIDGES -
STA. LL 901 00 EASTBOUND & WESTBOUND

DIAPHRAGMS

WASHINGTON STATE HIGHWAY COMMISSION
DEPARTMENT OF HIGHWAYS
OLYMPIA, WASHINGTON

G.H. ANDREWS — DIRECTOR OF HIGHWAYS

C. S. Lloyd — BRIDGE ENGINEER

APPROVED May 2, 1975

CONTRACT NUMBER 9973

SHEET 134 OF 135 SHEETS

SR 90/372

10/93

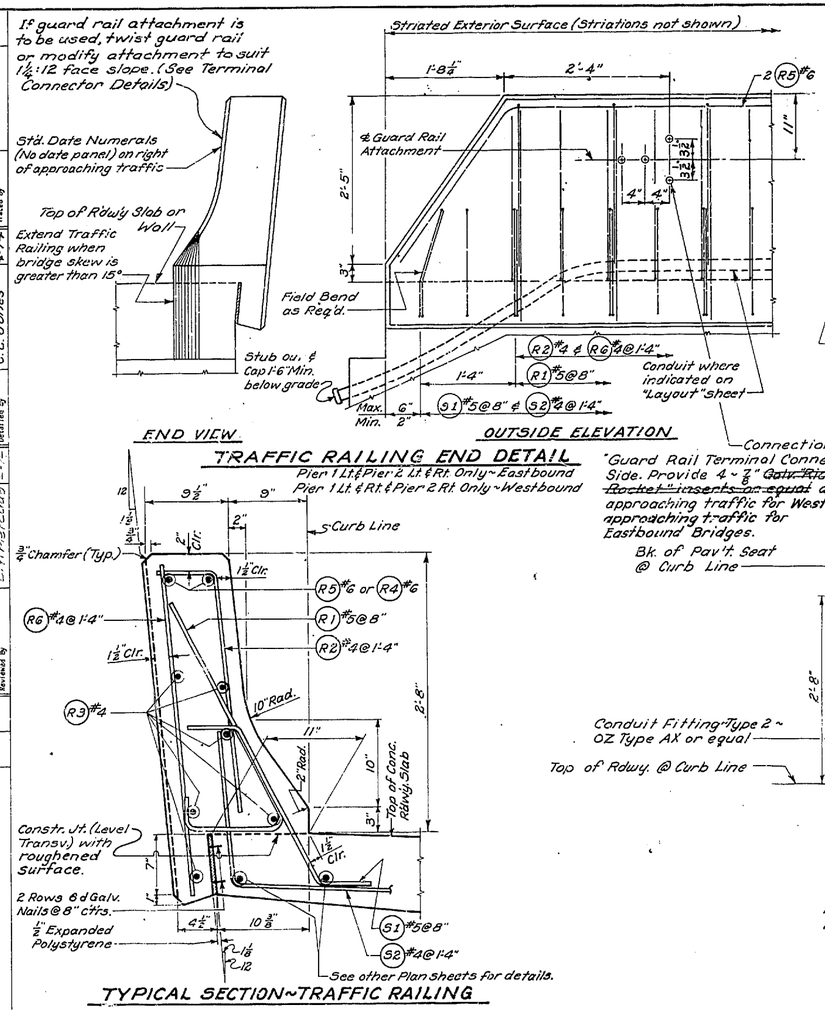

TRAFFIC RAILING END DETAIL

Pier 1 Lt. & Pier 2 Lt. & Rt. Only ~ Eastbound
Pier 1 Lt. & Rt. & Pier 2 Rt. Only ~ Westbound

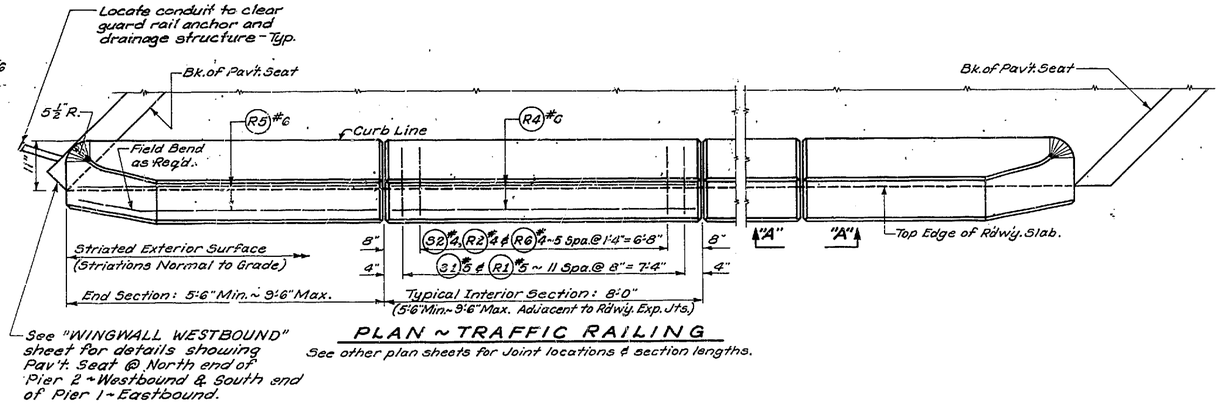

PLAN ~ TRAFFIC RAILING

See other plan sheets for Joint locations & section lengths.

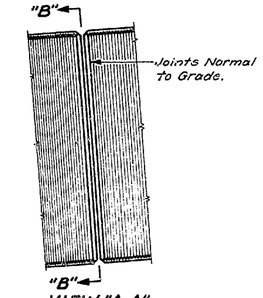

VIEW "A-A"

All Chamfers ¾".

TYPICAL SECTION ~ TRAFFIC RAILING

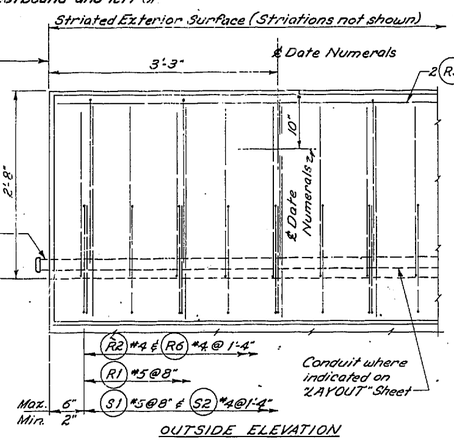

OUTSIDE ELEVATION

TRAFFIC RAILING END DETAIL

Pier 1 Rt. Only ~ Eastbound
Pier 2 Lt. Only ~ Westbound
Elevation shown for Pier 1 ~ Eastbound Bridge. Pier 2 ~ Westbound Bridge similar.

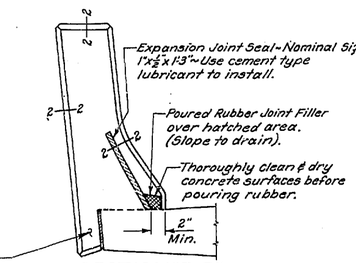

For locations of lengths of blackout of lower projection of Traffic Railing, see "RET. WALLS 2 & 3" sheet.

SECTION "B-B"

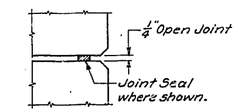

SECTION 2-2

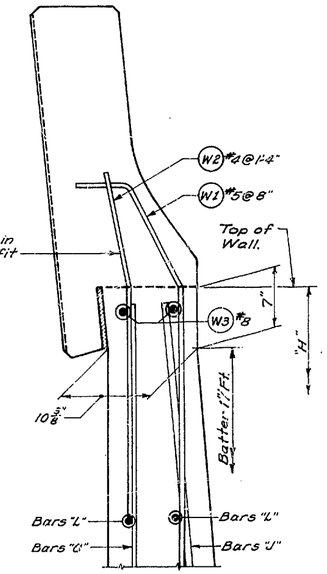

★ TRAFFIC RAILING ON RETAINING WALLS

For details not shown see "Typical Section ~ Traffic Railing."

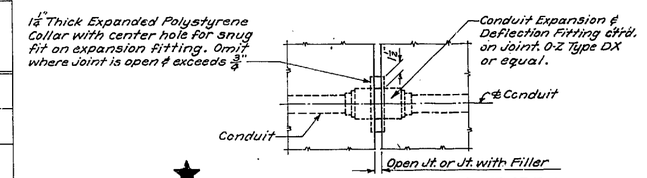

★ CONDUIT EXPANSION FITTING ~ TYPE-1

For Ret. Wall Joints, Ret. Wall to Bridge Joints & others as specified.
Joint Skew 15° Maximum ~ Angular Motion 20° Maximum.
Other motion ¾" Maximum any direction.
See Plans for location and Type.

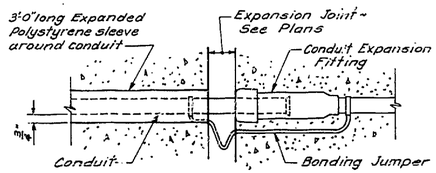

CONDUIT EXPANSION FITTING ~ TYPE 2

Conduit Fitting ~ O-Z Type AX or equal for movement of ± 2" Max.
Conduit Fitting ~ O-Z Type AXB or equal for movement of ± 4" Max.
See Plans for location & type.

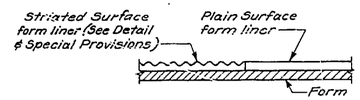

SECTION "X-X"

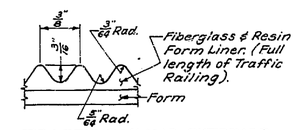

TRAFFIC RAILING EXTERIOR FACE TREATMENT

(See Special Provisions).
Slight deviations from the dimensions shown are permissible, subject to the approval of the Engineer.

TRAFFIC RAILING BAR LIST

All reinforcing shall be A.S.T.M. A-615, Gr. 60

MARK	SIZE	LENGTH	BENDING DIAGRAM (All dimensions are out to out)
R1	5	3'-8"	
R2	4	2'-9"	
R3	4	7'-9" △	Str.
R4	6	7'-9" △	Str.
R5	6	(a)	
R6	4	3'-1"	Str.
R7	3	1'-6"	Str.
R8	3	4'-0"	Str.
S1	5	2'-5"	
S2	4	4'-10"	

△ Shown for Typ. Interior Section. Vary as req'd. for non-typical sections or end sections.

(a) Determine from Plans

APPROXIMATE QUANTITIES ~ TRAFFIC RAILING

Class AX Concrete	0.100	Cu.Yds./Lin.Ft.	Wt. = 427 Lbs./Lin.Ft.
Steel Reinf. Bars	15.7	Lbs./Lin.Ft.	Bars R1 to R6
Steel Reinf. Bars	6.2	Lbs./Lin.Ft.	Bars S1 & S2

★ Denotes Detail does not apply to these Bridges

SR 90 MP 15.77 TO MP 16.64
EAST ISSAQUAH VICINITY
KING COUNTY
E. FORK ISSAQUAH CREEK BRIDGES -
STA. LL 901 00 EASTBOUND & WESTBOUND

TRAFFIC RAILING

WASHINGTON STATE HIGHWAY COMMISSION
DEPARTMENT OF HIGHWAYS
OLYMPIA, WASHINGTON

G. H. ANDREWS — DIRECTOR OF HIGHWAYS

C. S. Saboyd — BRIDGE ENGINEER — APPROVED May 2, 1975

CONTRACT NUMBER 9973 — SHEET 135 OF 135 SHEETS

As Built Changes In Red 2-2-83

SR 90/372

107/1

Layout by D.M.D. & T.W.R.	Layout Checked by 4-7-74	Traced by 4-7-74	
Designed by R.D.B. & Y.F.C.	Design Checked by 4-7-74	Detailed by S.C. Jones	
Engineer of Bridge Design	Supervising Bridge Engr.	Reviewed by	
APP'D			
BY			

REVISION

DATE	REVISION	BY	APP'D
5-20-74	Rev. Note "Traffic Railing End Detail"	M.S.S.	

SR 90 JOB NO. 1627 SHEET 21

FED. ROAD DIV. NO.	STATE	FED. AID PROJ. NO.	FISCAL YEAR	SHEET NO	TOTAL SHEETS
8	WASH.	PE-002-1(6) UNIT 2		13	15

Designing Engineer	W. F. Anderson	Feb. 1949
Designed	J. D. F.	Nov. 1949
Design Checked	G.A.R. (R.C.E.)	" "
Traced	R.P.B.	Feb. 1950
Quantities Figured	G.A.R.	Jan. "
Quantities Checked	G.A.R.	" "
Drawn	B.H.	Nov. "

Date	By

Drawn	
Traced	
Checked	
Const. Engr.	
Dist. Engr.	

Note: Grade Elevations shown are finished grades and are equal to profile grade elevations.

SEC. 30, T. 24 N. R. 7 E., W.M.

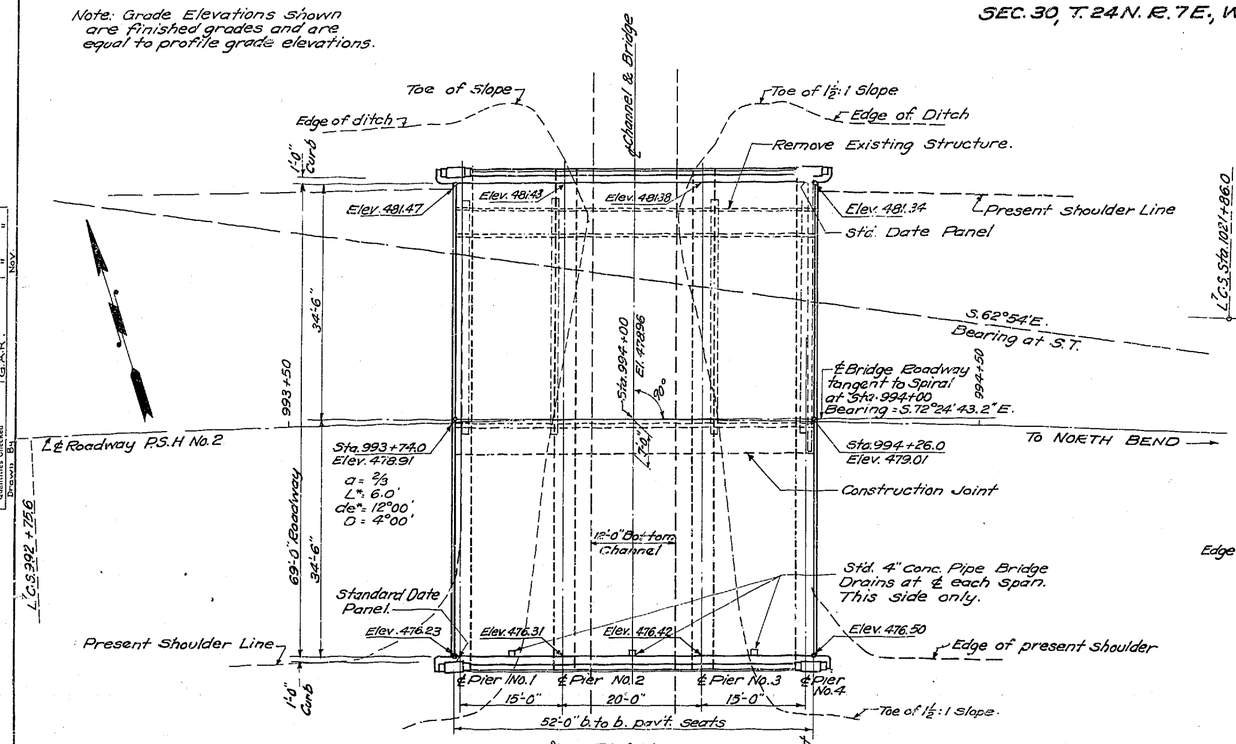

PLAN

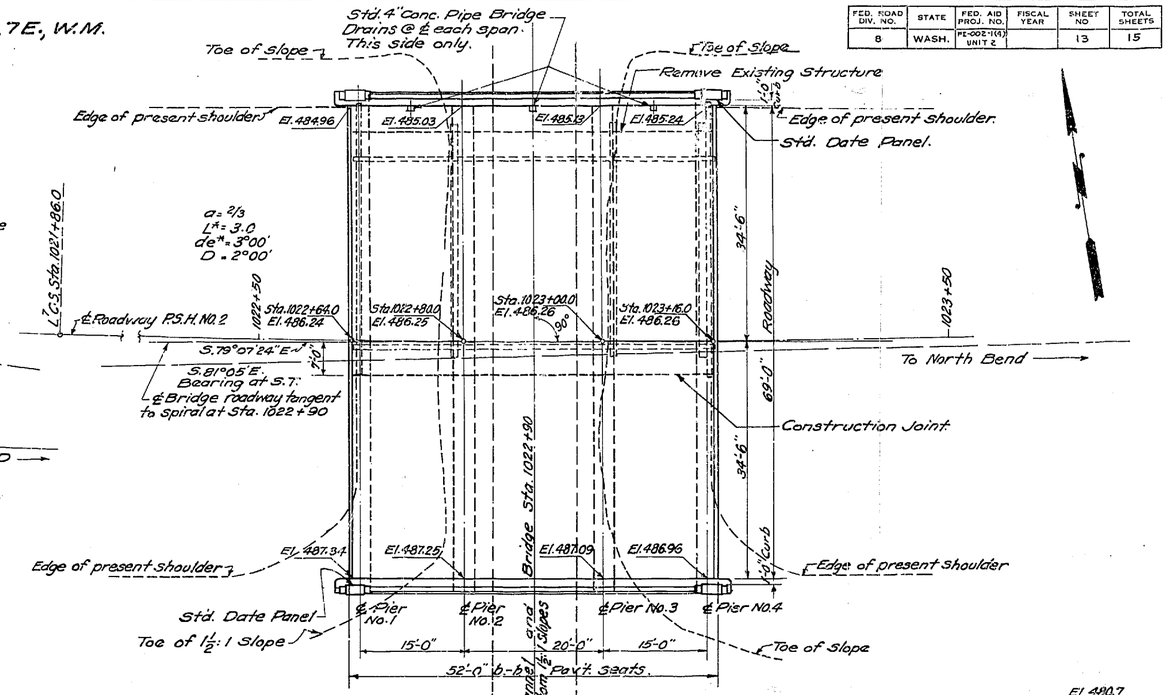

PLAN

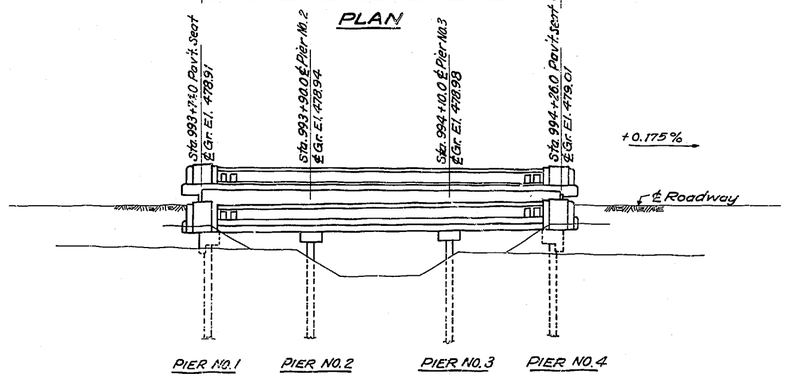

ELEVATION
BRIDGE NO. 2/616.7

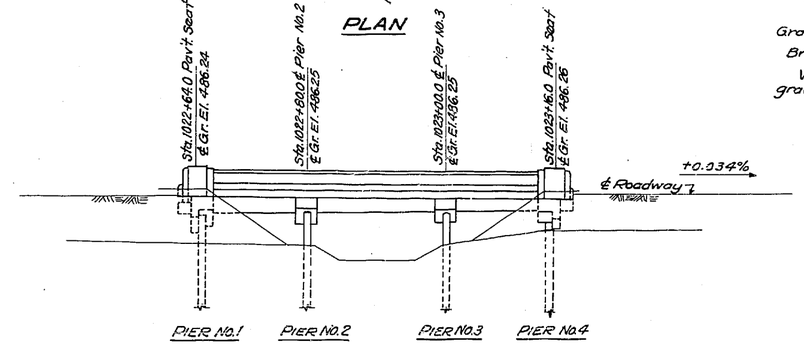

ELEVATION
BRIDGE NO. 2/616.2

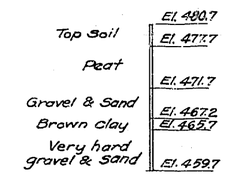

TEST HOLE NO. 1
Sta. 1022+81

	El. 471.6
Top Soil	El. 469.6
Peat	El. 465.6
Blue Clay & Sand	El. 460.6
Peat, Clay & Sand	El. 453.6
Sand & Gravel	El. 449.6
Fine Brown Sand	El. 444.6
Probably Bed Rock.	

TEST HOLE NO. 2
Sta. 994+15.0

H20-S16 LOADING

PRIMARY STATE HIGHWAY NO. 2
GRAND RIDGE TO PRESTON
KING COUNTY

LAYOUT — BRIDGE NO. 2/616.7
BRIDGE NO. 2/616.2

WILLIAM A. BUGGE — STATE OF WASHINGTON — REGISTERED PROFESSIONAL ENGINEER

STATE OF WASHINGTON
DEPARTMENT OF HIGHWAYS
OLYMPIA, WASHINGTON

APPROVED: MAY 4, 1951
W. A. Bugge
DIRECTOR OF HIGHWAYS

APPROVED:
Sergy Thomas
BRIDGE ENGINEER

SHEET 12 OF 14 SHEETS
CONTRACT NUMBER 4040

S/102

88/119

FED. ROAD DIST. NO.	STATE	FED. AID PROJ. NO.	FISCAL YEAR	SHEET NO.	TOTAL SHEETS
8	WASH.	FE-001-1(4) UNIT 2		14	15

Designing Engineer	W. F. Prescott, Feb. 1951
Designed	W.D.T.
Design Checked	A.L.B. (R.C.K.) Dec. 1949
Detailed	S.D.T. Dec. 1949
Quantities Figured	J.D.T. Jan. 1950
Quantities Checked	G.A.B. "

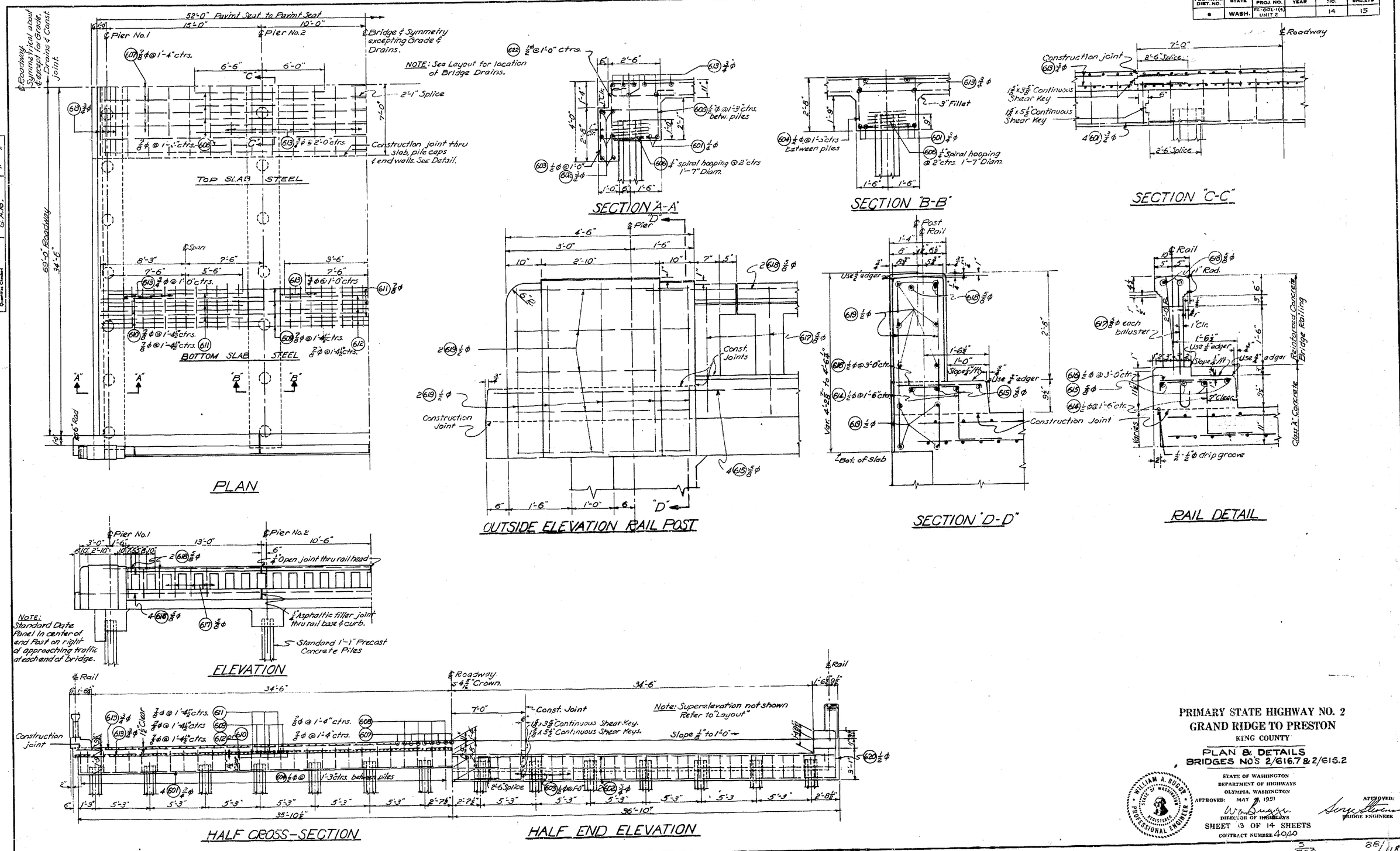

PRIMARY STATE HIGHWAY NO. 2
GRAND RIDGE TO PRESTON
KING COUNTY

PLAN & DETAILS
BRIDGES NO'S 2/616.7 & 2/616.2

STATE OF WASHINGTON
DEPARTMENT OF HIGHWAYS
OLYMPIA, WASHINGTON

APPROVED: MAY 9, 1951
W. A. Bugge
DIRECTOR OF HIGHWAYS

APPROVED:
Jorge Florez
BRIDGE ENGINEER

WILLIAM A. BUGGE — STATE OF WASHINGTON — REGISTERED PROFESSIONAL ENGINEER

SHEET 13 OF 14 SHEETS
CONTRACT NUMBER 4040

3/702

88/118

FED. ROAD DIV. NO.	STATE	FED. AID PROJ. NO.	FISCAL YEAR	SHEET NO.	TOTAL SHEETS
10	WASH.	I-90-1(106)17		161	185

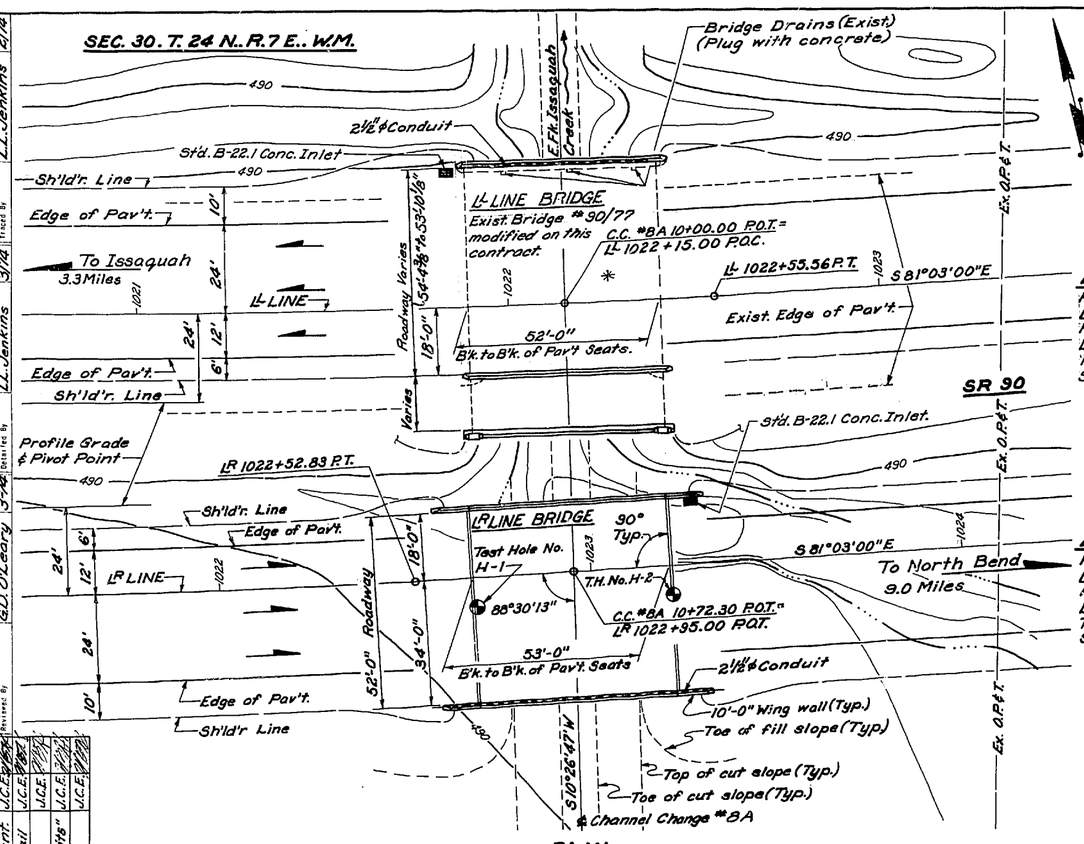

PLAN

L^L LINE-CURVE DATA

P.I. L^L 1017+88.66
Δ 17°59'00" Lt.
R. 3000.00'
L. 941.61'
T. 474.71'
S. 0.06'/ft.

L^R LINE-CURVE DATA

P.I. L^R 1018+00.83
Δ. 17°24'00" Lt.
R. 3000.00'
L. 911.06'
T. 459.07'
S. 0.06'/ft.

APPROXIMATE QUANTITIES

L^L LINE BRIDGE

Steel Reinforcing Bars	2000	Lbs.
Concrete Class AX	17	Cu. Yds.
Electrical Conduit (2 1/2" round)	60	Lin. Ft.
Asphalt Concrete Pavement Class B	155	Tons
Removing Portions of Existing Structure	Lump	Sum
Membrane Waterproofing (Deck Seal)	315	Sq. Yds.

L^R LINE BRIDGE

Structure Excavation Class A	115	Cu. Yds.
Steel Reinforcing Bars	6100	Lbs.
Concrete Class B	56	Cu. Yds.
Concrete Class AX	40	Cu. Yds.
Superstructure - E. Fk. Issaquah Cr. Brs. - Sta. 1022 (L^R Line Bridge)	Lump	Sum
Water Reducing Additive Est.	110	Dollars

GENERAL NOTES

All material and work shall be in accordance with the requirements of the State of Washington, Department of Highways, Standard Specifications for Road and Bridge Construction, dated 1974.

The concrete in the footings shall be Class B mix. All other cast in place concrete shall be Class AX mix.

Falsework shall be carefully released to prevent impact or undue stresses in the structure.

Unless otherwise shown on the plans, concrete cover measured from the face of the concrete to the face of any reinforcement bar shall be 2" at the top of the roadway slab, 1" at the bottom of the roadway slab, 2 1/2" at the bottom of footings and 1 1/2" at all other locations.

The designations "Bridge No. 90/77" and "L^L Line Bridge" are used interchangeably.

FOR L^R LINE BRIDGE:

The L^R Line Bridge has been designed in accordance with the requirements for Load Factor Design, 1973 A.A.S.H.O. Specifications.

Footing elevations and substructure details are subject to change depending upon foundation material encountered. Reinforcing steel for footings and pier walls shall not be cut until final footing elevations have been determined in the field, and substructure details have been modified as required.

The maximum design soil pressure per square foot is two and one half (2 1/2) tons for Piers 1 and 2. As specified elsewhere in these plans and special provisions, unsuitable material shall be removed and the excavation backfilled prior to constructing these footings.

The roadway slab shall not be poured until 24 hours minimum after pouring the diaphragms.

✳ Bridge deck overlayed w/ 0.25' Cl. B A.C.P.

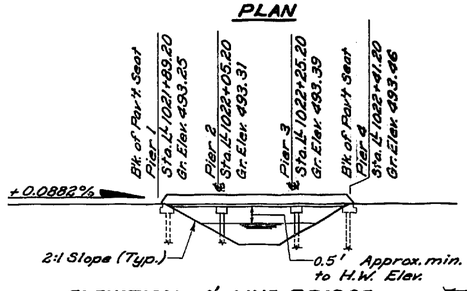

ELEVATION - L^L LINE BRIDGE

Grade elevations shown are finish grades on L^L LINE and vary from profile grade.

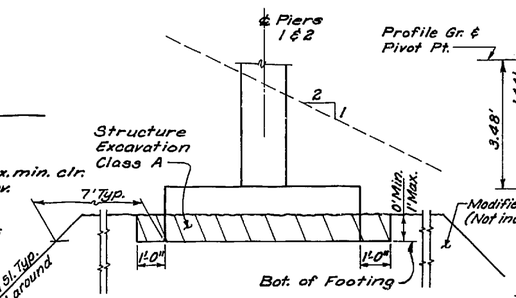

STRUCTURE EXCAVATION LIMITS AND MODIFIED GRAVEL BORROW LIMITS L^R LINE

Typical Section thru Pier Wall.

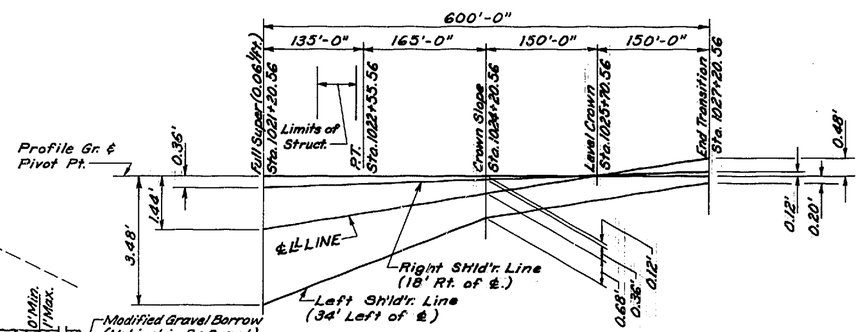

SUPERELEVATION ~ L^L LINE

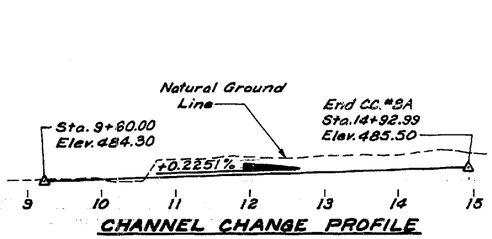

CHANNEL CHANGE PROFILE

LOADING: HS-20 or 2-24^K AXLES @ 4' C'T'RS.

DATUM

Sea Level Datum of 1929

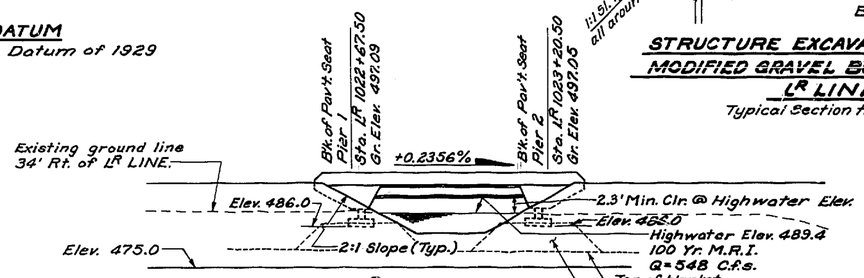

ELEVATION - L^R LINE BRIDGE

Grade elevations shown are finish grades on L^R LINE and vary from profile grade.

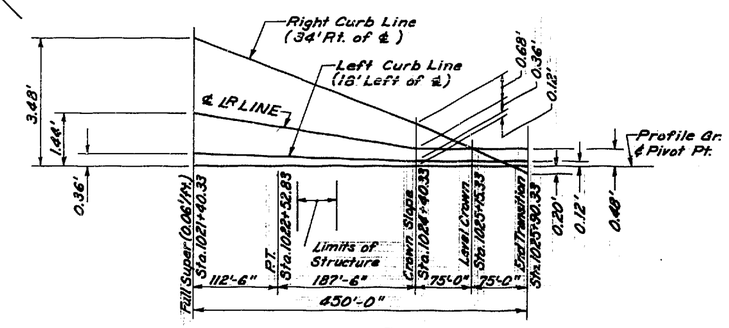

SUPERELEVATION ~ L^R LINE

AS BUILT CHANGES IN RED 10-21-83

SR 90 MP 17.95 TO MP 20.48

HIGH POINT INTERCHANGE TO PRESTON

KING COUNTY

E. FK. ISSAQUAH CR. BRS. - STA. 1022

LAYOUT L^L & L^R LINE BRIDGES

WASHINGTON STATE HIGHWAY COMMISSION
DEPARTMENT OF HIGHWAYS
OLYMPIA, WASHINGTON

G. H. ANDREWS — DIRECTOR OF HIGHWAYS

C. S. Gloyd — BRIDGE ENGINEER — APPROVED April 23, 1974

CONTRACT NUMBER 9820 — SHEET 161 OF 185 SHEETS

DATE	REVISION	BY	APP'D
4/11/74	Changed Channel Grade to +0.2251%	W.L.G.	
4/16/74	Stl. Reinf. Bars & Conc. Cl. AX Quant.	J.C.E.	
4/16/74	Removed Inlet on R.L.-Rt. Rail	J.C.E.	
5/2/74	Changed Inlets to Std. B-22.1	J.C.E.	
7/19/74	Added "Modified Gravel Borrow Limits"	J.C.E.	
7/19/74	Rev. Conc. Class B Quantity	J.C.E.	

DATE	REVISION	BY	APP'D
4/4/74	Structure Excav. & Quantity	D.D.	
4/11/74	Changed Min. Clr. Elev. To H.W. Elev.	W.L.G.	

Layout By	H.J. Kroger	11/73	Engineer of Bridge Design		
Layout Checked By	R.D. Gates	11/73	Engineer of Bridge Design		
Traced By	L.L. Jenkins	2/74	Supervising Bridge Engr.		
Designed By	R.D. Gates	2/74	Reviewed By		
Design Checked By	R.D. Gates / R.D. Balducco	2/74			
Detailed By	L.L. Jenkins	3/74			

SR 90 JOB NO. 1628 SHEET 1 of 9

FED. ROAD DIV. NO.	STATE	FED. AID PROJ. NO.	FISCAL YEAR	SHEET NO.	TOTAL SHEETS
10	WASH.	I-90-1(106)	17	162	185

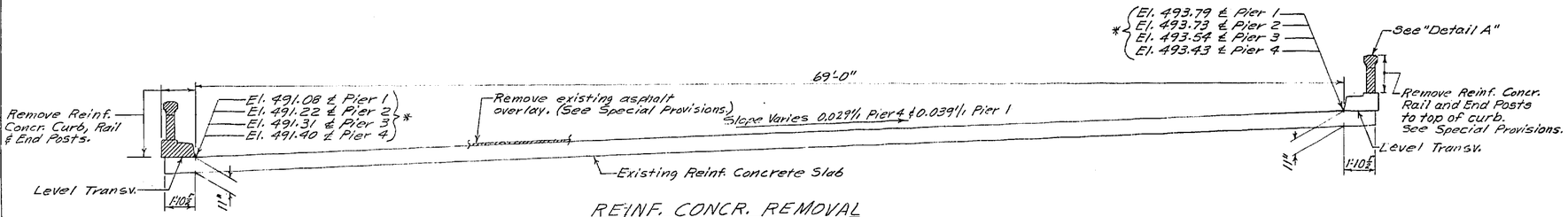

REINF. CONCR. REMOVAL
Looking Ahead on Station
Normal to original spiral &

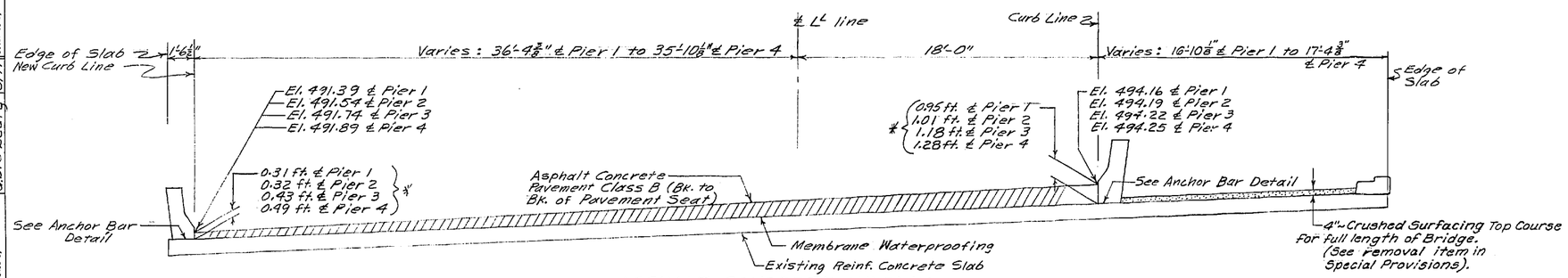

ASPHALT CONCRETE OVERLAY
Looking Ahead on Stationing
Normal to new alignment (L' Line)
* Shall be verified in the field.

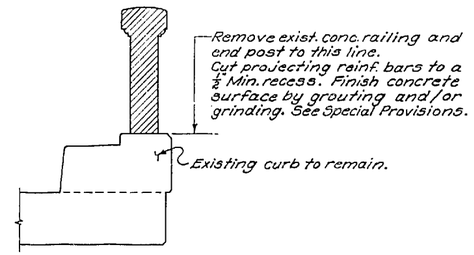

DETAIL "A"

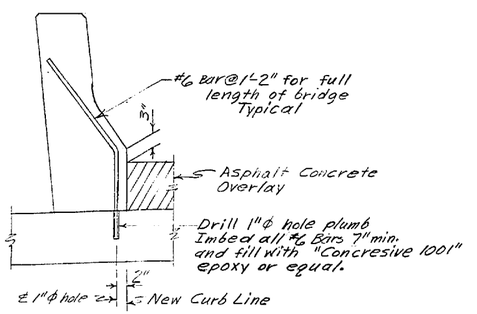

ANCHOR BAR DETAIL
Typical

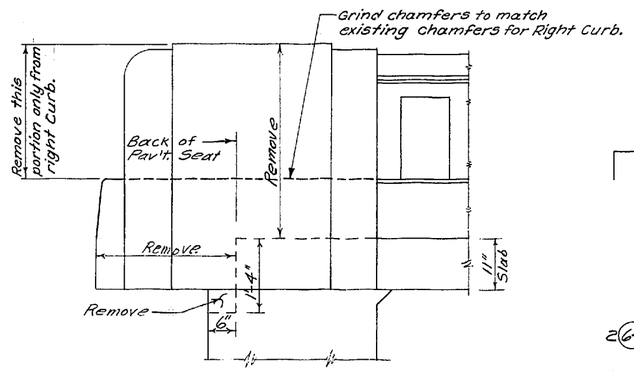

END POST REMOVAL
Left curb shown.

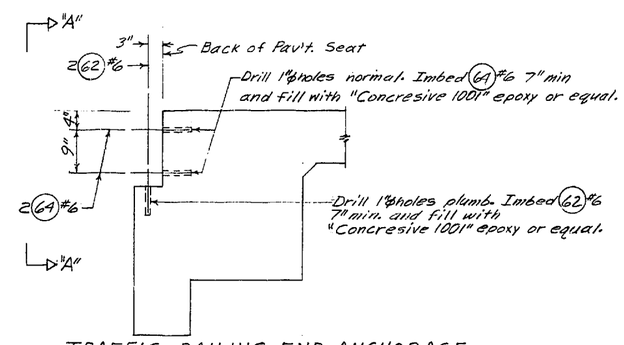

TRAFFIC RAILING END ANCHORAGE
Typical

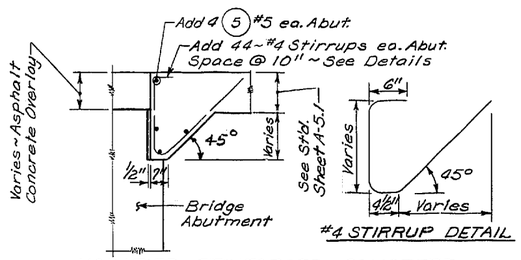

#4 STIRRUP DETAIL

MODIFIED REINFORCED CONCRETE BRIDGE APPROACH SLAB ~ STD. A-5.1
Not included in Bridge Quantities.
L' Line Bridge

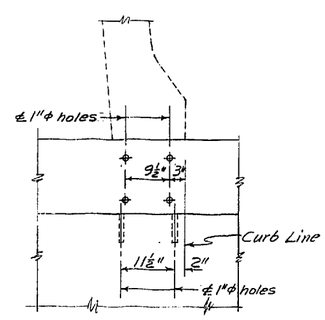

VIEW "A-A"

DATE	REVISION	BY	APP'D
4/15/74	Right railing & curb ~ Crushed Surf.	J.C.E.	
4/18/74	Modified Approach Slab Detail	L.L.J.	

SR 90 JOB NO. 1628 SHEET 2

BY	APP'D	Engineer of Bridge Design	Supervising Bridge Engr.	Reviewed By	Designed By	Design Checked By	Detailed By	Layout By	Layout Checked By	Traced By
		G.D. O'Leary			D. DeMicco	C. M. GLAZE	D. DeMicco	3/74	3/74	3/74

SR 90 MP 17.95 TO MP 20.48
HIGH POINT INTERCHANGE TO PRESTON
KING COUNTY
E. FK. ISSAQUAH CR. BRS. - STA. 1022

REMOVAL & OVERLAY DETAILS
L' LINE BRIDGE

WASHINGTON STATE HIGHWAY COMMISSION
DEPARTMENT OF HIGHWAYS
OLYMPIA, WASHINGTON

G.H. ANDREWS DIRECTOR OF HIGHWAYS

C. S. Lloyd
BRIDGE ENGINEER
APPROVED April 23, 1974

CONTRACT NUMBER 9820
SHEET 162 OF 185 SHEETS

FED. ROAD DIV. NO.	STATE	FED. AID PROJ. NO.	FISCAL YEAR	SHEET NO.	TOTAL SHEETS
10	WASH.	I-90-1(106)	17	163	185

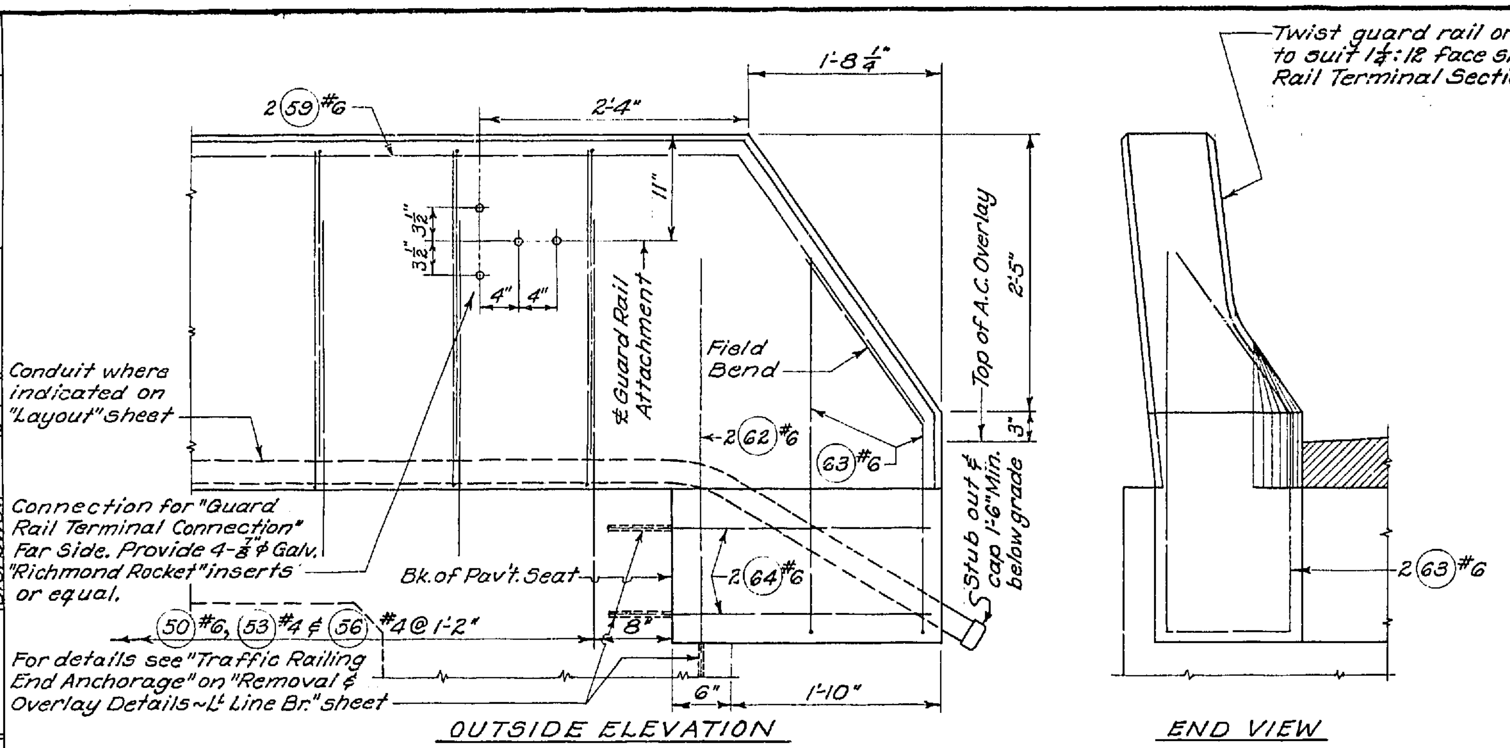

TRAFFIC RAILING END DETAIL
Left Railing shown.

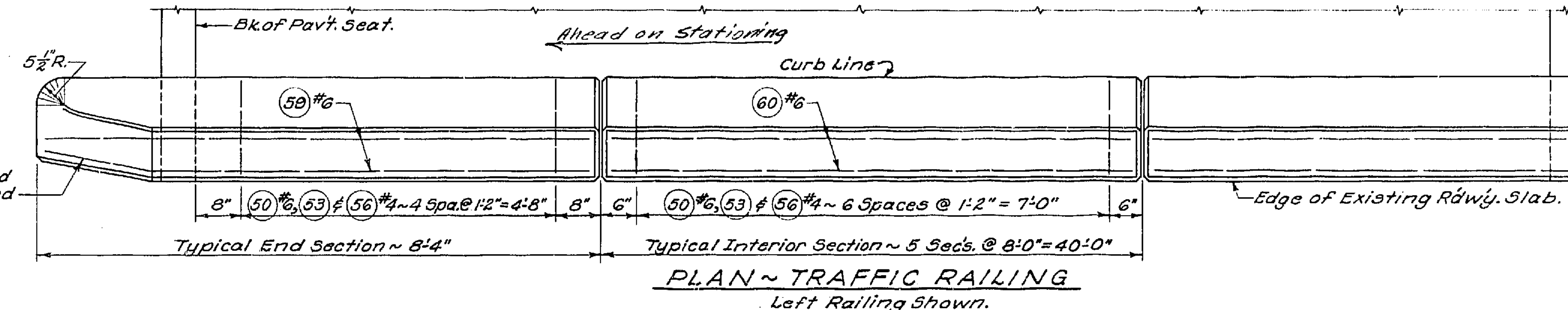

PLAN ~ TRAFFIC RAILING
Left Railing Shown.
Traffic Railing Joint Spacing shown typical for Left and Interior Railings.

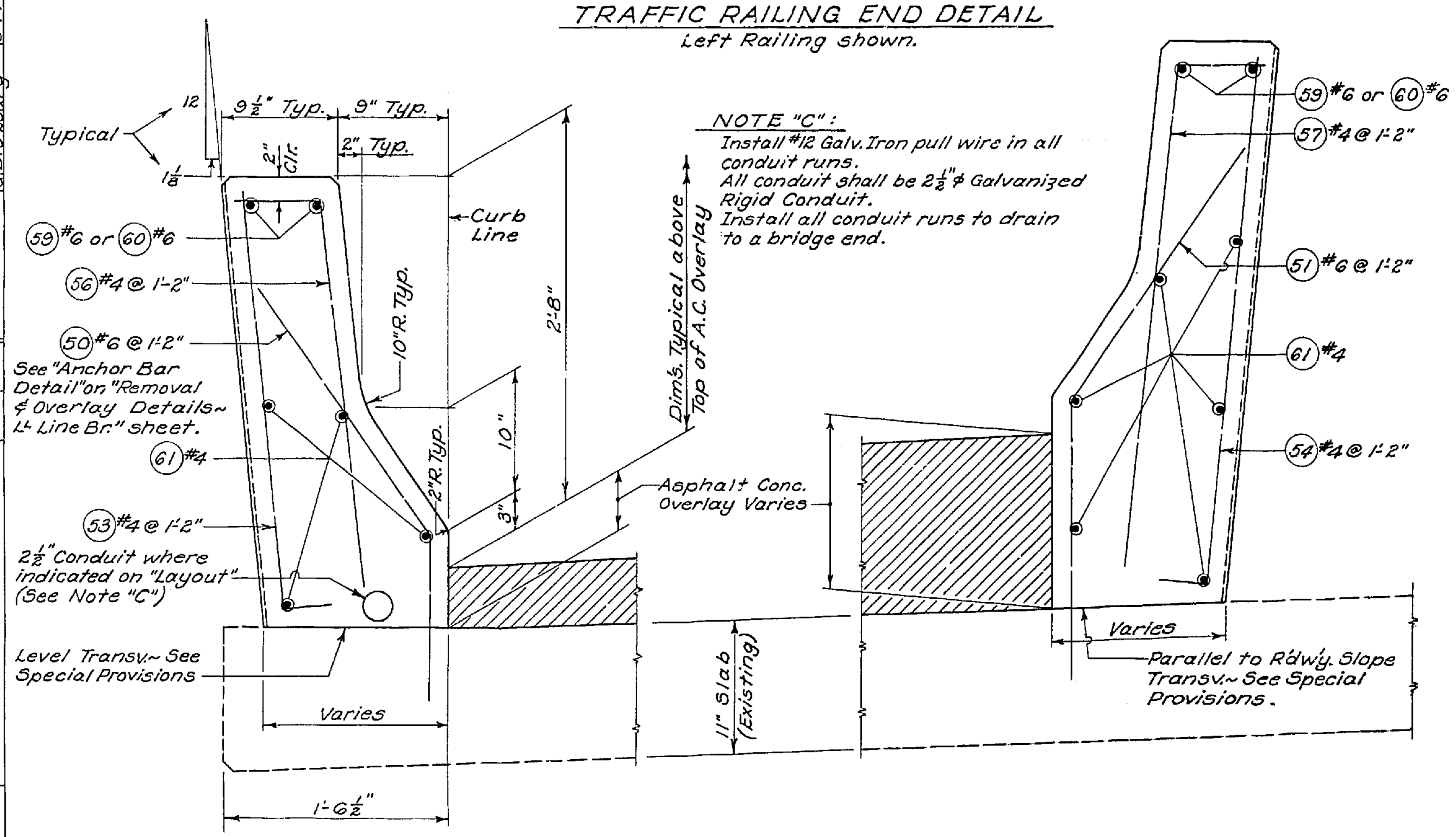

NOTE "C":
Install #12 Galv. Iron pull wire in all conduit runs.
All conduit shall be 2½" ∅ Galvanized Rigid Conduit.
Install all conduit runs to drain to a bridge end.

TYPICAL SECTIONS THRU TRAFFIC RAILING
All Chamfers ¾".
Looking ahead on Stationing.

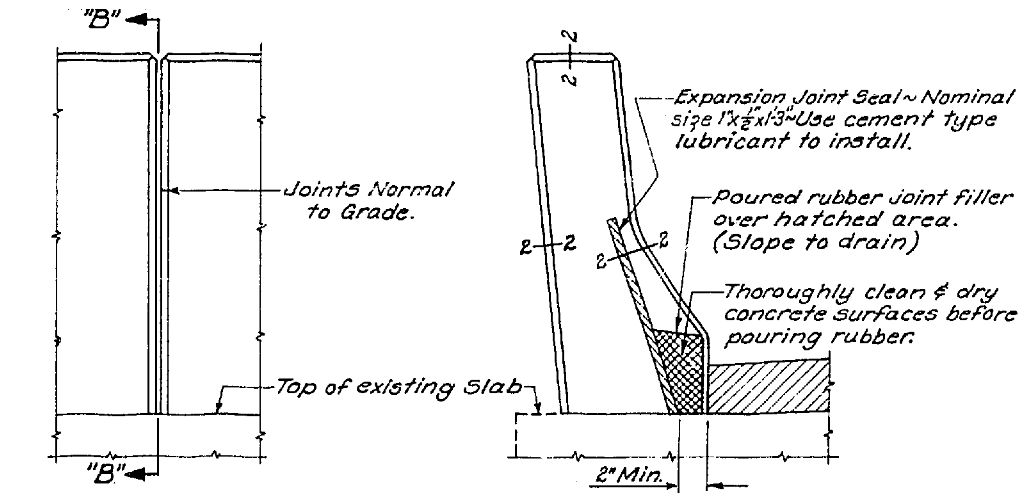

RAILING JOINTS
All Chamfers ¾

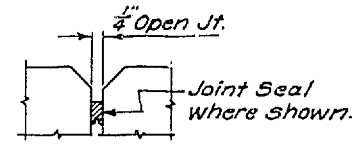

SECTION 2-2

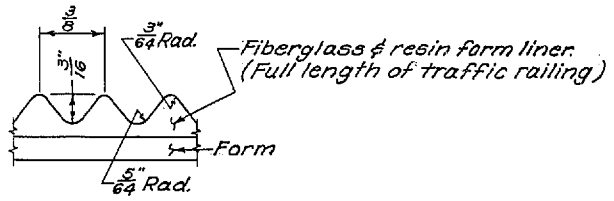

TRAFFIC RAILING EXTERIOR FACE TREATMENT
(See Special Provisions)
Slight deviations from the dimensions shown are permissible, subject to the approval of the Engineer.

TRAFFIC RAILING BAR LIST
All Reinf. shall be A.S.T.M. A-615, Grade 60.

MARK NO.	SIZE	NO. REQ'D.	STIRR. OR TIE	BEND TYPE	LENGTH
50	6	45		93	Varies
51	6	45		93	Varies
53	4	45	T	94	Varies
54	4	45	T	94	Varies
56	4	45	T	95	Varies
57	4	45	T	95	Varies
59	6	12		96	9'-8"
60	6	30		Str.	7'-9"
61	4	98		Str.	Varies (70 @ 7'-9" & 28 @ 8'-1")
62	6	12		Str.	4'-0"
63	6	12	S	97	6'-10"
64	6	24		Str.	2'-9"

BENDING DIAGRAM
All dimensions are out to out

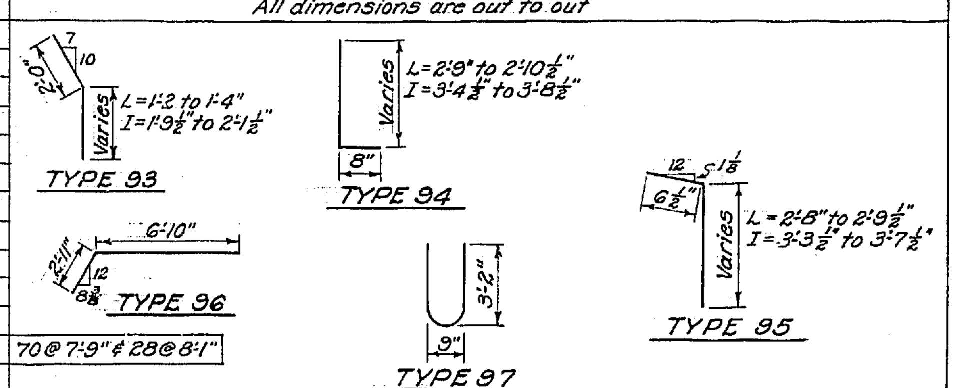

NOTE: L= Left Railing.
I= Interior Railing.

DATE	REVISION	BY	APP'D
4/15/74	Removed Right Railing	J.C.E.	
5/1/74	Expansion Joint Seal	J.C.E.	

SR 90 JOB NO. 1628 SHEET 3

Designed By D. DelDucco 3-74 | Layout By
Design Checked By C.M. Glatze 3-74 | Layout Checked By
Detailed By J.C. Ewell 3-74 | Traced By
Engineer of Bridge Design | Supervising Bridge Engr. | Reviewed By G.D. O'Leary

SR 90 MP 17.95 TO MP 20.48
HIGH POINT INTERCHANGE TO PRESTON
KING COUNTY
E. FK. ISSAQUAH CR. BRS. - STA. 1022

TRAFFIC RAILING & CONDUIT
L LINE BRIDGE

WASHINGTON STATE HIGHWAY COMMISSION
DEPARTMENT OF HIGHWAYS
OLYMPIA, WASHINGTON
G. H. ANDREWS DIRECTOR OF HIGHWAYS

C. S. Gloyd
BRIDGE ENGINEER APPROVED April 23, 1974
CONTRACT NUMBER 9820 SHEET 163 OF 185 SHEETS